Alignment

Application & Installation Guide

LEBW4975-08

Caterpillar: Confidential Green

THIS PAGE INTENTIONALLY LEFT BLANK

Table of Contents

1 Introduction 5
1.1 References 6
1.2 Changes since last revision 6
2 General Alignment Considerations 8
2.1 Types of misalignment 8
2.1.1 Parallel or bore misalignment 8
2.1.2 Angular or face misalignment 8
2.1.3 Inaccurate flanges 9
3 Alignment tools 11
3.1 Laser alignment tools 11
3.2 Dial indicators 11
3.3 Accuracy of dial indicator readings 11
3.4 Support brackets 12
4 Principles of alignment 14
4.1 Cold alignment 14
4.2 Hot alignment 14
4.3 Crankshaft position 15
4.4 Flywheel sag or droop 15
4.5 Crankshaft endplay 16
4.6 Crankshaft deflection 16
4.7 Torque reaction 18
4.8 Thermal growth 19
5 Alignment related mounting considerations 21
5.1 Shimming 21
5.1.1 Metal shims 21
5.1.2 Poured resin chocks 22
5.1.3 Adjustable chocks 23
5.2 Mounting bolts 24

©2025 Caterpillar All rights reserved

5.3 Mounting bolt torque 24
6 Flexible Couplings 26
6.1 General Requirements 26
6.2 Misalignment Capability 26
6.3 Stiffness 26
6.4 Serviceability 27
6.5 Coupling load capability 27
6.6 Cat couplings 27
6.7 Couplings by other manufacturers 28
6.8 Specific alignment considerations 28
6.9 Alignment of close-coupled driven equipment 28
6.10 Alignment of remote-mounted gear-driven equipment 30
6.11 Alignment considerations 31
6.12 Alignment check 32
6.13 Front crankshaft drives 33
6.14 Drive shafts 33

©2025 Caterpillar All rights reserved

1 Introduction

To obtain optimum service life from a Cat® engine and its driven equipment, correct alignment between the units is required. Improper alignment results in excessive vibration, short life of driven equipment/compound bearing and coupling clutch parts, and frequent re-alignment. Good alignment practices include proper shimming, correct torque on hold-down bolts, accurate laser or dial indicator usage, allowances for bearing clearances, thermal growth, and accounting for other characteristics of the engine and/or the driven equipment. Special Instructions, listed under Reference Material at the end of this section, are available with specific alignment procedures for all Cat engine and driven equipment combinations.

Cat marine engine alignment is covered separate from this guide – refer to Reference Material for media numbers.

NOTE: Moving an aligned package, such as a generator set, will typically affect the alignment. It is prudent to not begin an alignment procedure until the unit is installed in the location in which it will be operated. However, it is often necessary to test run the equipment before it reaches its final destination. When this is done, the package should be aligned to enable the test run, and then the alignment must be re-verified after the package is set at the final location. Regardless of the reason for the move, whenever an installed engine is moved to a different location, once placed at that new location the alignment between engine and driven equipment must be checked and corrected as needed.

©2025 Caterpillar All rights reserved

1.1 References

The following information is provided as an additional reference to subjects discussed in this guide. Please note the information in these publications is subject to change without notice. This list gives examples of publications pertaining to this topic (alignment), but others are likely to exist that are not listed here. Please search in SIS for topics pertaining to alignment and deflection checks for your particular engine and installation type.

- SEHS7654 – Special Instruction - Alignment - General Instructions
- SEHS7259 – Special Instruction - Alignment of Single Bearing Generators
- SEHS7073 (3500) – Special Instruction - Alignment of Two Bearing Generators
- REHS0423 (3600) – Special Instruction - Alignment of Two Bearing Generators
- REHS0177 – Special Instruction - Alignment of Close Coupled Two Bearing Generators
- REHS7854 – Special Instruction - Alignment of Genset Package with Gearbox
- REHS0445 – Special Instruction - Alignment Procedures for G3500 Tandem Generator Sets
- REHS0475 – Special Instruction - The Installation and Alignment of the Two Bearing Locomotive Generators
- SEBD9162 – Engine News dated 08-01-1990 - Checking Crankshaft Deflection on 3600/G3600 Engines
- SEBD9646 – Engine News dated 04-26-2010 - Checking Crankshaft Deflection on 3600/C280/G3600 Engines
- LEGM4734 – Marine Engine A&I Guide – Mounting and Alignment
- LEKM8467 – 3600 Marine Engine A&I Guide – Mounting and Alignment
- SEHS7956 – Alignment of Caterpillar Diesel Engines to Caterpillar Marine Transmission
- LEBW4987 – G3600 Commissioning Guide
- LEGW0005 – G3600 A4 Commissioning Guide
- LEBW4974 – Mounting A&I Guide

1.2 Changes since last revision

- Section 4.6 (p.16) – updated to correctly indicate 0.08 mm (0.003 in) TIR for alignment checks of the center crank throw.
- Updated figure numbering to correctly align with the guide section numbers.
- Added reference document LEGW0005

©2025 Caterpillar All rights reserved

©2025 Caterpillar All rights reserved

2 General Alignment Considerations

2.1 Types of misalignment

2.1.1 Parallel or bore misalignment

Parallel or bore misalignment occurs when the centerlines of the engine and the driven equipment are parallel but not in the same plane.

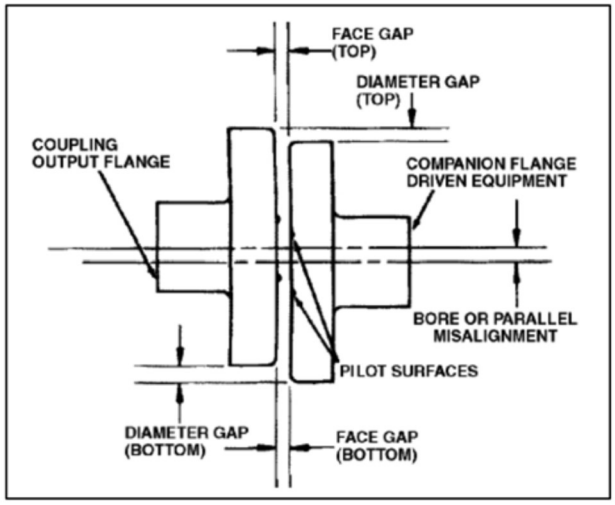

Figure 2.1 **Example of bore misalignment**

2.1.2 Angular or face misalignment

Angular or face misalignment occurs when the centerlines of the engine and driven equipment are not parallel.

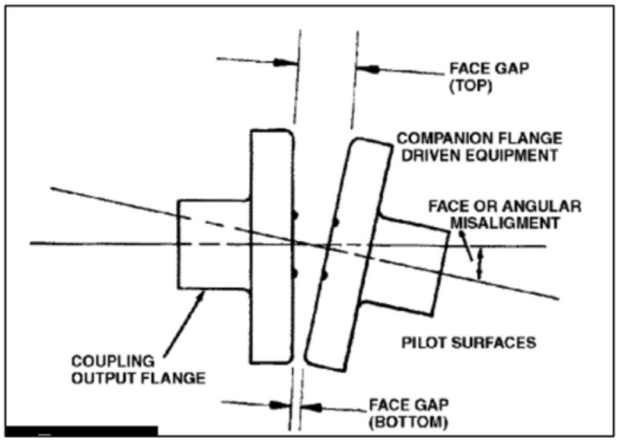

Figure 2.2 **Example of face misalignment**

©2025 Caterpillar All rights reserved

Note that misalignment can occur in more than one plane. For this reason, alignment readings must be taken at 90 degree intervals as the units are rotated.

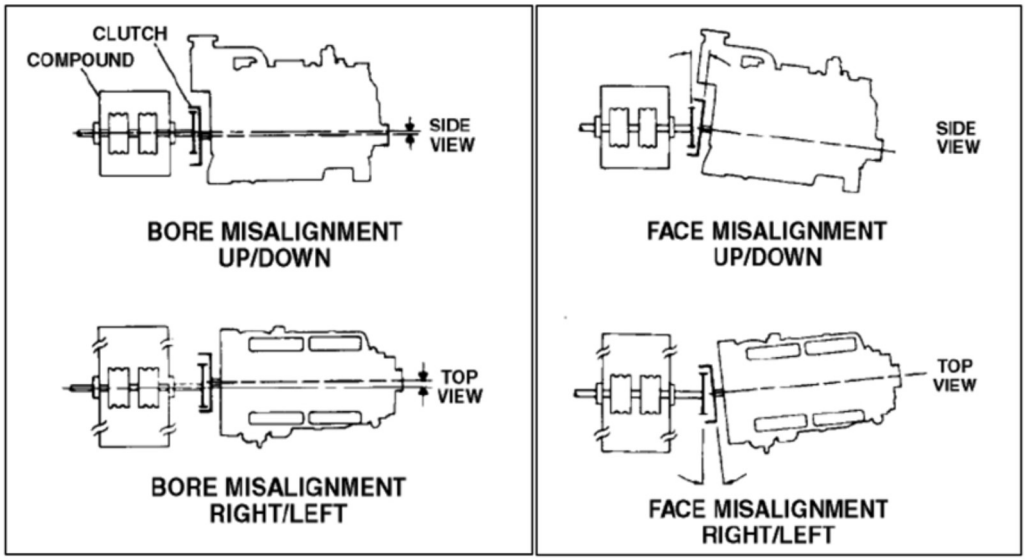

Figure 2.3 **Examples of compound misalignment**

2.1.3 Inaccurate flanges

Inaccurate flanges cause apparent misalignment and make accurate alignment impossible. Face runout refers to the distance the hub face is out of perpendicular to the shaft centerline. Bore runout refers to the distance the bore centerline of a hub is out of alignment with the shaft centerline.

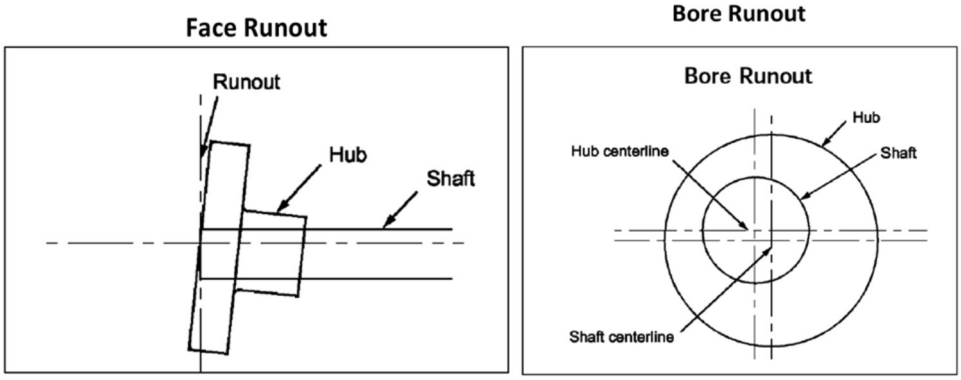

Figure 2.4 **Face and bore runout on an imperfect flange**

©2025 Caterpillar All rights reserved

The runout of the face and bore of the flywheel, clutch or coupling, driven members, and hubs must be checked when inconsistent alignment results occur. Face or bore errors must be corrected. Bore-to-pilot diameter runout error should not be more than 0.05 mm (0.002 in) on the flywheel and 0.13 mm (0.005 in) on adapters bolted to the flywheel. Flange face runout should not be more than 0.05 mm (0.002 in).

©2025 Caterpillar All rights reserved

3 Alignment tools

3.1 Laser alignment tools

Using laser alignment tooling is the most common method of checking alignment. This is a more accurate measurement of any misalignment and the laser tooling furnishes the technician information for a quick correction of any misalignment.

Note: The laser alignment tools typically measure the actual offsets. The dial indicators measure a total indicator reading (TIR).

Follow all the instructions provided by the manufacturer in order to ensure the parallel misalignment and the angular misalignment are within the specifications.

Typically, the laser alignment tools compensate for any axial movement of the rotor shaft for the generator or the crankshaft. If the axial shaft moves during the angular measurements, consult the literature on the laser alignment tool for information.

3.2 Dial indicators

A dial indicator measures very small changes in distance. Alignment of shafting requires measurement of small changes in distance dimensions. The indicator must be rigidly located and supported so the specified alignment values can be measured.

3.3 Accuracy of dial indicator readings

There is a quick way to check the validity of dial indicator face alignment readings. As Figure 2.5 shows, readings are taken at four locations designated as A, B, C, and D. When taking readings, the dial indicator should be returned to A to be sure that the indicator reading returns to zero. Values shown in Figure 2.5 are for a unit not in alignment.

The quick check is to remember that reading of B + D should equal C. This is valid where driving and driven shafts are rotated together while checking alignment.

The quick check is useful for indicating improper procedures such as: sagging indicator brackets, dial indicator finger riding on flywheel chamfer, or indicator not properly positioned causing indicator to run out of travel.

©2025 Caterpillar All rights reserved

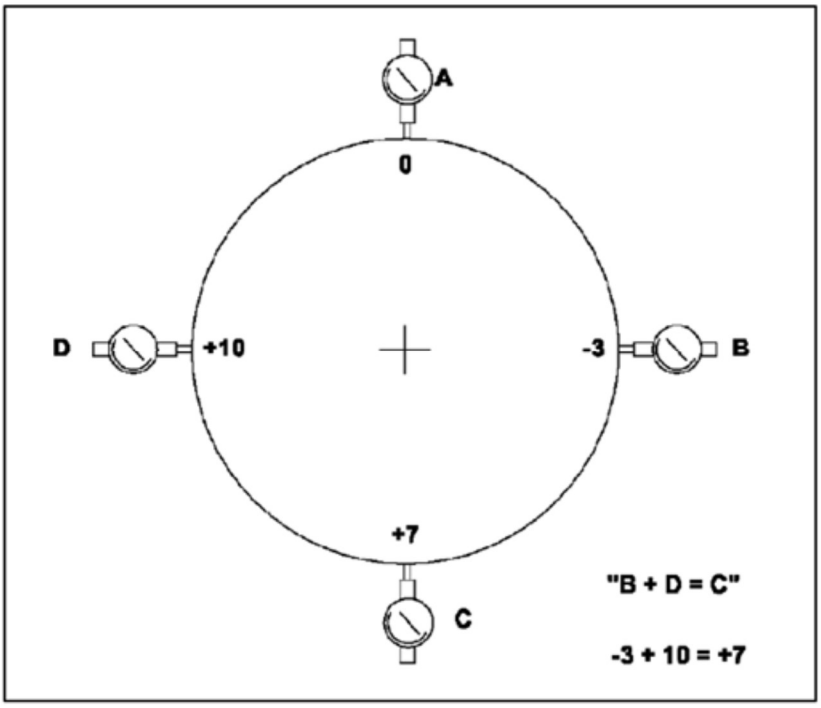

Figure 3.1 **Quick check for dial indicator readings**

3.4 Support brackets

An indicator support bracket must rigidly support the indicator when fixed to one of the shafts and rotated. The support bracket allows location of the dial indicator at the measurement point. Proper brackets can be adjusted to work with varying driveline configurations.

Dial indicator brackets must not bend due to the weight of the indicator. Commercially available dial indicator brackets may not give adequate support when the indicator is rotated, causing false readings. Magnetic base dial indicator supports are not recommended.

To check support bracket rigidity, rotate the same configurations of bracket and indicator through a circle while indicating on the bracket side of the coupling. A maximum reading of less than 0.025 mm (0.001 in) is allowed. It may be necessary to temporarily bolt a rigid reference arm on the bracket side of the indicator coupling to read against when taking an alignment reading.

©2025 Caterpillar All rights reserved

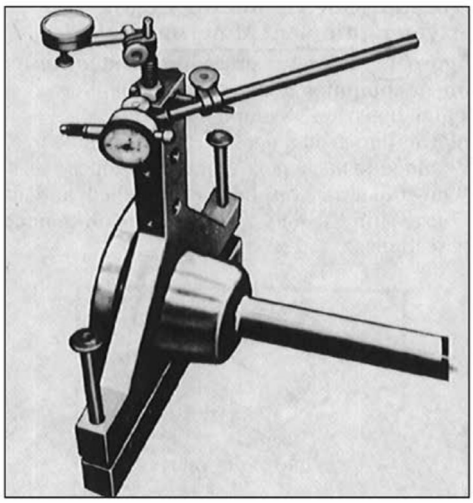

Figure 3.2 **Support brackets for dial indicators**

Caterpillar® recommends using the bracket shown below when performing an alignment check using dial indicators. Use two 12.7 mm (0.50 in) diameter threaded rods or bolts to assemble the adapter. It may be necessary to fabricate different brackets when checking clutch alignments.

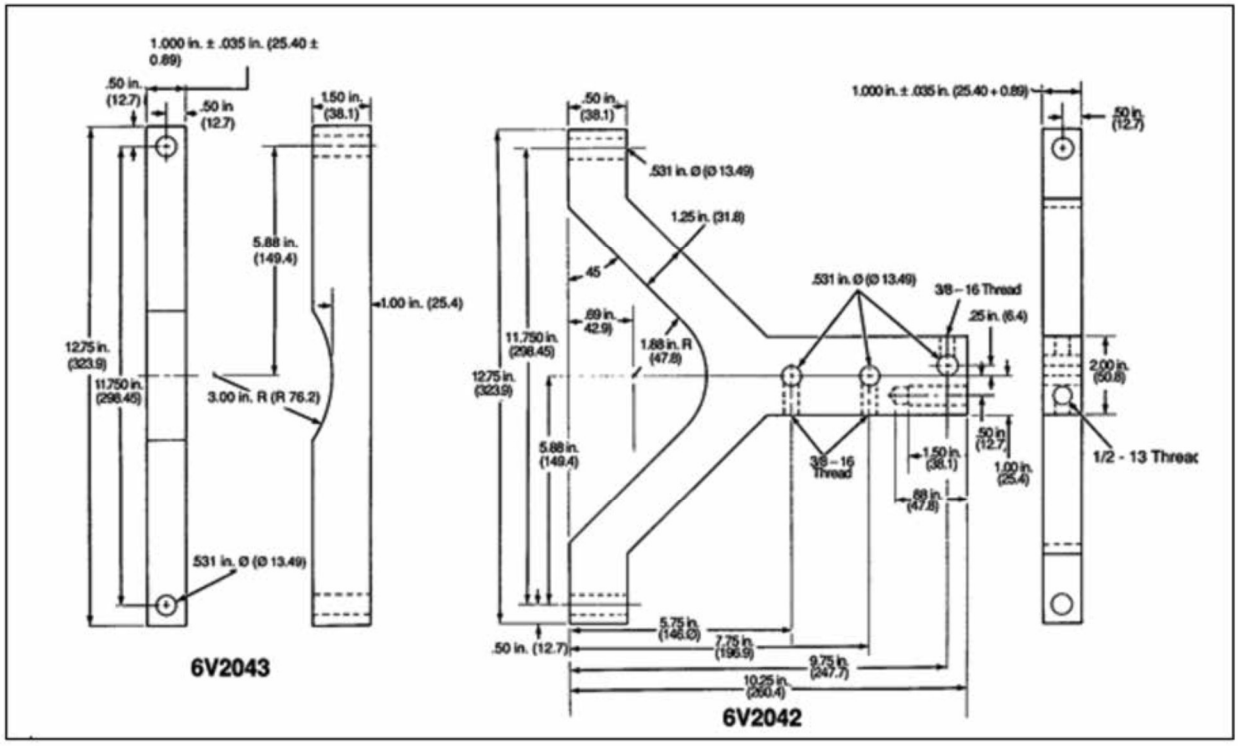

Figure 3.3 **Support bracket fabrication for dial indicator mount**

©2025 Caterpillar All rights reserved

4 Principles of alignment

4.1 Cold alignment

The driven equipment and engine crankshaft rotate in the center of their respective bearings, so their centerlines should coincide. Alignment is made under static conditions while the crankshaft is in the bottom of its bearings. This is not its position during operation. Firing pressures, centrifugal forces, and engine oil pressure all tend to lift the crankshaft and cause the flywheel to orbit around its true center, as seen in the figure below.

Since there is no accurate or practical method of measuring alignment with an engine running at operating temperature and under load, all Caterpillar alignment procedures must be performed with the engine stopped and the engine and driven equipment at ambient temperature. This is called “cold alignment.” In order to achieve correct operating alignment, certain factors must be taken into consideration in determining cold alignment specifications.

Depending on the application, some or all of the following factors will affect the cold alignment procedure. Sometimes, the driven equipment will have ball or roller bearings; this type of support does not change the rotational axis between the static and running conditions.

Before performing cold alignment, you must perform a check for engine soft foot. An incorrect soft foot will affect the alignment. Springing of the skid might also occur. Soft foot might also affect the crankshaft deflection. See 2.4.7 for soft foot procedure.

4.2 Hot alignment

In the past, a hot alignment check may have been used to check the accuracy of the cold alignment procedure. However, factory tests have shown that the results of the hot alignment check are inconsistent; therefore, this procedure is not recommended except for G3600 engines. Please refer to the G3600 Commissioning Guide for the G3600 hot alignment procedure.

©2025 Caterpillar All rights reserved

4.3 Crankshaft position

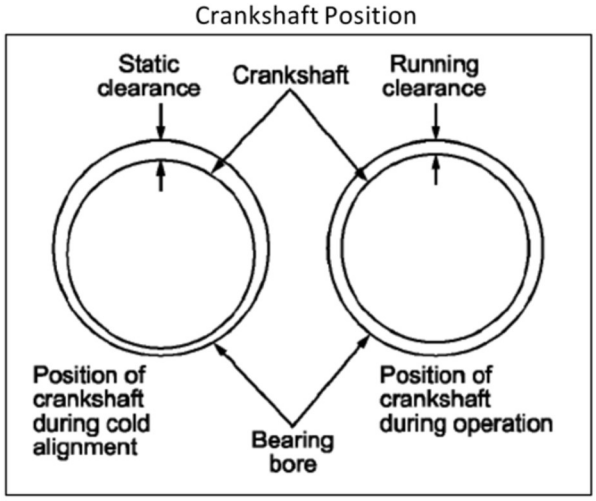

Figure 4.1 **"Floating" of the crankshaft during engine operation**

4.4 Flywheel sag or droop

With the engine not running, the flywheel weight causes the rear of the crankshaft to bend slightly. The weight of the coupling increases this crankshaft deflection. This results in the checking surface (pilot bore or outside flywheel diameter) rotating below centerline of the crankshaft bearings. For this reason, Caterpillar recommends alignment checks be performed with the coupling in place.

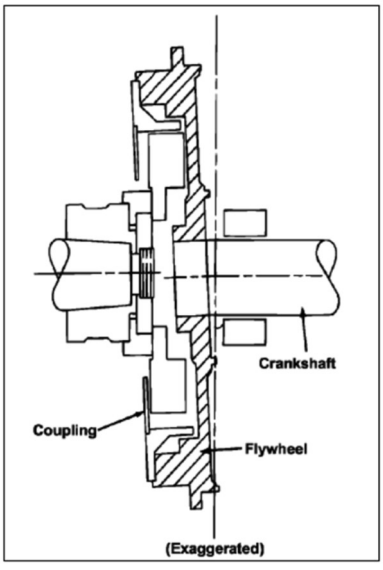

Figure 4.2 **Flywheel sag or droop**

©2025 Caterpillar All rights reserved

4.5 Crankshaft endplay

In all applications, after installation of the driven equipment the crankshaft endplay must not be less than it was before installation of the equipment. Crankshaft endplay should be checked during cold alignment and again after the engine is at operating temperature. Endplay at operating temperature must not be less than endplay during cold alignment.

Before taking indicator readings during the alignment procedure, always move the engine crankshaft to the end of its endplay, toward the front of the engine, and the driven equipment shaft to the end of its endplay toward the engine. Do not use force against the crankshaft or driven equipment shaft while taking the indicator readings. After installation and alignment of the driven equipment, the crankshaft endplay must not be less than before the installation of the equipment. Endplay must also fall within the tolerance allowed for the engine and driven equipment.

4.6 Crankshaft deflection

Cat engines mounted on bases not supplied by Caterpillar require a crankshaft deflection measurement. Crankshaft deflection must always be performed on C280/3600/G3600 engines regardless of base supplier. The following procedure can also be used to check crankshaft deflection when using a Cat base if there is doubt as to the accuracy of the engine installation.

This measurement can be performed on all Cat engines equipped with crankcase inspection doors to assure the engine block is not unduly stressed. Perform the measurement under cold engine conditions before startup and then again after the engine has reached operating temperature.

- Remove an inspection door from the block to expose the center crankshaft throw.
- Rotate the crankshaft in the normal rotation direction – always prelube the G3600 engine. When the cheeks of the center throw are past the connecting rod, install a Cat part no. 155-8795 Deflection Gauge or Starrett No. 696 distortion dial indicator, or similar tool, near the outer edge of the cheek (within 10 mm (0.39 inch)). As a precaution, tie a string to the gauge and secure it outside the engine to facilitate retrieval should the assembly fall into the oil pan. See Figure 2.10 below.
- Zero the dial indicator's rotating bezel.
- Properly seat the indicator rotating it on its own axis until it will hold a zero reading. A slight centerpunch mark may facilitate this operation.

©2025 Caterpillar All rights reserved

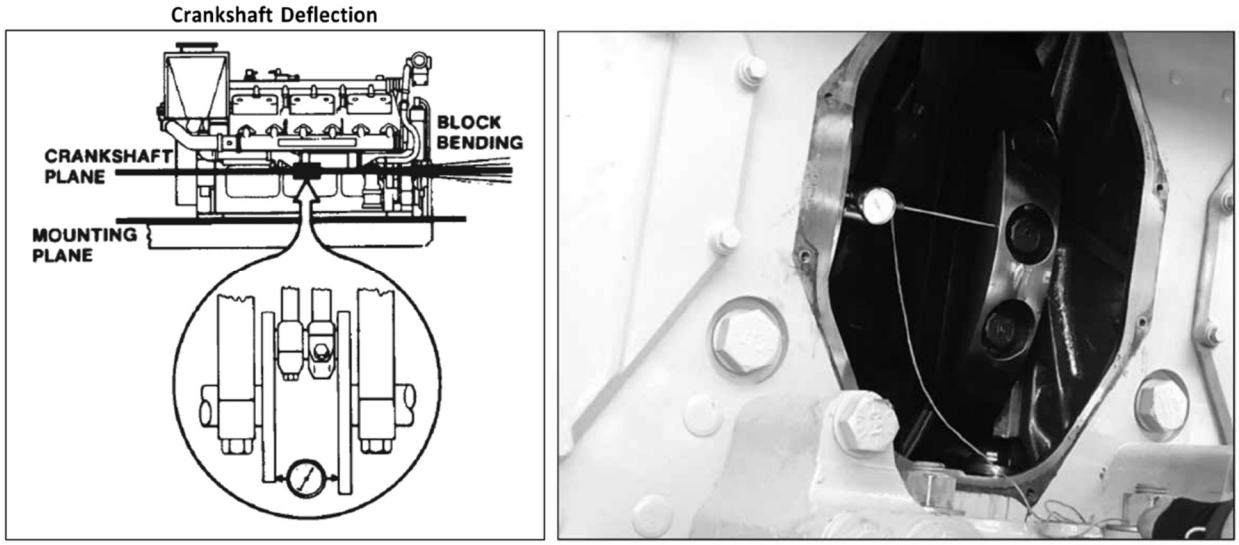

Figure 4.3 **Flywheel sag or droop**

- For all engines except D3600/C280/G3600, rotate the crankshaft in the normal direction of rotation for approximately 300 degrees of crankshaft rotation. Rotate the crankshaft backwards to its original position. The indicator must return to a zero reading at the original position in order to make a valid test. If the indicator did not return to a zero reading, the indicator shaft points were not seated and the test procedure must be repeated. The dial indicator must not move more than 0.025 mm (0.001 in) TIR.
- For G3600 engines, the crankshaft rotation must be from approximately one o'clock position to the eleven o'clock position. The dial indicator must not move more than 0.08 mm (0.003 in) TIR at the center throw and not more than 0.18 mm (0.007 in) TIR at the front and rear throws for the approximate 300 degrees of crankshaft rotation. Rotate the crankshaft backwards to its original position. The indicator must return to a zero reading at the original position in order to make a valid test. If the indicator did not return to a zero reading, the indicator shaft points were not seated and the test procedure must be repeated. For G3600 gas compression applications driving a reciprocating compressor from the flywheel end, generally this measurement is made at the center throw only. Checking deflection at the center throw on gas compression packages is sufficient because the driven end of the compressor crankshaft is supported by the compressor frame. The coupling between

©2025 Caterpillar All rights reserved

the compressor and engine is rigid and does not allow deflection between the two once properly aligned. If the engine has a load on the front (fan drive, etc), a front deflection measurement is also required. For applications having driven equipment other than a reciprocating compressor, the throws to check depends on the location of the driven equipment (refer to Engine News SEBD9646).

- For D3600/C280 engines, the crankshaft rotation must be from approximately one o'clock position to the eleven o'clock position. The dial indicator must not move more than 0.08 mm (0.003 in) TIR at the center throw and not more than 0.18 mm (0.007 in) TIR at the front and rear throws for the approximate 300 degrees of crankshaft rotation. Rotate the crankshaft backwards to its original position. The indicator must return to a zero reading at the original position in order to make a valid test. If the indicator did not return to a zero reading, the indicator shaft points were not seated and the test procedure must be repeated. The throws to check depends on the location of the driven equipment (refer to Engine News SEBD9646).
- If at any point other than during crankshaft rotation, the indicator reads more than stated value above or the model specific limits stated in the Commissioning Guide, cylinder block distortion has occurred due to improper mounting.
- To correct the problem, loosen hold-down bolts between engine rails and mounting blocks.
- Re-measure all shims and adjust as necessary.
- Repeat distortion check procedure.

The image in Figure 2.10 shows the Cat part number 155-8795 Deflection Gauge installed in a G3600 vee engine, using the cheeks of the crankshaft throw to support the gauge, as the crankshaft deflection is measured. In the inline G3600, a 1" bolt must be used to serve as one cheek to support the dial indicator. On later inline G3600 engines, the tapped bolt hole is located behind the center main bearing location only.

4.7 Torque reaction

The tendency of the engine to twist in the opposite direction of shaft rotation and the tendency of the driven equipment to turn in the direction of shaft rotation is torque reaction. It naturally increases with load and may cause a vibration. This type of vibration will not be noticeable at idle but will be felt with load. This usually is caused by a change in alignment due to insufficient base strength allowing excessive base deflection under torque reaction load. This has the effect of introducing a side-to-side centerline offset that disappears when the engine is idled (unloaded) or stopped.

©2025 Caterpillar All rights reserved

4.8 Thermal growth

As engine and driven equipment reach operating temperatures, expansion or thermal growth will occur. This growth occurs in all directions. Refer to the Mounting A&I Guide for thermal expansion equations.

Vertical growth occurs between the component mounting feet and their respective centerlines of rotation. This thermal growth depends on the type of metals used, the temperature rise that occurs, and the vertical distance from the center of rotation to the mounting feet.

Crankshaft horizontal growth occurs at the opposite end of the engine from the thrust bearing. This growth has to be planned for when driven equipment is connected to that end of the engine. The growth is slight if the driven equipment is bolted to the engine block, since the block and crankshaft grow at approximately the same rate.

Horizontal compensation consists of using a coupling allowing sufficient relative movement between driving and driven members. The equipment must be positioned so the horizontal growth moves into the coupling operating zone, not away from it. Failure to do so results in excessive crankshaft thrust bearing loading and/or coupling failure. Sufficient clearance has been allowed if it is determined during a hot alignment check that the crankshaft still has end clearance. Location of the thrust bearing on 3400 and 3500 engines is at the center of the crankshaft. It is at the rear of the crankshaft on other engines.

One method is to position the engine crankshaft all the way forward (towards the front of base). Position the driven equipment shaft back (towards the rear of the base) against thrust bearing. For generators without thrust bearings, the generator must be positioned in the magnetic center.

Adjust driven equipment shaft to half (50 %) of the total end-play of the driven equipment and engine. Failure to do so results in excessive crankshaft thrust bearing loading and/or coupling failure. Sufficient clearance has been allowed if it is determined that the crankshaft still has end clearance during a hot alignment check.

©2025 Caterpillar All rights reserved

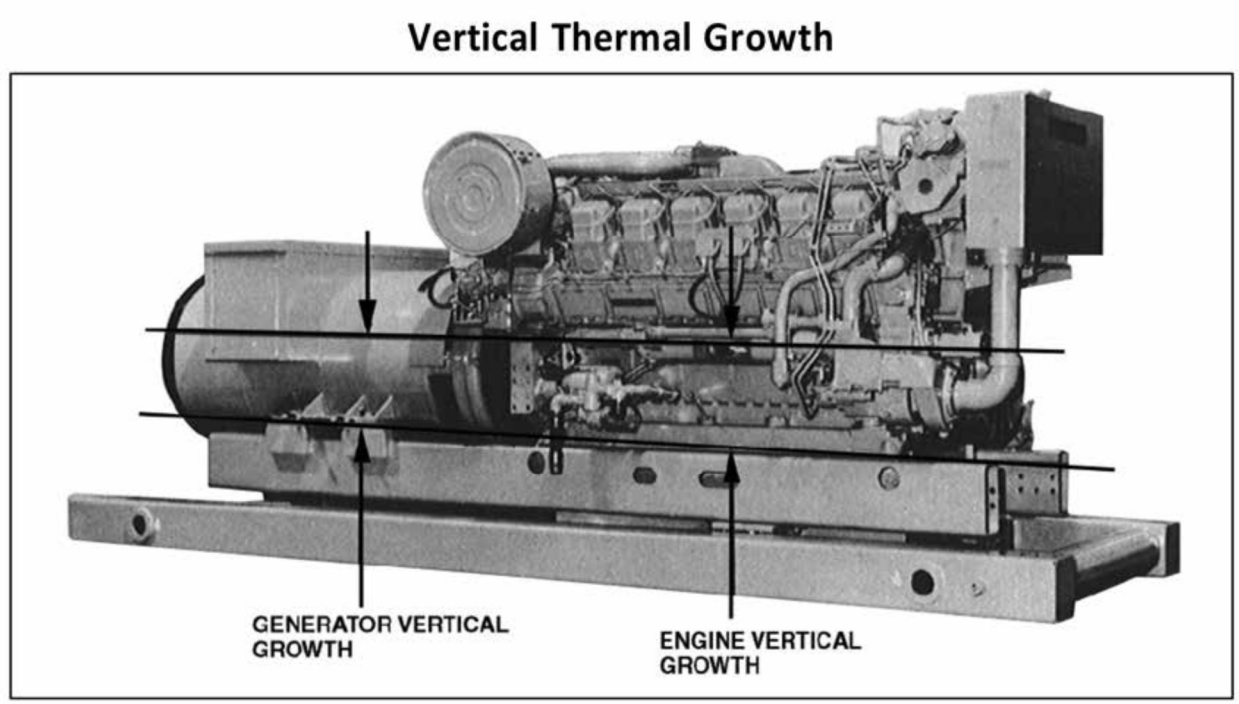

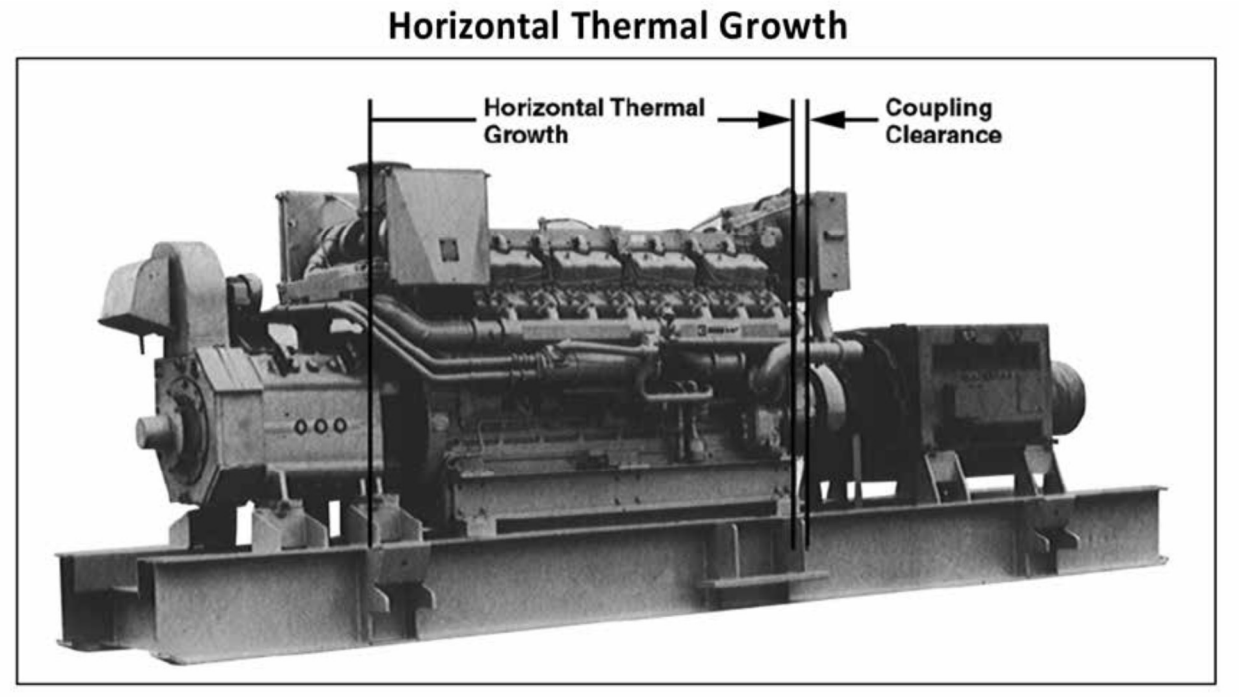

Figure 4.4 **Illustrations of thermal growth on a generator set**

©2025 Caterpillar All rights reserved

5 Alignment related mounting considerations

5.1 Shimming

Shims can be used to obtain correct alignment between the engine and the driven unit. Depending on the application, shims are required under the engine, under the driven unit, or under the engine and driven unit. The most commonly used shim materials are metal or poured resin chocks. Under no circumstances should lead be used as a shim material. Lead is easily deformed under weight and vibration and has poor support characteristics.

5.1.1 Metal shims

After the engine and driven equipment have been aligned, install brass or some other type of non-rusting metal shims between the mounting feet or mounting pads of the engine or driven unit and the base or other mounting surface. Handle shims carefully to avoid damage. Use only complete width and length shims, do not use partial shims trimmed to fit.

Important: The mounting surfaces use for metal shims must be flat, free of burrs, and parallel to the bottom surface of the mounting pads or feet.

Shim packs under all equipment should be 0.76 mm (0.030 in) minimum and 1.5 mm (0.060 in) maximum thickness to prevent later corrections requiring removing shims when there are too few or no shims remaining. Excessive thickness of shims may compress with use.

Before performing alignment, ensure each mounting surface is carrying its portion of the load by checking for soft foot. Maximum allowable soft foot is 0.0762 mm (0.0 03 in).

Failure to measure and correct excessive soft foot can result not only in misalignment, but also in springing of the substructure, high stress in welds or base metal, and high twisting forces in the engine or driven equipment. Measuring/correcting soft foot should be the first step in the alignment process. The figure below illustrates this “zero soft foot” condition.

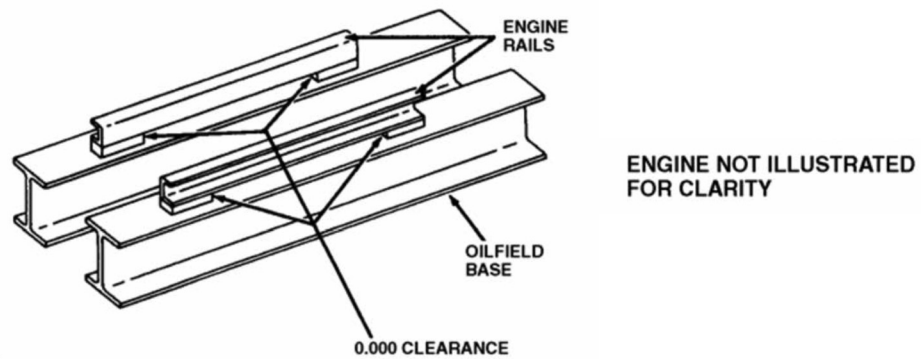

Figure 5.1 **Achieving “zero soft foot” between mounts and base**

©2025 Caterpillar All rights reserved

5.1.2 Poured resin chocks

Pourable epoxy-based resin chocking offers an alternative to the use of metal shims for alignment purposes. After pouring, this compound cures at normal temperatures to become an extremely tough and durable solid, providing the following advantages over metal shims. Here are some of the advantages of using poured resin chocks:

- The time consuming and costly process of selective machining and hand fitting of solid steel shims is avoided.
- The surface condition or flatness of mating foundation and support planes is less critical, eliminating further machining operations in many cases.
- The plastic chocking material offers some degree of noise damping between the engine or driven equipment and the foundation.
- Zero shrinkage of the poured shim material, when mixed and applied properly, allows the most precise retention of position and alignment when the mounting procedure has been properly completed and the retaining bolts secured.

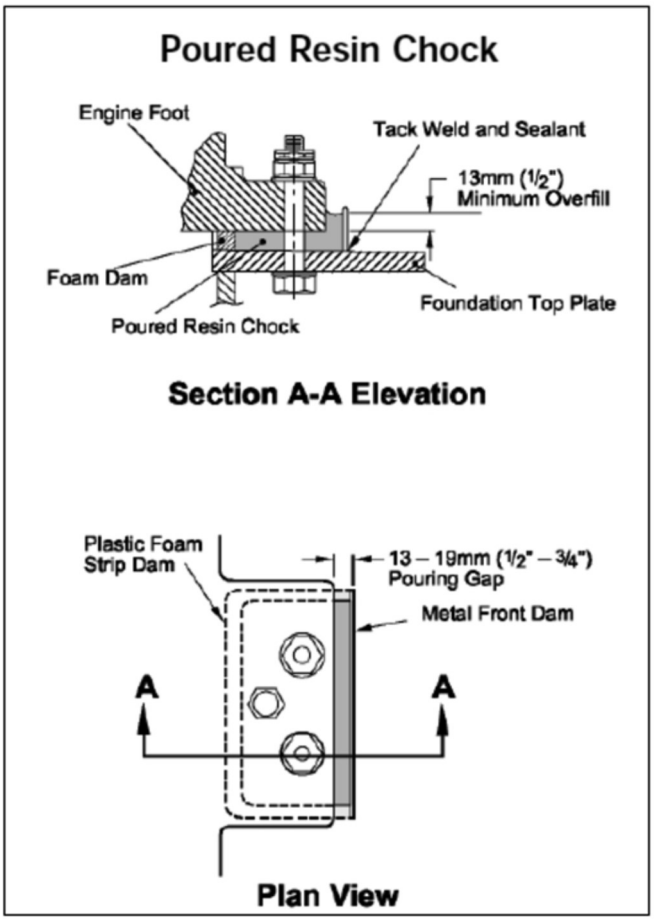

Figure 5.2 **Preparation for poured resin chocking**

©2025 Caterpillar All rights reserved

5.1.3 Adjustable chocks

Mechanical chock systems are available for purchase that are height-adjustable and self-leveling. These adjustable chocks can be used in place of metal shims and poured resin chocks. These chocks can greatly speed up the mounting/alignment process, and compared to the poured resin chocks carry these advantages:

- The poured resin chock curing time is eliminated, making the entire mounting and alignment procedure quicker.
- The adjustable chocks may be reusable.

Adjustable chocks must be of adequate size and material for the application. Additionally, regular inspection is required to ensure their integrity. Failure of adjustable chocks will result in equipment misalignment and possibly significant engine and/or driven equipment damage. An increased frequency of alignment checks is recommended when adjustable chocks are used.

Using mechanical adjustable chocks is not the preferred method of mounting as recommended by Caterpillar. While it scores very high on “ease of use”, this method does not have the stability and long life that the full-size sole plate/shim method has demonstrated over decades of use.

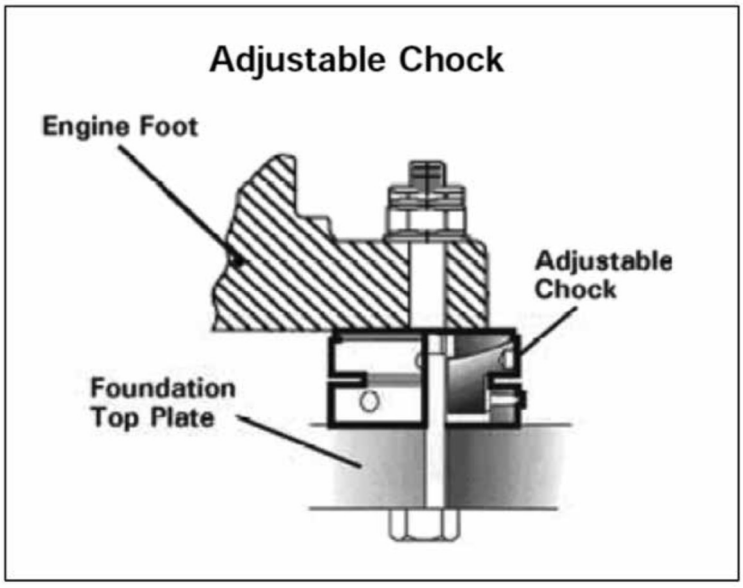

Figure 5.3 **Typical installation for an adjustable chock**

©2025 Caterpillar All rights reserved

5.2 Mounting bolts

The diameter of the clearance-type bolts used to hold the engine rails or feet to the base must be 1.6 mm (0.06 in) less than the diameter of the holes in the engine rails/feet. This clearance is to allow the engine mounting rails or feet to grow without confinement. Refer to the section on thermal growth.

5.3 Mounting bolt torque

A bolt is properly torqued when it is stretched the calculated amount to clamp properly. The proper stretch clamps the driven device to the base securely. The clamp is then maintained during movement caused by vibration. An under-torqued bolt cannot maintain clamping force while vibrations are present. It will gradually work loosen and allow misalignment to occur.

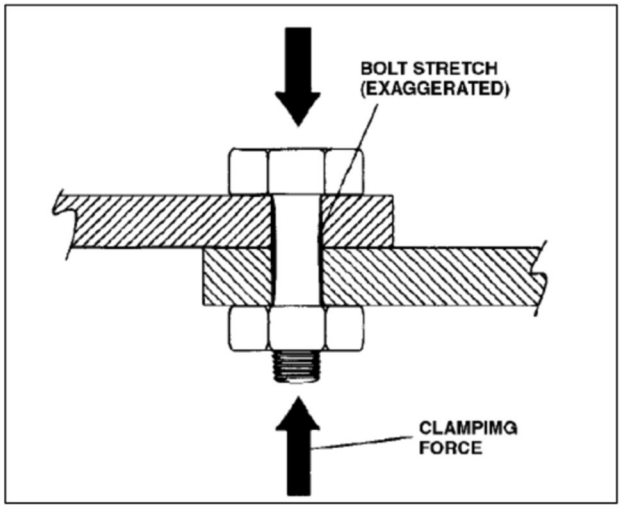

Figure 5.4 **Clamping force generated by bolt stretch**

Bolts of the size used on Cat oil field bases require very high torque values. As an example, a 25.4 mm (1 in) bolt has a torque of 875 ±100 N•m (640 ± 80 ft lb). A torque wrench, extension, and torque multiplier are required to obtain this high value. Do not use special bolt lubricant; the effective bolt clamping force can be excessive. Refer to the service manual for bolt torque specifications. Any additional model specific mounting bolt torque recommendations are provided in the Commissioning Guide.

Cat bolts are made of Grade 8 steel, one of the strongest available. Six raised or depressed lines on the nut or bolt head identify the bolts as Grade 8.

©2025 Caterpillar All rights reserved

Figure 2.14 shows the general recommended torque for various Cat bolts; however, these values may be too high for standard commercially available fasteners. Always refer to the recommended torque guidance from the fastener manufacturer. Differences in fastener materials will alter the torque-to-clamping force relationship, which can affect management of thermal growth increased operating temperature and in turn may cause excessive crankshaft deflection and consequential damage. Also, always check for mounting fastener guidance for your specific engine, installation, or application as case-specific guidance may vary.

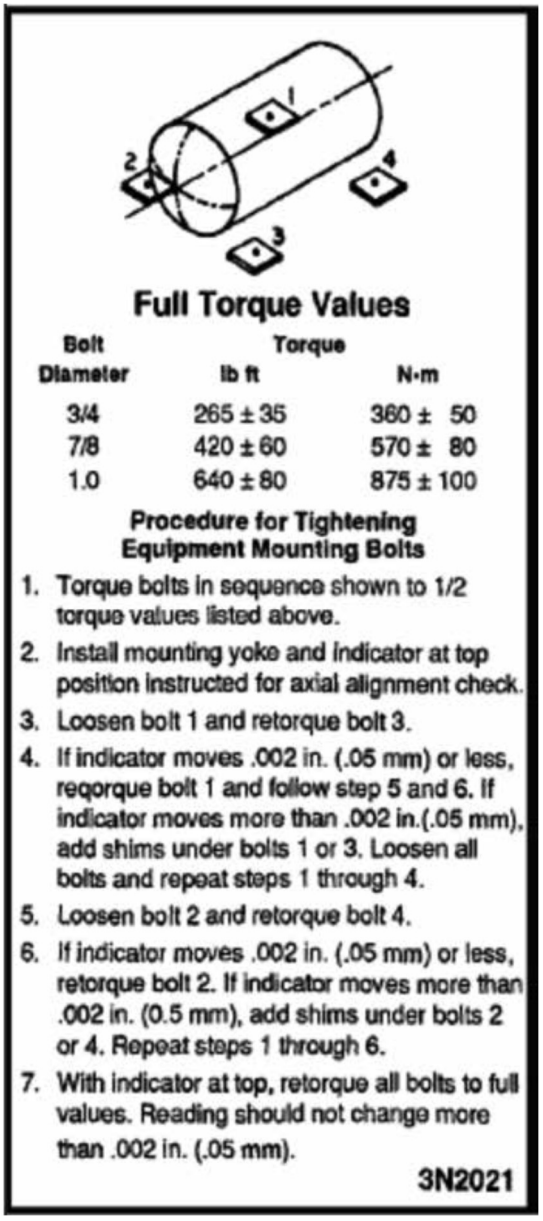

Figure 5.5 **General guidance for mounting bolt torques**

©2025 Caterpillar All rights reserved

6 Flexible Couplings

6.1 General Requirements

A flexible coupling is a device used to transmit power from one shaft to another while accommodating some shaft misalignment. Flexible couplings can be used to connect an engine to a driven unit, two engines together, or several driven units together.

Some typical flexible couplings are:

- Couplings with rubber or elastomer elements
- Couplings with flexible steel plates or discs
- Couplings with spring type elements
- Gear type couplings
- Roller chain type couplings

Four (4) distinct characteristics must be considered in the selection of a coupling.

- Misalignment capability
- Stiffness
- Serviceability
- Load capability

6.2 Misalignment Capability

The coupling must be capable of compensating for some misalignment between two connected shafts. It is not the intent to correct for all shaft misalignment, but only to compensate for small amounts of shaft misalignment normally present due to temperature fluctuations and operating loads.

6.3 Stiffness

The coupling must be of proper torsional stiffness to prevent critical orders of torsional vibration from occurring within the operating speed range. To ensure coupling compatibility, qualified personnel should perform a torsional vibration analysis. Caterpillar recommends a torsional vibration analysis be completed for all reciprocating compressor applications. If requested, Caterpillar can perform this theoretical analysis for a fee as part of an engine order.

©2025 Caterpillar All rights reserved

6.4 Serviceability

Ease of installation and service is a significant factor when selecting a coupling. If required, spacer pieces can be used to permit removal and installation of the coupling without disturbing the engine-to-driven equipment alignment.

6.5 Coupling load capability

In any installation, the coupling should be the design weak link or first part to fail. When failure occurs, the chance of damage to the engine and driven equipment is minimized. Safety measures must be considered to prevent major damage should coupling failure occur. The use of a standard, commercially available coupling offers the benefit of parts availability and reduced downtime in case of failure. When selecting a coupling, always follow the coupling manufacturer's recommendation regarding the best coupling for a specific application.

6.6 Cat couplings

The three types of flexible couplings supplied by Caterpillar are:

- Flexible steel plate couplings are used in single-bearing generator applications.
- Spider and ring with rubber blocks are used in close-coupled marine transmission applications.
- Viscous-damped couplings are used with remote-mounted driven equipment and two bearing generators.

These couplings use an internal gear design with a rubber element between the gears. Silicone grease aids in dampening characteristics. Clearances involved in internal gear design allow accurate alignment measurement to be made without removing the rubber element. The coupling for front-driven equipment is similar to the rear-drive coupling illustrated here. On front drives, the driven element is supported on the engine crankshaft as it does not weigh as much as the driving element.

©2025 Caterpillar All rights reserved

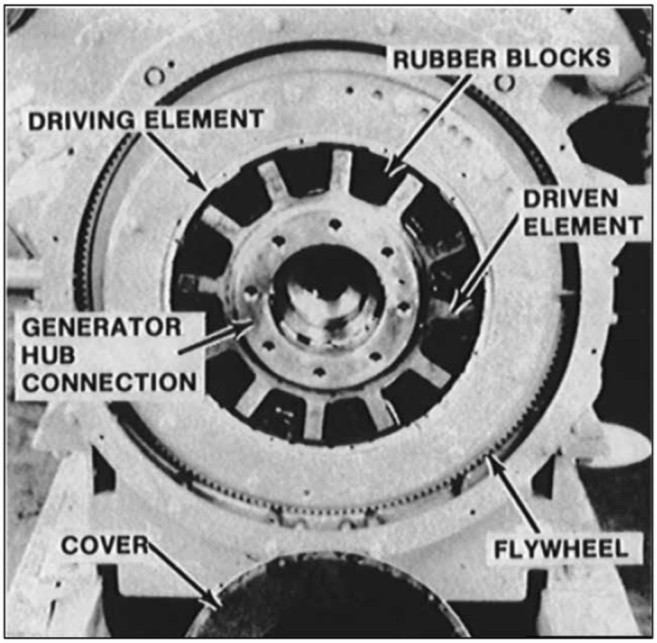

Figure 6.1 **Example of coupling with rubber block elements**

6.7 Couplings by other manufacturers

Typical flexible couplings provided by other manufacturers use elements made of rubber or elastomer, and their stiffness can vary considerably. Therefore, it may be necessary to remove the flexible elements from the coupling in order to get valid indicator readings for the face and bore misalignment.

6.8 Specific alignment considerations

As mentioned in the Alignment section introduction, Caterpillar provides special instructions with specific alignment procedures for all Cat engine and driven equipment combinations. These procedures are listed at the end of this section under Reference Material and should be used for the actual alignment procedure, but the following offers some specific considerations relating to some of the more common applications.

6.9 Alignment of close-coupled driven equipment

Close-coupled components, such as single-bearing generators, transmissions, compounds, etc., rely on the bolting together of two piloted housings to determine alignment. When two piloted housings are joined together in a parallel manner, they are in alignment. However,

©2025 Caterpillar All rights reserved

outside stresses can be introduced by poor mounting practices and allow the flywheel housing to flex. This can contribute to high vibration.

To check for outside stresses, loosen the mounting bolts between the driven equipment and engine flywheel housing. There should be no contact between flywheel housing and driven equipment housing at this time to assure that neither housing is being stressed. Clearance between the two separated faces should be parallel within 0.13 mm (0.0 05 in) (see Figure below). Oil field generators are extra heavy and may distort the flywheel housing when it is not parallel to the engine.

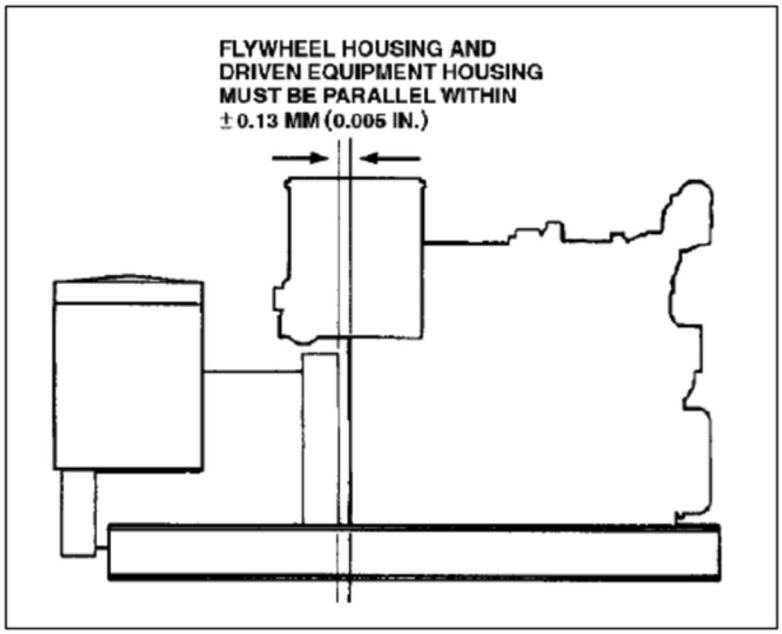

Figure 6.2 **Parallelism requirement for close-coupled installation**

To avoid this, make sure there is a minimum 0.13 mm (0.005 in) gap for the full 360° when making this parallelism check.

A dial indicator mounted between flywheel and generator rotor is sometimes used to check alignment. However, after the generator housing is piloted into and bolted to the flywheel housing, alignment is not checked by the dial indicator method.

When the dial indicator method produces results in conflict with the parallelism check of the two housings (see “Alignment Check” below), such conflict indicates the rear bearing of the driven equipment is not centered in relation to the engine, and is subject to generator manufacturer’s accepted tolerances, flywheel housing nominal runout, and flywheel droop.

©2025 Caterpillar All rights reserved

Do not shim generator mounting feet after the generator housing is bolted to the flywheel housing. Such practices stress both the generator housing and flywheel housing and can cause vibrations.

It is not necessary to make this check on smaller Cat generator sets where the engine does not have rear mounting feet but relies on the generator set support. However, this check is necessary on smaller Cat engines where the driven equipment is also rigidly connected to another piece of equipment. A common example of this would be a mechanical drive where the clutch mechanism is bolted to the compound. Poor mounting practices with this arrangement can cause excessive stresses in the flywheel housing.

Single bearing generators are recommended to have a pilot shaft extension and loose-fitting flex plates, or no pilot shaft extension with piloted plates. This aids in maintaining proper alignment. If vibration is noted at assembly of a generator having coupling plates piloted into the flywheel, repositioning the coupling plates 1/4-of-a-turn with respect to the original location can often correct the vibration. Start the unit and observe the change in vibration. A second or third relocation may be necessary to find the position of lowest vibration. Locate plates at point of lowest vibration. This procedure allows manufacturing tolerances to attempt to cancel each other. If the vibration is first order, balance weights may be added after determining that alignment is correct.

Before bolting coupling plates onto the flywheel, always rotate engine to the same position; for example, cylinder number 1 TDC. Tighten half the bolts while the flywheel is in this position. Then rotate as necessary to tighten other bolts. This procedure assures that any sag in the crankshaft is always at the same position when the plates are fastened to the flywheel.

6.10 Alignment of remote-mounted gear-driven equipment

Perform final alignment after all major equipment has been installed on the base. Engines and driven equipment should be filled with oil and water as required and ready to operate.

Remote mounted gear drive units must be supported by the same base or rails as the engine as shown in the Figure below. These units are not fastened to the engine except through a drive shaft and flexible coupling. To install these units, the gear drive must first be aligned with the equipment that it is driving. Then the engine must be aligned with the gear drive unit.

Alignment between the gear drive unit and its driven equipment is usually line-to-line alignment. The centerline of the gear drive output shaft is in line with the centerline of the

©2025 Caterpillar All rights reserved

input shaft of the driven equipment. Depending upon the application, it may be necessary to use a flexible coupling between the gear drive unit and the driven equipment.

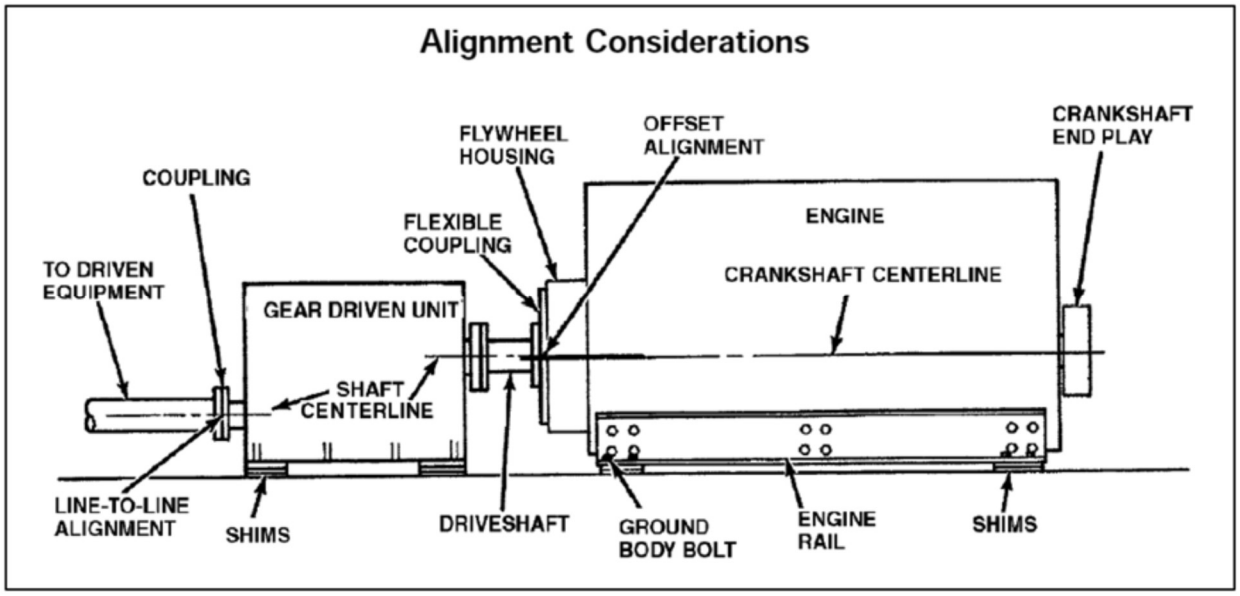

Figure 6.3 **Alignment considerations for gear-driven unit**

6.11 Alignment considerations

The allowable misalignment between the output shaft of the gear drive unit and the input shaft of the driven equipment must be within the coupling manufacturer's tolerances.

Use shims as necessary between the mounting pads of the gear drive unit and the base to put the gear drive unit in alignment with the driven equipment. There must be solid contact between the mounting pads and the base at all locations without the anchor bolts installed (no soft foot). If all mounting pads are not solidly supported, distortion of the gear drive unit may result when the anchor bolts are tightened.

Alignment between the gear drive unit and the engine is always an "offset" alignment. The centerline of the engine crankshaft is positioned below the centerline of the gear drive input shaft. This compensates for the thermal growth of the engine, flywheel sag, and main bearing clearance during cold alignment. With this vertical "offset" in the cold condition, the crankshaft and gear drive input shaft will be will be correctly aligned at operating temperature. Because of this "offset" alignment, the coupling between the engine and gear drive unit must be a flexible coupling.

©2025 Caterpillar All rights reserved

After the engine is correctly aligned with the gear drive unit, install shims as necessary between the engine rails/feet and base to maintain this alignment. There must be solid contact between the rails/feet and base at all mounting locations before installation of the anchor bolts. If there is not solid contact, the engine cylinder block can be stressed when the anchor bolts are tightened. Use a fitted bolt at the right rear corner between the rail and the base to direct horizontal thermal growth.

When clutches are used that contain air bladders, pay careful attention to air pressure; the allowable amount of misalignment goes down as air pressure increases. Alignment limits must not exceed limits established for a Cat viscous dampened coupling or for the clutch, whichever is smaller.

6.12 Alignment check

Clutches are to be disengaged when alignment is checked. Rotate clutch slowly through 360° (6 radius) and check total indicator reading at 90° (1.5 radius) intervals. Shim the engine as required to achieve correct alignment.

The dial indicator reading will include an error due to runout of clutch or flywheel parts. Where excessive runout is suspected, check and correct as required.

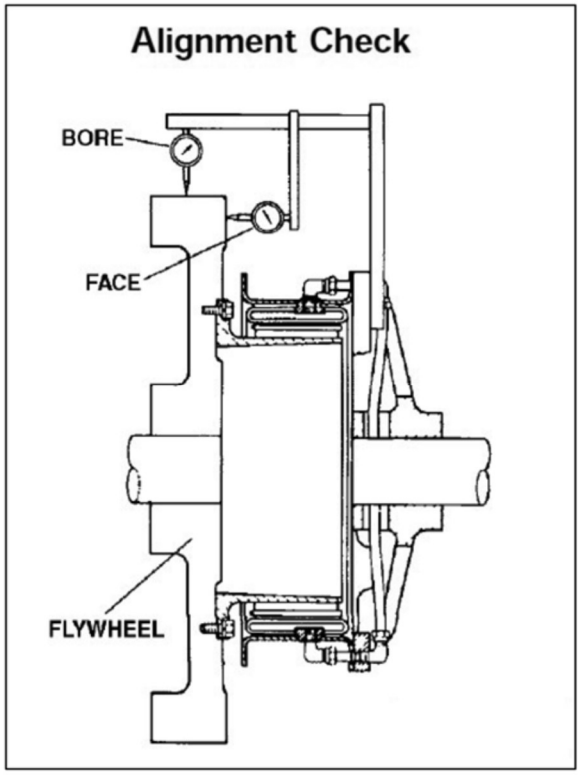

Figure 6.4 **Alignment check set-up**

©2025 Caterpillar All rights reserved

6.13 Front crankshaft drives

With front crankshaft drives, indicator readings may appear to show the driven shaft is lower than the engine. This occurs because the dial indicator is mounted on the driven shaft instead of the engine, reversing the indicator reference point due to the coupling configurations, see Figure below. The alignment centerline offset values are shown in the Figure as well. Further information can be found in the service publication SEHS7073, “Special Instruction – Alignment of Two Bearing Generators”.

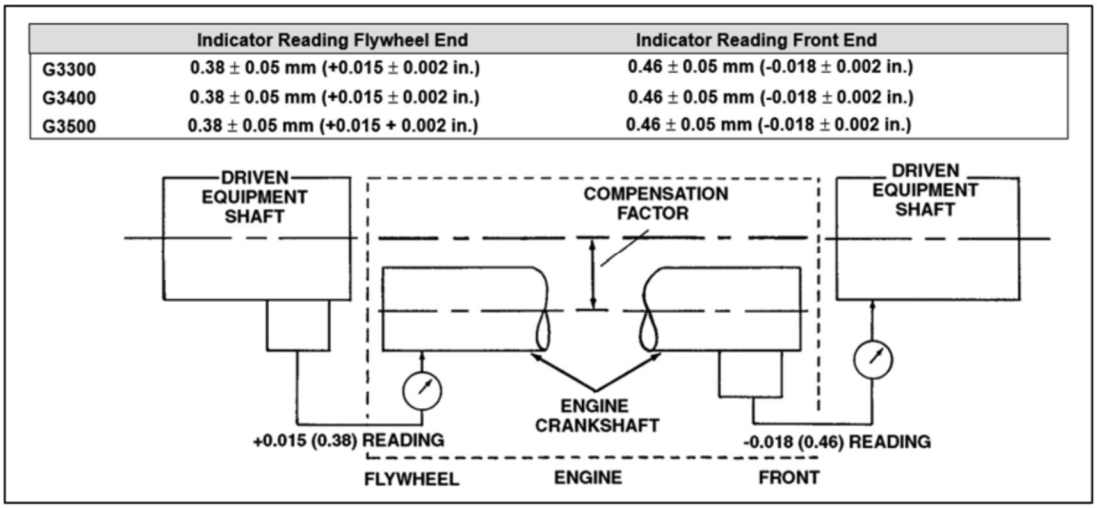

Figure 6.5 **Centerline offset for use with front drive couplings**

6.14 Drive shafts

Some drives, such as U-joint couplings, have different operating angle limits for different speeds. As a general rule, the angle should be the same on each end of the shaft as shown in the Figure below. The yokes must be properly aligned and sliding spline connections should move freely. If there is no angle at all, bearings will be subject to brinell damage due to lack of movement.

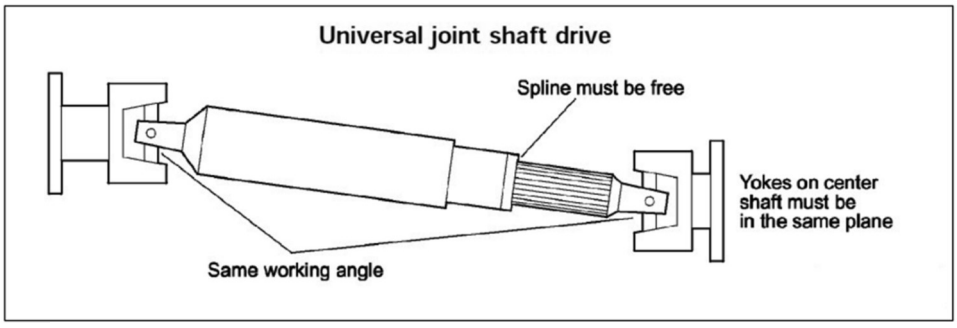

Figure 6.6 **Working angle on drive shaft U-joints**

©2025 Caterpillar All rights reserved

THIS PAGE INTENTIONALLY LEFT BLANK

©2025 Caterpillar All rights reserved

LET'S DO THE WORK.™

Information contained in this publication may be considered confidential. Discretion is recommended when distributing.
Materials and specifications are subject to change without notice.

© 2025 Caterpillar. All Rights Reserved. CAT, CATERPILLAR, LET'S DO THE WORK, their respective logos, "Caterpillar Corporate Yellow", the "Power Edge" and Cat "Modern Hex" trade dress as well as corporate and product identity used herein, are trademarks of Caterpillar and may not be used without permission.

CAT®