Cat® C4.4 ACERT™ & C7.1 ACERT U.S. EPA Tier 3 Equivalent/ EU Stage IIIA Equivalent Engines

fuel system supplement

Four- and six-cylinder diesel engines for agricultural, industrial, and construction applications

Engine Models:

G9R & E7A – 6 Cylinder
2W2 & W23 – 4 Cylinder

LEBH0027-00

A&I Manual Introduction

This supplement has been compiled to provide the necessary information for the correct installation of the common rail fuel system on the Cat® C4.4 ACERT™ and C7.1 ACERT engines.

This manual is not an exhaustive source of instruction or data and should only be used in conjunction with advice from your local application engineers, sales manager, and/or technical support representative.

The following media publications for the relevant engine type should also be used for further technical information:

- C4.4/7.1 ACERT Electronics Application and Installation Manual – LEBH0019
- Operator and Maintenance Manual (OMM)
- System Operation Test and Adjust (SOTA)
- Specifications (Specs)
- Disassembly and Assembly (D&A)
- Engine Specification Manual (ESM)
- General Installation Manual (GIM)

Correct practices, procedures, and safety precautions should always be followed.

Please Note: The information in this publication was based upon current information at the time of publication. Check for the most current information before you start any job. Cat dealers will have the most current information.

Improper operation, maintenance, or repair of this product may be dangerous, and may result in injury or death.

Do not operate or perform any maintenance or repair on this product until you have read and understood the operation, maintenance, and repair information.

Caterpillar cannot anticipate every possible circumstance that might involve a potential hazard. The warnings in this publication and on the product are not all-inclusive. If a tool, procedure, work method, or operating technique not specifically recommended by Caterpillar is used, you must be sure that it is safe for you and for other people. You must also be sure that the product will not be damaged and/or made unsafe by the procedures that are used.

Table of Contents

1.0 Introduction 6

1.1 Safety Requirements 6

1.2 Terminology 6

2.0 Fuel System Mandatory Installation Requirements 7

2.1 General Requirements 7

2.2 Cleanliness 7

2.3 Fuel Specification 8

2.4 Pressure and Temperature Limits 8

2.5 Fuel Tank Requirements 8

2.6 Fuel Line Requirements 8

2.7 Fuel Supply line 8

2.8 Fuel Return line 8

2.9 Fuel Filter Requirements 9

2.10 Fuel Connectors 9

2.11 Prohibited Materials 10

3.0 Fuel System Operating Parameters 11

3.1 Fuel Specification 11

3.2 Temperature and Viscosity 11

4.0 Fuel System Overview 12

4.1 Fuel System Schematic 12

4.2 Fuel System Limits 13

4.3 HP Fuel System 13

4.4 LP Fuel System 13

5.0 Fuel System Components 14

5.1 LP – Transfer Pump 14

5.2 LP – Primary Filters 14

5.3 LP – Secondary Filters 15

5.4 Additional Fuel System Components 16

5.4.1 Water-in-fuel (WIF) Sensor 16

5.4.2 Filter Condition Monitoring 16

5.5 Components Requiring a Fuel Feed 16

5.5.1 ECU **16**

6.0 Fuel System Design Considerations 17
6.1 Customer Connections. 17
6.2 General Fuel System Requirements 20
6.2.1 Pipe Work and Connector Requirements 20
6.2.2 Filter Requirements 20
6.3 Fuel System Performance 20
6.3.1 Establishing System Capability 21
6.4 Fuel Cooling 22
6.4.1 Fuel Cooler Specifications 23
6.5 Fuel Tank Design and Installation 23

7.0 Revision Notes 24

1.0 Introduction

Mechanical system requirements other than the fuel system are covered by the General Installation Manual and relevant Engine Specification Manual.

Electrical and Electronic requirements are covered by the C4.4/C7.1 ACERT Electronic Application and Installation Manual LEBH0019.

The fuel system is a critical engine system, and plays a vital role in delivering not only engine performance, but also compliance with emission standards.

In order for a diesel engine to function correctly, it must be supplied with an adequate supply of fuel. The fuel must meet the recommended specification and be free from air, water, and solid matter. The fuel system must be installed correctly and must adhere to installation instructions, cleanliness standards, and be subject to regular maintenance following correct practices and procedures.

1.1 Safety Requirements

Due to the high pressures generated by the Common Rail Fuel system, the following safety requirements MUST be adhered to when working on the engine.

Failure to follow the correct inspection, maintenance and service instructions may cause personal injury or death.

- After the engine has stopped, the fuel pressure must be dissipated from the high pressure (HP) fuel lines before any service or repair is performed on the fuel system. To do this, please follow the service guidelines detailed in the OMM.
- Contact with high pressure fuel may cause fluid penetration and burn hazards. High pressure fuel spray will cause a fire hazard.
- It is strongly recommended that an engine cover be fitted over the HP fuel system in applications where the OEM or installer does not provide a machine enclosure to provide protection to a third party.
- Inspection of the fuel lines, hoses, filters and system components should be undertaken to check for wear and deterioration and to ensure there are no foul conditions. Correct fitment of clamps and heat shield should also be ensured.
- Correct practices and procedures should be followed as outlined in the following appropriate service manuals:
  - Operator and maintenance manual (OMM)
  - System Operation Test and Adjust (SOTA)
  - Specifications (Specs)
  - Disassembly and Assembly (D&A)

1.2 Terminology

EPP	Electric Priming Pump
FIP	Fuel Injection Pump
RTT	Return-to-tank
ULSD	Ultra Low Sulphur Diesel
WIF	Water-in-fuel

2.0 Fuel System Mandatory Installation Requirements

2.1 General Requirements

- The engine must be equipped and operated with the filters supplied with the engine.
- Under no circumstances is it acceptable to modify the fuel system components or replace/customize sections of the fuel system that were supplied with the engine (as-delivered).
- It is not acceptable to disturb or alter the fuel system lines, mounts, clips, or common rail assembly without prior Caterpillar engineering approval.
- During fast fill, the pressure build up must not exceed 400 kPa at the transfer pump inlet when the engine is not running; 0 kPa if the engine is running. It is recommended that fast fill is not conducted while the engine is running unless the fuel tank is designed to minimize aeration of the fuel.
- It is not permitted to prime the fuel system by using compressed air.

2.2 Cleanliness

- All components installed before the secondary filter, including lines and fittings, must meet the cleanliness specification detailed in figure 2.1 below.
- The fuel system component's post-secondary filter must not be disturbed.
- The fuel filtration specified for the engine will provide the required protection of the fuel system for a service interval of:
  - 500 hours in territories with known low fuel contamination
  - 250 hours in territories with known high fuel contamination

Caterpillar OEM Component Cleanliness Standard

This specification defines cleanliness levels applicable to finished engine components and assemblies.
All cleanliness standards are based on flushing the specified area with solvent, filtering the flushed solvent onto a membrane filter patch, measuring particle dimension with a microscope and measuing total particle mass with an analytical balance.
The specified cleanliness must be met at the time of assembly.
Particles to be measured for size are metallic, rust (either free or loosely attached), slag, sand, and other abrasives. If particles are fragile and break up with gentle probing (gentle probing will not tear membrane filter patch), only the remaining solid pieces are to be measured for specification performance.

Largest Particle Allowed, in microns (A)			Maximum No. Particles Allowed per Given		Maximum Mass Allowed (B)		Abrasive (Oxide) Restricted (B)	
X	Y	Z	#	X	mg/m2	mg	40	mg
1200	500	150	4	500-1200	170	10	No (D)	1.2

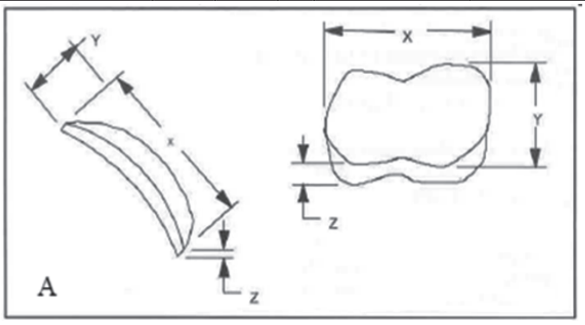

B - Per passage
D - For fuel system components only - No more than 10 abrasives greater than 40 micron in size per cleanliness patch
Number of Particles

Based on Caterpillar 1E2500A

Figure 2.1 – Fuel Cleanliness Specification

2.3 Fuel Specification

The fuel used must meet the specification requirements detailed in the engine OMM.

2.4 Pressure and Temperature Limits

Please refer to Table 4.1 in section 4.2 for the process limits of the fuel system.

2.5 Fuel Tank Requirements

- The fuel tank must meet cleanliness specification detailed in Figure 2.1 Section 2.2.
- The fuel tank must be vented and the vent filtered to a maximum of 10 microns.
- The vent must be serviceable and an appropriate maintenance instruction included in the machine manual.
- The tank material must be capable of withstanding the maximum temperature requirements and fuel types required for use, and must not contain any materials listed within Table 2.1 in Prohibited Materials section 2.11.
- The use of non-serviceable fuel tank inlet filter (filler neck) is not permitted.

2.6 Fuel Line Requirements

- Fuel lines (tank to engine) must meet SAEJ30R7 minimum requirement and SAEJ30R9 as modified by the manufacturer for specific bio-diesel levels.
- Fuel lines must be adequately supported as short and direct as possible with no dips, sags or kinks. They should be kept away from heat sources and be clear of all fouls with other components.

2.7 Fuel Supply Line

- The main engine fuel supply line must be a minimum of 150 mm away from the fuel return line or lines, at their point of termination inside the fuel tank.
- The fuel supply line must not become uncovered under any operating conditions, e.g., machine pitching/slewing, or angle of operation.
- If a gauze filter is fitted on the fuel supply line it must be accessible for service and diagnostic purposes.
- A service/ shutoff valve may be used in the supply line if this is an OEM requirement.
- The maximum fuel inlet restriction limit in section 4.2 must be adhered to.

2.8 Fuel Return Line

- The fuel return line(s) must terminate below the minimum fuel level within the fuel tank.
- The fuel-return line must be capable of withstanding a maximum temperature of 120°C.
- A service/shutoff valve is not required in the return line to prevent the engine running on return line fuel.
- If a service shutoff valve is an OEM requirement, an electrical interlock must be employed to prevent excessive pressure and resulting damage to the fuel pump.
- A non-return valve is not required in the return line to prevent fuel system drain down during servicing.
- If a non-return valve is an OEM requirement, it must be located on the fuel tank side of the fuel cooler.
- The maximum fuel return line pressure in Section 4.2 must be adhered to.

2.9 Fuel Filter Requirements

Only Caterpillar supplied filters may be used within the fuel supply system.

Primary (Pre-filter)

- A primary filter must be fitted to all installations.
- The primary filter must be placed in a position that is clearly visible and allow sufficient access for daily checks and servicing safely without damage to other components.
- The primary filter must be placed in a position that is NOT the highest point within the fuel system. If this is a customer requirement, additional testing will be required – reference Section 6.2.2.
- The primary filter must be mounted vertically within a tolerance of +/-5°.
- The primary filter must be mounted off engine in a location that is isolated from excessive vibration to prevent the emulsification of water in fuel – reference Section 6.2.2.
- The primary filter must not be subject to G loading in excess of 10 G vertical low cycle acceleration.
- Water-in-fuel sensing is mandatory and all engines must have the water-in-fuel sensor connected directly to the machine wiring harness.

Secondary (Main Engine) Filter

- If a remote secondary filter is a requirement, the Caterpillar supplied remote filter option must be selected.
- Under no circumstance is it acceptable to make any modifications to the standard engine-mounted filter option or disturb any of the fuel lines to or from it.
- Remote filter systems must meet the following requirements:
  - The complete set of remote system components must be used with no modifications to parts or hose lengths.
  - It is not permitted to disturb any of the fuel line's post-secondary filter
  - The secondary filter must be mounted:
    a. off engine
    b. vertically with a tolerance of +/-5°
    c. in a position that is clearly visible and may be easily serviced, safely without damage to other components.
    d. in a position that is NOT the highest point within the fuel system. If this is a customer requirement then additional testing will be required – reference Section 6.2.2.
  - The secondary filter must not be subject to G loading in excess of 10 g vertical low cycle acceleration.

2.10 Fuel Connectors

- For customer connections please refer to Table 6.1 Section 6.
- It is essential that all fitted connections are not removed or replaced and that the correct mating part is selected to connect customer-supplied fuel lines.
- The filter connections should not be reduced in size in order to maintain a reduced transfer inlet pressure and maintain system performance at altitude – reference Section 6.3.

2.11 Prohibited Materials

Table 2.1 below, contains a list of prohibited materials that must not be used within the fuel system. These should be taken into consideration when selecting and designing any fuel system components such as the fuel tank or fuel cooler. Particular care should be taken with the application of any plating and/or coatings that are used.

Use of these materials may contaminate the fuel leading to coking of the injector nozzle.

Prohibited Material	Symbol
Lead	Pb
Sodium	Na
Calcium	Ca
Zinc or Zinc Plating	Zn
Copper	Cu

Table 2.1 – Prohibited Materials

We recommend only the following zinc plates as being acceptable:

- Zinc Phosphate: ASTM B117, D609
- Zinc Chromate/Trivalent plates: ASTM 4042

These materials, along with chemical compounds, may also be present in fuel and certain fuel additives, e.g., corrosion inhibitors, the presence of which can cause Internal Diesel Injector Deposits (IDID). These deposits may affect the proper functioning of the fuel injectors.

In order to prevent this, fuel additives that have measurable levels of any of the following listed substances should not be used:

- Acids, e.g., Dimmer and Fatty (Oleic, Stearic, and Linoleic); including DDS (Diamino Diphenyl Sulfone)
- Alkali metals, e.g., Sodium, Calcium, Potassium, and alkali metal compounds, e.g., sodium chloride, sodium hydroxide, sodium nitrate
- Carboxylates
- Organic amides

3.0 Fuel System Operating Parameters

3.1 Fuel Specification

Please refer to the mandatory requirements for details of fuel specifications, quality and cleanliness requirements.

Ultra Low Sulphur Diesel (ULSD)

The use of ultra low sulphur diesel is not a requirement for this engine type. However, as the fuel pump is oil-lubricated, the amount of sulphur should be limited and may impact the effect the service life of the oil – see OMM for details.

Bio-diesel

Bio-diesel fuel may be used up to B20 (80% standard mineral with 20% bio-fuel dilution by volume), provided an appropriate approved additive is used. Refer to the OMM for the acceptable specification and conditions of use. Use of higher concentrations will affect performance, durability and warranty conditions.

As bio-fuel is chemically more reactive than the mineral oil used in diesel fuel, it is imperative to consider the effects of this fuel on all components that it may come into contact with.

Advice should be sought from the applications department if the use of bio-diesel is required.

3.2 Temperature and Viscosity

The fuel system used does not compensate for fuel temperature and viscosity. The effect of increased fuel temperature and decreased viscosity will affect the performance and durability of the engine.

To ensure durability and performance of the fuel system, the maximum fuel temperature must not be exceeded.

4.0 Fuel System Overview

The fuel system has been designed to operate within lower regulated regions where the consistency and quality of the fuel can vary widely and can have a significant effect on the robustness and/or performance of the system.

Typical fuel quality concerns include:

- High debris levels
- High sulphur fuel – contributes to degradation of oil quality, in particular soot holding capability
- Low lubricity levels – causes higher wear in fuel system
- High water-in-fuel content

The C4.4 ACERT and C7.1 ACERT Tier 3 engines have an increased robustness to poor quality fuel, which has been achieved by using proven fuel system components and designs and providing an improved, multi-stage efficient filtration system with increased capacity for debris and water collection.

The fuel system employed for these engine types is described below with a more detailed explanation of the components themselves in Section 5.0

4.1 Fuel System Schematic

Both 4- and 6-cylinder engines use the same electronically controlled common rail fuel system.

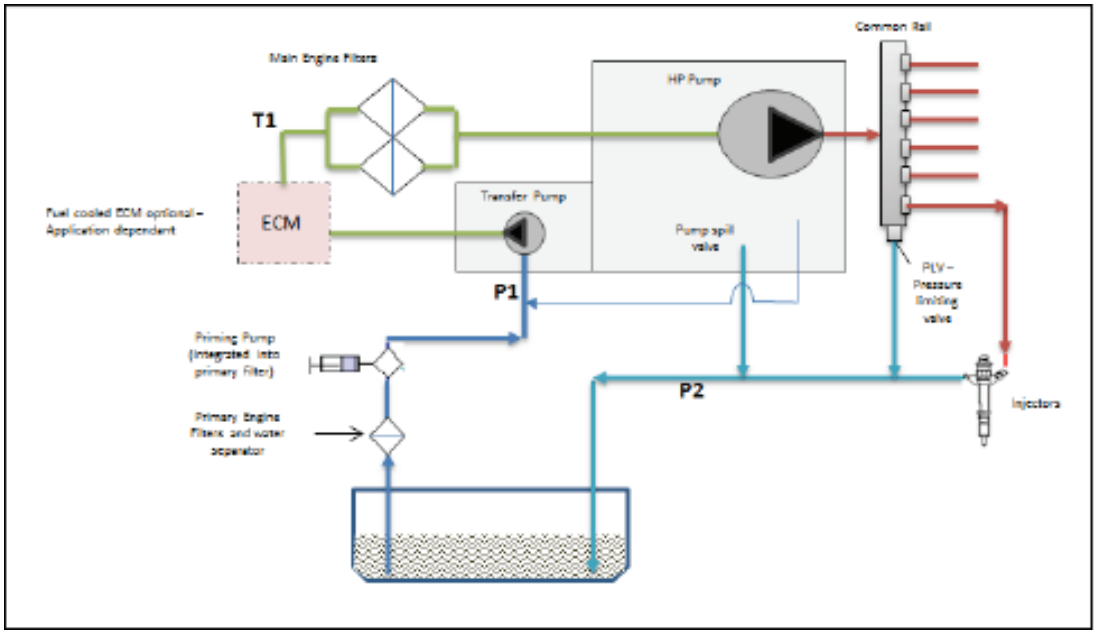

Figure 4.1 – Fuel System Schematic

The transfer pump draws fuel from the fuel tank through the primary filter where water is separated from the fuel, and primary filtration occurs. The transfer pump pumps fuel to the secondary filters, where finer contaminants are removed, and on to the high-pressure side of the common rail pump. If the engine is equipped with the fuel-cooled ECU option, the fuel is used to cool the ECU prior to secondary filtration before entering the high pressure pump. The high pressure pump supplies fuel at up to 130 MPa to the common rail where it is distributed to the injectors.

Excess fuel is returned from the injector, common rail, and fuel injection pump into a single return line to the fuel tank.

The standard option on both 4- and 6-cylinder fuel systems is for an air-cooled ECU. A fuel-cooled ECU is optional, depending on installation and temperature constraints.

4.2 Fuel System Limits

Table 4.1 below details the pressure and temperature limits of the fuel system. This table refers to locations which are detailed on the fuel system schematic Figure 4.1 in Section 4.1.

Value	Location	Limit	Notes
RTT pressure	P2 – Customer RTT connection point	100-150 kPa (abs)	Test at HI and FLRS. Both conditions must be within limit
TP inlet depression	P1 – Inlet to transfer pump	35-100 kPa (abs)	Test Conditions – Sea level, new fuel filters, zero load and if an electric primary filter is used disconnect. To check the lower limit: test at HI minimum fuel level. To check the upper limit: test at LI, full fuel tank. Refer to Table 5.2 section 5.2 for system capability assessment.
Temperature	T1 – Secondary filter inlet	75°C @ 125°C oil 70°C @ 135°C oil max*	Extrapolate data during fuel run down/combined cooling test at 1:1, limit is at low level warning

*As the fuel pump is oil lubricated, the fuel temperature is directly related to the oil temperature. Allowing a higher maximum oil temperature will mean more heat transfer to the fuel, consequently leading to a lower maximum fuel temperature limit.

4.3 HP Fuel System

The high pressure pump is a two plunger pump that is driven at half engine speed by the gear train. The pump is inlet metered by an inlet metering valve (IMV) and is lubricated by engine oil.

No assisted engine rotation is allowable with the pump electrics unplugged, or without the ECU powered up. It is acceptable to hand crank the engine as long as engine rotational speed does not exceed 15 rpm.

The fuel shutoff solenoid is normally open and energized to close, i.e., in the normal non-energized position, the valve is open with maximum fuel delivery and when energized the valve closes with minimum fuel delivery.

If the engine is cranked without powering up the ECU, maximum fuel will be delivered to the fuel rail while the injectors draw no fuel from the rail. There will be a consequential build-up of pressure in the rail. Although this may activate the pressure relief valve, it will have an adverse effect on system durability.

4.4 LP Fuel System

The low-pressure fuel system consists of a three-filter filtration system as standard with a twin parallel filter arrangement for the main engine filters.

A primary and secondary filter is mandatory on all applications. The primary filter includes a water separator and is supplied with a water-in-fuel switch. It is supplied loose for remote fitting onto the application.

Priming of the low pressure fuel system is achieved either through activation of the hand primer on the primary filter or via use of the Electric Priming Pump (EPP) on the primary filter head if this option is selected.

The LP system is NOT self-venting. When the EPP is selected additional venting procedures are required – reference OMM.

5.0 Fuel System Components

5.1 LP – Transfer Pump

The transfer pump is a sliding vane-type pump incorporated into the common rail fuel injection. The transfer pump is able to operate up to 5000 m altitude without the need for an additional electric pump, provided the inlet restriction is kept to a minimum and falls within the required range – refer to Table 4.1 in Section 4.2 for more information.

5.2 LP – Primary Filters

The primary (Pre) filter is the first filter in the engine fuel system and provides a 10-micron filtration level. All primary filters are supplied with a water-in-fuel (WIF) sensor as standard and feature a water separator bowl, which must be drained manually. Use of the WIF sensor is mandatory for all machines and must be connected in accordance to the requirements in the Electronic Application and Installation manual LEBH0019.

- The primary filters are sized to provide increased filtration and water separation capacity.
- The primary filters are supplied loose from the factory and must be mounted off-engine.
- The primary filters are not supplied with any connectors for the fuel lines; these must be supplied by the customer.

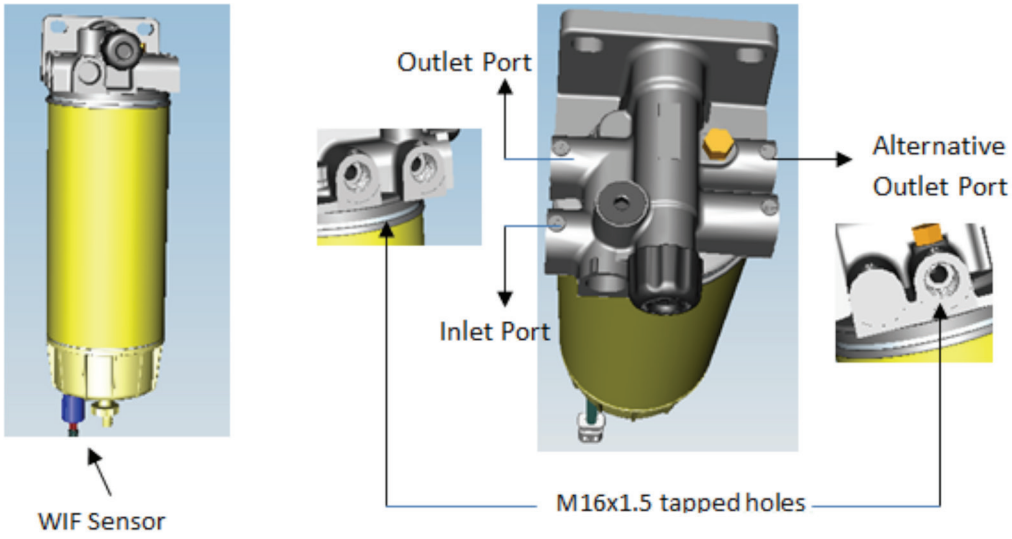

Figure 5.1 – Primary Filter with Manual Priming Pump

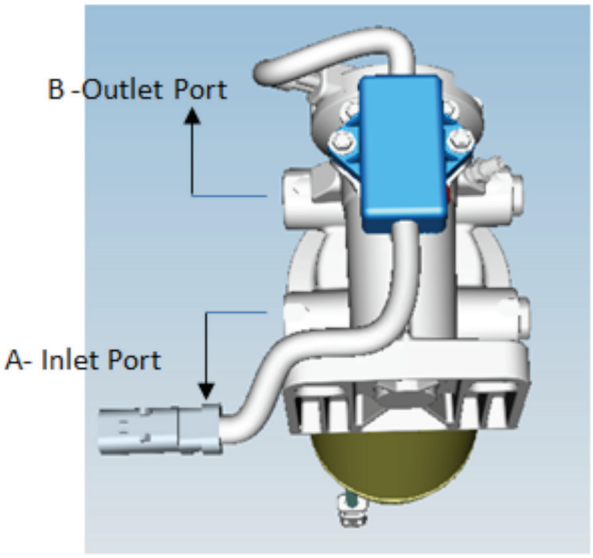

Figure 5.2 – Primary Filter with Electric Priming Pump

5.3 LP – Secondary Filters

Secondary filters offer a high filtration level of 4 microns and are the last serviceable filter before the fuel enters the high pressure pump and consequently the fuel rail and injectors.

For this reason it is mandatory that the secondary filter is not modified in any way, and is serviced regularly with genuine OE parts.

A remote secondary filter is available as an option but this is not preferred, as it does not allow the supply of a system that Caterpillar has fully validated to ensure robustness and durability. It also introduces additional risk to fuel cleanliness. For these reasons it is highly recommended that the standard engine-fitted option is selected and that the remote option is only taken when there are no other available alternatives.

If a remote secondary filter option is selected, the Mandatory Requirements Section 2.9 must be adhered to.

5.4 Additional Fuel System Components

5.4.1 Water-in-fuel (WIF) Sensor

The WIF sensor is supplied fitted on all primary filters and provides the signal to engine/machine control indicating when the water bowl needs draining. The use of this sensor is mandatory.

5.4.2 Filter Condition Monitoring

An absolute pressure sensor may be fitted to the primary filter outlet connection to monitor inlet pressure to the transfer pump.

If the 35 kPa lower limit is detected before the standard filter service period is reached, this will indicate filter replacement is required.

This will occur when heavily contaminated fuel is used in the machine or when the machine is used at high altitude.

This component is not part of the engine option offering, however may be considered necessary for certain machine types or installations.

5.5 Components Requiring a Fuel Feed

5.5.1 ECU

An air-cooled ECU is the standard offering for all installations. However, for some situations in which the under-hood temperatures are high or have insufficient air flow across the engine, a fuel-cooled ECU may be a requirement. This requirement will be determined by an ECU temperature test, which is part of the standard installation tests and must be conducted on all machines.

The fuel-cooled ECU option is essentially the same as the air-cooled ECU, but includes a fuel passage integral to the ECU body in order to prevent overheating of sensitive components and capacitors on the electrical circuit board. Fuel is supplied to the ECU from the transfer pump and then delivered back to the inlet of the secondary filter.

6.0 Fuel System Design Considerations

6.1 Customer Connections

Connection	Connection Location	4- and 6-cylinder (SAE J2044)
Primary Filter Inlet	A	M16 x 1.5 Tapped Hole
Primary Filter Outlet	B	M16 x 1.5 Tapped Hole
TP Inlet Connection	C	15.82 Quick Fit Male
TP Outlet	D	9.49 Quick Fit Male
Secondary Filters Inlet	E	9.49 Quick Fit Male
ECU Outlet	F	9.49 Quick Fit Male
RTT Connection	G	9.49 Quick Fit Male

Table 6.1 – Customer Fuel System Connections

Connections A and B

- Fuel tank to primary filter (A)
- Primary filter (B) to transfer pump inlet (C)

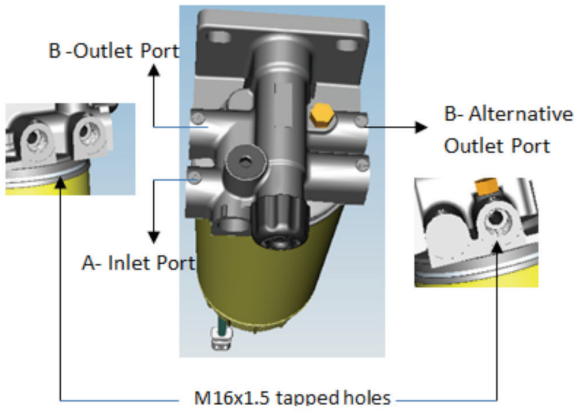

Figure 6.1 – Primary Filter Connections

Connections C – Transfer Pump Inlet Connection

- Primary filter (B) to transfer pump inlet (C)

The transfer pump is integrated into the common rail fuel injection pump FIP which is the same on both the 4- and 6-cylinder engines. Figure 5.2 shows the inlet connection point.

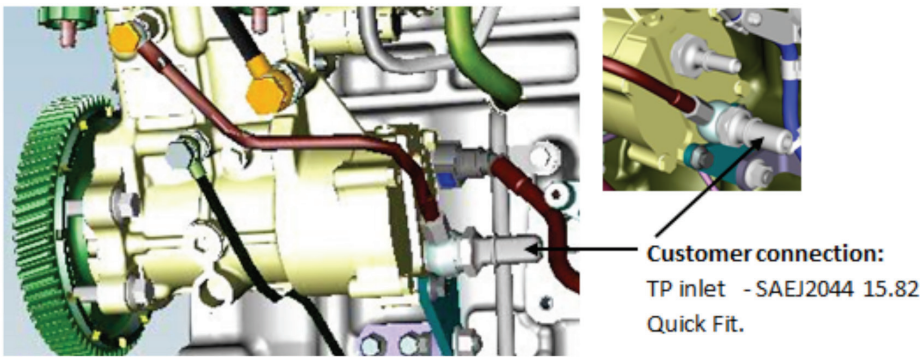

Figure 6.2 – Transfer Pump Inlet Connections

Remote Secondary Filters

For remote secondary filter installations, the customer must provide their own connection between:

- the transfer pump outlet (D) and the secondary filter inlet (E) – air-cooled ECU options or
- the ECU outlet (F) and secondary filter inlet (E) – fuel-cooled ECU options.

The connections between the transfer pump and ECU inlet is always supplied fitted and the connection between the secondary filter outlet and fuel pump inlet is always supplied connected with a long hose. Under no circumstance is it acceptable to disturb these connections, as it is vital to maintain the integrity and cleanliness of the fuel system post filter.

Connection D – Transfer Pump Outlet (remote secondary filter installations only)

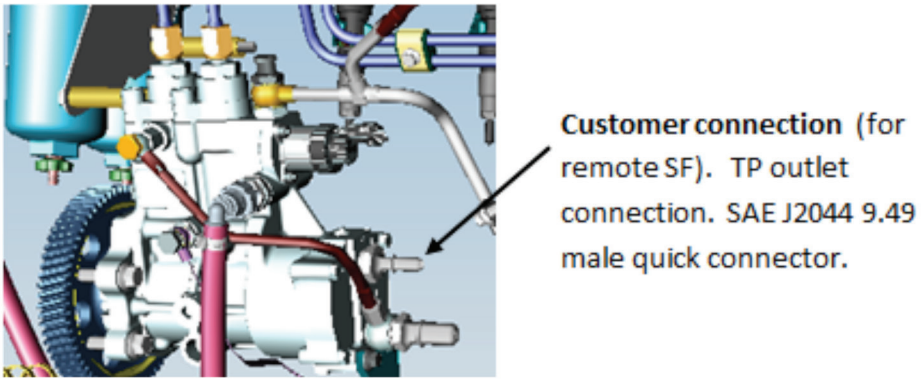

Figure 6.3 – Transfer Pump Outlet Connection

Connection E – Secondary Filter Inlet

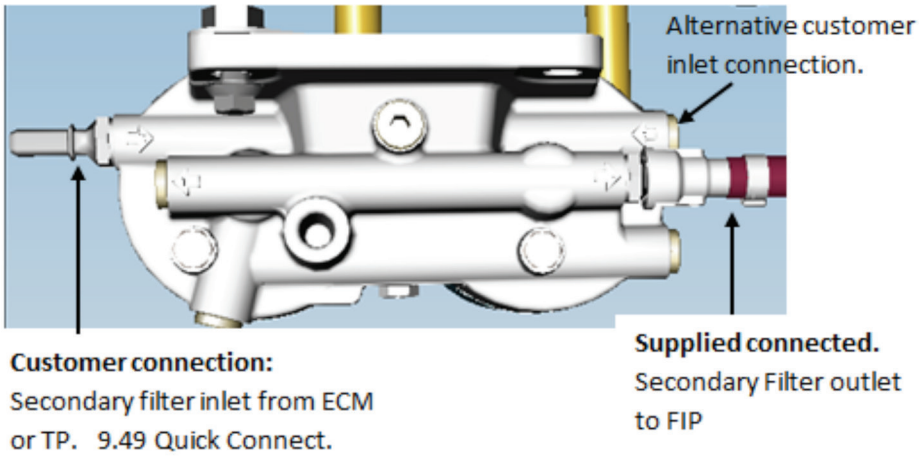

Figure 6.4 – Secondary Filter Inlet Connection

Connection F – ECU Outlet Connections

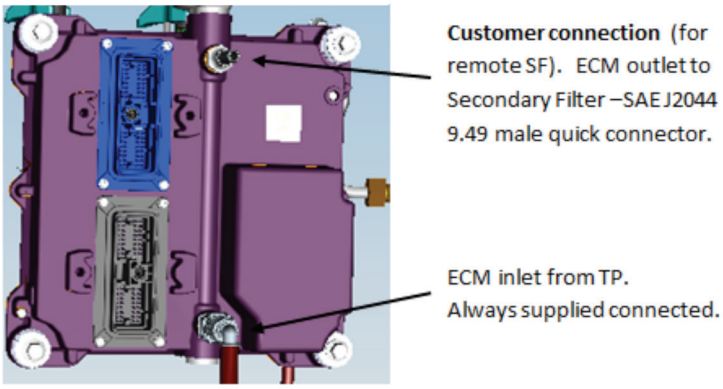

Figure 6.5 – ECU Fuel Connections

Connection G – Return-to-tank Connections

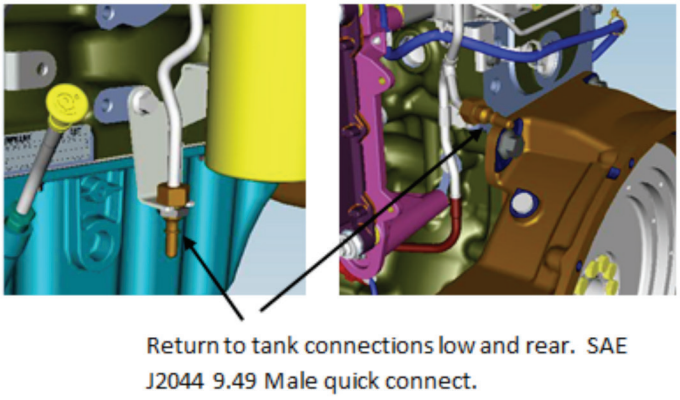

Figure 6.6 – 6-cylinder RTT Connections

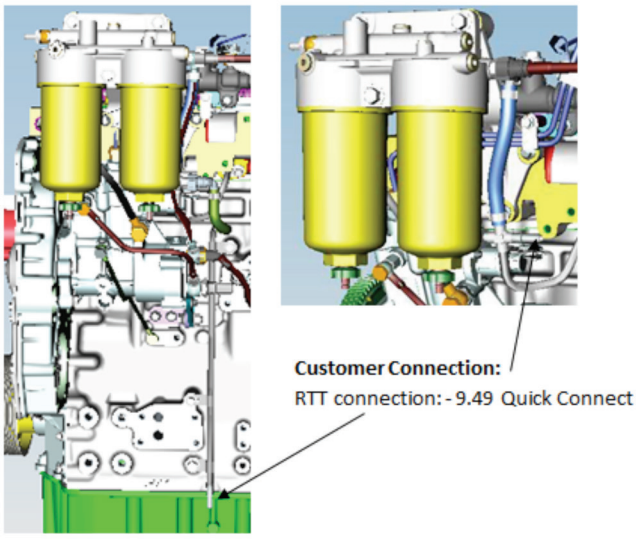

Figure 6.7 – 4-cylinder RTT Connections

6.2 General Fuel System Requirements

6.2.1 Pipe Work and Connector Requirements

- All fuel lines should be designed to be as short and direct as possible with no dips, sags, or kinks. They should be kept away from heat sources and be clear of all fouls with other components.
- Pipe work must be to the material specifications outlined in this document. It is recommended that the fuel supply line have a minimum internal diameter of 10 mm.
- The fuel return line(s) must terminate below the minimum fuel level within the fuel tank. This is to prevent jetting (aeration of the fuel) and prevent drain down of the fuel system when the engine is not running.
- All quick fit connectors used on the supplied system are to SAE standard J2044. It would be advised that, where possible, these are used on all machine interfaces with the engine fuel system (excludes RTT connection).

6.2.2 Filter Requirements

- Customer-mounted fuel filters should be mounted off engine and must be isolated from excessive vibration. A touch test should be conducted across the speed range to assess the vibration and if excessive vibrations are suspected, full vibration testing must be conducted. Please consult your application engineer for further detail.
- Both the primary and the secondary filters should be mounted in a position lower that the FIP to aid de-aeration.
  - If the secondary filter is mounted above the FIP, dependant on the fuel line length and routing, the system may not deaerate sufficiently, leading to an incomplete system drain down and issues with repeat starting. This will require additional testing.

6.3 Fuel System Performance

Maintaining an acceptable, consistent performance of the fuel system is dependent on maintaining sufficient fuel flow to the fuel pump, which itself, is dependent on the performance of the fuel transfer pump. A critical parameter affecting this performance is the transfer pump inlet depression, which is application-specific and depends on the customer low pressure fuel system design. This includes all the fuel lines, connections, and filters within the customer-supplied system from the fuel tank up to the transfer pump inlet connection.

Due to the nature of the transfer pump design, the performance of the low pressure fuel system is also affected by altitude. The transfer pump must operate with an inlet pressure of between 35 and 100 kPa absolute pressure. A pressure less than the lower limit is likely to result in performance and durability issues resulting in unstable, stuttering behavior and noisy operation as the fuel vapor is drawn out of the fuel and cavitation occurs. A pressure above the maximum limit can also result in a problem with consequential damage to the fuel system itself.

Minimizing the pressure drop from the fuel tank will allow the system to operate and maintain its performance at altitude and will also maintain fuel filter service life.

In reality, though, there is often a trade-off in performance between altitude capability and service life.

For example, if a machine operates at high altitude, the transfer pump inlet restriction limit (gauge pressure) is reduced due to the reduction in atmospheric air pressure. This essentially means a reduction to the restriction allowance for the fuel system circuit prior to the transfer pump inlet. As the restriction of the pipe work is not variable, the reduction has to be accommodated by reducing the overall filter restriction allowance and consequently reducing the service life of the filter. An acceptable solution maybe to accept a reduced filter service life for operation at high altitudes.

The performance of the fuel system must be tested for all installations and an understanding gained of the capabilities and limitations with respect to the design and operational requirements of the machine.

6.3.1 Establishing System Capability

For any particular machine, the measured transfer pump inlet depression can be used to help provide an indication of the fuel system capability in terms of altitude and fuel filter service life.

The transfer pump inlet limit is limited to a minimum pressure of 35 kPa (abs) while engine is running. The nearer this measured pressure is to 0 kPa, the greater the altitude capability of the machine, while maintaining a maximum service period.

The chunk chart in Figure 6.8 is an example of how constituent parts of a fuel system may contribute to the overall transfer pump inlet depression. This will obviously depend on the individual parts used and the condition of the primary fuel filter. The difference between a clean and dirty filter on the supplied primary filter is 15 kPa.

The transfer pump inlet pressure must fall between 35 and 100 kPa (abs).

Table 6.2 provides an indication of the likely altitude capability for different transfer pump inlet pressures when measured in accordance to the test conditions. These values are given based on maintaining 500-hour service interval and no degradation in performance; dependent on fuel specification and cleanliness levels – reference OMM.

If the desired altitude figure is not achieved, the following actions may be necessary:

- reduce the service intervals at altitude (only advisable if approximate difference between desired and table results differ by 500 m altitude)
- reduce system restriction between the fuel tank sender unit and transfer pump inlet connection.

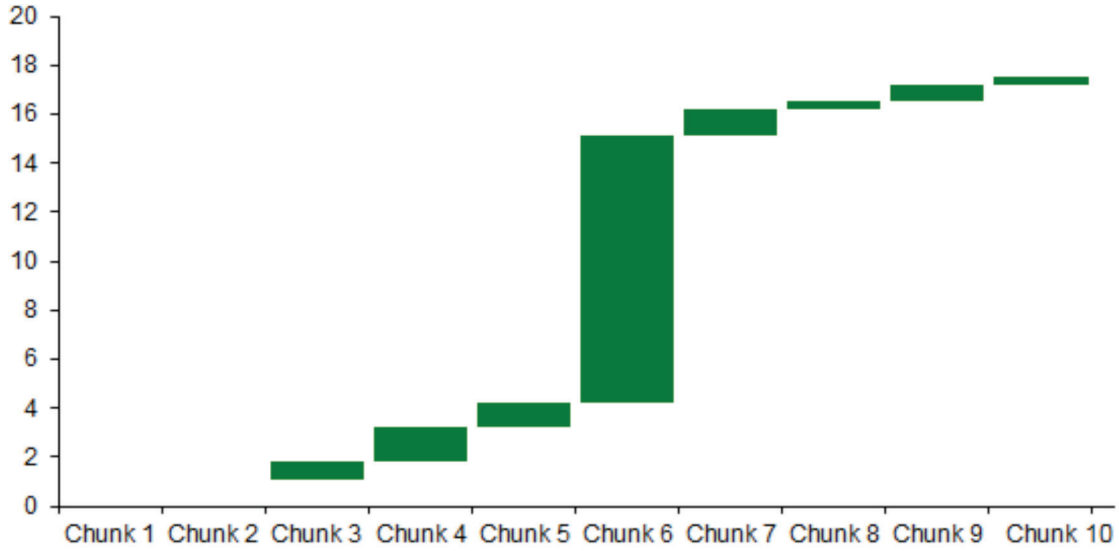

1 - Head pressure
2 - Tank pickup pipe
3 - Tank out connector
4 - Pipe from tank to primary filter
5 - Primary filter inlet connector
6 - Primary filter
7 - Primary filter outlet connector
8 - Primary filter to transfer pump inlet pipe
9 - Transfer pump inlet pipe
10 - Transfer pump inlet pipe connector

Figure 6.8 Fuel Restriction Chunk Chart

Pressure Measured at Transfer Pump kPa (gauge)	Altitude Capability (m)
-51	0
-46	500
-40	1000
-35	1500
-31	2000
-26	2500
-22	3000
-17	3500
-13	4000
-10	4500
-6	500

Table 6.2 – Transfer Pump Inlet Pressure and Altitude Capability

The test should be conducted at two different conditions to ensure both the lower and upper limit are not exceeded.

This should be measured in accordance to the defined test procedure reference TPD-TBA. The general requirements for each test are detailed below:

1. Transfer Pump Pressure Inlet – Lower Limit

The minimum transfer pump inlet pressure, measured at sea level with clean filters must be -50 kPa (gauge) or greater.

Test conditions:
Sea level, new fuel filters, engine running at maximum (high-idle) speed, zero load and with a minimum fuel level in the fuel tank. If electric primary filter is used, disconnect to ensure it is not operating.

2. Transfer Pump Pressure Inlet – Upper Limit

The transfer pump inlet upper limit is limited to a maximum pressure of 100 kPa (abs) during engine run or 0 kPa (gauge) with a clean filter. The value measured must not exceed 0 kPa (gauge).

Test conditions:
Sea level, new fuel filters, engine running at minimum (low idle) speed, zero load, with full fuel tank. If electric primary filter is used, disconnect to ensure it is not operating.

6.4 Fuel Cooling

The requirement for a fuel cooler is application-specific and every installation should be tested to assess whether a fuel cooler is needed.

The fuel system temperature limits detailed in Table 4.1 Section 4.2 Fuel System Limits must be adhered to.

The use of a high pressure common rail system means increased leak off temperatures; however, only a small proportion of the total return line volume, approximately 25%, is from the injector. The larger proportion, approximately 75%, is returned directly from the fuel pump which is not as hot. The resulting temperature depends on the actual engine rating itself, the machine operation and the installation design.

It is, therefore important to assess the need for fuel cooling to ensure that, not only is the maximum fuel temperature not exceeded, but the fuel returning to the tank does not exceed the material capabilities of the tank and fuel lines. This must be considered for all conditions of operation including the minimum level of fuel in the tank.

The factors affecting fuel cooling are complex and depend largely on the installation and duty cycle of the machine.

The following factors have been found to have a significant influence on the temperature of the fuel:

- Fuel tank location – positioned near to an additional heat source, i.e., hydraulic tank, subject to good air flow
- Fuel tank material and cross sectional area – ability to dissipate heat
- Under hood temperatures – ability of components to dissipate heat
- Fan – pusher/puller airflow across the fuel tank, filters, and pipe work along with its location
- Material and routing of fuel lines
- Reserve volume of fuel in the tank

If a fuel cooler is required, it is the OEM's responsibility to provide and install the fuel cooler while adhering to the cleanliness, pressure, and temperature requirements.

It is essential that the fuel cooler is fitted on the RTT line and not on the supply line. This is due to the limited transfer pump inlet depression and the significant effect on performance when this restriction is increased. Due to the increased temperatures on the RTT line, this location is also a more efficient cooling solution.

6.4.1 Fuel Cooler Specifications

Contact your applications engineer for guidance on fuel cooler sizing/selection.

- Flow range, inlet temperature objectives, etc. must be stabilized and below the tank maximum material temperature limit.

6.5 Fuel Tank Design and Installation

The fuel tank must be located to ensure that the maximum fuel pressure head, fuel supply, and fuel return restrictions are not exceeded. Reference Table 4.1, Section 4.2 Fuel Systems Limits.

The fuel tank must be designed to include the following features:

- Expansion space
- Sediment space (required to prevent suction screen plugging)
- Drainage
- *Tank vent and filter – see mandatory requirements
- Serviceable large particle filter, within tank filler neck.

Tank baffling should be considered, particularly where machines can experience extreme or frequent changes in gradient. It is essential to ensure that under all achievable gradient conditions there is sufficient fuel level to cover the fuel supply line; this is to prevent unnecessary machine stoppages or reduced ETP pressure/flow and hence engine performance. Minimum tank volume of 5% or more. Care should be taken not to exceed the maximum high-pressure pump inlet pressure specified in the ESM when applying fast-fill procedures during machine assembly; adequate venting during filling should control this.

*The tank vent must be serviceable and sized to achieve a 500-hour service interval, taking into consideration the environment.

7.0 Revision Notes

Caterpillar.
Your Local Resource.
Worldwide.

Your Cat dealer is prepared to answer any questions you may have about Cat Power Systems, customer support, parts or service capability anywhere in the world. For the name and number of the Cat dealer nearest you, visit our website or contact Caterpillar Inc. World Headquarters in Peoria, Illinois, U.S.A.

World Headquarters:
Caterpillar Inc.
Peoria, Illinois, U.S.A
Tel: (309) 578-6298
Fax: (309) 578-2559

Mailing Address:
Caterpillar Inc.
Industrial Power Systems
P.O. Box 610
Mossville, IL 61552

www.cat-industrial.com

E-mail: cat_power@cat.com



Materials and specifications are subject to change without notice. Rating ranges listed include the lowest and highest available for a specific engine or family of engines. Load factor and time at rated load and speed will determine the best engine/rating match.
CAT, CATERPILLAR, their respective logos, ACERT, "Caterpillar Yellow" and the "Power Edge" trade dress, as well as corporate and product identity used herein, are trademarks of Caterpillar and may not be used without permission.

LEBH0027-00 (4-14)

©2014 Caterpillar
All rights reserved.