Crankcase Ventilation Systems

Application & Installation Guide

LEBW4958-07

Caterpillar: Confidential Green

THIS PAGE LEFT INTENTIONALLY BLANK

Table of Contents

1 Introduction 4
1.1 Changes since last revision 4
2 Crankcase Emissions 5
2.1 Crankcase Emissions Composition and Volume 5
3 Ventilation System Types 7
3.1 General Considerations 7
3.2 Open (Non-Ingestive) Crankcase Ventilation 8
3.3 Closed (Ingestive) Crankcase Ventilation 10
3.3.1 Low-Pressure Ingestive System 10
3.3.2 High-Pressure Ingestive System 13
4 System Design 16
4.1 Ventilation Pipe Routing and Support 16
4.2 Vent Lines Restriction Estimation 19

©2021 Caterpillar All rights reserved

1 Introduction

This section of the Application and Installation Guides describes the requirements and options available for ventilation of the engine's crankcase. Additional engine systems, components and dynamics are addressed in other sections of the Application and Installation Guides.

Systems and components described in this guide may not be available or applicable for every engine. Consult the applicable engine model price list and/or parts reference guide for information on specific model option availability or compatibility.

1.1 References

The following sources may provide additional information regarding subjects covered in this guide.

- REHS0883: Special Instruction – Installation and Maintenance of the Powered Fumes Disposal Filter
- M0088278: Special Instruction – Installation and Maintenance of Fumes Disposal Filter for Certain G3500 Series Engines

1.2 Changes since last revision

- Section 3.3.2: Corrected typo, changed "heater" to "heated".
- Section 4.2: Added back statement of vent lines restriction limit omitted in revision 06. This statement was present in revision 05.

©2021 Caterpillar All rights reserved

2 Crankcase Emissions

The engine's crankcase is the space enclosed by the cylinder block and the oil pan that is below the underside of the pistons. It is an active volume containing the portion of the lubricating oil fill that is not entrained in the engine's lubricating passages, and it is constantly in direct contact with many of the moving parts of the engine, particularly the pistons, connecting rods, and crankshaft. This volume exists at a significantly lower pressure than is seen in the individual combustion chambers during engine operation, thus it is normal for some combustion gases to leak past the piston rings into the crankcase. Such gases are termed "blow-by".

Due to the entrance of these blow-by gases, the open space in the crankcase is commonly at slight positive pressure relative to the atmosphere surrounding the engine. Crankcase ventilation systems are designed to control the balance of pressure between the engine crankcase and the surrounding atmosphere while managing the captive crankcase fumes. Crankcase pressures that are significantly above or below atmospheric pressure can have negative effects on component life, performance of the lubricating oil system, and overall engine emissions, so it is in the users best interest to manage that pressure through the use of a crankcase ventilation system.

Ventilating the engine crankcase is not a difficult process in itself, as that only requires the engine to be equipped with a connecting system allowing excessive pressure to escape the enclosed volume. However, controlling emissions and preventing contamination of the engine's internals add some complexity to designing such a system.

2.1 Crankcase Emissions Composition and Volume

As noted above, blow-by consists of combustion by-products escaping past the piston rings and into the crankcase. Because these blow-by gases are captured within the crankcase they increase the pressure within the crankcase. Also, they are in constant contact with the oil fill in the engine's oil pan and thus contribute to contamination of the lubricating oil.

Proper oil control requires the use of seals at points where moving parts pass through the boundaries of the crankcase, such as at the ends of the crankshaft or around service access doors. Excessive pressures in the crankcase can lead to degradation of those seals and resultant oil leakage, which is both a cosmetic and contamination nuisance outside the engine, but also serves as a potential path for contaminants to get inside the engine when it is not in operation.

©2021 Caterpillar All rights reserved

The overall volume of blow-by migrating into the crankcase varies due to cylinder firing pressures, piston ring system design and contact pressure, and component wear during continued operation of the engine. Since proper ventilation of the crankcase allows these fumes to exit the engine, crankcase fumes are a portion of the engine's overall emissions. However, because they are dependent upon the design of the specific engine, how it has been incorporated into its operating site, varying environmental conditions, and the wear state of the engine over its service life cycle, the actual flow volume of crankcase emissions is difficult to specify.

In terms of the hydrocarbon gases in the blow-by, crankcase hydrocarbon emissions will typically be around 3% of the total exhaust hydrocarbon emissions at the engine's mid-life condition, but can increase to as much as 20% of that total due to variables such as production tolerances in the piston rings and ring wear due to engine operating conditions. Other compounds that result from combustion, such as NOx, are also present in the crankcase gases, in proportions that are dependent upon the combustion design of the specific engine – thus lean-burn gas engines will typically carry lower concentrations of NOx in the crankcase than would similar rich-burn gas engine models or even diesel engines. The presence of sulfur compounds or aldehydes will be similarly dependent upon the type of engine, the quality of the fuel, and the operational and maintenance practices for that engine.

It is considered inevitable that crankcase emissions will be included in the total system emission values that are required to be reported for an engine installation. The state of California and parts of Europe already have such requirements for including crankcase emissions in the total engine emission numbers. In fact, it is expected that eventually the free venting of crankcase emissions to the atmosphere will be discouraged or even prohibited in many areas.

©2021 Caterpillar All rights reserved

3 Ventilation System Types

Crankcase ventilation systems can be categorized into two high-level configurations:

- Open, or “non-ingestive”, where the crankcase fumes are vented directly to the atmosphere in some manner; or
- Closed, or “ingestive”, where the crankcase fumes are routed back to the engine’s inlet to direct them into the engine’s combustion process.

With the exception of some marine pleasure craft applications, Caterpillar does not offer ingestive crankcase ventilation systems on diesel engines.

3.1 General Considerations

Crankcase fumes must be routed away from the engine and nearby equipment, and outside of engine enclosure when one is present. From a safety standpoint, crankcase fumes are an environmental hazard for the site and its personnel as they include oil and combustion byproducts. Crankcase fumes are also combustible and present a fire hazard while present in specific concentrations.

In addition to removing those hazards, crankcase ventilation helps limit the pressure trapped inside the engine. Elevated pressures can stress the various seals around the crankcase and eventually lead to leaks. Those leaks create a messy operating environment as well as a potential path for contaminants to enter the engine.

Another key reason for ventilating the crankcase is to protect the oil fill in the engine’s sump. Blowby includes gases and particulates similar to those found in the primary engine exhaust. As the blowby sits in the crankcase those components can react with the oil. Nitrates, sulfur compounds, and particulate matter all contribute to degradation of the oil, shortening the life of the oil fill and thus increasing operating costs. Studies have shown the addition of a simple passive crankcase ventilation system can extend the useful life of the oil fill by as much as two times; however actual results on a given site will vary. The actual impact of a crankcase ventilation system will vary with engine size, load profile, hours of service, maintenance practices, and the engine’s ambient operating conditions.

Conventional crankcase venting designs are passive, relying upon the higher pressure in the crankcase to drive fumes out and into the fumes management system. By their nature these systems will operate at a slight positive pressure, which is advantageous because it helps prevent contaminants from the surroundings from getting into the engine. More complex designs, particularly where the fumes will be routed to the engine inlet, may use a

©2021 Caterpillar All rights reserved

powered blower to drive the fumes from the crankcase. Powered systems that draw on the crankcase change the crankcase pressure from positive to negative, creating a slight vacuum in the crankcase. Positive or negative, the crankcase pressure should not differ from the ambient barometric pressure by more than 0.25 kPa (1 in H_2O).

3.2 Open (Non-Ingestive) Crankcase Ventilation

Since the open system releases the crankcase fumes directly to the atmosphere, the emissions standards that may apply at the installation site should be a consideration before implementing an open ventilation design. The open design has long been the convention for crankcase ventilation, prior to the implementation of emissions standards. But as regulatory oversight has become more commonplace, open ventilation has attracted more attention as an existing emissions path. For regions that do not include crankcase emissions as a part of the documented emissions from the engine this type of system should be an acceptable solution.

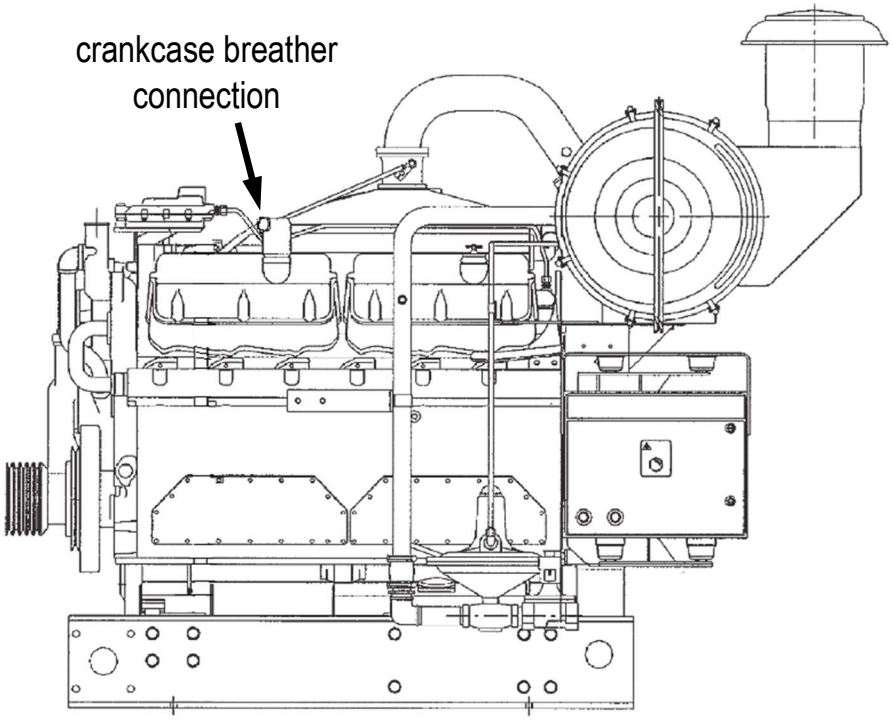

Figure 3.1 **Components of an open crankcase ventilation arrangement**

Figure 3.1 shows the most basic form of crankcase ventilation, a tubular connection on a filtration canister mounted to the valve cover. By design, this space near the top of the

©2021 Caterpillar All rights reserved

engine has a direct communication path down to the crankcase at the bottom of the engine, making this accessible, top-mounted connection location possible. This location should not be simply left as an open vent. The fine oil mist and partial combustion vapors that escape through the vent, which are combustible and hazardous, will be released near to the engine, posing a risk to both personnel and equipment. Vent lines must be connected to this location on site to route fumes away from the engine to a safe location.

Regarding hazards from the crankcase fumes:

- Crankcase emissions carry entrained oil droplets that can accumulate within the ventilation system piping and around the system outlet. This oil should be collected for proper disposal. In addition to cosmetic and environmental issues, oil mist that does not coalesce can carry to nearby engine air intakes, resulting in clogged air filters and potential engine damage.
- Crankcase fumes can also cause problems in the electrical equipment around the engine room. Oil deposits and combustible gases should not be allowed to reach such equipment.
- Crankcase emissions that remain airborne pose a health hazard to personnel working in the nearby area, especially if those fumes are discharged into an enclosed engine room. Poor ventilation of the engine room can only make this worse. Ventilation piping should carry fumes away from the engine and to the outside of an enclosure.

Regarding design for managing pressure in the crankcase:

- Use separate vent lines for each engine on a site; do not interconnect venting systems directly. Separate piping systems eliminate the risk of fumes from a running engine entering an idle engine.
- Piping in the crankcase ventilation system must be sized appropriately to manage the resulting pressure in the crankcase. Sizing calculations must fit the type of system (passive or powered) and include the vent line design's restriction to flow.
- Crankcase venting lines should not discharge into the air ventilation ducts nor exhaust piping, as oil deposits in those locations may become a fire hazard. Connections to the exhaust piping may also lead to oil deposits on the catalyst, affecting its performance.

Other considerations for the ventilation system design are covered in the "Design" section found later in this Guide.

©2021 Caterpillar All rights reserved

3.3 Closed (Ingestive) Crankcase Ventilation

Any system that routes the crankcase fumes back into the engine's intake is considered a closed or ingestive system. Such systems are related to the Positive Crankcase Ventilation, or PCV, systems found on most automobiles. The automotive PCV is most commonly a simple closed path for fumes from the crankcase to the engine's intake. In a naturally aspirated automotive installation, the entire vent path can be kept very short and close to the engine at all times. In this manner there is almost no drop out of oil or water along the vent path, thus issues with oily deposits or water are relatively low and manageable.

Scaling up crankcase ventilation to what must be done for larger engines helps make drop out a more significant concern. The addition of a turbocharger and aftercooler adds risk by placing two important and expensive components directly in line with the re-ingested fumes flow. Turbocharging can have such a significant impact on power output and efficiency that it is present on the majority of large engines today, and the elevated pressure in a turbocharged air intake system drives two different strategies for accomplishing ingestive crankcase ventilation.

3.3.1 Low-Pressure Ingestive System

Fundamentally, the crankcase ventilation system is a low-pressure system. Without the addition of a powered blower, the crankcase does not present adequate pressure for the evacuated fumes to be introduced to the air flow downstream of the turbocharger where air pressures are significantly greater than the ambient barometric pressure. A low-pressure ingestive system therefore must introduce the fumes upstream of the turbocharger, in the low-pressure air intake. A simplified view of such a system is shown in Figure 3.2, with the major components identified.

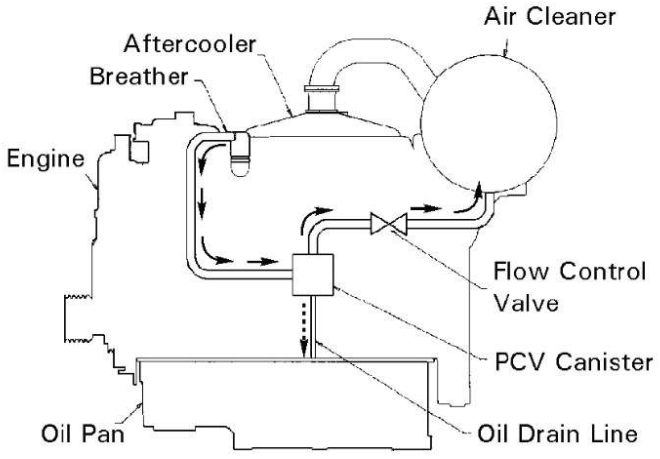

Figure 3.2 **A simple low-pressure ingestive crankcase ventilation system**

©2021 Caterpillar All rights reserved

The system uses the valve cover mounted crankcase breather noted earlier, keeping the connection simple and accessible. Fumes exiting the breather are routed to a device (shown here as the “PCV canister”) to remove fine oil mist from the flow, resulting in two paths existing the device, one for the de-misted fumes and the other for drainage of the extracted oil. This example shows the accumulated oil being dumped back into the engine sump, a practice that is acceptable when the crankcase can keep the water vapor in the blowby gas in the vapor form. Liquid water accumulation in the engine’s sump can be very damaging to the oil fill, and consequently to the engine itself.

Oil mist removal is a critical component of any ingestive system. Even when present, oil mist removal devices that are not highly effective can allow oil mist carryover, and that oil can deposit on many sensitive surfaces in the engine, resulting in fouling of the air cleaner, fuel-air mixer, turbocharger, aftercooler, or even into the combustion chamber. Oil accumulation on components along that path can result in:

- Shortened air cleaner life
- Poor air-fuel mixer function (on gas engines)
- Fouled or damaged turbocharger or aftercooler
- Shortened spark plug life (on gas engines)
- Reduced detonation margin, leading to increased incidence of detonation and potential piston damage (on gas or DGB engines)
- Reduced site load capability or limited operational range
- Reduced efficiency
- Shortened component life.

In fact, some tests have shown that even with an extremely effective oil mist removal device, oil carryover still occurs. Oil deposits on working surfaces have the potential to cause an imbalance of the turbocharger, shortening turbo bearing life, or to coat the aftercooler core, reducing its ability to pass heat to the coolant and thus possibly lowering the maximum permissible site power. With this in mind it is important to consider both the benefits and consequences when deciding to proceed with an ingestive system.

The influences of both environmental and regulatory considerations have made ingestive crankcase ventilation a popular request, enough so that there are limited offerings available from the Cat factory for specific engine models. And even with factory systems engineered for that particular engine it is advised that the operation and maintenance procedures provided be strictly followed to achieve the best results possible. Any time an ingestive system is in use, the user should account for the incremental increase in maintenance costs that are likely – fumes re-ingestion changes conditions from those noted in the standard

©2021 Caterpillar All rights reserved

maintenance schedules. Ingestive systems are not recommended for use with corrosive gas applications, such as landfill gas or sour field gas, due to risk of damage to intake system components.

While Caterpillar cannot grant any formal approval for a customer-supplied ingestive system, it is understandable that certain circumstances may compel a user to install a system they themselves supply. For such circumstances we offer general advice on steps that may be taken to improve the success of the installation. For a customer-supplied low-pressure ingestive crankcase ventilation system consider these points:

- All crankcase fumes introduced to the low-pressure air inlet must first pass through an oil mist removal system. The oil mist removal system used must demonstrate a minimum oil removal rate of 99.97%, calculated as shown based on oil concentration "C" before and after the oil mist removal device.

$$\%\, removal = \frac{C(before) - C(after)}{C(before)} \times 100$$

- The oil mist removal device must be serviced according to the guidelines of its manufacturer to ensure maximum effectiveness during its use. This includes draining of accumulated oil and/or changing of filtration media (filtration media should be replaced or cleaned at every oil change).
- The system (removal device and installation piping) must be sized for two times the nominal indicated crankcase emissions rate for the specific engine in use. This ensures added capacity to accommodate increases in blowby rate due to normal engine wear.
- Under low ambient temperature conditions, the water vapor present in the crankcase fumes can freeze. The system must be protected from such freezing and the resulting consequences for the system's operation. For extreme cold sites consider placing insulation around the vent lines to help retain heat in the lines.
- The system must ensure the crankcase pressure is maintained according to the minimum and maximum limits expressed earlier in this Guide. The system should further include a bypass or safety that ensures acceptable pressures in the crankcase in the event of a ventilation system fault, such as freezing or clogging.
- Caterpillar factory-provided systems may be designed to return oil to the crankcase. For customer-supplied systems this is not recommended until testing can demonstrate the impact of the returned oil on the sump oil fill. To complete this testing, trend S•O•S℠ samples of recovered oil every 100 hours of engine operation up to 800 hours to certify that the recovered oil does not reach condemning limits. If oil exceeds condemning limits, DO NOT return oil to the crankcase.

©2021 Caterpillar All rights reserved

3.3.2 High-Pressure Ingestive System

A high-pressure ingestive crankcase ventilation system is very similar in concept to the low-pressure system discussed above, with the difference that the evacuated crankcase fumes are introduced to the engine's intake downstream of the turbocharger where air pressures are much higher. This key difference drives the need for a powered blower to boost the crankcase fumes to the pressure necessary to enable them to enter the pressurized air flow. A simple diagram of such a system is shown in Figure 3.3.

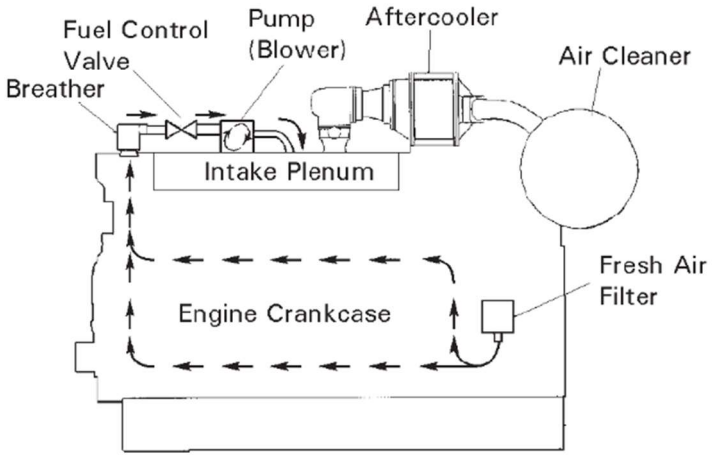

Figure 3.3 **A simple high-pressure ingestive crankcase ventilation system**

The obvious advantage of this system configuration is the elimination of exposing the turbocharger and aftercooler (and possibly the air-fuel mixers) to the crankcase fumes. Even so, the oil carryover can have consequences to the rest of the intake system components downstream of the introduction point, so oil mist removal should still be included in the high-pressure system design.

A key consideration for a powered blower system is that air may need to be admitted to the crankcase to manage the overall pressure that results there. This may be strictly a part of the design calculations for resultant crankcase pressure, or there may also be a need to dilute the crankcase fumes to conform to regulatory standards in force on site. By either standard, the rate of air admission will be a consequence of the system design. An important consideration for systems that admit fresh air into the crankcase is the impact of air temperature on the water vapor present inside the crankcase. For cold environments the admitted air should be heated to limit the possibility of significant condensation in the crankcase. Local conditions will dictate the heating requirements.

©2021 Caterpillar All rights reserved

Figure 3.4 illustrates how a powered system may be applied to a multiple-engine installation. While this diagram is general in nature it includes deliberate details that emphasize the instructions provided throughout this guide. The individual engine risers connect to the main vent line at or above its centerline so they do not interfere with liquids drain-back. The condensate drain is placed at the low end of the upward-sloped main vent line. The powered draft fan is placed near the outlet to induce the draft across all connected engines, but the system includes a main balance valve to draw fresh air to adjust the overall system vacuum and individual balance valves on each riser to fine-tune the vacuum on each crankcase.

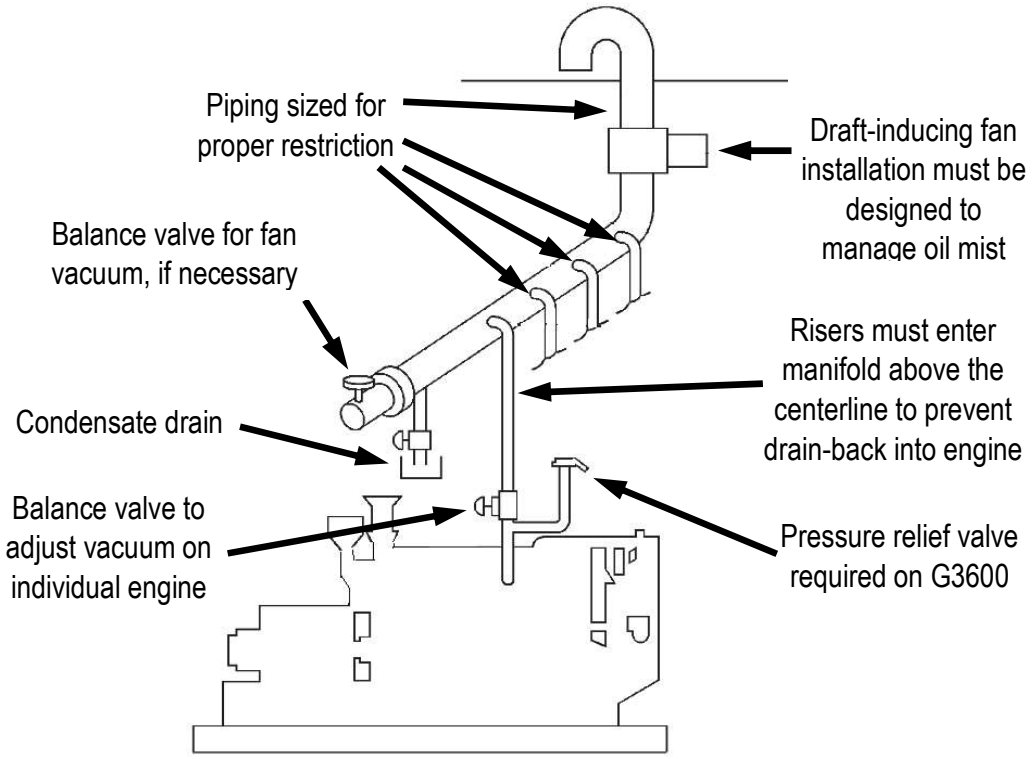

Figure 3.4 **Example of a multi-engine powered crankcase ventilation system**

3.3.3 Balance Valve

It can be difficult to precisely size the blower for a powered system. A blower that is too large may draw too much vacuum on the system, making adjustment of individual engine crankcase vacuum difficult. A solution is to place a balance valve somewhere on the suction side of the blower to allow air to be drawn into the main manifold. This air draw reduces the vacuum draw on the rest of the system. A relief valve may be necessary to

©2021 Caterpillar All rights reserved

limit the resulting crankcase pressure if the blower system is not engaged. This relief should be set to 0.13 kPa (0.5 in) H_2O.

3.3.4 Diluting Crankcase Emissions

Under certain circumstances is may be necessary to dilute the crankcase emissions with air from the surroundings. This may be driven by a regulatory requirement or simply by the need to balance the vacuum draw of the powered ventilation system. The following steps outline how this can be done. This procedure requires a blow-by indicator to measure the outflow from each engine.

1. Measure the amount of combustion blow-by for a given engine. This is done by closing the crankcase ventilation valve, blocking the crankcase air filter, and attaching the blow-by indicator to the oil fill spout. The reading on the indicator is the engine's blow-by. All measurements are to be taken with the engine running at rated speed, load, and temperature.
2. Unplug the crankcase air filter and connect the blow-by indicator to it. Slowly open the crankcase ventilation valve until the indicator reads the same as in step 1. This procedure will allow an equal amount of air to be drawn into the crankcase as is being blown past the piston rings.
3. Perform this procedure for each engine.
4. Make a final check of the crankcase pressure to ensure the vacuum on the engine is less than 0.25 kPa (1 in) H_2O.

©2021 Caterpillar All rights reserved

4 System Design

As suggested above, where it is not provided complete from the factory the crankcase ventilation system design is exclusively the responsibility of the user or installer.

4.1 Ventilation Pipe Routing and Support

Crankcase ventilation piping should be installed to achieve a continuous upward slope as the piping moves away from the engine. The design must avoid sagging or other local low spots, as they become “traps” for liquids that may drop out in the lines. Accumulation of such liquids can block the line, effectively disabling the system. Slope should be designed into the horizontal pipe runs, with a minimum slope of 41.7 mm/m (0.5 in/ft). Individual straight sections of the piping system that cannot be disassembled for cleaning should include clean-out ports.

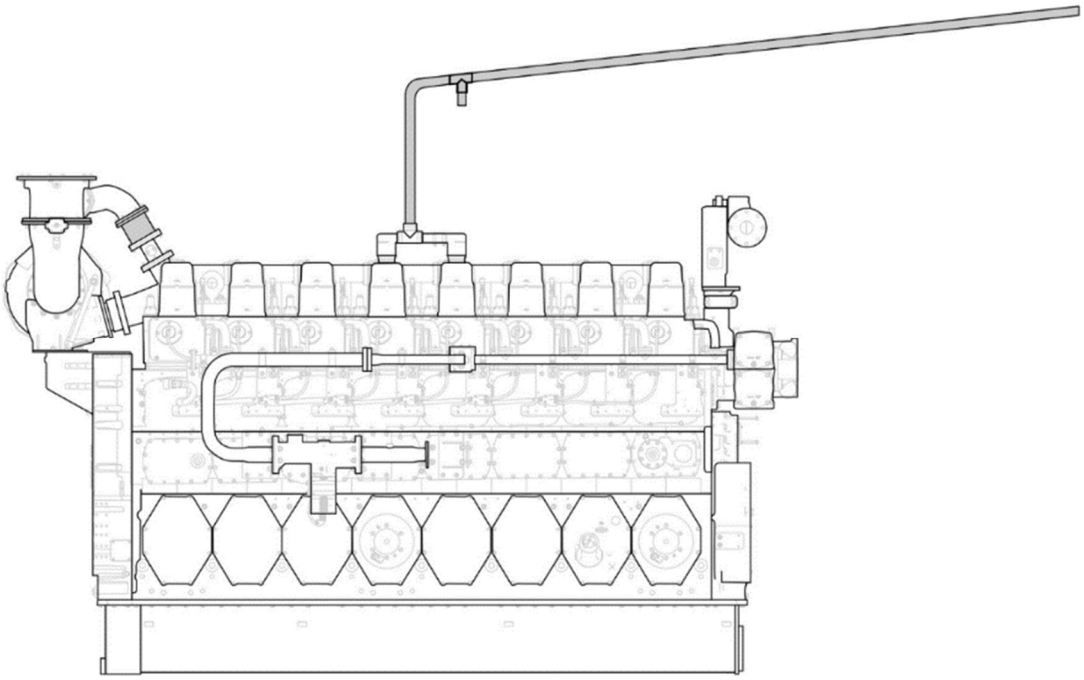

Figure 4.1 **Example of crankcase ventilation piping with drain leg**

Figure 4.1 shows a crankcase ventilation piping run with the appropriate upward slope. The system shown includes the factory connection combining two valve cover-mounted breathers into a single outlet connection. As received from the factory, this connection point is installed pointing downward with a shipping cover installed. This sort of factory offering

©2021 Caterpillar All rights reserved

must always have the cover removed and the connection re-oriented upward to avoid creating an inversion which can trap gases in that area. For vee engines with breathers near to one another on both banks, the two sides can be joined together into a single ventilation pipe, as shown in Figure 4.2.

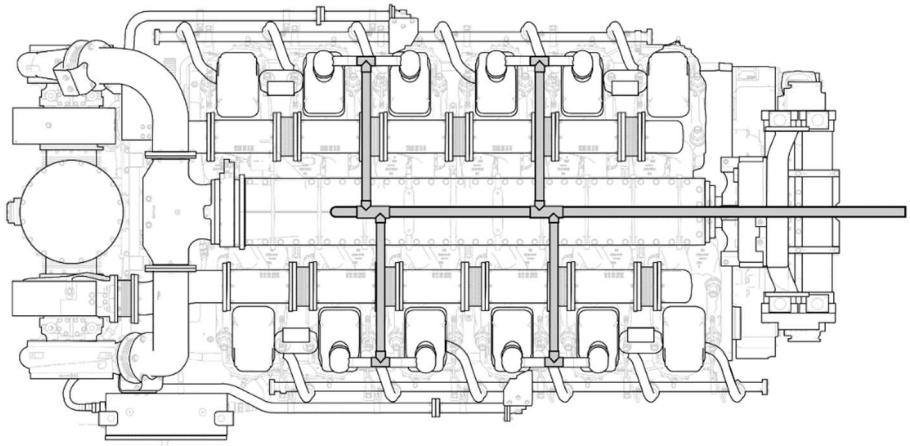

Figure 4.2 **Vee engine breathers joined to a common vent pipe**

Also seen in Figure 4.1 is a drain leg, a vertical pipe section at the bottom of the main pipe run that is intended to catch liquids that drain back down the vent pipe toward the engine. Drain leg use is recommended as a way to limit the risk of oil and water forming an emulsion when draining back into the sump. When it occurs, oil emulsified with water is no longer able to properly lubricate and protect moving engine parts and significant damage can result.

The drain leg should be located close to the engine to capture as much as possible of the liquid dropout. It is a local low spot that is not in the main flow path, and as an alternate path it must be “dead-headed” in some manner to prevent fumes from travelling that path as well. The dead-head can be a sealed cap or drain valve that is used to drain the accumulated liquids, or the open pipe end can incorporate a fluid level trap to close off the pipe opening while allowing the excess fluid to collect in an external catch basin. Examples of fluid-filled traps are seen in Figure 4.3. Note that any drain leg, regardless of design, must be serviced regularly to remove the accumulated liquids.

©2021 Caterpillar All rights reserved

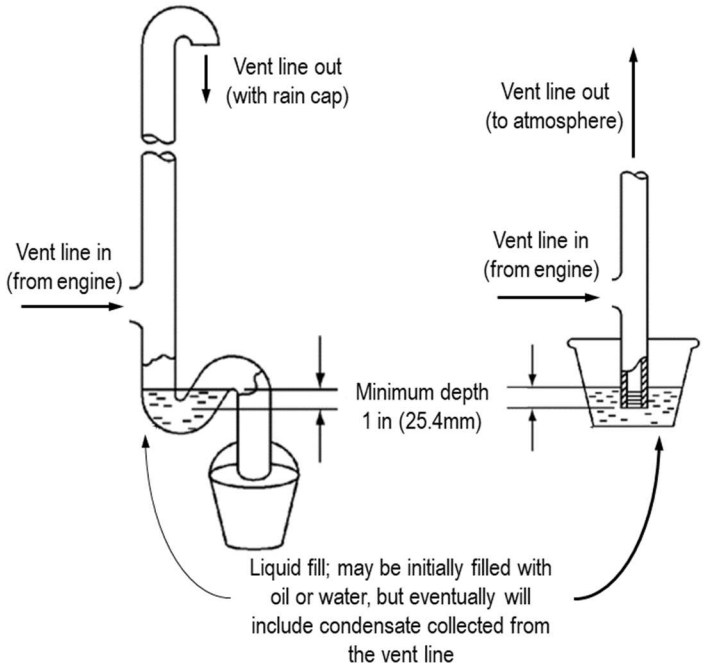

Figure 4.3 **Liquid-filled drain traps**

Crankcase vent piping that discharges directly to atmosphere must be protected by a rain cap or similar device to prevent rain or water spray from entering the piping outlet. Consider equipment located near the discharge area as well as the building itself when locating the outlet. Over time, very small amounts of oil carry-over can accumulate and become unsightly or even harmful to auxiliary equipment. This consideration includes routing to the main exhaust stack, as the much lower velocity of the exhaust gas there will not ensure the oil does not deposit down the inside of the stack. Oil mist carryover will remain an issue and must be addressed by collecting the oil accumulation, at the vent outlet or at the designed drain location.

Consideration should also be given to the air movement due to prevailing winds or fans on radiators or coolers. Discharge near such areas may lead to crankcase emissions being drawn into those devices (see Figure 4.4).

Piping should be supported by off-engine mounts to eliminate the risk of vibration-related fatigue in piping components that are supported from the engine itself. Piping support points should include compliant materials to eliminate the risk of chafing or fretting of the pipe within the clamp. Piping connections to the engine should include compliant joints to allow for relative motion between the externally supported piping and the engine.

©2021 Caterpillar All rights reserved

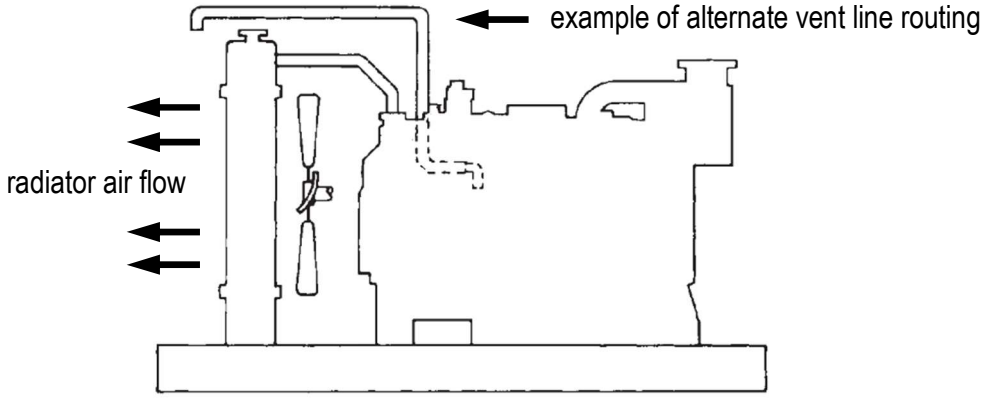

Figure 4.4 **Crankcase ventilation routing to protect a radiator**

Crankcase vent piping must not be connected to other systems where higher pressures are possible. Such conditions would result in backflow pressurization of the crankcase that may damage the engine.

4.2 Vent Lines Restriction Estimation

Restriction in the vent lines can be a critical consideration to the proper operation of the system. The simple restriction estimation tools presented elsewhere in the A&I Guides (Intake Air Systems, Exhaust Systems) can be useful to this crankcase ventilation system design as well and so they are also presented here for convenience.

In the absence of published values specific to the engine model involved in the system design, these generalized values may be useful. The blowby rate on a new engine is approximately 0.02 m^3/bkW-hr (0.5 ft^3/bhp-hr). Later in the engine's overhaul cycle that value can double due to wear in the cylinders.

Techniques such as the one shown below use severity factors to approximate the component restriction in terms of how much straight pipe length it would take to realize the same restriction. This approach does greatly simplify summing the component restrictions.

To obtain straight length equivalents for certain pipe elbows:

- Standard elbow (swept radius = diameter) $L = 33D/X$
- Long radius elbow (swept radius = 1.5x diameter) $L = 20D/X$
- 45° elbow (swept radius = 1.5x diameter) $L = 15D/X$
- Square elbow $L = 66D/X$

Use X = 1000 mm = 12 inches

©2021 Caterpillar All rights reserved

These equations may be useful for estimating resultant backpressure in a proposed piping design. Size the vent pipe for a maximum of 13 mm H_2O (0.5 in. H_2O) restriction at full load.

$$P(kPa) = \frac{L \times S \times Q^2 \times 3.6 \times 10^8}{D^5}$$

$$P(in\ H_2O) = \frac{L \times S \times Q^2}{187 \times D^5}$$

Where:

P = backpressure in kPa or inches H_2O

L = total equivalent pipe straight length in meters or feet

S = density of gas in kg/m^3 or lb/ft^3

Q = crankcase vent gas flow in m^3/min or ft^3/min

D = inside diameter of pipe in mm or inches

Where case-specific values are not available, approximate with S = 1.08 kg/m^3 = 0.067 lb/ft^3

To complete the pipe sizing, calculate the required minimum pipe diameter according to the equations, then choose the next larger commercially available pipe diameter. Use long radius elbows where possible to help minimize restriction.

©2021 Caterpillar All rights reserved

THIS PAGE LEFT INTENTIONALLY BLANK

LET'S DO THE WORK.™

Information contained in this publication may be considered confidential. Discretion is recommended when distributing.
Materials and specifications are subject to change without notice.

© 2020 Caterpillar. All Rights Reserved. CAT, CATERPILLAR, LET'S DO THE WORK, their respective logos, "Caterpillar Corporate Yellow", the "Power Edge" and Cat "Modern Hex" trade dress as well as corporate and product identity used herein, are trademarks of Caterpillar and may not be used without permission.

