Diesel Fuels and Fuel Systems

Application & Installation Guide

LEBW4976-12

Caterpillar: Confidential Green

Caterpillar: Confidential Green

THIS PAGE LEFT INTENTIONALLY BLANK

Table of Contents

1 Introduction 6
1.1 References 6
1.2 Changes since last revision 6
2 Diesel Fuels 7
2.1 Grades of common diesel fuel 7
2.1.1 Low grade 7
2.1.2 High Grade 7
2.1.3 American Society for Testing and Materials (ASTM) 8
2.2 Diesel fuel types 8
2.2.1 Crude oil 8
2.2.2 Residual oil or blended heavy fuel oil (HFO) 8
2.2.3 Distillate Fuel 9
2.2.4 Marine diesel oil 9
2.3 Diesel fuel characteristics 11
3 Diesel Fuel Selection 13
4 Diesel Fuel Systems 14
4.1 MUI fuel system 15
4.2 MEUI fuel system 15
4.3 HEUI fuel system 16
4.4 Common rail fuel system 16
4.5 ACERT technology 17
5 Diesel Fuel System Design Considerations 18
5.1 Fuel storage systems 18
5.1.1 Main fuel tank 18
5.1.2 Auxiliary fuel tanks 19
5.1.3 Fuel service tank or day tank 20
5.1.4 Fuel head limiting tank 23
5.1.5 Base mounted tanks 23

©2025 Caterpillar All rights reserved

Caterpillar: Confidential Green

5.2 Fuel tank design considerations 23
5.2.1 Fuel tank sizing 23
5.2.2 Fuel tank material 23
5.2.3 Fuel tank installation 23
5.2.4 Fuel tank drains 24
5.2.5 Fuel tank grounding 24
5.2.6 Fuel tank maintenance 24
5.3 Fuel transfer systems 25
5.3.1 Fuel transfer pumps – engine driven 25
5.3.2 Fuel transfer pumps – auxiliary 26
5.3.3 Fuel transfer pumps – emergency 27
5.4 Fuel piping design considerations 28
5.4.1 Fuel supply piping 28
5.4.2 Fuel return piping 28
5.4.3 Purging 29
5.4.4 Siphoning and check valves 29
5.4.5 Material 29
5.4.6 Sizing 29
5.4.7 Routing 30
5.5 Fuel filtration systems 30
5.5.1 Filter micron ratings 31
5.5.2 Primary fuel filter element specification 32
5.5.3 Duplex fuel filters 32
5.6 Water separation 33
5.6.1 Centrifuges 34
6 Miscellaneous Fuel System Considerations 37
6.1 Fuel temperature 37
6.2 Fuel coolers 37
6.3 Fuel heaters 38

©2025 Caterpillar All rights reserved

Caterpillar: Confidential Green

6.4 Partial load operation 39
6.5 Burning used crankcase oil 39
6.6 Continuous blending 41
7 Fuel Conservation Practices 42
Appendix A – Day Tank Sizing (when day tank serves as a heat sink) 43
A.1 Day Tank Calculations 44
A.2 Day Tank Thermal Capacity Calculation 44
Appendix B – Crude Oil Fuel 55
B.1 Pretreatment of Crude Oils 55
B.2 Crude Oil Maintenance Intervals 57
B.3 Crude Oil Settling Tanks 57
Appendix C – C175 Emergency Standby Gen Set Start Assurance Requirements 60
C.1 Supply and return line design 60
C.2 Tank Design 61

©2025 Caterpillar All rights reserved

Caterpillar: Confidential Green

1 Introduction

This section of the Application and Installation Guides describes diesel fuels, their characteristics and grades, and alternate fuels that may be used in a diesel engine. It also describes various diesel fuel systems used on Cat® engines, plus information about storage tanks, transfer systems, piping, and ancillary systems associated with the diesel fuel system. Additional engine systems, components, and dynamics are addressed in other sections of the Application and Installation Guides.

Systems and components described in this guide may not be available or applicable for every engine. Consult the applicable engine model price list and/or parts reference guide for information on specific model option availability or compatibility.

1.1 References

The following sources may provide additional information regarding subjects covered in this guide.

- REHS4726 – Special Instruction
- SEBD0717 – Diesel Fuels and Your Engine
- SEBU6251 – Cat Commercial Diesel Engine Fluids Recommendations
- SEBU7003 – 3600/C280 Diesel Engine Fluids Recommendations for Lubricants, Fuels, and Coolants
- REHS0104 – Guidelines for 3600/C280 Heavy Fuel Oil (HFO) Engines
- SENR9620 – Improving Component Durability: Fuel Systems

1.2 Changes since last revision

- Edited equations on p.47 to properly show nested operations on the top of the fraction (square brackets added).

©2025 Caterpillar All rights reserved

2 Diesel Fuels

Diesel fuel quality is an important factor in satisfactory engine life and performance. Fuels must provide adequate combustion without producing excess contaminates that can harm the engine. Additionally, fuel selection involves economic and environmental considerations. The availability of certain grades of diesel fuels may be cost prohibitive or inappropriate for various applications. This Application and Installation Guide provides information on the various diesel fuel oil types and how they relate to Cat engine installations.

2.1 Grades of common diesel fuel

A variety of fuel oils, also known as middle distillates, is marketed for use in diesel engines. Their properties and performance depend upon the refining practices employed and the nature of the crude oils from which they are produced. Because of constituents in the oil, some crude oils are naturally suited for refinement into high-grade fuels while others are best used for lower-grade fuels. Similarly, high-grade fuels, low-grade fuels and the various grades between them provide choices for the most suitable fuel for any given installation.

Note: The use of very high-grade or very low-grade fuel oils often requires modification to the fuel system and special consideration of additional costs that may be encountered. Contact your Cat dealer for information regarding the use of these fuel types.

2.1.1 Low grade

Low-grade fuels produce a higher heat value which translates into more engine power, but they also produce more contaminates that could negatively impact engine-life. Additionally, the use of low-grade fuel oil in diesel engines often produces darker exhaust and a more pronounced odor. These attributes may be objectionable in hospital, office, commercial or urban settings and require the use of a higher-grade fuel.

The high sulfur content often found in low-grade fuels causes corrosion, wear and deposits in the engine. Fuels that are not volatile enough or don't ignite rapidly may leave harmful deposits in the engine and may cause poor starting or running under adverse operating conditions. The use of low-grade fuels may require the use of high priced, higher detergent lubricating oils and more frequent oil changes to yield appropriate performance and engine life.

2.1.2 High Grade

High-grade fuels burn cleaner, but have a lower heat value, which yields slightly less power. Aviation jet fuels and kerosene are considered high-grade fuels and seldom contribute to

©2025 Caterpillar All rights reserved

Caterpillar: Confidential Green

the formation of harmful engine deposits and corrosion. Other attributes of high-grade fuels include the benefits of faster engine starting and less frequent overhauls, and the drawback of reduced lubricity.

2.1.3 American Society for Testing and Materials (ASTM)

Due to the different engine applications, designs, and sizes, standards for the limits of fuel properties have been set by the American Society for Testing and Materials (ASTM). Utilizing the correct fuel for the engine will minimize wear of the injection system, allowing easier starting and improve component service life.

Experience has proven that distillate fuels meeting basic specifications will result in optimum engine performance and durability. Depending on fuel costs and availability, the proper use of alternative fuels such as crude oil, blended oil, or residual oil can also provide cost competitive engine operation.

2.2 Diesel fuel types

2.2.1 Crude oil

The term crude oil is used to describe petroleum-based oils/fuels that are not yet refined. They are essentially in the same state as when they were pumped from the earth.

Certain types of crude oils can be burned in Cat engines. In some cases, crude oil is a practical and economical fuel for diesel engines. Crude oils are evaluated individually and special equipment may be needed to condition the fuel. Minimum guidelines have been established to determine the suitability of crude oils as shown in Appendix 2.

2.2.2 Residual oil or blended heavy fuel oil (HFO)

Residual fuel (which resembles tar and contains abrasive and corrosive substances) is composed of the remaining elements from crude oil after the crude has been refined into diesel fuel, gasoline, or lubricating oil.

After the more desirable products have been refined, residual fuel can be combined or diluted with a lighter fuel to produce a mixture that can flow. This mixture is called blended or heavy fuel. Heavy fuels tend to create more combustion chamber deposit formations which can cause increased cylinder and ring wear.

Blending may improve fuel density; however, adding alcohol (ethanol, methanol) or gasoline causes an explosive atmosphere in the tank and is not recommended.

©2025 Caterpillar All rights reserved

Caterpillar: Confidential Green

Cat 3600/C280 diesel engines, in general EPG applications only, can be modified to run on blended fuels, but extreme PREVENTIVE MEASURES MUST BE TAKEN, including following a thorough maintenance program and use of high quality fuel treatment equipment. For any other applications including marine, petroleum, industrial, etc., that require the burning of blended fuels, MaK Engines should be considered.

Blended fuel can lower fuel cost, but there are often significant tradeoffs. Fuel price must be weighed against the following:

- Fuel containment effects
- Reduced engine component life
- Higher maintenance and personnel costs
- Reduced warranty

2.2.3 Distillate Fuel

Distillate fuels are refined from crude oil and are commonly referred to as diesel fuel, furnace oil, gas oil, or kerosene.

2.2.4 Marine diesel oil

Many different names are used for marine diesel fuels, which can often cause a misunderstanding. Four types of marine diesel fuel are generally recognized and available at bunkering ports around the world. However, not all of the types are available at every station.

2.2.4.1 Gas Oil

This is a light distillate fuel which does not contain any residual fuel. Gas oil is approximately ASTM No. 1 diesel fuel.

2.2.4.2 Marine diesel

This is a distillate fuel that boils at a higher temperature than gas oil. The fuel varies from ASTM No. 2 diesel fuel to ASTM No. 4 diesel fuel. The composition can vary within the following range: ASTM No. 2 diesel fuel, No. 2 that is contaminated with heavier fuel in the bottom of the tanker, and No. 2 that is blended with as much as 20 % residual fuel.

2.2.4.3 Blended fuel oil

This is a blend of distillate and residual fuel. This fuel is blended to the viscosity that is requested by the operator or the engine manufacturer. Blended fuel is not recommended for use in Cat engines that are configured to use distillate fuel.

©2025 Caterpillar All rights reserved

Caterpillar: Confidential Green

2.2.4.4 Residual fuel

This is residue from the distillation of crude oil in a refinery. DO NOT use residual fuel in Cat engines that are configured to use distillate fuel.

2.2.4.5 Aircraft jet fuels and kerosene-type fuels

Aircraft jet fuels and kerosene type fuels may be used as a diesel engine fuel provided they meet acceptable limits. Adequate viscosity, particularly with kerosene type fuels is a major concern. For Cat engine fuel systems, a minimum viscosity of 1.4 cSt at 38°C (100°F) is required at the engine transfer pump to properly lubricate fuel system components. Kerosene type fuels have lower energy content than diesel fuels and therefore will produce less peak power output and/or will require more fuel volume to do an equivalent amount of work.

2.2.4.6 Biodiesel

Biodiesel is a fuel that can be made from a variety of sources. Soybean oil and rapeseed oil are the primary sources, but alternate base stocks may include animal tallow, waste cooking oil, or a variety of other feedstocks.

In original forms, these oils are not suitable for use as a fuel in compression engines; they must first be esterified. Without esterification, these oils will gel in the crankcase and the fuel tank.

2.2.4.7 Pyrolysis fuels

A particular family of renewable/alternative fuels, known as pyrolysis fuels, are typically NOT suitable for use in in modern diesel engines. Pyrolysis fuels can be obtained from various resources including wood, used tires, plastic, etc. Pyrolysis fuels in their raw form do not meet all the requirements in Table 1, "ASTM D975" and/or "EN 590"specifications.

These fuels have to be upgraded in order to produce a hydrocarbon product that meets all requirements defined in these specifications. Upgrading can include fractionation to remove volatiles, hydro-desulfurization, hydrotreating etc.

Where the pyrolysis fuel is obtained from wood, our experience has been that the liquid obtained contains high oxygen content (>10%), has high acidity (pH~1) and does not meet distillation, lubricity, and cetane requirements.

Use of this fuel is likely to lead to severe impairment and wear in the fuel system. Suitable upgrading would likely involve, at a minimum, hydro-deoxygenation, fractionation and other hydrotreating.

©2025 Caterpillar All rights reserved

Caterpillar: Confidential Green

Where the pyrolysis fuel is obtained from waste plastic, experience has shown the distillation, lubricity, cetane, and sulfur requirements are not met. Use of this fuel is likely to lead to impaired function of the fuel system and aftertreatment systems. Suitable upgrading would likely involve, at a minimum, fractionation and desulfurization and other hydrotreating.

Upgraded pyrolysis fuels that meet Cat Diesel Fuel specification in Table 1, “ASTM D975” and/or “EN 590” specifications can be considered for use in Cat diesel engines. Refer to this special publication for guidelines and requirements for fuels acceptable in Cat engines. Refer to your Cat dealer for questions.

2.2.4.8 Ultra low sulfur diesel (ULSD)

Ultra low sulfur diesel represents distillate fuels with ≤15 ppm sulfur. It has been developed to reduce particulate engine emissions.

2.3 Diesel fuel characteristics

The following information describes the basic fuel characteristics and their relation to engine performance.

- Cetane Number: Index of ignition quality determined by comparing with fuels used as standards for high and low cetane numbers. The higher the cetane number is the shorter the ignition delay period which affects warm-up, combustion, cold start, and exhaust smoke density.
- Sulfur: Sulfur is an element that occurs naturally in all crude oils, and when burned in the combustion chamber, can form oxides of sulfur. These can react with water vapor to create sulfuric acid, which can cause severe engine damage. High sulfur content requires usage of high Total Base Number (TBN) oils or shortening of the oil change periods.
- Gravity: An index of weight of a measured volume of fuel. Lower American Petroleum Institute (API) ratings indicate heavier fuel containing greater heat content.
- Viscosity: A time measure to resistance of flow. High viscosities cause poor fuel atomization thereby decreasing combustion efficiency. Low viscosity may not provide adequate lubrication to fuel system components.
- Distillation: This involves heating crude to relatively high temperatures. Vapor drawn at various temperatures produce fuels of different types. Lighter fuels, such as gasoline, are drawn off first and heavier fuels last. It has an influence on viscosity of the fuel and the BTU content, which affects exhaust and smoke, starting and power output.

©2025 Caterpillar All rights reserved

Caterpillar: Confidential Green

- Flash Point: Lowest temperature at which fuel will give off sufficient vapor to ignite when flame is applied.
- Pour Point: Is the temperature which is 3°C (5°F) above the temperature where the fuel just fails to flow or turns solid.
- Cloud Point: The temperature at which a cloud or a haze appears in the fuel. This will happen when the temperature falls below the melting point of waxes or paraffins that occur naturally in petroleum products.
- Water and Sediment: Percentage by volume of water and foreign material removed by centrifuging.
- Carbon Residue: Percentage by weight of dry carbon remaining when fuel is burned until no liquid remains.
- Ash: Percentage by weight of dirt, dust, sand, and other foreign matter remaining after combustion.
- Corrosion: A polished copper strip is immersed in fuel for three hours at 50°C (122°F). Fuel imparting more than slight discoloration is rejected.

©2025 Caterpillar All rights reserved

Caterpillar: Confidential Green

3 Diesel Fuel Selection

Fuel should always be selected based on the requirements set forth in the Engine specific Operation and Maintenance Manual. The information and charts below are for reference only. The fuels recommended for use in Cat diesel engines are normally No. 2-D diesel fuel and No. 2 fuel oil, although No. 1 grades are also acceptable. The tables below list the worldwide fuel standards which meet Caterpillar requirements.

Figure 3.1 **Worldwide fuel standards accepted for Cat diesel engines**

Standard	Name	Description
American	ASTM D975	No. 1-D & No. 2-D diesel fuel oils
	ASTM D396	No. 1 & No. 2 fuel oils
	ASTM D2880	No. 1-GT & No. 2-GT gas turbine fuels
British	BS 2869	Classes A1, A2, & B2 engine fuels
	BS 2869	Classes C2 & D burner fuels
West German	DIN 51601	Diesel fuel
	DIN 51603	Heating oil El
Australian	AS 3570	Automotive diesel fuel
Japanese	JIS K2204	Types 1(spl), 1, 2, 3, & 4(spl) gas oil
U.S. Government	W-F-800C	DF-1, DF-2 Conus, & DF-20 Conus diesel fuel
	W-F-815C	FS-1 & FS-2 burner fuel oil
U.S. Military	MIL-L-16884G	Marine oil

Figure 3.2 **Jet fuel and kerosene fuels accepted for Cat diesel engines**

Name	Description
ASTM D1655-80	Aviation turbine fuel (JET A-1)
MIL-T-5624L	Aviation turbine fuel (JP-5) NATO Code No. F-44
MILT-T-83133B	Aviation turbine fuel (JP-8) NATO Code No. F-34

©2025 Caterpillar All rights reserved

4 Diesel Fuel Systems

The fuel system on a diesel engine is a highly specialized set of components which must deliver the correct amount of fuel to the cylinder at the precise moment it is needed. A well-designed fuel system enables the engine to produce maximum power at maximum efficiency with a minimum of exhaust emissions.

Today's diesel injectors must develop very high injection pressures to function with modern high compression ratio engine designs. They must also control the start and duration of injection within milliseconds to perform at the level demanded by engine customers. These precision injectors require an adequate supply of clean, stable fuel for proper operation. This requirement in turn demands careful attention to the fuel storage and handling systems specified for each installation.

This section discusses the various fuel systems available on current Cat diesel engines, details the numerous fuel storage and handling system options available for diesel fuels, and outlines the advantages, disadvantages, and special considerations which accompany each system.

The basic fuel system, common to all Cat diesel engines, includes an engine driven fuel transfer pump, a secondary fuel filter, unit fuel injectors and a fuel pressure regulator. Optional Caterpillar supplied fuel system components include flexible hoses, a manual fuel priming pump, and a duplex primary fuel strainer.

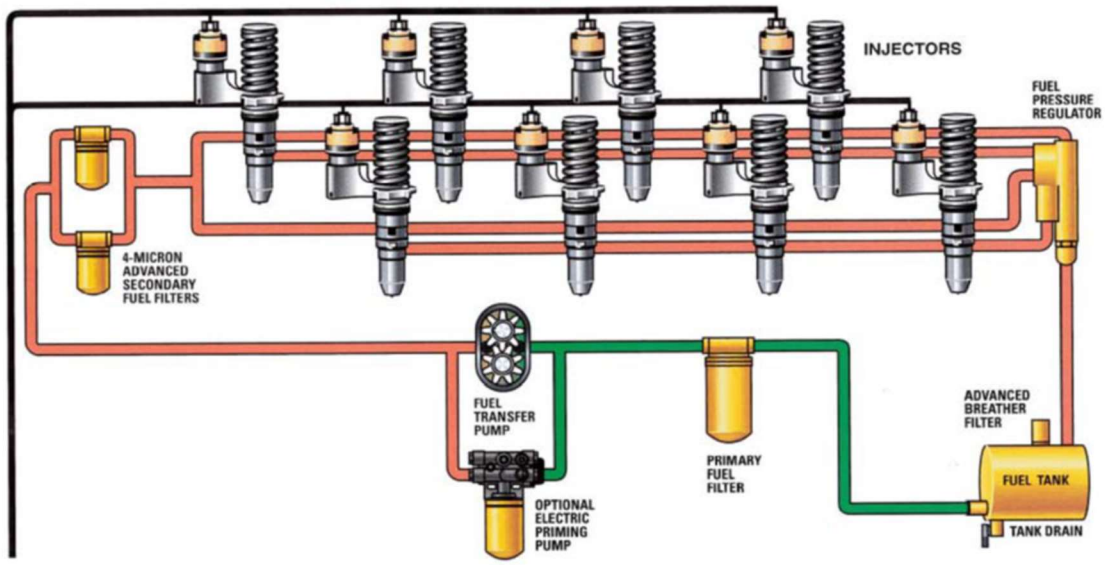

Figure 4.1 **Schematic of a basic diesel fuel system**

©2025 Caterpillar All rights reserved

Caterpillar: Confidential Green

The engine driven transfer pump delivers fuel to the unit injectors via the secondary fuel filter. The pump is equipped with a pump-mounted safety valve and the fuel flow at rated rpm is listed in the technical data and varies with engine speed.

The unit injector, either mechanically or hydraulically actuated, combines the functions of pumping, metering, and injecting into a single unit. It is located near the center of the combustion chamber in each cylinder head, between the rocker arms. External manifolds supply fuel from the transfer pump to the injectors, eliminating the need for high pressure fuel lines. Fuel continuously circulates through the injectors, and the excess fuel that is not used for combustion cools the injectors and is returned to the fuel tank via the pressure regulating valve. This excess fuel also aids in the purging of air from the system.

The fuel delivery pressure to the injectors is controlled by a pressure regulating valve. The pressure regulator must be adjusted at the installation site in order to provide the proper fuel pressure to the injectors.

The manual fuel priming pump is recommended if no electrical priming pump is available. The manual pump helps to bleed air from the fuel piping before initial engine operation and following engine maintenance such as filter element changes and injector replacement.

Caterpillar also recommends the use of a duplex primary fuel filter prior to the engine driven fuel transfer pump. This filter is available from Caterpillar via custom quote. When used, the duplex primary fuel filter is installed, remotely from the engine, in the fuel transfer pump suction piping.

4.1 MUI fuel system

The mechanically actuated and controlled unit injectors (MUI) use the engine camshaft and push rods to generate fuel injection pressure, and a mechanical linkage system to control the amount of fuel injected into the cylinders. The mechanical linkage system connects the governor to the fuel rack, which allows the fuel rate to the engine to be controlled in relation to the varying engine loads.

4.2 MEUI fuel system

The mechanically actuated electronically controlled unit injectors (MEUI), formerly known as Electronic Unit Injectors (EUI), also use the engine camshaft and push rods to generate fuel injection pressure, but use an electronic control module (ECM) to control the amount of fuel injected into the cylinders. A solenoid on each injector receives voltage signals from the ECM to become energized. The injectors will inject fuel only while the injector solenoid is energized.

©2025 Caterpillar All rights reserved

Caterpillar: Confidential Green

The ECM controls the amount of fuel that is injected by varying the signals that are sent to the injectors. By controlling the timing and the duration of the voltage signal, the ECM can control injection timing and the amount of fuel that is injected.

4.3 HEUI fuel system

The hydraulically actuated electronically controlled unit injectors (HEUI) use a hydraulic pump and engine oil to generate fuel injection pressure, and an ECM to control the pressure and amount of fuel injected into the cylinders.

The operation of the HEUI fuel system is completely different from any other type of fuel system that is actuated mechanically. The HEUI fuel system is completely free of adjustment. Changes in performance are made by installing different software in the ECM.

4.4 Common rail fuel system

Unlike the MEUI fuel system, in a common rail fuel system injection pressure is created external to the unit injectors in a high-pressure fuel pump which is driven off the engine. The pump pressurizes a high-pressure fuel manifold that runs along both sides of the engine, feeding high pressure fuel to the injectors. The electronic fuel injectors at each cylinder control the delivery and timing of the fuel injection(s). Similar to some other systems, the common rail fuel system has capability of multiple injections for a given combustion event.

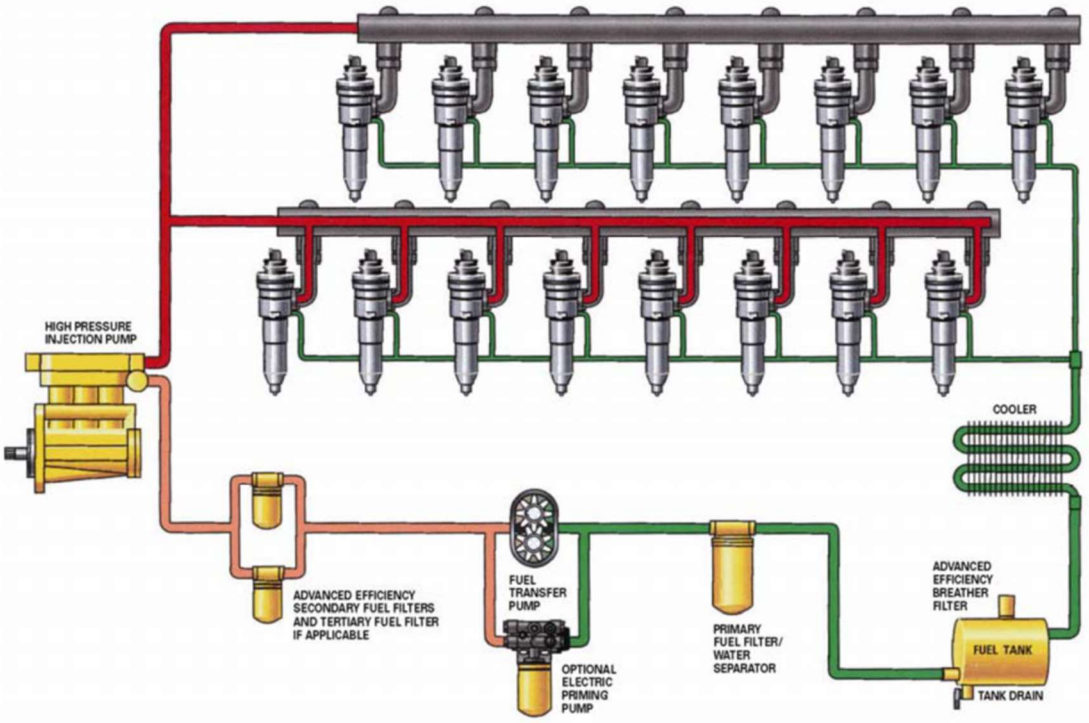

Figure 4.2 **Schematic of a common rail diesel fuel system**

©2025 Caterpillar All rights reserved

Caterpillar: Confidential Green

The main components of a common rail system include the high-pressure pump, the high-pressure lines and rail system, and the injectors. The low-pressure fuel system utilizes similar components to the unit injector fuel system.

The common rail fuel system does not continually circulate fuel through the entire system like the unit injector fuel system. Instead, small amounts of fuel are bypassed during the injection event. Due to the very high pressure in the fuel manifold, more heat is put into the fuel than on previous systems. Because of the additional heat added to the fuel, it is critical that the fuel inlet temperature is maintained within guidelines provided for the engine model. Recommended, and sometimes required, is the use of a fuel cooler to maintain the appropriate inlet fuel temperature. Otherwise, the overheated fuel will have very low viscosity and film strength which makes the fuel system components, especially the injectors, more susceptible to damage from fuel contaminants and wear, hence the importance of proper filtration practices on common rail engines.

4.5 ACERT technology

Caterpillar ACERT Technology improves diesel engine performance. This technology provides precise control over a range of combustion variables, which can be regulated to produce higher performance with fewer emissions. This technology works with the MEUI, HEUI and Common Rail fuel systems.

©2025 Caterpillar All rights reserved

Caterpillar: Confidential Green

5 Diesel Fuel System Design Considerations

Diesel fuel supply systems must ensure continuous and clean supply of fuel to the engine's fuel system. The recommended diesel fuel supply system typically has three major components: a fuel storage system, a fuel transfer system, and a fuel filtration system. The three component systems provide clean operating fuel to the engine.

5.1 Fuel storage systems

Bulk fuel is usually stored in large main storage tanks and transferred to smaller auxiliary tanks (service tanks or day tanks) near engines by electric motor-driven pumps. If auxiliary tanks are not necessary, the main fuel tank must provide a ready fuel supply to the engine-mounted transfer pump.

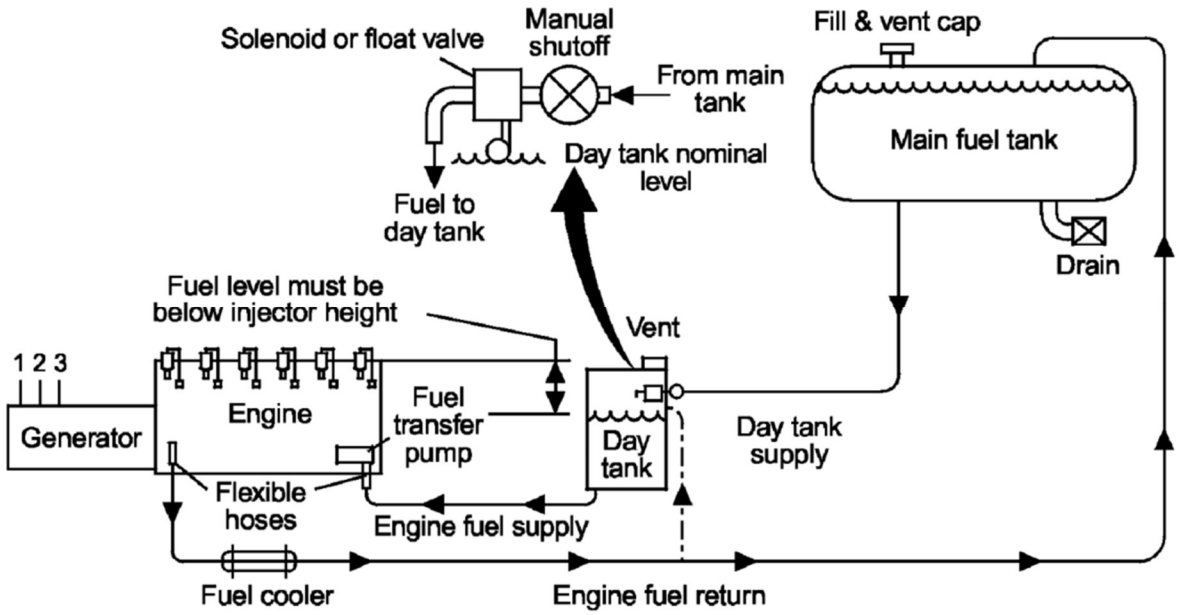

Figure 5.1 **Installation example with main and auxiliary fuel tanks**

5.1.1 Main fuel tank

The main fuel tank represents the primary fuel reservoir in all applications, and must have adequate capacity for the intended application. Rule of thumb for tank size is to find the fuel consumption rate at 100% load factor (depending on application: prime, stand-by, etc.) and multiply it with the number of hours between refills. Fuel consumption rates are shown on the technical data sheets for the specific engine. Additionally, 10% should be added to the

©2025 Caterpillar All rights reserved

result; 5% for expansion at the top of the tank, and 5% for sediment settlements at the bottom.

Example:

A power plant with one (1) 3516B diesel generator set, rated for 1145 bkW (1560 bhp) at 100% load. The fuel rate for the engine is 284 L/hr (75 gal/hr) as found in TMI.

The time between tank refills is based on weekly fuel tanker truck deliveries, so refill time is 168 hours.

Solution:

Tank vol. = 284 x 168 x 1.1 = 52,583 L

Tank vol. = 75 x 168 x 1.1 = 12,600 gal

5.1.2 Auxiliary fuel tanks

Note: Additional clarification is needed for C175. Reference TMI and the Special Instruction REHS4726.

Auxiliary fuel tanks, service tanks and day tanks are secondary fuel tanks located between the main fuel tank and the engine. These tanks are required in the following situations.

- The main fuel tank is located on the same level but more than 15 m (50 ft) away.
- The main fuel tank is located 3.7 m (12 ft) or more below the engine.
- The main fuel tank is located above the engine fuel injectors.

Any of the above conditions can cause unsatisfactory engine starting and operation. The purpose of an auxiliary tank is to relieve the fuel pressure “head” from the fuel transfer pump and injection equipment for efficient fuel flow.

A manual fuel priming pump, offered as an attachment, or an electric motor-driver boost pump may allow operation under conditions more severe than those previously described; but where starting dependability is required, Caterpillar recommends the use of an auxiliary fuel tank.

Auxiliary tanks offer convenient and ready fuel storage while providing a settling reservoir for water, sediment, and sludge.

©2025 Caterpillar All rights reserved

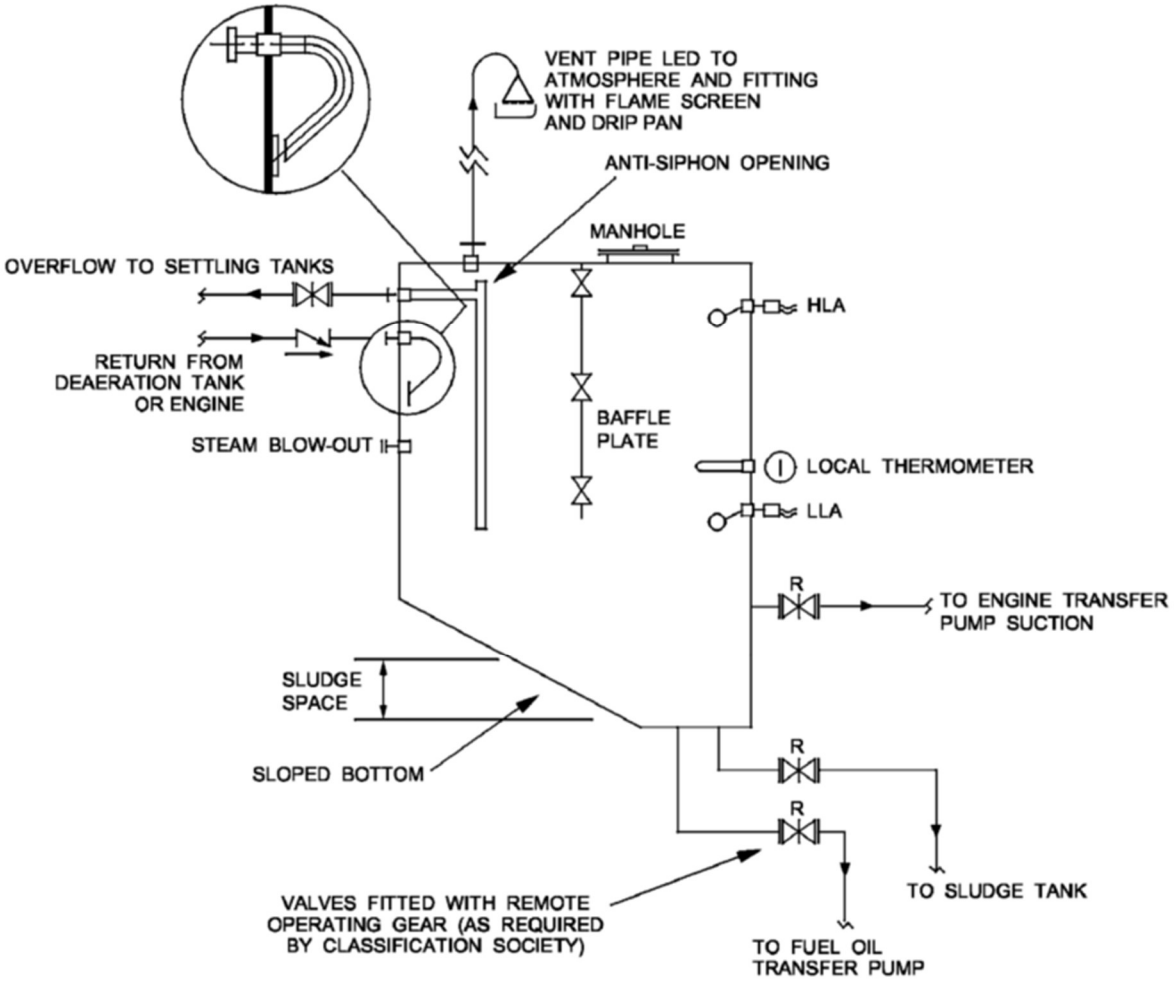

Figure 5.2 **Typical auxiliary fuel tank**

5.1.3 Fuel service tank or day tank

Auxiliary tanks such as fuel service tanks or day tanks can be quite simple. They usually consist of a small metal tank, either floor or wall mounted, in the immediate vicinity of the engine. The tank is usually sized to hold approximately eight hours of fuel, based on the engine's fuel consumption rate at full load.

Refilling can be accomplished by gravity, a hand pump, or with a motor-drive pump. Motor-drive pumps can be either manually or automatically controlled. For convenience and safety, automatic control is usually employed using a float-actuated electric motor driven pump. The refilling pump can be positioned either at the auxiliary tank or at the main tank outlet. The performance capability of the pump must be considered during placement.

©2025 Caterpillar All rights reserved

Features of the auxiliary tank should include the following.

- Fill line - Located above the high fuel level, with outlet baffled to prevent agitation of sediment in the tank.
- Delivery line - Located near the bottom but not so low as to pick up collected sediment or condensation.
- Return line - To carry excess fuel back to the auxiliary tank. Should have its outlet baffled for the reason described above.
- Overflow line - Allows excess fuel to return to the main tank in event of overfilling of the auxiliary tank.
- Vent line - Allows air pressure to equalize as tank is drained or filled (vent cap should be located away from open flame or sparks).
- Drain valve - Allows removal of condensate and sediment.
- Sight glass or float-type gauge - Provides a positive check on fuel level.

To prevent damage to the fuel filter housings, the return line should have no valves or restrictions to allow dangerous pressure buildups.

Flexible rubber hoses, used as fuel return lines, should be supported to prevent closing off over time due to weight of the hose and fuel. Hard fuel lines prevent this problem, but a flexible connection is still required to isolate vibration between the line and the tank.

A nonflammable tank mounting will maximize fire protection.

The overflow line should be at least two pipe sizes larger than the fill line. To simplify engine maintenance, a shut-off valve in the supply line is useful.

The delivery line, carrying the fuel to the engine-mounted fuel transfer pump, and the return line, carrying excess fuel back to the tank, should be no smaller in size than the respective fittings on the engine.

Larger fuel supply and return lines ensure adequate flow if the fuel tank supplies multiple engines over 9 m (30 ft.) away from the tank or when temperatures are low. Consult general dimension drawings for the sizes for each model.

It is important that the fuel return line is sloped down to the tank with no traps or obstructions in the line. If this is not done, the fuel system is prone to air-lock with consequent hard-starting.

The auxiliary tank should be located in a manner that places the level of the fuel (when the tank is full) no higher than the injection valves. On electronic unit injector fuel systems, excessive static pressure on the fuel system can cause fuel to leak from the injectors,

©2025 Caterpillar All rights reserved

leading to fuel dilution of the engine oil. If the injection valves were to leak, this excessive static pressure could also allow fuel to enter the combustion chambers. The capability of the fuel transfer pump must be taken into account such that the total of the pumping effort to lift the fuel (with the tank volume at the “low” level) plus the restriction losses in the transfer line remains less than the fuel pump’s maximum suction lift capability. In fact, a lower total for this (pumping work plus line restriction) will produce better starting, so a design goal would be to minimize this total. Place a float valve or solenoid valve in this type of day tank to regulate the fuel level to keep it below the level of the injectors.

Note: For C175 installations that are set up such that excess fuel from the engine returns to the main tank and also require the fuel supply day tank to be located higher than the main tank, a check valve may be required to be installed in the return line to prevent fuel drainage and loss of prime. Reference REHS4726.

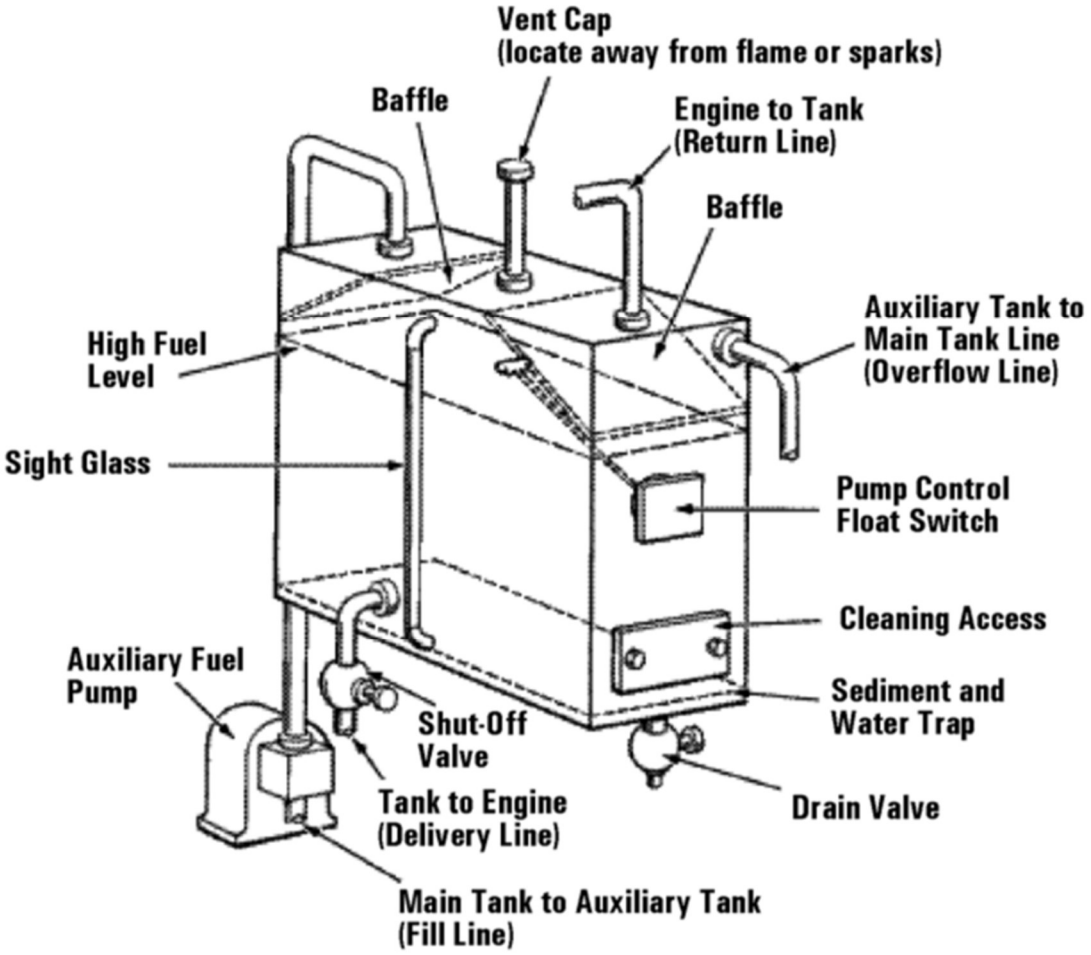

Figure 5.3 **Typical fuel head limiting tank**

SYSTEM DESIGN

©2025 Caterpillar All rights reserved

5.1.4 Fuel head limiting tank

If overhead mounting is unavoidable, include an open/close solenoid shut off valve in the supply line and a 3.45 kPa (0.5 psi) check valve in the return line. Be sure return restriction does not exceed 350 kPa (51 psi) at speed and load.

5.1.5 Base mounted tanks

Base mounted day tanks are sometimes used to provide a convenient and close source of fuel with adequate capacity for four to eight hours of operation. While minimizing the floor space needed for fuel storage, the height of the engine will increase significantly with this option designed to ease maintenance.

Fuel returning to the main tank may, because of its volume, aid with cooling, but returning to the day tank is permissible.

5.2 Fuel tank design considerations

5.2.1 Fuel tank sizing

The fuel tank is typically one of the least expensive items in an installation, and it is wise to provide too much, rather than too little, storage capacity. However, while the minimum required capacities of fuel tanks can be estimated, as outlined in the previous discussion of fuel tanks, some applications may need to meet the requirements of outside organizations, such as the U.S. National Electrical Code (NEC) or National Fire Protection Association (NFPA).

5.2.2 Fuel tank material

Fuel tanks made from low carbon rolled steel are best.

Caution: Zinc, either in the form of plating or as a major alloying component, should not be used with diesel fuels. Zinc is unstable in the presence of sulfur, particularly if moisture is present in the fuel. The sludge formed by chemical action is extremely harmful to the engine's internal components.

5.2.3 Fuel tank installation

Large capacity storage tanks allow bulk purchases and minimize dirt contamination. Maintaining full tanks reduces condensation, particularly if fuel is seldom used.

Tanks may be above or below ground level, but high fuel level generally should not exceed the engine injector's height. This prevents possible fuel leakage into cylinders.

©2025 Caterpillar All rights reserved

Above ground tanks provide accessibility, allowing for easy draining of impurities and reducing the danger of ground water contamination.

Underground tanks allow the earth to work as an insulator, limiting radical temperature changes which can cause flow restrictions, condensation, and possible power loss. Seasonal settlings are also avoided when burying the tank below frost line. In underground tanks, the water must be removed by pumping through a tube placed down the fill pipe.

Regulations governing the installation and maintenance of both above and below ground fuel tanks may apply.

Locate storage tank fill tubes for convenience and safety of filling operations. Vents are necessary to relieve air pressure created by filling and prevent vacuum as fuel is consumed.

5.2.4 Fuel tank drains

All fuel tanks should have easily accessible drain connections. Water and sediment that collects in the bottom of the tank must be eliminated regularly. Provide cleanout openings for periodical removal of sediment and trash that settles out of fuel tanks. Well-designed tanks have large enough clean-out openings so the lowest part of the fuel tank can be accessed with cleaning equipment.

5.2.5 Fuel tank grounding

Fuel tanks, both bulk and auxiliary, need to be grounded. This is to improve personal safety and reduce the fire hazard of sparks discharged from static electricity build-up during refueling operations. If the auxiliary tank is mounted to the base of the engine, it will be grounded at the same time as the engine. If the fuel tank is placed away from the engine, the tank must be grounded separately.

5.2.6 Fuel tank maintenance

Fuel has a storage life of approximately one year. This period may vary widely depending upon initial fuel quality, contaminant levels, and storage conditions. To remove water, scale, and bacteria growth, periodic exchange of fuel and filtering/treating is recommended to extend fuel life. Water contamination of fuel during long-term storage provides a medium for bacterial growth, forming a dark slime which:

- Plugs filters
- Deposits on tank walls and pipes
- Swells rubber products that it contacts

©2025 Caterpillar All rights reserved

Sulfur compounds are natural antioxidants, so low sulfur fuels (0.05 percent by weight) degrade quicker in storage.

Diesel fuels oxidize and form gums and varnishes which can plug fuel filters and injectors.

Because microorganism growth occurs in the fuel/water layer, the tank should be designed to minimize this interface, and water bottoms should be drained regularly. Microbiocide additives, either water or fuel soluble, can be added to fresh fuel to inhibit microorganism growth. Consult your local fuel supplier for recommended additives.

In warm climates, large bulk storage diesel fuel requires full filtering every six months to one year. Every two years the fuel should be completely changed to remove water, scale, bacteria growth, oxidized gums/resins, and minimize filter clogging due to fuel separation into components such as asphaltenes.

5.3 Fuel transfer systems

Note: For C175 installations please review REHS4726.

The diesel engine fuel supply, delivery, and governing systems are designed to deliver clean fuel in the precise quantity and time needed to produce the required engine performance.

All connection lines, valves and tanks should be thoroughly cleaned before making final connections to the engine. The entire fuel system external to the engine should be flushed prior to connection to engine and startup.

Caterpillar supplies the engine with a transfer pump and the secondary filter. The customer must provide the primary filter and, if needed, an auxiliary transfer pump. The auxiliary transfer pump is required when the distance, vertically or horizontally, between the day tank and engine exceeds the requirements discussed in Auxiliary Fuel Tanks.

5.3.1 Fuel transfer pumps – engine driven

Cat engine-mounted transfer pumps are positive displacement gear-type or piston-type pumps, with a limited prime and lift capability.

The pump lifts the fuel by displacing air from the suction pipe to the discharge pipe. Low pressure (vacuum) develops in the suction pipe and atmospheric pressure [101 kPa (14.5 psi) at sea level] moves the fuel into the vacuum. However, a perfect vacuum cannot be maintained, and the maximum that a pump can lift is about 5 m (17 ft).

©2025 Caterpillar All rights reserved

Cat fuel pumps' prime and lift capability is 3.7 m (12 ft), but pipe size, routing, and ambient temperature will impact this capability.

To determine if a pump can perform the required lift, the following items must be considered.

1. The vertical distance from the tank to the pump. The distance should be measured from the inlet pump port of the pump to the bottom of the tank.
2. Internal piping system losses reduce the lifting capability. This is based primarily on the size and the total length of the pipes, but also includes the various fittings and valves. As the temperature goes down the resistance goes up. The internal losses can be estimated using the Piping System Basic Information section of the Application & Installation Guide.
3. Elevation has a big impact on the pump's lifting capability. As described above the atmospheric pressure is helping the fuel into the vacuum, but as the elevation gets greater, the atmospheric pressure decreases and the available lift will also decrease. Refer to the table in Figure 5.4.

Note: This table does not apply to C175. Reference instructions in REHS4726.

Figure 5.4 **Table of reference values for lift versus elevation**

Elevation		Atmospheric Pressure		Available Lift	
meters	feet	kPa	Psi	meters	feet
0	0	101.3	14.7	5.18	17.0
305	1000	98.0	14.2	4.87	16.0
610	2000	93.8	13.6	4.70	15.5
915	3000	90.3	13.1	4.57	15.0
1220	4000	86.9	12.6	4.40	14.5
1525	5000	83.4	12.1	4.26	14.0
1830	6000	80.7	11.7	4.10	13.5

5.3.2 Fuel transfer pumps – auxiliary

An auxiliary transfer pump is required when the service tank or day tank is located further away, horizontally or vertically, than the engine driven pump's lift capability.

©2025 Caterpillar All rights reserved

Special considerations must be given to the auxiliary transfer pump when dealing with electronic engines and the 3500 engine family. Refer to technical data for the engine's fuel pump capacity to determine sizing auxiliary fuel transfer pumps.

A primary filter must be installed before the auxiliary pump and as close as possible to the tank.

Note: For C175, primary fuel filters are standard.

In many cases, the auxiliary pump will be driven by an electric motor and therefore needs a regulator valve so that the fuel flow can match the engine speed.

Example:

A power plant with one (1) 3516B diesel generator set, rated for 1145 bkW (1560 bhp) at 100% load. The fuel rate for the engine is 284 L/hr (75 gal/hr) as found in TMI.

The time between tank refills is based on weekly fuel tanker truck deliveries, so refill time is 168 hours.

The fuel tank for this genset is located 22 m (72.2 ft) horizontally and 2.5 m (8.2 ft) vertically (below) from the engine. This situation exceeds the fuel system requirements discussed in Auxiliary Fuel Tanks, therefore, an auxiliary pump is needed.

Solution:

TMI indicates that the fuel flow at rated speed is 1260 L/hr (333 gal/hr) @ 1200 rpm.

The auxiliary transfer pump required for this sample installation must be able to deliver fuel at 1260 L/hr (333 gal/hr) at a pressure of 34.5 kPa (5 psi).

5.3.3 Fuel transfer pumps – emergency

Many marine applications require the capability to connect an emergency fuel oil transfer pump into the engine’s fuel oil system. Cat engines can be provided with these optional connections when necessary.

This is a specific requirement of marine classification societies for seagoing single propulsion engine applications. The purpose is to ensure fuel oil supply in the event of an engine fuel oil pump failure. The emergency fuel oil pump allows the single propulsion engine to operate and the ship to reach port for engine repairs.

Guidelines for emergency fuel oil system operation:

1. Keep pressure drops to a minimum by using short, low restriction lines.

©2025 Caterpillar All rights reserved

2. Use a line size at least as large as the engine connection point.
3. Install a low-restriction strainer in front of the emergency oil pump.
4. Install a low-restriction check valve between the emergency pump discharge and the engine inlet connection.
5. Use a pressure-limiting valve in the emergency system set at the maximum oil pressure limit of the engine.
6. TMI contains flow rates and pressure limits to fulfill minimum engine requirements for full power at rated speeds for Cat engines.

5.4 Fuel piping design considerations

5.4.1 Fuel supply piping

Using shutoff valves in the delivery line may pull air into the system during shutdown and cause hard starting. The engine control system provides adequate shutdown options, but, if a shutdown solenoid is specified in the supply line, it should be timed to close after the engine stops rotating.

The pressure measured in the fuel supply line should be kept below the values shown in TMI.

5.4.2 Fuel return piping

Fuel return piping should normally enter the tank at the top and extend downward, exiting above the fuel level. Inlet and return lines should be separated in the tank as far apart as possible to allow fuel warmed in the engine to dissipate excess heat. Fuel tanks can function as a radiator of sorts, especially in engines that are not equipped with a fuel cooler or engines that use fuel to cool the injectors. Placing return lines and suction lines as far apart as possible provides the most opportunity for cooling. Return line placement is particularly important on smaller tanks and day tanks where the fuel volume is allowed to run down.

The fuel return line is under pressure, although not as high as the supply line.

Note: Shut-off valves should not be used in fuel return lines. Engine operation with the valve closed will cause damaging pressures.

Engine fuel pressure measured in the fuel return line should be kept below 27 kPa (4 psi), except for the 3300 engine family, which is 20 kPa (3 psi), C175 engine family, which is 60 kPa (8.7 psi) and the 3600 or C280 family, which is 350 kPa (51psi). The location of the day tank and the design of the pipes should accommodate these requirements.

©2025 Caterpillar All rights reserved

5.4.3 Purging

Purging should take place both in the supply and the return line.

5.4.4 Siphoning and check valves

Siphoning can occur in full fuel pipes when the one end of the pipe is placed in the fuel and the other end is below the level of fuel. Siphoning is a flow of fuel in the pipe without the help of pumps. It can occur in supply and return lines.

Siphoning is most likely to occur after a fuel line failure, which can be due to corrosion, fire or a cut from foreign objects or collision force.

The consequences of fuel line siphoning are fuel loss and the creation of a fire hazard. If the fuel ignites and the flow is not stopped, the fire will be more difficult to extinguish.

The fuel supply line has a fuel transfer pump. To avoid siphoning, the pump must be equipped with a check valve. This is in case the pump has been deactivated and the fuel supply line is breeched. For certain C175 installations, a check valve may be necessary. Reference Figure 5.2.

5.4.5 Material

Black iron pipe is best suited for diesel fuel lines. Steel or cast iron valves and fittings are preferred.

CAUTION: Copper and Zinc, either in the form of plating or as a major alloying component, should not be used with diesel fuels. Zinc is unstable in the presence of sulfur, particularly if moisture is present in the fuel. The sludge formed by chemical action is extremely harmful to the engine's internal components.

Pipes, hoses and fittings must be mechanically strong and resistant to deterioration due to age or environmental conditions. They must also be airtight to avoid entry of air into the suction side of the fuel system. A joint, which is leak-tight to fuel, can sometimes allow air to enter the fuel system, causing erratic running and loss of power.

5.4.6 Sizing

Sizing of pipes, hoses and fittings must be adequate to minimize flow loss.

Sizing for a particular application is determined by the supply and return line restrictions. This can be estimated with help from the Piping System Basic Information section of the Application & Installation Guide. The maximum allowable restrictions are published in the TMI.

©2025 Caterpillar All rights reserved

Generally, the supply line carrying fuel to the fuel transfer pump and the return line carrying excess fuel back to the tank should be no smaller in size than the connection fittings on the engine. In addition, the return line should be at least as large as the supply line.

If the fuel tank supplies multiple engines over 9.14 m (30 ft) from the tank, or ambient temperatures are low, larger fuel supply and return lines should be considered to ensure adequate flow. The overflow line from the day tank (or, if no day tank is used, the engine fuel return line) should be one size larger than the supply and return lines.

5.4.7 Routing

Fuel lines should be well routed and clipped with flexible hose connections where relative motion is present. Lines should be routed away from hot surfaces, like manifolds and turbochargers, to avoid fuel heating and potential hazard if a fuel line should fail.

Fuel lines should be routed to avoid formation of traps, which can catch sediments, or pockets of water, which will freeze in cold weather.

Whenever possible, route fuel lines down low, so any potential leakage will be confined to the fuel tank base or floor space. Leaks from overhead fuel system components may fall onto hot machinery, increasing the likelihood of fire danger.

Route fuel lines to avoid crossing paths and walkways. Protect fuel lines from abrasion and damage. Whenever possible, route fuel lines so they are visible for leak checking.

For electronic unit injector fuel systems, supply line pressure must decay to atmospheric pressure after engine shut down. Any sustained static pressure on the fuel system when the engine is not operating will cause excessive fuel to oil dilution.

5.5 Fuel filtration systems

Clean fuel that meets Caterpillar fuel recommendations provides outstanding engine service life and performance. The use of lesser fuels is a compromise and the risk is the user’s responsibility. Fuels not meeting Caterpillar's minimum specifications as described in SEBU 6251 will adversely affect:

- The perceived performance of the combustion system and fuel filters.
- The service life of the fuel injection system, valves, pistons, rings, liners, and bearings.

Even when fuel is handled very carefully, foreign particles will find their way in during handling or storage. Foreign particles could be paint flakes, dust, sand, rust, or microbiologic particles.

©2025 Caterpillar All rights reserved

Clean fuel is necessary for dependable engine performance. Engine filters protect the fuel injection pumps and nozzles and should never be removed or bypassed. The comparison in the figure below demonstrates the very tight clearance in the fuel system and the size of visible particles.

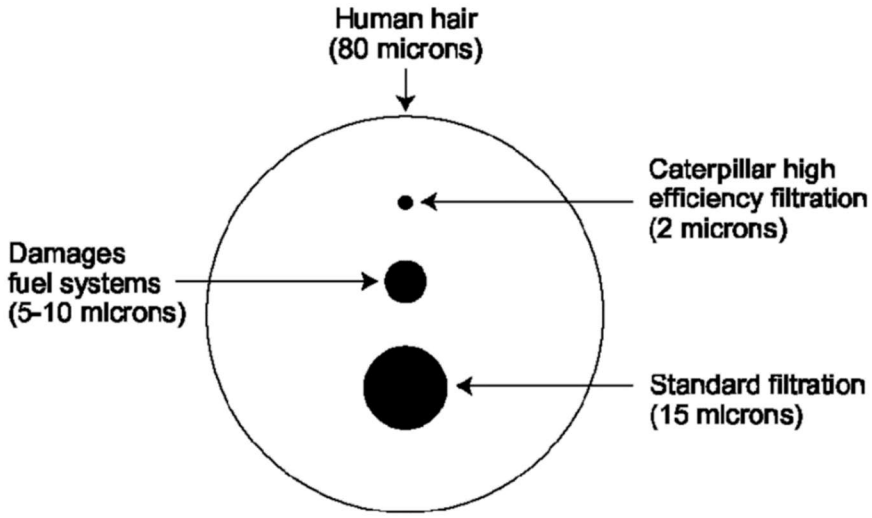

Figure 5.5 **Relative sizes of particles**

Primary filters will extend engine filter and transfer pump life. Water and sediment traps can be included upstream of the transfer pump, but pump flow must not be restricted.

5.5.1 Filter micron ratings

Caterpillar specifies actual filter capability, rupture strength, the capacity for holding dirt, flow resistance, filter area, etc. Caterpillar does not specify filter or filter paper by micron rating. Micron ratings are easily confused for the following reasons:

- The test for micron ratings is not repeatable at different labs. One manufacturer may give a rating of 10 microns (0.00039 in.), another at 2 microns (0.000079 in.) and a third may rate a particular filter media (paper) at 15 microns (0.00059 in.).
- There is no consistent relationship between micron rating and actual filtration efficiency. The entire filter needs to be tested, not just the media (paper).
- The micron rating does not show what happens to a filter over time. The test provides no information about how a filter will stand up under continual use.

©2025 Caterpillar All rights reserved

Micron ratings are over-emphasized; a 10-micron filter will not always stop a 10-micron particle. Many reputable filter manufacturing firms are drifting away from micron ratings to more conclusive tests. Smaller micron ratings are not necessarily better.

If all other factors (area) were equal, a smaller micron number media (paper) has a severe drawback: it has less capacity before plugging and needs to be replaced more often. The size of the pores in the paper needs to be balanced against the costs of the filter replacements.

Common questions are:

- What is the maximum particle size which can pass through Cat filters?
- What is the difference between nominal size and absolute size filters?

For example: A nominal 10 micron filter media (paper) will pass some particles up to about 50 microns in size. Theoretically, an absolute rating of 10 microns will stop all particles larger than 10 microns. In fact, filters with absolute micron ratings of 10 will pass some particles larger than 10 microns due to the irregularity of the paper weave. New filters may pass larger particles than they will after only a few hours of use.

As a rule, Caterpillar fuel filter media (paper) is about 3 microns nominal, 20 microns absolute. Oil filter media (paper) is about 10 microns nominal, 50 microns absolute. These are approximate values only.

Filters are not effectively compared on the basis of micron rating alone. Evaluate filters on the basis of their ability to collect foreign material as a whole.

5.5.2 Primary fuel filter element specification

The specs for primary fuel system elements are as below:

- 10 Micron Nominal Filtration
- For additional information see SENR9620 Fuel Systems Improving Component Durability

5.5.3 Duplex fuel filters

Many Cat engines can be equipped with duplex fuel filters. These filters may be serviced (change elements), without shutting off the engine. There are two types: the symmetrical type, which has two identical filter sets and the main-auxiliary type, which has a main filter set and a smaller capacity auxiliary filter set. A special valve connects the two sets of filters in each type. The valve routes the fuel to be filtered through either or both sets of filters.

Both filter sets can be used simultaneously to extend running time in an emergency.

©2025 Caterpillar All rights reserved

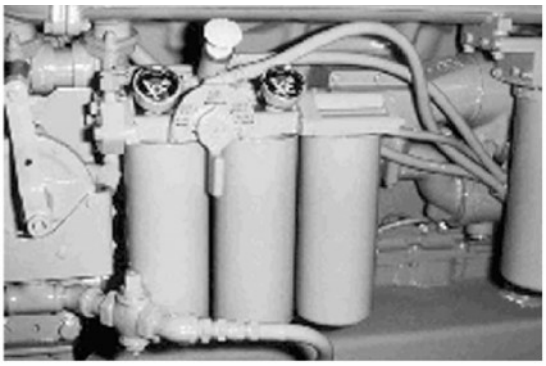

Figure 5.6 **Example of duplex fuel filters**

Duplex filters for fuel and lubricating oil allow extended operation without interruption.

- The main and auxiliary filter systems allow changing either the main or auxiliary filter elements with the engine running under load.
- Generally, the same elements are used in both systems, and are capable of providing adequate filtration for at least 100 hours full load running time with reasonably clean fuel and oil.
- Use pressure gauges to determine when filters must be changed.
- Avoid mounting filters near the radiator fan, because a fuel or oil leak during replacement could create a fire hazard. (As either substance passes through the fan it can be atomized, and therefore easier to ignite.) Plus, coated radiator fins trap dirt which can diminish cooling capability.

5.6 Water separation

Water in the diesel fuel is absolutely unwanted as it will cause damage to the engine and its components. Water appears in the fuel because of condensation, handling, and environmental conditions. Environmental conditions relate to the humidity of some climates. Water in the fuel will be prevalent in humid climates.

Water can impact the fuel system in the following ways.

- If water appears in the injection system, the fuel will not be able to lubricate as it is supposed to and it will lead to early wear.
- Water together with diesel fuel will form microbiological growth which will build up sludge. Sludge will cause wear of the filter system and influence the injection performance.

©2025 Caterpillar All rights reserved

- Iron will oxidize when in contact with water and can infiltrate the fuel. The iron oxide will cause injector wear.

Engines using high injection pressure fuel pumps must be protected from water and sediment in the fuel. It is extremely important to maintain water and sediment levels at or below 0.1%.

Note: Water and sediment collecting in fuel tanks may give the appearance that poor quality fuel was delivered to the site.

Several methods can be used to remove excess water and sediment from the fuel system:

- A water and sediment separator can be installed in the supply line ahead of the transfer pump. The separator must be sized to the handle the fuel being consumed by the engine as well as fuel being returned to the tank.
- Coalescing filter systems work effectively to remove sediment and water. If the level in the day tank is not maintained at a consistent level, install them between the main tank and the day tank. If proper day tank levels are maintained, a smaller system can be used between the main tank and the day tank to clean only the fuel being burned. These filters can plug and careful attention must be given to fuel pressure levels at the injectors to guard against misfiring.
- A centrifuge system can be used, particularly if the fuel quality consistently falls below the defined limits discussed in this guide.

5.6.1 Centrifuges

The centrifuge represents the most expensive and complex method of water separation, but it is the most effective. It is used extensively in marine, offshore and power generation applications where a continuous power supply is essential, and the continuous supply of clean fuel cannot be left to chance.

A centrifuge manufacturer should be consulted to determine the proper centrifuge type, size and flow requirements for a specific application. While the figure shows a single centrifuge schematic, many applications will require the use of two centrifuges, with one of the centrifuges acting as a standby.

©2025 Caterpillar All rights reserved

The required flow rate of a centrifuge can be approximated as follows:

$$Q = \frac{P \times b \times 24 \times 1.15}{R \times t}$$

Where:

Q= Flow required, L/hr or gal/hr

P= Total Engine Output, bkW or bhp

b= Fuel Consumption, g/bkW-hr or lb/bhp-hr

R= Density of fuel, kg/m3 or lb/gal

T= Daily separating time in automatic operation: 23 hr

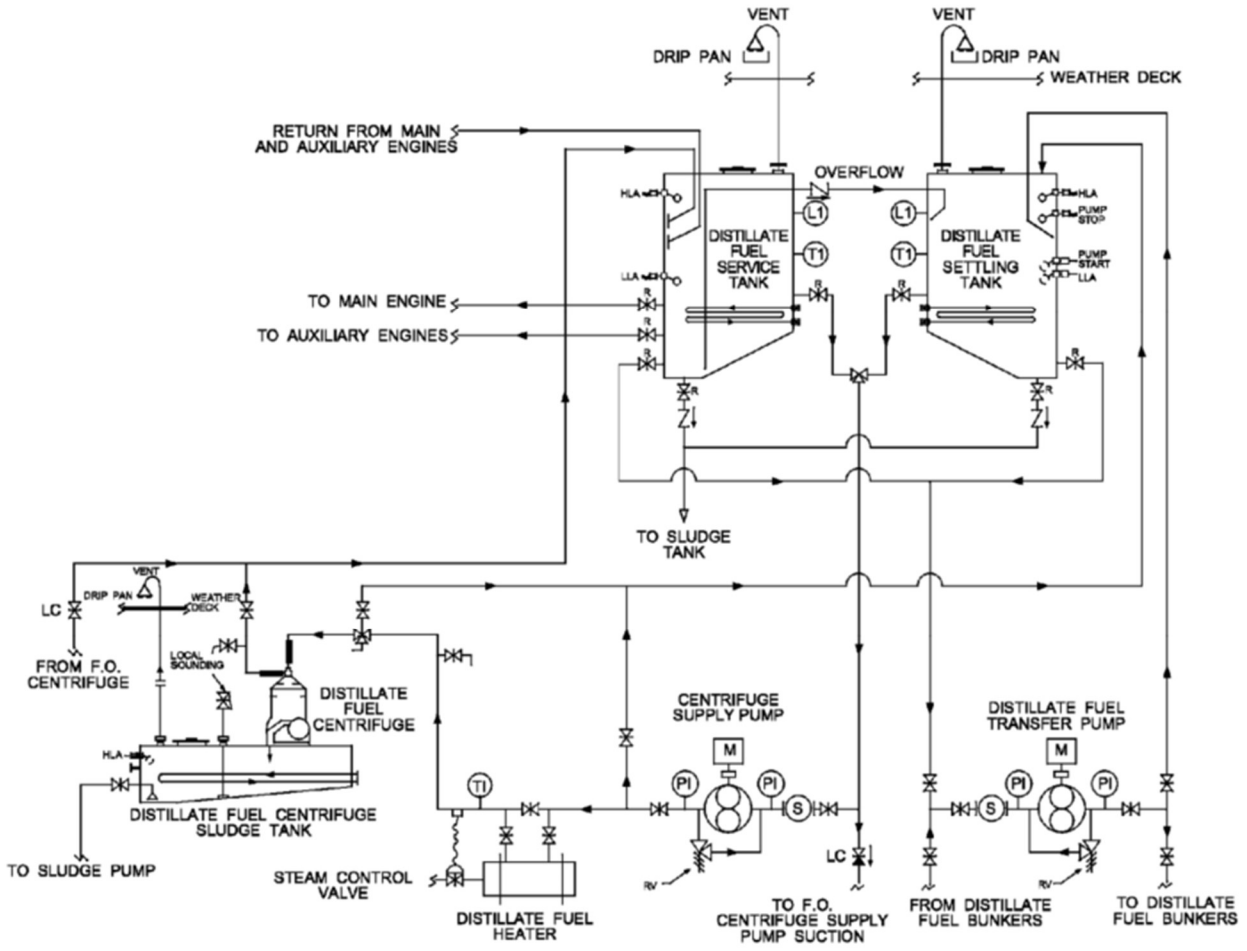

Figure 5.7 **Typical distillate fuel centrifuge system**

SYSTEM DESIGN

©2025 Caterpillar All rights reserved

Centrifuge seal water and control air requirements must be specified by the centrifuge manufacturer.

5.6.1.1 Sample points

The centrifuge operating efficiency is checked by drawing samples from both sides of the centrifuge.

5.6.1.2 Suction strainer

Install a simplex strainer ahead of the centrifuge supply pump and use a stainless steel basket with perforations sized nominally at 0.8 mm (0.03125 in) to protect the pump. The strainer body is normally manufactured from cast iron or bronze.

5.6.1.3 Centrifuge supply pump

Mount an electric motor driven supply pump separately from the centrifuge and size it appropriately for the centrifuge flow. The following pump characteristics are provided for guidance:

- Operating pressure - to suit conditions of piping system
- Operating fluid temperature 38°C (100°F)
- Viscosity for sizing pump motor - 500 cSt

5.6.1.4 Centrifuge fuel heater

The heater is sized using the pump capacity and the temperature rise required between the settling tank and the final centrifuge. The heater should be thermostatically controlled and set to maintain fuel temperature to the centrifuge within ± 2°C (± 4°F). The maximum preheating temperature for distillate fuel is 40° to 50°C (104° to 122°F).

©2025 Caterpillar All rights reserved

6 Miscellaneous Fuel System Considerations

6.1 Fuel temperature

The fuel temperature supplied to the engine can affect unit injector life and maximum power capability. Reduced lubrication capability due to high temperature/low viscosity fuel may result in component scuffing. The minimum allowable viscosity at the injectors is 1.4 cSt. A maximum fuel temperature limit of 66°C (150°F) to the unit injectors, regardless of fuel viscosity, prevents coking or gumming of the injectors. The maximum fuel viscosity to the unit injectors of 20 cSt prevents overpressure damage to the injectors.

Maximum fuel temperature limits to the low-pressure fuel transfer pump for Common Rail Fuel systems vary with engine model:

- C175 = 70°C (158°F)
- C7, C9, C15, C18 = 80°C (176°F)

The engines are power set at the factory, and higher fuel temperatures will reduce maximum power capability. The fuel stop power reduction is 1% for each 6°C (10°F) fuel supply temperature increase above the maximum fuel temperature limit. If the engine is operating below the fuel stop limit, the governor will add fuel as required to maintain the required engine speed and power.

6.2 Fuel coolers

As mentioned earlier in the Basic Fuel System description, Cat diesel engine fuel delivery systems are designed to deliver more fuel to the engine than is required for combustion, with the excess being returned to the fuel tanks. This excess fuel, on many engines, is used for cooling and lubricating of the pumps and injection systems and in doing so picks up engine heat and can raise the temperature of the fuel in the tanks.

As previously specified, engine power will be reduced if the fuel temperature exceeds the maximum limit because of the expansion of the fuel (low viscosity). With very low viscosity, the oil loses the capability to lubricate and damage to the injection components will occur.

Proper considerations regarding fuel tank location and size will help temperature control. If the tank is properly located and sized so the accumulated heat will not be objectionable when temperature stabilizes, then nothing more needs to be done. If the stabilized fuel tank temperature is high, the returning fuel should be cooled.

©2025 Caterpillar All rights reserved

The following factors affect the need for fuel cooling equipment.

- Length of periods of continuous operation; If the operating periods are short, the amount of heat returned to the fuel tanks will be relatively small. Fuel coolers are not generally required for engines used in applications requiring intermittent operation.
- Length of time between periods of operation; if the time between periods of operation is long, the heat will have an opportunity to dissipate.
- Volume of the fuel tank; If the volume of the fuel tank is larger than 11 000 L (3,000 gal), it will accept a great deal of heat before the temperature of the fuel leaving the tank increases significantly.
  Note: Day tank sizing is critical to maintain the desired fuel supply temperature. Fuel coolers may be required. For a more detailed discussion of required fuel tank volume, see the Day Tank Sizing section in Appendix 1.
- Ability of the fuel tanks to dissipate heat. In marine applications for instance, fuel in contact with the shell plating, where at least 10% of the inside surface area of the tank is shell plating, the heat will be easily dissipated and the stored fuel temperature will remain within a few degrees of the ambient water temperature.

A plate type heat exchanger may be used with titanium plates for seawater cooling or stainless-steel plates for fresh water cooling. Refer to Sea Water Systems in the Cooling Systems Application and Installation Guide for proper installation and maintenance procedures of fuel cooler in sea water applications.

6.3 Fuel heaters

Just as the ability to remove excess heat from fuel is an important design consideration in some applications, so is the ability to add heat to fuel in applications involving cold environments. Diesel fuel must not be too warm or too cool. Both cases will reduce life.

With mid-distillate No. 1 or No. 2 diesel fuel, cold weather can cause wax crystals to form in the fuel systems, partially or completely blocking fuel flow. The addition of a small amount of heat to the fuel before it flows through the filter(s) can prevent wax problems. The fuel will flow through pumps and lines but not through filters at temperature below the cloud point (where a cloud or haze appears in the fuel).

At temperatures below the pour point (the lowest temperature that fuel will flow or pour), fuel will not flow in lines or pumps. The use of fuel with a pour point above the minimum expected ambient temperature is not recommended. Fuel heaters will often solve cloud point problems but not pour point problems unless applied to the entire fuel storage volume.

©2025 Caterpillar All rights reserved

Consider the following suggestions when applying fuel heaters to Cat engines:

- Fuel heaters should be used when the ambient temperature is below the fuel cloud point. Many types of heaters can be used; however, the fuel should be heated before the first filter in the fuel system. Fuel heaters should not be used when the ambient temperature exceeds 15°C (60°F). Under no condition should the maximum fuel temperature at the outlet of the fuel heater exceed the limit specified on the previous page.
- Heaters used should be capable of handling the maximum fuel flow of the engine. The restriction created should not exceed published levels of the engine (published values for fuel flow and allowable restriction can be found in the TMI).
- Coolant may be taken from taps on the engine when using the engine as a heat source. Care must be taken to assure that coolant shunting to one system does not adversely affect another system, and that both have adequate flow.

CAUTION: Failed water sourced fuel heaters can introduce excessive water into the engine fuel system and cause injector failure.

Maintenance responsibility of this type of heater must be clearly defined.

 Fuel heaters offered by Caterpillar use engine coolant to heat the fuel and prevent the development of solid wax particles.

 When any fuel heater is used and ambient temperatures are below approximately 0°C (32°F), the engine should be started and run at low idle until the engine temperature rises slightly. This allows heat transfer to the fuel before high fuel flow rates at high power output are experienced by the system. This will reduce the possibility of wax plugging the fuel filter shortly after a cold start.

6.4 Partial load operation

Extended operation at low idle or at reduced load may cause increased oil consumption and carbon buildup in the cylinders. Carbon buildup results in a loss of power and/or poor performance. When possible, apply a full load at least on an hourly basis. This will burn excess carbon from the cylinders.

6.5 Burning used crankcase oil

With legislation and ecological pressures, it is becoming increasingly difficult to dispose of used oil. The burning of used crankcase oil in 3600/C280 engines is not recommended due to the detrimental effects on exhaust emissions. However, if ancillary methods of reducing

©2025 Caterpillar All rights reserved

exhaust emissions to acceptable limits are used, or if emissions are not a problem, burning crankcase oil in 3600/C280 engines is possible with the following guidelines.

- It is necessary to collect, store, and dispose of used crankcase oil from engines correctly. It is not acceptable to dump used crankcase oil into the oceans, rivers, and harbors from vessels or offshore drilling and production platform installations. It may be necessary for engine operators to consider burning crankcase oil in their Cat engines. This can be done, providing the precautions below are carefully followed:
- Only diesel engine crankcase oils can be mixed with the diesel engine fuel supply. The ratio of used oil to fuel must not exceed 5%. Premature filter plugging will occur at higher ratios. Under no circumstances should gasoline engine crankcase oil, transmission oils, special hydraulic oils not covered by Caterpillar recommendations, grease, cleaning solvents, etc., be mixed with the diesel fuel. Do not use crankcase oils containing water or antifreeze from engine coolant leaks or poor storage practices.
- Adequate mixing is essential. Lube oil and fuel oil, once mixed, will combine and not separate. Mix used filtered crankcase oil with an equal amount of fuel, then add the 50-50 blend to the supply tank before new fuel is added (maintaining the 5% used oil-to-fuel ratio). This procedure should normally provide sufficient mixing. Failure to achieve adequate mixing will result in premature filter plugging by slugs of undiluted oil.

  Note: Review SEBU6251 for fuel specifications
- Filter or centrifuge used oil before putting it in the fuel tanks to prevent premature fuel filter plugging, accelerated wear, or plugging of fuel system parts. Soot, dirt, metal, and residue particles larger than 5 microns (0.000197 in.) should be removed by this process. If filtering or centrifuging is not used before adding the oil to the fuel, primary filters with 5 microns (0.000197 in.) capability must be located between the fuel supply and engine. These will require frequent servicing.
- Clean handling techniques of the used crankcase oils are essential to prevent introducing contaminants from outside sources into the diesel fuel supply. Care must be taken in collecting, storing and transporting the used crankcase oil to the diesel fuel tanks. Diesel fuel day tank sight glasses may become blackened in time due to the carbon content in the crankcase oil. Ash content of the lube oil added to the fuel may also cause accumulation of turbocharger and valve deposits more rapidly than normal.

©2025 Caterpillar All rights reserved

6.6 Continuous blending

If the installation warrants, used lubricating oil can be blended and used in the engine in a continuous manner. The normal method uses a centrifuge module similar to the one shown earlier. The following information describes this system:

Centrifuge No. 1

Engine crankcase oil is continuously centrifuged except the clean waste oil tank is at which time the dirty waste oil is centrifuged and directed to the clean waste oil tank.

Centrifuge No. 2

Distillate fuel/oil mixture day tank is continually centrifuged.

Metering Pump

Adds up to 5% clean waste oil to the distillate fuel (from the main supply tank) when the day tank low level switch calls for more fuel.

Static Mixer

Runs when the metering pump is on to insure a proper homogeneous mixture of the fuel and clean waste oil. The centrifuge module is electronically controlled and includes the components within the dotted line as shown in the figure below. Size the system for appropriate fuel delivery.

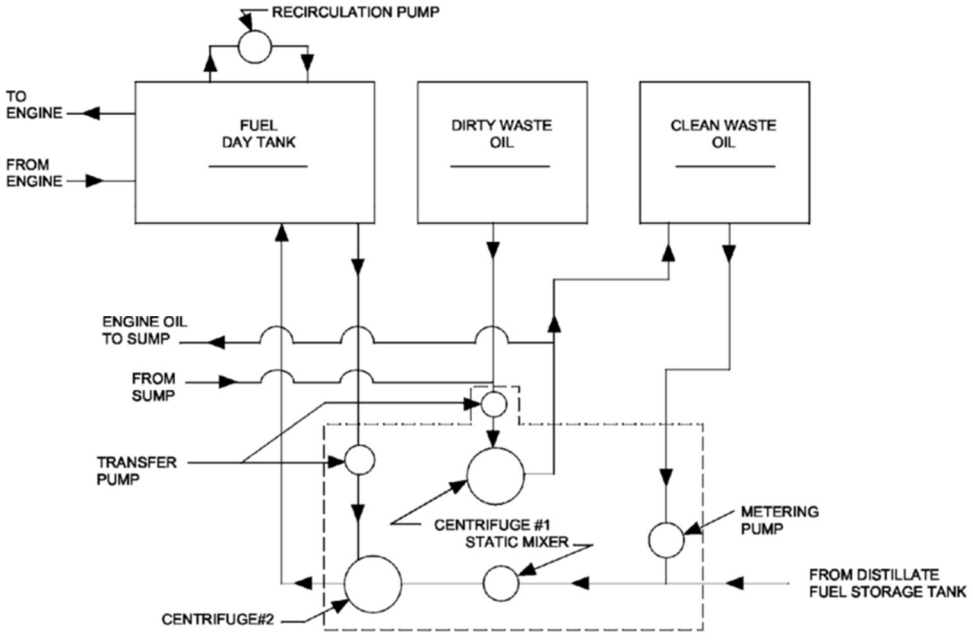

Figure 6.1 **Example of a continuous blending system**

©2025 Caterpillar All rights reserved

7 Fuel Conservation Practices

Fuel costs typically represent the single highest operating cost associated with any diesel engine application. This has promoted various fuel conservation practices that can usually be applied to all applications.

- Avoid fuel spillage. Do not overfill the fuel tank. Fuel expands when warm and may overflow, especially when tank is not designed correctly.
- Operate the engine with a good electrical system. One bad cell in a battery will overwork the alternator, consuming more engine horsepower and fuel. A poor electrical system can also lead to hard starting, which encourages excessive idling.
- Size the engine or generator set to the job. Engines operate more efficiently at relatively high load factors.
- Do not increase fuel settings to obtain more power.
- Make sure all air hoses and connections do not leak. Leaks keep the compressor working unnecessarily.
- Make sure the turbocharger is turning freely so that proper air-fuel ratio is maintained. A clean burning exhaust should indicate these items are functioning correctly.
- Operate the engine with a thermostat all year; cold engines consume more fuel and wear out more quickly.
- Keep air cleaners clean. Use an air cleaner restriction indicator to avoid guessing at air cleaner condition.

©2025 Caterpillar All rights reserved

Appendix A – Day Tank Sizing (when day tank serves as a heat sink)

The fuel supply temperature must be within specified limits for optimum injector life and maximum power capability.

Fuel systems without fuel coolers rely on the day tank to dissipate the heat of fuel returning from the engine. Day tank temperatures are affected by the following conditions:

- Day tank wetted surface area (including tank bottom)
- Engine(s) fuel consumption rate
- Day tank replenishing level
- Storage tank fuel temperature
- Ambient temperature
- Spaces contiguous to the day tank (void tanks, cofferdams, vessel shell plating, etc.)
- Return fuel temperature

Tank temperature calculation are performed in five steps. The first determines the fuel mass in the tank at each time interval. The second step is based on a fuel mix temperature resulting from the engine driven transfer pump flow rate to the engine and the return flow rate to the day tank. The third step determines the day tank fuel height for each incremental time element. Typically, the calculations will be based upon a 30-60 minute iterative time function. The end point for the calculation is assumed to be when the day tank is refilled. The fourth step approximates the heat transfer from the tank to the surrounding environment due to the temperature difference between the fuel mix temperature and the ambient temperature. This convective heat transfer then determines the resultant tank temperature. The fifth step evaluates the impact of the final fuel supply temperature on the engine's maximum power capability.

The included example calculations should only be used to provide general guidance. If the day tank size is marginal, use a fuel cooler.

To simplify the following calculations, it is assumed the day tank walls are surrounded by free moving air. If the tank walls are contiguous to the shell plating, heat transfer from the day tank will be enhanced. Conversely, if the day tank is bounded by void spaces and cofferdams, heat rejection from the day tank will be retarded. Typically, most day tanks are located with various combinations of the preceding boundary elements. The individual performing the evaluation must be familiar with the installation as well as the fundamental engineering concepts of the formulas used in the calculations.

©2025 Caterpillar All rights reserved

Caterpillar: Confidential Green

A.1 Day Tank Calculations

The following information is required to perform the calculations:

- Engine model
- Engine developed power (MCR or CSR)
- Engine speed
- Brake specific fuel consumption (BSFC)
- Initial day tank fuel temperature
- Storage tank fuel temperature (Make-up)
- Ambient air temperature
- Day tank length, width, and height
- Typical full day tank fuel height (assume 95% of tank capacity)
- Engine fuel transfer pump flow rate (see TMI)
- Fuel heat rejection from the engine (see TMI)
- Incremental time element

A.2 Day Tank Thermal Capacity Calculation

Example:

Application: Single main engine

Engine Model: 3612

Rated Power: 4640 bhp (CSR)

Rated Speed: 900 rpm

BSFC: 0.326 lb/bhp-hr

Initial Day Tank Fuel Temperature = 85°F

Storage Tank Temperature = 85°F

Ambient Air Temperature = 95°F

Day Tank Dimensions:

- Length (L) = 12 ft.
- Width (W) = 8 ft.
- Height (H) = 8.42 ft.

Fuel Height (@ 95% of total Capacity) (H) = 8 ft.

©2025 Caterpillar All rights reserved

Caterpillar: Confidential Green

Engine Fuel Oil Transfer Pump Flow Rate: qxfer = 19.0 gpm

Heat rejection from engine to fuel oil: Q = 1252 Btu/min

Incremental time element: t = 60 min.

Assume that the day tank will be replenished from the fuel storage tanks when the day tank level falls to approximately 50-55% of normal operating capacity. Some of the data above must be converted to other units prior to beginning calculations. The following formulas can be used:

1. Engine driven transfer pump mass flow rate = M_{xfer} (lb/min)
   Assume: #2 DO with an API gravity of 35 (7.1 lb/gal)
   $M_{xfer} = q_{xfer}$ x 7.1 lb/gal = 19.0 gpm x 7.1 lb/gal = 134.9 lb/min

2. Engine burn rate under full load conditions:
   a. Burn rate (gpm) = (BSFC x bhp x 1 hr) / (fuel density x 60 min)
      = (0.326 lb/bhp-hr x 4640 bhp x 1 hr) / (7.1 lb/gal. x 60 min)
      = 3.55 gpm
   b. Fuel mass flow burn rate
      = M_{BR} (lb/min)
      = 3.55 gpm x 7.1 lb/gal
      = 25.21 lb/min

3. Engine fuel return rate under full load conditions:
   a. Fuel return flow rate
      = q_{rtn} (gal/min)
      = supply rate - burn rate
      = 19.0 gpm - 3.55 gpm
      = 15.45 gpm
   b. Fuel return mass flow rate
      = M_{rtn} (lb/min)
      = 15.45 gpm x 7.1 lb/gal
      = 109.70 lb/min

4. ΔT_{ENG} of fuel = (T_{supply} - T_{rtn})
   $\Delta T_{ENG} = Q / (M_{rtn} \times C_p)$
   = 1252 Btu/min / (109.70 lb/min x 0.5 Btu/lb-°F)
   = 22.83°F

©2025 Caterpillar All rights reserved

Caterpillar: Confidential Green

5. 95% capacity of diesel oil day tank, (lb)
   Weight density (p) for #2 diesel oil = 52.42 lb/ft^3
   $M_{DT} = L \times W \times H \times p_{DO}$
   = 12 ft x 8 ft x 8 ft x 52.42 lb/ft^3
   = 40258.6 lb.

Step 1

Calculate the fuel mass in the day tank at specific time intervals:

Day Tank Fuel Quantity = $M_{DT} - (M_{BR} \times t)$

Where:

M_{DT} = Day tank contents at a specific time step (lbs)

M_{BR} = Engine fuel consumption (lb/min)

t = Incremental time step (min)

Assume the day tank is replenished at 55% of initial quantity of fuel. Prepare a table of volumes as shown below.

Figure A.1

Step 1 calculations table

Incremental Time (minutes)	Tank Fuel Quantity (lb)	Capacity (%)
0	40258.6	100.0
60	38746.0	96.2
120	37233.4	92.5
180	35720.8	88.7
240	34208.2	85.0
300	32695.6	81.2
360	31183.0	77.5
420	29670.4	73.7
480	28157.8	69.9
540	26645.2	66.2
600	25132.6	62.4
660	23620.0	58.7
720	22107.4	54.9
Refill	40258.6	100.0

©2025 Caterpillar All rights reserved

Caterpillar: Confidential Green

Step 2

Calculate the fuel oil mix temperature (T_{mix}):

$$T_{mix} = \frac{\left[M_{DT(t-1)} - (M_{xfer} \times t)\right] \times T_{DT(t-1)} + (M_{RTN} \times t) \times (T_{DT(t-1)} + \Delta T_{ENG})}{M_{DT(t-1)} - (M_{BR} \times t)}$$

Where:

M_{DT} = day tank contents at a specific time step (lb)

$M_{DT(t-1)}$ = day tank contents from previous time step (lb)

M_{xfer} = engine transfer pump mass flow rate (lb/min)

M_{RTN} = engine return mass flow rate (lb/min)

t = incremental time step

$T_{DT(t-1)}$ = day tank temperature from previous time step

ΔT_{ENG} = fuel temperature rise across the engine (°F)

M_{BR} = engine fuel consumption (lb/min)

Values for the example calculation:

M_{xfer} = 134.9 lb/min

t = 60 min

$T_{DT(t-1)}$ = initial day tank temperature is used for first iteration = 85°F

M_{RTN} = 109.70 lb/min

ΔT_{ENG} = 22.83°F

M_{BR} = 25.21 lb/min

$$T_{mix} = \frac{[40258.6 - (134.9)(60)](85) + (109.70)(60)(85 + 22.83)}{40258.6 - (25.21)(60)}$$

$$T_{mix} = 88.9°F \; at \; t = 60 \; min$$

This calculation is repeated for each increment (t).

©2025 Caterpillar All rights reserved

Caterpillar: Confidential Green

Prepare a summary table for each increment as shown:

Figure A.2 **Step 2 calculations table**

Incremental Time (minutes)	Mix Temperature (°F)
0	85.0
60	88.9
120	92.9
180	97.1
240	101.5
300	106.1
360	110.9
420	116.0
480	121.3
540	126.9
600	132.9
660	139.3
720	146.1
Refill	

Step 3

Calculate the height of fuel contained in the day tank at t = incremental time step.

$H = M_{DT} / (p \times L \times W)$

Where:

H = Height of fuel in the tank

M_{DT} = Fuel contained in the day tank at each incremental time step

p = Weight density of #2 DO (52.42 lb/ft3)

L = Length of day tank (12 ft)

W = Width of day tank (8 ft)

©2025 Caterpillar All rights reserved

Caterpillar: Confidential Green

Prepare a summary table for each time increment (t) as shown.

Figure A.3 **Step 3 calculations table**

Incremental Time (minutes)	Height in Tank (ft)
0	8.0
60	7.7
120	7.4
180	7.1
240	6.8
300	6.5
360	6.2
420	5.9
480	5.6
540	5.3
600	5.0
660	4.7
720	4.4
Refill	8.0

Step 4

Calculate the heat transferred between the fuel in the day tank and the atmosphere, the ΔT of the fuel in the day tank due to the heat transfer, and the resulting fuel day tank temperature.

a. Heat transferred between the day tank and the atmosphere:

$$Q_{TK} = \left\{ U \times [H \times (2L + 2W) + (L \times W)] \times \left[T_{AMB} - \frac{(T_{MIX} + T_{DT})}{2} \right] \right\} \times t$$

Where:

Q_{TK} = Heat transfer to/from atmosphere (Btu) This considers 6mm (0.25 in) tank boundaries, and the film coefficient for air and oil. The air side film coefficient is predominant when compared to the oil side film. The tank thickness has a negligible effect.

©2025 Caterpillar All rights reserved

Caterpillar: Confidential Green

U = Coefficient of heat transfer, (0.0424 Btu/min•ft^2•°F)

L = day tank length (ft)

W = day tank width (ft)

T_{AMB} = ambient temperature (°F)

T_{MIX} = mix temperature of return fuel and fuel in tank (°F)

T_{DT} = day tank temperature resulting from heat transfer to/from day tank (°F)

t = incremental time step (min)

H = fuel height for specific time step (ft)

b. Temperature change in the day tank resulting from heat to/from day tank:

$\Delta T_{DT} = Q_{TK} / (M_{DT} \times Cp)$

Where:

ΔT_{DT} = temperature change of fuel in the day tank (°F)

Q_{TK} = heat transfer to/from atmosphere (Btu)

M_{DT} = mass of fuel in day tank (lb)

C_P = specific heat of #2 MDO = 0.5 Btu/lb •°F

c. Day tank temperature resulting from heat transfer to/from day tank:

$T_{DT} = T_{MIX} + \Delta T_{DT}$

Where:

T_{DT} = day tank temperature (°F)

T_{MIX} = mix temperature of return fuel and tank fuel (°F)

ΔT_{DT} = temperature change of day tank (°F)

©2025 Caterpillar All rights reserved

Caterpillar: Confidential Green

These three calculations are interdependent in nature. First, Q_{TK} is determined for the first incremental time step. The resulting value for Q_{TK} is then used to compute the ΔT_{DT}. ΔT_{DT} is then used to determine T_{TK}. This process is then repeated for each incremental time step.

Example:

a: $$Q_{TK} = \left\{U \times [H \times (2L + 2W) + (L \times W)] \times \left[T_{AMB} - \frac{(T_{MIX}+T_{DT})}{2}\right]\right\} \times t$$

$$Q_{TK} = \left\{0.0424 \times [7.7(40) + (96)] \times \left[95 - \frac{(88.9 + 85)}{2}\right]\right\} \times 60$$

$$Q_{TK} = 8283.6\ Btu$$

b: $\Delta T_{DT} = Q_{TK} / (M_{DT} \times Cp) = 8283.6\ Btu / [(38746.0\ lb)(0.5\ Btu/lb\ °F)] = 0.43°F$

This is the difference from atmosphere to day tank

c: $T_{DT} = T_{MIX} + \Delta T_{DT} = 88.9°F + 0.43°F = 89.3°F$

This series of calculations is then repeated for the subsequent incremental time steps.

Prepare a summary table for each time increment (t) as shown:

Figure A.4 **Step 4 calculations table**

Incremental Time (minutes)	Heat Rejection to/from Day Tank (Btu)	Temperature Change in Day Tank (°F)	Day Tank Temperature (°F)
0	--	--	85.0
60	8283.6	0.43	89.3
120	4069.7	0.22	93.2
180	-4.0	0.00	97.1
240	-4022.0	-0.24	101.3
300	-7966.3	-0.49	105.6
360	-11818.7	-0.76	110.2
420	-15561.4	-1.05	114..9
480	-19257.8	-1.37	120.0
540	-22802.6	-1.71	125.2
600	-26253.3	-2.09	130.8
660	-29655.5	-2.51	136.8
720	-32973.6	-2.98	143.1
Refill	--	--	116.9

©2025 Caterpillar All rights reserved

Caterpillar: Confidential Green

The last part in Step 4 determine the day tank temperature after refilling ($T_{DT\ refill}$):

$$T_{DT\ refill} = \frac{\left[\left(M_{DT\ full} - M_{DT\ tn}\right) \times T_{MUF}\right] + \left(M_{DT\ tn} \times T_{TK\ n}\right)}{M_{DT\ full}}$$

Where:

$M_{DT\ full}$ = capacity of day tank, (lb)

$M_{DT\ tn}$ = fuel in day tank prior to refilling, (lb)

T_{MUF} = temperature of make-up fuel, (°F)

$T_{TK\ n}$ = temperature of tank fuel prior to refilling, (°F)

Example:

$$T_{DT\ refill} = \frac{[(40258.6 - 22107.4) \times 85] + (22107.4 \times 143.1)}{40258.6}$$

$$T_{DT\ refill} = 116.9°F$$

Step 5

The last step calculates the maximum power capability of the engine at the resultant day tank temperature for each time interval.

Note: The engines are power set at the factory with 30 ±3°C (86 ±5°F) fuel to the engine transfer pump. Higher fuel temperatures reduce maximum power capability. The fuel stop power reduction is 1% for each 5.6°C (10° F) fuel supply temperature increase above 30°C. If the engine is operating below the fuel stop limit, the governor will add fuel as required to maintain the required engine speed and power.

$$P_{corr} = P_{rated} \times \left\{1 - \left[\frac{\left(T_{DT} - T_{ref}\right)}{10°F} \times \frac{1}{100}\right]\right\}$$

Where:

P_{corr} = corrected engine power, bhp

P_{rated} = rated bhp

T_{ref} = 86°F (power setting)

T_{DT} = actual day tank fuel temperature, °F

©2025 Caterpillar All rights reserved

Caterpillar: Confidential Green

Example:

For t = 60, the corrected power of the engine is:

$$P_{corr} = 4640\ bhp \times \left\{1 - \left[\frac{(89.3°F - 86°F)}{10°F} \times \frac{1}{100}\right]\right\}$$

$$P_{corr} = 4625\ bhp$$

A summary table for each increment (t) is also prepared as shown:

Figure A.5 **Step 5 calculations table**

Incremental Time (minutes)	Day Tank Temperature (°F)	Corrected Engine Power (bhp)
0	85.0	--
60	89.3	4625
120	93.2	4607
180	97.1	4588
240	101.3	4569
300	105.6	4549
360	110.2	4528
420	114.9	4506
480	120.0	4482
540	125.2	4458
600	130.8	4432
660	136.8	4405
720	143.1	4375
Refill	116.9	4497

Conclusion

The previous calculations indicate day tank fuel temperatures can have an effect on the maximum power capability of the engine. The example was based upon a fixed pitch propeller application. Typically, a fixed pitch propeller is selected and sized to absorb 85-90% of the engine's name plate rating. In this example, this would equate to 3950-4175 bhp. The lowest calculated corrected power was determined to be 4375 bhp. This would leave a 5-10% power margin and vessel performance would not be affected.

©2025 Caterpillar All rights reserved

Caterpillar: Confidential Green

While vessel performance may not be affected in this example, the maximum fuel temperature of 143.1°F will put the fuel viscosity near or below the minimum allowable viscosity of 1.4 cSt at the injectors, depending on the type of distillate fuel being used. In addition, the temperature of the fuel in the tank after refill is now 116.9°F instead of 85°F as used at the beginning of the iteration. Therefore, continued operation at full load on this fuel tank would cause the fuel temperature to rise even higher than the maximum temperature shown in this iteration. To protect the fuel injectors a fuel cooler should be used in this application, despite the fact that available engine power is still acceptable.

Aside from the impact on engine performance, maximum fuel tank temperatures are also established by various marine classification societies and regulatory bodies. Their interest is based upon the increased risks of fire that results from elevated fuel temperatures.

Useful Fuel Formulas and Data

The following information can be useful in sizing fuel coolers and heaters:

Specific Gravity (SG) and Density

API Gravity = (141.5/SG) - 131.5 SG = 141.5/(API Gravity + 131.5)

SG = Density / 998 kg/m^3 Density (kg/m^3) = SG x 998 kg/m^3

Density (lbm/gal)= SG x 998 kg/m^3 x (1 lbm/ft^3 / 16.02 kg/m^3) x (1 ft^3 / 7.48 gal)

Mass Flow Rate

M (kg/sec) = Density (kg/m^3) x (1 m^3 / 1000 L) x [Flow Rate (L/min) / 60 sec/min]

M (lbm/min) = Density (lbm/gal) x Flow Rate (gal/min)

Specific Heat (c_p) - Typical specific heat values, two different API gravity fuels (Btu/lbm-°F)

API Gravity	38°C (100°F)	60°C (140°F)	82°C (180°F)	93°C (200°F)	115°C (240°F)
30	0.463	0.482	0.501	0.511	0.530
40	0.477	0.497	0.516	0.526	0.546

0.5461 Btu/lbm-°F = 4.186 kJ/kg-°C

Heat Rejection

Q (kW) = M (kg/sec) x cp (kJ/kg-°C) x ΔT (°C)

Q (Btu/min) = M (lbm/min) x cp (Btu/lbm-°F) x ΔT (°F)

©2025 Caterpillar All rights reserved

Caterpillar: Confidential Green

Appendix B – Crude Oil Fuel

Note: Crude oils are not suitable for use as fuel in all engine applications. The suitability of these fuels for use is determined on a case-by-case basis. A complete fuel analysis is required.

NOTICE: Use of permissible crude oil fuels can result in higher maintenance costs and in reduced engine service life.

NOTICE: Caterpillar does not recommend using any of the heavier fractions such as residuals or bottoms in engines that are configured to use distillate diesel fuel. Failure to follow this recommendation will result in severe wear of components and engine failure.

Residual fuels or blended fuels with residuals are unsuitable because they have a high viscosity range, low ignition quality and high vanadium and sodium contents that shorten engine life. Such fuels may cause high wear rates in the fuel system, on the piston rings, cylinder liners, and exhaust valves. Also, filter problems and deposits in the piston ring belt may be evidenced.

Special crude oil fuel pretreatment equipment may be required and is available from suppliers of fuel treatment equipment. Also, it may be essential to start and stop the engine on a better quality, ASTM No. 2-D type fuel to prevent plugging and sticking fuel system components and to permit satisfactory starting capability.

The same diesel power ratings may not always apply for Cat engines burning crude oil. Reasonable engine service life can be achieved when proper procedures are followed. However, the greater risks involved make it good practice to include slightly higher than normal maintenance costs when figuring the overall economics to be gained.

A fuel analysis should be performed. Include a distillation curve. Operation at light load is not recommended. On occasion, operation at 50% load has reportedly caused smoking.

Engines for crude oil fuel operation should be equipped with higher temperature thermostats, bypass centrifugal oil filter, and fuel injector pushrod keepers.

B.1 Pretreatment of Crude Oils

The crude may contain excessive amounts of sediment and water that will require removal before they get to the engine. This can usually be accomplished with a settling tank (see figure below), a centrifuge, special filtering equipment, or a combination of these methods. The crude may also contain solid particles of wax at ambient temperature that would plug

©2025 Caterpillar All rights reserved

the filters rapidly. It is impractical to try to remove the wax, but the crude can be heated sufficiently to dissolve it. The amount of heat needed will vary from one crude to another and each situation requires an assessment. Jacket-water heated fuel filters, available from fuel equipment suppliers, are often suitable for heating the crude. If this is not appropriate for your application, an external heating system will be necessary.

The crude oil must not have too high a viscosity. For maximum life and minimum maintenance of the fuel pumping and injection systems, the viscosity of the crude oil in these systems should be within 1.4 to 20 cSt at 104°F (40°C). If the crude's natural viscosity is higher than this, it may be heated or diluted to reduce it. The degree of heating required will vary from one crude oil to another and will have to be established in each case. Another method of reducing viscosity is to blend the original crude with a sufficient amount of lighter distillate material. Again, the blending proportions would have to be determined for each crude oil.

The crude must have a cetane number of at least 40. This brings its distillation characteristics into the picture. The cetane number should be determined by actual engine test because calculated numbers of crude oils are unreliable. The cetane number of a crude oil is a function of its composition. Crude is generally subdivided into fractions by boiling temperatures. The combination of the gasoline and naphtha fractions, which have low cetane numbers, should not exceed 30% of the total crude. The kerosene, distillate, and gas oil fractions combined should make up at least 30% of the total because they have high cetane numbers.

Another problem created by highly volatile crude oils (low initial boiling points) is vapor locking of the fuel system. This situation can be handled by an "air eliminator." This, in some cases, can be an ordinary float-type steam trap inverted, but it should be made of corrosion-resistant materials. It should be located after the auxiliary filters. If the engine is stopped occasionally and allowed to cool, coagulation may build up in this vapor trap and cause it to be inoperative.

The proper oil change recommendation must be made in each case. Many crude oils contain large amounts of material that accelerate lube oil deterioration. For this reason, the standard change period with recommended oils should be reduced by one-half. From this point, the length of change period with crude is determined by sulfur content the same as with distillate fuels. With 0.4-1.0% sulfur, the change period should again be reduced by one-half. When sulfur content exceeds 1.0%, still further reduction is recommended. In many cases, it may be desirable to install a larger capacity lube oil system to avoid short oil changes. The use of Cat S•O•SSM, is strongly recommended.

©2025 Caterpillar All rights reserved

B.2 Crude Oil Maintenance Intervals

Engine inspection intervals should be reduced by 50% when using crude oil as fuel, and maintenance routines should be modified based on the results of these increased inspections.

B.3 Crude Oil Settling Tanks

A great deal of sludge can be removed from crude oil by proper settling. A recommended settling system consists of two cone-bottomed tanks (see figure), each holding a little more than four days usable supply of fuel.

Sludge in the bottom third is discarded before refilling. The tanks must be housed in a heated building, and each fitted with heating coils.

Immediately after filling, hot water is circulated through the heating coil until the tank is heated to 100°F (38°C). The heat is then shut off and the fuel allowed to settle undisturbed for four days.

During this time, fuel is being used from a second tank. Temperature inside the settling tank building should be maintained above 70°F (21°C), and the tanks must be vented outside the building.

A two-day supply of diesel fuel should be maintained for emergency use. This supply can also be used to start and stop engine when the crude oil fuel is highly viscous or heavy with paraffins.

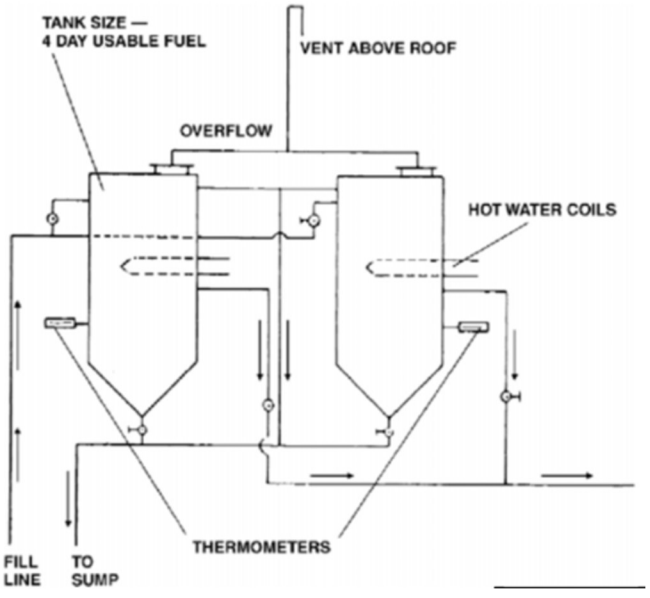

Figure B.1 **Example of a crude oil settling tank system**

©2025 Caterpillar All rights reserved

Figure B.2

Crude Oil Specifications

Specification and ASTM Test Method	Requirements	
Cetane number [1] (ASTM D613) (DI Engines)	Minimum	40
Water and sediment % volume (ASTM D1796)	Maximum	0.5%
Pour point (ASTM D97)	Minimum	10°F (6°C) below ambient temperature
Cloud point (ASTM D97)	Maximum	Not higher than lowest expected ambient temperature
Sulfur (ASTM D3605 or D1552)	Maximum	3% - See reference to adjust oil TBN for sulfur content that is above 1%
Kinematic Viscosity (2)	Minimum	1.4 cSt
	Maximum	20cSt (as delivered to rotary fuel injection pumps) 20cSt (as delivered to other fuel injection pumps)
API gravity (ASTM D287)	Maximum	45
	Minimum	30
Specific gravity (via Standards tables) [3]	Maximum	0.8017%
	Minimum	0.8762%
Gasoline and naphtha fraction fractions boiled off below 392°F (200°C)	Maximum	30%
Kerosene and distillate fraction fractions boiled off between 392°F (200°C) and cracking point	Minimum	30%
Carbon residue (on 10% bottoms) (ASTM D524)	Maximum	3.5%
Distillation - 10%	Maximum	540°F (282°C)
- 90%	Maximum	716°F (380°C)
- cracking	Minimum	60%
- residue (ASTM D86)	Maximum	10%
Reid vapor pressure (ASTM D323)	Maximum	20 psi (138 kPa)
Salt (ASTM D3230)	Maximum	100 lb per 1,000 barrels (220 kg per 200 kL)
Gums and Resins [4] (ASTM D381)	Maximum	5.8 grains per gallon (10 mg per 100 mL)
Copper strip corrosion (ASTM D130)	Maximum	No. 3
Flashpoint °F °C (ASTM D93)	Minimum	legal limit
Ash % weight (ASTM D482)	Maximum	0.1%
Aromatics % (ASTM D1319)	Maximum	35%
Vanadium PPM (ASTM D3605)	Maximum	4 PPM
Sodium PPM (ASTM D3605)	Maximum	10 PPM
Nickel PPM (ASTM D3605)	Maximum	1 PPM
Aluminum PPM (ASTM D3605)	Maximum	1 PPM
Silicon PPM (ASTM D3605)	Maximum	1 PPM

PPM = parts per million

©2025 Caterpillar All rights reserved

See notes below.

(1) The cetane number should be determined by actual engine test because calculated numbers of crude oils are unreliable. A higher cetane number fuel may be required for operation at high altitude or in cold weather.

(2) The values of the fuel viscosity are the values as the fuel is delivered to the fuel injection pumps. For ease of comparison, fuels should also meet the minimum and maximum viscosity requirements at 40°C (104°F) that are stated by the use of either the “ASTM D445” test method of the “ISO 3104” test method. If a fuel with a low viscosity is used, cooling of the fuel may be required to maintain 1.4 cSt or greater viscosity at the fuel injection pump. Fuels with a high viscosity might require fuel heaters in order to bring down the viscosity to either 4.5 cSt or less for rotary fuel injection pumps or 20 cSt viscosity or less for other fuel injection pumps.

(3) Via Standards tables, the equivalent specific gravity using the “ASTM D287” test method temperature of 15.56°C (60°F) for the minimum API gravity of 30 is 0.8762, and for the maximum API gravity of 45 is 0.8017. The equivalent kg/m3 (kilograms per cubic meter) using the “ASTM D287” test method temperature of 15.56°C (60°F) for the minimum API gravity of 30 is 875.7 kg.m3, and for the maximum API gravity of 45 is 801.3 kg/m3.

(4) Follow the test conditions and procedures for gasoline (motor).

NOTICE: These recommendations are subject to change without notice. Contact your local Cat dealer for the most up-to-date fluids recommendations.

©2025 Caterpillar All rights reserved

Appendix C – C175 Emergency Standby Gen Set Start Assurance Requirements

Note: Requirements and values stated in the document are C175 specific, refer to TMI for safe source of engine specific requirements and information.

C.1 Supply and return line design

A constant horizontal or upwards slope must be maintained from the tank to the engine connection. This practice aids in purging out any air that could get trapped in the lines by allowing it to rise up to the engine filter where it can be purged out to the return section of the on-engine fuel system.

The sizing must be adequate, and routing should minimize the number of fittings, adapters, valves, etc. within the fuel lines routing.

- C175 EP fuel supply line internal diameters must be between 1.5”-2.0” to the engine. Refer to REHS4726 for inlet fuel pressure calculation guidelines.
- Using 45-degree fittings instead of 90-degree fittings will help maintain proper fuel flow velocities in transient situations like emergency load applications.
- An engine being able to maintain rated load is not direct indicator that the fuel supply system is adequate, the engine could still have difficulty accepting large load applications even if the system supports sustained rated load operation.

Pressure and Temperature Requirements

- Supply fuel pressure range as measured at the fuel transfer pump inlet at rated speed and power condition: -27kPa to 70kPa.
    - With Caterpillar supplied primary filters, the minimum pressure at the engine inlet fuel connection prior to the primary filters is -19kPa.
    - If an installation proves difficult to meet the minimum pressure requirement, a boost pump can be added to the system and regulated
- Fuel return to tank pressure range as measured at the HPFP out fitting at rated speed and no-load condition: < 60kPa
- Fuel inlet temperature shall not exceed 70C
    - If the bulk or day tanks aren’t sized large enough to dissipate the necessary heat to keep the fuel below the alarm levels a fuel cooler may need to be included in the system.

©2025 Caterpillar All rights reserved

Caterpillar: Confidential Green

C.2 Tank Design

Standpipes for the fuel supply and return lines should end at the lowest level of the tank that fuel should be taken from.

- Space from the bottom of the tank is required to keep from picking up loose debris that settles on the bottom
- Return lines should be kept as far away from the supply line as possible to minimize localized heat transfer to the supply fuel. Also, keeping the lines separate will minimize the amount of debris picked up by the supply line from the return fuel agitating debris in the tank.
- Return line standpipes below the fuel level will ensure that only fuel is introduced back into the low-pressure fuel system in the event of leak down.
- Having baffles between supply and return allows for better heat dissipation between return and supply and can also help with debris agitation getting into the supply.

Fuel supply inlet check valve (foot valve) should be used on the fuel supply line to minimize the amount of fuel drain back out of the primed fuel lines.

- Drain down can cause air pockets in the fuel supply system that can cause the engine start times to increase in the event of an emergency.
- Foot valves do add restriction to the system and need to be chosen appropriately to maintain fuel transfer pump inlet requirements
- The lowest cracking pressure valve available (>0) is recommended to maintain system pressures within acceptable limits.
- Positioning closest to the supply inlet ensures the most amount of fuel remaining in the system and can help reduce pulses from the engine mounted pumps affecting valve operation.

Tank placement and system design must ensure there is no head pressure from the tank to engine while the engine is not running. This could lead to fuel draining into the oil circuit of the engine.

- Ensure the fuel level in the tank that directly supplies fuel to the engine cannot be above the high-pressure fuel pump. If this is unavoidable, valving needs to be in place to block the flow of fuel from the tank to the engine when the engine is not in operation.
- If a fuel boost pump is used, the control strategy must ensure that the pump cannot be activated while the engine is not in operation.

©2025 Caterpillar All rights reserved

Caterpillar: Confidential Green

THIS PAGE LEFT INTENTIONALLY BLANK

©2025 Caterpillar All rights reserved

THIS PAGE LEFT INTENTIONALLY BLANK

LET'S DO THE WORK.™

Information contained in this publication may be considered confidential. Discretion is recommended when distributing. Materials and specifications are subject to change without notice.

© 2025 Caterpillar. All Rights Reserved. CAT, CATERPILLAR, LET'S DO THE WORK, their respective logos, "Caterpillar Corporate Yellow", the "Power Edge" and Cat "Modern Hex" trade dress as well as corporate and product identity used herein, are trademarks of Caterpillar and may not be used without permission.