APPLICATION AND INSTALLATION GUIDE

EXHAUST SYSTEMS

CAT®

Contents

Exhaust Systems **1**
System Components 2
Exhaust Manifold 2
Dry Manifolds 2
Watercooled Manifolds 2
Air Shielded Watercooled Manifolds 3
Heat Shielding 3
Blankets (Soft Manifold Shields) 3
Hard Wrap (Hard Manifold Shields) 4
Guards and Shields 4
Turbochargers 4
Wastegate 4
Flexible Exhaust Connections 5
Flexible Metal Hose and Bellows 5
Slip Joints 6
Silencer 8
Silencer Rating 8
Silencer Selection 8
Exhaust System Piping 10
Exhaust System Design 10
Exhaust Thimbles 12
Exhaust Pipe Insulation 12
Water Ingress Prevention 13

Exhaust System Backpressure 13
Measuring Backpressure 14
Calculating Backpressure 16
Equivalent Length of Straight Pipe 16
Combined Exhaust Systems 16
Pipe Support Considerations 17
Thermal Growth 17
Turbocharger Loading 17
Loading Calculations 17
Vertical Exhaust 18
Horizontal Exhaust 18
Vibration Transmission 20
Exhaust Discharge 20
Common Exhaust Stack 20
Power Module or Drop-Over Enclosure 21
Cleanliness During Installation 23
Slobber or Wet Stacking 23
Exhaust Systems for Specific Applications 24
Marine Dry Exhaust System 24
Marine Exhaust Ejector Automatic Ventilation System 24
Duct Design Guidelines 24
Marine Wet Exhaust System 30
Exhaust Risers 31
Water Lift Silencers 31
Wave Action and Wet Exhaust Systems 32

Surge Chamber.....33
Valve in Exhaust Discharge.....34
Hose vs. Rigid Exhaust Pipe.....34
Location of Exhaust Discharge Opening.....34
Valves in Exhaust Water Cooling Lines.....34

Foreword

This section of the Application and Installation Guide generally describes wide-ranging requirements and options for the Exhaust System on Cat® engines listed on the cover of this section. Additional engine systems, components and dynamics are addressed in other sections of this Application and Installation Guide.

Engine-specific information and data are available from a variety of sources. Refer to the Introduction section of this guide for additional references.

Systems and components described in this guide may not be available or applicable for every engine. The listing below indicates which exhaust component designs are utilized by each Cat engine model. Refer to the Price List for specific options and compatibility.

● = Standard ❍ = Optional - = Not Available	3126B	C7	C-9	C9	C-10/C-12	C11/C13	3406E	C-15/C-16	C15/C18	3412E	C27/C32	3500	C175	3600	G3300/G3400	G3500	G3600
Dry Manifolds	●	●	●	●	●	●	●	●	●	●	●	●	●	●	-	●	●
Watercooled Manifolds	-	-	-	-	●	-	●	●	-	●	-	●	-	-	●	●	-
Air Shielded Watercooled Manifolds	-	-	-	-	-	-	-	-	-	-	-	-	-	-	●	●	-
Soft Shields	-	-	-	-	-	-	-	-	-	-	-	●†	-	●	-	-	●
Hard Shields	-	-	-	-	-	●	●	●	●	●	-	●	●	●	-	●	-
Exhaust Silencers	❍	❍	❍	❍	❍	❍	❍	❍	❍	❍	❍	❍	❍	❍	❍	❍	❍

† Soft shield covers turbocharger but not manifolds.

Information contained in this publication may be considered confidential. Discretion is recommended when distributing. Materials and specifications are subject to change without notice.

CAT, CATERPILLAR, their respective logos, "Caterpillar Yellow" and the POWER EDGE trade dress, as well as corporate and product identity used herein, are trademarks of Caterpillar and may not be used without permission.

©2022 Caterpillar
All rights reserved.

Exhaust Systems

Well-designed exhaust systems collect exhaust gases from engine cylinders and discharge them as quickly and silently as possible. Primary system design considerations include:

- Minimizing resistance to gas flow (back pressure) and keeping it within the limits specified for the particular engine model and rating to provide maximum efficiency.
- Reducing exhaust noise emission to meet local regulations and application requirements.
- Providing adequate clearance between exhaust system components and engine components, machine structures, engine bays, enclosures and building structures to reduce the impact of high exhaust temperatures on such items.
- Ensuring the system does not overstress engine components such as turbochargers and manifolds with excess weight. Overstressing can shorten the life of engine components.
- Ensuring the exhaust system components are able to reject heat energy as intended by the original design. “Dry” turbochargers and manifolds should not be wrapped or shielded without Cat components or Caterpillar approval.

SECTION CONTENTS

System Components 2
- Manifolds
- Heat Shielding
- Turbochargers
- Connections
- Silencers

Exhaust System Piping 9
- System Design
- Pipe Support Considerations
- Exhaust Discharge
- Thimbles
- Water Ingress
- Backpressure
- Cleanliness
- Slobbering

Exhaust Systems for Specific Applications 23
- Marine Dry Exhaust
- Ejector Automatic Ventilation
- Duct Design
- Marine Wet Exhaust
- Water Lift Silencers
- Wave Action on Wet Exhaust
- Hose vs. Pipe
- Discharge Opening

©2022 Caterpillar
All rights reserved.

System Components

The main components of an exhaust system include, but are not limited to, the exhaust manifold, turbocharger, wastegate, piping and the silencer. The individual components and their function are explained below.

Exhaust Manifold

Engine exhaust manifolds collect exhaust gases from each cylinder and channel them into an exhaust outlet. The manifold is designed to give minimum backpressure and turbulence. Cat products utilize dry, watercooled and air shielded watercooled (ASWC) manifold designs, based on application and design requirements. Refer to **Figure 1** for manifold configurations.

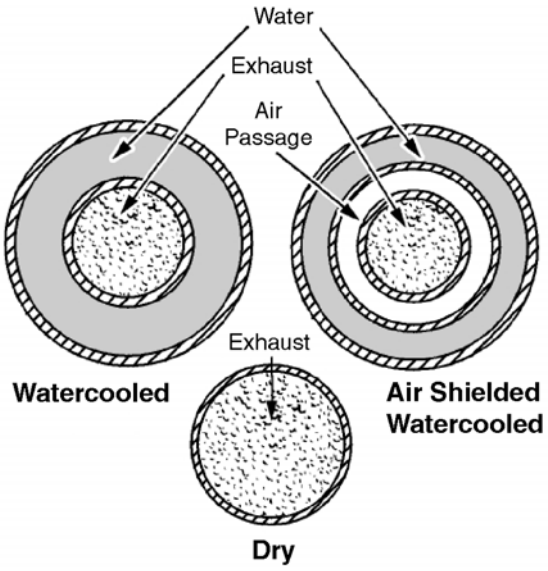

Figure 1

Dry Manifolds

Dry manifolds are the preferred manifold design. They are cost effective and by providing the maximum possible exhaust energy to the turbocharger, they offer the highest overall efficiency. Dry manifolds, however, also radiate the most heat and reach the highest surface temperatures.

Some applications require low manifold surface temperatures. For example, the Mining Safety and Health Agency (MSHA), the Atmospheres Explosibles (ATEX) directive and marine societies require that engine surface temperatures remain below 200°C (400°F) for certain mines.

Heat shields and blankets are available for some Cat products to meet lower surface temperature requirements. A few marine products offer optional watercooled manifolds.

Gas engines run with a higher exhaust temperature compared to diesel engines. Due to these high exhaust temperatures, some models utilize watercooled or air shielded watercooled manifolds.

Watercooled Manifolds

Passages within watercooled manifolds allow engine jacket coolant to flow around the manifold removing heat otherwise carried by exhaust gases. Surface temperatures of watercooled manifolds are considerably lower than those of dry manifolds, however heat rejection to

©2022 Caterpillar
All rights reserved.

the jacket water is increased by 20 to 40 percent. This increase requires a larger capacity cooling system.

Watercooled manifolds also reduce exhaust heat energy delivered to the turbocharger. This requires the use of an appropriately matched turbocharger for maximum efficiency. The turbocharger used on dry manifold applications may not be suitable for use on watercooled applications.

Air Shielded Watercooled Manifolds

Air shielded watercooled manifolds (ASWC) make use of an insulating air cavity between the exhaust manifold and the water shield. Engine water circulates around the air shield but does not come into direct contact with the inner manifold. This reduces the necessary jacket water cooling load and maintains higher exhaust energy available to the turbocharger.

Heat Shielding

Note: Installing non-approved shields or softwrap can cause exhaust system damage. Damage from non-approved components will not be subject to Quality and Workmanship warranty without approval from Caterpillar. If lower exhaust skin temperatures are necessary, further evaluation of displacement and rating (A-E) choices should be considered.

Heat shielding may be used as a means of shielding hot surfaces and protecting components or operators from excessive heat. The use of heat shields depends on many factors including, but not limited to, installation type, environment and legislative requirements. Guards may also be an effective means of providing protection. Shields that are designed and supplied by Caterpillar are fit for this purpose. Any customer fitted shields must be carefully designed and applied to ensure that damage to the engine does not result. Wraps and shields, especially those not provided by Caterpillar, must be cautious of increasing component skin temperature. Significant airflow around the shield can help reduce increases in component skin temperature.

Blankets (Soft Manifold Shields)

Blankets are made of an insulating layer of material with a thermal cloth outer layer. Most blankets will be held in place with stainless steel springs or wire which will be laced over the blankets. Blankets will isolate both heat and noise.

Caterpillar does not recommend use of blankets on exhaust manifolds, turbochargers or other engine components. The use of manifold blankets often results in premature failure of exhaust manifold components. Exceptions may be made if the insulation is supplied and approved for a particular application by Caterpillar; for these products, Caterpillar uses exhaust and turbocharger components that are made from materials capable of withstanding higher temperatures. Cat engines that use wraps and shields are developed to a lower exhaust gas temperature limit.

©2022 Caterpillar
All rights reserved.

Hard Wrap (Hard Manifold Shields)

Hard wrap is often used on the engine itself, for example in the vee between cylinder banks. The hard wrap consists of three layers; a thermal sheet, a blanket of fiberglass and sheet of bendable metal. It is installed with the thermal sheet facing the hot surface but not touching it. The air layer in between works as an insulator. Holes for bolts can be drilled in the metal sheet, making it easy to install or remove.

Guards and Shields

Guards and shields are usually made using perforated sheet metal. They are installed with an air gap between the shield and the hot surface. With adequate airflow around the engine, the heat transfer from iron to air will lower the temperature of the shield considerably.

CAUTION: All heat shielding, whether blankets, hard wrap or guards and shields should be designed in such a way that critical engine components, such as manifolds and turbochargers, do not reach critical temperatures, as this may lead to premature failure. Turbocharger turbine housings and non-water cooled turbine housings should not be wrapped. In some cases, Caterpillar designed and approved heat shielding/wrap is available for specific engine models and ratings.

Turbochargers

Turbochargers are employed to achieve higher specific engine power output by converting some of the energy in the exhaust gas stream into energy in the inlet system in the form of raised inlet pressure (boost). This raised inlet pressure forces more air into the engine cylinders, allowing more fuel to be burned and thus resulting in higher power output.

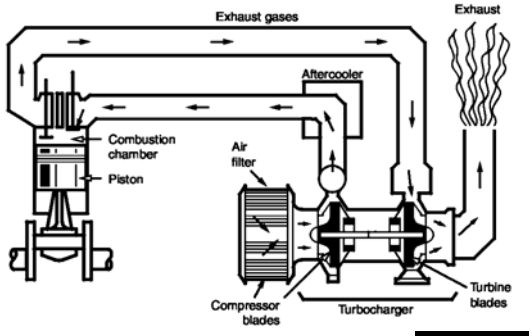

Figure 2

Refer to **Figure 2**. Hot exhaust gases exit the cylinder and enter the turbine side of the turbocharger. The turbine blades and the compressor blades share a common shaft.

The exhaust gases drive the turbine blades which in turn drive the compressor blades on the air intake side. This high speed rotation compresses the intake air to provide more oxygen for combustion.

Wastegate

Turbochargers equipped with a wastegate can efficiently operate in a much broader range of altitudes and ambient conditions. The wastegate opens at a predetermined pressure and vents some of the exhaust flow away from the turbocharger. The reduced exhaust flow slows the turbocharger to avoid

©2022 Caterpillar
All rights reserved.

overspeed and excessive boost pressure.

On some natural gas engines, the wastegate may be manually adjusted for site conditions to optimize the throttle position for efficiency or improved response.

Note: The exhaust flow by-passing the two turbochargers of a G3600 vee engine via the wastegate are plumbed together and exit on one exhaust outlet. Therefore, if measuring exhaust flow, you will notice an uneven exhaust gas flow through the two exhaust outlets when the wastegate is open. Typically, the right side flow will be 15% higher than the left side.

CAUTION: Tampering with the boost line to the wastegate will raise aftercooler heat rejection, increase turbocharger speed and peak engine cylinder pressure. This will negatively affect engine reliability, durability, stability, emissions and overall performance.

Flexible Exhaust Connections

The exhaust piping system must be isolated from the engine with flexible connections, designed for zero leakage and flexible in all directions. Two types of flexible connections are normally used a flexible metal hose type and a bellows type.

Flexible Metal Hose and Bellows

Flexible metal hose is commonly used for exhaust systems with a diameter of 150 mm (6 in) and smaller. Bellows are typically used for exhaust systems with a diameter of 200 mm (8 in) and larger.

Flexible connections should be installed as close as possible to the engine exhaust outlet. A flexible exhaust connection has three primary functions.

- To isolate the weight of the exhaust piping from the engine. The amount of weight which the exhaust outlet for each engine model can withstand varies.
- To relieve exhaust components of excessive vibrational fatigue stresses.
- To allow relative shifting of exhaust components. This has numerous causes. It may result from expansion and contraction due to temperature changes, by creep processes that take place throughout the life of any structure, or by torque reactions.

The weight of the exhaust piping and supports should not be supported by the engine block or engine components. Never attach structures supporting the weight of the exhaust piping directly to the engine block or engine components. The engines are not designed to support his extra weight and engine vibrations will be transmitted to the structure and piping.

A typical piping layout with flexible connections is shown in **Figure 3**.

Flexible pipe connections, when insulated, must expand and contract freely within the insulation. This generally requires a soft material or insulated sleeve to encase the connection.

©2022 Caterpillar
All rights reserved.

Typical Exhaust Piping With Flexible Connection

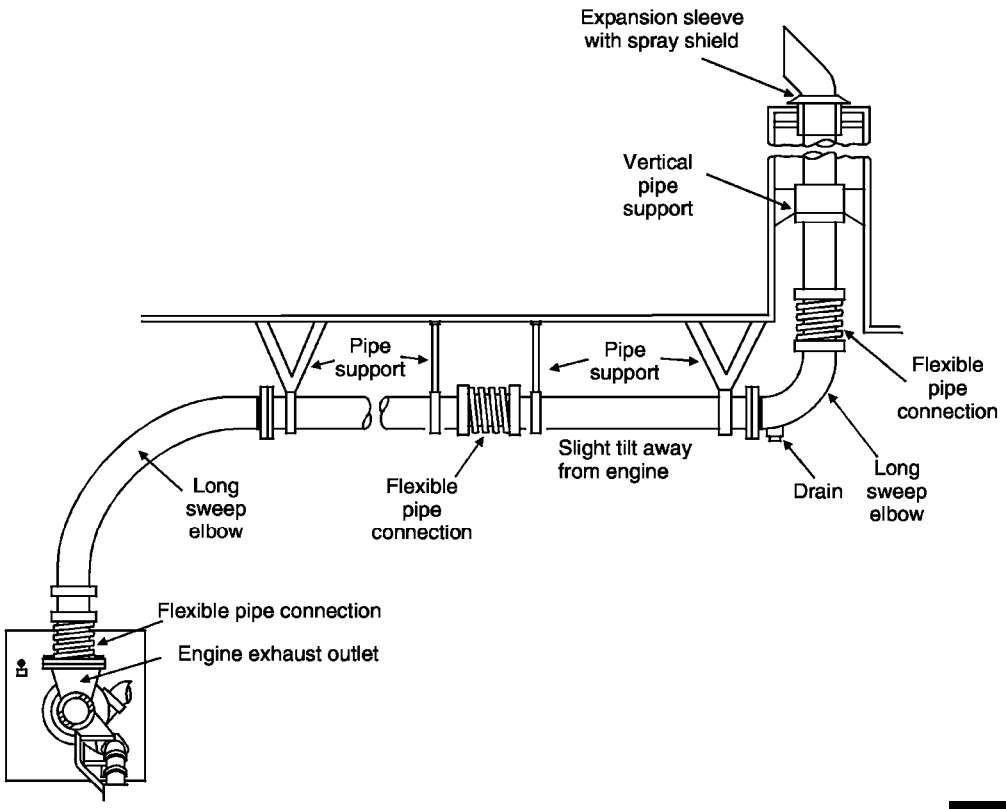

Figure 3

The flexible connections should be pre-stretched during installation to allow for expected thermal growth. Four small straps can be tack-welded between the two end flanges to hold the engine exhaust flexible connections or bellows in a rigid position during exhaust piping installation. This will prevent the bellows from being installed in a flexed condition. Attach a warning tag to the bellows noting that the weld straps must be removed prior to starting the engine.

Any flexible connector must have good fatigue resistance. It should give acceptable service life while withstanding vibratory stress and it should be soft enough to prevent transmission of vibration beyond the connection.

The installation limitations of Caterpillar supplied flexible exhaust fittings are shown in the table below. For maximum durability, allow the bellows to operate as close as possible to its free state.

Slip Joints

Slip joints are another method of handling the expansion and contraction of exhaust systems. Slip joints are designed to have controlled leakage when the system is cold. When the engine starts and the exhaust pipes warm up, the joints will expand and make a gas-

©2022 Caterpillar
All rights reserved.

tight fit. The slip joints are flexible in only one direction and require good support on each side.

However, Caterpillar does not normally recommend the use of slip joints due to disadvantages such as leaking exhaust fumes, exhaust slobber and the inability of the joint to flex in more than one direction.

Installation Limits of Flexible Exhaust Fittings – Flexible Metal Hose-Type						
Hose Diameter	A Maximum Offset Between Flanges		B Maximum Compression From Free Length		C Maximum Extension From Free Length	
	mm	in.	mm	in.	mm	in.
4 & 5 in.	25.4	1.0	6.25	.25	6.25	2.5
6 in.	38.1	1.5	6.25	.25	6.25	2.5

Installation Limits of Flexible Exhaust Fittings - Bellows-Type						
Bellows Diameter	A Maximum Offset Between Flanges		B** Minimum Acceptable Convolution Gap		C Maximum Extension From Free Length	
	mm	in.	mm	in.	mm	in.
6 in.	1.00	0.04	2.27	0.089	2.00	0.08
8 & 12 in.	19.05	0.75	3.07	0.121	25.40	1.00
10 in.	15.00	0.59			25.40/1.00***	1.00/0.35***
14 in.	19.05	0.75	7.97	0.314	25.40	1.00
18 in.	22.86	0.90	7.87	0.310	44.45	1.75

** Critical Dimensions: DO NOT allow gaps in convolutions to be less than value indicated anywhere on part!

*** Maximum allowable COMPRESSION from free length

Spring Rate for Flexible Fittings - Bellows-Type		
Diameter	Spring Rate	
	kN/m	lb/in.
6 in.	140.0	799
8 in.	29.7	170
12 in.	33.9	194
14 in.	68.5	391
18 in.	19.3	110

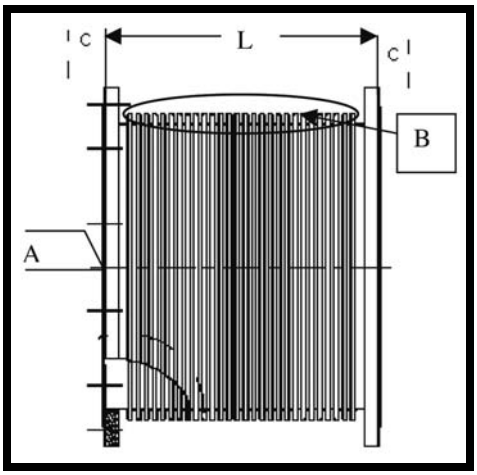

Figure 4

©2022 Caterpillar
All rights reserved.

Silencer

Exhaust noise is one of the principal noise sources of any engine installation. The purpose of the silencer is to reduce the noise of the exhaust before it is released to the atmosphere.

Exhaust noise arises from the intermittent release of high pressure exhaust gas from the engine cylinders, causing strong gas pressure fluctuations in the exhaust system. This leads not only to discharge noise at the exhaust outlet, but also to noise radiation from exhaust pipe and silencer surfaces. A well designed and matched exhaust system will significantly reduce noise from these sources. The silencer makes a major contribution to exhaust noise reduction.

Excessive noise is objectionable in most applications. The required degree of silencing depends on factors such as the application type, whether it is stationary or mobile and whether there are any legal regulations regarding noise emission. For example, excessive noise is objectionable in a hospital or residential area but may well be acceptable at an isolated pumping station.

Silencer Rating

Silencers are typically rated according to their degree of silencing. Industrial silencer (sound reduction up to 12-18 dB), Residential silencer (sound reduction up to 18-25 dB), Critical silencer (sound reduction up to 25-35 dB), and Hospital silencer (sound reduction up to 32-42 dB) are the terms commonly used to describe the different ratings.

- Level 1 Silencer System "Residential" — Suitable for industrial areas where background noise level is relatively high or for remote areas where partly muffled noise is permissible.
- Level 2 Silencer System "Critical" — Reduces exhaust noise to an acceptable level in localities where moderately effective silencing is required — such as semi-residential areas where moderate background noise is always present.
- Level 3 Silencer System "Supercritical" — Provides maximum silencing for residential, hospital, school, hotel, store, apartment building and other areas where background noise level is low and generator set noise must be kept to a minimum.

Silencer Selection

The silencer is generally the largest single contributor to exhaust back-pressure. Therefore, required noise reduction and permissible back-pressure must be considered when selecting a silencer. Application type, available space, cost and appearance may also need to be taken into account.

To select a silencer, use silencer supplier data, corrected for outlet temperature and velocity, to determine the silencer size and type that satisfies noise reduction criteria

©2022 Caterpillar
All rights reserved.

with an acceptable maximum pressure drop.

After calculating pressure loss, it may be necessary to check a second silencer, or a different pipe size, before an optimum combination is achieved.

Silencer design is a highly specialized art. Responsibility for the details of design and construction should be assigned to the silencer manufacturer.

©2022 Caterpillar
All rights reserved.

Exhaust System Piping

The function of the exhaust piping is to convey the exhaust gases from the engine exhaust outlet to the silencer and other exhaust system components, terminating at the system outlet. Piping is a key feature in overall exhaust system layout.

Exhaust System Design

The physical characteristics of the engine room or engine bay will determine the exhaust system layout. Exhaust piping should be designed to minimize the exhaust backpressure while keeping engine serviceability in mind. The exhaust piping should be securely supported however; the exhaust piping should never be supported directly by the engine block or engine components. Allowances should be made for system movement and vibration isolation by using suitable flexible components such as rubber dampers or springs.

Piping must be designed with engine service in mind. In many cases, an overhead crane will be used to service the heavier engine components on the larger engines.

The following recommendations should be followed when designing an exhaust piping system.

Typical Silencer Details

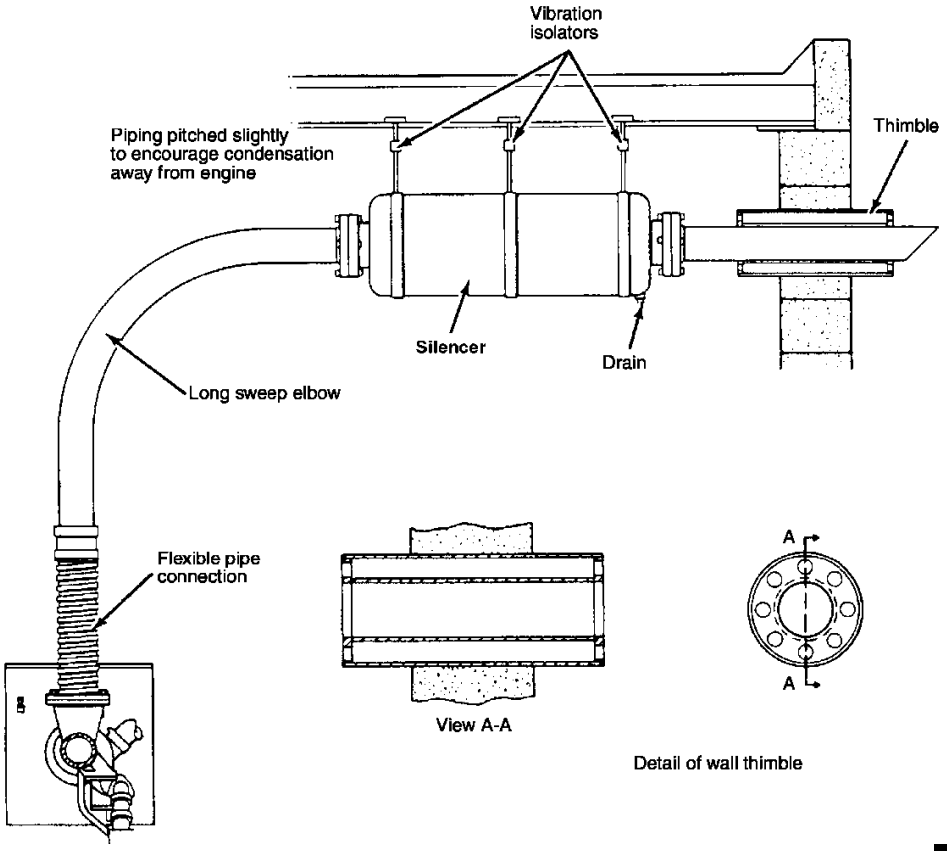

Figure 5

©2022 Caterpillar
All rights reserved.

The minimum requirements for the design of the exhaust system should be to contain explosions that could be encountered during the operation of the engine. Caterpillar recommends the use of explosion relief valves on all gas engines, particularly for the larger size engines due to the high fuel volumes. Explosion relief valves should be located as close to the engine as possible (typically at piping elbows) to minimize any potential exhaust system damage in the event of an exhaust explosion. Additional pressure relief valves can be used prior to the muffler, catalytic converter, or heat recovery equipment to add additional protection for these devices. Explosion relief valves are fitted on the exhaust pipe to relieve pressure in a safe manner and must be vented to a safe area. (Reference local codes.) Explosion relief valves can be purchased from aftermarket suppliers.

- All piping should be installed with a minimum clearance of 229 mm (9 in) from combustible materials.
- The exhaust piping must be properly supported, especially adjacent to the engine, so that its weight is not borne by the engine or the turbocharger. This is discussed in more detail later in this section.
- Exhaust piping should be sized according to the maximum backpressure limit for the engine.
- Where appropriate, heat radiation may be reduced by covering the off-engine exhaust piping with suitable, high temperature insulation.
- Install metal thimble guards for exhaust piping passing through wooden walls or roofs. The thimble guards should be 305 mm (12 in) greater in diameter than the exhaust pipes, see **Figure 5**.
- When exhaust stacks are used, extend them upward and away from the engine room to avoid heat, fumes and odors.
- Locate the exhaust pipe outlets away from the air intake system. Engine air cleaners, turbochargers and aftercoolers contaminated with exhaust products can induce premature failures.
- Avoid routing exhaust piping close to fuel pumps, fuel lines, fuel filters, fuel tanks and other combustible materials.
- Exhaust pipe outlets cut at 30° to 45° angles, rather than 90° angles, will reduce exhaust gas turbulence and noise. Refer to **Figure 6**.
- Exhaust outlets should be arranged to keep water from entering the piping system. Rain caps forced open by exhaust pressure will accomplish this; however, they will also introduce additional backpressure into the system and should be carefully evaluated.
- Paint or other materials should not be applied directly on or near the engine exhaust system or installation exhaust piping unless rated for high temperature applications.

©2022 Caterpillar
All rights reserved.

Pipe Design Joining Two Turbochargers

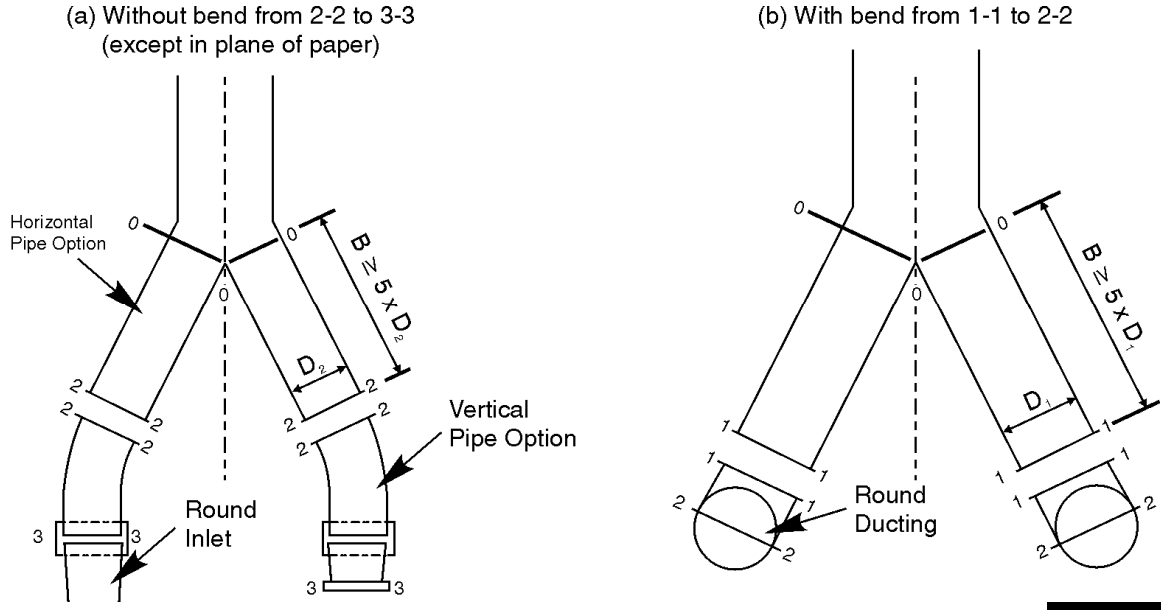

Figure 6

The exhaust system can accumulate a considerable amount of condensed moisture. For example, gas engines burning natural gas create one pound of water for each 10 ft^3 of natural gas burned. For this reason, long runs of exhaust piping require traps to drain moisture. Traps should be installed at the lowest point of the line, near the exhaust outlet, to prevent rain water from reaching the engine. Exhaust lines should be sloped away from engine, toward the trap, so condensation will properly drain, see **Figure 3** in the previous section.

Exhaust Thimbles

Exhaust thimbles, as illustrated in **Figure 5**, are fabrications used for wall or ceiling penetrations. The thimble provides a separation of the exhaust pipe from walls or ceilings, in order to provide mechanical and thermal isolation. Single sleeve thimbles must have diameters at least 305 mm (12 in) larger than the exhaust pipe. Double thimbles (inner and outer sleeve) should have outside diameters at least 152 mm (6 in) larger than the exhaust pipe.

Exhaust Pipe Insulation

No exposed parts of the exhaust system should be near wood or other combustible material. Exhaust piping inside the engine room or machinery space (and the silencer, if mounted inside) should be covered with suitable insulation materials to protect personnel and to reduce room temperature. A sufficient layer of suitable insulating material surrounding the piping and silencer and retained by a stainless steel or aluminum sheath may substantially reduce heat radiation

©2013 Caterpillar
All rights reserved.

to the room from the exhaust system. An additional benefit of the insulation is that it provides sound attenuation to reduce noise in the room.

Water Ingress Prevention

Exhaust system outlets must be provided with an appropriate means of preventing snow, rainwater or sea spray from entering the engine through the exhaust piping. This can be accomplished by several methods, but must be given careful consideration. The selected method can impose significant restrictions that must be taken into account when calculating system backpressure.

One simple method, used primarily with horizontal exhaust pipes, is to angle cut the end of the pipe as shown in **Figure 3**, **Figure 5** and **Figure 7**.

A common method used with vertical exhaust pipes is to angle the pipe at 45° or 90° from vertical using an appropriate elbow, then angle cutting the pipe end as previously described.

Another feature that may be used in conjunction with either of the above methods are Rain/Spray Slots as shown in **Figure 6**.

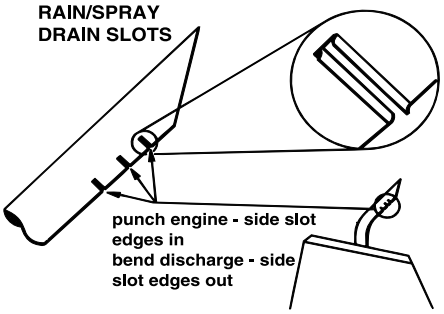

Figure 7

Slots are cut into the exhaust pipe to allow rain/spray to drain harmlessly. The edges of each slot are deformed as shown in the previous graphic. The engine side of the slot is bent inward and the downstream side of the slot is bent outward. No more than a 60° arc of the pipe circumference should be slotted in this way.

For applications where none of the above methods is possible, it may be necessary to fit some form of rain cap to the end of the vertical pipe section. This method can provide a positive means of water ingress prevention, but not without imposing a significant backpressure restriction.

Exhaust System Backpressure

Excessive exhaust restriction can adversely affect performance, resulting in reduced power and increased fuel consumption, exhaust temperatures and emissions. It will also reduce exhaust valve and turbocharger life. It is imperative that exhaust backpressure is kept within specified limits for those engines subject to emissions legislation. When designing an exhaust system, the design target for backpressure should be half the maximum allowable system backpressure. To ensure compliance, exhaust system backpressure must be verified to be within the Caterpillar EPA declared maximum value for the engine configuration and rating. Values can be found in the “Systems Data” listed in the Cat Technical Marketing Information (TMI) system.

©2022 Caterpillar
All rights reserved.

Backpressure includes restrictions due to pipe size, silencer, system configuration, rain cap and other exhaust-related components. Excessive backpressure is commonly caused by one or more of the following factors:

- Exhaust pipe diameter too small.
- Excessive number of sharp bends in the system.
- Exhaust pipe too long.
- Silencer resistance too high.

Engines with a vee cylinder configuration should be designed so the exhaust piping gives equal backpressure to each bank.

Measuring Backpressure

Exhaust backpressure is measured as the engine is operating under full rated load and speed conditions. Either a water manometer or a gauge measuring inches of water may be used.

Some engine installations are already equipped with a fitting in the exhaust discharge for measuring backpressure. If the system is not equipped with such a fitting, use the following guidelines, **Figure 8** and **Figure 9** to locate and install a pressure tap.

- Locate the pressure tap in a straight length of exhaust pipe as close to the turbocharger as possible.
- Locate the tap three pipe diameters from any upstream pipe transition.
- Locate the tap two pipe diameters from any downstream pipe transition.

For example, in a 100 mm (4 in) diameter pipe, the tapping would be placed no closer than 300 mm (12 in) downstream of a bend or section change.

©2022 Caterpillar
All rights reserved.

Preferred Pressure Tap Location & Installation

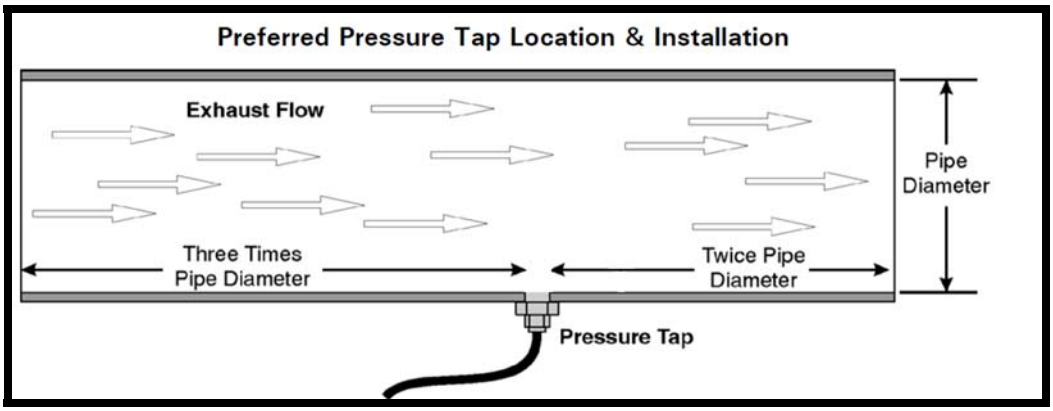

Figure 8

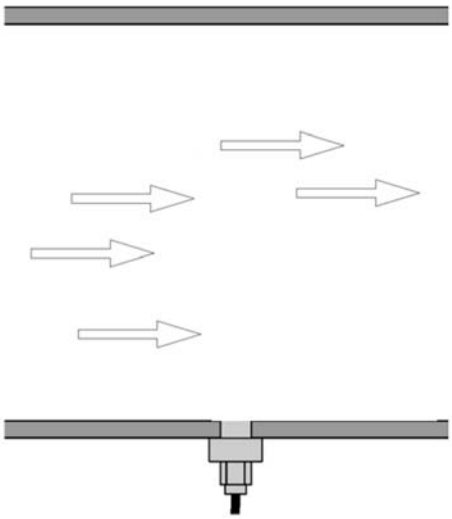

Figure 9

The pressure tapping can be made by using a 1/8 NPT “half coupling” welded or brazed to the desired location on the exhaust pipe. After the coupling is attached, a 3.05 mm (0.12 in) diameter hole is drilled through the exhaust pipe wall. Any burrs on the inside of the pipe wall should be removed so that the gas flow is not disturbed. The gauge or gauge hose can then be attached to the half coupling. The tip of the probe should be cut parallel to the exhaust gas flow.

©2022 Caterpillar
All rights reserved.

Calculating Backpressure

Backpressure is calculated by:

$$P\ (kPa) = \frac{L \times S \times Q^2 \times 3.6 \times 10^6}{D^5} + P_S$$

$$P\ (in.\ H_2O) = \frac{L \times S \times Q^2}{187 \times D^5} + P_S$$

Where:

P = Back pressure (kPa), (in. H_2O)

psi = 0.0361 x in. water column

kPa = 0.00981 x mm water column

L = Total Equivalent Length of pipe (m) (ft)

Q = Exhaust gas flow (m^3/min), (cfm)

D = Inside diameter of pipe (mm), (in.)

S = Density of gas (kg/m^3), (lb/ft^3)

Ps = Pressure drop of silencer/raincap (kPa), (in. H_2O)

Useful conversion factors:

psi = 0.0361 x in. of water column

psi = 0.00142 x mm of water column

psi = 0.491 x in. of mercury column

kPa = 0.0098 x mm of water column

kPa = 0.25 x in. of water column

kPa = 3.386 x in. of mercury column

kPa = 0.145 psi

Equivalent Length of Straight Pipe

To obtain equivalent length of straight pipe for various elbows:

$$L = \frac{33D}{X}$$ Standard Elbow
elbow radius = pipe diameter

$$L = \frac{20D}{X}$$ Long Elbow
radius = 1.5 diameter

$$L = \frac{15D}{X}$$ 45° elbow

$$L = \frac{66D}{X}$$ square elbow

Where X = 1000 mm or 12 in.

As shown by the equations, if 90° elbows are required, long radius elbows with a radius of 1.5 times the pipe diameter helps to lower resistance.

Combined Exhaust Systems

Although economically tempting, a common exhaust system for multiple installations is not acceptable. Combined exhaust systems with boilers or other engines allow exhaust gases to be forced into engines not operating. Water vapor created during combustion will condense in cold engines and quickly causes engine damage. Duct valves separating engine exhausts is also discouraged. High temperatures warp valve seats causing leakage.

Exhaust draft fans have been applied successfully in combined exhaust ducts, but most operate only whenever exhaust is present. To prevent turbocharger windmilling (without lubrication), draft fans

©2022 Caterpillar
All rights reserved.

should not be operable when the engine is shut down. The exhaust system of non-running engines must be closed and vented.

3600 vee engines have two exhaust outlets, one for each bank. Combining these together with a Y-type fabrication, while possible, may result in unequal thermal growth and backpressure from one bank to the other. This unequal growth can put unwanted loading onto the turbocharger mounting or the flex bellows. The unequal backpressure can adversely affect the operation and performance of the engine. If the exhaust outlets are joined, these problems can be minimized by providing a flexible connection on each leg and by keeping each leg equal in length.

Pipe Support Considerations

Thermal Growth

Thermal growth of exhaust piping must be taken into account in order to avoid excessive load on supporting structures.

Steel exhaust pipe expands 1.13 mm/m (0.0076 in/ft) for each 100°C (100°F) rise of exhaust temperature. This amounts to 16.5 mm (0.65 in) expansion for each 3.05 m (10 ft) of pipe from 35° to 510°C (100° to 950°F).

Piping systems must be designed so thermal growth expands away from the engine.

A restraint member may be used to keep the ends of a long pipe run fixed in place, forcing all thermal growth towards the expansion joints.

Supports should also be located to allow expansion away from the engine. Supports can reduce strains or distortions to connected equipment and can allow component removal without additional support.

Flexible pipe connection, when insulated, must expand and contract freely within the insulation. This generally requires a soft material or insulated sleeve to encase the connection.

Turbocharger Loading

Careful consideration must be given to the load external piping may induce on the turbocharger. To minimize the load carried by the turbocharger housing, a bellows should be placed as close as possible to the turbocharger outlet and downstream exhaust piping should be self supporting. The thermal growth of horizontal piping connected to the turbocharger exhaust must also be accounted for in the design.

Maximum allowable vertical load and bending moment limits are provided for each engine model. Consult the Technical Information Appendix for the appropriate information.

For 3600/G3600 series engines, the Caterpillar supplied bellows and adapter, or elbow and bellows options, account for the maximum allowable loading on the turbocharger. All other external piping must be self-supporting.

Loading Calculations

The following example illustrates the type of calculation used to

©2022 Caterpillar
All rights reserved.

determine vertical load and bending moment at the engine exhaust outlet due to the weight of the adapter mounted directly to the exhaust outlet.

Figure 10 shows measurement points for the various distances when calculating the forces and moments on the turbocharger.

This example assumes a Gas 3516 with single exhaust outlet.

Vertical Exhaust

W = Adapter Weight

I = 1/2 Bellows Weight

g = gravity = 9.82 m/s (32.2 ft)

With Cat Hardware:

W = 2.9 kg (6.4 lb)

I = 0.6 kg (1.4 lb)

Forces:

F_W = W x g = 2.9 x 9.82 = 28 N (6.4 lb)

F_I = I x g = 0.6 x 9.82 = 6 N (1.4 lb)

Sum of Vertical Forces:

F_V = F_W + F_I = 28 + 6 = 34 N (7.8 lb)

Sum of Moments:

M = (h1 x FW) + (h2 x FI) = (0 x 28) + (0 x b) = 0 N•m (ft-lb)

Since for this particular engine model F_V < 111 N (25 lb) and M < 120 N•m (89.5 ft-lb), the exhaust system meets the load and moment requirements.

Horizontal Exhaust

W = Adapter Weight

J = Elbow Adapter Weight

I = ½ Bellows Weight

With Cat Hardware:

W = 2.9 kg (6.4 lb)

I = 0.6 kg (1.4 lb)

J = 4.8 kg (10.7 lb)

h_1 = 0

h_2 = 100 mm (3.9 in)

h_3 = 580 mm (22.8 in)

Forces:

F_W = 28 N (6.4 lb)

F_I = 6 N (1.4 lb)

F_J = F x g = 4.8 x 9.82 = 47 N (10.7 lb)

Sum of Vertical Forces

FV = FW + FI + FJ = 28 + 6 + 47 = 81 N (18.5 lb)

Sum of Moments

M = (h1 x FW) + (h2 x FI) + (h3 x FJ) = (0 x 28) + (.100 x 6) + (.580 x 47) = 27.9 N•m (20.8 ft-lb)

Since for this particular engine model F_V < 111 N (25 lb) and M < 120 N•m (89.5 ft-lb), the exhaust system meets the load and moment requirements.

©2022 Caterpillar
All rights reserved.

Vertical and Horizontal Exhaust

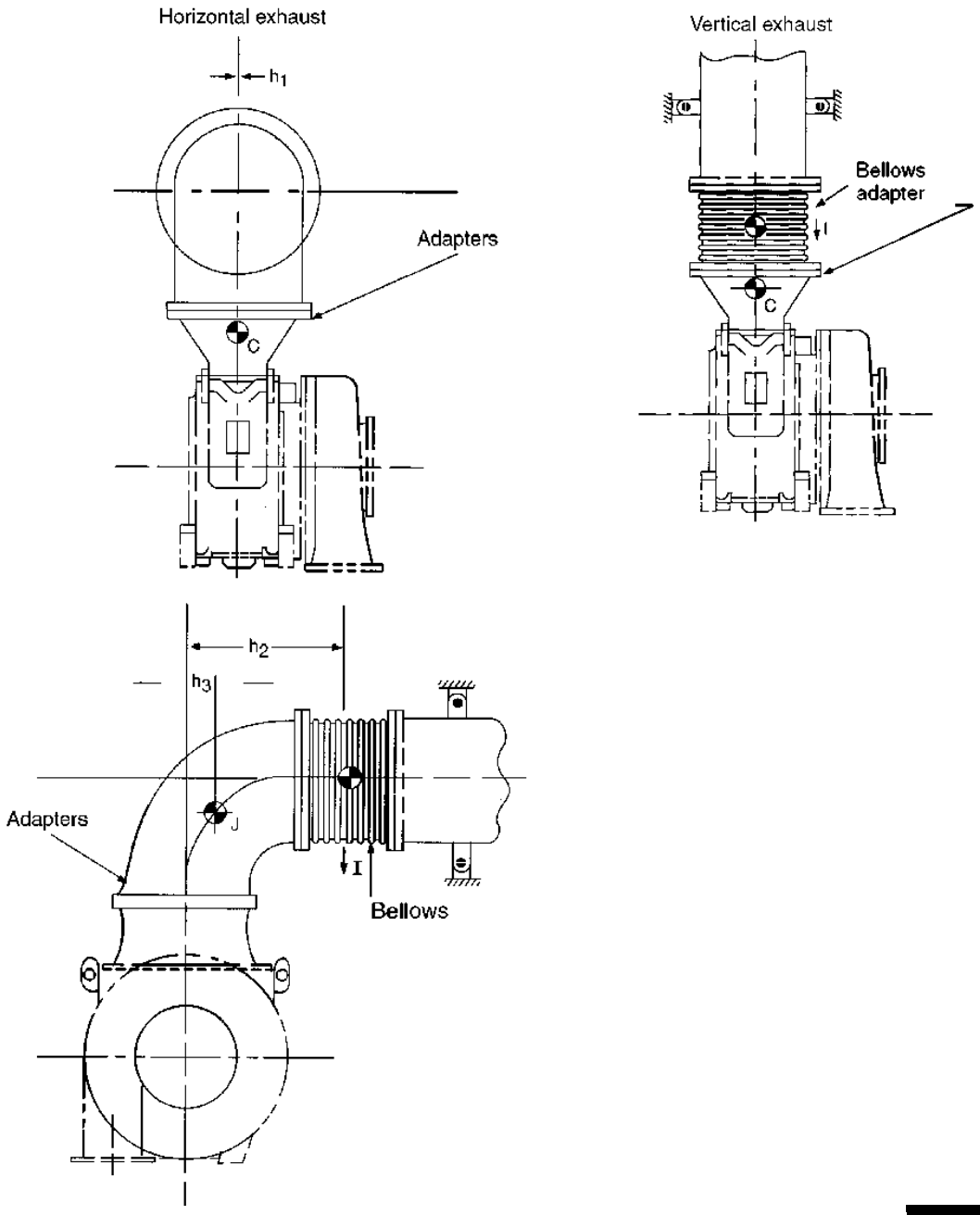

Figure 10

©2022 Caterpillar
All rights reserved.

Vibration Transmission

Piping connected to stationary engines requires isolation, particularly when resilient mounts are used. Without isolation, pipes can transmit vibrations long distances. Isolator pipe supports should have springs to attenuate low frequencies and rubber or cork to minimize high frequency transmissions.

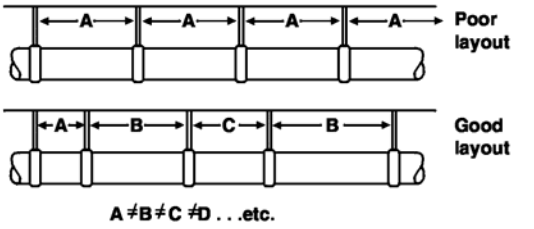

Figure 11

To prevent build up of resonant pipe vibrations, support long piping runs at unequal distances as shown in **Figure 11**.

Exhaust Discharge

Exhaust outlets, whether via an exhaust pipe or stack, must be designed to ensure that engine exhaust is discharged in such a manner that exhaust gas will not recirculate and be drawn back into the engine's environment. Engine air cleaners, turbochargers and aftercoolers may become contaminated with spent combustion products such as hydrocarbons and soot. This contamination can lead to various modes of failure.

Recirculation of hot exhaust gas can also adversely affect the ambient capability of the installation. This can occur when air, significantly above ambient, is drawn through radiator equipped cooling systems. **Figure 12** through **Figure 16** show typical exhaust piping systems that are arranged to avoid recirculation.

Common Exhaust Stack

The exhaust can be directed into a special stack that also serves as the outlet for radiator discharge air and may be sound-insulated. In such instances the radiator discharge air enters below the exhaust gas inlet so that the rising radiator air tends to cool exhaust system components within the stack. Refer to the following two graphics.

The silencer may be located within the stack or in the room with its tail pipe extending through the stack and then outward. Air guide vanes should be installed in the stack to turn radiator discharge airflow upward and to reduce radiator fan air flow restriction. Alternatively the sound insulation lining may have a curved contour to direct air flow upward.

An exhaust stack will remain cooler and cleaner if the engine exhaust is contained within the exhaust piping throughout its run through the stack. If the exhaust pipe terminates short of the stack outlet, the discharged ventilation air will tend to cool the exhaust stack downstream of the point where it mixes with the exhaust gases.

©2022 Caterpillar
All rights reserved.

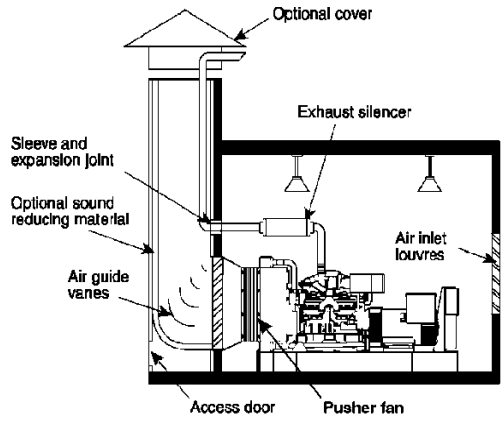

Figure 12

Figure 12 is an example of a horizontally mounted exhaust silencer with the exhaust pipe and radiator air utilizing a common stack.

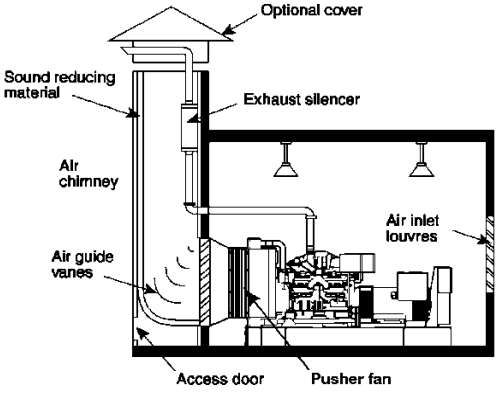

Figure 13

Figure 13 is an example of a vertically mounted exhaust silencer with the exhaust pipe and radiator air utilizing a common stack.

Power Module or Drop-Over Enclosure

For a generator set enclosed in a power module or drop-over enclosure, the exhaust and radiator discharges should flow together, either above or below the enclosure without a stack.

This arrangement, as shown in **Figure 14** and **Figure 15**, will prevent the recirculation of exhaust gases back into the module or enclosure. Sometimes, for this purpose, the radiator can be mounted horizontally and the fan driven by an electric motor to discharge air vertically.

Note that the suction fan arrangement in **Figure 16** does not provide adequate cooling air to the generator. A separate source of generator cooling air is required for this configuration.

©2022 Caterpillar
All rights reserved.

Typical Power Module or Drop-Over Enclosure Exhaust System with Internal Silencer

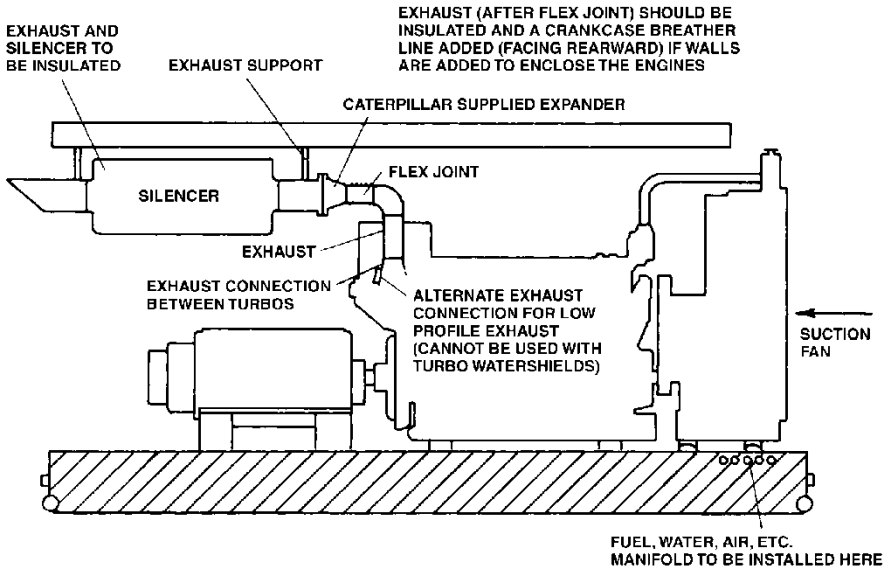

Figure 14

Typical Power Module or Drop-Over Enclosure Exhaust System with External Silencer

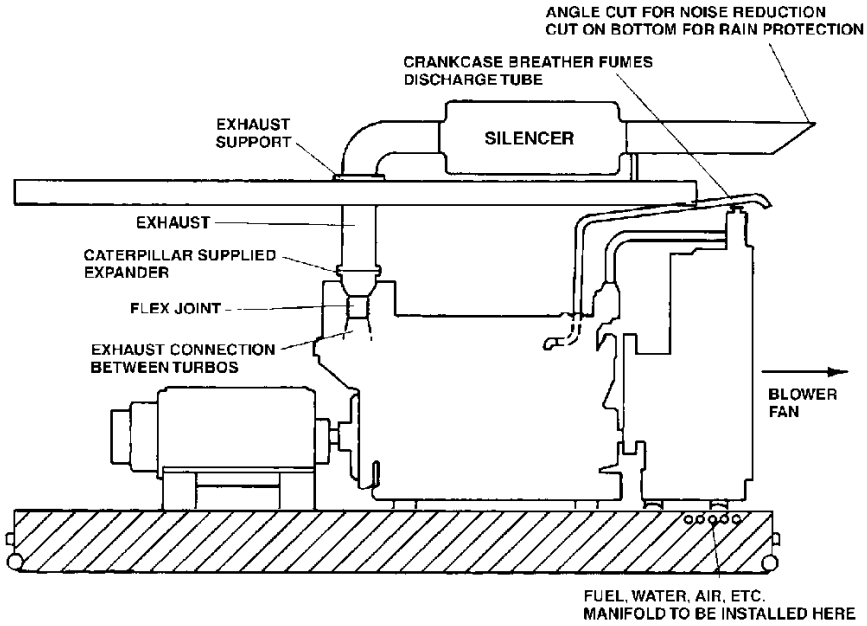

Figure 15

©2022 Caterpillar
All rights reserved.

Cleanliness During Installation

During exhaust system assembly, all openings on the turbocharger should be covered with an identifiable blanking plate to prevent debris from falling into the turbocharger. The Cat shipping cover can be used for this purpose. This can be installed directly onto the turbine housing outlet. A warning tag should also be attached to the plate or cover indicating that it must be removed prior to engine starting. Refer to Caterpillar Flushing and Pickling Guidelines for pipe cleanliness.

Slobber or Wet Stacking

Exhaust slobber is the black oily fluid that can leak from exhaust system joints. It consists of fuel and/or oil mixed with soot from the inside of the exhaust system.

Oil leakage may be a result of worn valve guides, piston rings or turbocharger seals. Fuel leakage usually occurs with combustion problems.

Engines are designed to operate at loaded conditions. Extended engine operation at no load or lightly loaded conditions (less than 15% load) up to 4 hours, reduce the sealing capability of some integral engine components, even when the engine is new.

If slobber occurs, external signs of slobber will be evident, unless the exhaust system is completely sealed.

Exhaust slobber is not usually harmful to the engine, but the results can be unsightly and objectionable.

If extended idle or light load periods of engine operation up to 4 hours are mandatory, the objectionable effect of the engine slobber and hydrocarbon loading on downstream exhaust components such as SCR systems can be avoided by loading the engine to at least 30% load for approximately ten minutes every four hours. This will remove any fluids that have accumulated in the exhaust manifold. To minimize exhaust slobber, it is important that the engine is correctly sized for each application.

©2022 Caterpillar
All rights reserved.

Exhaust Systems for Specific Applications

Some engine applications face more installation challenges than others. Marine installations, for instance, are afforded very little space and require considerable protection from water entering the exhaust system.

The information that follows addresses some of these challenges and can be applicable to marine-based as well as some land based installations.

Marine Dry Exhaust System

The marine dry exhaust system, in general, is similar to a typical land-based exhaust system and will be subject to the same exhaust system design considerations as already discussed in this section.

Figure 16 shows a typical marine exhaust system installation that addresses these design considerations:

- The exhaust piping is supported directly above the engine exhaust outlet, so that the weight of the exhaust piping is not directly supported by the engine or turbocharger.
- The exhaust piping is run in a simple and direct manner, with a minimum number of bends, in order to minimize system backpressure.
- Intermediate section of piping is supported with a spring hanger to allow for movement due to thermal growth and to minimize vibration transmission.
- The exhaust pipe is provided with a drainage system to collect and remove any water that may get into the piping.

Marine Exhaust Ejector Automatic Ventilation System

A relatively simple system utilizing an engine's exhaust for ventilating an engine room can be arranged with most dry exhaust systems. Ductwork can be installed around the engine exhaust piping in such a way that the exhaust flow creates a vacuum that is utilized to draw the hot air out of the upper part of the engine room. This method has been used successfully in marine applications with small engine rooms and minimal ventilation requirements.

An exhaust ejector system may draw out a quantity of ventilating air approximately equal to the flow of exhaust gas. **Figure 17**, **Figure 18** and **Figure 19** show variations of this design.

Note: To make an exhaust ejector system successful, air must be allowed to enter the engine room freely.

Duct Design Guidelines

To determine duct area, a useful rule of thumb is:

Use 10 cm^2 of duct cross sectional area per engine kilowatt and not more than three right angle bends.

©2022 Caterpillar
All rights reserved.

Use 1.25 in^2 of duct cross sectional area per engine horsepower and no more than three right angle bends.

If more right angle bends are required, increase the pipe diameter by one pipe size.

For best results, the intake air openings should discharge cool air into the engine room near the floor level. After the intake air has been heated by contact with hot surfaces in the engine room, draw the ventilating air out from a point directly over the engines, near the engine room overhead.

Place the ejector in the exhaust system just prior to the exhaust's discharge to atmosphere to avoid backpressure on the mixture of exhaust gas and hot air through any length of stack. Any bends in the exhaust stack following the mixture can seriously affect the system's performance.

Furthermore, the exhaust stack will remain cooler and cleaner if the engine exhaust is contained within the exhaust piping throughout its run through the stack. The discharged ventilation air will tend to cool the exhaust stack upstream of the point where it is mixed with the exhaust gases.

Exhaust ejectors are most effective on vessels with only one propulsion engine. On multiple engine installations, if one engine is operated at reduced load, the ejector air flow for the engine with reduced load may reverse, pulling exhaust gas from the more heavily loaded engine into the engine room.

©2022 Caterpilla
All rights reserved.

Typical Marine Dry Exhaust System

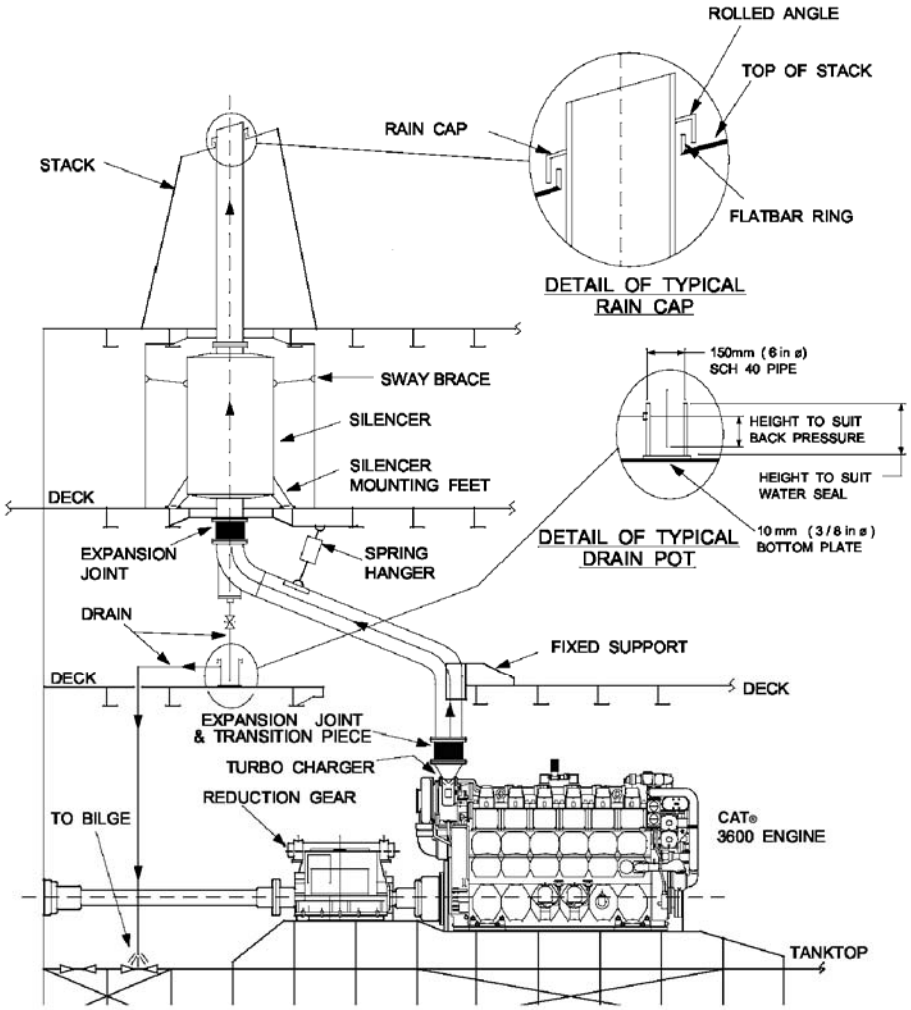

Figure 16

©2022 Caterpillar
All rights reserved.

Sample Exhaust Ejector System

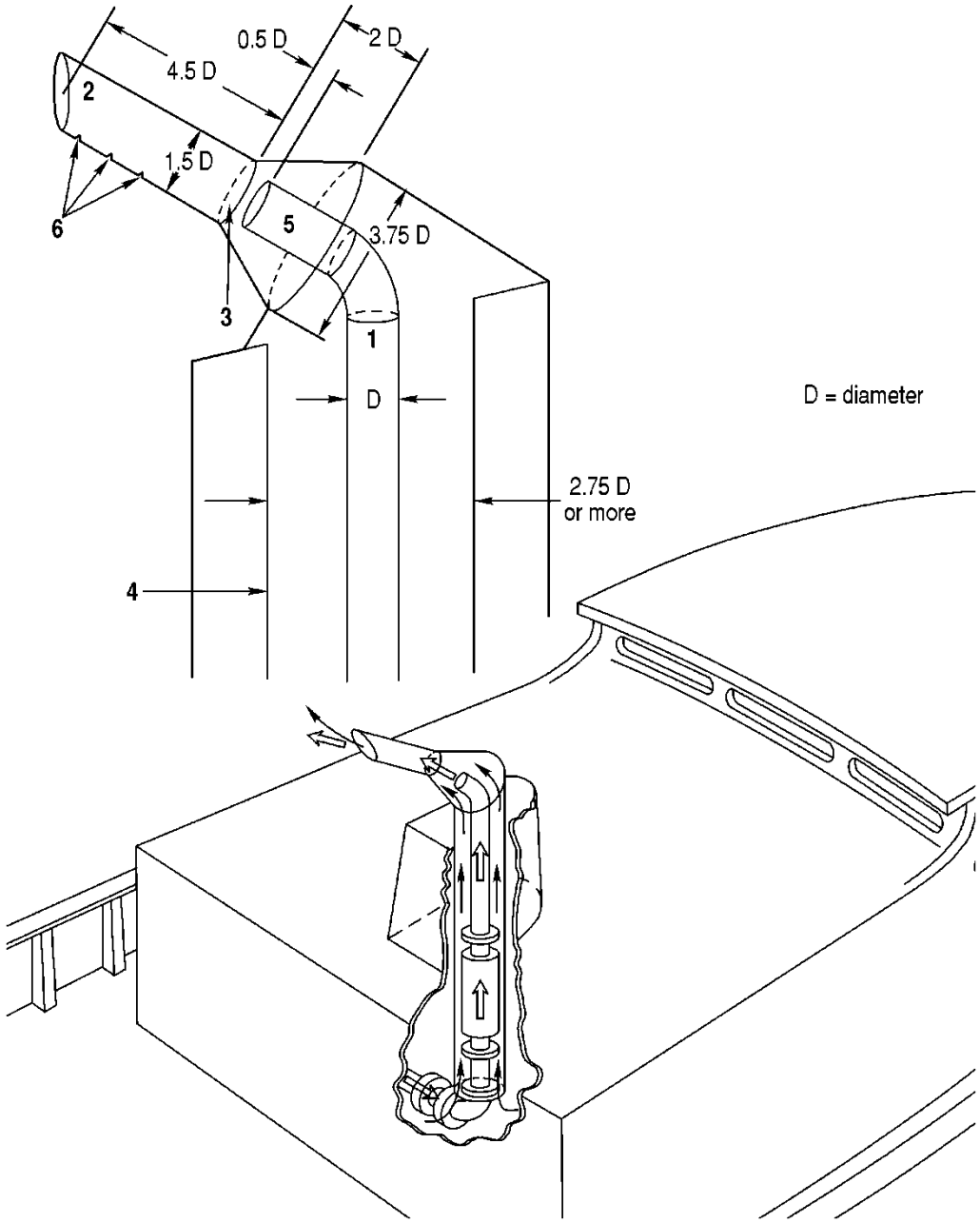

Figure 17

©2022 Caterpillar
All rights reserved.

Sample Exhaust Ejector System

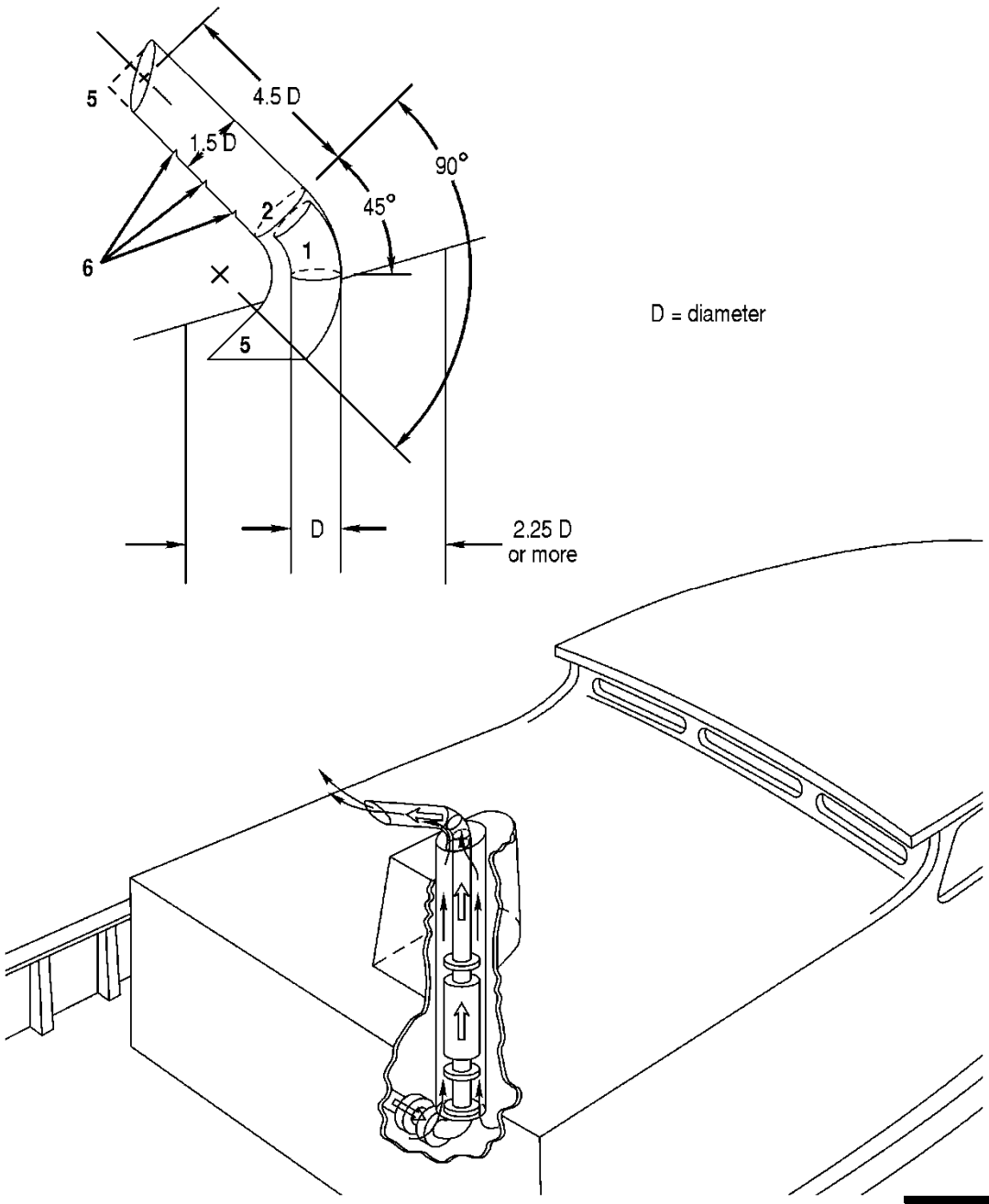

Figure 18

©2022 Caterpillar
All rights reserved.

Sample Exhaust Ejector System

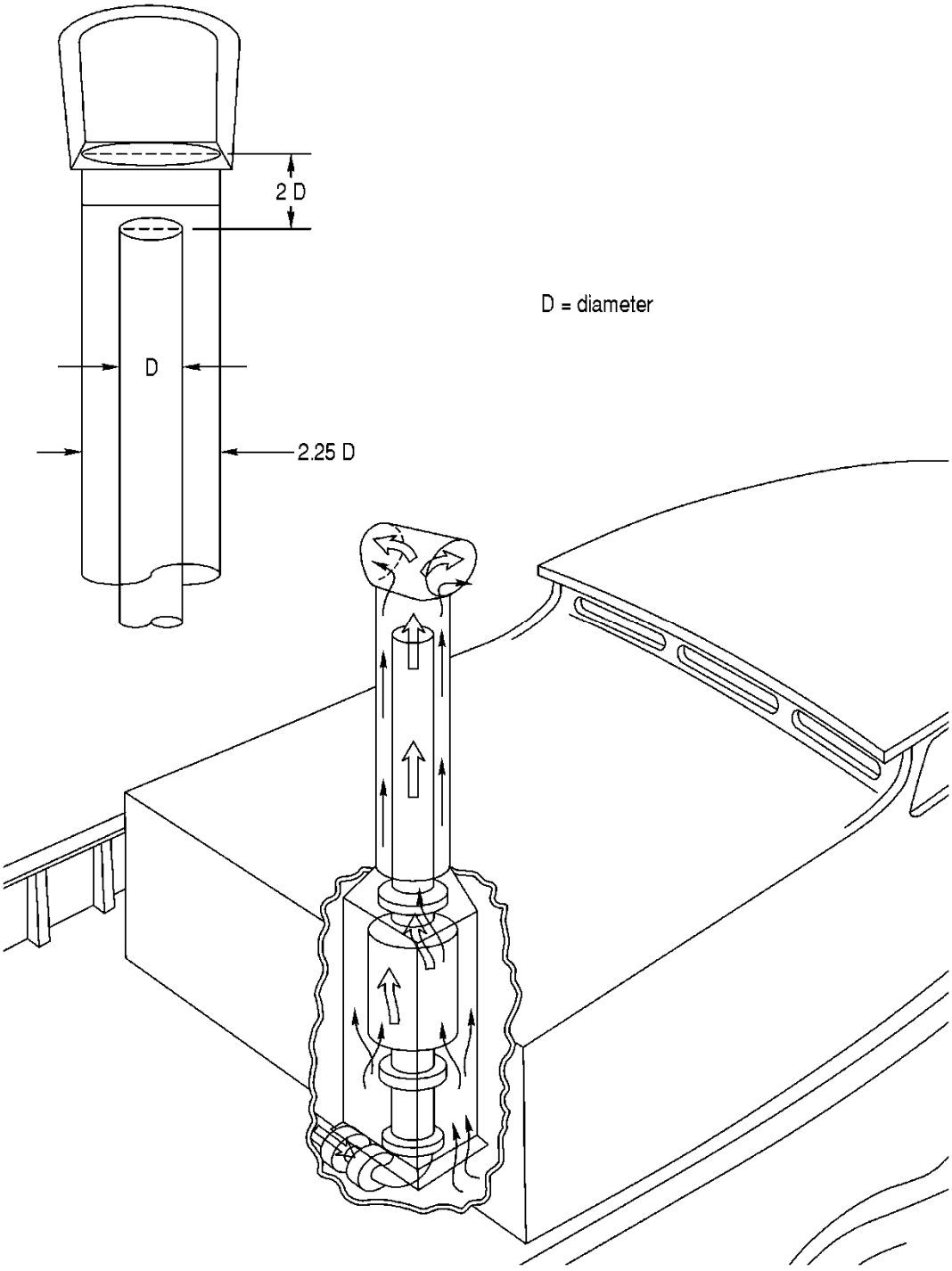

Figure 19

©2022 Caterpillar
All rights reserved.

Marine Wet Exhaust System

Wet exhaust systems mix the exhaust gases with the sea water discharged from the sea water side of the engine's jacket water heat exchanger. See **Figure 20** for an example of a wet exhaust system.

Wet exhaust piping may be cool enough to be made of uninsulated fiberglass reinforced plastic (FRP) or rubber.

Moisture of exhaust gases and seawater is discharged from the boat at or slightly below the vessels waterline.

With a relatively small elevation difference between the engine's exhaust discharge elbow and the vessels waterline, it is difficult to design a system which will always prevent water from entering the engine through the exhaust system. While a number of proprietary exhaust components are available to help avoid this problem, the most common generic methods are exhaust risers and water lift silencers.

Wet Exhaust System using Dry Exhaust Elbows at Engine Exhaust Discharge

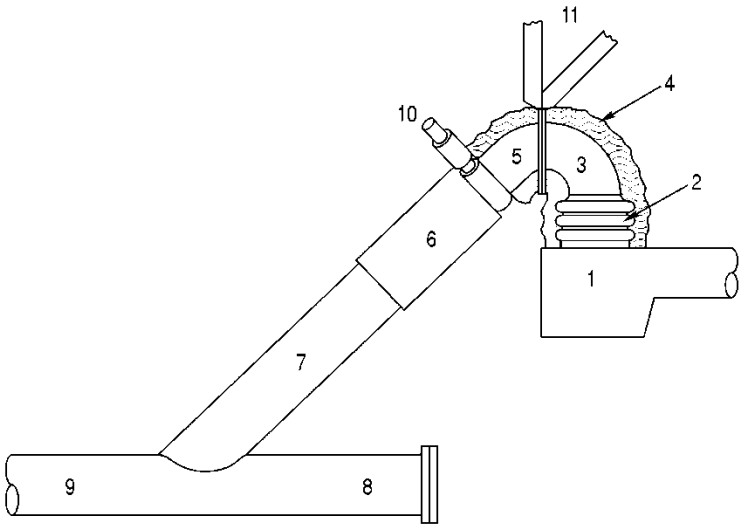

Figure 20

1. Turbocharger Heat Shield
2. Flexible Pipe Connection
3. Elbow (Centerline bend radius must be greater than or equal to the diameter of the pipe)
4. Insulation (Must not restrict flexibility of flexible pipe connection)
5. Elbow (Minimum 15° with water discharge ring)
6. Exhaust Hose
7. Connecting Exhaust Pipe
8. Discharge Pipe
9. Surge Pipe
10. Raw Water Discharge Connection
11. Support from overhead structure

©2022 Caterpillar
All rights reserved.

Exhaust Risers

One way to minimize the possibility of water entering the engine from backflow in the wet exhaust system is to have a steep downward slope on the exhaust piping, downstream of the engine. Refer to **Figure 21**.

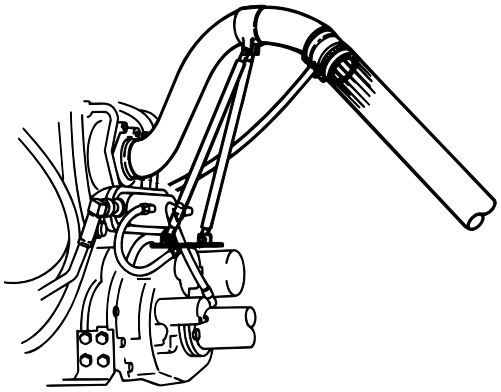

Figure 21

Exhaust risers are pipes that elevate the exhaust gases, allowing a steeper slope in the downstream piping.

The risers must be insulated or water-jacketed to protect personnel in the engine compartment from the high temperatures of the exhaust gas in the riser. The seawater is not injected into the exhaust gases until downstream of the top of the riser, so the upward-sloping portion of the riser is dangerously hot if not insulated or water-jacketed.

The weight of locally fabricated risers (not provided by Caterpillar) must be supported from the engine and marine transmission. Refer to the Technical Data Sheet for max static bending moment on the exhaust connection.

Do not attempt to carry the weight of the risers from the boat's overhead or deck structure. The risers will vibrate and move with the engine-transmission. The risers must be supported independently from the hull to avoid transmitting those vibrations into the boat's structure and passenger compartments. A flexible connection must be used between the riser and the hull mounted exhaust pipe to allow for the engine transmission movement during operation.

Except for a few small engines, exhaust risers are not available from Caterpillar. See fabricators of custom exhaust components for exhaust risers.

Water Lift Silencers

Another way to minimize the possibility of water entering the engine from backflow in the wet exhaust system is by using a water lift silencer. See **Figure 22** for an example of a water lift silencer.

Water lift silencers are small, sealed tanks, mounted to the deck in the engine compartment. The tanks have two connections, an inlet connection and an outlet connection. An additional small drain connection in the bottom is often provided. The inlet enters the tank through the top or side.

The tubing of the inlet connection does not extend past the tank walls. The tubing of the outlet connection enters the tank walls through the top and extends to the bottom of the tank, where it terminates on an angle.

©2022 Caterpillar
All rights reserved.

Typical Water Lift Silencer

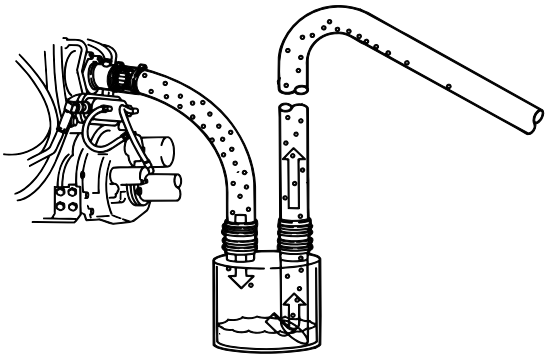

Figure 22

As the mixture of seawater and exhaust gas enters the tank from the inlet connection, the water level rises in the tank. As the water level rises, the water surface gradually reduces the gas flow area entering the discharge pipe. The reduced area for gas flow causes a great increase in gas velocity. The high speed of the gases, entering the outlet pipe, finely divides the water. The finely divided water is transported to the highest elevation of the exhaust piping as a mist of water droplets.

If good design practice is not followed, the engines exhaust backpressure limit is easily exceeded.

The vertical (upward sloping) portion of piping immediately downstream of a water lift muffler must be designed as a pneumatic conveyer, using high exhaust gas velocities to lift finely divided droplets of the sea water to a point from which the gas/water mixture can be safely allowed to drain to the thru-hull fitting.

The diameter of the piping between the water lift muffler and the highest system elevation must allow for a 25.4 m/sec (5000 ft/min) flow velocity of the exhaust-gas-and-water droplet mixture, with the engine running at rated load and speed.

If this velocity is not maintained, the water droplets will not remain in suspension. The water will be forced out of the reservoir of the water lift muffler as a solid slug of water. This will cause the exhaust back pressure to be the same as a column of water the height of the upward sloping muffler discharge piping.

If the velocity in the upward sloping muffler discharge piping is kept above 25.4 m/sec (5000 ft/min), then the exhaust backpressure will be much lower.

Wave Action and Wet Exhaust Systems

While the previously discussed methods will help prevent water from entering the engine through the exhaust system in normal circumstances, wave action can pose additional problems. Waves, striking the hull's exhaust opening, can force water up into the exhaust system. If the waves are severe, or if the exhaust system design allows, the water can reach the engine. Early turbocharger failure or piston seizure may result.

There are a number of ways the kinetic energy of waves entering the engine's exhaust system can be harmlessly dissipated.

The traditional method of preventing water from entering an idle engine is to locate the engine far

©2022 Caterpillar
All rights reserved.

enough above the water line that breaking waves do not reach the height of the exhaust elbow. While the relative elevation of the engine to the water line is fixed and unchangeable, it is possible to design an exhaust system that protects the engine from ingesting water.

Features of such an exhaust system include:

- Sufficient elevation difference between the water line and the highest point in the exhaust piping to prevent even small amounts of water from reaching the engine.
- Some method of dissipating the kinetic energy of the waves as they enter the exhaust piping. The more effective the method of wave energy dissipation, the lower the elevation difference required.
- In no case should the elevation difference between the water line and the highest point in the exhaust piping be less than 560 mm (22 in.).

Surge Chamber

A surge chamber is a branch of the exhaust piping, near the engine that has one end closed off, as shown as **Item 3** in **Figure 23**. When a wave of water enters the exhaust pipe and moves toward the engine, the air trapped in front of the wave will be compressed into the surge chamber. The cushion of compressed air in the surge chamber will force almost all waves back out.

Typical Wet Exhaust System with Engine Mounted Above Water Line

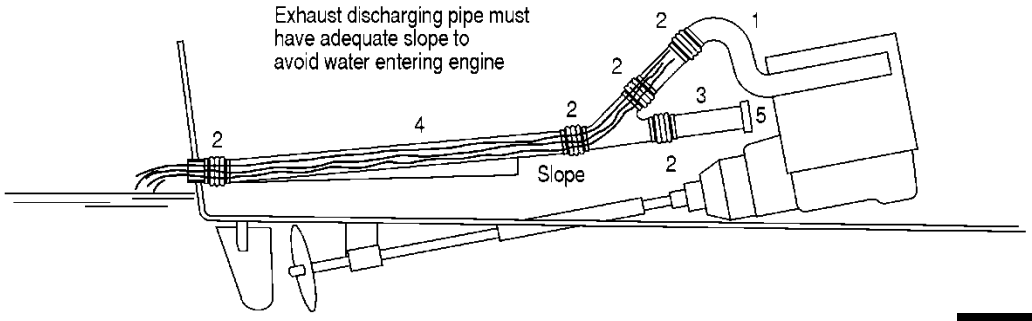

Figure 23

1. Water-cooled Exhaust Elbow – sea water cools elbow, then discharges into exhaust pipe through peripheral slot at end of elbow.
2. Rubber Exhaust Hose Flexible Connection – must be oil and heat resistant.
3. Backwater Surge Chamber – prevents sea water surging into engine exhaust from oncoming waves when vessel is at rest.
4. Exhaust Pipe - should have slight downward gradient toward discharge end.
5. End Cover Plate – removable for inspection and cleanout purposes.

©2022 Caterpillar
All rights reserved.

Valve in Exhaust Discharge

A valve located where the exhaust piping exits the hull can keep waves from entering the exhaust piping when the engine is not running. The valve mechanism should not include any components that rely on sliding contact to maintain flexibility. This type of action has proven troublesome in an atmosphere of salt water and exhaust gas. A flexible strip of one of the chemically inert plastics can provide hinge action.

Hose vs. Rigid Exhaust Pipe

The weight and heat of the water and exhaust gases can cause non-rigid exhaust piping to sag or deform, leaving low spots between pipe supports.

If the slope of the piping is too shallow, water will collect in the low spots and reduce the flow of exhaust gas. This will lead to excessive exhaust backpressure, smoke, high exhaust temperatures, and in severe cases, premature engine failures.

Hose and other non-rigid piping must be evenly supported over its entire length.

Location of Exhaust Discharge Opening

All diesel engines will eventually discharge some smoke through their exhaust systems. Perhaps not when they are new, but certainly near the end of their useful time before overhaul. Locating exhaust discharge openings as far aft as possible and on the sides of the vessel, if above the water line, will minimize the hull and deck area exposed to the eventual discoloration.

The best exhaust system to minimize smoke and noise is to locate the exhaust exit under the water. These systems must also have a small above the water line path for the exhaust for when the boat is not moving. Care must be taken when designing underwater exhaust systems to keep the backpressure within limits.

Valves in Exhaust Water Cooling Lines

Never use shutoffs or valves of any kind in the lines supplying cooling water to the water-cooled exhaust fittings.

The cooling water that is injected into the exhaust gas stream must not be interrupted, for any reason, while the engine is running. Without a dependable supply of cooling water, the high temperature of the exhaust gases will cause severe and rapid deterioration of plastic or rubber exhaust pipe, with potentially disastrous consequences.

©2022 Caterpillar
All rights reserved.



LEBW4970-08

©2022 Caterpillar
All rights reserved.

Printed in U.S.A.