Mounting

Application & Installation Guide

LEBW4974-07

Caterpillar: Confidential Green

THIS PAGE LEFT INTENTIONALLY BLANK

Table of Contents

1 Introduction 5
1.1 References 5
1.2 Changes since last revision 5
2 General Considerations for Mounting an Engine 6
2.1 Foundations 6
2.1.1 Planning 6
2.2 Bases 8
2.2.1 Base design – considerations for driven equipment design 9
2.2.2 Base design – considerations for engine mounting configurations 11
2.2.3 Base design – considerations for the external application 15
3 Structural Requirements 18
3.1 Dynamic modeling 19
4 Mounting Systems and Fasteners 22
4.1 Mounting bolt location 22
4.2 Thermal growth 23
4.3 Mounting systems 26
4.3.1 Soft foot 26
4.3.2 Using shims 28
4.3.3 Adjustable chocks 29
4.3.4 Epoxy grout 30
4.4 Related issues 31
5 Specific Equipment Considerations 32
5.1 Overhung power transmissions 32
5.2 Clutches and drives 35
5.2.1 Clutches 35
5.2.2 Belt and chain drives 36
5.3 Substructure suitability 37
6 Isolation 38

©2025 Caterpillar All rights reserved

6.1 Isolation methods 38
6.2 Bulk isolation (gravel or sand) 40
6.3 Isolation mats or pads 41
6.4 Rubber isolators 41
6.5 Spring isolators 41
6.6 Mobile equipment 44
6.7 Seismic loads 45
6.8 External piping 45
6.9 Other Isolation Methods 46

©2025 Caterpillar All rights reserved

1 Introduction

This section of the Application and Installation Guides describes the requirements and options available for mounting of the engine. Additional engine systems, components, and dynamics are addressed in other sections of the Application and Installation Guides.

Systems and components described in this guide may not be available or applicable for every engine. Consult the applicable engine model price list and/or parts reference guide for information on specific model option availability or compatibility.

1.1 References

The following sources may provide additional information regarding subjects covered in this guide.

- SEHS8700: Special Instruction – Installation of Flexible Mounting Groups
- SEHS9162: Special Instruction – Spring Isolator Group Installation and Adjustment Procedure

1.2 Changes since last revision

- Updated to new template.
- Re-ordered some sections to develop a more consistent flow between topics.
- Sections 2 and 3: Incorporated lessons learned regarding dynamic modeling from 2019 GMRC white paper “Engine pedestal design – case study and lessons learned”.
- Section 4.2: Updated guidance on proper torques for mounting bolts.
- Section 6.5: Added note regarding isolation stabilization during transport.

©2025 Caterpillar All rights reserved

2 General Considerations for Mounting an Engine

Proper mounting of an engine and coupling to the driven equipment are key pieces in achieving a successful installation. Different mounting methods exist largely because no one system will be universally successful in addressing the circumstances that may arise on a particular installation. To frame this discussion, we start with the basics.

2.1 Foundations

The foundation is the on-site portion of the mounting system. It is the set of conditions that are prepared to receive the engine and driven equipment in a manner that will enable them to operate in a trouble-free manner. To achieve this goal, the foundation must:

- Support the total weight of the equipment being mounted (static loading)
- Support the forces and moments that result from operation of the engine and driven equipment (dynamic loading)
- Enable maintaining the alignment between the engine, the driven equipment, and any accessories that require a fixed relationship to either.

The responsibility for the design and execution of the foundation lies entirely with those installing the equipment. The foundation design must take into account the conditions for that site, and preparation for that design includes any studies necessary to understand the geologic or sub-soil make-up of the site. Such in-depth analysis of the site's conditions will enable an informed selection of the anchoring strategy that should be used to secure the equipment that will be used there.

NOTE: All discussions here regarding foundations are intended to raise awareness of the importance of topics of due diligence for foundation design. These discussions are not intended to be comprehensive nor all-inclusive, merely informative. As noted above, all such considerations are the responsibility of those preparing the site and installing the equipment.

2.1.1 Planning

A site soil study is essential to understanding the strata present and their load bearing properties, both static and dynamic. The details revealed in this study should provide the conditions needed to accurately evaluate the interaction between the soil and the foundation footers. The options available for the footers each present a particular set of characteristics that will affect how they interact with the soil, so proper modeling of the full foundation design is essential to validating the design choices prior to any iron arriving on site. When

©2025 Caterpillar All rights reserved

executed properly, this advance planning work will reveal how the entire system – soil, footers, and any interconnection foundation structure – will perform for the equipment it will support.

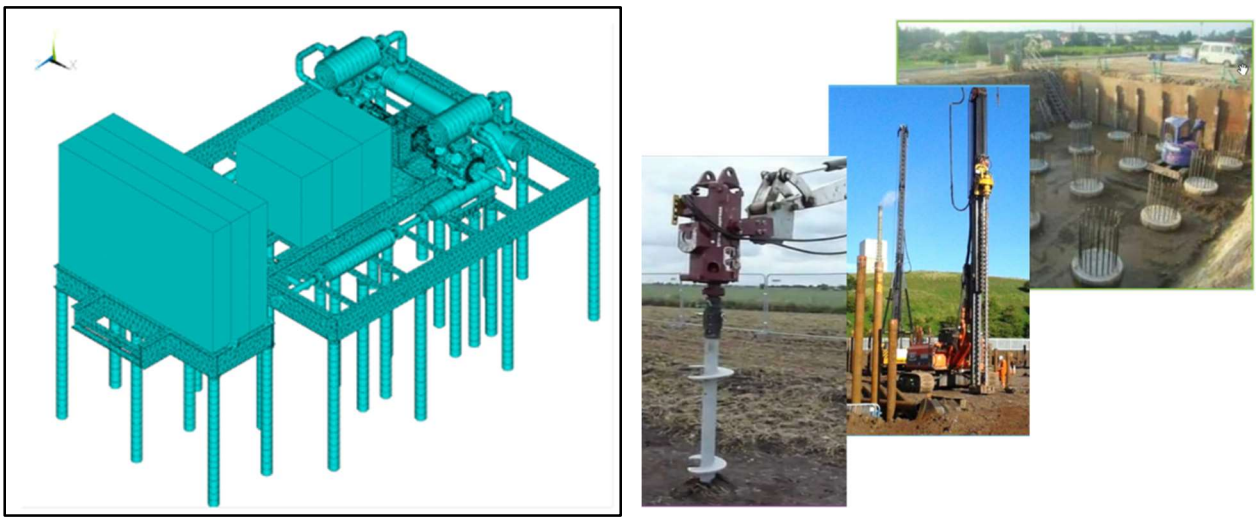

LEFT: Foundation design model; RIGHT: examples of screw pile, driven piles, and cast-in-place piles.

Figure 2.1 **Examples of foundation design components**

The ground loading evaluation should incorporate the of the fluids that will be used in the systems. Coolant, oil, and fuel must be included along with the dry weights of the machinery to be installed. The nature of the installation should be a key consideration; a small, mobile package will likely not require the extensive studies, planning, or site preparation of a large permanent installation. Climate and seasonal variations should be considered in the design.

Noise and vibration should be accommodated according to any requirements applicable to the site. The mass of large, heavy concrete inertia blocks may be required for some equipment, while other designs may allow for the inertia mass to be added to the package being installed. If permitted by the equipment installed, vibration isolators may help to address the dynamics of the operating equipment, but regardless of the design selections present, the ground-engaging structure must tolerate the extremes of those operating dynamics.

Reciprocating engines and compressors present a highly dynamic package to secure on site. Generator sets will typically require much less substantial underpinnings; however, the possibility of out-of-phase paralleling of those gen sets can change those conditions

©2025 Caterpillar All rights reserved

considerably. Such gen set loadings may require twice the foundation loading capacity, and it is recommended that gen set be bolted to the foundation.

Many resources are available to assist with this preparatory work. White papers from industry organizations can help to frame the issues that must be addressed, and expert help can be contracted to conduct the studies and analyses needed for a successful result.

2.2 Bases

The base is the structure that directly engages the foundation. Often generators, compressors, or pumps are packaged to the engine on a common base. This design simplifies the transport and installation of the engine and driven equipment by having them "pre-installed" to a common structure that is then secured to the site foundation. For mobile equipment the base may be the entire substructure for the package, and on for some mobile designs that base may incorporate a trailer for ease of transport.

Regardless of the nature of the installation, the base must provide the structural rigidity needed to maintain the alignment between the engine and the driven equipment. A major cause of misalignment issues is flexing of the base due to inadequate torsional rigidity (although such issues can also arise from an improper installation or incorrect alignment procedures). The design of the base must also account for the type of connection that will be present between the engine and driven equipment. In many cases, the engine and the driven equipment will be fastened separately to portions of the base while for some the engine and driven equipment will be close-coupled, with the driven equipment bolted directly to the engine's flywheel housing.

Considerations for a proper base design include:

- Protect the engine block, coupling, and driven equipment from forces experienced during transport. Directly related to this is consideration for the proper lifting gear to be used in moving the package. Spreader bar design and lifting point locations both play heavily into the bending loads experienced by the package during handling. The base should not be permanently distorted by shipping and handling, in a manner that would not allow the equipment to be properly aligned.
- Limit flexing of the base structure (due to the torque reaction to equipment operation) and ensure no torsional or linear vibrations are present in the operating speed and load range of the engine. The base design should be dynamically analyzed to verify no resonances occur in proximity to that range, including some margin above and below those operating points.

©2025 Caterpillar All rights reserved

- Make proper alignment easy to achieve and ensure that alignment can be maintained under all operational and environmental conditions. Frequent realignment of the driveline components should not be required. The base design should incorporate the space needed for the shimming or chocking method that will be used in securing the driveline components to the base structure.
- Provide mounting locations and fastening holes for all ancillary equipment that will not be mounted directly to the engine or driven equipment.

2.2.1 Base design – considerations for driven equipment design

Because generator designs vary, they present a convenient model to use in examining different issues to be addressed by the structure that joins the engine and driven equipment. While each base design must be evaluated on its own merits, the comments below highlight some issues raised by these different design inputs from the driven equipment.

2.2.1.1 Close-coupled driven equipment

Many smaller generators provide only a single bearing on the end furthest from the engine. This design recognizes the relatively low weight load of the generator rotor and thus relies on the engine to provide the support at the coupling end of the generator shaft. This design is most commonly connected as “close-coupled”, where the driven equipment is bolted directly to the engine’s flywheel housing. In this way the engine and driven equipment become a single structure to be mounted to the base, typically reducing the number points of contact with the base. This also means that the reaction torque loads between the engine and driven equipment are supported by this close-coupling and do not rely on the base structure to address those loads.

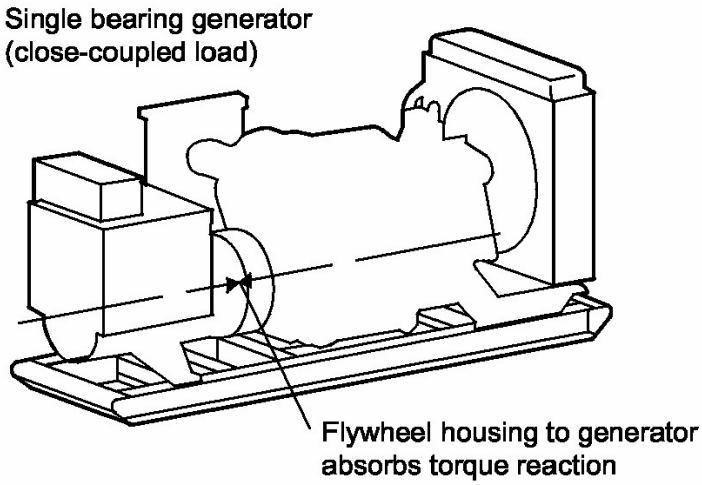

Figure 2.2 **Example of single-bearing driven equipment**

©2025 Caterpillar All rights reserved

Note that this close-coupled mounting may also be used with “two-bearing” driven equipment. The coupling used and alignment method must accommodate the added bearing, as it adds a degree of constraint to the inboard end of the driven equipment.

Some factory arrangements include package-length rails, structural members that extend beyond the engine’s flywheel to provide an integral support for the driven equipment as well. This arrangement is perhaps most commonly seen on generator sets. It also provides a basic structure to support the alignment between the engine and driven equipment.

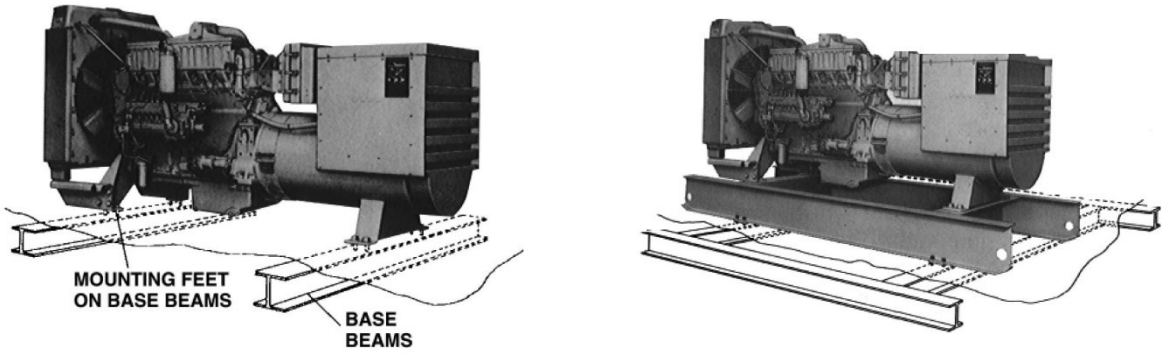

Figure 2.3 **Package-length rails add rigidity to close-coupling**

2.2.1.2 Remoted-mounted driven equipment

Driven equipment with a self-supporting shaft (meaning at least two bearings) can be located further from the engine, eliminating the flywheel housing connection to the engine. As both the engine and driven equipment are mounted separately to the base, those mountings become more integral to the alignment of the two shafts. Also, with no structure joining the engine and driven equipment, the torque reaction must now be supported in the base. These two considerations must be addressed in the design:

- The mounting locations must enable the fine adjustments needed to achieve a proper alignment between the engine and driven equipment shafts.
- The base structure must be sufficiently robust as to resist excessive deflection during equipment operation.

The accommodations for positioning adjustment for alignment are relatively easy to incorporate into the design. The structural consideration requires more analysis. Note that inadequate structural rigidity can lead to misalignment issues during operation. That is, even when the alignment is acceptable during the static checks prior to operation, flexing of

©2025 Caterpillar All rights reserved

the base under load can push the shafts out of alignment, potentially leading to issues with bearings or in the coupling.

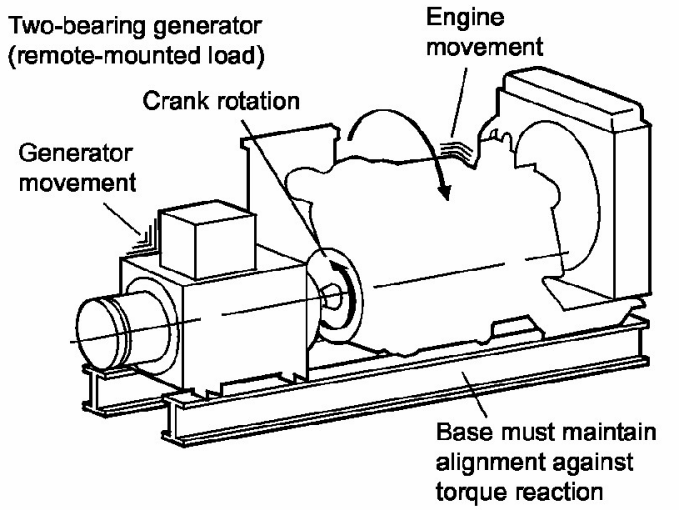

Figure 2.4 **Example of remote-mounted driven equipment**

2.2.2 Base design – considerations for engine mounting configurations

Similar to how the driven equipment influences the base design, the factory-provided system for mounting the engine drives considerations for the base design as well.

2.2.2.1 Foot-mounted engines

Engine mounting “feet” are distinct mounting points provided with the engine. This mounting solution is common for engines that are to be supported directly from the cylinder block. The presence of such mounting feet requires that the base provide mating surfaces to engage each foot when the engine is mounted to the base. These mounting pads must incorporate the holes needed to accept the fasteners that will secure the engine to the base; the engine’s mounting feet should not be welded directly to the base as this does not allow for the adjustments needed to complete the alignment of engine to driven equipment.

Examples of engine mounting feet are seen in the figure that follows. Note that examples are shown of both small and large engines using these discrete mounts. To be clear, some of the smaller engines use a vee-shaped structure that mounts to the end of the engine rather than to the side of the block; such mounts may be called “engine supports” instead of feet.

©2025 Caterpillar All rights reserved

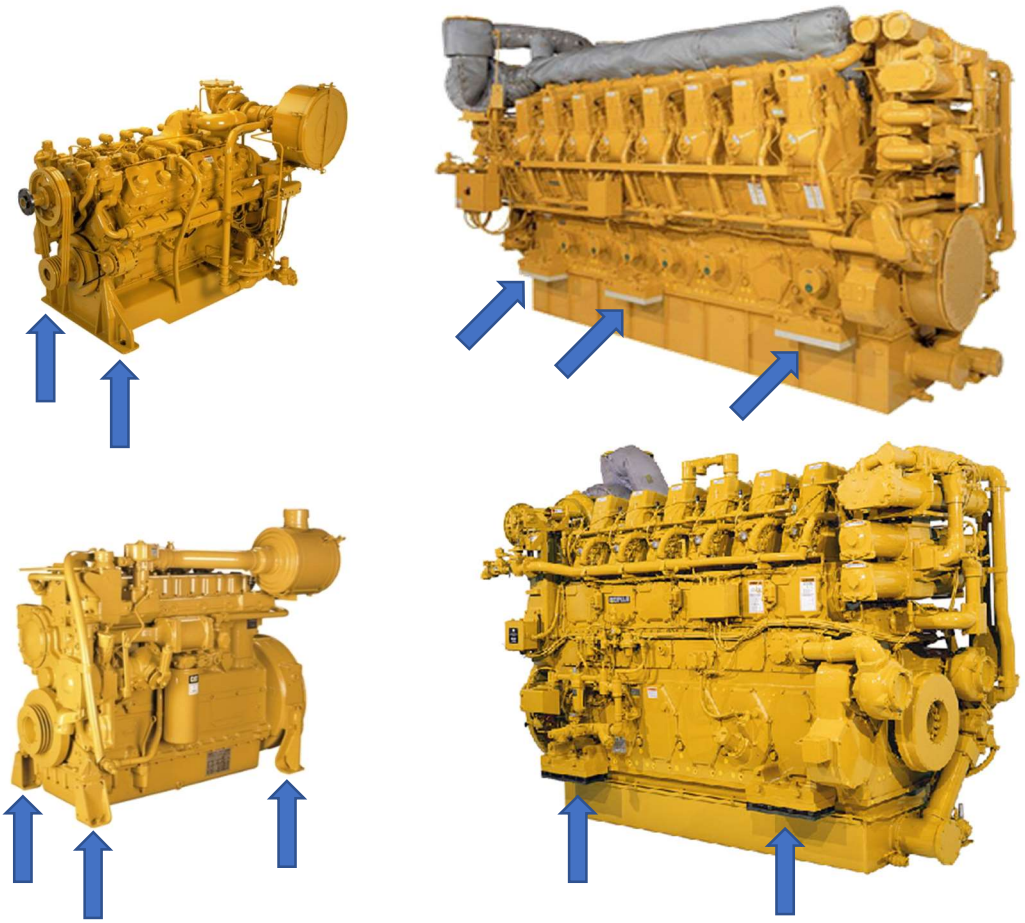

Figure 2.5 **Examples of engines with mounting feet**

As distinct mounting points, mounting feet focus loadings between the engine and base structure through those distinct locations. This can dictate some aspects of the structural design of the base, particularly with regard to the structural cross-members that tie one side rail to the other. Where possible, cross members with a section height equal to the side beams should be placed at the engine mounts to directly couple the base structure across the width of the engine's mounting footprint. For some engines, having an underslung oil pan affects the ability to do this. Regardless, the base structure must achieve the rigidity needed to limit torsional flexing. Where I-beam or C-channel structural members are used for the side beams, the distinct point loadings of engine mounting feet can also distort the top flange of those side beams. It may be helpful to use gusseting around the foot mounting locations to increase the rigidity of the flanges at those points. Be certain the gusseting allows for working space for any tools used in securing the fasteners at each mount.

©2025 Caterpillar All rights reserved

The base designer has the option of having the mounting points tapped to thread the mounting bolts directly into the base mounting pads, or to use through holes with separate fasteners to engage the mounting bolts or studs. Allow sufficient space for the shims, adjustable chocks, or other mounting systems that may be used at each mounting point. Flexible mounts must not be used in these joints; a sustainable alignment cannot be achieved with the movement allowances afforded by flexible mounts.

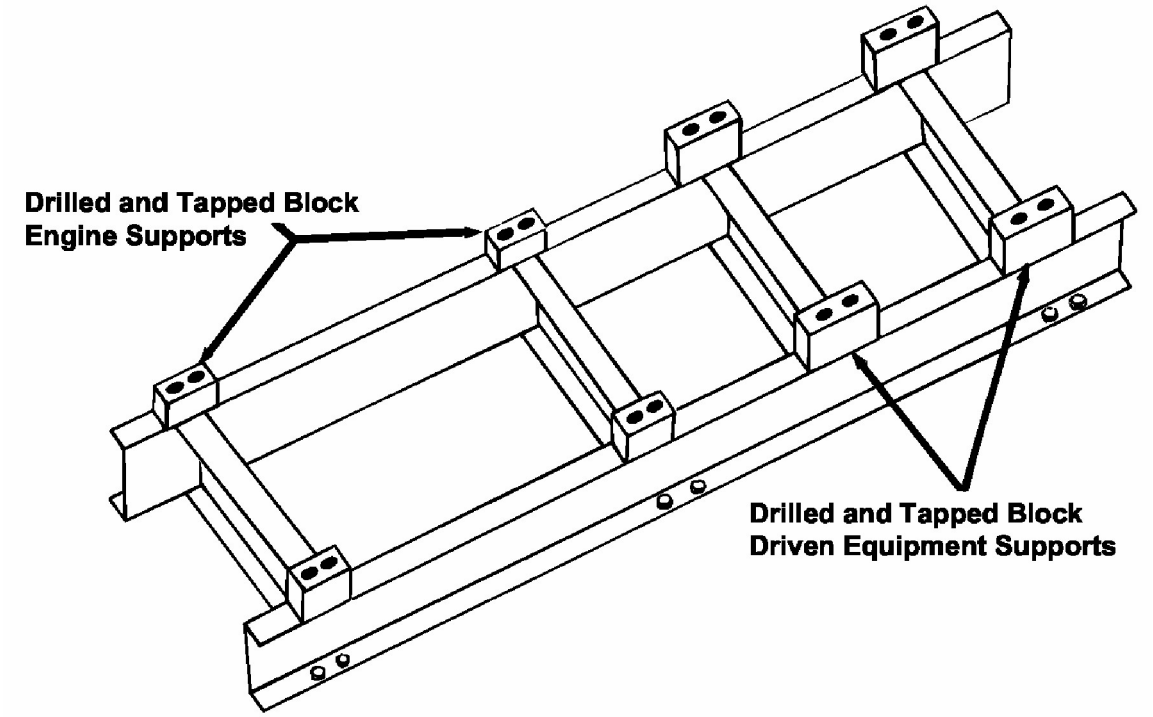

Figure 2.6 **Example of base for foot-mounted engine and driven equipment**

2.2.2.2 Rail-mounted engines

Engine mounting “rails” are structural members mounted to the sides of the engine that incorporate mounting locations along their length. These are often seen as C-channel beams, but other designs may be in use for particular engines. Mounting rails, where used, are the factory-provided mounts for that engine and thus should be used in securing the engine to the base. Changes to those rails constitute changes to the factory mounting system and thus should not be made without explicit factory approval.

©2025 Caterpillar All rights reserved



Figure 2.7 **Examples of engines with mounting rails**

As with mounting feet, engine mounting rails should not be welded directly to the base. While mounting rails contribute additional structure to the sides of the engine they still fasten to the base at distinct points, leading to much the same considerations as noted above for foot-mounted engines. The base design must still deliver the rigidity needed to limit flexing, there must still be adequate room at the mount locations for alignment adjustments to be made, and the potential for distortion at the mount locations still makes gusseting a useful tool in achieving a successful result.

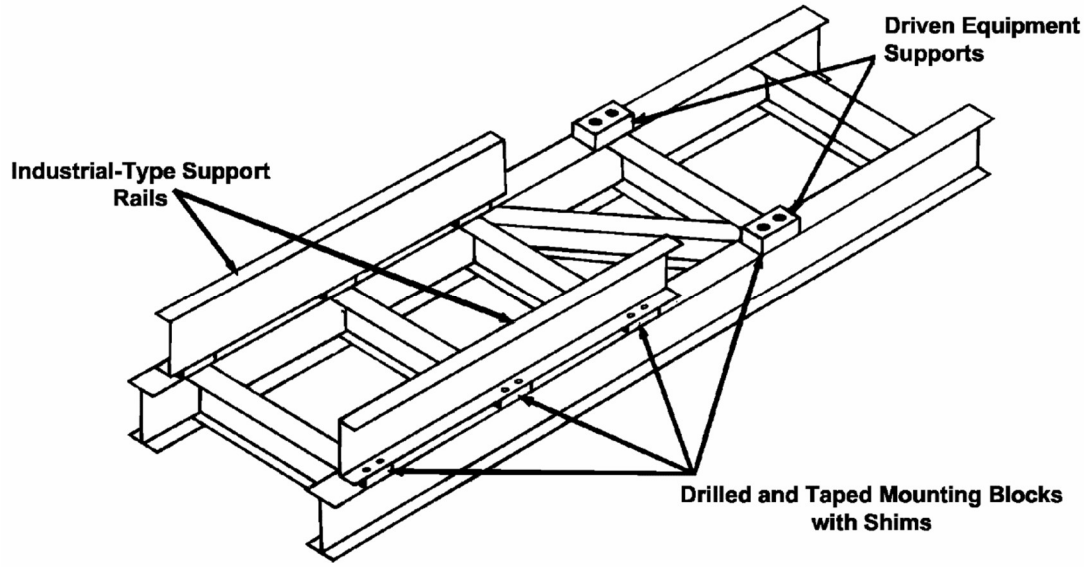

Figure 2.8 **Example of base for rail-mounted engine**

©2025 Caterpillar All rights reserved

2.2.3 Base design – considerations for the external application

The ultimate use of the engine and driven equipment may be referred to as its “application”, and that use can have a significant impact on the design of the base. A key consideration in this regard is whether the environment for the application will be free from significant external forces, or if it is likely that significant forces may be transmitted through the base and back into the engine and driven equipment.

2.2.3.1 Application with low distorting forces

Environments with little likelihood of external forces that can distorting the relationship between the engine and driven equipment allow for simpler mounting solutions. With no expectation the environment will exert forces on the engine-to-driven equipment alignment, the pieces may be bolted to the foundation structure directly.

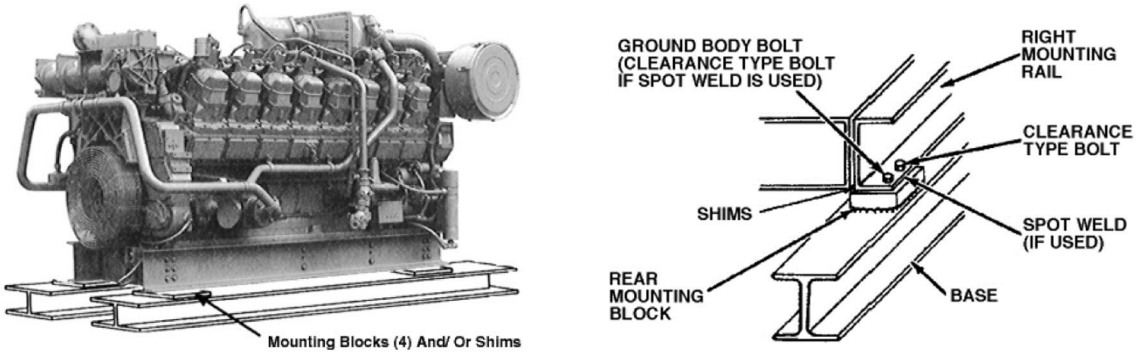

Figure 2.9 **Use of mounting blocks for a rail-mounted engine**

For a rail-mounted engine, the discrete mounting points may use only the chocking system of choice, or they may incorporate mounting blocks that are welded directly to the underlying structure. If the mounting blocks are pre-drilled and tapped to accept the mounting bolts, it may be useful to fasten them to the engine to use the engine as a positioning template for locating them on the base structure. If this is done, the mounting blocks should only be tack-welded in place with the engine secured in this way. It will probably be necessary to remove the engine entirely to complete the final welds all the way around the mounting blocks, but this is preferred to limit distortion as the welds cool.

As we will see in a later section of this guide, the fine details of this joint between engine and supporting structure are important. The engine produces a lot of heat during operation and as it heats up it will expand in size a minute amount. This thermal growth represents a dynamic change in this joint that can lead to many issues with stress or distortion.

©2025 Caterpillar All rights reserved

Strategies to manage this growth can be very effective in protecting the alignment between the engine and driven equipment.

One point of focus for this is to secure the positioning of the end of the engine closest to the coupling. Some applications will specify “pinning”, the use of a dowel of ground-body bolt in a tight clearance hole to positively locate one point at that end. A common convention is to place the pinned mounting joint at the right-hand mount closest to the coupling (often the right rear of the engine). It is important that only one side be pinned in this manner as there will be some thermal growth laterally across the engine and that must not be constrained. For applications where pinning is not specified or not permitted, a joint with the proper full clamping load should be adequate to ensure that mounting location does not shift or slip under thermal distortion forces.

For the rail-mounting block mounting system it is helpful to include guide strips on the mounting blocks located away from the drive coupling end of the engine. These guide strips will help to direct the thermal growth in a straight line, which is important to maintaining the integrity of the engine-to-driven equipment alignment.

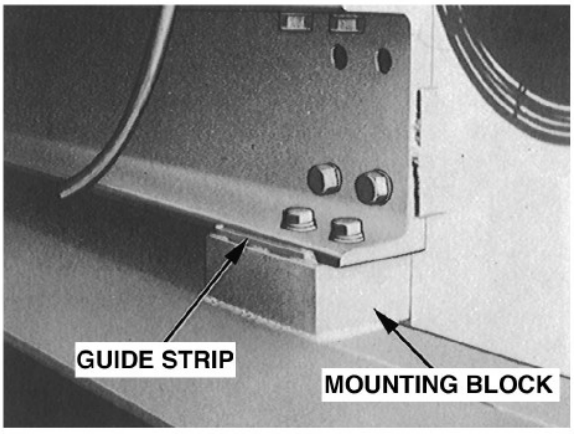

Figure 2.10 **Guide strip on a mounting block**

This strategy for accommodating the dimensional changes that result from swings in temperature does depend on controlled slippage in the joints located away from the coupling. This requires planning to accommodate those dimensional changes (growth or contraction), which is relatively easily done. For many engines, having adequate clearance in the bolt holes is sufficient. If the expected thermal growth will be larger than a reasonable for hole diametral clearance will allow, a slotted hole in the structure can help with directing the growth.

©2025 Caterpillar All rights reserved

2.2.3.2 Applications with significant distorting forces

Mobile packages that will be transported frequently are a prime example of an application with significant distorting forces. All movement and handling of the package brings the potential for jarring or twisting forces that can be transmitted through the base structure and into the engine and driven equipment.

A strategy for handling distorting forces is referred to as “three-point mounting”. The engine and driven equipment are fastened to their own base structure (the “inner base”), and that structure is then secured to a larger structure (the “outer base”) at only three points of contact. In concept, because those three points define a plane the inner base will always be free from distortion regardless of the forces being exerted on the outer base. Suspending the inner structure in this manner isolates it from deflections in the outer structure, protecting the alignment and preventing distortion of the engine block.

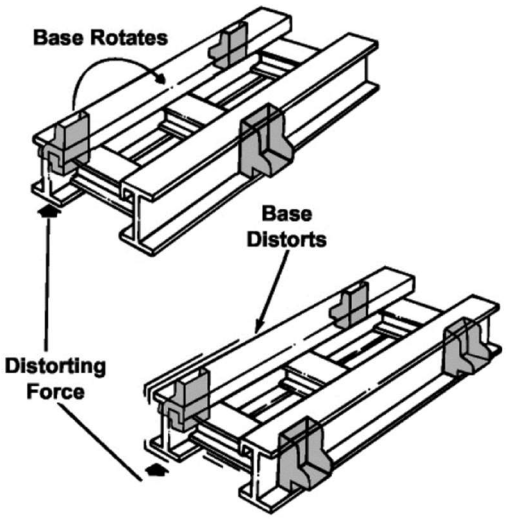

Figure 2.11 **Three-point mounting system**

©2025 Caterpillar All rights reserved

3 Structural Requirements

A core design point for the structure into which the engine is to be mounted is the idea that the engine is a dynamic structure itself, one that creates many of the excitations that the larger package structure must keep under control. To do this requires that the structure adhere to sound engineering principles that direct loads through solid paths that aren't easily excited by the engine's inputs.

One simple guideline is this: cantilevered support structures are not acceptable. The package base should be designed to place a rigid structure underneath each of the engine's mounting points. Mounts that project over free space can be induced by cyclic excitations to flex, and that is likely to be detrimental to the long-term integrity of the structure.

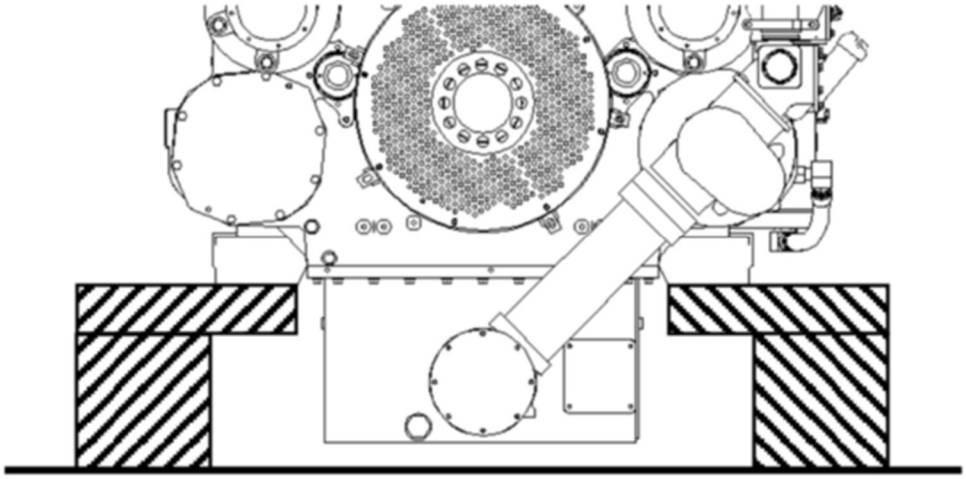

Figure 3.1 **Cantilevered support structures are not acceptable**

Many factors can lead to the need for increased structure in a base. As noted earlier, the differences between close-coupled and remote-mounted driven equipment increases the structural demands on the base significantly. The type and size of the driven equipment will also affect the base, with reciprocating compressors and pumps adding lateral shaking forces not typically seen on generators or rotary compressors (screw or centrifugal types). In the figure below, the addition of plates spanning the open spaces between base structural members adds rigidity to the base.

©2025 Caterpillar All rights reserved

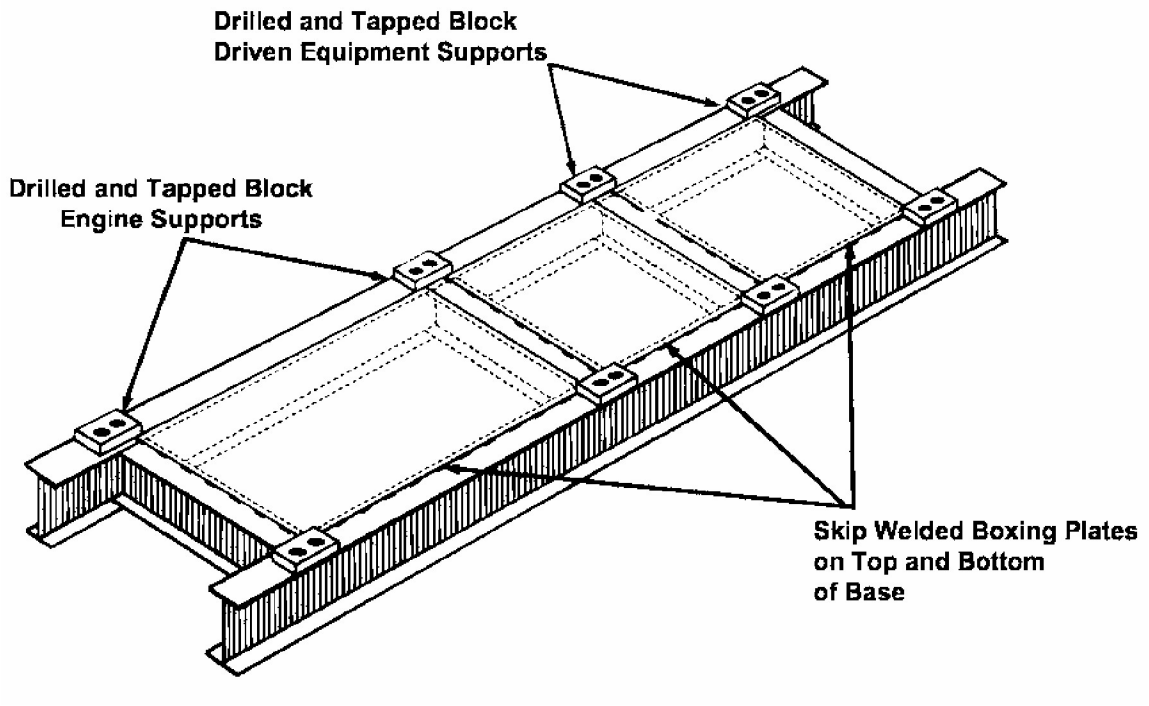

Figure 3.2 **Adding boxing plates to a base**

Skip-welding is recommended for this sort of reinforcement to limit distortion of the base during the welding process.

3.1 Dynamic modeling

The common goals and requirements placed on bases lead to similar attributes across very different applications. However, the dynamics of each combination of engine and driven equipment are unique to each instance. The key to success in each scenario is in conducting a suitable analysis to demonstrate the response of the base to that scenario's particular input loadings.

Analyzing the dynamic responses of a structure involves creating a model of that structure and then applying to that model the dynamic inputs it would be experience in actual use. Engines and the equipment they drive operate cyclically; they repeat the same motions over and over in a cycle. This repetition over time leads to cyclic responses in the structures into which they are installed, which brings into play the concept of resonance.

To understand resonance, we turn to physics and for that discussion we will describe the engine and package as a structure. All structures have a characteristic known as the natural frequency, which is the frequency at which the structure will oscillate (vibrate) when set into motion by a single input. A guitar string is a classic example of such an oscillation,

©2025 Caterpillar All rights reserved

as the string is plucked just once and yet continues to vibrate at a constant frequency, what we hear as the 'pitch' of the string. The natural frequency of the structure and the resonance behaviors the structure exhibits are characteristic of the shape and size of the structure as well as other details such as the materials used, how they are fastened together, and more. It is a complex interplay in the real world, but one for which the science is well-developed and thus it is very reasonable to model the structure to learn about its responses to complex inputs – like the vibrational impulses of a reciprocating engine. Service providers are available to perform this sort of analysis, and their results can either validate the design presented for analysis or inform the modifications that may be required to bring the package into conformity with the established limits for vibration.

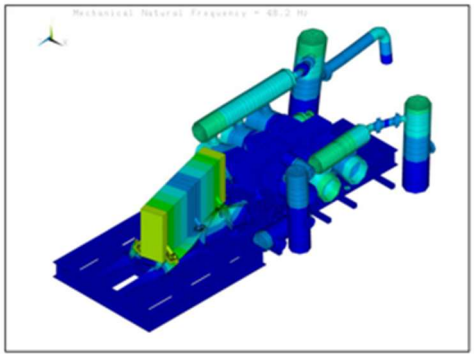

This example shows finite element modeling of an engine packaged with a reciprocating compressor. The distortions seen are exaggerated to help illustrate how the resonance is experienced within the package structure. Such detail can help guide the designer to a solution for excessive vibration.

Figure 3.3 **Example of engine modeled as installed in a package**

At this point it is appropriate to provide a warning: equipment attributes that affect package dynamics can and do change over time. As a consequence, a structural design for a package for a particular engine that has worked well in the past may respond differently to a newer version of that same engine, particularly if the rating (power and/or speed) has changed. A change in rating represents a change in the input excitations to the package structure, which can shift the response characteristics in frequency, amplitude, or both. The important takeaway from this cautionary note is to be certain you are aware of changes in the packaged equipment over time. When changes are noted that can affect structural dynamics it may be time to revisit the analysis to capture those changes.

One challenge that can complicate this is the relationship between the detail present in a design model and the dynamic response results that come from an analysis using that model. While smaller engines are less likely to see a strong relationship here, larger engine structures will begin to respond differently under increased power output. In practical terms this means that modeling done previously using a simple beam to represent the engine may

©2025 Caterpillar All rights reserved

now require a little more detail about the dynamic response of the engine itself. And it's not too hard to see that when the engine begins to exhibit more pronounced structural dynamics one can expect those dynamics to cascade into the responses of the structures into which that engine is incorporated.

The chocking solution selected for a given project can also be a contributor to this phenomenon. Steel shims, epoxy chocking material, and adjustable chocks all contribute some response to the joint between the engine and the base structure, and thus understanding how to represent them in the dynamic analysis model can have an important effect on the analysis results. Assuming a rigid joint will not work for all cases.

One detail that should be emphasized here is that half-order responses are important to review for 4-stroke reciprocating engines. Consider that each cylinder contributes a firing impulse only every other rotation of the crankshaft and this starts to make sense. So, if the analysis does not review half-order responses it can easily be missing excitations that are important.

©2025 Caterpillar All rights reserved

4 Mounting Systems and Fasteners

Among the various structural connections in a packaged engine drive, the joint between the engine and the base is perhaps the most important. This arises largely from the key role the engine mounts play in establishing and maintaining the alignment between the engine's crankshaft and the main shaft of the driven equipment. This role requires that the mounting joints have the ability to be adjusted, and adjustability by its nature tends to run in opposition to the traits that make a robust joint.

Properly mounting the engine to a package structure or other foundation is one of the key considerations to ensure the best operation and service life of the engine. While several options exist for mounting systems, they all share a common end goal - to provide a robust support for the engine that retains the proper alignment of the rotating driveline while accommodating the thermal growth of the installed components.

An acceptable mounting system must provide mounting surfaces that conform as closely as possible to the underside of each of the engine's mounting feet. Eliminating gaps between the mounting feet and the foundation serves to minimize bending stresses that can minutely deform the cylinder block. Any such deformation of the block can affect the precisely machined centerline of the crankshaft bearings resulting in cyclic bending of the crankshaft during operation. If left uncorrected, this bending can cause fatigue that can compromise the service life of the crankshaft.

4.1 Mounting bolt location

Mounting bolts must be positioned to apply clamping loads to a solid joint, such as through a solid mounting block where there is separation between the engine mount and foundation. As seen in the image below, locating the bolts in between support blocks directs the clamping load into the unsupported structures of each side of the joint, creating distortion.

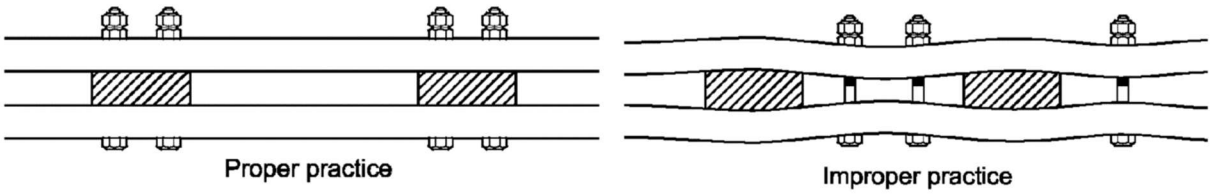

Figure 4.1 **Proper location of mounting bolts on the structure**

©2025 Caterpillar All rights reserved

4.2 Thermal growth

Thermal growth occurs as the engine warms from resting temperature to full operating temperature as a result of the heat of operation. The changes in linear dimensions that result are very small, but they are enough to induce significant stresses into the engine structure if the mounting points are improperly constrained.

The rate of growth for a given change in temperature varies with the material in use. Fortunately, the amount of growth can be determined using a simple equation:

$$\Delta L = \alpha L_0 \Delta T$$

This equation states the change in length (ΔL) is equal to the thermal expansion coefficient (α) multiplied by the original length (L_0) times the change in temperature (ΔT). Values for α are easily obtained from many references (Web sites, books), while the dimensions can be taken directly from the general dimension drawing.

Here are a couple typical values for α for materials of interest in an engine:

Steel: $\alpha = 6.5 \times 10^{-6}$ /°F or $\alpha = 11.7 \times 10^{-6}$ /°C

Cast Iron: $\alpha = 6.7 \times 10^{-6}$ /°F or $\alpha = 12.1 \times 10^{-6}$ /°C

The units of “per degree F” or “per degree C” make sense when one considers the result in the equation is a *change* in length. The units used in the original length measure pass through to the resulting change in length value.

As an example of use of this equation, consider this portion of an engine general dimension drawing:

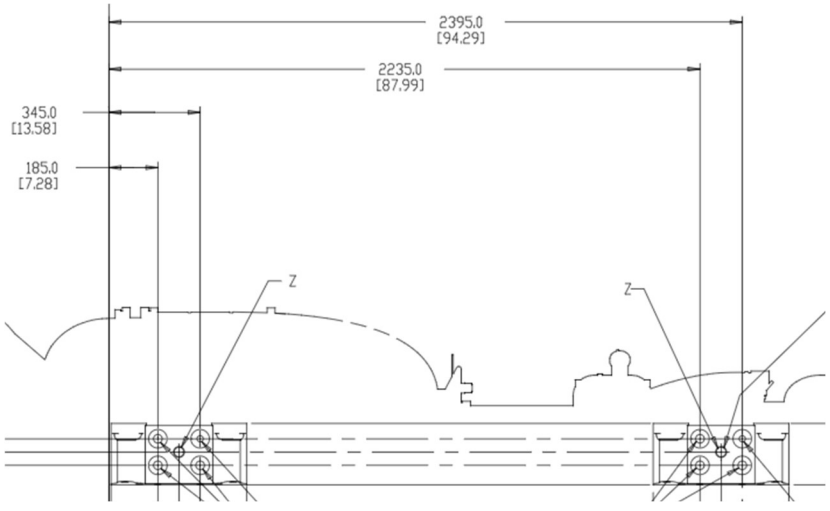

Figure 4.2 **Mounting foot dimensions from an engine drawing**

©2025 Caterpillar All rights reserved

This image shows the front and rear mounting feet that are bolted to the sides of a cast iron cylinder block. Using the same hole on each foot as a reference one finds the distance from front foot to rear foot is 2395 mm – 345 mm = 2050 mm. The value provided earlier can serve as the thermal growth coefficient here, so the scenario only requires the change in temperature to have a complete equation to solve. For this case, the temperature change will be for warming the engine from its cold resting temperature of 10°C to an approximate operating temperature of 85°C. For this scenario:

$$\Delta L = (12.1 \times 10^{-6}\ /°C) \times (2395 - 345\ mm) \times (85 - 10\ °C) = 1.94\ mm$$

As noted above, this change of less than 2 mm is not very large across a span of over 2000mm. But, in this case if both mounting feet are bolted down securely at the cold condition, that mounting system will because stressed (and likely distorted) by that 2 mm of additional length present in the operating state.

The image in Figure 4.3 illustrates a key point in managing thermal growth in a package: seeking to maintain the aligned positioning at the coupling while relieving growth-induced stresses. It shows two mounts under the engine and two more under the driven equipment, and for both pieces of equipment the mount location at the coupling end is fully constrained. Looking at the mount location at the opposite end one can see it is allowed some relative movement, but only along the centerline of the shaft axis in both pieces of equipment. Done properly, this strategy allows the mounts to resolve the thermal growth rather than to have it build stress into the equipment structures, yet it prevents movement in directions that would allow the alignment of the equipment to deteriorate.

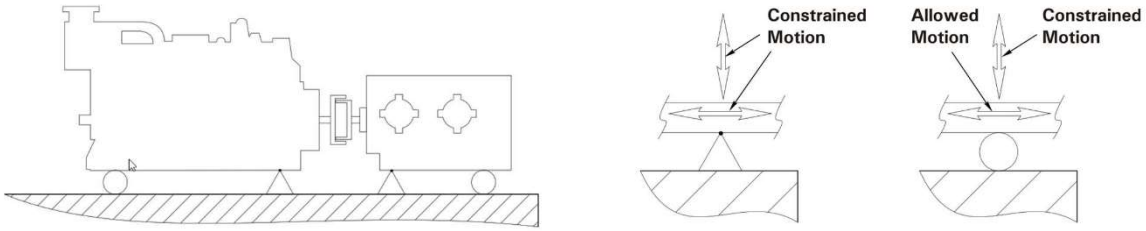

Figure 4.3 **Limiting movement of mounts near the coupling connection**

A proven technique for accomplishing this in a package is to use “torque stagger”. This strategy specifies full standard torque for the fasteners at the coupling-end mounts and lessened torques on the fasteners for the mounting points further from the coupling. The Caterpillar® guidance for torque stagger on the engine mounts is based on percentages of the full standard torque for the fasteners being used, allowing it to scale to the fasteners

©2025 Caterpillar All rights reserved

selected by the installer (se Figure 4.4). This allows the strategy to accommodate different engine sizes and different mounting joint designs equally well.

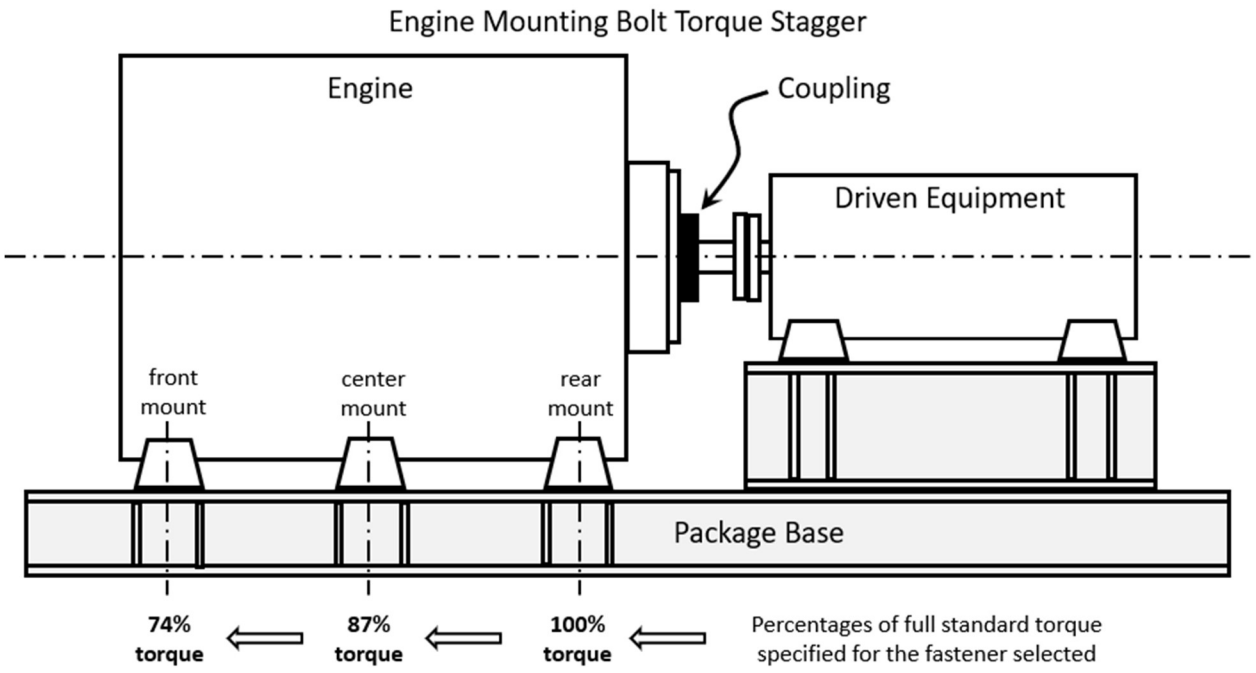

Figure 4.4 **Torque stagger strategy for engine mounting fasteners**

Torque stagger decreases the clamping loads in the forward mounts slightly to encourage thermal growth to resolve itself through slippage in the direction of the crankshaft centerline. The high clamping load present in the rear (coupling end) mounts serves to anchor the engine's positional relationship with the coupling to help maintain the alignment.

As noted above, this torque stagger technique has been used extensively in demanding applications with consistently successful results. For those who prefer that all of the mounting fasteners be at their full recommended torque, there is an alternate method for completing the engine mounting process. In the first step the torque stagger method is used for the cold alignment to help resolve thermal growth during the warm-up run of the package. Then a second step is added: when the unit is shut down for the required hot checks, the mounting fasteners can be torqued to their full value. Done promptly, this "hot torquing" will capture the engine in its operating state to help ensure that the stresses from thermal growth are minimized for the condition at which the engine will spend its running hours. The inclusion of this second step is at the discretion of the installer.

©2025 Caterpillar All rights reserved

It is every bit as important that these mounts be maintained over time, thus they should be viewed as a routine maintenance item. Periodic checks, at least yearly, should be completed to verify both the mounting and alignment remain within specifications.

It is important to remember that the basis torque for these procedures must come from the recommended torque for the fasteners being used. For mounting bolts sourced from Caterpillar, the Cat® recommended standard torque applies; for fasteners from another source, their torque recommendation should be used. Torque values should be adjusted according to the source's guidance for the finish coating selected or for lubricant used if lube is applied for the torquing process.

4.3 Mounting systems

The engine's mounting feet are designed to mate to a foundation structure that shares a common plane through all mounting points. Achieving this across a large foundation can be challenging using individually prepared locations yet machining the entire structure to meet the necessary mount tolerances can be difficult and costly. Some variance is likely among the mounting locations across the structure, so it is important to have a strategy for minimizing those variances to within an acceptable tolerance. Fortunately, several options exist to systematically resolve the variations among mounting locations to achieve the desired outcome.

4.3.1 Soft foot

"Soft foot" is the term used to describe any gapping between the mounting surfaces on the foundation and the engine's mounting feet once the engine is installed on the foundation.

Soft foot can appear in two forms:

- Parallel soft foot, in which the surfaces of the mounting foot and foundation pad are parallel but do not touch.
- Angular soft foot, in which the surfaces of the mounting foot and foundation pad are not parallel to one another.

Parallel soft foot is the variation of height among the mounts the produces the gapping between engine and base; it is addressed by the shimming and chocking techniques discussed here. Angular soft foot represents a deformity in the joint between the foot and foundation, and significant angular soft foot cannot be corrected by simple shimming or chocking. In such cases the source of the angular deformity should be identified and corrected before proceeding with the installation of the engine.

©2025 Caterpillar All rights reserved

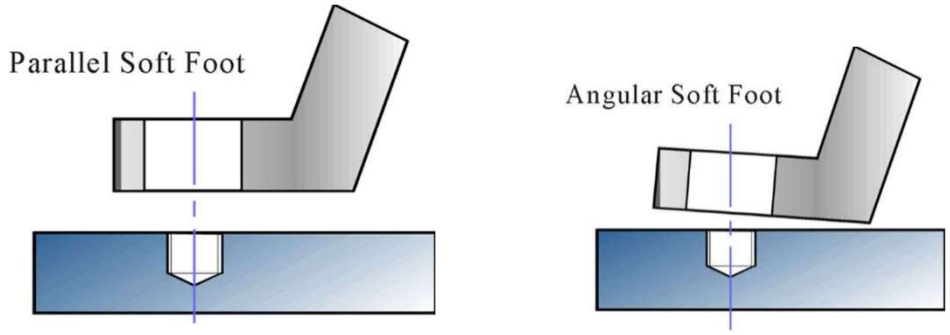

Figure 4.5 **Types of soft foot**

The amount of soft foot present is easily measured using the "release method". In the release method the mounting feet are first fully bolted (at proper torque) down to the foundation. Please check to see that the jack bolt is fully withdrawn before torqueing the mounting bolts. A dial indicator is then installed, with its base on the package foundation and its pointer on the top of the mounting foot. The indicator readout is then set to zero and the mounting bolts are fully loosened. Any increase in the reading on the indicator is soft foot present in that joint.

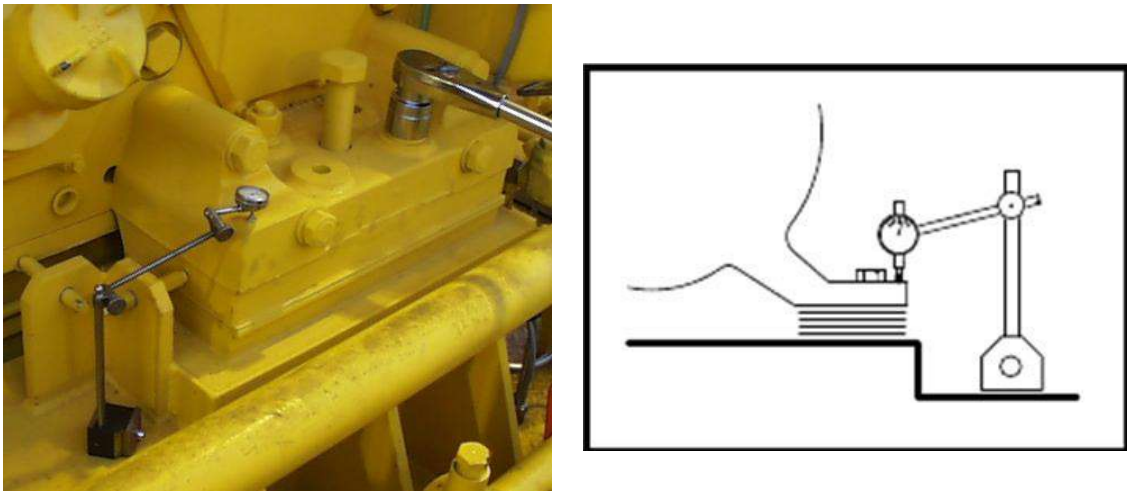

Figure 4.6 **A soft foot test using a dial indicator on the support**

Making to adjustments for soft foot is simplified by the use of the jack-up bolts. These bolts engage threaded holes near each mounting location to enable small amounts of lifting or lowering at each foot. These threads carry a tremendous load in lifting a significant portion

©2025 Caterpillar All rights reserved

of the weight of the engine, so lubrication of the threads is essential. Ensure the proper lubricant (Caterpillar spec 1E2254) has been applied to the jack-up bolts prior to their use.

4.3.2 Using shims

As noted above, once the amount of soft foot is identified it needs to be eliminated. This can be done using shims, thin metal plates of varying thicknesses that fill the gap to achieve hard contact in the joint. Many factory-provided mounts (such as mounting feet) have shims pre-cut to fit around the bolts, allowing insertion and removal without dismantling the joint for each adjustment to the shim stack.

Stacks of shims (often called "shim packs") should not be less than 0.75 mm (0.030 in) thick nor greater than 6 mm (0.236 in) thick. Excessively tall shim packs may shift during engine operation, a change that may compromise the joint. Gaps greater than 6 mm (0.236 in) should be reduced using solid plate material, with additional shims then used as needed to reach the desired goal.

It bears repeating here that Shims should not be used to address angular soft foot. Use of partial shims (to build a wedge-shaped stack) is not permitted as the resulting stack can slide out of the joint over time, compromising the joint. Instead, the foundation and/or mounting surface should be re-worked to resolve the angular difference.

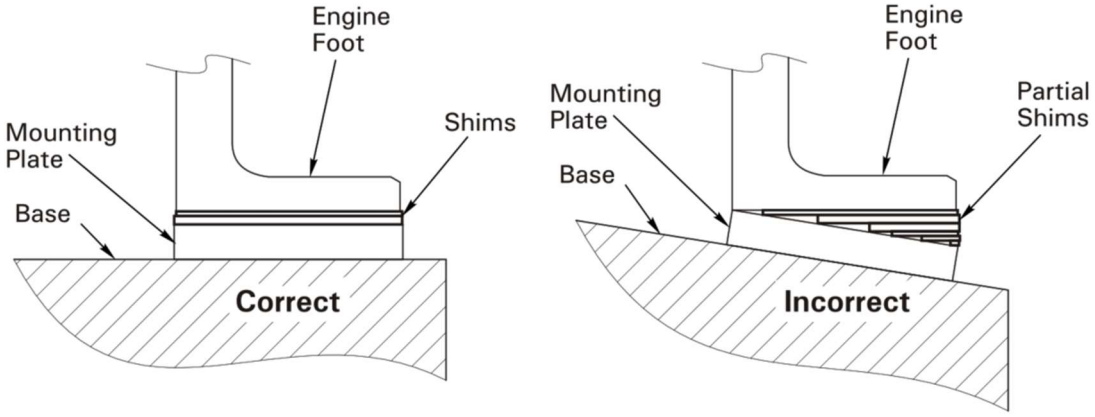

Figure 4.7 **Correct and incorrect use of shims**

This shimming technique is used with prepared mount locations. Some engines offer engineered mounting plates designed as a direct mate to the mounting foot, greatly simplifying the preparation of each mount. Such plates are welded into the foundation structure, so positioning throughout the welding and cooling process is important. For pre-tapped mounting plates, it may be possible to mount them to the engine to help properly position them on the foundation. If this is done, tack weld only while the engine is in place.

©2025 Caterpillar All rights reserved

Perform final welding with the engine removed so that welds may be run on all four sides of the mounting plate. This helps to minimize possible distortion during cooling of the welds and ensures the joint between plate and foundation has no openings where moisture can penetrate and start corrosion of the structure.

4.3.3 Adjustable chocks

Adjustable chocks are commercially available mounts that are specifically designed to greatly simplify the mounting process. In place of shims, the mounts use a vertical screw thread and spherically dished contact pad to eliminate parallel and angular soft foot in each mount. Because of the sheer simplicity of this method they have gained wide acceptance in many applications.

As with many mechanical devices, these chocks must be matched to the application to perform properly. Each chock manufacturer will have specific guidance on selecting the correct chock for the loads that will be experienced at each mount, and their installation guidelines should determine the limits of parallel and angular soft foot that can be accommodated by their products.

All manufacturers' instructions should be closely followed to achieve the best performance from these mounts. Certain surfaces within the chock must be lubricated to ensure proper adjustment at installation. Also, unless otherwise specified these chocks should not be used as a jack-up bolt; the height adjustments in each mount should still be managed using the jack-up bolt that is installed in the Cat factory mount.

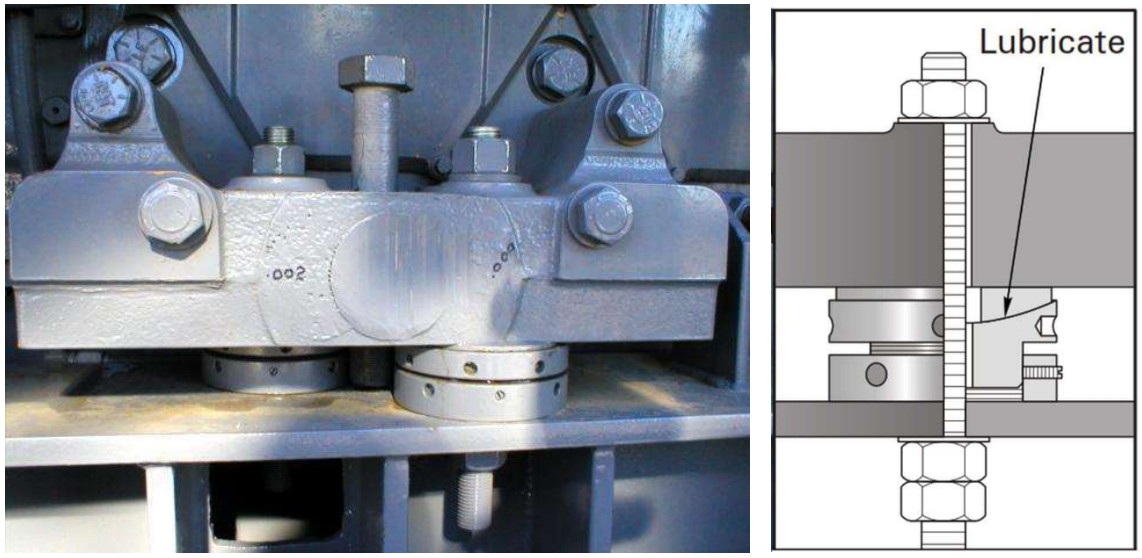

Figure 4.8 **Example of adjustable chock installation**

©2025 Caterpillar All rights reserved

4.3.4 Epoxy grout

Some mounting methods allow for constructing mounting pads that require no shims. Epoxy resins are commercially available for creating strong, durable mounts that are custom fit to each specific installation. These grouted mounting pads are created by "floating" the engine mounts in the epoxy resin material until it cures. This grouted mount thus becomes a rigid structure with essentially zero soft foot.

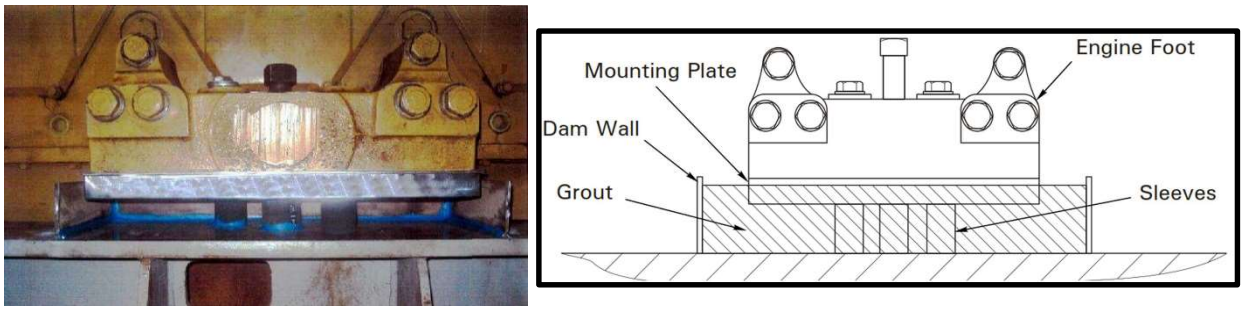

Figure 4.9 **Example of epoxy grouted mount installation**

Where available, prepared mounting plates can be very useful in creating a robust grouted mount. Using the steel mounting plate as a working surface on top of the epoxy grout minimizes the risk of chipping or abrasion of the grout surface in the event the engine must be removed and reinstalled. Grouted mounts are well matched to individual mounting feet but may also be used for engines with mounting rails. When used with rails it is possible to pour the resin for the full length of the rails (a continuous pour) of only at the mounting pad locations (an interrupted pour), but regardless of the technique used the manufacturer's guidance must be followed for allowable minimum loading (load per contact area).

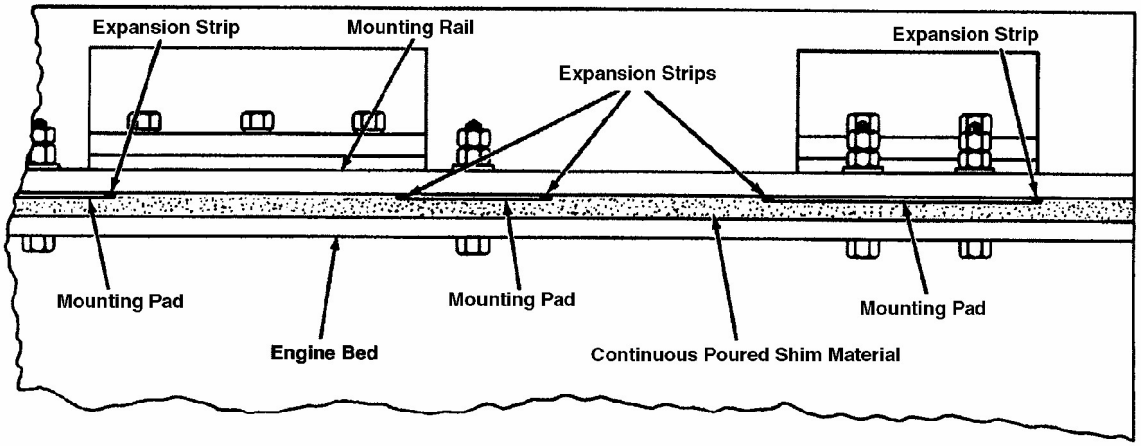

Figure 4.10 **Expansion strips in epoxy grouted mount installation**

©2025 Caterpillar All rights reserved

When using a continuous pour, the nature of the prepared contact surface of the rail must be understood to properly accommodate thermal growth. If the underside of the rail is smooth for the length of the rail, no further provisions should be needed as the smooth surface will be able to expand freely along the top surface of the epoxy. However, if the rail has raised mounting pads on the underside, small foam rubber strips should be installed on both the forward and rearward edges of each pad to allow the pads to move on the epoxy surface.

The general technique used for creating grouted mounts from prepared mounting plates is very similar to that described earlier for welding the mounting plates, using the engine as an installation guide for positioning and alignment. The key difference is in the preparation of each mounting pad location. For grout you will build a retention dam around the space in which the grout will be poured on the foundation beams. Sleeves will need to be installed around the bolts to prevent them from engaging the grout; the contact should be between the grout and the mounting plate to mate plate and grout together into a single support structure. As with any purchased product, the manufacturer's guidelines should be followed in all steps: selection of the proper grout, preparation and pouring, and curing.

4.4 Related issues

The topic of mounting is closely interrelated to both alignment and vibration. The design and execution of the engine's mounting can have a direct effect – positive or negative – on the ability of the engine to stay in alignment with its driven equipment, and on how vibration energies present in the package are managed. The practices described here for selection, completion, and maintenance of the mounting system might just as easily appear in the A&I Guide sections for Alignment (LEBW4975) or Vibration (LEBW4972), but have been placed here because of their direct association with the *mounting* activity. In a sense, this close interrelationship suggests that one should study the issues involved in *all three* topics to better understand how to handle each one in turn.

©2025 Caterpillar All rights reserved

5 Specific Equipment Considerations

5.1 Overhung power transmissions

Mobile pump and well service packages are a specific case of the type of application that can have significant external distorting forces, particularly during transport, installation, or even in operation from reaction forces of the plunger-style pump. TMI may contain information on the limits for such dynamic loads or for the bending moment applied at the flywheel housing.

A common mounting solution is to use a single trunnion-type support at the front of the engine and two supports at the rear (one on each side). This front mount is not a true trunnion in that it cannot rotate, so the connection of this mount to the outer structure must allow for a rocking motion to occur (minimal torsional restraint). The radiator should be mounted to the structure separately in this design. Where it is not possible to mount the radiator separately a special wide front support is used, as seen in the figure below.

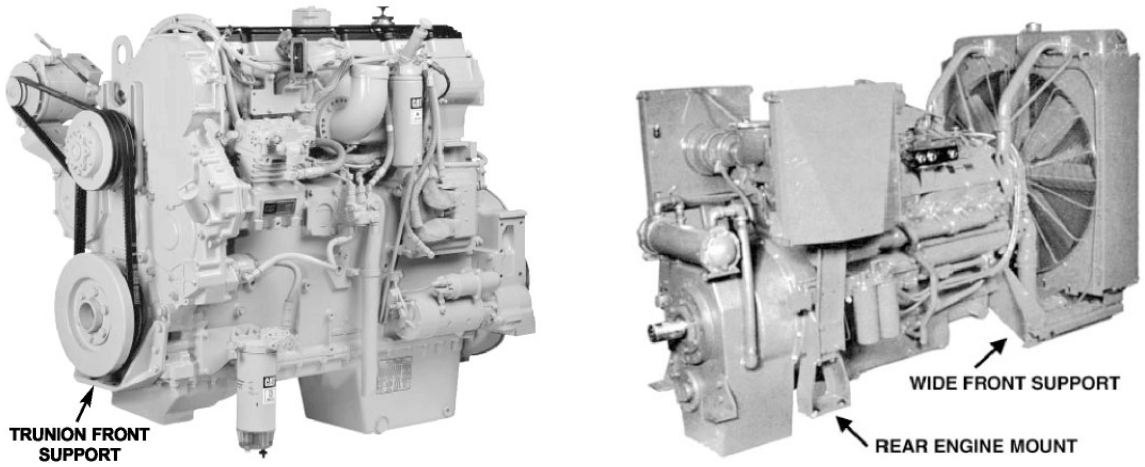

Figure 5.1 **Front supports for industrial engine**

These applications commonly include a transmission that is mounted directly to the engine's flywheel. The transmission becomes, essentially, a close-coupled component secured to the engine at the flywheel housing and given its substantial weight the arrangement must be evaluated to against the loading limits of the flywheel housing. The rear engine mounts should be located further rearward to support the weight of the transmission. Some transmissions incorporate mounting pads that may be used for this, but any such use should be verified with the transmission manufacturer.

©2025 Caterpillar All rights reserved

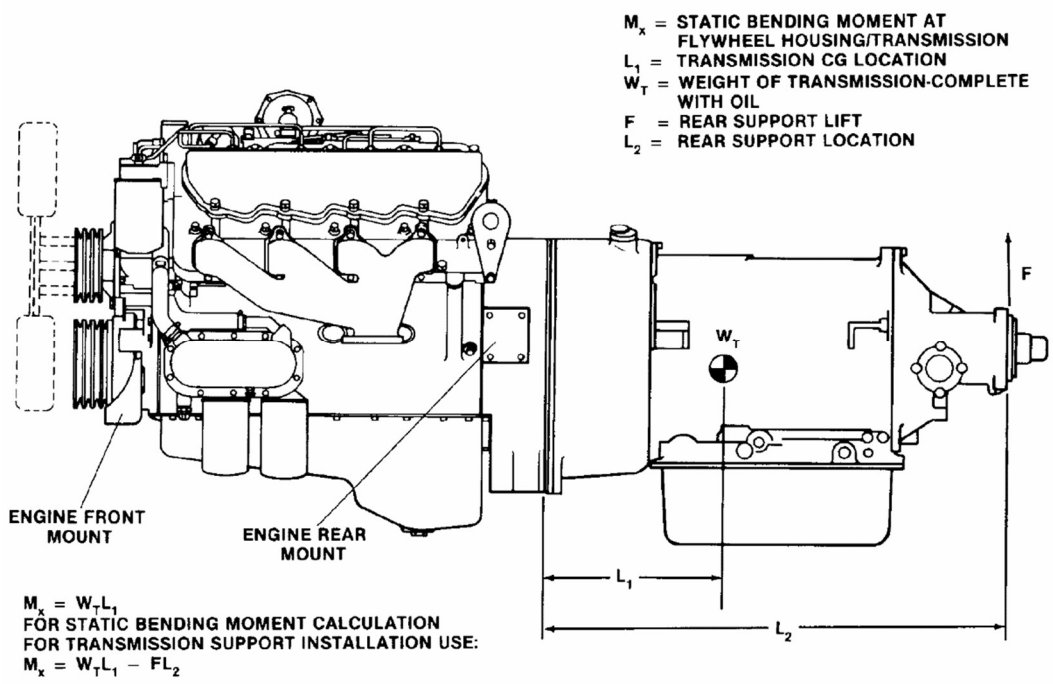

Figure 5.2 **Static bending moment for engine + transmission**

The following figures illustrate different strategies for incorporating the transmission into the three-point mounting. In the first, the engine, transmission, and radiator are all mounted on a subframe, a sort of inner base, that is then three-point mounted to the outer structure.

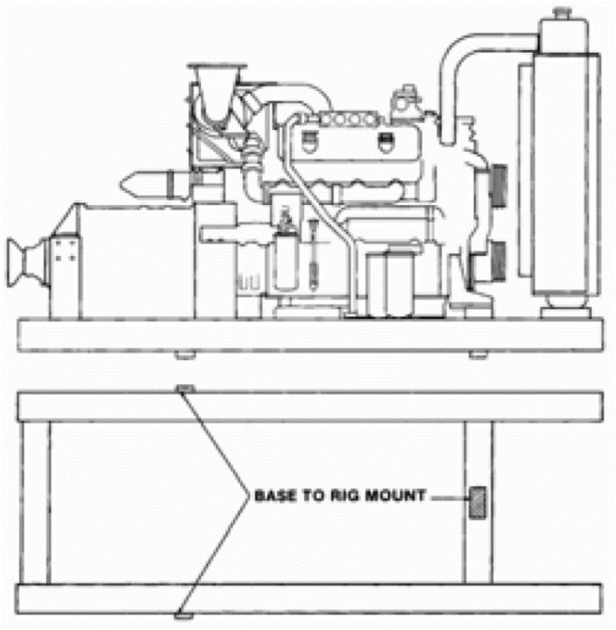

Figure 5.3 **Three-point mount: engine, transmission, and radiator on a base**

©2025 Caterpillar All rights reserved

In the second, the engine and transmission mounts are joined on a short base, with the front of the engine supported with the trunnion-type mount and the radiator mounted separately.

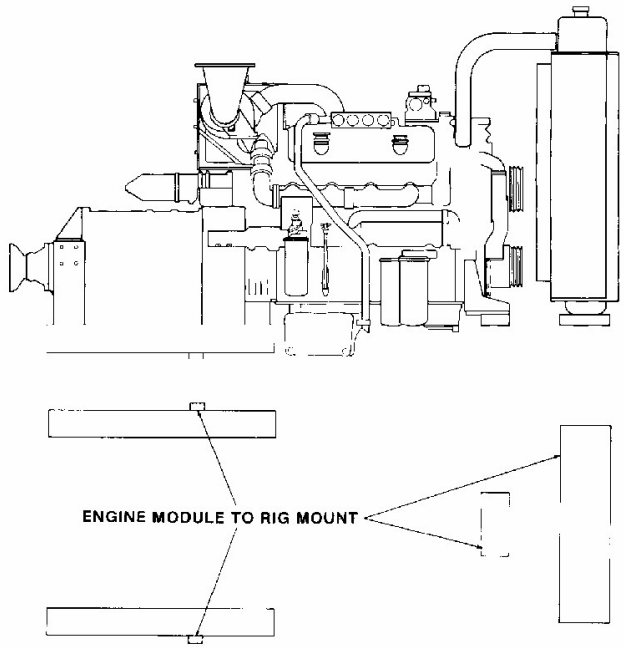

Figure 5.4 **Three-point mount: engine-transmission mount, front trunnion**

A third design uses springs to support the overhanging weight of the transmission.

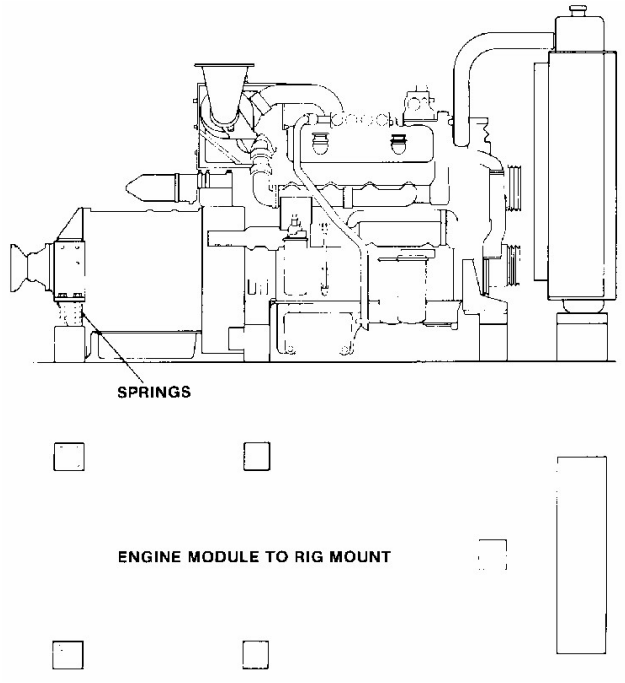

Figure 5.5 **Three-point mount: transmission spring mount**

©2025 Caterpillar All rights reserved

This approach requires specific sizing of the springs to be effective and is limited to use on trailer rigs or service rigs, where the fifth wheel trailer hitch provides the degrees of freedom needed to limit distortion forces exerted on the package during transport.

Note that the vertical spring rate is an important parameter in this design. The vertical spring rates at the transmission and at the rear of the engine must be properly matched to reduce bending forces on the engine's flywheel housing. It is recommended that the spring rates at the transmission should not be higher than those at the engine's rear as this can subject the transmission to high structural forces.

It is also important to constrain rolling motion as little as possible. This too helps to protect the engine-transmission structure for distorting forces from the mounting frame or base.

5.2 Clutches and drives

5.2.1 Clutches

Both plate-type clutches and air clutches are used on mobile and service rig applications. Plate-type clutches are primarily used to drive small pumps and compressors. Engines driving mud pumps, draw works, or rotary tables normally use air clutches.

Plate-type clutches can operate with a limited amount of side load, but clutch supports or pillow block bearings allow greater side load capability. Such supports or bearings must be mounted on the same skid as the engine.

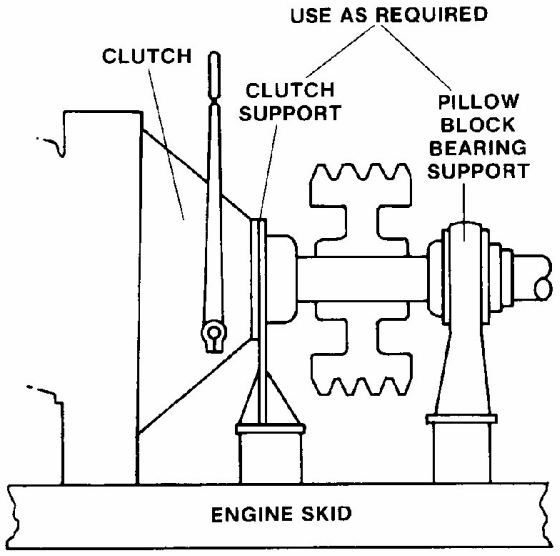

Figure 5.6 **Clutch installation with supports**

©2025 Caterpillar All rights reserved

Air clutches use an expanding air bladder for the clutch element, as shown in the figure below. In this arrangement the output shaft must be supported by two support bearings. As with plate-type clutches, these bearings and supports must be mounted on the same skid as the engine. Air pressure to operate the clutch is supplied by an air connection through the drilled passage in the output shaft. Clutch alignment tolerances are reduced as air pressure to the clutch increases.

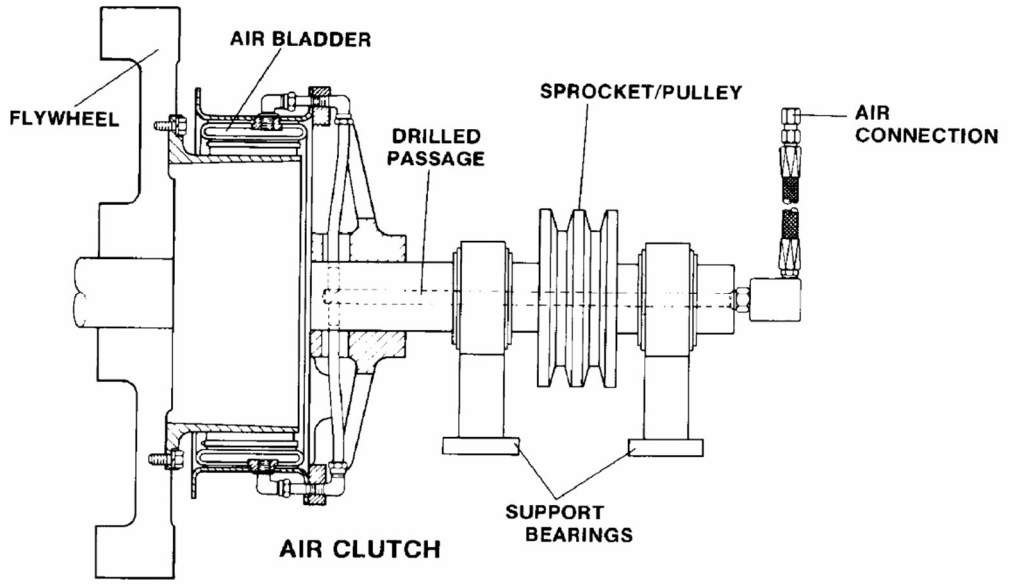

Figure 5.7 **Air clutch installation with belt drive supports**

5.2.2 Belt and chain drives

In addition to the inline torque drawn, belt and chain drives exert side loads that result from the tension applied to the belts or chains. When placed on an unsupported output shaft these side loads may cause the driving shaft (PTO shaft or crankshaft) to bend, which can lead to bearing or shaft failures. Published side load limits must not be exceeded.

To help limit the applied bending moment, the drive sprocket or pulley should always be mounted as close to the supporting bearing as possible. The belt or chain tensions should not grossly exceed the design tension and should be checking regularly.

If the necessary tension must exceed the published side load limit it may be necessary to provide additional support for the drive. This can be done by placing the pulley/sprocket on a separate self-supporting shaft with two bearing dedicated bearings to support the side loads independent of the engine's bearings.

©2025 Caterpillar All rights reserved

5.3 Substructure suitability

Substructures must have sufficient strength and rigidity to support the weight of engines and compounds and to withstand imposed vibrations and torque from mud pumps and engines. Lateral bracing provides resistance to sway as illustrated in the figure below.

The pin joints should be tight. On older rigs, it is sometimes necessary to repair worn pin joints. The figure illustrates that there should be no appreciable unsupported span of the compound skid. Unsupported spans tend to allow the skid to sag, causing harmful vibrations.

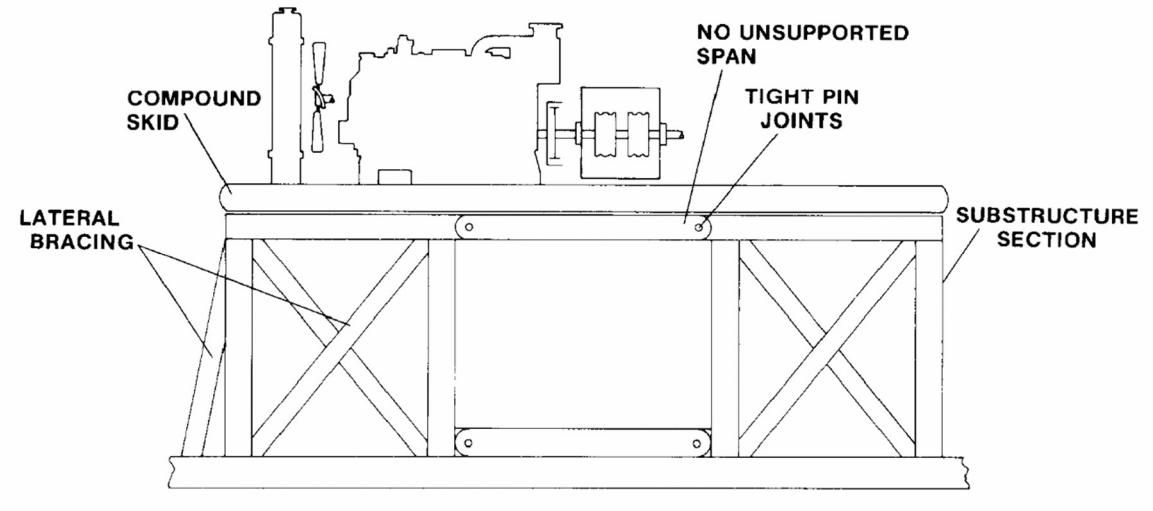

Figure 5.8 **Pump rig support structure**

©2025 Caterpillar All rights reserved

6 Isolation

Isolation refers to placing compliant connections between structures to limit the transmission of vibrations from one area to another. This vibration isolation is required where engine or packaged unit vibration must not transfer into the structure of a building or vessel, or where vibrations from one installed unit could reach other nearby units while they are not in operation. In each case the key issue is that the vibration energy of the operating engine or package is undesirable in (or could be harmful to) other structures and thus should be managed.

Cat engines and packaged units are capable of withstanding all self-induced vibrations and no isolation is required merely to prolong their service life. For the scenarios described above, Cat generator sets with isolation mounts between the generator set and base already satisfy those requirements.

Except for severe shock loads, exterior vibrations rarely affect units that are running. The lubrication that protects the bearings from wear also provides a form of isolation between the running surfaces, limiting the ability of common vibrations from inducing direct contact between those surfaces. Regardless, the methods of vibration isolation are the same whether the source of the vibration is external or self-generated. Some form of flexible component must be inserted into the mounting system to de-couple the structures to limit the transmission of the vibration energy.

Caterpillar recommends the use of flexible mounts on all auxiliary engine installations. Some Caterpillar packages have factory installed vibration isolators; refer to the price list or product description to determine if they are standard or optional.

6.1 Isolation methods

Commercially available solutions for vibration isolation may be as simple as a compliant material that is inserted in the mounting joint, or a more complex form as fabricated mounting components that serve as the mounts. In either form, the isolator uses static deflection to dampen the vibration energy, thereby limiting its transmission across the joint into the other structure. There is a tradeoff inherent in this approach that forms a key consideration in the selection of the isolator, that of how the compliance that enables the damping of vibration energy also can limit the load carrying capacity of the isolator.

In principle, the natural frequency of the damper/isolator determines its effectiveness at limiting the transmission of vibration through the joint. Figure 6.1 shows a basic relationship among that natural frequency, the frequency of the vibrations, and the efficiency of the

©2025 Caterpillar All rights reserved

isolation. By using engine rpm as the nominal vibration frequency, the magnitude of compression on isolating materials can be estimated.

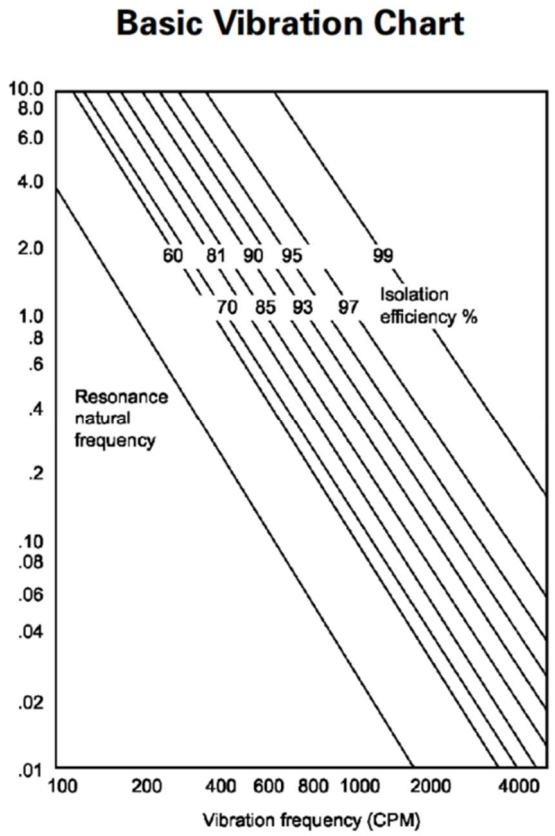

Figure 6.1 **Vibration efficiency chart**

In a general sense, a softer isolator will carry a lower natural frequency and thus will be more effective at isolating vibrations. However, that increased compliance can limit the ability of the isolator to support the load placed on it.

Compliant isolators are commonly used in power generation installations, providing two-way protection between the generator set and its surroundings. They are not typically used in applications where hard connections between the engine or driven equipment and the surroundings may be affected by this compliance in the mounts. Gas compression installations are characteristic of such an application, where the integrity of the hard joints in the compressor piping and of the alignment between the engine and compressor may be adversely affected by having compliance in the mounting joints.

©2025 Caterpillar All rights reserved

6.2 Bulk isolation (gravel or sand)

Starting with the simplest method, where a unit is installed on the ground its vibrations may be dampened by placing bulk materials in between it and its supporting foundation. While not highly effective as dampers, a gravel or sand layer incorporated into the ground-engaging foundation may be enough to achieve the goals of a simple installation. This layer of sand or gravel can reduce transmitted vibrations by one-third to one-half, with gravel having a slightly greater effectiveness than sand.

Installation of a bulk isolating system is simple. On an earthen foundation, the foundation pit must be made a bit larger than would be necessary for just the foundation block alone. The bottom layer of gravel or sand is added and must be tamped before any other foundation components are added. The tamping compacts the bulk material, increasing its ability to support the loads that will be placed upon it and thus limiting settling under load. Forms may then be constructed on top of this base layer into which the foundation block is poured. Once that pour is cured, the forms can be removed and additional bulk material placed around the sides of the foundation block, also tamped to compact it into place.

A similar technique can be used in the concrete flooring of a building, where construction practices allow it. The foundation block of the engine or package installation may be isolated on all sides with a soft joint material. Rubber, asphalt-impregnated felt, fiberglass, and cork have all been used in this way, although cork is seldom used now because it can rot if not kept dry. This sort of block isolation can be very effective at isolating high frequency vibrations, while effectiveness may diminish for low frequencies.

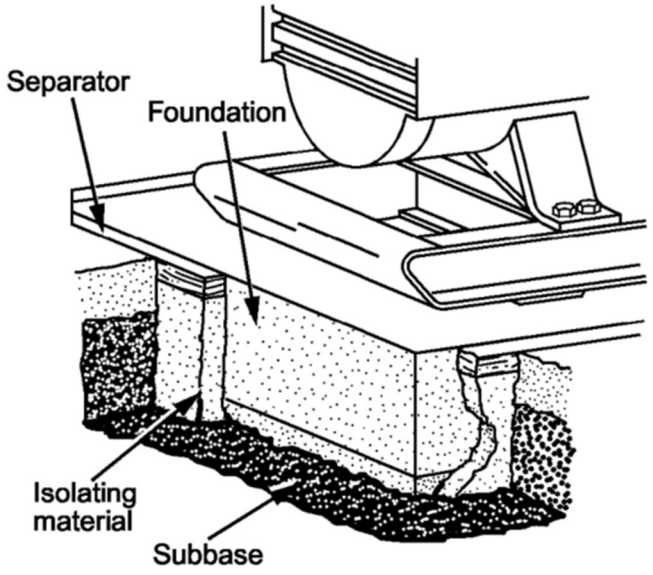

Figure 6.2 **Example of a bulk isolation installation**

©2025 Caterpillar All rights reserved

6.3 Isolation mats or pads

This simple approach can also be used between the mounting surfaces of an installation. Where an engine or package can be placed directly on a floor or other supporting structure, isolation mats or pads may be inserted in between the hard surfaces of the joint to provide vibration isolation. Fiberglass, felt, composition, and flat rubber of a waffle design do little to isolate major vibration forces, but do isolate much of the high frequency noise. The fabric materials tend to compress with age and become ineffective. Because deflection of these types of isolators is small, their natural frequency is relatively high compared to the engines. Cork is not effective with disturbing frequencies below 1800 cps and, if not kept dry, will rot. It is seldom used with modern generator sets but is used to separate engine foundations and surrounding floor because of resistance to oil, acid, or temperature changes between 18° and 93°C (0° and 200°F).

Note that any isolator mat or pad must be installed in a manner consistent with the manufacturer's instructions. Attempting to stack these isolators or apply them indiscriminately could force the total system into resonance. Pad type isolators can be effective for frequencies above 2000 Hz.

6.4 Rubber isolators

Elastomeric materials such as rubber may also be manufactured into discrete isolators. Such elastomeric mounts may be adequate for applications where the vibration control requirements are not severe. Through careful selection and installation of these mounts, isolation effectiveness of up to 90% is possible. Part of that selection process involves checking that elastomeric isolator material does not exhibit the same natural frequency as the engine or package it is being used to support. Be certain to check this property in both the vertical and horizontal planes.

6.5 Spring isolators

Steel spring isolators are perhaps the most effective design for limiting transmission of low frequency vibrations. When properly matched and installed, they can isolate over 96% of all vibration and noise that might otherwise be transmitted into the surroundings. The larger range of motion of spring isolators can also enable them to isolate larger disturbances, preventing migration of such shocks among adjacent pieces of equipment. Steel spring-type isolators are typically effective in the vibration frequency range from 5 to 1000 Hz.

©2025 Caterpillar All rights reserved

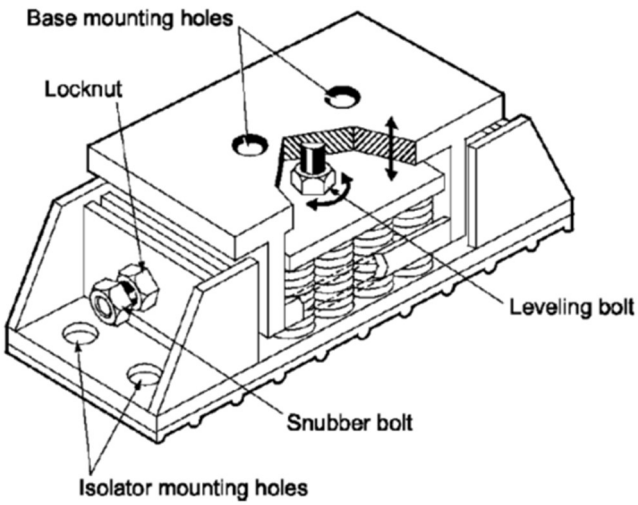

Figure 6.3 **Spring type isolator**

The example shown in the figure above includes thrust blocks to restrict lateral movement without interfering with the spring function. The snubber bolts shown allow for adjustment of the allowed range of lateral motion. No allowance for torque or vibratory loads is typically required, and on some installations no anchor bolting is needed either. However, when operating in parallel, vertical restraints are recommended and for those cases the isolator must be firmly fastened to the foundation.

Anchor bolting is not always required, but if the mounts are to be bolted to the foundation, the typical method is to pre-cast multiple anchor bolts into the concrete foundation, necessitating close control of bolt placement location. A preferred method is to drill anchor bolt holes after the generator set is on site, using the isolators for drilling templates. The anchor bolts are then installed and secured with epoxy resin. If necessary, the foundation must be shimmed or grouted (for full surface area of isolator foot) at the isolator locations to provide a surface flat and level within 6.34 mm (0.25 in) for all isolator contact areas. Elevation differences between isolators should be minimized for the isolators to share the weight evenly when the generator set is horizontal to the foundation.

Marine-type spring isolators are commonly used for marine auxiliary engine mounting. This type of isolator includes directional limits stops for all planes of motion to restrict excessive movement due to the pitch and roll forces of the seas, and from possible contact between vessels. For isolators that do not include vertical limit stops, external vertical limit stops should be installed to limit relative travel between the engine supports and the mounting structure on the vessel. Details may be seen in the figures below.

©2025 Caterpillar All rights reserved

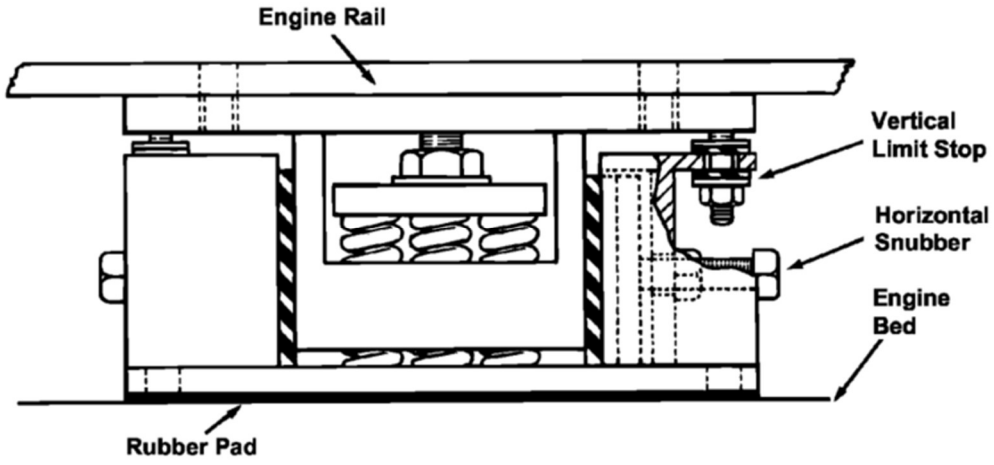

Figure 6.4 **Marine type isolator**

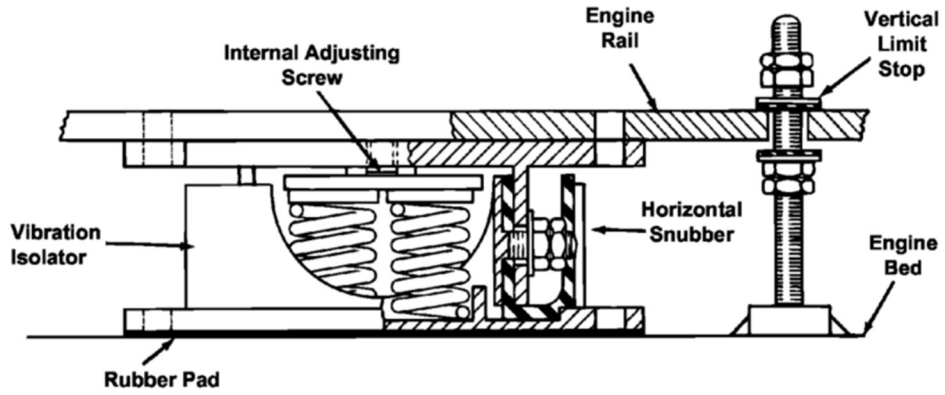

Figure 6.5 **Spring isolator with external limit stop**

Isolator snubbers and limit stops should be adjusted to permit only the amount of motion necessary for isolation purposes. No matter what type of isolation is used, it should be sized to have a natural frequency as far removed from the exciting frequencies of the engine as possible. If these two frequencies are similar, the entire unit would be in resonance.

When anchor bolting is necessary, they should be installed according to the appropriate isolator installation guidelines. The installation and adjustment of the vibration isolators supplied by Caterpillar are covered in the Special Instructions listed under “Reference Materials”, found elsewhere in this Guide.

©2025 Caterpillar All rights reserved

Stationary equipment isolators are used when the package will not be transported with isolators attached or will not experience seismic shock. Isolators suited for equipment transport must contain thrust blocks to control lateral movement. Isolators suited for seismic zones include even more specialized design features. See details on both of these isolator types below.

NOTE: Non-seismic spring isolators shall not be installed on a generator set during shipping without shipping brackets installed that prevent relative motion in all directions. If requested, dealer must provide documentation of shipping bracket validation tests showing the brackets and enclosure mount points do not yield under combined 5G generator set load in all directions for warranty claims.

6.6 Mobile equipment

Isolation from a moveable platform is desirable to:

- Reduce vibration
- Reduce noise
- Prevent torque loading of the engine or package caused by non-rigid platform or trailer bed structures.

Mobile equipment isolators have the same features as stationary equipment isolators but also have built-in restraints capable of withstanding a +2G vertical load and +3G horizontal load under low cyclic conditions. They are suitable for use with mobile platforms but are not generally intended to handle seismic shock.

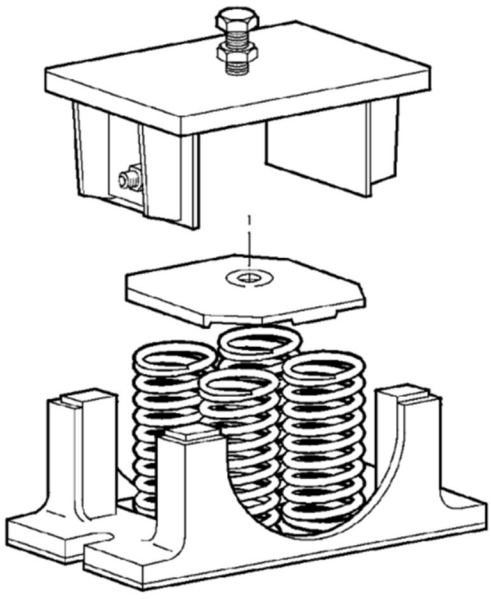

Figure 6.7 **Isolator for mobile equipment**

©2025 Caterpillar All rights reserved

These isolators perform a critical role in equipment longevity as vibration carried throughout an enclosure can lead to early failure of auxiliary equipment -- relays, switches, gauges, and piping can be adversely affected. Noise, while normally only annoying, can attain levels objectionable to owners and operators. If operating near property lines, noise could exceed local ordinances.

With mobile equipment weight is a factor, and as a result mobile designs may present a less substantial structure as a foundation than would commonly be encountered on a stationary installation. The package should not be fastened directly to this mobile platform or trailer bed because unless this structure is extremely rigid it will distort during movement. Deflection of the bed would be transmitted to the engine, causing block bending and possible crankshaft and bearing failures. Proper isolation can enable the package structure to remain unaffected by deflections in the mobile equipment bed. Lateral movement of the package must also be minimized as the trailer is transported. However, addressing this can be as simple as blocking the unit off the isolators during the move, or tightening the snubbers during transport -- the thrust blocks alone may be enough to restrict this lateral movement.

6.7 Seismic loads

Seismic shocks (those generated by the earth) typically will not harm an engine directly, but spring isolators can be excited by such shocks to amplify the movements to a more concerning level. Special isolators incorporating seismic restraining or damping devices are available, but they must be selected based on requirements specific to the location in which they will be used (the “seismic zone”). All parts of such an installation must be addressed to be suited to these seismic loads, including connected piping and auxiliary equipment supports.

6.8 External piping

As noted earlier, where hard piping is involved the use of isolators can be an issue. Piping connected to engines or packaged units with resilient mounts requires isolation of its own. Fuel and water lines, exhaust pipes, and electrical conduit can otherwise transmit vibrations over long distances.

©2025 Caterpillar All rights reserved

If isolator pipe hangers are used, they should have springs to attenuate low frequencies and compliant material in the saddles to minimize high frequency transmissions. To prevent resonant vibrations, long runs of piping should be supported at unequal intervals as shown in the figure below.

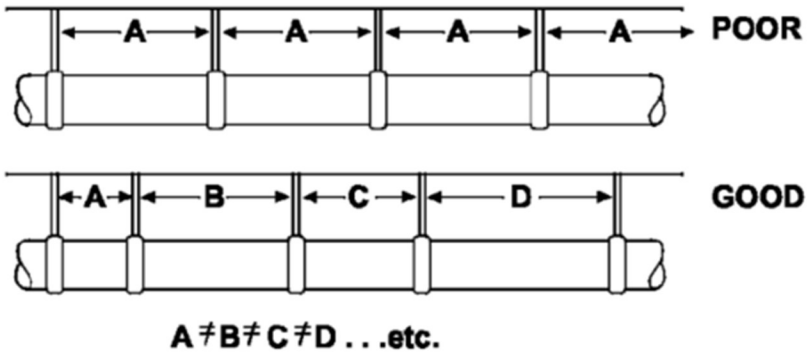

Figure 6.6 **External piping supports**

6.9 Other Isolation Methods

Fiberglass, felt, composition, and flat rubber of a waffle design do little to isolate major vibration forces, but do isolate much of the high frequency noise. The fabric materials tend to compress with age and become ineffective. Because deflection of these types of isolators is small, their natural frequency is relatively high compared to the engines. Attempting to stack these isolators or apply them indiscriminately could force the total system into resonance. Pad type isolators can be effective for frequencies above 2000 Hz.

Cork is not effective with disturbing frequencies below 1800 cps and if not kept dry will rot. It is seldom used with modern generator sets, but is used to separate engine foundations and surrounding floor because of resistance to oil, acid, or temperature changes between -18° and 93°C (0° and 200°F).

©2025 Caterpillar All rights reserved

THIS PAGE LEFT INTENTIONALLY BLANK

LET'S DO THE WORK.™

Information contained in this publication may be considered confidential. Discretion is recommended when distributing. Materials and specifications are subject to change without notice.

© 2025 Caterpillar. All Rights Reserved. CAT, CATERPILLAR, LET'S DO THE WORK, their respective logos, "Caterpillar Corporate Yellow", the "Power Edge" and Cat "Modern Hex" trade dress as well as corporate and product identity used herein, are trademarks of Caterpillar and may not be used without permission.