C1.1 with 14A Dynamo/PM Alternator or 40A Alternator

14A Dynamo/PM Alternator

Electrical system

Back EMF warning

As with all electro-magnetic devices, the Electrical Shut Off Solenoid (ESOS) uses a coil to generate a magnetic field to control the plunger position. When voltage is applied to, or removed from, the coil in normal operation of the engine a voltage spike (back EMF) may occur. This spike should be suppressed using diodes D1 and D2 in order to avoid damage to other electronic components that may be fitted to the machine, e.g. voltage regulators, auto shut down units etc. See separate wiring diagrams for Auto Shut Down.

Wiring diagrams

C0.5, C0.7 and C1.1 (14 amp, 15 amp alternator)

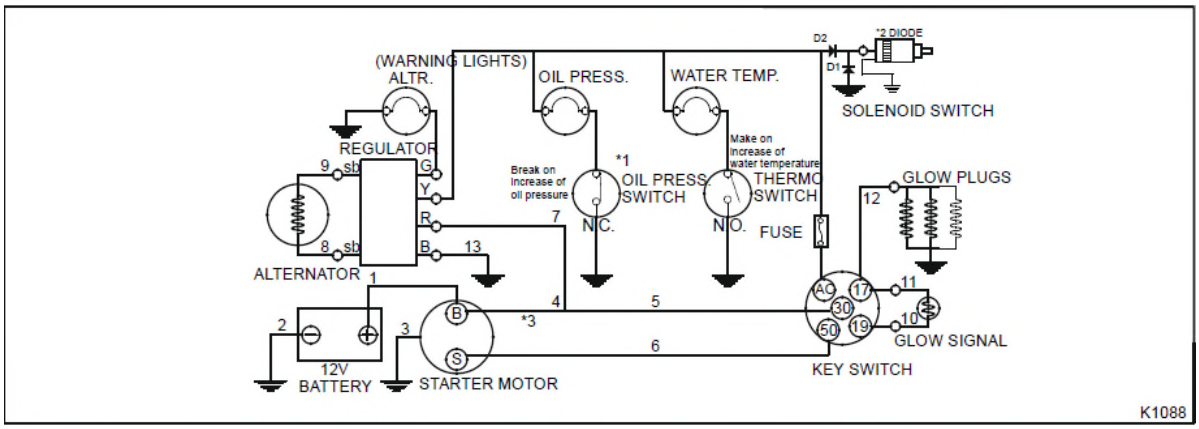

* 1 - Maximum current draw for standard oil pressure switch is 0.42 amps (5 Watts maximum bulb).
* 2 - Diode capacity: current 3 amps, reverse voltage 600V (D1 is mandatory).
* 3 - A fuse can be fitted if desired (delayed fuse).

D1 and D2 = Diodes.

Maximum circuit resistance

The resistance of battery cables 1, 2 and 3 must not exceed 0.001 ohm.

Circuit	Cable number	Circuit current	Maximum circuit resistance	Maximum circuit volt drop	Remarks
Alternator charging	4, 7, 8, 9, 13	14 amps 15 Amps	0.036 ohm 0.033 ohm	0.5 Volt	See glow plugs circuit.
Starter motor solenoid	4, 5, 6	15.75 Amps	0.04 ohm	0.63 Volt	See glow plugs circuit.
STD glow plugs (via glow signal)	4, 5, 10, 11, 12	(Peak max) 26 Amps (C0.5) 39 Amps (C0.7) 63 Amps (C1.1)	0.0192 ohm (C0.5) 0.0128 ohm (C0.7) 0.0079 ohm (C1.1)	0.5 Volt	-

If a glow signal is not used, it is still necessary to connect terminals 17 and 19 on the key switch.

C1.1 (with 40amp alternator)

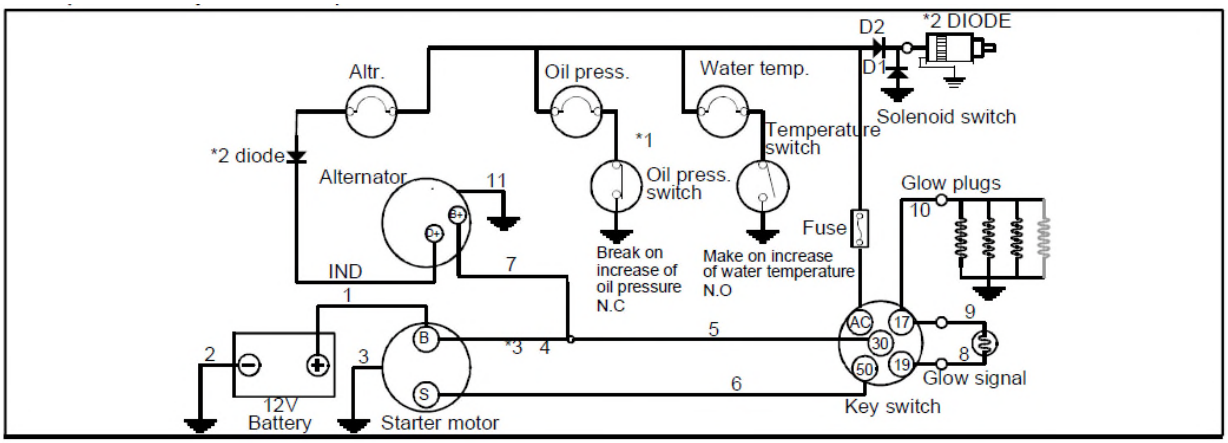

Note: Minimum cable size for the 40 amp alternator is 6 mm^2

* 1 - Maximum current draw for standard oil pressure switch is 0.42 amps (5 Watts maximum bulb).
* 2 - Diode capacity: current 3 amps, reverse voltage 600V (D2 is mandatory).
* 3 - A fuse can be fitted if desired (delayed fuse).

D1 and D2 = Diodes.

Maximum circuit resistance

The resistance of battery cables 1, 2 and 3 must not exceed 0.001 ohm, for 12V systems and 0.0034 ohms for 24V systems.

Circuit	Cable number	Circuit current	Maximum circuit resistance	Maximum circuit volt drop	Remarks
Alternator charging	4, 7, 11	65/85 Amps	0.0077 ohm (65A) 0.0059 ohm (85A)	0.5 Volt	See glow plugs circuit
Starter motor solenoid	4, 5, 6	15.75 Amps	0.04 ohm	0.63 Volt	See glow plugs circuit
STD glow plugs (via glow signal)	4, 5, 8, 9, 10	57 Amps (3 cyl) 76 Amps (4 cyl)	0.0087 ohm (3 cyl) 0.0065 ohm (4 cyl)	0.5 Volt	-

Note: If a glow signal is not used, it is still necessary to connect terminal 17 and 19 on the key switch.

Alternator charge lamp.

Alternator charge lamp rating: 12V - 2,2W at 850 rev/min.

When the engine is at rest the alternator charge lamp is illuminated via the battery and it extinguishes when the alternator is generating. Using a lower wattage bulb than the rating above, will increase the speed at which self excitation occurs upon initial run up e.g. a charge lamp with a lower wattage bulb will have a rating of 12V - 1,2W at 1300 rev/min.

Battery performance

Commercial reference number	Cold cranking amps			Reserve capacity (minutes)
	BS 3911/IEC (8.4V/60sec)	SAE J537 (7.2V/30sec)	DIN 72311 (9V/30sec)	
049	175	285	150	55
069	340	540	300	120
072	420	590	380	120
647	540	740	450	220
655	600	780	540	235

Caution: *The use of ether is* ***prohibited,*** *it may damage the engine and it will invalidate the warranty.*

Batteries that meet this specification will give suitable start performance. If the auxiliary loads are large, it may be necessary to specify a battery with a higher ampere-hour capacity (or reserve capacity) or to use a separate battery system. Any battery that is chosen because of its higher reserve capacity must not have inferior high rate discharge characteristics.

Battery to starter lead resistance

The resistance of the lead(s) used between the battery/batteries and the starter motor must not be more than 0.001 ohms for 12V systems and 0.0034 Ohms for 24V systems. More detailed information on types of battery is available in the Caterpillar installation manual.

Glow plugs

The use of glow plugs will not affect the specification of the battery, but may reduce by a small amount, the voltage available at the starter motor.

The total voltage drop for the “glow plug to battery” leads must not exceed 0.5 volts (this includes all connectors).

Auto shut down - C1.1 and C1.6 (40 amp alternator)

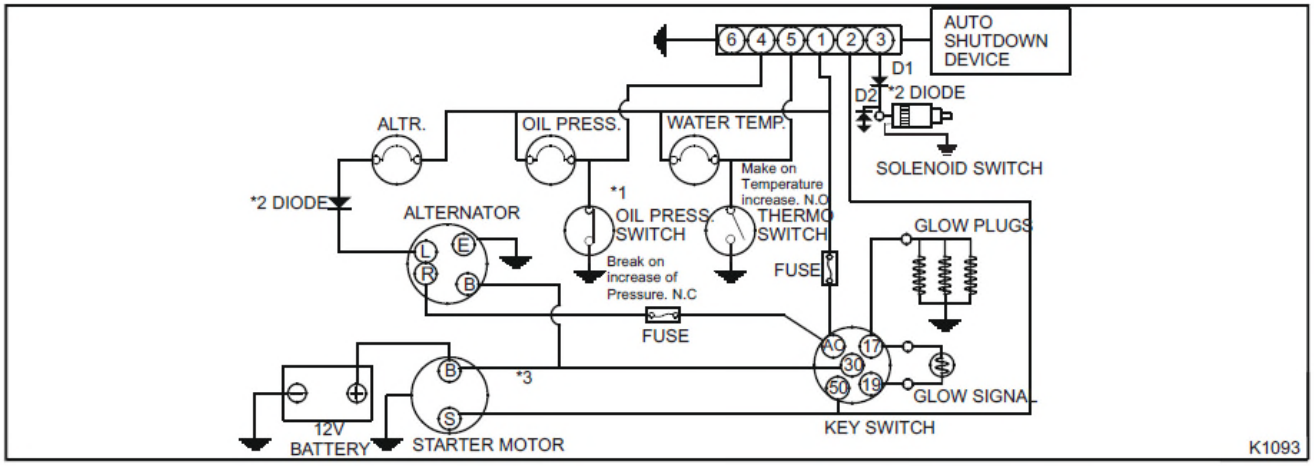

*1 - Maximum current draw for standard oil pressure switch is 0.42 amps (5 Watts maximum bulb).
* 2 - Diode capacity: current 3 amps, reverse voltage 600V (this is mandatory).
*3 - A fuse can be fitted if desired (delayed fuse).
D1 and D2 = Diodes.

Note: If a glow signal is not used, it is still necessary to connect terminals 17 and 19 on the key switch.

Pin No. connector	Wire colour	Connection
1	Red	Key switch - AC
2	Orange	Key switch - 50
3	Red/Black	Solenoid
4	Brown	Oil pressure switch
5	Blue	Coolant temperature switch
6	Black	Ground (Earth)