# Caterpillar C1.5, C1.7, C1.5 (DIT), C2.2, C2.2 (DIT), C2.2 (DITAAC)

## Fitted with 65/85 amp alternator

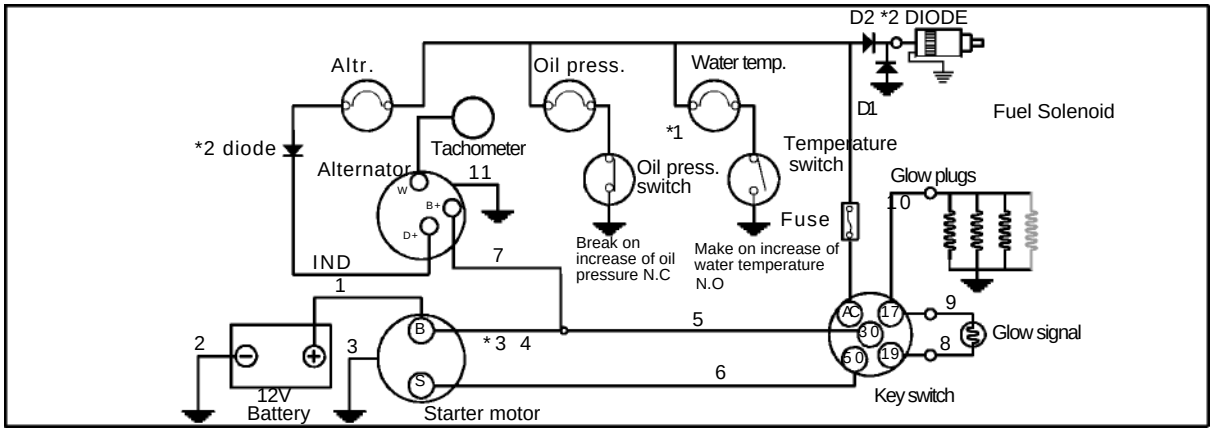


**Note:** Minimum cable size for the 65 amp alternator is 8.50 mm², and 16.00 mm² for the 85 amp alternator.

* 1 - Maximum current draw for standard oil pressure switch is 0.42 amps (5 Watts maximum bulb).
* 2 - Diode capacity: current 3 amps, reverse voltage 600V (D2 is mandatory).
* 3 - A fuse can be fitted if desired (delayed fuse).

D1 and D2 = Diodes.

**Maximum circuit resistance**

The resistance of battery cables 1, 2 and 3 must not exceed 0.001 ohm, for 12V systems and 0.0034 ohms for 24V systems.

| Circuit | Cable number | Circuit current | Maximum circuit resistance | Maximum circuit volt drop | Remarks |
|---|---|---|---|---|---|
| Alternator charging | 4, 7, 11 | 65/85 Amps | 0.0077 ohm (65A)<br>0.0059 ohm (85A) | 0.5 Volt | See glow plugs circuit |
| Starter motor solenoid | 4, 5, 6 | 15.75 Amps | 0.04 ohm | 0.63 Volt | See glow plugs circuit |
| STD glow plugs (via glow signal) | 4, 5, 8, 9, 10 | 57 Amps (3 cyl)<br>76 Amps (4 cyl) | 0.0087 ohm (3 cyl)<br>0.0065 ohm (4 cyl) | 0.5 Volt | - |

**Note:** If a glow signal is not used, it is still necessary to connect terminal 17 and 19 on the key switch.

**Alternator charge lamp.**

Alternator charge lamp rating: 12V - 2,2W at 850 rev/min.

When the engine is at rest the alternator charge lamp is illuminated via the battery and it extinguishes when the alternator is generating. Using a lower wattage bulb than the rating above, will increase the speed at which self excitation occurs upon initial run up e.g. a charge lamp with a lower wattage bulb will have a rating of 12V - 1,2W at 1300 rev/min.

## Installation data

## Cold start system

The following conditions will determine the minimum temperatures at which the engine will start:

- Starter motor performance
- Battery type
- Lubricating oil grade
- Cold start aid.

Refer to the Caterpillar Installation Manual, or your local Distributor, for more information on minimum start temperatures and types of starter motors etc.

**Equipment required for cold temperatures**

The chart below gives the minimum temperature at which a combination of engine oil, battery, starter motor and ring gear will start the engine.

| Engine type | Temperature | 0 °C (32 °F) | -15 °C (5 °F) | -20 °C (-4 °F) |
|---|---|---|---|---|
| | Lubricating oil viscosity | 20W | 10W | 5W |
| C0.5 | Battery | 049 | 049 | 069 |
| | Starter motor (kW) | 0,8 | 0,8 | 1,2 |
| | Ring gear teeth | 88 | 88 | 88 |
| C0.7 | Battery | 049 | 049 | 069 |
| | Starter motor (kW) | 0,8 | 0,8 | 1,2 |
| | Ring gear teeth | 88 | 88 | 88 |
| C1.1 | Battery | 069 | 069 | 069 |
| | Starter motor (kW) | 1,1 | 1,1 | 1,4 |
| | Ring gear teeth | 96 | 96 | 96 |
| C1.5<br>C1.5 (DIT) | Battery | 072 | 072 | 647 |
| | Starter motor (kW) | 2,0 | 2,0 | 2,0 |
| | Ring gear teeth | 109 | 109 | 109 |
| C1.6 | Battery | TBA | TBA | TBA |
| | Starter motor (kW) | 1,4 | TBA | TBA |
| | Ring gear teeth | 96 | 96 | 96 |
| C2.2<br>C2.2 (DIT)<br>C2.2 (DITAAC) | Battery | 647 | 647 | 655 |
| | Starter motor (kW) | 2,0 | 2,0 | 2,0 |
| | Ring gear teeth | 126 | 126 | 126 |

The table below shows the ratio between the flywheel ring gear and the starter motor pinion.

| Engine | No. teeth on ring gear | No. teeth on starter motor pinion | Ratio |
|---|---|---|---|
| C0.5 | 88 | 8 | 11.0 : 1 |
| C0.7 | 88 | 8 | 11.0 : 1 |
| C1.1 | 96 | 9 | 10.6 : 1 |
| C1.5<br>C1.5 (DIT) | 109 | 9 | 12.1 : 1 |
| C1.7 | 109 | 11 | 9.9 : 1 |
| C1.6 | 96 | 9 | 10.6 : 1 |
| C2.2<br>C2.2 (DIT)<br>C2.2 (DITAAC) | 126 | 9 | 14.0 : 1 |

**Battery performance**

| Commercial reference number | Cold cranking amps | | | Reserve capacity (minutes) |
|---|---|---|---|---|
| | BS 3911/IEC (8.4V/60sec) | SAE J537 (7.2V/30sec) | DIN 72311 (9V/30sec) | |
| 049 | 175 | 285 | 150 | 55 |
| 069 | 340 | 540 | 300 | 120 |
| 072 | 420 | 590 | 380 | 120 |
| 647 | 540 | 740 | 450 | 220 |
| 655 | 600 | 780 | 540 | 235 |

***Caution:*** *The use of ether is* ***prohibited,*** *it may damage the engine and it will invalidate the warranty.*

Batteries that meet this specification will give suitable start performance. If the auxiliary loads are large, it may be necessary to specify a battery with a higher ampere-hour capacity (or reserve capacity) or to use a separate battery system. Any battery that is chosen because of its higher reserve capacity must not have inferior high rate discharge characteristics.

**Battery to starter lead resistance**

The resistance of the lead(s) used between the battery/batteries and the starter motor must not be more than 0.001 ohms for 12V systems and 0.0034 Ohms for 24V systems. More detailed information on types of battery is available in the Caterpillar installation manual.

**Glow plugs**

The use of glow plugs will not affect the specification of the battery, but may reduce by a small amount, the voltage available at the starter motor.

The total voltage drop for the “glow plug to battery” leads must not exceed 0.5 volts (this includes all connectors).

**Auto shut down - C1.1 and C1.6 (40 amp alternator)**

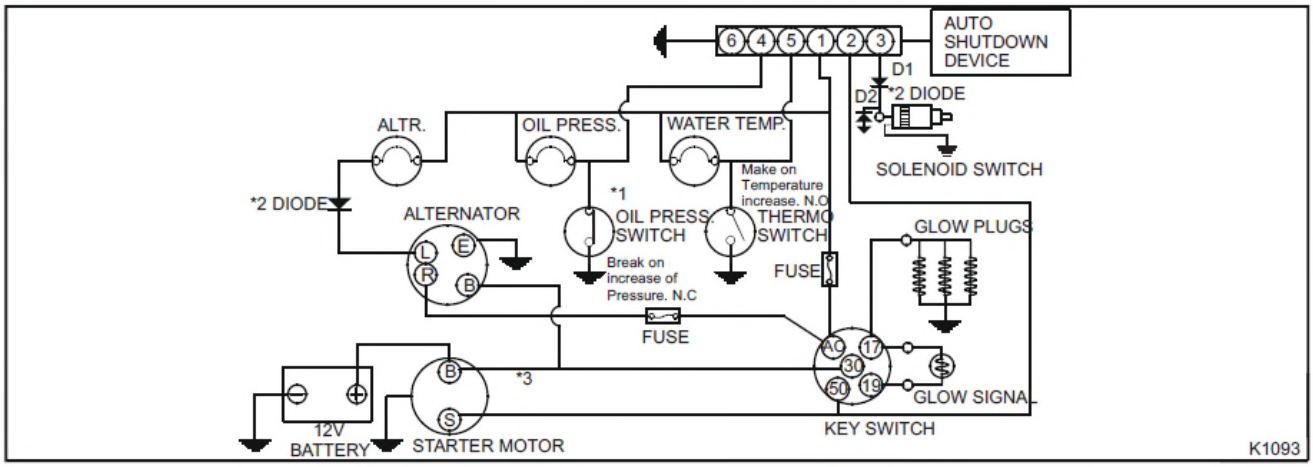


*1 - Maximum current draw for standard oil pressure switch is 0.42 amps (5 Watts maximum bulb).
* 2 - Diode capacity: current 3 amps, reverse voltage 600V (this is mandatory).
*3 - A fuse can be fitted if desired (delayed fuse).
D1 and D2 = Diodes.

**Note:** If a glow signal is not used, it is still necessary to connect terminals 17 and 19 on the key switch.

| Pin No. connector | Wire colour | Connection |
|---|---|---|
| 1 | Red | Key switch - AC |
| 2 | Orange | Key switch - 50 |
| 3 | Red/Black | Solenoid |
| 4 | Brown | Oil pressure switch |
| 5 | Blue | Coolant temperature switch |
| 6 | Black | Ground (Earth) |