Electrical Wiring Diagram – Caterpillar Model C4.4 S/No. Prefix 440

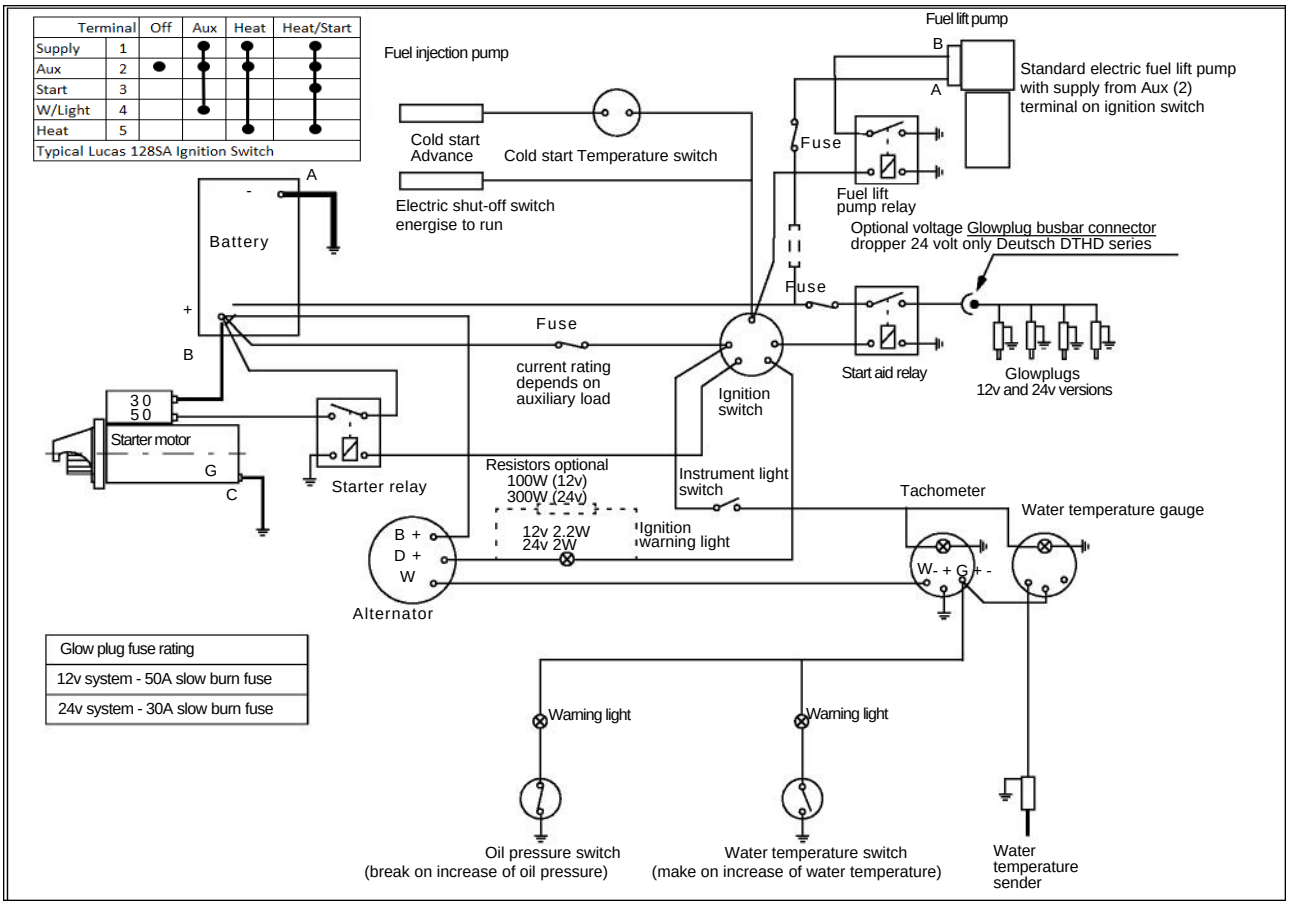

Starter motors

Model	Voltage	Solenoid current		Max volts drop in solenoid circuit
		Max pull-in amps	Max hold-in amps	
3.0 kW	12	68	20	0.65
4.5 kW	24	45	15	1.0

Note: Resistance of battery cables A, B, and C not to exceed 0.0017 ohm.

Alternators

Model	Rating	Min cable size	Max circuit Voltage drop
A115i	14V 65A	8.50 mm^2	0.5V
	14V 75A	16.00 mm^2	
A217iR	14V 85A	16.00 mm^2	
	14V 100A	25.00 mm^2	
	14V 120A	25.00 mm^2	
A217iM	28V 55A	8.50 mm^2	1.0V
	28V 75A	16.00 mm^2	