M0077536-13 (en-us)
July 2022

Parts Manual

C7.1 Industrial Engine

M751-UP (Engine)

Scan to find and purchase genuine Cat® parts and related service information.

Product and Dealer Information

Note: For product identification plate locations, see the section “Product Identification Information” in the Operation and Maintenance Manual.

Delivery Date: _____

Product Information

Model: _____

Product Identification Number: _____

Engine Serial Number: _____

Transmission Serial Number: _____

Generator Serial Number: _____

Attachment Serial Numbers: _____

Attachment Information: _____

Customer Equipment Number: _____

Dealer Equipment Number: _____

Dealer Information

Name: _____ Branch: _____

Address: _____

_____

_____

	Dealer Contact	Phone Number	Hours
Sales:	_____	_____	_____
Parts:	_____	_____	_____
Service:	_____	_____	_____

MEMORANDA

TABLE OF CONTENTS

NAME	PAGE
GENERAL INFORMATION	A2
REPAIR ALTERNATIVES	A4
SUPPLEMENTAL COOLANT ADDITIVES	A5
MAINTENANCE PARTS	A6
INDEX	A7
ENGINE ARRANGEMENT	1
CONFIGURATION AR-ENGINE	1
ENGINE AR-PRIMARY	2
BASIC ENGINE	5
ADAPTER GP-AIR COMPRESSOR	5
CAMSHAFT GP	6
COVER GP-VALVE MECHANISM	7
CRANKSHAFT GP	10
CYLINDER BLOCK AS	14
CYLINDER BLOCK GP	15
CYLINDER BLOCK GP-SHORT	16
CYLINDER HEAD GP	19
DRIVE GP-FAN	22
EXTENSION GP-FAN	23
FLYWHEEL GP	24
HOUSING GP-FLYWHEEL	26
HOUSING GP-FRONT	28
JET GP-PISTON COOLING	37
LIFTING GP-ENGINE	38
MOUNTING GP-FAN DRIVE	39
PAN GP-OIL	40
PISTON & ROD GP	45
PLUG GP-CYLINDER HEAD	58
PLUG GP-ENGINE	59
PULLEY GP-CRANKSHAFT	61
PULLEY GP-FAN DRIVE	62
ROCKER ARM GP	63
VALVE MECHANISM GP	65
LUBRICATION SYSTEM	66
BREATHER GP	66
FILLER GP-ENGINE OIL	69
FILTER GP-ENGINE OIL	71
PUMP GP-ENGINE OIL	73
COOLING SYSTEM	74
CONNECTOR GP-CAB HEATER LINES	74
COOLER GP-ENGINE OIL	75
FAN GP	80
PUMP GP-WATER	81
RADIATOR AS	86
RADIATOR GP	87

NAME	PAGE
AIR INLET AND EXHAUST SYSTEM	89
FLANGE GP-EXHAUST	89
MANIFOLD GP-INLET	90
TURBOCHARGER GP	91
FUEL SYSTEM	100
FILTER & LINES GP-FUEL	100
FILTER GP-FUEL	102
LINES GP-FUEL FILTER	110
LINES GP-FUEL INJECTION	113
PUMP GP-FUEL INJECTION	114
ELECTRICAL AND STARTING SYSTEM	116
ALTERNATOR GP-CHARGING	116
SENSOR GP-TEMPERATURE	117
STARTING AID GP	118
STARTING MOTOR GP-ELECTRIC	120
SWITCH GP-PRESSURE	121
ENCLOSURES, GUARDS AND BASES	122
MOUNTING GP-ACCESSORY MODULE	122
OPERATOR STATION	123
PLUG AS	123
SERVICE EQUIPMENT AND SUPPLIES	124
FILM GP	124
PLATE & FILM GP	129
PART NUMBER INDEX	B1

GENERAL INFORMATION

1. ENGINE IDENTIFICATION

Cat engines are identified with Serial Numbers and Arrangement Numbers. In some cases, Modification Numbers are also used. The serial number plate which shows these numbers is mounted on the engine.

Cat dealers need this information to determine which components were included on the engine when it was assembled at the factory. This permits accurate identification of replacement part numbers.

2. ORDERING PARTS

⚠ WARNING

When replacement parts are required for this product Caterpillar recommends using Caterpillar replacement parts or parts with equivalent specifications including, but not limited to, physical dimensions, type, strength and material.

Failure to heed this warning can lead to premature failures, product damage, personal injury or death.

Quality Cat replacement parts are available from Cat dealers throughout the world. Their parts inventories are up to date and include all parts normally required to protect your investment in Cat Engines. Dealers may offer repair kits or remanufactured parts to allow selection of the most effective repair alternative for a particular situation. When ordering parts, your order should specify the quantity, part number, part name, and the serial number/product identification number of the engine for which the parts are needed.

3. PARTS MANUAL ORGANIZATION

Product information in this manual is presented as "information elements" that represent all of the components for the specific model. An Engine Arrangement is an example of an information element. The information elements are organized alphabetically by part name and secondarily by part number within each major section of the manual.

4. TABLE OF CONTENTS

A table of contents (TOC) is found at the beginning of the manual. The TOC lists each section of the manual with a complete list of all information elements organized as they appear in the manual. Page numbers are provided for quick reference to detailed parts identification illustrations and serviceable consist lists.

5. MAINTENANCE PARTS INDEX

The Maintenance Parts Index, located near the beginning of the manual, references most frequently used maintenance part numbers, providing description, quantity, usage and page number. This information is organized alphabetically by part description.

6. INDEX

The index located near the front of the manual is an alphabetical listing of all information elements included in the manual. Page numbers are provided for quick reference to detailed parts identification illustrations and serviceable consist lists.

7. PART NUMBER INDEX

A numerical index listing all part numbers and the corresponding page number(s) appears at the back of the manual.

8. CAPTIONS

Captions located at the beginning each information element identify the part number and part name along with additional descriptive information. S/N information found in each caption should be used to select correct information for a specific engine. Field replacement options, identification of optional attachment components, and where used ("part of") information is also provided.

The first line of a caption is shown in larger type font to indicate the beginning of an information element. Captions for additional pages that may be required to illustrate an information element will be shown in standard type font and will include the term (contd.).

9. NON-SERVICED PARTS

In some instances it is necessary to display non-serviced parts that are a link to lower level serviceable consist lists. These non-serviced part numbers are shown in italic type indicating that they are not available. All consist lists have not been converted to reflect this enhancement.

10. PARTS LIST REFERENCE NUMBERS

Numbers shown in the Ref No column correspond to numbers used in the associated graphic(s). An alphabetic suffix may be added to a reference number to identify lower level consist items. Numbers shown in the Graphic Ref column refer to the graphic number identifier displayed in the lower left corner of each illustration. The Graphic Ref number may be used in combination with the item Ref No to determine the correct part number. There may be intentional omission of a Ref No in a consist list as information is updated to reflect the latest serviceable part numbers.

11. INDENTED PART NAMES

When a part name is indented in a parts list, it is part of (included in) the group or assembly under which it is indented.

12. ILLUSTRATION REFERENCE LETTERS

When necessary, illustrations contain reference letters (A, B, C etc.) that are intended to track lines and harnesses from one point to another. They are also used to show where to reconnect illustrations that have been separated.

13. ABBREVIATIONS AND SYMBOLS

O.D. – Outside Diameter
I.D. – Inside Diameter
A – Not Part Of This Group
B – Use As Required
C – Change From Previous Type
D – Order By The Meter
E – Order By The Centimeter
F – Not Shown
G – Order By The Inch
I – Refer To Hydraulic Information System
M – Metric Part
R – Remfg Part May Be Available
Y – Separate Illustration
Z – Not Serviced Separately

14. DESCRIPTION OF TYPE CHANGES

Type - A type is defined as any configuration change that requires an additional Information Element for an Arrangement, Group, or Assembly. If serial number breaks for types are not available, a type # (Type 1, Type 2, etc.) will be displayed in the caption. These "type" changes are identified with a "C" note (change from previous type) in the Parts List. Only the "types" that apply to this Parts Manual will be included. Additional types may exist causing "C" notes to appear on an Information Element when no other types are shown.

15. <END>

This symbol indicates the end of an information element.

16. SUPPLEMENTAL COOLANT ADDITIVES

Information for Supplemental Coolant Additives is no longer included in this manual. See your Operation and Maintenance Manual for coolant maintenance information.

NOTE:

Continuing improvement and advancement of product design may cause changes to your engine which may not be included in this publication. Whenever a question arises regarding your Cat product or this publication, please consult your Cat dealer for the latest available information.

REMANUFACTURED COMPONENTS

As an option when making repairs consider Cat Remanufactured Components. Components that are available through the Cat Remanufactured Program are identified three ways in the parts book:

- with the letter R in the note field of the parts list
- with an R* at the beginning of the first line of the caption
- with an *R at the end of the first line of the caption

Typical components included in the Remanufacturing Program include:

ALTERNATORS
CONNECTING RODS
CRANKSHAFTS - UNDERSIZE
CRANKSHAFTS - UPGRADE TO NEW
CYLINDER HEADS
ELECTRONIC CONTROL MODULES (ECM)
ELECTRONIC SENSORS
FUEL INJECTORS
FUEL NOZZLES
FUEL PUMPS
GOVERNORS
OIL PUMPS
PISTONS
SHORT BLOCKS
STARTERS
TURBOCHARGERS - COMPLETE
TURBOCHARGER CARTRIDGES
WATER PUMPS

Cat Remanufactured engines for many engine arrangements are also available.

SUPPLEMENTAL COOLANT ADDITIVES

CUSTOMER BENEFITS:

Protects against cavitation, foam, erosion, corrosion, and scale buildup in cooling systems.

- Provides measured coolant conditioner.

DESCRIPTION:

Additives deplete from the coolant with normal operation. For this reason, Supplemental Coolant Additives (SCA) must be added to all heavy duty coolants at regular intervals. In addition, when not using a fully formulated, pre-charged antifreeze, like Cat DEAC, an initial charge of SCA must be added to the cooling system. The amount of SCA added to the system is dependent on the capacity of the system.

The SCA for initial fill is provided as a liquid. SCA's for maintenance intervals are available in liquid form and as a spin-on element. (No Spin-on available for 3600 Family of Engines)

NOTE:

The amount of SCA added at initial fill is not the same as the amount added at maintenance intervals.

The coolant additive elements can be used with any ethylene or propylene glycol type antifreeze which meets ASTM D4985 or ASTM D5345 Specifications.

NOTE:

For use with standard heavy duty coolant only, not for use with Extended Life Coolant.

PARTS NEEDED:

Cooling System Capacity		Liquid SCA at Initial Fill	Liquid SCA at Maintenance*	Spin-on SCA Maintenance Element*
Liters	Gallons			
22-30	(6-8)	3P-2044 (1)	6V-3542 (1)	111-2370 (1)
30-38	(8-10)	3P-2044 (1) 6V-3542 (1)	111-2372 (1)	111-2369 (1)
38-49	(10-13)	3P-2044 (1) 8T-1589 (1)	111-2372 (1)	111-2369 (1)
49-64	(13-17)	3P-2044 (2)	8T-1589 (1)	9N-3368 (1)
64-83	(17-22)	3P-2044 (2) 8T-1589 (1)	111-2372 (1) 6V-3542 (1)	111-2371 (1)
83-114	(22-30)	3P-2044 (3) 8T-1589 (1)	3P-2044 (1)	9N-3718 (1)
114-163	(30-43)	3P-2044 (5)	3P-2044 (1) 6V-3542 (1)	111-2371 (2)
163-242	(43-64)	3P-2044 (8)	3P-2044 (2)	9N-3718 (2)

* Normal maintenance period is 250 hrs. See your Operation and Maintenance Manual for complete coolant maintenance instructions.

( ) Indicates quantity required.

MAINTENANCE PARTS

DESCRIPTION	PART NUMBER	QTY	WHERE USED	PAGE
AIR INLET AND EXHAUST SYSTEM				
FILTER AS-AIR	289-2346	1	TURBOCHARGER GP	94
	289-2347	1	TURBOCHARGER GP	94
FILTER ELEMENT-AIR (PRIMARY)	289-2348	1	TURBOCHARGER GP	94
FILTER ELEMENT-AIR (SECONDARY)	289-2349	1	TURBOCHARGER GP	94
BASIC ENGINE				
BREATHER (CRANKCASE)	326-7288	1	COVER GP-VALVE MECHANISM	9
CAP AS-ENGINE OIL FILLER	369-3869	1	COVER GP-VALVE MECHANISM	7
SEAL-VALVE COVER	256-7704	1	COVER GP-VALVE MECHANISM	7
V-BELT SET (INCLUDES 2-BELTS)	126-2240	1	DRIVE GP-FAN	22
COOLING SYSTEM				
GASKET-WATER REGULATOR	281-8744	1	PUMP GP-WATER	81
HOSE-WATER (LOWER RADIATOR)	303-6191	1	RADIATOR GP	87
HOSE-WATER (UPPER RADIATOR)	293-8080	1	RADIATOR GP	87
REGULATOR AS-WATER TEMPERATURE (INCLUDES CONNECTOR)	417-7782	1	PUMP GP-WATER	84
ELECTRICAL AND STARTING SYSTEM				
GLOW PLUG (12-VOLT)	453-3510	6	STARTING AID GP	119
FUEL SYSTEM				
FILTER AS-FUEL	435-6472	1	FILTER GP-FUEL	109
FILTER AS-FUEL (FUEL FILTER, WATER SEPARATOR)	441-5111	1	FILTER & LINES GP-FUEL	100
		1	FILTER GP-FUEL	108
FILTER AS-FUEL (WATER SEPARATOR)	441-5111	1	FILTER GP-FUEL	107
FILTER-FUEL	435-6493	2	FILTER GP-FUEL	109
LUBRICATION SYSTEM				
CAP AS-OIL FILLER (ENGINE)	130-9888	1	FILLER GP-ENGINE OIL	69
FILTER-ENGINE OIL	462-1171	1	FILTER GP-ENGINE OIL	71
FILTER-FUMES DISPOSAL	273-5711	1	FILTER GP-ENGINE OIL	72

INDEX

NAME PAGE

A

ADAPTER GP-AIR COMPRESSOR 5
ALTERNATOR GP-CHARGING 116

B

BASE GP-BREATHER 68
BREATHER (CRANKCASE) 9
BREATHER GP 66
68
BREATHER GP–CRANKCASE 67

C

CAMSHAFT GP 6
CAP AS-ENGINE OIL FILLER 7
CAP AS-OIL FILLER (ENGINE) 69
70
CONFIGURATION AR-ENGINE 1
CONNECTING ROD GP (GRADE B) 53
56
CONNECTING ROD GP (GRADE G) 45
47
49
51
53
56
CONNECTING ROD GP (GRADE R) 53
56
CONNECTING ROD GP (STANDARD) 53
56
CONNECTOR GP-CAB HEATER LINES 74
COOLER GP-ENGINE OIL 75
77
78
COVER GP-VALVE MECHANISM 8
9
COVER GP-VALVE MECHANISM–CYLINDER HEAD 7
CRANKSHAFT GP 10
12
CYLINDER BLOCK AS 14
CYLINDER BLOCK GP 15
CYLINDER BLOCK GP-SHORT 16
17
18
CYLINDER HEAD GP 19
20
21

D

DRIVE GP-FAN 22

NAME PAGE

E

ENGINE AR-PRIMARY 2
3
4
EXTENSION GP-FAN 23

F

FAN GP 80
FILLER GP-ENGINE OIL 69
70
FILM GP 124
125
126
127
128
FILM-IDENTIFICATION (CAT) 124
125
126
127
128
129
FILM-IDENTIFICATION (ENGINE SERIAL NUMBER) 124
FILM-IDENTIFICATION (OIL FILL, READ OMM) . . 7
FILM-WARNING (DO NOT SPRAY, READ OMM) 124
125
129
FILM-WARNING (UNIVERSAL WARNING) 124
125
129
FILTER & LINES GP-FUEL 100
FILTER AS-AIR 94
96
98
FILTER AS-FUEL 109
FILTER AS-FUEL (FUEL FILTER, WATER SEPARATOR) 100
108
FILTER AS-FUEL (WATER SEPARATOR) 107
FILTER ELEMENT-AIR (PRIMARY) 94
96
98
FILTER ELEMENT-AIR (SECONDARY) 94
96
98
FILTER GP-ENGINE OIL 71
72
FILTER GP-FUEL 102
104
107
108
109
FILTER GP-FUEL–WATER SEPARATOR, SENSOR 107
FILTER-ENGINE OIL 71
FILTER-FUEL 109
FILTER-FUMES DISPOSAL 72

INDEX

NAME PAGE

FLANGE GP-EXHAUST 89
FLYWHEEL GP 24
25

G

GASKET-WATER REGULATOR. 81
84
GAUGE AS-OIL LEVEL (DIPSTICK) (ENGINE). . . 40
41
GAUGE GP-COOLANT TEMPERATURE (WATER). 117
GAUGE GP-OIL LEVEL (DIPSTICK) 42
GEAR-FUEL PUMP (68-TEETH) 114
GLOW PLUG (12-VOLT) 119

H

HOSE-WATER (LOWER RADIATOR). 87
HOSE-WATER (UPPER RADIATOR) 87
HOUSING GP-FLYWHEEL 26
27
HOUSING GP-FRONT 32
34
HOUSING GP-FRONT–GEAR CASE 28

I

INDICATOR-AIR FILTER CHANGE. 94
96
98

J

JET GP-PISTON COOLING 37

L

LIFTING GP-ENGINE 38
LINES GP-FUEL FILTER. 100
102
104
110
LINES GP-FUEL INJECTION 34
113

M

MANIFOLD GP-INLET. 90
MOUNTING GP-ACCESSORY MODULE. 122
MOUNTING GP-FAN DRIVE. 39

NAME PAGE

P

PAN GP-OIL 40
41
42
44
PISTON & ROD GP 45
47
49
51
53
56
PISTON GP 45
47
49
51
PLATE & FILM GP 129
PLATE GP-SERIAL NUMBER 3
4
PLUG AS 123
PLUG GP-CYLINDER HEAD 58
PLUG GP-ENGINE 59
60
PULLEY GP-CRANKSHAFT 61
PULLEY GP-FAN DRIVE. 62
PUMP GP-ENGINE OIL. 73
PUMP GP-FUEL INJECTION 114
PUMP GP-WATER. 81
84

R

RADIATOR AS 86
RADIATOR GP 87
REGULATOR AS-WATER TEMPERATURE (INCLUDES CONNECTOR). 84
ROCKER ARM GP 63
64

S

SEAL-VALVE COVER. 7
8
9
SENSOR GP-TEMPERATURE 2
117
SENSOR-LEVEL (12-VOLT) 107
SOLENOID (12-VOLT) (FUEL INJECTION PUMP). 114
STARTING AID GP. 118
119
STARTING MOTOR GP-ELECTRIC 120
SWITCH AS-PRESSURE (ENGINE OIL). 121
SWITCH GP-PRESSURE. 121
SWITCH-TEMPERATURE (FUEL) 114
SWITCH-WATER TEMPERATURE 117

NAME PAGE NAME PAGE

T

TURBOCHARGER GP 91
92
93
94
96
98

V

V-BELT SET (INCLUDES 2-BELTS). 22
VALVE MECHANISM GP. 65

MEMORANDA

486-5568 CONFIGURATION AR-ENGINE

PART OF 482-9241 ENGINE AR-PRIMARY

SMCS-1000 **i09569735**

NOTE	PART NUMBER	QTY	PART NAME 1 2 3 4 5 6 (PRODUCT LEVEL)	SEE PAGE
Y	**425-0779**	1	CYLINDER BLOCK GP-SHORT	16
Y	**425-3316**	1	CYLINDER HEAD GP (SHORT)	20
Y	**482-9241**	1	ENGINE AR-PRIMARY	2

Y - SEPARATE ILLUSTRATION

<END>

487-3750 CONFIGURATION AR-ENGINE

PART OF 485-3093 ENGINE AR-PRIMARY

SMCS-1000 **i09571962**

NOTE	PART NUMBER	QTY	PART NAME 1 2 3 4 5 6 (PRODUCT LEVEL)	SEE PAGE
Y	**425-0779**	1	CYLINDER BLOCK GP-SHORT	16
Y	**425-3316**	1	CYLINDER HEAD GP (SHORT)	20
Y	**485-3093**	1	ENGINE AR-PRIMARY	3

Y - SEPARATE ILLUSTRATION

<END>

583-2112 CONFIGURATION AR-ENGINE

PART OF 582-9032 ENGINE AR-PRIMARY

SMCS-1000 **i09572461**

NOTE	PART NUMBER	QTY	PART NAME 1 2 3 4 5 6 (PRODUCT LEVEL)	SEE PAGE
Y	*476-6625*	1	CYLINDER BLOCK GP-SHORT	18
Y	*476-6624*	1	CYLINDER HEAD GP (SHORT)	21
Y	**582-9032**	1	ENGINE AR-PRIMARY	4

Y - SEPARATE ILLUSTRATION

<END>

482-9241 ENGINE AR-PRIMARY

129 BRAKE KW (173 BHP) AT 2000 RPM

OPTIONAL FIELD REPLACEMENT ORDER 425-0779—PAGE: 16, 425-3316—PAGE: 20

SMCS-1000 **i09569737**

NOTE	PART NUMBER	QTY	PART NAME 1 2 3 4 5 6 (PRODUCT LEVEL)	SEE PAGE
Y	*345-9774*	1	BREATHER GP	67
Y	*399-1963*	1	CAMSHAFT GP	6
AY	*486-5568*	1	CONFIGURATION AR-ENGINE	1
Y	*346-0091*	1	COOLER GP-ENGINE OIL	77
Y	*348-3285*	1	CRANKSHAFT GP	10
Y	*348-3283*	1	CYLINDER BLOCK GP	15
Y	*391-3193*	1	CYLINDER HEAD GP	19
Y	*536-0608*	1	EXTENSION GP-FAN	23
Y	*390-3737*	1	FILLER GP-ENGINE OIL	69
Y	*346-1919*	1	FILM GP	124
Y	*346-0220*	1	FILTER GP-ENGINE OIL	71
Y	*351-0859*	1	FILTER GP-FUEL	102
Y	*423-5410*	1	FILTER GP-FUEL	107
Y	*424-1876*	1	FILTER GP-FUEL	109
Y	*345-8961*	1	FLYWHEEL GP	25
Y	*345-8839*	1	HOUSING GP-FLYWHEEL	27
Y	*346-0478*	1	HOUSING GP-FRONT	28
Y	*348-3503*	1	JET GP-PISTON COOLING	37
Y	*346-0818*	1	LIFTING GP-ENGINE	38
Y	*346-0771*	1	MANIFOLD GP-INLET	90
Y	*419-0401*	1	PAN GP-OIL	42
Y	*348-3296*	1	PISTON & ROD GP	45
Y	*380-1084*	1	PLUG AS	123
Y	*346-2908*	1	PLUG GP-ENGINE	60
Y	*358-3097*	1	PULLEY GP-CRANKSHAFT	61
Y	*393-1438*	1	PULLEY GP-FAN DRIVE	62
Y	*462-6685*	1	PUMP GP-ENGINE OIL	73
Y	*443-7120*	1	PUMP GP-FUEL INJECTION	114
Y	*346-0410*	1	PUMP GP-WATER	81
Y	*391-3197*	1	ROCKER ARM GP	63
Y	*346-1844*	1	SENSOR GP-TEMPERATURE	117
Y	*346-0800*	1	STARTING AID GP	119
Y	*346-1824*	1	SWITCH GP-PRESSURE	121
Y	*419-9129*	1	TURBOCHARGER GP	91

A - NOT PART OF THIS GROUP
Y - SEPARATE ILLUSTRATION

<END>

485-3093 ENGINE AR-PRIMARY

129 BRAKE KW (173 BHP) AT 2000 RPM

OPTIONAL FIELD REPLACEMENT ORDER 425-0779—PAGE: 16, 425-3316—PAGE: 20, 425-3316—PAGE: 20, 425-0779—PAGE: 16

SMCS-1000 **i09571967**

NOTE	PART NUMBER	QTY	PART NAME 1 2 3 4 5 6 (PRODUCT LEVEL)	SEE PAGE
Y	*435-5152*	1	ALTERNATOR GP-CHARGING	116
Y	*425-0181*	1	BREATHER GP	68
Y	*399-1963*	1	CAMSHAFT GP	6
AY	*487-3750*	1	CONFIGURATION AR-ENGINE	1
Y	*346-0091*	1	COOLER GP-ENGINE OIL	77
Y	*348-3285*	1	CRANKSHAFT GP	10
Y	*348-3283*	1	CYLINDER BLOCK GP	15
Y	*391-3193*	1	CYLINDER HEAD GP	19
Y	*345-9561*	1	DRIVE GP-FAN	22
Y	*477-5510*	1	FAN GP	80
Y	*390-3737*	1	FILLER GP-ENGINE OIL	69
Y	*415-5625*	1	FILM GP (ALTERNATOR)	126
Y	*423-8803*	1	FILM GP (STARTING MOTOR)	127
Y	*346-1968*	1	FILM GP	125
Y	*611-2650*	1	FILM GP (CAT)	128
Y	*424-0675*	1	FILTER & LINES GP-FUEL	100
Y	*346-0220*	1	FILTER GP-ENGINE OIL	71
Y	*424-1869*	1	FILTER GP-ENGINE OIL	72
Y	*424-1876*	1	FILTER GP-FUEL	109
Y	*346-0769*	1	FLANGE GP-EXHAUST	89
Y	*345-8901*	1	FLYWHEEL GP	24
Y	*345-8838*	1	HOUSING GP-FLYWHEEL	26
Y	*346-0487*	1	HOUSING GP-FRONT	32
Y	*348-3503*	1	JET GP-PISTON COOLING	37
Y	*346-0818*	1	LIFTING GP-ENGINE	38
Y	*346-0771*	1	MANIFOLD GP-INLET	90
Y	*346-1528*	1	MOUNTING GP-ACCESSORY MODULE	122
Y	*345-9659*	1	PAN GP-OIL	40
Y	*348-3296*	1	PISTON & ROD GP	45
Y	*346-1841*	1	PLUG GP-CYLINDER HEAD	58
Y	*346-1820*	1	PLUG GP-ENGINE	59
Y	*346-2908*	1	PLUG GP-ENGINE	60
Y	*358-3097*	1	PULLEY GP-CRANKSHAFT	61
Y	*452-9242*	1	LINES GP-FUEL FILTER	110
Y	*462-6685*	1	PUMP GP-ENGINE OIL	73
Y	*443-7120*	1	PUMP GP-FUEL INJECTION	114
Y	*346-0411*	1	PUMP GP-WATER	84
Y	*477-5513*	1	RADIATOR GP	87
Y	*391-3197*	1	ROCKER ARM GP	63
Y	*346-0800*	1	STARTING AID GP	119
Y	*360-2781*	1	STARTING MOTOR GP-ELECTRIC	120
Y	*477-5517*	1	TURBOCHARGER GP	94
	376-6464	1	PLATE GP-SERIAL NUMBER	

A - NOT PART OF THIS GROUP
Y - SEPARATE ILLUSTRATION

<END>

582-9032 ENGINE AR-PRIMARY

129 BRAKE KW (173 BHP) AT 2000 RPM

OPTIONAL FIELD REPLACEMENT ORDER 425-3316—PAGE: 20, 425-0779—PAGE: 16

SMCS-1000 **i09572460**

NOTE	PART NUMBER	QTY	PART NAME 1 2 3 4 5 6 (PRODUCT LEVEL)	SEE PAGE
Y	*452-2249*	1	CONNECTOR GP-CAB HEATER LINES	74
Y	*345-9747*	1	BREATHER GP	66
Y	*399-1963*	1	CAMSHAFT GP	6
AY	*583-2112*	1	CONFIGURATION AR-ENGINE	1
Y	*442-0326*	1	COOLER GP-ENGINE OIL	78
Y	*348-3285*	1	CRANKSHAFT GP	10
Y	*348-3283*	1	CYLINDER BLOCK GP	15
Y	*391-3193*	1	CYLINDER HEAD GP	19
Y	*419-6486*	1	FILLER GP-ENGINE OIL	70
Y	*346-0220*	1	FILTER GP-ENGINE OIL	71
Y	*351-0859*	1	FILTER GP-FUEL	102
Y	*423-5411*	1	FILTER GP-FUEL	108
Y	*424-1876*	1	FILTER GP-FUEL	109
Y	*358-4828*	1	HOUSING GP-FRONT	34
Y	*348-3503*	1	JET GP-PISTON COOLING	37
Y	*346-0818*	1	LIFTING GP-ENGINE	38
Y	*346-0771*	1	MANIFOLD GP-INLET	90
Y	*435-1889*	1	MOUNTING GP-FAN DRIVE	39
Y	*345-9669*	1	PAN GP-OIL	41
Y	*348-3296*	1	PISTON & ROD GP	45
Y	*346-1967*	1	PLATE & FILM GP (ENGINE)	129
Y	*346-1841*	1	PLUG GP-CYLINDER HEAD	58
Y	*346-1820*	1	PLUG GP-ENGINE	59
Y	*358-3097*	1	PULLEY GP-CRANKSHAFT	61
Y	*462-6685*	1	PUMP GP-ENGINE OIL	73
Y	*443-7120*	1	PUMP GP-FUEL INJECTION	114
Y	*346-0410*	1	PUMP GP-WATER	81
Y	*391-3197*	1	ROCKER ARM GP	63
Y	*346-0798*	1	STARTING AID GP	118
Y	*419-9129*	1	TURBOCHARGER GP	91
	376-6464	1	PLATE GP-SERIAL NUMBER	

A - NOT PART OF THIS GROUP
Y - SEPARATE ILLUSTRATION

<END>

293-1877 ADAPTER GP-AIR COMPRESSOR

PART OF 358-4828 HOUSING GP-FRONT

SMCS-1803 **i08839056**

NOTE	REF NO	GRAPHIC REF	PART NUMBER	QTY	PART NAME 1 2 3 4 5 6 (PRODUCT LEVEL)	SEE PAGE
M	1	1	**6I-0254**	4	BOLT (M8X1.25X30-MM)	
	2	1	**7W-2562**	1	RING-SNAP	
	3	1	**6D-0044**	2	DOWEL	
	4	1	**1B-8705**	2	KEY-WOODRUFF	
	5	1	**113-4598**	2	NUT	
	6	1	**113-4604**	1	GASKET	
	7	1	**126-3216**	2	STUD	
	8	1	**224-6635**	1	BUSHING	
	9	1	**302-4332**	1	HOUSING	

PARTS SHOWN IN GRAPHIC(S) WITHOUT A REFERENCE NUMBER ARE NOT SERVICED SEPARATELY

M - METRIC PART

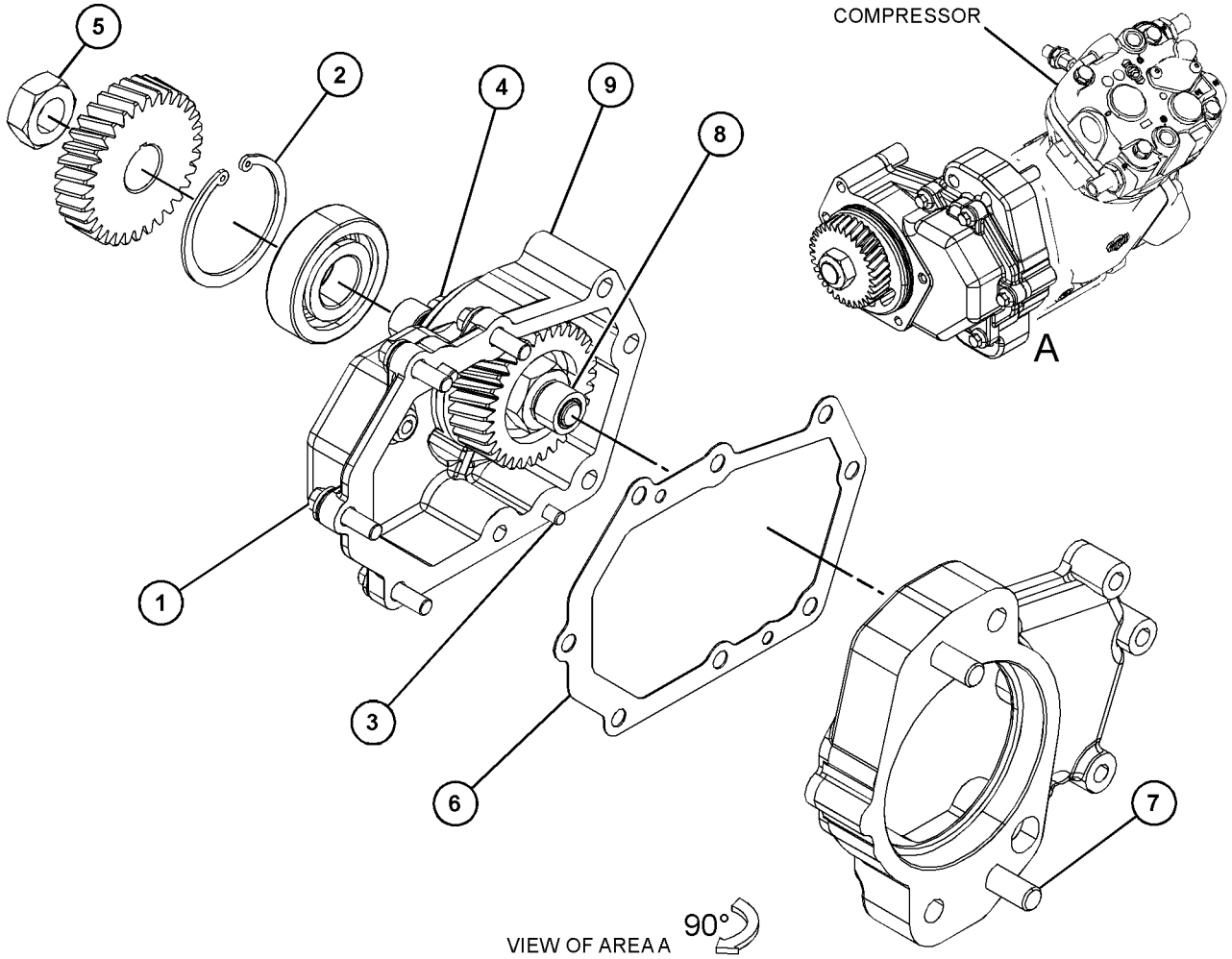

GRAPHIC #1

<END>

g06811674

399-1963 CAMSHAFT GP

PART OF 482-9241, 485-3093, 582-9032 ENGINE AR-PRIMARY

SMCS-1210 **i06256237**

NOTE	REF NO	GRAPHIC REF	PART NUMBER	QTY	PART NAME 1 2 3 4 5 6 (PRODUCT LEVEL)	SEE PAGE
	1	1	**464-6253**	12	LIFTER-VALVE	
	2	1	**388-9876**	1	CAMSHAFT GP	
		1	**067-6135**	1	KEY-WOODRUFF	
	3	1	**067-6095**	12	ROD	

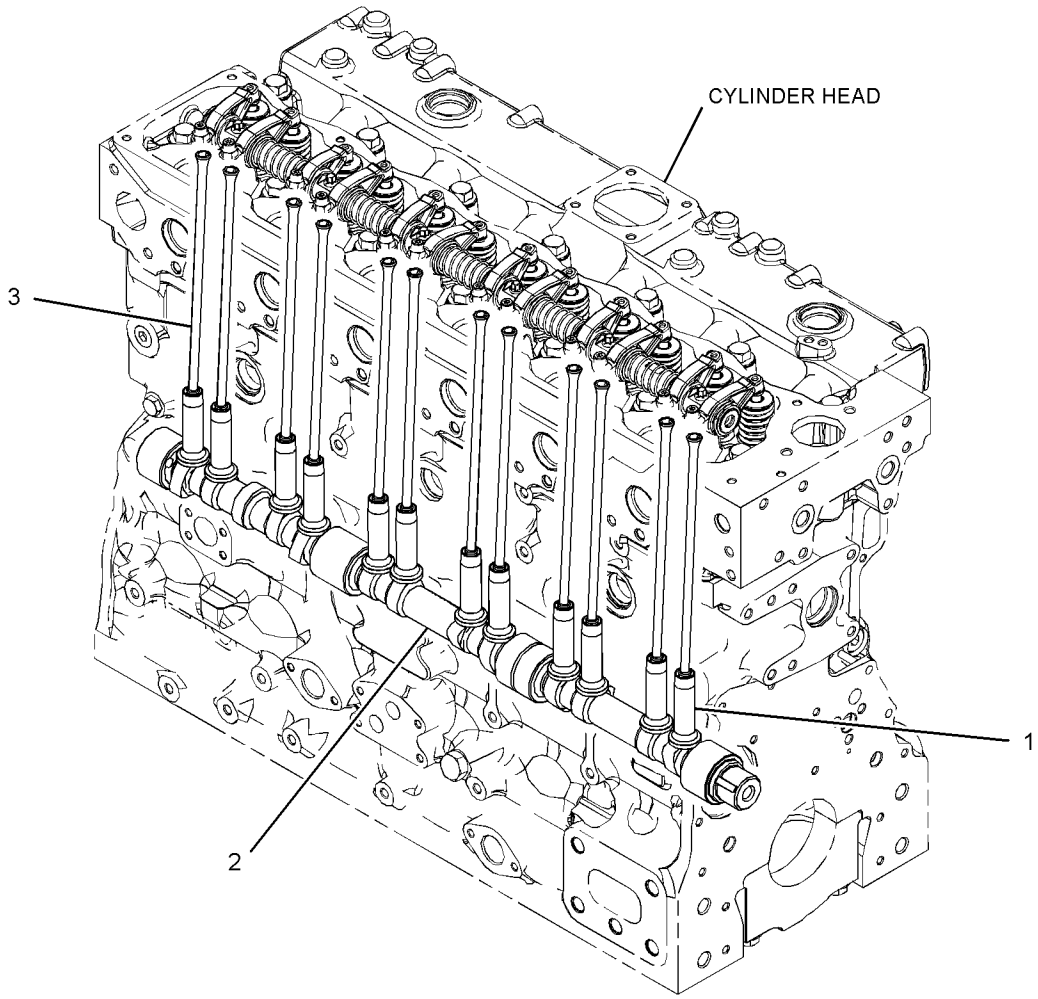

GRAPHIC #1 <END> g03320144

335-6883 COVER GP-VALVE MECHANISM–CYLINDER HEAD

PART OF 345-9774 BREATHER GP

SMCS-1107 **i07307115**

NOTE	REF NO	GRAPHIC REF	PART NUMBER	QTY	PART NAME 1 2 3 4 5 6 (PRODUCT LEVEL)	SEE PAGE
	1	1	**326-7289**	1	SEAL-O-RING	
	2	1	**369-3869**	1	CAP AS-ENGINE OIL FILLER	
	2A	1	**357-0147**	1	FILM-IDENTIFICATION (OIL FILL, READ OMM)	
	3	1	**256-7704**	1	SEAL-VALVE COVER	
M	4	1	**8T-0337**	4	SCREW-MACHINE (M4X0.7X12-MM)	

M - METRIC PART

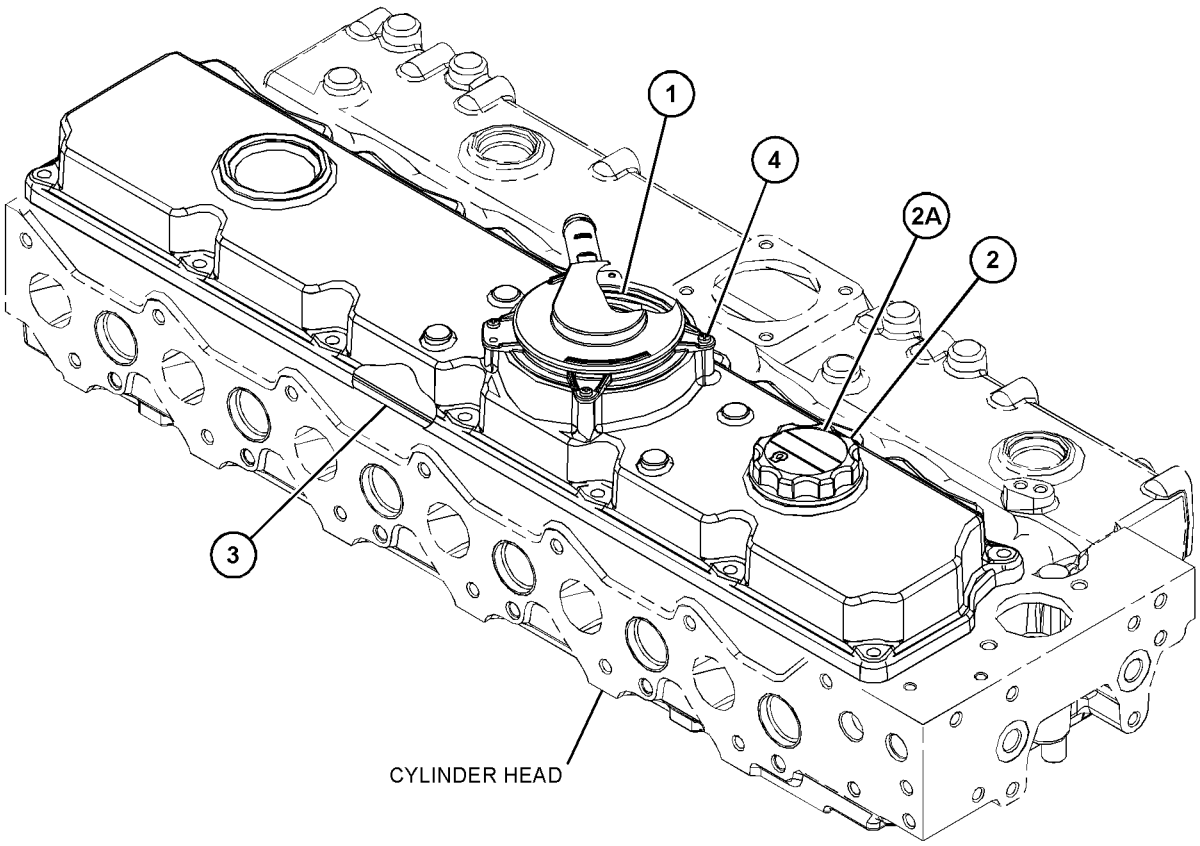

GRAPHIC #1 <END> g06286768

367-5393 COVER GP-VALVE MECHANISM

PART OF 345-9747 BREATHER GP

SMCS-1107 **i07758528**

NOTE	REF NO	GRAPHIC REF	PART NUMBER	QTY	PART NAME 1 2 3 4 5 6 (PRODUCT LEVEL)	SEE PAGE
	1	1	**256-7704**	1	SEAL-VALVE COVER	
	2	1	**326-7289**	1	SEAL-O-RING	
M	3	1	**8T-0337**	4	SCREW-MACHINE (M4X0.7X12-MM)	

PARTS SHOWN IN GRAPHIC(S) WITHOUT A REFERENCE NUMBER ARE NOT SERVICED SEPARATELY

M - METRIC PART

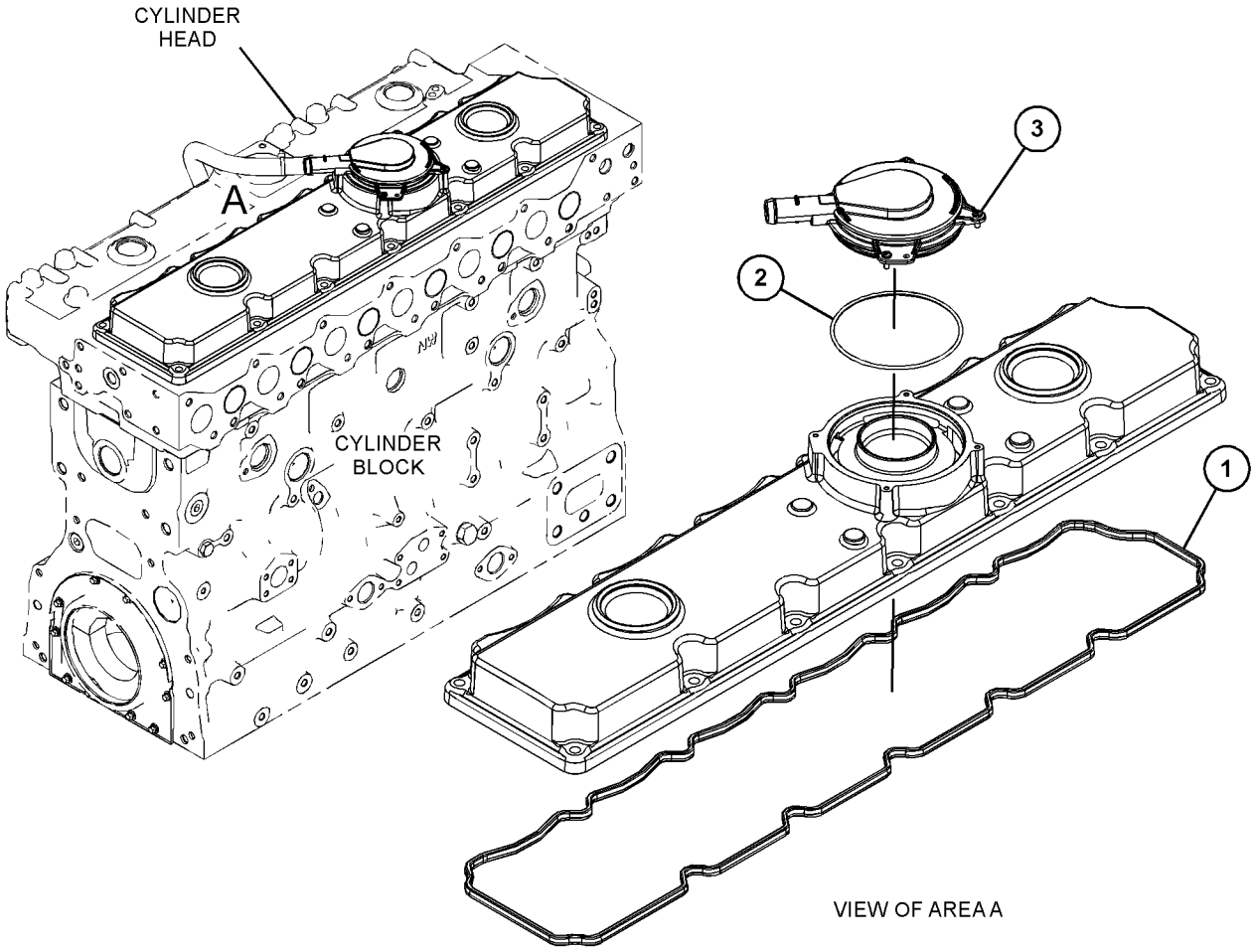

GRAPHIC #1 <END> g06421646

424-9429 COVER GP-VALVE MECHANISM

PART OF 425-0181 BREATHER GP

SMCS-1107 **i07321769**

NOTE	REF NO	GRAPHIC REF	PART NUMBER	QTY	PART NAME 1 2 3 4 5 6 (PRODUCT LEVEL)	SEE PAGE
	1	1	**256-7704**	1	SEAL-VALVE COVER	
	2	1	**367-5394**	1	COVER	
	3	1	**326-7288**	1	BREATHER (CRANKCASE)	
	4	1	**326-7289**	1	SEAL-O-RING	
M	5	1	**8T-0337**	4	SCREW-MACHINE (M4X0.7X12-MM)	

M - METRIC PART

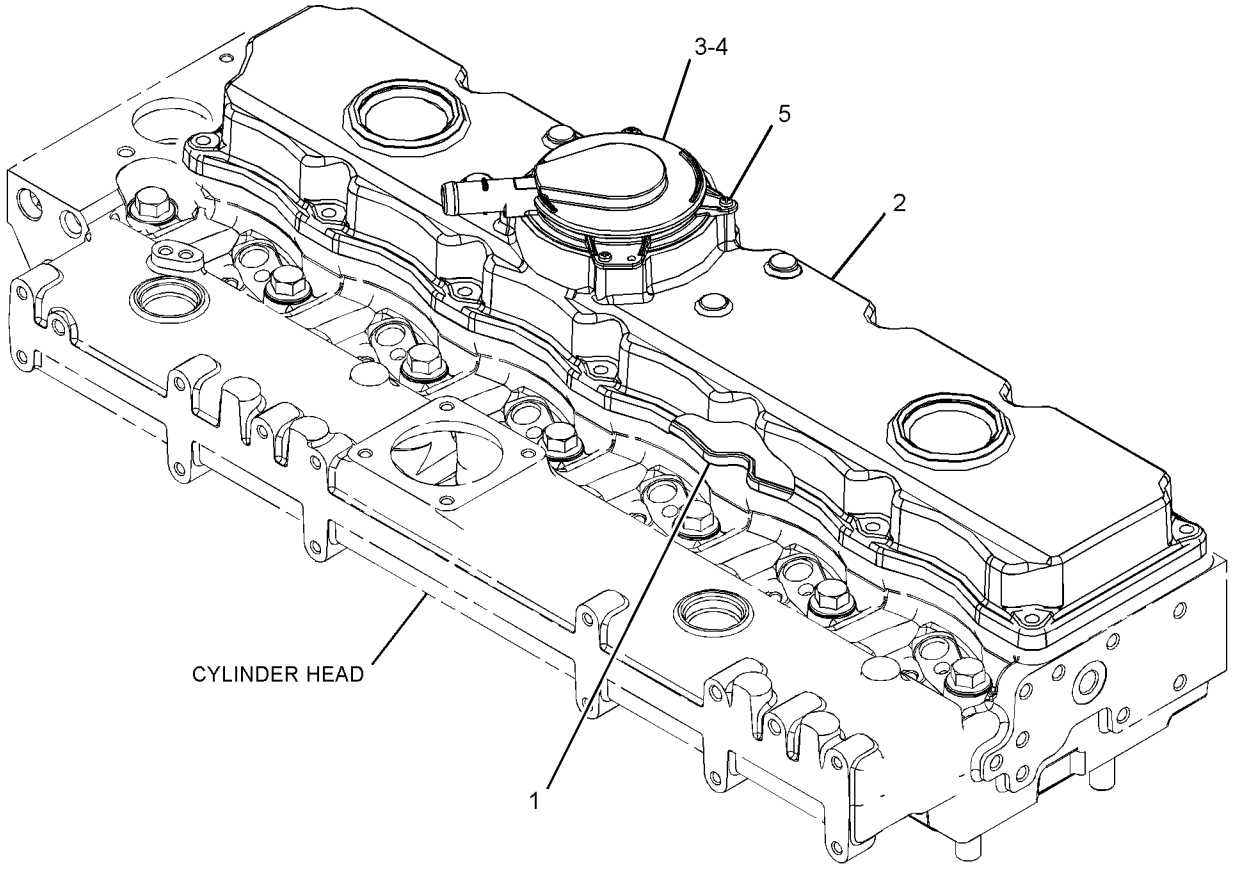

GRAPHIC #1 <END> g03589664

348-3285 CRANKSHAFT GP

PART OF 425-0779 CYLINDER BLOCK GP-SHORT, 482-9241, 485-3093, 582-9032 ENGINE AR-PRIMARY

SMCS-1202 **i07818636**

NOTE	REF NO	GRAPHIC REF	PART NUMBER	QTY	PART NAME 1 2 3 4 5 6 (PRODUCT LEVEL)	SEE PAGE
L	1	1	*470-8101*	7	BEARING-CRANKSHAFT (STANDARD-UPPER)	
	2	1	*470-8171*	7	BEARING-CRANKSHAFT (STANDARD-LOWER)	
J	3	1	**363-0559**	2	WASHER-THRUST	
	4	1	**376-4074**	1	CRANKSHAFT	
	5	1	**067-6135**	1	KEY-WOODRUFF	
	6	1	**276-7391**	1	GEAR (34-TEETH)	
					AVAILABLE REPAIR KIT(S):	
L			**448-4217**	1	KIT-BEARING (STANDARD) (CRANKSHAFT)	
					(INCLUDES BEARINGS)	
AB			**448-4218**		KIT-BEARING (0.254-MM US)	
					(INCLUDES BEARINGS)	
AB			**448-4220**		KIT-BEARING (0.508-MM US)	
					(INCLUDES BEARINGS)	
AB			**448-4222**		KIT-BEARING (0.762-MM US)	
					(INCLUDES BEARINGS)	
J			**364-5145**	1	KIT-WASHER (STANDARD) (CRANKSHAFT)	
					(INCLUDES WASHERS)	
AB			**448-4227**		KIT-WASHER (0.20-MM US)	
					(INCLUDES WASHERS)	

A - NOT PART OF THIS GROUP
B - USE AS REQUIRED
J - KIT MARKED J SERVICES PART(S) MARKED J
L - KIT MARKED L SERVICES PART(S) MARKED L

348-3285 **CRANKSHAFT GP (**contd.**)** **i07818636**

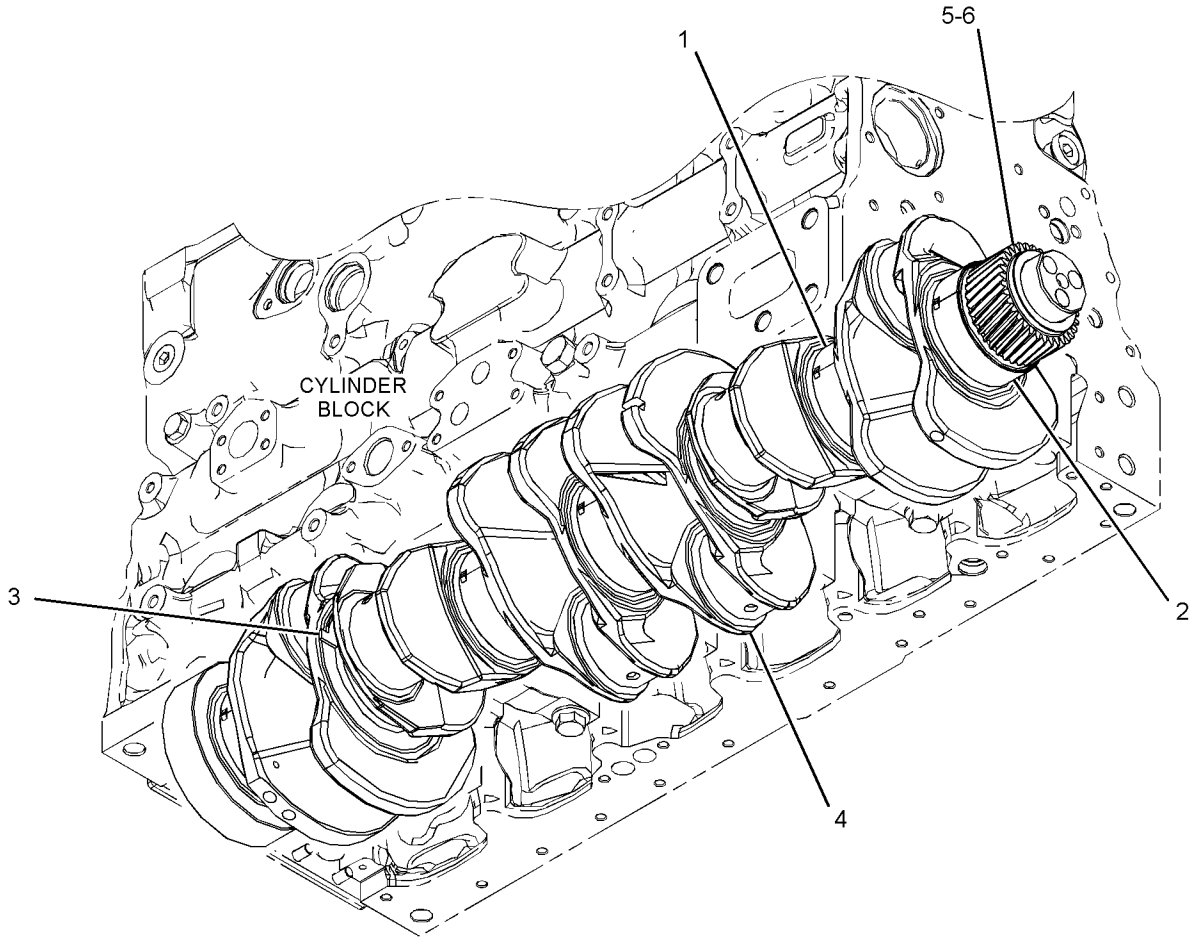

GRAPHIC #1 <END> g03320275

463-9843 CRANKSHAFT GP

PART OF 425-0779 CYLINDER BLOCK GP-SHORT

SMCS-1202 **i08410565**

NOTE	REF NO	GRAPHIC REF	PART NUMBER	QTY	PART NAME 1 2 3 4 5 6 (PRODUCT LEVEL)	SEE PAGE
	1	1	**276-7391**	1	GEAR (34-TEETH)	
	2	1	**067-6135**	1	KEY-WOODRUFF	
N	3	1	*470-8101*	7	BEARING-CRANKSHAFT (STANDARD-UPPER)	
J	4	1	*363-0559*	2	WASHER-THRUST	
	5	1	**376-4074**	1	CRANKSHAFT	
P	6	1	*445-9324*	7	BEARING (LOWER)	
					AVAILABLE REPAIR KIT(S):	
N			**360-1978**	1	KIT-BEARING (STANDARD) (CRANKSHAFT)	
					(INCLUDES BEARINGS)	
AB			**454-3745**		KIT-BEARING (0.254-MM US)	
					(INCLUDES BEARINGS)	
AB			**454-3931**		KIT-BEARING (0.508-MM US)	
					(INCLUDES BEARINGS)	
AB			**454-3935**		KIT-BEARING (0.762-MM US)	
					(INCLUDES BEARINGS)	
J			**364-5145**	1	KIT-WASHER (STANDARD) (CRANKSHAFT)	
					(INCLUDES THRUST WASHERS)	
AB			**448-4227**		KIT-WASHER (0.20-MM US)	
					(INCLUDES THRUST WASHERS)	
P			**448-4217**	1	KIT-BEARING (STANDARD) (CRANKSHAFT)	
					(INCLUDES BEARINGS)	
AB			**448-4218**		KIT-BEARING (0.254-MM US)	
					(INCLUDES BEARINGS)	
AB			**448-4220**		KIT-BEARING (0.508-MM US)	
					(INCLUDES BEARINGS)	
AB			**448-4222**		KIT-BEARING (0.762-MM US)	
					(INCLUDES BEARINGS)	

A - NOT PART OF THIS GROUP
B - USE AS REQUIRED
J - KIT MARKED J SERVICES PART(S) MARKED J
N - KIT MARKED N SERVICES PART(S) MARKED N
P - KIT MARKED P SERVICES PART(S) MARKED P

463-9843 **CRANKSHAFT GP (**contd.**)** **i08410565**

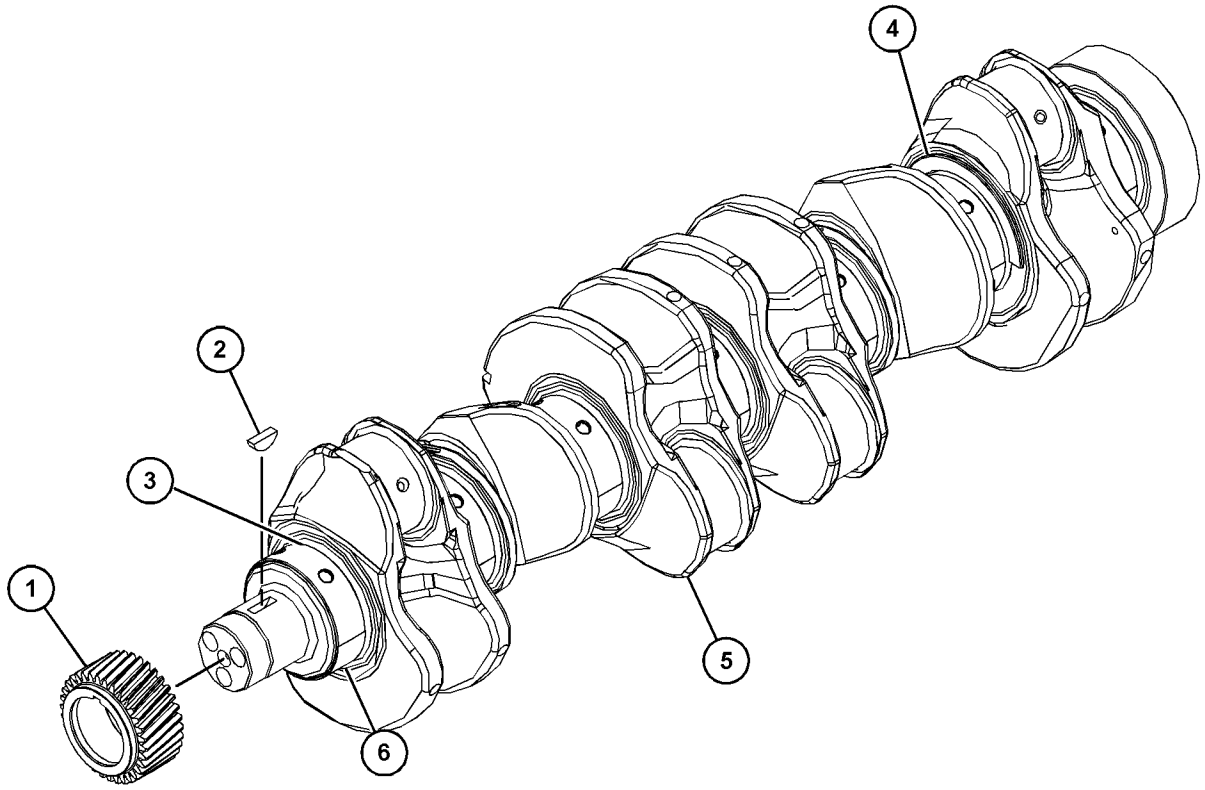

GRAPHIC #1 <END> g03821614

331-1682 CYLINDER BLOCK AS

PART OF 348-3283 CYLINDER BLOCK GP

SMCS-1201 **i06914648**

NOTE	REF NO	GRAPHIC REF	PART NUMBER	QTY	PART NAME 1 2 3 4 5 6 (PRODUCT LEVEL)	SEE PAGE
	1	1	**067-6043**	7	PLUG-SIDE	
	2	1	**185-0884**	2	DOWEL	
	3	1	**225-8858**	2	PLUG	
	4	1	**232-7597**	2	PLUG	
	5	1	**232-7599**	2	PLUG (7/8-14-THD)	
	6	1	**276-5602**	2	PLUG-CORE	
	7	1	**232-7596**	1	PLUG	
	8	1	**067-6823**	1	PLUG	
	9	1	**276-5600**	14	BOLT-SPECIAL	
	10	1	**370-6545**	1	BUSHING-CAMSHAFT	

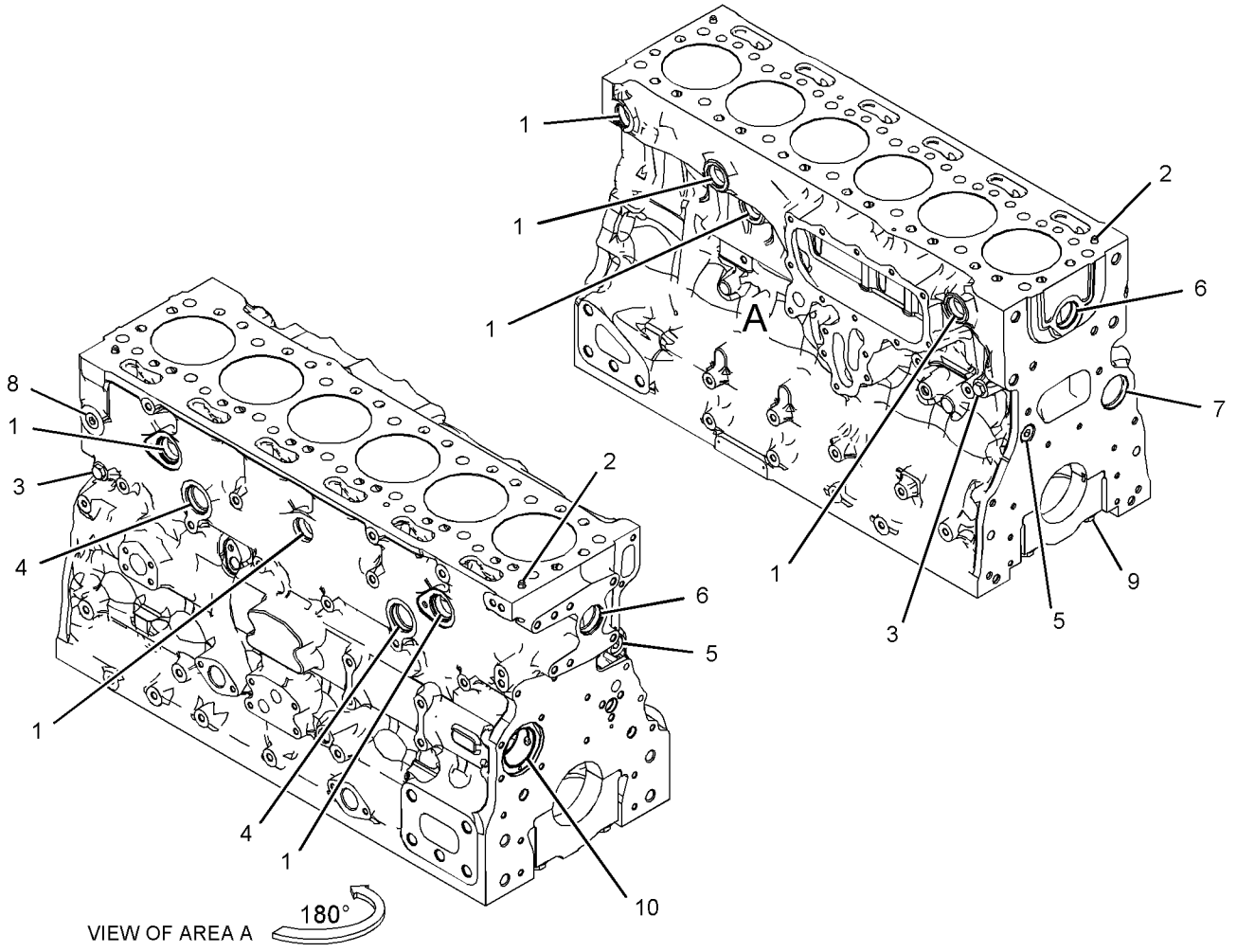

VIEW OF AREA A

GRAPHIC #1 <END> g06004757

348-3283 CYLINDER BLOCK GP

PART OF 425-0779 CYLINDER BLOCK GP-SHORT, 482-9241, 485-3093, 582-9032 ENGINE AR-PRIMARY

SMCS-1201 **i05644594**

NOTE	REF NO	GRAPHIC REF	PART NUMBER	QTY	PART NAME 1 2 3 4 5 6 (PRODUCT LEVEL)	SEE PAGE
M	1	1	**209-9219**	10	BOLT (M8X1.25X16-MM)	
	2	1	**232-1322**	1	PLUG	
	3	1	**276-5603**	1	SEAL-O-RING	
Y	4	1	*331-1682*	1	CYLINDER BLOCK AS	14
	5	1	**232-7449**	1	HOUSING AS	

M - METRIC PART
Y - SEPARATE ILLUSTRATION

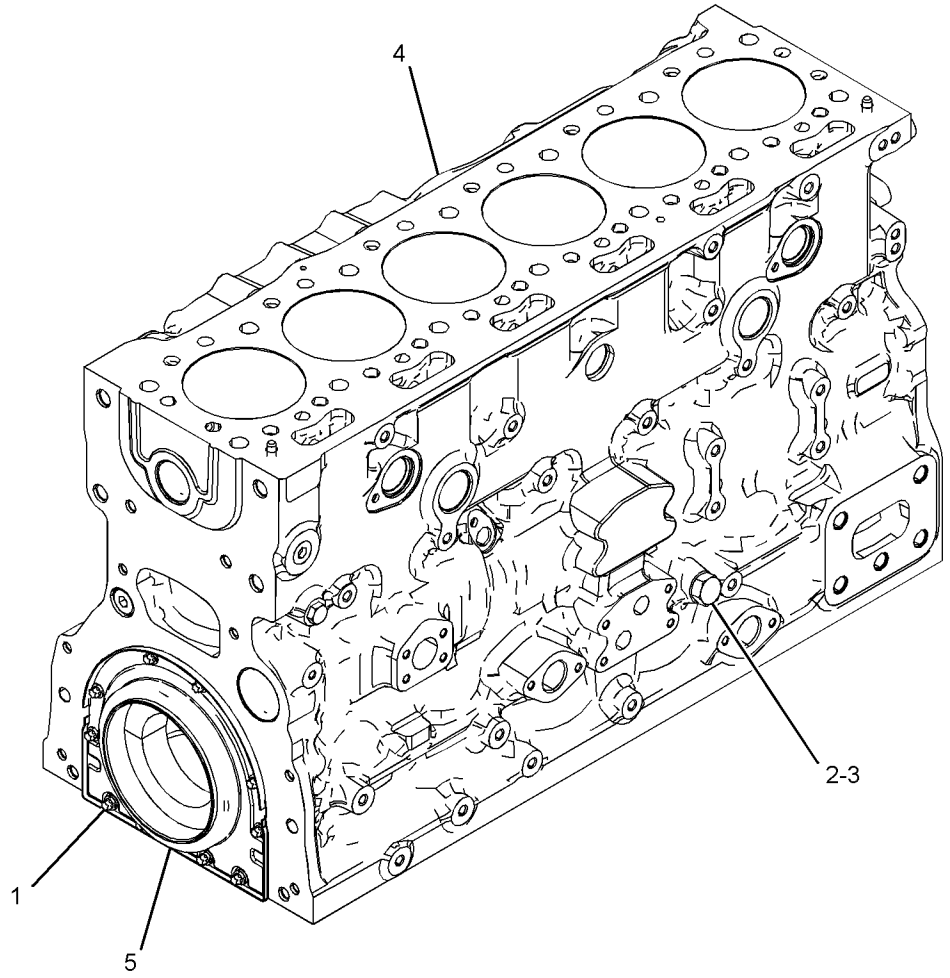

GRAPHIC #1 <END> g03318997

425-0779 CYLINDER BLOCK GP-SHORT

FIELD REPLACEMENT FOR 482-9241—PAGE: 2: FOR 485-3093—PAGE: 3: FOR 482-9241—PAGE: 2
PART OF 486-5568, 487-3750 CONFIGURATION AR-ENGINE, 476-6625 CYLINDER BLOCK GP-SHORT
TYPE 1

SMCS-1200 **i08071048**

NOTE	REF NO	GRAPHIC REF	PART NUMBER	QTY	PART NAME 1 2 3 4 5 6 (PRODUCT LEVEL)	SEE PAGE
Y	1	1	*348-3283*	1	CYLINDER BLOCK GP	15
Y	2	1	*348-3285*	1	CRANKSHAFT GP	10
Y	3	1	*348-3503*	1	JET GP-PISTON COOLING	37
Y	4	1	*348-3300*	1	PISTON & ROD GP	51

Y - SEPARATE ILLUSTRATION

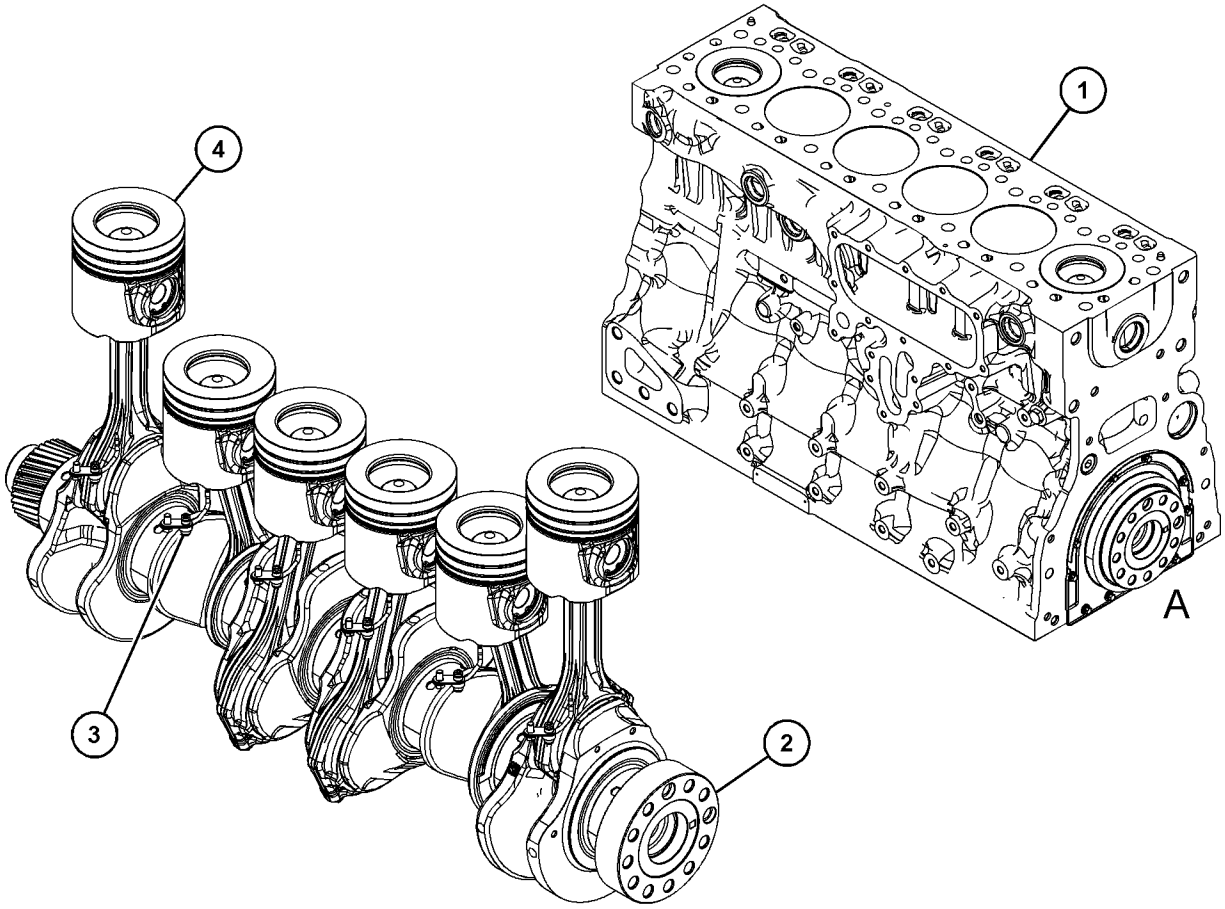

VIEW OF AREA A
(PARTS REMOVED FOR CLARITY)

GRAPHIC #1 <END> g06534299

425-0779 CYLINDER BLOCK GP-SHORT

FIELD REPLACEMENT FOR 482-9241—PAGE: 2: FOR 485-3093—PAGE: 3: FOR 482-9241—PAGE: 2
PART OF 487-3750 CONFIGURATION AR-ENGINE, 476-6625 CYLINDER BLOCK GP-SHORT
TYPE 2

SMCS-1200 **i09043986**

NOTE	REF NO	GRAPHIC REF	PART NUMBER	QTY	PART NAME 1 2 3 4 5 6 (PRODUCT LEVEL)	SEE PAGE
Y	1	1	*348-3283*	1	CYLINDER BLOCK GP	15
CY	2	1	*463-9843*	1	CRANKSHAFT GP	12
Y	3	1	*348-3503*	1	JET GP-PISTON COOLING	37
CY	4	1	*475-1557*	1	PISTON & ROD GP	56
CY	5	1	*475-2041*	1	PAN GP-OIL	44
C	6	1	*376-6463*	1	PLATE GP-SERIAL NUMBER	
	6A	1	**332-0905**	2	RIVET-DRIVE	
	6B	1	**350-8959**	1	PLATE-SERIAL NUMBER	

C - CHANGE FROM PREVIOUS TYPE
Y - SEPARATE ILLUSTRATION

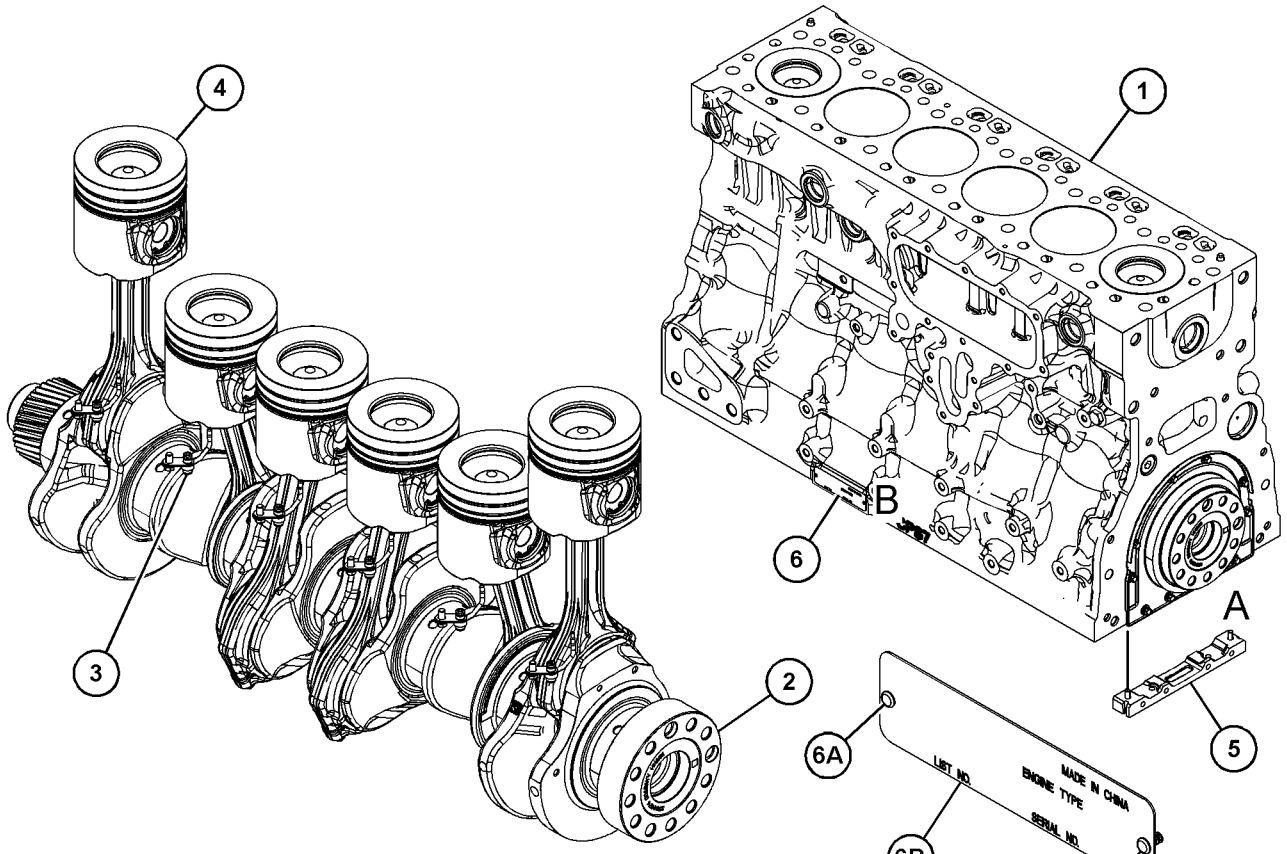

VIEW OF AREA A
(PARTS REMOVED FOR CLARITY)

VIEW OF AREA B
(PARTS REMOVED FOR CLARITY)

GRAPHIC #1 <END> g07484983

476-6625 CYLINDER BLOCK GP-SHORT

PART OF 583-2112 CONFIGURATION AR-ENGINE

SMCS-1200 **i07570484**

NOTE	PART NUMBER	QTY	PART NAME 1 2 3 4 5 6 (PRODUCT LEVEL)	SEE PAGE
Y	**425-0779**	1	CYLINDER BLOCK GP-SHORT	16

Y - SEPARATE ILLUSTRATION

<END>

391-3193 CYLINDER HEAD GP

PART OF 425-3316 CYLINDER HEAD GP, 482-9241, 485-3093, 582-9032 ENGINE AR-PRIMARY

SMCS-1100 **i07647965**

NOTE	REF NO	GRAPHIC REF	PART NUMBER	QTY	PART NAME 1 2 3 4 5 6 (PRODUCT LEVEL)	SEE PAGE
	1	1	**335-7055**	14	BOLT	
	2	1	**359-6616**	1	GASKET (CYLINDER HEAD)	
	3	1	**450-9263**	1	CYLINDER HEAD GP	
		1	**067-6006**	6	PLUG	
		1	**335-6264**	12	GUIDE-VALVE	
		1	**542-1363**	8	PLUG-CUP	
		1	**335-6266**	6	INSERT-VALVE SEAT	
		1	**381-6236**	6	INSERT-VALVE SEAT	

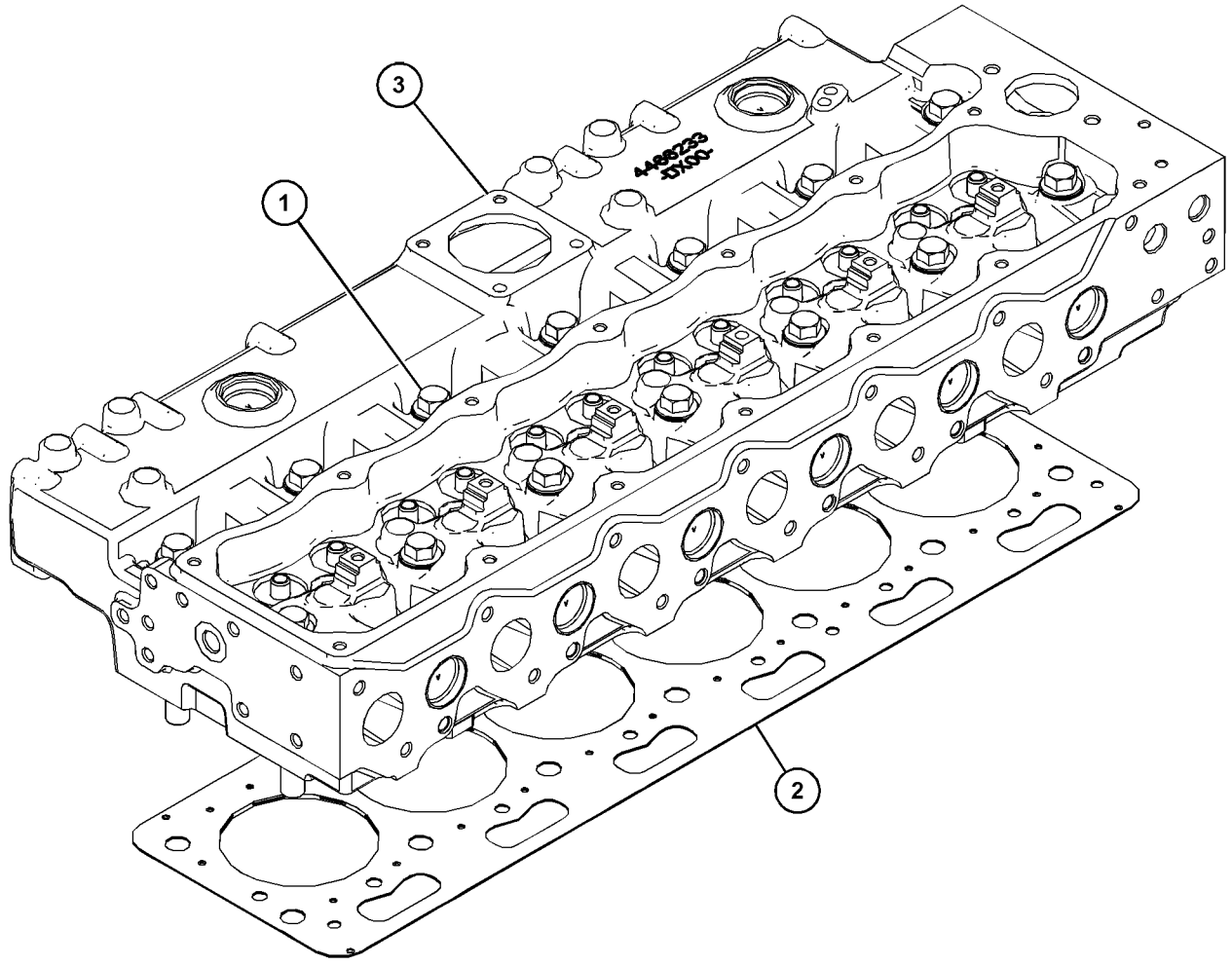

GRAPHIC #1 <END> g06149931

425-3316 CYLINDER HEAD GP

FIELD REPLACEMENT FOR 485-3093—PAGE: 3: FOR 482-9241—PAGE: 2: FOR 485-3093—PAGE: 3: FOR 582-9032—PAGE: 4

PART OF 486-5568, 487-3750 CONFIGURATION AR-ENGINE, 476-6624 CYLINDER HEAD GP

SMCS-1100 **i07019329**

NOTE	REF NO	GRAPHIC REF	PART NUMBER	QTY	PART NAME 1 2 3 4 5 6 (PRODUCT LEVEL)	SEE PAGE
Y	1	1	*391-3193*	1	CYLINDER HEAD GP	19
Y	2	1	*438-3180*	1	ROCKER ARM GP	64

Y - SEPARATE ILLUSTRATION

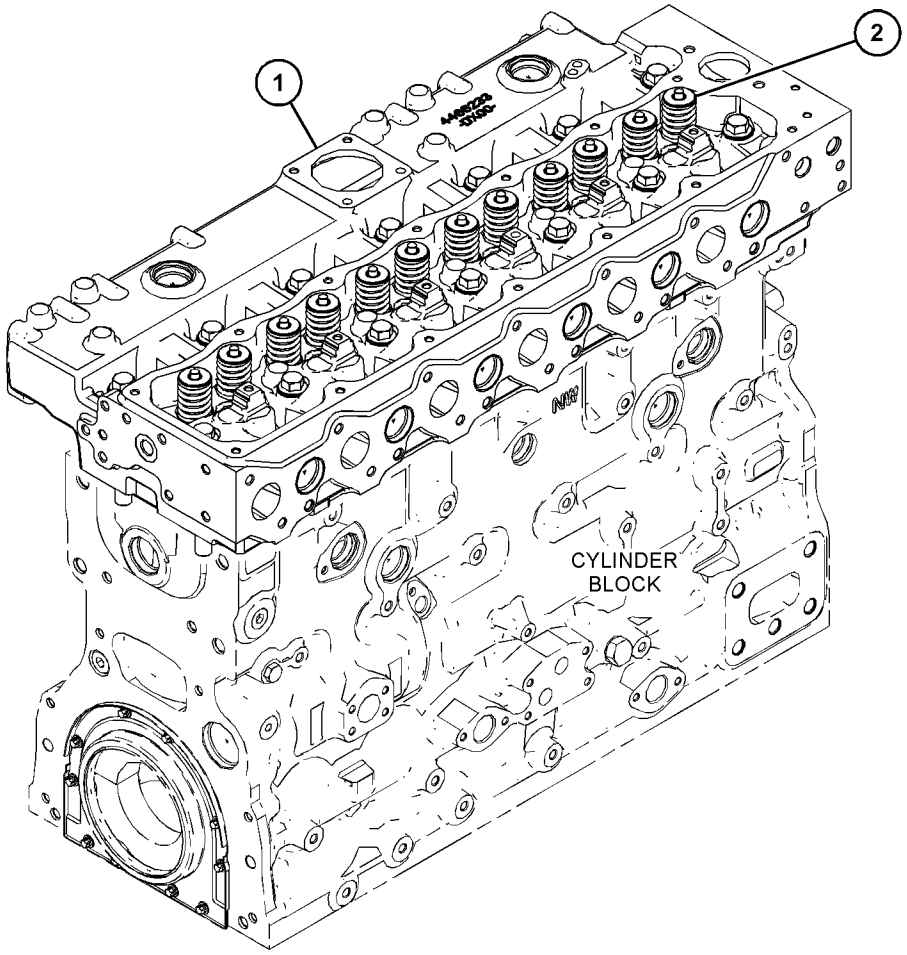

GRAPHIC #1 <END> g06198264

476-6624 CYLINDER HEAD GP

PART OF 583-2112 CONFIGURATION AR-ENGINE

SMCS-1100 **i08827071**

NOTE	REF NO	GRAPHIC REF	PART NUMBER	QTY	PART NAME 1 2 3 4 5 6 (PRODUCT LEVEL)	SEE PAGE
Y	1	1	**425-3316**	1	CYLINDER HEAD GP (SHORT)	20

Y - SEPARATE ILLUSTRATION

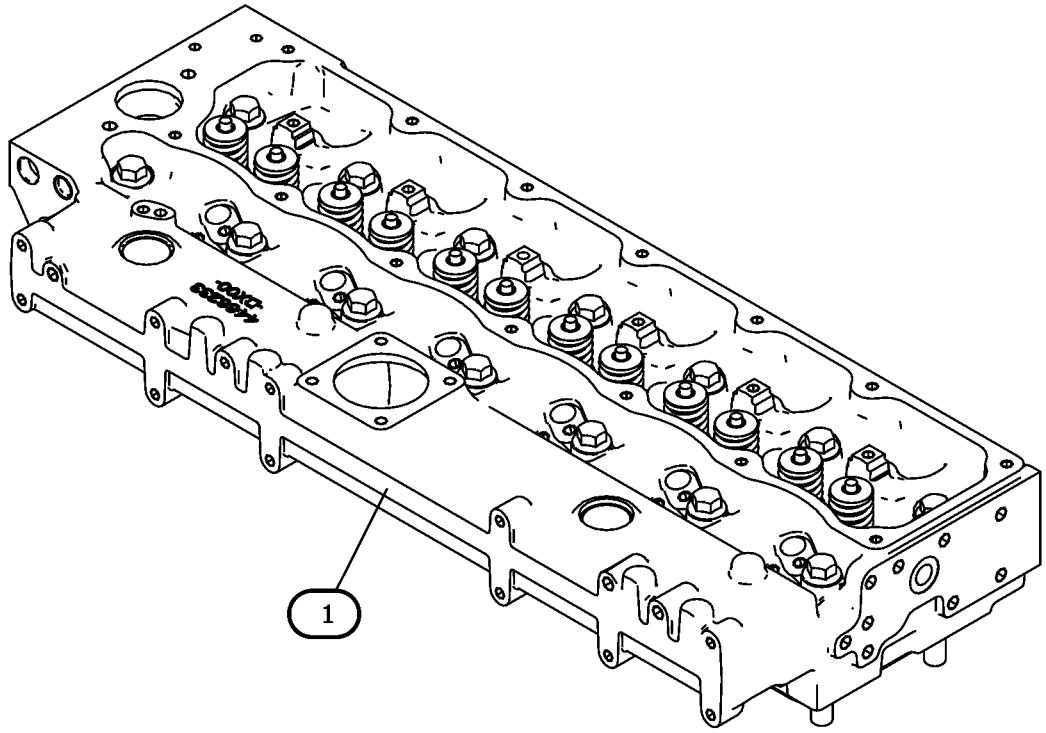

GRAPHIC #1 <END> g06800812

345-9561 DRIVE GP-FAN

PART OF 485-3093 ENGINE AR-PRIMARY

SMCS-1359 **i06690620**

NOTE	REF NO	GRAPHIC REF	PART NUMBER	QTY	PART NAME 1 2 3 4 5 6 (PRODUCT LEVEL)	SEE PAGE
M	1	1	**111-0859**	4	BOLT (M10X1.5X35-MM)	
	2	1	**126-2240**	1	V-BELT SET (INCLUDES 2-BELTS)	
	3	1	**130-3880**	1	PULLEY-FAN DRIVE	
	4	1	**230-8065**	1	HOUSING AS	

M - METRIC PART

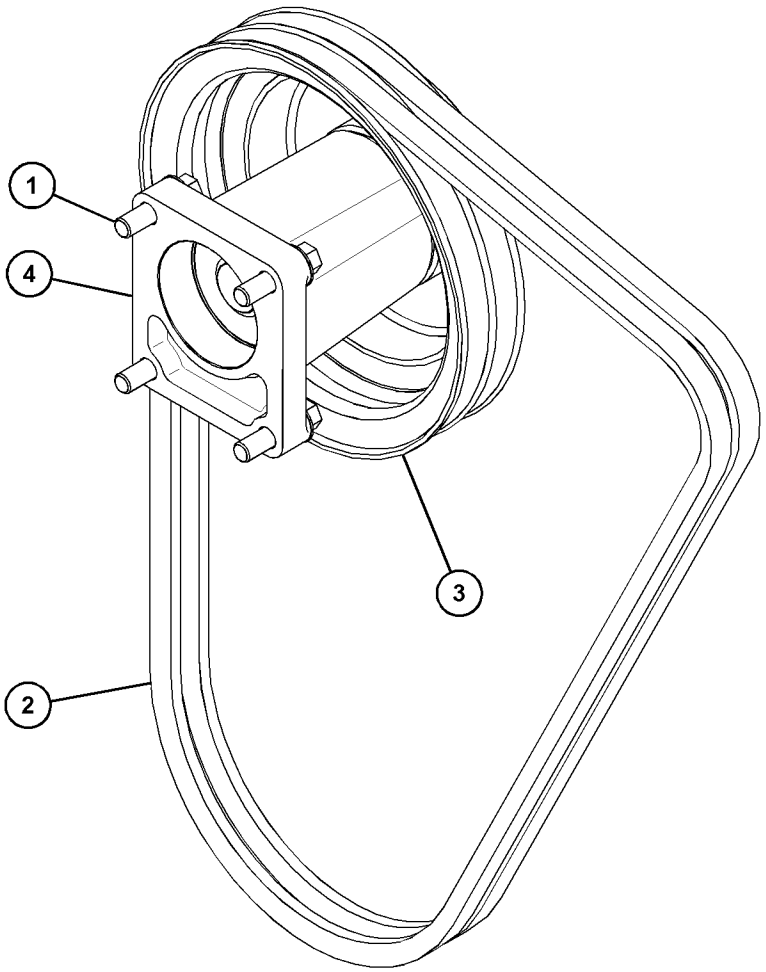

GRAPHIC #1 <END> g06115571

536-0608 EXTENSION GP-FAN

PART OF 482-9241 ENGINE AR-PRIMARY

SMCS-1359 **i07105767**

NOTE	REF NO	GRAPHIC REF	PART NUMBER	QTY	PART NAME 1 2 3 4 5 6 (PRODUCT LEVEL)	SEE PAGE
M	1	1	**6V-9189**	4	LOCKNUT (M8X1.25-THD)	
M	2	1	**133-7668**	4	STUD (M8X1.25X116-MM)	
	3	1	**133-7669**	1	EXTENSION-FAN	
F		1	**453-9700**	1	EXTENSION (FAN PULLEY)	

F - NOT SHOWN
M - METRIC PART

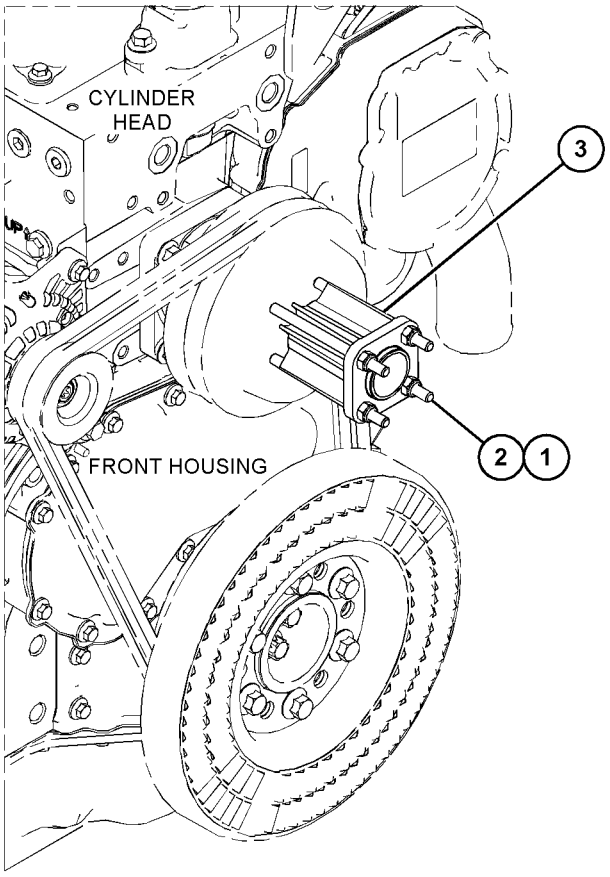

GRAPHIC #1 <END> g06219861

345-8901 FLYWHEEL GP

PART OF 485-3093 ENGINE AR-PRIMARY

SMCS-1156 **i06240174**

NOTE	REF NO	GRAPHIC REF	PART NUMBER	QTY	PART NAME 1 2 3 4 5 6 (PRODUCT LEVEL)	SEE PAGE
	1	1	**458-3400**	1	FLYWHEEL AS	
	1A	1	**033-7687**	1	RING-STARTING MOTOR (126-TEETH)	
	2	1	**0S-1603**	12	BOLT (1/2-20X1.5-IN)	
	3	1	**145-4911**	12	WASHER	

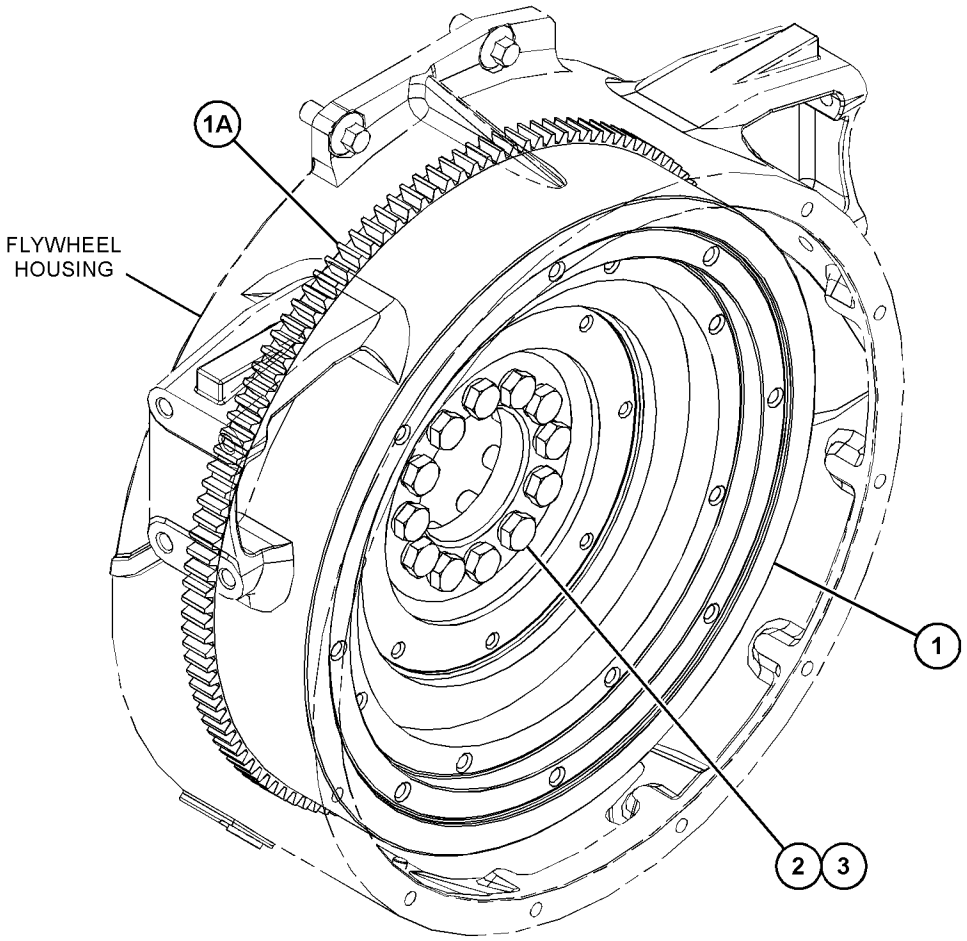

GRAPHIC #1 <END> g03647217

345-8961 FLYWHEEL GP

PART OF 482-9241 ENGINE AR-PRIMARY

SMCS-1156 **i06992697**

NOTE	REF NO	GRAPHIC REF	PART NUMBER	QTY	PART NAME 1 2 3 4 5 6 (PRODUCT LEVEL)	SEE PAGE
	1	1	**0S-1603**	12	BOLT (1/2-20X1.5-IN)	
	2	1	**145-4911**	12	WASHER	
	3	1	**458-3404**	1	FLYWHEEL AS	
	3A	1	**033-7687**	1	RING-STARTING MOTOR (126-TEETH)	

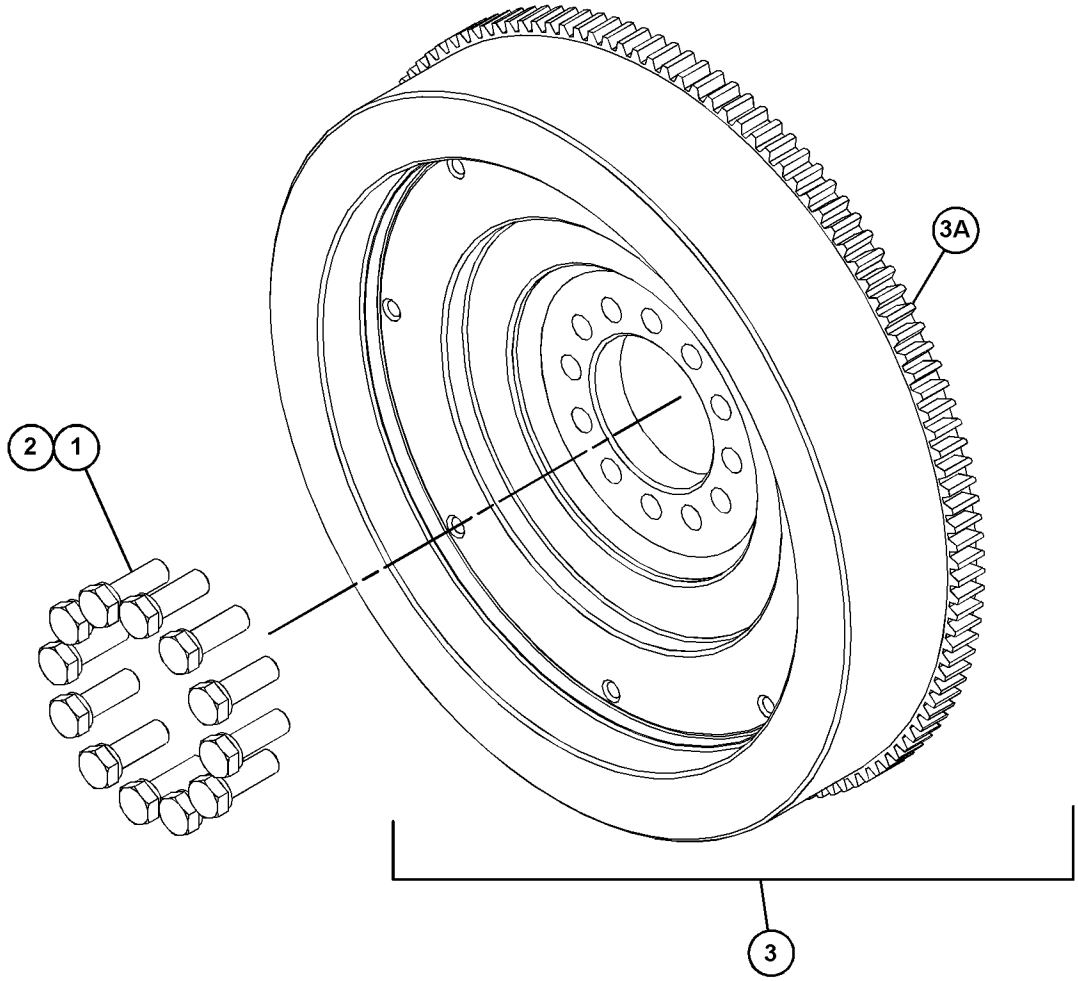

GRAPHIC #1 <END> g03686845

345-8838 HOUSING GP-FLYWHEEL

PART OF 485-3093 ENGINE AR-PRIMARY

SMCS-1157 **i05727425**

NOTE	REF NO	GRAPHIC REF	PART NUMBER	QTY	PART NAME 1 2 3 4 5 6 (PRODUCT LEVEL)	SEE PAGE
M	1	1	**6I-0423**	2	BOLT (M12X1.75X30-MM)	
	2	1	**7W-1176**	1	PLATE-COVER	
M	3	1	**114-4363**	2	BOLT (M8X1.25X12-MM)	
M	4	1	**121-0883**	6	BOLT (M10X1.5X30-MM)	
	5	1	**199-3109**	1	PLUG	
	6	1	**287-8597**	2	DOWEL	
	7	1	**306-2332**	1	HOUSING-FLYWHEEL	
	8	1	**375-9272**	2	PLUG	
	9	1	**393-4006**	1	GASKET	

M - METRIC PART

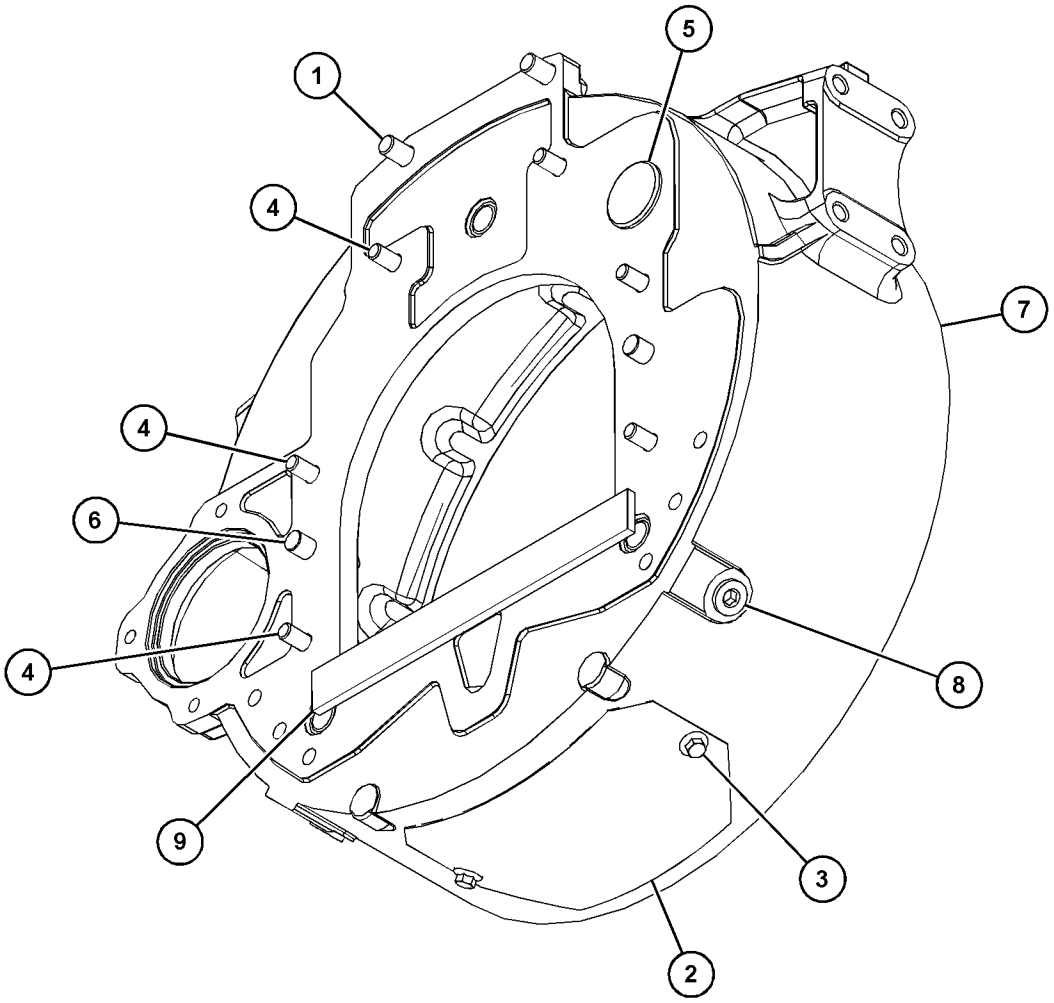

GRAPHIC #1 <END> g03647626

345-8839 HOUSING GP-FLYWHEEL

PART OF 482-9241 ENGINE AR-PRIMARY

SMCS-1157 **i05726732**

NOTE	REF NO	GRAPHIC REF	PART NUMBER	QTY	PART NAME 1 2 3 4 5 6 (PRODUCT LEVEL)	SEE PAGE
	1	1	**281-6331**	1	HOUSING-FLYWHEEL	
M	2	1	**6I-0423**	2	BOLT (M12X1.75X30-MM)	
M	3	1	**6I-0631**	2	BOLT (M6X1X12-MM)	
	4	1	**102-1957**	1	PLATE	
M	5	1	**121-0883**	6	BOLT (M10X1.5X30-MM)	
	6	1	**199-3108**	1	PLUG	
	7	1	**199-3109**	1	PLUG	
	8	1	**287-8597**	2	DOWEL	
	9	1	**375-9272**	1	PLUG	
	10	1	**393-4006**	1	GASKET	

M - METRIC PART

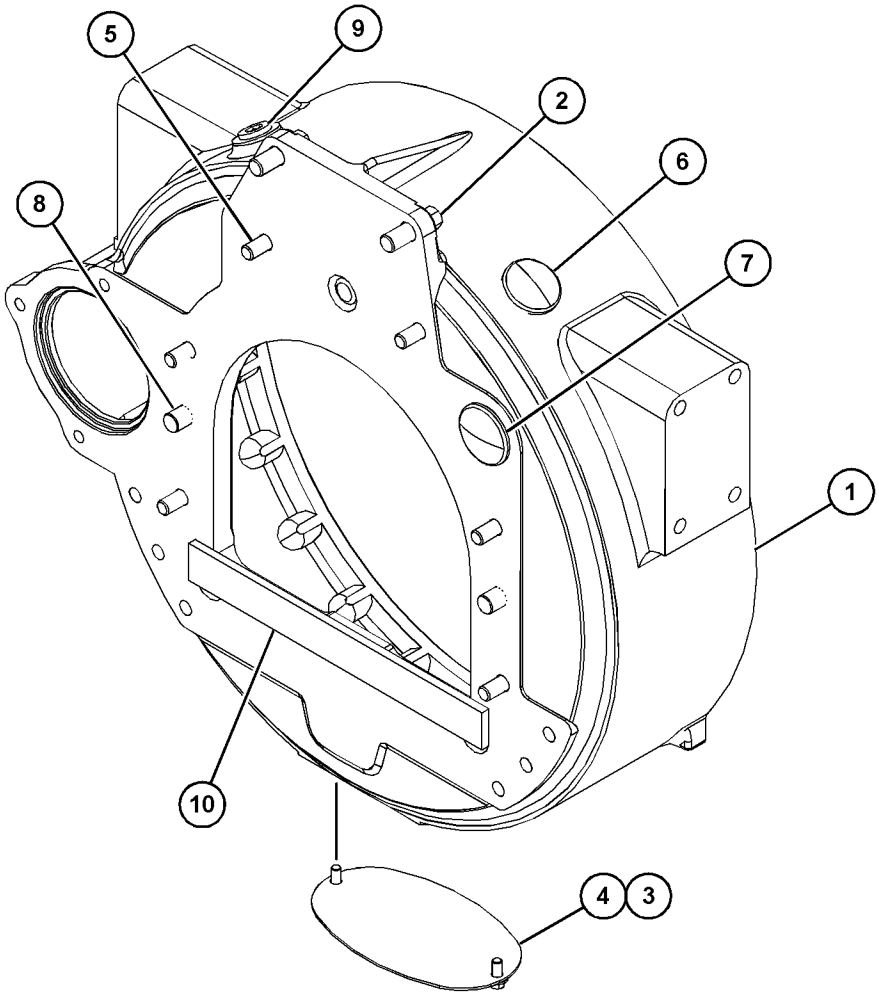

GRAPHIC #1 <END> g03666105

346-0478 HOUSING GP-FRONT—GEAR CASE

PART OF 482-9241 ENGINE AR-PRIMARY

SMCS-1151, 1162, 1206 **i09553529**

NOTE	REF NO	GRAPHIC REF	PART NUMBER	QTY	PART NAME 1 2 3 4 5 6 (PRODUCT LEVEL)	SEE PAGE
M	1	2	**6I-0650**	3	BOLT (M10X1.5X65-MM)	
	3	3	**067-6179**	1	DOWEL	
M	4	1	**100-3751**	5	BOLT (M8X1.25X65-MM)	
M	5	1,3	**100-4830**	2	BOLT (M10X1.5X20-MM)	
M	6	2	**101-3895**	2	BOLT (M8X1.25X35-MM)	
M	7	3	**111-8222**	5	BOLT (M8X1.25X16-MM)	
M	8	1	**124-3815**	9	BOLT (M8X1.25X16-MM)	
	9	2	**133-1011**	1	WASHER	
	10	3	**232-3666**	1	WASHER-THRUST	
	11	1	**277-3013**	1	SEAL	
	12	1	**277-4223**	1	PLUG	
	13	3	**329-7854**	1	PLATE AS	
	13A	3	**329-7856**	1	SEAL-O-RING	
	14	2	**346-0408**	1	PLATE	
M	15	2,3	**6I-0217**	6	BOLT (M8X1.25X20-MM)	
M	16	1	**6I-0645**	4	BOLT (M8X1.25X25-MM)	
	17	2	**324-0444**	1	HUB-IDLER GEAR	
	18	2	**326-5063**	1	HOUSING-FRONT	
	19	2	**425-7103**	1	GEAR (68-TEETH)	
	20	1	**226-8767**	1	COVER AS-FRONT	
	20A	2	**226-8766**	1	GASKET-COVER	
	21	2	**251-4336**	1	GEAR AS-IDLER (73-TEETH)	
	22	3	**277-3012**	1	GASKET-COVER	
M	23	2	**344-3434**	1	BOLT-FLANGE HEAD (M12X1.75X45-MM)	

M - METRIC PART

346-0478 **HOUSING GP-FRONT (**contd.**)** **i09553529**

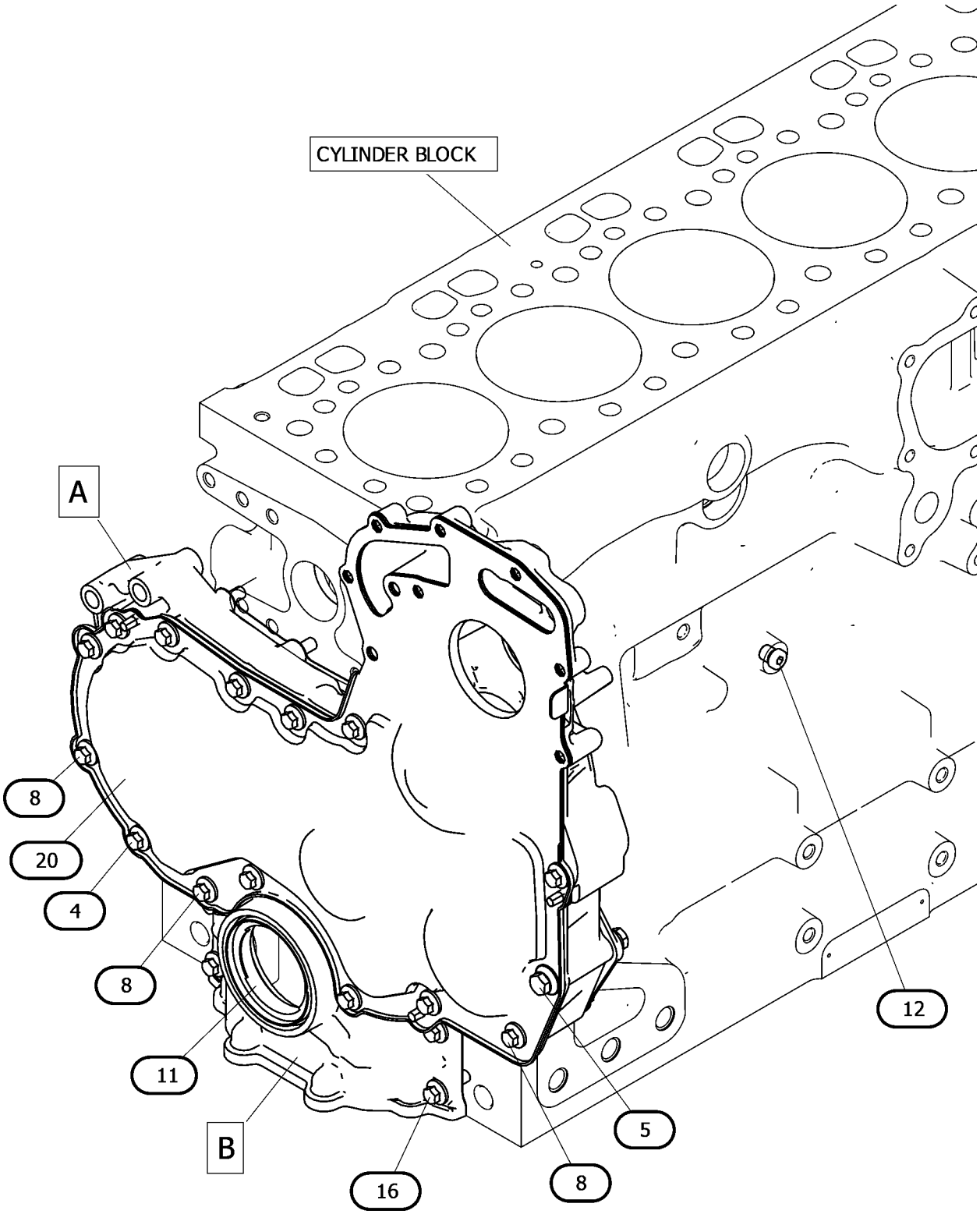

GRAPHIC #1 g07489372

346-0478 **HOUSING GP-FRONT** (contd.) **i09553529**

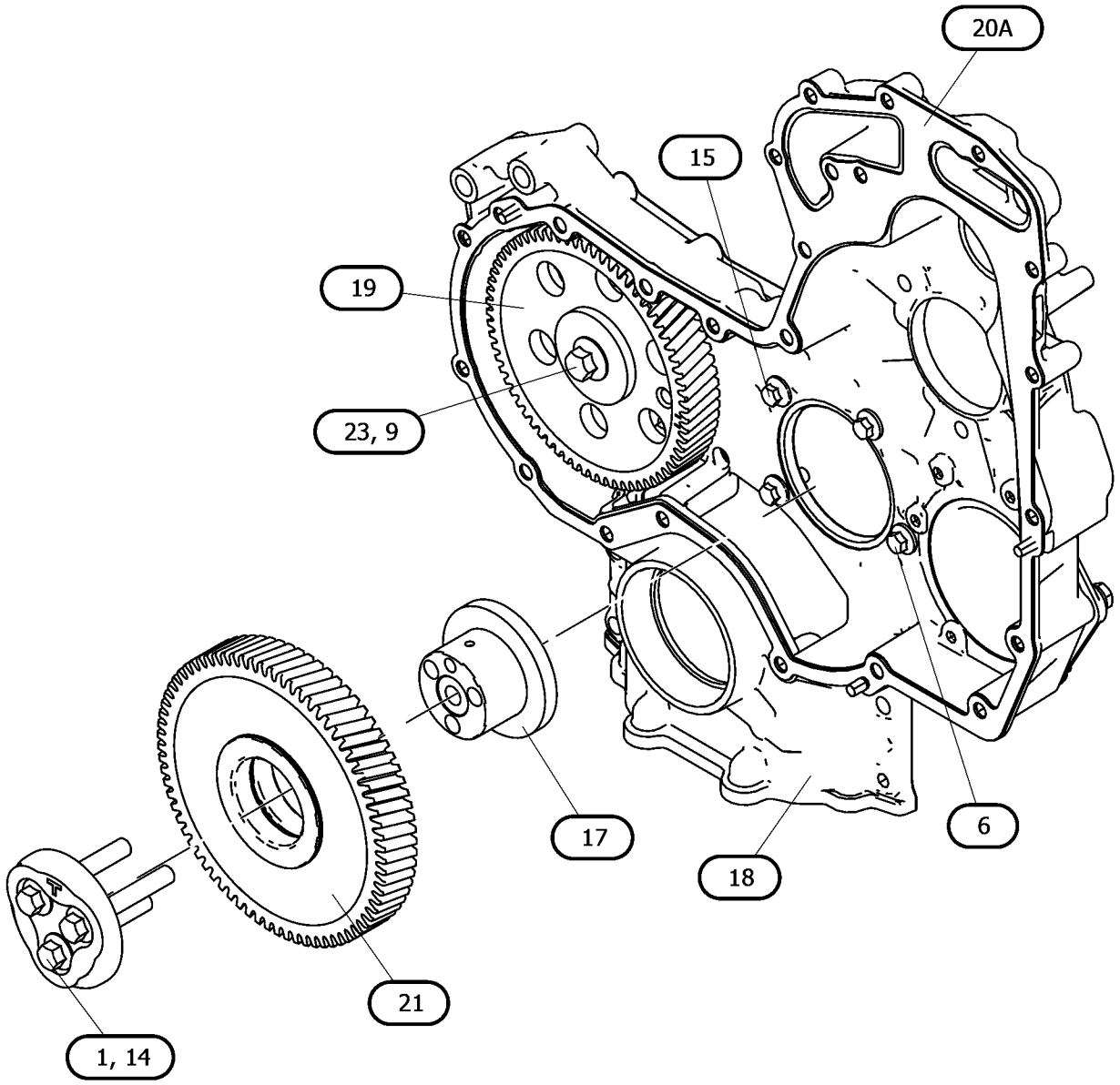

VIEW OF AREA A
(PARTS REMOVED FOR CLARITY)

GRAPHIC #2 g07489372_01

346-0478 **HOUSING GP-FRONT (**contd.**)** **i09553529**

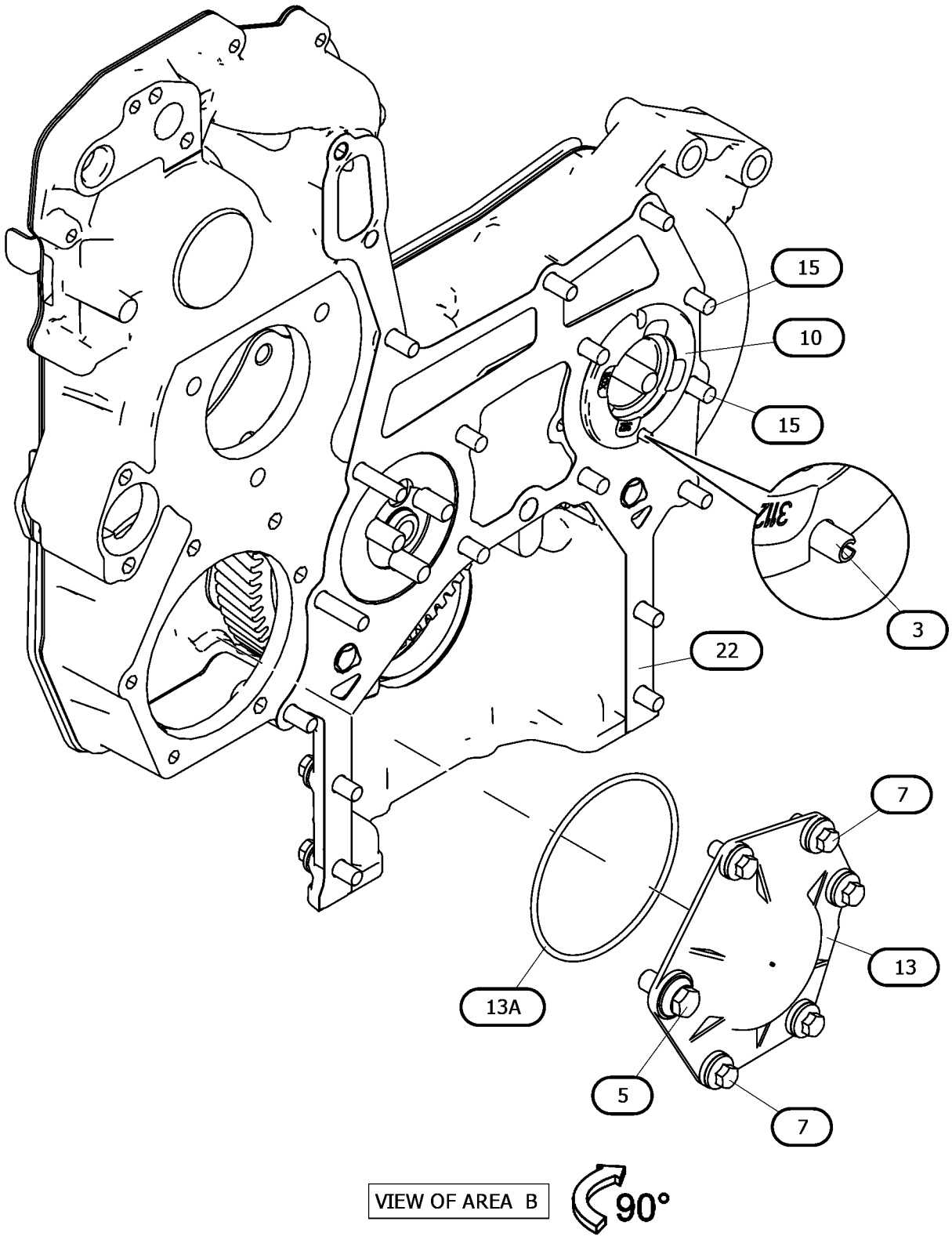

GRAPHIC #3 <END> g07489372_02

346-0487 HOUSING GP-FRONT

PART OF 485-3093 ENGINE AR-PRIMARY

SMCS-1151, 1162, 1206 **i06895673**

NOTE	REF NO	GRAPHIC REF	PART NUMBER	QTY	PART NAME 1 2 3 4 5 6 (PRODUCT LEVEL)	SEE PAGE
M	1	1	**6I-0217**	6	BOLT (M8X1.25X20-MM)	
M	2	1	**6I-0454**	3	BOLT (M10X1.5X70-MM)	
M	3	1	**6I-0645**	4	BOLT (M8X1.25X25-MM)	
M	4	1	**7C-4616**	1	BOLT (M12X1.75X45-MM)	
	5	1	**067-6179**	1	DOWEL	
M	6	1	**100-4830**	2	BOLT (M10X1.5X20-MM)	
M	7	1	**101-3895**	2	BOLT (M8X1.25X35-MM)	
M	8	1	**111-8222**	5	BOLT (M8X1.25X16-MM)	
	9	1	**133-1011**	1	WASHER	
	10	1	**226-8767**	1	COVER AS-FRONT	
	10A	1	**226-8766**	1	GASKET-COVER	
	11	1	**232-3666**	1	WASHER-THRUST	
	12	1	**277-3013**	1	SEAL	
	13	1	**277-4223**	1	PLUG	
	14	1	**291-6517**	1	PLATE	
	15	1	**326-5063**	1	HOUSING-FRONT	
	16	1	**329-7854**	1	PLATE AS	
	16A	1	**329-7856**	1	SEAL-O-RING	
	17	1	**359-9431**	1	GEAR-IDLER	
M	18	1	**100-3751**	5	BOLT (M8X1.25X65-MM)	
M	19	1	**124-3815**	9	BOLT (M8X1.25X16-MM)	
	20	1	**425-7103**	1	GEAR (68-TEETH)	
	21	1	**277-3012**	1	GASKET-COVER	

M - METRIC PART

346-0487 **HOUSING GP-FRONT (**contd.**)** **i06895673**

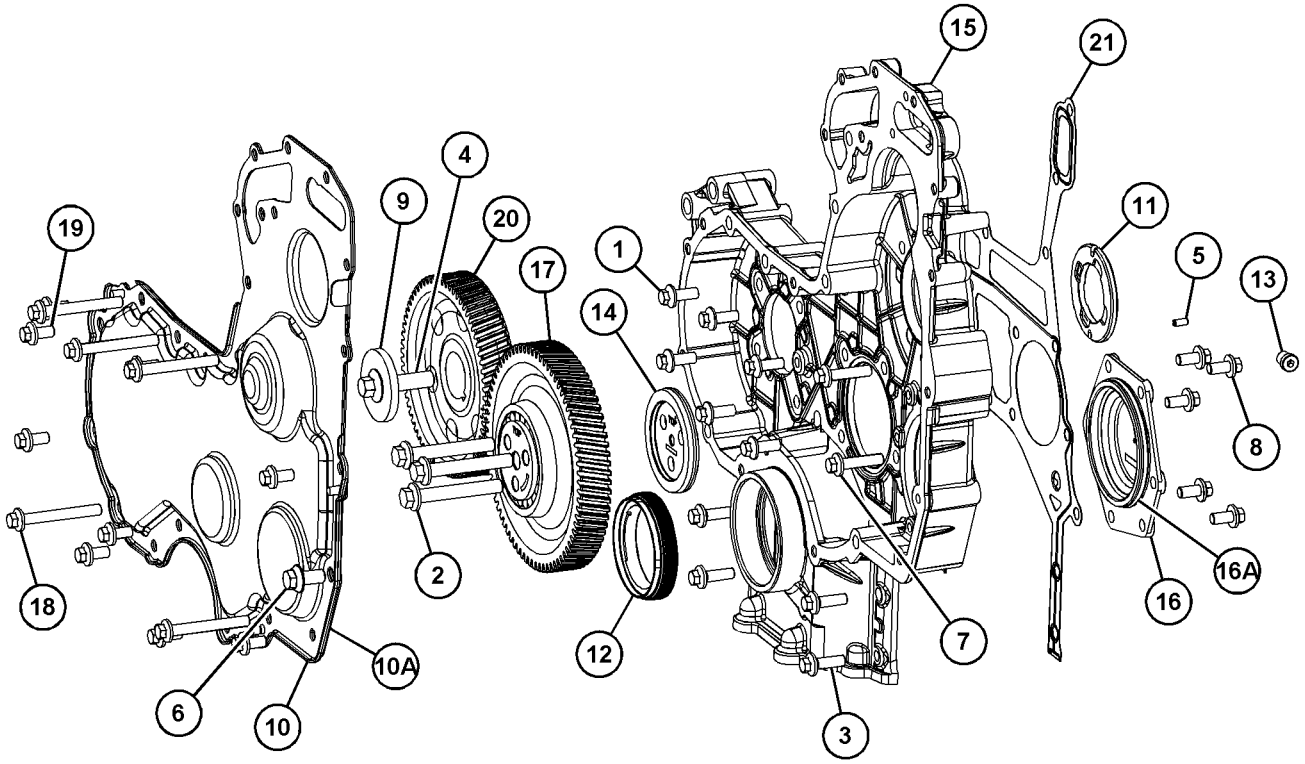

GRAPHIC #1 <END> g06148361

358-4828 HOUSING GP-FRONT

PART OF 582-9032 ENGINE AR-PRIMARY

SMCS-1151, 1162, 1206 **i07144740**

NOTE	REF NO	GRAPHIC REF	PART NUMBER	QTY	PART NAME 1 2 3 4 5 6 (PRODUCT LEVEL)	SEE PAGE
M	1	2	**6I-0302**	2	BOLT (M10X1.5X25-MM)	
M	2	1	**6I-0650**	3	BOLT (M10X1.5X65-MM)	
M	3	1	**7C-4616**	1	BOLT (M12X1.75X45-MM)	
	4	1	**067-6179**	1	DOWEL	
M	5	1	**100-3751**	5	BOLT (M8X1.25X65-MM)	
M	6	1	**101-3895**	2	BOLT (M8X1.25X35-MM)	
	7	2	**102-2073**	1	SEAL-O-RING	
	8	2	**113-8076**	1	PIN	
M	9	1	**124-3815**	9	BOLT (M8X1.25X16-MM)	
	10	2	**126-3219**	1	SEAL-O-RING	
	11	1	**133-1011**	1	WASHER	
	12	2	**198-8262**	1	COVER AS	
	12A	2	**198-8263**	1	SEAL-O-RING	
	13	2	**214-3203**	1	WASHER (SEALING)	
	14	1	**425-7103**	1	GEAR (68-TEETH)	
	15	1	**226-8767**	1	COVER AS-FRONT	
	15A	1	**226-8766**	1	GASKET-COVER	
	16	1	**232-3666**	1	WASHER-THRUST	
	17	1	**273-3690**	1	BOLT	
M	18	2	**273-3691**	4	BOLT (M8X1.25X80-MM)	
	19	1	**277-3012**	1	GASKET-COVER	
	20	1	**277-3013**	1	SEAL	
M	21	2	**293-1875**	2	BOLT (M10X1.5X16-MM)	
	22	2	**293-1878**	1	CONNECTION	
	23	1	**321-6121**	1	HOSE	
	24	1	**331-6129**	4	CLAMP	
	25	1	**346-0408**	1	PLATE	
	26	1	**361-9898**	1	HOSE	
M	27	1,2	**6I-0217**	8	BOLT (M8X1.25X20-MM)	
M	28	2	**184-0983**	2	NUT-HEX FLANGE (M12X1.75-THD)	
M	29	1	**6I-0645**	4	BOLT (M8X1.25X25-MM)	
	30	2	**259-2623**	1	GEAR (34-TEETH)	
	31	1	**324-0444**	1	HUB-IDLER GEAR	
	32	1	**326-5063**	1	HOUSING-FRONT	
	33	2	**035-8017**	1	UNION	
	34	2	**209-6825**	2	ADAPTER	
	35	2	**451-1179**	1	COMPRESSOR	
	36	2	**247-4928**	2	WASHER (16.5X20.5X1.6-MM THK)	
	37	1	**251-4336**	1	GEAR AS-IDLER (73-TEETH)	
	38	2	**293-1876**	1	BRACKET	
Y	39	2	**293-1877**	1	ADAPTER GP-AIR COMPRESSOR	5
	40	2	**321-6120**	1	LINES GP-FUEL INJECTION	

M - METRIC PART
Y - SEPARATE ILLUSTRATION

358-4828 **HOUSING GP-FRONT (**contd.**)** **i07144740**

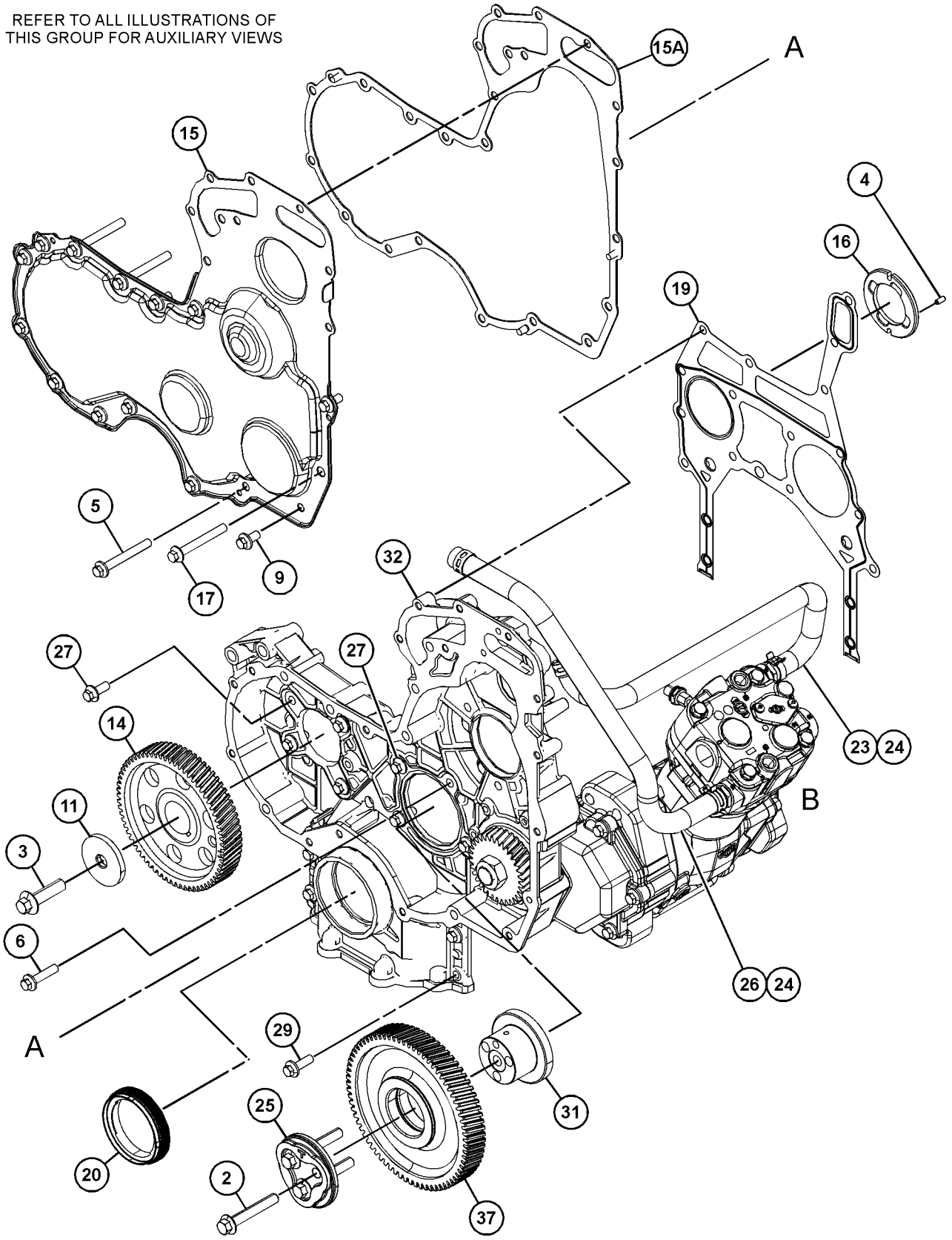

GRAPHIC #1 g06219307

358-4828 **HOUSING GP-FRONT (**contd.**)** **i07144740**

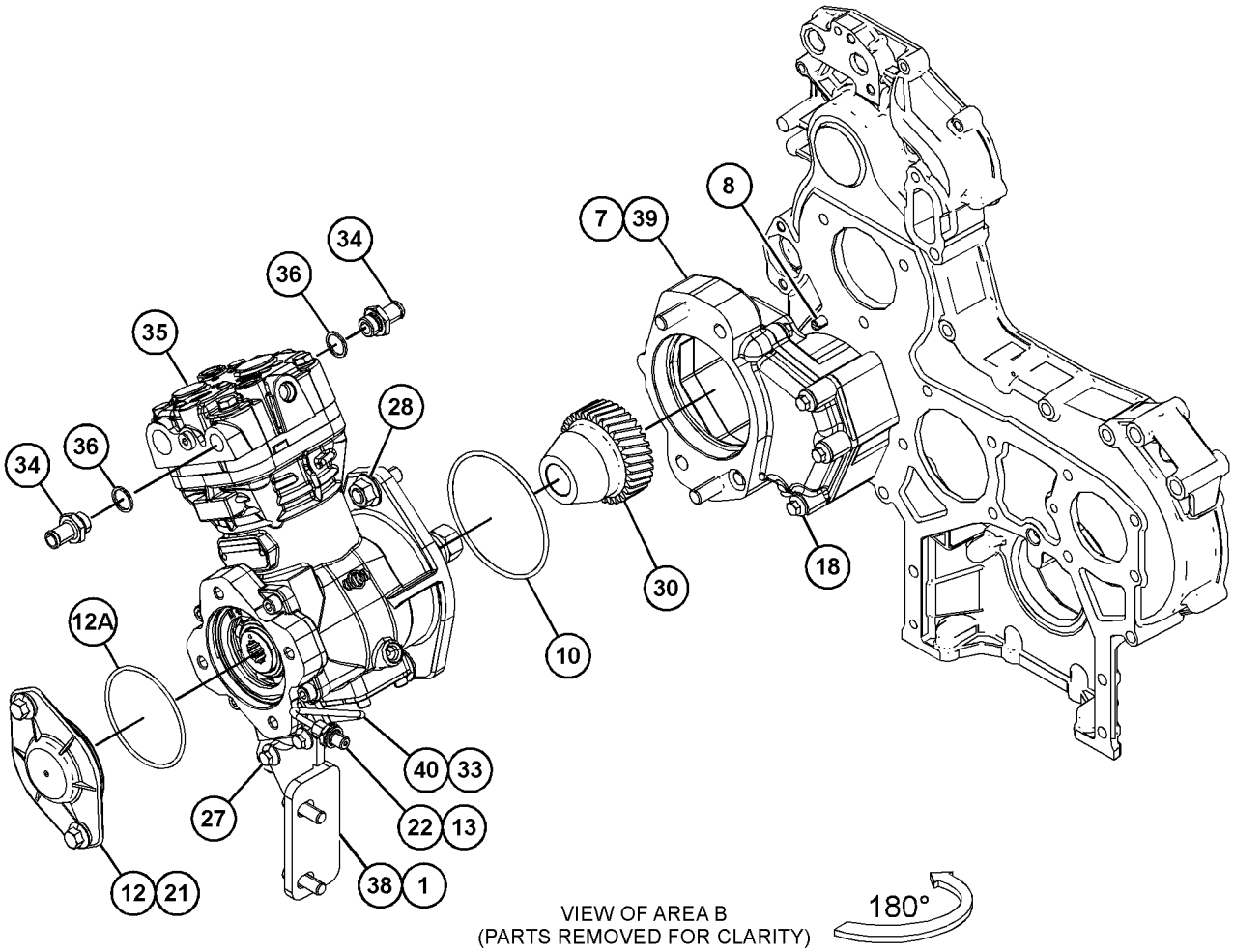

GRAPHIC #2 <END> g06219308

348-3503 JET GP-PISTON COOLING

PART OF 425-0779 CYLINDER BLOCK GP-SHORT, 482-9241, 485-3093, 582-9032 ENGINE AR-PRIMARY

SMCS-1331 **i05645496**

NOTE	REF NO	GRAPHIC REF	PART NUMBER	QTY	PART NAME 1 2 3 4 5 6 (PRODUCT LEVEL)	SEE PAGE
M	1	1	**100-4841**	6	BOLT (M6X1X10-MM)	
	2	1	**329-3796**	6	TUBE AS-OIL JET	

M - METRIC PART

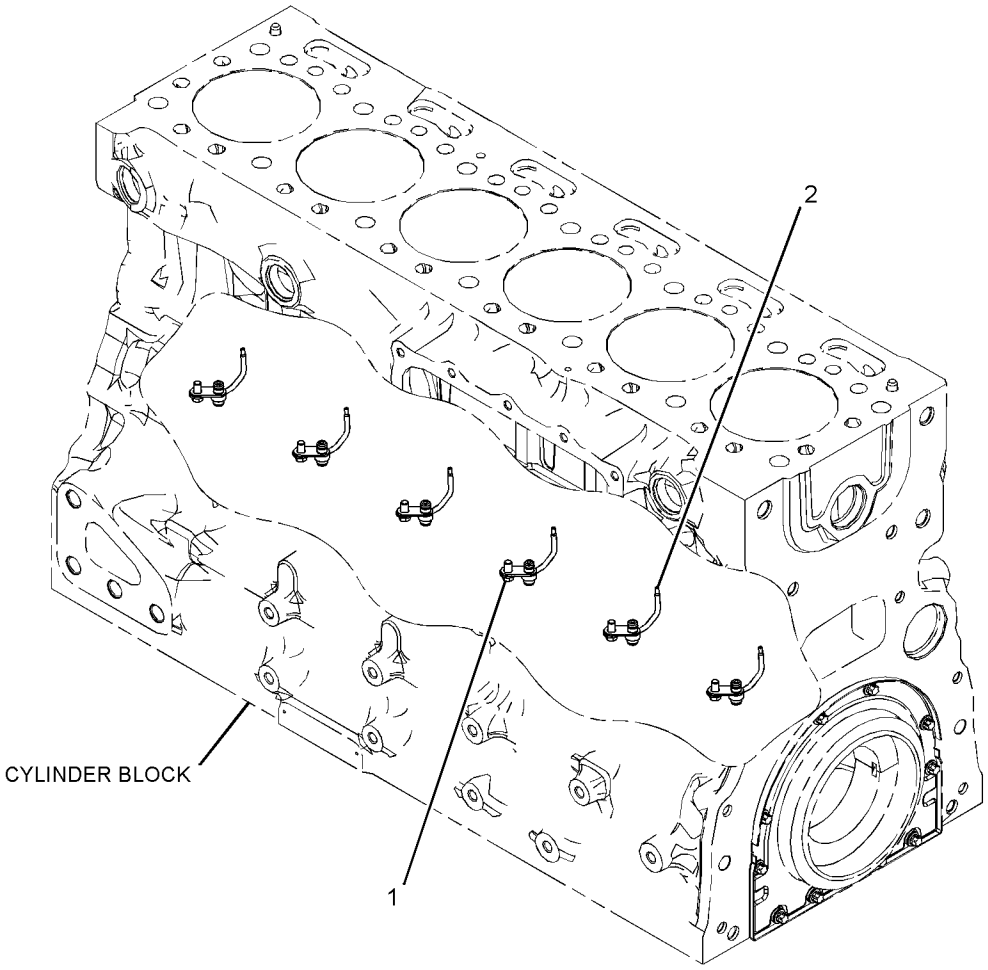

GRAPHIC #1 <END> g03316934

346-0818 LIFTING GP-ENGINE

PART OF 482-9241, 485-3093, 582-9032 ENGINE AR-PRIMARY

SMCS-1122 **i05645661**

NOTE	REF NO	GRAPHIC REF	PART NUMBER	QTY	PART NAME 1 2 3 4 5 6 (PRODUCT LEVEL)	SEE PAGE
	1	1	**277-4444**	1	PLATE-LIFTING	
	2	1	**277-4445**	1	PLATE-LIFTING	
M	3	1	**6I-0654**	4	BOLT (M10X1.5X25-MM)	

M - METRIC PART

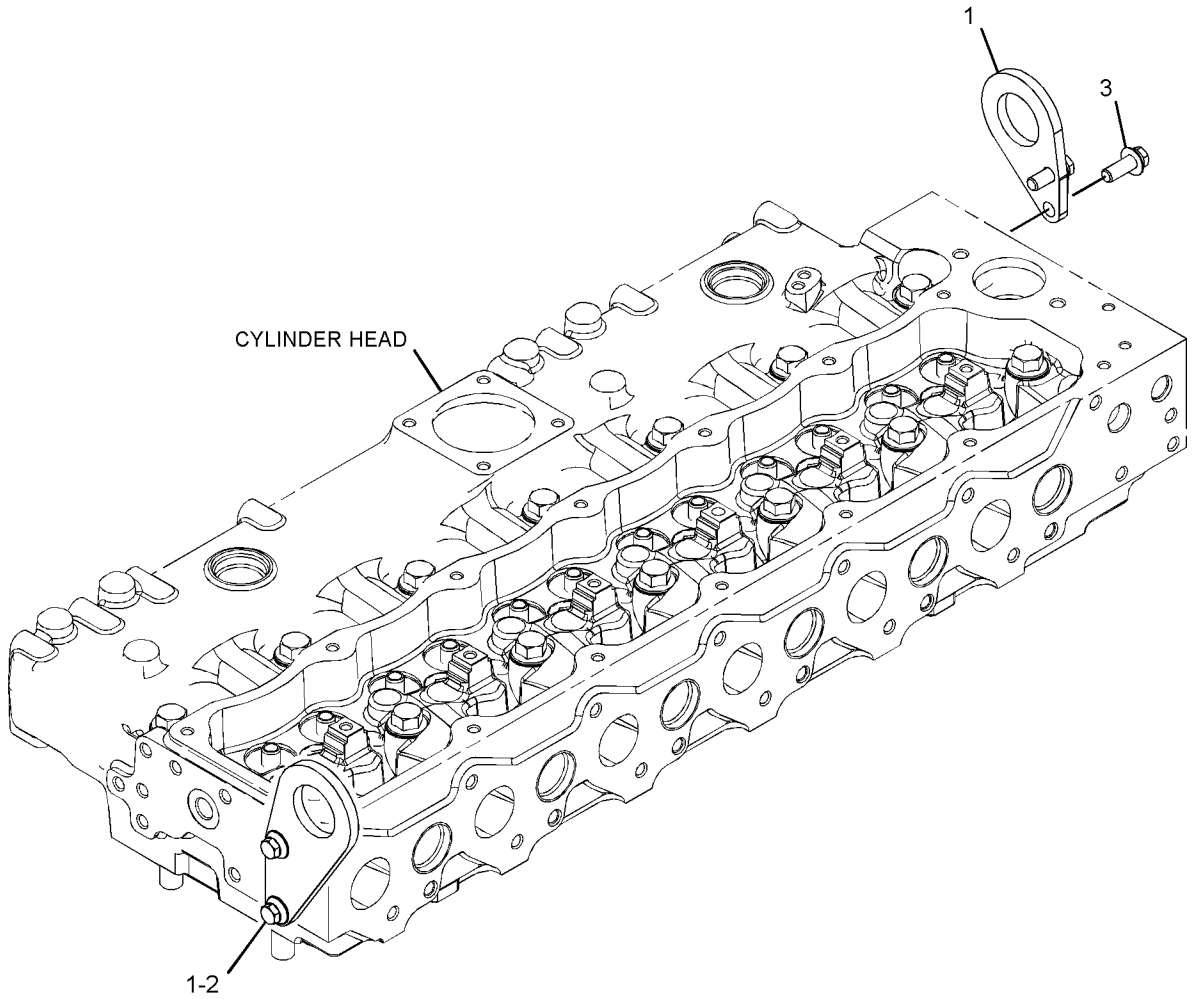

GRAPHIC #1 <END> g03587256

435-1889 MOUNTING GP-FAN DRIVE

PART OF 582-9032 ENGINE AR-PRIMARY

SMCS-1359 **i05644771**

NOTE	REF NO	GRAPHIC REF	PART NUMBER	QTY	PART NAME 1 2 3 4 5 6 (PRODUCT LEVEL)	SEE PAGE
	1	1	**179-7071**	4	BOLT (M8X1.25X20-MM)	

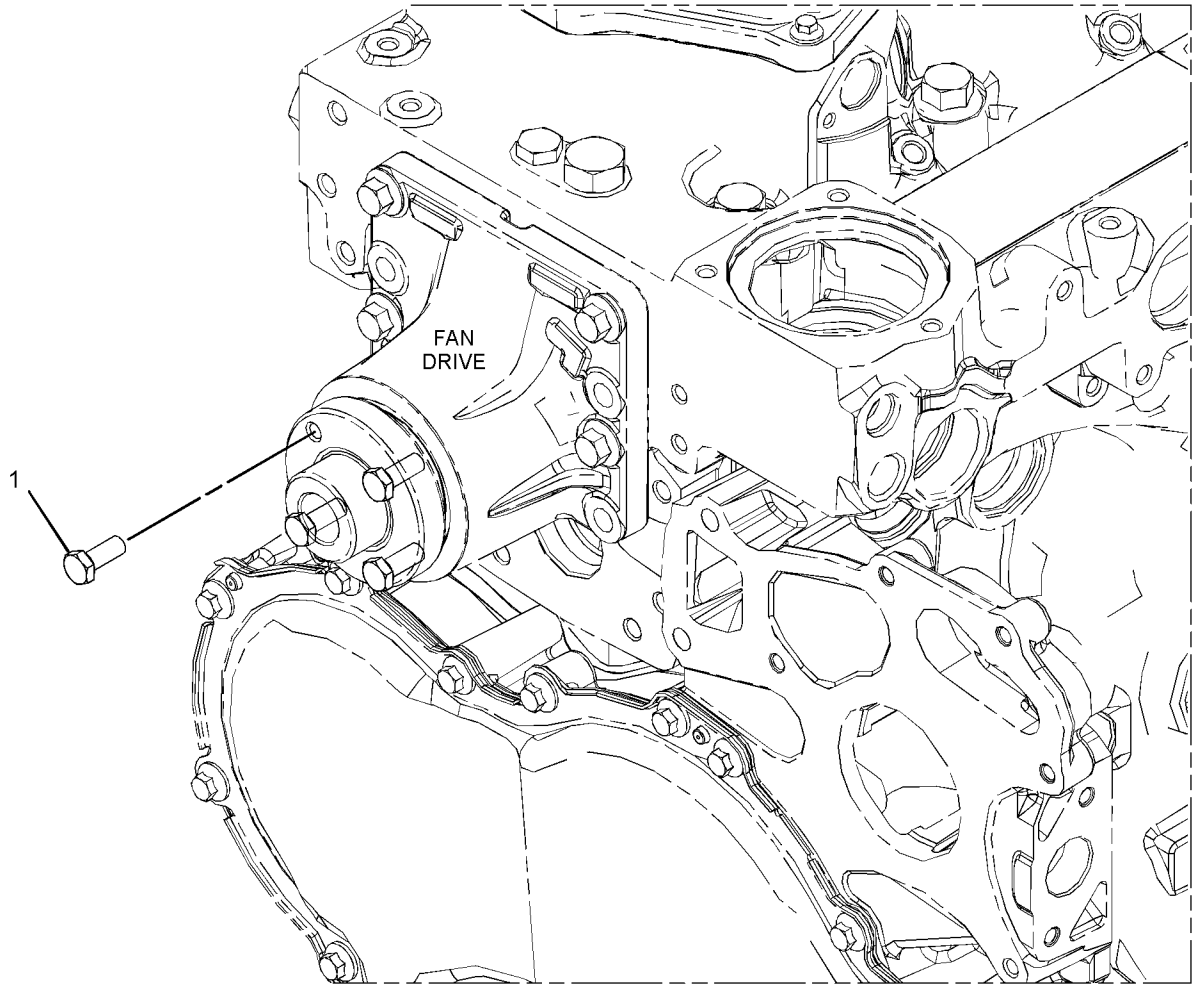

GRAPHIC #1 <END> g02564805

345-9659 PAN GP-OIL

PART OF 485-3093 ENGINE AR-PRIMARY

SMCS-1302 **i07643015**

NOTE	REF NO	GRAPHIC REF	PART NUMBER	QTY	PART NAME 1 2 3 4 5 6 (PRODUCT LEVEL)	SEE PAGE
	1	1	**6I-1497**	1	SEAL	
M	2	1	**6I-0260**	30	BOLT (M8X1.25X25-MM)	
M	3	1	**8T-0269**	2	BOLT-SOCKET HEAD (M6X1X20-MM)	
M	4	1	**6I-0572**	2	BOLT (M8X1.25X20-MM)	
	5	1	**230-8094**	1	BRIDGE	
	6	1	**283-4283**	1	GAUGE AS-OIL LEVEL (DIPSTICK) (ENGINE)	
	6A	1	**275-9891**	2	SEAL-O-RING	
	7	1	**283-4302**	1	TUBE-OIL SUCTION	
	8	1	**351-4749**	1	GASKET-OIL PAN	
	9	1	**6I-0289**	1	PLUG	
	10	1	**354-8538**	1	PAN AS-OIL	
	10A	1	**8L-2786**	2	SEAL-O-RING	
	10B	1	**9S-4185**	2	PLUG (3/4-16-THD)	
	11	1	**6I-4681**	1	GASKET	
	12	1	**251-8336**	1	TUBE AS	

M - METRIC PART

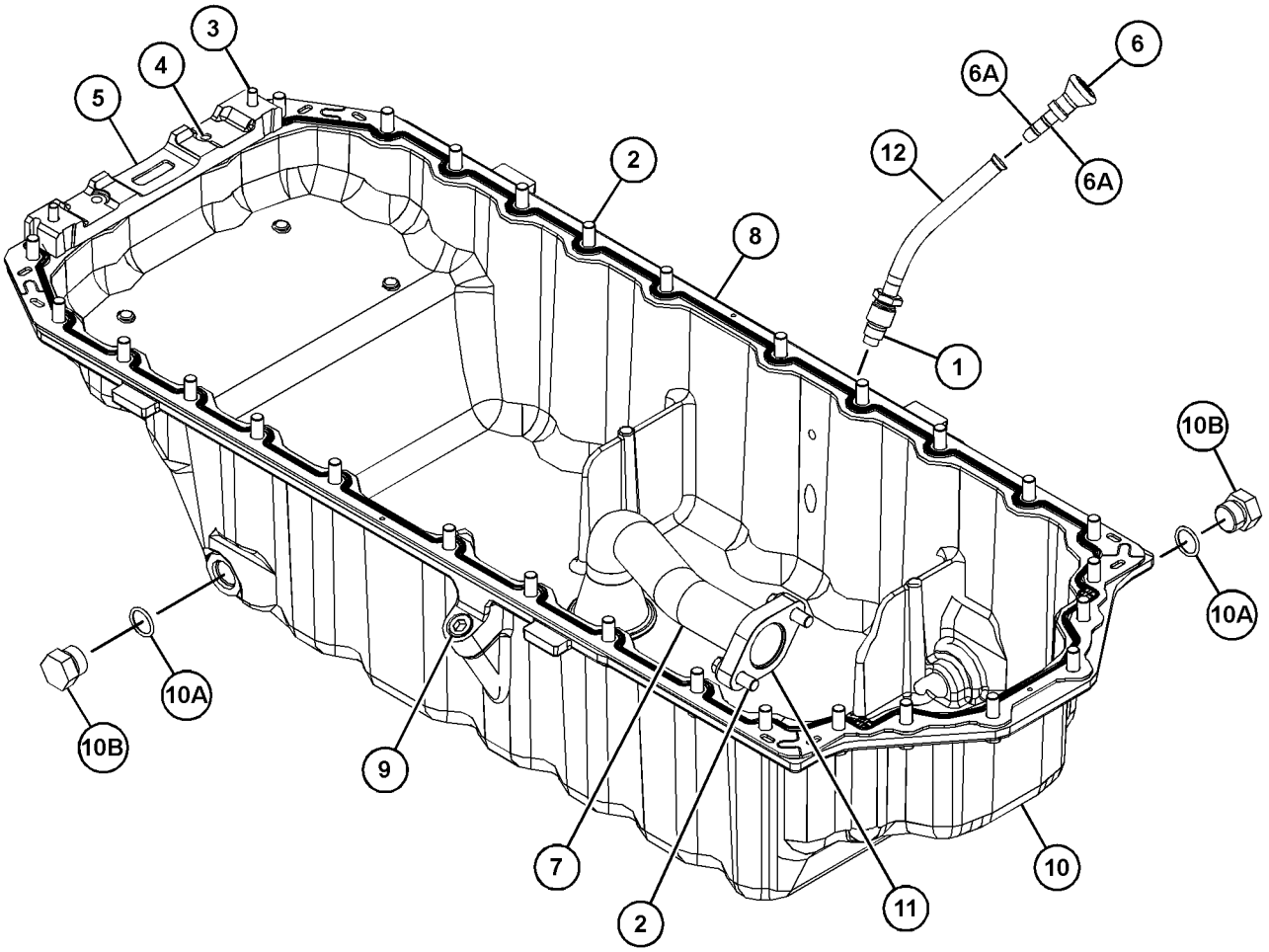

GRAPHIC #1 <END> g06384871

345-9669 PAN GP-OIL

PART OF 582-9032 ENGINE AR-PRIMARY

SMCS-1302 **i07574151**

NOTE	REF NO	GRAPHIC REF	PART NUMBER	QTY	PART NAME 1 2 3 4 5 6 (PRODUCT LEVEL)	SEE PAGE
M	1	1	**6I-0217**	28	BOLT (M8X1.25X20-MM)	
M	2	1	**6I-0260**	2	BOLT (M8X1.25X25-MM)	
M	3	1	**8T-0269**	2	BOLT-SOCKET HEAD (M6X1X20-MM)	
M	4	1	**6I-0572**	2	BOLT (M8X1.25X20-MM)	
	5	1	**230-8094**	1	BRIDGE	
	6	1	**283-4283**	1	GAUGE AS-OIL LEVEL (DIPSTICK) (ENGINE)	
	6A	1	**275-9891**	2	SEAL-O-RING	
	7	1	**283-4302**	1	TUBE-OIL SUCTION	
	8	1	**351-4749**	1	GASKET-OIL PAN	
	9	1	**6I-0289**	1	PLUG	
	10	1	**354-8538**	1	PAN AS-OIL	
	10A	1	**8L-2786**	2	SEAL-O-RING	
	10B	1	**9S-4185**	2	PLUG (3/4-16-THD)	
	11	1	**6I-1497**	1	SEAL	
	12	1	**6I-4681**	1	GASKET	
	13	1	**251-8336**	1	TUBE AS	

M - METRIC PART

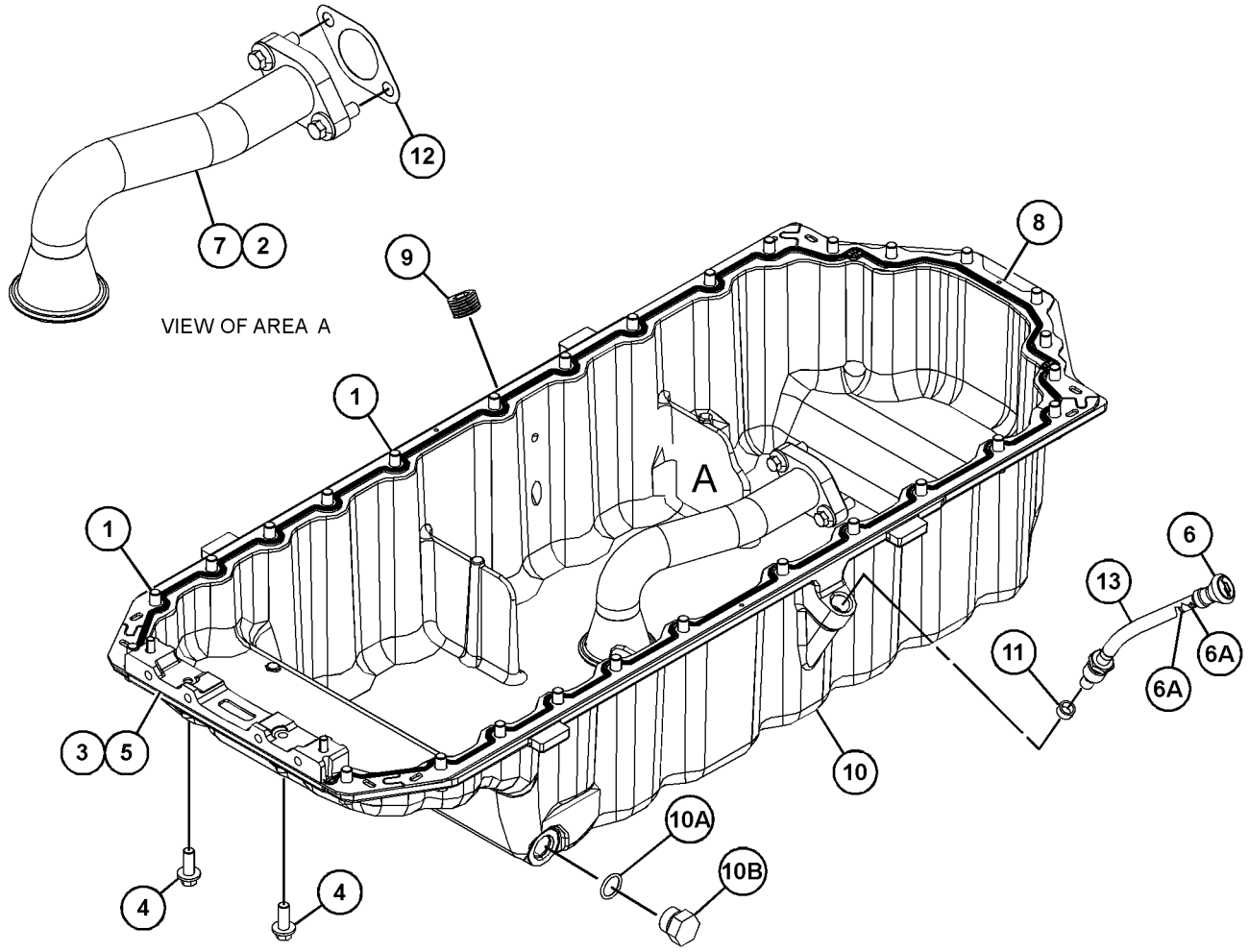

GRAPHIC #1 <END> g06389653

419-0401 PAN GP-OIL

PART OF 482-9241 ENGINE AR-PRIMARY

SMCS-1302 **i07623153**

NOTE	REF NO	GRAPHIC REF	PART NUMBER	QTY	PART NAME 1 2 3 4 5 6 (PRODUCT LEVEL)	SEE PAGE
M	1	1	**6I-0363**	2	BOLT (M6X1X20-MM)	
M	2	1	**124-3815**	1	BOLT (M8X1.25X16-MM)	
	3	1	**351-4749**	1	GASKET-OIL PAN	
	4	1	**6I-0289**	1	PLUG	
	5	1	**354-8538**	1	PAN AS-OIL	
		1	**8L-2786**	2	SEAL-O-RING	
		1	**9S-4185**	2	PLUG (3/4-16-THD)	
	6	1	**360-0099**	1	BRACKET AS	
	7	1	**360-5468**	1	TUBE AS	
		1	**6I-1497**	1	SEAL	
		1	**187-0555**	1	CLIP	
M	8	1	**6I-0217**	29	BOLT (M8X1.25X20-MM)	
M	9	1	**6I-0260**	2	BOLT (M8X1.25X25-MM)	
M	10	1	**6I-0572**	2	BOLT (M8X1.25X20-MM)	
	11	1	**230-8094**	1	BRIDGE	
	12	1	**283-4302**	1	TUBE-OIL SUCTION	
	13	1	**286-9622**	1	GAUGE GP-OIL LEVEL (DIPSTICK)	
		1	**275-9891**	1	SEAL-O-RING	
	14	1	**6I-4681**	1	GASKET	

M - METRIC PART

419-0401 **PAN GP-OIL (**contd.**)** **i07623153**

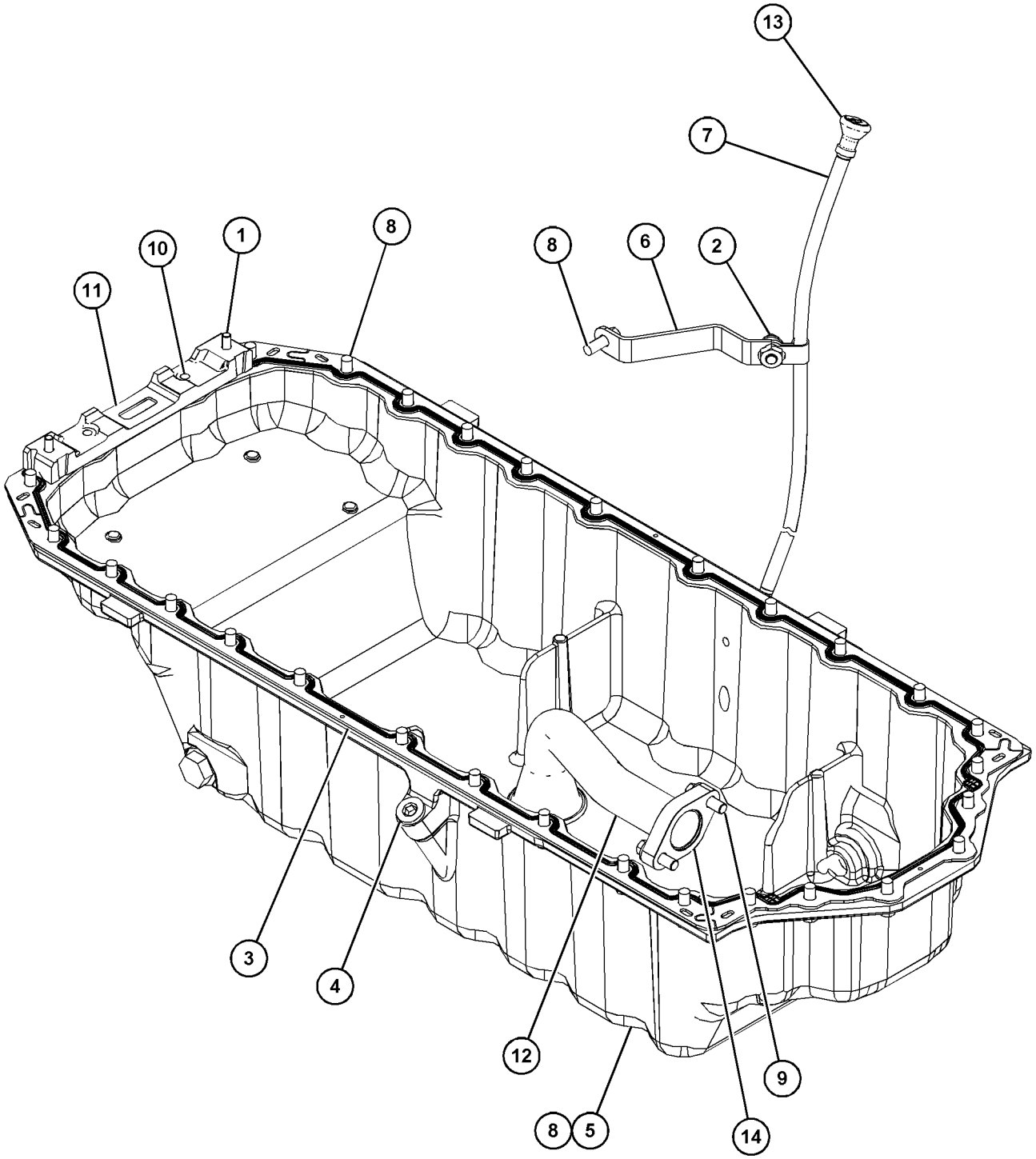

GRAPHIC #1 <END> g06053206

475-2041 PAN GP-OIL

PART OF 425-0779 CYLINDER BLOCK GP-SHORT

SMCS-1302 **i06615590**

NOTE	REF NO	GRAPHIC REF	PART NUMBER	QTY	PART NAME 1 2 3 4 5 6 (PRODUCT LEVEL)	SEE PAGE
M	1	1	**8T-0269**	2	BOLT-SOCKET HEAD (M6X1X20-MM)	
	2	1	**230-8094**	1	BRIDGE	

M - METRIC PART

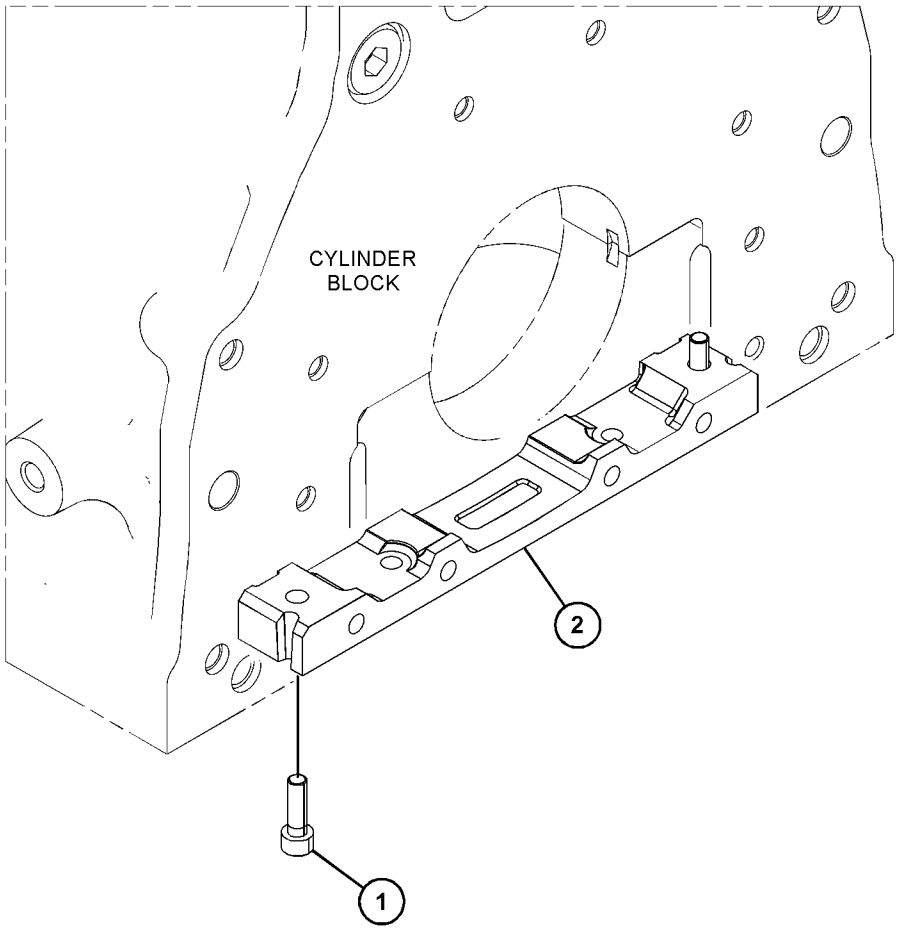

GRAPHIC #1 <END> g06122038

348-3296 PISTON & ROD GP

PART OF 482-9241 ENGINE AR-PRIMARY

TYPE 1

SMCS-1225 **i07946104**

NOTE	REF NO	GRAPHIC REF	PART NUMBER	QTY	PART NAME 1 2 3 4 5 6 (PRODUCT LEVEL)	SEE PAGE
	1	1	**331-0290**	6	CONNECTING ROD GP (GRADE G)	
					(EACH INCLUDES)	
	1A	1	**276-7478**	1	BUSHING	
M	1B	1	**323-9312**	2	BOLT (M10X1X50-MM)	
NP	2	1	*370-7998*	6	PISTON GP	
L	3	1	*317-5482*	6	BEARING	
	4	1	*317-5483*	6	BEARING	
N	5	1	**124-3536**	12	RING-RETAINING	
					AVAILABLE REPAIR KIT(S):	
L			**360-1564**	1	KIT-BEARING (STANDARD) (PISTON)	
					(INCLUDES BEARINGS)	
AB			**458-7918**		KIT-BEARING (0.25-MM US)	
					(INCLUDES CONNECTING ROD BEARINGS)	
AB			**458-7939**		KIT-BEARING (0.50-MM US)	
					(INCLUDES CONNECTING ROD BEARINGS)	
AB			**458-7940**		KIT-BEARING (0.75-MM US)	
					(INCLUDES CONNECTING ROD BEARINGS)	
P			**389-7188**	1	KIT-RING (STANDARD)	
					(INCLUDES PISTON RINGS)	
AB			**380-2065**		KIT-PISTON RING (0.5-MM OS)	
					(INCLUDES PISTON RINGS)	
AB			**466-4849**		KIT-PISTON RING (1-MM OS)	
					(INCLUDES PISTON RINGS)	
N			**415-4315**	1	KIT-PISTON (STANDARD)	
					(INCLUDES PISTON RINGS, CLIP, PIN, & PISTON)	
ABN			**380-4848**		KIT-PISTON (0.5-MM OS)	
					(INCLUDES RETAINING RING, PISTON RINGS, PISTON, & PIN)	
ABN			**380-5077**		KIT-PISTON (1-MM OS)	
					(INCLUDES RETAINING RING, PISTON RINGS, PISTON, & PIN)	

A - NOT PART OF THIS GROUP
B - USE AS REQUIRED
L - KIT MARKED L SERVICES PART(S) MARKED L
M - METRIC PART
N - KIT MARKED N SERVICES PART(S) MARKED N
P - KIT MARKED P SERVICES PART(S) MARKED P

348-3296 **PISTON & ROD GP (**contd.**)** **i07946104**

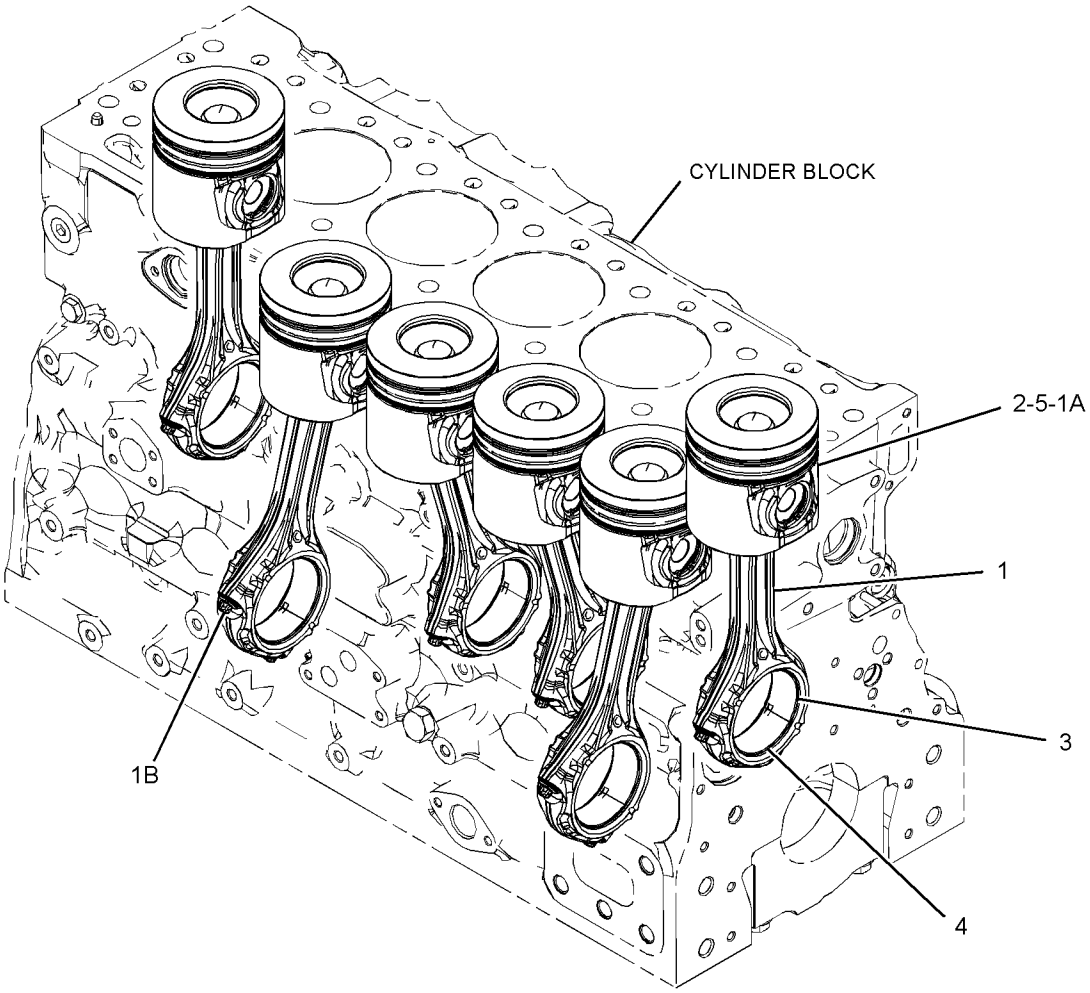

GRAPHIC #1 <END> g06312057

348-3296 PISTON & ROD GP

PART OF 482-9241, 485-3093 ENGINE AR-PRIMARY
TYPE 2

SMCS-1225 **i07946151**

NOTE	REF NO	GRAPHIC REF	PART NUMBER	QTY	PART NAME 1 2 3 4 5 6 (PRODUCT LEVEL)	SEE PAGE
	1	1	**331-0290**	6	CONNECTING ROD GP (GRADE G)	
					(EACH INCLUDES)	
	1A	1	**276-7478**	1	BUSHING	
M	1B	1	**323-9312**	2	BOLT (M10X1X50-MM)	
NP	2	1	*370-7998*	6	PISTON GP	
L	3	1	*317-5482*	6	BEARING	
CL	4	1	*470-8038*	6	BEARING	
N	5	1	**124-3536**	12	RING-RETAINING	
					AVAILABLE REPAIR KIT(S):	
L			**436-7781**	1	KIT-BEARING (STANDARD) (PISTON)	
					(INCLUDES BEARINGS)	
AB			**480-4489**		KIT-BEARING (0.254-MM US)	
					(INCLUDES CONNECTING ROD BEARINGS)	
AB			**480-4490**		KIT-BEARING (0.51-MM US)	
					(INCLUDES CONNECTING ROD BEARINGS)	
AB			**480-4491**		KIT-BEARING (0.762-MM US)	
					(INCLUDES CONNECTING ROD BEARINGS)	
CP			**276-7476**	1	KIT-PISTON RING (STANDARD) (STANDARD)	
					(INCLUDES PISTON RINGS)	
AB			**380-2065**		KIT-PISTON RING (0.5-MM OS)	
					(INCLUDES PISTON RINGS)	
AB			**466-4849**		KIT-PISTON RING (1-MM OS)	
					(INCLUDES PISTON RINGS)	
N			**415-4315**	1	KIT-PISTON (STANDARD)	
					(INCLUDES PISTON RINGS, CLIPS, PIN, & PISTON)	
ABN			**380-4848**		KIT-PISTON (0.5-MM OS)	
					(INCLUDES RETAINING RINGS, PISTON RINGS, PISTON, & PIN)	
ABN			**380-5077**		KIT-PISTON (1-MM OS)	
					(INCLUDES RETAINING RINGS, PISTON RINGS, PISTON, & PIN)	

A - NOT PART OF THIS GROUP
B - USE AS REQUIRED
C - CHANGE FROM PREVIOUS TYPE
L - KIT MARKED L SERVICES PART(S) MARKED L
M - METRIC PART
N - KIT MARKED N SERVICES PART(S) MARKED N
P - KIT MARKED P SERVICES PART(S) MARKED P

348-3296 **PISTON & ROD GP (**contd.**)** **i07946151**

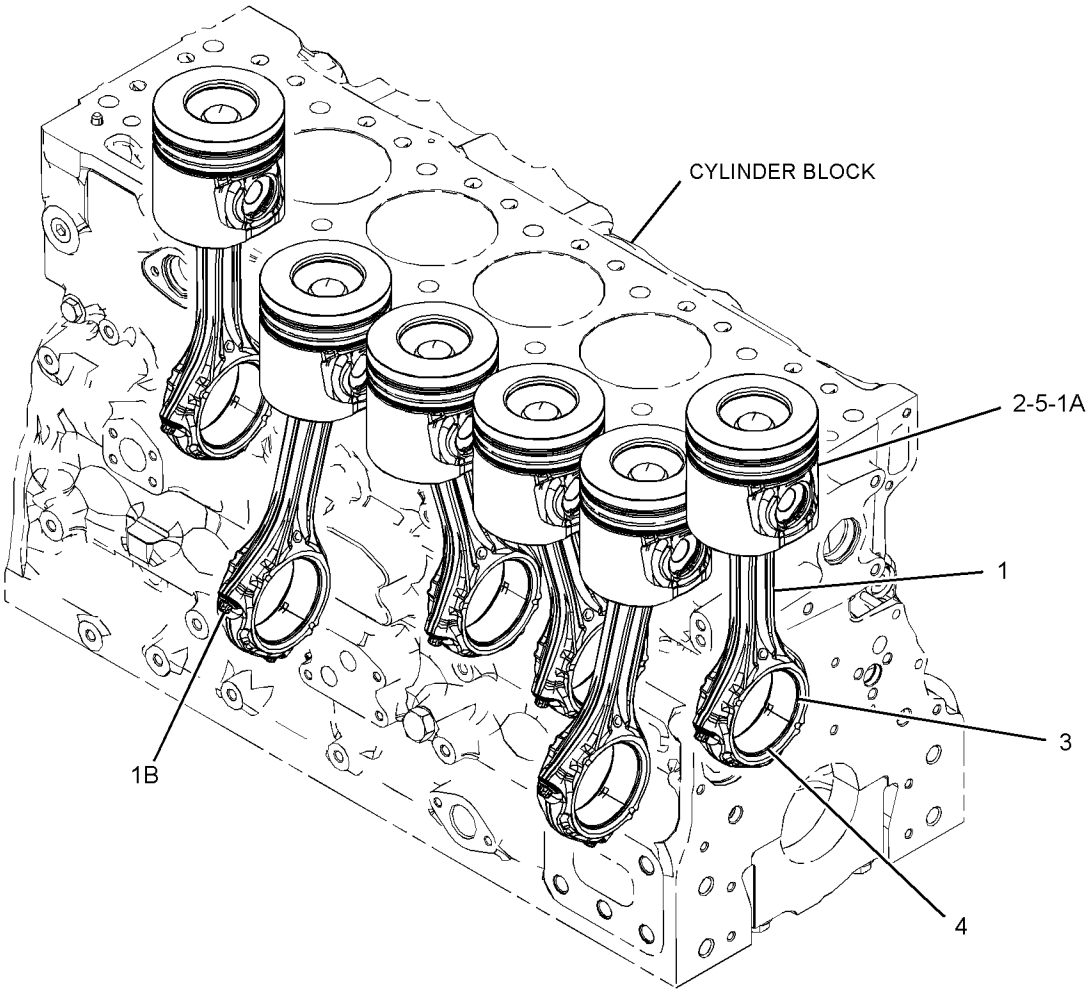

GRAPHIC #1 <END> g06312057

348-3296 PISTON & ROD GP

PART OF 482-9241, 485-3093, 582-9032 ENGINE AR-PRIMARY
TYPE 3

SMCS-1225 **i07946156**

NOTE	REF NO	GRAPHIC REF	PART NUMBER	QTY	PART NAME 1 2 3 4 5 6 (PRODUCT LEVEL)	SEE PAGE
	1	1	**331-0290**	6	CONNECTING ROD GP (GRADE G)	
					(EACH INCLUDES)	
	1A	1	**276-7478**	1	BUSHING	
M	1B	1	**323-9312**	2	BOLT (M10X1X50-MM)	
CNP	2	1	*567-6051*	6	PISTON GP	
L	3	1	*317-5482*	6	BEARING	
L	4	1	*470-8038*	6	BEARING	
N	5	1	**124-3536**	12	RING-RETAINING	
					AVAILABLE REPAIR KIT(S):	
L			**436-7781**	1	KIT-BEARING (STANDARD)	
					(INCLUDES BEARINGS)	
AB			**480-4489**		KIT-BEARING (0.254-MM US)	
					(INCLUDES CONNECTING ROD BEARINGS)	
AB			**480-4490**		KIT-BEARING (0.51-MM US)	
					(INCLUDES CONNECTING ROD BEARINGS)	
AB			**480-4491**		KIT-BEARING (0.762-MM US)	
					(INCLUDES CONNECTING ROD BEARINGS)	
CP			**574-9895**	1	KIT-PISTON RING (STANDARD)	
					(INCLUDES PISTON RINGS)	
ABC			**574-9896**		KIT-PISTON RING (0.5-MM OS)	
					(INCLUDES PISTON RINGS)	
ABC			**575-3353**		KIT-PISTON RING (1.0-MM OS)	
					(INCLUDES PISTON RINGS)	
CN			**576-9753**	1	KIT-PISTON (STANDARD)	
					(INCLUDES PISTON RINGS, CLIPS, PIN, & PISTON)	
ABCN			**576-9739**		KIT-PISTON (0.5-MM OS)	
					(INCLUDES RETAINING RINGS, PISTON RINGS, PISTON, & PIN)	
ABCN			**576-9746**		KIT-PISTON (1.0-MM OS)	
					(INCLUDES RETAINING RINGS, PISTON RINGS, PISTON, & PIN)	

A - NOT PART OF THIS GROUP
B - USE AS REQUIRED
C - CHANGE FROM PREVIOUS TYPE
L - KIT MARKED L SERVICES PART(S) MARKED L
M - METRIC PART
N - KIT MARKED N SERVICES PART(S) MARKED N
P - KIT MARKED P SERVICES PART(S) MARKED P

348-3296 **PISTON & ROD GP (**contd.**)** **i07946156**

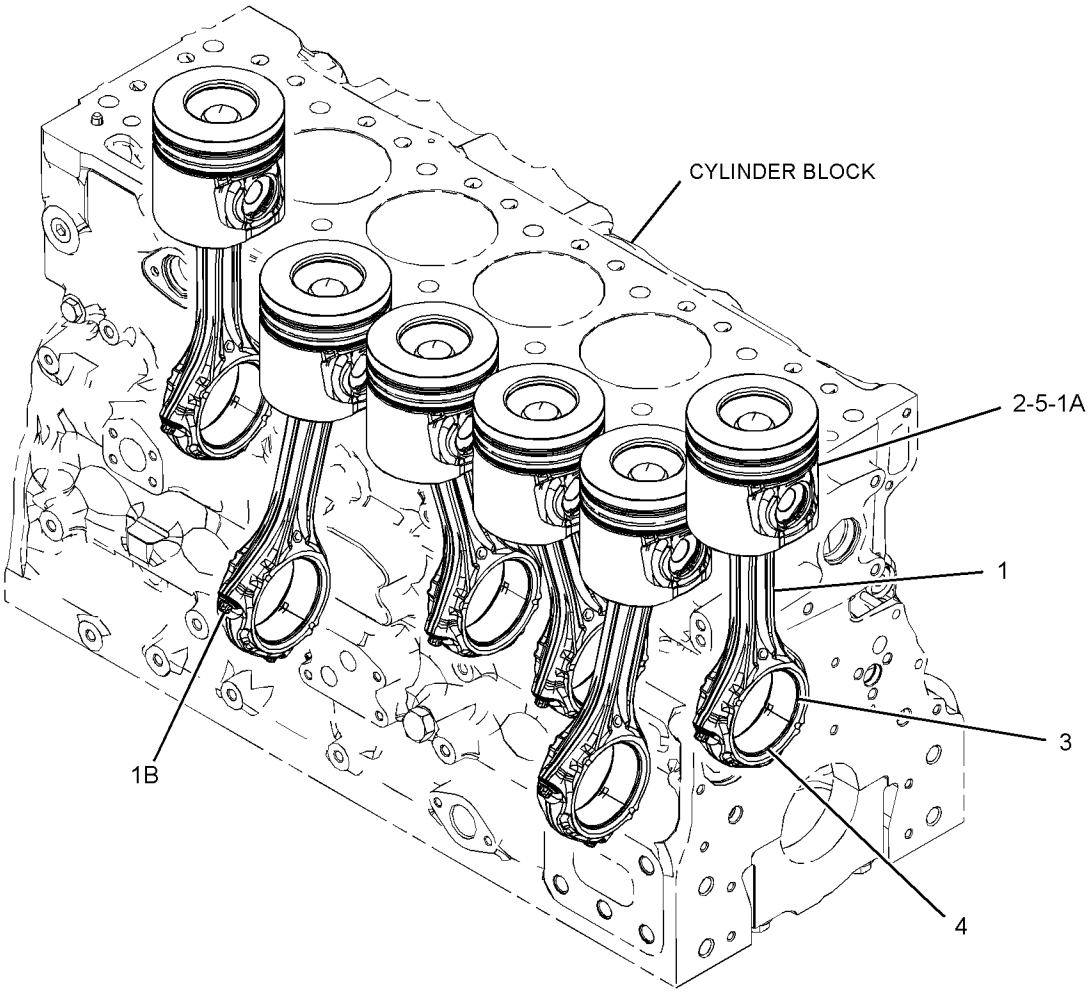

GRAPHIC #1 <END> g06312057

348-3300 PISTON & ROD GP

PART OF 425-0779 CYLINDER BLOCK GP-SHORT

TYPE 1

SMCS-1225 **i07053132**

NOTE	REF NO	GRAPHIC REF	PART NUMBER	QTY	PART NAME 1 2 3 4 5 6 (PRODUCT LEVEL)	SEE PAGE
	1	1	**331-0290**	6	CONNECTING ROD GP (GRADE G)	
					(EACH INCLUDES)	
		1	**276-7478**	1	BUSHING	
M	1A	1	**323-9312**	2	BOLT (M10X1X50-MM)	
N	2	1	*366-0149*	6	PISTON GP	
L	3	1	*317-5482*	6	BEARING	
CL	4	1	*470-8038*	6	BEARING	
N	5	1	**124-3536**	12	RING-RETAINING	
					AVAILABLE REPAIR KIT(S):	
L			**360-1564**	1	KIT-BEARING (STANDARD) (PISTON)	
					(INCLUDES BEARINGS)	
AB			**458-7918**		KIT-BEARING (0.25-MM US)	
					(INCLUDES CONNECTING ROD BEARINGS)	
AB			**458-7939**		KIT-BEARING (0.50-MM US)	
					(INCLUDES CONNECTING ROD BEARINGS)	
AB			**458-7940**		KIT-BEARING (0.75-MM US)	
					(INCLUDES CONNECTING ROD BEARINGS)	
C			**276-7476**	1	KIT-PISTON RING (STANDARD) (STANDARD)	
					(INCLUDES RINGS)	
AB			**380-2065**		KIT-PISTON RING (0.5-MM OS)	
					(INCLUDES RINGS)	
AB			**466-4849**		KIT-PISTON RING (1-MM OS)	
					(INCLUDES RINGS)	
N			**389-5891**	1	KIT-PISTON (STANDARD)	
					(INCLUDES RETAINING RING, PISTON RINGS, PISTON, & PIN)	
ABN			**380-4849**		KIT-PISTON (0.5-MM OS)	
					(INCLUDES RETAINING RINGS, PISTON RINGS, PISTON, & PIN)	
ABN			**380-5078**		KIT-PISTON (1-MM OS)	
					(INCLUDES RETAINING RINGS, PISTON RINGS, PISTON, & PIN)	

A - NOT PART OF THIS GROUP
B - USE AS REQUIRED
C - CHANGE FROM PREVIOUS TYPE
L - KIT MARKED L SERVICES PART(S) MARKED L
M - METRIC PART
N - KIT MARKED N SERVICES PART(S) MARKED N

348-3300 **PISTON & ROD GP (**contd.**)** **i07053132**

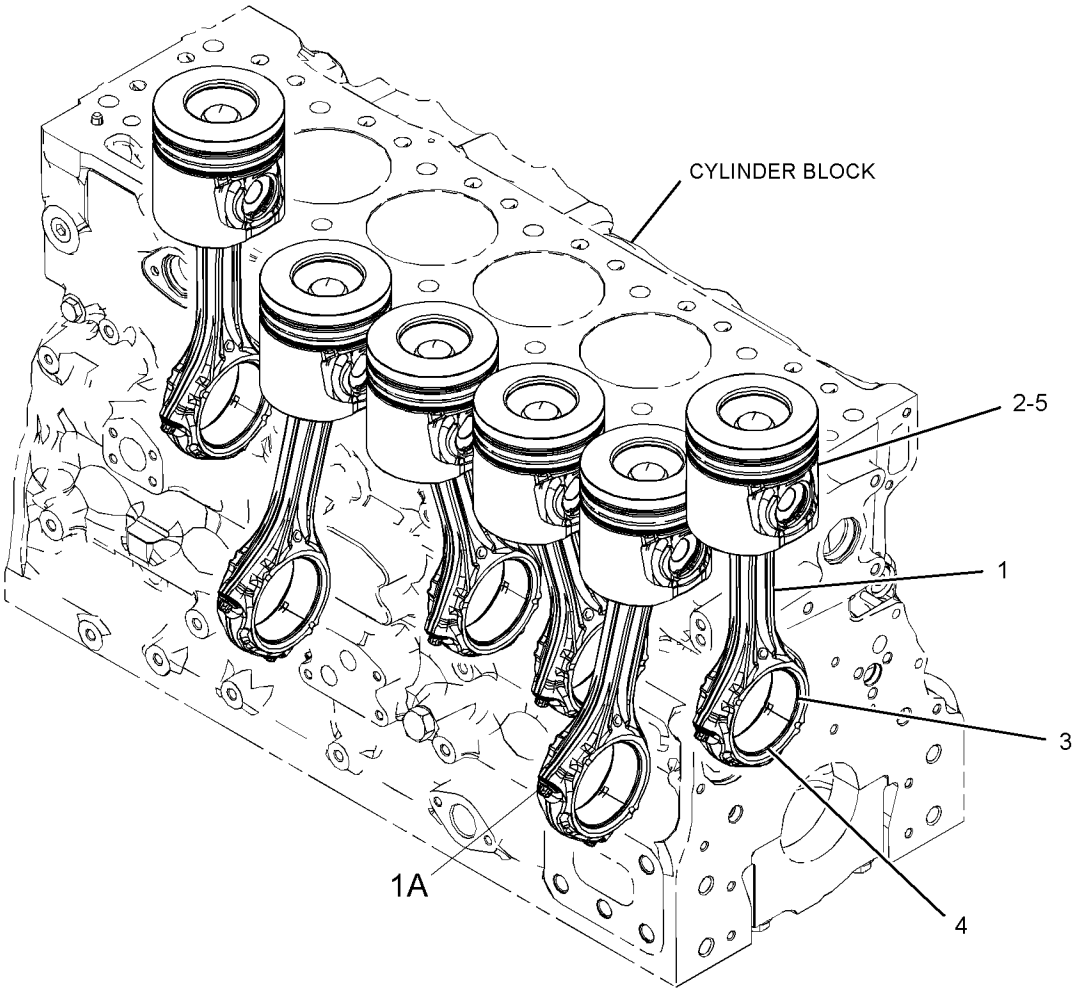

GRAPHIC #1 <END> g06208163

348-3300 PISTON & ROD GP

PART OF 425-0779 CYLINDER BLOCK GP-SHORT

TYPE 2

SMCS-1225 **i08795933**

NOTE	REF NO	GRAPHIC REF	PART NUMBER	QTY	PART NAME 1 2 3 4 5 6 (PRODUCT LEVEL)	SEE PAGE
U	1	1	**619-3393**	12	RING-RETAINING	
	2	2	*317-5482*	6	BEARING	
P	3	2	**605-5520**	6	CONNECTING ROD GP (STANDARD)	
					—OR—	
ABP		2	**331-0290**	6	CONNECTING ROD GP (GRADE G)	
					—OR—	
ABP		2	**331-0291**	6	CONNECTING ROD GP (GRADE R)	
					—OR—	
ABP		2	**331-0292**	6	CONNECTING ROD GP (GRADE B)	
					(EACH CONNECTING ROD GP INCLUDES)	
	3A	2	**276-7478**	1	BUSHING	
M	3B	2	**323-9312**	2	BOLT (M10X1X50-MM)	
J	4	2	*470-8038*	6	BEARING	
CU	5	1	*567-6050*	6	PISTON GP	
					AVAILABLE REPAIR KIT(S):	
J			**436-7781**	1	KIT-BEARING (STANDARD)	
					(INCLUDES BEARINGS)	
AB			**480-4489**		KIT-BEARING (0.254-MM US)	
					(INCLUDES CONNECTING ROD BEARINGS)	
AB			**480-4490**		KIT-BEARING (0.51-MM US)	
					(INCLUDES CONNECTING ROD BEARINGS)	
AB			**480-4491**		KIT-BEARING (0.762-MM US)	
					(INCLUDES CONNECTING ROD BEARINGS)	
U			**576-9752**	6	KIT-PISTON (STANDARD)	
					(INCLUDES RETAINING RINGS, PIN, PISTON & PISTON RINGS)	
AB			**576-9738**		KIT-PISTON (0.5-MM OS)	
					(INCLUDES RETAINING RINGS, PIN, PISTON & PISTON RINGS)	
AB			**576-9745**		KIT-PISTON (1-MM OS)	
					(INCLUDES RETAINING RINGS, PIN, PISTON & PISTON RINGS)	

A - NOT PART OF THIS GROUP
B - USE AS REQUIRED
C - CHANGE FROM PREVIOUS TYPE
J - KIT MARKED J SERVICES PART(S) MARKED J
M - METRIC PART
P - ENSURE THAT CORRECT ROD LENGTH IS FITTED
U - KIT MARKED U SERVICES PART(S) MARKED U

348-3300 **PISTON & ROD GP** (contd.) **i08795933**

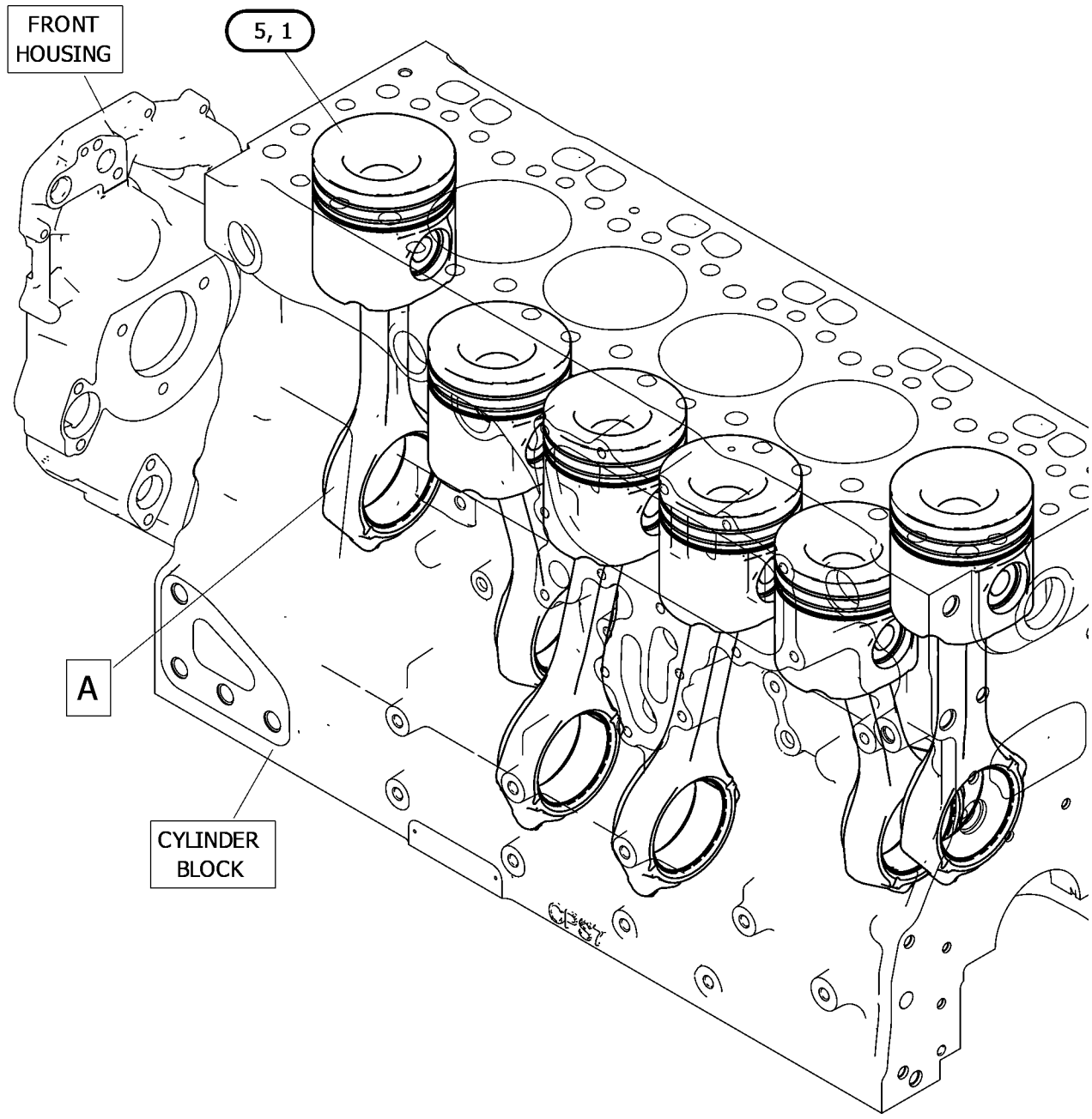

GRAPHIC #1 g06791897

348-3300 **PISTON & ROD GP (**contd.**)** **i08795933**

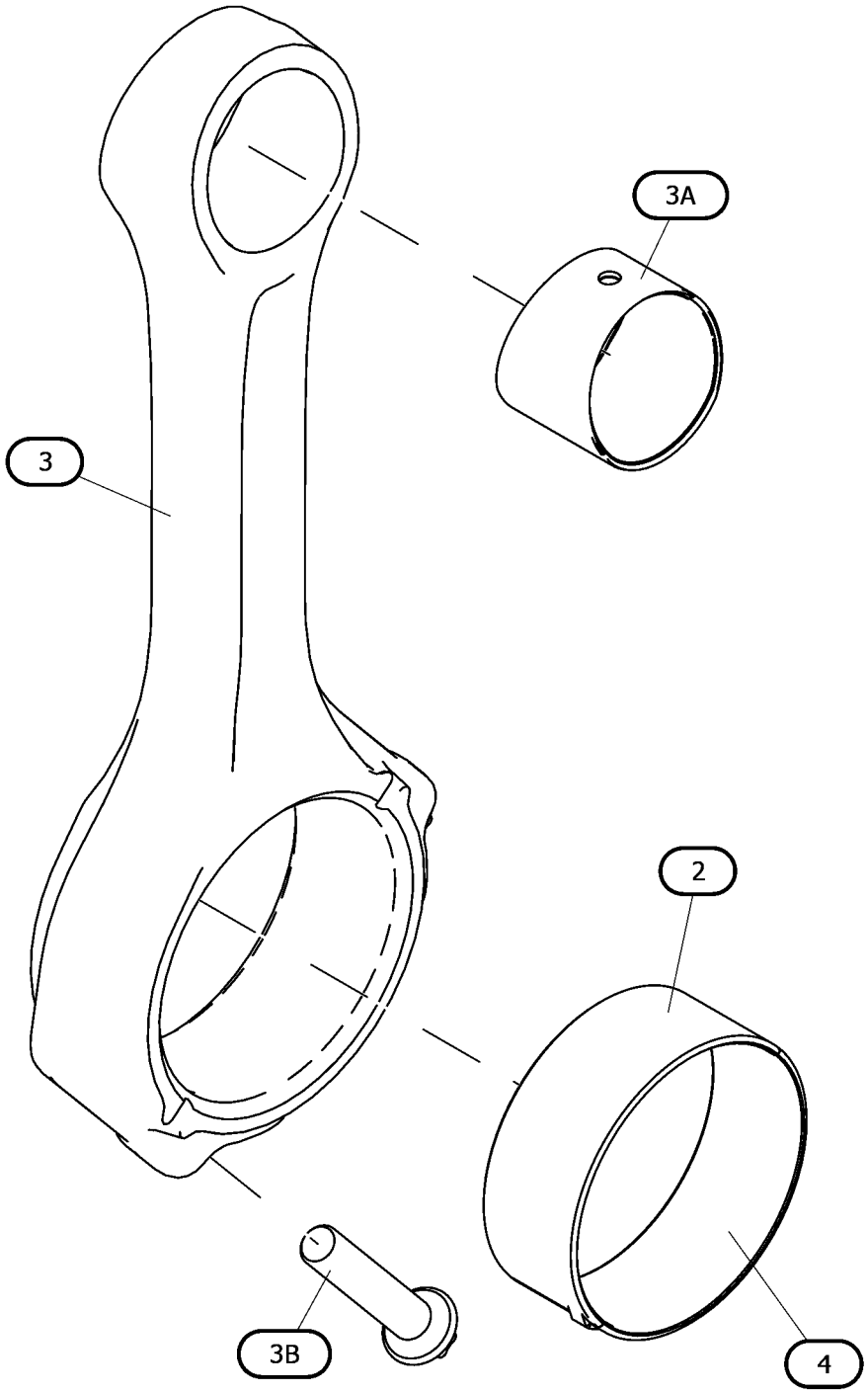

VIEW OF AREA A
(PARTS REMOVED FOR CLARITY)

GRAPHIC #2 <END> g06791897_01

475-1557 PISTON & ROD GP

PART OF 425-0779 CYLINDER BLOCK GP-SHORT

SMCS-1225 **i08796198**

NOTE	REF NO	GRAPHIC REF	PART NUMBER	QTY	PART NAME 1 2 3 4 5 6 (PRODUCT LEVEL)	SEE PAGE
	1	1	**619-3393**	12	RING-RETAINING	
CP	2	1	**605-5520**	6	CONNECTING ROD GP (STANDARD)	
					—OR—	
ABP		1	**331-0290**	6	CONNECTING ROD GP (GRADE G)	
					—OR—	
ABP		1	**331-0291**	6	CONNECTING ROD GP (GRADE R)	
					—OR—	
ABP		1	**331-0292**	6	CONNECTING ROD GP (GRADE B)	
					(EACH CONNECTING ROD GP INCLUDES)	
	2A	1	**276-7478**	1	BUSHING	
M	2B	1	**323-9312**	2	BOLT (M10X1X50-MM)	
U	3	1	*387-2156*	6	BEARING (STANDARD-UPPER)	
U	4	1	*470-8038*	6	BEARING (STANDARD-LOWER)	
CJ	5	1	*567-6050*	6	PISTON GP	
					AVAILABLE REPAIR KIT(S):	
U			**436-7781**	1	KIT-BEARING (STANDARD)	
					(INCLUDES BEARINGS)	
AB			**480-4489**		KIT-BEARING (0.254-MM US)	
					(INCLUDES BEARINGS)	
AB			**480-4490**		KIT-BEARING (0.51-MM US)	
					(INCLUDES BEARINGS)	
AB			**480-4491**		KIT-BEARING (0.762-MM US)	
					(INCLUDES BEARINGS)	
J			**576-9752**	1	KIT-PISTON (STANDARD)	
					(INCLUDES RETAINING RINGS, PIN, PISTON & PISTON RINGS)	
AB			**576-9738**		KIT-PISTON (0.5-MM OS)	
					(INCLUDES RETAINING RINGS, PIN, PISTON & PISTON RINGS)	
AB			**576-9745**		KIT-PISTON (1-MM OS)	
					(INCLUDES RETAINING RINGS, PIN, PISTON & PISTON RINGS)	
J			**574-9895**	1	KIT-PISTON RING (STANDARD)	
					(INCLUDES PISTON RINGS)	
AB			**574-9896**		KIT-PISTON RING (0.5-MM OS)	
					(INCLUDES PISTON RINGS)	
AB			**575-3353**		KIT-PISTON RING (1.0-MM OS)	
					(INCLUDES PISTON RINGS)	

A - NOT PART OF THIS GROUP
B - USE AS REQUIRED
C - CHANGE FROM PREVIOUS TYPE
J - KIT MARKED J SERVICES PART(S) MARKED J
M - METRIC PART
P - ENSURE THAT CORRECT ROD LENGTH IS FITTED
U - KIT MARKED U SERVICES PART(S) MARKED U

475-1557 **PISTON & ROD GP** (contd.) **i08796198**

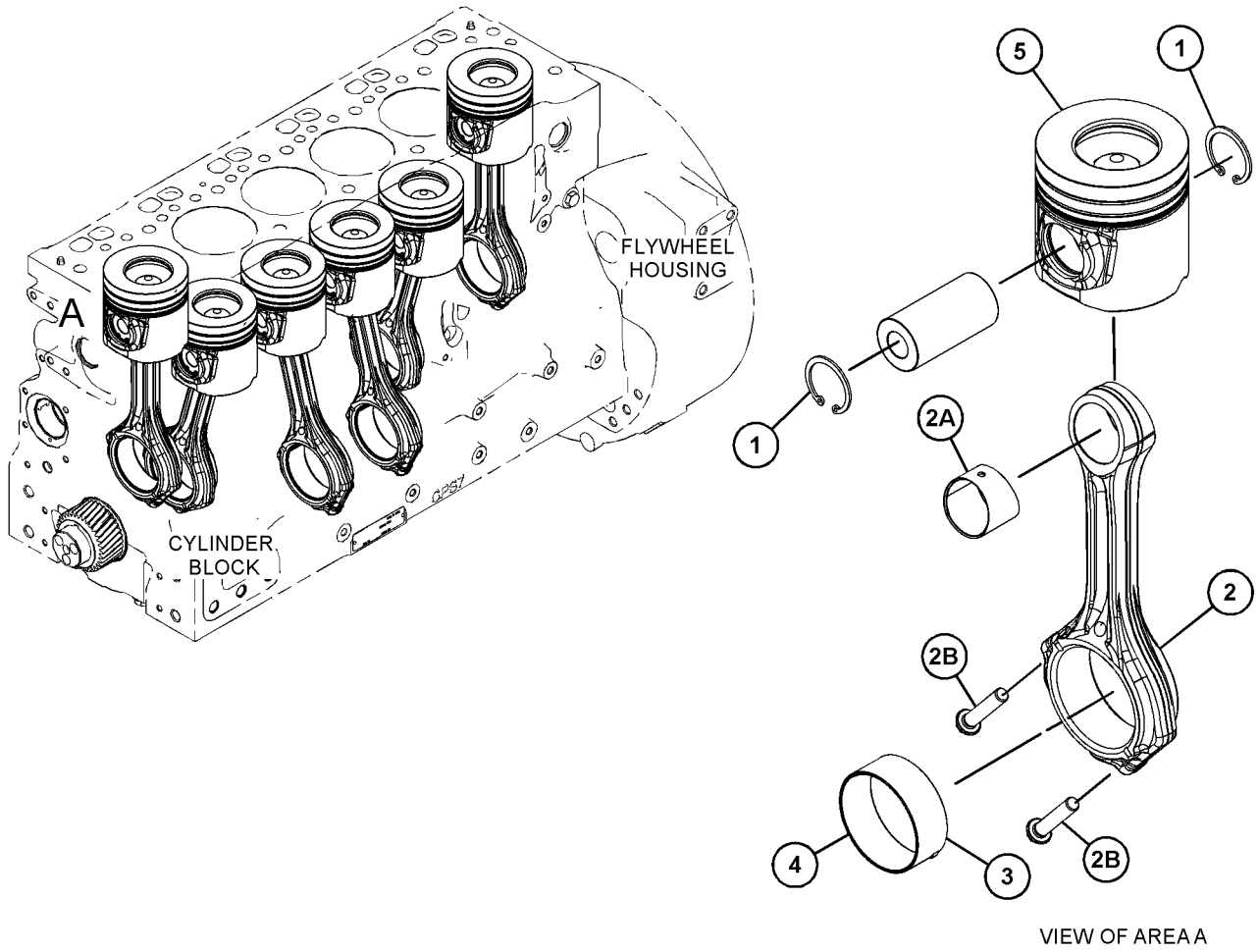

GRAPHIC #1 <END> g06792239

346-1841 PLUG GP-CYLINDER HEAD

PART OF 485-3093, 582-9032 ENGINE AR-PRIMARY

SMCS-1100 **i07041812**

NOTE	REF NO	GRAPHIC REF	PART NUMBER	QTY	PART NAME 1 2 3 4 5 6 (PRODUCT LEVEL)	SEE PAGE
C	1	1	**470-4925**	1	PLUG	

C - CHANGE FROM PREVIOUS TYPE

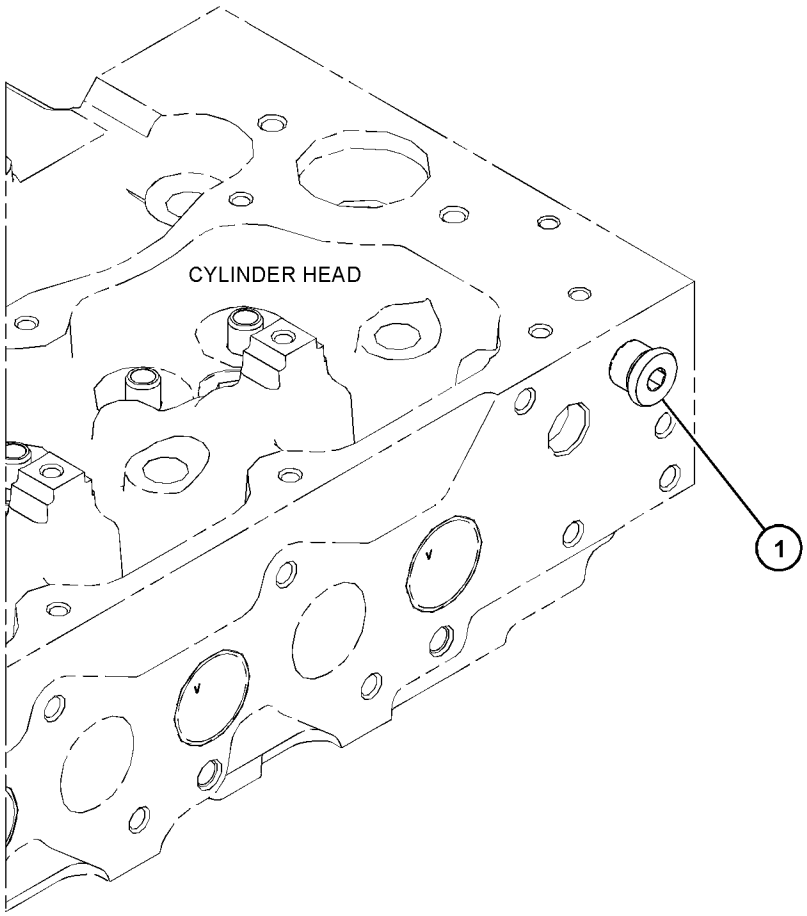

GRAPHIC #1 <END> g06199498

346-1820 PLUG GP-ENGINE

PART OF 485-3093, 582-9032 ENGINE AR-PRIMARY

SMCS-1100, 1201 **i06690617**

NOTE	REF NO	GRAPHIC REF	PART NUMBER	QTY	PART NAME 1 2 3 4 5 6 (PRODUCT LEVEL)	SEE PAGE
	1	1	**199-9267**	1	SEAL-O-RING	
	2	1	**225-7941**	1	PLUG	
	3	1	**232-3861**	1	PLUG (BLANKING)	
	4	1	**330-5898**	1	SEAL-O-RING	

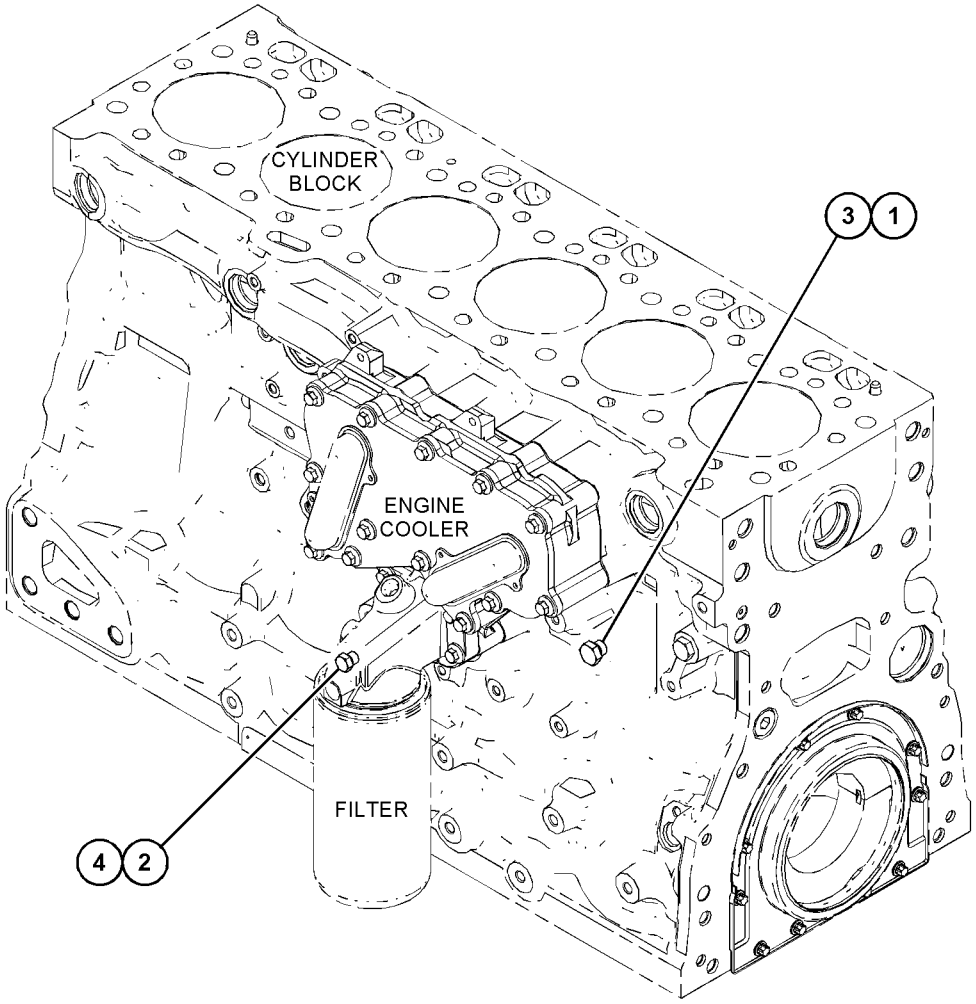

GRAPHIC #1 <END> g06148035

346-2908 PLUG GP-ENGINE

PART OF 482-9241, 485-3093 ENGINE AR-PRIMARY

SMCS-1100, 1201 **i05723850**

NOTE	REF NO	GRAPHIC REF	PART NUMBER	QTY	PART NAME 1 2 3 4 5 6 (PRODUCT LEVEL)	SEE PAGE
	1	1	**067-6823**	3	PLUG	

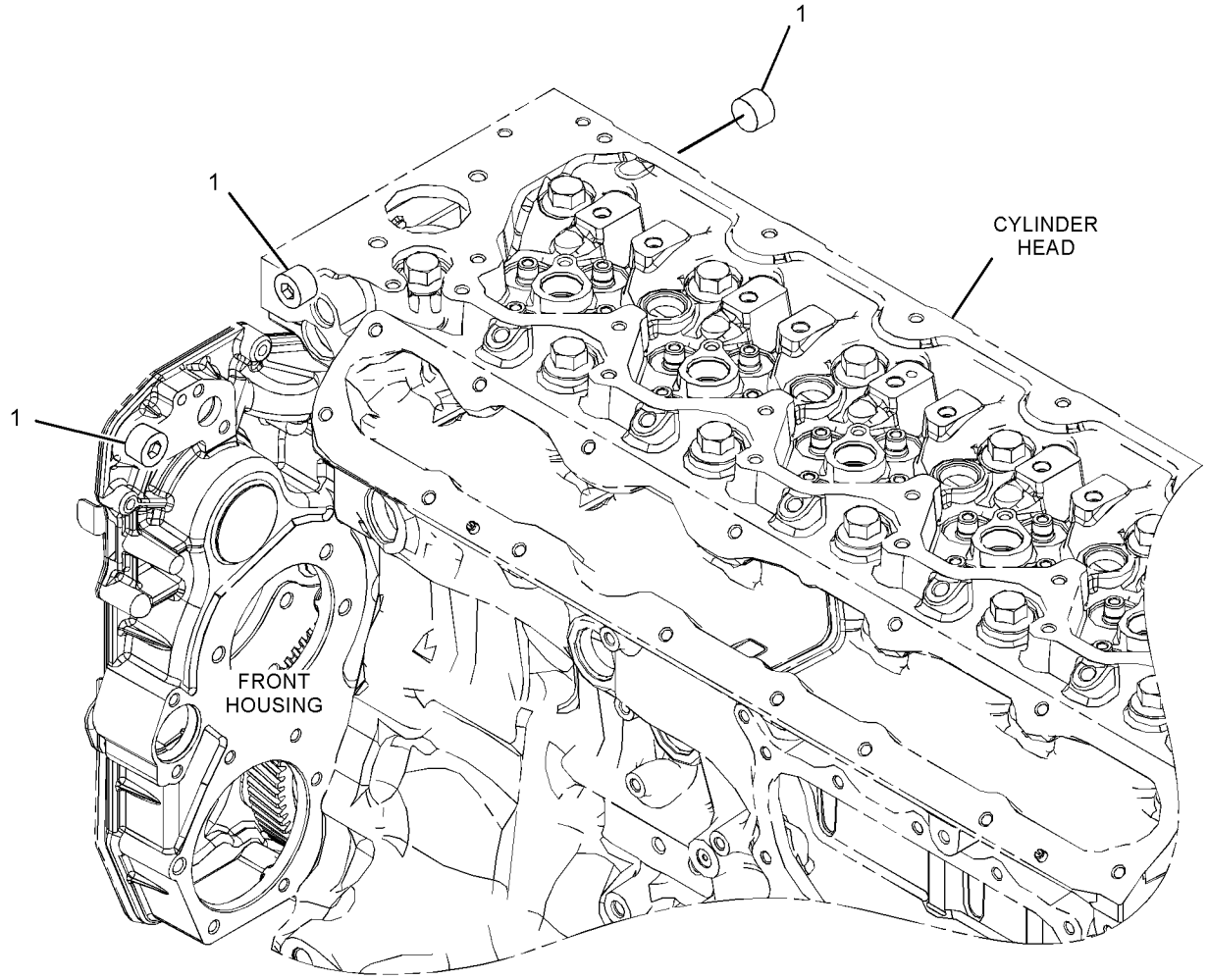

GRAPHIC #1 <END> g03380722

358-3097 PULLEY GP-CRANKSHAFT

PART OF 482-9241, 485-3093, 582-9032 ENGINE AR-PRIMARY

SMCS-1205 **i05908133**

NOTE	REF NO	GRAPHIC REF	PART NUMBER	QTY	PART NAME 1 2 3 4 5 6 (PRODUCT LEVEL)	SEE PAGE
M	1	1	**274-1935**	6	BOLT (M12X1.75X30-MM)	
M	2	1	**342-6510**	3	BOLT-TORX (M14X1.5X70-MM)	
	3	1	**351-1724**	1	DAMPER	
	4	1	**355-2243**	1	PULLEY	

M - METRIC PART

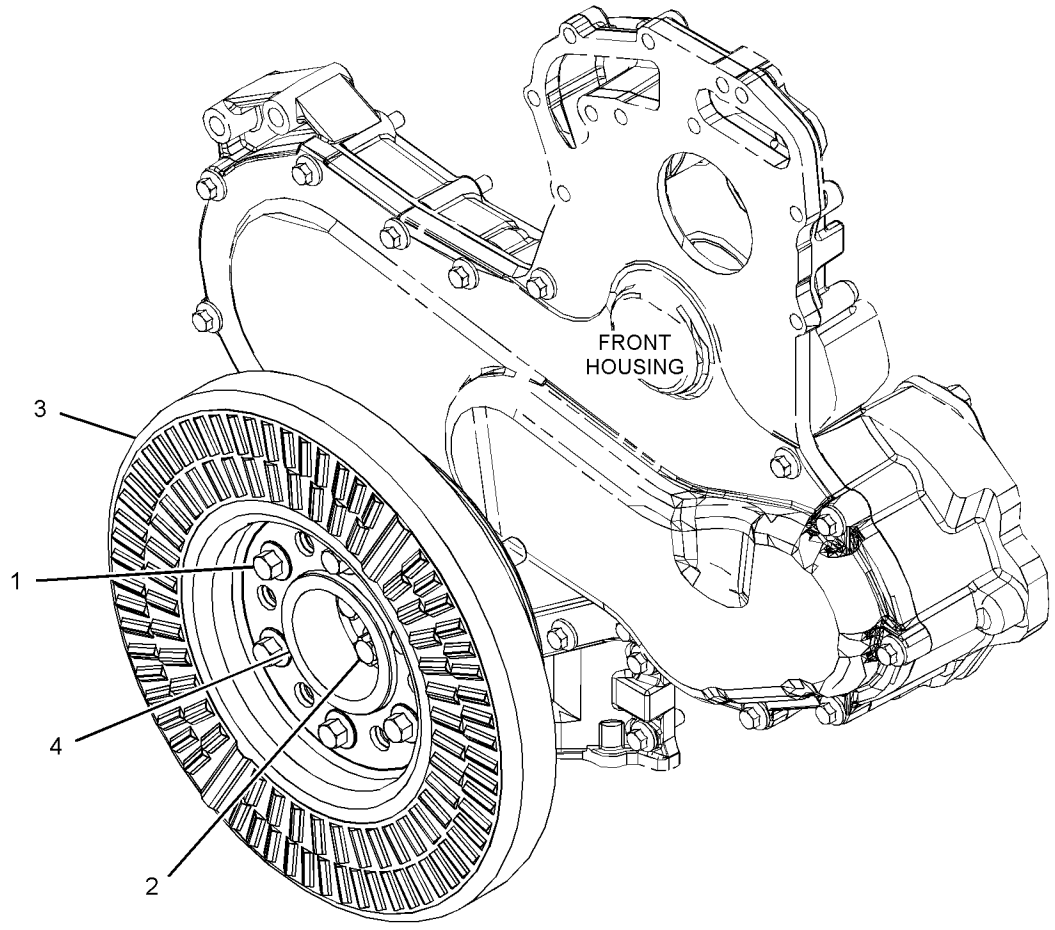

GRAPHIC #1 <END> g03591676

393-1438 PULLEY GP-FAN DRIVE

PART OF 482-9241 ENGINE AR-PRIMARY

SMCS-1359 **i06614406**

NOTE	REF NO	GRAPHIC REF	PART NUMBER	QTY	PART NAME 1 2 3 4 5 6 (PRODUCT LEVEL)	SEE PAGE
	1	1	**130-3880**	1	PULLEY-FAN DRIVE	
M	2	1	**111-0859**	4	BOLT (M10X1.5X35-MM)	
	3	1	**230-8065**	1	HOUSING AS	

M - METRIC PART

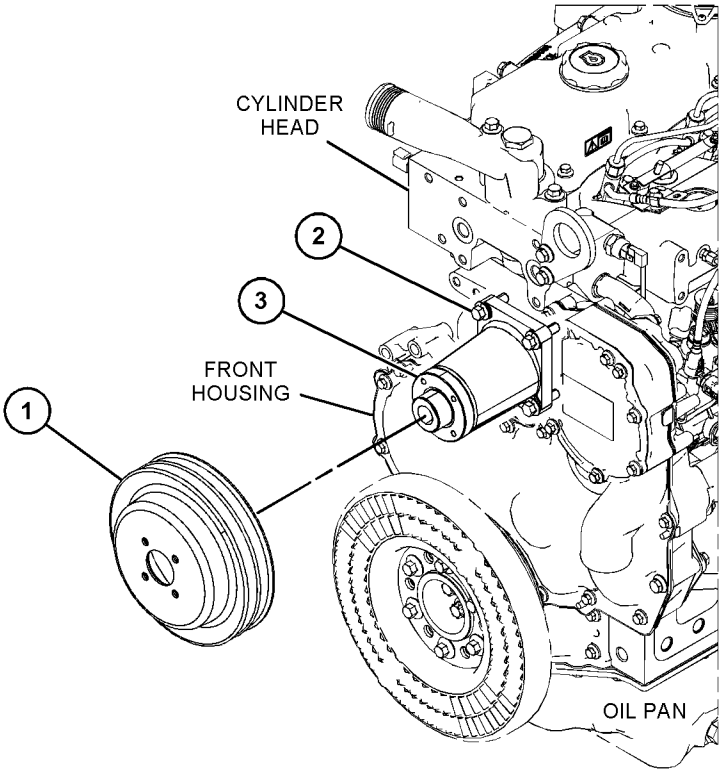

GRAPHIC #1 <END> g06122246

391-3197 ROCKER ARM GP

PART OF 482-9241, 485-3093, 582-9032 ENGINE AR-PRIMARY

SMCS-1123 **i06831149**

NOTE	REF NO	GRAPHIC REF	PART NUMBER	QTY	PART NAME 1 2 3 4 5 6 (PRODUCT LEVEL)	SEE PAGE
	1	1	**252-6438**	6	SEAL-INLET VALVE	
	2	1	**254-3954**	6	SEAL	
	3	1	**315-3393**	24	COLLET	
	4	1	**315-3394**	6	VALVE-EXHAUST	
Y	5	1	**335-5602**	1	VALVE MECHANISM GP	65
	6	1	**436-0520**	12	SPRING-VALVE	
	7	1	**335-5607**	12	RETAINER-SPRING	
	8	1	**497-1111**	6	VALVE-INLET	

Y - SEPARATE ILLUSTRATION

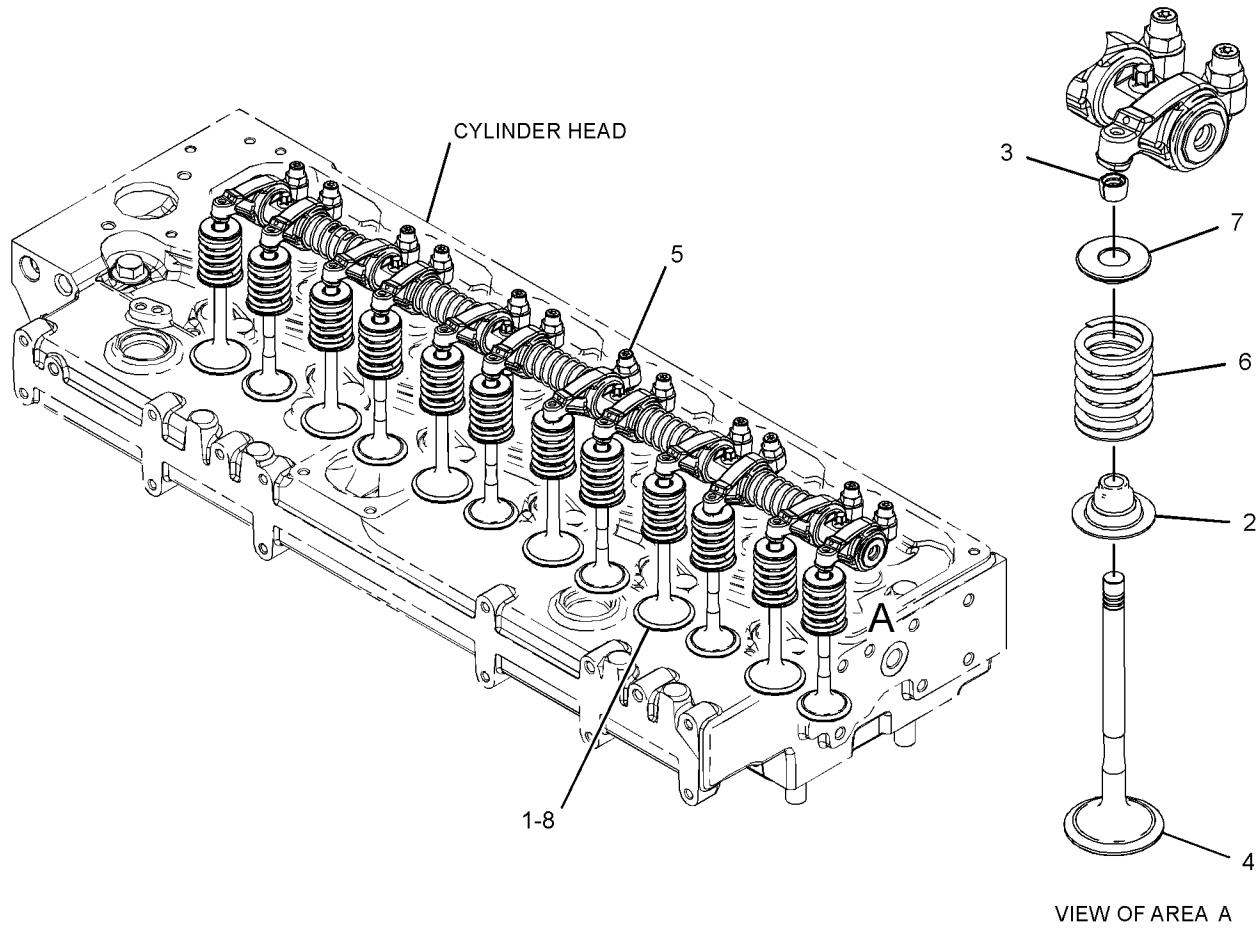

GRAPHIC #1 <END> g03317583

438-3180 ROCKER ARM GP

PART OF 425-3316 CYLINDER HEAD GP

SMCS-1123 **i06920576**

NOTE	REF NO	GRAPHIC REF	PART NUMBER	QTY	PART NAME 1 2 3 4 5 6 (PRODUCT LEVEL)	SEE PAGE
	1	1	**436-0520**	12	SPRING-VALVE	
	2	1	**335-5607**	12	RETAINER-SPRING	
	3	1	**497-1111**	6	VALVE-INLET	
	4	1	**252-6438**	6	SEAL-INLET VALVE	
	5	1	**254-3954**	6	SEAL	
	6	1	**315-3393**	24	COLLET	
	7	1	**315-3394**	6	VALVE-EXHAUST	

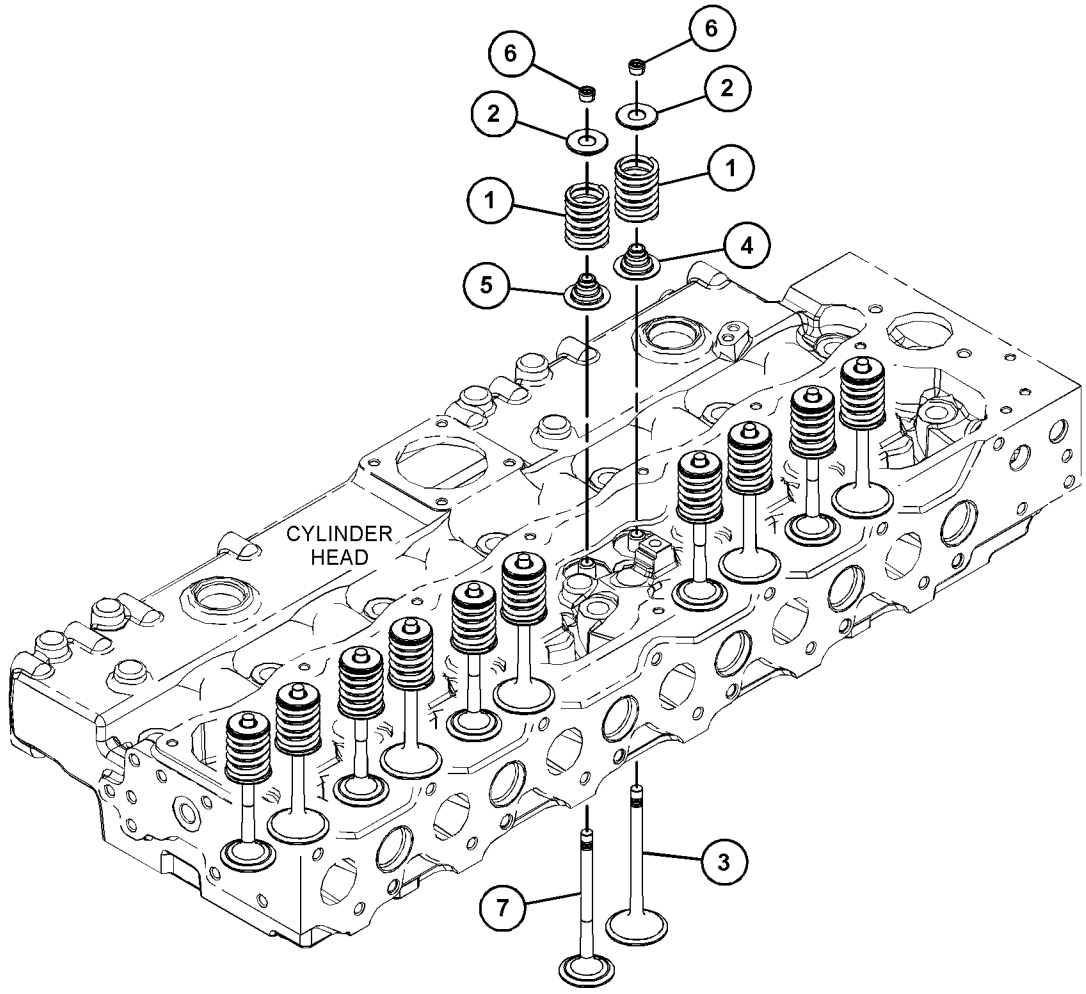

GRAPHIC #1 <END> g03646317

335-5602 VALVE MECHANISM GP

PART OF 391-3197 ROCKER ARM GP

SMCS-1102, 1121, 1123, 1209 **i05907405**

NOTE	REF NO	GRAPHIC REF	PART NUMBER	QTY	PART NAME 1 2 3 4 5 6 (PRODUCT LEVEL)	SEE PAGE
	1	1	**335-5604**	1	SHAFT AS-ROCKER ARM	
		1	**276-9200**	2	PLUG-SHAFT END	
		1	**335-5605**	1	SHAFT-ROCKER ARM	
	2	1	**225-5961**	2	WASHER (26.7X34.32X0.38-MM THK)	
M	3	1	**8T-9535**	1	BOLT-SOCKET HEAD (M8X1.25X60-MM)	
M	4	1	**225-5962**	5	BOLT (M8X1.25X30-MM)	
	5	1	**225-5959**	2	CLIP	
	6	1	**225-5638**	5	SPRING	
	7	1	**225-5625**	6	LEVER AS	
					(EACH INCLUDES)	
		1	**5B-9079**	1	NUT-JAM (3/8-24-THD)	
		1	**185-1546**	1	SCREW	
	8	1	**225-5640**	6	LEVER AS	
					(EACH INCLUDES)	
		1	**5B-9079**	1	NUT-JAM (3/8-24-THD)	
		1	**185-1546**	1	SCREW	

M - METRIC PART

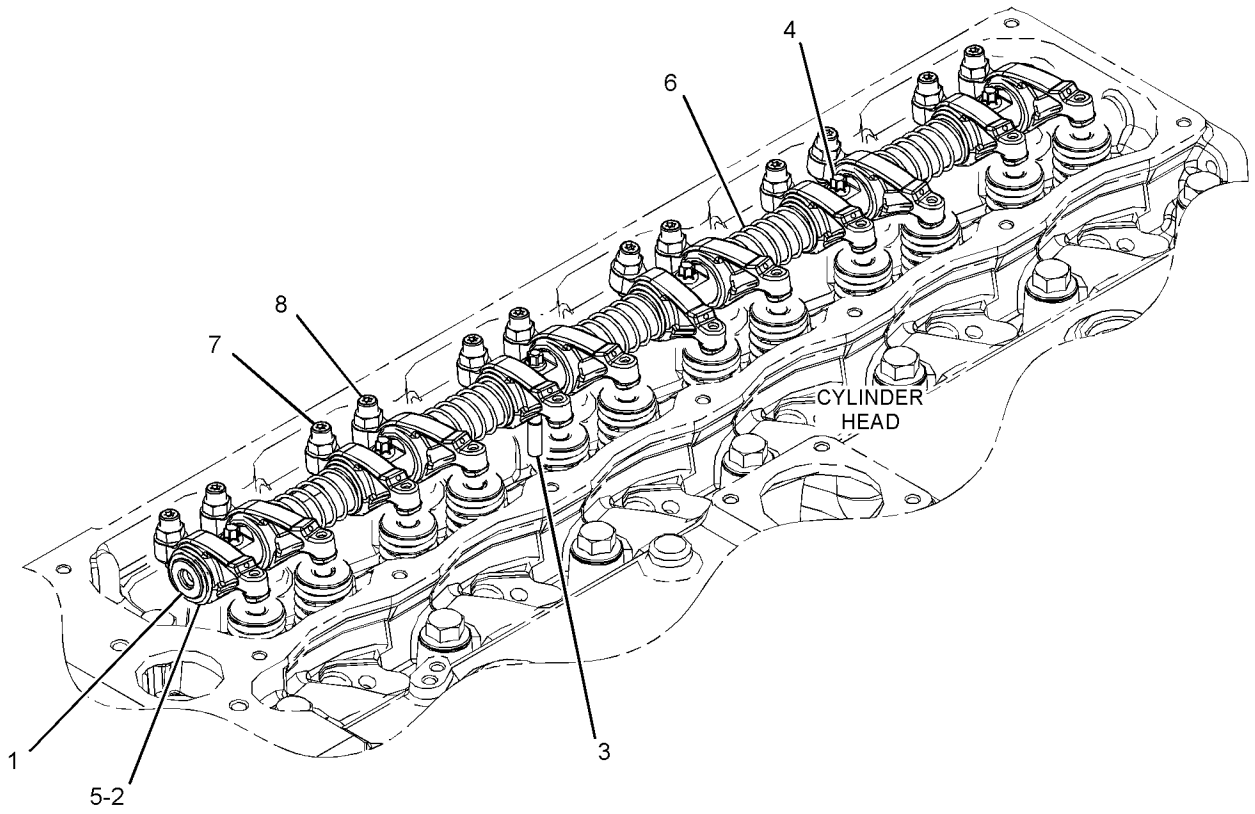

GRAPHIC #1 <END> g03319968

345-9747 BREATHER GP

PART OF 582-9032 ENGINE AR-PRIMARY

SMCS-1317 **i06132139**

NOTE	REF NO	GRAPHIC REF	PART NUMBER	QTY	PART NAME 1 2 3 4 5 6 (PRODUCT LEVEL)	SEE PAGE
	1	1	**032-9020**	1	CLIP	
	2	1	**162-1565**	1	SPRING (CRANKCASE BREATHER HOSE)	
	3	1	**198-8645**	1	HOSE (CRANKCASE BREATHER)	
Y	4	1	**367-5393**	1	COVER GP-VALVE MECHANISM	8
M	5	1	**6I-0254**	14	BOLT (M8X1.25X30-MM)	
	6	1	**7C-1281**	1	BRACKET	
	7	1	**217-9039**	1	STRAP-CABLE	

M - METRIC PART
Y - SEPARATE ILLUSTRATION

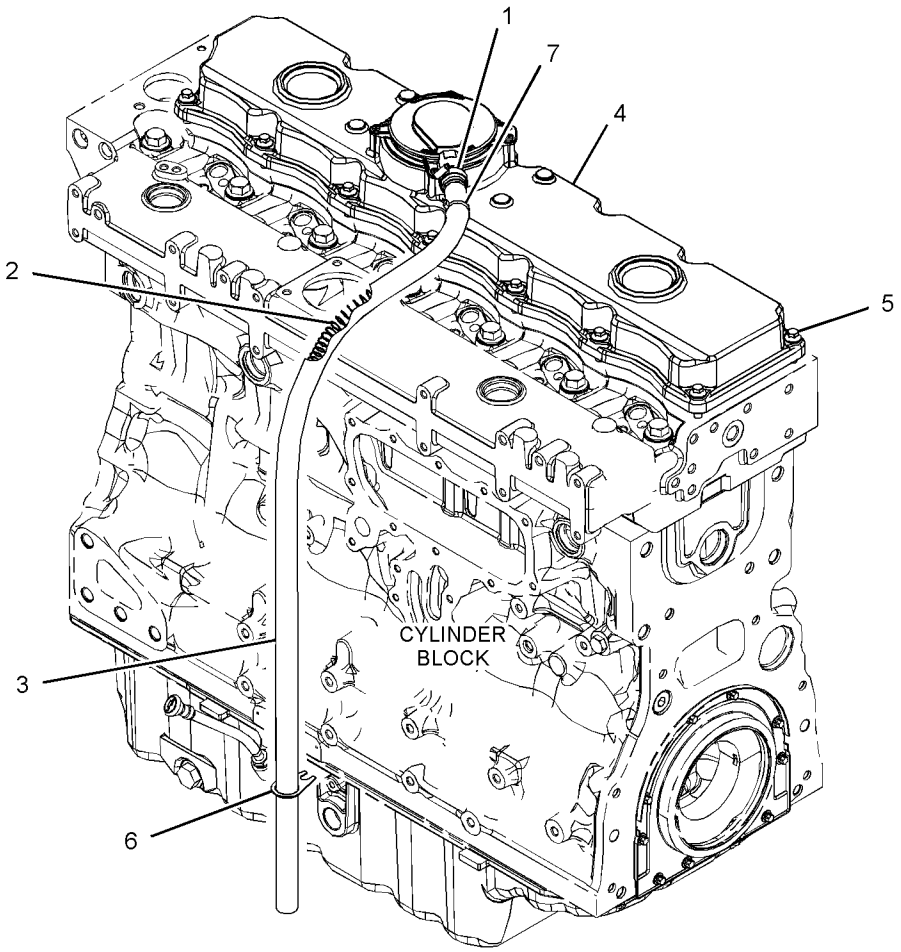

GRAPHIC #1 <END> g03778861

345-9774 BREATHER GP–CRANKCASE

PART OF 482-9241 ENGINE AR-PRIMARY

SMCS-1317 **i07333112**

NOTE	REF NO	GRAPHIC REF	PART NUMBER	QTY	PART NAME 1 2 3 4 5 6 (PRODUCT LEVEL)	SEE PAGE
	1	1	**032-9020**	1	CLIP	
	2	1	**162-1565**	1	SPRING (CRANKCASE BREATHER HOSE)	
	3	1	**198-8645**	1	HOSE (CRANKCASE BREATHER)	
Y	4	1	**335-6883**	1	COVER GP-VALVE MECHANISM	7
M	5	1	**6I-0254**	14	BOLT (M8X1.25X30-MM)	
	6	1	**7C-1281**	1	BRACKET	
	7	1	**217-9039**	1	STRAP-CABLE	

M - METRIC PART
Y - SEPARATE ILLUSTRATION

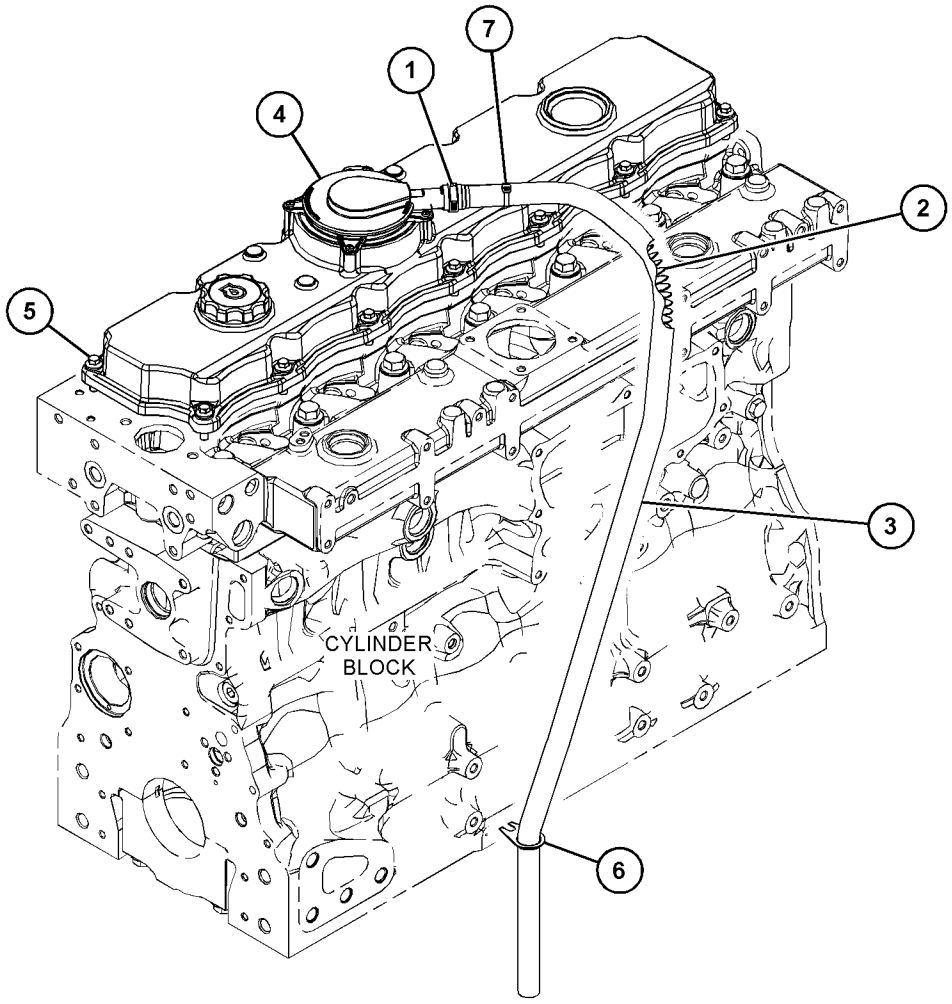

GRAPHIC #1 <END> g03810680

425-0181 BREATHER GP

PART OF 485-3093 ENGINE AR-PRIMARY

SMCS-1317 **i05644559**

NOTE	REF NO	GRAPHIC REF	PART NUMBER	QTY	PART NAME 1 2 3 4 5 6 (PRODUCT LEVEL)	SEE PAGE
	1	1	**422-0508**	1	BRACKET	
	2	1	**422-7707**	1	HOSE	
Y	3	1	*424-9429*	1	COVER GP-VALVE MECHANISM	9
M	4	1	**6I-0217**	3	BOLT (M8X1.25X20-MM)	
M	5	1	**6I-0254**	16	BOLT (M8X1.25X30-MM)	
M	6	1	**178-3336**	2	NUT-HEX FLANGE (M8X1.25-THD)	
	7	1	**032-9020**	1	CLIP	
	8	1	**280-2023**	1	HOSE	
	9	1	**306-2333**	1	BASE GP-BREATHER	
	10	1	**2S-3440**	2	CLAMP-HOSE	
	11	1	**7C-1281**	1	BRACKET	

M - METRIC PART
Y - SEPARATE ILLUSTRATION

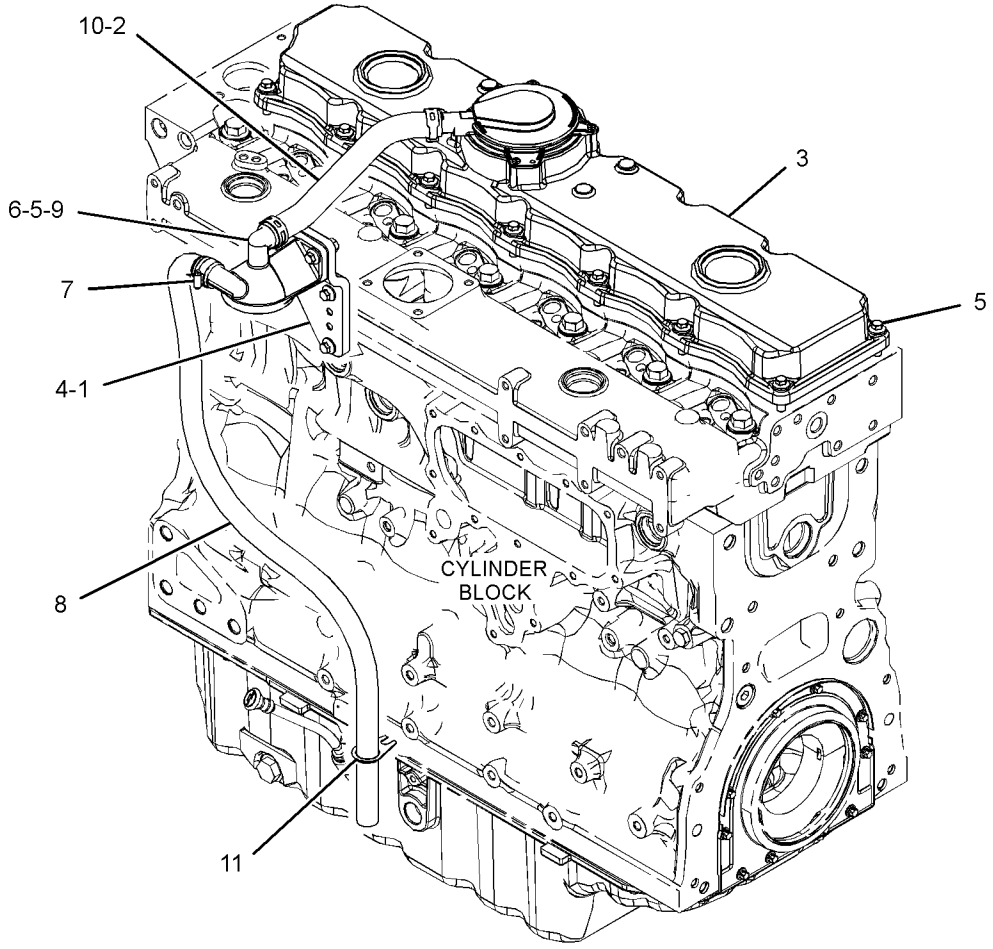

GRAPHIC #1 <END> g03589312

390-3737 FILLER GP-ENGINE OIL

PART OF 482-9241, 485-3093 ENGINE AR-PRIMARY

SMCS-1316 **i08330641**

NOTE	REF NO	GRAPHIC REF	PART NUMBER	QTY	PART NAME 1 2 3 4 5 6 (PRODUCT LEVEL)	SEE PAGE
M	1	1	**6I-0217**	2	BOLT (M8X1.25X20-MM)	
	2	1	**277-1974**	1	PLATE AS	
		1	**277-1975**	1	SEAL-O-RING	
	3	1	**321-2383**	1	FILLER AS	
		1	**306-2337**	1	SEAL-O-RING	
		1	**130-9888**	1	CAP AS-OIL FILLER (ENGINE)	
		1	**113-1504**	1	SEAL-O-RING	
M	4	1	**6I-0254**	1	BOLT (M8X1.25X30-MM)	
M	5	1	**6I-4374**	1	BOLT (M8X1.25X60-MM)	

M - METRIC PART

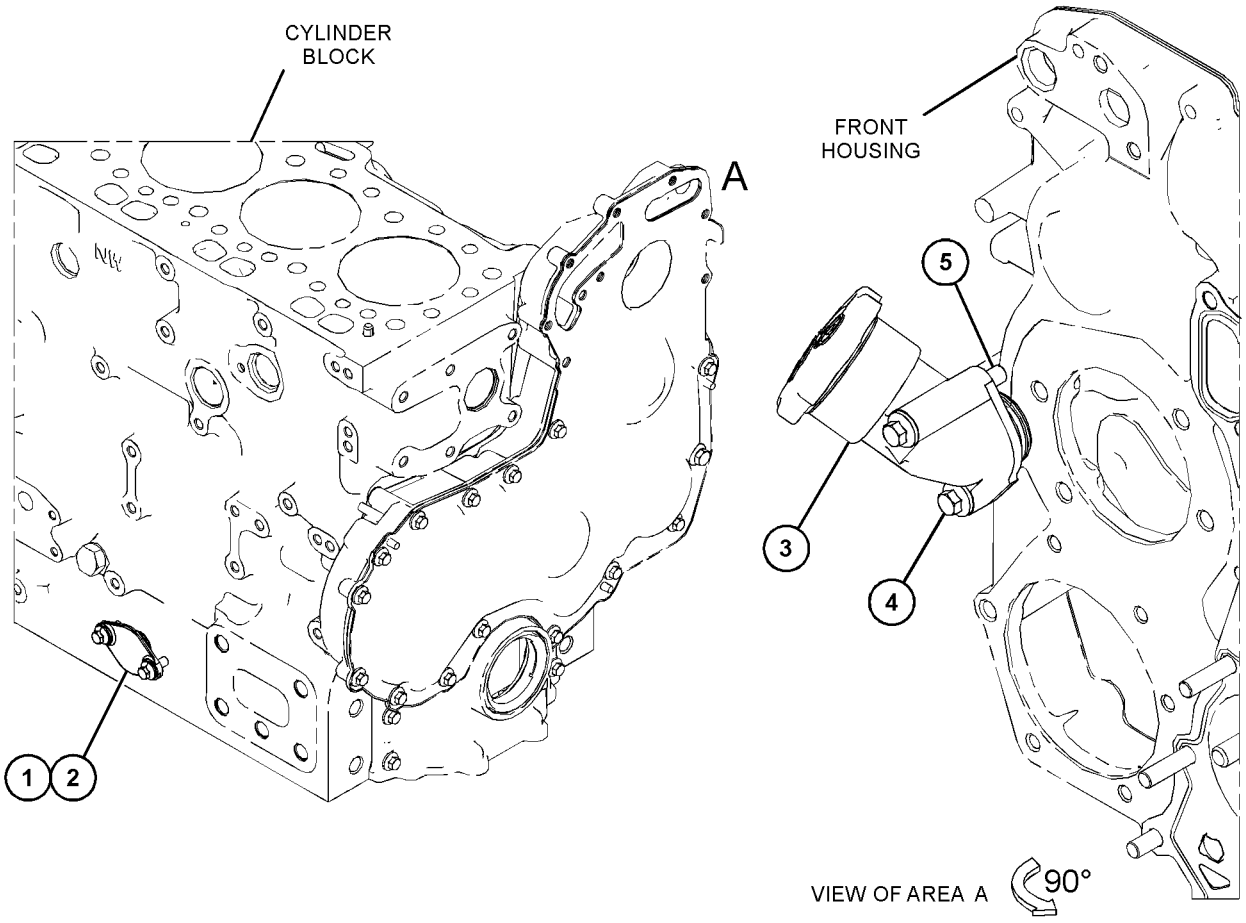

GRAPHIC #1 <END> g06614861

419-6486 FILLER GP-ENGINE OIL

PART OF 582-9032 ENGINE AR-PRIMARY

SMCS-1316 **i05644809**

NOTE	REF NO	GRAPHIC REF	PART NUMBER	QTY	PART NAME 1 2 3 4 5 6 (PRODUCT LEVEL)	SEE PAGE
	1	1	**225-6522**	1	PLUG-CUP	
	2	1	**285-3058**	1	FILLER AS-OIL	
	2A	1	**234-6171**	1	SEAL-O-RING	
	2B	1	**130-9888**	1	CAP AS-OIL FILLER (ENGINE)	
	2C	1	**113-1504**	1	SEAL-O-RING	
M	3	1	**6I-0217**	2	BOLT (M8X1.25X20-MM)	

M - METRIC PART

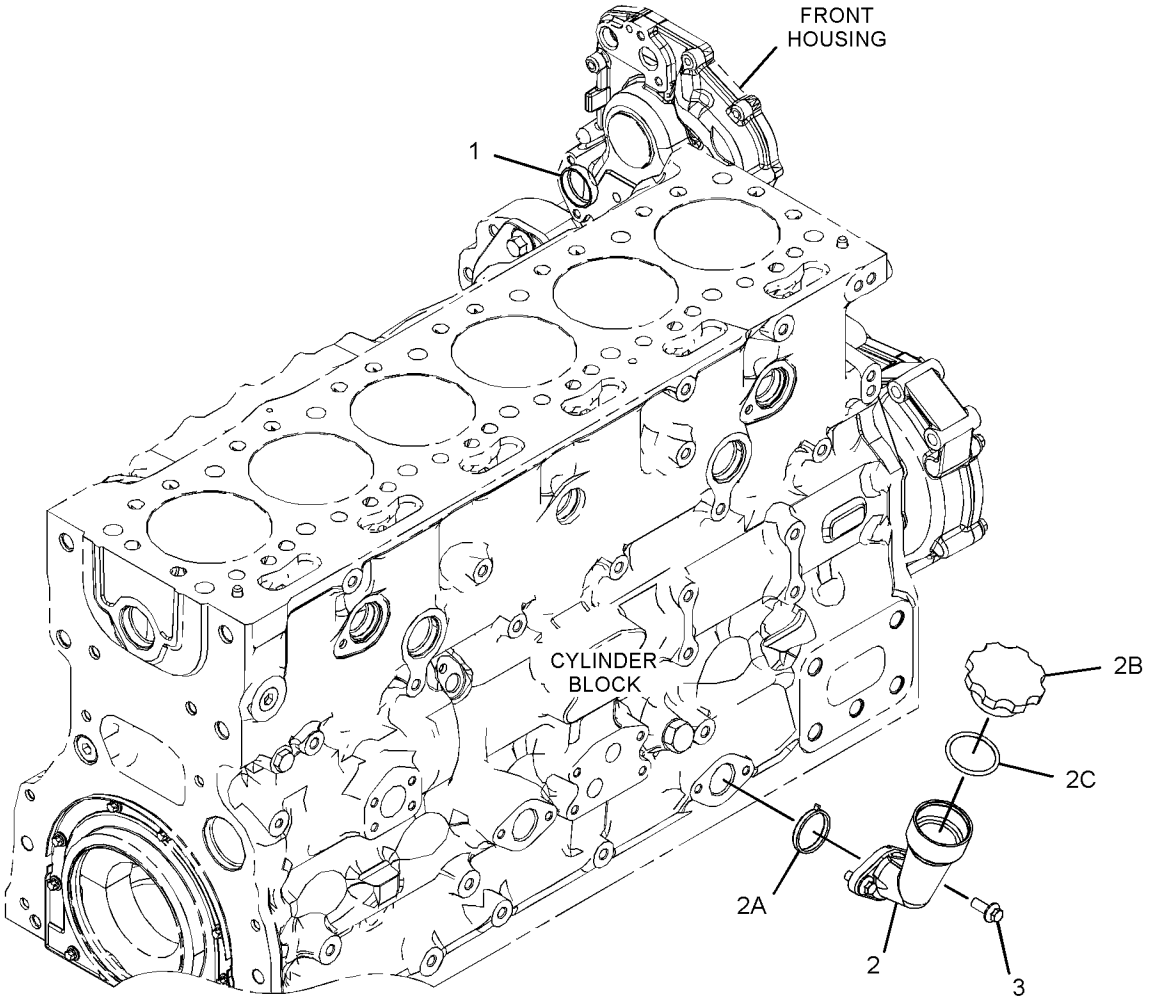

GRAPHIC #1 <END> g03596564

346-0220 FILTER GP-ENGINE OIL

PART OF 482-9241, 485-3093, 582-9032 ENGINE AR-PRIMARY

SMCS-1306, 1308 **i05882504**

NOTE	REF NO	GRAPHIC REF	PART NUMBER	QTY	PART NAME 1 2 3 4 5 6 (PRODUCT LEVEL)	SEE PAGE
	1	1	**462-1171**	1	FILTER-ENGINE OIL	

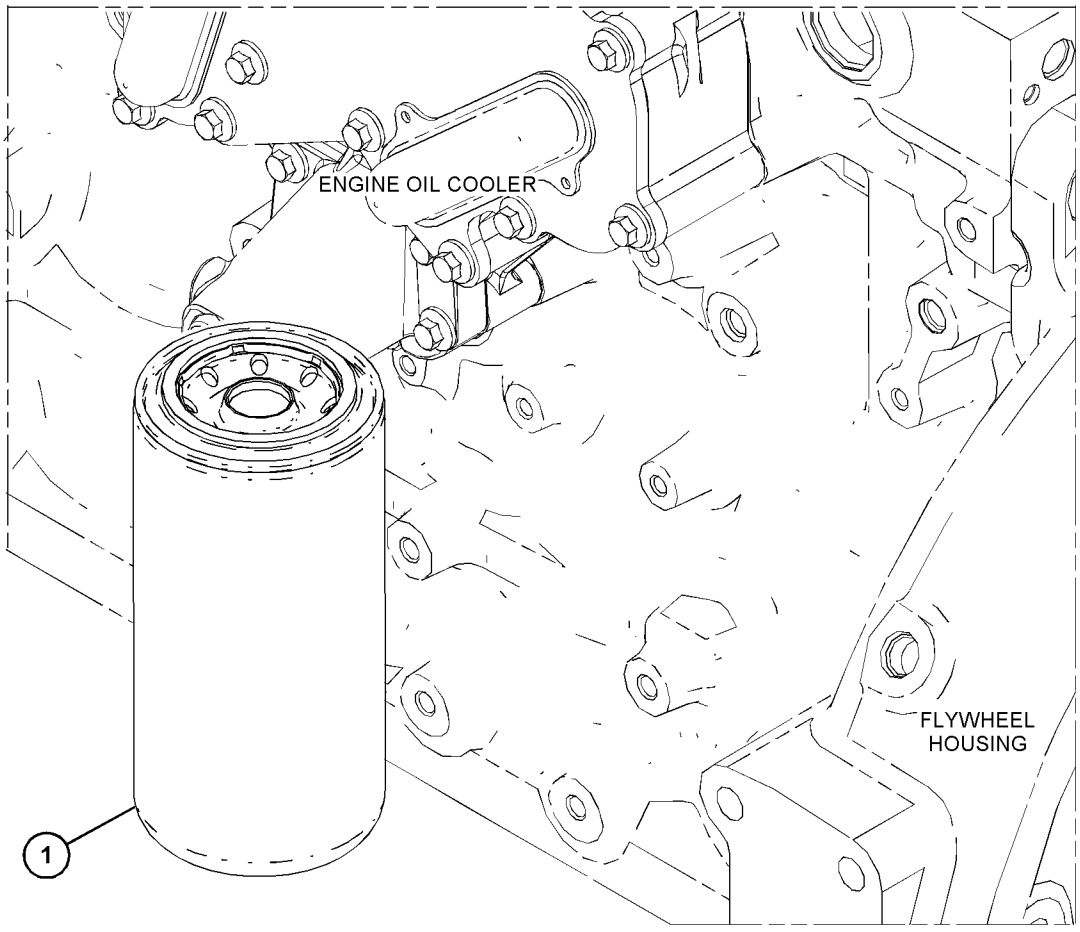

GRAPHIC #1 <END> g03710180

424-1869 FILTER GP-ENGINE OIL

PART OF 485-3093 ENGINE AR-PRIMARY

SMCS-1306, 1308 **i05649596**

NOTE	REF NO	GRAPHIC REF	PART NUMBER	QTY	PART NAME 1 2 3 4 5 6 (PRODUCT LEVEL)	SEE PAGE
	1	1	**273-5711**	1	FILTER-FUMES DISPOSAL	

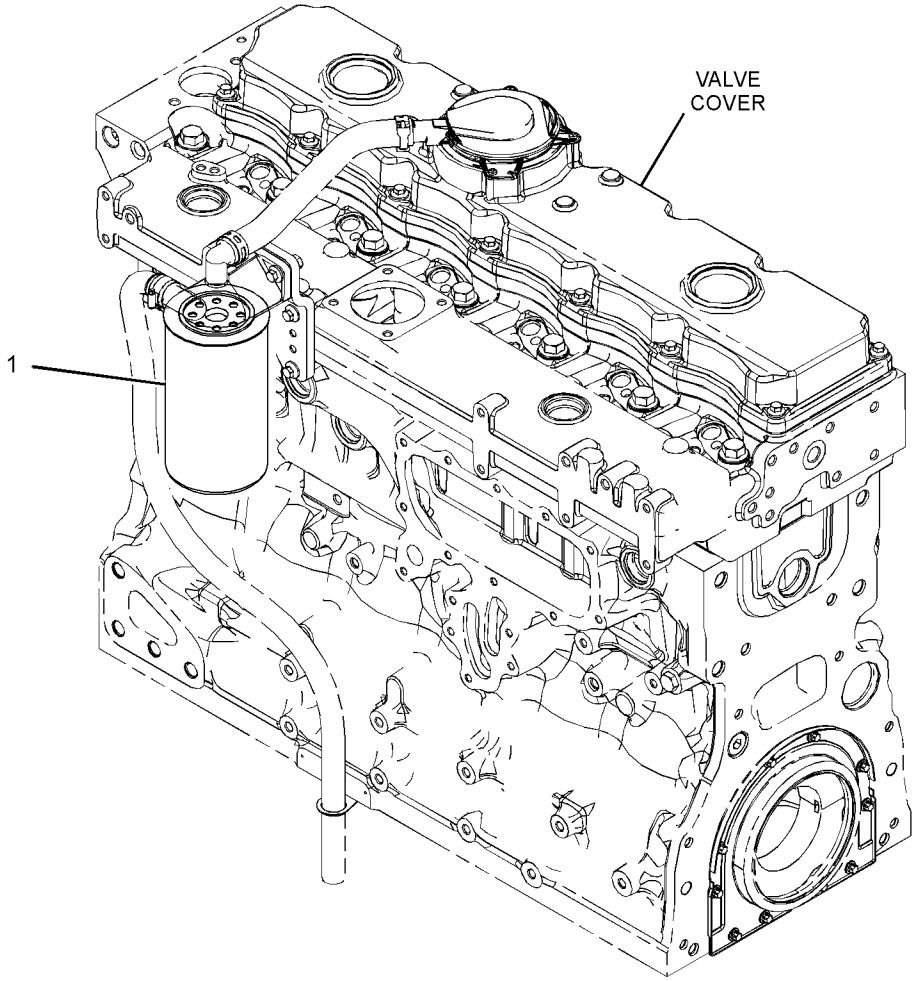

GRAPHIC #1 <END> g03596205

462-6685 PUMP GP-ENGINE OIL

PART OF 482-9241, 485-3093, 582-9032 ENGINE AR-PRIMARY

SMCS-1304, 1315 **i07025260**

NOTE	REF NO	GRAPHIC REF	PART NUMBER	QTY	PART NAME 1 2 3 4 5 6 (PRODUCT LEVEL)	SEE PAGE
	1	1	**420-0454**	1	PUMP AS-OIL	
M	2	1	**6I-1090**	4	BOLT (M8X1.25X40-MM)	

M - METRIC PART

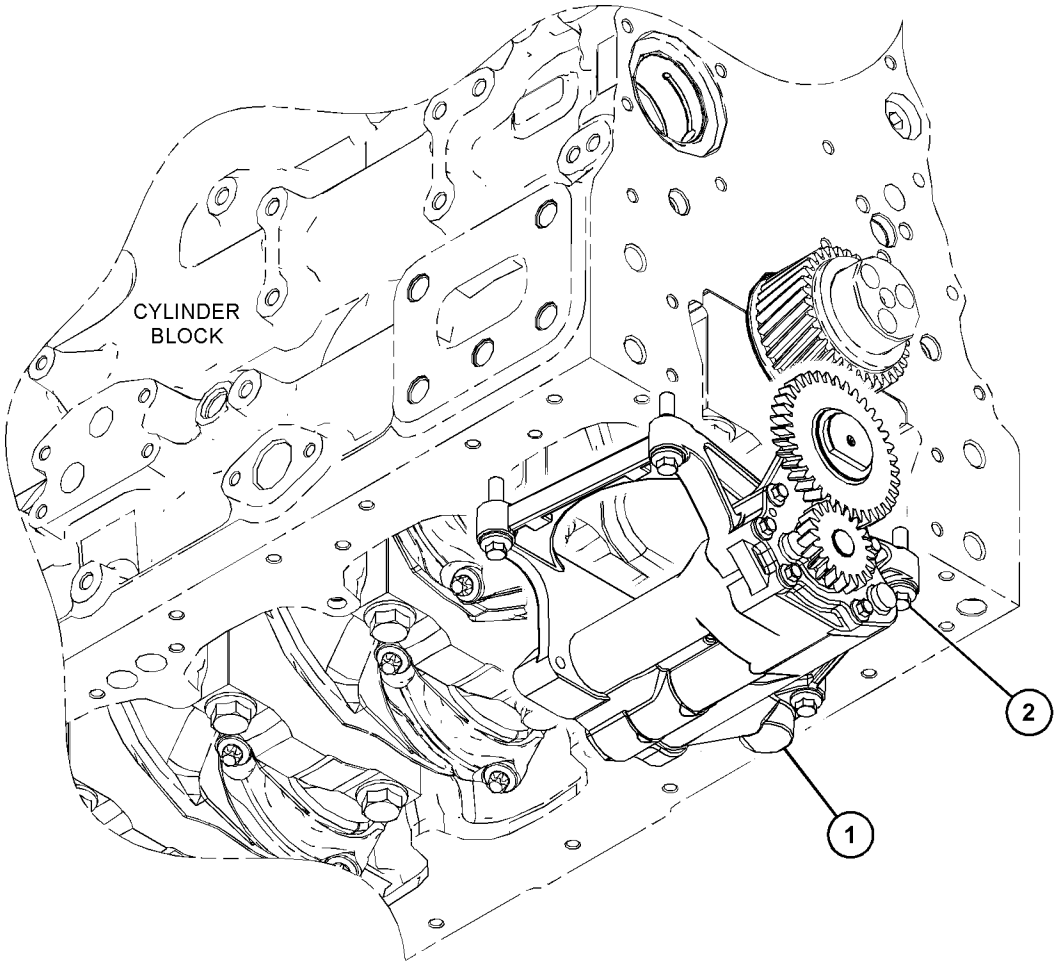

GRAPHIC #1 <END> g03797853

452-2249 CONNECTOR GP-CAB HEATER LINES

PART OF 582-9032 ENGINE AR-PRIMARY

SMCS-1380 **i06942666**

NOTE	REF NO	GRAPHIC REF	PART NUMBER	QTY	PART NAME 1 2 3 4 5 6 (PRODUCT LEVEL)	SEE PAGE
	1	1	**067-6823**	1	PLUG	
	2	1	**113-4616**	1	CONNECTOR	
	3	1	**293-1881**	1	ELBOW	

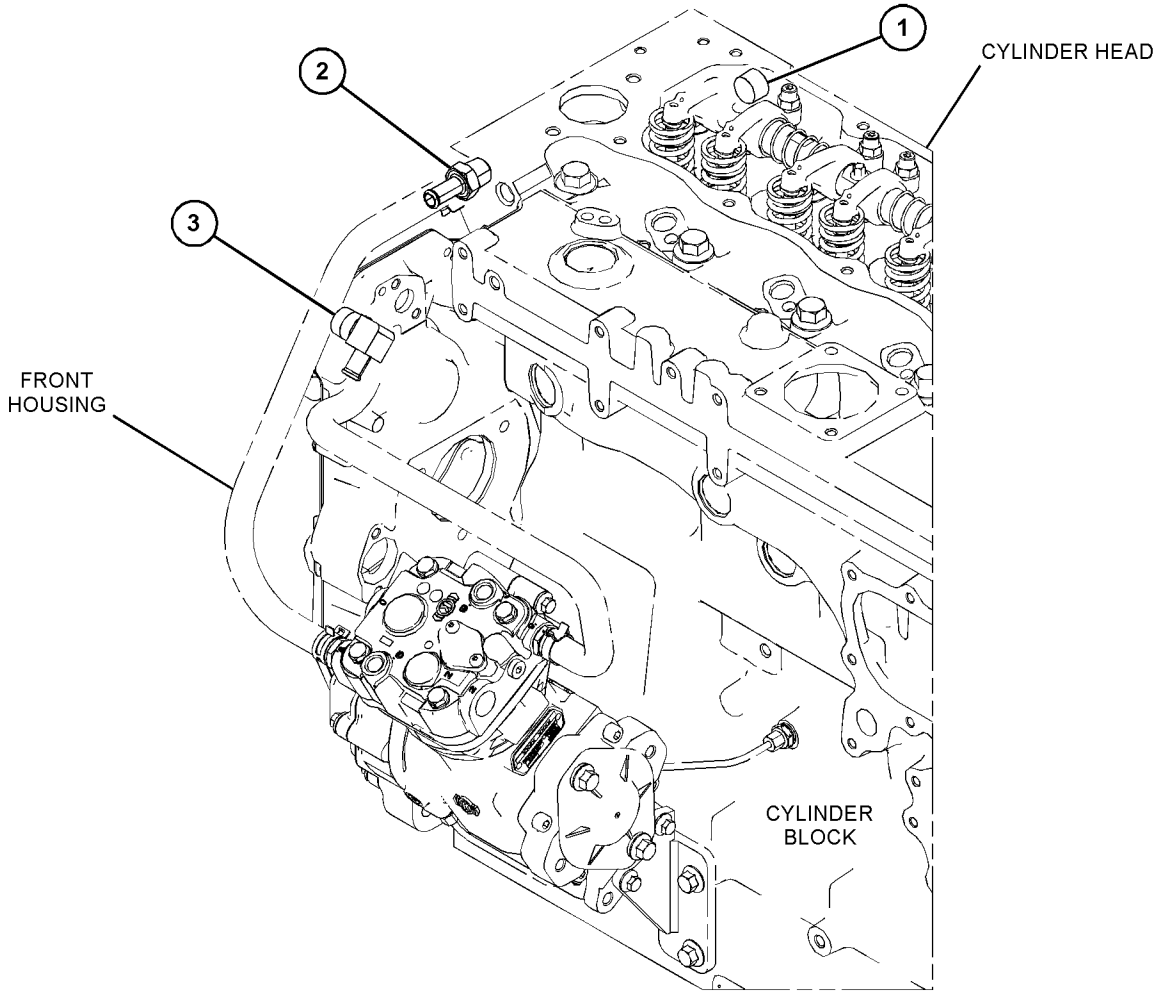

GRAPHIC #1 <END> g06204280

326-7401 COOLER GP-ENGINE OIL

PART OF 346-0091, 442-0326 COOLER GP-ENGINE OIL

SMCS-1378 **i05644584**

NOTE	REF NO	GRAPHIC REF	PART NUMBER	QTY	PART NAME 1 2 3 4 5 6 (PRODUCT LEVEL)	SEE PAGE
M	1	1	**6I-0260**	1	BOLT (M8X1.25X25-MM)	
M	2	1	**6I-4793**	6	BOLT (M8X1.25X50-MM)	
	3	1	**277-2500**	1	GASKET	
	4	1	**281-7039**	1	COOLER-OIL (ENGINE)	
	5	1	**281-7040**	1	GASKET	

M - METRIC PART

326-7401 **COOLER GP-ENGINE OIL (**contd.**)** **i05644584**

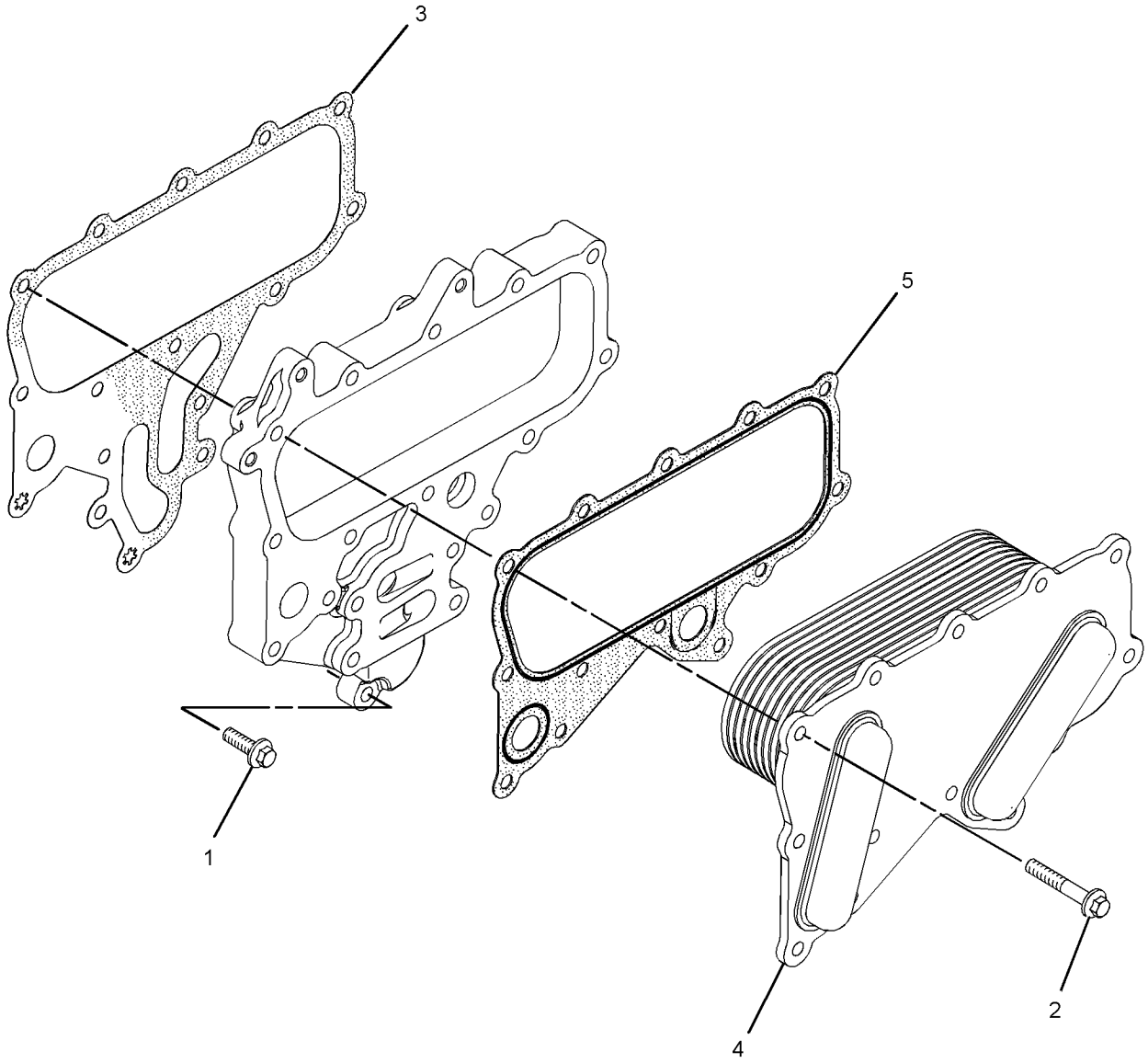

GRAPHIC #1 <END> g01508024

346-0091 COOLER GP-ENGINE OIL

PART OF 482-9241, 485-3093 ENGINE AR-PRIMARY

SMCS-1378 **i06713303**

NOTE	REF NO	GRAPHIC REF	PART NUMBER	QTY	PART NAME 1 2 3 4 5 6 (PRODUCT LEVEL)	SEE PAGE
	1	1	**225-7944**	2	GASKET	
	2	1	**232-3751**	1	PLATE	
	3	1	**277-2537**	1	PLATE	
M	4	1	**6I-0217**	6	BOLT (M8X1.25X20-MM)	
C	5	1	*502-2115*	1	HEAD AS-OIL FILTER	
Y	6	1	**326-7401**	1	COOLER GP-ENGINE OIL	75
M	7	1	**6I-0455**	4	BOLT (M8X1.25X55-MM)	
M	8	1	**6I-4793**	7	BOLT (M8X1.25X50-MM)	

C - CHANGE FROM PREVIOUS TYPE
M - METRIC PART
Y - SEPARATE ILLUSTRATION

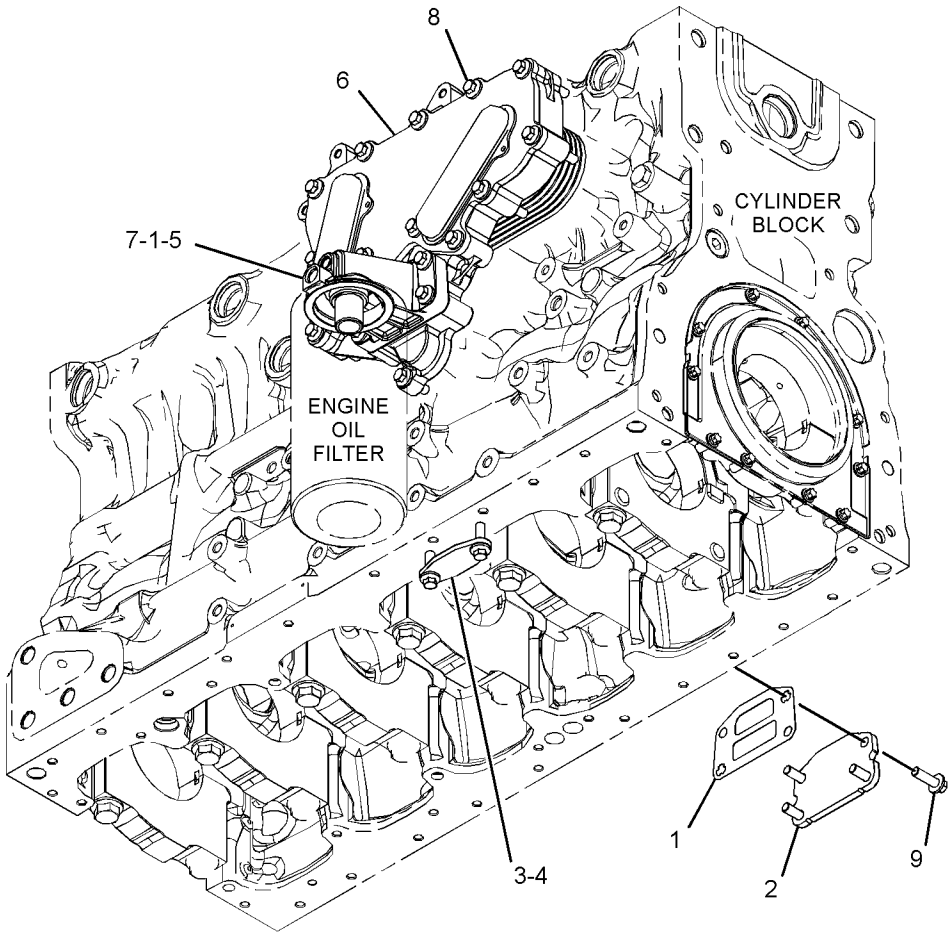

GRAPHIC #1 <END> g03743771

442-0326 COOLER GP-ENGINE OIL

PART OF 582-9032 ENGINE AR-PRIMARY

SMCS-1378 **i07050586**

NOTE	REF NO	GRAPHIC REF	PART NUMBER	QTY	PART NAME 1 2 3 4 5 6 (PRODUCT LEVEL)	SEE PAGE
M	1	1	**6I-4793**	7	BOLT (M8X1.25X50-MM)	
	2	1	**153-5294**	1	PLUG	
	3	1	**225-7944**	2	GASKET	
	4	1	**228-7093**	4	SEAL-O-RING	
	5	1	**232-3751**	1	PLATE	
	6	1	**277-2537**	1	PLATE	
I	8	1	**295-1654**	2	HOSE AS	
Y	9	1	**326-7401**	1	COOLER GP-ENGINE OIL	75
	10	1	**340-4212**	1	ADAPTER	
	11	1	**386-7037**	1	ADAPTER AS	
	12	1	**3D-2824**	3	SEAL-O-RING	
M	15	1	**6I-0217**	6	BOLT (M8X1.25X20-MM)	
M	16	1	**6I-0455**	4	BOLT (M8X1.25X55-MM)	
	17	1	**6V-8635**	1	CONNECTOR	
	18	1	**6V-8714**	1	CONNECTOR	
	19	1	**6V-9008**	1	ELBOW (90-DEG)	
	20	1	**7M-8485**	3	SEAL-O-RING	
	21	1	**8J-4645**	1	PLUG (STRAIGHT THREAD O-RING)	
	22	1	**8T-6684**	1	ELBOW (90-DEG)	

I - REFER TO HYDRAULIC INFORMATION SYSTEM
M - METRIC PART
Y - SEPARATE ILLUSTRATION

442-0326 **COOLER GP-ENGINE OIL (**contd.**)** **i07050586**

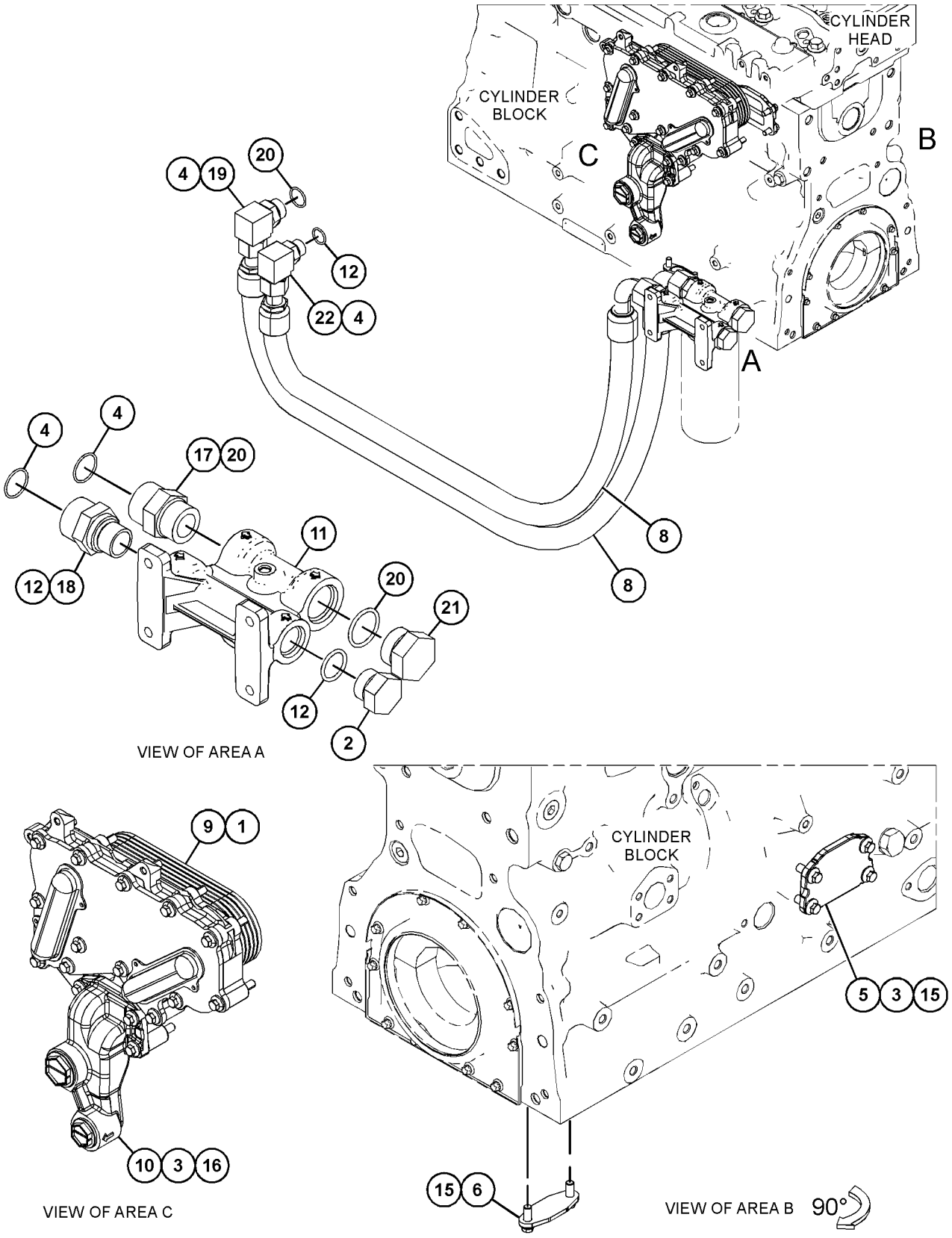

GRAPHIC #1 <END> g06234643

477-5510 FAN GP

PART OF 485-3093 ENGINE AR-PRIMARY

SMCS-1356 **i06703514**

NOTE	REF NO	GRAPHIC REF	PART NUMBER	QTY	PART NAME 1 2 3 4 5 6 (PRODUCT LEVEL)	SEE PAGE
M	1	1	**6V-9189**	4	LOCKNUT (M8X1.25-THD)	
M	2	1	**133-7668**	4	STUD (M8X1.25X116-MM)	
	3	1	**293-9235**	1	FAN	
	4	1	**468-7700**	1	EXTENSION	

M - METRIC PART

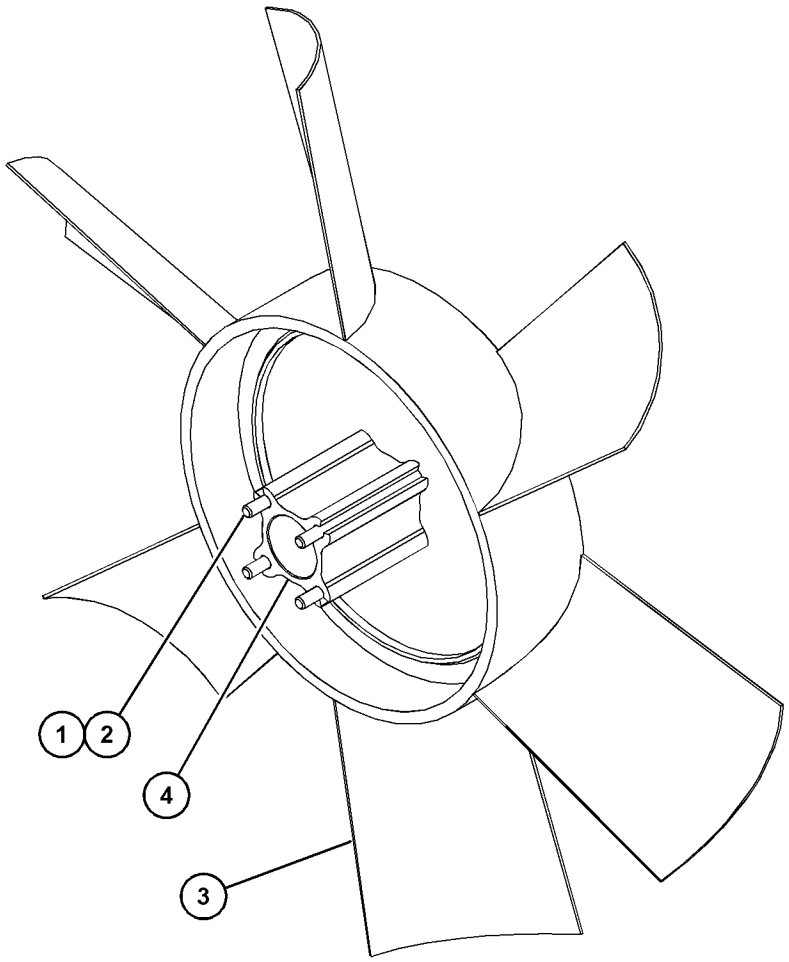

GRAPHIC #1 <END> g06115552

346-0410 PUMP GP-WATER

PART OF 482-9241, 582-9032 ENGINE AR-PRIMARY

SMCS-1361 **i09043947**

NOTE	REF NO	GRAPHIC REF	PART NUMBER	QTY	PART NAME 1 2 3 4 5 6 (PRODUCT LEVEL)	SEE PAGE
M	1	1	**103-5687**	1	BOLT (M10X1.5X85-MM)	
M	2	1	**113-8129**	2	BOLT (M8X1.25X75-MM)	
M	3	1	**123-2899**	1	BOLT (M10X1.5X40-MM)	
J	4	2	**225-8019**	1	GASKET	
CJ	5	1	*485-4894*	1	PUMP GP-WATER	
M	5A	1	**278-3242**	3	BOLT-FLANGE HEAD (M8X1.25X18-MM)	
	5B	1	**374-4419**	1	GASKET	
M	6	2	**6I-0217**	2	BOLT (M8X1.25X20-MM)	
M	7	1	**6I-0254**	2	BOLT (M8X1.25X30-MM)	
M	8	1	**6I-0839**	5	BOLT (M8X1.25X70-MM)	
	9	2	**604-2388**	1	PIPE AS	
	9A	2	**225-7738**	1	SEAL-O-RING	
	9B	2	**619-4764**	1	SEAL	
	10	1	**281-8744**	1	GASKET-WATER REGULATOR	
	11	1	**357-8714**	1	CONNECTION AS	
	11A	1	**367-8509**	1	SEAL-BONDED	
	11B	1	**367-8512**	1	PLUG	
					AVAILABLE REPAIR KIT(S):	
CJ			**485-4895**	1	KIT-WATER PUMP	

C - CHANGE FROM PREVIOUS TYPE
J - KIT MARKED J SERVICES PARTS MARKED J
M - METRIC PART

346-0410 **PUMP GP-WATER** (contd.) **i09043947**

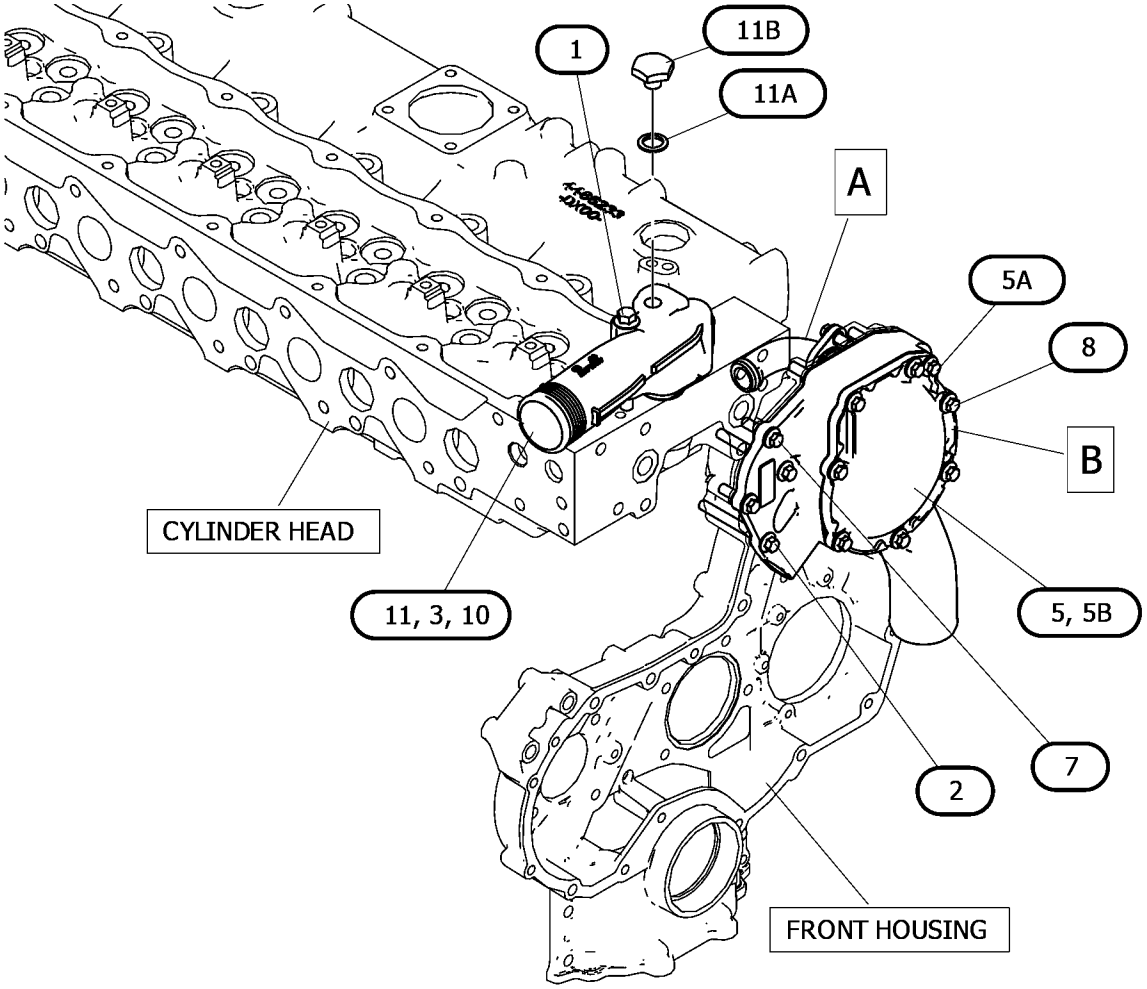

GRAPHIC #1 g07198041

346-0410 **PUMP GP-WATER (**contd.**)** **i09043947**

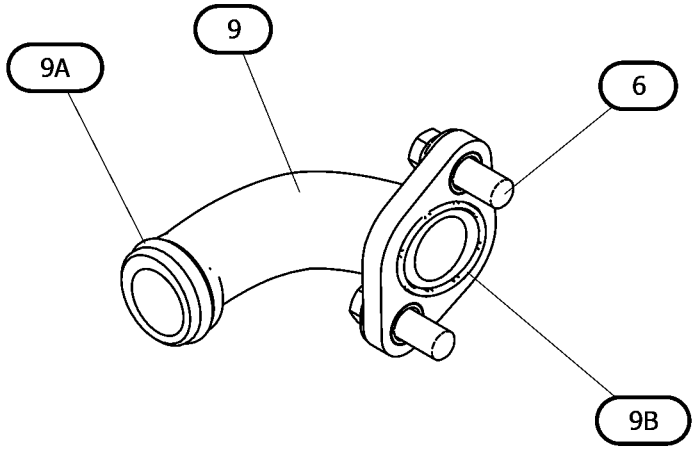

VIEW OF AREA A

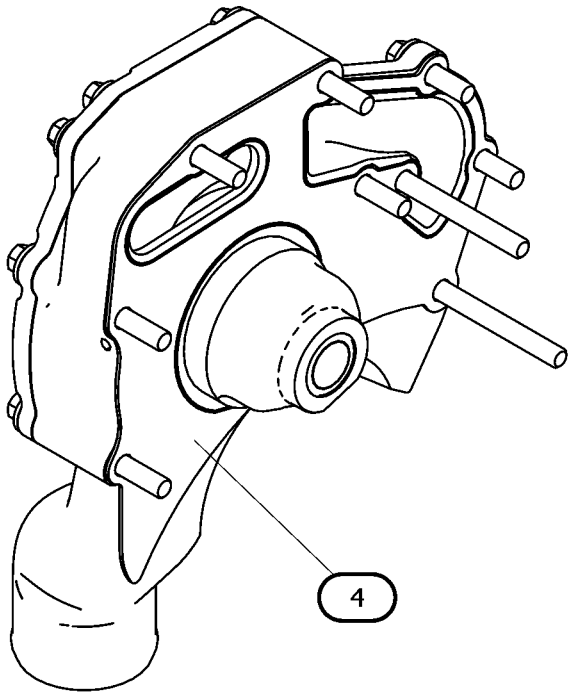

VIEW OF AREA B



GRAPHIC #2 <END> g07198041_01

346-0411 PUMP GP-WATER

PART OF 485-3093 ENGINE AR-PRIMARY

SMCS-1361 **i09043950**

NOTE	REF NO	GRAPHIC REF	PART NUMBER	QTY	PART NAME 1 2 3 4 5 6 (PRODUCT LEVEL)	SEE PAGE
M	1	1	**113-8129**	2	BOLT (M8X1.25X75-MM)	
M	2	1	**123-2899**	2	BOLT (M10X1.5X40-MM)	
	4	1	**604-2388**	1	PIPE AS	
	4A	1	**225-7738**	1	SEAL-O-RING	
	4B	1	**619-4764**	1	SEAL	
	5	1	**281-8744**	1	GASKET-WATER REGULATOR	
CJ	6	1	*485-4894*	1	PUMP GP-WATER	
M		1	**278-3242**	3	BOLT-FLANGE HEAD (M8X1.25X18-MM)	
		1	**374-4419**	1	GASKET	
	7	1	**417-7782**	1	REGULATOR AS-WATER TEMPERATURE (INCLUDES CONNECTOR)	
M	8	1	**6I-0217**	2	BOLT (M8X1.25X20-MM)	
M	9	1	**6I-0254**	2	BOLT (M8X1.25X30-MM)	
M	10	1	**6I-0839**	5	BOLT (M8X1.25X70-MM)	
J	11	1	**225-8019**	1	GASKET	
					AVAILABLE REPAIR KIT(S):	
J			**485-4895**	1	KIT-WATER PUMP	

C - CHANGE FROM PREVIOUS TYPE
J - PART MARKED 'J' SERVICES PART(S) MARKED J
M - METRIC PART

346-0411 **PUMP GP-WATER (**contd.**)** **i09043950**

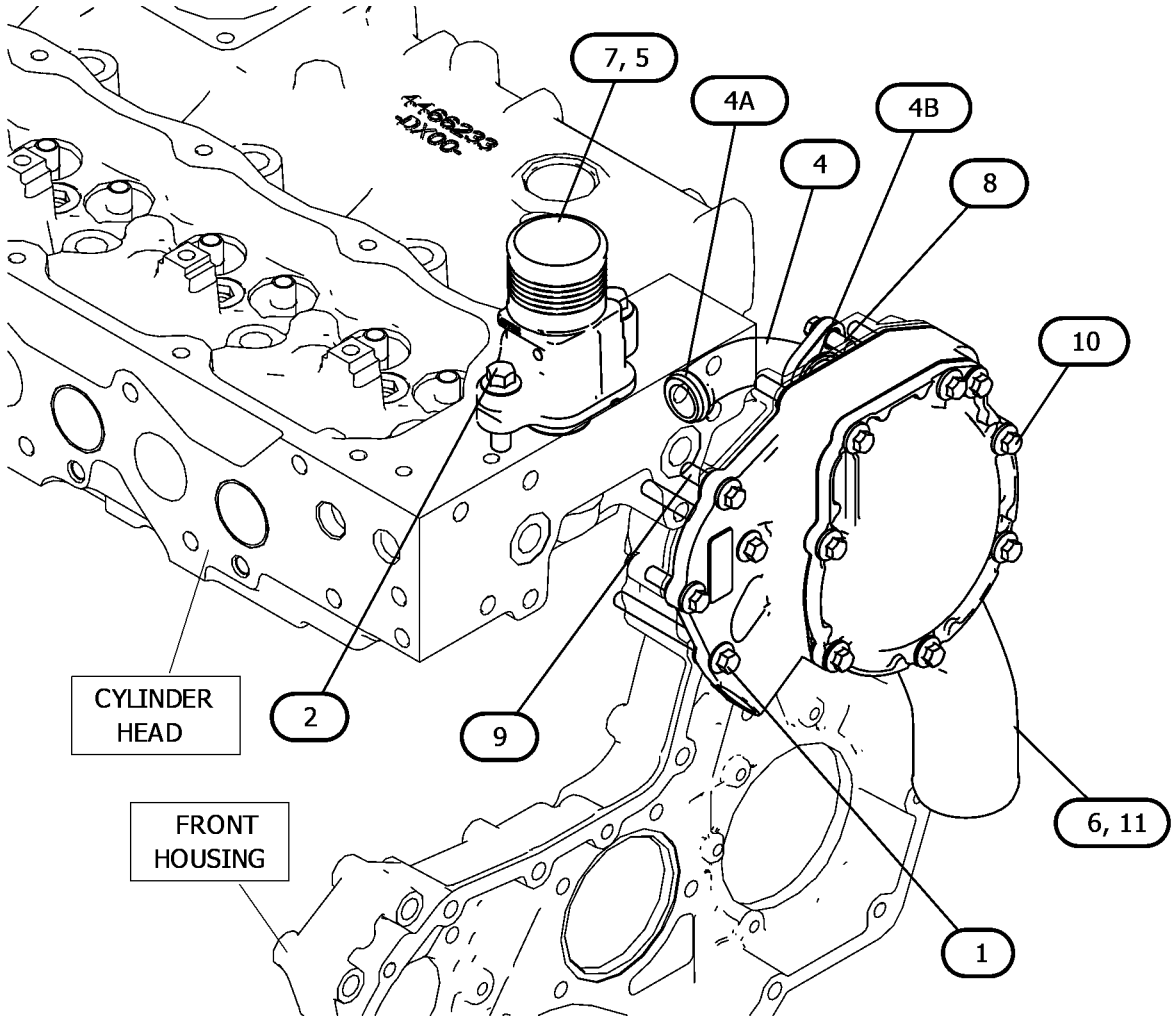

GRAPHIC #1 <END> g07191548

454-3464 RADIATOR AS

PART OF 477-5513 RADIATOR GP

SMCS-1353 **i07506621**

NOTE	REF NO	GRAPHIC REF	PART NUMBER	QTY	PART NAME 1 2 3 4 5 6 (PRODUCT LEVEL)	SEE PAGE
	1	1	**457-0482**	1	GUARD-RADIATOR	
	2	1	**422-6389**	2	WASHER (1/4-IN)	
	3	1	**422-6388**	1	WASHER (1/2-IN)	
	4	1	**422-6387**	1	PLUG (1/4-IN)	
M	5	1	**124-3815**	15	BOLT (M8X1.25X16-MM)	
	6	1	**365-2908**	1	AFTERCOOLER	
	7	1	**398-1750**	1	RADIATOR AS	
	8	1	**398-1775**	1	BRACKET AS	
	9	1	**422-6385**	1	PLUG (1/2-IN)	

M - METRIC PART

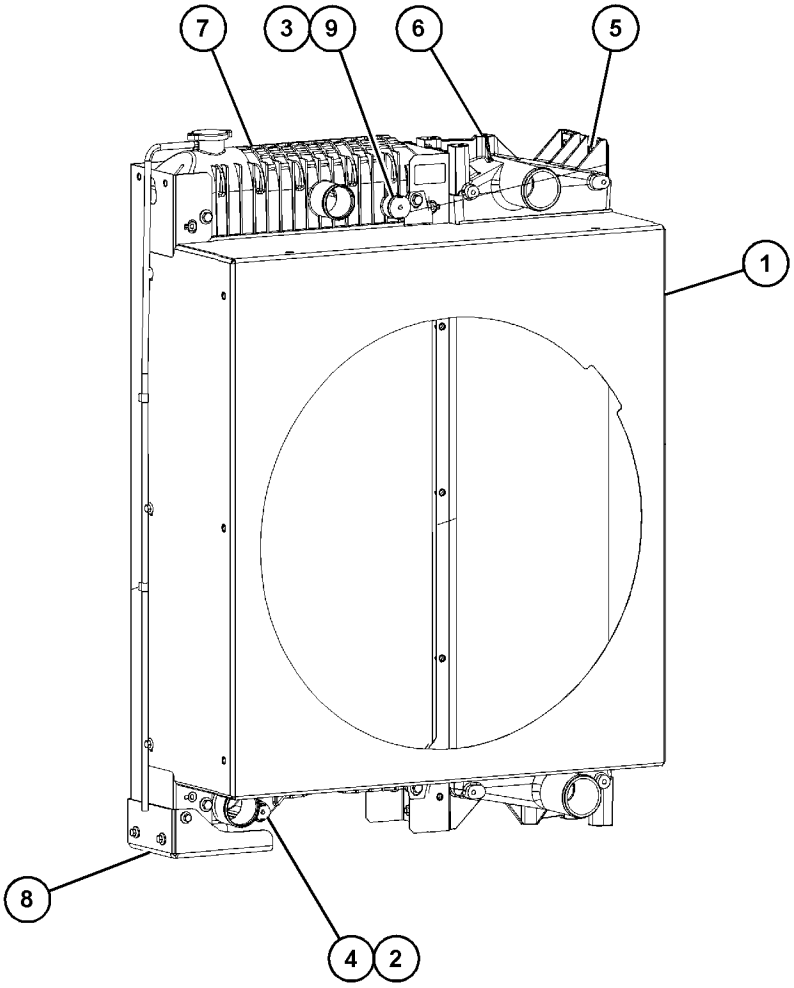

GRAPHIC #1 <END> g06342824

477-5513 RADIATOR GP

PART OF 485-3093 ENGINE AR-PRIMARY

SMCS-1353 **i06690626**

NOTE	REF NO	GRAPHIC REF	PART NUMBER	QTY	PART NAME 1 2 3 4 5 6 (PRODUCT LEVEL)	SEE PAGE
M	1	1	**6I-0593**	3	BOLT (M10X1.5X30-MM)	
M	2	1	**6I-0654**	3	BOLT (M10X1.5X25-MM)	
M	3	1	**100-4458**	2	BOLT (M8X1.25X14-MM)	
M	4	1	**100-4461**	2	BOLT (M10X1.5X50-MM)	
M	5	1	**101-7541**	4	SCREW-FLAT HEAD (M8X1.25X25-MM)	
	6	1	**101-7546**	2	MOUNT	
M	7	1	**114-4363**	3	BOLT (M8X1.25X12-MM)	
M	8	1	**124-3815**	3	BOLT (M8X1.25X16-MM)	
	9	1	**185-0112**	1	HOSE-AIR	
	10	1	**265-6527**	1	CLIP	
M	11	1	**277-0120**	6	BOLT (M16X2X40-MM)	
	12	1	**293-8077**	1	BRACKET	
	13	1	**293-8079**	1	BRACKET	
	14	1	**293-8080**	1	HOSE-WATER (UPPER RADIATOR)	
	15	1	**293-8084**	2	HOSE-AIR	
	16	1	**293-8086**	1	HOSE-AIR	
	17	1	**303-6191**	1	HOSE-WATER (LOWER RADIATOR)	
	18	1	**317-9229**	5	CLAMP-HOSE	
	19	1	**322-9011**	1	BRACKET AS-RADIATOR	
	20	1	**324-3528**	6	CLAMP-HOSE	
	21	1	**355-2242**	1	PIPE	
M	22	1	**362-8050**	4	NUT (M8X1.25-THD)	
M	23	1	**363-4208**	1	BOLT (M8X1.25X40-MM)	
	24	1	**368-4111**	1	GUARD AS-FAN	
M	24A	1	**362-8050**	3	NUT (M8X1.25-THD)	
M	24B	1	**363-4208**	3	BOLT (M8X1.25X40-MM)	
	25	1	**368-5399**	1	GUARD-FAN	
Y	26	1	**454-3464**	1	RADIATOR AS	86
	27	1	**477-0707**	1	PIPE	
	28	1	**477-0720**	1	BRACKET	
	29	1	**477-2319**	1	GUARD AS	
	30	1	**498-2984**	2	ISOLATOR	
M	31	1	**6I-0260**	3	BOLT (M8X1.25X25-MM)	
M	32	1	**175-7141**	4	NUT-HEX FLANGE (M10X1.5-THD)	
	33	1	**7W-2601**	2	SPACER (10.3X19X3.2-MM THK)	
	34	1	**101-7539**	2	WASHER (11.91X47.63X1.625-MM THK)	
	35	1	**101-7540**	2	WASHER (11.9X38.2X1.6-MM THK)	

M - METRIC PART
Y - SEPARATE ILLUSTRATION

477-5513 **RADIATOR GP** (contd.) **i06690626**

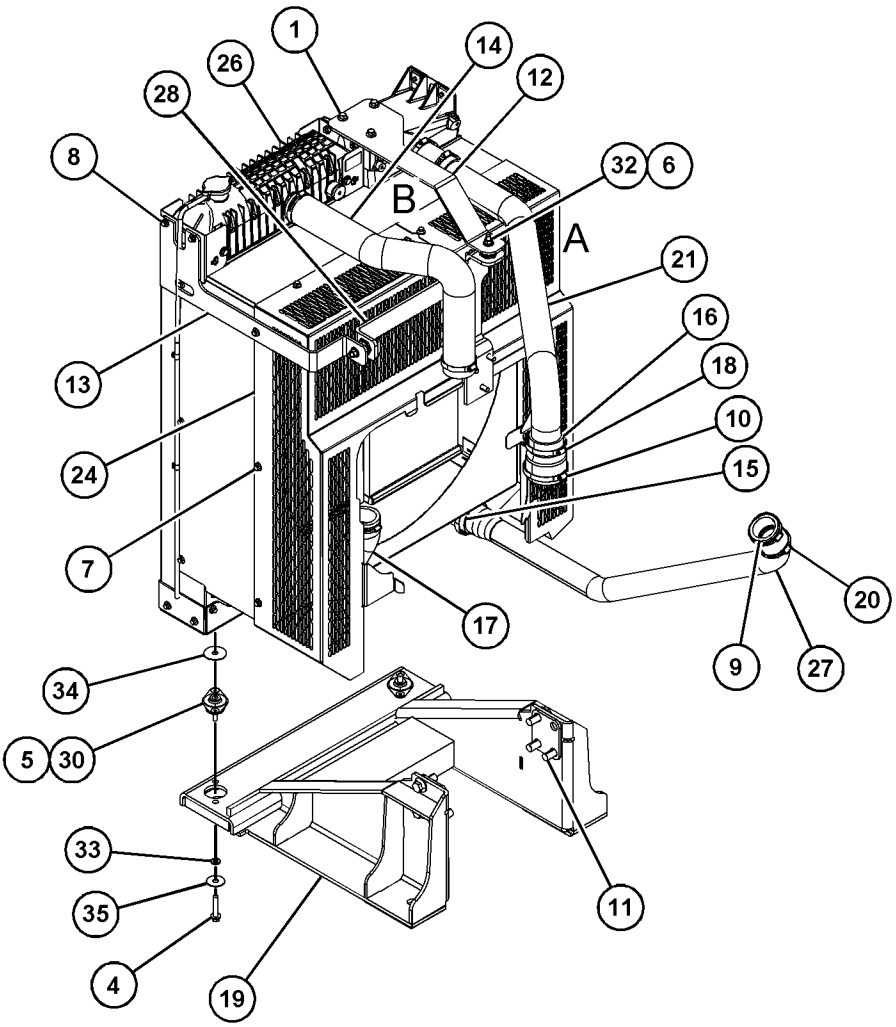

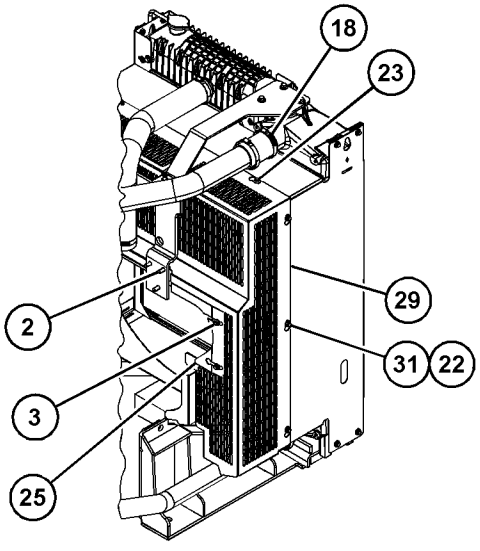

VIEW OF AREA A 90°

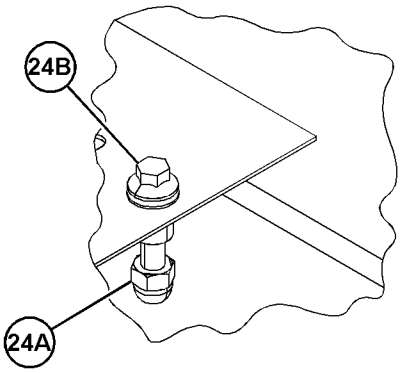

VIEW OF AREA B
(PARTS REMOVED FOR CLARITY) 90°

GRAPHIC #1 <END> g06135778

346-0769 FLANGE GP-EXHAUST

PART OF 485-3093 ENGINE AR-PRIMARY

SMCS-1061 **i05847746**

NOTE	REF NO	GRAPHIC REF	PART NUMBER	QTY	PART NAME 1 2 3 4 5 6 (PRODUCT LEVEL)	SEE PAGE
	1	1	**7R-6290**	1	FLANGE	
	2	1	**100-4002**	1	ADAPTER	
M	3	1	**100-4003**	3	STUD (M10X1.5X35-MM)	
M	4	1	**6I-0563**	3	NUT (M10X1.5-THD)	
	5	1	**7C-1243**	1	RING	

M - METRIC PART

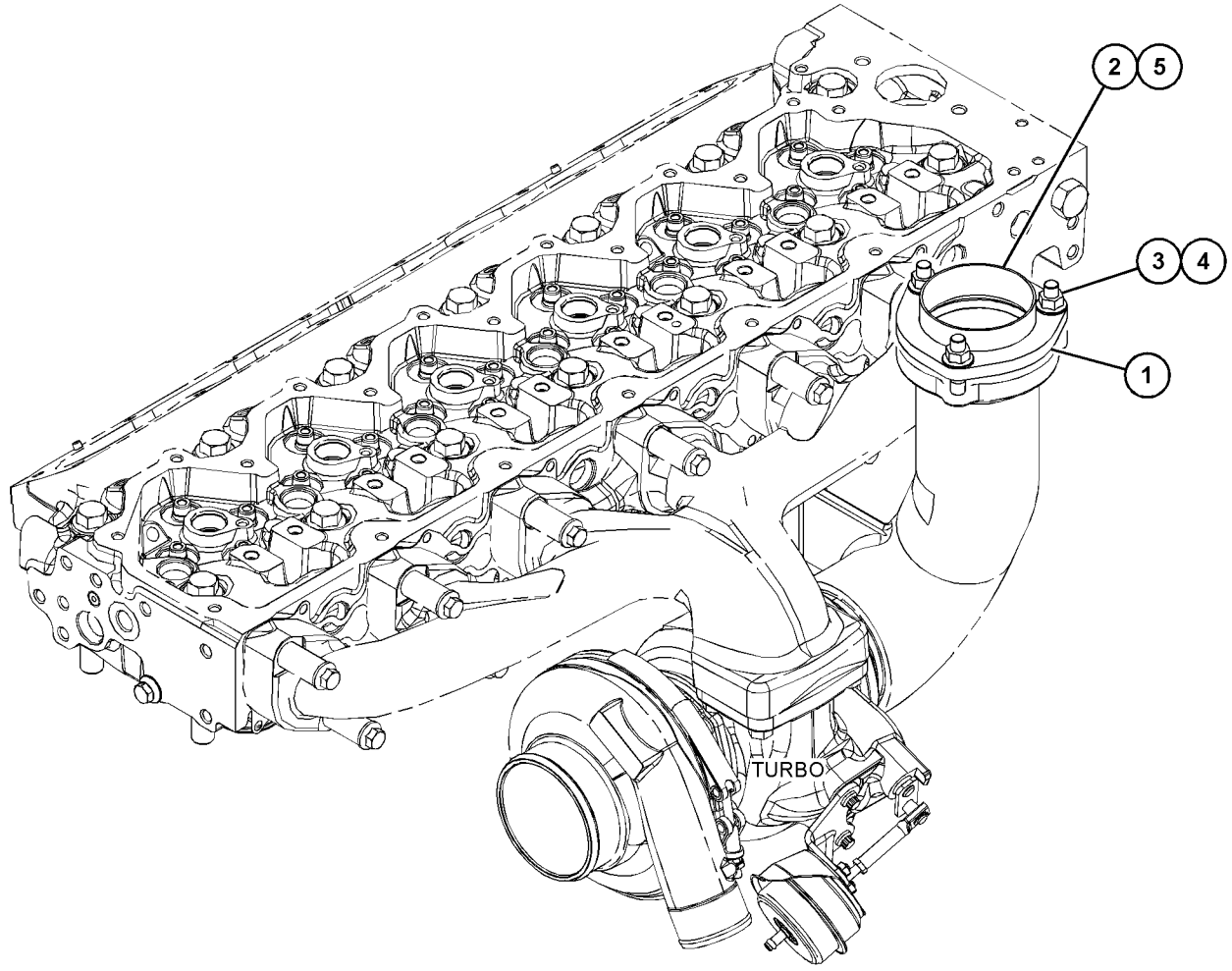

GRAPHIC #1 <END> g03696664

346-0771 MANIFOLD GP-INLET

PART OF 482-9241, 485-3093, 582-9032 ENGINE AR-PRIMARY

SMCS-1058 **i06132142**

NOTE	REF NO	GRAPHIC REF	PART NUMBER	QTY	PART NAME 1 2 3 4 5 6 (PRODUCT LEVEL)	SEE PAGE
	1	1	**238-8289**	1	PIPE AS	
	1A	1	**238-8288**	1	GASKET-INLET	
M	2	1	**6I-0645**	4	BOLT (M8X1.25X25-MM)	

M - METRIC PART

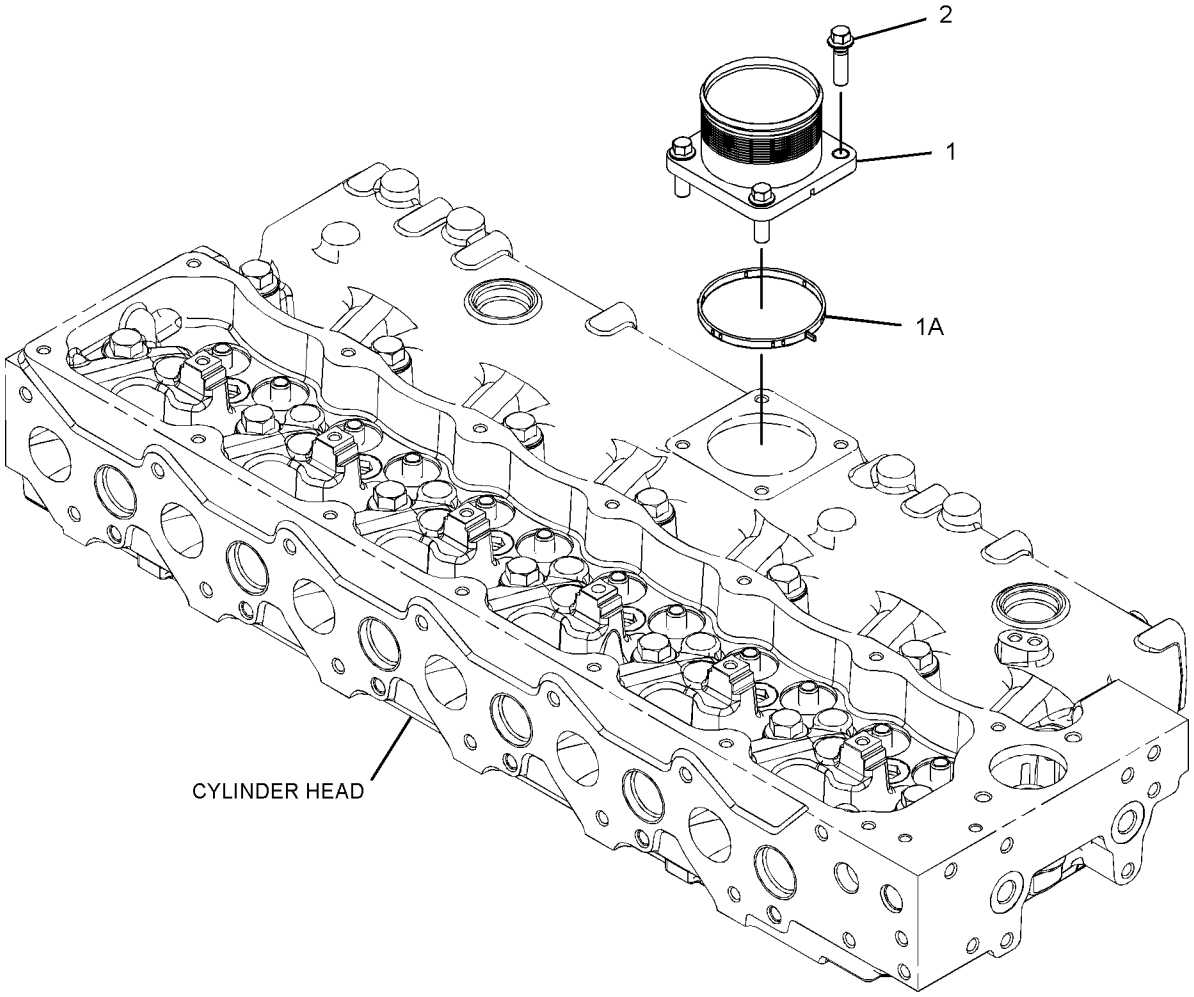

GRAPHIC #1 <END> g03603996

419-9129 TURBOCHARGER GP

PART OF 482-9241 ENGINE AR-PRIMARY

TYPE 1

SMCS-1052, 1053 **i06702398**

NOTE	REF NO	GRAPHIC REF	PART NUMBER	QTY	PART NAME 1 2 3 4 5 6 (PRODUCT LEVEL)	SEE PAGE
M	1	1	**6I-0563**	4	NUT (M10X1.5-THD)	
M	2	1	**6I-0217**	5	BOLT (M8X1.25X20-MM)	
	3	1	**238-8292**	12	BOLT-FLANGE HEAD	
	4	1	**278-0017**	1	GASKET	
	5	1	**416-7727**	2	GASKET (EXHAUST)	
	6	1	**286-7851**	12	SPACER	
	7	1	**396-8052**	1	MANIFOLD-EXHAUST	
	8	1	**350-2375**	1	TUBE AS	
	9	1	**456-5183**	1	LINE AS	
	9A	1	**3P-0647**	2	SEAL-O-RING	
	9B	1	**277-9940**	1	SEAL-O-RING	
	10	1	**361-7519**	4	ROD-THREADED	
	11	1	**431-4574**	1	TURBOCHARGER	
	12	1	**437-4170**	1	GASKET	
	13	1	**451-0548**	1	BOLT	

M - METRIC PART

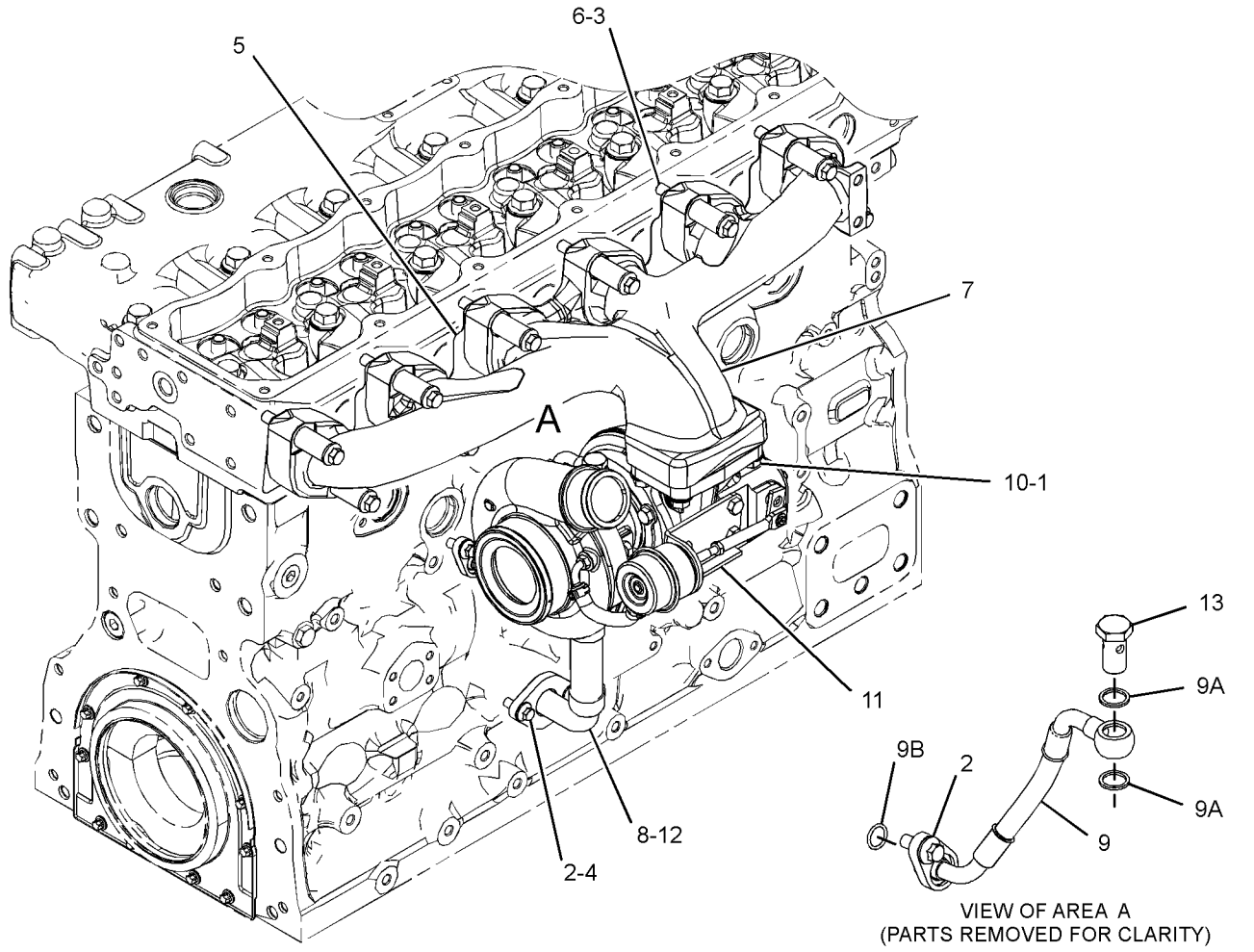

GRAPHIC #1 <END> g03810813

419-9129 TURBOCHARGER GP

PART OF 482-9241 ENGINE AR-PRIMARY
TYPE 2

SMCS-1052, 1053 **i07375571**

NOTE	REF NO	GRAPHIC REF	PART NUMBER	QTY	PART NAME 1 2 3 4 5 6 (PRODUCT LEVEL)	SEE PAGE
M	1	1	**6I-0563**	4	NUT (M10X1.5-THD)	
M	2	1	**6I-0217**	5	BOLT (M8X1.25X20-MM)	
	3	1	**238-8292**	12	BOLT-FLANGE HEAD	
	4	1	**278-0017**	1	GASKET	
	5	1	**416-7727**	2	GASKET (EXHAUST)	
	6	1	**286-7851**	12	SPACER	
	7	1	**396-8052**	1	MANIFOLD-EXHAUST	
C	8	1	**518-4774**	1	TUBE AS	
	9	1	**456-5183**	1	LINE AS	
	9A	1	**3P-0647**	2	SEAL-O-RING	
	9B	1	**277-9940**	1	SEAL-O-RING	
	10	1	**361-7519**	4	ROD-THREADED	
	11	1	**431-4574**	1	TURBOCHARGER	
	12	1	**437-4170**	1	GASKET	
	13	1	**451-0548**	1	BOLT	

C - CHANGE FROM PREVIOUS TYPE
M - METRIC PART

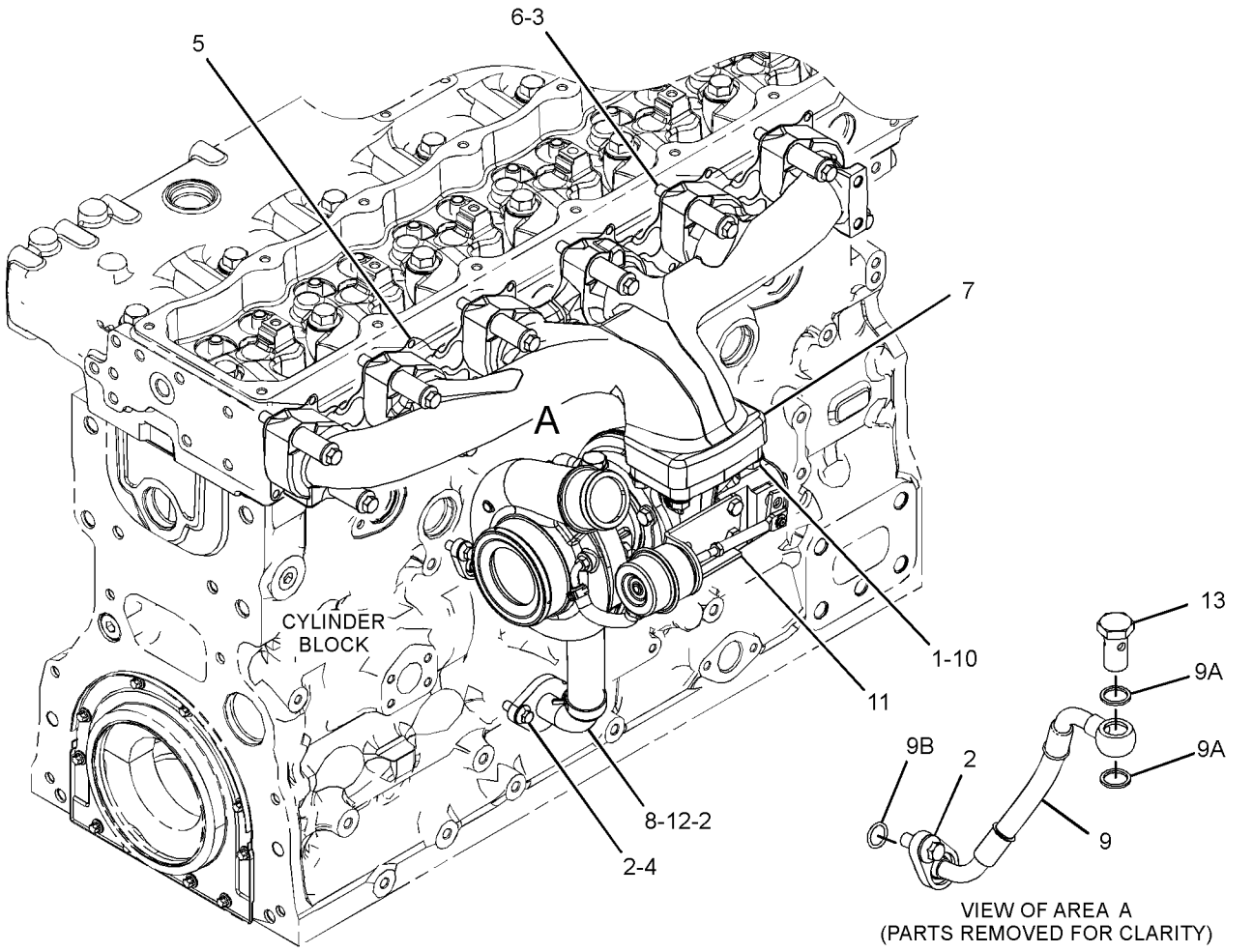

GRAPHIC #1 <END> g06317366

419-9129 TURBOCHARGER GP

PART OF 482-9241, 582-9032 ENGINE AR-PRIMARY

TYPE 3

SMCS-1052, 1053 **i07729894**

NOTE	REF NO	GRAPHIC REF	PART NUMBER	QTY	PART NAME 1 2 3 4 5 6 (PRODUCT LEVEL)	SEE PAGE
M	1	1	**6I-0563**	4	NUT (M10X1.5-THD)	
M	2	1	**6I-0217**	5	BOLT (M8X1.25X20-MM)	
	3	1	**238-8292**	12	BOLT-FLANGE HEAD	
	4	1	**278-0017**	1	GASKET	
	5	1	**416-7727**	2	GASKET (EXHAUST)	
	6	1	**286-7851**	12	SPACER	
	7	1	**396-8052**	1	MANIFOLD-EXHAUST	
C	8	1	**350-2375**	1	TUBE AS	
	9	1	**456-5183**	1	LINE AS	
	9A	1	**228-4947**	2	SEAL-O-RING	
	9B	1	**277-9940**	1	SEAL-O-RING	
	10	1	**361-7519**	4	ROD-THREADED	
	11	1	**431-4574**	1	TURBOCHARGER	
	12	1	**437-4170**	1	GASKET	
	13	1	**451-0548**	1	BOLT	

C - CHANGE FROM PREVIOUS TYPE
M - METRIC PART

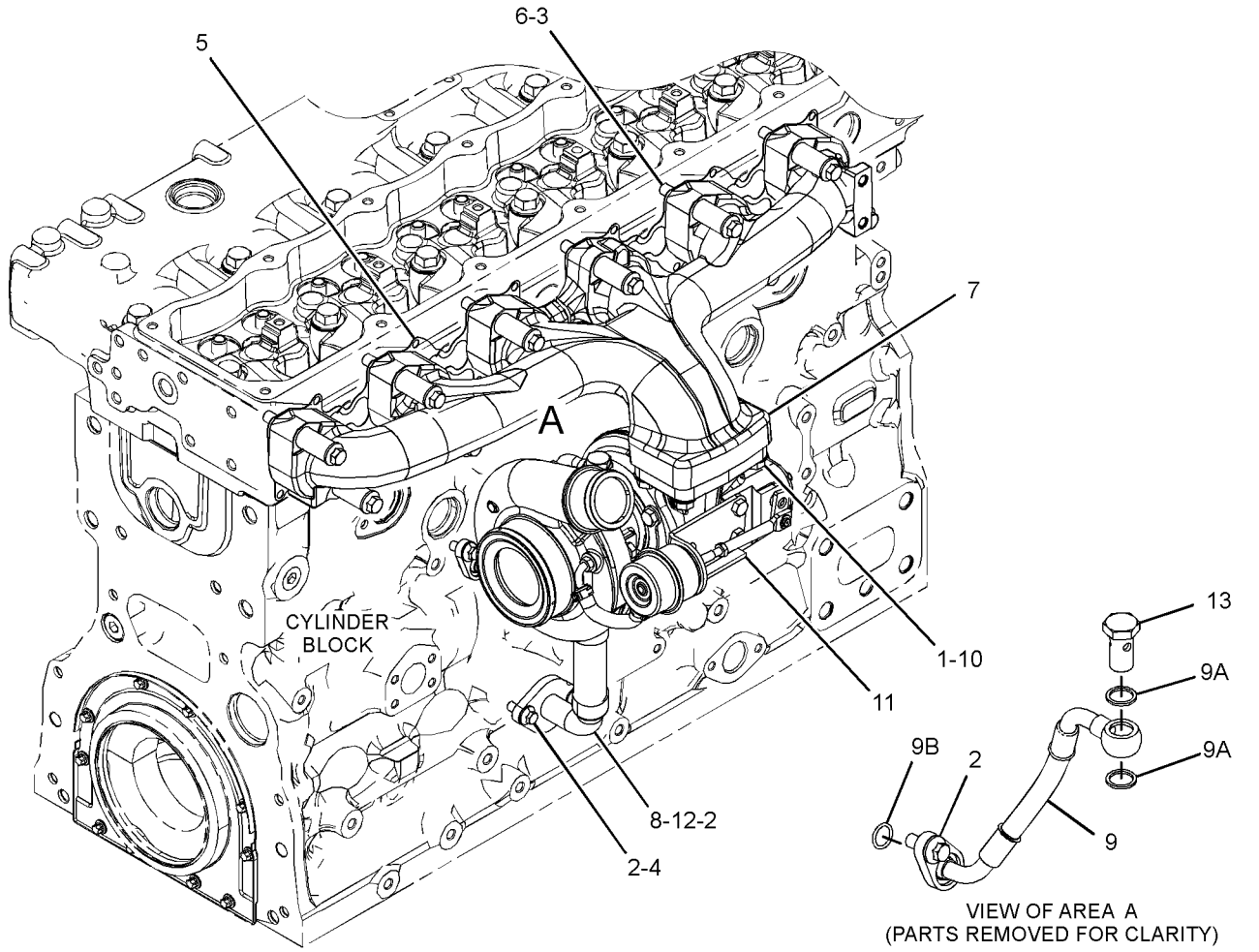

GRAPHIC #1 <END> g06472215

477-5517 TURBOCHARGER GP

PART OF 485-3093 ENGINE AR-PRIMARY

TYPE 1

SMCS-1052, 1053 **i06690616**

NOTE	REF NO	GRAPHIC REF	PART NUMBER	QTY	PART NAME 1 2 3 4 5 6 (PRODUCT LEVEL)	SEE PAGE
M	1	1	**6I-0654**	4	BOLT (M10X1.5X25-MM)	
M	2	1	**100-4461**	3	BOLT (M10X1.5X50-MM)	
	3	1	**238-8292**	12	BOLT-FLANGE HEAD	
	4	1	**268-5341**	1	CLAMP-HOSE	
	5	1	**278-0017**	1	GASKET	
M	6	1	**286-0123**	3	BOLT (M10X1.5X35-MM THK)	
	7	1	**286-7851**	12	SPACER	
	8	1	**350-2375**	1	TUBE AS	
	9	1	**355-2237**	1	BRACKET	
	10	1	**355-2239**	1	DUCT	
	11	1	**355-2240**	1	ELBOW	
	12	1	**385-0020**	1	CLIP-HOSE	
	13	1	**396-8052**	1	MANIFOLD-EXHAUST	
	14	1	**416-7727**	2	GASKET	
	15	1	**431-4573**	1	TURBOCHARGER	
	16	1	**437-4170**	1	GASKET	
	17	1	**451-0548**	1	BOLT	
	18	1	**456-5183**	1	LINE AS	
	18A	1	**3P-0647**	2	SEAL-O-RING	
	18B	1	**277-9940**	1	SEAL-O-RING	
M	19	1	**6I-0217**	5	BOLT (M8X1.25X20-MM)	
M	20	1	**6I-0563**	4	NUT (M10X1.5-THD)	
	21	1	**280-2424**	1	ADAPTER	
	22	1	**289-2346**	1	FILTER AS-AIR	
	22A	1	**252-9208**		INDICATOR-AIR FILTER CHANGE	
	22B	1	**289-2360**	1	CAP	
	22C	1	**289-2347**	1	FILTER AS-AIR	
	22D	1	**289-2348**	1	FILTER ELEMENT-AIR (PRIMARY)	
	22E	1	**289-2349**	1	FILTER ELEMENT-AIR (SECONDARY)	
	23	1	**361-7519**	4	ROD-THREADED	

M - METRIC PART

477-5517 **TURBOCHARGER GP (**contd.**)** **i06690616**

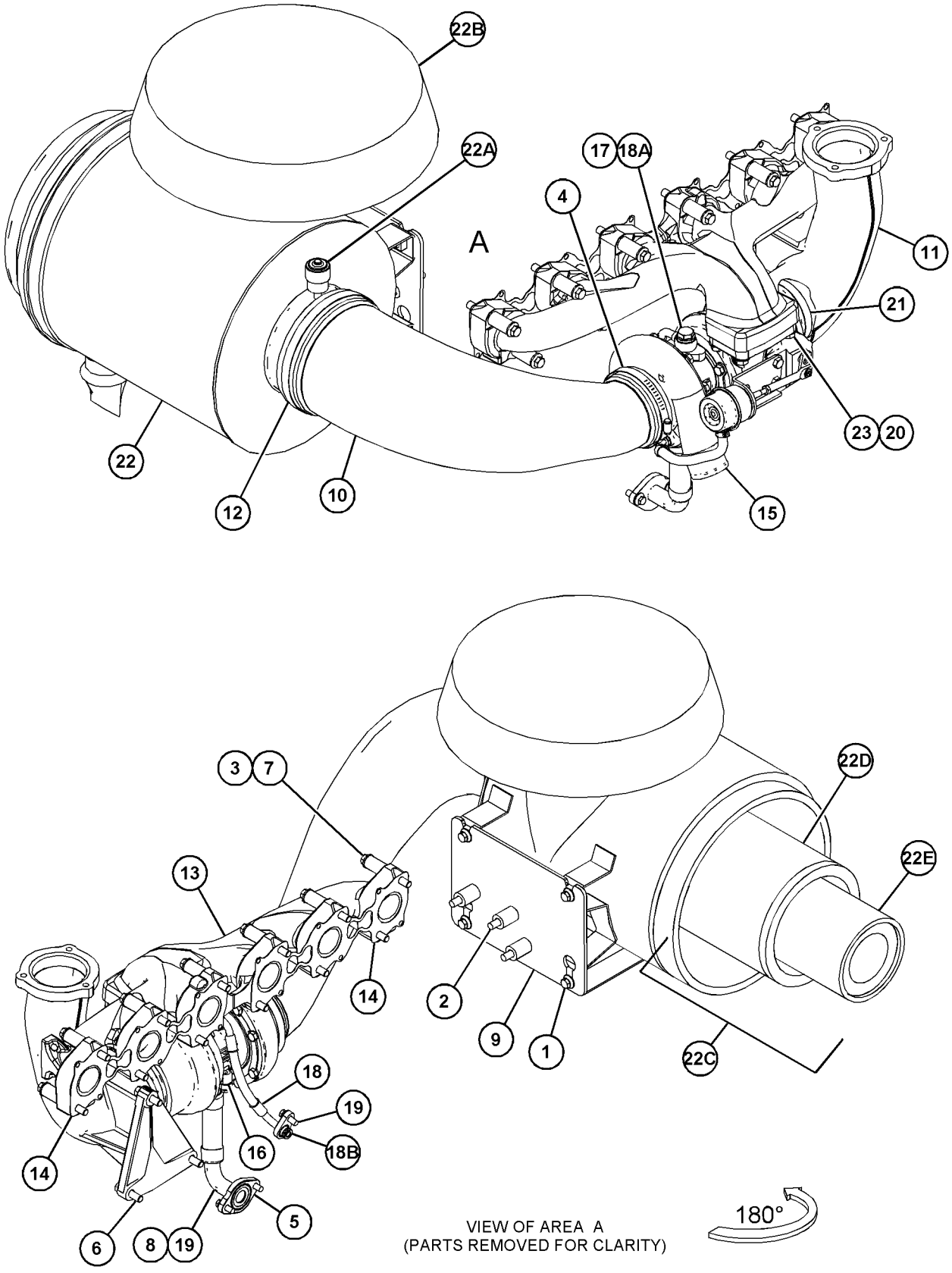

VIEW OF AREA A
(PARTS REMOVED FOR CLARITY)

GRAPHIC #1 <END> g06145056

477-5517 TURBOCHARGER GP

PART OF 485-3093 ENGINE AR-PRIMARY

TYPE 2

SMCS-1052, 1053 **i07375746**

NOTE	REF NO	GRAPHIC REF	PART NUMBER	QTY	PART NAME 1 2 3 4 5 6 (PRODUCT LEVEL)	SEE PAGE
M	1	1	**6I-0654**	4	BOLT (M10X1.5X25-MM)	
M	2	1	**100-4461**	3	BOLT (M10X1.5X50-MM)	
	3	1	**238-8292**	12	BOLT-FLANGE HEAD	
	4	1	**268-5341**	1	CLAMP-HOSE	
	5	1	**278-0017**	1	GASKET	
M	6	1	**286-0123**	3	BOLT (M10X1.5X35-MM THK)	
	7	1	**286-7851**	12	SPACER	
C	8	1	**518-4774**	1	TUBE AS	
	9	1	**355-2237**	1	BRACKET	
	10	1	**355-2239**	1	DUCT	
	11	1	**355-2240**	1	ELBOW	
	12	1	**385-0020**	1	CLIP-HOSE	
	13	1	**396-8052**	1	MANIFOLD-EXHAUST	
	14	1	**416-7727**	2	GASKET	
	15	1	**431-4573**	1	TURBOCHARGER	
	16	1	**437-4170**	1	GASKET	
	17	1	**451-0548**	1	BOLT	
	18	1	**456-5183**	1	LINE AS	
	18A	1	**3P-0647**	2	SEAL-O-RING	
	18B	1	**277-9940**	1	SEAL-O-RING	
M	19	1	**6I-0217**	5	BOLT (M8X1.25X20-MM)	
M	20	1	**6I-0563**	4	NUT (M10X1.5-THD)	
	21	1	**280-2424**	1	ADAPTER	
	22	1	**289-2346**	1	FILTER AS-AIR	
	22A	1	**252-9208**		INDICATOR-AIR FILTER CHANGE	
	22B	1	**289-2360**	1	CAP	
	22C	1	**289-2347**	1	FILTER AS-AIR	
	22D	1	**289-2348**	1	FILTER ELEMENT-AIR (PRIMARY)	
	22E	1	**289-2349**	1	FILTER ELEMENT-AIR (SECONDARY)	
	23	1	**361-7519**	4	ROD-THREADED	

C - CHANGE FROM PREVIOUS TYPE
M - METRIC PART

477-5517 **TURBOCHARGER GP (**contd.**)** **i07375746**

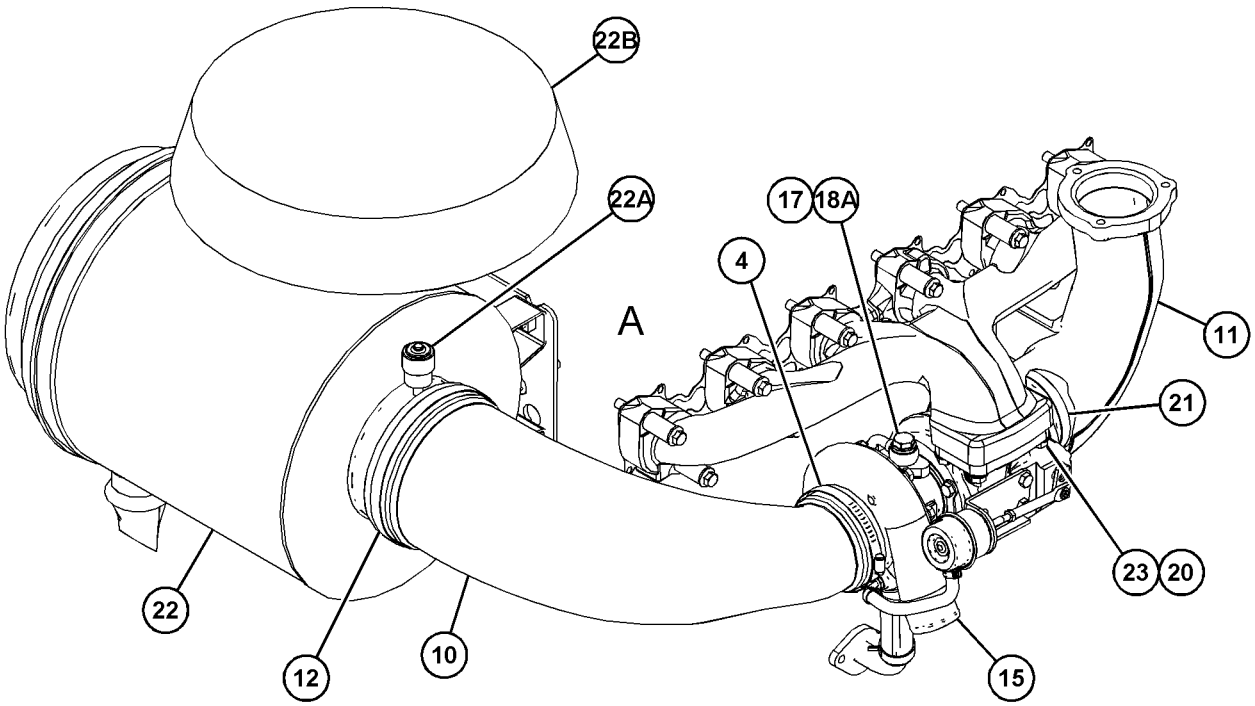

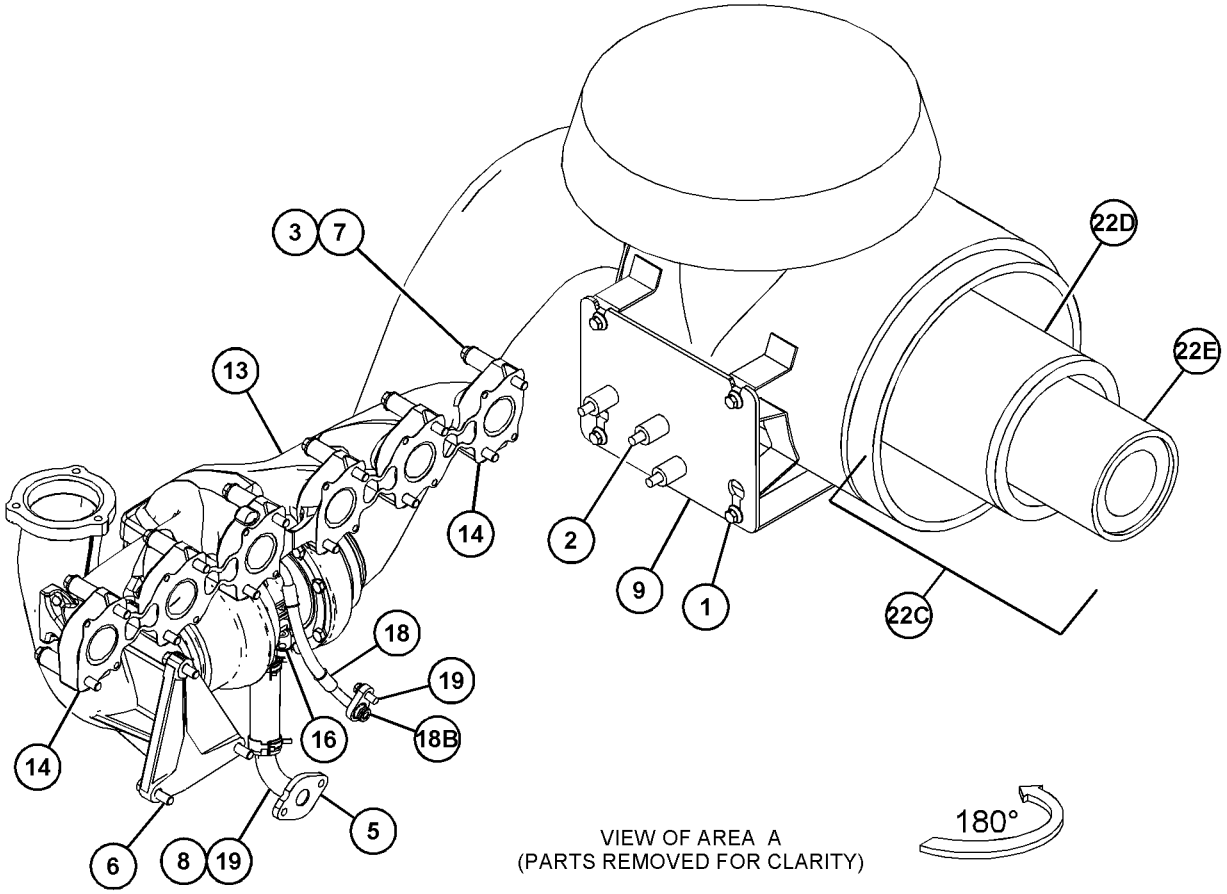

VIEW OF AREA A
(PARTS REMOVED FOR CLARITY)

GRAPHIC #1 <END> g06317196

477-5517 TURBOCHARGER GP

PART OF 485-3093 ENGINE AR-PRIMARY

TYPE 3

SMCS-1052, 1053 **i07729882**

NOTE	REF NO	GRAPHIC REF	PART NUMBER	QTY	PART NAME 1 2 3 4 5 6 (PRODUCT LEVEL)	SEE PAGE
M	1	1	**6I-0654**	4	BOLT (M10X1.5X25-MM)	
M	2	1	**100-4461**	3	BOLT (M10X1.5X50-MM)	
	3	1	**238-8292**	12	BOLT-FLANGE HEAD	
	4	1	**371-2636**	1	CLIP-HOSE	
	5	1	**278-0017**	1	GASKET	
M	6	1	**286-0123**	3	BOLT (M10X1.5X35-MM THK)	
	7	1	**286-7851**	12	SPACER	
C	8	1	**350-2375**	1	TUBE AS	
	9	1	**355-2237**	1	BRACKET	
	10	1	**355-2239**	1	DUCT	
	11	1	**355-2240**	1	ELBOW	
	12	1	**385-0020**	1	CLIP-HOSE	
	13	1	**396-8052**	1	MANIFOLD-EXHAUST	
	14	1	**416-7727**	2	GASKET	
	15	1	**431-4573**	1	TURBOCHARGER	
	16	1	**437-4170**	1	GASKET	
	17	1	**451-0548**	1	BOLT (M14X1.5-THD)	
	18	1	**456-5183**	1	LINE AS	
	18A	1	**228-4947**	2	SEAL-O-RING	
	18B	1	**277-9940**	1	SEAL-O-RING	
M	19	1	**6I-0217**	5	BOLT (M8X1.25X20-MM)	
M	20	1	**6I-0563**	4	NUT (M10X1.5-THD)	
	21	1	**280-2424**	1	ADAPTER	
	22	1	**289-2346**	1	FILTER AS-AIR	
	22A	1	**252-9208**	1	INDICATOR-AIR FILTER CHANGE	
	22B	1	**289-2360**	1	CAP	
	22C	1	**289-2347**	1	FILTER AS-AIR	
	22D	1	**289-2348**	1	FILTER ELEMENT-AIR (PRIMARY)	
	22E	1	**289-2349**	1	FILTER ELEMENT-AIR (SECONDARY)	
	23	1	**361-7519**	4	ROD-THREADED	

C - CHANGE FROM PREVIOUS TYPE
M - METRIC PART

477-5517 **TURBOCHARGER GP (**contd.**)** **i07729882**

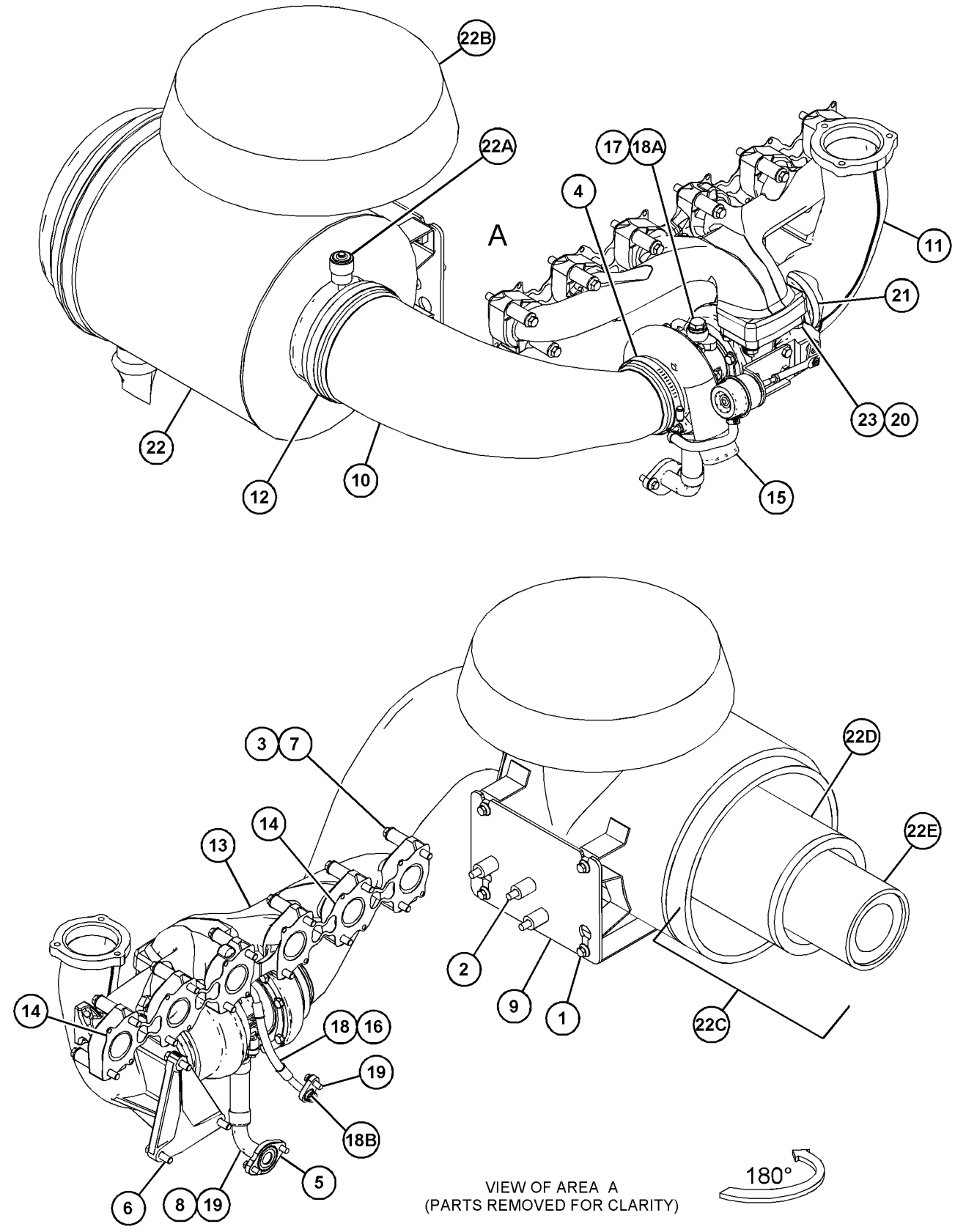

VIEW OF AREA A
(PARTS REMOVED FOR CLARITY)

GRAPHIC #1 <END> g06472297

424-0675 FILTER & LINES GP-FUEL

PART OF 485-3093 ENGINE AR-PRIMARY

SMCS-1261, 1274 **i06980107**

NOTE	REF NO	GRAPHIC REF	PART NUMBER	QTY	PART NAME 1 2 3 4 5 6 (PRODUCT LEVEL)	SEE PAGE
M	1	1	**6I-0593**	2	BOLT (M10X1.5X30-MM)	
	2	1	**032-8005**	1	BOLT	
C	3	1	**033-7849**	1	PLUG	
M	4	1	**100-4830**	1	BOLT (M10X1.5X20-MM)	
C	5	1	**241-3359**	4	WASHER-SEALING (13.25X18.45X1.6-MM THK)	
	6	1	**342-6283**	1	BRACKET AS	
	7	1	**342-8497**	1	LINES GP-FUEL FILTER	
	7A	1	**127-8162**	3	CLIP	
	8	1	**342-8584**	1	CONNECTOR	
	9	1	**441-5108**	1	FILTER GP-FUEL	
	9A	1	**214-8857**	1	PLUG	
	9B	1	**441-5111**	1	FILTER AS-FUEL (FUEL FILTER, WATER SEPARATOR)	
M	10	1	**6I-0217**	2	BOLT (M8X1.25X20-MM)	
	11	1	**303-4585**	1	CONNECTION AS	

C - CHANGE FROM PREVIOUS TYPE
M - METRIC PART

424-0675 **FILTER & LINES GP-FUEL (**contd.**)** **i06980107**

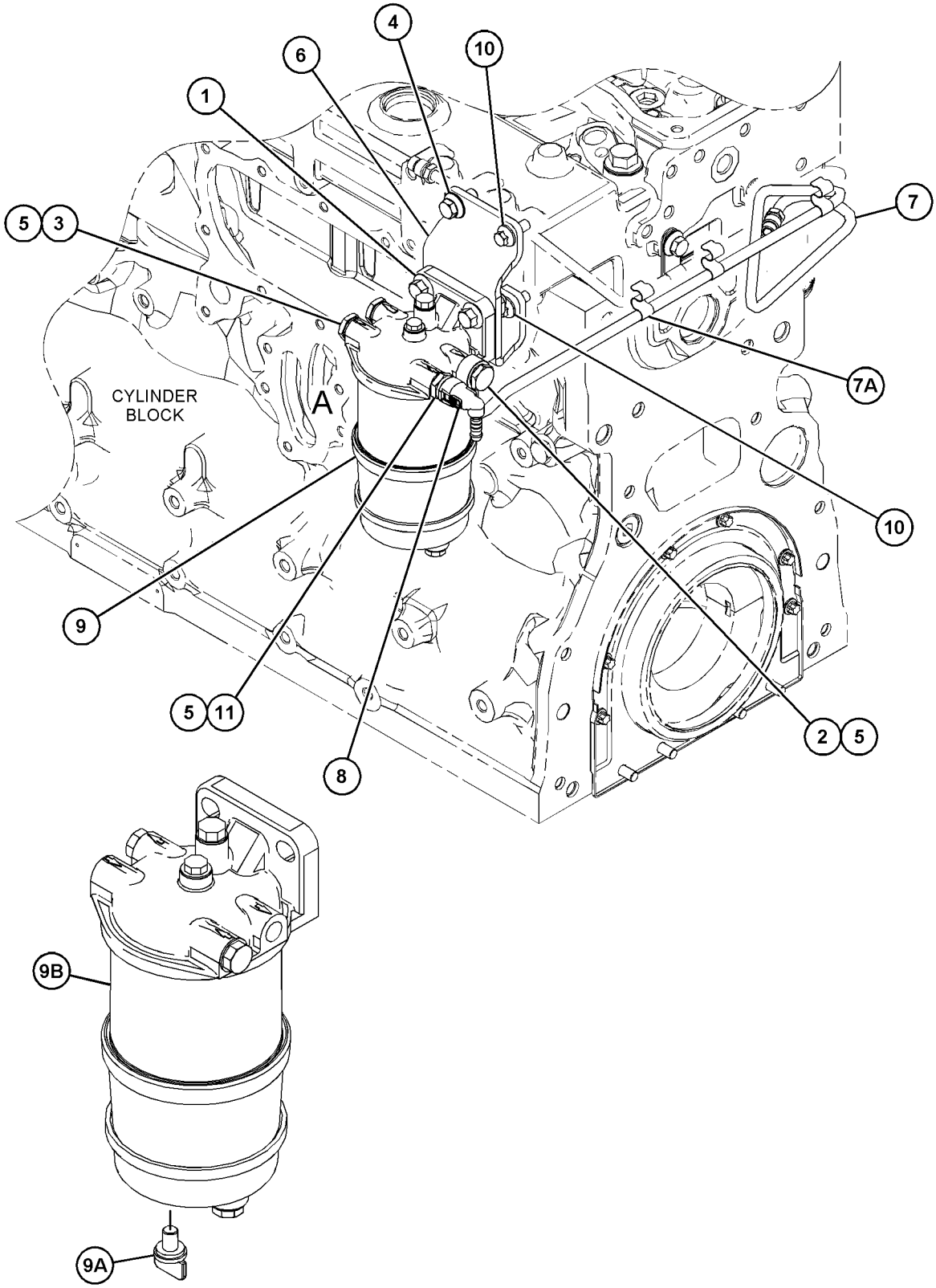

VIEW OF AREA A
(PARTS REMOVED FOR CLARITY)

GRAPHIC #1 <END> g06218175

351-0859 FILTER GP-FUEL

LINES

PART OF 482-9241 ENGINE AR-PRIMARY

TYPE 1

SMCS-1261 **i07190274**

NOTE	REF NO	GRAPHIC REF	PART NUMBER	QTY	PART NAME 1 2 3 4 5 6 (PRODUCT LEVEL)	SEE PAGE
	1	1	**7W-4694**	2	PLUG	
M	2	1	**100-4830**	3	BOLT (M10X1.5X20-MM)	
M	3	1	**111-8222**	1	BOLT (M8X1.25X16-MM)	
M	4	1	**124-3815**	4	BOLT (M8X1.25X16-MM)	
	5	1	**127-8162**	1	CLIP	
	6	1	**231-4457**	1	GASKET	
	7	1	**232-3126**	4	CLIP	
	8	1	**246-4361**	4	WASHER (10.5X14X1.5-MM THK)	
	9	1	**336-4803**	1	LINE AS	
	9A	1	**067-6999**	1	FERRULE	
	9B	1	**106-8835**	1	NUT	
	10	1	**342-4998**	2	BRACKET	
	11	1	**342-8494**	1	LINE AS-FUEL	
	12	1	**342-8495**	1	LINE AS-FUEL	
	13	1	**342-8498**	1	LINES GP-FUEL FILTER	
	13A	1	**220-7163**	2	CLIP	
	14	1	**342-8584**	1	CONNECTOR	
	15	1	**390-1557**	1	PUMP AS-FUEL TRANSFER	
	16	1	**391-7813**	1	BRACKET	
M	17	1	**6I-0217**	1	BOLT (M8X1.25X20-MM)	
M	18	1	**6I-0254**	4	BOLT (M8X1.25X30-MM)	
M	19	1	**6I-0260**	2	BOLT (M8X1.25X25-MM)	
	20	1	**246-4364**	1	BOLT-SPECIAL (BANJO)	
	21	1	**033-7849**	2	PLUG	
	22	1	**035-8017**	1	UNION	
	23	1	**067-6264**	1	FITTING-FLARED	
	24	1	**067-6265**	1	FITTING-BRASS	
	25	1	**240-5571**	1	BRACKET	
	26	1	**241-3359**	3	WASHER-SEALING (13.25X18.45X1.6-MM THK)	
	27	1	**303-4585**	1	CONNECTION AS	
	28	1	**320-9213**	1	CONNECTION	
	29	1	**330-5898**	1	SEAL-O-RING	

M - METRIC PART

351-0859 **FILTER GP-FUEL** (contd.) **i07190274**

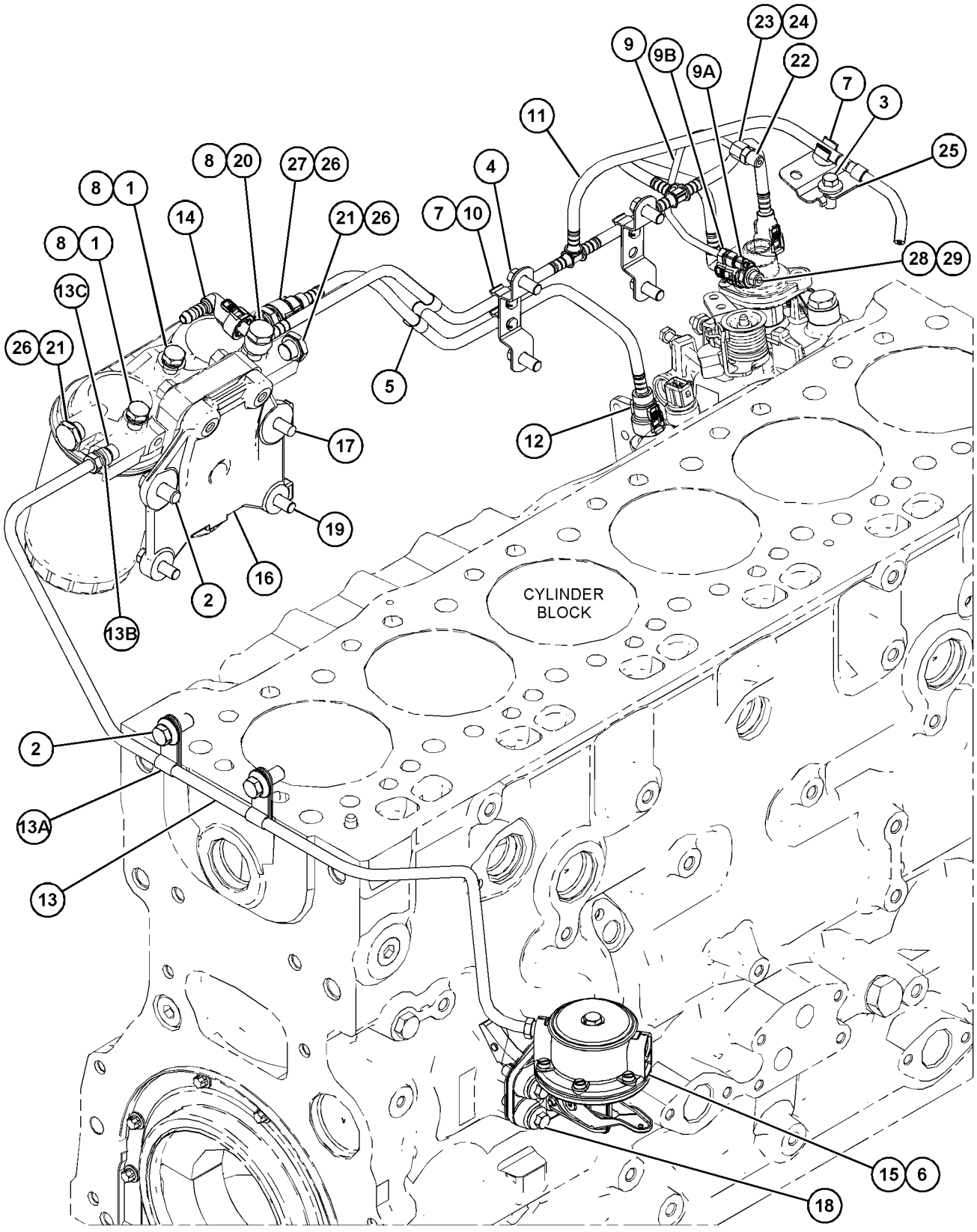

GRAPHIC #1 <END> g06247446

351-0859 FILTER GP-FUEL

LINES

PART OF 482-9241, 582-9032 ENGINE AR-PRIMARY

TYPE 2

SMCS-1261 **i08155996**

NOTE	REF NO	GRAPHIC REF	PART NUMBER	QTY	PART NAME 1 2 3 4 5 6 (PRODUCT LEVEL)	SEE PAGE
	1	1	**7W-4694**	2	PLUG	
	2	2	**035-8017**	1	UNION	
M	3	1	**100-4830**	3	BOLT (M10X1.5X20-MM)	
M	4	2	**111-8222**	1	BOLT (M8X1.25X16-MM)	
M	5	2	**124-3815**	5	BOLT (M8X1.25X16-MM)	
	6	2	**127-8162**	1	CLIP	
	7	1	**231-4457**	1	GASKET	
	8	2	**232-3126**	3	CLIP	
	9	2	**240-5571**	1	BRACKET	
	10	1,2	**241-3359**	3	WASHER-SEALING (13.25X18.45X1.6-MM THK)	
	11	1,2	**246-4361**	4	WASHER (10.5X14X1.5-MM THK)	
	12	2	**303-4585**	1	CONNECTION AS	
	13	2	**320-9213**	1	CONNECTION	
	14	2	**330-5898**	1	SEAL-O-RING	
	15	2	**336-4803**	1	LINE AS	
	15A	2	**067-6999**	1	FERRULE	
	15B	2	**106-8835**	1	NUT	
	16	2	**342-4998**	2	BRACKET	
	17	2	**342-8494**	1	LINE AS-FUEL	
	18	2	**342-8495**	1	LINE AS-FUEL	
	19	1	**342-8498**	1	LINES GP-FUEL FILTER	
	19A	1	**220-7163**	2	CLIP	
		1	**067-6268**	2	NUT-FUEL LINE	
		1	**067-6269**	2	FERRULE	
	20	2	**342-8584**	1	CONNECTOR	
	21	2	**365-3308**	1	NUT-COMPRESSION (3/8-24-THD)	
	22	1	**390-1557**	1	PUMP AS-FUEL TRANSFER	
	23	2	**391-7813**	1	BRACKET	
M	24	1	**6I-0254**	4	BOLT (M8X1.25X30-MM)	
M	25	2	**6I-0260**	2	BOLT (M8X1.25X25-MM)	
	26	2	**246-4364**	1	BOLT-SPECIAL (BANJO)	
	27	1	**033-7849**	2	PLUG	
	28	2	**067-6265**	1	FITTING-BRASS	
	29	2	**232-1115**	1	CLIP-PIPE	

M - METRIC PART

351-0859 **FILTER GP-FUEL (**contd.**)** **i08155996**

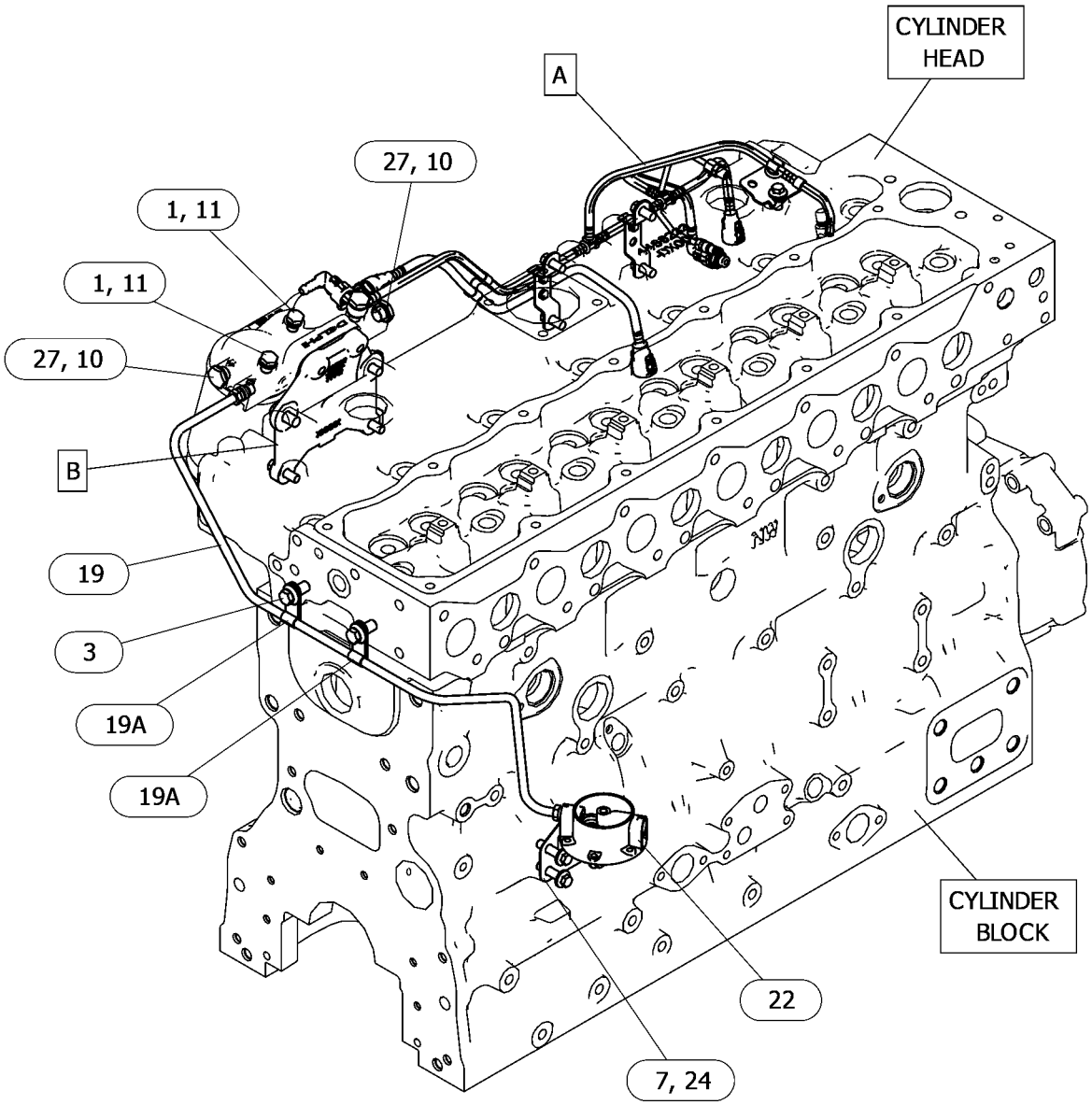

GRAPHIC #1 g06648307

351-0859 **FILTER GP-FUEL (**contd.**)** **i08155996**

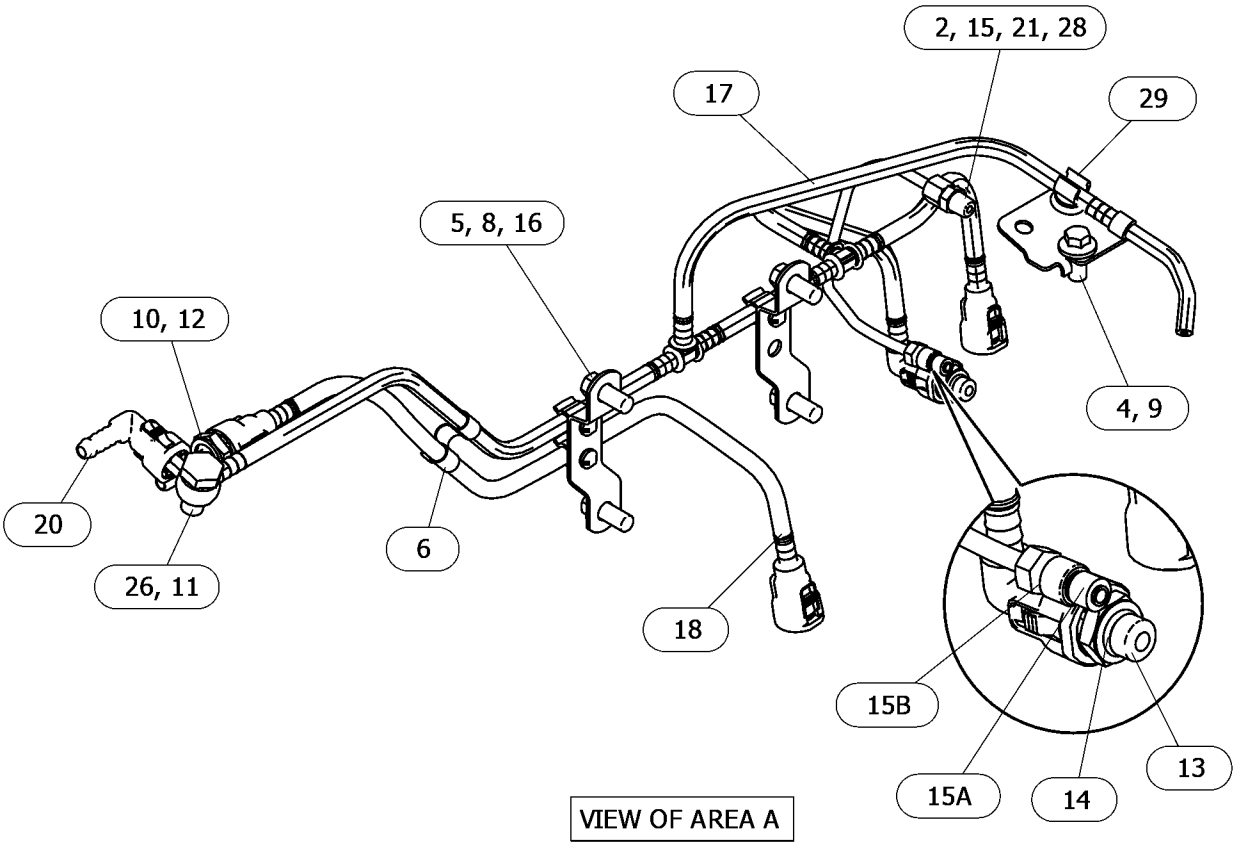

VIEW OF AREA A

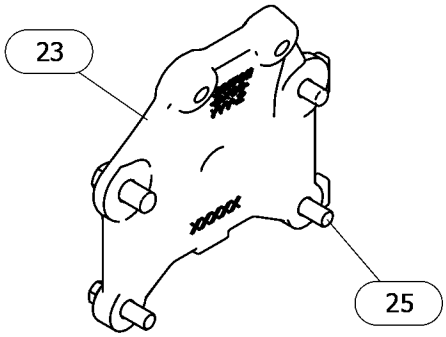

VIEW OF AREA B

GRAPHIC #2 <END> g06648307_01

423-5410 FILTER GP-FUEL—WATER SEPARATOR, SENSOR

PART OF 482-9241 ENGINE AR-PRIMARY

SMCS-1261 **i06614412**

NOTE	REF NO	GRAPHIC REF	PART NUMBER	QTY	PART NAME 1 2 3 4 5 6 (PRODUCT LEVEL)	SEE PAGE
	1	1	**441-5107**	1	FILTER GP-FUEL	
	1A	1	**214-8857**	1	PLUG	
	1B	1	**310-1869**	1	SENSOR-LEVEL (12-VOLT)	
	1C	1	**441-5111**	1	FILTER AS-FUEL (WATER SEPARATOR)	

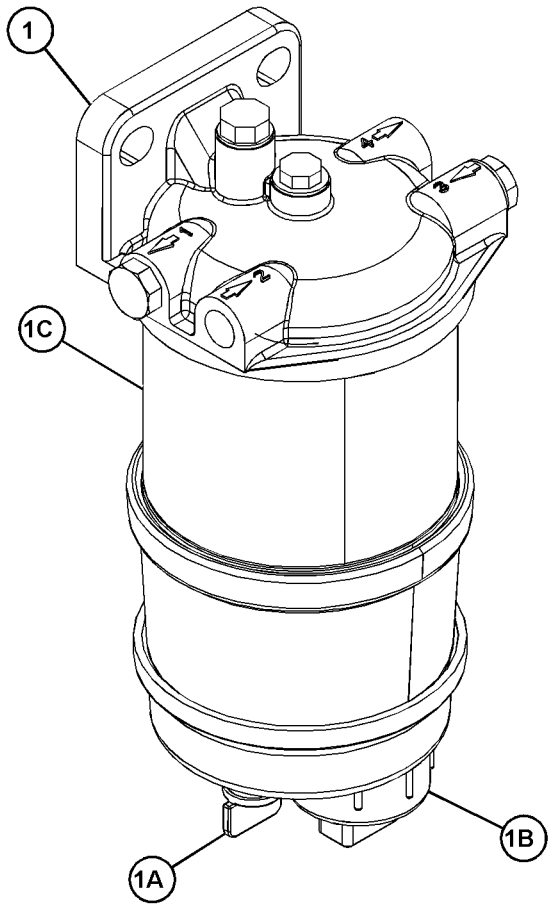

GRAPHIC #1 <END> g06113614

423-5411 FILTER GP-FUEL

PART OF 582-9032 ENGINE AR-PRIMARY

SMCS-1261 **i05910480**

NOTE	REF NO	GRAPHIC REF	PART NUMBER	QTY	PART NAME 1 2 3 4 5 6 (PRODUCT LEVEL)	SEE PAGE
	1	1	**441-5108**	1	FILTER GP-FUEL	
	1A	1	**441-5111**	1	FILTER AS-FUEL (FUEL FILTER, WATER SEPARATOR)	
	1B	1	**214-8857**	1	PLUG	

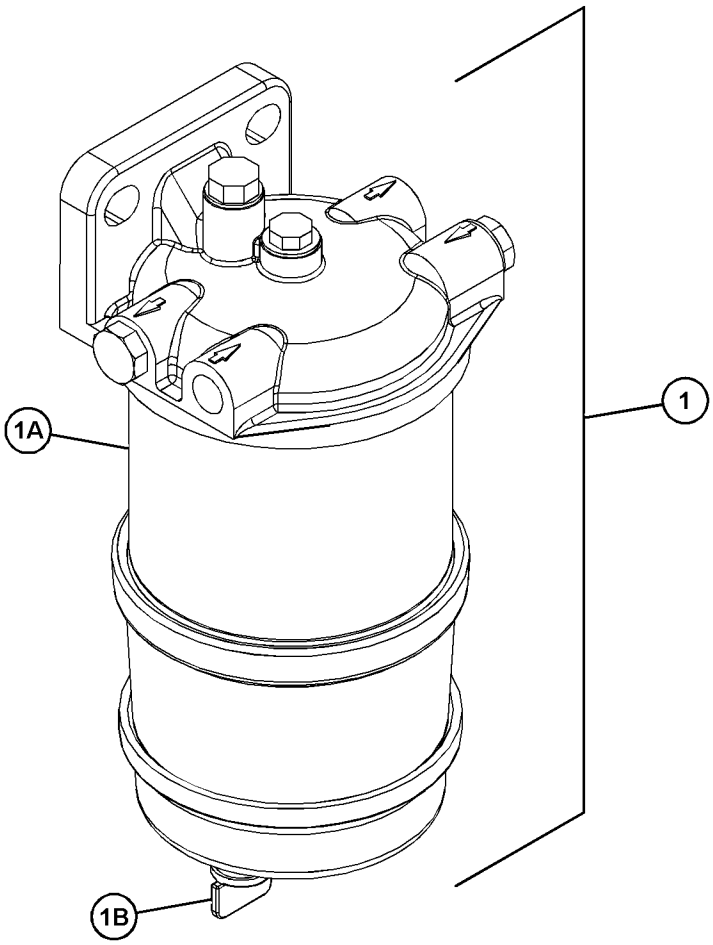

GRAPHIC #1 <END> g03729297

424-1876 FILTER GP-FUEL

PART OF 482-9241, 485-3093, 582-9032 ENGINE AR-PRIMARY

SMCS-1261 **i06131444**

NOTE	REF NO	GRAPHIC REF	PART NUMBER	QTY	PART NAME 1 2 3 4 5 6 (PRODUCT LEVEL)	SEE PAGE
M	1	1	**111-0859**	2	BOLT (M10X1.5X35-MM)	
	2	1	**435-6472**	1	FILTER AS-FUEL	
		1	**435-6493**	2	FILTER-FUEL	

M - METRIC PART

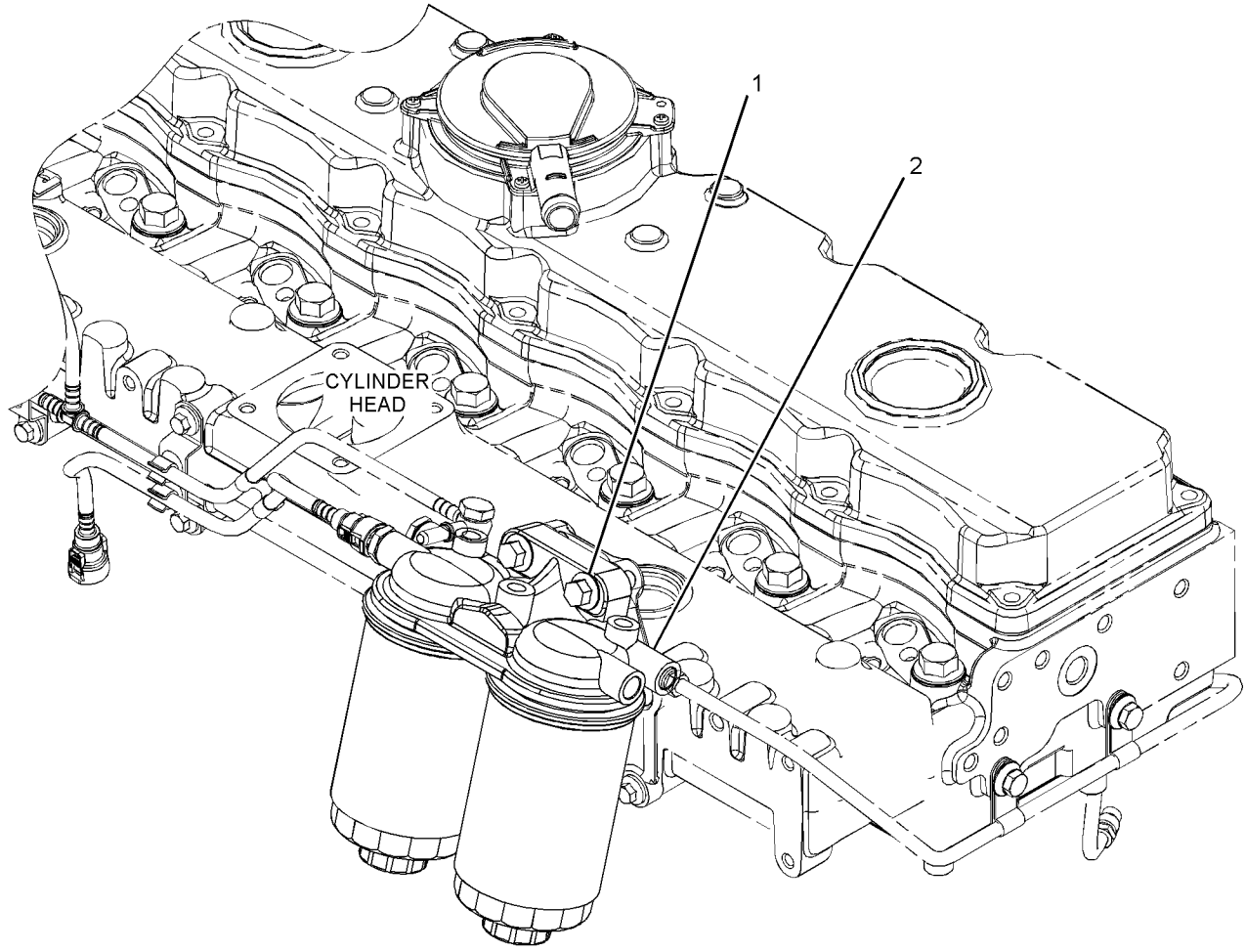

GRAPHIC #1 <END> g03583317

452-9242 LINES GP-FUEL FILTER

PART OF 485-3093 ENGINE AR-PRIMARY

SMCS-1261, 1274 **i08148566**

NOTE	REF NO	GRAPHIC REF	PART NUMBER	QTY	PART NAME 1 2 3 4 5 6 (PRODUCT LEVEL)	SEE PAGE
	1	1	**7W-4694**	2	PLUG	
	2	1	**033-7849**	2	PLUG	
M	3	1	**100-4830**	3	BOLT (M10X1.5X20-MM)	
M	4	2	**111-8222**	1	BOLT (M8X1.25X16-MM)	
M	5	1,2	**124-3815**	3	BOLT (M8X1.25X16-MM)	
	6	2	**127-8162**	1	CLIP	
	7	1	**231-4457**	1	GASKET	
	8	2	**232-3126**	3	CLIP	
	9	2	**240-5571**	1	BRACKET	
	10	1	**241-3359**	3	WASHER-SEALING (13.25X18.45X1.6-MM THK)	
	11	1	**246-4361**	4	WASHER (10.5X14X1.5-MM THK)	
	12	1	**320-9213**	1	CONNECTION	
	13	1	**330-5898**	1	SEAL-O-RING	
	14	2	**336-4803**	1	LINE AS	
	14A	2	**067-6999**	1	FERRULE	
	14B	2	**106-8835**	1	NUT	
	15	2	**342-4998**	1	BRACKET	
	16	1	**342-8494**	1	LINE AS-FUEL	
	17	1	**342-8495**	1	LINE AS-FUEL	
	18	1	**342-8498**	1	LINES GP-FUEL FILTER	
	18A	1	**220-7163**	2	CLIP	
	19	1	**342-8584**	1	CONNECTOR	
	20	1	**390-1557**	1	PUMP AS-FUEL TRANSFER	
	21	1	**391-7813**	1	BRACKET	
M	23	1	**6I-0254**	4	BOLT (M8X1.25X30-MM)	
M	24	1	**6I-0260**	2	BOLT (M8X1.25X25-MM)	
	25	1	**246-4364**	1	BOLT-SPECIAL (BANJO)	
	26	2	**035-8017**	1	UNION	
	27	2	**067-6265**	1	FITTING-BRASS	
	28	1	**303-4585**	1	CONNECTION AS	
	29	2	**365-3308**	1	NUT-COMPRESSION (3/8-24-THD)	
	30	2	**232-1115**	1	CLIP-PIPE	

M - METRIC PART

452-9242 **LINES GP-FUEL FILTER (**contd.**)** **i08148566**

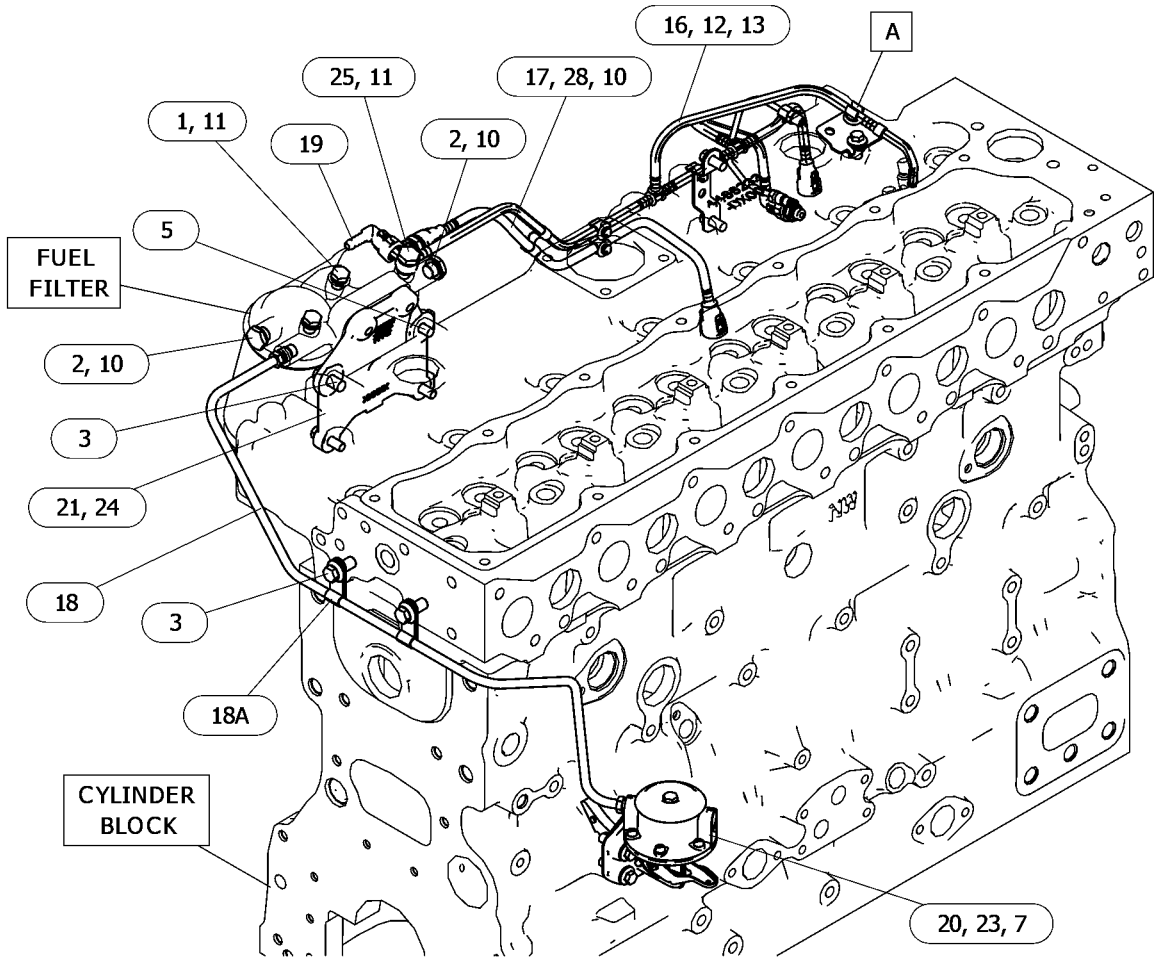

GRAPHIC #1 g06651183

452-9242 **LINES GP-FUEL FILTER (**contd.**)** **i08148566**

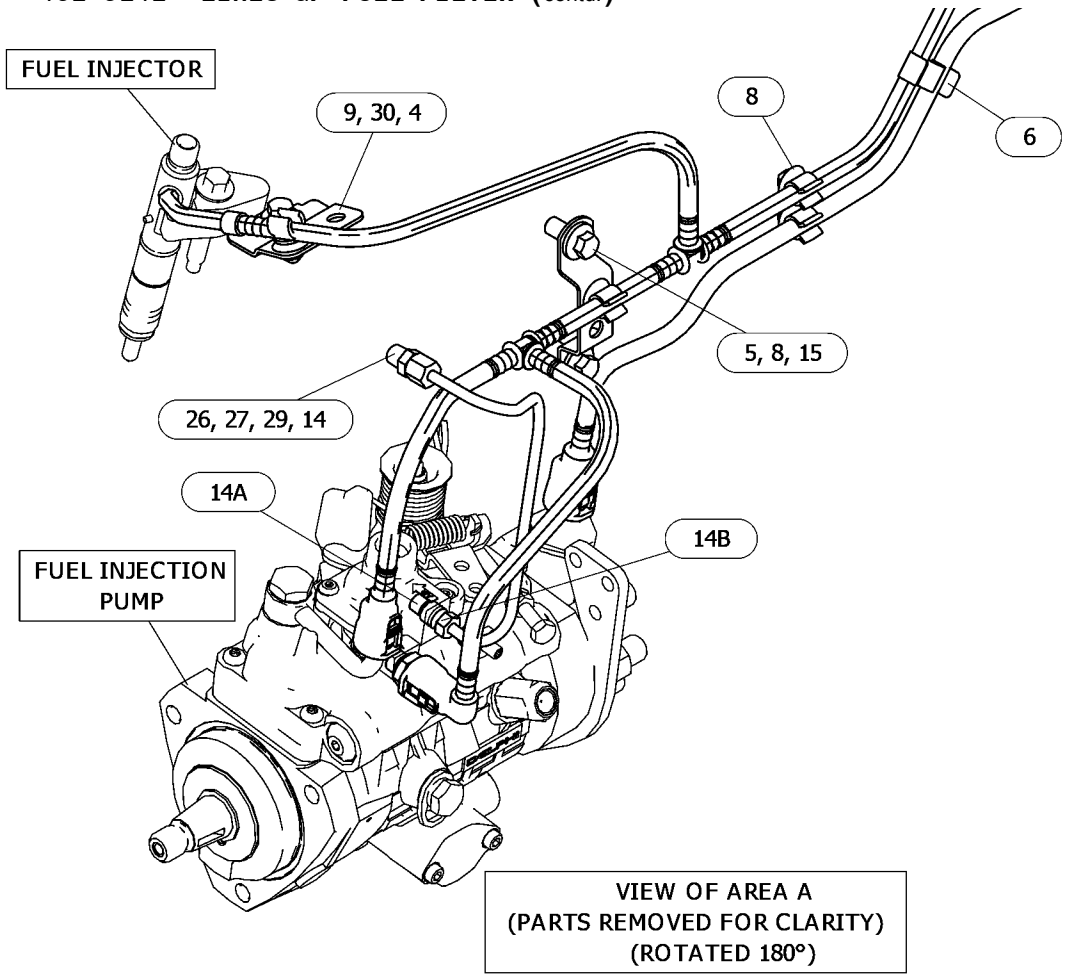

GRAPHIC #2 <END> g06651183_01

364-2901 LINES GP-FUEL INJECTION

PART OF 443-7120 PUMP GP-FUEL INJECTION

SMCS-1252, 1254 **i05987557**

NOTE	REF NO	GRAPHIC REF	PART NUMBER	QTY	PART NAME 1 2 3 4 5 6 (PRODUCT LEVEL)	SEE PAGE
	1	1	**124-3708**	3	CLIP	
	2	1	**124-3709**	1	CLIP	
	3	1	**162-9994**	2	CLIP	
	4	1	**364-2862**	1	LINE AS-FUEL	
	5	1	**364-2863**	1	LINE AS-FUEL	
	6	1	**364-2864**	1	LINE AS-FUEL	
	7	1	**364-2866**	1	LINE AS-FUEL	
	8	1	**364-2879**	1	LINE AS-FUEL	
	9	1	**364-2882**	1	LINE AS-FUEL	

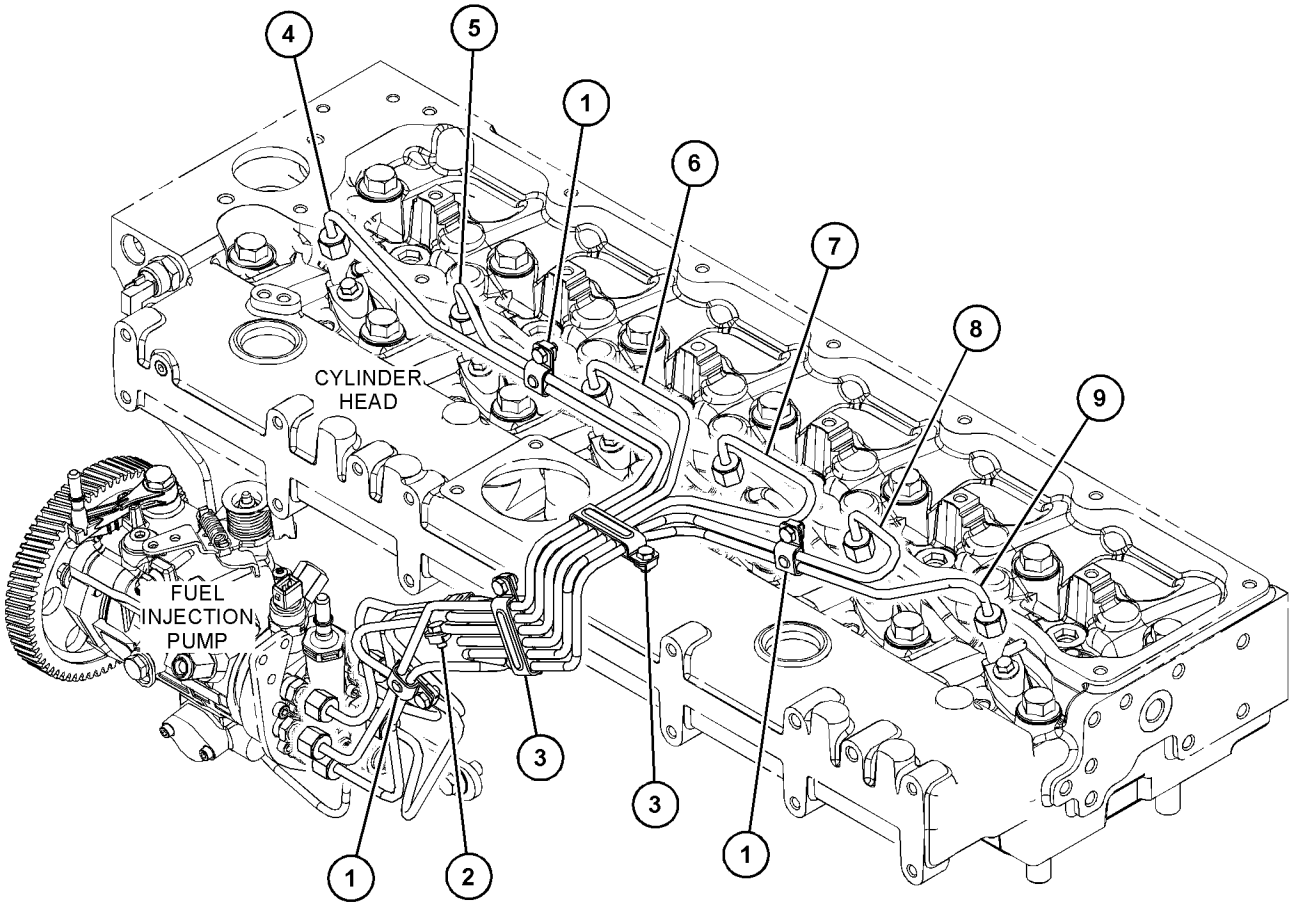

GRAPHIC #1 <END> g03679178

443-7120 PUMP GP-FUEL INJECTION

PART OF 482-9241, 485-3093, 582-9032 ENGINE AR-PRIMARY

SMCS-1251, 1290 **i07609918**

NOTE	REF NO	GRAPHIC REF	PART NUMBER	QTY	PART NAME 1 2 3 4 5 6 (PRODUCT LEVEL)	SEE PAGE
M	1	1	**100-4830**	1	BOLT (M10X1.5X20-MM)	
	2	1	**169-5326**	1	SWITCH-TEMPERATURE (FUEL)	
	3	1	**425-7107**	1	GEAR-FUEL PUMP (68-TEETH)	
	4	1	**232-1794**	5	HOSE	
	5	1	**232-3149**	3	WASHER (8.35X16.85X1.55-MM THK)	
	6	1	**238-8671**	6	CLAMP-INJECTOR	
	7	1	**336-4757**	1	BRACKET	
Y	8	1	*364-2901*	1	LINES GP-FUEL INJECTION	113
	9	1	**396-8257**	1	CAP	
	10	1	**458-2332**	1	PUMP AS-FUEL INJECTION	
M	10A	1	**111-3422**	1	NUT (M14X1.5-THD)	
	10B	1	**111-3423**	1	WASHER	
	10C	1	**152-3968**	1	SEAL-O-RING	
	10D	1	**176-6219**	1	SOLENOID (12-VOLT) (FUEL INJECTION PUMP)	
	11	1	**469-4201**	6	INJECTOR AS-FUEL	
M	12	1	**6I-0260**	4	BOLT (M8X1.25X25-MM)	
M	13	1	**178-3336**	1	NUT-HEX FLANGE (M8X1.25-THD)	
M	14	1	**232-3274**	6	BOLT (M8X1.25X48.1-MM)	
	15	1	**232-1793**	1	CABLE	

M - METRIC PART
Y - SEPARATE ILLUSTRATION

443-7120 **PUMP GP-FUEL INJECTION (**contd.**)** **i07609918**

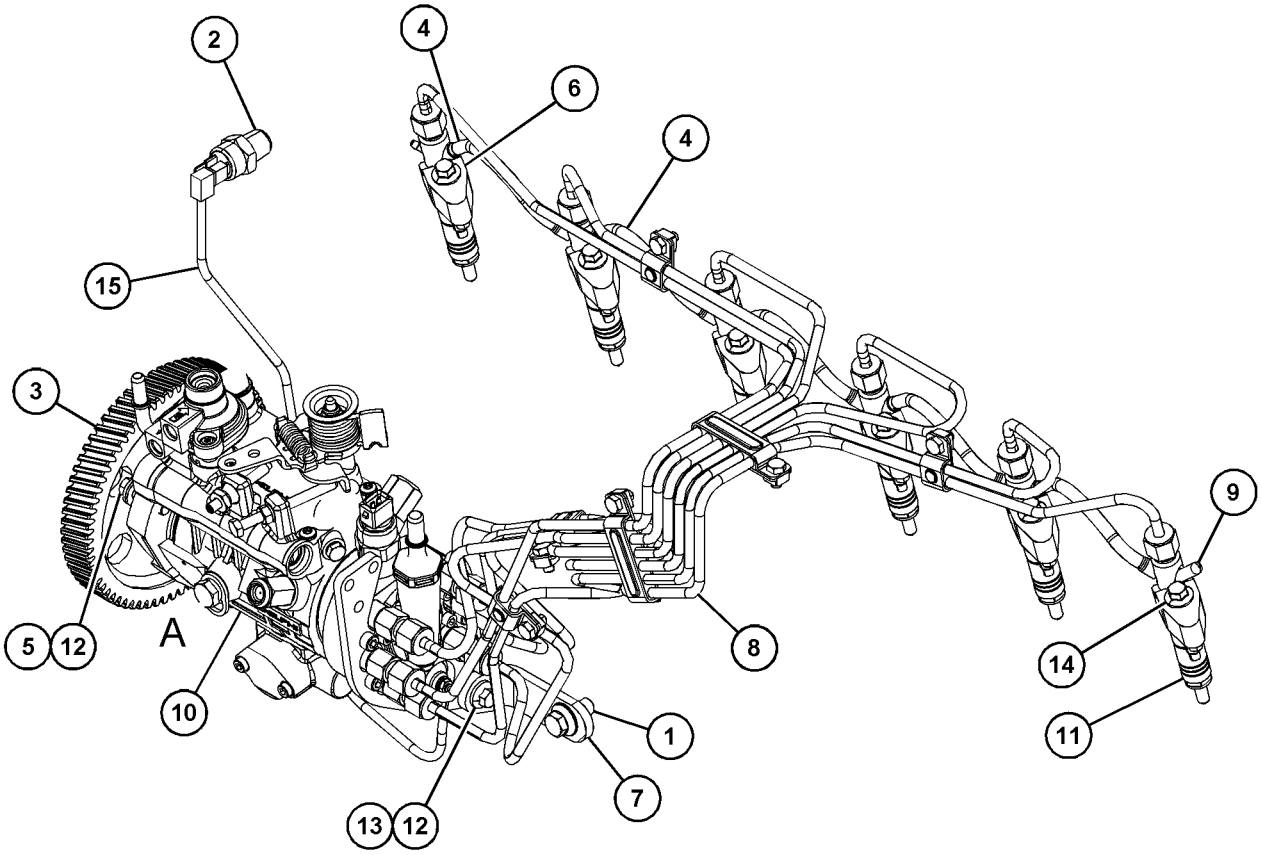

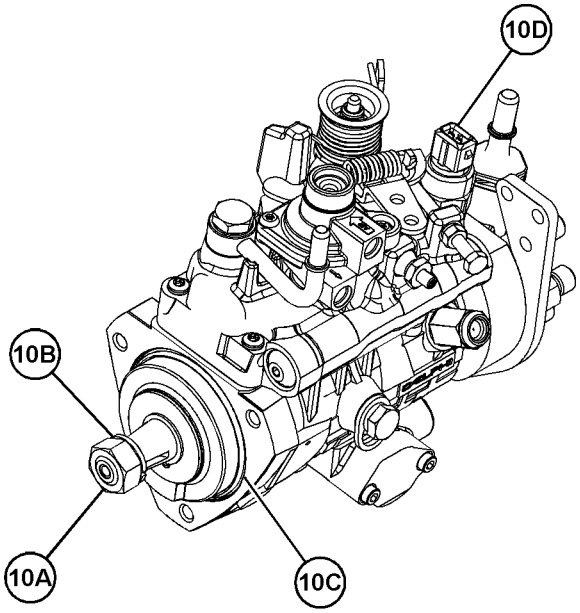

VIEW OF AREA A 90°

GRAPHIC #1 <END> g06149234

435-5152 ALTERNATOR GP-CHARGING

PART OF 485-3093 ENGINE AR-PRIMARY

SMCS-1405 **i06915884**

NOTE	REF NO	GRAPHIC REF	PART NUMBER	QTY	PART NAME 1 2 3 4 5 6 (PRODUCT LEVEL)	SEE PAGE
M	1	1	**6I-0454**	1	BOLT (M10X1.5X70-MM)	
	2	1	**067-6366**	1	WASHER (8.7X19X1.8-MM THK)	
M	3	1	**100-8451**	1	BOLT (M8X1.25X130-MM)	
M	4	1	**6V-9189**	1	LOCKNUT (M8X1.25-THD)	
M	5	1	**140-8783**	2	BOLT (M10X1.5X45-MM)	
	6	1	**355-6228**	1	BRACKET	
	7	1	**371-5649**	1	ALTERNATOR (12-VOLT, 85-AMPERE)	
M	8	1	**6I-0260**	1	BOLT (M8X1.25X25-MM)	
M	9	1	**175-7141**	1	NUT-HEX FLANGE (M10X1.5-THD)	
	10	1	**214-3205**	1	SPACER (10.32X19.05X6.35-MM THK)	
	11	1	**453-3595**	1	BRACKET	
	12	1	**233-9532**	1	PULLEY-ALTERNATOR	
	13	1	**132-8848**	1	WASHER (8.7X25.4X4.7-MM THK)	

M - METRIC PART

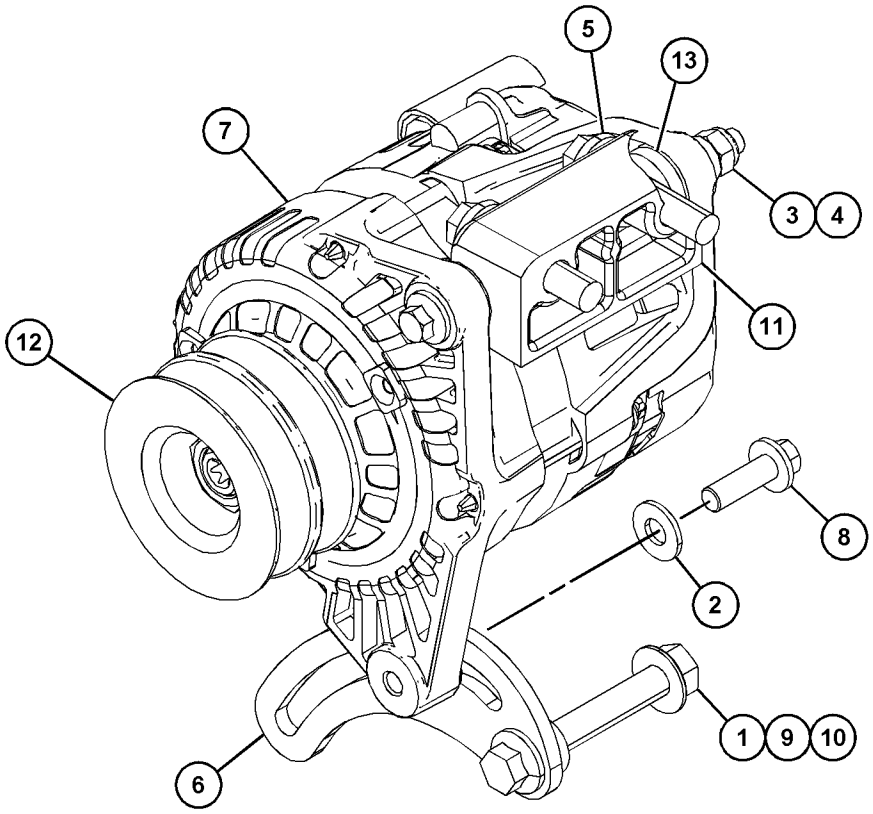

GRAPHIC #1 <END> g06166682

346-1844 SENSOR GP-TEMPERATURE

PART OF 482-9241 ENGINE AR-PRIMARY

SMCS-1906, 1919, 1921, 1922, 1928, 1929 **i06614424**

NOTE	REF NO	GRAPHIC REF	PART NUMBER	QTY	PART NAME 1 2 3 4 5 6 (PRODUCT LEVEL)	SEE PAGE
	1	1	**199-9751**	1	SEAL-O-RING	
	2	1	**180-6121**	1	GAUGE GP-COOLANT TEMPERATURE (WATER)	
	3	1	**236-8757**	1	SWITCH-WATER TEMPERATURE	

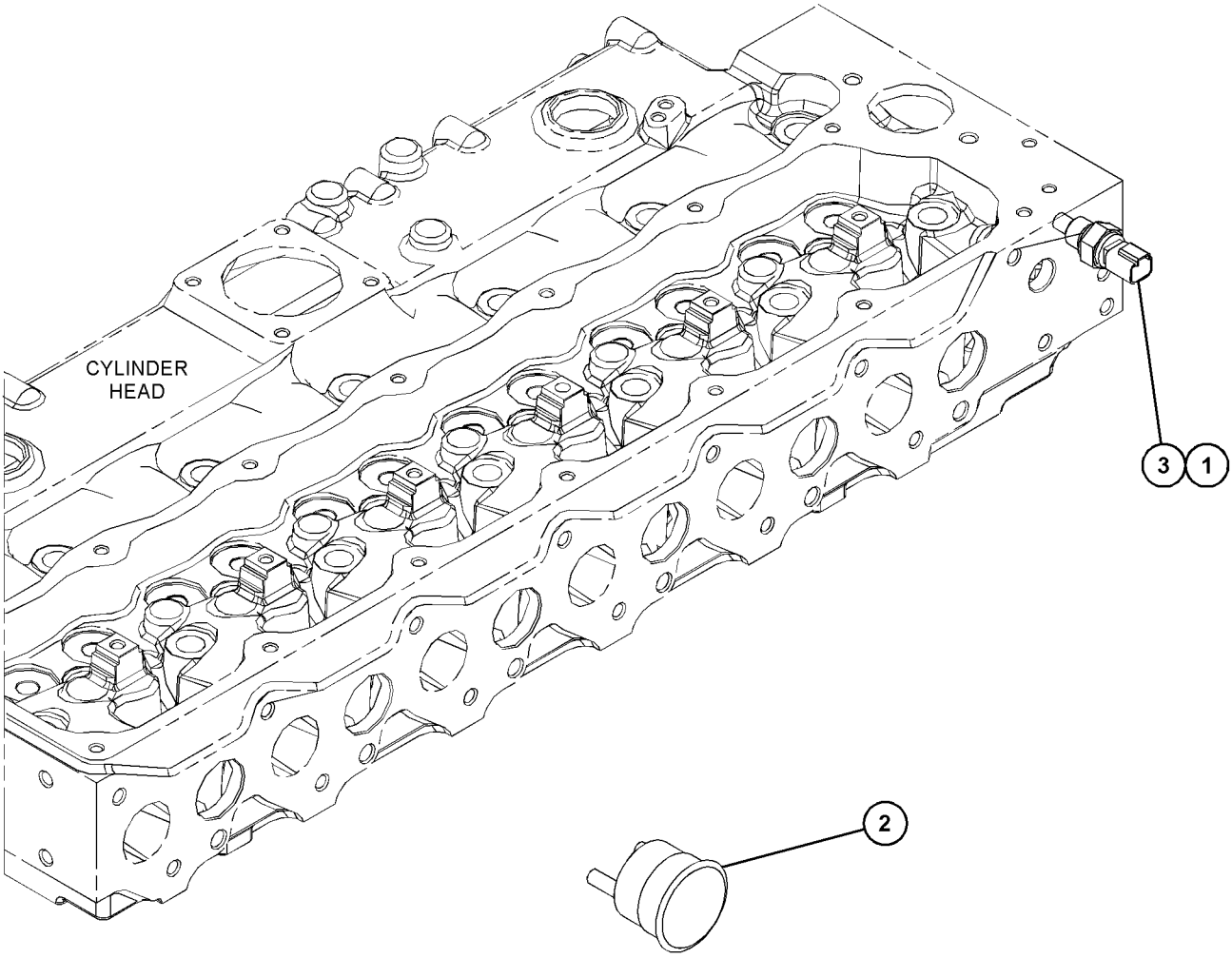

GRAPHIC #1 <END> g06053180

346-0798 STARTING AID GP

PLUG

PART OF 582-9032 ENGINE AR-PRIMARY

SMCS-1090 **i06131617**

NOTE	REF NO	GRAPHIC REF	PART NUMBER	QTY	PART NAME 1 2 3 4 5 6 (PRODUCT LEVEL)	SEE PAGE
	1	1	**298-3484**	6	PLUG	

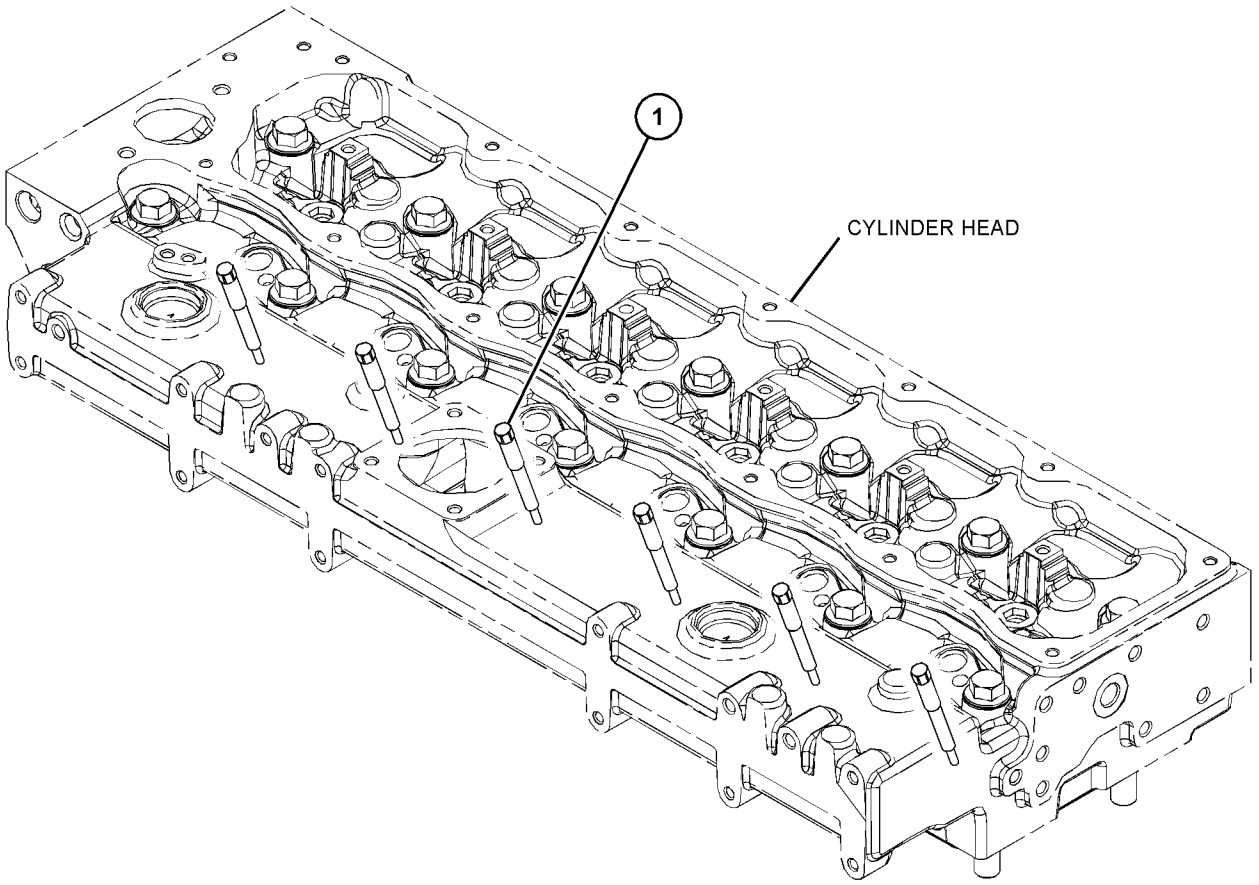

GRAPHIC #1 <END> g03779197

346-0800 STARTING AID GP

PART OF 482-9241, 485-3093 ENGINE AR-PRIMARY

SMCS-1090 **i06920959**

NOTE	REF NO	GRAPHIC REF	PART NUMBER	QTY	PART NAME 1 2 3 4 5 6 (PRODUCT LEVEL)	SEE PAGE
	1	1	**368-3145**	1	BUS BAR AS	
	2	1	**453-3510**	6	GLOW PLUG (12-VOLT)	

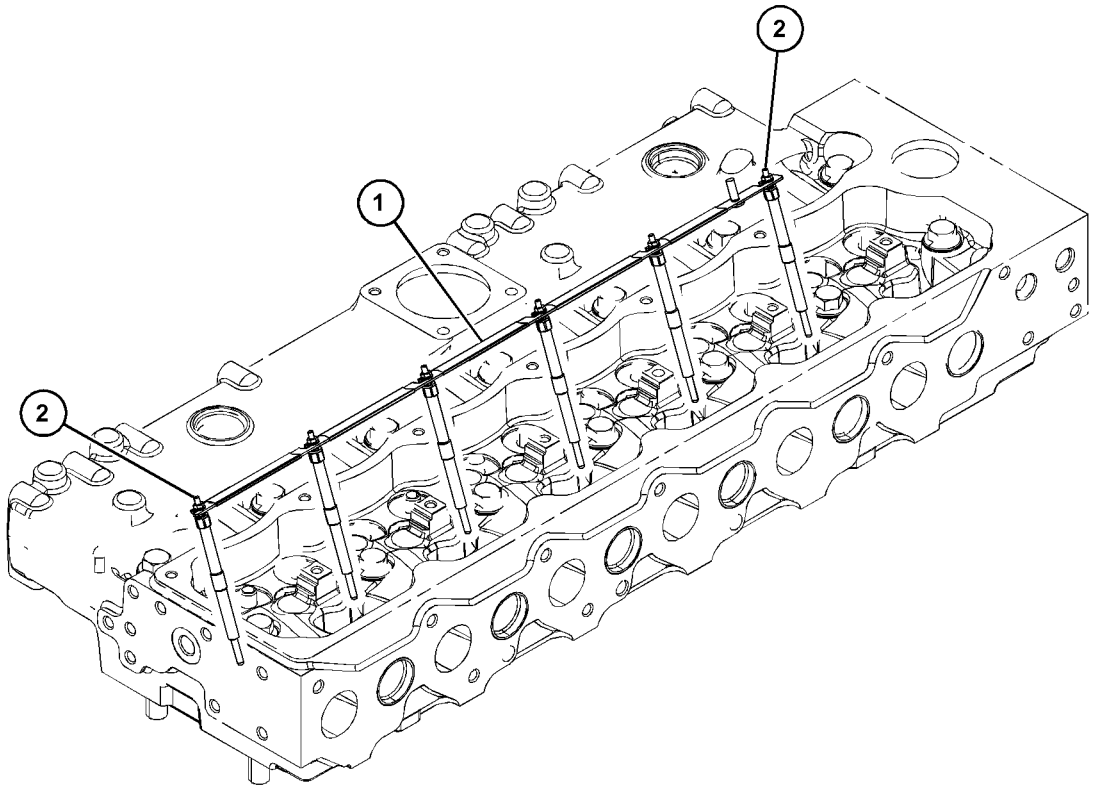

GRAPHIC #1 <END> g06201378

360-2781 STARTING MOTOR GP-ELECTRIC

PART OF 485-3093 ENGINE AR-PRIMARY

SMCS-1453 **i07651211**

NOTE	REF NO	GRAPHIC REF	PART NUMBER	QTY	PART NAME 1 2 3 4 5 6 (PRODUCT LEVEL)	SEE PAGE
	1	1	**357-5204**	1	STARTING MOTOR-ELECTRIC (12-VOLT, 4.2-KW)	
M	2	1	**6I-4012**	3	STUD (M10X1.5X40-MM)	
M	3	1	**175-7141**	3	NUT-HEX FLANGE (M10X1.5-THD)	

M - METRIC PART

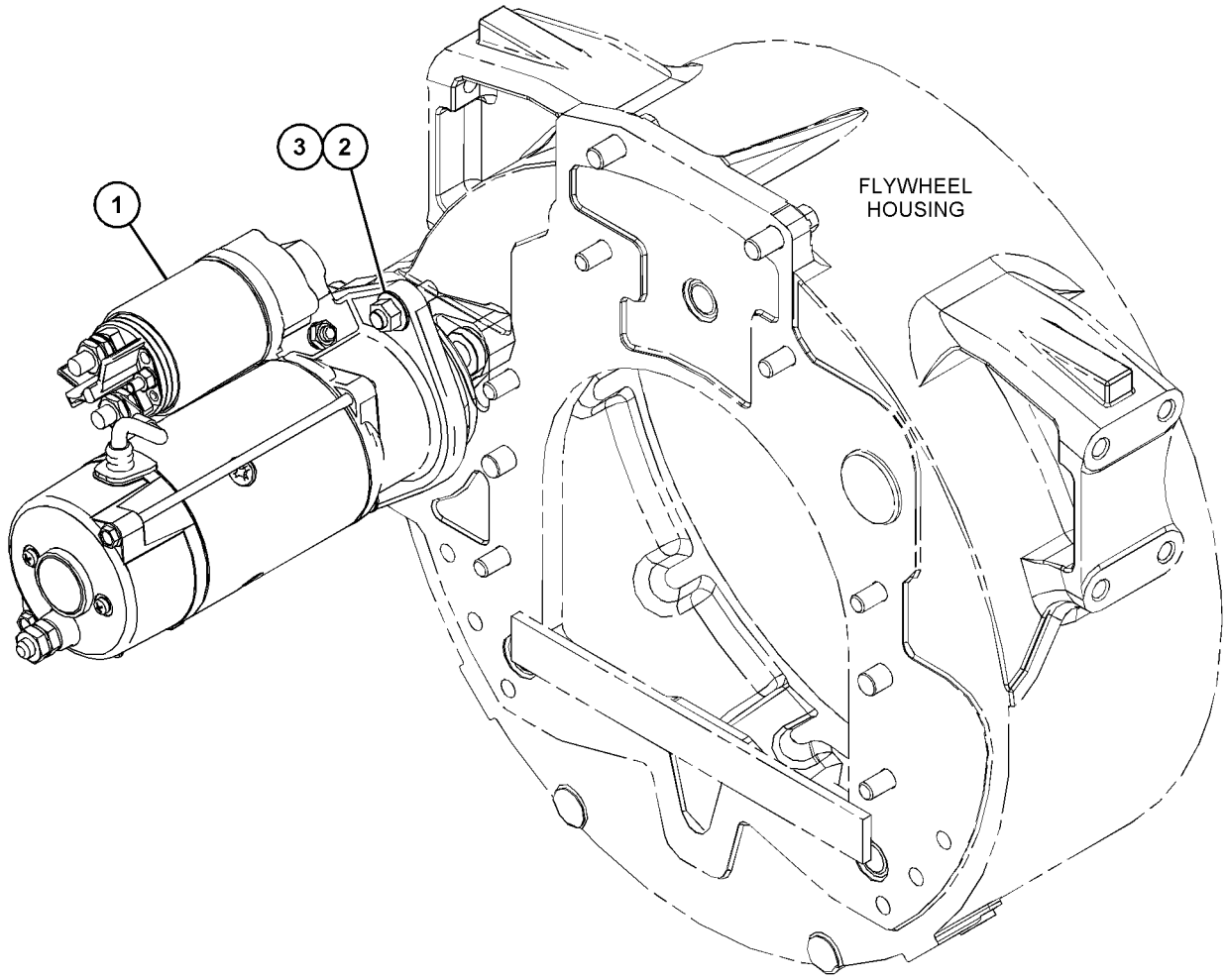

GRAPHIC #1 <END> g03827157

346-1824 SWITCH GP-PRESSURE

PART OF 482-9241 ENGINE AR-PRIMARY

SMCS-7400, 7421 **i06614426**

NOTE	REF NO	GRAPHIC REF	PART NUMBER	QTY	PART NAME 1 2 3 4 5 6 (PRODUCT LEVEL)	SEE PAGE
	1	1	**199-9267**	1	SEAL-O-RING	
	2	1	**237-4894**	1	SWITCH AS-PRESSURE (ENGINE OIL)	
	3	1	**225-7941**	1	PLUG	
	4	1	**330-5898**	1	SEAL-O-RING	

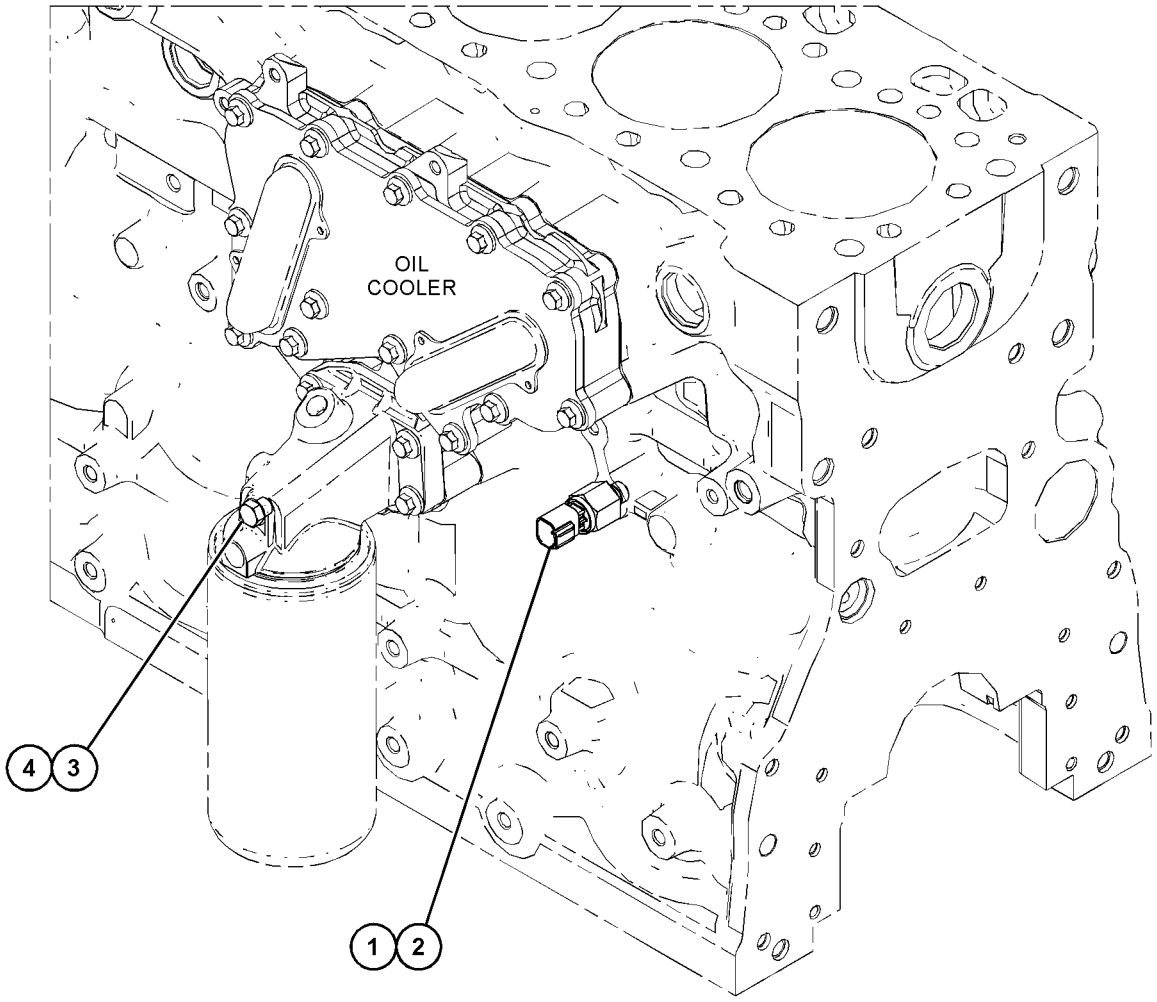

GRAPHIC #1 <END> g06053174

346-1528 MOUNTING GP-ACCESSORY MODULE

WHITE BLANKING PLUGS

PART OF 485-3093 ENGINE AR-PRIMARY

SMCS-7263, 7274 **i05859679**

NOTE	REF NO	GRAPHIC REF	PART NUMBER	QTY	PART NAME 1 2 3 4 5 6 (PRODUCT LEVEL)	SEE PAGE
	1	1	**101-7186**	1	BRACKET	
	2	1	**101-7185**	1	BRACKET	
M	3	1	**6I-0423**	6	BOLT (M12X1.75X30-MM)	
	4	1	**6H-3616**	4	PLUG-PROTECTION	

M - METRIC PART

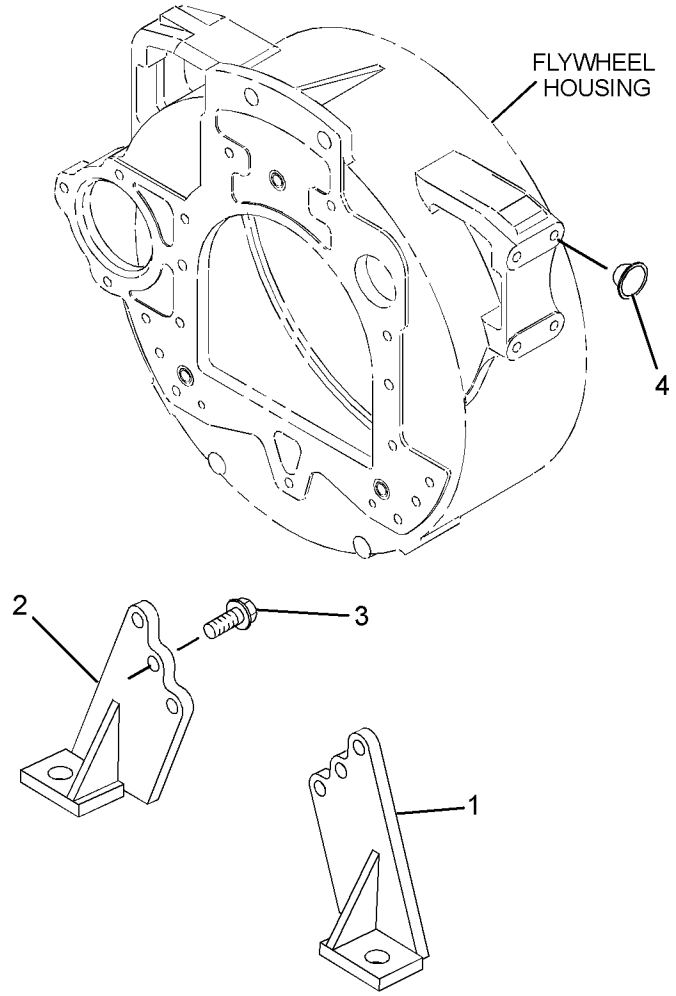

GRAPHIC #1 <END> g01316761

380-1084 PLUG AS

PART OF 482-9241 ENGINE AR-PRIMARY

SMCS-7553 **i05934036**

NOTE	REF NO	GRAPHIC REF	PART NUMBER	QTY	PART NAME 1 2 3 4 5 6 (PRODUCT LEVEL)	SEE PAGE
	1	1	**6H-3616**	6	PLUG-PROTECTION	

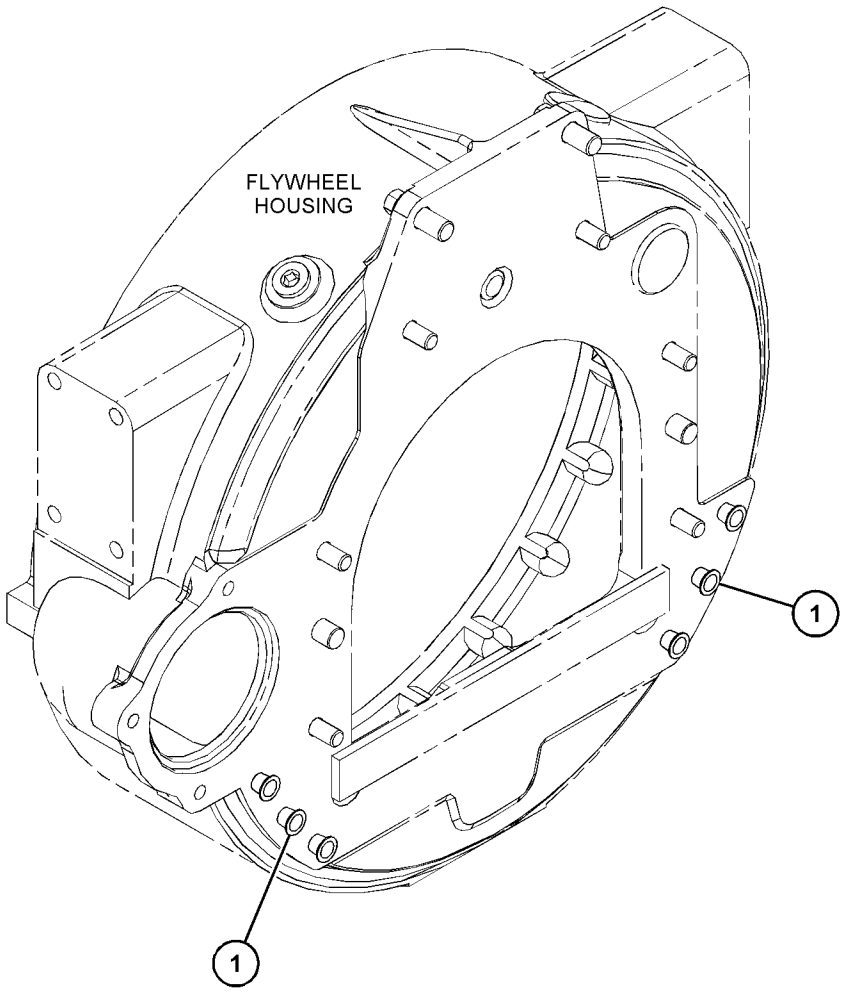

GRAPHIC #1 <END> g03732224

346-1919 FILM GP

PART OF 482-9241 ENGINE AR-PRIMARY

SMCS-7405, 7557 **i06614410**

NOTE	REF NO	GRAPHIC REF	PART NUMBER	QTY	PART NAME 1 2 3 4 5 6 (PRODUCT LEVEL)	SEE PAGE
	1	1	**317-6198**	1	FILM-IDENTIFICATION (ENGINE SERIAL NUMBER)	
	2	1	**326-9052**	1	FILM-WARNING (DO NOT SPRAY, READ OMM)	
	3	1	**346-8219**	2	FILM-WARNING (UNIVERSAL WARNING)	
	4	1	**450-9772**	1	FILM-IDENTIFICATION (CAT)	

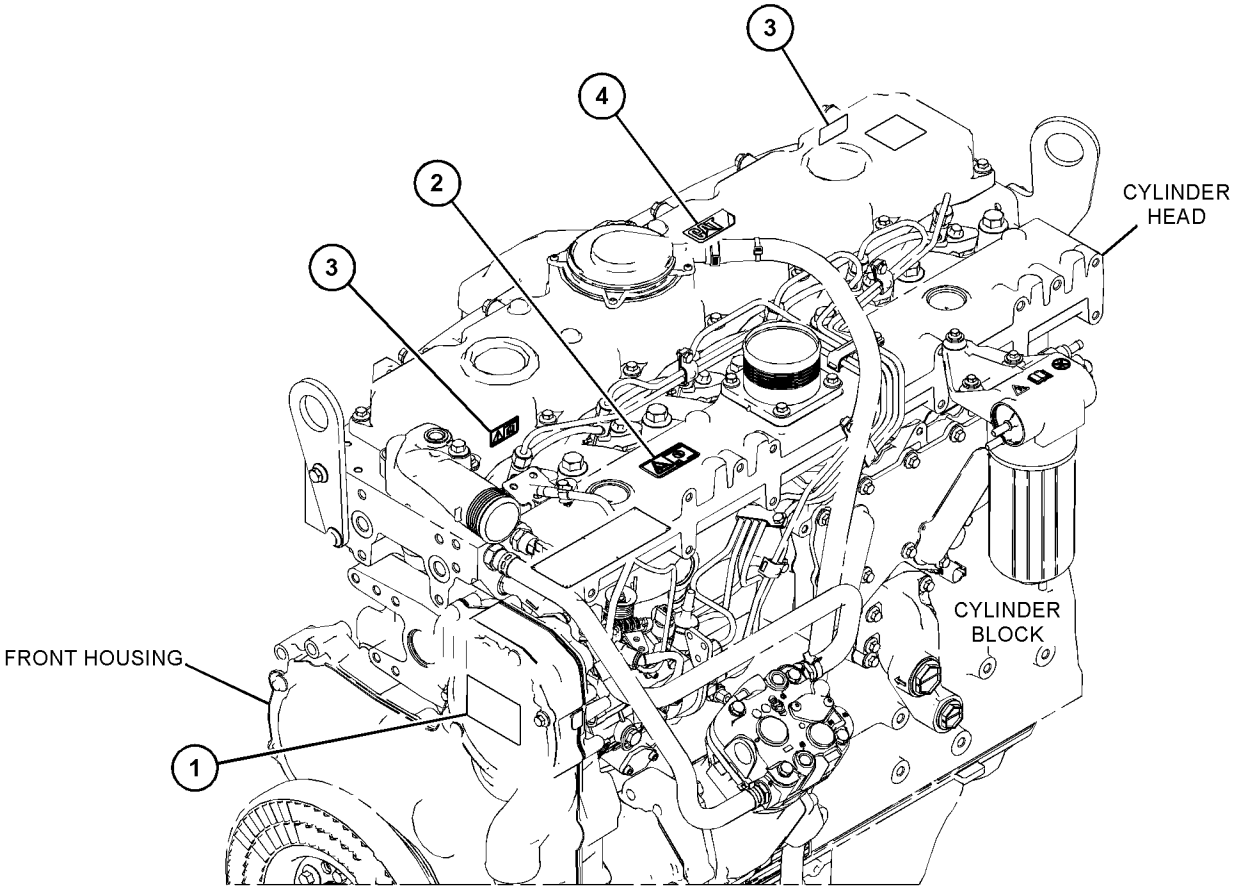

GRAPHIC #1 <END> g06135937

346-1968 FILM GP

PART OF 485-3093 ENGINE AR-PRIMARY

SMCS-7405, 7557 **i08163932**

NOTE	REF NO	GRAPHIC REF	PART NUMBER	QTY	PART NAME 1 2 3 4 5 6 (PRODUCT LEVEL)	SEE PAGE
	1	1	**576-1157**	1	FILM-IDENTIFICATION (CAT)	
	2	1	**326-9053**	1	FILM-WARNING (DO NOT SPRAY, READ OMM)	
					(EXPLOSION HAZARD. COULD CAUSE SERIOUS INJURY OR DEATH. DO NOT USE ETHER. READ THE OPERATOR'S MANUAL.)	
	3	1	**346-8219**	2	FILM-WARNING (UNIVERSAL WARNING)	
					(COULD CAUSE SERIOUS INJURY OR DEATH. DO NOT OPERATE OR WORK ON THIS EQUIPMENT UNLESS YOU HAVE READ AND UNDERSTAND THE OPERATION AND MAINTENANCE MANUALS.)	

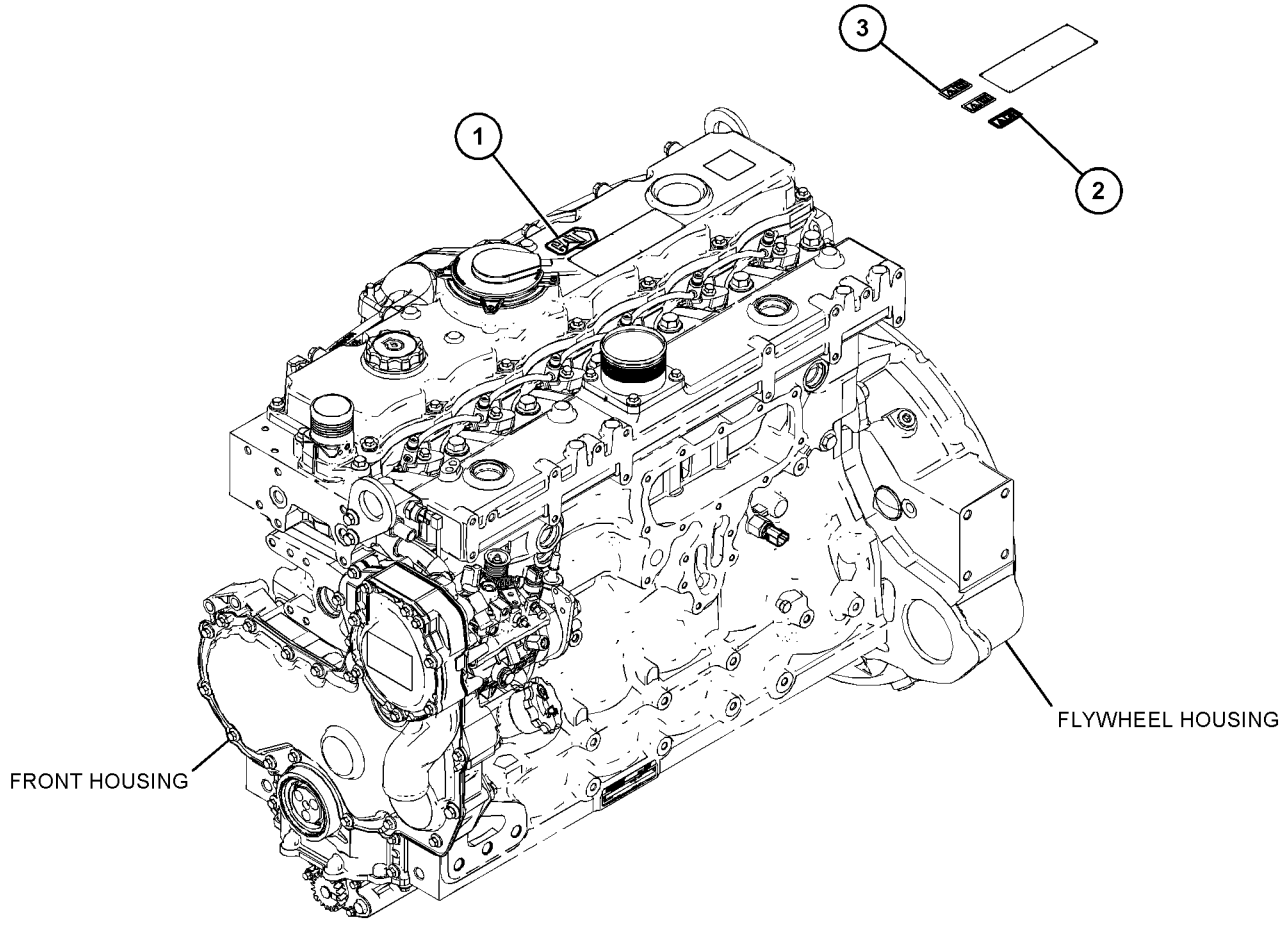

GRAPHIC #1 <END> g06574241

415-5625 FILM GP

PART OF 485-3093 ENGINE AR-PRIMARY

SMCS-7405, 7557 **i06041156**

NOTE	REF NO	GRAPHIC REF	PART NUMBER	QTY	PART NAME 1 2 3 4 5 6 (PRODUCT LEVEL)	SEE PAGE
	1	1	**451-7225**	1	FILM-IDENTIFICATION (CAT)	

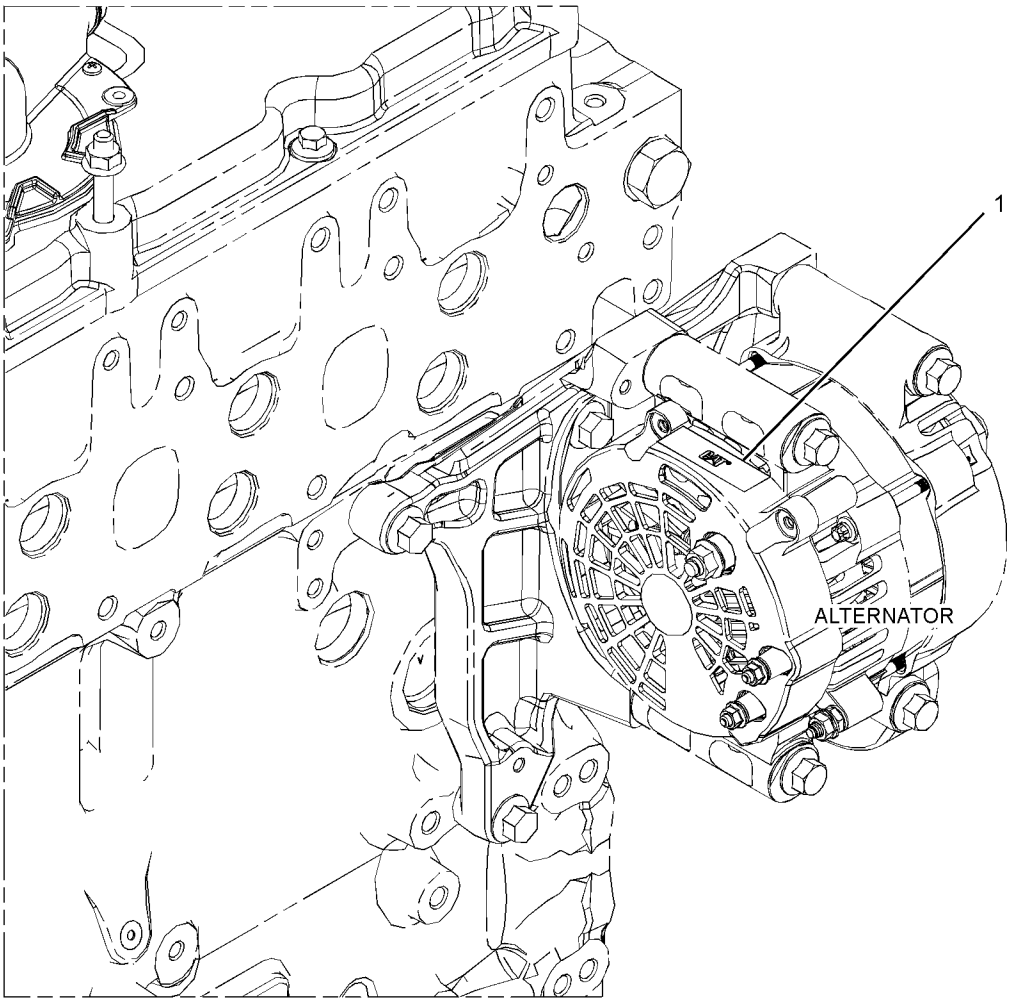

GRAPHIC #1 <END> g02675436

423-8803 FILM GP

BRANDING

PART OF 485-3093 ENGINE AR-PRIMARY

SMCS-7405, 7557

i06016684

NOTE	REF NO	GRAPHIC REF	PART NUMBER	QTY	PART NAME 1 2 3 4 5 6 (PRODUCT LEVEL)	SEE PAGE
	1	1	**451-7225**	1	FILM-IDENTIFICATION (CAT)	

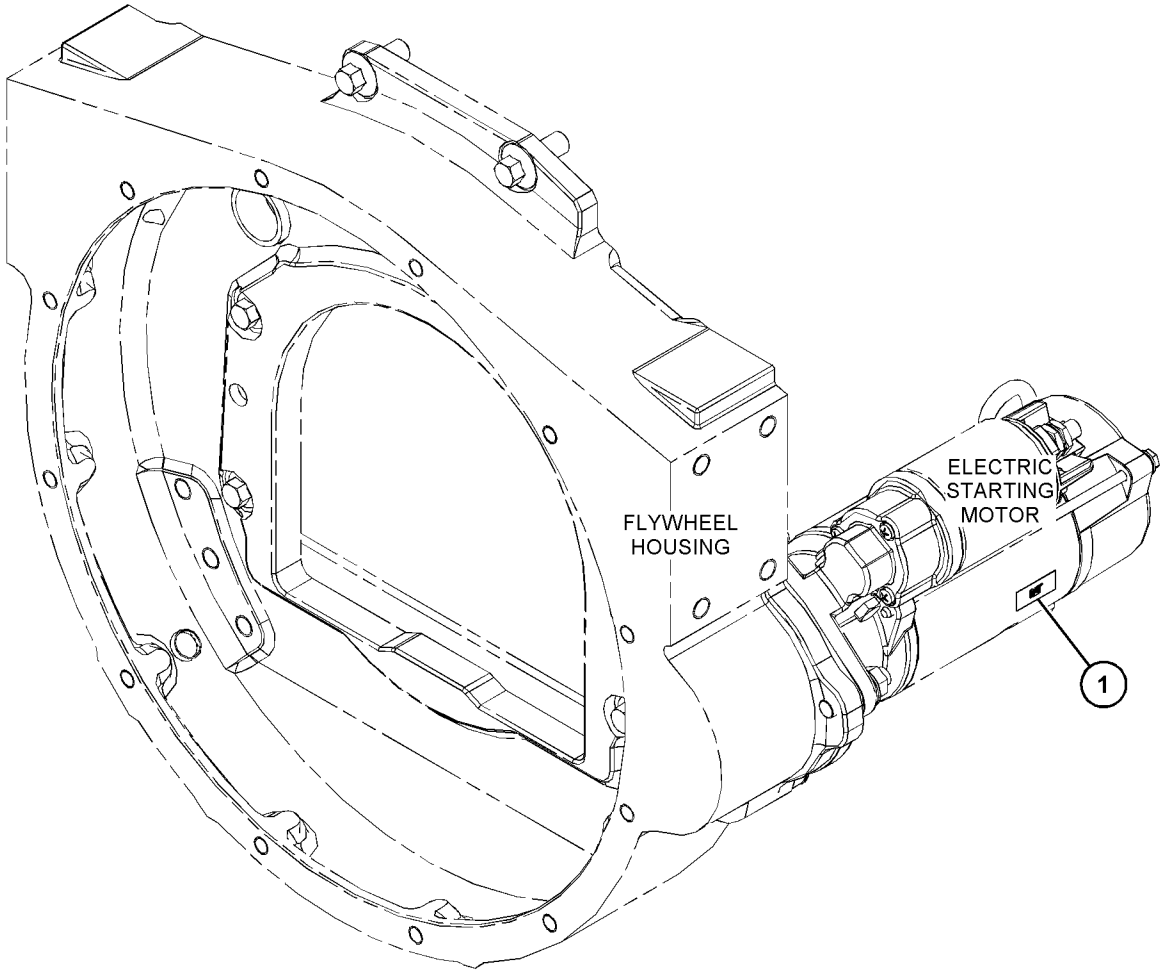

GRAPHIC #1 <END> g03820844

611-2650 FILM GP

PART OF 485-3093 ENGINE AR-PRIMARY

SMCS-7405, 7557 **i08749541**

NOTE	REF NO	GRAPHIC REF	PART NUMBER	QTY	PART NAME 1 2 3 4 5 6 (PRODUCT LEVEL)	SEE PAGE
	1	1	**451-7225**	1	FILM-IDENTIFICATION (CAT)	

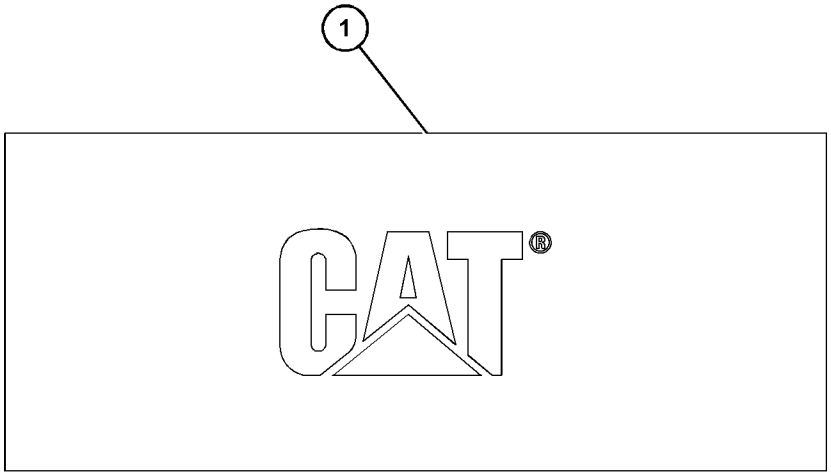

GRAPHIC #1 <END> g07489711

346-1967 PLATE & FILM GP

PART OF 582-9032 ENGINE AR-PRIMARY

SMCS-7405, 7557 **i08110696**

NOTE	REF NO	GRAPHIC REF	PART NUMBER	QTY	PART NAME 1 2 3 4 5 6 (PRODUCT LEVEL)	SEE PAGE
	1	1	**576-1157**	1	FILM-IDENTIFICATION (CAT)	
	2	1	**326-9053**	1	FILM-WARNING (DO NOT SPRAY, READ OMM)	
					(EXPLOSION HAZARD. COULD CAUSE SERIOUS INJURY OR DEATH. DO NOT USE ETHER. READ THE OPERATOR'S MANUAL)	
	3	1	**346-8219**	2	FILM-WARNING (UNIVERSAL WARNING)	
					(COULD CAUSE SERIOUS INJURY OR DEATH. DO NOT OPERATE OR WORK ON THIS EQUIPMENT UNLESS YOU HAVE READ AND UNDERSTAND THE OPERATION AND MAINTENANCE MANUALS)	

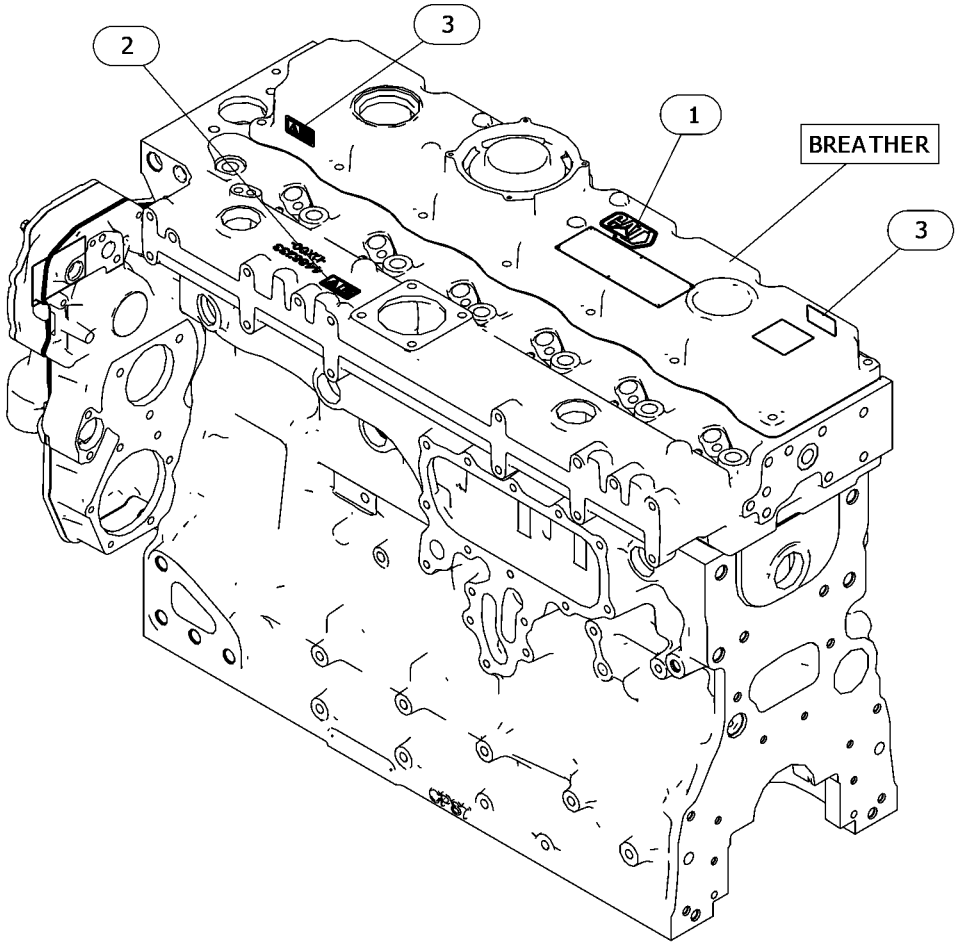

GRAPHIC #1 <END> g06598611

MEMORANDA

PART NUMBER INDEX

Part Page

0

0S-1603 24
25

1

1B-8705 5

2

2S-3440 68

3

3D-2824 78
3P-0647 91
92
94
96

5

5B-9079 65

6

6D-0044 5
6H-3616 122
123
6I-0217 28
32
34
41
42
68
69
70
77
78
81
84
91
92
93
94
96
98
100
102
6I-0254 5
66
67
68
69
81
84
102
104
110
6I-0260 40
41
42
75
87
102
104
110
114
116
6I-0289 40
41
42
6I-0302 34
6I-0363 42
6I-0423 26
27
122
6I-0454 32
116
6I-0455 77
78
6I-0563 89
91
92
93
94
96
98
6I-0572 40
41
42
6I-0593 87
100
6I-0631 27
6I-0645 28
32
34
90
6I-0650 28
34
6I-0654 38
87
94
96
98
6I-0839 81
84
6I-1090 73
6I-1497 40
41
42
6I-4012 120
6I-4374 69
6I-4681 40
41
42
6I-4793 75
77
78
6V-8635 78
6V-8714 78
6V-9008 78
6V-9189 23
80
116

7

7C-1243 89
7C-1281 66
67
68
7C-4616 32
34
7M-8485 78
7R-6290 89
7W-1176 26
7W-2562 5
7W-2601 87
7W-4694 102
104
110

8

8J-4645 78
8L-2786 40
41
42
8T-0269 40
41
44
8T-0337 7
8
9
8T-6684 78
8T-9535 65

9

9S-4185 40
41
42

0

032-8005 100
032-9020 66
67
68
033-7687 24
25
033-7849 100
102
104
110
035-8017 34
102
104
110
067-6006 19
067-6043 14
067-6095 6
067-6135 6
10
12
067-6179 28
32
34
067-6264 102
067-6265 102
104
110
067-6268 104
067-6269 104
067-6366 116
067-6823 14
60
74
067-6999 102
104
110

1

100-3751 28
32
34
100-4002 89
100-4003 89
100-4458 87
100-4461 87
94
96
98
100-4830 28
32
100
102
104
110
114
100-4841 37
100-8451 116
101-3895 28
32
34
101-7185 122
101-7186 122
101-7539 87
101-7540 87
101-7541 87
101-7546 87
102-1957 27
102-2073 34
103-5687 81
106-8835 102
104
110
111-0859 22
62
109
111-3422 114
111-3423 114
111-8222 28
32
102
104
110
113-1504 69
70
113-4598 5
113-4604 5
113-4616 74
113-8076 34
113-8129 81
84
114-4363 26
87
121-0883 26
27
123-2899 81
84
124-3536 45
47
49
51
124-3708 113
124-3709 113
124-3815 28
32
34
42
86
87
102
104

► PRIMARY REFERENCE

PART NUMBER INDEX

Part Page

110
126-2240 22
126-3216 5
126-3219 34
127-8162 100
102
104
110
130-3880 22
62
130-9888 69
70
132-8848 116
133-1011 28
32
34
133-7668 23
80
133-7669 23
140-8783 116
145-4911 24
25
152-3968 114
153-5294 78
162-1565 66
67
162-9994 113
169-5326 114
175-7141 87
116
120
176-6219 114
178-3336 68
114
179-7071 39
180-6121 117
184-0983 34
185-0112 87
185-0884 14
185-1546 65
187-0555 42
198-8262 34
198-8263 34
198-8645 66
67
199-3108 27
199-3109 26
27
199-9267 59
121
199-9751 117

2

209-6825 34
209-9219 15
214-3203 34
214-3205 116
214-8857 100
107
108
217-9039 66
67
220-7163 102
104
110
224-6635 5
225-5625 65
225-5638 65
225-5640 65
225-5959 65
225-5961 65
225-5962 65
225-6522 70
225-7738 81
84
225-7941 59
121
225-7944 77
78
225-8019 81
84
225-8858 14
226-8766 28
32
226-8767 28
32
34
228-4947 93
98
228-7093 78
230-8065 22
62
230-8094 40
41
42
231-4457 102
104
110
232-1115 104
110
232-1322 15
232-1793 114
232-1794 114
232-3126 102
104
110
232-3149 114
232-3274 114
232-3666 28
32
34
232-3751 77
78
232-3861 59
232-7449 15
232-7596 14
232-7597 14
232-7599 14
233-9532 116
234-6171 70
236-8757 117
237-4894 121
238-8288 90
238-8289 90
238-8292 91
92
93
94
96
98
238-8671 114
240-5571 102
104
110
241-3359 100
102
104
110
246-4361 102
104
110
246-4364 102
104
110
247-4928 34
251-4336 28
34
251-8336 40
41
252-6438 63
64
252-9208 94
96
98
254-3954 63
64
256-7704 7
8
9
259-2623 34
265-6527 87
268-5341 94
96
273-3690 34
273-3691 34
273-5711 72
274-1935 61
275-9891 40
41
42
276-5600 14
276-5602 14
276-5603 15
276-7391 10
12
276-7476 47
51
276-7478 45
47
49
51
53
56
276-9200 65
277-0120 87
277-1974 69
277-1975 69
277-2500 75
277-2537 77
78
277-3012 28
32
34
277-3013 28
32
34
277-4223 28
32
277-4444 38
277-4445 38
277-9940 91
92
93
94
96
98
278-0017 91
92
93
94
96
98
278-3242 81
84
280-2023 68
280-2424 94
96
98
281-6331 27
281-7039 75
281-7040 75
281-8744 81
84
283-4283 40
41
283-4302 40
41
42
285-3058 70
286-0123 94
96
98
286-7851 91
92
93
94
96
98
289-2346 94
96
98
289-2347 94
96
98
289-2348 94
96
98
289-2349 94
96
98
289-2360 94
96
98
291-6517 32
293-1875 34
293-1876 34
293-1877 . . . . . ►5
►34
293-1878 34
293-1881 74
293-8077 87
293-8079 87
293-8080 87
293-8084 87
293-8086 87
293-9235 80
295-1654 78
298-3484 118

3

302-4332 5
303-4585 100
102
104
110
303-6191 87
306-2332 26
306-2333 68
306-2337 69
310-1869 107
315-3393 63
64
315-3394 63
64
317-5482 45

► PRIMARY REFERENCE

PART NUMBER INDEX

Part	Page
	47
	49
	51
	53
317-5483	45
317-6198	124
317-9229	87
320-9213	102
	104
	110
321-2383	69
321-6120	34
321-6121	34
322-9011	87
323-9312	45
	47
	49
	51
	53
	56
324-0444	28
	34
324-3528	87
326-5063	28
	32
	34
326-7288	9
326-7289	7
	8
	9
326-7401	▶75
	▶77
	▶78
326-9052	124
326-9053	125
	129
329-3796	37
329-7854	28
	32
329-7856	28
	32
330-5898	59
	102
	104
	110
	121
331-0290	45
	47
	49
	51
	53
	56
331-0291	53
	56
331-0292	53
	56
331-1682	▶14
	▶15
331-6129	34
332-0905	17
335-5602	63
	65
335-5604	65
335-5605	65
335-5607	63
	64
335-6264	19
335-6266	19
335-6883	▶7
	▶67
335-7055	19
336-4757	114
336-4803	102
	104
	110
340-4212	78
342-4998	102
	104
	110
342-6283	100
342-6510	61
342-8494	102
	104
	110
342-8495	102
	104
	110
342-8497	100
342-8498	102
	104
	110
342-8584	100
	102
	104
	110
344-3434	28
345-8838	3
	26
345-8839	2
	27
345-8901	3
	24
345-8961	2
	25
345-9561	3
	22
345-9659	3
	40
345-9669	4
	41
345-9747	4
	66
345-9774	2
	67
346-0091	2
	3
	77
346-0220	2
	3
	4
	71
346-0408	28
	34
346-0410	2
	4
	81
346-0411	3
	84
346-0478	2
	28
346-0487	3
	32
346-0769	3
	89
346-0771	2
	3
	4
	90
346-0798	4
	118
346-0800	2
	3
	119
346-0818	2
	3
	4
	38
346-1528	3
	122
346-1820	3
	4
	59
346-1824	2
	121
346-1841	3
	4
	58
346-1844	2
	117
346-1919	2
	124
346-1967	4
	129
346-1968	3
	125
346-2908	2
	3
	60
346-8219	124
	125
	129
348-3283	2
	3
	4
	15
	16
	17
348-3285	2
	3
	4
	10
	16
348-3296	2
	3
	4
	45
	47
	49
348-3300	16
	51
	53
348-3503	2
	3
	4
	16
	17
	37
350-2375	91
	93
	94
	98
350-8959	17
351-0859	2
	4
	102
	104
351-1724	61
351-4749	40
	41
	42
354-8538	40
	41
	42
355-2237	94
	96
	98
355-2239	94
	96
	98
355-2240	94
	96
	98
355-2242	87
355-2243	61
355-6228	116
357-0147	7
357-5204	120
357-8714	81
358-3097	2
	3
	4
	61
358-4828	4
	34
359-6616	19
359-9431	32
360-0099	42
360-1564	45
	51
360-1978	12
360-2781	3
	120
360-5468	42
361-7519	91
	92
	93
	94
	96
	98
361-9898	34
362-8050	87
363-0559	10
	12
363-4208	87
364-2862	113
364-2863	113
364-2864	113
364-2866	113
364-2879	113
364-2882	113
364-2901	▶113
	▶114
364-5145	10
	12
365-2908	86
365-3308	104
	110
366-0149	51
367-5393	▶8
	▶66
367-5394	9
367-8509	81
367-8512	81
368-3145	119
368-4111	87
368-5399	87
369-3869	7
370-6545	14
370-7998	45
	47
371-2636	98
371-5649	116
374-4419	81
	84
375-9272	26
	27
376-4074	10
	12
376-6463	17
376-6464	3
	4
380-1084	2
	123
380-2065	45
	47
	51

▶ PRIMARY REFERENCE

PART NUMBER INDEX

Part	Page
380-4848	45
	47
380-4849	51
380-5077	45
	47
380-5078	51
381-6236	19
385-0020	94
	96
	98
386-7037	78
387-2156	56
388-9876	6
389-5891	51
389-7188	45
390-1557	102
	104
	110
390-3737	2
	3
	69
391-3193	2
	3
	4
	19
	20
391-3197	2
	3
	4
	63
391-7813	102
	104
	110
393-1438	2
	62
393-4006	26
	27
396-8052	91
	92
	93
	94
	96
	98
396-8257	114
398-1750	86
398-1775	86
399-1963	2
	3
	4
	6

4

Part	Page
415-4315	45
	47
415-5625	3
	126
416-7727	91
	92
	93
	94
	96
	98
417-7782	84
419-0401	2
	42
419-6486	4
	70
419-9129	2
	4
	91
	92
	93
420-0454	73
422-0508	68
422-6385	86
422-6387	86
422-6388	86
422-6389	86
422-7707	68
423-5410	2
	107
423-5411	4
	108
423-8803	3
	127
424-0675	3
	100
424-1869	3
	72
424-1876	2
	3
	4
	109
424-9429	▶9
	▶68
425-0181	3
	68
425-0779	1
	16
	17
	18
425-3316	1
	20
	21
425-7103	28
	32
	34
425-7107	114
431-4573	94
	96
	98
431-4574	91
	92
	93
435-1889	4
	39
435-5152	3
	116
435-6472	109
435-6493	109
436-0520	63
	64
436-7781	47
	49
	53
	56
437-4170	91
	92
	93
	94
	96
	98
438-3180	20
	64
441-5107	107
441-5108	100
	108
441-5111	100
	107
	108
442-0326	4
	78
443-7120	2
	3
	4
	114
445-9324	12
448-4217	10
	12
448-4218	10
	12
448-4220	10
	12
448-4222	10
	12
448-4227	10
	12
450-9263	19
450-9772	124
451-0548	91
	92
	93
	94
	96
	98
451-1179	34
451-7225	126
	127
	128
452-2249	4
	74
452-9242	3
	110
453-3510	119
453-3595	116
453-9700	23
454-3464	▶86
	▶87
454-3745	12
454-3931	12
454-3935	12
456-5183	91
	92
	93
	94
	96
	98
457-0482	86
458-2332	114
458-3400	24
458-3404	25
458-7918	45
	51
458-7939	45
	51
458-7940	45
	51
462-1171	71
462-6685	2
	3
	4
	73
463-9843	▶12
	▶17
464-6253	6
466-4849	45
	47
	51
468-7700	80
469-4201	114
470-4925	58
470-8038	47
	49
	51
	53
	56
470-8101	10
	12
470-8171	10
475-1557	17
	56
475-2041	17
	44
476-6624	1
	21
476-6625	1
	18
477-0707	87
477-0720	87
477-2319	87
477-5510	3
	80
477-5513	3
	87
477-5517	3
	94
	96
	98
480-4489	47
	49
	53
	56
480-4490	47
	49
	53
	56
480-4491	47
	49
	53
	56
482-9241	1
	2
485-3093	1
	3
485-4894	81
	84
485-4895	81
	84
486-5568	▶1
	▶2
487-3750	▶1
	▶3
497-1111	63
	64
498-2984	87

5

Part	Page
502-2115	77
518-4774	92
	96
536-0608	2
	23
542-1363	19
567-6050	53
	56
567-6051	49
574-9895	49
	56
574-9896	49
	56
575-3353	49
	56
576-1157	125
	129
576-9738	53
	56
576-9739	49
576-9745	53
	56
576-9746	49

PART NUMBER INDEX

Part	Page	Part	Page	Part	Page	Part	Page
576-9752	53						
	56						
576-9753	49						
582-9032	1						
	4						
583-2112	►1						
	►4						

6

604-2388	81						
	84						
605-5520	53						
	56						
611-2650	3						
	128						
619-3393	53						
	56						
619-4764	81						
	84						

MEMORANDA

©2022 Caterpillar
All Rights Reserved

CAT, CATERPILLAR, LET'S DO THE WORK, their respective logos, “Caterpillar Corporate Yellow”, the "Power Edge" and Cat "Modern Hex" trade dress as well as corporate and product identity used herein, are trademarks of Caterpillar and may not be used without permission.