M0096489-04 (en-us)
July 2019

Parts Manual

C0.5 Industrial Engine

C691-UP (Engine)

Scan to find and purchase genuine Cat® parts and related service information.

Product and Dealer Information

Note: For product identification plate locations, see the section “Product Identification Information” in the Operation and Maintenance Manual.

Delivery Date: _____

Product Information

Model: _____

Product Identification Number: _____

Engine Serial Number: _____

Transmission Serial Number: _____

Generator Serial Number: _____

Attachment Serial Numbers: _____

Attachment Information: _____

Customer Equipment Number: _____

Dealer Equipment Number: _____

Dealer Information

Name: _____ Branch: _____

Address: _____

_____

_____

	Dealer Contact	Phone Number	Hours
Sales:	_____	_____	_____
Parts:	_____	_____	_____
Service:	_____	_____	_____

MEMORANDA

TABLE OF CONTENTS

NAME	PAGE
GENERAL INFORMATION	A2
REPAIR ALTERNATIVES	A4
SUPPLEMENTAL COOLANT ADDITIVES	A5
MAINTENANCE PARTS	A6
INDEX	A7
ENGINE ARRANGEMENT	1
ENGINE AR	1
ENGINE AR-PRIMARY	2
BASIC ENGINE	5
CAMSHAFT GP	5
CAP-ADAPTER	7
COVER GP-FRONT HOUSING	8
COVER GP-VALVE MECHANISM	9
CRANKSHAFT GP	11
CYLINDER BLOCK GP	15
CYLINDER HEAD AS	22
CYLINDER HEAD GP	24
DRIVE GP-FAN	26
PULLEY GP-FAN	27
DRIVE GP-TIMING	28
EXTENSION GP-FAN	33
FLYWHEEL GP	35
HOUSING GP-FLYWHEEL	39
HOUSING GP-FRONT	43
KIT-FRONT GEAR	46
LIFTING GP-ENGINE	47
PAN GP-OIL	49
PISTON & ROD GP	53
PISTON GP	54
PLUG GP-ENGINE	55
PULLEY GP	57
PULLEY GP-CRANKSHAFT	58
PULLEY GP-WATER PUMP	59
ROCKER ARM AS	60
ROCKER ARM GP	61
V-BELT GP	62
VALVE MECHANISM GP	64
LUBRICATION SYSTEM	66
FILLER GP-ENGINE OIL	66
FILTER GP-ENGINE OIL	69
MOUNTING GP-ENGINE OIL FILTER	71
VALVE GP-ENGINE OIL RELIEF	72
COOLING SYSTEM	73
COVER GP-REGULATOR HOUSING	73
FAN GP	75
PUMP GP-WATER	78
RADIATOR & MOUNTING GP	80
RADIATOR GP	82
AIR INLET AND EXHAUST SYSTEM	84
AIR CLEANER GP	84
CONNECTION GP-EXHAUST	86
FLANGE GP-EXHAUST	87
INLET GP-CONVERTER	88
MANIFOLD GP-EXHAUST	90
PLUG GP-EXHAUST	92
FUEL SYSTEM	93
CONTROL GP-GOVERNOR	93
FILTER GP-FUEL	97
PUMP GP-FUEL INJECTION	98
PUMP GP-FUEL PRIMING	106
PUMP GP-FUEL TRANSFER	108
THROTTLE GP	109
ELECTRICAL AND STARTING SYSTEM	110
ALTERNATOR GP-CHARGING	110
CONNECTION GP-ELECTRICAL	112
SENSOR & MTG GP-PRESSURE	114
SENSOR GP-TEMPERATURE	115
STARTING AID GP	116
STARTING AID GP-ETHER	117
STARTING MOTOR GP-ELECTRIC	118
SWITCH GP-PRESSURE	120
SWITCH GP-START	121
SWITCH GP-TEMPERATURE	123
SERVICE EQUIPMENT AND SUPPLIES	124
PLATE & FILM GP	124
PART NUMBER INDEX	B1

GENERAL INFORMATION

1. ENGINE IDENTIFICATION

Cat engines are identified with Serial Numbers and Arrangement Numbers. In some cases, Modification Numbers are also used. The serial number plate which shows these numbers is mounted on the engine.

Cat dealers need this information to determine which components were included on the engine when it was assembled at the factory. This permits accurate identification of replacement part numbers.

2. ORDERING PARTS

⚠ WARNING

When replacement parts are required for this product Caterpillar recommends using Caterpillar replacement parts or parts with equivalent specifications including, but not limited to, physical dimensions, type, strength and material.

Failure to heed this warning can lead to premature failures, product damage, personal injury or death.

Quality Cat replacement parts are available from Cat dealers throughout the world. Their parts inventories are up to date and include all parts normally required to protect your investment in Cat Engines. Dealers may offer repair kits or remanufactured parts to allow selection of the most effective repair alternative for a particular situation. When ordering parts, your order should specify the quantity, part number, part name, and the serial number/product identification number of the engine for which the parts are needed.

3. PARTS MANUAL ORGANIZATION

Product information in this manual is presented as "information elements" that represent all of the components for the specific model. An Engine Arrangement is an example of an information element. The information elements are organized alphabetically by part name and secondarily by part number within each major section of the manual.

4. TABLE OF CONTENTS

A table of contents (TOC) is found at the beginning of the manual. The TOC lists each section of the manual with a complete list of all information elements organized as they appear in the manual. Page numbers are provided for quick reference to detailed parts identification illustrations and serviceable consist lists.

5. MAINTENANCE PARTS INDEX

The Maintenance Parts Index, located near the beginning of the manual, references most frequently used maintenance part numbers, providing description, quantity, usage and page number. This information is organized alphabetically by part description.

6. INDEX

The index located near the front of the manual is an alphabetical listing of all information elements included in the manual. Page numbers are provided for quick reference to detailed parts identification illustrations and serviceable consist lists.

7. PART NUMBER INDEX

A numerical index listing all part numbers and the corresponding page number(s) appears at the back of the manual.

8. CAPTIONS

Captions located at the beginning each information element identify the part number and part name along with additional descriptive information. S/N information found in each caption should be used to select correct information for a specific engine. Field replacement options, identification of optional attachment components, and where used ("part of") information is also provided.

The first line of a caption is shown in larger type font to indicate the beginning of an information element. Captions for additional pages that may be required to illustrate an information element will be shown in standard type font and will include the term (contd.) .

9. NON-SERVICED PARTS

In some instances it is necessary to display non-serviced parts that are a link to lower level serviceable consist lists. These non-serviced part numbers are shown in italic type indicating that they are not available. All consist lists have not been converted to reflect this enhancement.

10. PARTS LIST REFERENCE NUMBERS

Numbers shown in the Ref No column correspond to numbers used in the associated graphic(s). An alphabetic suffix may be added to a reference number to identify lower level consist items. Numbers shown in the Graphic Ref column refer to the graphic number identifier displayed in the lower left corner of each illustration. The Graphic Ref number may be used in combination with the item Ref No to determine the correct part number. There may be intentional omission of a Ref No in a consist list as information is updated to reflect the latest serviceable part numbers.

11. INDENTED PART NAMES

When a part name is indented in a parts list, it is part of (included in) the group or assembly under which it is indented.

12. ILLUSTRATION REFERENCE LETTERS

When necessary, illustrations contain reference letters (A, B, C etc.) that are intended to track lines and harnesses from one point to another. They are also used to show where to reconnect illustrations that have been separated.

13. ABBREVIATIONS AND SYMBOLS

O.D. – Outside Diameter
I.D. – Inside Diameter
A – Not Part Of This Group
B – Use As Required
C – Change From Previous Type
D – Order By The Meter
E – Order By The Centimeter
F – Not Shown
G – Order By The Inch
I – Refer To Hydraulic Information System
M – Metric Part
R – Remfg Part May Be Available
Y – Separate Illustration
Z – Not Serviced Separately

14. DESCRIPTION OF TYPE CHANGES

Type - A type is defined as any configuration change that requires an additional Information Element for an Arrangement, Group, or Assembly. If serial number breaks for types are not available, a type # (Type 1, Type 2, etc.) will be displayed in the caption. These "type" changes are identified with a "C" note (change from previous type) in the Parts List. Only the "types" that apply to this Parts Manual will be included. Additional types may exist causing "C" notes to appear on an Information Element when no other types are shown.

15. <END>

This symbol indicates the end of an information element.

NOTE:

Continuing improvement and advancement of product design may cause changes to your engine which may not be included in this publication. Whenever a question arises regarding your Cat product or this publication, please consult your Cat dealer for the latest available information.

REMANUFACTURED COMPONENTS

As an option when making repairs consider Cat Remanufactured Components. Components that are available through the Cat Remanufactured Program are identified three ways in the parts book:

- with the letter R in the note field of the parts list
- with an R* at the beginning of the first line of the caption
- with an *R at the end of the first line of the caption

Typical components included in the Remanufacturing Program include:

ALTERNATORS
CONNECTING RODS
CRANKSHAFTS - UNDERSIZE
CRANKSHAFTS - UPGRADE TO NEW
CYLINDER HEADS
ELECTRONIC CONTROL MODULES (ECM)
ELECTRONIC SENSORS
FUEL INJECTORS
FUEL NOZZLES
FUEL PUMPS
GOVERNORS
OIL PUMPS
PISTONS
SHORT BLOCKS
STARTERS
TURBOCHARGERS - COMPLETE
TURBOCHARGER CARTRIDGES
WATER PUMPS

Cat Remanufactured engines for many engine arrangements are also available.

SUPPLEMENTAL COOLANT ADDITIVES

CUSTOMER BENEFITS:

Protects against cavitation, foam, erosion, corrosion, and scale buildup in cooling systems.

- Provides measured coolant conditioner.

DESCRIPTION:

Additives deplete from the coolant with normal operation. For this reason, Supplemental Coolant Additives (SCA) must be added to all heavy duty coolants at regular intervals. In addition, when not using a fully formulated, pre-charged antifreeze, like Cat DEAC, an initial charge of SCA must be added to the cooling system. The amount of SCA added to the system is dependent on the capacity of the system.

The SCA for initial fill is provided as a liquid. SCA's for maintenance intervals are available in liquid form and as a spin-on element. (No Spin-on available for 3600 Family of Engines)

NOTE:

The amount of SCA added at initial fill is not the same as the amount added at maintenance intervals.

The coolant additive elements can be used with any ethylene or propylene glycol type antifreeze which meets ASTM D4985 or ASTM D5345 Specifications.

NOTE:

For use with standard heavy duty coolant only, not for use with Extended Life Coolant.

PARTS NEEDED:

Cooling System Capacity		Liquid SCA at Initial Fill	Liquid SCA at Maintenance*	Spin-on SCA Maintenance Element*
Liters	Gallons			
22-30	(6-8)	3P-2044 (1)	6V-3542 (1)	111-2370 (1)
30-38	(8-10)	3P-2044 (1) 6V-3542 (1)	111-2372 (1)	111-2369 (1)
38-49	(10-13)	3P-2044 (1) 8T-1589 (1)	111-2372 (1)	111-2369 (1)
49-64	(13-17)	3P-2044 (2)	8T-1589 (1)	9N-3368 (1)
64-83	(17-22)	3P-2044 (2) 8T-1589 (1)	111-2372 (1) 6V-3542 (1)	111-2371 (1)
83-114	(22-30)	3P-2044 (3) 8T-1589 (1)	3P-2044 (1)	9N-3718 (1)
114-163	(30-43)	3P-2044 (5)	3P-2044 (1) 6V-3542 (1)	111-2371 (2)
163-242	(43-64)	3P-2044 (8)	3P-2044 (2)	9N-3718 (2)

* Normal maintenance period is 250 hrs. See your Operation and Maintenance Manual for complete coolant maintenance instructions.

( ) Indicates quantity required.

MAINTENANCE PARTS

DESCRIPTION	PART NUMBER	QTY	WHERE USED	PAGE
AIR INLET AND EXHAUST SYSTEM				
BREATHER	365-1632	1	AIR CLEANER GP	84
FILTER AS-AIR	365-1630	1	AIR CLEANER GP	84
FILTER-AIR	365-1631	1	AIR CLEANER GP	84
BASIC ENGINE				
BELT-DRIVE (ALTERNATOR)	310-8861	1	V-BELT GP	62
CAP	483-1214	1	HOUSING GP-FRONT	44
KEY	153-5518	1	CRANKSHAFT GP	11
PLUG-DRAIN (ENGINE OIL PAN)	153-6831	2	PLUG GP-ENGINE	55
STRAINER (ENGINE OIL)	331-5294	1	PAN GP-OIL	49
	547-5190	1	PAN GP-OIL	51
V-BELT (ALTERNATOR)	548-5481	1	V-BELT GP	63
COOLING SYSTEM				
CAP-RADIATOR	365-1622	1	RADIATOR & MOUNTING GP	80
		1	RADIATOR GP	82
GASKET	290-0360	1	COVER GP-REGULATOR HOUSING	74
GASKET (HOUSING, REGULATOR)	290-0360	1	COVER GP-REGULATOR HOUSING	73
REGULATOR-WATER TEMPERATURE (95-DEG C)	290-0358	1	PUMP GP-WATER	78
ELECTRICAL AND STARTING SYSTEM				
KEY-IGNITION	361-3925	1	SWITCH GP-START	121
FUEL SYSTEM				
FILTER ELEMENT-FUEL	288-6572	1	FILTER GP-FUEL	97
LUBRICATION SYSTEM				
CAP-OIL FILLER (ENGINE)	289-6120	2	FILLER GP-ENGINE OIL	66
FILTER-ENGINE OIL	266-7143	1	FILTER GP-ENGINE OIL	69
	482-8619	1	FILTER GP-ENGINE OIL	70

INDEX

NAME PAGE

A

AIR CLEANER GP 84
85
ALTERNATOR GP-CHARGING 110
111

B

BELT-DRIVE (ALTERNATOR). 62
BREATHER 84

C

CAMSHAFT GP 5
6
CAP 44
CAP-ADAPTER 7
CAP-OIL FILLER (ENGINE) 66
68
CAP-RADIATOR 80
82
CONNECTION GP-ELECTRICAL. 112
113
CONNECTION GP-EXHAUST. 86
CONTROL GP-GOVERNOR 93
94
95
96
COVER GP-FRONT HOUSING 8
COVER GP-REGULATOR HOUSING. 73
74
COVER GP-VALVE MECHANISM. 9
CRANKSHAFT GP. 11
13
CYLINDER BLOCK GP 15
18
20
CYLINDER HEAD AS. 22
23
CYLINDER HEAD GP. 24
25

D

DRIVE GP-FAN 26
DRIVE GP-TIMING 28

E

ENGINE AR. 1
ENGINE AR-PRIMARY. 2
3
4
EXTENSION GP-FAN 33
34

NAME PAGE

F

FAN GP 75
76
77
FILLER GP-ENGINE OIL. 66
67
68
FILM-IDENTIFICATION (CAT). 124
FILM-INFORMATION (FUEL FILTER). 124
FILM-WARNING (DO NOT SPRAY, READ OMM). 85
FILM-WARNING (DO NOT SPRAY, READ OMM) (ETHER) 84
FILM-WARNING (UNIVERSAL). 124
FILTER AS-AIR. 84
FILTER ELEMENT-FUEL 97
FILTER GP-ENGINE OIL. 69
70
FILTER GP-FUEL. 97
FILTER-AIR 84
FILTER-ENGINE OIL. 69
70
FLANGE GP-EXHAUST 87
FLYWHEEL GP 35
36
37
38

G

GASKET 74
GASKET (HOUSING, REGULATOR) 73
GAUGE AS 49
GAUGE-OIL LEVEL (DIPSTICK) (ENGINE) 49
51

H

HOUSING GP-FLYWHEEL 39
40
41
42
HOUSING GP-FRONT 43
44

I

INLET GP-CONVERTER 88

K

KEY 11
13
KEY-IGNITION. 121
KIT-FRONT GEAR. 46

INDEX

NAME PAGE

L

LIFTING GP-ENGINE 47
48

M

MANIFOLD GP-EXHAUST 90
91
MOUNTING GP-ENGINE OIL FILTER 71

P

PAN GP-OIL 49
51
PISTON & ROD GP 53
PISTON GP 54
PLATE & FILM GP 124
PLUG GP-ENGINE 55
56
PLUG GP-EXHAUST–MANIFOLD 92
PLUG-DRAIN (ENGINE OIL PAN) 55
56
PULLEY GP 57
PULLEY GP-CRANKSHAFT 58
PULLEY GP-FAN 27
PULLEY GP-WATER PUMP 59
PUMP GP-FUEL 98
100
104
PUMP GP-FUEL INJECTION 98
100
102
104
PUMP GP-FUEL PRIMING 106
107
PUMP GP-FUEL TRANSFER 108
PUMP GP-WATER 78
79

R

RADIATOR & MOUNTING GP 80
RADIATOR GP 82
REGULATOR (ALTERNATOR VOLTAGE) 110
111
REGULATOR-WATER TEMPERATURE (95-DEG C) 78
ROCKER ARM AS 60
ROCKER ARM GP 61

S

SENSOR & MTG GP-PRESSURE 2
3
4
114
SENSOR GP-TEMPERATURE 2
3
4
115
SOLENOID AS (12-VOLT) (FUEL SHUTOFF) 93
109
STARTING AID GP 116
STARTING AID GP-ETHER 117
STARTING MOTOR GP-ELECTRIC 118
119
STRAINER (ENGINE OIL) 49
51
SWITCH AS-START 121
122
SWITCH GP-PRESSURE 120
SWITCH GP-START 1
121
122
SWITCH GP-TEMPERATURE 123
SWITCH-PRESSURE (ENGINE OIL) 114
120
SWITCH-TEMPERATURE (ENGINE COOLANT) 115
123

T

THROTTLE GP 109

V

V-BELT (ALTERNATOR) 63
V-BELT GP 62
63
VALVE GP-ENGINE OIL RELIEF 72
VALVE MECHANISM GP 64

ENGINE ARRANGEMENT

308-6551 ENGINE AR

8.2 KW (10.9 BHP) AT 2800 RPM. NATURALLY ASPIRATED
PART OF 552-5701 ENGINE AR-PRIMARY

SMCS-1000 **i07475430**

NOTE	PART NUMBER	QTY	PART NAME 1 2 3 4 5 6 (PRODUCT LEVEL)	SEE PAGE
Y	**310-9211**	1	ALTERNATOR GP-CHARGING	110
Y	*310-9213*	1	V-BELT GP	62
Y	*321-6741*	1	CONNECTION GP-ELECTRICAL	112
Y	*308-2309*	1	CONNECTION GP-EXHAUST	86
Y	*308-5629*	1	CONTROL GP-GOVERNOR	93
Y	*308-4884*	1	COVER GP-FRONT HOUSING (AUXILIARY DRIVE)	8
Y	*308-4776*	1	COVER GP-REGULATOR HOUSING	73
Y	*308-4891*	1	COVER GP-VALVE MECHANISM	9
Y	*308-4185*	1	CRANKSHAFT GP	11
Y	*308-4178*	1	CYLINDER BLOCK GP	15
Y	*308-4187*	1	CYLINDER HEAD GP	24
Y	*515-2716*	1	DRIVE GP-FAN	26
Y	*308-4238*	1	DRIVE GP-TIMING	28
Y	*310-9209*	1	FAN GP	75
Y	*308-4725*	1	FILLER GP-ENGINE OIL	66
Y	*308-4726*	1	FILTER GP-ENGINE OIL	69
Y	*311-1725*	1	FLYWHEEL GP	35
Y	*311-1724*	1	HOUSING GP-FLYWHEEL	39
Y	*308-5618*	1	LIFTING GP-ENGINE	47
Y	*308-5583*	1	MANIFOLD GP-EXHAUST	90
Y	*308-4735*	1	MOUNTING GP-ENGINE OIL FILTER	71
Y	*310-9205*	1	PAN GP-OIL	49
Y	*308-4186*	1	PISTON GP	54
Y	*310-9206*	1	PLUG GP-ENGINE	55
Y	*310-9207*	1	PULLEY GP	57
Y	*308-4317*	1	PULLEY GP-WATER PUMP	59
Y	*310-9201*	1	PUMP GP-FUEL INJECTION	98
Y	*308-2320*	1	PUMP GP-FUEL PRIMING	106
Y	*308-5613*	1	PUMP GP-FUEL TRANSFER	108
Y	*310-9208*	1	PUMP GP-WATER	78
Y	*468-5384*	1	RADIATOR & MOUNTING GP	80
Y	*308-5614*	1	STARTING AID GP	116
Y	*308-4311*	1	STARTING MOTOR GP-ELECTRIC	118
Y	*308-5644*	1	SWITCH GP-PRESSURE	120
Y	*308-2314*	1	SWITCH GP-START	121
Y	*310-9227*	1	SWITCH GP-TEMPERATURE	123
Y	*308-4211*	1	VALVE GP-ENGINE OIL RELIEF	72
Y	*308-4188*	1	VALVE MECHANISM GP	64
			AVAILABLE REPAIR KIT(S):	
Y	**339-3015**	1	KIT-FRONT GEAR	46
			(INCLUDES COVER, SPRING, COLLAR, CLIP, WASHERS, & SHIMS)	

Y - SEPARATE ILLUSTRATION

<END>

549-5443 ENGINE AR-PRIMARY

5 BRAKE KW (7 BHP) AT 1800 RPM

SMCS-1000 **i07835746**

NOTE	PART NUMBER	QTY	PART NAME 1 2 3 4 5 6 (PRODUCT LEVEL)	SEE PAGE
Y	*532-8659*	1	AIR CLEANER GP	84
Y	*532-8595*	1	ALTERNATOR GP-CHARGING	111
Y	*532-8405*	1	CAMSHAFT GP	5
Y	*541-6343*	1	CONNECTION GP-ELECTRICAL	113
Y	*542-7643*	1	CONTROL GP-GOVERNOR	94
Y	*532-8569*	1	COVER GP-REGULATOR HOUSING	74
Y	*532-8400*	1	CRANKSHAFT GP	13
Y	*532-8399*	1	CYLINDER BLOCK GP	18
Y	*532-8402*	1	CYLINDER HEAD GP	25
Y	*532-8589*	1	EXTENSION GP-FAN	33
Y	*532-8585*	1	FAN GP	77
Y	*532-8530*	1	FILLER GP-ENGINE OIL	67
Y	*532-8560*	1	FILTER GP-ENGINE OIL	70
Y	*532-9876*	1	FILTER GP-FUEL	97
Y	*550-1337*	1	FLANGE GP-EXHAUST	87
Y	*532-8501*	1	FLYWHEEL GP	38
Y	*532-8449*	1	HOUSING GP-FLYWHEEL	40
Y	*532-8604*	1	HOUSING GP-FRONT	43
Y	*532-8637*	1	INLET GP-CONVERTER	88
Y	*532-9889*	1	LIFTING GP-ENGINE	48
Y	*532-8683*	1	MANIFOLD GP-EXHAUST	91
Y	*532-8511*	1	PAN GP-OIL	51
Y	*532-8401*	1	PISTON & ROD GP	53
Y	*552-4186*	1	PLATE & FILM GP	124
Y	*532-8519*	1	PLUG GP-ENGINE	56
Y	*532-8563*	1	PULLEY GP-CRANKSHAFT	58
Y	*542-7644*	1	PUMP GP-FUEL INJECTION	102
Y	*565-2285*	1	PUMP GP-FUEL PRIMING	107
Y	*532-8567*	1	PUMP GP-WATER	79
Y	*542-7645*	1	RADIATOR GP	82
Y	*532-8404*	1	ROCKER ARM GP	61
Y	*533-2747*	1	SENSOR GP-TEMPERATURE	115
Y	*532-9887*	1	STARTING AID GP-ETHER	117
Y	*532-8502*	1	STARTING MOTOR GP-ELECTRIC	119
Y	*532-9916*	1	SENSOR & MTG GP-PRESSURE	114
Y	*561-0909*	1	SWITCH GP-START	122
Y	*532-9894*	1	THROTTLE GP	109
Y	*532-8597*	1	V-BELT GP	63

Y - SEPARATE ILLUSTRATION

<END>

552-5701 ENGINE AR-PRIMARY

37-KW

SMCS-1000 **i07475442**

NOTE	PART NUMBER	QTY	PART NAME 1 2 3 4 5 6 (PRODUCT LEVEL)	SEE PAGE
Y	*308-6551*	1	ENGINE AR	1

Y - SEPARATE ILLUSTRATION

<END>

552-5704 ENGINE AR-PRIMARY

SMCS-1000 **i07762074**

NOTE	PART NUMBER	QTY	PART NAME 1 2 3 4 5 6 (PRODUCT LEVEL)	SEE PAGE
Y	*532-8659*	1	AIR CLEANER GP	84
Y	*551-6312*	1	CAMSHAFT GP	6
Y	*541-6343*	1	CONNECTION GP-ELECTRICAL	113
Y	*551-6476*	1	CONTROL GP-GOVERNOR	96
Y	*532-9894*	1	THROTTLE GP	109
Y	*532-8569*	1	COVER GP-REGULATOR HOUSING	74
Y	*532-8637*	1	INLET GP-CONVERTER	88
Y	*532-8400*	1	CRANKSHAFT GP	13
Y	*532-8399*	1	CYLINDER BLOCK GP	18
Y	*532-8402*	1	CYLINDER HEAD GP	25
Y	*532-8290*	1	PULLEY GP-FAN	27
Y	*532-8583*	1	FAN GP	76
Y	*542-4595*	1	EXTENSION GP-FAN	34
Y	*532-8530*	1	FILLER GP-ENGINE OIL	67
Y	*532-8560*	1	FILTER GP-ENGINE OIL	70
Y	*565-2285*	1	PUMP GP-FUEL PRIMING	107
Y	*550-1337*	1	FLANGE GP-EXHAUST	87
Y	*532-8498*	1	FLYWHEEL GP	37
Y	*532-9887*	1	STARTING AID GP-ETHER	117
Y	*551-6413*	1	HOUSING GP-FLYWHEEL	42
Y	*532-8604*	1	HOUSING GP-FRONT	43
Y	*532-9889*	1	LIFTING GP-ENGINE	48
Y	*532-9876*	1	FILTER GP-FUEL	97
Y	*532-8683*	1	MANIFOLD GP-EXHAUST	91
Y	*532-8511*	1	PAN GP-OIL	51
Y	*532-8401*	1	PISTON & ROD GP	53
Y	*532-8519*	1	PLUG GP-ENGINE	56
Y	*532-8563*	1	PULLEY GP-CRANKSHAFT	58
Y	*550-7127*	1	PUMP GP-FUEL INJECTION	104
Y	*532-8567*	1	PUMP GP-WATER	79
Y	*542-7645*	1	RADIATOR GP	82
Y	*533-2747*	1	SENSOR GP-TEMPERATURE	115
Y	*532-8502*	1	STARTING MOTOR GP-ELECTRIC	119
Y	*532-9916*	1	SENSOR & MTG GP-PRESSURE	114
Y	*561-0909*	1	SWITCH GP-START	122
Y	*532-8597*	1	V-BELT GP	63
Y	*532-8404*	1	ROCKER ARM GP	61
	552-4186	1	PLATE & FILM GP	

Y - SEPARATE ILLUSTRATION

<END>

558-8965 ENGINE AR-PRIMARY

8.2 BRAKE KW (10.0 BHP) AT2800 RPM

SMCS-1000 **i07708299**

NOTE	PART NUMBER	QTY	PART NAME 1 2 3 4 5 6 (PRODUCT LEVEL)	SEE PAGE
Y	*551-4271*	1	AIR CLEANER GP	85
Y	*532-8405*	1	CAMSHAFT GP	5
Y	*551-1921*	1	CAP-ADAPTER	7
Y	*550-7118*	1	CONTROL GP-GOVERNOR	95
Y	*532-9894*	1	THROTTLE GP	109
Y	*532-8569*	1	COVER GP-REGULATOR HOUSING	74
Y	*532-8637*	1	INLET GP-CONVERTER	88
Y	*532-8400*	1	CRANKSHAFT GP	13
Y	*532-8399*	1	CYLINDER BLOCK GP	18
Y	*532-8402*	1	CYLINDER HEAD GP	25
Y	*547-5943*	1	FILLER GP-ENGINE OIL	68
Y	*532-8560*	1	FILTER GP-ENGINE OIL	70
Y	*532-8475*	1	FLYWHEEL GP	36
Y	*532-9887*	1	STARTING AID GP-ETHER	117
Y	*540-6551*	1	HOUSING GP-FLYWHEEL	41
Y	*532-8604*	1	HOUSING GP-FRONT	43
Y	*532-9889*	1	LIFTING GP-ENGINE	48
Y	*532-8511*	1	PAN GP-OIL	51
Y	*532-8401*	1	PISTON & ROD GP	53
Y	*532-8519*	1	PLUG GP-ENGINE	56
Y	*532-8660*	1	PLUG GP-EXHAUST	92
Y	*532-8563*	1	PULLEY GP-CRANKSHAFT	58
Y	*550-7127*	1	PUMP GP-FUEL INJECTION	104
Y	*532-8567*	1	PUMP GP-WATER	79
Y	*533-2747*	1	SENSOR GP-TEMPERATURE	115
Y	*532-9916*	1	SENSOR & MTG GP-PRESSURE	114
Y	*532-8404*	1	ROCKER ARM GP	61
	552-4186	1	PLATE & FILM GP	

Y - SEPARATE ILLUSTRATION

<END>

532-8405 CAMSHAFT GP

PART OF 549-5443, 558-8965 ENGINE AR-PRIMARY

SMCS-1210 **i07708601**

NOTE	REF NO	GRAPHIC REF	PART NUMBER	QTY	PART NAME 1 2 3 4 5 6 (PRODUCT LEVEL)	SEE PAGE
	1	1	**542-6419**	1	CAMSHAFT AS	
	1A	1	**153-6492**	1	KEY-WOODRUFF	
	1B	1	**183-3605**	1	BEARING	
	1C	1	**308-4261**	1	GEAR-CAMSHAFT	
	1D	1	**313-9323**	1	SPACER (20.5X28X9.3-MM THK)	
	2	1	**153-5594**	4	TAPPET	
	3	1	**490-0367**	1	PLATE	
M	4	1	**9X-6153**	1	BOLT (M6X1X10-MM)	
	5	1	**153-6838**	1	BOLT AS	
	6	1	**528-6881**	4	PUSHROD AS	

M - METRIC PART

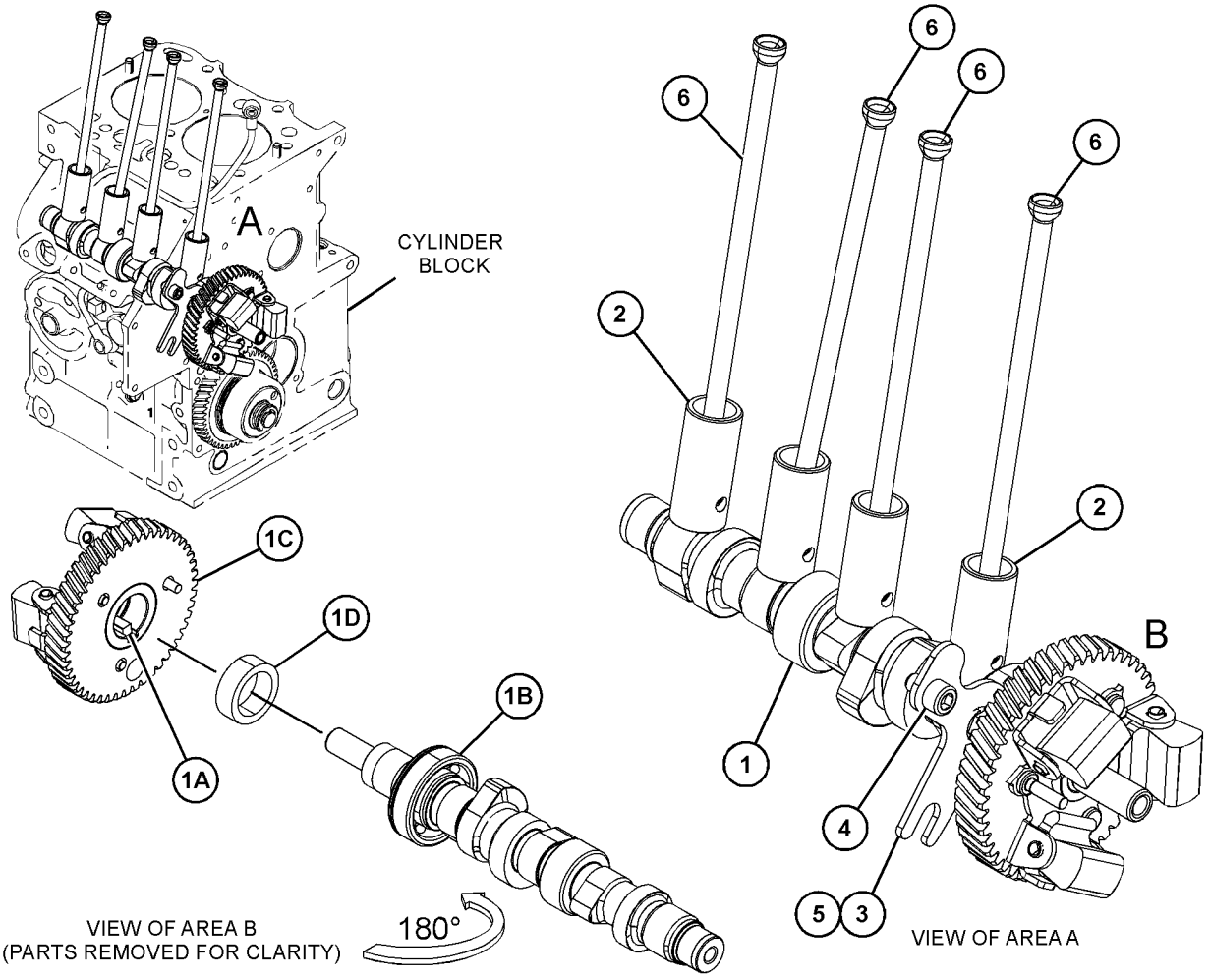

GRAPHIC #1 <END> g06404605

551-6312 CAMSHAFT GP

PART OF 552-5704 ENGINE AR-PRIMARY

SMCS-1210 **i07762064**

NOTE	REF NO	GRAPHIC REF	PART NUMBER	QTY	PART NAME 1 2 3 4 5 6 (PRODUCT LEVEL)	SEE PAGE
	1	1	**153-6838**	1	BOLT AS	
M	2	1	**9X-6153**	1	BOLT (M6X1X10-MM)	
	3	1	**490-0367**	1	PLATE	
	4	1	**528-6881**	4	PUSHROD AS	
	5	1	**153-5594**	4	TAPPET	
	6	1	**551-4267**	1	CAMSHAFT AS	
	6A	1	**153-6492**	1	KEY-WOODRUFF	
	6B	1	**183-3605**	1	BEARING	
	6C	1	**313-9323**	1	SPACER (20.5X28X9.3-MM THK)	
	6D	1	**327-7720**	1	GEAR-CAMSHAFT (48-TEETH)	

M - METRIC PART

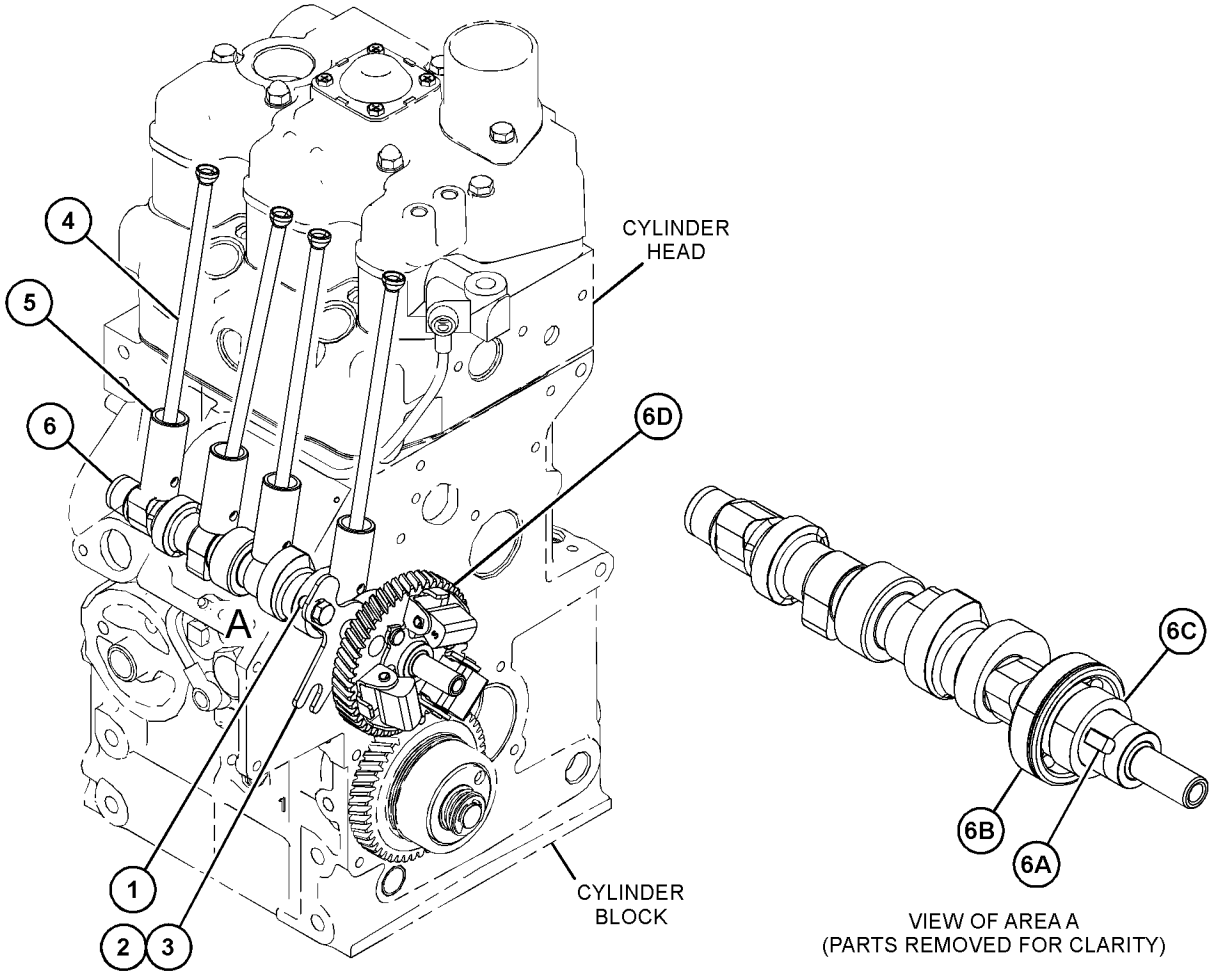

GRAPHIC #1 <END> g06425147

551-1921 CAP-ADAPTER

PART OF 558-8965 ENGINE AR-PRIMARY

SMCS-1250 **i07695635**

NOTE	REF NO	GRAPHIC REF	PART NUMBER	QTY	PART NAME 1 2 3 4 5 6 (PRODUCT LEVEL)	SEE PAGE
					(NO SERVICED PARTS)	

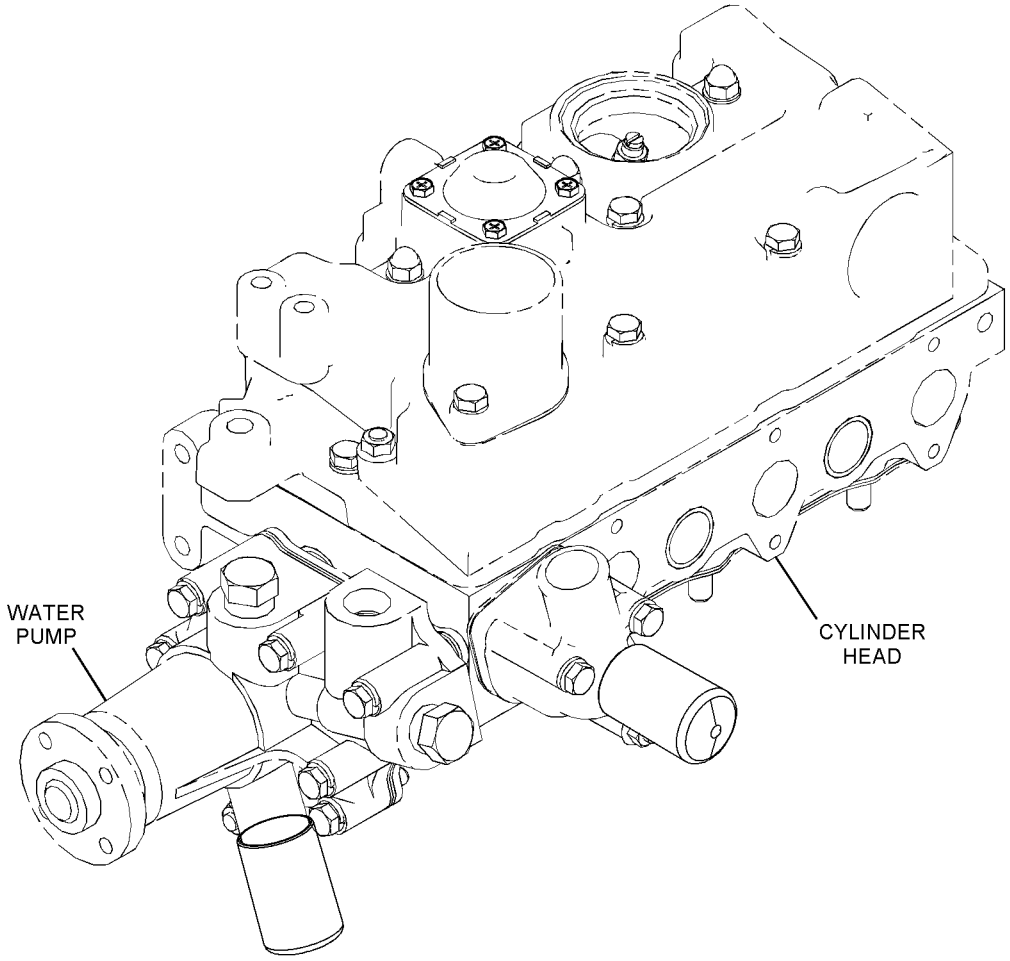

GRAPHIC #1 <END> g06402196

308-4884 COVER GP-FRONT HOUSING

SMCS-1151, 1166 **i07483061**

NOTE	REF NO	GRAPHIC REF	PART NUMBER	QTY	PART NAME 1 2 3 4 5 6 (PRODUCT LEVEL)	SEE PAGE
M	1	1	**153-5592**	4	NUT (M8X1.25-THD)	
	2	1	**289-5968**	1	PLATE	
	3	1	**289-5969**	1	GASKET	
	4	1	**289-5970**	4	BOLT	
	5	1	**462-7339**	1	PLATE	

M - METRIC PART

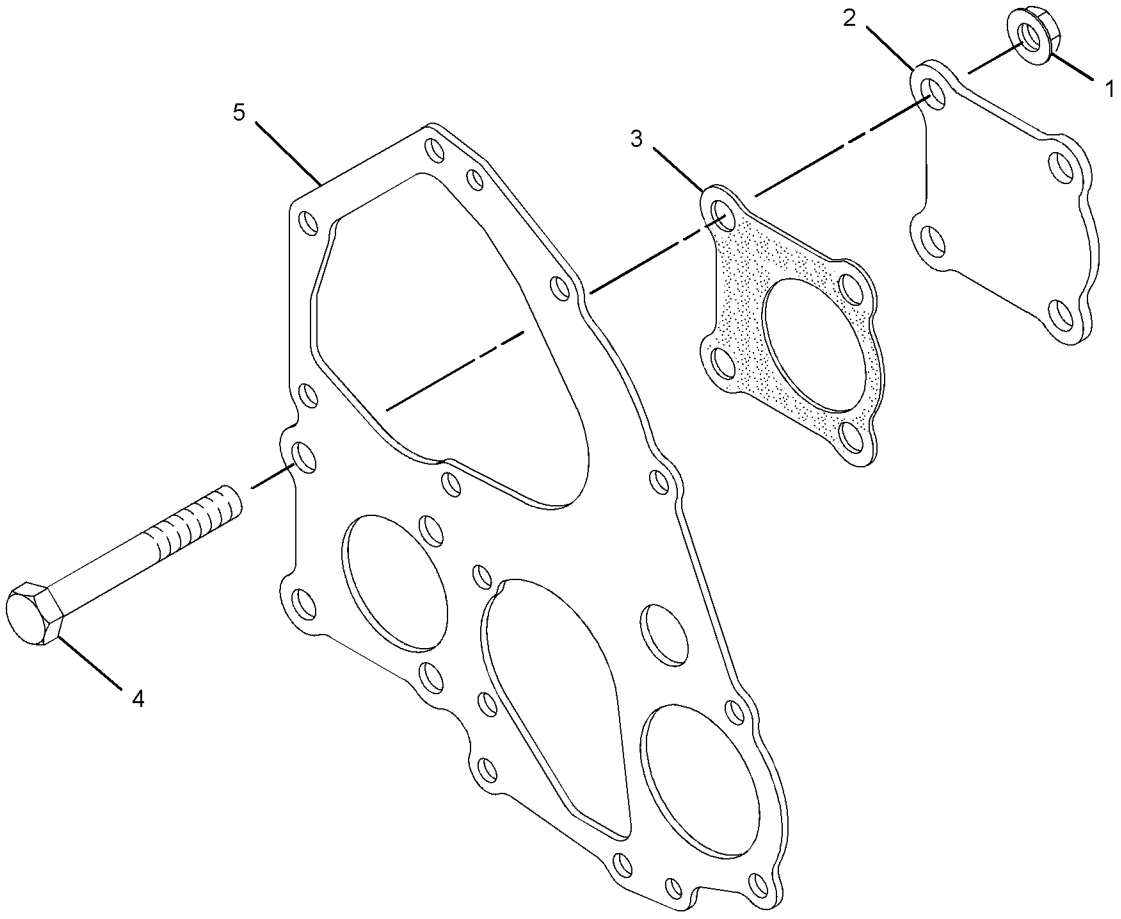

GRAPHIC #1 <END> g01829162

308-4891 COVER GP-VALVE MECHANISM

SMCS-1107 **i07479069**

NOTE	REF NO	GRAPHIC REF	PART NUMBER	QTY	PART NAME 1 2 3 4 5 6 (PRODUCT LEVEL)	SEE PAGE
	1	1	**153-5939**	1	STOPPER (OIL)	
	2	1	**153-7640**	2	BOLT AS	
M	3	1	**217-5860**	4	BOLT (M4X0.7X8-MM)	
	4	1	**217-5862**	4	SCREW (SELF-TAPPING)	
	5	1	**231-3013**	1	CONNECTION-AIR	
	6	1	**499-0368**	1	GASKET (AIR INTAKE)	
	7	1	**288-6585**	1	COVER-ROCKER	
	8	1	**288-6586**	1	GASKET (VALVE COVER)	
	9	1	**288-6588**	1	VALVE-BREATHER	
	10	1	**288-6590**	2	WASHER (6.2X12.5X1-MM THK)	
M	11	1	**288-6591**	3	BOLT (M6X1X70-MM)	
	12	1	**291-0250**	1	PLATE	
M	13	1	**308-1892**	2	NUT (M6X1-THD)	

M - METRIC PART

308-4891 **COVER GP-VALVE MECHANISM (**contd.**)** **i07479069**

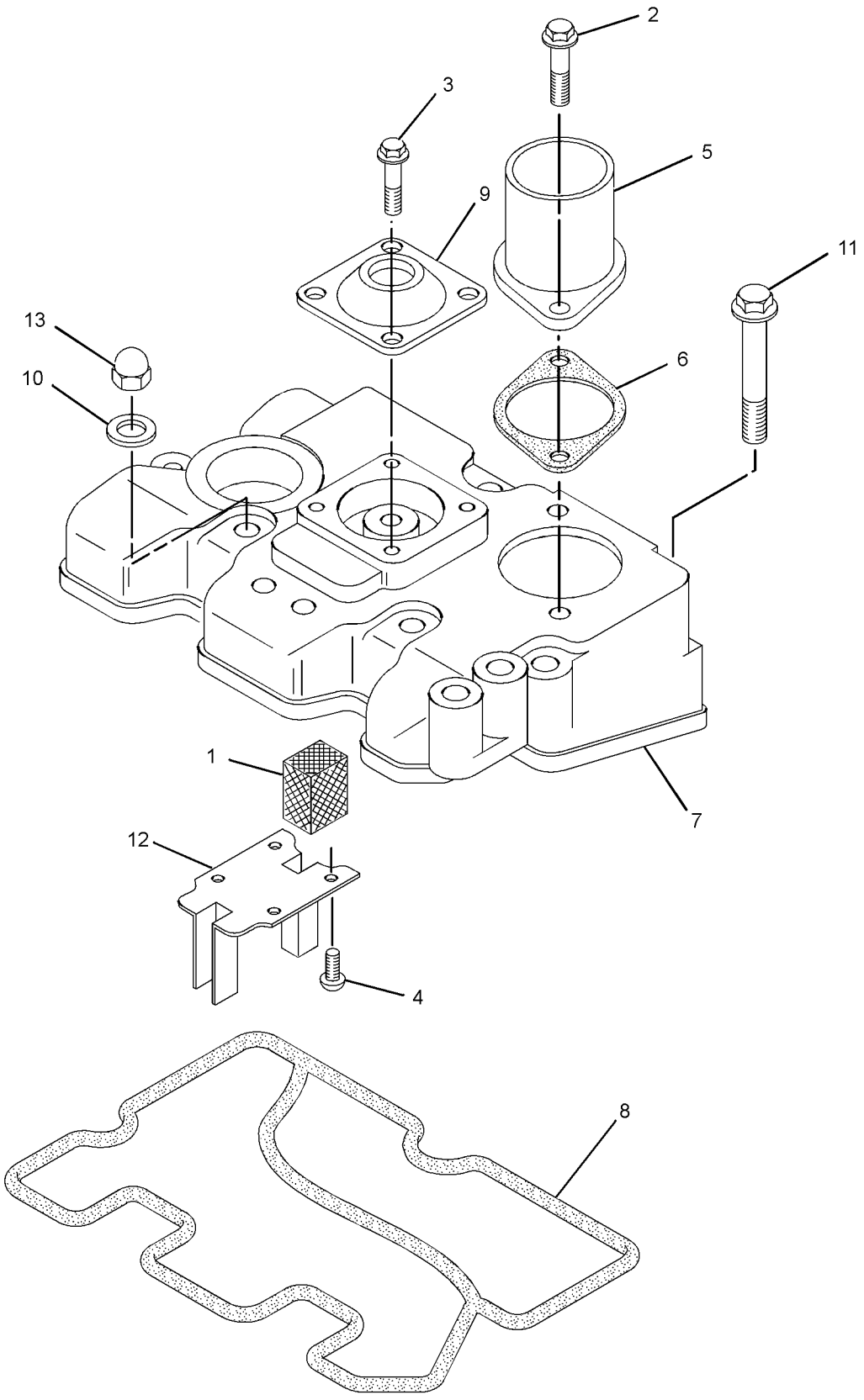

GRAPHIC #1 <END> g01358214

308-4185 CRANKSHAFT GP

SMCS-1202 **i07478945**

NOTE	REF NO	GRAPHIC REF	PART NUMBER	QTY	PART NAME 1 2 3 4 5 6 (PRODUCT LEVEL)	SEE PAGE
	1	1	**153-5397**	1	BOLT AS	
	2	1	**153-5408**	2	BOLT	
	3	1	**288-6554**	1	CRANKSHAFT AS	
	3A	1	**153-5518**	1	KEY	
	3B	1	**288-6555**	1	GEAR-CRANKSHAFT	
	4	1	**288-6556**	1	HOLDER AS	
	4A	1	**153-5402**	2	DOWEL	
	4B	1	**288-6557**	2	BOLT	
	5	1	**311-0664**	1	KIT-BEARING	
	6	1	**288-6559**	1	HOLDER AS	
	6A	1	**153-5402**	2	DOWEL	
	6B	1	**288-6560**	2	BOLT	
	7	1	**288-6561**	1	KIT-BEARING	

308-4185 **CRANKSHAFT GP (**contd.**)** **i07478945**

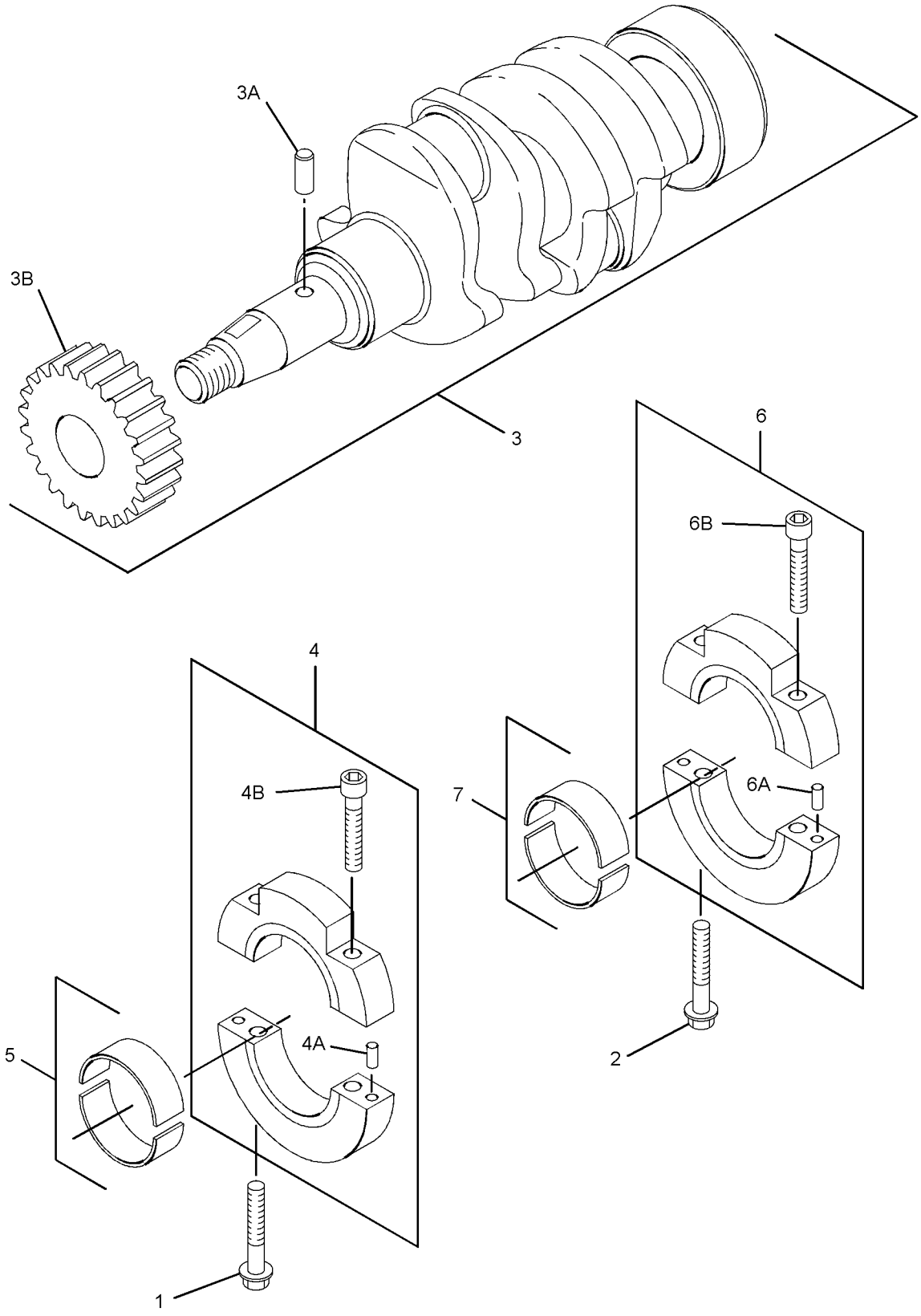

GRAPHIC #1 <END> g01357104

532-8400 CRANKSHAFT GP

PART OF 549-5443, 552-5704, 558-8965 ENGINE AR-PRIMARY

SMCS-1202 **i07495712**

NOTE	REF NO	GRAPHIC REF	PART NUMBER	QTY	PART NAME 1 2 3 4 5 6 (PRODUCT LEVEL)	SEE PAGE
	1	1	**153-5397**	1	BOLT AS	
	2	1	**153-5408**	2	BOLT	
	3	1	**542-6420**	1	CRANKSHAFT AS	
	3A	1	**153-5518**	1	KEY	
	3B	1	**288-6555**	1	GEAR-CRANKSHAFT	
	4	1	**288-6556**	1	HOLDER AS	
	4A	1	**153-5402**	2	DOWEL	
	4B	1	**288-6557**	2	BOLT	
	5	1	**311-0664**	1	KIT-BEARING	
	6	1	**288-6559**	1	HOLDER AS	
	6A	1	**153-5402**	2	DOWEL	
	6B	1	**288-6560**	2	BOLT	
	7	1	**288-6561**	1	KIT-BEARING	

532-8400 **CRANKSHAFT GP (**contd.**)** **i07495712**

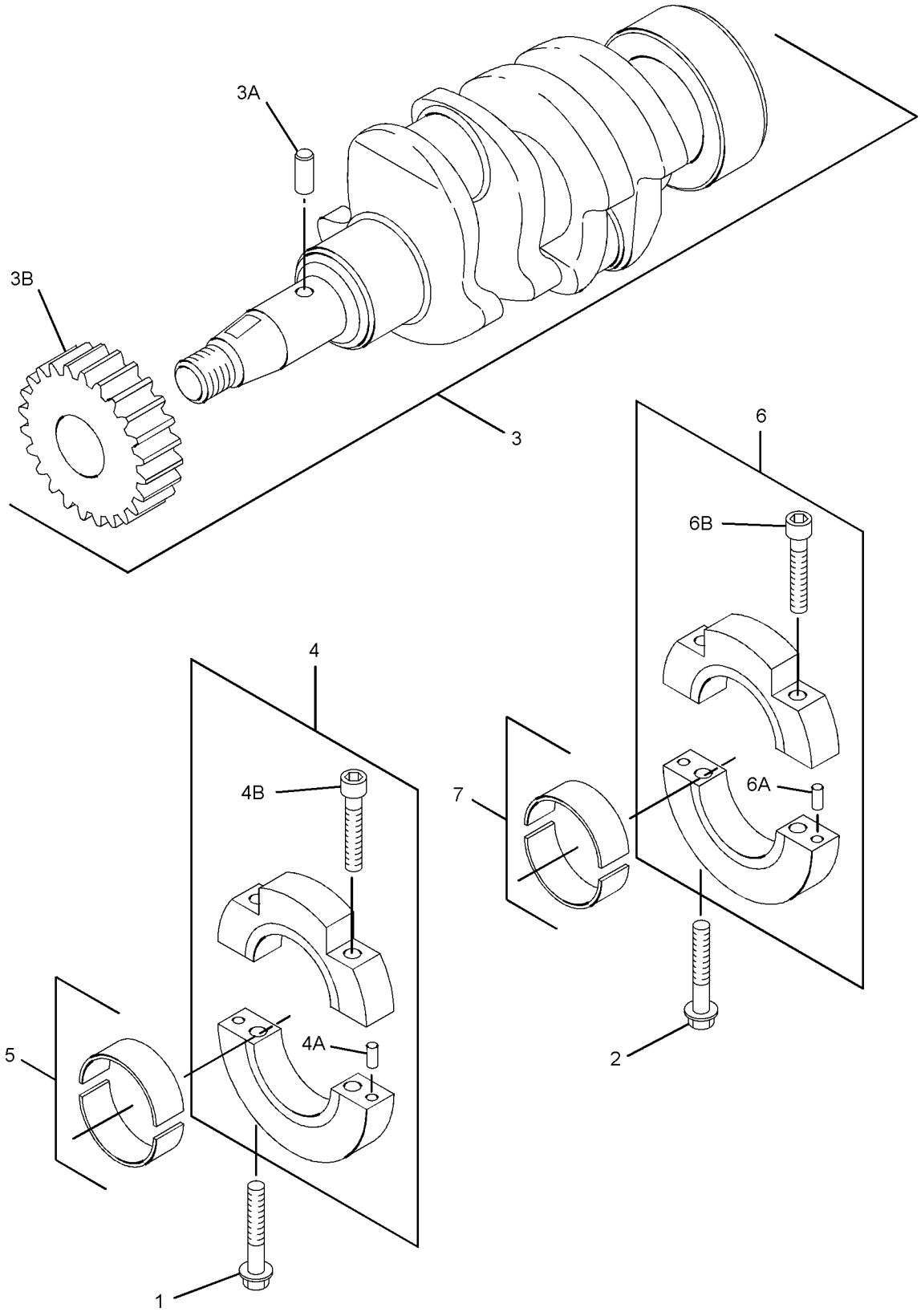

GRAPHIC #1 <END> g01357104

308-4178 CYLINDER BLOCK GP

SMCS-1201 **i07478942**

NOTE	REF NO	GRAPHIC REF	PART NUMBER	QTY	PART NAME 1 2 3 4 5 6 (PRODUCT LEVEL)	SEE PAGE
	1	2	**153-5385**	1	PLUG	
	2	2	**153-5387**	4	PLUG	
	3	2	**153-5391**	1	PLUG	
	4	2	**153-5392**	1	BEARING	
	5	2	**153-5393**	2	DOWEL	
	6	2	**153-5394**	2	DOWEL	
	7	2	**487-0157**	2	PIN-SPRING	
M	8	2	**153-5407**	2	STUD (M6X1X28-MM)	
	9	1	**153-5414**	1	SEAL AS	
	10	1	**153-6838**	3	BOLT AS	
M	11	2	**183-1163**	1	STUD (M6X1X43-MM)	
M	12	2	**183-1164**	1	STUD (M6X1X68-MM)	
	13	2	**420-5890**	2	DOWEL	
	14	2	**221-1136**	3	PLUG (BLANKING)	
	15	2	**288-6537**	1	CAP	
	16	2	**288-6538**	3	PLUG	
	17	2	**288-6539**	1	CAP	
	18	2	**153-5390**	1	BALL BEARING	
	19	2	**308-4180**	1	BUSHING	
	20	1	**288-6544**	1	GASKET	
F		1	**210-9587**	2	DOWEL	

F - NOT SHOWN
M - METRIC PART

308-4178 **CYLINDER BLOCK GP (**contd.**)** **i07478942**

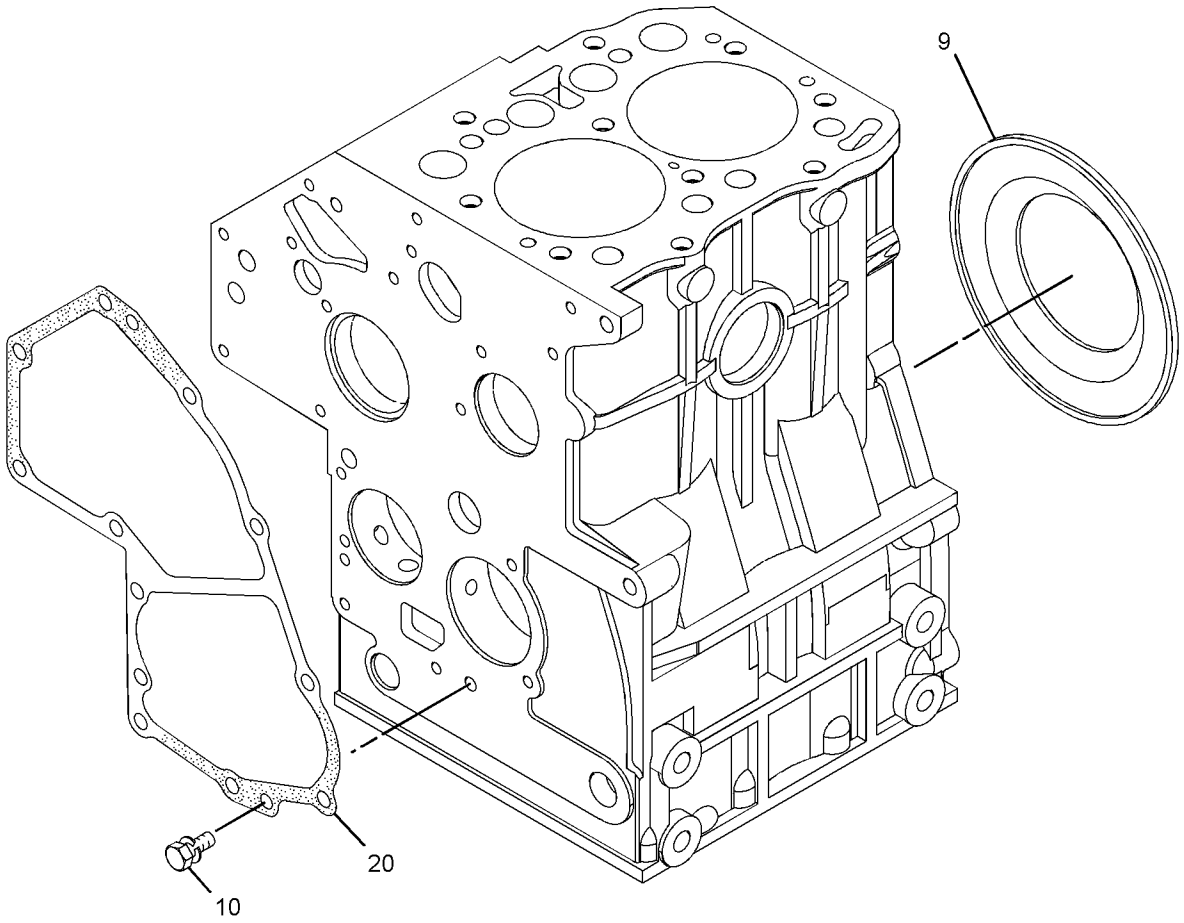

GRAPHIC #1 g01830154

308-4178 **CYLINDER BLOCK GP (**contd.**)** **i07478942**

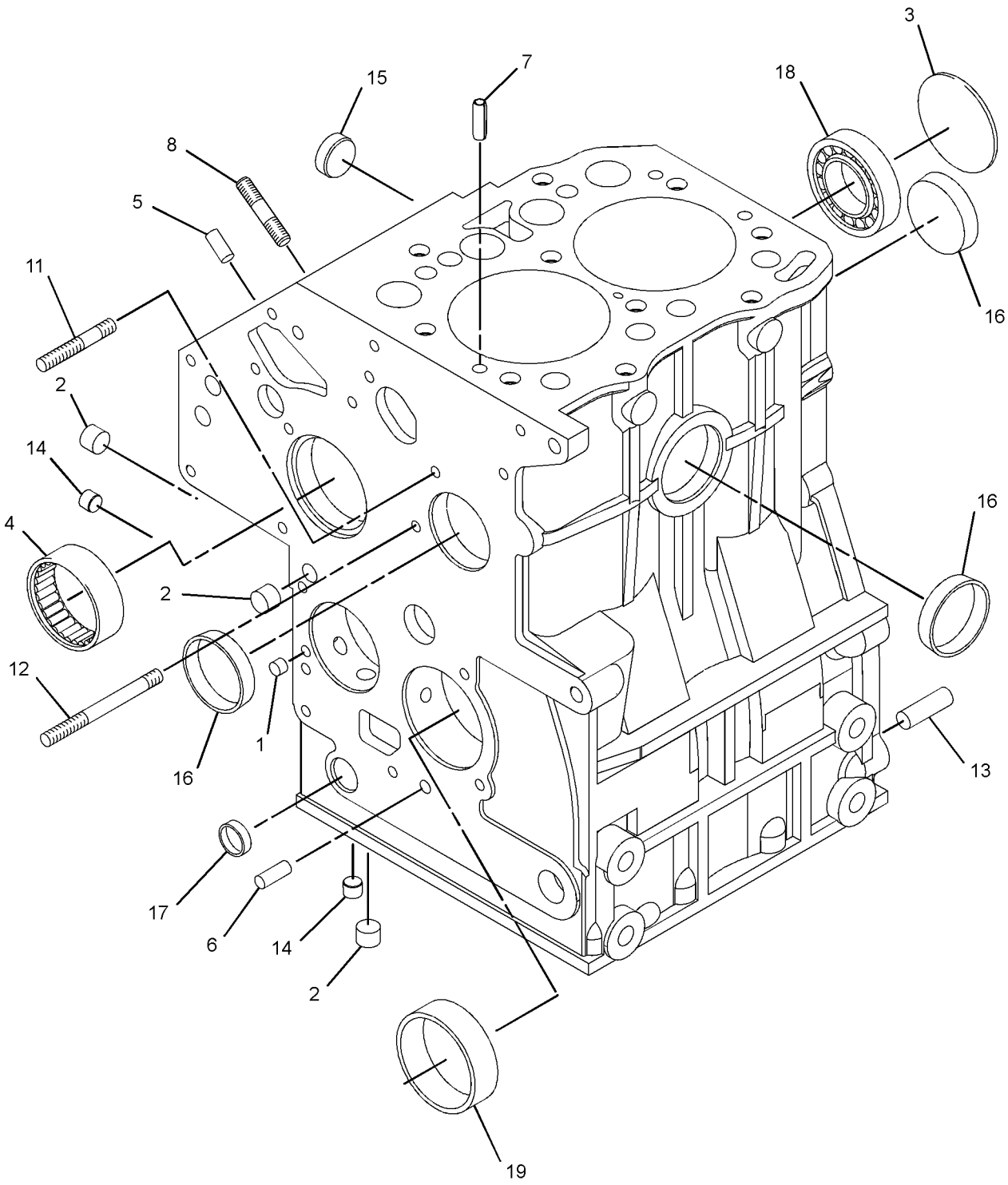

GRAPHIC #2 <END> g06106098

532-8399 CYLINDER BLOCK GP

PART OF 549-5443, 558-8965 ENGINE AR-PRIMARY

TYPE 1

SMCS-1201 **i07495803**

NOTE	REF NO	GRAPHIC REF	PART NUMBER	QTY	PART NAME 1 2 3 4 5 6 (PRODUCT LEVEL)	SEE PAGE
	1	1	**547-5181**	1	CYLINDER BLOCK AS	
	1A	1	**288-6537**	1	CAP	
	1B	1	**288-6538**	3	PLUG	
	2	1	**153-5390**	1	BALL BEARING	
	3	1	**420-5890**	2	DOWEL	
	4	1	**153-5393**	2	DOWEL	
	5	1	**153-6853**		SEAL-O-RING	
	6	1	**153-5391**	1	PLUG	
	7	1	**153-5381**	1	PLUG	
	8	1	**153-5414**		SEAL AS	
	9	1	**154-1942**	1	VALVE-RELIEF	
	10	1	**153-5392**	1	BEARING	
	11	1	**153-7985**	1	WASHER	
	12	1	**288-6542**		SHAFT	
	13	1	**536-6614**	1	ROTOR	
	14	1	**536-6617**	1	GEAR AS-IDLER	
	15	1	**153-6851**	1	CLIP	
	16	1	**153-6850**	1	COLLAR	
	17	1	**153-6848**	1	COVER	
	18	1	**153-6849**	1	SPRING	
B	19	1	**160-4151**	1	SHIM (0.15-MM THK)	
B		1	**160-4152**	1	SHIM (0.2-MM THK)	
B		1	**160-4153**	1	SHIM (0.5-MM THK)	
B		1	**160-4150**	1	SHIM (0.1-MM THK)	
	20	1	**153-5387**	4	PLUG	
	21	1	**153-5385**	1	PLUG	
	22	1	**221-1136**	2	PLUG (BLANKING)	
	23	1	**308-4180**	1	BUSHING	
	24	1	**487-0157**	2	PIN-SPRING	
	25	1	**153-6879**	1	STUD-HOLLOW	
	26	1	**289-6121**	1	TUBE	
	27	1	**258-7291**		PLUG-PIPE	

B - USE AS REQUIRED

532-8399 **CYLINDER BLOCK GP (**contd.**)** **i07495803**

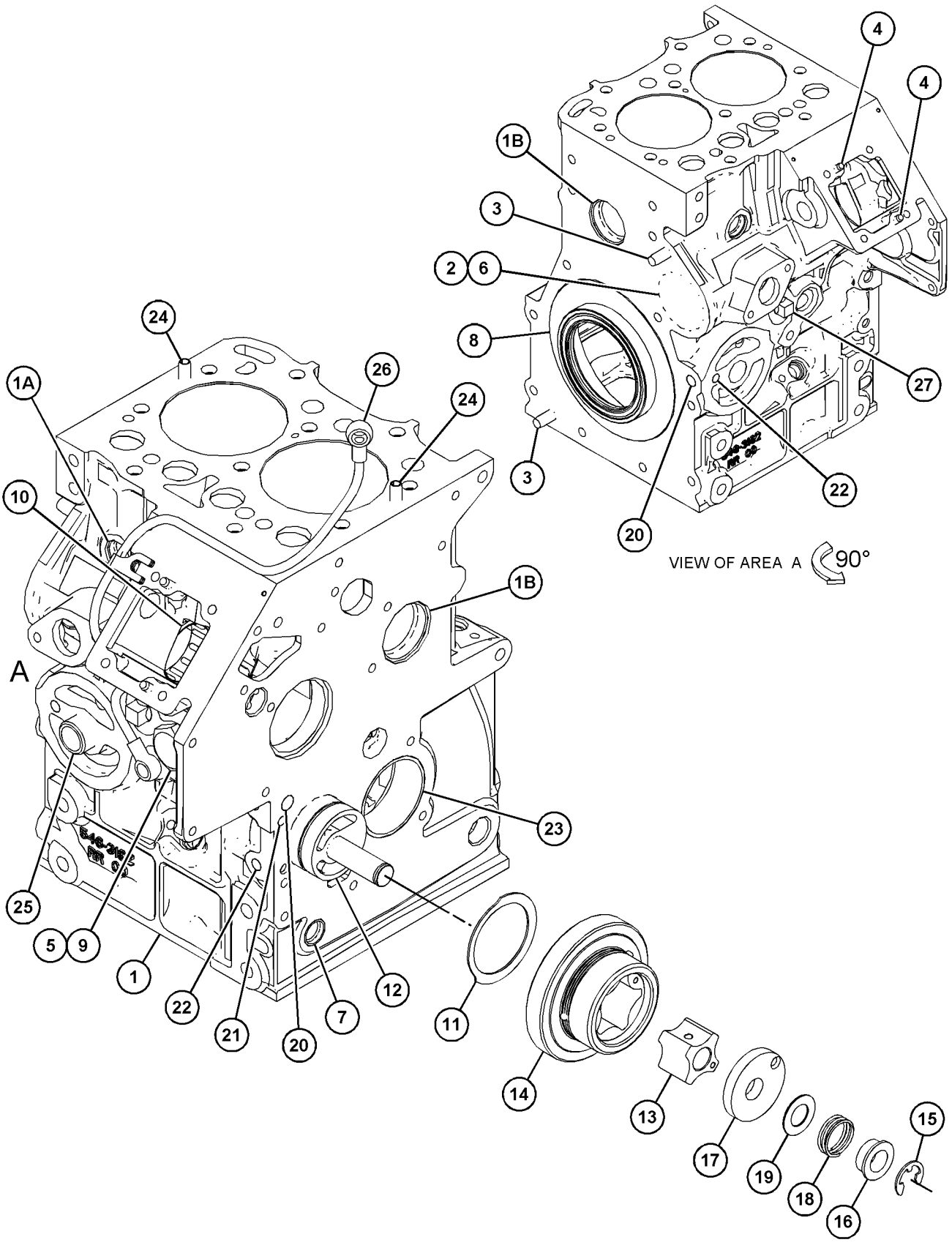

GRAPHIC #1 <END> g06352440

532-8399 CYLINDER BLOCK GP

PART OF 549-5443, 552-5704, 558-8965 ENGINE AR-PRIMARY

TYPE 2

SMCS-1201 **i07748025**

NOTE	REF NO	GRAPHIC REF	PART NUMBER	QTY	PART NAME 1 2 3 4 5 6 (PRODUCT LEVEL)	SEE PAGE
	1	1	*547-5181*	1	CYLINDER BLOCK AS	
	1A	1	**288-6537**	1	CAP	
	1B	1	**288-6538**	3	PLUG	
		1	**288-6539**	1	CAP	
	2	1	**153-5390**	1	BALL BEARING	
	3	1	**420-5890**	2	DOWEL	
	4	1	**153-5393**	2	DOWEL	
	5	1	**153-6853**	1	SEAL-O-RING	
	6	1	**153-5391**	1	PLUG (EXPANSION)	
	7	1	**153-5381**	1	PLUG	
	8	1	**153-5414**	1	SEAL AS	
	9	1	**154-1942**	1	VALVE-RELIEF	
	10	1	**153-5392**	1	BEARING	
J	11	1	**153-7985**	1	WASHER	
J	12	1	**288-6542**	1	SHAFT	
M		1	**153-5592**	1	NUT (M8X1.25-THD)	
CJ	14	1	*561-2379*	1	GEAR AS-IDLER (48-TEETH)	
		1	**154-1677**	3	BUSHING	
		1	**154-1678**	3	DOWEL	
		1	**154-1679**	1	SPRING	
J	15	1	**153-6851**	1	CLIP (CIRCLE)	
J	16	1	**153-6850**	1	COLLAR	
J	17	1	**153-6848**	1	COVER	
J	18	1	**153-6849**	1	SPRING	
BJ	19	1	**160-4151**	1	SHIM (0.15-MM THK)	
BJ		1	**160-4152**	1	SHIM (0.2-MM THK)	
BJ		1	**160-4153**	1	SHIM (0.5-MM THK)	
BJ		1	**160-4150**	1	SHIM (0.1-MM THK)	
	20	1	**153-5387**	4	PLUG (BLANK)	
	21	1	**153-5385**	1	PLUG	
	22	1	**221-1136**	2	PLUG (BLANKING) (BLANK)	
	23	1	**308-4180**	1	BUSHING	
	24	1	**487-0157**	2	PIN-SPRING	
	25	1	**153-6879**	1	STUD-HOLLOW	
	26	1	**289-6121**	1	TUBE	
	27	1	**258-7291**	1	PLUG-PIPE	
					PARTS SHOWN IN GRAPHIC(S) WITHOUT A REFERENCE NUMBER ARE NOT SERVICED SEPARATELY	
					AVAILABLE REPAIR KIT(S):	
JY			**339-3015**	1	KIT-FRONT GEAR	46
					(INCLUDES ROTOR, GEAR AS, COVER, SPRING, COLLAR, RETAINING RING, WASHER & SHIMS)	

B - USE AS REQUIRED
C - CHANGE FROM PREVIOUS TYPE
J - KIT MARKED J SERVICES PART(S) MARKED J
M - METRIC PART
Y - SEPARATE ILLUSTRATION

532-8399 **CYLINDER BLOCK GP (**contd.**)** **i07748025**

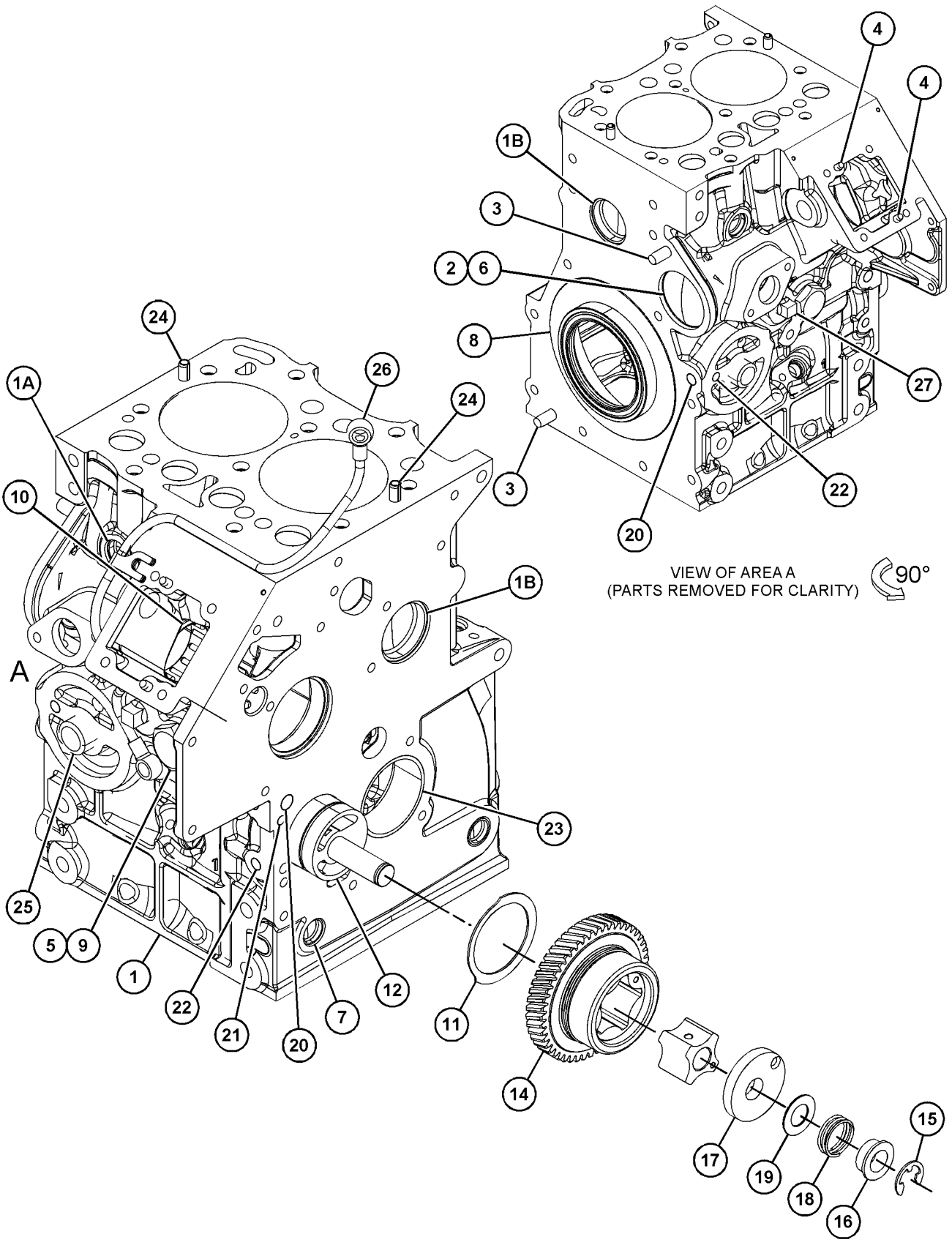

GRAPHIC #1 <END> g06456095

289-4914 CYLINDER HEAD AS

PART OF 308-4187 CYLINDER HEAD GP

SMCS-1100, 1101 **i07483063**

NOTE	REF NO	GRAPHIC REF	PART NUMBER	QTY	PART NAME 1 2 3 4 5 6 (PRODUCT LEVEL)	SEE PAGE
	1	1	**154-1673**	2	PIN	
	2	1	**288-6537**	1	CAP	
	3	1	**289-4915**	4	PLUG	
	4	1	**289-4916**	2	VALVE-INLET	
	5	1	**289-4917**	2	SEAT-VALVE	
	6	1	**289-4919**	2	VALVE-EXHAUST	
	7	1	**289-4921**	4	CAP-VALVE	
	8	1	**289-4922**	8	PIN-COTTER	
	9	1	**289-4923**	4	SPRING	
	10	1	**289-4924**	4	SEAT-VALVE	
	11	1	**289-4925**	1	STUD	

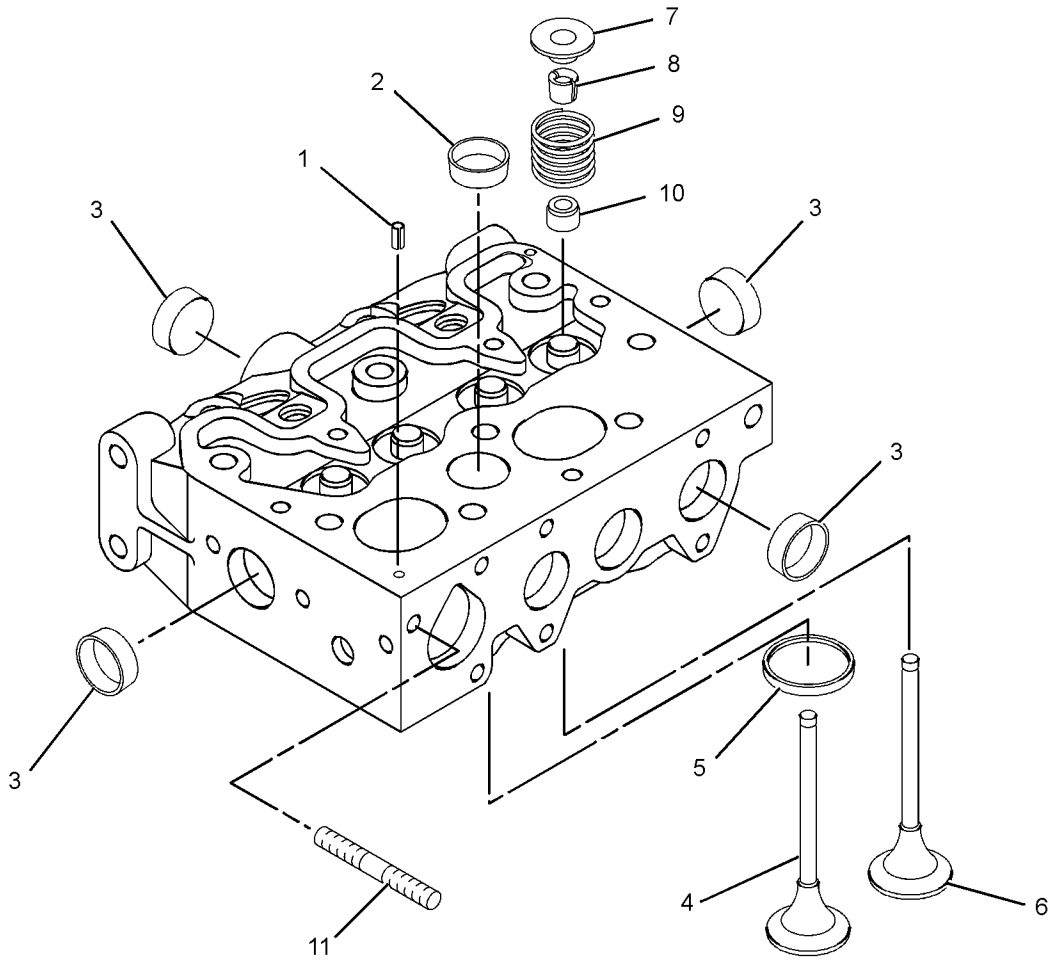

GRAPHIC #1 <END> g01254716

542-6421 CYLINDER HEAD AS

PART OF 532-8402 CYLINDER HEAD GP

SMCS-1100, 1101 **i07828755**

NOTE	REF NO	GRAPHIC REF	PART NUMBER	QTY	PART NAME 1 2 3 4 5 6 (PRODUCT LEVEL)	SEE PAGE
	1	1	**289-4916**	2	VALVE-INLET	
	2	1	**289-4919**	2	VALVE-EXHAUST	
	3	1	**289-4921**	4	CAP-VALVE	
	4	1	**289-4922**	8	PIN-COTTER	
	5	1	**289-4923**	4	SPRING	
	6	1	**289-4924**	4	SEAT-VALVE	
	7	1	*547-5183*	1	CYLINDER HEAD AS	
	7A	1	**288-6537**	1	CAP	
	7B	1	**289-4915**	4	PLUG	
	7C	1	**289-4917**	2	SEAT-VALVE	

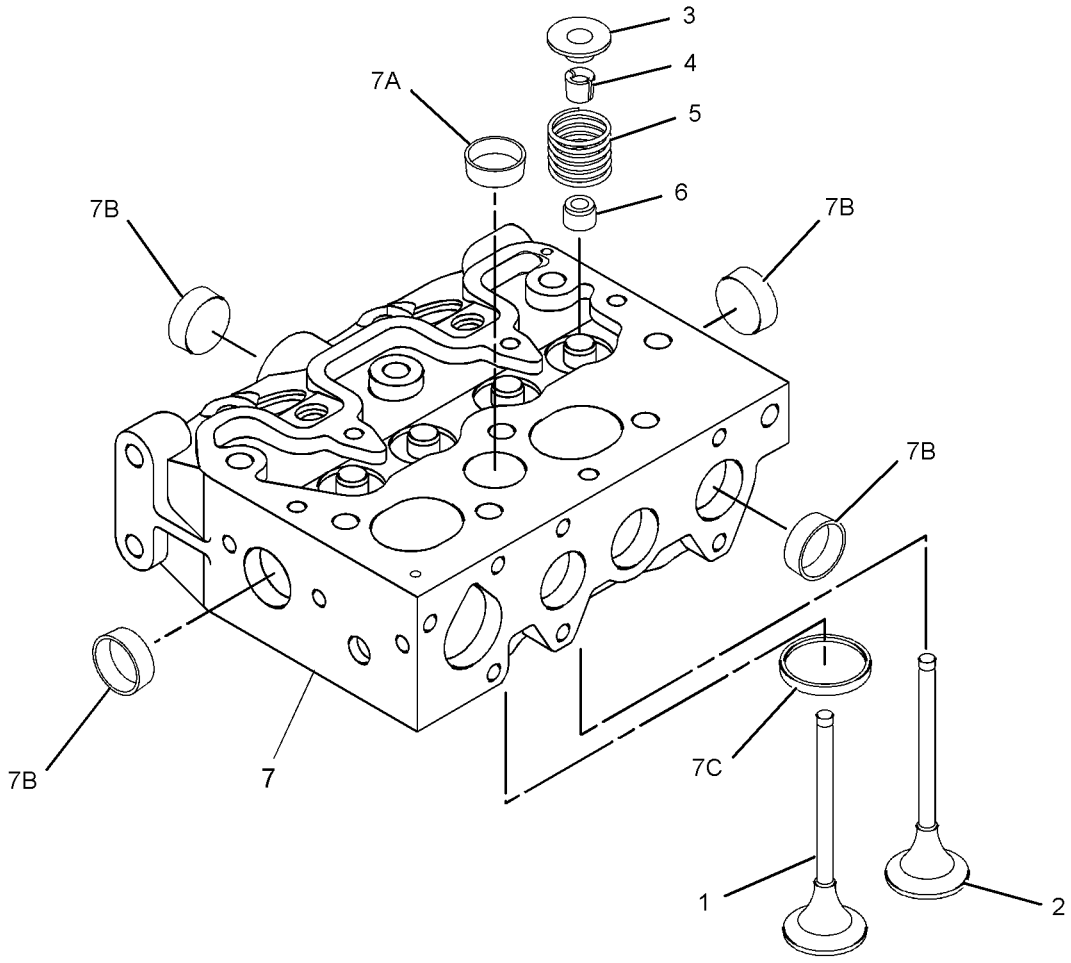

GRAPHIC #1 <END> g06451360

308-4187 CYLINDER HEAD GP

SMCS-1100 **i07478949**

NOTE	REF NO	GRAPHIC REF	PART NUMBER	QTY	PART NAME 1 2 3 4 5 6 (PRODUCT LEVEL)	SEE PAGE
M	1	1	**153-5944**	2	STUD (M6X1X33-MM) (EXHAUST MANIFOLD)	
Y	2	1	*289-4914*	1	CYLINDER HEAD AS	22
	3	1	**289-4926**	4	CAP	
	4	1	**289-4927**	8	BOLT	
	5	1	**289-4928**	2	BOLT	
B	6	1	**290-9700**	1	GASKET-CYLINDER HEAD (1.2-MM THK)	
B		1	**290-9701**	1	GASKET-CYLINDER HEAD (1.3-MM THK)	

B - USE AS REQUIRED
M - METRIC PART
Y - SEPARATE ILLUSTRATION

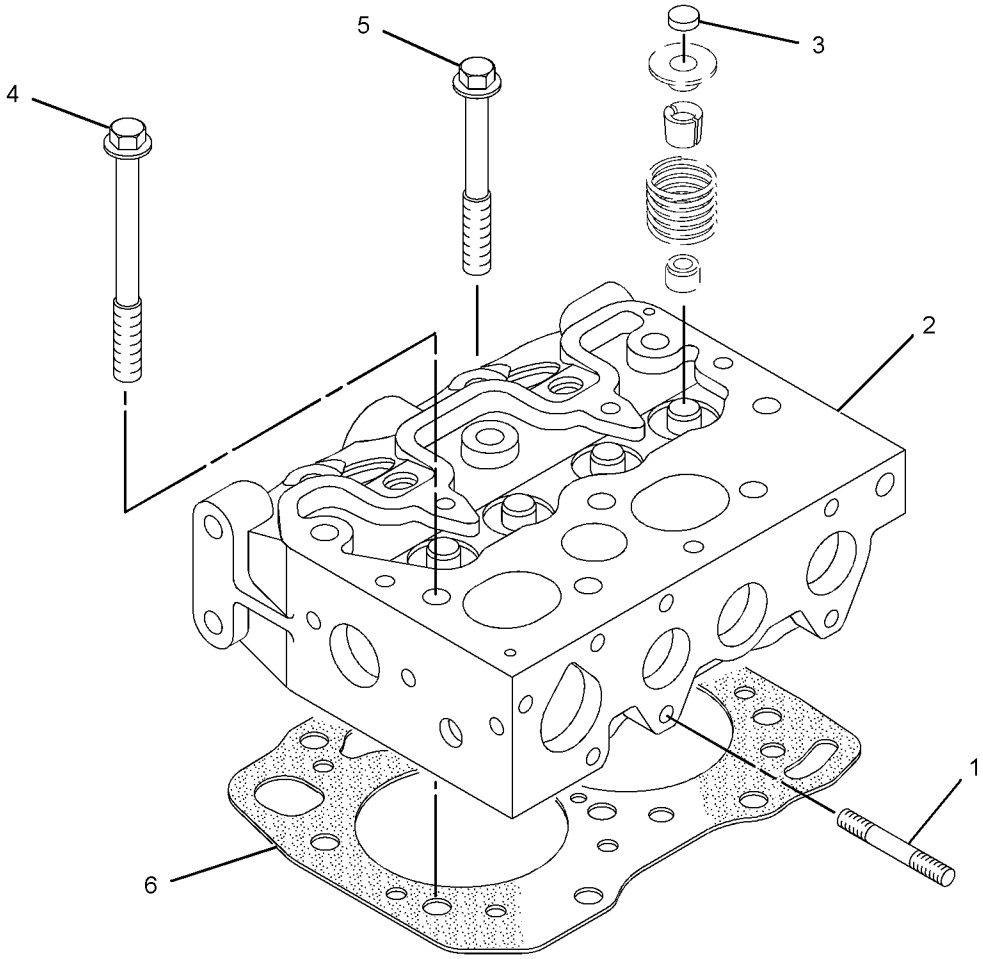

GRAPHIC #1 <END> g01357624

532-8402 CYLINDER HEAD GP

PART OF 549-5443, 552-5704, 558-8965 ENGINE AR-PRIMARY

SMCS-1100 **i07761369**

NOTE	REF NO	GRAPHIC REF	PART NUMBER	QTY	PART NAME 1 2 3 4 5 6 (PRODUCT LEVEL)	SEE PAGE
Y	1	1	*542-6421*	1	CYLINDER HEAD AS	23
	2	1	**290-9701**	1	GASKET-CYLINDER HEAD	
	3	1	**290-9700**	1	GASKET-CYLINDER HEAD	
	4	1	**289-4927**	8	BOLT	
	5	1	**289-4928**	2	BOLT	
	6	1	**5D-1319**	2	PIN-SPRING	

Y - SEPARATE ILLUSTRATION

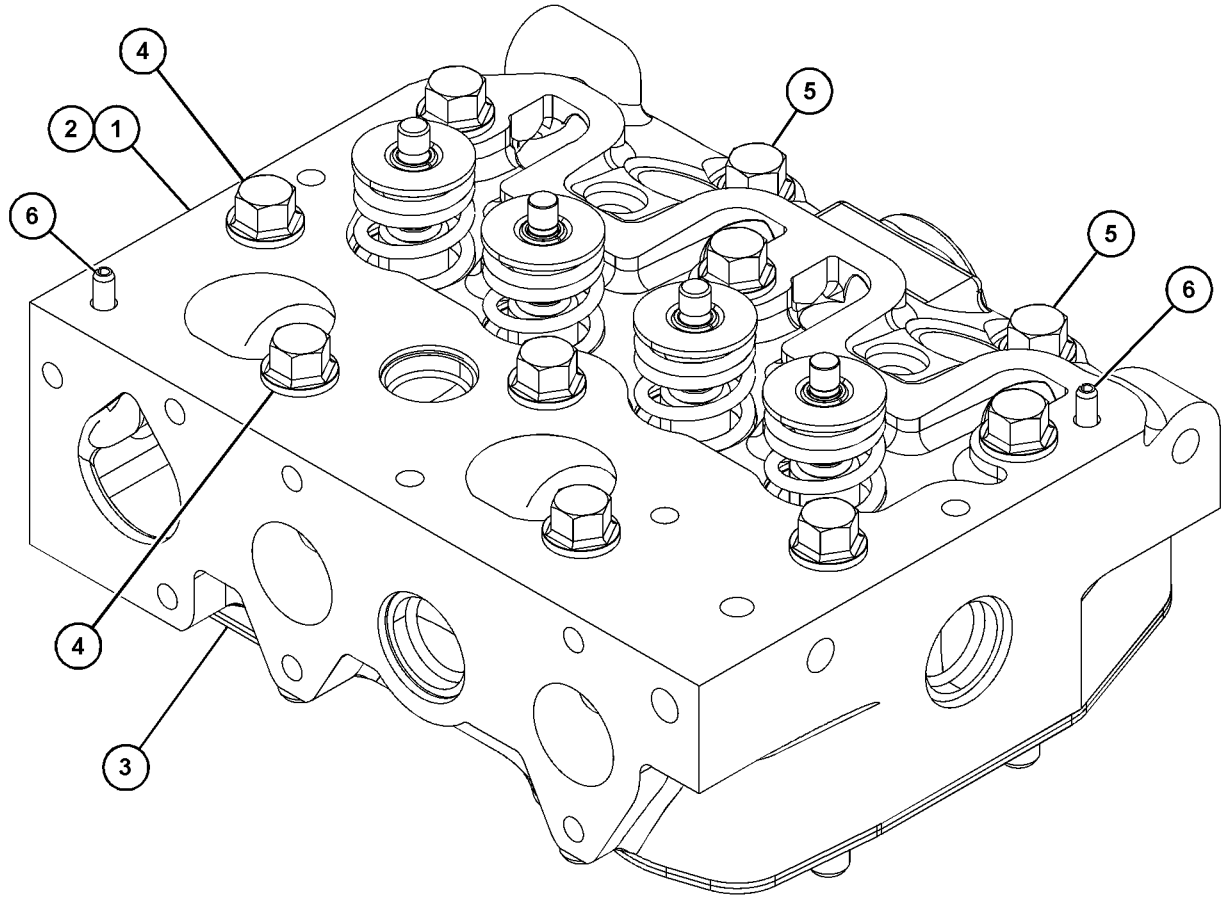

GRAPHIC #1 <END> g06449422

515-2716 DRIVE GP-FAN

SMCS-1359 **i07479296**

NOTE	REF NO	GRAPHIC REF	PART NUMBER	QTY	PART NAME 1 2 3 4 5 6 (PRODUCT LEVEL)	SEE PAGE
M	1	1	**178-2510**	4	BOLT (M6X1X45-MM)	
	2	1	**432-6548**	1	HOLDER	

M - METRIC PART

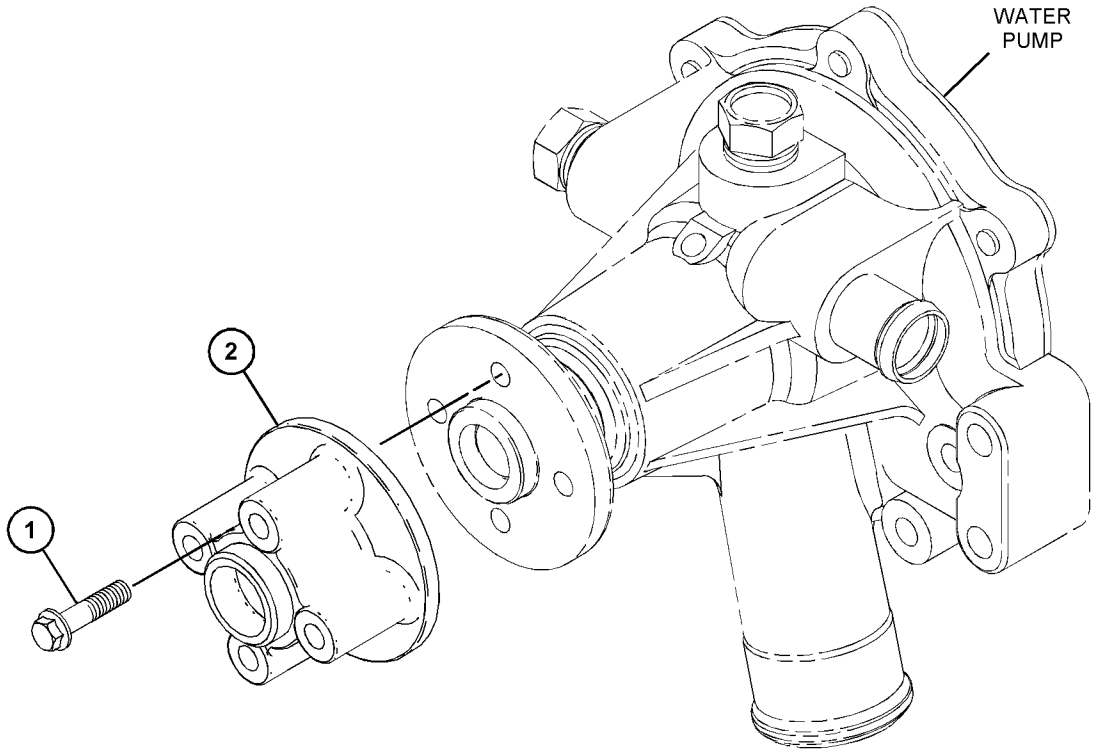

GRAPHIC #1 <END> g06248848

532-8290 PULLEY GP-FAN

PART OF 552-5704 ENGINE AR-PRIMARY

SMCS-1359 **i07470070**

NOTE	REF NO	GRAPHIC REF	PART NUMBER	QTY	PART NAME 1 2 3 4 5 6 (PRODUCT LEVEL)	SEE PAGE
	1	1	**483-4030**	1	PULLEY-WATER PUMP	

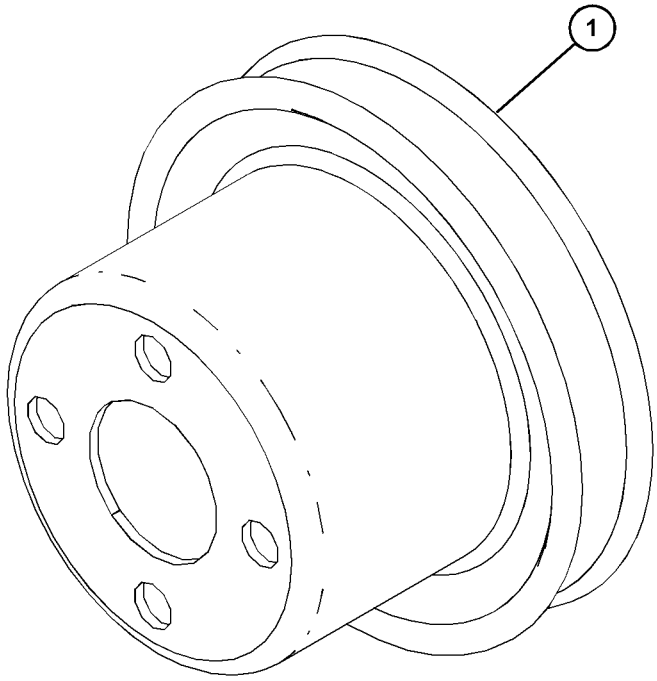

GRAPHIC #1 <END> g06313044

308-4238 DRIVE GP-TIMING

SMCS-1207, 1272 **i07478982**

NOTE	REF NO	GRAPHIC REF	PART NUMBER	QTY	PART NAME 1 2 3 4 5 6 (PRODUCT LEVEL)	SEE PAGE
M	1	2	**5C-2890**	1	NUT (M6X1-THD)	
	2	2	**139-5511**	1	CAP (TAMPER RESISTANT)	
M	3	2	**153-5592**	1	NUT (M8X1.25-THD)	
M	4	1	**153-5960**	1	NUT (M6X1-THD)	
	5	1	**153-5962**	4	BOLT AS	
	6	1	**153-6415**	2	WASHER (SEAL)	
	7	3	**153-6838**	1	BOLT AS	
	8	1	**153-7978**	1	SEAL	
	9	1	**153-7983**	1	PIN	
	10	1	**336-2965**	1	SPRING	
	11	3	**153-7990**	1	PLATE	
M	12	3	**9X-6153**	1	BOLT (M6X1X10-MM)	
	13	2	**095-1574**	1	SEAL-O-RING	
	14	1	**5D-1319**	1	PIN-SPRING	
M	15	2	**369-4486**	2	BOLT (M6X1X35-MM)	
M	16	2	**162-2207**	1	NUT (M6X1-THD)	
	17	1	**165-2140**	4	BOLT AS	
M	18	2	**183-3572**	4	BOLT (M6X1X16-MM)	
	19	1	**217-7115**	1	CAP (TAMPER RESISTANT)	
	20	1	**289-7503**	1	GASKET	
	21	2	**423-7724**	1	GASKET	
	22	2	**334-0732**	1	ARM (FRONT HOUSING)	
	23	2	**308-1882**	1	SPRING	
	24	1	**390-3729**	1	LEVER-CONTROL	
	25	2	**335-5578**	1	BRACKET	
M	26	1	**308-1892**	1	NUT (M6X1-THD)	
	27	1	**311-0655**	1	SPRING	
	28	1	**313-5832**	1	BOLT AS	
	28A	1	**153-7987**	1	WASHER (9.2X17X1.8-MM THK)	
M	28B	1	**191-9297**	1	NUT (M10X1.25-THD)	
	28C	1	**313-5833**	1	SPRING	
	29	1	**308-1897**	1	RING	
	30	1	**309-6732**	1	BOLT	
	31	1	**425-7065**	1	CAP-TAMPER PROOF	
	32	1	**321-4249**	1	NUT	
	33	1	**154-2715**	1	WASHER	
	34	3	**308-1904**	1	SLIDER	
	35	3	**308-4256**	1	CAMSHAFT AS	
	35A	3	**153-6492**	1	KEY-WOODRUFF	
	35B	3	**154-4506**	1	SPACER	
	35C	3	**154-4507**	1	GEAR-CAMSHAFT (22-TEETH)	
	35D	3	**183-3605**	1	BEARING	
	35E	3	**308-4261**	1	GEAR-CAMSHAFT (48-TEETH)	
	36	1	**324-3396**	1	LEVER AS-CONTROL	
	37	1	**308-4266**	1	SHAFT	
	38	1	**309-7591**	1	HOUSING-FRONT	
	39	2	**311-9622**	1	SPRING	
	40	1	**390-3731**	1	SHAFT	
M	41	1	**308-1889**	1	NUT (M10X1.25-THD)	
M	42	1	**313-2025**	1	BOLT-SPECIAL (M10X1.25-MM THD)	

308-4238 **DRIVE GP-TIMING (**contd.**)** **i07478982**

NOTE	REF NO	GRAPHIC REF	PART NUMBER	QTY	PART NAME 1 2 3 4 5 6 (PRODUCT LEVEL)	SEE PAGE
F			**154-1396**	1	CLIP	
F			**290-9701**	1	GASKET-CYLINDER HEAD	

F - NOT SHOWN
M - METRIC PART

308-4238 **DRIVE GP-TIMING (**contd.**)** **i07478982**

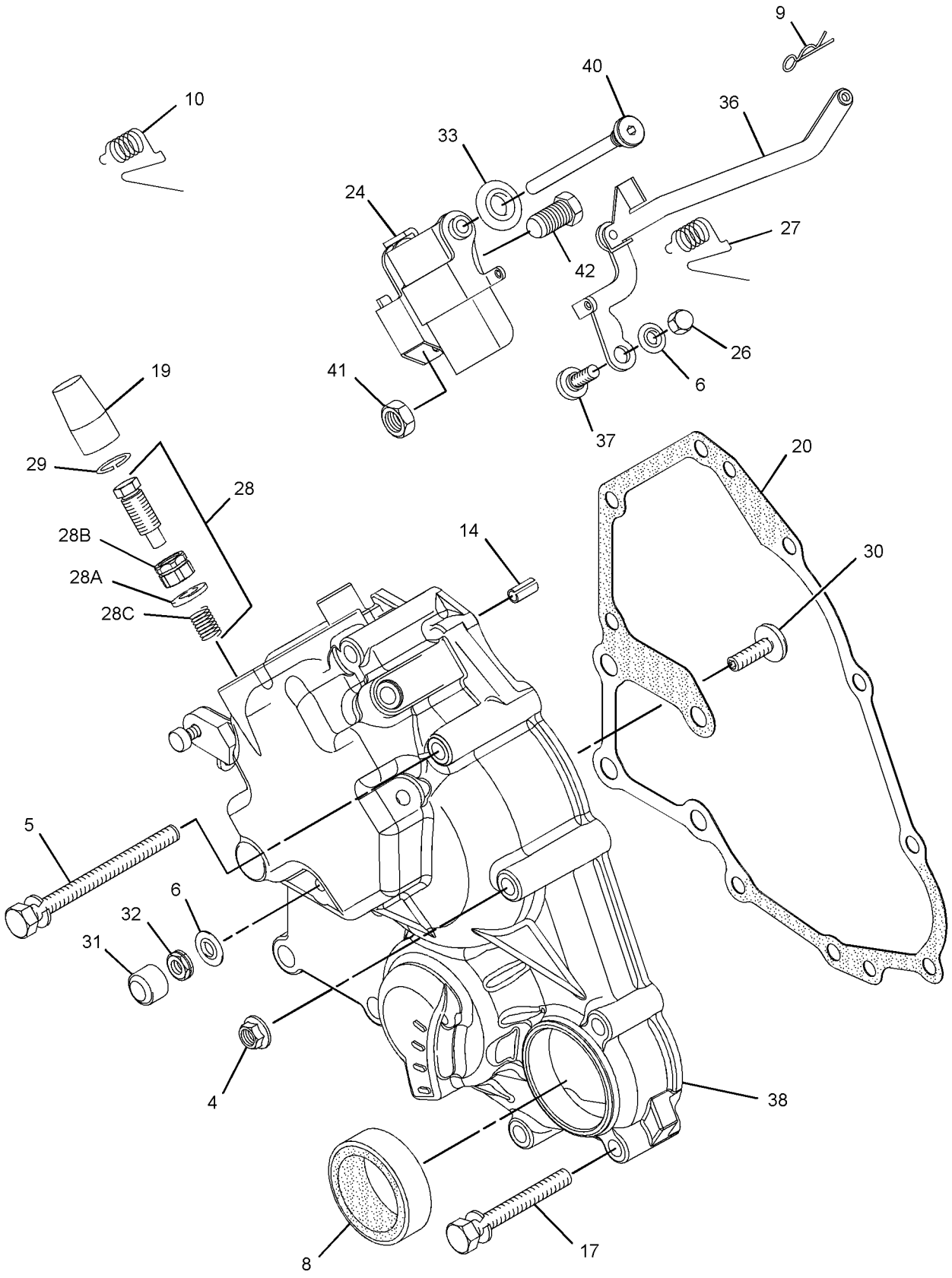

GRAPHIC #1 g03723058

308-4238 **DRIVE GP-TIMING (**contd.**)** **i07478982**

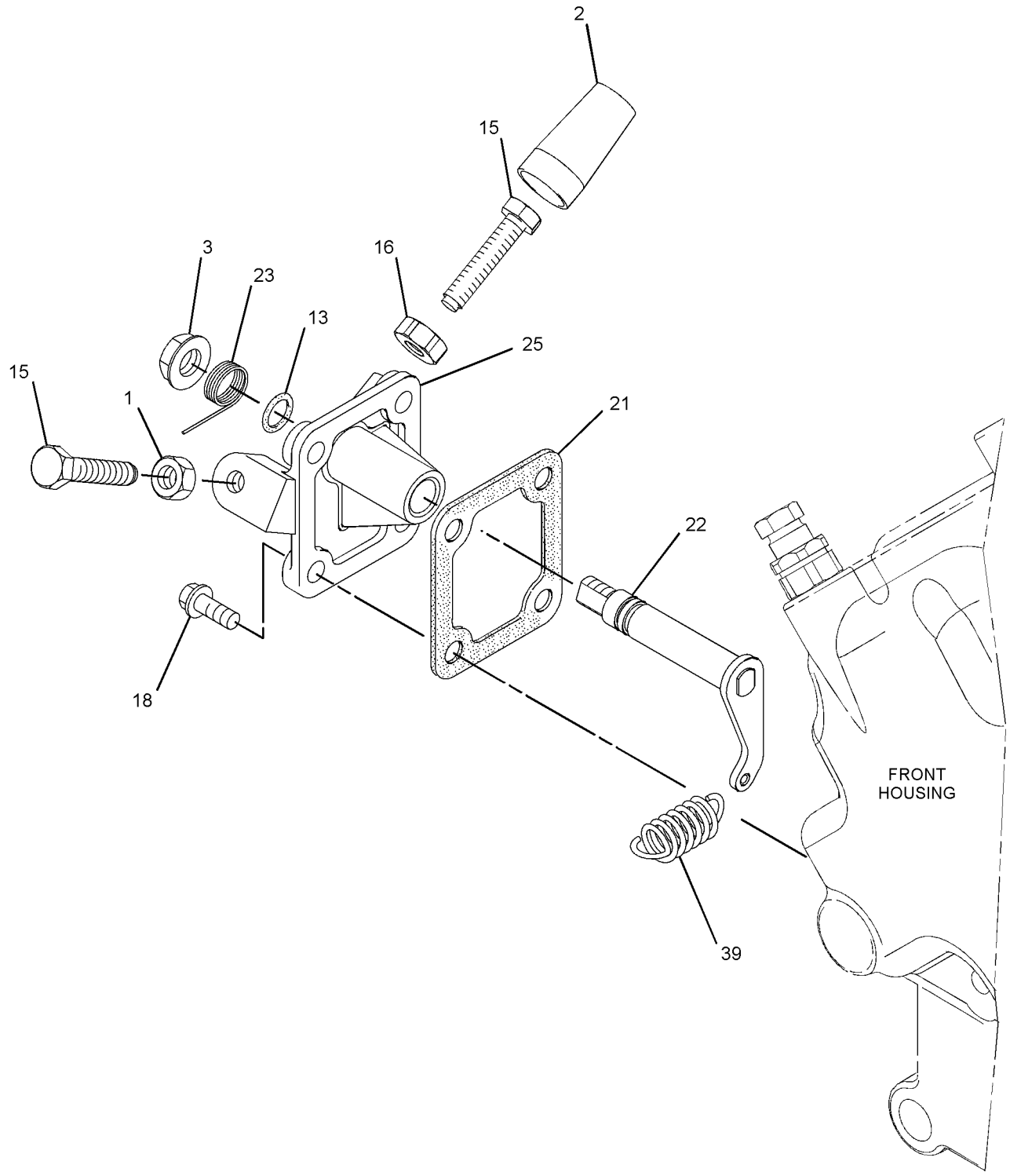

GRAPHIC #2 g02602318

308-4238 **DRIVE GP-TIMING (**contd.**)** **i07478982**

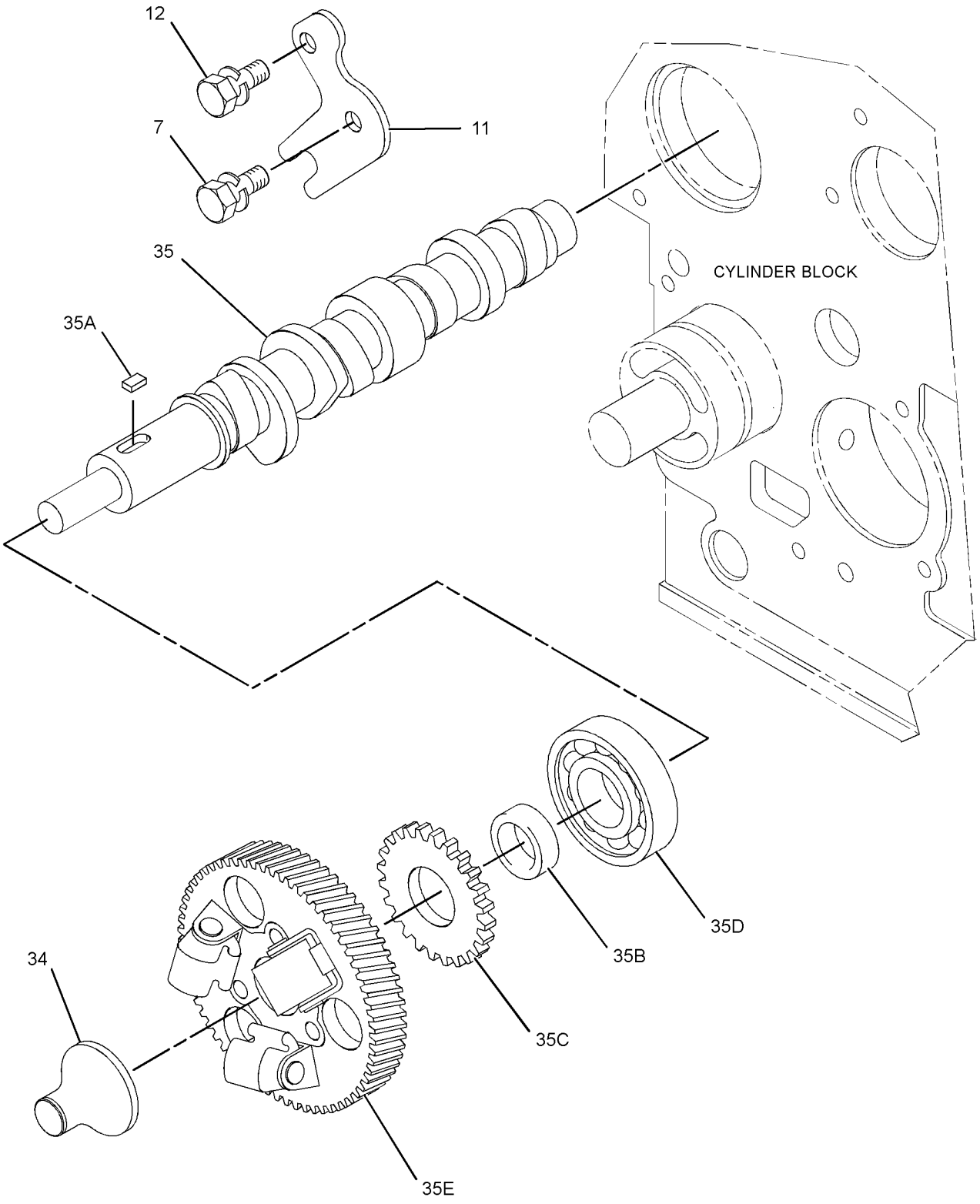

GRAPHIC #3 <END> g02005777

532-8589 EXTENSION GP-FAN

PART OF 549-5443 ENGINE AR-PRIMARY

SMCS-1359 **i07499317**

NOTE	REF NO	GRAPHIC REF	PART NUMBER	QTY	PART NAME 1 2 3 4 5 6 (PRODUCT LEVEL)	SEE PAGE
	1	1	**255-1297**	1	PLATE	
	2	1	**153-5961**	4	BOLT AS	

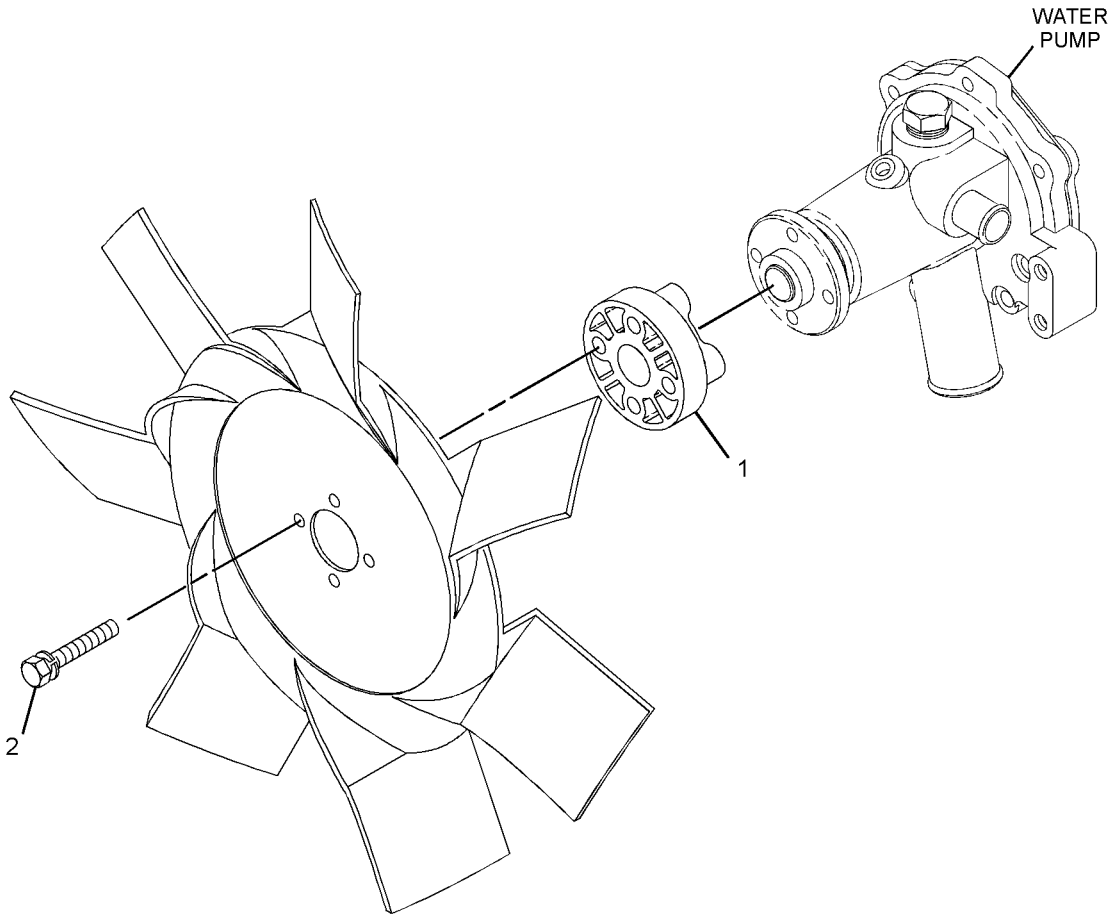

GRAPHIC #1 <END> g06339376

542-4595 EXTENSION GP-FAN

PART OF 552-5704 ENGINE AR-PRIMARY

SMCS-1359 **i07710348**

NOTE	REF NO	GRAPHIC REF	PART NUMBER	QTY	PART NAME 1 2 3 4 5 6 (PRODUCT LEVEL)	SEE PAGE
	1	1	**153-6856**	4	BOLT AS	
	2	1	**432-6548**	1	HOLDER	

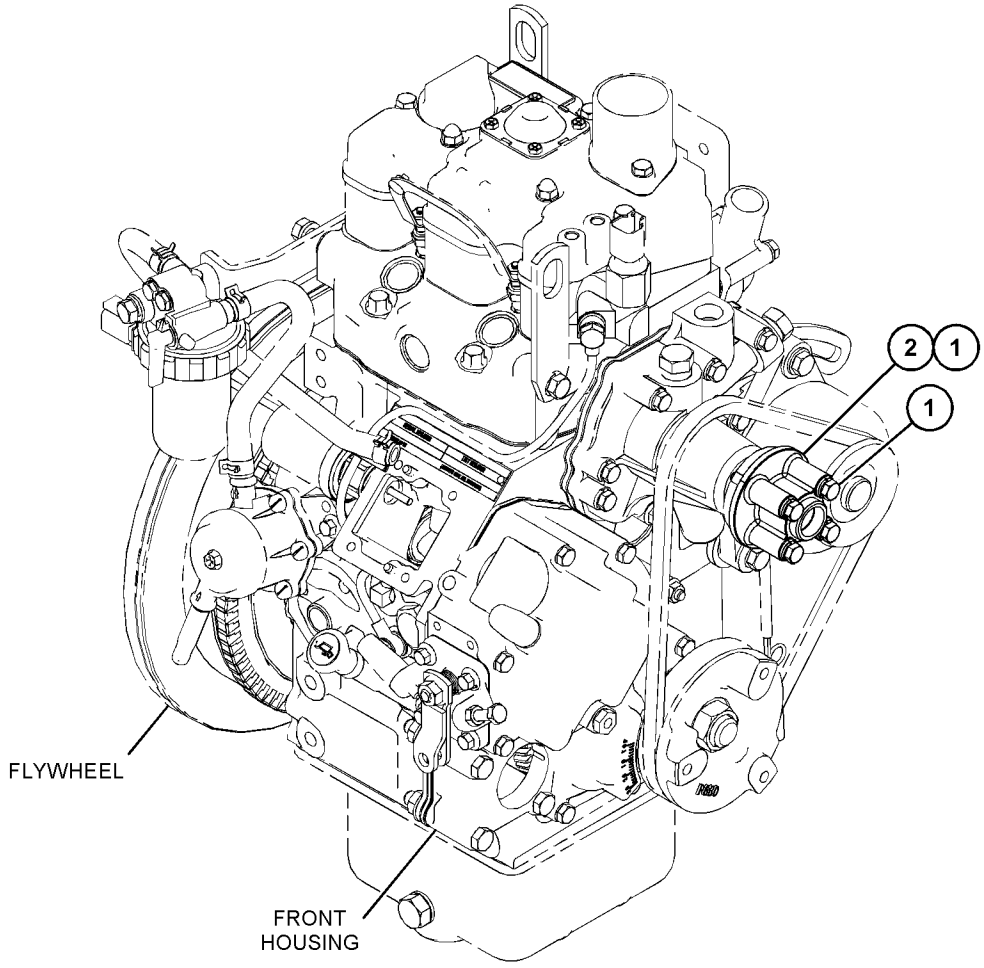

GRAPHIC #1 <END> g06405958

311-1725 FLYWHEEL GP

SMCS-1156 **i07479256**

NOTE	REF NO	GRAPHIC REF	PART NUMBER	QTY	PART NAME 1 2 3 4 5 6 (PRODUCT LEVEL)	SEE PAGE
M	1	1	**288-6579**	4	BOLT (M10X1.25X25-MM)	
	2	1	**311-1728**	1	FLYWHEEL AS	
	2A	1	**288-6578**	1	RING	

M - METRIC PART

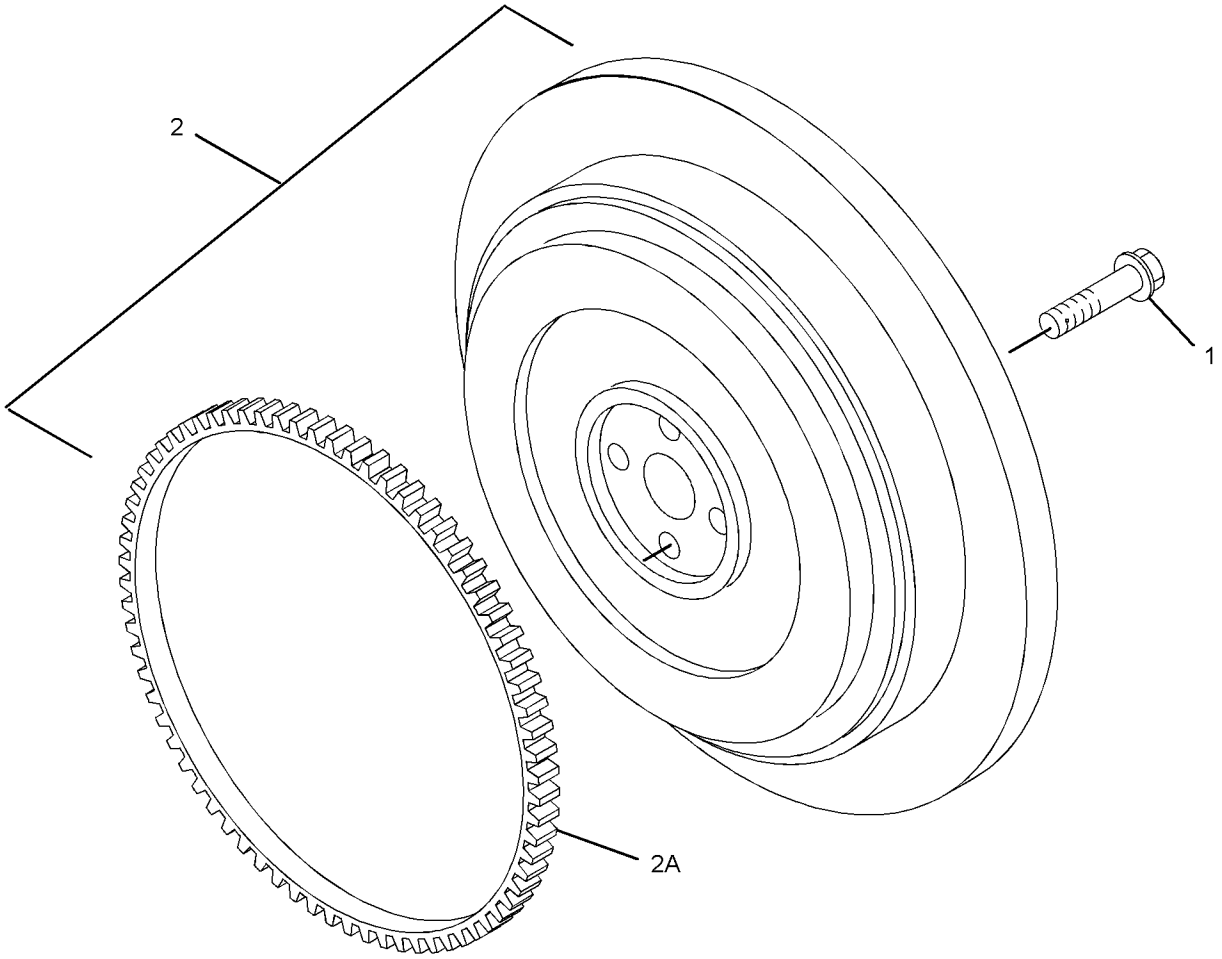

GRAPHIC #1 <END> g01447827

532-8475 FLYWHEEL GP

PART OF 558-8965 ENGINE AR-PRIMARY

SMCS-1156 **i07708290**

NOTE	REF NO	GRAPHIC REF	PART NUMBER	QTY	PART NAME 1 2 3 4 5 6 (PRODUCT LEVEL)	SEE PAGE
M	1	1	**288-6579**	4	BOLT (M10X1.25X25-MM) (M10X1.25-MM THD)	

M - METRIC PART

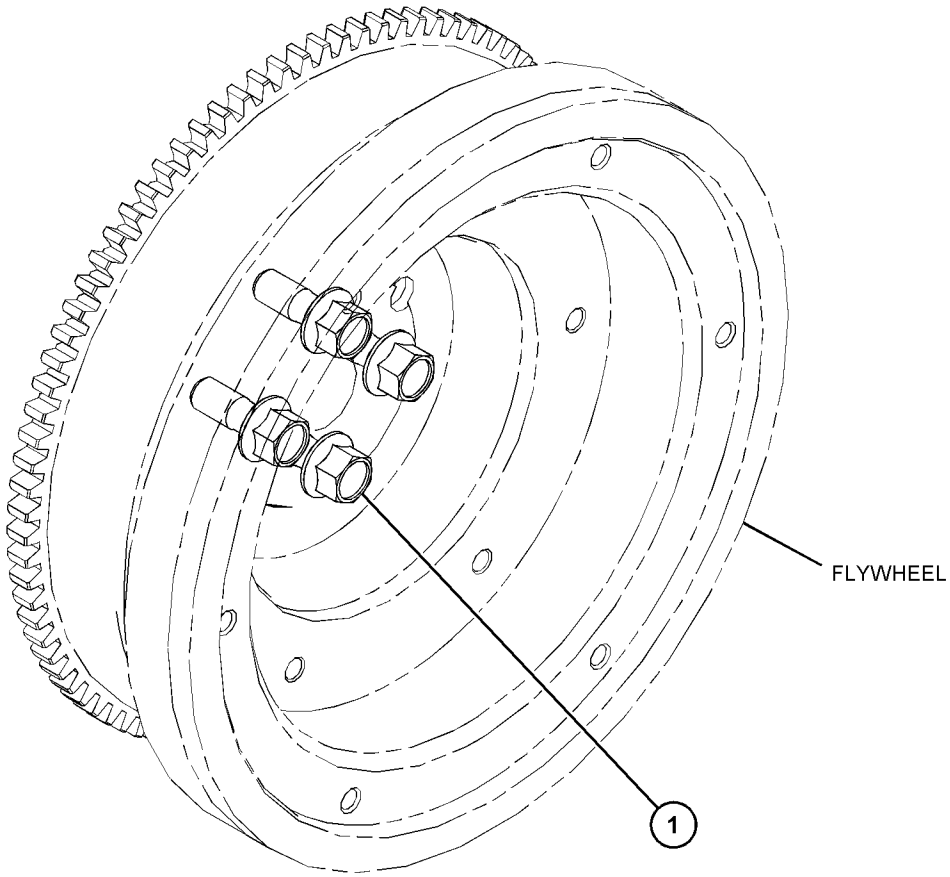

GRAPHIC #1 <END> g06403175

532-8498 FLYWHEEL GP

PART OF 552-5704 ENGINE AR-PRIMARY

SMCS-1156 **i07710354**

NOTE	REF NO	GRAPHIC REF	PART NUMBER	QTY	PART NAME 1 2 3 4 5 6 (PRODUCT LEVEL)	SEE PAGE
M	1	1	**288-6579**	4	BOLT (M10X1.25X25-MM)	
	2	1	**311-1728**	1	FLYWHEEL AS	
		1	**288-6578**	1	RING	

M - METRIC PART

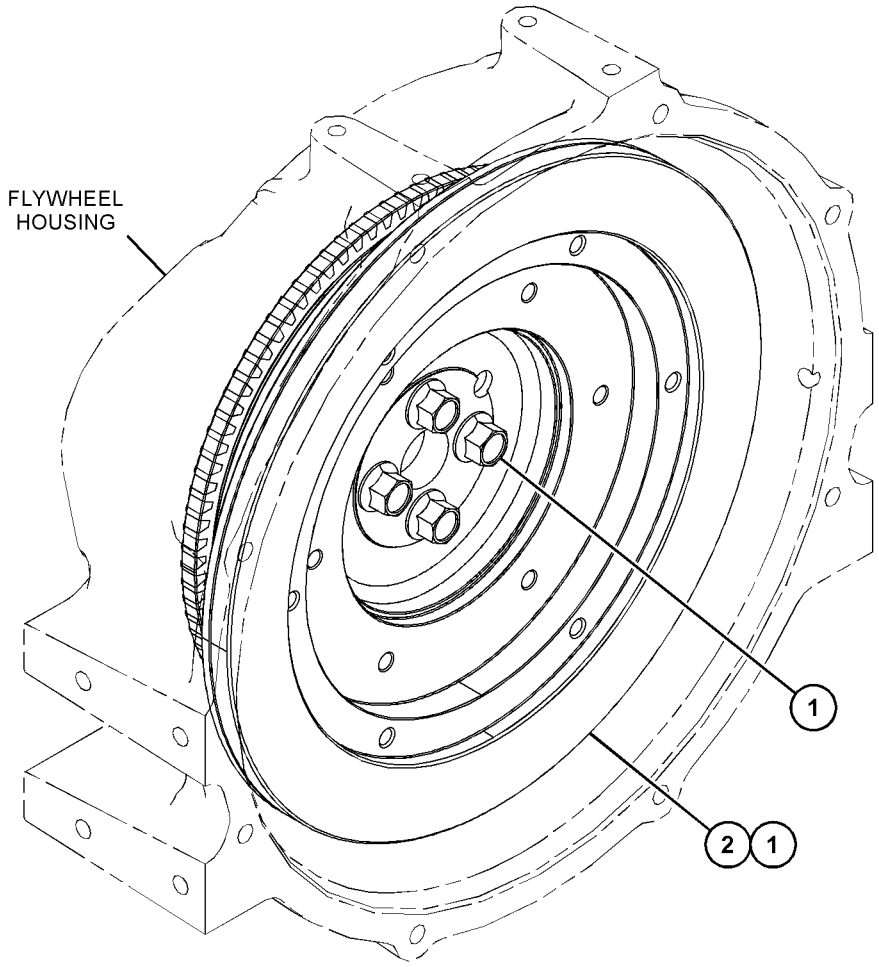

GRAPHIC #1 <END> g06404511

532-8501 FLYWHEEL GP

PART OF 549-5443 ENGINE AR-PRIMARY

SMCS-1156 **i07499297**

NOTE	REF NO	GRAPHIC REF	PART NUMBER	QTY	PART NAME 1 2 3 4 5 6 (PRODUCT LEVEL)	SEE PAGE
	1	1	**547-5186**	1	FLYWHEEL AS	
M	2	1	**288-6579**	1	BOLT (M10X1.25X25-MM)	

M - METRIC PART

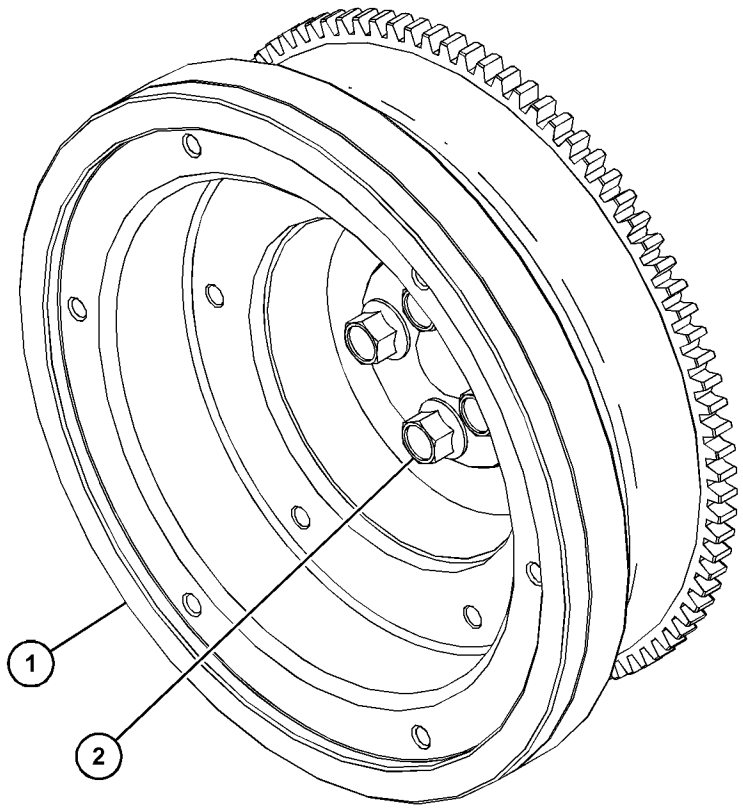

GRAPHIC #1 <END> g06340741

311-1724 HOUSING GP-FLYWHEEL

SMCS-1157 **i07479236**

NOTE	REF NO	GRAPHIC REF	PART NUMBER	QTY	PART NAME 1 2 3 4 5 6 (PRODUCT LEVEL)	SEE PAGE
	1	1	**154-2395**	1	PLUG	
	2	1	**165-2141**	8	BOLT AS	
	3	1	**311-1726**	1	HOUSING-FLYWHEEL	
M	4	1	**311-1727**	2	BOLT (M8X1.25X30-MM)	

M - METRIC PART

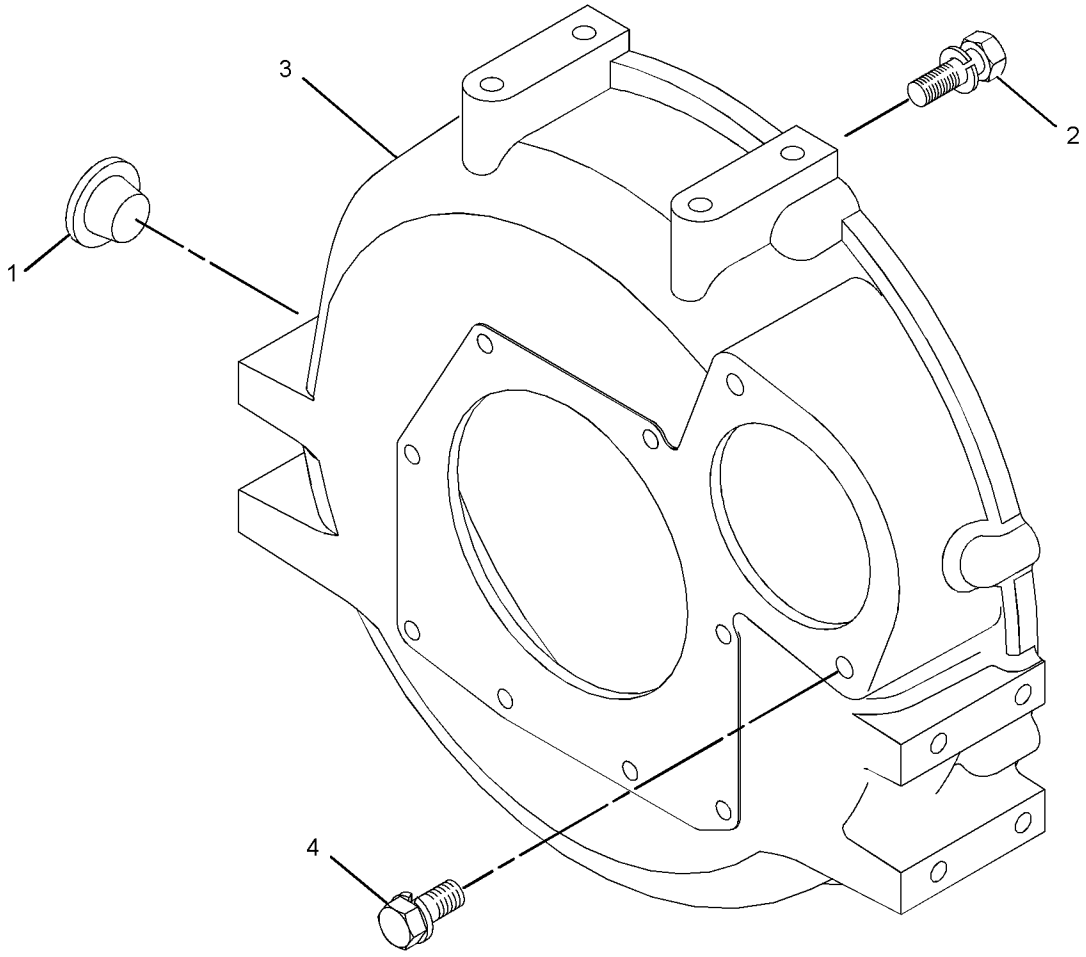

GRAPHIC #1 <END> g01447483

532-8449 HOUSING GP-FLYWHEEL

PART OF 549-5443 ENGINE AR-PRIMARY

SMCS-1157 **i07499284**

NOTE	REF NO	GRAPHIC REF	PART NUMBER	QTY	PART NAME 1 2 3 4 5 6 (PRODUCT LEVEL)	SEE PAGE
	1	1	**364-8947**	1	PLUG	
	2	1	**165-2141**	8	BOLT AS	
	3	1	**548-5480**	1	HOUSING-FLYWHEEL	

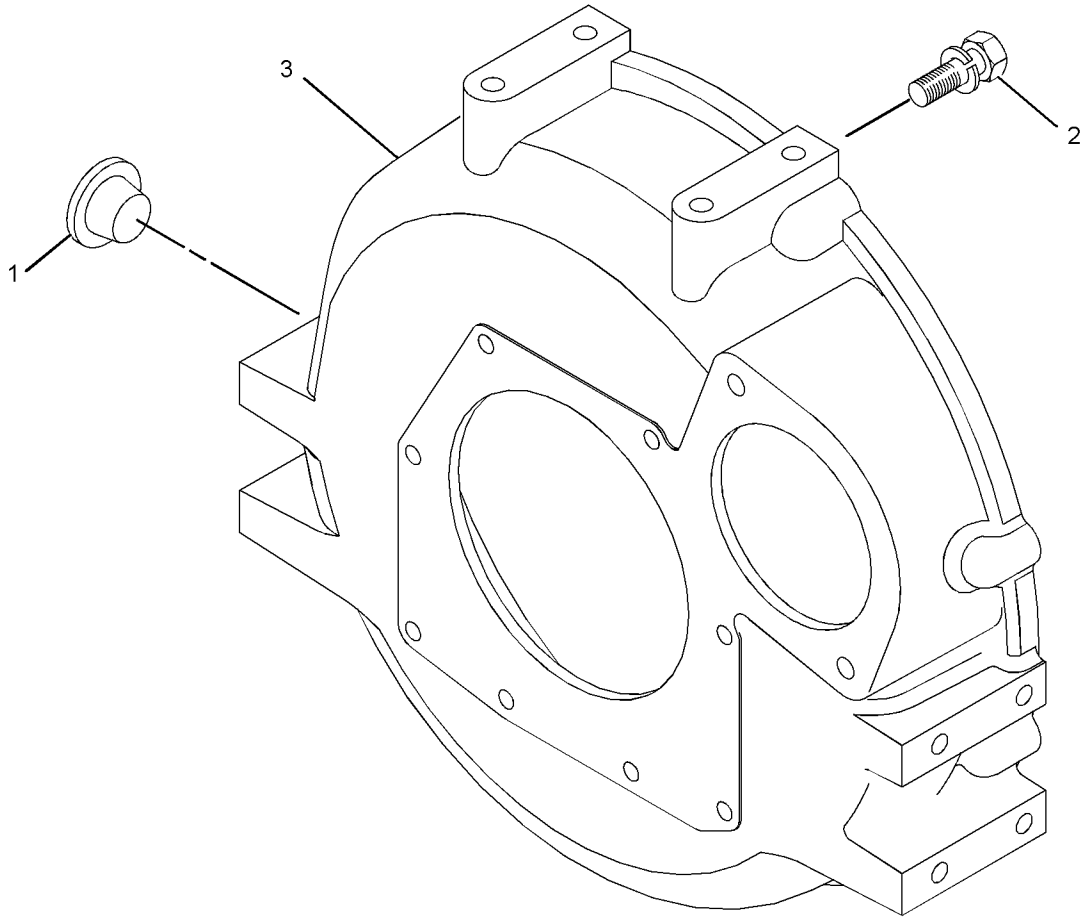

GRAPHIC #1 <END> g06339346

540-6551 HOUSING GP-FLYWHEEL

PART OF 558-8965 ENGINE AR-PRIMARY

SMCS-1157 **i07501854**

NOTE	REF NO	GRAPHIC REF	PART NUMBER	QTY	PART NAME 1 2 3 4 5 6 (PRODUCT LEVEL)	SEE PAGE
	1	1	*153-6375*	10	BOLT AS	
					(EACH INCLUDES)	
	1A	1	**3B-4505**	1	LOCKWASHER	
M	1B	1	**8T-4200**	1	BOLT (M8X1.25X16-MM)	
	2	1	**542-6936**	1	PLATE	

M - METRIC PART

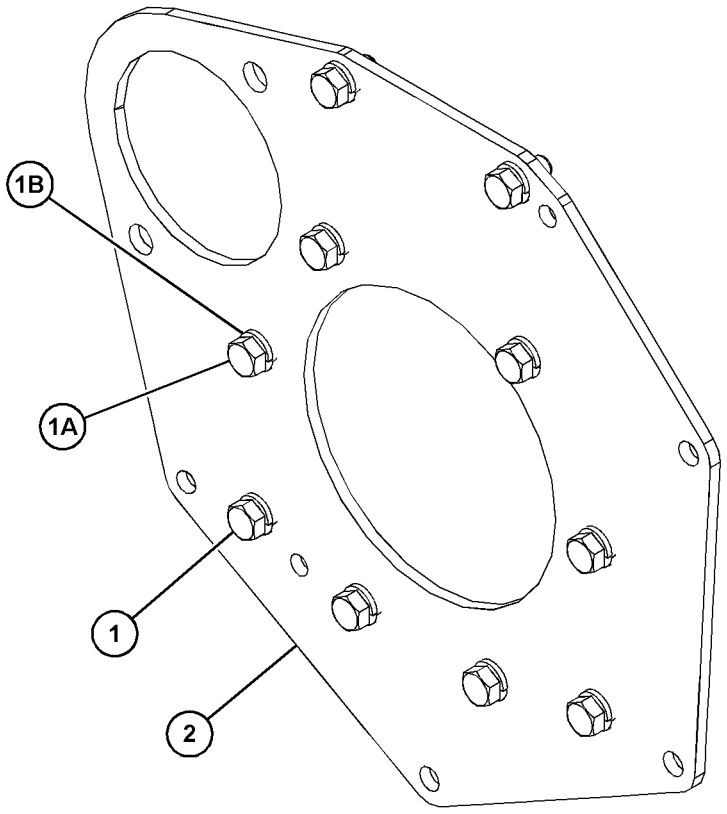

GRAPHIC #1 <END> g06340739

551-6413 HOUSING GP-FLYWHEEL

PART OF 552-5704 ENGINE AR-PRIMARY

SMCS-1157 **i07711083**

NOTE	REF NO	GRAPHIC REF	PART NUMBER	QTY	PART NAME 1 2 3 4 5 6 (PRODUCT LEVEL)	SEE PAGE
	1	1	**558-5465**	1	HOUSING-FLYWHEEL	
	2	1	**165-2141**	8	BOLT AS	
	3	1	**364-8947**	1	PLUG	

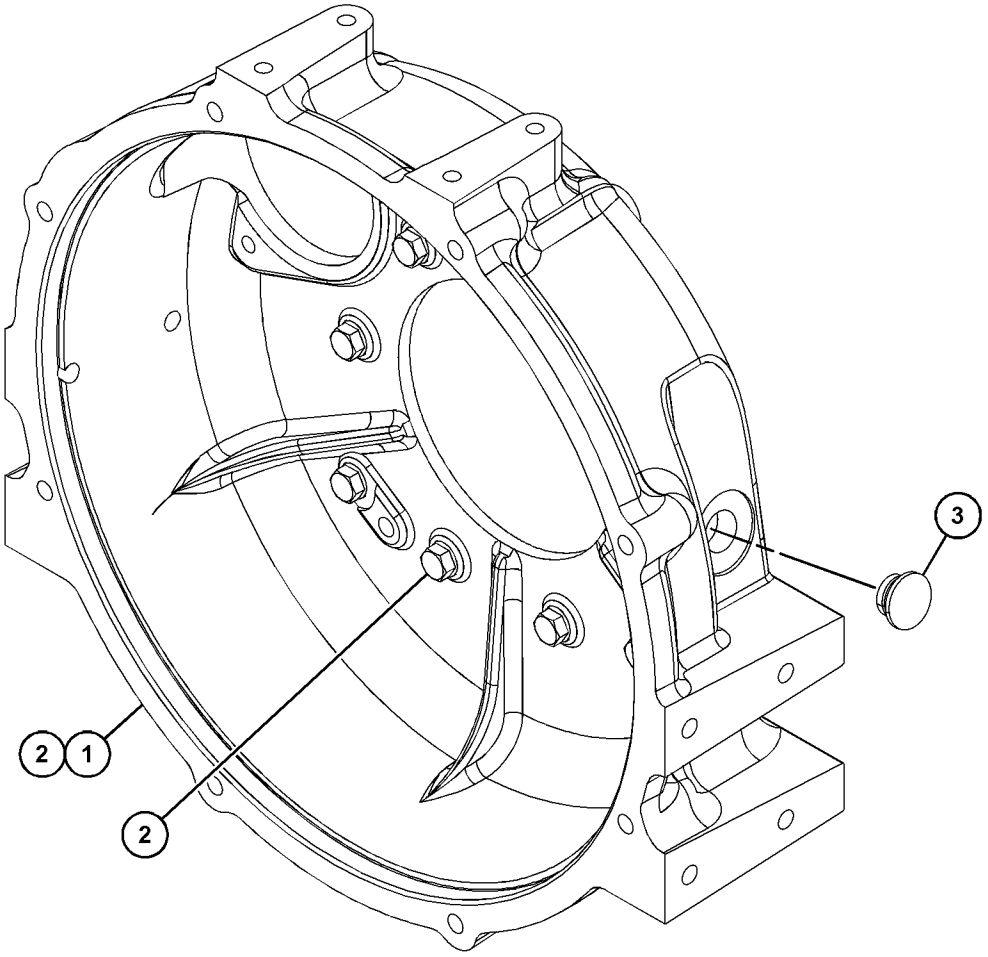

GRAPHIC #1 <END> g06405973

532-8604 HOUSING GP-FRONT

PART OF 549-5443, 552-5704, 558-8965 ENGINE AR-PRIMARY

SMCS-1151, 1162, 1206 **i07495831**

NOTE	REF NO	GRAPHIC REF	PART NUMBER	QTY	PART NAME 1 2 3 4 5 6 (PRODUCT LEVEL)	SEE PAGE
Y	1	1	**541-2788**	1	HOUSING GP-FRONT	44
	2	1	**288-6544**	1	GASKET	
	3	1	**542-6884**	1	MOUNTING AS	
	4	1	**542-7006**	1	GASKET	
	5	1	**542-6985**	1	PLATE	
	6	1	**542-6983**	4	BOLT	
	7	1	**153-5992**	4	SUPPORT-SPRING	
	8	1	**153-6838**	2	BOLT AS	

Y - SEPARATE ILLUSTRATION

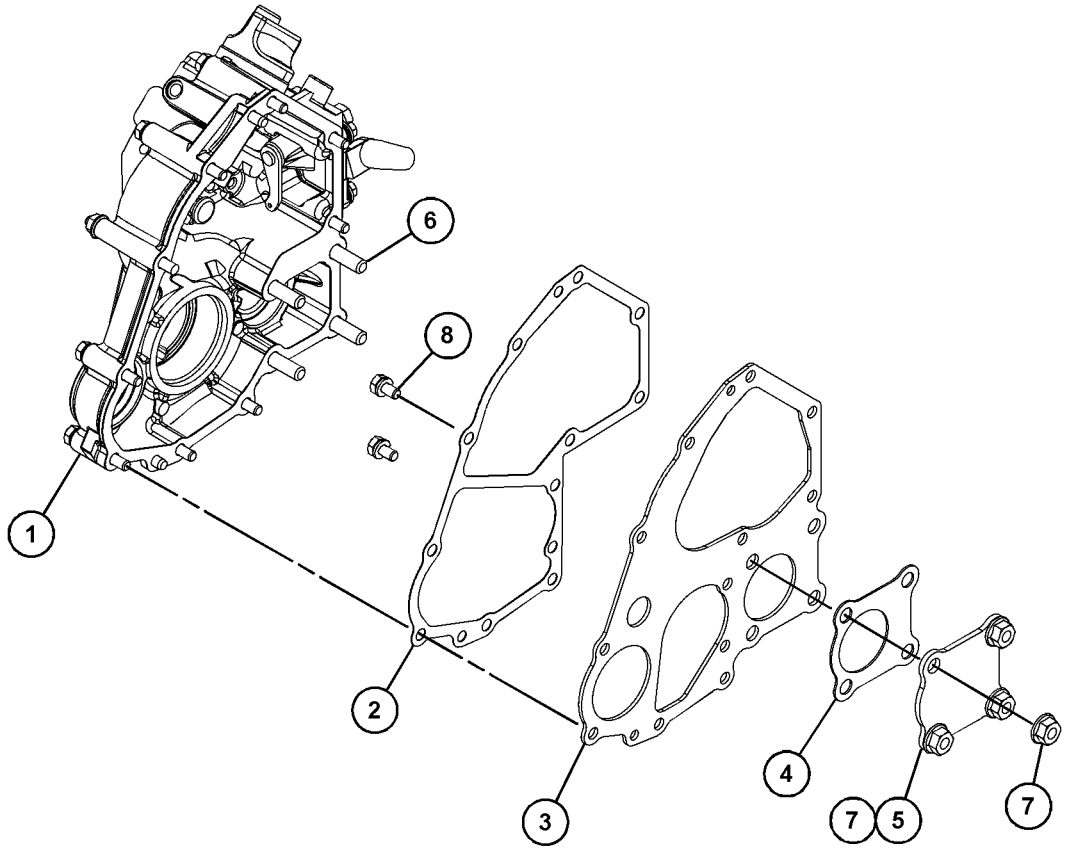

GRAPHIC #1 <END> g06338466

541-2788 HOUSING GP-FRONT

PART OF 532-8604 HOUSING GP-FRONT

SMCS-1151, 1162, 1206 **i07496256**

NOTE	REF NO	GRAPHIC REF	PART NUMBER	QTY	PART NAME 1 2 3 4 5 6 (PRODUCT LEVEL)	SEE PAGE
	1	1	**559-6261**	1	HOUSING-FRONT	
	2	1	**423-7724**	1	GASKET	
	3	1	**335-5578**	1	BRACKET	
M	4	1	**106-8916**	4	BOLT (M6X1X16-MM)	
M	5	1	**162-2207**	1	NUT (M6X1-THD)	
M	6	1	**133-5512**	1	NUT (M6X1-THD)	
M	7	1	**369-4486**	2	BOLT (M6X1X35-MM)	
	8	1	**334-0732**	1	ARM	
	9	1	**289-7507**	1	SEAL-O-RING	
M	10	1	**153-5592**	1	NUT (M8X1.25-THD)	
	11	1	**330-9189**	1	PLUG	
	12	1	**154-1673**	1	PIN	
	13	1	**153-7978**	1	SEAL	
	14	1	**153-6415**	1	WASHER (SEAL)	
	15	1	**503-9731**	1	SHROUD	
	16	1	**502-9478**	1	NUT (TAMPER RESISTANT)	
M	17	1	**495-0737**	1	BOLT (M6X0.5X19.5-MM)	
	18	1	**308-1882**	1	SPRING	
	19	1	**502-5421**	1	PIN	
	20	1	**503-9707**	1	CAP	
	21	1	**165-2140**	4	BOLT AS	
	22	1	**153-5962**	4	BOLT AS	
	23	1	**162-2208**	1	CAP	
M	24	1	**153-5960**	1	NUT (M6X1-THD)	
M	25	1	**183-1164**	1	STUD (M6X1X68-MM)	
	26	1	**289-7503**	1	GASKET	
	27	1	**288-6593**	1	SEAL	
	28	1	**483-1214**	1	CAP	
	29	1	**153-5394**	2	DOWEL	
	30	1	**313-5832**	1	BOLT AS	
M	30A	1	**191-9297**	1	NUT (M10X1.25-THD)	
	30B	1	**153-7987**	1	WASHER (9.2X17X1.8-MM THK)	
	30C	1	**313-5833**	1	SPRING	
	31	1	**423-7554**	1	CAP	
	31A	1	**217-7115**	1	CAP (TAMPER RESISTANT)	

M - METRIC PART

541-2788 **HOUSING GP-FRONT (**contd.**)** **i07496256**

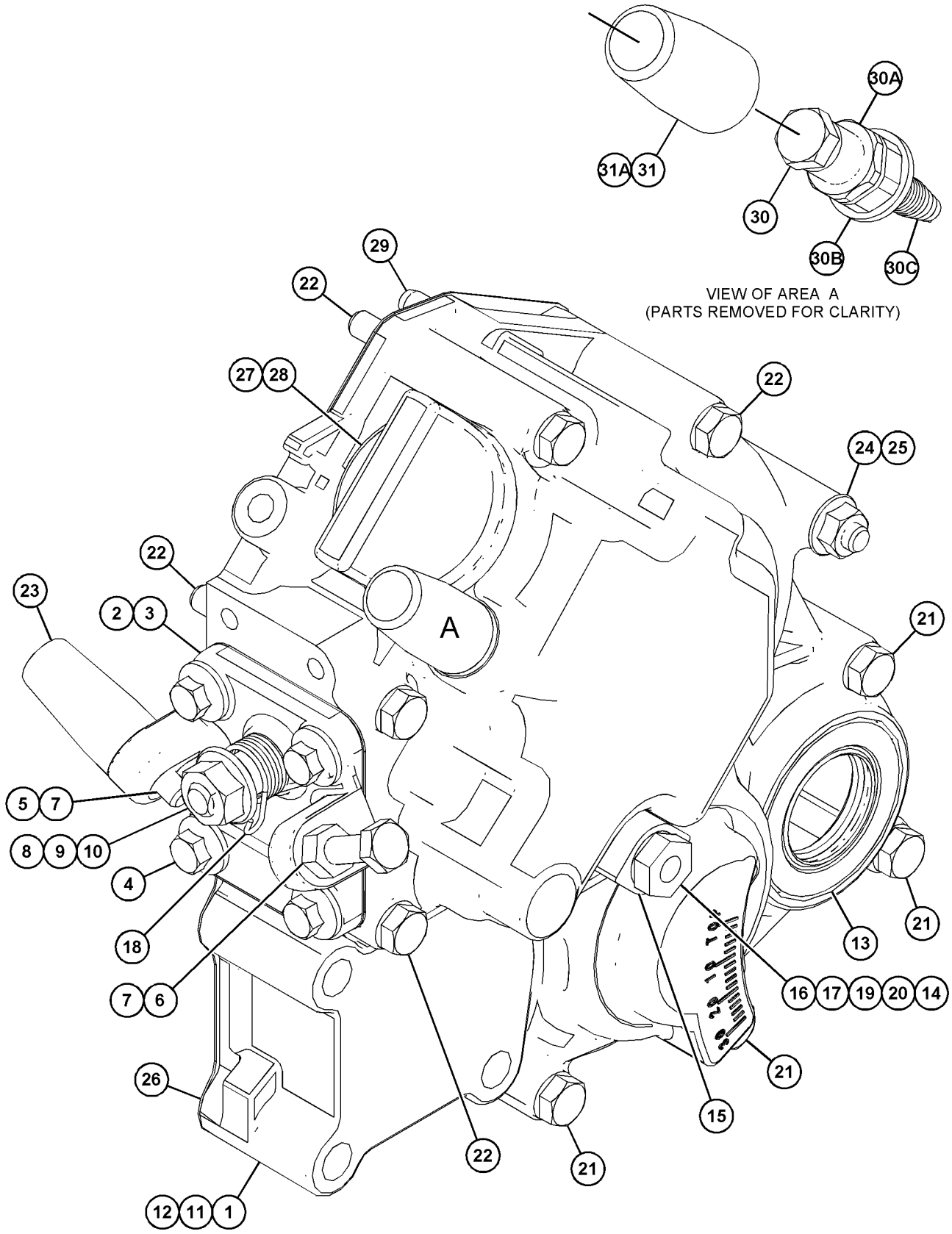

GRAPHIC #1 <END> g06352360

339-3015 KIT-FRONT GEAR

PART OF 532-8399 CYLINDER BLOCK GP

SMCS-1204, 1212, 1234 **i07479271**

NOTE	REF NO	GRAPHIC REF	PART NUMBER	QTY	PART NAME 1 2 3 4 5 6 (PRODUCT LEVEL)	SEE PAGE
B	1	1	**160-4150**	1	SHIM (0.1-MM THK)	
B		1	**160-4151**	1	SHIM (0.15-MM THK)	
B		1	**160-4152**	1	SHIM (0.2-MM THK)	
B		1	**160-4153**	1	SHIM (0.5-MM THK)	
	2	1	**153-6848**	1	COVER	
	3	1	**153-6849**	1	SPRING	
	4	1	**153-6850**	1	COLLAR	
	5	1	**153-6851**	1	CLIP	
	6	1	**153-7985**	1	WASHER	

B - USE AS REQUIRED

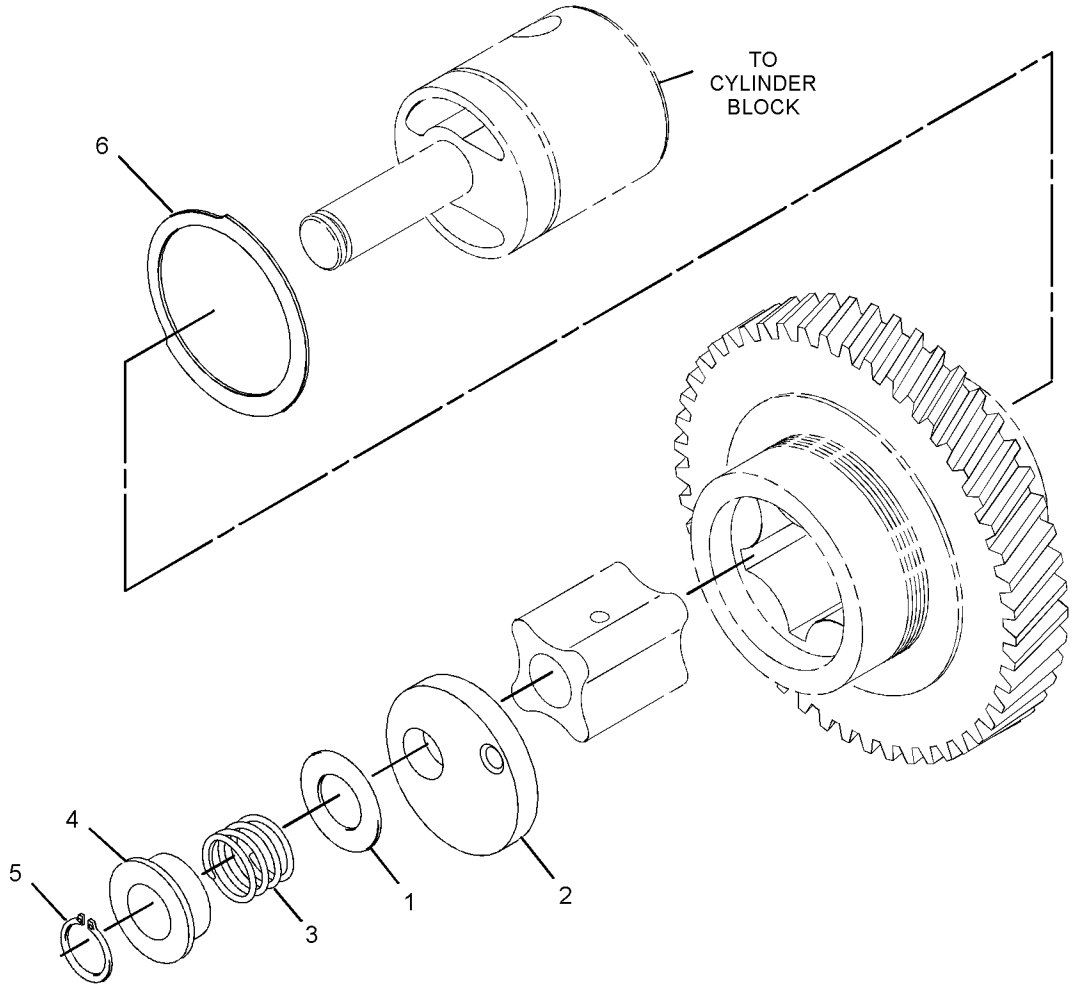

GRAPHIC #1 <END> g02013893

308-5618 LIFTING GP-ENGINE

SMCS-1122 **i07479111**

NOTE	REF NO	GRAPHIC REF	PART NUMBER	QTY	PART NAME 1 2 3 4 5 6 (PRODUCT LEVEL)	SEE PAGE
	1	1	**153-6375**	1	BOLT AS	
M	2	1	**6I-0260**	1	BOLT (M8X1.25X25-MM)	
	3	1	**183-4031**	1	SPACER	
	4	1	**308-5617**	2	PLATE-LIFTING	

M - METRIC PART

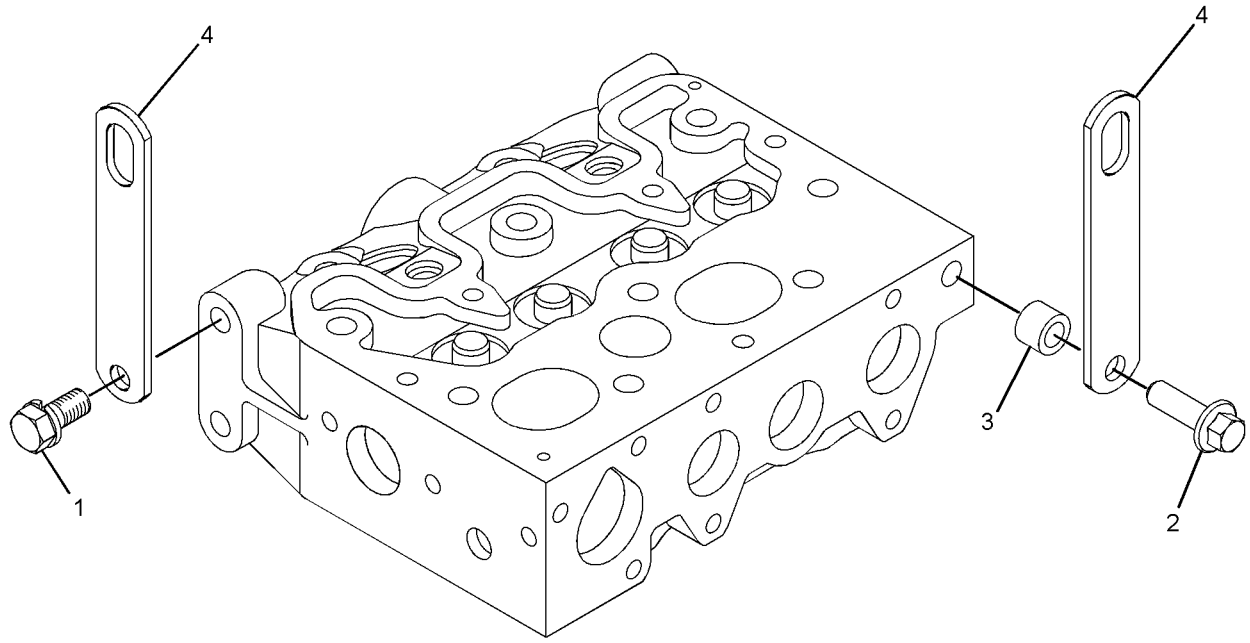

GRAPHIC #1 <END> g06202641

532-9889 LIFTING GP-ENGINE

PART OF 549-5443, 552-5704, 558-8965 ENGINE AR-PRIMARY

SMCS-1122 **i07498216**

NOTE	REF NO	GRAPHIC REF	PART NUMBER	QTY	PART NAME 1 2 3 4 5 6 (PRODUCT LEVEL)	SEE PAGE
	1	1	**153-6375**	1	BOLT AS	
M	2	1	**6I-0260**	1	BOLT (M8X1.25X25-MM)	
	3	1	**515-7370**	1	SPACER	
	4	1	**308-5617**	2	PLATE-LIFTING	

M - METRIC PART

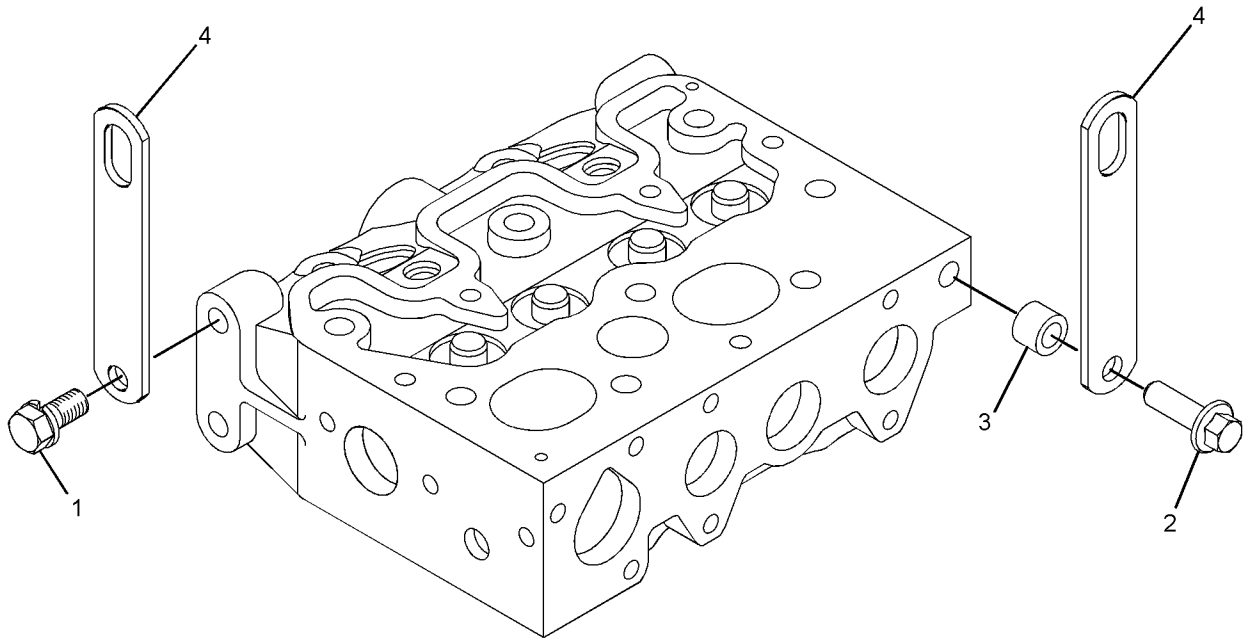

GRAPHIC #1 <END> g06202641

310-9205 PAN GP-OIL

SMCS-1302 **i07483890**

NOTE	REF NO	GRAPHIC REF	PART NUMBER	QTY	PART NAME 1 2 3 4 5 6 (PRODUCT LEVEL)	SEE PAGE
M	1	1	**100-4841**	15	BOLT (M6X1X10-MM)	
	2	1	**153-6835**	1	SEAL-O-RING	
	3	1	**153-6838**	2	BOLT AS	
	4	1	**209-7089**	1	GAUGE-OIL LEVEL (DIPSTICK) (ENGINE)	
	5	1	**229-5150**	1	GAUGE AS	
	6	1	**289-6111**	1	GASKET-OIL PAN	
	7	1	**331-5294**	1	STRAINER (ENGINE OIL)	
	8	1	**331-5293**	1	TUBE-OIL GAUGE	
	9	1	**289-6119**	1	SEAL-O-RING	
	10	1	**310-8327**	1	PAN-OIL	

M - METRIC PART

310-9205 **PAN GP-OIL (**contd.**)** **i07483890**

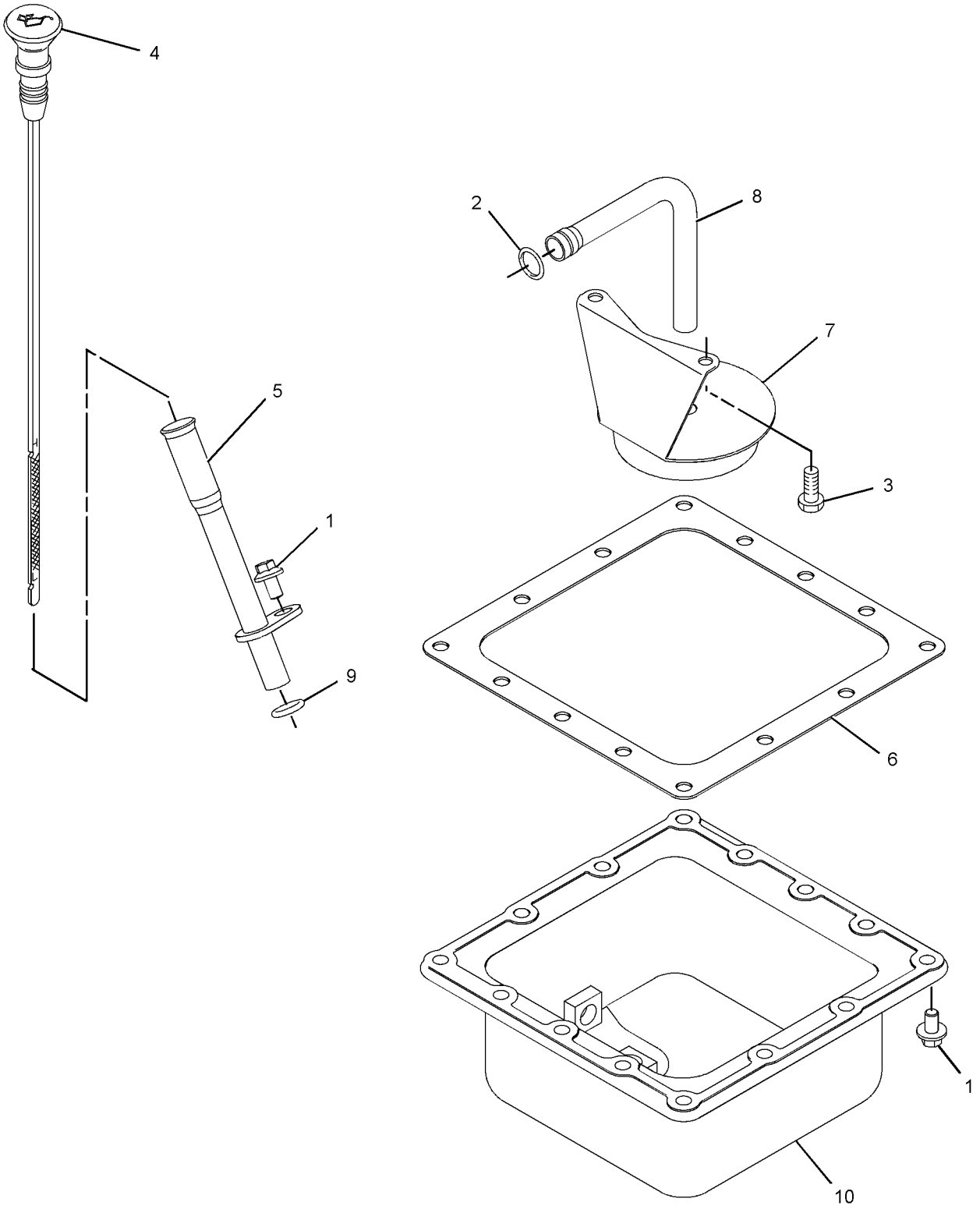

GRAPHIC #1 <END> g06136340

532-8511 PAN GP-OIL

PART OF 549-5443, 552-5704, 558-8965 ENGINE AR-PRIMARY

SMCS-1302 **i07495586**

NOTE	REF NO	GRAPHIC REF	PART NUMBER	QTY	PART NAME 1 2 3 4 5 6 (PRODUCT LEVEL)	SEE PAGE
M	1	1	**100-4841**	14	BOLT (M6X1X10-MM)	
	2	1	**153-6835**	1	SEAL-O-RING	
	3	1	**153-6838**	4	BOLT AS	
	4	1	**209-7089**	1	GAUGE-OIL LEVEL (DIPSTICK) (ENGINE)	
	5	1	**483-1201**	1	GAUGE AS	
	6	1	**289-6111**	1	GASKET-OIL PAN	
	7	1	**547-5190**	1	STRAINER (ENGINE OIL)	
	8	1	**331-5293**		TUBE-OIL GAUGE	
	10	1	**310-8327**	1	PAN-OIL	
	11	1	**369-8010**	1	PLUG	

M - METRIC PART

532-8511 **PAN GP-OIL (**contd.**)** **i07495586**

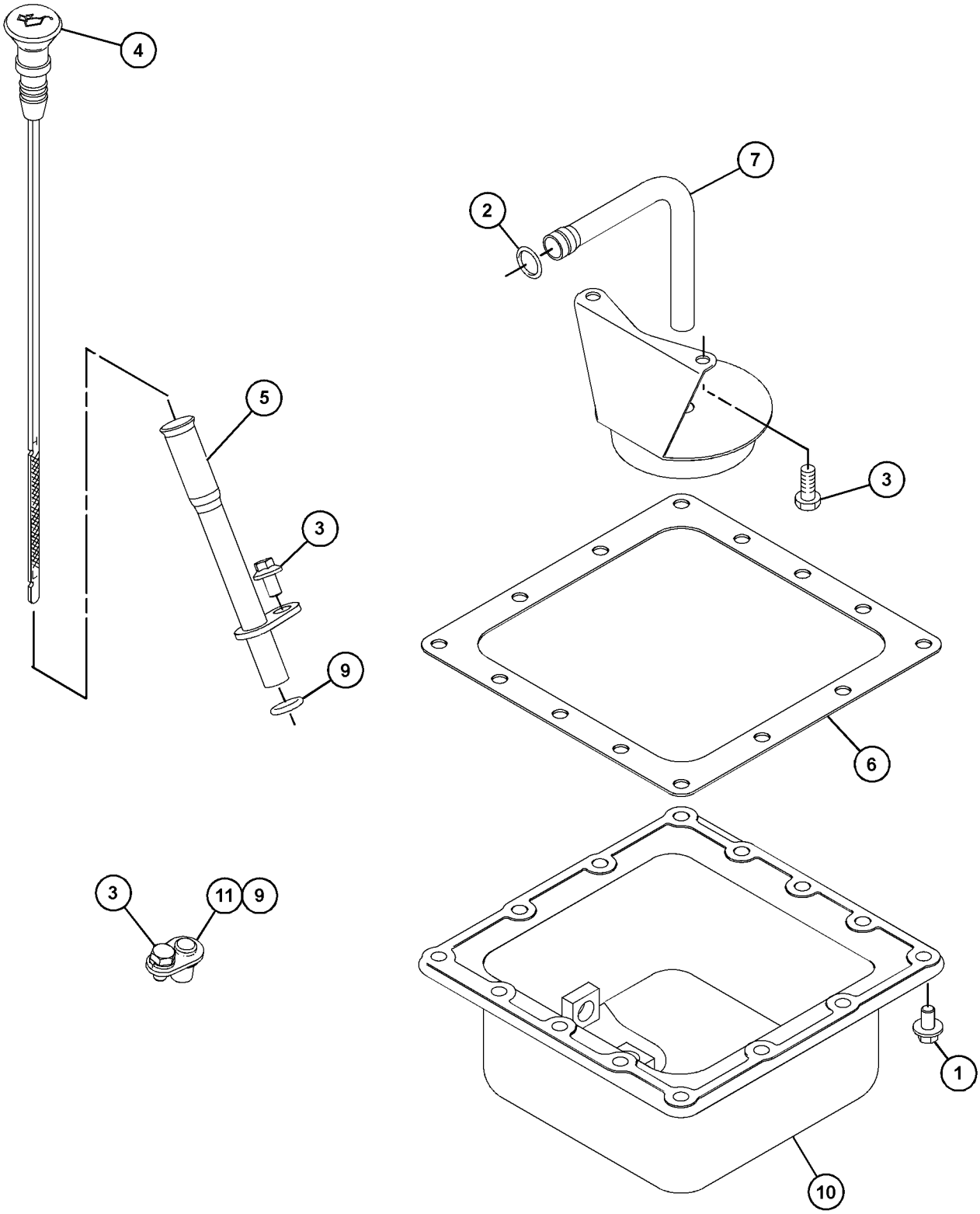

GRAPHIC #1 <END> g06337852

532-8401 PISTON & ROD GP

PART OF 549-5443, 552-5704, 558-8965 ENGINE AR-PRIMARY

SMCS-1225 **i07493597**

NOTE	REF NO	GRAPHIC REF	PART NUMBER	QTY	PART NAME 1 2 3 4 5 6 (PRODUCT LEVEL)	SEE PAGE
	1	1	**288-6545**	2	KIT-PISTON RING	
					(EACH INCLUDES)	
	1A	1	**288-6546**	1	KIT-PISTON RING	
	2	1	**288-6547**	2	PIN	
	3	1	**288-6548**	2	CLIP	
	4	1	**288-6549**	2	ROD AS-CONNECTING	
					(EACH INCLUDES)	
	4A	1	**288-6550**	1	BUSHING	
	4B	1	**288-6551**	2	BOLT-CONNECTING ROD	
	4C	1	**288-6552**	2	NUT-CONNECTING ROD	
	5	1	**288-6553**	1	KIT-BEARING	

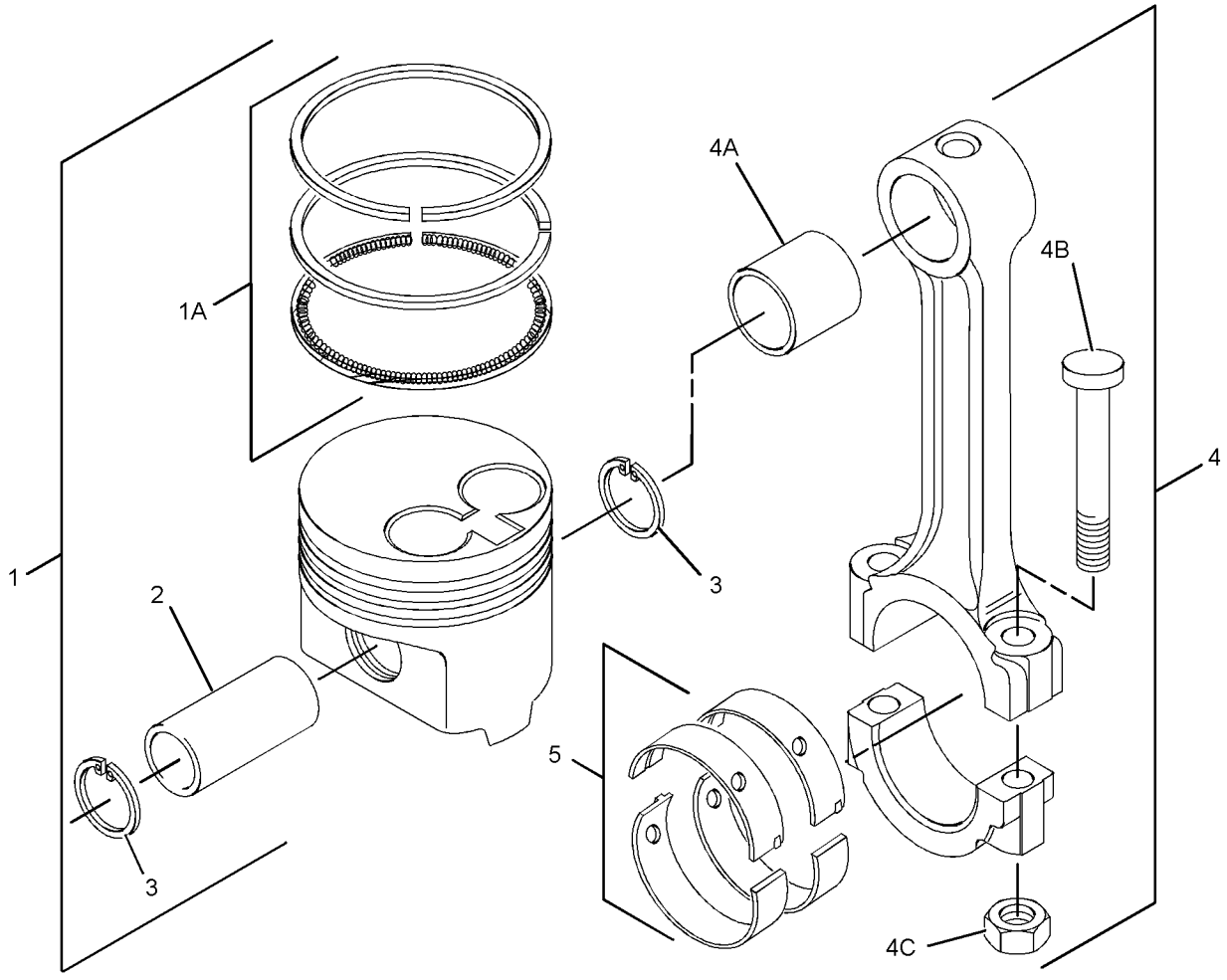

GRAPHIC #1 <END> g01254035

308-4186 PISTON GP

SMCS-1214 **i07478946**

NOTE	REF NO	GRAPHIC REF	PART NUMBER	QTY	PART NAME 1 2 3 4 5 6 (PRODUCT LEVEL)	SEE PAGE
	1	1	**288-6545**	2	KIT-PISTON RING	
					(EACH INCLUDES)	
	1A	1	**288-6546**	1	KIT-PISTON RING	
	2	1	**288-6547**	2	PIN	
	3	1	**288-6548**	2	CLIP	
	4	1	**288-6549**	2	ROD AS-CONNECTING	
					(EACH INCLUDES)	
	4A	1	**288-6550**	1	BUSHING	
	4B	1	**288-6551**	2	BOLT-CONNECTING ROD	
	4C	1	**288-6552**	2	NUT-CONNECTING ROD	
	5	1	**288-6553**	1	KIT-BEARING	

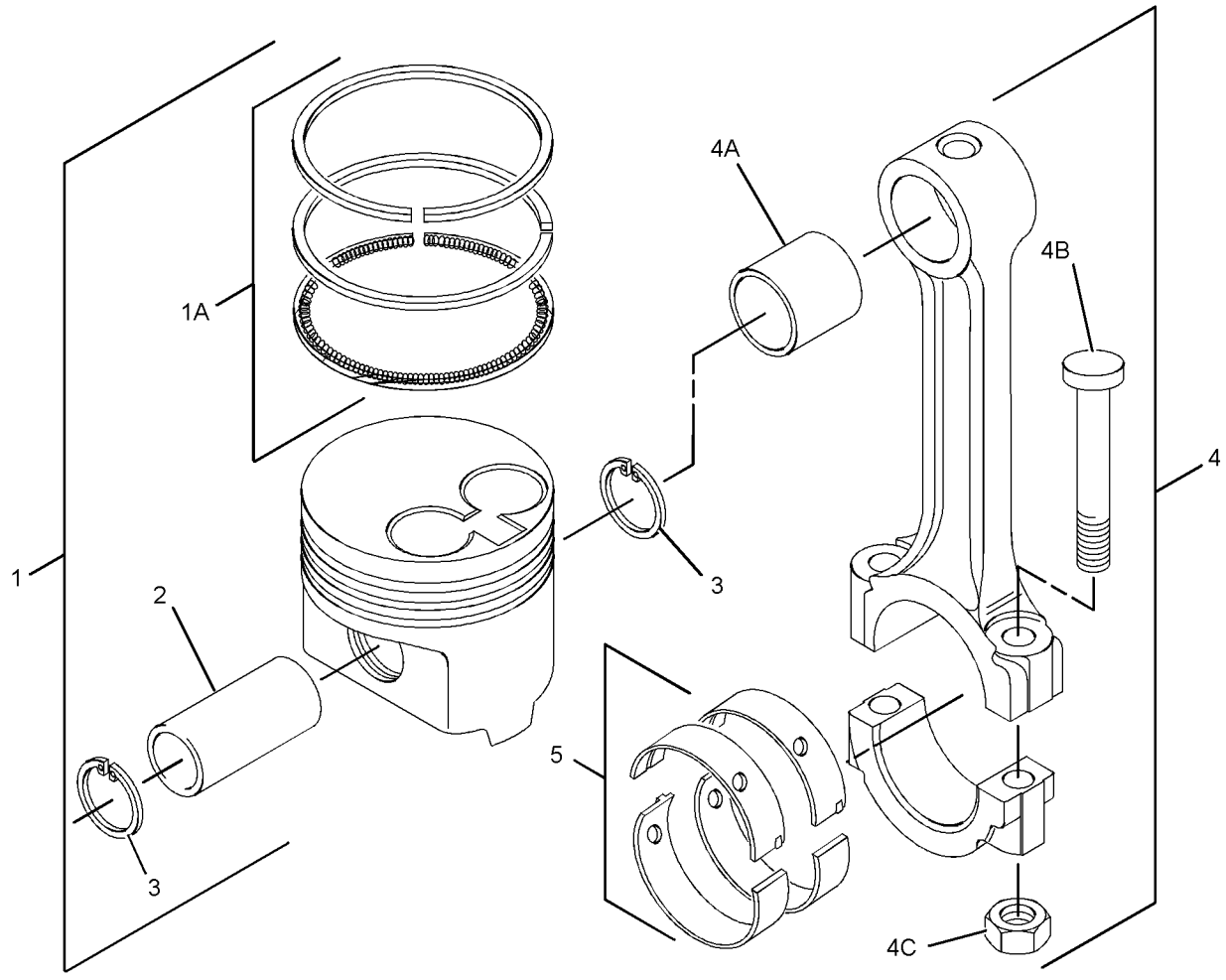

GRAPHIC #1 <END> g01254035

310-9206 PLUG GP-ENGINE

SMCS-1100, 1201 **i07479159**

NOTE	REF NO	GRAPHIC REF	PART NUMBER	QTY	PART NAME 1 2 3 4 5 6 (PRODUCT LEVEL)	SEE PAGE
	1	1	**153-6831**	2	PLUG-DRAIN (ENGINE OIL PAN)	
	2	1	**153-6832**	2	WASHER	

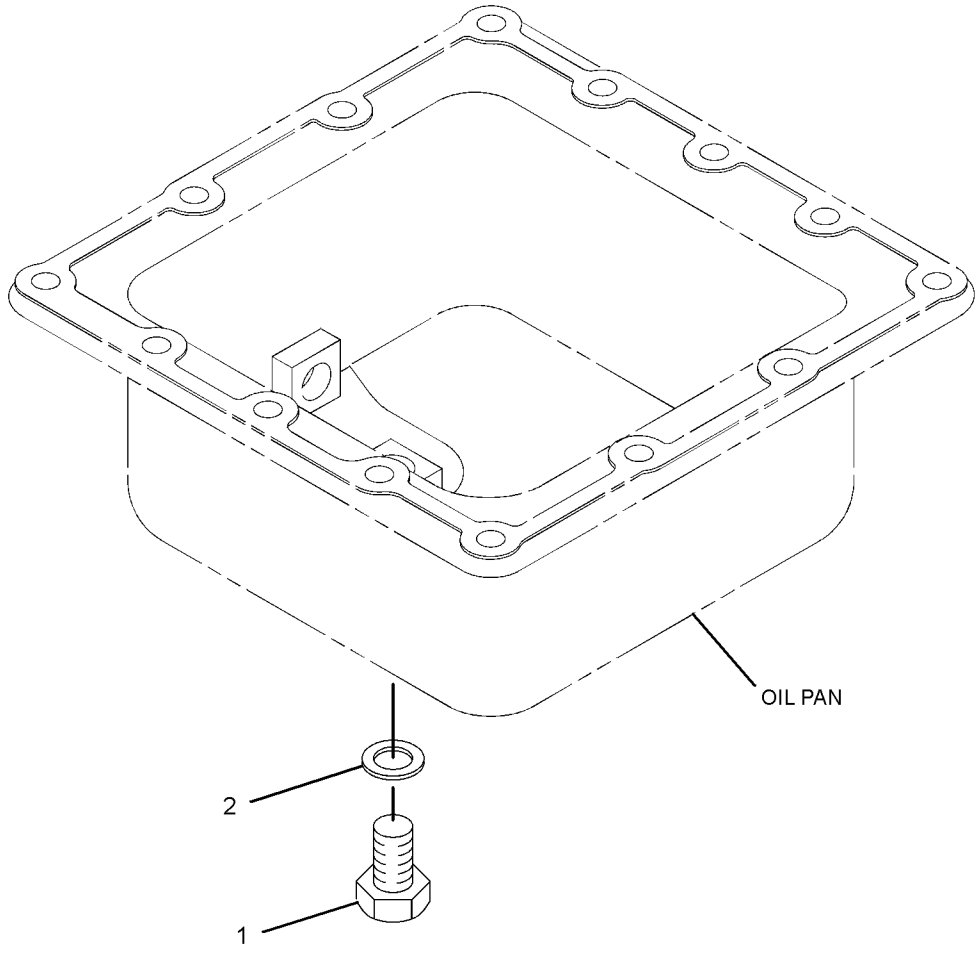

GRAPHIC #1 <END> g01438064

532-8519 PLUG GP-ENGINE

PART OF 549-5443, 552-5704, 558-8965 ENGINE AR-PRIMARY

SMCS-1100, 1201 **i07495568**

NOTE	REF NO	GRAPHIC REF	PART NUMBER	QTY	PART NAME 1 2 3 4 5 6 (PRODUCT LEVEL)	SEE PAGE
	1	1	**153-6831**	2	PLUG-DRAIN (ENGINE OIL PAN)	
	2	1	**153-6832**	2	WASHER	

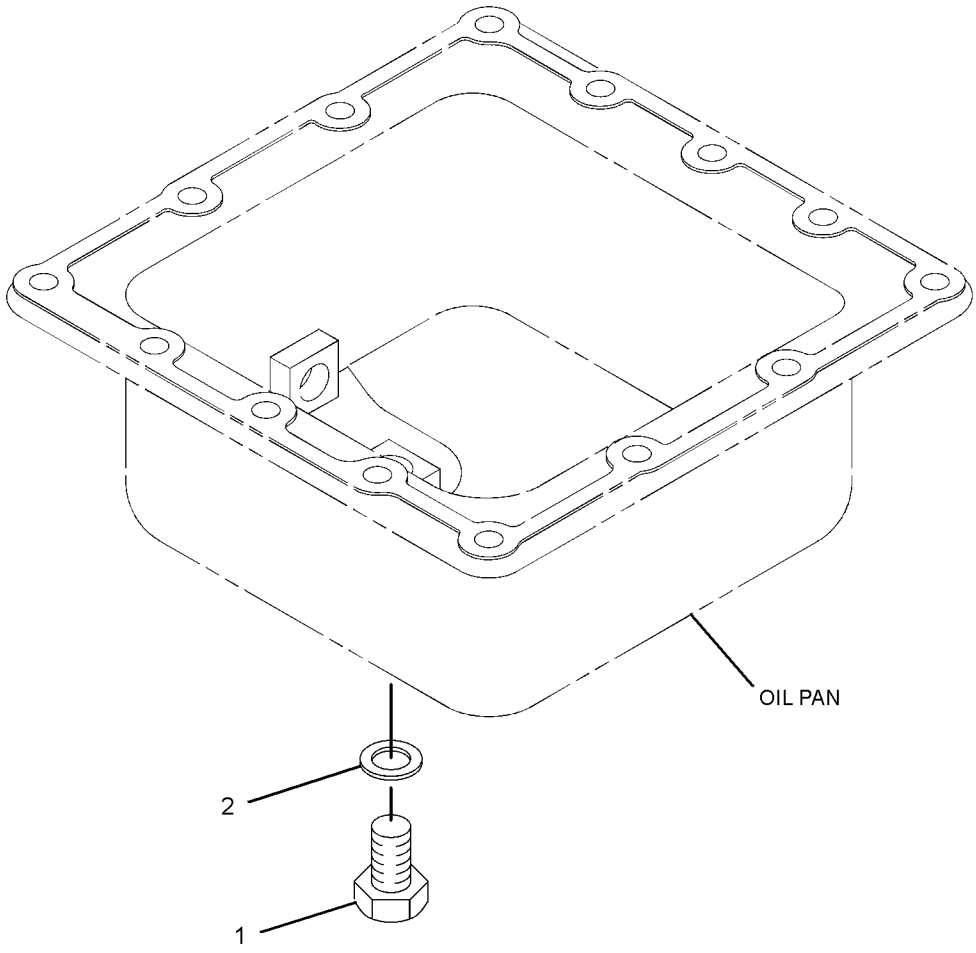

GRAPHIC #1 <END> g01438064

310-9207 PULLEY GP

SMCS-1205, 1359, 1384, 1425 **i07479179**

NOTE	REF NO	GRAPHIC REF	PART NUMBER	QTY	PART NAME 1 2 3 4 5 6 (PRODUCT LEVEL)	SEE PAGE
	1	1	**153-6492**	1	KEY-WOODRUFF	
	2	1	**153-6496**	1	NUT	
	3	1	**310-8856**	1	PULLEY-CRANKSHAFT	

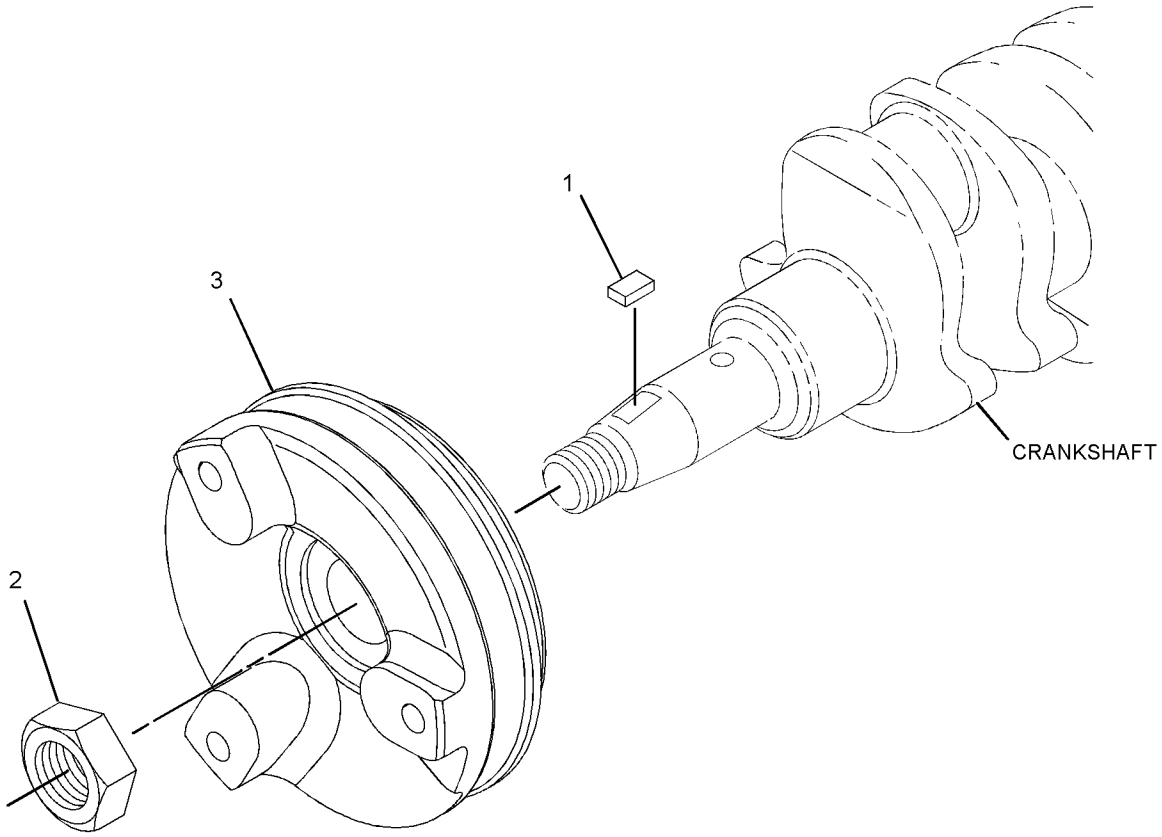

GRAPHIC #1 <END> g01447858

532-8563 PULLEY GP-CRANKSHAFT

PART OF 549-5443, 552-5704, 558-8965 ENGINE AR-PRIMARY

SMCS-1205 **i07495667**

NOTE	REF NO	GRAPHIC REF	PART NUMBER	QTY	PART NAME 1 2 3 4 5 6 (PRODUCT LEVEL)	SEE PAGE
	1	1	**153-6492**	1	KEY-WOODRUFF	
	2	1	**153-6496**		NUT	

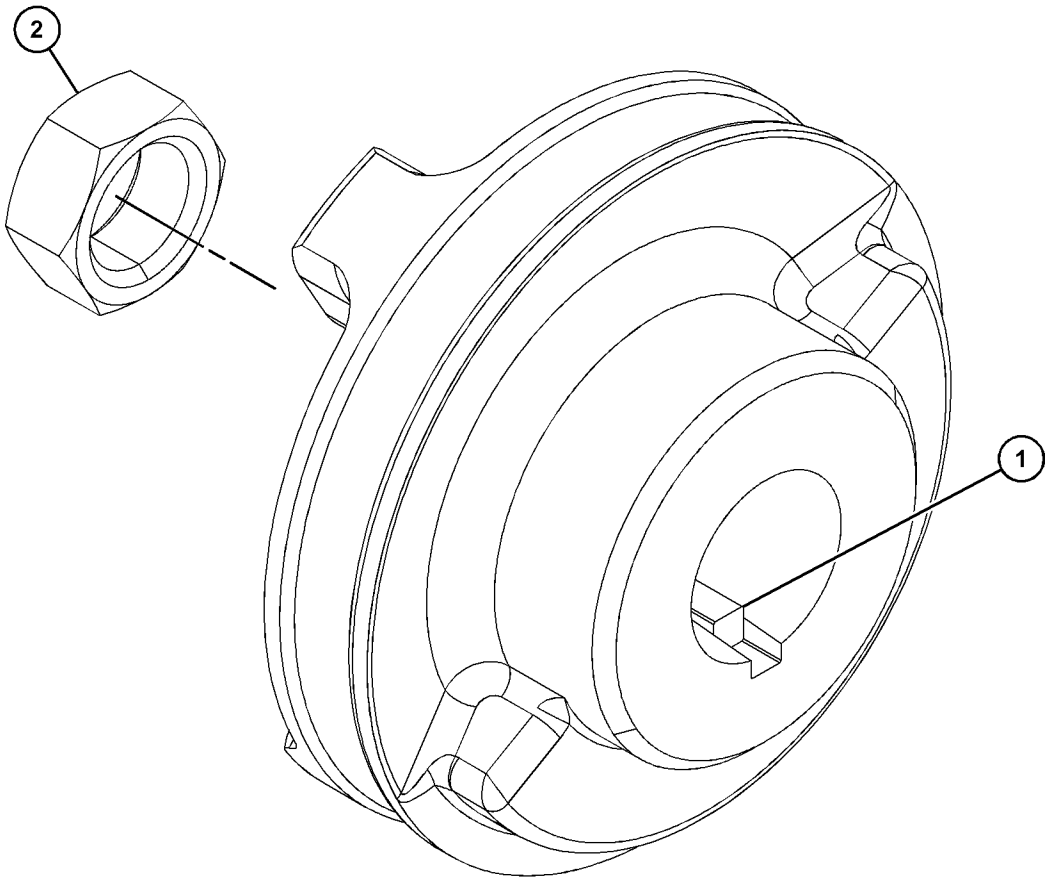

GRAPHIC #1 <END> g06338022

308-4317 PULLEY GP-WATER PUMP

SMCS-1384 **i07777849**

NOTE	REF NO	GRAPHIC REF	PART NUMBER	QTY	PART NAME 1 2 3 4 5 6 (PRODUCT LEVEL)	SEE PAGE
	1	1	**153-5963**	1	PULLEY-WATER PUMP	

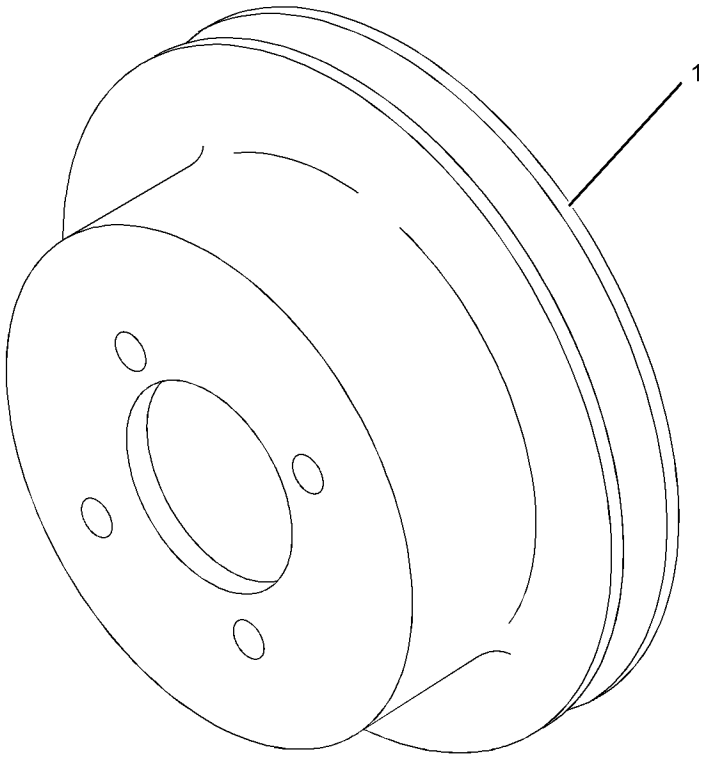

GRAPHIC #1 <END> g01355819

547-5184 ROCKER ARM AS

PART OF 532-8404 ROCKER ARM GP

SMCS-1123 **i07493550**

NOTE	REF NO	GRAPHIC REF	PART NUMBER	QTY	PART NAME 1 2 3 4 5 6 (PRODUCT LEVEL)	SEE PAGE
	1	1	**289-4931**	1	ROCKER ARM	
	2	1	**289-4935**	2	PIN	
	3	1	**153-6841**	1	SEAL-O-RING	
	4	1	**289-4930**	1	ROCKER ARM	
M	5	1	**153-5590**	4	NUT (M7X1-THD)	
	6	1	**289-4932**	1	SPRING	
	7	1	**289-4934**	1	PLUG	
	8	1	**153-5587**		SCREW-ADJUSTMENT	

M - METRIC PART

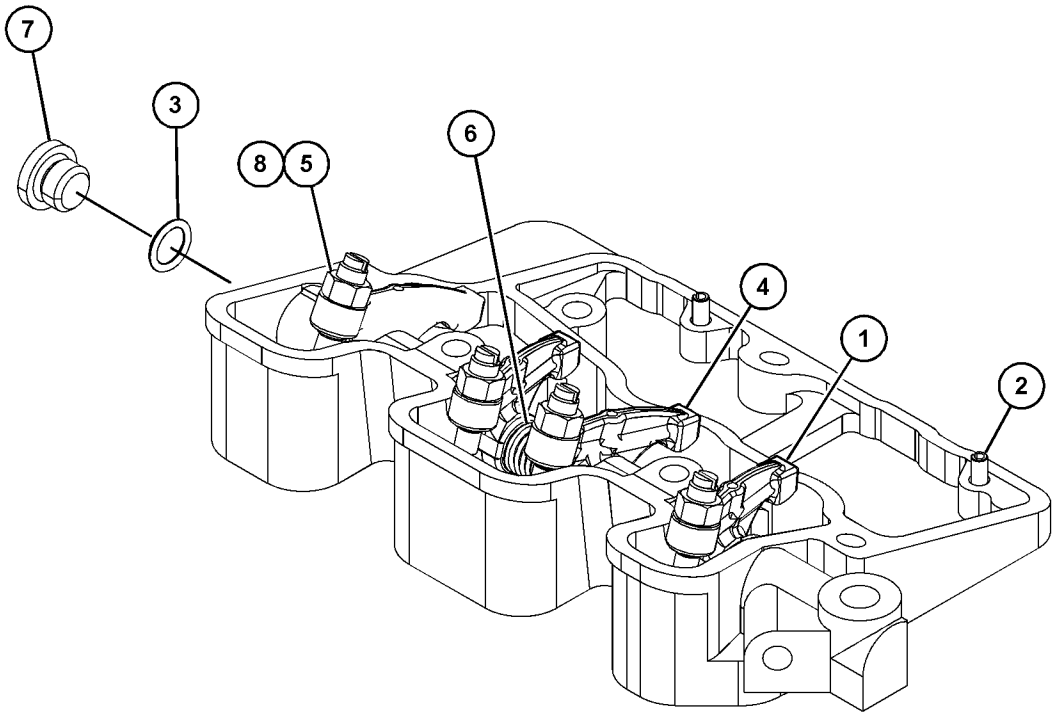

GRAPHIC #1 <END> g06338485

532-8404 ROCKER ARM GP

PART OF 549-5443, 552-5704, 558-8965 ENGINE AR-PRIMARY

SMCS-1123 **i07493453**

NOTE	REF NO	GRAPHIC REF	PART NUMBER	QTY	PART NAME 1 2 3 4 5 6 (PRODUCT LEVEL)	SEE PAGE
	1	1	**289-4931**	1	ROCKER ARM	
	2	1	**289-4935**	2	PIN	
	3	1	**153-6841**	1	SEAL-O-RING	
	4	1	**289-4930**	1	ROCKER ARM	
M	5	1	**153-5590**	4	NUT (M7X1-THD)	
	6	1	**289-4932**	1	SPRING	
	7	1	**289-4934**	1	PLUG	
	8	1	**153-5587**	1	SCREW-ADJUSTMENT	
Y	9	1	**547-5184**	1	ROCKER ARM AS	60

M - METRIC PART
Y - SEPARATE ILLUSTRATION

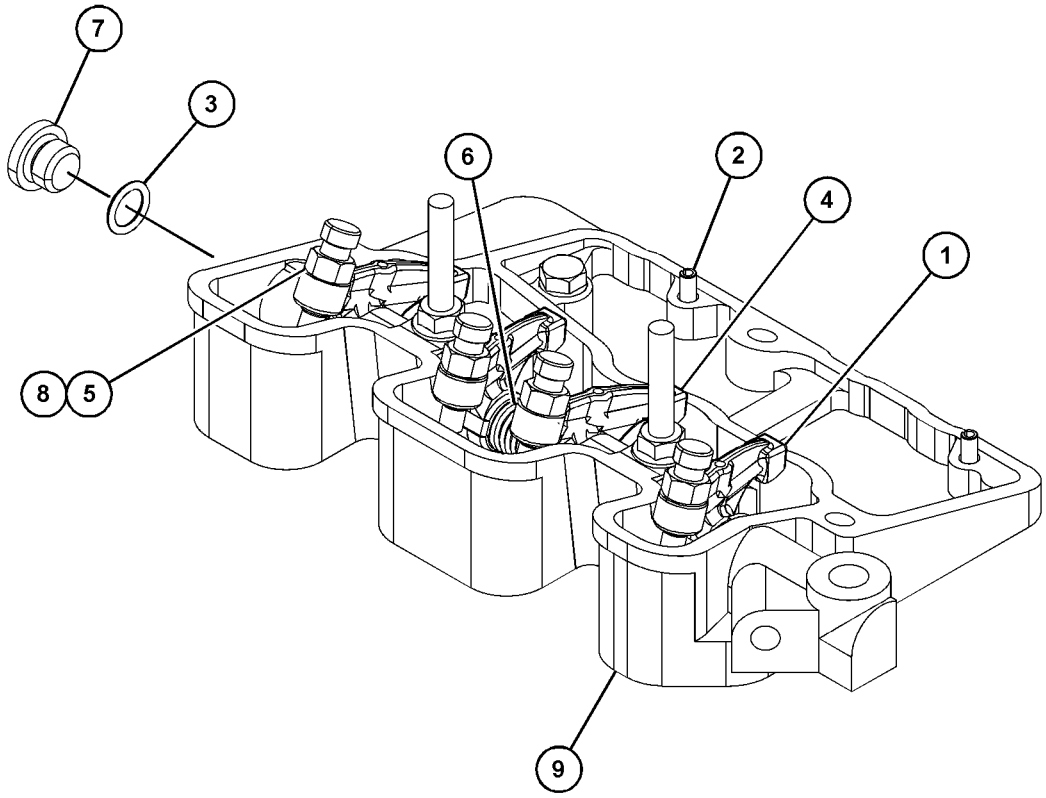

GRAPHIC #1 <END> g06338480

310-9213 V-BELT GP

ALTERNATOR

SMCS-1357 **i07785930**

NOTE	REF NO	GRAPHIC REF	PART NUMBER	QTY	PART NAME 1 2 3 4 5 6 (PRODUCT LEVEL)	SEE PAGE
	1	1	**310-8861**	1	BELT-DRIVE (ALTERNATOR)	

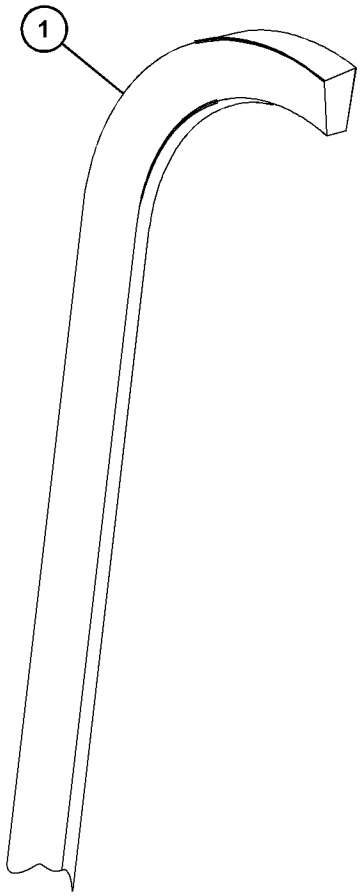

GRAPHIC #1 <END> g06429038

532-8597 V-BELT GP

PART OF 549-5443, 552-5704 ENGINE AR-PRIMARY

SMCS-1357 **i07499127**

NOTE	REF NO	GRAPHIC REF	PART NUMBER	QTY	PART NAME 1 2 3 4 5 6 (PRODUCT LEVEL)	SEE PAGE
	1	1	**548-5481**	1	V-BELT (ALTERNATOR)	

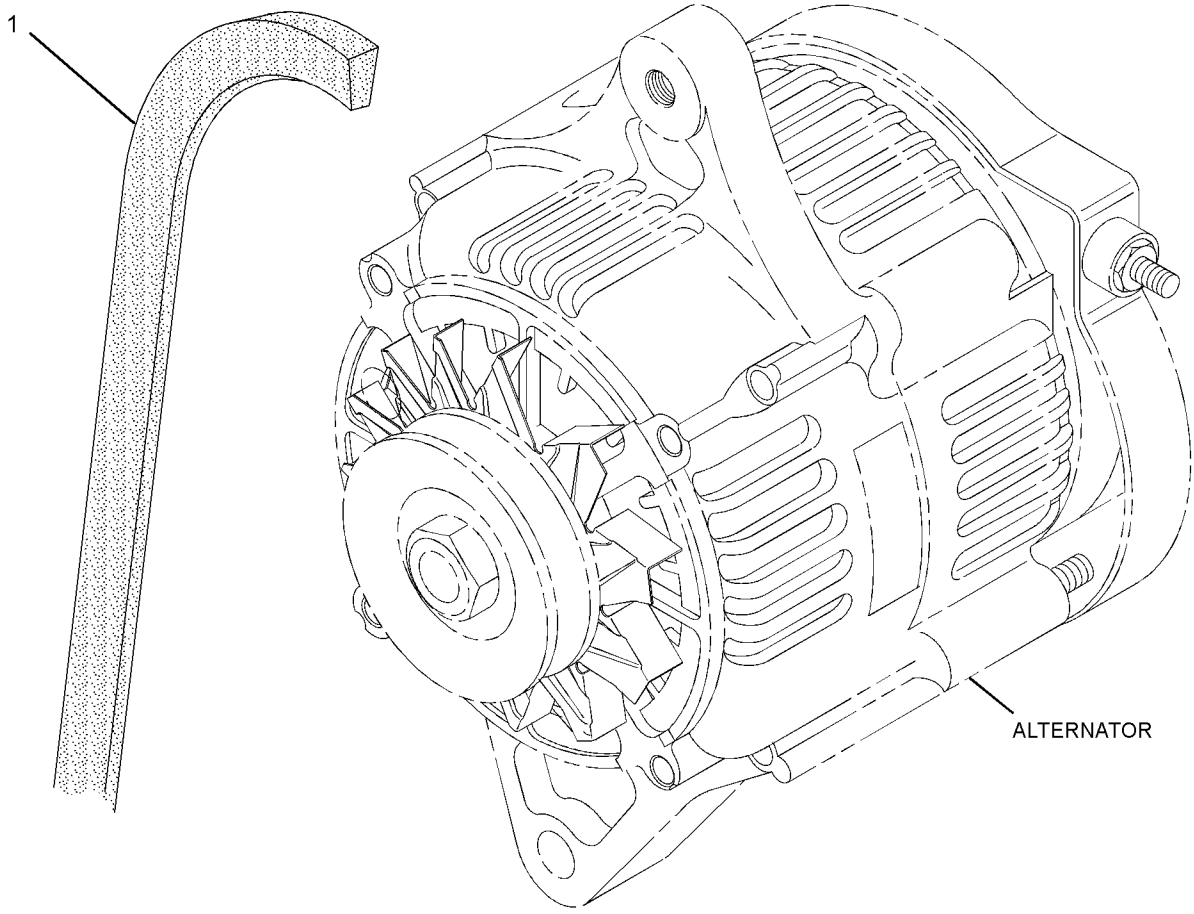

GRAPHIC #1 <END> g01448299

308-4188 VALVE MECHANISM GP

SMCS-1102, 1121, 1123, 1209 **i07478951**

NOTE	REF NO	GRAPHIC REF	PART NUMBER	QTY	PART NAME 1 2 3 4 5 6 (PRODUCT LEVEL)	SEE PAGE
M	1	1	**153-5960**	2	NUT (M6X1-THD)	
	2	1	**153-6861**	1	BOLT AS	
	3	1	**438-9109**	4	TAPPET	
	4	1	*289-4929*	1	ROCKER ARM AS	
	4A	1	**153-5587**	4	SCREW-ADJUSTMENT	
M	4B	1	**153-5590**	4	NUT (M7X1-THD)	
	4C	1	**153-6841**	1	SEAL-O-RING	
	4D	1	**289-4930**	2	ROCKER ARM	
	4E	1	**289-4931**	2	ROCKER ARM	
	4F	1	**289-4932**	1	SPRING	
	4G	1	**289-4933**	1	SHAFT-ROCKER ARM	
	4H	1	**289-4934**	1	PLUG	
	4J	1	**289-4935**	2	PIN	
	5	1	**289-4937**	1	GASKET	
	6	1	**289-4939**	2	STUD	
	7	1	**289-4940**	4	PUSHROD	

M - METRIC PART

308-4188 **VALVE MECHANISM GP (**contd.**)** **i07478951**

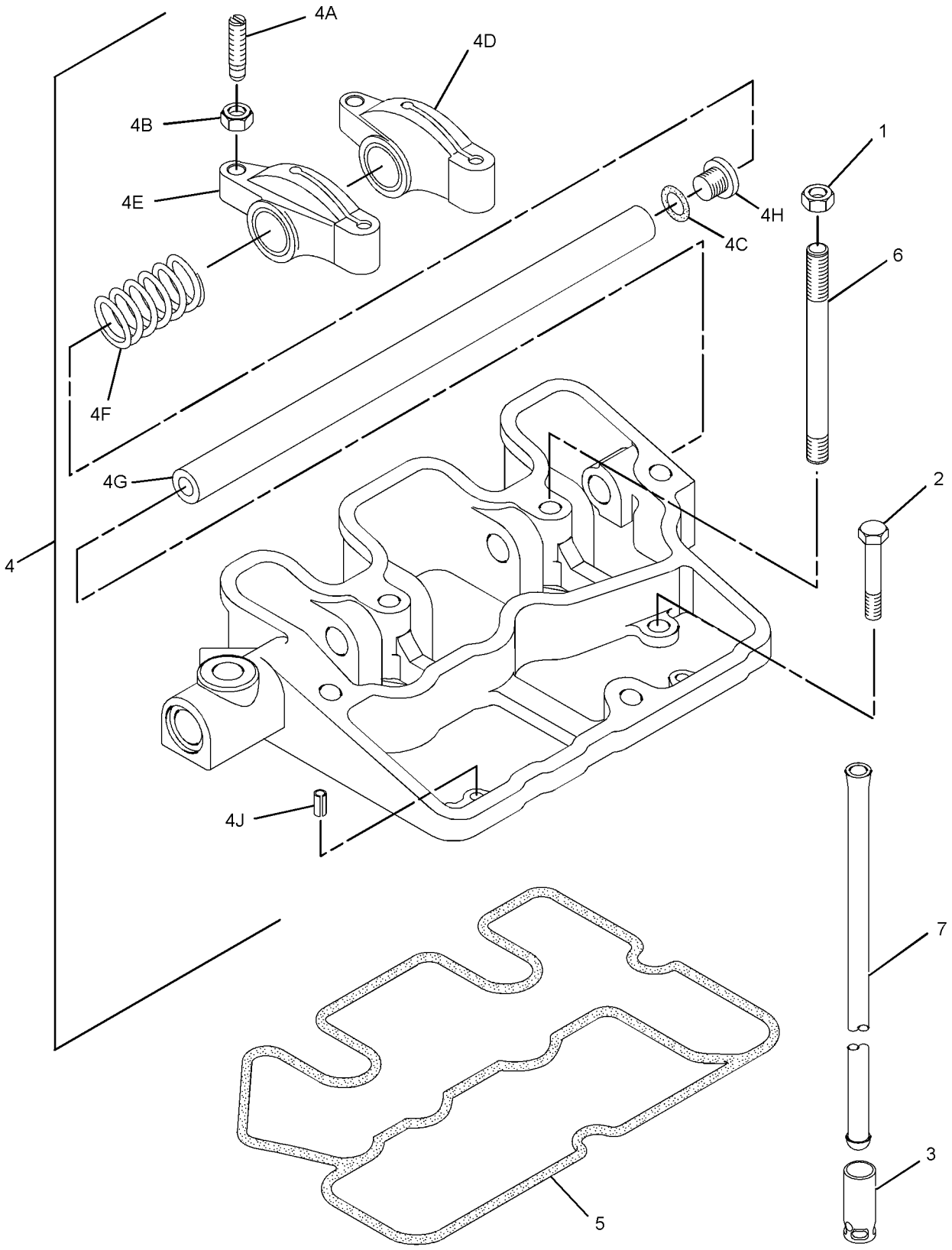

GRAPHIC #1 <END> g01357234

308-4725 FILLER GP-ENGINE OIL

SMCS-1316 **i07483074**

NOTE	REF NO	GRAPHIC REF	PART NUMBER	QTY	PART NAME 1 2 3 4 5 6 (PRODUCT LEVEL)	SEE PAGE
	1	1	**288-6593**	2	SEAL	
	2	1	**289-6120**	2	CAP-OIL FILLER (ENGINE)	

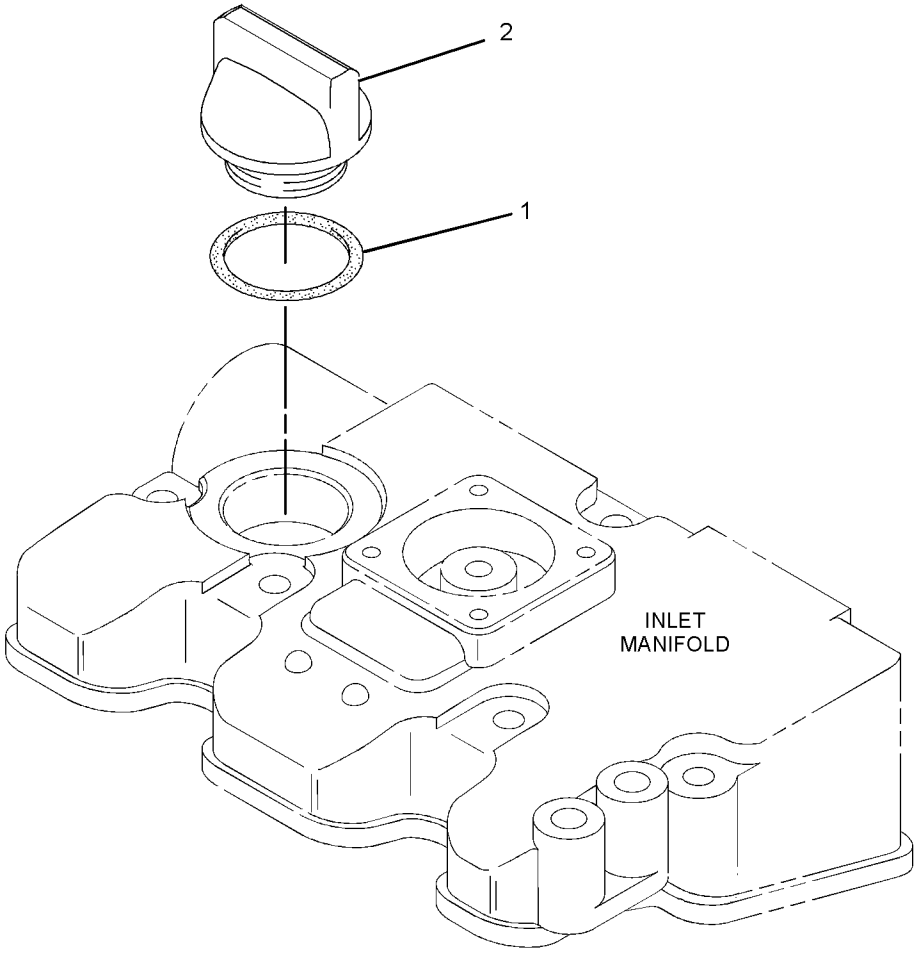

GRAPHIC #1 <END> g01355754

532-8530 FILLER GP-ENGINE OIL

PART OF 549-5443, 552-5704 ENGINE AR-PRIMARY

SMCS-1316 **i07708599**

NOTE	REF NO	GRAPHIC REF	PART NUMBER	QTY	PART NAME 1 2 3 4 5 6 (PRODUCT LEVEL)	SEE PAGE
	1	1	**334-0272**	1	PLUG-OIL FILLER	
	2	1	**288-6593**	1	SEAL	

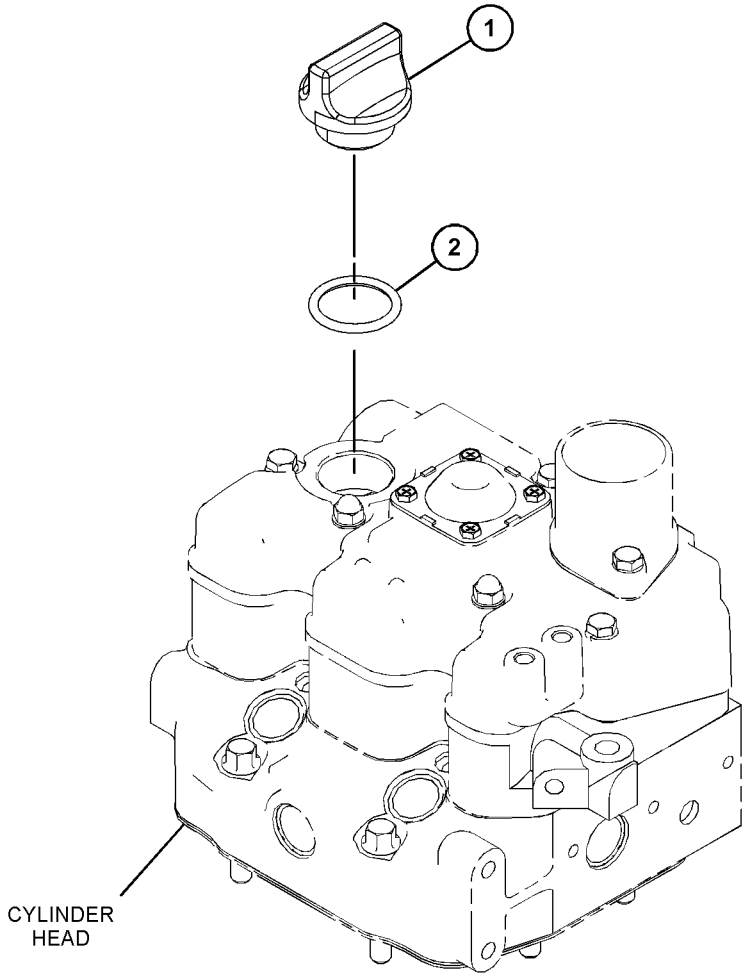

GRAPHIC #1 <END> g06404564

547-5943 FILLER GP-ENGINE OIL

PART OF 558-8965 ENGINE AR-PRIMARY

SMCS-1316 **i07501865**

NOTE	REF NO	GRAPHIC REF	PART NUMBER	QTY	PART NAME 1 2 3 4 5 6 (PRODUCT LEVEL)	SEE PAGE
	1	1	**288-6593**	2	SEAL	
	2	1	**289-6120**	2	CAP-OIL FILLER (ENGINE)	

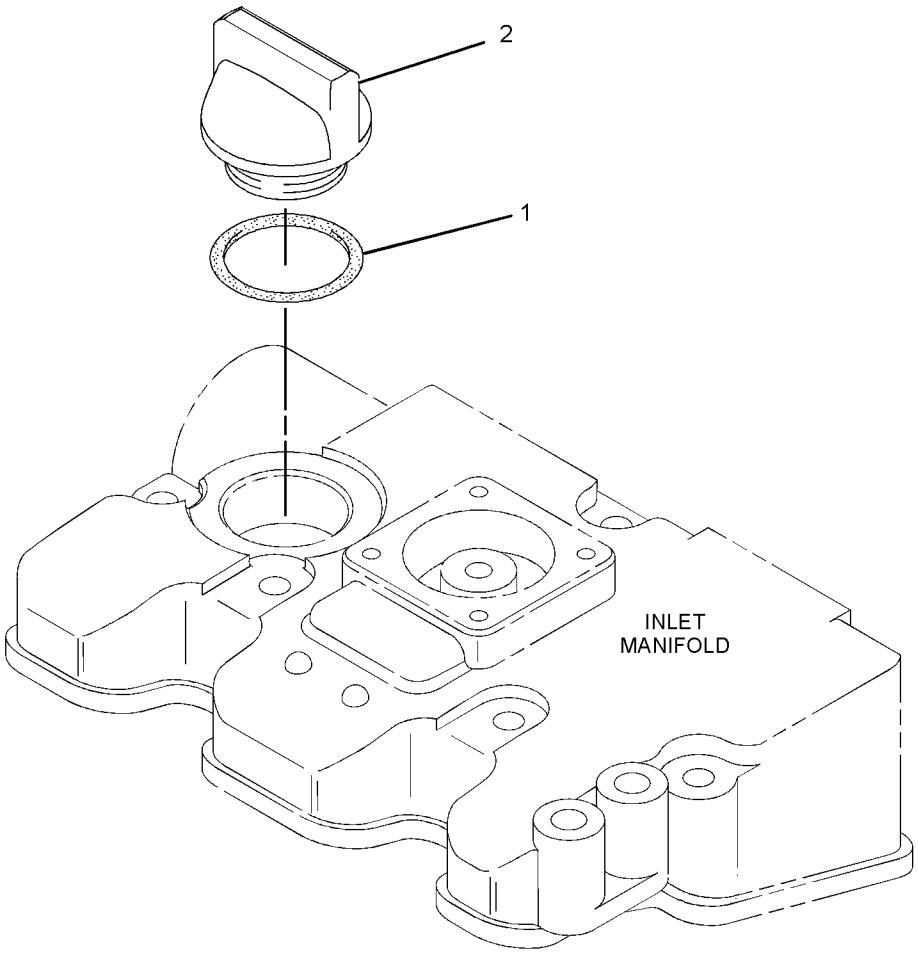

GRAPHIC #1 <END> g01355754

308-4726 FILTER GP-ENGINE OIL

SMCS-1306, 1308 **i07479033**

NOTE	REF NO	GRAPHIC REF	PART NUMBER	QTY	PART NAME 1 2 3 4 5 6 (PRODUCT LEVEL)	SEE PAGE
	1	1	**266-7143**	1	FILTER-ENGINE OIL	

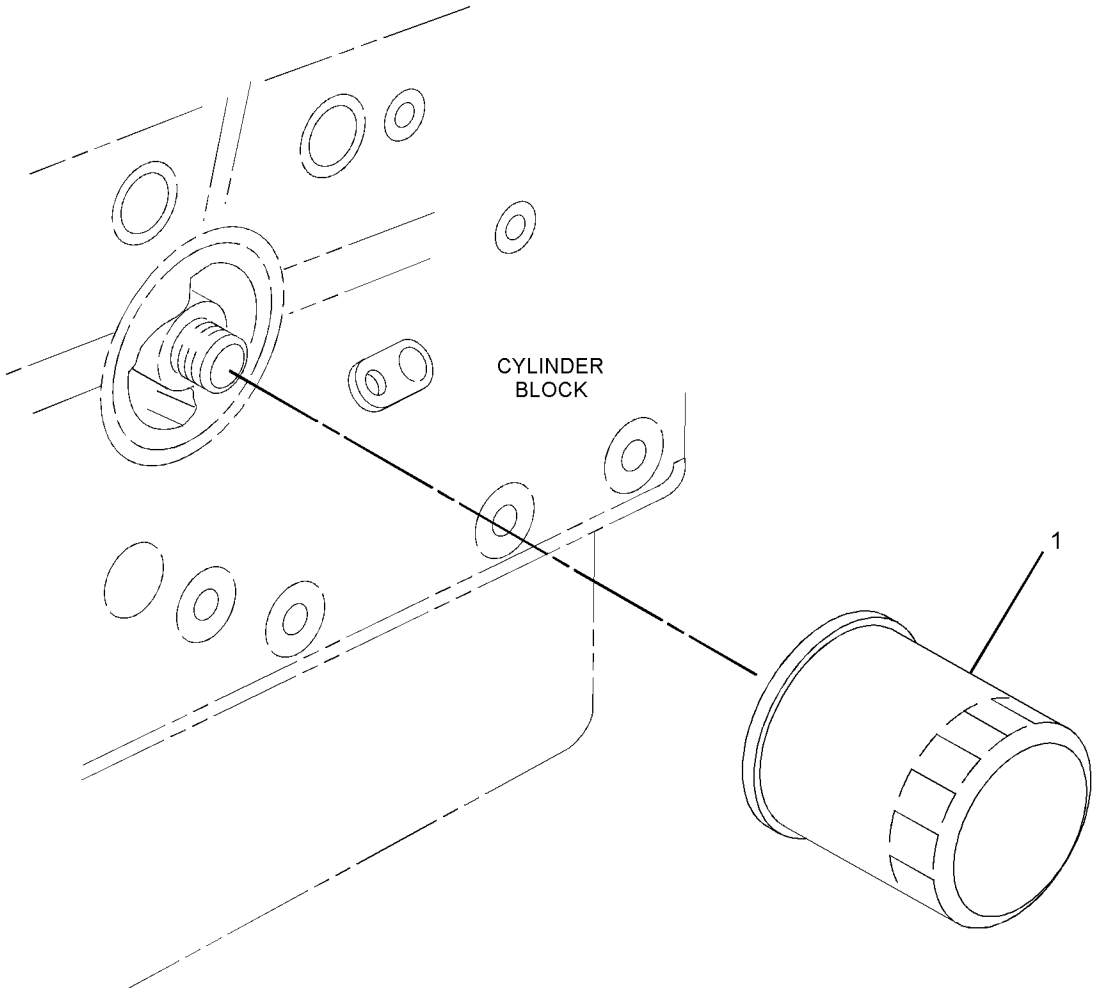

GRAPHIC #1 <END> g01355757

532-8560 FILTER GP-ENGINE OIL

PART OF 549-5443, 552-5704, 558-8965 ENGINE AR-PRIMARY

SMCS-1306, 1308 **i07695611**

NOTE	REF NO	GRAPHIC REF	PART NUMBER	QTY	PART NAME 1 2 3 4 5 6 (PRODUCT LEVEL)	SEE PAGE
	1	1	**482-8619**	1	FILTER-ENGINE OIL	

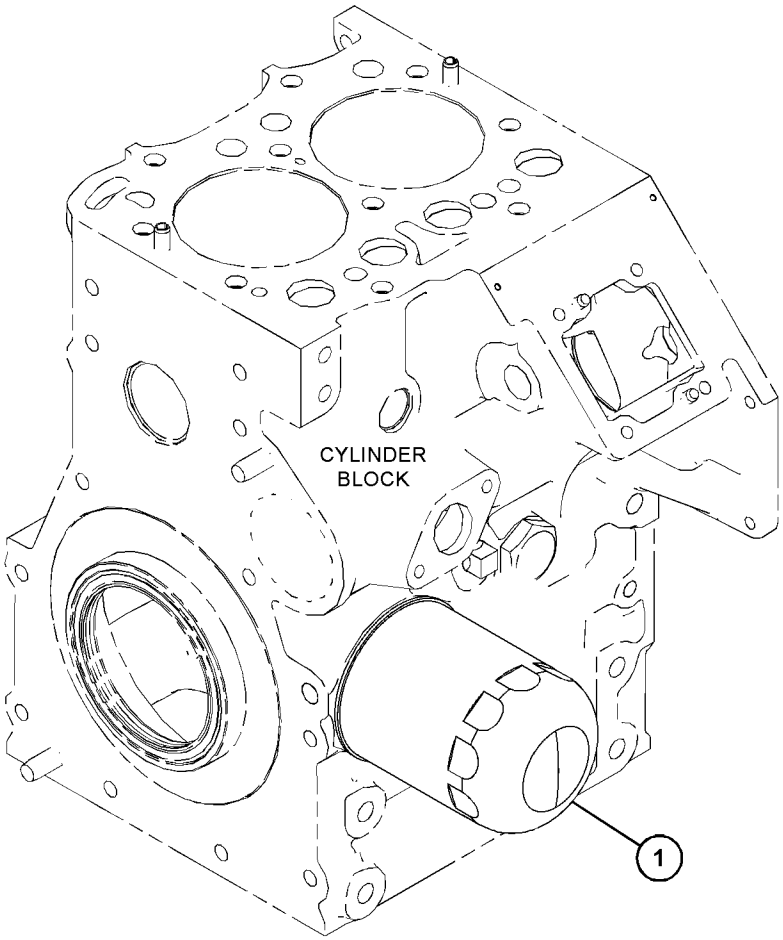

GRAPHIC #1 <END> g06405281

308-4735 MOUNTING GP-ENGINE OIL FILTER

SMCS-1306, 1308

i03384424

NOTE	REF NO	GRAPHIC REF	PART NUMBER	QTY	PART NAME 1 2 3 4 5 6 (PRODUCT LEVEL)	SEE PAGE
	1	1	**153-6879**	1	STUD-HOLLOW	

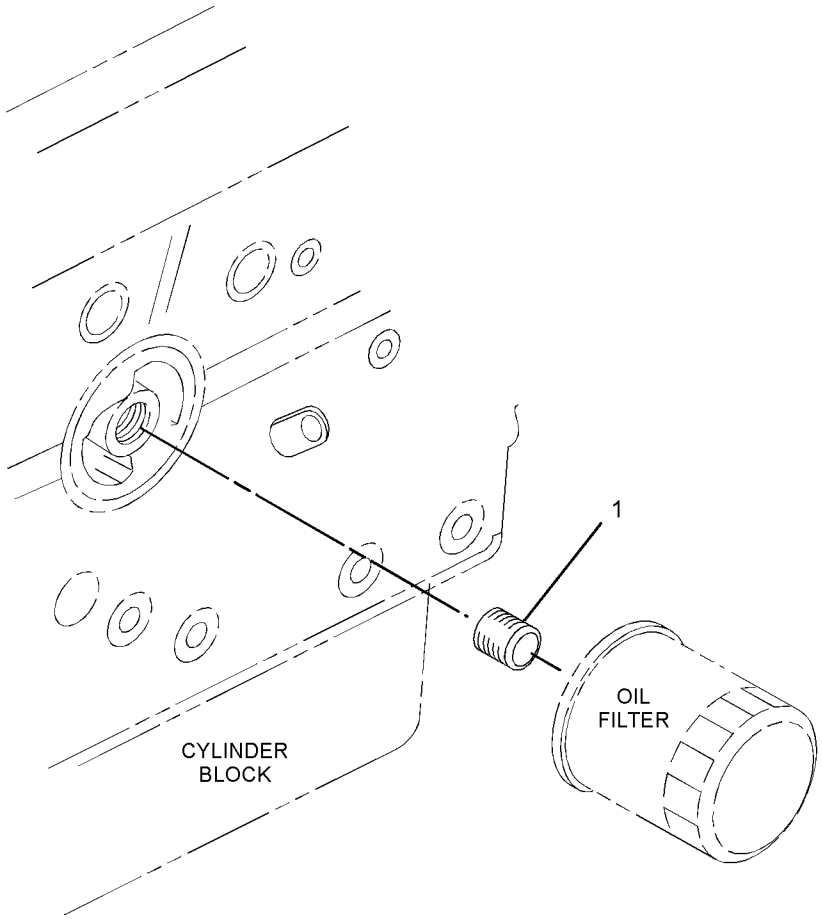

GRAPHIC #1 <END> g01355707

308-4211 VALVE GP-ENGINE OIL RELIEF

SMCS-1315 **i07478962**

NOTE	REF NO	GRAPHIC REF	PART NUMBER	QTY	PART NAME 1 2 3 4 5 6 (PRODUCT LEVEL)	SEE PAGE
	1	1	**153-5936**	4	WASHER (8.2X14.5X1-MM)	
	2	1	**153-6853**	1	SEAL-O-RING	
M	3	1	**153-6881**	2	BOLT (M8X1.25X18-MM)	
	4	1	**154-1942**	1	VALVE-RELIEF (ENGINE OIL PRESSURE)	
	5	1	**289-6121**	1	TUBE	

M - METRIC PART

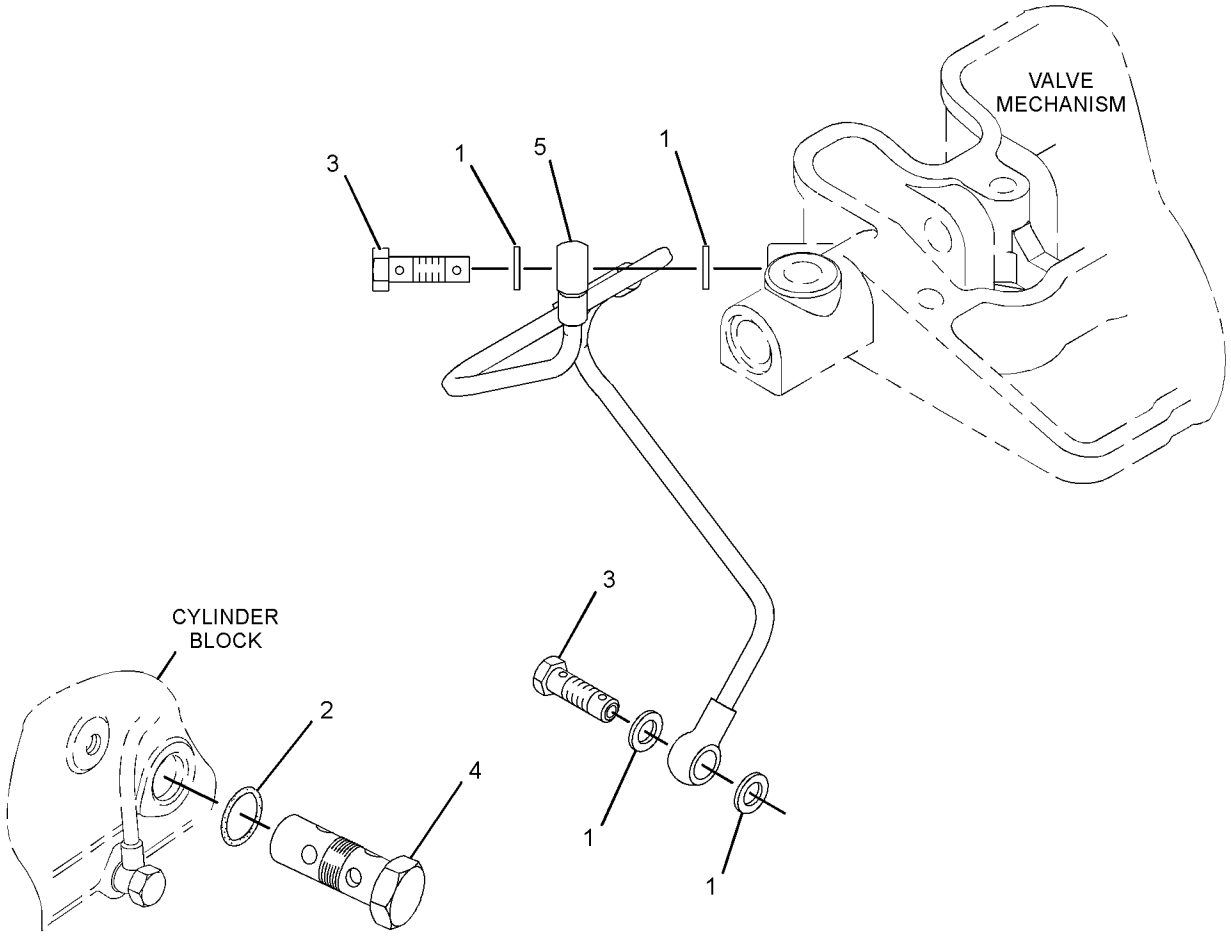

GRAPHIC #1 <END> g02005894

308-4776 COVER GP-REGULATOR HOUSING

SMCS-1393 **i07479049**

NOTE	REF NO	GRAPHIC REF	PART NUMBER	QTY	PART NAME 1 2 3 4 5 6 (PRODUCT LEVEL)	SEE PAGE
M	1	1	**153-5960**	1	NUT (M6X1-THD)	
	2	1	**154-1244**	2	BOLT AS	
	3	1	**290-0357**	1	HOUSING-THERMOSTAT	
	4	1	**290-0360**	1	GASKET (HOUSING, REGULATOR)	

M - METRIC PART

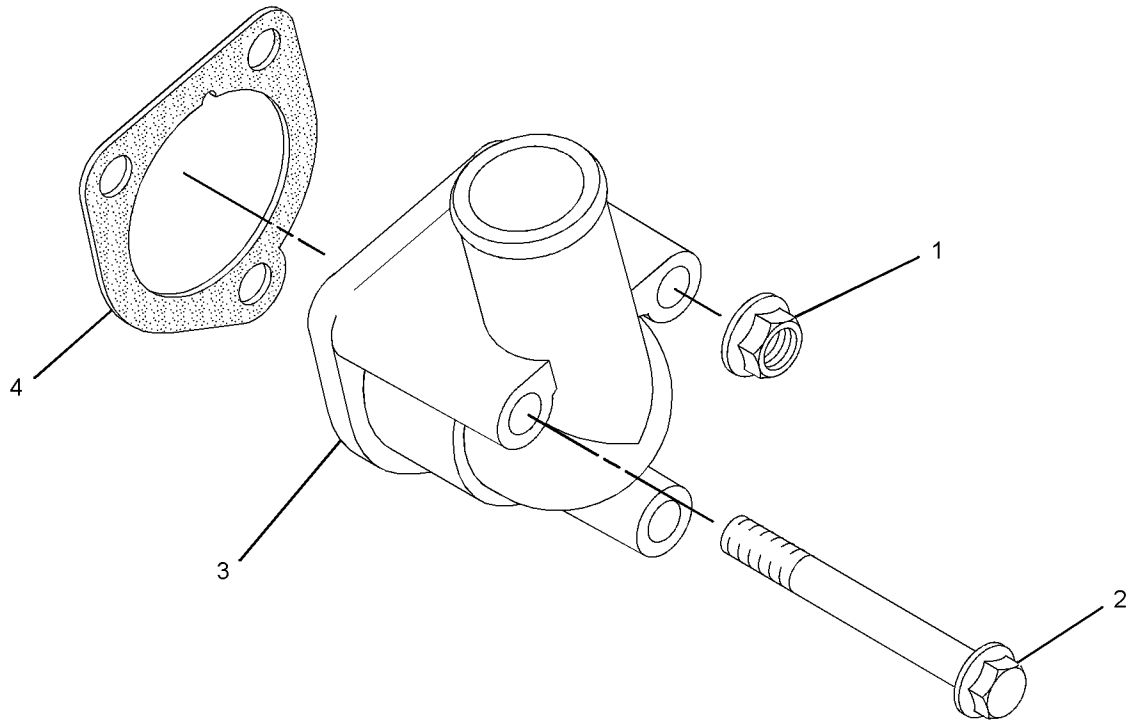

GRAPHIC #1 <END> g01358232

532-8569 COVER GP-REGULATOR HOUSING

PART OF 549-5443, 552-5704, 558-8965 ENGINE AR-PRIMARY

SMCS-1393 **i07495818**

NOTE	REF NO	GRAPHIC REF	PART NUMBER	QTY	PART NAME 1 2 3 4 5 6 (PRODUCT LEVEL)	SEE PAGE
	1	1	**290-0360**	1	GASKET	
	2	1	**542-6977**	1	HOUSING-THERMOSTAT	
	3	1	**154-1244**	2	BOLT AS	
	4	1	**289-4925**	1	STUD	
M	5	1	**153-5960**	1	NUT (M6X1-THD)	

M - METRIC PART

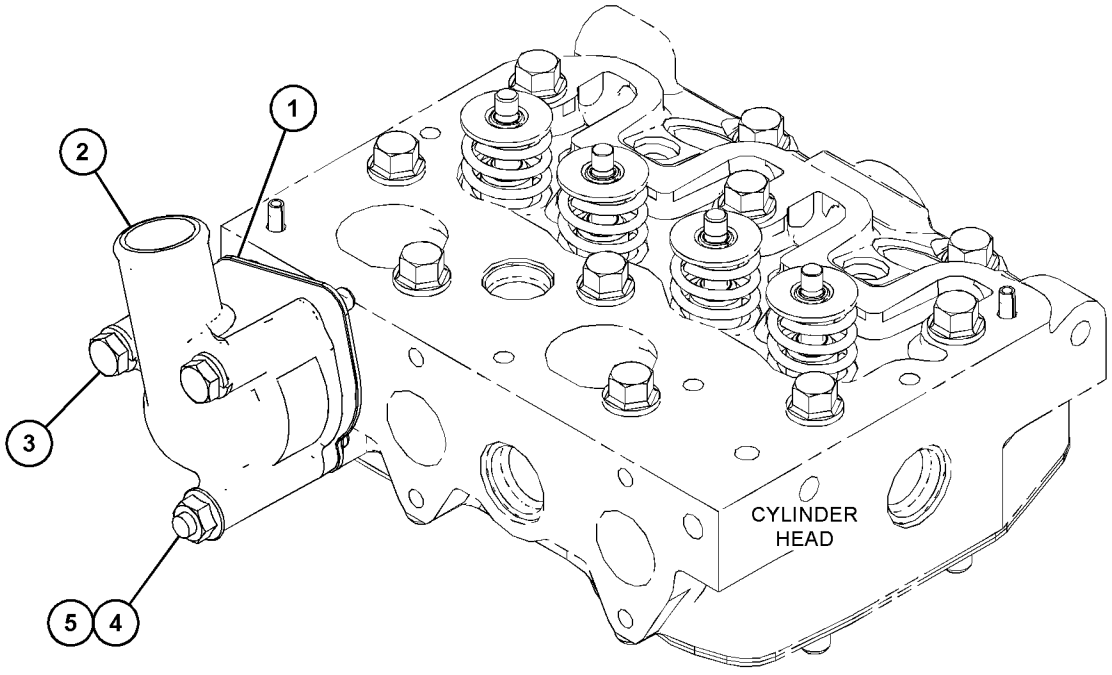

GRAPHIC #1 <END> g06340856

310-9209 FAN GP

SMCS-1356 **i07483066**

NOTE	REF NO	GRAPHIC REF	PART NUMBER	QTY	PART NAME 1 2 3 4 5 6 (PRODUCT LEVEL)	SEE PAGE
	1	1	**307-5362**	1	FAN (6-BLADE)	

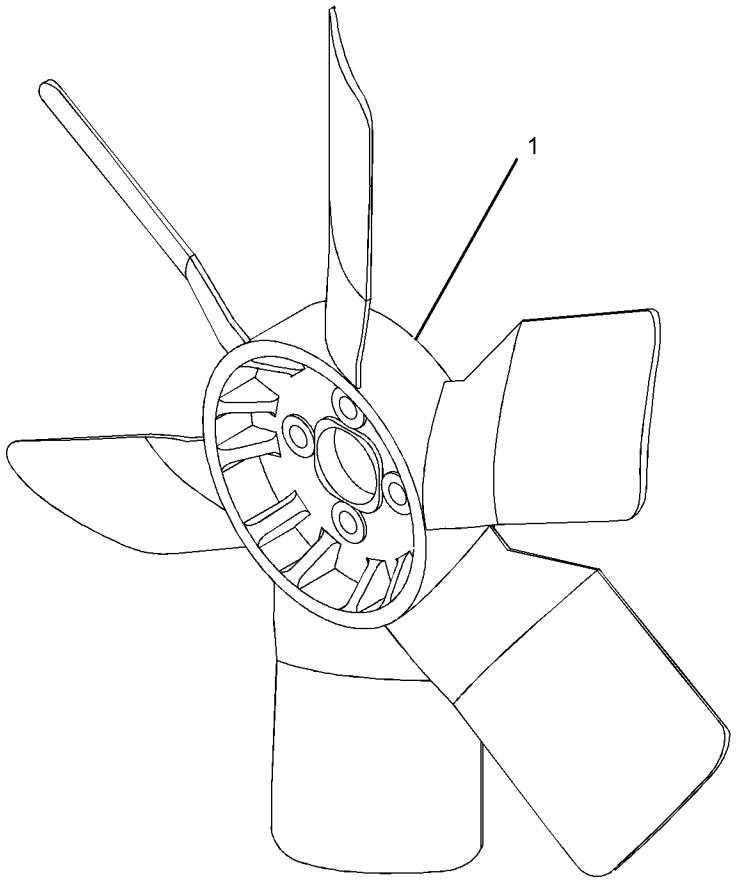

GRAPHIC #1 <END> g01447885

532-8583 FAN GP

PART OF 552-5704 ENGINE AR-PRIMARY

SMCS-1356 **i07710349**

NOTE	REF NO	GRAPHIC REF	PART NUMBER	QTY	PART NAME 1 2 3 4 5 6 (PRODUCT LEVEL)	SEE PAGE
	1	1	**307-5362**	1	FAN (6-BLADE) (COOLING)	

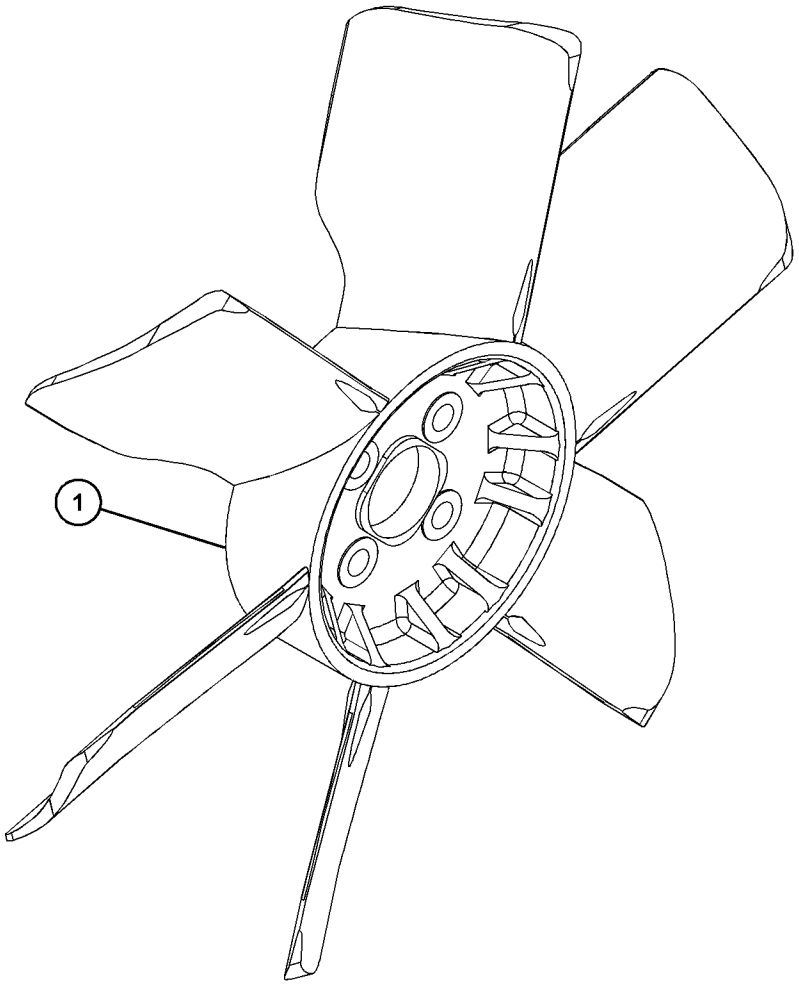

GRAPHIC #1 <END> g06404527

532-8585 FAN GP

PART OF 549-5443 ENGINE AR-PRIMARY

SMCS-1356 **i07499323**

NOTE	REF NO	GRAPHIC REF	PART NUMBER	QTY	PART NAME 1 2 3 4 5 6 (PRODUCT LEVEL)	SEE PAGE
	1	1	**288-6569**	1	FAN	

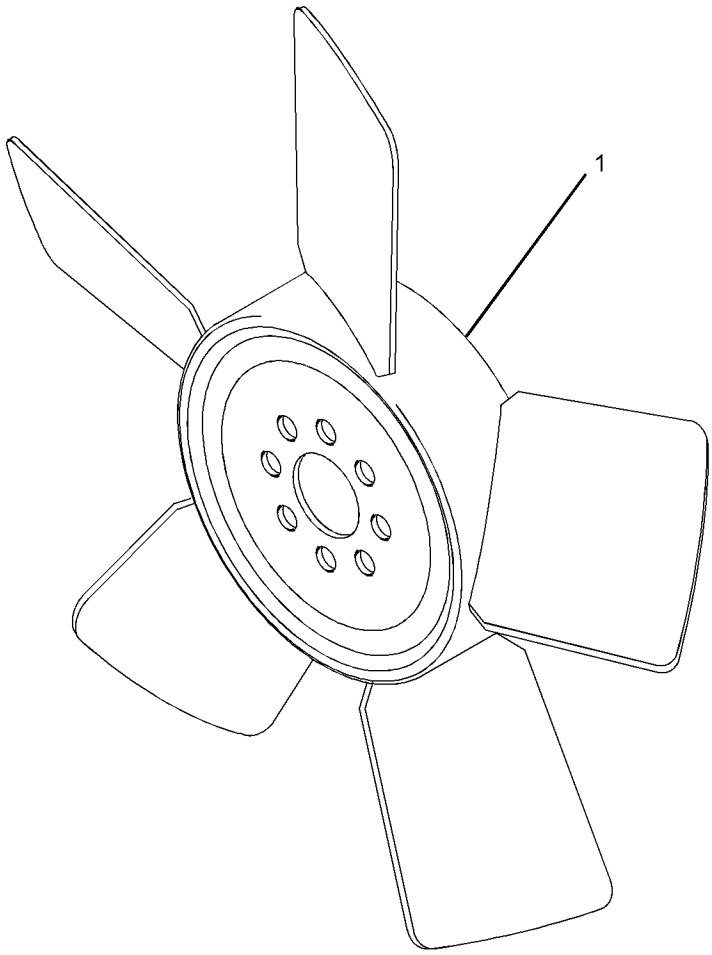

GRAPHIC #1 <END> g01355658

310-9208 PUMP GP-WATER

SMCS-1361 **i07479190**

NOTE	REF NO	GRAPHIC REF	PART NUMBER	QTY	PART NAME 1 2 3 4 5 6 (PRODUCT LEVEL)	SEE PAGE
M	1	1	**153-5960**	1	NUT (M6X1-THD)	
	2	1	**153-5961**	3	BOLT AS	
	3	1	**154-1244**	4	BOLT AS	
	4	1	**258-7291**	1	PLUG-PIPE	
	5	1	**290-0353**	1	GASKET	
	6	1	**290-0355**	1	GASKET	
	7	1	**290-0358**	1	REGULATOR-WATER TEMPERATURE (95-DEG C)	
	8	1	**290-0361**	1	SPRING	
	9	1	**291-4736**	1	PLATE	
	10	1	**308-3675**	1	PUMP GP-WATER	

M - METRIC PART

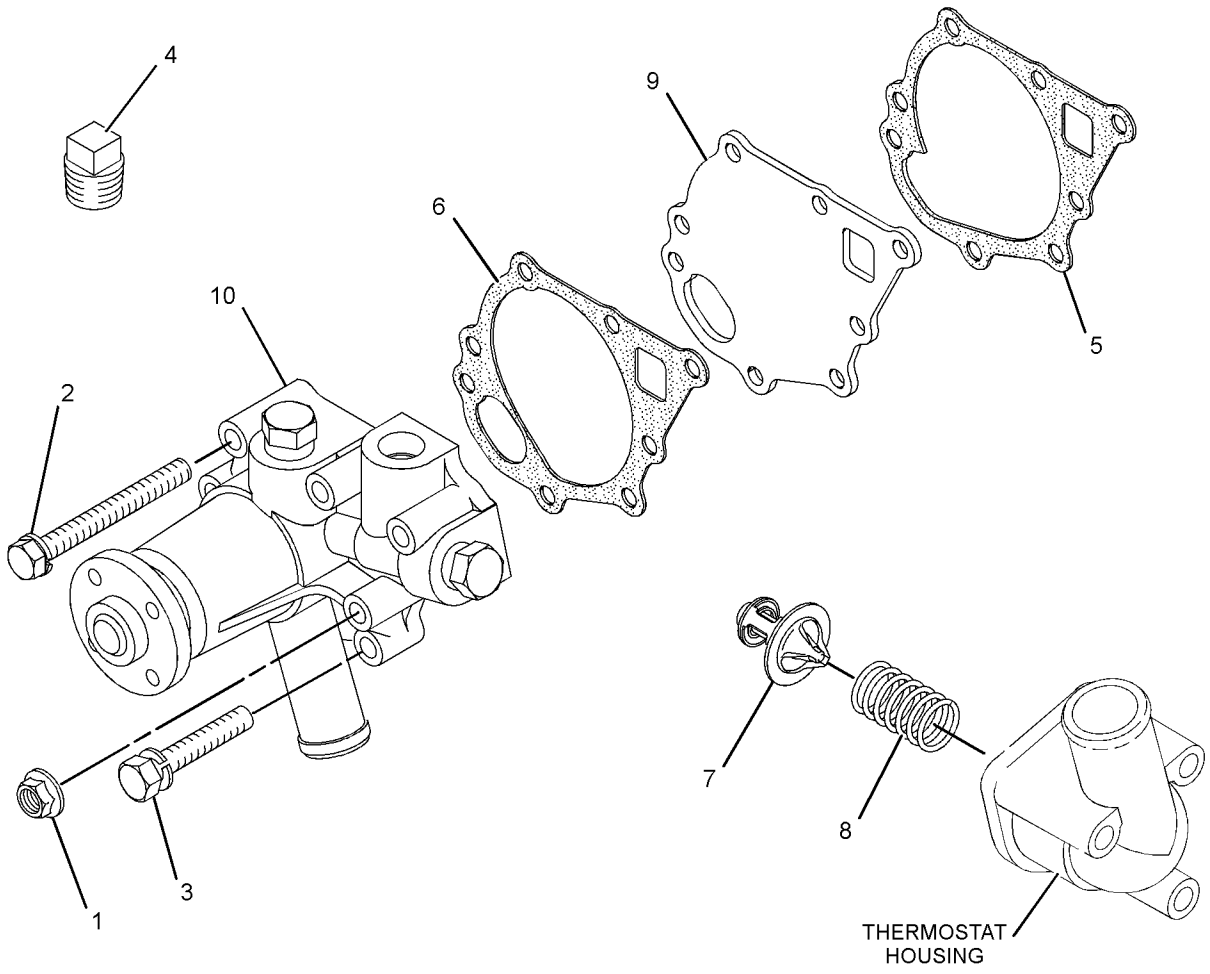

GRAPHIC #1 <END> g01435628

532-8567 PUMP GP-WATER

PART OF 549-5443, 552-5704, 558-8965 ENGINE AR-PRIMARY

SMCS-1361 **i07495656**

NOTE	REF NO	GRAPHIC REF	PART NUMBER	QTY	PART NAME 1 2 3 4 5 6 (PRODUCT LEVEL)	SEE PAGE
	1	1	**290-0353**	1	GASKET	
	2	1	**290-0355**	1	GASKET	
	3	1	**542-6954**	1	PLATE	

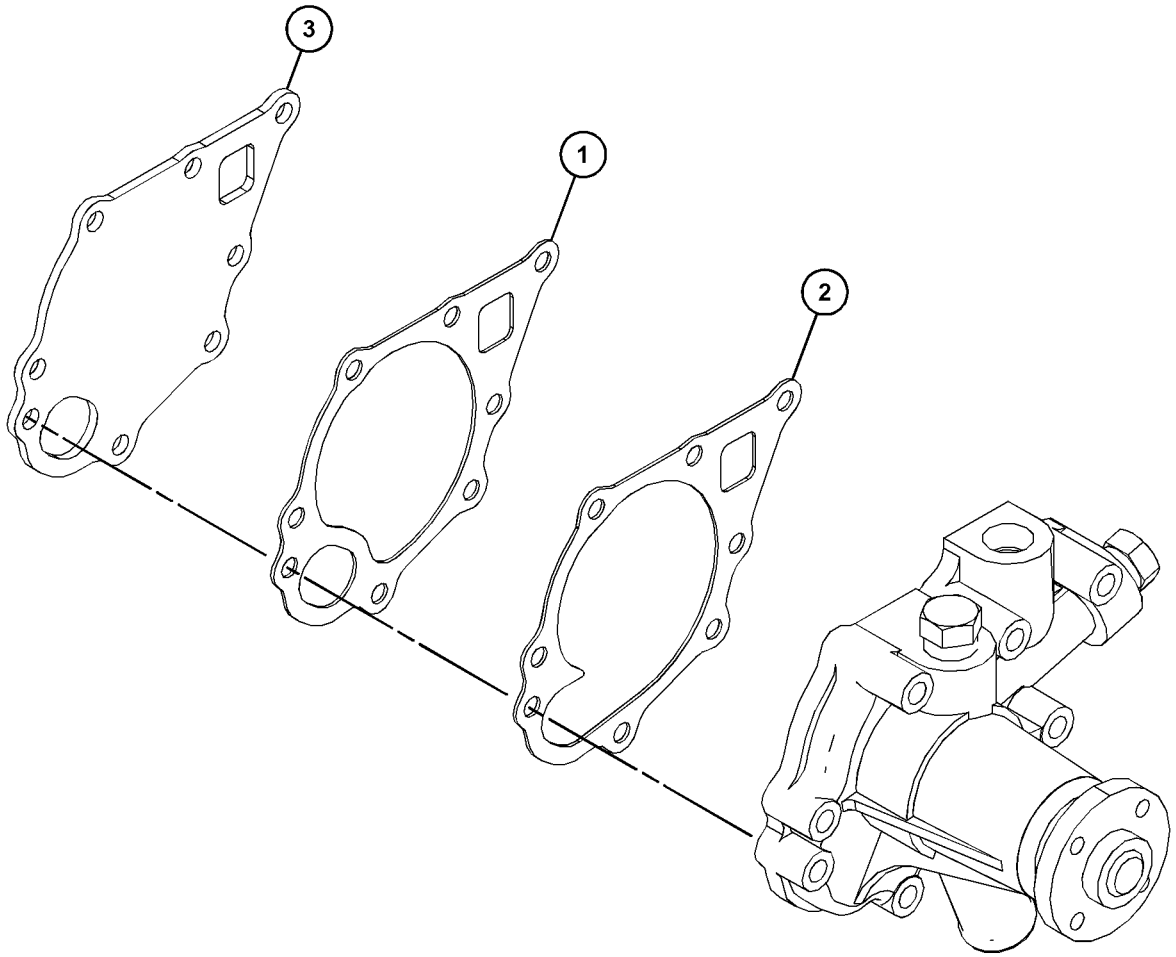

GRAPHIC #1 <END> g06337990

468-5384 RADIATOR & MOUNTING GP

SMCS-1353 **i07479290**

NOTE	REF NO	GRAPHIC REF	PART NUMBER	QTY	PART NAME 1 2 3 4 5 6 (PRODUCT LEVEL)	SEE PAGE
	1	2	**155-7984**	2	WASHER (8.4X16X1.6-MM THK)	
	2	2	**163-5372**	4	WASHER (8X15.4X4-MM THK)	
	3	2	**165-2141**	2	BOLT AS	
					(EACH INCLUDES)	
		2	**3B-4505**	1	LOCKWASHER	
M		2	**8T-4189**	1	BOLT (M8X1.25X20-MM)	
M	4	2	**180-8579**	4	NUT (M8X1.25-MM THD)	
	5	1	**365-1621**	1	RADIATOR AS	
		1	**365-1622**	1	CAP-RADIATOR	
		1	**365-1623**	1	TAP	
		1	**365-1624**	1	SEAL-O-RING	
		1	**365-1625**	1	HOSE-RADIATOR	
	6	1	**365-1626**	1	HOSE	
	7	1	**365-1629**	1	HOSE	
	8	1	**365-1634**	4	CLIP-HOSE	
	9	2	**367-6750**	4	BOLT	
	10	2	**517-9176**	2	BRACKET	

M - METRIC PART

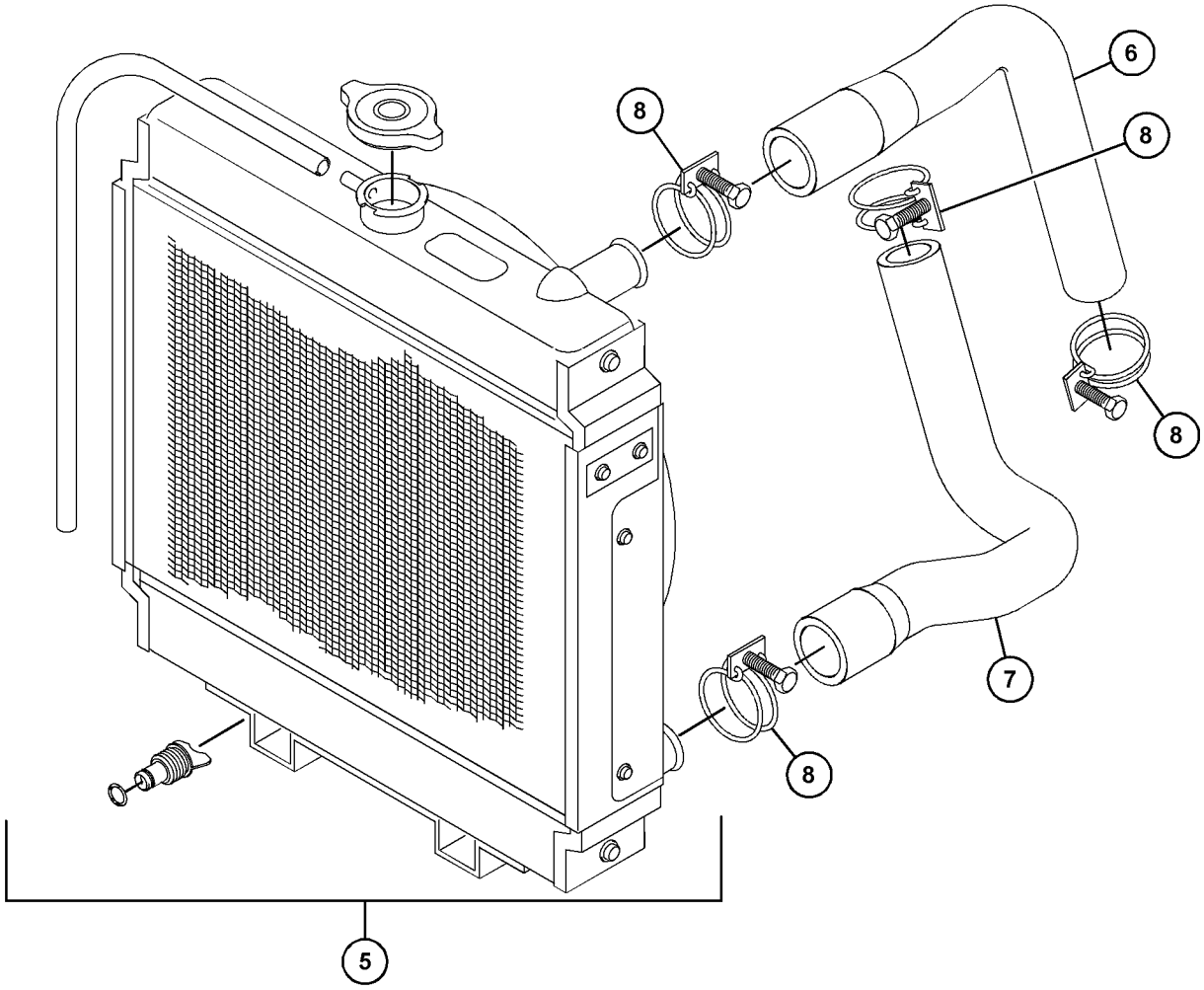

GRAPHIC #1 g06220058

468-5384 **RADIATOR & MOUNTING GP (**contd.**)** **i07479290**

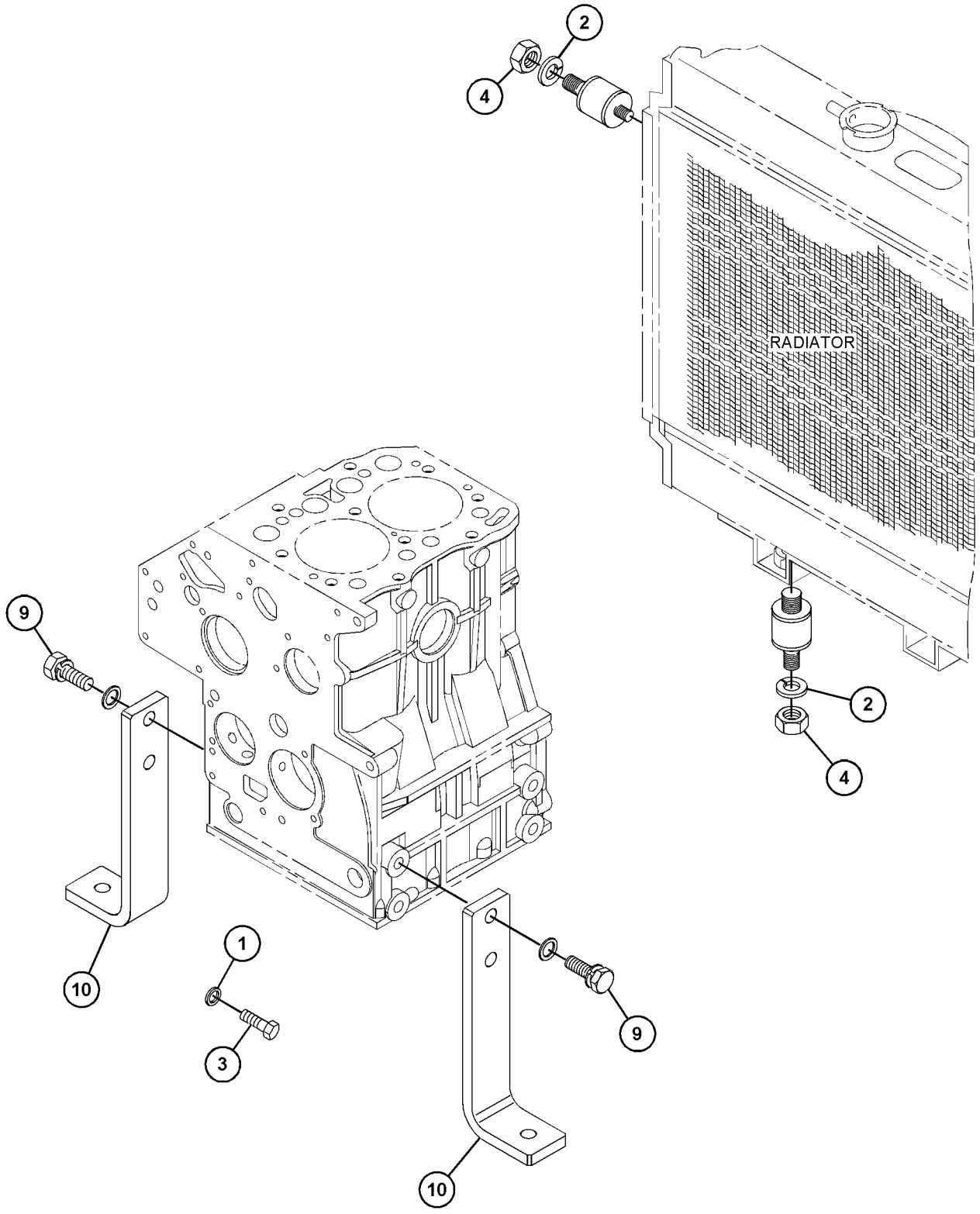

GRAPHIC #2 <END> g06220061

542-7645 RADIATOR GP

PART OF 549-5443, 552-5704 ENGINE AR-PRIMARY

SMCS-1353 **i07761363**

NOTE	REF NO	GRAPHIC REF	PART NUMBER	QTY	PART NAME 1 2 3 4 5 6 (PRODUCT LEVEL)	SEE PAGE
	1	1	**155-7984**	4	WASHER (8.4X16X1.6-MM THK)	
	2	1	**163-5372**	4	WASHER (8X15.4X4-MM THK)	
	3	1	**165-2141**	2	BOLT AS	
M	4	1	**180-8579**	4	NUT (M8X1.25-MM THD)	
M	5	1	**183-3939**	4	BOLT (M8X1.25X20-MM)	
	6	1	**9X-8256**	2	WASHER (6.6X12X2-MM THK)	
M	7	1	**239-1137**	4	BOLT (M10X1.25X25-MM)	
	8	1	**365-1621**	1	RADIATOR AS	
		1	**365-1622**	1	CAP-RADIATOR	
		1	**365-1623**	1	TAP	
		1	**365-1624**	1	SEAL-O-RING	
		1	**365-1625**	1	HOSE-RADIATOR	
	9	1	**365-1626**	1	HOSE	
	10	1	**365-1627**	2	CLIP-HOSE	
	11	1	**365-1628**	2	CLIP-HOSE	
	12	1	**365-1629**	1	HOSE	
	13	1	**456-4584**	4	WASHER	
	14	1	**483-1360**	1	BRACKET AS	
		1	**153-7640**	2	BOLT AS	
M		1	**099-6418**	2	NUT (M6X1-THD)	
	15	1	**483-1362**	2	MOUNT	
	16	1	**483-1363**	2	MOUNT	
	17	1	**542-6951**	4	WASHER	
	18	1	**547-5197**	2	MOUNTING	
	19	1	**547-5198**	1	PLATE AS	

M - METRIC PART

542-7645 **RADIATOR GP (**contd.**)** **i07761363**

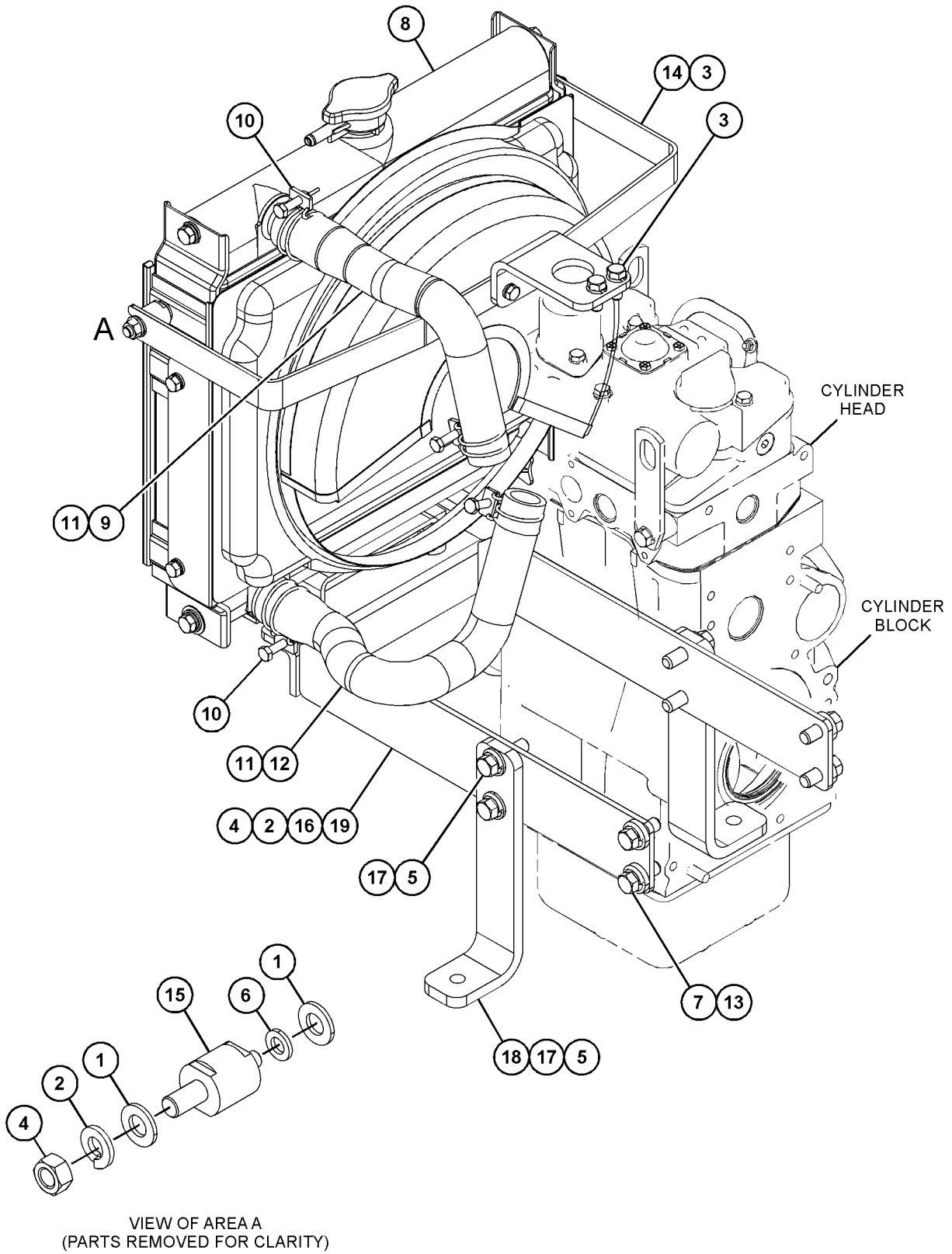

GRAPHIC #1 <END> g06445951

532-8659 AIR CLEANER GP

PART OF 549-5443, 552-5704 ENGINE AR-PRIMARY

SMCS-1051, 1054 **i07708594**

NOTE	REF NO	GRAPHIC REF	PART NUMBER	QTY	PART NAME 1 2 3 4 5 6 (PRODUCT LEVEL)	SEE PAGE
	1	1	**310-8859**	2	WASHER	
	2	1	**367-6748**	1	BRACKET	
	3	1	**365-1630**	1	FILTER AS-AIR	
		1	**365-1631**	1	FILTER-AIR	
		1	**365-1632**	1	BREATHER	
	4	1	**547-5194**	1	HOSE (AIR CLEANER)	
	5	1	**365-1634**	2	CLIP-HOSE	
	6	1	**326-9052**	1	FILM-WARNING (DO NOT SPRAY, READ OMM) (ETHER)	
	7	1	**153-6375**	2	BOLT AS	

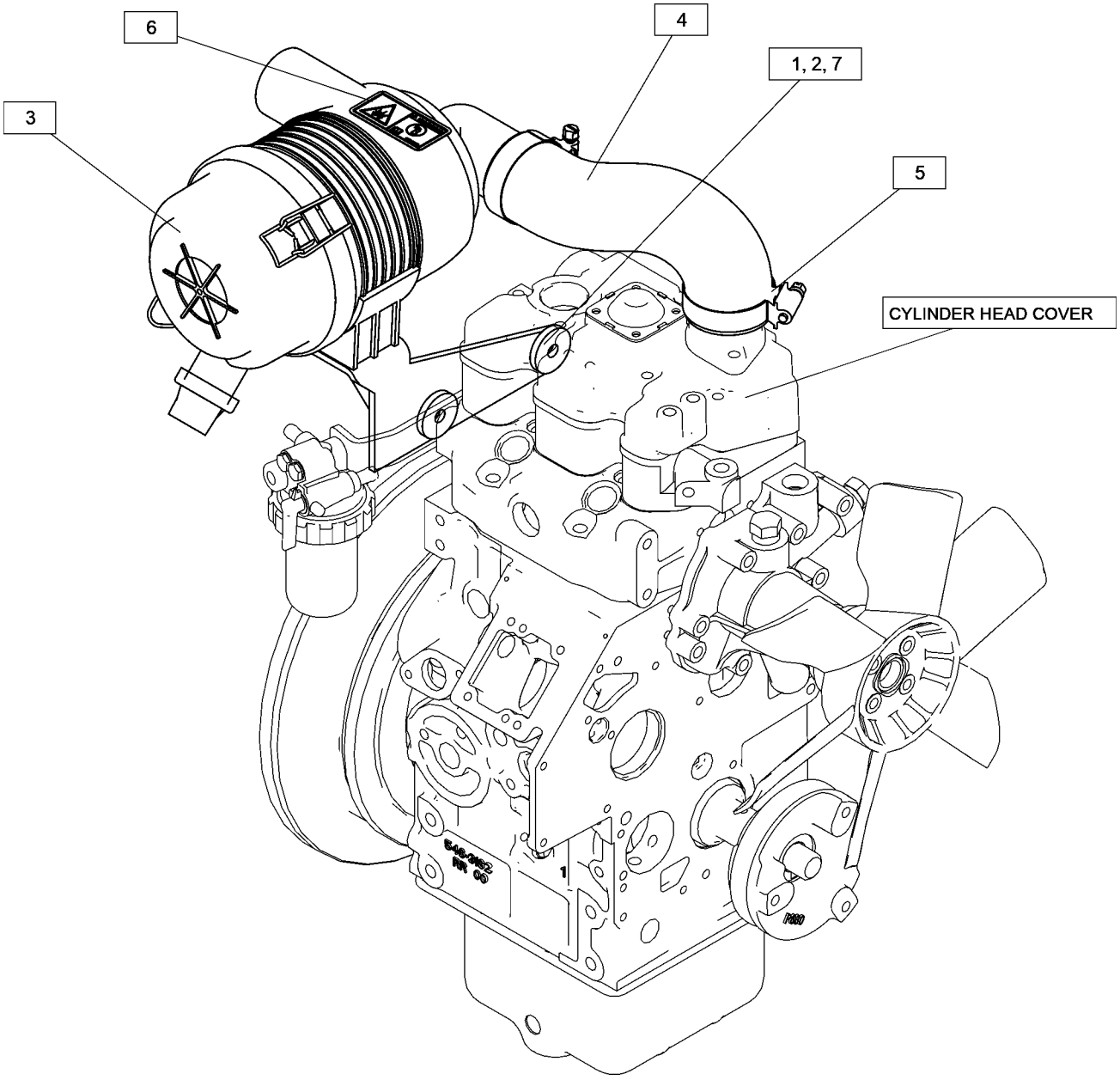

GRAPHIC #1 <END> g06432009

551-4271 AIR CLEANER GP

PART OF 558-8965 ENGINE AR-PRIMARY

SMCS-1051, 1054 **i07695612**

NOTE	REF NO	GRAPHIC REF	PART NUMBER	QTY	PART NAME 1 2 3 4 5 6 (PRODUCT LEVEL)	SEE PAGE
	1	1	**326-9052**	1	FILM-WARNING (DO NOT SPRAY, READ OMM)	

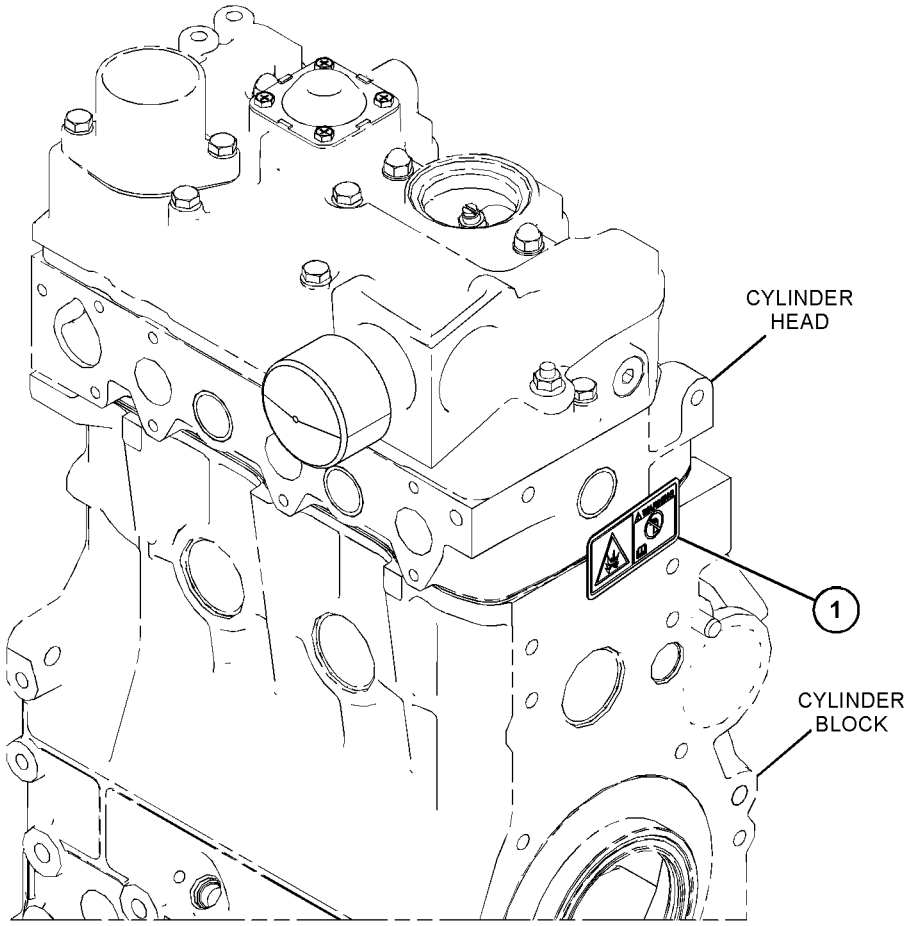

GRAPHIC #1 <END> g06402200

308-2309 CONNECTION GP-EXHAUST

SMCS-1061 **i07176208**

NOTE	REF NO	GRAPHIC REF	PART NUMBER	QTY	PART NAME 1 2 3 4 5 6 (PRODUCT LEVEL)	SEE PAGE
	1	1	**435-0208**	2	GASKET	
	2	1	**168-9001**	8	BOLT AS	
	3	1	**366-3065**	2	FLANGE	

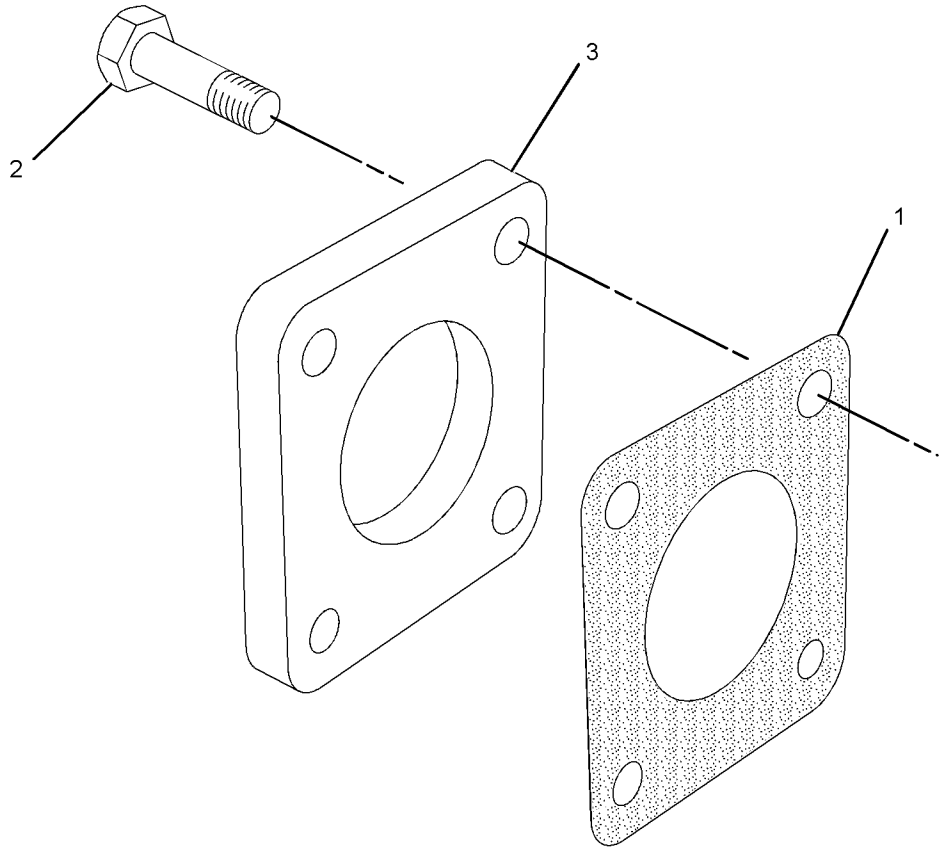

GRAPHIC #1 <END> g01388832

550-1337 FLANGE GP-EXHAUST

PART OF 549-5443, 552-5704 ENGINE AR-PRIMARY

SMCS-1061 **i07708296**

NOTE	REF NO	GRAPHIC REF	PART NUMBER	QTY	PART NAME 1 2 3 4 5 6 (PRODUCT LEVEL)	SEE PAGE
	1	1	**168-9001**	4	BOLT AS	
	2	1	**366-3065**	1	FLANGE	
	3	1	**435-0208**	1	GASKET	

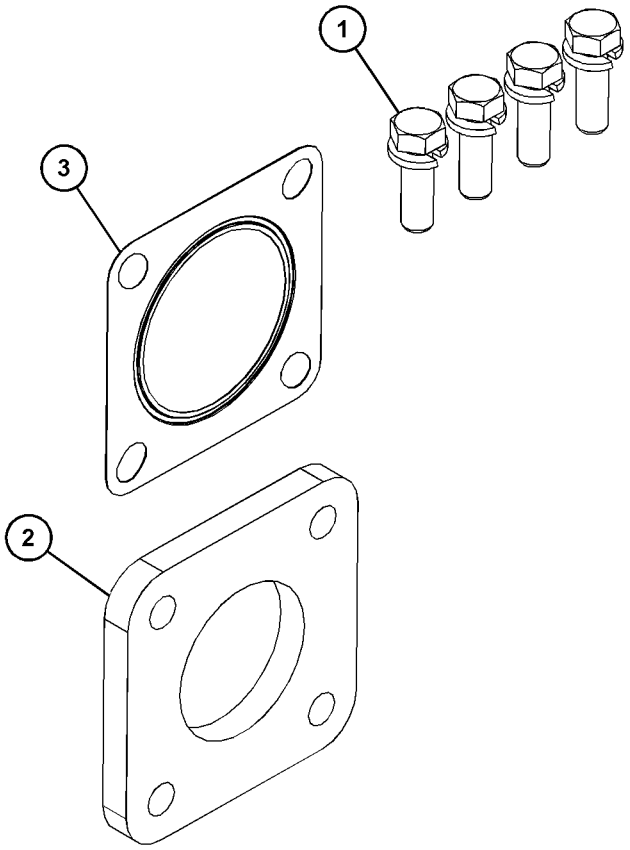

GRAPHIC #1 <END> g06403106

532-8637 INLET GP-CONVERTER

PART OF 549-5443, 552-5704, 558-8965 ENGINE AR-PRIMARY

SMCS-1061, 1091 **i07498108**

NOTE	REF NO	GRAPHIC REF	PART NUMBER	QTY	PART NAME 1 2 3 4 5 6 (PRODUCT LEVEL)	SEE PAGE
	1	1	**153-5939**	1	STOPPER (OIL)	
	2	1	**153-7640**	2	BOLT AS	
M	3	1	**217-5860**	4	BOLT (M4X0.7X8-MM)	
	4	1	**217-5862**	4	SCREW (SELF-TAPPING)	
	5	1	**231-3013**	1	CONNECTION-AIR	
	6	1	**499-0368**	1	GASKET (AIR INTAKE)	
	7	1	**546-1857**	1	COVER-ROCKER	
	8	1	**288-6586**	1	GASKET (VALVE COVER)	
	9	1	**288-6588**	1	VALVE-BREATHER	
	10	1	**288-6590**	2	WASHER (6.2X12.5X1-MM THK)	
M	11	1	**288-6591**	3	BOLT (M6X1X70-MM)	
	12	1	**291-0250**	1	PLATE	
M	13	1	**308-1892**	2	NUT (M6X1-THD)	

M - METRIC PART

532-8637 **INLET GP-CONVERTER (**contd.**)** **i07498108**

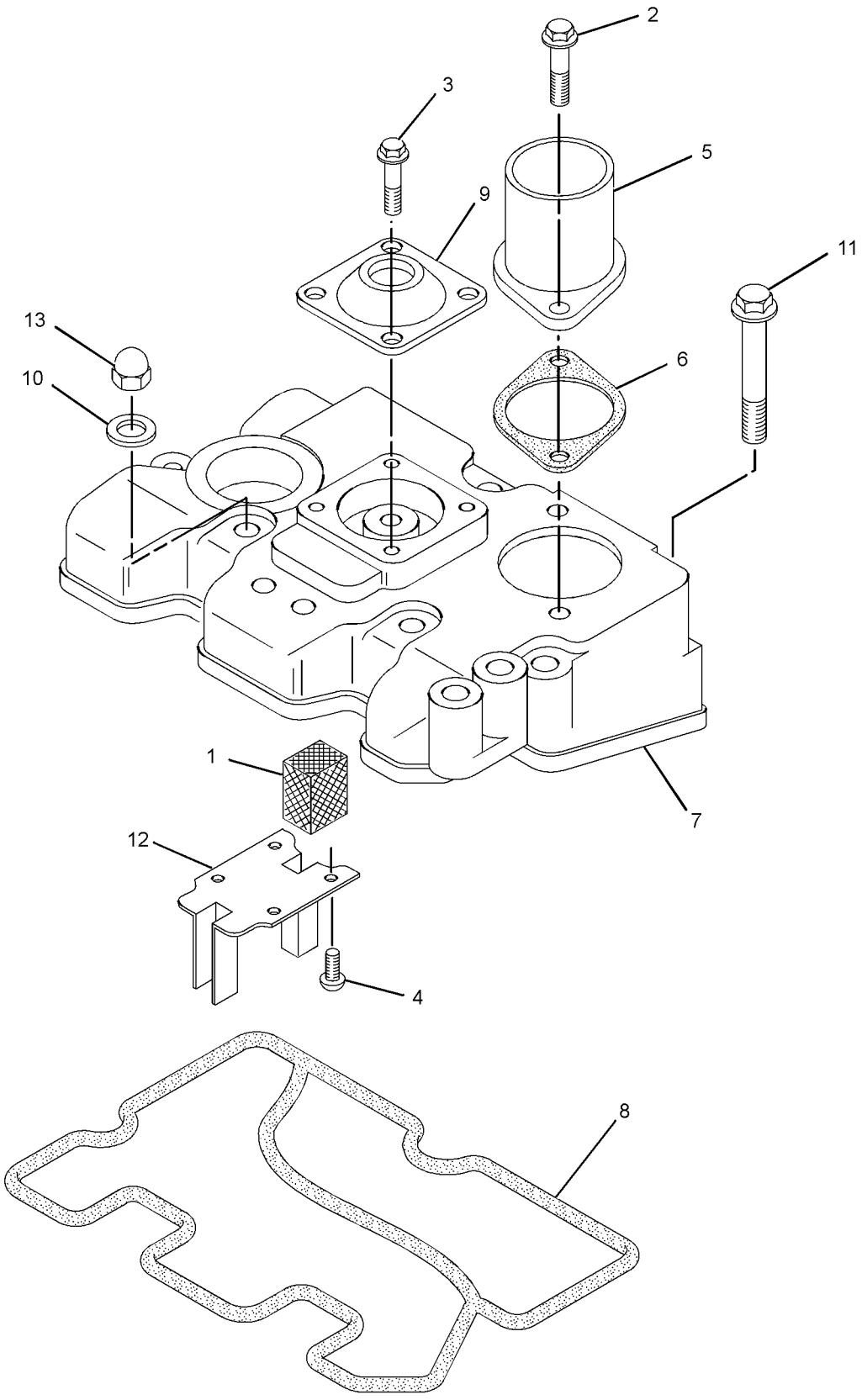

GRAPHIC #1 <END> g01358214

308-5583 MANIFOLD GP-EXHAUST

SMCS-1059 **i07479089**

NOTE	REF NO	GRAPHIC REF	PART NUMBER	QTY	PART NAME 1 2 3 4 5 6 (PRODUCT LEVEL)	SEE PAGE
M	1	1	**153-5960**	2	NUT (M6X1-THD)	
	2	1	**153-6861**	2	BOLT AS	
	3	1	**288-6584**	1	GASKET-EXHAUST	
	4	1	**308-5576**	1	MANIFOLD-EXHAUST	

M - METRIC PART

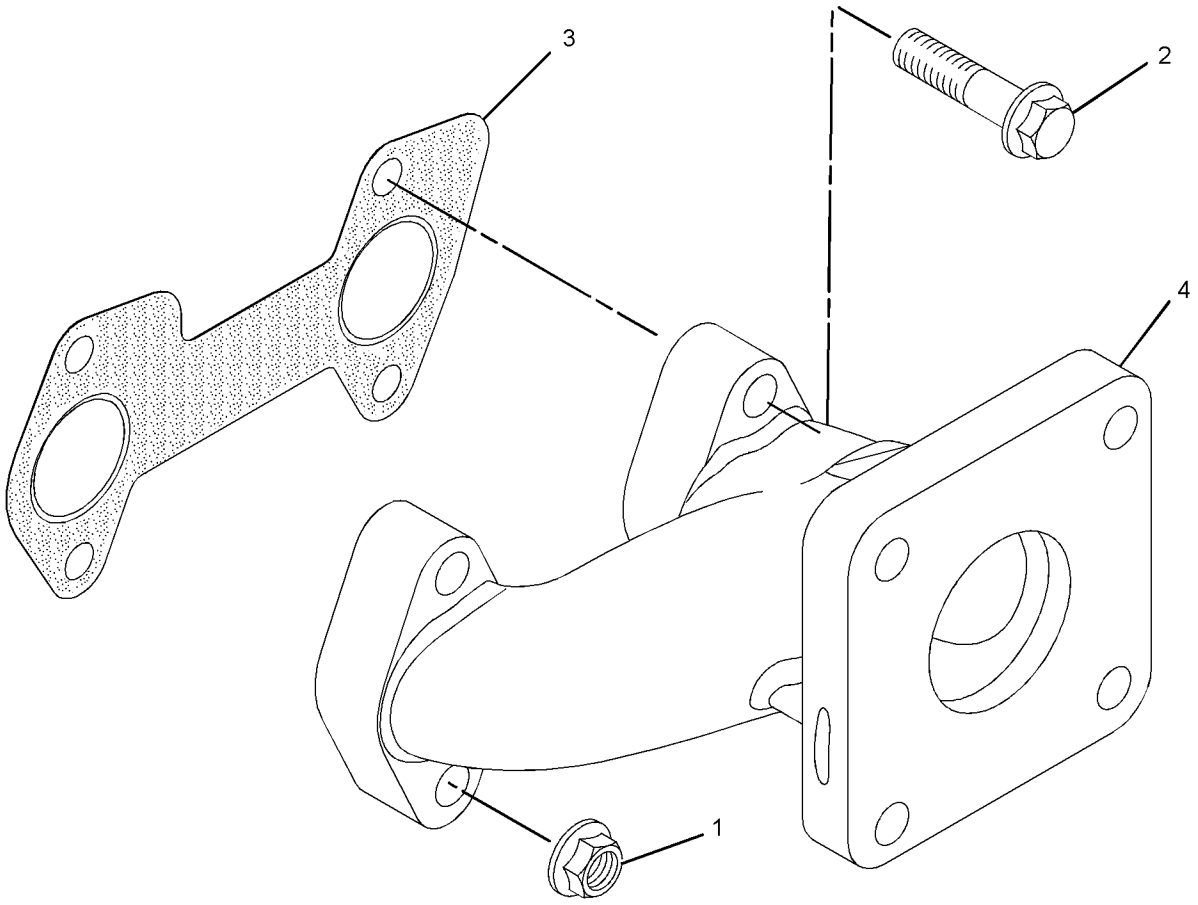

GRAPHIC #1 <END> g01359608

532-8683 MANIFOLD GP-EXHAUST

PART OF 549-5443, 552-5704 ENGINE AR-PRIMARY

SMCS-1059 **i07761360**

NOTE	REF NO	GRAPHIC REF	PART NUMBER	QTY	PART NAME 1 2 3 4 5 6 (PRODUCT LEVEL)	SEE PAGE
	1	1	**288-6583**	1	MANIFOLD-EXHAUST	
	2	1	**153-6861**	2	BOLT AS	
M	3	1	**153-5944**	2	STUD (M6X1X33-MM)	
M	4	1	**153-5960**	2	NUT (M6X1-THD)	
	5	1	**288-6584**	1	GASKET-EXHAUST	
	6	1	**210-6655**	1	PLUG	

M - METRIC PART

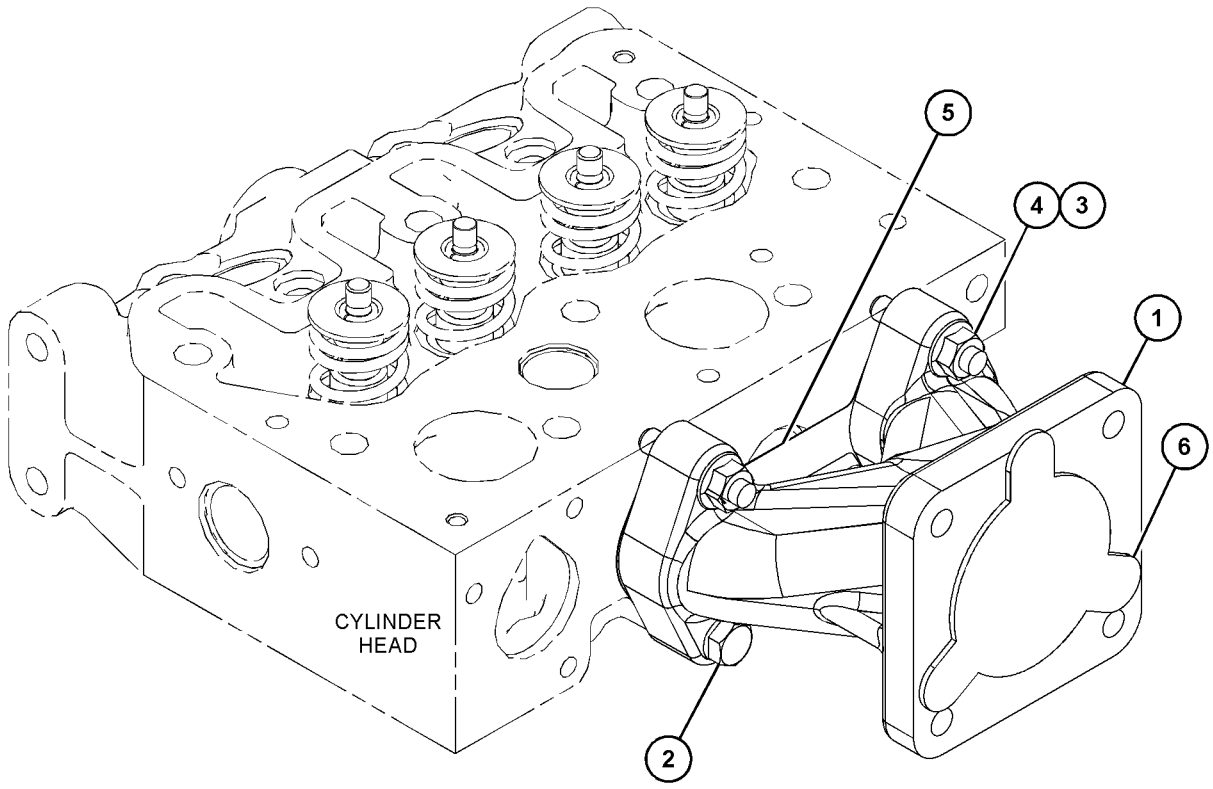

GRAPHIC #1 <END> g06425265

532-8660 PLUG GP-EXHAUST—MANIFOLD

PART OF 558-8965 ENGINE AR-PRIMARY

SMCS-1052 **i07659872**

NOTE	REF NO	GRAPHIC REF	PART NUMBER	QTY	PART NAME 1 2 3 4 5 6 (PRODUCT LEVEL)	SEE PAGE
M	1	1	**153-5944**	2	STUD (M6X1X33-MM)	

M - METRIC PART

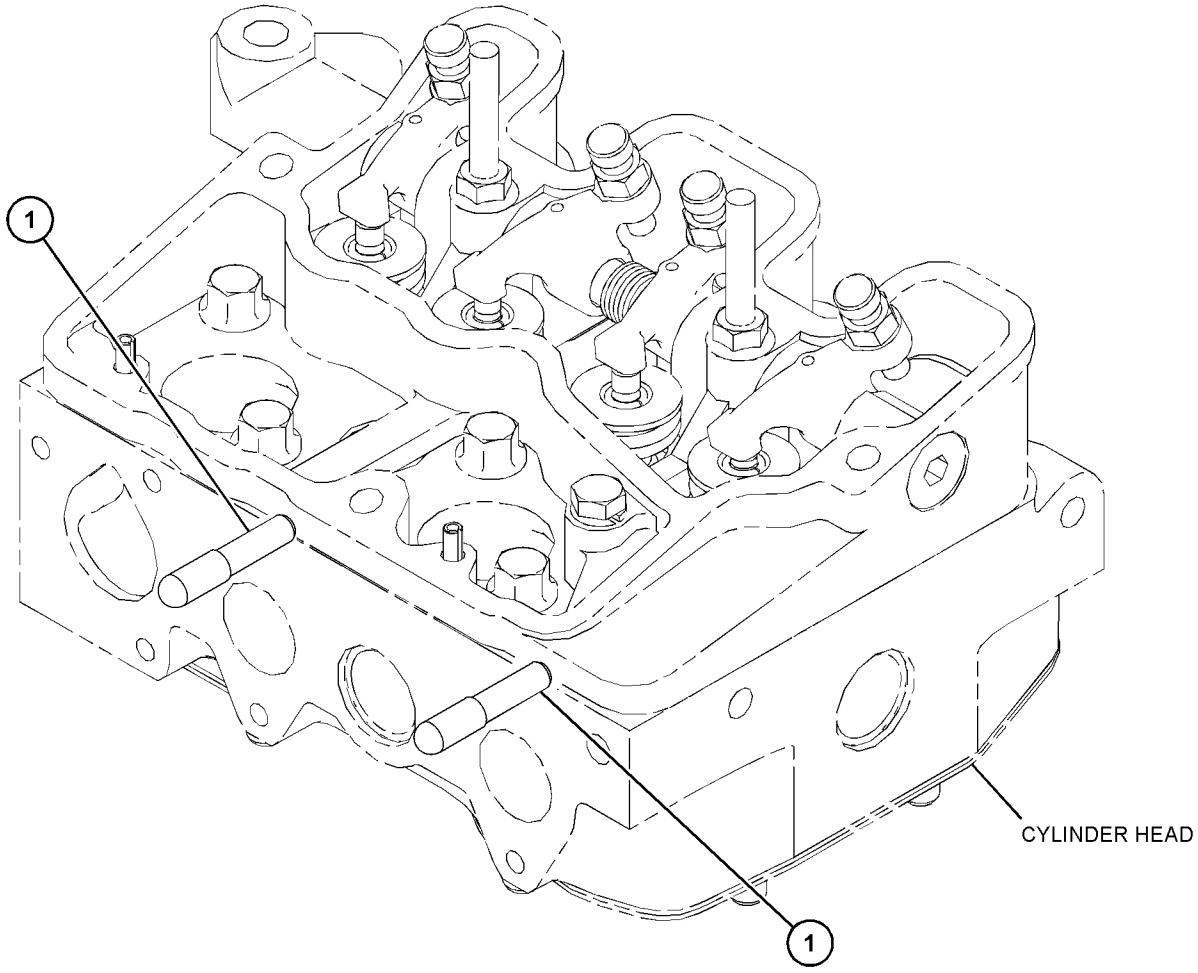

GRAPHIC #1 <END> g06456076

308-5629 CONTROL GP-GOVERNOR

SMCS-1265, 1276 **i07479122**

NOTE	REF NO	GRAPHIC REF	PART NUMBER	QTY	PART NAME 1 2 3 4 5 6 (PRODUCT LEVEL)	SEE PAGE
	1	1	**153-6412**	1	WASHER	
	2	1	**419-7640**	1	SOLENOID AS (12-VOLT) (FUEL SHUTOFF)	
	3	1	**308-1914**	1	LEVER-CONTROL	

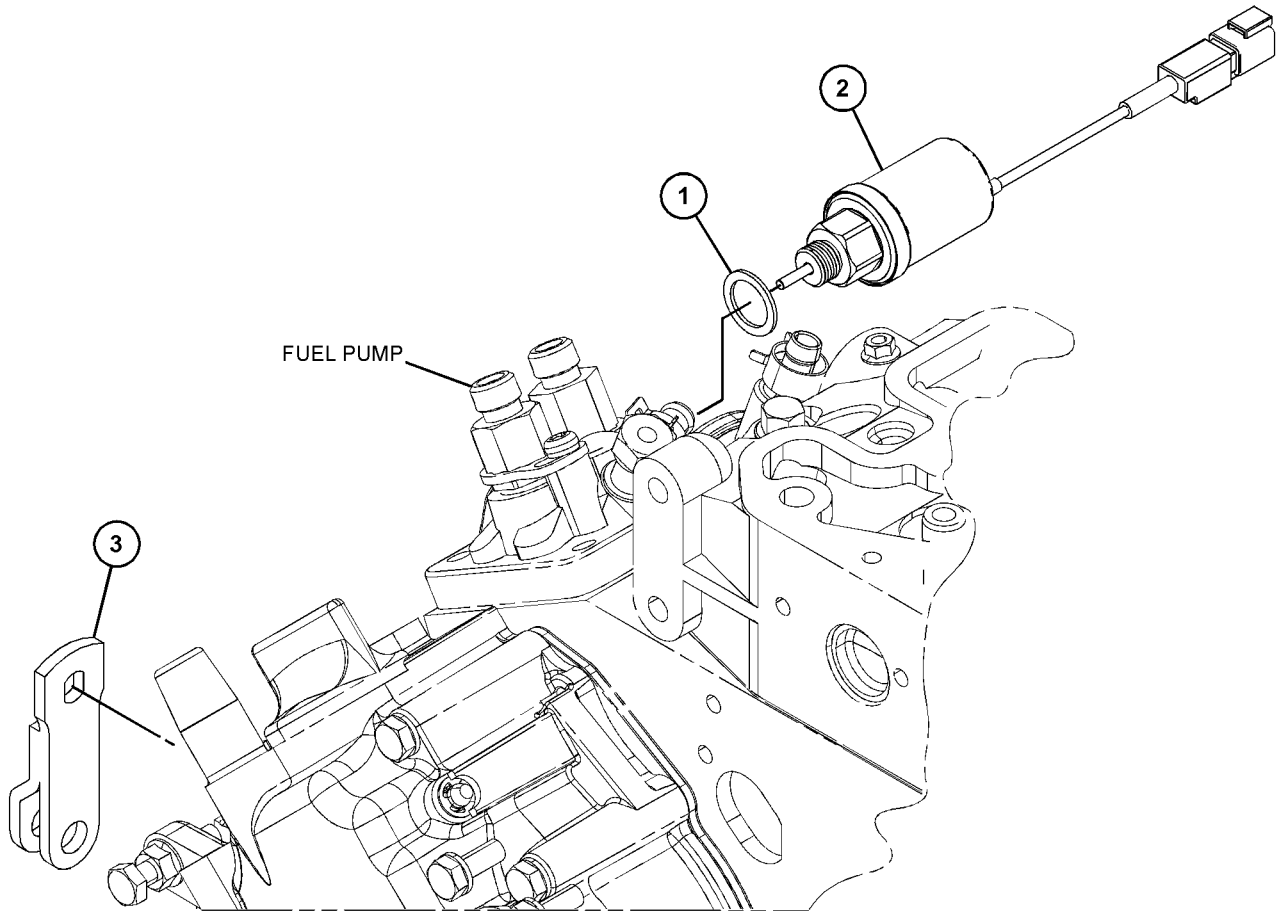

GRAPHIC #1 <END> g06204498

542-7643 CONTROL GP-GOVERNOR

PART OF 549-5443 ENGINE AR-PRIMARY

SMCS-1265, 1276 **i07499344**

NOTE	REF NO	GRAPHIC REF	PART NUMBER	QTY	PART NAME 1 2 3 4 5 6 (PRODUCT LEVEL)	SEE PAGE
	1	1	**478-1537**	1	CONTROL GP-GOVERNOR	
	2	1	**390-3731**	1	SHAFT	
	3	1	**324-3396**	1	LEVER AS-CONTROL	
	4	1	**309-6729**	1	SEAL-O-RING	
	5	1	**308-4266**	1	SHAFT	
	6	1	**363-8409**	1	SLIDER	
	7	1	**364-1817**	1	SPRING	
	8	1	**311-0655**	1	SPRING	
	9	1	**153-7983**	1	PIN	
	10	1	**153-6415**	1	WASHER (SEAL)	
M	11	1	**308-1892**	1	NUT (M6X1-THD)	

M - METRIC PART

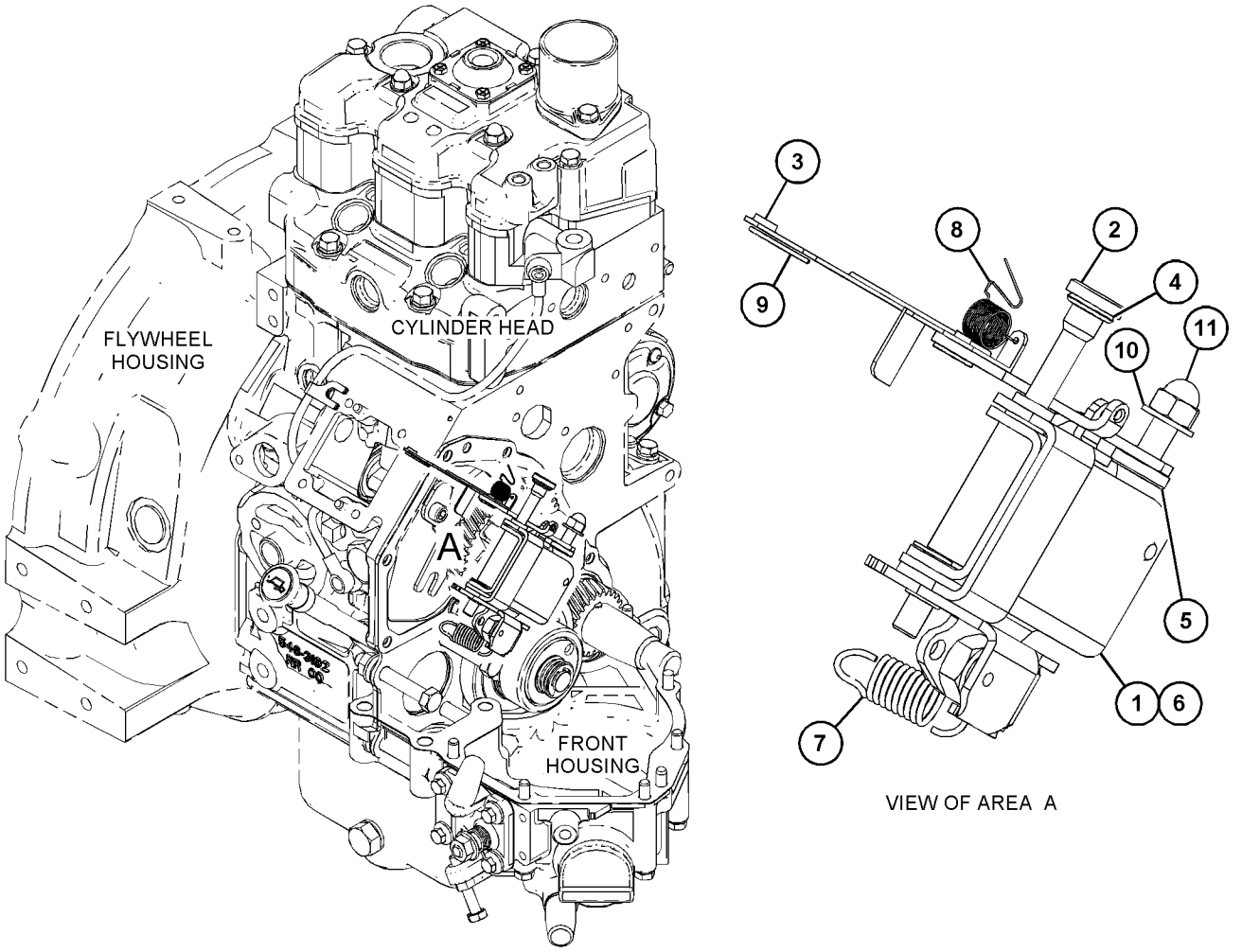

GRAPHIC #1 <END> g06351975

550-7118 CONTROL GP-GOVERNOR

PART OF 558-8965 ENGINE AR-PRIMARY

SMCS-1265, 1276 **i07501870**

NOTE	REF NO	GRAPHIC REF	PART NUMBER	QTY	PART NAME 1 2 3 4 5 6 (PRODUCT LEVEL)	SEE PAGE
	1	1	**478-1537**	1	CONTROL GP-GOVERNOR	
	2	1	**390-3731**	1	SHAFT	
M	2A	1	**313-2025**	1	BOLT-SPECIAL (M10X1.25-MM THD)	
M	2B	1	**308-1889**		NUT (M10X1.25-THD)	
	3	1	**324-3396**	1	LEVER AS-CONTROL	
	4	1	**309-6729**	1	SEAL-O-RING	
	5	1	**308-1904**	1	SLIDER	
	6	1	**311-9622**	1	SPRING	
	7	1	**311-0655**	1	SPRING	
	8	1	**153-7983**	1	PIN	
	9	1	**308-4266**	1	SHAFT	
	10	1	**153-6415**	1	WASHER (SEAL)	
M	11	1	**308-1892**	1	NUT (M6X1-THD)	

M - METRIC PART

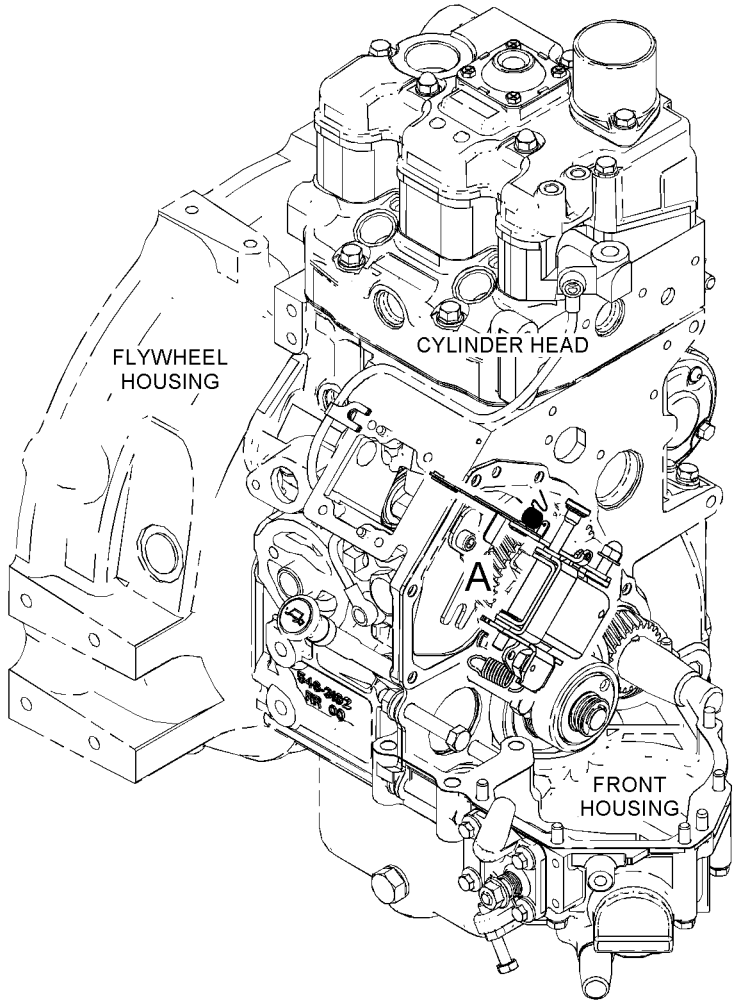

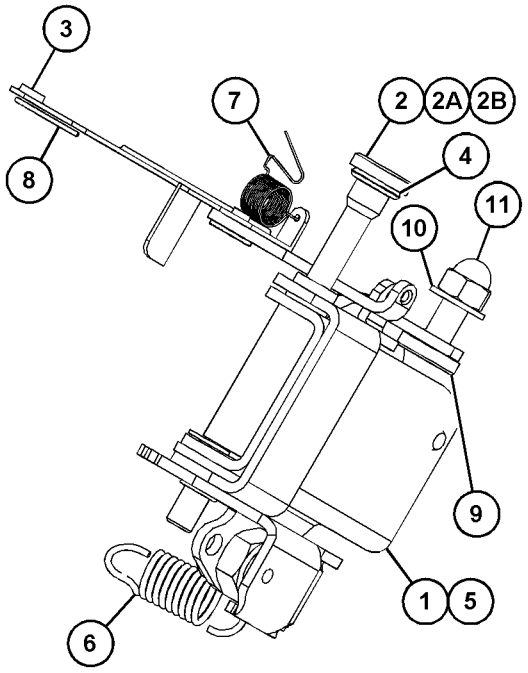

VIEW OF AREA A

GRAPHIC #1 <END> g06351958

551-6476 CONTROL GP-GOVERNOR

PART OF 552-5704 ENGINE AR-PRIMARY

SMCS-1265, 1276 **i07710350**

NOTE	REF NO	GRAPHIC REF	PART NUMBER	QTY	PART NAME 1 2 3 4 5 6 (PRODUCT LEVEL)	SEE PAGE
	1	1	**153-6415**	1	WASHER (SEAL)	
	2	1	**153-7983**	1	PIN	
M	3	1	**308-1892**	1	NUT (M6X1-THD)	
	4	1	**308-1904**	1	SLIDER	
	5	1	**308-4266**	1	SHAFT	
	6	1	**309-6729**	1	SEAL-O-RING	
	7	1	**324-3396**	1	LEVER AS-CONTROL	
	8	1	**327-5129**	1	SPRING	
	9	1	**336-4050**	1	SPRING	
	10	1	**390-3731**	1	SHAFT	
	11	1	**478-1537**	1	CONTROL GP-GOVERNOR	
	11A	1	**390-3729**	1	LEVER-CONTROL	
M		1	**308-1889**	1	NUT (M10X1.25-THD)	
M		1	**313-2025**	1	BOLT-SPECIAL (M10X1.25-MM THD)	

M - METRIC PART

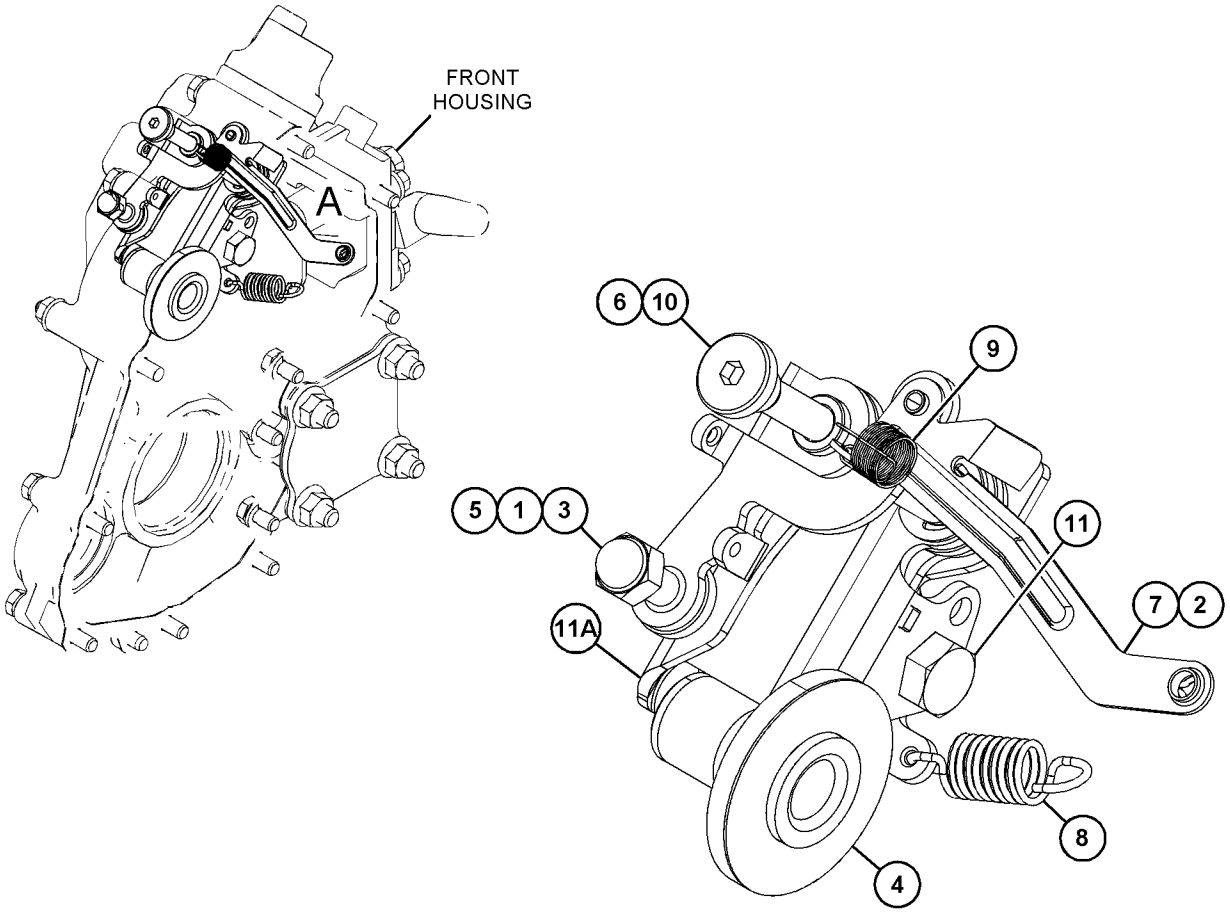

VIEW OF AREA A

GRAPHIC #1 <END> g06404534

532-9876 FILTER GP-FUEL

PART OF 549-5443, 552-5704 ENGINE AR-PRIMARY

SMCS-1261 **i07708357**

NOTE	REF NO	GRAPHIC REF	PART NUMBER	QTY	PART NAME 1 2 3 4 5 6 (PRODUCT LEVEL)	SEE PAGE
	1	1	**295-4070**	1	PUMP AS-FUEL TRANSFER	
M	2	1	**6I-0846**	2	BOLT (M6X1X14-MM)	
	3	1	**155-7984**	3	WASHER (8.4X16X1.6-MM THK)	
	4	1	**291-0241**	1	BRACKET AS	
	5	1	**168-9001**	2	BOLT AS	
	6	1	**288-6571**	1	FILTER GP-FUEL	
		1	**183-5444**	1	SEAL-O-RING	
		1	**183-5451**	1	RING	
		1	**288-6572**	1	FILTER ELEMENT-FUEL	
	7	1	**289-5979**	1	BOLT	
	8	1	**288-6574**	1	TUBE-FUEL	
	9	1	**288-6576**	1	PIPE-FUEL	
	10	1	**196-8356**	4	CLIP	

M - METRIC PART

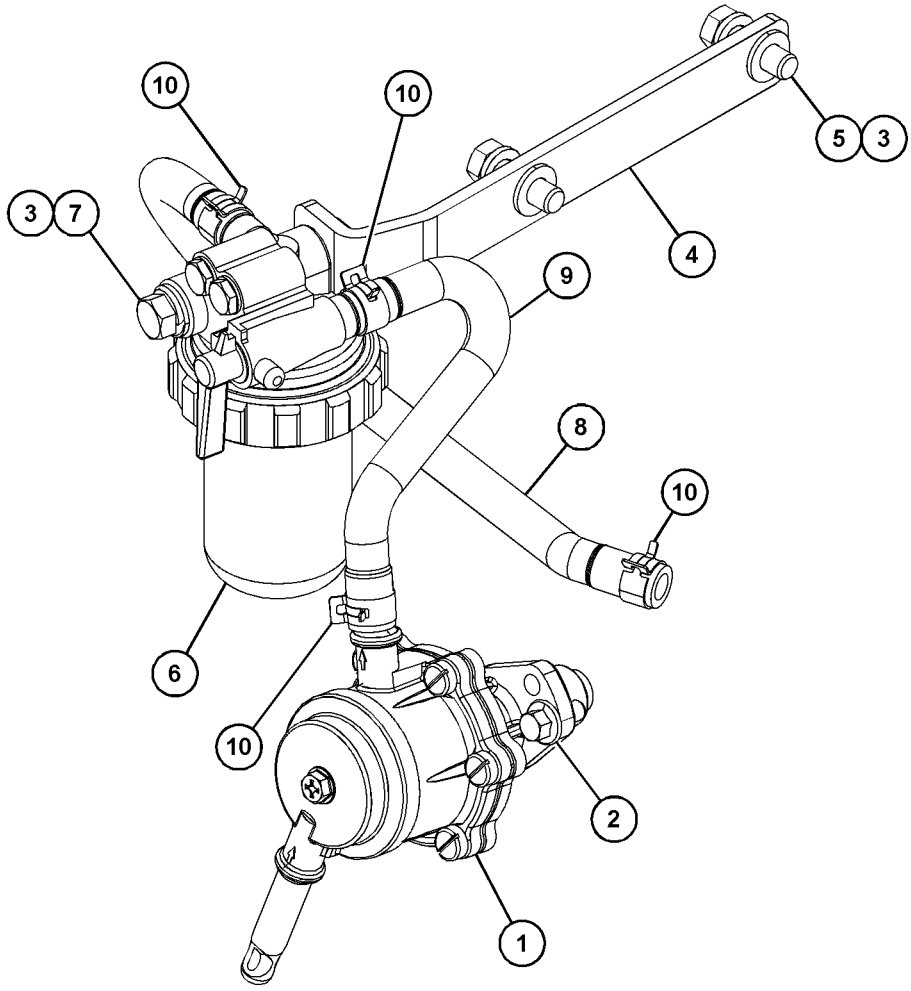

GRAPHIC #1 <END> g06406025

310-9201 PUMP GP-FUEL INJECTION

TYPE 1

SMCS-1251, 1290 **i07594993**

NOTE	REF NO	GRAPHIC REF	PART NUMBER	QTY	PART NAME 1 2 3 4 5 6 (PRODUCT LEVEL)	SEE PAGE
M	1	1	**153-5960**	3	NUT (M6X1-THD)	
	2	1	**153-6415**	1	WASHER (SEAL)	
	3	1	**153-7640**	2	BOLT AS	
	4	1	**426-4357**	2	GASKET	
M	5	1	**183-3353**	1	BOLT (M6X1X25-MM)	
	6	1	**232-0218**	2	CLAMP	
	7	1	**232-0290**	1	CONNECTOR	
	8	1	**288-6563**	1	TUBE (FUEL)	
	9	1	**288-6564**	1	TUBE (FUEL)	
	10	1	**288-6565**	1	LINE-LEAKOFF	
	11	1	**288-6566**	1	TUBE (FUEL)	
	12	1	**288-6567**	2	INJECTOR	
					(EACH INCLUDES)	
		1	**232-0793**	1	WASHER-SPECIAL	
	13	1	**290-8014**	2	CLAMP	
	14	1	**293-3237**	1	PUMP GP-FUEL	
	15	1	**290-9844**	1	SHIM (0.3-MM THK)	
B		1	**290-9845**	1	SHIM (0.2-MM THK)	
B		1	**290-9846**	1	SHIM (0.5-MM THK)	
B		1	**290-9847**	1	SHIM (0.5-MM THK)	
B		1	**290-9848**	1	SHIM (0.4-MM THK)	
B		1	**326-1811**	1	SHIM (0.25-MM THK)	
B		1	**326-1812**	1	SHIM (0.35-MM THK)	

B - USE AS REQUIRED
M - METRIC PART

310-9201 **PUMP GP-FUEL INJECTION (**contd.**)** **i07594993**

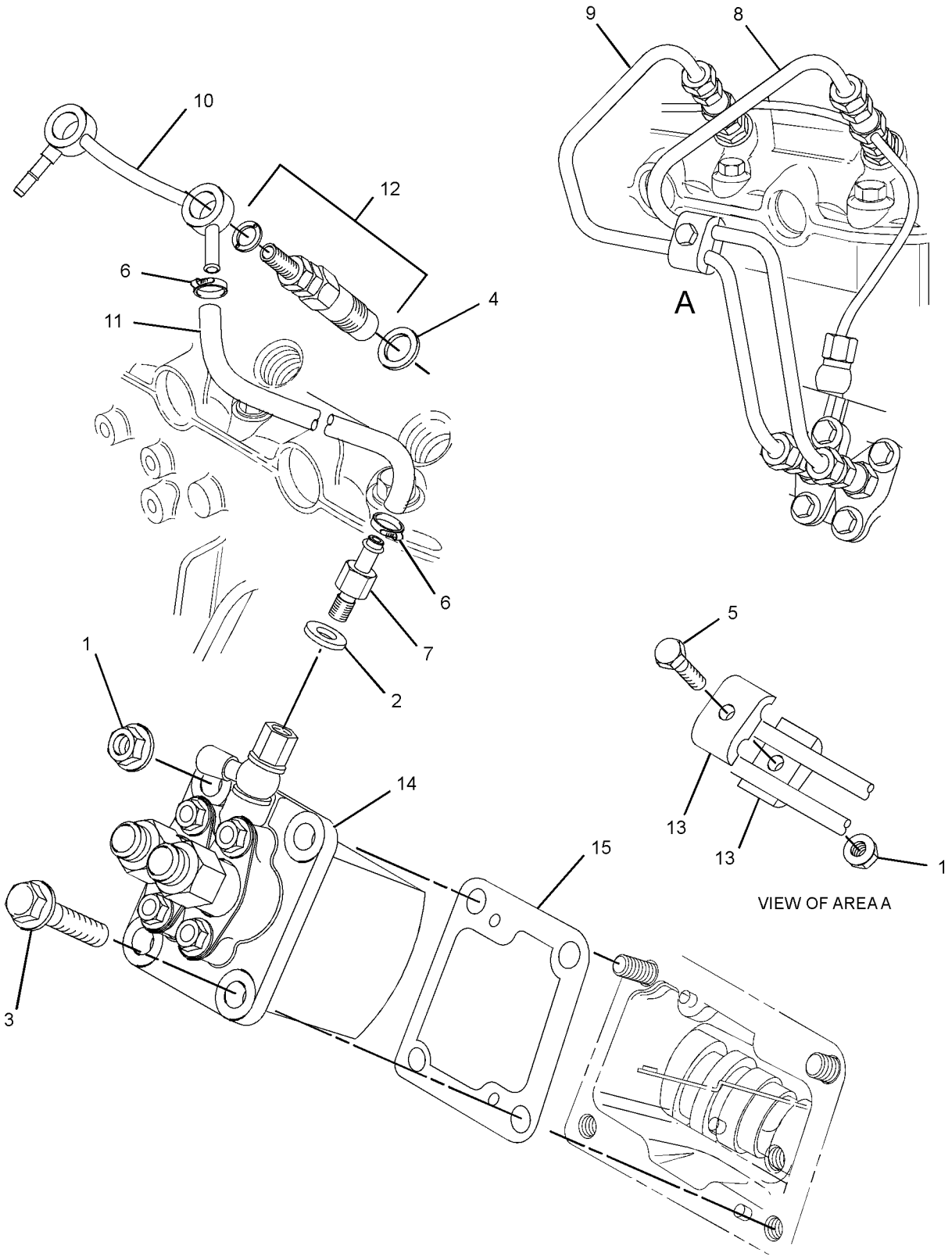

GRAPHIC #1 <END> g01446846

310-9201 PUMP GP-FUEL INJECTION

TYPE 2

SMCS-1251, 1290 **i07594991**

NOTE	REF NO	GRAPHIC REF	PART NUMBER	QTY	PART NAME 1 2 3 4 5 6 (PRODUCT LEVEL)	SEE PAGE
M	1	1	**153-5960**	3	NUT (M6X1-THD)	
	2	1	**153-6415**	1	WASHER (SEAL)	
	3	1	**153-7640**	2	BOLT AS	
	4	1	**426-4357**	2	GASKET	
M	5	1	**183-3353**	1	BOLT (M6X1X25-MM)	
	6	1	**232-0218**	2	CLAMP	
	7	1	**232-0290**	1	CONNECTOR	
	8	1	**288-6563**	1	TUBE (FUEL)	
	9	1	**288-6564**	1	TUBE (FUEL)	
	10	1	**288-6565**	1	LINE-LEAKOFF	
	11	1	**288-6566**	1	TUBE (FUEL)	
C	12	1	**557-1200**	2	INJECTOR	
	13	1	**290-8014**	2	CLAMP	
	14	1	**293-3237**	1	PUMP GP-FUEL	
	15	1	**290-9844**	1	SHIM (0.3-MM THK)	
B		1	**290-9845**	1	SHIM (0.2-MM THK)	
B		1	**290-9846**	1	SHIM (0.5-MM THK)	
B		1	**290-9847**	1	SHIM (0.5-MM THK)	
B		1	**290-9848**	1	SHIM (0.4-MM THK)	
B		1	**326-1811**	1	SHIM (0.25-MM THK)	
B		1	**326-1812**	1	SHIM (0.35-MM THK)	

B - USE AS REQUIRED
C - CHANGE FROM PREVIOUS TYPE
M - METRIC PART

310-9201 **PUMP GP-FUEL INJECTION (**contd.**)** **i07594991**

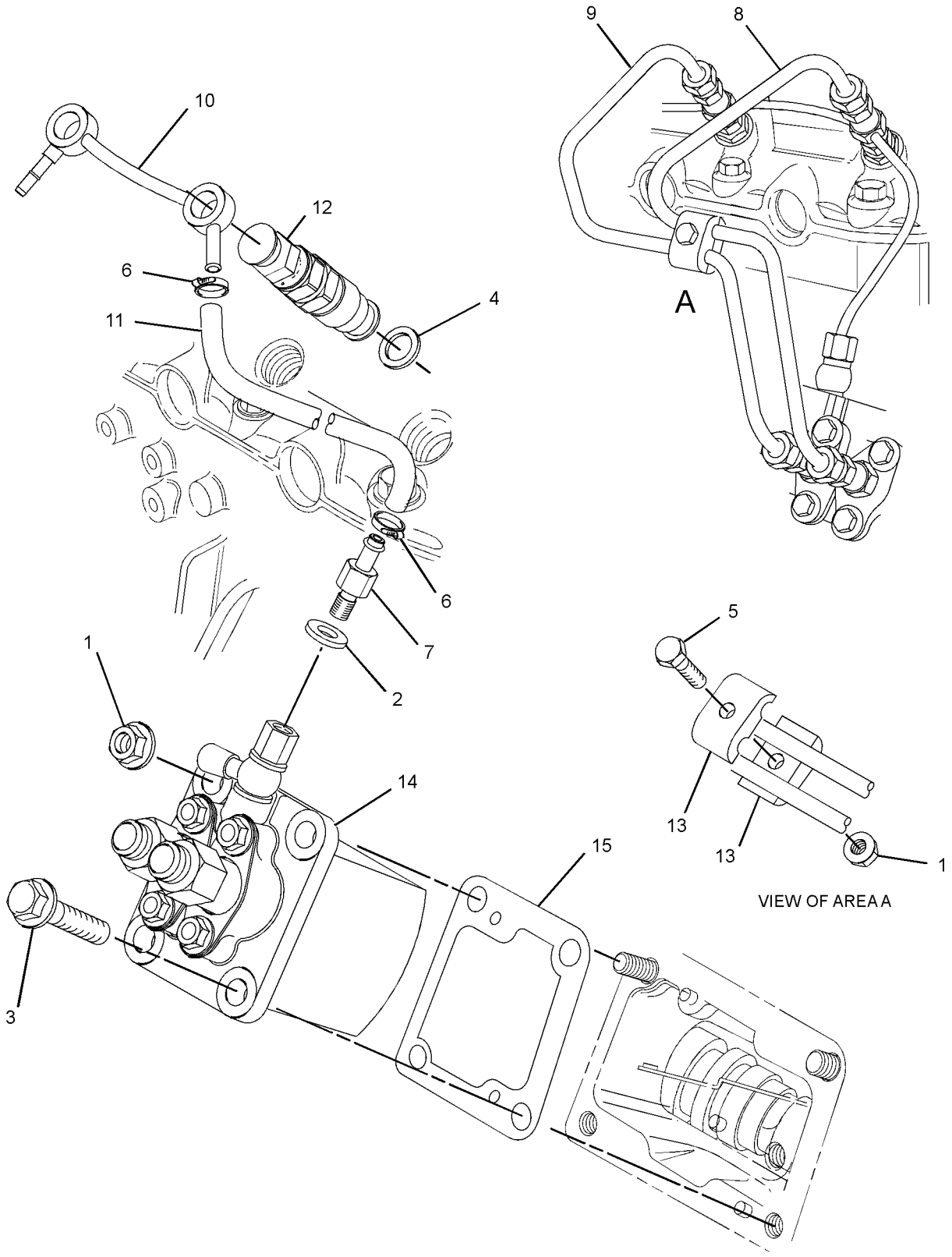

GRAPHIC #1 <END> g06341520

542-7644 PUMP GP-FUEL INJECTION

PART OF 549-5443 ENGINE AR-PRIMARY

SMCS-1251, 1290 **i07708346**

NOTE	REF NO	GRAPHIC REF	PART NUMBER	QTY	PART NAME 1 2 3 4 5 6 (PRODUCT LEVEL)	SEE PAGE
M	1	1	**153-5407**	2	STUD (M6X1X28-MM)	
M	2	1	**153-5960**	3	NUT (M6X1-THD)	
	3	1	**153-6415**	1	WASHER (SEAL)	
	4	1	**153-7640**	2	BOLT AS	
M	5	1	**183-3353**	1	BOLT (M6X1X25-MM)	
	6	1	**290-8014**	2	CLAMP	
	7	1	**426-4357**	2	GASKET	
	8	1	**232-0218**	2	CLAMP	
	9	1	**232-0290**	1	CONNECTOR	
	10	1	**288-6563**	1	TUBE	
	11	1	**288-6564**	1	TUBE	
	12	1	**288-6565**	1	LINE-LEAKOFF	
	13	1	**288-6566**	1	TUBE	
B	14	1	**290-9844**	1	SHIM (0.3-MM THK)	
B		1	**290-9845**	1	SHIM (0.2-MM THK)	
B		1	**290-9846**	1	SHIM (0.5-MM THK)	
B		1	**290-9847**	1	SHIM (0.5-MM THK)	
B		1	**290-9848**	1	SHIM (0.4-MM THK)	
B		1	**326-1811**	1	SHIM (0.25-MM THK)	
B		1	**326-1812**	1	SHIM (0.35-MM THK)	
	15	1	**483-1370**	1	INJECTOR AS-FUEL	
	16	1	**557-1200**	2	INJECTOR	

B - USE AS REQUIRED
M - METRIC PART

542-7644 **PUMP GP-FUEL INJECTION (**contd.**)** **i07708346**

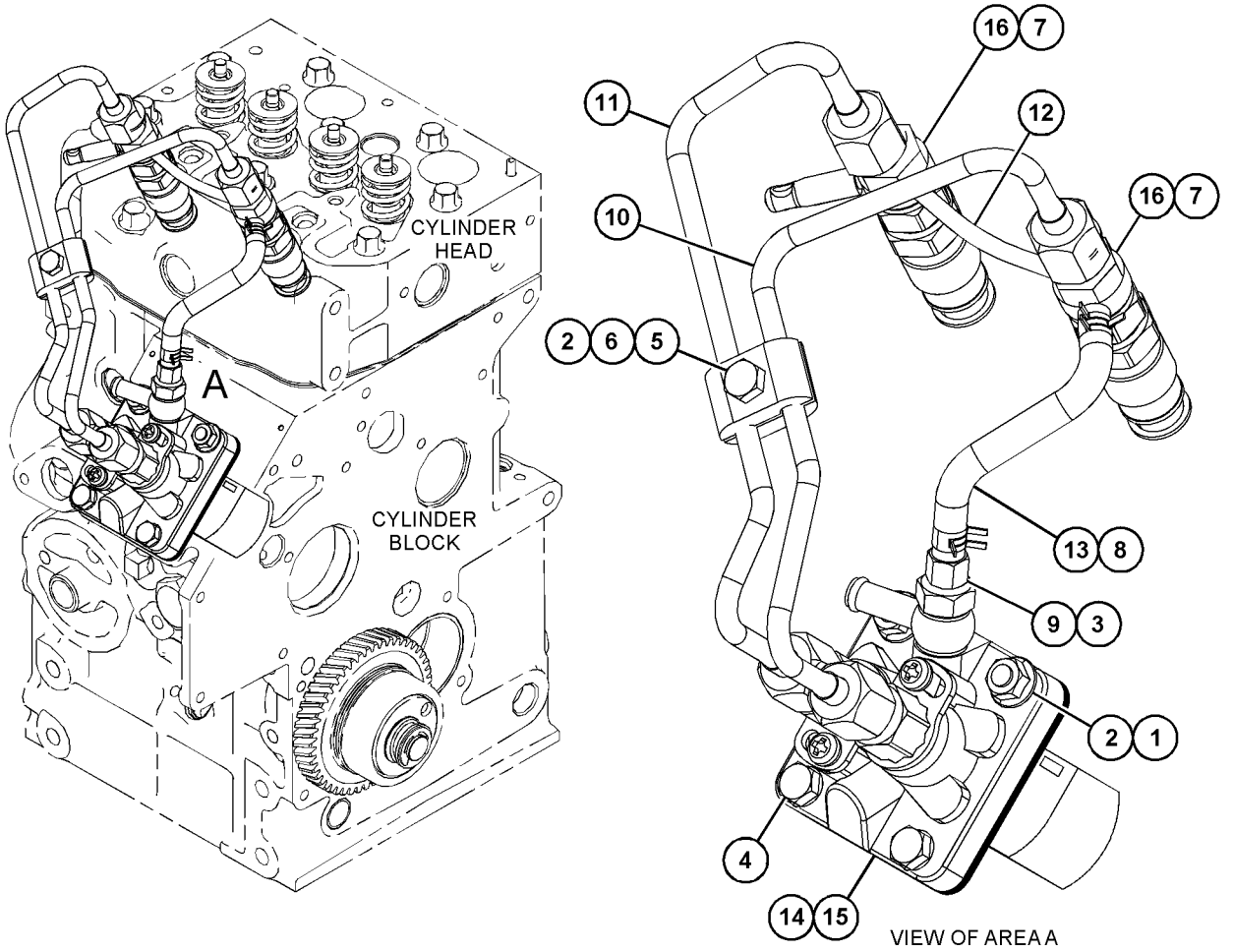

GRAPHIC #1 <END> g06404525

550-7127 PUMP GP-FUEL INJECTION

PART OF 552-5704, 558-8965 ENGINE AR-PRIMARY

SMCS-1251, 1290 **i07695590**

NOTE	REF NO	GRAPHIC REF	PART NUMBER	QTY	PART NAME 1 2 3 4 5 6 (PRODUCT LEVEL)	SEE PAGE
M	1	1	**153-5407**	2	STUD (M6X1X28-MM)	
	2	1	**153-6415**	1	WASHER (SEAL)	
M	3	1	**183-3353**	1	BOLT (M6X1X25-MM)	
	4	1	**290-8014**	2	CLAMP	
	5	1	**426-4357**	2	GASKET	
	6	1	**232-0218**	2	CLAMP	
	7	1	**232-0290**	1	CONNECTOR	
	8	1	**288-6563**	1	TUBE	
	9	1	**288-6564**	1	TUBE	
	10	1	**288-6565**	1	LINE-LEAKOFF	
	11	1	**288-6566**	1	TUBE	
B	12	1	**290-9844**	1	SHIM (0.3-MM THK)	
B		1	**290-9845**	1	SHIM (0.2-MM THK)	
B		1	**290-9846**	1	SHIM (0.5-MM THK)	
B		1	**290-9847**	1	SHIM (0.5-MM THK)	
B		1	**290-9848**	1	SHIM (0.4-MM THK)	
B		1	**326-1811**	1	SHIM (0.25-MM THK)	
B		1	**326-1812**	1	SHIM (0.35-MM THK)	
	13	1	**293-3237**	1	PUMP GP-FUEL	
	14	1	**557-1200**	2	INJECTOR	
M	15	1	**153-5960**	3	NUT (M6X1-THD)	
	16	1	**153-7640**	2	BOLT AS	

B - USE AS REQUIRED
M - METRIC PART

550-7127 **PUMP GP-FUEL INJECTION (**contd.**)** **i07695590**

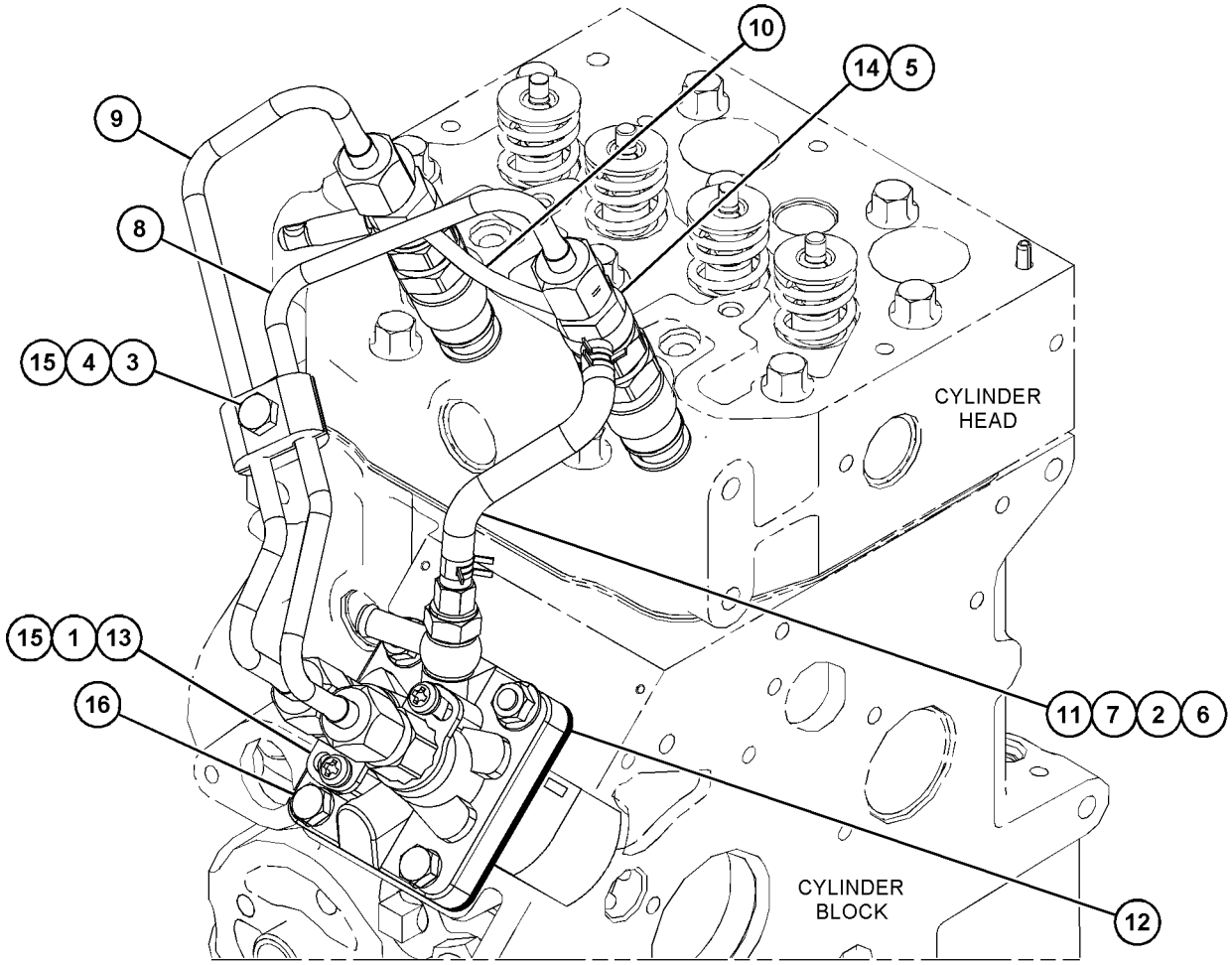

GRAPHIC #1 <END> g06413270

308-2320 PUMP GP-FUEL PRIMING

SMCS-1258 **i05473660**

NOTE	REF NO	GRAPHIC REF	PART NUMBER	QTY	PART NAME 1 2 3 4 5 6 (PRODUCT LEVEL)	SEE PAGE
	1	1	**197-8540**	1	PUMP GP-FUEL PRIMING	

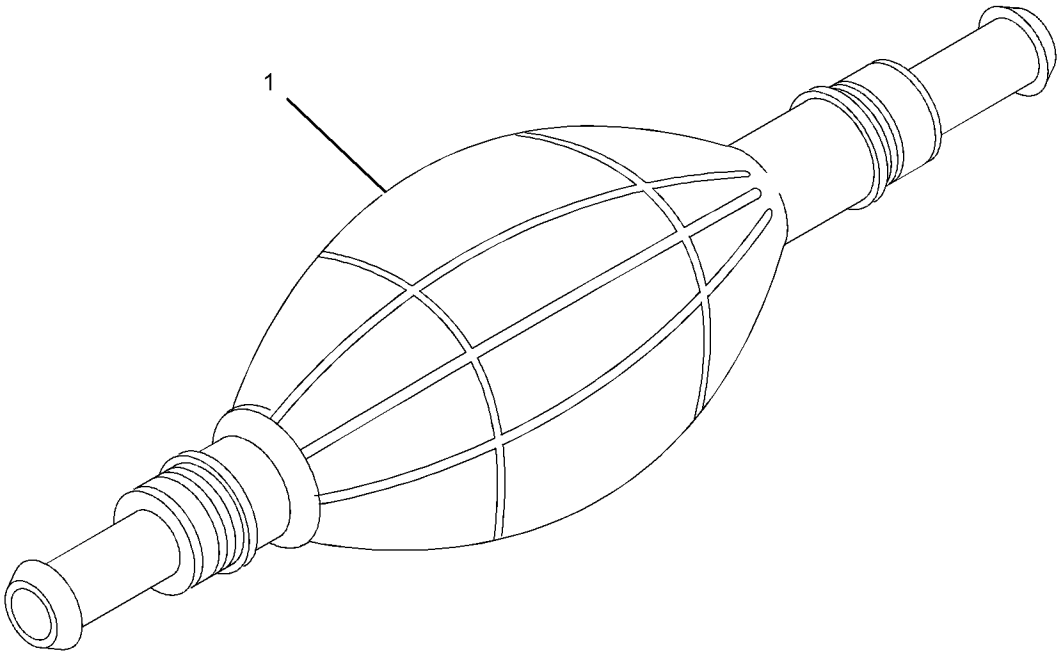

GRAPHIC #1 <END> g01912002

565-2285 PUMP GP-FUEL PRIMING

PART OF 549-5443, 552-5704 ENGINE AR-PRIMARY

SMCS-1256, 1258, 1260 **i07710352**

NOTE	REF NO	GRAPHIC REF	PART NUMBER	QTY	PART NAME 1 2 3 4 5 6 (PRODUCT LEVEL)	SEE PAGE
	1	1	**526-5212**	1	PUMP AS-HAND	

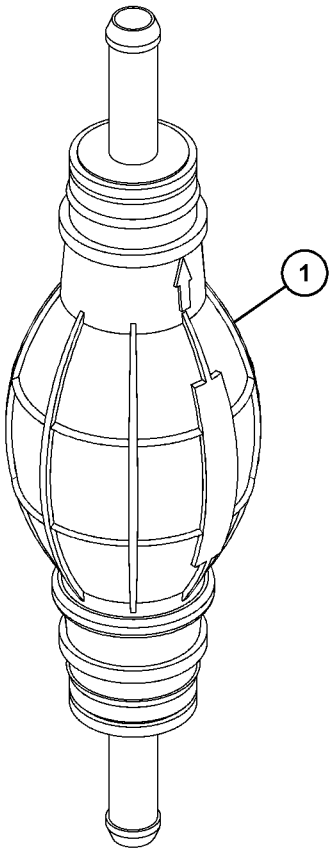

GRAPHIC #1 <END> g06406016

308-5613 PUMP GP-FUEL TRANSFER

SMCS-1256 **i07479090**

NOTE	REF NO	GRAPHIC REF	PART NUMBER	QTY	PART NAME 1 2 3 4 5 6 (PRODUCT LEVEL)	SEE PAGE
M	1	1	**153-6873**	1	BOLT	
	2	1	**176-7719**	1	SEAL-O-RING	
	3	1	**295-4070**	1	PUMP AS-FUEL TRANSFER	

M - METRIC PART

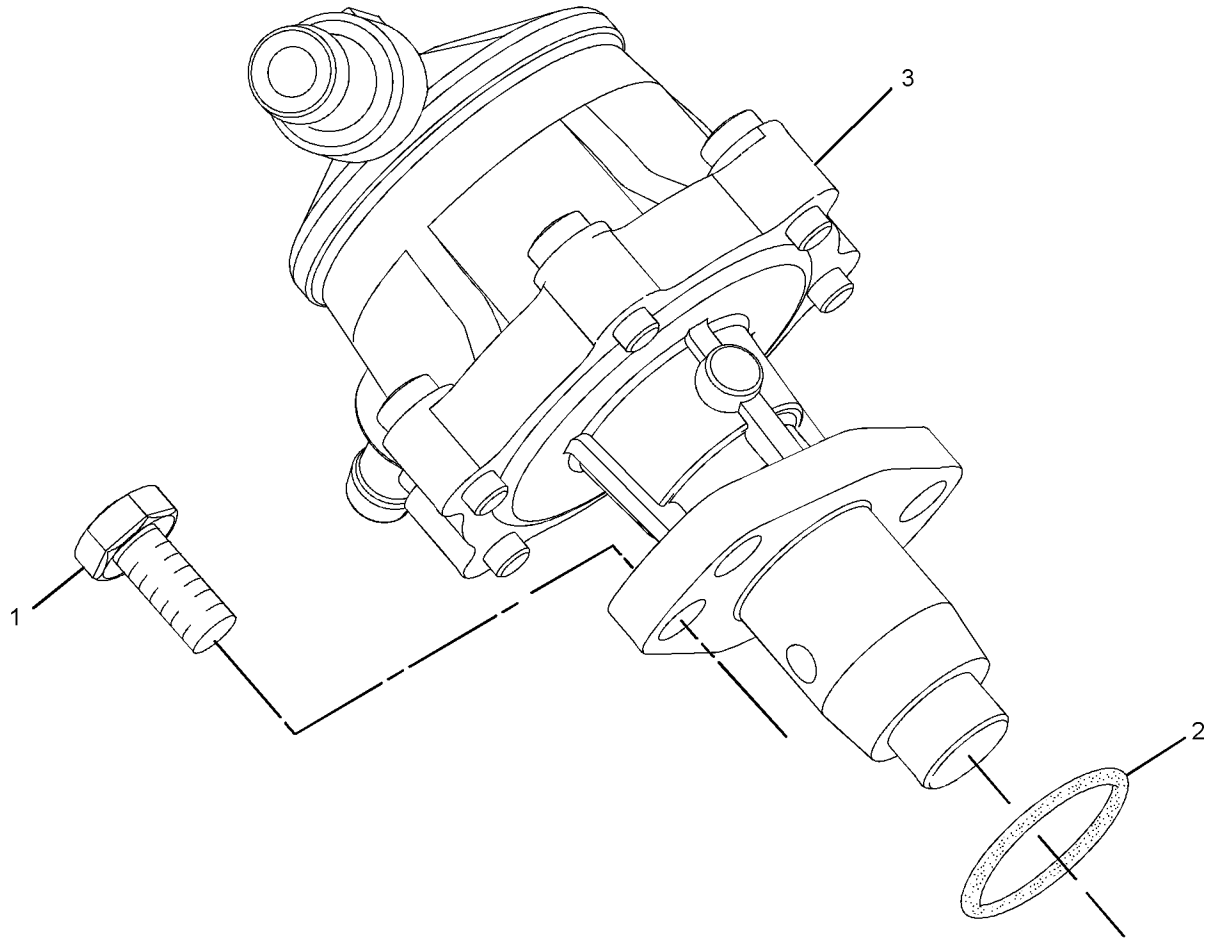

GRAPHIC #1 <END> g01447430

532-9894 THROTTLE GP

PART OF 549-5443, 552-5704, 558-8965 ENGINE AR-PRIMARY

SMCS-1265 **i07501866**

NOTE	REF NO	GRAPHIC REF	PART NUMBER	QTY	PART NAME 1 2 3 4 5 6 (PRODUCT LEVEL)	SEE PAGE
	1	1	**153-6412**	1	WASHER	
	2	1	**419-7640**	1	SOLENOID AS (12-VOLT) (FUEL SHUTOFF)	
	3	1	**308-1914**	1	LEVER-CONTROL	

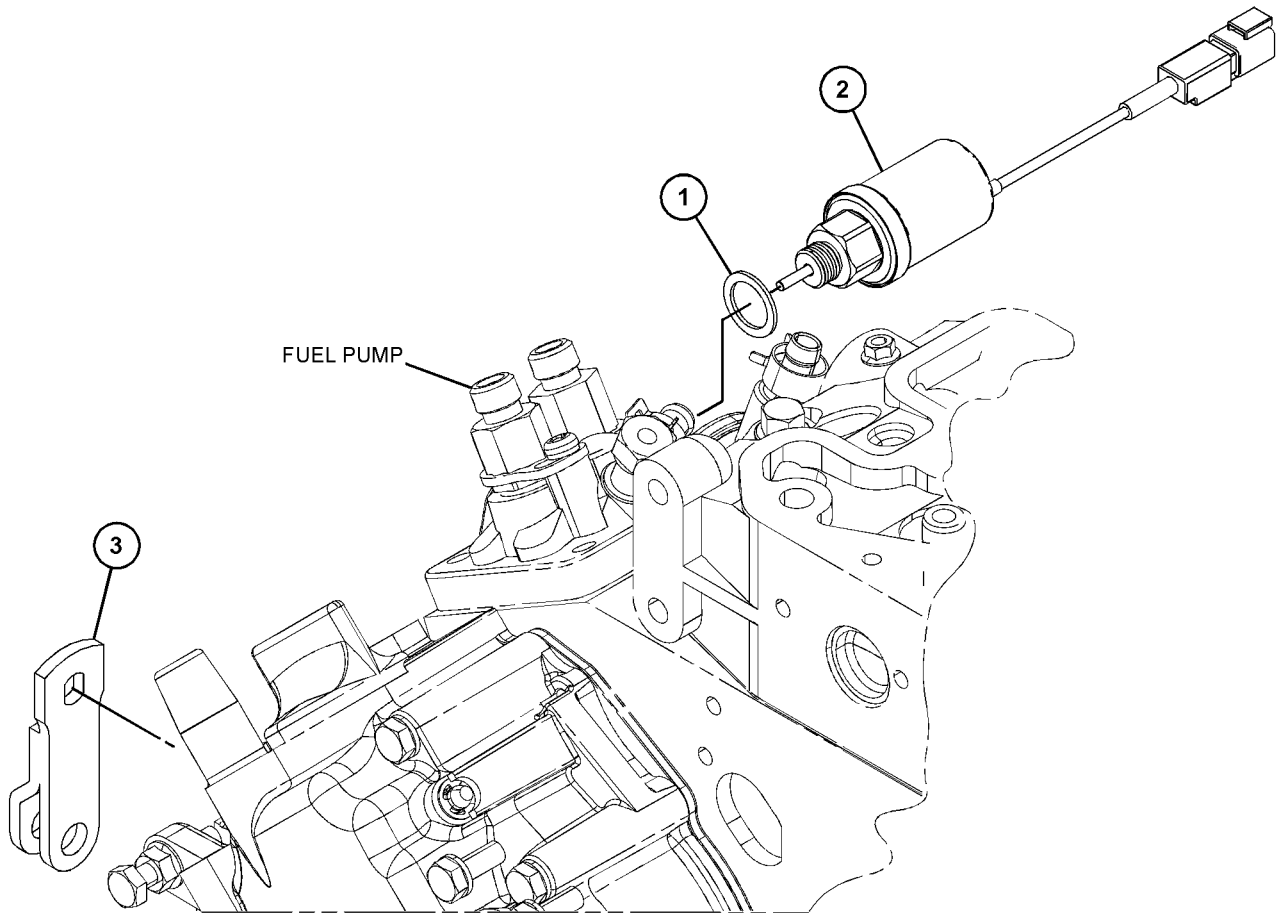

GRAPHIC #1 <END> g06204498

310-9211 ALTERNATOR GP-CHARGING

SMCS-1405 **i07479201**

NOTE	REF NO	GRAPHIC REF	PART NUMBER	QTY	PART NAME 1 2 3 4 5 6 (PRODUCT LEVEL)	SEE PAGE
M	1	1	**153-5592**	1	NUT (M8X1.25-THD)	
	2	1	**153-6375**	1	BOLT AS	
	3	1	**163-5372**	1	WASHER (8X15.4X4-MM THK)	
	4	1	**197-8816**	1	REGULATOR (ALTERNATOR VOLTAGE)	
	5	1	**234-8762**	1	CONNECTOR	
	6	1	**289-5976**	1	LEVER	
	7	1	**310-8857**	1	ALTERNATOR	
	8	1	**168-9000**	1	BOLT	
	9	1	**310-8859**	1	WASHER	

M - METRIC PART

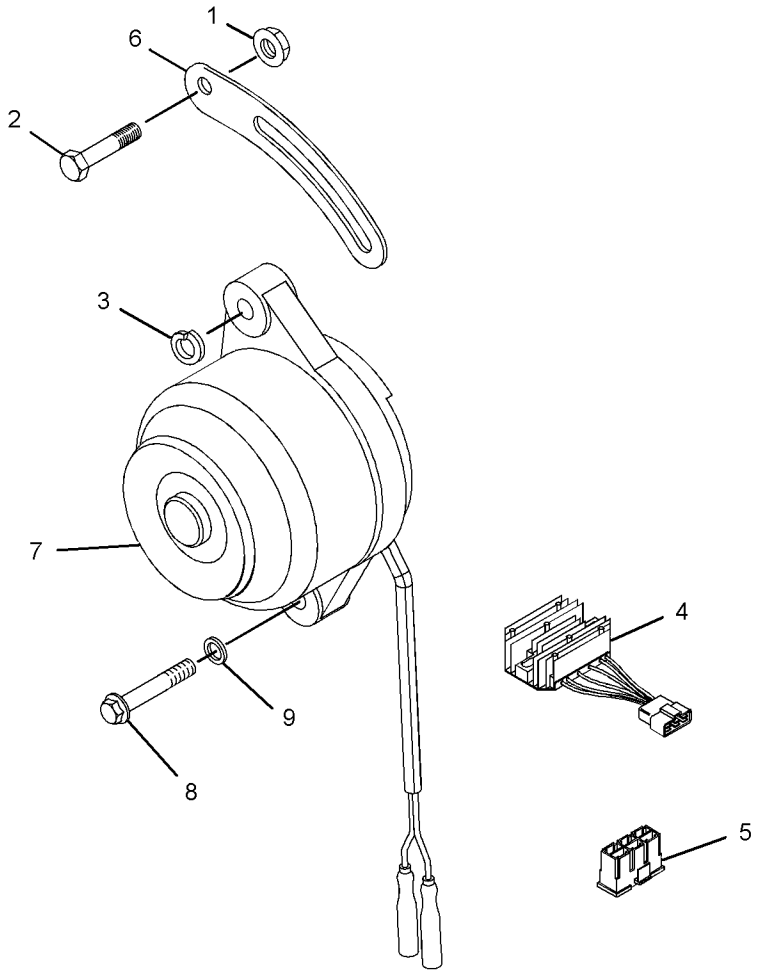

GRAPHIC #1 <END> g01448271

532-8595 ALTERNATOR GP-CHARGING

PART OF 549-5443 ENGINE AR-PRIMARY

SMCS-1405 **i07499252**

NOTE	REF NO	GRAPHIC REF	PART NUMBER	QTY	PART NAME 1 2 3 4 5 6 (PRODUCT LEVEL)	SEE PAGE
M	1	1	**153-5592**	1	NUT (M8X1.25-THD)	
	2	1	**153-6375**	1	BOLT AS	
	3	1	**431-5028**	1	BOLT	
	4	1	**197-8816**	1	REGULATOR (ALTERNATOR VOLTAGE)	
	5	1	**234-8762**	1	CONNECTOR	
	6	1	**289-5976**	1	LEVER	
	7	1	**310-8857**	1	ALTERNATOR	
	8	1	**168-9000**	1	BOLT	
	9	1	**310-8859**	1	WASHER	
	10	1	**155-7984**		WASHER (8.4X16X1.6-MM THK)	

M - METRIC PART

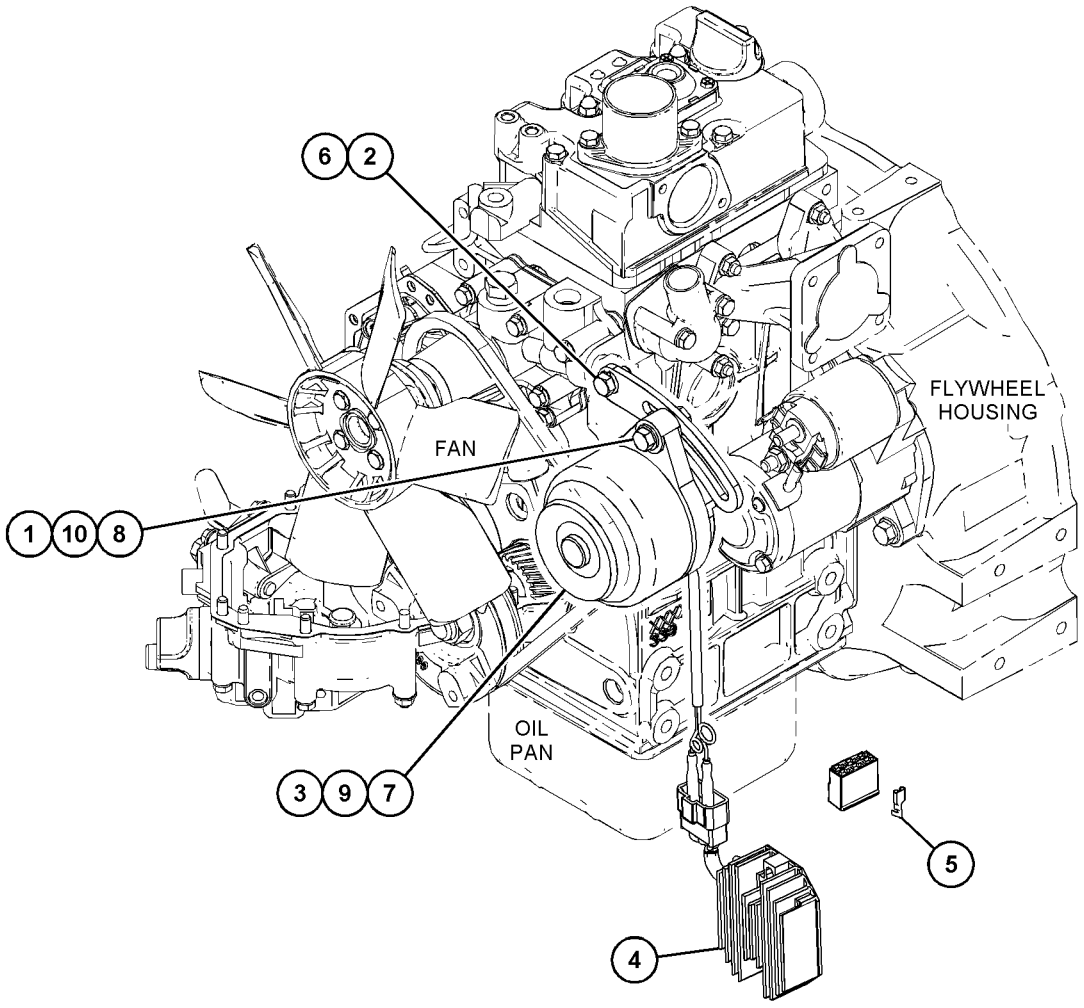

GRAPHIC #1 <END> g06352058

321-6741 CONNECTION GP-ELECTRICAL

SMCS-1408 **i03395703**

NOTE	REF NO	GRAPHIC REF	PART NUMBER	QTY	PART NAME 1 2 3 4 5 6 (PRODUCT LEVEL)	SEE PAGE
	1	1	**254-5541**	1	CONNECTION AS	

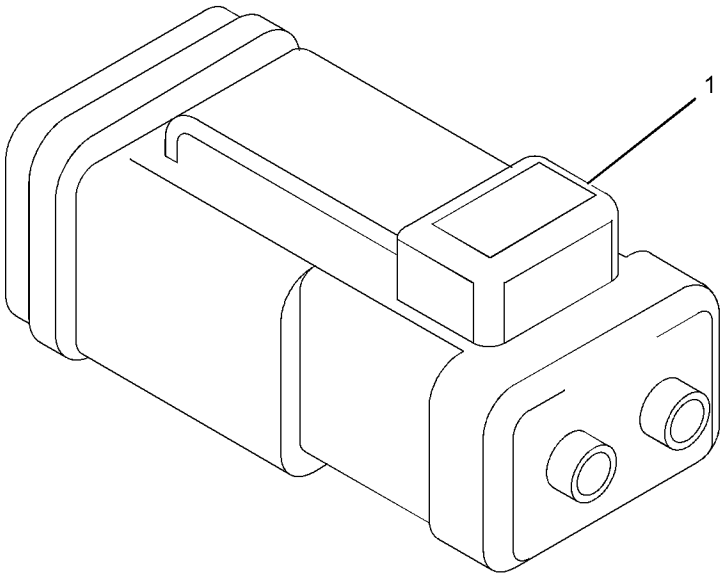

GRAPHIC #1 <END> g01513229

541-6343 CONNECTION GP-ELECTRICAL

PART OF 549-5443, 552-5704 ENGINE AR-PRIMARY

SMCS-1408 **i07708297**

NOTE	REF NO	GRAPHIC REF	PART NUMBER	QTY	PART NAME 1 2 3 4 5 6 (PRODUCT LEVEL)	SEE PAGE
	1	1	**254-5541**	1	CONNECTION AS	
		1	**9X-3402**	6	SOCKET-CONNECTOR (16-GA TO 18-GA)	
		1	**331-4226**	3	KIT-CONNECTING PLUG (2-PIN)	
					(INCLUDES PLUG AS, WEDGE, & INTERFACE SEAL)	

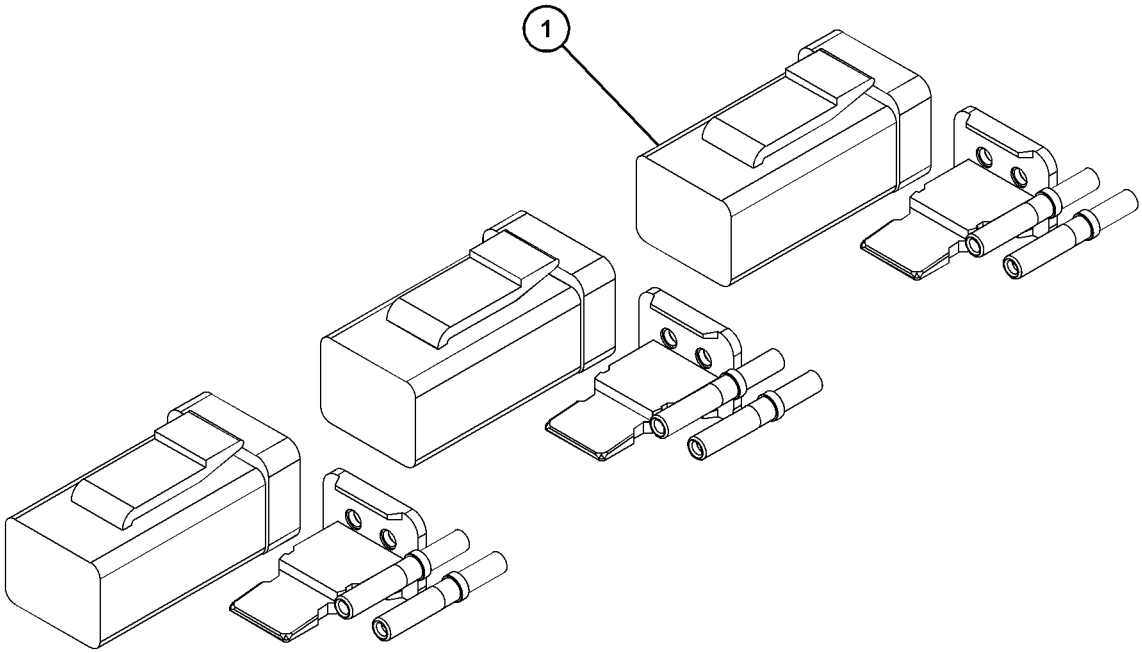

GRAPHIC #1 <END> g06403237

532-9916 SENSOR & MTG GP-PRESSURE

PART OF 549-5443, 552-5704, 558-8965 ENGINE AR-PRIMARY

SMCS-1916, 1917, 1923, 1924, 1925 **i07498250**

NOTE	REF NO	GRAPHIC REF	PART NUMBER	QTY	PART NAME 1 2 3 4 5 6 (PRODUCT LEVEL)	SEE PAGE
	1	1	**153-5936**	4	WASHER (8.2X14.5X1-MM)	
M	2	1	**153-6881**	2	BOLT (M8X1.25X18-MM)	
	3	1	**452-3668**	1	SWITCH-PRESSURE (ENGINE OIL)	

M - METRIC PART

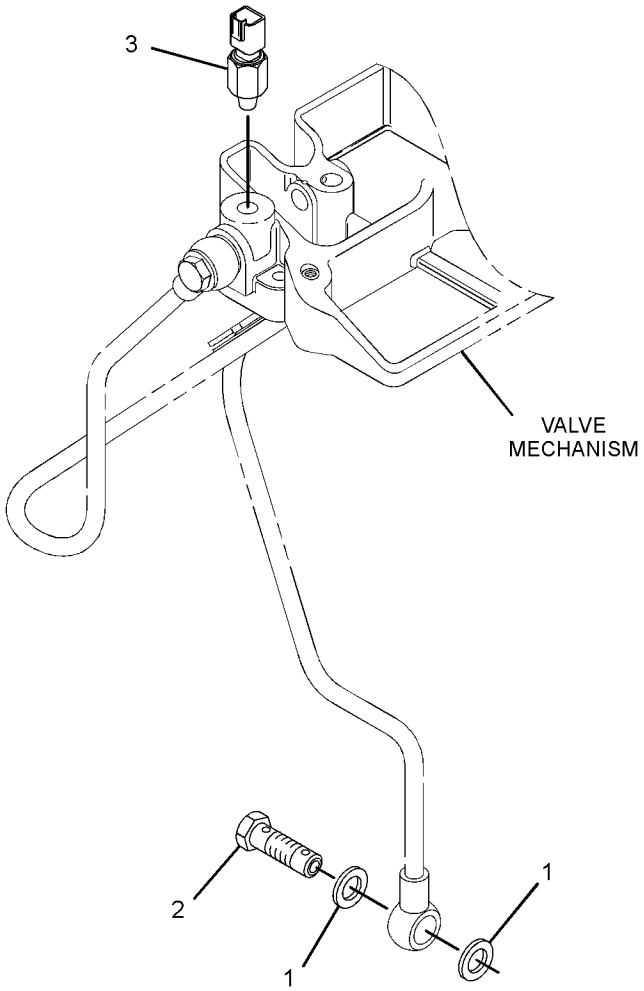

GRAPHIC #1 <END> g03651562

533-2747 SENSOR GP-TEMPERATURE

PART OF 549-5443, 552-5704, 558-8965 ENGINE AR-PRIMARY

SMCS-1906, 1919, 1921, 1922, 1928, 1929 **i07498254**

NOTE	REF NO	GRAPHIC REF	PART NUMBER	QTY	PART NAME 1 2 3 4 5 6 (PRODUCT LEVEL)	SEE PAGE
	1	1	**231-2999**	1	SWITCH-TEMPERATURE (ENGINE COOLANT)	

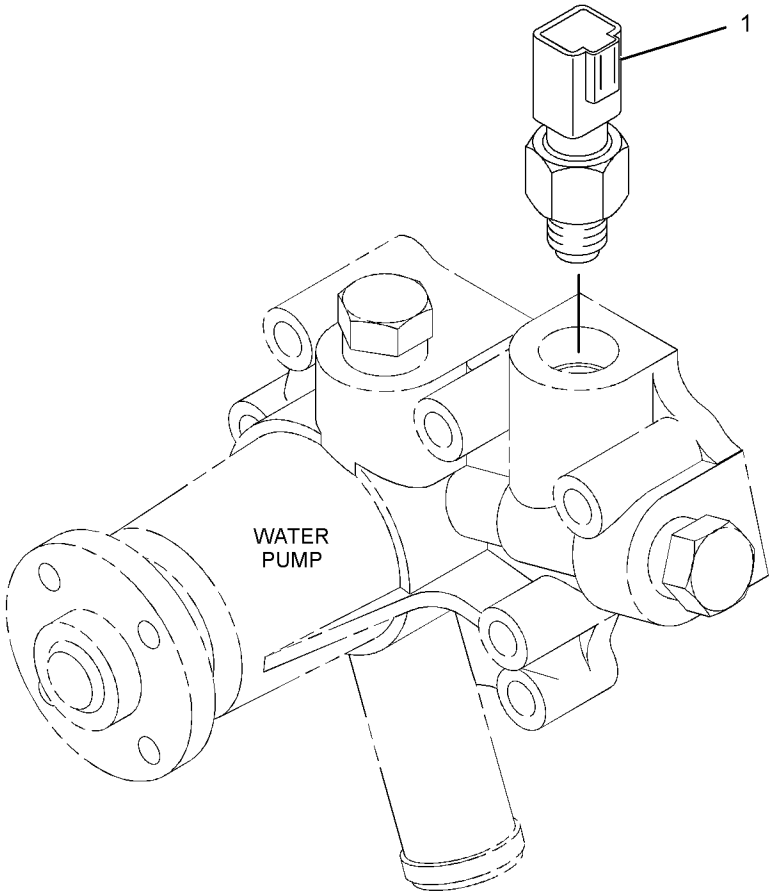

GRAPHIC #1 <END> g01436683

308-5614 STARTING AID GP

SMCS-1090 **i07479104**

NOTE	REF NO	GRAPHIC REF	PART NUMBER	QTY	PART NAME 1 2 3 4 5 6 (PRODUCT LEVEL)	SEE PAGE
	1	1	**308-5615**	1	CONNECTION	
	2	1	**364-7033**	1	CONNECTOR	
	3	1	**307-8672**	2	GLOW PLUG AS	
					(EACH INCLUDES)	
M	3A	1	**231-2839**	1	NUT-FLANGE (M4X0.7-THD)	

M - METRIC PART

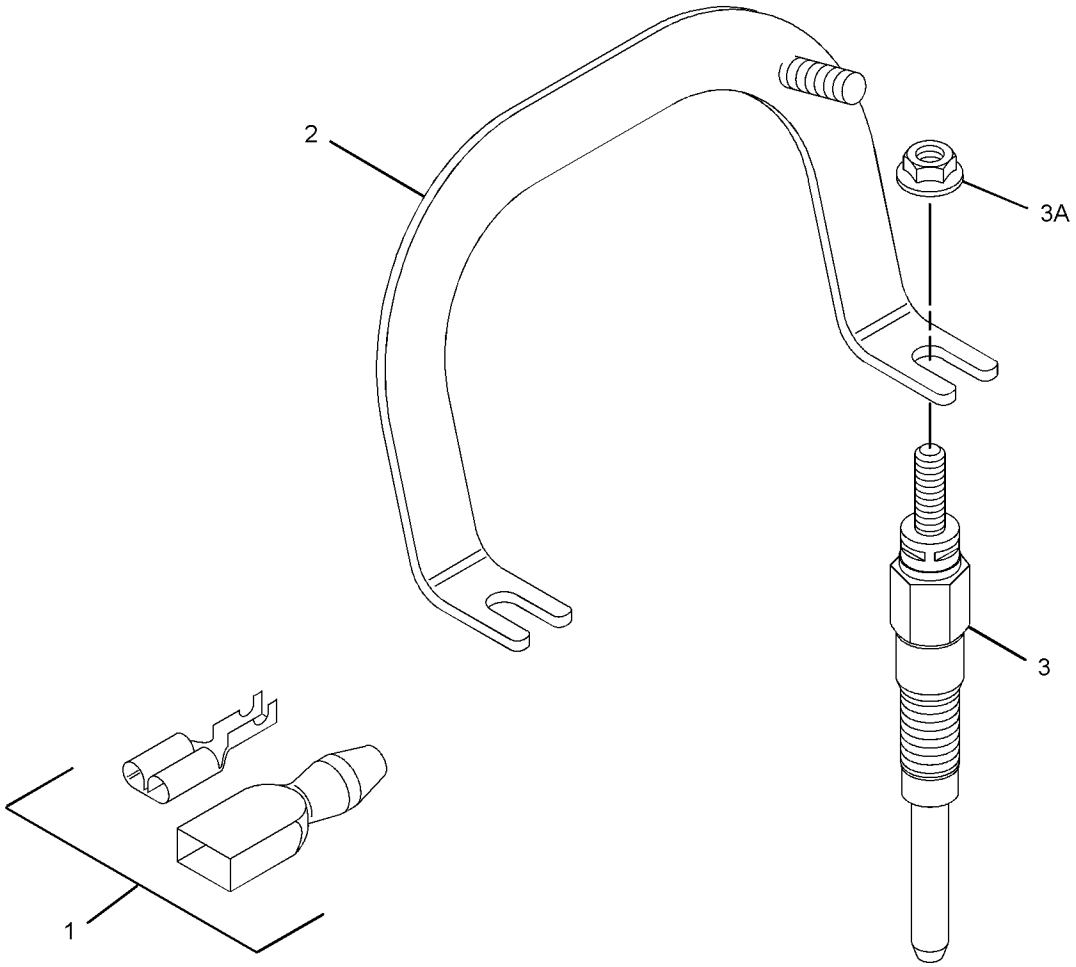

GRAPHIC #1 <END> g02726723

532-9887 STARTING AID GP-ETHER

PART OF 549-5443, 552-5704, 558-8965 ENGINE AR-PRIMARY

SMCS-1456 **i07498222**

NOTE	REF NO	GRAPHIC REF	PART NUMBER	QTY	PART NAME 1 2 3 4 5 6 (PRODUCT LEVEL)	SEE PAGE
	1	1	**439-4149**	2	PLUG-GLOW	
	2	1	**364-7033**	1	CONNECTOR	
M	3	1	**231-2839**	1	NUT-FLANGE (M4X0.7-THD)	

M - METRIC PART

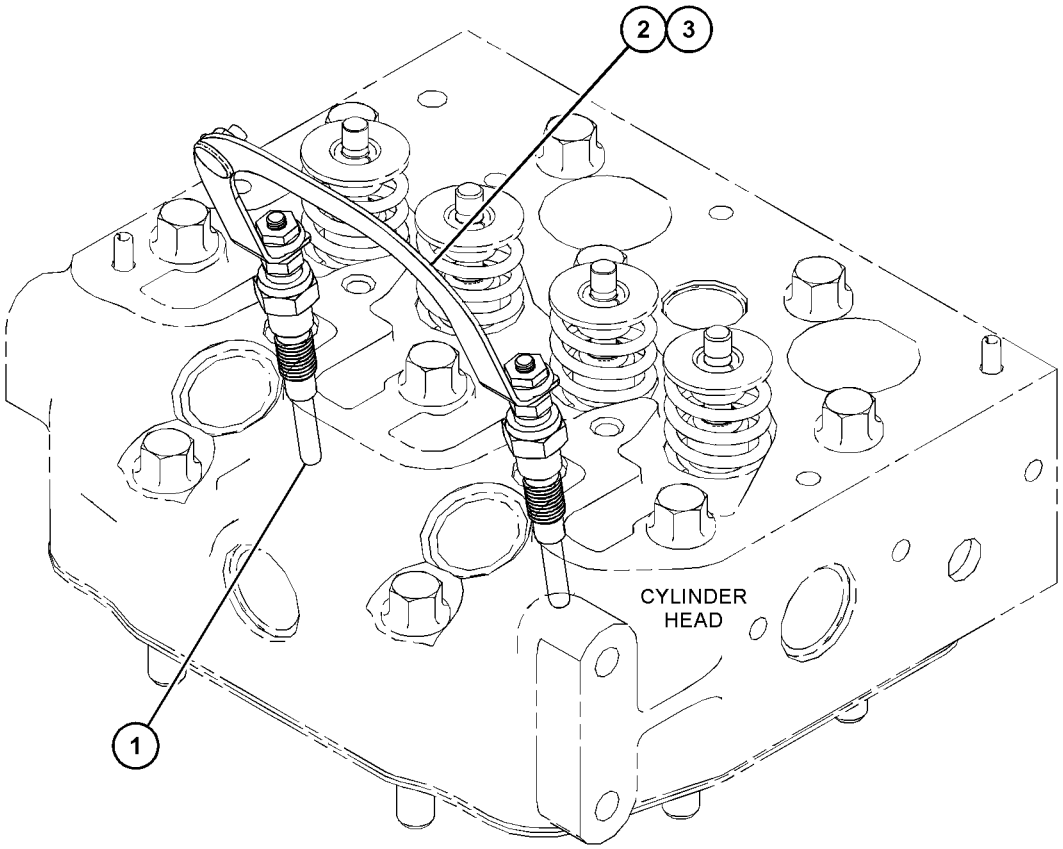

GRAPHIC #1 <END> g06340853

308-4311 STARTING MOTOR GP-ELECTRIC

SMCS-1453 **i07479001**

NOTE	REF NO	GRAPHIC REF	PART NUMBER	QTY	PART NAME 1 2 3 4 5 6 (PRODUCT LEVEL)	SEE PAGE
	1	1	**543-5428**	1	STARTING MOTOR AS	

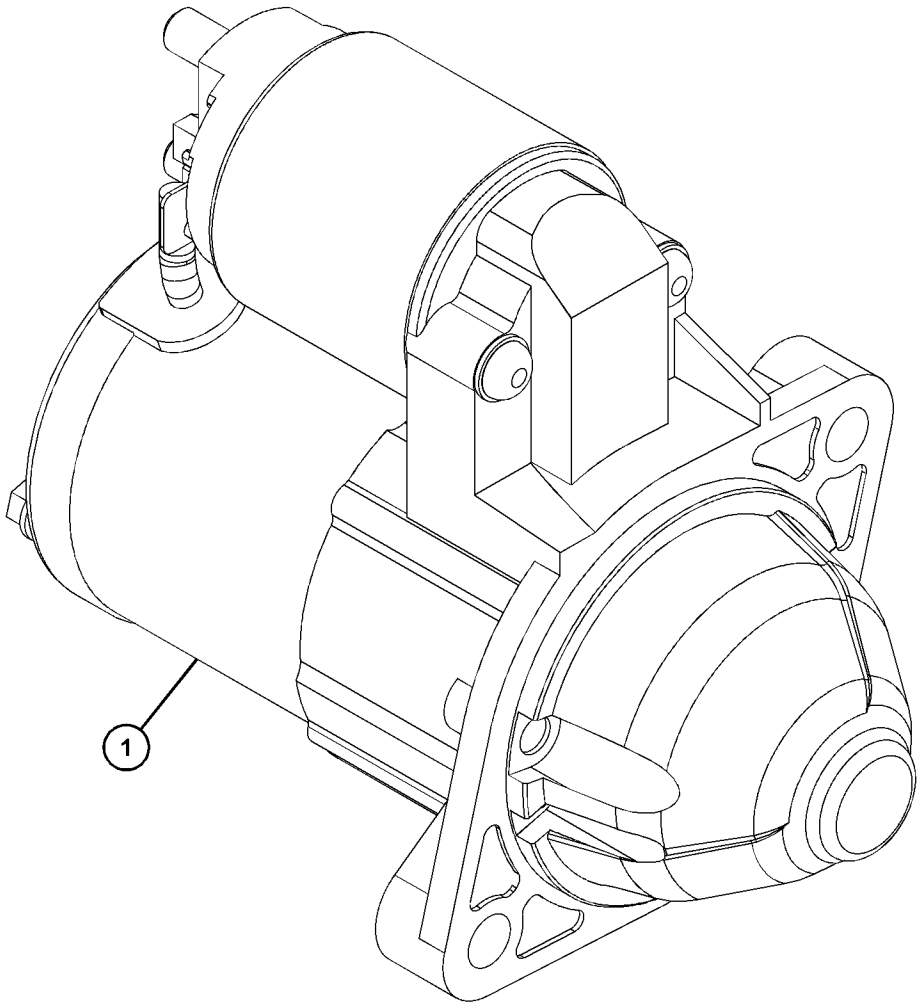

GRAPHIC #1 <END> g06252746

532-8502 STARTING MOTOR GP-ELECTRIC

PART OF 549-5443, 552-5704 ENGINE AR-PRIMARY

SMCS-1453 **i07743027**

NOTE	REF NO	GRAPHIC REF	PART NUMBER	QTY	PART NAME 1 2 3 4 5 6 (PRODUCT LEVEL)	SEE PAGE
	1	1	**543-5428**	1	STARTING MOTOR AS	
M	2	1	**311-1727**	2	BOLT (M8X1.25X30-MM)	

M - METRIC PART

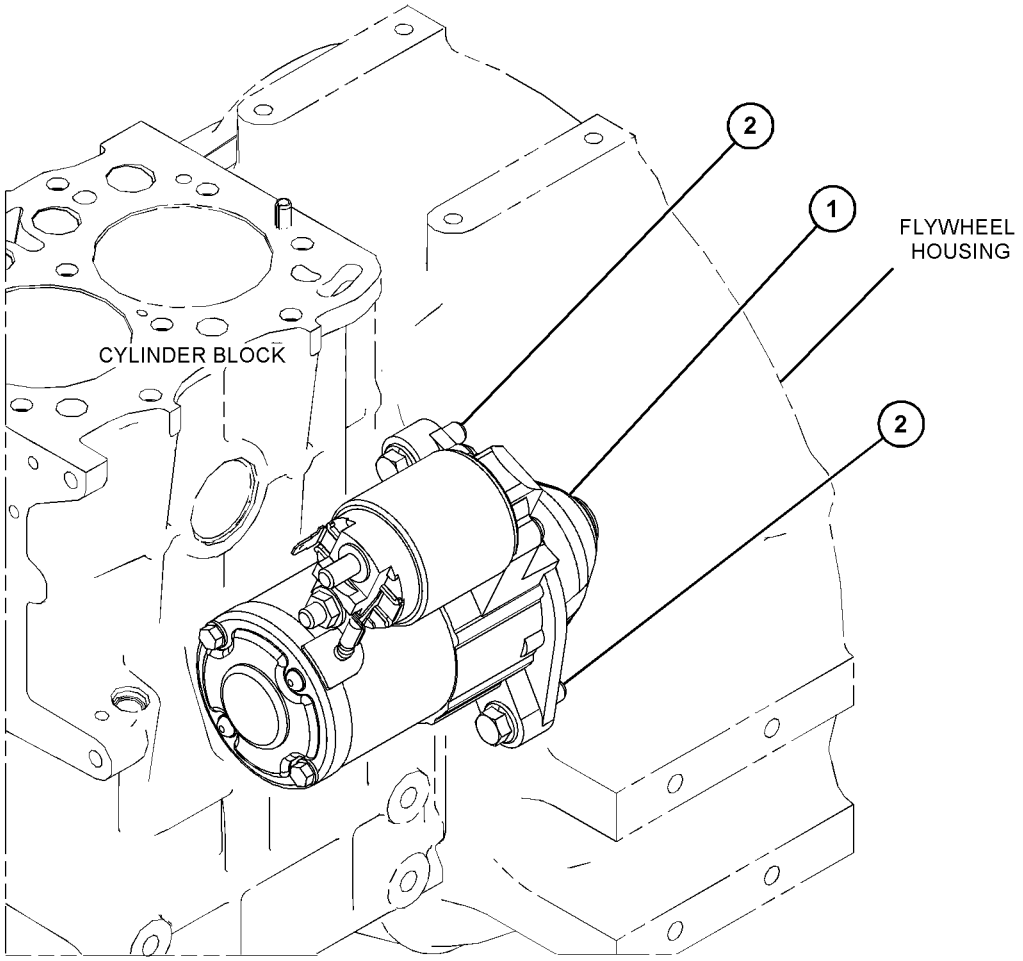

GRAPHIC #1 <END> g06456234

308-5644 SWITCH GP-PRESSURE

SMCS-7400, 7421 **i07479125**

NOTE	REF NO	GRAPHIC REF	PART NUMBER	QTY	PART NAME 1 2 3 4 5 6 (PRODUCT LEVEL)	SEE PAGE
	1	1	**153-5936**	2	WASHER (8.2X14.5X1-MM)	
M	2	1	**153-6881**	1	BOLT (M8X1.25X18-MM)	
	3	1	**452-3668**	1	SWITCH-PRESSURE (ENGINE OIL)	

M - METRIC PART

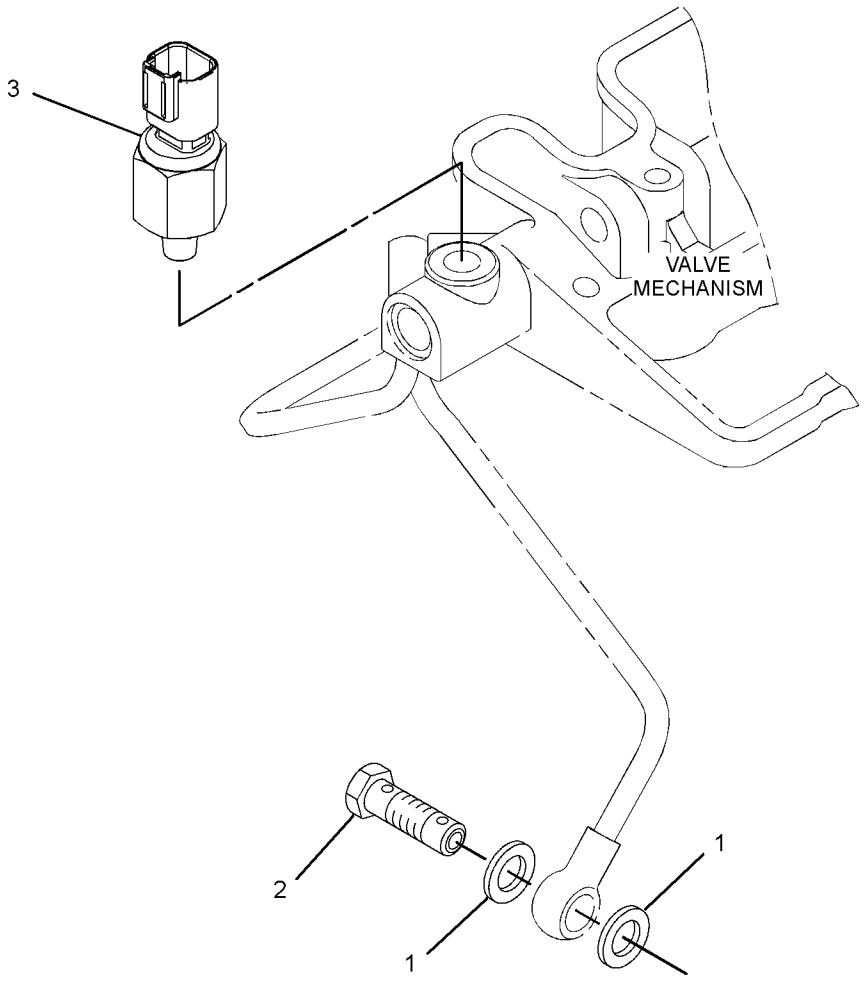

GRAPHIC #1 <END> g03780042

308-2314 SWITCH GP-START

SMCS-1416 **i04840451**

NOTE	REF NO	GRAPHIC REF	PART NUMBER	QTY	PART NAME 1 2 3 4 5 6 (PRODUCT LEVEL)	SEE PAGE
	1	1	**183-5460**	1	PLATE	
	2	1	**359-6000**	1	SWITCH AS-START	
	2A	1	**183-5458**	1	CAP	
	2B	1	**361-3925**	1	KEY-IGNITION	

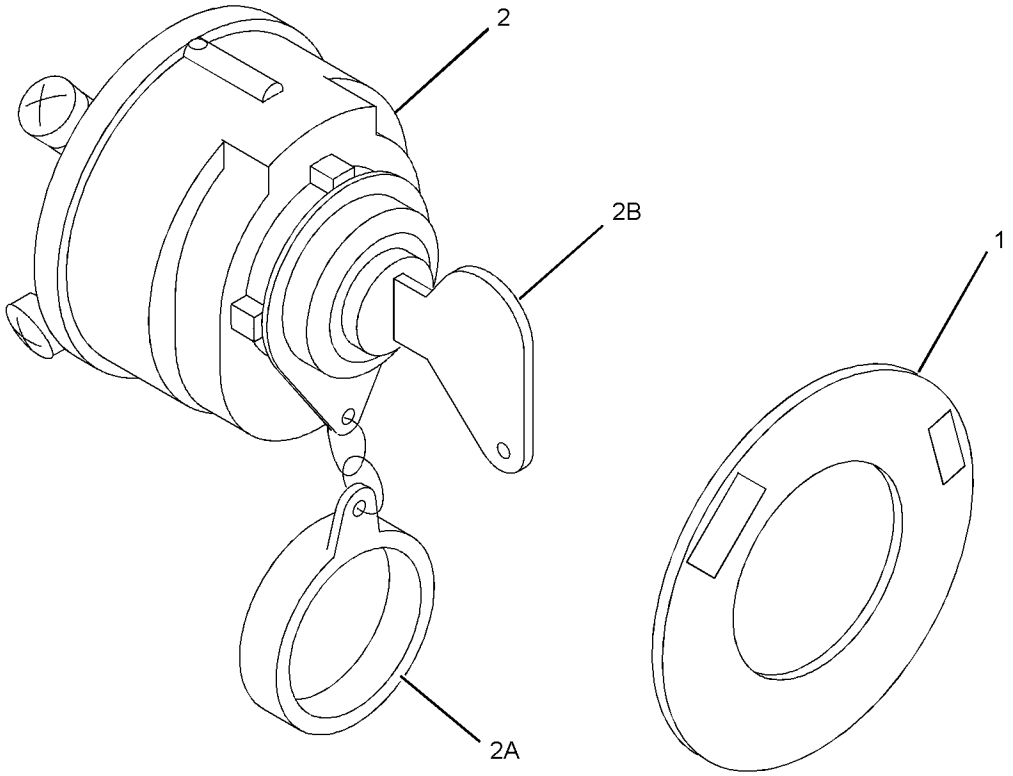

GRAPHIC #1 <END> g01389581

561-0909 SWITCH GP-START

PART OF 549-5443, 552-5704 ENGINE AR-PRIMARY

SMCS-1416 **i07710353**

NOTE	REF NO	GRAPHIC REF	PART NUMBER	QTY	PART NAME 1 2 3 4 5 6 (PRODUCT LEVEL)	SEE PAGE
	1	1	**183-5460**	1	PLATE	
	2	1	**434-4611**	1	SWITCH AS-START	

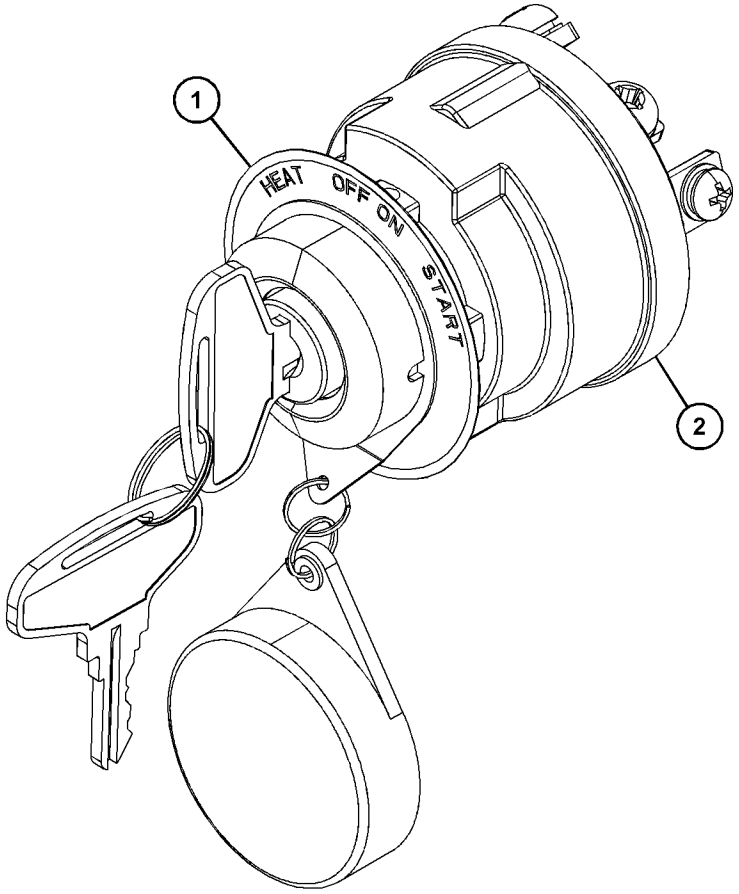

GRAPHIC #1 <END> g06409930

310-9227 SWITCH GP-TEMPERATURE

SMCS-7400 **i07479214**

NOTE	REF NO	GRAPHIC REF	PART NUMBER	QTY	PART NAME 1 2 3 4 5 6 (PRODUCT LEVEL)	SEE PAGE
	1	1	**231-2999**	1	SWITCH-TEMPERATURE (ENGINE COOLANT)	

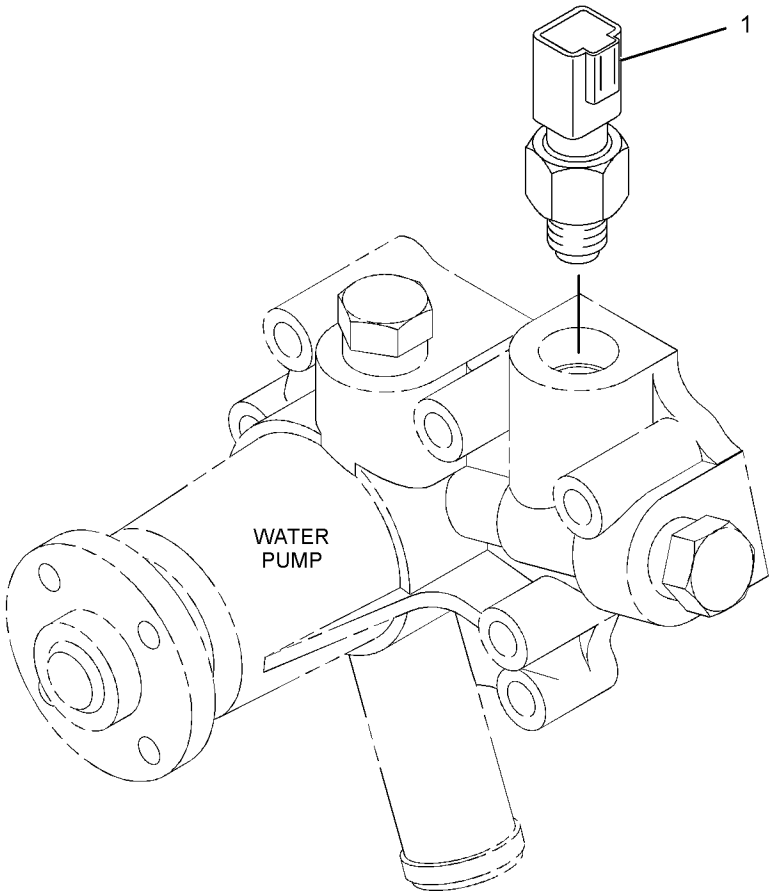

GRAPHIC #1 <END> g01436683

552-4186 PLATE & FILM GP

PART OF 549-5443 ENGINE AR-PRIMARY

SMCS-7405, 7557 **i07816810**

NOTE	PART NUMBER	QTY	PART NAME 1 2 3 4 5 6 (PRODUCT LEVEL)	SEE PAGE
	153-8532	1	FILM-INFORMATION (FUEL FILTER)	
	346-8220	1	FILM-WARNING (UNIVERSAL)	
	450-9772	1	FILM-IDENTIFICATION (CAT)	
	419-0074	2	SCREW-DRIVE (NO 2X0.16-IN)	

<END>

PART NUMBER INDEX

Part Page

3

3B-4505 41
80

5

5C-2890 28
5D-1319 25
28

6

6I-0260 47
48
6I-0846 97

8

8T-4189 80
8T-4200 41

9

9X-3402 113
9X-6153 5
6
28
9X-8256 82

0

095-1574 28
099-6418 82

1

100-4841 49
51
106-8916 44
133-5512 44
139-5511 28
153-5381 18
20
153-5385 15
18
20
153-5387 15
18
20
153-5390 15
18
20
153-5391 15
18
20
153-5392 15
18
20
153-5393 15
18
20
153-5394 15
44
153-5397 11
13
153-5402 11
13
153-5407 15
102
104
153-5408 11
13
153-5414 15
18
20
153-5518 11
13
153-5587 60
61
64
153-5590 60
61
64
153-5592 8
20
28
44
110
111
153-5594 5
6
153-5936 72
114
120
153-5939 9
88
153-5944 24
91
92
153-5960 28
44
64
73
74
78
90
91
98
100
102
104
153-5961 33
78
153-5962 28
44
153-5963 59
153-5992 43
153-6375 41
47
48
84
110
111
153-6412 93
109
153-6415 28
44
94
95
96
98
100
102
104
153-6492 5
6
28
57
58
153-6496 57
58
153-6831 55
56
153-6832 55
56
153-6835 49
51
153-6838 5
6
15
28
43
49
51
153-6841 60
61
64
153-6848 18
20
46
153-6849 18
20
46
153-6850 18
20
46
153-6851 18
20
46
153-6853 18
20
72
153-6856 34
153-6861 64
90
91
153-6873 108
153-6879 18
20
71
153-6881 72
114
120
153-7640 9
82
88
98
100
102
104
153-7978 28
44
153-7983 28
94
95
96
153-7985 18
20
46
153-7987 28
44
153-7990 28
153-8532 124
154-1244 73
74
78
154-1396 29
154-1673 22
44
154-1677 20
154-1678 20
154-1679 20
154-1942 18
20
72
154-2395 39
154-2715 28
154-4506 28
154-4507 28
155-7984 80
82
97
111
160-4150 18
20
46
160-4151 18
20
46
160-4152 18
20
46
160-4153 18
20
46
162-2207 28
44
162-2208 44
163-5372 80
82
110
165-2140 28
44
165-2141 39
40
42
80
82
168-9000 110
111
168-9001 86
87
97
176-7719 108
178-2510 26
180-8579 80
82
183-1163 15
183-1164 15
44
183-3353 98
100
102
104
183-3572 28
183-3605 5
6
28
183-3939 82
183-4031 47
183-5444 97
183-5451 97
183-5458 121
183-5460 121
122
191-9297 28
44
196-8356 97
197-8540 106
197-8816 110
111

► PRIMARY REFERENCE

PART NUMBER INDEX

Part Page

2

209-7089 49
51
210-6655 91
210-9587 15
217-5860 9
88
217-5862 9
88
217-7115 28
44
221-1136 15
18
20
229-5150 49
231-2839 116
117
231-2999 115
123
231-3013 9
88
232-0218 98
100
102
104
232-0290 98
100
102
104
232-0793 98
234-8762 110
111
239-1137 82
254-5541 112
113
255-1297 33
258-7291 18
20
78
266-7143 69
288-6537 15
18
20
22
23
288-6538 15
18
20
288-6539 15
20
288-6542 18
20
288-6544 15
43
288-6545 53
54
288-6546 53
54
288-6547 53
54
288-6548 53
54
288-6549 53
54
288-6550 53
54
288-6551 53
54
288-6552 53
54
288-6553 53
54
288-6554 11
288-6555 11
13
288-6556 11
13
288-6557 11
13
288-6559 11
13
288-6560 11
13
288-6561 11
13
288-6563 98
100
102
104
288-6564 98
100
102
104
288-6565 98
100
102
104
288-6566 98
100
102
104
288-6567 98
288-6569 77
288-6571 97
288-6572 97
288-6574 97
288-6576 97
288-6578 35
37
288-6579 35
36
37
38
288-6583 91
288-6584 90
91
288-6585 9
288-6586 9
88
288-6588 9
88
288-6590 9
88
288-6591 9
88
288-6593 44
66
67
68
289-4914 . . . . . ►22
►24
289-4915 22
23
289-4916 22
23
289-4917 22
23
289-4919 22
23
289-4921 22
23
289-4922 22
23
289-4923 22
23
289-4924 22
23
289-4925 22
74
289-4926 24
289-4927 24
25
289-4928 24
25
289-4929 64
289-4930 60
61
64
289-4931 60
61
64
289-4932 60
61
64
289-4933 64
289-4934 60
61
64
289-4935 60
61
64
289-4937 64
289-4939 64
289-4940 64
289-5968 8
289-5969 8
289-5970 8
289-5976 110
111
289-5979 97
289-6111 49
51
289-6119 49
289-6120 66
68
289-6121 18
20
72
289-7503 28
44
289-7507 44
290-0353 78
79
290-0355 78
79
290-0357 73
290-0358 78
290-0360 73
74
290-0361 78
290-8014 98
100
102
104
290-9700 24
25
290-9701 24
25
29
290-9844 98
100
102
104
290-9845 98
100
102
104
290-9846 98
100
102
104
290-9847 98
100
102
104
290-9848 98
100
102
104
291-0241 97
291-0250 9
88
291-4736 78
293-3237 98
100
104
295-4070 97
108

3

307-5362 75
76
307-8672 116
308-1882 28
44
308-1889 28
95
96
308-1892 9
28
88
94
95
96
308-1897 28
308-1904 28
95
96
308-1914 93
109
308-2309 1
86
308-2314 1
121
308-2320 1
106
308-3675 78
308-4178 1
15
308-4180 15
18
20
308-4185 1
11
308-4186 1
54
308-4187 1
24
308-4188 1
64
308-4211 1
72
308-4238 1
28
308-4256 28
308-4261 5
28
308-4266 28
94
95
96
308-4311 1

► PRIMARY REFERENCE

PART NUMBER INDEX

Part Page

118
308-4317 1
59
308-4725 1
66
308-4726 1
69
308-4735 1
71
308-4776 1
73
308-4884 1
8
308-4891 1
9
308-5576 90
308-5583 1
90
308-5613 1
108
308-5614 1
116
308-5615 116
308-5617 47
48
308-5618 1
47
308-5629 1
93
308-5644 1
120
308-6551 . . . . . ►1
►3
309-6729 94
95
96
309-6732 28
309-7591 28
310-8327 49
51
310-8856 57
310-8857 110
111
310-8859 84
110
111
310-8861 62
310-9201 1
98
100
310-9205 1
49
310-9206 1
55
310-9207 1
57
310-9208 1
78
310-9209 1
75
310-9211 1
110
310-9213 1
62
310-9227 1
123
311-0655 28
94
95
311-0664 11
13
311-1724 1
39
311-1725 1

35
311-1726 39
311-1727 39
119
311-1728 35
37
311-9622 28
95
313-2025 28
95
96
313-5832 28
44
313-5833 28
44
313-9323 5
6
321-4249 28
321-6741 1
112
324-3396 28
94
95
96
326-1811 98
100
102
104
326-1812 98
100
102
104
326-9052 84
85
327-5129 96
327-7720 6
330-9189 44
331-4226 113
331-5293 49
51
331-5294 49
334-0272 67
334-0732 28
44
335-5578 28
44
336-2965 28
336-4050 96
339-3015 1
20
46
346-8220 124
359-6000 121
361-3925 121
363-8409 94
364-1817 94
364-7033 116
117
364-8947 40
42
365-1621 80
82
365-1622 80
82
365-1623 80
82
365-1624 80
82
365-1625 80
82
365-1626 80
82
365-1627 82
365-1628 82

365-1629 80
82
365-1630 84
365-1631 84
365-1632 84
365-1634 80
84
366-3065 86
87
367-6748 84
367-6750 80
369-4486 28
44
369-8010 51
390-3729 28
96
390-3731 28
94
95
96

4

419-0074 124
419-7640 93
109
420-5890 15
18
20
423-7554 44
423-7724 28
44
425-7065 28
426-4357 98
100
102
104
431-5028 111
432-6548 26
34
434-4611 122
435-0208 86
87
438-9109 64
439-4149 117
450-9772 124
452-3668 114
120
456-4584 82
462-7339 8
468-5384 1
80
478-1537 94
95
96
482-8619 70
483-1201 51
483-1214 44
483-1360 82
483-1362 82
483-1363 82
483-1370 102
483-4030 27
487-0157 15
18
20
490-0367 5
6
495-0737 44
499-0368 9
88

5

502-5421 44
502-9478 44
503-9707 44
503-9731 44
515-2716 1
26
515-7370 48
517-9176 80
526-5212 107
528-6881 5
6
532-8290 3
27
532-8399 2
3
4
18
20
532-8400 2
3
4
13
532-8401 2
3
4
53
532-8402 2
3
4
25
532-8404 2
3
4
61
532-8405 2
4
5
532-8449 2
40
532-8475 4
36
532-8498 3
37
532-8501 2
38
532-8502 2
3
119
532-8511 2
3
4
51
532-8519 2
3
4
56
532-8530 2
3
67
532-8560 2
3
4
70
532-8563 2
3
4
58
532-8567 2
3
4
79
532-8569 2

► PRIMARY REFERENCE

PART NUMBER INDEX

Part	Page
	3
	4
	74
532-8583	3
	76
532-8585	2
	77
532-8589	2
	33
532-8595	2
	111
532-8597	2
	3
	63
532-8604	2
	3
	4
	43
532-8637	2
	3
	4
	88
532-8659	2
	3
	84
532-8660	4
	92
532-8683	2
	3
	91
532-9876	2
	3
	97
532-9887	2
	3
	4
	117
532-9889	2
	3
	4
	48
532-9894	2
	3
	4
	109
532-9916	2
	3
	4
	114
533-2747	2
	3
	4
	115
536-6614	18
536-6617	18
540-6551	4
	41
541-2788	43
	44
541-6343	2
	3
	113
542-4595	3
	34
542-6419	5
542-6420	13
542-6421	►23
	►25
542-6884	43
542-6936	41
542-6951	82
542-6954	79
542-6977	74
542-6983	43
542-6985	43
542-7006	43
542-7643	2
	94
542-7644	2
	102
542-7645	2
	3
	82
543-5428	118
	119
546-1857	88
547-5181	18
	20
547-5183	23
547-5184	►60
	►61
547-5186	38
547-5190	51
547-5194	84
547-5197	82
547-5198	82
547-5943	4
	68
548-5480	40
548-5481	63
549-5443	►2
550-1337	2
	3
	87
550-7118	4
	95
550-7127	3
	4
	104
551-1921	4
	7
551-4267	6
551-4271	4
	85
551-6312	3
	6
551-6413	3
	42
551-6476	3
	96
552-4186	2
	3
	4
	124
552-5701	►3
552-5704	►3
557-1200	100
	102
	104
558-5465	42
558-8965	►4
559-6261	44
561-0909	2
	3
	122
561-2379	20
565-2285	2
	3
	107

► PRIMARY REFERENCE

©2019 Caterpillar
All Rights Reserved

CAT, CATERPILLAR, LET'S DO THE WORK, their respective logos, “Caterpillar Corporate Yellow”, the "Power Edge" and Cat "Modern Hex" trade dress as well as corporate and product identity used herein, are trademarks of Caterpillar and may not be used without permission.