Component Identifiers (CID*)	
Engine Control Module	
CID	Component
0001	Cylinder #1 Injector
0002	Cylinder #2 Injector
0003	Cylinder #3 Injector
0004	Cylinder #4 Injector
0041	8 Volt DC Supply
0091	Throttle Position Sensor
0100	Engine Oil Pressure Sensor
0110	Engine Coolant Temperature Sensor
0168	Electrical System Voltage
0172	Intake Manifold Air Temperature Sensor
0190	Engine speed Sensor
0247	SAE J1939 Data Link
0253	Personality Module
0261	Engine Timing
0262	5 Volt Sensor DC Power Supply
0268	Programmed Parameter Fault
0342	Secondary Engine Speed Sensor
0526	Turbo Wastegate Drive
0774	Secondary Throttle Position Sensor
1639	Machine Security System Module
1743	Engine Operation Mode Selection Switch
1779	Fuel Rail #/Pressure Valve Solenoid
1785	Intake Manifold Pressure Sensor
1797	Fuel Rail Pressure Sensor
1834	Ignition Key Switch
2246	Glow Plug Start Aid Relay

* The CID is a diagnostic code that indicates which circuit is faulty.

Failure Mode Identifiers (FMI)*	
FMI No.	Failure Description
0	Data valid but above normal operational range (most severe).
1	Data valid but below normal operational range (most severe).
2	Erratic, intermittent, or incorrect.
3	Voltage above normal.
4	Voltage below normal.
5	Current below normal.
6	Current above normal or grounded circuit.
7	Mechanical system not responding properly.
8	Abnormal frequency, pulse width, or period.
9	Abnormal update rate.
10	Abnormal rate of change.
11	Failure mode not identifiable.
12	Bad device or component.
13	Out of calibration.
14	Special Instruction.
15	Data valid but above normal operational range (least severity).
16	Data valid but above normal operational range (moderate severity).
17	Data valid but below normal operational range (least severity).
18	Data valid but below normal operational range (moderate severity).
19	Received network data in error.
20	Data drifted high.

*The FMI is a diagnostic code that indicates what type of failure has occurred.

Event Codes Machine Control	
Event Code	Condition
E172	High Air Filter Restriction
E194	High Exhaust Temperature
E232	High Fuel / Water Separator Water Level
E360	Low Engine Oil Pressure
E361	High Engine Coolant Temperature
E362	Engine Overspeed
E396	High Fuel Rail Pressure
E398	Low Fuel Rail Pressure
E539	High Intake Manifold Air Temperature
E2143	Low Engine Coolant Temperature

Related Electrical Service Manuals	
Title	Form Number
Troubleshooting: C4.4 and C6.6 Industrial Engines	SENR9969-02
Systems operation/Testing and Adjusting	RENR7965-00

RENR9964-06
June 2025

Schematic

C4.4 Industrial Engine
Electrical System

4441-UP

Volume 1

Electrical Schematic Symbols And Definitions

Symbols

Pressure Symbol | Temperature Symbol | Level Symbol | Flow Symbol | Circuit Breaker Symbol

Symbols And Definitions

Fuse - A component in an electrical circuit that will open the circuit if too much current flows through it.

Switch (Normally Open): A switch that will close at a specified point (temp, press, etc.). The circle indicates that the component has screw terminals and a wire can be disconnected from it.

Switch (Normally Closed): A switch that will open at a specified point (temp, press, etc.). No circle indicates that the wire cannot be disconnected from the component.

Ground (Wired): This indicates that the component is connected to a grounded wire. The grounded wire is fastened to the machine.

Ground (Case): This indicates that the component does not have a wire connected to ground. It is grounded by being fastened to the machine.

Reed Switch: A switch whose contacts are controlled by a magnet. A magnet closes the contacts of a normally open reed switch; it opens the contacts of a normally closed reed switch.

Sender: A component that is used with a temperature or pressure gauge. The sender measures the temperature or pressure. Its resistance changes to give an indication to the gauge of the temperature or pressure.

Relay (Magnetic Switch): A relay is an electrical component that is activated by electricity. It has a coil that makes an electromagnet when current flows through it. The electromagnet can open or close the switch part of the relay.

Solenoid: A solenoid is an electrical component that is activated by electricity. It has a coil that makes an electromagnet when current flows through it. The electromagnet can open or close a valve or move a piece of metal that can do work.

MAGNETIC LATCH SOLENOID - A magnetic latch solenoid is an electrical component that is activated by electricity and held latched by a permanent magnet. It has two coils (latch and unlatch) that make electromagnet when current flows through them. It also has an internal switch that places the latch coil circuit open at the time the coil latches.

Harness And Wire Symbols

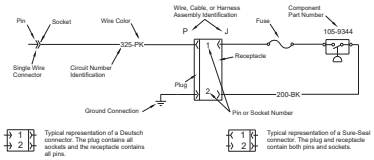

©2025 Caterpillar
All Rights Reserved

Printed in U.S.A.

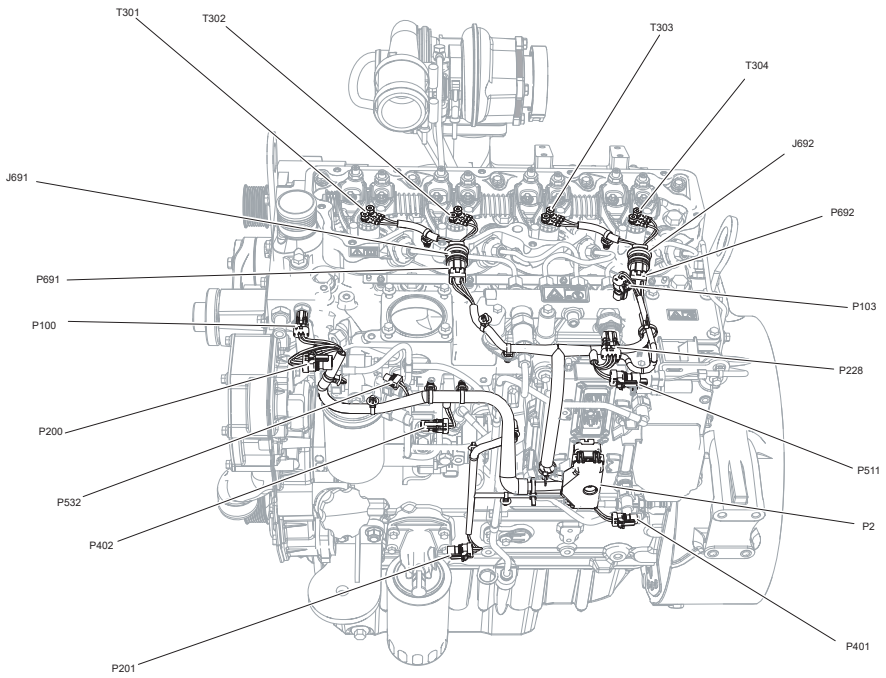

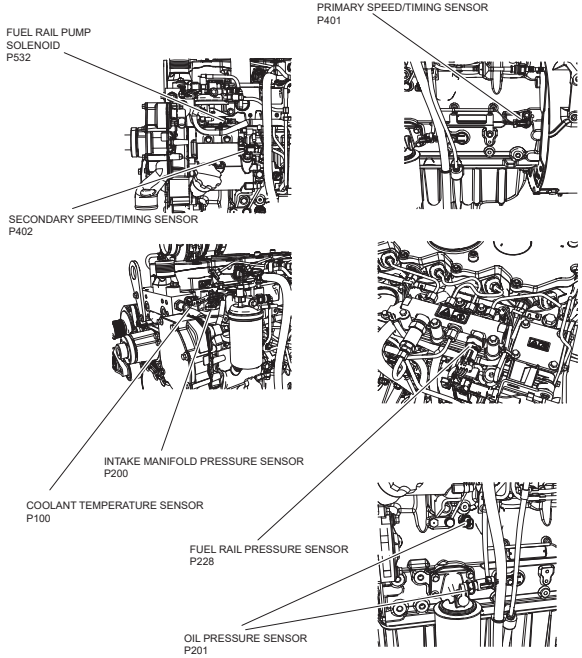

RENR9964-06

RENR9964-06

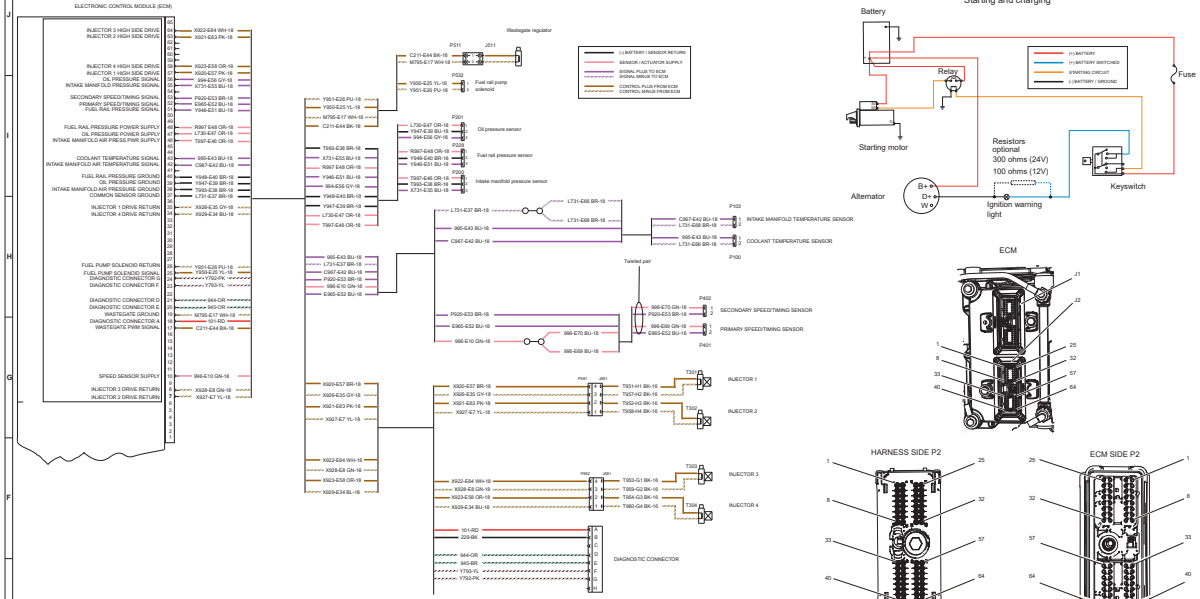

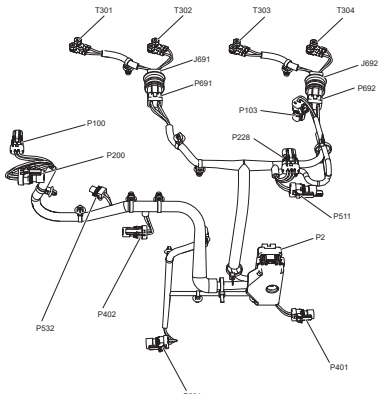

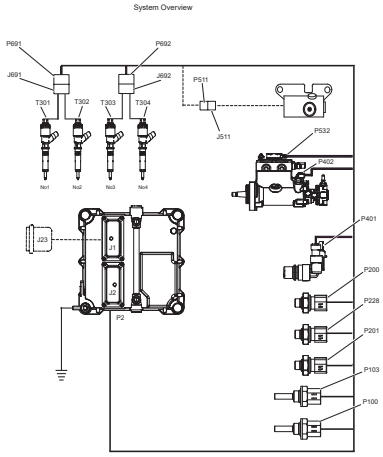

J1 PIN LOCATION INDUSTRIAL ENGINE

PIN NUMBER	DESCRIPTION	FUNCTION	PIN NUMBER	DESCRIPTION	FUNCTION
1	BATTERY (-)	BATTERY –VE	33	VS RET	SENSOR 0V RETURN
2	BATTERY (-)	BATTERY –VE	34	VS RET	SENSOR 0V RETURN
3	BATTERY (-)	BATTERY –VE	35	SWG RET	SWITCH RETURN
4	N/A	N/A	36	SWB 2	MAINTENANCE RESET
5	N/A	N/A	37	SWB 1	N/A
6	N/A	N/A	38	SWG 11	AIR FILTER RESTRICTION SWITCH
7	BATTERY (+)	BATTERY +VE	39	SWG 10	MODE SWITCH 1
8	BATTERY (+)	BATTERY +VE	40	SWK 0	IGNITION SWITCH INPUT
9	BATTERY (-)	BATTERY -VE	41	VS 5 200MA	SENSOR 5V SUPPLY
10	BATTERY (-)	BATTERY -VE	42	VS 5 200MA	SENSOR 5V SUPPLY
11	DF PWM 2 SHIELD	N/A	43	VS 8 100MA	PWM THROTTLE SENSOR 8V SUPPLY
12	DF PWM 2-	N/A	44	SWG 9	THROTTLE 2 IVS
13	DF PWM 2+	N/A	45	SWG 8	THROTTLE 1 IVS
14	N/A	N/A	46	SWG 7	MODE SWITCH 2
15	BATTERY (+)	BATTERY +VE	47	SWG 6	THROTTLE SELECT SWITCH OR COOLANT LEVEL SWITCH
16	BATTERY (+)	BATTERY +VE	48	SWG 5	REMOTE SHUTDOWN SWITCH (NO)
17	N/A	N/A	49	SWG 4	PTO MODE DISENGAGE (NC)
18	N/A	N/A	50	SWG 3	PTO MODE RAISE/RESUME
19	N/A	N/A	51	SWG 2	PTO MODE SET/LOWER
20	CAN (+)	J1939 CAN DL +	52	SWG 1	PTO MODE ON/OFF
21	CAN (-)	J1939 CAN DL -	53	AIN ACT/PWM I 1	PWM THROTTLE INPUT
22	CAN A SHIELD	CAN SHIELD	54	AIN ACT 7	THROTTLE 1 ANALOGUE INPUT
23	CDL (+)	CDL (+)	55	AIN ACT 5	THROTTLE 2 ANALOGUE INPUT
24	CDL (-)	CDL (-)	56	AIN ACT 4	N/A
25	DOUT PWM RET	PWM RETURN	57	DOUT 1A 1	START AID CONTROL
26	DOUT PWM RET	PWM RETURN	58	DOUT 0.3A 10	MAINTENANCE DUE LAMP
27	N/A	N/A	59	DOUT 0.3A 9	WARNING LAMP
28	N/A	N/A	60	DOUT 0.3A 8	SHUTDOWN LAMP
29	N/A	N/A	61	DOUT 0.3A 4	PTO MODE LAMP
30	N/A	N/A	62	DOUT 0.3A 3	LOW OIL PRESSURE LAMP
31	PWM 2A RETURN 1	N/A	63	DOUT 0.3A 2	COLD START LAMP
32	PWM 2A DRIVER 1	N/A	64	DOUT 0.3A 1	N/A

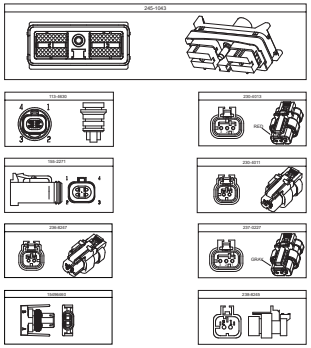

WIRES IN THE FOLLOWING GROUPS SHALL BE TWISTED: ONE TWIST PER 25 MM.	
WIRE GROUP	WIRE NAME
EN TW1	C800-EN70
EN TW1	C801-EN4
EN TW2	E983-EN10
EN TW2	E964-EN17
EN TW3	E985-EN23
EN TW3	E985-EN24
EN TW4	Y797-EN47
EN TW4	Y798-EN20
EN TW5	Y797-EN23
EN TW5	Y798-EN27
EN TW6	Y797-EN1
EN TW6	Y798-EN36
EN TW7	A364-EN126
EN TW7	A365-EN127
ER TW1	Y797-ER121
ER TW1	Y798-ER119
ER TW10	C800-ER116
ER TW10	C801-ER117
ER TW2	E983-ER10
ER TW2	E964-ER17
ER TW3	E985-ER25
ER TW3	E986-ER24
ER TW4	Y797-ER47
ER TW4	Y798-ER30
ER TW5	Y797-ER23
ER TW5	Y798-ER27
ER TW6	Y797-ER1
ER TW6	Y798-ER36
ER TW7	Y797-ER122
ER TW7	Y798-ER126
ER TW8	C800-ER100
ER TW8	C801-ER115
ER TW9	C800-ER125
ER TW9	C801-ER124
VA TW1	C800-VA8
VA TW1	C801-VA7

PART NUMBER	PLUG OR JACK	CONNECTOR
230-4011	P103	INTAKE MANIFOLD TEMPERATURE CONNECTOR
230-4011	P100	COOLANT TEMPERATURE CONNECTOR
230-4013	P201	OIL PRESSURE CONNECTOR
237-0227	P200	INTAKE MANIFOLD PRESSURE CONNECTOR
230-4013	P228	FUEL RAIL PRESSURE CONNECTOR
10R8980	P532	SOLENOID CONNECTOR FOR FUEL INVL PUMP
238-8247	P401	PRIMARY SPEED/TIMING CONNECTOR
238-8247	P402	SECONDARY SPEED/TIMING CONNECTOR
113-4830	J691	INTERNAL CONNECTOR FOR THE INJECTORS 1 AND 2
113-4830	J692	INTERNAL CONNECTOR FOR THE INJECTORS 3 AND 4
155-2271	P691	EXTERNAL CONNECTOR FOR THE INJECTORS 1 AND 2
155-2271	P692	EXTERNAL CONNECTOR FOR THE INJECTORS 3 AND 4
238-8245	P511	CONNECTION TO WASTEGATE

Note: 1 The oil pressure sensor can be install in one of two different position.

C4.4 Industrial Engine (S/N 444 1-UP) (261-0764) (CHGO1) Wiring Diagram

WIRE GROUP COLOR DESCRIPTIONS
(+) BATTERY
(+) BATTERY SWITCHED
(-) BATTERY / SENSOR RETURN
SENSOR / ACTUATOR SUPPLY
SIGNAL TO ECM
CONTROL (POSITIVE) FROM ECM
CONTROL (RETURN) FROM ECM
CAN DATA LINK B
CAN DATA LINK C
OTHER COLOR DESCRIPTIONS
HIGHWAYS

SYMBOL	DESCRIPTION	ABBREV	COLOR
		BK	Black
		WH	White
		BU	Blue
		YL	Yellow
		RD	Red
		GN	Green
		OR	Orange
		GY	Gray
		BR	Brown
		VI	Violet
		PK	Pink
		TN	Tan

Do not operate or work on this product unless you have read and understood the instructions and warnings in the Operation and Maintenance Manual and other relevant service literature. Failure to follow the instructions or heed the warnings could result in injury or death. Read safety signs carefully.

THIS SCHEMATIC IS FOR THE C4.4 INDUSTRIAL ENGINE AND C4.4 ENGINE FOR GENERATOR SET ELECTRICAL SYSTEM

MEDIA NUMBER: RENR9964-06

Components are shown installed on a fully operable engine in a non powered state.
Refer to the appropriate Service Manual for Troubleshooting, Specifications and Systems Operations.
Refer to the parts manual using a specific serial number prefix to 808 before ordering parts from this schematic.