SEBP3644-74 (en-us)
March 2023

Parts Manual

3054C Industrial Engine

3341-UP (Engine)

Scan to find and purchase genuine Cat® parts and related service information.

Product and Dealer Information

Note: For product identification plate locations, see the section “Product Identification Information” in the Operation and Maintenance Manual.

Delivery Date: _____

Product Information

Model: _____

Product Identification Number: _____

Engine Serial Number: _____

Transmission Serial Number: _____

Generator Serial Number: _____

Attachment Serial Numbers: _____

Attachment Information: _____

Customer Equipment Number: _____

Dealer Equipment Number: _____

Dealer Information

Name: _____ Branch: _____

Address: _____

_____

_____

	Dealer Contact	Phone Number	Hours
Sales:	_____	_____	_____
Parts:	_____	_____	_____
Service:	_____	_____	_____

MEMORANDA

TABLE OF CONTENTS

NAME	PAGE
GENERAL INFORMATION	A3
REPAIR ALTERNATIVES	A5
SUPPLEMENTAL COOLANT ADDITIVES	A6
MAINTENANCE PARTS	A7
INDEX	A9
ENGINE ARRANGEMENT	1
ENGINE AR	1
ENGINE AR-CORE	3
ENGINE AR-PRIMARY	6
BASIC ENGINE	195
ADAPTER GP-AIR COMPRESSOR	195
AIR COMPRESSOR GP	196
BALANCER AS	198
BALANCER GP	199
CAMSHAFT GP	203
COVER GP-CYLINDER HEAD	219
COVER GP-ENGINE	228
COVER GP-FRONT HOUSING	231
COVER GP-VALVE MECHANISM	233
CRANKSHAFT GP	449
CYLINDER BLOCK AS	491
CYLINDER BLOCK GP	493
CYLINDER BLOCK GP-SHORT	527
CYLINDER HEAD GP	528
DRIVE GP-ACCESSORY	547
DRIVE GP-FAN	561
EXTENSION GP-FAN	587
FASTENER GP-PULLEY	589
FLYWHEEL GP	590
HOUSING GP-FLYWHEEL	608
HOUSING GP-FRONT	622
LIFTING GP-ENGINE	646
MOUNTING GP-ALTERNATOR	650
MOUNTING GP-ENGINE	651
MOUNTING GP-FAN DRIVE	677
PAN GP-OIL	679
PISTON & ROD GP	764
PISTON GP	814
PLUG GP-ENGINE	816
PLUG GP-FLYWHEEL HOUSING	828
PULLEY GP	829
PULLEY GP-CRANKSHAFT	830
ROCKER ARM GP	838
VALVE MECHANISM GP	839
LUBRICATION SYSTEM	860
FILTER GP-ENGINE OIL	860
PUMP GP-ENGINE OIL	863
COOLING SYSTEM	866
CONNECTION GP-WATER	866
CONNECTOR GP-CAB HEATER LINES	872
COOLER AS-OIL	875
COOLER GP-ENGINE OIL	876
COOLER GP-FLTR BASE & ENG OIL	883
COOLER GP-OIL	971
FAN GP	975
FAN GP-BLOWER	979
FAN GP-SUCTION	983
KIT-OIL COOLER & LINES GASKET	990
MOUNTING GP-FAN	991
PUMP GP-WATER	992
RADIATOR GP	996
AIR INLET AND EXHAUST SYSTEM	1023
AIR CLEANER GP	1023
CONNECTION GP-INLET	1037
COVER GP-INLET MANIFOLD	1052
ELBOW GP-AIR INLET	1053
ELBOW GP-EXHAUST	1064
FLANGE GP-EXHAUST	1067
MANIFOLD GP-EXHAUST	1069
MOUNTING GP-EXHAUST	1072
TURBOCHARGER GP	1073
FUEL SYSTEM	1139
CONNECTOR-HOSE	1139
FILTER & LINES GP-FUEL	1140
FILTER AS-FUEL	1142
FILTER GP-FUEL	1143
FILTER GP-WATER SEP & FUEL	1168
KIT-FUEL PRIMING PUMP	1169
LINES GP-FUEL	1170
LINES GP-FUEL FILTER	1171
LINES GP-FUEL INJECTION	1172
PUMP AS-FUEL INJECTION	1174
PUMP GP-FUEL INJECTION	1175
PUMP GP-FUEL PRM & PRIM FILTER	1495
SEPARATOR GP-WATER	1521
ELECTRICAL AND STARTING SYSTEM	1524
ALTERNATOR GP-CHARGING	1524
CONTROL GP-ELECTRONIC	1540
CONTROL GP-JACKET WATER HEATER	1541
CONVERTER GP-ELECTRICAL	1542
GLOW PLUG GP	1547
HARNESS AS-CONTROL	1551
HARNESS AS-PUMP	1551
HARNESS AS-WIRING	1552
HARNESS GP	1553

TABLE OF CONTENTS

NAME	PAGE	NAME	PAGE
INSTALLATION GP-COMMUNICATION	1554		
SENDER GP-TEMPERATURE	1555		
STARTING AID GP	1557		
STARTING MOTOR GP-ELECTRIC	1559		
SWITCH GP-PRESSURE	1577		
SWITCH GP-TEMPERATURE	1582		
HYDRAULIC SYSTEM	1584		
MOUNTING GP-MOTOR	1584		
OPERATOR STATION	1585		
DISPLAY GP-MONITOR	1585		
SERVICE EQUIPMENT AND SUPPLIES	1589		
KIT-GASKET	1589		
PART NUMBER INDEX	B1		

1. ENGINE IDENTIFICATION

Cat engines are identified with Serial Numbers and Arrangement Numbers. In some cases, Modification Numbers are also used. The serial number plate which shows these numbers is mounted on the engine.

Cat dealers need this information to determine which components were included on the engine when it was assembled at the factory. This permits accurate identification of replacement part numbers.

2. ORDERING PARTS

⚠ WARNING

When replacement parts are required for this product Caterpillar recommends using Caterpillar replacement parts or parts with equivalent specifications including, but not limited to, physical dimensions, type, strength and material.

Failure to heed this warning can lead to premature failures, product damage, personal injury or death.

Quality Cat replacement parts are available from Cat dealers throughout the world. Their parts inventories are up to date and include all parts normally required to protect your investment in Cat Engines. Dealers may offer repair kits or remanufactured parts to allow selection of the most effective repair alternative for a particular situation. When ordering parts, your order should specify the quantity, part number, part name, and the serial number/product identification number of the engine for which the parts are needed.

3. PARTS MANUAL ORGANIZATION

Product information in this manual is presented as "information elements" that represent all of the components for the specific model. An Engine Arrangement is an example of an information element. The information elements are organized alphabetically by part name and secondarily by part number within each major section of the manual.

4. TABLE OF CONTENTS

A table of contents (TOC) is found at the beginning of the manual. The TOC lists each section of the manual with a complete list of all information elements organized as they appear in the manual. Page numbers are provided for quick reference to detailed parts identification illustrations and serviceable consist lists.

5. MAINTENANCE PARTS INDEX

The Maintenance Parts Index, located near the beginning of the manual, references most frequently used maintenance part numbers, providing description, quantity, usage and page number. This information is organized alphabetically by part description.

6. INDEX

The index located near the front of the manual is an alphabetical listing of all information elements included in the manual. Page numbers are provided for quick reference to detailed parts identification illustrations and serviceable consist lists.

7. PART NUMBER INDEX

A numerical index listing all part numbers and the corresponding page number(s) appears at the back of the manual.

8. CAPTIONS

Captions located at the beginning each information element identify the part number and part name along with additional descriptive information. S/N information found in each caption should be used to select correct information for a specific engine. Field replacement options, identification of optional attachment components, and where used ("part of") information is also provided.

The first line of a caption is shown in larger type font to indicate the beginning of an information element. Captions for additional pages that may be required to illustrate an information element will be shown in standard type font and will include the term (contd.).

9. NON-SERVICED PARTS

In some instances it is necessary to display non-serviced parts that are a link to lower level serviceable consist lists. These non-serviced part numbers are shown in italic type indicating that they are not available. All consist lists have not been converted to reflect this enhancement.

10. PARTS LIST REFERENCE NUMBERS

Numbers shown in the Ref No column correspond to numbers used in the associated graphic(s). An alphabetic suffix may be added to a reference number to identify lower level consist items. Numbers shown in the Graphic Ref column refer to the graphic number identifier displayed in the lower left corner of each illustration. The Graphic Ref number may be used in combination with the item Ref No to determine the correct part number. There may be intentional omission of a Ref No in a consist list as information is updated to reflect the latest serviceable part numbers.

11. INDENTED PART NAMES

When a part name is indented in a parts list, it is part of (included in) the group or assembly under which it is indented.

12. ILLUSTRATION REFERENCE LETTERS

When necessary, illustrations contain reference letters (A, B, C etc.) that are intended to track lines and harnesses from one point to another. They are also used to show where to reconnect illustrations that have been separated.

13. ABBREVIATIONS AND SYMBOLS

O.D. – Outside Diameter
I.D. – Inside Diameter
A – Not Part Of This Group
B – Use As Required
C – Change From Previous Type
D – Order By The Meter
E – Order By The Centimeter
F – Not Shown
G – Order By The Inch
I – Refer To Hydraulic Information System
M – Metric Part
R – Remfg Part May Be Available
Y – Separate Illustration
Z – Not Serviced Separately

14. DESCRIPTION OF TYPE CHANGES

Type - A type is defined as any configuration change that requires an additional Information Element for an Arrangement, Group, or Assembly. If serial number breaks for types are not available, a type # (Type 1, Type 2, etc.) will be displayed in the caption. These "type" changes are identified with a "C" note (change from previous type) in the Parts List. Only the "types" that apply to this Parts Manual will be included. Additional types may exist causing "C" notes to appear on an Information Element when no other types are shown.

15. <END>

This symbol indicates the end of an information element.

16. SUPPLEMENTAL COOLANT ADDITIVES

Information for Supplemental Coolant Additives is no longer included in this manual. See your Operation and Maintenance Manual for coolant maintenance information.

NOTE:

Continuing improvement and advancement of product design may cause changes to your engine which may not be included in this publication. Whenever a question arises regarding your Cat product or this publication, please consult your Cat dealer for the latest available information.

REMANUFACTURED COMPONENTS

As an option when making repairs consider Cat Remanufactured Components. Components that are available through the Cat Remanufactured Program are identified three ways in the parts book:

- with the letter R in the note field of the parts list
- with an R* at the beginning of the first line of the caption
- with an *R at the end of the first line of the caption

Typical components included in the Remanufacturing Program include:

ALTERNATORS
CONNECTING RODS
CRANKSHAFTS - UNDERSIZE
CRANKSHAFTS - UPGRADE TO NEW
CYLINDER HEADS
ELECTRONIC CONTROL MODULES (ECM)
ELECTRONIC SENSORS
FUEL INJECTORS
FUEL NOZZLES
FUEL PUMPS
GOVERNORS
OIL PUMPS
PISTONS
SHORT BLOCKS
STARTERS
TURBOCHARGERS - COMPLETE
TURBOCHARGER CARTRIDGES
WATER PUMPS

Cat Remanufactured engines for many engine arrangements are also available.

SUPPLEMENTAL COOLANT ADDITIVES

CUSTOMER BENEFITS:

Protects against cavitation, foam, erosion, corrosion, and scale buildup in cooling systems.

- Provides measured coolant conditioner.

DESCRIPTION:

Additives deplete from the coolant with normal operation. For this reason, Supplemental Coolant Additives (SCA) must be added to all heavy duty coolants at regular intervals. In addition, when not using a fully formulated, pre-charged antifreeze, like Cat DEAC, an initial charge of SCA must be added to the cooling system. The amount of SCA added to the system is dependent on the capacity of the system.

The SCA for initial fill is provided as a liquid. SCA's for maintenance intervals are available in liquid form and as a spin-on element. (No Spin-on available for 3600 Family of Engines)

NOTE:

The amount of SCA added at initial fill is not the same as the amount added at maintenance intervals.

The coolant additive elements can be used with any ethylene or propylene glycol type antifreeze which meets ASTM D4985 or ASTM D5345 Specifications.

NOTE:

For use with standard heavy duty coolant only, not for use with Extended Life Coolant.

PARTS NEEDED:

Cooling System Capacity		Liquid SCA at Initial Fill	Liquid SCA at Maintenance*	Spin-on SCA Maintenance Element*
Liters	Gallons			
22-30	(6-8)	3P-2044 (1)	6V-3542 (1)	111-2370 (1)
30-38	(8-10)	3P-2044 (1) 6V-3542 (1)	111-2372 (1)	111-2369 (1)
38-49	(10-13)	3P-2044 (1) 8T-1589 (1)	111-2372 (1)	111-2369 (1)
49-64	(13-17)	3P-2044 (2)	8T-1589 (1)	9N-3368 (1)
64-83	(17-22)	3P-2044 (2) 8T-1589 (1)	111-2372 (1) 6V-3542 (1)	111-2371 (1)
83-114	(22-30)	3P-2044 (3) 8T-1589 (1)	3P-2044 (1)	9N-3718 (1)
114-163	(30-43)	3P-2044 (5)	3P-2044 (1) 6V-3542 (1)	111-2371 (2)
163-242	(43-64)	3P-2044 (8)	3P-2044 (2)	9N-3718 (2)

* Normal maintenance period is 250 hrs. See your Operation and Maintenance Manual for complete coolant maintenance instructions.

( ) Indicates quantity required.

MAINTENANCE PARTS

DESCRIPTION	PART NUMBER	QTY	WHERE USED	PAGE
AIR INLET AND EXHAUST SYSTEM				
FILTER ELEMENT AS-AIR (PRIMARY)	233-5182	1	AIR CLEANER GP	1024
FILTER ELEMENT AS-AIR (SECONDARY)	233-5184	1	AIR CLEANER GP	1024
FILTER ELEMENT-AIR (PRIMARY)	110-6326	1	AIR CLEANER GP	1023
	123-2367	1	AIR CLEANER GP	1031
FILTER ELEMENT-AIR (SECONDARY)	110-6331	1	AIR CLEANER GP	1023
	123-2368	1	AIR CLEANER GP	1031
BASIC ENGINE				
BREATHER AS	286-3029	1	COVER GP-VALVE MECHANISM	237
CAP AS (ENGINE OIL FILLER)	136-3608	1	COVER GP-CYLINDER HEAD	223
		1	COVER GP-VALVE MECHANISM	2332-3523-7241
CAP AS-OIL FILLER (ENGINE)	130-9888	1	COVER GP-VALVE MECHANISM	266
GASKET (VALVE COVER)	225-6451	1	COVER GP-CYLINDER HEAD	221
		1	COVER GP-VALVE MECHANISM	2332-3523-7241
PLUG-DRAIN (ENGINE OIL)	7C-0351	2	PAN GP-OIL	679
STRAINER	233-8148	1	PAN GP-OIL	679
STRAINER (ENGINE OIL)	233-8148	1	PAN GP-OIL	705
V-BELT (FAN DRIVE)	5M-8135	2	DRIVE GP-FAN	567
V-BELT SET (INCLUDES 2-BELTS)	128-5247	1	DRIVE GP-FAN	561
	3S-8447	1	DRIVE GP-FAN	585
V-BELT SET (INCLUDES 2-BELTS) (FAN DRIVE)	106-9331	1	DRIVE GP-FAN	580
	113-7130	1	DRIVE GP-FAN	572
	121-4365	1	DRIVE GP-FAN	568
	128-5250	1	DRIVE GP-FAN	576
	247-0099	1	DRIVE GP-FAN	565
	3N-1491	1	DRIVE GP-FAN	584
	3S-8447	1	DRIVE GP-FAN	581
	4N-8771	1	DRIVE GP-FAN	563
	5L-3308	1	DRIVE GP-FAN	578
	5L-4995	1	DRIVE GP-FAN	566
	9L-0895	1	DRIVE GP-FAN	571
	9L-1226	1	DRIVE GP-FAN	579
V-BELT SET (INCLUDES 2-BELTS) (FAN)	9L-6128	1	DRIVE GP-FAN	574
COOLING SYSTEM				
CAP-RADIATOR	103-6710	1	RADIATOR GP	1008
	236-7764	1	RADIATOR GP	996
HOSE-RADIATOR	236-8781	1	RADIATOR GP	1004
	251-8410	1	RADIATOR GP	1020
HOSE-RADIATOR (LOWER)	236-8781	1	RADIATOR GP	996
	251-8410	1	RADIATOR GP	1008
HOSE-RADIATOR (UPPER)	236-7722	1	RADIATOR GP	996

MAINTENANCE PARTS

DESCRIPTION	PART NUMBER	QTY	WHERE USED	PAGE
	292-2946	1	RADIATOR GP	1008
PLUG-DRAIN	236-7765	1	RADIATOR GP	1004
PLUG-DRAIN (RADIATOR)	236-7765	1	RADIATOR GP	996
REGULATOR AS-WATER TEMPERATURE (CONNECTOR INCLUDED)	254-2268	1	CONNECTION GP-WATER	867
REGULATOR AS-WATER TEMPERATURE (INCLUDES CONNECTOR)	254-2267	1	CONNECTION GP-WATER	868
REGULATOR-WATER TEMPERATURE	225-6908	1	CONNECTION GP-WATER	870
ELECTRICAL AND STARTING SYSTEM				
GLOW PLUG (12-VOLT)	232-6662	4	GLOW PLUG GP	1547
	453-3510	4	GLOW PLUG GP	1548
GLOW PLUG (24-VOLT)	226-8770	4	GLOW PLUG GP	1549
	462-2238	4	GLOW PLUG GP	1550
KEY (START)	128-7723	1	STARTING AID GP	1558
FUEL SYSTEM				
CAP	232-1328	1	PUMP GP-FUEL INJECTION	1175
CAP (FUEL INJECTOR)	232-1328	1	PUMP GP-FUEL INJECTION	1187
DRAIN AS (FUEL FILTER)	222-6617	1	PUMP GP-FUEL PRM & PRIM FILTER	1501
DRAIN AS (WATER SEPARATOR)	222-6617	1	FILTER GP-FUEL	1157
ELEMENT-WATER SEPARATOR (PRIMARY)	138-3100	1	SEPARATOR GP-WATER	1521
FILTER AS-FUEL (12-VOLT) (12V)	386-0189	1	KIT-FUEL PRIMING PUMP	1169
FILTER AS-FUEL (FUEL FILTER, WATER SEPARATOR)	441-5111	1	FILTER GP-WATER SEP & FUEL	1168
		1	SEPARATOR GP-WATER	1523
FILTER AS-FUEL (WATER SEPARATOR)	441-5111	1	FILTER GP-FUEL	1167
FILTER ELEMENT-WTR SEP & FUEL	1R-1804	1	FILTER AS-FUEL	1142
		1	FILTER GP-FUEL	1145 1147
		1	PUMP GP-FUEL PRM & PRIM FILTER	1495-1497-1499-1501
FILTER ELEMENT-WTR SEP & FUEL (WATER SEPARATOR)	1R-1804	1	FILTER GP-FUEL	1157
STRAINER (FUEL FILTER)	387-6403	1	FILTER AS-FUEL	1142
LUBRICATION SYSTEM				
FILTER AS-ENGINE OIL	7W-2326	1	FILTER GP-ENGINE OIL	861
FILTER ELEMENT AS-ENGINE OIL	1R-1801	1	FILTER GP-ENGINE OIL	860

INDEX

NAME PAGE

A

ACTUATOR GP-GOVERNOR 1399
1402
1405
1409
1412
1415
1418
1481
1484
1488
ADAPTER GP-AIR COMPRESSOR 195
AIR CLEANER GP 1023
1024
1025
1026
1027
1028
1029
1030
1031
1032
1033
1034
1035
1101
1104
1132
AIR COMPRESSOR GP 196
ALTERNATOR GP-CHARGING 1524
1525
1526
1527
1528
1530
1531
1532
1533
1534
1535
1536
1537
1538
1539
ALTERNATOR GP-CHARGING (12-VOLT, 85-AMPERE) 1535
ALTERNATOR GP-CHARGING–120-AMPERE, WITH MOUNTING 1529

B

BALANCER AS. 198
BALANCER GP 199
200
201
BREATHER AS. 237
239
240
243
245
246
268
270
272
284
286
288
290
294
296
348
350
352
397
399
401
416
418
419
444
BUS BAR GP 1548
1549
1550

C

CAMSHAFT GP 203
204
205
206
207
208
209
210
211
212
213
214
215
216
217
218

INDEX

NAME	PAGE
CAP	1175
	1178
	1181
	1184
	1204
	1207
	1210
	1213
	1216
	1219
	1222
	1225
	1228
	1231
	1234
	1237
	1240
	1243
	1246
	1249
	1255
	1258
	1261
	1264
	1267
	1270
	1273
	1276
	1279
	1283
	1286
	1289
	1292
	1296
	1298
	1300
	1339
	1342
	1345
	1348
	1351
	1354
	1364
	1367
	1370
	1376
	1379
	1383
	1386
	1389
	1392
	1399
	1402
	1405
	1409
	1412
	1415
	1418
	1421
	1424
	1427
	1430
	1445
	1451
	1454
	1461
	1464
	1467
	1470
	1474
	1477
	1481
	1484
	1488
	1491
CAP (FUEL INJECTOR)	1187
	1197
	1200
	1306
	1309
	1358
	1361
	1373
	1395
	1438
	1441
	1448
CAP AS (ENGINE OIL FILLER)	223
	224
	225
	226
	227
	233
	235
	237
	241
	243
	247
	249
	256
	258
	292
	294
	298
	300
	310
	312
	354
	384
	386
	388
	395
	397
	408
	431
	433
	448

INDEX

NAME	PAGE
CAP AS-OIL FILLER (ENGINE)	266
	268
	270
	272
	274
	276
	278
	280
	282
	284
	286
	288
	290
	292
	294
	296
	298
	300
	302
	304
	306
	308
	320
	322
	324
	326
	328
	330
	332
	334
	336
	338
	340
	342
	344
	346
	348
	350
	352
	354
	356
	358
	360
	362
	364
	366
	368
	370
	372
	374
	376
	378
	380
	382
	384
	386
	388
	390
	392
	394
	408
	410
	412
	414
	420
	422
	424
	426
	428
	434
	436
	438
	440
	442
	444
	446
	447
CAP-RADIATOR	996
	1000
	1004
	1008
	1012
	1016
	1020
CONNECTION GP-INLET	1037
	1038
	1042
	1043
	1046
	1047
	1049
	1051
CONNECTION GP-INLET–AIR	1039
	1040
	1041
	1044
	1045
CONNECTION GP-WATER	866
	867
	868
	870
	871
CONNECTOR GP-CAB HEATER LINES	872
	873
	874
CONNECTOR-HOSE–FUEL LINES	1139
CONTROL GP-ELECTRONIC–PL641E CELLULAR	1540
CONTROL GP-JACKET WATER HEATER	1541
CONVERTER GP-ELECTRICAL	1542
	1543
	1544
	1545
	1546
COOLER AS-OIL	875
COOLER GP-ENGINE OIL	876
	877
	878
	880
	881
	882

INDEX

NAME	PAGE
COOLER GP-FLTR BASE & ENG OIL	883
	884
	885
	886
	888
	889
	890
	892
	893
	894
	896
	897
	899
	900
	901
	902
	903
	904
	906
	908
	909
	911
	913
	915
	917
	918
	919
	921
	922
	923
	925
	927
	929
	931
	932
	933
	934
	935
	937
	939
	941
	943
	945
	947
	949
	951
	953
	955
	956
	957
	959
	961
	963
	965
	967
	968
	969
	970
COOLER GP-OIL–ENGINE	971
	972
	973

NAME	PAGE
CORE AS-OIL COOLER	878
	880
	990
COVER GP-CYLINDER HEAD	219
	220
	221
	222
	223
	224
	225
	226
	227
COVER GP-ENGINE	228
	229
	230
COVER GP-FRONT HOUSING	231
	232
COVER GP-INLET MANIFOLD	1052

INDEX

NAME	PAGE
COVER GP-VALVE MECHANISM	233
	235
	237
	239
	240
	241
	243
	245
	246
	247
	249
	251
	253
	255
	256
	258
	260
	262
	264
	266
	268
	270
	272
	274
	276
	278
	280
	282
	284
	286
	288
	290
	292
	294
	296
	298
	300
	302
	304
	306
	308
	310
	312
	314
	316
	318
	320
	322
	324
	326
	328
	330
	332
	334
	336
	338
	340
	342
	344
	346
	348

NAME	PAGE
	350
	352
	354
	356
	358
	360
	362
	364
	366
	368
	370
	372
	374
	376
	378
	380
	382
	384
	386
	388
	390
	392
	394
	395
	397
	399
	401
	402
	404
	406
	416
	418
	419
	420
	422
	424
	426
	428
	430
	431
	432
	433
	434
	436
	438
	440
	442
	444
	446
	447
	448
COVER GP-VALVE MECHANISM–VALVE MECHANISM	408
	410
	412
	414

INDEX

NAME	PAGE
CRANKSHAFT GP	449
	451
	453
	454
	455
	456
	458
	459
	460
	461
	463
	464
	466
	467
	469
	470
	471
	472
	473
	474
	475
	476
	477
	478
	480
	482
	484
	486
	487
	488
	489
	490
CYLINDER BLOCK AS	491

NAME	PAGE
CYLINDER BLOCK GP	493
	495
	496
	497
	498
	499
	501
	502
	503
	504
	505
	506
	507
	508
	509
	510
	511
	512
	513
	514
	515
	516
	517
	518
	520
	522
	523
	524
	525
	526

INDEX

NAME	PAGE
CYLINDER BLOCK GP-SHORT	17
	18
	20
	21
	22
	23
	24
	28
	30
	31
	32
	33
	34
	38
	40
	41
	44
	45
	47
	48
	49
	51
	55
	57
	59
	61
	63
	64
	66
	68
	70
	71
	72
	74
	76
	77
	89
	91
	92
	93
	95
	97
	98
	100
	101
	102
	103
	105
	108
	111
	118
	119
	121
	123
	124
	126
	127
	131
	132
	133
	135
	140
	141
	142
	144
	145
	146
	147
	148
	149
	150
	151
	152
	153
	154
	155
	156
	157
	158
	159
	160
	162
	163
	164
	165
	167
	169
	171
	173
	175
	177
	182
	184
	186
	192
	193
	527
CYLINDER HEAD GP	528
	529
	531
	532
	533
	534
	535
	536
	537
	538
	539
	540
	541
	542
	543
	544
	545
	546

INDEX

NAME PAGE

D

DISPLAY GP-MONITOR 1585
1586
1587
1588
DRAIN AS (FUEL FILTER) 1501
1515
1516
DRAIN AS (WATER SEPARATOR) 1157
DRIVE GP-ACCESSORY 547
549
551
553
555
557
558
559
DRIVE GP-FAN 561-586

E

ELBOW GP-AIR INLET 1053
1054
1055
1056
1057
1059
1060
1062
1063
ELBOW GP-EXHAUST 1064
1065
1066
ELEMENT-WATER SEPARATOR (PRIMARY) 1521
ENGINE AR 1
2
ENGINE AR-CORE 3
4
5

NAME PAGE

ENGINE AR-PRIMARY 6
7
8
9
10
11
12
13
14
15
16
17
18
19
20
21
22
23
24
25
27
28
29
30
31
32
33
34
35
36
38
39
40
41
42
43
44
45
46
47
48
49
50
51
53
54
55
57
59
61
63
64
66
68
69
70
71
72
74
76
77

INDEX

NAME	PAGE
	78
	79
	80
	81
	83
	85
	86
	87
	89
	90
	91
	92
	93
	94
	95
	97
	98
	99
	100
	101
	102
	103
	105
	106
	107
	108
	109
	111
	113
	114
	115
	116
	117
	118
	119
	121
	123
	124
	125
	126
	127
	129
	131
-165	
	167
	168
	169
	171
	172
	173
	175
	177
	178
	179
	180
	182
	183
	184
	185
	186
	187
	188
	189
	190
	191
	192
	193
	194
EXTENSION GP-FAN	587
	588

F

FAN GP	975
	976
	977
	978
FAN GP-BLOWER	979
	980
	981
	982
FAN GP-SUCTION	983
	984
	985
	986
	987
	988
	989
FASTENER GP-PULLEY	589
FILLER GP-ENGINE OIL	266
	268
	274
	276
	282
	284
	292
	294
	298
	300
	326
	328
	330
	332
	346
	348
	354
	356
	374
	376
	378
	384
	386
	388
	408
	420
	436
	438
	440
	442

INDEX

NAME PAGE

FILLER GP-ENGINE OIL (ENGINE) 340
342
344
FILM-IDENTIFICATION (WIRELESS COM DEVICE, READ OMM) 1554
FILM-WARNING (EXPLOSION, WIRELESS, OMM, INTL) 1554
FILM-WARNING (EXPLOSION, WIRELESS, OMM, U.S.). 1554
FILM-WARNING (UNIVERSAL WARNING) 239
240
245
246
253
255
262
264
270
272
280
288
290
304
306
308
316
318
328
330
332
342
344
350
352
360
362
372
382
392
394
399
401
404
406
414
418
419
424
426
428
FILTER & LINES GP-FUEL 1140
1141
FILTER AS-ENGINE OIL 861
862
FILTER AS-FUEL 1142
FILTER AS-FUEL (12-VOLT) (12V) 1169
FILTER AS-FUEL (FUEL FILTER, WATER SEPARATOR) 1168
1523
FILTER AS-FUEL (WATER SEPARATOR) 1167

NAME PAGE

FILTER ELEMENT AS-AIR (PRIMARY) 1024
1025
1035
FILTER ELEMENT AS-AIR (SECONDARY) 1024
1025
1035
FILTER ELEMENT AS-ENGINE OIL. 860
FILTER ELEMENT-AIR (PRIMARY) 1023
1028
1031
FILTER ELEMENT-AIR (SECONDARY) 1023
1028
1031
FILTER ELEMENT-WTR SEP & FUEL 1142
1145
1147
1495
1497
1499
1501
1509
1511
1513
1515
1516
FILTER ELEMENT-WTR SEP & FUEL (WATER SEPARATOR) 1157
FILTER GP-ENGINE OIL 860
861
862
FILTER GP-FUEL. 1143
1145
1147
1149
1151
1153
1155
1157
1159
1161
1163
1165
1167
1523
FILTER GP-WATER SEP & FUEL 1168
FLANGE GP-EXHAUST 1067

INDEX

NAME	PAGE
FLYWHEEL GP	590
	591
	592
	593
	594
	595
	596
	597
	598
	599
	600
	601
	602
	603
	604
	605
	606
	607

G

NAME	PAGE
GASKET (VALVE COVER)	221
	222
	223
	224
	225
	226
	227
	233
	235
	237
	241
	243
	247
	249
	256
	258
	266
	268
	274
	276
	282
	284
	286
	292
	294
	298
	300
	310
	312
	320
	322
	324
	326
	334
	336
	338
	346
	348
	350
	352
	354
	364
	366
	368
	374
	376
	378
	384
	386
	388
	395
	397
	408
	416
	420
	422
	430
	431
	432

INDEX

NAME	PAGE
	433
	434
	448
GAUGE AS-OIL LEVEL (DIPSTICK)	705
GAUGE AS-OIL LEVEL (DIPSTICK) (ENGINE)	679
	681
	683
	685
	687
	689
	691
	693
	695
	697
	699
	701
	703
	707
	709
	715
	717
	719
	721
	723
	725
	727
	729
	731
	732
	734
	736
	738
	740
	742
	744
	746
	748
	750
	752
	756
	758
	760
	762
GAUGE GP-COOLANT TEMPERATURE	1555
	1556
GAUGE-OIL LEVEL (DIPSTICK) (ENGINE)	711
	713

NAME	PAGE
GEAR-FUEL PUMP (68-TEETH)	1187
	1213
	1228
	1237
	1240
	1249
	1258
	1261
	1273
	1289
	1292
	1300
	1354
	1395
	1402
	1405
	1412
	1415
	1418
	1448
	1467
	1470
	1477
	1484
	1488
GLOW PLUG (12-VOLT)	1547
	1548
GLOW PLUG (24-VOLT)	1549
	1550
GLOW PLUG GP	1547
	1548
	1549
	1550

H

HARNESS AS-CONTROL	1554
HARNESS AS-CONTROL–PRODUCT LINK	1551
HARNESS AS-PUMP	1551
	1552
HARNESS AS-WIRING–PL461 TO PL462 CONVERSION	1552
HARNESS AS-WIRING–PRODUCT LINK RADIO	1552
HARNESS GP	1553
HOSE-RADIATOR	1004
	1016
	1020
HOSE-RADIATOR (LOWER)	996
	1000
	1008
	1012
HOSE-RADIATOR (UPPER)	996
	1000
	1004
	1008
	1012
	1016
	1020

NAME PAGE

HOUSING GP-FLYWHEEL 608
609
610
611
612
613
614
615
616
617
618
619
620
621
HOUSING GP-FRONT 622
624
626
628
630
632
634
636
638
640
642
644

I

INDICATOR AS-AIR FILTER CHANGE 1025
INDICATOR-AIR FILTER CHANGE. 1028
1030
1031
1129
INSTALLATION GP-COMMUNICATION–PL641 CELLULAR. 1554
INSTALLATION GP-COMMUNICATION–PLE601 NETWORK MANAGER. 1554

K

KEY (START) 1558
KIT-FUEL PRIMING PUMP. 1169
KIT-GASKET–WATER PUMP 1589
KIT-OIL COOLER & LINES GASKET 990

L

LIFTING GP-ENGINE 646
647
648
649
LINES GP-FUEL. 1170
LINES GP-FUEL FILTER. 1171
LINES GP-FUEL INJECTION 1172
1173
LINES GP-OIL. 1107

M

MANIFOLD GP-EXHAUST. 1069
1070
1071
MOUNTING GP-ALTERNATOR 650
MOUNTING GP-ENGINE 651
652
653
654
655
656
657
658
659
660
661
662
663
665
666
667
668
669
670
671
672
673
675
MOUNTING GP-EXHAUST–TURBO EXHAUST. 1072
MOUNTING GP-FAN. 991
MOUNTING GP-FAN DRIVE. 35
36
677
678
MOUNTING GP-MOTOR–STARTING 1584

INDEX

NAME PAGE

P

PAN GP-OIL 707
709
711
713
721
723
725
727
729
736
738
740
742
744
746
748
750
752
754
756
758
760
762

PAN GP-OIL–ENGINE. 679
681
683
685
687
689
691
693
695
697
699
701
703
705
715
717
719
731
732
734

NAME PAGE

PISTON & ROD GP 764
766
768
770
772
774
776
778
780
782
784
786
788
790
792
794
796
798
800
802
804
806
808
810
812

PISTON GP 770
772
778
780
794
796
806
814

PLUG GP-ENGINE 816
817
818
819
820
821
822
823
824
825
826

PLUG GP-ENGINE–CYLINDER BLOCK. 827
PLUG GP-FLYWHEEL HOUSING 828
PLUG-DRAIN. 1004
1016

INDEX

NAME	PAGE
PLUG-DRAIN (ENGINE OIL)	679
	681
	683
	685
	687
	689
	691
	693
	695
	697
	699
	701
	703
	705
	707
	709
	711
	713
	715
	717
	719
	721
	723
	725
	727
	729
	731
	732
	734
	736
	738
	740
	742
	744
	746
	748
	750
	752
	754
	756
	758
	760
	762
PLUG-DRAIN (RADIATOR)	996
	1000
PULLEY GP-CRANKSHAFT	830
	831
	832
	833
	834
	835
	836
	837
PULLEY GP–FAN AUX	829
PUMP AS-FUEL INJECTION	1174
PUMP GP-ENGINE OIL	863
	864
	865

NAME	PAGE
PUMP GP-FUEL INJECTION	1175
	1178
	1181
	1184
	1187
	1190
	1191
	1194
	1197
	1200
	1203
	1204
	1207
	1210
	1213
	1216
	1219
	1222
	1225
	1228
	1231
	1234
	1237
	1240
	1243
	1246
	1249
	1252
	1253
	1254
	1255
	1258
	1261
	1264
	1267
	1270
	1273
	1276
	1279
	1282
	1283
	1286
	1289
	1292
	1295
	1296
	1298
	1300
	1302
	1303
	1306
	1309
	1312
-1339	
	1342
	1345
	1348
	1351
	1354
	1357
	1358

INDEX

NAME	PAGE
	1361
	1364
	1367
	1370
	1373
	1376
	1379
	1382
	1383
	1386
	1389
	1392
	1395
	1398
	1399
	1402
	1405
	1408
	1409
	1412
	1415
	1418
	1421
	1424
	1427
	1430
	1433
	1434
	1435
	1436
	1437
	1438
	1441
	1444
	1445
	1448
	1451
	1454
	1457
	1458
	1459
	1460
	1461
	1464
	1467
	1470
	1473
	1474
	1477
	1480
	1481
	1484
	1487
	1488
	1491
	1494
PUMP GP-FUEL PRIMING	1147
PUMP GP-FUEL PRM & PRIM FILTER	1153
	1157
	1495
	1497
	1499
	1501
	1503
	1505
	1507
	1509
	1511
	1513
	1515
	1516
	1517
	1519
PUMP GP-WATER	992
	994

R

RADIATOR GP	996
	1000
	1004
	1008
	1012
	1016
	1020
REGULATOR AS-VOLTAGE (24-VOLT) (FUEL FILTER)	1143
REGULATOR AS-VOLTAGE (24-VOLT) (FUEL PUMP)	1513
REGULATOR AS-WATER TEMPERATURE (CONNECTOR INCLUDED)	867
REGULATOR AS-WATER TEMPERATURE (INCLUDES CONNECTOR)	868
REGULATOR-WATER TEMPERATURE	870
RING GP-PISTON	770
	772
	778
	780
	794
	796
	798
	800
	806
ROCKER ARM GP	838

S

SEAL-CRANKSHAFT	632
	634
	636
	638
	640
	642
	644

INDEX

NAME	PAGE
SEAL-CRANKSHAFT (FRONT)	622, 624, 628
SENDER GP-TEMPERATURE–ENGINE COOLANT	1555, 1556
SENSOR AS-SPEED (ENGINE)	1415, 1418
SENSOR AS-SPEED (FUEL PUMP)	1405
SENSOR-LEVEL (12-VOLT)	1523
SENSOR-SPEED	1399, 1402
SENSOR-SPEED (ENGINE)	1409, 1412
SEPARATOR GP-WATER	1521, 1522, 1523
SOFTWARE GP-MONITOR (CELLULAR)	1540
SOLENOID (12-VOLT)	1187, 1473, 1480, 1481, 1484
SOLENOID (12-VOLT) (FUEL INJECTION PUMP)	1395
SOLENOID (12-VOLT) (FUEL SHUTOFF)	1203, 1231, 1246, 1249, 1252, 1254, 1264, 1267, 1270, 1273, 1282, 1312, 1313, 1314, 1321, 1322, 1323, 1324, 1325, 1326, 1333, 1334, 1357, 1382, 1392, 1398, 1408, 1433, 1434, 1435, 1444, 1457, 1459, 1460, 1474, 1487
SOLENOID-SHUTOFF (24-VOLT)	1174, 1300, 1494
SOLENOID-SHUTOFF (24-VOLT) (FUEL SHUTOFF)	1253, 1254, 1295, 1327, 1328, 1329, 1330, 1331, 1332, 1436, 1458, 1467, 1470
STARTING AID GP–IGNITION	1557, 1558
STARTING MOTOR GP-ELECTRIC	1559, 1561, 1562, 1564, 1565, 1566, 1567, 1568, 1569, 1570, 1571, 1572, 1573, 1574, 1575, 1576
STARTING MOTOR GP-ELECTRIC (12-VOLT, 3.2-KW)	1575
STARTING MOTOR GP-ELECTRIC (12-VOLT, 3.2-KW) (12-VOLT, 3.2-KW)	1568
STARTING MOTOR GP-ELECTRIC–12-VOLT	1563
STRAINER	679, 681, 683, 701, 703
STRAINER (ENGINE OIL)	705
STRAINER (FUEL FILTER)	1142
SWITCH AS (IGNITION)	1557
SWITCH AS (STARTING MOTOR)(12-VOLT)	1559
SWITCH AS-PRESSURE (ENGINE OIL)	1577, 1578, 1579, 1580, 1581

INDEX

NAME	PAGE
SWITCH GP-PRESSURE	72
	79
	81
	116
	119
	121
	124
	125
	127
	129
	140
	141
	142
	144
	145
	146
	147
	148
	149
	150
	151
	152
	153
	154
	164
	177
	178
	179
	180
	182
	184
	187
	189
	190
	193
	1581

NAME	PAGE
SWITCH GP-PRESSURE (ENGINE OIL)	1
	17
	18
	19
	21
	22
	23
	24
	28
	31
	32
	35
	39
	41
	42
	43
	44
	45
	48
	49
	51
	55
	57
	59
	61
	63
	64
	66
	68
	70
	71
	74
	76
	77
	83
	85
	87
	93
	95
	97
	98
	100
	101
	102
	108
	155
	156
	157
	158
	159
	160
	162
	163
	172
	188
SWITCH GP-PRESSURE–ENGINE OIL	1577
	1578
	1579
	1580
SWITCH GP-TEMPERATURE	1583

INDEX

NAME	PAGE
SWITCH GP-TEMPERATURE–ENGINE COOLANT	1582
SWITCH-TEMPERATURE	1351
	1481
	1484
	1583
SWITCH-TEMPERATURE (ENGINE COOLANT)	1181
	1184
	1187
	1303
	1306
	1309
	1376
	1379
	1392
	1418
	1421
	1424
	1438
	1441
	1445
	1448
	1474
	1477
	1491
	1582
SWITCH-TEMPERATURE (TIMING ADVANCE)	1175
	1178
	1191
	1194
	1197
	1200
	1204
	1207
	1210
	1213
	1216
	1219
	1222
	1225
	1228
	1231
	1234
	1237
	1240
	1243
	1246
	1249
	1255
	1258
	1261
	1264
	1267
	1270
	1273
	1283
	1286
	1289
	1292
	1296
	1298
	1300
	1339
	1342
	1345
	1348
	1354
	1358
	1361
	1364
	1367
	1370
	1373
	1383
	1386
	1389
	1395
	1427
	1430
	1451
	1454
	1461
	1464
	1467
	1470

INDEX

NAME PAGE

SWITCH-WATER TEMPERATURE (ENGINE COOLANT) 1555
1556

T

TURBOCHARGER GP 1073
1075
1077
1079
1081
1083
1085
1087
1089
1091
1095
1097
1099
1101
1104
1107
1109
1111
1113
1116
1119
1121
1124
1126
1129
1132
1135
1137

V

V-BELT (FAN DRIVE) 567
V-BELT SET (INCLUDES 2-BELTS) 561
585
V-BELT SET (INCLUDES 2-BELTS) (FAN DRIVE) 563
565
566
568
571
572
573
576
578
579
580
581
582
584
V-BELT SET (INCLUDES 2-BELTS) (FAN) 574
VALVE AS-RELIEF 201
VALVE AS-RELIEF (ENGINE OIL PRESSURE) 198

NAME PAGE

VALVE GP-SOLENOID (12-VOLT) 1276
1279
VALVE GP-SOLENOID (12-VOLT) (FUEL SHUTOFF) 1190
1315
1316
1317
1335
1336
1337
1491
VALVE MECHANISM GP 839
840
842
843
844
846
847
849
851
853
855
856
857
858
859

ENGINE ARRANGEMENT

274-1172 ENGINE AR

52 BRAKE KW (70 BHP) AT 2200 RPM

SMCS-1000 **i04389848**

NOTE	PART NUMBER	QTY	PART NAME 1 2 3 4 5 6 (PRODUCT LEVEL)	SEE PAGE
Y	*271-7077*	1	ALTERNATOR GP-CHARGING	1536
Y	*247-4921*	1	CAMSHAFT GP	210
Y	*253-6204*	1	CONNECTION GP-INLET	1040
Y	*231-0038*	1	CONNECTION GP-WATER	870
Y	*271-7078*	1	COOLER GP-FLTR BASE & ENG OIL	963
Y	*247-4923*	1	COVER GP-ENGINE	228
Y	*267-9420*	1	COVER GP-VALVE MECHANISM	346
Y	*247-4821*	1	CRANKSHAFT GP	470
Y	*247-4820*	1	CYLINDER BLOCK GP	511
Y	*247-4873*	1	CYLINDER HEAD GP	539
Y	*271-7079*	1	DRIVE GP-FAN	581
Y	*277-2972*	1	FAN GP-SUCTION	989
Y	*260-3128*	1	FILTER & LINES GP-FUEL	1140
Y	*232-7378*	1	FILTER GP-ENGINE OIL	861
Y	*230-7286*	1	FLYWHEEL GP	590
Y	*232-6661*	1	GLOW PLUG GP	1547
Y	*223-7825*	1	HOUSING GP-FLYWHEEL	608
Y	*243-3272*	1	HOUSING GP-FRONT	636
Y	*232-3713*	1	LIFTING GP-ENGINE	647
Y	*237-5408*	1	MANIFOLD GP-EXHAUST	1071
Y	*233-9840*	1	MOUNTING GP-ENGINE	653
Y	*244-1651*	1	PAN GP-OIL	731
Y	*247-4831*	1	PISTON & ROD GP	794
Y	*225-4317*	1	PLUG GP-ENGINE	816
Y	*230-7353*	1	PULLEY GP-CRANKSHAFT	832
			S/N: 3341-25630	
Y	*360-7351*	1	PULLEY GP-CRANKSHAFT	836
			S/N: 33425631-UP	
Y	*230-7578*	1	PUMP GP-ENGINE OIL	863
Y	*285-8528*	1	PUMP GP-FUEL INJECTION	1438
Y	*233-7425*	1	PUMP GP-FUEL PRM & PRIM FILTER	1499
Y	*230-7355*	1	PUMP GP-WATER	992
Y	*236-8758*	1	SENDER GP-TEMPERATURE	1555
Y	*234-9666*	1	STARTING MOTOR GP-ELECTRIC	1562
			—OR—	
Y	*323-6678*	1	STARTING MOTOR GP-ELECTRIC	1568
Y	*253-0756*	1	SWITCH GP-PRESSURE (ENGINE OIL)	1579
Y	*247-4876*	1	VALVE MECHANISM GP	849
R	**359-0731**	1	CYLINDER BLOCK GP-SHORT	

R - REMANUFACTURED PART MAY BE AVAILABLE
Y - SEPARATE ILLUSTRATION

<END>

ENGINE ARRANGEMENT

308-5599 ENGINE AR

64 BRAKE KW (86 BHP) AT 2400 RPM

SMCS-1000 **i04352889**

NOTE	PART NUMBER	QTY	PART NAME 1 2 3 4 5 6 (PRODUCT LEVEL)	SEE PAGE
Y	*316-5657*	1	ALTERNATOR GP-CHARGING	1537
Y	*233-7236*	1	CAMSHAFT GP	204
Y	*230-7581*	1	CONNECTION GP-INLET	1037
Y	*231-0038*	1	CONNECTION GP-WATER	870
Y	*253-6184*	1	COOLER GP-FLTR BASE & ENG OIL	923
Y	*230-9139*	1	COVER GP-VALVE MECHANISM	241
Y	*233-7027*	1	CRANKSHAFT GP	454
Y	*233-7007*	1	CYLINDER BLOCK GP	497
Y	*233-7234*	1	CYLINDER HEAD GP	532
Y	*235-1044*	1	DRIVE GP-ACCESSORY	551
Y	*322-4099*	1	DRIVE GP-FAN	585
Y	*235-0365*	1	ELBOW GP-EXHAUST	1064
Y	*252-4441*	1	FAN GP-BLOWER	980
Y	*232-7378*	1	FILTER GP-ENGINE OIL	861
Y	*243-4279*	1	FLYWHEEL GP	597
			S/N: 3341-22539	
Y	*268-3627*	1	FLYWHEEL GP	600
			S/N: 33422540-UP	
Y	*232-6661*	1	GLOW PLUG GP	1547
Y	*223-7825*	1	HOUSING GP-FLYWHEEL	608
			S/N: 3341-22539	
Y	*329-1367*	1	HOUSING GP-FLYWHEEL	621
			S/N: 33422540-UP	
Y	*232-6179*	1	HOUSING GP-FRONT	626
Y	*232-3713*	1	LIFTING GP-ENGINE	647
Y	*231-0292*	1	MANIFOLD GP-EXHAUST	1070
Y	*233-9840*	1	MOUNTING GP-ENGINE	653
			S/N: 3341-22539	
Y	*267-5101*	1	MOUNTING GP-ENGINE	661
			S/N: 33422540-UP	
Y	*244-1651*	1	PAN GP-OIL (ENGINE)	731
Y	*233-7233*	1	PISTON & ROD GP	770
Y	*225-4317*	1	PLUG GP-ENGINE (FRONT HOUSING, CYLINDER HEAD)	816
Y	*232-6204*	1	PLUG GP-ENGINE (CYLINDER HEAD)	821
Y	*253-2479*	1	PLUG GP-ENGINE (CYLINDER BLOCK)	827
Y	*230-7352*	1	PULLEY GP-CRANKSHAFT	831
			S/N: 3341-25630	
Y	*360-7350*	1	PULLEY GP-CRANKSHAFT	835
			S/N: 33425631-UP	
Y	*243-4305*	1	PUMP GP-ENGINE OIL	864
Y	*233-7974*	1	PUMP GP-FUEL INJECTION	1191
Y	*233-7425*	1	PUMP GP-FUEL PRM & PRIM FILTER	1499
Y	*230-7355*	1	PUMP GP-WATER	992
Y	*243-2420*	1	STARTING AID GP (SWITCH)	1558
Y	*329-1385*	1	STARTING MOTOR GP-ELECTRIC	1573
Y	*233-7235*	1	VALVE MECHANISM GP	840
R	**359-0731**	1	CYLINDER BLOCK GP-SHORT	
			AVAILABLE GASKET KIT(S):	

308-5599 **ENGINE AR (**contd.**)** **i04352889**

NOTE	PART NUMBER	QTY	PART NAME 1 2 3 4 5 6 (PRODUCT LEVEL)	SEE PAGE
	277-5156	1	KIT-GASKET (TOP)	
	272-0494	1	KIT-GASKET (BOTTOM)	

R - REMANUFACTURED PART MAY BE AVAILABLE
Y - SEPARATE ILLUSTRATION

<END>

232-9761 ENGINE AR-CORE

SMCS-1000 **i01872185**

NOTE	PART NUMBER	QTY	PART NAME 1 2 3 4 5 6 (PRODUCT LEVEL)	SEE PAGE
Y	*232-7528*	1	CAMSHAFT GP	203
Y	*232-7439*	1	CRANKSHAFT GP	451
Y	*232-7606*	1	CYLINDER BLOCK GP	495
Y	*232-7524*	1	CYLINDER HEAD GP	531
Y	*232-7442*	1	PISTON & ROD GP	764
Y	*232-7526*	1	VALVE MECHANISM GP	839

Y - SEPARATE ILLUSTRATION

<END>

234-0809 ENGINE AR-CORE

SMCS-1000 **i01872166**

NOTE	PART NUMBER	QTY	PART NAME 1 2 3 4 5 6 (PRODUCT LEVEL)	SEE PAGE
Y	*233-7236*	1	CAMSHAFT GP	204
Y	*233-7027*	1	CRANKSHAFT GP	454
Y	*233-7007*	1	CYLINDER BLOCK GP	497
Y	*233-7234*	1	CYLINDER HEAD GP	532
Y	*233-7233*	1	PISTON & ROD GP	770
Y	*233-7235*	1	VALVE MECHANISM GP	840

Y - SEPARATE ILLUSTRATION

<END>

237-6430 ENGINE AR-CORE

SMCS-1000 **i01940356**

NOTE	PART NUMBER	QTY	PART NAME 1 2 3 4 5 6 (PRODUCT LEVEL)	SEE PAGE
Y	*237-5858*	1	CAMSHAFT GP	205
Y	*237-5838*	1	CRANKSHAFT GP	456
Y	*237-5836*	1	CYLINDER BLOCK GP	501
Y	*237-5852*	1	CYLINDER HEAD GP	533
Y	*237-5840*	1	PISTON & ROD GP	774
Y	*237-5856*	1	VALVE MECHANISM GP	842

Y - SEPARATE ILLUSTRATION

<END>

ENGINE ARRANGEMENT

243-2287 ENGINE AR-CORE

SMCS-1000 **i01989390**

NOTE	PART NUMBER	QTY	PART NAME 1 2 3 4 5 6 (PRODUCT LEVEL)	SEE PAGE
Y	*243-1954*	1	CAMSHAFT GP	206
Y	*243-1950*	1	CRANKSHAFT GP	459
Y	*243-1948*	1	CYLINDER BLOCK GP	503
Y	*243-1952*	1	CYLINDER HEAD GP	534
Y	*243-1951*	1	PISTON & ROD GP	778
Y	*243-1953*	1	VALVE MECHANISM GP	843

Y - SEPARATE ILLUSTRATION

<END>

243-3185 ENGINE AR-CORE

SMCS-1000 **i01964509**

NOTE	PART NUMBER	QTY	PART NAME 1 2 3 4 5 6 (PRODUCT LEVEL)	SEE PAGE
Y	*243-3184*	1	CAMSHAFT GP	207
Y	*243-3180*	1	CRANKSHAFT GP	461
Y	*243-3179*	1	CYLINDER BLOCK GP	505
Y	*243-3182*	1	CYLINDER HEAD GP	535
Y	*243-3181*	1	PISTON & ROD GP	782
Y	*243-3183*	1	VALVE MECHANISM GP	844

Y - SEPARATE ILLUSTRATION

<END>

243-4857 ENGINE AR-CORE

SMCS-1000 **i01986398**

NOTE	PART NUMBER	QTY	PART NAME 1 2 3 4 5 6 (PRODUCT LEVEL)	SEE PAGE
Y	*243-4845*	1	CAMSHAFT GP	208
Y	*243-4839*	1	CRANKSHAFT GP	464
Y	*243-4837*	1	CYLINDER BLOCK GP	507
Y	*243-4843*	1	CYLINDER HEAD GP	536
Y	*243-4842*	1	PISTON & ROD GP	786
Y	*243-4844*	1	VALVE MECHANISM GP	846

Y - SEPARATE ILLUSTRATION

<END>

244-2099 ENGINE AR-CORE

SMCS-1000 **i01985287**

NOTE	PART NUMBER	QTY	PART NAME 1 2 3 4 5 6 (PRODUCT LEVEL)	SEE PAGE
Y	*244-2096*	1	CAMSHAFT GP	209
Y	*244-2081*	1	CRANKSHAFT GP	467
Y	*244-2014*	1	CYLINDER BLOCK GP	509
Y	*244-2088*	1	CYLINDER HEAD GP	537
Y	*244-2083*	1	PISTON & ROD GP	790
Y	*244-2093*	1	VALVE MECHANISM GP	847

Y - SEPARATE ILLUSTRATION

<END>

253-8765 ENGINE AR-CORE

SMCS-1000 **i02112516**

NOTE	PART NUMBER	QTY	PART NAME 1 2 3 4 5 6 (PRODUCT LEVEL)	SEE PAGE
Y	*253-8764*	1	CAMSHAFT GP	211
Y	*253-8751*	1	CRANKSHAFT GP	472
Y	*253-8750*	1	CYLINDER BLOCK GP	513
Y	*253-8757*	1	CYLINDER HEAD GP	540
Y	*253-8756*	1	PISTON & ROD GP	798
Y	*253-8763*	1	VALVE MECHANISM GP	851

Y - SEPARATE ILLUSTRATION

<END>

207-1080 ENGINE AR-PRIMARY

60 BRAKE KW (80 BHP) AT 2200 RPM

SMCS-1000 **i05460743**

NOTE	PART NUMBER	QTY	PART NAME 1 2 3 4 5 6 (PRODUCT LEVEL)	SEE PAGE
Y	*234-0617*	1	BALANCER GP	199
Y	*238-8290*	1	CONNECTION GP-INLET	1039
Y	*231-0033*	1	CONNECTION GP-WATER	868
Y	*234-1546*	1	COOLER GP-FLTR BASE & ENG OIL	886
Y	*230-9139*	1	COVER GP-VALVE MECHANISM	241
Y	*235-1044*	1	DRIVE GP-ACCESSORY	551
Y	*230-8066*	1	DRIVE GP-FAN	562
Y	*235-0365*	1	ELBOW GP-EXHAUST	1064
Y	*234-0809*	1	ENGINE AR-CORE	3
Y	*232-7378*	1	FILTER GP-ENGINE OIL	861
Y	*235-0322*	1	FLYWHEEL GP	593
Y	*232-6661*	1	GLOW PLUG GP	1547
Y	*235-0321*	1	HOUSING GP-FLYWHEEL	612
Y	*235-1419*	1	HOUSING GP-FRONT	630
Y	*232-3713*	1	LIFTING GP-ENGINE	647
Y	*231-0292*	1	MANIFOLD GP-EXHAUST	1070
Y	*235-1039*	1	MOUNTING GP-ALTERNATOR	650
Y	*235-0366*	1	MOUNTING GP-ENGINE	654
Y	*235-0343*	1	MOUNTING GP-FAN DRIVE	677
Y	*235-0328*	1	MOUNTING GP-MOTOR	1584
Y	*233-8150*	1	PAN GP-OIL (ENGINE)	701
Y	*225-4317*	1	PLUG GP-ENGINE (FRONT HOUSING, CYLINDER HEAD)	816
Y	*253-2479*	1	PLUG GP-ENGINE	827
Y	*232-6204*	1	PLUG GP-ENGINE (CYLINDER HEAD)	821
Y	*230-7352*	1	PULLEY GP-CRANKSHAFT	831
			S/N: 3341-25630	
Y	*360-7350*	1	PULLEY GP-CRANKSHAFT	835
			S/N: 33425631-UP	
Y	*233-7974*	1	PUMP GP-FUEL INJECTION	1191
			—OR—	
Y	*267-9413*	1	PUMP GP-FUEL INJECTION	1339
Y	*233-7425*	1	PUMP GP-FUEL PRM & PRIM FILTER	1499
Y	*230-7355*	1	PUMP GP-WATER	992
Y	*235-0367*	1	SEPARATOR GP-WATER	1522
R	**359-0731**	1	CYLINDER BLOCK GP-SHORT	
			AVAILABLE GASKET KIT(S):	
	277-5156	1	KIT-GASKET (TOP)	
	272-0494	1	KIT-GASKET (BOTTOM)	

R - REMANUFACTURED PART MAY BE AVAILABLE
Y - SEPARATE ILLUSTRATION

<END>

207-1083 ENGINE AR-PRIMARY

64 BRAKE KW (86 BHP) AT 2400 RPM

SMCS-1000 **i05460757**

NOTE	PART NUMBER	QTY	PART NAME 1 2 3 4 5 6 (PRODUCT LEVEL)	SEE PAGE
Y	*230-7581*	1	CONNECTION GP-INLET	1037
Y	*231-0033*	1	CONNECTION GP-WATER	868
Y	*253-2472*	1	COOLER GP-FLTR BASE & ENG OIL	904
Y	*235-3554*	1	COVER GP-VALVE MECHANISM	282
Y	*363-7802*	1	DRIVE GP-FAN	586
Y	*234-0809*	1	ENGINE AR-CORE	3
Y	*232-7378*	1	FILTER GP-ENGINE OIL	861
Y	*235-3552*	1	FLYWHEEL GP	595
Y	*232-6661*	1	GLOW PLUG GP	1547
Y	*232-3670*	1	HOUSING GP-FRONT	622
Y	*232-3713*	1	LIFTING GP-ENGINE	647
Y	*231-0292*	1	MANIFOLD GP-EXHAUST	1070
Y	*234-9738*	1	MOUNTING GP-FAN	991
Y	*230-8253*	1	PAN GP-OIL	689
Y	*230-7569*	1	PLUG GP-ENGINE	819
Y	*253-2479*	1	PLUG GP-ENGINE	827
Y	*232-6204*	1	PLUG GP-ENGINE	821
Y	*233-9426*	1	PLUG GP-ENGINE	823
Y	*234-4215*	1	PLUG GP-ENGINE	824
Y	*230-7353*	1	PULLEY GP-CRANKSHAFT	832
			S/N: 3341-25630	
Y	*360-7351*	1	PULLEY GP-CRANKSHAFT	836
			S/N: 33425631-UP	
YR	**266-3718**	1	PUMP GP-FUEL INJECTION	1337
Y	*235-3555*	1	PUMP GP-FUEL PRM & PRIM FILTER	1509
			S/N: 3341-571	
Y	*233-7425*	1	PUMP GP-FUEL PRM & PRIM FILTER	1499
			S/N: 334572-UP	
Y	*230-7578*	1	PUMP GP-ENGINE OIL	863
Y	*230-7355*	1	PUMP GP-WATER	992
R	**359-0731**	1	CYLINDER BLOCK GP-SHORT	
			AVAILABLE GASKET KIT(S):	
	272-2232	1	KIT-GASKET (BOTTOM)	
	277-5156	1	KIT-GASKET (TOP)	

R - REMANUFACTURED PART MAY BE AVAILABLE
Y - SEPARATE ILLUSTRATION

<END>

207-1097 ENGINE AR-PRIMARY

75 BRAKE KW (100 BHP) AT 2200 RPM

SMCS-1000 **i05460764**

NOTE	PART NUMBER	QTY	PART NAME 1 2 3 4 5 6 (PRODUCT LEVEL)	SEE PAGE
Y	*234-0617*	1	BALANCER GP	199
Y	*231-0033*	1	CONNECTION GP-WATER	868
Y	*253-2474*	1	COOLER GP-FLTR BASE & ENG OIL	915
Y	*231-0149*	1	COVER GP-INLET MANIFOLD	1052
Y	*237-2790*	1	COVER GP-VALVE MECHANISM	320
			S/N: 3341-16450	
Y	*328-8203*	1	COVER GP-VALVE MECHANISM	434
			S/N: 33416451-UP	
Y	*237-7313*	1	DRIVE GP-FAN	570
Y	*237-6430*	1	ENGINE AR-CORE	3
Y	*232-7378*	1	FILTER GP-ENGINE OIL	861
Y	*232-6661*	1	GLOW PLUG GP	1547
Y	*232-3670*	1	HOUSING GP-FRONT	622
Y	*232-3713*	1	LIFTING GP-ENGINE	647
Y	*243-1882*	1	PAN GP-OIL	711
Y	*230-7569*	1	PLUG GP-ENGINE (OIL FILL)	819
Y	*225-4317*	1	PLUG GP-ENGINE (FRONT HOUSING, CYLINDER HEAD)	816
Y	*253-2479*	1	PLUG GP-ENGINE (CYLINDER BLOCK)	827
Y	*232-6204*	1	PLUG GP-ENGINE (CYLINDER HEAD)	821
Y	*230-7352*	1	PULLEY GP-CRANKSHAFT	831
			S/N: 3341-25630	
Y	*360-7350*	1	PULLEY GP-CRANKSHAFT	835
			S/N: 33425631-UP	
Y	*236-8229*	1	PUMP GP-FUEL INJECTION	1255
Y	*233-9417*	1	PUMP GP-FUEL PRM & PRIM FILTER	1505
			S/N: 3341-16450	
Y	*328-8204*	1	FILTER GP-FUEL	1163
			S/N: 33416451-UP	
Y	*230-7355*	1	PUMP GP-WATER	992
Y	*237-3924*	1	TURBOCHARGER GP	1091
	359-0733	1	CYLINDER BLOCK GP-SHORT	
			AVAILABLE REPAIR KIT(S):	
	277-5156	1	KIT-GASKET (TOP)	
	290-2494	1	KIT-BOTTOM GASKET	

Y - SEPARATE ILLUSTRATION

<END>

207-1098 ENGINE AR-PRIMARY

86 BRAKE KW (115 BHP) AT 2200 RPM

SMCS-1000 **i05460777**

NOTE	PART NUMBER	QTY	PART NAME 1 2 3 4 5 6 (PRODUCT LEVEL)	SEE PAGE
Y	*234-0617*	1	BALANCER GP	199
Y	*231-0033*	1	CONNECTION GP-WATER	868
Y	*253-2474*	1	COOLER GP-FLTR BASE & ENG OIL	915
Y	*237-2790*	1	COVER GP-VALVE MECHANISM	320
			S/N: 3341-15980	
Y	*328-8203*	1	COVER GP-VALVE MECHANISM	434
			S/N: 33415981-UP	
Y	*237-7313*	1	DRIVE GP-FAN	570
Y	*256-4440*	1	ELBOW GP-AIR INLET	1059
Y	*243-4857*	1	ENGINE AR-CORE	4
Y	*232-7378*	1	FILTER GP-ENGINE OIL	861
Y	*232-6661*	1	GLOW PLUG GP	1547
Y	*232-3670*	1	HOUSING GP-FRONT	622
Y	*232-3713*	1	LIFTING GP-ENGINE	647
Y	*243-1882*	1	PAN GP-OIL	711
Y	*230-7569*	1	PLUG GP-ENGINE (OIL FILL)	819
Y	*225-4317*	1	PLUG GP-ENGINE (FRONT HOUSING, CYLINDER HEAD)	816
Y	*253-2479*	1	PLUG GP-ENGINE (CYLINDER BLOCK)	827
Y	*232-6204*	1	PLUG GP-ENGINE (CYLINDER HEAD)	821
Y	*230-7352*	1	PULLEY GP-CRANKSHAFT	831
			S/N: 3341-25630	
Y	*360-7350*	1	PULLEY GP-CRANKSHAFT	835
			S/N: 33425631-UP	
Y	*237-7999*	1	PUMP GP-FUEL INJECTION	1283
Y	*233-9417*	1	PUMP GP-FUEL PRM & PRIM FILTER	1505
			S/N: 3341-15980	
Y	*328-8204*	1	FILTER GP-FUEL	1163
			S/N: 33415981-UP	
Y	*230-7355*	1	PUMP GP-WATER	992
Y	*243-4143*	1	TURBOCHARGER GP	1099
	359-0733	1	CYLINDER BLOCK GP-SHORT	
			AVAILABLE GASKET KIT(S):	
	277-5156	1	KIT-GASKET (TOP)	
	290-2494	1	KIT-BOTTOM GASKET	

Y - SEPARATE ILLUSTRATION

<END>

207-1099 ENGINE AR-PRIMARY

75 BRAKE KW (100 BHP) AT 2200 RPM

SMCS-1000 **i05460949**

NOTE	PART NUMBER	QTY	PART NAME 1 2 3 4 5 6 (PRODUCT LEVEL)	SEE PAGE
Y	*234-0617*	1	BALANCER GP	199
Y	*231-0038*	1	CONNECTION GP-WATER	870
Y	*253-2474*	1	COOLER GP-FLTR BASE & ENG OIL	915
Y	*231-0149*	1	COVER GP-INLET MANIFOLD	1052
Y	*237-2790*	1	COVER GP-VALVE MECHANISM	320
Y	*236-8241*	1	DRIVE GP-FAN	569
Y	*237-6430*	1	ENGINE AR-CORE	3
Y	*232-7378*	1	FILTER GP-ENGINE OIL	861
Y	*232-6661*	1	GLOW PLUG GP	1547
Y	*232-3670*	1	HOUSING GP-FRONT	622
Y	*232-3713*	1	LIFTING GP-ENGINE	647
Y	*237-5935*	1	PAN GP-OIL	707
Y	*230-7569*	1	PLUG GP-ENGINE (OIL FILL)	819
Y	*225-4317*	1	PLUG GP-ENGINE (FRONT HOUSING, CYLINDER HEAD)	816
Y	*253-2479*	1	PLUG GP-ENGINE (CYLINDER BLOCK)	827
Y	*232-6204*	1	PLUG GP-ENGINE (CYLINDER HEAD)	821
Y	*230-7352*	1	PULLEY GP-CRANKSHAFT	831
			S/N: 3341-25630	
Y	*360-7350*	1	PULLEY GP-CRANKSHAFT	835
			S/N: 33425631-UP	
Y	*236-8229*	1	PUMP GP-FUEL INJECTION	1255
Y	*233-9417*	1	PUMP GP-FUEL PRM & PRIM FILTER	1505
Y	*230-7355*	1	PUMP GP-WATER	992
Y	*237-3924*	1	TURBOCHARGER GP	1091
	359-0733	1	CYLINDER BLOCK GP-SHORT	
			AVAILABLE REPAIR KIT(S):	
	277-5156	1	KIT-GASKET (TOP)	
	290-2494	1	KIT-BOTTOM GASKET	

Y - SEPARATE ILLUSTRATION

<END>

207-1100 ENGINE AR-PRIMARY

69 BRAKE KW (92 BHP) AT 2200 RPM

SMCS-1000 **i07027084**

NOTE	PART NUMBER	QTY	PART NAME 1 2 3 4 5 6 (PRODUCT LEVEL)	SEE PAGE
Y	*234-0617*	1	BALANCER GP	199
Y	*231-0033*	1	CONNECTION GP-WATER	868
Y	*253-2474*	1	COOLER GP-FLTR BASE & ENG OIL	915
Y	*231-0149*	1	COVER GP-INLET MANIFOLD	1052
Y	*237-2790*	1	COVER GP-VALVE MECHANISM	320
			S/N: 3341-16750	
Y	*328-8203*	1	COVER GP-VALVE MECHANISM	434
			S/N: 33416751-UP	
Y	*237-7313*	1	DRIVE GP-FAN	570
Y	*237-6430*	1	ENGINE AR-CORE	3
Y	*232-7378*	1	FILTER GP-ENGINE OIL	861
Y	*232-6661*	1	GLOW PLUG GP	1547
Y	*232-3670*	1	HOUSING GP-FRONT	622
Y	*232-3713*	1	LIFTING GP-ENGINE	647
Y	*237-5935*	1	PAN GP-OIL	707
Y	*230-7569*	1	PLUG GP-ENGINE (OIL FILL)	819
Y	*225-4317*	1	PLUG GP-ENGINE (FRONT HOUSING, CYLINDER HEAD)	816
Y	*253-2479*	1	PLUG GP-ENGINE (CYLINDER BLOCK)	827
Y	*232-6204*	1	PLUG GP-ENGINE (CYLINDER HEAD)	821
Y	*230-7352*	1	PULLEY GP-CRANKSHAFT	831
			S/N: 3341-25630	
Y	*360-7350*	1	PULLEY GP-CRANKSHAFT	835
			S/N: 33425631-UP	
Y	*237-5214*	1	PUMP GP-FUEL INJECTION	1264
Y	*233-9417*	1	PUMP GP-FUEL PRM & PRIM FILTER	1505
			S/N: 3341-16750	
Y	*328-8204*	1	FILTER GP-FUEL	1163
			S/N: 33416751-UP	
Y	*230-7355*	1	PUMP GP-WATER	992
Y	*237-3924*	1	TURBOCHARGER GP	1091
	359-0733	1	CYLINDER BLOCK GP-SHORT	
			AVAILABLE REPAIR KIT(S):	
	277-5156	1	KIT-GASKET (TOP)	
	290-2494	1	KIT-BOTTOM GASKET	

Y - SEPARATE ILLUSTRATION

<END>

207-1101 ENGINE AR-PRIMARY

60 BRAKE KW (80 BHP) AT 2200 RPM

SMCS-1000 **i05460960**

NOTE	PART NUMBER	QTY	PART NAME 1 2 3 4 5 6 (PRODUCT LEVEL)	SEE PAGE
Y	*234-0617*	1	BALANCER GP	199
Y	*231-0033*	1	CONNECTION GP-WATER	868
Y	*237-6452*	1	COOLER GP-FLTR BASE & ENG OIL	897
Y	*235-3554*	1	COVER GP-VALVE MECHANISM	282
			S/N: 3341-16199	
Y	*353-9815*	1	COVER GP-VALVE MECHANISM	444
			S/N: 33416200-UP	
Y	*237-7313*	1	DRIVE GP-FAN	570
Y	*235-2489*	1	ELBOW GP-AIR INLET	1056
Y	*243-2287*	1	ENGINE AR-CORE	4
Y	*232-7378*	1	FILTER GP-ENGINE OIL	861
Y	*232-6661*	1	GLOW PLUG GP	1547
Y	*232-3670*	1	HOUSING GP-FRONT	622
Y	*232-3713*	1	LIFTING GP-ENGINE	647
Y	*231-0292*	1	MANIFOLD GP-EXHAUST	1070
Y	*243-1882*	1	PAN GP-OIL	711
Y	*230-7569*	1	PLUG GP-ENGINE	819
Y	*225-4317*	1	PLUG GP-ENGINE	816
Y	*232-6204*	1	PLUG GP-ENGINE	821
Y	*253-2479*	1	PLUG GP-ENGINE	827
Y	*230-7352*	1	PULLEY GP-CRANKSHAFT	831
			S/N: 3341-25630	
Y	*360-7350*	1	PULLEY GP-CRANKSHAFT	835
			S/N: 33425631-UP	
Y	*267-9413*	1	PUMP GP-FUEL INJECTION	1339
Y	*233-7425*	1	PUMP GP-FUEL PRM & PRIM FILTER	1499
			S/N: 3341-16199	
Y	*353-9830*	1	PUMP GP-FUEL PRM & PRIM FILTER	1517
			S/N: 33416200-UP	
Y	*230-7355*	1	PUMP GP-WATER	992
	359-0730	1	CYLINDER BLOCK GP-SHORT	
			AVAILABLE REPAIR KIT(S):	
	277-5156	1	KIT-GASKET (TOP)	
	290-2494	1	KIT-BOTTOM GASKET	

Y - SEPARATE ILLUSTRATION

<END>

207-1102 ENGINE AR-PRIMARY

60 BRAKE KW (80 BHP) AT 2200 RPM

SMCS-1000 **i07027082**

NOTE	PART NUMBER	QTY	PART NAME 1 2 3 4 5 6 (PRODUCT LEVEL)	SEE PAGE
Y	*234-0617*	1	BALANCER GP	199
Y	*231-0038*	1	CONNECTION GP-WATER	870
Y	*237-6452*	1	COOLER GP-FLTR BASE & ENG OIL	897
Y	*235-3554*	1	COVER GP-VALVE MECHANISM	282
Y	*236-8241*	1	DRIVE GP-FAN	569
Y	*235-2489*	1	ELBOW GP-AIR INLET	1056
Y	*232-7378*	1	FILTER GP-ENGINE OIL	861
Y	*232-6661*	1	GLOW PLUG GP	1547
Y	*232-3670*	1	HOUSING GP-FRONT	622
Y	*232-3713*	1	LIFTING GP-ENGINE	647
Y	*231-0292*	1	MANIFOLD GP-EXHAUST	1070
Y	*237-5935*	1	PAN GP-OIL (ENGINE)	707
Y	*230-7569*	1	PLUG GP-ENGINE (OIL FILL)	819
Y	*225-4317*	1	PLUG GP-ENGINE (FRONT HOUSING, CYLINDER HEAD)	816
Y	*253-2479*	1	PLUG GP-ENGINE	827
Y	*232-6204*	1	PLUG GP-ENGINE (CYLINDER HEAD)	821
Y	*230-7352*	1	PULLEY GP-CRANKSHAFT	831
			S/N: 3341-25630	
Y	*360-7350*	1	PULLEY GP-CRANKSHAFT	835
			S/N: 33425631-UP	
Y	*267-9413*	1	PUMP GP-FUEL INJECTION	1339
Y	*233-7425*	1	PUMP GP-FUEL PRM & PRIM FILTER	1499
Y	*230-7355*	1	PUMP GP-WATER	992
	359-0730	1	CYLINDER BLOCK GP-SHORT	
			AVAILABLE REPAIR KIT(S):	
	277-5156	1	KIT-GASKET (TOP)	
	290-2494	1	KIT-BOTTOM GASKET	

Y - SEPARATE ILLUSTRATION

<END>

207-1103 ENGINE AR-PRIMARY

69 BRAKE KW (92 BHP) AT 2200 RPM

SMCS-1000 **i07027072**

NOTE	PART NUMBER	QTY	PART NAME 1 2 3 4 5 6 (PRODUCT LEVEL)	SEE PAGE
Y	*234-0617*	1	BALANCER GP	199
Y	*231-0038*	1	CONNECTION GP-WATER	870
Y	*253-2474*	1	COOLER GP-FLTR BASE & ENG OIL	915
Y	*231-0149*	1	COVER GP-INLET MANIFOLD	1052
Y	*237-2790*	1	COVER GP-VALVE MECHANISM	320
Y	*236-8241*	1	DRIVE GP-FAN	569
Y	*237-6430*	1	ENGINE AR-CORE	3
Y	*232-7378*	1	FILTER GP-ENGINE OIL	861
Y	*232-6661*	1	GLOW PLUG GP	1547
Y	*232-3670*	1	HOUSING GP-FRONT	622
Y	*232-3713*	1	LIFTING GP-ENGINE	647
Y	*237-5935*	1	PAN GP-OIL	707
Y	*230-7569*	1	PLUG GP-ENGINE (OIL FILL)	819
Y	*225-4317*	1	PLUG GP-ENGINE (FRONT HOUSING, CYLINDER HEAD)	816
Y	*253-2479*	1	PLUG GP-ENGINE (CYLINDER BLOCK)	827
Y	*232-6204*	1	PLUG GP-ENGINE (CYLINDER HEAD)	821
Y	*230-7352*	1	PULLEY GP-CRANKSHAFT	831
			S/N: 3341-25630	
Y	*360-7350*	1	PULLEY GP-CRANKSHAFT	835
			S/N: 33425631-UP	
Y	*237-5214*	1	PUMP GP-FUEL INJECTION	1264
Y	*233-9417*	1	PUMP GP-FUEL PRM & PRIM FILTER	1505
Y	*230-7355*	1	PUMP GP-WATER	992
Y	*237-3924*	1	TURBOCHARGER GP	1091
	359-0733	1	CYLINDER BLOCK GP-SHORT	
			AVAILABLE REPAIR KIT(S):	
	277-5156	1	KIT-GASKET (TOP)	
	290-2494	1	KIT-BOTTOM GASKET	

Y - SEPARATE ILLUSTRATION

<END>

207-1104 ENGINE AR-PRIMARY

64 BRAKE KW (86 BHP) AT 2400 RPM

SMCS-1000 **i04339516**

NOTE	PART NUMBER	QTY	PART NAME 1 2 3 4 5 6 (PRODUCT LEVEL)	SEE PAGE
Y	*235-0028*	1	ALTERNATOR GP-CHARGING	1526
Y	*231-0033*	1	CONNECTION GP-WATER	868
Y	*235-8562*	1	COOLER GP-FLTR BASE & ENG OIL	894
Y	*230-9196*	1	COVER GP-FRONT HOUSING	231
Y	*230-9139*	1	COVER GP-VALVE MECHANISM	241
Y	**235-2385**	1	DRIVE GP-FAN	567
Y	*235-2489*	1	ELBOW GP-AIR INLET	1056
Y	*235-0365*	1	ELBOW GP-EXHAUST	1064
Y	*234-0809*	1	ENGINE AR-CORE	3
Y	*243-2411*	1	FAN GP-SUCTION	984
Y	*232-7378*	1	FILTER GP-ENGINE OIL	861
Y	*230-7291*	1	FLYWHEEL GP	591
Y	*232-6661*	1	GLOW PLUG GP	1547
Y	*243-2454*	1	HOUSING GP-FLYWHEEL	616
Y	*232-6179*	1	HOUSING GP-FRONT	626
Y	*232-3713*	1	LIFTING GP-ENGINE	647
Y	*231-0292*	1	MANIFOLD GP-EXHAUST	1070
Y	*243-2455*	1	PAN GP-OIL (ENGINE)	715
Y	*243-2416*	1	PLUG GP-ENGINE	826
Y	*232-6204*	1	PLUG GP-ENGINE (CYLINDER HEAD)	821
Y	*225-4317*	1	PLUG GP-ENGINE (FRONT HOUSING, CYLINDER HEAD)	816
Y	*230-7353*	1	PULLEY GP-CRANKSHAFT	832
			S/N: 3341-25630	
Y	*360-7351*	1	PULLEY GP-CRANKSHAFT	836
			S/N: 33425631-UP	
Y	*230-7578*	1	PUMP GP-ENGINE OIL	863
Y	*233-7974*	1	PUMP GP-FUEL INJECTION	1191
Y	*233-7425*	1	PUMP GP-FUEL PRM & PRIM FILTER	1499
Y	*230-7355*	1	PUMP GP-WATER	992
Y	*235-0367*	1	SEPARATOR GP-WATER	1522
Y	*243-2420*	1	STARTING AID GP (SWITCH)	1558
Y	*234-9666*	1	STARTING MOTOR GP-ELECTRIC	1562
			—OR—	
Y	*323-6678*	1	STARTING MOTOR GP-ELECTRIC	1568
Y	*233-9445*	1	SWITCH GP-PRESSURE (ENGINE OIL)	1577
R	**359-0731**	1	CYLINDER BLOCK GP-SHORT	
			AVAILABLE REPAIR KIT(S):	
	272-0494	1	KIT-GASKET (BOTTOM)	
	277-5156	1	KIT-GASKET (TOP)	

R - REMANUFACTURED PART MAY BE AVAILABLE
Y - SEPARATE ILLUSTRATION

<END>

207-1108 ENGINE AR-PRIMARY

62 BRAKE KW (83 BHP)AT 2200 RPM

SMCS-1000 **i05460977**

NOTE	PART NUMBER	QTY	PART NAME 1 2 3 4 5 6 (PRODUCT LEVEL)	SEE PAGE
Y	*243-4301*	1	ALTERNATOR GP-CHARGING	1531
Y	*230-7581*	1	CONNECTION GP-INLET	1037
Y	*231-0038*	1	CONNECTION GP-WATER	870
Y	*253-2473*	1	COOLER GP-FLTR BASE & ENG OIL	909
Y	*230-9196*	1	COVER GP-FRONT HOUSING	231
Y	*230-9139*	1	COVER GP-VALVE MECHANISM	241
Y	*243-4280*	1	DRIVE GP-FAN	572
Y	*235-0365*	1	ELBOW GP-EXHAUST	1064
Y	*234-0809*	1	ENGINE AR-CORE	3
Y	*243-4297*	1	EXTENSION GP-FAN	587
Y	*232-7378*	1	FILTER GP-ENGINE OIL	861
Y	*243-4334*	1	FILTER GP-FUEL	1153
Y	*243-4279*	1	FLYWHEEL GP	597
Y	*232-6661*	1	GLOW PLUG GP	1547
Y	*223-7825*	1	HOUSING GP-FLYWHEEL	608
Y	*232-6179*	1	HOUSING GP-FRONT	626
Y	*232-3713*	1	LIFTING GP-ENGINE	647
Y	*231-0292*	1	MANIFOLD GP-EXHAUST	1070
Y	*230-8278*	1	PAN GP-OIL (ENGINE)	693
Y	*243-2416*	1	PLUG GP-ENGINE	826
Y	*232-6204*	1	PLUG GP-ENGINE (CYLINDER HEAD)	821
Y	*225-4317*	1	PLUG GP-ENGINE (FRONT HOUSING, CYLINDER HEAD)	816
Y	*230-7351*	1	PULLEY GP-CRANKSHAFT	830
			S/N: 3341-25630	
Y	*360-7349*	1	PULLEY GP-CRANKSHAFT	834
			S/N: 33425631-UP	
Y	*243-4305*	1	PUMP GP-ENGINE OIL	864
Y	*233-7974*	1	PUMP GP-FUEL INJECTION	1191
			—OR—	
Y	*274-4964*	1	PUMP GP-FUEL INJECTION	1421
Y	*230-7355*	1	PUMP GP-WATER	992
Y	*234-9666*	1	STARTING MOTOR GP-ELECTRIC	1562
			—OR—	
Y	*323-6678*	1	STARTING MOTOR GP-ELECTRIC	1568
Y	*233-9445*	1	SWITCH GP-PRESSURE (ENGINE OIL)	1577
R	**359-0731**	1	CYLINDER BLOCK GP-SHORT	
			AVAILABLE GASKET KIT(S):	
	272-0494	1	KIT-GASKET (BOTTOM)	
	277-5156	1	KIT-GASKET (TOP)	

R - REMANUFACTURED PART MAY BE AVAILABLE
Y - SEPARATE ILLUSTRATION

<END>

207-1119 ENGINE AR-PRIMARY

97 BRAKE KW (130 BHP) AT 2200 RPM

SMCS-1000 **i04342072**

NOTE	PART NUMBER	QTY	PART NAME 1 2 3 4 5 6 (PRODUCT LEVEL)	SEE PAGE
Y	*243-4185*	1	TURBOCHARGER GP (AIR CLEANER, TURBOCHARGER)	1101
Y	*243-4149*	1	ALTERNATOR GP-CHARGING	1530
Y	*254-3775*	1	CONNECTION GP-INLET	1042
Y	*231-0033*	1	CONNECTION GP-WATER	868
Y	*238-2799*	1	COOLER GP-FLTR BASE & ENG OIL	901
Y	*236-1238*	1	COVER GP-VALVE MECHANISM	298
Y	*243-3274*	1	DRIVE GP-ACCESSORY	553
Y	*243-3196*	1	DRIVE GP-FAN	571
Y	*243-3185*	1	ENGINE AR-CORE	4
Y	*243-3203*	1	FAN GP-SUCTION	985
Y	*232-7378*	1	FILTER GP-ENGINE OIL	861
Y	*243-3398*	1	FLYWHEEL GP	596
Y	*232-6661*	1	GLOW PLUG GP	1547
Y	*224-2162*	1	HOUSING GP-FLYWHEEL	609
Y	*243-3272*	1	HOUSING GP-FRONT	636
Y	*232-3713*	1	LIFTING GP-ENGINE	647
Y	*243-3275*	1	MOUNTING GP-ENGINE	655
Y	*243-2455*	1	PAN GP-OIL (ENGINE)	715
Y	*225-4317*	1	PLUG GP-ENGINE (FRONT HOUSING, CYLINDER HEAD)	816
Y	*232-6204*	1	PLUG GP-ENGINE (CYLINDER HEAD)	821
Y	*230-7352*	1	PULLEY GP-CRANKSHAFT	831
			S/N: 3341-25630	
Y	*360-7350*	1	PULLEY GP-CRANKSHAFT	835
			S/N: 3341-25631	
Y	*232-1827*	1	PUMP GP-FUEL INJECTION	1175
Y	*233-9417*	1	PUMP GP-FUEL PRM & PRIM FILTER	1505
Y	*230-7355*	1	PUMP GP-WATER	992
Y	*235-0367*	1	SEPARATOR GP-WATER	1522
Y	*243-2420*	1	STARTING AID GP (SWITCH)	1558
Y	*234-9666*	1	STARTING MOTOR GP-ELECTRIC	1562
Y	*253-0756*	1	SWITCH GP-PRESSURE (ENGINE OIL)	1579
R	**359-0734**	1	CYLINDER BLOCK GP-SHORT	
			AVAILABLE GASKET KIT(S):	
	272-0494	1	KIT-GASKET (BOTTOM)	
	277-5156	1	KIT-GASKET (TOP)	

R - REMANUFACTURED PART MAY BE AVAILABLE
Y - SEPARATE ILLUSTRATION

<END>

207-1125 ENGINE AR-PRIMARY

75 BRAKE KW (100 BHP) AT 2200 RPM

SMCS-1000 **i04328431**

NOTE	PART NUMBER	QTY	PART NAME 1 2 3 4 5 6 (PRODUCT LEVEL)	SEE PAGE
Y	*236-8196*	1	ALTERNATOR GP-CHARGING	1527
Y	*231-0033*	1	CONNECTION GP-WATER	868
Y	*238-2799*	1	COOLER GP-FLTR BASE & ENG OIL	901
Y	*231-0149*	1	COVER GP-INLET MANIFOLD	1052
Y	*236-1238*	1	COVER GP-VALVE MECHANISM	298
Y	*243-3274*	1	DRIVE GP-ACCESSORY	553
Y	*243-3196*	1	DRIVE GP-FAN	571
Y	*243-3185*	1	ENGINE AR-CORE	4
Y	*243-3203*	1	FAN GP-SUCTION	985
Y	*232-7378*	1	FILTER GP-ENGINE OIL	861
Y	*230-7291*	1	FLYWHEEL GP	591
Y	*232-6661*	1	GLOW PLUG GP	1547
Y	*224-2162*	1	HOUSING GP-FLYWHEEL	609
Y	*243-3272*	1	HOUSING GP-FRONT	636
Y	*232-3713*	1	LIFTING GP-ENGINE	647
Y	*243-3275*	1	MOUNTING GP-ENGINE	655
Y	*243-3202*	1	PAN GP-OIL (ENGINE)	721
Y	*232-6204*	1	PLUG GP-ENGINE (CYLINDER HEAD)	821
Y	*225-4317*	1	PLUG GP-ENGINE (FRONT HOUSING, CYLINDER HEAD)	816
Y	*230-7352*	1	PULLEY GP-CRANKSHAFT	831
			S/N: 3341-25630	
Y	*360-7350*	1	PULLEY GP-CRANKSHAFT	835
			S/N: 33425631-UP	
Y	*230-7578*	1	PUMP GP-ENGINE OIL	863
Y	*236-8229*	1	PUMP GP-FUEL INJECTION	1255
Y	*233-9417*	1	PUMP GP-FUEL PRM & PRIM FILTER	1505
Y	*230-7355*	1	PUMP GP-WATER	992
Y	*235-0367*	1	SEPARATOR GP-WATER	1522
Y	*243-2420*	1	STARTING AID GP (SWITCH)	1558
Y	*234-9666*	1	STARTING MOTOR GP-ELECTRIC	1562
			—OR—	
Y	*323-6678*	1	STARTING MOTOR GP-ELECTRIC	1568
Y	*253-0756*	1	SWITCH GP-PRESSURE (ENGINE OIL)	1579
Y	*235-5234*	1	TURBOCHARGER GP	1081
R	**359-0734**	1	CYLINDER BLOCK GP-SHORT	
			AVAILABLE REPAIR KIT(S):	
	272-0494	1	KIT-GASKET (BOTTOM)	
	277-5156	1	KIT-GASKET (TOP)	

R - REMANUFACTURED PART MAY BE AVAILABLE
Y - SEPARATE ILLUSTRATION

<END>

207-1126 ENGINE AR-PRIMARY

62 BRAKE KW (83 BHP) AT 2200 RPM

SMCS-1000 **i05460982**

NOTE	PART NUMBER	QTY	PART NAME 1 2 3 4 5 6 (PRODUCT LEVEL)	SEE PAGE
Y	*253-6199*	1	ALTERNATOR GP-CHARGING	1533
Y	*253-6204*	1	CONNECTION GP-INLET	1040
Y	*231-0038*	1	CONNECTION GP-WATER	870
Y	*253-6184*	1	COOLER GP-FLTR BASE & ENG OIL	923
Y	*230-9196*	1	COVER GP-FRONT HOUSING	231
Y	*230-9151*	1	COVER GP-VALVE MECHANISM	266
Y	*253-0728*	1	DRIVE GP-FAN	578
Y	*234-0809*	1	ENGINE AR-CORE	3
Y	*243-4297*	1	EXTENSION GP-FAN	587
Y	*232-7378*	1	FILTER GP-ENGINE OIL	861
Y	*243-4334*	1	FILTER GP-FUEL	1153
Y	*238-4769*	1	FLANGE GP-EXHAUST	1067
Y	*243-4279*	1	FLYWHEEL GP	597
Y	*232-6661*	1	GLOW PLUG GP	1547
Y	*223-7825*	1	HOUSING GP-FLYWHEEL	608
Y	*232-6179*	1	HOUSING GP-FRONT	626
Y	*232-3713*	1	LIFTING GP-ENGINE	647
Y	*231-0292*	1	MANIFOLD GP-EXHAUST	1070
Y	*230-8278*	1	PAN GP-OIL (ENGINE)	693
Y	*225-4317*	1	PLUG GP-ENGINE (FRONT HOUSING, CYLINDER HEAD)	816
Y	*243-2416*	1	PLUG GP-ENGINE	826
Y	*230-7351*	1	PULLEY GP-CRANKSHAFT	830
			S/N: 3341-25630	
Y	*360-7349*	1	PULLEY GP-CRANKSHAFT	834
			S/N: 3341-25631	
Y	*243-4305*	1	PUMP GP-ENGINE OIL	864
Y	*267-9413*	1	PUMP GP-FUEL INJECTION	1339
Y	*230-7355*	1	PUMP GP-WATER	992
Y	*234-9666*	1	STARTING MOTOR GP-ELECTRIC	1562
			—OR—	
Y	*323-6678*	1	STARTING MOTOR GP-ELECTRIC	1568
Y	*253-0756*	1	SWITCH GP-PRESSURE (ENGINE OIL)	1579
Y	*235-8749*	1	SWITCH GP-TEMPERATURE (ENGINE COOLANT)	1582
R	**359-0731**	1	CYLINDER BLOCK GP-SHORT	
			AVAILABLE GASKET KIT(S):	
	272-0494	1	KIT-GASKET (BOTTOM)	
	277-5156	1	KIT-GASKET (TOP)	

R - REMANUFACTURED PART MAY BE AVAILABLE
Y - SEPARATE ILLUSTRATION

<END>

207-1131 ENGINE AR-PRIMARY

95 BRAKE KW (128 BHP) AT 2200 RPM

SMCS-1000 **i04335794**

NOTE	PART NUMBER	QTY	PART NAME 1 2 3 4 5 6 (PRODUCT LEVEL)	SEE PAGE
Y	*245-4664*	1	ALTERNATOR GP-CHARGING	1532
Y	*234-0617*	1	BALANCER GP	199
Y	*245-4665*	1	CONNECTOR GP-CAB HEATER LINES	872
Y	*260-3135*	1	CONNECTION GP-INLET	1044
Y	*230-8086*	1	CONNECTION GP-WATER	867
Y	*240-5535*	1	CONVERTER GP-ELECTRICAL	1543
Y	*235-5230*	1	COOLER GP-FLTR BASE & ENG OIL	890
Y	*236-8190*	1	COVER GP-VALVE MECHANISM	310
Y	*235-1044*	1	DRIVE GP-ACCESSORY	551
Y	*198-4576*	1	DRIVE GP-FAN	561
Y	*232-9761*	1	ENGINE AR-CORE	3
Y	*232-7378*	1	FILTER GP-ENGINE OIL	861
Y	*235-0322*	1	FLYWHEEL GP	593
Y	*233-9834*	1	GLOW PLUG GP	1549
Y	*235-0321*	1	HOUSING GP-FLYWHEEL	612
Y	*232-6179*	1	HOUSING GP-FRONT	626
Y	*233-7432*	1	LIFTING GP-ENGINE	648
Y	*198-5823*	1	PAN GP-OIL	679
Y	*253-2479*	1	PLUG GP-ENGINE (CYLINDER BLOCK)	827
Y	*232-6204*	1	PLUG GP-ENGINE (CYLINDER HEAD)	821
Y	*234-3542*	1	PLUG GP-FLYWHEEL HOUSING	828
Y	*230-7351*	1	PULLEY GP-CRANKSHAFT	830
			S/N: 3341-25630	
Y	*360-7349*	1	PULLEY GP-CRANKSHAFT	834
			S/N: 33425631-UP	
Y	*233-9526*	1	PUMP GP-FUEL INJECTION	1216
Y	*233-9417*	1	PUMP GP-FUEL PRM & PRIM FILTER	1505
Y	*230-7355*	1	PUMP GP-WATER	992
Y	*230-7304*	1	STARTING MOTOR GP-ELECTRIC	1561
Y	*232-6197*	1	TURBOCHARGER GP	1075
R	**359-0734**	1	CYLINDER BLOCK GP-SHORT	
			AVAILABLE REPAIR KIT(S):	
	272-0494	1	KIT-GASKET (BOTTOM)	
	277-5156	1	KIT-GASKET (TOP)	

R - REMANUFACTURED PART MAY BE AVAILABLE
Y - SEPARATE ILLUSTRATION

<END>

207-1133 ENGINE AR-PRIMARY

86 BRAKE KW (115 BHP) AT 2200 RPM

SMCS-1000 **i04338989**

NOTE	PART NUMBER	QTY	PART NAME 1 2 3 4 5 6 (PRODUCT LEVEL)	SEE PAGE
Y	*243-4185*	1	TURBOCHARGER GP (AIR CLEANER, TURBOCHARGER)	1101
Y	*236-8196*	1	ALTERNATOR GP-CHARGING	1527
Y	*234-0617*	1	BALANCER GP	199
Y	*231-0033*	1	CONNECTION GP-WATER	868
Y	*235-5230*	1	COOLER GP-FLTR BASE & ENG OIL	890
Y	*230-9196*	1	COVER GP-FRONT HOUSING	231
Y	*236-8190*	1	COVER GP-VALVE MECHANISM	310
Y	*236-8181*	1	DRIVE GP-FAN	568
Y	*244-2099*	1	ENGINE AR-CORE	4
Y	*236-8195*	1	FAN GP-SUCTION	983
Y	*232-7378*	1	FILTER GP-ENGINE OIL	861
Y	*235-0322*	1	FLYWHEEL GP	593
Y	*232-6661*	1	GLOW PLUG GP	1547
Y	*235-0321*	1	HOUSING GP-FLYWHEEL	612
Y	*232-6179*	1	HOUSING GP-FRONT	626
Y	*232-3713*	1	LIFTING GP-ENGINE	647
Y	*235-0366*	1	MOUNTING GP-ENGINE	654
Y	*233-8150*	1	PAN GP-OIL (ENGINE)	701
Y	*254-3775*	1	CONNECTION GP-INLET	1042
Y	*225-4317*	1	PLUG GP-ENGINE (FRONT HOUSING, CYLINDER HEAD)	816
Y	*230-7352*	1	PULLEY GP-CRANKSHAFT	831
			S/N: 3341-25630	
Y	*360-7350*	1	PULLEY GP-CRANKSHAFT	835
			S/N: 33425631-UP	
Y	*237-7999*	1	PUMP GP-FUEL INJECTION	1283
Y	*233-9417*	1	PUMP GP-FUEL PRM & PRIM FILTER	1505
Y	*230-7355*	1	PUMP GP-WATER	992
Y	*236-8785*	1	RADIATOR GP	996
Y	*236-8758*	1	SENDER GP-TEMPERATURE	1555
Y	*235-0367*	1	SEPARATOR GP-WATER	1522
Y	*236-8212*	1	STARTING AID GP (SWITCH)	1557
Y	*234-9666*	1	STARTING MOTOR GP-ELECTRIC	1562
Y	*253-0756*	1	SWITCH GP-PRESSURE (ENGINE OIL)	1579
R	**359-0734**	1	CYLINDER BLOCK GP-SHORT	
			AVAILABLE GASKET KIT(S):	
	272-0494	1	KIT-GASKET (BOTTOM)	
	277-5156	1	KIT-GASKET (TOP)	

R - REMANUFACTURED PART MAY BE AVAILABLE
Y - SEPARATE ILLUSTRATION

<END>

207-1134 ENGINE AR-PRIMARY

95 BRAKE KW (127 BHP) AT 2200 RPM

SMCS-1000 **i04339031**

NOTE	PART NUMBER	QTY	PART NAME 1 2 3 4 5 6 (PRODUCT LEVEL)	SEE PAGE
Y	*243-4185*	1	TURBOCHARGER GP (AIR CLEANER, TURBOCHARGER)	1101
Y	*236-8196*	1	ALTERNATOR GP-CHARGING	1527
Y	*234-0617*	1	BALANCER GP	199
Y	*231-0033*	1	CONNECTION GP-WATER	868
Y	*235-5230*	1	COOLER GP-FLTR BASE & ENG OIL	890
Y	*230-9196*	1	COVER GP-FRONT HOUSING	231
Y	*236-8190*	1	COVER GP-VALVE MECHANISM	310
Y	*236-8181*	1	DRIVE GP-FAN	568
Y	*232-9761*	1	ENGINE AR-CORE	3
Y	*236-8195*	1	FAN GP-SUCTION	983
Y	*232-7378*	1	FILTER GP-ENGINE OIL	861
Y	*235-0322*	1	FLYWHEEL GP	593
Y	*232-6661*	1	GLOW PLUG GP	1547
Y	*235-0321*	1	HOUSING GP-FLYWHEEL	612
Y	*232-6179*	1	HOUSING GP-FRONT	626
Y	*232-3713*	1	LIFTING GP-ENGINE	647
Y	*235-0366*	1	MOUNTING GP-ENGINE	654
Y	*233-8150*	1	PAN GP-OIL (ENGINE)	701
Y	*254-3775*	1	CONNECTION GP-INLET	1042
Y	*225-4317*	1	PLUG GP-ENGINE (FRONT HOUSING, CYLINDER HEAD)	816
Y	*230-7352*	1	PULLEY GP-CRANKSHAFT	831
			S/N: 3341-25630	
Y	*360-7350*	1	PULLEY GP-CRANKSHAFT	835
			S/N: 33425631-UP	
Y	*232-1827*	1	PUMP GP-FUEL INJECTION	1175
Y	*233-9417*	1	PUMP GP-FUEL PRM & PRIM FILTER	1505
Y	*230-7355*	1	PUMP GP-WATER	992
Y	*236-8785*	1	RADIATOR GP	996
Y	*236-8758*	1	SENDER GP-TEMPERATURE	1555
Y	*235-0367*	1	SEPARATOR GP-WATER	1522
Y	*236-8212*	1	STARTING AID GP (SWITCH)	1557
Y	*234-9666*	1	STARTING MOTOR GP-ELECTRIC	1562
Y	*253-0756*	1	SWITCH GP-PRESSURE (ENGINE OIL)	1579
R	**359-0734**	1	CYLINDER BLOCK GP-SHORT	
			AVAILABLE GASKET KIT(S):	
	272-0494	1	KIT-GASKET (BOTTOM)	
	239-9897	1	KIT-GASKET (TOP)	

R - REMANUFACTURED PART MAY BE AVAILABLE
Y - SEPARATE ILLUSTRATION

<END>

207-1144 ENGINE AR-PRIMARY

81 BRAKE KW (108 BHP) AT 2400 RPM

SMCS-1000 **i09678043**

NOTE	PART NUMBER	QTY	PART NAME 1 2 3 4 5 6 (PRODUCT LEVEL)	SEE PAGE
Y	**235-0028**	1	ALTERNATOR GP-CHARGING	1526
Y	*316-8482*	1	CAMSHAFT GP	214
Y	*254-3775*	1	CONNECTION GP-INLET	1042
Y	*231-0033*	1	CONNECTION GP-WATER	868
Y	*238-2799*	1	COOLER GP-FLTR BASE & ENG OIL	901
Y	*230-9196*	1	COVER GP-FRONT HOUSING	231
Y	*234-0251*	1	COVER GP-VALVE MECHANISM	274
Y	*316-8479*	1	CRANKSHAFT GP	475
Y	*316-8478*	1	CYLINDER BLOCK GP	516
Y	*316-8481*	1	CYLINDER HEAD GP	542
Y	*234-9680*	1	DRIVE GP-FAN	566
Y	*232-9761*	1	ENGINE AR-CORE	3
Y	*232-7378*	1	FILTER GP-ENGINE OIL	861
Y	*243-3398*	1	FLYWHEEL GP	596
Y	*232-6661*	1	GLOW PLUG GP	1547
Y	*224-2162*	1	HOUSING GP-FLYWHEEL	609
Y	*232-6179*	1	HOUSING GP-FRONT	626
Y	*232-3713*	1	LIFTING GP-ENGINE	647
Y	*234-9738*	1	MOUNTING GP-FAN	991
Y	*243-2455*	1	PAN GP-OIL (ENGINE)	715
Y	*316-8480*	1	PISTON & ROD GP	802
Y	*225-4317*	1	PLUG GP-ENGINE (FRONT HOUSING, CYLINDER HEAD)	816
Y	*232-6204*	1	PLUG GP-ENGINE (CYLINDER HEAD)	821
Y	*235-2624*	1	PLUG GP-ENGINE	825
Y	*230-7353*	1	PULLEY GP-CRANKSHAFT	832
			S/N: 3341-25630	
Y	*360-7351*	1	PULLEY GP-CRANKSHAFT	836
			S/N: 33425631-UP	
Y	*230-7578*	1	PUMP GP-ENGINE OIL	863
Y	*233-9405*	1	PUMP GP-FUEL INJECTION	1204
Y	*233-9417*	1	PUMP GP-FUEL PRM & PRIM FILTER	1505
Y	*230-7355*	1	PUMP GP-WATER	992
Y	*234-9666*	1	STARTING MOTOR GP-ELECTRIC	1562
			—OR—	
Y	*323-6678*	1	STARTING MOTOR GP-ELECTRIC	1568
Y	*253-0756*	1	SWITCH GP-PRESSURE (ENGINE OIL)	1579
Y	*233-9780*	1	TURBOCHARGER GP	1079
Y	*316-8483*	1	VALVE MECHANISM GP	855
R	**359-0734**	1	CYLINDER BLOCK GP-SHORT	
			AVAILABLE GASKET KIT(S):	
	272-0494	1	KIT-GASKET (BOTTOM)	
	277-5156	1	KIT-GASKET (TOP)	

R - REMANUFACTURED PART MAY BE AVAILABLE
Y - SEPARATE ILLUSTRATION

<END>

207-1145 ENGINE AR-PRIMARY

97 BRAKE KW (130 BHP) AT 2200 RPM

SMCS-1000 **i09683392**

NOTE	PART NUMBER	QTY	PART NAME 1 2 3 4 5 6 (PRODUCT LEVEL)	SEE PAGE
Y	**235-0028**	1	ALTERNATOR GP-CHARGING	1526
Y	*316-8482*	1	CAMSHAFT GP	214
Y	*254-3775*	1	CONNECTION GP-INLET	1042
Y	*231-0033*	1	CONNECTION GP-WATER	868
Y	*238-2799*	1	COOLER GP-FLTR BASE & ENG OIL	901
Y	*230-9196*	1	COVER GP-FRONT HOUSING	231
Y	*234-0251*	1	COVER GP-VALVE MECHANISM	274
Y	*316-8479*	1	CRANKSHAFT GP	475
Y	*316-8478*	1	CYLINDER BLOCK GP	516
Y	*316-8481*	1	CYLINDER HEAD GP	542
Y	*234-9680*	1	DRIVE GP-FAN	566
Y	*232-9761*	1	ENGINE AR-CORE	3
Y	*232-7378*	1	FILTER GP-ENGINE OIL	861
Y	*243-3398*	1	FLYWHEEL GP	596
Y	*232-6661*	1	GLOW PLUG GP	1547
Y	*234-9665*	1	HOUSING GP-FLYWHEEL	611
Y	*232-6179*	1	HOUSING GP-FRONT	626
Y	*232-3713*	1	LIFTING GP-ENGINE	647
Y	*234-9738*	1	MOUNTING GP-FAN	991
Y	*243-2455*	1	PAN GP-OIL	715
Y	*316-8480*	1	PISTON & ROD GP	802
Y	*225-4317*	1	PLUG GP-ENGINE (FRONT HOUSING, CYLINDER HEAD)	816
Y	*232-6204*	1	PLUG GP-ENGINE (CYLINDER HEAD)	821
Y	*235-2624*	1	PLUG GP-ENGINE	825
Y	*230-7353*	1	PULLEY GP-CRANKSHAFT	832
			S/N: 3341-25630	
Y	*360-7351*	1	PULLEY GP-CRANKSHAFT	836
			S/N: 33425631-UP	
Y	*230-7578*	1	PUMP GP-ENGINE OIL	863
Y	*232-1827*	1	PUMP GP-FUEL INJECTION	1175
Y	*233-9417*	1	PUMP GP-FUEL PRM & PRIM FILTER	1505
Y	*230-7355*	1	PUMP GP-WATER	992
Y	*234-9666*	1	STARTING MOTOR GP-ELECTRIC	1562
			—OR—	
Y	*323-6678*	1	STARTING MOTOR GP-ELECTRIC	1568
Y	*253-0756*	1	SWITCH GP-PRESSURE (ENGINE OIL)	1579
Y	*232-6197*	1	TURBOCHARGER GP	1075
Y	*316-8483*	1	VALVE MECHANISM GP	855
R	**359-0734**	1	CYLINDER BLOCK GP-SHORT	
			AVAILABLE GASKET KIT(S):	
	272-0494	1	KIT-GASKET (BOTTOM)	
	277-5156	1	KIT-GASKET (TOP)	

R - REMANUFACTURED PART MAY BE AVAILABLE
Y - SEPARATE ILLUSTRATION

<END>

207-1149 ENGINE AR-PRIMARY

62 BRAKE KW (83 BHP) AT 2400 RPM

SMCS-1000 **i04417131**

NOTE	PART NUMBER	QTY	PART NAME 1 2 3 4 5 6 (PRODUCT LEVEL)	SEE PAGE
Y	*243-4149*	1	ALTERNATOR GP-CHARGING	1530
Y	*234-0617*	1	BALANCER GP	199
Y	*233-7236*	1	CAMSHAFT GP	204
Y	*230-7581*	1	CONNECTION GP-INLET	1037
Y	*231-0033*	1	CONNECTION GP-WATER	868
Y	*234-1546*	1	COOLER GP-FLTR BASE & ENG OIL	886
Y	*235-3554*	1	COVER GP-VALVE MECHANISM	282
Y	*233-7027*	1	CRANKSHAFT GP	454
Y	*233-7007*	1	CYLINDER BLOCK GP	497
Y	*233-7234*	1	CYLINDER HEAD GP	532
Y	*244-1649*	1	DRIVE GP-FAN	573
Y	*260-3215*	1	FAN GP-SUCTION	987
Y	*232-7378*	1	FILTER GP-ENGINE OIL	861
Y	*238-4769*	1	FLANGE GP-EXHAUST	1067
Y	*230-7291*	1	FLYWHEEL GP	591
Y	*232-6661*	1	GLOW PLUG GP	1547
Y	*235-0321*	1	HOUSING GP-FLYWHEEL	612
Y	*232-3670*	1	HOUSING GP-FRONT	622
Y	*232-3713*	1	LIFTING GP-ENGINE	647
Y	*231-0286*	1	MANIFOLD GP-EXHAUST	1069
Y	*252-4475*	1	MOUNTING GP-ENGINE	657
Y	*233-8150*	1	PAN GP-OIL (ENGINE)	701
Y	*233-7233*	1	PISTON & ROD GP	770
Y	*225-4317*	1	PLUG GP-ENGINE (FRONT HOUSING, CYLINDER HEAD)	816
Y	*230-7569*	1	PLUG GP-ENGINE (OIL FILL)	819
Y	*230-7352*	1	PULLEY GP-CRANKSHAFT	831
			S/N: 3341-25630	
Y	*360-7350*	1	PULLEY GP-CRANKSHAFT	835
			S/N: 33425631-UP	
Y	*233-7974*	1	PUMP GP-FUEL INJECTION	1191
Y	*233-7425*	1	PUMP GP-FUEL PRM & PRIM FILTER	1499
Y	*230-7355*	1	PUMP GP-WATER	992
Y	*236-8212*	1	STARTING AID GP (SWITCH)	1557
Y	*234-9666*	1	STARTING MOTOR GP-ELECTRIC	1562
			—OR—	
Y	*323-6678*	1	STARTING MOTOR GP-ELECTRIC	1568
Y	*237-4896*	1	SWITCH GP-PRESSURE (ENGINE OIL)	1578
Y	*235-8749*	1	SWITCH GP-TEMPERATURE (ENGINE COOLANT)	1582
			S/N: 3341-25653	
Y	*367-0594*	1	SWITCH GP-TEMPERATURE (COOLANT)	1583
			S/N: 33425654-UP	
Y	*233-7235*	1	VALVE MECHANISM GP	840
Y	*251-8423*	1	RADIATOR GP	1008
R	**359-0731**	1	CYLINDER BLOCK GP-SHORT	
			AVAILABLE GASKET KIT(S):	
	272-0494	1	KIT-GASKET (BOTTOM)	
	277-5156	1	KIT-GASKET (TOP)	

207-1149 **ENGINE AR-PRIMARY (**contd.**)** **i04417131**

NOTE	PART NUMBER	QTY	PART NAME 1 2 3 4 5 6 (PRODUCT LEVEL)	SEE PAGE

R - REMANUFACTURED PART MAY BE AVAILABLE
Y - SEPARATE ILLUSTRATION

<END>

207-1151 ENGINE AR-PRIMARY

60 BRAKE KW (80 BHP) AT 2200 RPM

SMCS-1000 **i04382433**

NOTE	PART NUMBER	QTY	PART NAME 1 2 3 4 5 6 (PRODUCT LEVEL)	SEE PAGE
Y	*267-9411*	1	ALTERNATOR GP-CHARGING	1534
Y	*264-0395*	1	BALANCER GP	200
Y	*233-7236*	1	CAMSHAFT GP	204
Y	*253-6204*	1	CONNECTION GP-INLET	1040
Y	*231-0033*	1	CONNECTION GP-WATER	868
Y	*267-9422*	1	COOLER GP-FLTR BASE & ENG OIL	947
Y	*230-9196*	1	COVER GP-FRONT HOUSING	231
Y	*267-9420*	1	COVER GP-VALVE MECHANISM	346
Y	*233-7027*	1	CRANKSHAFT GP	454
Y	*233-7007*	1	CYLINDER BLOCK GP	497
Y	*233-7234*	1	CYLINDER HEAD GP	532
Y	*267-9412*	1	DRIVE GP-FAN	579
Y	*253-6191*	1	EXTENSION GP-FAN	588
Y	*225-7942*	1	FILTER GP-ENGINE OIL	860
Y	*235-0322*	1	FLYWHEEL GP	593
Y	*232-6661*	1	GLOW PLUG GP	1547
Y	*235-0321*	1	HOUSING GP-FLYWHEEL	612
Y	*232-6179*	1	HOUSING GP-FRONT	626
Y	*232-3713*	1	LIFTING GP-ENGINE	647
Y	*237-5408*	1	MANIFOLD GP-EXHAUST	1071
Y	*235-0366*	1	MOUNTING GP-ENGINE	654
Y	*233-8150*	1	PAN GP-OIL (ENGINE)	701
Y	*233-7233*	1	PISTON & ROD GP	770
Y	*225-4317*	1	PLUG GP-ENGINE (FRONT HOUSING, CYLINDER HEAD)	816
Y	*232-3716*	1	PLUG GP-ENGINE (CYLINDER BLOCK)	820
Y	*232-6204*	1	PLUG GP-ENGINE	821
Y	*230-7352*	1	PULLEY GP-CRANKSHAFT	831
			S/N: 3341-25630	
Y	*360-7350*	1	PULLEY GP-CRANKSHAFT	835
			S/N: 33425631-UP	
Y	*267-9413*	1	PUMP GP-FUEL INJECTION	1339
Y	*233-7425*	1	PUMP GP-FUEL PRM & PRIM FILTER	1499
Y	*230-7355*	1	PUMP GP-WATER	992
Y	*235-0367*	1	SEPARATOR GP-WATER	1522
Y	*234-9666*	1	STARTING MOTOR GP-ELECTRIC	1562
			—OR—	
Y	*323-6678*	1	STARTING MOTOR GP-ELECTRIC	1568
Y	*233-7235*	1	VALVE MECHANISM GP	840
R	**359-0731**	1	CYLINDER BLOCK GP-SHORT	
			AVAILABLE GASKET KIT(S):	
	272-0494	1	KIT-GASKET (BOTTOM)	
	277-5156	1	KIT-GASKET (TOP)	

R - REMANUFACTURED PART MAY BE AVAILABLE
Y - SEPARATE ILLUSTRATION

<END>

207-1153 ENGINE AR-PRIMARY

95 BRAKE KW (127 BHP) AT 2200 RPM

SMCS-1000 **i04328829**

NOTE	PART NUMBER	QTY	PART NAME 1 2 3 4 5 6 (PRODUCT LEVEL)	SEE PAGE
Y	*236-9965*	1	ALTERNATOR GP-CHARGING	1528
Y	*234-0617*	1	BALANCER GP	199
Y	*232-7528*	1	CAMSHAFT GP	203
Y	*260-3135*	1	CONNECTION GP-INLET	1044
Y	*231-0033*	1	CONNECTION GP-WATER	868
Y	*240-5535*	1	CONVERTER GP-ELECTRICAL	1543
Y	*235-5230*	1	COOLER GP-FLTR BASE & ENG OIL	890
Y	*236-8190*	1	COVER GP-VALVE MECHANISM	310
Y	*232-7439*	1	CRANKSHAFT GP	451
Y	*232-7606*	1	CYLINDER BLOCK GP	495
Y	*232-7524*	1	CYLINDER HEAD GP	531
Y	*235-1044*	1	DRIVE GP-ACCESSORY	551
Y	*236-8181*	1	DRIVE GP-FAN	568
Y	*267-5695*	1	FAN GP-SUCTION	988
Y	*232-7378*	1	FILTER GP-ENGINE OIL	861
Y	*235-0322*	1	FLYWHEEL GP	593
Y	*233-9834*	1	GLOW PLUG GP	1549
Y	*235-0321*	1	HOUSING GP-FLYWHEEL	612
Y	*235-1419*	1	HOUSING GP-FRONT	630
Y	*232-3713*	1	LIFTING GP-ENGINE	647
Y	*267-5698*	1	MOUNTING GP-ENGINE	662
Y	*233-8150*	1	PAN GP-OIL (ENGINE)	701
Y	*232-7442*	1	PISTON & ROD GP	764
Y	*225-4317*	1	PLUG GP-ENGINE (FRONT HOUSING, CYLINDER HEAD)	816
Y	*230-7352*	1	PULLEY GP-CRANKSHAFT	831
			S/N: 33425630-UP	
Y	*360-7350*	1	PULLEY GP-CRANKSHAFT	835
			S/N: 3341-25631	
Y	*233-9526*	1	PUMP GP-FUEL INJECTION	1216
Y	*233-9417*	1	PUMP GP-FUEL PRM & PRIM FILTER	1505
Y	*230-7355*	1	PUMP GP-WATER	992
Y	*236-8785*	1	RADIATOR GP	996
Y	*236-9970*	1	SENDER GP-TEMPERATURE	1556
Y	*235-0367*	1	SEPARATOR GP-WATER	1522
Y	*236-8212*	1	STARTING AID GP (SWITCH)	1557
Y	*230-7304*	1	STARTING MOTOR GP-ELECTRIC	1561
Y	*253-0756*	1	SWITCH GP-PRESSURE (ENGINE OIL)	1579
Y	*236-8760*	1	TURBOCHARGER GP	1089
Y	*232-7526*	1	VALVE MECHANISM GP	839
R	**359-0734**	1	CYLINDER BLOCK GP-SHORT	
			AVAILABLE GASKET KIT(S):	
	272-0494	1	KIT-GASKET (BOTTOM)	
	277-5156	1	KIT-GASKET (TOP)	

R - REMANUFACTURED PART MAY BE AVAILABLE
Y - SEPARATE ILLUSTRATION

<END>

207-1159 ENGINE AR-PRIMARY

64 BRAKE KW (86 BHP) AT 2400 RPM

SMCS-1000 **i04389630**

NOTE	PART NUMBER	QTY	PART NAME 1 2 3 4 5 6 (PRODUCT LEVEL)	SEE PAGE
Y	*233-7236*	1	CAMSHAFT GP	204
Y	*231-0033*	1	CONNECTION GP-WATER	868
Y	*267-5081*	1	COOLER GP-FLTR BASE & ENG OIL	935
Y	*230-9196*	1	COVER GP-FRONT HOUSING	231
Y	*230-9139*	1	COVER GP-VALVE MECHANISM	241
Y	*233-7027*	1	CRANKSHAFT GP	454
Y	*233-7007*	1	CYLINDER BLOCK GP	497
Y	*233-7234*	1	CYLINDER HEAD GP	532
Y	*233-7491*	1	ELBOW GP-AIR INLET	1054
Y	*232-7378*	1	FILTER GP-ENGINE OIL	861
Y	*232-6661*	1	GLOW PLUG GP	1547
Y	*232-6179*	1	HOUSING GP-FRONT	626
Y	*232-3713*	1	LIFTING GP-ENGINE	647
Y	*231-0292*	1	MANIFOLD GP-EXHAUST	1070
Y	*267-5101*	1	MOUNTING GP-ENGINE	661
Y	*230-8253*	1	PAN GP-OIL (ENGINE)	689
Y	*233-7233*	1	PISTON & ROD GP	770
Y	*225-4317*	1	PLUG GP-ENGINE (FRONT HOUSING, CYLINDER HEAD)	816
Y	*230-7351*	1	PULLEY GP-CRANKSHAFT	830
			S/N: 3341-25630	
Y	*360-7349*	1	PULLEY GP-CRANKSHAFT	834
			S/N: 33425631-UP	
Y	*243-4305*	1	PUMP GP-ENGINE OIL	864
Y	*233-7974*	1	PUMP GP-FUEL INJECTION	1191
Y	*233-7425*	1	PUMP GP-FUEL PRM & PRIM FILTER	1499
Y	*230-7355*	1	PUMP GP-WATER	992
Y	*236-8212*	1	STARTING AID GP (SWITCH)	1557
Y	*237-4896*	1	SWITCH GP-PRESSURE (ENGINE OIL)	1578
Y	*235-8749*	1	SWITCH GP-TEMPERATURE (ENGINE COOLANT)	1582
Y	*233-7235*	1	VALVE MECHANISM GP	840
R	**359-0731**	1	CYLINDER BLOCK GP-SHORT	
			AVAILABLE GASKET KIT(S):	
	272-0494	1	KIT-GASKET (BOTTOM)	
	277-5156	1	KIT-GASKET (TOP)	

R - REMANUFACTURED PART MAY BE AVAILABLE
Y - SEPARATE ILLUSTRATION

<END>

207-1160 ENGINE AR-PRIMARY

86 BRAKE KW (115 BHP) AT 2200 RPM

SMCS-1000 **i06998405**

NOTE	PART NUMBER	QTY	PART NAME 1 2 3 4 5 6 (PRODUCT LEVEL)	SEE PAGE
Y	*236-9965*	1	ALTERNATOR GP-CHARGING	1528
Y	*244-2096*	1	CAMSHAFT GP	209
Y	*260-3135*	1	CONNECTION GP-INLET	1044
Y	*231-0033*	1	CONNECTION GP-WATER	868
Y	*240-5535*	1	CONVERTER GP-ELECTRICAL	1543
Y	*238-2799*	1	COOLER GP-FLTR BASE & ENG OIL	901
Y	*230-9196*	1	COVER GP-FRONT HOUSING	231
Y	*236-8190*	1	COVER GP-VALVE MECHANISM	310
Y	*244-2081*	1	CRANKSHAFT GP	467
Y	*244-2014*	1	CYLINDER BLOCK GP	509
Y	*244-2088*	1	CYLINDER HEAD GP	537
Y	*236-8181*	1	DRIVE GP-FAN	568
Y	*236-9963*	1	FAN GP-BLOWER	979
Y	*260-3128*	1	FILTER & LINES GP-FUEL	1140
Y	*232-7378*	1	FILTER GP-ENGINE OIL	861
Y	*243-3398*	1	FLYWHEEL GP	596
Y	*224-2162*	1	HOUSING GP-FLYWHEEL	609
Y	*232-6179*	1	HOUSING GP-FRONT	626
Y	*232-3713*	1	LIFTING GP-ENGINE	647
Y	*267-5698*	1	MOUNTING GP-ENGINE	662
Y	*243-2455*	1	PAN GP-OIL (ENGINE)	715
Y	*244-2083*	1	PISTON & ROD GP	790
Y	*225-4317*	1	PLUG GP-ENGINE (FRONT HOUSING, CYLINDER HEAD)	816
Y	*230-7352*	1	PULLEY GP-CRANKSHAFT	831
			S/N: 3341-25630	
Y	*360-7350*	1	PULLEY GP-CRANKSHAFT	835
			S/N: 33425631-UP	
Y	*230-7578*	1	PUMP GP-ENGINE OIL	863
Y	*272-1393*	1	PUMP GP-FUEL INJECTION	1392
Y	*233-9417*	1	PUMP GP-FUEL PRM & PRIM FILTER	1505
Y	*230-7355*	1	PUMP GP-WATER	992
Y	*236-8785*	1	RADIATOR GP	996
Y	*243-2420*	1	STARTING AID GP (SWITCH)	1558
Y	*230-7304*	1	STARTING MOTOR GP-ELECTRIC	1561
Y	*237-4896*	1	SWITCH GP-PRESSURE (ENGINE OIL)	1578
Y	*235-8749*	1	SWITCH GP-TEMPERATURE (ENGINE COOLANT)	1582
			S/N: 3341-25631	
Y	*367-0594*	1	SWITCH GP-TEMPERATURE	1583
			S/N: 33417076-UP	
Y	*236-8760*	1	TURBOCHARGER GP	1089
Y	*244-2093*	1	VALVE MECHANISM GP	847
R	**359-0734**	1	CYLINDER BLOCK GP-SHORT	
			AVAILABLE GASKET KIT(S):	
	277-5156	1	KIT-GASKET (TOP)	
	272-0494	1	KIT-GASKET (BOTTOM)	

R - REMANUFACTURED PART MAY BE AVAILABLE
Y - SEPARATE ILLUSTRATION

<END>

207-1161 ENGINE AR-PRIMARY*R

75 BRAKE KW (100 BHP) AT 2200 RPM

SMCS-1000 **i06845887**

NOTE	PART NUMBER	QTY	PART NAME 1 2 3 4 5 6 (PRODUCT LEVEL)	SEE PAGE
Y	*236-9965*	1	ALTERNATOR GP-CHARGING	1528
Y	*232-7528*	1	CAMSHAFT GP	203
Y	*231-0033*	1	CONNECTION GP-WATER	868
Y	*240-5535*	1	CONVERTER GP-ELECTRICAL	1543
Y	*268-0868*	1	COOLER GP-FLTR BASE & ENG OIL	953
Y	*251-6242*	1	COVER GP-CYLINDER HEAD	219
Y	*288-1532*	1	COVER GP-VALVE MECHANISM	402
Y	*232-7439*	1	CRANKSHAFT GP	451
Y	*232-7606*	1	CYLINDER BLOCK GP	495
Y	*232-7524*	1	CYLINDER HEAD GP	531
Y	*251-6697*	1	DRIVE GP-FAN	576
Y	*260-3215*	1	FAN GP-SUCTION	987
Y	*260-3128*	1	FILTER & LINES GP-FUEL	1140
Y	*232-7378*	1	FILTER GP-ENGINE OIL	861
Y	*235-0322*	1	FLYWHEEL GP	593
Y	*233-9834*	1	GLOW PLUG GP	1549
Y	*224-2162*	1	HOUSING GP-FLYWHEEL	609
Y	*232-3670*	1	HOUSING GP-FRONT	622
Y	*232-3713*	1	LIFTING GP-ENGINE	647
Y	*252-4475*	1	MOUNTING GP-ENGINE	657
Y	*243-3202*	1	PAN GP-OIL	721
Y	*232-7442*	1	PISTON & ROD GP	764
Y	*225-4317*	1	PLUG GP-ENGINE	816
Y	*230-7569*	1	PLUG GP-ENGINE	819
Y	*230-7352*	1	PULLEY GP-CRANKSHAFT	831
			S/N: 3341-25630	
Y	*360-7350*	1	PULLEY GP-CRANKSHAFT	835
			S/N: 33425631-UP	
Y	*230-7578*	1	PUMP GP-ENGINE OIL	863
Y	*237-8259*	1	PUMP GP-FUEL INJECTION	1296
Y	*233-9417*	1	PUMP GP-FUEL PRM & PRIM FILTER	1505
Y	*230-7355*	1	PUMP GP-WATER	992
Y	*251-8423*	1	RADIATOR GP	1008
Y	*236-9970*	1	SENDER GP-TEMPERATURE	1556
Y	*236-8212*	1	STARTING AID GP (SWITCH)	1557
Y	*230-7304*	1	STARTING MOTOR GP-ELECTRIC	1561
Y	*253-0756*	1	SWITCH GP-PRESSURE (ENGINE OIL)	1579
Y	*241-1699*	1	TURBOCHARGER GP	1095
Y	*232-7526*	1	VALVE MECHANISM GP	839
R	**359-0734**	1	CYLINDER BLOCK GP-SHORT	
			AVAILABLE GASKET KIT(S):	
	272-2232	1	KIT-GASKET (BOTTOM)	
	277-5156	1	KIT-GASKET (TOP)	

R - REMANUFACTURED PART MAY BE AVAILABLE
Y - SEPARATE ILLUSTRATION

<END>

207-1163 ENGINE AR-PRIMARY

81 BRAKE KW (108 BHP) AT 2400 RPM

SMCS-1000 **i04339109**

NOTE	PART NUMBER	QTY	PART NAME 1 2 3 4 5 6 (PRODUCT LEVEL)	SEE PAGE
Y	*233-9533*	1	ALTERNATOR GP-CHARGING	1524
Y	*260-3135*	1	CONNECTION GP-INLET	1044
Y	*231-0033*	1	CONNECTION GP-WATER	868
Y	*242-6131*	1	CONVERTER GP-ELECTRICAL	1544
Y	*238-2799*	1	COOLER GP-FLTR BASE & ENG OIL	901
Y	*230-9196*	1	COVER GP-FRONT HOUSING	231
Y	*230-9149*	1	COVER GP-VALVE MECHANISM	247
Y	*234-9680*	1	DRIVE GP-FAN	566
Y	*232-9761*	1	ENGINE AR-CORE	3
Y	*243-3203*	1	FAN GP-SUCTION	985
Y	*260-3128*	1	FILTER & LINES GP-FUEL	1140
Y	*232-7378*	1	FILTER GP-ENGINE OIL	861
Y	*243-3398*	1	FLYWHEEL GP	596
Y	*233-9834*	1	GLOW PLUG GP	1549
Y	*224-2162*	1	HOUSING GP-FLYWHEEL	609
Y	*232-6179*	1	HOUSING GP-FRONT	626
Y	*232-3713*	1	LIFTING GP-ENGINE	647
Y	*235-0366*	1	MOUNTING GP-ENGINE	654
Y	*243-2455*	1	PAN GP-OIL	715
Y	*225-4317*	1	PLUG GP-ENGINE	816
Y	*230-7353*	1	PULLEY GP-CRANKSHAFT	832
			S/N: 3341-25630	
Y	*360-7351*	1	PULLEY GP-CRANKSHAFT	836
			S/N: 33425631-UP	
Y	*230-7578*	1	PUMP GP-ENGINE OIL	863
Y	*233-9405*	1	PUMP GP-FUEL INJECTION	1204
Y	*233-9417*	1	PUMP GP-FUEL PRM & PRIM FILTER	1505
Y	*230-7355*	1	PUMP GP-WATER	992
Y	*243-2420*	1	STARTING AID GP (SWITCH)	1558
Y	*230-7304*	1	STARTING MOTOR GP-ELECTRIC	1561
Y	*253-0756*	1	SWITCH GP-PRESSURE (ENGINE OIL)	1579
Y	*235-8749*	1	SWITCH GP-TEMPERATURE (ENIGNE COOLANT)	1582
Y	*233-9780*	1	TURBOCHARGER GP	1079
R	**359-0734**	1	CYLINDER BLOCK GP-SHORT	
			AVAILABLE GASKET KIT(S):	
	272-0494	1	KIT-GASKET (BOTTOM)	
	277-5156	1	KIT-GASKET (TOP)	

R - REMANUFACTURED PART MAY BE AVAILABLE
Y - SEPARATE ILLUSTRATION

<END>

207-1164 ENGINE AR-PRIMARY

97 BRAKE KW (130 BHP) AT 2200 RPM

SMCS-1000 **i04328890**

NOTE	PART NUMBER	QTY	PART NAME 1 2 3 4 5 6 (PRODUCT LEVEL)	SEE PAGE
Y	*234-0617*	1	BALANCER GP	199
Y	*232-7528*	1	CAMSHAFT GP	203
Y	*231-0033*	1	CONNECTION GP-WATER	868
Y	*235-5230*	1	COOLER GP-FLTR BASE & ENG OIL	890
Y	*230-9149*	1	COVER GP-VALVE MECHANISM	247
Y	*232-7439*	1	CRANKSHAFT GP	451
Y	*232-7606*	1	CYLINDER BLOCK GP	495
Y	*232-7524*	1	CYLINDER HEAD GP	531
Y	*235-1044*	1	DRIVE GP-ACCESSORY	551
Y	*230-8066*	1	DRIVE GP-FAN	562
Y	*269-8077*	1	ELBOW GP-AIR INLET	1062
Y	*232-7378*	1	FILTER GP-ENGINE OIL	861
Y	*235-0322*	1	FLYWHEEL GP	593
Y	*232-6661*	1	GLOW PLUG GP	1547
Y	*235-0321*	1	HOUSING GP-FLYWHEEL	612
Y	*235-1419*	1	HOUSING GP-FRONT	630
Y	*232-3713*	1	LIFTING GP-ENGINE	647
Y	*235-1039*	1	MOUNTING GP-ALTERNATOR	650
Y	*235-0366*	1	MOUNTING GP-ENGINE	654
Y	*235-0343*	1	MOUNTING GP-FAN DRIVE	677
Y	*235-0328*	1	MOUNTING GP-MOTOR	1584
Y	*233-8150*	1	PAN GP-OIL	701
Y	*232-7442*	1	PISTON & ROD GP	764
Y	*225-4317*	1	PLUG GP-ENGINE	816
Y	*232-6204*	1	PLUG GP-ENGINE	821
Y	*253-2479*	1	PLUG GP-ENGINE	827
Y	*230-7352*	1	PULLEY GP-CRANKSHAFT	831
			S/N: 3341-25630	
Y	*360-7350*	1	PULLEY GP-CRANKSHAFT	835
			S/N: 33425631-UP	
Y	*232-1827*	1	PUMP GP-FUEL INJECTION	1175
Y	*233-9417*	1	PUMP GP-FUEL PRM & PRIM FILTER	1505
Y	*230-7355*	1	PUMP GP-WATER	992
Y	*232-6197*	1	TURBOCHARGER GP	1075
Y	*232-7526*	1	VALVE MECHANISM GP	839
R	**359-0734**	1	CYLINDER BLOCK GP-SHORT	
			AVAILABLE GASKET KIT(S):	
	272-0494	1	KIT-GASKET (BOTTOM)	
	277-5156	1	KIT-GASKET (TOP)	

R - REMANUFACTURED PART MAY BE AVAILABLE
Y - SEPARATE ILLUSTRATION

<END>

207-1165 ENGINE AR-PRIMARY

73 BRAKE KW (97 BHP) AT 2200 RPM

SMCS-1000 **i04350150**

NOTE	PART NUMBER	QTY	PART NAME 1 2 3 4 5 6 (PRODUCT LEVEL)	SEE PAGE
Y	*243-4301*	1	ALTERNATOR GP-CHARGING	1531
Y	*234-0617*	1	BALANCER GP	199
Y	*231-0033*	1	CONNECTION GP-WATER	868
Y	*235-5230*	1	COOLER GP-FLTR BASE & ENG OIL	890
Y	*231-0149*	1	COVER GP-INLET MANIFOLD	1052
Y	*230-9196*	1	COVER GP-FRONT HOUSING	231
Y	*230-9149*	1	COVER GP-VALVE MECHANISM	247
Y	*253-0728*	1	DRIVE GP-FAN	578
Y	*232-9761*	1	ENGINE AR-CORE	3
Y	*260-3215*	1	FAN GP-SUCTION	987
Y	*260-3128*	1	FILTER & LINES GP-FUEL	1140
Y	*232-7378*	1	FILTER GP-ENGINE OIL	861
Y	*235-3552*	1	FLYWHEEL GP	595
Y	*232-6661*	1	GLOW PLUG GP	1547
Y	*233-9834*	1	GLOW PLUG GP	1549
Y	*260-3214*	1	HOUSING GP-FLYWHEEL	617
Y	*235-1419*	1	HOUSING GP-FRONT	630
Y	*232-3713*	1	LIFTING GP-ENGINE	647
Y	*251-8335*	1	MOUNTING GP-ENGINE	656
Y	*233-8150*	1	PAN GP-OIL (ENGINE)	701
Y	*225-4317*	1	PLUG GP-ENGINE	816
Y	*230-7351*	1	PULLEY GP-CRANKSHAFT	830
Y	*236-8229*	1	PUMP GP-FUEL INJECTION	1255
Y	*233-9417*	1	PUMP GP-FUEL PRM & PRIM FILTER	1505
Y	*230-7355*	1	PUMP GP-WATER	992
Y	*251-8423*	1	RADIATOR GP	1008
Y	*236-8212*	1	STARTING AID GP (SWITCH)	1557
Y	*234-9666*	1	STARTING MOTOR GP-ELECTRIC	1562
			—OR—	
Y	*323-6678*	1	STARTING MOTOR GP-ELECTRIC	1568
Y	*237-4896*	1	SWITCH GP-PRESSURE (ENGINE OIL)	1578
Y	*235-8749*	1	SWITCH GP-TEMPERATURE (ENGINE COOLANT)	1582
			S/N: 3341-17285	
Y	*367-0594*	1	SWITCH GP-TEMPERATURE	1583
			S/N: 33417286-UP	
Y	*241-1699*	1	TURBOCHARGER GP	1095
	268-0867	1	CYLINDER BLOCK GP-SHORT	
			AVAILABLE GASKET KIT(S):	
	272-0494	1	KIT-GASKET (BOTTOM)	
	277-5156	1	KIT-GASKET (TOP)	

Y - SEPARATE ILLUSTRATION

<END>

207-1170 ENGINE AR-PRIMARY

62 BRAKE KW (83 BHP) AT 2400 RPM

SMCS-1000 **i07356649**

NOTE	PART NUMBER	QTY	PART NAME 1 2 3 4 5 6 (PRODUCT LEVEL)	SEE PAGE
Y	*243-4301*	1	ALTERNATOR GP-CHARGING	1531
Y	*234-0617*	1	BALANCER GP	199
Y	*233-7236*	1	CAMSHAFT GP	204
Y	*231-0038*	1	CONNECTION GP-WATER	870
Y	*234-1546*	1	COOLER GP-FLTR BASE & ENG OIL	886
Y	*235-8161*	1	COVER GP-VALVE MECHANISM	292
Y	*233-7027*	1	CRANKSHAFT GP	454
Y	*233-7007*	1	CYLINDER BLOCK GP	497
Y	*233-7234*	1	CYLINDER HEAD GP	532
Y	*235-1044*	1	DRIVE GP-ACCESSORY	551
Y	*268-3641*	1	DRIVE GP-FAN	580
Y	*268-3643*	1	ELBOW GP-EXHAUST	1066
Y	*260-3128*	1	FILTER & LINES GP-FUEL	1140
Y	*232-7378*	1	FILTER GP-ENGINE OIL	861
Y	*268-3627*	1	FLYWHEEL GP	600
Y	*232-6661*	1	GLOW PLUG GP	1547
Y	*268-3626*	1	HOUSING GP-FLYWHEEL	618
Y	*232-6179*	1	HOUSING GP-FRONT	626
Y	*232-3713*	1	LIFTING GP-ENGINE	647
Y	*231-0292*	1	MANIFOLD GP-EXHAUST	1070
Y	*268-5708*	1	MOUNTING GP-FAN DRIVE	678
Y	*233-8150*	1	PAN GP-OIL (ENGINE)	701
Y	*230-7581*	1	CONNECTION GP-INLET	1037
Y	*233-7233*	1	PISTON & ROD GP	770
Y	*225-4317*	1	PLUG GP-ENGINE (FRONT HOUSING, CYLINDER HEAD)	816
Y	*232-6204*	1	PLUG GP-ENGINE (CYLINDER HEAD)	821
Y	*233-9426*	1	PLUG GP-ENGINE	823
Y	*230-7351*	1	PULLEY GP-CRANKSHAFT	830
			S/N: 3341-25630	
Y	*360-7349*	1	PULLEY GP-CRANKSHAFT	834
			S/N: 33425631-UP	
YR	*266-3718*	1	PUMP GP-FUEL INJECTION	1337
Y	*233-7425*	1	PUMP GP-FUEL PRM & PRIM FILTER	1499
Y	*230-7355*	1	PUMP GP-WATER	992
Y	*268-3631*	1	STARTING MOTOR GP-ELECTRIC	1564
			—OR—	
Y	*328-6071*	1	STARTING MOTOR GP-ELECTRIC	1570
Y	*253-0756*	1	SWITCH GP-PRESSURE (ENGINE OIL)	1579
Y	*233-7235*	1	VALVE MECHANISM GP	840
R	**359-0731**	1	CYLINDER BLOCK GP-SHORT	
			AVAILABLE GASKET KIT(S):	
	272-0494	1	KIT-GASKET (BOTTOM)	
	277-5156	1	KIT-GASKET (TOP)	

R - REMANUFACTURED PART MAY BE AVAILABLE
Y - SEPARATE ILLUSTRATION

<END>

207-1171 ENGINE AR-PRIMARY

62 BRAKE KW (83 BHP) AT 2400 RPM

SMCS-1000 **i04389662**

NOTE	PART NUMBER	QTY	PART NAME 1 2 3 4 5 6 (PRODUCT LEVEL)	SEE PAGE
Y	*236-8196*	1	ALTERNATOR GP-CHARGING	1527
Y	*264-0395*	1	BALANCER GP	200
Y	*233-7236*	1	CAMSHAFT GP	204
Y	*238-8290*	1	CONNECTION GP-INLET	1039
Y	*231-0033*	1	CONNECTION GP-WATER	868
Y	*268-9708*	1	COOLER GP-FLTR BASE & ENG OIL	957
Y	*230-9196*	1	COVER GP-FRONT HOUSING	231
Y	*230-9139*	1	COVER GP-VALVE MECHANISM	241
Y	*233-7027*	1	CRANKSHAFT GP	454
Y	*233-7007*	1	CYLINDER BLOCK GP	497
Y	*233-7234*	1	CYLINDER HEAD GP	532
Y	*244-1649*	1	DRIVE GP-FAN	573
Y	*235-0365*	1	ELBOW GP-EXHAUST	1064
Y	*268-5339*	1	FAN GP-BLOWER	981
Y	*260-3128*	1	FILTER & LINES GP-FUEL	1140
Y	*232-7378*	1	FILTER GP-ENGINE OIL	861
Y	*230-7291*	1	FLYWHEEL GP	591
Y	*232-6661*	1	GLOW PLUG GP	1547
Y	*235-0321*	1	HOUSING GP-FLYWHEEL	612
Y	*232-6179*	1	HOUSING GP-FRONT	626
Y	*232-3713*	1	LIFTING GP-ENGINE	647
Y	*231-0292*	1	MANIFOLD GP-EXHAUST	1070
Y	*252-4475*	1	MOUNTING GP-ENGINE	657
Y	*268-5708*	1	MOUNTING GP-FAN DRIVE	678
Y	*198-5823*	1	PAN GP-OIL (ENGINE)	679
Y	*233-7233*	1	PISTON & ROD GP	770
Y	*225-4317*	1	PLUG GP-ENGINE (FRONT HOUSING, CYLINDER HEAD)	816
Y	*232-6204*	1	PLUG GP-ENGINE (CYLINDER HEAD)	821
Y	*253-2479*	1	PLUG GP-ENGINE	827
Y	*230-7352*	1	PULLEY GP-CRANKSHAFT	831
			S/N: 3341-25630	
Y	*360-7350*	1	PULLEY GP-CRANKSHAFT	835
			S/N: 33425631-UP	
YR	**266-3718**	1	PUMP GP-FUEL INJECTION	1337
Y	*233-7425*	1	PUMP GP-FUEL PRM & PRIM FILTER	1499
Y	*230-7355*	1	PUMP GP-WATER	992
Y	*251-8423*	1	RADIATOR GP	1008
Y	*243-2420*	1	STARTING AID GP (SWITCH)	1558
Y	*234-9666*	1	STARTING MOTOR GP-ELECTRIC	1562
			—OR—	
Y	*323-6678*	1	STARTING MOTOR GP-ELECTRIC	1568
Y	*233-7235*	1	VALVE MECHANISM GP	840
R	**359-0731**	1	CYLINDER BLOCK GP-SHORT	
			AVAILABLE GASKET KIT(S):	
	272-0494	1	KIT-GASKET (BOTTOM)	
	277-5156	1	KIT-GASKET (TOP)	

207-1171 **ENGINE AR-PRIMARY (**contd.**)** **i04389662**

NOTE	PART NUMBER	QTY	PART NAME 1 2 3 4 5 6 (PRODUCT LEVEL)	SEE PAGE

R - REMANUFACTURED PART MAY BE AVAILABLE
Y - SEPARATE ILLUSTRATION

<END>

207-1172 ENGINE AR-PRIMARY

73 BRAKE KW (97 BHP) AT 2400 RPM

SMCS-1000 **i04328929**

NOTE	PART NUMBER	QTY	PART NAME 1 2 3 4 5 6 (PRODUCT LEVEL)	SEE PAGE
Y	*236-8196*	1	ALTERNATOR GP-CHARGING	1527
Y	*234-0617*	1	BALANCER GP	199
Y	*232-7528*	1	CAMSHAFT GP	203
Y	*231-0033*	1	CONNECTION GP-WATER	868
Y	*235-5230*	1	COOLER GP-FLTR BASE & ENG OIL	890
Y	*231-0149*	1	COVER GP-INLET MANIFOLD	1052
Y	*230-9196*	1	COVER GP-FRONT HOUSING	231
Y	*230-9149*	1	COVER GP-VALVE MECHANISM	247
Y	*232-7439*	1	CRANKSHAFT GP	451
Y	*232-7606*	1	CYLINDER BLOCK GP	495
Y	*232-7524*	1	CYLINDER HEAD GP	531
Y	*251-6697*	1	DRIVE GP-FAN	576
Y	*260-3215*	1	FAN GP-SUCTION	987
Y	*260-3128*	1	FILTER & LINES GP-FUEL	1140
Y	*232-7378*	1	FILTER GP-ENGINE OIL	861
Y	*230-7291*	1	FLYWHEEL GP	591
Y	*232-6661*	1	GLOW PLUG GP	1547
Y	*235-0321*	1	HOUSING GP-FLYWHEEL	612
Y	*232-6179*	1	HOUSING GP-FRONT	626
Y	*232-3713*	1	LIFTING GP-ENGINE	647
Y	*252-4475*	1	MOUNTING GP-ENGINE	657
Y	*198-5823*	1	PAN GP-OIL (ENGINE)	679
Y	*232-7442*	1	PISTON & ROD GP	764
Y	*232-6204*	1	PLUG GP-ENGINE	821
Y	*225-4317*	1	PLUG GP-ENGINE	816
Y	*253-2479*	1	PLUG GP-ENGINE	827
Y	*230-7352*	1	PULLEY GP-CRANKSHAFT	831
			S/N: 3341-25630	
Y	*360-7350*	1	PULLEY GP-CRANKSHAFT	835
			S/N: 33425631-UP	
Y	*269-8487*	1	PUMP GP-FUEL INJECTION	1345
Y	*233-9417*	1	PUMP GP-FUEL PRM & PRIM FILTER	1505
Y	*230-7355*	1	PUMP GP-WATER	992
Y	*251-8423*	1	RADIATOR GP	1008
Y	*243-2420*	1	STARTING AID GP (SWITCH)	1558
Y	*234-9666*	1	STARTING MOTOR GP-ELECTRIC	1562
			—OR—	
Y	*323-6678*	1	STARTING MOTOR GP-ELECTRIC	1568
Y	*241-1699*	1	TURBOCHARGER GP	1095
Y	*232-7526*	1	VALVE MECHANISM GP	839
R	**359-0734**	1	CYLINDER BLOCK GP-SHORT	
			AVAILABLE GASKET KIT(S):	
	277-5156	1	KIT-GASKET (TOP)	
	272-0494	1	KIT-GASKET (BOTTOM)	

R - REMANUFACTURED PART MAY BE AVAILABLE
Y - SEPARATE ILLUSTRATION

<END>

207-1173 ENGINE AR-PRIMARY

64 BRAKE KW (86 BHP) AT 2400 RPM

SMCS-1000 **i04266889**

NOTE	PART NUMBER	QTY	PART NAME 1 2 3 4 5 6 (PRODUCT LEVEL)	SEE PAGE
Y	*236-9965*	1	ALTERNATOR GP-CHARGING	1528
Y	*233-7236*	1	CAMSHAFT GP	204
Y	*231-0033*	1	CONNECTION GP-WATER	868
Y	*240-5535*	1	CONVERTER GP-ELECTRICAL	1543
Y	*267-8797*	1	COOLER GP-FLTR BASE & ENG OIL	941
Y	*230-9128*	1	COVER GP-VALVE MECHANISM	235
Y	*233-7027*	1	CRANKSHAFT GP	454
Y	*233-7007*	1	CYLINDER BLOCK GP	497
Y	*233-7234*	1	CYLINDER HEAD GP	532
Y	*244-1649*	1	DRIVE GP-FAN	573
Y	*267-8817*	1	CONNECTION GP-INLET	1047
Y	*260-3215*	1	FAN GP-SUCTION	987
Y	*260-3128*	1	FILTER & LINES GP-FUEL	1140
Y	*225-7942*	1	FILTER GP-ENGINE OIL	860
Y	*238-4769*	1	FLANGE GP-EXHAUST	1067
Y	*230-7291*	1	FLYWHEEL GP	591
Y	*233-9834*	1	GLOW PLUG GP	1549
Y	*224-2162*	1	HOUSING GP-FLYWHEEL	609
Y	*232-3670*	1	HOUSING GP-FRONT	622
Y	*232-3713*	1	LIFTING GP-ENGINE	647
Y	*231-0292*	1	MANIFOLD GP-EXHAUST	1070
Y	*252-4475*	1	MOUNTING GP-ENGINE	657
Y	*230-8253*	1	PAN GP-OIL (ENGINE)	689
Y	*233-7233*	1	PISTON & ROD GP	770
Y	*225-4317*	1	PLUG GP-ENGINE (FRONT HOUSING, CYLINDER HEAD)	816
Y	*230-7569*	1	PLUG GP-ENGINE (OIL FILL)	819
Y	*230-7352*	1	PULLEY GP-CRANKSHAFT	831
Y	*243-4305*	1	PUMP GP-ENGINE OIL	864
Y	*240-5572*	1	PUMP GP-FUEL INJECTION	1303
Y	*233-7425*	1	PUMP GP-FUEL PRM & PRIM FILTER	1499
Y	*230-7355*	1	PUMP GP-WATER	992
Y	*251-8423*	1	RADIATOR GP	1008
Y	*230-7304*	1	STARTING MOTOR GP-ELECTRIC	1561
Y	*253-0756*	1	SWITCH GP-PRESSURE (ENGINE OIL)	1579
Y	*235-8749*	1	SWITCH GP-TEMPERATURE (ENGINE COOLANT)	1582
			S/N: 3341-18417	
Y	*367-0594*	1	SWITCH GP-TEMPERATURE	1583
			S/N: 33418418-UP	
Y	*233-7235*	1	VALVE MECHANISM GP	840
	267-5367	1	CYLINDER BLOCK GP-SHORT	
			AVAILABLE GASKET KIT(S):	
	272-0494	1	KIT-GASKET (BOTTOM)	
	277-5156	1	KIT-GASKET (TOP)	

Y - SEPARATE ILLUSTRATION

<END>

207-1175 ENGINE AR-PRIMARY

97 BRAKE KW (130 BHP) 2200 RPM

SMCS-1000 **i04901596**

NOTE	PART NUMBER	QTY	PART NAME 1 2 3 4 5 6 (PRODUCT LEVEL)	SEE PAGE
Y	*236-8196*	1	ALTERNATOR GP-CHARGING	1527
Y	*243-3184*	1	CAMSHAFT GP	207
Y	*231-0033*	1	CONNECTION GP-WATER	868
Y	*238-2799*	1	COOLER GP-FLTR BASE & ENG OIL	901
Y	*270-8904*	1	COVER GP-VALVE MECHANISM	374
Y	*243-3180*	1	CRANKSHAFT GP	461
Y	*243-3179*	1	CYLINDER BLOCK GP	505
Y	*243-3182*	1	CYLINDER HEAD GP	535
Y	*243-3274*	1	DRIVE GP-ACCESSORY	553
Y	*236-8181*	1	DRIVE GP-FAN	568
Y	*267-5695*	1	FAN GP-SUCTION	988
Y	*232-7378*	1	FILTER GP-ENGINE OIL	861
Y	*245-9831*	1	FLYWHEEL GP	598
Y	*232-6661*	1	GLOW PLUG GP	1547
Y	*223-7825*	1	HOUSING GP-FLYWHEEL	608
Y	*243-3272*	1	HOUSING GP-FRONT	636
Y	*232-3713*	1	LIFTING GP-ENGINE	647
Y	*260-3152*	1	MOUNTING GP-ENGINE	660
Y	*251-8284*	1	PAN GP-OIL (ENGINE)	736
Y	*254-3775*	1	CONNECTION GP-INLET	1042
Y	*243-3181*	1	PISTON & ROD GP	782
Y	*225-4317*	1	PLUG GP-ENGINE	816
Y	*230-7352*	1	PULLEY GP-CRANKSHAFT	831
			S/N: 3341-25630	
Y	*360-7350*	1	PULLEY GP-CRANKSHAFT	835
			S/N: 33425631-UP	
Y	*230-7578*	1	PUMP GP-ENGINE OIL	863
Y	*232-1827*	1	PUMP GP-FUEL INJECTION	1175
Y	*233-9417*	1	PUMP GP-FUEL PRM & PRIM FILTER	1505
Y	*230-7355*	1	PUMP GP-WATER	992
Y	*236-8785*	1	RADIATOR GP	996
Y	*265-5720*	1	SEPARATOR GP-WATER	1523
Y	*234-9666*	1	STARTING MOTOR GP-ELECTRIC	1562
			—OR—	
Y	*323-6678*	1	STARTING MOTOR GP-ELECTRIC	1568
Y	*237-4896*	1	SWITCH GP-PRESSURE (ENGINE OIL)	1578
Y	*235-8749*	1	SWITCH GP-TEMPERATURE (ENGINE COOLANT)	1582
			S/N: 3341-4952	
Y	*367-0594*	1	SWITCH GP-TEMPERATURE	1583
			S/N: 3344953-UP	
Y	*236-8760*	1	TURBOCHARGER GP	1089
Y	*243-3183*	1	VALVE MECHANISM GP	844
R	**359-0734**	1	CYLINDER BLOCK GP-SHORT	
			AVAILABLE GASKET KIT(S):	
	272-0494	1	KIT-GASKET (BOTTOM)	
	277-5156	1	KIT-GASKET (TOP)	

207-1175 **ENGINE AR-PRIMARY (**contd.**)** **i04901596**

NOTE	PART NUMBER	QTY	PART NAME 1 2 3 4 5 6 (PRODUCT LEVEL)	SEE PAGE
R - REMANUFACTURED PART MAY BE AVAILABLE Y - SEPARATE ILLUSTRATION				

<END>

213-0296 ENGINE AR-PRIMARY

80 BRAKE KW (108 BHP) AT 2400 RPM

SMCS-1000 **i04339311**

NOTE	PART NUMBER	QTY	PART NAME 1 2 3 4 5 6 (PRODUCT LEVEL)	SEE PAGE
Y	*235-0028*	1	ALTERNATOR GP-CHARGING	1526
Y	*231-0033*	1	CONNECTION GP-WATER	868
Y	*238-2799*	1	COOLER GP-FLTR BASE & ENG OIL	901
Y	*230-9196*	1	COVER GP-FRONT HOUSING	231
Y	*234-0251*	1	COVER GP-VALVE MECHANISM	274
Y	*234-9680*	1	DRIVE GP-FAN	566
Y	*232-9761*	1	ENGINE AR-CORE	3
Y	*232-7378*	1	FILTER GP-ENGINE OIL	861
Y	*243-3398*	1	FLYWHEEL GP	596
Y	*232-6661*	1	GLOW PLUG GP	1547
Y	*234-9665*	1	HOUSING GP-FLYWHEEL	611
Y	*232-6179*	1	HOUSING GP-FRONT	626
Y	*232-3713*	1	LIFTING GP-ENGINE	647
Y	*234-9738*	1	MOUNTING GP-FAN	991
Y	*230-8253*	1	PAN GP-OIL (ENGINE)	689
Y	*254-3775*	1	CONNECTION GP-INLET	1042
Y	*235-2624*	1	PLUG GP-ENGINE	825
Y	*232-6204*	1	PLUG GP-ENGINE (CYLINDER HEAD)	821
Y	*230-7353*	1	PULLEY GP-CRANKSHAFT	832
			S/N: 3341-25630	
Y	*360-7351*	1	PULLEY GP-CRANKSHAFT	836
			S/N: 33425631-UP	
Y	*230-7578*	1	PUMP GP-ENGINE OIL	863
Y	*233-9405*	1	PUMP GP-FUEL INJECTION	1204
Y	*233-9417*	1	PUMP GP-FUEL PRM & PRIM FILTER	1505
Y	*230-7355*	1	PUMP GP-WATER	992
Y	*234-9666*	1	STARTING MOTOR GP-ELECTRIC	1562
Y	*253-0756*	1	SWITCH GP-PRESSURE (ENGINE OIL)	1579
Y	*233-9780*	1	TURBOCHARGER GP	1079
R	**359-0734**	1	CYLINDER BLOCK GP-SHORT	
			AVAILABLE GASKET KIT(S):	
	277-5156	1	KIT-GASKET (TOP)	
	272-0494	1	KIT-GASKET (BOTTOM)	
R - REMANUFACTURED PART MAY BE AVAILABLE Y - SEPARATE ILLUSTRATION				

<END>

219-7588 ENGINE AR-PRIMARY*R

62 BRAKE KW (83 BHP) AT 2400 RPM

SMCS-1000 **i05460994**

NOTE	PART NUMBER	QTY	PART NAME 1 2 3 4 5 6 (PRODUCT LEVEL)	SEE PAGE
Y	*234-0617*	1	BALANCER GP	199
Y	*230-7581*	1	CONNECTION GP-INLET	1037
Y	*231-0033*	1	CONNECTION GP-WATER	868
Y	*234-1546*	1	COOLER GP-FLTR BASE & ENG OIL	886
Y	*230-9196*	1	COVER GP-FRONT HOUSING	231
Y	*230-9139*	1	COVER GP-VALVE MECHANISM	241
Y	*230-8083*	1	DRIVE GP-FAN	564
Y	*234-0809*	1	ENGINE AR-CORE	3
Y	*234-1421*	1	MOUNTING GP-EXHAUST	1072
			S/N: 3341-845	
Y	*235-0365*	1	ELBOW GP-EXHAUST	1064
			S/N: 334846-UP	
Y	*232-7378*	1	FILTER GP-ENGINE OIL	861
Y	*232-6661*	1	GLOW PLUG GP	1547
Y	*232-6179*	1	HOUSING GP-FRONT	626
Y	*232-3713*	1	LIFTING GP-ENGINE	647
Y	*231-0292*	1	MANIFOLD GP-EXHAUST	1070
Y	*233-8150*	1	PAN GP-OIL (ENGINE)	701
Y	*232-6204*	1	PLUG GP-ENGINE (CYLINDER HEAD)	821
Y	*225-4317*	1	PLUG GP-ENGINE (FRONT HOUSING, CYLINDER HEAD)	816
Y	*233-9426*	1	PLUG GP-ENGINE	823
Y	*230-7351*	1	PULLEY GP-CRANKSHAFT	830
			S/N: 3341-1976	
Y	*230-7352*	1	PULLEY GP-CRANKSHAFT	831
			S/N: 3341977-25630	
Y	*360-7350*	1	PULLEY GP-CRANKSHAFT	835
			S/N: 33425631-UP	
Y	*233-7974*	1	PUMP GP-FUEL INJECTION	1191
Y	*233-7425*	1	PUMP GP-FUEL PRM & PRIM FILTER	1499
Y	*230-7355*	1	PUMP GP-WATER	992
Y	*253-0756*	1	SWITCH GP-PRESSURE (ENGINE OIL)	1579
R	**359-0731**	1	CYLINDER BLOCK GP-SHORT	
			AVAILABLE GASKET KIT(S):	
	277-5156	1	KIT-GASKET (TOP)	
	272-0494	1	KIT-GASKET (BOTTOM)	

R - REMANUFACTURED PART MAY BE AVAILABLE
Y - SEPARATE ILLUSTRATION

<END>

219-7589 ENGINE AR-PRIMARY

64 BRAKE KW (86 BHP) AT 2400 RPM

SMCS-1000 **i04349201**

NOTE	PART NUMBER	QTY	PART NAME 1 2 3 4 5 6 (PRODUCT LEVEL)	SEE PAGE
Y	*231-0033*	1	CONNECTION GP-WATER	868
Y	*253-2472*	1	COOLER GP-FLTR BASE & ENG OIL	904
Y	*230-9196*	1	COVER GP-FRONT HOUSING	231
Y	*230-9139*	1	COVER GP-VALVE MECHANISM	241
Y	*230-8083*	1	DRIVE GP-FAN	564
Y	*234-0809*	1	ENGINE AR-CORE	3
Y	*235-0365*	1	ELBOW GP-EXHAUST	1064
Y	*232-7378*	1	FILTER GP-ENGINE OIL	861
Y	*235-0322*	1	FLYWHEEL GP	593
Y	*232-6661*	1	GLOW PLUG GP	1547
Y	*238-3016*	1	HOUSING GP-FLYWHEEL	615
Y	*232-6179*	1	HOUSING GP-FRONT	626
Y	*232-3713*	1	LIFTING GP-ENGINE	647
Y	*231-0292*	1	MANIFOLD GP-EXHAUST	1070
Y	*230-8253*	1	PAN GP-OIL (ENGINE)	689
Y	*230-7581*	1	CONNECTION GP-INLET	1037
Y	*233-9426*	1	PLUG GP-ENGINE	823
			—OR—	
Y	*235-2624*	1	PLUG GP-ENGINE	825
Y	*232-6204*	1	PLUG GP-ENGINE (CYLINDER HEAD)	821
Y	*225-4317*	1	PLUG GP-ENGINE (FRONT HOUSING, CYLINDER HEAD)	816
Y	*230-7352*	1	PULLEY GP-CRANKSHAFT	831
			S/N: 3341-25630	
Y	*360-7350*	1	PULLEY GP-CRANKSHAFT	835
			S/N: 33425631-UP	
Y	*230-7578*	1	PUMP GP-ENGINE OIL	863
Y	*233-7974*	1	PUMP GP-FUEL INJECTION	1191
Y	*233-7425*	1	PUMP GP-FUEL PRM & PRIM FILTER	1499
Y	*230-7355*	1	PUMP GP-WATER	992
Y	*330-8329*	1	STARTING MOTOR GP-ELECTRIC	1574
Y	*253-0756*	1	SWITCH GP-PRESSURE (ENGINE OIL)	1579
R	**359-0731**	1	CYLINDER BLOCK GP-SHORT	
			AVAILABLE GASKET KIT(S):	
	277-5156	1	KIT-GASKET (TOP)	
	272-0494	1	KIT-GASKET (BOTTOM)	

R - REMANUFACTURED PART MAY BE AVAILABLE
Y - SEPARATE ILLUSTRATION

<END>

219-7590 ENGINE AR-PRIMARY

95 BRAKE KW (127 BHP) AT 2200 RPM

SMCS-1000 **i04342389**

NOTE	PART NUMBER	QTY	PART NAME 1 2 3 4 5 6 (PRODUCT LEVEL)	SEE PAGE
Y	*234-0617*	1	BALANCER GP	199
Y	*254-3775*	1	CONNECTION GP-INLET	1042
Y	*231-0033*	1	CONNECTION GP-WATER	868
Y	*235-5230*	1	COOLER GP-FLTR BASE & ENG OIL	890
Y	*230-9196*	1	COVER GP-FRONT HOUSING	231
Y	*230-9149*	1	COVER GP-VALVE MECHANISM	247
Y	*230-8083*	1	DRIVE GP-FAN	564
Y	*232-9761*	1	ENGINE AR-CORE	3
Y	*232-7378*	1	FILTER GP-ENGINE OIL	861
Y	*232-6661*	1	GLOW PLUG GP	1547
Y	*232-6179*	1	HOUSING GP-FRONT	626
Y	*232-3713*	1	LIFTING GP-ENGINE	647
Y	*233-8150*	1	PAN GP-OIL (ENGINE)	701
Y	*232-6204*	1	PLUG GP-ENGINE (CYLINDER HEAD)	821
Y	*225-4317*	1	PLUG GP-ENGINE (FRONT HOUSING, CYLINDER HEAD)	816
Y	*233-9426*	1	PLUG GP-ENGINE	823
Y	*230-7352*	1	PULLEY GP-CRANKSHAFT	831
			S/N: 3341-25630	
Y	*360-7350*	1	PULLEY GP-CRANKSHAFT	835
			S/N: 33425631-UP	
Y	*232-1827*	1	PUMP GP-FUEL INJECTION	1175
Y	*233-9417*	1	PUMP GP-FUEL PRM & PRIM FILTER	1505
Y	*230-7355*	1	PUMP GP-WATER	992
Y	*253-0756*	1	SWITCH GP-PRESSURE (ENGINE OIL)	1579
Y	*233-9539*	1	TURBOCHARGER GP	1077
R	**359-0734**	1	CYLINDER BLOCK GP-SHORT	
			AVAILABLE GASKET KIT(S):	
	277-5156	1	KIT-GASKET (TOP)	
	272-0494	1	KIT-GASKET (BOTTOM)	

R - REMANUFACTURED PART MAY BE AVAILABLE
Y - SEPARATE ILLUSTRATION

<END>

219-7591 ENGINE AR-PRIMARY

91 BRAKE KW (122 BHP) AT 2300 RPM

SMCS-1000 **i04339329**

NOTE	PART NUMBER	QTY	PART NAME 1 2 3 4 5 6 (PRODUCT LEVEL)	SEE PAGE
Y	*231-0033*	1	CONNECTION GP-WATER	868
Y	*238-2799*	1	COOLER GP-FLTR BASE & ENG OIL	901
Y	*230-9196*	1	COVER GP-FRONT HOUSING	231
Y	*230-9149*	1	COVER GP-VALVE MECHANISM	247
Y	*230-8083*	1	DRIVE GP-FAN	564
Y	*232-9761*	1	ENGINE AR-CORE	3
Y	*232-7378*	1	FILTER GP-ENGINE OIL	861
Y	*232-6661*	1	GLOW PLUG GP	1547
Y	*232-6179*	1	HOUSING GP-FRONT	626
Y	*232-3713*	1	LIFTING GP-ENGINE	647
Y	*230-8253*	1	PAN GP-OIL (ENGINE)	689
Y	*254-3775*	1	CONNECTION GP-INLET	1042
Y	*225-4317*	1	PLUG GP-ENGINE (FRONT HOUSING, CYLINDER HEAD)	816
Y	*232-6204*	1	PLUG GP-ENGINE (CYLINDER HEAD)	821
Y	*233-9426*	1	PLUG GP-ENGINE	823
Y	*230-7352*	1	PULLEY GP-CRANKSHAFT	831
			S/N: 3341-25630	
Y	*360-7350*	1	PULLEY GP-CRANKSHAFT	835
			S/N: 33425631-UP	
Y	*230-7578*	1	PUMP GP-ENGINE OIL	863
Y	*234-2414*	1	PUMP GP-FUEL INJECTION	1231
Y	*233-9417*	1	PUMP GP-FUEL PRM & PRIM FILTER	1505
Y	*230-7355*	1	PUMP GP-WATER	992
Y	*253-0756*	1	SWITCH GP-PRESSURE (ENGINE OIL)	1579
Y	*249-0106*	1	TURBOCHARGER GP	1107
R	**359-0734**	1	CYLINDER BLOCK GP-SHORT	
			AVAILABLE GASKET KIT(S):	
	277-5156	1	KIT-GASKET (TOP)	
	272-0494	1	KIT-GASKET (BOTTOM)	

R - REMANUFACTURED PART MAY BE AVAILABLE
Y - SEPARATE ILLUSTRATION

<END>

222-2232 ENGINE AR-PRIMARY

64 BRAKE KW (86 BHP) AT 2400 RPM

SMCS-1000 **i02355831**

NOTE	PART NUMBER	QTY	PART NAME 1 2 3 4 5 6 (PRODUCT LEVEL)	SEE PAGE
			(NO SERVICED PARTS)	

<END>

222-2362 ENGINE AR-PRIMARY

92 BRAKE KW (123 BHP) AT 2400 RPM

SMCS-1000 **i02355845**

NOTE	PART NUMBER	QTY	PART NAME 1 2 3 4 5 6 (PRODUCT LEVEL)	SEE PAGE
			(NO SERVICED PARTS)	

<END>

223-6467 ENGINE AR-PRIMARY*R

91 BRAKE KW (122 BHP) AT 2300 RPM

SMCS-1000 **i05461120**

NOTE	PART NUMBER	QTY	PART NAME 1 2 3 4 5 6 (PRODUCT LEVEL)	SEE PAGE
Y	*256-4441*	1	CONNECTION GP-INLET	1043
Y	*231-0033*	1	CONNECTION GP-WATER	868
Y	*238-2799*	1	COOLER GP-FLTR BASE & ENG OIL	901
Y	*230-9196*	1	COVER GP-FRONT HOUSING	231
Y	*236-8190*	1	COVER GP-VALVE MECHANISM	310
Y	*230-8066*	1	DRIVE GP-FAN	562
			S/N: 3341-10725	
Y	*311-7449*	1	DRIVE GP-FAN	583
			S/N: 33410726-UP	
Y	*232-9761*	1	ENGINE AR-CORE	3
Y	*232-7378*	1	FILTER GP-ENGINE OIL	861
Y	*234-2431*	1	FILTER GP-FUEL	1145
Y	*290-7085*	1	FLYWHEEL GP	602
			S/N: 3347103-UP	
Y	*232-6661*	1	GLOW PLUG GP	1547
Y	*223-7825*	1	HOUSING GP-FLYWHEEL	608
			S/N: 3347103-UP	
Y	*232-6179*	1	HOUSING GP-FRONT	626
Y	*232-3713*	1	LIFTING GP-ENGINE	647
Y	*230-8278*	1	PAN GP-OIL (ENGINE)	693
Y	*225-4317*	1	PLUG GP-ENGINE (FRONT HOUSING, CYLINDER HEAD)	816
Y	*253-2479*	1	PLUG GP-ENGINE	827
Y	*232-6204*	1	PLUG GP-ENGINE (CYLINDER HEAD)	821
Y	*233-9426*	1	PLUG GP-ENGINE	823
			S/N: 3341-7102	
Y	*243-2416*	1	PLUG GP-ENGINE	826
			S/N: 3347103-UP	
Y	*230-7352*	1	PULLEY GP-CRANKSHAFT	831
			S/N: 3341-10725	
Y	*230-7353*	1	PULLEY GP-CRANKSHAFT	832
			S/N: 33410726-25630	
Y	*360-7351*	1	PULLEY GP-CRANKSHAFT	836
			S/N: 33425631-UP	
Y	*230-7578*	1	PUMP GP-ENGINE OIL	863
Y	*234-2414*	1	PUMP GP-FUEL INJECTION	1231
Y	*230-7355*	1	PUMP GP-WATER	992
Y	*283-3327*	1	TURBOCHARGER GP	1124
R	**359-0734**	1	CYLINDER BLOCK GP-SHORT	
			AVAILABLE GASKET KIT(S):	
	277-5156	1	KIT-GASKET (TOP)	
	272-0494	1	KIT-GASKET (BOTTOM)	

R - REMANUFACTURED PART MAY BE AVAILABLE
Y - SEPARATE ILLUSTRATION

<END>

223-6511 ENGINE AR-PRIMARY

89 BRAKE KW (119 BHP) AT 2300 RPM

SMCS-1000 **i05461829**

NOTE	PART NUMBER	QTY	PART NAME 1 2 3 4 5 6 (PRODUCT LEVEL)	SEE PAGE
Y	*234-0617*	1	BALANCER GP	199
Y	*231-0033*	1	CONNECTION GP-WATER	868
Y	*235-5230*	1	COOLER GP-FLTR BASE & ENG OIL	890
Y	*230-9196*	1	COVER GP-FRONT HOUSING	231
Y	*230-9149*	1	COVER GP-VALVE MECHANISM	247
Y	*230-8083*	1	DRIVE GP-FAN	564
Y	*232-9761*	1	ENGINE AR-CORE	3
Y	*232-7378*	1	FILTER GP-ENGINE OIL	861
Y	*232-6661*	1	GLOW PLUG GP	1547
Y	*232-6179*	1	HOUSING GP-FRONT	626
Y	*232-3713*	1	LIFTING GP-ENGINE	647
Y	*233-8150*	1	PAN GP-OIL (ENGINE)	701
Y	*254-3775*	1	CONNECTION GP-INLET	1042
Y	*225-4317*	1	PLUG GP-ENGINE (FRONT HOUSING, CYLINDER HEAD)	816
Y	*232-6204*	1	PLUG GP-ENGINE (CYLINDER HEAD)	821
Y	*233-9426*	1	PLUG GP-ENGINE	823
Y	*230-7352*	1	PULLEY GP-CRANKSHAFT	831
			S/N: 3341-25630	
Y	*360-7350*	1	PULLEY GP-CRANKSHAFT	835
			S/N: 33425631-UP	
Y	*234-2414*	1	PUMP GP-FUEL INJECTION	1231
			—OR—	
Y	*290-5525*	1	PUMP GP-FUEL INJECTION	1445
Y	*233-9417*	1	PUMP GP-FUEL PRM & PRIM FILTER	1505
Y	*230-7355*	1	PUMP GP-WATER	992
Y	*253-0756*	1	SWITCH GP-PRESSURE (ENGINE OIL)	1579
Y	*249-0106*	1	TURBOCHARGER GP	1107
R	**359-0734**	1	CYLINDER BLOCK GP-SHORT	
			AVAILABLE GASKET KIT(S):	
	277-5156	1	KIT-GASKET (TOP)	
	272-0494	1	KIT-GASKET (BOTTOM)	

R - REMANUFACTURED PART MAY BE AVAILABLE
Y - SEPARATE ILLUSTRATION

<END>

223-7570 ENGINE AR-PRIMARY

78 BRAKE KW (108 BHP) AT 2400 RPM

SMCS-1000 **i04342410**

NOTE	PART NUMBER	QTY	PART NAME 1 2 3 4 5 6 (PRODUCT LEVEL)	SEE PAGE
Y	*234-0617*	1	BALANCER GP	199
Y	*231-0033*	1	CONNECTION GP-WATER	868
Y	*235-5230*	1	COOLER GP-FLTR BASE & ENG OIL	890
Y	*230-9196*	1	COVER GP-FRONT HOUSING	231
Y	*230-9149*	1	COVER GP-VALVE MECHANISM	247
Y	*230-8083*	1	DRIVE GP-FAN	564
Y	*232-9761*	1	ENGINE AR-CORE	3
Y	*232-7378*	1	FILTER GP-ENGINE OIL	861
Y	*232-6661*	1	GLOW PLUG GP	1547
Y	*232-6179*	1	HOUSING GP-FRONT	626
Y	*232-3713*	1	LIFTING GP-ENGINE	647
Y	*233-8150*	1	PAN GP-OIL (ENGINE)	701
Y	*254-3775*	1	CONNECTION GP-INLET	1042
Y	*232-6204*	1	PLUG GP-ENGINE (CYLINDER HEAD)	821
Y	*225-4317*	1	PLUG GP-ENGINE (FRONT HOUSING, CYLINDER HEAD)	816
Y	*233-9426*	1	PLUG GP-ENGINE	823
Y	*230-7352*	1	PULLEY GP-CRANKSHAFT	831
			S/N: 3341-25630	
Y	*360-7350*	1	PULLEY GP-CRANKSHAFT	835
			S/N: 33425631-UP	
Y	*233-9405*	1	PUMP GP-FUEL INJECTION	1204
Y	*233-9417*	1	PUMP GP-FUEL PRM & PRIM FILTER	1505
Y	*230-7355*	1	PUMP GP-WATER	992
Y	*253-0756*	1	SWITCH GP-PRESSURE (ENGINE OIL)	1579
Y	*233-9780*	1	TURBOCHARGER GP	1079
R	**359-0734**	1	CYLINDER BLOCK GP-SHORT	
			AVAILABLE GASKET KIT(S):	
	277-5156	1	KIT-GASKET (TOP)	
	272-0494	1	KIT-GASKET (BOTTOM)	

R - REMANUFACTURED PART MAY BE AVAILABLE
Y - SEPARATE ILLUSTRATION

<END>

224-5874 ENGINE AR-PRIMARY

62 BRAKE KW (83 BHP) AT 2400 RPM

SMCS-1000 **i02335613**

NOTE	PART NUMBER	QTY	PART NAME 1 2 3 4 5 6 (PRODUCT LEVEL)	SEE PAGE
			(NO SERVICED PARTS)	

<END>

224-5875 ENGINE AR-PRIMARY

60 BRAKE KW (80 BHP) AT 2200 RPM

SMCS-1000 **i02335637**

NOTE	PART NUMBER	QTY	PART NAME 1 2 3 4 5 6 (PRODUCT LEVEL)	SEE PAGE
			(NO SERVICED PARTS)	
			<END>	

224-5877 ENGINE AR-PRIMARY

73 BRAKE KW (97 BHP) AT 2400 RPM

SMCS-1000 **i02343402**

NOTE	PART NUMBER	QTY	PART NAME 1 2 3 4 5 6 (PRODUCT LEVEL)	SEE PAGE
			(NO SERVICED PARTS)	
			<END>	

224-5878 ENGINE AR-PRIMARY

73 BRAKE KW (97 BHP) AT 2200 RPM

SMCS-1000 **i02335827**

NOTE	PART NUMBER	QTY	PART NAME 1 2 3 4 5 6 (PRODUCT LEVEL)	SEE PAGE
			(NO SERVICED PARTS)	
			<END>	

224-5879 ENGINE AR-PRIMARY

95 BRAKE KW (127 BHP) AT 2200 RPM

SMCS-1000 **i02335846**

NOTE	PART NUMBER	QTY	PART NAME 1 2 3 4 5 6 (PRODUCT LEVEL)	SEE PAGE
			(NO SERVICED PARTS)	
			<END>	

230-5539 ENGINE AR-PRIMARY

75 BRAKE KW (100 BHP) AT 2300 RPM

SMCS-1000 **i05461831**

NOTE	PART NUMBER	QTY	PART NAME 1 2 3 4 5 6 (PRODUCT LEVEL)	SEE PAGE
Y	*235-0028*	1	ALTERNATOR GP-CHARGING	1526
			S/N: 3341-2065	
Y	*268-1036*	1	ALTERNATOR GP-CHARGING	1535
			S/N: 3342066-UP	
Y	*230-8086*	1	CONNECTION GP-WATER	867
Y	*253-2475*	1	COOLER GP-FLTR BASE & ENG OIL	919
Y	*230-9196*	1	COVER GP-FRONT HOUSING	231
Y	*231-0149*	1	COVER GP-INLET MANIFOLD	1052
Y	*236-1238*	1	COVER GP-VALVE MECHANISM	298
			S/N: 3341-546	
Y	*230-9149*	1	COVER GP-VALVE MECHANISM	247
			S/N: 334547-UP	
Y	*235-2385*	1	DRIVE GP-FAN	567
			S/N: 3341-1816	
Y	*234-9680*	1	DRIVE GP-FAN	566
			S/N: 3341817-UP	
Y	*232-9761*	1	ENGINE AR-CORE	3
Y	*232-7378*	1	FILTER GP-ENGINE OIL	861
Y	*230-7291*	1	FLYWHEEL GP	591
Y	*232-6661*	1	GLOW PLUG GP	1547
Y	*224-2162*	1	HOUSING GP-FLYWHEEL	609
Y	*232-6179*	1	HOUSING GP-FRONT	626
Y	*233-7432*	1	LIFTING GP-ENGINE	648
			S/N: 3341-669	
Y	*243-2483*	1	LIFTING GP-ENGINE	649
			S/N: 334670-UP	
Y	*234-9738*	1	MOUNTING GP-FAN	991
Y	*230-8253*	1	PAN GP-OIL	689
			S/N: 3341-546	
Y	*243-3806*	1	PAN GP-OIL	727
			S/N: 334547-UP	
Y	*225-4317*	1	PLUG GP-ENGINE	816
Y	*234-3542*	1	PLUG GP-FLYWHEEL HOUSING	828
Y	*230-7353*	1	PULLEY GP-CRANKSHAFT	832
			S/N: 3341-25630	
Y	*360-7351*	1	PULLEY GP-CRANKSHAFT	836
			S/N: 33425631-UP	
Y	*230-7578*	1	PUMP GP-ENGINE OIL	863
Y	*236-2140*	1	PUMP GP-FUEL INJECTION	1243
Y	*233-9417*	1	PUMP GP-FUEL PRM & PRIM FILTER	1505
Y	*230-7355*	1	PUMP GP-WATER	992
Y	*235-0367*	1	SEPARATOR GP-WATER	1522
Y	*234-9666*	1	STARTING MOTOR GP-ELECTRIC	1562
			—OR—	
Y	*323-6678*	1	STARTING MOTOR GP-ELECTRIC	1568
Y	*253-0756*	1	SWITCH GP-PRESSURE (ENGINE OIL)	1579
Y	*236-1269*	1	TURBOCHARGER GP	1083
R	**359-0734**	1	CYLINDER BLOCK GP-SHORT	

230-5539 **ENGINE AR-PRIMARY (**contd.**)** **i05461831**

NOTE	PART NUMBER	QTY	PART NAME 1 2 3 4 5 6 (PRODUCT LEVEL)	SEE PAGE
			AVAILABLE REPAIR KIT(S):	
	277-5156	1	KIT-GASKET (TOP)	
	290-2495	1	KIT-GASKET (BOTTOM)	

R - REMANUFACTURED PART MAY BE AVAILABLE
Y - SEPARATE ILLUSTRATION

<END>

230-5540 ENGINE AR-PRIMARY

63 BRAKE KW (85 BHP) AT 2300 RPM

SMCS-1000 **i05646807**

NOTE	PART NUMBER	QTY	PART NAME 1 2 3 4 5 6 (PRODUCT LEVEL)	SEE PAGE
Y	*235-0028*	1	ALTERNATOR GP-CHARGING	1526
			S/N: 3341-2104	
Y	**268-1036**	1	ALTERNATOR GP-CHARGING	1535
			S/N: 3342105-UP	
Y	*230-7581*	1	CONNECTION GP-INLET	1037
Y	*230-8086*	1	CONNECTION GP-WATER	867
Y	*235-8562*	1	COOLER GP-FLTR BASE & ENG OIL	894
Y	*230-9196*	1	COVER GP-FRONT HOUSING	231
Y	*230-9139*	1	COVER GP-VALVE MECHANISM	241
Y	*235-2385*	1	DRIVE GP-FAN	567
			S/N: 3341-1816	
Y	*234-9680*	1	DRIVE GP-FAN	566
			S/N: 3341817-UP	
Y	*235-8175*	1	ELBOW GP-EXHAUST	1065
Y	*234-0809*	1	ENGINE AR-CORE	3
Y	*232-7378*	1	FILTER GP-ENGINE OIL	861
Y	*230-7291*	1	FLYWHEEL GP	591
Y	*232-6661*	1	GLOW PLUG GP	1547
Y	*224-2162*	1	HOUSING GP-FLYWHEEL	609
Y	*232-6179*	1	HOUSING GP-FRONT	626
Y	*233-7432*	1	LIFTING GP-ENGINE	648
Y	*231-0292*	1	MANIFOLD GP-EXHAUST	1070
Y	*234-9738*	1	MOUNTING GP-FAN	991
Y	*243-3806*	1	PAN GP-OIL (ENGINE)	727
Y	*225-4317*	1	PLUG GP-ENGINE	816
Y	*234-3542*	1	PLUG GP-FLYWHEEL HOUSING	828
Y	*230-7353*	1	PULLEY GP-CRANKSHAFT	832
			S/N: 3341-25630	
Y	*360-7351*	1	PULLEY GP-CRANKSHAFT	836
			S/N: 33425631-UP	
Y	*230-7578*	1	PUMP GP-ENGINE OIL	863
Y	*233-7974*	1	PUMP GP-FUEL INJECTION	1191
			—OR—	
Y	*274-4964*	1	PUMP GP-FUEL INJECTION	1421
Y	*233-7425*	1	PUMP GP-FUEL PRM & PRIM FILTER	1499
Y	*230-7355*	1	PUMP GP-WATER	992
Y	*235-0367*	1	SEPARATOR GP-WATER	1522
Y	*234-9666*	1	STARTING MOTOR GP-ELECTRIC	1562
			—OR—	
Y	*323-6678*	1	STARTING MOTOR GP-ELECTRIC	1568
Y	*233-9445*	1	SWITCH GP-PRESSURE (ENGINE OIL)	1577
Y	*235-8749*	1	SWITCH GP-TEMPERATURE (ENGINE COOLANT)	1582
R	**359-0731**	1	CYLINDER BLOCK GP-SHORT	
			AVAILABLE GASKET KIT(S):	
	277-5156	1	KIT-GASKET (TOP)	
	272-0494	1	KIT-GASKET (BOTTOM)	

230-5540 **ENGINE AR-PRIMARY (**contd.**)** **i05646807**

NOTE	PART NUMBER	QTY	PART NAME 1 2 3 4 5 6 (PRODUCT LEVEL)	SEE PAGE
R - REMANUFACTURED PART MAY BE AVAILABLE Y - SEPARATE ILLUSTRATION				

<END>

230-9719 ENGINE AR-PRIMARY

64 BRAKE KW (86 HBP) AT 2400 RPM

SMCS-1000 **i02335860**

NOTE	PART NUMBER	QTY	PART NAME 1 2 3 4 5 6 (PRODUCT LEVEL)	SEE PAGE
			(NO SERVICED PARTS)	

<END>

231-0178 ENGINE AR-PRIMARY

95 BRAKE KW (127 BHP) AT 2200 RPM

SMCS-1000 **i06845906**

NOTE	PART NUMBER	QTY	PART NAME 1 2 3 4 5 6 (PRODUCT LEVEL)	SEE PAGE
Y	*251-4551*	1	AIR CLEANER GP	1026
Y	*236-8196*	1	ALTERNATOR GP-CHARGING	1527
Y	*234-0617*	1	BALANCER GP	199
Y	*231-0033*	1	CONNECTION GP-WATER	868
Y	*235-5230*	1	COOLER GP-FLTR BASE & ENG OIL	890
Y	*230-9196*	1	COVER GP-FRONT HOUSING	231
Y	*236-8190*	1	COVER GP-VALVE MECHANISM	310
Y	*236-8181*	1	DRIVE GP-FAN	568
Y	*232-9761*	1	ENGINE AR-CORE	3
Y	*316-8485*	1	FAN GP	978
Y	*232-7378*	1	FILTER GP-ENGINE OIL	861
Y	*235-0322*	1	FLYWHEEL GP	593
Y	*232-6661*	1	GLOW PLUG GP	1547
Y	*235-0321*	1	HOUSING GP-FLYWHEEL	612
Y	*232-6179*	1	HOUSING GP-FRONT	626
Y	*232-3713*	1	LIFTING GP-ENGINE	647
Y	*235-0366*	1	MOUNTING GP-ENGINE	654
Y	*233-8150*	1	PAN GP-OIL (ENGINE)	701
Y	*254-3775*	1	CONNECTION GP-INLET	1042
Y	*225-4317*	1	PLUG GP-ENGINE	816
Y	*230-7352*	1	PULLEY GP-CRANKSHAFT	831
			S/N: 3341-25630	
Y	*360-7350*	1	PULLEY GP-CRANKSHAFT	835
			S/N: 33425631-UP	
Y	*232-1827*	1	PUMP GP-FUEL INJECTION	1175
Y	*232-9763*	1	PUMP GP-FUEL PRM & PRIM FILTER	1495
			S/N: 3341-571	
Y	*233-9417*	1	PUMP GP-FUEL PRM & PRIM FILTER	1505
			S/N: 334572-UP	
Y	*230-7355*	1	PUMP GP-WATER	992
Y	*236-8785*	1	RADIATOR GP	996
Y	*236-8758*	1	SENDER GP-TEMPERATURE	1555
Y	*235-0367*	1	SEPARATOR GP-WATER	1522
			S/N: 3341-4886	
Y	*260-3128*	1	FILTER & LINES GP-FUEL	1140
			S/N: 3344887-UP	
Y	*234-9666*	1	STARTING MOTOR GP-ELECTRIC	1562
			—OR—	
Y	*323-6678*	1	STARTING MOTOR GP-ELECTRIC	1568
Y	*236-8212*	1	STARTING AID GP (SWITCH)	1557
Y	*253-0756*	1	SWITCH GP-PRESSURE (ENGINE OIL)	1579
Y	*290-2489*	1	TURBOCHARGER GP	1132
R	**359-0734**	1	CYLINDER BLOCK GP-SHORT	
			AVAILABLE GASKET KIT(S):	
	272-0494	1	KIT-GASKET (BOTTOM)	
	277-5156	1	KIT-GASKET (TOP)	

231-0178 **ENGINE AR-PRIMARY (**contd.**)** **i06845906**

NOTE	PART NUMBER	QTY	PART NAME 1 2 3 4 5 6 (PRODUCT LEVEL)	SEE PAGE

R - REMANUFACTURED PART MAY BE AVAILABLE
Y - SEPARATE ILLUSTRATION

<END>

231-0179 ENGINE AR-PRIMARY

95 BRAKE KW (127 BHP) AT 2200 RPM

SMCS-1000 **i05461833**

NOTE	PART NUMBER	QTY	PART NAME 1 2 3 4 5 6 (PRODUCT LEVEL)	SEE PAGE
Y	*251-4551*	1	AIR CLEANER GP	1026
Y	*236-8196*	1	ALTERNATOR GP-CHARGING	1527
Y	*234-0617*	1	BALANCER GP	199
Y	*231-0033*	1	CONNECTION GP-WATER	868
Y	*235-5230*	1	COOLER GP-FLTR BASE & ENG OIL	890
Y	*230-9196*	1	COVER GP-FRONT HOUSING	231
Y	*236-8190*	1	COVER GP-VALVE MECHANISM	310
Y	*236-8181*	1	DRIVE GP-FAN	568
Y	*232-9761*	1	ENGINE AR-CORE	3
Y	*236-8195*	1	FAN GP-SUCTION	983
			S/N: 3341-4886	
Y	*267-5695*	1	FAN GP-SUCTION	988
			S/N: 3344887-UP	
Y	*232-7378*	1	FILTER GP-ENGINE OIL	861
Y	*235-0322*	1	FLYWHEEL GP	593
Y	*232-6661*	1	GLOW PLUG GP	1547
Y	*235-0321*	1	HOUSING GP-FLYWHEEL	612
Y	*232-6179*	1	HOUSING GP-FRONT	626
Y	*232-3713*	1	LIFTING GP-ENGINE	647
Y	*235-0366*	1	MOUNTING GP-ENGINE	654
Y	*233-8150*	1	PAN GP-OIL (ENGINE)	701
Y	*254-3775*	1	CONNECTION GP-INLET	1042
Y	*225-4317*	1	PLUG GP-ENGINE	816
Y	*230-7352*	1	PULLEY GP-CRANKSHAFT	831
			S/N: 3341-25630	
Y	*360-7350*	1	PULLEY GP-CRANKSHAFT	835
			S/N: 33425631-UP	
Y	*232-1827*	1	PUMP GP-FUEL INJECTION	1175
Y	*232-9763*	1	PUMP GP-FUEL PRM & PRIM FILTER	1495
			S/N: 3341-571	
Y	*233-9417*	1	PUMP GP-FUEL PRM & PRIM FILTER	1505
			S/N: 334572-UP	
Y	*230-7355*	1	PUMP GP-WATER	992
Y	*236-8785*	1	RADIATOR GP	996
Y	*236-8758*	1	SENDER GP-TEMPERATURE	1555
Y	*235-0367*	1	SEPARATOR GP-WATER	1522
			S/N: 3341-4886	
Y	*260-3128*	1	FILTER & LINES GP-FUEL	1140
			S/N: 3344887-UP	
Y	*234-9666*	1	STARTING MOTOR GP-ELECTRIC	1562
			—OR—	
Y	*323-6678*	1	STARTING MOTOR GP-ELECTRIC	1568
Y	*236-8212*	1	STARTING AID GP (SWITCH)	1557
Y	*253-0756*	1	SWITCH GP-PRESSURE (ENGINE OIL)	1579
Y	*290-2489*	1	TURBOCHARGER GP	1132
R	**359-0734**	1	CYLINDER BLOCK GP-SHORT	
			AVAILABLE GASKET KIT(S):	

231-0179 **ENGINE AR-PRIMARY (**contd.**)** **i05461833**

NOTE	PART NUMBER	QTY	PART NAME 1 2 3 4 5 6 (PRODUCT LEVEL)	SEE PAGE
	277-5156	1	KIT-GASKET (TOP)	
	272-0494	1	KIT-GASKET (BOTTOM)	

R - REMANUFACTURED PART MAY BE AVAILABLE
Y - SEPARATE ILLUSTRATION

<END>

231-0180 ENGINE AR-PRIMARY

95 BRAKE KW (127 BHP) AT 2200 RPM

SMCS-1000 **i09689461**

NOTE	PART NUMBER	QTY	PART NAME 1 2 3 4 5 6 (PRODUCT LEVEL)	SEE PAGE
Y	*251-4551*	1	AIR CLEANER GP	1026
Y	*236-9965*	1	ALTERNATOR GP-CHARGING	1528
Y	*316-8482*	1	CAMSHAFT GP	214
Y	*260-3135*	1	CONNECTION GP-INLET	1044
Y	*231-0033*	1	CONNECTION GP-WATER	868
Y	*235-5230*	1	COOLER GP-FLTR BASE & ENG OIL	890
Y	*230-9196*	1	COVER GP-FRONT HOUSING	231
Y	*236-8190*	1	COVER GP-VALVE MECHANISM	310
Y	*316-8479*	1	CRANKSHAFT GP	475
Y	*316-8478*	1	CYLINDER BLOCK GP	516
Y	*316-8481*	1	CYLINDER HEAD GP	542
Y	*236-8181*	1	DRIVE GP-FAN	568
Y	*232-9761*	1	ENGINE AR-CORE	3
Y	*316-8485*	1	FAN GP	978
Y	*232-7378*	1	FILTER GP-ENGINE OIL	861
Y	*235-0322*	1	FLYWHEEL GP	593
Y	*233-9834*	1	GLOW PLUG GP	1549
Y	*235-0321*	1	HOUSING GP-FLYWHEEL	612
Y	*232-6179*	1	HOUSING GP-FRONT	626
Y	*232-3713*	1	LIFTING GP-ENGINE	647
Y	*235-0366*	1	MOUNTING GP-ENGINE	654
Y	*233-8150*	1	PAN GP-OIL (ENGINE)	701
Y	*316-8480*	1	PISTON & ROD GP	802
Y	*225-4317*	1	PLUG GP-ENGINE	816
Y	*230-7352*	1	PULLEY GP-CRANKSHAFT	831
			S/N: 3341-25630	
Y	*360-7350*	1	PULLEY GP-CRANKSHAFT	835
			S/N: 33425631-UP	
Y	*233-9526*	1	PUMP GP-FUEL INJECTION	1216
Y	*237-0291*	1	PUMP GP-FUEL PRM & PRIM FILTER	1513
			S/N: 3341-554	
Y	*232-9763*	1	PUMP GP-FUEL PRM & PRIM FILTER	1495
			S/N: 334555-571	
Y	*233-9417*	1	PUMP GP-FUEL PRM & PRIM FILTER	1505
			S/N: 334572-UP	
Y	*230-7355*	1	PUMP GP-WATER	992
Y	*236-8785*	1	RADIATOR GP	996
Y	*236-9970*	1	SENDER GP-TEMPERATURE	1556
Y	*235-0367*	1	SEPARATOR GP-WATER	1522
			S/N: 3341-4886	
Y	*260-3128*	1	FILTER & LINES GP-FUEL	1140
			S/N: 3344887-UP	
Y	*230-7304*	1	STARTING MOTOR GP-ELECTRIC	1561
Y	*236-8212*	1	STARTING AID GP (SWITCH)	1557
Y	*253-0756*	1	SWITCH GP-PRESSURE (ENGINE OIL)	1579
Y	*290-2489*	1	TURBOCHARGER GP	1132
Y	*316-8483*	1	VALVE MECHANISM GP	855
R	**359-0734**	1	CYLINDER BLOCK GP-SHORT	

231-0180 **ENGINE AR-PRIMARY (**contd.**)** **i09689461**

NOTE	PART NUMBER	QTY	PART NAME 1 2 3 4 5 6 (PRODUCT LEVEL)	SEE PAGE
			AVAILABLE GASKET KIT(S):	
	272-0494	1	KIT-GASKET (BOTTOM)	
	277-5156	1	KIT-GASKET (TOP)	

R - REMANUFACTURED PART MAY BE AVAILABLE
Y - SEPARATE ILLUSTRATION

<END>

231-0181 ENGINE AR-PRIMARY

95 BRAKE KW (127 BHP) AT 2200 RPM

SMCS-1000 **i05461836**

NOTE	PART NUMBER	QTY	PART NAME 1 2 3 4 5 6 (PRODUCT LEVEL)	SEE PAGE
Y	*251-4551*	1	AIR CLEANER GP	1026
Y	*236-9965*	1	ALTERNATOR GP-CHARGING	1528
Y	*234-0617*	1	BALANCER GP	199
Y	*260-3135*	1	CONNECTION GP-INLET	1044
Y	*231-0033*	1	CONNECTION GP-WATER	868
Y	*235-5230*	1	COOLER GP-FLTR BASE & ENG OIL	890
Y	*230-9196*	1	COVER GP-FRONT HOUSING	231
Y	*236-8190*	1	COVER GP-VALVE MECHANISM	310
Y	*236-8181*	1	DRIVE GP-FAN	568
Y	*232-9761*	1	ENGINE AR-CORE	3
Y	*236-8195*	1	FAN GP-SUCTION	983
			S/N: 3341-4886	
Y	*267-5695*	1	FAN GP-SUCTION	988
			S/N: 3344887-UP	
Y	*232-7378*	1	FILTER GP-ENGINE OIL	861
Y	*235-0322*	1	FLYWHEEL GP	593
Y	*233-9834*	1	GLOW PLUG GP	1549
Y	*235-0321*	1	HOUSING GP-FLYWHEEL	612
Y	*232-6179*	1	HOUSING GP-FRONT	626
Y	*232-3713*	1	LIFTING GP-ENGINE	647
Y	*235-0366*	1	MOUNTING GP-ENGINE	654
Y	*233-8150*	1	PAN GP-OIL (ENGINE)	701
Y	*225-4317*	1	PLUG GP-ENGINE	816
Y	*230-7352*	1	PULLEY GP-CRANKSHAFT	831
			S/N: 3341-25630	
Y	*360-7350*	1	PULLEY GP-CRANKSHAFT	835
			S/N: 33425631-UP	
Y	*233-9526*	1	PUMP GP-FUEL INJECTION	1216
Y	*237-0291*	1	PUMP GP-FUEL PRM & PRIM FILTER	1513
			S/N: 3341-554	
Y	*232-9763*	1	PUMP GP-FUEL PRM & PRIM FILTER	1495
			S/N: 334555-571	
Y	*233-9417*	1	PUMP GP-FUEL PRM & PRIM FILTER	1505
			S/N: 334572-UP	
Y	*230-7355*	1	PUMP GP-WATER	992
Y	*236-8785*	1	RADIATOR GP	996
Y	*236-9970*	1	SENDER GP-TEMPERATURE	1556
Y	*235-0367*	1	SEPARATOR GP-WATER	1522
			S/N: 3341-4886	
Y	*260-3128*	1	FILTER & LINES GP-FUEL	1140
			S/N: 3344887-UP	
Y	*230-7304*	1	STARTING MOTOR GP-ELECTRIC	1561
Y	*236-8212*	1	STARTING AID GP (SWITCH)	1557
Y	*253-0756*	1	SWITCH GP-PRESSURE (ENGINE OIL)	1579
Y	*290-2489*	1	TURBOCHARGER GP	1132
R	**359-0734**	1	CYLINDER BLOCK GP-SHORT	
			AVAILABLE REPAIR KIT(S):	

231-0181 **ENGINE AR-PRIMARY (**contd.**)** **i05461836**

NOTE	PART NUMBER	QTY	PART NAME 1 2 3 4 5 6 (PRODUCT LEVEL)	SEE PAGE
	277-5156	1	KIT-GASKET (TOP)	
	272-0494	1	KIT-GASKET (BOTTOM)	

R - REMANUFACTURED PART MAY BE AVAILABLE
Y - SEPARATE ILLUSTRATION

<END>

231-0182 ENGINE AR-PRIMARY

97 BRAKE KW (130 BHP) AT 2200 RPM

SMCS-1000 **i05461837**

NOTE	PART NUMBER	QTY	PART NAME 1 2 3 4 5 6 (PRODUCT LEVEL)	SEE PAGE
Y	*251-4551*	1	AIR CLEANER GP	1026
Y	*236-8196*	1	ALTERNATOR GP-CHARGING	1527
Y	*231-0033*	1	CONNECTION GP-WATER	868
Y	*238-2799*	1	COOLER GP-FLTR BASE & ENG OIL	901
Y	*230-9196*	1	COVER GP-FRONT HOUSING	231
Y	*236-8190*	1	COVER GP-VALVE MECHANISM	310
Y	*236-8181*	1	DRIVE GP-FAN	568
Y	*232-9761*	1	ENGINE AR-CORE	3
Y	*236-9963*	1	FAN GP-BLOWER	979
Y	*232-7378*	1	FILTER GP-ENGINE OIL	861
Y	*235-0322*	1	FLYWHEEL GP	593
Y	*232-6661*	1	GLOW PLUG GP	1547
Y	*224-2162*	1	HOUSING GP-FLYWHEEL	609
Y	*232-6179*	1	HOUSING GP-FRONT	626
Y	*232-3713*	1	LIFTING GP-ENGINE	647
Y	*235-0366*	1	MOUNTING GP-ENGINE	654
Y	*230-8253*	1	PAN GP-OIL	689
Y	*254-3775*	1	CONNECTION GP-INLET	1042
Y	*225-4317*	1	PLUG GP-ENGINE	816
Y	*230-7352*	1	PULLEY GP-CRANKSHAFT	831
			S/N: 3341-25630	
Y	*360-7350*	1	PULLEY GP-CRANKSHAFT	835
			S/N: 33425631-UP	
Y	*230-7578*	1	PUMP GP-ENGINE OIL	863
Y	*232-1827*	1	PUMP GP-FUEL INJECTION	1175
Y	*232-9763*	1	PUMP GP-FUEL PRM & PRIM FILTER	1495
			S/N: 3341-571	
Y	*233-9417*	1	PUMP GP-FUEL PRM & PRIM FILTER	1505
			S/N: 334572-UP	
Y	*230-7355*	1	PUMP GP-WATER	992
Y	*236-8785*	1	RADIATOR GP	996
Y	*236-8758*	1	SENDER GP-TEMPERATURE	1555
Y	*235-0367*	1	SEPARATOR GP-WATER	1522
			S/N: 3341-4886	
Y	*260-3128*	1	FILTER & LINES GP-FUEL	1140
			S/N: 3344887-UP	
Y	*234-9666*	1	STARTING MOTOR GP-ELECTRIC	1562
Y	*236-8212*	1	STARTING AID GP (SWITCH)	1557
Y	*253-0756*	1	SWITCH GP-PRESSURE (ENGINE OIL)	1579
Y	*290-2489*	1	TURBOCHARGER GP	1132
R	**359-0734**	1	CYLINDER BLOCK GP-SHORT	
			AVAILABLE GASKET KIT(S):	
	272-0494	1	KIT-GASKET (BOTTOM)	
	277-5156	1	KIT-GASKET (TOP)	

R - REMANUFACTURED PART MAY BE AVAILABLE
Y - SEPARATE ILLUSTRATION

<END>

231-0183 ENGINE AR-PRIMARY

97 BRAKE KW (130 BHP) AT 2200 RPM

SMCS-1000 **i05461838**

NOTE	PART NUMBER	QTY	PART NAME 1 2 3 4 5 6 (PRODUCT LEVEL)	SEE PAGE
Y	*251-4551*	1	AIR CLEANER GP	1026
Y	*236-8196*	1	ALTERNATOR GP-CHARGING	1527
Y	*231-0033*	1	CONNECTION GP-WATER	868
Y	*238-2799*	1	COOLER GP-FLTR BASE & ENG OIL	901
Y	*230-9196*	1	COVER GP-FRONT HOUSING	231
Y	*236-8190*	1	COVER GP-VALVE MECHANISM	310
Y	*236-8181*	1	DRIVE GP-FAN	568
Y	*232-9761*	1	ENGINE AR-CORE	3
Y	*236-8195*	1	FAN GP-SUCTION	983
			S/N: 3341-4886	
Y	*267-5695*	1	FAN GP-SUCTION	988
			S/N: 3344887-UP	
Y	*232-7378*	1	FILTER GP-ENGINE OIL	861
Y	*235-0322*	1	FLYWHEEL GP	593
Y	*232-6661*	1	GLOW PLUG GP	1547
Y	*224-2162*	1	HOUSING GP-FLYWHEEL	609
Y	*232-6179*	1	HOUSING GP-FRONT	626
Y	*232-3713*	1	LIFTING GP-ENGINE	647
Y	*235-0366*	1	MOUNTING GP-ENGINE	654
Y	*230-8253*	1	PAN GP-OIL (ENGINE)	689
Y	*254-3775*	1	CONNECTION GP-INLET	1042
Y	*225-4317*	1	PLUG GP-ENGINE	816
Y	*230-7352*	1	PULLEY GP-CRANKSHAFT	831
			S/N: 3341-25630	
Y	*360-7350*	1	PULLEY GP-CRANKSHAFT	835
			S/N: 33425631-UP	
Y	*230-7578*	1	PUMP GP-ENGINE OIL	863
Y	*232-1827*	1	PUMP GP-FUEL INJECTION	1175
Y	*232-9763*	1	PUMP GP-FUEL PRM & PRIM FILTER	1495
			S/N: 3341-571	
Y	*233-9417*	1	PUMP GP-FUEL PRM & PRIM FILTER	1505
			S/N: 334572-UP	
Y	*230-7355*	1	PUMP GP-WATER	992
Y	*236-8785*	1	RADIATOR GP	996
Y	*236-8758*	1	SENDER GP-TEMPERATURE	1555
Y	*235-0367*	1	SEPARATOR GP-WATER	1522
			S/N: 3341-4886	
Y	*260-3128*	1	FILTER & LINES GP-FUEL	1140
			S/N: 3344887-UP	
Y	*234-9666*	1	STARTING MOTOR GP-ELECTRIC	1562
			—OR—	
Y	*323-6678*	1	STARTING MOTOR GP-ELECTRIC	1568
Y	*236-8212*	1	STARTING AID GP (SWITCH)	1557
Y	*253-0756*	1	SWITCH GP-PRESSURE (ENGINE OIL)	1579
Y	*290-2489*	1	TURBOCHARGER GP	1132
R	**359-0734**	1	CYLINDER BLOCK GP-SHORT	
			AVAILABLE GASKET KIT(S):	

231-0183 **ENGINE AR-PRIMARY (**contd.**)** **i05461838**

NOTE	PART NUMBER	QTY	PART NAME 1 2 3 4 5 6 (PRODUCT LEVEL)	SEE PAGE
	277-5156	1	KIT-GASKET (TOP)	
	272-0494	1	KIT-GASKET (BOTTOM)	

R - REMANUFACTURED PART MAY BE AVAILABLE
Y - SEPARATE ILLUSTRATION

<END>

231-0184 ENGINE AR-PRIMARY

97 BRAKE KW (130 BHP) AT 2200 RPM

SMCS-1000 **i06845825**

NOTE	PART NUMBER	QTY	PART NAME 1 2 3 4 5 6 (PRODUCT LEVEL)	SEE PAGE
Y	*251-4551*	1	AIR CLEANER GP	1026
Y	*236-9965*	1	ALTERNATOR GP-CHARGING	1528
Y	*260-3135*	1	CONNECTION GP-INLET	1044
Y	*231-0033*	1	CONNECTION GP-WATER	868
Y	*238-2799*	1	COOLER GP-FLTR BASE & ENG OIL	901
Y	*230-9196*	1	COVER GP-FRONT HOUSING	231
Y	*236-8190*	1	COVER GP-VALVE MECHANISM	310
Y	*236-8181*	1	DRIVE GP-FAN	568
Y	*232-9761*	1	ENGINE AR-CORE	3
Y	*316-8485*	1	FAN GP	978
Y	*232-7378*	1	FILTER GP-ENGINE OIL	861
Y	*235-0322*	1	FLYWHEEL GP	593
Y	*233-9834*	1	GLOW PLUG GP	1549
Y	*224-2162*	1	HOUSING GP-FLYWHEEL	609
Y	*232-6179*	1	HOUSING GP-FRONT	626
Y	*232-3713*	1	LIFTING GP-ENGINE	647
Y	*235-0366*	1	MOUNTING GP-ENGINE	654
Y	*230-8253*	1	PAN GP-OIL (ENGINE)	689
Y	*225-4317*	1	PLUG GP-ENGINE	816
Y	*230-7352*	1	PULLEY GP-CRANKSHAFT	831
			S/N: 3341-25630	
Y	*360-7350*	1	PULLEY GP-CRANKSHAFT	835
			S/N: 33425631-UP	
Y	*230-7578*	1	PUMP GP-ENGINE OIL	863
Y	*233-9526*	1	PUMP GP-FUEL INJECTION	1216
Y	*237-0291*	1	PUMP GP-FUEL PRM & PRIM FILTER	1513
			S/N: 3341-554	
Y	*232-9763*	1	PUMP GP-FUEL PRM & PRIM FILTER	1495
			S/N: 334555-571	
Y	*233-9417*	1	PUMP GP-FUEL PRM & PRIM FILTER	1505
			S/N: 334572-UP	
Y	*230-7355*	1	PUMP GP-WATER	992
Y	*236-8785*	1	RADIATOR GP	996
Y	*236-9970*	1	SENDER GP-TEMPERATURE	1556
Y	*235-0367*	1	SEPARATOR GP-WATER	1522
			S/N: 3341-4886	
Y	*260-3128*	1	FILTER & LINES GP-FUEL	1140
			S/N: 3344887-UP	
Y	*230-7304*	1	STARTING MOTOR GP-ELECTRIC	1561
Y	*236-8212*	1	STARTING AID GP (SWITCH)	1557
Y	*253-0756*	1	SWITCH GP-PRESSURE (ENGINE OIL)	1579
Y	*290-2489*	1	TURBOCHARGER GP	1132
R	**359-0734**	1	CYLINDER BLOCK GP-SHORT	
			AVAILABLE GASKET KIT(S):	
	272-0494	1	KIT-GASKET (BOTTOM)	
	277-5156	1	KIT-GASKET (TOP)	

231-0184 **ENGINE AR-PRIMARY (**contd.**)** **i06845825**

NOTE	PART NUMBER	QTY	PART NAME 1 2 3 4 5 6 (PRODUCT LEVEL)	SEE PAGE

R - REMANUFACTURED PART MAY BE AVAILABLE
Y - SEPARATE ILLUSTRATION

<END>

231-0186 ENGINE AR-PRIMARY

97 BRAKE KW (130 BHP) AT 2200 RPM

SMCS-1000 **i05461840**

NOTE	PART NUMBER	QTY	PART NAME 1 2 3 4 5 6 (PRODUCT LEVEL)	SEE PAGE
Y	*251-4551*	1	AIR CLEANER GP	1026
Y	*236-9965*	1	ALTERNATOR GP-CHARGING	1528
Y	*260-3135*	1	CONNECTION GP-INLET	1044
Y	*231-0033*	1	CONNECTION GP-WATER	868
Y	*238-2799*	1	COOLER GP-FLTR BASE & ENG OIL	901
Y	*230-9196*	1	COVER GP-FRONT HOUSING	231
Y	*236-8190*	1	COVER GP-VALVE MECHANISM	310
Y	*236-8181*	1	DRIVE GP-FAN	568
Y	*232-9761*	1	ENGINE AR-CORE	3
Y	*236-8195*	1	FAN GP-SUCTION	983
			S/N: 3341-4886	
Y	*267-5695*	1	FAN GP-SUCTION	988
			S/N: 3344887-UP	
Y	*232-7378*	1	FILTER GP-ENGINE OIL	861
Y	*235-0322*	1	FLYWHEEL GP	593
Y	*233-9834*	1	GLOW PLUG GP	1549
Y	*224-2162*	1	HOUSING GP-FLYWHEEL	609
Y	*232-6179*	1	HOUSING GP-FRONT	626
Y	*232-3713*	1	LIFTING GP-ENGINE	647
Y	*235-0366*	1	MOUNTING GP-ENGINE	654
Y	*230-8253*	1	PAN GP-OIL (ENGINE)	689
Y	*225-4317*	1	PLUG GP-ENGINE	816
Y	*230-7352*	1	PULLEY GP-CRANKSHAFT	831
			S/N: 3341-25630	
Y	*360-7350*	1	PULLEY GP-CRANKSHAFT	835
			S/N: 33425631-UP	
Y	*230-7578*	1	PUMP GP-ENGINE OIL	863
Y	*233-9526*	1	PUMP GP-FUEL INJECTION	1216
Y	*237-0291*	1	PUMP GP-FUEL PRM & PRIM FILTER	1513
			S/N: 3341-554	
Y	*232-9763*	1	PUMP GP-FUEL PRM & PRIM FILTER	1495
			S/N: 334555-571	
Y	*233-9417*	1	PUMP GP-FUEL PRM & PRIM FILTER	1505
			S/N: 334572-UP	
Y	*230-7355*	1	PUMP GP-WATER	992
Y	*236-9971*	1	RADIATOR GP	1004
			—OR—	
Y	*236-8785*	1	RADIATOR GP	996
Y	*236-9970*	1	SENDER GP-TEMPERATURE	1556
Y	*235-0367*	1	SEPARATOR GP-WATER	1522
			S/N: 3341-4886	
Y	*260-3128*	1	FILTER & LINES GP-FUEL	1140
			S/N: 3344887-UP	
Y	*236-8212*	1	STARTING AID GP (SWITCH)	1557
Y	*230-7304*	1	STARTING MOTOR GP-ELECTRIC	1561
Y	*253-0756*	1	SWITCH GP-PRESSURE (ENGINE OIL)	1579
Y	*290-2489*	1	TURBOCHARGER GP	1132
R	**359-0734**	1	CYLINDER BLOCK GP-SHORT	

231-0186 **ENGINE AR-PRIMARY (**contd.**)** **i05461840**

NOTE	PART NUMBER	QTY	PART NAME 1 2 3 4 5 6 (PRODUCT LEVEL)	SEE PAGE
			AVAILABLE GASKET KIT(S):	
	272-0494	1	KIT-GASKET (BOTTOM)	
	277-5156	1	KIT-GASKET (TOP)	

R - REMANUFACTURED PART MAY BE AVAILABLE
Y - SEPARATE ILLUSTRATION

<END>

231-7013 ENGINE AR-PRIMARY

91 BRAKE KW (122 BHP) AT 2300 RPM

SMCS-1000 **i02335891**

NOTE	PART NUMBER	QTY	PART NAME 1 2 3 4 5 6 (PRODUCT LEVEL)	SEE PAGE
			(NO SERVICED PARTS)	

<END>

232-4502 ENGINE AR-PRIMARY

97 BRAKE KW (130 BHP) AT 2200 RPM

SMCS-1000 **i04349799**

NOTE	PART NUMBER	QTY	PART NAME 1 2 3 4 5 6 (PRODUCT LEVEL)	SEE PAGE
Y	*235-0028*	1	ALTERNATOR GP-CHARGING	1526
Y	*231-0033*	1	CONNECTION GP-WATER	868
Y	*238-2799*	1	COOLER GP-FLTR BASE & ENG OIL	901
Y	*230-9196*	1	COVER GP-FRONT HOUSING	231
Y	*234-0251*	1	COVER GP-VALVE MECHANISM	274
Y	*234-9680*	1	DRIVE GP-FAN	566
Y	*232-9761*	1	ENGINE AR-CORE	3
Y	*232-7378*	1	FILTER GP-ENGINE OIL	861
Y	*243-3398*	1	FLYWHEEL GP	596
Y	*232-6661*	1	GLOW PLUG GP	1547
Y	*234-9665*	1	HOUSING GP-FLYWHEEL	611
Y	*232-6179*	1	HOUSING GP-FRONT	626
Y	*232-3713*	1	LIFTING GP-ENGINE	647
Y	*234-9738*	1	MOUNTING GP-FAN	991
Y	*230-8253*	1	PAN GP-OIL (ENGINE)	689
Y	*254-3775*	1	CONNECTION GP-INLET	1042
Y	*225-4317*	1	PLUG GP-ENGINE (FRONT HOUSING, CYLINDER HEAD)	816
Y	*232-6204*	1	PLUG GP-ENGINE (CYLINDER HEAD)	821
Y	*235-2624*	1	PLUG GP-ENGINE	825
Y	*230-7353*	1	PULLEY GP-CRANKSHAFT	832
			S/N: 3341-25630	
Y	*360-7351*	1	PULLEY GP-CRANKSHAFT	836
			S/N: 33425631-UP	
Y	*230-7578*	1	PUMP GP-ENGINE OIL	863
Y	*232-1827*	1	PUMP GP-FUEL INJECTION	1175
Y	*233-9417*	1	PUMP GP-FUEL PRM & PRIM FILTER	1505
Y	*230-7355*	1	PUMP GP-WATER	992
Y	*234-9666*	1	STARTING MOTOR GP-ELECTRIC	1562
Y	*253-0756*	1	SWITCH GP-PRESSURE (ENGINE OIL)	1579
Y	*232-6197*	1	TURBOCHARGER GP	1075
R	**359-0734**	1	CYLINDER BLOCK GP-SHORT	
			AVAILABLE GASKET KIT(S):	
	277-5156	1	KIT-GASKET (TOP)	
	272-0494	1	KIT-GASKET (BOTTOM)	

R - REMANUFACTURED PART MAY BE AVAILABLE
Y - SEPARATE ILLUSTRATION

<END>

241-8581 ENGINE AR-PRIMARY

75 BRAKE KW (100 BHP) AT 2200 RPM

SMCS-1000 **i02335914**

NOTE	PART NUMBER	QTY	PART NAME 1 2 3 4 5 6 (PRODUCT LEVEL)	SEE PAGE
			(NO SERVICED PARTS)	

<END>

241-8582 ENGINE AR-PRIMARY

75 BRAKE KW (100 BHP) AT 2200 RPM

SMCS-1000 **i06845943**

NOTE	PART NUMBER	QTY	PART NAME 1 2 3 4 5 6 (PRODUCT LEVEL)	SEE PAGE
Y	*253-0888*	1	AIR CLEANER GP	1029
Y	*236-8196*	1	ALTERNATOR GP-CHARGING	1527
Y	*231-0033*	1	CONNECTION GP-WATER	868
Y	*238-2799*	1	COOLER GP-FLTR BASE & ENG OIL	901
Y	*230-9196*	1	COVER GP-FRONT HOUSING	231
Y	*231-0149*	1	COVER GP-INLET MANIFOLD	1052
Y	*230-9149*	1	COVER GP-VALVE MECHANISM	247
Y	*251-6697*	1	DRIVE GP-FAN	576
Y	*232-9761*	1	ENGINE AR-CORE	3
Y	*260-3215*	1	FAN GP-SUCTION	987
Y	*232-7378*	1	FILTER GP-ENGINE OIL	861
Y	*235-0322*	1	FLYWHEEL GP	593
Y	*232-6661*	1	GLOW PLUG GP	1547
Y	*224-2162*	1	HOUSING GP-FLYWHEEL	609
Y	*232-6179*	1	HOUSING GP-FRONT	626
Y	*232-3713*	1	LIFTING GP-ENGINE	647
Y	*252-4475*	1	MOUNTING GP-ENGINE	657
Y	*243-2455*	1	PAN GP-OIL (ENGINE)	715
Y	*225-4317*	1	PLUG GP-ENGINE	816
Y	*230-7352*	1	PULLEY GP-CRANKSHAFT	831
			S/N: 3341-25630	
Y	*360-7349*	1	PULLEY GP-CRANKSHAFT	834
			S/N: 33425631-UP	
Y	*230-7578*	1	PUMP GP-ENGINE OIL	863
Y	*236-8229*	1	PUMP GP-FUEL INJECTION	1255
Y	*233-9417*	1	PUMP GP-FUEL PRM & PRIM FILTER	1505
Y	*230-7355*	1	PUMP GP-WATER	992
Y	*251-8423*	1	RADIATOR GP	1008
Y	*236-8758*	1	SENDER GP-TEMPERATURE	1555
Y	*236-8212*	1	STARTING AID GP (SWITCH)	1557
Y	*234-9666*	1	STARTING MOTOR GP-ELECTRIC	1562
Y	*253-0756*	1	SWITCH GP-PRESSURE (ENGINE OIL)	1579
Y	*290-2045*	1	TURBOCHARGER GP	1126
R	**359-0734**	1	CYLINDER BLOCK GP-SHORT	
			AVAILABLE GASKET KIT(S):	
	272-0494	1	KIT-GASKET (BOTTOM)	
	277-5156	1	KIT-GASKET (TOP)	

R - REMANUFACTURED PART MAY BE AVAILABLE
Y - SEPARATE ILLUSTRATION

<END>

241-8583 ENGINE AR-PRIMARY

75 BRAKE KW (100 BHP) AT 2200 RPM

SMCS-1000 **i04908139**

NOTE	PART NUMBER	QTY	PART NAME 1 2 3 4 5 6 (PRODUCT LEVEL)	SEE PAGE
Y	*245-4664*	1	ALTERNATOR GP-CHARGING	1532
Y	*232-7528*	1	CAMSHAFT GP	203
Y	*231-0033*	1	CONNECTION GP-WATER	868
Y	*240-5535*	1	CONVERTER GP-ELECTRICAL	1543
Y	*238-2799*	1	COOLER GP-FLTR BASE & ENG OIL	901
Y	*251-6242*	1	COVER GP-CYLINDER HEAD	219
Y	*230-9196*	1	COVER GP-FRONT HOUSING	231
Y	*230-9149*	1	COVER GP-VALVE MECHANISM	247
Y	*232-7439*	1	CRANKSHAFT GP	451
Y	*232-7606*	1	CYLINDER BLOCK GP	495
Y	*232-7524*	1	CYLINDER HEAD GP	531
Y	*253-0728*	1	DRIVE GP-FAN	578
Y	*268-5339*	1	FAN GP-BLOWER	981
Y	*260-3128*	1	FILTER & LINES GP-FUEL	1140
Y	*232-7378*	1	FILTER GP-ENGINE OIL	861
Y	*235-0322*	1	FLYWHEEL GP	593
Y	*233-9834*	1	GLOW PLUG GP	1549
Y	*224-2162*	1	HOUSING GP-FLYWHEEL	609
Y	*232-6179*	1	HOUSING GP-FRONT	626
Y	*232-3713*	1	LIFTING GP-ENGINE	647
Y	*252-4475*	1	MOUNTING GP-ENGINE	657
Y	*243-2455*	1	PAN GP-OIL (ENGINE)	715
Y	*232-7442*	1	PISTON & ROD GP	764
Y	*225-4317*	1	PLUG GP-ENGINE	816
Y	*230-7351*	1	PULLEY GP-CRANKSHAFT	830
			S/N: 3341-25630	
Y	*360-7349*	1	PULLEY GP-CRANKSHAFT	834
			S/N: 33425631-UP	
Y	*230-7578*	1	PUMP GP-ENGINE OIL	863
Y	*237-8259*	1	PUMP GP-FUEL INJECTION	1296
Y	*233-9417*	1	PUMP GP-FUEL PRM & PRIM FILTER	1505
Y	*230-7355*	1	PUMP GP-WATER	992
Y	*251-8423*	1	RADIATOR GP	1008
Y	*236-8212*	1	STARTING AID GP (SWITCH)	1557
Y	*230-7304*	1	STARTING MOTOR GP-ELECTRIC	1561
Y	*253-0756*	1	SWITCH GP-PRESSURE	1579
Y	*235-8749*	1	SWITCH GP-TEMPERATURE (ENGINE COOLANT)	1582
			S/N: 3341-24873	
Y	*367-0594*	1	SWITCH GP-TEMPERATURE (ENGINE COOLANT)	1583
			S/N: 33424874-UP	
Y	*290-2045*	1	TURBOCHARGER GP	1126
Y	*232-7526*	1	VALVE MECHANISM GP	839
R	**359-0734**	1	CYLINDER BLOCK GP-SHORT	
			AVAILABLE GASKET KIT(S):	
	272-0494	1	KIT-GASKET (BOTTOM)	
	277-5156	1	KIT-GASKET (TOP)	

241-8583 **ENGINE AR-PRIMARY (**contd.**)** **i04908139**

NOTE	PART NUMBER	QTY	PART NAME 1 2 3 4 5 6 (PRODUCT LEVEL)	SEE PAGE

R - REMANUFACTURED PART MAY BE AVAILABLE
Y - SEPARATE ILLUSTRATION

<END>

241-8584 ENGINE AR-PRIMARY

75 BRAKE KW (100 BHP) AT 2200 RPM

SMCS-1000 **i05461843**

NOTE	PART NUMBER	QTY	PART NAME 1 2 3 4 5 6 (PRODUCT LEVEL)	SEE PAGE
Y	*245-4664*	1	ALTERNATOR GP-CHARGING	1532
Y	*232-7528*	1	CAMSHAFT GP	203
Y	*231-0033*	1	CONNECTION GP-WATER	868
Y	*240-5535*	1	CONVERTER GP-ELECTRICAL	1543
Y	*238-2799*	1	COOLER GP-FLTR BASE & ENG OIL	901
Y	*251-6242*	1	COVER GP-CYLINDER HEAD	219
Y	*230-9196*	1	COVER GP-FRONT HOUSING	231
Y	*230-9149*	1	COVER GP-VALVE MECHANISM	247
Y	*232-7439*	1	CRANKSHAFT GP	451
Y	*232-7606*	1	CYLINDER BLOCK GP	495
Y	*232-7524*	1	CYLINDER HEAD GP	531
Y	*253-0728*	1	DRIVE GP-FAN	578
Y	*260-3215*	1	FAN GP-SUCTION	987
Y	*260-3128*	1	FILTER & LINES GP-FUEL	1140
Y	*232-7378*	1	FILTER GP-ENGINE OIL	861
Y	*235-0322*	1	FLYWHEEL GP	593
Y	*233-9834*	1	GLOW PLUG GP	1549
Y	*224-2162*	1	HOUSING GP-FLYWHEEL	609
Y	*232-6179*	1	HOUSING GP-FRONT	626
Y	*232-3713*	1	LIFTING GP-ENGINE	647
Y	*252-4475*	1	MOUNTING GP-ENGINE	657
Y	*243-2455*	1	PAN GP-OIL	715
Y	*232-7442*	1	PISTON & ROD GP	764
Y	*225-4317*	1	PLUG GP-ENGINE	816
Y	*230-7351*	1	PULLEY GP-CRANKSHAFT	830
			S/N: 3341-25630	
Y	*360-7349*	1	PULLEY GP-CRANKSHAFT	834
			S/N: 33425631-UP	
Y	*230-7578*	1	PUMP GP-ENGINE OIL	863
Y	*237-8259*	1	PUMP GP-FUEL INJECTION	1296
Y	*233-9417*	1	PUMP GP-FUEL PRM & PRIM FILTER	1505
Y	*230-7355*	1	PUMP GP-WATER	992
Y	*251-8423*	1	RADIATOR GP	1008
Y	*236-8212*	1	STARTING AID GP (SWITCH)	1557
Y	*230-7304*	1	STARTING MOTOR GP-ELECTRIC	1561
Y	*253-0756*	1	SWITCH GP-PRESSURE (ENGINE OIL)	1579
Y	*235-8749*	1	SWITCH GP-TEMPERATURE (ENGINE COOLANT)	1582
			S/N: 3341-5311	
Y	*367-0594*	1	SWITCH GP-TEMPERATURE (ENGINE COOLANT)	1583
			S/N: 3345312-UP	
Y	*290-2045*	1	TURBOCHARGER GP	1126
Y	*232-7526*	1	VALVE MECHANISM GP	839
R	**359-0734**	1	CYLINDER BLOCK GP-SHORT	
			AVAILABLE GASKET KIT(S):	
	272-0494	1	KIT-GASKET (BOTTOM)	
	277-5156	1	KIT-GASKET (TOP)	

241-8584 **ENGINE AR-PRIMARY (**contd.**)** **i05461843**

NOTE	PART NUMBER	QTY	PART NAME 1 2 3 4 5 6 (PRODUCT LEVEL)	SEE PAGE

R - REMANUFACTURED PART MAY BE AVAILABLE
Y - SEPARATE ILLUSTRATION

<END>

241-8585 ENGINE AR-PRIMARY

73 BRAKE KW (97 BHP) AT 2200 RPM

FIELD REPLACEMENT ORDER 471-0930—PAGE: 193

SMCS-1000 **i06821176**

NOTE	PART NUMBER	QTY	PART NAME 1 2 3 4 5 6 (PRODUCT LEVEL)	SEE PAGE
Y	*243-4301*	1	ALTERNATOR GP-CHARGING	1531
Y	*234-0617*	1	BALANCER GP	199
Y	*232-7528*	1	CAMSHAFT GP	203
Y	*231-0033*	1	CONNECTION GP-WATER	868
Y	*235-5230*	1	COOLER GP-FLTR BASE & ENG OIL	890
Y	*231-0149*	1	COVER GP-INLET MANIFOLD	1052
Y	*230-9196*	1	COVER GP-FRONT HOUSING	231
Y	*230-9149*	1	COVER GP-VALVE MECHANISM	247
Y	*232-7439*	1	CRANKSHAFT GP	451
Y	*232-7606*	1	CYLINDER BLOCK GP	495
Y	*232-7524*	1	CYLINDER HEAD GP	531
Y	*253-0728*	1	DRIVE GP-FAN	578
Y	*268-5339*	1	FAN GP-BLOWER	981
Y	*260-3128*	1	FILTER & LINES GP-FUEL	1140
Y	*232-7378*	1	FILTER GP-ENGINE OIL	861
Y	*235-0322*	1	FLYWHEEL GP	593
Y	*232-6661*	1	GLOW PLUG GP	1547
Y	*235-0321*	1	HOUSING GP-FLYWHEEL	612
Y	*232-6179*	1	HOUSING GP-FRONT	626
Y	*232-3713*	1	LIFTING GP-ENGINE	647
Y	*252-4475*	1	MOUNTING GP-ENGINE	657
Y	*233-8150*	1	PAN GP-OIL	701
Y	*232-7442*	1	PISTON & ROD GP	764
Y	*225-4317*	1	PLUG GP-ENGINE	816
Y	*230-7351*	1	PULLEY GP-CRANKSHAFT	830
			S/N: 3341-25630	
Y	*360-7349*	1	PULLEY GP-CRANKSHAFT	834
			S/N: 33425631-UP	
Y	*236-8229*	1	PUMP GP-FUEL INJECTION	1255
Y	*233-9417*	1	PUMP GP-FUEL PRM & PRIM FILTER	1505
Y	*230-7355*	1	PUMP GP-WATER	992
Y	*251-8423*	1	RADIATOR GP	1008
Y	*236-8212*	1	STARTING AID GP (SWITCH)	1557
Y	*234-9666*	1	STARTING MOTOR GP-ELECTRIC	1562
			—OR—	
Y	*323-6678*	1	STARTING MOTOR GP-ELECTRIC	1568
Y	*253-0756*	1	SWITCH GP-PRESSURE (ENGINE OIL)	1579
Y	*235-8749*	1	SWITCH GP-TEMPERATURE (ENGINE COOLANT)	1582
			S/N: 3341-26711	
Y	*367-0594*	1	SWITCH GP-TEMPERATURE	1583
			S/N: 33426712-UP	
Y	*290-2045*	1	TURBOCHARGER GP	1126
Y	*232-7526*	1	VALVE MECHANISM GP	839
R	**359-0734**	1	CYLINDER BLOCK GP-SHORT	
			AVAILABLE GASKET KIT(S):	
	272-0494	1	KIT-GASKET (BOTTOM)	
	277-5156	1	KIT-GASKET (TOP)	

241-8585 **ENGINE AR-PRIMARY (**contd.**)** **i06821176**

NOTE	PART NUMBER	QTY	PART NAME 1 2 3 4 5 6 (PRODUCT LEVEL)	SEE PAGE
R - REMANUFACTURED PART MAY BE AVAILABLE Y - SEPARATE ILLUSTRATION				

<END>

241-8586 ENGINE AR-PRIMARY

73 BRAKE KW (97 BHP) AT 2200 RPM

SMCS-1000 **i06845946**

NOTE	PART NUMBER	QTY	PART NAME 1 2 3 4 5 6 (PRODUCT LEVEL)	SEE PAGE
Y	*253-0888*	1	AIR CLEANER GP	1029
Y	*243-4301*	1	ALTERNATOR GP-CHARGING	1531
Y	*234-0617*	1	BALANCER GP	199
Y	*231-0033*	1	CONNECTION GP-WATER	868
Y	*235-5230*	1	COOLER GP-FLTR BASE & ENG OIL	890
Y	*231-0149*	1	COVER GP-INLET MANIFOLD	1052
Y	*230-9196*	1	COVER GP-FRONT HOUSING	231
Y	*230-9149*	1	COVER GP-VALVE MECHANISM	247
Y	*253-0728*	1	DRIVE GP-FAN	578
Y	*232-9761*	1	ENGINE AR-CORE	3
Y	*260-3215*	1	FAN GP-SUCTION	987
Y	*232-7378*	1	FILTER GP-ENGINE OIL	861
Y	*235-0322*	1	FLYWHEEL GP	593
Y	*232-6661*	1	GLOW PLUG GP	1547
Y	*235-0321*	1	HOUSING GP-FLYWHEEL	612
Y	*232-6179*	1	HOUSING GP-FRONT	626
Y	*232-3713*	1	LIFTING GP-ENGINE	647
Y	*252-4475*	1	MOUNTING GP-ENGINE	657
Y	*233-8150*	1	PAN GP-OIL	701
Y	*225-4317*	1	PLUG GP-ENGINE	816
Y	*230-7351*	1	PULLEY GP-CRANKSHAFT	830
			S/N: 3341-25630	
Y	*360-7349*	1	PULLEY GP-CRANKSHAFT	834
			S/N: 33425631-UP	
Y	*236-8229*	1	PUMP GP-FUEL INJECTION	1255
Y	*233-9417*	1	PUMP GP-FUEL PRM & PRIM FILTER	1505
Y	*230-7355*	1	PUMP GP-WATER	992
Y	*251-8423*	1	RADIATOR GP	1008
Y	*236-8758*	1	SENDER GP-TEMPERATURE	1555
Y	*236-8212*	1	STARTING AID GP (SWITCH)	1557
Y	*234-9666*	1	STARTING MOTOR GP-ELECTRIC	1562
			—OR—	
Y	*323-6678*	1	STARTING MOTOR GP-ELECTRIC	1568
Y	*253-0756*	1	SWITCH GP-PRESSURE (ENGINE OIL)	1579
Y	*290-2045*	1	TURBOCHARGER GP	1126
R	**359-0734**	1	CYLINDER BLOCK GP-SHORT	
			AVAILABLE GASKET KIT(S):	
	272-0494	1	KIT-GASKET (BOTTOM)	
	277-5156	1	KIT-GASKET (TOP)	
R - REMANUFACTURED PART MAY BE AVAILABLE Y - SEPARATE ILLUSTRATION				

<END>

241-8587 ENGINE AR-PRIMARY

73 BRAKE KW (97 BHP) AT 2200 RPM

SMCS-1000 **i02335948**

NOTE	PART NUMBER	QTY	PART NAME 1 2 3 4 5 6 (PRODUCT LEVEL)	SEE PAGE
			(NO SERVICED PARTS)	
			<END>	

241-8588 ENGINE AR-PRIMARY

73 BRAKE KW (97 BHP) AT 2200 RPM

SMCS-1000 **i02335960**

NOTE	PART NUMBER	QTY	PART NAME 1 2 3 4 5 6 (PRODUCT LEVEL)	SEE PAGE
			(NO SERVICED PARTS)	
			<END>	

241-8589 ENGINE AR-PRIMARY

64 BRAKE KW (86 BHP) AT 2400 RPM

SMCS-1000 **i04411580**

NOTE	PART NUMBER	QTY	PART NAME 1 2 3 4 5 6 (PRODUCT LEVEL)	SEE PAGE
Y	*243-4301*	1	ALTERNATOR GP-CHARGING	1531
Y	*233-7236*	1	CAMSHAFT GP	204
Y	*254-3312*	1	CONNECTION GP-INLET	1041
Y	*231-0033*	1	CONNECTION GP-WATER	868
Y	*253-2472*	1	COOLER GP-FLTR BASE & ENG OIL	904
Y	*230-9196*	1	COVER GP-FRONT HOUSING	231
Y	*230-9139*	1	COVER GP-VALVE MECHANISM	241
Y	*233-7027*	1	CRANKSHAFT GP	454
Y	*233-7007*	1	CYLINDER BLOCK GP	497
Y	*233-7234*	1	CYLINDER HEAD GP	532
Y	*243-4280*	1	DRIVE GP-FAN	572
Y	*235-0365*	1	ELBOW GP-EXHAUST	1064
Y	*268-5339*	1	FAN GP-BLOWER	981
Y	*260-3128*	1	FILTER & LINES GP-FUEL	1140
Y	*232-7378*	1	FILTER GP-ENGINE OIL	861
Y	*235-0322*	1	FLYWHEEL GP	593
Y	*232-6661*	1	GLOW PLUG GP	1547
Y	*224-2162*	1	HOUSING GP-FLYWHEEL	609
Y	*232-6179*	1	HOUSING GP-FRONT	626
Y	*232-3713*	1	LIFTING GP-ENGINE	647
Y	*231-0292*	1	MANIFOLD GP-EXHAUST	1070
Y	*252-4475*	1	MOUNTING GP-ENGINE	657
Y	*230-8253*	1	PAN GP-OIL	689
Y	*233-7233*	1	PISTON & ROD GP	770
Y	*225-4317*	1	PLUG GP-ENGINE	816
Y	*230-7351*	1	PULLEY GP-CRANKSHAFT	830
			S/N: 3341-25630	
Y	*360-7349*	1	PULLEY GP-CRANKSHAFT	834
			S/N: 33425631-UP	
Y	*230-7578*	1	PUMP GP-ENGINE OIL	863
Y	*233-7974*	1	PUMP GP-FUEL INJECTION	1191
Y	*233-7425*	1	PUMP GP-FUEL PRM & PRIM FILTER	1499
Y	*230-7355*	1	PUMP GP-WATER	992
Y	*251-8423*	1	RADIATOR GP	1008
Y	*236-8212*	1	STARTING AID GP (SWITCH)	1557
Y	*234-9666*	1	STARTING MOTOR GP-ELECTRIC	1562
			—OR—	
Y	*323-6678*	1	STARTING MOTOR GP-ELECTRIC	1568
Y	*253-0756*	1	SWITCH GP-PRESSURE	1579
Y	*235-8749*	1	SWITCH GP-TEMPERATURE	1582
			S/N: 3341-23542	
Y	*367-0594*	1	SWITCH GP-TEMPERATURE	1583
			S/N: 33423543-UP	
Y	*233-7235*	1	VALVE MECHANISM GP	840
R	**359-0731**	1	CYLINDER BLOCK GP-SHORT	
			AVAILABLE GASKET KIT(S):	
	272-0494	1	KIT-GASKET (BOTTOM)	
	277-5156	1	KIT-GASKET (TOP)	

241-8589 **ENGINE AR-PRIMARY (**contd.**)** **i04411580**

NOTE	PART NUMBER	QTY	PART NAME 1 2 3 4 5 6 (PRODUCT LEVEL)	SEE PAGE
R - REMANUFACTURED PART MAY BE AVAILABLE Y - SEPARATE ILLUSTRATION				

<END>

241-8590 ENGINE AR-PRIMARY

64 BRAKE KW (86 BHP) AT 2400 RPM

SMCS-1000 **i02335977**

NOTE	PART NUMBER	QTY	PART NAME 1 2 3 4 5 6 (PRODUCT LEVEL)	SEE PAGE
			(NO SERVICED PARTS)	

<END>

241-8591 ENGINE AR-PRIMARY

64 BRAKE KW (86 BHP) AT 2400 RPM

SMCS-1000 **i02335979**

NOTE	PART NUMBER	QTY	PART NAME 1 2 3 4 5 6 (PRODUCT LEVEL)	SEE PAGE
			(NO SERVICED PARTS)	

<END>

241-8592 ENGINE AR-PRIMARY

64 BRAKE KW (86 BHP) AT 2400 RPM

SMCS-1000 **i05078070**

NOTE	PART NUMBER	QTY	PART NAME 1 2 3 4 5 6 (PRODUCT LEVEL)	SEE PAGE
Y	*245-4664*	1	ALTERNATOR GP-CHARGING	1532
Y	*233-7236*	1	CAMSHAFT GP	204
Y	*267-8817*	1	CONNECTION GP-INLET	1047
Y	*231-0033*	1	CONNECTION GP-WATER	868
Y	*240-5535*	1	CONVERTER GP-ELECTRICAL	1543
Y	*253-2472*	1	COOLER GP-FLTR BASE & ENG OIL	904
Y	*230-9196*	1	COVER GP-FRONT HOUSING	231
Y	*230-9139*	1	COVER GP-VALVE MECHANISM	241
Y	*233-7027*	1	CRANKSHAFT GP	454
Y	*233-7007*	1	CYLINDER BLOCK GP	497
Y	*233-7234*	1	CYLINDER HEAD GP	532
Y	*243-4280*	1	DRIVE GP-FAN	572
Y	*235-0365*	1	ELBOW GP-EXHAUST	1064
Y	*260-3215*	1	FAN GP-SUCTION	987
Y	*260-3128*	1	FILTER & LINES GP-FUEL	1140
Y	*232-7378*	1	FILTER GP-ENGINE OIL	861
Y	*235-0322*	1	FLYWHEEL GP	593
Y	*233-9834*	1	GLOW PLUG GP	1549
Y	*224-2162*	1	HOUSING GP-FLYWHEEL	609
Y	*232-6179*	1	HOUSING GP-FRONT	626
Y	*232-3713*	1	LIFTING GP-ENGINE	647
Y	*231-0292*	1	MANIFOLD GP-EXHAUST	1070
Y	*252-4475*	1	MOUNTING GP-ENGINE	657
Y	*230-8253*	1	PAN GP-OIL	689
Y	*233-7233*	1	PISTON & ROD GP	770
Y	*225-4317*	1	PLUG GP-ENGINE	816
Y	*230-7351*	1	PULLEY GP-CRANKSHAFT	830
			S/N: 3341-25630	
Y	*360-7349*	1	PULLEY GP-CRANKSHAFT	834
			S/N: 33425631-UP	
Y	*230-7578*	1	PUMP GP-ENGINE OIL	863
Y	*240-5572*	1	PUMP GP-FUEL INJECTION	1303
Y	*233-7425*	1	PUMP GP-FUEL PRM & PRIM FILTER	1499
Y	*230-7355*	1	PUMP GP-WATER	992
Y	*251-8423*	1	RADIATOR GP	1008
Y	*236-8212*	1	STARTING AID GP (SWITCH)	1557
Y	*230-7304*	1	STARTING MOTOR GP-ELECTRIC	1561
Y	*253-0756*	1	SWITCH GP-PRESSURE	1579
Y	*235-8749*	1	SWITCH GP-TEMPERATURE	1582
			—OR—	
Y	**367-0594**	1	SWITCH GP-TEMPERATURE	1583
Y	*233-7235*	1	VALVE MECHANISM GP	840
R	**359-0731**	1	CYLINDER BLOCK GP-SHORT	
			AVAILABLE GASKET KIT(S):	
	272-0494	1	KIT-GASKET (BOTTOM)	
	277-5156	1	KIT-GASKET (TOP)	

241-8592 **ENGINE AR-PRIMARY (**contd.**)** **i05078070**

NOTE	PART NUMBER	QTY	PART NAME 1 2 3 4 5 6 (PRODUCT LEVEL)	SEE PAGE

R - REMANUFACTURED PART MAY BE AVAILABLE
Y - SEPARATE ILLUSTRATION

<END>

241-8593 ENGINE AR-PRIMARY

62 BRAKE KW (83 BHP) AT 2400 RPM

SMCS-1000 **i06845917**

NOTE	PART NUMBER	QTY	PART NAME 1 2 3 4 5 6 (PRODUCT LEVEL)	SEE PAGE
Y	*243-4301*	1	ALTERNATOR GP-CHARGING	1531
Y	*234-0617*	1	BALANCER GP	199
Y	*233-7236*	1	CAMSHAFT GP	204
Y	*254-3312*	1	CONNECTION GP-INLET	1041
Y	*231-0033*	1	CONNECTION GP-WATER	868
Y	*234-1546*	1	COOLER GP-FLTR BASE & ENG OIL	886
Y	*230-9196*	1	COVER GP-FRONT HOUSING	231
Y	*230-9139*	1	COVER GP-VALVE MECHANISM	241
Y	*233-7027*	1	CRANKSHAFT GP	454
Y	*233-7007*	1	CYLINDER BLOCK GP	497
Y	*233-7234*	1	CYLINDER HEAD GP	532
Y	*243-4280*	1	DRIVE GP-FAN	572
Y	*235-0365*	1	ELBOW GP-EXHAUST	1064
Y	*268-5339*	1	FAN GP-BLOWER	981
Y	*260-3128*	1	FILTER & LINES GP-FUEL	1140
Y	*232-7378*	1	FILTER GP-ENGINE OIL	861
Y	*235-0322*	1	FLYWHEEL GP	593
Y	*232-6661*	1	GLOW PLUG GP	1547
Y	*235-0321*	1	HOUSING GP-FLYWHEEL	612
Y	*232-6179*	1	HOUSING GP-FRONT	626
Y	*232-3713*	1	LIFTING GP-ENGINE	647
Y	*231-0292*	1	MANIFOLD GP-EXHAUST	1070
Y	*252-4475*	1	MOUNTING GP-ENGINE	657
Y	*233-8150*	1	PAN GP-OIL	701
Y	*233-7233*	1	PISTON & ROD GP	770
Y	*225-4317*	1	PLUG GP-ENGINE	816
Y	*230-7351*	1	PULLEY GP-CRANKSHAFT	830
			S/N: 3341-25630	
Y	*360-7349*	1	PULLEY GP-CRANKSHAFT	834
			S/N: 33425631-UP	
Y	*233-7974*	1	PUMP GP-FUEL INJECTION	1191
Y	*233-7425*	1	PUMP GP-FUEL PRM & PRIM FILTER	1499
Y	*230-7355*	1	PUMP GP-WATER	992
Y	*251-8423*	1	RADIATOR GP	1008
Y	*236-8212*	1	STARTING AID GP (SWITCH)	1557
Y	*234-9666*	1	STARTING MOTOR GP-ELECTRIC	1562
			—OR—	
Y	*323-6678*	1	STARTING MOTOR GP-ELECTRIC	1568
Y	*253-0756*	1	SWITCH GP-PRESSURE (ENGINE OIL)	1579
Y	*235-8749*	1	SWITCH GP-TEMPERATURE (ENGINE COOLANT)	1582
			S/N: 3341-26187	
Y	*367-0594*	1	SWITCH GP-TEMPERATURE	1583
			S/N: 33426188-UP	
Y	*233-7235*	1	VALVE MECHANISM GP	840
R	**359-0731**	1	CYLINDER BLOCK GP-SHORT	
			AVAILABLE GASKET KIT(S):	
	272-0494	1	KIT-GASKET (BOTTOM)	
	277-5156	1	KIT-GASKET (TOP)	

241-8593 **ENGINE AR-PRIMARY (**contd.**)** **i06845917**

NOTE	PART NUMBER	QTY	PART NAME 1 2 3 4 5 6 (PRODUCT LEVEL)	SEE PAGE
R - REMANUFACTURED PART MAY BE AVAILABLE Y - SEPARATE ILLUSTRATION				

<END>

241-8594 ENGINE AR-PRIMARY

62 BRAKE KW (83 BHP) AT 2400 RPM

SMCS-1000 **i06845823**

NOTE	PART NUMBER	QTY	PART NAME 1 2 3 4 5 6 (PRODUCT LEVEL)	SEE PAGE
Y	*254-3309*	1	AIR CLEANER GP	1032
Y	*243-4301*	1	ALTERNATOR GP-CHARGING	1531
Y	*234-0617*	1	BALANCER GP	199
Y	*254-3312*	1	CONNECTION GP-INLET	1041
Y	*231-0033*	1	CONNECTION GP-WATER	868
Y	*234-1546*	1	COOLER GP-FLTR BASE & ENG OIL	886
Y	*230-9196*	1	COVER GP-FRONT HOUSING	231
Y	*230-9139*	1	COVER GP-VALVE MECHANISM	241
Y	*243-4280*	1	DRIVE GP-FAN	572
Y	*235-0365*	1	ELBOW GP-EXHAUST	1064
Y	*234-0809*	1	ENGINE AR-CORE	3
Y	*260-3215*	1	FAN GP-SUCTION	987
Y	*232-7378*	1	FILTER GP-ENGINE OIL	861
Y	*235-0322*	1	FLYWHEEL GP	593
Y	*232-6661*	1	GLOW PLUG GP	1547
Y	*235-0321*	1	HOUSING GP-FLYWHEEL	612
Y	*232-6179*	1	HOUSING GP-FRONT	626
Y	*232-3713*	1	LIFTING GP-ENGINE	647
Y	*231-0292*	1	MANIFOLD GP-EXHAUST	1070
Y	*252-4475*	1	MOUNTING GP-ENGINE	657
Y	*233-8150*	1	PAN GP-OIL (ENGINE)	701
Y	*225-4317*	1	PLUG GP-ENGINE	816
Y	*230-7351*	1	PULLEY GP-CRANKSHAFT	830
			S/N: 3341-25630	
Y	*360-7349*	1	PULLEY GP-CRANKSHAFT	834
			S/N: 33425631-UP	
Y	*233-7974*	1	PUMP GP-FUEL INJECTION	1191
Y	*233-7425*	1	PUMP GP-FUEL PRM & PRIM FILTER	1499
Y	*230-7355*	1	PUMP GP-WATER	992
Y	*251-8423*	1	RADIATOR GP	1008
Y	*236-8758*	1	SENDER GP-TEMPERATURE	1555
Y	*236-8212*	1	STARTING AID GP (SWITCH)	1557
Y	*234-9666*	1	STARTING MOTOR GP-ELECTRIC	1562
			—OR—	
Y	*323-6678*	1	STARTING MOTOR GP-ELECTRIC	1568
Y	*253-0756*	1	SWITCH GP-PRESSURE (ENGINE OIL)	1579
R	**359-0731**	1	CYLINDER BLOCK GP-SHORT	
			AVAILABLE GASKET KIT(S):	
	272-0494	1	KIT-GASKET (BOTTOM)	
	277-5156	1	KIT-GASKET (TOP)	

R - REMANUFACTURED PART MAY BE AVAILABLE
Y - SEPARATE ILLUSTRATION

<END>

241-8595 ENGINE AR-PRIMARY

62 BRAKE KW (83 BHP) AT 2400 RPM

SMCS-1000 **i02335985**

NOTE	PART NUMBER	QTY	PART NAME 1 2 3 4 5 6 (PRODUCT LEVEL)	SEE PAGE
			(NO SERVICED PARTS)	

<END>

241-8596 ENGINE AR-PRIMARY

62 BRAKE KW (83 BHP) AT 2400 RPM

SMCS-1000 **i05198611**

NOTE	PART NUMBER	QTY	PART NAME 1 2 3 4 5 6 (PRODUCT LEVEL)	SEE PAGE
Y	*245-4664*	1	ALTERNATOR GP-CHARGING	1532
Y	*234-0617*	1	BALANCER GP	199
Y	*233-7236*	1	CAMSHAFT GP	204
Y	*267-8817*	1	CONNECTION GP-INLET	1047
Y	*231-0033*	1	CONNECTION GP-WATER	868
Y	*240-5535*	1	CONVERTER GP-ELECTRICAL	1543
Y	*234-1546*	1	COOLER GP-FLTR BASE & ENG OIL	886
Y	*230-9196*	1	COVER GP-FRONT HOUSING	231
Y	*230-9139*	1	COVER GP-VALVE MECHANISM	241
Y	*233-7027*	1	CRANKSHAFT GP	454
Y	*233-7007*	1	CYLINDER BLOCK GP	497
Y	*233-7234*	1	CYLINDER HEAD GP	532
Y	*243-4280*	1	DRIVE GP-FAN	572
Y	*235-0365*	1	ELBOW GP-EXHAUST	1064
Y	*260-3215*	1	FAN GP-SUCTION	987
Y	*260-3128*	1	FILTER & LINES GP-FUEL	1140
Y	*232-7378*	1	FILTER GP-ENGINE OIL	861
Y	*235-0322*	1	FLYWHEEL GP	593
Y	*233-9834*	1	GLOW PLUG GP	1549
Y	*235-0321*	1	HOUSING GP-FLYWHEEL	612
Y	*232-6179*	1	HOUSING GP-FRONT	626
Y	*232-3713*	1	LIFTING GP-ENGINE	647
Y	*231-0292*	1	MANIFOLD GP-EXHAUST	1070
Y	*252-4475*	1	MOUNTING GP-ENGINE	657
Y	*233-8150*	1	PAN GP-OIL	701
Y	*233-7233*	1	PISTON & ROD GP	770
Y	*225-4317*	1	PLUG GP-ENGINE	816
Y	*230-7351*	1	PULLEY GP-CRANKSHAFT	830
			S/N: 3341-25630	
Y	*360-7349*	1	PULLEY GP-CRANKSHAFT	834
			S/N: 33425631-UP	
Y	*240-5572*	1	PUMP GP-FUEL INJECTION	1303
Y	*233-7425*	1	PUMP GP-FUEL PRM & PRIM FILTER	1499
Y	*230-7355*	1	PUMP GP-WATER	992
Y	*251-8423*	1	RADIATOR GP	1008
Y	*236-8212*	1	STARTING AID GP (SWITCH)	1557
Y	*230-7304*	1	STARTING MOTOR GP-ELECTRIC	1561
Y	*253-0756*	1	SWITCH GP-PRESSURE (ENGINE OIL)	1579
Y	*235-8749*	1	SWITCH GP-TEMPERATURE (ENGINE COOLANT)	1582
			S/N: 3341-4900	
Y	*367-0594*	1	SWITCH GP-TEMPERATURE (ENGINE COOLANT)	1583
			S/N: 3344901-UP	
Y	*233-7235*	1	VALVE MECHANISM GP	840
R	**359-0731**	1	CYLINDER BLOCK GP-SHORT	
			AVAILABLE GASKET KIT(S):	
	272-0494	1	KIT-GASKET (BOTTOM)	
	277-5156	1	KIT-GASKET (TOP)	

241-8596 **ENGINE AR-PRIMARY (**contd.**)** **i05198611**

NOTE	PART NUMBER	QTY	PART NAME 1 2 3 4 5 6 (PRODUCT LEVEL)	SEE PAGE

R - REMANUFACTURED PART MAY BE AVAILABLE
Y - SEPARATE ILLUSTRATION

<END>

244-3103 ENGINE AR-PRIMARY

75 BRAKE KW (100 BHP) AT 2200 RPM

SMCS-1000 **i05170564**

NOTE	PART NUMBER	QTY	PART NAME 1 2 3 4 5 6 (PRODUCT LEVEL)	SEE PAGE
Y	*236-8196*	1	ALTERNATOR GP-CHARGING	1527
Y	*231-0033*	1	CONNECTION GP-WATER	868
Y	*265-5299*	1	COOLER GP-FLTR BASE & ENG OIL	932
Y	*231-0149*	1	COVER GP-INLET MANIFOLD	1052
Y	*236-1238*	1	COVER GP-VALVE MECHANISM	298
Y	*265-5289*	1	DRIVE GP-ACCESSORY	559
Y	*251-6697*	1	DRIVE GP-FAN	576
Y	*243-3185*	1	ENGINE AR-CORE	4
Y	*252-4441*	1	FAN GP-BLOWER	980
Y	*232-7378*	1	FILTER GP-ENGINE OIL	861
Y	*230-7286*	1	FLYWHEEL GP	590
Y	*232-6661*	1	GLOW PLUG GP	1547
Y	*223-7825*	1	HOUSING GP-FLYWHEEL	608
Y	*243-3272*	1	HOUSING GP-FRONT	636
Y	*232-3713*	1	LIFTING GP-ENGINE	647
Y	*251-8335*	1	MOUNTING GP-ENGINE	656
Y	*251-8284*	1	PAN GP-OIL	736
Y	*225-4317*	1	PLUG GP-ENGINE	816
Y	*230-7352*	1	PULLEY GP-CRANKSHAFT	831
			S/N: 33425630-UP	
Y	*360-7350*	1	PULLEY GP-CRANKSHAFT	835
			S/N: 33425631-UP	
Y	*230-7578*	1	PUMP GP-ENGINE OIL	863
Y	*236-8229*	1	PUMP GP-FUEL INJECTION	1255
Y	*233-9417*	1	PUMP GP-FUEL PRM & PRIM FILTER	1505
Y	*230-7355*	1	PUMP GP-WATER	992
Y	*251-8423*	1	RADIATOR GP	1008
Y	*234-9666*	1	STARTING MOTOR GP-ELECTRIC	1562
			—OR—	
Y	*323-6678*	1	STARTING MOTOR GP-ELECTRIC	1568
Y	*237-4896*	1	SWITCH GP-PRESSURE (ENGINE OIL)	1578
Y	*235-8749*	1	SWITCH GP-TEMPERATURE (ENGINE COOLANT)	1582
			S/N: 3341-2630O	
Y	*367-0594*	1	SWITCH GP-TEMPERATURE	1583
			S/N: 33426301-UP	
Y	*251-6806*	1	TURBOCHARGER GP	1109
			S/N: 3341-1605	
Y	*265-5303*	1	TURBOCHARGER GP	1116
			S/N: 3341606-UP	
R	**359-0734**		CYLINDER BLOCK GP-SHORT	
			AVAILABLE GASKET KIT(S):	
	272-0494	1	KIT-GASKET (BOTTOM)	
	277-5156	1	KIT-GASKET (TOP)	

R - REMANUFACTURED PART MAY BE AVAILABLE
Y - SEPARATE ILLUSTRATION

<END>

244-3104 ENGINE AR-PRIMARY

62 BRAKE KW (83 BHP) AT 2200 RPM

SMCS-1000 **i06809875**

NOTE	PART NUMBER	QTY	PART NAME 1 2 3 4 5 6 (PRODUCT LEVEL)	SEE PAGE
Y	*265-5300*	1	AIR CLEANER GP	1035
			S/N: 3341606-UP	
Y	*236-8196*	1	ALTERNATOR GP-CHARGING	1527
Y	*253-8786*	1	COOLER GP-FLTR BASE & ENG OIL	929
Y	*235-8161*	1	COVER GP-VALVE MECHANISM	292
Y	*253-8823*	1	DRIVE GP-ACCESSORY	555
Y	*244-1649*	1	DRIVE GP-FAN	573
Y	*253-8765*	1	ENGINE AR-CORE	5
Y	*260-3215*	1	FAN GP-SUCTION	987
Y	*232-7378*	1	FILTER GP-ENGINE OIL	861
Y	*238-4769*	1	FLANGE GP-EXHAUST	1067
Y	*230-7286*	1	FLYWHEEL GP	590
Y	*232-6661*	1	GLOW PLUG GP	1547
Y	*223-7825*	1	HOUSING GP-FLYWHEEL	608
Y	*235-1419*	1	HOUSING GP-FRONT	630
Y	*232-3713*	1	LIFTING GP-ENGINE	647
Y	*231-0292*	1	MANIFOLD GP-EXHAUST	1070
Y	*251-8335*	1	MOUNTING GP-ENGINE	656
Y	*251-8284*	1	PAN GP-OIL	736
Y	*225-4317*	1	PLUG GP-ENGINE	816
Y	*230-7352*	1	PULLEY GP-CRANKSHAFT	831
			S/N: 3341-25630	
Y	*360-7350*	1	PULLEY GP-CRANKSHAFT	835
			S/N: 33425631-UP	
Y	*230-7578*	1	PUMP GP-ENGINE OIL	863
Y	*233-7974*	1	PUMP GP-FUEL INJECTION	1191
			—OR—	
Y	*267-9413*	1	PUMP GP-FUEL INJECTION	1339
Y	*233-7425*	1	PUMP GP-FUEL PRM & PRIM FILTER	1499
Y	*230-7355*	1	PUMP GP-WATER	992
Y	*251-8423*	1	RADIATOR GP	1008
Y	*234-9666*	1	STARTING MOTOR GP-ELECTRIC	1562
			—OR—	
Y	*323-6678*	1	STARTING MOTOR GP-ELECTRIC	1568
Y	*253-8966*	1	SWITCH GP-PRESSURE (ENGINE OIL)	1580
Y	*367-0594*	1	SWITCH GP-TEMPERATURE (ENGINE COOLANT)	1583
			AVAILABLE GASKET KIT(S):	
	272-0494	1	KIT-GASKET (BOTTOM)	
	277-5156	1	KIT-GASKET (TOP)	

Y - SEPARATE ILLUSTRATION

<END>

244-3105 ENGINE AR-PRIMARY

75 BRAKE KW (100 BHP) AT 2200 RPM

SMCS-1000 **i06845834**

NOTE	PART NUMBER	QTY	PART NAME 1 2 3 4 5 6 (PRODUCT LEVEL)	SEE PAGE
Y	*236-8196*	1	ALTERNATOR GP-CHARGING	1527
Y	*231-0033*	1	CONNECTION GP-WATER	868
Y	*265-5299*	1	COOLER GP-FLTR BASE & ENG OIL	932
Y	*231-0149*	1	COVER GP-INLET MANIFOLD	1052
Y	*236-1238*	1	COVER GP-VALVE MECHANISM	298
Y	*265-5289*	1	DRIVE GP-ACCESSORY	559
Y	*251-6697*	1	DRIVE GP-FAN	576
Y	*243-3185*	1	ENGINE AR-CORE	4
Y	*260-3215*	1	FAN GP-SUCTION	987
Y	*232-7378*	1	FILTER GP-ENGINE OIL	861
Y	*230-7286*	1	FLYWHEEL GP	590
Y	*232-6661*	1	GLOW PLUG GP	1547
Y	*223-7825*	1	HOUSING GP-FLYWHEEL	608
Y	*243-3272*	1	HOUSING GP-FRONT	636
Y	*232-3713*	1	LIFTING GP-ENGINE	647
Y	*251-8335*	1	MOUNTING GP-ENGINE	656
Y	*251-8284*	1	PAN GP-OIL	736
Y	*225-4317*	1	PLUG GP-ENGINE	816
Y	*230-7352*	1	PULLEY GP-CRANKSHAFT	831
			S/N: 3341-25630	
Y	*360-7350*	1	PULLEY GP-CRANKSHAFT	835
			S/N: 33425631-UP	
Y	*230-7578*	1	PUMP GP-ENGINE OIL	863
Y	*236-8229*	1	PUMP GP-FUEL INJECTION	1255
Y	*233-9417*	1	PUMP GP-FUEL PRM & PRIM FILTER	1505
Y	*230-7355*	1	PUMP GP-WATER	992
Y	*251-8423*	1	RADIATOR GP	1008
Y	*234-9666*	1	STARTING MOTOR GP-ELECTRIC	1562
			—OR—	
Y	*323-6678*	1	STARTING MOTOR GP-ELECTRIC	1568
Y	*237-4896*	1	SWITCH GP-PRESSURE (ENGINE OIL)	1578
Y	*235-8749*	1	SWITCH GP-TEMPERATURE (ENGINE COOLANT)	1582
			S/N: 3341-23552	
Y	*367-0594*	1	SWITCH GP-TEMPERATURE	1583
			S/N: 33423553-UP	
Y	*251-6806*	1	TURBOCHARGER GP	1109
			S/N: 3341-1605	
Y	*265-5303*	1	TURBOCHARGER GP	1116
			S/N: 3341606-UP	
R	**359-0734**	1	CYLINDER BLOCK GP-SHORT	
			AVAILABLE GASKET KIT(S):	
	272-0494	1	KIT-GASKET (BOTTOM)	
	277-5156	1	KIT-GASKET (TOP)	

R - REMANUFACTURED PART MAY BE AVAILABLE
Y - SEPARATE ILLUSTRATION

<END>

256-4720 ENGINE AR-PRIMARY

91 BRAKE KW (122 BHP) AT 2300 RPM

SMCS-1000 **i04396579**

NOTE	PART NUMBER	QTY	PART NAME 1 2 3 4 5 6 (PRODUCT LEVEL)	SEE PAGE
Y	*258-7556*	1	AIR COMPRESSOR GP	196
Y	*233-9533*	1	ALTERNATOR GP-CHARGING	1524
Y	*232-7528*	1	CAMSHAFT GP	203
Y	*231-0038*	1	CONNECTION GP-WATER	870
Y	*273-3806*	1	CONTROL GP-JACKET WATER HEATER	1541
Y	*240-5535*	1	CONVERTER GP-ELECTRICAL	1543
Y	*253-2475*	1	COOLER GP-FLTR BASE & ENG OIL	919
Y	*270-4368*	1	COVER GP-VALVE MECHANISM	364
Y	*232-7439*	1	CRANKSHAFT GP	451
Y	*232-7606*	1	CYLINDER BLOCK GP	495
Y	*232-7524*	1	CYLINDER HEAD GP	531
Y	*234-9680*	1	DRIVE GP-FAN	566
Y	*270-4374*	1	ELBOW GP-AIR INLET	1063
Y	*260-3128*	1	FILTER & LINES GP-FUEL	1140
Y	*232-7378*	1	FILTER GP-ENGINE OIL	861
Y	*233-9834*	1	GLOW PLUG GP	1549
Y	*223-7825*	1	HOUSING GP-FLYWHEEL	608
Y	*232-6179*	1	HOUSING GP-FRONT	626
Y	*232-3713*	1	LIFTING GP-ENGINE	647
Y	*252-6456*	1	MOUNTING GP-ENGINE	658
Y	*270-4367*	1	PAN GP-OIL (ENGINE)	740
Y	*232-7442*	1	PISTON & ROD GP	764
Y	*232-6204*	1	PLUG GP-ENGINE	821
Y	*253-2479*	1	PLUG GP-ENGINE	827
Y	*230-7353*	1	PULLEY GP-CRANKSHAFT	832
			S/N: 3341-25630	
Y	*360-7351*	1	PULLEY GP-CRANKSHAFT	836
			S/N: 33425631-UP	
Y	*230-7578*	1	PUMP GP-ENGINE OIL	863
Y	*270-4364*	1	PUMP GP-FUEL INJECTION	1364
Y	*233-9417*	1	PUMP GP-FUEL PRM & PRIM FILTER	1505
Y	*230-7355*	1	PUMP GP-WATER	992
Y	*230-7304*	1	STARTING MOTOR GP-ELECTRIC	1561
Y	*249-0106*	1	TURBOCHARGER GP	1107
Y	*232-7526*	1	VALVE MECHANISM GP	839
R	**359-0734**	1	CYLINDER BLOCK GP-SHORT	
			AVAILABLE GASKET KIT(S):	
	272-0494	1	KIT-GASKET (BOTTOM)	
	277-5156	1	KIT-GASKET (TOP)	

R - REMANUFACTURED PART MAY BE AVAILABLE
Y - SEPARATE ILLUSTRATION

<END>

ENGINE ARRANGEMENT

257-8358 ENGINE AR-PRIMARY*R

75 BRAKE KW (100 BHP) AT 2200 RPM

SMCS-1000 **i02335987**

NOTE	PART NUMBER	QTY	PART NAME 1 2 3 4 5 6 (PRODUCT LEVEL)	SEE PAGE
			(NO SERVICED PARTS)	

<END>

257-8359 ENGINE AR-PRIMARY

81 BRAKE KW (108 BHP) AT 2400 RPM

SMCS-1000 **i04400737**

NOTE	PART NUMBER	QTY	PART NAME 1 2 3 4 5 6 (PRODUCT LEVEL)	SEE PAGE
Y	*258-7556*	1	AIR COMPRESSOR GP	196
Y	*233-9533*	1	ALTERNATOR GP-CHARGING	1524
Y	*260-3135*	1	CONNECTION GP-INLET	1044
Y	*231-0033*	1	CONNECTION GP-WATER	868
Y	*242-6131*	1	CONVERTER GP-ELECTRICAL	1544
Y	*238-2799*	1	COOLER GP-FLTR BASE & ENG OIL	901
Y	*230-9149*	1	COVER GP-VALVE MECHANISM	247
Y	*234-9680*	1	DRIVE GP-FAN	566
Y	*232-9761*	1	ENGINE AR-CORE	3
Y	*260-3128*	1	FILTER & LINES GP-FUEL	1140
Y	*232-7378*	1	FILTER GP-ENGINE OIL	861
Y	*260-3119*	1	FLYWHEEL GP	599
Y	*233-9834*	1	GLOW PLUG GP	1549
Y	*223-7825*	1	HOUSING GP-FLYWHEEL	608
Y	*232-6179*	1	HOUSING GP-FRONT	626
Y	*232-3713*	1	LIFTING GP-ENGINE	647
Y	*260-3152*	1	MOUNTING GP-ENGINE	660
Y	*234-9738*	1	MOUNTING GP-FAN	991
Y	*243-2455*	1	PAN GP-OIL (ENGINE)	715
Y	*230-7353*	1	PULLEY GP-CRANKSHAFT	832
			S/N: 3341-25630	
Y	*360-7351*	1	PULLEY GP-CRANKSHAFT	836
			S/N: 33425631-UP	
Y	*230-7578*	1	PUMP GP-ENGINE OIL	863
Y	*233-9405*	1	PUMP GP-FUEL INJECTION	1204
Y	*233-9417*	1	PUMP GP-FUEL PRM & PRIM FILTER	1505
Y	*230-7355*	1	PUMP GP-WATER	992
Y	*243-2420*	1	STARTING AID GP (SWITCH)	1558
Y	*230-7304*	1	STARTING MOTOR GP-ELECTRIC	1561
Y	*253-0756*	1	SWITCH GP-PRESSURE (ENGINE OIL)	1579
Y	*235-8749*	1	SWITCH GP-TEMPERATURE (ENGINE COOLANT)	1582
Y	*233-9780*	1	TURBOCHARGER GP	1079
R	**359-0734**	1	CYLINDER BLOCK GP-SHORT	
			AVAILABLE GASKET KIT(S):	
	272-0494	1	KIT-GASKET (BOTTOM)	
	277-5156	1	KIT-GASKET (TOP)	

R - REMANUFACTURED PART MAY BE AVAILABLE
Y - SEPARATE ILLUSTRATION

<END>

257-8360 ENGINE AR-PRIMARY

60 BRAKE KW (80 BHP) AT 2200 RPM

SMCS-1000 **i07854002**

NOTE	PART NUMBER	QTY	PART NAME 1 2 3 4 5 6 (PRODUCT LEVEL)	SEE PAGE
Y	*267-9411*	1	ALTERNATOR GP-CHARGING	1534
Y	*264-0395*	1	BALANCER GP	200
Y	*233-7236*	1	CAMSHAFT GP	204
Y	*253-6204*	1	CONNECTION GP-INLET	1040
Y	*231-0033*	1	CONNECTION GP-WATER	868
Y	*267-9422*	1	COOLER GP-FLTR BASE & ENG OIL	947
Y	*230-9196*	1	COVER GP-FRONT HOUSING	231
Y	*267-9420*	1	COVER GP-VALVE MECHANISM	346
Y	*233-7027*	1	CRANKSHAFT GP	454
Y	*233-7007*	1	CYLINDER BLOCK GP	497
Y	*233-7234*	1	CYLINDER HEAD GP	532
Y	*267-9412*	1	DRIVE GP-FAN	579
Y	*260-3128*	1	FILTER & LINES GP-FUEL	1140
Y	*225-7942*	1	FILTER GP-ENGINE OIL	860
Y	*235-0322*	1	FLYWHEEL GP	593
Y	*232-6661*	1	GLOW PLUG GP	1547
Y	*235-0321*	1	HOUSING GP-FLYWHEEL	612
Y	*232-6179*	1	HOUSING GP-FRONT	626
Y	*232-3713*	1	LIFTING GP-ENGINE	647
Y	*237-5408*	1	MANIFOLD GP-EXHAUST	1071
Y	*268-5266*	1	MOUNTING GP-ENGINE	663
Y	*234-9738*	1	MOUNTING GP-FAN	991
Y	*233-8150*	1	PAN GP-OIL (ENGINE)	701
Y	*233-7233*	1	PISTON & ROD GP	770
Y	*225-4317*	1	PLUG GP-ENGINE	816
Y	*232-6204*	1	PLUG GP-ENGINE	821
Y	*253-2479*	1	PLUG GP-ENGINE	827
Y	*230-7352*	1	PULLEY GP-CRANKSHAFT	831
			S/N: 3341-25630	
Y	*360-7350*	1	PULLEY GP-CRANKSHAFT	835
			S/N: 33425631-UP	
Y	*267-9413*	1	PUMP GP-FUEL INJECTION	1339
Y	*233-7425*	1	PUMP GP-FUEL PRM & PRIM FILTER	1499
Y	*230-7355*	1	PUMP GP-WATER	992
Y	*234-9666*	1	STARTING MOTOR GP-ELECTRIC	1562
			—OR—	
Y	*323-6678*	1	STARTING MOTOR GP-ELECTRIC	1568
Y	*233-7235*	1	VALVE MECHANISM GP	840
R	**359-0731**	1	CYLINDER BLOCK GP-SHORT	
			AVAILABLE GASKET KIT(S):	
	272-0494	1	KIT-GASKET (BOTTOM)	
	277-5156	1	KIT-GASKET (TOP)	

R - REMANUFACTURED PART MAY BE AVAILABLE
Y - SEPARATE ILLUSTRATION

<END>

257-8362 ENGINE AR-PRIMARY

96 BRAKE KW (128 BHP) AT 2000 RPM
ALSO AN ATTACHMENT

SMCS-1000 **i04398851**

NOTE	PART NUMBER	QTY	PART NAME 1 2 3 4 5 6 (PRODUCT LEVEL)	SEE PAGE
Y	*236-8196*	1	ALTERNATOR GP-CHARGING	1527
Y	*232-7528*	1	CAMSHAFT GP	203
Y	*231-0033*	1	CONNECTION GP-WATER	868
Y	*238-2799*	1	COOLER GP-FLTR BASE & ENG OIL	901
Y	*236-8190*	1	COVER GP-VALVE MECHANISM	310
Y	*232-7439*	1	CRANKSHAFT GP	451
Y	*232-7606*	1	CYLINDER BLOCK GP	495
Y	*232-7524*	1	CYLINDER HEAD GP	531
Y	*231-0055*	1	DRIVE GP-ACCESSORY	549
Y	*236-8181*	1	DRIVE GP-FAN	568
Y	*267-5695*	1	FAN GP-SUCTION	988
Y	*260-3128*	1	FILTER & LINES GP-FUEL	1140
Y	*232-7378*	1	FILTER GP-ENGINE OIL	861
Y	*235-0322*	1	FLYWHEEL GP	593
Y	*232-6661*	1	GLOW PLUG GP	1547
Y	*224-2162*	1	HOUSING GP-FLYWHEEL	609
Y	*232-6179*	1	HOUSING GP-FRONT	626
Y	*232-3713*	1	LIFTING GP-ENGINE	647
Y	*267-5698*	1	MOUNTING GP-ENGINE	662
Y	*243-2455*	1	PAN GP-OIL	715
Y	*267-5696*	1	CONNECTION GP-INLET	1046
			—OR—	
Y	*254-3775*	1	CONNECTION GP-INLET	1042
Y	*232-7442*	1	PISTON & ROD GP	764
Y	*225-4317*	1	PLUG GP-ENGINE	816
Y	*230-7352*	1	PULLEY GP-CRANKSHAFT	831
			S/N: 3341-25630	
Y	*360-7350*	1	PULLEY GP-CRANKSHAFT	835
			S/N: 33425631-UP	
Y	*230-7578*	1	PUMP GP-ENGINE OIL	863
Y	*270-8261*	1	PUMP GP-FUEL INJECTION	1370
Y	*233-9417*	1	PUMP GP-FUEL PRM & PRIM FILTER	1505
Y	*230-7355*	1	PUMP GP-WATER	992
Y	*270-8267*	1	RADIATOR GP	1016
Y	*236-8758*	1	SENDER GP-TEMPERATURE	1555
Y	*234-9666*	1	STARTING MOTOR GP-ELECTRIC	1562
			—OR—	
Y	*323-6678*	1	STARTING MOTOR GP-ELECTRIC	1568
Y	*253-0756*	1	SWITCH GP-PRESSURE (ENGINE OIL)	1579
Y	*236-8760*	1	TURBOCHARGER GP	1089
Y	*232-7526*	1	VALVE MECHANISM GP	839
R	**359-0734**	1	CYLINDER BLOCK GP-SHORT	
			AVAILABLE GASKET KIT(S):	
	272-0494	1	KIT-GASKET (BOTTOM)	
	277-5156	1	KIT-GASKET (TOP)	

257-8362 **ENGINE AR-PRIMARY (**contd.**)** **i04398851**

NOTE	PART NUMBER	QTY	PART NAME 1 2 3 4 5 6 (PRODUCT LEVEL)	SEE PAGE

R - REMANUFACTURED PART MAY BE AVAILABLE
Y - SEPARATE ILLUSTRATION

<END>

ENGINE ARRANGEMENT

257-8364 ENGINE AR-PRIMARY

95 BRAKE KW (128 BHP) AT 2200 RPM

SMCS-1000 **i05461847**

NOTE	PART NUMBER	QTY	PART NAME 1 2 3 4 5 6 (PRODUCT LEVEL)	SEE PAGE
Y	*236-8196*	1	ALTERNATOR GP-CHARGING	1527
Y	*234-0617*	1	BALANCER GP	199
Y	*232-7528*	1	CAMSHAFT GP	203
Y	*231-0033*	1	CONNECTION GP-WATER	868
Y	*235-5230*	1	COOLER GP-FLTR BASE & ENG OIL	890
Y	*230-9196*	1	COVER GP-FRONT HOUSING	231
Y	*236-8190*	1	COVER GP-VALVE MECHANISM	310
Y	*232-7439*	1	CRANKSHAFT GP	451
Y	*232-7606*	1	CYLINDER BLOCK GP	495
Y	*232-7524*	1	CYLINDER HEAD GP	531
Y	*236-8181*	1	DRIVE GP-FAN	568
Y	*267-5696*	1	CONNECTION GP-INLET	1046
Y	*267-5695*	1	FAN GP-SUCTION	988
Y	*260-3128*	1	FILTER & LINES GP-FUEL	1140
Y	*232-7378*	1	FILTER GP-ENGINE OIL	861
Y	*243-3398*	1	FLYWHEEL GP	596
Y	*232-6661*	1	GLOW PLUG GP	1547
Y	*235-0321*	1	HOUSING GP-FLYWHEEL	612
Y	*232-6179*	1	HOUSING GP-FRONT	626
Y	*232-3713*	1	LIFTING GP-ENGINE	647
Y	*267-5698*	1	MOUNTING GP-ENGINE	662
Y	*233-8150*	1	PAN GP-OIL	701
Y	*254-3775*	1	CONNECTION GP-INLET	1042
Y	*232-7442*	1	PISTON & ROD GP	764
Y	*225-4317*	1	PLUG GP-ENGINE	816
Y	*230-7352*	1	PULLEY GP-CRANKSHAFT	831
			S/N: 3341-25630	
Y	*360-7350*	1	PULLEY GP-CRANKSHAFT	835
			S/N: 33425631-UP	
Y	*232-1827*	1	PUMP GP-FUEL INJECTION	1175
Y	*233-9417*	1	PUMP GP-FUEL PRM & PRIM FILTER	1505
Y	*230-7355*	1	PUMP GP-WATER	992
Y	*236-8785*	1	RADIATOR GP	996
Y	*236-8758*	1	SENDER GP-TEMPERATURE	1555
Y	*236-8212*	1	STARTING AID GP (SWITCH)	1557
Y	*234-9666*	1	STARTING MOTOR GP-ELECTRIC	1562
			—OR—	
Y	*323-6678*	1	STARTING MOTOR GP-ELECTRIC	1568
Y	*253-0756*	1	SWITCH GP-PRESSURE (ENGINE OIL)	1579
Y	*236-8760*	1	TURBOCHARGER GP	1089
Y	*232-7526*	1	VALVE MECHANISM GP	839
R	**359-0734**	1	CYLINDER BLOCK GP-SHORT	
			AVAILABLE GASKET KIT(S):	
	272-0494	1	KIT-GASKET (BOTTOM)	
	277-5156	1	KIT-GASKET (TOP)	

R - REMANUFACTURED PART MAY BE AVAILABLE
Y - SEPARATE ILLUSTRATION

<END>

257-8369 ENGINE AR-PRIMARY

97 BRAKE KW (130 BHP) AT 2200 RPM

SMCS-1000 **i04398859**

NOTE	PART NUMBER	QTY	PART NAME 1 2 3 4 5 6 (PRODUCT LEVEL)	SEE PAGE
Y	*251-4551*	1	AIR CLEANER GP	1026
Y	*245-4664*	1	ALTERNATOR GP-CHARGING	1532
Y	*232-7528*	1	CAMSHAFT GP	203
Y	*260-3135*	1	CONNECTION GP-INLET	1044
Y	*231-0033*	1	CONNECTION GP-WATER	868
Y	*240-5535*	1	CONVERTER GP-ELECTRICAL	1543
Y	*238-2799*	1	COOLER GP-FLTR BASE & ENG OIL	901
Y	*230-9196*	1	COVER GP-FRONT HOUSING	231
Y	*236-8190*	1	COVER GP-VALVE MECHANISM	310
Y	*232-7439*	1	CRANKSHAFT GP	451
Y	*232-7606*	1	CYLINDER BLOCK GP	495
Y	*232-7524*	1	CYLINDER HEAD GP	531
Y	*280-7187*	1	DRIVE GP-FAN	582
Y	*236-9963*	1	FAN GP-BLOWER	979
Y	*260-3128*	1	FILTER & LINES GP-FUEL	1140
Y	*232-7378*	1	FILTER GP-ENGINE OIL	861
Y	*235-0322*	1	FLYWHEEL GP	593
Y	*233-9834*	1	GLOW PLUG GP	1549
Y	*224-2162*	1	HOUSING GP-FLYWHEEL	609
Y	*232-6179*	1	HOUSING GP-FRONT	626
Y	*232-3713*	1	LIFTING GP-ENGINE	647
Y	*235-0366*	1	MOUNTING GP-ENGINE	654
Y	*243-2455*	1	PAN GP-OIL (ENGINE)	715
Y	*232-7442*	1	PISTON & ROD GP	764
Y	*225-4317*	1	PLUG GP-ENGINE	816
Y	*230-7351*	1	PULLEY GP-CRANKSHAFT	830
			S/N: 3341-25630	
Y	*360-7349*	1	PULLEY GP-CRANKSHAFT	834
			S/N: 33425631-UP	
Y	*230-7578*	1	PUMP GP-ENGINE OIL	863
Y	*233-9526*	1	PUMP GP-FUEL INJECTION	1216
Y	*233-9417*	1	PUMP GP-FUEL PRM & PRIM FILTER	1505
Y	*230-7355*	1	PUMP GP-WATER	992
Y	*236-9970*	1	SENDER GP-TEMPERATURE	1556
Y	*236-8212*	1	STARTING AID GP (SWITCH)	1557
Y	*230-7304*	1	STARTING MOTOR GP-ELECTRIC	1561
Y	*253-0756*	1	SWITCH GP-PRESSURE (ENGINE OIL)	1579
Y	*236-8760*	1	TURBOCHARGER GP	1089
Y	*232-7526*	1	VALVE MECHANISM GP	839
R	**359-0734**	1	CYLINDER BLOCK GP-SHORT	
			AVAILABLE GASKET KIT(S):	
	272-0494	1	KIT-GASKET (BOTTOM)	
	277-5156	1	KIT-GASKET (TOP)	

R - REMANUFACTURED PART MAY BE AVAILABLE
Y - SEPARATE ILLUSTRATION

<END>

257-8370 ENGINE AR-PRIMARY

62 BRAKE KW (83 BHP) AT 2400 RPM

SMCS-1000 **i04389780**

NOTE	PART NUMBER	QTY	PART NAME 1 2 3 4 5 6 (PRODUCT LEVEL)	SEE PAGE
Y	*236-8196*	1	ALTERNATOR GP-CHARGING	1527
Y	*234-0617*	1	BALANCER GP	199
Y	*233-7236*	1	CAMSHAFT GP	204
Y	*230-8086*	1	CONNECTION GP-WATER	867
Y	*234-1546*	1	COOLER GP-FLTR BASE & ENG OIL	886
Y	*230-9139*	1	COVER GP-VALVE MECHANISM	241
Y	*233-7027*	1	CRANKSHAFT GP	454
Y	*233-7007*	1	CYLINDER BLOCK GP	497
Y	*233-7234*	1	CYLINDER HEAD GP	532
Y	*231-0055*	1	DRIVE GP-ACCESSORY	549
Y	*251-6697*	1	DRIVE GP-FAN	576
Y	*235-0365*	1	ELBOW GP-EXHAUST	1064
Y	*243-4297*	1	EXTENSION GP-FAN	587
Y	*268-6486*	1	FLYWHEEL GP	601
Y	*232-6661*	1	GLOW PLUG GP	1547
Y	*260-3214*	1	HOUSING GP-FLYWHEEL	617
Y	*232-6179*	1	HOUSING GP-FRONT	626
Y	*243-2483*	1	LIFTING GP-ENGINE	649
Y	*231-0292*	1	MANIFOLD GP-EXHAUST	1070
Y	*233-9840*	1	MOUNTING GP-ENGINE	653
Y	*233-8150*	1	PAN GP-OIL	701
Y	*230-7581*	1	CONNECTION GP-INLET	1037
Y	*233-7233*	1	PISTON & ROD GP	770
Y	*225-4317*	1	PLUG GP-ENGINE (FRONT HOUSING, CYLINDER HEAD)	816
Y	*232-6204*	1	PLUG GP-ENGINE (CYLINDER HEAD)	821
Y	*253-2479*	1	PLUG GP-ENGINE	827
Y	*230-7352*	1	PULLEY GP-CRANKSHAFT	831
			S/N: 3341-25630	
Y	*360-7350*	1	PULLEY GP-CRANKSHAFT	835
			S/N: 33425631-UP	
Y	*233-7974*	1	PUMP GP-FUEL INJECTION	1191
Y	*233-7425*	1	PUMP GP-FUEL PRM & PRIM FILTER	1499
Y	*230-7355*	1	PUMP GP-WATER	992
Y	*234-9666*	1	STARTING MOTOR GP-ELECTRIC	1562
			—OR—	
Y	*323-6678*	1	STARTING MOTOR GP-ELECTRIC	1568
Y	*233-7235*	1	VALVE MECHANISM GP	840
R	**359-0731**	1	CYLINDER BLOCK GP-SHORT	
			AVAILABLE GASKET KIT(S):	
	272-0494	1	KIT-GASKET (BOTTOM)	
	277-5156	1	KIT-GASKET (TOP)	

R - REMANUFACTURED PART MAY BE AVAILABLE
Y - SEPARATE ILLUSTRATION

<END>

257-8374 ENGINE AR-PRIMARY

75 BRAKE KW (100 BHP) AT 2300 RPM

SMCS-1000 **i04398860**

NOTE	PART NUMBER	QTY	PART NAME 1 2 3 4 5 6 (PRODUCT LEVEL)	SEE PAGE
Y	*243-4301*	1	ALTERNATOR GP-CHARGING	1531
Y	*232-7528*	1	CAMSHAFT GP	203
Y	*231-0038*	1	CONNECTION GP-WATER	870
Y	*268-0868*	1	COOLER GP-FLTR BASE & ENG OIL	953
Y	*231-0149*	1	COVER GP-INLET MANIFOLD	1052
Y	*230-9196*	1	COVER GP-FRONT HOUSING	231
Y	*230-9149*	1	COVER GP-VALVE MECHANISM	247
Y	*232-7439*	1	CRANKSHAFT GP	451
Y	*232-7606*	1	CYLINDER BLOCK GP	495
Y	*232-7524*	1	CYLINDER HEAD GP	531
Y	*253-0728*	1	DRIVE GP-FAN	578
Y	*243-4297*	1	EXTENSION GP-FAN	587
Y	*232-7378*	1	FILTER GP-ENGINE OIL	861
Y	*234-2431*	1	FILTER GP-FUEL	1145
Y	*243-4279*	1	FLYWHEEL GP	597
Y	*232-6661*	1	GLOW PLUG GP	1547
Y	*223-7825*	1	HOUSING GP-FLYWHEEL	608
Y	*232-6179*	1	HOUSING GP-FRONT	626
Y	*232-3713*	1	LIFTING GP-ENGINE	647
Y	*230-8278*	1	PAN GP-OIL (ENGINE)	693
Y	*232-7442*	1	PISTON & ROD GP	764
Y	*225-4317*	1	PLUG GP-ENGINE (FRONT HOUSING, CYLINDER HEAD)	816
Y	*243-2416*	1	PLUG GP-ENGINE	826
Y	*230-7351*	1	PULLEY GP-CRANKSHAFT	830
			S/N: 3341-25630	
Y	*360-7349*	1	PULLEY GP-CRANKSHAFT	834
			S/N: 33425631-UP	
Y	*230-7578*	1	PUMP GP-ENGINE OIL	863
Y	*271-8875*	1	PUMP GP-FUEL INJECTION	1383
Y	*230-7355*	1	PUMP GP-WATER	992
Y	*234-9666*	1	STARTING MOTOR GP-ELECTRIC	1562
			—OR—	
Y	*323-6678*	1	STARTING MOTOR GP-ELECTRIC	1568
Y	*253-0756*	1	SWITCH GP-PRESSURE (ENGINE OIL)	1579
Y	*235-8749*	1	SWITCH GP-TEMPERATURE (ENGINE COOLANT)	1582
Y	*241-1699*	1	TURBOCHARGER GP	1095
Y	*232-7526*	1	VALVE MECHANISM GP	839
R	**359-0734**	1	CYLINDER BLOCK GP-SHORT	
			AVAILABLE GASKET KIT(S):	
	272-0494	1	KIT-GASKET (BOTTOM)	
	277-5156	1	KIT-GASKET (TOP)	

R - REMANUFACTURED PART MAY BE AVAILABLE
Y - SEPARATE ILLUSTRATION

<END>

257-8375 ENGINE AR-PRIMARY*R

97 BRAKE KW (130 BHP) AT 2200 RPM

SMCS-1000 **i04398866**

NOTE	PART NUMBER	QTY	PART NAME 1 2 3 4 5 6 (PRODUCT LEVEL)	SEE PAGE
Y	*235-0028*	1	ALTERNATOR GP-CHARGING	1526
Y	*232-7528*	1	CAMSHAFT GP	203
Y	*231-0033*	1	CONNECTION GP-WATER	868
Y	*238-2799*	1	COOLER GP-FLTR BASE & ENG OIL	901
Y	*238-2777*	1	COVER GP-VALVE MECHANISM	334
Y	*232-7439*	1	CRANKSHAFT GP	451
Y	*232-7606*	1	CYLINDER BLOCK GP	495
Y	*232-7524*	1	CYLINDER HEAD GP	531
Y	*234-9680*	1	DRIVE GP-FAN	566
Y	*269-8077*	1	ELBOW GP-AIR INLET	1062
Y	*260-3128*	1	FILTER & LINES GP-FUEL	1140
Y	*232-7378*	1	FILTER GP-ENGINE OIL	861
Y	*243-3398*	1	FLYWHEEL GP	596
Y	*232-6661*	1	GLOW PLUG GP	1547
Y	*243-2454*	1	HOUSING GP-FLYWHEEL	616
Y	*232-3670*	1	HOUSING GP-FRONT	622
Y	*232-3713*	1	LIFTING GP-ENGINE	647
Y	*234-9738*	1	MOUNTING GP-FAN	991
Y	*243-2455*	1	PAN GP-OIL (ENGINE)	715
Y	*232-7442*	1	PISTON & ROD GP	764
Y	*225-4317*	1	PLUG GP-ENGINE (FRONT HOUSING, CYLINDER HEAD)	816
Y	*230-7569*	1	PLUG GP-ENGINE (OIL FILL)	819
Y	*232-6204*	1	PLUG GP-ENGINE (CYLINDER HEAD)	821
Y	*243-2416*	1	PLUG GP-ENGINE	826
Y	*230-7353*	1	PULLEY GP-CRANKSHAFT	832
			S/N: 3341-25630	
Y	*360-7351*	1	PULLEY GP-CRANKSHAFT	836
			S/N: 33425631-UP	
Y	*230-7578*	1	PUMP GP-ENGINE OIL	863
Y	*232-1827*	1	PUMP GP-FUEL INJECTION	1175
Y	*233-9417*	1	PUMP GP-FUEL PRM & PRIM FILTER	1505
Y	*230-7355*	1	PUMP GP-WATER	992
Y	*236-8212*	1	STARTING AID GP (SWITCH)	1557
Y	*234-9666*	1	STARTING MOTOR GP-ELECTRIC	1562
			—OR—	
Y	*323-6678*	1	STARTING MOTOR GP-ELECTRIC	1568
Y	*253-0756*	1	SWITCH GP-PRESSURE (ENGINE OIL)	1579
Y	*232-6197*	1	TURBOCHARGER GP	1075
Y	*232-7526*	1	VALVE MECHANISM GP	839
R	**359-0734**	1	CYLINDER BLOCK GP-SHORT	
			AVAILABLE GASKET KIT(S):	
	272-0494	1	KIT-GASKET (BOTTOM)	
	277-5156	1	KIT-GASKET (TOP)	

R - REMANUFACTURED PART MAY BE AVAILABLE
Y - SEPARATE ILLUSTRATION

<END>

257-8376 ENGINE AR-PRIMARY

75 BRAKE KW (100 BHP) AT 2400 RPM

SMCS-1000 **i04398869**

NOTE	PART NUMBER	QTY	PART NAME 1 2 3 4 5 6 (PRODUCT LEVEL)	SEE PAGE
Y	*234-3463*	1	ALTERNATOR GP-CHARGING	1525
Y	*232-7528*	1	CAMSHAFT GP	203
Y	*231-0038*	1	CONNECTION GP-WATER	870
Y	*238-4448*	1	CONVERTER GP-ELECTRICAL	1542
Y	*238-2799*	1	COOLER GP-FLTR BASE & ENG OIL	901
Y	*251-6242*	1	COVER GP-CYLINDER HEAD	219
Y	*230-9196*	1	COVER GP-FRONT HOUSING	231
Y	*230-9149*	1	COVER GP-VALVE MECHANISM	247
Y	*232-7439*	1	CRANKSHAFT GP	451
Y	*232-7606*	1	CYLINDER BLOCK GP	495
Y	*232-7524*	1	CYLINDER HEAD GP	531
Y	*251-6697*	1	DRIVE GP-FAN	576
Y	*252-4441*	1	FAN GP-BLOWER	980
Y	*260-3128*	1	FILTER & LINES GP-FUEL	1140
Y	*232-7378*	1	FILTER GP-ENGINE OIL	861
Y	*234-2431*	1	FILTER GP-FUEL	1145
Y	*235-3552*	1	FLYWHEEL GP	595
Y	*233-9834*	1	GLOW PLUG GP	1549
Y	*223-7825*	1	HOUSING GP-FLYWHEEL	608
Y	*232-6179*	1	HOUSING GP-FRONT	626
Y	*232-3713*	1	LIFTING GP-ENGINE	647
Y	*233-9840*	1	MOUNTING GP-ENGINE	653
Y	*230-8278*	1	PAN GP-OIL (ENGINE)	693
Y	*232-7442*	1	PISTON & ROD GP	764
Y	*225-4317*	1	PLUG GP-ENGINE (FRONT HOUSING, CYLINDER HEAD)	816
Y	*232-6204*	1	PLUG GP-ENGINE (CYLINDER HEAD)	821
Y	*230-7352*	1	PULLEY GP-CRANKSHAFT	831
			S/N: 3341-25630	
Y	*360-7350*	1	PULLEY GP-CRANKSHAFT	835
			S/N: 33425631-UP	
Y	*230-7578*	1	PUMP GP-ENGINE OIL	863
Y	*269-8487*	1	PUMP GP-FUEL INJECTION	1345
Y	*230-7355*	1	PUMP GP-WATER	992
Y	*243-2420*	1	STARTING AID GP (SWITCH)	1558
Y	*230-7304*	1	STARTING MOTOR GP-ELECTRIC	1561
Y	*253-0756*	1	SWITCH GP-PRESSURE (ENGINE OIL)	1579
Y	*269-8489*	1	TURBOCHARGER GP	1119
Y	*232-7526*	1	VALVE MECHANISM GP	839
R	**359-0734**	1	CYLINDER BLOCK GP-SHORT	
			AVAILABLE GASKET KIT(S):	
	272-0494	1	KIT-GASKET (BOTTOM)	
	277-5156	1	KIT-GASKET (TOP)	

R - REMANUFACTURED PART MAY BE AVAILABLE
Y - SEPARATE ILLUSTRATION

<END>

257-8380 ENGINE AR-PRIMARY

75 BRAKE KW (100 BHP) AT 2100 RPM

SMCS-1000 **i04411604**

NOTE	PART NUMBER	QTY	PART NAME 1 2 3 4 5 6 (PRODUCT LEVEL)	SEE PAGE
Y	*236-8196*	1	ALTERNATOR GP-CHARGING	1527
Y	*232-7528*	1	CAMSHAFT GP	203
Y	*231-0033*	1	CONNECTION GP-WATER	868
Y	*238-2799*	1	COOLER GP-FLTR BASE & ENG OIL	901
Y	*231-0149*	1	COVER GP-INLET MANIFOLD	1052
Y	*230-9196*	1	COVER GP-FRONT HOUSING	231
Y	*230-9149*	1	COVER GP-VALVE MECHANISM	247
Y	*232-7439*	1	CRANKSHAFT GP	451
Y	*232-7606*	1	CYLINDER BLOCK GP	495
Y	*232-7524*	1	CYLINDER HEAD GP	531
Y	*251-6697*	1	DRIVE GP-FAN	576
Y	*260-3215*	1	FAN GP-SUCTION	987
Y	*260-3128*	1	FILTER & LINES GP-FUEL	1140
Y	*232-7378*	1	FILTER GP-ENGINE OIL	861
Y	*230-7291*	1	FLYWHEEL GP	591
Y	*232-6661*	1	GLOW PLUG GP	1547
Y	*224-2162*	1	HOUSING GP-FLYWHEEL	609
Y	*232-6179*	1	HOUSING GP-FRONT	626
Y	*232-3713*	1	LIFTING GP-ENGINE	647
Y	*252-4475*	1	MOUNTING GP-ENGINE	657
Y	*243-2455*	1	PAN GP-OIL (ENGINE)	715
Y	*232-7442*	1	PISTON & ROD GP	764
Y	*230-7352*	1	PULLEY GP-CRANKSHAFT	831
			S/N: 3341-25630	
Y	*360-7350*	1	PULLEY GP-CRANKSHAFT	835
			S/N: 33425631-UP	
Y	*230-7578*	1	PUMP GP-ENGINE OIL	863
Y	*270-3084*	1	PUMP GP-FUEL INJECTION	1358
Y	*233-9417*	1	PUMP GP-FUEL PRM & PRIM FILTER	1505
Y	*230-7355*	1	PUMP GP-WATER	992
Y	*251-8423*	1	RADIATOR GP	1008
Y	*243-2420*	1	STARTING AID GP (SWITCH)	1558
Y	*234-9666*	1	STARTING MOTOR GP-ELECTRIC	1562
			—OR—	
Y	*323-6678*	1	STARTING MOTOR GP-ELECTRIC	1568
Y	*237-4896*	1	SWITCH GP-PRESSURE (ENGINE OIL)	1578
Y	*235-8749*	1	SWITCH GP-TEMPERATURE (ENGINE COOLANT)	1582
			S/N: 3341-16801	
Y	*367-0594*	1	SWITCH GP-TEMPERATURE	1583
			S/N: 33416802-UP	
Y	*253-0774*	1	TURBOCHARGER GP	1111
Y	*232-7526*	1	VALVE MECHANISM GP	839
R	**359-0734**	1	CYLINDER BLOCK GP-SHORT	
			AVAILABLE GASKET KIT(S):	
	272-0494	1	KIT-GASKET (BOTTOM)	
	277-5156	1	KIT-GASKET (TOP)	

257-8380 **ENGINE AR-PRIMARY (**contd.**)** **i04411604**

NOTE	PART NUMBER	QTY	PART NAME 1 2 3 4 5 6 (PRODUCT LEVEL)	SEE PAGE

R - REMANUFACTURED PART MAY BE AVAILABLE
Y - SEPARATE ILLUSTRATION

<END>

257-8381 ENGINE AR-PRIMARY

97 BRAKE KW (130 BHP) AT 2200 RPM
ALSO AN ATTACHMENT

SMCS-1000 **i05462251**

NOTE	PART NUMBER	QTY	PART NAME 1 2 3 4 5 6 (PRODUCT LEVEL)	SEE PAGE
Y	*236-8196*	1	ALTERNATOR GP-CHARGING	1527
Y	*243-3184*	1	CAMSHAFT GP	207
Y	*231-0033*	1	CONNECTION GP-WATER	868
Y	*265-5299*	1	COOLER GP-FLTR BASE & ENG OIL	932
Y	*270-8904*	1	COVER GP-VALVE MECHANISM	374
Y	*243-3180*	1	CRANKSHAFT GP	461
Y	*243-3179*	1	CYLINDER BLOCK GP	505
Y	*243-3182*	1	CYLINDER HEAD GP	535
Y	*265-5289*	1	DRIVE GP-ACCESSORY	559
Y	*236-8181*	1	DRIVE GP-FAN	568
Y	*267-5695*	1	FAN GP-SUCTION	988
Y	*232-7378*	1	FILTER GP-ENGINE OIL	861
Y	*245-9831*	1	FLYWHEEL GP	598
Y	*232-6661*	1	GLOW PLUG GP	1547
Y	*223-7825*	1	HOUSING GP-FLYWHEEL	608
Y	*243-3272*	1	HOUSING GP-FRONT	636
Y	*232-3713*	1	LIFTING GP-ENGINE	647
Y	*260-3152*	1	MOUNTING GP-ENGINE	660
Y	*251-8284*	1	PAN GP-OIL	736
Y	*254-3775*	1	CONNECTION GP-INLET	1042
Y	*243-3181*	1	PISTON & ROD GP	782
Y	*225-4317*	1	PLUG GP-ENGINE	816
Y	*230-7352*	1	PULLEY GP-CRANKSHAFT	831
			S/N: 3341-25630	
Y	*360-7350*	1	PULLEY GP-CRANKSHAFT	835
			S/N: 33425631-UP	
Y	*230-7578*	1	PUMP GP-ENGINE OIL	863
Y	*232-1827*	1	PUMP GP-FUEL INJECTION	1175
Y	*233-9417*	1	PUMP GP-FUEL PRM & PRIM FILTER	1505
Y	*230-7355*	1	PUMP GP-WATER	992
Y	*236-8785*	1	RADIATOR GP	996
Y	*265-5720*	1	SEPARATOR GP-WATER	1523
Y	*234-9666*	1	STARTING MOTOR GP-ELECTRIC	1562
			—OR—	
Y	*323-6678*	1	STARTING MOTOR GP-ELECTRIC	1568
Y	*253-8966*	1	SWITCH GP-PRESSURE (ENGINE OIL)	1580
Y	*235-8749*	1	SWITCH GP-TEMPERATURE (ENGINE COOLANT)	1582
Y	*270-8890*	1	TURBOCHARGER GP	1121
Y	*243-3183*	1	VALVE MECHANISM GP	844
R	**359-0734**	1	CYLINDER BLOCK GP-SHORT	
			AVAILABLE GASKET KIT(S):	
	272-0494	1	KIT-GASKET (BOTTOM)	
	277-5156	1	KIT-GASKET (TOP)	

R - REMANUFACTURED PART MAY BE AVAILABLE
Y - SEPARATE ILLUSTRATION

<END>

259-2362 ENGINE AR-PRIMARY

60 BRAKE KW (80 BHP) AT 2200 RPM
ALSO AN ATTACHMENT

SMCS-1000 **i02335994**

NOTE	PART NUMBER	QTY	PART NAME 1 2 3 4 5 6 (PRODUCT LEVEL)	SEE PAGE
			(NO SERVICED PARTS)	
			<END>	

263-9663 ENGINE AR-PRIMARY

75 BRAKE KW (100 BHP) AT 2400 RPM

SMCS-1000 **i02320552**

NOTE	PART NUMBER	QTY	PART NAME 1 2 3 4 5 6 (PRODUCT LEVEL)	SEE PAGE
			(NO SERVICED PARTS)	
			<END>	

270-0057 ENGINE AR-PRIMARY

97 BRAKE KW (130 BHP) AT 2200 RPM

SMCS-1000 **i02450365**

NOTE	PART NUMBER	QTY	PART NAME 1 2 3 4 5 6 (PRODUCT LEVEL)	SEE PAGE
			(NO SERVICED PARTS)	
			<END>	

270-0063 ENGINE AR-PRIMARY

60 BRAKE KW (80 BHP) AT 2200 RPM

SMCS-1000 **i07854001**

NOTE	PART NUMBER	QTY	PART NAME 1 2 3 4 5 6 (PRODUCT LEVEL)	SEE PAGE
Y	*267-9411*	1	ALTERNATOR GP-CHARGING	1534
Y	*234-0617*	1	BALANCER GP	199
Y	*233-7236*	1	CAMSHAFT GP	204
Y	*253-6204*	1	CONNECTION GP-INLET	1040
Y	*231-0033*	1	CONNECTION GP-WATER	868
Y	*234-1546*	1	COOLER GP-FLTR BASE & ENG OIL	886
Y	*230-9196*	1	COVER GP-FRONT HOUSING	231
Y	*267-9420*	1	COVER GP-VALVE MECHANISM	346
Y	*233-7027*	1	CRANKSHAFT GP	454
Y	*233-7007*	1	CYLINDER BLOCK GP	497
Y	*233-7234*	1	CYLINDER HEAD GP	532
Y	*267-9412*	1	DRIVE GP-FAN	579
Y	*260-3128*	1	FILTER & LINES GP-FUEL	1140
Y	*232-7378*	1	FILTER GP-ENGINE OIL	861
Y	*235-0322*	1	FLYWHEEL GP	593
Y	*232-6661*	1	GLOW PLUG GP	1547
Y	*235-0321*	1	HOUSING GP-FLYWHEEL	612
Y	*232-6179*	1	HOUSING GP-FRONT	626
Y	*232-3713*	1	LIFTING GP-ENGINE	647
Y	*237-5408*	1	MANIFOLD GP-EXHAUST	1071
Y	*243-3275*	1	MOUNTING GP-ENGINE	655
Y	*234-9738*	1	MOUNTING GP-FAN	991
Y	*233-8150*	1	PAN GP-OIL (ENGINE)	701
Y	*233-7233*	1	PISTON & ROD GP	770
Y	*225-4317*	1	PLUG GP-ENGINE	816
Y	*232-6204*	1	PLUG GP-ENGINE	821
Y	*253-2479*	1	PLUG GP-ENGINE	827
Y	*230-7352*	1	PULLEY GP-CRANKSHAFT	831
			S/N: 3341-25630	
Y	*360-7350*	1	PULLEY GP-CRANKSHAFT	835
			S/N: 33425631-UP	
Y	*267-9413*	1	PUMP GP-FUEL INJECTION	1339
Y	*233-7425*	1	PUMP GP-FUEL PRM & PRIM FILTER	1499
Y	*230-7355*	1	PUMP GP-WATER	992
Y	*234-9666*	1	STARTING MOTOR GP-ELECTRIC	1562
			—OR—	
Y	*323-6678*	1	STARTING MOTOR GP-ELECTRIC	1568
Y	*233-7235*	1	VALVE MECHANISM GP	840
R	**359-0731**	1	CYLINDER BLOCK GP-SHORT	
			AVAILABLE GASKET KIT(S):	
	272-0494	1	KIT-GASKET (BOTTOM)	
	277-5156	1	KIT-GASKET (TOP)	

R - REMANUFACTURED PART MAY BE AVAILABLE
Y - SEPARATE ILLUSTRATION

<END>

270-0065 ENGINE AR-PRIMARY

130 BRAKE KW (174 BHP) AT 2500 RPM

SMCS-1000 **i02356218**

NOTE	PART NUMBER	QTY	PART NAME 1 2 3 4 5 6 (PRODUCT LEVEL)	SEE PAGE
			(NO SERVICED PARTS)	

<END>

270-0073 ENGINE AR-PRIMARY

91 BRAKE KW (122 BHP) AT 2300 RPM

SMCS-1000 **i04398927**

NOTE	PART NUMBER	QTY	PART NAME 1 2 3 4 5 6 (PRODUCT LEVEL)	SEE PAGE
Y	*232-7528*	1	CAMSHAFT GP	203
Y	*231-0038*	1	CONNECTION GP-WATER	870
Y	*238-2799*	1	COOLER GP-FLTR BASE & ENG OIL	901
Y	*230-9196*	1	COVER GP-FRONT HOUSING	231
Y	*234-0251*	1	COVER GP-VALVE MECHANISM	274
Y	*232-7439*	1	CRANKSHAFT GP	451
Y	*232-7606*	1	CYLINDER BLOCK GP	495
Y	*232-7524*	1	CYLINDER HEAD GP	531
Y	*252-7003*	1	DRIVE GP-FAN	577
Y	*256-4440*	1	ELBOW GP-AIR INLET	1059
Y	*260-3128*	1	FILTER & LINES GP-FUEL	1140
Y	*232-7378*	1	FILTER GP-ENGINE OIL	861
Y	*232-6661*	1	GLOW PLUG GP	1547
Y	*232-6179*	1	HOUSING GP-FRONT	626
Y	*232-3713*	1	LIFTING GP-ENGINE	647
Y	*235-0343*	1	MOUNTING GP-FAN DRIVE	677
Y	*230-8144*	1	PAN GP-OIL (ENGINE)	685
Y	*232-7442*	1	PISTON & ROD GP	764
Y	*225-4317*	1	PLUG GP-ENGINE (FRONT HOUSING, CYLINDER HEAD)	816
Y	*232-6204*	1	PLUG GP-ENGINE (CYLINDER HEAD)	821
Y	*233-9426*	1	PLUG GP-ENGINE	823
Y	*230-7352*	1	PULLEY GP-CRANKSHAFT	831
			S/N: 3341-25630	
Y	*360-7350*	1	PULLEY GP-CRANKSHAFT	835
			S/N: 33425631-UP	
Y	*230-7578*	1	PUMP GP-ENGINE OIL	863
Y	*234-2414*	1	PUMP GP-FUEL INJECTION	1231
Y	*233-9417*	1	PUMP GP-FUEL PRM & PRIM FILTER	1505
Y	*230-7355*	1	PUMP GP-WATER	992
Y	*253-0756*	1	SWITCH GP-PRESSURE (ENGINE OIL)	1579
Y	*283-3327*	1	TURBOCHARGER GP	1124
Y	*232-7526*	1	VALVE MECHANISM GP	839
R	**359-0734**	1	CYLINDER BLOCK GP-SHORT	
			AVAILABLE REPAIR KIT(S):	
		1	KIT-GASKET (BOTTOM)	
		1	KIT-GASKET (TOP) (TOP)	

R - REMANUFACTURED PART MAY BE AVAILABLE
Y - SEPARATE ILLUSTRATION

<END>

272-2837 ENGINE AR-PRIMARY*R

103 BRAKE KW (138 BHP) AT 1500 RPM

SMCS-1000 **i05832986**

NOTE	PART NUMBER	QTY	PART NAME 1 2 3 4 5 6 (PRODUCT LEVEL)	SEE PAGE
Y	*232-7528*	1	CAMSHAFT GP	203
			—OR—	
Y	*288-1434*	1	CAMSHAFT GP	212
			—OR—	
Y	*367-2792*	1	CAMSHAFT GP	216
Y	*230-8086*	1	CONNECTION GP-WATER	867
Y	*238-2799*	1	COOLER GP-FLTR BASE & ENG OIL	901
Y	*272-2230*	1	COVER GP-CYLINDER HEAD	220
Y	*230-9196*	1	COVER GP-FRONT HOUSING	231
Y	*272-2228*	1	COVER GP-VALVE MECHANISM	384
			—OR—	
Y	*367-2220*	1	COVER GP-VALVE MECHANISM	446
Y	*232-7439*	1	CRANKSHAFT GP	451
			—OR—	
Y	*274-4717*	1	CRANKSHAFT GP	474
			—OR—	
Y	*367-2788*	1	CRANKSHAFT GP	487
Y	*232-7606*	1	CYLINDER BLOCK GP	495
			—OR—	
Y	*274-4718*	1	CYLINDER BLOCK GP	515
			—OR—	
Y	*367-2787*	1	CYLINDER BLOCK GP	523
			—OR—	
Y	*232-7524*	1	CYLINDER HEAD GP	531
			—OR—	
Y	*288-1424*	1	CYLINDER HEAD GP	541
			—OR—	
Y	*367-2790*	1	CYLINDER HEAD GP	544
Y	*272-2229*	1	FILTER GP-ENGINE OIL	862
Y	*232-6661*	1	GLOW PLUG GP	1547
Y	*232-6179*	1	HOUSING GP-FRONT	626
Y	*233-7432*	1	LIFTING GP-ENGINE	648
Y	*247-4885*	1	LINES GP-FUEL FILTER	1171
Y	*272-2231*	1	MOUNTING GP-ENGINE	665
Y	*272-2224*	1	PAN GP-OIL	746
Y	*232-7442*	1	PISTON & ROD GP	764
			—OR—	
Y	*274-4720*	1	PISTON GP	814
			—OR—	
Y	*367-2789*	1	PISTON & ROD GP	808
Y	*225-4317*	1	PLUG GP-ENGINE (FRONT HOUSING, CYLINDER HEAD)	816
Y	*232-6204*	1	PLUG GP-ENGINE (CYLINDER HEAD)	821
Y	*253-2479*	1	PLUG GP-ENGINE	827
Y	*230-7352*	1	PULLEY GP-CRANKSHAFT	831
Y	*230-7578*	1	PUMP GP-ENGINE OIL	863
Y	*441-4311*	1	PUMP GP-FUEL INJECTION	1488
Y	*230-7355*	1	PUMP GP-WATER	992
Y	*232-7526*	1	VALVE MECHANISM GP	839

272-2837 **ENGINE AR-PRIMARY (**contd.**)** **i05832986**

NOTE	PART NUMBER	QTY	PART NAME 1 2 3 4 5 6 (PRODUCT LEVEL)	SEE PAGE
			—OR—	
Y	*275-0170*	1	VALVE MECHANISM GP	853
			—OR—	
Y	*367-2791*	1	VALVE MECHANISM GP	857
			AVAILABLE GASKET KIT(S):	
	277-5156	1	KIT-GASKET (TOP)	
	272-2232	1	KIT-GASKET (BOTTOM)	

Y - SEPARATE ILLUSTRATION

<END>

272-2839 ENGINE AR-PRIMARY*R

94 BRAKE KW (126 BHP) AT 1800 RPM

SMCS-1000 **i09602753**

NOTE	PART NUMBER	QTY	PART NAME 1 2 3 4 5 6 (PRODUCT LEVEL)	SEE PAGE
Y	*232-7528*	1	CAMSHAFT GP	203
			—OR—	
Y	*367-2792*	1	CAMSHAFT GP	216
Y	*230-8086*	1	CONNECTION GP-WATER	867
Y	*238-2799*	1	COOLER GP-FLTR BASE & ENG OIL	901
Y	*272-2230*	1	COVER GP-CYLINDER HEAD	220
Y	*230-9196*	1	COVER GP-FRONT HOUSING	231
Y	*272-2228*	1	COVER GP-VALVE MECHANISM	384
			—OR—	
Y	*367-2220*	1	COVER GP-VALVE MECHANISM	446
Y	*232-7439*	1	CRANKSHAFT GP	451
			—OR—	
Y	*367-2788*	1	CRANKSHAFT GP	487
Y	*232-7606*	1	CYLINDER BLOCK GP	495
			—OR—	
Y	*367-2787*	1	CYLINDER BLOCK GP	523
Y	*232-7524*	1	CYLINDER HEAD GP	531
			—OR—	
Y	*367-2790*	1	CYLINDER HEAD GP	544
Y	*272-2229*	1	FILTER GP-ENGINE OIL	862
Y	*232-6661*	1	GLOW PLUG GP	1547
			—OR—	
Y	*233-9834*	1	GLOW PLUG GP	1549
Y	*232-6179*	1	HOUSING GP-FRONT	626
Y	*233-7432*	1	LIFTING GP-ENGINE	648
Y	*247-4885*	1	LINES GP-FUEL FILTER	1171
Y	*272-2231*	1	MOUNTING GP-ENGINE	665
Y	*272-2224*	1	PAN GP-OIL	746
Y	*232-7442*	1	PISTON & ROD GP	764
			—OR—	
Y	*367-2789*	1	PISTON & ROD GP	808
Y	*225-4317*	1	PLUG GP-ENGINE	816
Y	**232-6204**	1	PLUG GP-ENGINE	821
Y	*253-2479*	1	PLUG GP-ENGINE	827
Y	*230-7352*	1	PULLEY GP-CRANKSHAFT	831
Y	*230-7578*	1	PUMP GP-ENGINE OIL	863
Y	*272-2799*	1	PUMP GP-FUEL INJECTION	1409
Y	*230-7355*	1	PUMP GP-WATER	992
Y	*232-7526*	1	VALVE MECHANISM GP	839
			—OR—	
Y	*367-2791*	1	VALVE MECHANISM GP	857
	268-0867	1	CYLINDER BLOCK GP-SHORT	
	277-5156	1	KIT-GASKET (TOP)	
			(INCLUDES O-RING SEAL, WASHER, GASKETS, CYLINDER HEAD GASKET, TURBOCHARGER GASKETS, SEALS & INLET VALVE SEALS)	
	272-2232	1	KIT-GASKET (BOTTOM)	
			(INCLUDES SEALS, GASKETS, O-RING SEALS & TURBOCHARGER GASKET)	

272-2839 **ENGINE AR-PRIMARY (**contd.**)** **i09602753**

NOTE	PART NUMBER	QTY	PART NAME 1 2 3 4 5 6 (PRODUCT LEVEL)	SEE PAGE
Y - SEPARATE ILLUSTRATION				

<END>

272-2841 ENGINE AR-PRIMARY*R

83 BRAKE KW (110 BHP) AT 1500 RPM

SMCS-1000 **i05832985**

NOTE	PART NUMBER	QTY	PART NAME 1 2 3 4 5 6 (PRODUCT LEVEL)	SEE PAGE
Y	*232-7528*	1	CAMSHAFT GP	203
			—OR—	
Y	*367-2792*	1	CAMSHAFT GP	216
Y	*230-8086*	1	CONNECTION GP-WATER	867
Y	*238-2799*	1	COOLER GP-FLTR BASE & ENG OIL	901
Y	*272-2230*	1	COVER GP-CYLINDER HEAD	220
Y	*230-9196*	1	COVER GP-FRONT HOUSING	231
Y	*272-2228*	1	COVER GP-VALVE MECHANISM	384
			—OR—	
Y	*367-2220*	1	COVER GP-VALVE MECHANISM	446
Y	*232-7439*	1	CRANKSHAFT GP	451
			—OR—	
Y	*367-2788*	1	CRANKSHAFT GP	487
Y	*232-7606*	1	CYLINDER BLOCK GP	495
			—OR—	
Y	*367-2787*	1	CYLINDER BLOCK GP	523
Y	*232-7524*	1	CYLINDER HEAD GP	531
			—OR—	
Y	*367-2790*	1	CYLINDER HEAD GP	544
Y	*272-2229*	1	FILTER GP-ENGINE OIL	862
Y	*232-6661*	1	GLOW PLUG GP	1547
Y	*232-6179*	1	HOUSING GP-FRONT	626
Y	*233-7432*	1	LIFTING GP-ENGINE	648
Y	*247-4885*	1	LINES GP-FUEL FILTER	1171
Y	*272-2231*	1	MOUNTING GP-ENGINE	665
Y	*272-2224*	1	PAN GP-OIL	746
Y	*232-7442*	1	PISTON & ROD GP	764
			—OR—	
Y	*367-2789*	1	PISTON & ROD GP	808
Y	*225-4317*	1	PLUG GP-ENGINE	816
Y	**232-6204**	1	PLUG GP-ENGINE	821
Y	*253-2479*	1	PLUG GP-ENGINE	827
Y	*230-7352*	1	PULLEY GP-CRANKSHAFT	831
Y	*230-7578*	1	PUMP GP-ENGINE OIL	863
Y	*272-2291*	1	PUMP GP-FUEL INJECTION	1399
Y	*230-7355*	1	PUMP GP-WATER	992
Y	*232-7526*	1	VALVE MECHANISM GP	839
			—OR—	
Y	*367-2791*	1	VALVE MECHANISM GP	857
			AVAILABLE GASKET KIT(S):	
	277-5156	1	KIT-GASKET (TOP)	
	272-2232	1	KIT-GASKET (BOTTOM)	

Y - SEPARATE ILLUSTRATION

<END>

273-0872 ENGINE AR-PRIMARY*R

54/44 BRAKE KW (72/58 BHP) AT 1800/1500 RPM

SMCS-1000 **i05205995**

NOTE	PART NUMBER	QTY	PART NAME 1 2 3 4 5 6 (PRODUCT LEVEL)	SEE PAGE
Y	*233-7236*	1	CAMSHAFT GP	204
			—OR—	
Y	*367-2089*	1	CAMSHAFT GP	215
Y	*230-8086*	1	CONNECTION GP-WATER	867
Y	*245-4665*	1	CONNECTOR GP-CAB HEATER LINES	872
Y	*253-2472*	1	COOLER GP-FLTR BASE & ENG OIL	904
Y	*230-9196*	1	COVER GP-FRONT HOUSING	231
Y	*273-0871*	1	COVER GP-VALVE MECHANISM	395
Y	*233-7027*	1	CRANKSHAFT GP	454
			—OR—	
Y	*367-2085*	1	CRANKSHAFT GP	486
Y	*233-7007*	1	CYLINDER BLOCK GP	497
			—OR—	
Y	*367-2084*	1	CYLINDER BLOCK GP	522
Y	*233-7234*	1	CYLINDER HEAD GP	532
			—OR—	
Y	*367-2087*	1	CYLINDER HEAD GP	543
Y	*233-7491*	1	ELBOW GP-AIR INLET	1054
Y	*272-2229*	1	FILTER GP-ENGINE OIL	862
Y	*232-6661*	1	GLOW PLUG GP	1547
Y	*232-6179*	1	HOUSING GP-FRONT	626
Y	*233-7432*	1	LIFTING GP-ENGINE	648
Y	*247-4885*	1	LINES GP-FUEL FILTER	1171
Y	*272-2231*	1	MOUNTING GP-ENGINE	665
Y	*272-2224*	1	PAN GP-OIL	746
Y	*233-7233*	1	PISTON & ROD GP	770
			—OR—	
Y	*367-2086*	1	PISTON & ROD GP	806
Y	*253-2479*	1	PLUG GP-ENGINE	827
Y	*230-7352*	1	PULLEY GP-CRANKSHAFT	831
Y	*230-7578*	1	PUMP GP-ENGINE OIL	863
Y	*273-0869*	1	PUMP GP-FUEL INJECTION	1418
			—OR—	
Y	*367-2070*	1	PUMP GP-FUEL INJECTION	1481
Y	*230-7355*	1	PUMP GP-WATER	992
Y	*233-7235*	1	VALVE MECHANISM GP	840
			—OR—	
Y	*367-2088*	1	VALVE MECHANISM GP	856
	267-5367	1	CYLINDER BLOCK GP-SHORT	
			AVAILABLE GASKET KIT(S):	
	277-5156	1	KIT-GASKET (TOP)	
	272-0494	1	KIT-GASKET (BOTTOM)	

Y - SEPARATE ILLUSTRATION

<END>

ENGINE ARRANGEMENT

273-3725 ENGINE AR-PRIMARY

97 BRAKE KW (130 BHP) AT 2200 RPM

SMCS-1000 **i02356248**

NOTE	PART NUMBER	QTY	PART NAME 1 2 3 4 5 6 (PRODUCT LEVEL)	SEE PAGE
			(NO SERVICED PARTS)	

<END>

274-1169 ENGINE AR-PRIMARY

56 BRAKE KW (75 BHP) AT 2200 RPM

SMCS-1000 **i04389796**

NOTE	PART NUMBER	QTY	PART NAME 1 2 3 4 5 6 (PRODUCT LEVEL)	SEE PAGE
Y	*236-8196*	1	ALTERNATOR GP-CHARGING	1527
Y	*233-7236*	1	CAMSHAFT GP	204
Y	*254-3312*	1	CONNECTION GP-INLET	1041
Y	*231-0033*	1	CONNECTION GP-WATER	868
Y	*253-2473*	1	COOLER GP-FLTR BASE & ENG OIL	909
Y	*267-9420*	1	COVER GP-VALVE MECHANISM	346
Y	*233-7007*	1	CYLINDER BLOCK GP	497
Y	*233-7234*	1	CYLINDER HEAD GP	532
Y	*231-0055*	1	DRIVE GP-ACCESSORY	549
Y	*244-1649*	1	DRIVE GP-FAN	573
Y	*268-5339*	1	FAN GP-BLOWER	981
Y	*260-3128*	1	FILTER & LINES GP-FUEL	1140
Y	*232-7378*	1	FILTER GP-ENGINE OIL	861
Y	*235-3552*	1	FLYWHEEL GP	595
Y	*232-6661*	1	GLOW PLUG GP	1547
Y	*238-3016*	1	HOUSING GP-FLYWHEEL	615
Y	*232-6179*	1	HOUSING GP-FRONT	626
Y	*232-3713*	1	LIFTING GP-ENGINE	647
Y	*237-5408*	1	MANIFOLD GP-EXHAUST	1071
Y	*286-1604*	1	MOUNTING GP-ENGINE	667
Y	*286-1603*	1	PAN GP-OIL	754
Y	*233-7233*	1	PISTON & ROD GP	770
Y	*225-4317*	1	PLUG GP-ENGINE	816
Y	*230-7352*	1	PULLEY GP-CRANKSHAFT	831
			S/N: 3341-25630	
Y	*360-7350*	1	PULLEY GP-CRANKSHAFT	835
			S/N: 33425631-UP	
Y	*243-4305*	1	PUMP GP-ENGINE OIL	864
Y	*237-5394*	1	PUMP GP-FUEL INJECTION	1276
Y	*233-7425*	1	PUMP GP-FUEL PRM & PRIM FILTER	1499
Y	*230-7355*	1	PUMP GP-WATER	992
Y	*251-8423*	1	RADIATOR GP	1008
Y	*236-8758*	1	SENDER GP-TEMPERATURE	1555
Y	*281-4516*	1	STARTING MOTOR GP-ELECTRIC	1565
Y	*237-4896*	1	SWITCH GP-PRESSURE	1578
Y	*233-7235*	1	VALVE MECHANISM GP	840
R	**359-0731**	1	CYLINDER BLOCK GP-SHORT	

R - REMANUFACTURED PART MAY BE AVAILABLE
Y - SEPARATE ILLUSTRATION

<END>

274-1173 ENGINE AR-PRIMARY

62 BRAKE KW (83 BHP) AT 2200 RPM

SMCS-1000 **i05462257**

NOTE	PART NUMBER	QTY	PART NAME 1 2 3 4 5 6 (PRODUCT LEVEL)	SEE PAGE
Y	*233-9533*	1	ALTERNATOR GP-CHARGING	1524
Y	*233-7236*	1	CAMSHAFT GP	204
Y	*231-0038*	1	CONNECTION GP-WATER	870
Y	*240-5535*	1	CONVERTER GP-ELECTRICAL	1543
Y	*253-6184*	1	COOLER GP-FLTR BASE & ENG OIL	923
Y	*230-9196*	1	COVER GP-FRONT HOUSING	231
Y	*230-9139*	1	COVER GP-VALVE MECHANISM	241
Y	*233-7027*	1	CRANKSHAFT GP	454
Y	*233-7007*	1	CYLINDER BLOCK GP	497
Y	*233-7234*	1	CYLINDER HEAD GP	532
Y	*234-9680*	1	DRIVE GP-FAN	566
Y	*289-3198*	1	CONNECTION GP-INLET	1051
Y	*235-8175*	1	ELBOW GP-EXHAUST	1065
Y	*271-7800*	1	FAN GP-BLOWER	982
Y	*260-3128*	1	FILTER & LINES GP-FUEL	1140
Y	*232-7378*	1	FILTER GP-ENGINE OIL	861
Y	*235-2382*	1	FLYWHEEL GP	594
Y	*233-9834*	1	GLOW PLUG GP	1549
Y	*224-2162*	1	HOUSING GP-FLYWHEEL	609
Y	*232-6179*	1	HOUSING GP-FRONT	626
Y	*232-3713*	1	LIFTING GP-ENGINE	647
Y	*231-0292*	1	MANIFOLD GP-EXHAUST	1070
Y	*244-1651*	1	PAN GP-OIL	731
Y	*233-7233*	1	PISTON & ROD GP	770
Y	*225-4317*	1	PLUG GP-ENGINE (FRONT HOUSING, CYLINDER HEAD)	816
Y	*232-6204*	1	PLUG GP-ENGINE (CYLINDER HEAD)	821
Y	*234-3542*	1	PLUG GP-FLYWHEEL HOUSING	828
Y	*230-7552*	1	PULLEY GP	829
Y	*230-7353*	1	PULLEY GP-CRANKSHAFT	832
			S/N: 3341-25630	
Y	*360-7351*	1	PULLEY GP-CRANKSHAFT	836
			S/N: 33425631-UP	
Y	*243-4305*	1	PUMP GP-ENGINE OIL	864
Y	*274-5006*	1	PUMP GP-FUEL INJECTION	1427
Y	*233-7425*	1	PUMP GP-FUEL PRM & PRIM FILTER	1499
Y	*230-7355*	1	PUMP GP-WATER	992
Y	*230-7304*	1	STARTING MOTOR GP-ELECTRIC	1561
Y	*253-0756*	1	SWITCH GP-PRESSURE	1579
Y	*233-7235*	1	VALVE MECHANISM GP	840
R	**359-0731**	1	CYLINDER BLOCK GP-SHORT	
			AVAILABLE REPAIR KIT(S):	
	272-0494		KIT-GASKET (BOTTOM)	
	277-5156		KIT-GASKET (TOP)	

R - REMANUFACTURED PART MAY BE AVAILABLE
Y - SEPARATE ILLUSTRATION

<END>

276-8688 ENGINE AR-PRIMARY

64 BRAKE KW (86 BHP) AT 2400 RPM

SMCS-1000 **i02356244**

NOTE	PART NUMBER	QTY	PART NAME 1 2 3 4 5 6 (PRODUCT LEVEL)	SEE PAGE
			(NO SERVICED PARTS)	

<END>

284-4626 ENGINE AR-PRIMARY*R

75 BRAKE KW (99 BHP) AT 2400 RPM

SMCS-1000 **i04398942**

NOTE	PART NUMBER	QTY	PART NAME 1 2 3 4 5 6 (PRODUCT LEVEL)	SEE PAGE
Y	*253-6199*	1	ALTERNATOR GP-CHARGING	1533
Y	*232-7528*	1	CAMSHAFT GP	203
Y	*231-0033*	1	CONNECTION GP-WATER	868
Y	*238-2799*	1	COOLER GP-FLTR BASE & ENG OIL	901
Y	*231-0149*	1	COVER GP-INLET MANIFOLD	1052
Y	*293-7195*	1	COVER GP-VALVE MECHANISM	408
Y	*232-7439*	1	CRANKSHAFT GP	451
Y	*232-7606*	1	CYLINDER BLOCK GP	495
Y	*232-7524*	1	CYLINDER HEAD GP	531
Y	*246-2983*	1	DRIVE GP-FAN	574
Y	*277-2972*	1	FAN GP-SUCTION	989
Y	*232-7378*	1	FILTER GP-ENGINE OIL	861
Y	*235-0322*	1	FLYWHEEL GP	593
Y	*232-6661*	1	GLOW PLUG GP	1547
Y	*236-8238*	1	HOUSING GP-FLYWHEEL	614
Y	*232-3670*	1	HOUSING GP-FRONT	622
Y	*232-3713*	1	LIFTING GP-ENGINE	647
Y	*293-7196*	1	PAN GP-OIL (ENGINE)	756
Y	*232-7442*	1	PISTON & ROD GP	764
Y	*225-4317*	1	PLUG GP-ENGINE (FRONT HOUSING, CYLINDER HEAD)	816
Y	*230-7569*	1	PLUG GP-ENGINE (OIL FILL)	819
Y	*234-3542*	1	PLUG GP-FLYWHEEL HOUSING	828
Y	*246-3196*	1	PULLEY GP-CRANKSHAFT	833
			S/N: 3341-25630	
Y	*360-7353*	1	PULLEY GP-CRANKSHAFT	837
			S/N: 33425631-UP	
Y	*230-7578*	1	PUMP GP-ENGINE OIL	863
Y	*269-8487*	1	PUMP GP-FUEL INJECTION	1345
Y	*233-9417*	1	PUMP GP-FUEL PRM & PRIM FILTER	1505
Y	*230-7355*	1	PUMP GP-WATER	992
Y	*236-8212*	1	STARTING AID GP (SWITCH)	1557
Y	*234-9666*	1	STARTING MOTOR GP-ELECTRIC	1562
			—OR—	
Y	*323-6678*	1	STARTING MOTOR GP-ELECTRIC	1568
Y	*237-4896*	1	SWITCH GP-PRESSURE (ENGINE OIL)	1578
Y	*235-8749*	1	SWITCH GP-TEMPERATURE (ENGINE COOLANT)	1582
Y	*290-2045*	1	TURBOCHARGER GP	1126
Y	*232-7526*	1	VALVE MECHANISM GP	839
R	**359-0734**	1	CYLINDER BLOCK GP-SHORT	
			AVAILABLE GASKET KIT(S):	
	272-2232	1	KIT-GASKET (BOTTOM)	
	277-5156	1	KIT-GASKET (TOP)	

R - REMANUFACTURED PART MAY BE AVAILABLE
Y - SEPARATE ILLUSTRATION

<END>

284-4631 ENGINE AR-PRIMARY

97 BRAKE KW (130 BHP) AT 2200 RPM

SMCS-1000 **i04729090**

NOTE	PART NUMBER	QTY	PART NAME 1 2 3 4 5 6 (PRODUCT LEVEL)	SEE PAGE
Y	*243-4301*	1	ALTERNATOR GP-CHARGING	1531
Y	*234-0617*	1	BALANCER GP	199
Y	*232-7528*	1	CAMSHAFT GP	203
Y	*231-0033*	1	CONNECTION GP-WATER	868
Y	*235-5230*	1	COOLER GP-FLTR BASE & ENG OIL	890
Y	*230-9196*	1	COVER GP-FRONT HOUSING	231
Y	*270-8904*	1	COVER GP-VALVE MECHANISM	374
Y	*232-7439*	1	CRANKSHAFT GP	451
Y	*232-7606*	1	CYLINDER BLOCK GP	495
Y	*232-7524*	1	CYLINDER HEAD GP	531
Y	*280-7187*	1	DRIVE GP-FAN	582
Y	*260-3215*	1	FAN GP-SUCTION	987
			S/N: 3341-12246	
Y	*267-5695*	1	FAN GP-SUCTION	988
			S/N: 33412247-UP	
Y	*232-7378*	1	FILTER GP-ENGINE OIL	861
Y	*294-8570*	1	FLYWHEEL GP	604
Y	*232-6661*	1	GLOW PLUG GP	1547
Y	*235-0321*	1	HOUSING GP-FLYWHEEL	612
Y	*232-6179*	1	HOUSING GP-FRONT	626
Y	*232-3713*	1	LIFTING GP-ENGINE	647
Y	*267-5698*	1	MOUNTING GP-ENGINE	662
Y	*233-8150*	1	PAN GP-OIL (ENGINE)	701
Y	*254-3775*	1	CONNECTION GP-INLET	1042
Y	*232-7442*	1	PISTON & ROD GP	764
Y	*225-4317*	1	PLUG GP-ENGINE	816
Y	*230-7351*	1	PULLEY GP-CRANKSHAFT	830
			S/N: 3341-25630	
Y	*360-7349*	1	PULLEY GP-CRANKSHAFT	834
			S/N: 33425631-UP	
Y	*232-1827*	1	PUMP GP-FUEL INJECTION	1175
Y	*233-9417*	1	PUMP GP-FUEL PRM & PRIM FILTER	1505
Y	*230-7355*	1	PUMP GP-WATER	992
Y	*236-8785*	1	RADIATOR GP	996
Y	*236-8212*	1	STARTING AID GP (SWITCH)	1557
Y	*234-9666*	1	STARTING MOTOR GP-ELECTRIC	1562
			—OR—	
Y	*323-6678*	1	STARTING MOTOR GP-ELECTRIC	1568
Y	*253-0756*	1	SWITCH GP-PRESSURE	1579
Y	*235-8749*	1	SWITCH GP-TEMPERATURE	1582
			S/N: 3341-12246	
Y	*367-0594*	1	SWITCH GP-TEMPERATURE	1583
			S/N: 33412247-UP	
Y	*236-8760*	1	TURBOCHARGER GP	1089
Y	*232-7526*	1	VALVE MECHANISM GP	839
R	**359-0734**	1	CYLINDER BLOCK GP-SHORT	
			AVAILABLE GASKET KIT(S):	

284-4631 **ENGINE AR-PRIMARY (**contd.**)** **i04729090**

NOTE	PART NUMBER	QTY	PART NAME 1 2 3 4 5 6 (PRODUCT LEVEL)	SEE PAGE
	272-0494	1	KIT-GASKET (BOTTOM)	
	277-5156		KIT-GASKET (TOP)	

R - REMANUFACTURED PART MAY BE AVAILABLE
Y - SEPARATE ILLUSTRATION

<END>

284-4632 ENGINE AR-PRIMARY

73 BRAKE KW (97 BHP) AT 2200 RPM

SMCS-1000 **i05207104**

NOTE	PART NUMBER	QTY	PART NAME 1 2 3 4 5 6 (PRODUCT LEVEL)	SEE PAGE
Y	*243-4301*	1	ALTERNATOR GP-CHARGING	1531
Y	*234-0617*	1	BALANCER GP	199
Y	*232-7528*	1	CAMSHAFT GP	203
Y	*231-0033*	1	CONNECTION GP-WATER	868
Y	*235-5230*	1	COOLER GP-FLTR BASE & ENG OIL	890
Y	*231-0149*	1	COVER GP-INLET MANIFOLD	1052
Y	*230-9196*	1	COVER GP-FRONT HOUSING	231
Y	*234-0251*	1	COVER GP-VALVE MECHANISM	274
Y	*232-7439*	1	CRANKSHAFT GP	451
Y	*232-7606*	1	CYLINDER BLOCK GP	495
Y	*232-7524*	1	CYLINDER HEAD GP	531
Y	*253-0728*	1	DRIVE GP-FAN	578
Y	*260-3215*	1	FAN GP-SUCTION	987
Y	*232-7378*	1	FILTER GP-ENGINE OIL	861
Y	*292-2955*	1	FLYWHEEL GP	603
Y	*232-6661*	1	GLOW PLUG GP	1547
Y	*235-0321*	1	HOUSING GP-FLYWHEEL	612
Y	*232-6179*	1	HOUSING GP-FRONT	626
Y	*232-3713*	1	LIFTING GP-ENGINE	647
Y	*292-2953*	1	MOUNTING GP-ENGINE	669
Y	*198-5823*	1	PAN GP-OIL	679
Y	*232-7442*	1	PISTON & ROD GP	764
Y	*225-4317*	1	PLUG GP-ENGINE	816
Y	*230-7351*	1	PULLEY GP-CRANKSHAFT	830
			S/N: 3341-25630	
Y	*360-7349*	1	PULLEY GP-CRANKSHAFT	834
			S/N: 33425631-UP	
Y	*292-2954*	1	PUMP GP-FUEL INJECTION	1451
Y	*233-9417*	1	PUMP GP-FUEL PRM & PRIM FILTER	1505
Y	*230-7355*	1	PUMP GP-WATER	992
Y	*251-8423*	1	RADIATOR GP	1008
Y	*236-8212*	1	STARTING AID GP (SWITCH)	1557
Y	*234-9666*	1	STARTING MOTOR GP-ELECTRIC	1562
			—OR—	
Y	*323-6678*	1	STARTING MOTOR GP-ELECTRIC	1568
Y	*253-0756*	1	SWITCH GP-PRESSURE	1579
Y	*235-8749*	1	SWITCH GP-TEMPERATURE	1582
			S/N: 3341-12261	
Y	*367-0594*	1	SWITCH GP-TEMPERATURE	1583
			S/N: 33412262-UP	
Y	*253-0774*	1	TURBOCHARGER GP	1111
Y	*232-7526*	1	VALVE MECHANISM GP	839
R	**359-0734**	1	CYLINDER BLOCK GP-SHORT	
			AVAILABLE GASKET KIT(S):	
	272-0494	1	KIT-GASKET (BOTTOM)	
	277-5156	1	KIT-GASKET (TOP)	

284-4632 **ENGINE AR-PRIMARY (**contd.**)** **i05207104**

NOTE	PART NUMBER	QTY	PART NAME 1 2 3 4 5 6 (PRODUCT LEVEL)	SEE PAGE

R - REMANUFACTURED PART MAY BE AVAILABLE
Y - SEPARATE ILLUSTRATION

<END>

284-4636 ENGINE AR-PRIMARY

75 BRAKE KW (100 BHP) AT 2400 RPM

SMCS-1000 **i04398951**

NOTE	PART NUMBER	QTY	PART NAME 1 2 3 4 5 6 (PRODUCT LEVEL)	SEE PAGE
Y	*243-4149*	1	ALTERNATOR GP-CHARGING	1530
Y	*232-7528*	1	CAMSHAFT GP	203
Y	*231-0033*	1	CONNECTION GP-WATER	868
Y	*238-2799*	1	COOLER GP-FLTR BASE & ENG OIL	901
Y	*231-0149*	1	COVER GP-INLET MANIFOLD	1052
Y	*230-9196*	1	COVER GP-FRONT HOUSING	231
Y	*230-9149*	1	COVER GP-VALVE MECHANISM	247
Y	*232-7439*	1	CRANKSHAFT GP	451
Y	*232-7606*	1	CYLINDER BLOCK GP	495
Y	*232-7524*	1	CYLINDER HEAD GP	531
Y	*243-3196*	1	DRIVE GP-FAN	571
Y	*292-3516*	1	FAN GP	975
Y	*232-7378*	1	FILTER GP-ENGINE OIL	861
Y	*298-3512*	1	FLYWHEEL GP	605
Y	*232-6661*	1	GLOW PLUG GP	1547
Y	*238-3016*	1	HOUSING GP-FLYWHEEL	615
Y	*232-6179*	1	HOUSING GP-FRONT	626
Y	*232-3713*	1	LIFTING GP-ENGINE	647
Y	*273-6234*	1	MOUNTING GP-ENGINE	666
Y	*243-2455*	1	PAN GP-OIL	715
Y	*232-7442*	1	PISTON & ROD GP	764
Y	*225-4317*	1	PLUG GP-ENGINE (FRONT HOUSING, CYLINDER HEAD)	816
Y	*232-6204*	1	PLUG GP-ENGINE (CYLINDER HEAD)	821
Y	*253-2479*	1	PLUG GP-ENGINE	827
Y	*230-7352*	1	PULLEY GP-CRANKSHAFT	831
			S/N: 3341-25630	
Y	*360-7350*	1	PULLEY GP-CRANKSHAFT	835
			S/N: 33425631-UP	
Y	*230-7578*	1	PUMP GP-ENGINE OIL	863
Y	*269-8487*	1	PUMP GP-FUEL INJECTION	1345
Y	*233-9417*	1	PUMP GP-FUEL PRM & PRIM FILTER	1505
Y	*230-7355*	1	PUMP GP-WATER	992
Y	*281-4516*	1	STARTING MOTOR GP-ELECTRIC	1565
			—OR—	
Y	*330-8329*	1	STARTING MOTOR GP-ELECTRIC	1574
Y	*292-3518*	1	TURBOCHARGER GP	1135
Y	*232-7526*	1	VALVE MECHANISM GP	839
R	**359-0734**	1	CYLINDER BLOCK GP-SHORT	
			AVAILABLE GASKET KIT(S):	
	272-0494	1	KIT-GASKET (BOTTOM)	
	277-5156	1	KIT-GASKET (TOP)	

R - REMANUFACTURED PART MAY BE AVAILABLE
Y - SEPARATE ILLUSTRATION

<END>

288-5185 ENGINE AR-PRIMARY

91 BRAKE KW (122 BHP) AT 2300 RPM

SMCS-1000 **i04398956**

NOTE	PART NUMBER	QTY	PART NAME 1 2 3 4 5 6 (PRODUCT LEVEL)	SEE PAGE
Y	*232-7528*	1	CAMSHAFT GP	203
Y	*231-0038*	1	CONNECTION GP-WATER	870
Y	*234-2941*	1	COOLER GP-FLTR BASE & ENG OIL	889
Y	*269-3101*	1	COVER GP-VALVE MECHANISM	354
Y	*232-7439*	1	CRANKSHAFT GP	451
Y	*232-7606*	1	CYLINDER BLOCK GP	495
Y	*232-7524*	1	CYLINDER HEAD GP	531
Y	*243-3196*	1	DRIVE GP-FAN	571
Y	*256-4440*	1	ELBOW GP-AIR INLET	1059
Y	*298-7821*	1	FAN GP	976
Y	*260-3128*	1	FILTER & LINES GP-FUEL	1140
Y	*294-8570*	1	FLYWHEEL GP	604
Y	*232-6661*	1	GLOW PLUG GP	1547
Y	*223-7825*	1	HOUSING GP-FLYWHEEL	608
Y	*232-3713*	1	LIFTING GP-ENGINE	647
Y	*298-7823*	1	MOUNTING GP-ENGINE	671
Y	*243-2455*	1	PAN GP-OIL (ENGINE)	715
Y	*232-7442*	1	PISTON & ROD GP	764
Y	*225-4317*	1	PLUG GP-ENGINE	816
Y	*230-7352*	1	PULLEY GP-CRANKSHAFT	831
			S/N: 3341-25630	
Y	*360-7350*	1	PULLEY GP-CRANKSHAFT	835
			S/N: 33425631-UP	
Y	*234-2414*	1	PUMP GP-FUEL INJECTION	1231
Y	*233-9417*	1	PUMP GP-FUEL PRM & PRIM FILTER	1505
Y	*230-7355*	1	PUMP GP-WATER	992
Y	*234-9666*	1	STARTING MOTOR GP-ELECTRIC	1562
			—OR—	
Y	*323-6678*	1	STARTING MOTOR GP-ELECTRIC	1568
Y	*253-0756*	1	SWITCH GP-PRESSURE	1579
Y	*235-8749*	1	SWITCH GP-TEMPERATURE	1582
Y	*232-7526*	1	VALVE MECHANISM GP	839
R	**359-0734**	1	CYLINDER BLOCK GP-SHORT	
			AVAILABLE GASKET KIT(S):	
	272-0494	1	KIT-GASKET (BOTTOM)	
	277-5156	1	KIT-GASKET (TOP)	

R - REMANUFACTURED PART MAY BE AVAILABLE
Y - SEPARATE ILLUSTRATION

<END>

288-5187 ENGINE AR-PRIMARY

52 BRAKE KW (70 BHP) AT 2200 RPM

SMCS-1000 **i04409330**

NOTE	PART NUMBER	QTY	PART NAME 1 2 3 4 5 6 (PRODUCT LEVEL)	SEE PAGE
Y	*271-7077*	1	ALTERNATOR GP-CHARGING	1536
Y	*299-2148*	1	CAMSHAFT GP	213
Y	*231-0033*	1	CONNECTION GP-WATER	868
Y	*271-7078*	1	COOLER GP-FLTR BASE & ENG OIL	963
Y	*247-4923*	1	COVER GP-ENGINE	228
Y	*267-9420*	1	COVER GP-VALVE MECHANISM	346
Y	*247-4821*	1	CRANKSHAFT GP	470
Y	*247-4820*	1	CYLINDER BLOCK GP	511
Y	*247-4873*	1	CYLINDER HEAD GP	539
Y	*271-7079*	1	DRIVE GP-FAN	581
Y	*277-2972*	1	FAN GP-SUCTION	989
Y	*234-1421*	1	MOUNTING GP-EXHAUST	1072
Y	*260-3128*	1	FILTER & LINES GP-FUEL	1140
Y	*232-7378*	1	FILTER GP-ENGINE OIL	861
Y	*243-4334*	1	FILTER GP-FUEL	1153
Y	*230-7286*	1	FLYWHEEL GP	590
Y	*232-6661*	1	GLOW PLUG GP	1547
Y	*223-7825*	1	HOUSING GP-FLYWHEEL	608
Y	*243-3272*	1	HOUSING GP-FRONT	636
Y	*232-3713*	1	LIFTING GP-ENGINE	647
Y	*237-5408*	1	MANIFOLD GP-EXHAUST	1071
Y	*232-6206*	1	MOUNTING GP-ENGINE	652
Y	*230-8278*	1	PAN GP-OIL (ENGINE)	693
Y	*230-7581*	1	CONNECTION GP-INLET	1037
Y	*247-4831*	1	PISTON & ROD GP	794
Y	*225-4317*	1	PLUG GP-ENGINE	816
Y	*230-7353*	1	PULLEY GP-CRANKSHAFT	832
			—OR—	
Y	*360-7351*	1	PULLEY GP-CRANKSHAFT	836
Y	*230-7578*	1	PUMP GP-ENGINE OIL	863
Y	*285-8528*	1	PUMP GP-FUEL INJECTION	1438
Y	*236-8758*	1	SENDER GP-TEMPERATURE	1555
Y	*234-9666*	1	STARTING MOTOR GP-ELECTRIC	1562
			—OR—	
Y	*323-6678*	1	STARTING MOTOR GP-ELECTRIC	1568
Y	*253-0756*	1	SWITCH GP-PRESSURE	1579
Y	*247-4876*	1	VALVE MECHANISM GP	849
R	**359-0731**	1	CYLINDER BLOCK GP-SHORT	
			AVAILABLE GASKET KIT(S):	
	272-0494	1	KIT-GASKET (BOTTOM)	
	277-5156	1	KIT-GASKET (TOP)	

R - REMANUFACTURED PART MAY BE AVAILABLE
Y - SEPARATE ILLUSTRATION

<END>

292-5292 ENGINE AR-PRIMARY

75 BRAKE KW (100 BHP) AT 2400 RPM

SMCS-1000 **i04557311**

NOTE	PART NUMBER	QTY	PART NAME 1 2 3 4 5 6 (PRODUCT LEVEL)	SEE PAGE
Y	*236-8196*	1	ALTERNATOR GP-CHARGING	1527
Y	*232-7528*	1	CAMSHAFT GP	203
Y	*231-0033*	1	CONNECTION GP-WATER	868
Y	*247-4926*	1	CONNECTOR GP-CAB HEATER LINES	873
Y	*238-2799*	1	COOLER GP-FLTR BASE & ENG OIL	901
Y	*230-9196*	1	COVER GP-FRONT HOUSING	231
Y	*231-0149*	1	COVER GP-INLET MANIFOLD	1052
Y	*236-1238*	1	COVER GP-VALVE MECHANISM	298
Y	*232-7439*	1	CRANKSHAFT GP	451
Y	*232-7606*	1	CYLINDER BLOCK GP	495
Y	*232-7524*	1	CYLINDER HEAD GP	531
Y	*251-6697*	1	DRIVE GP-FAN	576
Y	*243-4297*	1	EXTENSION GP-FAN	587
Y	*232-7378*	1	FILTER GP-ENGINE OIL	861
Y	*230-7291*	1	FLYWHEEL GP	591
Y	*232-6661*	1	GLOW PLUG GP	1547
Y	*235-0321*	1	HOUSING GP-FLYWHEEL	612
Y	*232-6179*	1	HOUSING GP-FRONT	626
Y	*232-3713*	1	LIFTING GP-ENGINE	647
Y	*252-7009*	1	MOUNTING GP-ENGINE	659
Y	*272-2224*	1	PAN GP-OIL	746
Y	*232-7442*	1	PISTON & ROD GP	764
Y	*232-6204*	1	PLUG GP-ENGINE	821
Y	*230-7552*	1	PULLEY GP	829
			S/N: 3341-25630	
Y	*360-7350*	1	PULLEY GP-CRANKSHAFT	835
			S/N: 33425631-UP	
Y	*230-7352*	1	PULLEY GP-CRANKSHAFT	831
Y	*230-7578*	1	PUMP GP-ENGINE OIL	863
Y	*269-8487*	1	PUMP GP-FUEL INJECTION	1345
Y	*233-9417*	1	PUMP GP-FUEL PRM & PRIM FILTER	1505
Y	*230-7355*	1	PUMP GP-WATER	992
Y	*323-6678*	1	STARTING MOTOR GP-ELECTRIC	1568
Y	*237-4896*	1	SWITCH GP-PRESSURE	1578
Y	*241-1699*	1	TURBOCHARGER GP	1095
Y	*232-7526*	1	VALVE MECHANISM GP	839
R	**359-0734**	1	CYLINDER BLOCK GP-SHORT	
			AVAILABLE GASKET KIT(S):	
	277-5156		KIT-GASKET (TOP)	
			(INCLUDES GASKETS, WASHERS, SEAL, & VALVE SEAL KIT)	
	272-0494		KIT-GASKET (BOTTOM)	
			(INCLUDES GASKETS & SEALS)	

R - REMANUFACTURED PART MAY BE AVAILABLE
Y - SEPARATE ILLUSTRATION

<END>

292-5293 ENGINE AR-PRIMARY

75 BRAKE KW (100 BHP) AT 2200 RPM

SMCS-1000 **i04398957**

NOTE	PART NUMBER	QTY	PART NAME 1 2 3 4 5 6 (PRODUCT LEVEL)	SEE PAGE
Y	*237-0027*	1	ALTERNATOR GP-CHARGING	1529
Y	*232-7528*	1	CAMSHAFT GP	203
Y	*231-0038*	1	CONNECTION GP-WATER	870
			S/N: 3341-14771	
Y	*230-8086*	1	CONNECTION GP-WATER	867
			S/N: 33414772-UP	
Y	*253-2475*	1	COOLER GP-FLTR BASE & ENG OIL	919
Y	*231-0149*	1	COVER GP-INLET MANIFOLD	1052
Y	*230-9149*	1	COVER GP-VALVE MECHANISM	247
Y	*232-7439*	1	CRANKSHAFT GP	451
Y	*232-7606*	1	CYLINDER BLOCK GP	495
Y	*232-7524*	1	CYLINDER HEAD GP	531
Y	*235-1044*	1	DRIVE GP-ACCESSORY	551
Y	*235-2385*	1	DRIVE GP-FAN	567
Y	*277-2972*	1	FAN GP-SUCTION	989
Y	*260-3128*	1	FILTER & LINES GP-FUEL	1140
Y	*232-7378*	1	FILTER GP-ENGINE OIL	861
Y	*235-2382*	1	FLYWHEEL GP	594
Y	*232-6661*	1	GLOW PLUG GP	1547
Y	*277-2940*	1	HOUSING GP-FLYWHEEL	619
Y	*232-6179*	1	HOUSING GP-FRONT	626
Y	*243-2483*	1	LIFTING GP-ENGINE	649
			S/N: 33414772-UP	
Y	*243-2455*	1	PAN GP-OIL (ENGINE)	715
Y	*232-7442*	1	PISTON & ROD GP	764
Y	*232-6204*	1	PLUG GP-ENGINE	821
Y	*234-4215*	1	PLUG GP-ENGINE	824
Y	*234-3542*	1	PLUG GP-FLYWHEEL HOUSING	828
			S/N: 3341-14771	
Y	*252-7009*	1	MOUNTING GP-ENGINE	659
			S/N: 33414772-UP	
Y	*230-7353*	1	PULLEY GP-CRANKSHAFT	832
			S/N: 3341-25630	
Y	*360-7351*	1	PULLEY GP-CRANKSHAFT	836
			S/N: 33425631-UP	
Y	*230-7578*	1	PUMP GP-ENGINE OIL	863
Y	*236-8229*	1	PUMP GP-FUEL INJECTION	1255
Y	*233-9417*	1	PUMP GP-FUEL PRM & PRIM FILTER	1505
Y	*230-7355*	1	PUMP GP-WATER	992
Y	*234-9666*	1	STARTING MOTOR GP-ELECTRIC	1562
			—OR—	
Y	*323-6678*	1	STARTING MOTOR GP-ELECTRIC	1568
Y	*253-0756*	1	SWITCH GP-PRESSURE	1579
Y	*241-1699*	1	TURBOCHARGER GP	1095
Y	*232-7526*	1	VALVE MECHANISM GP	839
R	**359-0734**	1	CYLINDER BLOCK GP-SHORT	
			AVAILABLE GASKET KIT(S):	

292-5293 **ENGINE AR-PRIMARY (**contd.**)** **i04398957**

NOTE	PART NUMBER	QTY	PART NAME 1 2 3 4 5 6 (PRODUCT LEVEL)	SEE PAGE
	272-0494	1	KIT-GASKET (BOTTOM)	
	277-5156	1	KIT-GASKET (TOP)	

R - REMANUFACTURED PART MAY BE AVAILABLE
Y - SEPARATE ILLUSTRATION

<END>

292-5297 ENGINE AR-PRIMARY

50 BRAKE KW (67 BHP) AT 2200 RPM

SMCS-1000 **i04390331**

NOTE	PART NUMBER	QTY	PART NAME 1 2 3 4 5 6 (PRODUCT LEVEL)	SEE PAGE
Y	*265-5300*	1	AIR CLEANER GP	1035
Y	*236-8196*	1	ALTERNATOR GP-CHARGING	1527
Y	*234-0617*	1	BALANCER GP	199
Y	*233-7236*	1	CAMSHAFT GP	204
Y	*247-4926*	1	CONNECTOR GP-CAB HEATER LINES	873
Y	*231-0033*	1	CONNECTION GP-WATER	868
Y	*234-1546*	1	COOLER GP-FLTR BASE & ENG OIL	886
Y	*230-9196*	1	COVER GP-FRONT HOUSING	231
Y	*230-9151*	1	COVER GP-VALVE MECHANISM	266
Y	*233-7027*	1	CRANKSHAFT GP	454
Y	*233-7007*	1	CYLINDER BLOCK GP	497
Y	*233-7234*	1	CYLINDER HEAD GP	532
Y	*251-6697*	1	DRIVE GP-FAN	576
Y	*235-8175*	1	ELBOW GP-EXHAUST	1065
Y	*260-3215*	1	FAN GP-SUCTION	987
Y	*232-7378*	1	FILTER GP-ENGINE OIL	861
Y	*292-2955*	1	FLYWHEEL GP	603
Y	*232-6661*	1	GLOW PLUG GP	1547
Y	*299-0164*	1	HARNESS GP	1553
Y	*299-0165*	1	HOUSING GP-FLYWHEEL	620
Y	*232-6179*	1	HOUSING GP-FRONT	626
Y	*232-3713*	1	LIFTING GP-ENGINE	647
Y	*231-0292*	1	MANIFOLD GP-EXHAUST	1070
Y	*286-1604*	1	MOUNTING GP-ENGINE	667
Y	*233-8150*	1	PAN GP-OIL (ENGINE)	701
Y	*233-7233*	1	PISTON & ROD GP	770
Y	*230-7352*	1	PULLEY GP-CRANKSHAFT	831
			S/N: 3341-24630	
Y	*360-7350*	1	PULLEY GP-CRANKSHAFT	835
			S/N: 33425631-UP	
Y	*285-8528*	1	PUMP GP-FUEL INJECTION	1438
Y	*233-7425*	1	PUMP GP-FUEL PRM & PRIM FILTER	1499
Y	*230-7355*	1	PUMP GP-WATER	992
Y	*251-8423*	1	RADIATOR GP	1008
Y	*236-8758*	1	SENDER GP-TEMPERATURE	1555
Y	*265-5720*	1	SEPARATOR GP-WATER	1523
Y	*236-8212*	1	STARTING AID GP (SWITCH)	1557
Y	*281-4516*	1	STARTING MOTOR GP-ELECTRIC	1565
			—OR—	
Y	*330-8329*	1	STARTING MOTOR GP-ELECTRIC	1574
Y	*253-0756*	1	SWITCH GP-PRESSURE	1579
Y	*233-7235*	1	VALVE MECHANISM GP	840
R	**359-0731**	1	CYLINDER BLOCK GP-SHORT	
			AVAILABLE GASKET KIT(S):	
	272-0494	1	KIT-GASKET (BOTTOM)	
	277-5156	1	KIT-GASKET (TOP)	

292-5297 **ENGINE AR-PRIMARY (**contd.**)** **i04390331**

NOTE	PART NUMBER	QTY	PART NAME 1 2 3 4 5 6 (PRODUCT LEVEL)	SEE PAGE

R - REMANUFACTURED PART MAY BE AVAILABLE
Y - SEPARATE ILLUSTRATION

<END>

292-5309 ENGINE AR-PRIMARY

75 BRAKE KW (100 BHP) AT 2100 RPM

SMCS-1000 **i05274450**

NOTE	PART NUMBER	QTY	PART NAME 1 2 3 4 5 6 (PRODUCT LEVEL)	SEE PAGE
Y	*236-9965*	1	ALTERNATOR GP-CHARGING	1528
Y	*232-7528*	1	CAMSHAFT GP	203
Y	*231-0033*	1	CONNECTION GP-WATER	868
Y	*298-7692*	1	CONVERTER GP-ELECTRICAL	1545
Y	*238-2799*	1	COOLER GP-FLTR BASE & ENG OIL	901
Y	*251-6242*	1	COVER GP-CYLINDER HEAD	219
Y	*230-9196*	1	COVER GP-FRONT HOUSING	231
Y	*236-8190*	1	COVER GP-VALVE MECHANISM	310
Y	*232-7439*	1	CRANKSHAFT GP	451
Y	*232-7606*	1	CYLINDER BLOCK GP	495
Y	*232-7524*	1	CYLINDER HEAD GP	531
Y	*236-8181*	1	DRIVE GP-FAN	568
Y	*277-2972*	1	FAN GP-SUCTION	989
Y	*260-3128*	1	FILTER & LINES GP-FUEL	1140
Y	**232-7378**	1	FILTER GP-ENGINE OIL	861
Y	*298-7693*	1	FILTER GP-FUEL	1157
Y	*235-2382*	1	FLYWHEEL GP	594
Y	*233-9834*	1	GLOW PLUG GP	1549
Y	*224-2162*	1	HOUSING GP-FLYWHEEL	609
Y	*232-6179*	1	HOUSING GP-FRONT	626
Y	*232-3713*	1	LIFTING GP-ENGINE	647
Y	*235-0366*	1	MOUNTING GP-ENGINE	654
Y	*293-7196*	1	PAN GP-OIL (ENGINE)	756
Y	*232-7442*	1	PISTON & ROD GP	764
Y	*225-4317*	1	PLUG GP-ENGINE	816
Y	*230-7552*	1	PULLEY GP	829
Y	*230-7352*	1	PULLEY GP-CRANKSHAFT	831
			S/N: 3341-25630	
Y	*360-7350*	1	PULLEY GP-CRANKSHAFT	835
			S/N: 33425631-UP	
Y	*230-7578*	1	PUMP GP-ENGINE OIL	863
Y	*298-7691*	1	PUMP GP-FUEL INJECTION	1461
Y	*236-9970*	1	SENDER GP-TEMPERATURE	1556
Y	*230-7304*	1	STARTING MOTOR GP-ELECTRIC	1561
Y	*237-4896*	1	SWITCH GP-PRESSURE	1578
Y	*253-0774*	1	TURBOCHARGER GP	1111
Y	*232-7526*	1	VALVE MECHANISM GP	839
R	**359-0734**	1	CYLINDER BLOCK GP-SHORT	
			AVAILABLE GASKET KIT(S):	
	272-0494	1	KIT-GASKET (BOTTOM)	
	277-5156	1	KIT-GASKET (TOP)	

R - REMANUFACTURED PART MAY BE AVAILABLE
Y - SEPARATE ILLUSTRATION

<END>

ENGINE ARRANGEMENT

294-7194 ENGINE AR-PRIMARY

97 BRAKE KW (130 BHP) AT 2200 RPM

SMCS-1000 **i04398989**

NOTE	PART NUMBER	QTY	PART NAME 1 2 3 4 5 6 (PRODUCT LEVEL)	SEE PAGE
Y	*258-7556*	1	AIR COMPRESSOR GP	196
Y	*236-8196*	1	ALTERNATOR GP-CHARGING	1527
Y	*234-0617*	1	BALANCER GP	199
Y	*232-7528*	1	CAMSHAFT GP	203
Y	*231-0033*	1	CONNECTION GP-WATER	868
Y	*273-3806*	1	CONTROL GP-JACKET WATER HEATER	1541
Y	*235-5230*	1	COOLER GP-FLTR BASE & ENG OIL	890
Y	*236-8190*	1	COVER GP-VALVE MECHANISM	310
Y	*232-7439*	1	CRANKSHAFT GP	451
Y	*232-7606*	1	CYLINDER BLOCK GP	495
Y	*232-7524*	1	CYLINDER HEAD GP	531
Y	*236-8181*	1	DRIVE GP-FAN	568
Y	*267-5695*	1	FAN GP-SUCTION	988
Y	*260-3128*	1	FILTER & LINES GP-FUEL	1140
Y	*232-7378*	1	FILTER GP-ENGINE OIL	861
Y	*235-0322*	1	FLYWHEEL GP	593
Y	*232-6661*	1	GLOW PLUG GP	1547
Y	*235-0321*	1	HOUSING GP-FLYWHEEL	612
Y	*232-6179*	1	HOUSING GP-FRONT	626
Y	*232-3713*	1	LIFTING GP-ENGINE	647
Y	*267-5698*	1	MOUNTING GP-ENGINE	662
Y	*233-8150*	1	PAN GP-OIL (ENGINE)	701
Y	*254-3775*	1	CONNECTION GP-INLET	1042
Y	*232-7442*	1	PISTON & ROD GP	764
Y	*230-7352*	1	PULLEY GP-CRANKSHAFT	831
			S/N: 3341-25630	
Y	*360-7350*	1	PULLEY GP-CRANKSHAFT	835
			S/N: 33425631-UP	
Y	*232-1827*	1	PUMP GP-FUEL INJECTION	1175
Y	*233-9417*	1	PUMP GP-FUEL PRM & PRIM FILTER	1505
Y	*230-7355*	1	PUMP GP-WATER	992
Y	*236-8785*	1	RADIATOR GP	996
Y	*236-8758*	1	SENDER GP-TEMPERATURE	1555
Y	*236-8212*	1	STARTING AID GP (SWITCH)	1557
Y	*234-9666*	1	STARTING MOTOR GP-ELECTRIC	1562
			—OR—	
Y	*323-6678*	1	STARTING MOTOR GP-ELECTRIC	1568
Y	*237-4896*	1	SWITCH GP-PRESSURE	1578
Y	*236-8760*	1	TURBOCHARGER GP	1089
Y	*232-7526*	1	VALVE MECHANISM GP	839
R	**359-0734**	1	CYLINDER BLOCK GP-SHORT	
			AVAILABLE GASKET KIT(S):	
	272-0494	1	KIT-GASKET (BOTTOM)	
	277-5156	1	KIT-GASKET (TOP)	

R - REMANUFACTURED PART MAY BE AVAILABLE
Y - SEPARATE ILLUSTRATION

<END>

295-2159 ENGINE AR-PRIMARY

97 BRAKE KW (130 BHP) AT 2200 RPM

SMCS-1000 **i04400647**

NOTE	PART NUMBER	QTY	PART NAME 1 2 3 4 5 6 (PRODUCT LEVEL)	SEE PAGE
Y	*258-7556*	1	AIR COMPRESSOR GP	196
Y	*234-0617*	1	BALANCER GP	199
Y	*232-7528*	1	CAMSHAFT GP	203
Y	*254-3775*	1	CONNECTION GP-INLET	1042
Y	*231-0033*	1	CONNECTION GP-WATER	868
Y	*273-3806*	1	CONTROL GP-JACKET WATER HEATER	1541
Y	*298-7692*	1	CONVERTER GP-ELECTRICAL	1545
Y	*235-5230*	1	COOLER GP-FLTR BASE & ENG OIL	890
Y	*236-8190*	1	COVER GP-VALVE MECHANISM	310
Y	*232-7439*	1	CRANKSHAFT GP	451
Y	*232-7606*	1	CYLINDER BLOCK GP	495
Y	*232-7524*	1	CYLINDER HEAD GP	531
Y	*247-8225*	1	DRIVE GP-FAN	575
Y	*260-3128*	1	FILTER & LINES GP-FUEL	1140
Y	*232-7378*	1	FILTER GP-ENGINE OIL	861
Y	*243-3398*	1	FLYWHEEL GP	596
Y	*233-9834*	1	GLOW PLUG GP	1549
Y	*299-0165*	1	HOUSING GP-FLYWHEEL	620
Y	*232-6179*	1	HOUSING GP-FRONT	626
Y	*232-3713*	1	LIFTING GP-ENGINE	647
Y	*309-9345*	1	MOUNTING GP-ENGINE	673
Y	*233-8150*	1	PAN GP-OIL	701
Y	*232-7442*	1	PISTON & ROD GP	764
Y	*232-6204*	1	PLUG GP-ENGINE	821
Y	*253-2479*	1	PLUG GP-ENGINE	827
Y	*230-7352*	1	PULLEY GP-CRANKSHAFT	831
			S/N: 3341-25630	
Y	*360-7350*	1	PULLEY GP-CRANKSHAFT	835
			S/N: 33425631-UP	
Y	*233-9526*	1	PUMP GP-FUEL INJECTION	1216
Y	*233-9417*	1	PUMP GP-FUEL PRM & PRIM FILTER	1505
Y	*230-7355*	1	PUMP GP-WATER	992
Y	*236-8212*	1	STARTING AID GP (SWITCH)	1557
Y	*232-6197*	1	TURBOCHARGER GP	1075
Y	*232-7526*	1	VALVE MECHANISM GP	839
R	**359-0734**	1	CYLINDER BLOCK GP-SHORT	
			AVAILABLE GASKET KIT(S):	
	272-0494	1	KIT-GASKET (BOTTOM)	
	277-5156	1	KIT-GASKET (TOP)	

R - REMANUFACTURED PART MAY BE AVAILABLE
Y - SEPARATE ILLUSTRATION

<END>

295-2162 ENGINE AR-PRIMARY

62 BRAKE KW (83 BHP) AT 2400 RPM

SMCS-1000 **i07381581**

NOTE	PART NUMBER	QTY	PART NAME 1 2 3 4 5 6 (PRODUCT LEVEL)	SEE PAGE
Y	**258-7556**	1	AIR COMPRESSOR GP	196
Y	*234-0617*	1	BALANCER GP	199
Y	*233-7236*	1	CAMSHAFT GP	204
Y	*231-0033*	1	CONNECTION GP-WATER	868
Y	*273-3806*	1	CONTROL GP-JACKET WATER HEATER	1541
Y	*298-7692*	1	CONVERTER GP-ELECTRICAL	1545
Y	*234-1546*	1	COOLER GP-FLTR BASE & ENG OIL	886
Y	*303-1469*	1	COVER GP-VALVE MECHANISM	416
Y	*233-7027*	1	CRANKSHAFT GP	454
Y	*233-7007*	1	CYLINDER BLOCK GP	497
Y	*233-7234*	1	CYLINDER HEAD GP	532
Y	*247-8225*	1	DRIVE GP-FAN	575
Y	*235-8175*	1	ELBOW GP-EXHAUST	1065
Y	*260-3128*	1	FILTER & LINES GP-FUEL	1140
Y	*232-7378*	1	FILTER GP-ENGINE OIL	861
Y	*230-7291*	1	FLYWHEEL GP	591
Y	*233-9834*	1	GLOW PLUG GP	1549
Y	*299-0165*	1	HOUSING GP-FLYWHEEL	620
Y	*232-6179*	1	HOUSING GP-FRONT	626
			—OR—	
Y	*550-2590*	1	HOUSING GP-FRONT	644
Y	*232-3713*	1	LIFTING GP-ENGINE	647
Y	*231-0292*	1	MANIFOLD GP-EXHAUST	1070
Y	*303-1470*	1	MOUNTING GP-ENGINE	672
Y	*233-8150*	1	PAN GP-OIL	701
Y	*230-7581*	1	CONNECTION GP-INLET	1037
Y	*233-7233*	1	PISTON & ROD GP	770
Y	*232-6204*	1	PLUG GP-ENGINE	821
Y	*253-2479*	1	PLUG GP-ENGINE	827
Y	*230-7352*	1	PULLEY GP-CRANKSHAFT	831
			S/N: 3341-25630	
Y	*360-7350*	1	PULLEY GP-CRANKSHAFT	835
			S/N: 33425631-UP	
Y	*240-5572*	1	PUMP GP-FUEL INJECTION	1303
Y	*233-7425*	1	PUMP GP-FUEL PRM & PRIM FILTER	1499
Y	*230-7355*	1	PUMP GP-WATER	992
Y	*233-7235*	1	VALVE MECHANISM GP	840
R	**359-0731**	1	CYLINDER BLOCK GP-SHORT	
			AVAILABLE REPAIR KIT(S):	
	272-0494	1	KIT-GASKET (BOTTOM)	
	277-2992	1	KIT-GASKET (TOP)	

R - REMANUFACTURED PART MAY BE AVAILABLE
Y - SEPARATE ILLUSTRATION

<END>

295-2176 ENGINE AR-PRIMARY

86 BRAKE KW (115 BHP) AT 2200 RPM

SMCS-1000 **i04400650**

NOTE	PART NUMBER	QTY	PART NAME 1 2 3 4 5 6 (PRODUCT LEVEL)	SEE PAGE
Y	*243-4301*	1	ALTERNATOR GP-CHARGING	1531
Y	*244-2096*	1	CAMSHAFT GP	209
Y	*316-5635*	1	CONNECTOR GP-CAB HEATER LINES	874
Y	*254-3775*	1	CONNECTION GP-INLET	1042
Y	*231-0033*	1	CONNECTION GP-WATER	868
Y	*238-2799*	1	COOLER GP-FLTR BASE & ENG OIL	901
Y	*230-9196*	1	COVER GP-FRONT HOUSING	231
Y	*272-2228*	1	COVER GP-VALVE MECHANISM	384
Y	*244-2081*	1	CRANKSHAFT GP	467
Y	*244-2014*	1	CYLINDER BLOCK GP	509
Y	*244-2088*	1	CYLINDER HEAD GP	537
Y	*280-7187*	1	DRIVE GP-FAN	582
Y	*267-5695*	1	FAN GP-SUCTION	988
Y	*260-3128*	1	FILTER & LINES GP-FUEL	1140
Y	*232-7378*	1	FILTER GP-ENGINE OIL	861
Y	*243-3398*	1	FLYWHEEL GP	596
Y	*232-6661*	1	GLOW PLUG GP	1547
Y	*224-2162*	1	HOUSING GP-FLYWHEEL	609
Y	*232-6179*	1	HOUSING GP-FRONT	626
Y	*232-3713*	1	LIFTING GP-ENGINE	647
Y	*267-5698*	1	MOUNTING GP-ENGINE	662
Y	*243-2455*	1	PAN GP-OIL	715
Y	*244-2083*	1	PISTON & ROD GP	790
Y	*230-7351*	1	PULLEY GP-CRANKSHAFT	830
			S/N: 3341-25630	
Y	*360-7349*	1	PULLEY GP-CRANKSHAFT	834
			S/N: 33425631-UP	
Y	*230-7578*	1	PUMP GP-ENGINE OIL	863
Y	*237-7999*	1	PUMP GP-FUEL INJECTION	1283
Y	*233-9417*	1	PUMP GP-FUEL PRM & PRIM FILTER	1505
Y	*230-7355*	1	PUMP GP-WATER	992
Y	*236-8785*	1	RADIATOR GP	996
Y	*236-8758*	1	SENDER GP-TEMPERATURE	1555
Y	*236-8212*	1	STARTING AID GP (SWITCH)	1557
Y	*234-9666*	1	STARTING MOTOR GP-ELECTRIC	1562
			—OR—	
Y	*323-6678*	1	STARTING MOTOR GP-ELECTRIC	1568
Y	*303-2131*	1	SWITCH GP-PRESSURE	1581
Y	*316-5634*	1	TURBOCHARGER GP	1137
Y	*244-2093*	1	VALVE MECHANISM GP	847
R	**359-0734**	1	CYLINDER BLOCK GP-SHORT	
			AVAILABLE GASKET KIT(S):	
	272-0494	1	KIT-GASKET (BOTTOM)	
	277-5156	1	KIT-GASKET (TOP)	

R - REMANUFACTURED PART MAY BE AVAILABLE
Y - SEPARATE ILLUSTRATION

<END>

296-0884 ENGINE AR-PRIMARY

62 BRAKE KW (83 BHP) AT 2400 RPM

SMCS-1000 **i04927560**

NOTE	PART NUMBER	QTY	PART NAME 1 2 3 4 5 6 (PRODUCT LEVEL)	SEE PAGE
Y	*243-4149*	1	ALTERNATOR GP-CHARGING	1530
Y	*234-0617*	1	BALANCER GP	199
Y	*243-1954*	1	CAMSHAFT GP	206
Y	*230-8086*	1	CONNECTION GP-WATER	867
Y	*247-4926*	1	CONNECTOR GP-CAB HEATER LINES	873
Y	*237-6452*	1	COOLER GP-FLTR BASE & ENG OIL	897
Y	*230-9196*	1	COVER GP-FRONT HOUSING	231
Y	*267-9420*	1	COVER GP-VALVE MECHANISM	346
Y	*243-1950*	1	CRANKSHAFT GP	459
Y	*243-1948*	1	CYLINDER BLOCK GP	503
Y	*243-1952*	1	CYLINDER HEAD GP	534
Y	*251-6697*	1	DRIVE GP-FAN	576
Y	*235-2489*	1	ELBOW GP-AIR INLET	1056
Y	*303-2128*	1	FAN GP	977
Y	*260-3128*	1	FILTER & LINES GP-FUEL	1140
Y	*232-7378*	1	FILTER GP-ENGINE OIL	861
Y	*303-2122*	1	FLYWHEEL GP	606
Y	*232-6661*	1	GLOW PLUG GP	1547
Y	*235-1419*	1	HOUSING GP-FRONT	630
Y	*233-7432*	1	LIFTING GP-ENGINE	648
Y	*237-5408*	1	MANIFOLD GP-EXHAUST	1071
Y	*303-2125*	1	PAN GP-OIL	762
Y	*243-1951*	1	PISTON & ROD GP	778
Y	*232-6204*	1	PLUG GP-ENGINE	821
Y	*230-7352*	1	PULLEY GP-CRANKSHAFT	831
			S/N: 3341-25630	
Y	*360-7350*	1	PULLEY GP-CRANKSHAFT	835
			S/N: 33425631-UP	
Y	*233-7974*	1	PUMP GP-FUEL INJECTION	1191
Y	*233-7425*	1	PUMP GP-FUEL PRM & PRIM FILTER	1499
Y	*230-7355*	1	PUMP GP-WATER	992
Y	*303-2123*	1	STARTING MOTOR GP-ELECTRIC	1567
			—OR—	
Y	*328-6072*	1	STARTING MOTOR GP-ELECTRIC	1572
Y	*303-2131*	1	SWITCH GP-PRESSURE	1581
Y	*243-1953*	1	VALVE MECHANISM GP	843
	359-0730	1	CYLINDER BLOCK GP-SHORT	
			AVAILABLE GASKET KIT(S):	
	290-2495	1	KIT-GASKET (BOTTOM)	
	277-2992	1	KIT-GASKET (TOP)	

Y - SEPARATE ILLUSTRATION

<END>

296-0885 ENGINE AR-PRIMARY

67 BRAKE KW (90 BHP) AT 2200 RPM

SMCS-1000 **i04927561**

NOTE	PART NUMBER	QTY	PART NAME 1 2 3 4 5 6 (PRODUCT LEVEL)	SEE PAGE
Y	*243-4149*	1	ALTERNATOR GP-CHARGING	1530
Y	*234-0617*	1	BALANCER GP	199
Y	*237-5858*	1	CAMSHAFT GP	205
Y	*230-8086*	1	CONNECTION GP-WATER	867
Y	*247-4926*	1	CONNECTOR GP-CAB HEATER LINES	873
Y	*253-2474*	1	COOLER GP-FLTR BASE & ENG OIL	915
Y	*231-0149*	1	COVER GP-INLET MANIFOLD	1052
Y	*230-9196*	1	COVER GP-FRONT HOUSING	231
Y	*303-2205*	1	COVER GP-VALVE MECHANISM	420
Y	*237-5838*	1	CRANKSHAFT GP	456
Y	*237-5836*	1	CYLINDER BLOCK GP	501
Y	*237-5852*	1	CYLINDER HEAD GP	533
Y	*251-6697*	1	DRIVE GP-FAN	576
Y	*303-2128*	1	FAN GP	977
Y	*260-3128*	1	FILTER & LINES GP-FUEL	1140
Y	*232-7378*	1	FILTER GP-ENGINE OIL	861
Y	*303-2122*	1	FLYWHEEL GP	606
Y	*232-6661*	1	GLOW PLUG GP	1547
Y	*235-1419*	1	HOUSING GP-FRONT	630
Y	*233-7432*	1	LIFTING GP-ENGINE	648
Y	*303-2125*	1	PAN GP-OIL	762
Y	*237-5840*	1	PISTON & ROD GP	774
Y	*232-6204*	1	PLUG GP-ENGINE	821
Y	*230-7352*	1	PULLEY GP-CRANKSHAFT	831
			S/N: 3341-25630	
Y	*360-7350*	1	PULLEY GP-CRANKSHAFT	835
			S/N: 33425631-UP	
Y	*237-5214*	1	PUMP GP-FUEL INJECTION	1264
Y	*233-9417*	1	PUMP GP-FUEL PRM & PRIM FILTER	1505
Y	*230-7355*	1	PUMP GP-WATER	992
Y	*303-2123*	1	STARTING MOTOR GP-ELECTRIC	1567
			—OR—	
Y	*328-6072*	1	STARTING MOTOR GP-ELECTRIC	1572
Y	*303-2131*	1	SWITCH GP-PRESSURE	1581
Y	*237-3924*	1	TURBOCHARGER GP	1091
Y	*237-5856*	1	VALVE MECHANISM GP	842
	359-0733	1	CYLINDER BLOCK GP-SHORT	
			AVAILABLE GASKET KIT(S):	
	290-2495	1	KIT-GASKET (BOTTOM)	
	277-5156	1	KIT-GASKET (TOP)	

Y - SEPARATE ILLUSTRATION

<END>

296-0886 ENGINE AR-PRIMARY

74 BRAKE KW (99 BHP) AT 2200 RPM

SMCS-1000 **i04927562**

NOTE	PART NUMBER	QTY	PART NAME 1 2 3 4 5 6 (PRODUCT LEVEL)	SEE PAGE
Y	*243-4149*	1	ALTERNATOR GP-CHARGING	1530
Y	*234-0617*	1	BALANCER GP	199
Y	*237-5858*	1	CAMSHAFT GP	205
Y	*230-8086*	1	CONNECTION GP-WATER	867
Y	*247-4926*	1	CONNECTOR GP-CAB HEATER LINES	873
Y	*253-2474*	1	COOLER GP-FLTR BASE & ENG OIL	915
Y	*231-0149*	1	COVER GP-INLET MANIFOLD	1052
Y	*230-9196*	1	COVER GP-FRONT HOUSING	231
Y	*303-2205*	1	COVER GP-VALVE MECHANISM	420
Y	*237-5838*	1	CRANKSHAFT GP	456
Y	*237-5836*	1	CYLINDER BLOCK GP	501
Y	*237-5852*	1	CYLINDER HEAD GP	533
Y	*251-6697*	1	DRIVE GP-FAN	576
Y	*303-2128*	1	FAN GP	977
Y	*260-3128*	1	FILTER & LINES GP-FUEL	1140
Y	*232-7378*	1	FILTER GP-ENGINE OIL	861
Y	*303-2122*	1	FLYWHEEL GP	606
Y	*232-6661*	1	GLOW PLUG GP	1547
Y	*235-1419*	1	HOUSING GP-FRONT	630
Y	*233-7432*	1	LIFTING GP-ENGINE	648
Y	*303-2125*	1	PAN GP-OIL	762
Y	*237-5840*	1	PISTON & ROD GP	774
Y	*232-6204*	1	PLUG GP-ENGINE	821
Y	*230-7352*	1	PULLEY GP-CRANKSHAFT	831
			S/N: 3341-25630	
Y	*360-7350*	1	PULLEY GP-CRANKSHAFT	835
			S/N: 33425631-UP	
Y	*303-2915*	1	PUMP GP-FUEL INJECTION	1474
Y	*233-9417*	1	PUMP GP-FUEL PRM & PRIM FILTER	1505
Y	*230-7355*	1	PUMP GP-WATER	992
Y	*303-2123*	1	STARTING MOTOR GP-ELECTRIC	1567
			—OR—	
Y	*328-6072*	1	STARTING MOTOR GP-ELECTRIC	1572
Y	*303-2131*	1	SWITCH GP-PRESSURE	1581
Y	*237-3924*	1	TURBOCHARGER GP	1091
Y	*237-5856*	1	VALVE MECHANISM GP	842
	359-0733	1	CYLINDER BLOCK GP-SHORT	
			AVAILABLE GASKET KIT(S):	
	290-2495	1	KIT-GASKET (BOTTOM)	
	277-5156	1	KIT-GASKET (TOP)	

Y - SEPARATE ILLUSTRATION

<END>

300-5069 ENGINE AR-PRIMARY

62 BRAKE KW (82 BHP) AT 2200 RPM

SMCS-1000 **i04390402**

NOTE	PART NUMBER	QTY	PART NAME 1 2 3 4 5 6 (PRODUCT LEVEL)	SEE PAGE
Y	*316-5657*	1	ALTERNATOR GP-CHARGING	1537
Y	*233-7236*	1	CAMSHAFT GP	204
Y	*231-0038*	1	CONNECTION GP-WATER	870
Y	*316-5656*	1	COOLER GP-OIL	971
Y	*230-9139*	1	COVER GP-VALVE MECHANISM	241
Y	*233-7027*	1	CRANKSHAFT GP	454
Y	*233-7007*	1	CYLINDER BLOCK GP	497
Y	*233-7234*	1	CYLINDER HEAD GP	532
Y	*235-1044*	1	DRIVE GP-ACCESSORY	551
Y	*316-5655*	1	DRIVE GP-FAN	584
Y	*233-9542*	1	ELBOW GP-AIR INLET	1055
Y	*243-4297*	1	EXTENSION GP-FAN	587
Y	*234-1421*	1	MOUNTING GP-EXHAUST	1072
Y	*232-7378*	1	FILTER GP-ENGINE OIL	861
Y	*230-7291*	1	FLYWHEEL GP	591
Y	*232-6661*	1	GLOW PLUG GP	1547
Y	*223-7825*	1	HOUSING GP-FLYWHEEL	608
Y	*232-6179*	1	HOUSING GP-FRONT	626
Y	*232-3713*	1	LIFTING GP-ENGINE	647
Y	*231-0286*	1	MANIFOLD GP-EXHAUST	1069
Y	*316-5658*	1	MOUNTING GP-ENGINE	675
Y	*232-2565*	1	PAN GP-OIL	699
Y	*233-7233*	1	PISTON & ROD GP	770
Y	*225-4317*	1	PLUG GP-ENGINE	816
Y	*232-6204*	1	PLUG GP-ENGINE	821
Y	*253-2479*	1	PLUG GP-ENGINE	827
Y	*230-7352*	1	PULLEY GP-CRANKSHAFT	831
			S/N: 3341-25630	
Y	*360-7350*	1	PULLEY GP-CRANKSHAFT	835
			S/N: 33425631-UP	
Y	*230-7578*	1	PUMP GP-ENGINE OIL	863
Y	*267-9413*	1	PUMP GP-FUEL INJECTION	1339
Y	*233-7425*	1	PUMP GP-FUEL PRM & PRIM FILTER	1499
Y	*230-7355*	1	PUMP GP-WATER	992
Y	*234-9666*	1	STARTING MOTOR GP-ELECTRIC	1562
			—OR—	
Y	*323-6678*	1	STARTING MOTOR GP-ELECTRIC	1568
Y	*233-7235*	1	VALVE MECHANISM GP	840
R	**359-0731**	1	CYLINDER BLOCK GP-SHORT	
			AVAILABLE GASKET KIT(S):	
	272-0494	1	KIT-GASKET (BOTTOM)	
	277-5156	1	KIT-GASKET (TOP)	

R - REMANUFACTURED PART MAY BE AVAILABLE
Y - SEPARATE ILLUSTRATION

<END>

304-1642 ENGINE AR-PRIMARY

81 BRAKE KW (108 BHP) AT 2400 RPM. FLEX ENGINE - FOR EUROPE ONLY

SMCS-1000 **i04290810**

NOTE	PART NUMBER	QTY	PART NAME 1 2 3 4 5 6 (PRODUCT LEVEL)	SEE PAGE
Y	*235-0028*	1	ALTERNATOR GP-CHARGING	1526
Y	*232-7528*	1	CAMSHAFT GP	203
Y	*254-3775*	1	CONNECTION GP-INLET	1042
Y	*231-0033*	1	CONNECTION GP-WATER	868
Y	*238-2799*	1	COOLER GP-FLTR BASE & ENG OIL	901
Y	*230-9196*	1	COVER GP-FRONT HOUSING	231
Y	*234-0251*	1	COVER GP-VALVE MECHANISM	274
Y	*232-7439*	1	CRANKSHAFT GP	451
Y	*232-7606*	1	CYLINDER BLOCK GP	495
Y	*232-7524*	1	CYLINDER HEAD GP	531
Y	*234-9680*	1	DRIVE GP-FAN	566
Y	*232-7378*	1	FILTER GP-ENGINE OIL	861
Y	*243-3398*	1	FLYWHEEL GP	596
Y	*232-6661*	1	GLOW PLUG GP	1547
Y	*234-9665*	1	HOUSING GP-FLYWHEEL	611
Y	*232-6179*	1	HOUSING GP-FRONT	626
Y	*232-3713*	1	LIFTING GP-ENGINE	647
Y	*234-9738*	1	MOUNTING GP-FAN	991
Y	*243-2455*	1	PAN GP-OIL	715
Y	*232-7442*	1	PISTON & ROD GP	764
Y	*225-4317*	1	PLUG GP-ENGINE	816
Y	*232-6204*	1	PLUG GP-ENGINE	821
Y	*235-2624*	1	PLUG GP-ENGINE	825
Y	*230-7353*	1	PULLEY GP-CRANKSHAFT	832
			S/N: 3341-25630	
Y	*360-7351*	1	PULLEY GP-CRANKSHAFT	836
			S/N: 33425631-UP	
Y	*230-7578*	1	PUMP GP-ENGINE OIL	863
Y	*233-9405*	1	PUMP GP-FUEL INJECTION	1204
Y	*233-9417*	1	PUMP GP-FUEL PRM & PRIM FILTER	1505
Y	*230-7355*	1	PUMP GP-WATER	992
Y	*234-9666*	1	STARTING MOTOR GP-ELECTRIC	1562
			—OR—	
Y	*323-6678*	1	STARTING MOTOR GP-ELECTRIC	1568
Y	*253-0756*	1	SWITCH GP-PRESSURE	1579
Y	*233-9780*	1	TURBOCHARGER GP	1079
Y	*232-7526*	1	VALVE MECHANISM GP	839
R	**359-0734**	1	CYLINDER BLOCK GP-SHORT	
			AVAILABLE GASKET KIT(S):	
	272-0494	1	KIT-GASKET (BOTTOM)	
	277-5156	1	KIT-GASKET (TOP)	

R - REMANUFACTURED PART MAY BE AVAILABLE
Y - SEPARATE ILLUSTRATION

<END>

304-1646 ENGINE AR-PRIMARY

95 BRAKE KW (127 BHP) AT 2200 RPM

SMCS-1000 **i04290811**

NOTE	PART NUMBER	QTY	PART NAME 1 2 3 4 5 6 (PRODUCT LEVEL)	SEE PAGE
Y	*234-0617*	1	BALANCER GP	199
Y	*232-7528*	1	CAMSHAFT GP	203
Y	*254-3775*	1	CONNECTION GP-INLET	1042
Y	*231-0033*	1	CONNECTION GP-WATER	868
Y	*235-5230*	1	COOLER GP-FLTR BASE & ENG OIL	890
Y	*230-9196*	1	COVER GP-FRONT HOUSING	231
Y	*230-9149*	1	COVER GP-VALVE MECHANISM	247
Y	*232-7439*	1	CRANKSHAFT GP	451
Y	*232-7606*	1	CYLINDER BLOCK GP	495
Y	*232-7524*	1	CYLINDER HEAD GP	531
Y	*230-8083*	1	DRIVE GP-FAN	564
Y	*232-7378*	1	FILTER GP-ENGINE OIL	861
Y	*232-6661*	1	GLOW PLUG GP	1547
Y	*232-6179*	1	HOUSING GP-FRONT	626
Y	*232-3713*	1	LIFTING GP-ENGINE	647
Y	*233-8150*	1	PAN GP-OIL	701
Y	*232-7442*	1	PISTON & ROD GP	764
Y	*225-4317*	1	PLUG GP-ENGINE	816
Y	*232-6204*	1	PLUG GP-ENGINE	821
Y	*233-9426*	1	PLUG GP-ENGINE	823
Y	*230-7352*	1	PULLEY GP-CRANKSHAFT	831
			S/N: 3341-25630	
Y	*360-7350*	1	PULLEY GP-CRANKSHAFT	835
			S/N: 33425631-UP	
Y	*232-1827*	1	PUMP GP-FUEL INJECTION	1175
Y	*233-9417*	1	PUMP GP-FUEL PRM & PRIM FILTER	1505
Y	*230-7355*	1	PUMP GP-WATER	992
Y	*253-0756*	1	SWITCH GP-PRESSURE	1579
Y	*233-9539*	1	TURBOCHARGER GP	1077
Y	*232-7526*	1	VALVE MECHANISM GP	839
R	**359-0734**	1	CYLINDER BLOCK GP-SHORT	
			AVAILABLE GASKET KIT(S):	
	272-0494	1	KIT-GASKET (BOTTOM)	
	277-5156	1	KIT-GASKET (TOP)	

R - REMANUFACTURED PART MAY BE AVAILABLE
Y - SEPARATE ILLUSTRATION

<END>

304-1766 ENGINE AR-PRIMARY

86 BRAKE KW (115 BHP) AT 2200 RPM

SMCS-1000 **i04290812**

NOTE	PART NUMBER	QTY	PART NAME 1 2 3 4 5 6 (PRODUCT LEVEL)	SEE PAGE
Y	*235-0028*	1	ALTERNATOR GP-CHARGING	1526
Y	*232-7528*	1	CAMSHAFT GP	203
Y	*254-3775*	1	CONNECTION GP-INLET	1042
Y	*231-0033*	1	CONNECTION GP-WATER	868
Y	*238-2799*	1	COOLER GP-FLTR BASE & ENG OIL	901
Y	*230-9196*	1	COVER GP-FRONT HOUSING	231
Y	*234-0251*	1	COVER GP-VALVE MECHANISM	274
Y	*232-7439*	1	CRANKSHAFT GP	451
Y	*232-7606*	1	CYLINDER BLOCK GP	495
Y	*232-7524*	1	CYLINDER HEAD GP	531
Y	*234-9680*	1	DRIVE GP-FAN	566
Y	*232-7378*	1	FILTER GP-ENGINE OIL	861
Y	*243-3398*	1	FLYWHEEL GP	596
Y	*232-6661*	1	GLOW PLUG GP	1547
Y	*234-9665*	1	HOUSING GP-FLYWHEEL	611
Y	*232-6179*	1	HOUSING GP-FRONT	626
Y	*232-3713*	1	LIFTING GP-ENGINE	647
Y	*234-9738*	1	MOUNTING GP-FAN	991
Y	*243-2455*	1	PAN GP-OIL	715
Y	*232-7442*	1	PISTON & ROD GP	764
Y	*225-4317*	1	PLUG GP-ENGINE (FRONT HOUSING, CYLINDER HEAD)	816
Y	*232-6204*	1	PLUG GP-ENGINE (CYLINDER HEAD)	821
Y	*235-2624*	1	PLUG GP-ENGINE	825
Y	*230-7353*	1	PULLEY GP-CRANKSHAFT	832
			S/N: 3341-25630	
Y	*360-7351*	1	PULLEY GP-CRANKSHAFT	836
			S/N: 33425631-UP	
Y	*230-7578*	1	PUMP GP-ENGINE OIL	863
Y	*232-1827*	1	PUMP GP-FUEL INJECTION	1175
Y	*233-9417*	1	PUMP GP-FUEL PRM & PRIM FILTER	1505
Y	*230-7355*	1	PUMP GP-WATER	992
Y	*234-9666*	1	STARTING MOTOR GP-ELECTRIC	1562
			—OR—	
Y	*323-6678*	1	STARTING MOTOR GP-ELECTRIC	1568
Y	*253-0756*	1	SWITCH GP-PRESSURE	1579
Y	*232-6197*	1	TURBOCHARGER GP	1075
Y	*232-7526*	1	VALVE MECHANISM GP	839
R	**359-0734**	1	CYLINDER BLOCK GP-SHORT	
			AVAILABLE GASKET KIT(S):	
	272-0494	1	KIT-GASKET (BOTTOM)	
	277-5156	1	KIT-GASKET (TOP)	

R - REMANUFACTURED PART MAY BE AVAILABLE
Y - SEPARATE ILLUSTRATION

<END>

305-0482 ENGINE AR-PRIMARY

62 BRAKE KW (83 BHP) AT 2400 RPM

SMCS-1000 **i05360317**

NOTE	PART NUMBER	QTY	PART NAME 1 2 3 4 5 6 (PRODUCT LEVEL)	SEE PAGE
Y	*243-4301*	1	ALTERNATOR GP-CHARGING	1531
Y	*234-0617*	1	BALANCER GP	199
Y	*233-7236*	1	CAMSHAFT GP	204
Y	*230-7581*	1	CONNECTION GP-INLET	1037
Y	*231-0033*	1	CONNECTION GP-WATER	868
Y	*316-5671*	1	COOLER GP-OIL	973
Y	*230-9139*	1	COVER GP-VALVE MECHANISM	241
Y	*233-7027*	1	CRANKSHAFT GP	454
Y	*233-7007*	1	CYLINDER BLOCK GP	497
Y	*233-7234*	1	CYLINDER HEAD GP	532
Y	*231-0055*	1	DRIVE GP-ACCESSORY	549
Y	*243-4280*	1	DRIVE GP-FAN	572
Y	*235-0365*	1	ELBOW GP-EXHAUST	1064
Y	*251-8298*	1	FAN GP-SUCTION	986
Y	*260-3128*	1	FILTER & LINES GP-FUEL	1140
Y	*235-0322*	1	FLYWHEEL GP	593
Y	*232-6661*	1	GLOW PLUG GP	1547
Y	*235-0321*	1	HOUSING GP-FLYWHEEL	612
Y	*232-6179*	1	HOUSING GP-FRONT	626
Y	*232-3713*	1	LIFTING GP-ENGINE	647
Y	*231-0292*	1	MANIFOLD GP-EXHAUST	1070
Y	*252-7009*	1	MOUNTING GP-ENGINE	659
Y	*233-8150*	1	PAN GP-OIL	701
Y	*233-7233*	1	PISTON & ROD GP	770
Y	*225-4317*	1	PLUG GP-ENGINE	816
Y	*230-7351*	1	PULLEY GP-CRANKSHAFT	830
			S/N: 3341-25630	
Y	*360-7349*	1	PULLEY GP-CRANKSHAFT	834
			S/N: 33425631-UP	
Y	*233-7974*	1	PUMP GP-FUEL INJECTION	1191
Y	*233-7425*	1	PUMP GP-FUEL PRM & PRIM FILTER	1499
Y	*230-7355*	1	PUMP GP-WATER	992
Y	*316-5670*	1	RADIATOR GP	1020
Y	*236-8212*	1	STARTING AID GP (SWITCH)	1557
Y	*234-9666*	1	STARTING MOTOR GP-ELECTRIC	1562
			—OR—	
Y	*323-6678*	1	STARTING MOTOR GP-ELECTRIC	1568
Y	*233-9445*	1	SWITCH GP-PRESSURE	1577
Y	*235-8749*	1	SWITCH GP-TEMPERATURE	1582
			—OR—	
Y	*367-0594*	1	SWITCH GP-TEMPERATURE	1583
Y	*233-7235*	1	VALVE MECHANISM GP	840
R	**359-0731**	1	CYLINDER BLOCK GP-SHORT	
			AVAILABLE GASKET KIT(S):	
	272-0494	1	KIT-GASKET (BOTTOM)	
	277-5156	1	KIT-GASKET (TOP)	

305-0482 **ENGINE AR-PRIMARY (**contd.**)** **i05360317**

NOTE	PART NUMBER	QTY	PART NAME 1 2 3 4 5 6 (PRODUCT LEVEL)	SEE PAGE
R - REMANUFACTURED PART MAY BE AVAILABLE Y - SEPARATE ILLUSTRATION				

<END>

305-2584 ENGINE AR-PRIMARY

92 BRAKE KW (123 BHP) AT 2400 RPM

SMCS-1000 **i04290813**

NOTE	PART NUMBER	QTY	PART NAME 1 2 3 4 5 6 (PRODUCT LEVEL)	SEE PAGE
Y	*234-0617*	1	BALANCER GP	199
Y	*232-7528*	1	CAMSHAFT GP	203
Y	*254-3775*	1	CONNECTION GP-INLET	1042
Y	*231-0033*	1	CONNECTION GP-WATER	868
Y	*235-5230*	1	COOLER GP-FLTR BASE & ENG OIL	890
Y	*230-9196*	1	COVER GP-FRONT HOUSING	231
Y	*230-9149*	1	COVER GP-VALVE MECHANISM	247
Y	*232-7439*	1	CRANKSHAFT GP	451
Y	*232-7606*	1	CYLINDER BLOCK GP	495
Y	*232-7524*	1	CYLINDER HEAD GP	531
Y	*230-8083*	1	DRIVE GP-FAN	564
Y	*232-7378*	1	FILTER GP-ENGINE OIL	861
Y	*232-6661*	1	GLOW PLUG GP	1547
Y	*232-6179*	1	HOUSING GP-FRONT	626
Y	*232-3713*	1	LIFTING GP-ENGINE	647
Y	*233-8150*	1	PAN GP-OIL	701
Y	*232-7442*	1	PISTON & ROD GP	764
Y	*225-4317*	1	PLUG GP-ENGINE (FRONT HOUSING, CYLINDER HEAD)	816
Y	*232-6204*	1	PLUG GP-ENGINE (CYLINDER HEAD)	821
Y	*233-9426*	1	PLUG GP-ENGINE	823
Y	*230-7352*	1	PULLEY GP-CRANKSHAFT	831
			S/N: 3341-25630	
Y	*360-7350*	1	PULLEY GP-CRANKSHAFT	835
			S/N: 33425631-UP	
Y	*232-1827*	1	PUMP GP-FUEL INJECTION	1175
Y	*233-9417*	1	PUMP GP-FUEL PRM & PRIM FILTER	1505
Y	*230-7355*	1	PUMP GP-WATER	992
Y	*253-0756*	1	SWITCH GP-PRESSURE	1579
Y	*233-9539*	1	TURBOCHARGER GP	1077
Y	*232-7526*	1	VALVE MECHANISM GP	839
R	**359-0734**	1	CYLINDER BLOCK GP-SHORT	
			AVAILABLE GASKET KIT(S):	
	272-0494	1	KIT-GASKET (BOTTOM)	
	277-5156	1	KIT-GASKET (TOP)	

R - REMANUFACTURED PART MAY BE AVAILABLE
Y - SEPARATE ILLUSTRATION

<END>

305-2588 ENGINE AR-PRIMARY

95 BRAKE KW (127 BHP) AT 2200 RPM

SMCS-1000 **i04290814**

NOTE	PART NUMBER	QTY	PART NAME 1 2 3 4 5 6 (PRODUCT LEVEL)	SEE PAGE
Y	*234-0617*	1	BALANCER GP	199
Y	*232-7528*	1	CAMSHAFT GP	203
Y	*254-3775*	1	CONNECTION GP-INLET	1042
Y	*231-0033*	1	CONNECTION GP-WATER	868
Y	*235-5230*	1	COOLER GP-FLTR BASE & ENG OIL	890
Y	*230-9196*	1	COVER GP-FRONT HOUSING	231
Y	*230-9149*	1	COVER GP-VALVE MECHANISM	247
Y	*232-7439*	1	CRANKSHAFT GP	451
Y	*232-7606*	1	CYLINDER BLOCK GP	495
Y	*232-7524*	1	CYLINDER HEAD GP	531
Y	*230-8083*	1	DRIVE GP-FAN	564
Y	*232-7378*	1	FILTER GP-ENGINE OIL	861
Y	*232-6661*	1	GLOW PLUG GP	1547
Y	*232-6179*	1	HOUSING GP-FRONT	626
Y	*232-3713*	1	LIFTING GP-ENGINE	647
Y	*233-8150*	1	PAN GP-OIL	701
Y	*232-7442*	1	PISTON & ROD GP	764
Y	*225-4317*	1	PLUG GP-ENGINE	816
Y	*232-6204*	1	PLUG GP-ENGINE	821
Y	*233-9426*	1	PLUG GP-ENGINE	823
Y	*230-7352*	1	PULLEY GP-CRANKSHAFT	831
			S/N: 3341-25630	
Y	*360-7350*	1	PULLEY GP-CRANKSHAFT	835
			S/N: 33425631-UP	
Y	*232-1827*	1	PUMP GP-FUEL INJECTION	1175
Y	*233-9417*	1	PUMP GP-FUEL PRM & PRIM FILTER	1505
Y	*230-7355*	1	PUMP GP-WATER	992
Y	*253-0756*	1	SWITCH GP-PRESSURE	1579
Y	*233-9539*	1	TURBOCHARGER GP	1077
Y	*232-7526*	1	VALVE MECHANISM GP	839
R	**359-0734**	1	CYLINDER BLOCK GP-SHORT	
			AVAILABLE GASKET KIT(S):	
	272-0494	1	KIT-GASKET (BOTTOM)	
	277-5156	1	KIT-GASKET (TOP)	

R - REMANUFACTURED PART MAY BE AVAILABLE
Y - SEPARATE ILLUSTRATION

<END>

305-2592 ENGINE AR-PRIMARY

92 BRAKE KW (123 BHP) AT 2400 RPM

SMCS-1000 **i04401570**

NOTE	PART NUMBER	QTY	PART NAME 1 2 3 4 5 6 (PRODUCT LEVEL)	SEE PAGE
Y	*234-0617*	1	BALANCER GP	199
Y	*232-7528*	1	CAMSHAFT GP	203
Y	*254-3775*	1	CONNECTION GP-INLET	1042
Y	*231-0033*	1	CONNECTION GP-WATER	868
Y	*235-5230*	1	COOLER GP-FLTR BASE & ENG OIL	890
Y	*230-9196*	1	COVER GP-FRONT HOUSING	231
Y	*230-9149*	1	COVER GP-VALVE MECHANISM	247
Y	*232-7439*	1	CRANKSHAFT GP	451
Y	*232-7606*	1	CYLINDER BLOCK GP	495
Y	*232-7524*	1	CYLINDER HEAD GP	531
Y	*230-8083*	1	DRIVE GP-FAN	564
Y	*232-7378*	1	FILTER GP-ENGINE OIL	861
Y	*232-6661*	1	GLOW PLUG GP	1547
Y	*232-6179*	1	HOUSING GP-FRONT	626
Y	*232-3713*	1	LIFTING GP-ENGINE	647
Y	*233-8150*	1	PAN GP-OIL	701
Y	*232-7442*	1	PISTON & ROD GP	764
Y	*225-4317*	1	PLUG GP-ENGINE (FRONT HOUSING, CYLINDER HEAD)	816
Y	*232-6204*	1	PLUG GP-ENGINE (CYLINDER HEAD)	821
Y	*233-9426*	1	PLUG GP-ENGINE	823
Y	*230-7352*	1	PULLEY GP-CRANKSHAFT	831
			S/N: 3341-25630	
Y	*360-7350*	1	PULLEY GP-CRANKSHAFT	835
			S/N: 33425631-UP	
Y	*232-1827*	1	PUMP GP-FUEL INJECTION	1175
Y	*233-9417*	1	PUMP GP-FUEL PRM & PRIM FILTER	1505
Y	*230-7355*	1	PUMP GP-WATER	992
Y	*253-0756*	1	SWITCH GP-PRESSURE	1579
Y	*233-9539*	1	TURBOCHARGER GP	1077
Y	*232-7526*	1	VALVE MECHANISM GP	839
R	**359-0734**	1	CYLINDER BLOCK GP-SHORT	
			AVAILABLE GASKET KIT(S):	
	272-0494	1	KIT-GASKET (BOTTOM)	
	277-5156	1	KIT-GASKET (TOP)	

R - REMANUFACTURED PART MAY BE AVAILABLE
Y - SEPARATE ILLUSTRATION

<END>

305-2596 ENGINE AR-PRIMARY

95 BRAKE KW (127 BHP) AT 2200 RPM

SMCS-1000 **i04401569**

NOTE	PART NUMBER	QTY	PART NAME 1 2 3 4 5 6 (PRODUCT LEVEL)	SEE PAGE
Y	*234-0617*	1	BALANCER GP	199
Y	*232-7528*	1	CAMSHAFT GP	203
Y	*254-3775*	1	CONNECTION GP-INLET	1042
Y	*231-0033*	1	CONNECTION GP-WATER	868
Y	*235-5230*	1	COOLER GP-FLTR BASE & ENG OIL	890
Y	*230-9196*	1	COVER GP-FRONT HOUSING	231
Y	*230-9149*	1	COVER GP-VALVE MECHANISM	247
Y	*232-7439*	1	CRANKSHAFT GP	451
Y	*232-7606*	1	CYLINDER BLOCK GP	495
Y	*232-7524*	1	CYLINDER HEAD GP	531
Y	*230-8083*	1	DRIVE GP-FAN	564
Y	*232-7378*	1	FILTER GP-ENGINE OIL	861
Y	*232-6661*	1	GLOW PLUG GP	1547
Y	*232-6179*	1	HOUSING GP-FRONT	626
Y	*232-3713*	1	LIFTING GP-ENGINE	647
Y	*233-8150*	1	PAN GP-OIL	701
Y	*232-7442*	1	PISTON & ROD GP	764
Y	*225-4317*	1	PLUG GP-ENGINE (FRONT HOUSING, CYLINDER HEAD)	816
Y	*232-6204*	1	PLUG GP-ENGINE (CYLINDER HEAD)	821
Y	*233-9426*	1	PLUG GP-ENGINE	823
Y	*230-7352*	1	PULLEY GP-CRANKSHAFT	831
			S/N: 3341-25630	
Y	*360-7350*	1	PULLEY GP-CRANKSHAFT	835
			S/N: 33425631-UP	
Y	*232-1827*	1	PUMP GP-FUEL INJECTION	1175
Y	*233-9417*	1	PUMP GP-FUEL PRM & PRIM FILTER	1505
Y	*230-7355*	1	PUMP GP-WATER	992
Y	*253-0756*	1	SWITCH GP-PRESSURE	1579
Y	*233-9539*	1	TURBOCHARGER GP	1077
Y	*232-7526*	1	VALVE MECHANISM GP	839
R	**359-0734**	1	CYLINDER BLOCK GP-SHORT	
			AVAILABLE GASKET KIT(S):	
	277-5156	1	KIT-GASKET (TOP)	
	272-0494	1	KIT-GASKET (BOTTOM)	

R - REMANUFACTURED PART MAY BE AVAILABLE
Y - SEPARATE ILLUSTRATION

<END>

305-2598 ENGINE AR-PRIMARY

95 BRAKE KW (127 BHP) AT 2200 RPM

SMCS-1000 **i04401610**

NOTE	PART NUMBER	QTY	PART NAME 1 2 3 4 5 6 (PRODUCT LEVEL)	SEE PAGE
Y	*234-0617*	1	BALANCER GP	199
Y	*232-7528*	1	CAMSHAFT GP	203
Y	*254-3775*	1	CONNECTION GP-INLET	1042
Y	*231-0033*	1	CONNECTION GP-WATER	868
Y	*235-5230*	1	COOLER GP-FLTR BASE & ENG OIL	890
Y	*230-9196*	1	COVER GP-FRONT HOUSING	231
Y	*230-9149*	1	COVER GP-VALVE MECHANISM	247
Y	*232-7439*	1	CRANKSHAFT GP	451
Y	*232-7606*	1	CYLINDER BLOCK GP	495
Y	*232-7524*	1	CYLINDER HEAD GP	531
Y	*230-8083*	1	DRIVE GP-FAN	564
Y	*232-7378*	1	FILTER GP-ENGINE OIL	861
Y	*232-6661*	1	GLOW PLUG GP	1547
Y	*232-6179*	1	HOUSING GP-FRONT	626
Y	*232-3713*	1	LIFTING GP-ENGINE	647
Y	*233-8150*	1	PAN GP-OIL	701
Y	*232-7442*	1	PISTON & ROD GP	764
Y	*225-4317*	1	PLUG GP-ENGINE (FRONT HOUSING, CYLINDER HEAD)	816
Y	*232-6204*	1	PLUG GP-ENGINE (CYLINDER HEAD)	821
Y	*233-9426*	1	PLUG GP-ENGINE	823
Y	*230-7352*	1	PULLEY GP-CRANKSHAFT	831
			S/N: 3341-25630	
Y	*360-7350*	1	PULLEY GP-CRANKSHAFT	835
			S/N: 33425631-UP	
Y	*232-1827*	1	PUMP GP-FUEL INJECTION	1175
Y	*233-9417*	1	PUMP GP-FUEL PRM & PRIM FILTER	1505
Y	*230-7355*	1	PUMP GP-WATER	992
Y	*253-0756*	1	SWITCH GP-PRESSURE	1579
Y	*233-9539*	1	TURBOCHARGER GP	1077
Y	*232-7526*	1	VALVE MECHANISM GP	839
R	**359-0734**	1	CYLINDER BLOCK GP-SHORT	
			AVAILABLE GASKET KIT(S):	
	277-5156	1	KIT-GASKET (TOP)	
	272-0494	1	KIT-GASKET (BOTTOM)	

R - REMANUFACTURED PART MAY BE AVAILABLE
Y - SEPARATE ILLUSTRATION

<END>

305-2600 ENGINE AR-PRIMARY

95 BRAKE KW (127 BHP) AT 2200 RPM

SMCS-1000 **i04401633**

NOTE	PART NUMBER	QTY	PART NAME 1 2 3 4 5 6 (PRODUCT LEVEL)	SEE PAGE
Y	*234-0617*	1	BALANCER GP	199
Y	*232-7528*	1	CAMSHAFT GP	203
Y	*254-3775*	1	CONNECTION GP-INLET	1042
Y	*231-0033*	1	CONNECTION GP-WATER	868
Y	*235-5230*	1	COOLER GP-FLTR BASE & ENG OIL	890
Y	*230-9196*	1	COVER GP-FRONT HOUSING	231
Y	*230-9149*	1	COVER GP-VALVE MECHANISM	247
Y	*232-7439*	1	CRANKSHAFT GP	451
Y	*232-7606*	1	CYLINDER BLOCK GP	495
Y	*232-7524*	1	CYLINDER HEAD GP	531
Y	*230-8083*	1	DRIVE GP-FAN	564
Y	*232-7378*	1	FILTER GP-ENGINE OIL	861
Y	*232-6661*	1	GLOW PLUG GP	1547
Y	*232-6179*	1	HOUSING GP-FRONT	626
Y	*232-3713*	1	LIFTING GP-ENGINE	647
Y	*232-7442*	1	PISTON & ROD GP	764
Y	*225-4317*	1	PLUG GP-ENGINE	816
Y	*232-6204*	1	PLUG GP-ENGINE	821
Y	*233-9426*	1	PLUG GP-ENGINE	823
Y	*230-7352*	1	PULLEY GP-CRANKSHAFT	831
			S/N: 3341-25630	
Y	*360-7350*	1	PULLEY GP-CRANKSHAFT	835
			S/N: 33425631-UP	
Y	*232-1827*	1	PUMP GP-FUEL INJECTION	1175
Y	*233-9417*	1	PUMP GP-FUEL PRM & PRIM FILTER	1505
Y	*230-7355*	1	PUMP GP-WATER	992
Y	*253-0756*	1	SWITCH GP-PRESSURE	1579
Y	*233-9539*	1	TURBOCHARGER GP	1077
Y	*232-7526*	1	VALVE MECHANISM GP	839
R	**359-0734**	1	CYLINDER BLOCK GP-SHORT	
			AVAILABLE GASKET KIT(S):	
	272-0494	1	KIT-GASKET (BOTTOM)	
	277-5156	1	KIT-GASKET (TOP)	

R - REMANUFACTURED PART MAY BE AVAILABLE
Y - SEPARATE ILLUSTRATION

<END>

306-1682 ENGINE AR-PRIMARY

95 BRAKE KW (127 BHP) AT 2200 RPM

SMCS-1000 **i04401637**

NOTE	PART NUMBER	QTY	PART NAME 1 2 3 4 5 6 (PRODUCT LEVEL)	SEE PAGE
Y	*236-8196*	1	ALTERNATOR GP-CHARGING	1527
Y	*234-0617*	1	BALANCER GP	199
Y	*232-7528*	1	CAMSHAFT GP	203
Y	*254-3775*	1	CONNECTION GP-INLET	1042
Y	*231-0033*	1	CONNECTION GP-WATER	868
Y	*235-5230*	1	COOLER GP-FLTR BASE & ENG OIL	890
Y	*230-9196*	1	COVER GP-FRONT HOUSING	231
Y	*236-8190*	1	COVER GP-VALVE MECHANISM	310
Y	*232-7439*	1	CRANKSHAFT GP	451
Y	*232-7606*	1	CYLINDER BLOCK GP	495
Y	*232-7524*	1	CYLINDER HEAD GP	531
Y	*236-8181*	1	DRIVE GP-FAN	568
Y	*267-5695*	1	FAN GP-SUCTION	988
Y	*260-3128*	1	FILTER & LINES GP-FUEL	1140
Y	*232-7378*	1	FILTER GP-ENGINE OIL	861
Y	*235-0322*	1	FLYWHEEL GP	593
Y	*232-6661*	1	GLOW PLUG GP	1547
Y	*235-0321*	1	HOUSING GP-FLYWHEEL	612
Y	*232-6179*	1	HOUSING GP-FRONT	626
Y	*232-3713*	1	LIFTING GP-ENGINE	647
Y	*267-5698*	1	MOUNTING GP-ENGINE	662
Y	*233-8150*	1	PAN GP-OIL	701
Y	*232-7442*	1	PISTON & ROD GP	764
Y	*225-4317*	1	PLUG GP-ENGINE	816
Y	*230-7352*	1	PULLEY GP-CRANKSHAFT	831
			S/N: 3341-25630	
Y	*360-7350*	1	PULLEY GP-CRANKSHAFT	835
			S/N: 33425631-UP	
Y	*232-1827*	1	PUMP GP-FUEL INJECTION	1175
Y	*233-9417*	1	PUMP GP-FUEL PRM & PRIM FILTER	1505
Y	*230-7355*	1	PUMP GP-WATER	992
Y	*236-8785*	1	RADIATOR GP	996
Y	*236-8758*	1	SENDER GP-TEMPERATURE	1555
Y	*236-8212*	1	STARTING AID GP (SWITCH)	1557
Y	*234-9666*	1	STARTING MOTOR GP-ELECTRIC	1562
			—OR—	
Y	*323-6678*	1	STARTING MOTOR GP-ELECTRIC	1568
Y	*253-0756*	1	SWITCH GP-PRESSURE	1579
Y	*290-2489*	1	TURBOCHARGER GP	1132
Y	*232-7526*	1	VALVE MECHANISM GP	839
R	**359-0734**	1	CYLINDER BLOCK GP-SHORT	
			AVAILABLE GASKET KIT(S):	
	272-0494	1	KIT-GASKET (BOTTOM)	
	277-5156	1	KIT-GASKET (TOP)	

R - REMANUFACTURED PART MAY BE AVAILABLE
Y - SEPARATE ILLUSTRATION

<END>

306-1687 ENGINE AR-PRIMARY

95 BRAKE KW (127 BHP) AT 2200 RPM

SMCS-1000 **i04401643**

NOTE	PART NUMBER	QTY	PART NAME 1 2 3 4 5 6 (PRODUCT LEVEL)	SEE PAGE
Y	*236-8196*	1	ALTERNATOR GP-CHARGING	1527
Y	*234-0617*	1	BALANCER GP	199
Y	*232-7528*	1	CAMSHAFT GP	203
Y	*254-3775*	1	CONNECTION GP-INLET	1042
Y	*231-0033*	1	CONNECTION GP-WATER	868
Y	*235-5230*	1	COOLER GP-FLTR BASE & ENG OIL	890
Y	*230-9196*	1	COVER GP-FRONT HOUSING	231
Y	*236-8190*	1	COVER GP-VALVE MECHANISM	310
Y	*232-7439*	1	CRANKSHAFT GP	451
Y	*232-7606*	1	CYLINDER BLOCK GP	495
Y	*232-7524*	1	CYLINDER HEAD GP	531
Y	*236-8181*	1	DRIVE GP-FAN	568
Y	*267-5695*	1	FAN GP-SUCTION	988
Y	*260-3128*	1	FILTER & LINES GP-FUEL	1140
Y	*232-7378*	1	FILTER GP-ENGINE OIL	861
Y	*235-0322*	1	FLYWHEEL GP	593
Y	*232-6661*	1	GLOW PLUG GP	1547
Y	*235-0321*	1	HOUSING GP-FLYWHEEL	612
Y	*232-6179*	1	HOUSING GP-FRONT	626
Y	*232-3713*	1	LIFTING GP-ENGINE	647
Y	*267-5698*	1	MOUNTING GP-ENGINE	662
Y	*233-8150*	1	PAN GP-OIL	701
Y	*232-7442*	1	PISTON & ROD GP	764
Y	*225-4317*	1	PLUG GP-ENGINE	816
Y	*230-7352*	1	PULLEY GP-CRANKSHAFT	831
			S/N: 3341-25630	
Y	*360-7350*	1	PULLEY GP-CRANKSHAFT	835
			S/N: 33425631-UP	
Y	*232-1827*	1	PUMP GP-FUEL INJECTION	1175
Y	*233-9417*	1	PUMP GP-FUEL PRM & PRIM FILTER	1505
Y	*230-7355*	1	PUMP GP-WATER	992
Y	*236-8785*	1	RADIATOR GP	996
Y	*236-8758*	1	SENDER GP-TEMPERATURE	1555
Y	*236-8212*	1	STARTING AID GP (SWITCH)	1557
Y	*234-9666*	1	STARTING MOTOR GP-ELECTRIC	1562
			—OR—	
Y	*323-6678*	1	STARTING MOTOR GP-ELECTRIC	1568
Y	*253-0756*	1	SWITCH GP-PRESSURE	1579
Y	*290-2489*	1	TURBOCHARGER GP	1132
Y	*232-7526*	1	VALVE MECHANISM GP	839
R	**359-0734**	1	CYLINDER BLOCK GP-SHORT	
			AVAILABLE GASKET KIT(S):	
	272-0494	1	KIT-GASKET (BOTTOM)	
	277-5156	1	KIT-GASKET (TOP)	

R - REMANUFACTURED PART MAY BE AVAILABLE
Y - SEPARATE ILLUSTRATION

<END>

306-1688 ENGINE AR-PRIMARY

95 BRAKE KW (127 BHP) AT 2200 RPM

SMCS-1000 **i04401651**

NOTE	PART NUMBER	QTY	PART NAME 1 2 3 4 5 6 (PRODUCT LEVEL)	SEE PAGE
Y	*236-8196*	1	ALTERNATOR GP-CHARGING	1527
Y	*234-0617*	1	BALANCER GP	199
Y	*232-7528*	1	CAMSHAFT GP	203
Y	*254-3775*	1	CONNECTION GP-INLET	1042
Y	*231-0033*	1	CONNECTION GP-WATER	868
Y	*235-5230*	1	COOLER GP-FLTR BASE & ENG OIL	890
Y	*230-9196*	1	COVER GP-FRONT HOUSING	231
Y	*236-8190*	1	COVER GP-VALVE MECHANISM	310
Y	*232-7439*	1	CRANKSHAFT GP	451
Y	*232-7606*	1	CYLINDER BLOCK GP	495
Y	*232-7524*	1	CYLINDER HEAD GP	531
Y	*236-8181*	1	DRIVE GP-FAN	568
Y	*267-5695*	1	FAN GP-SUCTION	988
Y	*260-3128*	1	FILTER & LINES GP-FUEL	1140
Y	*232-7378*	1	FILTER GP-ENGINE OIL	861
Y	*235-0322*	1	FLYWHEEL GP	593
Y	*232-6661*	1	GLOW PLUG GP	1547
Y	*235-0321*	1	HOUSING GP-FLYWHEEL	612
Y	*232-6179*	1	HOUSING GP-FRONT	626
Y	*232-3713*	1	LIFTING GP-ENGINE	647
Y	*267-5698*	1	MOUNTING GP-ENGINE	662
Y	*233-8150*	1	PAN GP-OIL	701
Y	*232-7442*	1	PISTON & ROD GP	764
Y	*225-4317*	1	PLUG GP-ENGINE	816
Y	*230-7352*	1	PULLEY GP-CRANKSHAFT	831
			S/N: 3341-25630	
Y	*360-7350*	1	PULLEY GP-CRANKSHAFT	835
			S/N: 33425631-UP	
Y	*232-1827*	1	PUMP GP-FUEL INJECTION	1175
Y	*233-9417*	1	PUMP GP-FUEL PRM & PRIM FILTER	1505
Y	*230-7355*	1	PUMP GP-WATER	992
Y	*236-8785*	1	RADIATOR GP	996
Y	*236-8758*	1	SENDER GP-TEMPERATURE	1555
Y	*236-8212*	1	STARTING AID GP (SWITCH)	1557
Y	*234-9666*	1	STARTING MOTOR GP-ELECTRIC	1562
			—OR—	
Y	*323-6678*	1	STARTING MOTOR GP-ELECTRIC	1568
Y	*253-0756*	1	SWITCH GP-PRESSURE	1579
Y	*290-2489*	1	TURBOCHARGER GP	1132
Y	*232-7526*	1	VALVE MECHANISM GP	839
R	**359-0734**	1	CYLINDER BLOCK GP-SHORT	
			AVAILABLE GASKET KIT(S):	
	272-0494	1	KIT-GASKET (BOTTOM)	
	277-5156	1	KIT-GASKET (TOP)	

R - REMANUFACTURED PART MAY BE AVAILABLE
Y - SEPARATE ILLUSTRATION

<END>

306-1689 ENGINE AR-PRIMARY

95 BRAKE KW (127 BHP) AT 2200 RPM

SMCS-1000 **i04401656**

NOTE	PART NUMBER	QTY	PART NAME 1 2 3 4 5 6 (PRODUCT LEVEL)	SEE PAGE
Y	*236-8196*	1	ALTERNATOR GP-CHARGING	1527
Y	*234-0617*	1	BALANCER GP	199
Y	*232-7528*	1	CAMSHAFT GP	203
Y	*254-3775*	1	CONNECTION GP-INLET	1042
Y	*231-0033*	1	CONNECTION GP-WATER	868
Y	*235-5230*	1	COOLER GP-FLTR BASE & ENG OIL	890
Y	*230-9196*	1	COVER GP-FRONT HOUSING	231
Y	*236-8190*	1	COVER GP-VALVE MECHANISM	310
Y	*232-7439*	1	CRANKSHAFT GP	451
Y	*232-7606*	1	CYLINDER BLOCK GP	495
Y	*232-7524*	1	CYLINDER HEAD GP	531
Y	*236-8181*	1	DRIVE GP-FAN	568
Y	*267-5695*	1	FAN GP-SUCTION	988
Y	*260-3128*	1	FILTER & LINES GP-FUEL	1140
Y	*232-7378*	1	FILTER GP-ENGINE OIL	861
Y	*235-0322*	1	FLYWHEEL GP	593
Y	*232-6661*	1	GLOW PLUG GP	1547
Y	*235-0321*	1	HOUSING GP-FLYWHEEL	612
Y	*232-6179*	1	HOUSING GP-FRONT	626
Y	*232-3713*	1	LIFTING GP-ENGINE	647
Y	*267-5698*	1	MOUNTING GP-ENGINE	662
Y	*233-8150*	1	PAN GP-OIL	701
Y	*232-7442*	1	PISTON & ROD GP	764
Y	*225-4317*	1	PLUG GP-ENGINE	816
Y	*230-7352*	1	PULLEY GP-CRANKSHAFT	831
			S/N: 3341-25630	
Y	*360-7350*	1	PULLEY GP-CRANKSHAFT	835
			S/N: 33425631-UP	
Y	*232-1827*	1	PUMP GP-FUEL INJECTION	1175
Y	*233-9417*	1	PUMP GP-FUEL PRM & PRIM FILTER	1505
Y	*230-7355*	1	PUMP GP-WATER	992
Y	*236-8785*	1	RADIATOR GP	996
Y	*236-8758*	1	SENDER GP-TEMPERATURE	1555
Y	*236-8212*	1	STARTING AID GP (SWITCH)	1557
Y	*234-9666*	1	STARTING MOTOR GP-ELECTRIC	1562
			—OR—	
Y	*323-6678*	1	STARTING MOTOR GP-ELECTRIC	1568
Y	*253-0756*	1	SWITCH GP-PRESSURE	1579
Y	*290-2489*	1	TURBOCHARGER GP	1132
Y	*232-7526*	1	VALVE MECHANISM GP	839
R	**359-0734**	1	CYLINDER BLOCK GP-SHORT	
			AVAILABLE GASKET KIT(S):	
	272-0494	1	KIT-GASKET (BOTTOM)	
	277-5156	1	KIT-GASKET (TOP)	

R - REMANUFACTURED PART MAY BE AVAILABLE
Y - SEPARATE ILLUSTRATION

<END>

306-1690 ENGINE AR-PRIMARY

95 BRAKE KW (127 BHP) AT 2200 RPM

SMCS-1000 **i04401655**

NOTE	PART NUMBER	QTY	PART NAME 1 2 3 4 5 6 (PRODUCT LEVEL)	SEE PAGE
Y	*236-8196*	1	ALTERNATOR GP-CHARGING	1527
Y	*234-0617*	1	BALANCER GP	199
Y	*232-7528*	1	CAMSHAFT GP	203
Y	*254-3775*	1	CONNECTION GP-INLET	1042
Y	*231-0033*	1	CONNECTION GP-WATER	868
Y	*235-5230*	1	COOLER GP-FLTR BASE & ENG OIL	890
Y	*230-9196*	1	COVER GP-FRONT HOUSING	231
Y	*236-8190*	1	COVER GP-VALVE MECHANISM	310
Y	*232-7439*	1	CRANKSHAFT GP	451
Y	*232-7606*	1	CYLINDER BLOCK GP	495
Y	*232-7524*	1	CYLINDER HEAD GP	531
Y	*236-8181*	1	DRIVE GP-FAN	568
Y	*267-5695*	1	FAN GP-SUCTION	988
Y	*260-3128*	1	FILTER & LINES GP-FUEL	1140
Y	*232-7378*	1	FILTER GP-ENGINE OIL	861
Y	*235-0322*	1	FLYWHEEL GP	593
Y	*232-6661*	1	GLOW PLUG GP	1547
Y	*235-0321*	1	HOUSING GP-FLYWHEEL	612
Y	*232-6179*	1	HOUSING GP-FRONT	626
Y	*232-3713*	1	LIFTING GP-ENGINE	647
Y	*267-5698*	1	MOUNTING GP-ENGINE	662
Y	*233-8150*	1	PAN GP-OIL	701
Y	*232-7442*	1	PISTON & ROD GP	764
Y	*225-4317*	1	PLUG GP-ENGINE	816
Y	*230-7352*	1	PULLEY GP-CRANKSHAFT	831
			S/N: 3341-25630	
Y	*360-7350*	1	PULLEY GP-CRANKSHAFT	835
			S/N: 33425631-UP	
Y	*232-1827*	1	PUMP GP-FUEL INJECTION	1175
Y	*233-9417*	1	PUMP GP-FUEL PRM & PRIM FILTER	1505
Y	*230-7355*	1	PUMP GP-WATER	992
Y	*236-8785*	1	RADIATOR GP	996
Y	*236-8758*	1	SENDER GP-TEMPERATURE	1555
Y	*236-8212*	1	STARTING AID GP (SWITCH)	1557
Y	*234-9666*	1	STARTING MOTOR GP-ELECTRIC	1562
			—OR—	
Y	*323-6678*	1	STARTING MOTOR GP-ELECTRIC	1568
Y	*253-0756*	1	SWITCH GP-PRESSURE	1579
Y	*290-2489*	1	TURBOCHARGER GP	1132
Y	*232-7526*	1	VALVE MECHANISM GP	839
R	**359-0734**	1	CYLINDER BLOCK GP-SHORT	
			AVAILABLE GASKET KIT(S):	
	272-0494	1	KIT-GASKET (BOTTOM)	
	277-5156	1	KIT-GASKET (TOP)	

R - REMANUFACTURED PART MAY BE AVAILABLE
Y - SEPARATE ILLUSTRATION

<END>

306-1691 ENGINE AR-PRIMARY

95 BRAKE KW (127 BHP) AT 2200 RPM

SMCS-1000 **i04401654**

NOTE	PART NUMBER	QTY	PART NAME 1 2 3 4 5 6 (PRODUCT LEVEL)	SEE PAGE
Y	*236-8196*	1	ALTERNATOR GP-CHARGING	1527
Y	*234-0617*	1	BALANCER GP	199
Y	*232-7528*	1	CAMSHAFT GP	203
Y	*254-3775*	1	CONNECTION GP-INLET	1042
Y	*231-0033*	1	CONNECTION GP-WATER	868
Y	*235-5230*	1	COOLER GP-FLTR BASE & ENG OIL	890
Y	*230-9196*	1	COVER GP-FRONT HOUSING	231
Y	*236-8190*	1	COVER GP-VALVE MECHANISM	310
Y	*232-7439*	1	CRANKSHAFT GP	451
Y	*232-7606*	1	CYLINDER BLOCK GP	495
Y	*232-7524*	1	CYLINDER HEAD GP	531
Y	*236-8181*	1	DRIVE GP-FAN	568
Y	*267-5695*	1	FAN GP-SUCTION	988
Y	*260-3128*	1	FILTER & LINES GP-FUEL	1140
Y	*232-7378*	1	FILTER GP-ENGINE OIL	861
Y	*235-0322*	1	FLYWHEEL GP	593
Y	*232-6661*	1	GLOW PLUG GP	1547
Y	*235-0321*	1	HOUSING GP-FLYWHEEL	612
Y	*232-6179*	1	HOUSING GP-FRONT	626
Y	*232-3713*	1	LIFTING GP-ENGINE	647
Y	*267-5698*	1	MOUNTING GP-ENGINE	662
Y	*233-8150*	1	PAN GP-OIL (ENGINE)	701
Y	*232-7442*	1	PISTON & ROD GP	764
Y	*225-4317*	1	PLUG GP-ENGINE	816
Y	*230-7352*	1	PULLEY GP-CRANKSHAFT	831
			S/N: 3341-25630	
Y	*360-7350*	1	PULLEY GP-CRANKSHAFT	835
			S/N: 33425631-UP	
Y	*232-1827*	1	PUMP GP-FUEL INJECTION	1175
Y	*233-9417*	1	PUMP GP-FUEL PRM & PRIM FILTER	1505
Y	*230-7355*	1	PUMP GP-WATER	992
Y	*236-8785*	1	RADIATOR GP	996
Y	*236-8758*	1	SENDER GP-TEMPERATURE (ENGINE COOLANT)	1555
Y	*236-8212*	1	STARTING AID GP (SWITCH)	1557
Y	*234-9666*	1	STARTING MOTOR GP-ELECTRIC	1562
			—OR—	
Y	*323-6678*	1	STARTING MOTOR GP-ELECTRIC	1568
Y	*253-0756*	1	SWITCH GP-PRESSURE (ENGINE OIL)	1579
Y	*290-2489*	1	TURBOCHARGER GP	1132
Y	*232-7526*	1	VALVE MECHANISM GP	839
R	**359-0734**	1	CYLINDER BLOCK GP-SHORT	
			AVAILABLE GASKET KIT(S):	
	272-0494	1	KIT-GASKET (BOTTOM)	
	277-5156	1	KIT-GASKET (TOP)	

R - REMANUFACTURED PART MAY BE AVAILABLE
Y - SEPARATE ILLUSTRATION

<END>

306-1692 ENGINE AR-PRIMARY

95 BRAKE KW (127 BHP) AT 2200 RPM

SMCS-1000 **i04401670**

NOTE	PART NUMBER	QTY	PART NAME 1 2 3 4 5 6 (PRODUCT LEVEL)	SEE PAGE
Y	*236-8196*	1	ALTERNATOR GP-CHARGING	1527
Y	*234-0617*	1	BALANCER GP	199
Y	*232-7528*	1	CAMSHAFT GP	203
Y	*254-3775*	1	CONNECTION GP-INLET	1042
Y	*231-0033*	1	CONNECTION GP-WATER	868
Y	*235-5230*	1	COOLER GP-FLTR BASE & ENG OIL	890
Y	*230-9196*	1	COVER GP-FRONT HOUSING	231
Y	*236-8190*	1	COVER GP-VALVE MECHANISM	310
Y	*232-7439*	1	CRANKSHAFT GP	451
Y	*232-7606*	1	CYLINDER BLOCK GP	495
Y	*232-7524*	1	CYLINDER HEAD GP	531
Y	*236-8181*	1	DRIVE GP-FAN	568
Y	*267-5695*	1	FAN GP-SUCTION	988
Y	*260-3128*	1	FILTER & LINES GP-FUEL	1140
Y	*232-7378*	1	FILTER GP-ENGINE OIL	861
Y	*235-0322*	1	FLYWHEEL GP	593
Y	*232-6661*	1	GLOW PLUG GP	1547
Y	*235-0321*	1	HOUSING GP-FLYWHEEL	612
Y	*232-6179*	1	HOUSING GP-FRONT	626
Y	*232-3713*	1	LIFTING GP-ENGINE	647
Y	*267-5698*	1	MOUNTING GP-ENGINE	662
Y	*233-8150*	1	PAN GP-OIL (ENGINE)	701
Y	*232-7442*	1	PISTON & ROD GP	764
Y	*225-4317*	1	PLUG GP-ENGINE	816
Y	*230-7352*	1	PULLEY GP-CRANKSHAFT	831
			S/N: 3341-25630	
Y	*360-7350*	1	PULLEY GP-CRANKSHAFT	835
			S/N: 33425631-UP	
Y	*232-1827*	1	PUMP GP-FUEL INJECTION	1175
Y	*233-9417*	1	PUMP GP-FUEL PRM & PRIM FILTER	1505
Y	*230-7355*	1	PUMP GP-WATER	992
Y	*236-8785*	1	RADIATOR GP	996
Y	*236-8758*	1	SENDER GP-TEMPERATURE (ENGINE COOLANT)	1555
Y	*236-8212*	1	STARTING AID GP (SWITCH)	1557
Y	*234-9666*	1	STARTING MOTOR GP-ELECTRIC	1562
			—OR—	
Y	*323-6678*	1	STARTING MOTOR GP-ELECTRIC	1568
Y	*253-0756*	1	SWITCH GP-PRESSURE (ENGINE OIL)	1579
Y	*290-2489*	1	TURBOCHARGER GP	1132
Y	*232-7526*	1	VALVE MECHANISM GP	839
R	**359-0734**	1	CYLINDER BLOCK GP-SHORT	
			AVAILABLE GASKET KIT(S):	
	272-0494	1	KIT-GASKET (BOTTOM)	
	277-5156	1	KIT-GASKET (TOP)	

R - REMANUFACTURED PART MAY BE AVAILABLE
Y - SEPARATE ILLUSTRATION

<END>

306-1697 ENGINE AR-PRIMARY

95 BRAKE KW (127 BHP) AT 2200 RPM

SMCS-1000 **i04401675**

NOTE	PART NUMBER	QTY	PART NAME 1 2 3 4 5 6 (PRODUCT LEVEL)	SEE PAGE
Y	*236-8196*	1	ALTERNATOR GP-CHARGING	1527
Y	*234-0617*	1	BALANCER GP	199
Y	*232-7528*	1	CAMSHAFT GP	203
Y	*254-3775*	1	CONNECTION GP-INLET	1042
Y	*231-0033*	1	CONNECTION GP-WATER	868
Y	*235-5230*	1	COOLER GP-FLTR BASE & ENG OIL	890
Y	*230-9196*	1	COVER GP-FRONT HOUSING	231
Y	*236-8190*	1	COVER GP-VALVE MECHANISM	310
Y	*232-7439*	1	CRANKSHAFT GP	451
Y	*232-7606*	1	CYLINDER BLOCK GP	495
Y	*232-7524*	1	CYLINDER HEAD GP	531
Y	*236-8181*	1	DRIVE GP-FAN	568
Y	*267-5695*	1	FAN GP-SUCTION	988
Y	*260-3128*	1	FILTER & LINES GP-FUEL	1140
Y	*232-7378*	1	FILTER GP-ENGINE OIL	861
Y	*235-0322*	1	FLYWHEEL GP	593
Y	*232-6661*	1	GLOW PLUG GP	1547
Y	*235-0321*	1	HOUSING GP-FLYWHEEL	612
Y	*232-6179*	1	HOUSING GP-FRONT	626
Y	*232-3713*	1	LIFTING GP-ENGINE	647
Y	*267-5698*	1	MOUNTING GP-ENGINE	662
Y	*233-8150*	1	PAN GP-OIL (ENGINE)	701
Y	*232-7442*	1	PISTON & ROD GP	764
Y	*225-4317*	1	PLUG GP-ENGINE	816
Y	*230-7352*	1	PULLEY GP-CRANKSHAFT	831
			S/N: 3341-25630	
Y	*360-7350*	1	PULLEY GP-CRANKSHAFT	835
			S/N: 33425631-UP	
Y	*232-1827*	1	PUMP GP-FUEL INJECTION	1175
Y	*233-9417*	1	PUMP GP-FUEL PRM & PRIM FILTER	1505
Y	*230-7355*	1	PUMP GP-WATER	992
Y	*236-8785*	1	RADIATOR GP	996
Y	*236-8758*	1	SENDER GP-TEMPERATURE (ENGINE COOLANT)	1555
Y	*236-8212*	1	STARTING AID GP (SWITCH)	1557
Y	*234-9666*	1	STARTING MOTOR GP-ELECTRIC	1562
			—OR—	
Y	*323-6678*	1	STARTING MOTOR GP-ELECTRIC	1568
Y	*253-0756*	1	SWITCH GP-PRESSURE (ENGINE OIL)	1579
Y	*290-2489*	1	TURBOCHARGER GP	1132
Y	*232-7526*	1	VALVE MECHANISM GP	839
R	**359-0734**	1	CYLINDER BLOCK GP-SHORT	
			AVAILABLE GASKET KIT(S):	
	272-0494	1	KIT-GASKET (BOTTOM)	
	277-5156	1	KIT-GASKET (TOP)	

R - REMANUFACTURED PART MAY BE AVAILABLE
Y - SEPARATE ILLUSTRATION

<END>

306-1698 ENGINE AR-PRIMARY

95 BRAKE KW (127 BHP) AT 2200 RPM

SMCS-1000 **i04401692**

NOTE	PART NUMBER	QTY	PART NAME 1 2 3 4 5 6 (PRODUCT LEVEL)	SEE PAGE
Y	*236-8196*	1	ALTERNATOR GP-CHARGING	1527
Y	*234-0617*	1	BALANCER GP	199
Y	*232-7528*	1	CAMSHAFT GP	203
Y	*254-3775*	1	CONNECTION GP-INLET	1042
Y	*231-0033*	1	CONNECTION GP-WATER	868
Y	*235-5230*	1	COOLER GP-FLTR BASE & ENG OIL	890
Y	*230-9196*	1	COVER GP-FRONT HOUSING	231
Y	*236-8190*	1	COVER GP-VALVE MECHANISM	310
Y	*232-7439*	1	CRANKSHAFT GP	451
Y	*232-7606*	1	CYLINDER BLOCK GP	495
Y	*232-7524*	1	CYLINDER HEAD GP	531
Y	*236-8181*	1	DRIVE GP-FAN	568
Y	*267-5695*	1	FAN GP-SUCTION	988
Y	*260-3128*	1	FILTER & LINES GP-FUEL	1140
Y	*232-7378*	1	FILTER GP-ENGINE OIL	861
Y	*235-0322*	1	FLYWHEEL GP	593
Y	*232-6661*	1	GLOW PLUG GP	1547
Y	*235-0321*	1	HOUSING GP-FLYWHEEL	612
Y	*232-6179*	1	HOUSING GP-FRONT	626
Y	*232-3713*	1	LIFTING GP-ENGINE	647
Y	*267-5698*	1	MOUNTING GP-ENGINE	662
Y	*233-8150*	1	PAN GP-OIL (ENGINE)	701
Y	*232-7442*	1	PISTON & ROD GP	764
Y	*225-4317*	1	PLUG GP-ENGINE	816
Y	*230-7352*	1	PULLEY GP-CRANKSHAFT	831
			S/N: 3341-25630	
Y	*360-7350*	1	PULLEY GP-CRANKSHAFT	835
			S/N: 33425631-UP	
Y	*232-1827*	1	PUMP GP-FUEL INJECTION	1175
Y	*233-9417*	1	PUMP GP-FUEL PRM & PRIM FILTER	1505
Y	*230-7355*	1	PUMP GP-WATER	992
Y	*236-8785*	1	RADIATOR GP	996
Y	*236-8758*	1	SENDER GP-TEMPERATURE (ENGINE COOLANT)	1555
Y	*236-8212*	1	STARTING AID GP (SWITCH)	1557
Y	*234-9666*	1	STARTING MOTOR GP-ELECTRIC	1562
			—OR—	
Y	*323-6678*	1	STARTING MOTOR GP-ELECTRIC	1568
Y	*253-0756*	1	SWITCH GP-PRESSURE (ENGINE OIL)	1579
Y	*290-2489*	1	TURBOCHARGER GP	1132
Y	*232-7526*	1	VALVE MECHANISM GP	839
R	**359-0734**	1	CYLINDER BLOCK GP-SHORT	
			AVAILABLE GASKET KIT(S):	
	272-0494	1	KIT-GASKET (BOTTOM)	
	277-5156	1	KIT-GASKET (TOP)	

R - REMANUFACTURED PART MAY BE AVAILABLE
Y - SEPARATE ILLUSTRATION

<END>

306-1700 ENGINE AR-PRIMARY

95 BRAKE KW (127 BHP) AT 2200 RPM

SMCS-1000 **i04401691**

NOTE	PART NUMBER	QTY	PART NAME 1 2 3 4 5 6 (PRODUCT LEVEL)	SEE PAGE
Y	*236-8196*	1	ALTERNATOR GP-CHARGING	1527
Y	*234-0617*	1	BALANCER GP	199
Y	*232-7528*	1	CAMSHAFT GP	203
Y	*254-3775*	1	CONNECTION GP-INLET	1042
Y	*231-0033*	1	CONNECTION GP-WATER	868
Y	*235-5230*	1	COOLER GP-FLTR BASE & ENG OIL	890
Y	*230-9196*	1	COVER GP-FRONT HOUSING	231
Y	*236-8190*	1	COVER GP-VALVE MECHANISM	310
Y	*232-7439*	1	CRANKSHAFT GP	451
Y	*232-7606*	1	CYLINDER BLOCK GP	495
Y	*232-7524*	1	CYLINDER HEAD GP	531
Y	*236-8181*	1	DRIVE GP-FAN	568
Y	*267-5695*	1	FAN GP-SUCTION	988
Y	*260-3128*	1	FILTER & LINES GP-FUEL	1140
Y	*232-7378*	1	FILTER GP-ENGINE OIL	861
Y	*235-0322*	1	FLYWHEEL GP	593
Y	*232-6661*	1	GLOW PLUG GP	1547
Y	*235-0321*	1	HOUSING GP-FLYWHEEL	612
Y	*232-6179*	1	HOUSING GP-FRONT	626
Y	*232-3713*	1	LIFTING GP-ENGINE	647
Y	*267-5698*	1	MOUNTING GP-ENGINE	662
Y	*233-8150*	1	PAN GP-OIL (ENGINE)	701
Y	*232-7442*	1	PISTON & ROD GP	764
Y	*225-4317*	1	PLUG GP-ENGINE	816
Y	*230-7352*	1	PULLEY GP-CRANKSHAFT	831
			S/N: 3341-25630	
Y	*360-7350*	1	PULLEY GP-CRANKSHAFT	835
			S/N: 33425631-UP	
Y	*232-1827*	1	PUMP GP-FUEL INJECTION	1175
Y	*233-9417*	1	PUMP GP-FUEL PRM & PRIM FILTER	1505
Y	*230-7355*	1	PUMP GP-WATER	992
Y	*236-8785*	1	RADIATOR GP	996
Y	*236-8758*	1	SENDER GP-TEMPERATURE (ENGINE COOLANT)	1555
Y	*236-8212*	1	STARTING AID GP (SWITCH)	1557
Y	*234-9666*	1	STARTING MOTOR GP-ELECTRIC	1562
			—OR—	
Y	*323-6678*	1	STARTING MOTOR GP-ELECTRIC	1568
Y	*253-0756*	1	SWITCH GP-PRESSURE (ENGINE OIL)	1579
Y	*290-2489*	1	TURBOCHARGER GP	1132
Y	*232-7526*	1	VALVE MECHANISM GP	839
R	**359-0734**	1	CYLINDER BLOCK GP-SHORT	
			AVAILABLE GASKET KIT(S):	
	272-0494	1	KIT-GASKET (BOTTOM)	
	277-5156	1	KIT-GASKET (TOP)	

R - REMANUFACTURED PART MAY BE AVAILABLE
Y - SEPARATE ILLUSTRATION

<END>

306-1701 ENGINE AR-PRIMARY

95 BRAKE KW (127 BHP) AT 2200 RPM

SMCS-1000 **i04401690**

NOTE	PART NUMBER	QTY	PART NAME 1 2 3 4 5 6 (PRODUCT LEVEL)	SEE PAGE
Y	*236-8196*	1	ALTERNATOR GP-CHARGING	1527
Y	*234-0617*	1	BALANCER GP	199
Y	*232-7528*	1	CAMSHAFT GP	203
Y	*254-3775*	1	CONNECTION GP-INLET	1042
Y	*231-0033*	1	CONNECTION GP-WATER	868
Y	*235-5230*	1	COOLER GP-FLTR BASE & ENG OIL	890
Y	*230-9196*	1	COVER GP-FRONT HOUSING	231
Y	*236-8190*	1	COVER GP-VALVE MECHANISM	310
Y	*232-7439*	1	CRANKSHAFT GP	451
Y	*232-7606*	1	CYLINDER BLOCK GP	495
Y	*232-7524*	1	CYLINDER HEAD GP	531
Y	*236-8181*	1	DRIVE GP-FAN	568
Y	*267-5695*	1	FAN GP-SUCTION	988
Y	*260-3128*	1	FILTER & LINES GP-FUEL	1140
Y	*232-7378*	1	FILTER GP-ENGINE OIL	861
Y	*235-0322*	1	FLYWHEEL GP	593
Y	*232-6661*	1	GLOW PLUG GP	1547
Y	*235-0321*	1	HOUSING GP-FLYWHEEL	612
Y	*232-6179*	1	HOUSING GP-FRONT	626
Y	*232-3713*	1	LIFTING GP-ENGINE	647
Y	*267-5698*	1	MOUNTING GP-ENGINE	662
Y	*233-8150*	1	PAN GP-OIL (ENGINE)	701
Y	*232-7442*	1	PISTON & ROD GP	764
Y	*225-4317*	1	PLUG GP-ENGINE	816
Y	*230-7352*	1	PULLEY GP-CRANKSHAFT	831
			S/N: 3341-25630	
Y	*360-7350*	1	PULLEY GP-CRANKSHAFT	835
			S/N: 33425631-UP	
Y	*232-1827*	1	PUMP GP-FUEL INJECTION	1175
Y	*233-9417*	1	PUMP GP-FUEL PRM & PRIM FILTER	1505
Y	*230-7355*	1	PUMP GP-WATER	992
Y	*236-8785*	1	RADIATOR GP	996
Y	*236-8758*	1	SENDER GP-TEMPERATURE (ENGINE COOLANT)	1555
Y	*236-8212*	1	STARTING AID GP (SWITCH)	1557
Y	*234-9666*	1	STARTING MOTOR GP-ELECTRIC	1562
			—OR—	
Y	*323-6678*	1	STARTING MOTOR GP-ELECTRIC	1568
Y	*253-0756*	1	SWITCH GP-PRESSURE (ENGINE OIL)	1579
Y	*290-2489*	1	TURBOCHARGER GP	1132
Y	*232-7526*	1	VALVE MECHANISM GP	839
R	**359-0734**	1	CYLINDER BLOCK GP-SHORT	
			AVAILABLE GASKET KIT(S):	
	272-0494	1	KIT-GASKET (BOTTOM)	
	277-5156	1	KIT-GASKET (TOP)	

R - REMANUFACTURED PART MAY BE AVAILABLE
Y - SEPARATE ILLUSTRATION

<END>

307-0436 ENGINE AR-PRIMARY

62 BRAKE KW (83 BHP) AT 2400 RPM

SMCS-1000 **i02847266**

NOTE	PART NUMBER	QTY	PART NAME 1 2 3 4 5 6 (PRODUCT LEVEL)	SEE PAGE
			NO SERVICED PARTS AT THIS TIME	

<END>

307-2279 ENGINE AR-PRIMARY

95 BRAKE KW (127 BHP) AT 2200 RPM

SMCS-1000 **i04402322**

NOTE	PART NUMBER	QTY	PART NAME 1 2 3 4 5 6 (PRODUCT LEVEL)	SEE PAGE
Y	*236-8196*	1	ALTERNATOR GP-CHARGING	1527
Y	*234-0617*	1	BALANCER GP	199
Y	*232-7528*	1	CAMSHAFT GP	203
Y	*254-3775*	1	CONNECTION GP-INLET	1042
Y	*231-0033*	1	CONNECTION GP-WATER	868
Y	*235-5230*	1	COOLER GP-FLTR BASE & ENG OIL	890
Y	*230-9196*	1	COVER GP-FRONT HOUSING	231
Y	*236-8190*	1	COVER GP-VALVE MECHANISM	310
Y	*232-7439*	1	CRANKSHAFT GP	451
Y	*232-7606*	1	CYLINDER BLOCK GP	495
Y	*232-7524*	1	CYLINDER HEAD GP	531
Y	*236-8181*	1	DRIVE GP-FAN	568
Y	*267-5695*	1	FAN GP-SUCTION	988
Y	*260-3128*	1	FILTER & LINES GP-FUEL	1140
Y	*232-7378*	1	FILTER GP-ENGINE OIL	861
Y	*235-0322*	1	FLYWHEEL GP	593
Y	*232-6661*	1	GLOW PLUG GP	1547
Y	*235-0321*	1	HOUSING GP-FLYWHEEL	612
Y	*232-6179*	1	HOUSING GP-FRONT	626
Y	*232-3713*	1	LIFTING GP-ENGINE	647
Y	*267-5698*	1	MOUNTING GP-ENGINE	662
Y	*233-8150*	1	PAN GP-OIL (ENGINE)	701
Y	*232-7442*	1	PISTON & ROD GP	764
Y	*225-4317*	1	PLUG GP-ENGINE	816
Y	*230-7352*	1	PULLEY GP-CRANKSHAFT	831
			S/N: 3341-25630	
Y	*360-7350*	1	PULLEY GP-CRANKSHAFT	835
			S/N: 33425631-UP	
Y	*232-1827*	1	PUMP GP-FUEL INJECTION	1175
Y	*233-9417*	1	PUMP GP-FUEL PRM & PRIM FILTER	1505
Y	*230-7355*	1	PUMP GP-WATER	992
Y	*236-8785*	1	RADIATOR GP	996
Y	*236-8758*	1	SENDER GP-TEMPERATURE (ENGINE COOLANT)	1555
Y	*236-8212*	1	STARTING AID GP (SWITCH)	1557
Y	*234-9666*	1	STARTING MOTOR GP-ELECTRIC	1562
			—OR—	
Y	*323-6678*	1	STARTING MOTOR GP-ELECTRIC	1568
Y	*253-0756*	1	SWITCH GP-PRESSURE (ENGINE OIL)	1579
Y	*290-2489*	1	TURBOCHARGER GP	1132
Y	*232-7526*	1	VALVE MECHANISM GP	839
R	**359-0734**	1	CYLINDER BLOCK GP-SHORT	
			AVAILABLE GASKET KIT(S):	
	272-0494	1	KIT-GASKET (BOTTOM)	
	277-5156	1	KIT-GASKET (TOP)	

R - REMANUFACTURED PART MAY BE AVAILABLE
Y - SEPARATE ILLUSTRATION

<END>

307-2280 ENGINE AR-PRIMARY*R

97 BRAKE KW (130 BHP) AT 2200 RPM

SMCS-1000 **i04402321**

NOTE	PART NUMBER	QTY	PART NAME 1 2 3 4 5 6 (PRODUCT LEVEL)	SEE PAGE
Y	*235-0028*	1	ALTERNATOR GP-CHARGING	1526
Y	*232-7528*	1	CAMSHAFT GP	203
Y	*231-0033*	1	CONNECTION GP-WATER	868
Y	*238-2799*	1	COOLER GP-FLTR BASE & ENG OIL	901
Y	*238-2777*	1	COVER GP-VALVE MECHANISM	334
Y	*232-7439*	1	CRANKSHAFT GP	451
Y	*232-7606*	1	CYLINDER BLOCK GP	495
Y	*232-7524*	1	CYLINDER HEAD GP	531
Y	*234-9680*	1	DRIVE GP-FAN	566
Y	*269-8077*	1	ELBOW GP-AIR INLET	1062
Y	*260-3128*	1	FILTER & LINES GP-FUEL	1140
Y	*232-7378*	1	FILTER GP-ENGINE OIL	861
Y	*243-3398*	1	FLYWHEEL GP	596
Y	*232-6661*	1	GLOW PLUG GP	1547
Y	*243-2454*	1	HOUSING GP-FLYWHEEL	616
Y	*232-3670*	1	HOUSING GP-FRONT	622
Y	*232-3713*	1	LIFTING GP-ENGINE	647
Y	*234-9738*	1	MOUNTING GP-FAN	991
Y	*243-2455*	1	PAN GP-OIL (ENGINE)	715
Y	*232-7442*	1	PISTON & ROD GP	764
Y	*225-4317*	1	PLUG GP-ENGINE	816
Y	*230-7569*	1	PLUG GP-ENGINE	819
Y	*232-6204*	1	PLUG GP-ENGINE	821
Y	*243-2416*	1	PLUG GP-ENGINE	826
Y	*230-7353*	1	PULLEY GP-CRANKSHAFT	832
			S/N: 3341-25630	
Y	*360-7351*	1	PULLEY GP-CRANKSHAFT	836
			S/N: 33425631-UP	
Y	*233-9405*	1	PUMP GP-FUEL INJECTION	1204
Y	*233-9417*	1	PUMP GP-FUEL PRM & PRIM FILTER	1505
Y	*230-7355*	1	PUMP GP-WATER	992
Y	*236-8212*	1	STARTING AID GP (SWITCH) (IGNITION)	1557
Y	*234-9666*	1	STARTING MOTOR GP-ELECTRIC	1562
			—OR—	
Y	*323-6678*	1	STARTING MOTOR GP-ELECTRIC	1568
Y	*253-0756*	1	SWITCH GP-PRESSURE (ENGINE OIL)	1579
Y	*233-9780*	1	TURBOCHARGER GP	1079
Y	*232-7526*	1	VALVE MECHANISM GP	839
R	**359-0734**	1	CYLINDER BLOCK GP-SHORT	
			AVAILABLE GASKET KIT(S):	
	272-2232	1	KIT-GASKET (BOTTOM)	
	277-5156	1	KIT-GASKET (TOP)	

R - REMANUFACTURED PART MAY BE AVAILABLE
Y - SEPARATE ILLUSTRATION

<END>

308-2863 ENGINE AR-PRIMARY

92 BARKE KW (123 BHP) AT 2400 RPM

SMCS-1000 **i04402326**

NOTE	PART NUMBER	QTY	PART NAME 1 2 3 4 5 6 (PRODUCT LEVEL)	SEE PAGE
Y	*234-0617*	1	BALANCER GP	199
Y	*232-7528*	1	CAMSHAFT GP	203
Y	*254-3775*	1	CONNECTION GP-INLET	1042
Y	*231-0033*	1	CONNECTION GP-WATER	868
Y	*235-5230*	1	COOLER GP-FLTR BASE & ENG OIL	890
Y	*230-9196*	1	COVER GP-FRONT HOUSING	231
Y	*230-9149*	1	COVER GP-VALVE MECHANISM	247
Y	*232-7439*	1	CRANKSHAFT GP	451
Y	*232-7606*	1	CYLINDER BLOCK GP	495
Y	*232-7524*	1	CYLINDER HEAD GP	531
Y	*230-8083*	1	DRIVE GP-FAN	564
Y	*232-7378*	1	FILTER GP-ENGINE OIL	861
Y	*232-6661*	1	GLOW PLUG GP	1547
Y	*232-6179*	1	HOUSING GP-FRONT	626
Y	*232-3713*	1	LIFTING GP-ENGINE	647
Y	*233-8150*	1	PAN GP-OIL	701
Y	*232-7442*	1	PISTON & ROD GP	764
Y	*225-4317*	1	PLUG GP-ENGINE	816
Y	*232-6204*	1	PLUG GP-ENGINE	821
Y	*233-9426*	1	PLUG GP-ENGINE	823
Y	*230-7352*	1	PULLEY GP-CRANKSHAFT	831
			S/N: 3341-25630	
Y	*360-7350*	1	PULLEY GP-CRANKSHAFT	835
			S/N: 33425631-UP	
Y	*232-1827*	1	PUMP GP-FUEL INJECTION	1175
Y	*233-9417*	1	PUMP GP-FUEL PRM & PRIM FILTER	1505
Y	*230-7355*	1	PUMP GP-WATER	992
Y	*253-0756*	1	SWITCH GP-PRESSURE	1579
Y	*233-9539*	1	TURBOCHARGER GP	1077
Y	*232-7526*	1	VALVE MECHANISM GP	839
R	**359-0734**	1	CYLINDER BLOCK GP-SHORT	
			AVAILABLE GASKET KIT(S):	
	272-0494	1	KIT-GASKET (BOTTOM)	
			(INCLUDES GASKETS & SEALS)	
	277-5156	1	KIT-GASKET (TOP)	
			(INCLUDES WASHER, SEAL, GASKETS, & VALVE SEAL KIT)	

R - REMANUFACTURED PART MAY BE AVAILABLE
Y - SEPARATE ILLUSTRATION

<END>

308-5594 ENGINE AR-PRIMARY

97 BRAKE KW (130 BHP) AT 2200 RPM

SMCS-1000 **i04348912**

NOTE	PART NUMBER	QTY	PART NAME 1 2 3 4 5 6 (PRODUCT LEVEL)	SEE PAGE
Y	*258-7556*	1	AIR COMPRESSOR GP	196
Y	*236-9965*	1	ALTERNATOR GP-CHARGING	1528
Y	*234-0617*	1	BALANCER GP	199
Y	*316-8482*	1	CAMSHAFT GP	214
Y	*254-3775*	1	CONNECTION GP-INLET	1042
Y	*231-0033*	1	CONNECTION GP-WATER	868
Y	*273-3806*	1	CONTROL GP-JACKET WATER HEATER	1541
Y	*298-7692*	1	CONVERTER GP-ELECTRICAL	1545
Y	*235-5230*	1	COOLER GP-FLTR BASE & ENG OIL	890
Y	*236-8190*	1	COVER GP-VALVE MECHANISM	310
Y	*316-8479*	1	CRANKSHAFT GP	475
Y	*316-8478*	1	CYLINDER BLOCK GP	516
Y	*316-8481*	1	CYLINDER HEAD GP	542
Y	*236-8181*	1	DRIVE GP-FAN	568
Y	*316-8485*	1	FAN GP	978
Y	*260-3128*	1	FILTER & LINES GP-FUEL	1140
Y	*232-7378*	1	FILTER GP-ENGINE OIL	861
Y	*243-3398*	1	FLYWHEEL GP	596
Y	*233-9834*	1	GLOW PLUG GP	1549
Y	*260-3214*	1	HOUSING GP-FLYWHEEL	617
Y	*232-6179*	1	HOUSING GP-FRONT	626
Y	*232-3713*	1	LIFTING GP-ENGINE	647
Y	*260-3152*	1	MOUNTING GP-ENGINE	660
Y	*233-8150*	1	PAN GP-OIL	701
			S/N: 3341-23357	
Y	*198-5823*	1	PAN GP-OIL	679
			S/N: 33423358-UP	
Y	*316-8480*	1	PISTON & ROD GP	802
Y	*232-6204*	1	PLUG GP-ENGINE	821
Y	*253-2479*	1	PLUG GP-ENGINE	827
Y	*230-7352*	1	PULLEY GP-CRANKSHAFT	831
			S/N: 3341-25630	
Y	*360-7350*	1	PULLEY GP-CRANKSHAFT	835
			S/N: 33425631-UP	
Y	*233-9526*	1	PUMP GP-FUEL INJECTION	1216
Y	*233-9417*	1	PUMP GP-FUEL PRM & PRIM FILTER	1505
Y	*230-7355*	1	PUMP GP-WATER	992
Y	*270-8267*	1	RADIATOR GP	1016
			S/N: 3341-23357	
Y	*236-8785*	1	RADIATOR GP	996
			S/N: 33423358-UP	
Y	*230-7304*	1	STARTING MOTOR GP-ELECTRIC	1561
Y	*290-2489*	1	TURBOCHARGER GP	1132
Y	*316-8483*	1	VALVE MECHANISM GP	855
R	**359-0734**	1	CYLINDER BLOCK GP-SHORT	
			AVAILABLE GASKET KIT(S):	
	272-0494	1	KIT-GASKET (BOTTOM)	
	277-5156	1	KIT-GASKET (TOP)	

308-5594 **ENGINE AR-PRIMARY (**contd.**)** **i04348912**

NOTE	PART NUMBER	QTY	PART NAME 1 2 3 4 5 6 (PRODUCT LEVEL)	SEE PAGE

R - REMANUFACTURED PART MAY BE AVAILABLE
Y - SEPARATE ILLUSTRATION

<END>

308-5600 ENGINE AR-PRIMARY*R

97 BRAKE KW (130 BHP) AT 2200 RPM

SMCS-1000 **i04347715**

NOTE	PART NUMBER	QTY	PART NAME 1 2 3 4 5 6 (PRODUCT LEVEL)	SEE PAGE
Y	*243-4301*	1	ALTERNATOR GP-CHARGING	1531
Y	*316-8482*	1	CAMSHAFT GP	214
Y	*254-3775*	1	CONNECTION GP-INLET	1042
Y	*231-0033*	1	CONNECTION GP-WATER	868
Y	*238-2799*	1	COOLER GP-FLTR BASE & ENG OIL	901
Y	*288-1532*	1	COVER GP-VALVE MECHANISM	402
Y	*316-8479*	1	CRANKSHAFT GP	475
Y	*316-8478*	1	CYLINDER BLOCK GP	516
Y	*316-8481*	1	CYLINDER HEAD GP	542
Y	*280-7187*	1	DRIVE GP-FAN	582
Y	*236-9963*	1	FAN GP-BLOWER	979
Y	*232-7378*	1	FILTER GP-ENGINE OIL	861
Y	*316-9045*	1	FLYWHEEL GP	607
Y	*232-6661*	1	GLOW PLUG GP	1547
Y	*235-2380*	1	HOUSING GP-FLYWHEEL	613
Y	*232-3670*	1	HOUSING GP-FRONT	622
Y	*232-3713*	1	LIFTING GP-ENGINE	647
Y	*243-2455*	1	PAN GP-OIL (ENGINE)	715
Y	*316-8480*	1	PISTON & ROD GP	802
Y	*225-4317*	1	PLUG GP-ENGINE (FRONT HOUSING, CYLINDER HEAD)	816
Y	*230-7569*	1	PLUG GP-ENGINE (OIL FILL)	819
Y	*232-6204*	1	PLUG GP-ENGINE (CYLINDER HEAD)	821
Y	*233-9426*	1	PLUG GP-ENGINE	823
Y	*230-7351*	1	PULLEY GP-CRANKSHAFT	830
			S/N: 3341-25630	
Y	*230-7578*	1	PUMP GP-ENGINE OIL	863
Y	*232-1827*	1	PUMP GP-FUEL INJECTION	1175
Y	*233-9417*	1	PUMP GP-FUEL PRM & PRIM FILTER	1505
Y	*230-7355*	1	PUMP GP-WATER	992
Y	*236-8212*	1	STARTING AID GP (SWITCH)	1557
Y	*234-9666*	1	STARTING MOTOR GP-ELECTRIC	1562
			—OR—	
Y	*323-6678*	1	STARTING MOTOR GP-ELECTRIC	1568
Y	*237-4896*	1	SWITCH GP-PRESSURE (ENGINE OIL)	1578
Y	*232-6197*	1	TURBOCHARGER GP	1075
Y	*316-8483*	1	VALVE MECHANISM GP	855
R	**359-0734**	1	CYLINDER BLOCK GP-SHORT	
			AVAILABLE GASKET KIT(S):	
	272-2232	1	KIT-GASKET (BOTTOM)	
	277-5156	1	KIT-GASKET (TOP)	

R - REMANUFACTURED PART MAY BE AVAILABLE
Y - SEPARATE ILLUSTRATION

<END>

308-5602 ENGINE AR-PRIMARY

75 BRAKE KW AT 2200 RPM

SMCS-1000 **i02847274**

NOTE	PART NUMBER	QTY	PART NAME 1 2 3 4 5 6 (PRODUCT LEVEL)	SEE PAGE
			NO SERVICED PARTS AT THIS TIME	

<END>

314-7349 ENGINE AR-PRIMARY

97 BRAKE KW (130 BHP) AT 2200 RPM

SMCS-1000 **i05395023**

NOTE	PART NUMBER	QTY	PART NAME 1 2 3 4 5 6 (PRODUCT LEVEL)	SEE PAGE
Y	*236-8196*	1	ALTERNATOR GP-CHARGING	1527
Y	*243-3184*	1	CAMSHAFT GP	207
Y	*254-3775*	1	CONNECTION GP-INLET	1042
Y	*231-0033*	1	CONNECTION GP-WATER	868
Y	*265-5299*	1	COOLER GP-FLTR BASE & ENG OIL	932
Y	*270-8904*	1	COVER GP-VALVE MECHANISM	374
Y	*243-3180*	1	CRANKSHAFT GP	461
Y	*243-3179*	1	CYLINDER BLOCK GP	505
Y	*243-3182*	1	CYLINDER HEAD GP	535
Y	*265-5289*	1	DRIVE GP-ACCESSORY	559
Y	*236-8181*	1	DRIVE GP-FAN	568
Y	*267-5695*	1	FAN GP-SUCTION	988
Y	*232-7378*	1	FILTER GP-ENGINE OIL	861
Y	*245-9831*	1	FLYWHEEL GP	598
Y	*232-6661*	1	GLOW PLUG GP	1547
Y	*223-7825*	1	HOUSING GP-FLYWHEEL	608
Y	*243-3272*	1	HOUSING GP-FRONT	636
Y	*232-3713*	1	LIFTING GP-ENGINE	647
Y	*260-3152*	1	MOUNTING GP-ENGINE	660
Y	*251-8284*	1	PAN GP-OIL (ENGINE)	736
Y	*243-3181*	1	PISTON & ROD GP	782
Y	*225-4317*	1	PLUG GP-ENGINE	816
Y	*230-7352*	1	PULLEY GP-CRANKSHAFT	831
			S/N: 3341-25630	
Y	*360-7350*	1	PULLEY GP-CRANKSHAFT	835
			S/N: 33425631-UP	
Y	*230-7578*	1	PUMP GP-ENGINE OIL	863
Y	*232-1827*	1	PUMP GP-FUEL INJECTION	1175
Y	*233-9417*	1	PUMP GP-FUEL PRM & PRIM FILTER	1505
Y	*230-7355*	1	PUMP GP-WATER	992
Y	*236-8785*	1	RADIATOR GP	996
Y	*265-5720*	1	SEPARATOR GP-WATER	1523
Y	*234-9666*	1	STARTING MOTOR GP-ELECTRIC	1562
			—OR—	
Y	*323-6678*	1	STARTING MOTOR GP-ELECTRIC	1568
Y	*253-8966*	1	SWITCH GP-PRESSURE (ENGINE OIL)	1580
Y	*235-8749*	1	SWITCH GP-TEMPERATURE (ENGINE COOLANT)	1582
			S/N: 3341-26100	
Y	*367-0594*	1	SWITCH GP-TEMPERATURE	1583
			S/N: 33426101-UP	
Y	*270-8890*	1	TURBOCHARGER GP	1121
Y	*243-3183*	1	VALVE MECHANISM GP	844
R	**359-0734**	1	CYLINDER BLOCK GP-SHORT	
			AVAILABLE GASKET KIT(S):	
	272-0494	1	KIT-GASKET (BOTTOM)	
	277-5156	1	KIT-GASKET (TOP)	

314-7349 **ENGINE AR-PRIMARY (**contd.**)** **i05395023**

NOTE	PART NUMBER	QTY	PART NAME 1 2 3 4 5 6 (PRODUCT LEVEL)	SEE PAGE

R - REMANUFACTURED PART MAY BE AVAILABLE
Y - SEPARATE ILLUSTRATION

<END>

314-7350 ENGINE AR-PRIMARY

97 BRAKE KW AT 2200 RPM

SMCS-1000 **i05395025**

NOTE	PART NUMBER	QTY	PART NAME 1 2 3 4 5 6 (PRODUCT LEVEL)	SEE PAGE
Y	*236-8196*	1	ALTERNATOR GP-CHARGING	1527
Y	*243-3184*	1	CAMSHAFT GP	207
Y	*254-3775*	1	CONNECTION GP-INLET	1042
Y	*231-0033*	1	CONNECTION GP-WATER	868
Y	*265-5299*	1	COOLER GP-FLTR BASE & ENG OIL	932
Y	*270-8904*	1	COVER GP-VALVE MECHANISM	374
Y	*243-3180*	1	CRANKSHAFT GP	461
Y	*243-3179*	1	CYLINDER BLOCK GP	505
Y	*243-3182*	1	CYLINDER HEAD GP	535
Y	*265-5289*	1	DRIVE GP-ACCESSORY	559
Y	*236-8181*	1	DRIVE GP-FAN	568
Y	*267-5695*	1	FAN GP-SUCTION	988
Y	*232-7378*	1	FILTER GP-ENGINE OIL	861
Y	*245-9831*	1	FLYWHEEL GP	598
Y	*232-6661*	1	GLOW PLUG GP	1547
Y	*223-7825*	1	HOUSING GP-FLYWHEEL	608
Y	*243-3272*	1	HOUSING GP-FRONT	636
Y	*232-3713*	1	LIFTING GP-ENGINE	647
Y	*260-3152*	1	MOUNTING GP-ENGINE	660
Y	*251-8284*	1	PAN GP-OIL	736
Y	*243-3181*	1	PISTON & ROD GP	782
Y	*225-4317*	1	PLUG GP-ENGINE	816
Y	*230-7352*	1	PULLEY GP-CRANKSHAFT	831
			S/N: 3341-2563O	
Y	*360-7350*	1	PULLEY GP-CRANKSHAFT	835
			S/N: 33425631-UP	
Y	*230-7578*	1	PUMP GP-ENGINE OIL	863
Y	*232-1827*	1	PUMP GP-FUEL INJECTION	1175
Y	*233-9417*	1	PUMP GP-FUEL PRM & PRIM FILTER	1505
Y	*230-7355*	1	PUMP GP-WATER	992
Y	*236-8785*	1	RADIATOR GP	996
Y	*265-5720*	1	SEPARATOR GP-WATER	1523
Y	*323-6678*	1	STARTING MOTOR GP-ELECTRIC	1568
Y	*253-8966*	1	SWITCH GP-PRESSURE (ENGINE OIL)	1580
Y	*235-8749*	1	SWITCH GP-TEMPERATURE	1582
			S/N: 3341-2335O	
Y	*367-0594*	1	SWITCH GP-TEMPERATURE	1583
			S/N: 33423351-UP	
Y	*270-8890*	1	TURBOCHARGER GP	1121
Y	*243-3183*	1	VALVE MECHANISM GP	844
R	**359-0734**	1	CYLINDER BLOCK GP-SHORT	
			AVAILABLE GASKET KIT(S):	
	272-0494	1	KIT-GASKET (BOTTOM)	
	277-5156	1	KIT-GASKET (TOP)	

R - REMANUFACTURED PART MAY BE AVAILABLE
Y - SEPARATE ILLUSTRATION

<END>

319-7259 ENGINE AR-PRIMARY

SMCS-1000 **i04390526**

NOTE	PART NUMBER	QTY	PART NAME 1 2 3 4 5 6 (PRODUCT LEVEL)	SEE PAGE
Y	*253-6199*	1	ALTERNATOR GP-CHARGING	1533
Y	*233-7236*	1	CAMSHAFT GP	204
Y	*253-6204*	1	CONNECTION GP-INLET	1040
Y	*231-0038*	1	CONNECTION GP-WATER	870
Y	*253-6184*	1	COOLER GP-FLTR BASE & ENG OIL	923
Y	*230-9196*	1	COVER GP-FRONT HOUSING	231
Y	*230-9151*	1	COVER GP-VALVE MECHANISM	266
Y	*233-7027*	1	CRANKSHAFT GP	454
Y	*233-7007*	1	CYLINDER BLOCK GP	497
Y	*233-7234*	1	CYLINDER HEAD GP	532
Y	*253-0728*	1	DRIVE GP-FAN	578
Y	*243-4297*	1	EXTENSION GP-FAN	587
Y	*232-7378*	1	FILTER GP-ENGINE OIL	861
Y	*243-4334*	1	FILTER GP-FUEL	1153
Y	*238-4769*	1	FLANGE GP-EXHAUST	1067
Y	*243-4279*	1	FLYWHEEL GP	597
Y	*232-6661*	1	GLOW PLUG GP	1547
Y	*223-7825*	1	HOUSING GP-FLYWHEEL	608
Y	*232-6179*	1	HOUSING GP-FRONT	626
Y	*232-3713*	1	LIFTING GP-ENGINE	647
Y	*231-0292*	1	MANIFOLD GP-EXHAUST	1070
Y	*230-8278*	1	PAN GP-OIL (ENGINE)	693
Y	*233-7233*	1	PISTON & ROD GP	770
Y	*225-4317*	1	PLUG GP-ENGINE	816
Y	*243-2416*	1	PLUG GP-ENGINE	826
Y	*230-7351*	1	PULLEY GP-CRANKSHAFT	830
			S/N: 3341-25630	
Y	*360-7349*	1	PULLEY GP-CRANKSHAFT	834
			S/N: 33425631-UP	
Y	*243-4305*	1	PUMP GP-ENGINE OIL	864
Y	*267-9413*	1	PUMP GP-FUEL INJECTION	1339
Y	*230-7355*	1	PUMP GP-WATER	992
Y	*234-9666*	1	STARTING MOTOR GP-ELECTRIC	1562
			—OR—	
Y	*323-6678*	1	STARTING MOTOR GP-ELECTRIC	1568
Y	*253-0756*	1	SWITCH GP-PRESSURE (ENGINE OIL)	1579
Y	*235-8749*	1	SWITCH GP-TEMPERATURE (ENGINE COOLANT)	1582
Y	*233-7235*	1	VALVE MECHANISM GP	840
R	**359-0731**	1	CYLINDER BLOCK GP-SHORT	
			AVAILABLE GASKET KIT(S):	
	272-0494	1	KIT-GASKET (BOTTOM)	
	277-5156	1	KIT-GASKET (TOP)	

R - REMANUFACTURED PART MAY BE AVAILABLE
Y - SEPARATE ILLUSTRATION

<END>

319-7260 ENGINE AR-PRIMARY

75 BRAKE KW (100 BHP) AT 2200 RPM

SMCS-1000 **i05171048**

NOTE	PART NUMBER	QTY	PART NAME 1 2 3 4 5 6 (PRODUCT LEVEL)	SEE PAGE
Y	*236-8196*	1	ALTERNATOR GP-CHARGING	1527
Y	*243-3184*	1	CAMSHAFT GP	207
Y	*231-0033*	1	CONNECTION GP-WATER	868
Y	*265-5299*	1	COOLER GP-FLTR BASE & ENG OIL	932
Y	*231-0149*	1	COVER GP-INLET MANIFOLD	1052
Y	*236-1238*	1	COVER GP-VALVE MECHANISM	298
Y	*243-3180*	1	CRANKSHAFT GP	461
Y	*243-3179*	1	CYLINDER BLOCK GP	505
Y	*243-3182*	1	CYLINDER HEAD GP	535
Y	*265-5289*	1	DRIVE GP-ACCESSORY	559
Y	*251-6697*	1	DRIVE GP-FAN	576
Y	*268-5339*	1	FAN GP-BLOWER	981
Y	*232-7378*	1	FILTER GP-ENGINE OIL	861
Y	*230-7286*	1	FLYWHEEL GP	590
Y	*232-6661*	1	GLOW PLUG GP	1547
Y	*223-7825*	1	HOUSING GP-FLYWHEEL	608
Y	*243-3272*	1	HOUSING GP-FRONT	636
Y	*232-3713*	1	LIFTING GP-ENGINE	647
Y	*251-8335*	1	MOUNTING GP-ENGINE	656
Y	*251-8284*	1	PAN GP-OIL (ENGINE)	736
Y	*243-3181*	1	PISTON & ROD GP	782
Y	*225-4317*	1	PLUG GP-ENGINE	816
Y	*230-7352*	1	PULLEY GP-CRANKSHAFT	831
			S/N: 3341-25630	
Y	*360-7350*	1	PULLEY GP-CRANKSHAFT	835
			S/N: 33425631-UP	
Y	*230-7578*	1	PUMP GP-ENGINE OIL	863
Y	*236-8229*	1	PUMP GP-FUEL INJECTION	1255
Y	*233-9417*	1	PUMP GP-FUEL PRM & PRIM FILTER	1505
Y	*230-7355*	1	PUMP GP-WATER	992
Y	*251-8423*	1	RADIATOR GP	1008
Y	*265-5720*	1	SEPARATOR GP-WATER	1523
Y	*234-9666*	1	STARTING MOTOR GP-ELECTRIC	1562
			—OR—	
Y	*323-6678*	1	STARTING MOTOR GP-ELECTRIC	1568
Y	*253-8966*	1	SWITCH GP-PRESSURE (ENGINE OIL)	1580
Y	*235-8749*	1	SWITCH GP-TEMPERATURE (ENGINE COOLANT)	1582
			S/N: 3341-25856	
Y	*367-0594*	1	SWITCH GP-TEMPERATURE	1583
			S/N: 33425857-UP	
Y	*265-5303*	1	TURBOCHARGER GP	1116
Y	*243-3183*	1	VALVE MECHANISM GP	844
R	**359-0734**	1	CYLINDER BLOCK GP-SHORT	
			AVAILABLE GASKET KIT(S):	
	272-0494	1	KIT-GASKET (BOTTOM)	
	277-5156	1	KIT-GASKET (TOP)	

319-7260 **ENGINE AR-PRIMARY (**contd.**)** **i05171048**

NOTE	PART NUMBER	QTY	PART NAME 1 2 3 4 5 6 (PRODUCT LEVEL)	SEE PAGE

R - REMANUFACTURED PART MAY BE AVAILABLE
Y - SEPARATE ILLUSTRATION

<END>

322-6826 ENGINE AR-PRIMARY

75 BRAKE KW (100 BHP) AT 2200 RPM

SMCS-1000 **i05423362**

NOTE	PART NUMBER	QTY	PART NAME 1 2 3 4 5 6 (PRODUCT LEVEL)	SEE PAGE
Y	*236-8196*	1	ALTERNATOR GP-CHARGING	1527
Y	*243-3184*	1	CAMSHAFT GP	207
Y	*231-0033*	1	CONNECTION GP-WATER	868
Y	*265-5299*	1	COOLER GP-FLTR BASE & ENG OIL	932
Y	*231-0149*	1	COVER GP-INLET MANIFOLD	1052
Y	*236-1238*	1	COVER GP-VALVE MECHANISM	298
Y	*243-3180*	1	CRANKSHAFT GP	461
Y	*243-3179*	1	CYLINDER BLOCK GP	505
Y	*243-3182*	1	CYLINDER HEAD GP	535
Y	*265-5289*	1	DRIVE GP-ACCESSORY	559
Y	*251-6697*	1	DRIVE GP-FAN	576
Y	*268-5339*	1	FAN GP-BLOWER	981
Y	*232-7378*	1	FILTER GP-ENGINE OIL	861
Y	*230-7286*	1	FLYWHEEL GP	590
Y	*232-6661*	1	GLOW PLUG GP	1547
Y	*223-7825*	1	HOUSING GP-FLYWHEEL	608
Y	*243-3272*	1	HOUSING GP-FRONT	636
Y	*232-3713*	1	LIFTING GP-ENGINE	647
Y	*251-8335*	1	MOUNTING GP-ENGINE	656
Y	*251-8284*	1	PAN GP-OIL (ENGINE)	736
Y	*243-3181*	1	PISTON & ROD GP	782
Y	*225-4317*	1	PLUG GP-ENGINE	816
Y	*230-7352*	1	PULLEY GP-CRANKSHAFT	831
			S/N: 3341-25630	
Y	*360-7350*	1	PULLEY GP-CRANKSHAFT	835
			S/N: 33425631-UP	
Y	*230-7578*	1	PUMP GP-ENGINE OIL	863
Y	*236-8229*	1	PUMP GP-FUEL INJECTION	1255
Y	*233-9417*	1	PUMP GP-FUEL PRM & PRIM FILTER	1505
Y	*230-7355*	1	PUMP GP-WATER	992
Y	*251-8423*	1	RADIATOR GP	1008
Y	*265-5720*	1	SEPARATOR GP-WATER	1523
Y	*234-9666*	1	STARTING MOTOR GP-ELECTRIC	1562
			—OR—	
Y	*323-6678*	1	STARTING MOTOR GP-ELECTRIC	1568
Y	*253-8966*	1	SWITCH GP-PRESSURE (ENGINE OIL)	1580
Y	*235-8749*	1	SWITCH GP-TEMPERATURE (ENGINE COOLANT)	1582
			S/N: 3341-24158	
Y	*367-0594*	1	SWITCH GP-TEMPERATURE	1583
			S/N: 33424159-UP	
Y	*265-5303*	1	TURBOCHARGER GP	1116
Y	*243-3183*	1	VALVE MECHANISM GP	844
R	**359-0734**	1	CYLINDER BLOCK GP-SHORT	
			AVAILABLE GASKET KIT(S):	
	277-5156	1	KIT-GASKET (TOP)	
	272-0494	1	KIT-GASKET (BOTTOM)	

322-6826 **ENGINE AR-PRIMARY (**contd.**)** **i05423362**

NOTE	PART NUMBER	QTY	PART NAME 1 2 3 4 5 6 (PRODUCT LEVEL)	SEE PAGE

R - REMANUFACTURED PART MAY BE AVAILABLE
Y - SEPARATE ILLUSTRATION

<END>

324-7132 ENGINE AR-PRIMARY

75 BRAKE KW (100 BHP) AT 2200 RPM

SMCS-1000 **i05422327**

NOTE	PART NUMBER	QTY	PART NAME 1 2 3 4 5 6 (PRODUCT LEVEL)	SEE PAGE
Y	*316-5657*	1	ALTERNATOR GP-CHARGING	1537
Y	*232-7528*	1	CAMSHAFT GP	203
Y	*231-0033*	1	CONNECTION GP-WATER	868
Y	*238-2799*	1	COOLER GP-FLTR BASE & ENG OIL	901
Y	*231-0149*	1	COVER GP-INLET MANIFOLD	1052
Y	*303-2205*	1	COVER GP-VALVE MECHANISM	420
Y	*232-7439*	1	CRANKSHAFT GP	451
Y	*232-7606*	1	CYLINDER BLOCK GP	495
Y	*232-7524*	1	CYLINDER HEAD GP	531
Y	*231-0055*	1	DRIVE GP-ACCESSORY	549
Y	*251-6697*	1	DRIVE GP-FAN	576
Y	*268-5339*	1	FAN GP-BLOWER	981
Y	*232-7378*	1	FILTER GP-ENGINE OIL	861
Y	*234-2431*	1	FILTER GP-FUEL	1145
Y	*230-7286*	1	FLYWHEEL GP	590
Y	*232-6661*	1	GLOW PLUG GP	1547
Y	*223-7825*	1	HOUSING GP-FLYWHEEL	608
Y	*232-6179*	1	HOUSING GP-FRONT	626
Y	*232-3713*	1	LIFTING GP-ENGINE	647
Y	*251-8335*	1	MOUNTING GP-ENGINE	656
Y	*230-8278*	1	PAN GP-OIL	693
Y	*232-7442*	1	PISTON & ROD GP	764
Y	*225-4317*	1	PLUG GP-ENGINE	816
Y	*230-7352*	1	PULLEY GP-CRANKSHAFT	831
			S/N: 3341-25630	
Y	*360-7350*	1	PULLEY GP-CRANKSHAFT	835
			S/N: 33425631-UP	
Y	*230-7578*	1	PUMP GP-ENGINE OIL	863
Y	*236-8229*	1	PUMP GP-FUEL INJECTION	1255
Y	*230-7355*	1	PUMP GP-WATER	992
Y	*251-8423*	1	RADIATOR GP	1008
Y	*265-5720*	1	SEPARATOR GP-WATER	1523
Y	*237-0024*	1	STARTING MOTOR GP-ELECTRIC	1563
Y	*253-0756*	1	SWITCH GP-PRESSURE	1579
Y	*235-8749*	1	SWITCH GP-TEMPERATURE	1582
			S/N: 3341-23986	
Y	*367-0594*	1	SWITCH GP-TEMPERATURE	1583
			S/N: 33423987-UP	
Y	*237-3924*	1	TURBOCHARGER GP	1091
Y	*232-7526*	1	VALVE MECHANISM GP	839
R	**359-0734**	1	CYLINDER BLOCK GP-SHORT	
			AVAILABLE GASKET KIT(S):	
	272-0494	1	KIT-GASKET (BOTTOM)	
	277-5156	1	KIT-GASKET (TOP)	

R - REMANUFACTURED PART MAY BE AVAILABLE
Y - SEPARATE ILLUSTRATION

<END>

324-7839 ENGINE AR-PRIMARY

62 BRAKE KW (83 BHP) AT 2400 RPM

SMCS-1000 **i04390694**

NOTE	PART NUMBER	QTY	PART NAME 1 2 3 4 5 6 (PRODUCT LEVEL)	SEE PAGE
Y	*234-0617*	1	BALANCER GP	199
Y	*233-7236*	1	CAMSHAFT GP	204
Y	*230-7581*	1	CONNECTION GP-INLET	1037
Y	*231-0033*	1	CONNECTION GP-WATER	868
Y	*234-1546*	1	COOLER GP-FLTR BASE & ENG OIL	886
Y	*230-9196*	1	COVER GP-FRONT HOUSING	231
Y	*230-9139*	1	COVER GP-VALVE MECHANISM	241
Y	*233-7027*	1	CRANKSHAFT GP	454
Y	*233-7007*	1	CYLINDER BLOCK GP	497
Y	*233-7234*	1	CYLINDER HEAD GP	532
Y	*230-8083*	1	DRIVE GP-FAN	564
Y	*235-0365*	1	ELBOW GP-EXHAUST	1064
Y	*232-7378*	1	FILTER GP-ENGINE OIL	861
Y	*232-6661*	1	GLOW PLUG GP	1547
Y	*232-6179*	1	HOUSING GP-FRONT	626
Y	*232-3713*	1	LIFTING GP-ENGINE	647
Y	*231-0292*	1	MANIFOLD GP-EXHAUST	1070
Y	*233-8150*	1	PAN GP-OIL	701
Y	*233-7233*	1	PISTON & ROD GP	770
Y	*225-4317*	1	PLUG GP-ENGINE	816
Y	*232-6204*	1	PLUG GP-ENGINE	821
Y	*233-9426*	1	PLUG GP-ENGINE	823
Y	*230-7352*	1	PULLEY GP-CRANKSHAFT	831
			S/N: 3341-25630	
Y	*360-7350*	1	PULLEY GP-CRANKSHAFT	835
			S/N: 33425631-UP	
Y	*233-7974*	1	PUMP GP-FUEL INJECTION	1191
Y	*233-7425*	1	PUMP GP-FUEL PRM & PRIM FILTER	1499
Y	*230-7355*	1	PUMP GP-WATER	992
Y	*253-0756*	1	SWITCH GP-PRESSURE	1579
Y	*233-7235*	1	VALVE MECHANISM GP	840
R	**359-0731**	1	CYLINDER BLOCK GP-SHORT	
			AVAILABLE GASKET KIT(S):	
	277-5156	1	KIT-GASKET (TOP)	
	272-0494	1	KIT-GASKET (BOTTOM)	

R - REMANUFACTURED PART MAY BE AVAILABLE
Y - SEPARATE ILLUSTRATION

<END>

324-7840 ENGINE AR-PRIMARY

64 BRAKE KW (86 BHP) AT 2400 RPM

SMCS-1000 **i04390695**

NOTE	PART NUMBER	QTY	PART NAME 1 2 3 4 5 6 (PRODUCT LEVEL)	SEE PAGE
Y	*233-7236*	1	CAMSHAFT GP	204
Y	*230-7581*	1	CONNECTION GP-INLET	1037
Y	*231-0033*	1	CONNECTION GP-WATER	868
Y	*253-2472*	1	COOLER GP-FLTR BASE & ENG OIL	904
Y	*230-9196*	1	COVER GP-FRONT HOUSING	231
Y	*230-9139*	1	COVER GP-VALVE MECHANISM	241
Y	*233-7027*	1	CRANKSHAFT GP	454
Y	*233-7007*	1	CYLINDER BLOCK GP	497
Y	*233-7234*	1	CYLINDER HEAD GP	532
Y	*230-8083*	1	DRIVE GP-FAN	564
Y	*235-0365*	1	ELBOW GP-EXHAUST	1064
Y	*232-7378*	1	FILTER GP-ENGINE OIL	861
Y	*235-0322*	1	FLYWHEEL GP	593
Y	*232-6661*	1	GLOW PLUG GP	1547
Y	*238-3016*	1	HOUSING GP-FLYWHEEL	615
Y	*232-6179*	1	HOUSING GP-FRONT	626
Y	*232-3713*	1	LIFTING GP-ENGINE	647
Y	*231-0292*	1	MANIFOLD GP-EXHAUST	1070
Y	*230-8253*	1	PAN GP-OIL	689
Y	*233-7233*	1	PISTON & ROD GP	770
Y	*225-4317*	1	PLUG GP-ENGINE	816
Y	*232-6204*	1	PLUG GP-ENGINE	821
Y	*235-2624*	1	PLUG GP-ENGINE	825
Y	*230-7352*	1	PULLEY GP-CRANKSHAFT	831
			S/N: 3341-25630	
Y	*360-7350*	1	PULLEY GP-CRANKSHAFT	835
			S/N: 33425631-UP	
Y	*230-7578*	1	PUMP GP-ENGINE OIL	863
Y	*233-7974*	1	PUMP GP-FUEL INJECTION	1191
Y	*233-7425*	1	PUMP GP-FUEL PRM & PRIM FILTER	1499
Y	*230-7355*	1	PUMP GP-WATER	992
Y	*330-8329*	1	STARTING MOTOR GP-ELECTRIC	1574
Y	*253-0756*	1	SWITCH GP-PRESSURE	1579
Y	*233-7235*	1	VALVE MECHANISM GP	840
R	**359-0731**	1	CYLINDER BLOCK GP-SHORT	
			AVAILABLE GASKET KIT(S):	
	272-0494	1	KIT-GASKET (BOTTOM)	
	277-5156	1	KIT-GASKET (TOP)	

R - REMANUFACTURED PART MAY BE AVAILABLE
Y - SEPARATE ILLUSTRATION

<END>

325-4340 ENGINE AR-PRIMARY

62 BRAKE KW (83 BHP) AT 2400 RPM

SMCS-1000 **i05397089**

NOTE	PART NUMBER	QTY	PART NAME 1 2 3 4 5 6 (PRODUCT LEVEL)	SEE PAGE
Y	*254-3309*	1	AIR CLEANER GP	1032
Y	*243-4301*	1	ALTERNATOR GP-CHARGING	1531
Y	*234-0617*	1	BALANCER GP	199
Y	*233-7236*	1	CAMSHAFT GP	204
Y	*254-3312*	1	CONNECTION GP-INLET	1041
Y	*231-0033*	1	CONNECTION GP-WATER	868
Y	*234-1546*	1	COOLER GP-FLTR BASE & ENG OIL	886
Y	*230-9196*	1	COVER GP-FRONT HOUSING	231
Y	*230-9139*	1	COVER GP-VALVE MECHANISM	241
Y	*233-7027*	1	CRANKSHAFT GP	454
Y	*233-7007*	1	CYLINDER BLOCK GP	497
Y	*233-7234*	1	CYLINDER HEAD GP	532
Y	*243-4280*	1	DRIVE GP-FAN	572
Y	*235-0365*	1	ELBOW GP-EXHAUST	1064
Y	*260-3215*	1	FAN GP-SUCTION	987
Y	*260-3128*	1	FILTER & LINES GP-FUEL	1140
Y	*232-7378*	1	FILTER GP-ENGINE OIL	861
Y	*235-0322*	1	FLYWHEEL GP	593
Y	*232-6661*	1	GLOW PLUG GP	1547
Y	*235-0321*	1	HOUSING GP-FLYWHEEL	612
Y	*232-6179*	1	HOUSING GP-FRONT	626
Y	*232-3713*	1	LIFTING GP-ENGINE	647
Y	*231-0292*	1	MANIFOLD GP-EXHAUST	1070
Y	*252-4475*	1	MOUNTING GP-ENGINE	657
Y	*233-8150*	1	PAN GP-OIL	701
Y	*233-7233*	1	PISTON & ROD GP	770
Y	*225-4317*	1	PLUG GP-ENGINE	816
Y	*230-7351*	1	PULLEY GP-CRANKSHAFT	830
			S/N: 3341-25630	
Y	*360-7349*	1	PULLEY GP-CRANKSHAFT	834
			S/N: 33425631-UP	
Y	*233-7974*	1	PUMP GP-FUEL INJECTION	1191
Y	*233-7425*	1	PUMP GP-FUEL PRM & PRIM FILTER	1499
Y	*230-7355*	1	PUMP GP-WATER	992
Y	*251-8423*	1	RADIATOR GP	1008
Y	*236-8212*	1	STARTING AID GP (SWITCH)	1557
Y	*234-9666*	1	STARTING MOTOR GP-ELECTRIC	1562
Y	*253-0756*	1	SWITCH GP-PRESSURE	1579
Y	*235-8749*	1	SWITCH GP-TEMPERATURE	1582
			S/N: 3341-26275	
Y	*367-0594*	1	SWITCH GP-TEMPERATURE	1583
			S/N: 33426276-UP	
Y	*233-7235*	1	VALVE MECHANISM GP	840
R	**359-0731**	1	CYLINDER BLOCK GP-SHORT	
			AVAILABLE GASKET KIT(S):	
	277-5156	1	KIT-GASKET (TOP)	
	272-0494	1	KIT-GASKET (BOTTOM)	

325-4340 **ENGINE AR-PRIMARY (**contd.**)** **i05397089**

NOTE	PART NUMBER	QTY	PART NAME 1 2 3 4 5 6 (PRODUCT LEVEL)	SEE PAGE

R - REMANUFACTURED PART MAY BE AVAILABLE
Y - SEPARATE ILLUSTRATION

<END>

325-4341 ENGINE AR-PRIMARY

76 BRAKE KW (101 BHP) AT 2200 RPM

SMCS-1000 **i05402011**

NOTE	PART NUMBER	QTY	PART NAME 1 2 3 4 5 6 (PRODUCT LEVEL)	SEE PAGE
Y	*243-4301*	1	ALTERNATOR GP-CHARGING	1531
Y	*234-0617*	1	BALANCER GP	199
Y	*232-7528*	1	CAMSHAFT GP	203
Y	*231-0033*	1	CONNECTION GP-WATER	868
Y	*235-5230*	1	COOLER GP-FLTR BASE & ENG OIL	890
Y	*231-0149*	1	COVER GP-INLET MANIFOLD	1052
Y	*230-9196*	1	COVER GP-FRONT HOUSING	231
Y	*230-9149*	1	COVER GP-VALVE MECHANISM	247
Y	*232-7439*	1	CRANKSHAFT GP	451
Y	*232-7606*	1	CYLINDER BLOCK GP	495
Y	*232-7524*	1	CYLINDER HEAD GP	531
Y	*253-0728*	1	DRIVE GP-FAN	578
Y	*260-3215*	1	FAN GP-SUCTION	987
Y	*260-3128*	1	FILTER & LINES GP-FUEL	1140
Y	*232-7378*	1	FILTER GP-ENGINE OIL	861
Y	*235-0322*	1	FLYWHEEL GP	593
Y	*232-6661*	1	GLOW PLUG GP	1547
Y	*235-0321*	1	HOUSING GP-FLYWHEEL	612
Y	*232-6179*	1	HOUSING GP-FRONT	626
Y	*232-3713*	1	LIFTING GP-ENGINE	647
Y	*252-4475*	1	MOUNTING GP-ENGINE	657
Y	*233-8150*	1	PAN GP-OIL	701
Y	*232-7442*	1	PISTON & ROD GP	764
Y	*225-4317*	1	PLUG GP-ENGINE	816
Y	*230-7351*	1	PULLEY GP-CRANKSHAFT	830
			S/N: 3341-25630	
Y	*360-7349*	1	PULLEY GP-CRANKSHAFT	834
			S/N: 33425631-UP	
Y	*236-8229*	1	PUMP GP-FUEL INJECTION	1255
Y	*233-9417*	1	PUMP GP-FUEL PRM & PRIM FILTER	1505
Y	*230-7355*	1	PUMP GP-WATER	992
Y	*251-8423*	1	RADIATOR GP	1008
Y	*236-8212*	1	STARTING AID GP (SWITCH)	1557
Y	*234-9666*	1	STARTING MOTOR GP-ELECTRIC	1562
Y	*253-0756*	1	SWITCH GP-PRESSURE	1579
Y	*367-0594*	1	SWITCH GP-TEMPERATURE	1583
Y	*290-2045*	1	TURBOCHARGER GP	1126
Y	*232-7526*	1	VALVE MECHANISM GP	839
R	**359-0734**	1	CYLINDER BLOCK GP-SHORT	
			AVAILABLE GASKET KIT(S):	
	272-0494	1	KIT-GASKET (BOTTOM)	
	277-5156	1	KIT-GASKET (TOP)	

R - REMANUFACTURED PART MAY BE AVAILABLE
Y - SEPARATE ILLUSTRATION

<END>

325-4893 ENGINE AR-PRIMARY

64 BRAKE KW (86 BHP) AT 2400 RPM

SMCS-1000 **i04390696**

NOTE	PART NUMBER	QTY	PART NAME 1 2 3 4 5 6 (PRODUCT LEVEL)	SEE PAGE
Y	*316-5657*	1	ALTERNATOR GP-CHARGING	1537
Y	*233-7236*	1	CAMSHAFT GP	204
Y	*230-7581*	1	CONNECTION GP-INLET	1037
Y	*231-0038*	1	CONNECTION GP-WATER	870
Y	*253-6184*	1	COOLER GP-FLTR BASE & ENG OIL	923
Y	*230-9139*	1	COVER GP-VALVE MECHANISM	241
Y	*233-7027*	1	CRANKSHAFT GP	454
Y	*233-7007*	1	CYLINDER BLOCK GP	497
Y	*233-7234*	1	CYLINDER HEAD GP	532
Y	*235-1044*	1	DRIVE GP-ACCESSORY	551
Y	*322-4099*	1	DRIVE GP-FAN	585
Y	*235-0365*	1	ELBOW GP-EXHAUST	1064
Y	*252-4441*	1	FAN GP-BLOWER	980
Y	*232-7378*	1	FILTER GP-ENGINE OIL	861
Y	*243-4279*	1	FLYWHEEL GP	597
Y	*232-6661*	1	GLOW PLUG GP	1547
Y	*223-7825*	1	HOUSING GP-FLYWHEEL	608
Y	*232-6179*	1	HOUSING GP-FRONT	626
Y	*232-3713*	1	LIFTING GP-ENGINE	647
Y	*231-0292*	1	MANIFOLD GP-EXHAUST	1070
Y	*233-9840*	1	MOUNTING GP-ENGINE	653
Y	*244-1651*	1	PAN GP-OIL	731
Y	*233-7233*	1	PISTON & ROD GP	770
Y	*225-4317*	1	PLUG GP-ENGINE	816
Y	*232-6204*	1	PLUG GP-ENGINE	821
Y	*253-2479*	1	PLUG GP-ENGINE	827
Y	*230-7352*	1	PULLEY GP-CRANKSHAFT	831
			S/N: 3341-25630	
Y	*360-7350*	1	PULLEY GP-CRANKSHAFT	835
			S/N: 33425631-UP	
Y	*243-4305*	1	PUMP GP-ENGINE OIL	864
Y	*233-7974*	1	PUMP GP-FUEL INJECTION	1191
Y	*233-7425*	1	PUMP GP-FUEL PRM & PRIM FILTER	1499
Y	*230-7355*	1	PUMP GP-WATER	992
Y	*243-2420*	1	STARTING AID GP (SWITCH)	1558
Y	*328-6071*	1	STARTING MOTOR GP-ELECTRIC	1570
Y	*233-7235*	1	VALVE MECHANISM GP	840
R	**359-0731**	1	CYLINDER BLOCK GP-SHORT	
			AVAILABLE GASKET KIT(S):	
	277-5156	1	KIT-GASKET (TOP)	
	272-0494	1	KIT-GASKET (BOTTOM)	

R - REMANUFACTURED PART MAY BE AVAILABLE
Y - SEPARATE ILLUSTRATION

<END>

325-4894 ENGINE AR-PRIMARY

75 BRAKE KW (100 BHP) AT 2400 RPM

SMCS-1000 **i04402730**

NOTE	PART NUMBER	QTY	PART NAME 1 2 3 4 5 6 (PRODUCT LEVEL)	SEE PAGE
Y	*234-3463*	1	ALTERNATOR GP-CHARGING	1525
Y	*232-7528*	1	CAMSHAFT GP	203
Y	*231-0038*	1	CONNECTION GP-WATER	870
Y	*238-4448*	1	CONVERTER GP-ELECTRICAL	1542
Y	*238-2799*	1	COOLER GP-FLTR BASE & ENG OIL	901
Y	*327-0093*	1	COVER GP-ENGINE	230
Y	*230-9196*	1	COVER GP-FRONT HOUSING	231
Y	*230-9149*	1	COVER GP-VALVE MECHANISM	247
Y	*232-7439*	1	CRANKSHAFT GP	451
Y	*232-7606*	1	CYLINDER BLOCK GP	495
Y	*232-7524*	1	CYLINDER HEAD GP	531
Y	*251-6697*	1	DRIVE GP-FAN	576
Y	*252-4441*	1	FAN GP-BLOWER	980
Y	*260-3128*	1	FILTER & LINES GP-FUEL	1140
Y	*232-7378*	1	FILTER GP-ENGINE OIL	861
Y	*234-2431*	1	FILTER GP-FUEL	1145
Y	*235-3552*	1	FLYWHEEL GP	595
Y	*233-9834*	1	GLOW PLUG GP	1549
Y	*223-7825*	1	HOUSING GP-FLYWHEEL	608
Y	*232-6179*	1	HOUSING GP-FRONT	626
Y	*232-3713*	1	LIFTING GP-ENGINE	647
Y	*233-9840*	1	MOUNTING GP-ENGINE	653
Y	*230-8278*	1	PAN GP-OIL	693
Y	*232-7442*	1	PISTON & ROD GP	764
Y	*225-4317*	1	PLUG GP-ENGINE	816
Y	*232-6204*	1	PLUG GP-ENGINE	821
Y	*230-7352*	1	PULLEY GP-CRANKSHAFT	831
			S/N: 3341-25630	
Y	*360-7350*	1	PULLEY GP-CRANKSHAFT	835
			S/N: 33425631-UP	
Y	*230-7578*	1	PUMP GP-ENGINE OIL	863
Y	*269-8487*	1	PUMP GP-FUEL INJECTION	1345
Y	*230-7355*	1	PUMP GP-WATER	992
Y	*243-2420*	1	STARTING AID GP (SWITCH)	1558
Y	*230-7304*	1	STARTING MOTOR GP-ELECTRIC	1561
Y	*253-0756*	1	SWITCH GP-PRESSURE	1579
Y	*269-8489*	1	TURBOCHARGER GP	1119
Y	*232-7526*	1	VALVE MECHANISM GP	839
R	**359-0734**	1	CYLINDER BLOCK GP-SHORT	
			AVAILABLE GASKET KIT(S):	
	277-5156	1	KIT-GASKET (TOP)	
	272-0494	1	KIT-GASKET (BOTTOM)	

R - REMANUFACTURED PART MAY BE AVAILABLE
Y - SEPARATE ILLUSTRATION

<END>

327-8268 ENGINE AR-PRIMARY

67 BRAKE KW (90 BHP) AT 2200 RPM

SMCS-1000 **i04927563**

NOTE	PART NUMBER	QTY	PART NAME 1 2 3 4 5 6 (PRODUCT LEVEL)	SEE PAGE
Y	*234-0617*	1	BALANCER GP	199
Y	*237-5858*	1	CAMSHAFT GP	205
Y	*231-0033*	1	CONNECTION GP-WATER	868
Y	*253-2474*	1	COOLER GP-FLTR BASE & ENG OIL	915
Y	*231-0149*	1	COVER GP-INLET MANIFOLD	1052
Y	*328-8203*	1	COVER GP-VALVE MECHANISM	434
Y	*237-5838*	1	CRANKSHAFT GP	456
Y	*237-5836*	1	CYLINDER BLOCK GP	501
Y	*237-5852*	1	CYLINDER HEAD GP	533
Y	*237-7313*	1	DRIVE GP-FAN	570
Y	*328-8204*	1	FILTER GP-FUEL	1163
Y	*232-6661*	1	GLOW PLUG GP	1547
Y	*232-3670*	1	HOUSING GP-FRONT	622
Y	*232-3713*	1	LIFTING GP-ENGINE	647
Y	*243-1882*	1	PAN GP-OIL	711
Y	*237-5840*	1	PISTON & ROD GP	774
Y	*225-4317*	1	PLUG GP-ENGINE	816
Y	*230-7569*	1	PLUG GP-ENGINE	819
Y	*232-6204*	1	PLUG GP-ENGINE	821
Y	*253-2479*	1	PLUG GP-ENGINE	827
Y	*230-7352*	1	PULLEY GP-CRANKSHAFT	831
			S/N: 3341-25630	
Y	*360-7350*	1	PULLEY GP-CRANKSHAFT	835
			S/N: 33425631-UP	
Y	*237-5214*	1	PUMP GP-FUEL INJECTION	1264
Y	*230-7355*	1	PUMP GP-WATER	992
Y	*237-3924*	1	TURBOCHARGER GP	1091
Y	*237-5856*	1	VALVE MECHANISM GP	842
	359-0733	1	CYLINDER BLOCK GP-SHORT	
			AVAILABLE GASKET KIT(S):	
	277-5156	1	KIT-GASKET (TOP)	
	290-2494	1	KIT-BOTTOM GASKET	

Y - SEPARATE ILLUSTRATION

<END>

330-3035 ENGINE AR-PRIMARY

75 BRAKE KW (100 BHP) AT 2400 RPM

SMCS-1000 **i04403242**

NOTE	PART NUMBER	QTY	PART NAME 1 2 3 4 5 6 (PRODUCT LEVEL)	SEE PAGE
Y	*243-4149*	1	ALTERNATOR GP-CHARGING	1530
Y	*232-7528*	1	CAMSHAFT GP	203
Y	*231-0033*	1	CONNECTION GP-WATER	868
Y	*238-2799*	1	COOLER GP-FLTR BASE & ENG OIL	901
Y	*231-0149*	1	COVER GP-INLET MANIFOLD	1052
Y	*230-9196*	1	COVER GP-FRONT HOUSING	231
Y	*230-9149*	1	COVER GP-VALVE MECHANISM	247
Y	*232-7439*	1	CRANKSHAFT GP	451
Y	*232-7606*	1	CYLINDER BLOCK GP	495
Y	*232-7524*	1	CYLINDER HEAD GP	531
Y	*243-3196*	1	DRIVE GP-FAN	571
Y	*292-3516*	1	FAN GP	975
Y	*232-7378*	1	FILTER GP-ENGINE OIL	861
Y	*298-3512*	1	FLYWHEEL GP	605
Y	*232-6661*	1	GLOW PLUG GP	1547
Y	*238-3016*	1	HOUSING GP-FLYWHEEL	615
Y	*232-6179*	1	HOUSING GP-FRONT	626
Y	*232-3713*	1	LIFTING GP-ENGINE	647
Y	*273-6234*	1	MOUNTING GP-ENGINE	666
Y	*243-2455*	1	PAN GP-OIL	715
Y	*232-7442*	1	PISTON & ROD GP	764
Y	*225-4317*	1	PLUG GP-ENGINE	816
Y	*232-6204*	1	PLUG GP-ENGINE	821
Y	*253-2479*	1	PLUG GP-ENGINE	827
Y	*230-7352*	1	PULLEY GP-CRANKSHAFT	831
			S/N: 3341-25630	
Y	*360-7350*	1	PULLEY GP-CRANKSHAFT	835
			S/N: 33425631-UP	
Y	*230-7578*	1	PUMP GP-ENGINE OIL	863
Y	*269-8487*	1	PUMP GP-FUEL INJECTION	1345
Y	*233-9417*	1	PUMP GP-FUEL PRM & PRIM FILTER	1505
Y	*230-7355*	1	PUMP GP-WATER	992
Y	*330-8329*	1	STARTING MOTOR GP-ELECTRIC	1574
Y	*292-3518*	1	TURBOCHARGER GP	1135
Y	*232-7526*	1	VALVE MECHANISM GP	839
R	**359-0734**	1	CYLINDER BLOCK GP-SHORT	
			AVAILABLE GASKET KIT(S):	
	272-0494	1	KIT-GASKET (BOTTOM)	
	277-5156	1	KIT-GASKET (TOP)	

R - REMANUFACTURED PART MAY BE AVAILABLE
Y - SEPARATE ILLUSTRATION

<END>

351-4366 ENGINE AR-PRIMARY

62 BRAKE KW (83 BHP) AT 2400 RPM

SMCS-1000 **i04390714**

NOTE	PART NUMBER	QTY	PART NAME 1 2 3 4 5 6 (PRODUCT LEVEL)	SEE PAGE
Y	*234-0617*	1	BALANCER GP	199
Y	*233-7236*	1	CAMSHAFT GP	204
Y	*230-7581*	1	CONNECTION GP-INLET	1037
Y	*231-0033*	1	CONNECTION GP-WATER	868
Y	*234-1546*	1	COOLER GP-FLTR BASE & ENG OIL	886
Y	*230-9196*	1	COVER GP-FRONT HOUSING	231
Y	*230-9139*	1	COVER GP-VALVE MECHANISM	241
Y	*233-7027*	1	CRANKSHAFT GP	454
Y	*233-7007*	1	CYLINDER BLOCK GP	497
Y	*233-7234*	1	CYLINDER HEAD GP	532
Y	*230-8083*	1	DRIVE GP-FAN	564
Y	*235-0365*	1	ELBOW GP-EXHAUST	1064
Y	*232-7378*	1	FILTER GP-ENGINE OIL	861
Y	*232-6661*	1	GLOW PLUG GP	1547
Y	*232-6179*	1	HOUSING GP-FRONT	626
Y	*232-3713*	1	LIFTING GP-ENGINE	647
Y	*231-0292*	1	MANIFOLD GP-EXHAUST	1070
Y	*233-8150*	1	PAN GP-OIL	701
Y	*233-7233*	1	PISTON & ROD GP	770
Y	*225-4317*	1	PLUG GP-ENGINE	816
Y	*232-6204*	1	PLUG GP-ENGINE	821
Y	*233-9426*	1	PLUG GP-ENGINE	823
Y	*230-7352*	1	PULLEY GP-CRANKSHAFT	831
			S/N: 3341-25630	
Y	*360-7350*	1	PULLEY GP-CRANKSHAFT	835
			S/N: 33425631-UP	
Y	*233-7974*	1	PUMP GP-FUEL INJECTION	1191
Y	*233-7425*	1	PUMP GP-FUEL PRM & PRIM FILTER	1499
Y	*230-7355*	1	PUMP GP-WATER	992
Y	*253-0756*	1	SWITCH GP-PRESSURE	1579
Y	*233-7235*	1	VALVE MECHANISM GP	840
R	**359-0731**	1	CYLINDER BLOCK GP-SHORT	
			AVAILABLE GASKET KIT(S):	
	272-0494	1	KIT-GASKET (BOTTOM)	
	277-2992	1	KIT-GASKET (TOP)	

R - REMANUFACTURED PART MAY BE AVAILABLE
Y - SEPARATE ILLUSTRATION

<END>

351-4367 ENGINE AR-PRIMARY

62 KW (83 BHP) AT 2400 RPM

SMCS-1000 **i04322106**

NOTE	PART NUMBER	QTY	PART NAME 1 2 3 4 5 6 (PRODUCT LEVEL)	SEE PAGE
Y	*233-7236*	1	CAMSHAFT GP	204
Y	*231-0033*	1	CONNECTION GP-WATER	868
Y	*234-1546*	1	COOLER GP-FLTR BASE & ENG OIL	886
Y	*230-9196*	1	COVER GP-FRONT HOUSING	231
Y	*230-9139*	1	COVER GP-VALVE MECHANISM	241
Y	*233-7027*	1	CRANKSHAFT GP	454
Y	*233-7007*	1	CYLINDER BLOCK GP	497
Y	*233-7234*	1	CYLINDER HEAD GP	532
Y	*230-8083*	1	DRIVE GP-FAN	564
Y	*232-7378*	1	FILTER GP-ENGINE OIL	861
Y	*232-6179*	1	HOUSING GP-FRONT	626
Y	*233-8150*	1	PAN GP-OIL	701
Y	*233-7233*	1	PISTON & ROD GP	770
Y	*225-4317*	1	PLUG GP-ENGINE (FRONT HOUSING, CYLINDER HEAD)	816
Y	*232-6204*	1	PLUG GP-ENGINE (CYLINDER HEAD)	821
Y	*233-9426*	1	PLUG GP-ENGINE	823
Y	*360-7350*	1	PULLEY GP-CRANKSHAFT	835
Y	*233-7974*	1	PUMP GP-FUEL INJECTION	1191
Y	*230-7355*	1	PUMP GP-WATER	992
Y	*253-0756*	1	SWITCH GP-PRESSURE (ENGINE OIL)	1579
Y	*233-7235*	1	VALVE MECHANISM GP	840
R	**359-0731**	1	CYLINDER BLOCK GP-SHORT	
			AVAILABLE GASKET KIT(S):	
	272-0494	1	KIT-GASKET (BOTTOM)	
	277-5156	1	KIT-GASKET (TOP)	

R - REMANUFACTURED PART MAY BE AVAILABLE
Y - SEPARATE ILLUSTRATION

<END>

373-1622 ENGINE AR-PRIMARY

SMCS-1000 **i06830554**

NOTE	PART NUMBER	QTY	PART NAME 1 2 3 4 5 6 (PRODUCT LEVEL)	SEE PAGE
Y	*234-0617*	1	BALANCER GP	199
Y	*233-7236*	1	CAMSHAFT GP	204
Y	*230-7581*	1	CONNECTION GP-INLET	1037
Y	*231-0033*	1	CONNECTION GP-WATER	868
Y	*234-1546*	1	COOLER GP-FLTR BASE & ENG OIL	886
Y	*230-9196*	1	COVER GP-FRONT HOUSING	231
Y	*230-9139*	1	COVER GP-VALVE MECHANISM	241
Y	*233-7027*	1	CRANKSHAFT GP	454
Y	*233-7007*	1	CYLINDER BLOCK GP	497
Y	*233-7234*	1	CYLINDER HEAD GP	532
Y	*230-8083*	1	DRIVE GP-FAN	564
Y	*235-0365*	1	ELBOW GP-EXHAUST	1064
Y	*232-7378*	1	FILTER GP-ENGINE OIL	861
Y	*232-6661*	1	GLOW PLUG GP	1547
Y	*232-6179*	1	HOUSING GP-FRONT	626
Y	*232-3713*	1	LIFTING GP-ENGINE	647
Y	*231-0292*	1	MANIFOLD GP-EXHAUST	1070
Y	*233-8150*	1	PAN GP-OIL	701
Y	*233-7233*	1	PISTON & ROD GP	770
Y	*225-4317*	1	PLUG GP-ENGINE	816
Y	*232-6204*	1	PLUG GP-ENGINE	821
Y	*233-9426*	1	PLUG GP-ENGINE	823
Y	*360-7350*	1	PULLEY GP-CRANKSHAFT	835
Y	*233-7974*	1	PUMP GP-FUEL INJECTION	1191
Y	*233-7425*	1	PUMP GP-FUEL PRM & PRIM FILTER	1499
Y	*230-7355*	1	PUMP GP-WATER	992
Y	*253-0756*	1	SWITCH GP-PRESSURE	1579
Y	*233-7235*	1	VALVE MECHANISM GP	840
R	**359-0731**	1	CYLINDER BLOCK GP-SHORT	
			AVAILABLE GASKET KIT(S):	
	272-0494	1	KIT-GASKET (BOTTOM)	
	277-2992	1	KIT-GASKET (TOP)	

R - REMANUFACTURED PART MAY BE AVAILABLE
Y - SEPARATE ILLUSTRATION

<END>

373-1623 ENGINE AR-PRIMARY

46 BRAKE KW (62 BHP) AT 2400 RPM

SMCS-1000 **i06830558**

NOTE	PART NUMBER	QTY	PART NAME 1 2 3 4 5 6 (PRODUCT LEVEL)	SEE PAGE
Y	*234-0617*	1	BALANCER GP	199
Y	*233-7236*	1	CAMSHAFT GP	204
Y	*230-7581*	1	CONNECTION GP-INLET	1037
Y	*231-0033*	1	CONNECTION GP-WATER	868
Y	*234-1546*	1	COOLER GP-FLTR BASE & ENG OIL	886
Y	*230-9196*	1	COVER GP-FRONT HOUSING	231
Y	*230-9139*	1	COVER GP-VALVE MECHANISM	241
Y	*233-7027*	1	CRANKSHAFT GP	454
Y	*233-7007*	1	CYLINDER BLOCK GP	497
Y	*233-7234*	1	CYLINDER HEAD GP	532
Y	*230-8083*	1	DRIVE GP-FAN	564
Y	*235-0365*	1	ELBOW GP-EXHAUST	1064
Y	*232-7378*	1	FILTER GP-ENGINE OIL	861
Y	*232-6661*	1	GLOW PLUG GP	1547
Y	*232-6179*	1	HOUSING GP-FRONT	626
Y	*232-3713*	1	LIFTING GP-ENGINE	647
Y	*231-0292*	1	MANIFOLD GP-EXHAUST	1070
Y	*233-8150*	1	PAN GP-OIL	701
Y	*233-7233*	1	PISTON & ROD GP	770
Y	*225-4317*	1	PLUG GP-ENGINE	816
Y	*232-6204*	1	PLUG GP-ENGINE	821
Y	*233-9426*	1	PLUG GP-ENGINE	823
Y	*360-7350*	1	PULLEY GP-CRANKSHAFT	835
Y	*233-7974*	1	PUMP GP-FUEL INJECTION	1191
Y	*233-7425*	1	PUMP GP-FUEL PRM & PRIM FILTER	1499
Y	*230-7355*	1	PUMP GP-WATER	992
Y	*253-0756*	1	SWITCH GP-PRESSURE	1579
Y	*233-7235*	1	VALVE MECHANISM GP	840
R	**359-0731**	1	CYLINDER BLOCK GP-SHORT	
			AVAILABLE GASKET KIT(S):	
	272-0494	1	KIT-GASKET (BOTTOM)	
	277-2992	1	KIT-GASKET (TOP)	

R - REMANUFACTURED PART MAY BE AVAILABLE
Y - SEPARATE ILLUSTRATION

<END>

430-6490 ENGINE AR-PRIMARY

SMCS-1000 **i06124314**

NOTE	PART NUMBER	QTY	PART NAME 1 2 3 4 5 6 (PRODUCT LEVEL)	SEE PAGE
Y	*233-7236*	1	CAMSHAFT GP	204
Y	*230-8086*	1	CONNECTION GP-WATER	867
Y	*323-6679*	1	COOLER GP-FLTR BASE & ENG OIL	967
Y	*230-9196*	1	COVER GP-FRONT HOUSING	231
Y	*273-0871*	1	COVER GP-VALVE MECHANISM	395
Y	*233-7027*	1	CRANKSHAFT GP	454
Y	*233-7007*	1	CYLINDER BLOCK GP	497
Y	*233-7234*	1	CYLINDER HEAD GP	532
Y	*233-7491*	1	ELBOW GP-AIR INLET	1054
Y	*232-7378*	1	FILTER GP-ENGINE OIL	861
Y	*232-6661*	1	GLOW PLUG GP	1547
Y	*232-6179*	1	HOUSING GP-FRONT	626
Y	*233-7432*	1	LIFTING GP-ENGINE	648
Y	*267-7069*	1	LINES GP-FUEL	1170
Y	*230-8144*	1	PAN GP-OIL (ENGINE)	685
Y	*233-7233*	1	PISTON & ROD GP	770
Y	*225-4317*	1	PLUG GP-ENGINE	816
Y	*232-6204*	1	PLUG GP-ENGINE	821
Y	*233-9426*	1	PLUG GP-ENGINE	823
Y	*253-2479*	1	PLUG GP-ENGINE	827
Y	*360-7350*	1	PULLEY GP-CRANKSHAFT	835
Y	*230-7578*	1	PUMP GP-ENGINE OIL	863
Y	*471-1500*	1	PUMP GP-FUEL INJECTION	1491
Y	*230-7355*	1	PUMP GP-WATER	992
Y	*233-7235*	1	VALVE MECHANISM GP	840
R	**359-0731**	1	CYLINDER BLOCK GP-SHORT	

R - REMANUFACTURED PART MAY BE AVAILABLE
Y - SEPARATE ILLUSTRATION

<END>

451-5317 ENGINE AR-PRIMARY

97 BRAKE KW (130 BHP) AT 2200 RPM

SMCS-1000 **i05989813**

NOTE	PART NUMBER	QTY	PART NAME 1 2 3 4 5 6 (PRODUCT LEVEL)	SEE PAGE
Y	*258-7556*	1	AIR COMPRESSOR GP	196
Y	*234-0617*	1	BALANCER GP	199
Y	*232-7528*	1	CAMSHAFT GP	203
Y	*254-3775*	1	CONNECTION GP-INLET	1042
Y	*231-0033*	1	CONNECTION GP-WATER	868
Y	*273-3806*	1	CONTROL GP-JACKET WATER HEATER	1541
Y	*298-7692*	1	CONVERTER GP-ELECTRICAL	1545
Y	*235-5230*	1	COOLER GP-FLTR BASE & ENG OIL	890
Y	*236-8190*	1	COVER GP-VALVE MECHANISM	310
Y	*232-7439*	1	CRANKSHAFT GP	451
Y	*232-7606*	1	CYLINDER BLOCK GP	495
Y	*232-7524*	1	CYLINDER HEAD GP	531
Y	*247-8225*	1	DRIVE GP-FAN	575
Y	*260-3128*	1	FILTER & LINES GP-FUEL	1140
Y	*232-7378*	1	FILTER GP-ENGINE OIL	861
Y	*243-3398*	1	FLYWHEEL GP	596
Y	*233-9834*	1	GLOW PLUG GP	1549
Y	*299-0165*	1	HOUSING GP-FLYWHEEL	620
Y	*232-6179*	1	HOUSING GP-FRONT	626
Y	*232-3713*	1	LIFTING GP-ENGINE	647
Y	*309-9345*	1	MOUNTING GP-ENGINE	673
Y	*233-8150*	1	PAN GP-OIL	701
Y	*232-7442*	1	PISTON & ROD GP	764
Y	*232-6204*	1	PLUG GP-ENGINE	821
Y	*253-2479*	1	PLUG GP-ENGINE	827
Y	*360-7350*	1	PULLEY GP-CRANKSHAFT	835
Y	*233-9526*	1	PUMP GP-FUEL INJECTION	1216
Y	*233-9417*	1	PUMP GP-FUEL PRM & PRIM FILTER	1505
Y	*230-7355*	1	PUMP GP-WATER	992
Y	*236-8212*	1	STARTING AID GP (SWITCH)	1557
Y	*232-6197*	1	TURBOCHARGER GP	1075
Y	*232-7526*	1	VALVE MECHANISM GP	839
R	**359-0734**	1	CYLINDER BLOCK GP-SHORT	

R - REMANUFACTURED PART MAY BE AVAILABLE
Y - SEPARATE ILLUSTRATION

<END>

471-0930 ENGINE AR-PRIMARY

97 BRAKE KW (73 BHP) AT 2200 RPM

FIELD REPLACEMENT FOR 241-8585—PAGE: 76

SMCS-1000 **i05987462**

NOTE	PART NUMBER	QTY	PART NAME 1 2 3 4 5 6 (PRODUCT LEVEL)	SEE PAGE
Y	*458-7626*	1	ALTERNATOR GP-CHARGING	1538
Y	*234-0617*	1	BALANCER GP	199
Y	*460-0745*	1	CAMSHAFT GP	217
Y	*231-0033*	1	CONNECTION GP-WATER	868
Y	*459-5504*	1	COOLER GP-FLTR BASE & ENG OIL	969
Y	*230-9196*	1	COVER GP-FRONT HOUSING	231
Y	*231-0149*	1	COVER GP-INLET MANIFOLD	1052
Y	*230-9149*	1	COVER GP-VALVE MECHANISM	247
Y	*460-0741*	1	CRANKSHAFT GP	489
Y	*460-0740*	1	CYLINDER BLOCK GP	524
Y	*460-0743*	1	CYLINDER HEAD GP	545
Y	*253-0728*	1	DRIVE GP-FAN	578
Y	*268-5339*	1	FAN GP-BLOWER	981
Y	*260-3128*	1	FILTER & LINES GP-FUEL	1140
Y	*232-7378*	1	FILTER GP-ENGINE OIL	861
Y	*235-0322*	1	FLYWHEEL GP	593
Y	*232-6661*	1	GLOW PLUG GP	1547
Y	*235-0321*	1	HOUSING GP-FLYWHEEL	612
Y	*459-5647*	1	HOUSING GP-FRONT	640
Y	*232-3713*	1	LIFTING GP-ENGINE	647
Y	*420-3162*	1	STARTING MOTOR GP-ELECTRIC	1575
Y	*252-4475*	1	MOUNTING GP-ENGINE	657
Y	*233-8150*	1	PAN GP-OIL	701
Y	*460-0742*	1	PISTON & ROD GP	810
Y	*225-4317*	1	PLUG GP-ENGINE	816
Y	*360-7349*	1	PULLEY GP-CRANKSHAFT	834
Y	*236-8229*	1	PUMP GP-FUEL INJECTION	1255
Y	*233-9417*	1	PUMP GP-FUEL PRM & PRIM FILTER	1505
Y	*230-7355*	1	PUMP GP-WATER	992
Y	*251-8423*	1	RADIATOR GP	1008
Y	*236-8212*	1	STARTING AID GP (SWITCH)	1557
Y	*253-0756*	1	SWITCH GP-PRESSURE	1579
Y	*367-0594*	1	SWITCH GP-TEMPERATURE	1583
Y	*290-2045*	1	TURBOCHARGER GP	1126
Y	*460-0744*	1	VALVE MECHANISM GP	858
R	**359-0734**	1	CYLINDER BLOCK GP-SHORT	

R - REMANUFACTURED PART MAY BE AVAILABLE
Y - SEPARATE ILLUSTRATION

<END>

471-0988 ENGINE AR-PRIMARY

74 BRAKE KW (99 BHP) AT 2200

SMCS-1000 **i06586806**

NOTE	PART NUMBER	QTY	PART NAME 1 2 3 4 5 6 (PRODUCT LEVEL)	SEE PAGE
Y	*489-1869*	1	ALTERNATOR GP-CHARGING	1539
Y	*234-0617*	1	BALANCER GP	199
Y	*478-6461*	1	CAMSHAFT GP	218
Y	*230-8086*	1	CONNECTION GP-WATER	867
Y	*247-4926*	1	CONNECTOR GP-CAB HEATER LINES	873
Y	*476-3073*	1	COOLER GP-ENGINE OIL	881
Y	*230-9196*	1	COVER GP-FRONT HOUSING	231
Y	*231-0149*	1	COVER GP-INLET MANIFOLD	1052
Y	*303-2205*	1	COVER GP-VALVE MECHANISM	420
Y	*478-6453*	1	CRANKSHAFT GP	490
Y	*478-6438*	1	CYLINDER BLOCK GP	525
Y	*478-6459*	1	CYLINDER HEAD GP	546
Y	*251-6697*	1	DRIVE GP-FAN	576
Y	*303-2128*	1	FAN GP	977
Y	*260-3128*	1	FILTER & LINES GP-FUEL	1140
Y	*232-7378*	1	FILTER GP-ENGINE OIL	861
Y	*303-2122*	1	FLYWHEEL GP	606
Y	*232-6661*	1	GLOW PLUG GP	1547
Y	*489-1970*	1	HOUSING GP-FRONT	642
Y	*233-7432*	1	LIFTING GP-ENGINE	648
Y	*303-2125*	1	PAN GP-OIL	762
Y	*478-6458*	1	PISTON & ROD GP	812
Y	*232-6204*	1	PLUG GP-ENGINE	821
Y	*360-7350*	1	PULLEY GP-CRANKSHAFT	835
Y	*303-2915*	1	PUMP GP-FUEL INJECTION	1474
Y	*233-9417*	1	PUMP GP-FUEL PRM & PRIM FILTER	1505
Y	*230-7355*	1	PUMP GP-WATER	992
Y	*489-1835*	1	STARTING MOTOR GP-ELECTRIC	1576
Y	*303-2131*	1	SWITCH GP-PRESSURE	1581
Y	*237-3924*	1	TURBOCHARGER GP	1091
Y	*478-6460*	1	VALVE MECHANISM GP	859
	359-0733	1	CYLINDER BLOCK GP-SHORT	

Y - SEPARATE ILLUSTRATION

<END>

293-1877 ADAPTER GP-AIR COMPRESSOR

PART OF 258-7556 AIR COMPRESSOR GP

SMCS-1803 **i08839061**

NOTE	REF NO	GRAPHIC REF	PART NUMBER	QTY	PART NAME 1 2 3 4 5 6 (PRODUCT LEVEL)	SEE PAGE
M	1	1	**6I-0254**	4	BOLT (M8X1.25X30-MM)	
	2	1	**7W-2562**	1	RING-SNAP	
	3	1	**6D-0044**	2	DOWEL	
	4	1	**1B-8705**	2	KEY-WOODRUFF	
	5	1	**113-4598**	2	NUT	
	6	1	**113-4604**	1	GASKET	
	7	1	**126-3216**	2	STUD	
	8	1	**224-6635**	1	BUSHING	
	9	1	**302-4332**	1	HOUSING	

PARTS SHOWN IN GRAPHIC(S) WITHOUT A REFERENCE NUMBER ARE NOT SERVICED SEPARATELY

M - METRIC PART

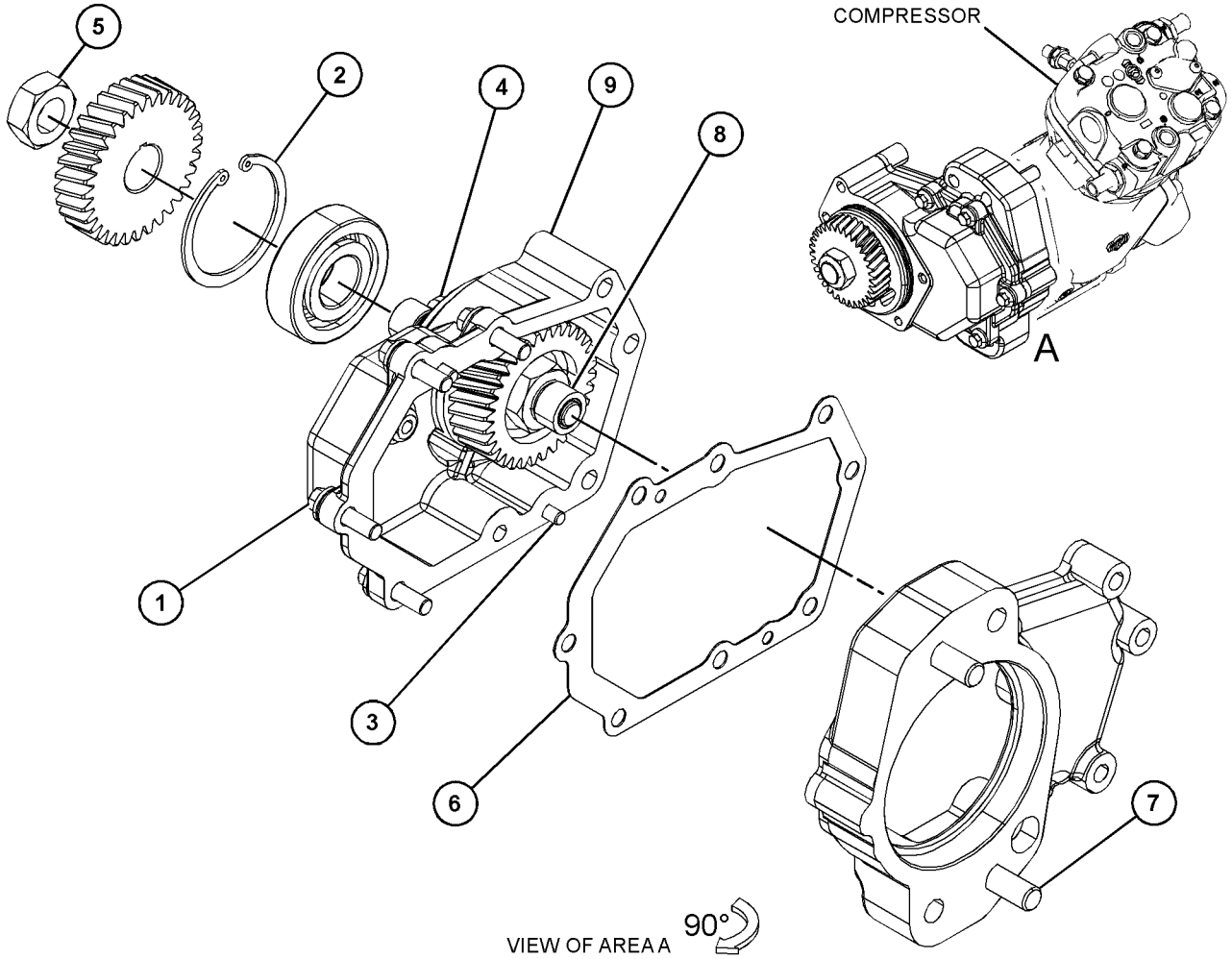

GRAPHIC #1

<END>

g06811768

258-7556 AIR COMPRESSOR GP

SMCS-1803 **i07378177**

NOTE	REF NO	GRAPHIC REF	PART NUMBER	QTY	PART NAME 1 2 3 4 5 6 (PRODUCT LEVEL)	SEE PAGE
	1	1	**5D-1026**	4	CLAMP-BAND	
M	2	1	**184-0983**	2	NUT-HEX FLANGE (M12X1.75-THD)	
M	3	1	**6I-0260**	4	BOLT (M8X1.25X25-MM)	
M	4	1	**273-3691**	1	BOLT (M8X1.25X80-MM)	
M	5	1	**6I-4200**	2	BOLT (M10X1.5X16-MM)	
	6	1	**035-8017**	1	UNION	
	7	1	**273-3690**	1	BOLT	
	8	1	**102-2073**	1	SEAL-O-RING	
	9	1	**113-4608**	1	ADAPTER	
	10	1	**113-8076**	1	PIN	
	11	1	**126-3219**	1	SEAL-O-RING	
	12	1	**451-1179**	1	COMPRESSOR	
	13	1	**198-8262**	1	COVER AS	
	13A	1	**198-8263**	1	SEAL-O-RING	
	14	1	**209-6825**	2	ADAPTER	
	15	1	**214-3203**	1	WASHER (SEALING)	
	16	1	**247-4928**	2	WASHER (16.5X20.5X1.6-MM THK)	
	17	1	**259-2611**	1	HOSE	
	18	1	**259-2612**	1	HOSE	
	19	1	**259-2613**	1	TUBE AS	
Y	20	1	**293-1877**	1	ADAPTER GP-AIR COMPRESSOR	195
	21	1	**259-2614**	1	BRACKET	
	22	1	**259-2623**	1	GEAR (34-TEETH)	
	23	1	**366-5914**	1	PISTON AS	
					AVAILABLE REPAIR KIT(S):	
			209-6883	1	KIT-REPAIR (AIR COMPRESSOR VALVE)	

M - METRIC PART
Y - SEPARATE ILLUSTRATION

258-7556 **AIR COMPRESSOR GP (**contd.**)** **i07378177**

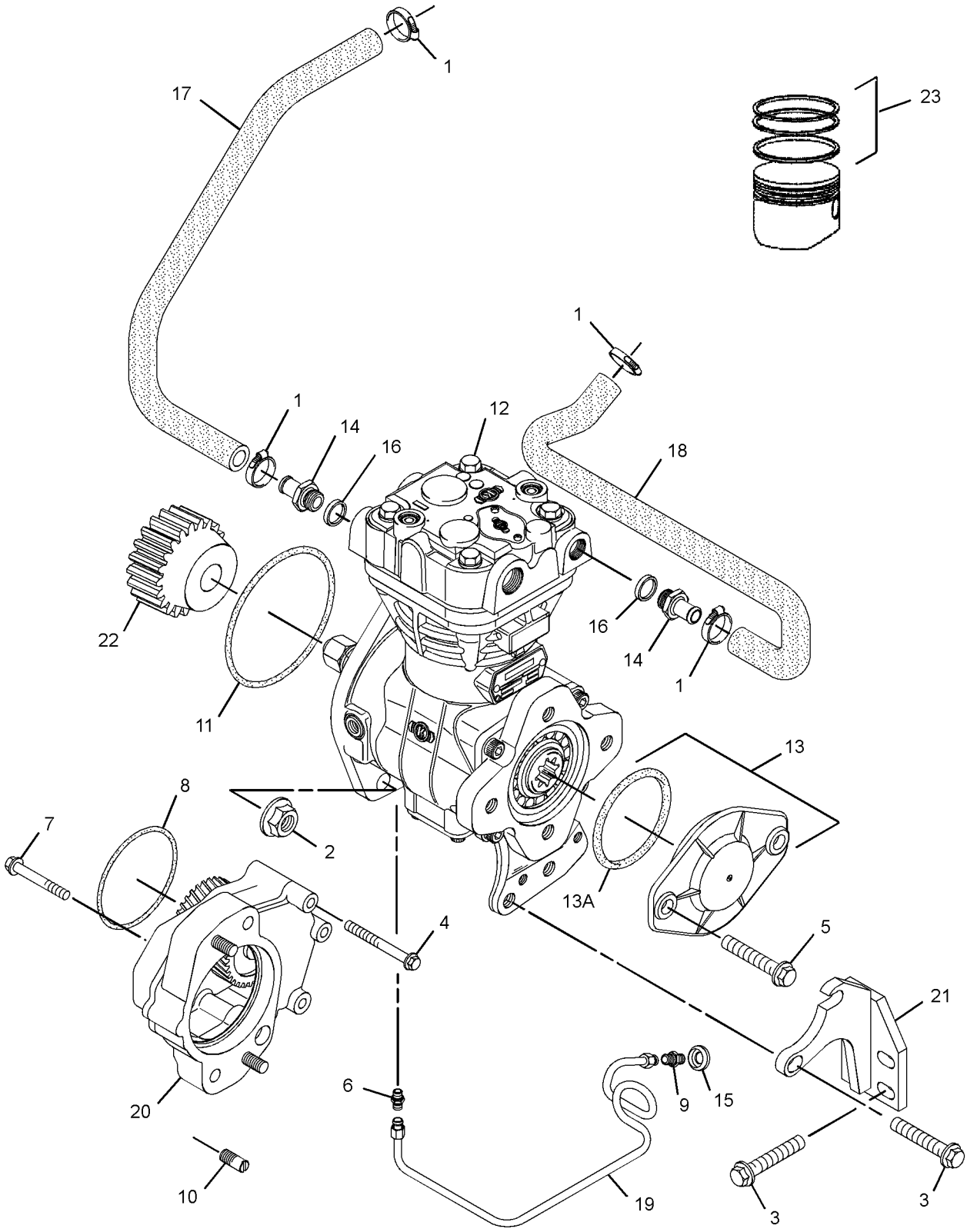

GRAPHIC #1 <END> g02709832

234-0615 BALANCER AS

PART OF 234-0617 BALANCER GP
ALSO AN ATTACHMENT

SMCS-1220 **i06580361**

NOTE	REF NO	GRAPHIC REF	PART NUMBER	QTY	PART NAME 1 2 3 4 5 6 (PRODUCT LEVEL)	SEE PAGE
	1	1	**8N-7998**	1	DOWEL	
M	2	1	**195-2221**	1	NUT (M12X1.75-THD)	
	3	1	**234-0189**	1	BOLT (M8X1.25-THD)	
	4	1	**234-0198**	1	SHAFT-GEAR	
	5	1	**234-0201**	1	WASHER-THRUST	
	6	1	**234-0204**	1	GEAR-BALANCER (17-TEETH)	
	7	1	**234-0205**	1	GEAR AS (44-TEETH)	
	8	1	**234-0212**	5	BOLT (M8X1.25-THD)	
	9	1	**234-0220**	1	COVER	
	10	1	**234-0223**	1	ROTOR AS	
	11	1	**234-0614**	1	DOWEL	
	12	1	**234-0616**	1	VALVE AS-RELIEF (ENGINE OIL PRESSURE)	
	12A	1	**234-0590**	1	PLUNGER	
	12B	1	**234-0591**	1	SPRING	
	12C	1	**234-0613**	1	PLUG-RETAINER	

M - METRIC PART

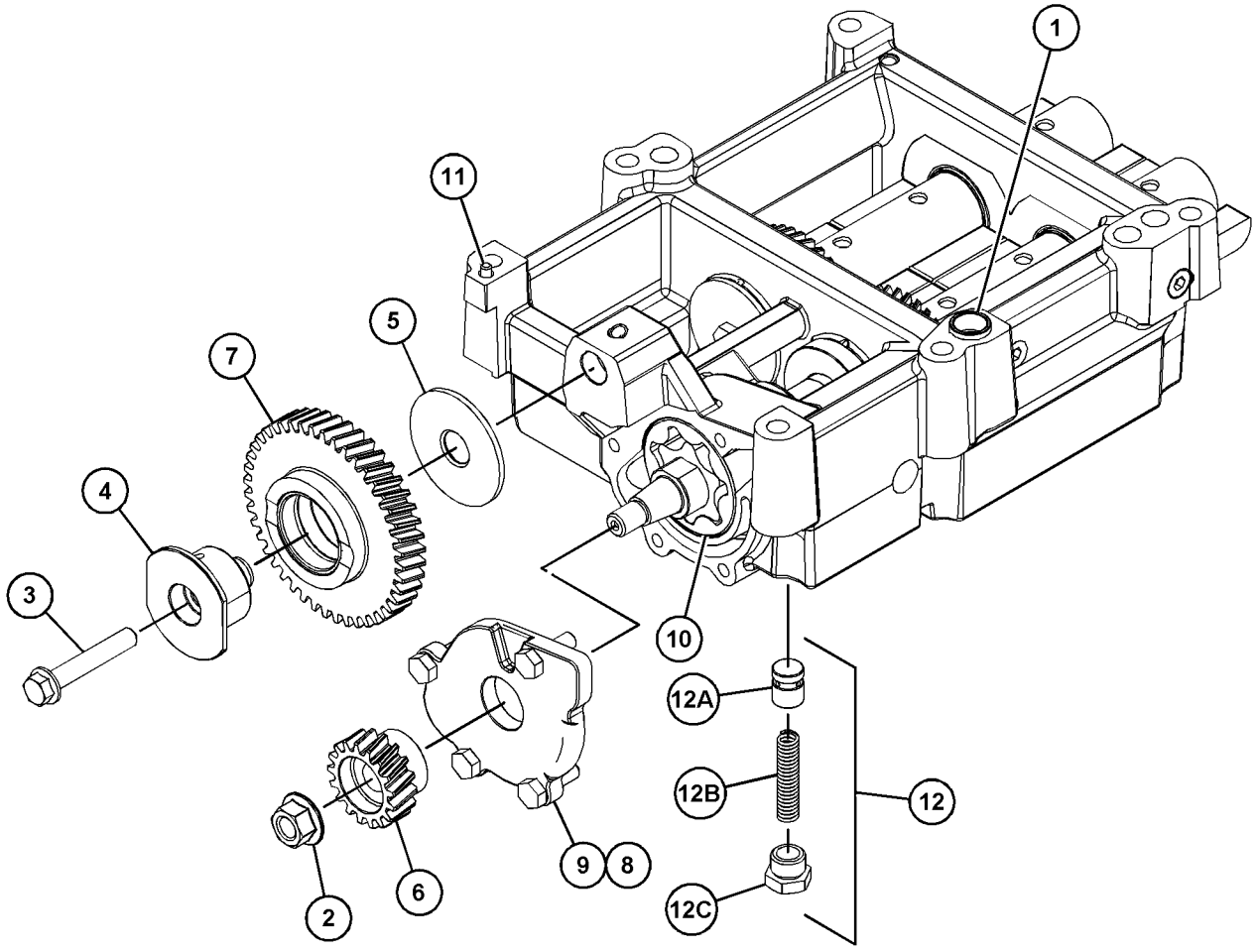

GRAPHIC #1 <END> g03813732

234-0617 BALANCER GP

ALSO AN ATTACHMENT

SMCS-1220 **i07033453**

NOTE	REF NO	GRAPHIC REF	PART NUMBER	QTY	PART NAME 1 2 3 4 5 6 (PRODUCT LEVEL)	SEE PAGE
M	1	1	**6I-0454**	6	BOLT (M10X1.5X70-MM)	
Y	2	1	**234-0615**	1	BALANCER AS	198

PARTS SHOWN IN GRAPHIC(S) WITHOUT A REFERENCE NUMBER ARE NOT SERVICED SEPARATELY

M - METRIC PART
Y - SEPARATE ILLUSTRATION

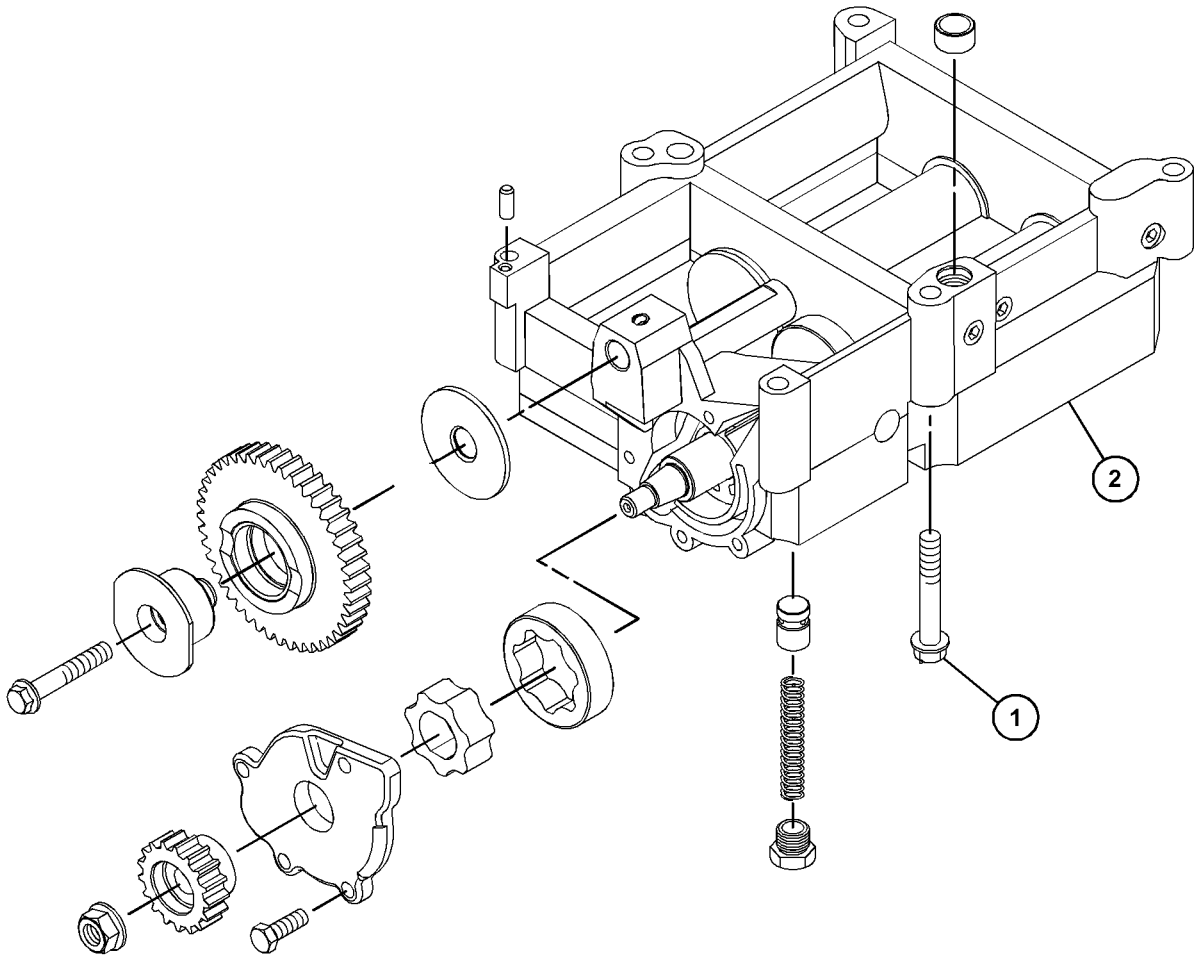

GRAPHIC #1 <END> g06201458

264-0395 BALANCER GP

ALSO AN ATTACHMENT

TYPE 1

SMCS-1220 **i02450978**

NOTE	REF NO	GRAPHIC REF	PART NUMBER	QTY	PART NAME 1 2 3 4 5 6 (PRODUCT LEVEL)	SEE PAGE
M	1	1	**6I-0454**	6	BOLT (M10X1.5X70-MM)	
	2	1	**264-0393**	1	BALANCER AS	
	3	1	**8N-7998**	1	DOWEL	
M	4	1	**195-2221**	1	NUT (M12X1.75-THD)	
	5	1	**234-0189**	1	BOLT (M8X1.25-THD)	
	6	1	**234-0198**	1	SHAFT-GEAR	
	7	1	**234-0201**	1	WASHER-THRUST	
	8	1	**234-0204**	1	GEAR-BALANCER (17-TEETH)	
	9	1	**234-0205**	1	GEAR AS (44-TEETH)	
	10	1	**234-0212**	5	BOLT (M8X1.25-THD)	
	11	1	**234-0220**	1	COVER	
	12	1	**234-0614**	1	DOWEL	
	13	1	**264-0391**	1	VALVE-RELIEF (ENGINE OIL PRESSURE)	
	13A	1	**234-0590**	1	PLUNGER	
	13B	1	**234-0613**	1	PLUG-RETAINER	
	13C	1	**264-0390**	1	SPRING	
	14	1	**264-0392**	1	ROTOR AS	

M - METRIC PART

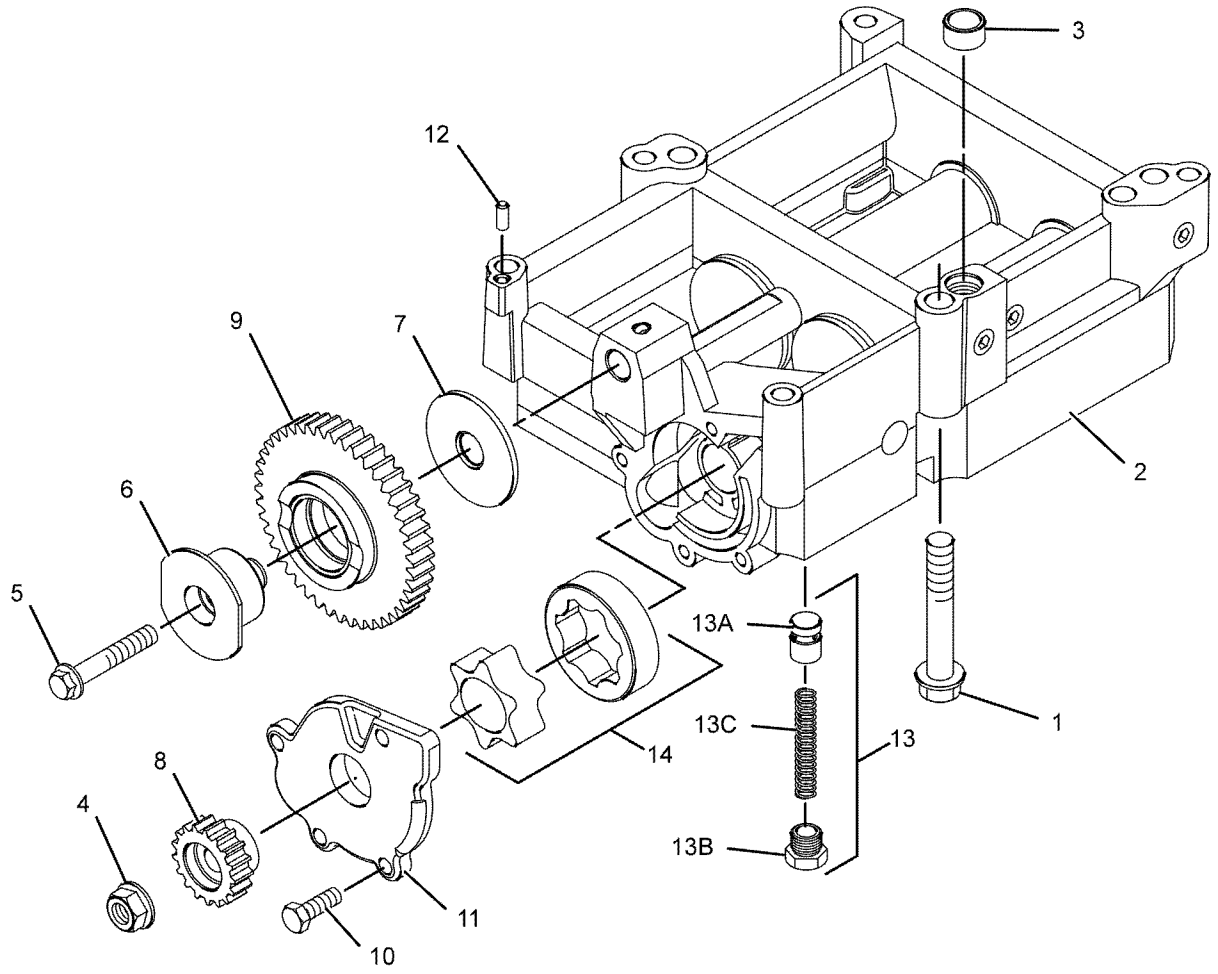

GRAPHIC #1 <END> g01144305

264-0395 BALANCER GP

ALSO AN ATTACHMENT

TYPE 2

SMCS-1220 **i02945106**

NOTE	REF NO	GRAPHIC REF	PART NUMBER	QTY	PART NAME 1 2 3 4 5 6 (PRODUCT LEVEL)	SEE PAGE
M	1	1	**6I-0454**	6	BOLT (M10X1.5X70-MM)	
	2	1	**234-0615**	1	BALANCER AS	
	2A	1	**8N-7998**	1	DOWEL	
M	2B	1	**195-2221**	1	NUT (M12X1.75-THD)	
	2C	1	**234-0189**	1	BOLT (M8X1.25-THD)	
	2D	1	**234-0198**	1	SHAFT-GEAR	
	2E	1	**234-0201**	1	WASHER-THRUST	
	2F	1	**234-0204**	1	GEAR-BALANCER (17-TEETH)	
	2G	1	**234-0205**	1	GEAR AS (44-TEETH)	
	2H	1	**234-0206**		BEARING	
	2J	1	**234-0220**	1	COVER	
	2K	1	**234-0223**	1	ROTOR AS	
	2L	1	**234-0614**	1	DOWEL	
	2M	1	**234-0616**	1	VALVE AS-RELIEF	
	2N	1	**234-0590**	1	PLUNGER	
	2P	1	**234-0591**	1	SPRING	
	2R	1	**234-0613**	1	PLUG-RETAINER	
	2S	1	**234-0212**	5	BOLT (M8X1.25-THD)	

M - METRIC PART

264-0395 **BALANCER GP** (contd.) **i02945106**

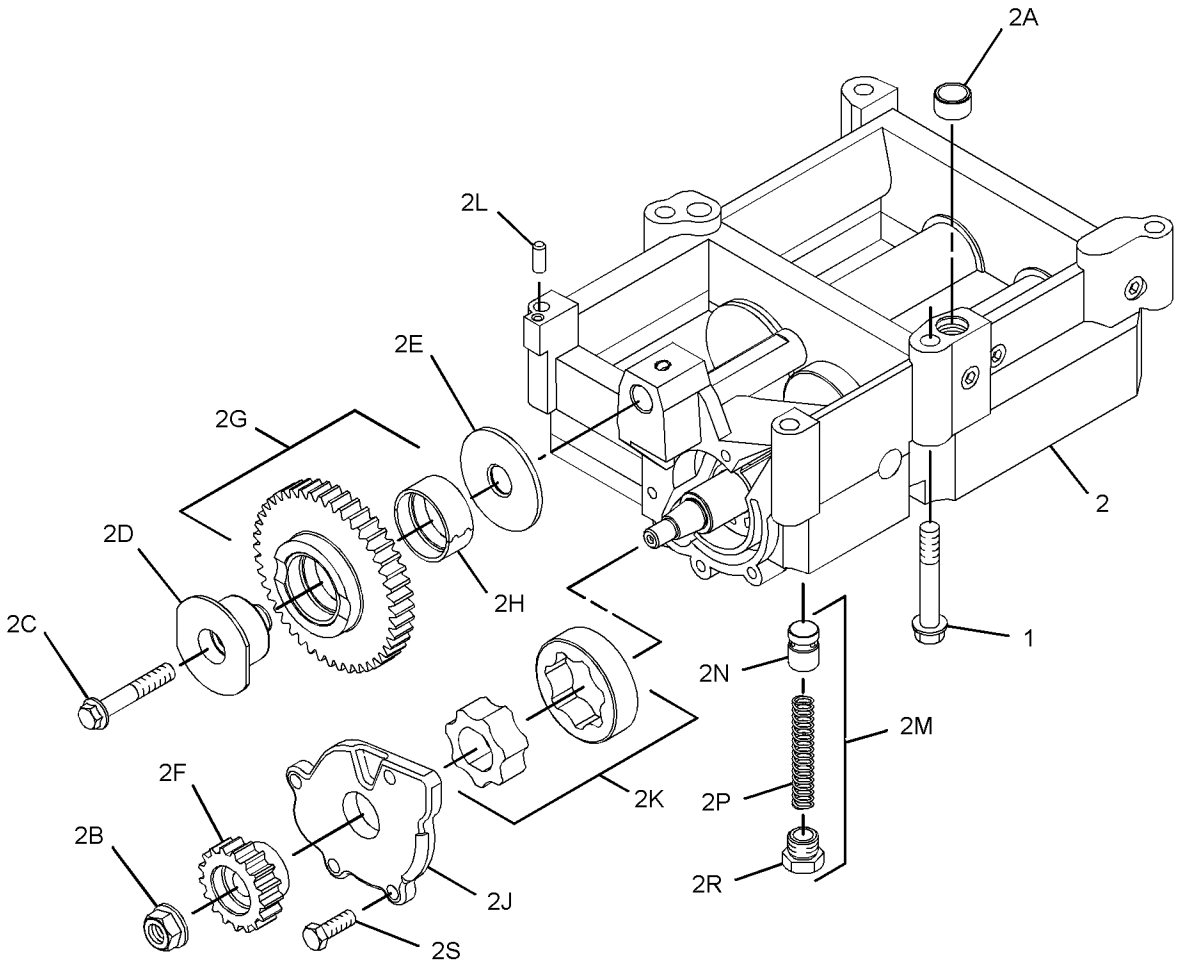

GRAPHIC #1 <END> g01728913

232-7528 CAMSHAFT GP

ALSO AN ATTACHMENT

SMCS-1210 **i01863441**

NOTE	REF NO	GRAPHIC REF	PART NUMBER	QTY	PART NAME 1 2 3 4 5 6 (PRODUCT LEVEL)	SEE PAGE
	1	1	**1B-8736**	1	KEY-WOODRUFF	
	2	1	**225-5967**	1	CAMSHAFT	

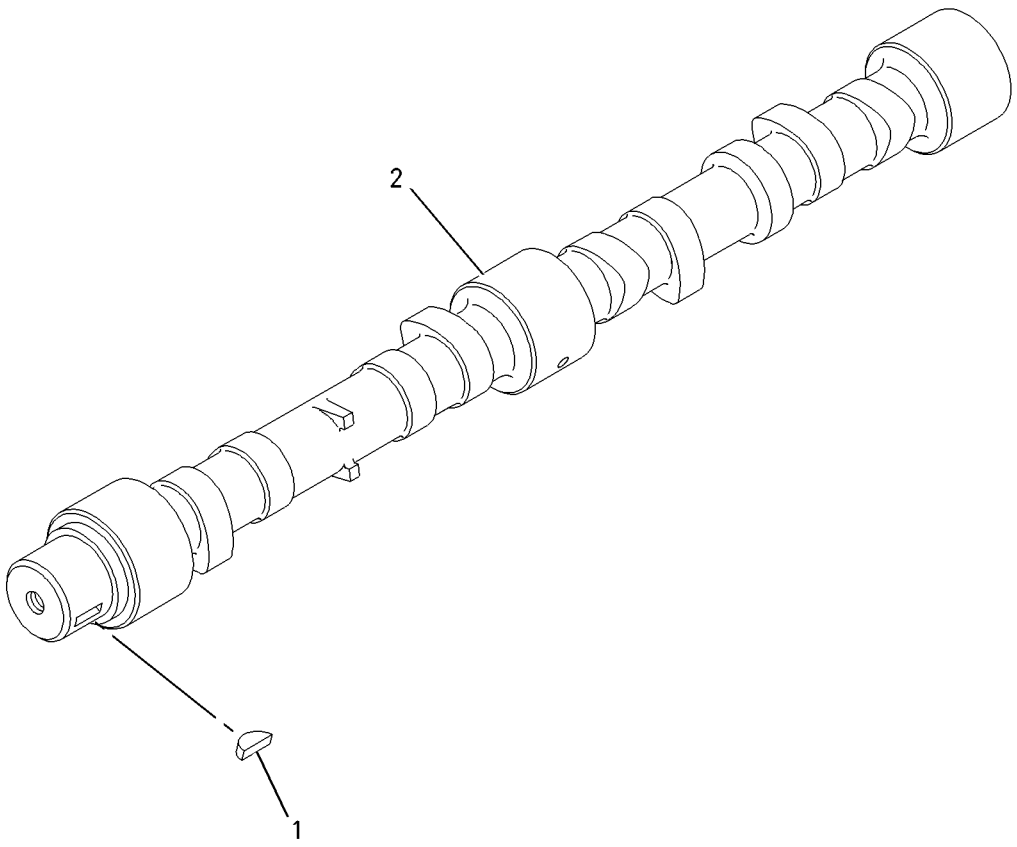

GRAPHIC #1 <END> g00911297

233-7236 CAMSHAFT GP

SMCS-1210 **i03640752**

NOTE	REF NO	GRAPHIC REF	PART NUMBER	QTY	PART NAME 1 2 3 4 5 6 (PRODUCT LEVEL)	SEE PAGE
	1	1	**350-1846**	1	CAMSHAFT AS	
	1A	1	**1B-8736**	1	KEY-WOODRUFF	

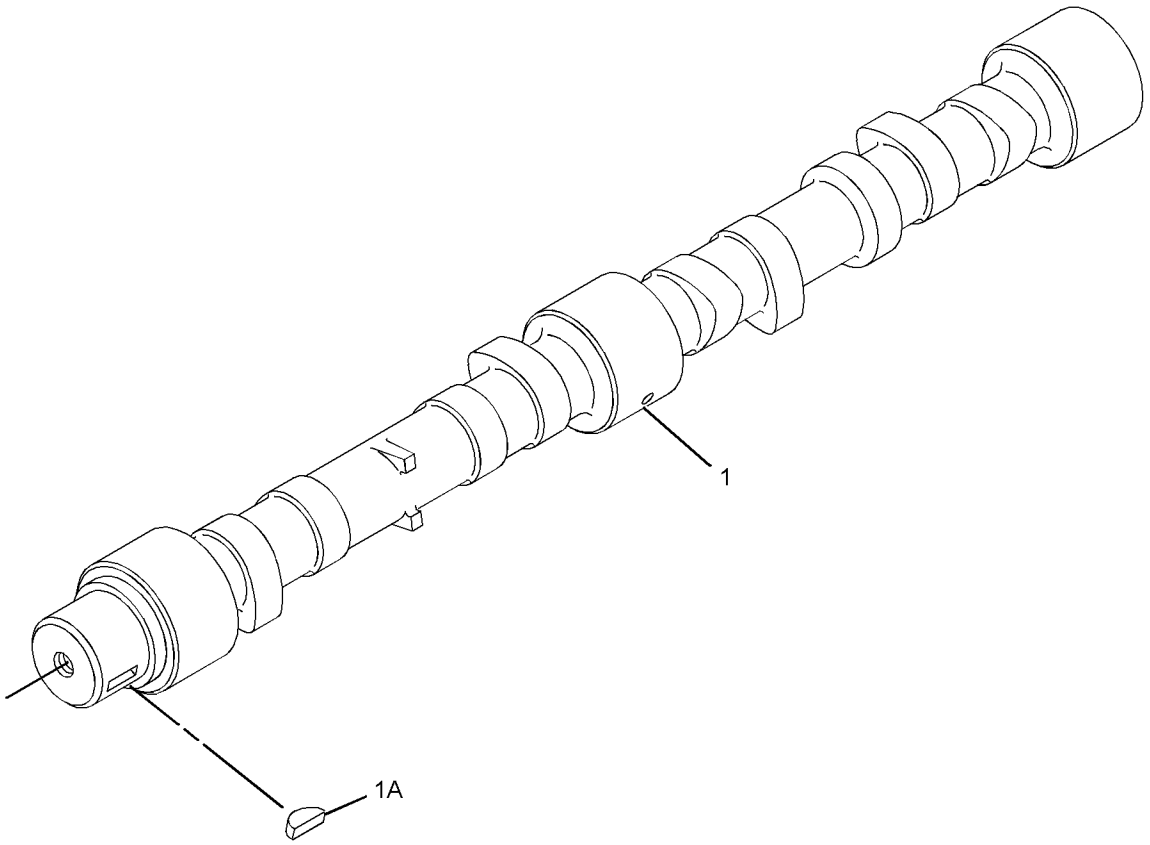

GRAPHIC #1 <END> g01956663

237-5858 CAMSHAFT GP

SMCS-1210 **i03642872**

NOTE	REF NO	GRAPHIC REF	PART NUMBER	QTY	PART NAME 1 2 3 4 5 6 (PRODUCT LEVEL)	SEE PAGE
	1	1	**350-2374**	1	CAMSHAFT AS	
	1A	1	**1B-8736**	1	KEY-WOODRUFF	

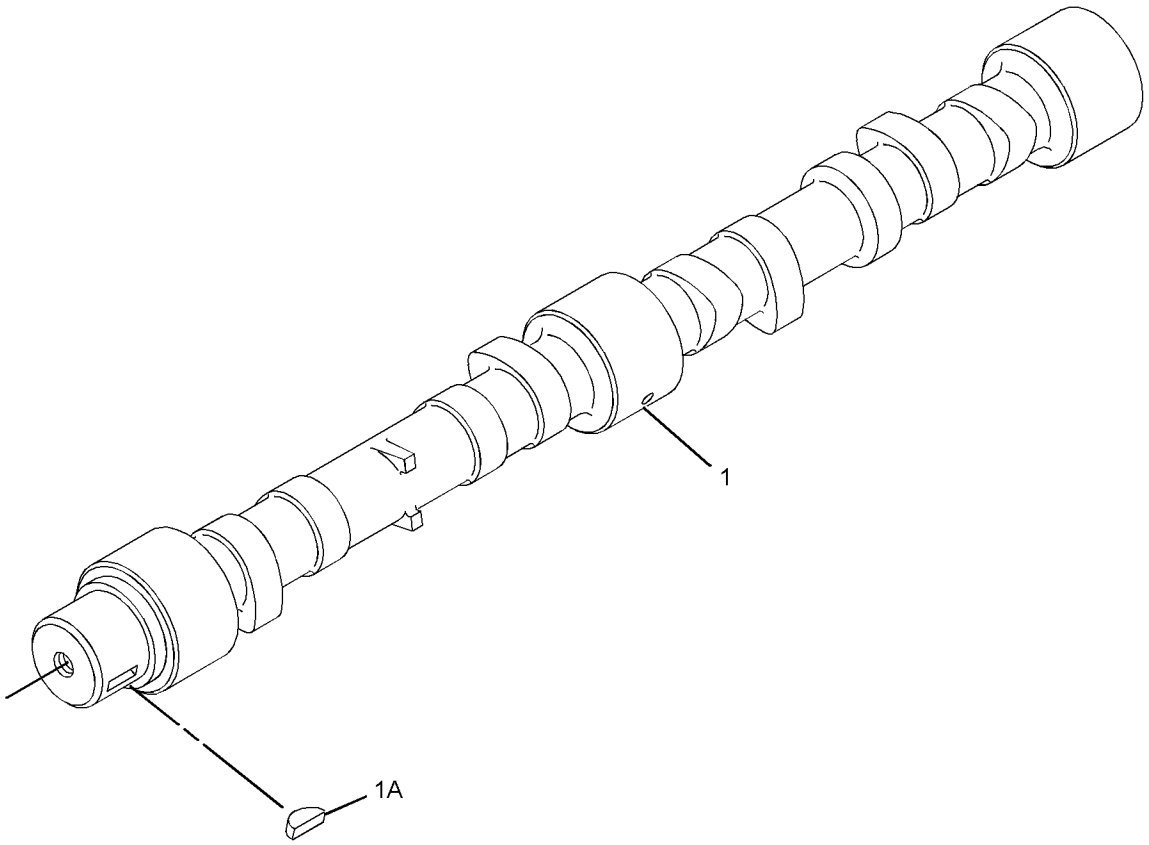

GRAPHIC #1 <END> g01956663

243-1954 CAMSHAFT GP

SMCS-1210 **i03642873**

NOTE	REF NO	GRAPHIC REF	PART NUMBER	QTY	PART NAME 1 2 3 4 5 6 (PRODUCT LEVEL)	SEE PAGE
	1	1	**350-1846**	1	CAMSHAFT AS	
	1A	1	**1B-8736**	1	KEY-WOODRUFF	

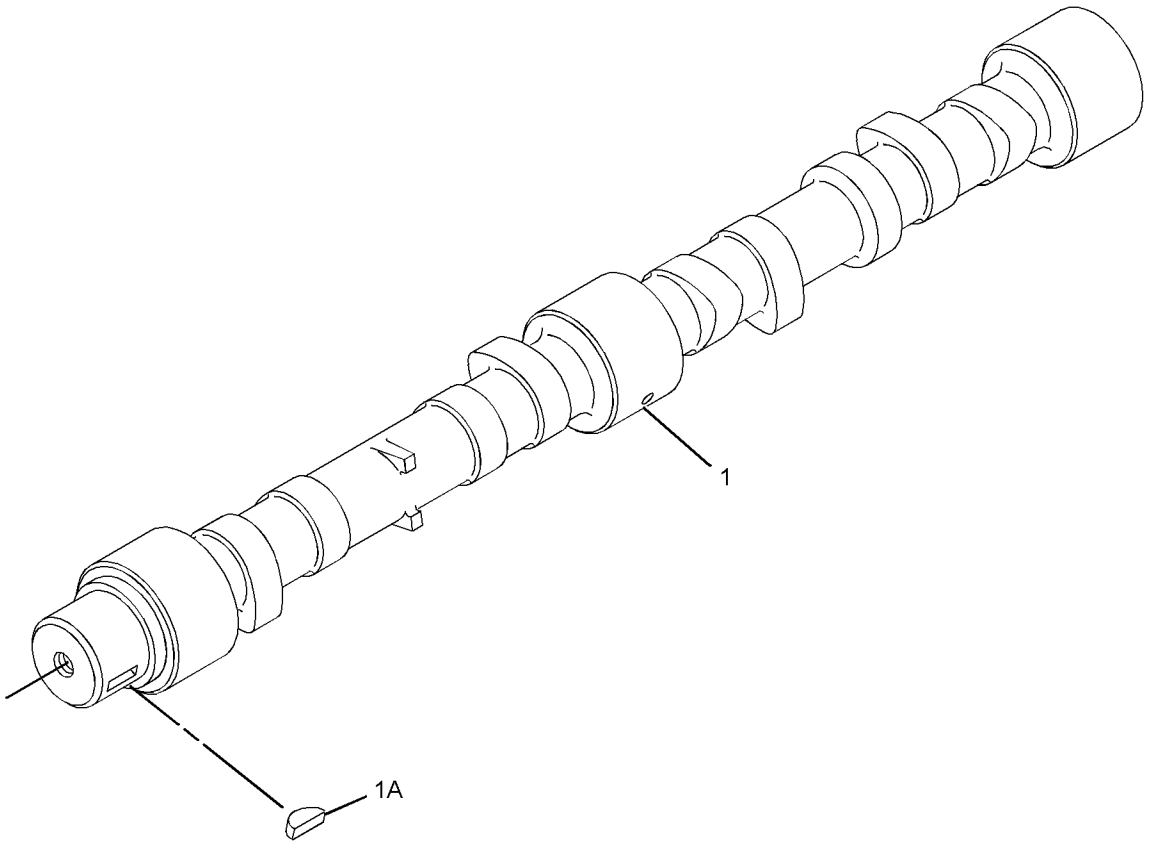

GRAPHIC #1 <END> g01956663

243-3184 CAMSHAFT GP

ALSO AN ATTACHMENT

SMCS-1210 **i03642874**

NOTE	REF NO	GRAPHIC REF	PART NUMBER	QTY	PART NAME 1 2 3 4 5 6 (PRODUCT LEVEL)	SEE PAGE
	1	1	**350-2374**	1	CAMSHAFT AS	
	1A	1	**1B-8736**	1	KEY-WOODRUFF	

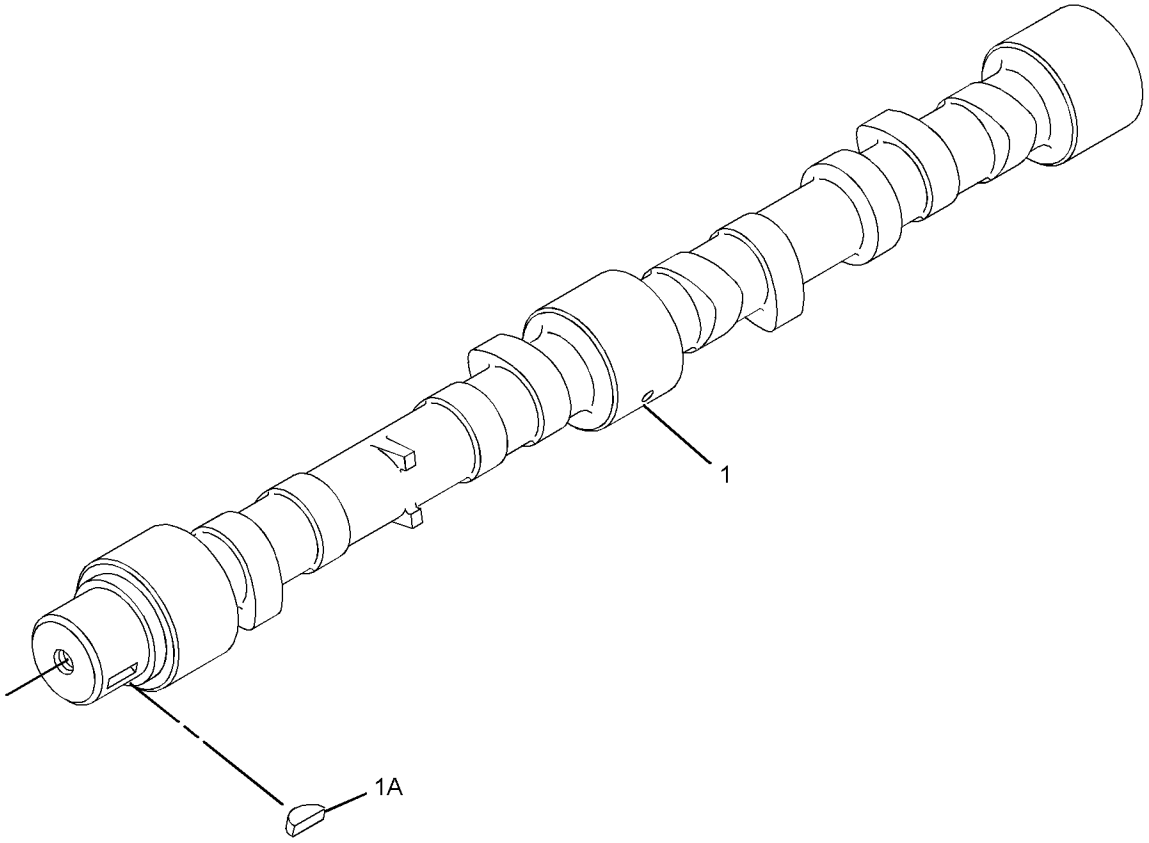

GRAPHIC #1 <END> g01956663

243-4845 CAMSHAFT GP

SMCS-1210 **i03642875**

NOTE	REF NO	GRAPHIC REF	PART NUMBER	QTY	PART NAME 1 2 3 4 5 6 (PRODUCT LEVEL)	SEE PAGE
	1	1	**350-1846**	1	CAMSHAFT AS	
	1A	1	**1B-8736**	1	KEY-WOODRUFF	

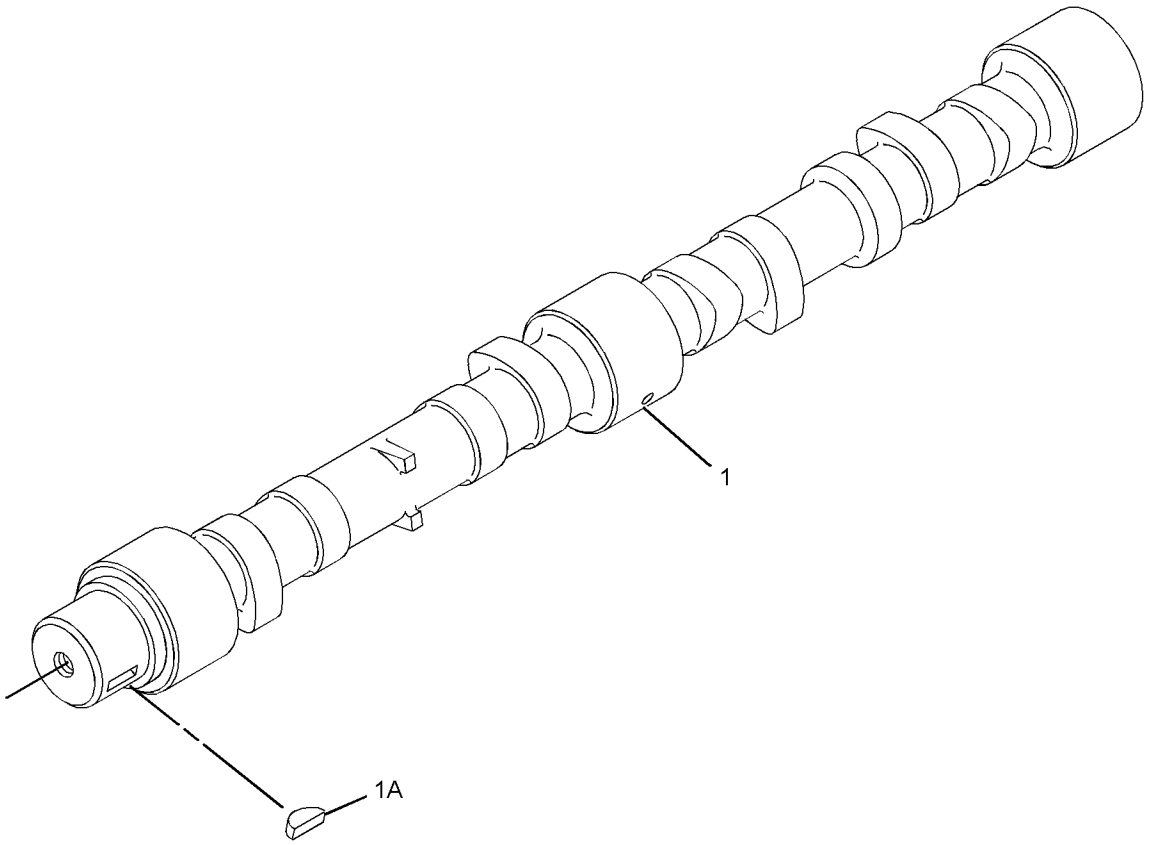

GRAPHIC #1 <END> g01956663

244-2096 CAMSHAFT GP

SMCS-1210 **i03642876**

NOTE	REF NO	GRAPHIC REF	PART NUMBER	QTY	PART NAME 1 2 3 4 5 6 (PRODUCT LEVEL)	SEE PAGE
	1	1	**350-1846**	1	CAMSHAFT AS	
	1A	1	**1B-8736**	1	KEY-WOODRUFF	

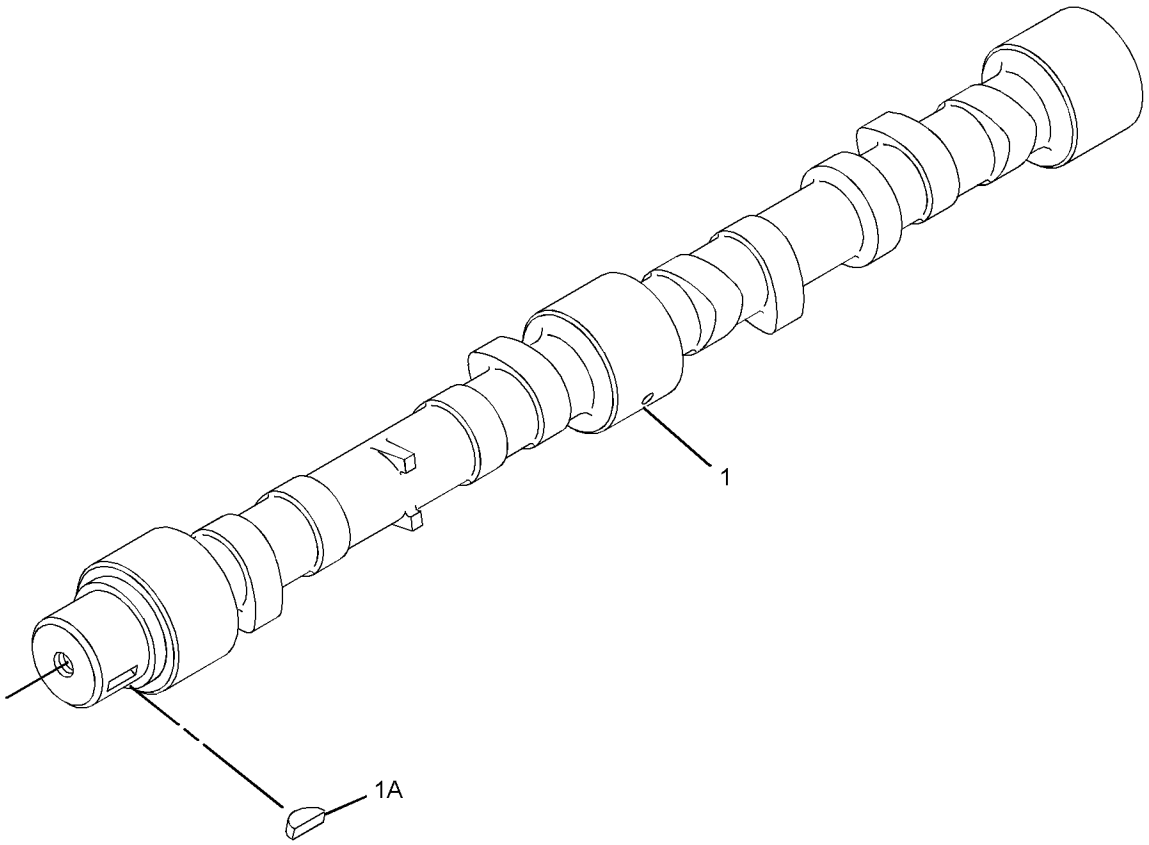

GRAPHIC #1 <END> g01956663

247-4921 CAMSHAFT GP

SMCS-1210 **i03652085**

NOTE	REF NO	GRAPHIC REF	PART NUMBER	QTY	PART NAME 1 2 3 4 5 6 (PRODUCT LEVEL)	SEE PAGE
	1	1	**350-1846**	1	CAMSHAFT AS	
	1A	1	**1B-8736**	1	KEY-WOODRUFF	

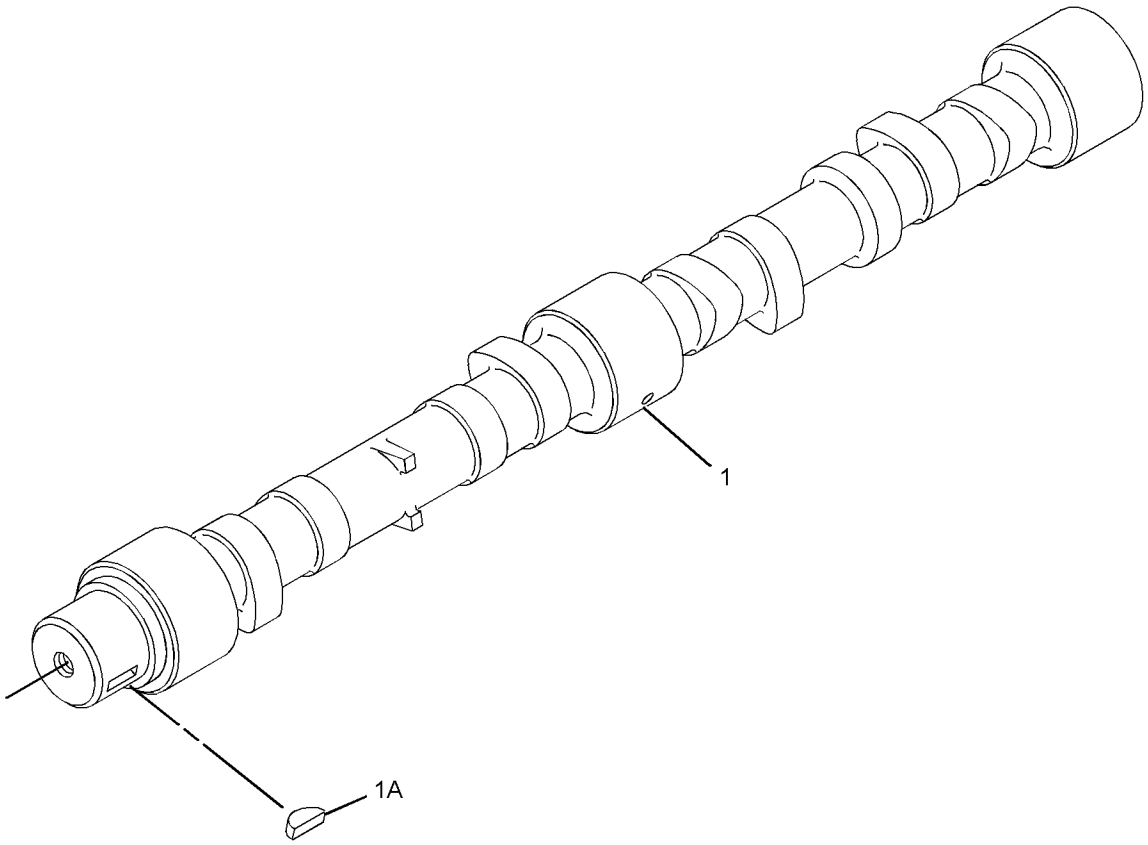

GRAPHIC #1 <END> g01956663

253-8764 CAMSHAFT GP

SMCS-1210 **i03652350**

NOTE	REF NO	GRAPHIC REF	PART NUMBER	QTY	PART NAME 1 2 3 4 5 6 (PRODUCT LEVEL)	SEE PAGE
	1	1	**350-1846**	1	CAMSHAFT AS	
	1A	1	**1B-8736**	1	KEY-WOODRUFF	

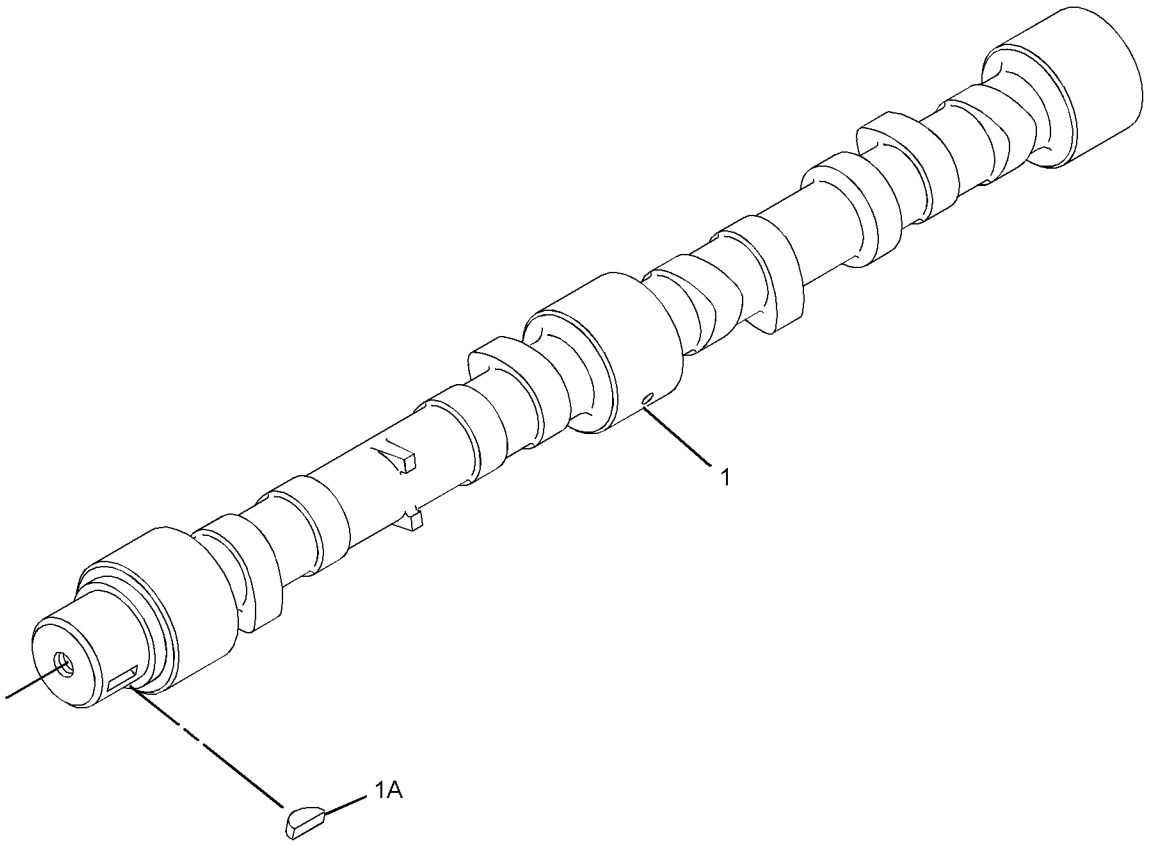

GRAPHIC #1 <END> g01956663

288-1434 CAMSHAFT GP

SMCS-1210 **i06564377**

NOTE	REF NO	GRAPHIC REF	PART NUMBER	QTY	PART NAME 1 2 3 4 5 6 (PRODUCT LEVEL)	SEE PAGE
	1	1	**067-6095**	8	ROD	
	2	1	**464-6253**	8	LIFTER-VALVE	
	3	1	**350-2374**	1	CAMSHAFT AS	
	3A	1	**067-6135**	1	KEY-WOODRUFF	

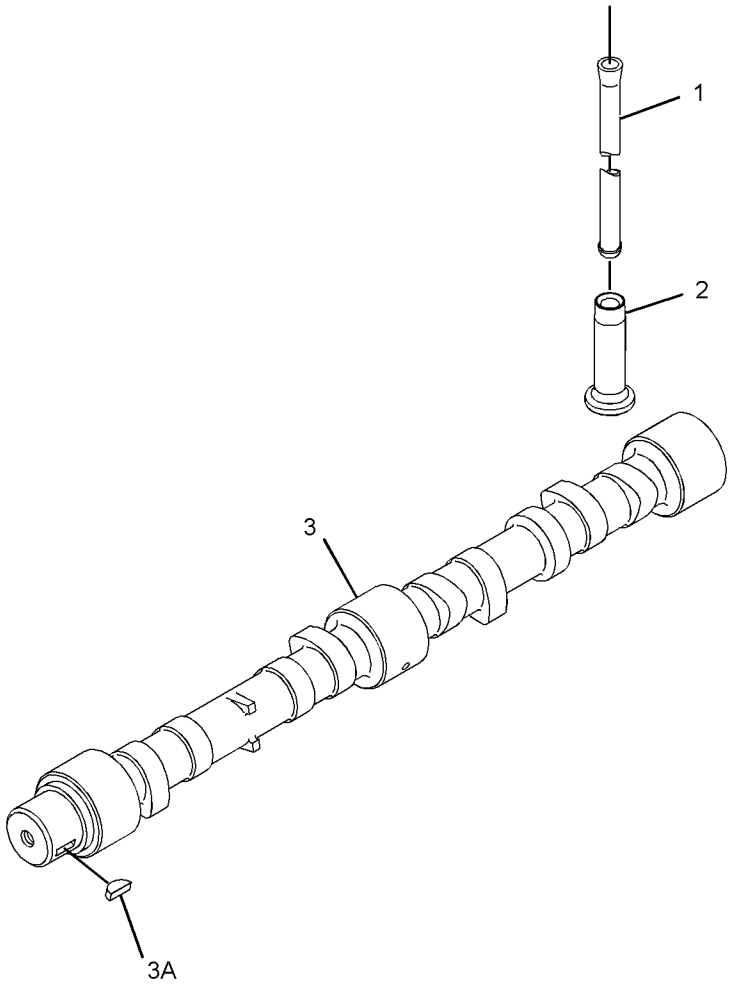

GRAPHIC #1 <END> g06031122

299-2148 CAMSHAFT GP

SMCS-1210 **i06563548**

NOTE	REF NO	GRAPHIC REF	PART NUMBER	QTY	PART NAME 1 2 3 4 5 6 (PRODUCT LEVEL)	SEE PAGE
	1	1	**067-6095**	8	ROD	
	2	1	**464-6253**	8	LIFTER-VALVE	
	3	1	**350-1846**	1	CAMSHAFT AS	
	3A	1	**067-6135**	1	KEY-WOODRUFF	

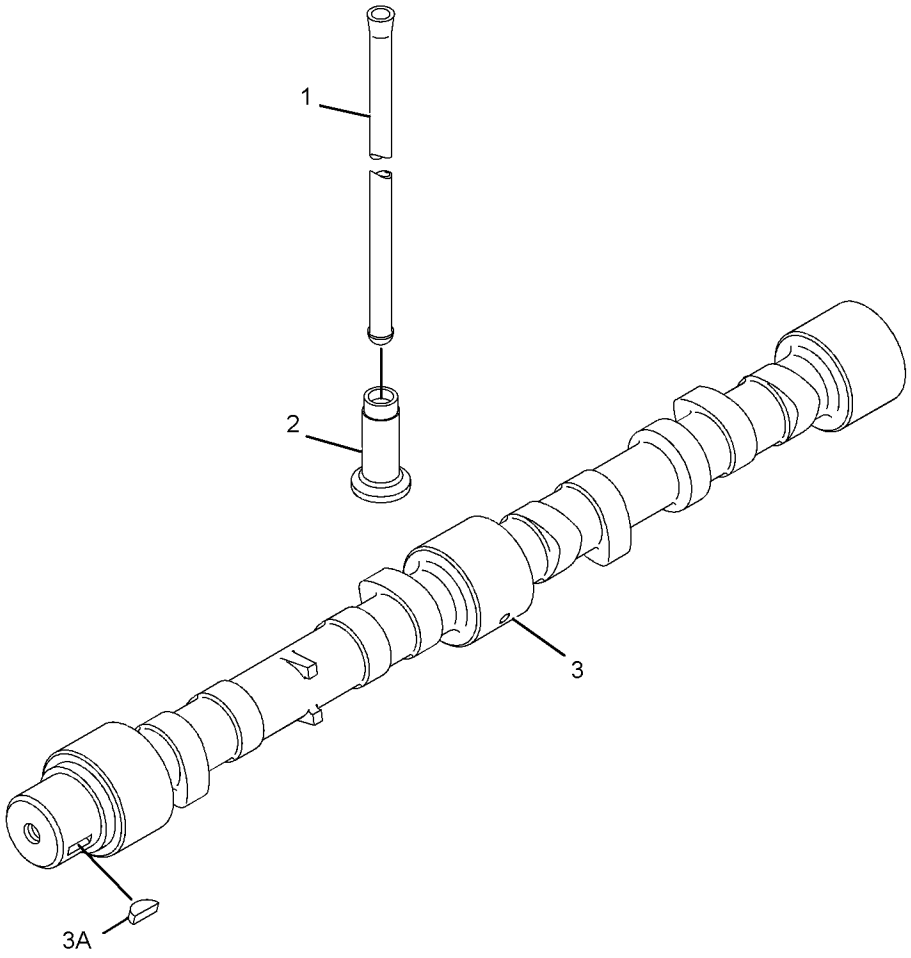

GRAPHIC #1 <END> g01964680

316-8482 CAMSHAFT GP

SMCS-1210 **i07019761**

NOTE	REF NO	GRAPHIC REF	PART NUMBER	QTY	PART NAME 1 2 3 4 5 6 (PRODUCT LEVEL)	SEE PAGE
	1	1	**067-6095**	8	ROD	
	2	1	**464-6253**	8	LIFTER-VALVE	
	3	1	**350-2374**	1	CAMSHAFT AS	
	3A	1	**1B-8736**	1	KEY-WOODRUFF	

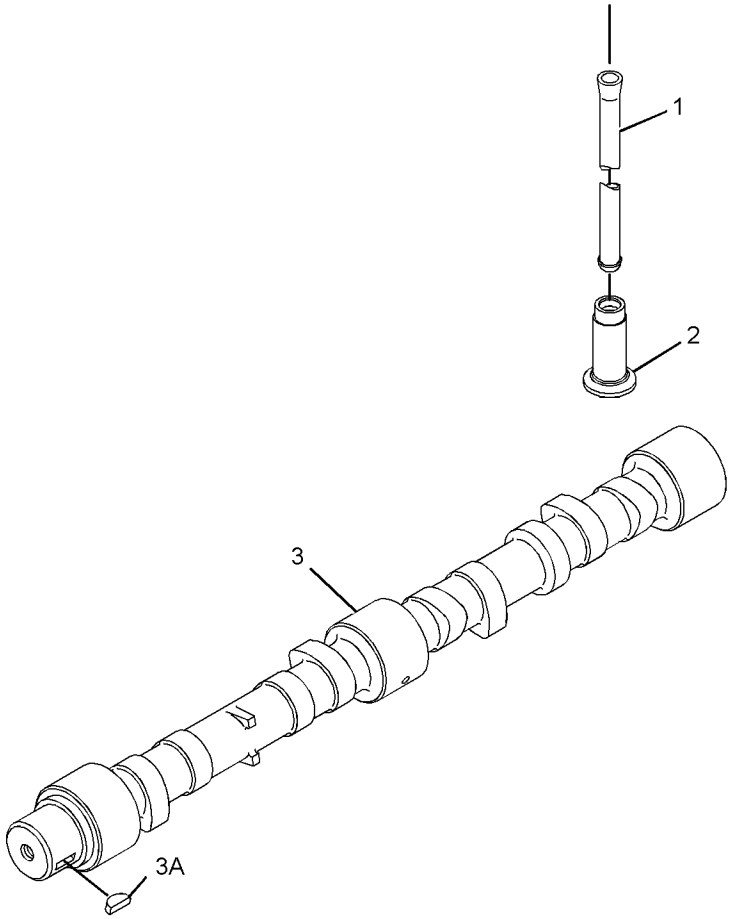

GRAPHIC #1 <END> g01964670

367-2089 CAMSHAFT GP

SMCS-1210 **i06559885**

NOTE	REF NO	GRAPHIC REF	PART NUMBER	QTY	PART NAME 1 2 3 4 5 6 (PRODUCT LEVEL)	SEE PAGE
	1	1	**067-6095**	8	ROD	
	2	1	**464-6253**	8	LIFTER-VALVE	
	3	1	**350-1846**	1	CAMSHAFT AS	
	3A	1	**067-6135**	1	KEY-WOODRUFF	

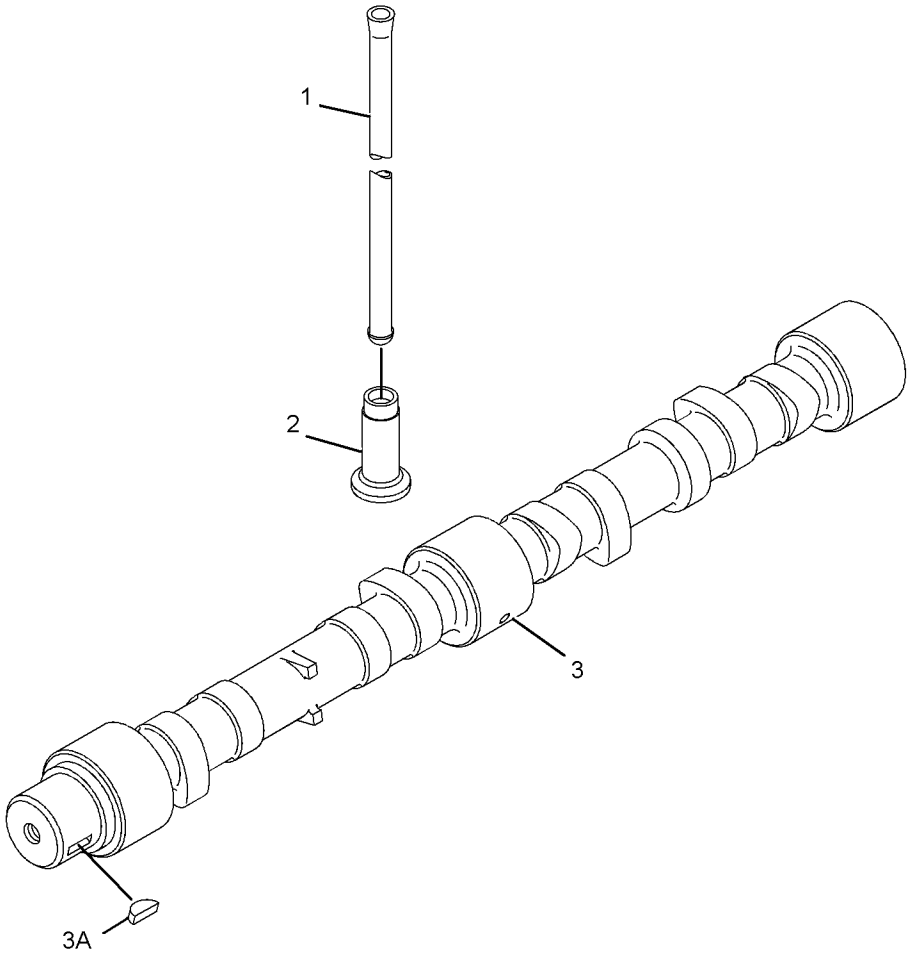

GRAPHIC #1 <END> g01964680

367-2792 CAMSHAFT GP

SMCS-1210 **i06559883**

NOTE	REF NO	GRAPHIC REF	PART NUMBER	QTY	PART NAME 1 2 3 4 5 6 (PRODUCT LEVEL)	SEE PAGE
	1	1	**067-6095**	8	ROD	
	2	1	**464-6253**	8	LIFTER-VALVE	
	3	1	**350-2374**	1	CAMSHAFT AS	
	3A	1	**067-6135**	1	KEY-WOODRUFF	

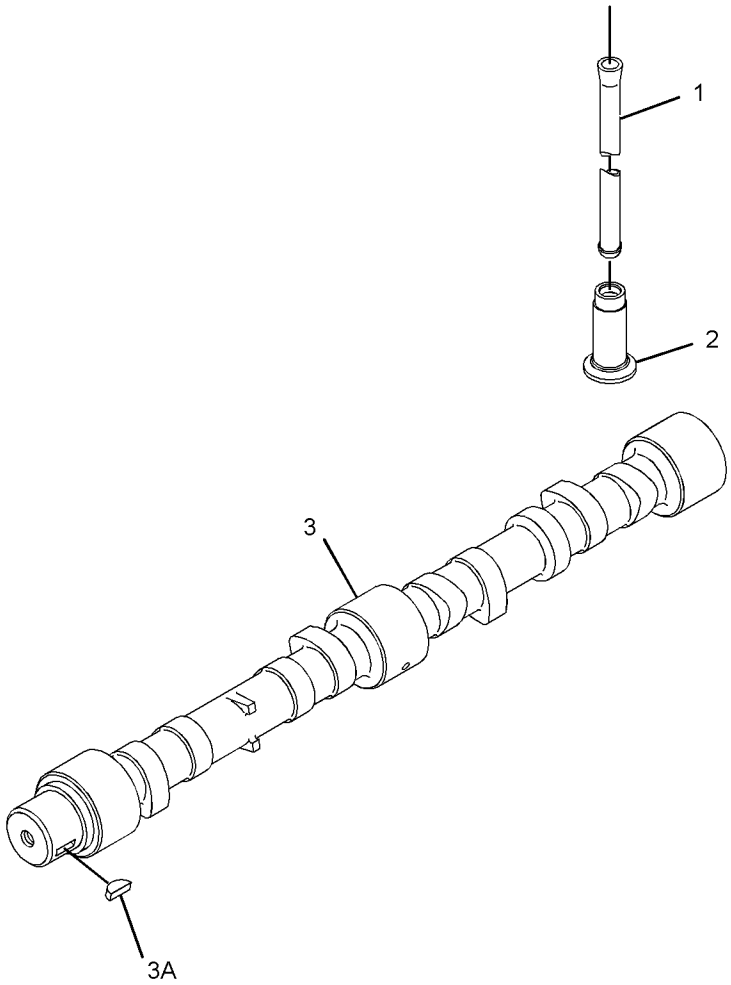

GRAPHIC #1 <END> g03337967

460-0745 CAMSHAFT GP

SMCS-1210 **i06564197**

NOTE	REF NO	GRAPHIC REF	PART NUMBER	QTY	PART NAME 1 2 3 4 5 6 (PRODUCT LEVEL)	SEE PAGE
	1	1	**067-6095**	8	ROD	
	2	1	**464-6253**	8	LIFTER-VALVE	
	3	1	**350-2374**	1	CAMSHAFT AS	
	3A	1	**067-6135**	1	KEY-WOODRUFF	

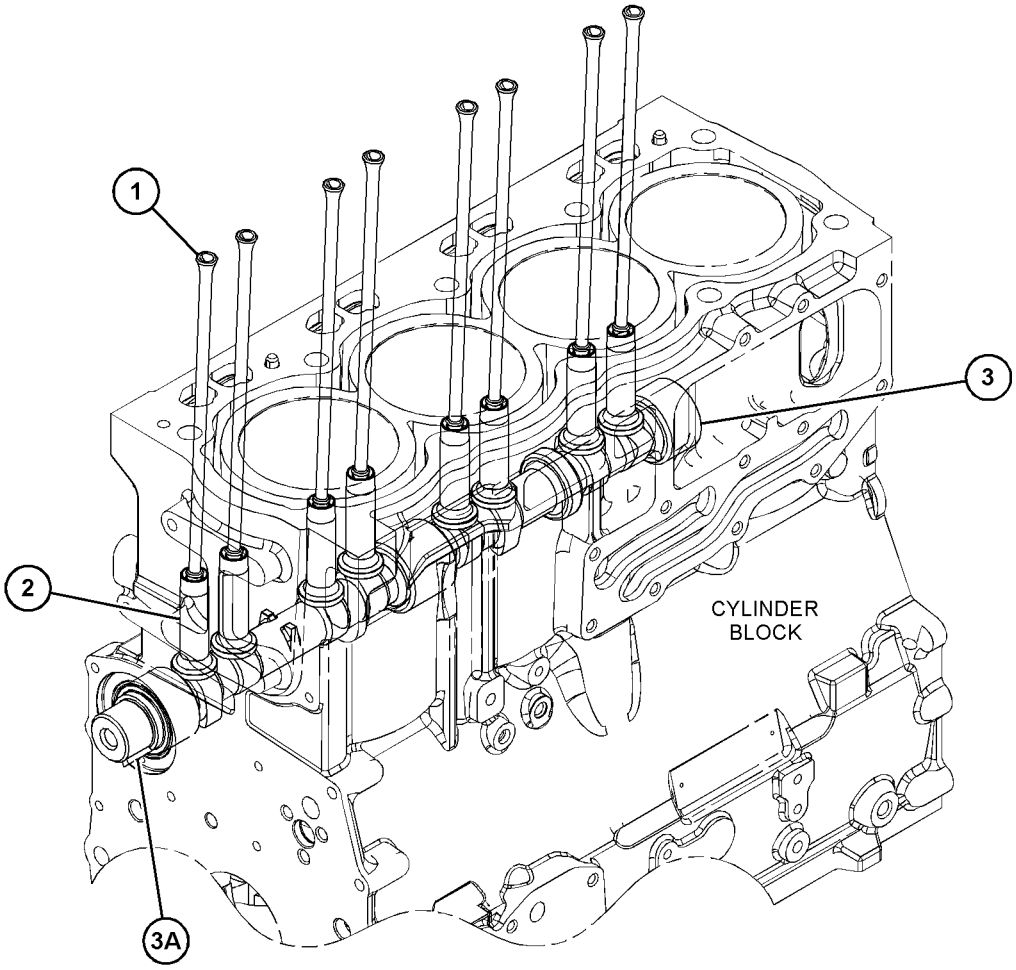

GRAPHIC #1 <END> g06035350

478-6461 CAMSHAFT GP

SMCS-1210 **i06564366**

NOTE	REF NO	GRAPHIC REF	PART NUMBER	QTY	PART NAME 1 2 3 4 5 6 (PRODUCT LEVEL)	SEE PAGE
	1	1	**067-6095**	8	ROD	
	2	1	**464-6253**	8	LIFTER-VALVE	
	3	1	**350-2374**	1	CAMSHAFT AS	
	3A	1	**067-6135**	1	KEY-WOODRUFF	

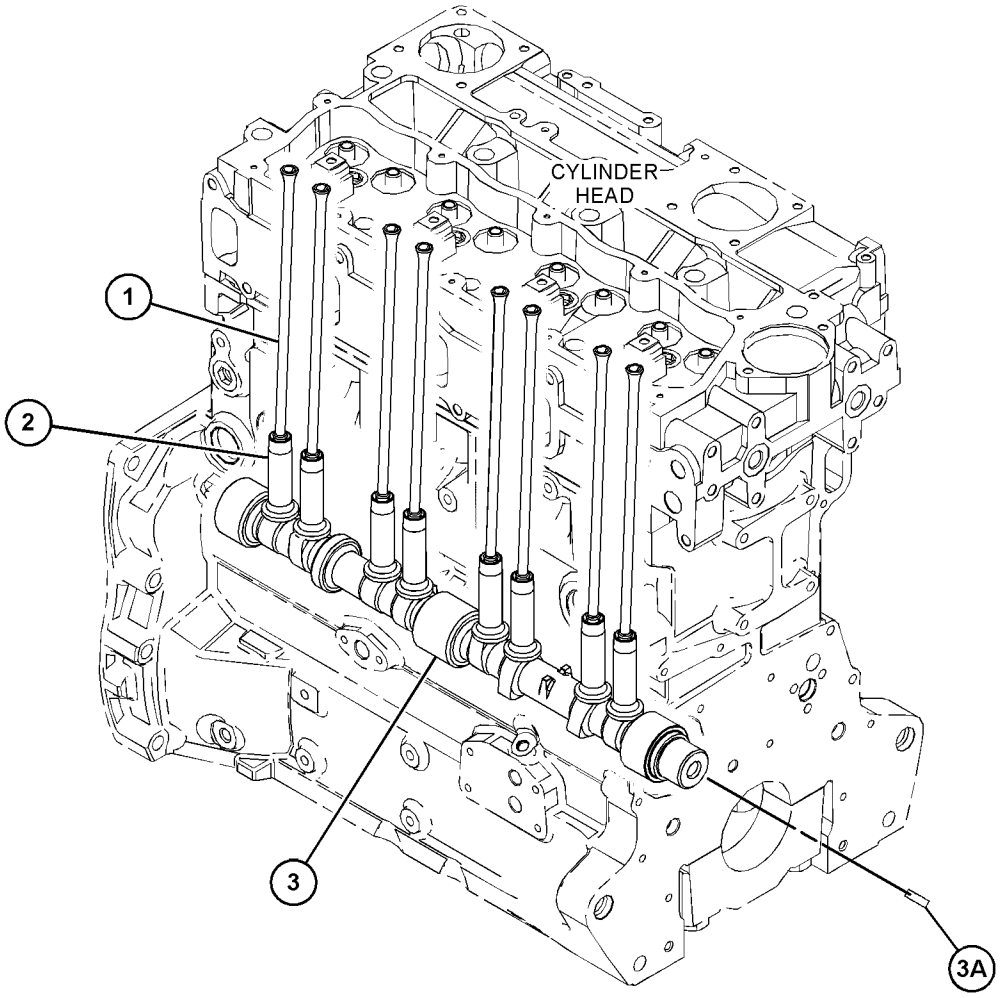

GRAPHIC #1 <END> g03875337

251-6242 COVER GP-CYLINDER HEAD

SMCS-1100 **i03821212**

NOTE	REF NO	GRAPHIC REF	PART NUMBER	QTY	PART NAME 1 2 3 4 5 6 (PRODUCT LEVEL)	SEE PAGE
M	1	1	**111-8222**	8	BOLT (M8X1.25X16-MM)	
	2	1	**114-2579**	3	GASKET	
	3	1	**185-6627**	3	PLATE	
M	4	1	**251-6241**	4	SCREW (M8X1.25X20-MM)	

M - METRIC PART

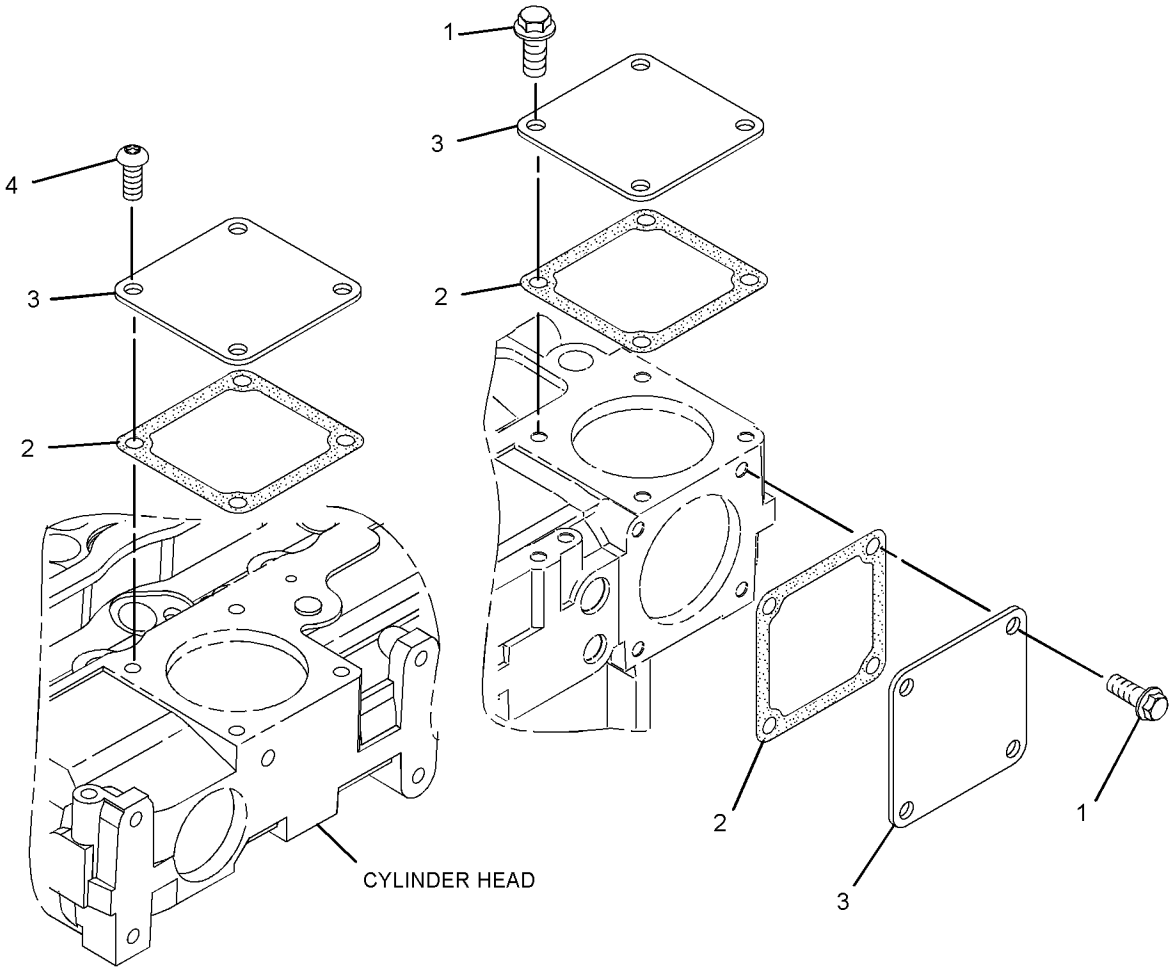

GRAPHIC #1 <END> g02109000

272-2230 COVER GP-CYLINDER HEAD

SMCS-1100 **i03823110**

NOTE	REF NO	GRAPHIC REF	PART NUMBER	QTY	PART NAME 1 2 3 4 5 6 (PRODUCT LEVEL)	SEE PAGE
M	1	1	**111-8222**	12	BOLT (M8X1.25X16-MM)	
	2	1	**114-2579**	3	GASKET	
	3	1	**185-6627**	3	PLATE	

M - METRIC PART

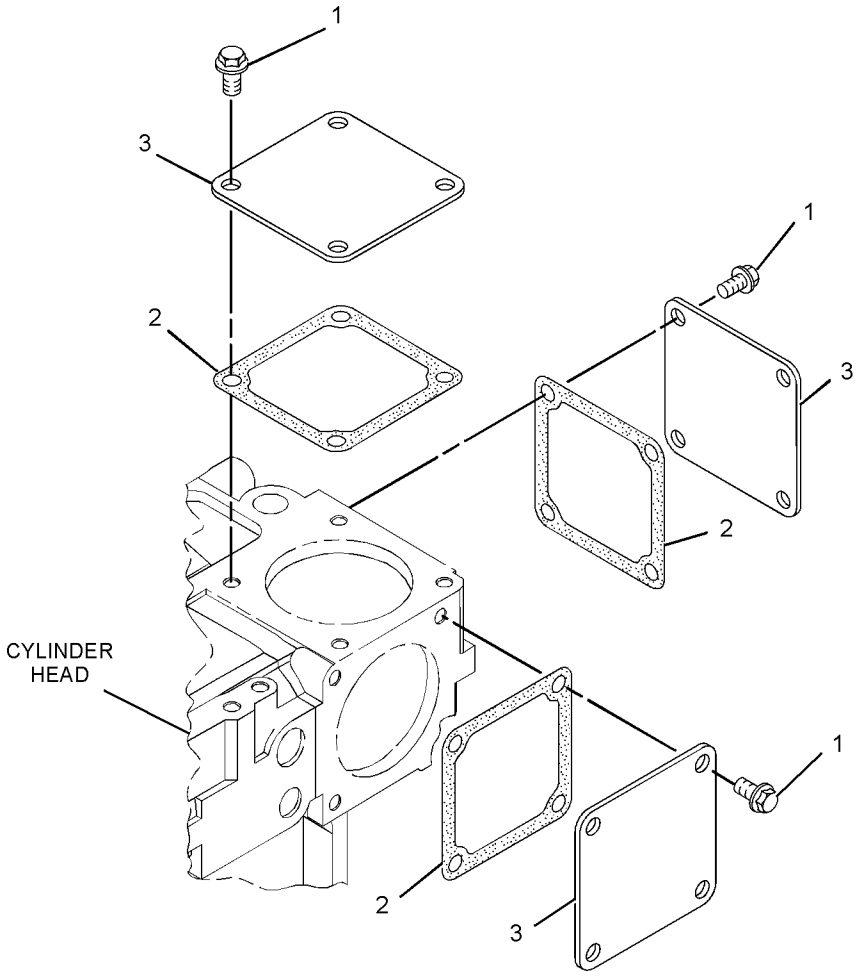

GRAPHIC #1 <END> g02131938

446-9143 COVER GP-CYLINDER HEAD

PART OF 237-2790, 303-2205, 328-8203 COVER GP-VALVE MECHANISM

SMCS-1100 **i07391782**

NOTE	REF NO	GRAPHIC REF	PART NUMBER	QTY	PART NAME 1 2 3 4 5 6 (PRODUCT LEVEL)	SEE PAGE
	1	1	**225-6451**	1	GASKET (VALVE COVER)	
	2	1	**225-6478**	4	SCREW-MACHINE	
	3	1	**292-9008**	1	SEAL	
	4	1	**431-1704**	1	PLATE	
	5	1	**349-2746**	10	BOLT	

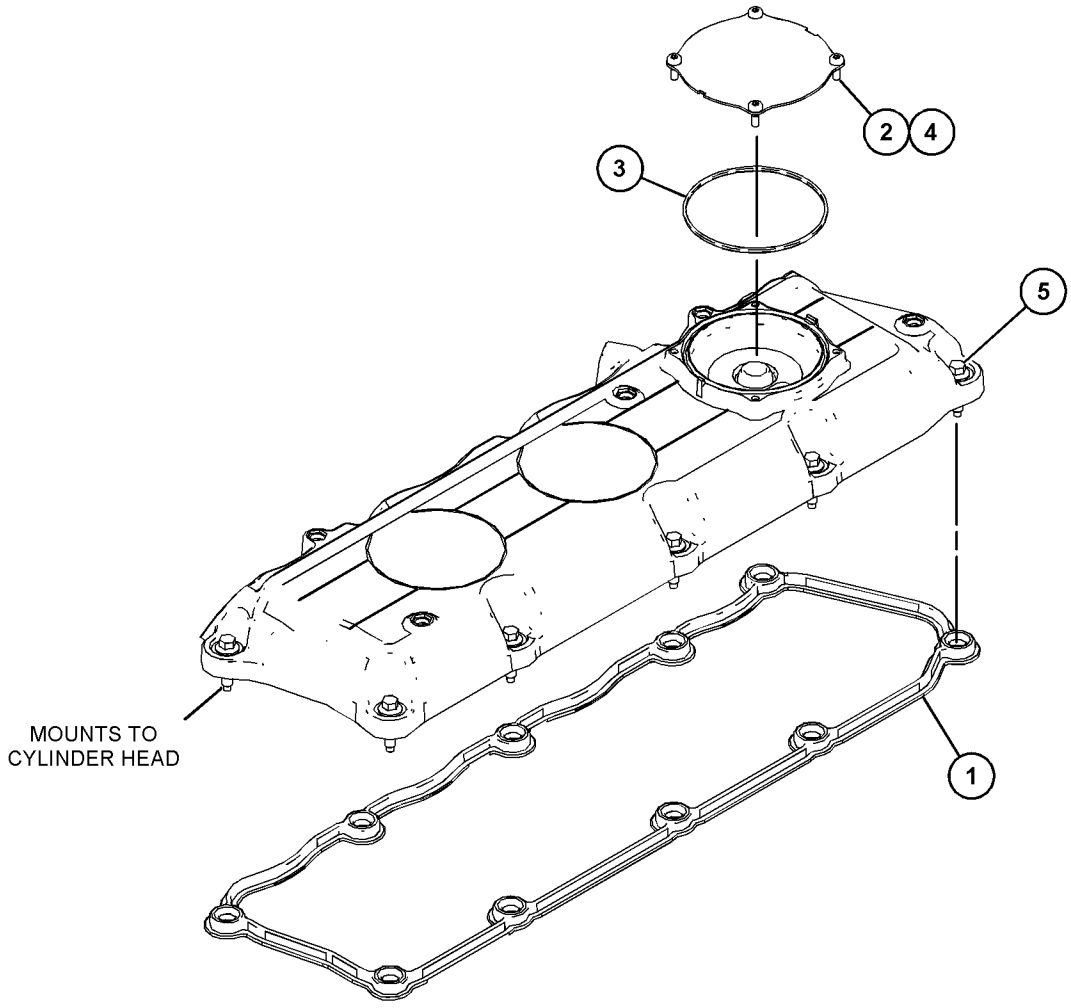

GRAPHIC #1 <END> g03774038

446-9162 COVER GP-CYLINDER HEAD

PART OF 238-2777, 270-4368, 270-8904 COVER GP-VALVE MECHANISM
ALSO AN ATTACHMENT

SMCS-1100 **i07392069**

NOTE	REF NO	GRAPHIC REF	PART NUMBER	QTY	PART NAME 1 2 3 4 5 6 (PRODUCT LEVEL)	SEE PAGE
	1	1	**225-6451**	1	GASKET (VALVE COVER)	
	2	1	**225-6478**	4	SCREW-MACHINE	
	3	1	**292-9008**	1	SEAL	
	4	1	**431-1704**	1	PLATE	
	5	1	**349-2746**	10	BOLT	

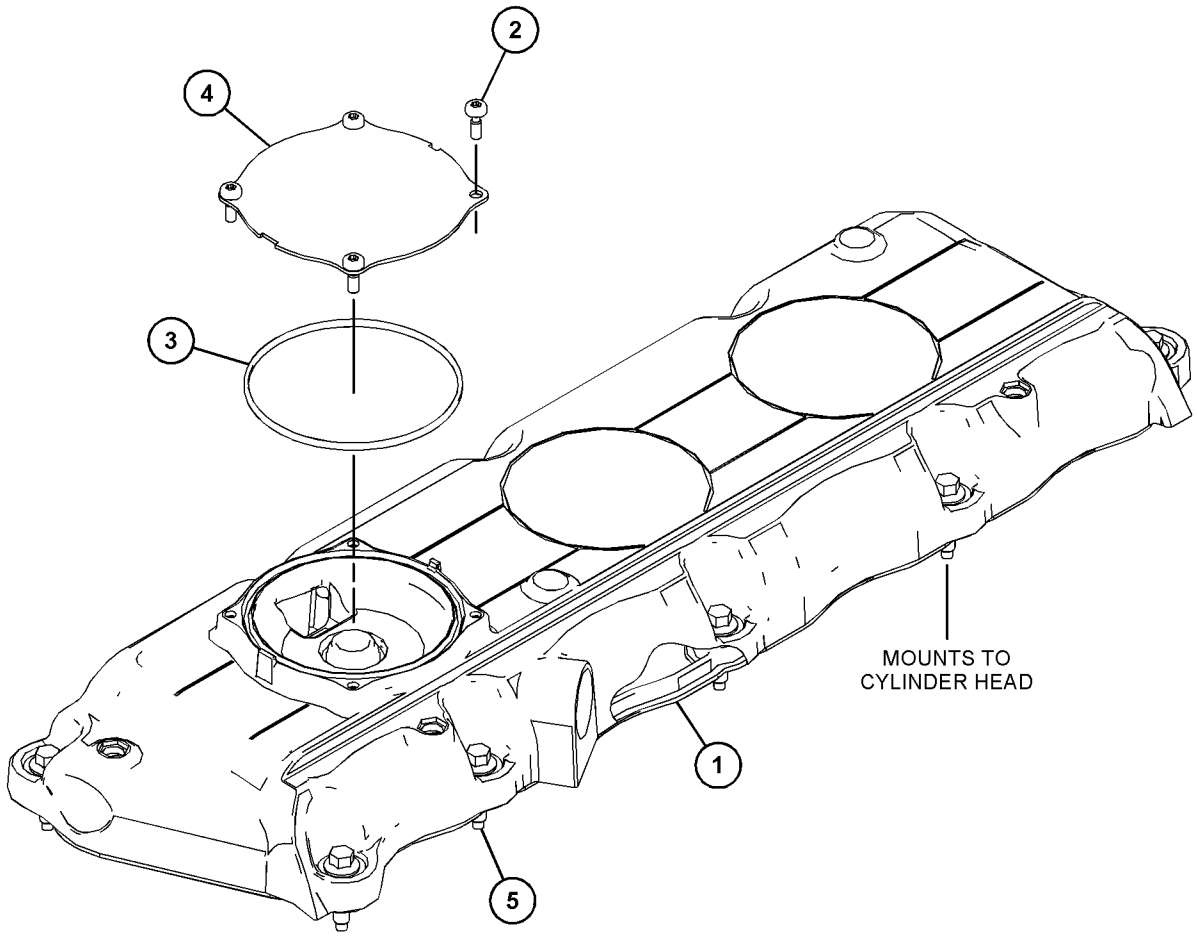

GRAPHIC #1 <END> g03860035

446-9163 COVER GP-CYLINDER HEAD

PART OF 230-9149, 230-9150, 236-1238, 269-3101, 288-1532, 293-7195 COVER GP-VALVE MECHANISM
ALSO AN ATTACHMENT

SMCS-1100 **i06078646**

NOTE	REF NO	GRAPHIC REF	PART NUMBER	QTY	PART NAME 1 2 3 4 5 6 (PRODUCT LEVEL)	SEE PAGE
	1	1	**225-6451**	1	GASKET (VALVE COVER)	
	2	1	**225-6478**	4	SCREW-MACHINE	
	3	1	**431-1704**	1	PLATE	
	4	1	**136-3608**	1	CAP AS (ENGINE OIL FILLER)	
	4A	1	**124-0506**	1	SEAL	
	5	1	**349-2746**	10	BOLT	
	6	1	**292-9008**	1	SEAL	

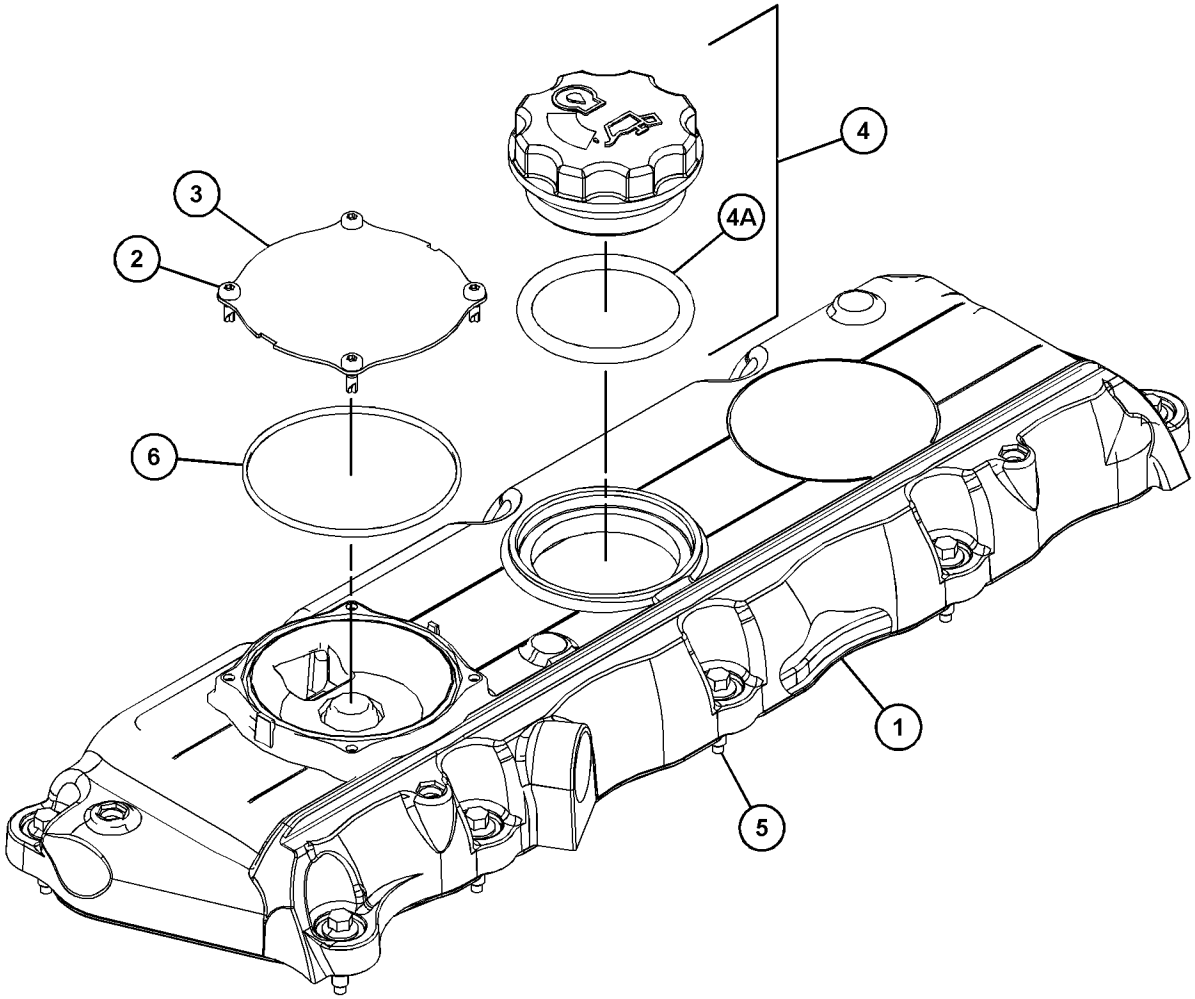

GRAPHIC #1 <END> g03809479

521-8085 COVER GP-CYLINDER HEAD

S/N: 33411289-UP

PART OF 293-7195 COVER GP-VALVE MECHANISM

SMCS-1100 **i07552344**

NOTE	REF NO	GRAPHIC REF	PART NUMBER	QTY	PART NAME 1 2 3 4 5 6 (PRODUCT LEVEL)	SEE PAGE
	1	1	**225-6451**	1	GASKET (VALVE COVER)	
	2	1	**225-6478**	4	SCREW-MACHINE	
	3	1	**431-1704**	1	PLATE	
	4	1	**136-3608**	1	CAP AS (ENGINE OIL FILLER)	
	4A	1	**124-0506**	1	SEAL	
	5	1	**349-2746**	10	BOLT	
	6	1	**292-9008**	1	SEAL	

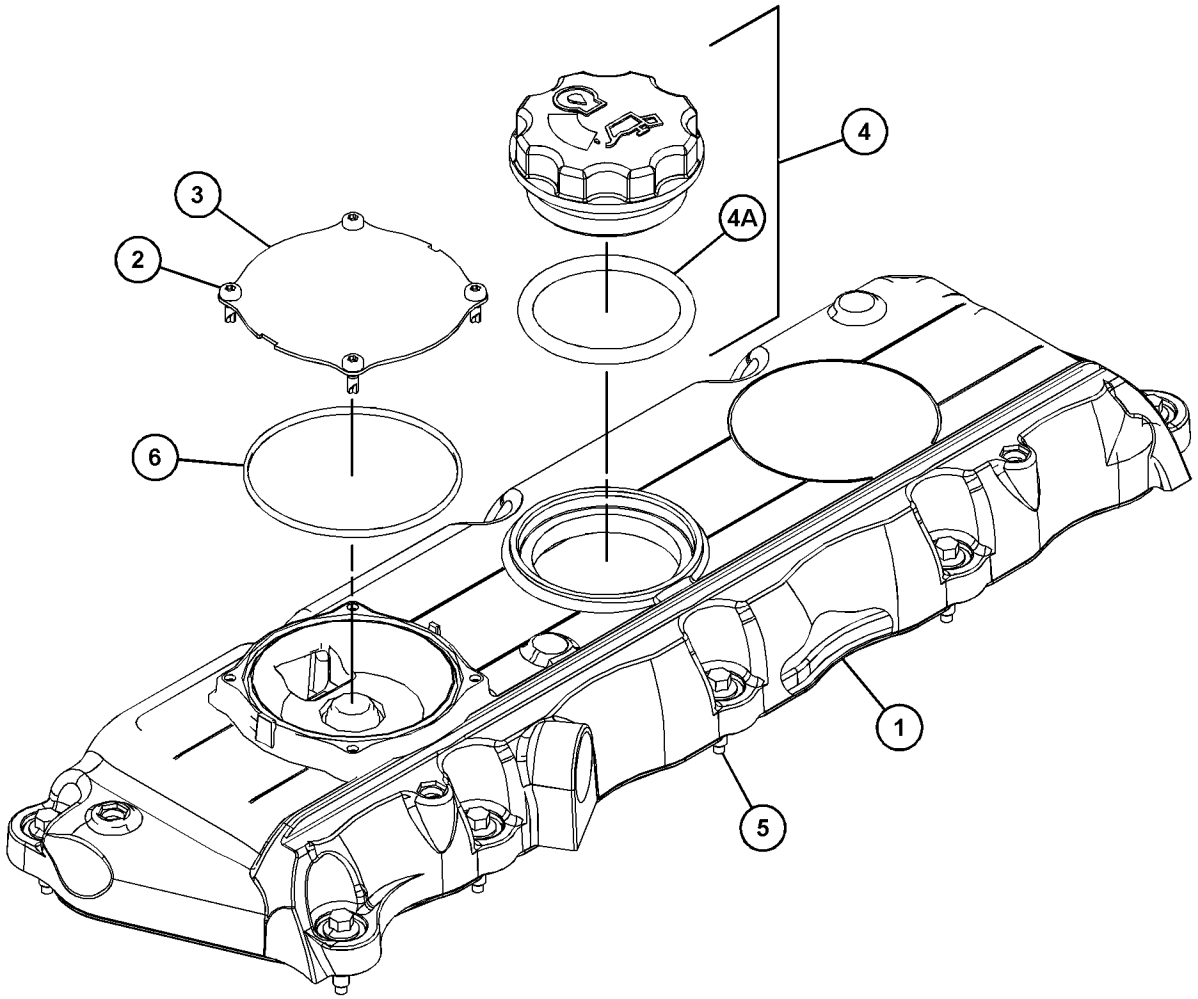

GRAPHIC #1 <END> g03809479

521-8086 COVER GP-CYLINDER HEAD

PART OF 230-9128, 230-9139, 230-9149, 230-9150, 235-8161, 236-1238, 269-3101, 288-1532 COVER GP-VALVE MECHANISM
ALSO AN ATTACHMENT

SMCS-1100 **i07391299**

NOTE	REF NO	GRAPHIC REF	PART NUMBER	QTY	PART NAME 1 2 3 4 5 6 (PRODUCT LEVEL)	SEE PAGE
	1	1	**225-6451**	1	GASKET (VALVE COVER)	
	2	1	**225-6456**	1	SPRING	
	3	1	**225-6461**	1	CAP	
	4	1	**225-6464**	1	DIAPHRAGM (CRANKCASE PRESSURE CONTACTOR)	
	5	1	**225-6477**	1	PLATE	
	6	1	**225-6478**	4	SCREW-MACHINE	
	7	1	**349-2746**	10	BOLT	
	8	1	**136-3608**	1	CAP AS (ENGINE OIL FILLER)	
	8A	1	**124-0506**	1	SEAL	
	9	1	**225-6479**	1	CAP	

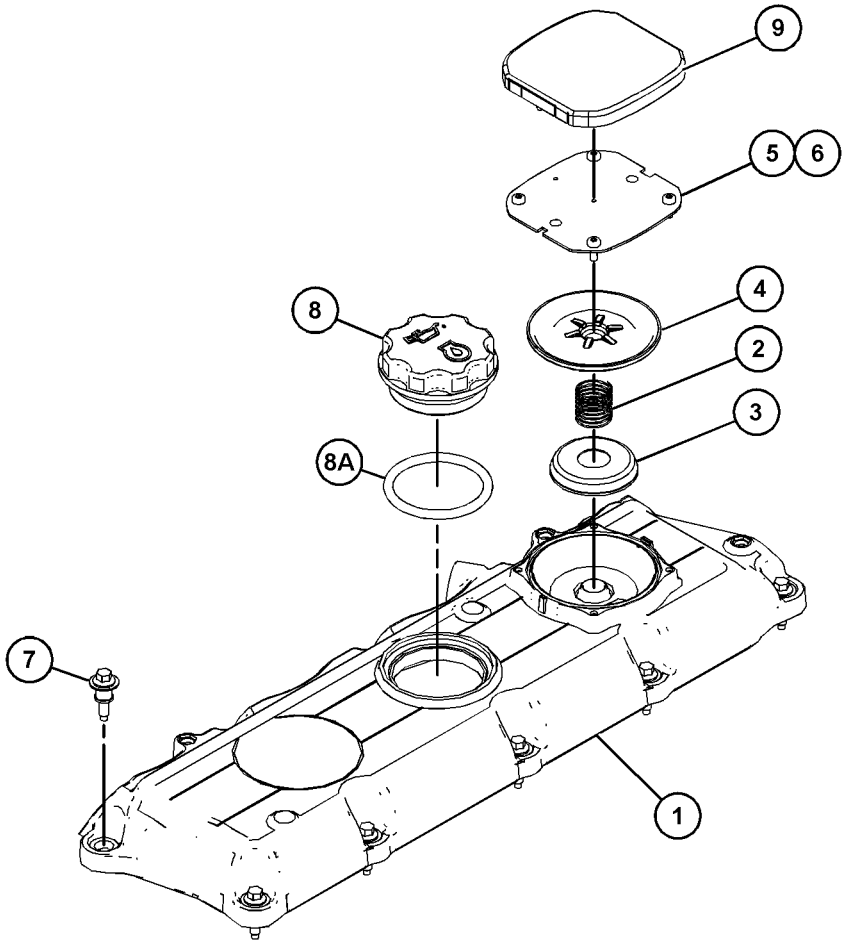

GRAPHIC #1 <END> g06194508

521-8087 COVER GP-CYLINDER HEAD

PART OF 236-8190, 272-2228, 273-0871 COVER GP-VALVE MECHANISM
ALSO AN ATTACHMENT

SMCS-1100 **i09565279**

NOTE	REF NO	GRAPHIC REF	PART NUMBER	QTY	PART NAME 1 2 3 4 5 6 (PRODUCT LEVEL)	SEE PAGE
	1	1	**225-6451**	1	GASKET (VALVE COVER)	
	2	1	**225-6456**	1	SPRING	
	3	1	**225-6461**	1	CAP	
	4	1	**225-6464**	1	DIAPHRAGM (CRANKCASE PRESSURE CONTACTOR)	
	5	1	**225-6477**	1	PLATE	
	6	1	**225-6478**	4	SCREW-MACHINE	
	7	1	**349-2746**	10	BOLT	
	8	1	**136-3608**	1	CAP AS (ENGINE OIL FILLER)	
	8A	1	**124-0506**	1	SEAL	
	9	1	**225-6479**	1	CAP	
	10	1	**520-6710**	1	COVER-VALVE MECHANISM	

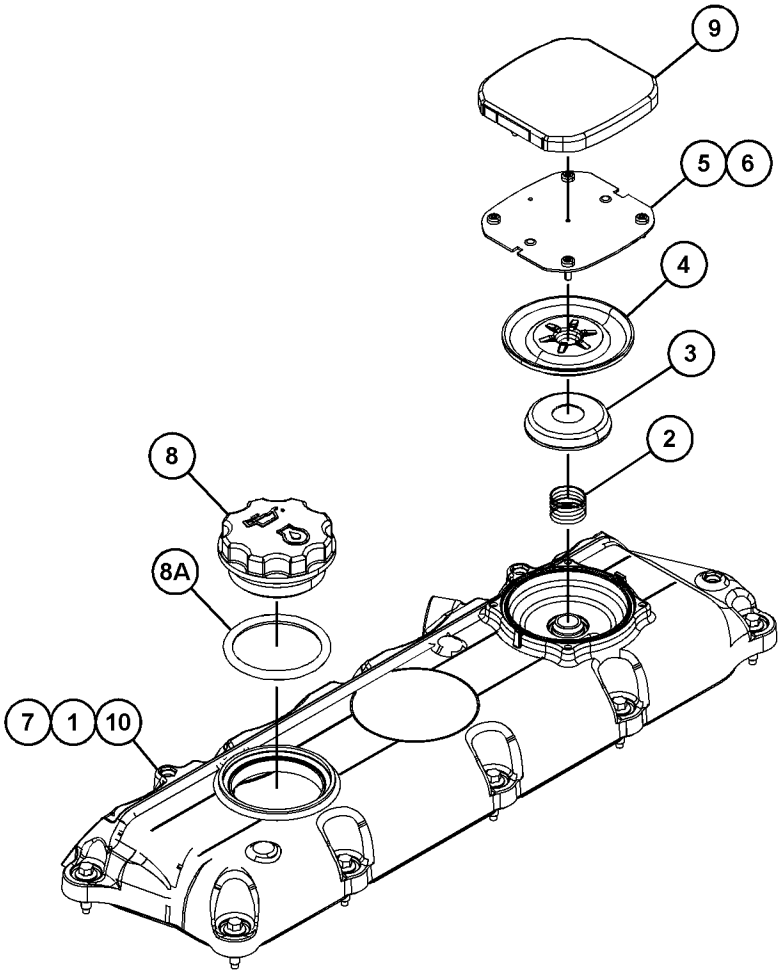

GRAPHIC #1 <END> g07494688

521-8088 COVER GP-CYLINDER HEAD

PART OF 367-2220 COVER GP-VALVE MECHANISM

SMCS-1100 **i07580220**

NOTE	REF NO	GRAPHIC REF	PART NUMBER	QTY	PART NAME 1 2 3 4 5 6 (PRODUCT LEVEL)	SEE PAGE
	1	1	**225-6451**	1	GASKET (VALVE COVER)	
	2	1	**225-6478**	4	SCREW-MACHINE	
	3	1	**292-9008**	1	SEAL	
	4	1	**431-1704**	1	PLATE	
	5	1	**349-2746**	10	BOLT	
	6	1	**136-3608**	1	CAP AS (ENGINE OIL FILLER)	
	6A	1	**124-0506**	1	SEAL	

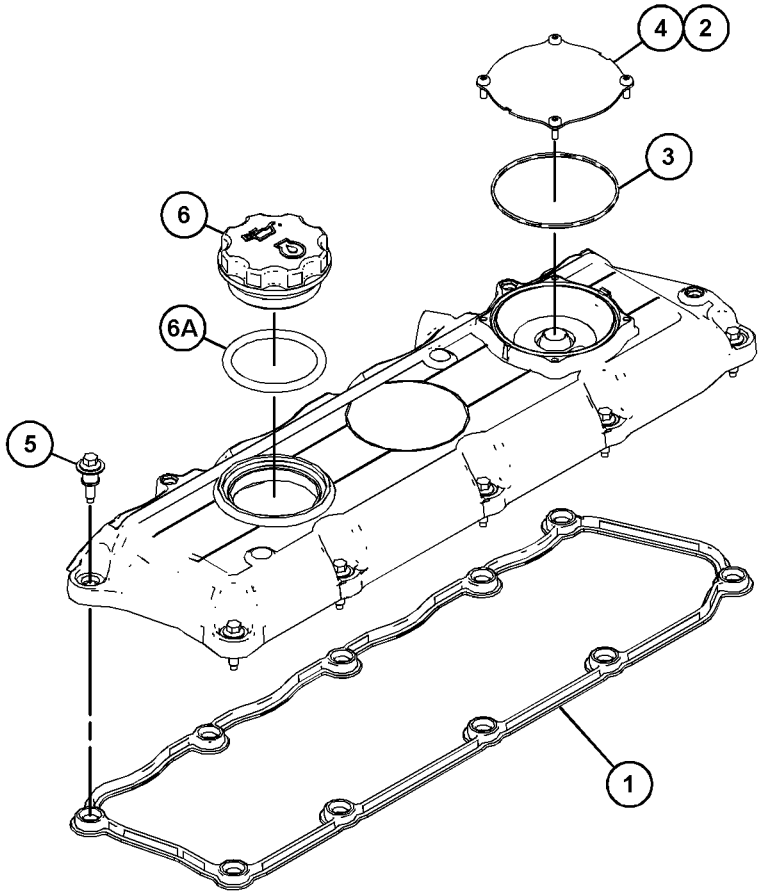

GRAPHIC #1 <END> g06194523

247-4923 COVER GP-ENGINE

TYPE 1

SMCS-795C **i02603922**

NOTE	REF NO	GRAPHIC REF	PART NUMBER	QTY	PART NAME 1 2 3 4 5 6 (PRODUCT LEVEL)	SEE PAGE
M	1	1	**100-4830**	1	BOLT (M10X1.5X20-MM)	
M	2	1	**111-8222**	5	BOLT (M8X1.25X16-MM)	
	3	1	**209-5502**	1	COVER AS (POWER TAKE-OFF)	
	4	1	**209-5503**	1	SEAL-COVER	
M	5	1	**6I-0646**	1	BOLT (M10X1.5X14-MM)	
	6	1	**214-3203**	1	WASHER (SEALING)	

M - METRIC PART

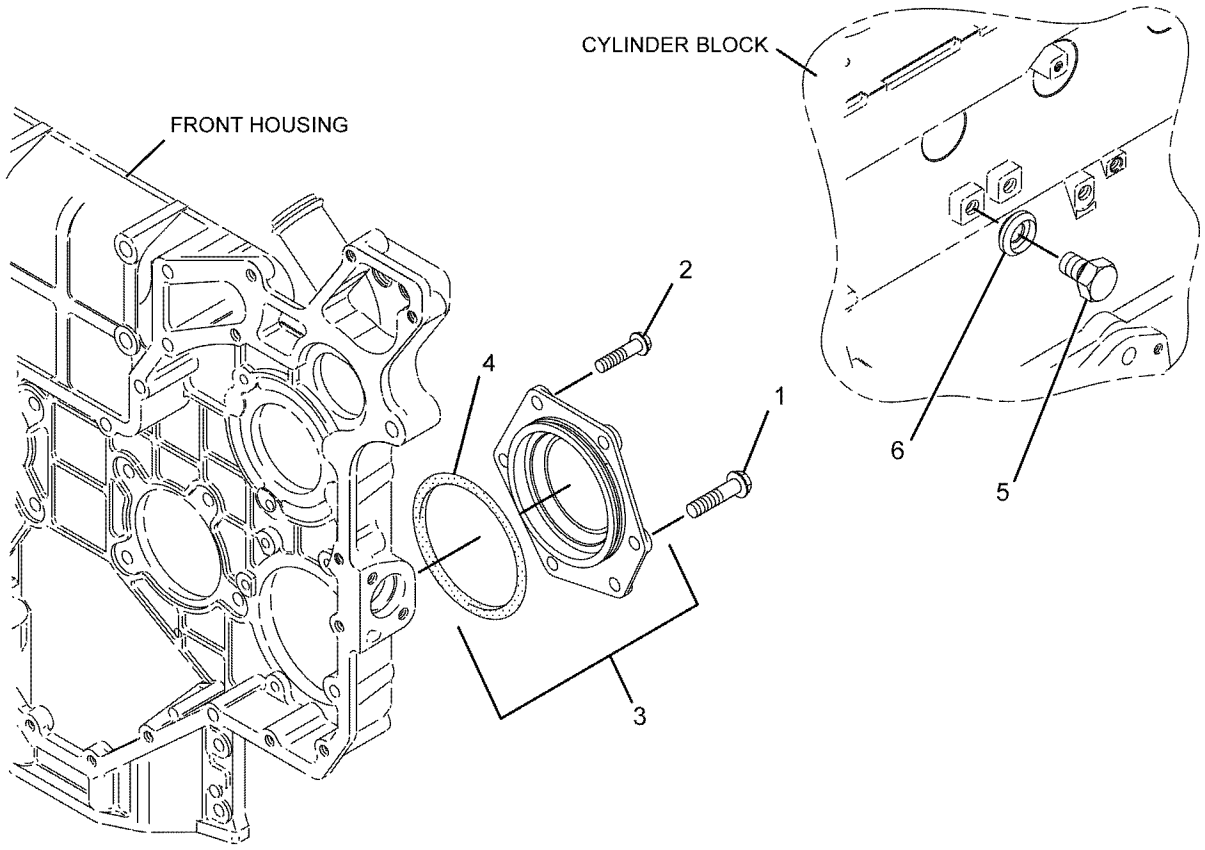

GRAPHIC #1 <END> g01116952

247-4923 COVER GP-ENGINE

TYPE 2

SMCS-795C **i03257580**

NOTE	REF NO	GRAPHIC REF	PART NUMBER	QTY	PART NAME 1 2 3 4 5 6 (PRODUCT LEVEL)	SEE PAGE
M	1	1	**100-4830**	1	BOLT (M10X1.5X20-MM)	
M	2	1	**111-8222**	5	BOLT (M8X1.25X16-MM)	
	3	1	**329-7854**	1	PLATE AS	
	4	1	**329-7856**	1	SEAL-O-RING	
M	5	1	**6I-0646**	1	BOLT (M10X1.5X14-MM)	
	6	1	**214-3203**	1	WASHER (SEALING)	

M - METRIC PART

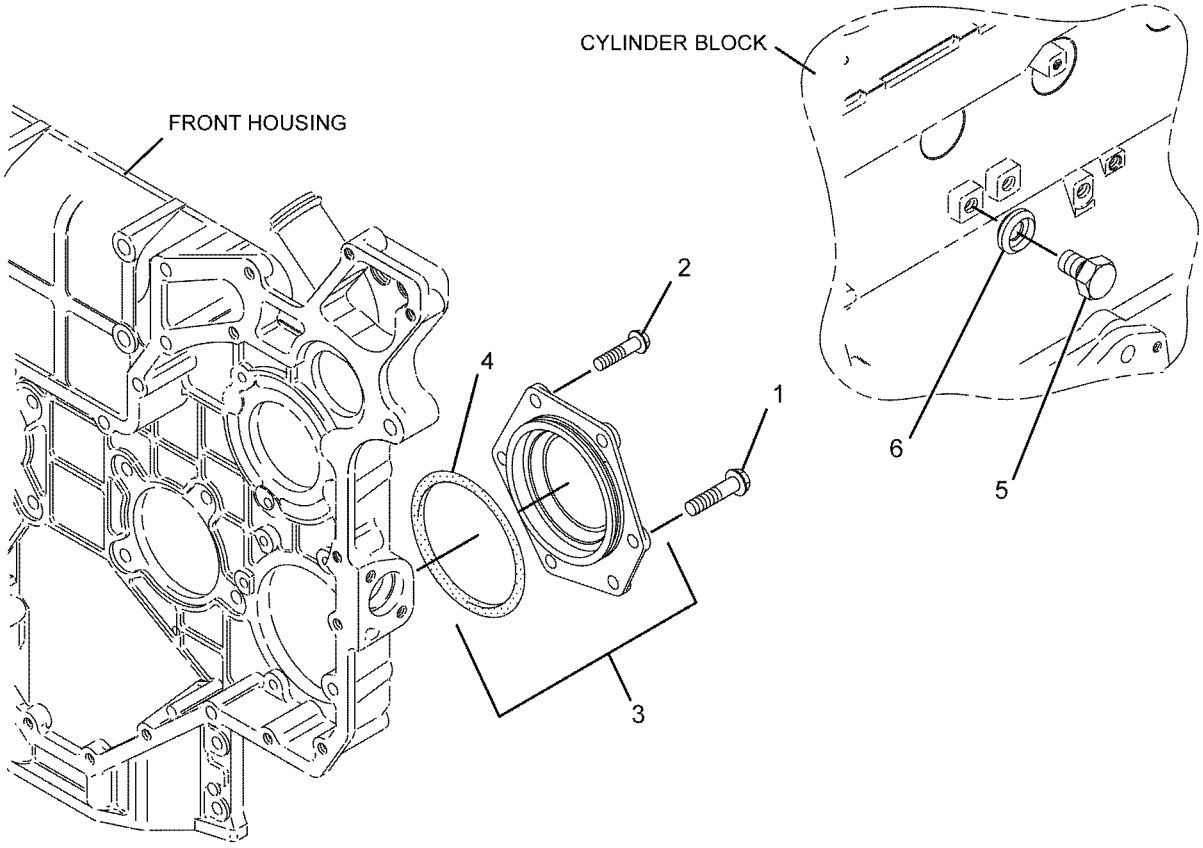

GRAPHIC #1 <END> g01116952

327-0093 COVER GP-ENGINE

SMCS-795C **i02956570**

NOTE	REF NO	GRAPHIC REF	PART NUMBER	QTY	PART NAME 1 2 3 4 5 6 (PRODUCT LEVEL)	SEE PAGE
M	1	1	**6I-0572**	4	BOLT (M8X1.25X20-MM)	
M	2	1	**111-8222**	8	BOLT (M8X1.25X16-MM)	
	3	1	**114-2579**	3	GASKET	
	4	1	**185-6627**	2	PLATE	

M - METRIC PART

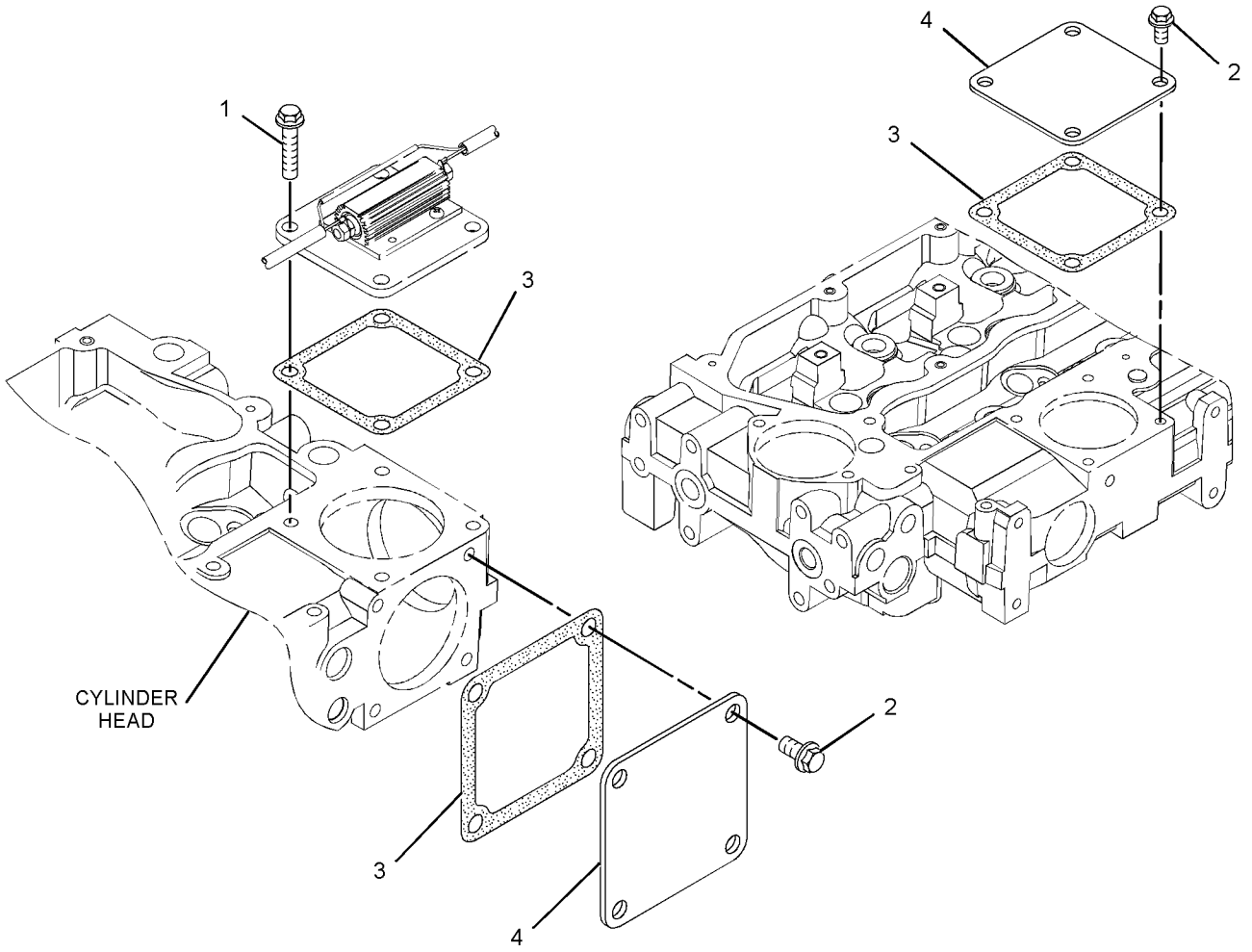

GRAPHIC #1 <END> g01539153

230-9196 COVER GP-FRONT HOUSING

ALSO AN ATTACHMENT

SMCS-1151, 1166 **i02655372**

NOTE	REF NO	GRAPHIC REF	PART NUMBER	QTY	PART NAME 1 2 3 4 5 6 (PRODUCT LEVEL)	SEE PAGE
M	1	1	**100-4830**	1	BOLT (M10X1.5X20-MM)	
M	2	1	**111-8222**	5	BOLT (M8X1.25X16-MM)	
	3	1	**209-5502**	1	COVER AS (POWER TAKE-OFF)	
	3A	1	**209-5503**	1	SEAL-COVER	
M	4	1	**6I-0646**	1	BOLT (M10X1.5X14-MM)	
	5	1	**214-3203**	1	WASHER (SEALING)	

M - METRIC PART

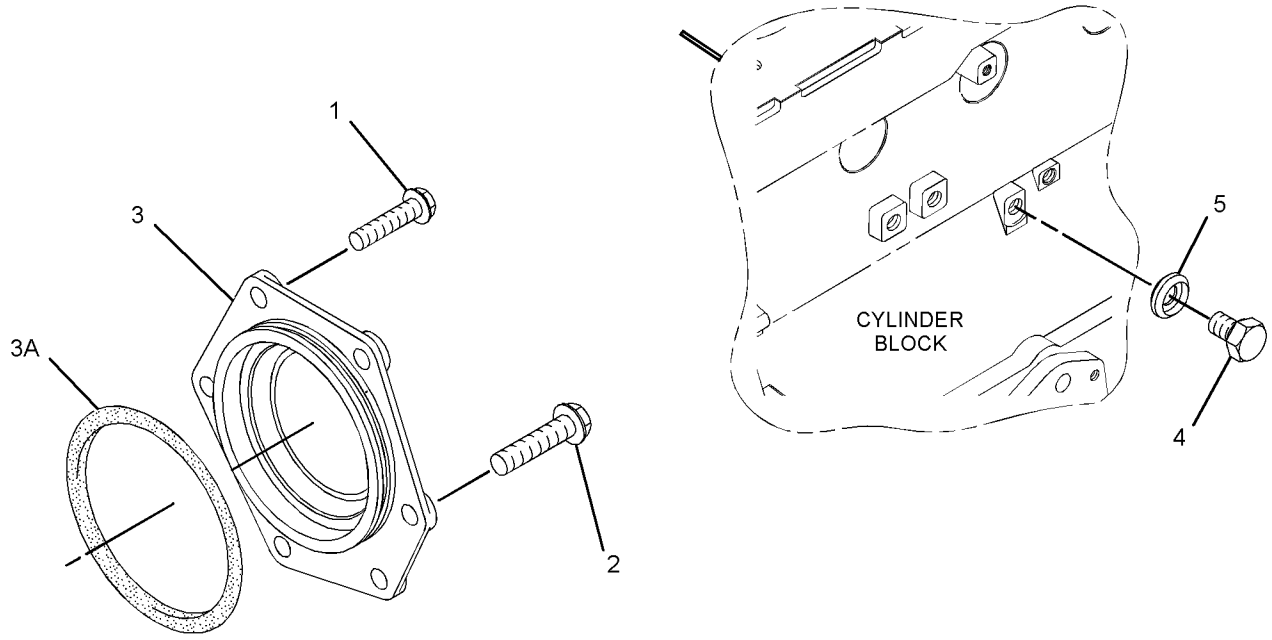

GRAPHIC #1 <END> g01342815

230-9196 COVER GP-FRONT HOUSING

ALSO AN ATTACHMENT

SMCS-1151, 1166 **i03257593**

NOTE	REF NO	GRAPHIC REF	PART NUMBER	QTY	PART NAME 1 2 3 4 5 6 (PRODUCT LEVEL)	SEE PAGE
M	1	1	**6I-0646**	1	BOLT (M10X1.5X14-MM)	
M	2	1	**100-4830**	1	BOLT (M10X1.5X20-MM)	
M	3	1	**111-8222**	5	BOLT (M8X1.25X16-MM)	
	4	1	**214-3203**	1	WASHER (SEALING)	
C	5	1	**329-7854**	1	PLATE AS	
	5A	1	**329-7856**	1	SEAL-O-RING	

C - CHANGE FROM PREVIOUS TYPE
M - METRIC PART

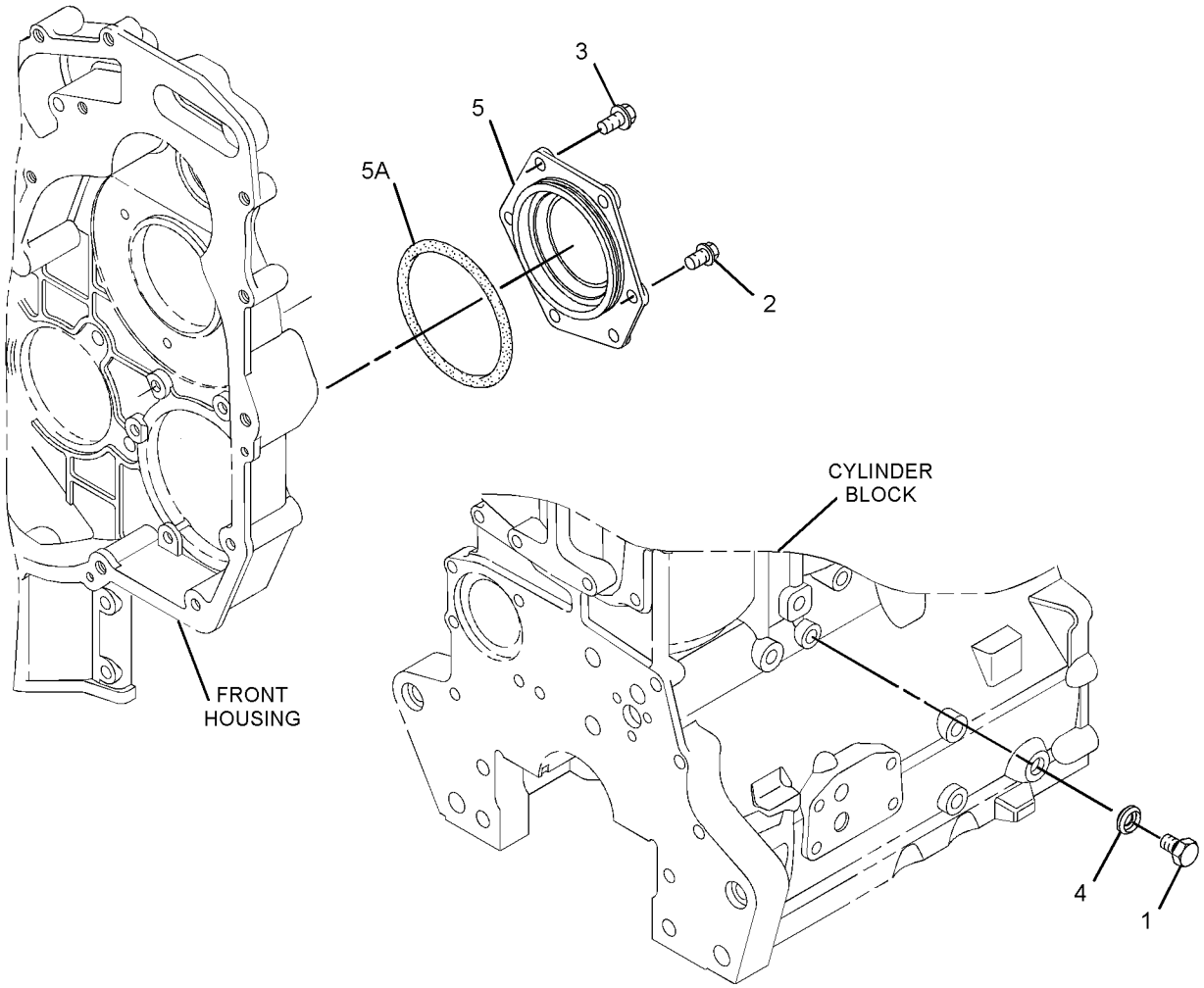

GRAPHIC #1 <END> g01649494

225-6527 COVER GP-VALVE MECHANISM

AN ATTACHMENT

SMCS-1107 **i03819491**

NOTE	REF NO	GRAPHIC REF	PART NUMBER	QTY	PART NAME 1 2 3 4 5 6 (PRODUCT LEVEL)	SEE PAGE
	1	1	**198-8645**	1	HOSE (CRANKCASE BREATHER)	
	2	1	**7C-1281**	1	BRACKET	
	3	1	**162-1565**	1	SPRING (CRANKCASE BREATHER HOSE)	
	4	1	**5D-1026**	1	CLAMP-BAND	
	5	1	**349-2746**	2	BOLT	
	6	1	**308-1393**	1	COVER GP-VALVE MECHANISM	
	6A	1	**136-3608**	1	CAP AS (ENGINE OIL FILLER)	
	6B	1	**124-0506**	1	SEAL	
	6C	1	**225-6451**	1	GASKET (VALVE COVER)	
	6D	1	**349-2746**	10	BOLT	
	6E	1	**225-6456**	1	SPRING	
	6F	1	**225-6461**	1	CAP	
	6G	1	**225-6464**	1	DIAPHRAGM (CRANKCASE PRESSURE CONTACTOR)	
	6H	1	**225-6477**	1	PLATE	
	6J	1	**225-6479**	1	CAP	
	6K	1	**225-6478**	4	SCREW-MACHINE	
	7	1	**287-8573**	1	PIPE AS	
	8	1	**225-6522**	1	PLUG-CUP	
	9	1	**225-6524**	1	PLUG-CUP	
F			**150-7732**	1	SEAL-O-RING	
F			**225-6517**	1	GASKET	

F - NOT SHOWN

225-6527 **COVER GP-VALVE MECHANISM (**contd.**)** **i03819491**

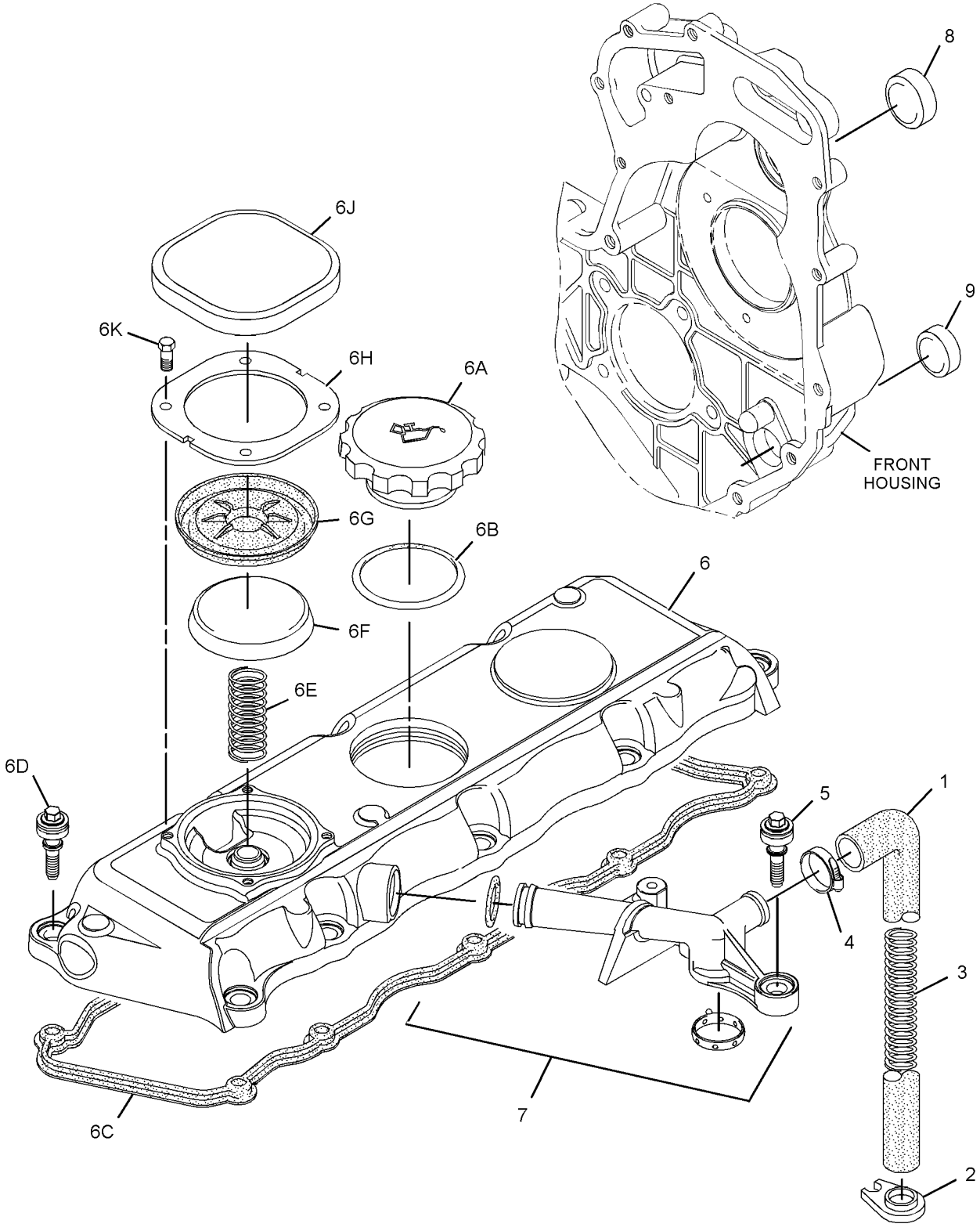

GRAPHIC #1 <END> g02081797

230-9128 COVER GP-VALVE MECHANISM

ALSO AN ATTACHMENT

TYPE 1

SMCS-1107 **i02799229**

NOTE	REF NO	GRAPHIC REF	PART NUMBER	QTY	PART NAME 1 2 3 4 5 6 (PRODUCT LEVEL)	SEE PAGE
M	1	1	**6I-0846**	3	BOLT (M6X1X14-MM)	
	2	1	**225-6481**	1	COVER AS-VALVE	
	3	1	**136-3608**	1	CAP AS (ENGINE OIL FILLER)	
	4	1	**124-0506**	1	SEAL (ENGINE OIL FILL CAP)	
	5	1	**225-6451**	1	GASKET (VALVE COVER)	
	6	1	**225-6455**	10	BOLT	
	7	1	**225-6456**	1	SPRING	
	8	1	**225-6461**	1	CAP (CRANKCASE BREATHER)	
	9	1	**225-6464**	1	DIAPHRAGM (CRANKCASE PRESSURE CONTACTOR)	
	10	1	**225-6477**	1	PLATE	
	11	1	**225-6478**	4	SCREW-MACHINE	
	12	1	**225-6479**	1	CAP (CRANKCASE BREATHER)	
	13	1	**225-6522**	1	PLUG-CUP	
	14	1	**225-6524**	1	PLUG-CUP	
	15	1	**230-9125**	1	CONNECTOR	
	16	1	**150-7732**	1	SEAL-O-RING	
	17	1	**225-6455**	2	BOLT	
	18	1	**225-6517**	1	GASKET	
	19	1	**230-9127**	1	COVER	

M - METRIC PART

230-9128 **COVER GP-VALVE MECHANISM (**contd.**)** **i02799229**

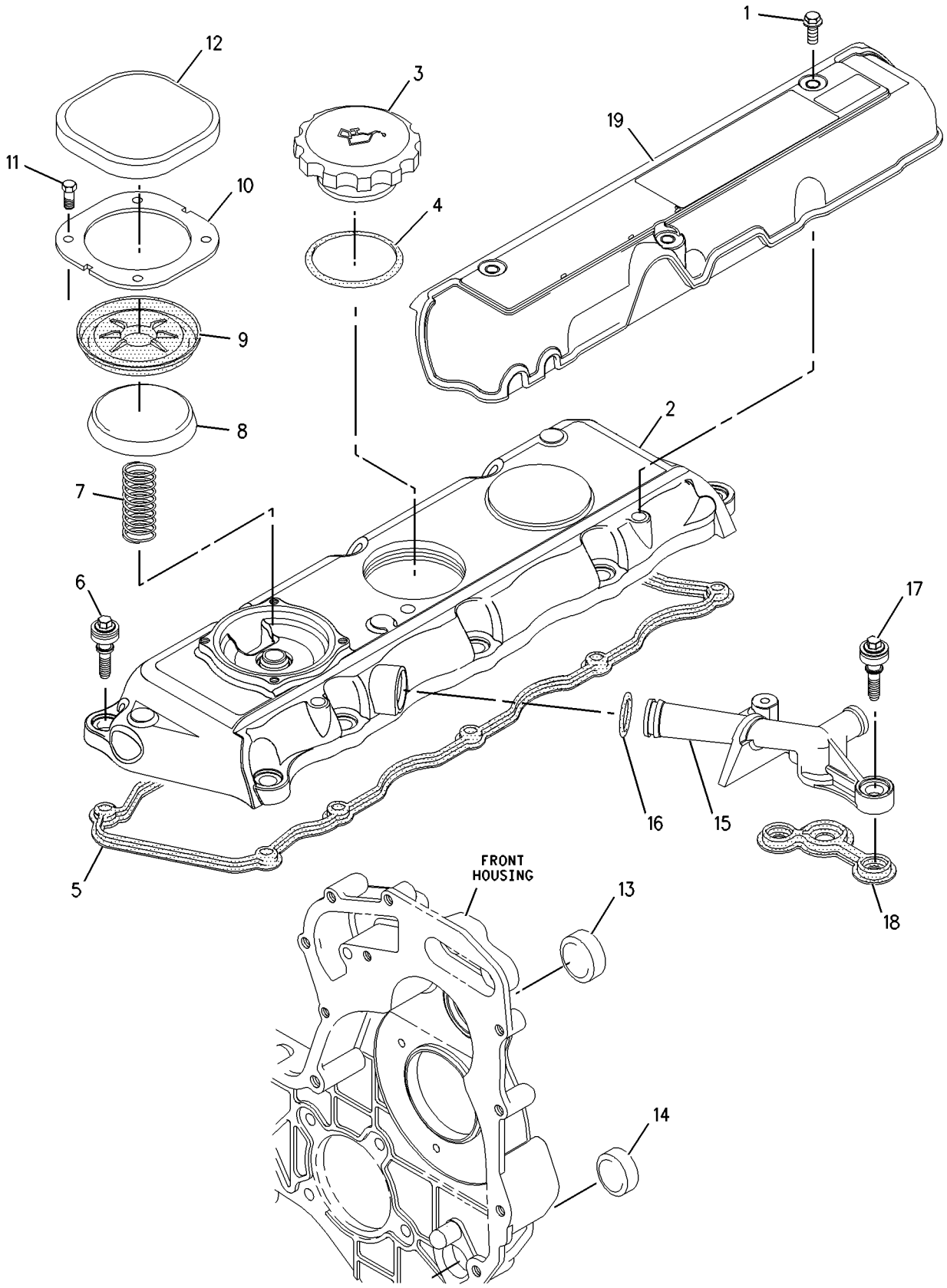

GRAPHIC #1 <END> g00955207

230-9128 COVER GP-VALVE MECHANISM

ALSO AN ATTACHMENT

TYPE 2

SMCS-1107 **i02799230**

NOTE	REF NO	GRAPHIC REF	PART NUMBER	QTY	PART NAME 1 2 3 4 5 6 (PRODUCT LEVEL)	SEE PAGE
M	1	1	**6I-0846**	3	BOLT (M6X1X14-MM)	
	2	1	**225-6522**	1	PLUG-CUP	
	3	1	**230-9127**	1	COVER (INJECTOR)	
C	4	1	**286-3029**	1	BREATHER AS	
C	4A	1	**150-7732**	1	SEAL-O-RING	
C	4B	1	**286-3030**	1	RING-SEAL	
	5	1	**225-6524**	1	PLUG-CUP	
	6	1	**247-7799**	1	COVER AS-VALVE	
	6A	1	**136-3608**	1	CAP AS (ENGINE OIL FILLER)	
	6B	1	**124-0506**	1	SEAL (ENGINE OIL FILL CAP)	
	6C	1	**225-6451**	1	GASKET (VALVE COVER)	
	6D	1	**225-6455**	10	BOLT	
	6E	1	**225-6456**	1	SPRING	
	6F	1	**225-6461**	1	CAP (CRANKCASE BREATHER)	
	6G	1	**225-6464**	1	DIAPHRAGM (CRANKCASE PRESSURE CONTACTOR)	
	6H	1	**225-6477**	1	PLATE	
	6J	1	**225-6478**	4	SCREW-MACHINE	
	6K	1	**225-6479**	1	CAP (CRANKCASE BREATHER)	
CMR	7	1	**100-4838**	2	BOLT (M6X1X20-MM)	

C - CHANGE FROM PREVIOUS TYPE
M - METRIC PART
R - REMANUFACTURED PART MAY BE AVAILABLE

230-9128 **COVER GP-VALVE MECHANISM (**contd.**)** **i02799230**

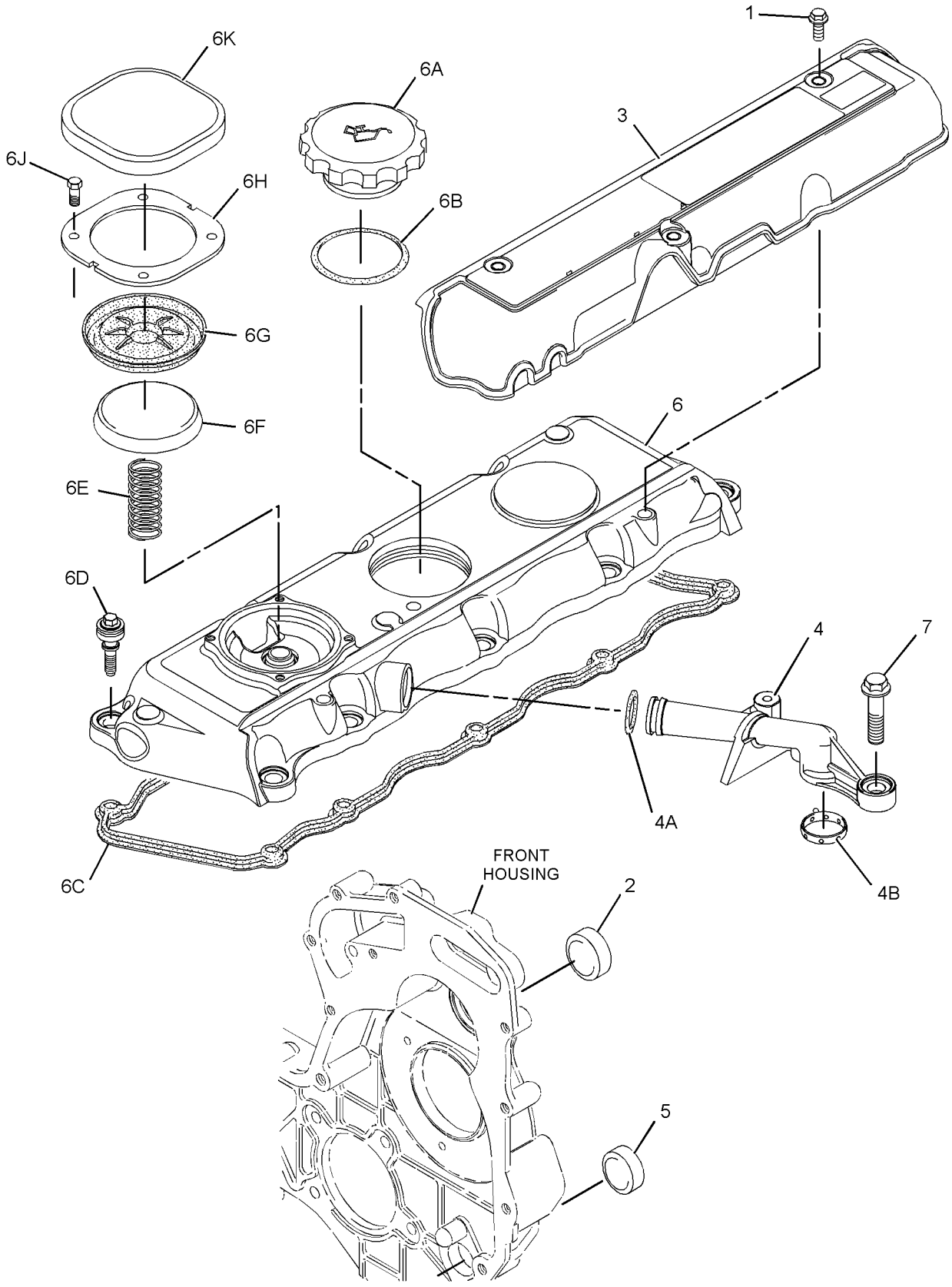

GRAPHIC #1 <END> g01263437

230-9128 COVER GP-VALVE MECHANISM

ALSO AN ATTACHMENT

SMCS-1107 **i06874559**

NOTE	REF NO	GRAPHIC REF	PART NUMBER	QTY	PART NAME 1 2 3 4 5 6 (PRODUCT LEVEL)	SEE PAGE
M	1	1	**6I-0846**	3	BOLT (M6X1X14-MM)	
	2	1	**225-6522**	1	PLUG-CUP	
	3	1	**230-9127**	1	COVER (INJECTOR)	
	4	1	**286-3029**	1	BREATHER AS	
	4A	1	**150-7732**	1	SEAL-O-RING	
	4B	1	**286-3030**	1	RING-SEAL	
	5	1	**225-6524**	1	PLUG-CUP	
CY	6	1	**308-1393**	1	COVER GP-VALVE MECHANISM	431
MR	7	1	**100-4838**	2	BOLT (M6X1X20-MM)	
	8	1	**346-8219**	1	FILM-WARNING (UNIVERSAL WARNING)	

C - CHANGE FROM PREVIOUS TYPE
M - METRIC PART
R - REMANUFACTURED PART MAY BE AVAILABLE
Y - SEPARATE ILLUSTRATION

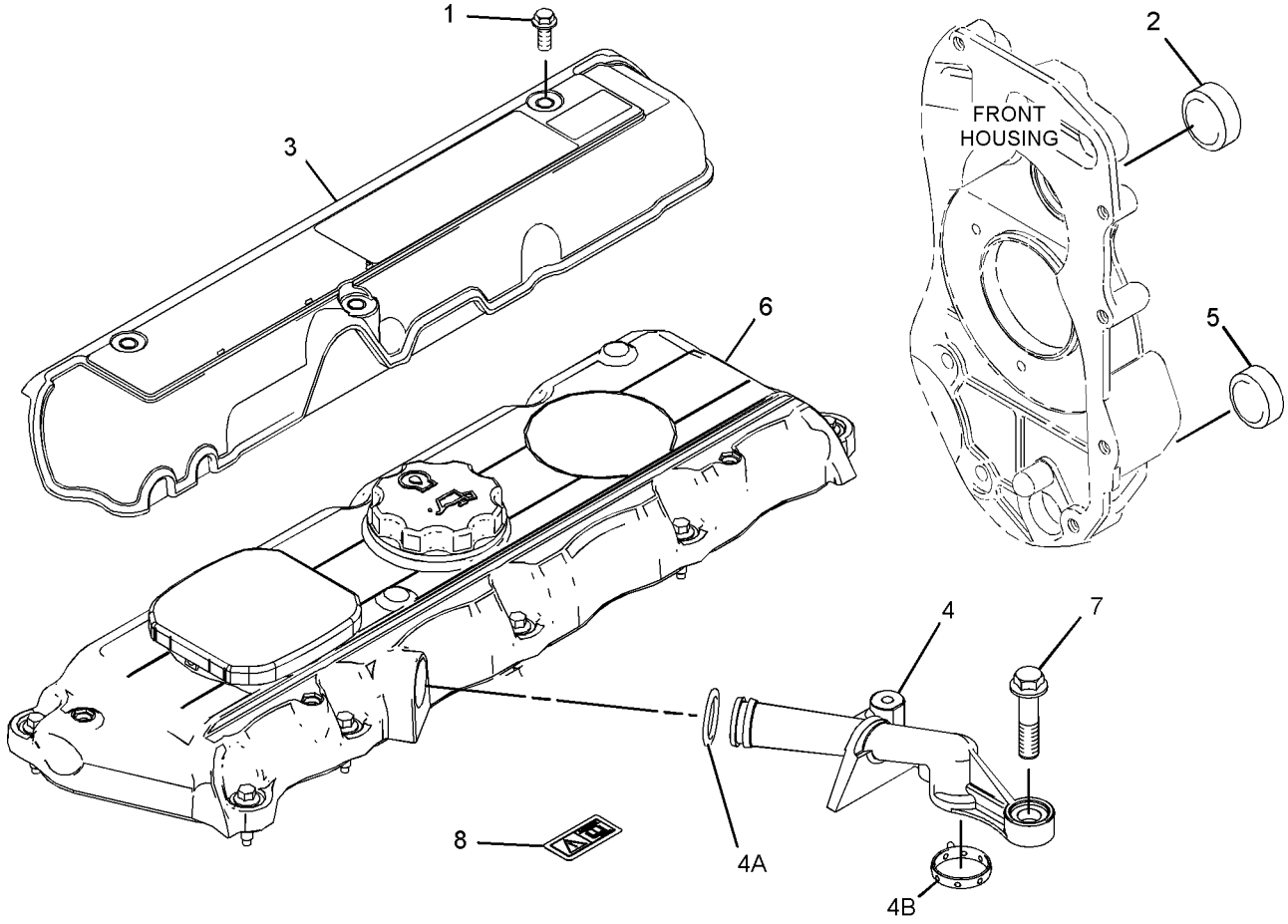

GRAPHIC #1 <END> g06150472

230-9128 COVER GP-VALVE MECHANISM

ALSO AN ATTACHMENT

SMCS-1107 **i07181624**

NOTE	REF NO	GRAPHIC REF	PART NUMBER	QTY	PART NAME 1 2 3 4 5 6 (PRODUCT LEVEL)	SEE PAGE
	1	1	**346-8219**	1	FILM-WARNING (UNIVERSAL WARNING)	
	2	1	**225-6522**	1	PLUG-CUP	
MR	3	1	**100-4838**	2	BOLT (M6X1X20-MM)	
	4	1	**286-3029**	1	BREATHER AS	
	4A	1	**150-7732**	1	SEAL-O-RING	
	4B	1	**286-3030**	1	RING-SEAL	
	5	1	**225-6524**	1	PLUG-CUP	
Y	6	1	**521-8086**	1	COVER GP-CYLINDER HEAD	225

M - METRIC PART
R - REMANUFACTURED PART MAY BE AVAILABLE
Y - SEPARATE ILLUSTRATION

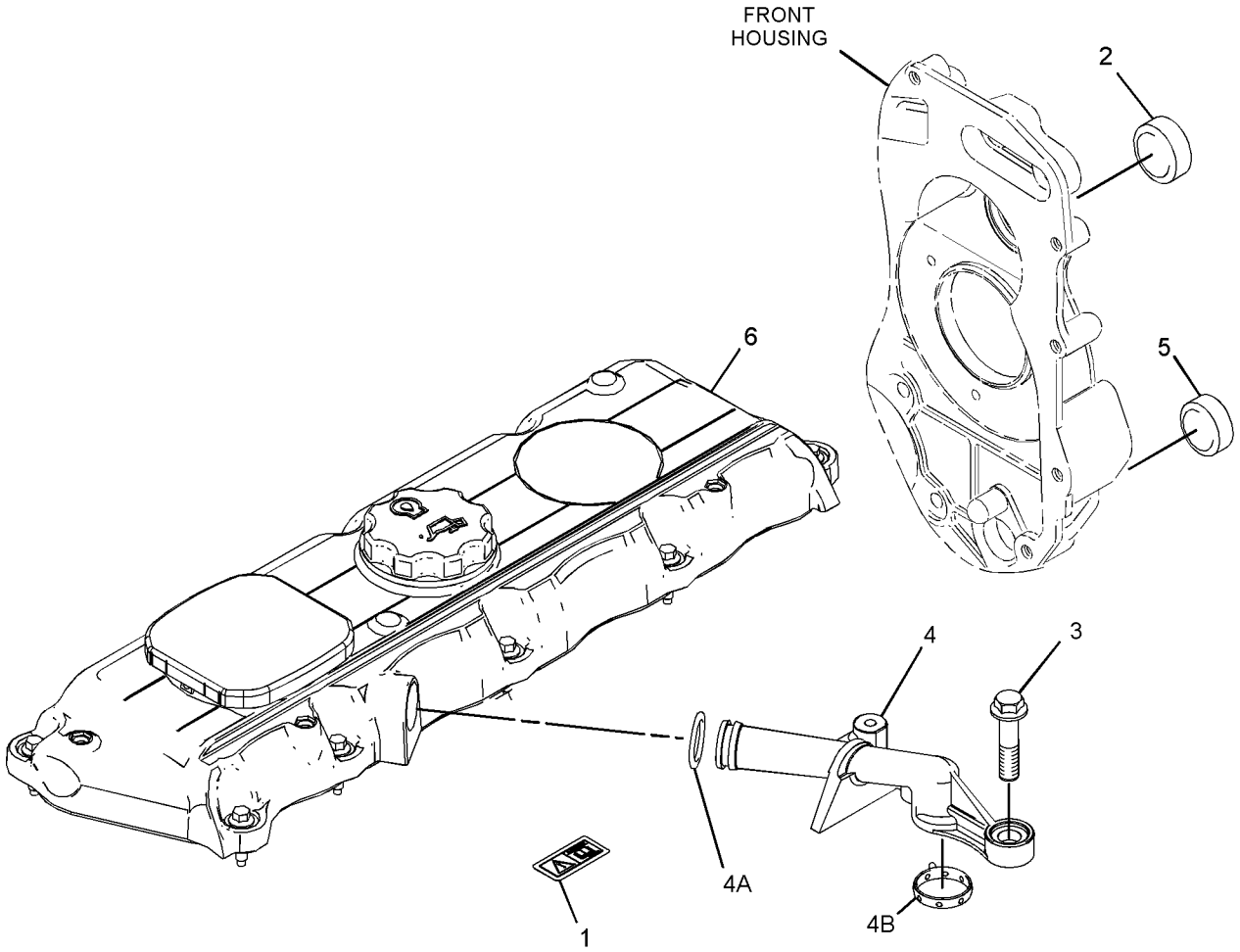

GRAPHIC #1 <END> g06200558

230-9139 COVER GP-VALVE MECHANISM

ALSO AN ATTACHMENT

TYPE 1

SMCS-1107 **i02138057**

NOTE	REF NO	GRAPHIC REF	PART NUMBER	QTY	PART NAME 1 2 3 4 5 6 (PRODUCT LEVEL)	SEE PAGE
M	1	1	**6I-0846**	3	BOLT (M6X1X14-MM)	
	2	1	**225-6481**	1	COVER AS-VALVE	
	3	1	**136-3608**	1	CAP AS (ENGINE OIL FILLER)	
	4	1	**124-0506**	1	SEAL	
	5	1	**225-6451**	1	GASKET (VALVE COVER)	
	6	1	**225-6455**	10	BOLT	
	7	1	**225-6456**	1	SPRING	
	8	1	**225-6461**	1	CAP	
	9	1	**225-6464**	1	DIAPHRAGM (CRANKCASE PRESSURE CONTACTOR)	
	10	1	**225-6477**	1	PLATE	
	11	1	**225-6478**	4	SCREW-MACHINE	
	12	1	**225-6479**	1	CAP	
	13	1	**225-6522**	1	PLUG-CUP	
	14	1	**230-9125**	1	CONNECTOR	
	15	1	**150-7732**	1	SEAL-O-RING	
	16	1	**225-6455**	2	BOLT	
	17	1	**225-6517**	1	GASKET	
	18	1	**230-9127**	1	COVER	

M - METRIC PART

230-9139 **COVER GP-VALVE MECHANISM (**contd.**)** **i02138057**

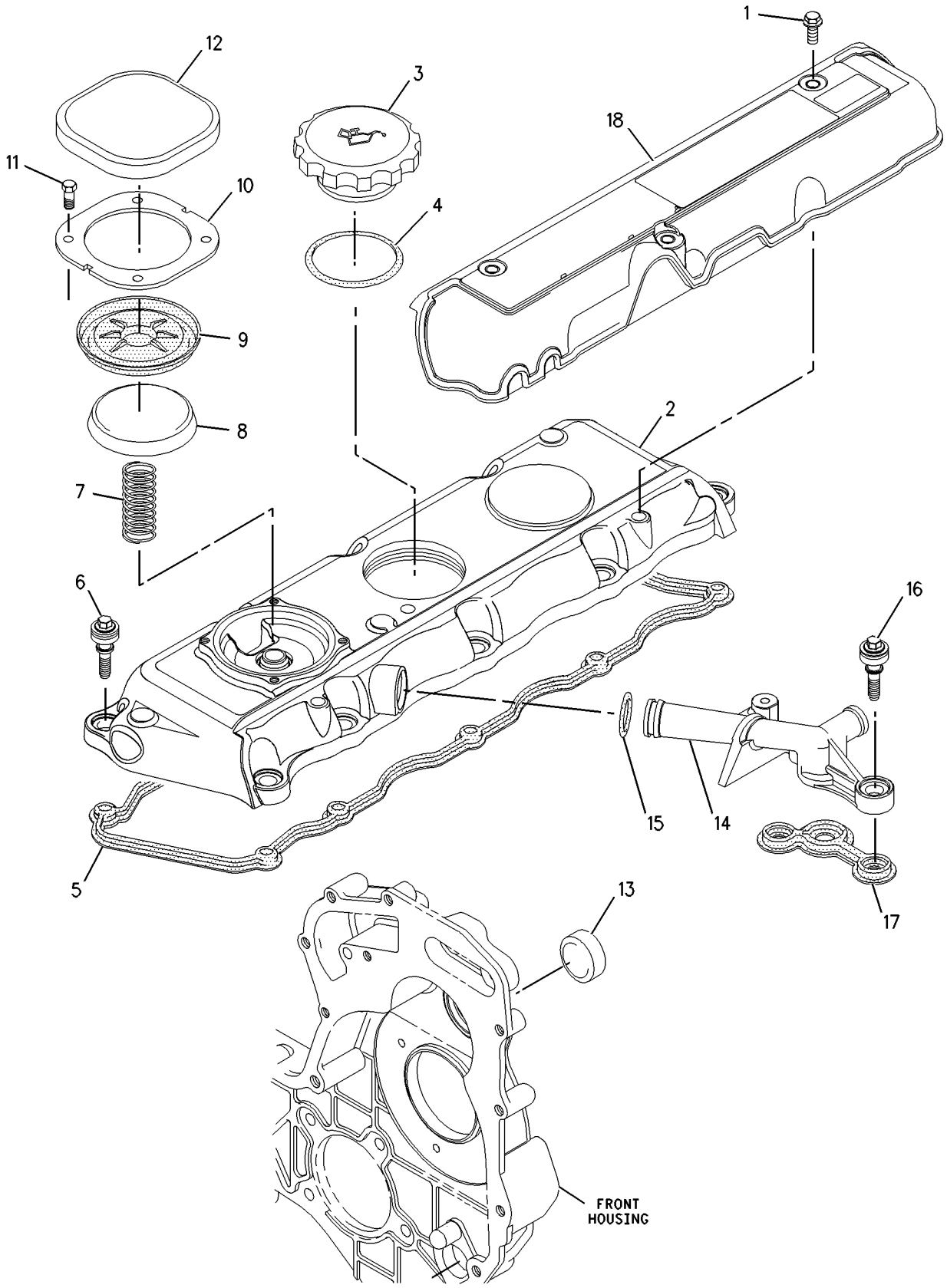

GRAPHIC #1 <END> g00954177

230-9139 COVER GP-VALVE MECHANISM

ALSO AN ATTACHMENT

TYPE 2

SMCS-1107 **i02506775**

NOTE	REF NO	GRAPHIC REF	PART NUMBER	QTY	PART NAME 1 2 3 4 5 6 (PRODUCT LEVEL)	SEE PAGE
M	1	1	**6I-0846**	3	BOLT (M6X1X14-MM)	
C	2	1	**247-7799**	1	COVER AS-VALVE	
	3	1	**136-3608**	1	CAP AS (ENGINE OIL FILLER)	
	4	1	**124-0506**	1	SEAL	
	5	1	**225-6451**	1	GASKET (VALVE COVER)	
	6	1	**225-6455**	10	BOLT	
	7	1	**225-6456**	1	SPRING	
	8	1	**225-6461**	1	CAP	
	9	1	**225-6464**	1	DIAPHRAGM (CRANKCASE PRESSURE CONTACTOR)	
	10	1	**225-6477**	1	PLATE	
	11	1	**225-6478**	4	SCREW-MACHINE	
	12	1	**225-6479**	1	CAP	
	13	1	**225-6522**	1	PLUG-CUP	
C	14	1	**286-3029**	1	BREATHER AS	
	14A	1	**150-7732**	1	SEAL-O-RING	
	14B	1	**286-3030**	1	RING-SEAL	
	15	1	**230-9127**	1	COVER	
CMR	16	1	**100-4838**	2	BOLT (M6X1X20-MM)	

C - CHANGE FROM PREVIOUS TYPE
M - METRIC PART
R - REMANUFACTURED PART MAY BE AVAILABLE

230-9139 **COVER GP-VALVE MECHANISM (**contd.**)** **i02506775**

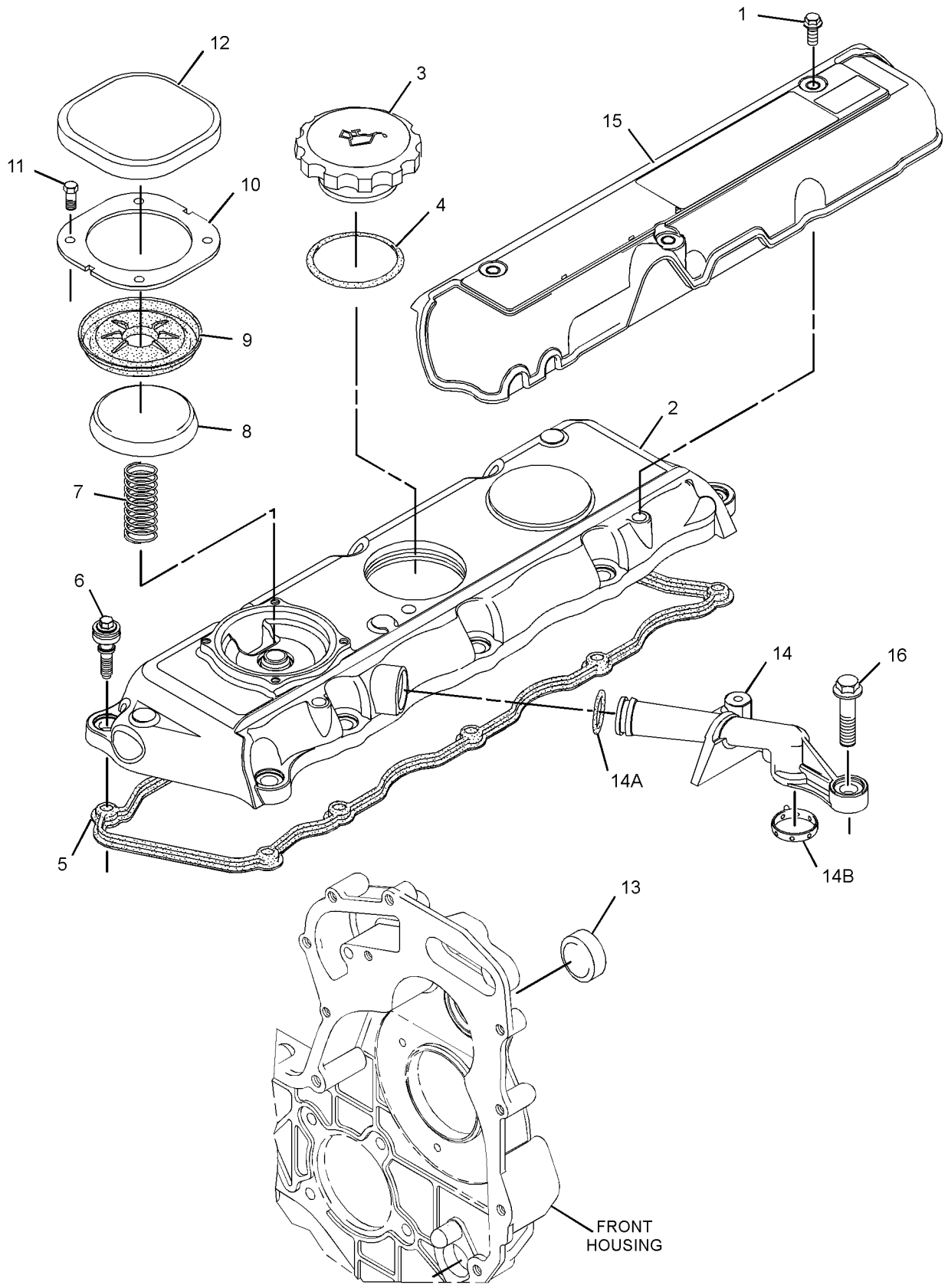

GRAPHIC #1 <END> g01267083

230-9139 COVER GP-VALVE MECHANISM

ALSO AN ATTACHMENT

TYPE 3

SMCS-1107 **i06874561**

NOTE	REF NO	GRAPHIC REF	PART NUMBER	QTY	PART NAME 1 2 3 4 5 6 (PRODUCT LEVEL)	SEE PAGE
M	1	1	**6I-0846**	3	BOLT (M6X1X14-MM)	
CY	2	1	**308-1393**	1	COVER GP-VALVE MECHANISM	431
	3	1	**225-6522**	1	PLUG-CUP	
	4	1	**286-3029**	1	BREATHER AS	
	4A	1	**150-7732**	1	SEAL-O-RING	
	4B	1	**286-3030**	1	RING-SEAL	
	5	1	**230-9127**	1	COVER	
MR	6	1	**100-4838**	2	BOLT (M6X1X20-MM)	
	7	1	**346-8219**	1	FILM-WARNING (UNIVERSAL WARNING)	

C - CHANGE FROM PREVIOUS TYPE
M - METRIC PART
R - REMANUFACTURED PART MAY BE AVAILABLE
Y - SEPARATE ILLUSTRATION

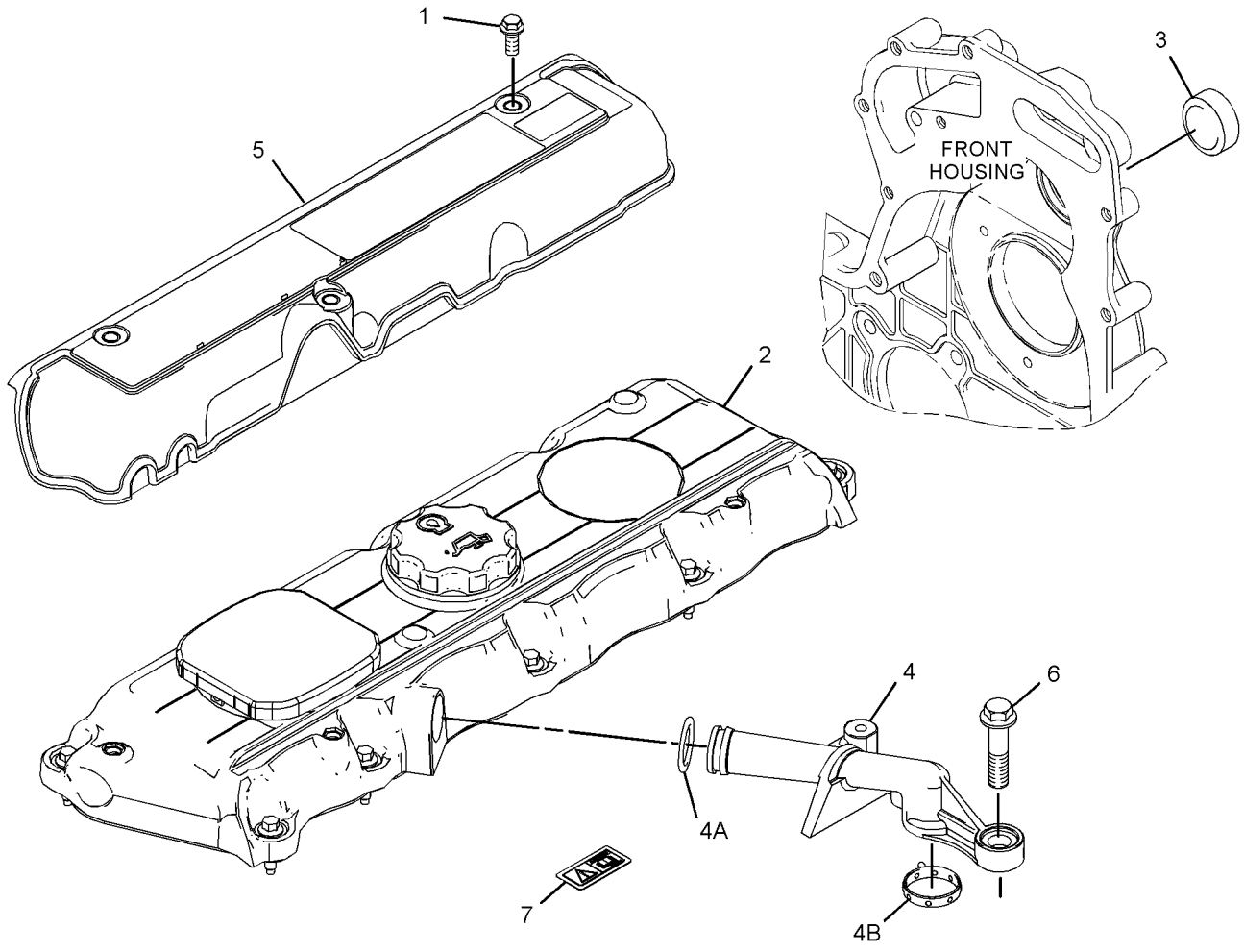

GRAPHIC #1 <END> g06150286

230-9139 COVER GP-VALVE MECHANISM

ALSO AN ATTACHMENT

TYPE 4

SMCS-1107 **i07181677**

NOTE	REF NO	GRAPHIC REF	PART NUMBER	QTY	PART NAME 1 2 3 4 5 6 (PRODUCT LEVEL)	SEE PAGE
Y	1	1	**521-8086**	1	COVER GP-CYLINDER HEAD	225
	2	1	**225-6522**	1	PLUG-CUP	
MR	3	1	**100-4838**	2	BOLT (M6X1X20-MM)	
	4	1	**286-3029**	1	BREATHER AS	
	4A	1	**150-7732**	1	SEAL-O-RING	
	4B	1	**286-3030**	1	RING-SEAL	
	5	1	**346-8219**	1	FILM-WARNING (UNIVERSAL WARNING)	

M - METRIC PART
R - REMANUFACTURED PART MAY BE AVAILABLE
Y - SEPARATE ILLUSTRATION

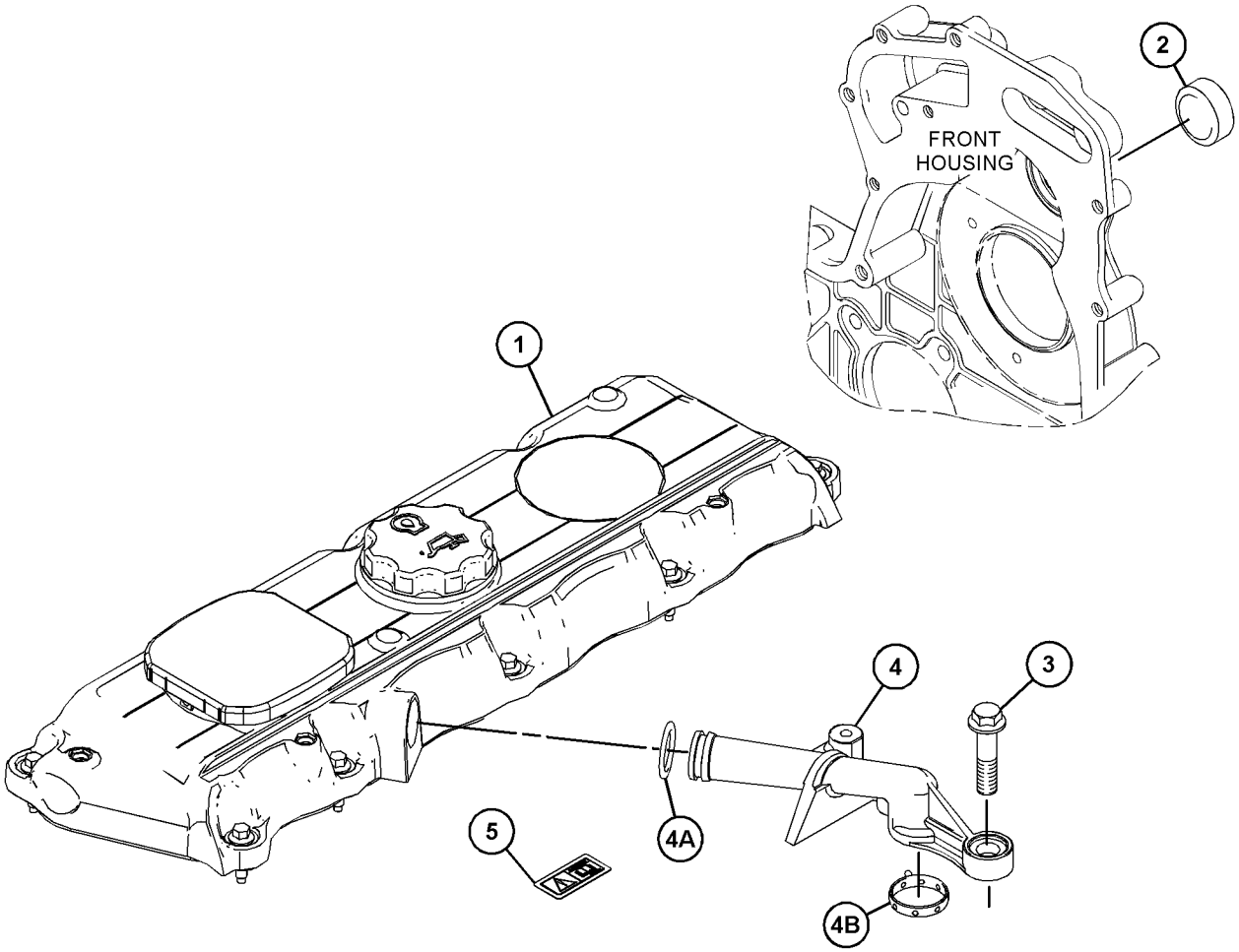

GRAPHIC #1 <END> g06253746

230-9149 COVER GP-VALVE MECHANISM

ALSO AN ATTACHMENT

TYPE 1

SMCS-1107 **i02128031**

NOTE	REF NO	GRAPHIC REF	PART NUMBER	QTY	PART NAME 1 2 3 4 5 6 (PRODUCT LEVEL)	SEE PAGE
	1	1	**5D-1026**	1	CLAMP-BAND	
M	2	1	**6I-0846**	3	BOLT (M6X1X14-MM)	
	3	1	**7C-1281**	1	BRACKET	
	4	1	**162-1565**	1	SPRING (CRANKCASE BREATHER HOSE)	
	5	1	**198-8645**	1	HOSE (CRANKCASE BREATHER)	
	6	1	**225-6481**	1	COVER AS-VALVE	
	7	1	**136-3608**	1	CAP AS (ENGINE OIL FILLER)	
	8	1	**124-0506**	1	SEAL	
	9	1	**225-6451**	1	GASKET (VALVE COVER)	
	10	1	**225-6455**	10	BOLT	
	11	1	**225-6456**	1	SPRING	
	12	1	**225-6461**	1	CAP	
	13	1	**225-6464**	1	DIAPHRAGM (CRANKCASE PRESSURE CONTACTOR)	
	14	1	**225-6477**	1	PLATE	
	15	1	**225-6478**	4	SCREW-MACHINE	
	16	1	**225-6479**	1	CAP	
	17	1	**225-6522**	1	PLUG-CUP	
	18	1	**230-9127**	1	COVER	
	19	1	**230-9144**	1	CONNECTOR	
	20	1	**150-7732**	1	SEAL-O-RING	
	21	1	**225-6455**	2	BOLT	
	22	1	**225-6517**	1	GASKET	

M - METRIC PART

230-9149 **COVER GP-VALVE MECHANISM (**contd.**)** **i02128031**

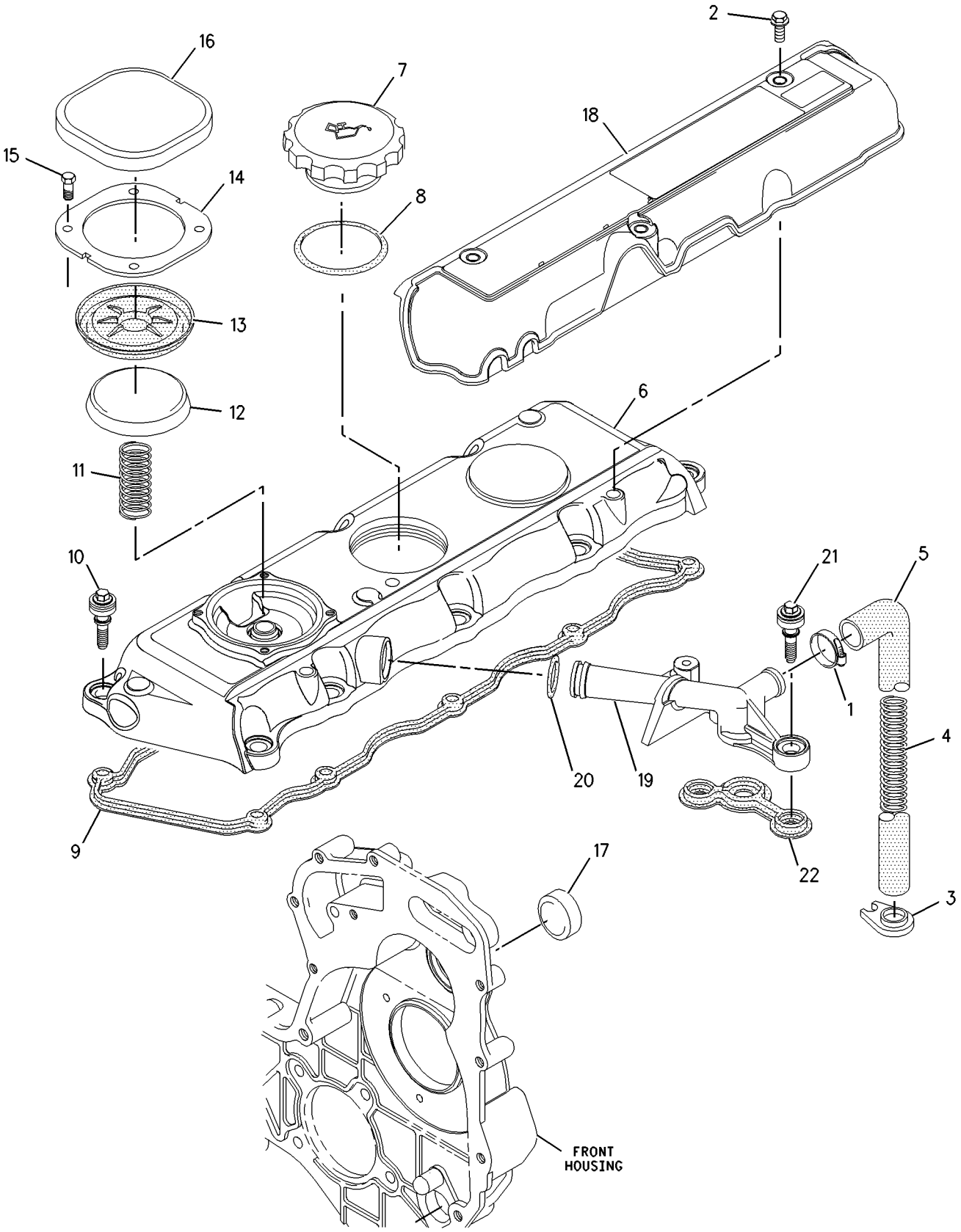

GRAPHIC #1 <END> g00953974

230-9149 COVER GP-VALVE MECHANISM

ALSO AN ATTACHMENT

TYPE 2

SMCS-1107 **i02514914**

NOTE	REF NO	GRAPHIC REF	PART NUMBER	QTY	PART NAME 1 2 3 4 5 6 (PRODUCT LEVEL)	SEE PAGE
	1	1	**5D-1026**	1	CLAMP-BAND	
M	2	1	**6I-0846**	3	BOLT (M6X1X14-MM)	
	3	1	**7C-1281**	1	BRACKET	
	4	1	**162-1565**	1	SPRING (CRANKCASE BREATHER HOSE)	
	5	1	**198-8645**	1	HOSE (CRANKCASE BREATHER)	
C	6	1	**247-7799**	1	COVER AS-VALVE	
	6A	1	**136-3608**	1	CAP AS (ENGINE OIL FILLER)	
	6B	1	**124-0506**	1	SEAL	
	6C	1	**225-6451**	1	GASKET (VALVE COVER)	
	6D	1	**225-6455**	10	BOLT	
	6E	1	**225-6456**	1	SPRING	
	6F	1	**225-6461**	1	CAP (CRANKCASE BREATHER)	
	6G	1	**225-6464**	1	DIAPHRAGM (CRANKCASE PRESSURE CONTACTOR)	
	6H	1	**225-6477**	1	PLATE	
	6J	1	**225-6478**	4	SCREW-MACHINE	
	6K	1	**225-6479**	1	CAP (CRANKCASE BREATHER)	
	7	1	**225-6522**	1	PLUG-CUP	
	8	1	**230-9127**	1	COVER (INJECTOR)	
C	9	1	**287-8573**	1	PIPE AS	
CMR	10	1	**100-4838**	2	BOLT (M6X1X20-MM)	

C - CHANGE FROM PREVIOUS TYPE
M - METRIC PART
R - REMANUFACTURED PART MAY BE AVAILABLE

230-9149 **COVER GP-VALVE MECHANISM (**contd.**)** **i02514914**

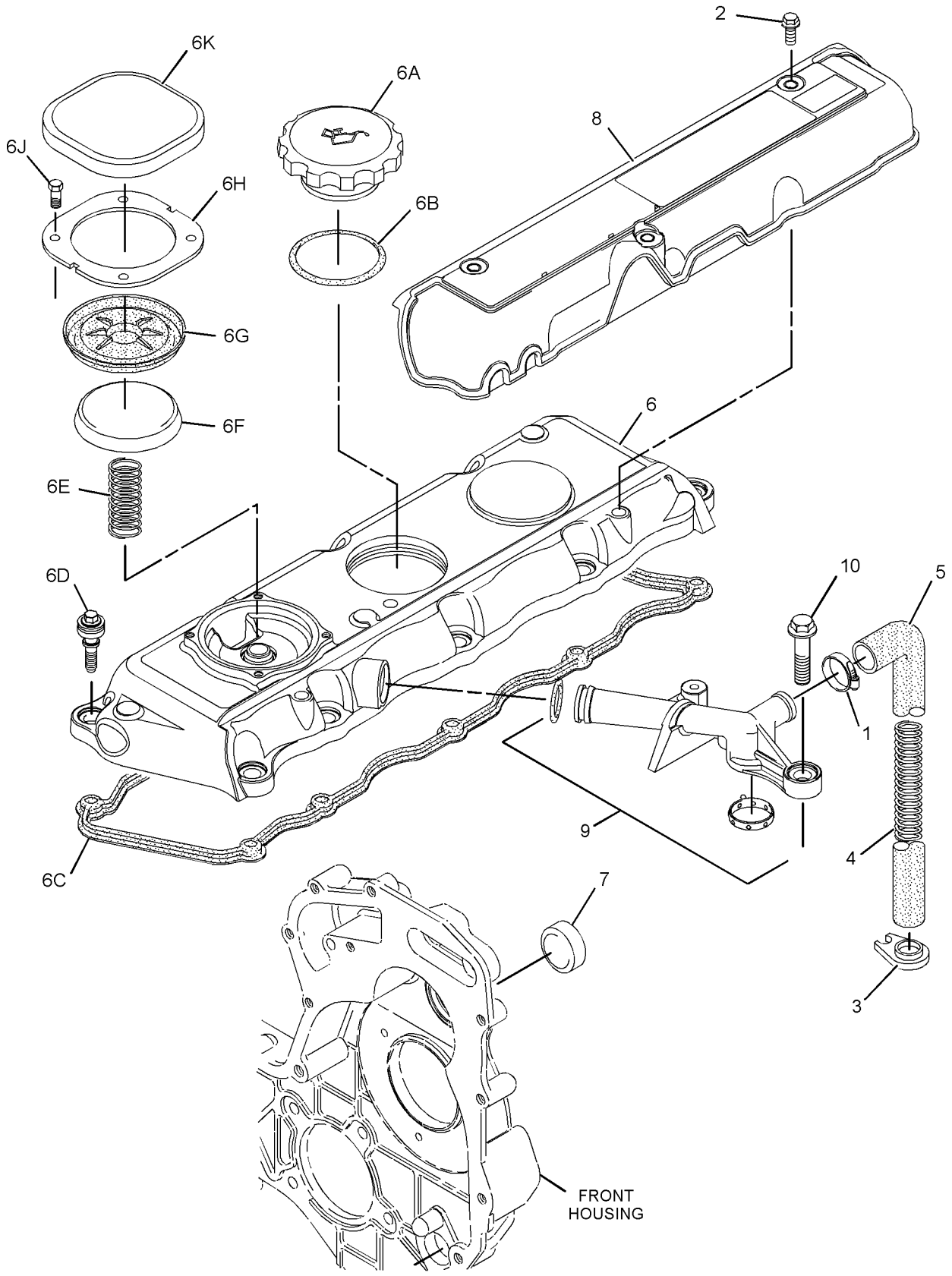

GRAPHIC #1 <END> g01263658

230-9149 COVER GP-VALVE MECHANISM

ALSO AN ATTACHMENT

TYPE 3

SMCS-1107 **i04952676**

NOTE	REF NO	GRAPHIC REF	PART NUMBER	QTY	PART NAME 1 2 3 4 5 6 (PRODUCT LEVEL)	SEE PAGE
	1	1	**5D-1026**	1	CLAMP-BAND	
M	2	1	**6I-0846**	3	BOLT (M6X1X14-MM)	
	3	1	**7C-1281**	1	BRACKET	
	4	1	**162-1565**	1	SPRING (CRANKCASE BREATHER HOSE)	
	5	1	**198-8645**	1	HOSE (CRANKCASE BREATHER)	
CY	6	1	**308-1393**	1	COVER GP-VALVE MECHANISM	431
	7	1	**225-6522**	1	PLUG-CUP	
	8	1	**230-9127**	1	COVER	
	9	1	**287-8573**	1	PIPE AS	
MR	10	1	**100-4838**	2	BOLT (M6X1X20-MM)	
	11	1	**217-9039**	1	STRAP-CABLE	

C - CHANGE FROM PREVIOUS TYPE
M - METRIC PART
R - REMANUFACTURED PART MAY BE AVAILABLE
Y - SEPARATE ILLUSTRATION

230-9149 **COVER GP-VALVE MECHANISM (**contd.**)** **i04952676**

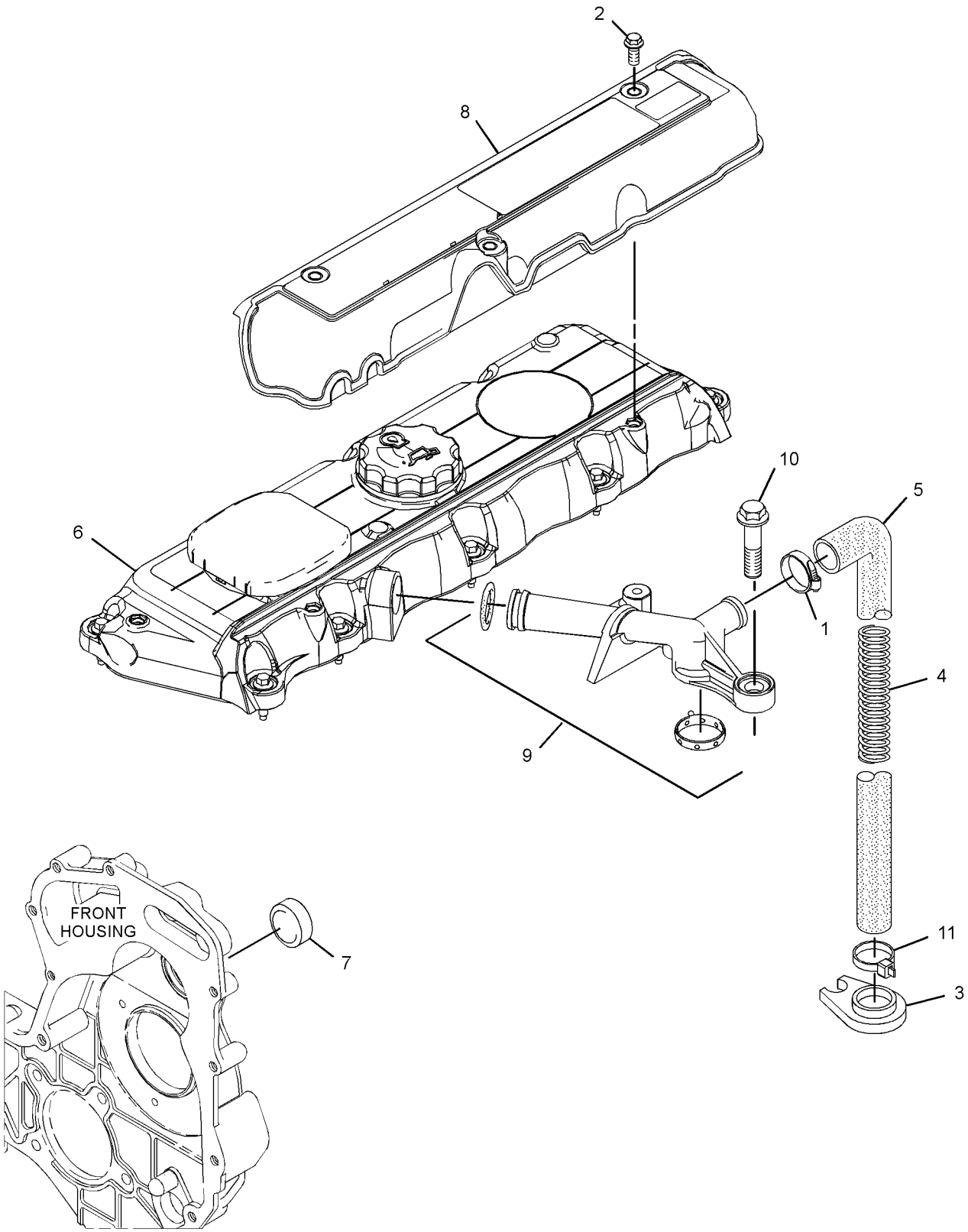

GRAPHIC #1 <END> g03177374

230-9149 COVER GP-VALVE MECHANISM

ALSO AN ATTACHMENT

TYPE 4

SMCS-1107 **i06914062**

NOTE	REF NO	GRAPHIC REF	PART NUMBER	QTY	PART NAME 1 2 3 4 5 6 (PRODUCT LEVEL)	SEE PAGE
	1	1	**5D-1026**	1	CLAMP-BAND	
M	2	1	**6I-0846**	3	BOLT (M6X1X14-MM)	
	3	1	**7C-1281**	1	BRACKET	
	4	1	**162-1565**	1	SPRING (CRANKCASE BREATHER HOSE)	
	5	1	**198-8645**	1	HOSE (CRANKCASE BREATHER)	
CY	6	1	**446-9163**	1	COVER GP-CYLINDER HEAD	223
	7	1	**225-6522**	1	PLUG-CUP	
	8	1	**230-9127**	1	COVER	
	9	1	**287-8573**	1	PIPE AS	
	9A	1	**150-7732**	1	SEAL-O-RING	
	9B	1	**286-3030**	1	RING-SEAL	
MR	10	1	**100-4838**	2	BOLT (M6X1X20-MM)	
	11	1	**217-9039**	1	STRAP-CABLE	
	12	1	**346-8219**	1	FILM-WARNING (UNIVERSAL WARNING)	

C - CHANGE FROM PREVIOUS TYPE
M - METRIC PART
R - REMANUFACTURED PART MAY BE AVAILABLE
Y - SEPARATE ILLUSTRATION

230-9149 **COVER GP-VALVE MECHANISM (**contd.**)** **i06914062**

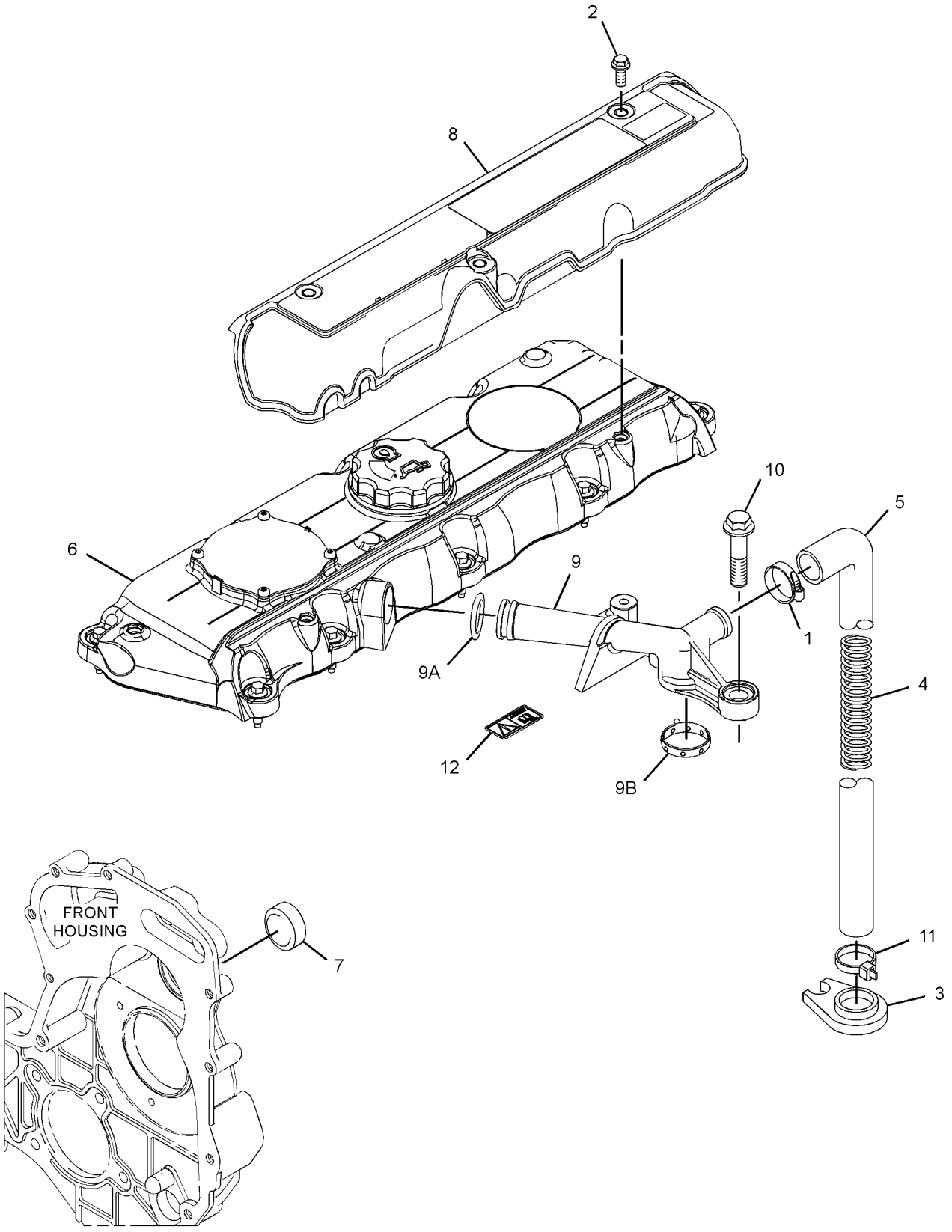

GRAPHIC #1 <END> g06150556

230-9149 COVER GP-VALVE MECHANISM

ALSO AN ATTACHMENT

TYPE 5

SMCS-1107 **i07307708**

NOTE	REF NO	GRAPHIC REF	PART NUMBER	QTY	PART NAME 1 2 3 4 5 6 (PRODUCT LEVEL)	SEE PAGE
	1	1	**5D-1026**	1	CLAMP-BAND	
	2	1	**217-9039**	1	STRAP-CABLE	
	3	1	**7C-1281**	1	BRACKET	
	4	1	**162-1565**	1	SPRING (CRANKCASE BREATHER HOSE)	
	5	1	**198-8645**	1	HOSE (CRANKCASE BREATHER)	
Y	6	1	**521-8086**	1	COVER GP-CYLINDER HEAD	225
	7	1	**225-6522**	1	PLUG-CUP	
	8	1	**346-8219**	1	FILM-WARNING (UNIVERSAL WARNING)	
	9	1	**287-8573**	1	PIPE AS	
	9A	1	**150-7732**	1	SEAL-O-RING	
	9B	1	**286-3030**	1	RING-SEAL	
MR	10	1	**100-4838**	2	BOLT (M6X1X20-MM)	

M - METRIC PART
R - REMANUFACTURED PART MAY BE AVAILABLE
Y - SEPARATE ILLUSTRATION

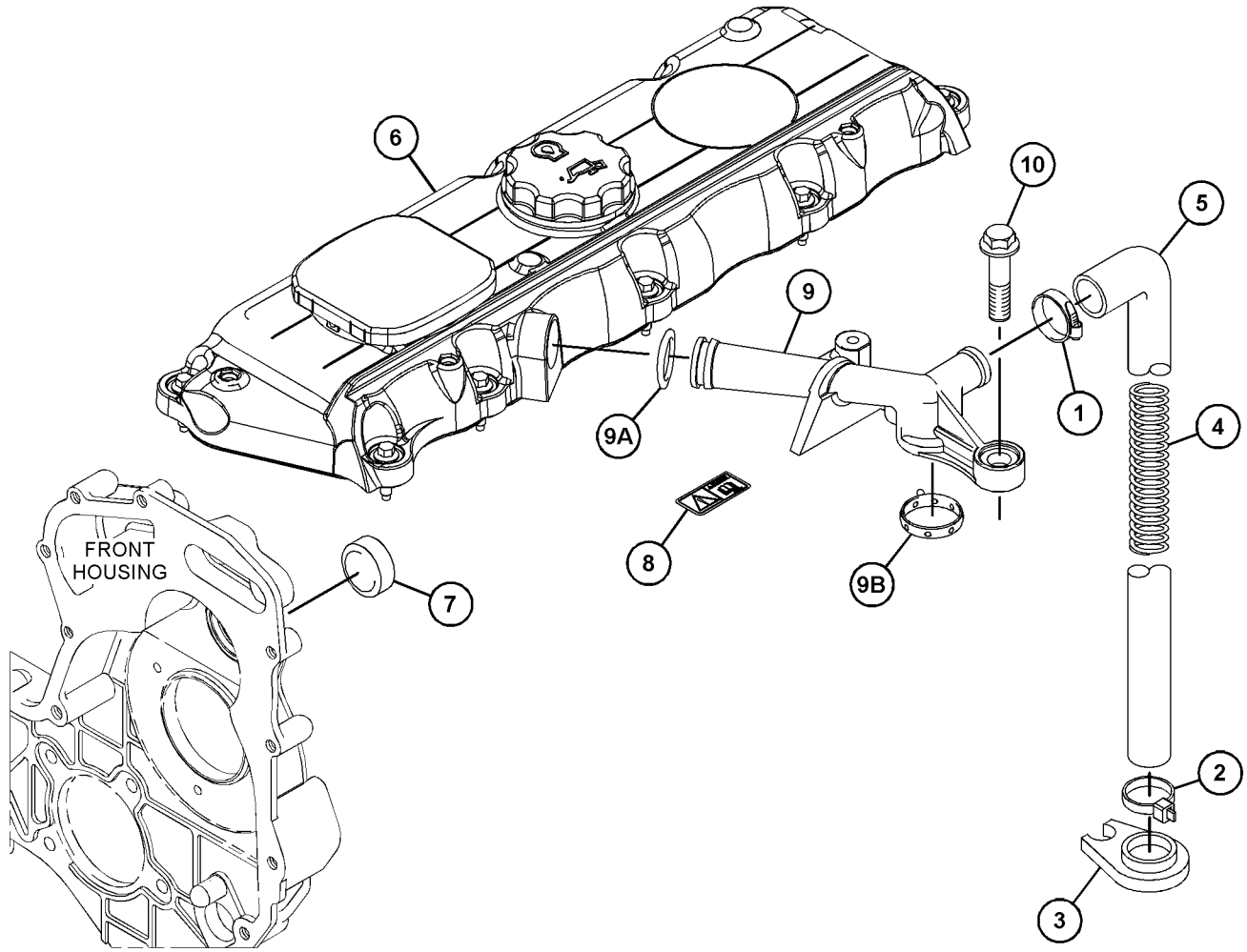

GRAPHIC #1 <END> g06278537

230-9150 COVER GP-VALVE MECHANISM

AN ATTACHMENT

TYPE 1

SMCS-1107 **i02138058**

NOTE	REF NO	GRAPHIC REF	PART NUMBER	QTY	PART NAME 1 2 3 4 5 6 (PRODUCT LEVEL)	SEE PAGE
	1	1	**5D-1026**	1	CLAMP-BAND	
M	2	1	**6I-0846**	3	BOLT (M6X1X14-MM)	
	3	1	**7C-1281**	1	BRACKET	
	4	1	**162-1565**	1	SPRING (CRANKCASE BREATHER HOSE)	
	5	1	**198-9169**	1	HOSE (CRANKCASE BREATHER)	
	6	1	**225-6481**	1	COVER AS-VALVE	
	7	1	**136-3608**	1	CAP AS (ENGINE OIL FILLER)	
	8	1	**124-0506**	1	SEAL	
	9	1	**225-6451**	1	GASKET (VALVE COVER)	
	10	1	**225-6455**	10	BOLT	
	11	1	**225-6456**	1	SPRING	
	12	1	**225-6461**	1	CAP	
	13	1	**225-6464**	1	DIAPHRAGM (CRANKCASE PRESSURE CONTACTOR)	
	14	1	**225-6477**	1	PLATE	
	15	1	**225-6478**	4	SCREW-MACHINE	
	16	1	**225-6479**	1	CAP	
	17	1	**225-6522**	1	PLUG-CUP	
	18	1	**225-6524**	1	PLUG-CUP	
	19	1	**230-9127**	1	COVER	
	20	1	**230-9144**	1	CONNECTOR	
	21	1	**150-7732**	1	SEAL-O-RING	
	22	1	**225-6455**	2	BOLT	
	23	1	**225-6517**	1	GASKET	

M - METRIC PART

230-9150 **COVER GP-VALVE MECHANISM (**contd.**)** **i02138058**

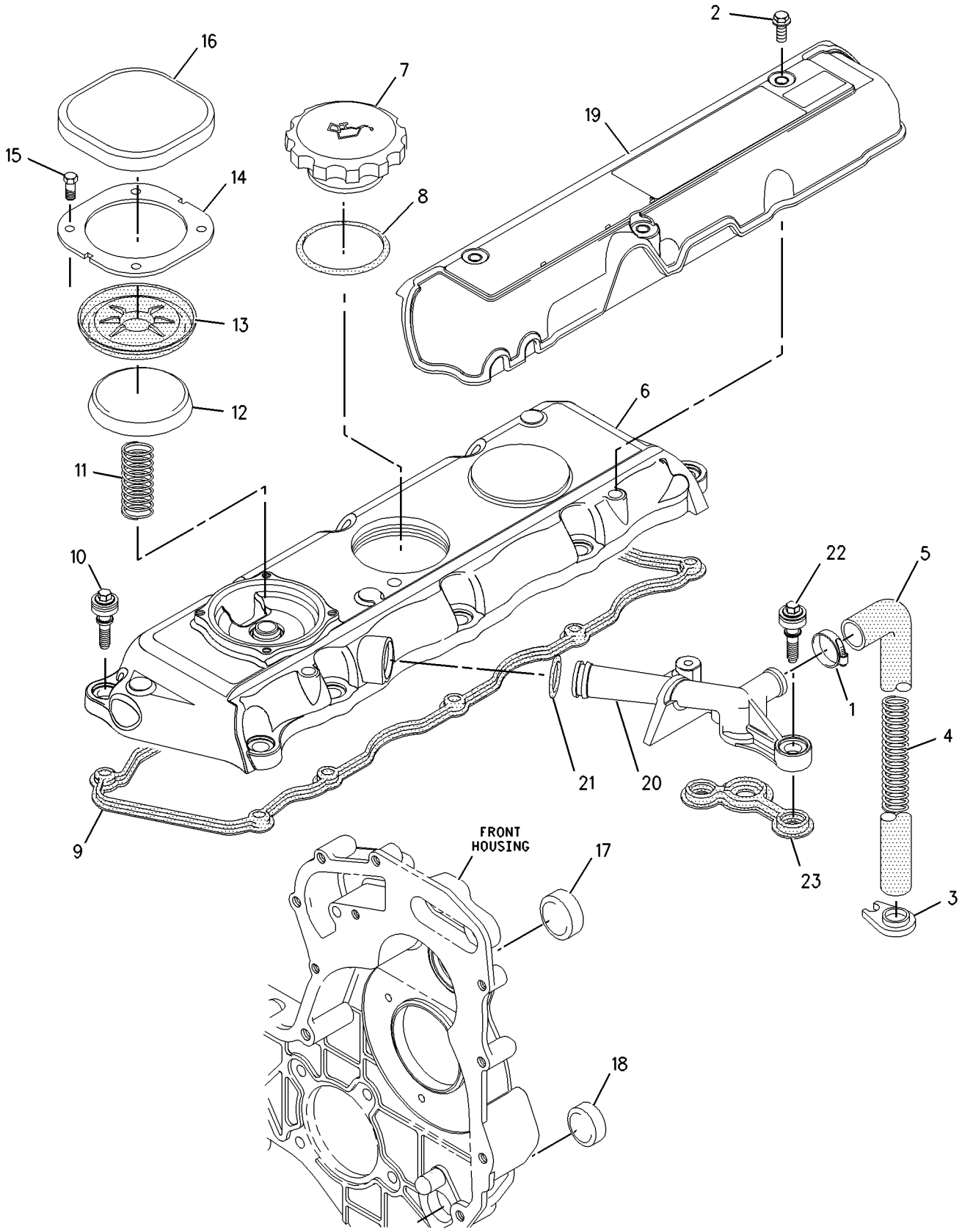

GRAPHIC #1 <END> g00955400

230-9150 COVER GP-VALVE MECHANISM

AN ATTACHMENT

TYPE 2

SMCS-1107 **i02506782**

NOTE	REF NO	GRAPHIC REF	PART NUMBER	QTY	PART NAME 1 2 3 4 5 6 (PRODUCT LEVEL)	SEE PAGE
	1	1	**5D-1026**	1	CLAMP-BAND	
M	2	1	**6I-0846**	3	BOLT (M6X1X14-MM)	
	3	1	**7C-1281**	1	BRACKET	
	4	1	**162-1565**	1	SPRING (CRANKCASE BREATHER HOSE)	
	5	1	**198-9169**	1	HOSE (CRANKCASE BREATHER)	
	6	1	**247-7799**	1	COVER AS-VALVE	
	7	1	**136-3608**	1	CAP AS (ENGINE OIL FILLER)	
	8	1	**124-0506**	1	SEAL	
	9	1	**225-6451**	1	GASKET (VALVE COVER)	
	10	1	**225-6455**	10	BOLT	
	11	1	**225-6456**	1	SPRING	
	12	1	**225-6461**	1	CAP	
	13	1	**225-6464**	1	DIAPHRAGM (CRANKCASE PRESSURE CONTACTOR)	
	14	1	**225-6477**	1	PLATE	
	15	1	**225-6478**	4	SCREW-MACHINE	
	16	1	**225-6479**	1	CAP	
	17	1	**225-6522**	1	PLUG-CUP	
	18	1	**225-6524**	1	PLUG-CUP	
	19	1	**230-9127**	1	COVER	
C	20	1	**287-8573**	1	PIPE AS	
CMR	21	1	**100-4838**	2	BOLT (M6X1X20-MM)	

C - CHANGE FROM PREVIOUS TYPE
M - METRIC PART
R - REMANUFACTURED PART MAY BE AVAILABLE

230-9150 **COVER GP-VALVE MECHANISM (**contd.**)** **i02506782**

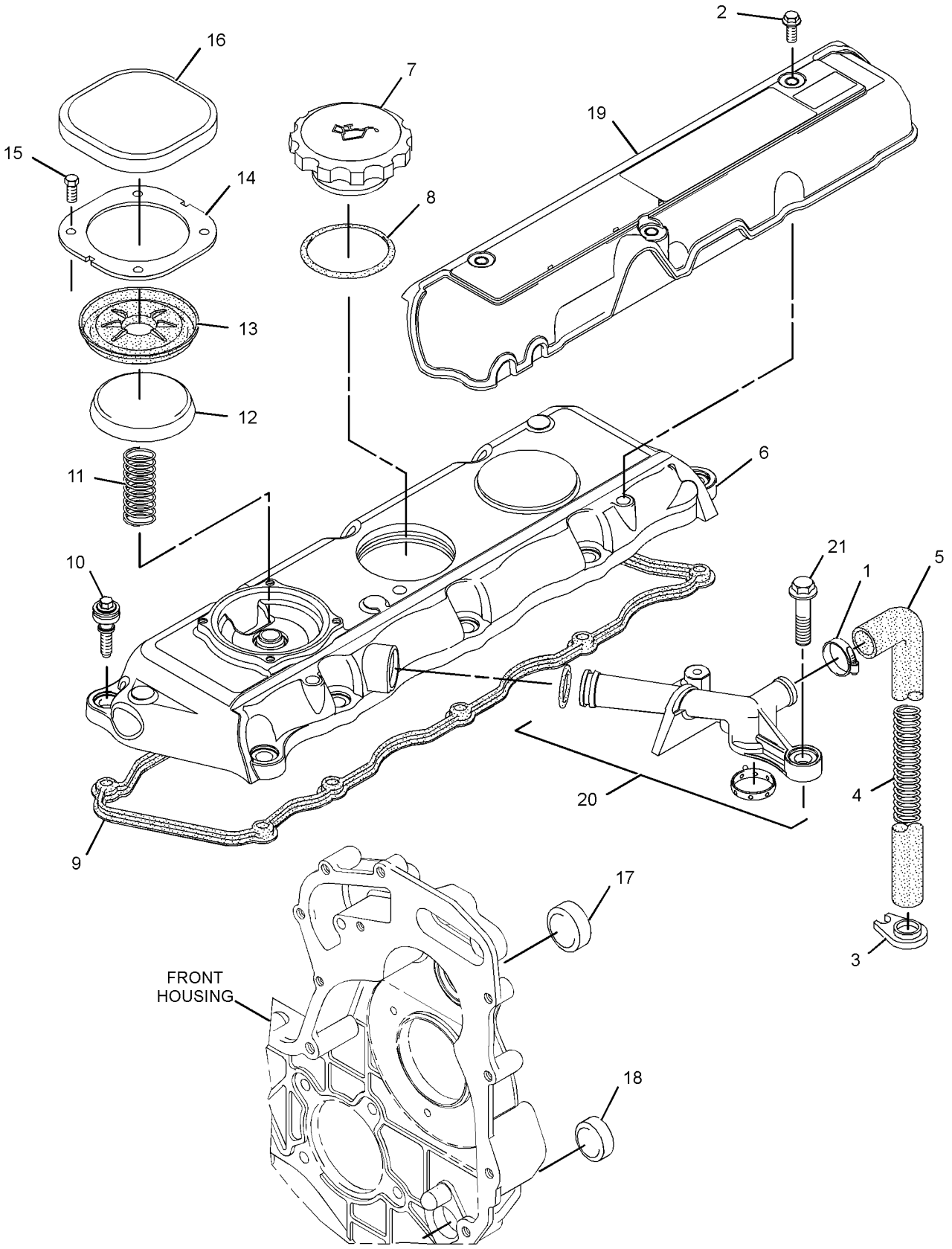

GRAPHIC #1 <END> g01263713

230-9150 COVER GP-VALVE MECHANISM

AN ATTACHMENT

TYPE 3

SMCS-1107 **i04948449**

NOTE	REF NO	GRAPHIC REF	PART NUMBER	QTY	PART NAME 1 2 3 4 5 6 (PRODUCT LEVEL)	SEE PAGE
	1	1	**5D-1026**	1	CLAMP-BAND	
M	2	1	**6I-0846**	3	BOLT (M6X1X14-MM)	
	3	1	**7C-1281**	1	BRACKET	
	4	1	**162-1565**	1	SPRING (CRANKCASE BREATHER HOSE)	
	5	1	**198-9169**	1	HOSE (CRANKCASE BREATHER)	
CY	6	1	**308-1393**	1	COVER GP-VALVE MECHANISM	431
MR	7	1	**100-4838**	2	BOLT (M6X1X20-MM)	
	8	1	**287-8573**	1	PIPE AS	
	9	1	**230-9127**	1	COVER	
	10	1	**225-6524**	1	PLUG-CUP	
	11	1	**225-6522**	1	PLUG-CUP	
	12	1	**217-9039**	1	STRAP-CABLE	

C - CHANGE FROM PREVIOUS TYPE
M - METRIC PART
R - REMANUFACTURED PART MAY BE AVAILABLE
Y - SEPARATE ILLUSTRATION

230-9150 **COVER GP-VALVE MECHANISM (**contd.**)** **i04948449**

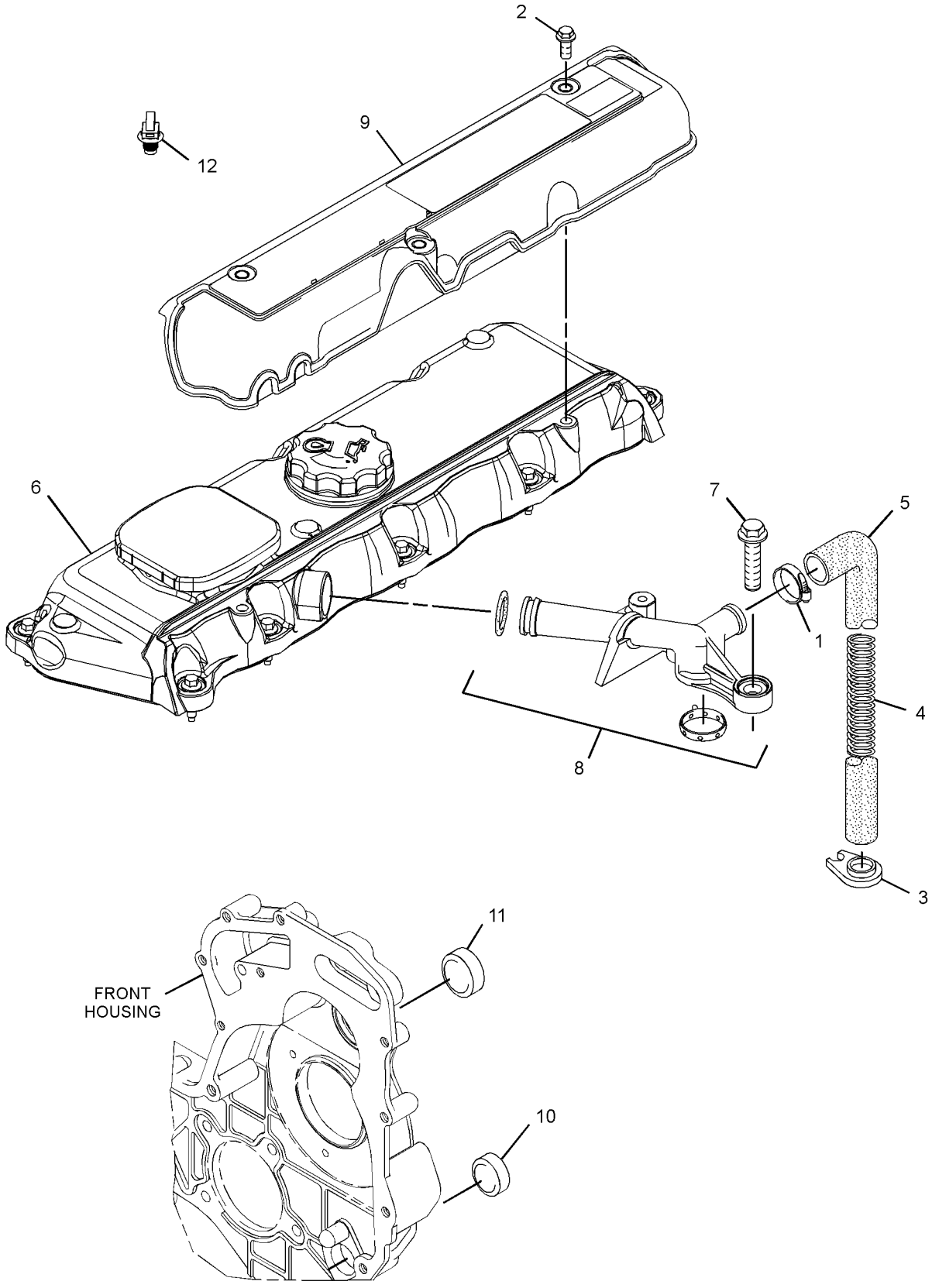

GRAPHIC #1 <END> g03140045

230-9150 COVER GP-VALVE MECHANISM

AN ATTACHMENT

TYPE 4

SMCS-1107 **i06995915**

NOTE	REF NO	GRAPHIC REF	PART NUMBER	QTY	PART NAME 1 2 3 4 5 6 (PRODUCT LEVEL)	SEE PAGE
	1	1	**5D-1026**	1	CLAMP-BAND	
M	2	1	**6I-0846**	3	BOLT (M6X1X14-MM)	
	3	1	**7C-1281**	1	BRACKET	
	4	1	**162-1565**	1	SPRING (CRANKCASE BREATHER HOSE)	
	5	1	**198-9169**	1	HOSE (CRANKCASE BREATHER)	
CY	6	1	*446-9163*	1	COVER GP-CYLINDER HEAD	223
MR	7	1	**100-4838**	2	BOLT (M6X1X20-MM)	
	8	1	**287-8573**	1	PIPE AS	
	8A	1	**150-7732**	1	SEAL-O-RING	
	8B	1	**286-3030**	1	RING-SEAL	
	9	1	**230-9127**	1	COVER	
	10	1	**225-6524**	1	PLUG-CUP	
	11	1	**225-6522**	1	PLUG-CUP	
	12	1	**217-9039**	1	STRAP-CABLE	
	13	1	**346-8219**	1	FILM-WARNING (UNIVERSAL WARNING)	

C - CHANGE FROM PREVIOUS TYPE
M - METRIC PART
R - REMANUFACTURED PART MAY BE AVAILABLE
Y - SEPARATE ILLUSTRATION

230-9150 **COVER GP-VALVE MECHANISM (**contd.**)** **i06995915**

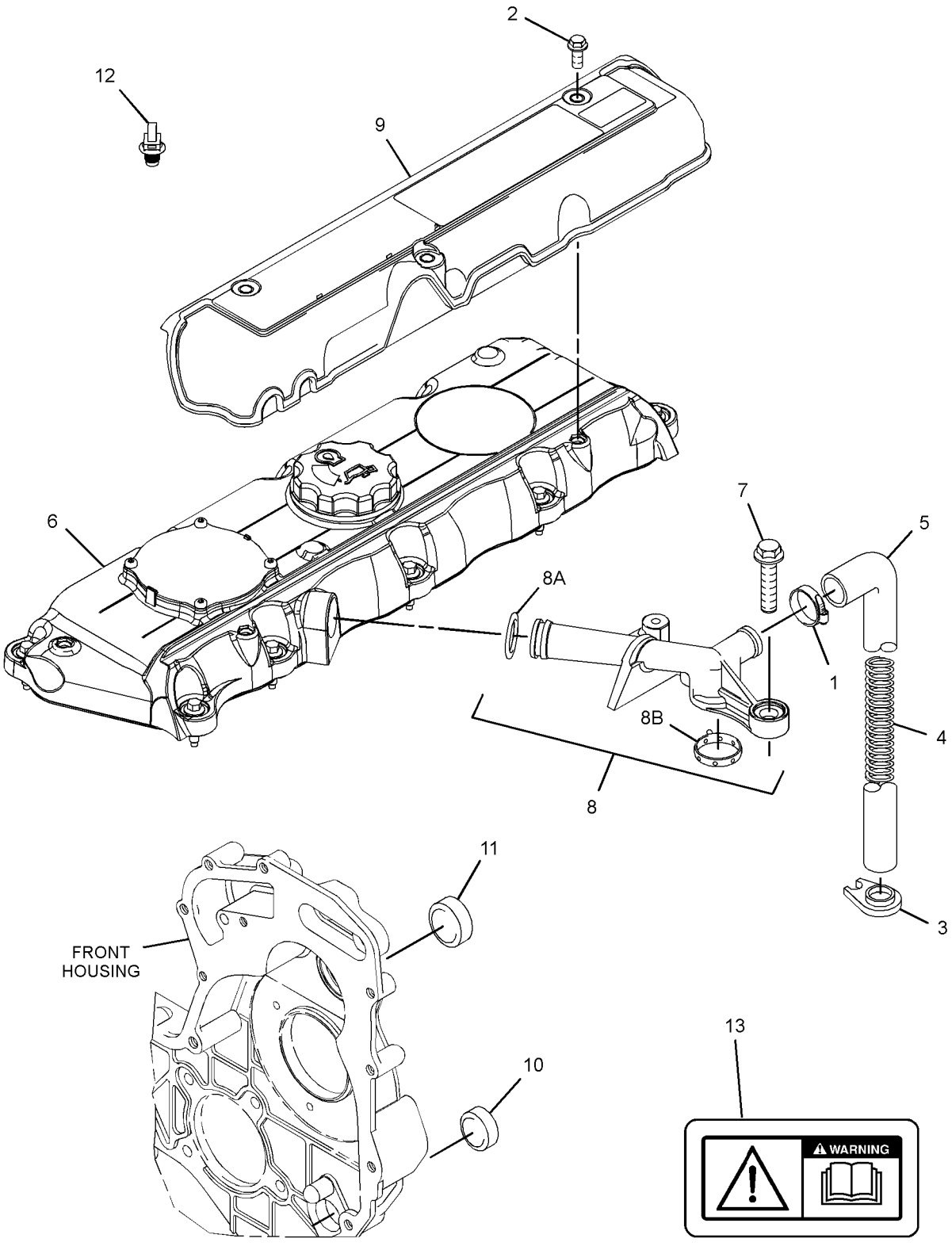

GRAPHIC #1 <END> g06209507

230-9150 COVER GP-VALVE MECHANISM

AN ATTACHMENT

TYPE 5

SMCS-1107 **i07308207**

NOTE	REF NO	GRAPHIC REF	PART NUMBER	QTY	PART NAME 1 2 3 4 5 6 (PRODUCT LEVEL)	SEE PAGE
	1	1	**5D-1026**	1	CLAMP-BAND	
	2	1	**217-9039**	1	STRAP-CABLE	
	3	1	**7C-1281**	1	BRACKET	
	4	1	**162-1565**	1	SPRING (CRANKCASE BREATHER HOSE)	
	5	1	**198-9169**	1	HOSE (CRANKCASE BREATHER)	
Y	6	1	**521-8086**	1	COVER GP-CYLINDER HEAD	225
MR	7	1	**100-4838**	2	BOLT (M6X1X20-MM)	
	8	1	**287-8573**	1	PIPE AS	
	8A	1	**150-7732**	1	SEAL-O-RING	
	8B	1	**286-3030**	1	RING-SEAL	
	9	1	**346-8219**	1	FILM-WARNING (UNIVERSAL WARNING)	
	10	1	**225-6524**	1	PLUG-CUP	
	11	1	**225-6522**	1	PLUG-CUP	

M - METRIC PART
R - REMANUFACTURED PART MAY BE AVAILABLE
Y - SEPARATE ILLUSTRATION

230-9150 **COVER GP-VALVE MECHANISM (**contd.**)** **i07308207**

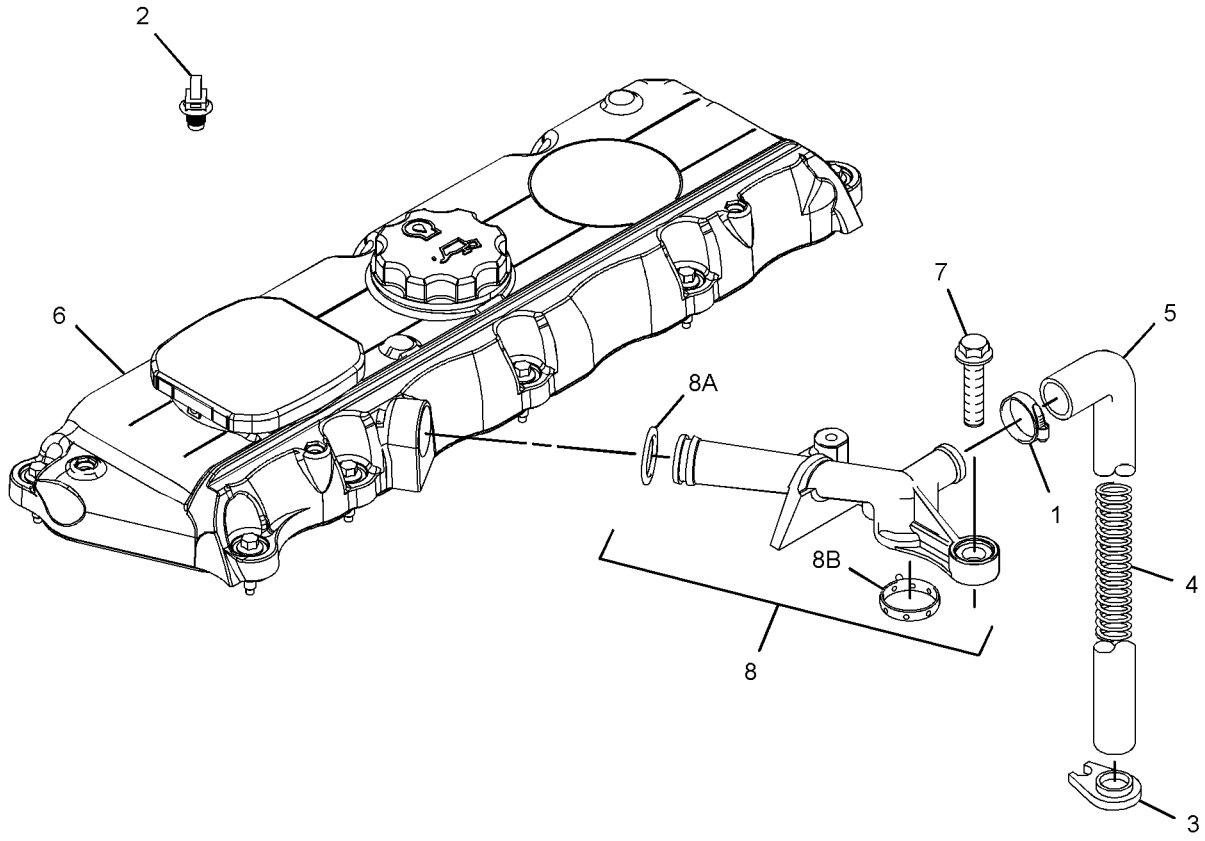

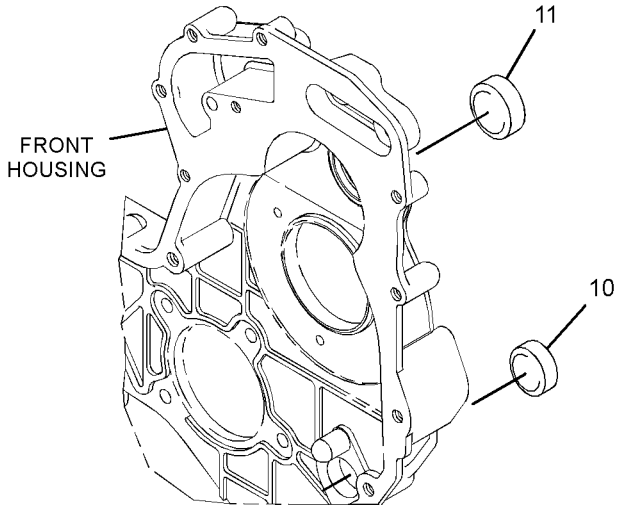

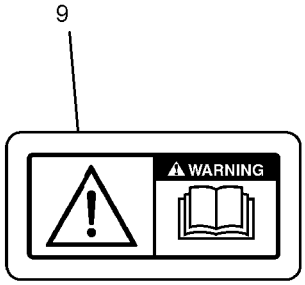

GRAPHIC #1 <END> g06271080

230-9151 COVER GP-VALVE MECHANISM

ALSO AN ATTACHMENT

TYPE 1

SMCS-1107 **i02138059**

NOTE	REF NO	GRAPHIC REF	PART NUMBER	QTY	PART NAME 1 2 3 4 5 6 (PRODUCT LEVEL)	SEE PAGE
M	1	1	**6I-0254**	1	BOLT (M8X1.25X30-MM)	
M	2	1	**6I-0846**	3	BOLT (M6X1X14-MM)	
M	3	1	**6I-4374**	1	BOLT (M8X1.25X60-MM)	
	4	1	**226-8763**	1	COVER AS-VALVE	
	5	1	**225-6451**	1	GASKET (VALVE COVER)	
	6	1	**225-6455**	10	BOLT	
	7	1	**225-6456**	1	SPRING	
	8	1	**225-6461**	1	CAP	
	9	1	**225-6464**	1	DIAPHRAGM (CRANKCASE PRESSURE CONTACTOR)	
	10	1	**225-6477**	1	PLATE	
	11	1	**225-6478**	4	SCREW-MACHINE	
	12	1	**225-6479**	1	CAP	
	13	1	**230-9125**	1	CONNECTOR	
	14	1	**150-7732**	1	SEAL-O-RING	
	15	1	**225-6455**	2	BOLT	
	16	1	**225-6517**	1	GASKET	
	17	1	**230-9127**	1	COVER	
	18	1	**230-9152**	1	FILLER GP-ENGINE OIL	
	19	1	**6I-1201**	1	SEAL-O-RING	
	20	1	**130-9888**	1	CAP AS-OIL FILLER (ENGINE)	
	21	1	**113-1504**	1	SEAL-O-RING	

M - METRIC PART

230-9151 **COVER GP-VALVE MECHANISM (**contd.**)** **i02138059**

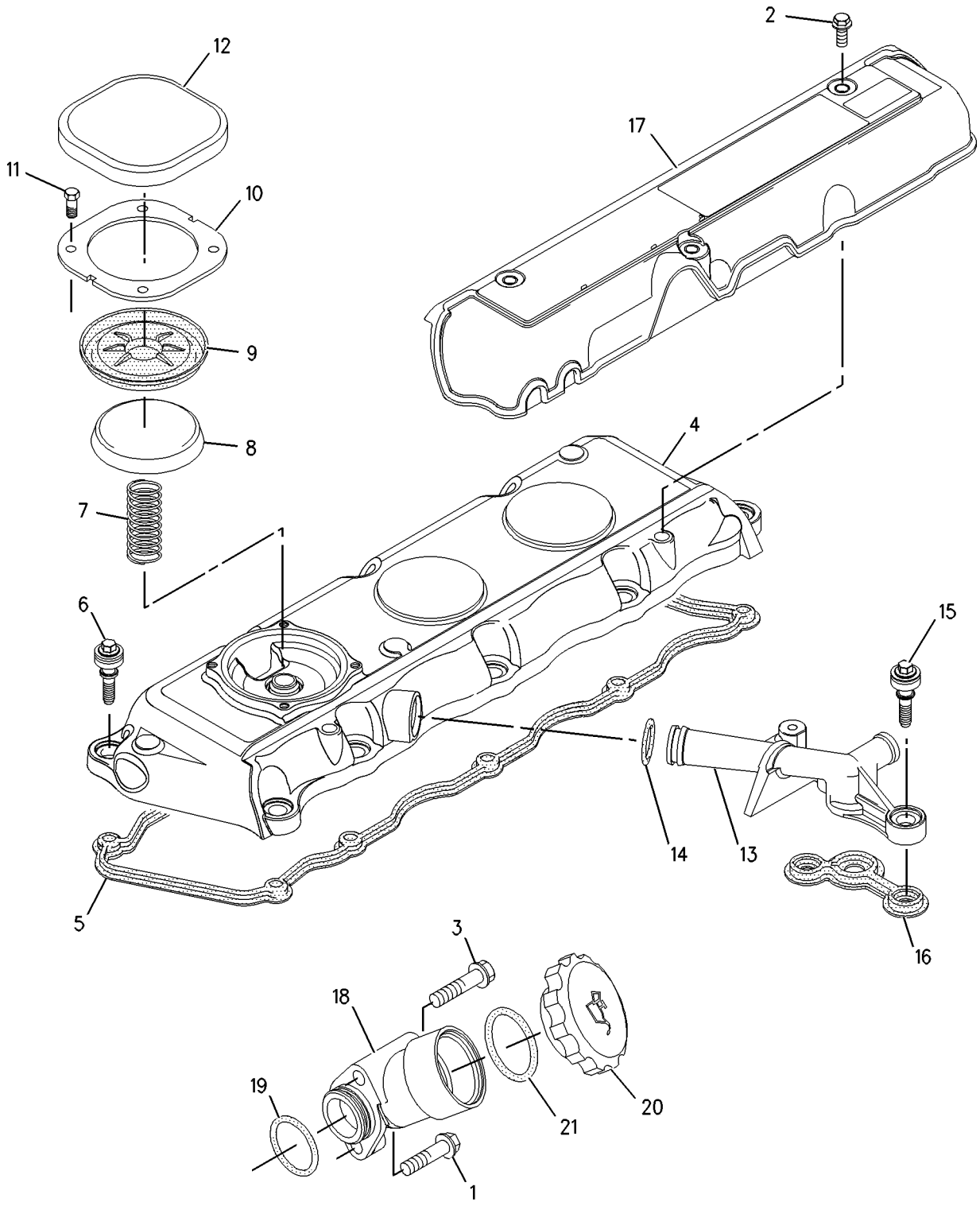

GRAPHIC #1 <END> g00956794

230-9151 COVER GP-VALVE MECHANISM

ALSO AN ATTACHMENT

TYPE 2

SMCS-1107 **i02701741**

NOTE	REF NO	GRAPHIC REF	PART NUMBER	QTY	PART NAME 1 2 3 4 5 6 (PRODUCT LEVEL)	SEE PAGE
M	1	1	**6I-0254**	1	BOLT (M8X1.25X30-MM)	
M	2	1	**6I-0846**	3	BOLT (M6X1X14-MM)	
M	3	1	**6I-4374**	1	BOLT (M8X1.25X60-MM)	
C	4	1	**249-5230**	1	COVER AS-VALVE	
	4A	1	**225-6451**	1	GASKET (VALVE COVER)	
	4B	1	**225-6456**	1	SPRING	
	4C	1	**225-6461**	1	CAP	
	4D	1	**225-6464**	1	DIAPHRAGM (CRANKCASE PRESSURE CONTACTOR)	
	4E	1	**225-6477**	1	PLATE	
	4F	1	**225-6478**	4	SCREW-MACHINE	
	4G	1	**225-6479**	1	CAP	
	4H	1	**225-6455**	10	BOLT	
C	5	1	**286-3029**	1	BREATHER AS	
	5A	1	**286-3030**	1	RING-SEAL	
	5B	1	**150-7732**	1	SEAL-O-RING	
	6	1	**230-9127**	1	COVER	
	7	1	**230-9152**	1	FILLER GP-ENGINE OIL	
	7A	1	**6I-1201**	1	SEAL-O-RING	
	7B	1	**130-9888**	1	CAP AS-OIL FILLER (ENGINE)	
	7C	1	**113-1504**	1	SEAL-O-RING	
CMR	8	1	**100-4838**	2	BOLT (M6X1X20-MM)	

C - CHANGE FROM PREVIOUS TYPE
M - METRIC PART
R - REMANUFACTURED PART MAY BE AVAILABLE

230-9151 **COVER GP-VALVE MECHANISM (**contd.**)** **i02701741**

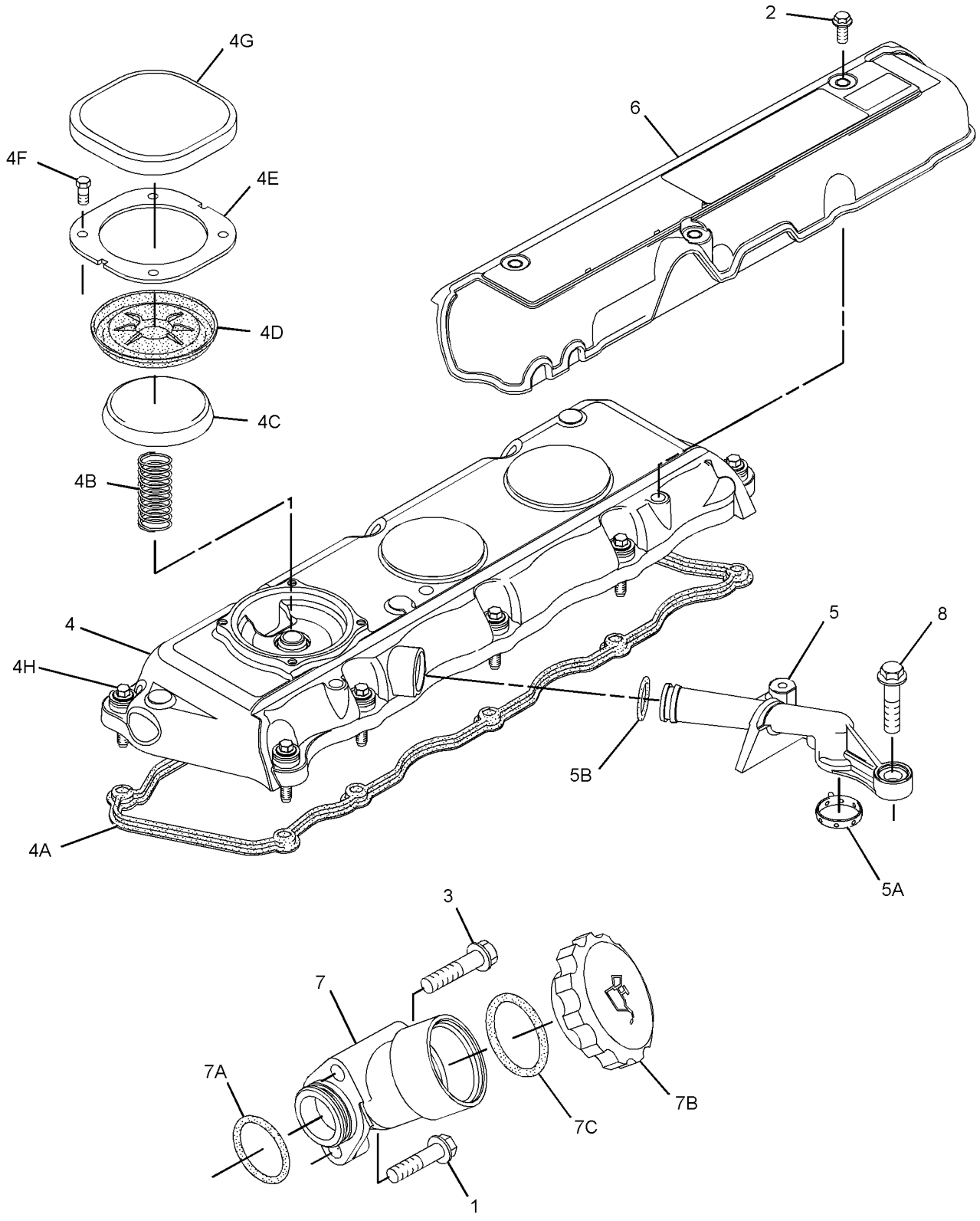

GRAPHIC #1 <END> g01392351

230-9151 COVER GP-VALVE MECHANISM

S/N: 3341-25177
ALSO AN ATTACHMENT

SMCS-1107 **i06889288**

NOTE	REF NO	GRAPHIC REF	PART NUMBER	QTY	PART NAME 1 2 3 4 5 6 (PRODUCT LEVEL)	SEE PAGE
M	1	1	**6I-0254**	1	BOLT (M8X1.25X30-MM)	
M	2	1	**6I-0846**	3	BOLT (M6X1X14-MM)	
M	3	1	**6I-4374**	1	BOLT (M8X1.25X60-MM)	
Y	4	1	**308-1381**	1	COVER GP-VALVE MECHANISM	430
	5	1	**286-3029**	1	BREATHER AS	
	5A	1	**286-3030**	1	RING-SEAL	
	5B	1	**150-7732**	1	SEAL-O-RING	
	6	1	**230-9127**	1	COVER	
	7	1	**321-2383**	1	FILLER AS	
	7A	1	**306-2337**	1	SEAL-O-RING	
	7B	1	**130-9888**	1	CAP AS-OIL FILLER (ENGINE)	
	7C	1	**113-1504**	1	SEAL-O-RING	
MR	8	1	**100-4838**	2	BOLT (M6X1X20-MM)	
	9	1	**346-8219**	1	FILM-WARNING (UNIVERSAL WARNING)	

M - METRIC PART
R - REMANUFACTURED PART MAY BE AVAILABLE
Y - SEPARATE ILLUSTRATION

230-9151 **COVER GP-VALVE MECHANISM (**contd.**)** **i06889288**

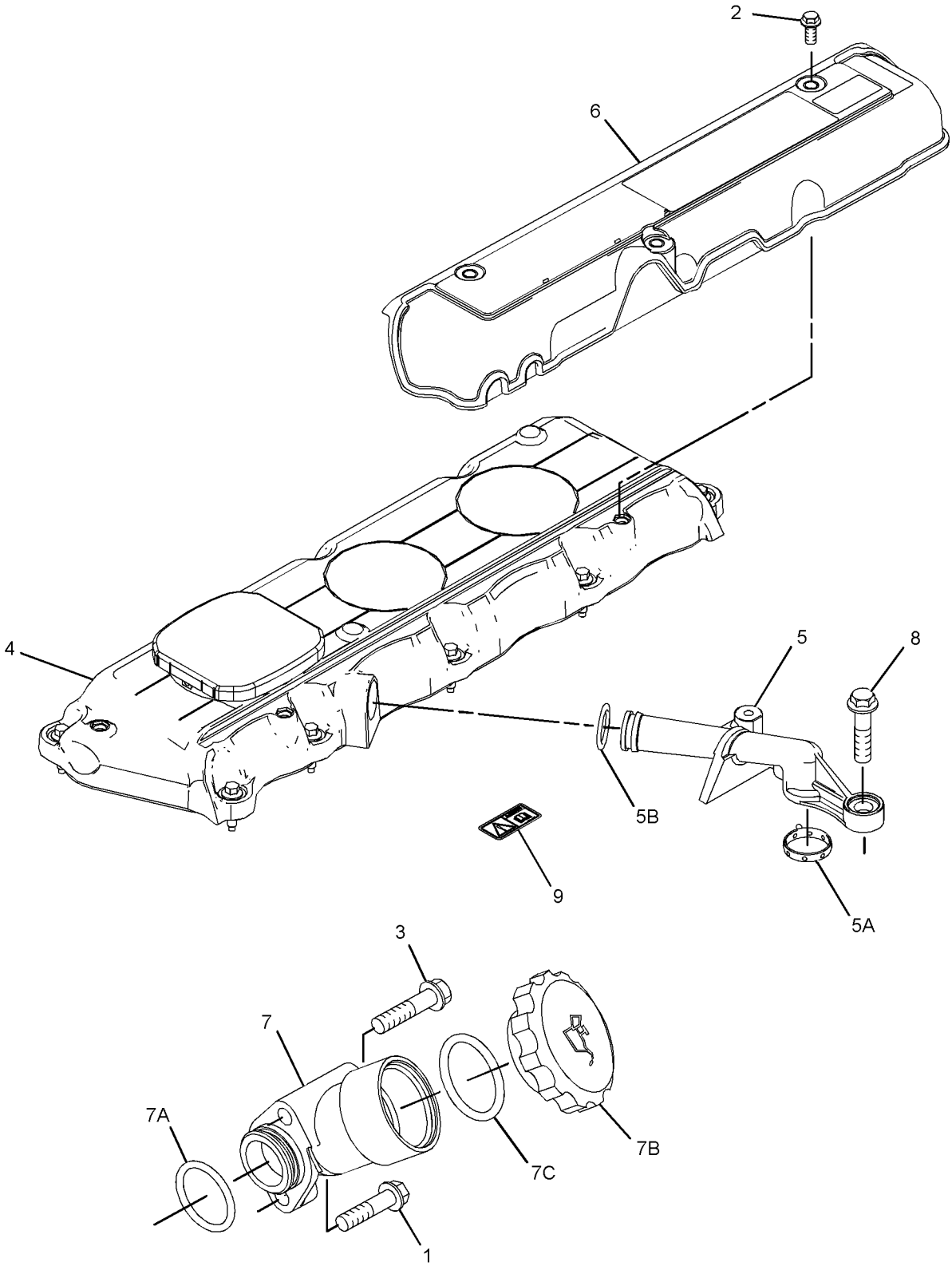

GRAPHIC #1 <END> g06197324

230-9151 COVER GP-VALVE MECHANISM

S/N: 33425178-UP
ALSO AN ATTACHMENT

SMCS-1107 **i07033792**

NOTE	REF NO	GRAPHIC REF	PART NUMBER	QTY	PART NAME 1 2 3 4 5 6 (PRODUCT LEVEL)	SEE PAGE
M	1	1	**6I-0254**	1	BOLT (M8X1.25X30-MM)	
MR	2	1	**100-4838**	2	BOLT (M6X1X20-MM)	
M	3	1	**6I-4374**	1	BOLT (M8X1.25X60-MM)	
Y	4	1	**308-1381**	1	COVER GP-VALVE MECHANISM	430
	5	1	**286-3029**	1	BREATHER AS	
	5A	1	**286-3030**	1	RING-SEAL	
	5B	1	**150-7732**	1	SEAL-O-RING	
	6	1	**346-8219**	1	FILM-WARNING (UNIVERSAL WARNING)	
	7	1	**321-2383**	1	FILLER AS	
	7A	1	**306-2337**	1	SEAL-O-RING	
	7B	1	**130-9888**	1	CAP AS-OIL FILLER (ENGINE)	
	7C	1	**113-1504**	1	SEAL-O-RING	

M - METRIC PART
R - REMANUFACTURED PART MAY BE AVAILABLE
Y - SEPARATE ILLUSTRATION

230-9151 **COVER GP-VALVE MECHANISM (**contd.**)** **i07033792**

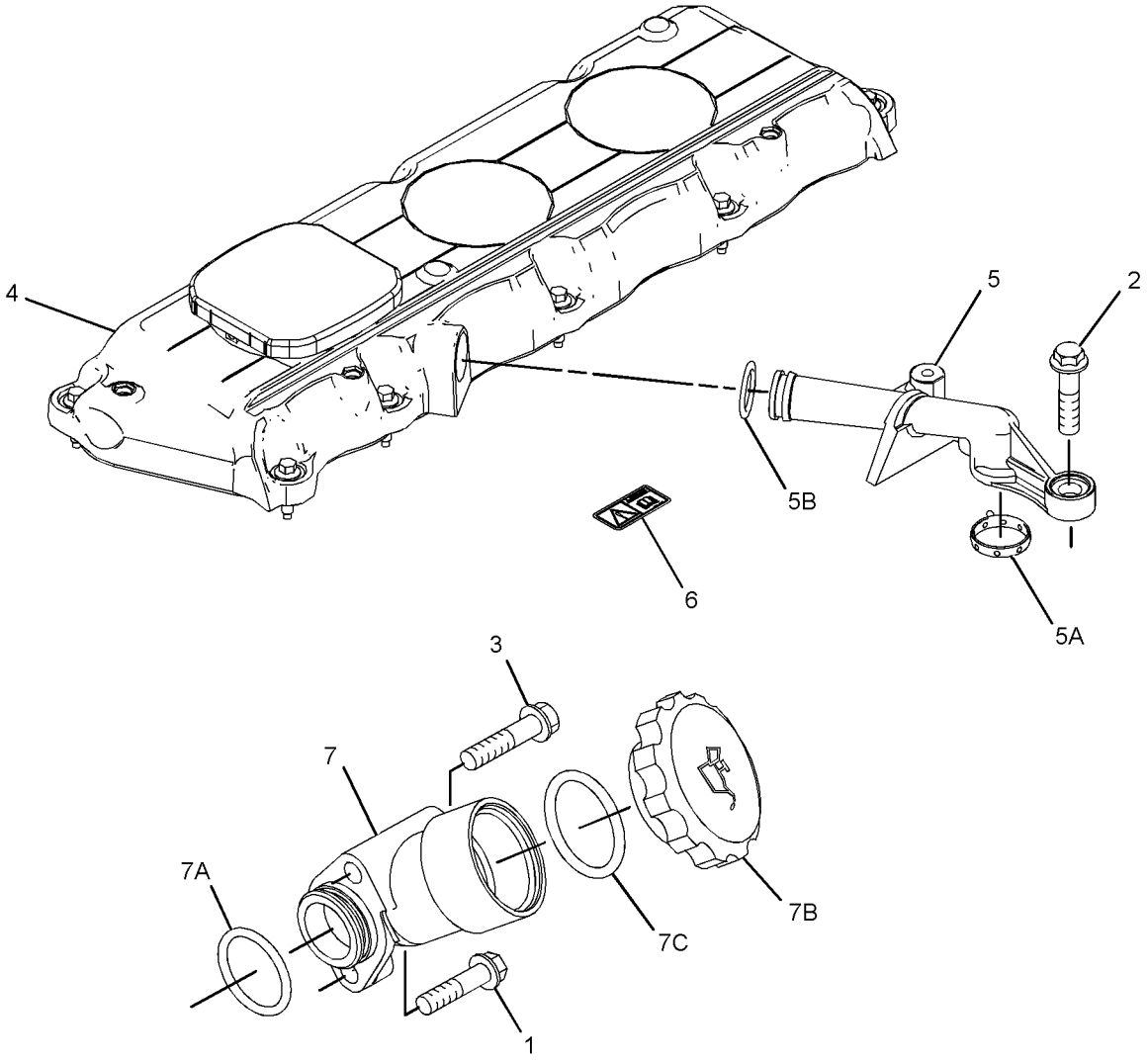

GRAPHIC #1 <END> g06203903

234-0251 COVER GP-VALVE MECHANISM

ALSO AN ATTACHMENT

TYPE 1

SMCS-1107 **i02136408**

NOTE	REF NO	GRAPHIC REF	PART NUMBER	QTY	PART NAME 1 2 3 4 5 6 (PRODUCT LEVEL)	SEE PAGE
	1	1	**5D-1026**	1	CLAMP-BAND	
M	2	1	**6I-0254**	1	BOLT (M8X1.25X30-MM)	
	3	1	**6I-0517**	1	SPRING (CRANKCASE BREATHER HOSE)	
M	4	1	**6I-0846**	3	BOLT (M6X1X14-MM)	
M	5	1	**6I-4374**	1	BOLT (M8X1.25X60-MM)	
	6	1	**7C-1281**	1	BRACKET	
	7	1	**198-8645**	1	HOSE (CRANKCASE BREATHER)	
	9	1	**226-8763**	1	COVER AS-VALVE	
	9A	1	**225-6451**	1	GASKET (VALVE COVER)	
	9B	1	**225-6455**	10	BOLT	
	9C	1	**225-6456**	1	SPRING	
	9D	1	**225-6461**	1	CAP	
	9E	1	**225-6464**	1	DIAPHRAGM (CRANKCASE PRESSURE CONTACTOR)	
	9F	1	**225-6477**	1	PLATE	
	9G	1	**225-6478**	4	SCREW-MACHINE	
	9H	1	**225-6479**	1	CAP	
	10	1	**230-9127**	1	COVER	
	11	1	**230-9144**	1	CONNECTOR	
	11A	1	**150-7732**	1	SEAL-O-RING	
	11B	1	**225-6455**	2	BOLT	
	11C	1	**225-6517**	1	GASKET	
	12	1	**230-9152**	1	FILLER GP-ENGINE OIL	
	12A	1	**6I-1201**	1	SEAL-O-RING	
	12B	1	**130-9888**	1	CAP AS-OIL FILLER (ENGINE)	
	12C	1	**113-1504**	1	SEAL-O-RING	

M - METRIC PART

234-0251 **COVER GP-VALVE MECHANISM (**contd.**)** **i02136408**

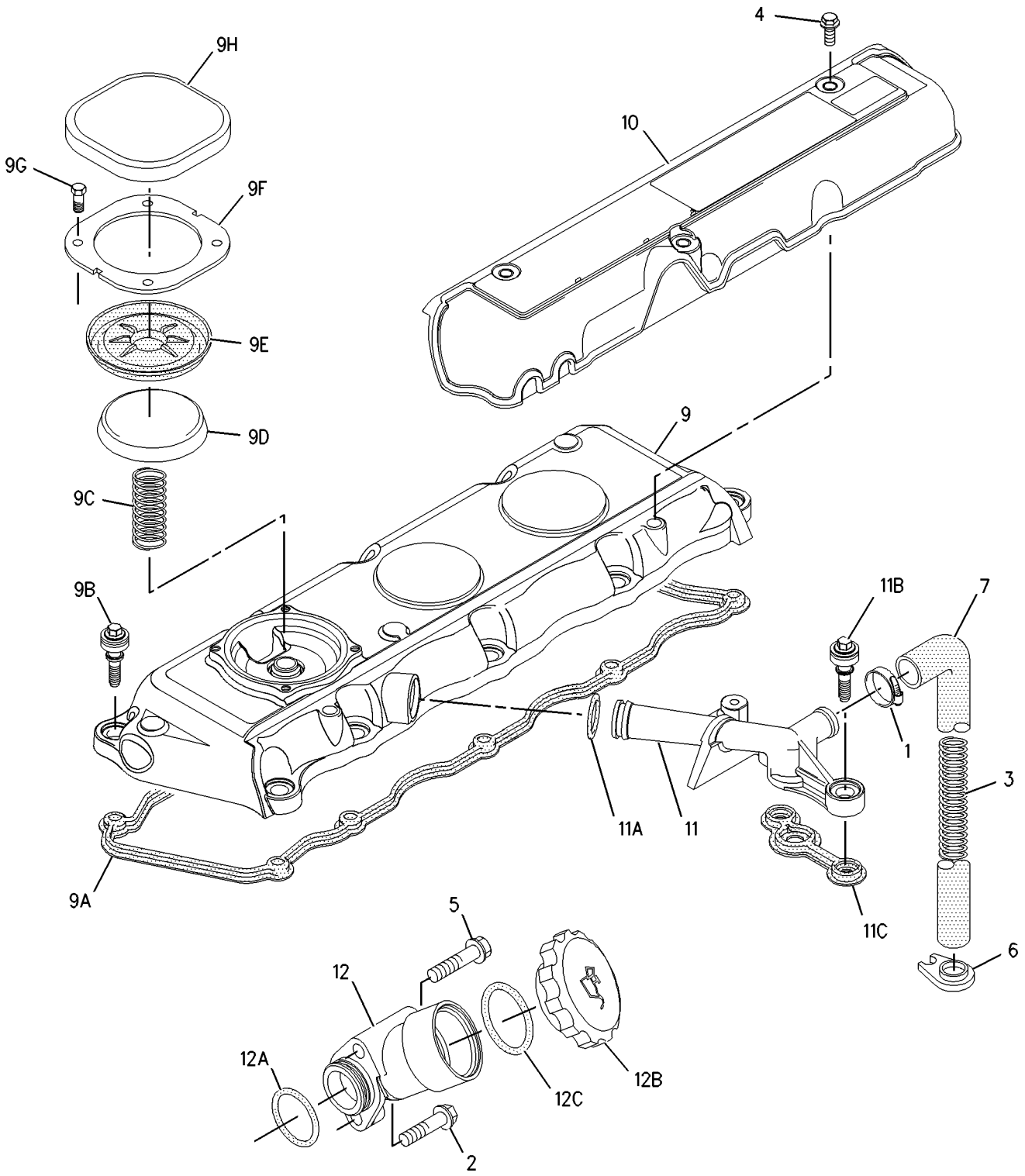

GRAPHIC #1 <END> g00985145

234-0251 COVER GP-VALVE MECHANISM

ALSO AN ATTACHMENT

TYPE 2

SMCS-1107 **i02645854**

NOTE	REF NO	GRAPHIC REF	PART NUMBER	QTY	PART NAME 1 2 3 4 5 6 (PRODUCT LEVEL)	SEE PAGE
	1	1	**5D-1026**	1	CLAMP-BAND	
M	2	1	**6I-0254**	1	BOLT (M8X1.25X30-MM)	
	3	1	**6I-0517**	1	SPRING (CRANKCASE BREATHER HOSE)	
M	4	1	**6I-0846**	3	BOLT (M6X1X14-MM)	
M	5	1	**6I-4374**	1	BOLT (M8X1.25X60-MM)	
	6	1	**7C-1281**	1	BRACKET	
	7	1	**198-8645**	1	HOSE (CRANKCASE BREATHER)	
C	9	1	**249-5230**	1	COVER AS-VALVE	
	9A	1	**225-6451**	1	GASKET (VALVE COVER)	
	9B	1	**225-6455**	10	BOLT	
	9C	1	**225-6456**	1	SPRING	
	9D	1	**225-6461**	1	CAP (CRANKCASE BREATHER)	
	9E	1	**225-6464**	1	DIAPHRAGM (CRANKCASE PRESSURE CONTACTOR)	
	9F	1	**225-6477**	1	PLATE	
	9G	1	**225-6478**	4	SCREW-MACHINE	
	9H	1	**225-6479**	1	CAP (CRANKCASE BREATHER)	
	10	1	**230-9127**	1	COVER	
C	11	1	**287-8573**	1	PIPE AS	
	12	1	**230-9152**	1	FILLER GP-ENGINE OIL	
	12A	1	**6I-1201**	1	SEAL-O-RING	
	12B	1	**130-9888**	1	CAP AS-OIL FILLER (ENGINE)	
	12C	1	**113-1504**	1	SEAL-O-RING	
CMR	13	1	**100-4838**	2	BOLT (M6X1X20-MM)	

C - CHANGE FROM PREVIOUS TYPE
M - METRIC PART
R - REMANUFACTURED PART MAY BE AVAILABLE

234-0251 **COVER GP-VALVE MECHANISM (**contd.**)** **i02645854**

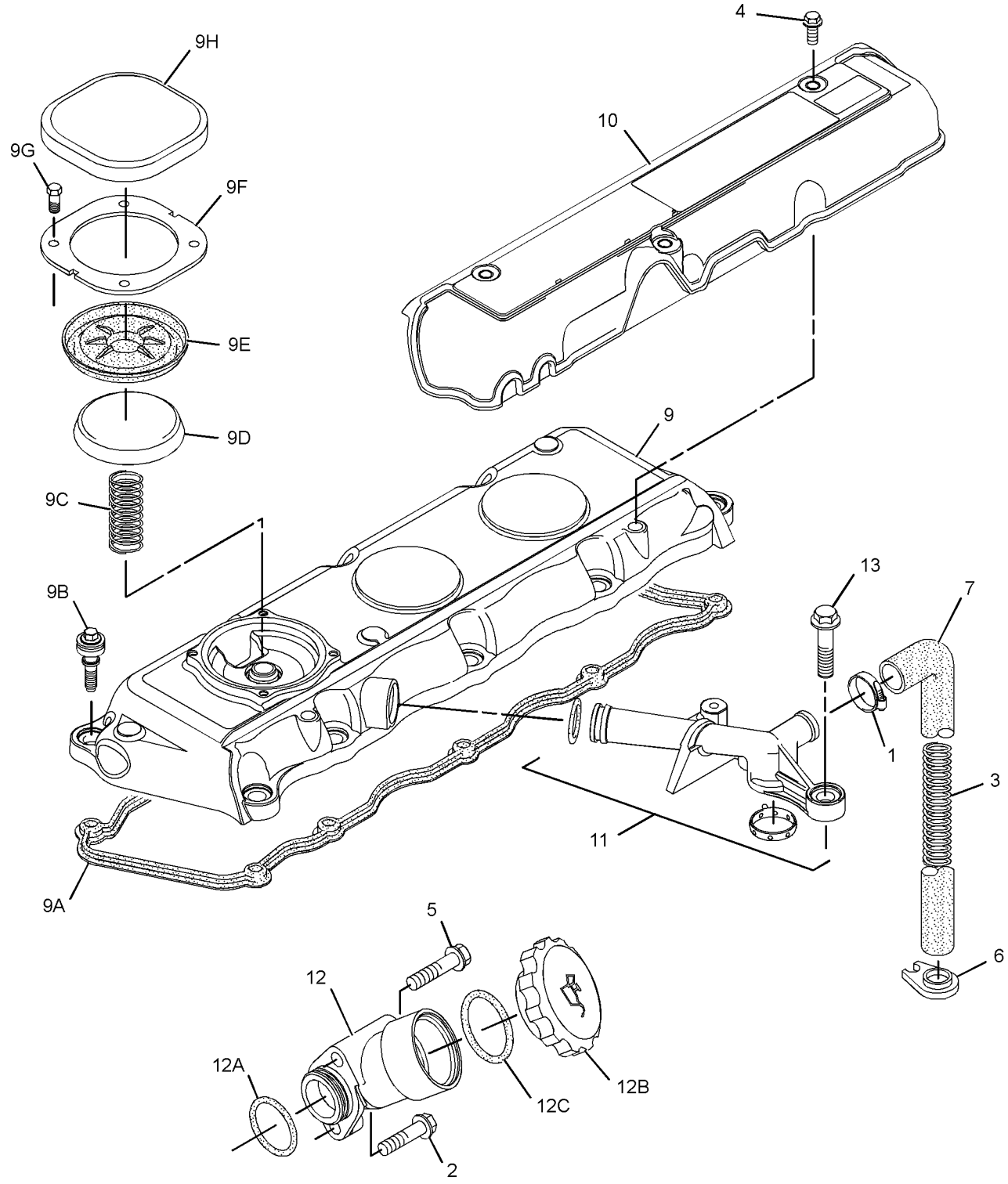

GRAPHIC #1 <END> g01293423

234-0251 COVER GP-VALVE MECHANISM

ALSO AN ATTACHMENT

TYPE 3

SMCS-1107 **i04952680**

NOTE	REF NO	GRAPHIC REF	PART NUMBER	QTY	PART NAME 1 2 3 4 5 6 (PRODUCT LEVEL)	SEE PAGE
	1	1	**5D-1026**	1	CLAMP-BAND	
M	2	1	**6I-0254**	1	BOLT (M8X1.25X30-MM)	
	3	1	**6I-0517**	1	SPRING (CRANKCASE BREATHER HOSE)	
M	4	1	**6I-0846**	3	BOLT (M6X1X14-MM)	
M	5	1	**6I-4374**	1	BOLT (M8X1.25X60-MM)	
	6	1	**7C-1281**	1	BRACKET	
	7	1	**198-8645**	1	HOSE (CRANKCASE BREATHER)	
CY	9	1	**308-1381**	1	COVER GP-VALVE MECHANISM	430
	10	1	**230-9127**	1	COVER	
	11	1	**287-8573**	1	PIPE AS	
	12	1	**321-2383**	1	FILLER AS	
	12A	1	**306-2337**	1	SEAL-O-RING	
	12B	1	**130-9888**	1	CAP AS-OIL FILLER (ENGINE)	
	12C	1	**113-1504**	1	SEAL-O-RING	
MR	13	1	**100-4838**	2	BOLT (M6X1X20-MM)	
	14	1	**217-9039**	1	STRAP-CABLE	

C - CHANGE FROM PREVIOUS TYPE
M - METRIC PART
R - REMANUFACTURED PART MAY BE AVAILABLE
Y - SEPARATE ILLUSTRATION

234-0251 **COVER GP-VALVE MECHANISM (**contd.**)** **i04952680**

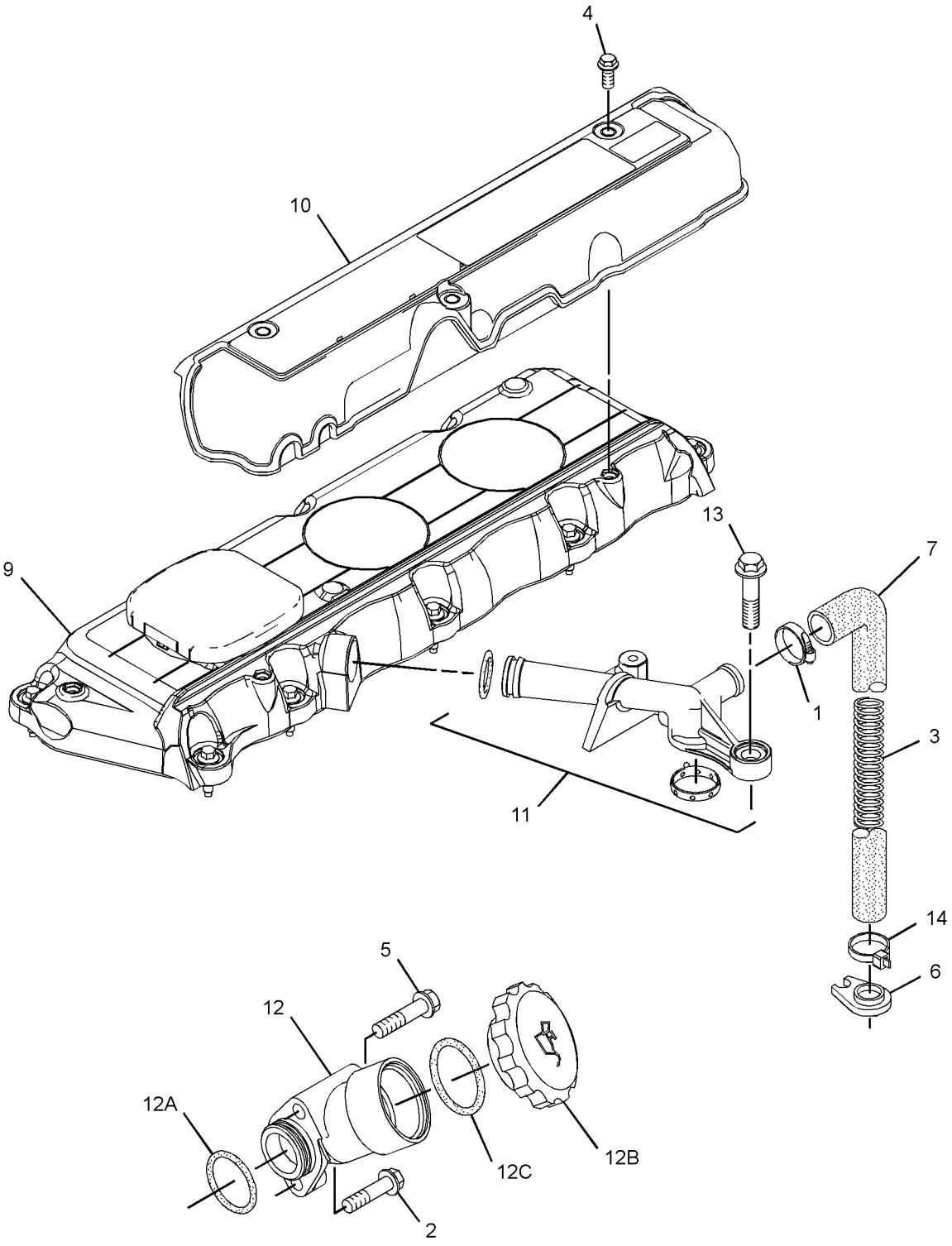

GRAPHIC #1 <END> g03177246

234-0251 COVER GP-VALVE MECHANISM

ALSO AN ATTACHMENT

TYPE 4

SMCS-1107 **i07195838**

NOTE	REF NO	GRAPHIC REF	PART NUMBER	QTY	PART NAME 1 2 3 4 5 6 (PRODUCT LEVEL)	SEE PAGE
	1	1	**5D-1026**	1	CLAMP-BAND	
M	2	1	**6I-0254**	1	BOLT (M8X1.25X30-MM)	
	3	1	**162-1565**	1	SPRING (CRANKCASE BREATHER HOSE)	
M	4	1	**6I-4374**	1	BOLT (M8X1.25X60-MM)	
	5	1	**7C-1281**	1	BRACKET	
MR	6	1	**100-4838**	2	BOLT (M6X1X20-MM)	
	7	1	**198-8645**	1	HOSE (CRANKCASE BREATHER)	
	8	1	**217-9039**	1	STRAP-CABLE	
	9	1	**287-8573**	1	PIPE AS	
	9A	1	**150-7732**	1	SEAL-O-RING	
	9B	1	**286-3030**	1	RING-SEAL	
	10	1	**321-2383**	1	FILLER AS	
	10A	1	**306-2337**	1	SEAL-O-RING	
	10B	1	**130-9888**	1	CAP AS-OIL FILLER (ENGINE)	
	10C	1	**113-1504**	1	SEAL-O-RING	
	11	1	**346-8219**	1	FILM-WARNING (UNIVERSAL WARNING)	
Y	12	1	**308-1381**	1	COVER GP-VALVE MECHANISM	430

M - METRIC PART
R - REMANUFACTURED PART MAY BE AVAILABLE
Y - SEPARATE ILLUSTRATION

234-0251 **COVER GP-VALVE MECHANISM (**contd.**)** **i07195838**

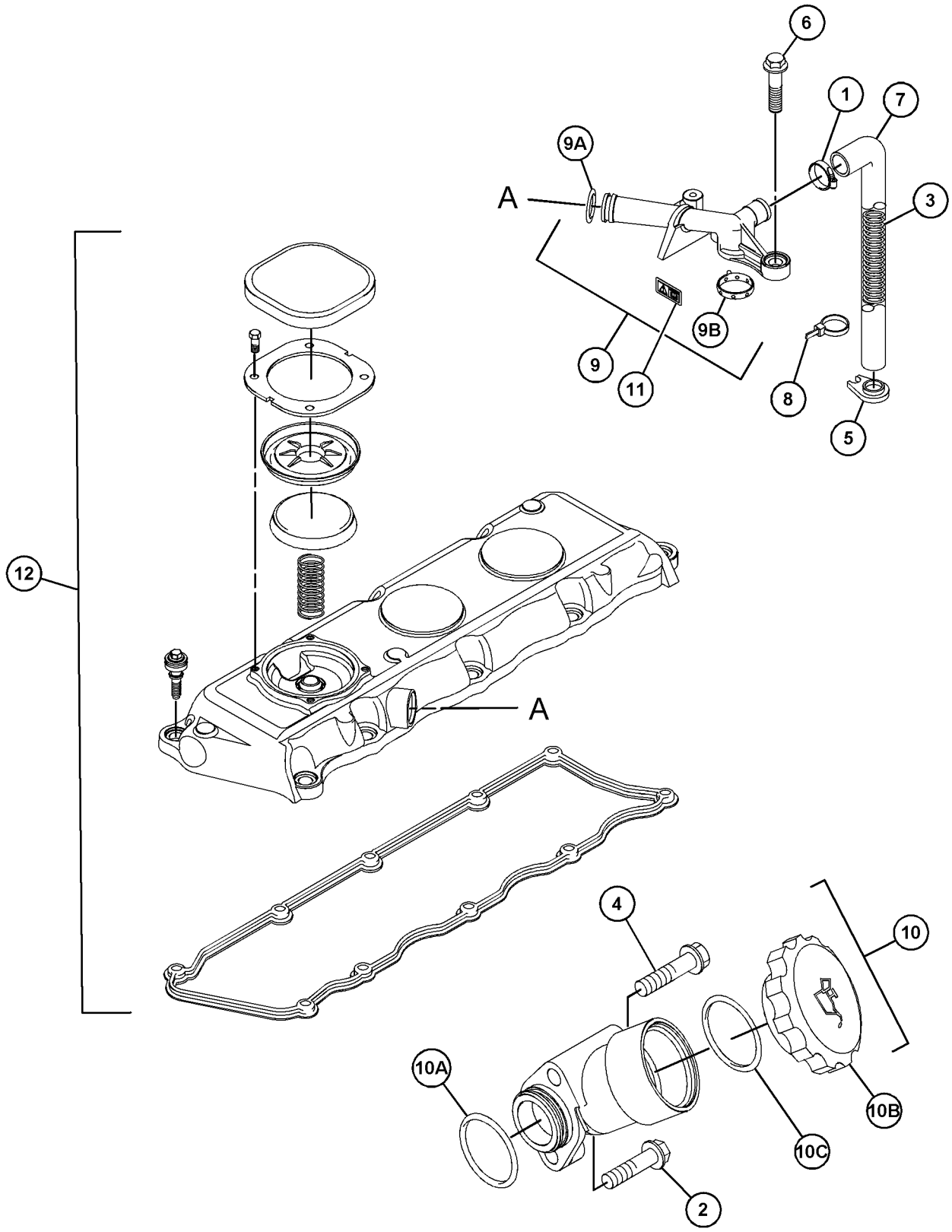

GRAPHIC #1 <END> g06208598

235-3554 COVER GP-VALVE MECHANISM

TYPE 1

SMCS-1107 **i02138067**

NOTE	REF NO	GRAPHIC REF	PART NUMBER	QTY	PART NAME 1 2 3 4 5 6 (PRODUCT LEVEL)	SEE PAGE
M	1	1	**6I-0254**	1	BOLT (M8X1.25X30-MM)	
M	2	1	**6I-4374**	1	BOLT (M8X1.25X60-MM)	
M	3	1	**6I-0846**	3	BOLT (M6X1X14-MM)	
	4	1	**225-6524**	1	PLUG-CUP	
	5	1	**226-8763**	1	COVER AS-VALVE	
	5A	1	**225-6451**	1	GASKET (VALVE COVER)	
	5B	1	**225-6455**	10	BOLT	
	5C	1	**225-6456**	1	SPRING	
	5D	1	**225-6461**	1	CAP	
	5E	1	**225-6464**	1	DIAPHRAGM (CRANKCASE PRESSURE CONTACTOR)	
	5F	1	**225-6477**	1	PLATE	
	5G	1	**225-6478**	4	SCREW-MACHINE	
	5H	1	**225-6479**	1	CAP	
	6	1	**230-9125**	1	CONNECTOR	
	6A	1	**150-7732**	1	SEAL-O-RING	
	6B	1	**225-6455**	2	BOLT	
	6C	1	**225-6517**	1	GASKET	
	7	1	**230-9127**	1	COVER	
	8	1	**230-9152**	1	FILLER GP-ENGINE OIL	
	8A	1	**6I-1201**	1	SEAL-O-RING	
	8B	1	**130-9888**	1	CAP AS-OIL FILLER (ENGINE)	
	8C	1	**113-1504**	1	SEAL-O-RING	

M - METRIC PART

235-3554 **COVER GP-VALVE MECHANISM (**contd.**)** **i02138067**

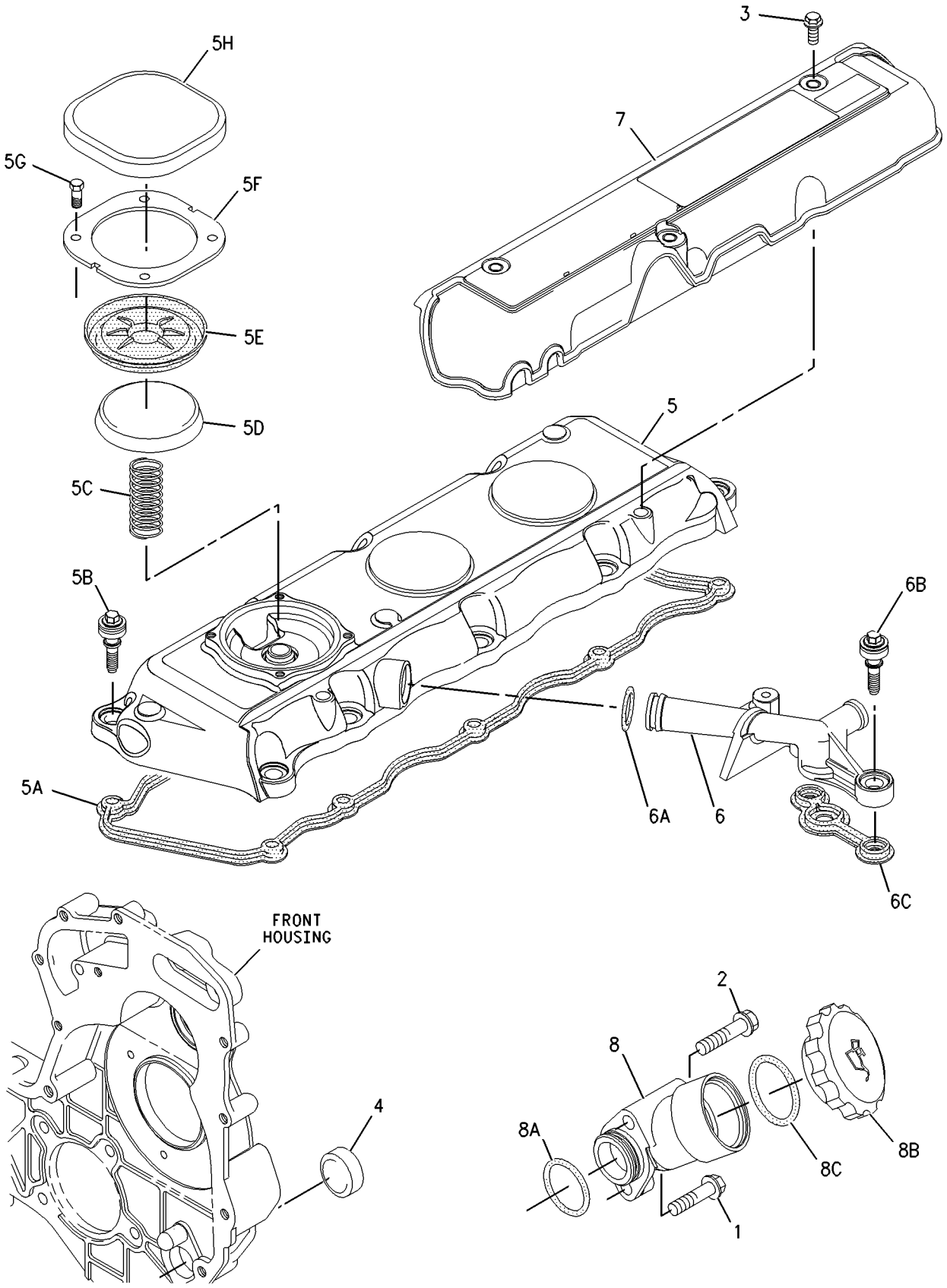

GRAPHIC #1 <END> g00984951

235-3554 COVER GP-VALVE MECHANISM

TYPE 2

SMCS-1107 **i02506787**

NOTE	REF NO	GRAPHIC REF	PART NUMBER	QTY	PART NAME 1 2 3 4 5 6 (PRODUCT LEVEL)	SEE PAGE
M	1	1	**6I-0254**	1	BOLT (M8X1.25X30-MM)	
M	2	1	**6I-4374**	1	BOLT (M8X1.25X60-MM)	
M	3	1	**6I-0846**	3	BOLT (M6X1X14-MM)	
	4	1	**225-6524**	1	PLUG-CUP	
C	5	1	**249-5230**	1	COVER AS-VALVE	
	5A	1	**225-6451**	1	GASKET (VALVE COVER)	
	5B	1	**225-6455**	10	BOLT	
	5C	1	**225-6456**	1	SPRING	
	5D	1	**225-6461**	1	CAP	
	5E	1	**225-6464**	1	DIAPHRAGM (CRANKCASE PRESSURE CONTACTOR)	
	5F	1	**225-6477**	1	PLATE	
	5G	1	**225-6478**	4	SCREW-MACHINE	
	5H	1	**225-6479**	1	CAP	
C	6	1	**286-3029**	1	BREATHER AS	
	6A	1	**150-7732**	1	SEAL-O-RING	
	6B	1	**286-3030**	1	RING-SEAL	
	7	1	**230-9127**	1	COVER	
	8	1	**230-9152**	1	FILLER GP-ENGINE OIL	
	8A	1	**6I-1201**	1	SEAL-O-RING	
	8B	1	**130-9888**	1	CAP AS-OIL FILLER (ENGINE)	
	8C	1	**113-1504**	1	SEAL-O-RING	
CMR	9	1	**100-4838**	1	BOLT (M6X1X20-MM)	

C - CHANGE FROM PREVIOUS TYPE
M - METRIC PART
R - REMANUFACTURED PART MAY BE AVAILABLE

235-3554 **COVER GP-VALVE MECHANISM (**contd.**)** **i02506787**

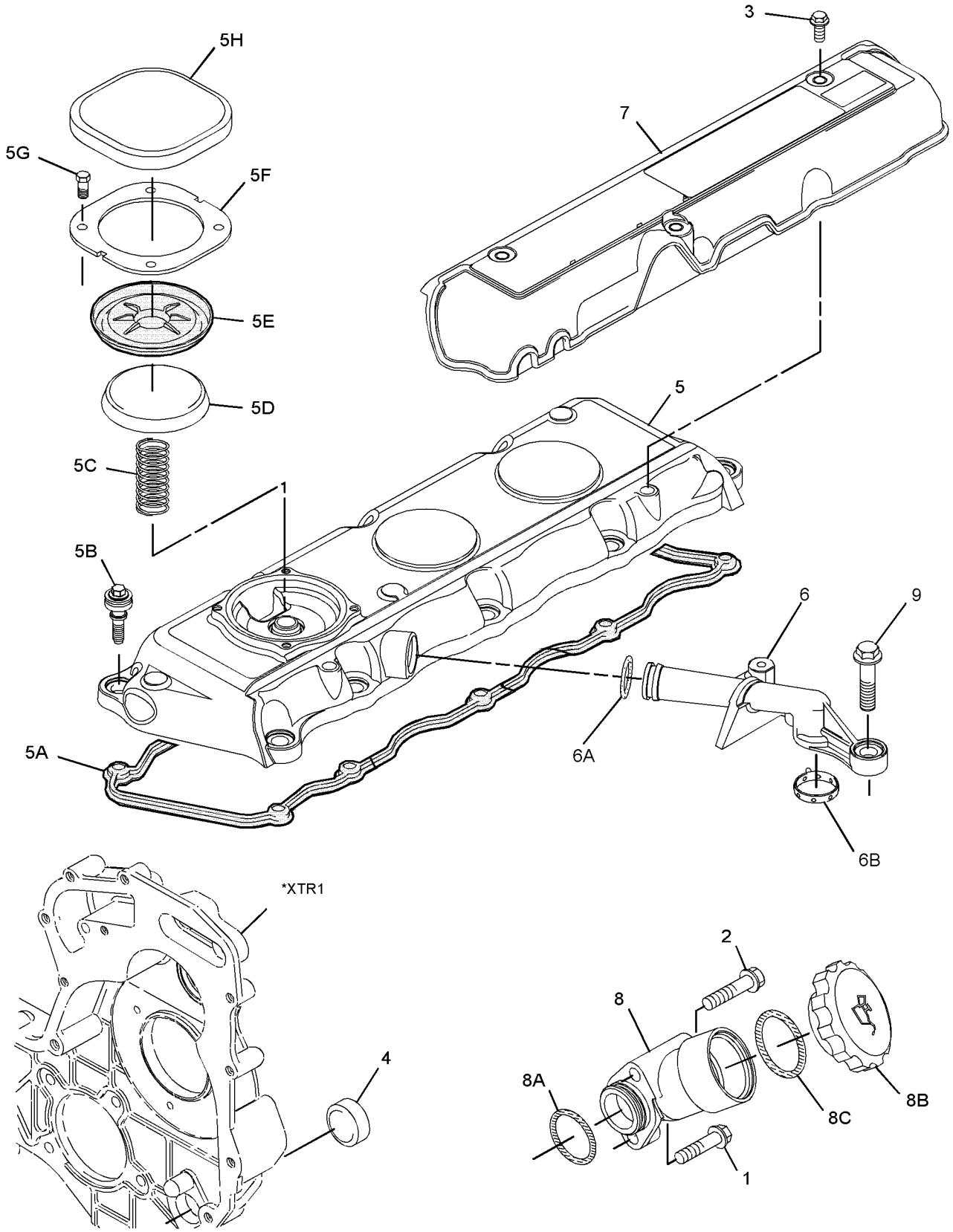

GRAPHIC #1 <END> g01317777

235-3554 COVER GP-VALVE MECHANISM

TYPE 3

SMCS-1107 **i06622096**

NOTE	REF NO	GRAPHIC REF	PART NUMBER	QTY	PART NAME 1 2 3 4 5 6 (PRODUCT LEVEL)	SEE PAGE
M	1	1	**6I-0254**	1	BOLT (M8X1.25X30-MM)	
M	2	1	**6I-4374**	1	BOLT (M8X1.25X60-MM)	
M	3	1	**6I-0846**	3	BOLT (M6X1X14-MM)	
	4	1	**225-6524**	1	PLUG-CUP	
C	5	1	**308-1381**	1	COVER GP-VALVE MECHANISM	
	5A	1	**225-6451**	1	GASKET (VALVE COVER)	
	5C	1	**225-6456**	1	SPRING	
	5D	1	**225-6461**	1	CAP	
	5E	1	**225-6464**	1	DIAPHRAGM (CRANKCASE PRESSURE CONTACTOR)	
	5F	1	**225-6477**	1	PLATE	
	5G	1	**225-6478**	4	SCREW-MACHINE	
	5H	1	**225-6479**	1	CAP	
C	6	1	**286-3029**	1	BREATHER AS	
	6A	1	**150-7732**	1	SEAL-O-RING	
	6B	1	**286-3030**	1	RING-SEAL	
	7	1	**230-9127**	1	COVER (INJECTOR)	
	8	1	**321-2383**	1	FILLER AS	
	8A	1	**306-2337**	1	SEAL-O-RING	
	8B	1	**130-9888**	1	CAP AS-OIL FILLER (ENGINE)	
	8C	1	**113-1504**	1	SEAL-O-RING	
CMR	9	1	**100-4838**	1	BOLT (M6X1X20-MM)	

C - CHANGE FROM PREVIOUS TYPE
M - METRIC PART
R - REMANUFACTURED PART MAY BE AVAILABLE

235-3554 **COVER GP-VALVE MECHANISM (**contd.**)** **i06622096**

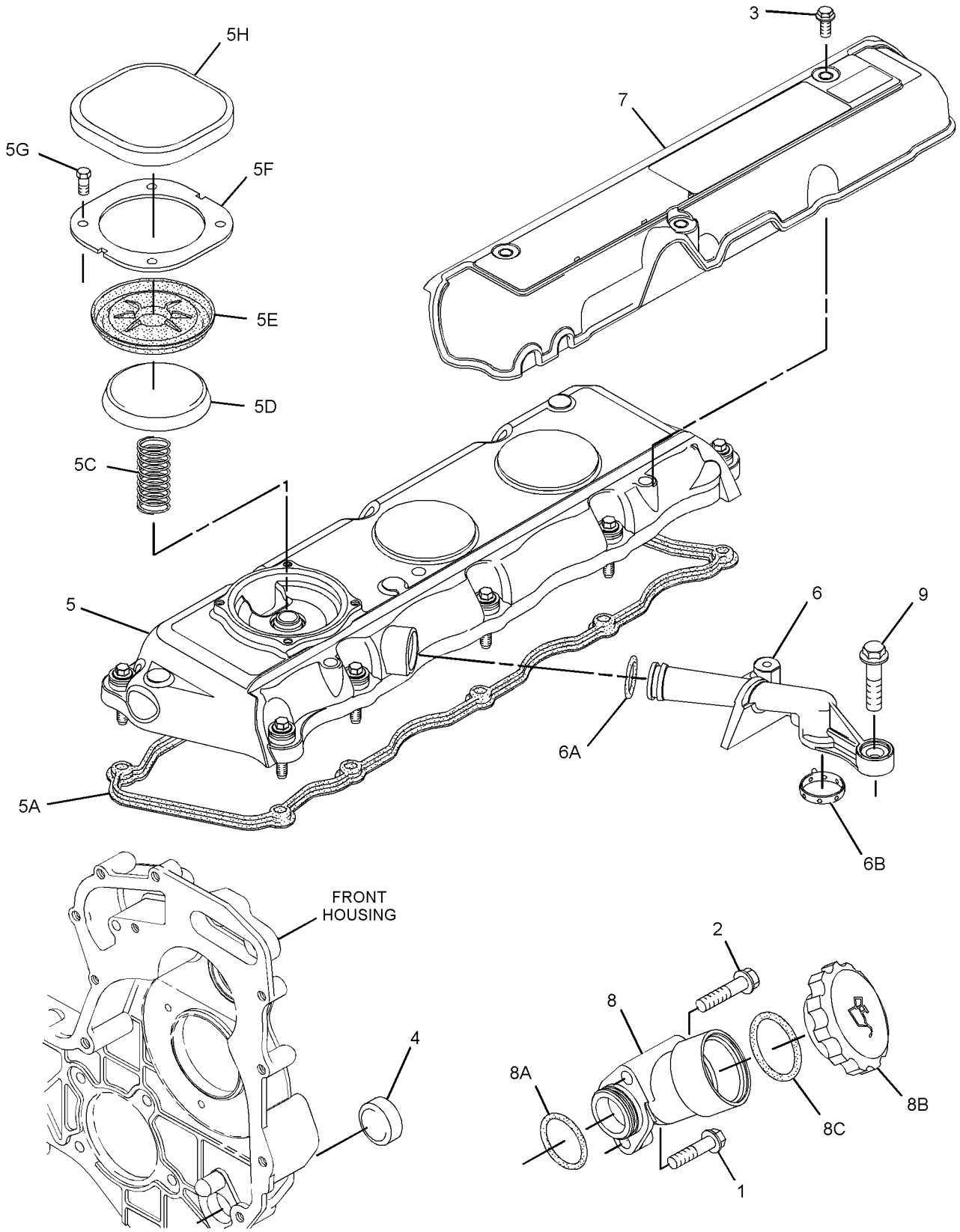

GRAPHIC #1 <END> g01379070

235-3554 COVER GP-VALVE MECHANISM

S/N: 3341-25653

SMCS-1107 **i06894369**

NOTE	REF NO	GRAPHIC REF	PART NUMBER	QTY	PART NAME 1 2 3 4 5 6 (PRODUCT LEVEL)	SEE PAGE
M	1	1	**6I-0254**	1	BOLT (M8X1.25X30-MM)	
M	2	1	**6I-4374**	1	BOLT (M8X1.25X60-MM)	
M	3	1	**6I-0846**	3	BOLT (M6X1X14-MM)	
	4	1	**225-6524**	1	PLUG-CUP	
CY	5	1	**308-1381**	1	COVER GP-VALVE MECHANISM	430
	6	1	**286-3029**	1	BREATHER AS	
	6A	1	**150-7732**	1	SEAL-O-RING	
	6B	1	**286-3030**	1	RING-SEAL	
	7	1	**230-9127**	1	COVER (INJECTOR)	
	8	1	**321-2383**	1	FILLER AS	
	8A	1	**306-2337**	1	SEAL-O-RING	
	8B	1	**130-9888**	1	CAP AS-OIL FILLER (ENGINE)	
	8C	1	**113-1504**	1	SEAL-O-RING	
MR	9	1	**100-4838**	1	BOLT (M6X1X20-MM)	
	10	1	**346-8219**	1	FILM-WARNING (UNIVERSAL WARNING)	

C - CHANGE FROM PREVIOUS TYPE
M - METRIC PART
R - REMANUFACTURED PART MAY BE AVAILABLE
Y - SEPARATE ILLUSTRATION

235-3554 **COVER GP-VALVE MECHANISM (**contd.**)** **i06894369**

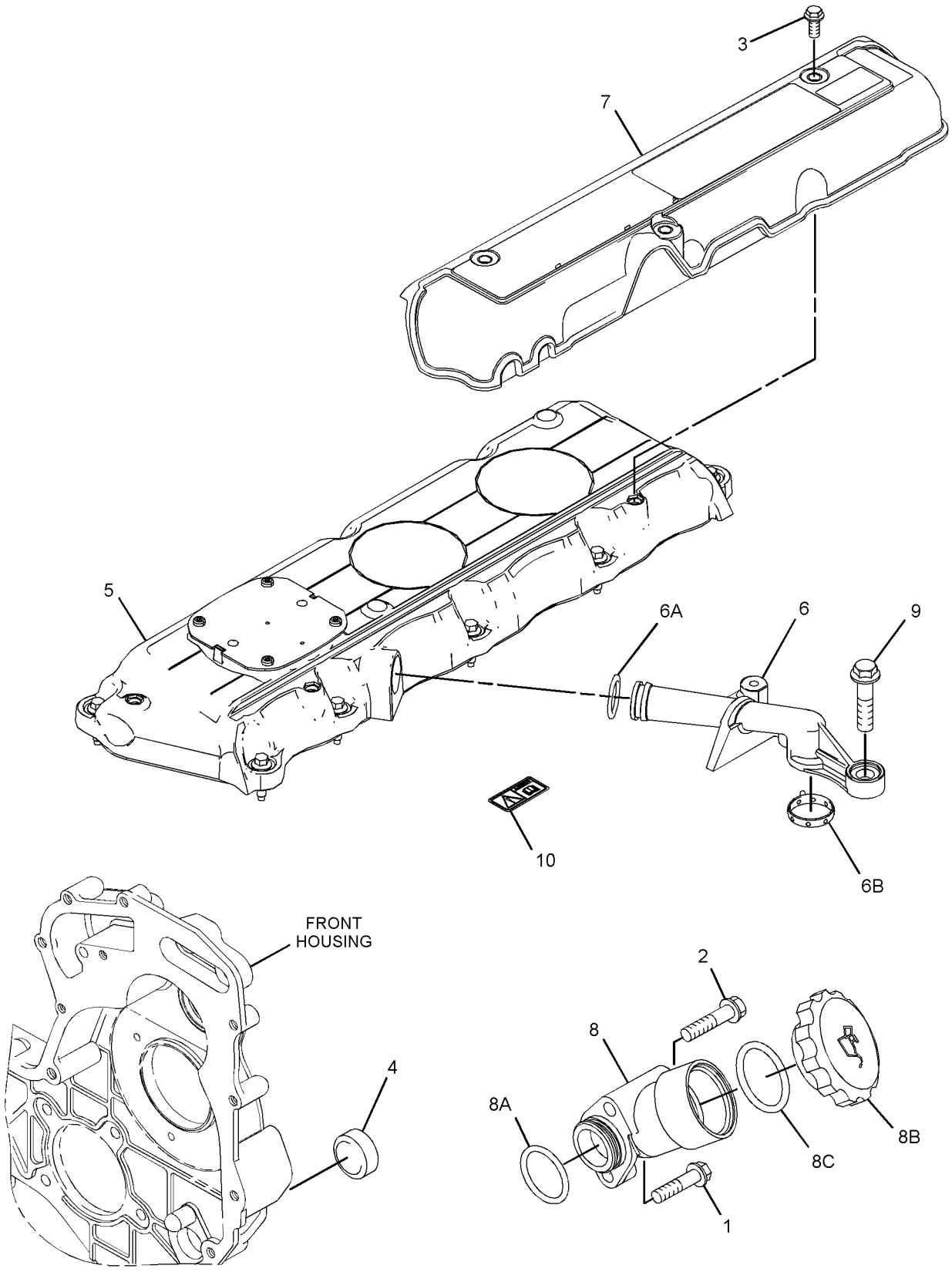

GRAPHIC #1 <END> g06200560

235-3554 COVER GP-VALVE MECHANISM

S/N: 33425654-UP

SMCS-1107 **i07168788**

NOTE	REF NO	GRAPHIC REF	PART NUMBER	QTY	PART NAME 1 2 3 4 5 6 (PRODUCT LEVEL)	SEE PAGE
M	1	1	**6I-0254**	1	BOLT (M8X1.25X30-MM)	
M	2	1	**6I-4374**	1	BOLT (M8X1.25X60-MM)	
	3	1	**346-8219**	1	FILM-WARNING (UNIVERSAL WARNING)	
	4	1	**225-6524**	1	PLUG-CUP	
CY	5	1	**308-1381**	1	COVER GP-VALVE MECHANISM	430
	6	1	**286-3029**	1	BREATHER AS	
	6A	1	**150-7732**	1	SEAL-O-RING	
	6B	1	**286-3030**	1	RING-SEAL	
MR	7	1	**100-4838**	1	BOLT (M6X1X20-MM)	
	8	1	**321-2383**	1	FILLER AS	
	8A	1	**306-2337**	1	SEAL-O-RING	
	8B	1	**130-9888**	1	CAP AS-OIL FILLER (ENGINE)	
	8C	1	**113-1504**	1	SEAL-O-RING	

C - CHANGE FROM PREVIOUS TYPE
M - METRIC PART
R - REMANUFACTURED PART MAY BE AVAILABLE
Y - SEPARATE ILLUSTRATION

235-3554 **COVER GP-VALVE MECHANISM (**contd.**)** **i07168788**

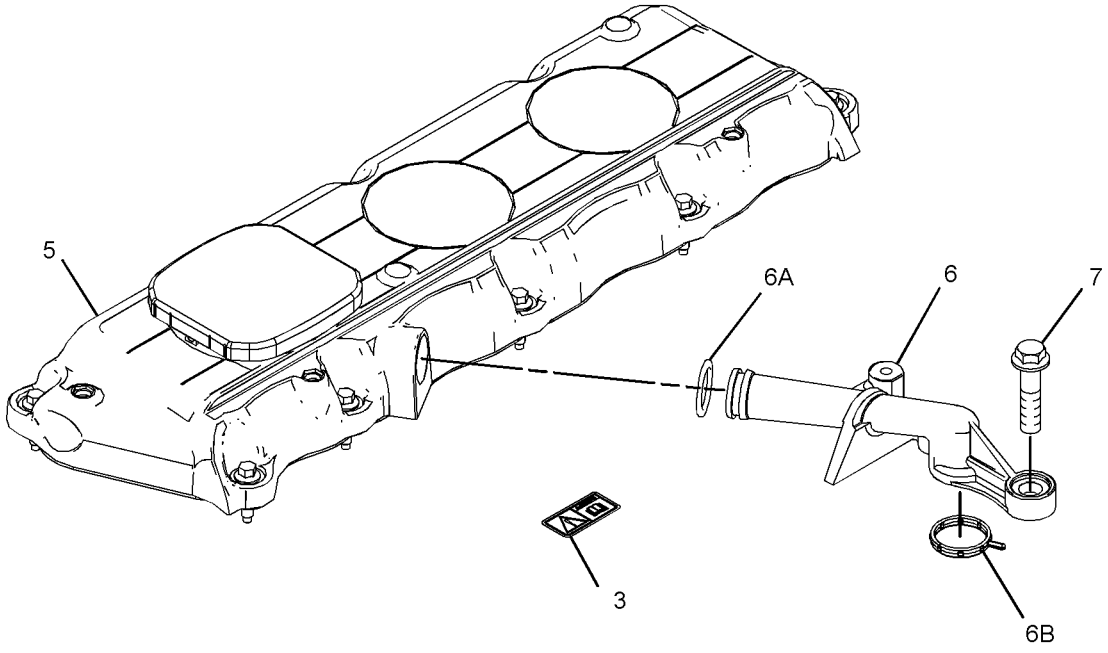

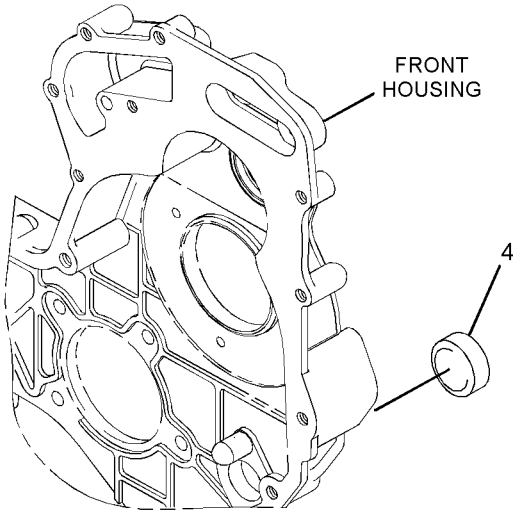

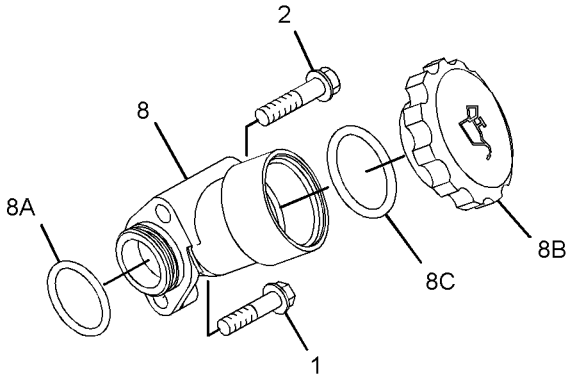

GRAPHIC #1 <END> g06246816

235-8161 COVER GP-VALVE MECHANISM

TYPE 1

SMCS-1107 **i02645855**

NOTE	REF NO	GRAPHIC REF	PART NUMBER	QTY	PART NAME 1 2 3 4 5 6 (PRODUCT LEVEL)	SEE PAGE
M	1	1	**6I-0254**	1	BOLT (M8X1.25X30-MM)	
M	2	1	**6I-4374**	1	BOLT (M8X1.25X60-MM)	
M	3	1	**6I-0846**	3	BOLT (M6X1X14-MM)	
	4	1	**225-6481**	1	COVER AS-VALVE	
	4A	1	**136-3608**	1	CAP AS (ENGINE OIL FILLER)	
	4B	1	**124-0506**	1	SEAL (ENGINE OIL FILL CAP)	
	4C	1	**225-6451**	1	GASKET (VALVE COVER)	
	4D	1	**225-6455**	10	BOLT	
	4E	1	**225-6456**	1	SPRING	
	4F	1	**225-6461**	1	CAP	
	4G	1	**225-6464**	1	DIAPHRAGM (CRANKCASE PRESSURE CONTACTOR)	
	4H	1	**225-6477**	1	PLATE	
	4J	1	**225-6478**	4	SCREW-MACHINE	
	4K	1	**225-6479**	1	CAP	
	5	1	**230-9125**	1	CONNECTOR	
	5A	1	**150-7732**	1	SEAL-O-RING	
	5B	1	**225-6455**	2	BOLT	
	5C	1	**225-6517**	1	GASKET	
	6	1	**230-9127**	1	COVER	
	7	1	**230-9152**	1	FILLER GP-ENGINE OIL	
	7A	1	**6I-1201**	1	SEAL-O-RING	
	7B	1	**130-9888**	1	CAP AS-OIL FILLER (ENGINE)	
	7C	1	**113-1504**	1	SEAL-O-RING	

M - METRIC PART

235-8161 **COVER GP-VALVE MECHANISM (**contd.**)** **i02645855**

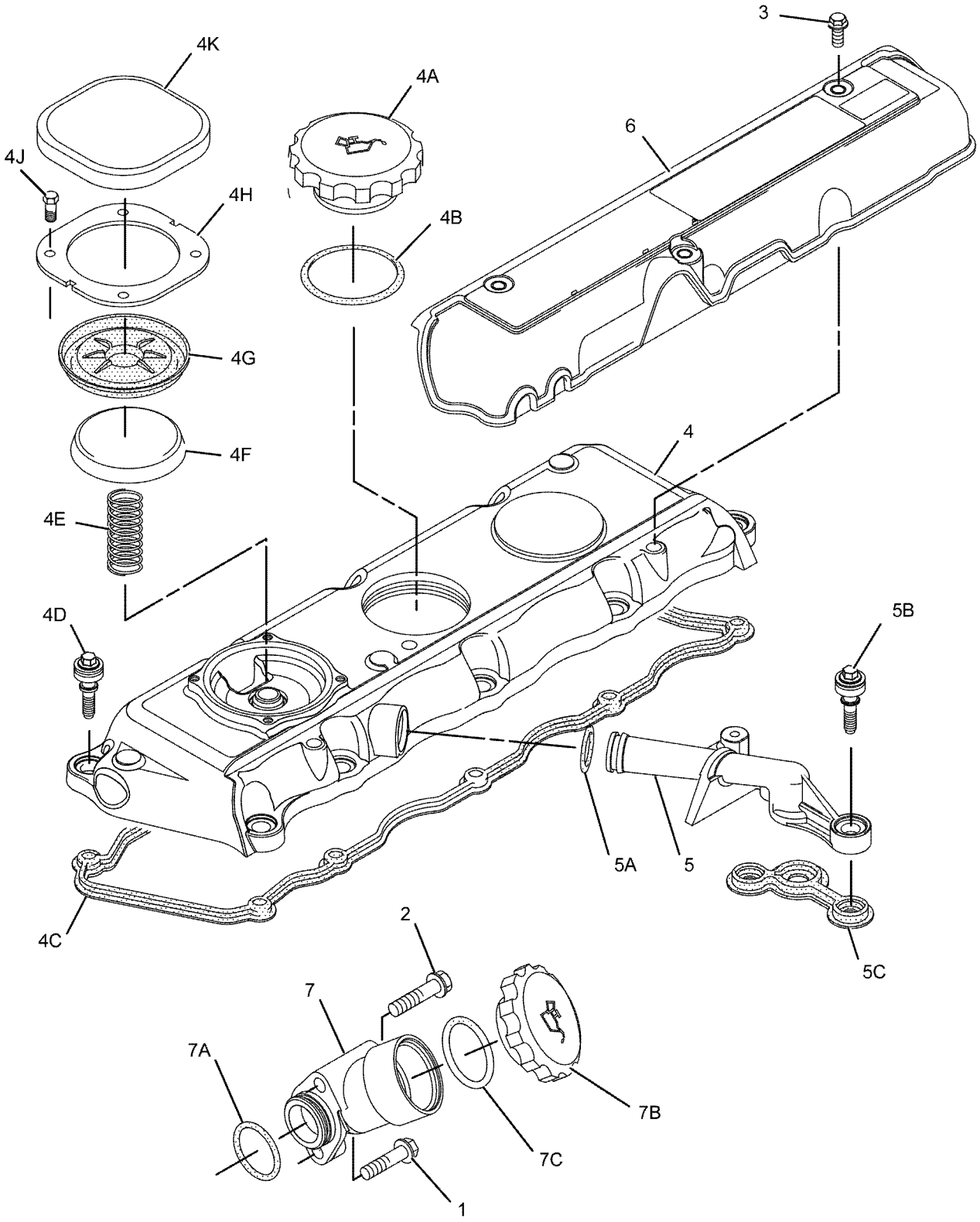

GRAPHIC #1 <END> g01029958

235-8161 COVER GP-VALVE MECHANISM

TYPE 2

SMCS-1107 **i02645856**

NOTE	REF NO	GRAPHIC REF	PART NUMBER	QTY	PART NAME 1 2 3 4 5 6 (PRODUCT LEVEL)	SEE PAGE
M	1	1	**6I-0254**	1	BOLT (M8X1.25X30-MM)	
M	2	1	**6I-4374**	1	BOLT (M8X1.25X60-MM)	
M	3	1	**6I-0846**	3	BOLT (M6X1X14-MM)	
C	4	1	**247-7799**	1	COVER AS-VALVE	
	4A	1	**136-3608**	1	CAP AS (ENGINE OIL FILLER)	
	4B	1	**124-0506**	1	SEAL (ENGINE OIL FILL CAP)	
	4C	1	**225-6451**	1	GASKET (VALVE COVER)	
	4D	1	**225-6455**	10	BOLT	
	4E	1	**225-6456**	1	SPRING	
	4F	1	**225-6461**	1	CAP	
	4G	1	**225-6464**	1	DIAPHRAGM (CRANKCASE PRESSURE CONTACTOR)	
	4H	1	**225-6477**	1	PLATE	
	4J	1	**225-6478**	4	SCREW-MACHINE	
	4K	1	**225-6479**	1	CAP	
C	5	1	**286-3029**	1	BREATHER AS	
	5A	1	**150-7732**	1	SEAL-O-RING	
	5B	1	**286-3030**	2	RING-SEAL	
	6	1	**230-9127**	1	COVER	
	7	1	**230-9152**	1	FILLER GP-ENGINE OIL	
	7A	1	**6I-1201**	1	SEAL-O-RING	
	7B	1	**130-9888**	1	CAP AS-OIL FILLER (ENGINE)	
	7C	1	**113-1504**	1	SEAL-O-RING	
CMR	8	1	**100-4838**	2	BOLT (M6X1X20-MM)	

C - CHANGE FROM PREVIOUS TYPE
M - METRIC PART
R - REMANUFACTURED PART MAY BE AVAILABLE

235-8161 **COVER GP-VALVE MECHANISM (**contd.**)** **i02645856**

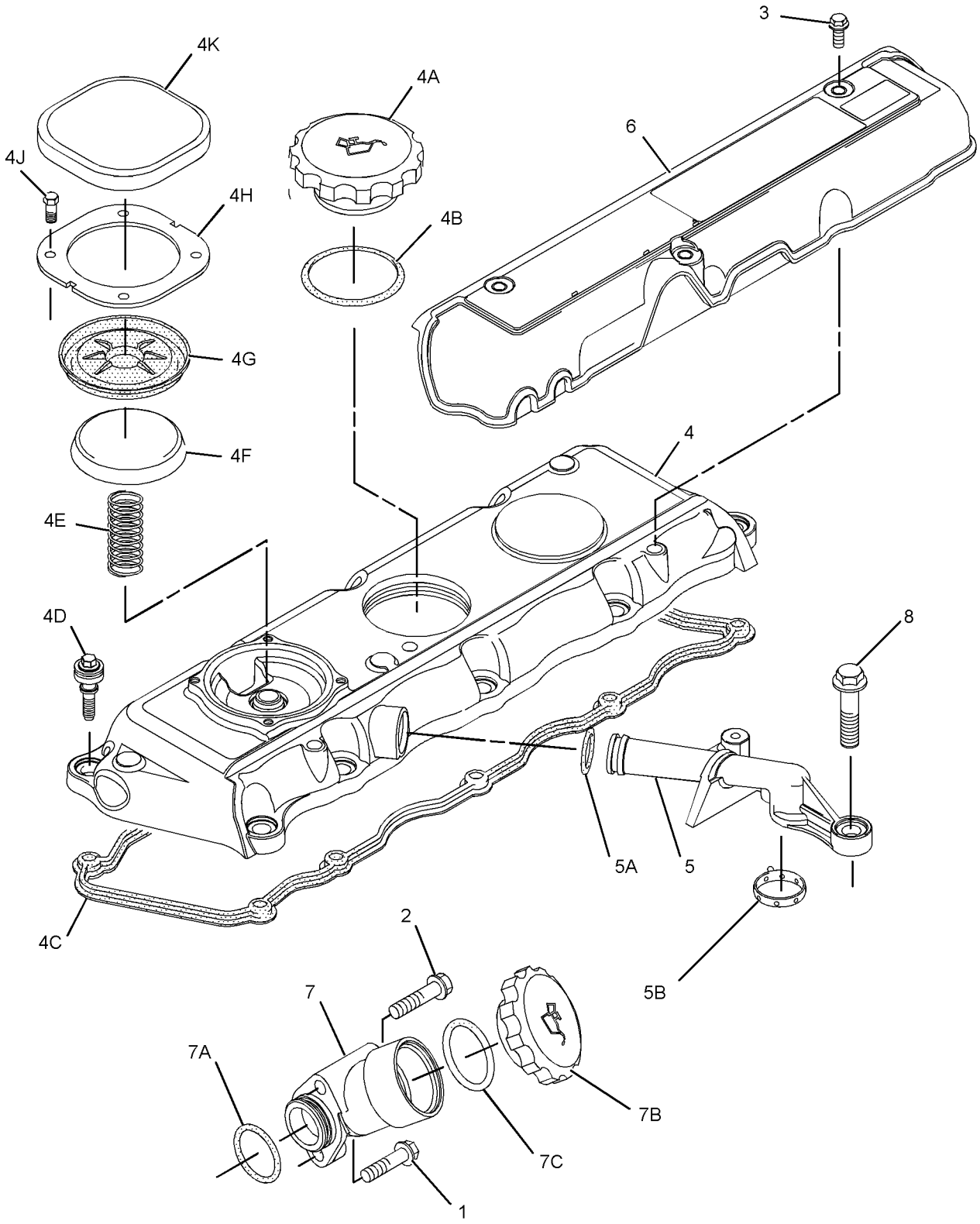

GRAPHIC #1 <END> g01297436

235-8161 COVER GP-VALVE MECHANISM

TYPE 3

SMCS-1107 **i07177713**

NOTE	REF NO	GRAPHIC REF	PART NUMBER	QTY	PART NAME 1 2 3 4 5 6 (PRODUCT LEVEL)	SEE PAGE
M	1	1	**6I-0254**	1	BOLT (M8X1.25X30-MM)	
M	2	1	**6I-0846**	3	BOLT (M6X1X14-MM)	
M	3	1	**6I-4374**	1	BOLT (M8X1.25X60-MM)	
MR	4	1	**100-4838**	2	BOLT (M6X1X20-MM)	
	5	1	**230-9127**	1	COVER (INJECTOR)	
	6	1	**286-3029**	1	BREATHER AS	
	6A	1	**150-7732**	1	SEAL-O-RING	
	6B	1	**286-3030**	2	RING-SEAL	
	7	1	**321-2383**	1	FILLER AS	
	7A	1	**306-2337**	1	SEAL-O-RING	
	7B	1	**130-9888**	1	CAP AS-OIL FILLER (ENGINE)	
	7C	1	**113-1504**	1	SEAL-O-RING	
CY	8	1	**521-8086**	1	COVER GP-CYLINDER HEAD	225

C - CHANGE FROM PREVIOUS TYPE
M - METRIC PART
R - REMANUFACTURED PART MAY BE AVAILABLE
Y - SEPARATE ILLUSTRATION

235-8161 **COVER GP-VALVE MECHANISM (**contd.**)** **i07177713**

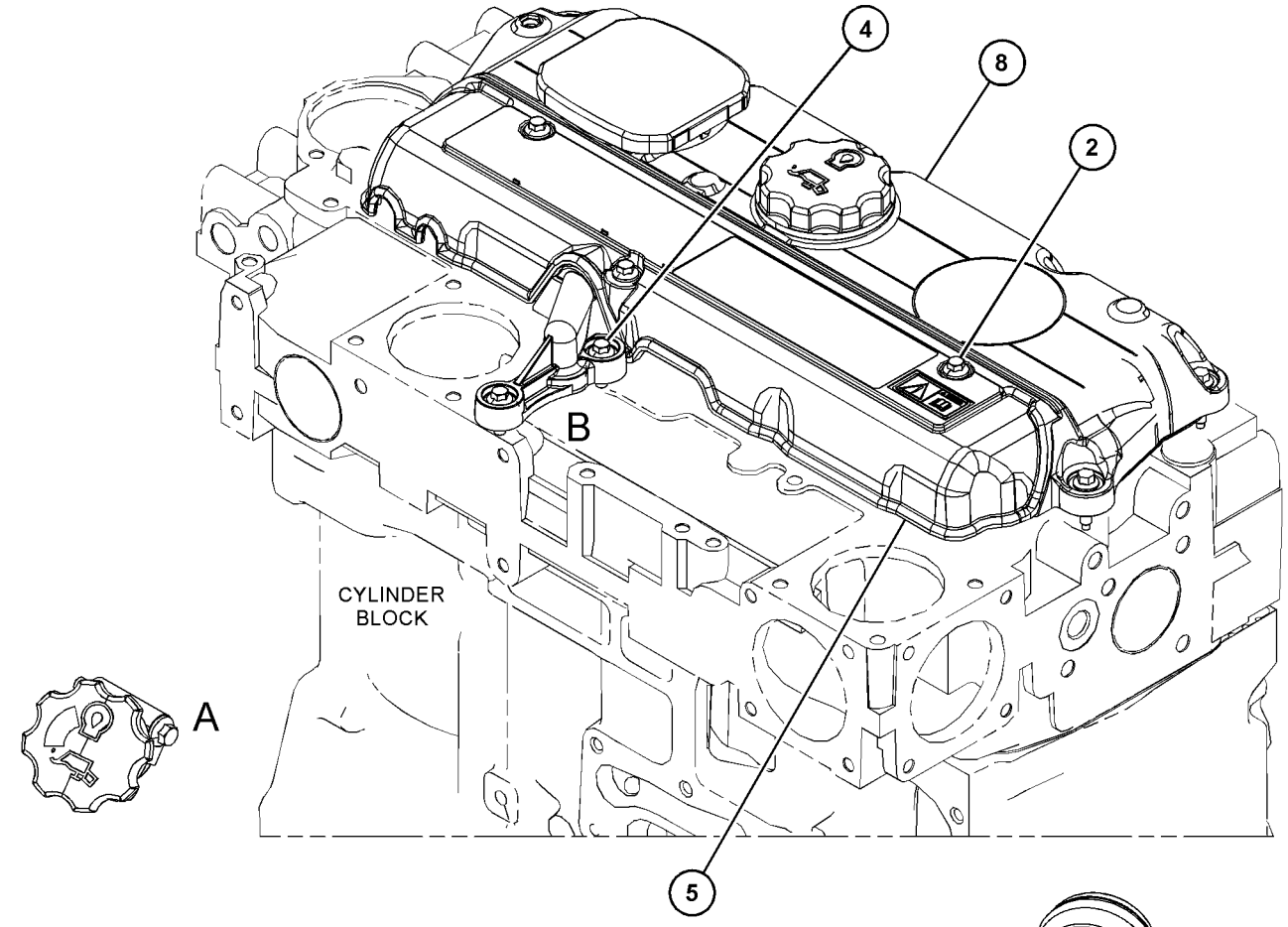

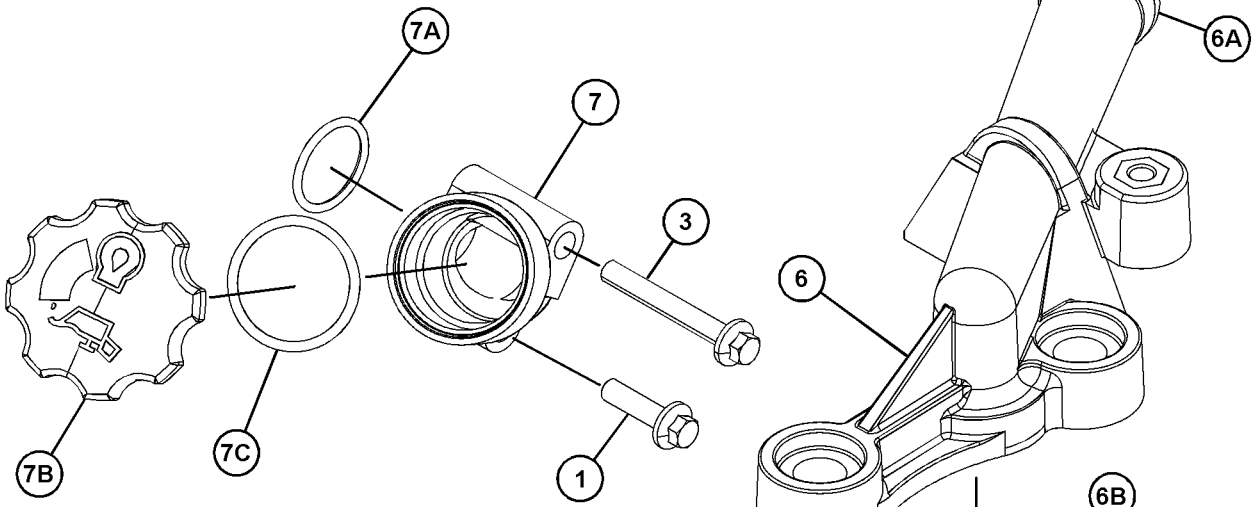

VIEW OF AREA A

VIEW OF AREA B

GRAPHIC #1 <END> g06244318

236-1238 COVER GP-VALVE MECHANISM

TYPE 1

SMCS-1107 **i02138073**

NOTE	REF NO	GRAPHIC REF	PART NUMBER	QTY	PART NAME 1 2 3 4 5 6 (PRODUCT LEVEL)	SEE PAGE
	1	1	**5D-1026**	1	CLAMP-BAND	
M	2	1	**6I-0254**	1	BOLT (M8X1.25X30-MM)	
M	3	1	**6I-0846**	3	BOLT (M6X1X14-MM)	
M	4	1	**6I-4374**	1	BOLT (M8X1.25X60-MM)	
	5	1	**7C-1281**	1	BRACKET	
	6	1	**162-1565**	1	SPRING (CRANKCASE BREATHER HOSE)	
	7	1	**198-8645**	1	HOSE (CRANKCASE BREATHER)	
	8	1	**225-6481**	1	COVER AS-VALVE	
	8A	1	**136-3608**	1	CAP AS (ENGINE OIL FILLER)	
	8B	1	**124-0506**	1	SEAL	
	8C	1	**225-6451**	1	GASKET (VALVE COVER)	
	8D	1	**225-6455**	10	BOLT	
	8E	1	**225-6456**	1	SPRING	
	8F	1	**225-6461**	1	CAP	
	8G	1	**225-6464**	1	DIAPHRAGM (CRANKCASE PRESSURE CONTACTOR)	
	8H	1	**225-6477**	1	PLATE	
	8J	1	**225-6478**	4	SCREW-MACHINE	
	8K	1	**225-6479**	1	CAP	
	9	1	**230-9127**	1	COVER	
	10	1	**230-9144**	1	CONNECTOR	
	10A	1	**150-7732**	1	SEAL-O-RING	
	10B	1	**225-6455**	2	BOLT	
	10C	1	**225-6517**	1	GASKET	
	11	1	**230-9152**	1	FILLER GP-ENGINE OIL	
	11A	1	**6I-1201**	1	SEAL-O-RING	
	11B	1	**130-9888**	1	CAP AS-OIL FILLER (ENGINE)	
	11C	1	**113-1504**	1	SEAL-O-RING	

M - METRIC PART

236-1238 **COVER GP-VALVE MECHANISM (**contd.**)** **i02138073**

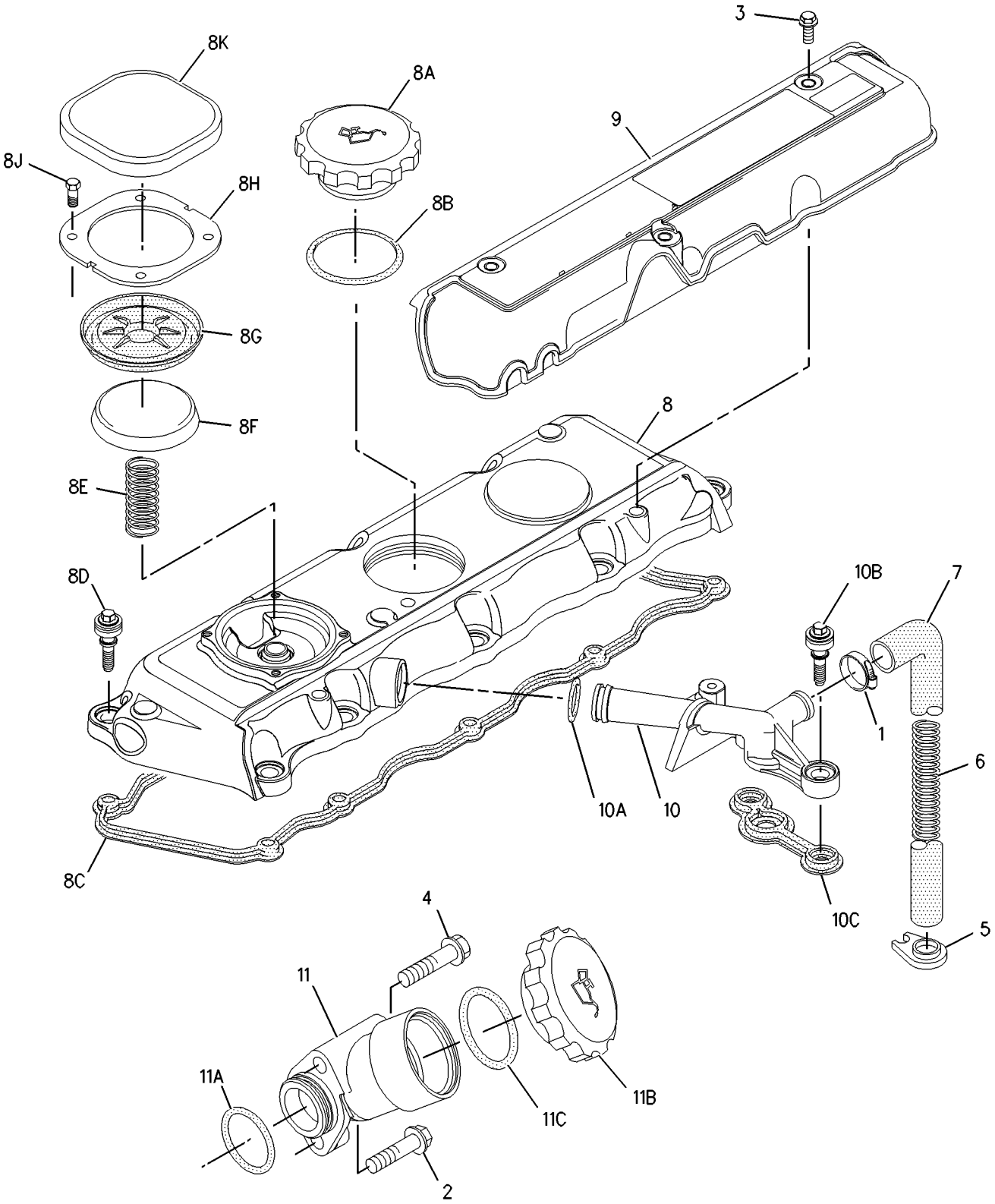

GRAPHIC #1 <END> g00998773

236-1238 COVER GP-VALVE MECHANISM

TYPE 2

SMCS-1107 **i02510641**

NOTE	REF NO	GRAPHIC REF	PART NUMBER	QTY	PART NAME 1 2 3 4 5 6 (PRODUCT LEVEL)	SEE PAGE
	1	1	**5D-1026**	1	CLAMP-BAND	
M	2	1	**6I-0254**	1	BOLT (M8X1.25X30-MM)	
M	3	1	**6I-0846**	3	BOLT (M6X1X14-MM)	
M	4	1	**6I-4374**	1	BOLT (M8X1.25X60-MM)	
	5	1	**7C-1281**	1	BRACKET	
	6	1	**162-1565**	1	SPRING (CRANKCASE BREATHER HOSE)	
	7	1	**198-8645**	1	HOSE (CRANKCASE BREATHER)	
C	8	1	**247-7799**	1	COVER AS-VALVE	
	8A	1	**225-6451**	1	GASKET (VALVE COVER)	
	8B	1	**225-6455**	10	BOLT	
	8C	1	**225-6456**	1	SPRING	
	8D	1	**225-6461**	1	CAP (CRANKCASE BREATHER)	
	8E	1	**225-6464**	1	DIAPHRAGM (CRANKCASE PRESSURE CONTACTOR)	
	8F	1	**225-6477**	1	PLATE	
	8G	1	**225-6478**	4	SCREW-MACHINE	
	8H	1	**225-6479**	1	CAP (CRANKCASE BREATHER)	
	8J	1	**136-3608**	1	CAP AS (ENGINE OIL FILLER)	
	8K	1	**124-0506**	1	SEAL	
	9	1	**230-9127**	1	COVER	
C	10	1	**287-8573**	1	PIPE AS	
	11	1	**230-9152**	1	FILLER GP-ENGINE OIL	
	11A	1	**6I-1201**	1	SEAL-O-RING	
	11B	1	**130-9888**	1	CAP AS-OIL FILLER (ENGINE)	
	11C	1	**113-1504**	1	SEAL-O-RING	
CMR	12	1	**100-4838**	2	BOLT (M6X1X20-MM)	

C - CHANGE FROM PREVIOUS TYPE
M - METRIC PART
R - REMANUFACTURED PART MAY BE AVAILABLE

236-1238 **COVER GP-VALVE MECHANISM (**contd.**)** **i02510641**

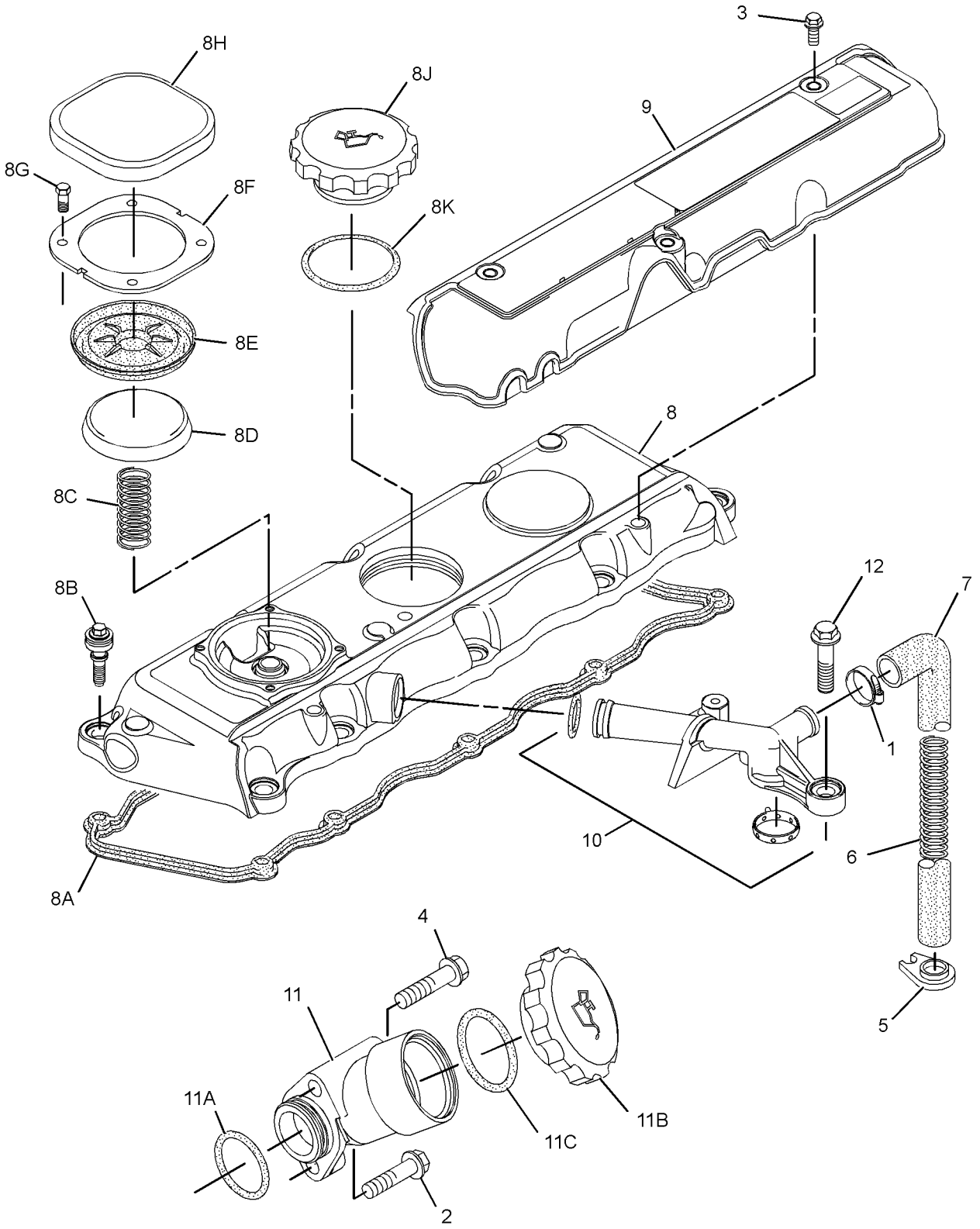

GRAPHIC #1 <END> g01263775

236-1238 COVER GP-VALVE MECHANISM

TYPE 3

SMCS-1107 **i04952682**

NOTE	REF NO	GRAPHIC REF	PART NUMBER	QTY	PART NAME 1 2 3 4 5 6 (PRODUCT LEVEL)	SEE PAGE
	1	1	**5D-1026**	1	CLAMP-BAND	
M	2	1	**6I-0254**	1	BOLT (M8X1.25X30-MM)	
M	3	1	**6I-0846**	3	BOLT (M6X1X14-MM)	
M	4	1	**6I-4374**	1	BOLT (M8X1.25X60-MM)	
	5	1	**7C-1281**	1	BRACKET	
	6	1	**162-1565**	1	SPRING (CRANKCASE BREATHER HOSE)	
	7	1	**198-8645**	1	HOSE (CRANKCASE BREATHER)	
CY	8	1	**308-1393**	1	COVER GP-VALVE MECHANISM	431
	9	1	**230-9127**	1	COVER	
	10	1	**287-8573**	1	PIPE AS	
	11	1	**321-2383**	1	FILLER AS	
	11A	1	**306-2337**	1	SEAL-O-RING	
	11B	1	**130-9888**	1	CAP AS-OIL FILLER (ENGINE)	
	11C	1	**113-1504**	1	SEAL-O-RING	
MR	12	1	**100-4838**	2	BOLT (M6X1X20-MM)	
	13	1	**217-9039**	1	STRAP-CABLE	

C - CHANGE FROM PREVIOUS TYPE
M - METRIC PART
R - REMANUFACTURED PART MAY BE AVAILABLE
Y - SEPARATE ILLUSTRATION

236-1238 **COVER GP-VALVE MECHANISM (**contd.**)** **i04952682**

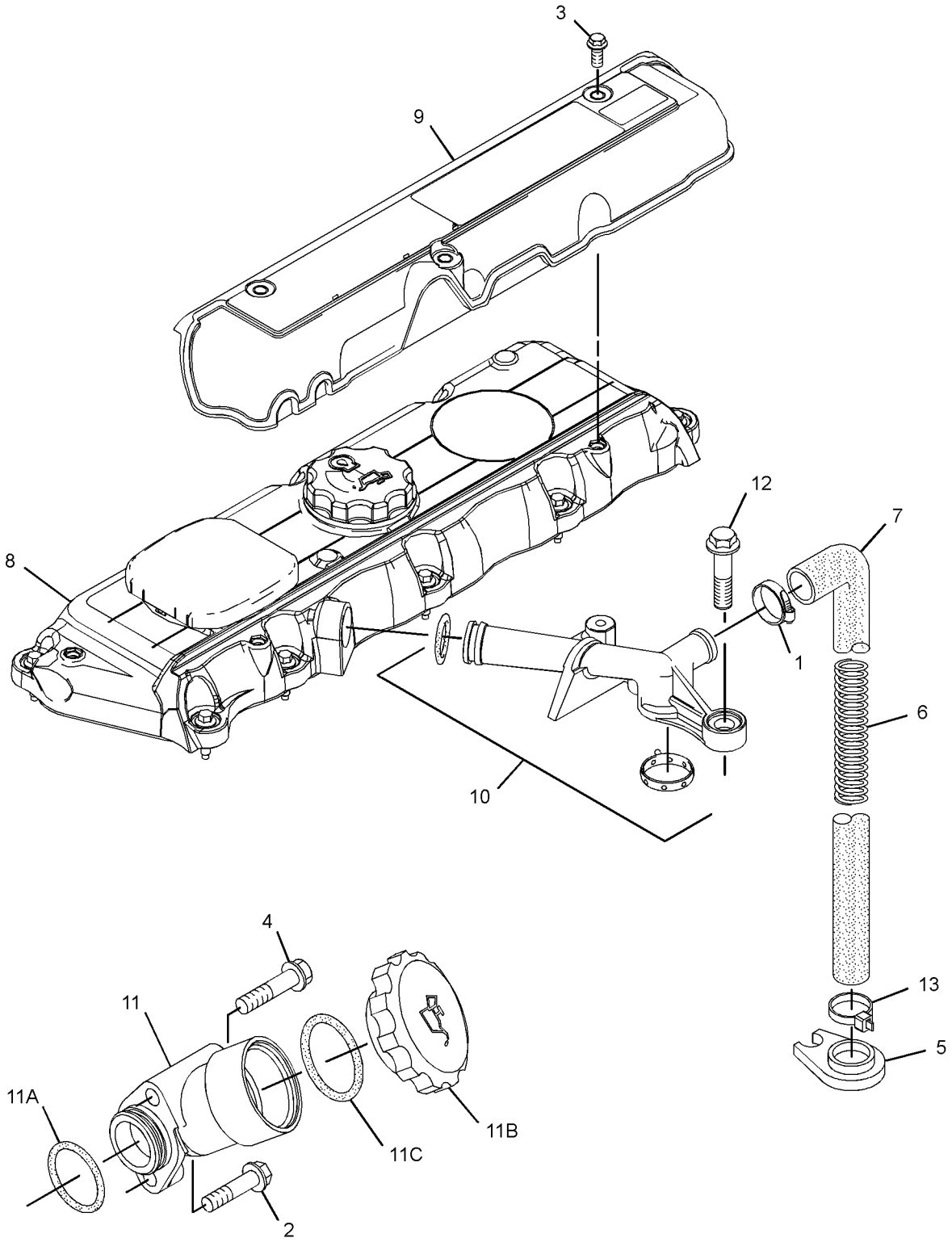

GRAPHIC #1 <END> g03179818

236-1238 COVER GP-VALVE MECHANISM

S/N: 3341-28118

SMCS-1107 **i06948026**

NOTE	REF NO	GRAPHIC REF	PART NUMBER	QTY	PART NAME 1 2 3 4 5 6 (PRODUCT LEVEL)	SEE PAGE
	1	1	**5D-1026**	1	CLAMP-BAND	
M	2	1	**6I-0254**	1	BOLT (M8X1.25X30-MM)	
M	3	1	**6I-0846**	3	BOLT (M6X1X14-MM)	
M	4	1	**6I-4374**	1	BOLT (M8X1.25X60-MM)	
	5	1	**7C-1281**	1	BRACKET	
	6	1	**162-1565**	1	SPRING (CRANKCASE BREATHER HOSE)	
	7	1	**198-8645**	1	HOSE (CRANKCASE BREATHER)	
CY	8	1	*446-9163*	1	COVER GP-CYLINDER HEAD	223
	9	1	**230-9127**	1	COVER	
	10	1	**287-8573**	1	PIPE AS	
	10A	1	**150-7732**	1	SEAL-O-RING	
	10B	1	**286-3030**	1	RING-SEAL	
	11	1	**321-2383**	1	FILLER AS	
	11A	1	**306-2337**	1	SEAL-O-RING	
	11B	1	**130-9888**	1	CAP AS-OIL FILLER (ENGINE)	
	11C	1	**113-1504**	1	SEAL-O-RING	
MR	12	1	**100-4838**	2	BOLT (M6X1X20-MM)	
	13	1	**217-9039**	1	STRAP-CABLE	
	14	1	**346-8219**	1	FILM-WARNING (UNIVERSAL WARNING)	

C - CHANGE FROM PREVIOUS TYPE
M - METRIC PART
R - REMANUFACTURED PART MAY BE AVAILABLE
Y - SEPARATE ILLUSTRATION

236-1238 **COVER GP-VALVE MECHANISM (**contd.**)** **i06948026**

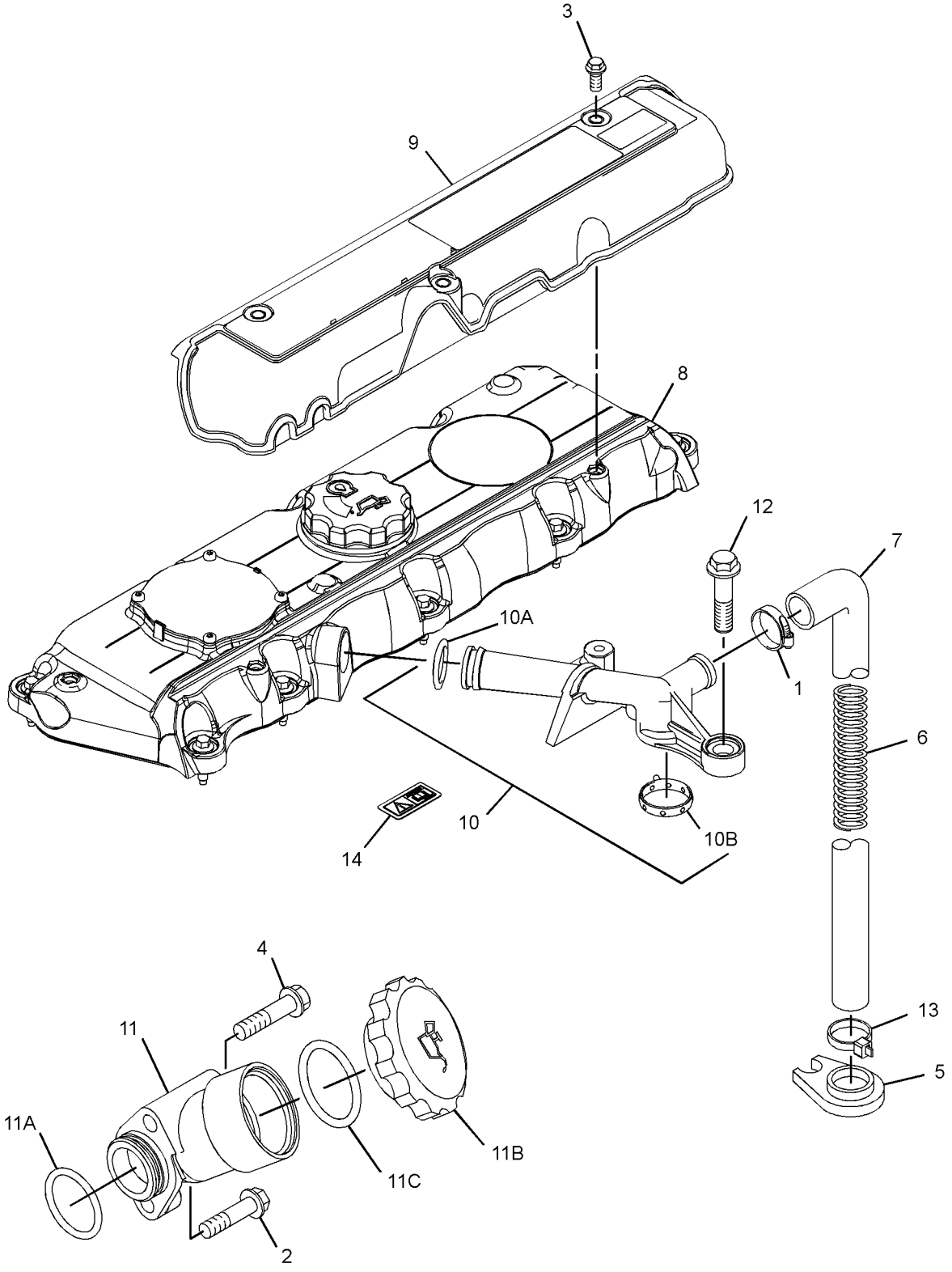

GRAPHIC #1 <END> g06199115

236-1238 COVER GP-VALVE MECHANISM

S/N: 33428119-UP

TYPE 1

SMCS-1107 **i07038324**

NOTE	REF NO	GRAPHIC REF	PART NUMBER	QTY	PART NAME 1 2 3 4 5 6 (PRODUCT LEVEL)	SEE PAGE
	1	1	**5D-1026**	1	CLAMP-BAND	
M	2	1	**6I-0254**	1	BOLT (M8X1.25X30-MM)	
	3	1	**217-9039**	1	STRAP-CABLE	
M	4	1	**6I-4374**	1	BOLT (M8X1.25X60-MM)	
	5	1	**7C-1281**	1	BRACKET	
	6	1	**162-1565**	1	SPRING (CRANKCASE BREATHER HOSE)	
	7	1	**198-8645**	1	HOSE (CRANKCASE BREATHER)	
Y	8	1	*446-9163*	1	COVER GP-CYLINDER HEAD	223
	9	1	**346-8219**	1	FILM-WARNING (UNIVERSAL WARNING)	
	10	1	**287-8573**	1	PIPE AS	
	10A	1	**150-7732**	1	SEAL-O-RING	
	10B	1	**286-3030**	1	RING-SEAL	
	11	1	**321-2383**	1	FILLER AS	
	11A	1	**306-2337**	1	SEAL-O-RING	
	11B	1	**130-9888**	1	CAP AS-OIL FILLER (ENGINE)	
	11C	1	**113-1504**	1	SEAL-O-RING	
MR	12	1	**100-4838**	2	BOLT (M6X1X20-MM)	

M - METRIC PART
R - REMANUFACTURED PART MAY BE AVAILABLE
Y - SEPARATE ILLUSTRATION

236-1238 **COVER GP-VALVE MECHANISM (**contd.**)** **i07038324**

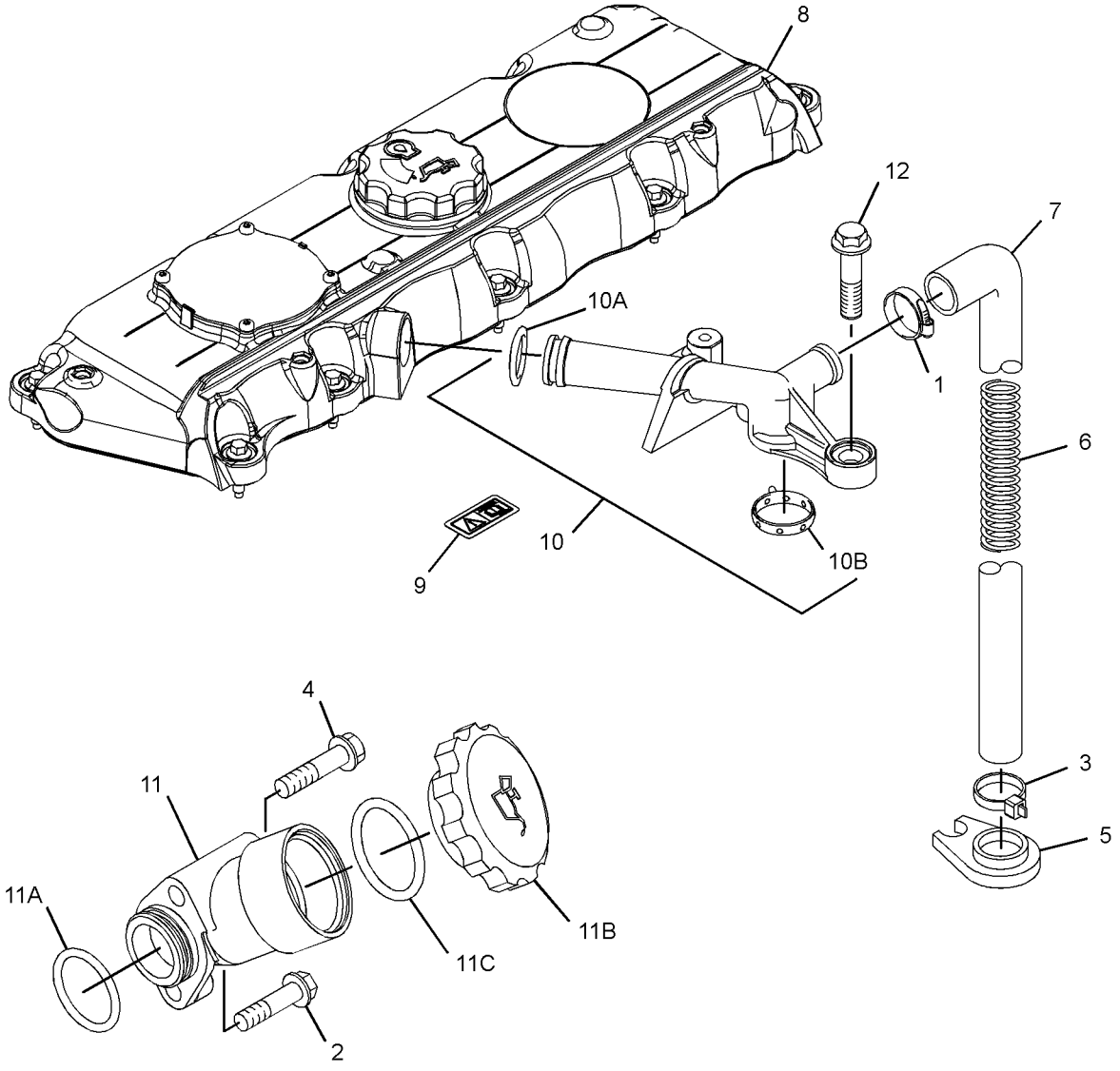

GRAPHIC #1 <END> g06204771

236-1238 COVER GP-VALVE MECHANISM

S/N: 33428119-UP

TYPE 2

SMCS-1107 **i07308054**

NOTE	REF NO	GRAPHIC REF	PART NUMBER	QTY	PART NAME 1 2 3 4 5 6 (PRODUCT LEVEL)	SEE PAGE
	1	1	**5D-1026**	1	CLAMP-BAND	
M	2	1	**6I-0254**	1	BOLT (M8X1.25X30-MM)	
	3	1	**217-9039**	1	STRAP-CABLE	
M	4	1	**6I-4374**	1	BOLT (M8X1.25X60-MM)	
	5	1	**7C-1281**	1	BRACKET	
	6	1	**162-1565**	1	SPRING (CRANKCASE BREATHER HOSE)	
	7	1	**198-8645**	1	HOSE (CRANKCASE BREATHER)	
CY	8	1	**521-8086**	1	COVER GP-CYLINDER HEAD	225
	9	1	**346-8219**	1	FILM-WARNING (UNIVERSAL WARNING)	
	10	1	**287-8573**	1	PIPE AS	
	10A	1	**150-7732**	1	SEAL-O-RING	
	10B	1	**286-3030**	1	RING-SEAL	
	11	1	**321-2383**	1	FILLER AS (OIL)	
	11A	1	**306-2337**	1	SEAL-O-RING	
	11B	1	**130-9888**	1	CAP AS-OIL FILLER (ENGINE)	
	11C	1	**113-1504**	1	SEAL-O-RING	
MR	12	1	**100-4838**	2	BOLT (M6X1X20-MM)	

C - CHANGE FROM PREVIOUS TYPE
M - METRIC PART
R - REMANUFACTURED PART MAY BE AVAILABLE
Y - SEPARATE ILLUSTRATION

236-1238 **COVER GP-VALVE MECHANISM (**contd.**)** **i07308054**

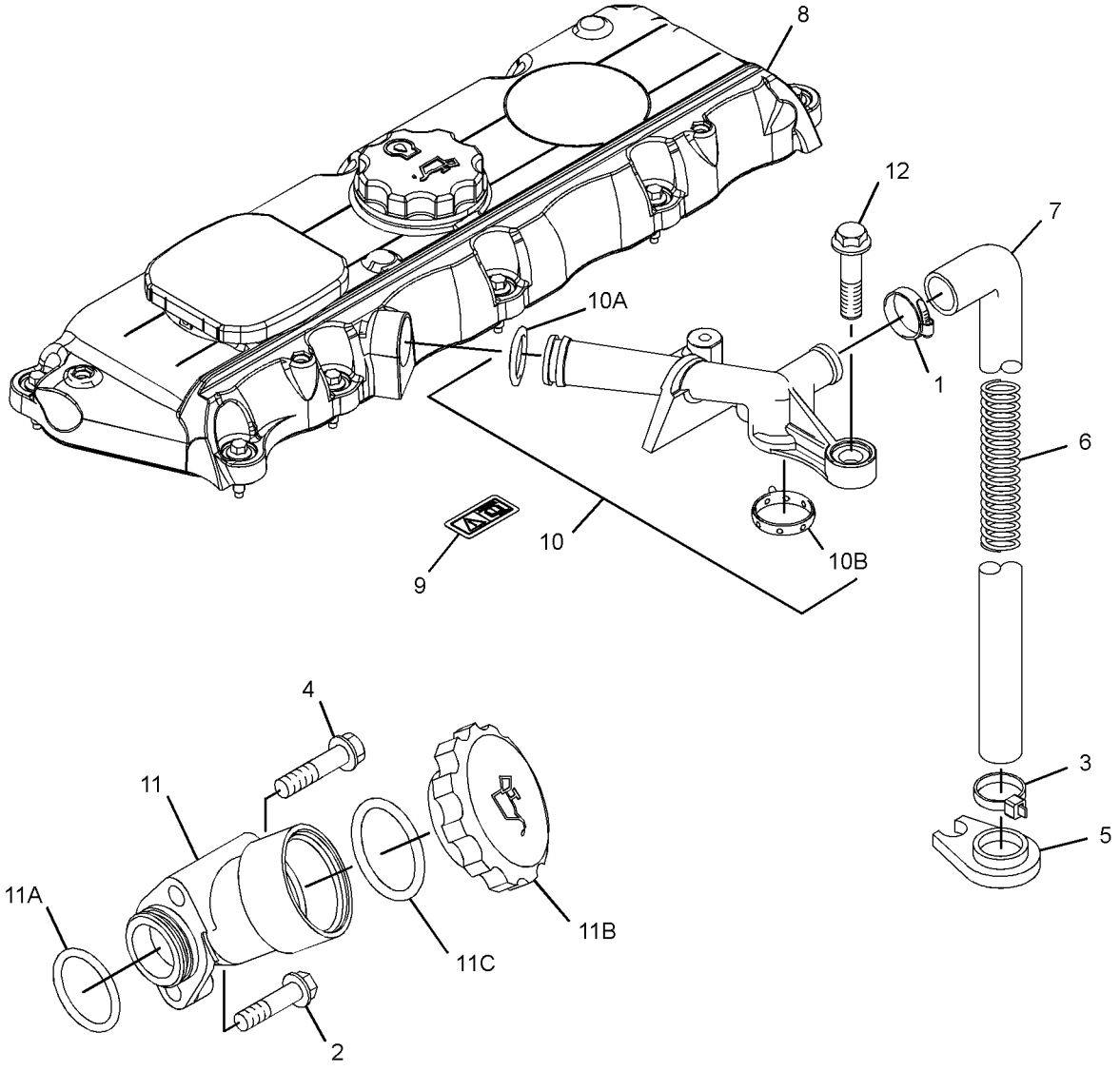

GRAPHIC #1 <END> g06253743

236-8190 COVER GP-VALVE MECHANISM

ALSO AN ATTACHMENT

TYPE 1

SMCS-1107 **i02138071**

NOTE	REF NO	GRAPHIC REF	PART NUMBER	QTY	PART NAME 1 2 3 4 5 6 (PRODUCT LEVEL)	SEE PAGE
	1	1	**5D-1026**	1	CLAMP-BAND	
M	2	1	**6I-0846**	3	BOLT (M6X1X14-MM)	
	3	1	**7C-1281**	1	BRACKET	
	4	1	**162-1565**	1	SPRING (CRANKCASE BREATHER HOSE)	
	5	1	**198-8645**	1	HOSE (CRANKCASE BREATHER)	
	6	1	**225-6522**	1	PLUG-CUP	
	7	1	**230-9127**	1	COVER	
	8	1	**230-9144**	1	CONNECTOR	
	8A	1	**150-7732**	1	SEAL-O-RING	
	8B	1	**225-6455**	2	BOLT	
	8C	1	**225-6517**	1	GASKET	
	9	1	**236-8184**	1	COVER GP-VALVE MECHANISM	
	9A	1	**136-3608**	1	CAP AS (ENGINE OIL FILLER)	
	9B	1	**124-0506**	1	SEAL	
	9C	1	**225-6451**	1	GASKET (VALVE COVER)	
	9D	1	**225-6455**	10	BOLT	
	9E	1	**225-6456**	1	SPRING	
	9F	1	**225-6461**	1	CAP	
	9G	1	**225-6464**	1	DIAPHRAGM (CRANKCASE PRESSURE CONTACTOR)	
	9H	1	**225-6477**	1	PLATE	
	9I	1	**225-6478**	4	SCREW-MACHINE	
	9J	1	**225-6479**	1	CAP	

M - METRIC PART

236-8190 **COVER GP-VALVE MECHANISM (**contd.**)** **i02138071**

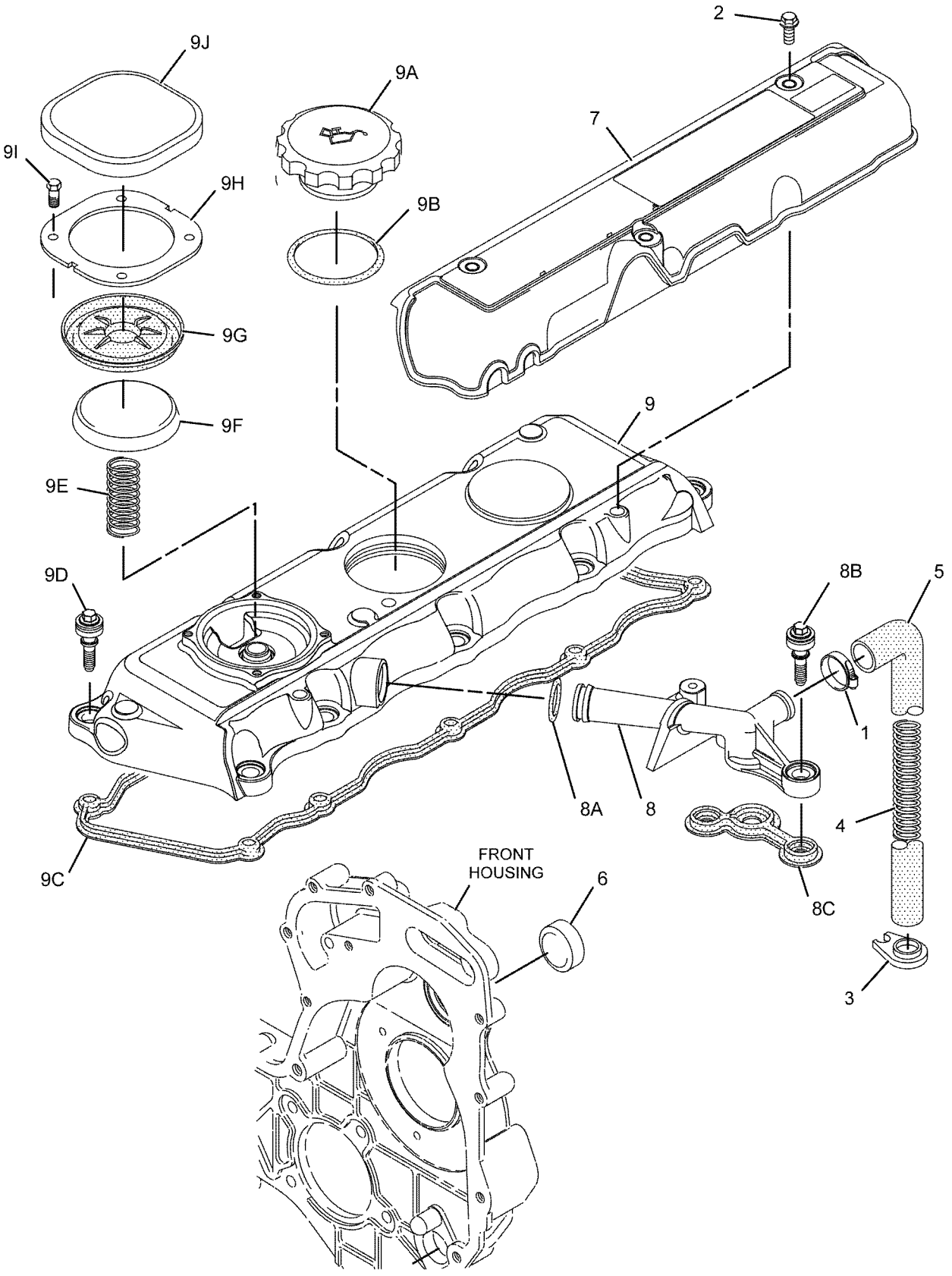

GRAPHIC #1 <END> g01025154

236-8190 COVER GP-VALVE MECHANISM

ALSO AN ATTACHMENT

TYPE 2

SMCS-1107 **i02510631**

NOTE	REF NO	GRAPHIC REF	PART NUMBER	QTY	PART NAME 1 2 3 4 5 6 (PRODUCT LEVEL)	SEE PAGE
	1	1	**5D-1026**	1	CLAMP-BAND	
M	2	1	**6I-0846**	3	BOLT (M6X1X14-MM)	
	3	1	**7C-1281**	1	BRACKET	
	4	1	**162-1565**	1	SPRING (CRANKCASE BREATHER HOSE)	
	5	1	**198-8645**	1	HOSE (CRANKCASE BREATHER)	
	6	1	**225-6522**	1	PLUG-CUP	
	7	1	**230-9127**	1	COVER (INJECTOR)	
C	8	1	**287-8573**	1	PIPE AS	
C	9	1	**247-7797**	1	COVER GP-VALVE MECHANISM (VALVE)	
	9A	1	**136-3608**	1	CAP AS (ENGINE OIL FILLER)	
	9B	1	**124-0506**	1	SEAL	
	9C	1	**225-6451**	1	GASKET (VALVE COVER)	
	9D	1	**225-6455**	10	BOLT	
	9E	1	**225-6456**	1	SPRING	
	9F	1	**225-6461**	1	CAP (CRANKCASE BREATHER)	
	9G	1	**225-6464**	1	DIAPHRAGM (CRANKCASE PRESSURE CONTACTOR)	
	9H	1	**225-6477**	1	PLATE	
	9J	1	**225-6478**	4	SCREW-MACHINE	
	9K	1	**225-6479**	1	CAP (CRANKCASE BREATHER)	
CMR	10	1	**100-4838**	2	BOLT (M6X1X20-MM)	

C - CHANGE FROM PREVIOUS TYPE
M - METRIC PART
R - REMANUFACTURED PART MAY BE AVAILABLE

236-8190 **COVER GP-VALVE MECHANISM (**contd.**)** **i02510631**

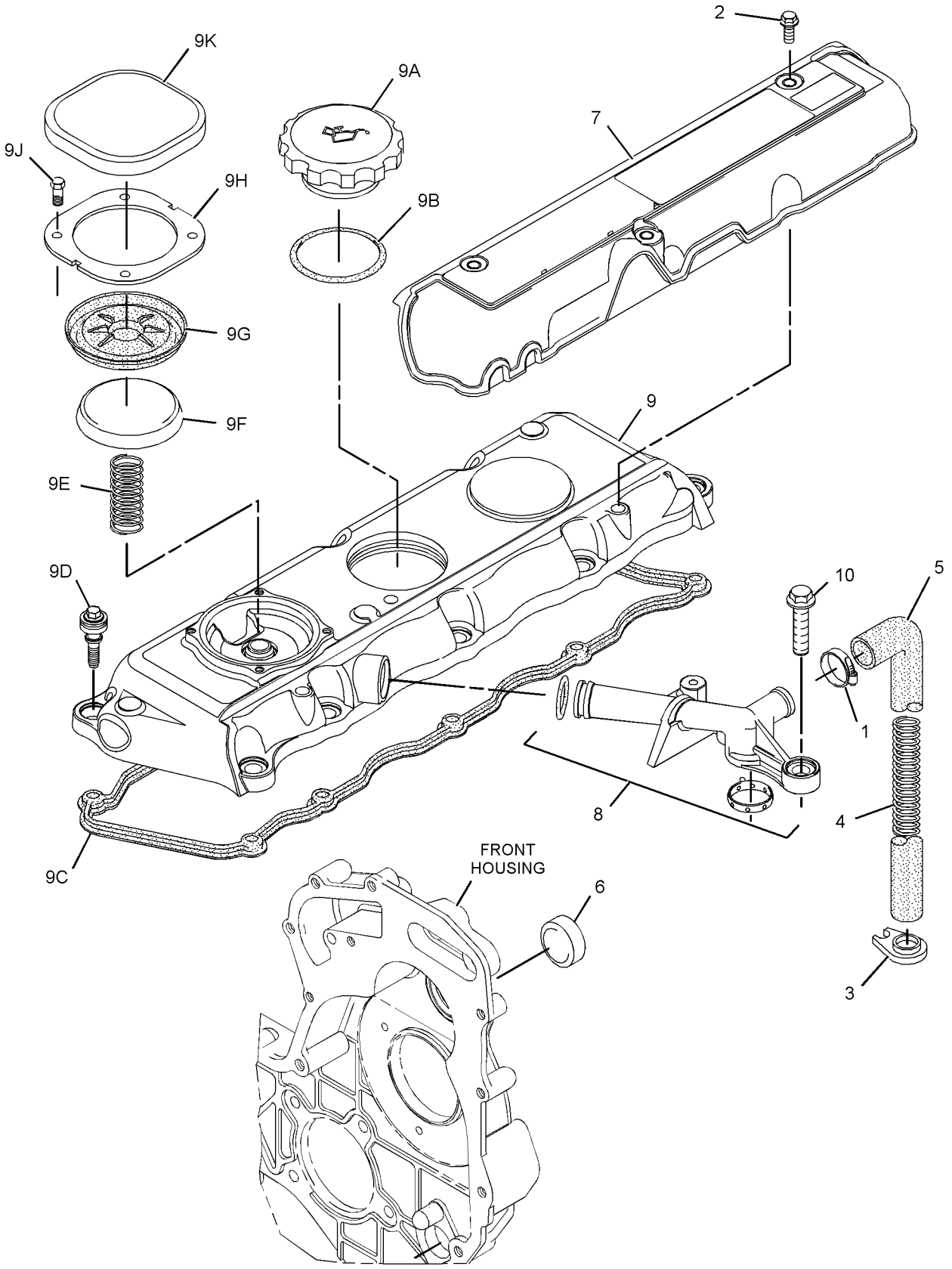

GRAPHIC #1 <END> g01273751

236-8190 COVER GP-VALVE MECHANISM

ALSO AN ATTACHMENT

TYPE 3

SMCS-1107 **i04952683**

NOTE	REF NO	GRAPHIC REF	PART NUMBER	QTY	PART NAME 1 2 3 4 5 6 (PRODUCT LEVEL)	SEE PAGE
	1	1	**5D-1026**	1	CLAMP-BAND	
M	2	1	**6I-0846**	3	BOLT (M6X1X14-MM)	
	3	1	**7C-1281**	1	BRACKET	
	4	1	**162-1565**	1	SPRING (CRANKCASE BREATHER HOSE)	
	5	1	**198-8645**	1	HOSE (CRANKCASE BREATHER)	
	6	1	**225-6522**	1	PLUG-CUP	
	7	1	**230-9127**	1	COVER (INJECTOR)	
	8	1	**287-8573**	1	PIPE AS	
CY	9	1	**308-1793**	1	COVER GP-VALVE MECHANISM (VALVE)	433
MR	10	1	**100-4838**	2	BOLT (M6X1X20-MM)	
	11	1	**217-9039**	1	STRAP-CABLE	

C - CHANGE FROM PREVIOUS TYPE
M - METRIC PART
R - REMANUFACTURED PART MAY BE AVAILABLE
Y - SEPARATE ILLUSTRATION

236-8190 **COVER GP-VALVE MECHANISM (**contd.**)** **i04952683**

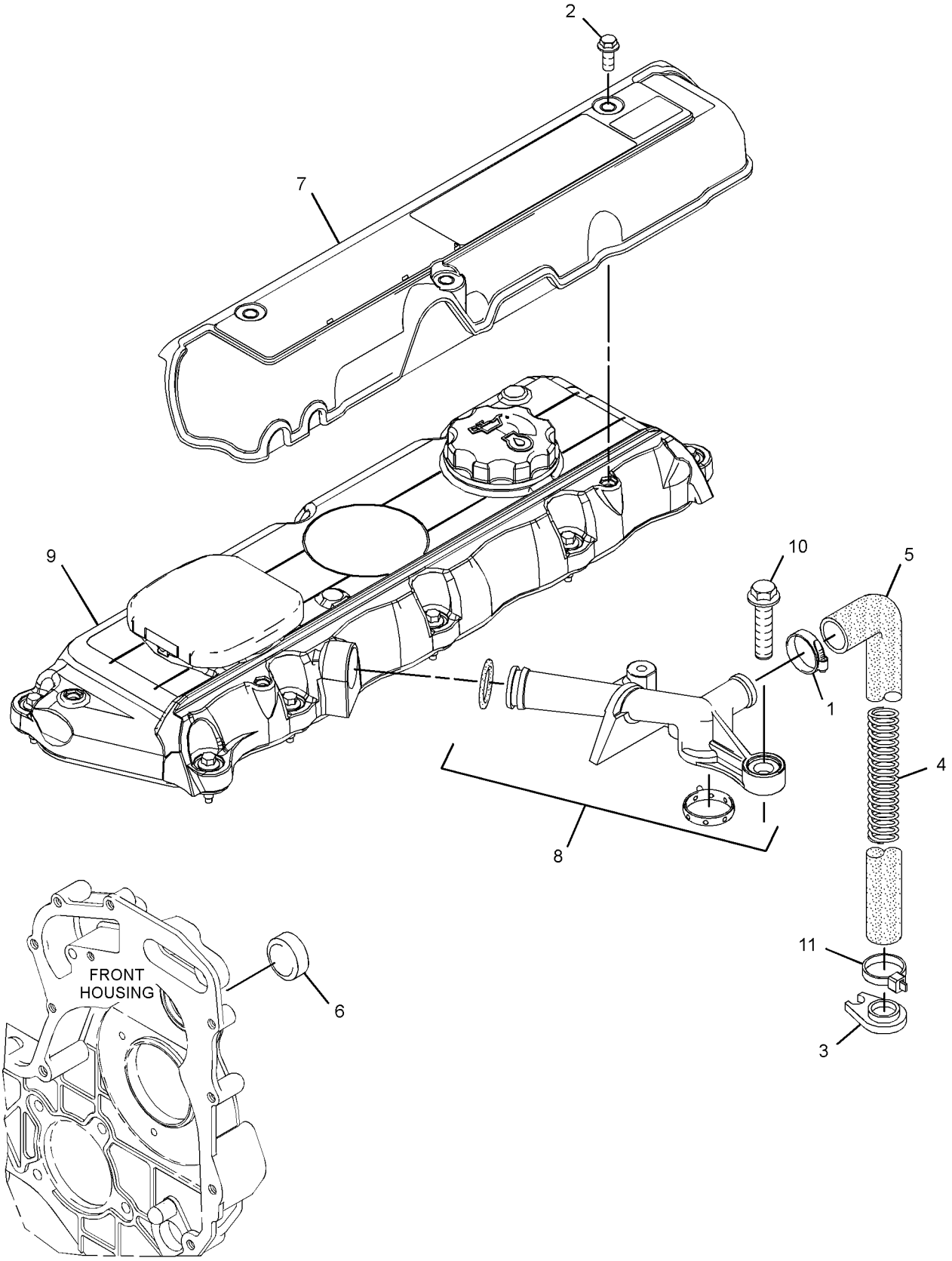

GRAPHIC #1 <END> g03182779

236-8190 COVER GP-VALVE MECHANISM

ALSO AN ATTACHMENT

TYPE 4

SMCS-1107 **i06889294**

NOTE	REF NO	GRAPHIC REF	PART NUMBER	QTY	PART NAME 1 2 3 4 5 6 (PRODUCT LEVEL)	SEE PAGE
	1	1	**5D-1026**	1	CLAMP-BAND	
M	2	1	**6I-0846**	3	BOLT (M6X1X14-MM)	
	3	1	**7C-1281**	1	BRACKET	
	4	1	**162-1565**	1	SPRING (CRANKCASE BREATHER HOSE)	
	5	1	**198-8645**	1	HOSE (CRANKCASE BREATHER)	
	6	1	**225-6522**	1	PLUG-CUP	
	7	1	**230-9127**	1	COVER (INJECTOR)	
	8	1	**287-8573**	1	PIPE AS	
	8A	1	**150-7732**	1	SEAL-O-RING	
	8B	1	**286-3030**	1	RING-SEAL	
CY	9	1	**449-1277**	1	COVER GP-VALVE MECHANISM (VALVE)	448
MR	10	1	**100-4838**	2	BOLT (M6X1X20-MM)	
	11	1	**217-9039**	1	STRAP-CABLE	
	12	1	**346-8219**	1	FILM-WARNING (UNIVERSAL WARNING)	

C - CHANGE FROM PREVIOUS TYPE
M - METRIC PART
R - REMANUFACTURED PART MAY BE AVAILABLE
Y - SEPARATE ILLUSTRATION

236-8190 **COVER GP-VALVE MECHANISM (**contd.**)** **i06889294**

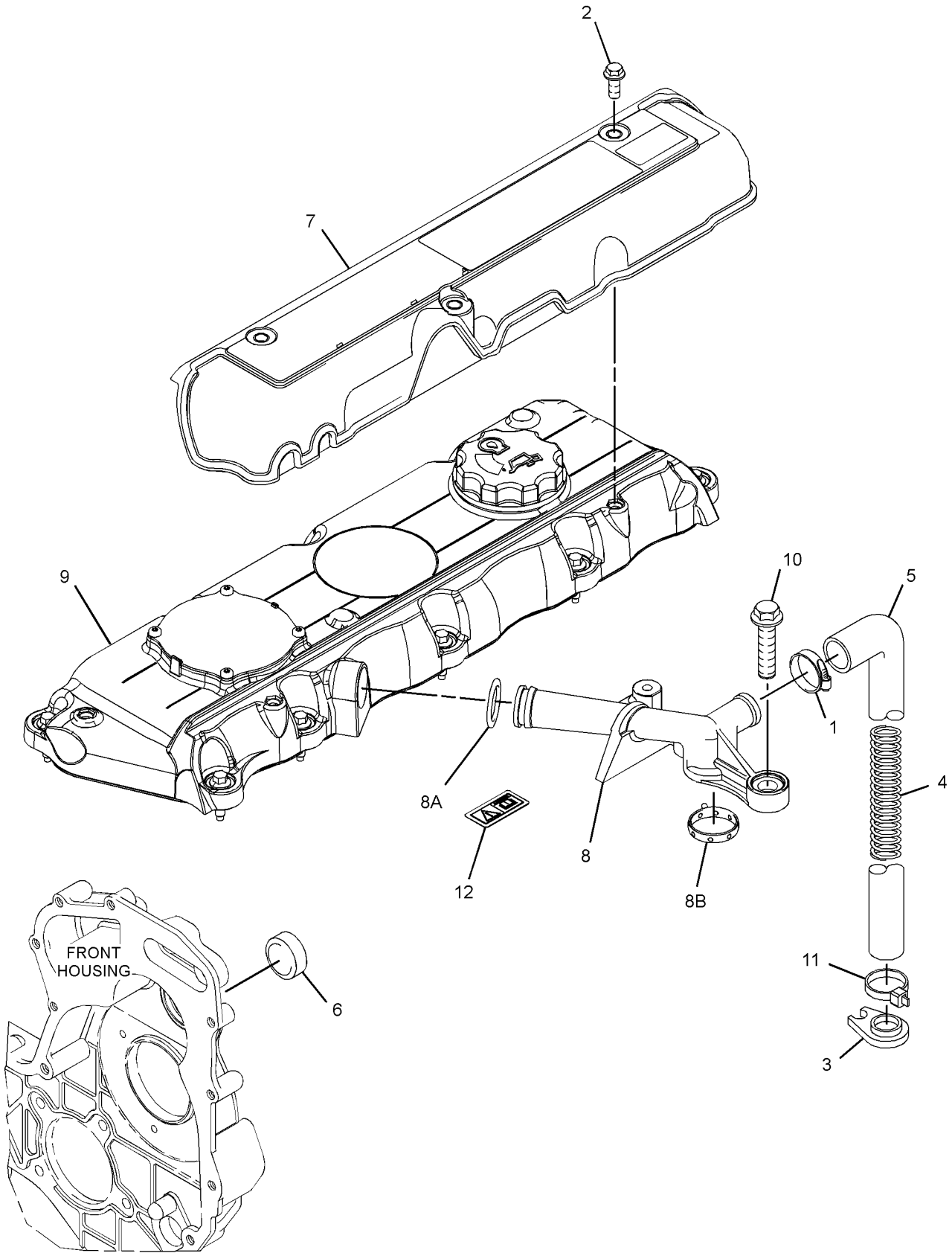

GRAPHIC #1 <END> g06197979

236-8190 COVER GP-VALVE MECHANISM

ALSO AN ATTACHMENT

TYPE 5

SMCS-1107 **i07311046**

NOTE	REF NO	GRAPHIC REF	PART NUMBER	QTY	PART NAME 1 2 3 4 5 6 (PRODUCT LEVEL)	SEE PAGE
	1	1	**5D-1026**	1	CLAMP-BAND	
	2	1	**217-9039**	1	STRAP-CABLE	
	3	1	**7C-1281**	1	BRACKET	
	4	1	**162-1565**	1	SPRING (CRANKCASE BREATHER HOSE)	
	5	1	**198-8645**	1	HOSE (CRANKCASE BREATHER)	
	6	1	**225-6522**	1	PLUG-CUP	
	7	1	**346-8219**	1	FILM-WARNING (UNIVERSAL WARNING)	
	8	1	**287-8573**	1	PIPE AS	
	8A	1	**2T-2695**	1	SEAL-O-RING	
	8B	1	**286-3030**	1	RING-SEAL	
Y	9	1	**521-8087**	1	COVER GP-CYLINDER HEAD	226
MR	10	1	**100-4838**	2	BOLT (M6X1X20-MM)	

M - METRIC PART
R - REMANUFACTURED PART MAY BE AVAILABLE
Y - SEPARATE ILLUSTRATION

236-8190 **COVER GP-VALVE MECHANISM (**contd.**)** **i07311046**

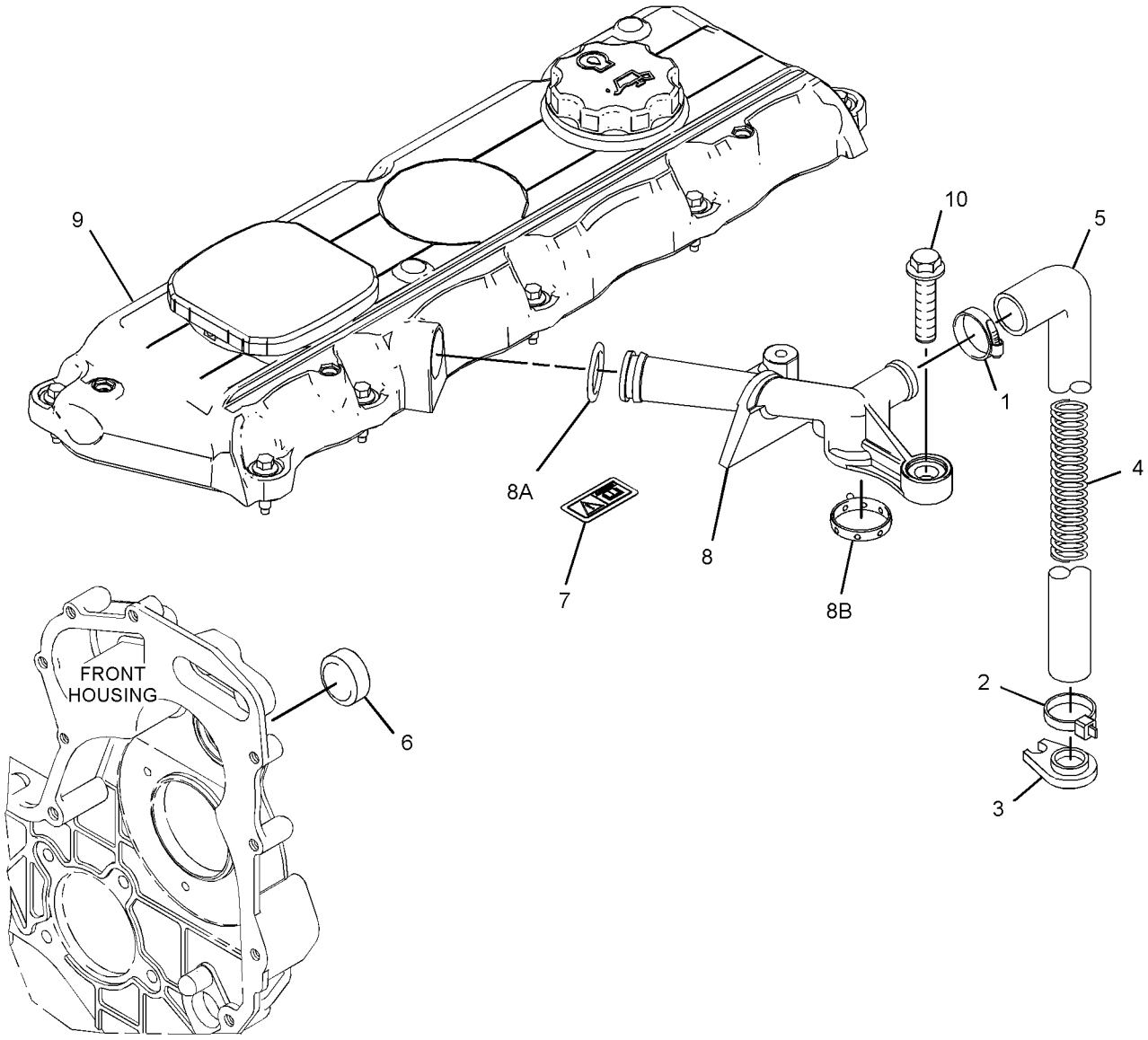

GRAPHIC #1 <END> g06279410

237-2790 COVER GP-VALVE MECHANISM

TYPE 1

SMCS-1107 **i02138072**

NOTE	REF NO	GRAPHIC REF	PART NUMBER	QTY	PART NAME 1 2 3 4 5 6 (PRODUCT LEVEL)	SEE PAGE
	1	1	**5D-1026**	1	CLAMP-BAND	
M	2	1	**6I-0456**	1	BOLT (M8X1.25X45-MM)	
M	3	1	**6I-0917**	1	BOLT (M6X1X25-MM)	
M	4	1	**6I-4374**	1	BOLT (M8X1.25X60-MM)	
	5	1	**7C-1281**	1	BRACKET	
M	6	1	**6I-0846**	3	BOLT (M6X1X14-MM)	
M	7	1	**100-4841**	2	BOLT (M6X1X10-MM)	
	8	1	**162-1565**	1	SPRING (CRANKCASE BREATHER HOSE)	
	9	1	**198-8645**	1	HOSE (CRANKCASE BREATHER)	
	10	1	**224-2712**	1	FILLER AS-OIL	
	10A	1	**113-1505**	1	SEAL-O-RING	
	10B	1	**130-9888**	1	CAP AS-OIL FILLER (ENGINE)	
	10C	1	**113-1504**	1	SEAL-O-RING	
	11	1	**230-9127**	1	COVER	
	12	1	**230-9144**	1	CONNECTOR	
	12A	1	**150-7732**	1	SEAL-O-RING	
	12B	1	**225-6455**	2	BOLT	
	12C	1	**225-6517**	1	GASKET	
	13	1	**237-0026**	1	COVER AS	
	13A	1	**225-6451**	1	GASKET (VALVE COVER)	
	13B	1	**225-6455**	10	BOLT	
	13C	1	**225-6456**	1	SPRING	
	13D	1	**225-6461**	1	CAP	
	13E	1	**225-6464**	1	DIAPHRAGM (CRANKCASE PRESSURE CONTACTOR)	
	13F	1	**225-6477**	1	PLATE	
	13G	1	**225-6478**	4	SCREW-MACHINE	
	13H	1	**225-6479**	1	CAP	
	14	1	**237-0769**	1	SHIELD-HEAT	

M - METRIC PART

237-2790 **COVER GP-VALVE MECHANISM (**contd.**)** **i02138072**

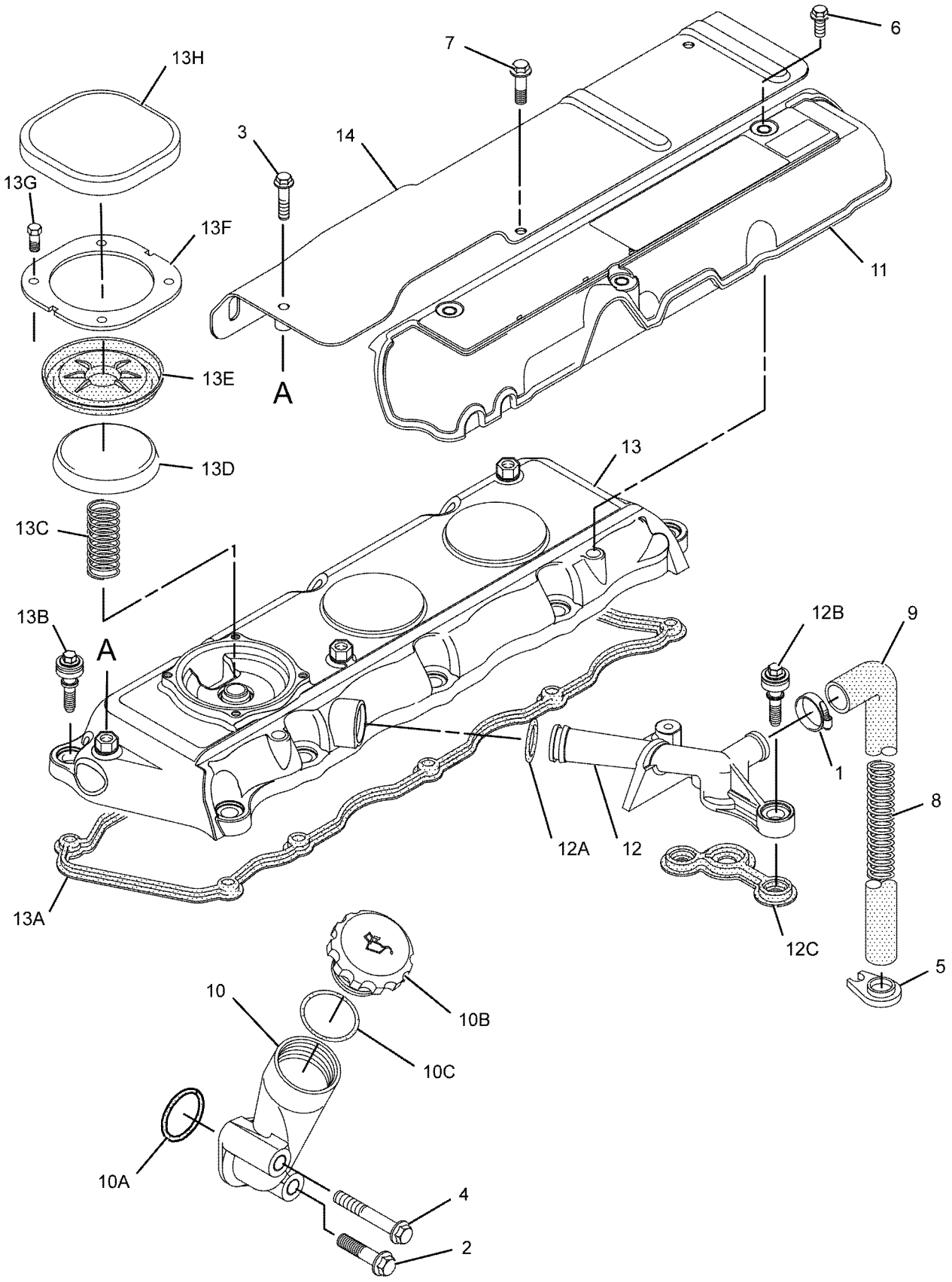

GRAPHIC #1 <END> g01025932

237-2790 COVER GP-VALVE MECHANISM

TYPE 2

SMCS-1107 **i02554653**

NOTE	REF NO	GRAPHIC REF	PART NUMBER	QTY	PART NAME 1 2 3 4 5 6 (PRODUCT LEVEL)	SEE PAGE
	1	1	**5D-1026**	1	CLAMP-BAND	
M	2	1	**6I-0456**	1	BOLT (M8X1.25X45-MM)	
M	3	1	**6I-0917**	1	BOLT (M6X1X25-MM)	
M	4	1	**6I-4374**	1	BOLT (M8X1.25X60-MM)	
	5	1	**7C-1281**	1	BRACKET	
M	6	1	**6I-0846**	3	BOLT (M6X1X14-MM)	
M	7	1	**100-4841**	2	BOLT (M6X1X10-MM)	
	8	1	**162-1565**	1	SPRING (CRANKCASE BREATHER HOSE)	
	9	1	**198-8645**	1	HOSE (CRANKCASE BREATHER)	
	10	1	**224-2712**	1	FILLER AS-OIL	
	10A	1	**113-1505**	1	SEAL-O-RING	
	10B	1	**130-9888**	1	CAP AS-OIL FILLER (ENGINE)	
	10C	1	**113-1504**	1	SEAL-O-RING	
	11	1	**230-9127**	1	COVER	
C	12	1	**287-8573**	1	PIPE AS	
	13	1	**247-7798**	1	COVER AS	
	13A	1	**225-6451**	1	GASKET (VALVE COVER)	
	13B	1	**225-6455**	10	BOLT	
	13C	1	**225-6456**	1	SPRING	
	13D	1	**225-6461**	1	CAP	
	13E	1	**225-6464**	1	DIAPHRAGM (CRANKCASE PRESSURE CONTACTOR)	
	13F	1	**225-6477**	1	PLATE	
	13G	1	**225-6478**	4	SCREW-MACHINE	
	13H	1	**225-6479**	1	CAP	
	14	1	**237-0769**	1	SHIELD-HEAT	
CMR	15	1	**100-4838**	2	BOLT (M6X1X20-MM)	

C - CHANGE FROM PREVIOUS TYPE
M - METRIC PART
R - REMANUFACTURED PART MAY BE AVAILABLE

237-2790 **COVER GP-VALVE MECHANISM (**contd.**)** **i02554653**

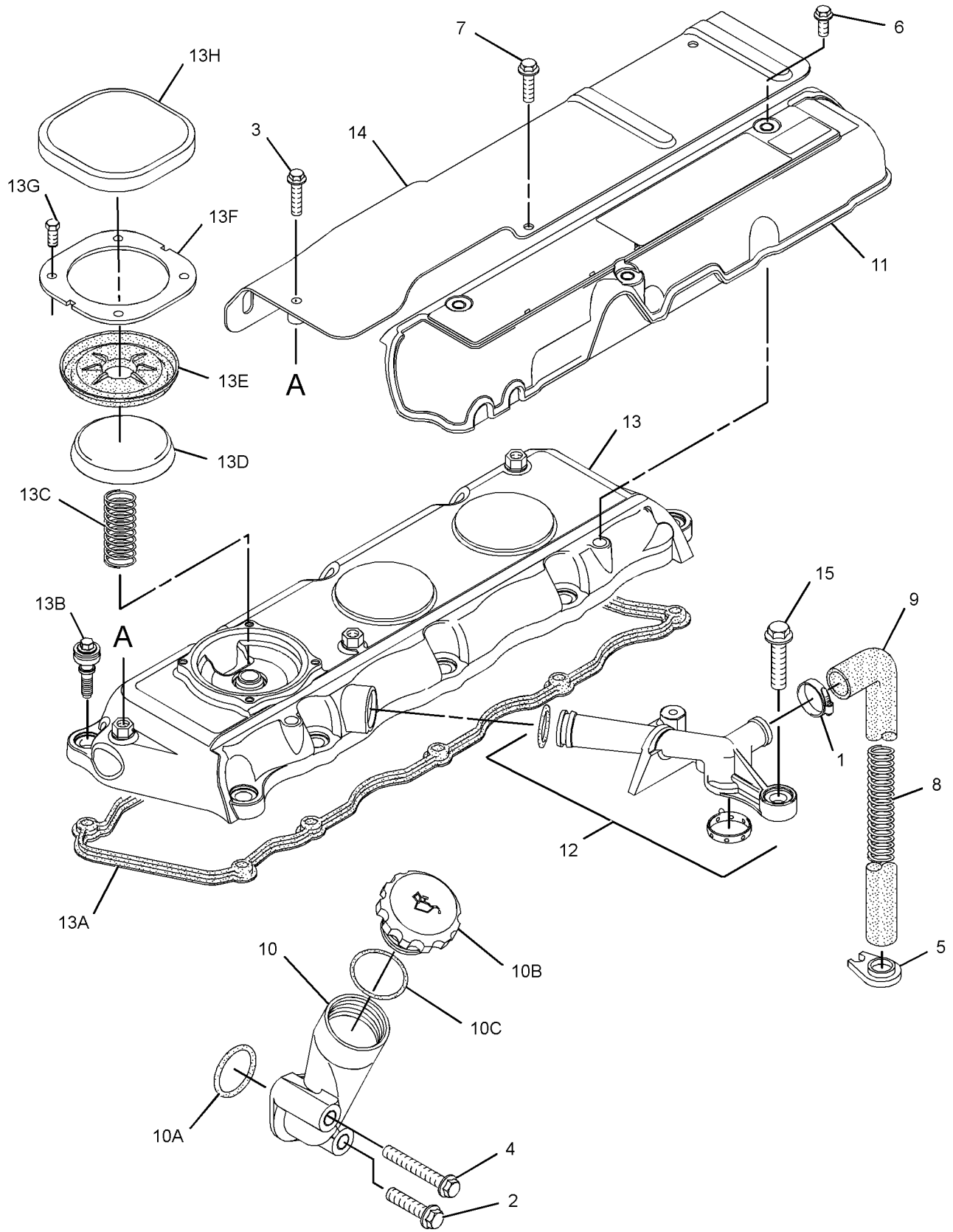

GRAPHIC #1 <END> g01318487

237-2790 COVER GP-VALVE MECHANISM

TYPE 3

SMCS-1107 **i02702366**

NOTE	REF NO	GRAPHIC REF	PART NUMBER	QTY	PART NAME 1 2 3 4 5 6 (PRODUCT LEVEL)	SEE PAGE
	1	1	**5D-1026**	1	CLAMP-BAND	
M	2	1	**6I-0456**	1	BOLT (M8X1.25X45-MM)	
M	3	1	**6I-0917**	1	BOLT (M6X1X25-MM)	
M	4	1	**6I-4374**	1	BOLT (M8X1.25X60-MM)	
	5	1	**7C-1281**	1	BRACKET	
M	6	1	**6I-0846**	3	BOLT (M6X1X14-MM)	
M	7	1	**100-4841**	2	BOLT (M6X1X10-MM)	
	8	1	**162-1565**	1	SPRING (CRANKCASE BREATHER HOSE)	
	9	1	**198-8645**	1	HOSE (CRANKCASE BREATHER)	
	10	1	**224-2712**	1	FILLER AS-OIL	
	10A	1	**113-1505**	1	SEAL-O-RING	
	10B	1	**130-9888**	1	CAP AS-OIL FILLER (ENGINE)	
	10C	1	**113-1504**	1	SEAL-O-RING	
	11	1	**230-9127**	1	COVER	
	12	1	**287-8573**	1	PIPE AS	
C	13	1	**308-1792**	1	COVER GP-VALVE MECHANISM	
	13A	1	**225-6451**	1	GASKET (VALVE COVER)	
	13B	1	**225-6456**	1	SPRING	
	13C	1	**225-6461**	1	CAP	
	13D	1	**225-6464**	1	DIAPHRAGM (CRANKCASE PRESSURE CONTACTOR)	
	13E	1	**225-6477**	1	PLATE	
	13F	1	**225-6478**	4	SCREW-MACHINE	
	13G	1	**225-6479**	1	CAP	
	14	1	**237-0769**	1	SHIELD-HEAT	
MR	15	1	**100-4838**	2	BOLT (M6X1X20-MM)	

C - CHANGE FROM PREVIOUS TYPE
M - METRIC PART
R - REMANUFACTURED PART MAY BE AVAILABLE

237-2790 **COVER GP-VALVE MECHANISM (**contd.**)** **i02702366**

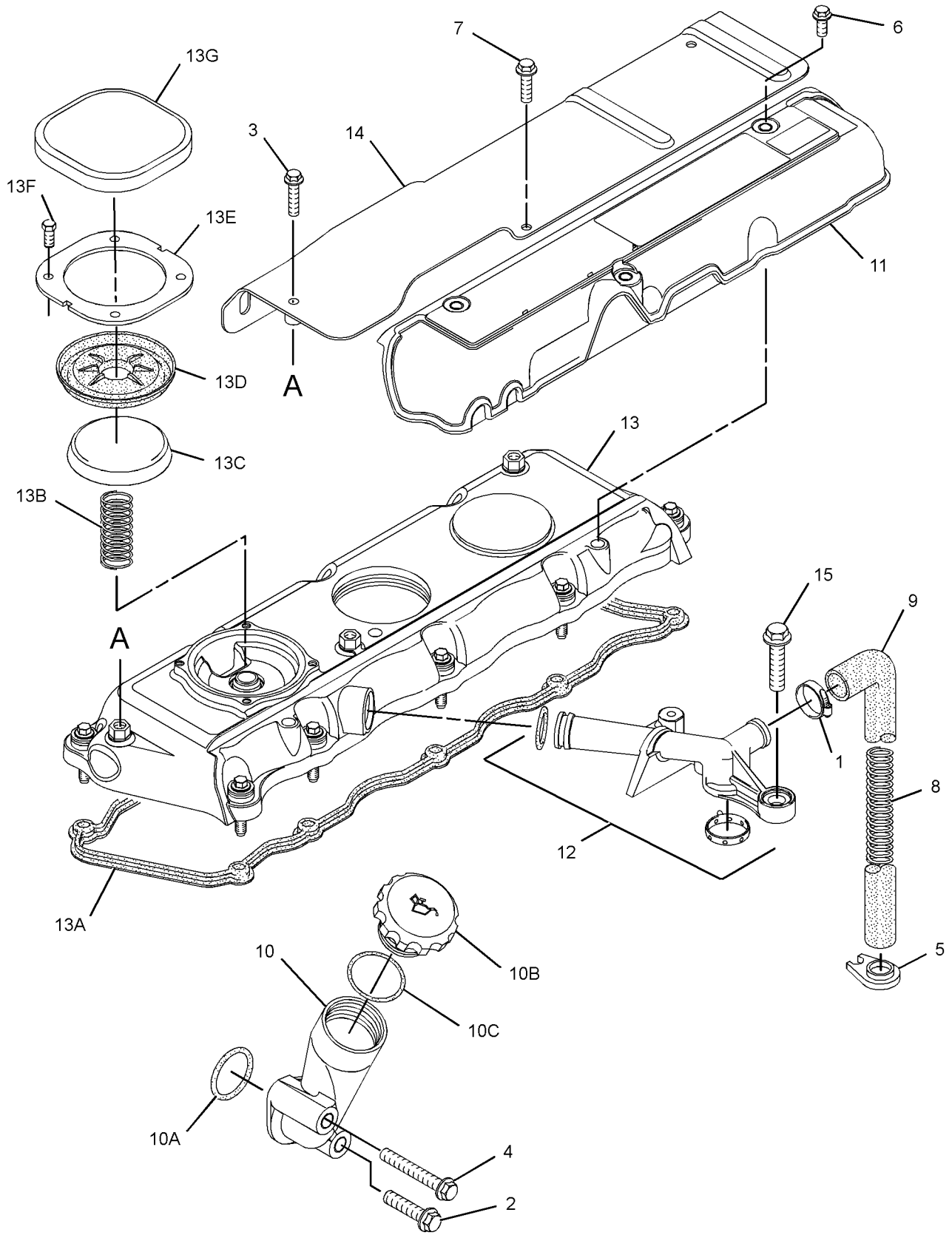

GRAPHIC #1 <END> g01420667

237-2790 COVER GP-VALVE MECHANISM

TYPE 4

SMCS-1107 **i04952684**

NOTE	REF NO	GRAPHIC REF	PART NUMBER	QTY	PART NAME 1 2 3 4 5 6 (PRODUCT LEVEL)	SEE PAGE
	1	1	**5D-1026**	1	CLAMP-BAND	
M	2	1	**6I-0456**	1	BOLT (M8X1.25X45-MM)	
M	3	1	**6I-0917**	1	BOLT (M6X1X25-MM)	
M	4	1	**6I-4374**	1	BOLT (M8X1.25X60-MM)	
	5	1	**7C-1281**	1	BRACKET	
M	6	1	**6I-0846**	3	BOLT (M6X1X14-MM)	
M	7	1	**100-4841**	2	BOLT (M6X1X10-MM)	
	8	1	**162-1565**	1	SPRING (CRANKCASE BREATHER HOSE)	
	9	1	**198-8645**	1	HOSE (CRANKCASE BREATHER)	
C	10	1	**317-3773**	1	FILLER GP-ENGINE OIL	
C	10A	1	**317-3776**	1	SEAL-O-RING	
	10B	1	**130-9888**	1	CAP AS-OIL FILLER (ENGINE)	
	10C	1	**113-1504**	1	SEAL-O-RING	
	11	1	**230-9127**	1	COVER	
	12	1	**287-8573**	1	PIPE AS	
	13	1	**308-1792**	1	COVER GP-VALVE MECHANISM	
	13A	1	**225-6451**	1	GASKET (VALVE COVER)	
	13B	1	**225-6456**	1	SPRING	
	13C	1	**225-6461**	1	CAP	
	13D	1	**225-6464**	1	DIAPHRAGM (CRANKCASE PRESSURE CONTACTOR)	
	13E	1	**225-6477**	1	PLATE	
	13F	1	**225-6478**	4	SCREW-MACHINE	
	13G	1	**225-6479**	1	CAP	
	14	1	**237-0769**	1	SHIELD-HEAT	
MR	15	1	**100-4838**	2	BOLT (M6X1X20-MM)	
	16	1	**217-9039**	1	STRAP-CABLE	

C - CHANGE FROM PREVIOUS TYPE
M - METRIC PART
R - REMANUFACTURED PART MAY BE AVAILABLE

237-2790 **COVER GP-VALVE MECHANISM (**contd.**)** **i04952684**

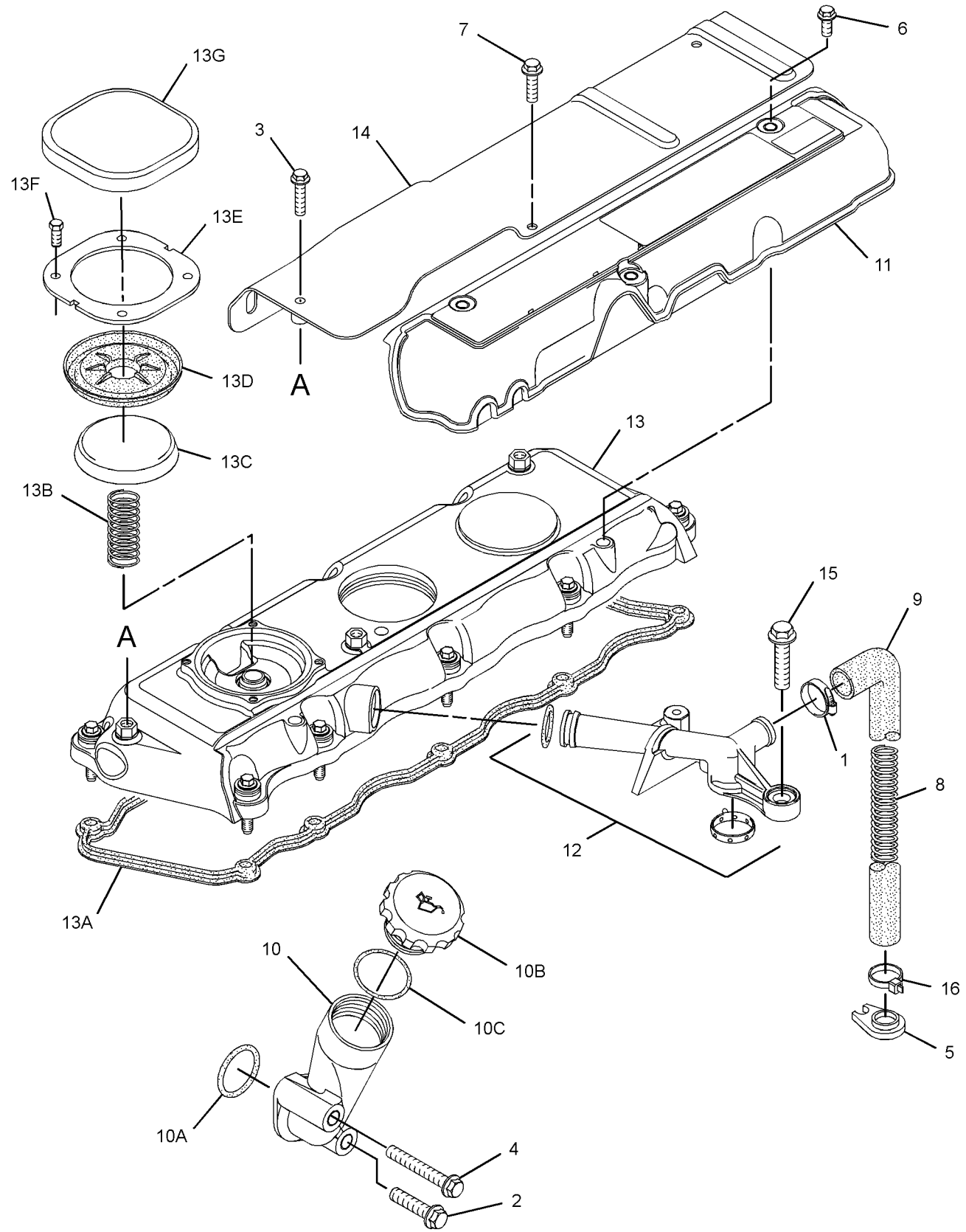

GRAPHIC #1 <END> g03188916

237-2790 COVER GP-VALVE MECHANISM

TYPE 5

SMCS-1107 **i06894367**

NOTE	REF NO	GRAPHIC REF	PART NUMBER	QTY	PART NAME 1 2 3 4 5 6 (PRODUCT LEVEL)	SEE PAGE
	1	1	**5D-1026**	1	CLAMP-BAND	
M	2	1	**6I-0456**	1	BOLT (M8X1.25X45-MM)	
M	3	1	**6I-0917**	1	BOLT (M6X1X25-MM)	
M	4	1	**6I-4374**	1	BOLT (M8X1.25X60-MM)	
	5	1	**7C-1281**	1	BRACKET	
M	6	1	**6I-0846**	3	BOLT (M6X1X14-MM)	
M	7	1	**100-4841**	2	BOLT (M6X1X10-MM)	
	8	1	**162-1565**	1	SPRING (CRANKCASE BREATHER HOSE)	
	9	1	**198-8645**	1	HOSE (CRANKCASE BREATHER)	
	10	1	**317-3773**	1	FILLER GP-ENGINE OIL	
	10A	1	**317-3776**	1	SEAL-O-RING	
	10B	1	**130-9888**	1	CAP AS-OIL FILLER (ENGINE)	
	10C	1	**113-1504**	1	SEAL-O-RING	
	11	1	**230-9127**	1	COVER	
	12	1	**287-8573**	1	PIPE AS	
	12A	1	**150-7732**	1	SEAL-O-RING	
	12B	1	**286-3030**	1	RING-SEAL	
CY	13	1	**446-9143**	1	COVER GP-CYLINDER HEAD	221
	14	1	**237-0769**	1	SHIELD-HEAT	
MR	15	1	**100-4838**	2	BOLT (M6X1X20-MM)	
	16	1	**217-9039**	1	STRAP-CABLE	
	17	1	**346-8219**	1	FILM-WARNING (UNIVERSAL WARNING)	

C - CHANGE FROM PREVIOUS TYPE
M - METRIC PART
R - REMANUFACTURED PART MAY BE AVAILABLE
Y - SEPARATE ILLUSTRATION

237-2790 **COVER GP-VALVE MECHANISM (**contd.**)** **i06894367**

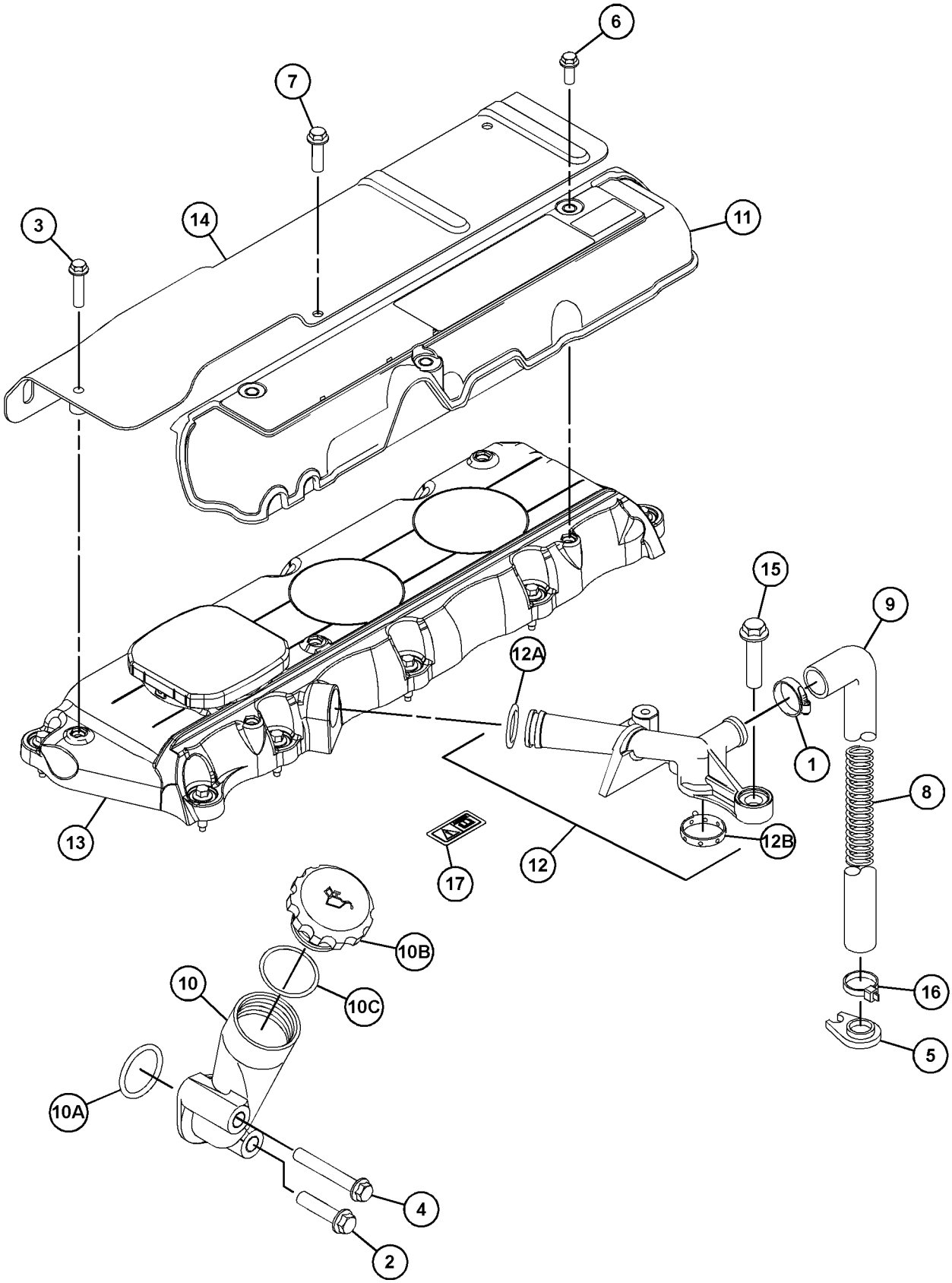

GRAPHIC #1 <END> g06197935

237-2790 COVER GP-VALVE MECHANISM

TYPE 6

SMCS-1107 **i07037919**

NOTE	REF NO	GRAPHIC REF	PART NUMBER	QTY	PART NAME 1 2 3 4 5 6 (PRODUCT LEVEL)	SEE PAGE
	1	1	**5D-1026**	1	CLAMP-BAND	
M	2	1	**6I-0456**	1	BOLT (M8X1.25X45-MM)	
M	3	1	**6I-0917**	1	BOLT (M6X1X25-MM)	
M	4	1	**6I-4374**	1	BOLT (M8X1.25X60-MM)	
	5	1	**7C-1281**	1	BRACKET	
	6	1	**217-9039**	1	STRAP-CABLE	
M	7	1	**100-4841**	2	BOLT (M6X1X10-MM)	
	8	1	**162-1565**	1	SPRING (CRANKCASE BREATHER HOSE)	
	9	1	**198-8645**	1	HOSE (CRANKCASE BREATHER)	
	10	1	**317-3773**	1	FILLER GP-ENGINE OIL	
	10A	1	**317-3776**	1	SEAL-O-RING	
	10B	1	**130-9888**	1	CAP AS-OIL FILLER (ENGINE)	
	10C	1	**113-1504**	1	SEAL-O-RING	
	11	1	**346-8219**	1	FILM-WARNING (UNIVERSAL WARNING)	
	12	1	**287-8573**	1	PIPE AS	
	12A	1	**150-7732**	1	SEAL-O-RING	
	12B	1	**286-3030**	1	RING-SEAL	
Y	13	1	**446-9143**	1	COVER GP-CYLINDER HEAD	221
	14	1	**237-0769**	1	SHIELD-HEAT	
MR	15	1	**100-4838**	2	BOLT (M6X1X20-MM)	

M - METRIC PART
R - REMANUFACTURED PART MAY BE AVAILABLE
Y - SEPARATE ILLUSTRATION

237-2790 **COVER GP-VALVE MECHANISM (**contd.**)** **i07037919**

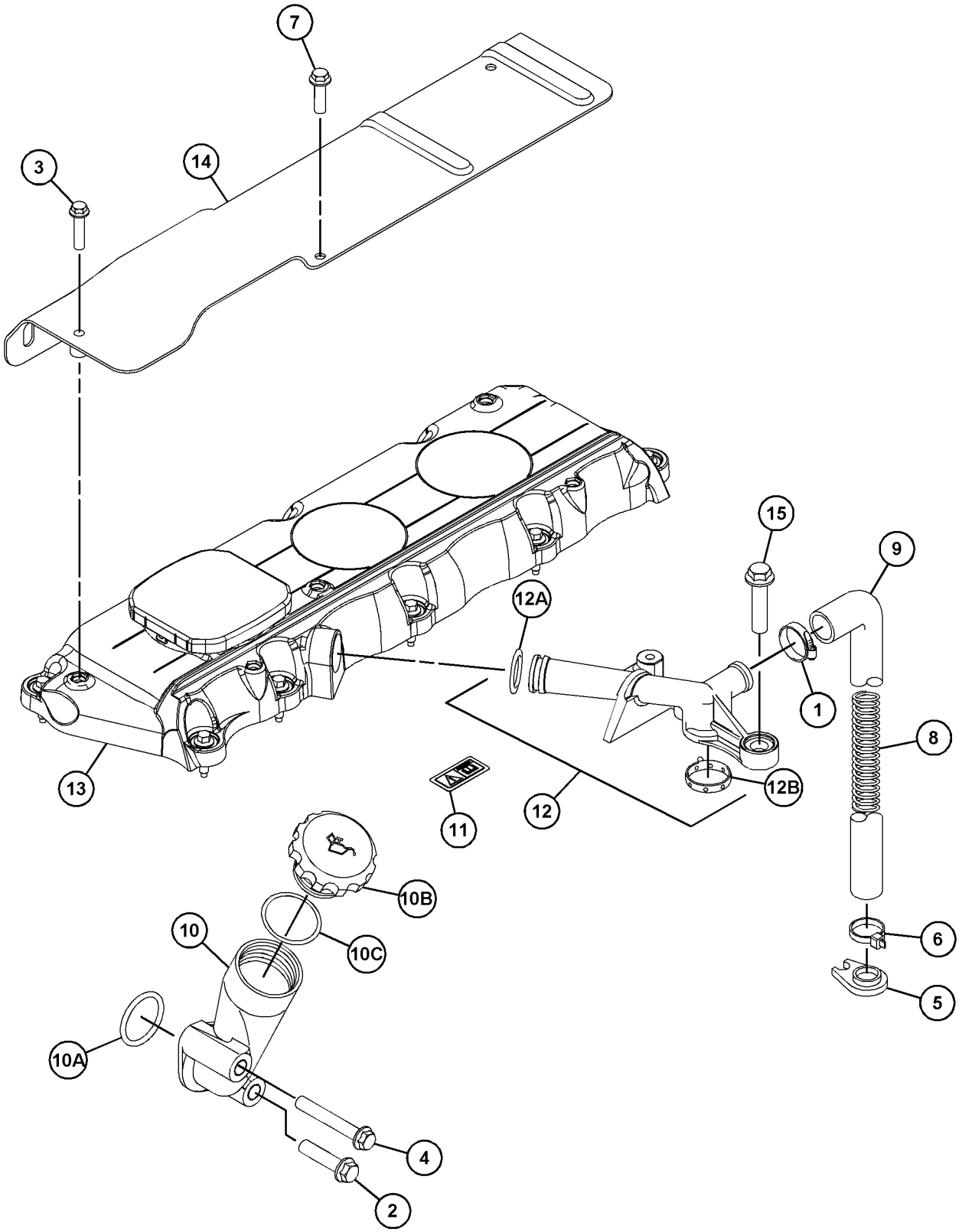

GRAPHIC #1 <END> g06209730

237-2790 COVER GP-VALVE MECHANISM

TYPE 7

SMCS-1107 **i07188075**

NOTE	REF NO	GRAPHIC REF	PART NUMBER	QTY	PART NAME 1 2 3 4 5 6 (PRODUCT LEVEL)	SEE PAGE
	1	1	**5D-1026**	1	CLAMP-BAND	
M	2	1	**6I-0456**	1	BOLT (M8X1.25X45-MM)	
M	3	1	**6I-0917**	1	BOLT (M6X1X25-MM)	
M	4	1	**6I-4374**	1	BOLT (M8X1.25X60-MM)	
	5	1	**7C-1281**	1	BRACKET	
	6	1	**217-9039**	1	STRAP-CABLE	
M	7	1	**100-4841**	2	BOLT (M6X1X10-MM)	
	8	1	**162-1565**	1	SPRING (CRANKCASE BREATHER HOSE)	
	9	1	**198-8645**	1	HOSE (CRANKCASE BREATHER)	
	10	1	**317-3773**	1	FILLER GP-ENGINE OIL	
	10A	1	**317-3776**	1	SEAL-O-RING	
	10B	1	**130-9888**	1	CAP AS-OIL FILLER (ENGINE)	
	10C	1	**113-1504**	1	SEAL-O-RING	
	11	1	**346-8219**	1	FILM-WARNING (UNIVERSAL WARNING)	
	12	1	**287-8573**	1	PIPE AS	
	12A	1	**150-7732**	1	SEAL-O-RING	
	12B	1	**286-3030**	1	RING-SEAL	
CY	13	1	**308-1792**	1	COVER GP-VALVE MECHANISM	432
	14	1	**237-0769**	1	SHIELD-HEAT	
MR	15	1	**100-4838**	2	BOLT (M6X1X20-MM)	

C - CHANGE FROM PREVIOUS TYPE
M - METRIC PART
R - REMANUFACTURED PART MAY BE AVAILABLE
Y - SEPARATE ILLUSTRATION

237-2790 **COVER GP-VALVE MECHANISM (**contd.**)** **i07188075**

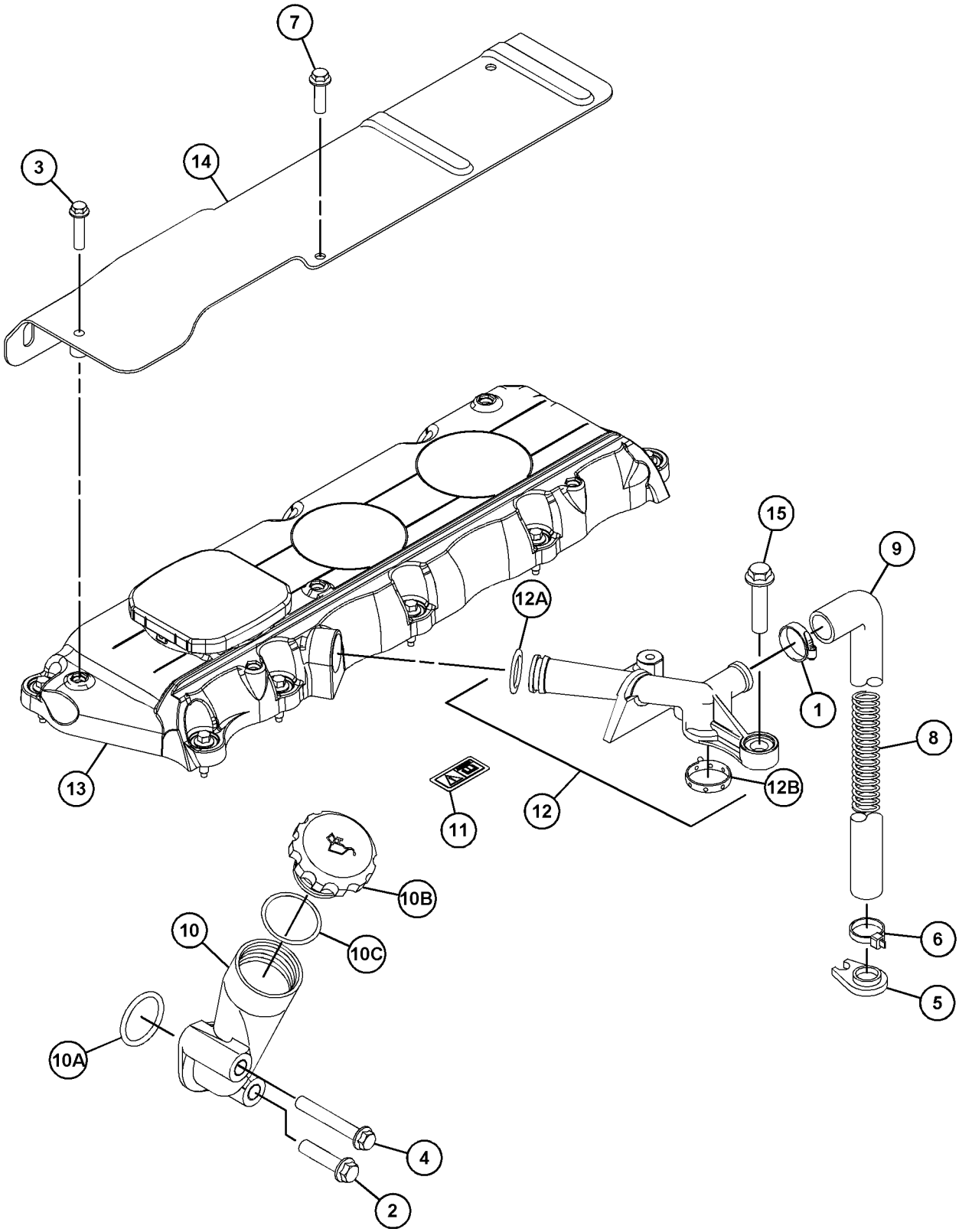

GRAPHIC #1 <END> g06209730

238-2777 COVER GP-VALVE MECHANISM

TYPE 1

SMCS-1107 **i02450968**

NOTE	REF NO	GRAPHIC REF	PART NUMBER	QTY	PART NAME 1 2 3 4 5 6 (PRODUCT LEVEL)	SEE PAGE
	1	1	**5D-1026**	1	CLAMP-BAND	
M	2	1	**6I-0456**	1	BOLT (M8X1.25X45-MM)	
M	3	1	**6I-0846**	3	BOLT (M6X1X14-MM)	
M	4	1	**6I-4374**	1	BOLT (M8X1.25X60-MM)	
	5	1	**7C-1281**	1	BRACKET	
	6	1	**162-1565**	1	SPRING (CRANKCASE BREATHER HOSE)	
	7	1	**198-8645**	1	HOSE (CRANKCASE BREATHER)	
	8	1	**224-2712**	1	FILLER AS-OIL (ENGINE)	
	8A	1	**113-1505**	1	SEAL-O-RING	
	8B	1	**130-9888**	1	CAP AS-OIL FILLER (ENGINE)	
	8C	1	**113-1504**	1	SEAL-O-RING	
	9	1	**225-6522**	1	PLUG-CUP	
	10	1	**226-8763**	1	COVER AS-VALVE	
	10A	1	**225-6451**	1	GASKET (VALVE COVER)	
	10B	1	**225-6455**	10	BOLT	
	10C	1	**225-6456**	1	SPRING	
	10D	1	**225-6461**	1	CAP	
	10E	1	**225-6464**	1	DIAPHRAGM (CRANKCASE PRESSURE CONTACTOR)	
	10F	1	**225-6477**	1	PLATE	
	10G	1	**225-6478**	4	SCREW-MACHINE	
	10H	1	**225-6479**	1	CAP	
	11	1	**230-9127**	1	COVER	
	12	1	**230-9144**	1	CONNECTOR	
	12A	1	**150-7732**	1	SEAL-O-RING	
	12B	1	**225-6455**	2	BOLT	
	12C	1	**225-6517**	1	GASKET	

M - METRIC PART

238-2777 **COVER GP-VALVE MECHANISM (**contd.**)** **i02450968**

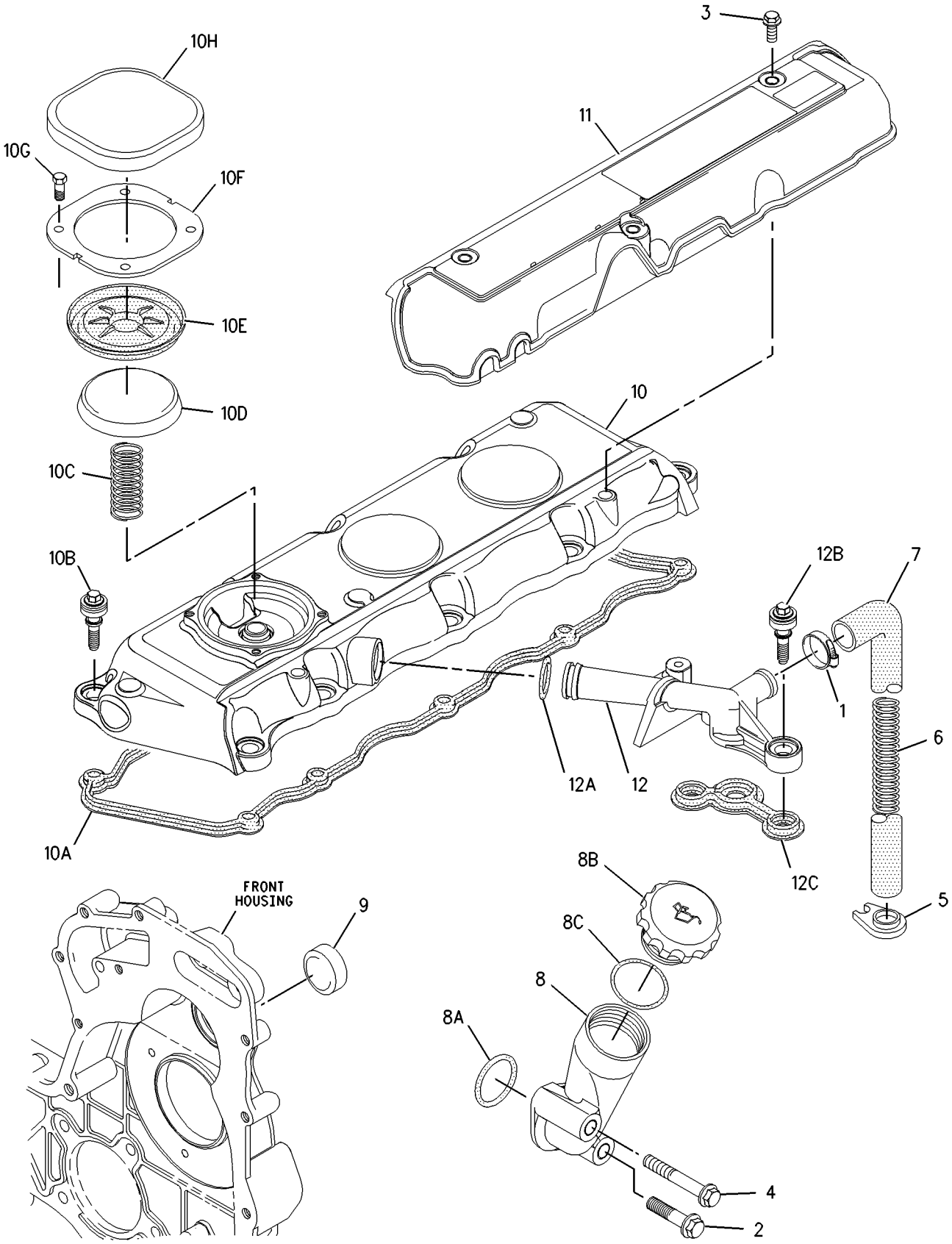

GRAPHIC #1 <END> g00998985

238-2777 COVER GP-VALVE MECHANISM

TYPE 2

SMCS-1107 **i02510652**

NOTE	REF NO	GRAPHIC REF	PART NUMBER	QTY	PART NAME 1 2 3 4 5 6 (PRODUCT LEVEL)	SEE PAGE
	1	1	**5D-1026**	1	CLAMP-BAND	
M	2	1	**6I-0456**	1	BOLT (M8X1.25X45-MM)	
M	3	1	**6I-0846**	3	BOLT (M6X1X14-MM)	
M	4	1	**6I-4374**	1	BOLT (M8X1.25X60-MM)	
	5	1	**7C-1281**	1	BRACKET	
	6	1	**162-1565**	1	SPRING (CRANKCASE BREATHER HOSE)	
	7	1	**198-8645**	1	HOSE (CRANKCASE BREATHER)	
	8	1	**224-2712**	1	FILLER AS-OIL (ENGINE)	
	8A	1	**113-1505**	1	SEAL-O-RING	
	8B	1	**130-9888**	1	CAP AS-OIL FILLER (ENGINE)	
	8C	1	**113-1504**	1	SEAL-O-RING	
	9	1	**225-6522**	1	PLUG-CUP	
C	10	1	**249-5230**	1	COVER AS-VALVE	
C	10A	1	**225-6451**	1	GASKET (VALVE COVER)	
C	10B	1	**225-6455**	10	BOLT	
C	10C	1	**225-6456**	1	SPRING	
C	10D	1	**225-6461**	1	CAP	
C	10E	1	**225-6464**	1	DIAPHRAGM (CRANKCASE PRESSURE CONTACTOR)	
C	10F	1	**225-6477**	1	PLATE	
C	10G	1	**225-6478**	4	SCREW-MACHINE	
C	10H	1	**225-6479**	1	CAP	
	11	1	**230-9127**	1	COVER	
C	12	1	**287-8573**	1	PIPE AS	
CMR	13	1	**100-4838**	2	BOLT (M6X1X20-MM)	

C - CHANGE FROM PREVIOUS TYPE
M - METRIC PART
R - REMANUFACTURED PART MAY BE AVAILABLE

238-2777 **COVER GP-VALVE MECHANISM (**contd.**)** **i02510652**

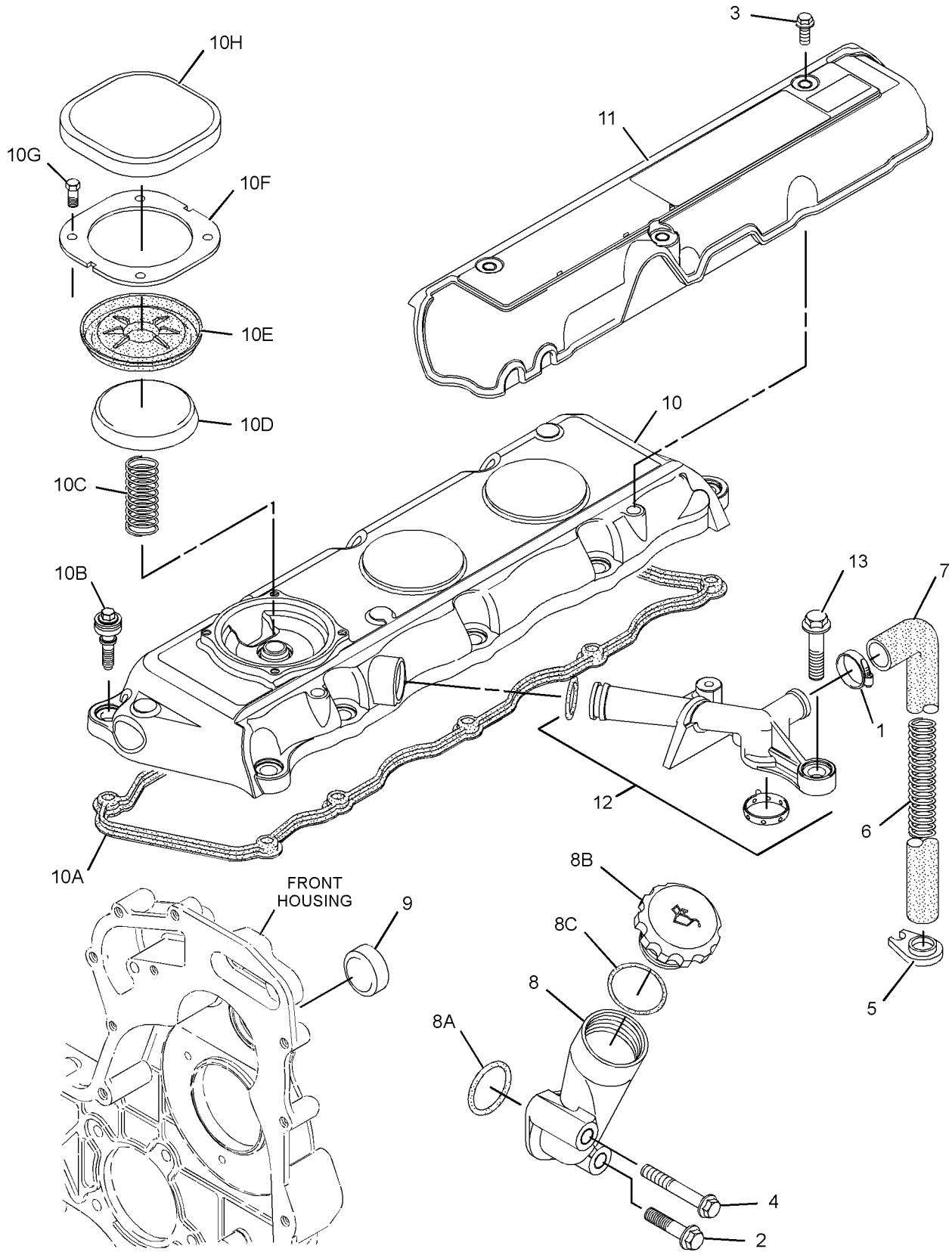

GRAPHIC #1 <END> g01263552

238-2777 COVER GP-VALVE MECHANISM

TYPE 3

SMCS-1107 **i02702363**

NOTE	REF NO	GRAPHIC REF	PART NUMBER	QTY	PART NAME 1 2 3 4 5 6 (PRODUCT LEVEL)	SEE PAGE
	1	1	**5D-1026**	1	CLAMP-BAND	
M	2	1	**6I-0456**	1	BOLT (M8X1.25X45-MM)	
M	3	1	**6I-0846**	3	BOLT (M6X1X14-MM)	
M	4	1	**6I-4374**	1	BOLT (M8X1.25X60-MM)	
	5	1	**7C-1281**	1	BRACKET	
	6	1	**162-1565**	1	SPRING (CRANKCASE BREATHER HOSE)	
	7	1	**198-8645**	1	HOSE (CRANKCASE BREATHER)	
	8	1	**224-2712**	1	FILLER AS-OIL (ENGINE)	
	8A	1	**113-1505**	1	SEAL-O-RING	
	8B	1	**130-9888**	1	CAP AS-OIL FILLER (ENGINE)	
	8C	1	**113-1504**	1	SEAL-O-RING	
	9	1	**225-6522**	1	PLUG-CUP	
C	10	1	**308-1381**	1	COVER GP-VALVE MECHANISM	
	10A	1	**225-6451**	1	GASKET (VALVE COVER)	
	10B	1	**225-6479**	1	CAP	
	10C	1	**225-6456**	1	SPRING	
	10D	1	**225-6461**	1	CAP	
	10E	1	**225-6464**	1	DIAPHRAGM (CRANKCASE PRESSURE CONTACTOR)	
	10F	1	**225-6477**	1	PLATE	
	10G	1	**225-6478**	4	SCREW-MACHINE	
	11	1	**230-9127**	1	COVER	
	12	1	**287-8573**	1	PIPE AS	
MR	13	1	**100-4838**	2	BOLT (M6X1X20-MM)	

C - CHANGE FROM PREVIOUS TYPE
M - METRIC PART
R - REMANUFACTURED PART MAY BE AVAILABLE

238-2777 **COVER GP-VALVE MECHANISM (**contd.**)** **i02702363**

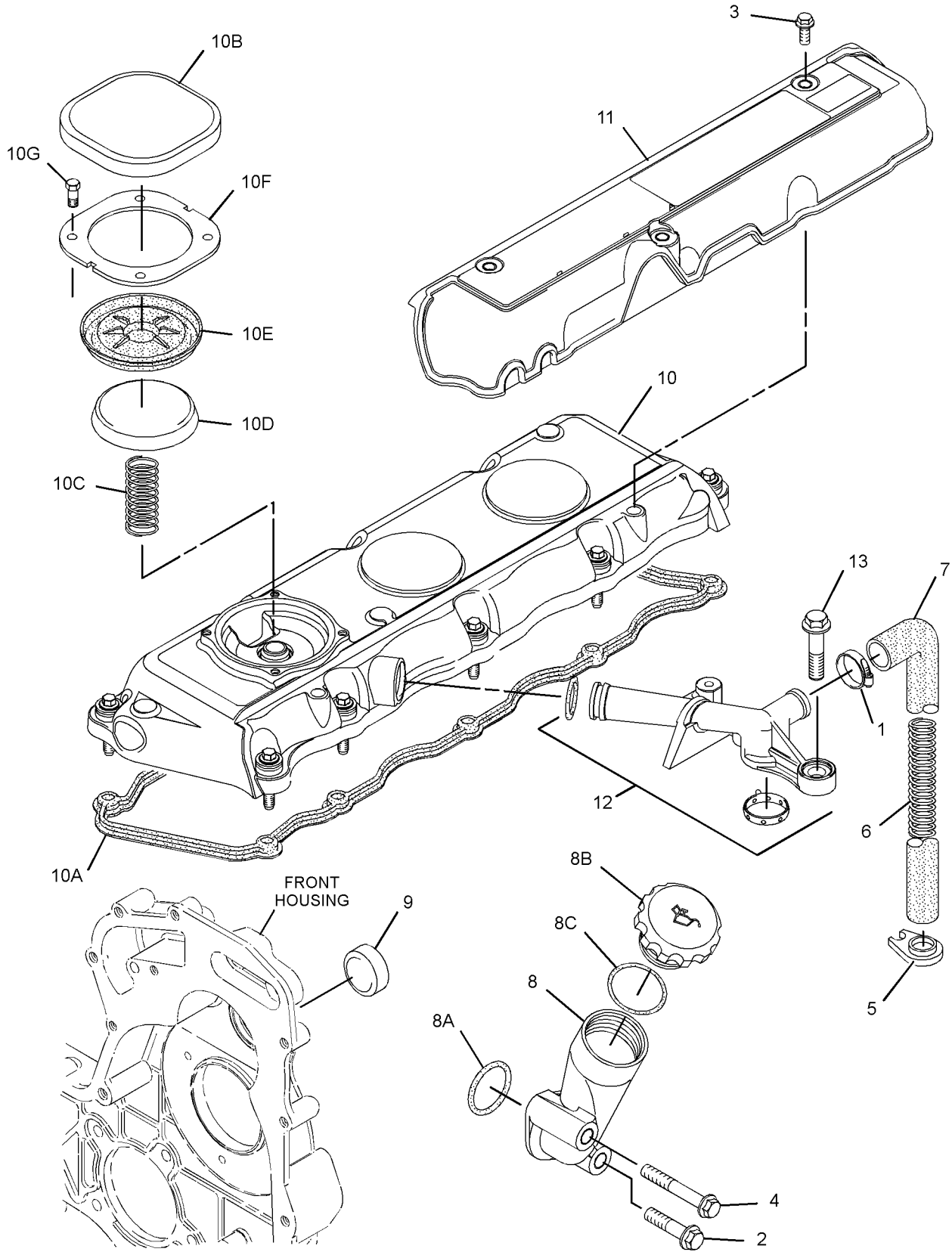

GRAPHIC #1 <END> g01420298

238-2777 COVER GP-VALVE MECHANISM

TYPE 4

SMCS-1107 **i04952762**

NOTE	REF NO	GRAPHIC REF	PART NUMBER	QTY	PART NAME 1 2 3 4 5 6 (PRODUCT LEVEL)	SEE PAGE
	1	1	**5D-1026**	1	CLAMP-BAND	
M	2	1	**6I-0456**	1	BOLT (M8X1.25X45-MM)	
M	3	1	**6I-0846**	3	BOLT (M6X1X14-MM)	
M	4	1	**6I-4374**	1	BOLT (M8X1.25X60-MM)	
	5	1	**7C-1281**	1	BRACKET	
	6	1	**162-1565**	1	SPRING (CRANKCASE BREATHER HOSE)	
	7	1	**198-8645**	1	HOSE (CRANKCASE BREATHER)	
C	8	1	**317-3773**	1	FILLER GP-ENGINE OIL (ENGINE)	
C	8A	1	**317-3776**	1	SEAL-O-RING	
	8B	1	**130-9888**	1	CAP AS-OIL FILLER (ENGINE)	
	8C	1	**113-1504**	1	SEAL-O-RING	
	9	1	**225-6522**	1	PLUG-CUP	
Y	10	1	**308-1381**	1	COVER GP-VALVE MECHANISM	430
	11	1	**230-9127**	1	COVER	
	12	1	**287-8573**	1	PIPE AS	
MR	13	1	**100-4838**	2	BOLT (M6X1X20-MM)	
	14	1	**217-9039**	1	STRAP-CABLE	

C - CHANGE FROM PREVIOUS TYPE
M - METRIC PART
R - REMANUFACTURED PART MAY BE AVAILABLE
Y - SEPARATE ILLUSTRATION

238-2777 **COVER GP-VALVE MECHANISM (**contd.**)** **i04952762**

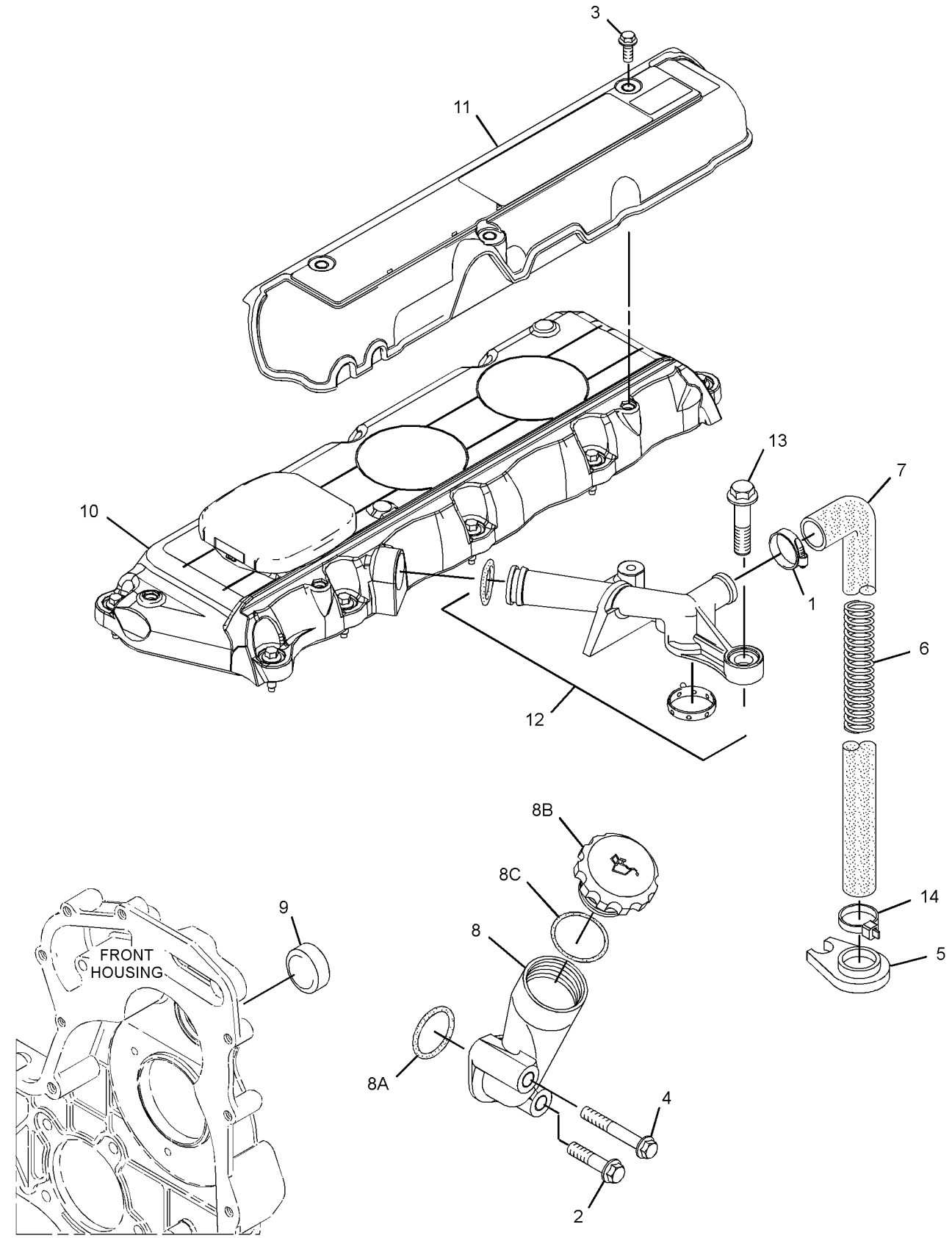

GRAPHIC #1 <END> g03179877

238-2777 COVER GP-VALVE MECHANISM

TYPE 5

SMCS-1107 **i06889296**

NOTE	REF NO	GRAPHIC REF	PART NUMBER	QTY	PART NAME 1 2 3 4 5 6 (PRODUCT LEVEL)	SEE PAGE
	1	1	**5D-1026**	1	CLAMP-BAND	
M	2	1	**6I-0456**	1	BOLT (M8X1.25X45-MM)	
M	3	1	**6I-0846**	3	BOLT (M6X1X14-MM)	
M	4	1	**6I-4374**	1	BOLT (M8X1.25X60-MM)	
	5	1	**7C-1281**	1	BRACKET	
	6	1	**162-1565**	1	SPRING (CRANKCASE BREATHER HOSE)	
	7	1	**198-8645**	1	HOSE (CRANKCASE BREATHER)	
	8	1	**317-3773**	1	FILLER GP-ENGINE OIL (ENGINE)	
	8A	1	**317-3776**	1	SEAL-O-RING	
	8B	1	**130-9888**	1	CAP AS-OIL FILLER (ENGINE)	
	8C	1	**113-1504**	1	SEAL-O-RING	
	9	1	**225-6522**	1	PLUG-CUP	
CY	10	1	**446-9162**	1	COVER GP-CYLINDER HEAD	222
	11	1	**230-9127**	1	COVER	
	12	1	**287-8573**	1	PIPE AS	
	12A	1	**150-7732**	1	SEAL-O-RING	
	12B	1	**286-3030**	1	RING-SEAL	
MR	13	1	**100-4838**	2	BOLT (M6X1X20-MM)	
	14	1	**217-9039**	1	STRAP-CABLE	
	15	1	**346-8219**	1	FILM-WARNING (UNIVERSAL WARNING)	

C - CHANGE FROM PREVIOUS TYPE
M - METRIC PART
R - REMANUFACTURED PART MAY BE AVAILABLE
Y - SEPARATE ILLUSTRATION

238-2777 **COVER GP-VALVE MECHANISM (**contd.**)** **i06889296**

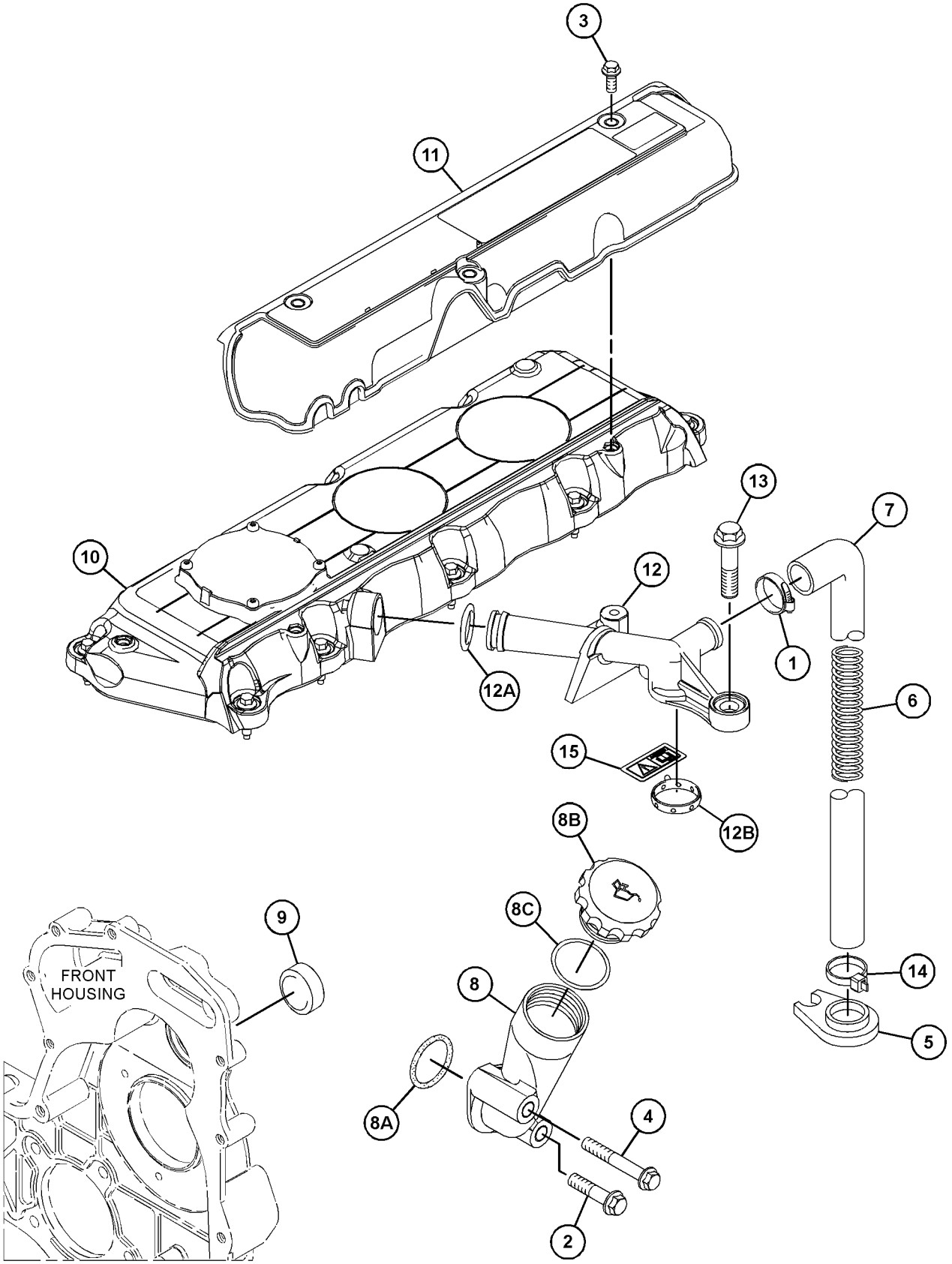

GRAPHIC #1 <END> g06158354

238-2777 COVER GP-VALVE MECHANISM

TYPE 6

SMCS-1107 **i07216915**

NOTE	REF NO	GRAPHIC REF	PART NUMBER	QTY	PART NAME 1 2 3 4 5 6 (PRODUCT LEVEL)	SEE PAGE
	1	1	**5D-1026**	1	CLAMP-BAND	
M	2	1	**6I-0456**	1	BOLT (M8X1.25X45-MM)	
	3	1	**217-9039**	1	STRAP-CABLE	
M	4	1	**6I-4374**	1	BOLT (M8X1.25X60-MM)	
	5	1	**7C-1281**	1	BRACKET	
	6	1	**162-1565**	1	SPRING (CRANKCASE BREATHER HOSE)	
	7	1	**198-8645**	1	HOSE (CRANKCASE BREATHER)	
	8	1	**317-3773**	1	FILLER GP-ENGINE OIL (ENGINE)	
	8A	1	**317-3776**	1	SEAL-O-RING	
	8B	1	**130-9888**	1	CAP AS-OIL FILLER (ENGINE)	
	8C	1	**113-1504**	1	SEAL-O-RING	
	9	1	**225-6522**	1	PLUG-CUP	
Y	10	1	**308-1381**	1	COVER GP-VALVE MECHANISM	430
	11	1	**346-8219**	1	FILM-WARNING (UNIVERSAL WARNING)	
	12	1	**287-8573**	1	PIPE AS	
	12A	1	**150-7732**	1	SEAL-O-RING	
	12B	1	**286-3030**	1	RING-SEAL	
MR	13	1	**100-4838**	2	BOLT (M6X1X20-MM)	

M - METRIC PART
R - REMANUFACTURED PART MAY BE AVAILABLE
Y - SEPARATE ILLUSTRATION

238-2777 **COVER GP-VALVE MECHANISM (**contd.**)** **i07216915**

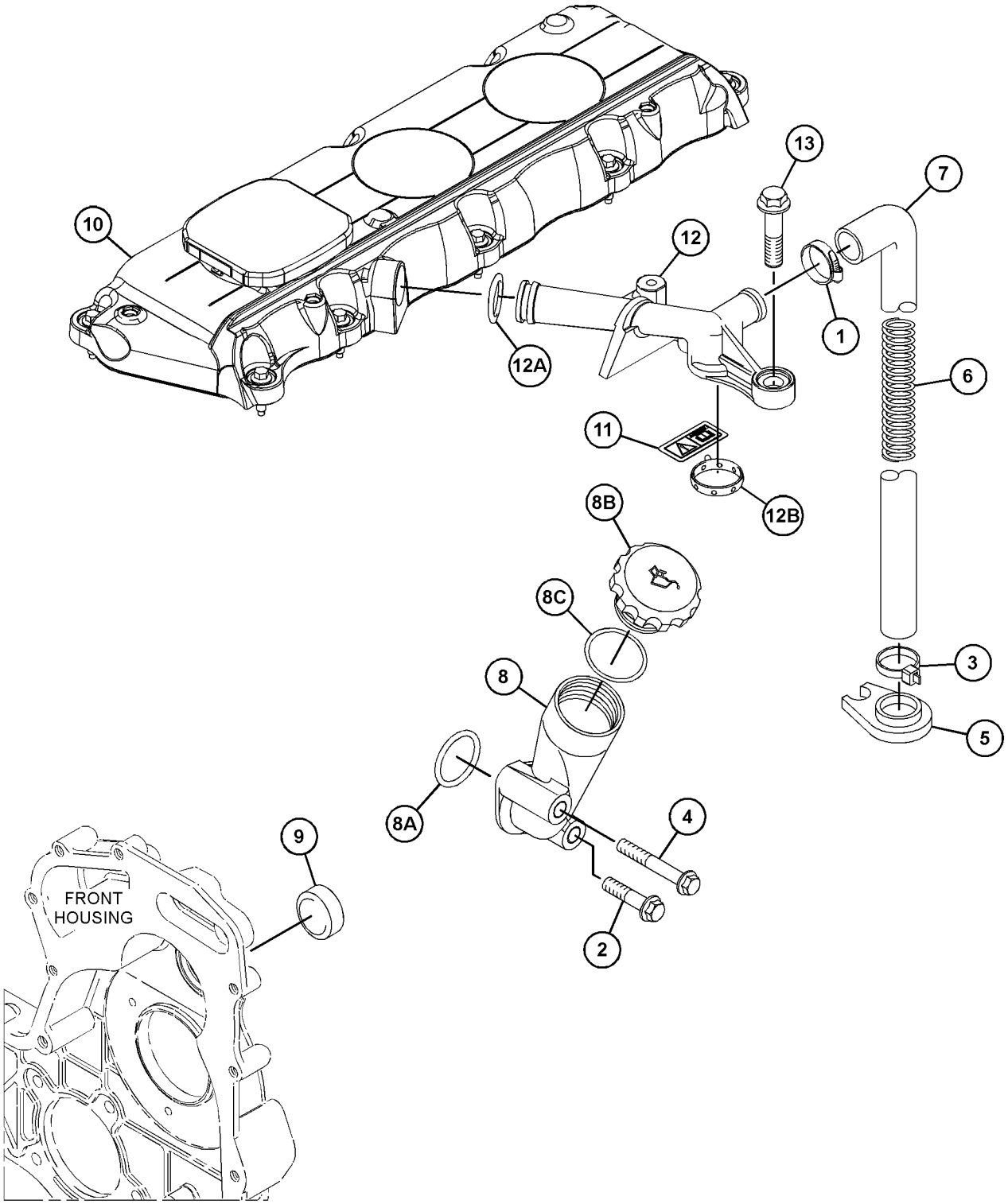

GRAPHIC #1 <END> g06251621

267-9420 COVER GP-VALVE MECHANISM

TYPE 1

SMCS-1107 **i02435538**

NOTE	REF NO	GRAPHIC REF	PART NUMBER	QTY	PART NAME 1 2 3 4 5 6 (PRODUCT LEVEL)	SEE PAGE
M	1	1	**6I-0254**	1	BOLT (M8X1.25X30-MM)	
M	2	1	**6I-0917**	1	BOLT (M6X1X25-MM)	
M	3	1	**6I-4374**	1	BOLT (M8X1.25X60-MM)	
M	4	1	**6I-0846**	3	BOLT (M6X1X14-MM)	
M	5	1	**100-4841**	2	BOLT (M6X1X10-MM)	
	6	1	**230-9125**	1	CONNECTOR	
	6A	1	**150-7732**	1	SEAL-O-RING	
	6B	1	**225-6455**	2	BOLT	
	6C	1	**225-6517**	1	GASKET	
	7	1	**230-9152**	1	FILLER GP-ENGINE OIL	
	7A	1	**6I-1201**	1	SEAL-O-RING	
	7B	1	**130-9888**	1	CAP AS-OIL FILLER (ENGINE)	
	7C	1	**113-1504**	1	SEAL-O-RING	
	11	1	*237-0026*	1	COVER AS	
	11A	1	**225-6451**	1	GASKET (VALVE COVER)	
	11B	1	**225-6455**	10	BOLT	
	11C	1	**225-6456**	1	SPRING	
	11D	1	**225-6461**	1	CAP	
	11E	1	**225-6464**	1	DIAPHRAGM (CRANKCASE PRESSURE CONTACTOR)	
	11F	1	**225-6477**	1	PLATE	
	11G	1	**225-6478**	4	SCREW-MACHINE	
	11H	1	**225-6479**	1	CAP	
	12	1	**237-0769**	1	SHIELD-HEAT	
	13	1	**230-9127**	1	COVER	

M - METRIC PART

267-9420 **COVER GP-VALVE MECHANISM (**contd.**)** **i02435538**

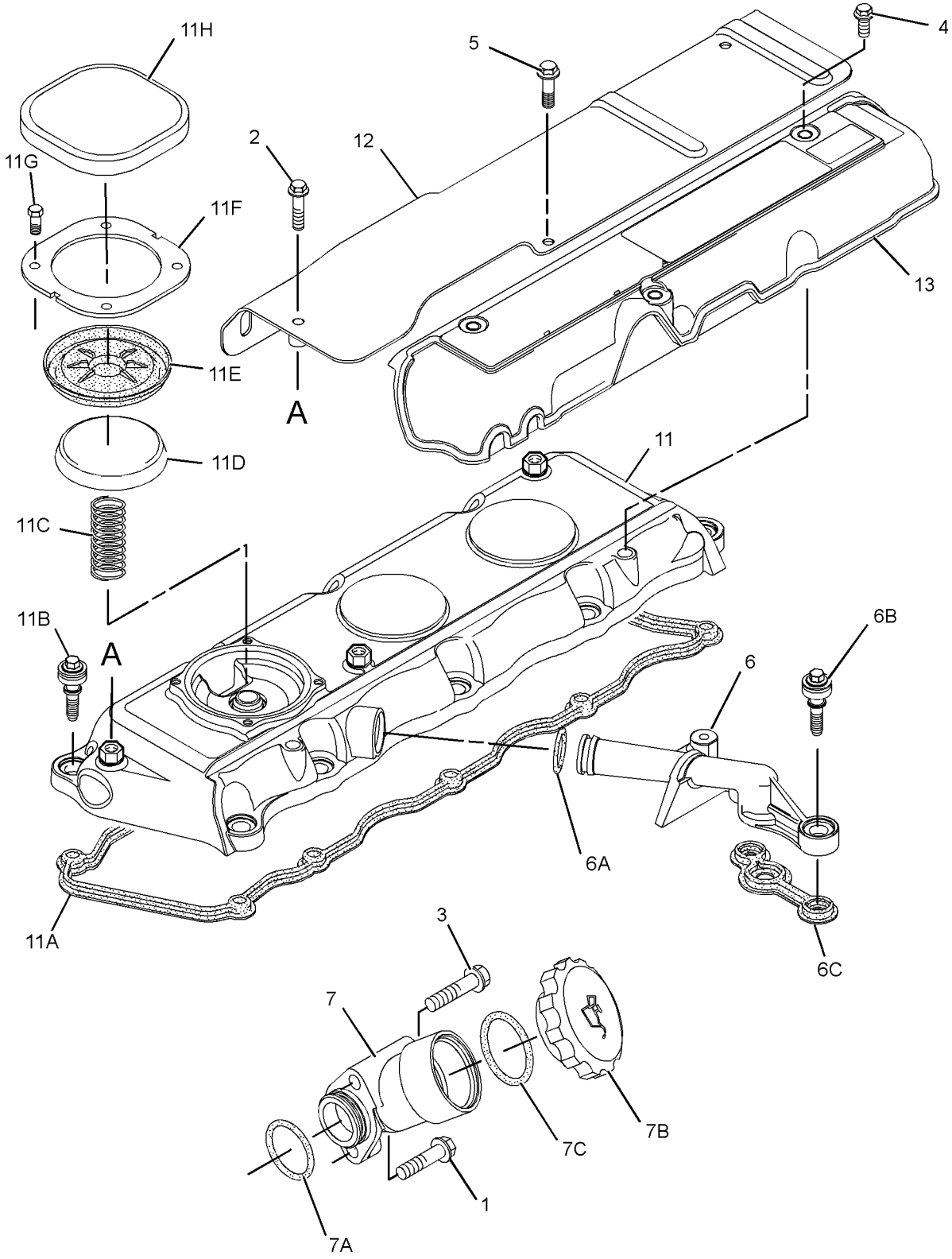

GRAPHIC #1 <END> g01154254

267-9420 COVER GP-VALVE MECHANISM

TYPE 2

SMCS-1107 **i02510606**

NOTE	REF NO	GRAPHIC REF	PART NUMBER	QTY	PART NAME 1 2 3 4 5 6 (PRODUCT LEVEL)	SEE PAGE
M	1	1	**6I-0254**	1	BOLT (M8X1.25X30-MM)	
M	2	1	**6I-0917**	1	BOLT (M6X1X25-MM)	
M	3	1	**6I-4374**	1	BOLT (M8X1.25X60-MM)	
M	4	1	**6I-0846**	3	BOLT (M6X1X14-MM)	
M	5	1	**100-4841**	2	BOLT (M6X1X10-MM)	
C	6	1	**286-3029**	1	BREATHER AS	
	6A	1	**150-7732**	1	SEAL-O-RING	
C	6B	1	**286-3030**	1	RING-SEAL	
	7	1	**230-9152**	1	FILLER GP-ENGINE OIL	
	7A	1	**6I-1201**	1	SEAL-O-RING	
	7B	1	**130-9888**	1	CAP AS-OIL FILLER (ENGINE)	
	7C	1	**113-1504**	1	SEAL-O-RING	
C	11	1	*247-7798*	1	COVER AS	
	11A	1	**225-6451**	1	GASKET (VALVE COVER)	
	11B	1	**225-6455**	10	BOLT	
	11C	1	**225-6456**	1	SPRING	
	11D	1	**225-6461**	1	CAP (CRANKCASE BREATHER)	
	11E	1	**225-6464**	1	DIAPHRAGM (CRANKCASE PRESSURE CONTACTOR)	
	11F	1	**225-6477**	1	PLATE	
	11G	1	**225-6478**	4	SCREW-MACHINE	
	11H	1	**225-6479**	1	CAP (CRANKCASE BREATHER)	
	12	1	**237-0769**	1	SHIELD-HEAT	
	13	1	**230-9127**	1	COVER (INJECTOR)	
CMR	14	1	**100-4838**	2	BOLT (M6X1X20-MM)	

C - CHANGE FROM PREVIOUS TYPE
M - METRIC PART
R - REMANUFACTURED PART MAY BE AVAILABLE

267-9420 **COVER GP-VALVE MECHANISM (**contd.**)** **i02510606**

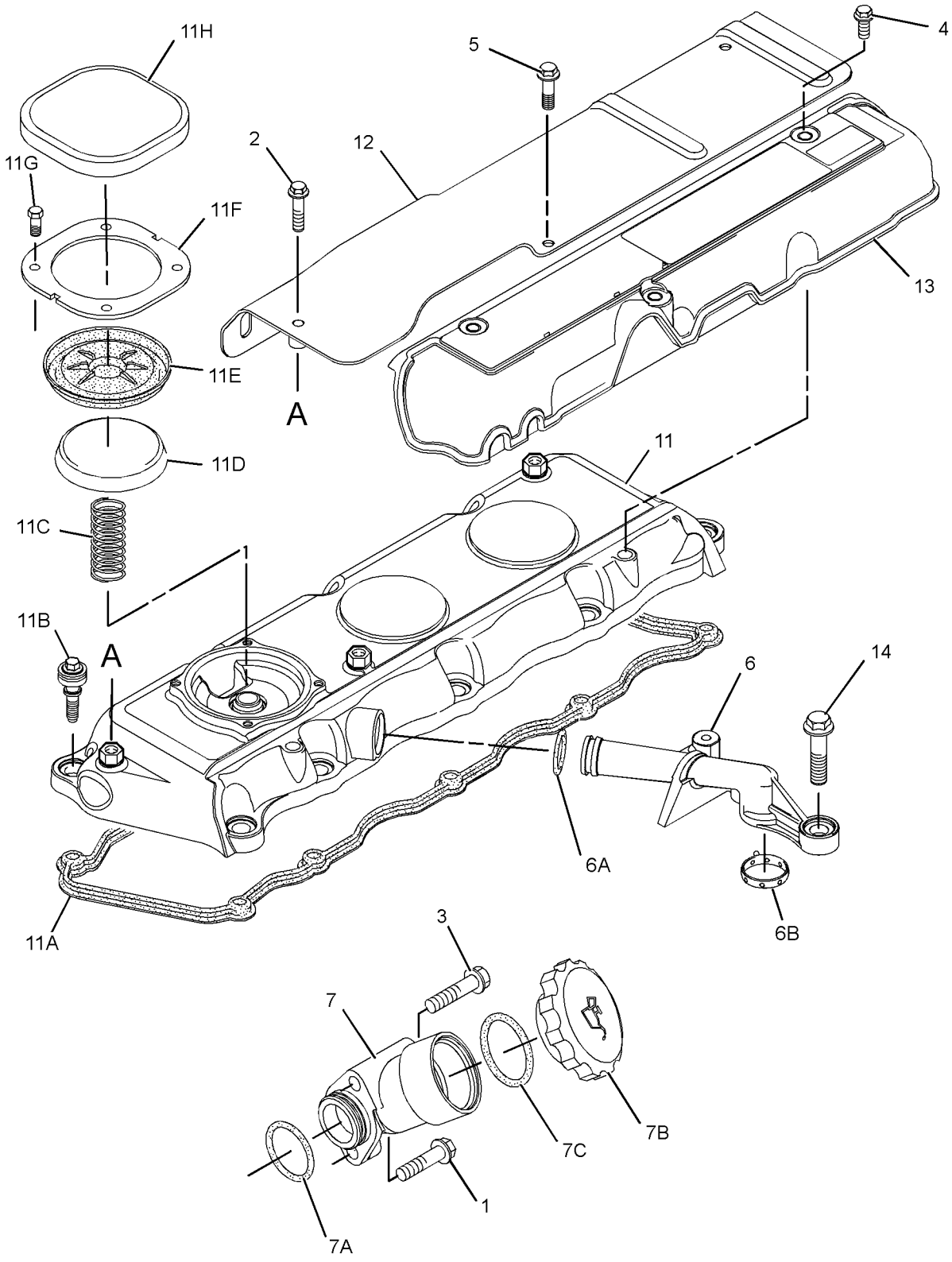

GRAPHIC #1 <END> g01263502

267-9420 COVER GP-VALVE MECHANISM

TYPE 3

SMCS-1107 **i06948886**

NOTE	REF NO	GRAPHIC REF	PART NUMBER	QTY	PART NAME 1 2 3 4 5 6 (PRODUCT LEVEL)	SEE PAGE
M	1	1	**6I-0254**	1	BOLT (M8X1.25X30-MM)	
M	2	1	**6I-0917**	1	BOLT (M6X1X25-MM)	
M	3	1	**6I-4374**	1	BOLT (M8X1.25X60-MM)	
M	4	1	**6I-0846**	3	BOLT (M6X1X14-MM)	
M	5	1	**100-4841**	2	BOLT (M6X1X10-MM)	
	6	1	**286-3029**	1	BREATHER AS	
	6A	1	**150-7732**	1	SEAL-O-RING	
	6B	1	**286-3030**	1	RING-SEAL	
	7	1	**321-2383**	1	FILLER AS	
	7A	1	**306-2337**	1	SEAL-O-RING	
	7B	1	**130-9888**	1	CAP AS-OIL FILLER (ENGINE)	
	7C	1	**113-1504**	1	SEAL-O-RING	
C	11	1	**308-1792**	1	COVER GP-VALVE MECHANISM	
	11A	1	**225-6451**	1	GASKET (VALVE COVER)	
	11B	1	**225-6479**	1	CAP (CRANKCASE BREATHER)	
	11C	1	**225-6456**	1	SPRING	
	11D	1	**225-6461**	1	CAP (CRANKCASE BREATHER)	
	11E	1	**225-6464**	1	DIAPHRAGM (CRANKCASE PRESSURE CONTACTOR)	
	11F	1	**225-6477**	1	PLATE	
	11G	1	**225-6478**	4	SCREW-MACHINE	
	11H	1	**349-2746**	10	BOLT	
	12	1	**237-0769**	1	SHIELD-HEAT	
	13	1	**230-9127**	1	COVER (INJECTOR)	
MR	14	1	**100-4838**	2	BOLT (M6X1X20-MM)	
	15	1	**346-8219**	1	FILM-WARNING (UNIVERSAL WARNING)	

C - CHANGE FROM PREVIOUS TYPE
M - METRIC PART
R - REMANUFACTURED PART MAY BE AVAILABLE

267-9420 **COVER GP-VALVE MECHANISM (**contd.**)** **i06948886**

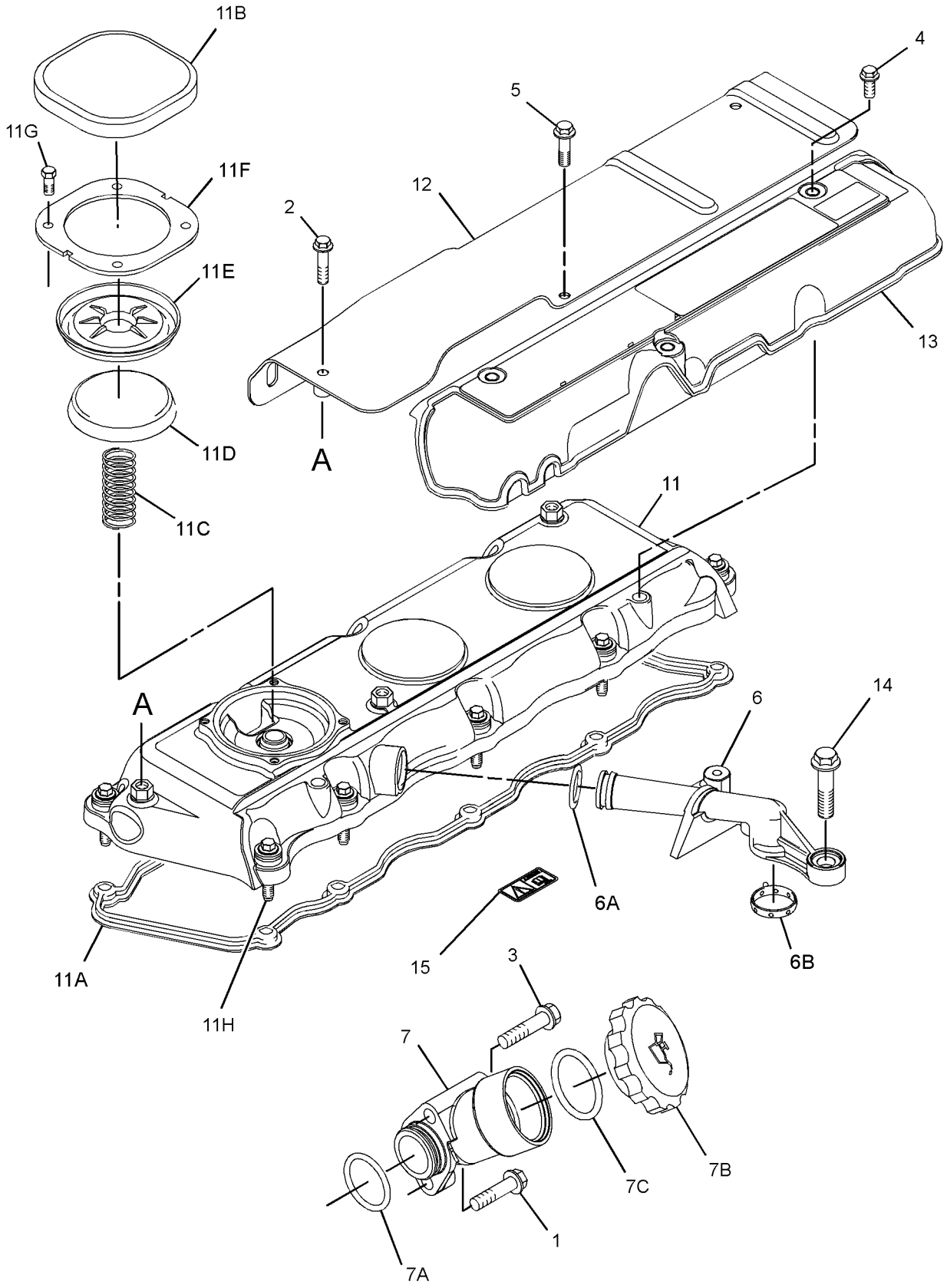

GRAPHIC #1 <END> g06204746

267-9420 COVER GP-VALVE MECHANISM

TYPE 4

SMCS-1107 **i06976172**

NOTE	REF NO	GRAPHIC REF	PART NUMBER	QTY	PART NAME 1 2 3 4 5 6 (PRODUCT LEVEL)	SEE PAGE
M	1	1	**6I-0254**	1	BOLT (M8X1.25X30-MM)	
M	2	1	**6I-0917**	1	BOLT (M6X1X25-MM)	
M	3	1	**6I-4374**	1	BOLT (M8X1.25X60-MM)	
	4	1	**346-8219**	1	FILM-WARNING (UNIVERSAL WARNING)	
M	5	1	**100-4841**	2	BOLT (M6X1X10-MM)	
	6	1	**286-3029**	1	BREATHER AS	
	6A	1	**150-7732**	1	SEAL-O-RING	
	6B	1	**286-3030**	1	RING-SEAL	
	7	1	**321-2383**	1	FILLER AS	
	7A	1	**306-2337**	1	SEAL-O-RING	
	7B	1	**130-9888**	1	CAP AS-OIL FILLER (ENGINE)	
	7C	1	**113-1504**	1	SEAL-O-RING	
C	8	1	**308-1792**	1	COVER GP-VALVE MECHANISM	
	8A	1	**225-6451**	1	GASKET (VALVE COVER)	
	8B	1	**225-6479**	1	CAP (CRANKCASE BREATHER)	
	8C	1	**225-6456**	1	SPRING	
	8D	1	**225-6461**	1	CAP (CRANKCASE BREATHER)	
	8E	1	**225-6464**	1	DIAPHRAGM (CRANKCASE PRESSURE CONTACTOR)	
	8F	1	**225-6477**	1	PLATE	
	8G	1	**225-6478**	4	SCREW-MACHINE	
	8H	1	**349-2746**	10	BOLT	
	9	1	**237-0769**	1	SHIELD-HEAT	
MR	10	1	**100-4838**	2	BOLT (M6X1X20-MM)	

C - CHANGE FROM PREVIOUS TYPE
M - METRIC PART
R - REMANUFACTURED PART MAY BE AVAILABLE

267-9420 **COVER GP-VALVE MECHANISM (**contd.**)** **i06976172**

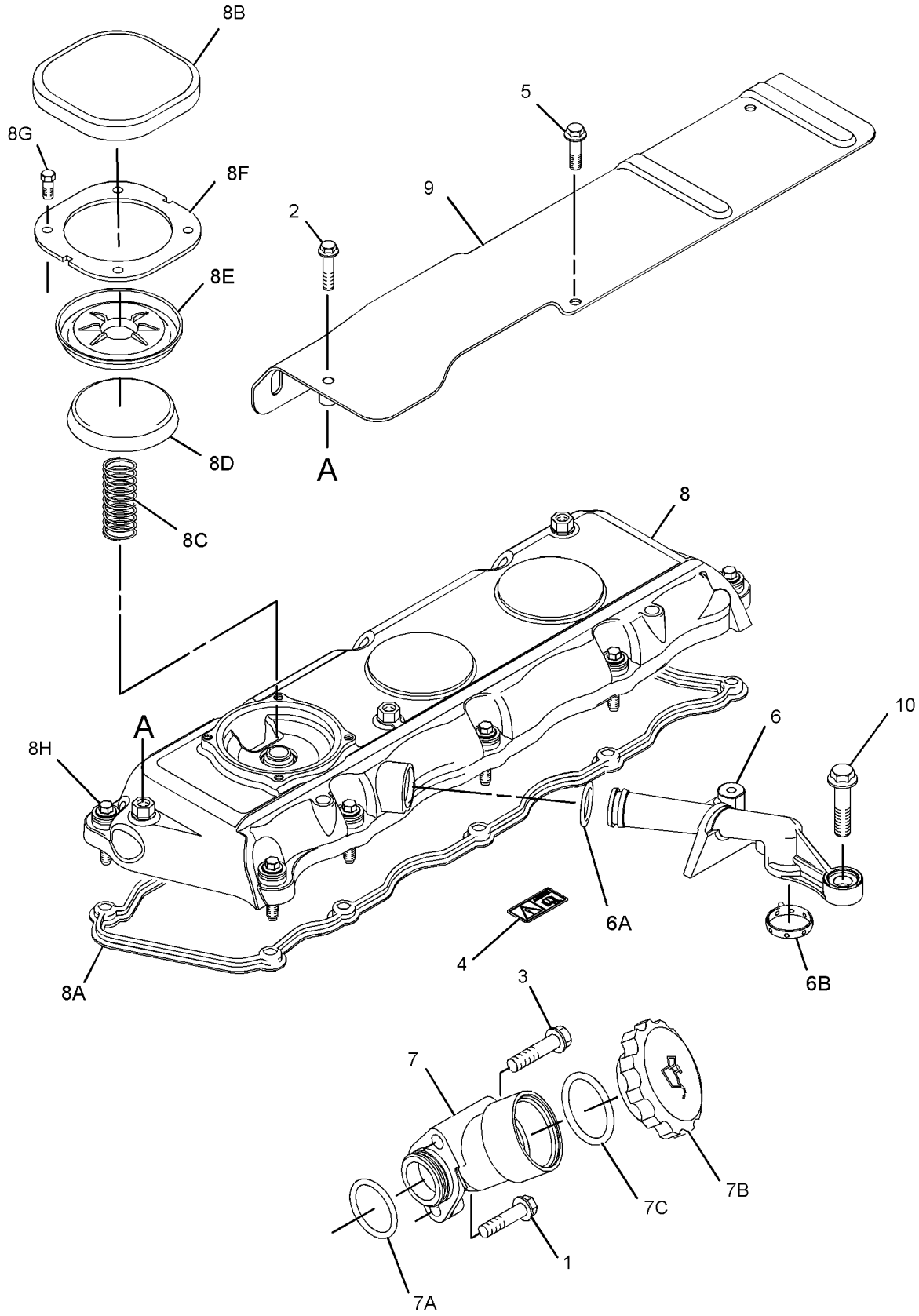

GRAPHIC #1 <END> g06208226

269-3101 COVER GP-VALVE MECHANISM

S/N: 3341-12607

SMCS-1107 **i02593748**

NOTE	REF NO	GRAPHIC REF	PART NUMBER	QTY	PART NAME 1 2 3 4 5 6 (PRODUCT LEVEL)	SEE PAGE
	1	1	**5D-1026**	1	CLAMP-BAND	
M	2	1	**6I-0254**	1	BOLT (M8X1.25X30-MM)	
	3	1	**162-1565**	1	SPRING (CRANKCASE BREATHER HOSE)	
M	4	1	**6I-0846**	3	BOLT (M6X1X14-MM)	
M	5	1	**6I-4374**	1	BOLT (M8X1.25X60-MM)	
	6	1	**7C-1281**	1	BRACKET	
	7	1	**198-9169**	1	HOSE (CRANKCASE BREATHER)	
	8	1	**230-9127**	1	COVER	
C	9	1	**287-8573**	1	PIPE AS	
	10	1	**230-9152**	1	FILLER GP-ENGINE OIL	
	10A	1	**6I-1201**	1	SEAL-O-RING	
	10B	1	**130-9888**	1	CAP AS-OIL FILLER (ENGINE)	
	10C	1	**113-1504**	1	SEAL-O-RING	
	11	1	**247-7799**	1	COVER AS-VALVE	
	11A	1	**136-3608**	1	CAP AS (ENGINE OIL FILLER)	
	11B	1	**124-0506**	1	SEAL	
	11C	1	**225-6451**	1	GASKET (VALVE COVER)	
	11D	1	**225-6455**	10	BOLT	
	11E	1	**225-6456**	1	SPRING	
	11F	1	**225-6461**	1	CAP	
	11G	1	**225-6464**	1	DIAPHRAGM (CRANKCASE PRESSURE CONTACTOR)	
	11H	1	**225-6477**	1	PLATE	
	11J	1	**225-6478**	4	SCREW-MACHINE	
	11K	1	**225-6479**	1	CAP	
CMR	12	1	**100-4838**	2	BOLT (M6X1X20-MM)	

C - CHANGE FROM PREVIOUS TYPE
M - METRIC PART
R - REMANUFACTURED PART MAY BE AVAILABLE

269-3101 **COVER GP-VALVE MECHANISM (**contd.**)** **i02593748**

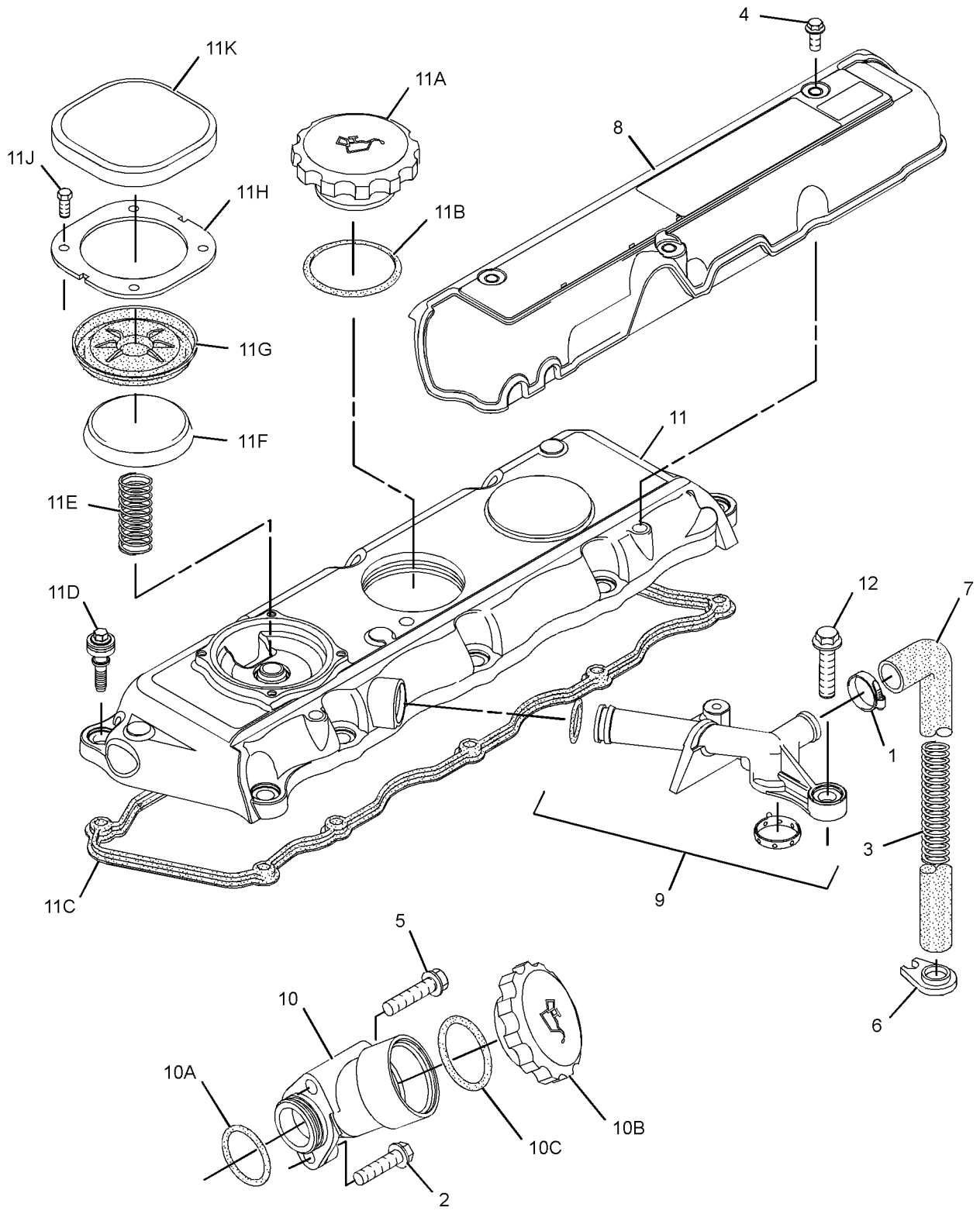

GRAPHIC #1 <END> g01294724

269-3101 COVER GP-VALVE MECHANISM

S/N: 33412608-UP

TYPE 1

SMCS-1107 **i05076295**

NOTE	REF NO	GRAPHIC REF	PART NUMBER	QTY	PART NAME 1 2 3 4 5 6 (PRODUCT LEVEL)	SEE PAGE
	1	1	**5D-1026**	1	CLAMP-BAND	
M	2	1	**6I-0254**	1	BOLT (M8X1.25X30-MM)	
	3	1	**162-1565**	1	SPRING (CRANKCASE BREATHER HOSE)	
M	4	1	**6I-0846**	3	BOLT (M6X1X14-MM)	
M	5	1	**6I-4374**	1	BOLT (M8X1.25X60-MM)	
	6	1	**7C-1281**	1	BRACKET	
	7	1	**198-9169**	1	HOSE (CRANKCASE BREATHER)	
	8	1	**230-9127**	1	COVER	
	9	1	**287-8573**	1	PIPE AS	
	10	1	**230-9152**	1	FILLER GP-ENGINE OIL	
	10A	1	**6I-1201**	1	SEAL-O-RING	
	10B	1	**130-9888**	1	CAP AS-OIL FILLER (ENGINE)	
	10C	1	**113-1504**	1	SEAL-O-RING	
CY	11	1	**308-1393**	1	COVER GP-VALVE MECHANISM	431
MR	12	1	**100-4838**	2	BOLT (M6X1X20-MM)	

PARTS SHOWN IN GRAPHIC(S) WITHOUT A REFERENCE NUMBER ARE NOT SERVICED SEPARATELY

C - CHANGE FROM PREVIOUS TYPE
M - METRIC PART
R - REMANUFACTURED PART MAY BE AVAILABLE
Y - SEPARATE ILLUSTRATION

269-3101 **COVER GP-VALVE MECHANISM (**contd.**)** **i05076295**

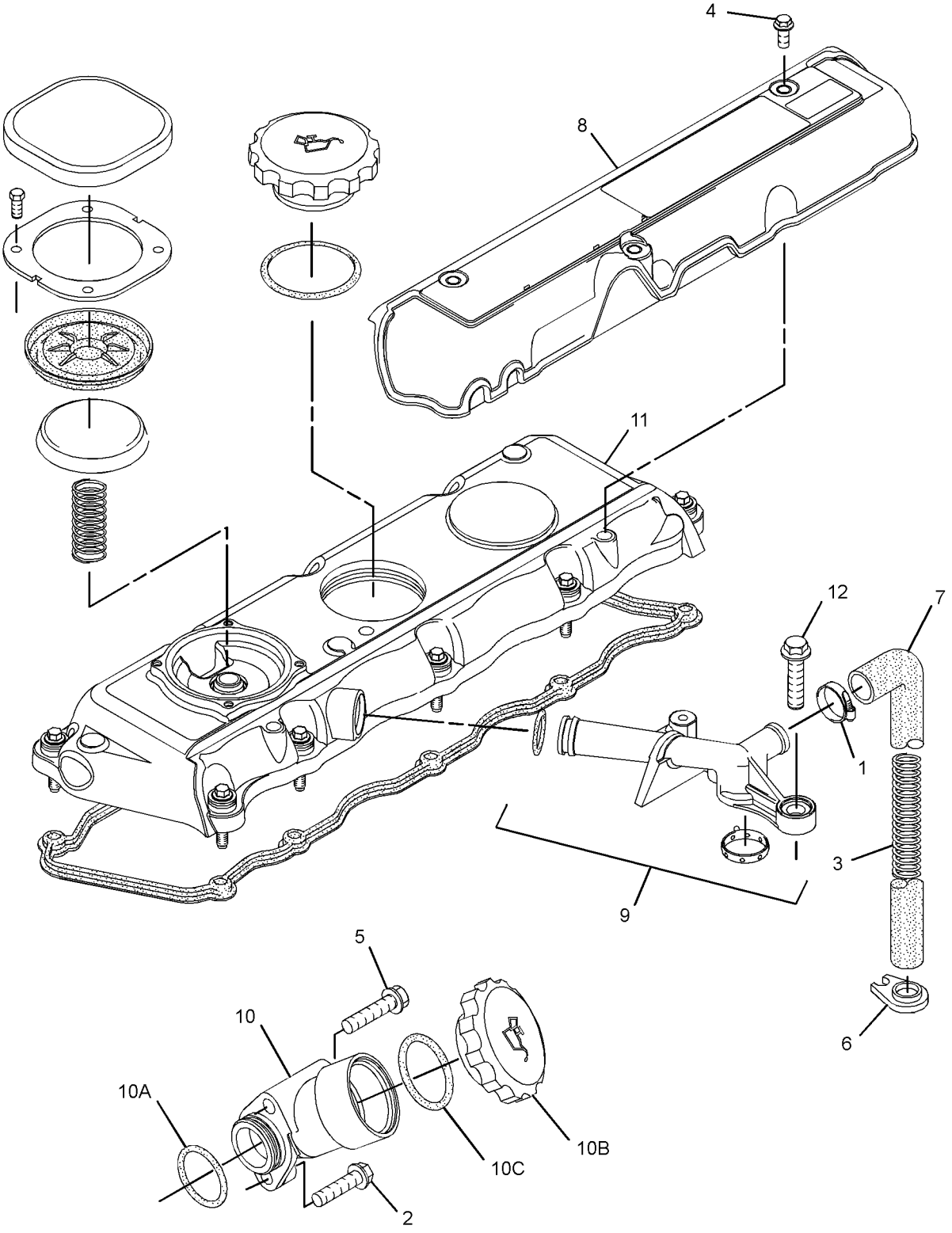

GRAPHIC #1 <END> g03242736

269-3101 COVER GP-VALVE MECHANISM

S/N: 33412608-UP

TYPE 2

SMCS-1107 **i04952733**

NOTE	REF NO	GRAPHIC REF	PART NUMBER	QTY	PART NAME 1 2 3 4 5 6 (PRODUCT LEVEL)	SEE PAGE
	1	1	**5D-1026**	1	CLAMP-BAND	
M	2	1	**6I-0254**	1	BOLT (M8X1.25X30-MM)	
	3	1	**162-1565**	1	SPRING (CRANKCASE BREATHER HOSE)	
M	4	1	**6I-0846**	3	BOLT (M6X1X14-MM)	
M	5	1	**6I-4374**	1	BOLT (M8X1.25X60-MM)	
	6	1	**7C-1281**	1	BRACKET	
	7	1	**198-9169**	1	HOSE (CRANKCASE BREATHER)	
	8	1	**230-9127**	1	COVER	
	9	1	**287-8573**	1	PIPE AS	
C	10	1	**321-2383**	1	FILLER AS	
	10A	1	**306-2337**	1	SEAL-O-RING	
	10B	1	**130-9888**	1	CAP AS-OIL FILLER (ENGINE)	
	10C	1	**113-1504**	1	SEAL-O-RING	
Y	11	1	**308-1393**	1	COVER GP-VALVE MECHANISM	431
MR	12	1	**100-4838**	2	BOLT (M6X1X20-MM)	
	13	1	**217-9039**	1	STRAP-CABLE	

C - CHANGE FROM PREVIOUS TYPE
M - METRIC PART
R - REMANUFACTURED PART MAY BE AVAILABLE
Y - SEPARATE ILLUSTRATION

269-3101 **COVER GP-VALVE MECHANISM (**contd.**)** **i04952733**

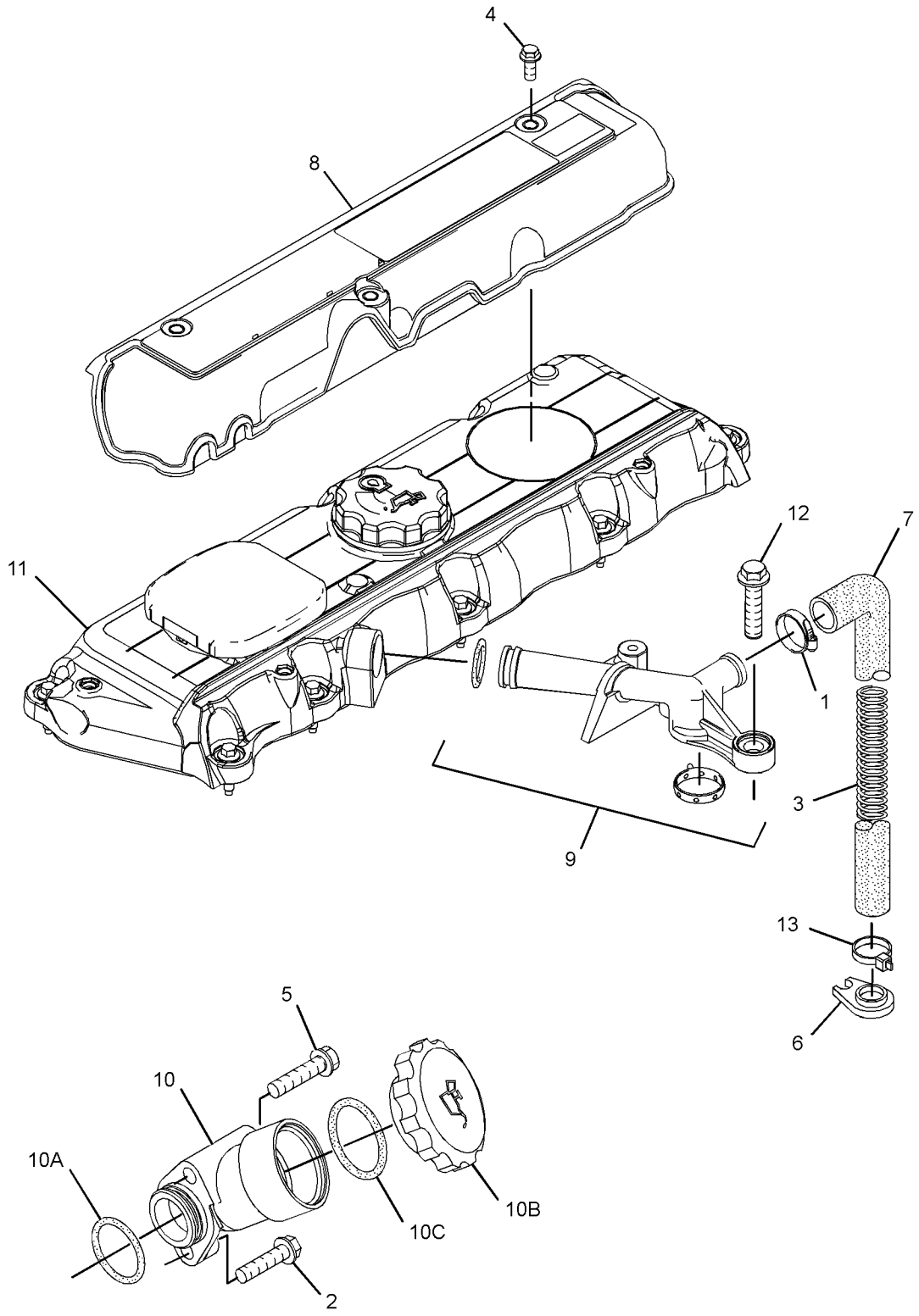

GRAPHIC #1 <END> g03164176

269-3101 COVER GP-VALVE MECHANISM

S/N: 33412608-UP

TYPE 3

SMCS-1107 **i06889290**

NOTE	REF NO	GRAPHIC REF	PART NUMBER	QTY	PART NAME 1 2 3 4 5 6 (PRODUCT LEVEL)	SEE PAGE
	1	1	**5D-1026**	1	CLAMP-BAND	
M	2	1	**6I-0254**	1	BOLT (M8X1.25X30-MM)	
	3	1	**162-1565**	1	SPRING (CRANKCASE BREATHER HOSE)	
M	4	1	**6I-0846**	3	BOLT (M6X1X14-MM)	
M	5	1	**6I-4374**	1	BOLT (M8X1.25X60-MM)	
	6	1	**7C-1281**	1	BRACKET	
MR	7	1	**100-4838**	2	BOLT (M6X1X20-MM)	
	8	1	**198-9169**	1	HOSE (CRANKCASE BREATHER)	
	9	1	**217-9039**	1	STRAP-CABLE	
	10	1	**230-9127**	1	COVER	
	11	1	**287-8573**	1	PIPE AS	
	11A	1	**150-7732**	1	SEAL-O-RING	
	11B	1	**286-3030**	1	RING-SEAL	
	12	1	**321-2383**	1	FILLER AS	
	12A	1	**306-2337**	1	SEAL-O-RING	
	12B	1	**130-9888**	1	CAP AS-OIL FILLER (ENGINE)	
	12C	1	**113-1504**	1	SEAL-O-RING	
	13	1	**346-8219**	1	FILM-WARNING (UNIVERSAL WARNING)	
CY	14	1	*446-9163*	1	COVER GP-CYLINDER HEAD	223

C - CHANGE FROM PREVIOUS TYPE
M - METRIC PART
R - REMANUFACTURED PART MAY BE AVAILABLE
Y - SEPARATE ILLUSTRATION

269-3101 **COVER GP-VALVE MECHANISM (**contd.**)** **i06889290**

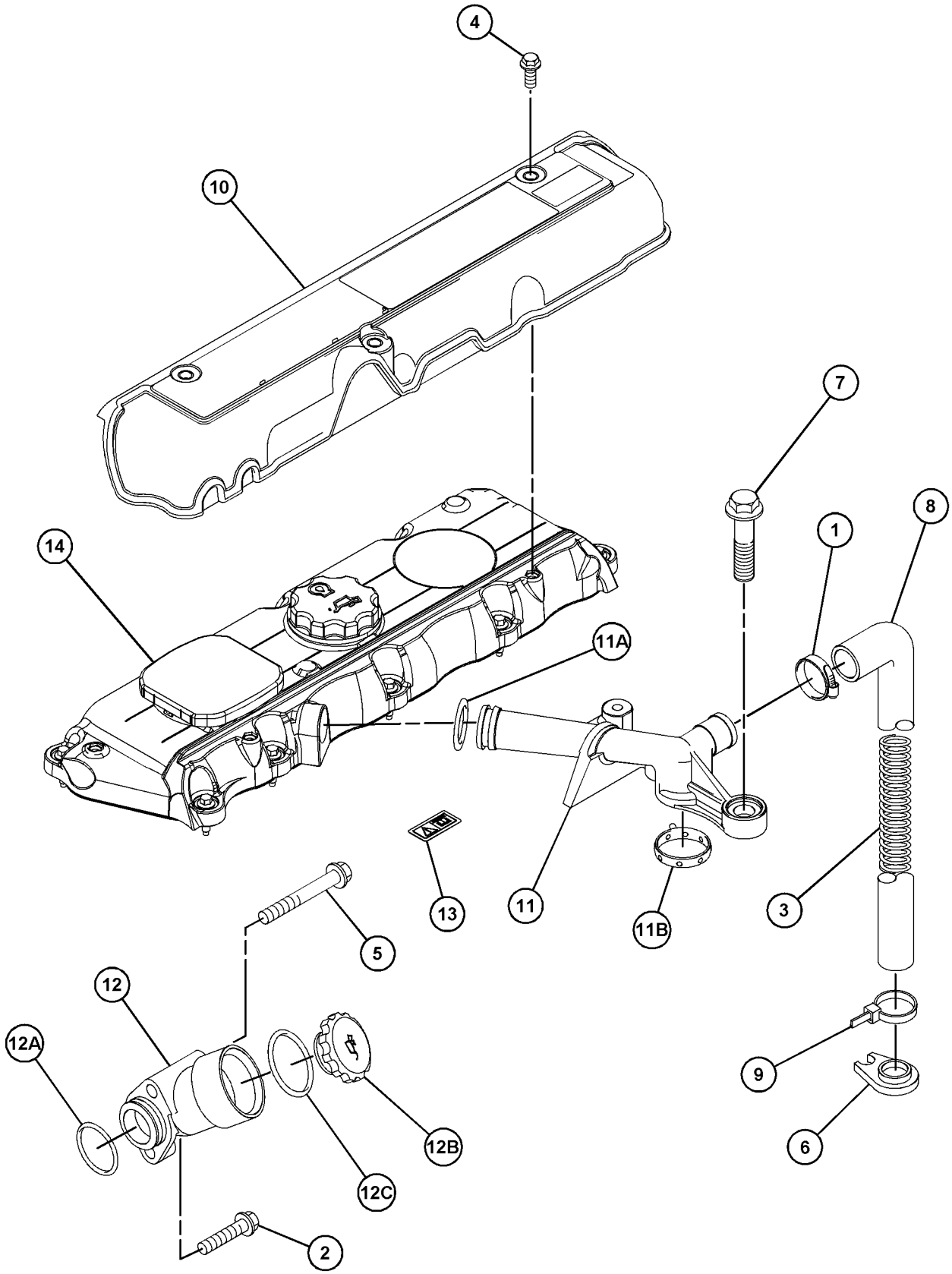

GRAPHIC #1 <END> g06198981

269-3101 COVER GP-VALVE MECHANISM

S/N: 33412608-UP

TYPE 4

SMCS-1107 **i07318736**

NOTE	REF NO	GRAPHIC REF	PART NUMBER	QTY	PART NAME 1 2 3 4 5 6 (PRODUCT LEVEL)	SEE PAGE
	1	1	**5D-1026**	1	CLAMP-BAND	
M	2	1	**6I-0254**	1	BOLT (M8X1.25X30-MM)	
	3	1	**162-1565**	1	SPRING (CRANKCASE BREATHER HOSE)	
	4	1	**346-8219**	1	FILM-WARNING (UNIVERSAL WARNING)	
M	5	1	**6I-4374**	1	BOLT (M8X1.25X60-MM)	
	6	1	**7C-1281**	1	BRACKET	
MR	7	1	**100-4838**	2	BOLT (M6X1X20-MM)	
	8	1	**198-9169**	1	HOSE (CRANKCASE BREATHER)	
	9	1	**217-9039**	1	STRAP-CABLE	
Y	10	1	**521-8086**	1	COVER GP-CYLINDER HEAD	225
	11	1	**287-8573**	1	PIPE AS	
	11A	1	**150-7732**	1	SEAL-O-RING	
	11B	1	**286-3030**	1	RING-SEAL	
	12	1	**321-2383**	1	FILLER AS	
	12A	1	**306-2337**	1	SEAL-O-RING	
	12B	1	**130-9888**	1	CAP AS-OIL FILLER (ENGINE)	
	12C	1	**113-1504**	1	SEAL-O-RING	

M - METRIC PART
R - REMANUFACTURED PART MAY BE AVAILABLE
Y - SEPARATE ILLUSTRATION

269-3101 **COVER GP-VALVE MECHANISM (**contd.**)** **i07318736**

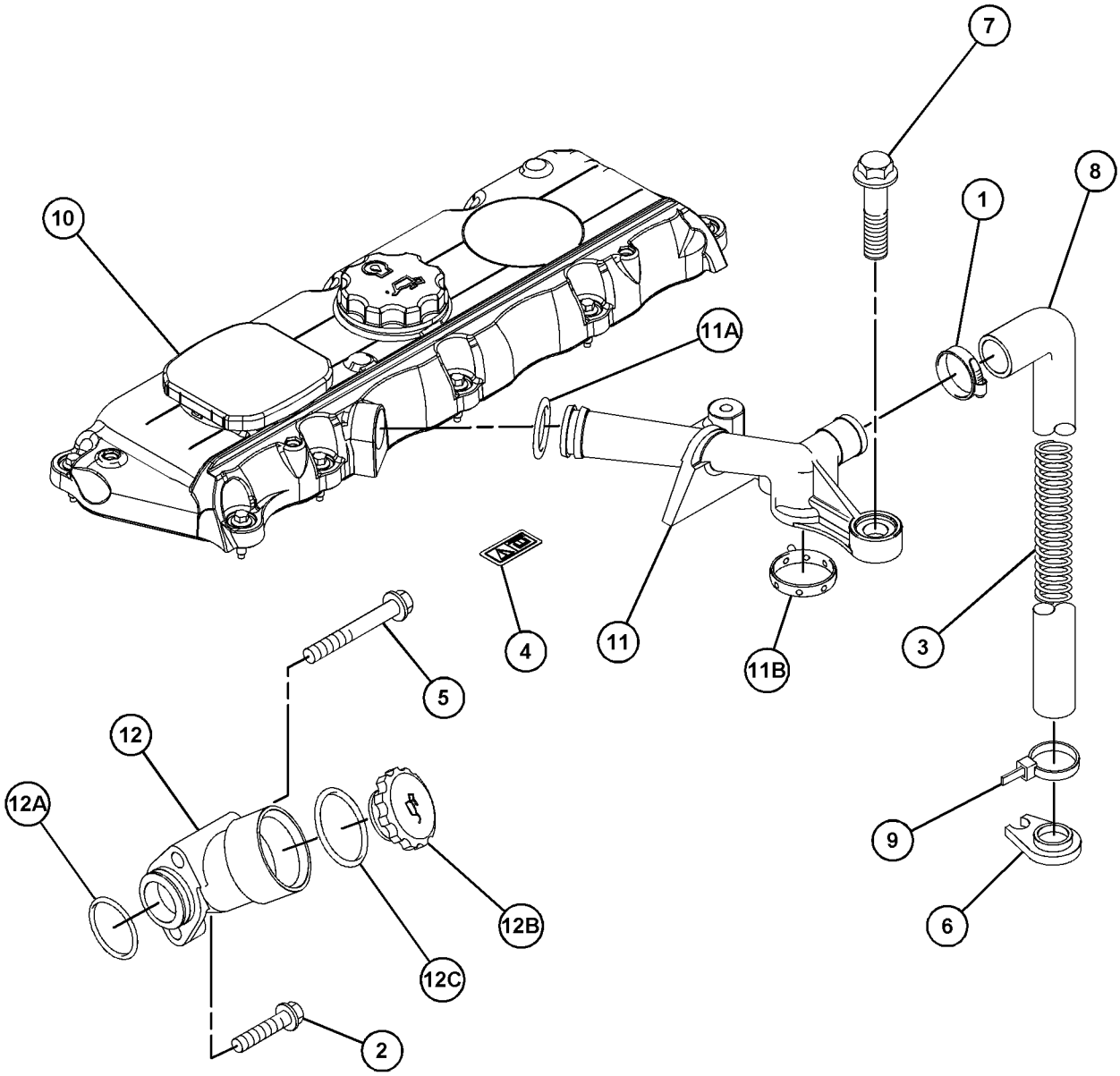

GRAPHIC #1 <END> g06251634

270-4368 COVER GP-VALVE MECHANISM

TYPE 1

SMCS-1107 **i02336620**

NOTE	REF NO	GRAPHIC REF	PART NUMBER	QTY	PART NAME 1 2 3 4 5 6 (PRODUCT LEVEL)	SEE PAGE
M	1	1	**6I-0291**	3	NUT (M8X1.25-THD)	
M	2	1	**6I-0846**	3	BOLT (M6X1X14-MM)	
	3	1	**7C-1281**	1	BRACKET	
	4	1	**5D-1026**	1	CLAMP-BAND	
M	5	1	**101-3877**	3	STUD (M8X1.25X37-MM)	
	6	1	**162-1565**	1	SPRING (CRANKCASE BREATHER HOSE)	
	7	1	**198-8645**	1	HOSE (CRANKCASE BREATHER)	
	8	1	**221-1139**	1	GASKET-FILLER	
	9	1	**225-6522**	1	PLUG-CUP	
	10	1	**230-3478**	1	FILLER AS-OIL	
	10A	1	**130-9888**	1	CAP AS-OIL FILLER (ENGINE)	
	10B	1	**113-1504**	1	SEAL-O-RING	
	11	1	**230-9127**	1	COVER	
	12	1	**230-9144**	1	CONNECTOR	
	12A	1	**150-7732**	1	SEAL-O-RING	
	12B	1	**225-6455**	2	BOLT	
	12C	1	**225-6517**	1	GASKET	
	13	1	**249-5230**	1	COVER AS-VALVE	
	13A	1	**225-6451**	1	GASKET (VALVE COVER)	
	13B	1	**225-6455**	10	BOLT	
	13C	1	**225-6456**	1	SPRING	
	13D	1	**225-6461**	1	CAP	
	13E	1	**225-6464**	1	DIAPHRAGM (CRANKCASE PRESSURE CONTACTOR)	
	13F	1	**225-6477**	1	PLATE	
	13G	1	**225-6478**	4	SCREW-MACHINE	
	13H	1	**225-6479**	1	CAP	

M - METRIC PART

270-4368 **COVER GP-VALVE MECHANISM (**contd.**)** **i02336620**

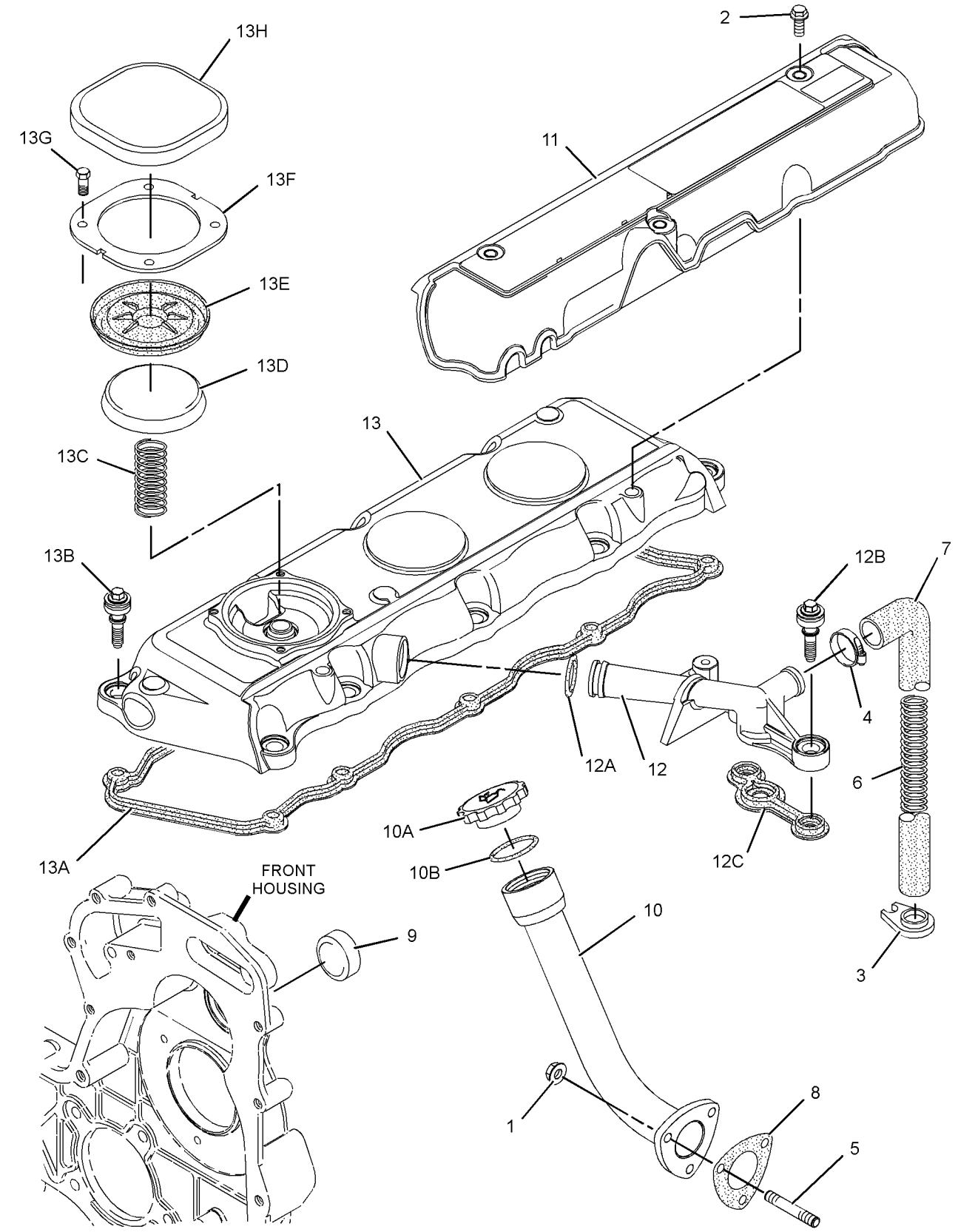

GRAPHIC #1 <END> g01173172

270-4368 COVER GP-VALVE MECHANISM

TYPE 2

SMCS-1107 **i02554656**

NOTE	REF NO	GRAPHIC REF	PART NUMBER	QTY	PART NAME 1 2 3 4 5 6 (PRODUCT LEVEL)	SEE PAGE
M	1	1	**6I-0291**	3	NUT (M8X1.25-THD)	
M	2	1	**6I-0846**	3	BOLT (M6X1X14-MM)	
	3	1	**7C-1281**	1	BRACKET	
	4	1	**5D-1026**	1	CLAMP-BAND	
M	5	1	**101-3877**	3	STUD (M8X1.25X37-MM)	
	6	1	**162-1565**	1	SPRING (CRANKCASE BREATHER HOSE)	
	7	1	**198-8645**	1	HOSE (CRANKCASE BREATHER)	
	8	1	**221-1139**	1	GASKET-FILLER	
	9	1	**225-6522**	1	PLUG-CUP	
	10	1	**230-3478**	1	FILLER AS-OIL	
	10A	1	**130-9888**	1	CAP AS-OIL FILLER (ENGINE)	
	10B	1	**113-1504**	1	SEAL-O-RING	
	11	1	**230-9127**	1	COVER	
C	12	1	**287-8573**	1	PIPE AS	
	13	1	**249-5230**	1	COVER AS-VALVE	
	13A	1	**225-6451**	1	GASKET (VALVE COVER)	
	13B	1	**225-6455**	10	BOLT	
	13C	1	**225-6456**	1	SPRING	
	13D	1	**225-6461**	1	CAP	
	13E	1	**225-6464**	1	DIAPHRAGM (CRANKCASE PRESSURE CONTACTOR)	
	13F	1	**225-6477**	1	PLATE	
	13G	1	**225-6478**	4	SCREW-MACHINE	
	13H	1	**225-6479**	1	CAP	
CMR	14	1	**100-4838**	2	BOLT (M6X1X20-MM)	

C - CHANGE FROM PREVIOUS TYPE
M - METRIC PART
R - REMANUFACTURED PART MAY BE AVAILABLE

270-4368 **COVER GP-VALVE MECHANISM (**contd.**)** **i02554656**

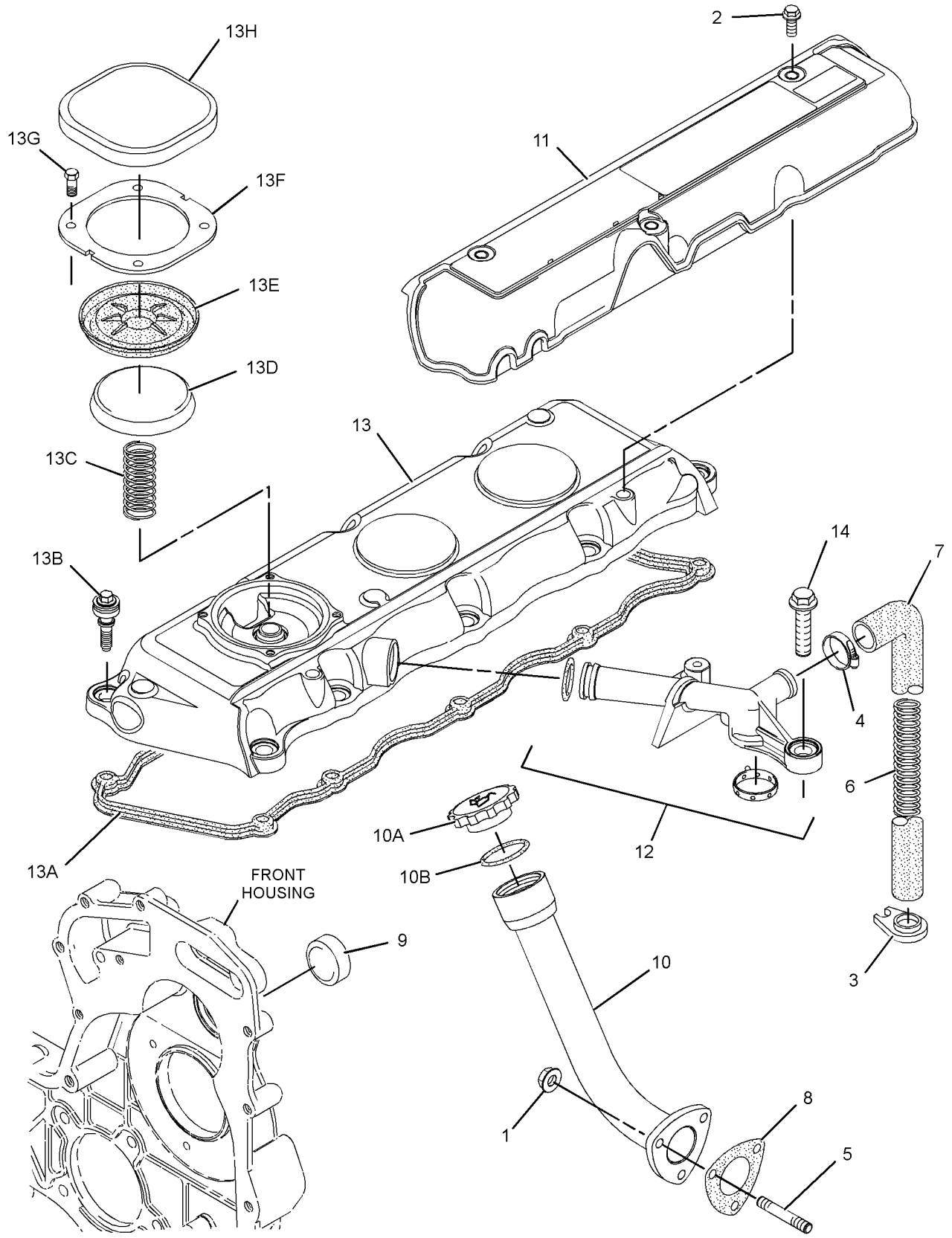

GRAPHIC #1 <END> g01312852

270-4368 COVER GP-VALVE MECHANISM

TYPE 3

SMCS-1107 **i03405544**

NOTE	REF NO	GRAPHIC REF	PART NUMBER	QTY	PART NAME 1 2 3 4 5 6 (PRODUCT LEVEL)	SEE PAGE
M	1	1	**6I-0291**	3	NUT (M8X1.25-THD)	
M	2	1	**6I-0846**	3	BOLT (M6X1X14-MM)	
	3	1	**7C-1281**	1	BRACKET	
	4	1	**5D-1026**	1	CLAMP-BAND	
M	5	1	**101-3877**	3	STUD (M8X1.25X37-MM)	
	6	1	**162-1565**	1	SPRING (CRANKCASE BREATHER HOSE)	
	7	1	**198-8645**	1	HOSE (CRANKCASE BREATHER)	
	8	1	**221-1139**	1	GASKET-FILLER	
	9	1	**225-6522**	1	PLUG-CUP	
	10	1	**341-2238**	1	FILLER AS-OIL	
	10A	1	**130-9888**	1	CAP AS-OIL FILLER (ENGINE)	
	10B	1	**113-1504**	1	SEAL-O-RING	
	11	1	**230-9127**	1	COVER	
	12	1	**287-8573**	1	PIPE AS	
C	13	1	**308-1381**	1	COVER GP-VALVE MECHANISM	
	13A	1	**225-6451**	1	GASKET (VALVE COVER)	
	13B	1	**225-6479**	1	CAP	
	13C	1	**225-6456**	1	SPRING	
	13D	1	**225-6461**	1	CAP	
	13E	1	**225-6464**	1	DIAPHRAGM (CRANKCASE PRESSURE CONTACTOR)	
	13F	1	**225-6477**	1	PLATE	
	13G	1	**225-6478**	4	SCREW-MACHINE	
MR	14	1	**100-4838**	2	BOLT (M6X1X20-MM)	

C - CHANGE FROM PREVIOUS TYPE
M - METRIC PART
R - REMANUFACTURED PART MAY BE AVAILABLE

270-4368 **COVER GP-VALVE MECHANISM (**contd.**)** **i03405544**

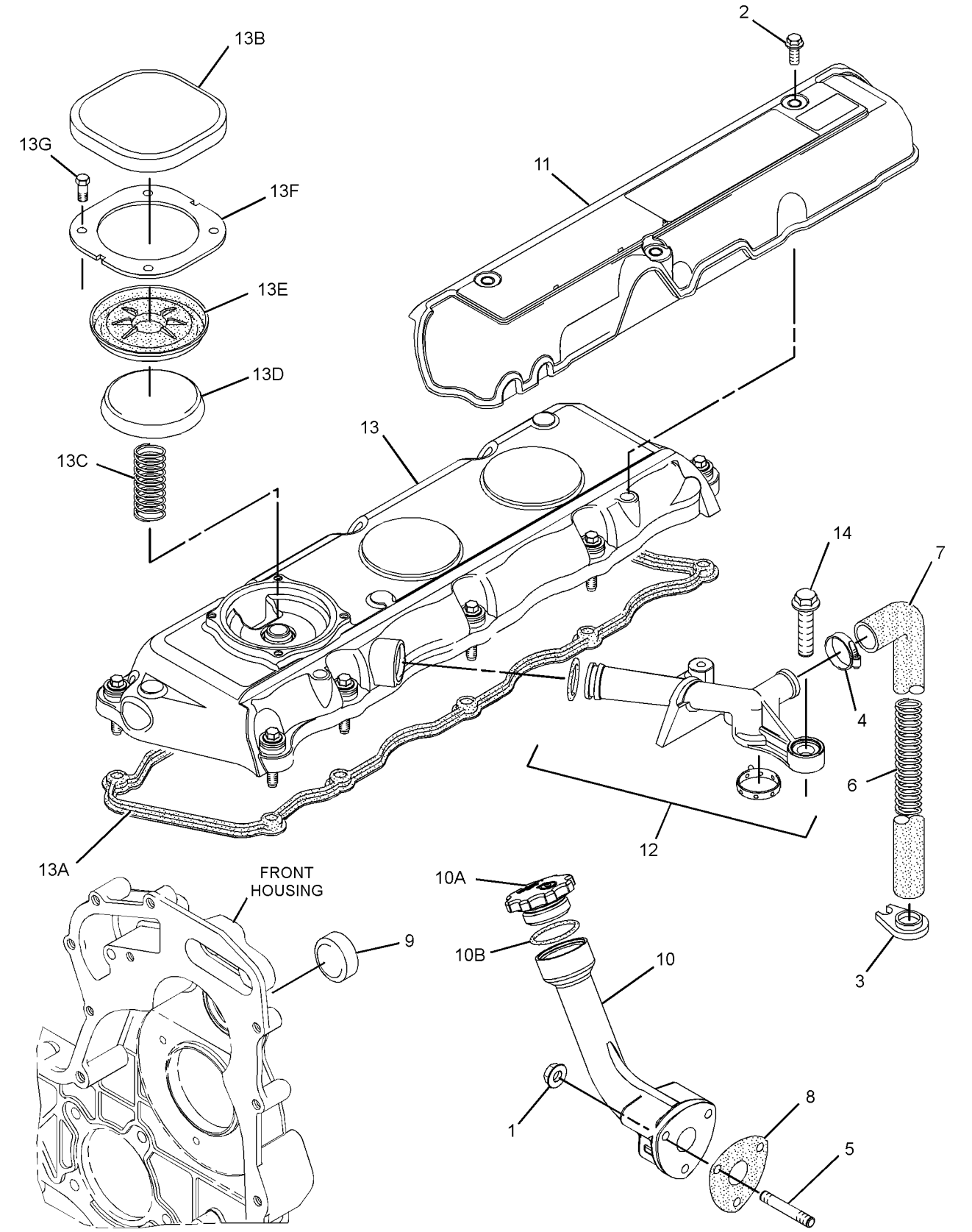

GRAPHIC #1 <END> g01770276

270-4368 COVER GP-VALVE MECHANISM

TYPE 4

SMCS-1107 **i04952735**

NOTE	REF NO	GRAPHIC REF	PART NUMBER	QTY	PART NAME 1 2 3 4 5 6 (PRODUCT LEVEL)	SEE PAGE
MR	1	1	**100-4838**	2	BOLT (M6X1X20-MM)	
M	2	1	**6I-0846**	3	BOLT (M6X1X14-MM)	
	3	1	**7C-1281**	1	BRACKET	
	4	1	**5D-1026**	1	CLAMP-BAND	
M	5	1	**6I-0291**	3	NUT (M8X1.25-THD)	
	6	1	**162-1565**	1	SPRING (CRANKCASE BREATHER HOSE)	
	7	1	**198-8645**	1	HOSE (CRANKCASE BREATHER)	
Y	8	1	**308-1381**	1	COVER GP-VALVE MECHANISM	430
	9	1	**225-6522**	1	PLUG-CUP	
	10	1	**341-2238**	1	FILLER AS-OIL	
	10A	1	**130-9888**	1	CAP AS-OIL FILLER (ENGINE)	
	10B	1	**113-1504**	1	SEAL-O-RING	
	11	1	**230-9127**	1	COVER	
	12	1	**287-8573**	1	PIPE AS	
	12A	1	**150-7732**	1	SEAL-O-RING	
	12B	1	**286-3030**	1	RING-SEAL	
	13	1	**154-6015**	3	STUD	
	14	1	**221-1139**	1	GASKET-FILLER	
	15	1	**217-9039**	1	STRAP-CABLE	

M - METRIC PART
R - REMANUFACTURED PART MAY BE AVAILABLE
Y - SEPARATE ILLUSTRATION

270-4368 **COVER GP-VALVE MECHANISM (**contd.**)** **i04952735**

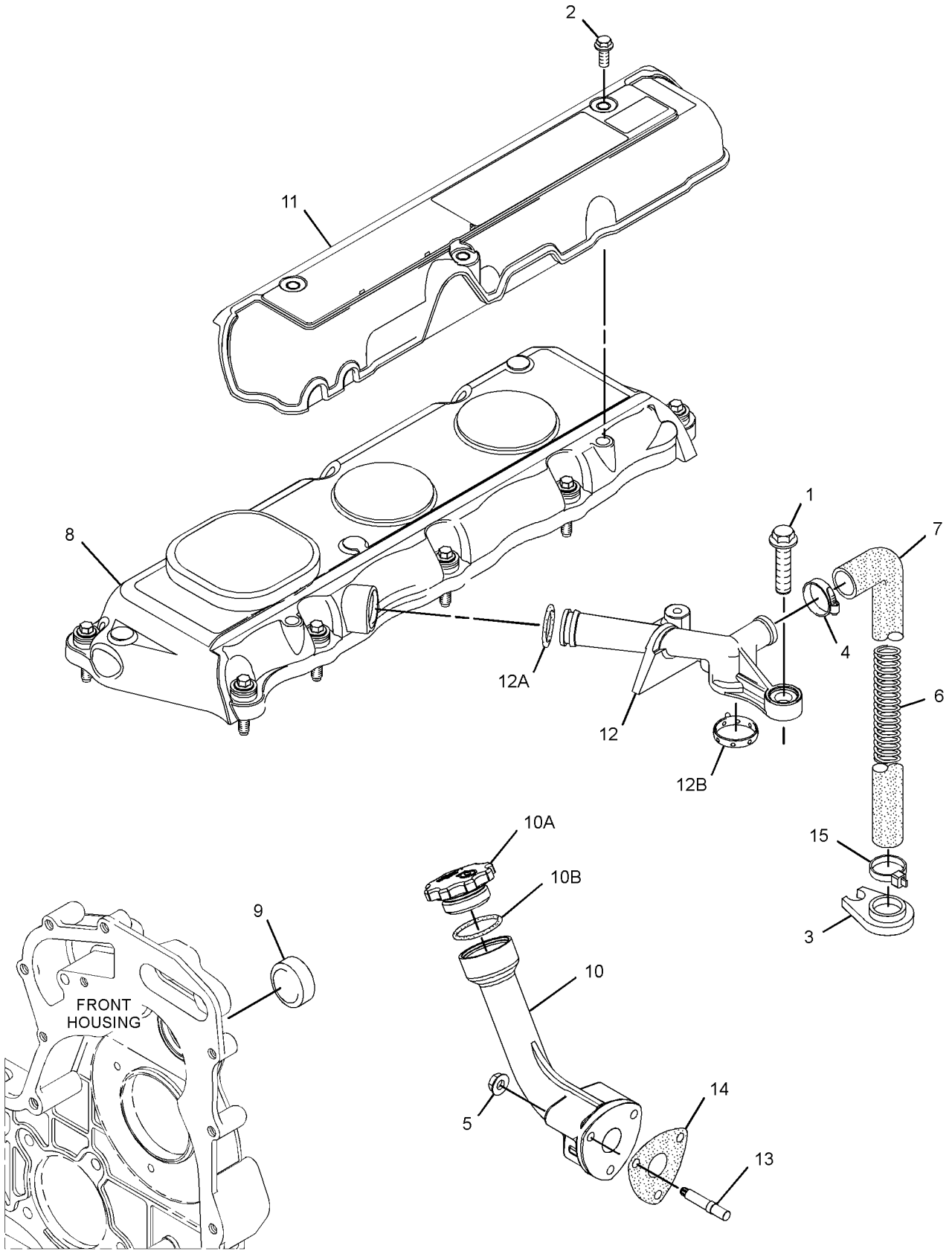

GRAPHIC #1 <END> g03189737

270-4368 COVER GP-VALVE MECHANISM

TYPE 5

SMCS-1107 **i06948974**

NOTE	REF NO	GRAPHIC REF	PART NUMBER	QTY	PART NAME 1 2 3 4 5 6 (PRODUCT LEVEL)	SEE PAGE
MR	1	1	**100-4838**	2	BOLT (M6X1X20-MM)	
	2	1	**346-8219**	1	FILM-WARNING (UNIVERSAL WARNING)	
	3	1	**7C-1281**	1	BRACKET	
	4	1	**5D-1026**	1	CLAMP-BAND	
M	5	1	**6I-0291**	3	NUT (M8X1.25-THD)	
	6	1	**162-1565**	1	SPRING (CRANKCASE BREATHER HOSE)	
	7	1	**198-8645**	1	HOSE (CRANKCASE BREATHER)	
CY	8	1	**446-9162**	1	COVER GP-CYLINDER HEAD	222
	9	1	**225-6522**	1	PLUG-CUP	
	10	1	**341-2238**	1	FILLER AS-OIL	
	10A	1	**130-9888**	1	CAP AS-OIL FILLER (ENGINE)	
	10B	1	**113-1504**	1	SEAL-O-RING	
	11	1	**217-9039**	1	STRAP-CABLE	
	12	1	**287-8573**	1	PIPE AS	
	12A	1	**150-7732**	1	SEAL-O-RING	
	12B	1	**286-3030**	1	RING-SEAL	
	13	1	**154-6015**	3	STUD	
	14	1	**221-1139**	1	GASKET-FILLER	

C - CHANGE FROM PREVIOUS TYPE
M - METRIC PART
R - REMANUFACTURED PART MAY BE AVAILABLE
Y - SEPARATE ILLUSTRATION

270-4368 **COVER GP-VALVE MECHANISM (**contd.**)** **i06948974**

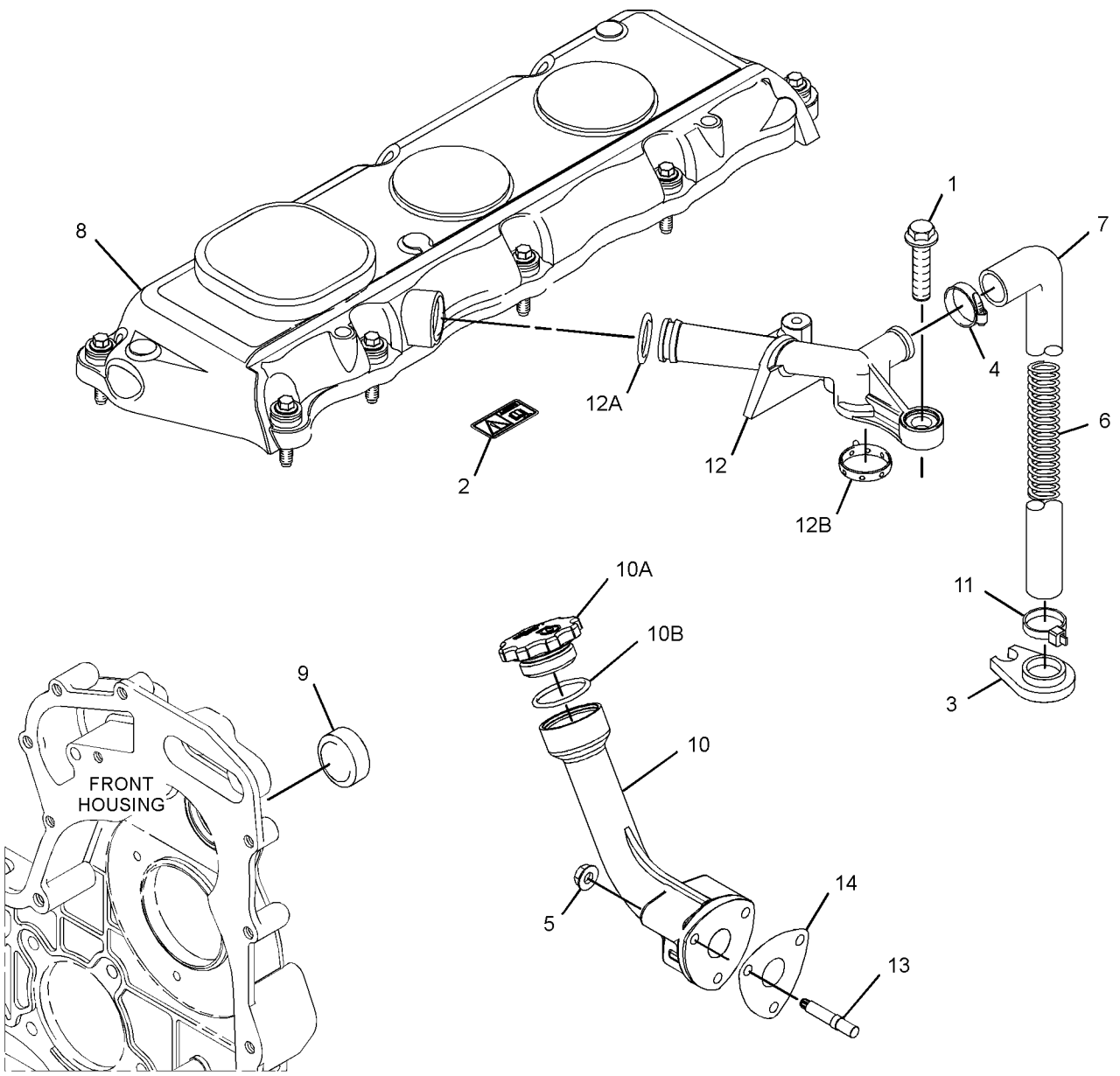

GRAPHIC #1 <END> g06207528

270-8904 COVER GP-VALVE MECHANISM

ALSO AN ATTACHMENT

TYPE 1

SMCS-1107 **i02359030**

NOTE	REF NO	GRAPHIC REF	PART NUMBER	QTY	PART NAME 1 2 3 4 5 6 (PRODUCT LEVEL)	SEE PAGE
M	1	1	**6I-0254**	1	BOLT (M8X1.25X30-MM)	
M	2	1	**6I-0846**	3	BOLT (M6X1X14-MM)	
M	3	1	**6I-4374**	1	BOLT (M8X1.25X60-MM)	
	4	1	**7C-1281**	1	BRACKET	
	5	1	**5D-1026**	1	CLAMP-BAND	
	6	1	**162-1565**	1	SPRING (CRANKCASE BREATHER HOSE)	
	7	1	**198-9169**	1	HOSE (CRANKCASE BREATHER)	
	8	1	**230-9127**	1	COVER (INJECTOR)	
	9	1	**230-9144**	1	CONNECTOR (BREATHER)	
	9A	1	**150-7732**	1	SEAL-O-RING	
	9B	1	**225-6455**	2	BOLT (ISOLATOR)	
	9C	1	**225-6517**	1	GASKET	
	10	1	**230-9152**	1	FILLER GP-ENGINE OIL	
	10A	1	**6I-1201**	1	SEAL-O-RING	
	10B	1	**130-9888**	1	CAP AS-OIL FILLER (ENGINE)	
	10C	1	**113-1504**	1	SEAL-O-RING	
	11	1	**249-5230**	1	COVER AS-VALVE	
	11A	1	**225-6451**	1	GASKET (VALVE COVER)	
	11B	1	**225-6455**	10	BOLT (ISOLATOR)	
	11C	1	**225-6456**	1	SPRING (CRANKCASE BREATHER)	
	11D	1	**225-6461**	1	CAP (CRANKCASE BREATHER)	
	11E	1	**225-6464**	1	DIAPHRAGM (CRANKCASE PRESSURE CONTACTOR)	
	11F	1	**225-6477**	1	PLATE	
	11G	1	**225-6478**	4	SCREW-MACHINE	
	11H	1	**225-6479**	1	CAP (CRANKCASE BREATHER)	

M - METRIC PART

270-8904 **COVER GP-VALVE MECHANISM (**contd.**)** **i02359030**

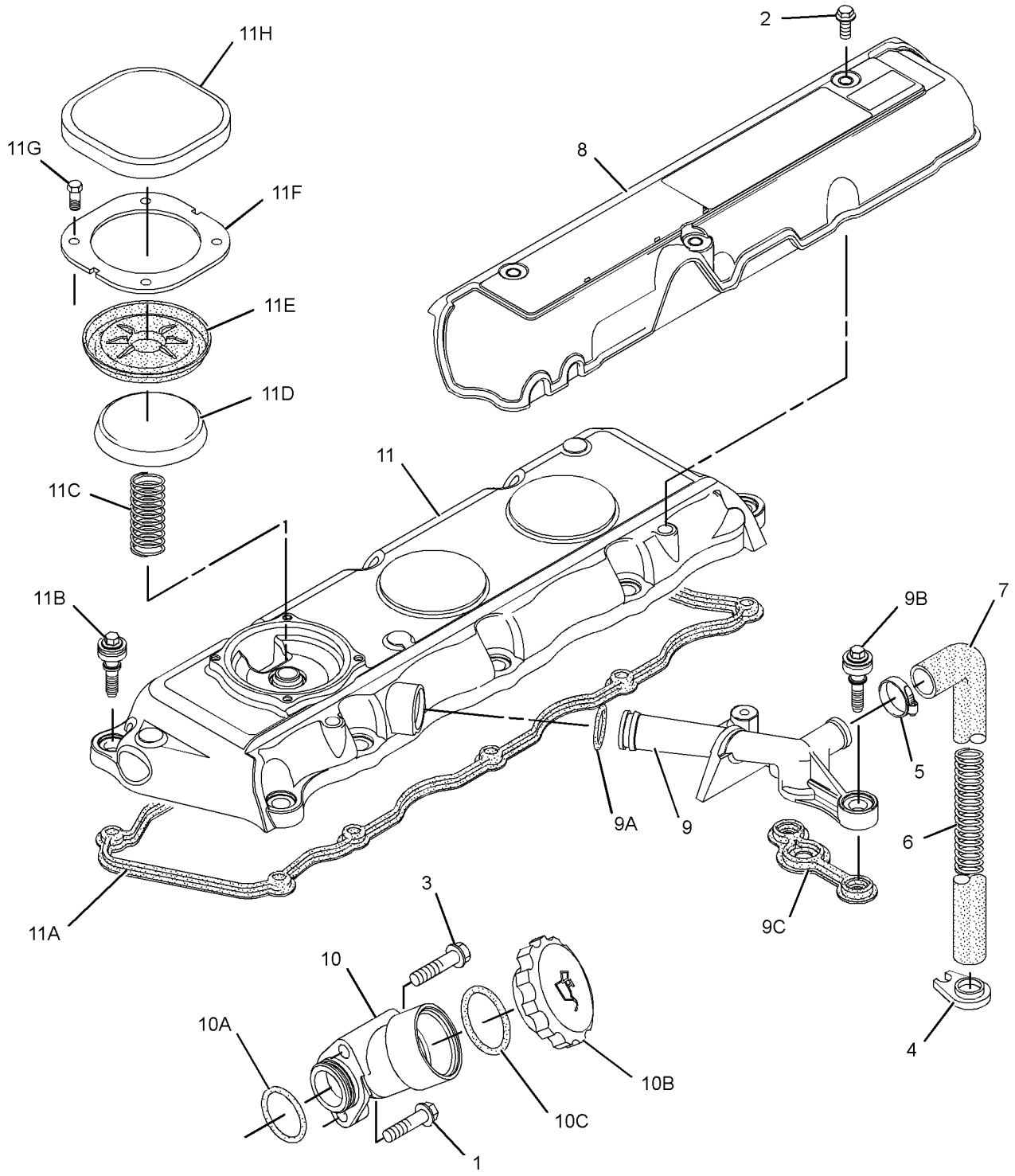

GRAPHIC #1 <END> g01175141

270-8904 COVER GP-VALVE MECHANISM

ALSO AN ATTACHMENT

TYPE 2

SMCS-1107 **i02510627**

NOTE	REF NO	GRAPHIC REF	PART NUMBER	QTY	PART NAME 1 2 3 4 5 6 (PRODUCT LEVEL)	SEE PAGE
M	1	1	**6I-0254**	1	BOLT (M8X1.25X30-MM)	
M	2	1	**6I-0846**	3	BOLT (M6X1X14-MM)	
M	3	1	**6I-4374**	1	BOLT (M8X1.25X60-MM)	
	4	1	**7C-1281**	1	BRACKET	
	5	1	**5D-1026**	1	CLAMP-BAND	
	6	1	**162-1565**	1	SPRING (CRANKCASE BREATHER HOSE)	
	7	1	**198-9169**	1	HOSE (CRANKCASE BREATHER)	
	8	1	**230-9127**	1	COVER (INJECTOR)	
C	9	1	**287-8573**	1	PIPE AS (BREATHER)	
	10	1	**230-9152**	1	FILLER GP-ENGINE OIL	
	10A	1	**6I-1201**	1	SEAL-O-RING	
	10B	1	**130-9888**	1	CAP AS-OIL FILLER (ENGINE)	
	10C	1	**113-1504**	1	SEAL-O-RING	
	11	1	**249-5230**	1	COVER AS-VALVE	
	11A	1	**225-6451**	1	GASKET (VALVE COVER)	
	11B	1	**225-6455**	10	BOLT (ISOLATOR)	
	11C	1	**225-6456**	1	SPRING (CRANKCASE BREATHER)	
	11D	1	**225-6461**	1	CAP (CRANKCASE BREATHER)	
	11E	1	**225-6464**	1	DIAPHRAGM (CRANKCASE PRESSURE CONTACTOR)	
	11F	1	**225-6477**	1	PLATE	
	11G	1	**225-6478**	4	SCREW-MACHINE	
	11H	1	**225-6479**	1	CAP (CRANKCASE BREATHER)	
CMR	12	1	**100-4838**	2	BOLT (M6X1X20-MM)	

C - CHANGE FROM PREVIOUS TYPE
M - METRIC PART
R - REMANUFACTURED PART MAY BE AVAILABLE

270-8904 **COVER GP-VALVE MECHANISM (**contd.**)** **i02510627**

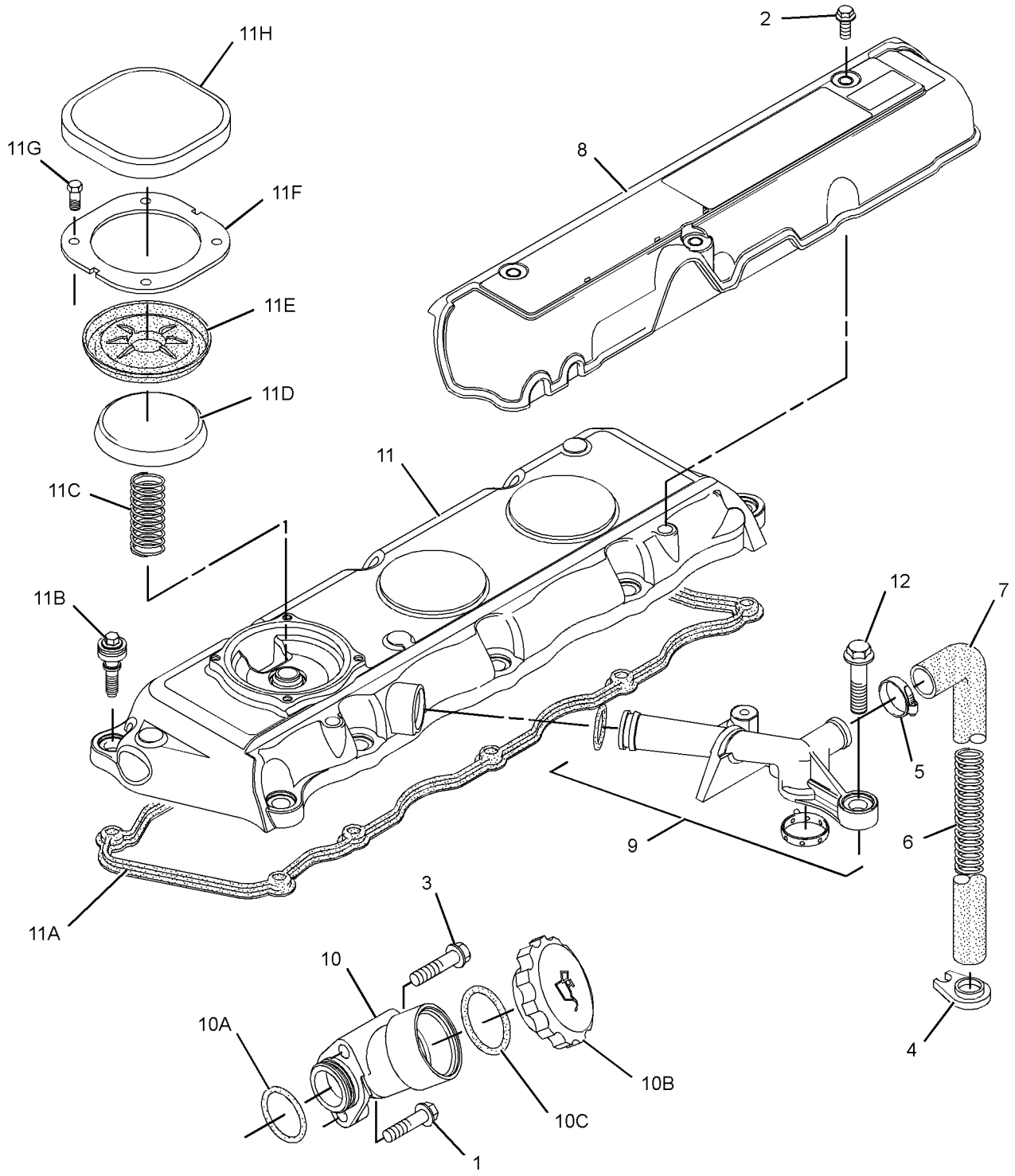

GRAPHIC #1 <END> g01301695

270-8904 COVER GP-VALVE MECHANISM

ALSO AN ATTACHMENT

TYPE 3

SMCS-1107 **i02702226**

NOTE	REF NO	GRAPHIC REF	PART NUMBER	QTY	PART NAME 1 2 3 4 5 6 (PRODUCT LEVEL)	SEE PAGE
M	1	1	**6I-0254**	1	BOLT (M8X1.25X30-MM)	
M	2	1	**6I-0846**	3	BOLT (M6X1X14-MM)	
M	3	1	**6I-4374**	1	BOLT (M8X1.25X60-MM)	
	4	1	**7C-1281**	1	BRACKET	
	5	1	**5D-1026**	1	CLAMP-BAND	
	6	1	**162-1565**	1	SPRING (CRANKCASE BREATHER HOSE)	
	7	1	**198-9169**	1	HOSE (CRANKCASE BREATHER)	
	8	1	**230-9127**	1	COVER (INJECTOR)	
C	9	1	**287-8573**	1	PIPE AS (BREATHER)	
	10	1	**230-9152**	1	FILLER GP-ENGINE OIL	
	10A	1	**6I-1201**	1	SEAL-O-RING	
	10B	1	**130-9888**	1	CAP AS-OIL FILLER (ENGINE)	
	10C	1	**113-1504**	1	SEAL-O-RING	
	11	1	**308-1381**	1	COVER GP-VALVE MECHANISM	
	11A	1	**225-6451**	1	GASKET (VALVE COVER)	
	11B	1	**225-6479**	1	CAP (CRANKCASE BREATHER)	
	11C	1	**225-6456**	1	SPRING (CRANKCASE BREATHER)	
	11D	1	**225-6461**	1	CAP (CRANKCASE BREATHER)	
	11E	1	**225-6464**	1	DIAPHRAGM (CRANKCASE PRESSURE CONTACTOR)	
	11F	1	**225-6477**	1	PLATE	
	11G	1	**225-6478**	4	SCREW-MACHINE	
CMR	12	1	**100-4838**	2	BOLT (M6X1X20-MM)	

C - CHANGE FROM PREVIOUS TYPE
M - METRIC PART
R - REMANUFACTURED PART MAY BE AVAILABLE

270-8904 **COVER GP-VALVE MECHANISM (**contd.**)** **i02702226**

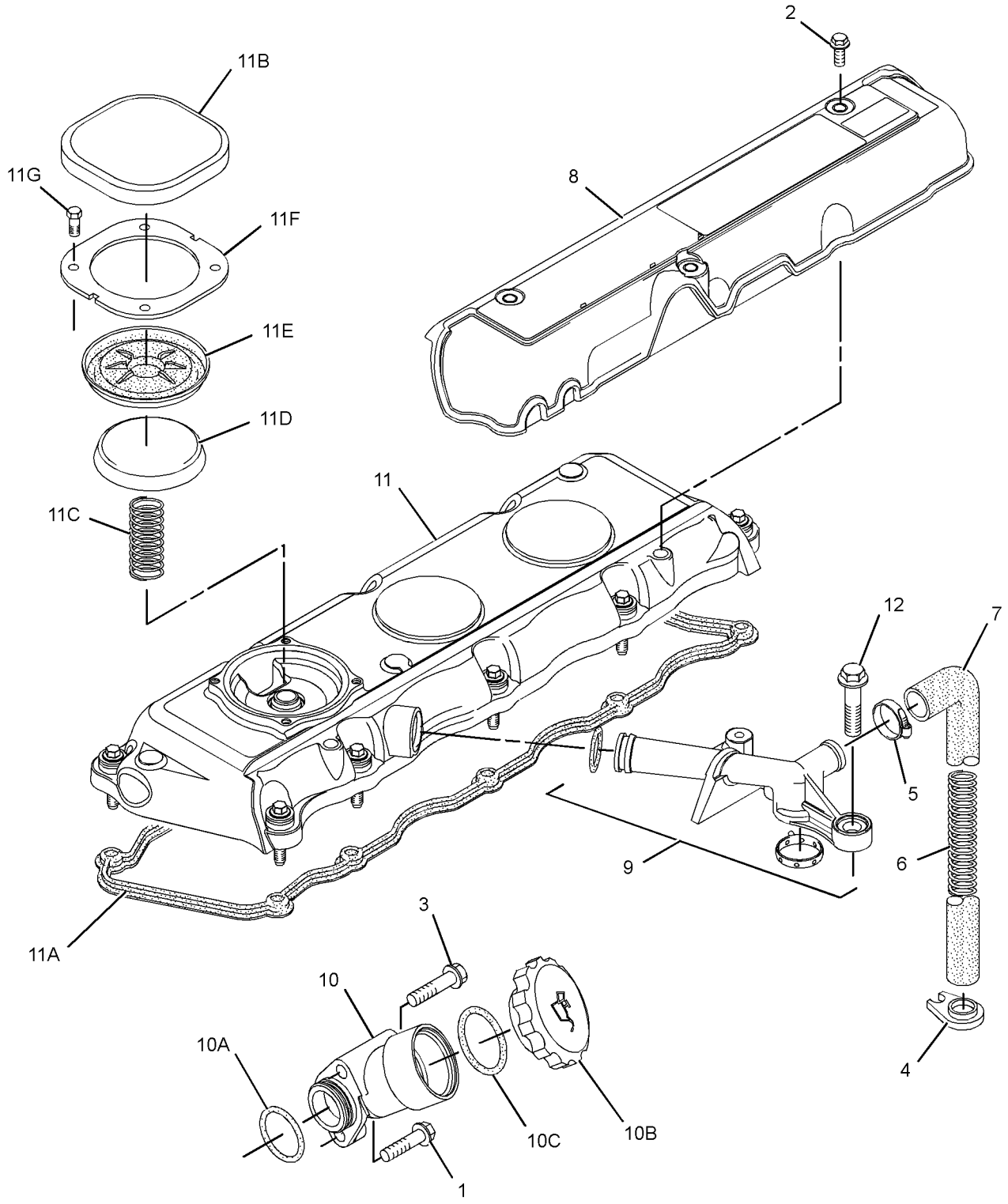

GRAPHIC #1 <END> g01420230

270-8904 COVER GP-VALVE MECHANISM

ALSO AN ATTACHMENT

TYPE 4

SMCS-1107 **i04952750**

NOTE	REF NO	GRAPHIC REF	PART NUMBER	QTY	PART NAME 1 2 3 4 5 6 (PRODUCT LEVEL)	SEE PAGE
M	1	1	**6I-0254**	1	BOLT (M8X1.25X30-MM)	
M	2	1	**6I-0846**	3	BOLT (M6X1X14-MM)	
M	3	1	**6I-4374**	1	BOLT (M8X1.25X60-MM)	
	4	1	**7C-1281**	1	BRACKET	
	5	1	**5D-1026**	1	CLAMP-BAND	
	6	1	**162-1565**	1	SPRING (CRANKCASE BREATHER HOSE)	
	7	1	**198-9169**	1	HOSE (CRANKCASE BREATHER)	
	8	1	**230-9127**	1	COVER (INJECTOR)	
C	9	1	**287-8573**	1	PIPE AS (BREATHER)	
	10	1	**321-2383**	1	FILLER AS	
	10A	1	**306-2337**	1	SEAL-O-RING	
	10B	1	**130-9888**	1	CAP AS-OIL FILLER (ENGINE)	
	10C	1	**113-1504**	1	SEAL-O-RING	
Y	11	1	**308-1381**	1	COVER GP-VALVE MECHANISM	430
CMR	12	1	**100-4838**	2	BOLT (M6X1X20-MM)	
	13	1	**217-9039**	1	STRAP-CABLE	

C - CHANGE FROM PREVIOUS TYPE
M - METRIC PART
R - REMANUFACTURED PART MAY BE AVAILABLE
Y - SEPARATE ILLUSTRATION

270-8904 **COVER GP-VALVE MECHANISM (**contd.**)** **i04952750**

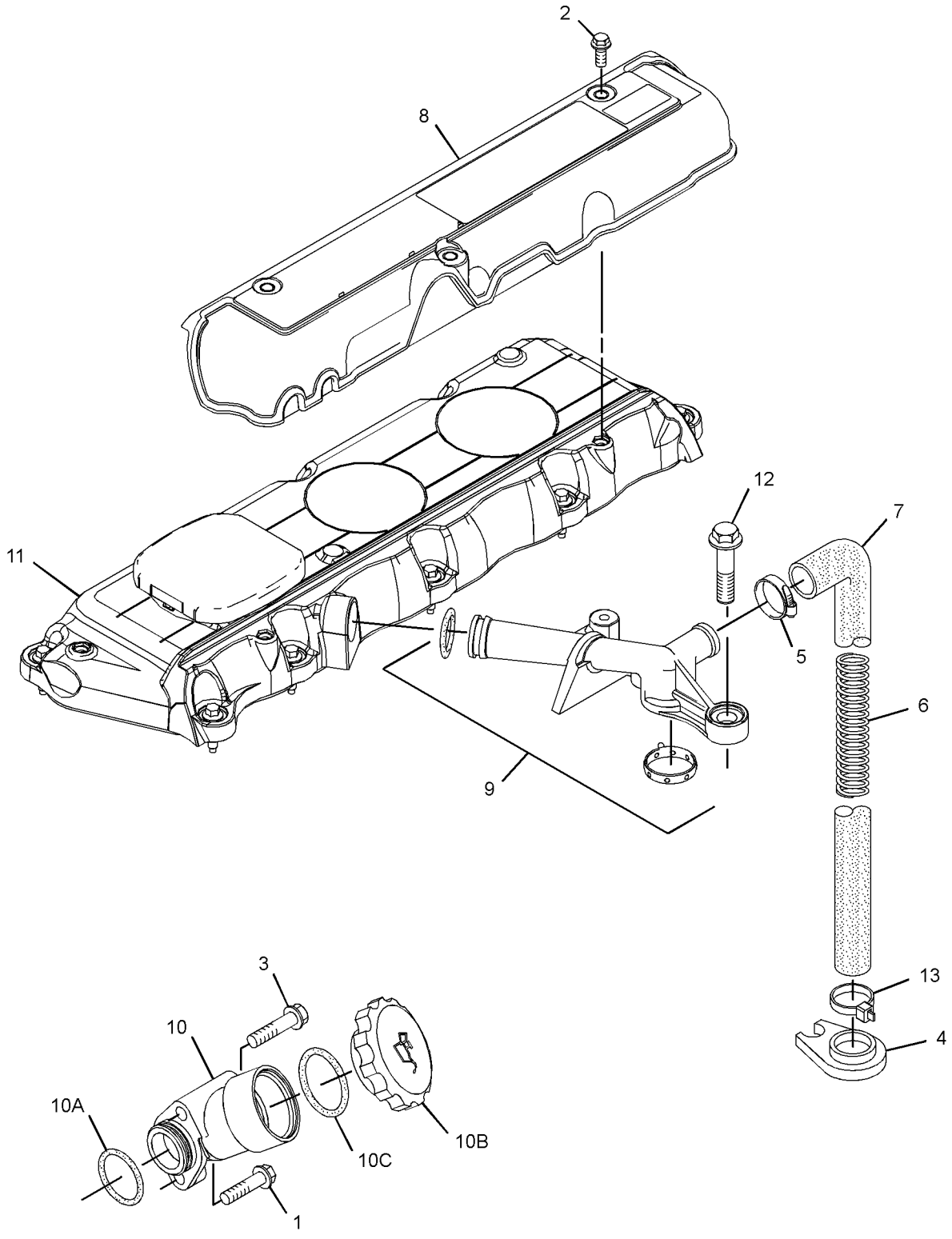

GRAPHIC #1 <END> g03182957

270-8904 COVER GP-VALVE MECHANISM

ALSO AN ATTACHMENT

TYPE 5

SMCS-1107 **i06948040**

NOTE	REF NO	GRAPHIC REF	PART NUMBER	QTY	PART NAME 1 2 3 4 5 6 (PRODUCT LEVEL)	SEE PAGE
M	1	1	**6I-0254**	1	BOLT (M8X1.25X30-MM)	
M	2	1	**6I-4374**	1	BOLT (M8X1.25X60-MM)	
	3	1	**7C-1281**	1	BRACKET	
	4	1	**5D-1026**	1	CLAMP-BAND	
	5	1	**162-1565**	1	SPRING (CRANKCASE BREATHER HOSE)	
	6	1	**198-9169**	1	HOSE (CRANKCASE BREATHER)	
	7	1	**287-8573**	1	PIPE AS (BREATHER)	
	8	1	**321-2383**	1	FILLER AS	
	8A	1	**306-2337**	1	SEAL-O-RING	
	8B	1	**130-9888**	1	CAP AS-OIL FILLER (ENGINE)	
	8C	1	**113-1504**	1	SEAL-O-RING	
CY	9	1	**446-9162**	1	COVER GP-CYLINDER HEAD	222
MR	10	1	**100-4838**	2	BOLT (M6X1X20-MM)	
	11	1	**217-9039**	1	STRAP-CABLE	
	12	1	**346-8219**	1	FILM-WARNING (UNIVERSAL WARNING)	

C - CHANGE FROM PREVIOUS TYPE
M - METRIC PART
R - REMANUFACTURED PART MAY BE AVAILABLE
Y - SEPARATE ILLUSTRATION

270-8904 **COVER GP-VALVE MECHANISM (**contd.**)** **i06948040**

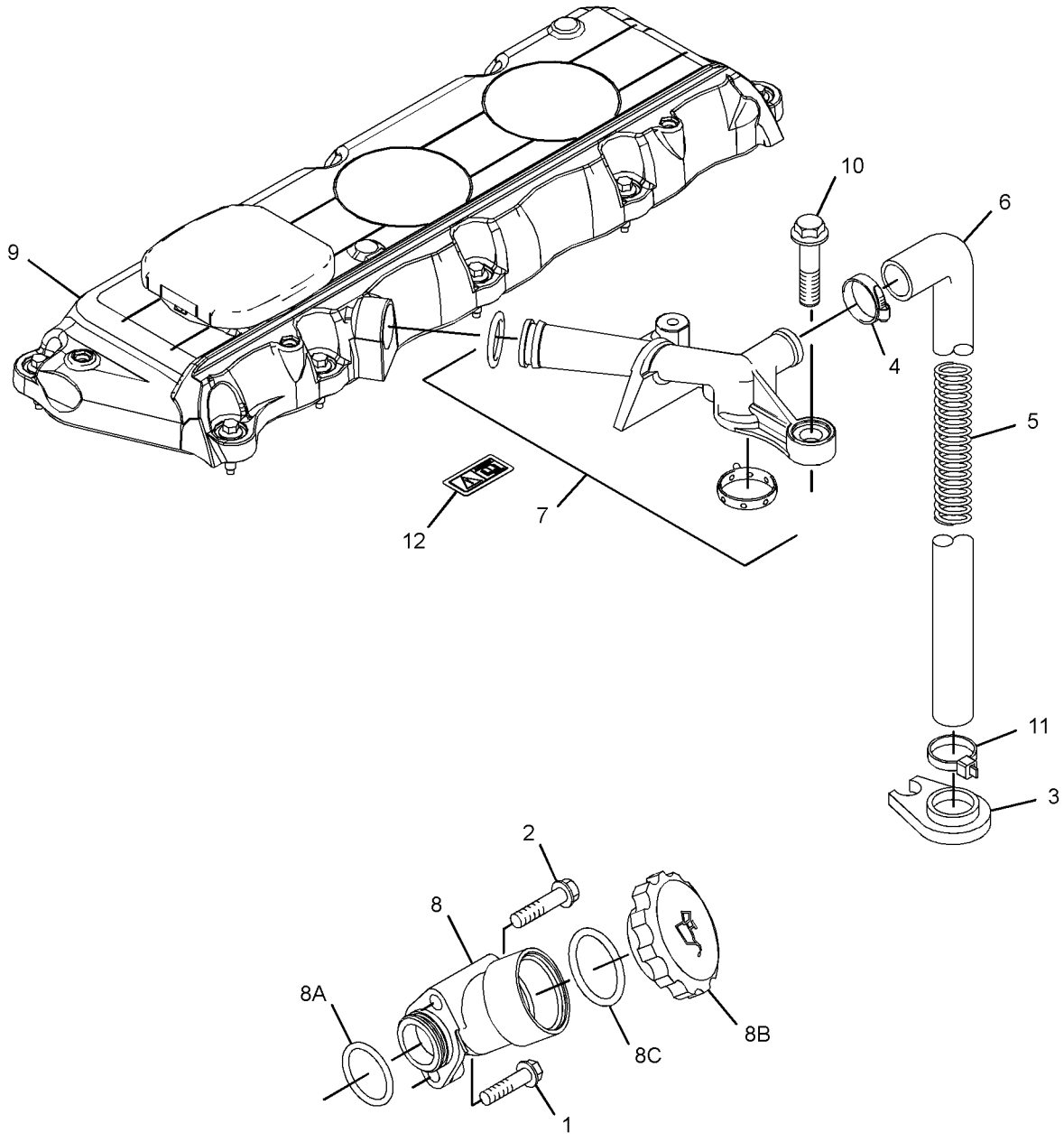

GRAPHIC #1 <END> g06199139

272-2228 COVER GP-VALVE MECHANISM

TYPE 1

SMCS-1107 **i02431182**

NOTE	REF NO	GRAPHIC REF	PART NUMBER	QTY	PART NAME 1 2 3 4 5 6 (PRODUCT LEVEL)	SEE PAGE
M	1	1	**6I-0254**	1	BOLT (M8X1.25X30-MM)	
M	2	1	**6I-4374**	1	BOLT (M8X1.25X60-MM)	
	3	1	**7C-1281**	1	BRACKET	
M	4	1	**6I-0846**	3	BOLT (M6X1X14-MM)	
	5	1	**5D-1026**	1	CLAMP-BAND	
	6	1	**162-1565**	1	SPRING (CRANKCASE BREATHER HOSE)	
	7	1	**198-8645**	1	HOSE (CRANKCASE BREATHER)	
	8	1	**230-9144**	1	CONNECTOR	
	8A	1	**150-7732**	1	SEAL-O-RING	
	8B	1	**225-6455**	2	BOLT	
	8C	1	**225-6517**	1	GASKET	
	9	1	**230-9152**	1	FILLER GP-ENGINE OIL	
	9A	1	**6I-1201**	1	SEAL-O-RING	
	9B	1	**130-9888**	1	CAP AS-OIL FILLER (ENGINE)	
	9C	1	**113-1504**	1	SEAL-O-RING	
	10	1	**236-8184**	1	COVER GP-VALVE MECHANISM	
	10A	1	**136-3608**	1	CAP AS (ENGINE OIL FILLER)	
	10B	1	**124-0506**	1	SEAL	
	10C	1	**225-6451**	1	GASKET (VALVE COVER)	
	10D	1	**225-6455**	10	BOLT	
	10E	1	**225-6456**	1	SPRING	
	10F	1	**225-6461**	1	CAP	
	10G	1	**225-6464**	1	DIAPHRAGM (CRANKCASE PRESSURE CONTACTOR)	
	10H	1	**225-6477**	1	PLATE	
	10J	1	**225-6478**	4	SCREW-MACHINE	
	10K	1	**225-6479**	1	CAP	
	11	1	**230-9127**	1	COVER	

M - METRIC PART

272-2228 **COVER GP-VALVE MECHANISM (**contd.**)** **i02431182**

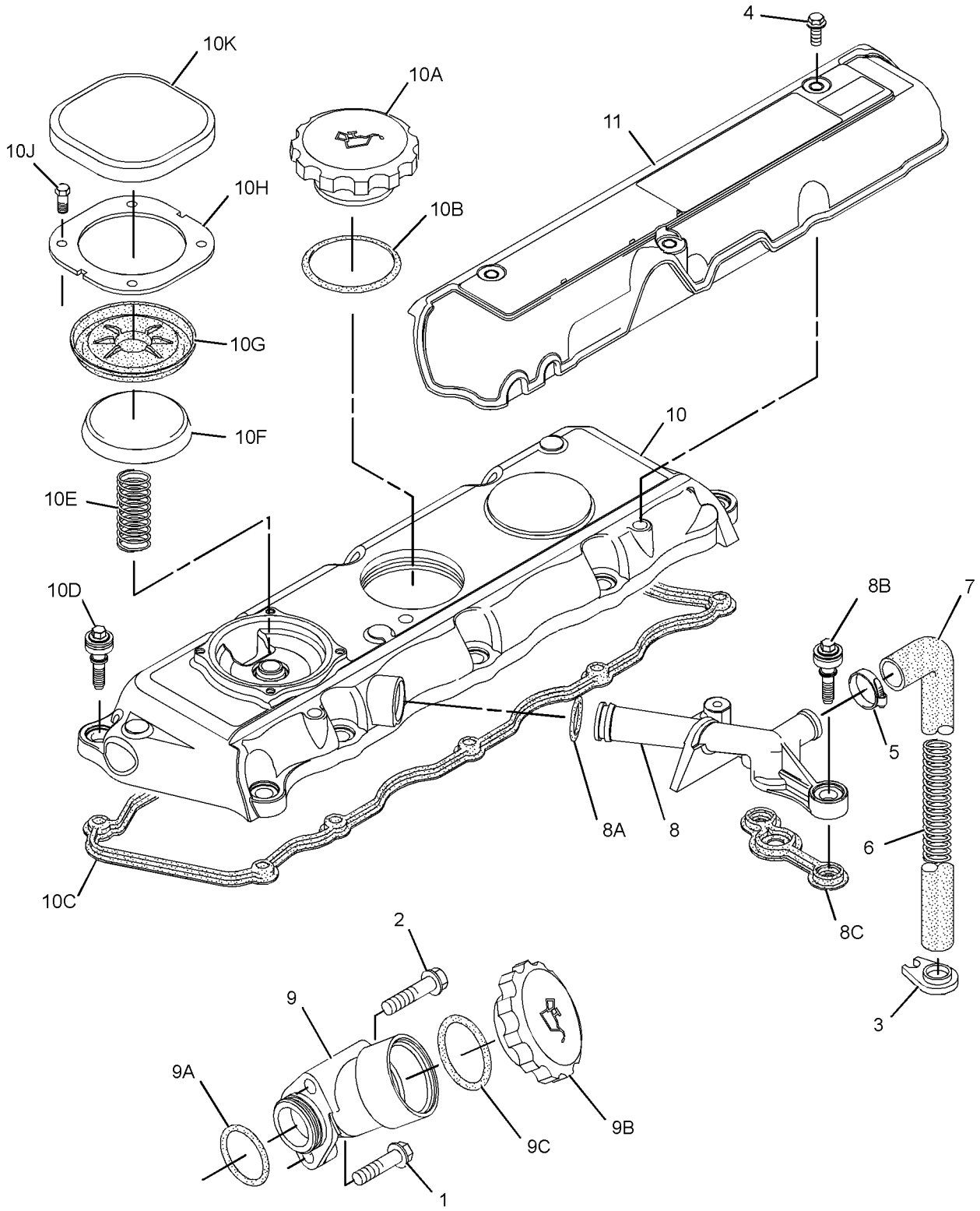

GRAPHIC #1 <END> g01157751

272-2228 COVER GP-VALVE MECHANISM

TYPE 2

SMCS-1107 **i02576247**

NOTE	REF NO	GRAPHIC REF	PART NUMBER	QTY	PART NAME 1 2 3 4 5 6 (PRODUCT LEVEL)	SEE PAGE
M	1	1	**6I-0254**	1	BOLT (M8X1.25X30-MM)	
M	2	1	**6I-4374**	1	BOLT (M8X1.25X60-MM)	
	3	1	**7C-1281**	1	BRACKET	
M	4	1	**6I-0846**	3	BOLT (M6X1X14-MM)	
	5	1	**5D-1026**	1	CLAMP-BAND	
	6	1	**162-1565**	1	SPRING (CRANKCASE BREATHER HOSE)	
	7	1	**198-8645**	1	HOSE (CRANKCASE BREATHER)	
C	8	1	**287-8573**	1	PIPE AS	
	9	1	**230-9152**	1	FILLER GP-ENGINE OIL	
	9A	1	**6I-1201**	1	SEAL-O-RING	
	9B	1	**130-9888**	1	CAP AS-OIL FILLER (ENGINE)	
	9C	1	**113-1504**	1	SEAL-O-RING	
C	10	1	**247-7797**	1	COVER GP-VALVE MECHANISM	
	10A	1	**136-3608**	1	CAP AS (ENGINE OIL FILLER)	
	10B	1	**124-0506**	1	SEAL	
	10C	1	**225-6451**	1	GASKET (VALVE COVER)	
	10D	1	**225-6455**	10	BOLT	
	10E	1	**225-6456**	1	SPRING	
	10F	1	**225-6461**	1	CAP (CRANKCASE BREATHER)	
	10G	1	**225-6464**	1	DIAPHRAGM (CRANKCASE PRESSURE CONTACTOR)	
	10H	1	**225-6477**	1	PLATE	
	10J	1	**225-6478**	4	SCREW-MACHINE	
	10K	1	**225-6479**	1	CAP	
	11	1	**230-9127**	1	COVER	
CMR	12	1	**100-4838**	2	BOLT (M6X1X20-MM)	

C - CHANGE FROM PREVIOUS TYPE
M - METRIC PART
R - REMANUFACTURED PART MAY BE AVAILABLE

272-2228 **COVER GP-VALVE MECHANISM (**contd.**)** **i02576247**

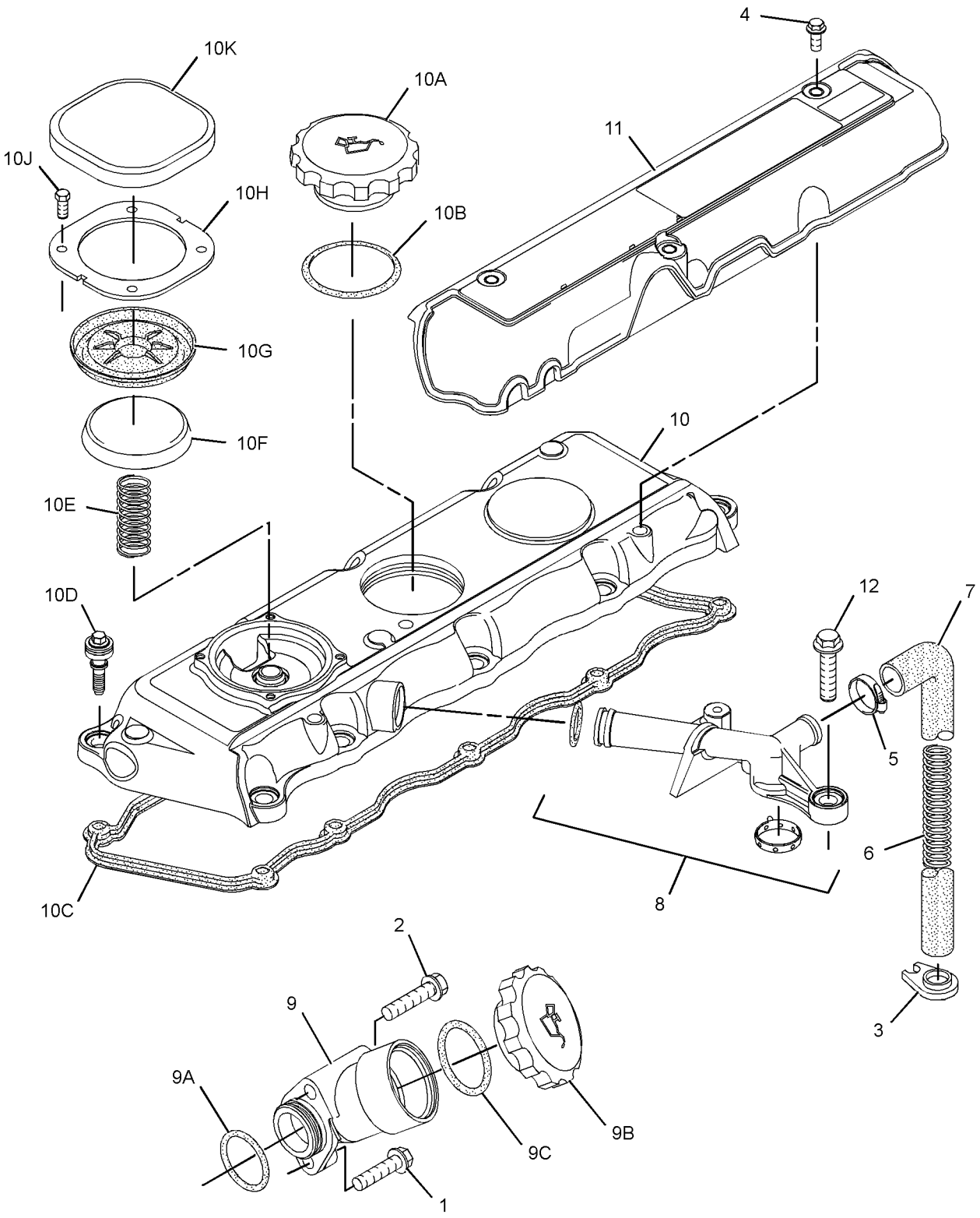

GRAPHIC #1 <END> g01288485

272-2228 COVER GP-VALVE MECHANISM

TYPE 3

SMCS-1107 **i02702372**

NOTE	REF NO	GRAPHIC REF	PART NUMBER	QTY	PART NAME 1 2 3 4 5 6 (PRODUCT LEVEL)	SEE PAGE
M	1	1	**6I-0254**	1	BOLT (M8X1.25X30-MM)	
M	2	1	**6I-4374**	1	BOLT (M8X1.25X60-MM)	
	3	1	**7C-1281**	1	BRACKET	
M	4	1	**6I-0846**	3	BOLT (M6X1X14-MM)	
	5	1	**5D-1026**	1	CLAMP-BAND	
	6	1	**162-1565**	1	SPRING (CRANKCASE BREATHER HOSE)	
	7	1	**198-8645**	1	HOSE (CRANKCASE BREATHER)	
	8	1	**287-8573**	1	PIPE AS	
	9	1	**230-9152**	1	FILLER GP-ENGINE OIL	
	9A	1	**6I-1201**	1	SEAL-O-RING	
	9B	1	**130-9888**	1	CAP AS-OIL FILLER (ENGINE)	
	9C	1	**113-1504**	1	SEAL-O-RING	
C	10	1	**308-1793**	1	COVER GP-VALVE MECHANISM	
	10A	1	**136-3608**	1	CAP AS (ENGINE OIL FILLER)	
	10B	1	**124-0506**	1	SEAL	
	10C	1	**225-6451**	1	GASKET (VALVE COVER)	
	10D	1	**225-6456**	1	SPRING	
	10E	1	**225-6461**	1	CAP (CRANKCASE BREATHER)	
	10F	1	**225-6464**	1	DIAPHRAGM (CRANKCASE PRESSURE CONTACTOR)	
	10G	1	**225-6477**	1	PLATE	
	10H	1	**225-6478**	4	SCREW-MACHINE	
	10J	1	**225-6479**	1	CAP	
	11	1	**230-9127**	1	COVER	
MR	12	1	**100-4838**	2	BOLT (M6X1X20-MM)	

C - CHANGE FROM PREVIOUS TYPE
M - METRIC PART
R - REMANUFACTURED PART MAY BE AVAILABLE

272-2228 **COVER GP-VALVE MECHANISM (**contd.**)** **i02702372**

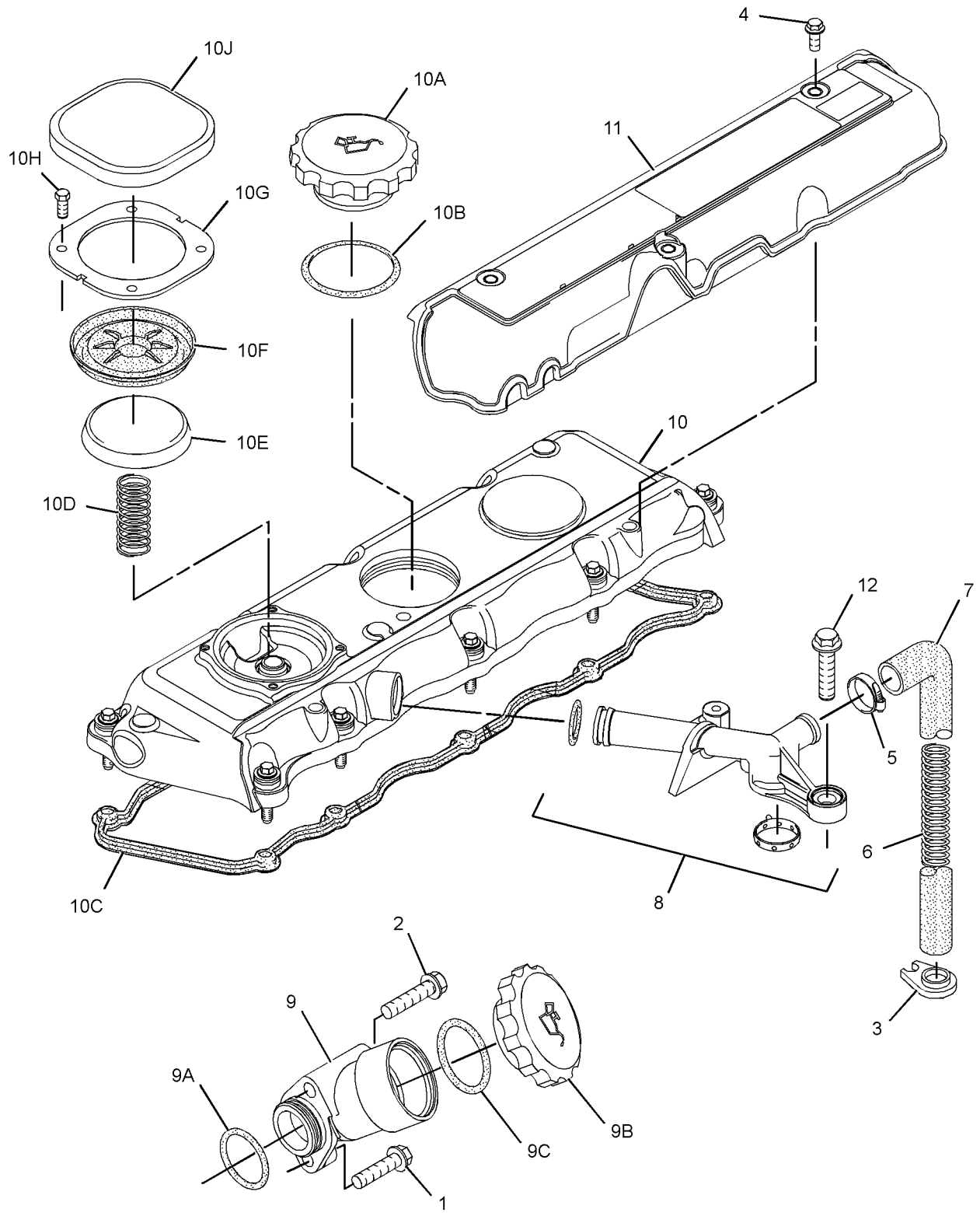

GRAPHIC #1 <END> g01401787

272-2228 COVER GP-VALVE MECHANISM

TYPE 4

SMCS-1107 **i04952737**

NOTE	REF NO	GRAPHIC REF	PART NUMBER	QTY	PART NAME 1 2 3 4 5 6 (PRODUCT LEVEL)	SEE PAGE
M	1	1	**6I-0254**	1	BOLT (M8X1.25X30-MM)	
M	2	1	**6I-4374**	1	BOLT (M8X1.25X60-MM)	
	3	1	**7C-1281**	1	BRACKET	
M	4	1	**6I-0846**	3	BOLT (M6X1X14-MM)	
	5	1	**5D-1026**	1	CLAMP-BAND	
	6	1	**162-1565**	1	SPRING (CRANKCASE BREATHER HOSE)	
	7	1	**198-8645**	1	HOSE (CRANKCASE BREATHER)	
	8	1	**287-8573**	1	PIPE AS	
C	9	1	**321-2383**	1	FILLER AS	
	9A	1	**306-2337**	1	SEAL-O-RING	
	9B	1	**130-9888**	1	CAP AS-OIL FILLER (ENGINE)	
	9C	1	**113-1504**	1	SEAL-O-RING	
CY	10	1	**308-1793**	1	COVER GP-VALVE MECHANISM	433
	11	1	**230-9127**	1	COVER	
MR	12	1	**100-4838**	2	BOLT (M6X1X20-MM)	
	13	1	**217-9039**	1	STRAP-CABLE	

C - CHANGE FROM PREVIOUS TYPE
M - METRIC PART
R - REMANUFACTURED PART MAY BE AVAILABLE
Y - SEPARATE ILLUSTRATION

272-2228 **COVER GP-VALVE MECHANISM (**contd.**)** **i04952737**

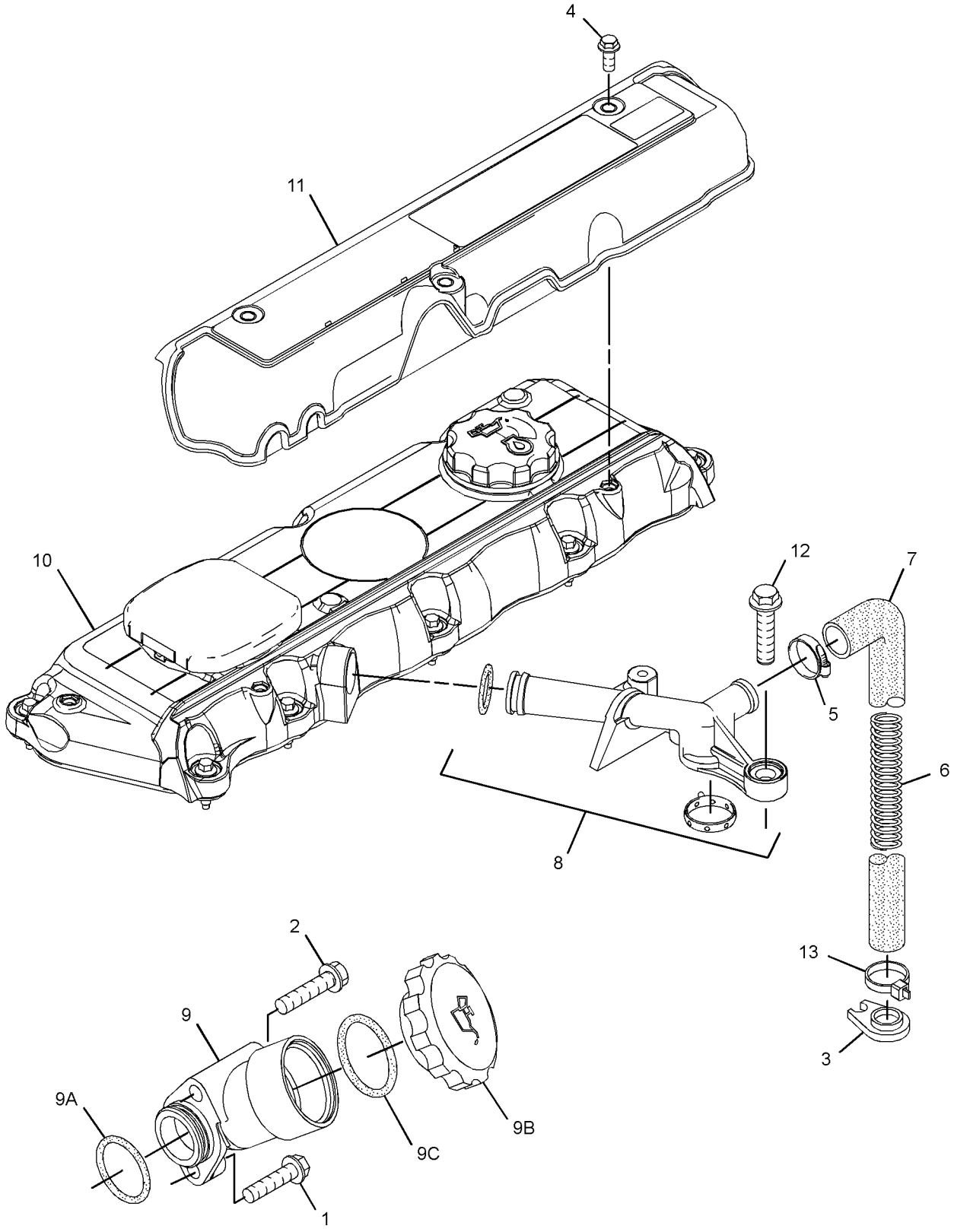

GRAPHIC #1 <END> g03182696

272-2228 COVER GP-VALVE MECHANISM

TYPE 5

SMCS-1107 **i06889292**

NOTE	REF NO	GRAPHIC REF	PART NUMBER	QTY	PART NAME 1 2 3 4 5 6 (PRODUCT LEVEL)	SEE PAGE
M	1	1	**6I-0254**	1	BOLT (M8X1.25X30-MM)	
M	2	1	**6I-4374**	1	BOLT (M8X1.25X60-MM)	
	3	1	**7C-1281**	1	BRACKET	
M	4	1	**6I-0846**	3	BOLT (M6X1X14-MM)	
	5	1	**5D-1026**	1	CLAMP-BAND	
	6	1	**162-1565**	1	SPRING (CRANKCASE BREATHER HOSE)	
	7	1	**198-8645**	1	HOSE (CRANKCASE BREATHER)	
	8	1	**287-8573**	1	PIPE AS	
	8A	1	**150-7732**	1	SEAL-O-RING	
	8B	1	**286-3030**	1	RING-SEAL	
	9	1	**321-2383**	1	FILLER AS	
	9A	1	**306-2337**	1	SEAL-O-RING	
	9B	1	**130-9888**	1	CAP AS-OIL FILLER (ENGINE)	
	9C	1	**113-1504**	1	SEAL-O-RING	
CY	10	1	**449-1277**	1	COVER GP-VALVE MECHANISM	448
	11	1	**230-9127**	1	COVER	
MR	12	1	**100-4838**	2	BOLT (M6X1X20-MM)	
	13	1	**217-9039**	1	STRAP-CABLE	
	14	1	**346-8219**	1	FILM-WARNING (UNIVERSAL WARNING)	

C - CHANGE FROM PREVIOUS TYPE
M - METRIC PART
R - REMANUFACTURED PART MAY BE AVAILABLE
Y - SEPARATE ILLUSTRATION

272-2228 **COVER GP-VALVE MECHANISM (**contd.**)** **i06889292**

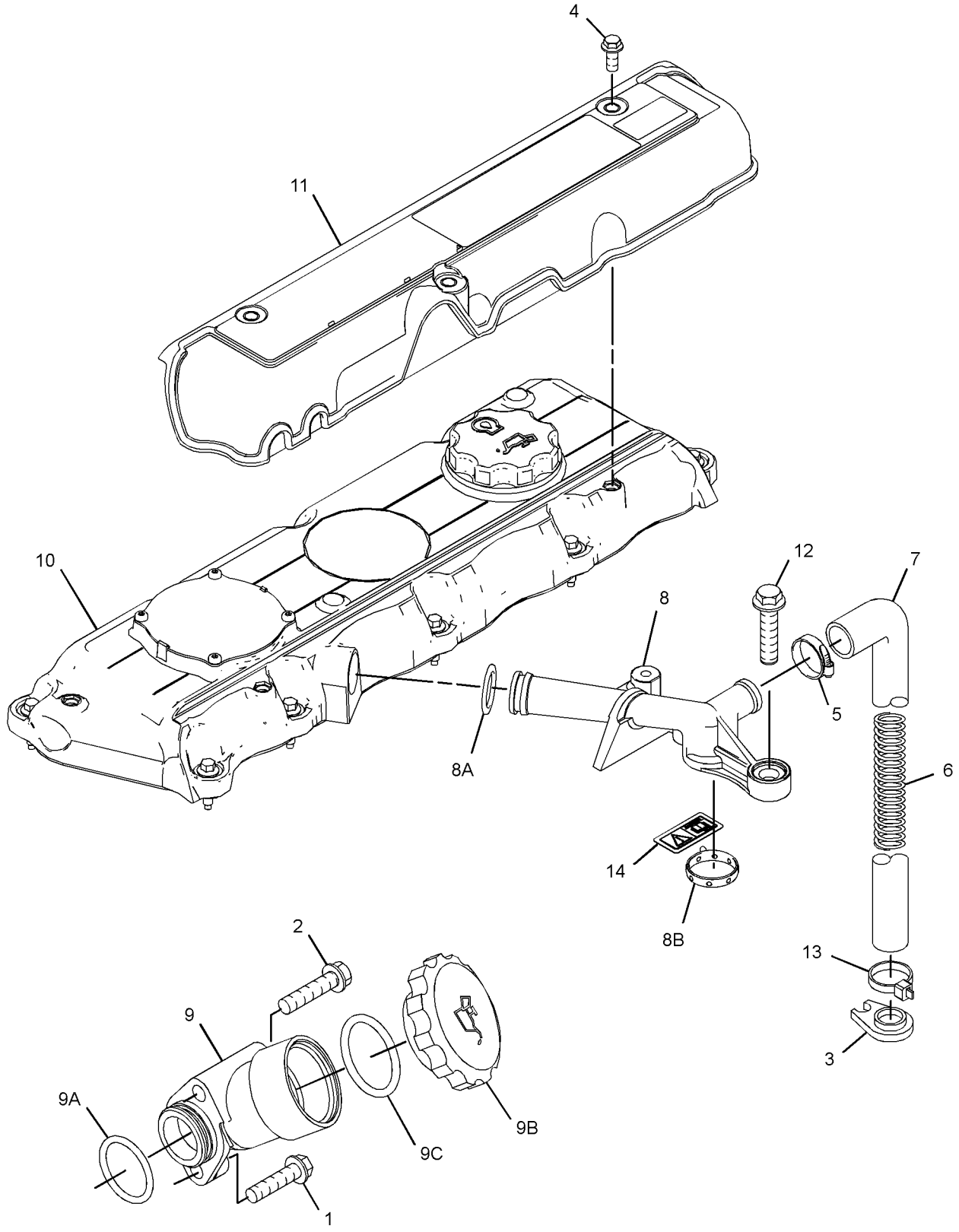

GRAPHIC #1 <END> g06158373

272-2228 COVER GP-VALVE MECHANISM

TYPE 6

SMCS-1107 **i07311441**

NOTE	REF NO	GRAPHIC REF	PART NUMBER	QTY	PART NAME 1 2 3 4 5 6 (PRODUCT LEVEL)	SEE PAGE
M	1	1	**6I-0254**	1	BOLT (M8X1.25X30-MM)	
M	2	1	**6I-4374**	1	BOLT (M8X1.25X60-MM)	
	3	1	**7C-1281**	1	BRACKET	
	4	1	**346-8219**	1	FILM-WARNING (UNIVERSAL WARNING)	
	5	1	**5D-1026**	1	CLAMP-BAND	
	6	1	**162-1565**	1	SPRING (CRANKCASE BREATHER HOSE)	
	7	1	**198-8645**	1	HOSE (CRANKCASE BREATHER)	
	8	1	**287-8573**	1	PIPE AS	
	8A	1	**150-7732**	1	SEAL-O-RING	
	8B	1	**286-3030**	1	RING-SEAL	
	9	1	**321-2383**	1	FILLER AS	
	9A	1	**306-2337**	1	SEAL-O-RING	
	9B	1	**130-9888**	1	CAP AS-OIL FILLER (ENGINE)	
	9C	1	**113-1504**	1	SEAL-O-RING	
Y	10	1	**521-8087**	1	COVER GP-CYLINDER HEAD	226
	11	1	**217-9039**	1	STRAP-CABLE	
MR	12	1	**100-4838**	2	BOLT (M6X1X20-MM)	

M - METRIC PART
R - REMANUFACTURED PART MAY BE AVAILABLE
Y - SEPARATE ILLUSTRATION

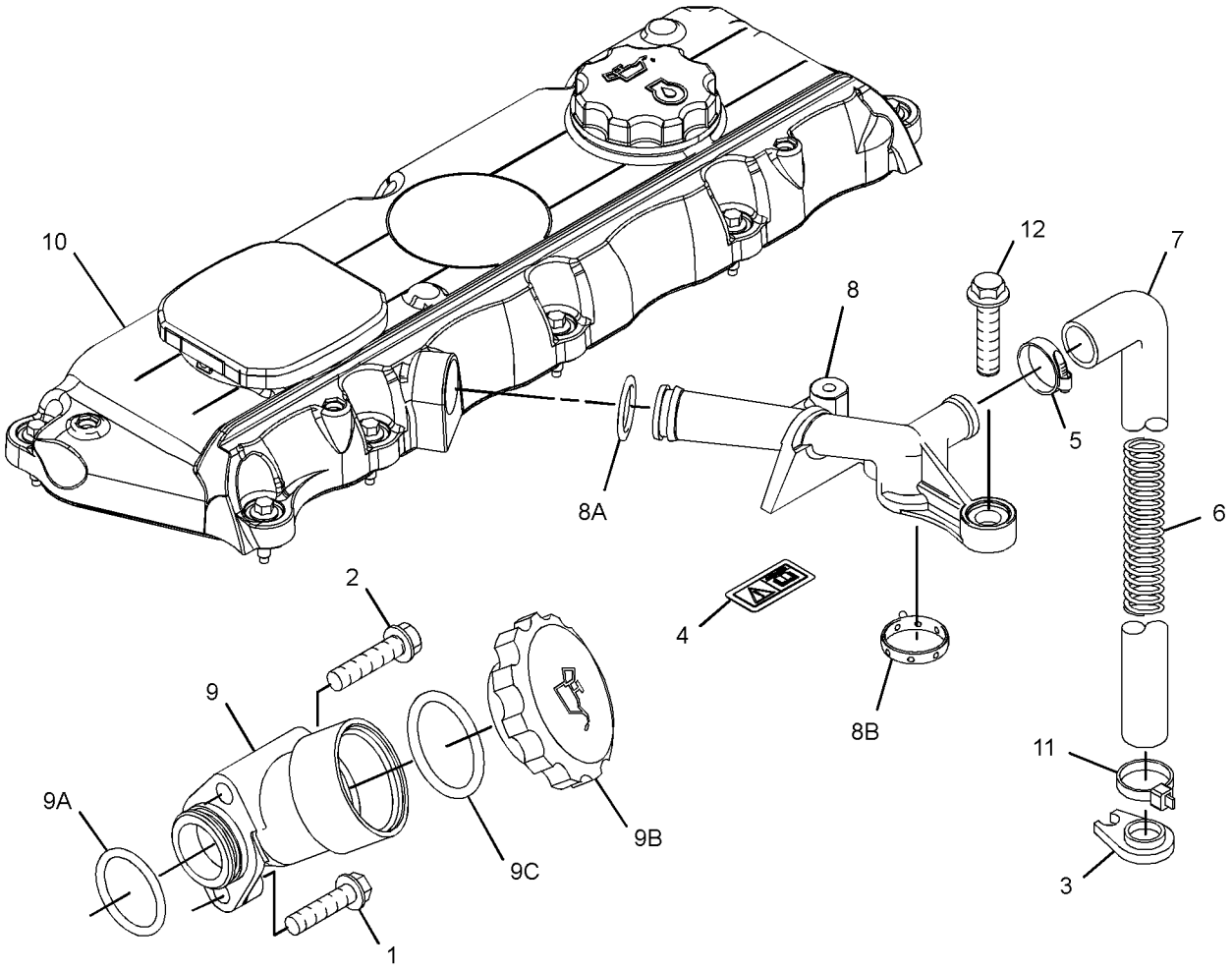

GRAPHIC #1 <END> g06247643

273-0871 COVER GP-VALVE MECHANISM

TYPE 1

SMCS-1107 **i02647297**

NOTE	REF NO	GRAPHIC REF	PART NUMBER	QTY	PART NAME 1 2 3 4 5 6 (PRODUCT LEVEL)	SEE PAGE
	1	1	**230-9127**	1	COVER	
M	3	1	**6I-0846**	3	BOLT (M6X1X14-MM)	
	4	1	**230-9125**	1	CONNECTOR	
	4A	1	**150-7732**	1	SEAL-O-RING	
	4B	1	**225-6455**	2	BOLT	
	4C	1	**225-6517**	1	GASKET	
	5	1	**236-8184**	1	COVER GP-VALVE MECHANISM	
	5A	1	**136-3608**	1	CAP AS (ENGINE OIL FILLER)	
	5B	1	**124-0506**	1	SEAL (ENGINE OIL FILL CAP)	
	5C	1	**225-6451**	1	GASKET (VALVE COVER)	
	5D	1	**225-6455**	10	BOLT	
	5E	1	**225-6456**	1	SPRING	
	5F	1	**225-6461**	1	CAP	
	5G	1	**225-6464**	1	DIAPHRAGM (CRANKCASE PRESSURE CONTACTOR)	
	5H	1	**225-6477**	1	PLATE	
	5J	1	**225-6478**	4	SCREW-MACHINE	
	5K	1	**225-6479**	1	CAP	
FM			**6I-0254**	1	BOLT (M8X1.25X30-MM)	
FM			**6I-4374**	1	BOLT (M8X1.25X60-MM)	
F			**236-9152**	1	BOSS	

F - NOT SHOWN
M - METRIC PART

273-0871 **COVER GP-VALVE MECHANISM (**contd.**)** **i02647297**

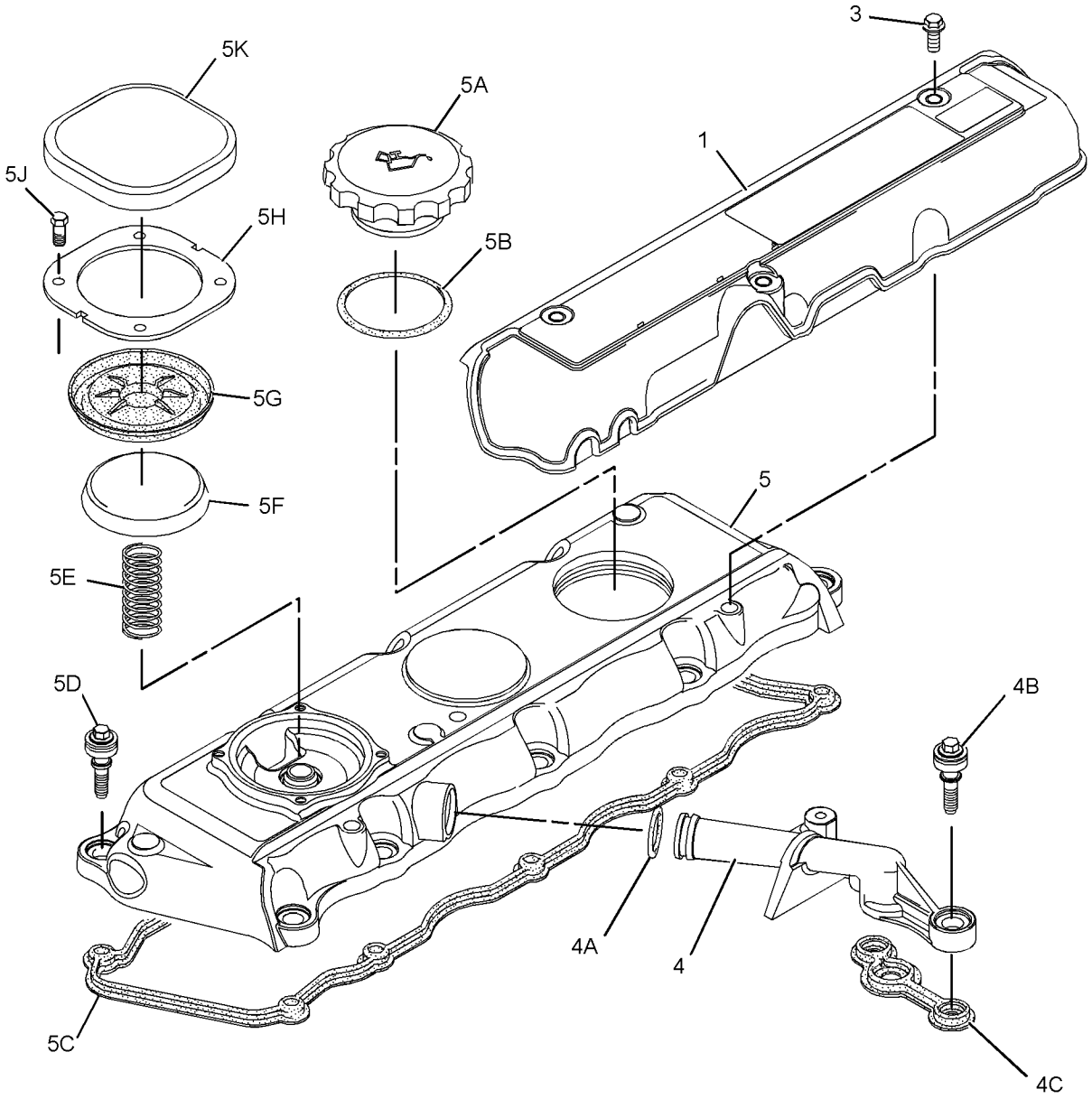

GRAPHIC #1 <END> g01160695

273-0871 COVER GP-VALVE MECHANISM

TYPE 2

SMCS-1107 **i02647298**

NOTE	REF NO	GRAPHIC REF	PART NUMBER	QTY	PART NAME 1 2 3 4 5 6 (PRODUCT LEVEL)	SEE PAGE
	1	1	**230-9127**	1	COVER	
M	3	1	**6I-0846**	3	BOLT (M6X1X14-MM)	
C	4	1	**286-3029**	1	BREATHER AS	
	4A	1	**150-7732**	1	SEAL-O-RING	
	4B	1	**286-3030**	2	RING-SEAL	
	5	1	**247-7797**	1	COVER GP-VALVE MECHANISM	
	5A	1	**136-3608**	1	CAP AS (ENGINE OIL FILLER)	
	5B	1	**124-0506**	1	SEAL (ENGINE OIL FILL CAP)	
	5C	1	**225-6451**	1	GASKET (VALVE COVER)	
	5D	1	**225-6455**	10	BOLT	
	5E	1	**225-6456**	1	SPRING	
	5F	1	**225-6461**	1	CAP (CRANKCASE BREATHER)	
	5G	1	**225-6464**	1	DIAPHRAGM (CRANKCASE PRESSURE CONTACTOR)	
	5H	1	**225-6477**	1	PLATE	
	5J	1	**225-6478**	4	SCREW-MACHINE	
	5K	1	**225-6479**	1	CAP	
CMR	6	1	**100-4838**	2	BOLT (M6X1X20-MM)	
FM			**6I-0254**	1	BOLT (M8X1.25X30-MM)	
FM			**6I-4374**	1	BOLT (M8X1.25X60-MM)	
F			**236-9152**	1	BOSS	

C - CHANGE FROM PREVIOUS TYPE
F - NOT SHOWN
M - METRIC PART
R - REMANUFACTURED PART MAY BE AVAILABLE

273-0871 **COVER GP-VALVE MECHANISM (**contd.**)** **i02647298**

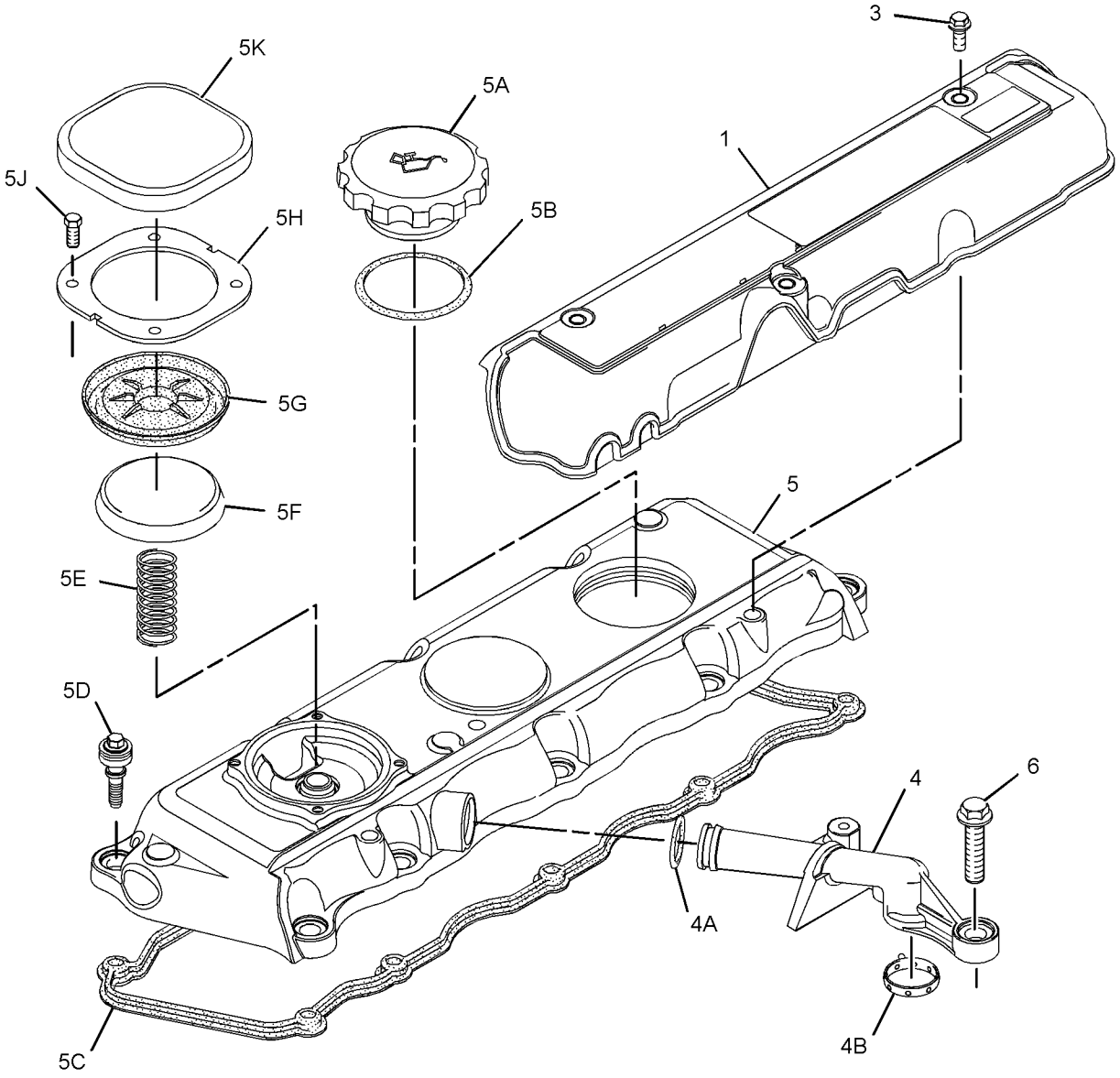

GRAPHIC #1 <END> g01288216

273-0871 COVER GP-VALVE MECHANISM

TYPE 3

SMCS-1107 **i06889289**

NOTE	REF NO	GRAPHIC REF	PART NUMBER	QTY	PART NAME 1 2 3 4 5 6 (PRODUCT LEVEL)	SEE PAGE
	1	1	**230-9127**	1	COVER	
MR	2	1	**100-4838**	2	BOLT (M6X1X20-MM)	
M	3	1	**6I-0846**	3	BOLT (M6X1X14-MM)	
	4	1	**286-3029**	1	BREATHER AS	
	4A	1	**150-7732**	1	SEAL-O-RING	
	4B	1	**286-3030**	2	RING-SEAL	
CY	5	1	**308-1793**	1	COVER GP-VALVE MECHANISM	433
	6	1	**346-8219**	1	FILM-WARNING (UNIVERSAL WARNING)	
FM		1	**6I-0254**	1	BOLT (M8X1.25X30-MM)	
FM		1	**6I-4374**	1	BOLT (M8X1.25X60-MM)	
F		1	**236-9152**	1	BOSS	

C - CHANGE FROM PREVIOUS TYPE
F - NOT SHOWN
M - METRIC PART
R - REMANUFACTURED PART MAY BE AVAILABLE
Y - SEPARATE ILLUSTRATION

273-0871 **COVER GP-VALVE MECHANISM (**contd.**)** **i06889289**

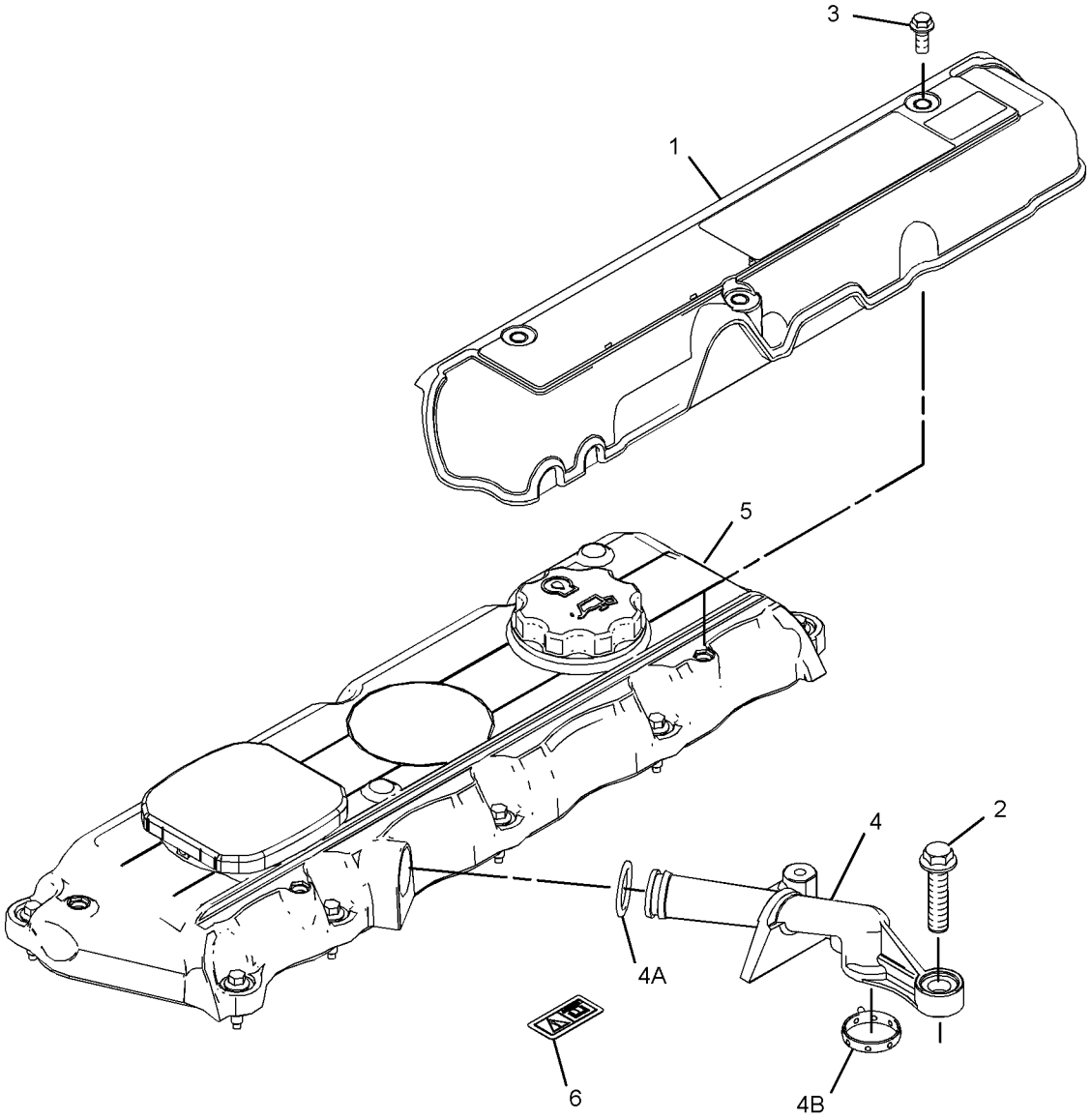

GRAPHIC #1 <END> g06197317

273-0871 COVER GP-VALVE MECHANISM

TYPE 4

SMCS-1107 **i07213897**

NOTE	REF NO	GRAPHIC REF	PART NUMBER	QTY	PART NAME 1 2 3 4 5 6 (PRODUCT LEVEL)	SEE PAGE
CY	1	1	**521-8087**	1	COVER GP-CYLINDER HEAD	226
MR	2	1	**100-4838**	2	BOLT (M6X1X20-MM)	
	3	1	**346-8219**	1	FILM-WARNING (UNIVERSAL WARNING)	
	4	1	**286-3029**	1	BREATHER AS	
	4A	1	**150-7732**	1	SEAL-O-RING	
	4B	1	**286-3030**	2	RING-SEAL	
M	5	1	**6I-0254**	1	BOLT (M8X1.25X30-MM)	
M	6	1	**6I-4374**	1	BOLT (M8X1.25X60-MM)	
F		1	**236-9152**	1	BOSS	

C - CHANGE FROM PREVIOUS TYPE
F - NOT SHOWN
M - METRIC PART
R - REMANUFACTURED PART MAY BE AVAILABLE
Y - SEPARATE ILLUSTRATION

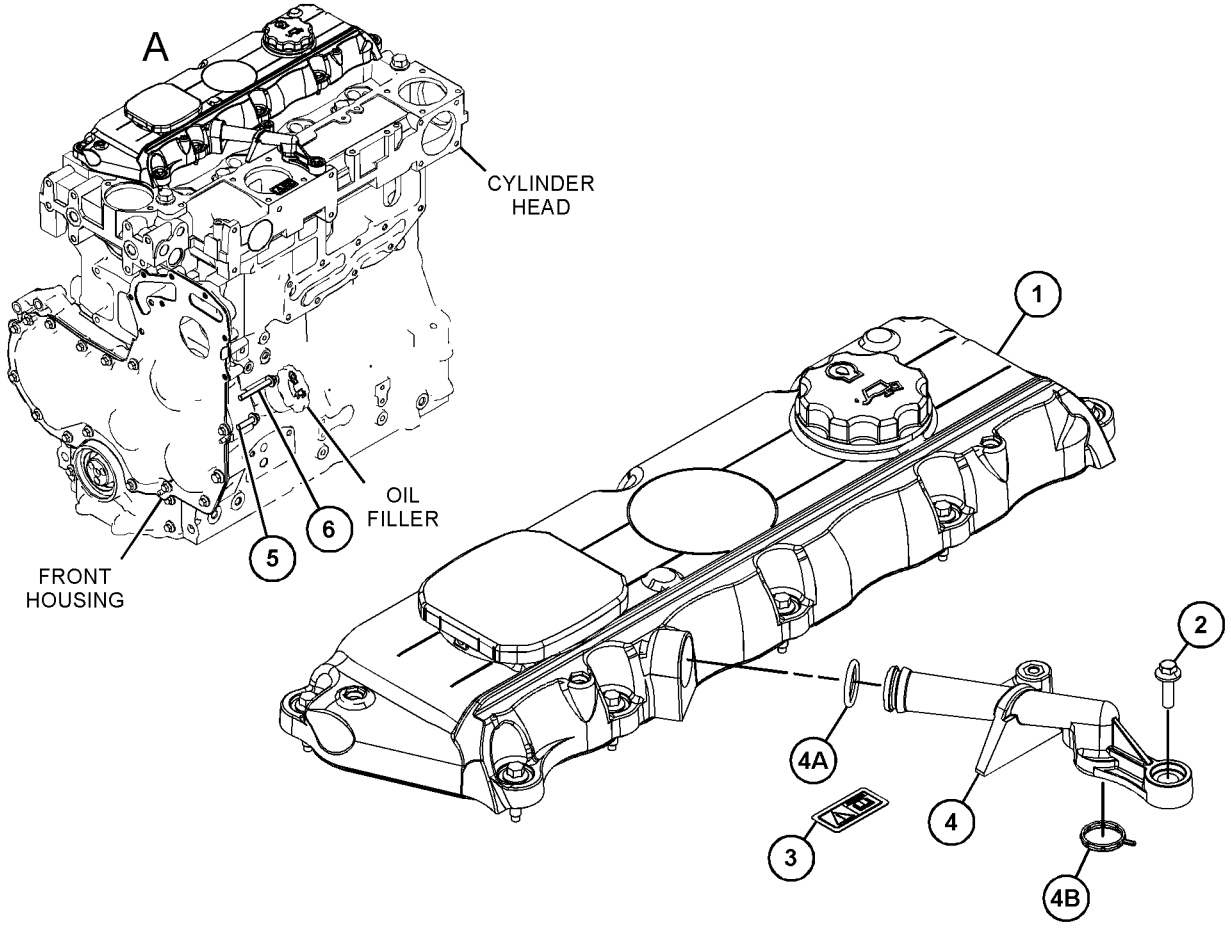

VIEW OF AREA A

GRAPHIC #1 <END> g06249233

288-1532 COVER GP-VALVE MECHANISM

TYPE 1

SMCS-1107 **i04952743**

NOTE	REF NO	GRAPHIC REF	PART NUMBER	QTY	PART NAME 1 2 3 4 5 6 (PRODUCT LEVEL)	SEE PAGE
M	1	1	**6I-0846**	3	BOLT (M6X1X14-MM)	
	2	1	**7C-1281**	1	BRACKET	
MR	3	1	**100-4838**	2	BOLT (M6X1X20-MM)	
	4	1	**162-1565**	1	SPRING (CRANKCASE BREATHER HOSE)	
	5	1	**198-8645**	1	HOSE (CRANKCASE BREATHER)	
	6	1	**225-6522**	1	PLUG-CUP	
	7	1	**225-6524**	1	PLUG-CUP	
	8	1	**230-9127**	1	COVER (INJECTOR)	
Y	9	1	**308-1393**	1	COVER GP-VALVE MECHANISM	431
	10	1	**287-8573**	1	PIPE AS	
	11	1	**217-9039**	1	STRAP-CABLE	

M - METRIC PART
R - REMANUFACTURED PART MAY BE AVAILABLE
Y - SEPARATE ILLUSTRATION

288-1532 **COVER GP-VALVE MECHANISM (**contd.**)** **i04952743**

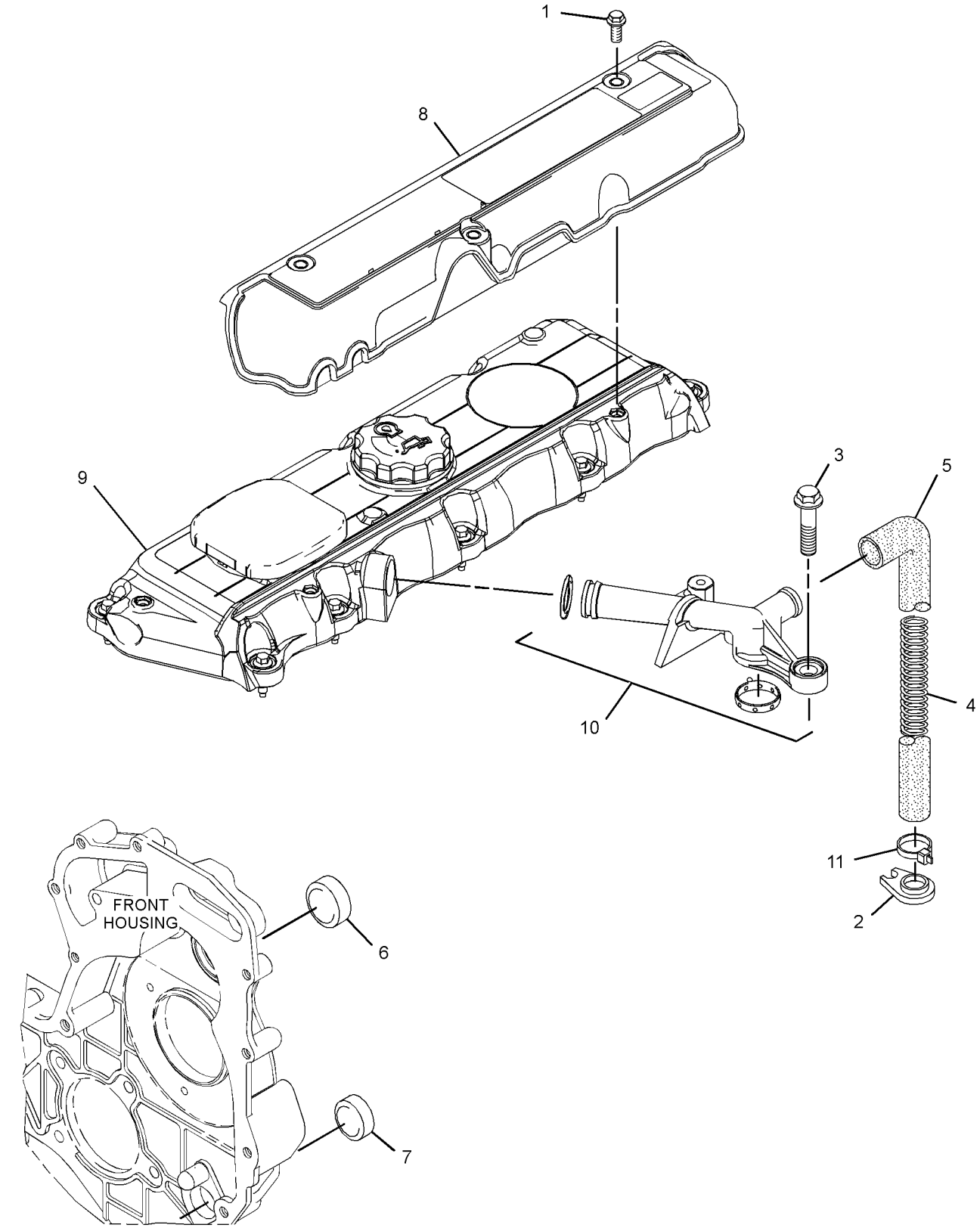

GRAPHIC #1 <END> g03168616

288-1532 COVER GP-VALVE MECHANISM

TYPE 2

SMCS-1107 **i06874560**

NOTE	REF NO	GRAPHIC REF	PART NUMBER	QTY	PART NAME 1 2 3 4 5 6 (PRODUCT LEVEL)	SEE PAGE
M	1	1	**6I-0846**	3	BOLT (M6X1X14-MM)	
	2	1	**7C-1281**	1	BRACKET	
MR	3	1	**100-4838**	2	BOLT (M6X1X20-MM)	
	4	1	**162-1565**	1	SPRING (CRANKCASE BREATHER HOSE)	
	5	1	**198-8645**	1	HOSE (CRANKCASE BREATHER)	
	6	1	**225-6522**	1	PLUG-CUP	
	7	1	**225-6524**	1	PLUG-CUP	
	8	1	**230-9127**	1	COVER (INJECTOR)	
CY	9	1	**446-9163**	1	COVER GP-CYLINDER HEAD	223
	10	1	**287-8573**	1	PIPE AS	
	10A	1	**150-7732**	1	SEAL-O-RING	
	10B	1	**286-3030**	1	RING-SEAL	
	11	1	**217-9039**	1	STRAP-CABLE	
	12	1	**346-8219**	1	FILM-WARNING (UNIVERSAL WARNING)	

C - CHANGE FROM PREVIOUS TYPE
M - METRIC PART
R - REMANUFACTURED PART MAY BE AVAILABLE
Y - SEPARATE ILLUSTRATION

288-1532 **COVER GP-VALVE MECHANISM (**contd.**)** **i06874560**

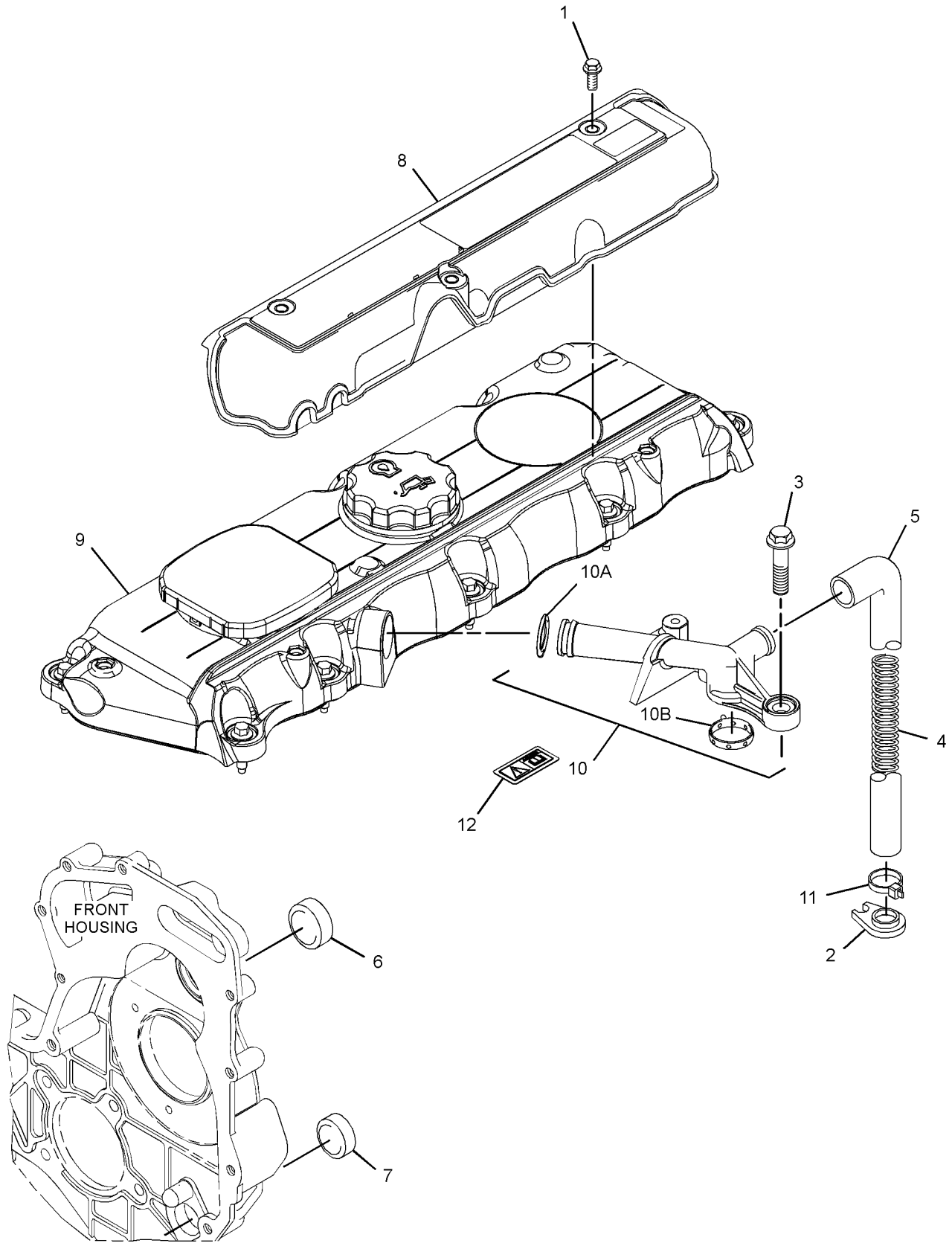

GRAPHIC #1 <END> g06199149

288-1532 COVER GP-VALVE MECHANISM

TYPE 3

SMCS-1107 **i07315188**

NOTE	REF NO	GRAPHIC REF	PART NUMBER	QTY	PART NAME 1 2 3 4 5 6 (PRODUCT LEVEL)	SEE PAGE
	1	1	**217-9039**	1	STRAP-CABLE	
	2	1	**7C-1281**	1	BRACKET	
MR	3	1	**100-4838**	2	BOLT (M6X1X20-MM)	
	4	1	**162-1565**	1	SPRING (CRANKCASE BREATHER HOSE)	
	5	1	**198-8645**	1	HOSE (CRANKCASE BREATHER)	
	6	1	**225-6522**	1	PLUG-CUP	
	7	1	**225-6524**	1	PLUG-CUP	
	8	1	**346-8219**	1	FILM-WARNING (UNIVERSAL WARNING)	
Y	9	1	**521-8086**	1	COVER GP-CYLINDER HEAD	225
	10	1	**287-8573**	1	PIPE AS	
	10A	1	**150-7732**	1	SEAL-O-RING	
	10B	1	**286-3030**	1	RING-SEAL	

M - METRIC PART
R - REMANUFACTURED PART MAY BE AVAILABLE
Y - SEPARATE ILLUSTRATION

288-1532 **COVER GP-VALVE MECHANISM (**contd.**)** **i07315188**

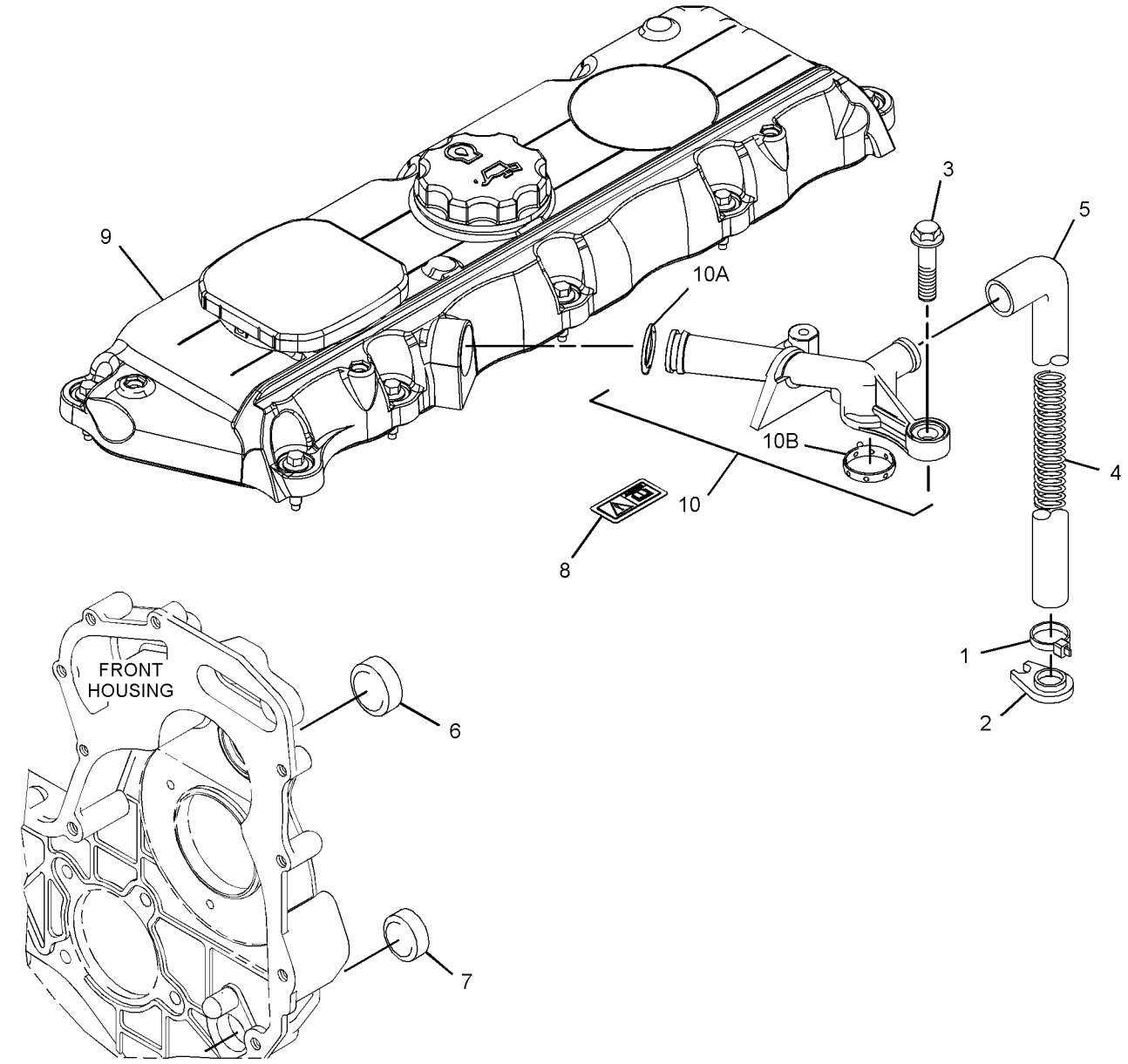

GRAPHIC #1 <END> g06279414

293-7195 COVER GP-VALVE MECHANISM–VALVE MECHANISM

TYPE 1

SMCS-1107 **i02561649**

NOTE	REF NO	GRAPHIC REF	PART NUMBER	QTY	PART NAME 1 2 3 4 5 6 (PRODUCT LEVEL)	SEE PAGE
M	1	1	**6I-0254**	1	BOLT (M8X1.25X30-MM)	
M	2	1	**6I-0846**	3	BOLT (M6X1X14-MM)	
M	3	1	**6I-4374**	1	BOLT (M8X1.25X60-MM)	
	4	1	**7C-1281**	1	BRACKET	
MR	5	1	**100-4838**	2	BOLT (M6X1X20-MM)	
	6	1	**101-3450**	1	CLAMP-HOSE	
	7	1	**162-1565**	1	SPRING (CRANKCASE BREATHER HOSE)	
	8	1	**198-8645**	1	HOSE (CRANKCASE BREATHER)	
	9	1	**225-6524**	1	PLUG-CUP	
	10	1	**230-9127**	1	COVER	
	11	1	**230-9152**	1	FILLER GP-ENGINE OIL	
	11A	1	**6I-1201**	1	SEAL-O-RING	
	11B	1	**130-9888**	1	CAP AS-OIL FILLER (ENGINE)	
	11C	1	**113-1504**	1	SEAL-O-RING	
	12	1	**247-7799**	1	COVER AS-VALVE	
	12A	1	**136-3608**	1	CAP AS (ENGINE OIL FILLER)	
	12B	1	**124-0506**	1	SEAL	
	12C	1	**225-6451**	1	GASKET (VALVE COVER)	
	12D	1	**225-6455**	10	BOLT	
	12E	1	**225-6456**	1	SPRING	
	12F	1	**225-6461**	1	CAP	
	12G	1	**225-6464**	1	DIAPHRAGM (CRANKCASE PRESSURE CONTACTOR)	
	12H	1	**225-6477**	1	PLATE	
	12J	1	**225-6478**	4	SCREW-MACHINE	
	12K	1	**225-6479**	1	CAP	
	13	1	**287-8573**	1	PIPE AS	

M - METRIC PART
R - REMANUFACTURED PART MAY BE AVAILABLE

293-7195 **COVER GP-VALVE MECHANISM (**contd.**)** **i02561649**

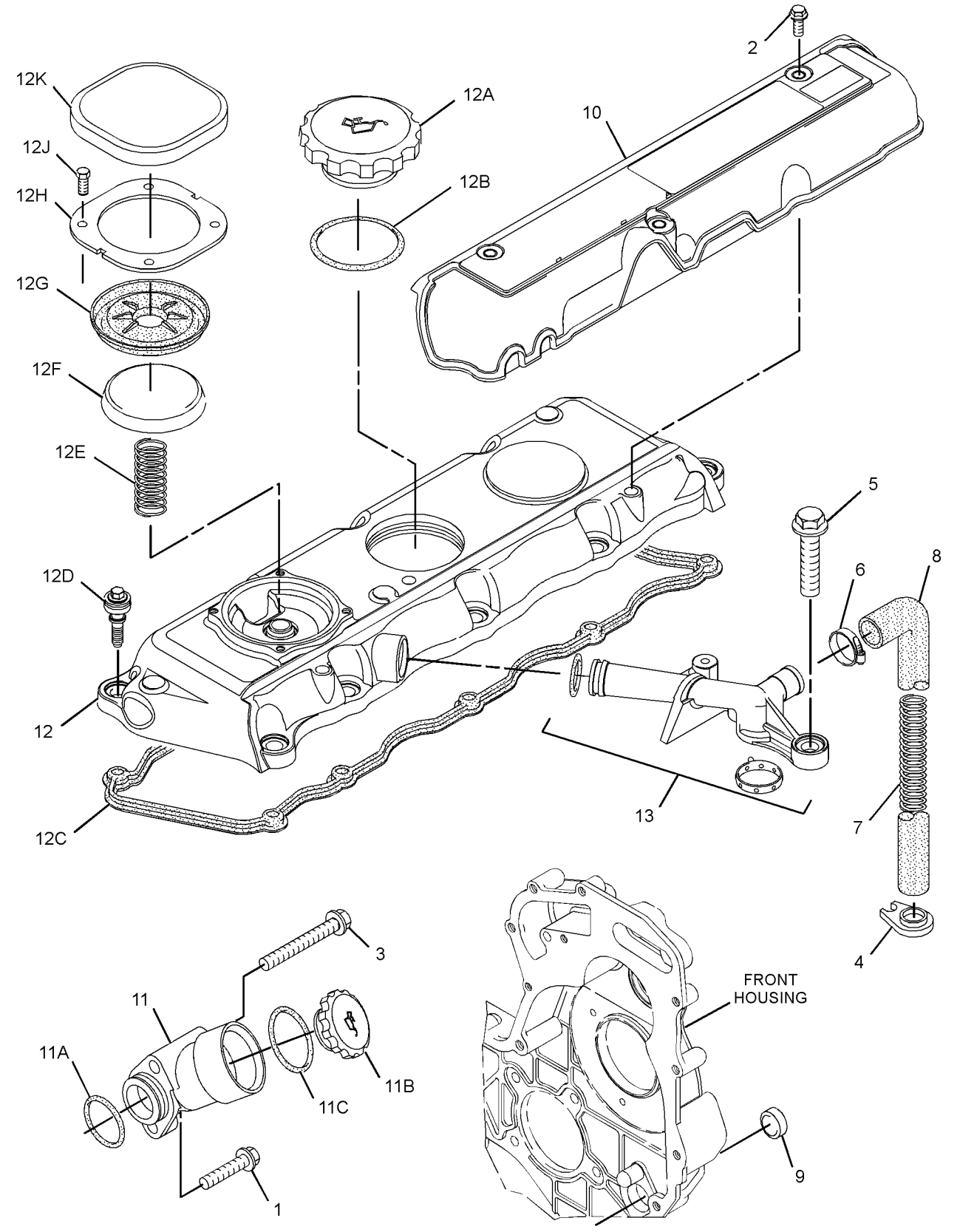

GRAPHIC #1 <END> g01312582

293-7195 COVER GP-VALVE MECHANISM–VALVE MECHANISM

TYPE 2

SMCS-1107 **i05102418**

NOTE	REF NO	GRAPHIC REF	PART NUMBER	QTY	PART NAME 1 2 3 4 5 6 (PRODUCT LEVEL)	SEE PAGE
M	1	1	**6I-0254**	1	BOLT (M8X1.25X30-MM)	
M	2	1	**6I-0846**	3	BOLT (M6X1X14-MM)	
M	3	1	**6I-4374**	1	BOLT (M8X1.25X60-MM)	
	4	1	**7C-1281**	1	BRACKET	
MR	5	1	**100-4838**	2	BOLT (M6X1X20-MM)	
	6	1	**5D-1026**	1	CLAMP-BAND	
	7	1	**162-1565**	1	SPRING (CRANKCASE BREATHER HOSE)	
	8	1	**198-8645**	1	HOSE (CRANKCASE BREATHER)	
	9	1	**225-6524**	1	PLUG-CUP	
	10	1	**230-9127**	1	COVER	
	11	1	**321-2383**	1	FILLER AS	
	11A	1	**306-2337**	1	SEAL-O-RING	
	11B	1	**130-9888**	1	CAP AS-OIL FILLER (ENGINE)	
	11C	1	**113-1504**	1	SEAL-O-RING	
CY	12	1	**308-1393**	1	COVER GP-VALVE MECHANISM	431
	13	1	**287-8573**	1	PIPE AS	
	14	1	**217-9039**	1	STRAP-CABLE	

C - CHANGE FROM PREVIOUS TYPE
M - METRIC PART
R - REMANUFACTURED PART MAY BE AVAILABLE
Y - SEPARATE ILLUSTRATION

293-7195 **COVER GP-VALVE MECHANISM (**contd.**)** **i05102418**

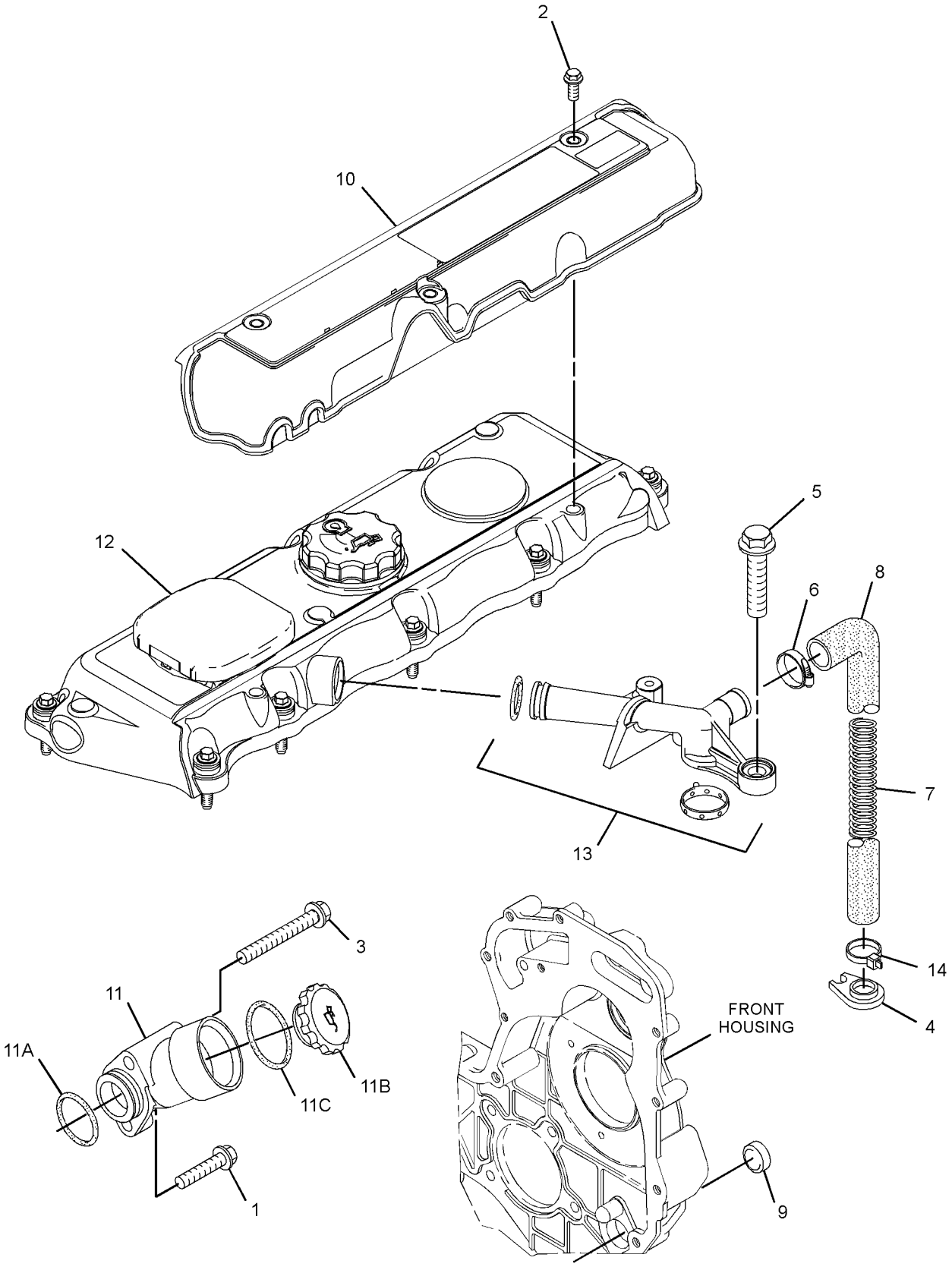

GRAPHIC #1 <END> g03336291

293-7195 COVER GP-VALVE MECHANISM–VALVE MECHANISM

S/N: 3341-11288

SMCS-1107 **i05865881**

NOTE	REF NO	GRAPHIC REF	PART NUMBER	QTY	PART NAME 1 2 3 4 5 6 (PRODUCT LEVEL)	SEE PAGE
M	1	1	**6I-0254**	1	BOLT (M8X1.25X30-MM)	
M	2	1	**6I-0846**	3	BOLT (M6X1X14-MM)	
M	3	1	**6I-4374**	1	BOLT (M8X1.25X60-MM)	
	4	1	**7C-1281**	1	BRACKET	
MR	5	1	**100-4838**	2	BOLT (M6X1X20-MM)	
	6	1	**5D-1026**	1	CLAMP-BAND	
	7	1	**162-1565**	1	SPRING (CRANKCASE BREATHER HOSE)	
	8	1	**198-8645**	1	HOSE (CRANKCASE BREATHER)	
	9	1	**225-6524**	1	PLUG-CUP	
	10	1	**230-9127**	1	COVER	
	11	1	**321-2383**	1	FILLER AS	
	11A	1	**306-2337**	1	SEAL-O-RING	
	11B	1	**130-9888**	1	CAP AS-OIL FILLER (ENGINE)	
	11C	1	**113-1504**	1	SEAL-O-RING	
CY	12	1	**446-9163**	1	COVER GP-CYLINDER HEAD	223
	13	1	**287-8573**	1	PIPE AS	
	14	1	**217-9039**	1	STRAP-CABLE	

C - CHANGE FROM PREVIOUS TYPE
M - METRIC PART
R - REMANUFACTURED PART MAY BE AVAILABLE
Y - SEPARATE ILLUSTRATION

293-7195 **COVER GP-VALVE MECHANISM (**contd.**)** **i05865881**

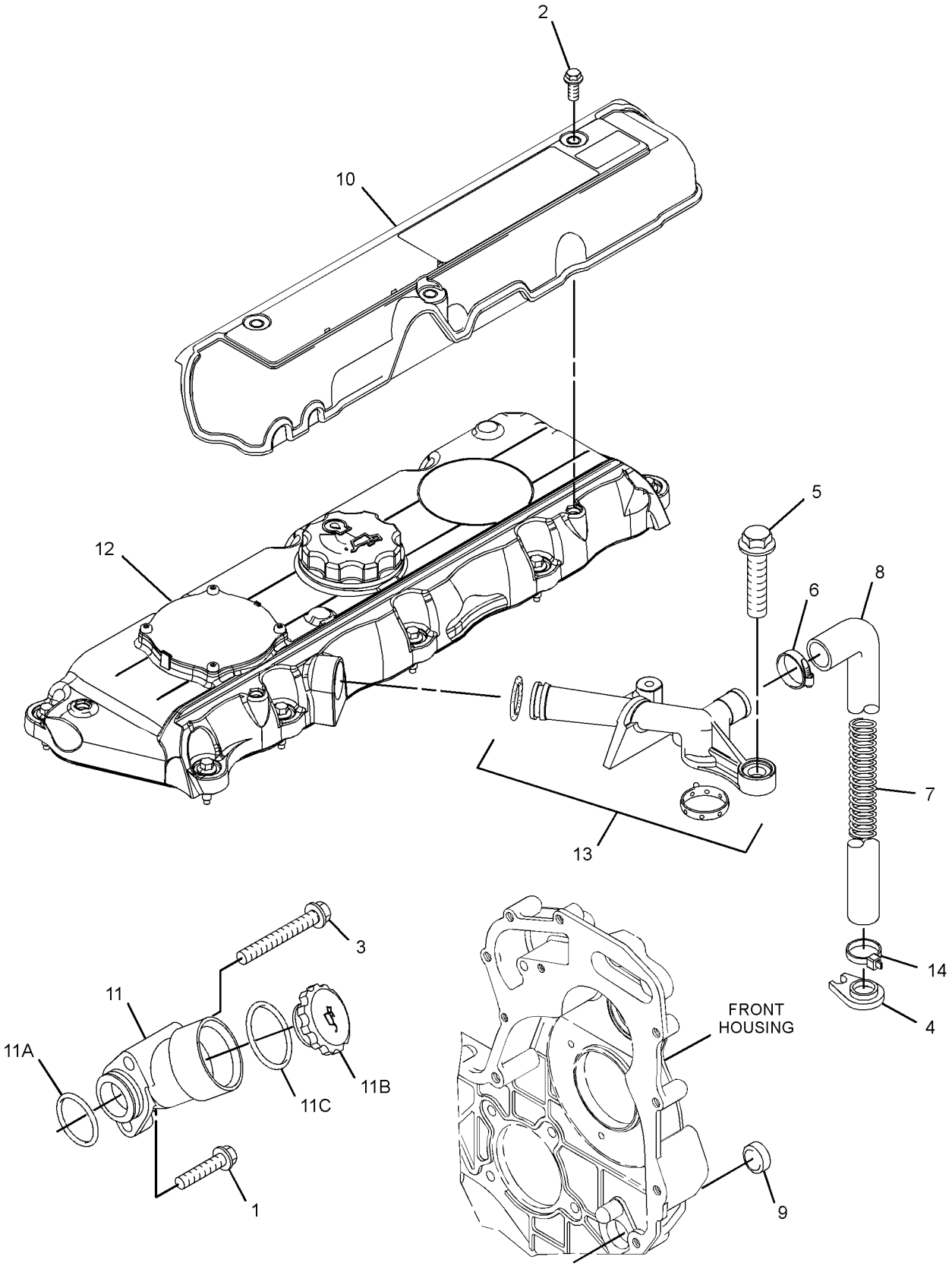

GRAPHIC #1 <END> g03811257

293-7195 COVER GP-VALVE MECHANISM–VALVE MECHANISM

S/N: 33411289-UP

SMCS-1107 **i07317208**

NOTE	REF NO	GRAPHIC REF	PART NUMBER	QTY	PART NAME 1 2 3 4 5 6 (PRODUCT LEVEL)	SEE PAGE
M	1	1	**6I-0254**	1	BOLT (M8X1.25X30-MM)	
C	2	1	**346-8219**	1	FILM-WARNING (UNIVERSAL WARNING)	
M	3	1	**6I-4374**	1	BOLT (M8X1.25X60-MM)	
	4	1	**7C-1281**	1	BRACKET	
MR	5	1	**100-4838**	2	BOLT (M6X1X20-MM)	
	6	1	**5D-1026**	1	CLAMP-BAND	
	7	1	**162-1565**	1	SPRING (CRANKCASE BREATHER HOSE)	
	8	1	**198-8645**	1	HOSE (CRANKCASE BREATHER)	
	9	1	**225-6524**	1	PLUG-CUP	
	10	1	**217-9039**	1	STRAP-CABLE	
	11	1	**321-2383**	1	FILLER AS	
	11A	1	**306-2337**	1	SEAL-O-RING	
	11B	1	**130-9888**	1	CAP AS-OIL FILLER (ENGINE)	
	11C	1	**113-1504**	1	SEAL-O-RING	
Y	12	1	**521-8085**	1	COVER GP-CYLINDER HEAD	224
	13	1	**287-8573**	1	PIPE AS	
	13A	1	**2T-2695**	1	SEAL-O-RING	
	13B	1	**286-3030**	1	RING-SEAL	

C - CHANGE FROM PREVIOUS TYPE
M - METRIC PART
R - REMANUFACTURED PART MAY BE AVAILABLE
Y - SEPARATE ILLUSTRATION

293-7195 **COVER GP-VALVE MECHANISM (**contd.**)** **i07317208**

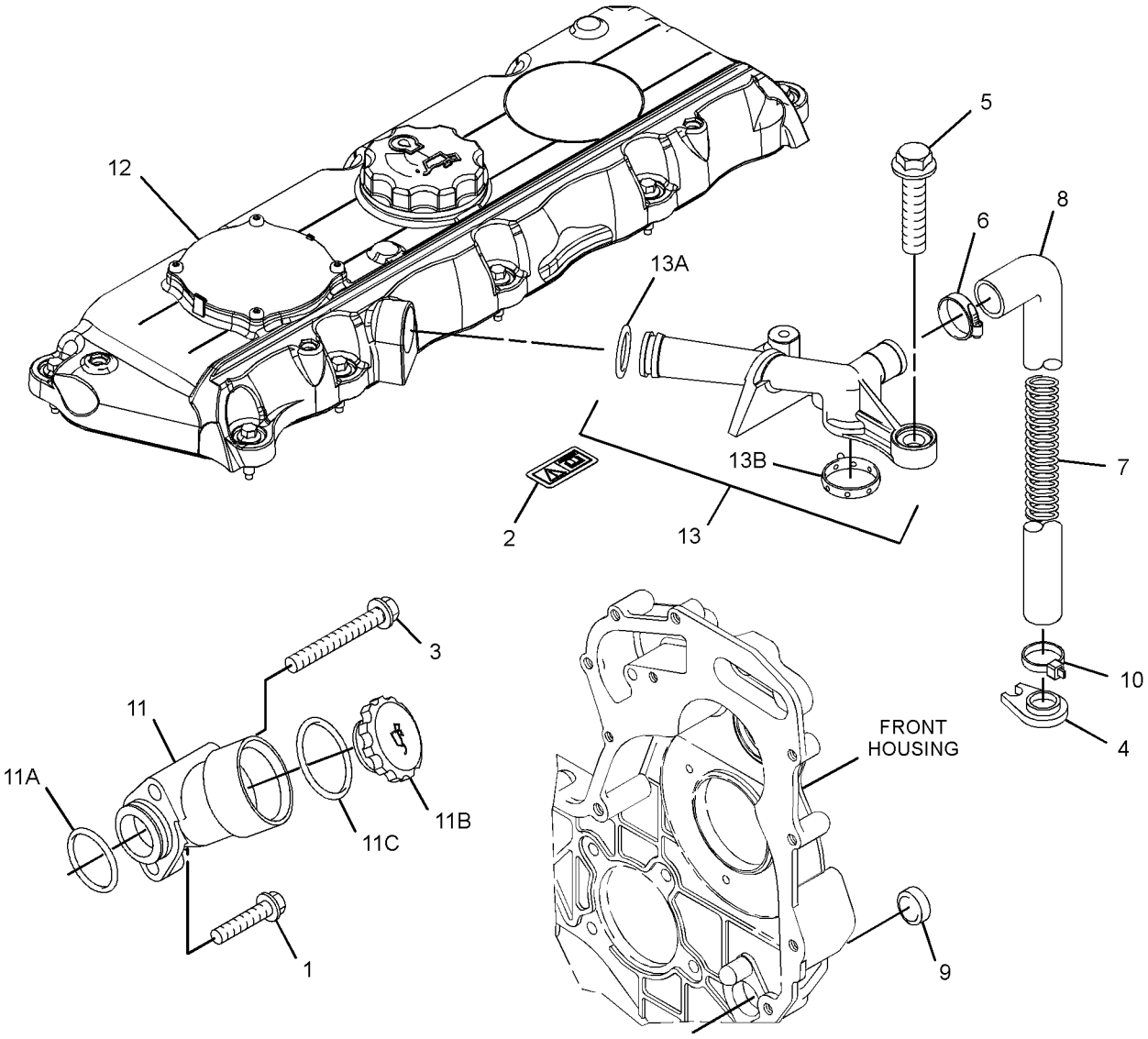

GRAPHIC #1 <END> g06206438

303-1469 COVER GP-VALVE MECHANISM

TYPE 1

SMCS-1107 **i02639190**

NOTE	REF NO	GRAPHIC REF	PART NUMBER	QTY	PART NAME 1 2 3 4 5 6 (PRODUCT LEVEL)	SEE PAGE
M	1	1	**6I-0846**	3	BOLT (M6X1X14-MM)	
MR	2	1	**100-4838**	1	BOLT (M6X1X20-MM)	
	3	1	**230-9127**	1	COVER	
	4	1	**249-5230**	1	COVER AS-VALVE	
	4A	1	**225-6451**	1	GASKET (VALVE COVER)	
	4B	1	**225-6455**	10	BOLT	
	4C	1	**225-6456**	1	SPRING	
	4D	1	**225-6461**	1	CAP (CRANKCASE BREATHER)	
	4E	1	**225-6464**	1	DIAPHRAGM (CRANKCASE PRESSURE CONTACTOR)	
	4F	1	**225-6477**	1	PLATE	
	4G	1	**225-6478**	4	SCREW-MACHINE	
	4H	1	**225-6479**	1	CAP (CRANKCASE BREATHER)	
	5	1	**286-3029**	1	BREATHER AS	
	5A	1	**150-7732**	1	SEAL-O-RING	
	5B	1	**286-3030**	1	RING-SEAL	

M - METRIC PART
R - REMANUFACTURED PART MAY BE AVAILABLE

303-1469 **COVER GP-VALVE MECHANISM (**contd.**)** **i02639190**

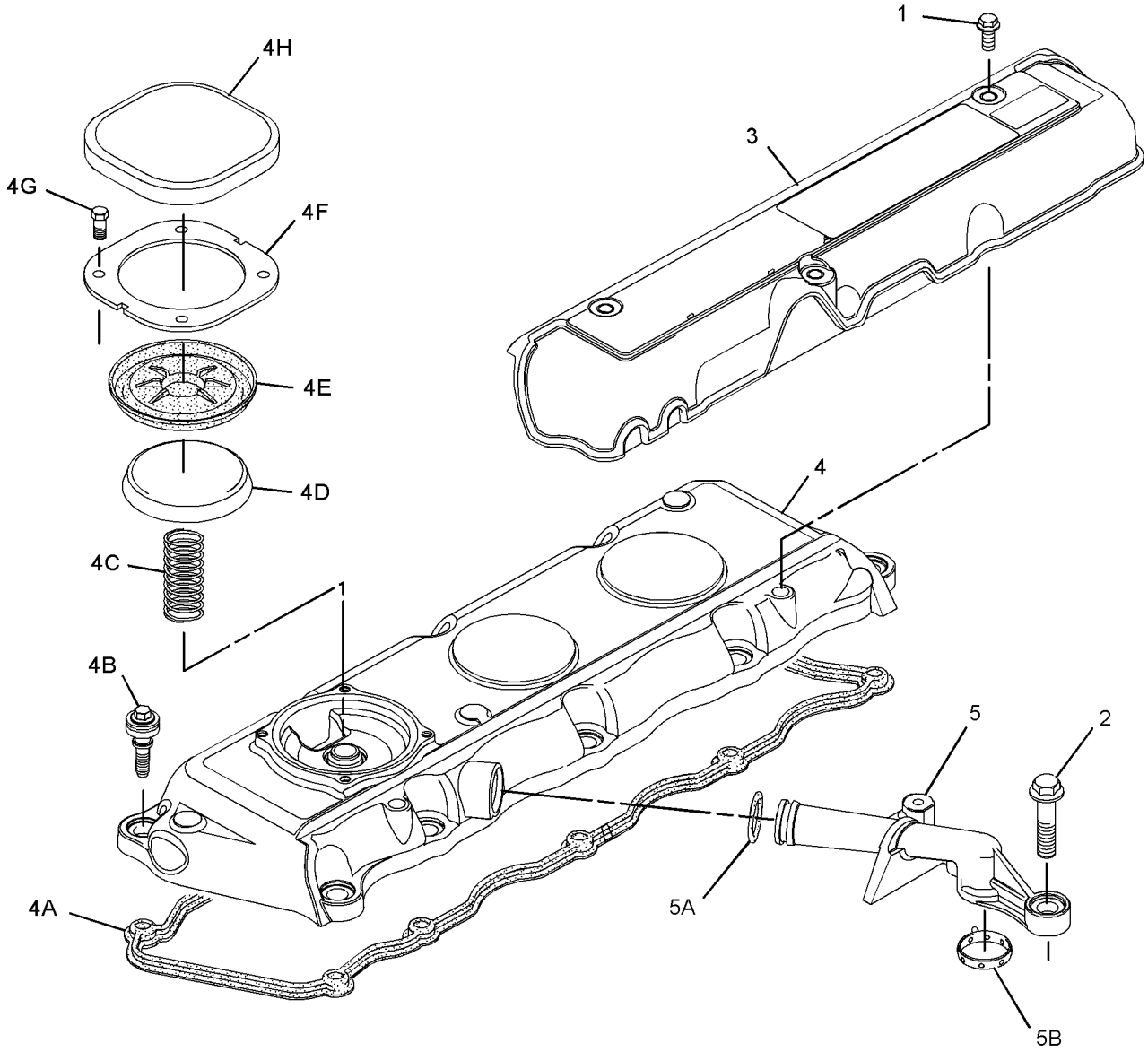

GRAPHIC #1 <END> g01325907

303-1469 COVER GP-VALVE MECHANISM

TYPE 2

SMCS-1107 **i06874563**

NOTE	REF NO	GRAPHIC REF	PART NUMBER	QTY	PART NAME 1 2 3 4 5 6 (PRODUCT LEVEL)	SEE PAGE
M	1	1	**6I-0846**	3	BOLT (M6X1X14-MM)	
MR	2	1	**100-4838**	2	BOLT (M6X1X20-MM)	
	3	1	**230-9127**	1	COVER	
CY	4	1	**308-1381**	1	COVER GP-VALVE MECHANISM	430
	5	1	**286-3029**	1	BREATHER AS	
	5A	1	**150-7732**	1	SEAL-O-RING	
	5B	1	**286-3030**	1	RING-SEAL	
	6	1	**346-8219**	1	FILM-WARNING (UNIVERSAL WARNING)	

C - CHANGE FROM PREVIOUS TYPE
M - METRIC PART
R - REMANUFACTURED PART MAY BE AVAILABLE
Y - SEPARATE ILLUSTRATION

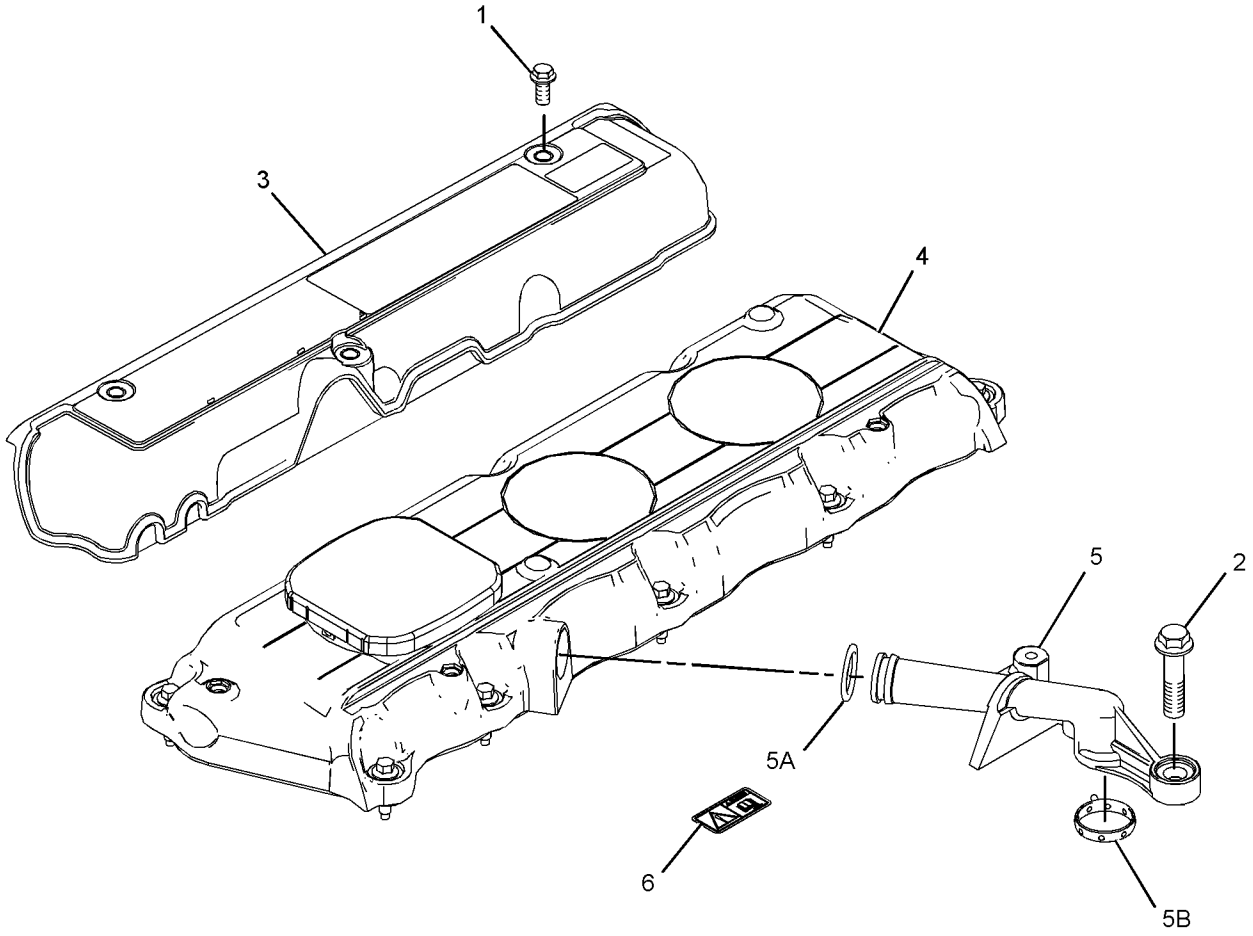

GRAPHIC #1 <END> g06150544

303-1469 COVER GP-VALVE MECHANISM

TYPE 3

SMCS-1107 **i06919842**

NOTE	REF NO	GRAPHIC REF	PART NUMBER	QTY	PART NAME 1 2 3 4 5 6 (PRODUCT LEVEL)	SEE PAGE
	1	1	**286-3029**	1	BREATHER AS	
	1A	1	**150-7732**	1	SEAL-O-RING	
	1B	1	**286-3030**	1	RING-SEAL	
MR	2	1	**100-4838**	2	BOLT (M6X1X20-MM)	
	3	1	**346-8219**	1	FILM-WARNING (UNIVERSAL WARNING)	
Y	4	1	**308-1381**	1	COVER GP-VALVE MECHANISM	430

M - METRIC PART
R - REMANUFACTURED PART MAY BE AVAILABLE
Y - SEPARATE ILLUSTRATION

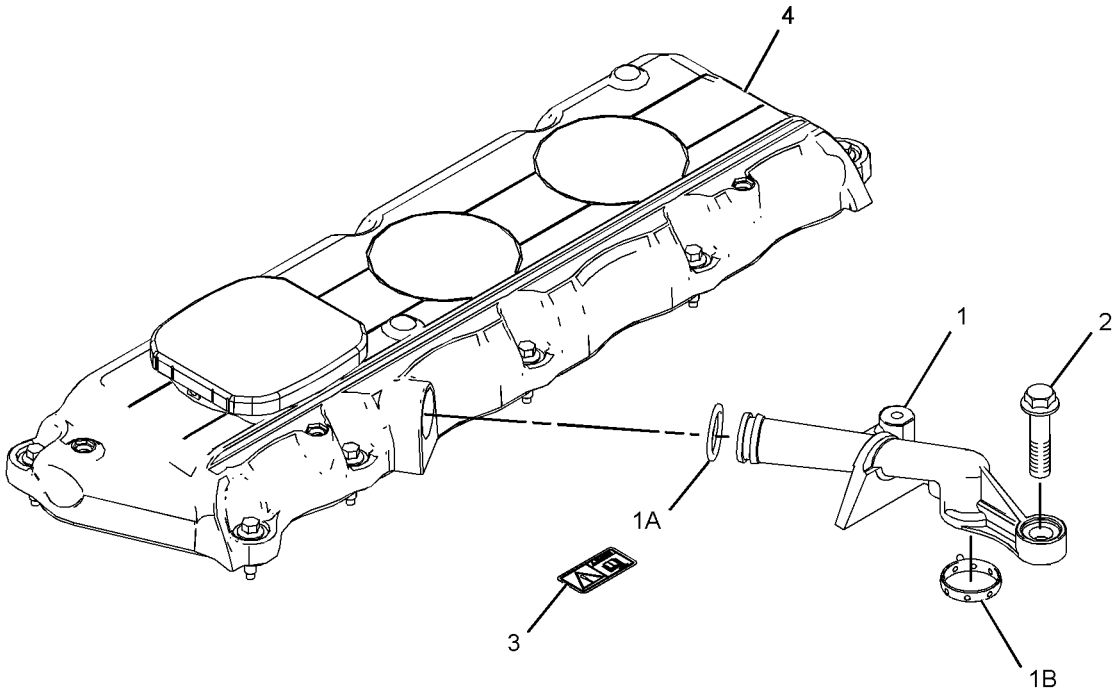

GRAPHIC #1 <END> g06181725

303-2205 COVER GP-VALVE MECHANISM

TYPE 1

SMCS-1107 **i02646766**

NOTE	REF NO	GRAPHIC REF	PART NUMBER	QTY	PART NAME 1 2 3 4 5 6 (PRODUCT LEVEL)	SEE PAGE
M	1	1	**6I-0254**	1	BOLT (M8X1.25X30-MM)	
	2	1	**198-8645**	1	HOSE (CRANKCASE BREATHER)	
M	3	1	**6I-0846**	3	BOLT (M6X1X14-MM)	
M	4	1	**6I-0917**	1	BOLT (M6X1X25-MM)	
M	5	1	**6I-4374**	1	BOLT (M8X1.25X60-MM)	
	6	1	**7C-1281**	1	BRACKET	
MR	7	1	**100-4838**	2	BOLT (M6X1X20-MM)	
M	8	1	**100-4841**	2	BOLT (M6X1X10-MM)	
	9	1	**5D-1026**	1	CLAMP-BAND	
	10	1	**162-1565**	1	SPRING (CRANKCASE BREATHER HOSE)	
	11	1	**230-9127**	1	COVER	
	12	1	**230-9152**	1	FILLER GP-ENGINE OIL	
	12A	1	**6I-1201**	1	SEAL-O-RING	
	12B	1	**130-9888**	1	CAP AS-OIL FILLER (ENGINE)	
	12C	1	**113-1504**	1	SEAL-O-RING	
	13	1	**237-0769**	1	SHIELD-HEAT	
	14	1	**247-7798**	1	COVER AS	
	14A	1	**225-6451**	1	GASKET (VALVE COVER)	
	14B	1	**225-6455**	10	BOLT	
	14C	1	**225-6456**	1	SPRING	
	14D	1	**225-6461**	1	CAP (CRANKCASE BREATHER)	
	14E	1	**225-6464**	1	DIAPHRAGM (CRANKCASE PRESSURE CONTACTOR)	
	14F	1	**225-6477**	1	PLATE	
	14G	1	**225-6478**	4	SCREW-MACHINE	
	14H	1	**225-6479**	1	CAP (CRANKCASE BREATHER)	
	15	1	**287-8573**	1	PIPE AS	

M - METRIC PART
R - REMANUFACTURED PART MAY BE AVAILABLE

303-2205 **COVER GP-VALVE MECHANISM (**contd.**)** **i02646766**

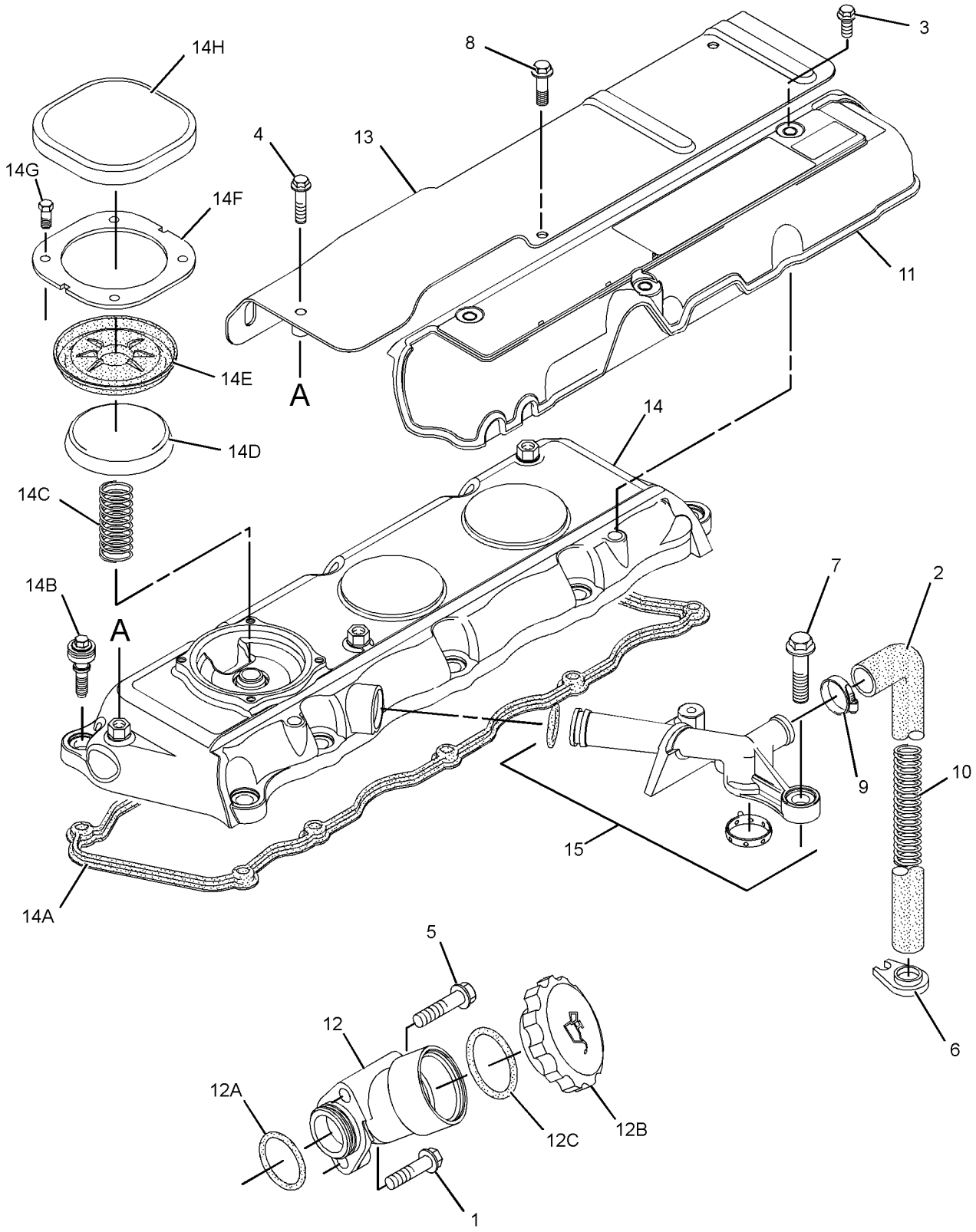

GRAPHIC #1 <END> g01326506

303-2205 COVER GP-VALVE MECHANISM

TYPE 2

SMCS-1107 **i04952716**

NOTE	REF NO	GRAPHIC REF	PART NUMBER	QTY	PART NAME 1 2 3 4 5 6 (PRODUCT LEVEL)	SEE PAGE
M	1	1	**6I-0254**	1	BOLT (M8X1.25X30-MM)	
	2	1	**198-8645**	1	HOSE (CRANKCASE BREATHER)	
M	3	1	**6I-0846**	3	BOLT (M6X1X14-MM)	
M	4	1	**6I-0917**	1	BOLT (M6X1X25-MM)	
M	5	1	**6I-4374**	1	BOLT (M8X1.25X60-MM)	
	6	1	**7C-1281**	1	BRACKET	
MR	7	1	**100-4838**	2	BOLT (M6X1X20-MM)	
M	8	1	**100-4841**	2	BOLT (M6X1X10-MM)	
	9	1	**5D-1026**	1	CLAMP-BAND	
	10	1	**162-1565**	1	SPRING (CRANKCASE BREATHER HOSE)	
	11	1	**230-9127**	1	COVER	
	12	1	**321-2383**	1	FILLER AS	
	12A	1	**306-2337**	1	SEAL-O-RING	
	12B	1	**130-9888**	1	CAP AS-OIL FILLER (ENGINE)	
	12C	1	**113-1504**	1	SEAL-O-RING	
	13	1	**237-0769**	1	SHIELD-HEAT	
C	14	1	**308-1792**	1	COVER GP-VALVE MECHANISM	
	14A	1	**225-6451**	1	GASKET (VALVE COVER)	
	14B	1	**225-6461**	1	CAP	
	14C	1	**225-6456**	1	SPRING	
	14D	1	**225-6461**	1	CAP (CRANKCASE BREATHER)	
	14E	1	**225-6464**	1	DIAPHRAGM (CRANKCASE PRESSURE CONTACTOR)	
	14F	1	**225-6477**	1	PLATE	
	14G	1	**225-6478**	4	SCREW-MACHINE	
	15	1	**287-8573**	1	PIPE AS	
	16	1	**217-9039**	1	STRAP-CABLE	

C - CHANGE FROM PREVIOUS TYPE
M - METRIC PART
R - REMANUFACTURED PART MAY BE AVAILABLE

303-2205 **COVER GP-VALVE MECHANISM (**contd.**)** **i04952716**

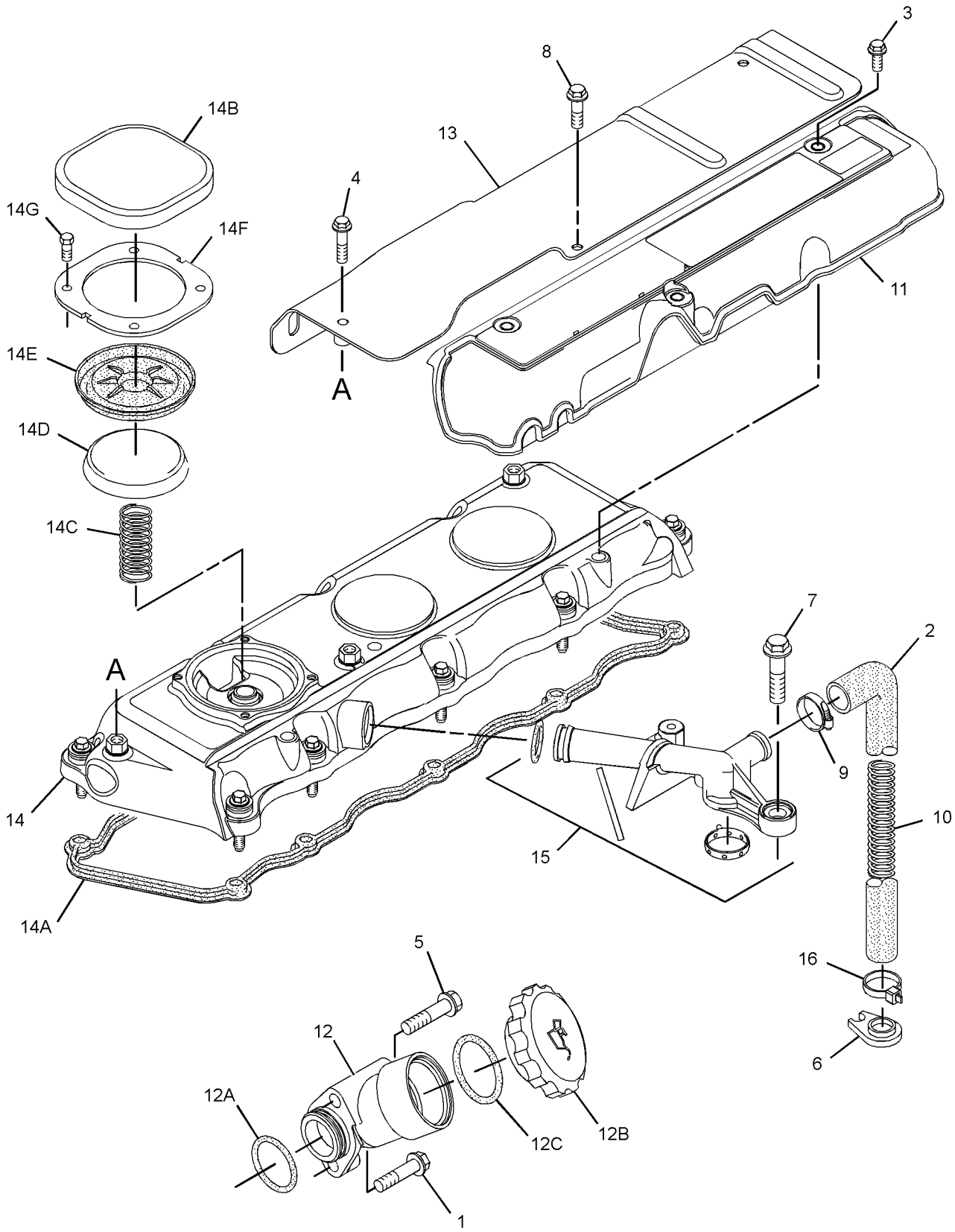

GRAPHIC #1 <END> g03179518

303-2205 COVER GP-VALVE MECHANISM

TYPE 3

SMCS-1107 **i06880081**

NOTE	REF NO	GRAPHIC REF	PART NUMBER	QTY	PART NAME 1 2 3 4 5 6 (PRODUCT LEVEL)	SEE PAGE
M	1	1	**6I-0254**	1	BOLT (M8X1.25X30-MM)	
	2	1	**198-8645**	1	HOSE (CRANKCASE BREATHER)	
M	3	1	**6I-0846**	3	BOLT (M6X1X14-MM)	
M	4	1	**6I-0917**	1	BOLT (M6X1X25-MM)	
M	5	1	**6I-4374**	1	BOLT (M8X1.25X60-MM)	
	6	1	**7C-1281**	1	BRACKET	
MR	7	1	**100-4838**	2	BOLT (M6X1X20-MM)	
M	8	1	**100-4841**	2	BOLT (M6X1X10-MM)	
	9	1	**5D-1026**	1	CLAMP-BAND	
	10	1	**162-1565**	1	SPRING (CRANKCASE BREATHER HOSE)	
	11	1	**230-9127**	1	COVER	
	12	1	**321-2383**	1	FILLER AS	
	12A	1	**306-2337**	1	SEAL-O-RING	
	12B	1	**130-9888**	1	CAP AS-OIL FILLER (ENGINE)	
	12C	1	**113-1504**	1	SEAL-O-RING	
	13	1	**237-0769**	1	SHIELD-HEAT	
CY	14	1	**446-9143**	1	COVER GP-CYLINDER HEAD	221
	15	1	**287-8573**	1	PIPE AS	
	15A	1	**150-7732**	1	SEAL-O-RING	
	15B	1	**286-3030**	1	RING-SEAL	
	16	1	**217-9039**	1	STRAP-CABLE	
	17	1	**346-8219**	1	FILM-WARNING (UNIVERSAL WARNING)	

C - CHANGE FROM PREVIOUS TYPE
M - METRIC PART
R - REMANUFACTURED PART MAY BE AVAILABLE
Y - SEPARATE ILLUSTRATION

303-2205 **COVER GP-VALVE MECHANISM (**contd.**)** **i06880081**

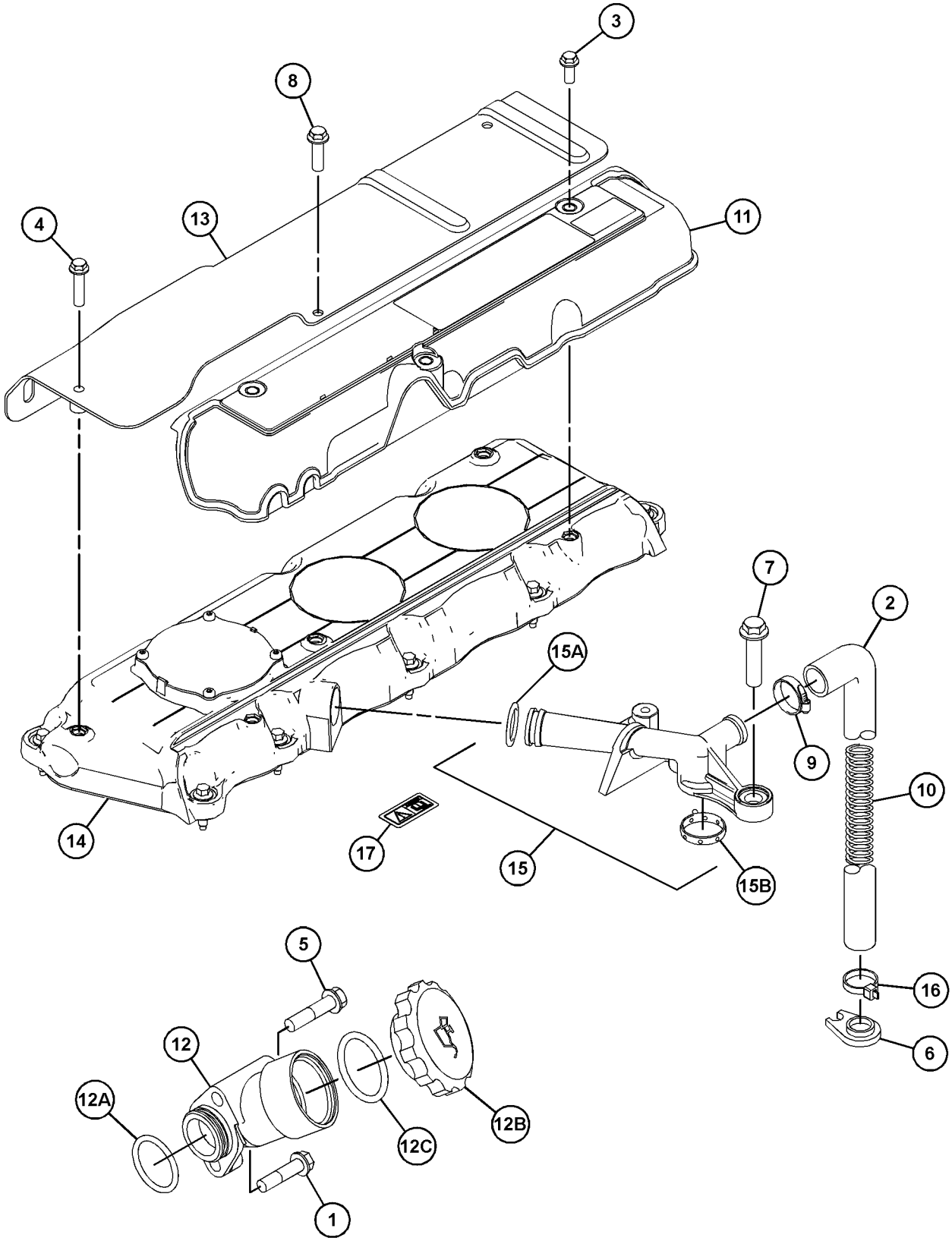

GRAPHIC #1 <END> g06199659

303-2205 COVER GP-VALVE MECHANISM

TYPE 4

SMCS-1107 **i07043802**

NOTE	REF NO	GRAPHIC REF	PART NUMBER	QTY	PART NAME 1 2 3 4 5 6 (PRODUCT LEVEL)	SEE PAGE
M	1	1	**6I-0254**	1	BOLT (M8X1.25X30-MM)	
	2	1	**198-8645**	1	HOSE (CRANKCASE BREATHER)	
M	4	1	**6I-0917**	1	BOLT (M6X1X25-MM)	
M	5	1	**6I-4374**	1	BOLT (M8X1.25X60-MM)	
	6	1	**7C-1281**	1	BRACKET	
MR	7	1	**100-4838**	2	BOLT (M6X1X20-MM)	
M	8	1	**100-4841**	2	BOLT (M6X1X10-MM)	
	9	1	**5D-1026**	1	CLAMP-BAND	
	10	1	**162-1565**	1	SPRING (CRANKCASE BREATHER HOSE)	
	12	1	**321-2383**	1	FILLER AS	
	12A	1	**306-2337**	1	SEAL-O-RING	
	12B	1	**130-9888**	1	CAP AS-OIL FILLER (ENGINE)	
	12C	1	**113-1504**	1	SEAL-O-RING	
	13	1	**237-0769**	1	SHIELD-HEAT	
CY	14	1	**446-9143**	1	COVER GP-CYLINDER HEAD	221
	15	1	**287-8573**	1	PIPE AS	
	15A	1	**2T-2695**	1	SEAL-O-RING	
	15B	1	**286-3030**	1	RING-SEAL	
	16	1	**217-9039**	1	STRAP-CABLE	
	17	1	**346-8219**	1	FILM-WARNING (UNIVERSAL WARNING)	

C - CHANGE FROM PREVIOUS TYPE
M - METRIC PART
R - REMANUFACTURED PART MAY BE AVAILABLE
Y - SEPARATE ILLUSTRATION

303-2205 **COVER GP-VALVE MECHANISM (**contd.**)** **i07043802**

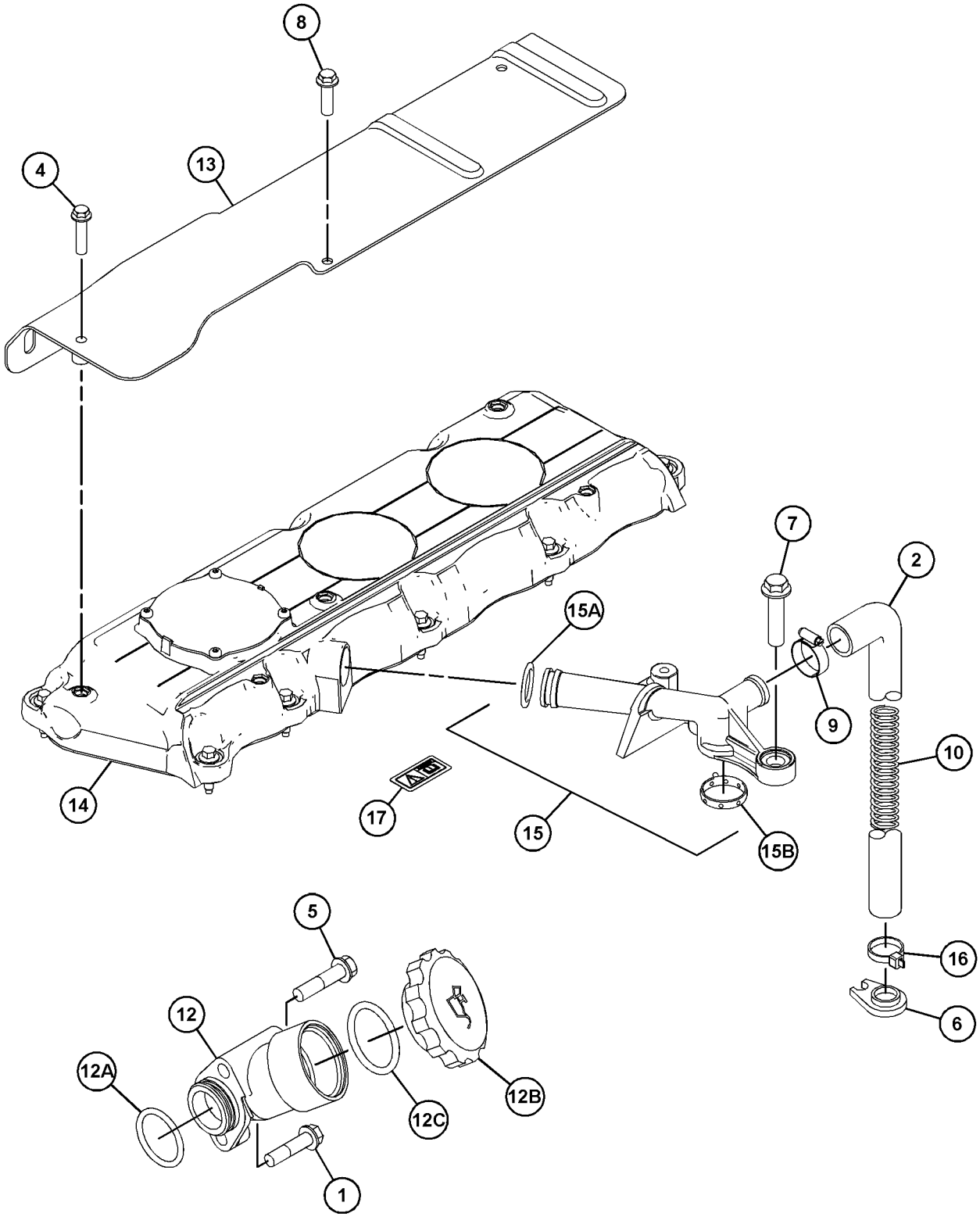

GRAPHIC #1 <END> g06210211

303-2205 COVER GP-VALVE MECHANISM

TYPE 5

SMCS-1107 **i07162098**

NOTE	REF NO	GRAPHIC REF	PART NUMBER	QTY	PART NAME 1 2 3 4 5 6 (PRODUCT LEVEL)	SEE PAGE
M	1	1	**6I-0254**	1	BOLT (M8X1.25X30-MM)	
	2	1	**198-8645**	1	HOSE (CRANKCASE BREATHER)	
	3	1	**346-8219**	1	FILM-WARNING (UNIVERSAL WARNING)	
M	4	1	**6I-0917**	1	BOLT (M6X1X25-MM)	
M	5	1	**6I-4374**	1	BOLT (M8X1.25X60-MM)	
	6	1	**7C-1281**	1	BRACKET	
MR	7	1	**100-4838**	2	BOLT (M6X1X20-MM)	
M	8	1	**100-4841**	2	BOLT (M6X1X10-MM)	
	9	1	**5D-1026**	1	CLAMP-BAND	
	10	1	**162-1565**	1	SPRING (CRANKCASE BREATHER HOSE)	
	11	1	**217-9039**	1	STRAP-CABLE	
	12	1	**321-2383**	1	FILLER AS (OIL)	
	12A	1	**306-2337**	1	SEAL-O-RING	
	12B	1	**130-9888**	1	CAP AS-OIL FILLER (ENGINE)	
	12C	1	**113-1504**	1	SEAL-O-RING	
	13	1	**237-0769**	1	SHIELD-HEAT	
CY	14	1	**308-1792**	1	COVER GP-VALVE MECHANISM	432
	15	1	**287-8573**	1	PIPE AS	
	15A	1	**2T-2695**	1	SEAL-O-RING	
	15B	1	**286-3030**	1	RING-SEAL	

C - CHANGE FROM PREVIOUS TYPE
M - METRIC PART
R - REMANUFACTURED PART MAY BE AVAILABLE
Y - SEPARATE ILLUSTRATION

303-2205 **COVER GP-VALVE MECHANISM (**contd.**)** **i07162098**

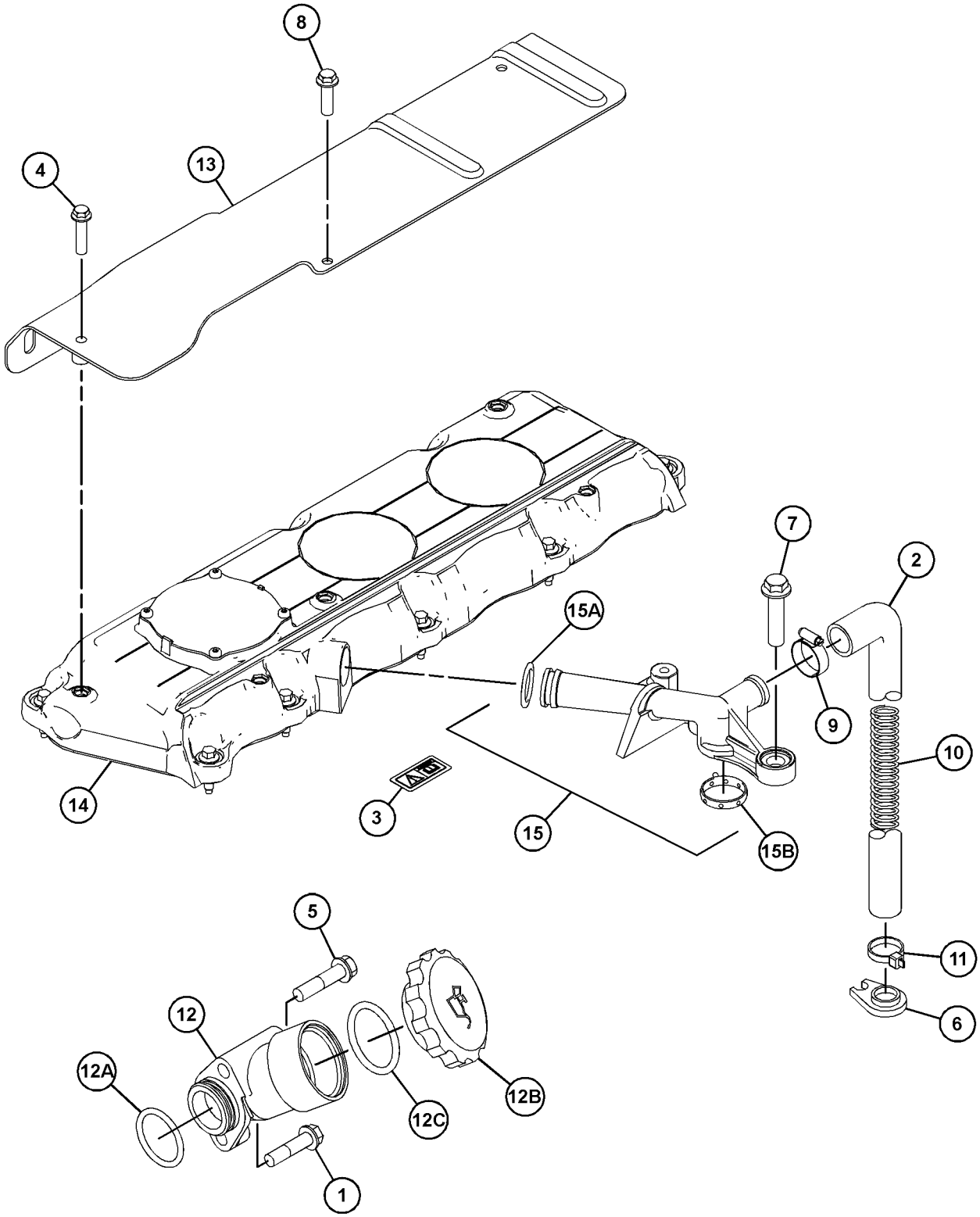

GRAPHIC #1 <END> g06241130

308-1381 COVER GP-VALVE MECHANISM

PART OF 230-9151, 234-0251, 235-3554, 238-2777, 270-4368, 270-8904, 303-1469, 353-9815 COVER GP-VALVE MECHANISM
ALSO AN ATTACHMENT

SMCS-1107 **i06293040**

NOTE	REF NO	GRAPHIC REF	PART NUMBER	QTY	PART NAME 1 2 3 4 5 6 (PRODUCT LEVEL)	SEE PAGE
	1	1	**225-6451**	1	GASKET (VALVE COVER)	
	2	1	**225-6456**	1	SPRING	
	3	1	**225-6461**	1	CAP	
	4	1	**225-6464**	1	DIAPHRAGM (CRANKCASE PRESSURE CONTACTOR)	
	5	1	**225-6477**	1	PLATE	
	6	1	**225-6478**	1	SCREW-MACHINE	
	7	1	**225-6479**	1	CAP	
	8	1	**349-2746**	10	BOLT	

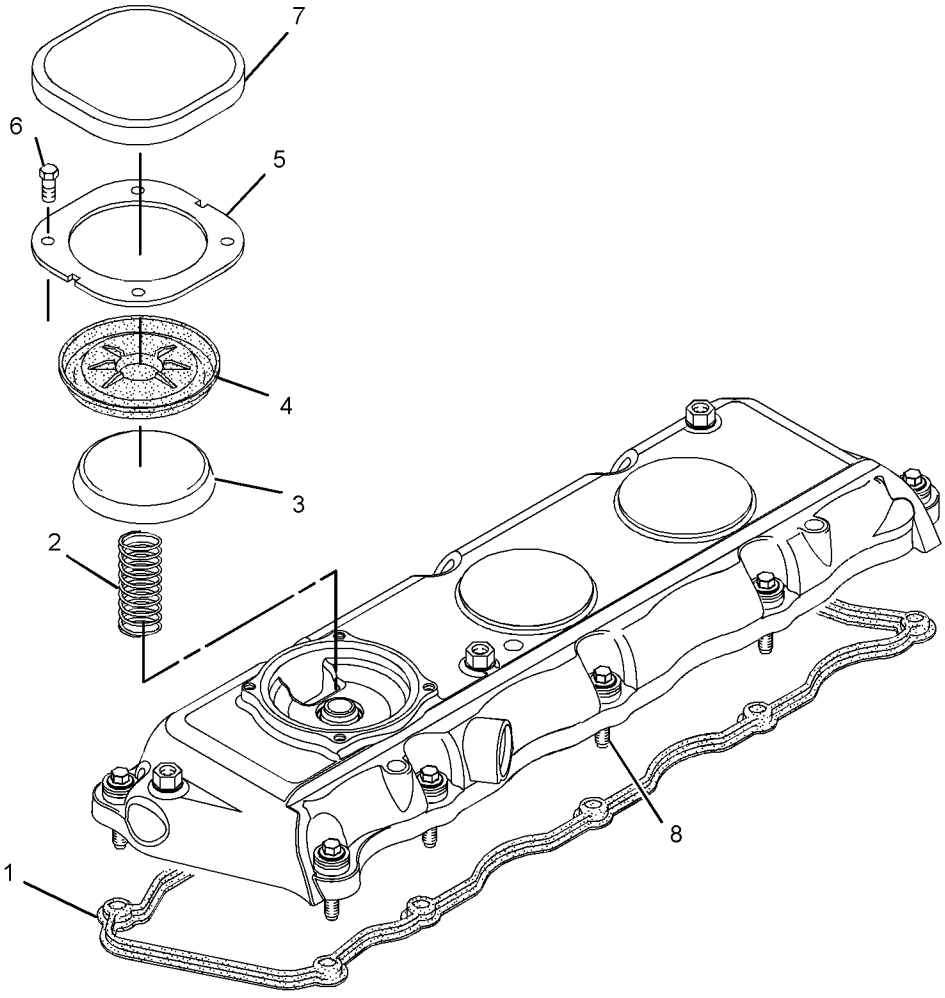

GRAPHIC #1 <END> g02153636

308-1393 COVER GP-VALVE MECHANISM

PART OF 230-9128, 230-9139, 230-9149, 230-9150, 236-1238, 269-3101, 288-1532, 293-7195 COVER GP-VALVE MECHANISM
ALSO AN ATTACHMENT

SMCS-1107 **i04952429**

NOTE	REF NO	GRAPHIC REF	PART NUMBER	QTY	PART NAME 1 2 3 4 5 6 (PRODUCT LEVEL)	SEE PAGE
	1	1	**136-3608**	1	CAP AS (ENGINE OIL FILLER)	
	1A	1	**124-0506**	1	SEAL	
	2	1	**225-6451**	1	GASKET (VALVE COVER)	
	3	1	**225-6456**	1	SPRING	
	4	1	**225-6461**	1	CAP	
	5	1	**225-6464**	1	DIAPHRAGM (CRANKCASE PRESSURE CONTACTOR)	
	6	1	**225-6477**	1	PLATE	
	7	1	**225-6478**	4	SCREW-MACHINE	
	8	1	**225-6479**	1	CAP	
	9	1	**349-2746**	1	BOLT	

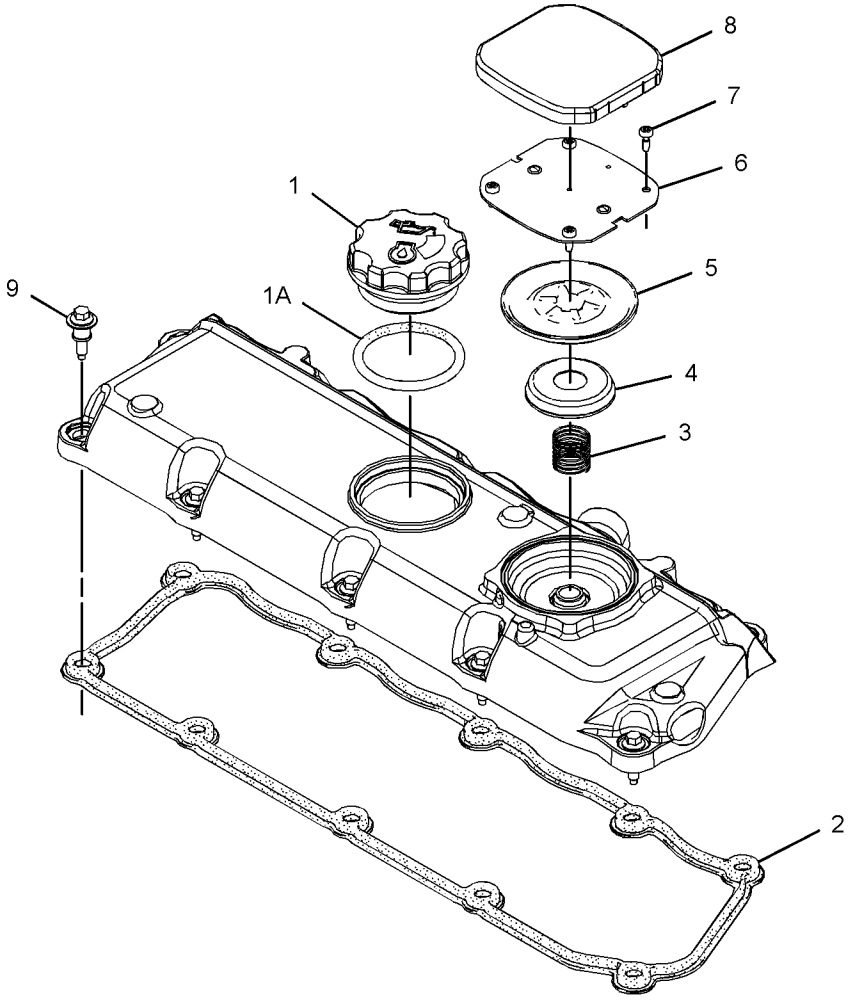

GRAPHIC #1 <END> g03139884

308-1792 COVER GP-VALVE MECHANISM

PART OF 237-2790, 303-2205, 328-8203 COVER GP-VALVE MECHANISM

SMCS-1107 **i07777742**

NOTE	REF NO	GRAPHIC REF	PART NUMBER	QTY	PART NAME 1 2 3 4 5 6 (PRODUCT LEVEL)	SEE PAGE
	1	1	**225-6451**	1	GASKET (VALVE COVER)	
	2	1	**225-6456**	1	SPRING	
	3	1	**225-6461**	1	CAP	
	4	1	**225-6464**	1	DIAPHRAGM (CRANKCASE PRESSURE CONTACTOR)	
	5	1	**225-6477**	1	PLATE	
	6	1	**225-6478**	4	SCREW-MACHINE	
	7	1	**225-6479**	1	CAP	
	8	1	**349-2746**	10	BOLT	

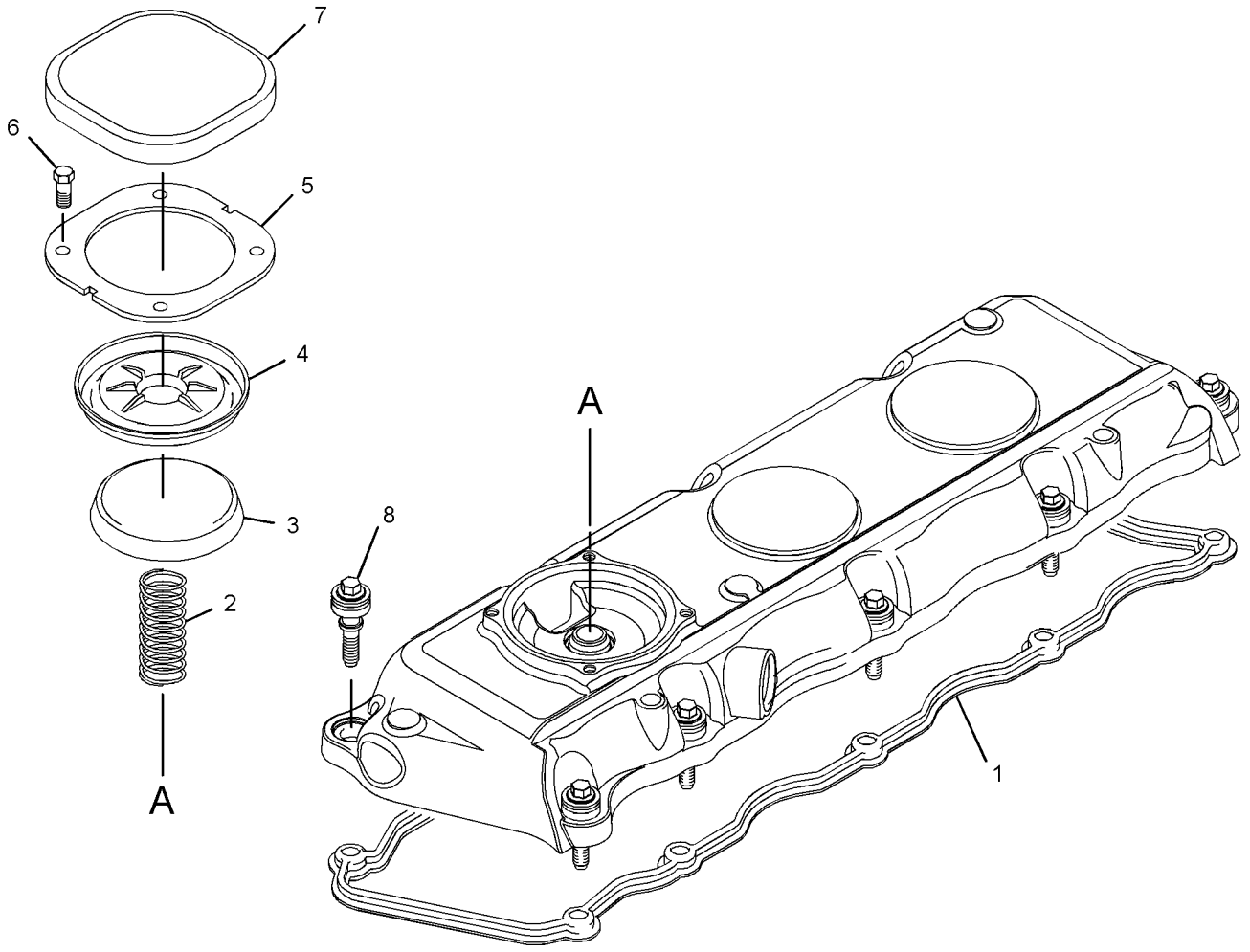

GRAPHIC #1 <END> g06433969

308-1793 COVER GP-VALVE MECHANISM

PART OF 236-8190, 272-2228, 273-0871, 367-2220 COVER GP-VALVE MECHANISM
ALSO AN ATTACHMENT

SMCS-1107 **i06722965**

NOTE	REF NO	GRAPHIC REF	PART NUMBER	QTY	PART NAME 1 2 3 4 5 6 (PRODUCT LEVEL)	SEE PAGE
	1	1	**136-3608**	1	CAP AS (ENGINE OIL FILLER)	
	1A	1	**124-0506**	1	SEAL	
	2	1	**225-6478**	4	SCREW-MACHINE	
	3	1	**225-6456**	1	SPRING (CRANKCASE BREATHER)	
	4	1	**225-6461**	1	CAP (CRANKCASE BREATHER)	
	5	1	**225-6464**	1	DIAPHRAGM (CRANKCASE PRESSURE CONTACTOR)	
	6	1	**225-6477**	1	PLATE	
	7	1	**225-6479**	1	CAP (CRANKCASE BREATHER)	
	8	1	**225-6451**	1	GASKET (VALVE COVER)	
	9	1	**349-2746**	10	BOLT	

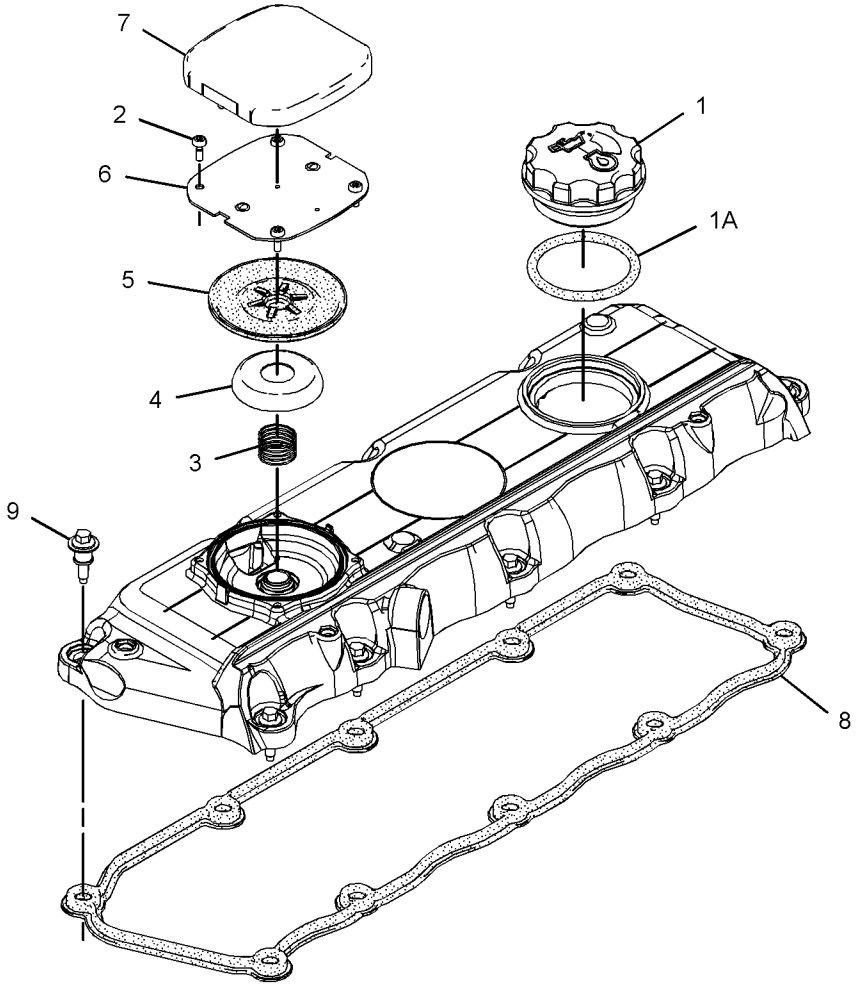

GRAPHIC #1 <END> g03189638

328-8203 COVER GP-VALVE MECHANISM

TYPE 1

SMCS-1107 **i03077170**

NOTE	REF NO	GRAPHIC REF	PART NUMBER	QTY	PART NAME 1 2 3 4 5 6 (PRODUCT LEVEL)	SEE PAGE
M	1	1	**6I-0456**	1	BOLT (M8X1.25X45-MM)	
M	2	1	**6I-0846**	3	BOLT (M6X1X14-MM)	
M	3	1	**6I-0917**	1	BOLT (M6X1X25-MM)	
M	4	1	**6I-4374**	1	BOLT (M8X1.25X60-MM)	
	5	1	**7C-1281**	1	BRACKET	
	6	1	**032-9020**	1	CLIP	
MR	7	1	**100-4838**	2	BOLT (M6X1X20-MM)	
M	8	1	**100-4841**	2	BOLT (M6X1X10-MM)	
	9	1	**162-1565**	1	SPRING (CRANKCASE BREATHER HOSE)	
	10	1	**198-8645**	1	HOSE (CRANKCASE BREATHER)	
	11	1	**224-2712**	1	FILLER AS-OIL	
	11A	1	**113-1505**	1	SEAL-O-RING	
	11B	1	**130-9888**	1	CAP AS-OIL FILLER (ENGINE)	
	11C	1	**113-1504**	1	SEAL-O-RING	
	12	1	**225-6522**	1	PLUG-CUP	
	13	1	**230-9127**	1	COVER	
	14	1	**237-0769**	1	SHIELD-HEAT	
	15	1	**287-8573**	1	PIPE AS	
	16	1	**308-1792**	1	COVER GP-VALVE MECHANISM	
	16A	1	**225-6451**	1	GASKET (VALVE COVER)	
	16B	1	**225-6456**	1	SPRING	
	16C	1	**225-6461**	1	CAP	
	16D	1	**225-6464**	1	DIAPHRAGM (CRANKCASE PRESSURE CONTACTOR)	
	16E	1	**225-6477**	1	PLATE	
	16F	1	**225-6478**	4	SCREW-MACHINE	
	16G	1	**225-6479**	1	CAP (CRANKCASE BREATHER)	

M - METRIC PART
R - REMANUFACTURED PART MAY BE AVAILABLE

328-8203 **COVER GP-VALVE MECHANISM (**contd.**)** **i03077170**

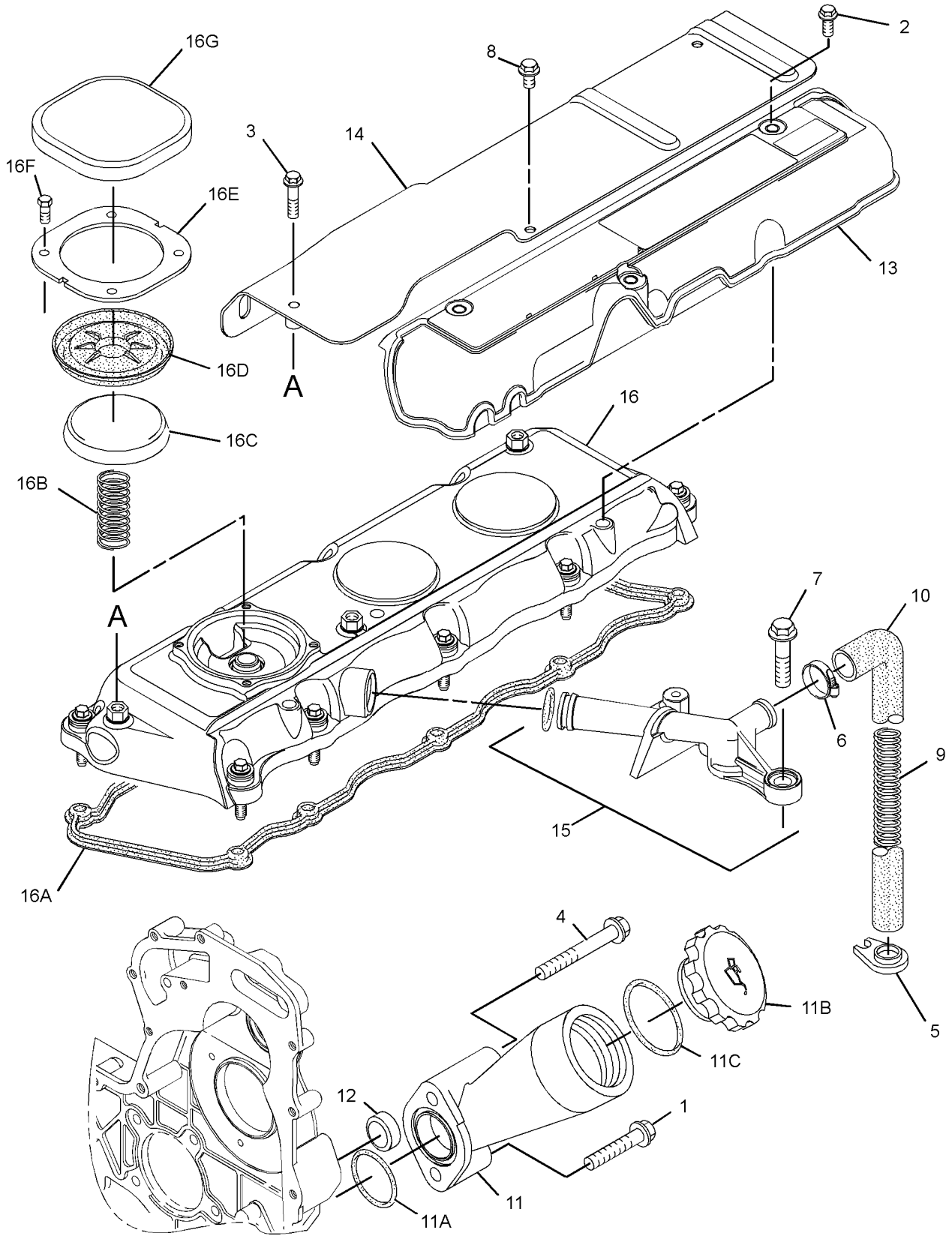

GRAPHIC #1 <END> g01960004

328-8203 COVER GP-VALVE MECHANISM

TYPE 2

SMCS-1107 **i05103174**

NOTE	REF NO	GRAPHIC REF	PART NUMBER	QTY	PART NAME 1 2 3 4 5 6 (PRODUCT LEVEL)	SEE PAGE
M	1	1	**6I-0456**	1	BOLT (M8X1.25X45-MM)	
M	2	1	**6I-0846**	3	BOLT (M6X1X14-MM)	
M	3	1	**6I-0917**	1	BOLT (M6X1X25-MM)	
M	4	1	**6I-4374**	1	BOLT (M8X1.25X60-MM)	
	5	1	**7C-1281**	1	BRACKET	
	6	1	**032-9020**	1	CLIP	
MR	7	1	**100-4838**	2	BOLT (M6X1X20-MM)	
M	8	1	**100-4841**	2	BOLT (M6X1X10-MM)	
	9	1	**162-1565**	1	SPRING (CRANKCASE BREATHER HOSE)	
	10	1	**198-8645**	1	HOSE (CRANKCASE BREATHER)	
C	11	1	**317-3773**	1	FILLER GP-ENGINE OIL	
C	11A	1	**317-3776**	1	SEAL-O-RING	
	11B	1	**130-9888**	1	CAP AS-OIL FILLER (ENGINE)	
	11C	1	**113-1504**	1	SEAL-O-RING	
	12	1	**225-6522**	1	PLUG-CUP	
	13	1	**230-9127**	1	COVER	
	14	1	**237-0769**	1	SHIELD-HEAT	
	15	1	**287-8573**	1	PIPE AS	
Y	16	1	**308-1792**	1	COVER GP-VALVE MECHANISM	432
C	17	1	**217-9039**	1	STRAP-CABLE	

C - CHANGE FROM PREVIOUS TYPE
M - METRIC PART
R - REMANUFACTURED PART MAY BE AVAILABLE
Y - SEPARATE ILLUSTRATION

328-8203 **COVER GP-VALVE MECHANISM (**contd.**)** **i05103174**

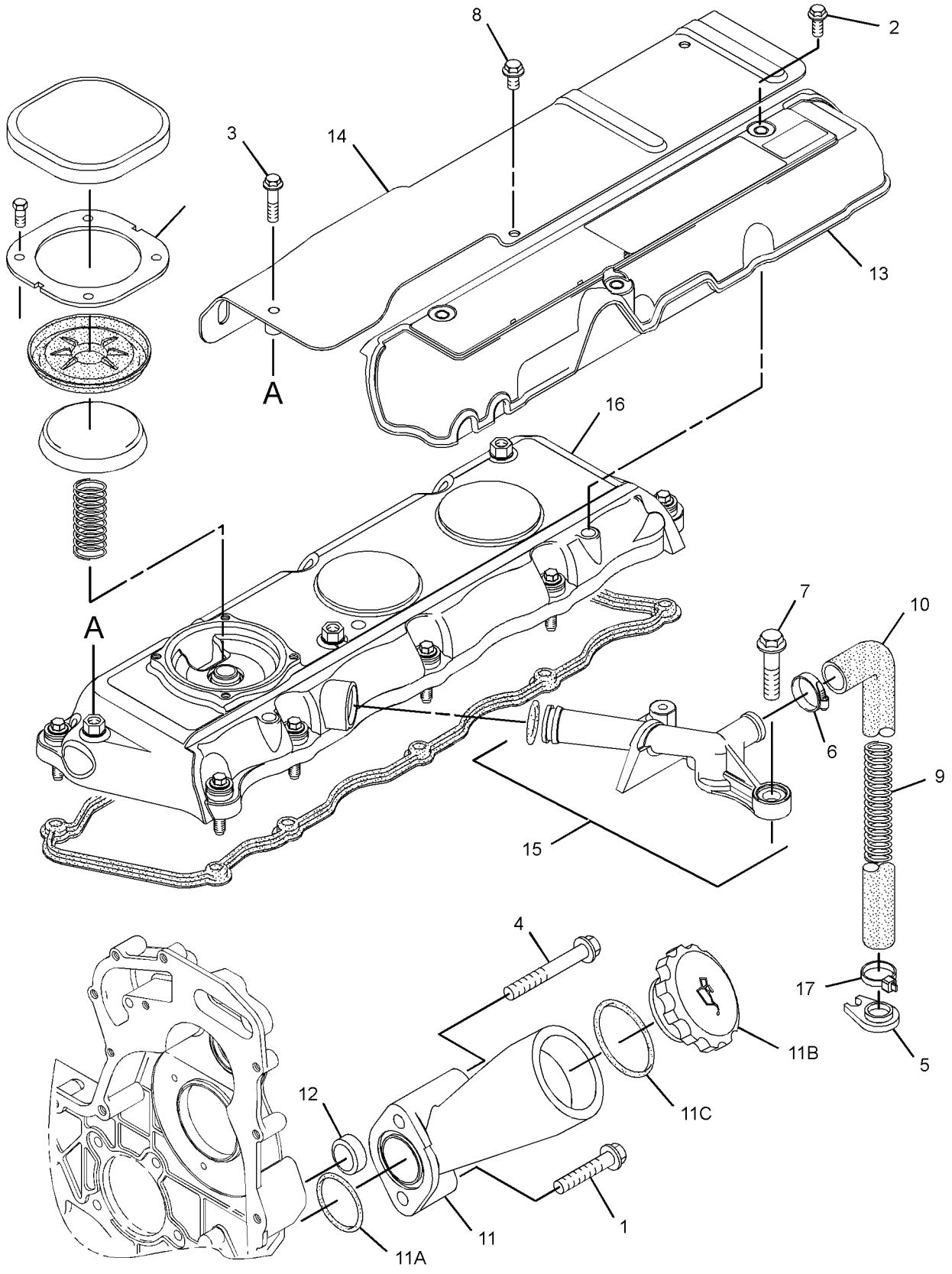

GRAPHIC #1 <END> g03346055

328-8203 COVER GP-VALVE MECHANISM

S/N: 3341-25785

SMCS-1107 **i05897309**

NOTE	REF NO	GRAPHIC REF	PART NUMBER	QTY	PART NAME 1 2 3 4 5 6 (PRODUCT LEVEL)	SEE PAGE
M	1	1	**6I-0456**	1	BOLT (M8X1.25X45-MM)	
M	2	1	**6I-0846**	3	BOLT (M6X1X14-MM)	
M	3	1	**6I-0917**	1	BOLT (M6X1X25-MM)	
M	4	1	**6I-4374**	1	BOLT (M8X1.25X60-MM)	
	5	1	**7C-1281**	1	BRACKET	
	6	1	**032-9020**	1	CLIP	
MR	7	1	**100-4838**	2	BOLT (M6X1X20-MM)	
M	8	1	**100-4841**	2	BOLT (M6X1X10-MM)	
	9	1	**162-1565**	1	SPRING (CRANKCASE BREATHER HOSE)	
	10	1	**198-8645**	1	HOSE (CRANKCASE BREATHER)	
	11	1	**317-3773**	1	FILLER GP-ENGINE OIL	
	11A	1	**317-3776**	1	SEAL-O-RING	
	11B	1	**130-9888**	1	CAP AS-OIL FILLER (ENGINE)	
	11C	1	**113-1504**	1	SEAL-O-RING	
	12	1	**225-6522**	1	PLUG-CUP	
	13	1	**230-9127**	1	COVER	
	14	1	**237-0769**	1	SHIELD-HEAT	
	15	1	**287-8573**	1	PIPE AS	
		1	**150-7732**	1	SEAL-O-RING	
		1	**286-3030**	1	RING-SEAL	
CY	16	1	**446-9143**	1	COVER GP-CYLINDER HEAD	221
	17	1	**217-9039**	1	STRAP-CABLE	

C - CHANGE FROM PREVIOUS TYPE
M - METRIC PART
R - REMANUFACTURED PART MAY BE AVAILABLE
Y - SEPARATE ILLUSTRATION

328-8203 **COVER GP-VALVE MECHANISM (**contd.**)** **i05897309**

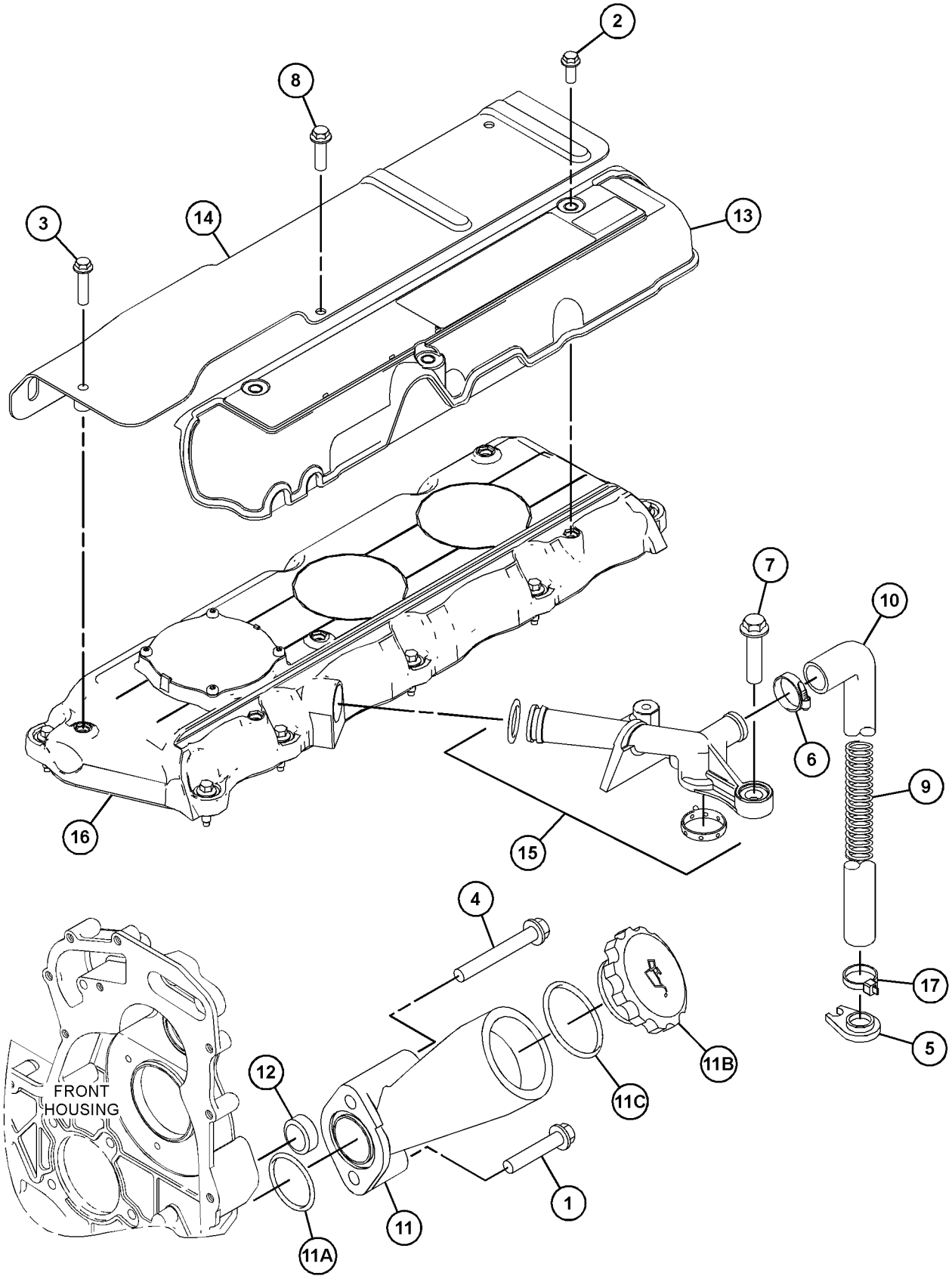

GRAPHIC #1 <END> g03809958

328-8203 COVER GP-VALVE MECHANISM

S/N: 33425786-UP

TYPE 1

SMCS-1107 **i06889284**

NOTE	REF NO	GRAPHIC REF	PART NUMBER	QTY	PART NAME 1 2 3 4 5 6 (PRODUCT LEVEL)	SEE PAGE
M	1	1	**6I-0456**	1	BOLT (M8X1.25X45-MM)	
CM	2	1	**6I-0846**	2	BOLT (M6X1X14-MM)	
M	3	1	**6I-0917**	1	BOLT (M6X1X25-MM)	
M	4	1	**6I-4374**	1	BOLT (M8X1.25X60-MM)	
	5	1	**7C-1281**	1	BRACKET	
	6	1	**032-9020**	1	CLIP	
MR	7	1	**100-4838**	2	BOLT (M6X1X20-MM)	
M	8	1	**100-4841**	2	BOLT (M6X1X10-MM)	
	9	1	**162-1565**	1	SPRING (CRANKCASE BREATHER HOSE)	
	10	1	**198-8645**	1	HOSE (CRANKCASE BREATHER)	
	11	1	**317-3773**	1	FILLER GP-ENGINE OIL	
	11A	1	**317-3776**	1	SEAL-O-RING	
	11B	1	**130-9888**	1	CAP AS-OIL FILLER (ENGINE)	
	11C	1	**113-1504**	1	SEAL-O-RING	
	12	1	**225-6522**	1	PLUG-CUP	
	13	1	**217-9039**	1	STRAP-CABLE	
	14	1	**237-0769**	1	SHIELD-HEAT	
	15	1	**287-8573**	1	PIPE AS	
	15A	1	**150-7732**	1	SEAL-O-RING	
	15B	1	**286-3030**	1	RING-SEAL	
Y	16	1	**446-9143**	1	COVER GP-CYLINDER HEAD	221

C - CHANGE FROM PREVIOUS TYPE
M - METRIC PART
R - REMANUFACTURED PART MAY BE AVAILABLE
Y - SEPARATE ILLUSTRATION

328-8203 **COVER GP-VALVE MECHANISM (**contd.**)** **i06889284**

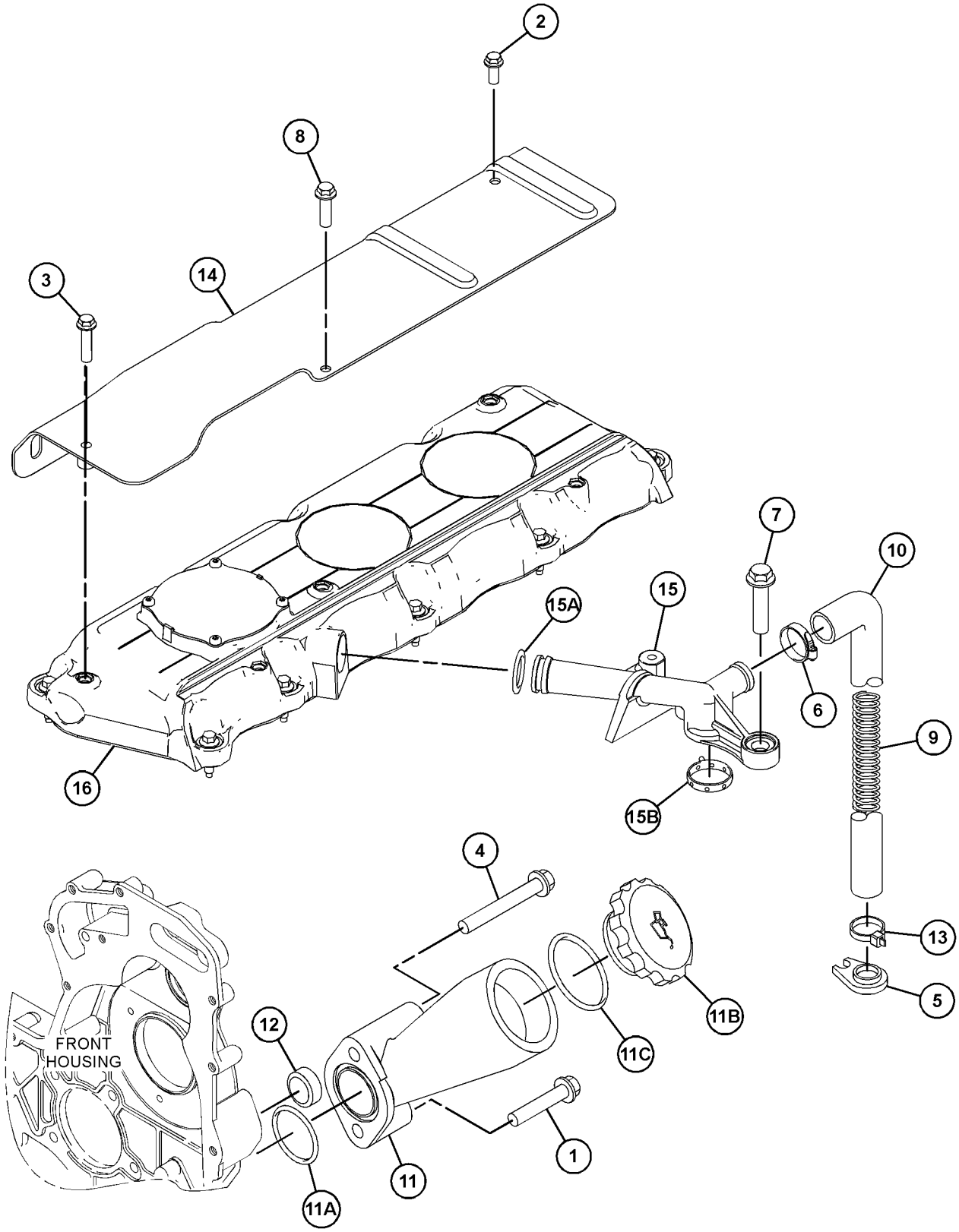

GRAPHIC #1 <END> g06158323

328-8203 COVER GP-VALVE MECHANISM

S/N: 33425786-UP

TYPE 2

SMCS-1107 **i06992782**

NOTE	REF NO	GRAPHIC REF	PART NUMBER	QTY	PART NAME 1 2 3 4 5 6 (PRODUCT LEVEL)	SEE PAGE
M	1	1	**6I-0456**	1	BOLT (M8X1.25X45-MM)	
M	2	1	**6I-0846**	2	BOLT (M6X1X14-MM)	
M	3	1	**6I-0917**	1	BOLT (M6X1X25-MM)	
M	4	1	**6I-4374**	1	BOLT (M8X1.25X60-MM)	
	5	1	**7C-1281**	1	BRACKET	
	6	1	**032-9020**	1	CLIP	
MR	7	1	**100-4838**	2	BOLT (M6X1X20-MM)	
M	8	1	**100-4841**	2	BOLT (M6X1X10-MM)	
	9	1	**162-1565**	1	SPRING (CRANKCASE BREATHER HOSE)	
	10	1	**198-8645**	1	HOSE (CRANKCASE BREATHER)	
	11	1	**317-3773**	1	FILLER GP-ENGINE OIL	
	11A	1	**317-3776**	1	SEAL-O-RING	
	11B	1	**130-9888**	1	CAP AS-OIL FILLER (ENGINE)	
	11C	1	**113-1504**	1	SEAL-O-RING	
	12	1	**225-6522**	1	PLUG-CUP	
	13	1	**217-9039**	1	STRAP-CABLE	
	14	1	**237-0769**	1	SHIELD-HEAT	
	15	1	**287-8573**	1	PIPE AS	
	15A	1	**150-7732**	1	SEAL-O-RING	
	15B	1	**286-3030**	1	RING-SEAL	
CY	16	1	**308-1792**	1	COVER GP-VALVE MECHANISM	432

C - CHANGE FROM PREVIOUS TYPE
M - METRIC PART
R - REMANUFACTURED PART MAY BE AVAILABLE
Y - SEPARATE ILLUSTRATION

328-8203 **COVER GP-VALVE MECHANISM (**contd.**)** **i06992782**

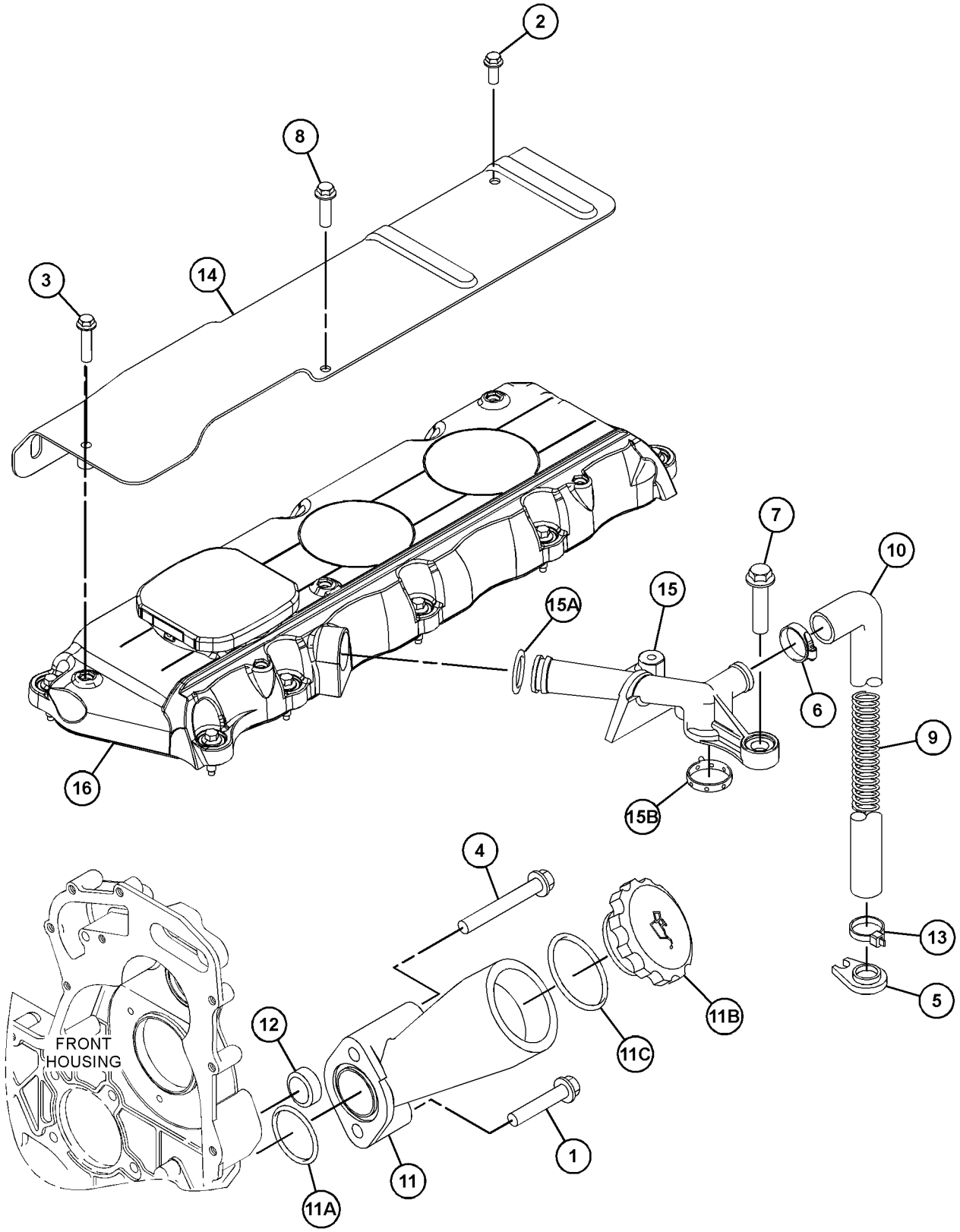

GRAPHIC #1 <END> g06208227

353-9815 COVER GP-VALVE MECHANISM

S/N: 33416200-UP

SMCS-1107 **i06839638**

NOTE	REF NO	GRAPHIC REF	PART NUMBER	QTY	PART NAME 1 2 3 4 5 6 (PRODUCT LEVEL)	SEE PAGE
M	1	2	**6I-0254**	1	BOLT (M8X1.25X30-MM)	
M	2	2	**6I-0846**	3	BOLT (M6X1X14-MM)	
M	3	2	**6I-4374**	1	BOLT (M8X1.25X60-MM)	
MR	4	2	**100-4838**	2	BOLT (M6X1X20-MM)	
	5	2	**225-6524**	1	PLUG-CUP	
	6	2	**230-9127**	1	COVER	
	7	2	**286-3029**	1	BREATHER AS	
	7A	2	**150-7732**	1	SEAL-O-RING	
	7B	2	**286-3030**	1	RING-SEAL	
Y	8	1	**308-1381**	1	COVER GP-VALVE MECHANISM	430
	9	2	**321-2383**	1	FILLER AS	
	9A	2	**130-9888**	1	CAP AS-OIL FILLER (ENGINE)	
	9B	2	**113-1504**	1	SEAL-O-RING	
	9C	2	**306-2337**	1	SEAL-O-RING	

M - METRIC PART
R - REMANUFACTURED PART MAY BE AVAILABLE
Y - SEPARATE ILLUSTRATION

REFER TO ALL ILLUSTRATIONS OF THIS GROUP FOR AUXILIARY VIEWS

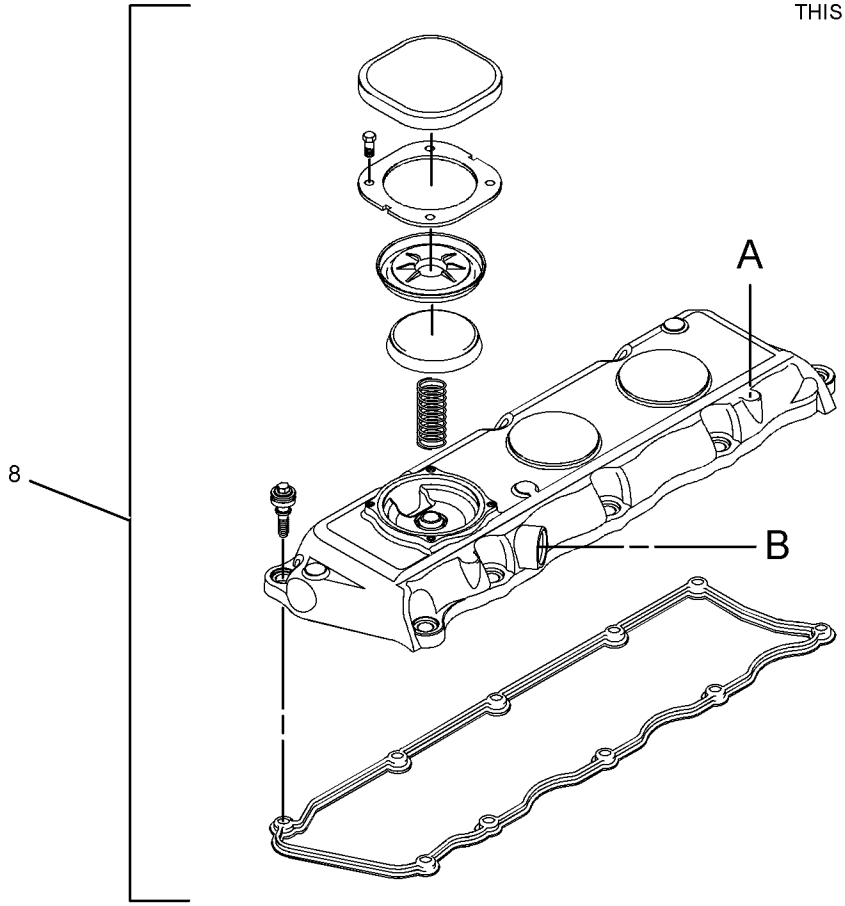

GRAPHIC #1 g06152711

353-9815 **COVER GP-VALVE MECHANISM (**contd.**)** **i06839638**

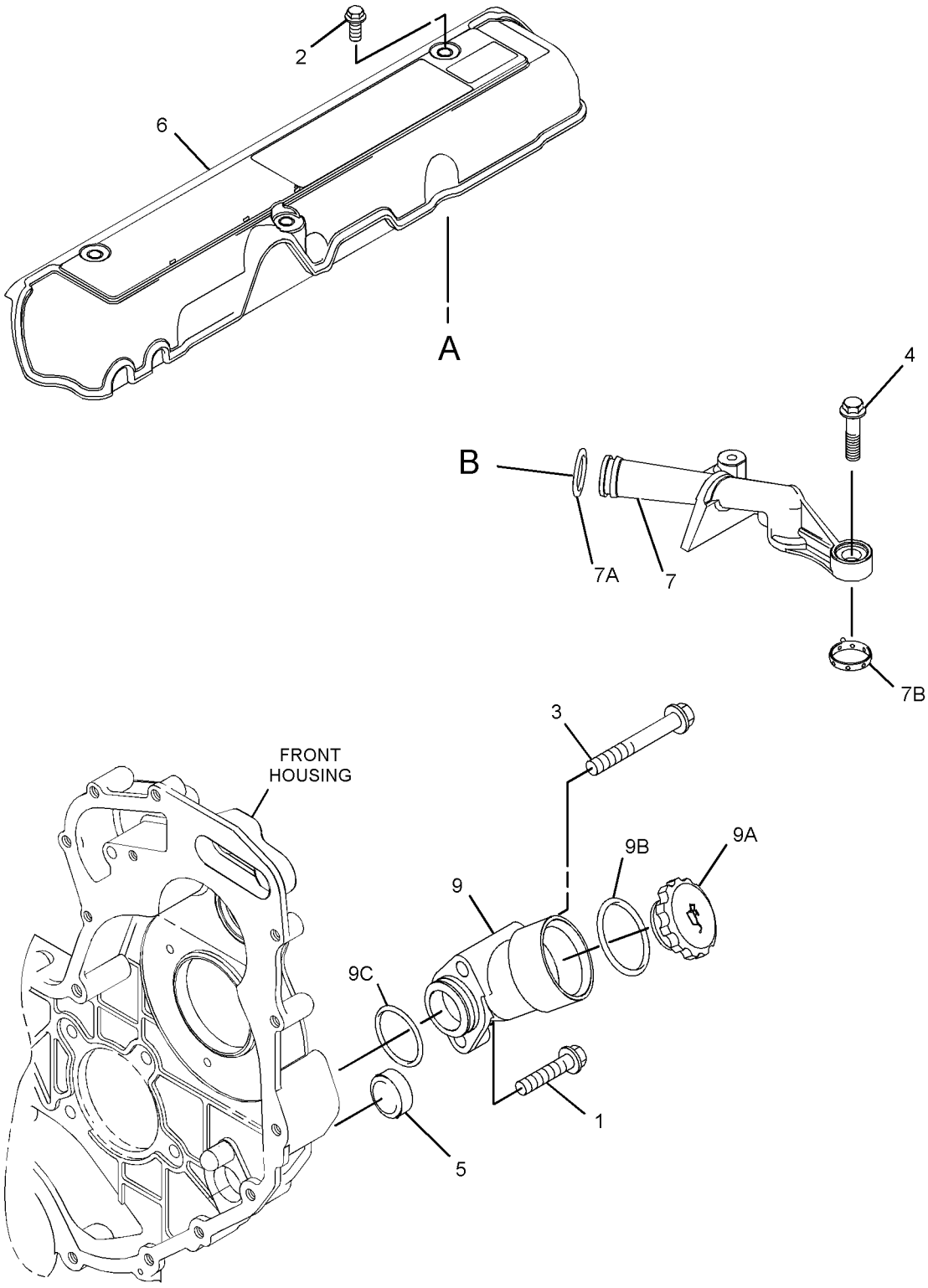

GRAPHIC #2 <END> g06152712

367-2220 COVER GP-VALVE MECHANISM

TYPE 1

SMCS-1107 **i05090254**

NOTE	REF NO	GRAPHIC REF	PART NUMBER	QTY	PART NAME 1 2 3 4 5 6 (PRODUCT LEVEL)	SEE PAGE
M	1	1	**6I-0254**	1	BOLT (M8X1.25X30-MM)	
M	2	1	**6I-4374**	1	BOLT (M8X1.25X60-MM)	
	3	1	**7C-1281**	1	BRACKET	
	4	1	**032-9020**	1	CLIP	
MR	5	1	**100-4838**	2	BOLT (M6X1X20-MM)	
	6	1	**162-1565**	1	SPRING (CRANKCASE BREATHER HOSE)	
	7	1	**198-8645**	1	HOSE (CRANKCASE BREATHER)	
	8	1	**287-8573**	1	PIPE AS	
	8A	1	**150-7732**	1	SEAL-O-RING	
	8B	1	**286-3030**	1	RING-SEAL	
Y	9	1	**308-1793**	1	COVER GP-VALVE MECHANISM	433
	10	1	**321-2383**	1	FILLER AS	
	10A	1	**130-9888**	1	CAP AS-OIL FILLER (ENGINE)	
	10B	1	**306-2337**	1	SEAL-O-RING	
	11	1	**217-9039**	1	STRAP-CABLE	

M - METRIC PART
R - REMANUFACTURED PART MAY BE AVAILABLE
Y - SEPARATE ILLUSTRATION

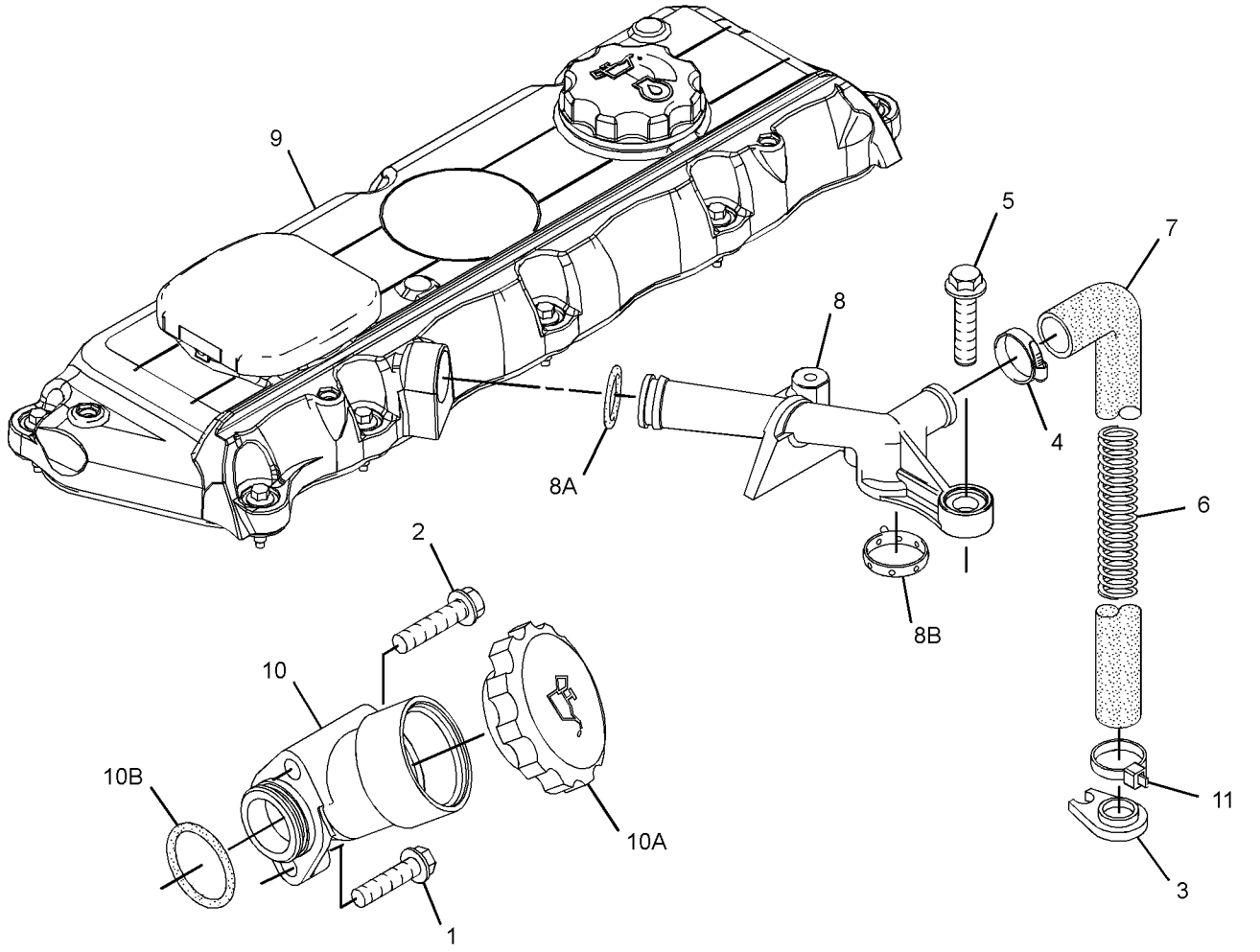

GRAPHIC #1 <END> g03332217

367-2220 COVER GP-VALVE MECHANISM

TYPE 2

SMCS-1107 **i07317248**

NOTE	REF NO	GRAPHIC REF	PART NUMBER	QTY	PART NAME 1 2 3 4 5 6 (PRODUCT LEVEL)	SEE PAGE
M	1	1	**6I-0254**	1	BOLT (M8X1.25X30-MM)	
M	2	1	**6I-4374**	1	BOLT (M8X1.25X60-MM)	
	3	1	**7C-1281**	1	BRACKET	
	4	1	**032-9020**	1	CLIP	
MR	5	1	**100-4838**	2	BOLT (M6X1X20-MM)	
	6	1	**162-1565**	1	SPRING (CRANKCASE BREATHER HOSE)	
	7	1	**198-8645**	1	HOSE (CRANKCASE BREATHER)	
	8	1	**287-8573**	1	PIPE AS	
	8A	1	**2T-2695**	1	SEAL-O-RING	
	8B	1	**286-3030**	1	RING-SEAL	
Y	9	1	**521-8088**	1	COVER GP-CYLINDER HEAD	227
	10	1	**321-2383**	1	FILLER AS	
	10A	1	**130-9888**	1	CAP AS-OIL FILLER (ENGINE)	
		1	**113-1504**	1	SEAL-O-RING	
	10B	1	**306-2337**	1	SEAL-O-RING	
	11	1	**217-9039**	1	STRAP-CABLE	

M - METRIC PART
R - REMANUFACTURED PART MAY BE AVAILABLE
Y - SEPARATE ILLUSTRATION

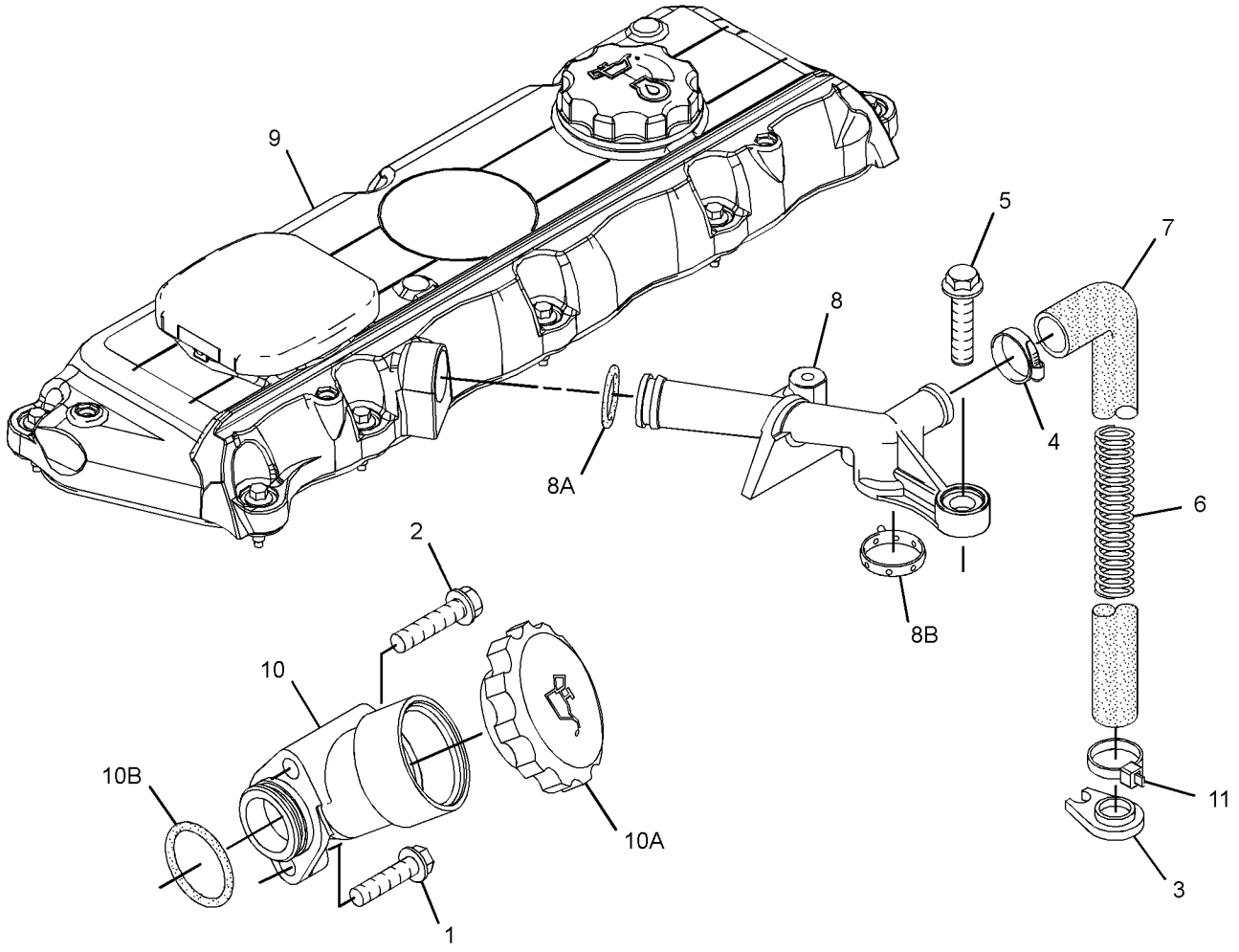

GRAPHIC #1 <END> g03332217

449-1277 COVER GP-VALVE MECHANISM

PART OF 236-8190, 272-2228 COVER GP-VALVE MECHANISM
ALSO AN ATTACHMENT

SMCS-1107 **i07071610**

NOTE	REF NO	GRAPHIC REF	PART NUMBER	QTY	PART NAME 1 2 3 4 5 6 (PRODUCT LEVEL)	SEE PAGE
	1	1	**225-6451**	1	GASKET (VALVE COVER)	
	2	1	**225-6478**	4	SCREW-MACHINE	
	3	1	**349-2746**	10	BOLT	
	4	1	**431-1704**	1	PLATE	
	5	1	**449-0818**	1	COVER-VALVE MECHANISM	
	6	1	**136-3608**	1	CAP AS (ENGINE OIL FILLER)	
	6A	1	**124-0506**	1	SEAL	

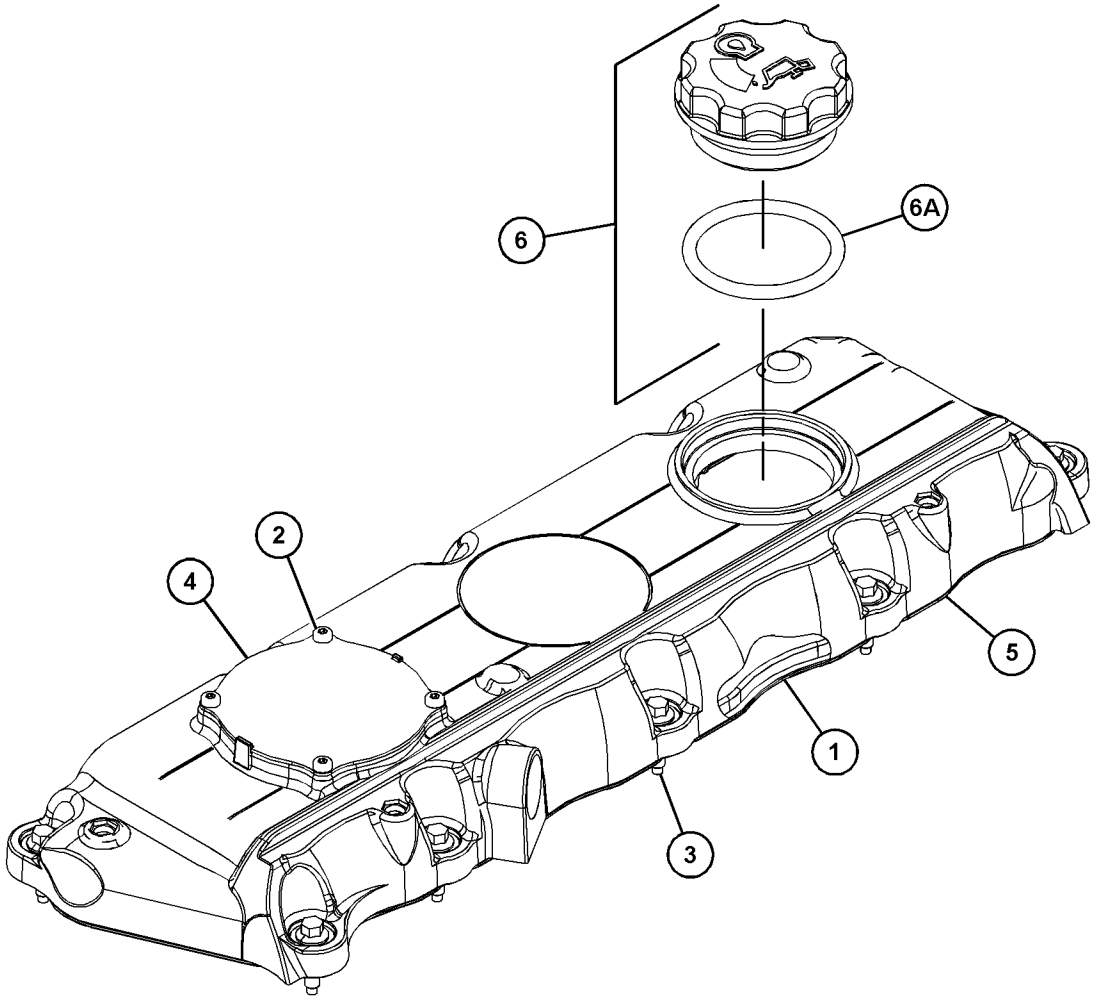

GRAPHIC #1 <END> g03704112

232-7400 CRANKSHAFT GP

SPLINED

PART OF 233-7027, 243-1950, 247-4821, 253-8751, 316-8479, 367-2788 CRANKSHAFT GP

SMCS-1202 **i05583215**

NOTE	REF NO	GRAPHIC REF	PART NUMBER	QTY	PART NAME 1 2 3 4 5 6 (PRODUCT LEVEL)	SEE PAGE
	1	1	**1B-8736**	1	KEY-WOODRUFF	
	2	1	**225-7772**	1	BEARING SET-MAIN (STANDARD)	
AB		1	**233-3785**		KIT-CRANKSHAFT BEARING (0.50-MM US)	
AB		1	**233-3784**		KIT-CRANKSHAFT BEARING (0.25-MM US)	
AB		1	**233-3786**		KIT-CRANKSHAFT BEARING (0.75-MM US)	
	3	1	**032-9090**	2	WASHER-THRUST (STANDARD-UPPER)	
AB		1	**067-6873**		WASHER-THRUST (0.18-MM OS)	
	4	1	**032-9091**	2	WASHER-THRUST (STANDARD-LOWER)	
AB		1	**067-6874**		WASHER-THRUST (0.18-MM OS)	
	5	1	**353-2205**	1	KIT-ROD BEARING	
AB		1	**353-2206**		KIT-ROD BEARING (0.25-MM US)	
AB		1	**353-2207**		KIT-ROD BEARING (0.50-MM US)	
AB		1	**353-2208**		KIT-ROD BEARING (0.75-MM US)	

A - NOT PART OF THIS GROUP
B - USE AS REQUIRED

232-7400 **CRANKSHAFT GP (**contd.**)** **i05583215**

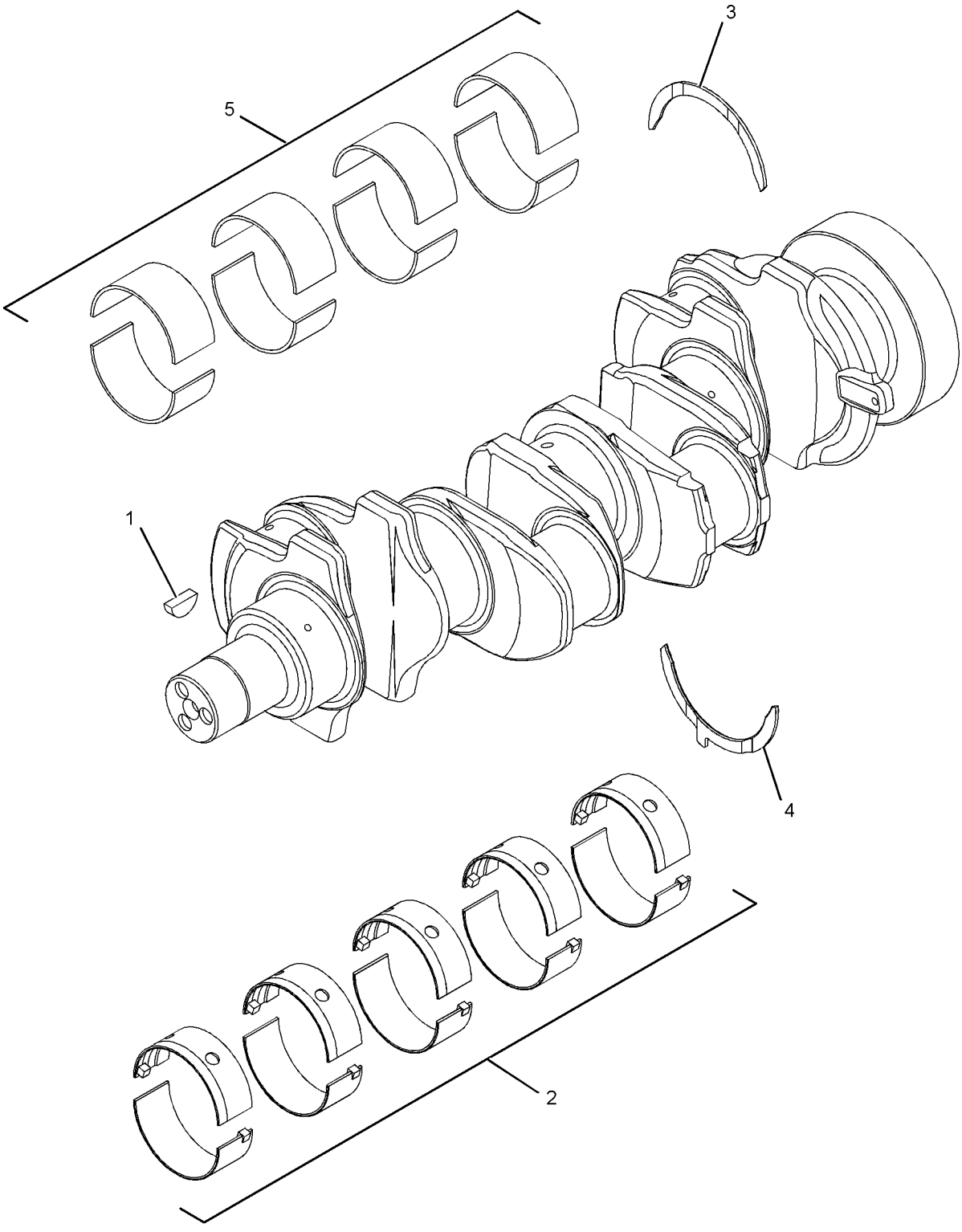

GRAPHIC #1 <END> g01369317

232-7439 CRANKSHAFT GP

S/N: 3341-25630

ALSO AN ATTACHMENT

SMCS-1202 **i05575533**

NOTE	REF NO	GRAPHIC REF	PART NUMBER	QTY	PART NAME 1 2 3 4 5 6 (PRODUCT LEVEL)	SEE PAGE
	1	1	**1B-8736**	1	KEY-WOODRUFF	
	2	1	**216-8314**	1	GEAR-CRANKSHAFT (34-TEETH)	
J	3	1	**232-7400**	1	CRANKSHAFT GP (WITH SPLINE) (CONNECTING ROD, 63.48-MM DIA)	
	4	1	**225-7772**	1	BEARING SET-MAIN (STANDARD)	
AB		1	**233-3784**		KIT-CRANKSHAFT BEARING (0.25-MM US)	
AB		1	**233-3785**		KIT-CRANKSHAFT BEARING (0.50-MM US)	
AB		1	**233-3786**		KIT-CRANKSHAFT BEARING (0.75-MM US)	
	5	1	**225-7781**	1	BEARING SET-ROD (STANDARD)	
AB		1	**233-3788**		KIT-ROD BEARING (0.25-MM US)	
AB		1	**233-3789**		KIT-ROD BEARING (0.50-MM US)	
AB		1	**233-3790**		KIT-ROD BEARING (0.75-MM US) (0.76-MM OS)	
	6	1	**032-9090**	2	WASHER-THRUST (STANDARD-UPPER)	
AB		1	**067-6873**		WASHER-THRUST (0.18-MM OS) (UPPER)	
	7	1	**032-9091**	2	WASHER-THRUST (STANDARD-LOWER)	
AB		1	**067-6874**		WASHER-THRUST (0.18-MM OS) (LOWER)	

A - NOT PART OF THIS GROUP
B - USE AS REQUIRED
J - CHECK CONNECTING ROD JOURNAL TO ENSURE THIS IS THE CORRECT CRANKSHAFT

232-7439 **CRANKSHAFT GP (**contd.**)** **i05575533**

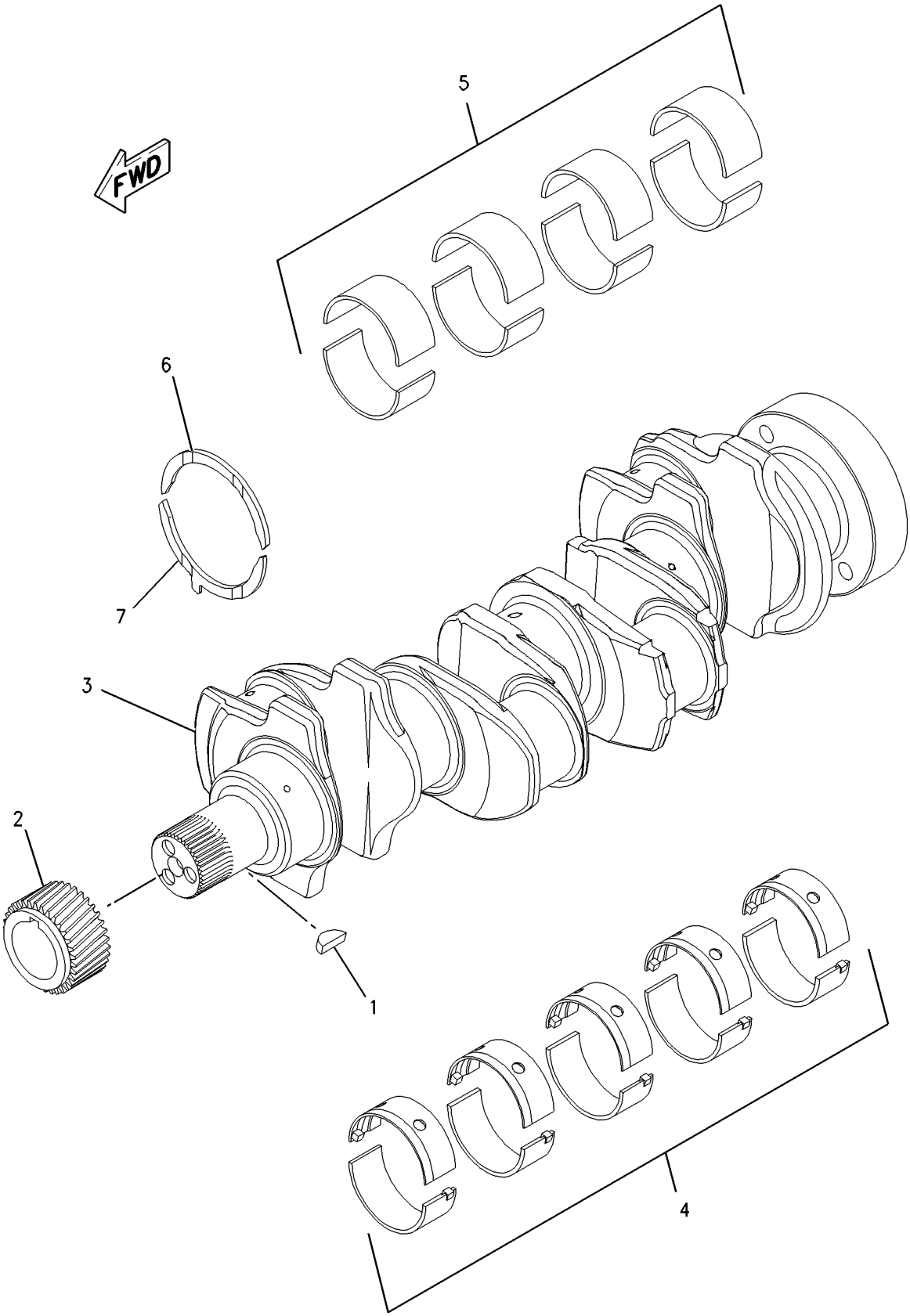

GRAPHIC #1 <END> g00950782

232-7439 CRANKSHAFT GP

ALSO AN ATTACHMENT

SMCS-1202 **i05165312**

NOTE	REF NO	GRAPHIC REF	PART NUMBER	QTY	PART NAME 1 2 3 4 5 6 (PRODUCT LEVEL)	SEE PAGE
C	1	1	**067-6135**	1	KEY-WOODRUFF	
	2	1	**216-8314**	1	GEAR-CRANKSHAFT (34-TEETH)	
CJY	3	1	**359-0715**	1	CRANKSHAFT GP (W/O SPLINE) (CONNECTING ROD, 68-MM DIA)	477

C - CHANGE FROM PREVIOUS TYPE
J - CHECK CONNECTING ROD JOURNAL TO ENSURE THIS IS THE CORRECT CRANKSHAFT
Y - SEPARATE ILLUSTRATION

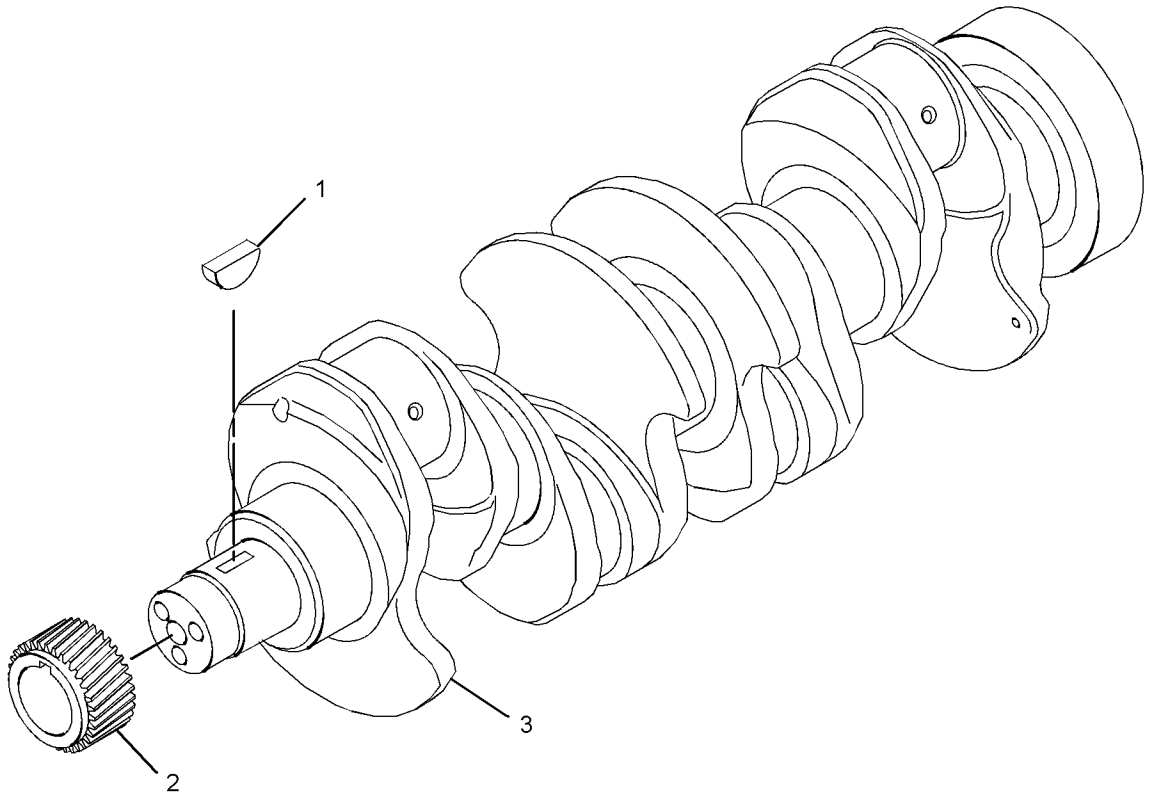

GRAPHIC #1 <END> g02177264

233-7027 CRANKSHAFT GP

S/N: 3341-25630

SMCS-1202 **i05165344**

NOTE	REF NO	GRAPHIC REF	PART NUMBER	QTY	PART NAME 1 2 3 4 5 6 (PRODUCT LEVEL)	SEE PAGE
JY	1	1	**232-7400**	1	CRANKSHAFT GP (WITH SPLINE) (CONNECTING ROD, 63.48-MM DIA)	449
	2	1	**216-8314**	1	GEAR-CRANKSHAFT (34-TEETH)	

J - CHECK CONNECTING ROD JOURNAL TO ENSURE THIS IS THE CORRECT CRANKSHAFT
Y - SEPARATE ILLUSTRATION

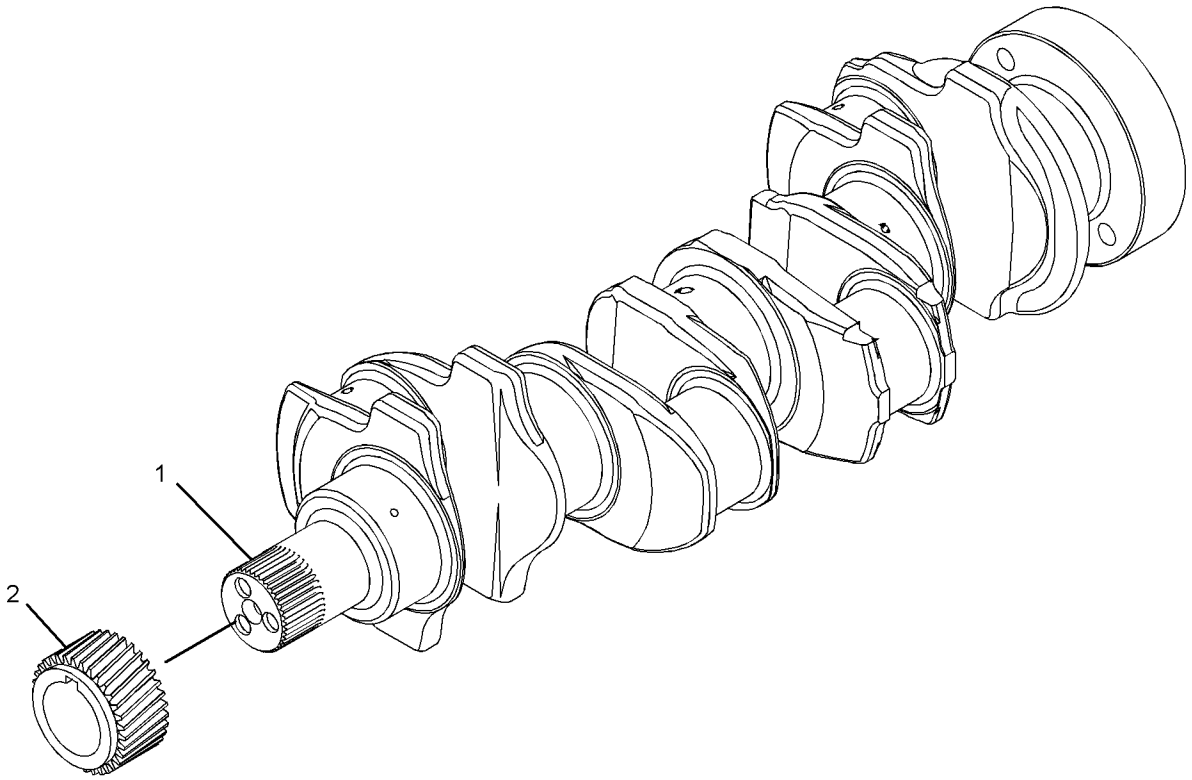

GRAPHIC #1 <END> g02152725

233-7027 CRANKSHAFT GP

SMCS-1202 **i05165345**

NOTE	REF NO	GRAPHIC REF	PART NUMBER	QTY	PART NAME 1 2 3 4 5 6 (PRODUCT LEVEL)	SEE PAGE
	1	1	**216-8314**	1	GEAR-CRANKSHAFT (34-TEETH)	
CJY	2	1	**359-0715**	1	CRANKSHAFT GP (W/O SPLINE) (CONNECTING ROD, 68-MM DIA)	477
C	3	1	**067-6135**	1	KEY-WOODRUFF	

C - CHANGE FROM PREVIOUS TYPE
J - CHECK CONNECTING ROD JOURNAL TO ENSURE THIS IS THE CORRECT CRANKSHAFT
Y - SEPARATE ILLUSTRATION

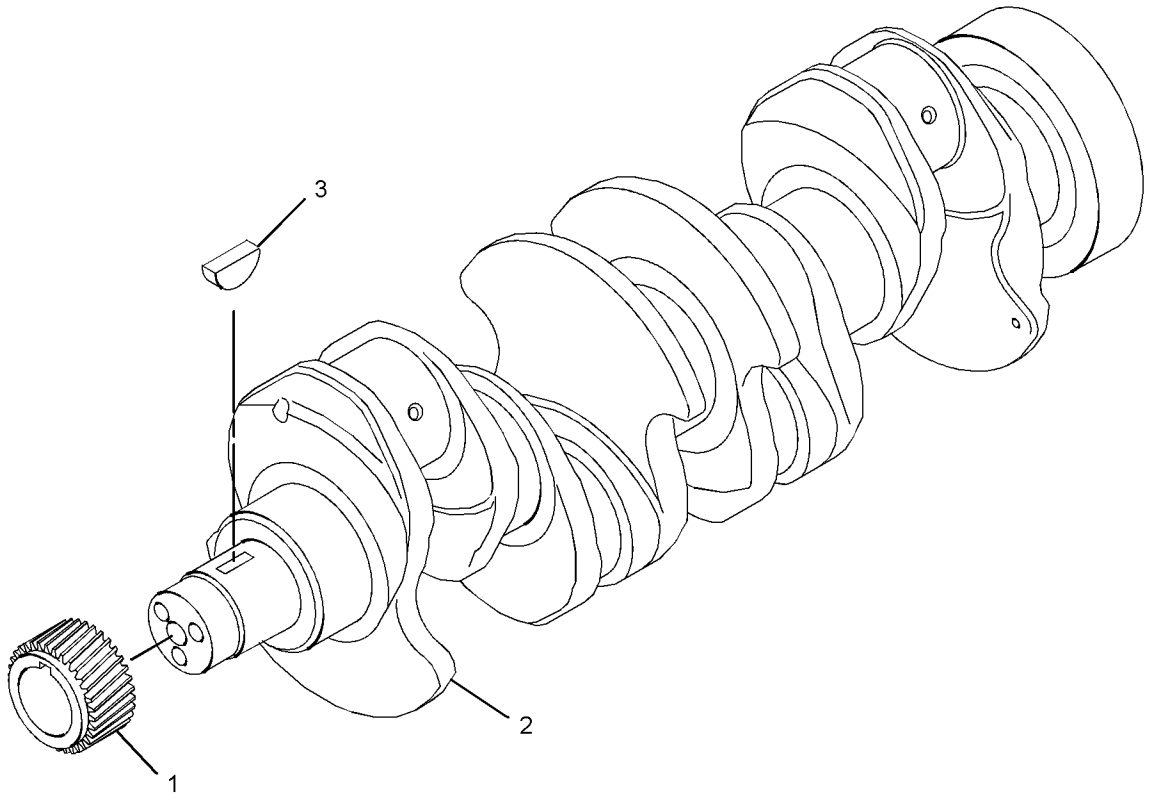

GRAPHIC #1 <END> g02163313

237-5838 CRANKSHAFT GP

S/N: 3341-25630

SMCS-1202 **i05165382**

NOTE	REF NO	GRAPHIC REF	PART NUMBER	QTY	PART NAME 1 2 3 4 5 6 (PRODUCT LEVEL)	SEE PAGE
	1	1	**1B-8736**	1	KEY-WOODRUFF	
	2	1	**216-8314**	1	GEAR-CRANKSHAFT (34-TEETH)	
J	3	1	**232-7400**	1	CRANKSHAFT GP (WITH SPLINE) (CONNECTING ROD, 63.48-MM DIA)	
	4	1	**225-7772**	1	BEARING SET-MAIN (STANDARD)	
AB		1	**233-3784**		KIT-CRANKSHAFT BEARING (0.25-MM US)	
AB		1	**233-3785**		KIT-CRANKSHAFT BEARING (0.50-MM US)	
AB		1	**233-3786**		KIT-CRANKSHAFT BEARING (0.75-MM US)	
	5	1	**225-7781**	1	BEARING SET-ROD (STANDARD)	
AB		1	**233-3788**		KIT-ROD BEARING (0.25-MM US)	
AB		1	**233-3789**		KIT-ROD BEARING (0.50-MM US)	
AB		1	**233-3790**		KIT-ROD BEARING (0.75-MM US)	
	6	1	**032-9090**	2	WASHER-THRUST (STANDARD-UPPER)	
AB		1	**067-6873**		WASHER-THRUST (0.18-MM OS) (UPPER)	
	7	1	**032-9091**	2	WASHER-THRUST (STANDARD-LOWER)	
AB		1	**067-6874**		WASHER-THRUST (0.18-MM OS) (LOWER)	

A - NOT PART OF THIS GROUP
B - USE AS REQUIRED
J - CHECK CONNECTING ROD JOURNAL TO ENSURE THIS IS THE CORRCET CRANKSHAFT

237-5838 **CRANKSHAFT GP (**contd.**)** **i05165382**

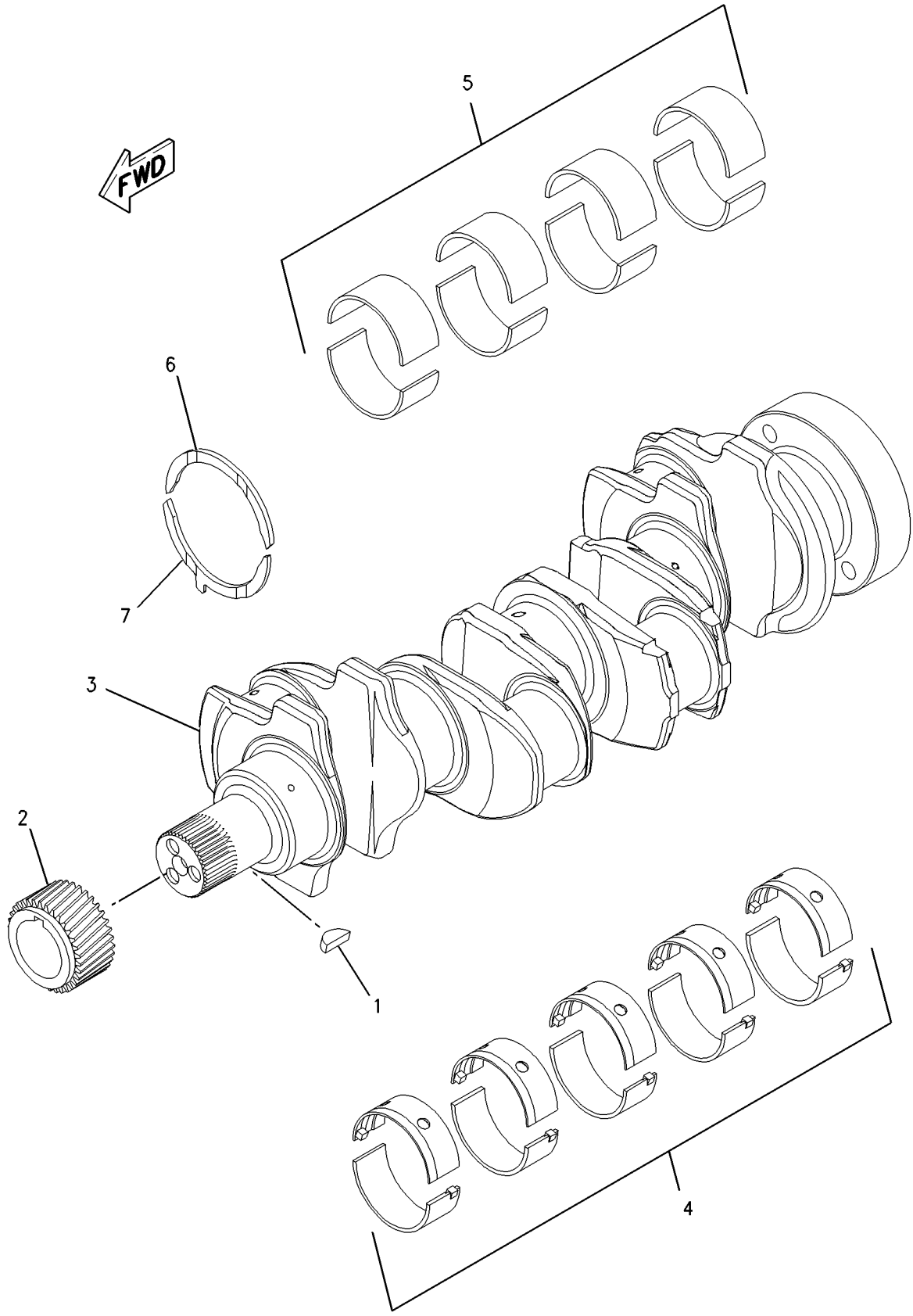

GRAPHIC #1 <END> g00950782

237-5838 CRANKSHAFT GP

S/N: 33425631-UP

SMCS-1202 **i07307598**

NOTE	REF NO	GRAPHIC REF	PART NUMBER	QTY	PART NAME 1 2 3 4 5 6 (PRODUCT LEVEL)	SEE PAGE
	1	1	**067-6135**	1	KEY-WOODRUFF	
	2	1	**216-8314**	1	GEAR-CRANKSHAFT (34-TEETH)	
JY	3	1	**359-0715**	1	CRANKSHAFT GP (W/O SPLINE) (CONNECTING ROD, 68-MM DIA)	477

J - CHECK CONNECTING ROD JOURNAL TO ENSURE THIS IS CORRECT CRANKSHAFT
Y - SEPARATE ILLUSTRATION

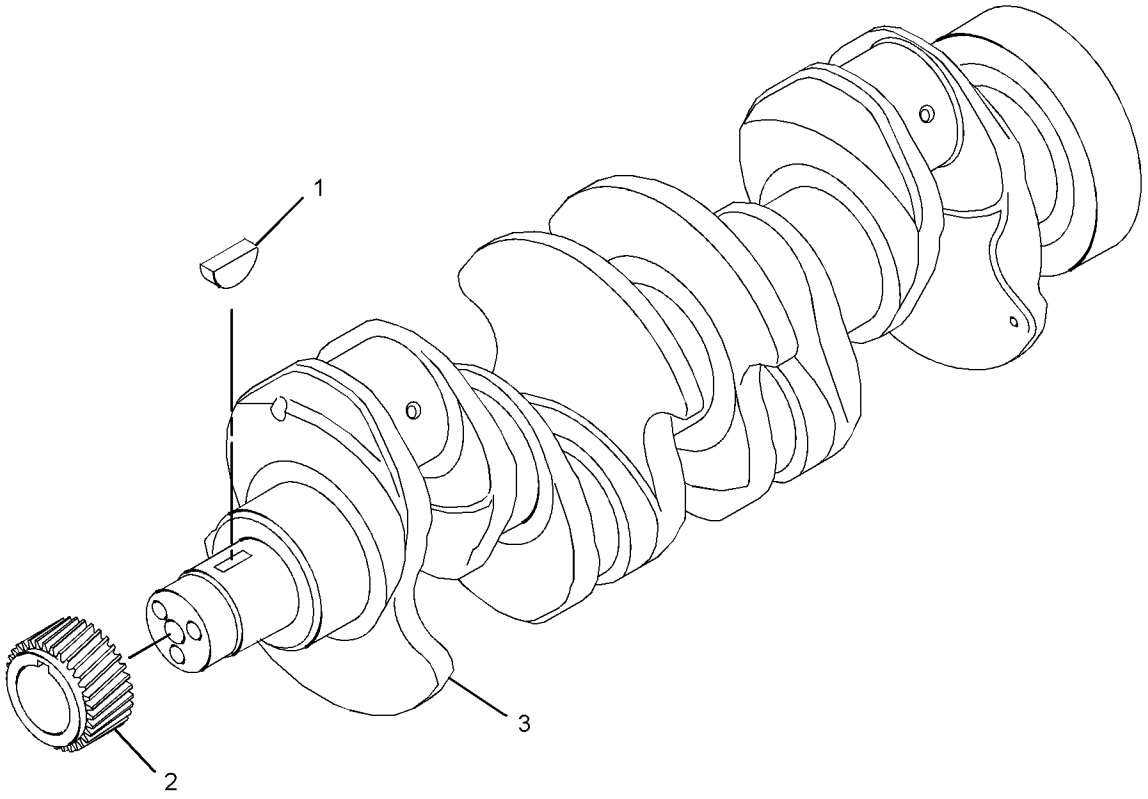

GRAPHIC #1 <END> g02177264

243-1950 CRANKSHAFT GP

S/N: 3341-25630

SMCS-1202 **i05165383**

NOTE	REF NO	GRAPHIC REF	PART NUMBER	QTY	PART NAME 1 2 3 4 5 6 (PRODUCT LEVEL)	SEE PAGE
	1	1	**1B-8736**	1	KEY-WOODRUFF	
	2	1	**216-8314**	1	GEAR-CRANKSHAFT (34-TEETH)	
JY	3	1	**232-7400**	1	CRANKSHAFT GP (WITH SPLINE) (CONNECTING ROD, 63.48-MM DIA)	449

J - CHECK CONNECTING ROD JOURNAL TO ENSURE THIS IS THE CORRECT CRANKSHAFT
Y - SEPARATE ILLUSTRATION

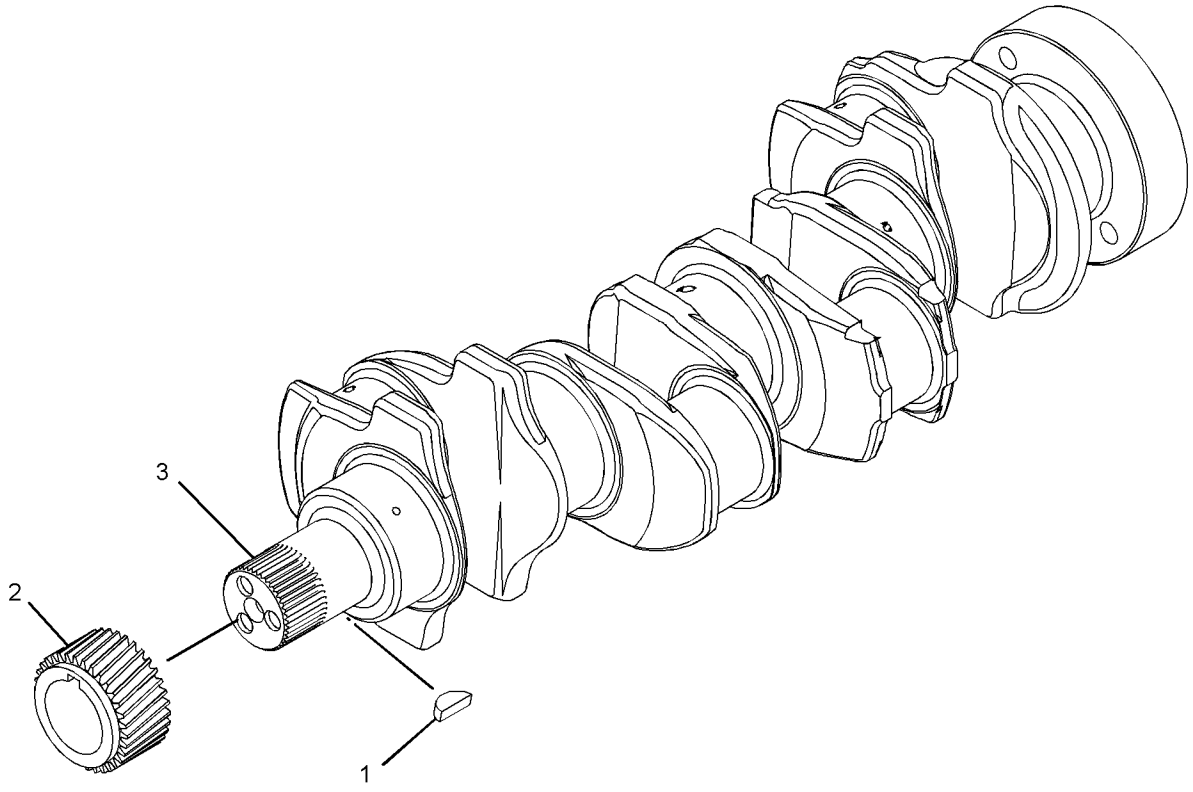

GRAPHIC #1 <END> g01382432

243-1950 CRANKSHAFT GP

S/N: 33425631-UP

SMCS-1202 **i05256146**

NOTE	REF NO	GRAPHIC REF	PART NUMBER	QTY	PART NAME 1 2 3 4 5 6 (PRODUCT LEVEL)	SEE PAGE
	1	1	**216-8314**	1	GEAR-CRANKSHAFT (34-TEETH)	
CJY	2	1	**359-0715**	1	CRANKSHAFT GP (W/O SPLINE) (CONNECTING ROD, 68-MM DIA)	477
	3	1	**067-6135**	1	KEY-WOODRUFF	

C - CHANGE FROM PREVIOUS TYPE
J - CHECK CONNECTING ROD JOURNAL TO ENSURETHIS IS THE CORRECT CRANKSHAFT
Y - SEPARATE ILLUSTRATION

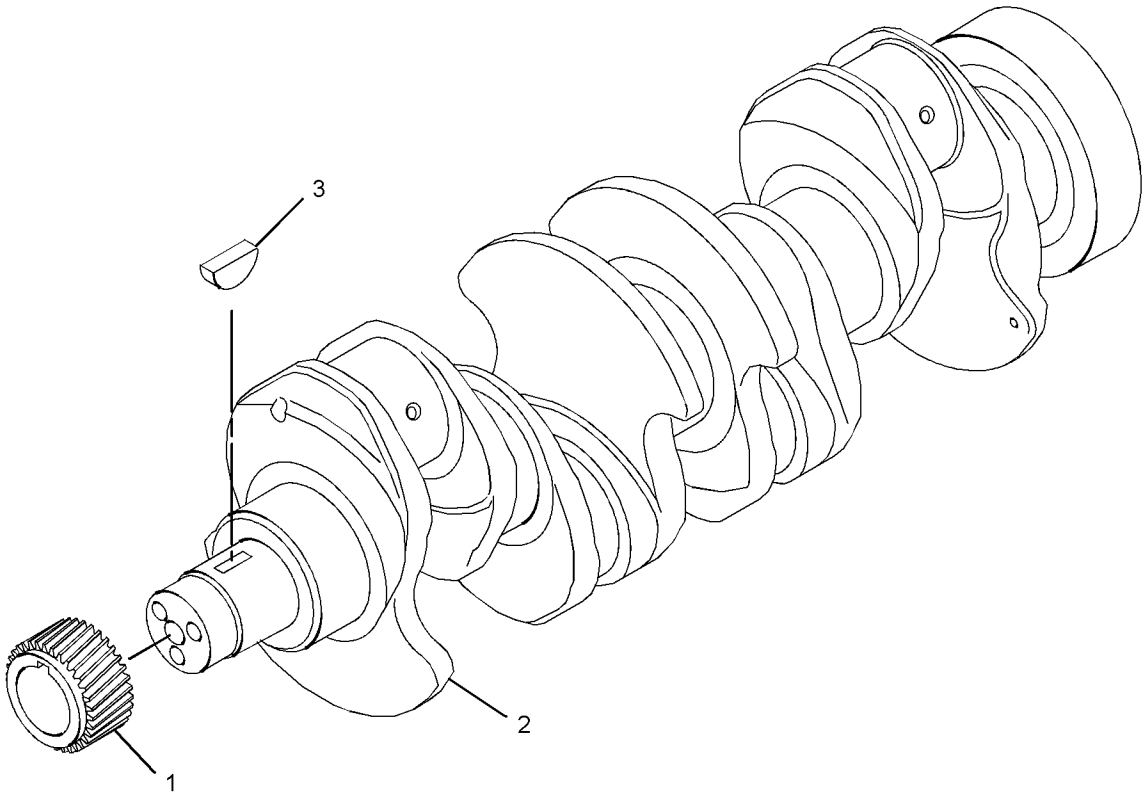

GRAPHIC #1 <END> g02163313

243-3180 CRANKSHAFT GP

S/N: 3341-25630

ALSO AN ATTACHMENT

SMCS-1202 **i05165381**

NOTE	REF NO	GRAPHIC REF	PART NUMBER	QTY	PART NAME 1 2 3 4 5 6 (PRODUCT LEVEL)	SEE PAGE
	1	1	**1B-8736**	1	KEY-WOODRUFF	
	2	1	**216-8314**	1	GEAR-CRANKSHAFT (34-TEETH)	
J	3	1	**232-7400**	1	CRANKSHAFT GP (WITH SPLINE) (CONNECTING ROD, 63.48-MM DIA)	
	4	1	**225-7772**	1	BEARING SET-MAIN (STANDARD)	
AB		1	**233-3784**		KIT-CRANKSHAFT BEARING (0.25-MM US)	
AB		1	**233-3785**		KIT-CRANKSHAFT BEARING (0.50-MM US)	
AB		1	**233-3786**		KIT-CRANKSHAFT BEARING (0.75-MM US)	
	5	1	**225-7781**	1	BEARING SET-ROD (STANDARD)	
AB		1	**233-3788**		KIT-ROD BEARING (0.25-MM US)	
AB		1	**233-3789**		KIT-ROD BEARING (0.50-MM US)	
AB		1	**233-3790**		KIT-ROD BEARING (0.75-MM US)	
	6	1	**032-9090**	2	WASHER-THRUST (STANDARD-UPPER)	
AB		1	**067-6873**		WASHER-THRUST (0.18-MM OS) (UPPER)	
	7	1	**032-9091**	2	WASHER-THRUST (STANDARD-LOWER)	
AB		1	**067-6874**		WASHER-THRUST (0.18-MM OS) (LOWER)	

A - NOT PART OF THIS GROUP
B - USE AS REQUIRED
J - CHECK CONNECTING ROD JOURNAL TO ENSURE THIS IS THE CORRECT CRANKSHAFT

243-3180 **CRANKSHAFT GP (**contd.**)** **i05165381**

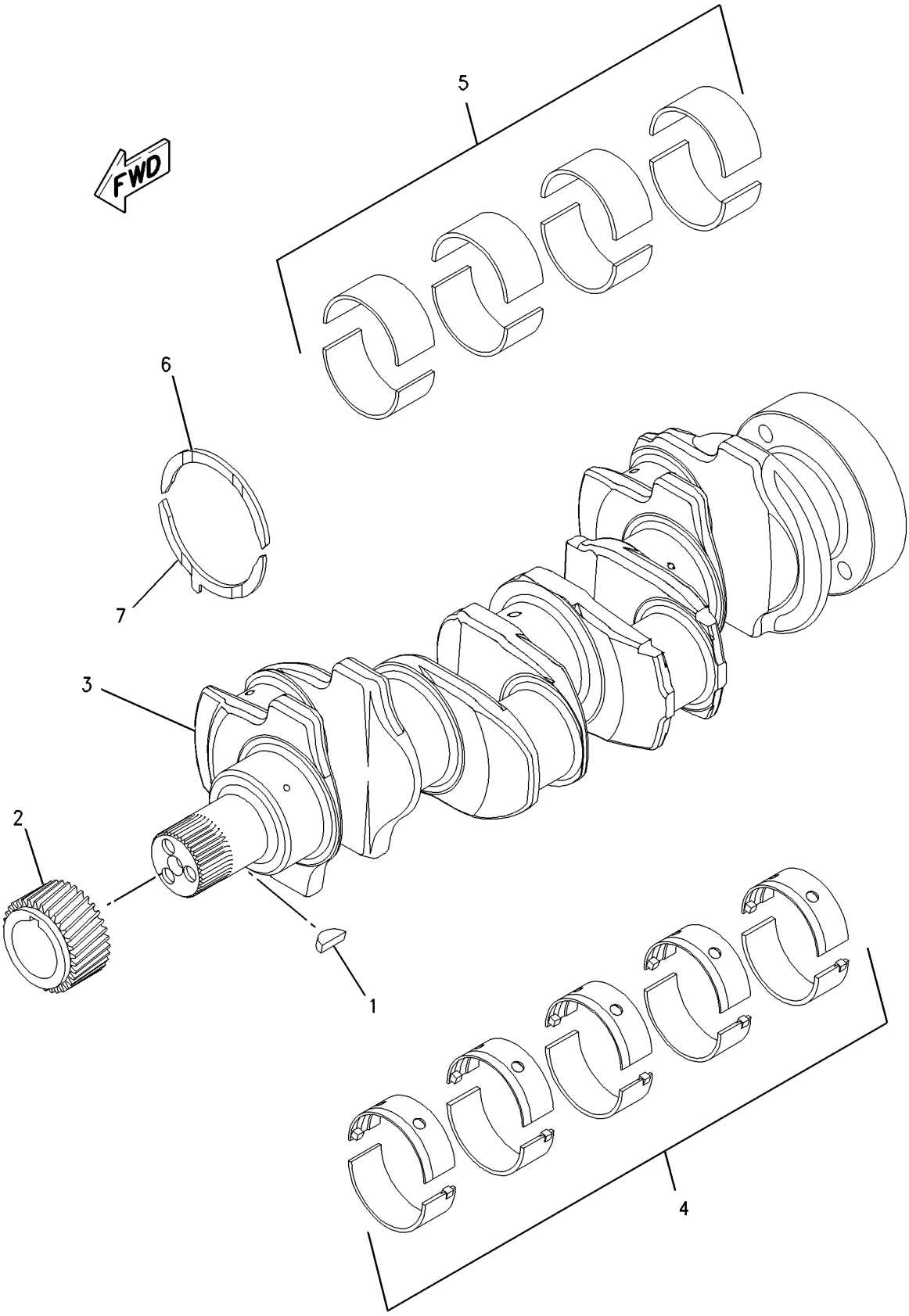

GRAPHIC #1 <END> g00950782

243-3180 CRANKSHAFT GP

S/N: 33425631-UP

ALSO AN ATTACHMENT

SMCS-1202 **i05165380**

NOTE	REF NO	GRAPHIC REF	PART NUMBER	QTY	PART NAME 1 2 3 4 5 6 (PRODUCT LEVEL)	SEE PAGE
	1	1	**216-8314**	1	GEAR-CRANKSHAFT (34-TEETH)	
CJY	2	1	**359-0715**	1	CRANKSHAFT GP (W/O SPLINE) (CONNECTING ROD, 68-MM DIA)	477
	3	1	**067-6135**	1	KEY-WOODRUFF	

C - CHANGE FROM PREVIOUS TYPE
J - CHECK CONNECTING ROD JOURNAL TO ENSURE THIS IS THE CORRECT CRANKSHAFT
Y - SEPARATE ILLUSTRATION

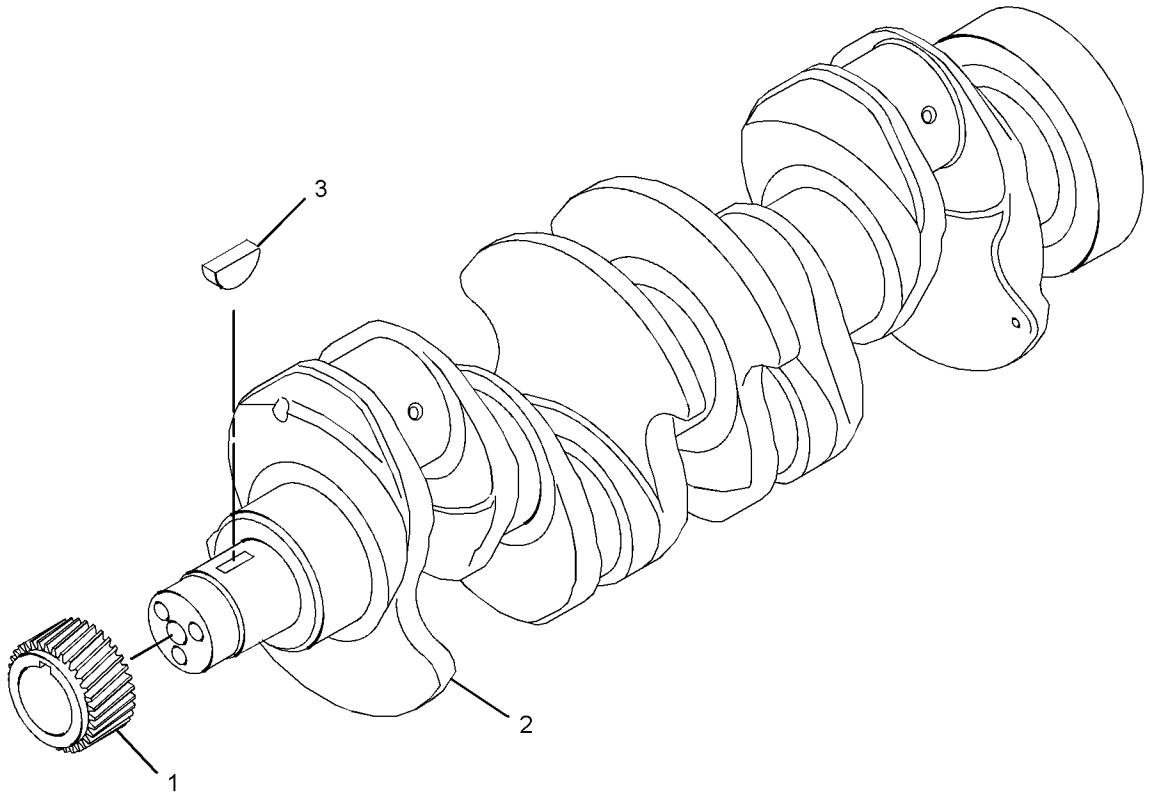

GRAPHIC #1 <END> g02163313

243-4839 CRANKSHAFT GP

S/N: 3341-25630

SMCS-1202 **i05165365**

NOTE	REF NO	GRAPHIC REF	PART NUMBER	QTY	PART NAME 1 2 3 4 5 6 (PRODUCT LEVEL)	SEE PAGE
	1	1	**1B-8736**	1	KEY-WOODRUFF	
	2	1	**216-8314**	1	GEAR-CRANKSHAFT (34-TEETH)	
J	3	1	**232-7400**	1	CRANKSHAFT GP (WITH SPLINE) (CONNECTING ROD, 63.48-MM DIA)	
	4	1	**225-7772**	1	BEARING SET-MAIN (STANDARD)	
AB		1	**233-3784**		KIT-CRANKSHAFT BEARING (0.25-MM US)	
AB		1	**233-3785**		KIT-CRANKSHAFT BEARING (0.50-MM US)	
AB		1	**233-3786**		KIT-CRANKSHAFT BEARING (0.75-MM US)	
	5	1	**225-7781**	1	BEARING SET-ROD (STANDARD)	
AB		1	**233-3788**		KIT-ROD BEARING (0.25-MM US)	
AB		1	**233-3789**		KIT-ROD BEARING (0.50-MM US)	
AB		1	**233-3790**		KIT-ROD BEARING (0.75-MM US)	
	6	1	**032-9090**	2	WASHER-THRUST (STANDARD-UPPER)	
AB		1	**067-6873**		WASHER-THRUST (0.18-MM OS) (UPPER)	
	7	1	**032-9091**	2	WASHER-THRUST (STANDARD-LOWER)	
AB		1	**067-6874**		WASHER-THRUST (0.18-MM OS) (LOWER)	

A - NOT PART OF THIS GROUP
B - USE AS REQUIRED
J - CHECK CONNECTING ROD JOURNAL TO ENSURE THIS IS THE CORRECT CRANKSHAFT

243-4839 **CRANKSHAFT GP (**contd.**)** **i05165365**

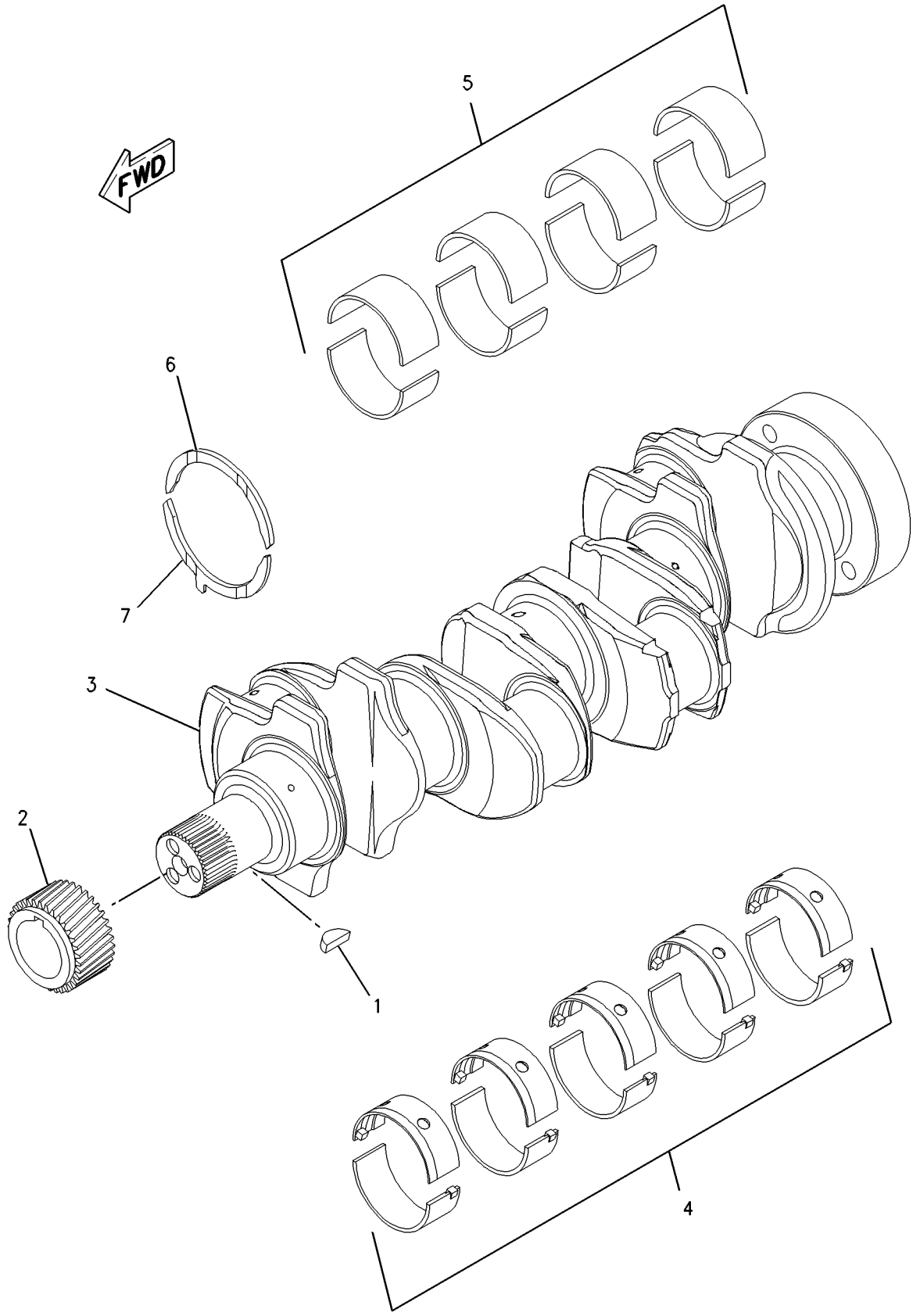

GRAPHIC #1 <END> g00950782

243-4839 CRANKSHAFT GP

S/N: 33425631-UP

SMCS-1202 **i05165373**

NOTE	REF NO	GRAPHIC REF	PART NUMBER	QTY	PART NAME 1 2 3 4 5 6 (PRODUCT LEVEL)	SEE PAGE
	1	1	**216-8314**	1	GEAR-CRANKSHAFT (34-TEETH)	
CJY	2	1	**359-0715**	1	CRANKSHAFT GP (W/O SPLINE) (CONNECTING ROD, 68-MM DIA)	477
	3	1	**067-6135**	1	KEY-WOODRUFF	

C - CHANGE FROM PREVIOUS TYPE
J - CHECK CONNECTING ROD JOURNAL TO ENSURE THIS IS THE CORRECT CRANKSHAFT
Y - SEPARATE ILLUSTRATION

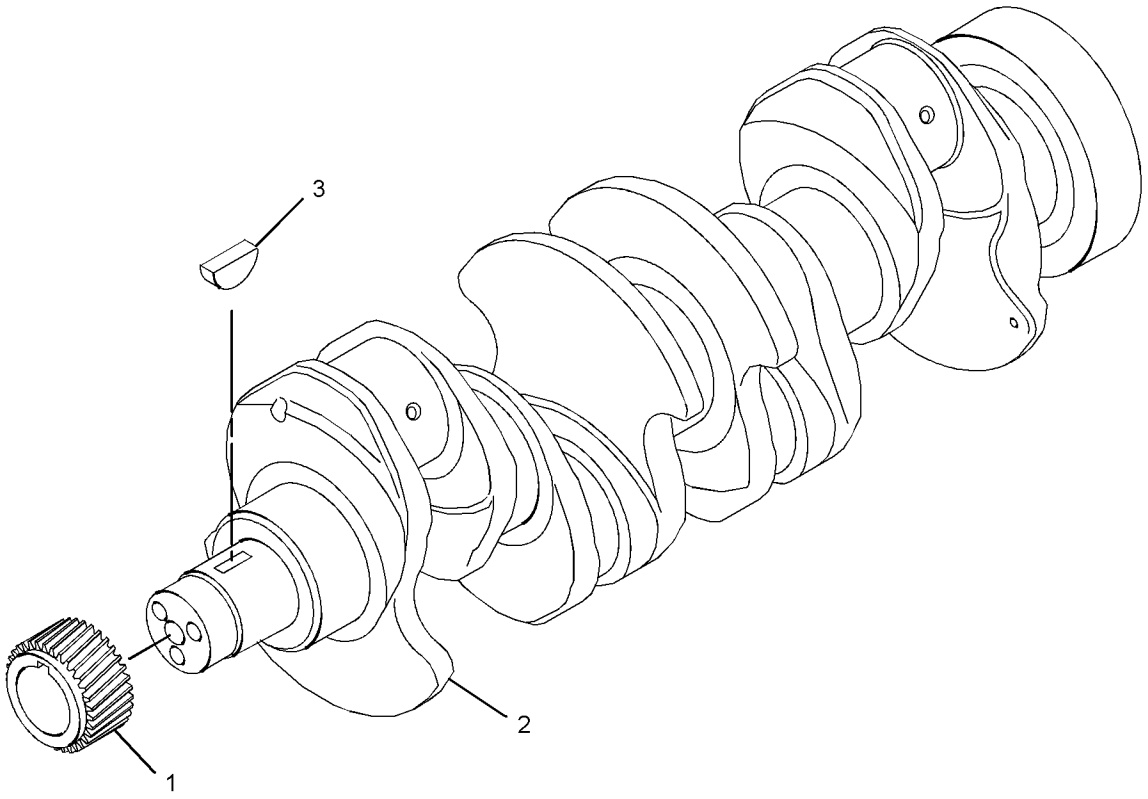

GRAPHIC #1 <END> g02163313

244-2081 CRANKSHAFT GP

S/N: 3341-25630

SMCS-1202 **i05165364**

NOTE	REF NO	GRAPHIC REF	PART NUMBER	QTY	PART NAME 1 2 3 4 5 6 (PRODUCT LEVEL)	SEE PAGE
	1	1	**1B-8736**	1	KEY-WOODRUFF	
	2	1	**216-8314**	1	GEAR-CRANKSHAFT (34-TEETH)	
J	3	1	**232-7400**	1	CRANKSHAFT GP (WITH SPLINE) (CONNECTING ROD, 63.48-MM DIA)	
	4	1	**225-7772**	1	BEARING SET-MAIN (STANDARD)	
AB		1	**233-3784**		KIT-CRANKSHAFT BEARING (0.25-MM US)	
AB		1	**233-3785**		KIT-CRANKSHAFT BEARING (0.50-MM US)	
AB		1	**233-3786**		KIT-CRANKSHAFT BEARING (0.75-MM US)	
	5	1	**225-7781**	1	BEARING SET-ROD (STANDARD)	
AB		1	**233-3788**		KIT-ROD BEARING (0.25-MM US)	
AB		1	**233-3789**		KIT-ROD BEARING (0.50-MM US)	
AB		1	**233-3790**		KIT-ROD BEARING (0.75-MM US)	
	6	1	**032-9090**	2	WASHER-THRUST (STANDARD-UPPER)	
AB		1	**067-6873**		WASHER-THRUST (0.18-MM OS) (UPPER)	
	7	1	**032-9091**	2	WASHER-THRUST (STANDARD-LOWER)	
AB		1	**067-6874**		WASHER-THRUST (0.18-MM OS) (LOWER)	

A - NOT PART OF THIS GROUP
B - USE AS REQUIRED
J - CHECK CONNECTING ROD JOURNAL TO ENSURE THIS IS THE CORRECT CRANKSHAFT

244-2081 **CRANKSHAFT GP (**contd.**)** **i05165364**

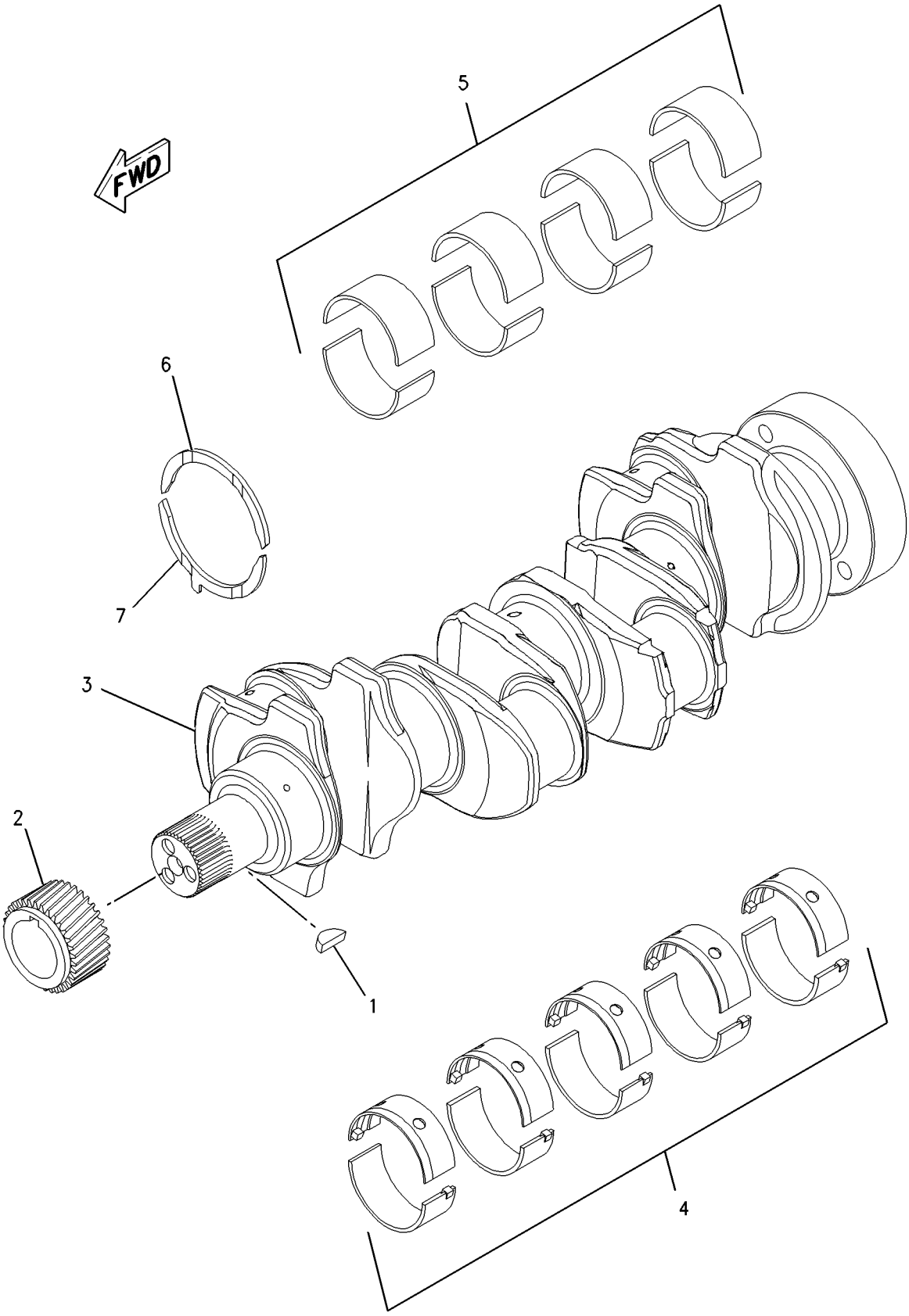

GRAPHIC #1 <END> g00950782

244-2081 CRANKSHAFT GP

S/N: 33425631-UP

SMCS-1202 **i05165366**

NOTE	REF NO	GRAPHIC REF	PART NUMBER	QTY	PART NAME 1 2 3 4 5 6 (PRODUCT LEVEL)	SEE PAGE
	1	1	**216-8314**	1	GEAR-CRANKSHAFT (34-TEETH)	
CJY	2	1	**359-0715**	1	CRANKSHAFT GP (W/O SPLINE) (CONNECTING ROD, 68-MM DIA)	477
	3	1	**067-6135**	1	KEY-WOODRUFF	

C - CHANGE FROM PREVIOUS TYPE
J - CHECK CONNECTING ROD JOURNAL TO ENSURE THIS IS THE CORRECT CRANKSHAFT
Y - SEPARATE ILLUSTRATION

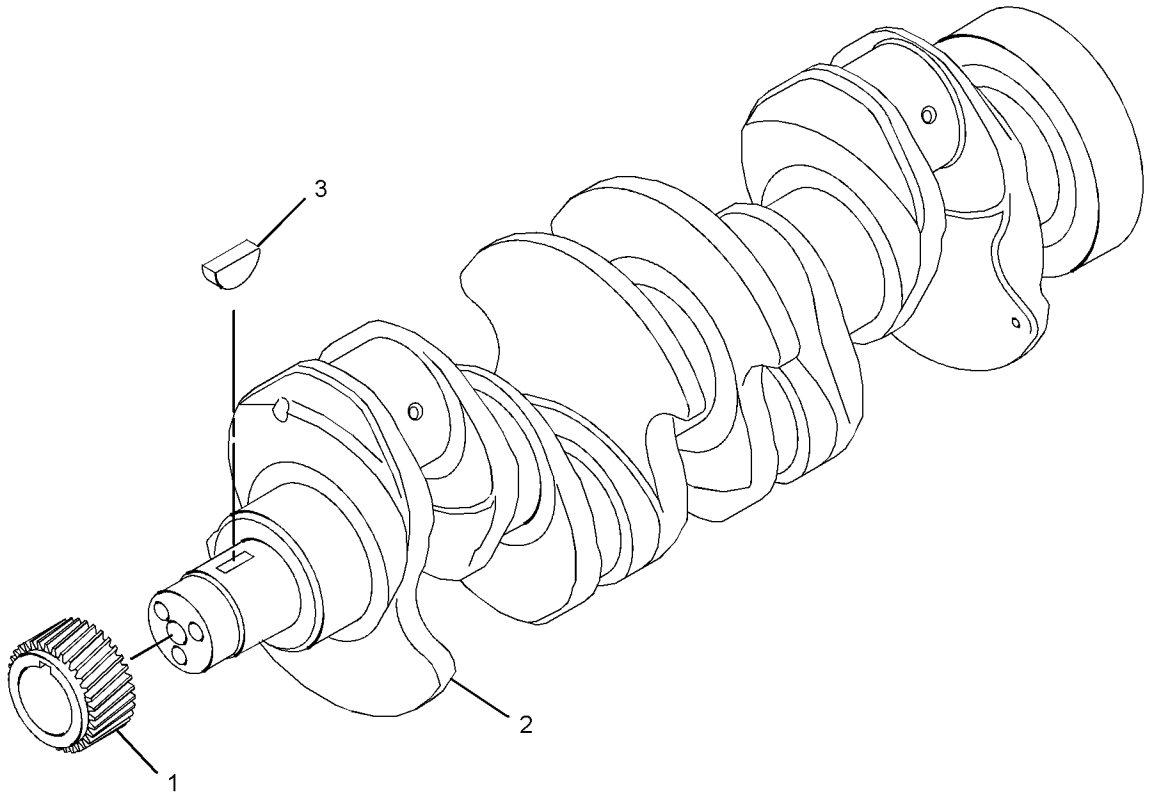

GRAPHIC #1 <END> g02163313

247-4821 CRANKSHAFT GP

S/N: 3341-25630

SMCS-1202 **i05165304**

NOTE	REF NO	GRAPHIC REF	PART NUMBER	QTY	PART NAME 1 2 3 4 5 6 (PRODUCT LEVEL)	SEE PAGE
	1	1	**1B-8736**	1	KEY-WOODRUFF	
	2	1	**216-8314**	1	GEAR-CRANKSHAFT (34-TEETH)	
JY	3	1	**232-7400**	1	CRANKSHAFT GP (WITH SPLINE) (CONNECTING ROD, 63.48-MM DIA)	449

J - CHECK CONNECTING ROD JOURNAL TO ENSURE THIS IS THE CORRECT CRANKSHAFT
Y - SEPARATE ILLUSTRATION

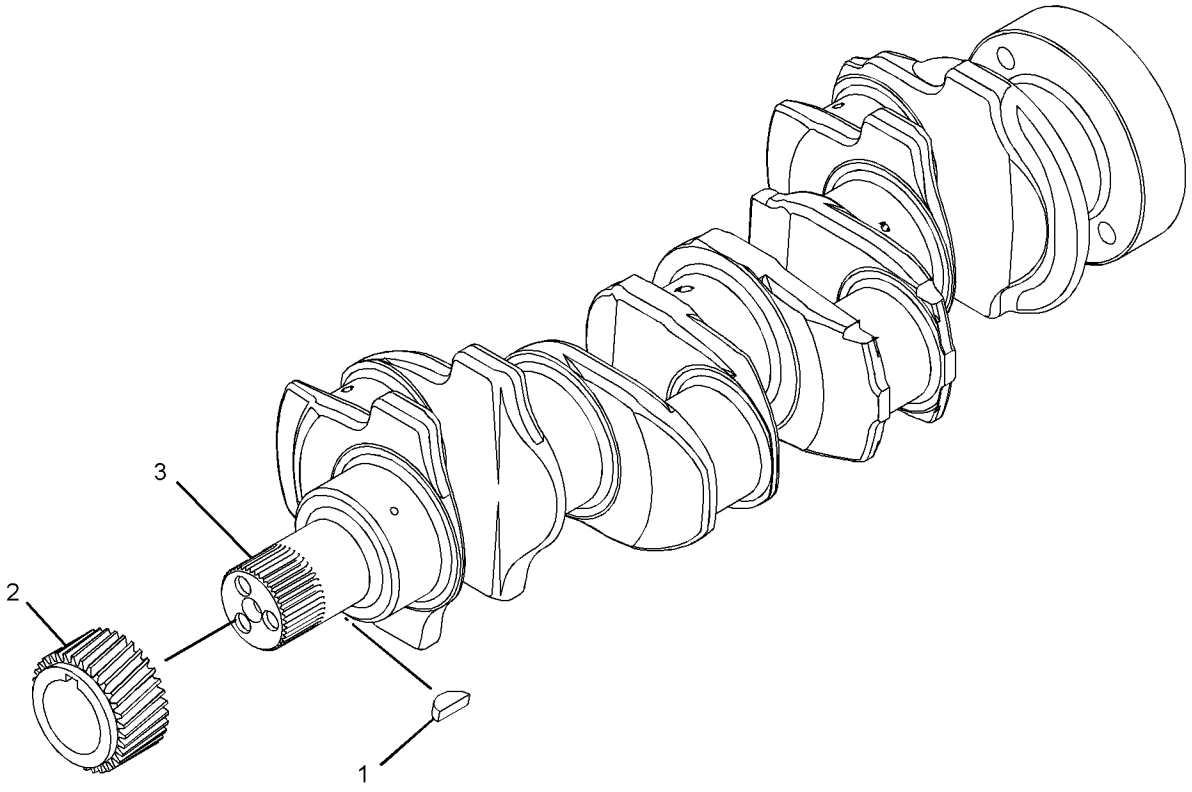

GRAPHIC #1 <END> g01382432

247-4821 CRANKSHAFT GP

S/N: 33425631-UP

SMCS-1202 **i05256147**

NOTE	REF NO	GRAPHIC REF	PART NUMBER	QTY	PART NAME 1 2 3 4 5 6 (PRODUCT LEVEL)	SEE PAGE
	1	1	**216-8314**	1	GEAR-CRANKSHAFT (34-TEETH)	
CJY	2	1	**359-0715**	1	CRANKSHAFT GP (W/O SPLINE) (CONNECTING ROD, 68-MM DIA)	477
C	3	1	**067-6135**	1	KEY-WOODRUFF	

C - CHANGE FROM PREVIOUS TYPE
J - CHECK CONNECTING ROD JOURNAL TO ENSURE THIS IS THE CORRECT CRANKSHAFT
Y - SEPARATE ILLUSTRATION

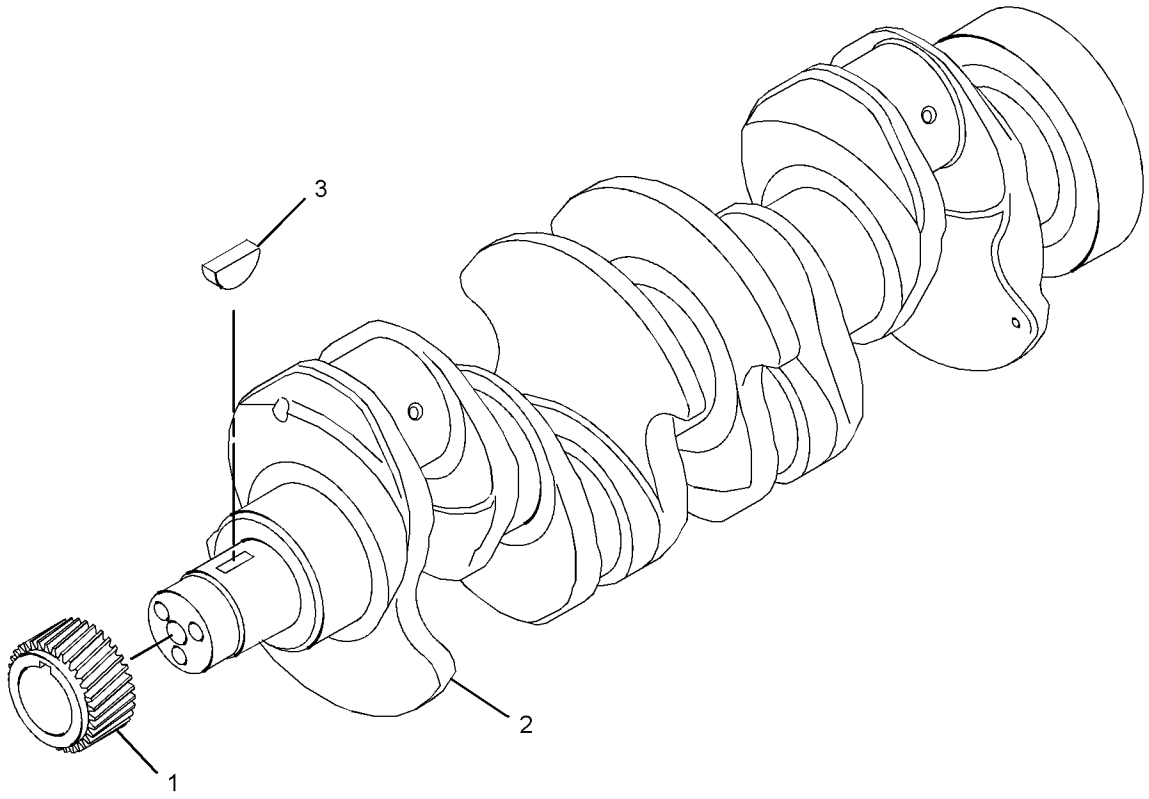

GRAPHIC #1 <END> g02163313

253-8751 CRANKSHAFT GP

S/N: 3341-25630

SMCS-1202 **i05165363**

NOTE	REF NO	GRAPHIC REF	PART NUMBER	QTY	PART NAME 1 2 3 4 5 6 (PRODUCT LEVEL)	SEE PAGE
	1	1	**1B-8736**	1	KEY-WOODRUFF	
	2	1	**216-8314**	1	GEAR-CRANKSHAFT (34-TEETH)	
JY	3	1	**232-7400**	1	CRANKSHAFT GP (WITH SPLINE) (CONNECTING ROD, 63.48-MM DIA)	449

J - CHECK CONNECTING ROD JOURNAL TO ENSURE THIS IS THE CORRECT CRANKSHAFT
Y - SEPARATE ILLUSTRATION

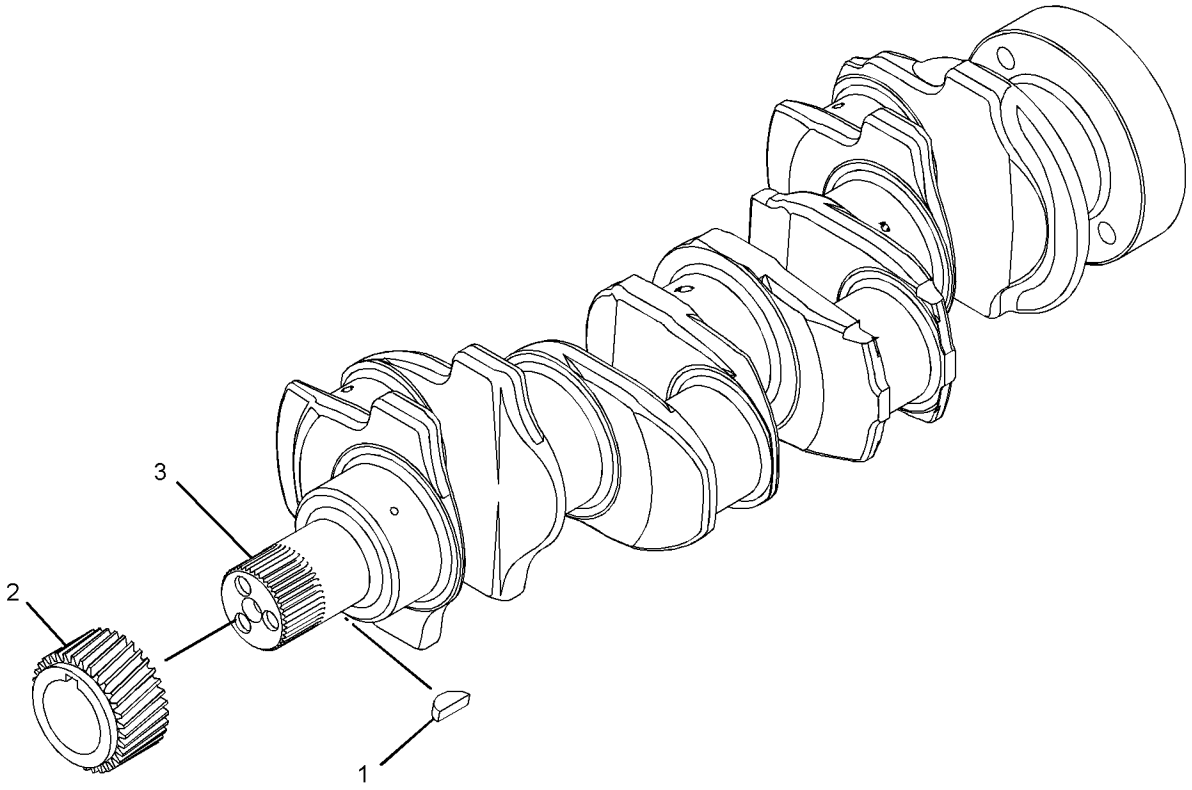

GRAPHIC #1 <END> g01382432

253-8751 CRANKSHAFT GP

S/N: 33425631-UP

SMCS-1202 **i05198600**

NOTE	REF NO	GRAPHIC REF	PART NUMBER	QTY	PART NAME 1 2 3 4 5 6 (PRODUCT LEVEL)	SEE PAGE
	1	1	**216-8314**	1	GEAR-CRANKSHAFT (34-TEETH)	
CJY	2	1	**359-0715**	1	CRANKSHAFT GP (W/O SPLINE) (CONNECTING ROD, 68-MM DIA)	477
	3	1	**067-6135**	1	KEY-WOODRUFF	

C - CHANGE FROM PREVIOUS TYPE
J - CHECK CONNECTING ROD JOURNAL TO ENSURE THIS IS THE CORRECT CRANKSHAFT
Y - SEPARATE ILLUSTRATION

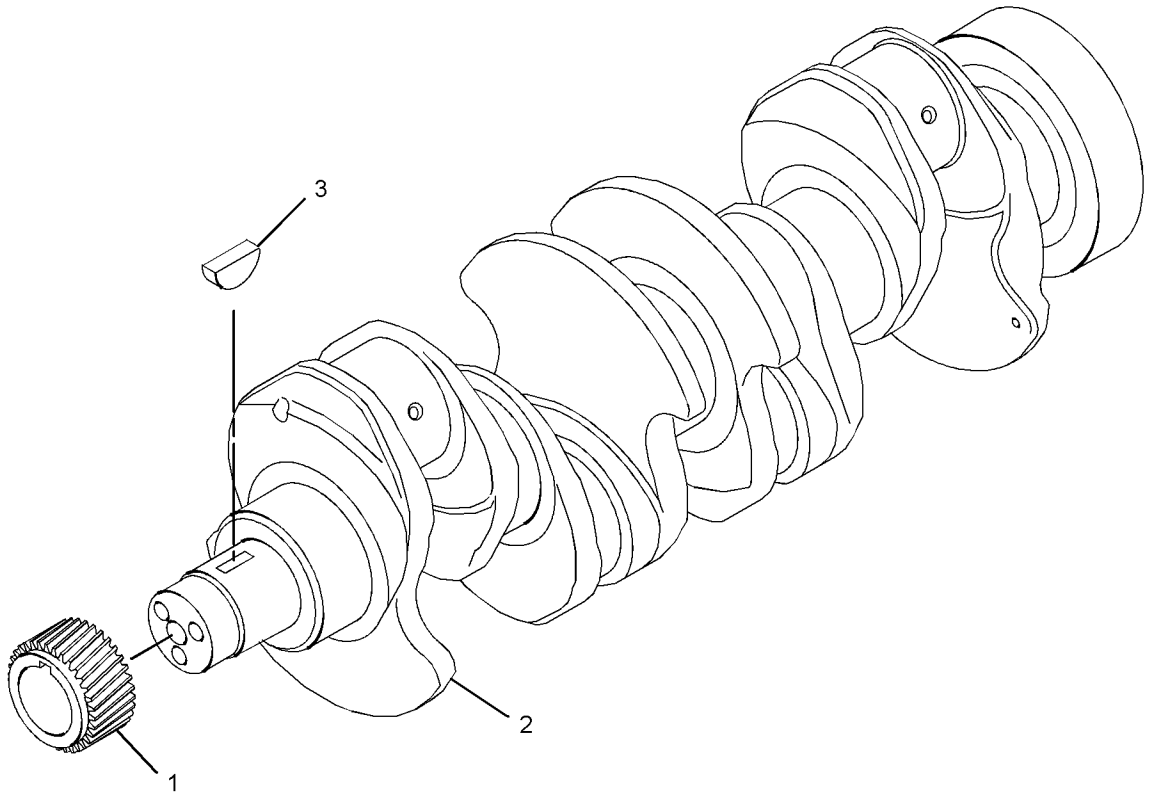

GRAPHIC #1 <END> g02163313

274-4717 CRANKSHAFT GP

SMCS-1202 **i05265942**

NOTE	REF NO	GRAPHIC REF	PART NUMBER	QTY	PART NAME 1 2 3 4 5 6 (PRODUCT LEVEL)	SEE PAGE
	1	1	**216-8314**	1	GEAR-CRANKSHAFT (34-TEETH)	
Y	2	1	**359-0715**	1	CRANKSHAFT GP (W/O SPLINE)	477
	3	1	**067-6135**	1	KEY-WOODRUFF	
					AVAILABLE REPAIR KIT(S):	
			274-4716	1	KIT-CRANKSHAFT	

Y - SEPARATE ILLUSTRATION

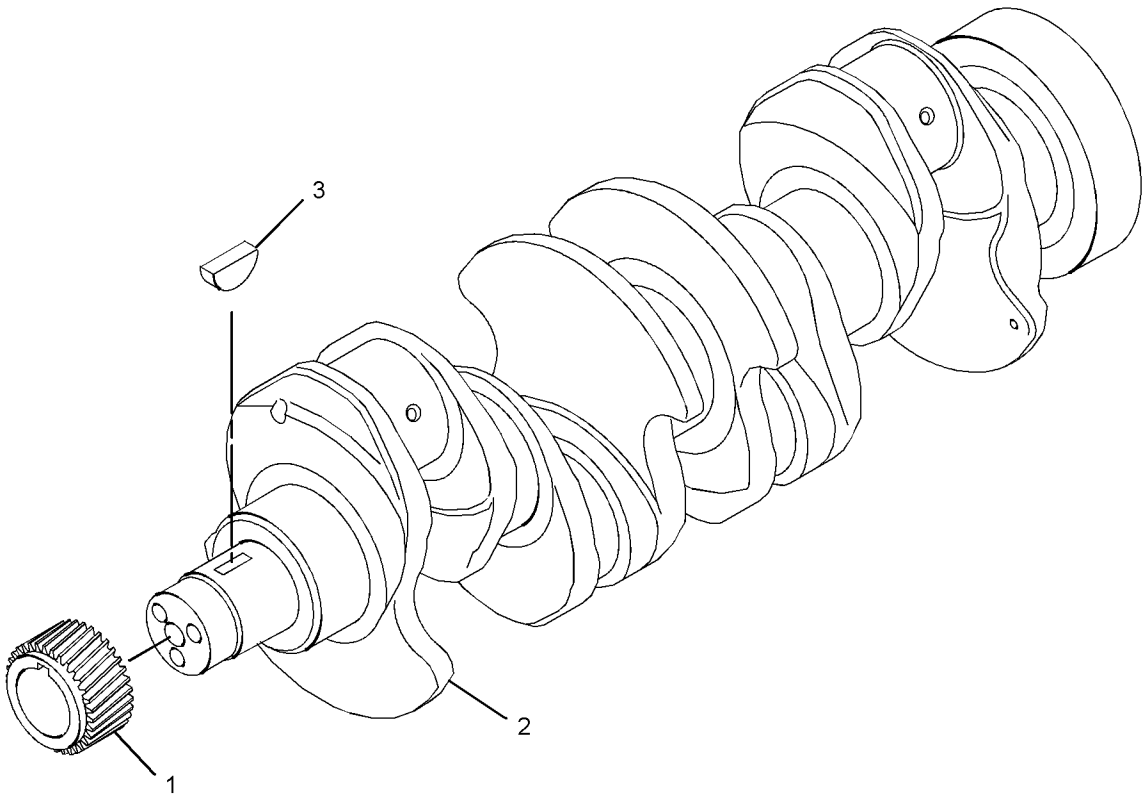

GRAPHIC #1 <END> g02163313

316-8479 CRANKSHAFT GP

S/N: 3341-25630

SMCS-1202 **i05165371**

NOTE	REF NO	GRAPHIC REF	PART NUMBER	QTY	PART NAME 1 2 3 4 5 6 (PRODUCT LEVEL)	SEE PAGE
	1	1	**216-8314**	1	GEAR-CRANKSHAFT (34-TEETH)	
JY	2	1	**232-7400**	1	CRANKSHAFT GP (WITH SPLINE) (CONNECTING ROD, 63.48-MM DIA)	449

J - CHECK CONNECTING ROD JOURNAL TO ENSURE THIS IS THE CORRECT CRANKSHAFT
Y - SEPARATE ILLUSTRATION

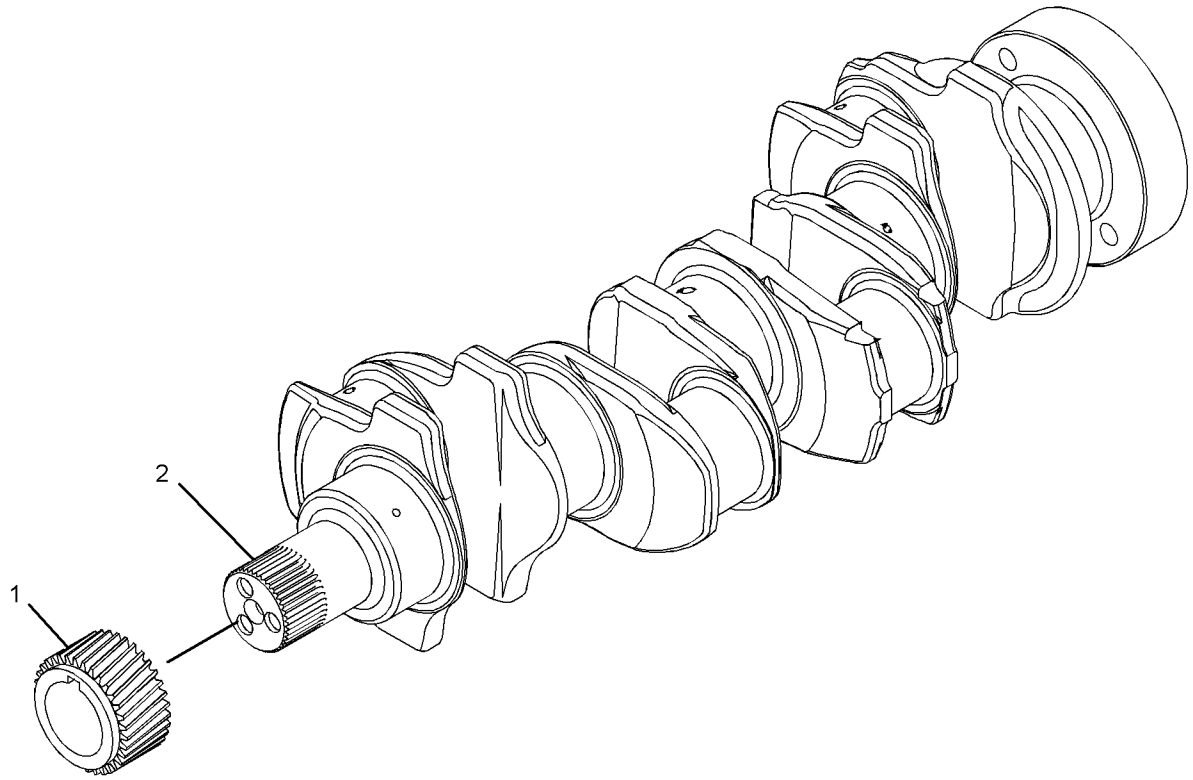

GRAPHIC #1 <END> g01420823

316-8479 CRANKSHAFT GP

S/N: 33425631-UP

SMCS-1202 **i05165367**

NOTE	REF NO	GRAPHIC REF	PART NUMBER	QTY	PART NAME 1 2 3 4 5 6 (PRODUCT LEVEL)	SEE PAGE
	1	1	**216-8314**	1	GEAR-CRANKSHAFT (34-TEETH)	
CJY	2	1	**359-0715**	1	CRANKSHAFT GP (W/O SPLINE) (CONNECTING ROD, 68-MM DIA)	477
C	3	1	**067-6135**	1	KEY-WOODRUFF	

C - CHANGE FROM PREVIOUS TYPE
J - CHECK CONNECTING ROD JOURNAL TO ENSURE THIS IS THE CORRECT CRANKSHAFT
Y - SEPARATE ILLUSTRATION

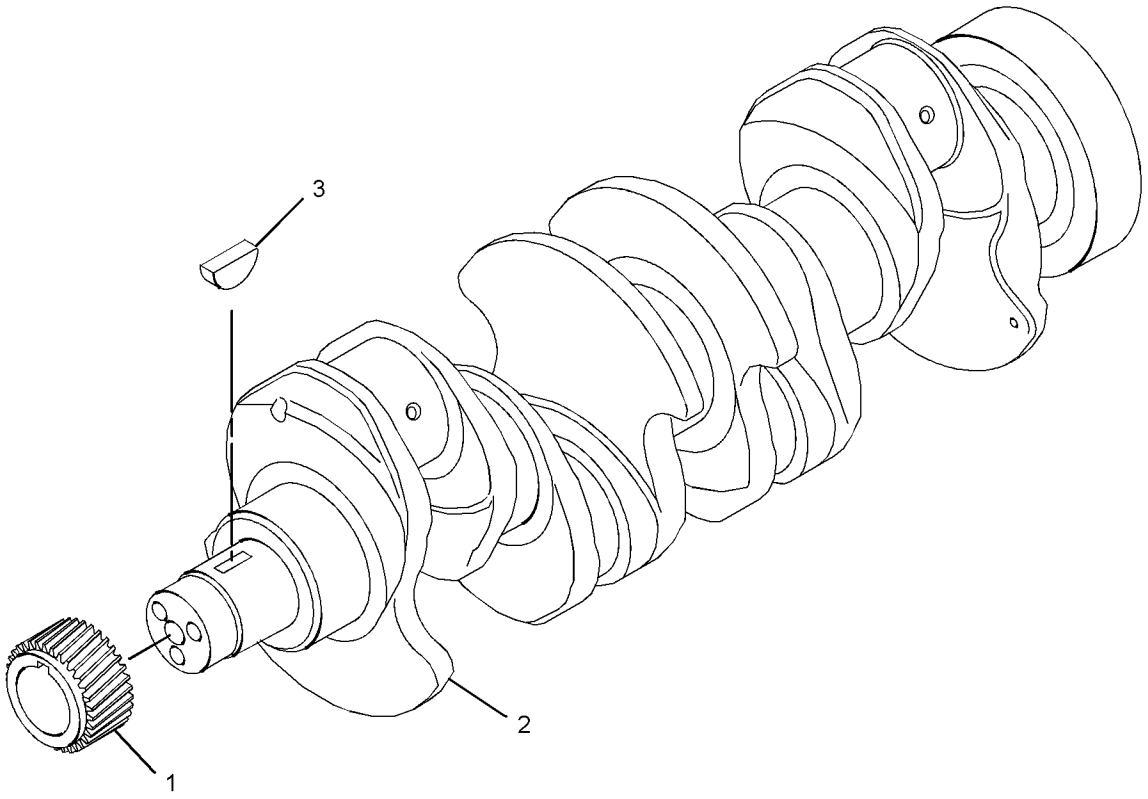

GRAPHIC #1 <END> g02163313

359-0715 CRANKSHAFT GP

PART OF 232-7439, 233-7027, 237-5838, 243-1950, 243-3180, 243-4839, 244-2081, 247-4821, 253-8751, 274-4717, 316-8479, 460-0741, 478-6453 CRANKSHAFT GP
ALSO AN ATTACHMENT
TYPE 1

SMCS-1202 **i07144518**

NOTE	REF NO	GRAPHIC REF	PART NUMBER	QTY	PART NAME 1 2 3 4 5 6 (PRODUCT LEVEL)	SEE PAGE
	1	1	**032-9090**	2	WASHER-THRUST (STANDARD-UPPER)	
AB		1	**067-6873**		WASHER-THRUST (0.18-MM OS)	
	2	1	**032-9091**	2	WASHER-THRUST (STANDARD-LOWER)	
AB		1	**067-6874**		WASHER-THRUST (0.18-MM OS)	
	3	1	**353-7423**	1	KIT-BEARING (MAIN)	
AB		1	**233-3786**		KIT-CRANKSHAFT BEARING (0.75-MM US)	
AB		1	**353-7424**		KIT-BEARING (0.25-MM US)	
AB		1	**353-7425**		KIT-BEARING (0.50-MM US)	
AB		1	**353-7426**	1	KIT-BEARING	
	4	1	**360-3986**	1	KIT-BEARING (CONNECTING ROD) (STANDARD)	

A - NOT PART OF THIS GROUP
B - USE AS REQUIRED

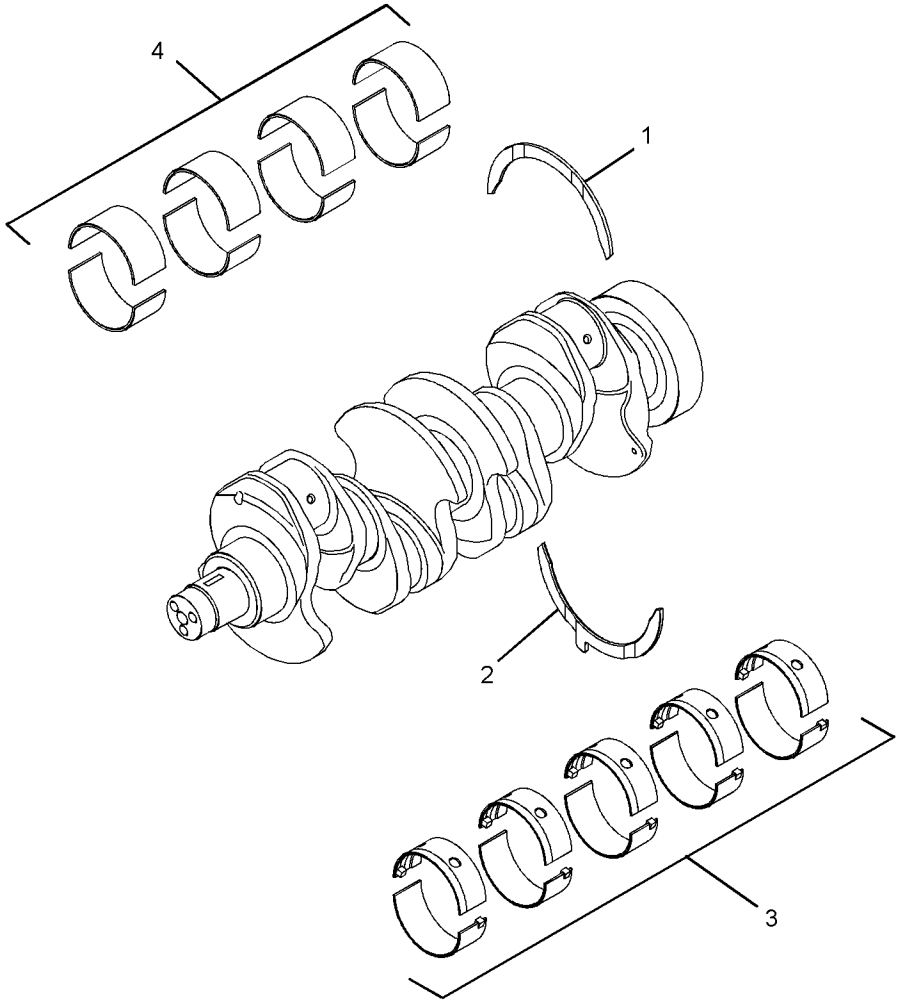

GRAPHIC #1 <END> g02174712

359-0715 CRANKSHAFT GP

PART OF 232-7439, 233-7027, 237-5838, 243-1950, 243-3180, 243-4839, 244-2081, 247-4821, 253-8751, 316-8479, 460-0741, 478-6453 CRANKSHAFT GP
ALSO AN ATTACHMENT
TYPE 2

SMCS-1202 **i07499798**

NOTE	REF NO	GRAPHIC REF	PART NUMBER	QTY	PART NAME 1 2 3 4 5 6 (PRODUCT LEVEL)	SEE PAGE
JP	1	1	*470-7995*	2	PLATE-THRUST (STANDARD)	
AB		1	**067-6873**		WASHER-THRUST (0.18-MM OS)	
JP	2	1	*470-8021*	2	PLATE-THRUST (STANDARD)	
AB		1	**067-6874**		WASHER-THRUST (0.18-MM OS)	
C	3	1	**518-5437**	1	KIT-BEARING (STANDARD) (MAIN)	
ABC		1	**518-5440**		KIT-BEARING (0.254-MM US)	
ABC		1	**518-5441**		KIT-BEARING (0.508-MM US)	
ABC		1	**518-5885**		KIT-BEARING (0.762-MM US)	
	4	1	**360-3986**	1	KIT-BEARING (CONNECTING ROD)	
AB		1	**468-7762**		KIT-BEARING (0.254-MM US)	
AB		1	**468-7769**		KIT-BEARING (0.508-MM US)	
AB		1	**468-7770**		KIT-BEARING (0.762-MM US)	
					AVAILABLE REPAIR KIT(S):	
J			**518-5891**	1	KIT-WASHER (STANDARD)	
					(INCLUDES WASHERS)	
AB			**518-5892**		KIT-WASHER (0.191-MM US)	
					(INCLUDES WASHERS)	
ABP			**518-5893**		KIT-WASHER (STANDARD, 0.191-MM US)	
					(INCLUDES WASHERS)	

A - NOT PART OF THIS GROUP
B - USE AS REQUIRED
C - CHANGE FROM PREVIOUS TYPE
J - KIT MARKED J SERVICES PART(S) MARKED J
P - KIT MARKED P SERVICES PART(S) MARKED P

359-0715 **CRANKSHAFT GP (**contd.**)** **i07499798**

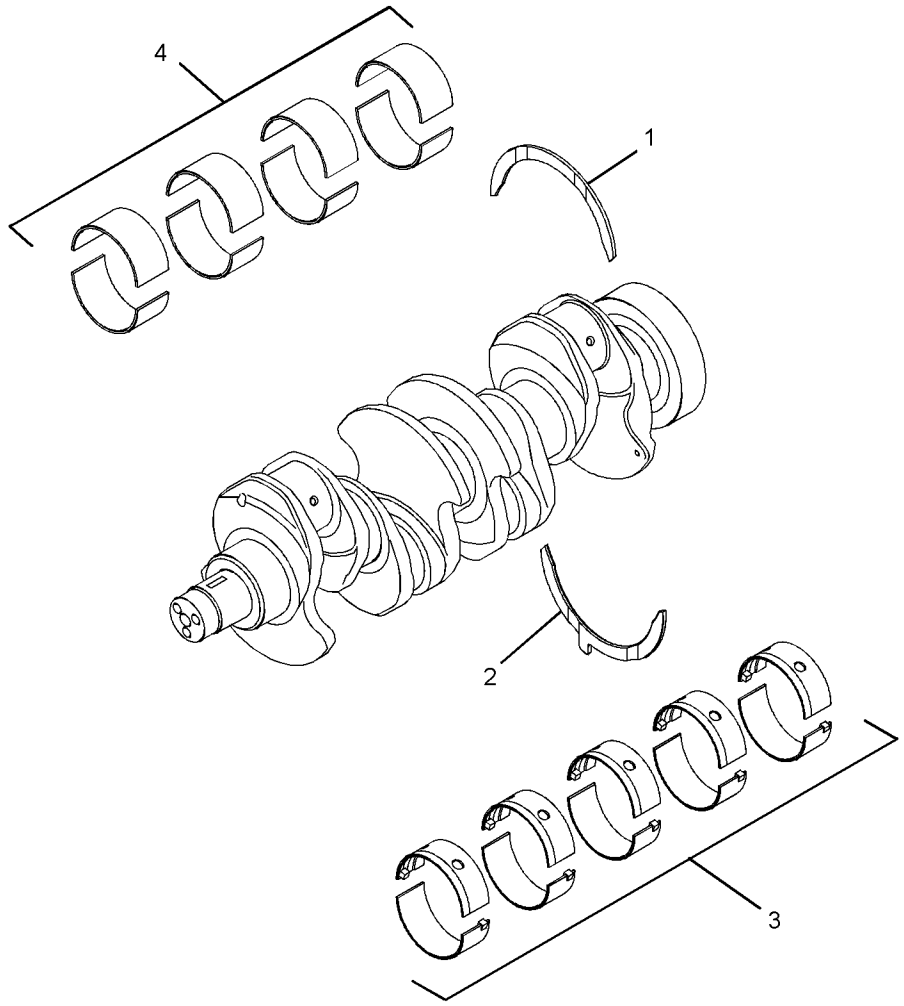

GRAPHIC #1 <END> g02174712

364-2829 CRANKSHAFT GP

WITH SPLINE

PART OF 367-2085, 367-2788 CRANKSHAFT GP

TYPE 1

SMCS-1202 **i07340992**

NOTE	REF NO	GRAPHIC REF	PART NUMBER	QTY	PART NAME 1 2 3 4 5 6 (PRODUCT LEVEL)	SEE PAGE
B	1	1	**032-9090**	2	WASHER-THRUST (STANDARD-UPPER)	
AB		1	**067-6873**		WASHER-THRUST (0.18-MM OS)	
B	2	1	**032-9091**	2	WASHER-THRUST (STANDARD-LOWER)	
AB		1	**067-6874**		WASHER-THRUST (0.18-MM OS)	
B	3	1	**353-2205**	1	KIT-ROD BEARING	
AB		1	**353-2206**		KIT-ROD BEARING (0.25-MM US)	
AB		1	**353-2207**		KIT-ROD BEARING (0.50-MM US)	
AB		1	**353-2208**		KIT-ROD BEARING (0.75-MM US)	
B	4	1	**353-7423**	1	KIT-BEARING (MAIN)	
AB		1	**353-7424**		KIT-BEARING (0.25-MM US)	
AB		1	**353-7425**		KIT-BEARING (0.50-MM US)	
AB		1	**353-7426**		KIT-BEARING (0.75-MM US)	

A - NOT PART OF THIS GROUP
B - USE AS REQUIRED

364-2829 **CRANKSHAFT GP (**contd.**)** **i07340992**

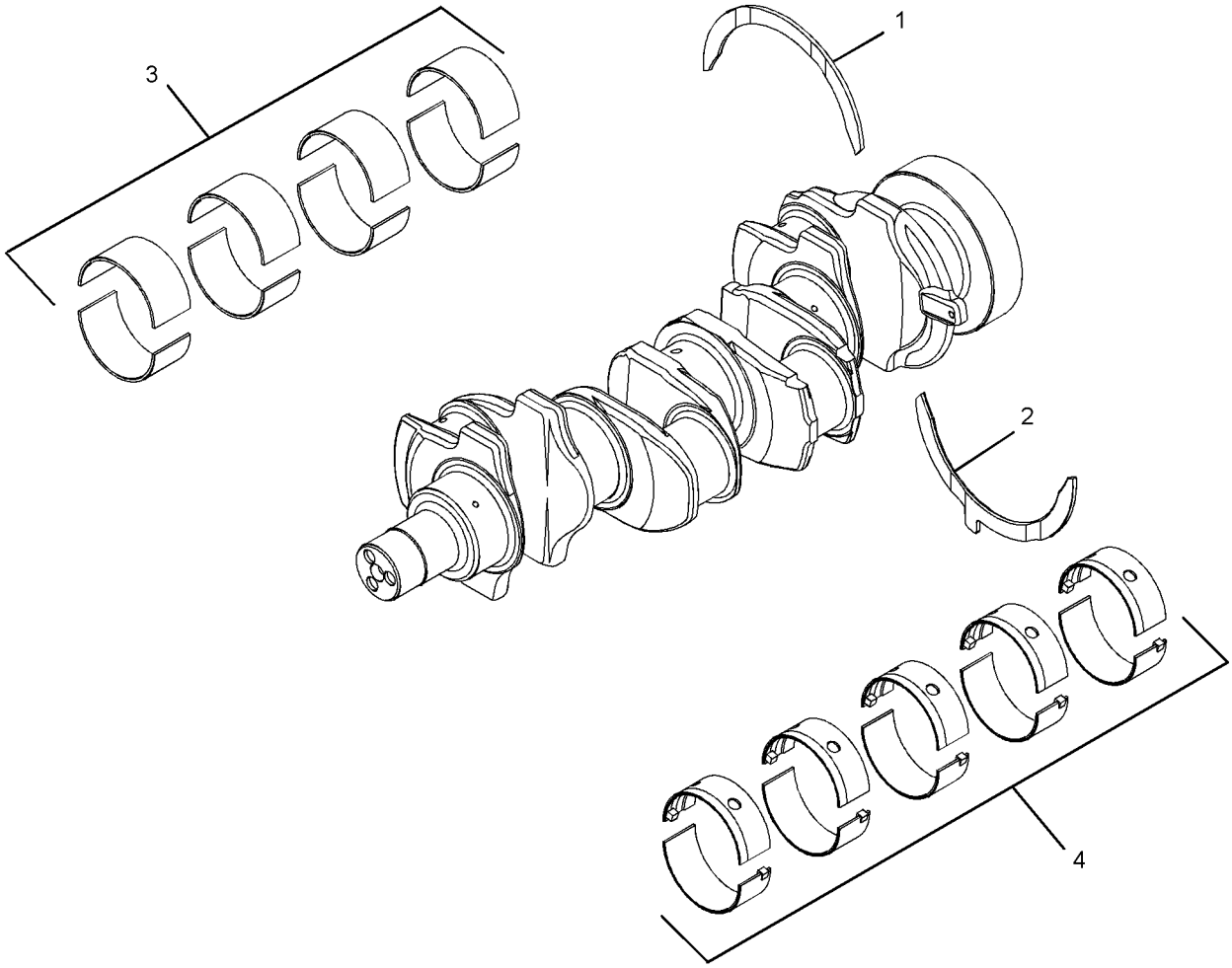

GRAPHIC #1 <END> g06288688

364-2829 CRANKSHAFT GP

WITH SPLINE

PART OF 367-2085, 367-2788 CRANKSHAFT GP

TYPE 2

SMCS-1202 **i08018593**

NOTE	REF NO	GRAPHIC REF	PART NUMBER	QTY	PART NAME 1 2 3 4 5 6 (PRODUCT LEVEL)	SEE PAGE
B	1	1	**032-9090**	2	WASHER-THRUST (STANDARD-UPPER)	
AB		1	**067-6873**		WASHER-THRUST (0.18-MM OS)	
B	2	1	**032-9091**	2	WASHER-THRUST (STANDARD-LOWER)	
AB		1	**067-6874**		WASHER-THRUST (0.18-MM OS)	
B	3	1	**353-2205**	1	KIT-ROD BEARING (STANDARD)	
AB		1	**353-2206**		KIT-ROD BEARING (0.25-MM US)	
AB		1	**353-2207**		KIT-ROD BEARING (0.50-MM US)	
AB		1	**353-2208**		KIT-ROD BEARING (0.75-MM US)	
BC	4	1	**518-5437**	1	KIT-BEARING (STANDARD)	
ABC		1	**518-5440**		KIT-BEARING (0.254-MM US)	
ABC		1	**518-5441**		KIT-BEARING (0.508-MM US)	
ABC		1	**518-5885**		KIT-BEARING (0.762-MM US)	

A - NOT PART OF THIS GROUP
B - USE AS REQUIRED
C - CHANGE FROM PREVIOUS TYPE

364-2829 **CRANKSHAFT GP (**contd.**)** **i08018593**

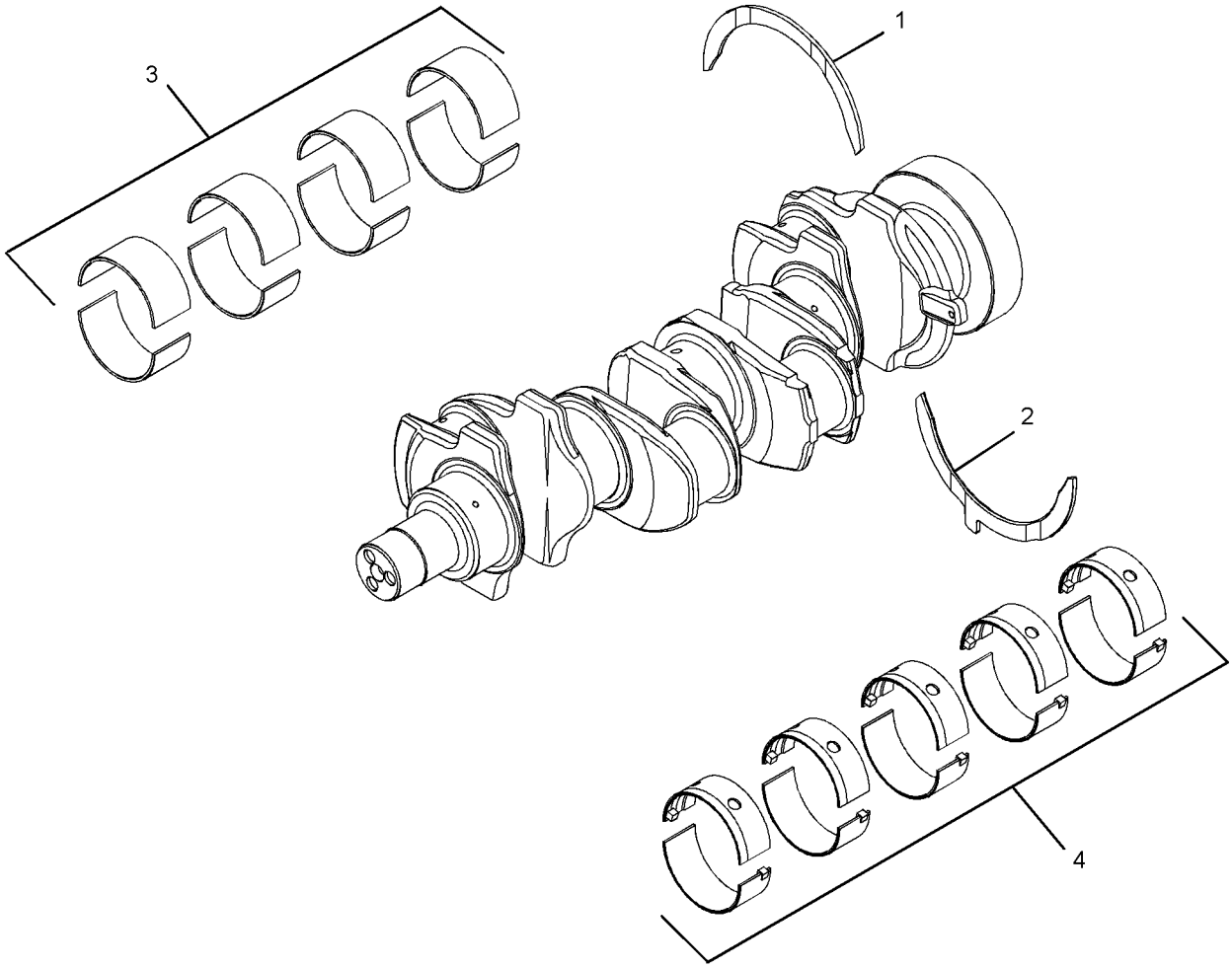

GRAPHIC #1 <END> g06288689

364-2829 CRANKSHAFT GP

WITH SPLINE

PART OF 367-2085, 367-2788 CRANKSHAFT GP

TYPE 3

SMCS-1202 **i08018153**

NOTE	REF NO	GRAPHIC REF	PART NUMBER	QTY	PART NAME 1 2 3 4 5 6 (PRODUCT LEVEL)	SEE PAGE
BC	1	1	*470-7995*	2	PLATE-THRUST (STANDARD) (UPPER)	
BC		1	**518-5891**	2	KIT-WASHER (STANDARD)	
ABC		1	**518-5892**		KIT-WASHER (0.191-MM US)	
ABC		1	**518-5893**		KIT-WASHER (STANDARD, 0.191-MM US)	
BC	2	1	*470-8021*	2	PLATE-THRUST (STANDARD) (LOWER)	
BC		1	**518-5891**	2	KIT-WASHER (STANDARD)	
ABC		1	**518-5892**		KIT-WASHER (0.191-MM US)	
ABC		1	**518-5893**		KIT-WASHER (STANDARD, 0.191-MM US)	
B	3	1	**353-2205**	1	KIT-ROD BEARING (STANDARD)	
AB		1	**353-2206**		KIT-ROD BEARING (0.25-MM US)	
AB		1	**353-2207**		KIT-ROD BEARING (0.50-MM US)	
AB		1	**353-2208**		KIT-ROD BEARING (0.75-MM US)	
B	4	1	**518-5437**	1	KIT-BEARING (STANDARD)	
AB		1	**518-5440**		KIT-BEARING (0.254-MM US)	
AB		1	**518-5441**		KIT-BEARING (0.508-MM US)	
AB		1	**518-5885**		KIT-BEARING (0.762-MM US)	

A - NOT PART OF THIS GROUP
B - USE AS REQUIRED
C - CHANGE FROM PREVIOUS TYPE

364-2829 **CRANKSHAFT GP (**contd.**)** **i08018153**

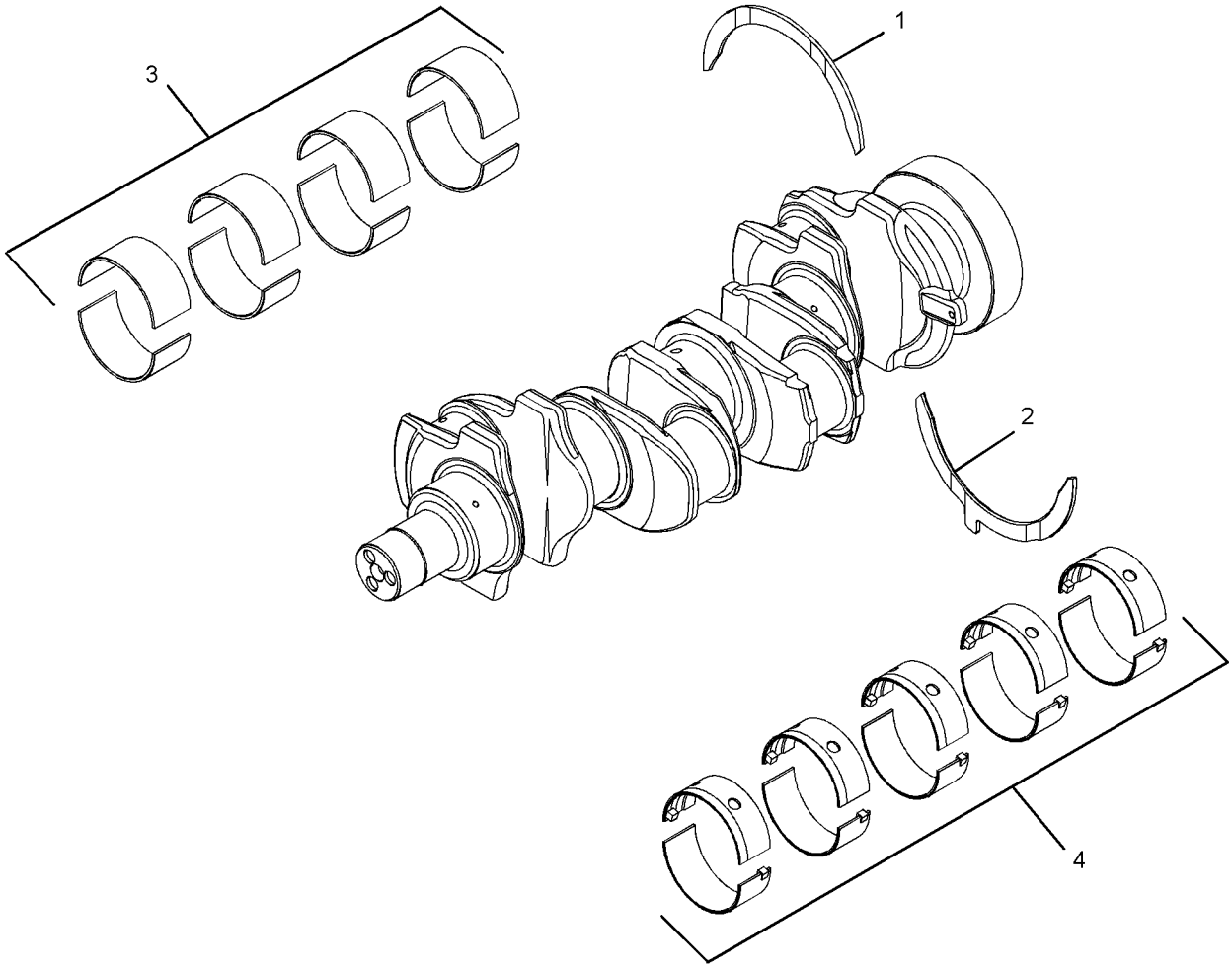

GRAPHIC #1 <END> g06288685

367-2085 CRANKSHAFT GP

SMCS-1202 **i05206372**

NOTE	REF NO	GRAPHIC REF	PART NUMBER	QTY	PART NAME 1 2 3 4 5 6 (PRODUCT LEVEL)	SEE PAGE
	1	1	**216-8314**	1	GEAR-CRANKSHAFT (34-TEETH)	
Y	2	1	**364-2829**	1	CRANKSHAFT GP	480

Y - SEPARATE ILLUSTRATION

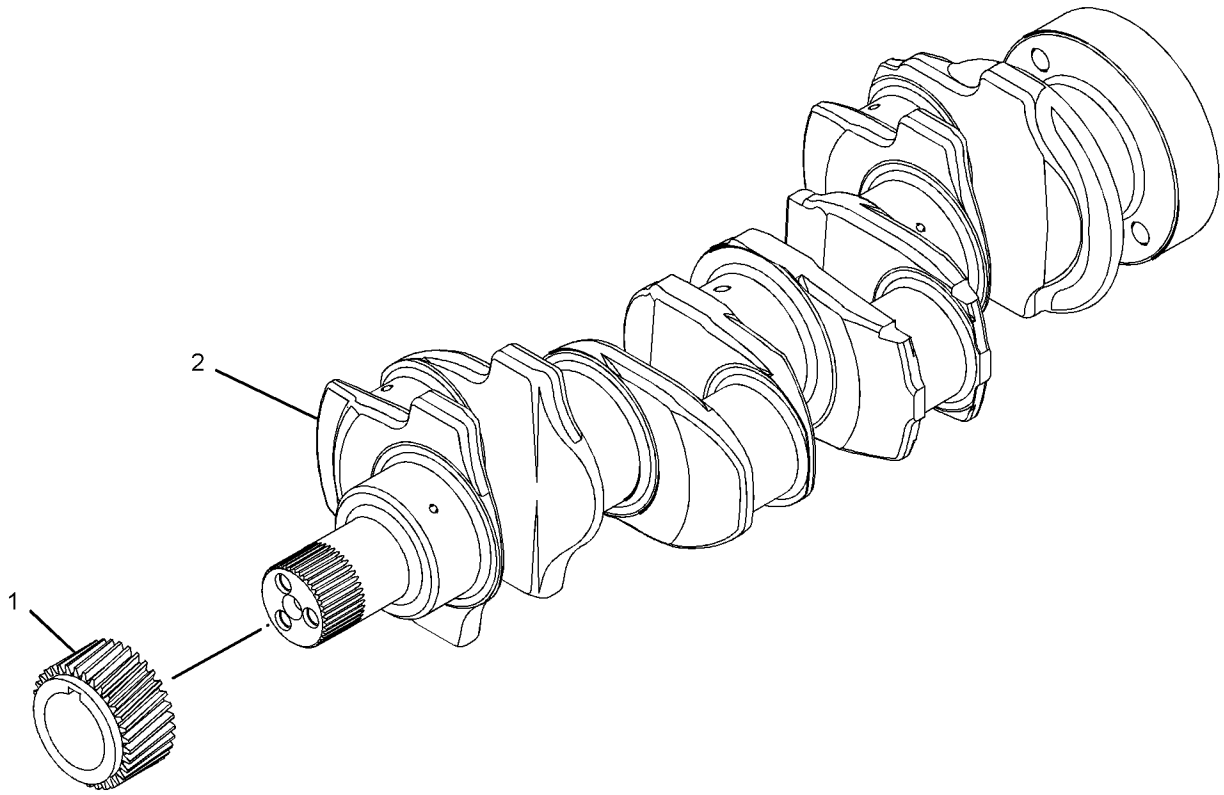

GRAPHIC #1 <END> g01402486

367-2788 CRANKSHAFT GP

TYPE 1

SMCS-1202 **i05266116**

NOTE	REF NO	GRAPHIC REF	PART NUMBER	QTY	PART NAME 1 2 3 4 5 6 (PRODUCT LEVEL)	SEE PAGE
	1	1	**216-8314**	1	GEAR-CRANKSHAFT (34-TEETH)	
Y	2	1	**232-7400**	1	CRANKSHAFT GP (WITH SPLINE)	449

Y - SEPARATE ILLUSTRATION

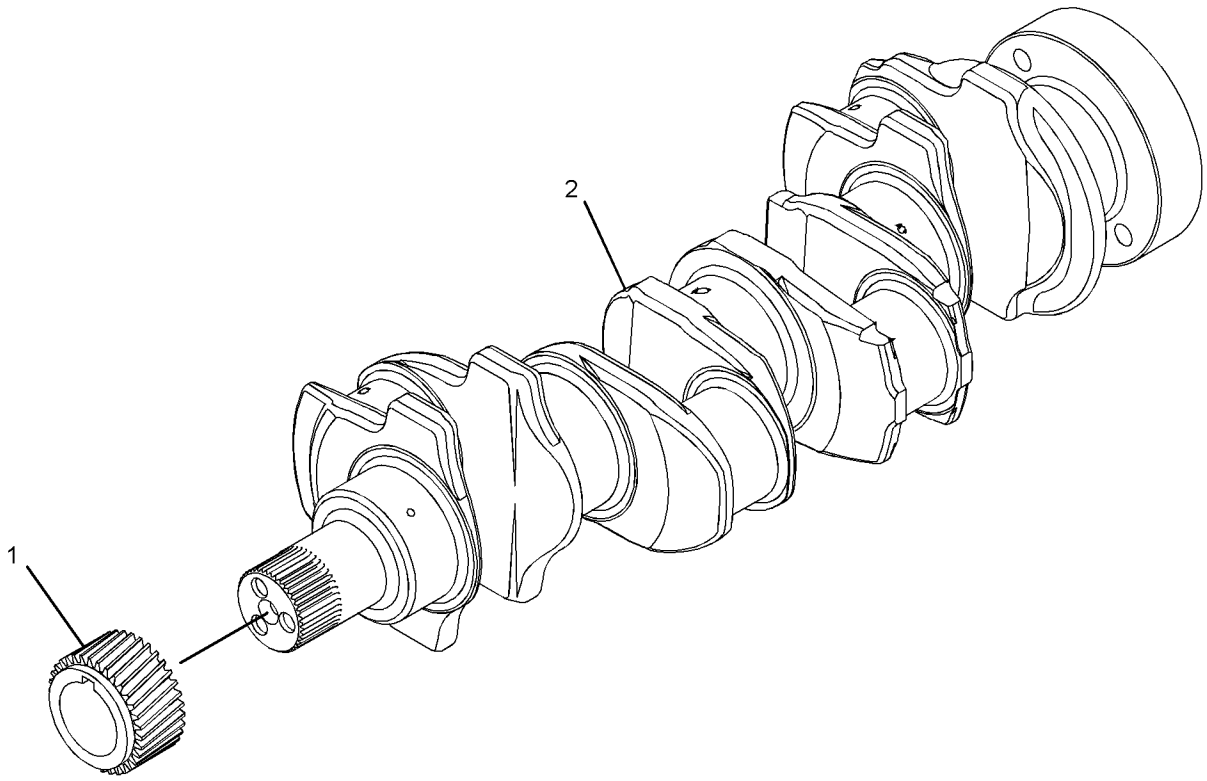

GRAPHIC #1 <END> g03349537

367-2788 CRANKSHAFT GP

TYPE 2

SMCS-1202 **i05267509**

NOTE	REF NO	GRAPHIC REF	PART NUMBER	QTY	PART NAME 1 2 3 4 5 6 (PRODUCT LEVEL)	SEE PAGE
	1	1	**216-8314**	1	GEAR-CRANKSHAFT (34-TEETH)	
CY	2	1	**364-2829**	1	CRANKSHAFT GP	480

C - CHANGE FROM PREVIOUS TYPE
Y - SEPARATE ILLUSTRATION

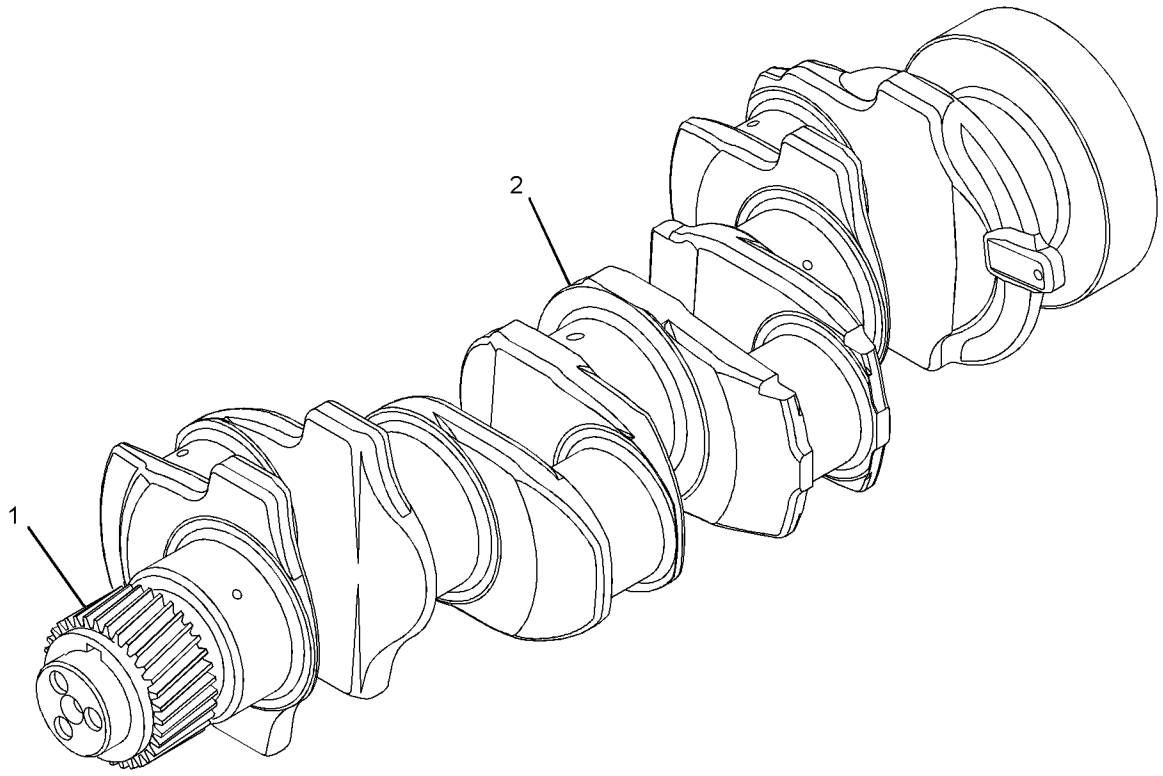

GRAPHIC #1 <END> g03352389

460-0741 CRANKSHAFT GP

SMCS-1202 **i05965336**

NOTE	REF NO	GRAPHIC REF	PART NUMBER	QTY	PART NAME 1 2 3 4 5 6 (PRODUCT LEVEL)	SEE PAGE
	1	1	**067-6135**	1	KEY-WOODRUFF	
	2	1	**216-8314**	1	GEAR-CRANKSHAFT (34-TEETH)	
Y	3	1	**359-0715**	1	CRANKSHAFT GP (W/O SPLINE)	477

Y - SEPARATE ILLUSTRATION

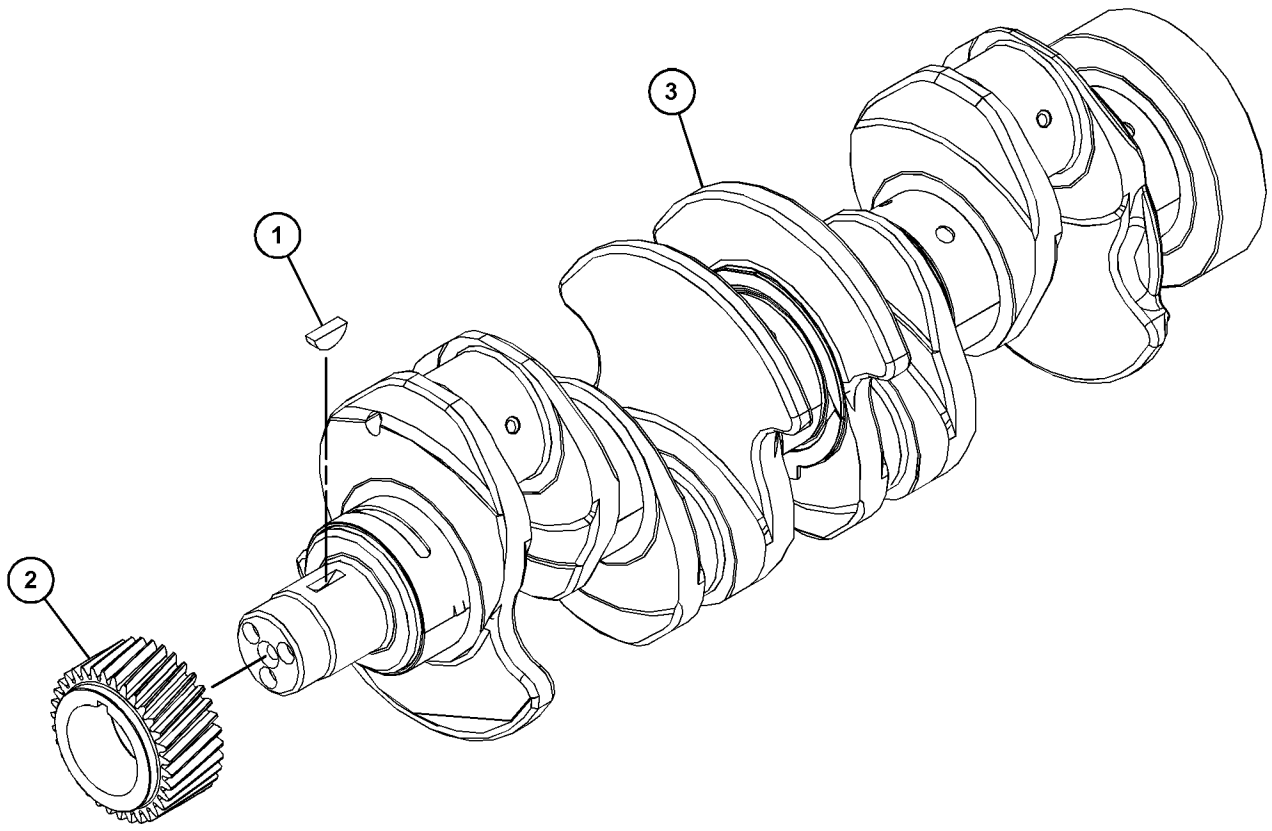

GRAPHIC #1 <END> g03703359

478-6453 CRANKSHAFT GP

SMCS-1202 **i06238814**

NOTE	REF NO	GRAPHIC REF	PART NUMBER	QTY	PART NAME 1 2 3 4 5 6 (PRODUCT LEVEL)	SEE PAGE
	1	1	**067-6135**	1	KEY-WOODRUFF	
	2	1	**216-8314**	1	GEAR-CRANKSHAFT (34-TEETH)	
Y	3	1	**359-0715**	1	CRANKSHAFT GP (W/O SPLINE)	477

Y - SEPARATE ILLUSTRATION

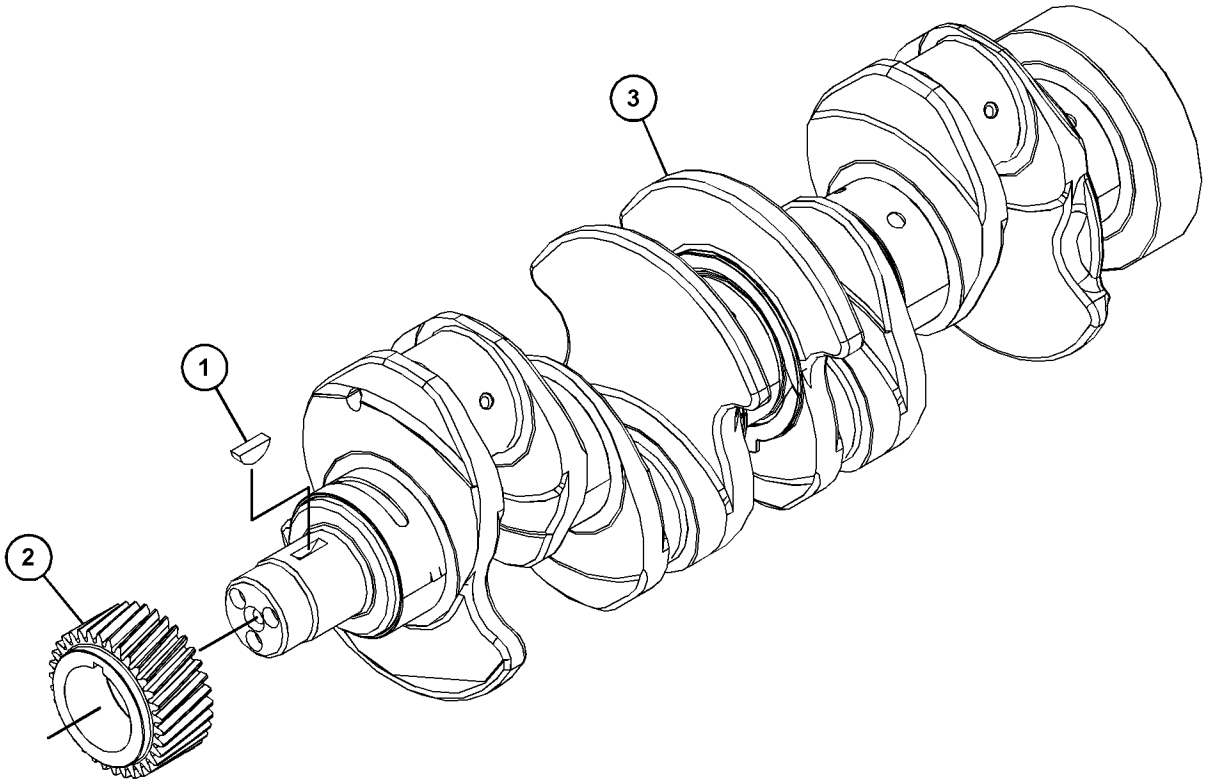

GRAPHIC #1 <END> g03875116

336-3516 CYLINDER BLOCK AS

PART OF 243-4837 CYLINDER BLOCK GP

SMCS-1201 **i05651396**

NOTE	REF NO	GRAPHIC REF	PART NUMBER	QTY	PART NAME 1 2 3 4 5 6 (PRODUCT LEVEL)	SEE PAGE
M	1	1	**6I-0645**	4	BOLT (M8X1.25X25-MM)	
M	2	1	**6I-0646**	1	BOLT (M10X1.5X14-MM)	
	3	1	**035-8063**	1	PLUG	
	4	1	**0S-2353**	10	BOLT (5/8-18X3.75-IN)	
	5	1	**067-6002**	10	DOWEL	
	6	1	**067-6006**	1	PLUG	
	7	1	**067-6043**	1	PLUG-SIDE	
M	8	1	**100-4841**	4	BOLT (M6X1X10-MM)	
	9	1	**185-0884**	2	DOWEL	
	10	1	**214-3203**	1	WASHER (SEALING)	
	11	1	**225-8858**	1	PLUG	
	12	1	**366-8853**	1	BEARING	
	13	1	**232-7596**	1	PLUG	
	14	1	**232-7597**	2	PLUG	
	15	1	**232-7599**	1	PLUG (7/8-14-THD)	
	16	1	**233-9408**	1	GASKET	
	17	1	**252-6318**	1	PLATE	
	18	1	**276-5605**	4	JET AS-PISTON COOLING	

M - METRIC PART

336-3516 **CYLINDER BLOCK AS (**contd.**)** **i05651396**

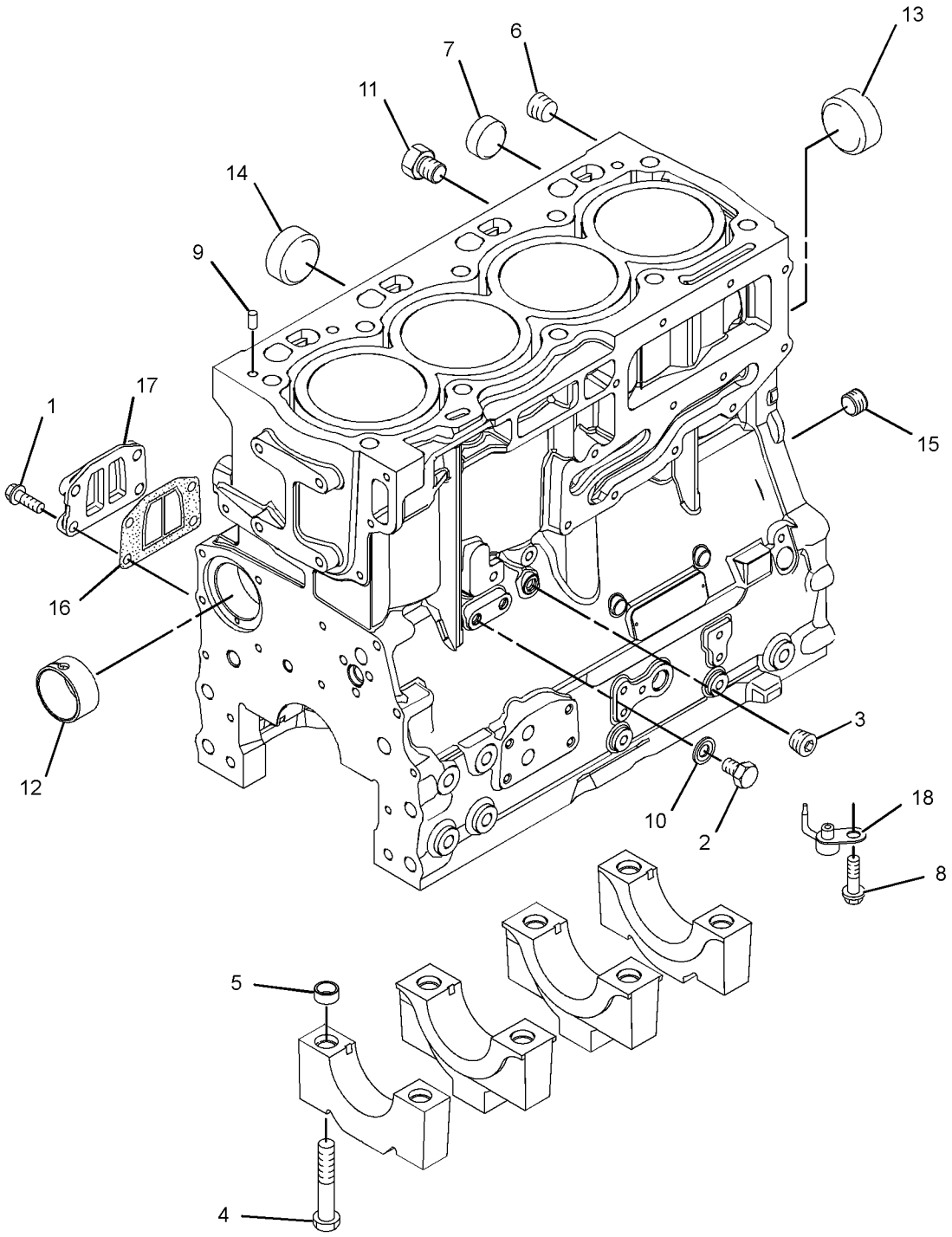

GRAPHIC #1 <END> g01586142

232-7604 CYLINDER BLOCK GP

PART OF 232-7606, 233-7007, 243-3179, 244-2014, 247-4820, 253-8750, 316-8478 CYLINDER BLOCK GP
ALSO AN ATTACHMENT

SMCS-1201 **i03251704**

NOTE	REF NO	GRAPHIC REF	PART NUMBER	QTY	PART NAME 1 2 3 4 5 6 (PRODUCT LEVEL)	SEE PAGE
M	1	1	**6I-0572**	4	BOLT (M8X1.25X20-MM)	
	2	1	**035-8068**	10	BOLT (5/8-18X3.75-IN)	
	3	1	**067-6002**	10	DOWEL	
	4	1	**067-6006**	1	PLUG	
	5	1	**067-6043**	1	PLUG-SIDE	
M	6	1	**100-4841**	4	BOLT (M6X1X10-MM)	
	7	1	**185-0884**	2	DOWEL	
	8	1	**225-7944**	1	GASKET (ENGINE OIL FILTER BASE)	
	9	1	**225-8858**	2	PLUG	
	10	1	**232-3751**	1	PLATE	
	11	1	**232-7440**	1	BEARING	
	12	1	**276-5605**	4	JET AS-PISTON COOLING	
	13	1	**232-7596**	1	PLUG	
	14	1	**232-7597**	2	PLUG	
	15	1	**232-7599**	1	PLUG (7/8-14-THD)	
	16	1	**232-7600**	1	PLUG-CUP	
	17	1	**232-7603**	1	PLUG	

M - METRIC PART

232-7604 **CYLINDER BLOCK GP (**contd.**)** **i03251704**

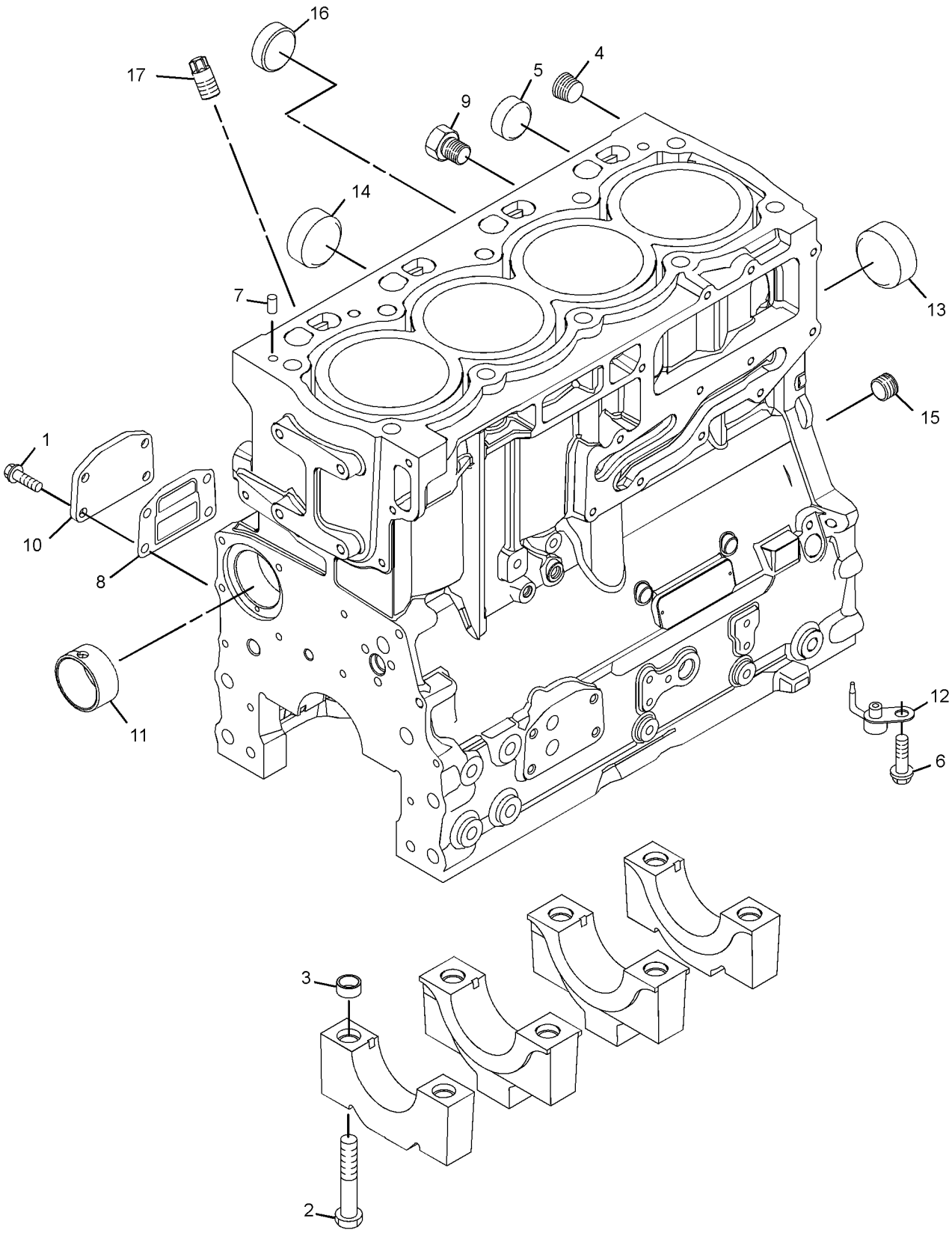

GRAPHIC #1 <END> g01652625

232-7606 CYLINDER BLOCK GP

S/N: 3341-25629

ALSO AN ATTACHMENT

SMCS-1201 **i01863465**

NOTE	REF NO	GRAPHIC REF	PART NUMBER	QTY	PART NAME 1 2 3 4 5 6 (PRODUCT LEVEL)	SEE PAGE
M	1	1	**209-9219**	10	BOLT (M8X1.25X16-MM)	
	2	1	**232-7449**	1	HOUSING AS	
Y	3	1	**232-7604**	1	CYLINDER BLOCK GP	493

M - METRIC PART
Y - SEPARATE ILLUSTRATION

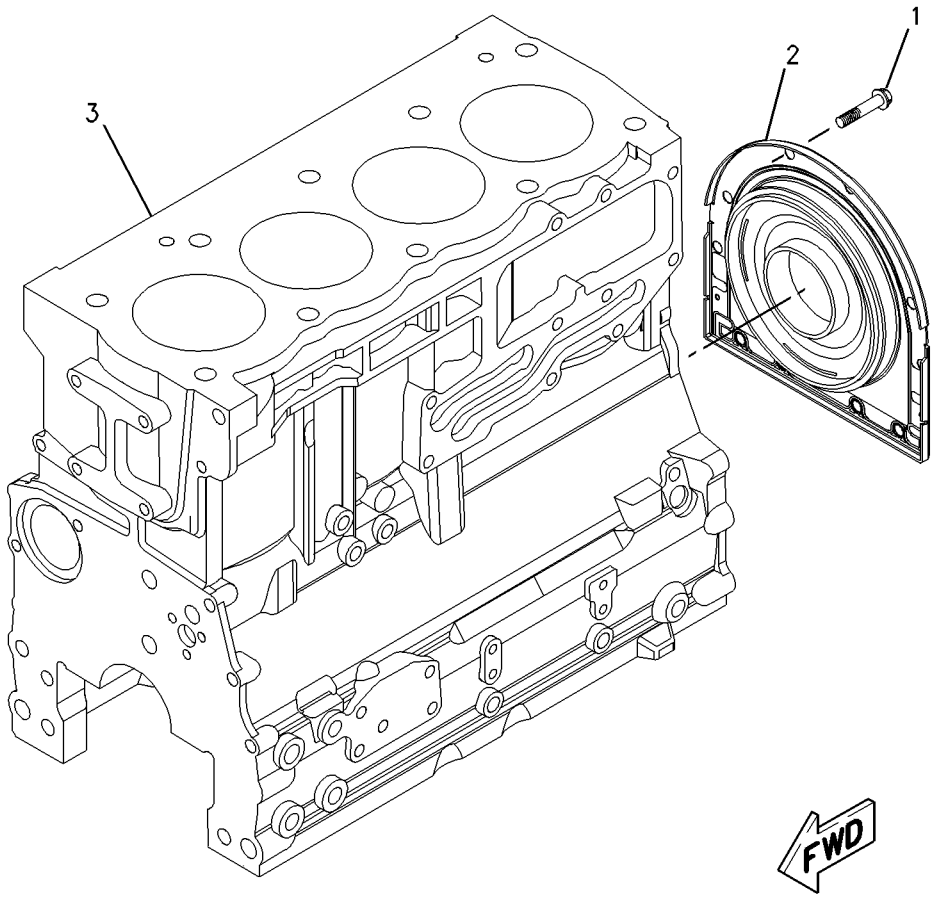

GRAPHIC #1 <END> g00952056

232-7606 CYLINDER BLOCK GP

ALSO AN ATTACHMENT

SMCS-1201 **i04339250**

NOTE	REF NO	GRAPHIC REF	PART NUMBER	QTY	PART NAME 1 2 3 4 5 6 (PRODUCT LEVEL)	SEE PAGE
M	1	1	**209-9219**	10	BOLT (M8X1.25X16-MM)	
	2	1	**232-7449**	1	HOUSING AS	
CY	3	1	**362-2190**	1	CYLINDER BLOCK GP	518

C - CHANGE FROM PREVIOUS TYPE
M - METRIC PART
Y - SEPARATE ILLUSTRATION

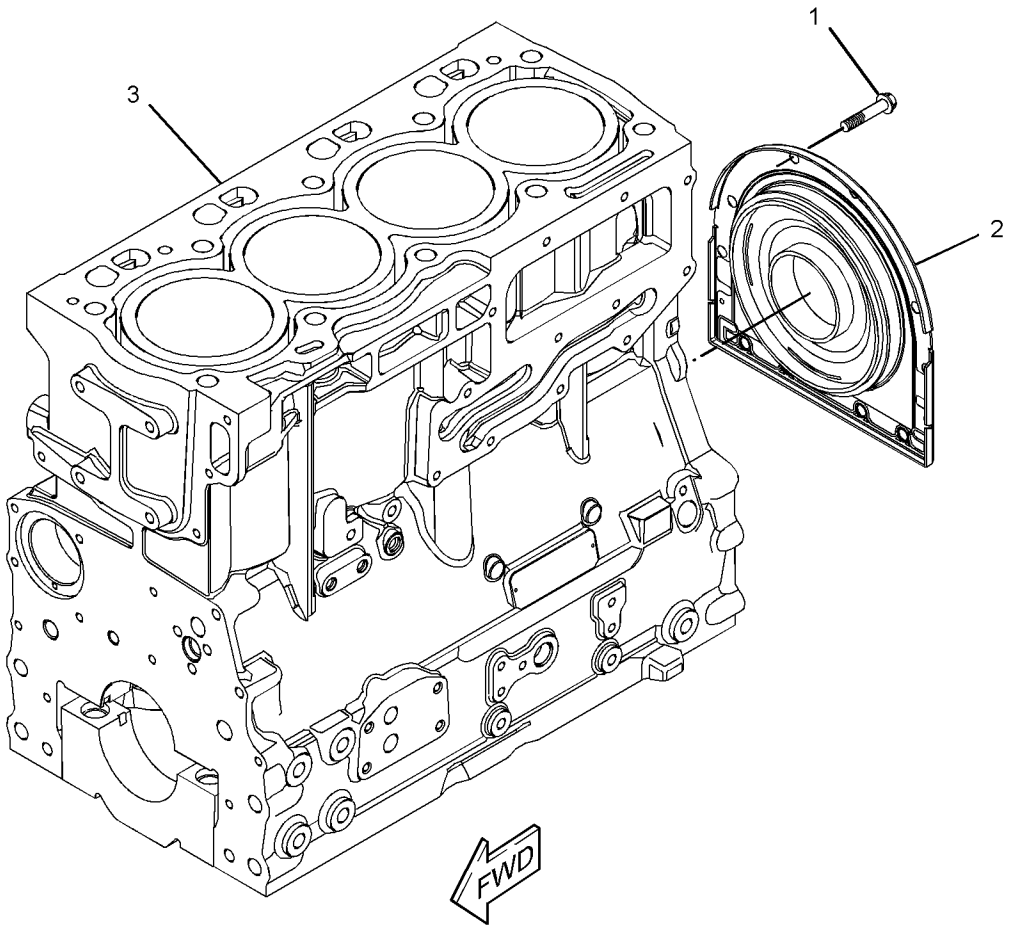

GRAPHIC #1 <END> g02500198

233-7007 CYLINDER BLOCK GP

TYPE 1

SMCS-1201 **i01872353**

NOTE	REF NO	GRAPHIC REF	PART NUMBER	QTY	PART NAME 1 2 3 4 5 6 (PRODUCT LEVEL)	SEE PAGE
M	1	1	**209-9219**	10	BOLT (M8X1.25X16-MM)	
	2	1	**232-7449**	1	HOUSING AS	
Y	3	1	**232-7604**	1	CYLINDER BLOCK GP	493

M - METRIC PART
Y - SEPARATE ILLUSTRATION

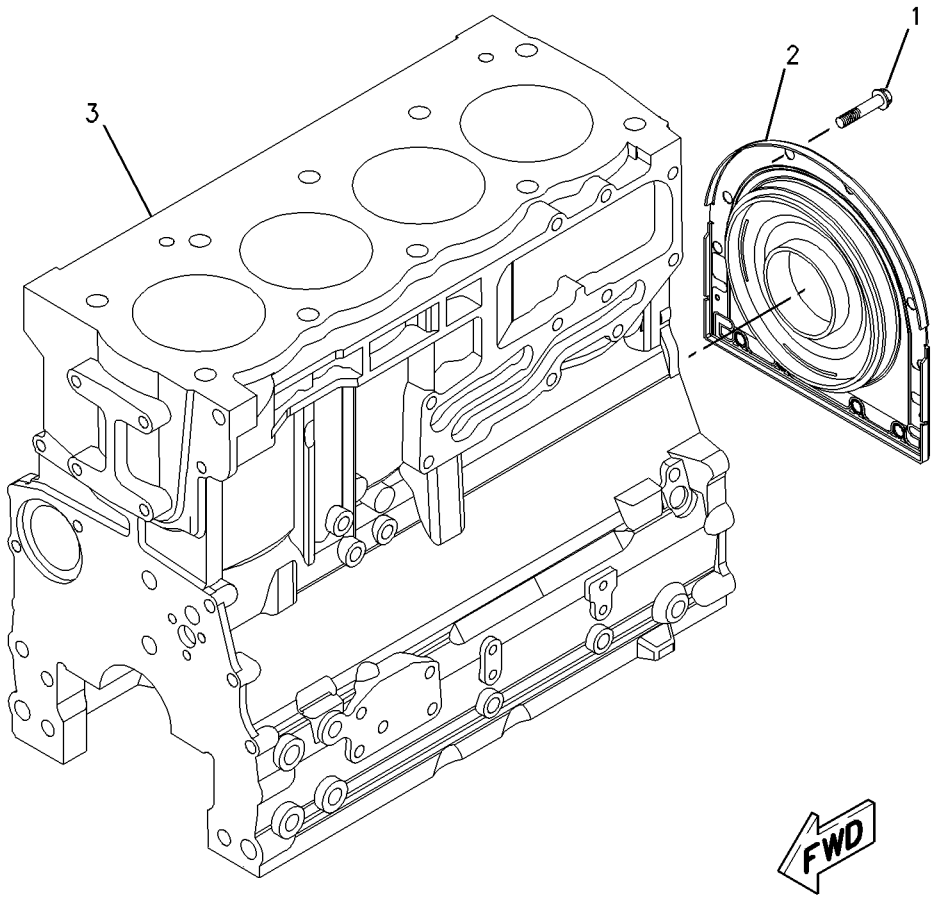

GRAPHIC #1 <END> g00952056

233-7007 CYLINDER BLOCK GP

TYPE 2

SMCS-1201 **i04339336**

NOTE	REF NO	GRAPHIC REF	PART NUMBER	QTY	PART NAME 1 2 3 4 5 6 (PRODUCT LEVEL)	SEE PAGE
M	1	1	**209-9219**	10	BOLT (M8X1.25X16-MM)	
	2	1	**232-7449**	1	HOUSING AS	
CY	3	1	**362-2190**	1	CYLINDER BLOCK GP	518

C - CHANGE FROM PREVIOUS TYPE
M - METRIC PART
Y - SEPARATE ILLUSTRATION

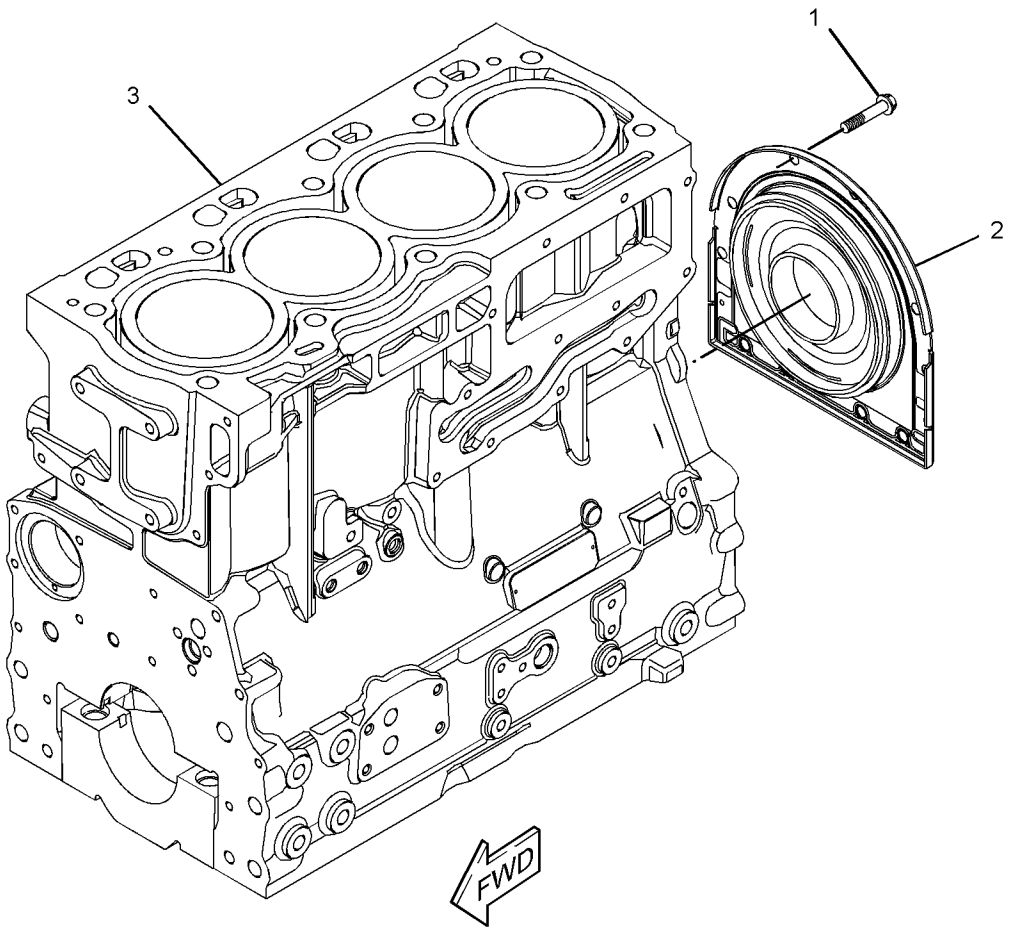

GRAPHIC #1 <END> g02500198

237-5833 CYLINDER BLOCK GP

PART OF 237-5836, 243-1948 CYLINDER BLOCK GP, 303-2168 CYLINDER BLOCK GP-SHORT

SMCS-1201 **i05329209**

NOTE	REF NO	GRAPHIC REF	PART NUMBER	QTY	PART NAME 1 2 3 4 5 6 (PRODUCT LEVEL)	SEE PAGE
M	1	1	**6I-0572**	4	BOLT (M8X1.25X20-MM)	
	2	1	**232-7603**	1	PLUG	
	3	1	**067-6002**	10	DOWEL	
	4	1	**067-6006**	1	PLUG	
	5	1	**067-6043**	1	PLUG-SIDE	
M	6	1	**100-4841**	4	BOLT (M6X1X10-MM)	
	7	1	**185-0884**	2	DOWEL	
	8	1	**225-7944**	1	GASKET	
	9	1	**225-8858**	2	PLUG	
	10	1	**232-3751**	1	PLATE	
	11	1	**366-8853**	1	BEARING	
	12	1	**276-5605**	4	JET AS-PISTON COOLING	
	13	1	**232-7596**	1	PLUG	
	14	1	**232-7597**	2	PLUG	
	15	1	**232-7599**	1	PLUG (7/8-14-THD)	
	16	1	**232-7600**	1	PLUG-CUP	

M - METRIC PART

237-5833 **CYLINDER BLOCK GP (**contd.**)** **i05329209**

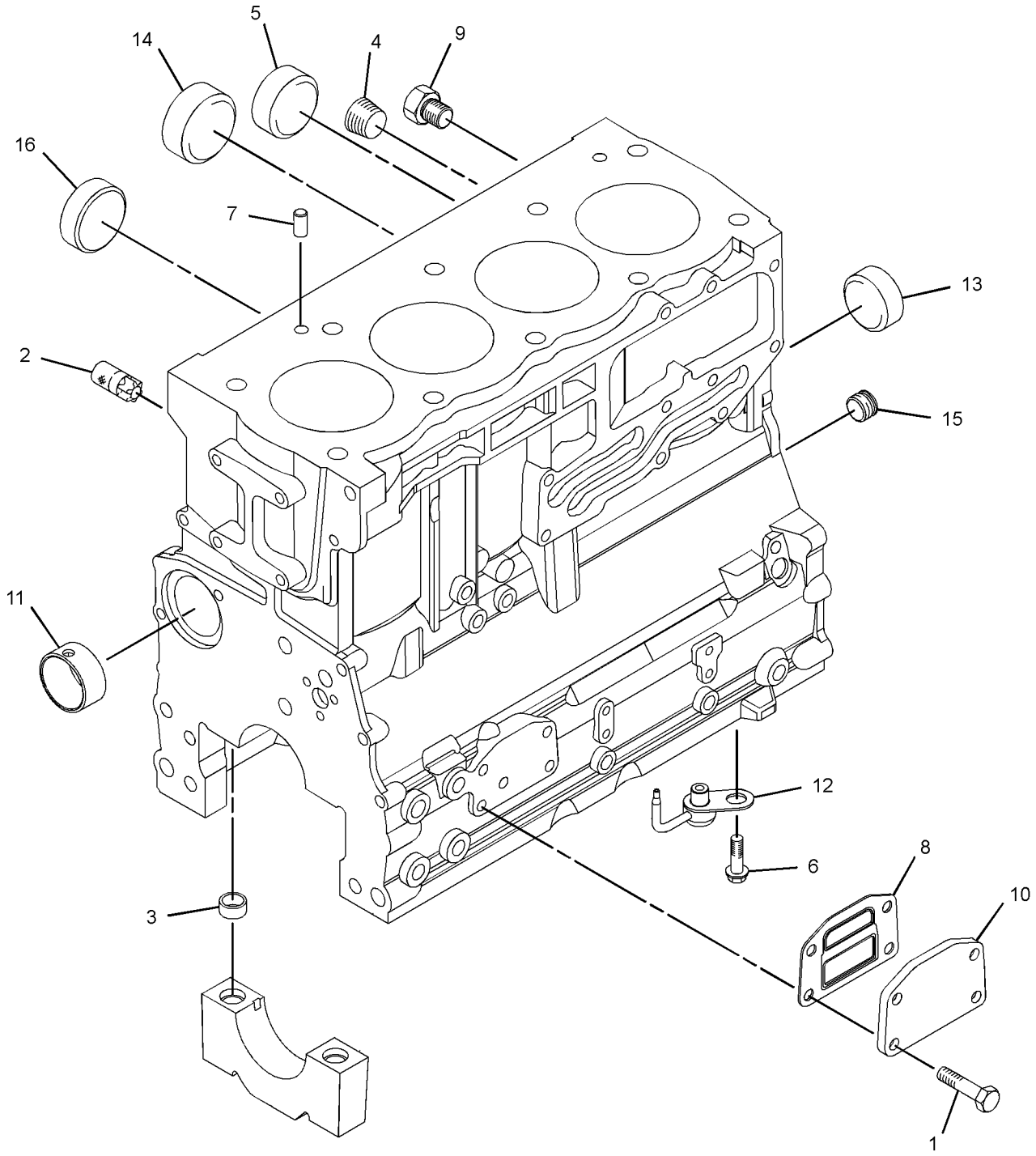

GRAPHIC #1 <END> g03377845

237-5836 CYLINDER BLOCK GP

TYPE 1

SMCS-1201 **i01940458**

NOTE	REF NO	GRAPHIC REF	PART NUMBER	QTY	PART NAME 1 2 3 4 5 6 (PRODUCT LEVEL)	SEE PAGE
M	1	1	**209-9219**	10	BOLT (M8X1.25X16-MM)	
	2	1	**232-7449**	1	HOUSING AS	
Y	3	1	**237-5833**	1	CYLINDER BLOCK GP	499

M - METRIC PART
Y - SEPARATE ILLUSTRATION

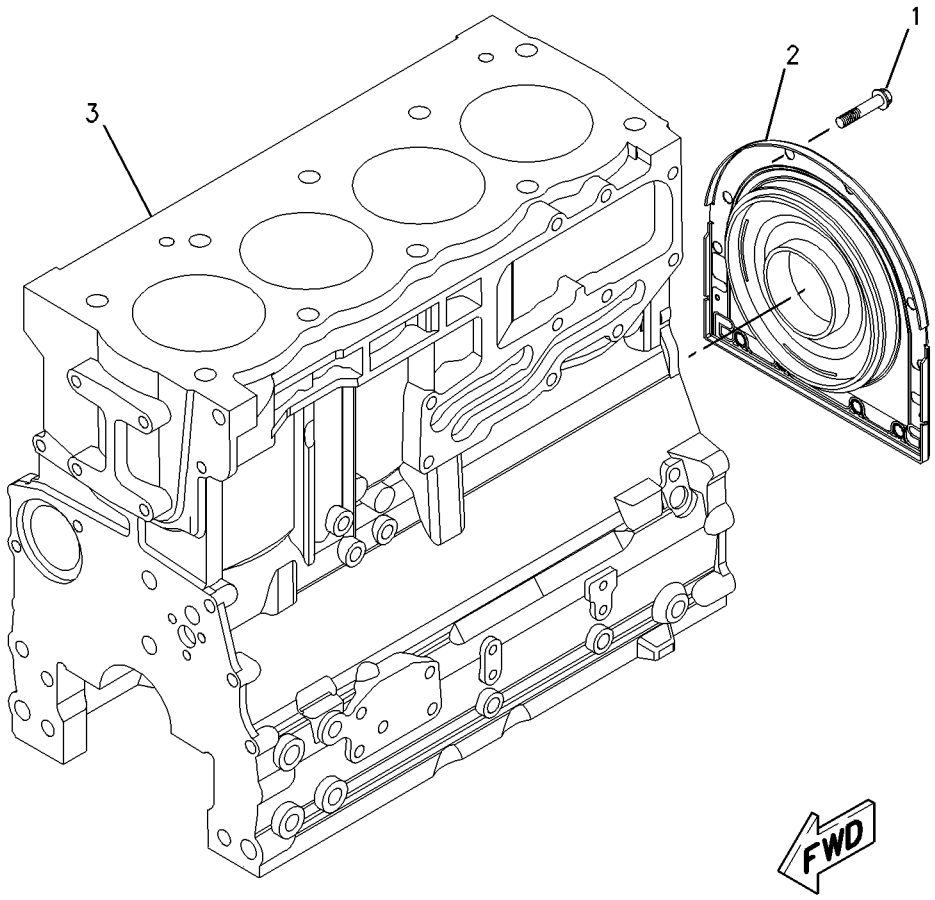

GRAPHIC #1 <END> g00952056

237-5836 CYLINDER BLOCK GP

TYPE 2

SMCS-1201 **i05651417**

NOTE	REF NO	GRAPHIC REF	PART NUMBER	QTY	PART NAME 1 2 3 4 5 6 (PRODUCT LEVEL)	SEE PAGE
M	1	1	**209-9219**	10	BOLT (M8X1.25X16-MM)	
	2	1	**232-7449**	1	HOUSING AS	
CY	3	1	**363-5760**	1	CYLINDER BLOCK GP	520

C - CHANGE FROM PREVIOUS TYPE
M - METRIC PART
Y - SEPARATE ILLUSTRATION

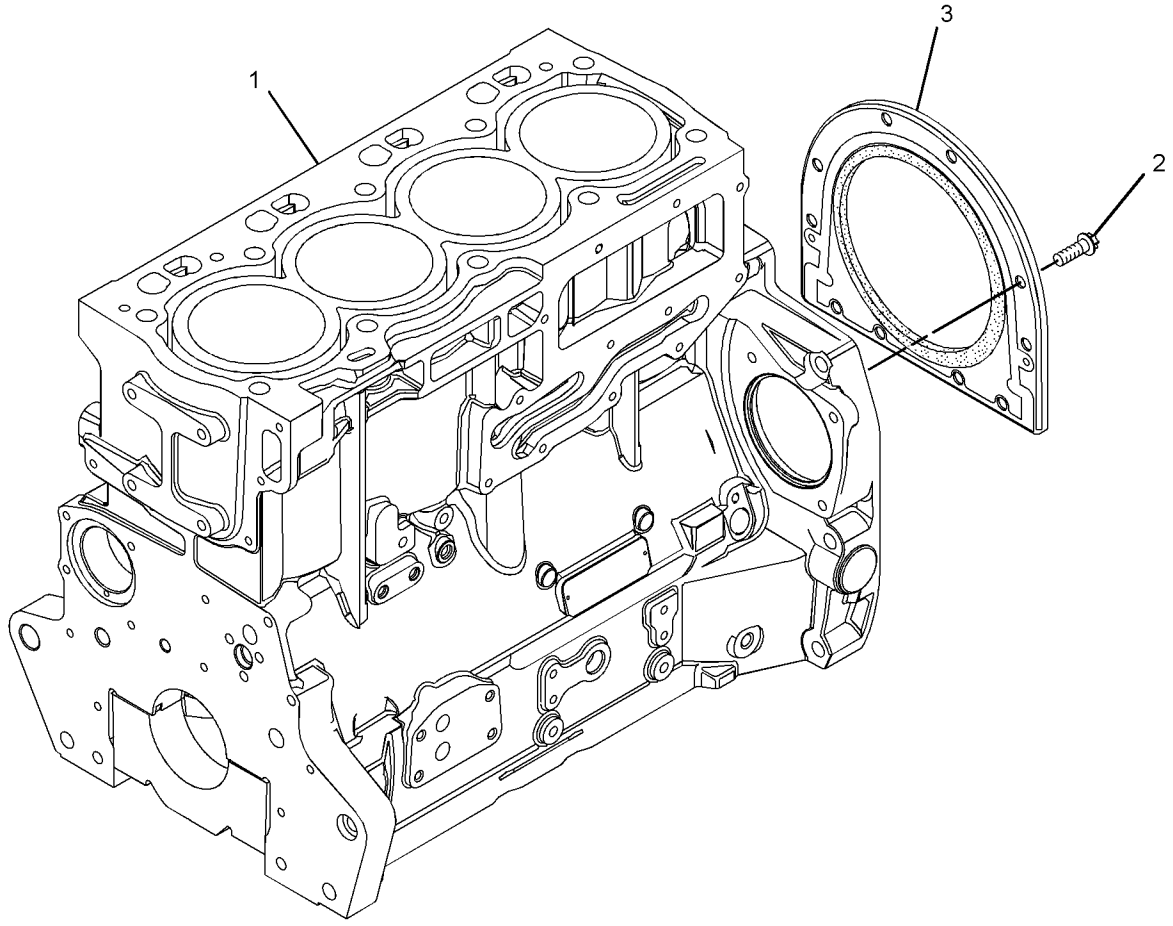

GRAPHIC #1 <END> g03346307

243-1948 CYLINDER BLOCK GP

S/N: 3341-23163

SMCS-1201 **i01964500**

NOTE	REF NO	GRAPHIC REF	PART NUMBER	QTY	PART NAME 1 2 3 4 5 6 (PRODUCT LEVEL)	SEE PAGE
M	1	1	**209-9219**	10	BOLT (M8X1.25X16-MM)	
	2	1	**232-7449**	1	HOUSING AS	
Y	3	1	**237-5833**	1	CYLINDER BLOCK GP	499

M - METRIC PART
Y - SEPARATE ILLUSTRATION

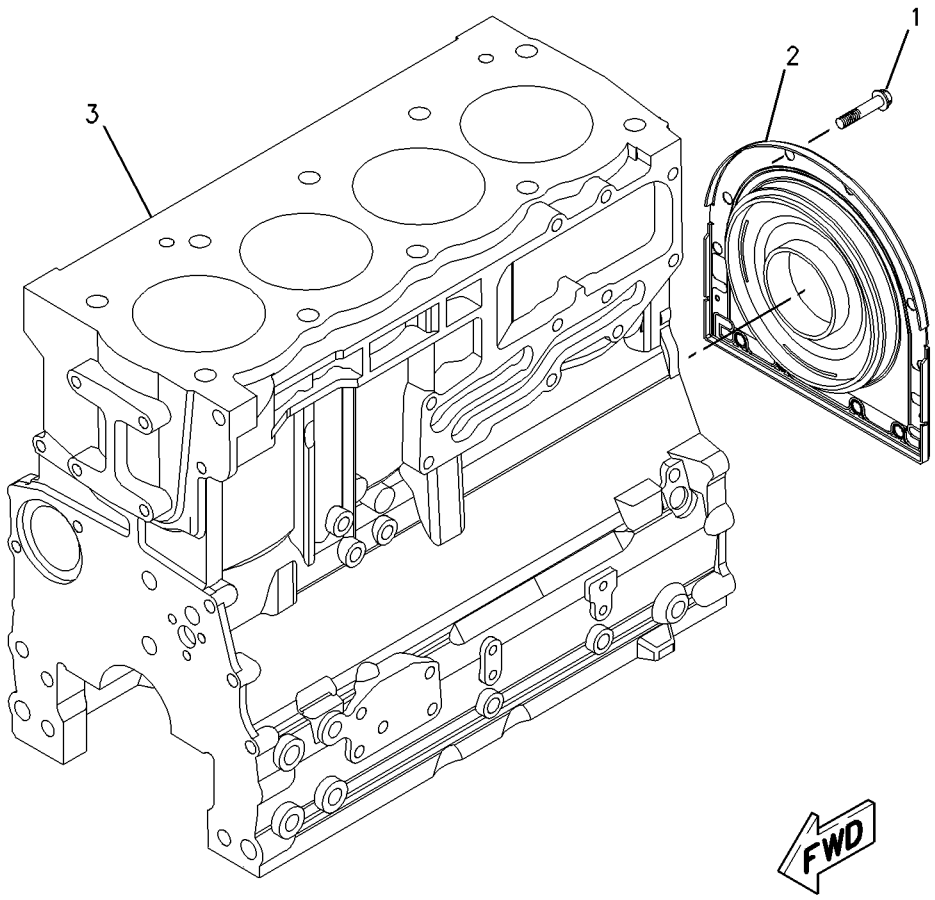

GRAPHIC #1 <END> g00952056

243-1948 CYLINDER BLOCK GP

S/N: 33423164-UP

SMCS-1201 **i05187721**

NOTE	REF NO	GRAPHIC REF	PART NUMBER	QTY	PART NAME 1 2 3 4 5 6 (PRODUCT LEVEL)	SEE PAGE
M	1	1	**209-9219**	10	BOLT (M8X1.25X16-MM)	
	2	1	**232-7449**	1	HOUSING AS	
CY	3	1	**363-5760**	1	CYLINDER BLOCK GP	520

C - CHANGE FROM PREVIOUS TYPE
M - METRIC PART
Y - SEPARATE ILLUSTRATION

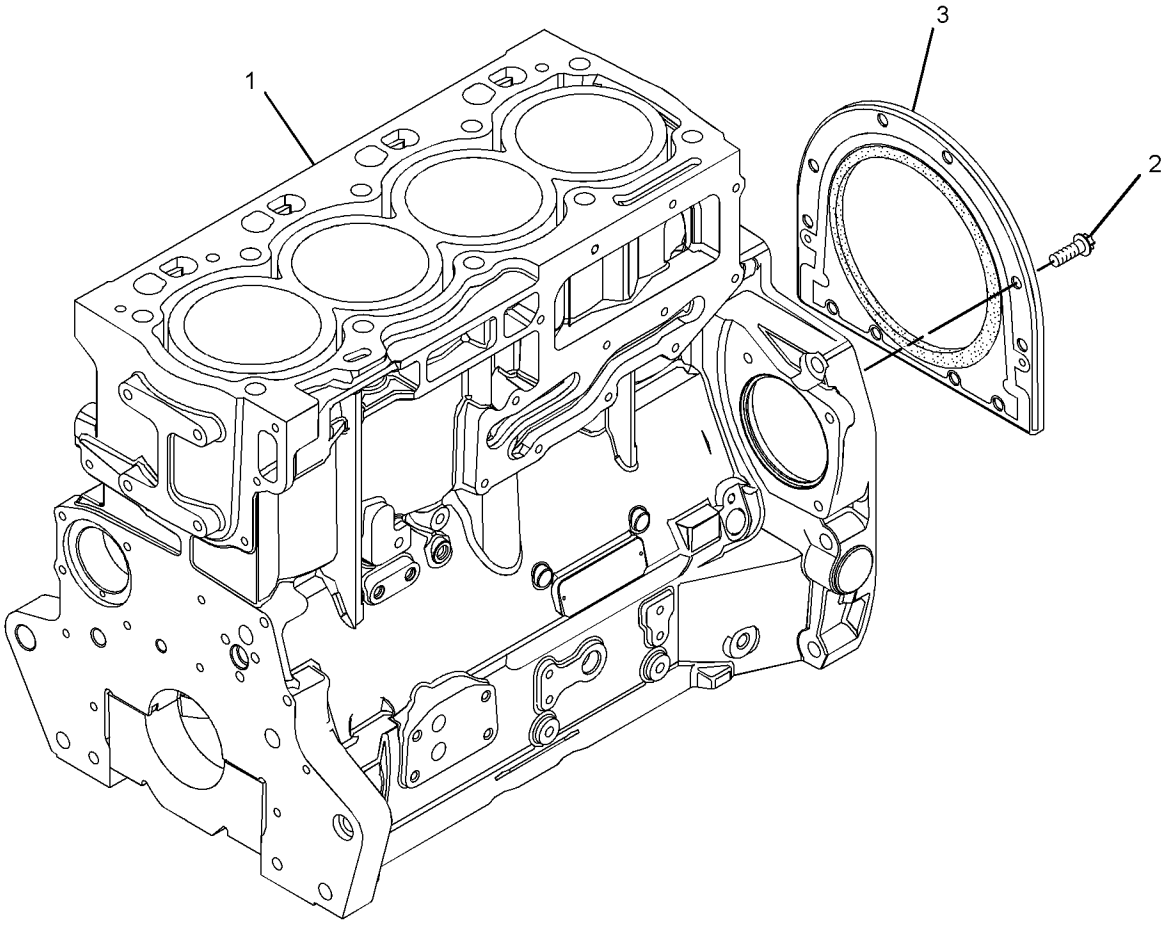

GRAPHIC #1 <END> g03346307

243-3179 CYLINDER BLOCK GP

ALSO AN ATTACHMENT

TYPE 1

SMCS-1201 **i01964519**

NOTE	REF NO	GRAPHIC REF	PART NUMBER	QTY	PART NAME 1 2 3 4 5 6 (PRODUCT LEVEL)	SEE PAGE
M	1	1	**209-9219**	10	BOLT (M8X1.25X16-MM)	
	2	1	**232-7449**	1	HOUSING AS	
Y	3	1	**232-7604**	1	CYLINDER BLOCK GP	493

M - METRIC PART
Y - SEPARATE ILLUSTRATION

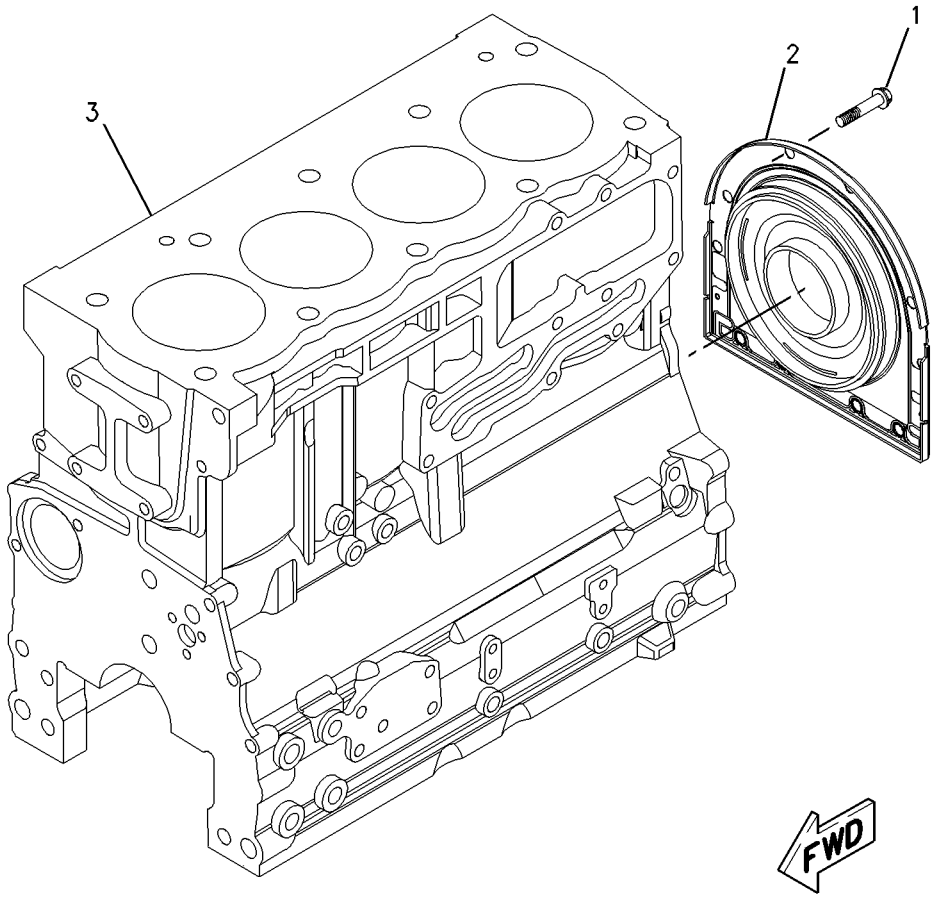

GRAPHIC #1 <END> g00952056

243-3179 CYLINDER BLOCK GP

ALSO AN ATTACHMENT

TYPE 2

SMCS-1201 **i04369661**

NOTE	REF NO	GRAPHIC REF	PART NUMBER	QTY	PART NAME 1 2 3 4 5 6 (PRODUCT LEVEL)	SEE PAGE
M	1	1	**209-9219**	10	BOLT (M8X1.25X16-MM)	
	2	1	**232-7449**	1	HOUSING AS	
CY	3	1	**362-2190**	1	CYLINDER BLOCK GP	518

C - CHANGE FROM PREVIOUS TYPE
M - METRIC PART
Y - SEPARATE ILLUSTRATION

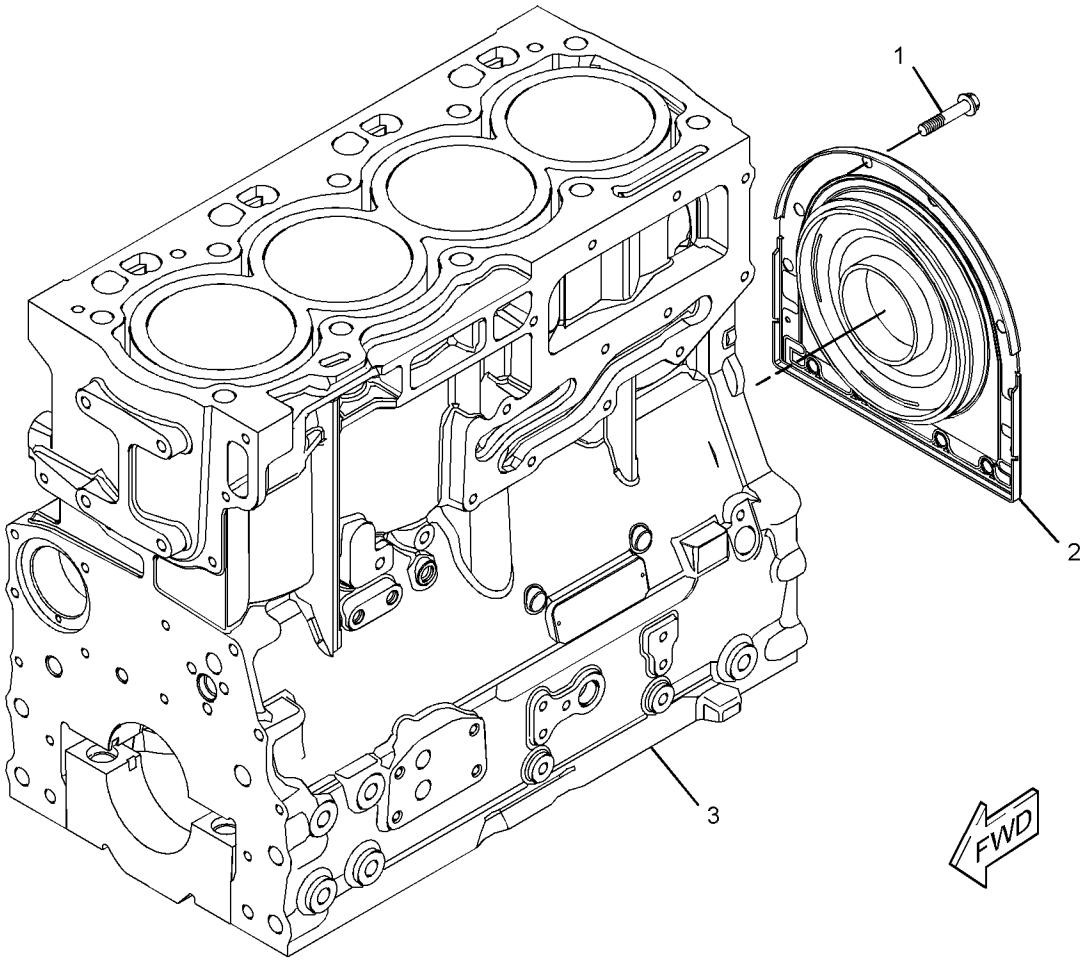

GRAPHIC #1 <END> g02585364

243-4837 CYLINDER BLOCK GP

TYPE 1

SMCS-1201 **i05651352**

NOTE	REF NO	GRAPHIC REF	PART NUMBER	QTY	PART NAME 1 2 3 4 5 6 (PRODUCT LEVEL)	SEE PAGE
M	1	1	**209-9219**	10	BOLT (M8X1.25X16-MM)	
	2	1	**232-7449**	1	HOUSING AS	
Y	3	1	**336-3516**	1	CYLINDER BLOCK AS	491

M - METRIC PART
Y - SEPARATE ILLUSTRATION

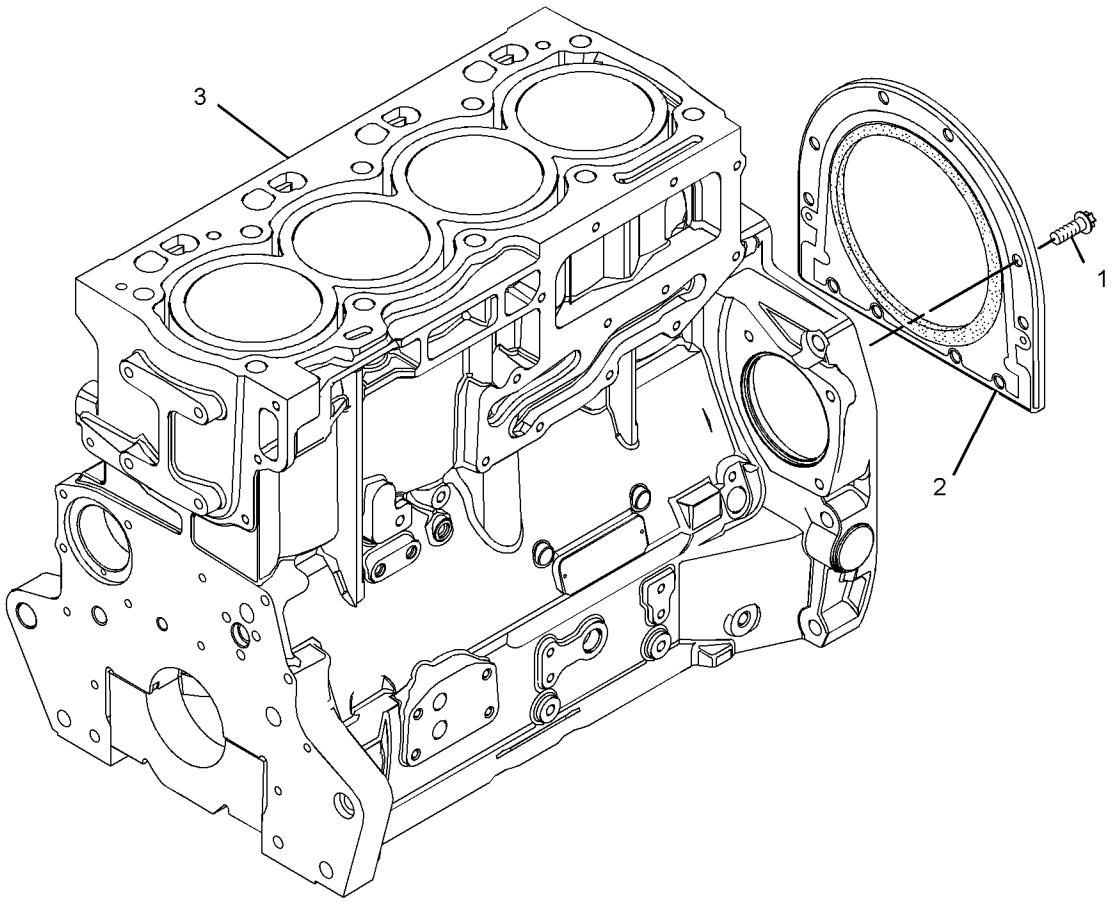

GRAPHIC #1 <END> g01770793

243-4837 CYLINDER BLOCK GP

TYPE 2

SMCS-1201 **i05651409**

NOTE	REF NO	GRAPHIC REF	PART NUMBER	QTY	PART NAME 1 2 3 4 5 6 (PRODUCT LEVEL)	SEE PAGE
M	1	1	**209-9219**	10	BOLT (M8X1.25X16-MM)	
	2	1	**232-7449**	1	HOUSING AS	
CY	3	1	**363-5760**	1	CYLINDER BLOCK GP	520

C - CHANGE FROM PREVIOUS TYPE
M - METRIC PART
Y - SEPARATE ILLUSTRATION

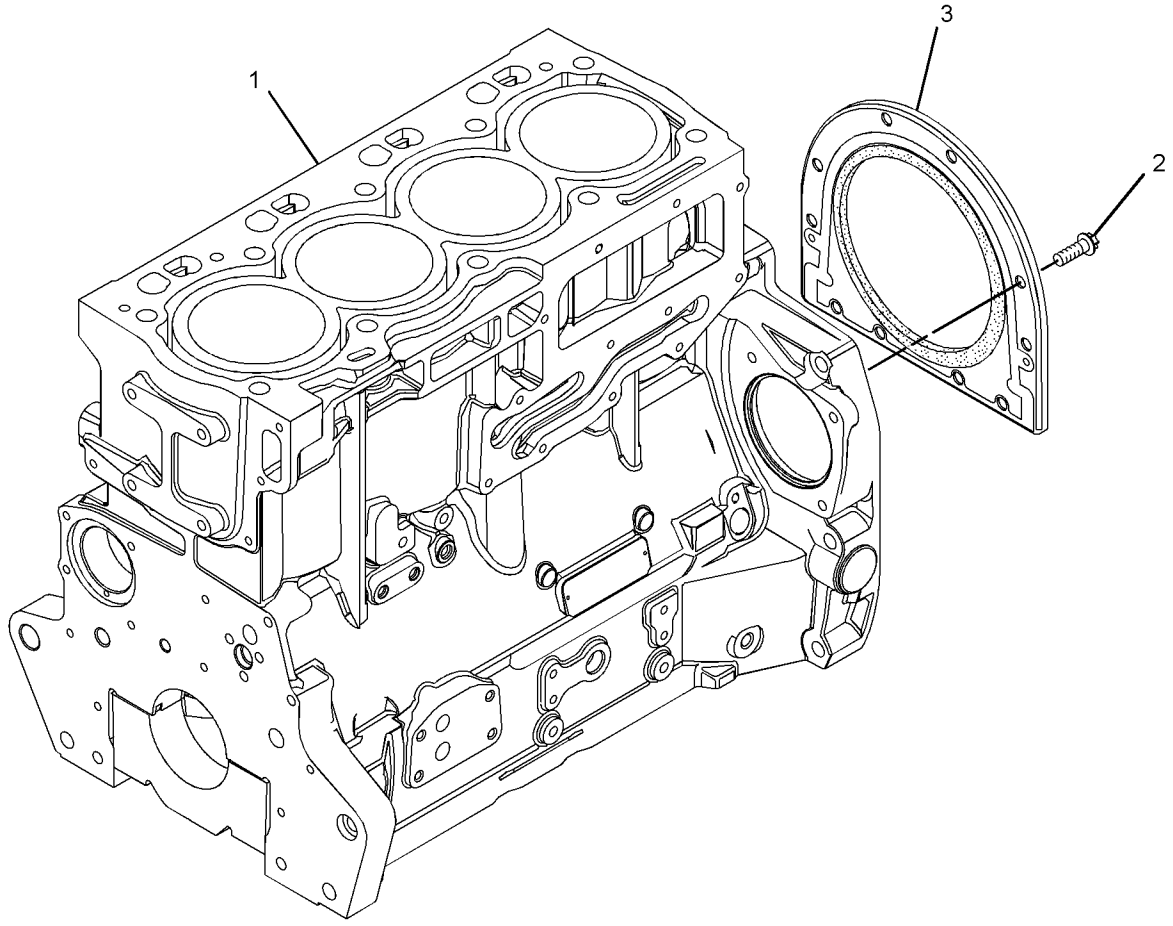

GRAPHIC #1 <END> g03346307

244-2014 CYLINDER BLOCK GP

TYPE 1

SMCS-1201 **i01985309**

NOTE	REF NO	GRAPHIC REF	PART NUMBER	QTY	PART NAME 1 2 3 4 5 6 (PRODUCT LEVEL)	SEE PAGE
M	1	1	**209-9219**	10	BOLT (M8X1.25X16-MM)	
	2	1	**232-7449**	1	HOUSING AS	
Y	3	1	**232-7604**	1	CYLINDER BLOCK GP	493

M - METRIC PART
Y - SEPARATE ILLUSTRATION

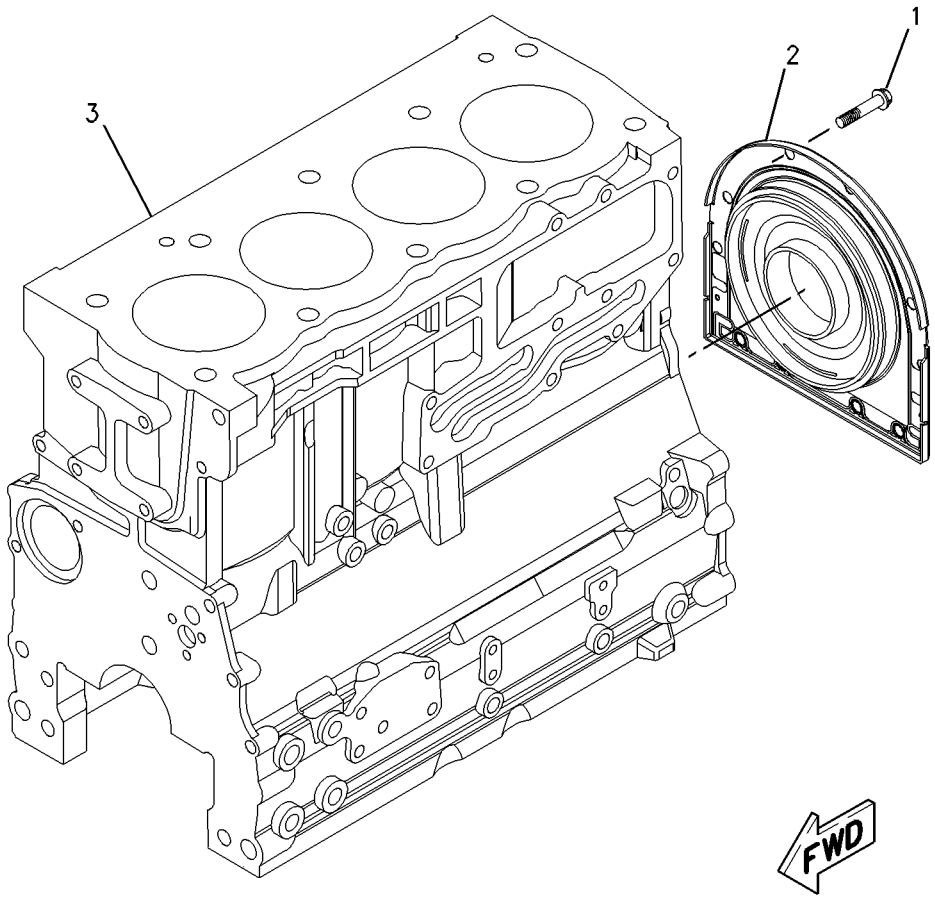

GRAPHIC #1 <END> g00952056

244-2014 CYLINDER BLOCK GP

TYPE 2

SMCS-1201 **i04369710**

NOTE	REF NO	GRAPHIC REF	PART NUMBER	QTY	PART NAME 1 2 3 4 5 6 (PRODUCT LEVEL)	SEE PAGE
M	1	1	**209-9219**	10	BOLT (M8X1.25X16-MM)	
	2	1	**232-7449**	1	HOUSING AS	
Y	3	1	**362-2190**	1	CYLINDER BLOCK GP	518

M - METRIC PART
Y - SEPARATE ILLUSTRATION

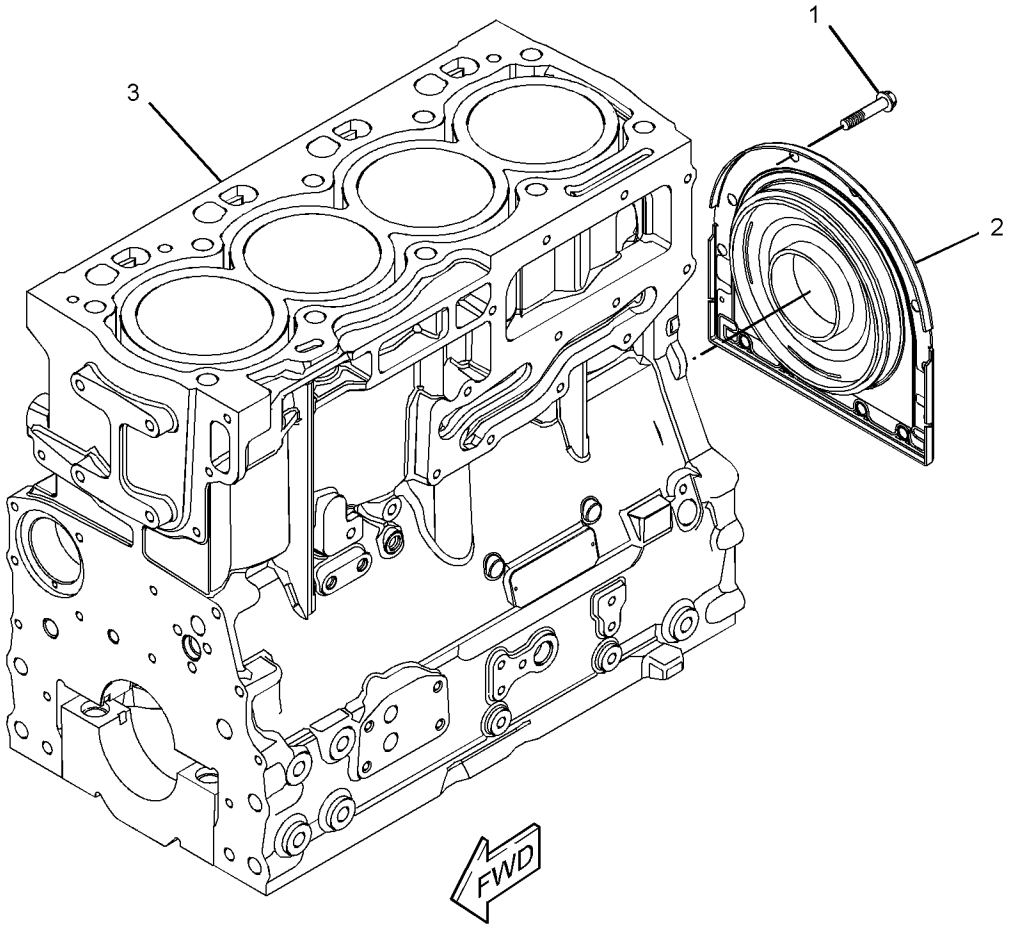

GRAPHIC #1 <END> g02500198

247-4820 CYLINDER BLOCK GP

TYPE 1

SMCS-1201 **i02603934**

NOTE	REF NO	GRAPHIC REF	PART NUMBER	QTY	PART NAME 1 2 3 4 5 6 (PRODUCT LEVEL)	SEE PAGE
M	1	1	**209-9219**	10	BOLT (M8X1.25X16-MM)	
	2	1	**232-7449**	1	HOUSING AS	
Y	3	1	**232-7604**	1	CYLINDER BLOCK GP	493

M - METRIC PART
Y - SEPARATE ILLUSTRATION

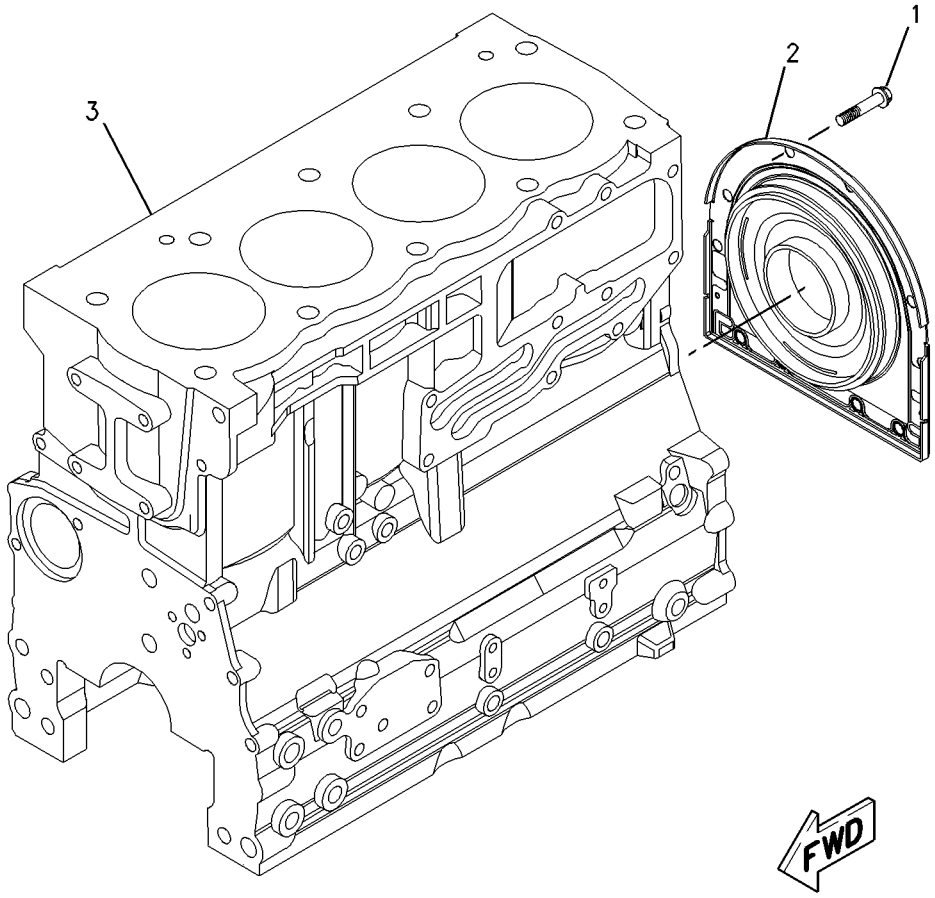

GRAPHIC #1 <END> g00952056

247-4820 CYLINDER BLOCK GP

TYPE 2

SMCS-1201 **i04369947**

NOTE	REF NO	GRAPHIC REF	PART NUMBER	QTY	PART NAME 1 2 3 4 5 6 (PRODUCT LEVEL)	SEE PAGE
M	1	1	**209-9219**	10	BOLT (M8X1.25X16-MM)	
	2	1	**232-7449**	1	HOUSING AS	
Y	3	1	**362-2190**	1	CYLINDER BLOCK GP	518

M - METRIC PART
Y - SEPARATE ILLUSTRATION

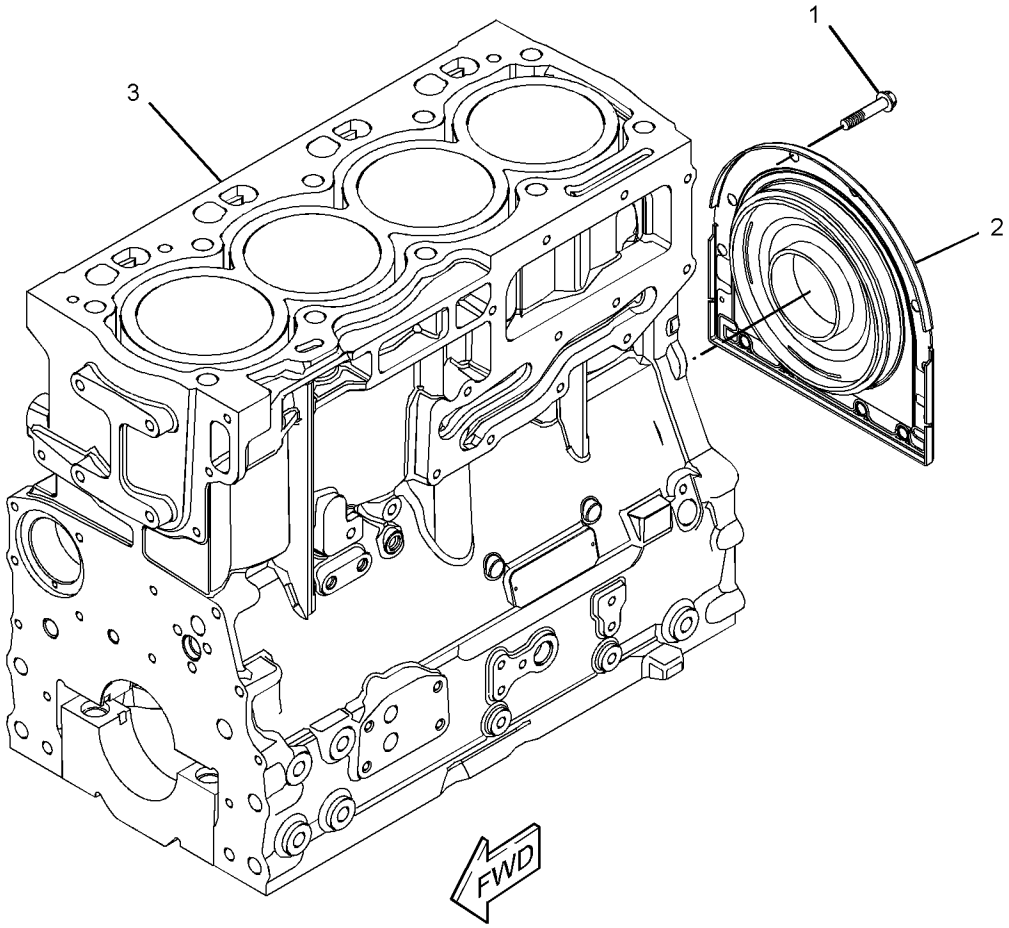

GRAPHIC #1 <END> g02500198

253-8750 CYLINDER BLOCK GP

TYPE 1

SMCS-1201 **i02112358**

NOTE	REF NO	GRAPHIC REF	PART NUMBER	QTY	PART NAME 1 2 3 4 5 6 (PRODUCT LEVEL)	SEE PAGE
M	1	1	**209-9219**	10	BOLT (M8X1.25X16-MM)	
	2	1	**232-7449**	1	HOUSING AS	
Y	3	1	**232-7604**	1	CYLINDER BLOCK GP	493

M - METRIC PART
Y - SEPARATE ILLUSTRATION

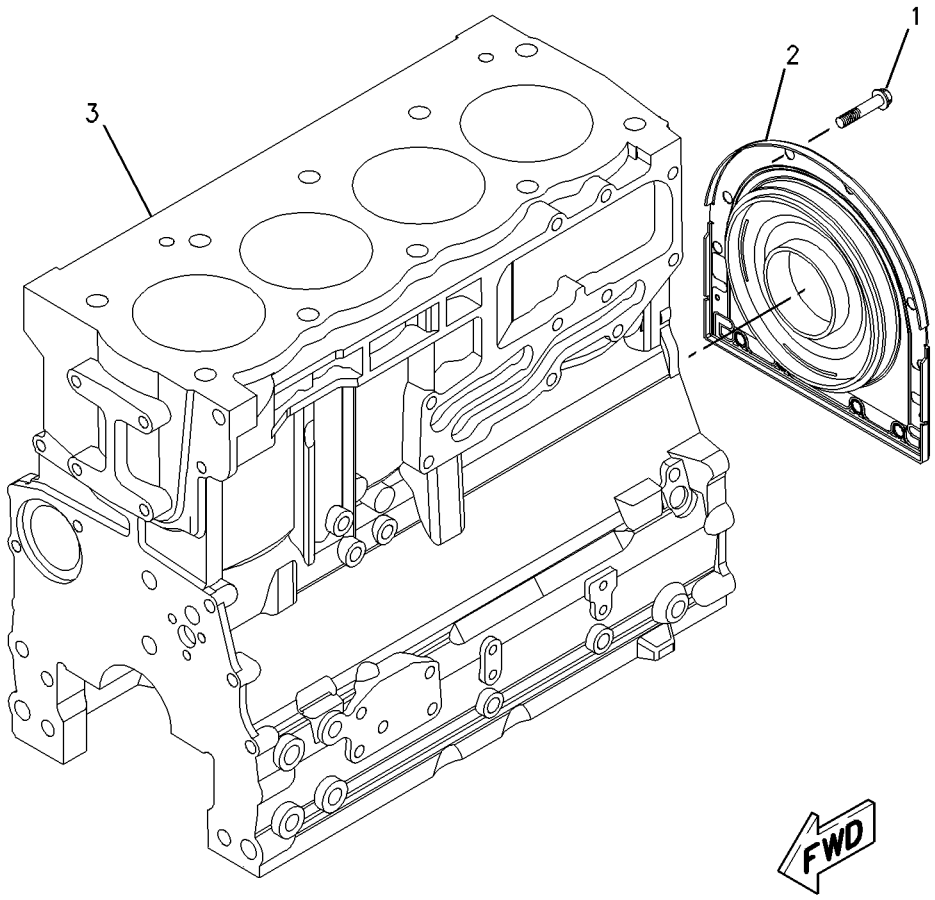

GRAPHIC #1 <END> g00952056

253-8750 CYLINDER BLOCK GP

TYPE 2

SMCS-1201 **i04905767**

NOTE	REF NO	GRAPHIC REF	PART NUMBER	QTY	PART NAME 1 2 3 4 5 6 (PRODUCT LEVEL)	SEE PAGE
M	1	1	**209-9219**	10	BOLT (M8X1.25X16-MM)	
	2	1	**232-7449**	1	HOUSING AS	
CY	3	1	**362-2190**	1	CYLINDER BLOCK GP	518

C - CHANGE FROM PREVIOUS TYPE
M - METRIC PART
Y - SEPARATE ILLUSTRATION

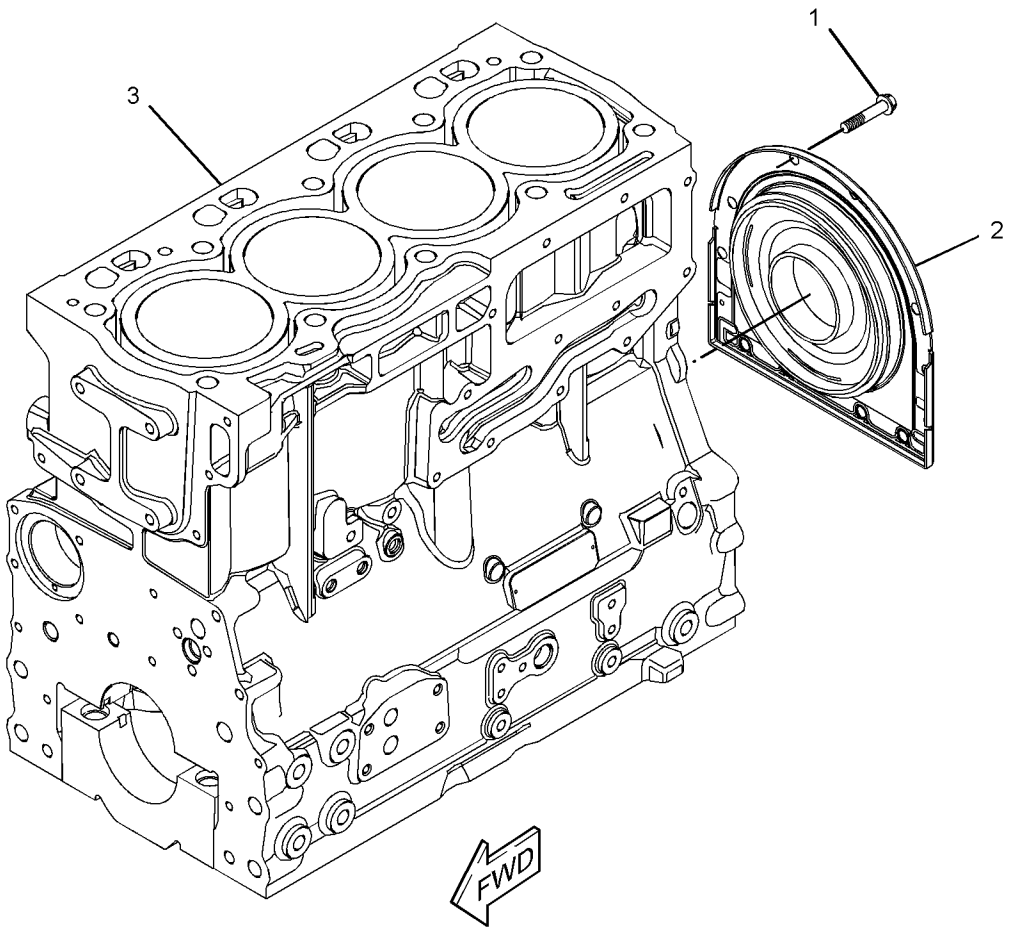

GRAPHIC #1 <END> g02500198

274-4718 CYLINDER BLOCK GP

SMCS-1201 **i05265944**

NOTE	REF NO	GRAPHIC REF	PART NUMBER	QTY	PART NAME 1 2 3 4 5 6 (PRODUCT LEVEL)	SEE PAGE
M	1	1	**209-9219**	10	BOLT (M8X1.25X16-MM)	
	2	1	**232-7449**	1	HOUSING AS	
Y	3	1	**362-2190**	1	CYLINDER BLOCK GP	518

M - METRIC PART
Y - SEPARATE ILLUSTRATION

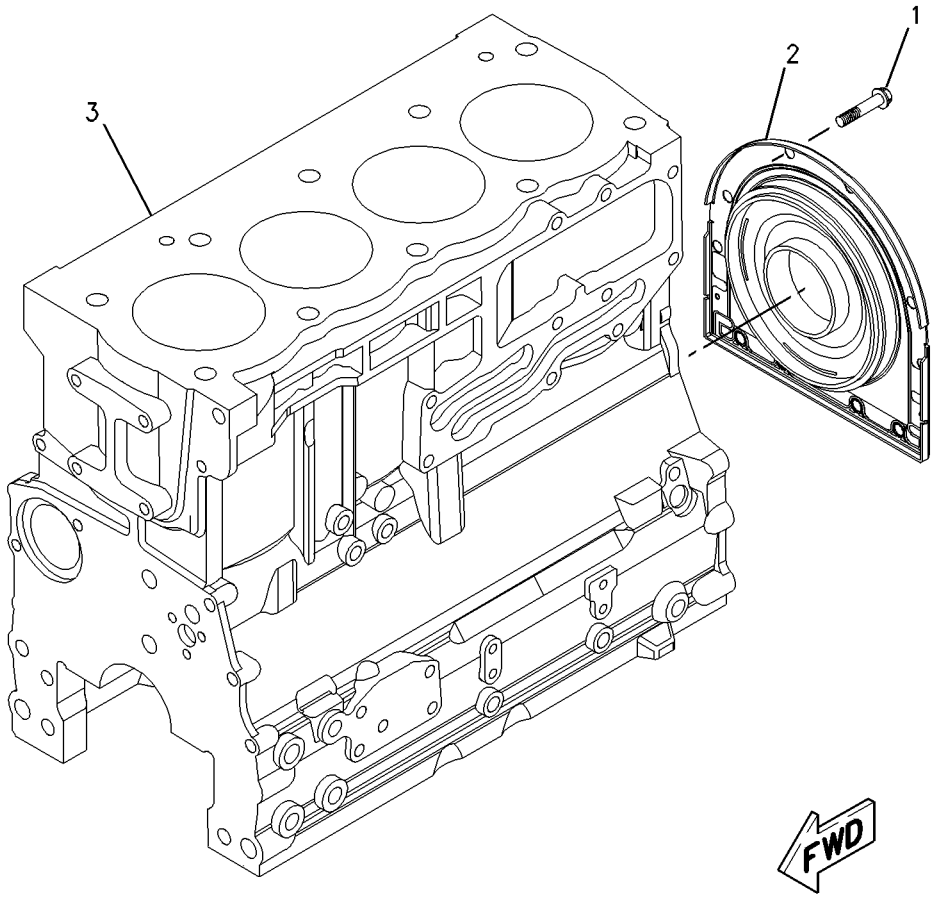

GRAPHIC #1 <END> g00952056

316-8478 CYLINDER BLOCK GP

TYPE 1

SMCS-1201 **i02822647**

NOTE	REF NO	GRAPHIC REF	PART NUMBER	QTY	PART NAME 1 2 3 4 5 6 (PRODUCT LEVEL)	SEE PAGE
M	1	1	**209-9219**	10	BOLT (M8X1.25X16-MM)	
	2	1	**232-7449**	1	HOUSING AS	
Y	3	1	**232-7604**	1	CYLINDER BLOCK GP	493

M - METRIC PART
Y - SEPARATE ILLUSTRATION

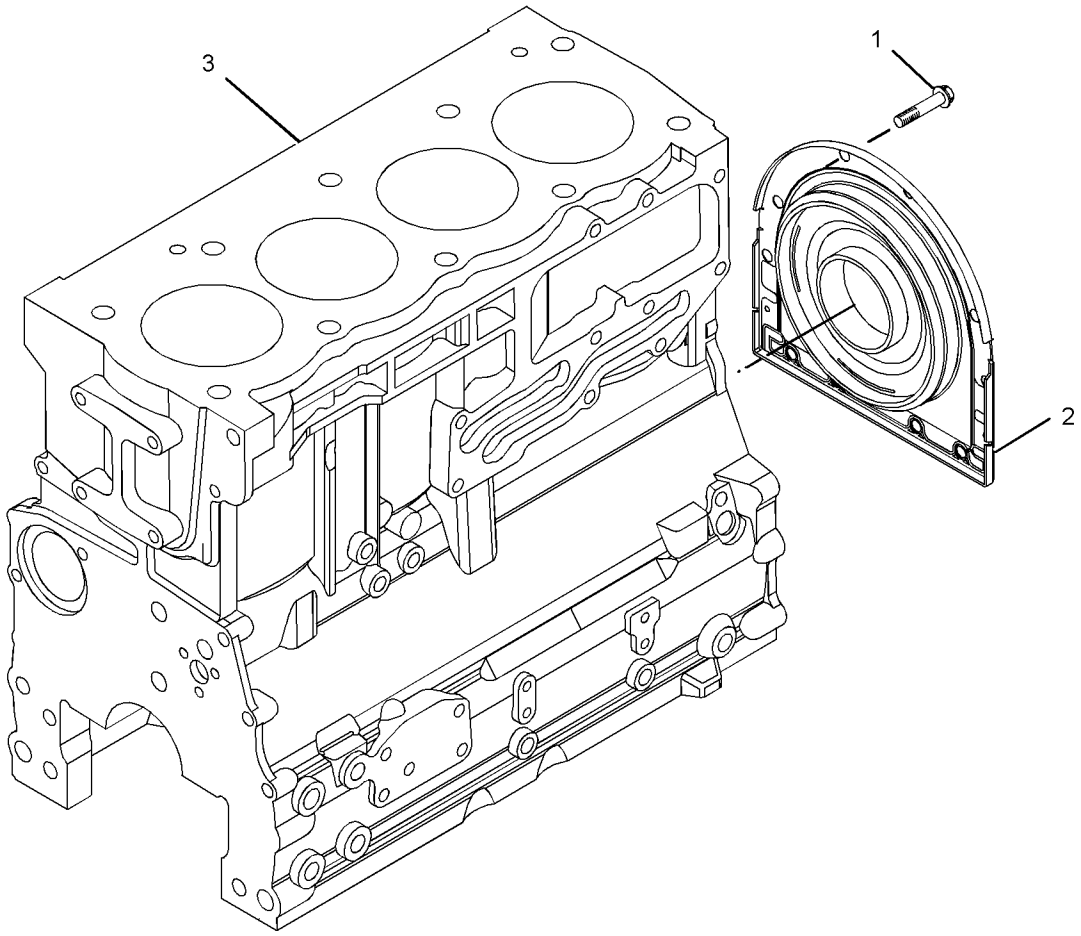

GRAPHIC #1 <END> g01420743

316-8478 CYLINDER BLOCK GP

TYPE 2

SMCS-1201 **i04905833**

NOTE	REF NO	GRAPHIC REF	PART NUMBER	QTY	PART NAME 1 2 3 4 5 6 (PRODUCT LEVEL)	SEE PAGE
M	1	1	**209-9219**	10	BOLT (M8X1.25X16-MM)	
	2	1	**232-7449**	1	HOUSING AS	
CY	3	1	**362-2190**	1	CYLINDER BLOCK GP	518

C - CHANGE FROM PREVIOUS TYPE
M - METRIC PART
Y - SEPARATE ILLUSTRATION

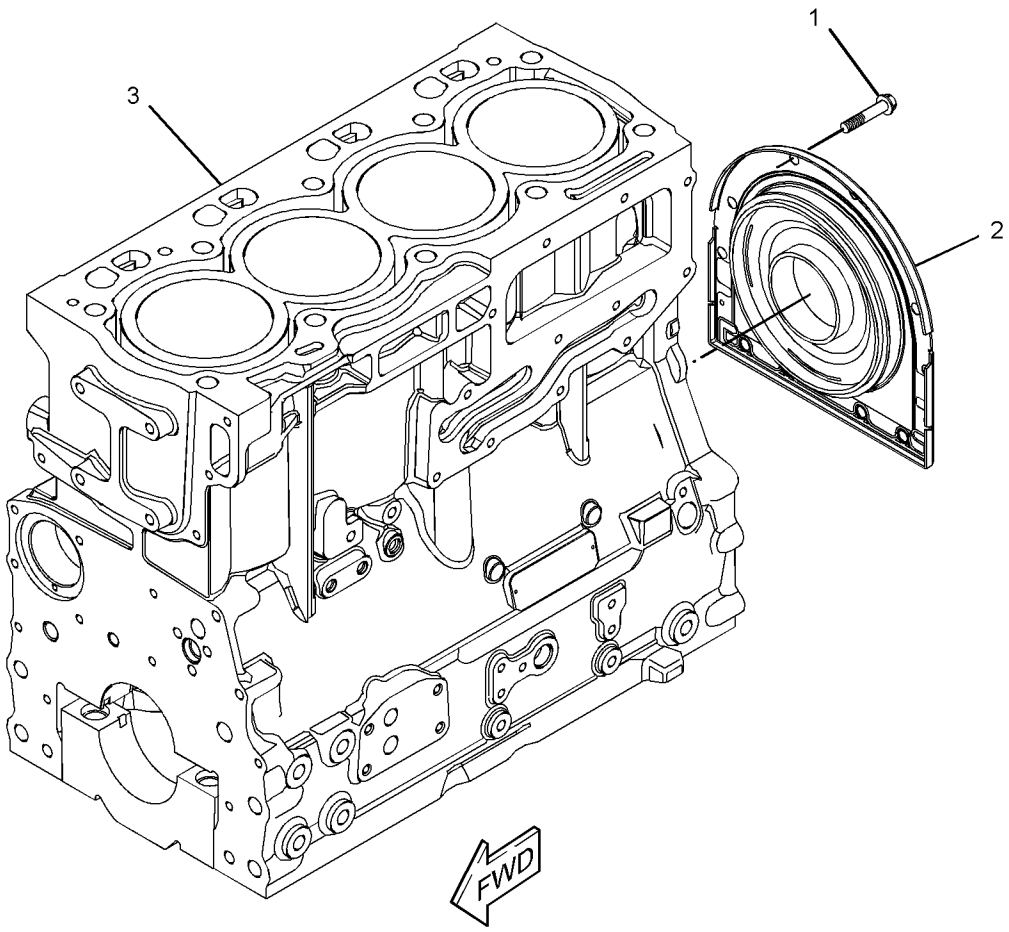

GRAPHIC #1 <END> g02500198

362-2190 CYLINDER BLOCK GP

PART OF 232-7606, 233-7007, 243-3179, 244-2014, 247-4820, 253-8750, 274-4718, 316-8478, 367-2084, 367-2787, 460-0740 CYLINDER BLOCK GP
ALSO AN ATTACHMENT

SMCS-1201 **i09733412**

NOTE	REF NO	GRAPHIC REF	PART NUMBER	QTY	PART NAME 1 2 3 4 5 6 (PRODUCT LEVEL)	SEE PAGE
M	1	1	**6I-0572**	4	BOLT (M8X1.25X20-MM)	
M	2	2	**6I-0646**	1	BOLT (M10X1.5X14-MM)	
	3	2	**035-8063**	1	PLUG	
M	4	2	**100-4841**	4	BOLT (M6X1X10-MM)	
	5	2	**214-3203**	1	WASHER (SEALING)	
	6	1	**225-7944**	1	GASKET	
	7	1	**232-3751**	1	PLATE	
	8	1	**232-7600**	1	PLUG-CUP	
	9	1	**232-7603**	1	PLUG	
	10	2	**276-5605**	4	JET AS-PISTON COOLING	
Y	11	1	*564-8856*	1	CYLINDER BLOCK GP	526

M - METRIC PART
Y - SEPARATE ILLUSTRATION

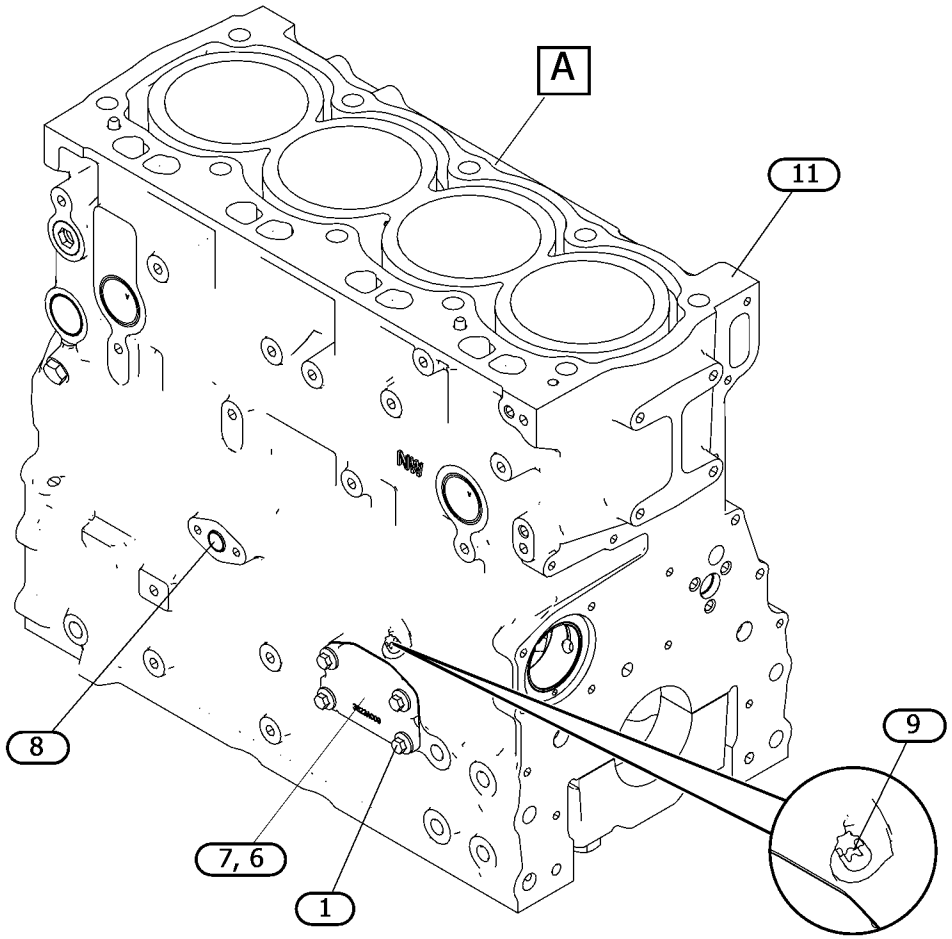

GRAPHIC #1 g07575732

362-2190 **CYLINDER BLOCK GP (**contd.**)** **i09733412**

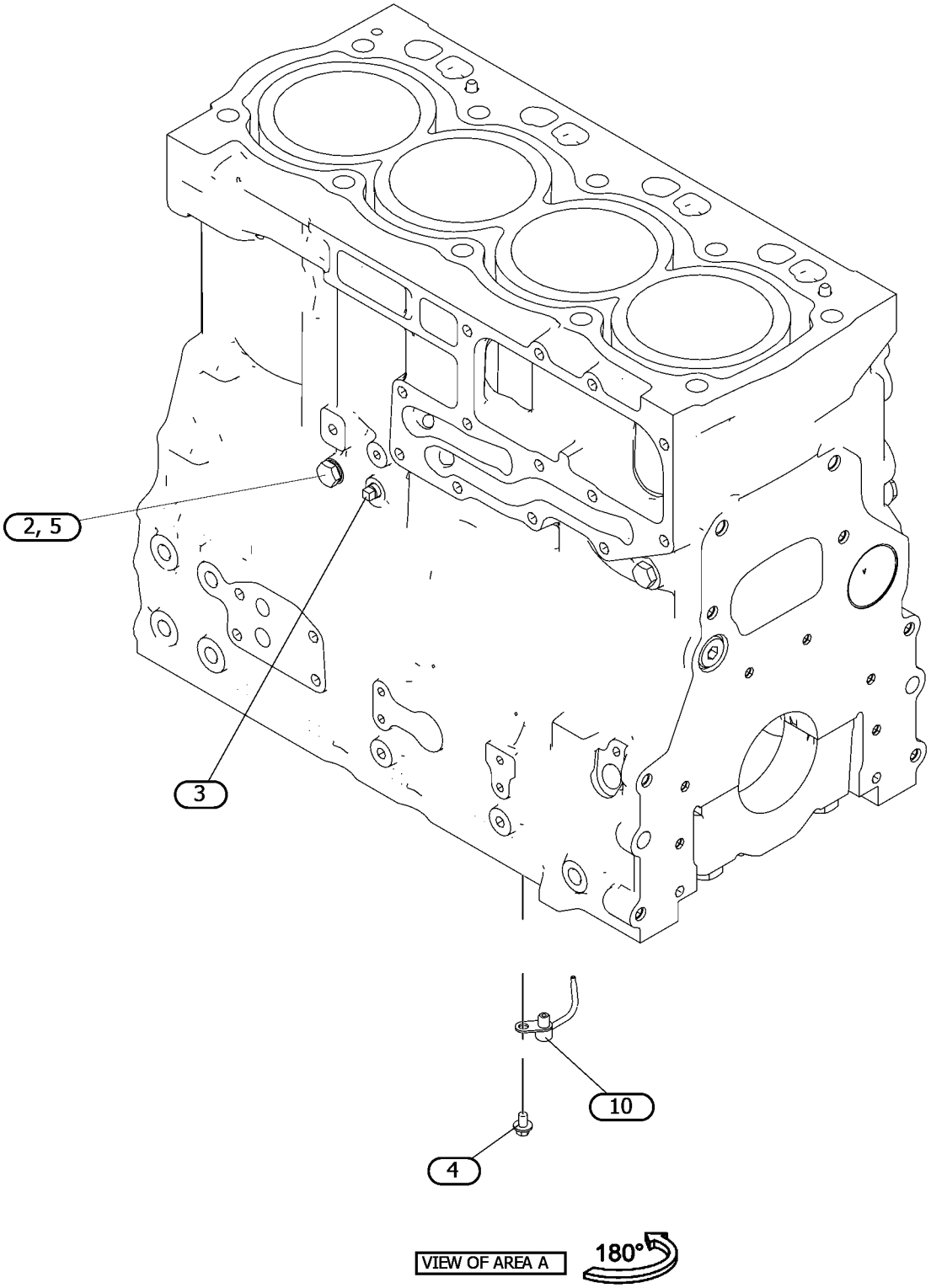

GRAPHIC #2 <END> g07575732_01

363-5760 CYLINDER BLOCK GP

PART OF 237-5836, 243-1948, 243-4837, 478-6438 CYLINDER BLOCK GP

SMCS-1201 **i06894385**

NOTE	REF NO	GRAPHIC REF	PART NUMBER	QTY	PART NAME 1 2 3 4 5 6 (PRODUCT LEVEL)	SEE PAGE
M	1	1	**6I-0645**	4	BOLT (M8X1.25X25-MM)	
M	2	1	**6I-0646**	1	BOLT (M10X1.5X14-MM)	
	3	1	**035-8063**	1	PLUG	
	4	1	**035-8068**	10	BOLT (5/8-18X3.75-IN)	
	5	1	**067-6002**	10	DOWEL	
	6	1	**067-6006**	1	PLUG	
	7	1	**067-6043**	1	PLUG-SIDE	
M	8	1	**100-4841**	4	BOLT (M6X1X10-MM)	
	9	1	**185-0884**	2	DOWEL	
	10	1	**214-3203**	1	WASHER (SEALING)	
	11	1	**225-8858**	2	PLUG	
	12	1	**232-7596**	1	PLUG	
	13	1	**232-7597**	2	PLUG	
	14	1	**232-7599**	1	PLUG (7/8-14-THD)	
	15	1	**232-7600**	1	PLUG-CUP	
	16	1	**232-7603**	1	PLUG	
	17	1	**233-9408**	1	GASKET	
	18	1	**252-6318**	1	PLATE	
	19	1	**276-5605**	4	JET AS-PISTON COOLING	
	20	1	**366-8853**	1	BEARING	

M - METRIC PART

363-5760 **CYLINDER BLOCK GP (**contd.**)** **i06894385**

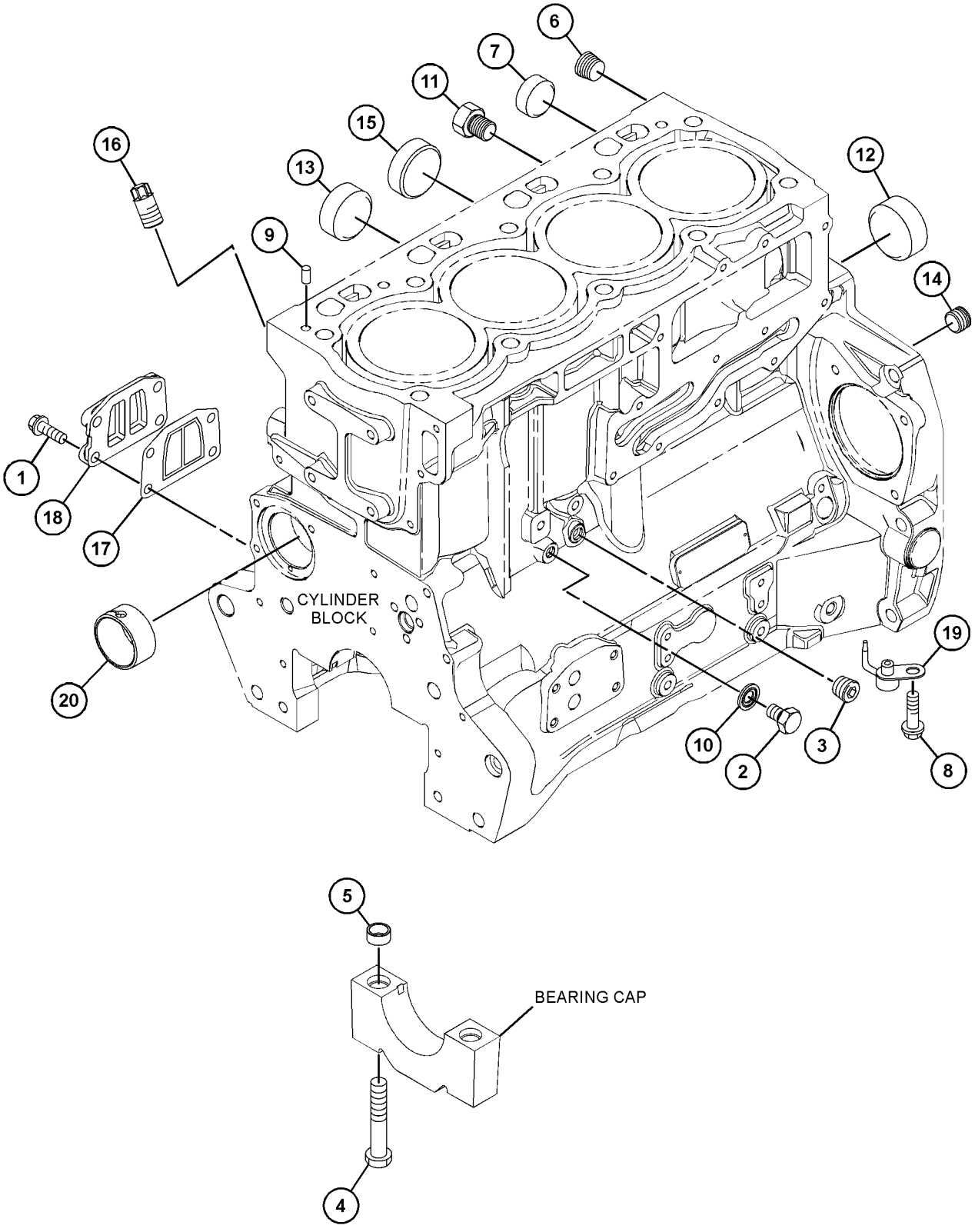

GRAPHIC #1 <END> g06203887

367-2084 CYLINDER BLOCK GP

SMCS-1201 **i05206331**

NOTE	REF NO	GRAPHIC REF	PART NUMBER	QTY	PART NAME 1 2 3 4 5 6 (PRODUCT LEVEL)	SEE PAGE
M	1	1	**209-9219**	10	BOLT (M8X1.25X16-MM)	
	2	1	**232-7449**	1	HOUSING AS	
CY	3	1	**362-2190**	1	CYLINDER BLOCK GP	518

C - CHANGE FROM PREVIOUS TYPE
M - METRIC PART
Y - SEPARATE ILLUSTRATION

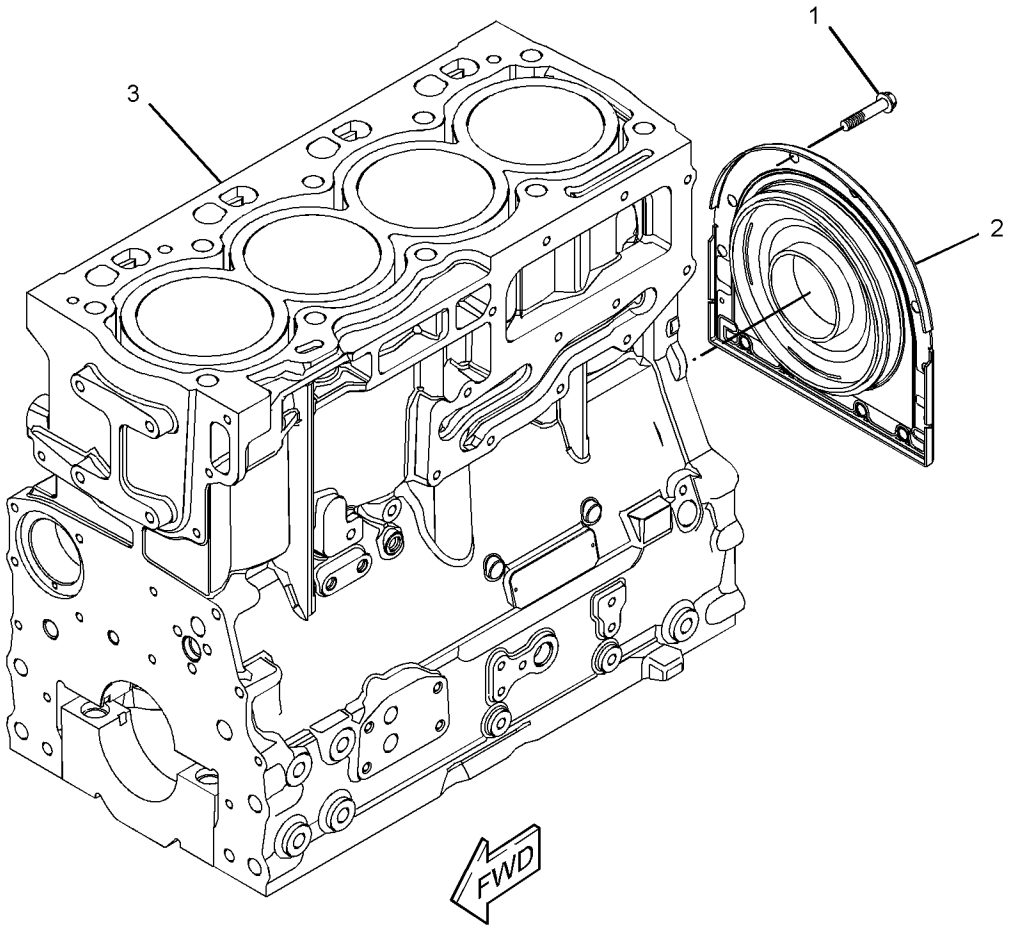

GRAPHIC #1 <END> g02500198

367-2787 CYLINDER BLOCK GP

SMCS-1201 **i05266122**

NOTE	REF NO	GRAPHIC REF	PART NUMBER	QTY	PART NAME 1 2 3 4 5 6 (PRODUCT LEVEL)	SEE PAGE
M	1	1	**209-9219**	10	BOLT (M8X1.25X16-MM)	
	2	1	**232-7449**	1	HOUSING AS	
Y	3	1	**362-2190**	1	CYLINDER BLOCK GP	518

M - METRIC PART
Y - SEPARATE ILLUSTRATION

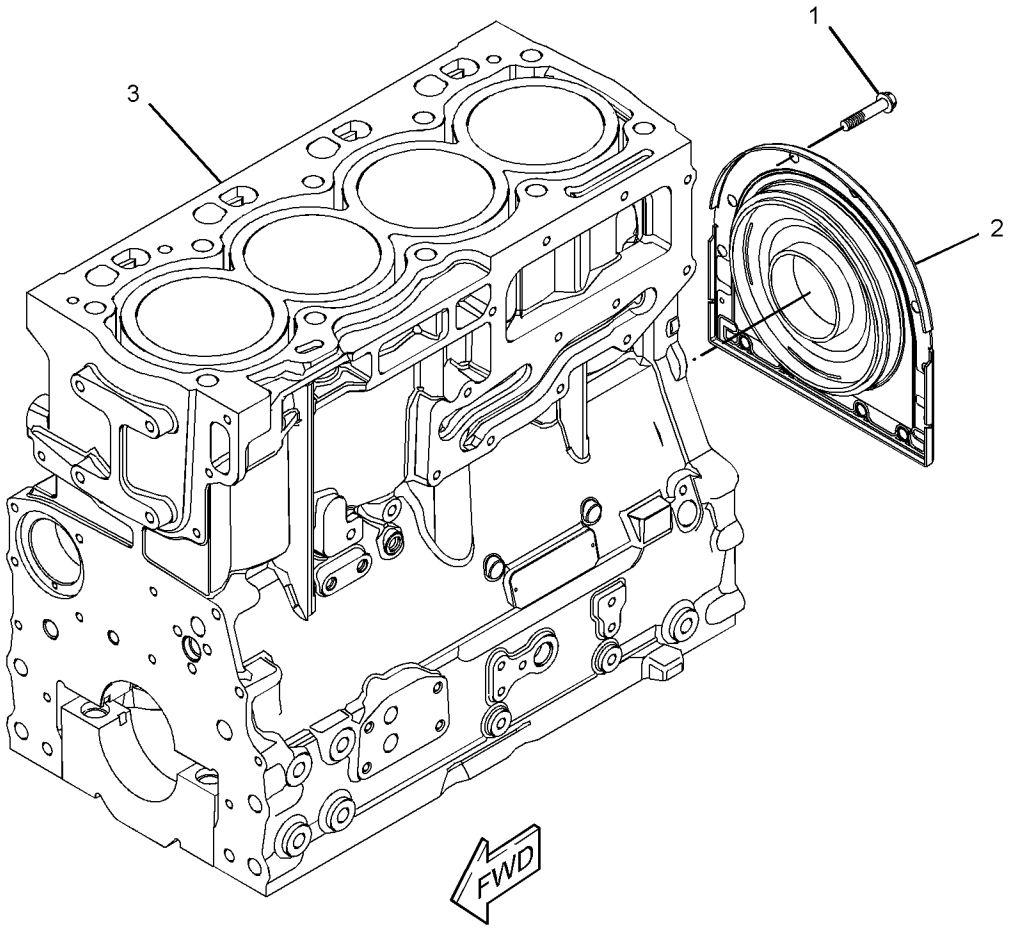

GRAPHIC #1 <END> g02500198

460-0740 CYLINDER BLOCK GP

SMCS-1201 **i05965341**

NOTE	REF NO	GRAPHIC REF	PART NUMBER	QTY	PART NAME 1 2 3 4 5 6 (PRODUCT LEVEL)	SEE PAGE
M	1	1	**209-9219**	10	BOLT (M8X1.25X16-MM)	
	2	1	**232-7449**	1	HOUSING AS	
Y	3	1	**362-2190**	1	CYLINDER BLOCK GP	518

M - METRIC PART
Y - SEPARATE ILLUSTRATION

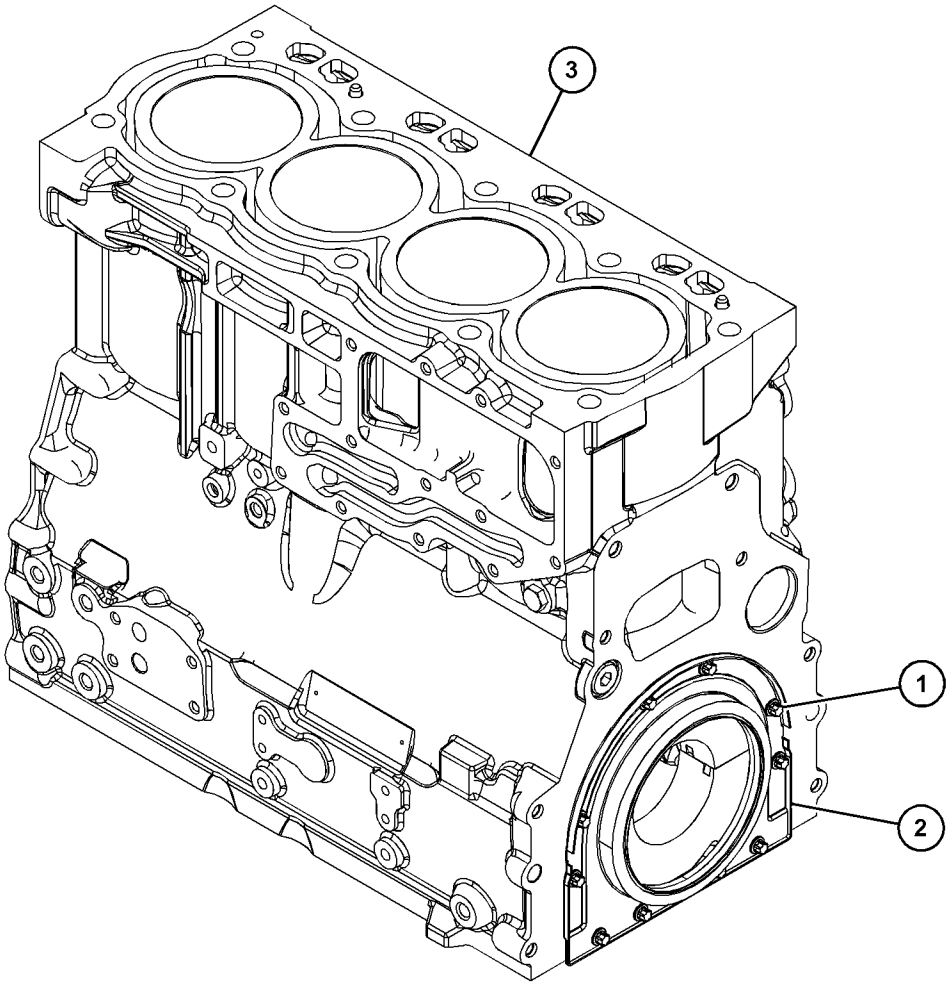

GRAPHIC #1 <END> g03703281

478-6438 CYLINDER BLOCK GP

SMCS-1201 **i06589840**

NOTE	REF NO	GRAPHIC REF	PART NUMBER	QTY	PART NAME 1 2 3 4 5 6 (PRODUCT LEVEL)	SEE PAGE
M	1	1	**209-9219**	10	BOLT (M8X1.25X16-MM)	
	2	1	**232-7449**	1	HOUSING AS	
Y	3	1	**363-5760**	1	CYLINDER BLOCK GP	520

M - METRIC PART
Y - SEPARATE ILLUSTRATION

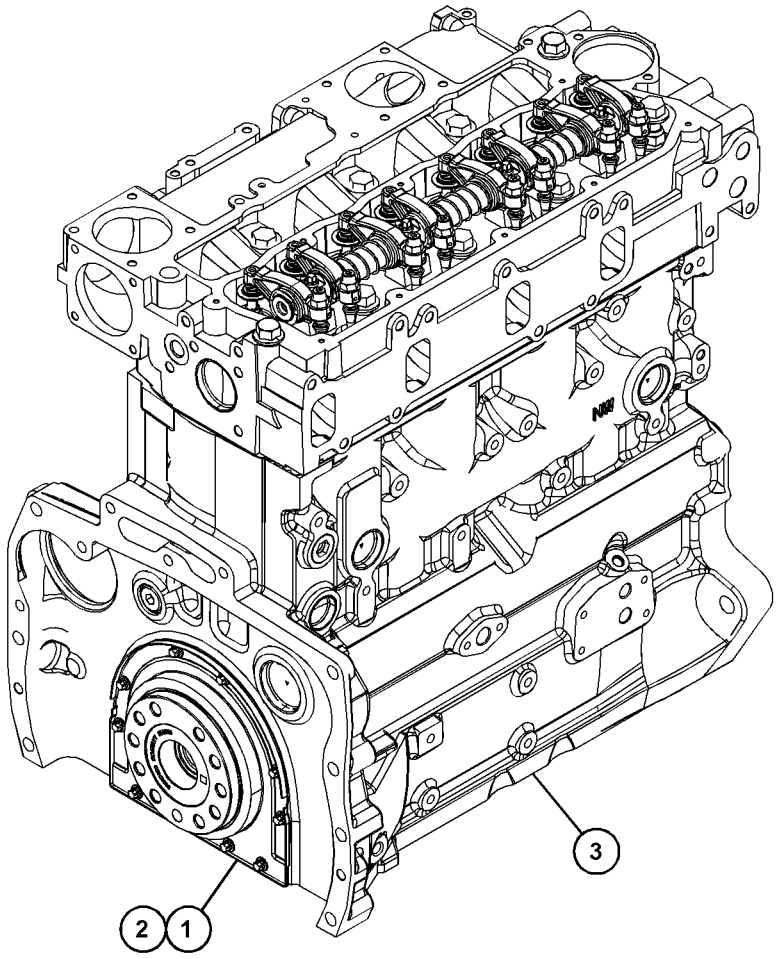

GRAPHIC #1 <END> g06113601

564-8856 CYLINDER BLOCK GP

PART OF 362-2190 CYLINDER BLOCK GP
ALSO AN ATTACHMENT

SMCS-1201 **i09733425**

NOTE	REF NO	GRAPHIC REF	PART NUMBER	QTY	PART NAME 1 2 3 4 5 6 (PRODUCT LEVEL)	SEE PAGE
	1	1	**370-6545**	1	BUSHING-CAMSHAFT	
	2	1	**067-6006**	1	PLUG	
	3	1	**067-6043**	1	PLUG-SIDE	
	4	1	**185-0884**	2	DOWEL	
	5	1	**225-8858**	2	PLUG	
	6	1	**232-7596**	1	PLUG	
	7	1	**232-7597**	2	PLUG	
	8	1	**232-7599**	1	PLUG (7/8-14-THD)	
	9	1	**067-6002**	10	DOWEL	
	10	1	**035-8068**	10	BOLT (5/8-18X3.75-IN)	
					PARTS SHOWN IN GRAPHIC(S) WITHOUT A REFERENCE NUMBER ARE NOT SERVICED SEPARATELY	

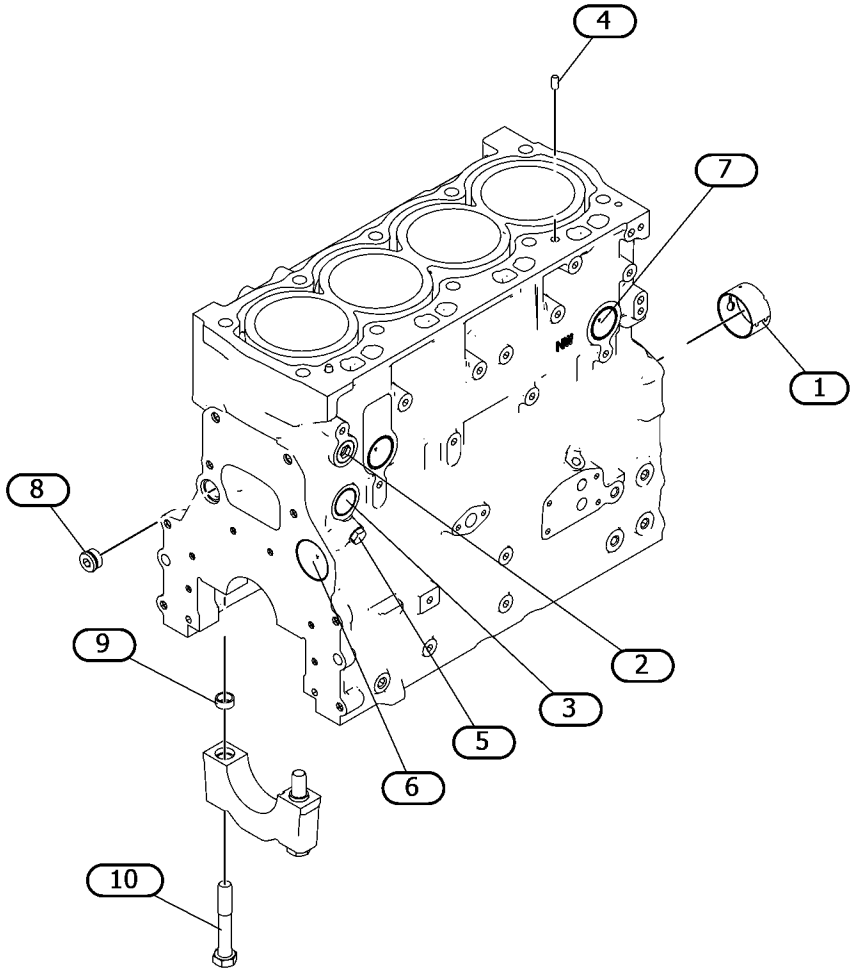

GRAPHIC #1 <END> g07577379

303-2168 CYLINDER BLOCK GP-SHORT

SMCS-1200 **i02639233**

NOTE	PART NUMBER	QTY	PART NAME 1 2 3 4 5 6 (PRODUCT LEVEL)	SEE PAGE
Y	**237-5833**	1	CYLINDER BLOCK GP	499
M	**209-9219**	10	BOLT (M8X1.25X16-MM)	
	232-7400	1	CRANKSHAFT GP (WITH SPLINE)	
	1B-8736	1	KEY-WOODRUFF	
	032-9090	1	WASHER-THRUST (STANDARD-UPPER)	
	032-9091	1	WASHER-THRUST (STANDARD-LOWER)	
	067-6873	2	WASHER-THRUST (0.18-MM OS)	
	067-6874	2	WASHER-THRUST (0.18-MM OS)	
	225-7772	1	BEARING SET-MAIN (STANDARD)	
	225-7781	1	BEARING SET-ROD	
	233-3784	1	KIT-CRANKSHAFT BEARING (0.25-MM US)	
	233-3785	1	KIT-CRANKSHAFT BEARING (0.50-MM US)	
	233-3786	1	KIT-CRANKSHAFT BEARING (0.75-MM US)	
	233-3788	1	KIT-ROD BEARING (0.25-MM US)	
	233-3789	1	KIT-ROD BEARING (0.50-MM US)	
	233-3790	1	KIT-ROD BEARING (0.75-MM US)	
	232-7449	1	HOUSING AS	
	225-5437	4	PISTON AS	
			(EACH INCLUDES)	
	124-3536	2	RING-RETAINING	
	225-5436	1	KIT-PISTON RING	

M - METRIC PART
Y - SEPARATE ILLUSTRATION

<END>

232-7519 CYLINDER HEAD GP

PART OF 232-7524, 237-5852, 243-1952, 243-3182, 243-4843, 244-2088, 288-1424, 316-8481, 367-2790, 460-0743, 478-6459 CYLINDER HEAD GP
ALSO AN ATTACHMENT
TYPE 1

SMCS-1100 **i06217923**

NOTE	REF NO	GRAPHIC REF	PART NUMBER	QTY	PART NAME 1 2 3 4 5 6 (PRODUCT LEVEL)	SEE PAGE
	1	1	**2B-0858**	1	PLUG-PIPE	
	2	1	**9Y-5015**	2	PLUG-FREEZE	
	3	1	**067-6006**	4	PLUG	
	4	1	**147-1979**	16	RETAINER-VALVE SPRING	
	5	1	**185-0882**	8	GUIDE-VALVE (INTAKE)	
	6	1	**199-9751**	1	SEAL-O-RING	
	7	1	**329-6655**	4	INSERT-VALVE SEAT (INLET)	
	8	1	**322-9663**	4	INSERT-VALVE SEAT (EXHAUST)	
	9	1	**225-5495**	4	VALVE-INLET	
	10	1	**436-0519**	8	SPRING-VALVE	
	11	1	**252-6438**	4	SEAL-INLET VALVE	
	12	1	**225-5498**	8	CAP	
	13	1	**225-5499**	4	VALVE-EXHAUST	
	14	1	**232-1322**	1	PLUG	
	15	1	**254-3954**	4	SEAL	

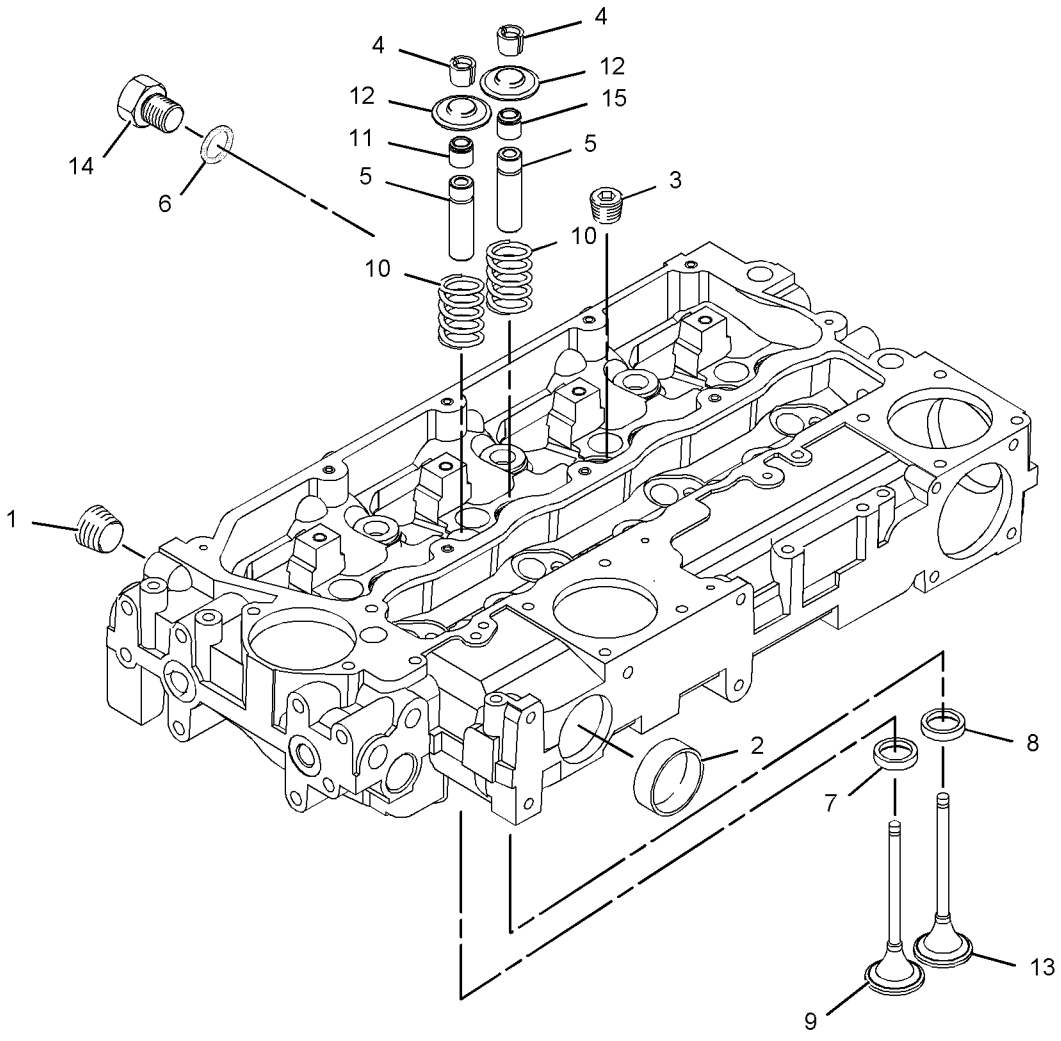

GRAPHIC #1 <END> g01095382

232-7519 CYLINDER HEAD GP

PART OF 232-7524, 237-5852, 243-1952, 243-3182, 243-4843, 244-2088, 316-8481, 367-2790, 460-0743, 478-6459 CYLINDER HEAD GP
ALSO AN ATTACHMENT
TYPE 2

SMCS-1100 **i09640243**

NOTE	REF NO	GRAPHIC REF	PART NUMBER	QTY	PART NAME 1 2 3 4 5 6 (PRODUCT LEVEL)	SEE PAGE
C	1	1	**067-6823**	1	PLUG	
	2	1	**147-1979**	16	RETAINER-VALVE SPRING	
	3	1	**199-9751**	1	SEAL-O-RING	
	4	1	**225-5495**	4	VALVE-INLET	
	5	1	**225-5498**	8	CAP	
	6	1	**225-5499**	4	VALVE-EXHAUST	
	7	1	**252-6438**	4	SEAL-INLET VALVE	
	8	1	**254-3954**	4	SEAL	
	9	1	**436-0519**	8	SPRING-VALVE	
C	10	1	**470-4925**	1	PLUG	
C	11	1	*522-9019*	1	CYLINDER HEAD AS	
		1	**185-0882**	8	GUIDE-VALVE (INTAKE)	
		1	**9Y-5015**	2	PLUG-FREEZE	
		1	**067-6006**	4	PLUG	
		1	**322-9663**	4	INSERT-VALVE SEAT (EXHAUST)	
		1	**329-6655**	4	INSERT-VALVE SEAT (INLET)	

C - CHANGE FROM PREVIOUS TYPE

232-7519 **CYLINDER HEAD GP (**contd.**)** **i09640243**

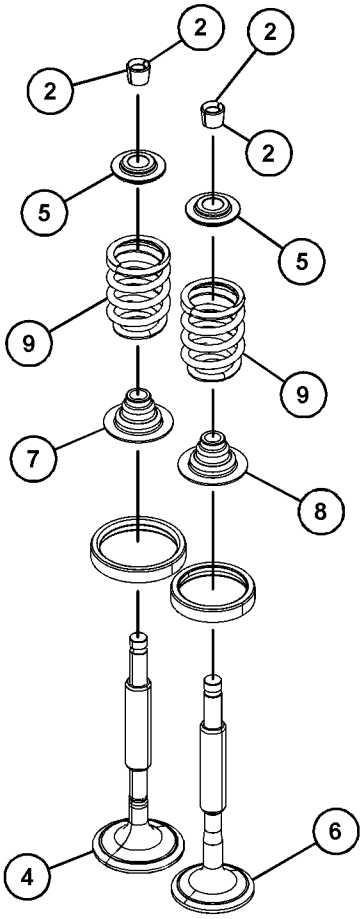

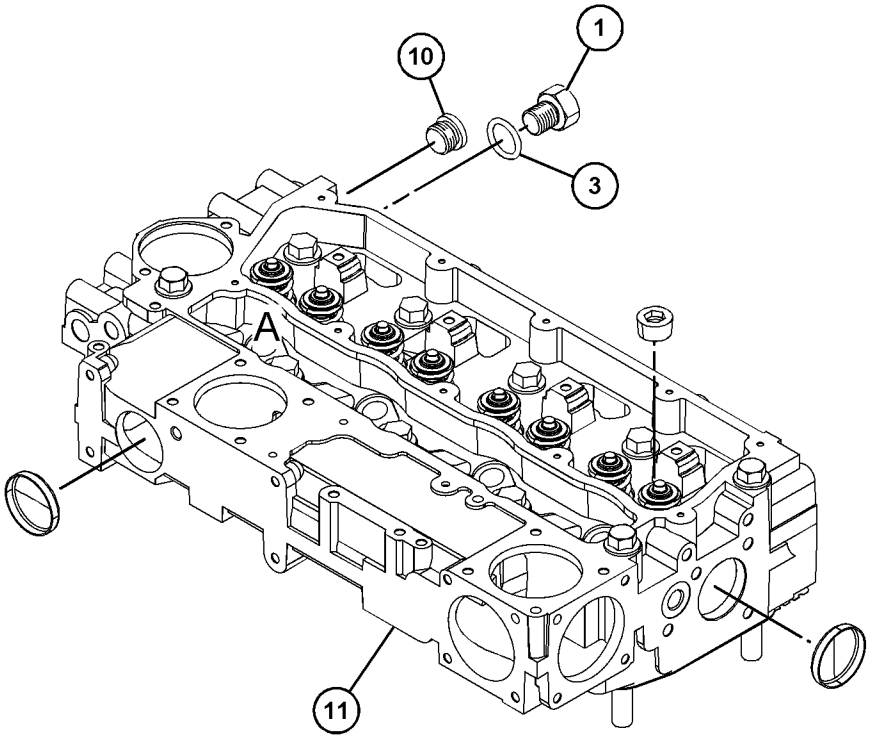

VIEW OF AREA A
(PARTS REMOVED FOR CLARITY)

GRAPHIC #1 <END> g06773162

232-7524 CYLINDER HEAD GP

ALSO AN ATTACHMENT

SMCS-1100 **i05295185**

NOTE	REF NO	GRAPHIC REF	PART NUMBER	QTY	PART NAME 1 2 3 4 5 6 (PRODUCT LEVEL)	SEE PAGE
M	1	1	**225-5501**	7	BOLT (M15X1.5X137-MM)	
M	2	1	**225-5502**	3	BOLT (M15X1.5X162-MM)	
	3	1	**258-4946**	1	GASKET-CYLINDER HEAD	
AB		1	**369-3705**	1	GASKET-CYLINDER HEAD	
Y	4	1	**232-7519**	1	CYLINDER HEAD GP	528

A - NOT PART OF THIS GROUP
B - USE AS REQUIRED
M - METRIC PART
Y - SEPARATE ILLUSTRATION

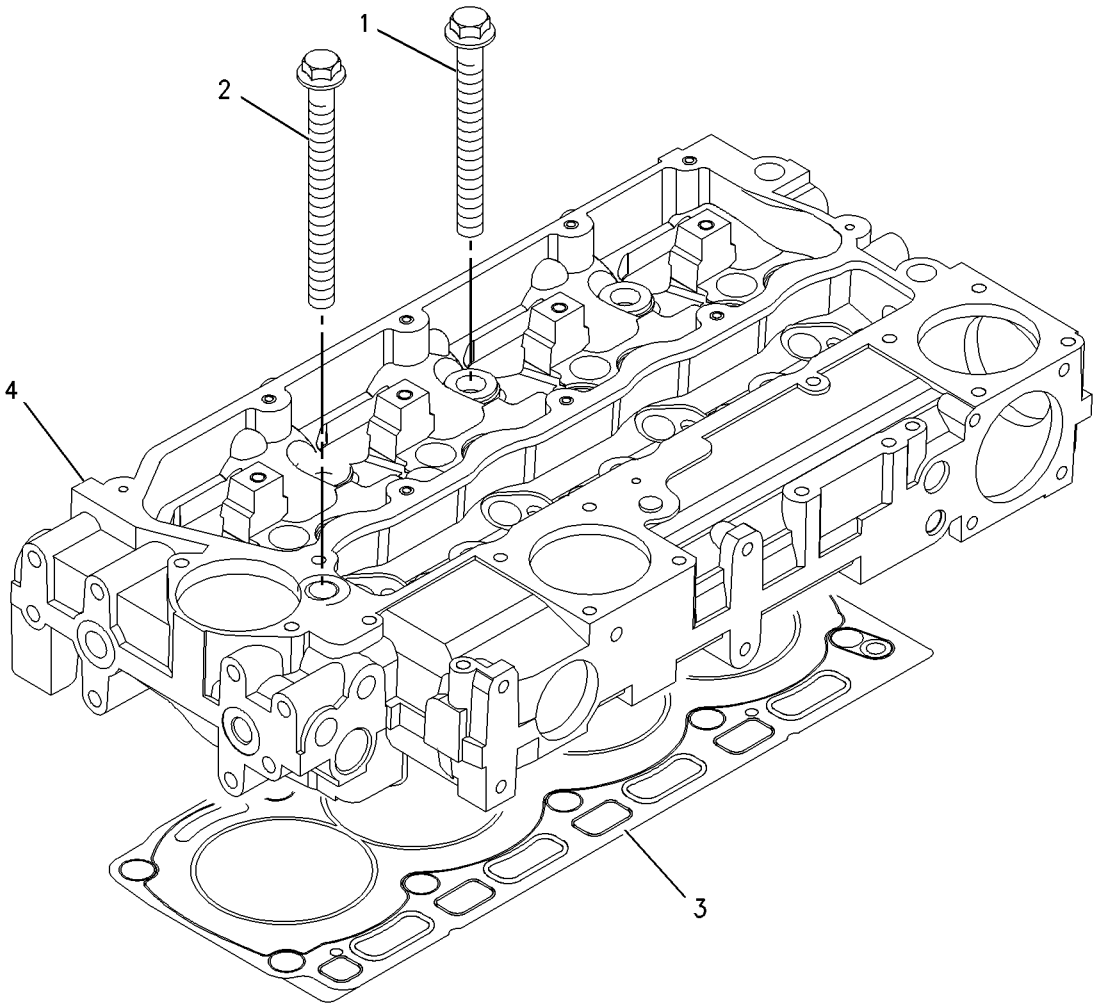

GRAPHIC #1 <END> g00909291

233-7234 CYLINDER HEAD GP

SMCS-1100 **i06574228**

NOTE	REF NO	GRAPHIC REF	PART NUMBER	QTY	PART NAME 1 2 3 4 5 6 (PRODUCT LEVEL)	SEE PAGE
M	1	1	**225-5501**	7	BOLT (M15X1.5X137-MM)	
M	2	1	**225-5502**	3	BOLT (M15X1.5X162-MM)	
	3	1	**258-4946**	1	GASKET-CYLINDER HEAD	
AB		1	**369-3705**	1	GASKET-CYLINDER HEAD	
Y	4	1	**247-4868**	1	CYLINDER HEAD GP	538

A - NOT PART OF THIS GROUP
B - USE AS REQUIRED
M - METRIC PART
Y - SEPARATE ILLUSTRATION

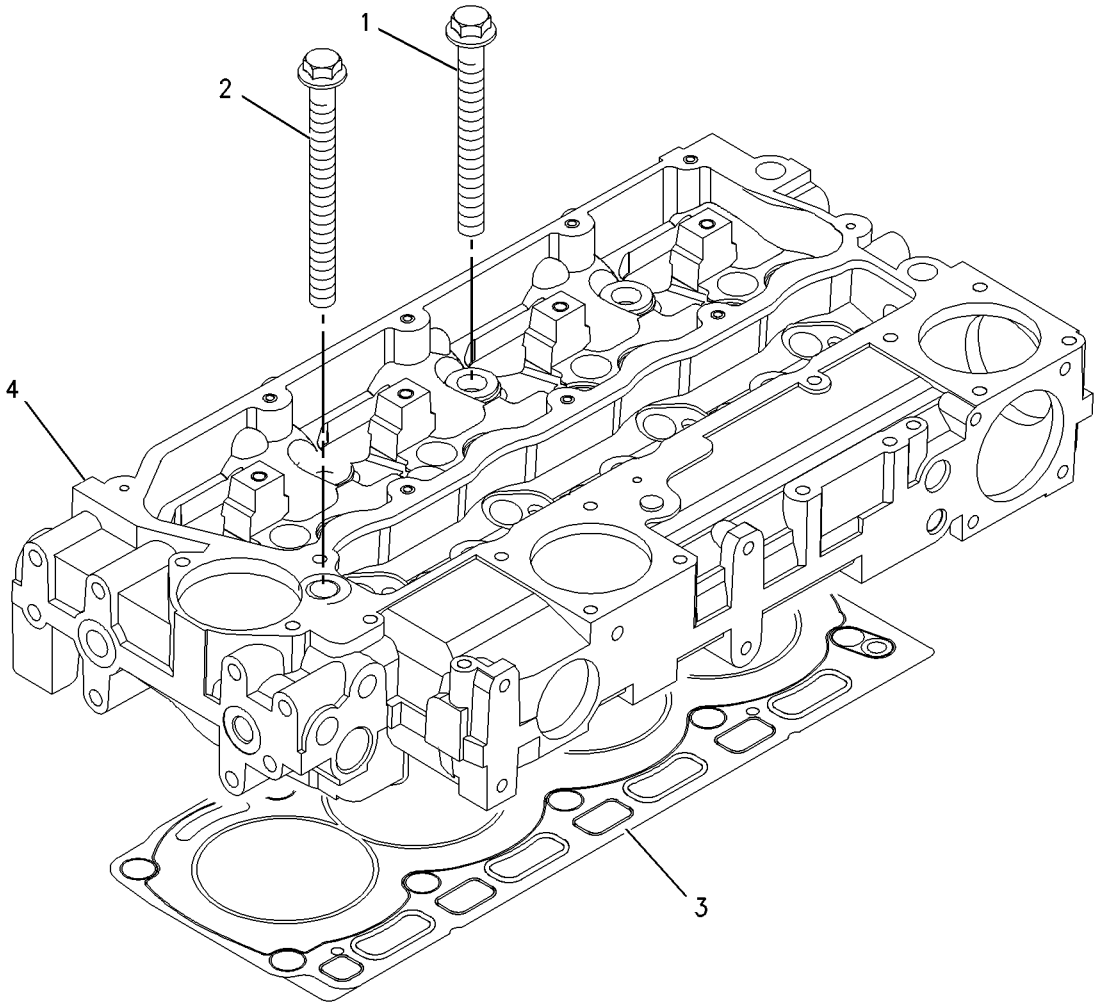

GRAPHIC #1 <END> g00909291

237-5852 CYLINDER HEAD GP

SMCS-1100 **i05295197**

NOTE	REF NO	GRAPHIC REF	PART NUMBER	QTY	PART NAME 1 2 3 4 5 6 (PRODUCT LEVEL)	SEE PAGE
M	1	1	**225-5501**	7	BOLT (M15X1.5X137-MM)	
M	2	1	**225-5502**	3	BOLT (M15X1.5X162-MM)	
	3	1	**258-4946**	1	GASKET-CYLINDER HEAD	
AB		1	**369-3705**	1	GASKET-CYLINDER HEAD	
Y	4	1	**232-7519**	1	CYLINDER HEAD GP	528

A - NOT PART OF THIS GROUP
B - USE AS REQUIRED
M - METRIC PART
Y - SEPARATE ILLUSTRATION

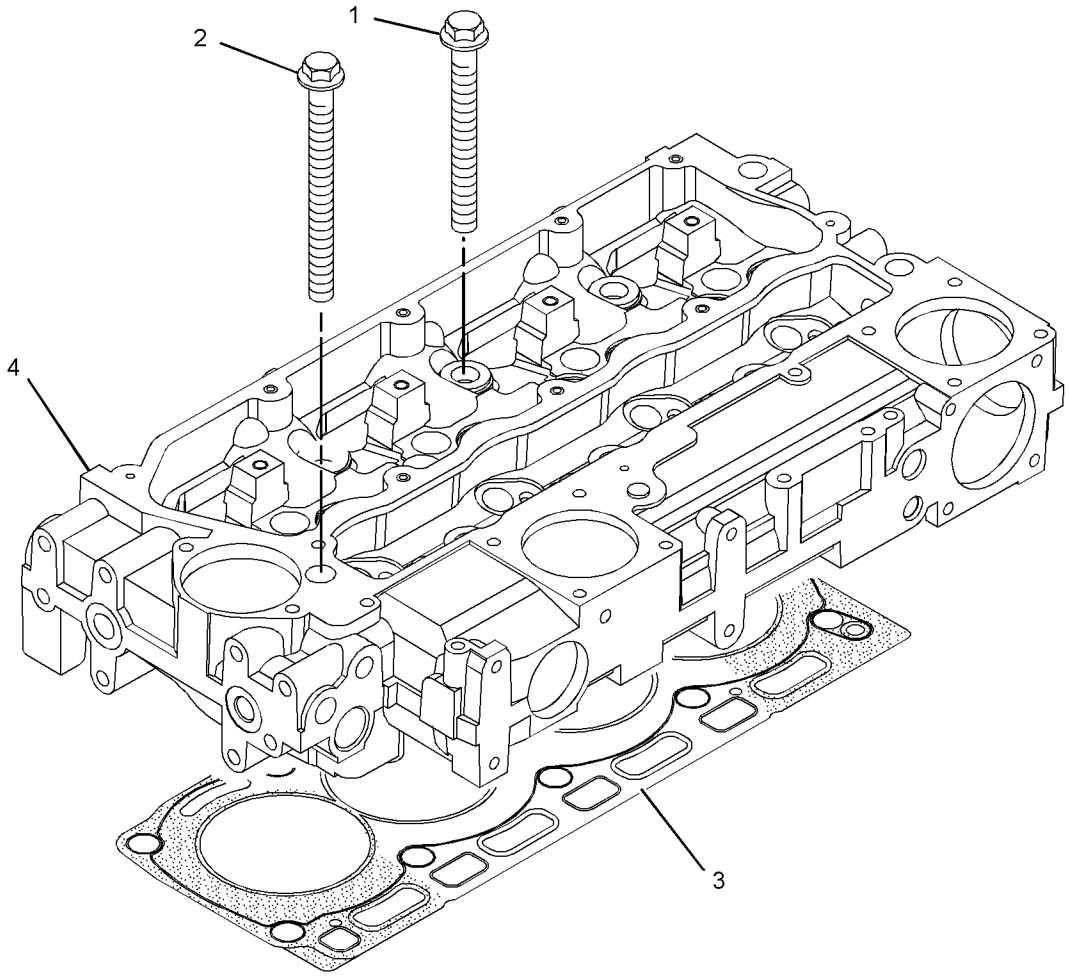

GRAPHIC #1 <END> g01269653

243-1952 CYLINDER HEAD GP

SMCS-1100 **i05295198**

NOTE	REF NO	GRAPHIC REF	PART NUMBER	QTY	PART NAME 1 2 3 4 5 6 (PRODUCT LEVEL)	SEE PAGE
M	1	1	**225-5501**	7	BOLT (M15X1.5X137-MM)	
M	2	1	**225-5502**	3	BOLT (M15X1.5X162-MM)	
	3	1	**258-4946**	1	GASKET-CYLINDER HEAD	
AB		1	**369-3705**	1	GASKET-CYLINDER HEAD	
Y	4	1	**232-7519**	1	CYLINDER HEAD GP	528

A - NOT PART OF THIS GROUP
B - USE AS REQUIRED
M - METRIC PART
Y - SEPARATE ILLUSTRATION

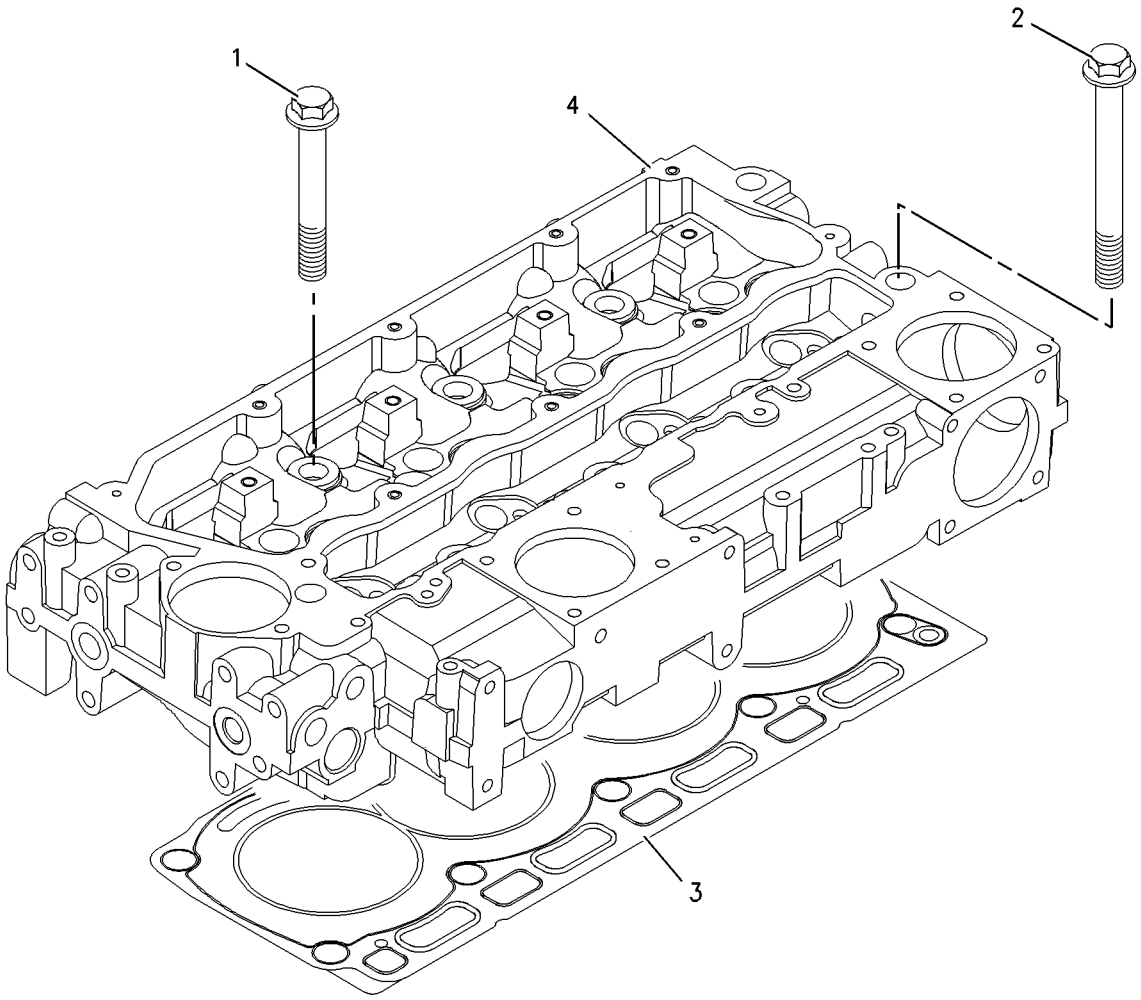

GRAPHIC #1 <END> g00994423

243-3182 CYLINDER HEAD GP

ALSO AN ATTACHMENT

SMCS-1100 **i05295203**

NOTE	REF NO	GRAPHIC REF	PART NUMBER	QTY	PART NAME 1 2 3 4 5 6 (PRODUCT LEVEL)	SEE PAGE
M	1	1	**225-5501**	7	BOLT (M15X1.5X137-MM)	
M	2	1	**225-5502**	3	BOLT (M15X1.5X162-MM)	
	3	1	**258-4946**	1	GASKET-CYLINDER HEAD	
AB		1	**369-3705**	1	GASKET-CYLINDER HEAD	
Y	4	1	**232-7519**	1	CYLINDER HEAD GP	528

A - NOT PART OF THIS GROUP
B - USE AS REQUIRED
M - METRIC PART
Y - SEPARATE ILLUSTRATION

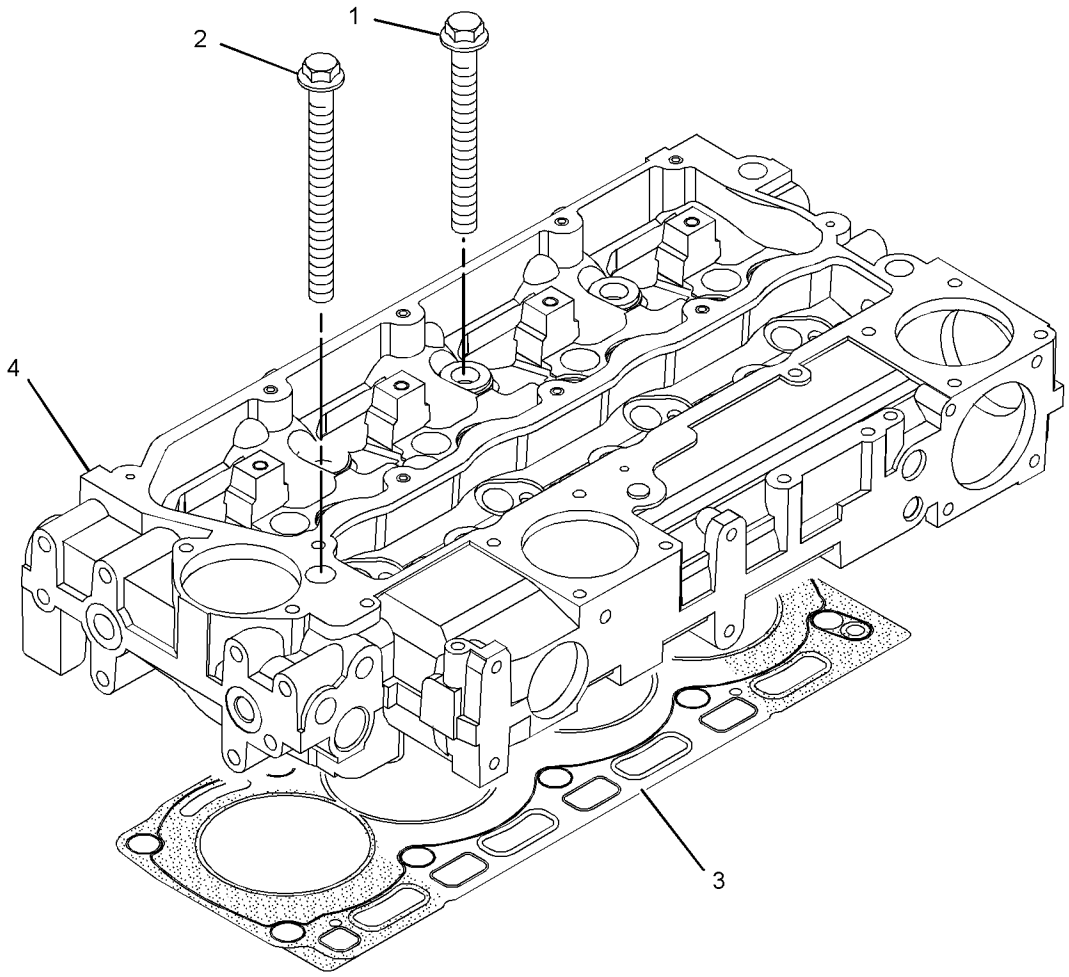

GRAPHIC #1 <END> g01269653

243-4843 CYLINDER HEAD GP

SMCS-1100 **i05295204**

NOTE	REF NO	GRAPHIC REF	PART NUMBER	QTY	PART NAME 1 2 3 4 5 6 (PRODUCT LEVEL)	SEE PAGE
M	1	1	**225-5501**	7	BOLT (M15X1.5X137-MM)	
M	2	1	**225-5502**	3	BOLT (M15X1.5X162-MM)	
	3	1	**258-4946**	1	GASKET-CYLINDER HEAD	
AB		1	**369-3705**	1	GASKET-CYLINDER HEAD	
Y	4	1	**232-7519**	1	CYLINDER HEAD GP	528

A - NOT PART OF THIS GROUP
B - USE AS REQUIRED
M - METRIC PART
Y - SEPARATE ILLUSTRATION

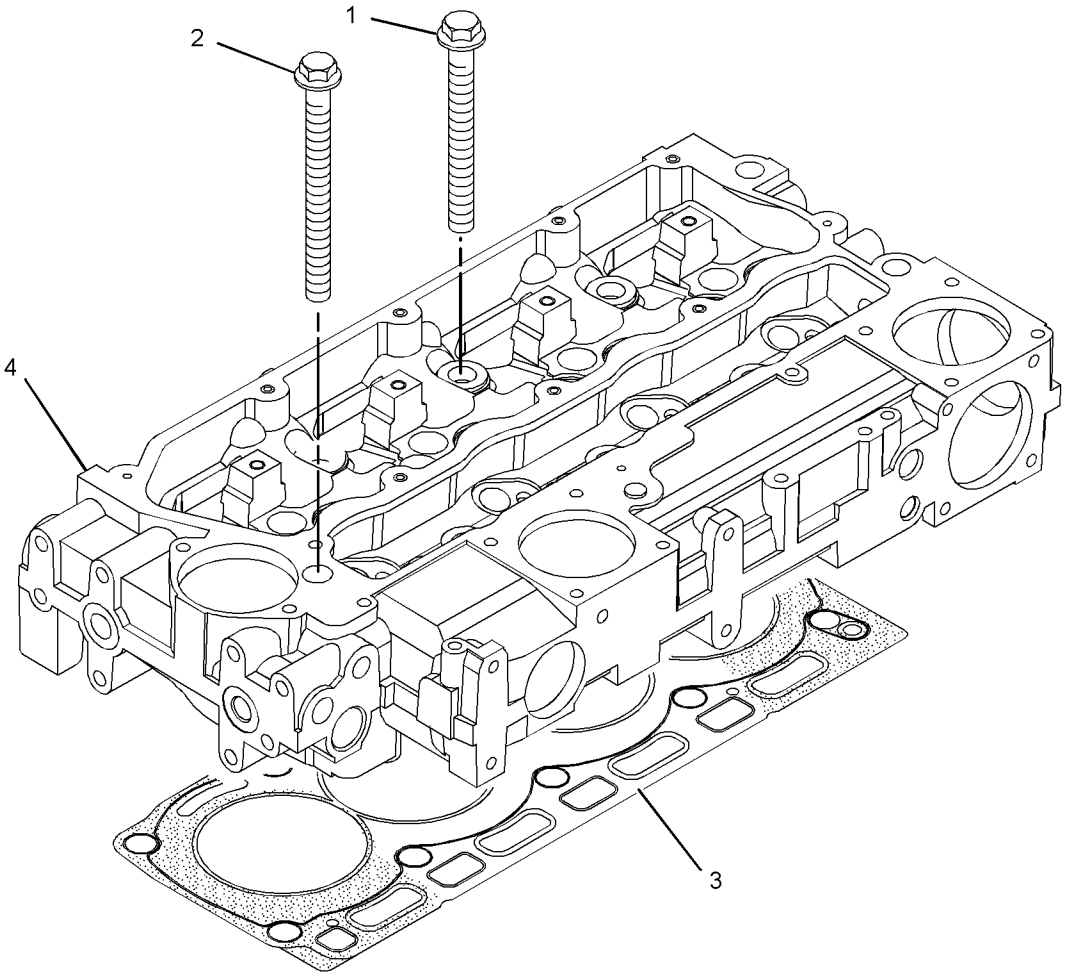

GRAPHIC #1 <END> g01269653

244-2088 CYLINDER HEAD GP

SMCS-1100 **i05295205**

NOTE	REF NO	GRAPHIC REF	PART NUMBER	QTY	PART NAME 1 2 3 4 5 6 (PRODUCT LEVEL)	SEE PAGE
M	1	1	**225-5501**	7	BOLT (M15X1.5X137-MM)	
M	2	1	**225-5502**	3	BOLT (M15X1.5X162-MM)	
	3	1	**258-4946**	1	GASKET-CYLINDER HEAD	
AB		1	**369-3705**	1	GASKET-CYLINDER HEAD	
Y	4	1	**232-7519**	1	CYLINDER HEAD GP	528

A - NOT PART OF THIS GROUP
B - USE AS REQUIRED
M - METRIC PART
Y - SEPARATE ILLUSTRATION

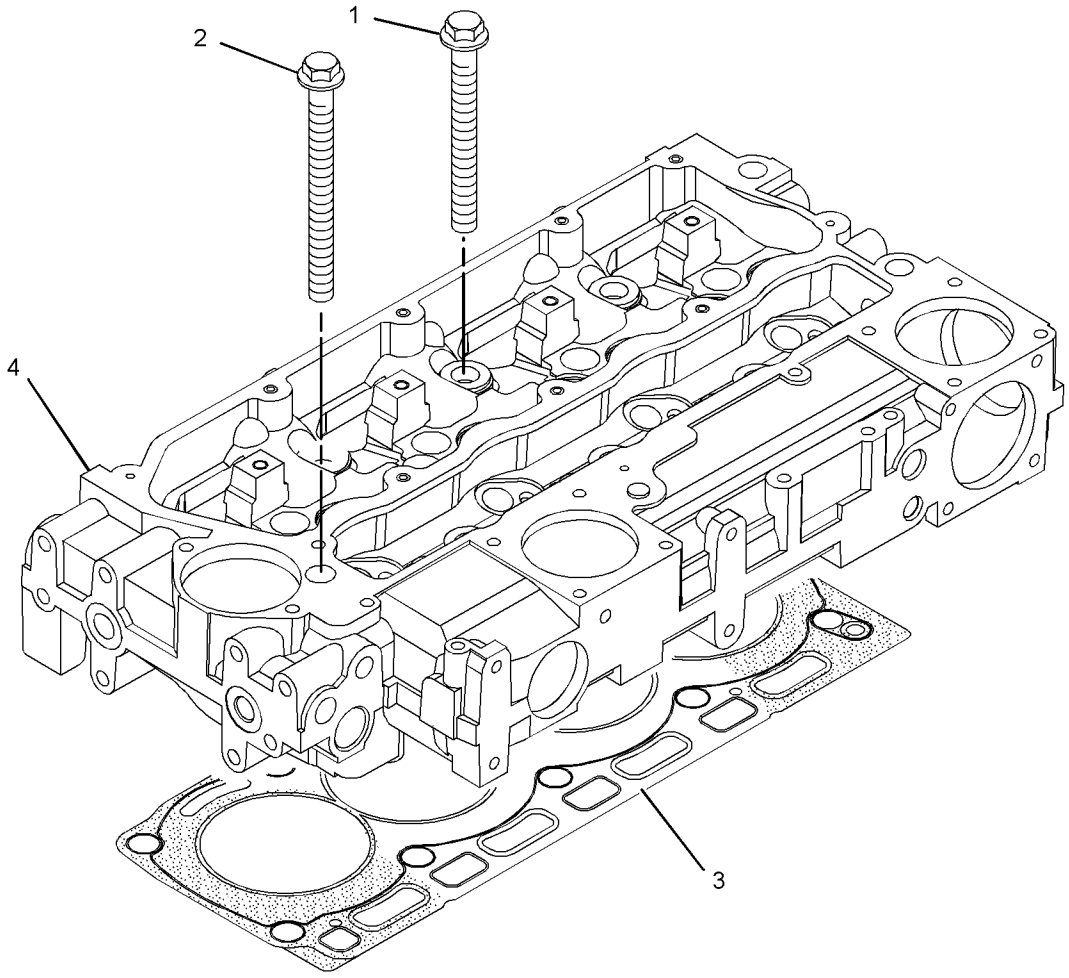

GRAPHIC #1 <END> g01269653

247-4868 CYLINDER HEAD GP

PART OF 233-7234, 247-4873, 253-8757, 367-2087 CYLINDER HEAD GP

SMCS-1100 **i06217443**

NOTE	REF NO	GRAPHIC REF	PART NUMBER	QTY	PART NAME 1 2 3 4 5 6 (PRODUCT LEVEL)	SEE PAGE
	1	1	**2B-0858**	1	PLUG-PIPE	
	2	1	**9Y-5015**	2	PLUG-FREEZE	
	3	1	**067-6006**	4	PLUG	
	4	1	**147-1979**	16	RETAINER-VALVE SPRING	
	5	1	**185-0882**	8	GUIDE-VALVE (INTAKE)	
	6	1	**199-9751**	1	SEAL-O-RING	
	7	1	**329-6655**	4	INSERT-VALVE SEAT (INLET)	
	8	1	**322-9663**	4	INSERT-VALVE SEAT (EXHAUST)	
	9	1	**225-5495**	4	VALVE-INLET	
	10	1	**436-0519**	8	SPRING-VALVE	
	11	1	**225-5498**	8	CAP	
	12	1	**225-5499**	4	VALVE-EXHAUST	
	13	1	**232-1322**	1	PLUG	
	14	1	**252-6438**	4	SEAL-INLET VALVE	
	15	1	**254-3954**	4	SEAL (EXHAUST VALVE)	

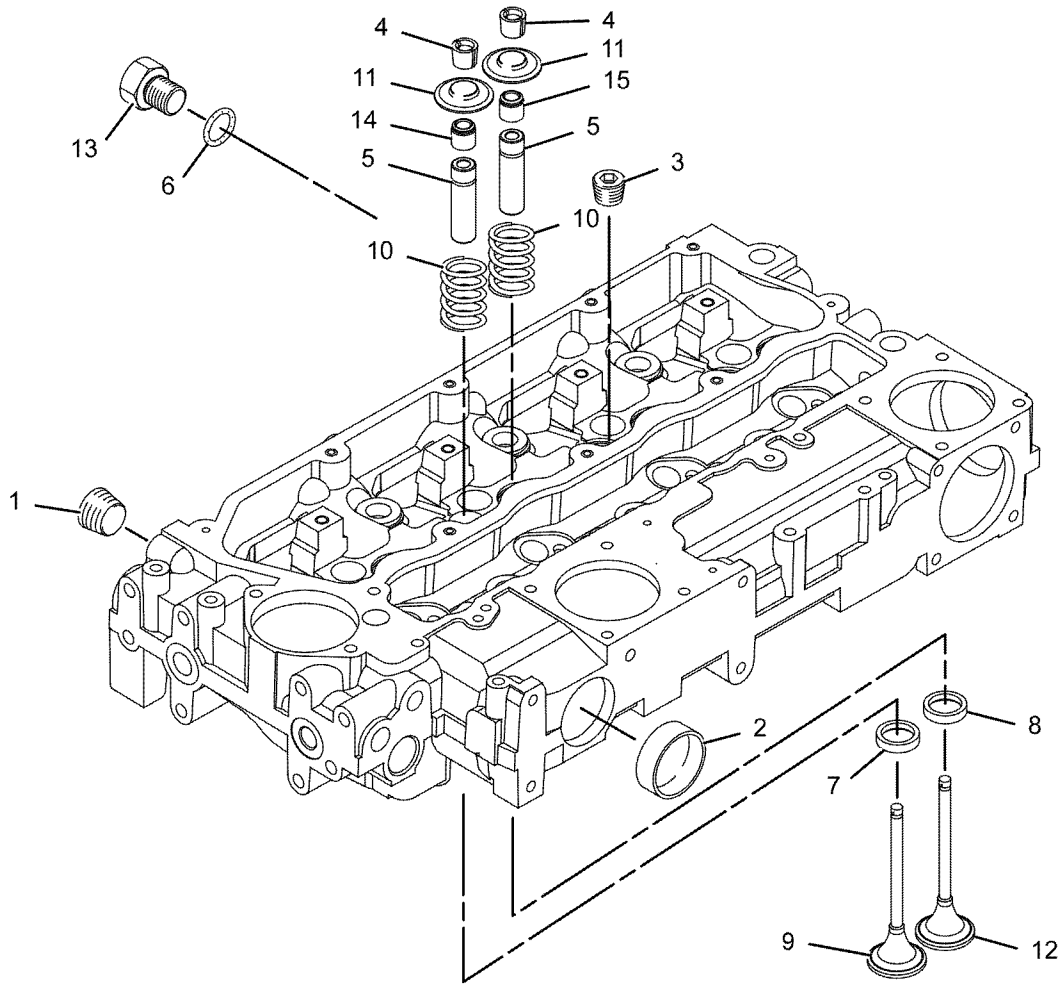

GRAPHIC #1 <END> g01078948

247-4873 CYLINDER HEAD GP

SMCS-1100 **i05295208**

NOTE	REF NO	GRAPHIC REF	PART NUMBER	QTY	PART NAME 1 2 3 4 5 6 (PRODUCT LEVEL)	SEE PAGE
M	1	1	**225-5501**	7	BOLT (M15X1.5X137-MM)	
M	2	1	**225-5502**	3	BOLT (M15X1.5X162-MM)	
	3	1	**258-4946**	1	GASKET-CYLINDER HEAD	
AB		1	**369-3705**	1	GASKET-CYLINDER HEAD	
Y	4	1	**247-4868**	1	CYLINDER HEAD GP	538

A - NOT PART OF THIS GROUP
B - USE AS REQUIRED
M - METRIC PART
Y - SEPARATE ILLUSTRATION

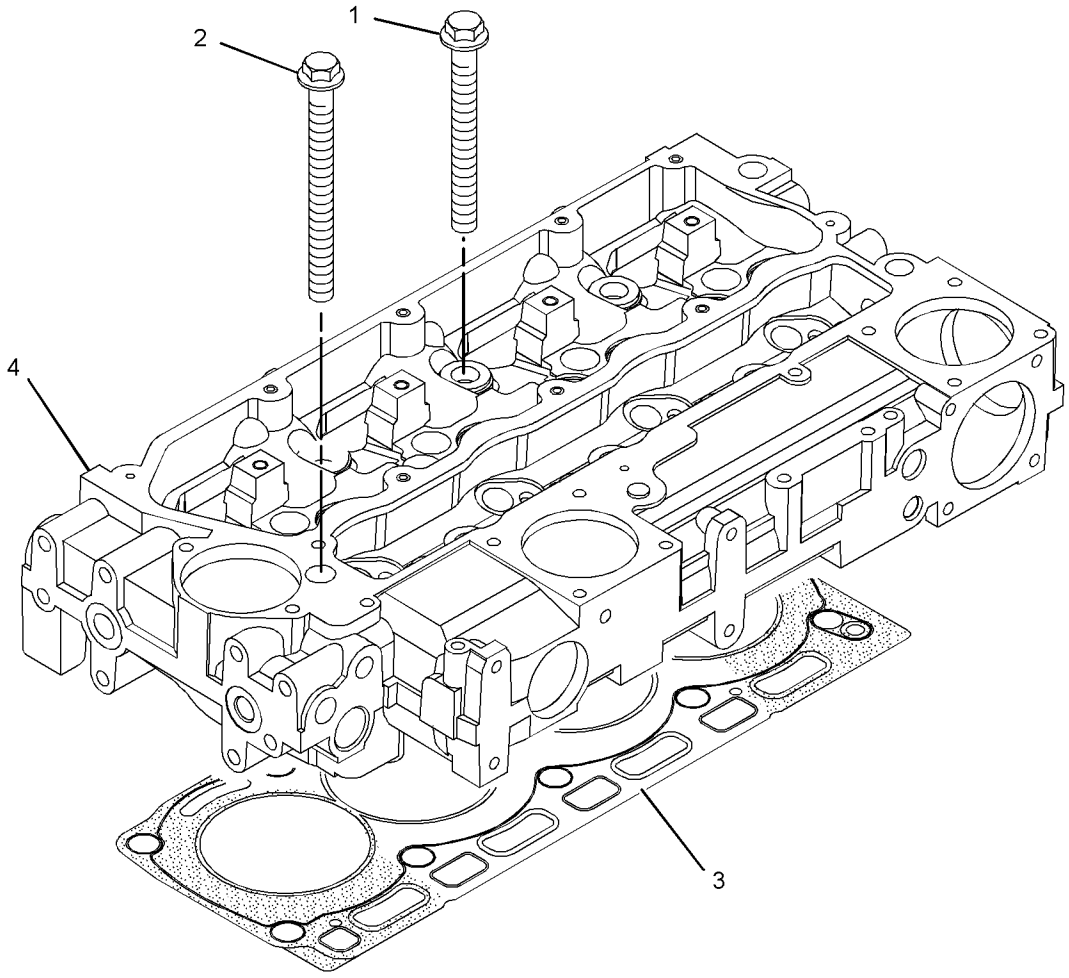

GRAPHIC #1 <END> g01269653

253-8757 CYLINDER HEAD GP

SMCS-1100 **i05295209**

NOTE	REF NO	GRAPHIC REF	PART NUMBER	QTY	PART NAME 1 2 3 4 5 6 (PRODUCT LEVEL)	SEE PAGE
M	1	1	**225-5501**	7	BOLT (M15X1.5X137-MM)	
M	2	1	**225-5502**	3	BOLT (M15X1.5X162-MM)	
	3	1	**258-4946**	1	GASKET-CYLINDER HEAD	
AB		1	**369-3705**	1	GASKET-CYLINDER HEAD	
Y	4	1	**247-4868**	1	CYLINDER HEAD GP	538

A - NOT PART OF THIS GROUP
B - USE AS REQUIRED
M - METRIC PART
Y - SEPARATE ILLUSTRATION

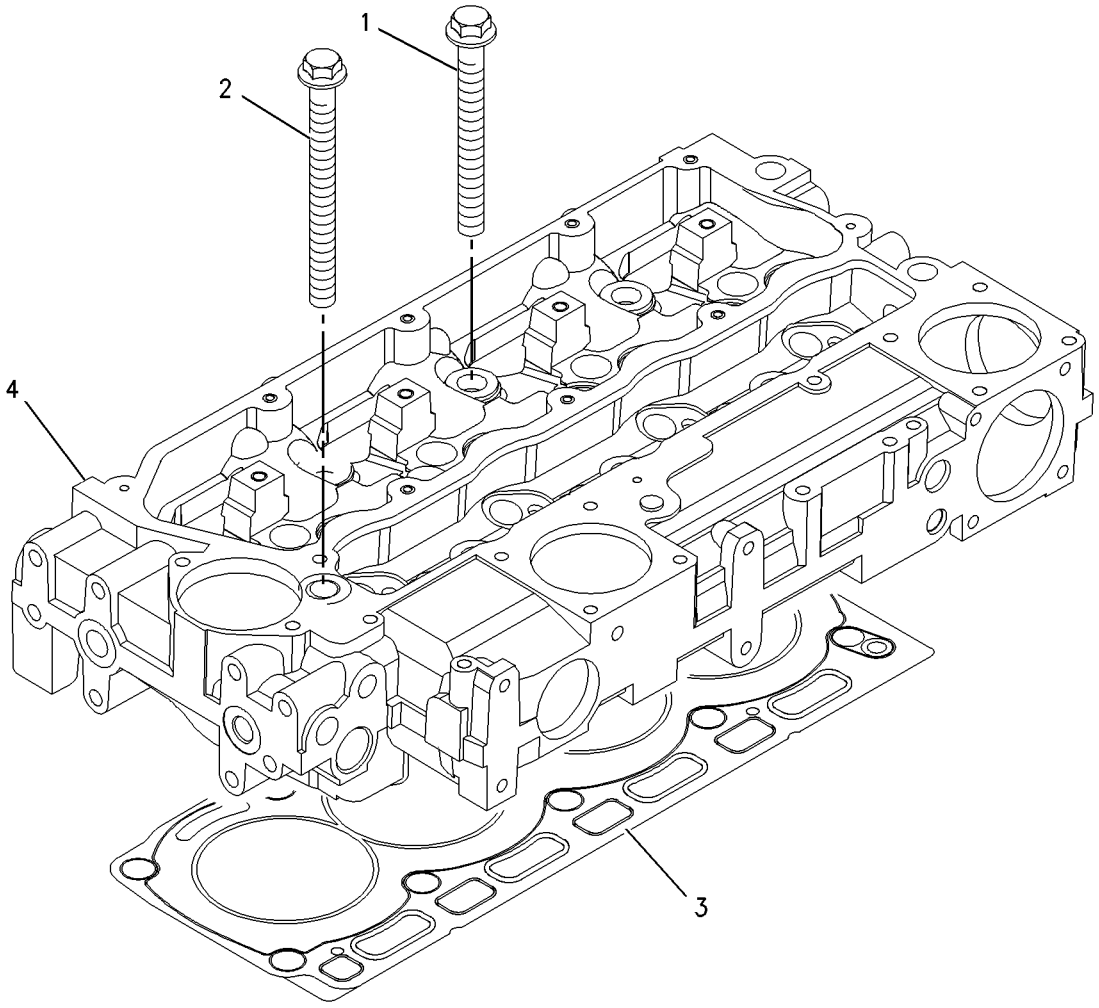

GRAPHIC #1 <END> g00909291

288-1424 CYLINDER HEAD GP

SMCS-1100 **i06126506**

NOTE	REF NO	GRAPHIC REF	PART NUMBER	QTY	PART NAME 1 2 3 4 5 6 (PRODUCT LEVEL)	SEE PAGE
M	1	1	**225-5501**	7	BOLT (M15X1.5X137-MM)	
M	2	1	**225-5502**	3	BOLT (M15X1.5X162-MM)	
Y	3	1	**232-7519**	1	CYLINDER HEAD GP	528
	4	1	**258-4946**	1	GASKET-CYLINDER HEAD	

M - METRIC PART
Y - SEPARATE ILLUSTRATION

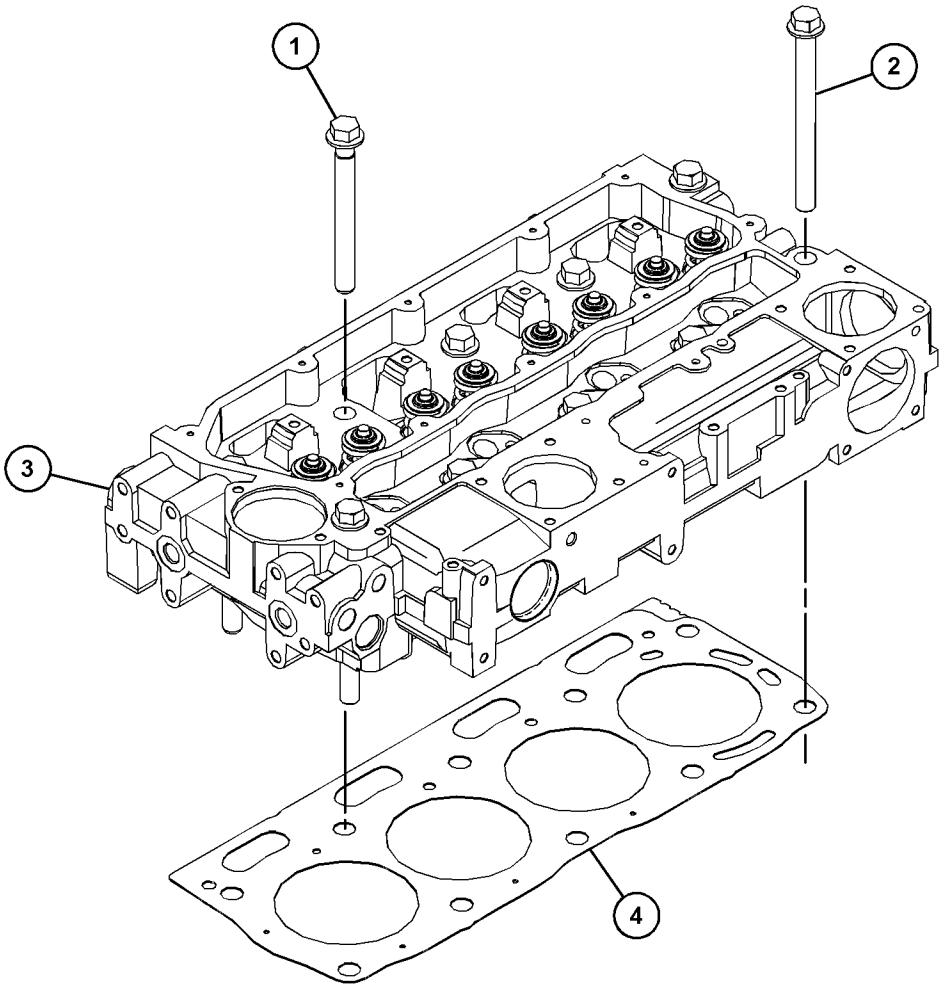

GRAPHIC #1 <END> g03829642

316-8481 CYLINDER HEAD GP

SMCS-1100 **i05295216**

NOTE	REF NO	GRAPHIC REF	PART NUMBER	QTY	PART NAME 1 2 3 4 5 6 (PRODUCT LEVEL)	SEE PAGE
M	1	1	**225-5501**	7	BOLT (M15X1.5X137-MM)	
M	2	1	**225-5502**	3	BOLT (M15X1.5X162-MM)	
	3	1	**258-4946**	1	GASKET-CYLINDER HEAD	
AB		1	**369-3705**	1	GASKET-CYLINDER HEAD	
Y	4	1	**232-7519**	1	CYLINDER HEAD GP	528

A - NOT PART OF THIS GROUP
B - USE AS REQUIRED
M - METRIC PART
Y - SEPARATE ILLUSTRATION

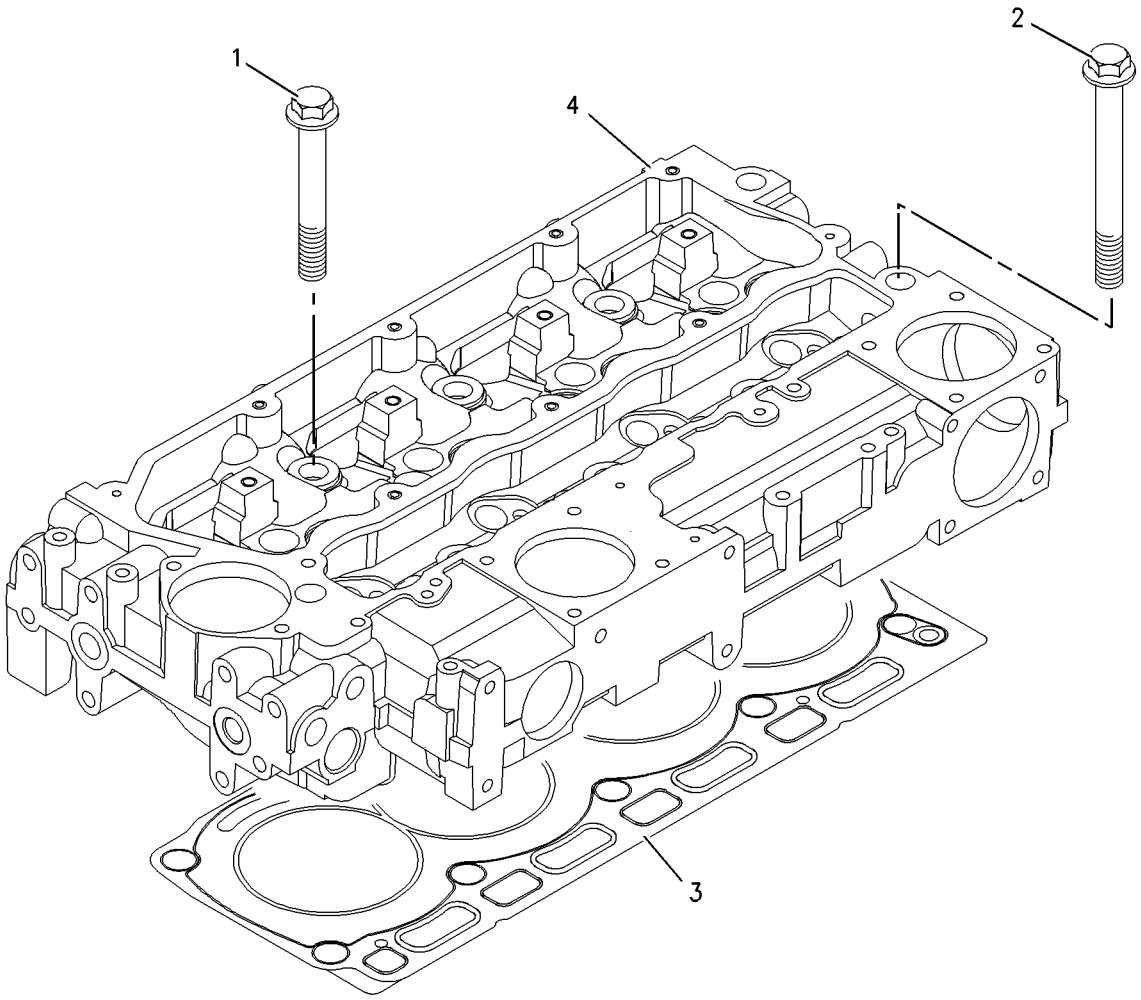

GRAPHIC #1 <END> g00994423

367-2087 CYLINDER HEAD GP

SMCS-1100 **i05295213**

NOTE	REF NO	GRAPHIC REF	PART NUMBER	QTY	PART NAME 1 2 3 4 5 6 (PRODUCT LEVEL)	SEE PAGE
M	1	1	**225-5501**	7	BOLT (M15X1.5X137-MM)	
M	2	1	**225-5502**	3	BOLT (M15X1.5X162-MM)	
	3	1	**258-4946**	1	GASKET-CYLINDER HEAD	
AB		1	**369-3705**	1	GASKET-CYLINDER HEAD	
Y	4	1	**247-4868**	1	CYLINDER HEAD GP	538

A - NOT PART OF THIS GROUP
B - USE AS REQUIRED
M - METRIC PART
Y - SEPARATE ILLUSTRATION

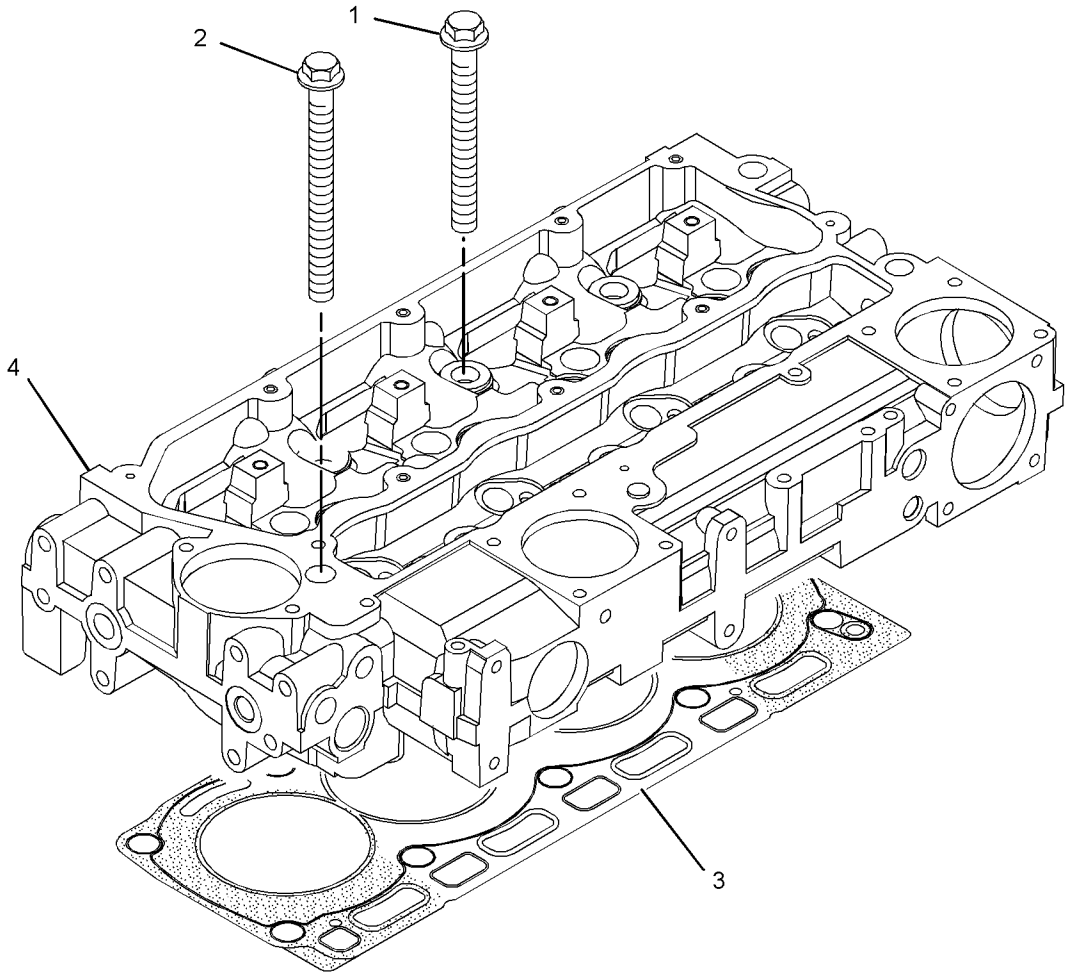

GRAPHIC #1 <END> g01269653

367-2790 CYLINDER HEAD GP

SMCS-1100 **i06244716**

NOTE	REF NO	GRAPHIC REF	PART NUMBER	QTY	PART NAME 1 2 3 4 5 6 (PRODUCT LEVEL)	SEE PAGE
M	1	1	**225-5501**	7	BOLT (M15X1.5X137-MM)	
M	2	1	**225-5502**	3	BOLT (M15X1.5X162-MM)	
Y	3	1	**232-7519**	1	CYLINDER HEAD GP	528
	4	1	**258-4946**	1	GASKET-CYLINDER HEAD	

M - METRIC PART
Y - SEPARATE ILLUSTRATION

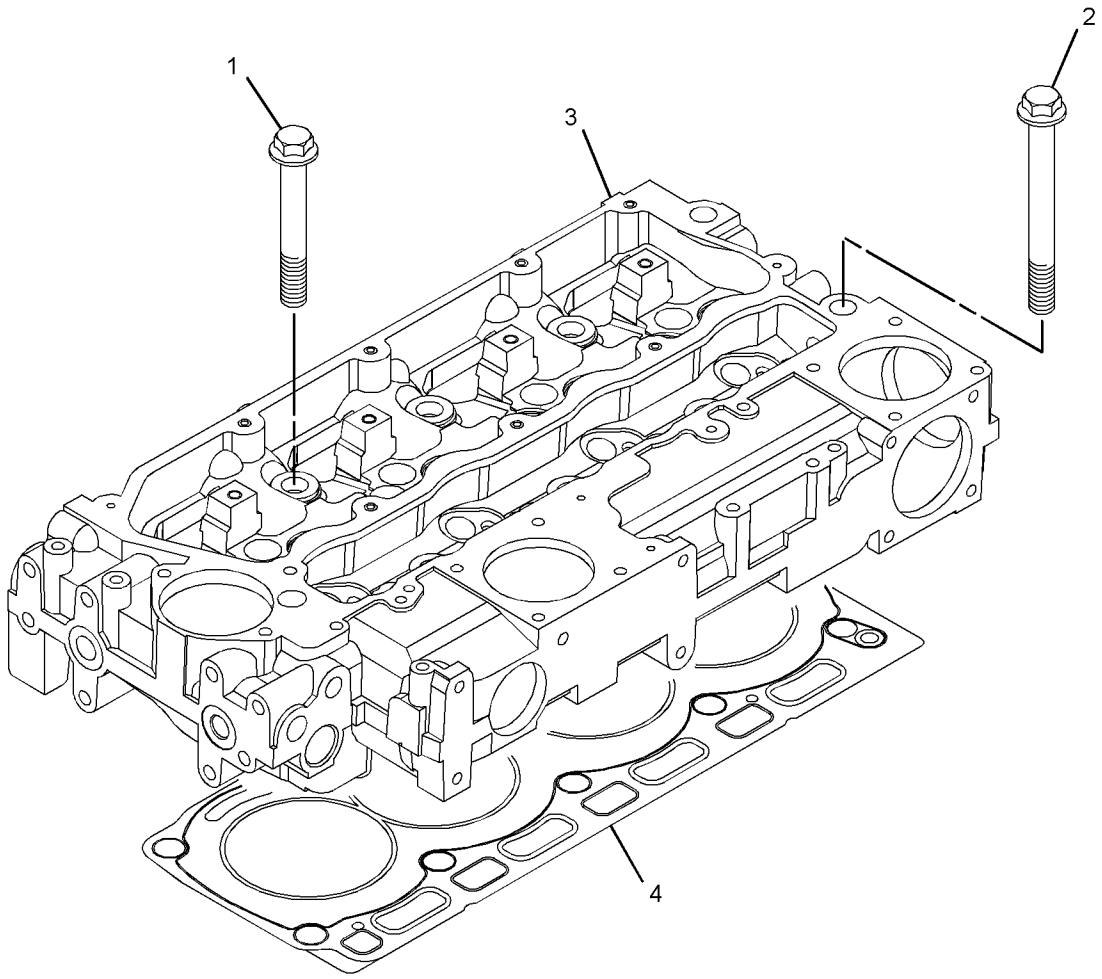

GRAPHIC #1 <END> g03349488

460-0743 CYLINDER HEAD GP

SMCS-1100 **i05965352**

NOTE	REF NO	GRAPHIC REF	PART NUMBER	QTY	PART NAME 1 2 3 4 5 6 (PRODUCT LEVEL)	SEE PAGE
M	1	1	**225-5501**	7	BOLT (M15X1.5X137-MM)	
M	2	1	**225-5502**	3	BOLT (M15X1.5X162-MM)	
Y	3	1	**232-7519**	1	CYLINDER HEAD GP	528
	4	1	**258-4946**	1	GASKET-CYLINDER HEAD	

M - METRIC PART
Y - SEPARATE ILLUSTRATION

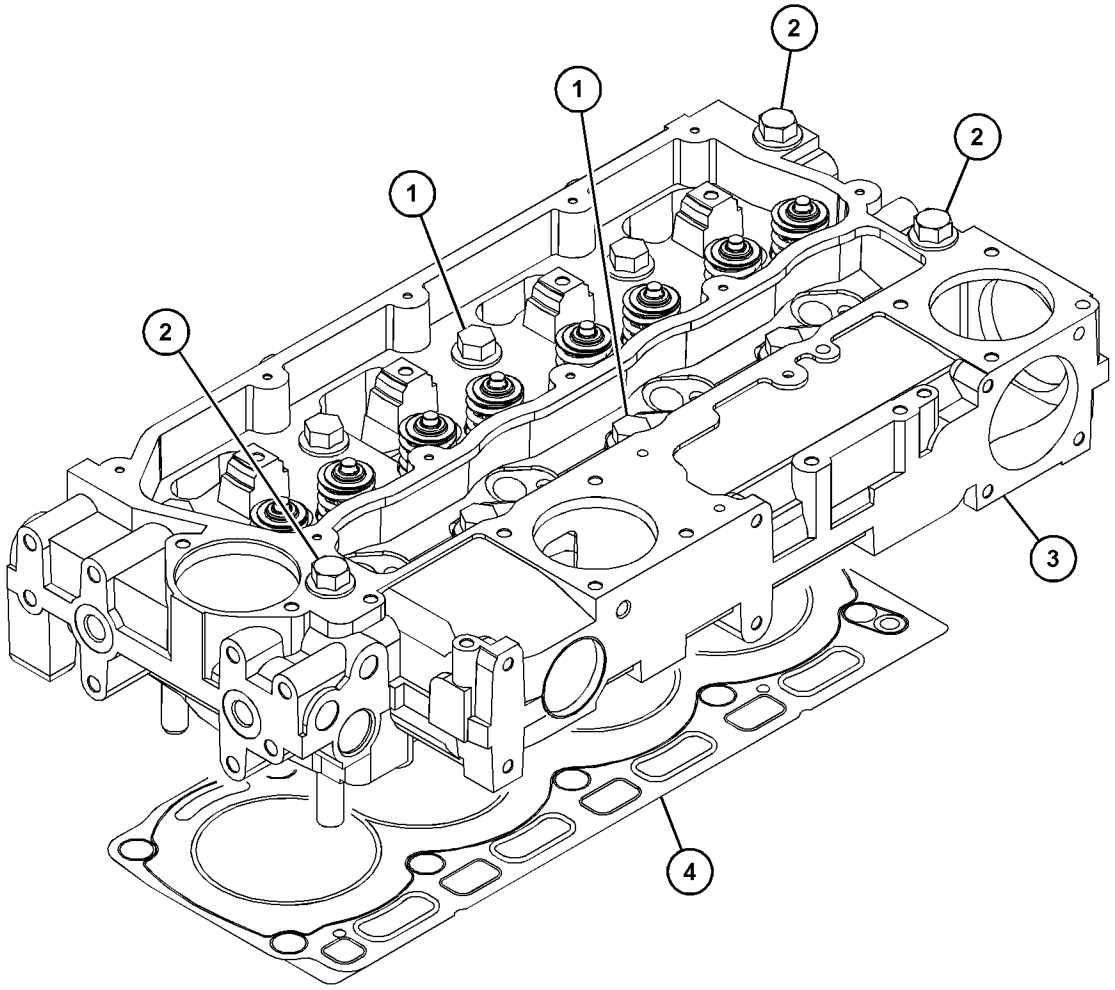

GRAPHIC #1 <END> g03703670

478-6459 CYLINDER HEAD GP

SMCS-1100 **i06238816**

NOTE	REF NO	GRAPHIC REF	PART NUMBER	QTY	PART NAME 1 2 3 4 5 6 (PRODUCT LEVEL)	SEE PAGE
M	1	1	**225-5501**	7	BOLT (M15X1.5X137-MM)	
M	2	1	**225-5502**	3	BOLT (M15X1.5X162-MM)	
Y	3	1	**232-7519**	1	CYLINDER HEAD GP	528
	4	1	**258-4946**	1	GASKET-CYLINDER HEAD	

M - METRIC PART
Y - SEPARATE ILLUSTRATION

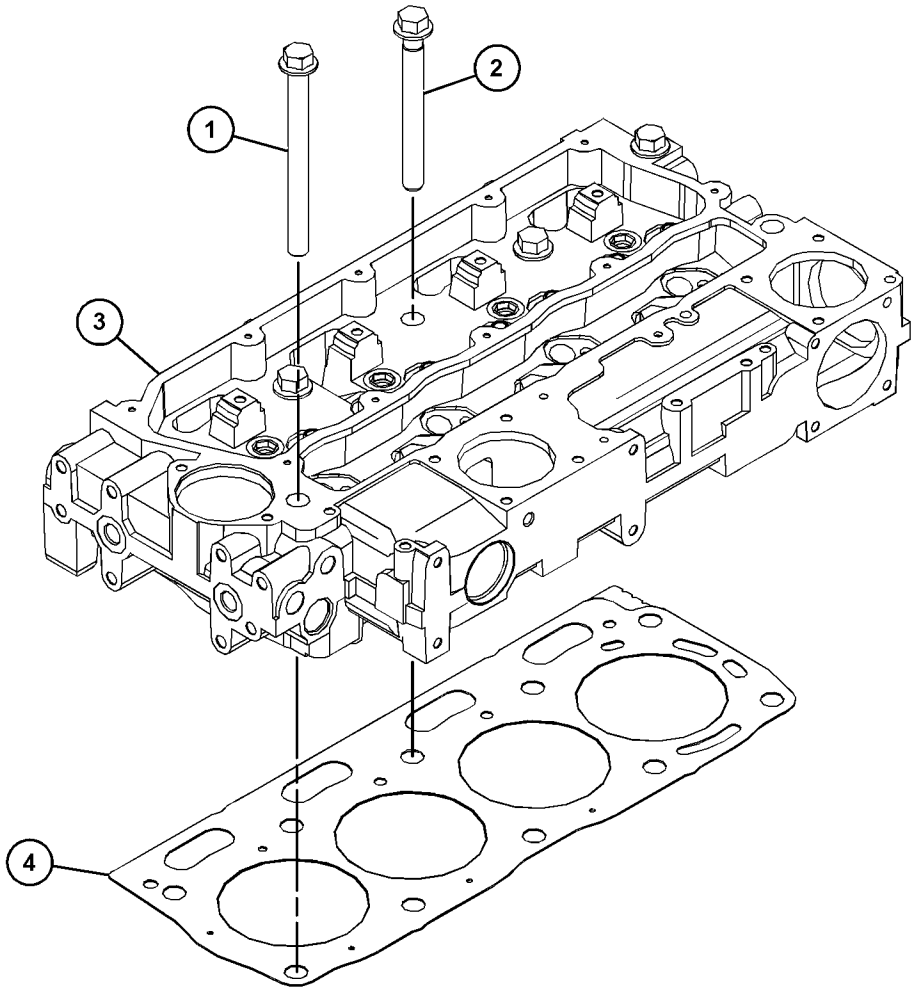

GRAPHIC #1 <END> g03876892

231-0047 DRIVE GP-ACCESSORY

AN ATTACHMENT

SMCS-1207 **i03044006**

NOTE	REF NO	GRAPHIC REF	PART NUMBER	QTY	PART NAME 1 2 3 4 5 6 (PRODUCT LEVEL)	SEE PAGE
	1	1	**222-8625**	1	ADAPTER AS	
	1A	1	**6H-3957**	1	BALL BEARING	
	1B	1	**102-2076**	1	CLIP	
	1C	1	**217-7877**	1	GEAR (33-TEETH)	
	1D	1	**102-2075**	1	BEARING	
	2	1	**214-3203**	1	WASHER (SEALING)	
M	3	1	**6I-0646**	1	BOLT (M10X1.5X14-MM)	
	4	1	**102-2073**	1	SEAL-O-RING	
M	5	1	**102-2078**	1	BOLT (M10X1.5X25-MM)	
M	7	1	**126-3212**	5	BOLT (M8X1.25X25-MM)	

M - METRIC PART

231-0047 **DRIVE GP-ACCESSORY (**contd.**)** **i03044006**

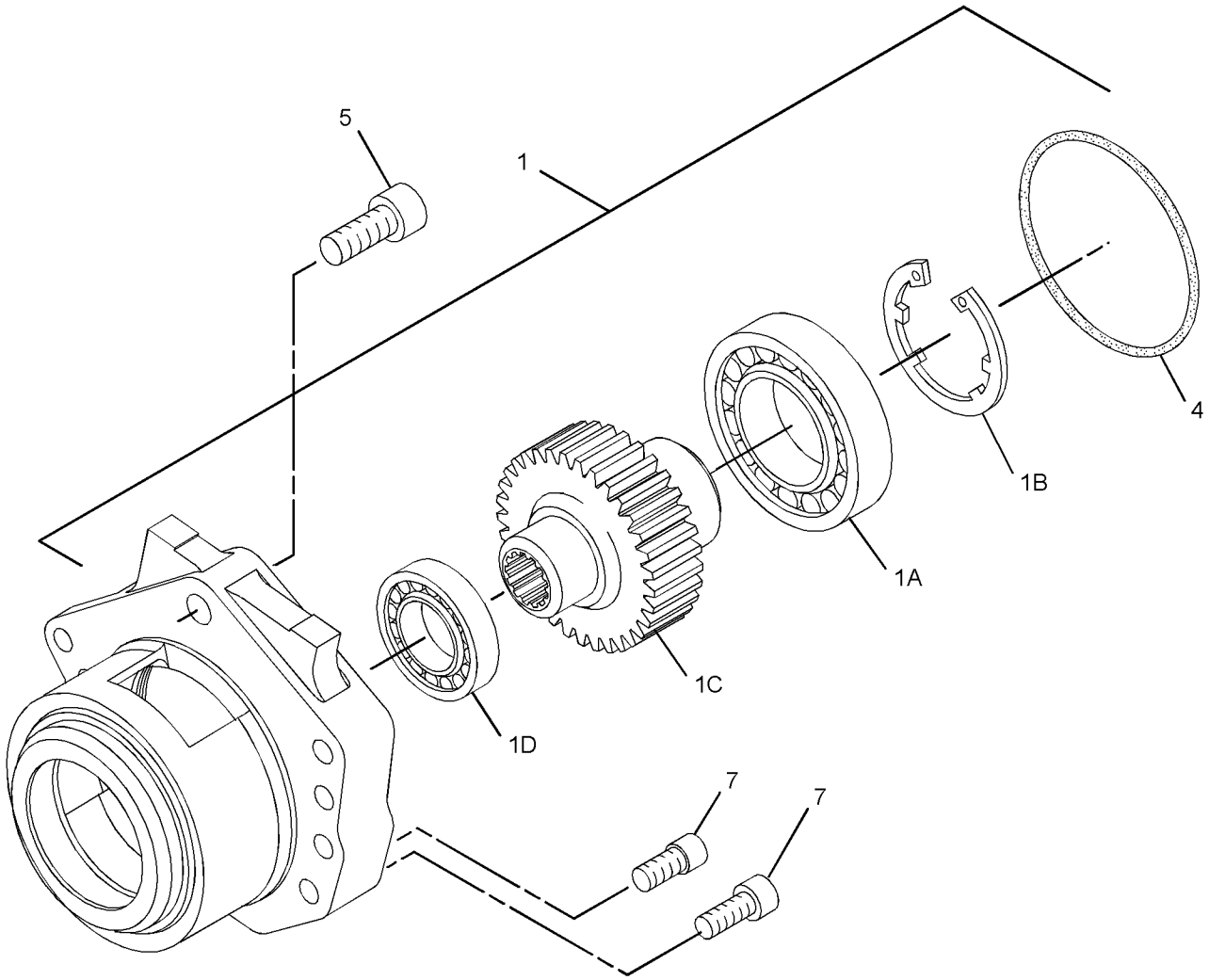

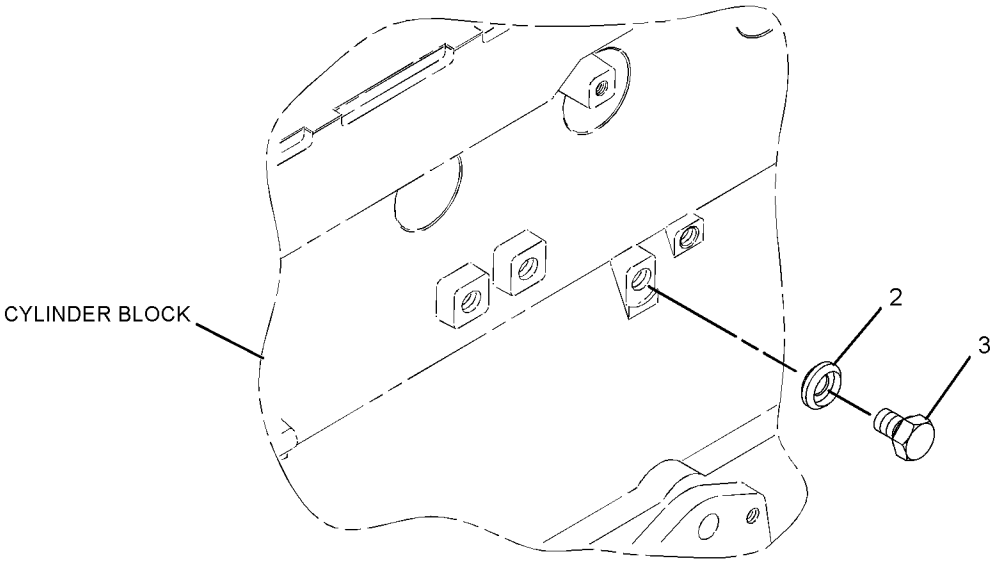

GRAPHIC #1 <END> g01447181

231-0055 DRIVE GP-ACCESSORY

ALSO AN ATTACHMENT

SMCS-1207 **i02908154**

NOTE	REF NO	GRAPHIC REF	PART NUMBER	QTY	PART NAME 1 2 3 4 5 6 (PRODUCT LEVEL)	SEE PAGE
	1	1	**230-9195**	1	ADAPTER AS	
	1A	1	**6H-3957**	1	BALL BEARING	
	1B	1	**102-2076**	1	CLIP	
	1C	1	**230-9194**	1	GEAR (33-TEETH)	
	1D	1	**102-2075**	1	BEARING	
	2	1	*231-0046*	1	PLUG	
M		1	**6I-0646**	1	BOLT (M10X1.5X14-MM)	
	2A	1	**214-3203**	1	WASHER (SEALING)	
	3	1	**102-2073**	1	SEAL-O-RING	
M	4	1	**102-2078**	1	BOLT (M10X1.5X25-MM)	
M	6	1	**126-3212**	5	BOLT (M8X1.25X25-MM)	

M - METRIC PART

231-0055 **DRIVE GP-ACCESSORY (**contd.**)** **i02908154**

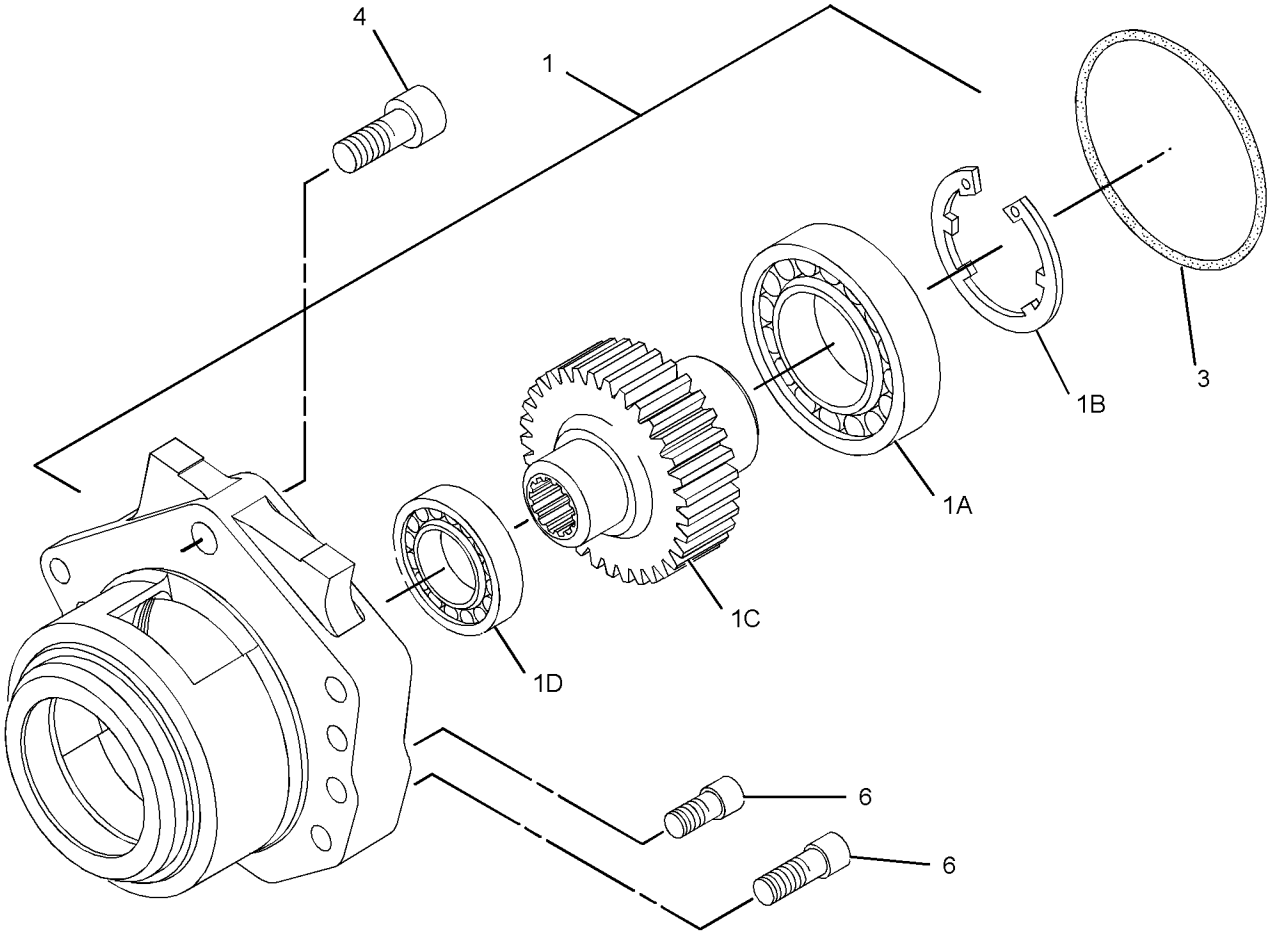

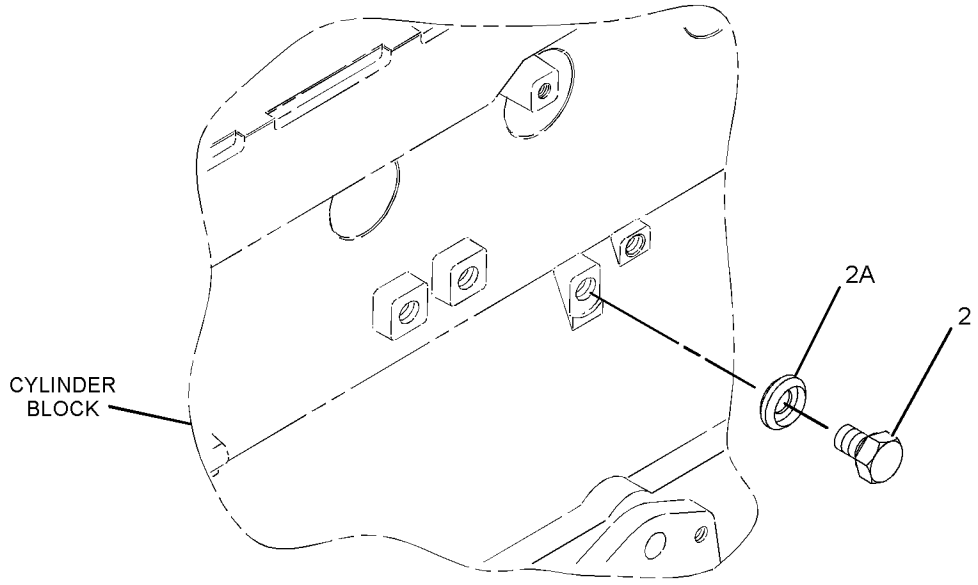

GRAPHIC #1 <END> g01447169

235-1044 DRIVE GP-ACCESSORY

SMCS-1207 **i02908158**

NOTE	REF NO	GRAPHIC REF	PART NUMBER	QTY	PART NAME 1 2 3 4 5 6 (PRODUCT LEVEL)	SEE PAGE
	1	1	**235-1063**	1	ADAPTER AS	
	1A	1	**6H-3957**	1	BALL BEARING	
	1B	1	**102-2076**	1	CLIP	
	1C	1	**235-1061**	1	GEAR (33-TEETH)	
	1D	1	**102-2075**	1	BEARING	
	2	1	*231-0046*	1	PLUG	
M		1	**6I-0646**	1	BOLT (M10X1.5X14-MM)	
	2A	1	**214-3203**	1	WASHER (SEALING)	
	3	1	**102-2073**	1	SEAL-O-RING	
M	4	1	**102-2078**	1	BOLT (M10X1.5X25-MM)	
M	6	1	**126-3212**	5	BOLT (M8X1.25X25-MM)	

M - METRIC PART

235-1044 **DRIVE GP-ACCESSORY (**contd.**)** **i02908158**

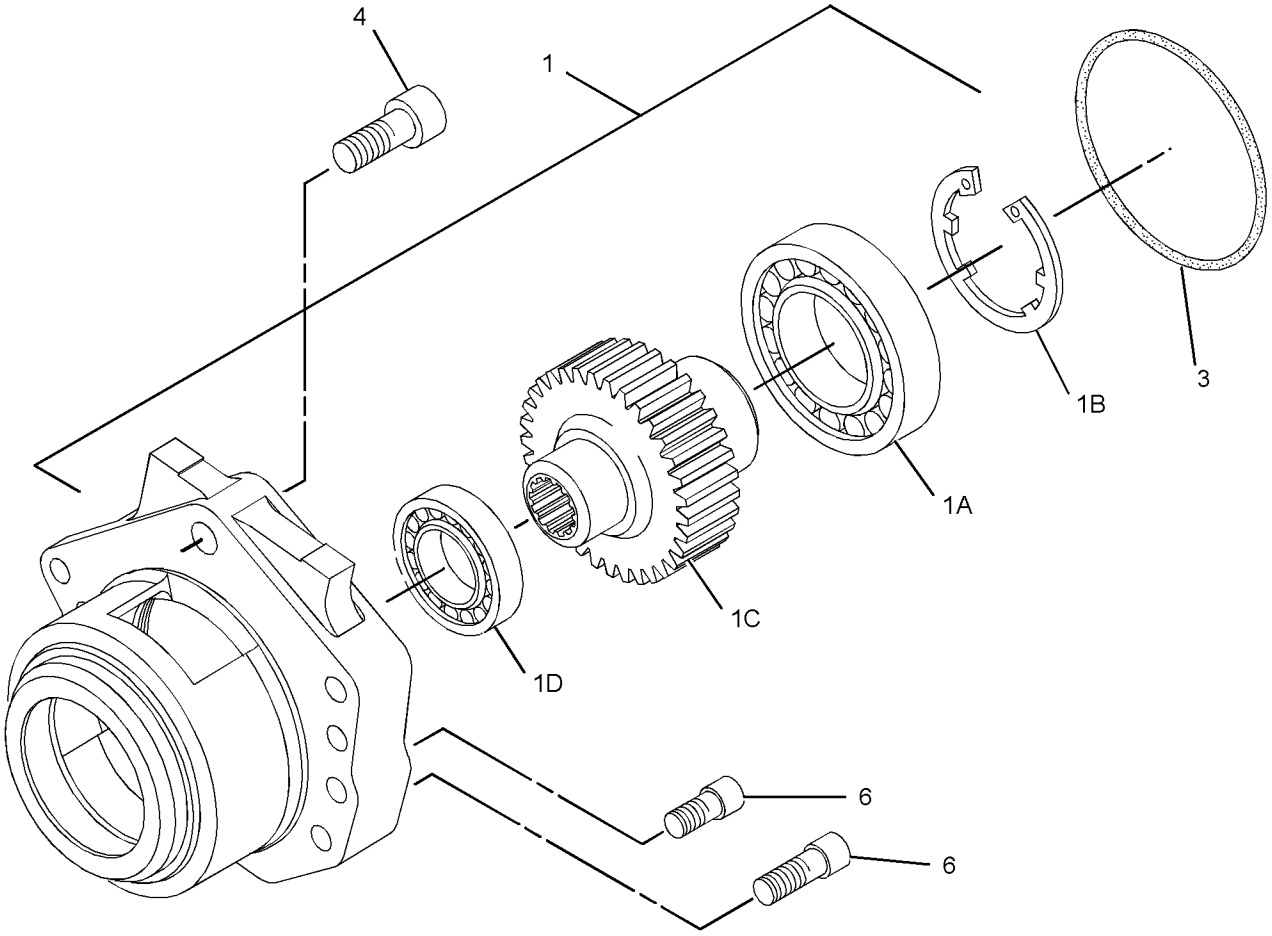

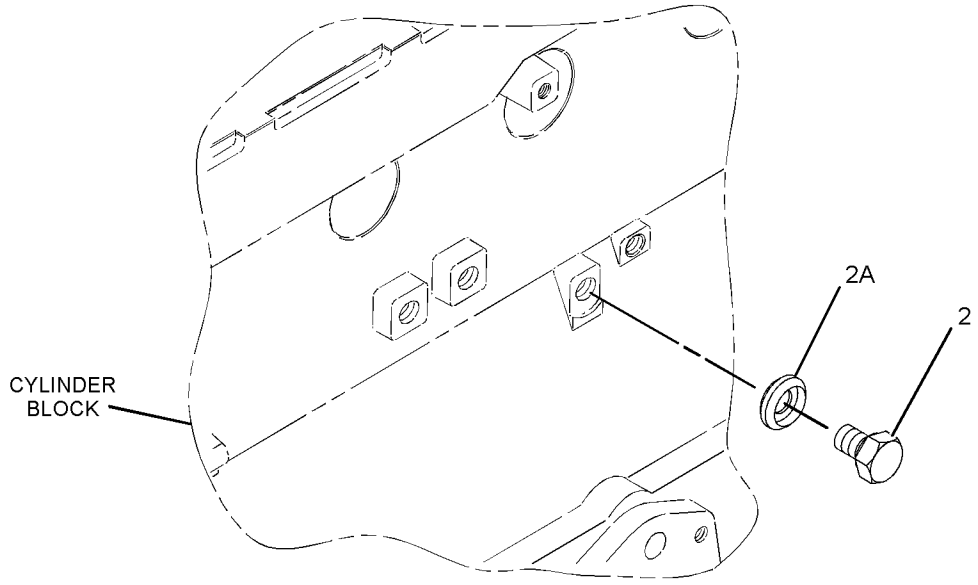

GRAPHIC #1 <END> g01447161

243-3274 DRIVE GP-ACCESSORY

SMCS-1207 **i02908160**

NOTE	REF NO	GRAPHIC REF	PART NUMBER	QTY	PART NAME 1 2 3 4 5 6 (PRODUCT LEVEL)	SEE PAGE
M	1	1	**100-4830**	2	BOLT (M10X1.5X20-MM)	
	2	1	**102-2073**	1	SEAL-O-RING	
M	3	1	**102-2078**	1	BOLT (M10X1.5X25-MM)	
	5	1	**198-8262**	1	COVER AS	
	5A	1	**198-8263**	1	SEAL-O-RING	
	6	1	*231-0046*	1	PLUG	
M		1	**6I-0646**	1	BOLT (M10X1.5X14-MM)	
	6A	1	**214-3203**	1	WASHER (SEALING)	
	7	1	**235-1063**	1	ADAPTER AS	
	7A	1	**6H-3957**	1	BALL BEARING	
	7B	1	**102-2075**	1	BEARING	
	7C	1	**102-2076**	1	CLIP	
	7D	1	**235-1061**	1	GEAR (33-TEETH)	
M	8	1	**126-3212**	5	BOLT (M8X1.25X25-MM)	

M - METRIC PART

243-3274 **DRIVE GP-ACCESSORY (**contd.**)** **i02908160**

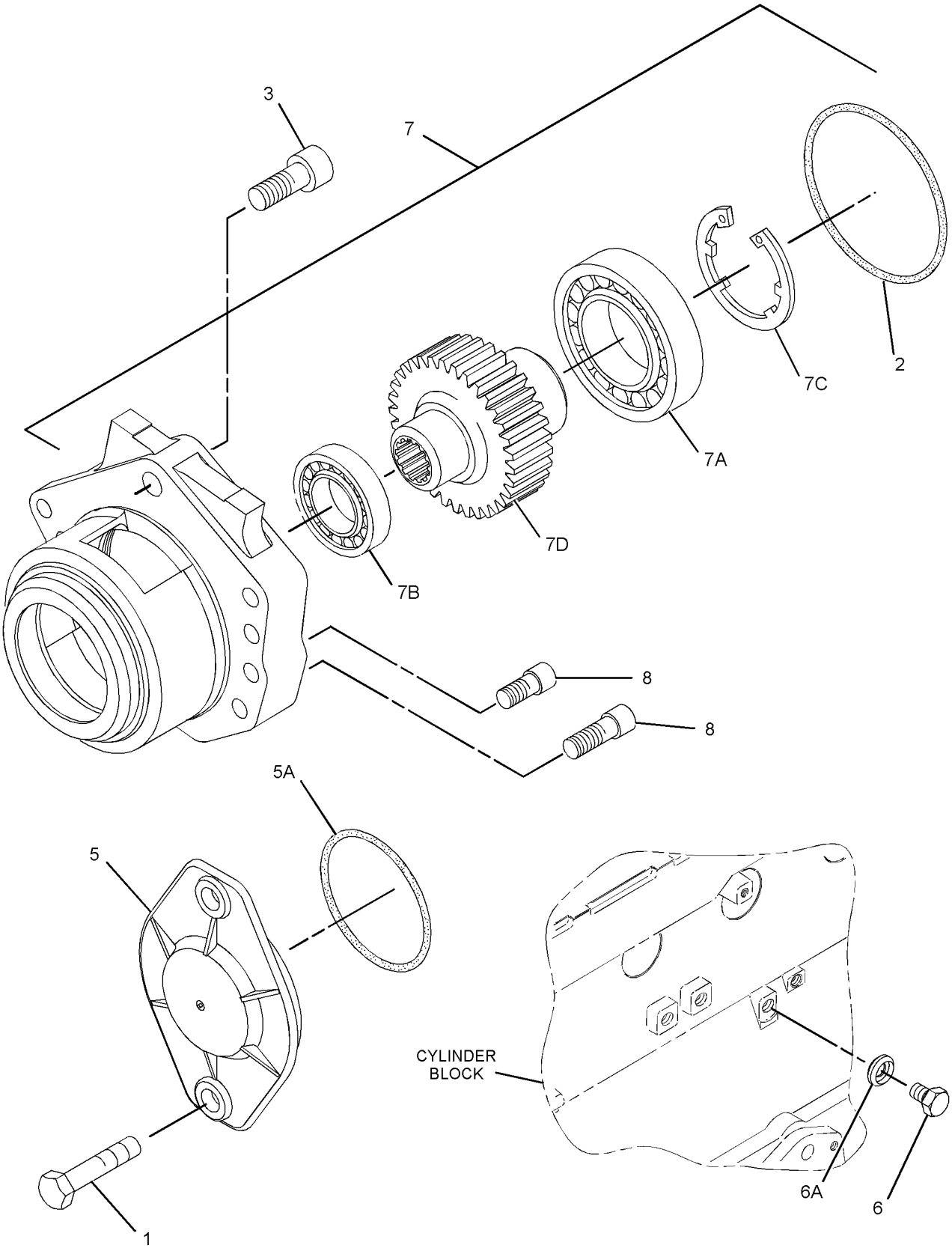

GRAPHIC #1 <END> g01447168

253-8823 DRIVE GP-ACCESSORY

SMCS-1207 **i02913180**

NOTE	REF NO	GRAPHIC REF	PART NUMBER	QTY	PART NAME 1 2 3 4 5 6 (PRODUCT LEVEL)	SEE PAGE
M	1	1	**6I-0217**	1	BOLT (M8X1.25X20-MM)	
M	2	1	**6I-0593**	2	BOLT (M10X1.5X30-MM)	
M	3	1	**6I-0654**	2	BOLT (M10X1.5X25-MM)	
	4	1	**067-6928**	1	CLIP	
	5	1	**102-2073**	1	SEAL-O-RING	
M	6	1	**102-2078**	1	BOLT (M10X1.5X25-MM)	
	8	1	**201-5509**	1	SEAL-O-RING	
	9	1	**201-5510**	1	SHAFT	
	10	1	**201-5511**	1	SLEEVE	
	11	1	*231-0046*	1	PLUG	
M		1	**6I-0646**	1	BOLT (M10X1.5X14-MM)	
	11A	1	**214-3203**	1	WASHER (SEALING)	
	12	1	**235-1063**	1	ADAPTER AS	
	12A	1	**6H-3957**	1	BALL BEARING	
	12B	1	**102-2075**	1	BEARING	
	12C	1	**102-2076**	1	CLIP	
	12D	1	**235-1061**	1	GEAR (33-TEETH)	
	13	1	**253-8828**	1	HOUSING	
	14	1	**253-8958**	1	GASKET	
	15	1	**253-8960**	1	BRACKET	
M	16	1	**126-3212**	5	BOLT (M8X1.25X25-MM)	

M - METRIC PART

253-8823 **DRIVE GP-ACCESSORY (**contd.**)** **i02913180**

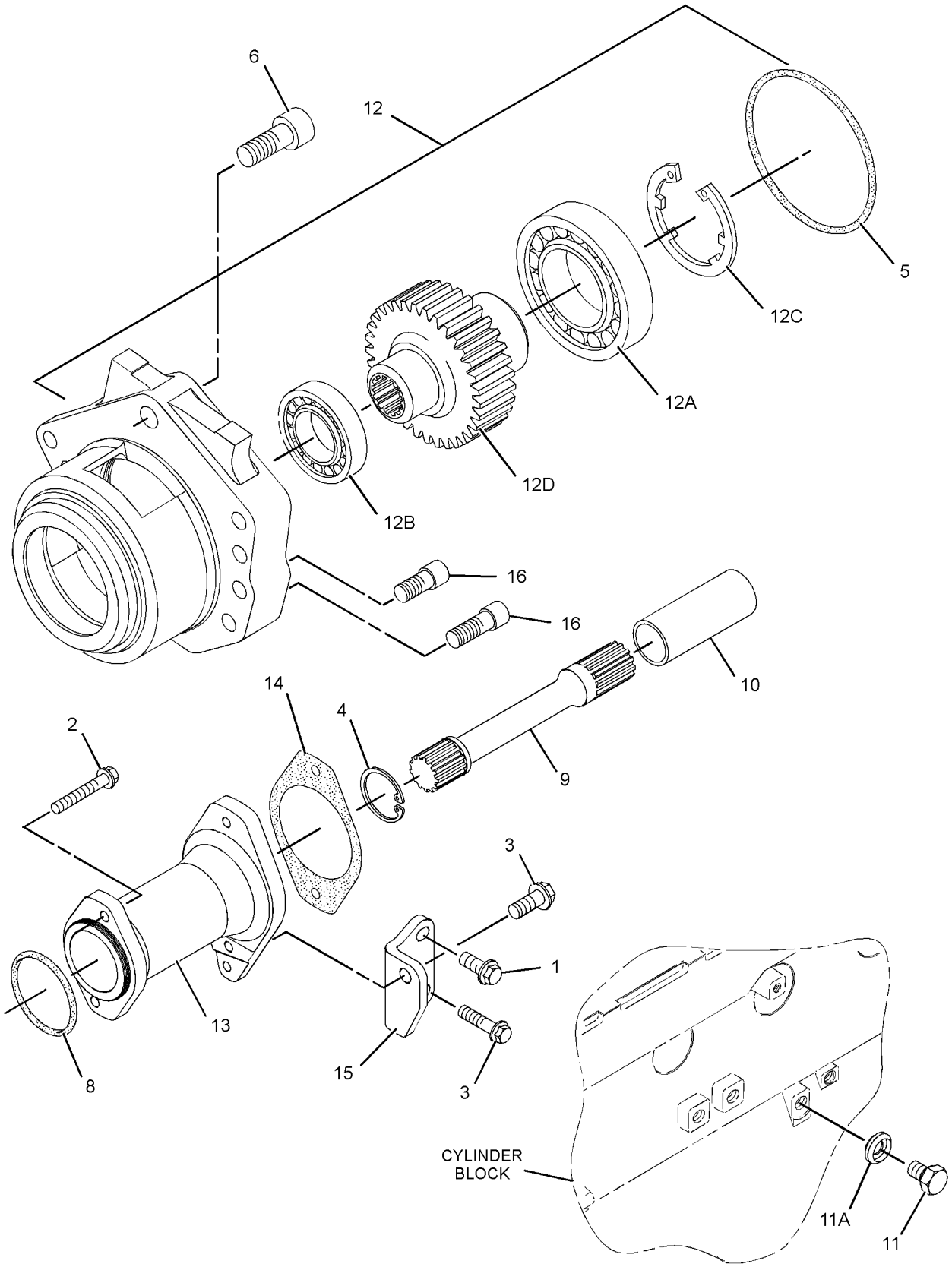

GRAPHIC #1 <END> g01447165

256-3651 DRIVE GP-ACCESSORY

AN ATTACHMENT

TYPE 1

SMCS-1207 **i02204302**

NOTE	REF NO	GRAPHIC REF	PART NUMBER	QTY	PART NAME 1 2 3 4 5 6 (PRODUCT LEVEL)	SEE PAGE
M	1	1	**6I-0291**	4	NUT (M8X1.25-THD)	
M	2	1	**6I-0646**	1	BOLT (M10X1.5X14-MM)	
M	3	1	**6I-0840**	4	STUD (M8X20-MM)	
	4	1	**7W-1165**	1	GASKET-HYDRAULIC PUMP	
	5	1	**7W-1218**	1	WASHER	
	6	1	**7W-1219**	1	NUT	
	7	1	**102-2073**	1	SEAL-O-RING	
	8	1	**113-8067**	1	ADAPTER	
	9	1	**113-8071**	1	NUT (M12X1.5-THD)	
	10	1	**113-8075**	1	NUT	
	11	1	**113-8076**	1	PIN	
	12	1	**113-8077**	4	BOLT	
	13	1	**214-3203**	1	WASHER (SEALING)	
	14	1	**256-3660**	1	GEAR-PUMP DRIVE (34-TEETH)	
F			**199-3109**	1	PLUG	

F - NOT SHOWN
M - METRIC PART

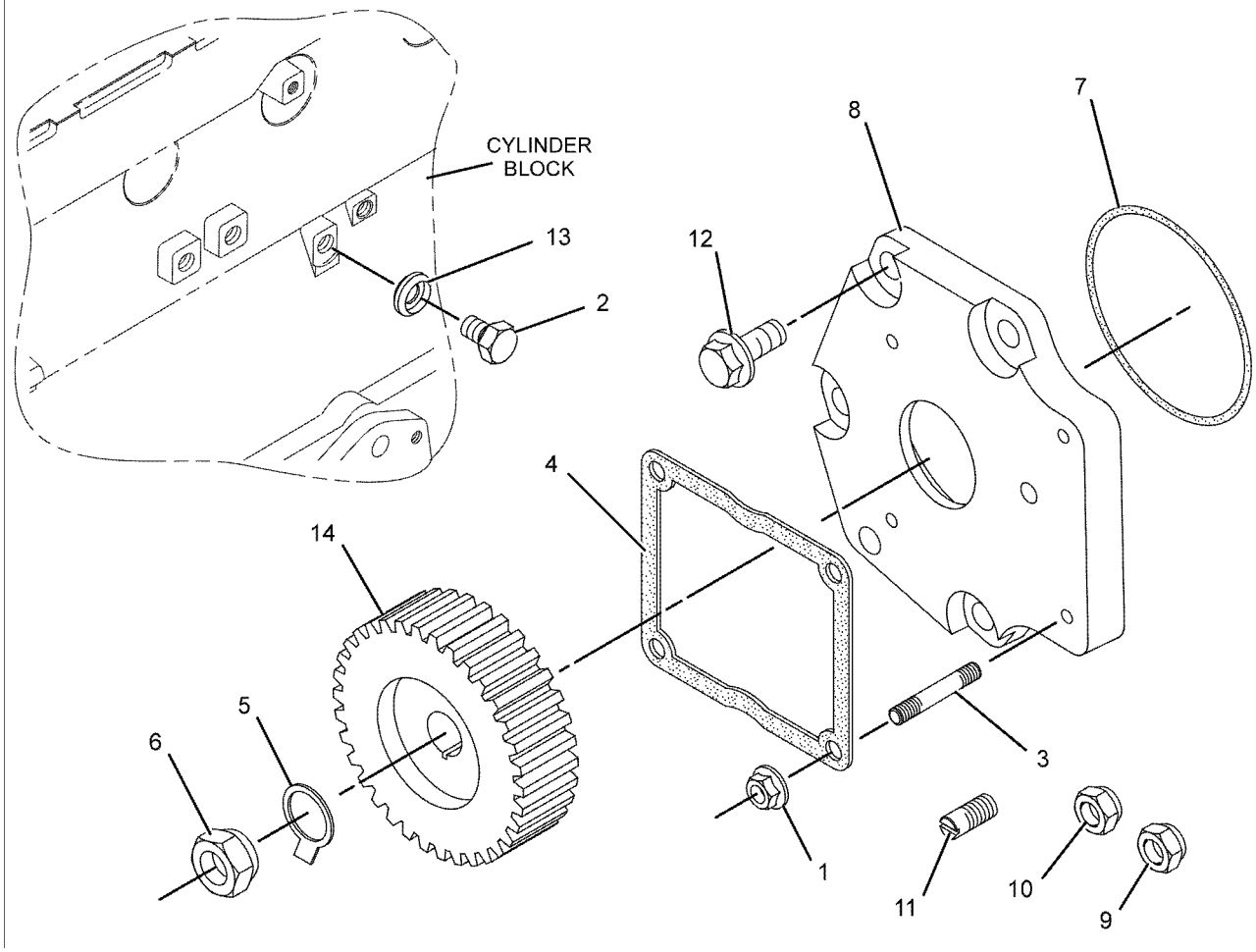

GRAPHIC #1 <END> g01116750

256-3651 DRIVE GP-ACCESSORY

AN ATTACHMENT

TYPE 2

SMCS-1207 **i07045586**

NOTE	REF NO	GRAPHIC REF	PART NUMBER	QTY	PART NAME 1 2 3 4 5 6 (PRODUCT LEVEL)	SEE PAGE
M	1	1	**178-3336**	4	NUT-HEX FLANGE (M8X1.25-THD)	
M	2	1	**6I-0646**	1	BOLT (M10X1.5X14-MM)	
M	3	1	**6I-0840**	4	STUD (M8X20-MM)	
	4	1	**7W-1165**	1	GASKET-HYDRAULIC PUMP	
	5	1	**256-3660**	1	GEAR-PUMP DRIVE (34-TEETH)	
	6	1	**214-3203**	1	WASHER (SEALING)	
	7	1	**102-2073**	1	SEAL-O-RING	
	8	1	**113-8067**	1	ADAPTER	
	9	1	**113-8076**	1	PIN	
F		1	**199-3109**	1	PLUG	

F - NOT SHOWN
M - METRIC PART

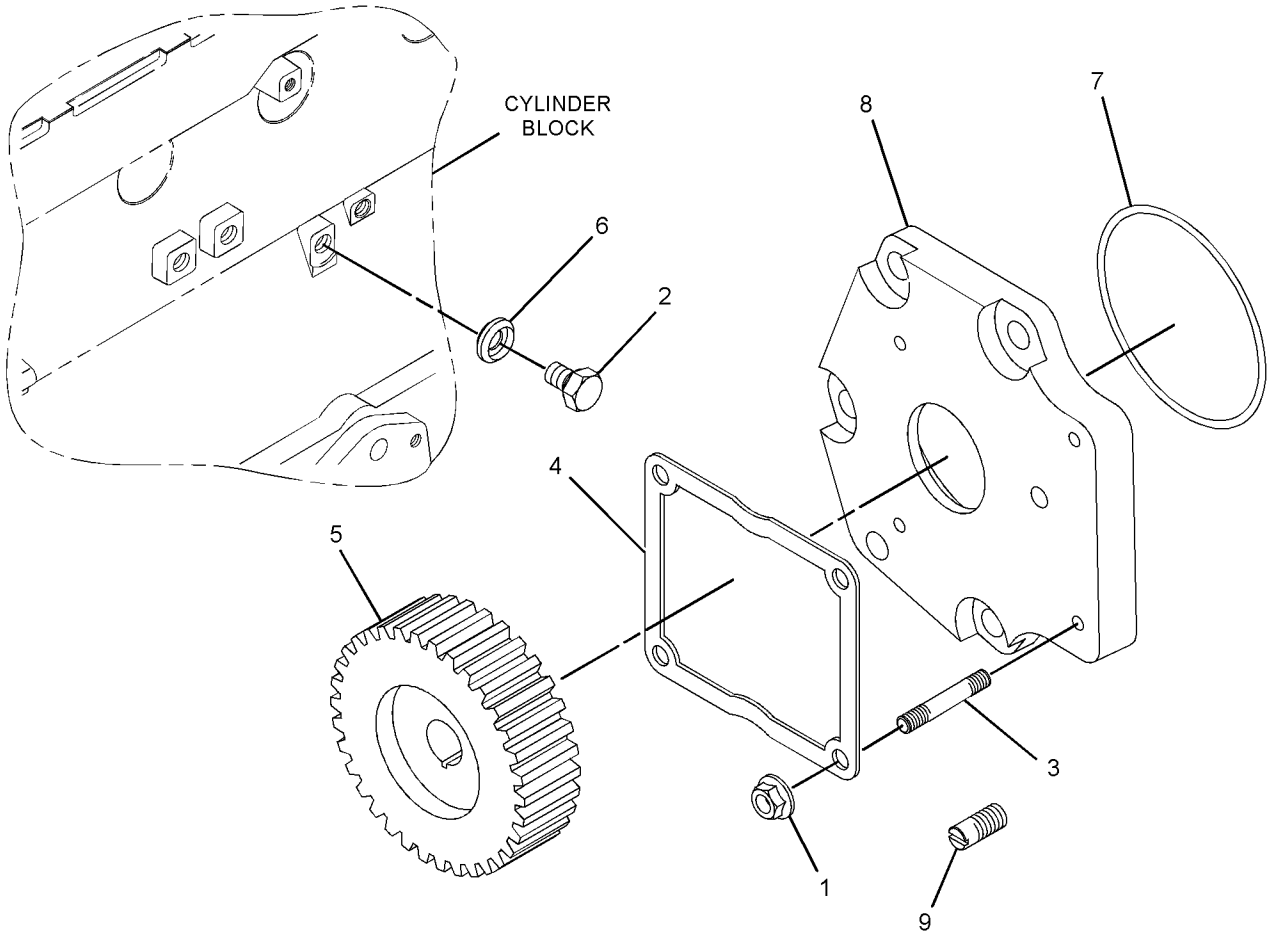

GRAPHIC #1 <END> g06203534

265-5289 DRIVE GP-ACCESSORY

ALSO AN ATTACHMENT

SMCS-1207 **i06059708**

NOTE	REF NO	GRAPHIC REF	PART NUMBER	QTY	PART NAME 1 2 3 4 5 6 (PRODUCT LEVEL)	SEE PAGE
M	1	1	**6I-0217**	1	BOLT (M8X1.25X20-MM)	
M	2	1	**6I-0593**	2	BOLT (M10X1.5X30-MM)	
M	3	1	**6I-0646**	1	BOLT (M10X1.5X14-MM)	
M	4	1	**6I-0654**	2	BOLT (M10X1.5X25-MM)	
	5	1	**067-6928**	1	CLIP	
M	6	1	**100-4830**	2	BOLT (M10X1.5X20-MM)	
	7	1	**102-2073**	1	SEAL-O-RING	
M	8	1	**102-2078**	1	BOLT (M10X1.5X25-MM)	
	10	1	**198-8262**	1	COVER AS	
	10A	1	**198-8263**	1	SEAL-O-RING	
	11	1	**201-5509**	1	SEAL-O-RING	
	12	1	**201-5510**	1	SHAFT	
	13	1	**201-5511**	1	SLEEVE	
	14	1	**214-3203**	1	WASHER (SEALING)	
	15	1	**235-1063**	1	ADAPTER AS	
	15A	1	**6H-3957**	1	BALL BEARING	
	15B	1	**102-2075**	1	BEARING	
	15C	1	**102-2076**	1	CLIP	
	15D	1	**235-1061**	1	GEAR (33-TEETH) (13-TEETH ID)	
	16	1	**253-8828**	1	HOUSING	
	17	1	**253-8958**	1	GASKET	
	18	1	**253-8960**	1	BRACKET	
M	19	1	**126-3212**	5	BOLT (M8X1.25X25-MM)	

M - METRIC PART

265-5289 **DRIVE GP-ACCESSORY (**contd.**)** **i06059708**

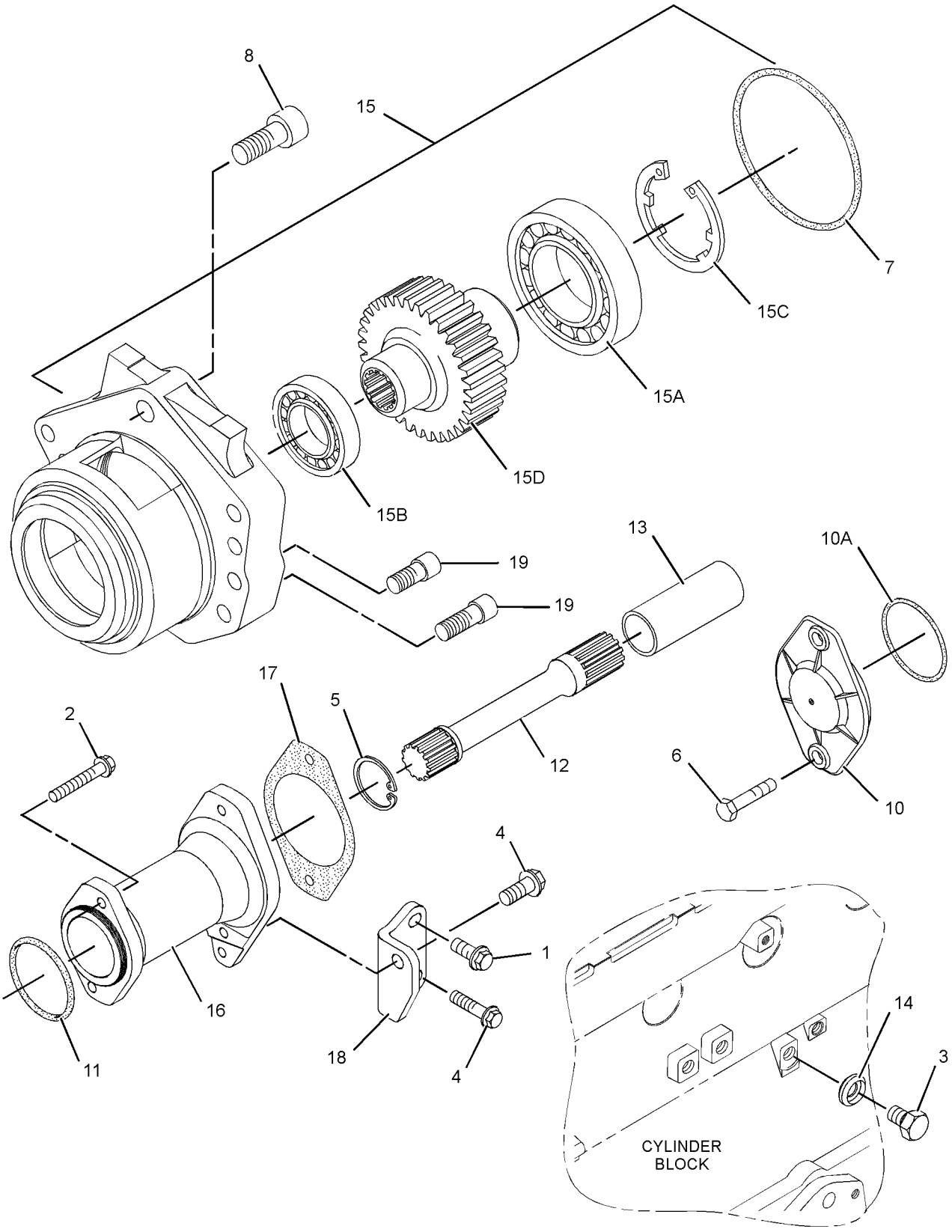

GRAPHIC #1 <END> g01447199

198-4576 DRIVE GP-FAN

SMCS-1359 **i09733373**

NOTE	REF NO	GRAPHIC REF	PART NUMBER	QTY	PART NAME 1 2 3 4 5 6 (PRODUCT LEVEL)	SEE PAGE
	1	1	**128-5247**	1	V-BELT SET (INCLUDES 2-BELTS)	
M	2	1	**111-0859**	4	BOLT (M10X1.5X35-MM)	
	3	1	**130-3879**	1	PULLEY-FAN DRIVE	
	4	1	**230-8065**	1	HOUSING AS	

M - METRIC PART

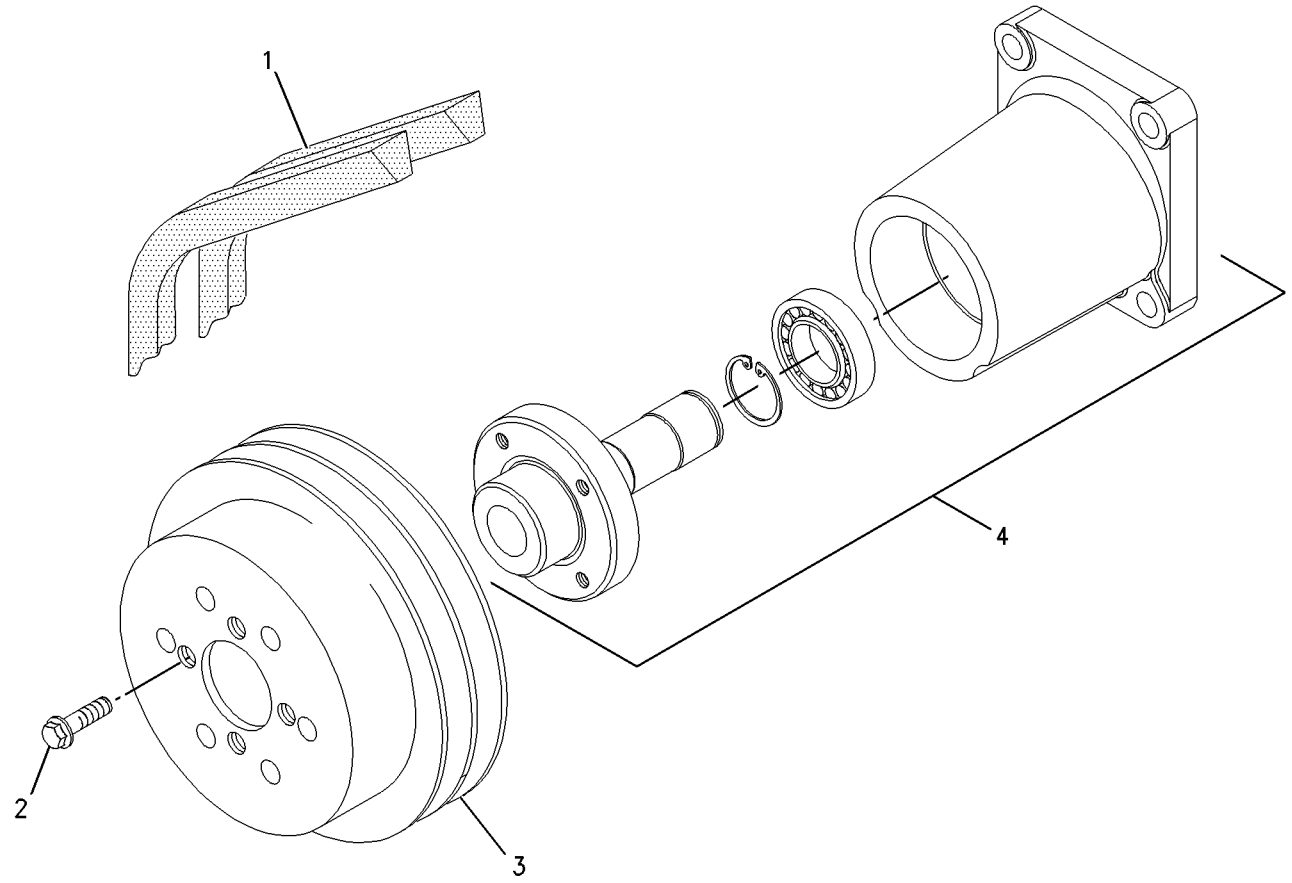

GRAPHIC #1 <END> g00956805

230-8066 DRIVE GP-FAN

ALSO AN ATTACHMENT

SMCS-1359 **i01876843**

NOTE	REF NO	GRAPHIC REF	PART NUMBER	QTY	PART NAME 1 2 3 4 5 6 (PRODUCT LEVEL)	SEE PAGE
M	1	1	**111-0859**	4	BOLT (M10X1.5X35-MM)	
	2	1	**130-3880**	1	PULLEY-FAN DRIVE	
	3	1	**230-8065**	1	HOUSING AS	

M - METRIC PART

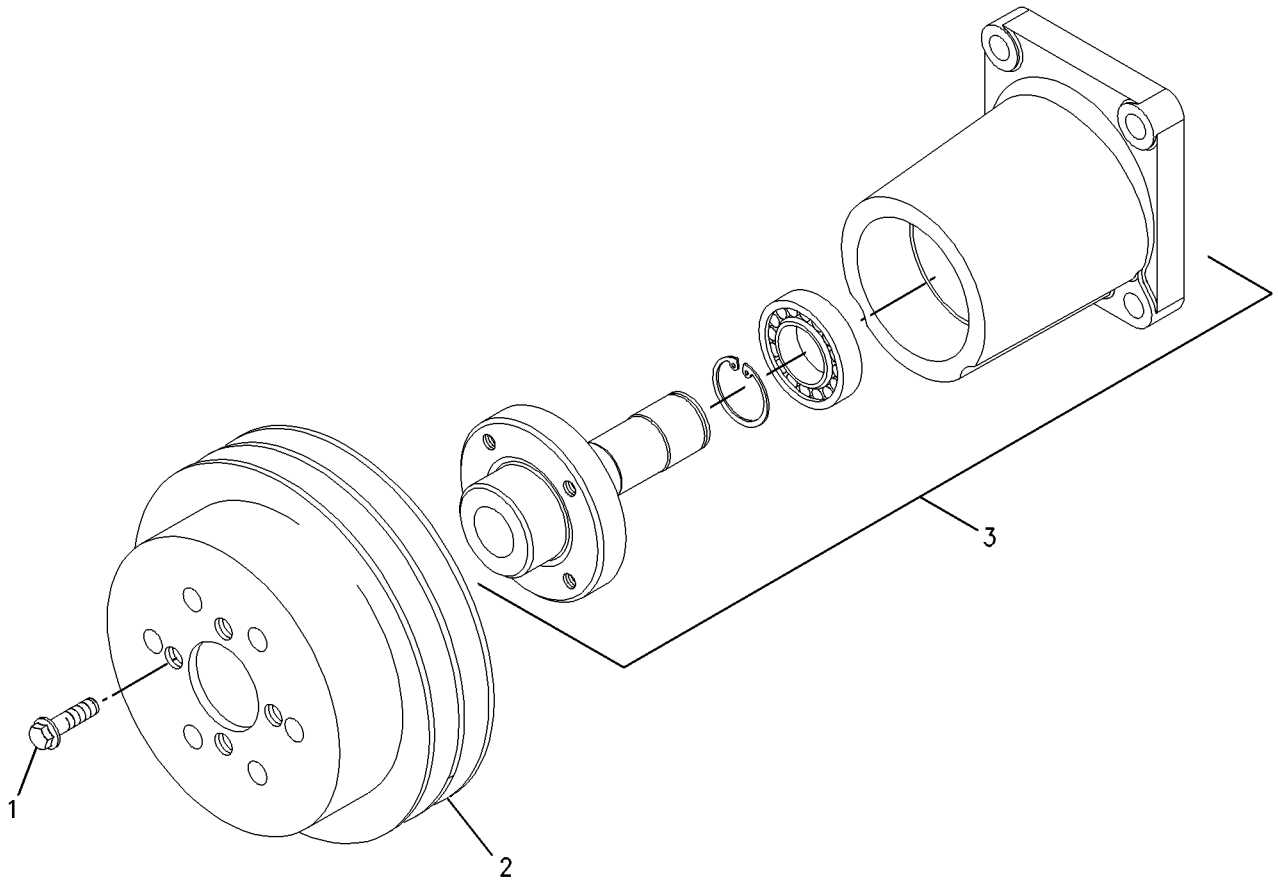

GRAPHIC #1 <END> g00956811

230-8082 DRIVE GP-FAN

AN ATTACHMENT

SMCS-1359 **i02138049**

NOTE	REF NO	GRAPHIC REF	PART NUMBER	QTY	PART NAME 1 2 3 4 5 6 (PRODUCT LEVEL)	SEE PAGE
	1	1	**4N-8771**	1	V-BELT SET (INCLUDES 2-BELTS) (FAN DRIVE)	
M	2	1	**111-0859**	4	BOLT (M10X1.5X35-MM)	
	3	1	**130-3880**	1	PULLEY-FAN DRIVE	
	4	1	**230-8065**	1	HOUSING AS	

M - METRIC PART

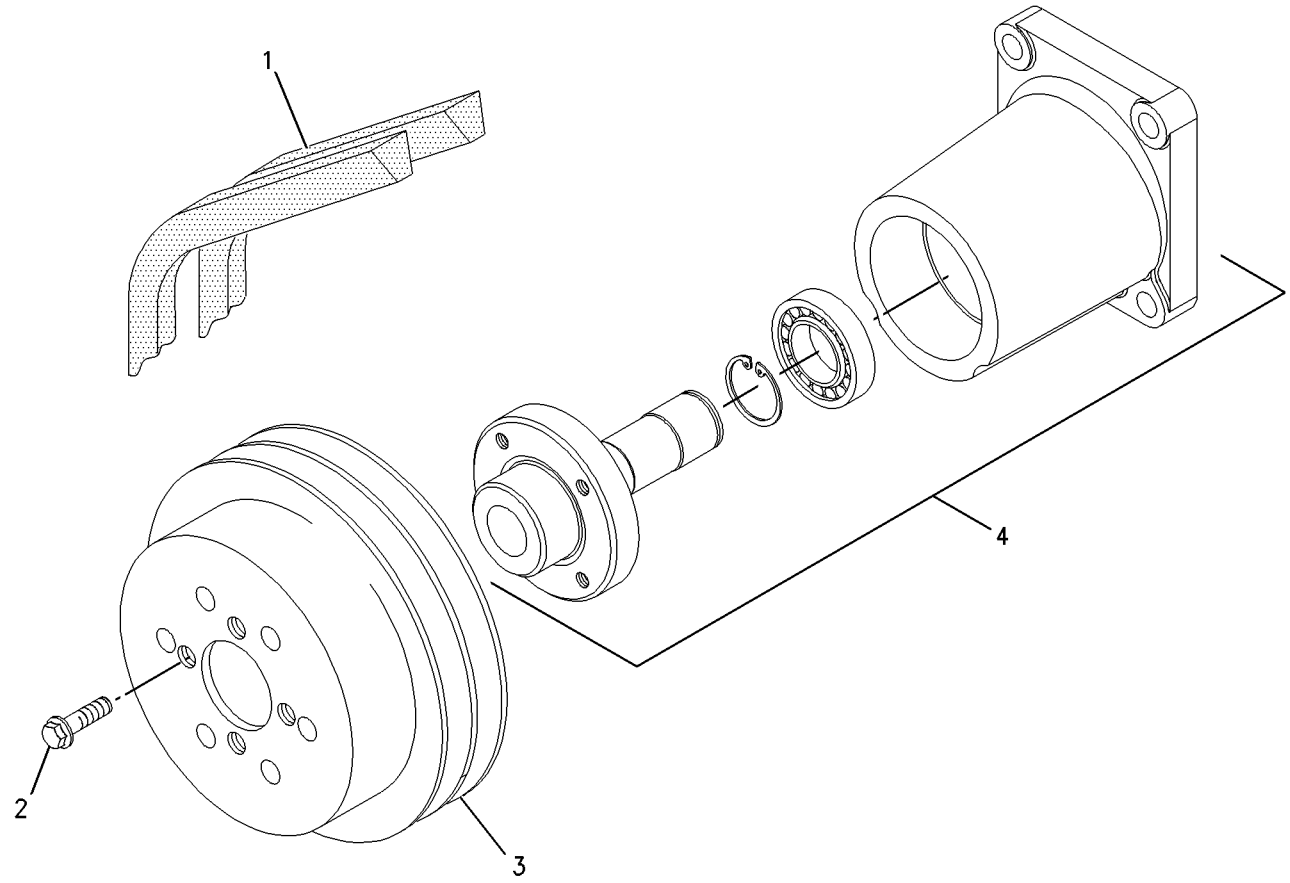

GRAPHIC #1 <END> g00956805

230-8083 DRIVE GP-FAN

ALSO AN ATTACHMENT

SMCS-1359 **i01872188**

NOTE	REF NO	GRAPHIC REF	PART NUMBER	QTY	PART NAME 1 2 3 4 5 6 (PRODUCT LEVEL)	SEE PAGE
M	1	1	**111-0859**	4	BOLT (M10X1.5X35-MM)	
	2	1	**130-3879**	1	PULLEY-FAN DRIVE	
	3	1	**230-8065**	1	HOUSING AS	

M - METRIC PART

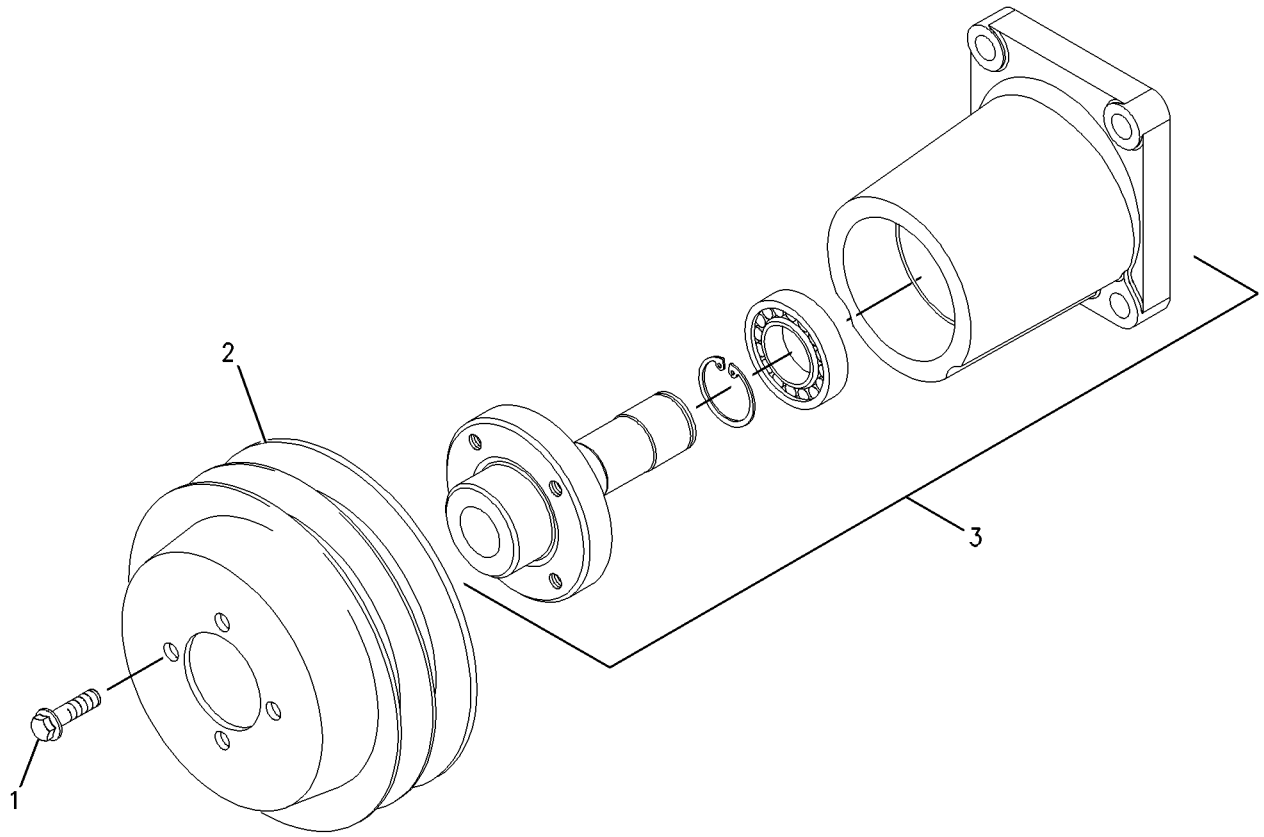

GRAPHIC #1 <END> g00955629

230-9699 DRIVE GP-FAN

AN ATTACHMENT

SMCS-1359 **i02138065**

NOTE	REF NO	GRAPHIC REF	PART NUMBER	QTY	PART NAME 1 2 3 4 5 6 (PRODUCT LEVEL)	SEE PAGE
M	1	1	**111-0859**	4	BOLT (M10X1.5X35-MM)	
	2	1	**130-3879**	1	PULLEY-FAN DRIVE	
	3	1	**230-8065**	1	HOUSING AS	
	4	1	**247-0099**	1	V-BELT SET (INCLUDES 2-BELTS) (FAN DRIVE)	

M - METRIC PART

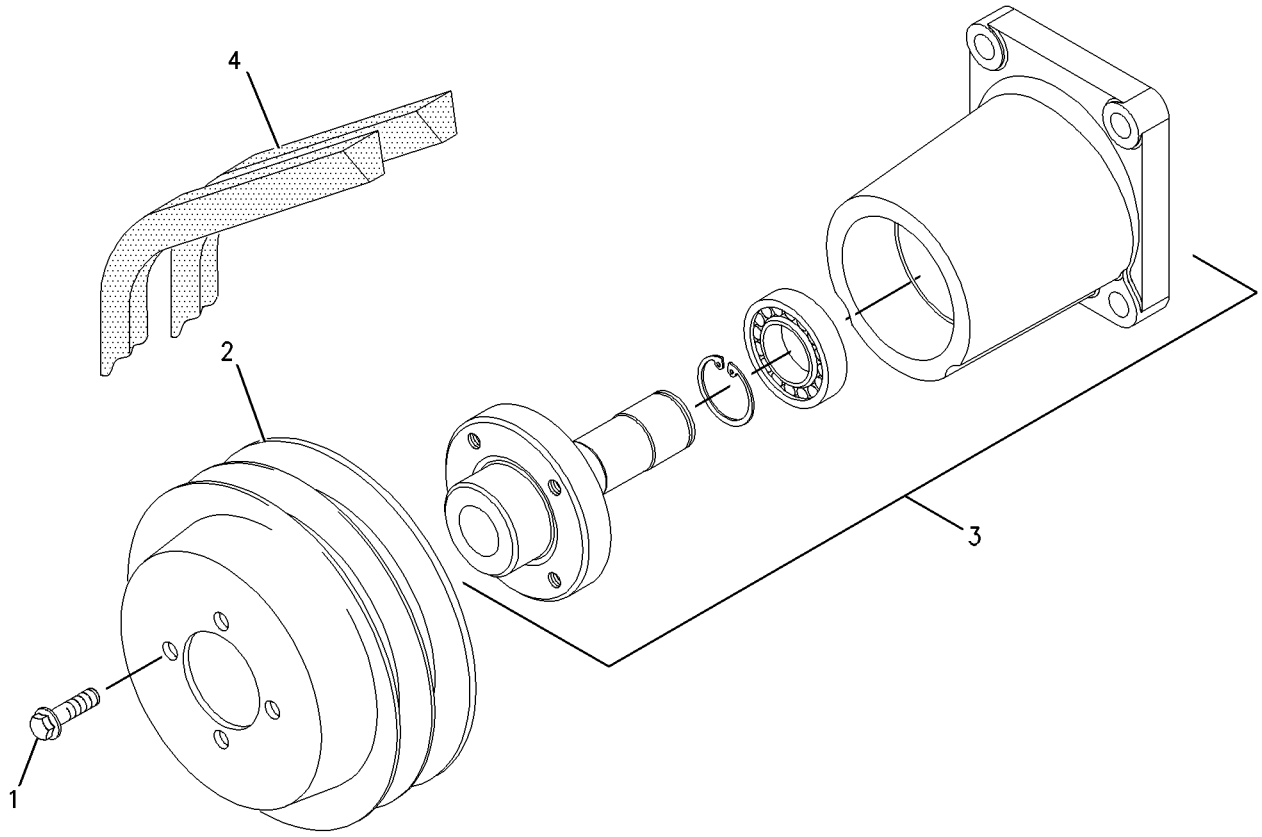

GRAPHIC #1 <END> g00956514

234-9680 DRIVE GP-FAN

SMCS-1359 **i06031088**

NOTE	REF NO	GRAPHIC REF	PART NUMBER	QTY	PART NAME 1 2 3 4 5 6 (PRODUCT LEVEL)	SEE PAGE
M	1	1	**111-0859**	4	BOLT (M10X1.5X35-MM)	
	2	1	**130-3879**	1	PULLEY-FAN DRIVE	
	3	1	**230-8065**	1	HOUSING AS	
	4	1	**5L-4995**	1	V-BELT SET (INCLUDES 2-BELTS) (FAN DRIVE)	

M - METRIC PART

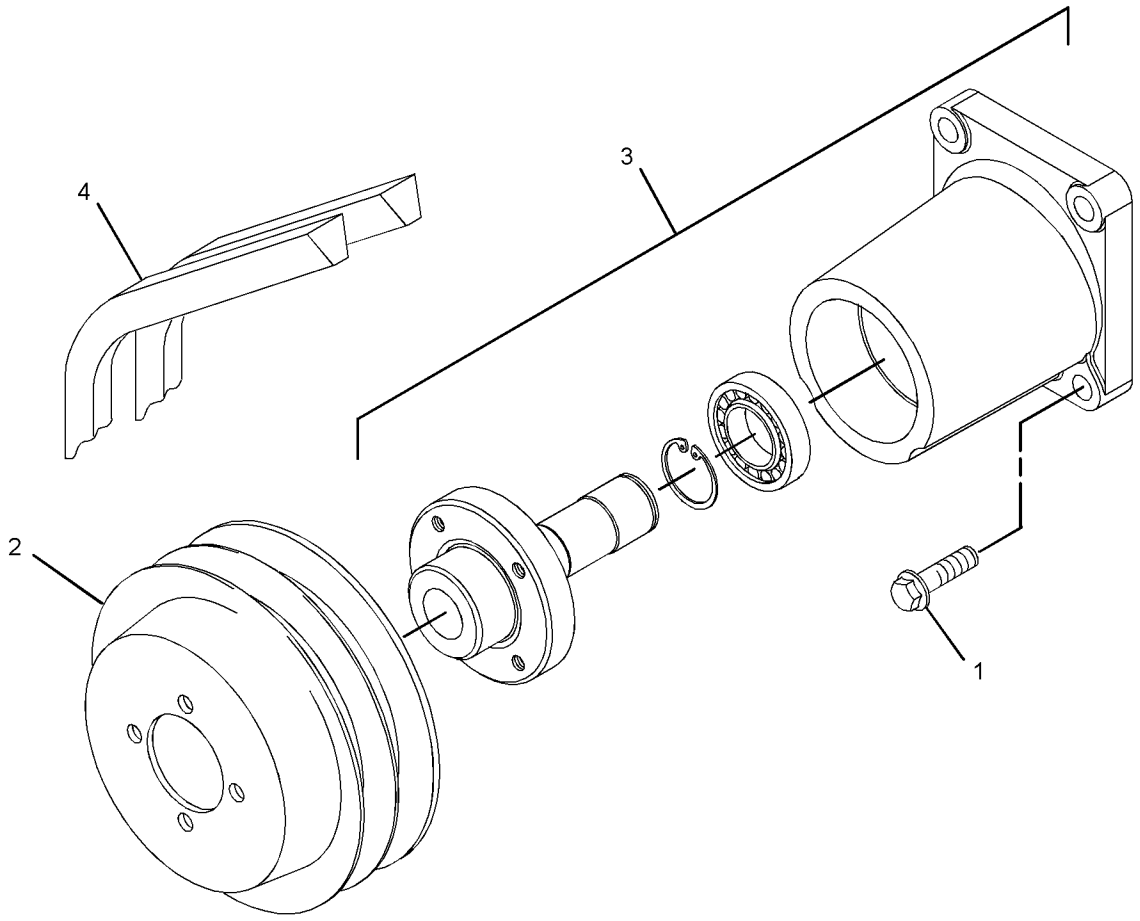

GRAPHIC #1 <END> g03781758

235-2385 DRIVE GP-FAN

SMCS-1359 **i02344889**

NOTE	REF NO	GRAPHIC REF	PART NUMBER	QTY	PART NAME 1 2 3 4 5 6 (PRODUCT LEVEL)	SEE PAGE
	1	1	**5M-8135**	2	V-BELT (FAN DRIVE)	
M	2	1	**111-0859**	4	BOLT (M10X1.5X35-MM)	
	3	1	**130-3880**	1	PULLEY-FAN DRIVE	
	4	1	**230-8065**	1	HOUSING AS	

M - METRIC PART

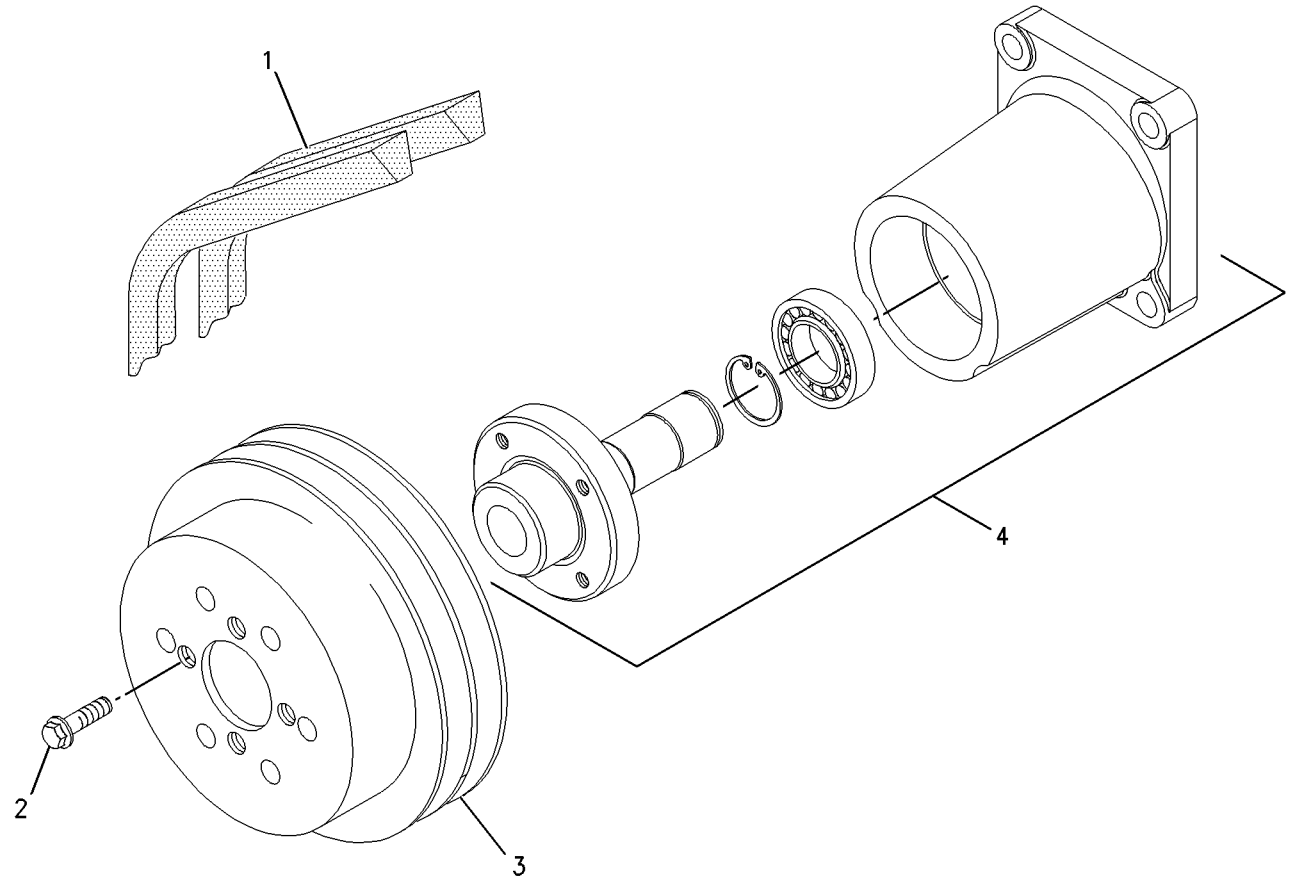

GRAPHIC #1 <END> g00956805

236-8181 DRIVE GP-FAN

ALSO AN ATTACHMENT

SMCS-1359 **i02138070**

NOTE	REF NO	GRAPHIC REF	PART NUMBER	QTY	PART NAME 1 2 3 4 5 6 (PRODUCT LEVEL)	SEE PAGE
	1	1	**121-4365**	1	V-BELT SET (INCLUDES 2-BELTS) (FAN DRIVE)	
M	2	1	**111-0859**	4	BOLT (M10X1.5X35-MM)	
	3	1	**130-3880**	1	PULLEY-FAN DRIVE	
	4	1	**230-8065**	1	HOUSING AS	

M - METRIC PART

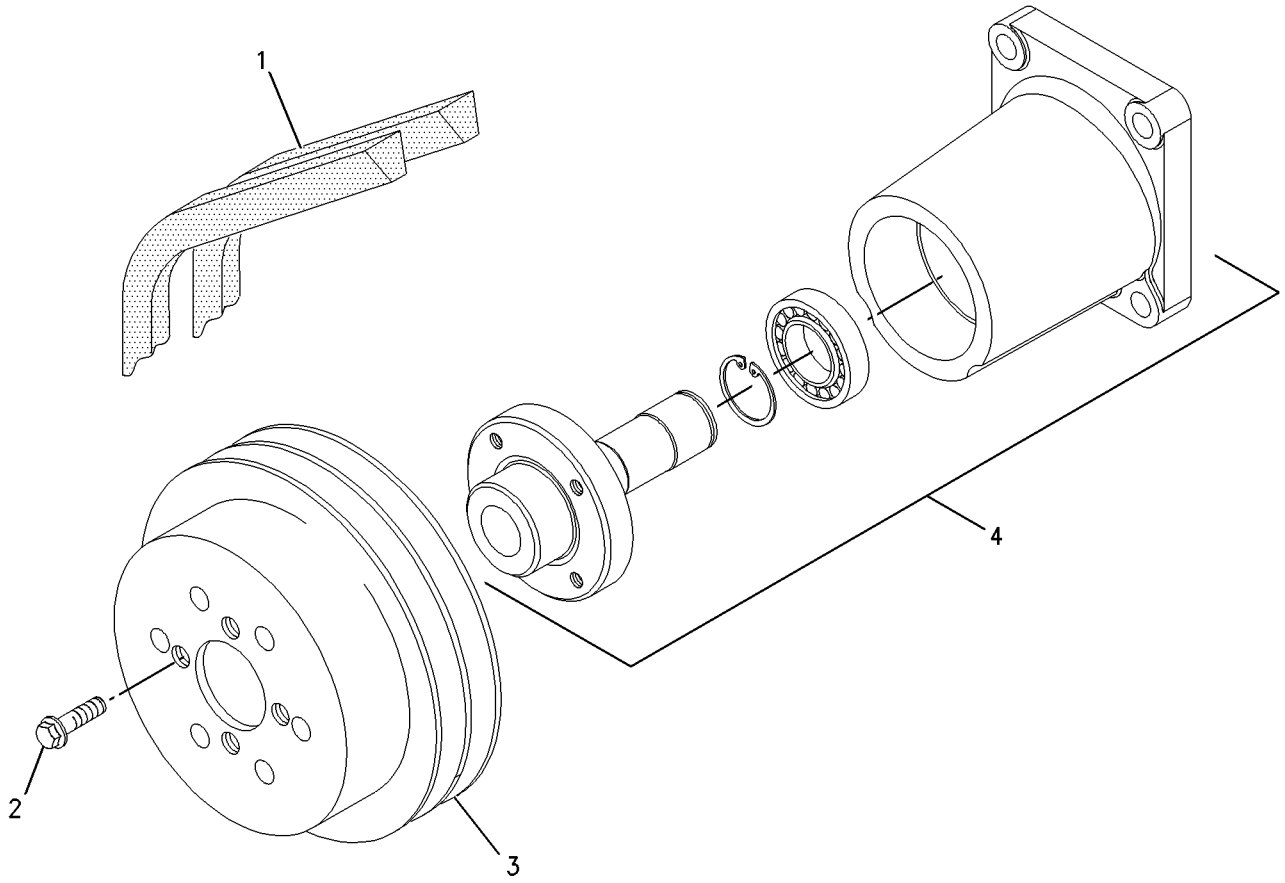

GRAPHIC #1 <END> g00956805

236-8241 DRIVE GP-FAN

SMCS-1359 **i01964508**

NOTE	REF NO	GRAPHIC REF	PART NUMBER	QTY	PART NAME 1 2 3 4 5 6 (PRODUCT LEVEL)	SEE PAGE
M	1	1	**111-0859**	4	BOLT (M10X1.5X35-MM)	
	2	1	**230-8065**	1	HOUSING AS	

M - METRIC PART

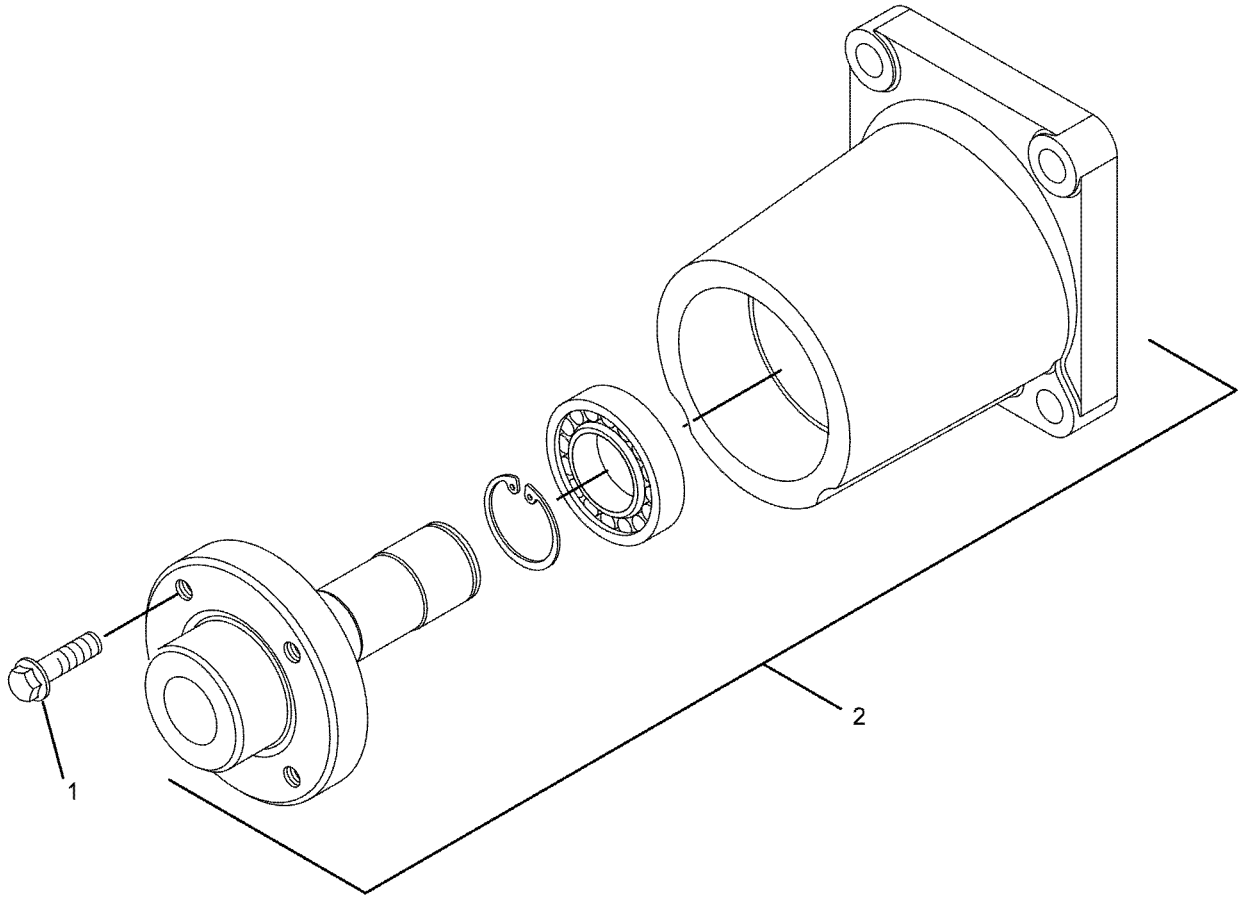

GRAPHIC #1 <END> g01022188

237-7313 DRIVE GP-FAN

SMCS-1359 **i01940448**

NOTE	REF NO	GRAPHIC REF	PART NUMBER	QTY	PART NAME 1 2 3 4 5 6 (PRODUCT LEVEL)	SEE PAGE
M	1	1	**111-0859**	4	BOLT (M10X1.5X35-MM)	
	2	1	**237-7312**	1	HOUSING AS	
	2A	1	**225-5959**	1	CLIP	

M - METRIC PART

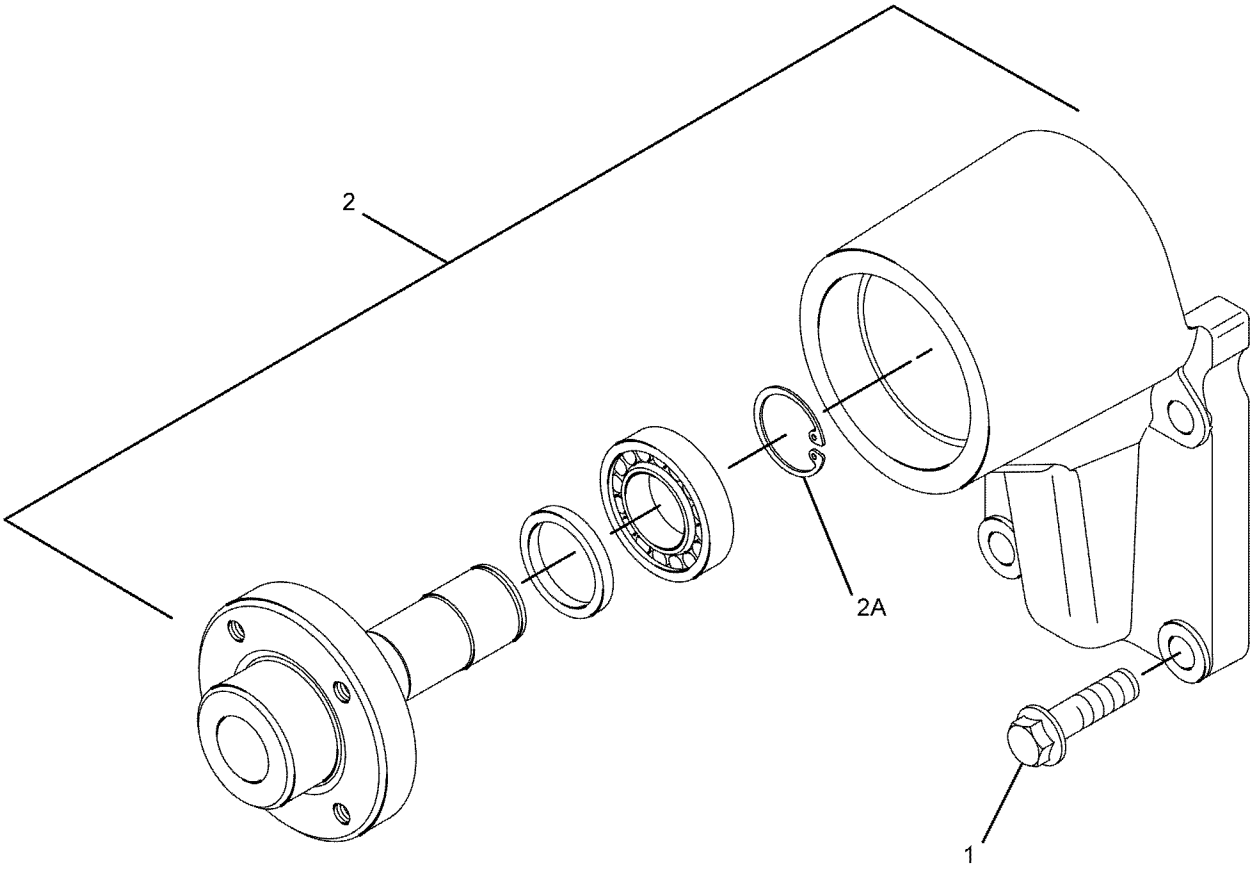

GRAPHIC #1 <END> g01030446

243-3196 DRIVE GP-FAN

SMCS-1359 **i02185913**

NOTE	REF NO	GRAPHIC REF	PART NUMBER	QTY	PART NAME 1 2 3 4 5 6 (PRODUCT LEVEL)	SEE PAGE
M	1	1	**111-0859**	4	BOLT (M10X1.5X35-MM)	
	2	1	**130-3879**	1	PULLEY-FAN DRIVE	
	3	1	**230-8065**	1	HOUSING AS	
	4	1	**9L-0895**	1	V-BELT SET (INCLUDES 2-BELTS) (FAN DRIVE)	

M - METRIC PART

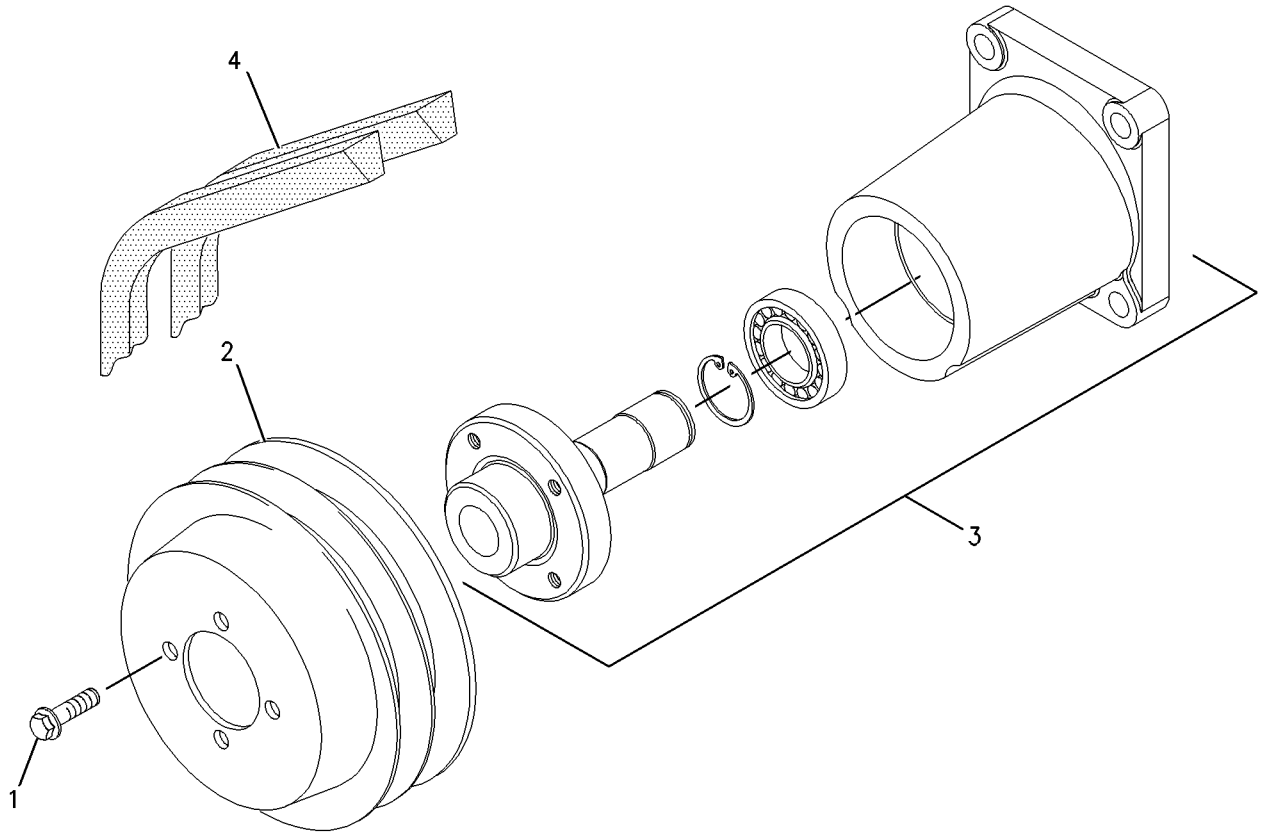

GRAPHIC #1 <END> g00956514

243-4280 DRIVE GP-FAN

SMCS-1359 **i02138178**

NOTE	REF NO	GRAPHIC REF	PART NUMBER	QTY	PART NAME 1 2 3 4 5 6 (PRODUCT LEVEL)	SEE PAGE
	1	1	**113-7130**	1	V-BELT SET (INCLUDES 2-BELTS) (FAN DRIVE)	
M	2	1	**111-0859**	4	BOLT (M10X1.5X35-MM)	
	3	1	**130-3880**	1	PULLEY-FAN DRIVE	
	4	1	**230-8065**	1	HOUSING AS	

M - METRIC PART

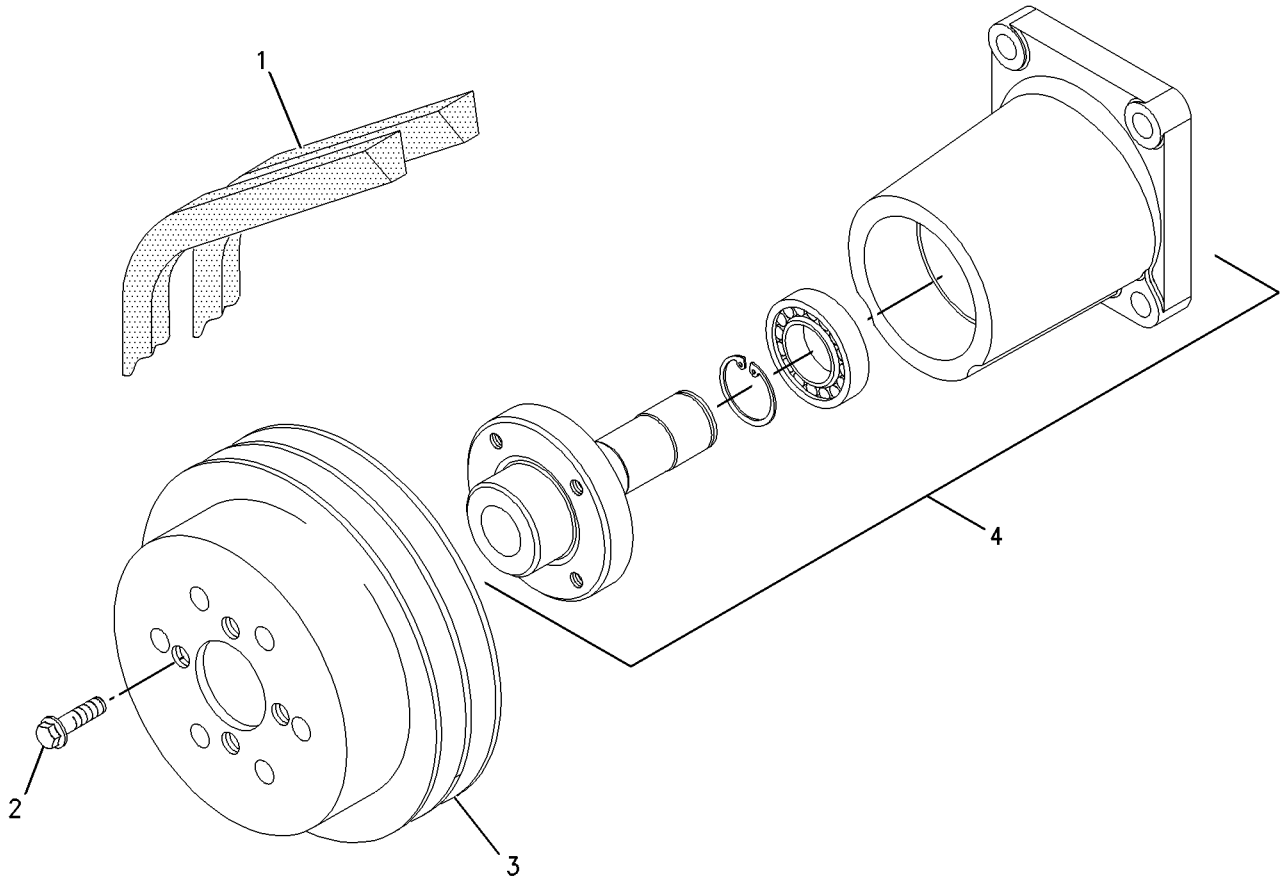

GRAPHIC #1 <END> g00956805

244-1649 DRIVE GP-FAN

SMCS-1359 **i02088924**

NOTE	REF NO	GRAPHIC REF	PART NUMBER	QTY	PART NAME 1 2 3 4 5 6 (PRODUCT LEVEL)	SEE PAGE
	1	1	**113-7130**	1	V-BELT SET (INCLUDES 2-BELTS) (FAN DRIVE)	
M	2	1	**111-0859**	4	BOLT (M10X1.5X35-MM)	
	3	1	**130-3880**	1	PULLEY-FAN DRIVE	
	4	1	**230-8065**	1	HOUSING AS	

M - METRIC PART

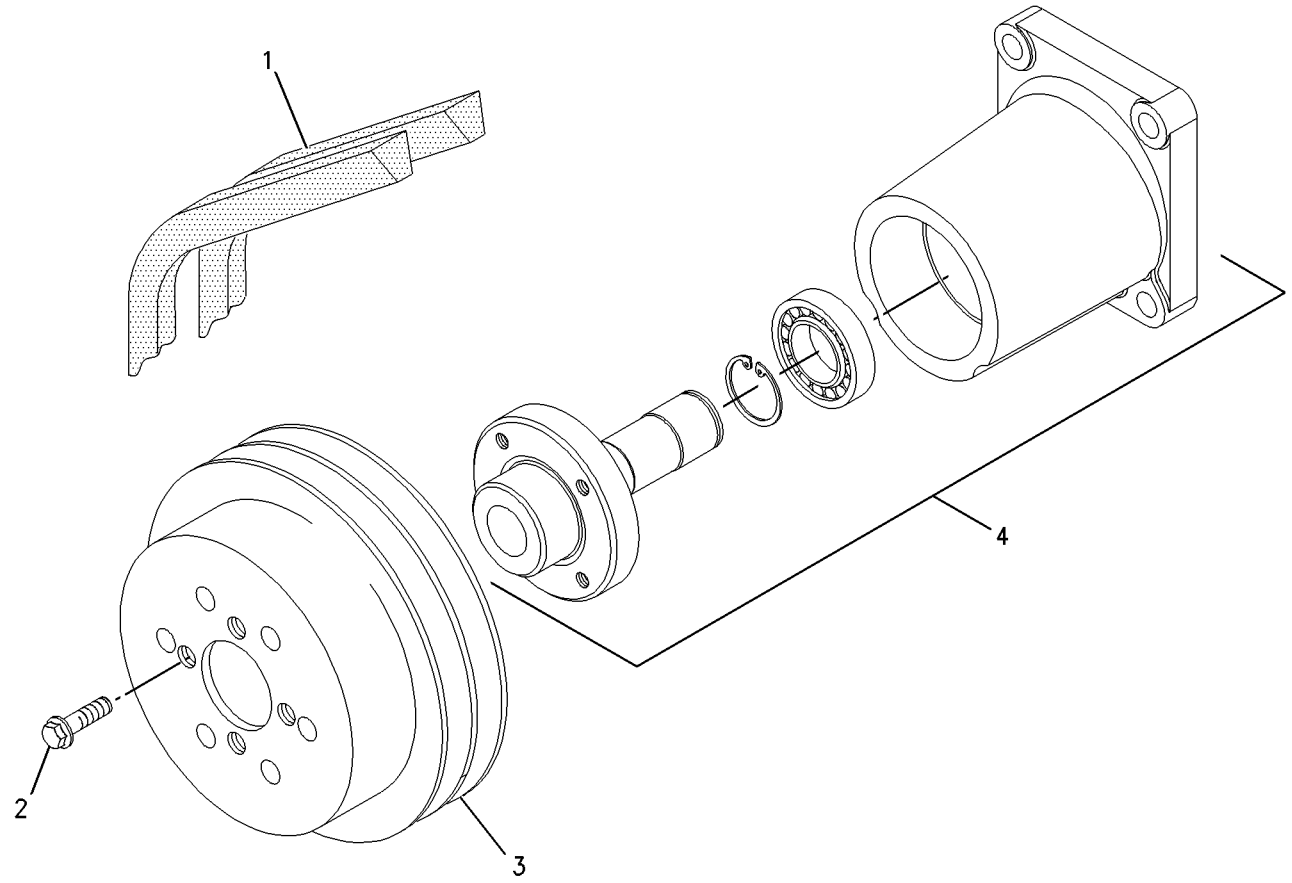

GRAPHIC #1 <END> g00956805

246-2983 DRIVE GP-FAN

SMCS-1359 **i02056044**

NOTE	REF NO	GRAPHIC REF	PART NUMBER	QTY	PART NAME 1 2 3 4 5 6 (PRODUCT LEVEL)	SEE PAGE
M	1	1	**111-0859**	4	BOLT (M10X1.5X35-MM)	
	2	1	**130-3879**	1	PULLEY-FAN DRIVE	
	3	1	**230-8065**	1	HOUSING AS	
	4	1	**9L-6128**	1	V-BELT SET (INCLUDES 2-BELTS) (FAN)	

M - METRIC PART

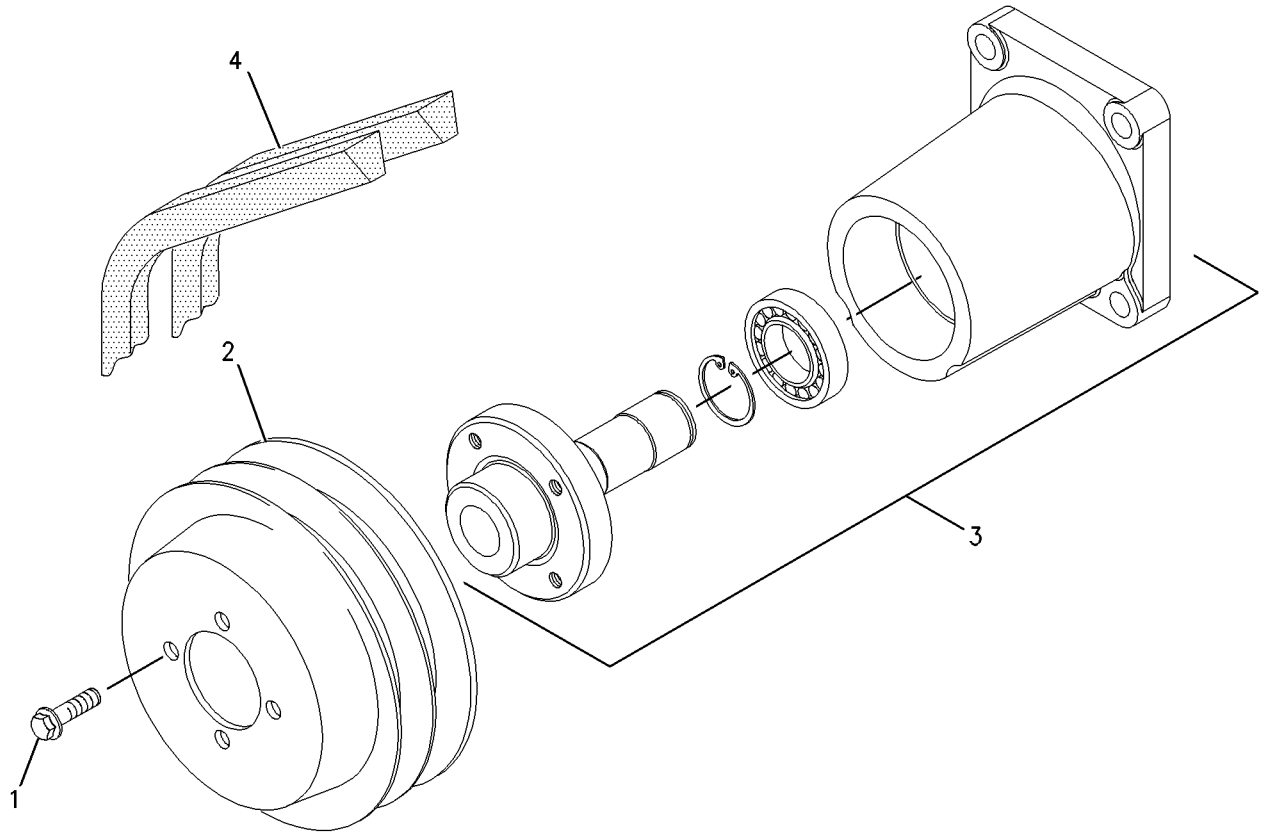

GRAPHIC #1 <END> g00956514

247-8225 DRIVE GP-FAN

SMCS-1359 **i02088923**

NOTE	REF NO	GRAPHIC REF	PART NUMBER	QTY	PART NAME 1 2 3 4 5 6 (PRODUCT LEVEL)	SEE PAGE
M	1	1	**111-0859**	4	BOLT (M10X1.5X35-MM)	
	2	1	**130-3880**	1	PULLEY-FAN DRIVE	
	3	1	**230-8065**	1	HOUSING AS	

M - METRIC PART

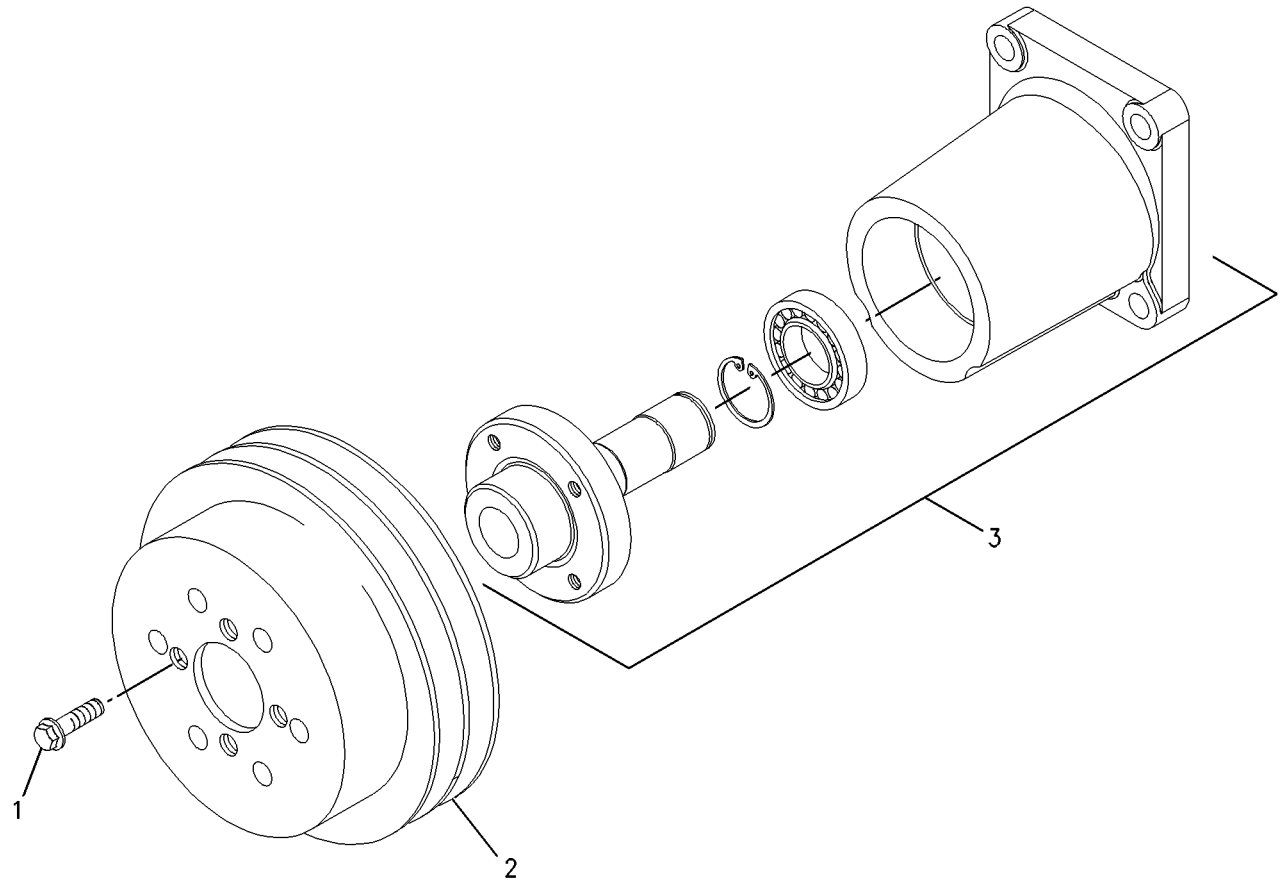

GRAPHIC #1 <END> g00956811

251-6697 DRIVE GP-FAN

SMCS-1359 **i02212705**

NOTE	REF NO	GRAPHIC REF	PART NUMBER	QTY	PART NAME 1 2 3 4 5 6 (PRODUCT LEVEL)	SEE PAGE
	1	1	**128-5250**	1	V-BELT SET (INCLUDES 2-BELTS) (FAN DRIVE)	
M	2	1	**111-0859**	4	BOLT (M10X1.5X35-MM)	
	3	1	**130-3879**	1	PULLEY-FAN DRIVE	
	4	1	**230-8065**	1	HOUSING AS	

M - METRIC PART

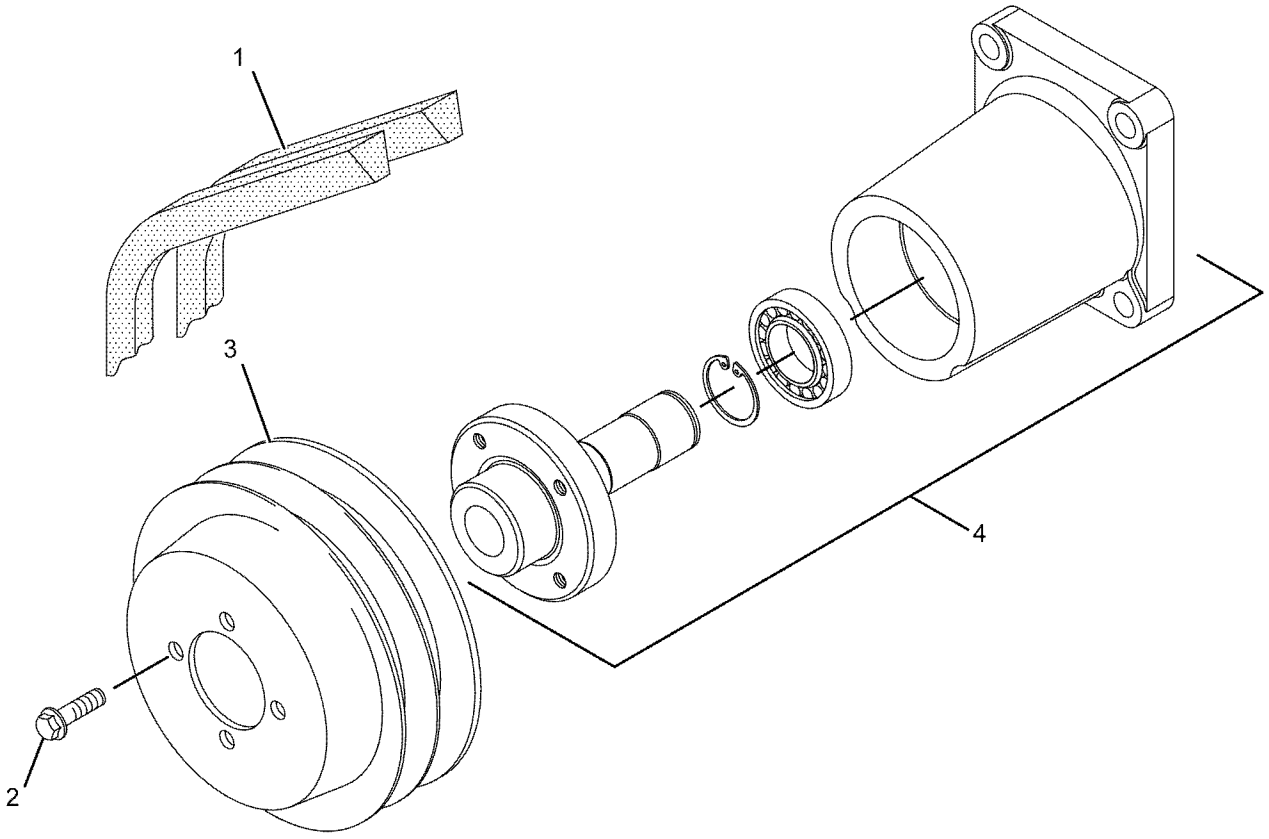

GRAPHIC #1 <END> g01079204

252-7003 DRIVE GP-FAN

SMCS-1359 **i02216812**

NOTE	REF NO	GRAPHIC REF	PART NUMBER	QTY	PART NAME 1 2 3 4 5 6 (PRODUCT LEVEL)	SEE PAGE
M	1	1	**111-0859**	4	BOLT (M10X1.5X35-MM)	
	2	1	**130-3880**	1	PULLEY-FAN DRIVE	
	3	1	**237-7312**	1	HOUSING AS	
	3A	1	**225-5959**	1	CLIP	

M - METRIC PART

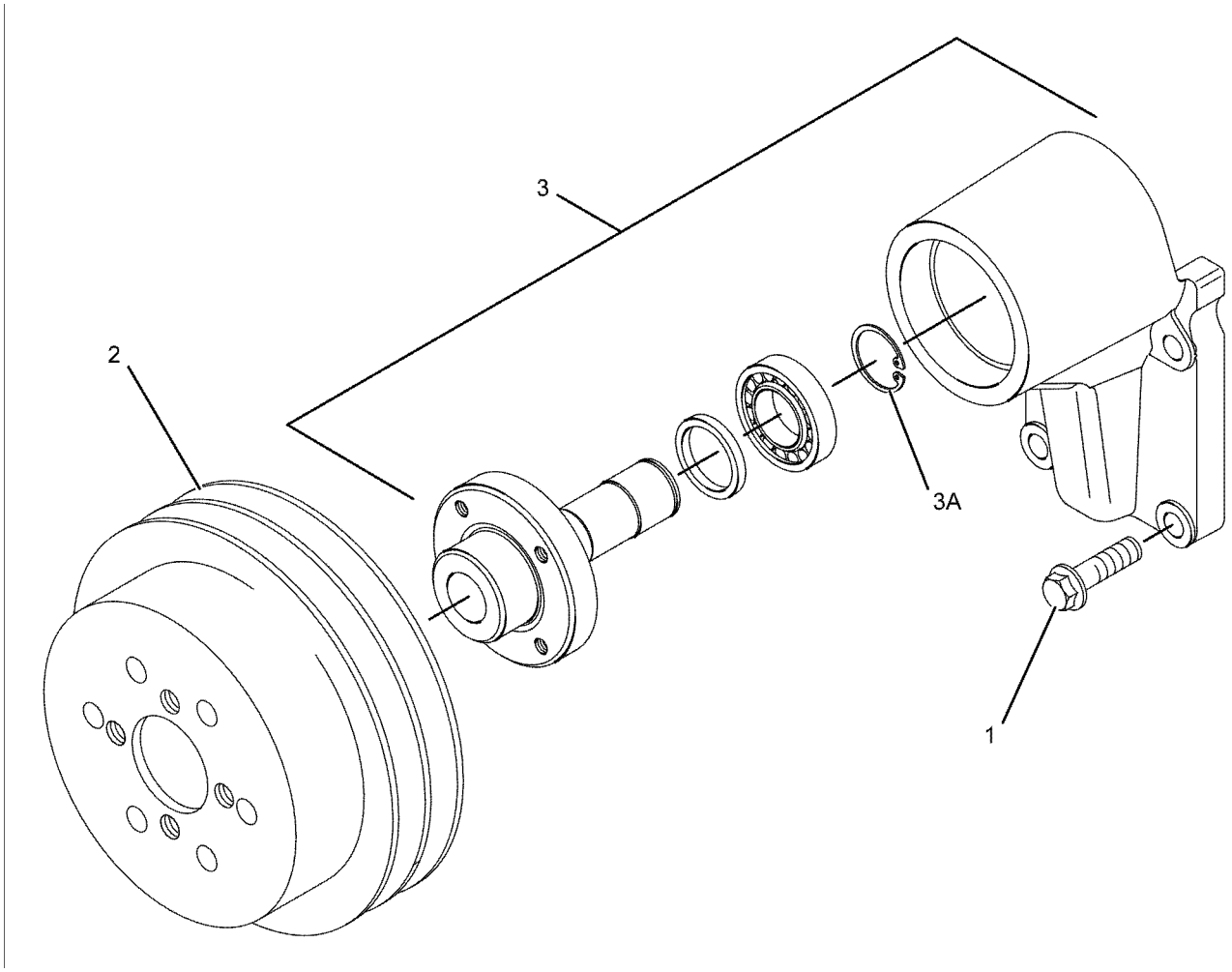

GRAPHIC #1 <END> g01125076

253-0728 DRIVE GP-FAN

SMCS-1359 **i02212713**

NOTE	REF NO	GRAPHIC REF	PART NUMBER	QTY	PART NAME 1 2 3 4 5 6 (PRODUCT LEVEL)	SEE PAGE
M	1	1	**111-0859**	4	BOLT (M10X1.5X35-MM)	
	2	1	**130-3879**	1	PULLEY-FAN DRIVE	
	3	1	**230-8065**	1	HOUSING AS	
	4	1	**5L-3308**	1	V-BELT SET (INCLUDES 2-BELTS) (FAN DRIVE)	

M - METRIC PART

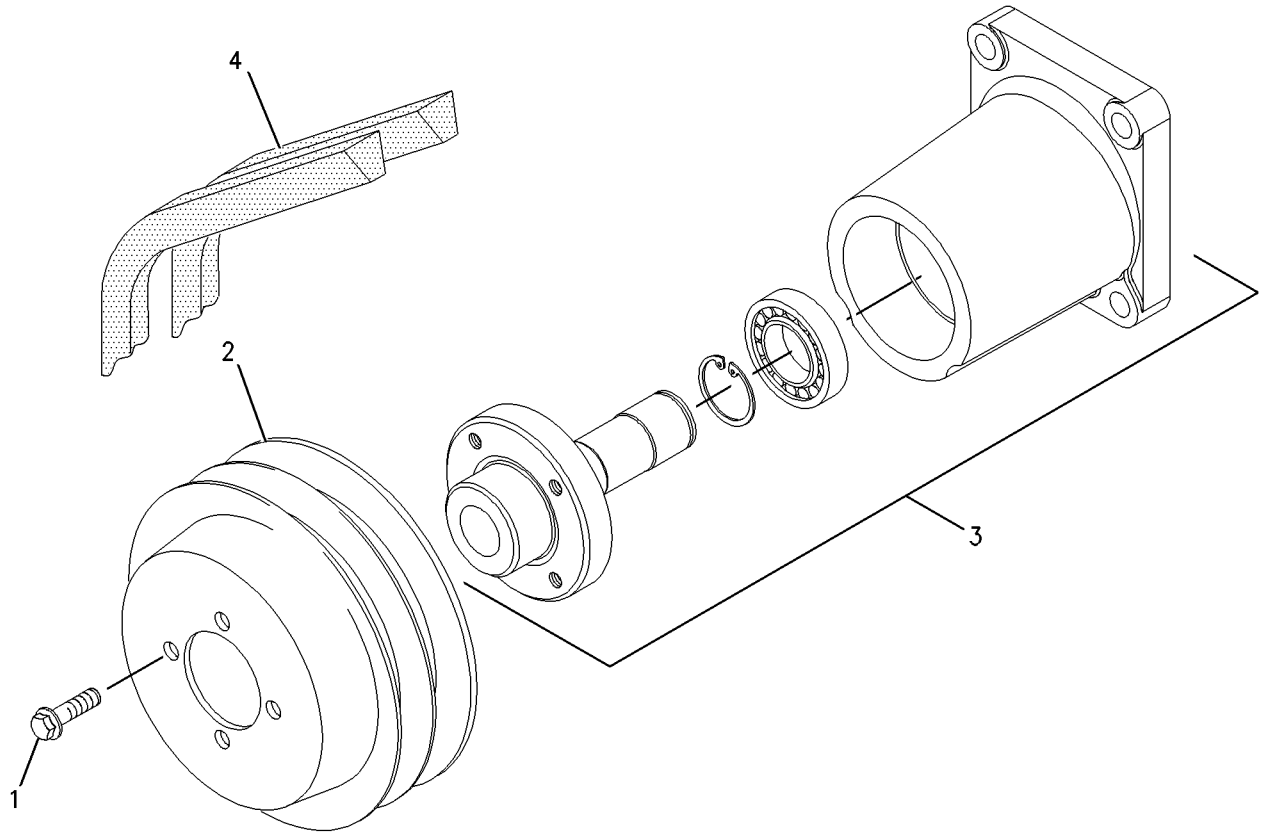

GRAPHIC #1 <END> g00956514

267-9412 DRIVE GP-FAN

SMCS-1359 **i07836401**

NOTE	REF NO	GRAPHIC REF	PART NUMBER	QTY	PART NAME 1 2 3 4 5 6 (PRODUCT LEVEL)	SEE PAGE
M	1	1	**111-0859**	4	BOLT (M10X1.5X35-MM)	
	2	1	**130-3880**	1	PULLEY-FAN DRIVE	
	3	1	**237-7312**	1	HOUSING AS	
	3A	1	**225-5959**	1	CLIP	
	4	1	**9L-1226**	1	V-BELT SET (INCLUDES 2-BELTS) (FAN DRIVE)	

M - METRIC PART

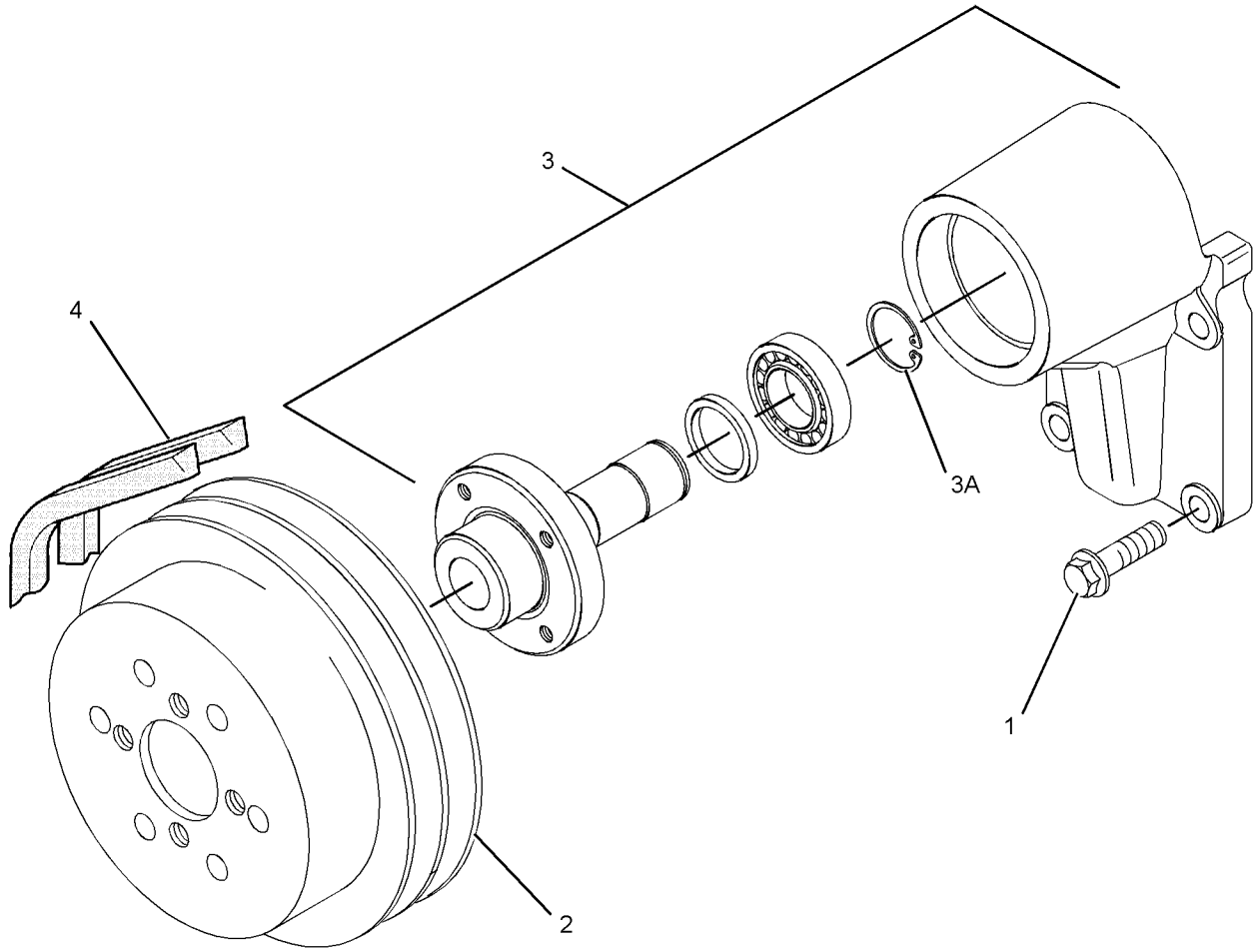

GRAPHIC #1 <END> g01151472

268-3641 DRIVE GP-FAN

SMCS-1359 **i02344904**

NOTE	REF NO	GRAPHIC REF	PART NUMBER	QTY	PART NAME 1 2 3 4 5 6 (PRODUCT LEVEL)	SEE PAGE
	1	1	**106-9331**	1	V-BELT SET (INCLUDES 2-BELTS) (FAN DRIVE)	
M	2	1	**111-0859**	4	BOLT (M10X1.5X35-MM)	
	3	1	**230-8065**	1	HOUSING AS	
	4	1	**268-3642**	1	PULLEY-FAN DRIVE	

M - METRIC PART

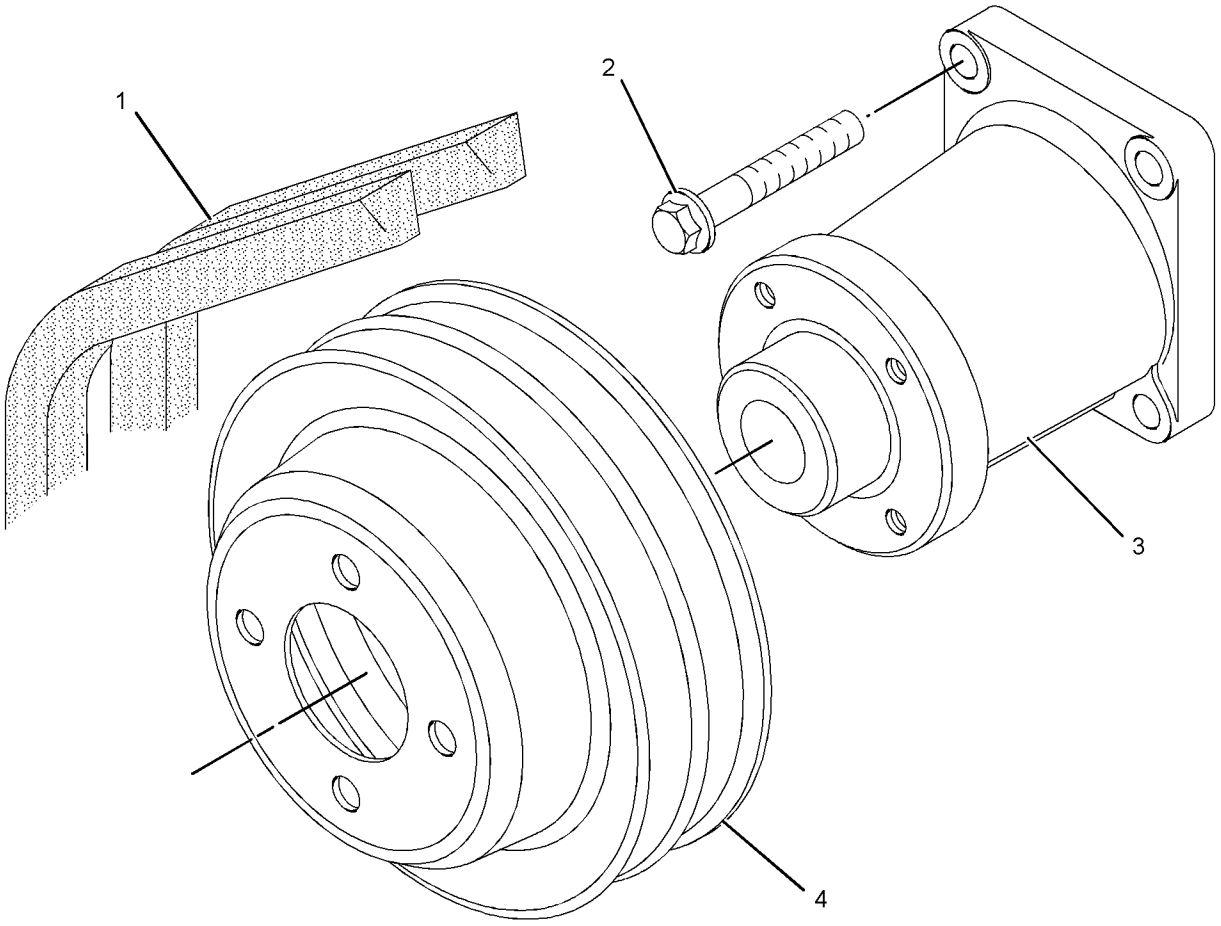

GRAPHIC #1 <END> g01157189

271-7079 DRIVE GP-FAN

SMCS-1359 **i02603919**

NOTE	REF NO	GRAPHIC REF	PART NUMBER	QTY	PART NAME 1 2 3 4 5 6 (PRODUCT LEVEL)	SEE PAGE
	1	1	**3S-8447**	1	V-BELT SET (INCLUDES 2-BELTS) (FAN DRIVE)	
M	2	1	**111-0859**	4	BOLT (M10X1.5X35-MM)	
	3	1	**130-3880**	1	PULLEY-FAN DRIVE	
	4	1	**230-8065**	1	HOUSING AS	

M - METRIC PART

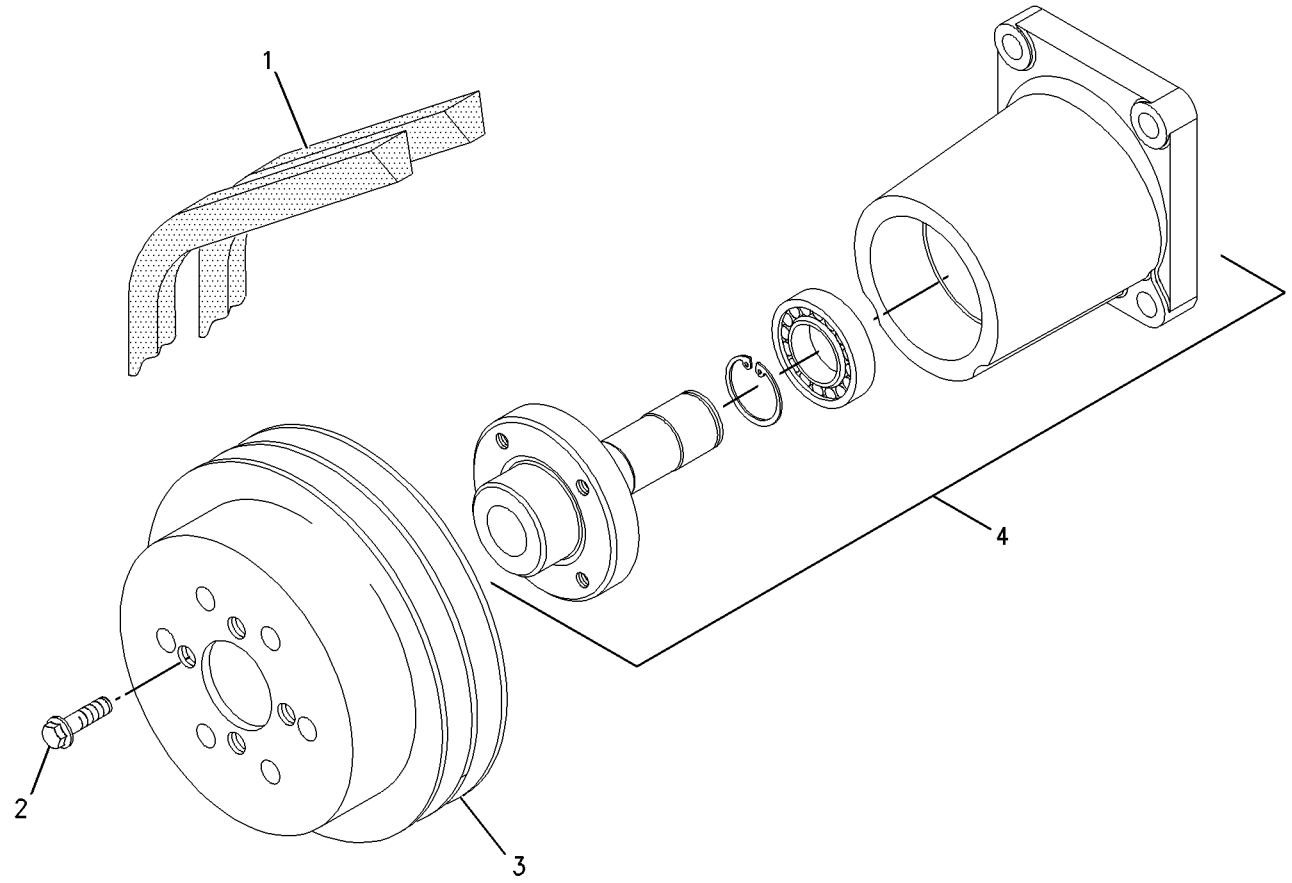

GRAPHIC #1 <END> g00956805

280-7187 DRIVE GP-FAN

SMCS-1359 **i02389108**

NOTE	REF NO	GRAPHIC REF	PART NUMBER	QTY	PART NAME 1 2 3 4 5 6 (PRODUCT LEVEL)	SEE PAGE
M	1	1	**111-0859**	4	BOLT (M10X1.5X35-MM)	
	2	1	**4N-8771**	1	V-BELT SET (INCLUDES 2-BELTS) (FAN DRIVE)	
	3	1	**130-3880**	1	PULLEY-FAN DRIVE	
	4	1	**230-8065**	1	HOUSING AS	

M - METRIC PART

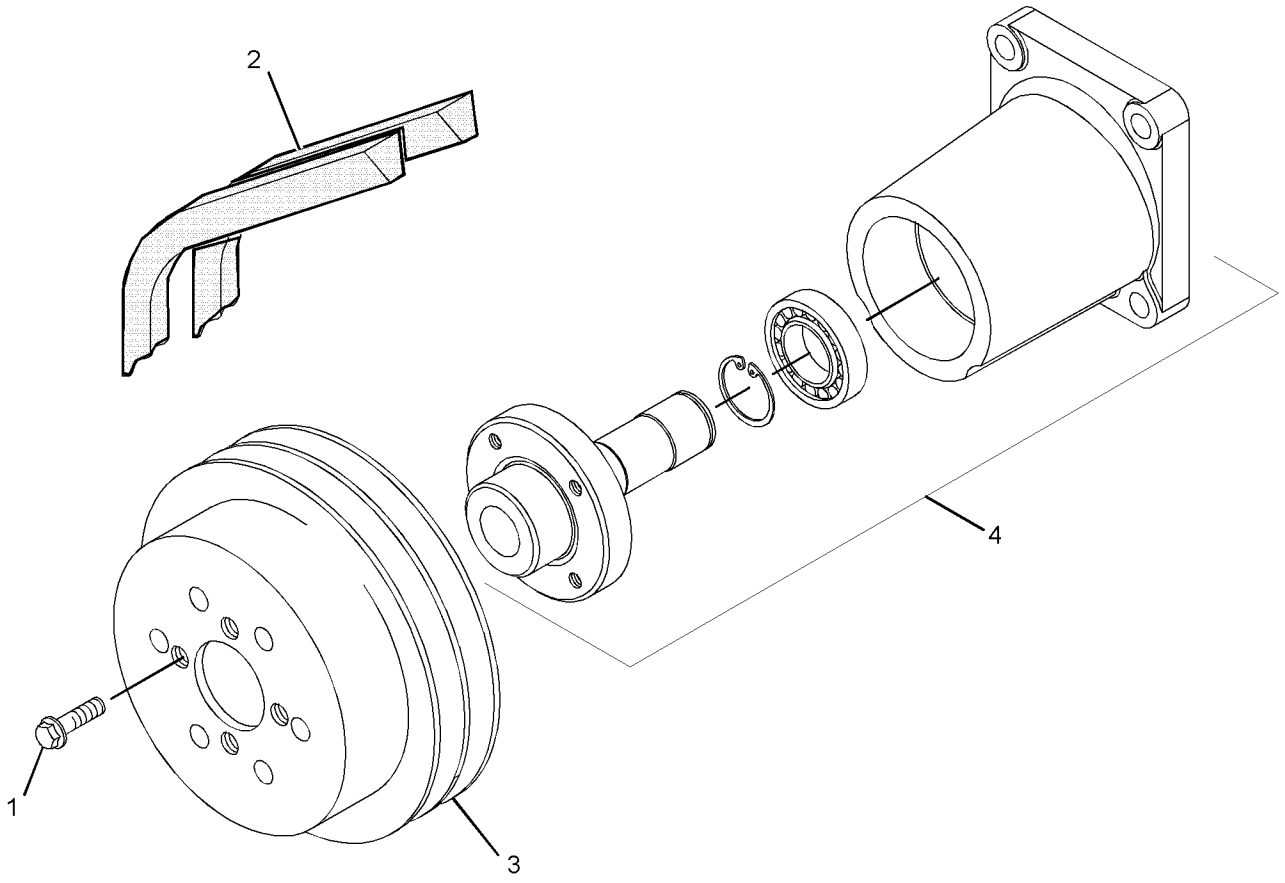

GRAPHIC #1 <END> g01204505

311-7449 DRIVE GP-FAN

S/N: 33410726-UP

SMCS-1359 **i02756906**

NOTE	REF NO	GRAPHIC REF	PART NUMBER	QTY	PART NAME 1 2 3 4 5 6 (PRODUCT LEVEL)	SEE PAGE
M	1	1	**111-0859**	4	BOLT (M10X1.5X35-MM)	
	2	1	**130-3880**	1	PULLEY-FAN DRIVE	
	3	1	**230-8065**	1	HOUSING AS	

M - METRIC PART

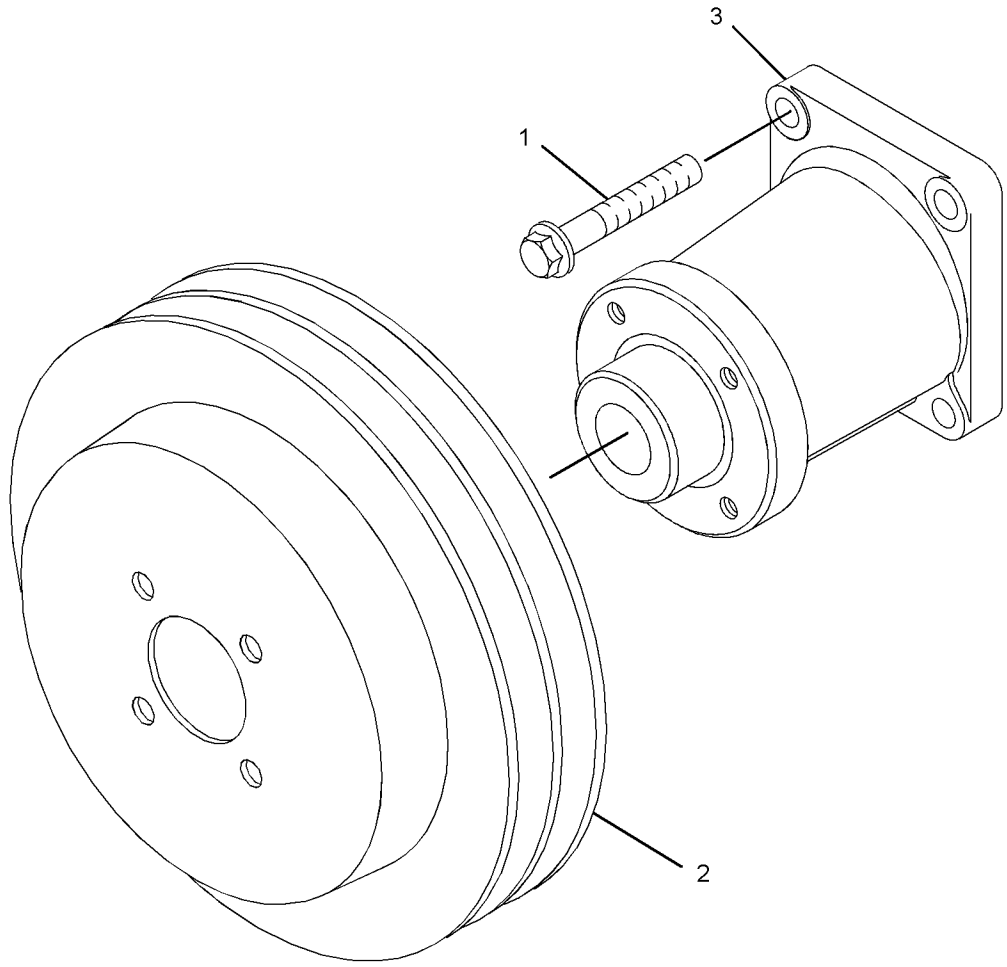

GRAPHIC #1 <END> g01419750

316-5655 DRIVE GP-FAN

SMCS-1359 **i02817122**

NOTE	REF NO	GRAPHIC REF	PART NUMBER	QTY	PART NAME 1 2 3 4 5 6 (PRODUCT LEVEL)	SEE PAGE
	1	1	**3N-1491**	1	V-BELT SET (INCLUDES 2-BELTS) (FAN DRIVE)	
M	2	1	**111-0859**	4	BOLT (M10X1.5X35-MM)	
	3	1	**230-8065**	1	HOUSING AS	
	4	1	**268-3642**	1	PULLEY-FAN DRIVE	

M - METRIC PART

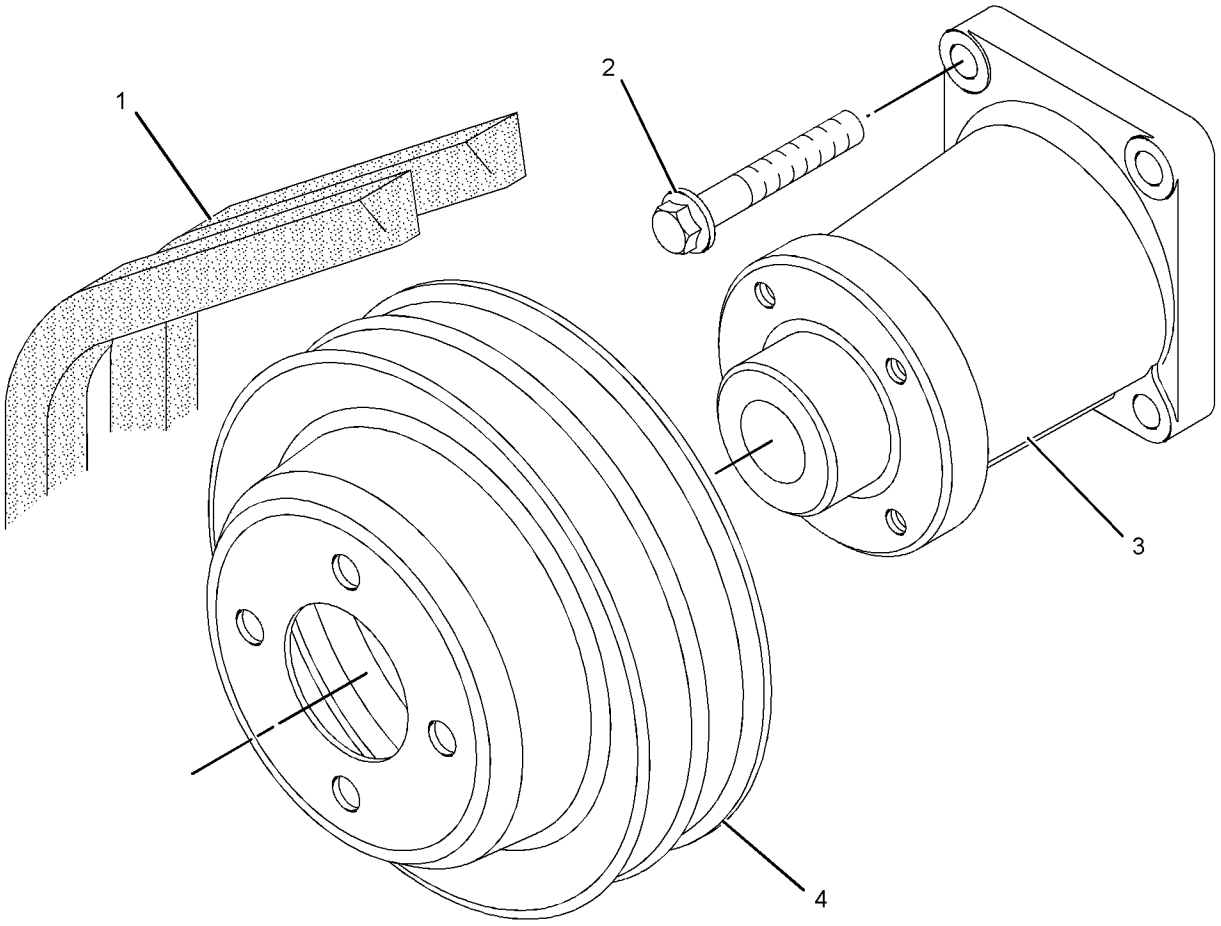

GRAPHIC #1 <END> g01157189

322-4099 DRIVE GP-FAN

SMCS-1359 **i02900355**

NOTE	REF NO	GRAPHIC REF	PART NUMBER	QTY	PART NAME 1 2 3 4 5 6 (PRODUCT LEVEL)	SEE PAGE
M	1	1	**111-0859**	4	BOLT (M10X1.5X35-MM)	
	2	1	**230-8065**	1	HOUSING AS	
	3	1	**268-3642**	1	PULLEY-FAN DRIVE	
	4	1	**3S-8447**	1	V-BELT SET (INCLUDES 2-BELTS)	

M - METRIC PART

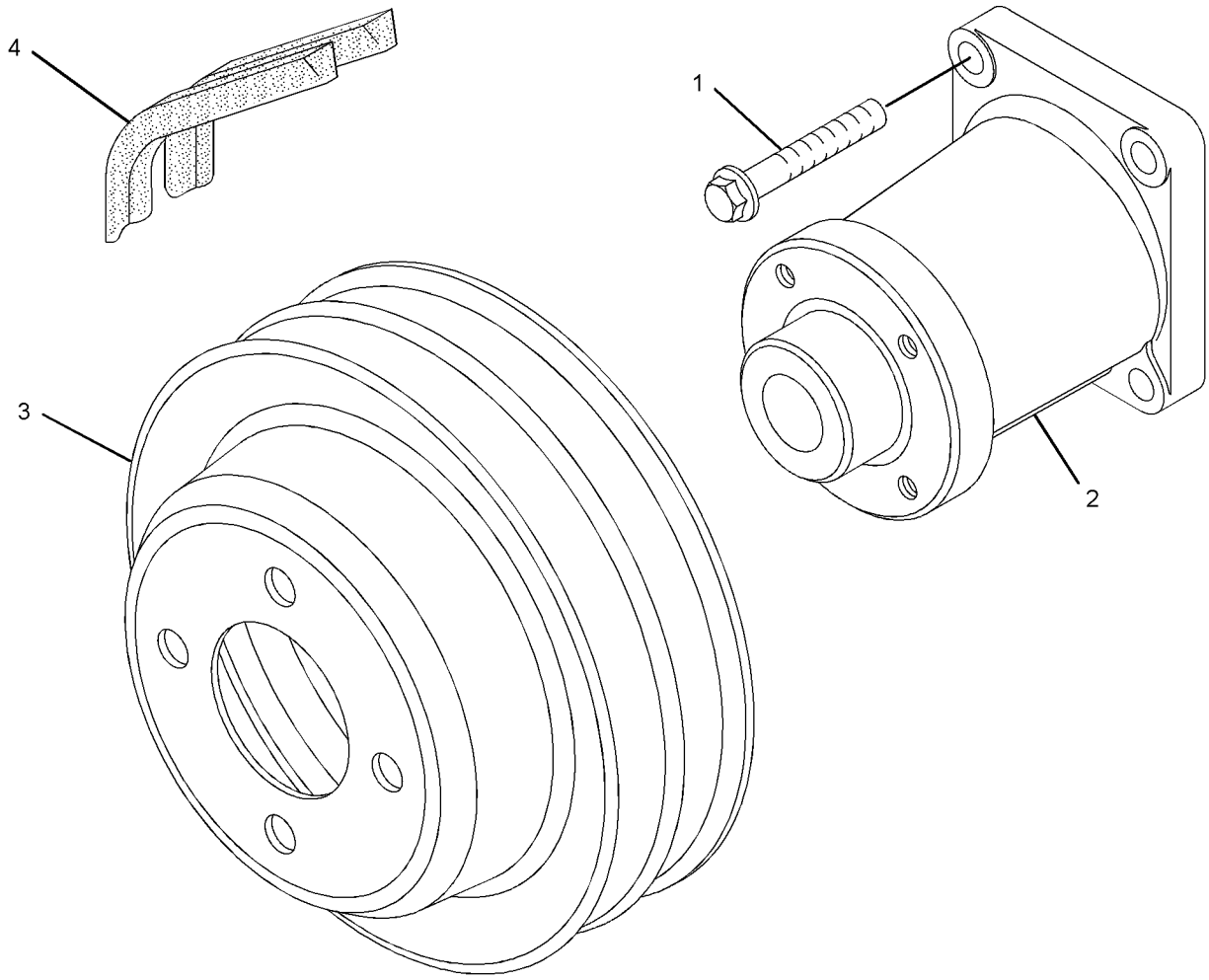

GRAPHIC #1 <END> g01629113

363-7802 DRIVE GP-FAN

SMCS-1359 **i04002091**

NOTE	REF NO	GRAPHIC REF	PART NUMBER	QTY	PART NAME 1 2 3 4 5 6 (PRODUCT LEVEL)	SEE PAGE
M	1	1	**111-0859**	4	BOLT (M10X1.5X35-MM)	
	2	1	**130-3879**	1	PULLEY-FAN DRIVE	
	3	1	**235-4105**	1	HOUSING AS	
	3A	1	**225-5959**	1	CLIP	

M - METRIC PART

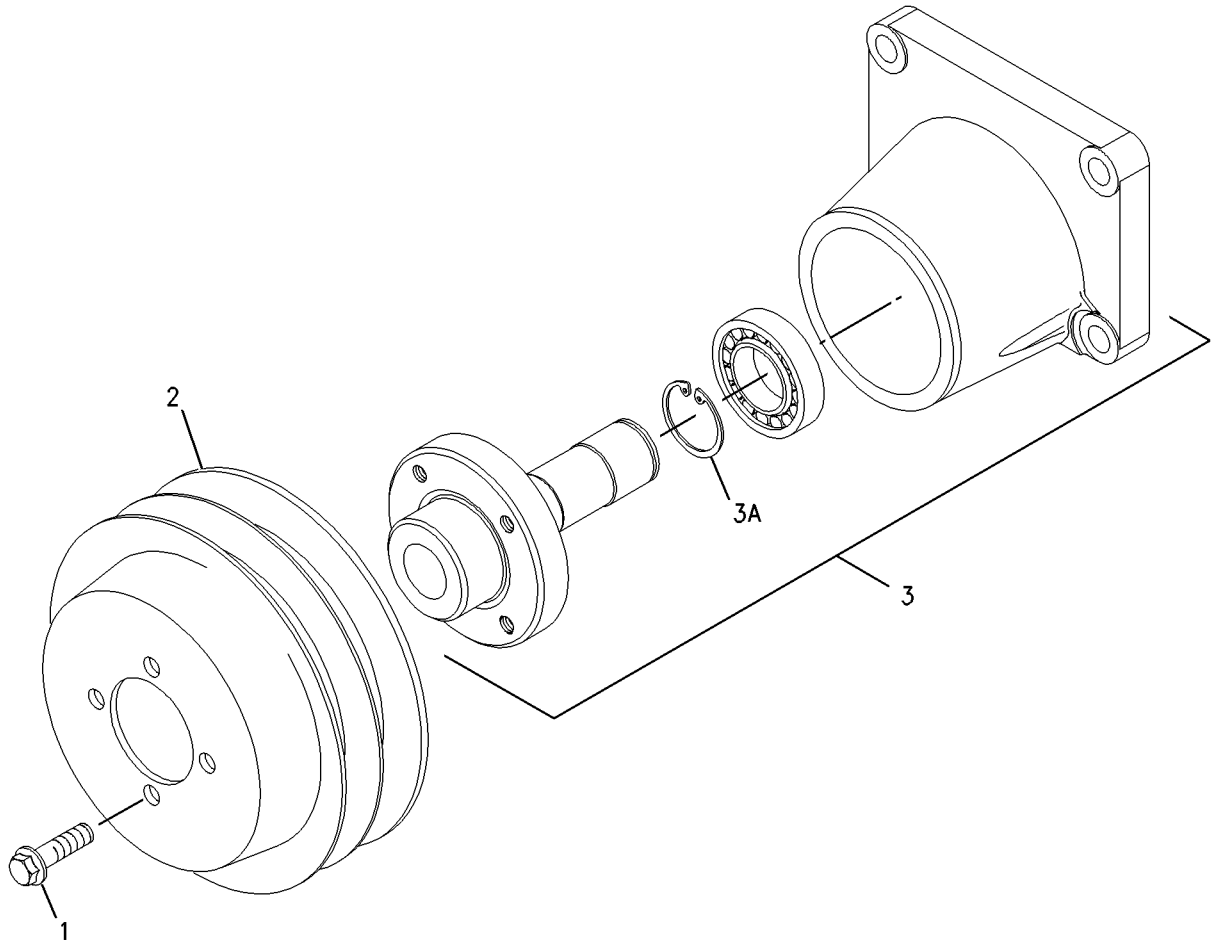

GRAPHIC #1 <END> g00985378

243-4297 EXTENSION GP-FAN

SMCS-1359 **i06233723**

NOTE	REF NO	GRAPHIC REF	PART NUMBER	QTY	PART NAME 1 2 3 4 5 6 (PRODUCT LEVEL)	SEE PAGE
M	1	1	**6V-9189**	4	LOCKNUT (M8X1.25-THD)	
	2	1	**453-9679**	1	EXTENSION	
	3	1	**134-4139**	4	STUD	

M - METRIC PART

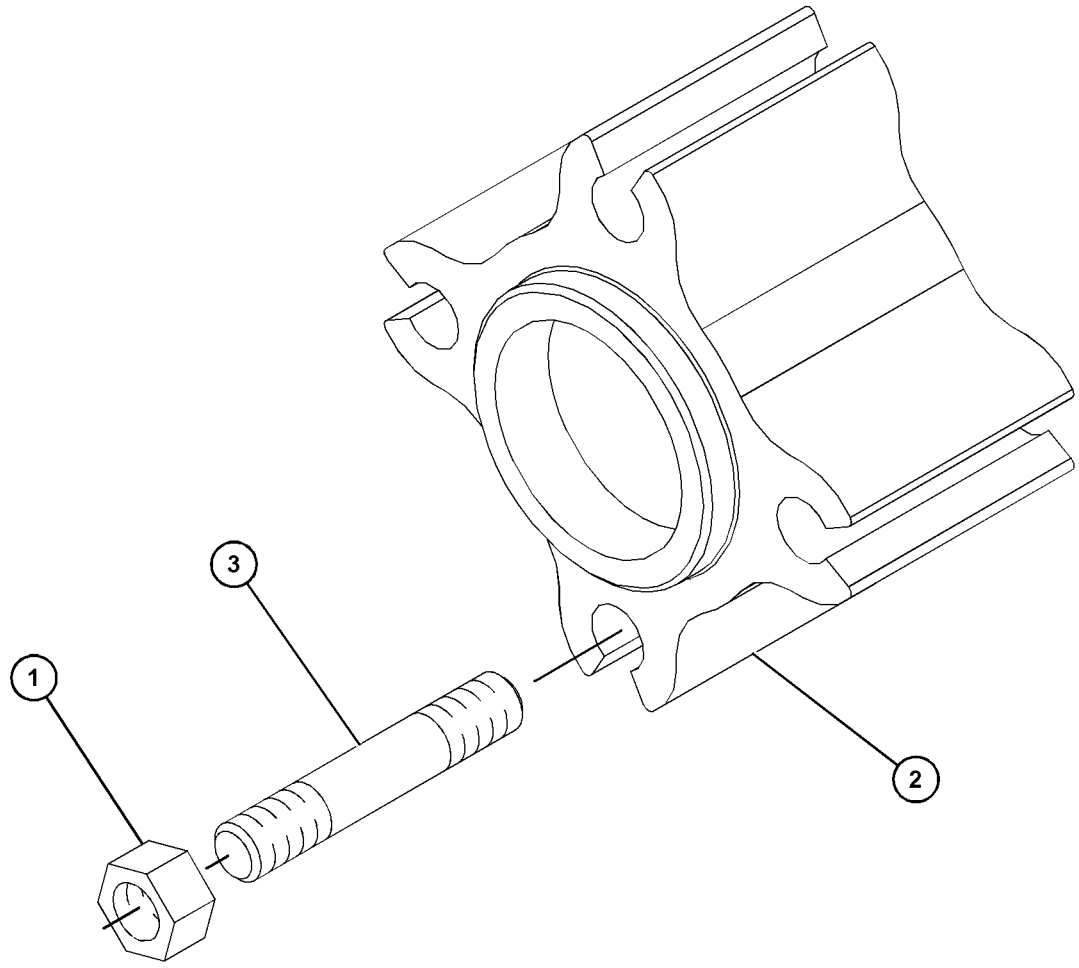

GRAPHIC #1 <END> g06012382

253-6191 EXTENSION GP-FAN

SMCS-1359 **i02113358**

NOTE	REF NO	GRAPHIC REF	PART NUMBER	QTY	PART NAME 1 2 3 4 5 6 (PRODUCT LEVEL)	SEE PAGE
	1	1	**9Y-1590**	1	EXTENSION-FAN	
M	2	1	**113-6349**	4	NUT (M8X1.25-THD)	
	3	1	**135-5417**	4	STUD (M8X1.25X91-MM)	

M - METRIC PART

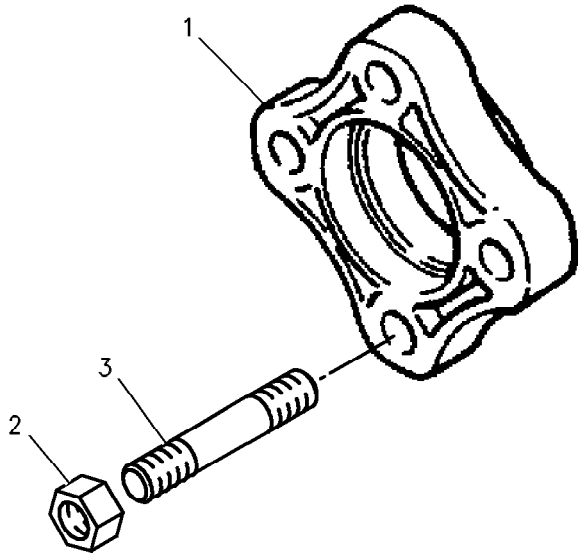

GRAPHIC #1 <END> g00279616

230-7354 FASTENER GP-PULLEY

AN ATTACHMENT

SMCS-1205 **i01876706**

NOTE	REF NO	GRAPHIC REF	PART NUMBER	QTY	PART NAME 1 2 3 4 5 6 (PRODUCT LEVEL)	SEE PAGE
	1	1	**6I-0501**	1	BLOCK	
	2	1	**7W-4634**	3	BOLT (7/16-20X1.5-IN)	

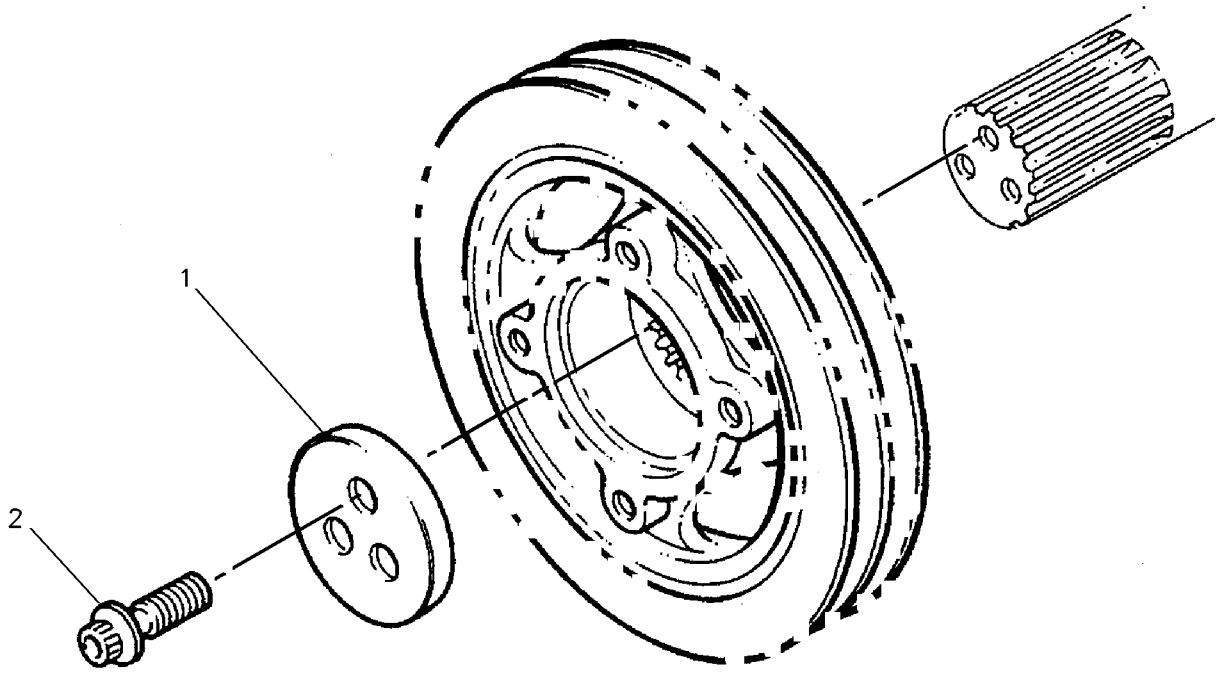

GRAPHIC #1 <END> g00948929

230-7286 FLYWHEEL GP

ALSO AN ATTACHMENT

SMCS-1156 **i06997716**

NOTE	REF NO	GRAPHIC REF	PART NUMBER	QTY	PART NAME 1 2 3 4 5 6 (PRODUCT LEVEL)	SEE PAGE
	1	1	**0S-1603**	10	BOLT (1/2-20X1.5-IN)	
	2	1	**5P-8245**	10	WASHER-HARD (13.5X25.5X3-MM THK)	
	3	1	**458-3404**	1	FLYWHEEL AS	
	3A	1	**033-7687**	1	RING-STARTING MOTOR (126-TEETH)	

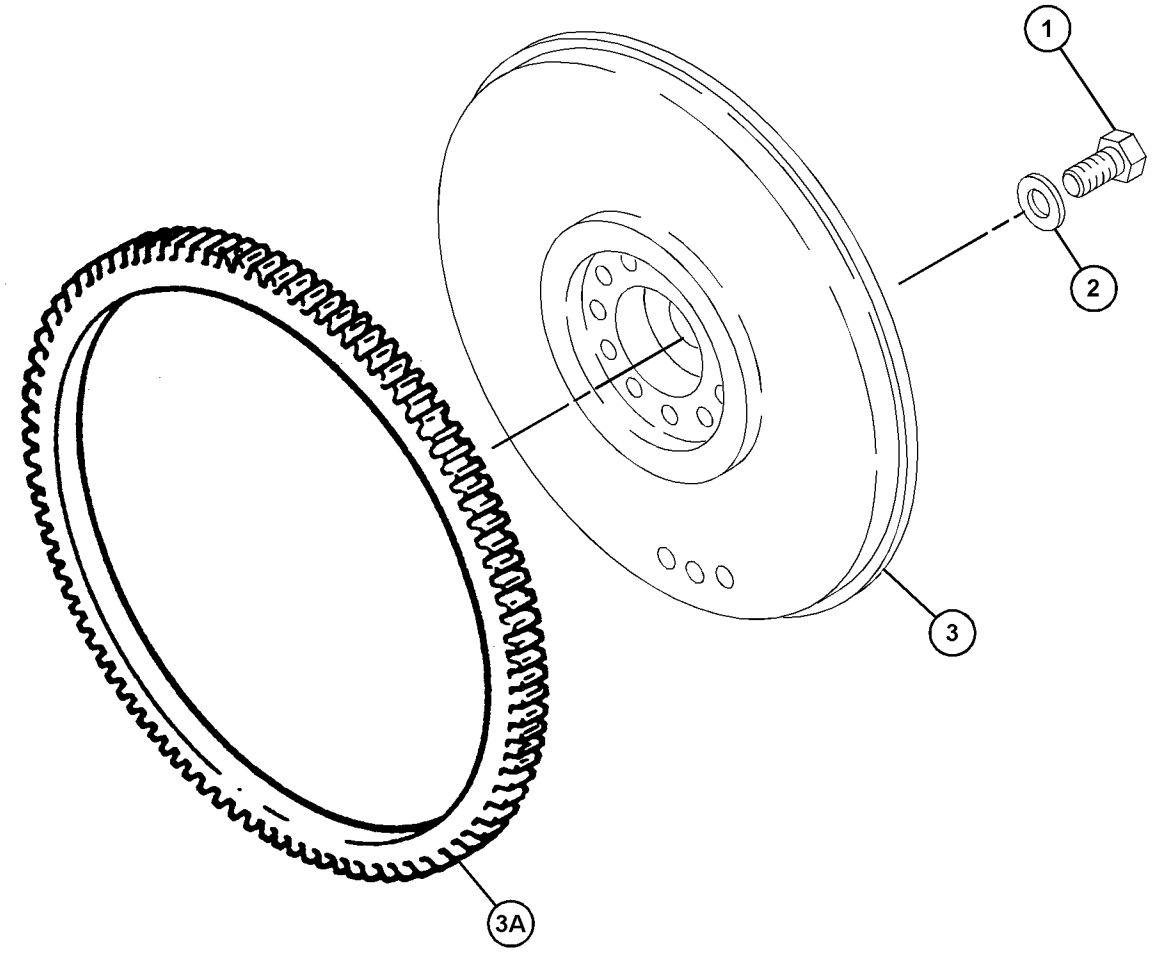

GRAPHIC #1 <END> g06193142

230-7291 FLYWHEEL GP

ALSO AN ATTACHMENT

SMCS-1156 **i06719909**

NOTE	REF NO	GRAPHIC REF	PART NUMBER	QTY	PART NAME 1 2 3 4 5 6 (PRODUCT LEVEL)	SEE PAGE
	1	1	**0S-1603**	6	BOLT (1/2-20X1.5-IN)	
	2	1	**5P-8245**	6	WASHER-HARD (13.5X25.5X3-MM THK)	
	3	1	**458-3400**	1	FLYWHEEL AS	
	3A	1	**033-7687**	1	RING-STARTING MOTOR (126-TEETH)	

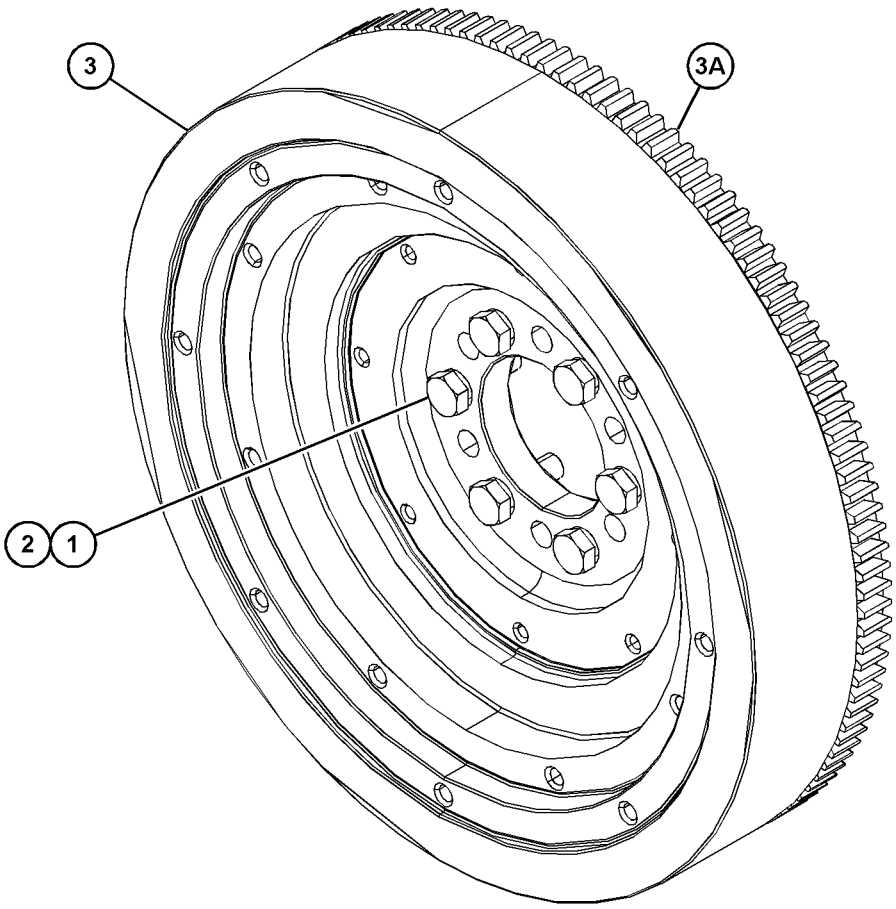

GRAPHIC #1 <END> g06112611

230-7300 FLYWHEEL GP

AN ATTACHMENT

SMCS-1156 **i05196693**

NOTE	REF NO	GRAPHIC REF	PART NUMBER	QTY	PART NAME 1 2 3 4 5 6 (PRODUCT LEVEL)	SEE PAGE
	1	1	**0S-1603**	6	BOLT (1/2-20X1.5-IN)	
	2	1	**5P-8245**	6	WASHER-HARD (13.5X25.5X3-MM THK)	
	3	1	**369-7944**	1	FLYWHEEL AS	
	4	1	**033-7687**	1	RING-STARTING MOTOR (126-TEETH)	

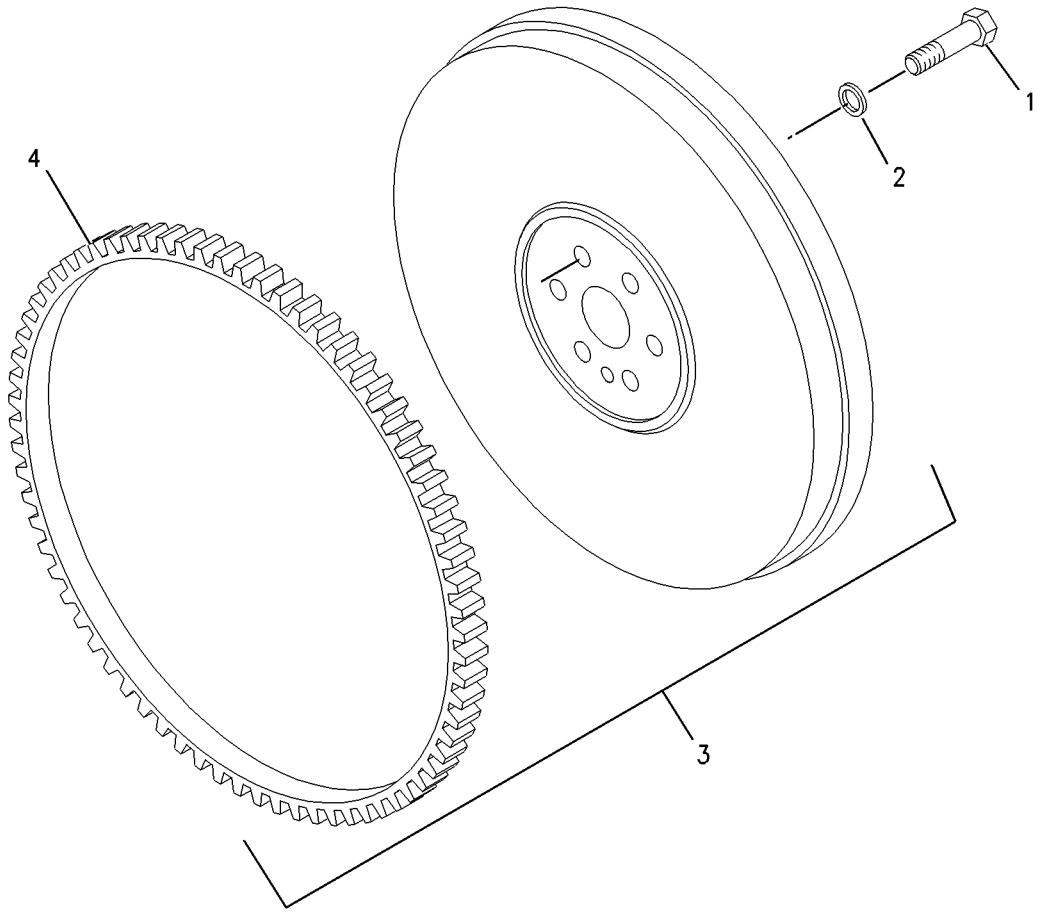

GRAPHIC #1 <END> g00955555

235-0322 FLYWHEEL GP

ALSO AN ATTACHMENT

SMCS-1156 **i06704676**

NOTE	REF NO	GRAPHIC REF	PART NUMBER	QTY	PART NAME 1 2 3 4 5 6 (PRODUCT LEVEL)	SEE PAGE
	1	1	**0S-1603**	6	BOLT (1/2-20X1.5-IN)	
	2	1	**458-3400**	1	FLYWHEEL AS	
	2A	1	**033-7687**	1	RING-STARTING MOTOR (126-TEETH)	
	3	1	**5P-8245**	6	WASHER-HARD (13.5X25.5X3-MM THK)	
	4	1	**9V-3811**	4	BOLT-12 POINT HEAD (1/2-20X2.25-IN)	
	5	1	**149-5599**	1	HOUSING	

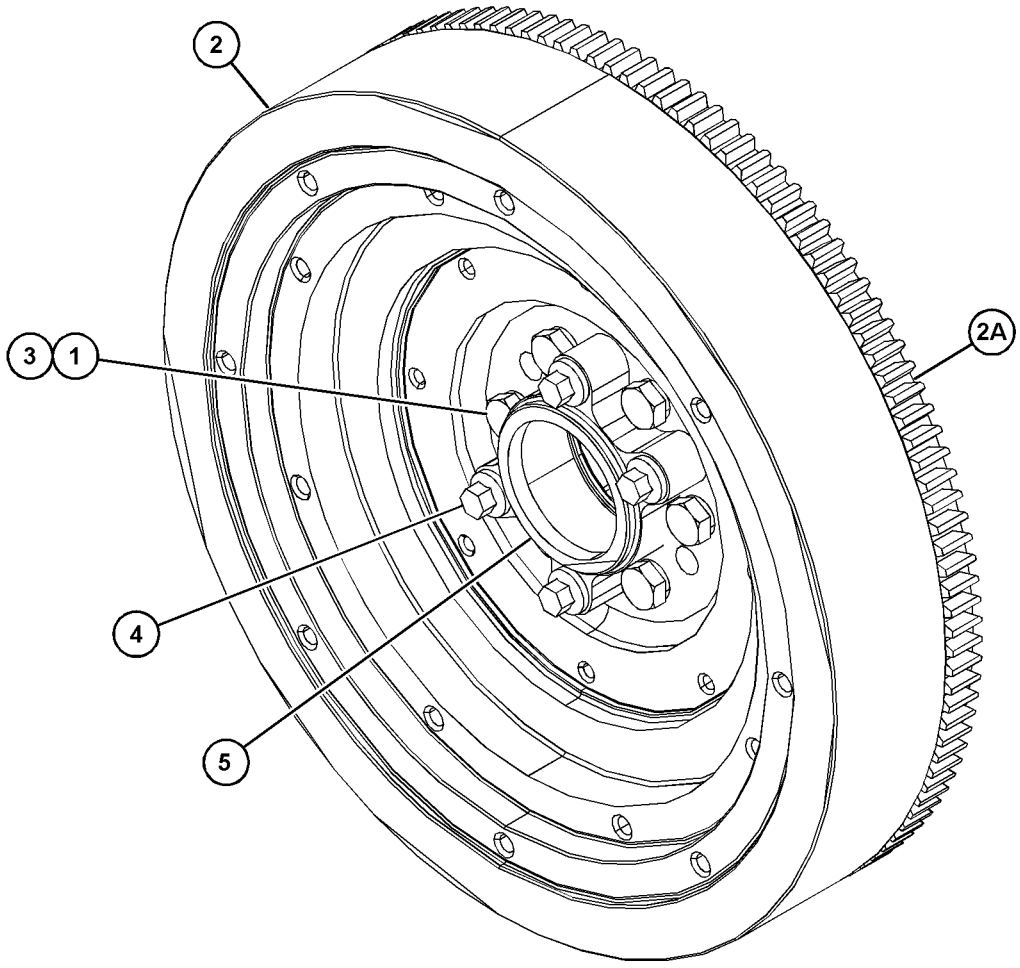

GRAPHIC #1 <END> g06110326

235-2382 FLYWHEEL GP

SMCS-1156 **i02604056**

NOTE	REF NO	GRAPHIC REF	PART NUMBER	QTY	PART NAME 1 2 3 4 5 6 (PRODUCT LEVEL)	SEE PAGE
	1	1	**0S-1603**	10	BOLT (1/2-20X1.5-IN)	
	2	1	**5P-8245**	10	WASHER-HARD (13.5X25.5X3-MM THK)	
	3	1	**114-2405**	1	FLYWHEEL AS	
	3A	1	**033-7687**	1	RING-STARTING MOTOR (126-TEETH)	

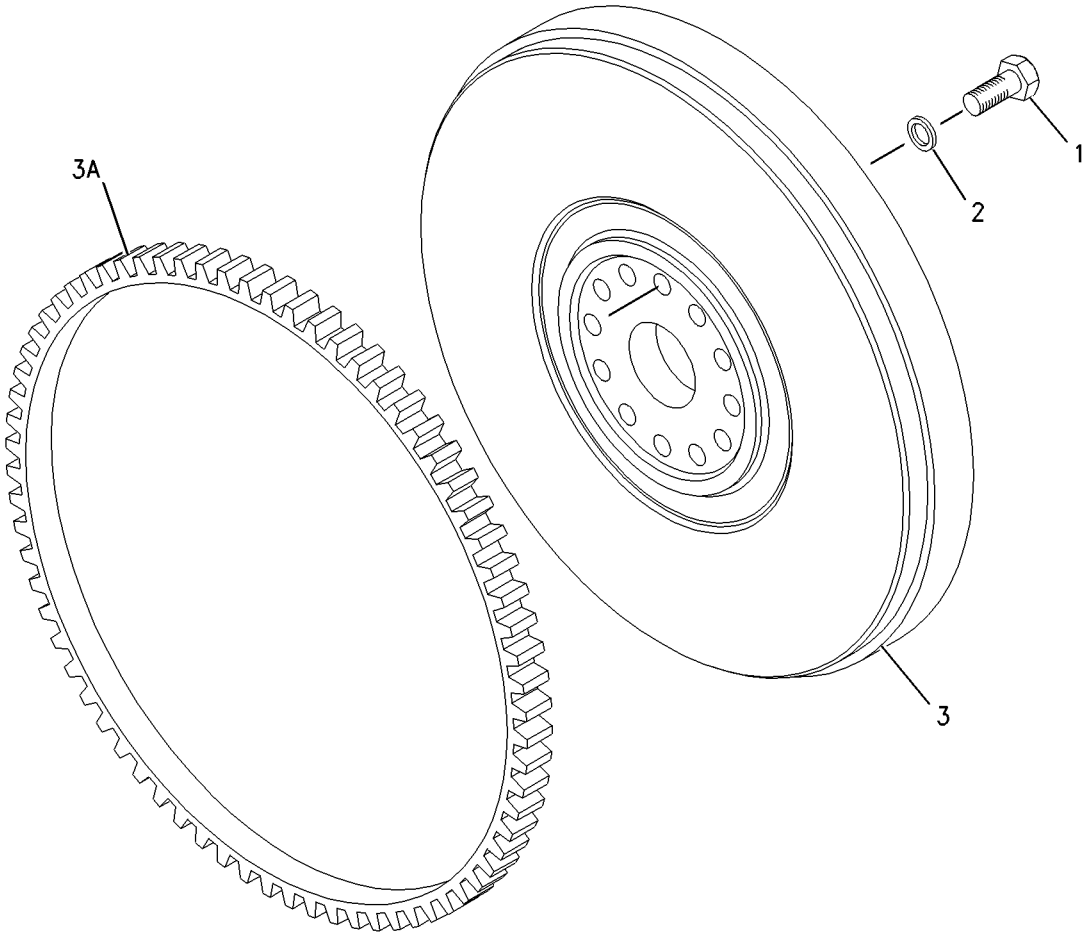

GRAPHIC #1 <END> g00975546

235-3552 FLYWHEEL GP

SMCS-1156 **i01890750**

NOTE	REF NO	GRAPHIC REF	PART NUMBER	QTY	PART NAME 1 2 3 4 5 6 (PRODUCT LEVEL)	SEE PAGE
	1	1	**4K-7502**	6	BOLT (1/2-20X1.375-IN)	
	2	1	**5P-8245**	6	WASHER-HARD (13.5X25.5X3-MM THK)	
	3	1	**113-7543**	1	FLYWHEEL AS	
	3A	1	**033-7687**	1	RING-STARTING MOTOR (126-TEETH)	

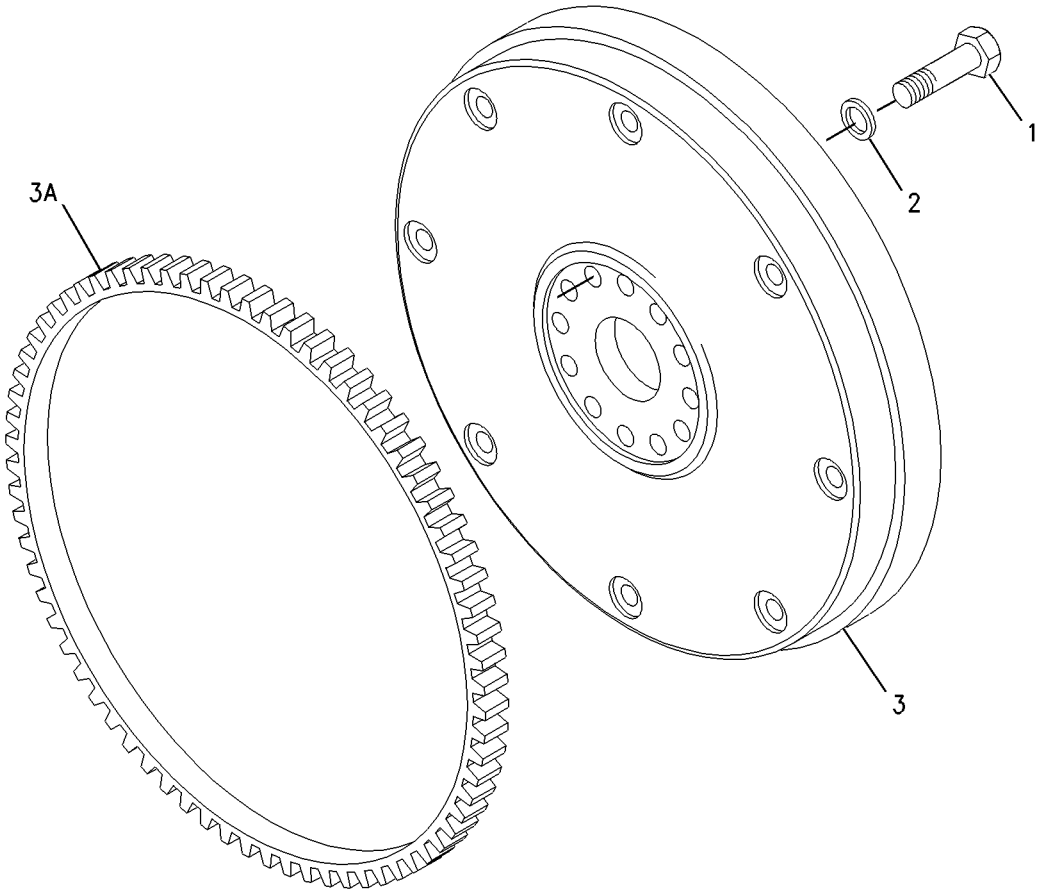

GRAPHIC #1 <END> g00985396

243-3398 FLYWHEEL GP

SMCS-1156 **i06719902**

NOTE	REF NO	GRAPHIC REF	PART NUMBER	QTY	PART NAME 1 2 3 4 5 6 (PRODUCT LEVEL)	SEE PAGE
	1	1	**0S-1603**	10	BOLT (1/2-20X1.5-IN)	
	2	1	**5P-8245**	10	WASHER-HARD (13.5X25.5X3-MM THK)	
	3	1	**458-3400**	1	FLYWHEEL AS	
	3A	1	**033-7687**	1	RING-STARTING MOTOR (126-TEETH)	

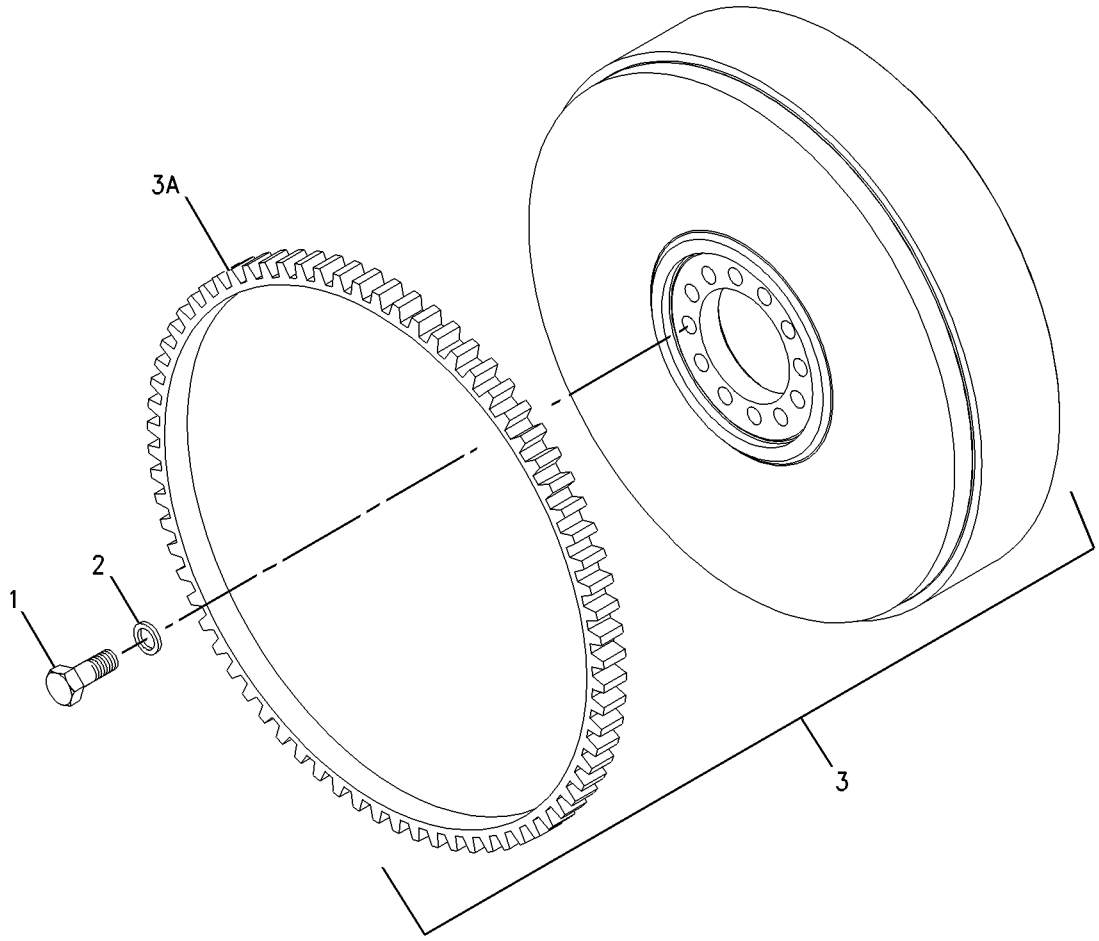

GRAPHIC #1 <END> g00933389

243-4279 FLYWHEEL GP

SMCS-1156 **i02139173**

NOTE	REF NO	GRAPHIC REF	PART NUMBER	QTY	PART NAME 1 2 3 4 5 6 (PRODUCT LEVEL)	SEE PAGE
	1	1	**0S-1603**	6	BOLT (1/2-20X1.5-IN)	
	2	1	**5P-8245**	6	WASHER-HARD (13.5X25.5X3-MM THK)	
	3	1	**243-4278**	1	FLYWHEEL AS	
	4	1	**033-7687**	1	RING-STARTING MOTOR (126-TEETH)	

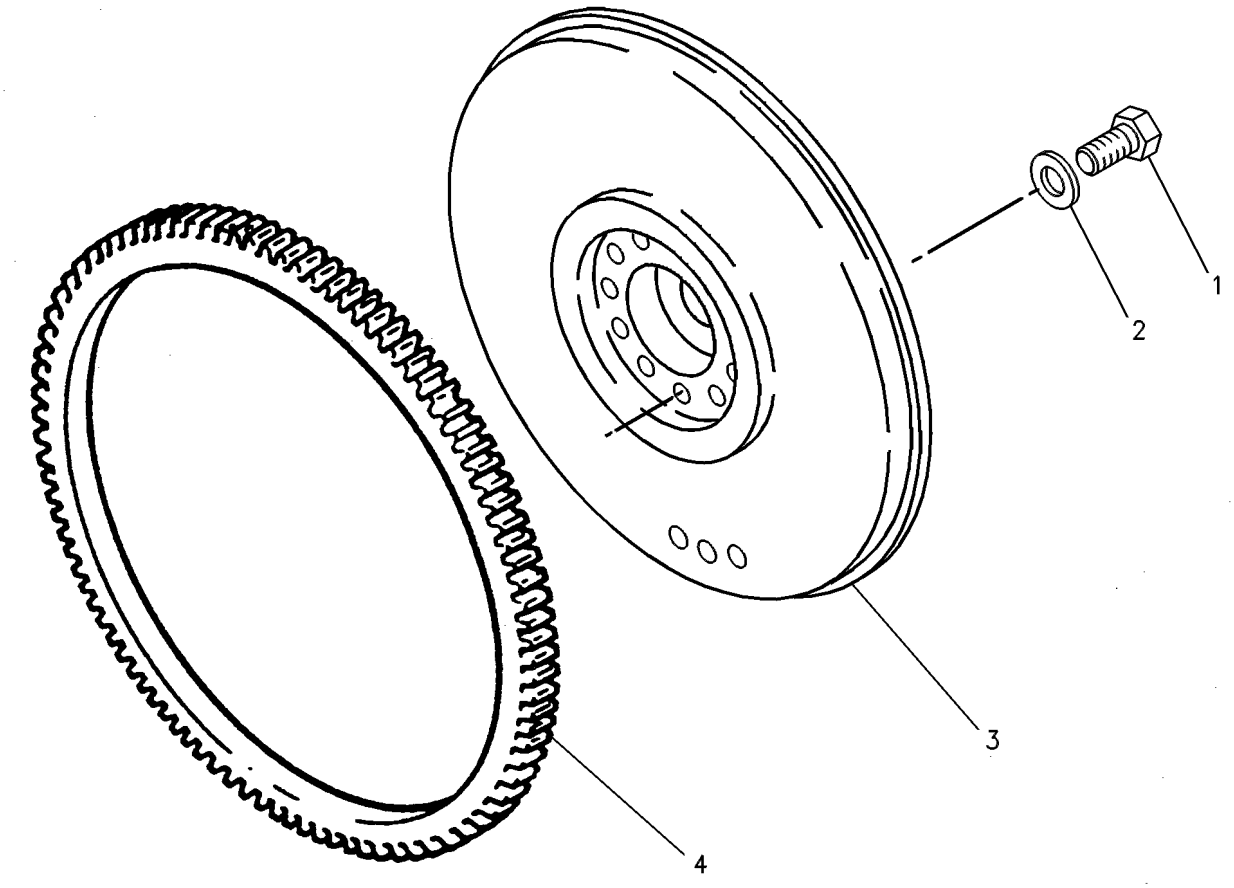

GRAPHIC #1 <END> g00240388

245-9831 FLYWHEEL GP

ALSO AN ATTACHMENT

SMCS-1156 **i06997702**

NOTE	REF NO	GRAPHIC REF	PART NUMBER	QTY	PART NAME 1 2 3 4 5 6 (PRODUCT LEVEL)	SEE PAGE
	1	1	**0S-1603**	10	BOLT (1/2-20X1.5-IN)	
	2	1	**5P-8245**	10	WASHER-HARD (13.5X25.5X3-MM THK)	
	3	1	**458-3404**	1	FLYWHEEL AS	
	4	1	**033-7687**	1	RING-STARTING MOTOR (126-TEETH)	

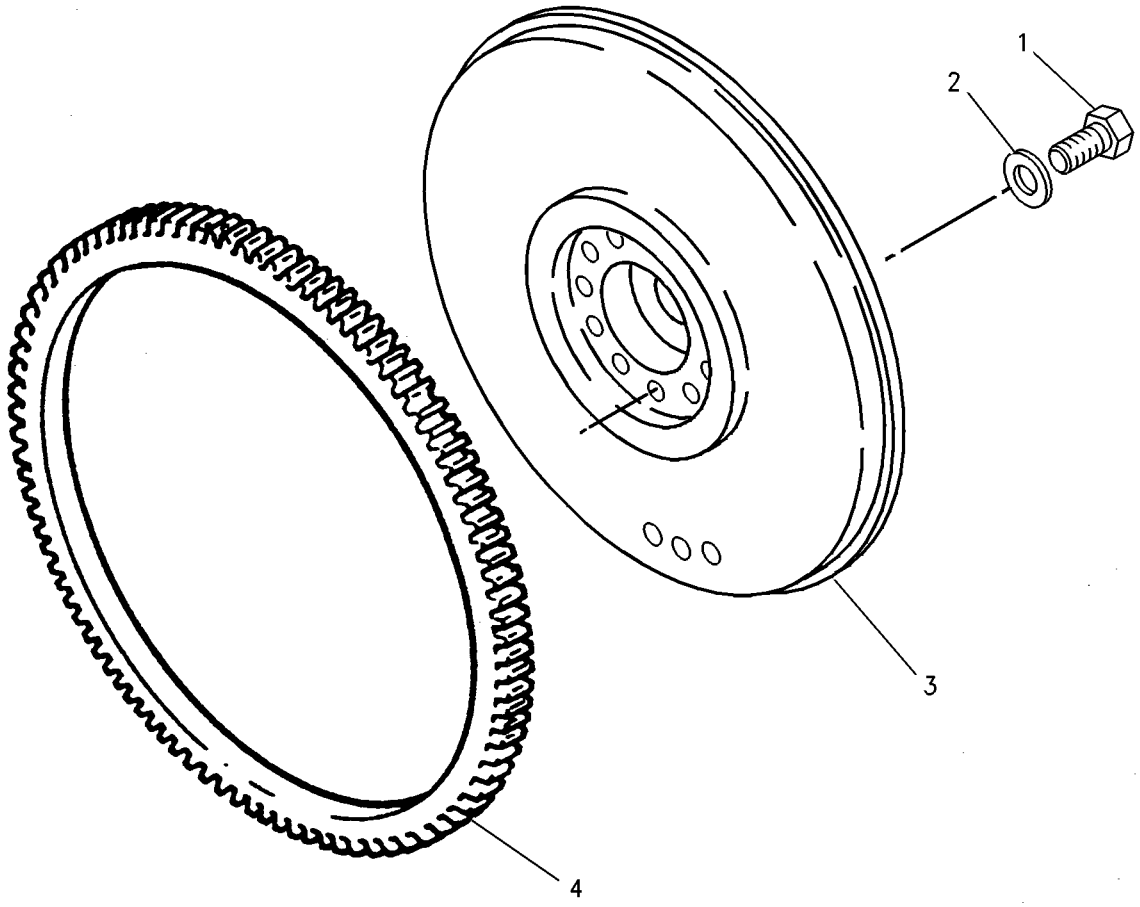

GRAPHIC #1 <END> g00931180

260-3119 FLYWHEEL GP

SMCS-1156 **i02212726**

NOTE	REF NO	GRAPHIC REF	PART NUMBER	QTY	PART NAME 1 2 3 4 5 6 (PRODUCT LEVEL)	SEE PAGE
	1	1	**113-7543**	1	FLYWHEEL AS	
	2	1	**033-7687**	1	RING-STARTING MOTOR (126-TEETH)	
	3	1	**4K-7502**	10	BOLT (1/2-20X1.375-IN)	
	4	1	**5P-8245**	10	WASHER-HARD (13.5X25.5X3-MM THK)	

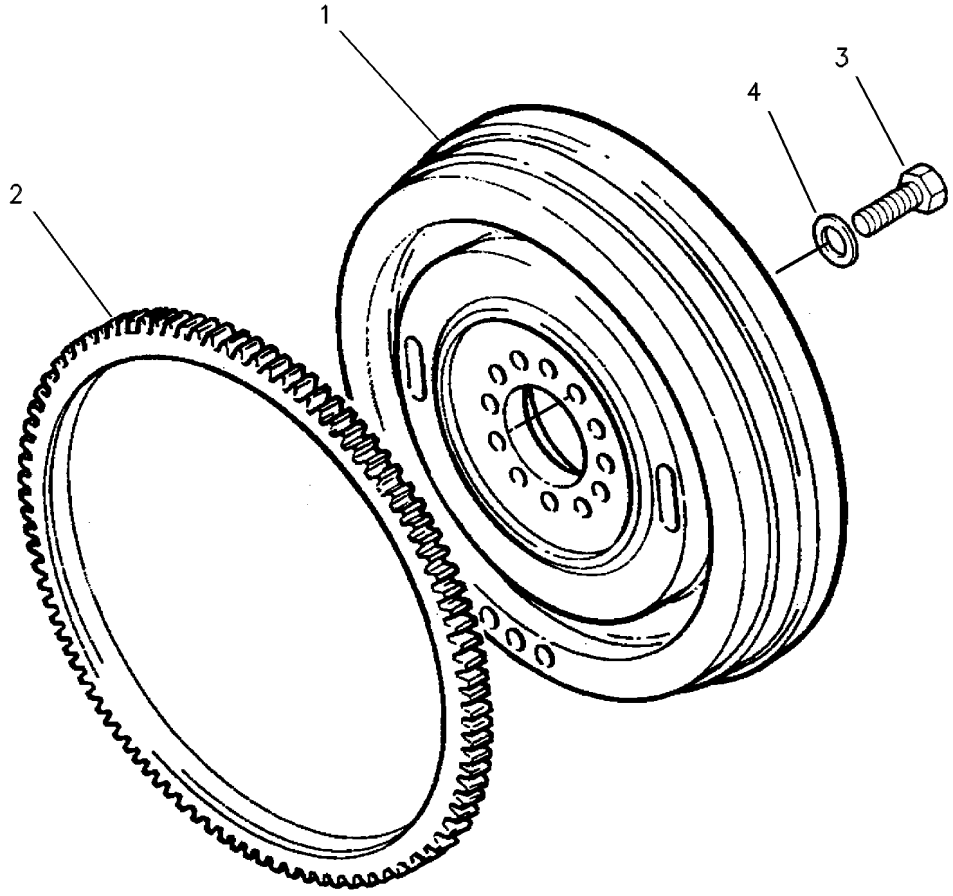

GRAPHIC #1 <END> g00241149

268-3627 FLYWHEEL GP

SMCS-1156 **i02293047**

NOTE	REF NO	GRAPHIC REF	PART NUMBER	QTY	PART NAME 1 2 3 4 5 6 (PRODUCT LEVEL)	SEE PAGE
	1		**268-3630**	1	FLYWHEEL AS	
	1A		**033-7687**	1	RING-STARTING MOTOR (126-TEETH)	
	2		**0S-1603**	6	BOLT (1/2-20X1.5-IN)	
	3		**5P-8245**	6	WASHER-HARD (13.5X25.5X3-MM THK)	

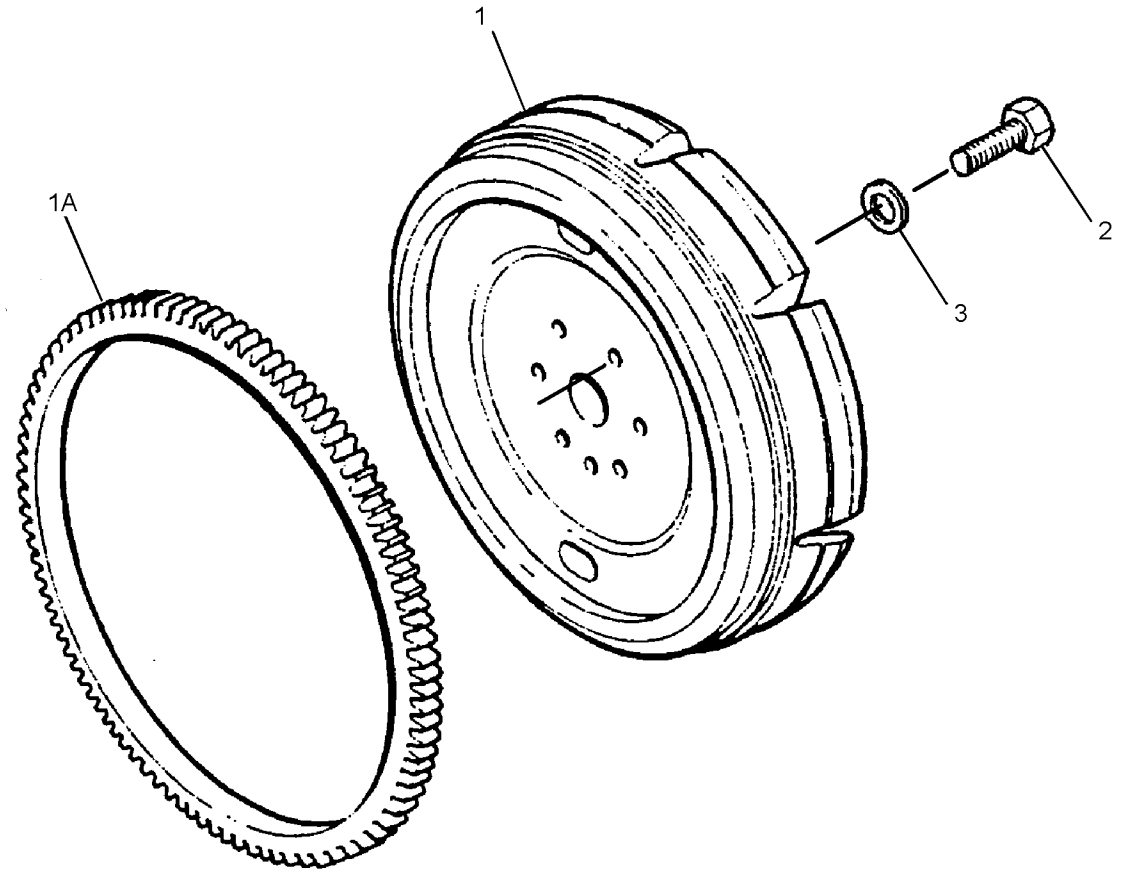

GRAPHIC #1 <END> g01151759

268-6486 FLYWHEEL GP

SMCS-1156 **i02335495**

NOTE	REF NO	GRAPHIC REF	PART NUMBER	QTY	PART NAME 1 2 3 4 5 6 (PRODUCT LEVEL)	SEE PAGE
	1	1	**006-9566**	6	BOLT (1/2-20X1.437-IN) (1/2-20X1.125 IN)	
	2	1	**5P-8245**	6	WASHER-HARD (13.5X25.5X3-MM THK)	
	3	1	**119-4034**	1	FLYWHEEL AS	
	4	1	**033-7687**	1	RING-STARTING MOTOR (126-TEETH)	

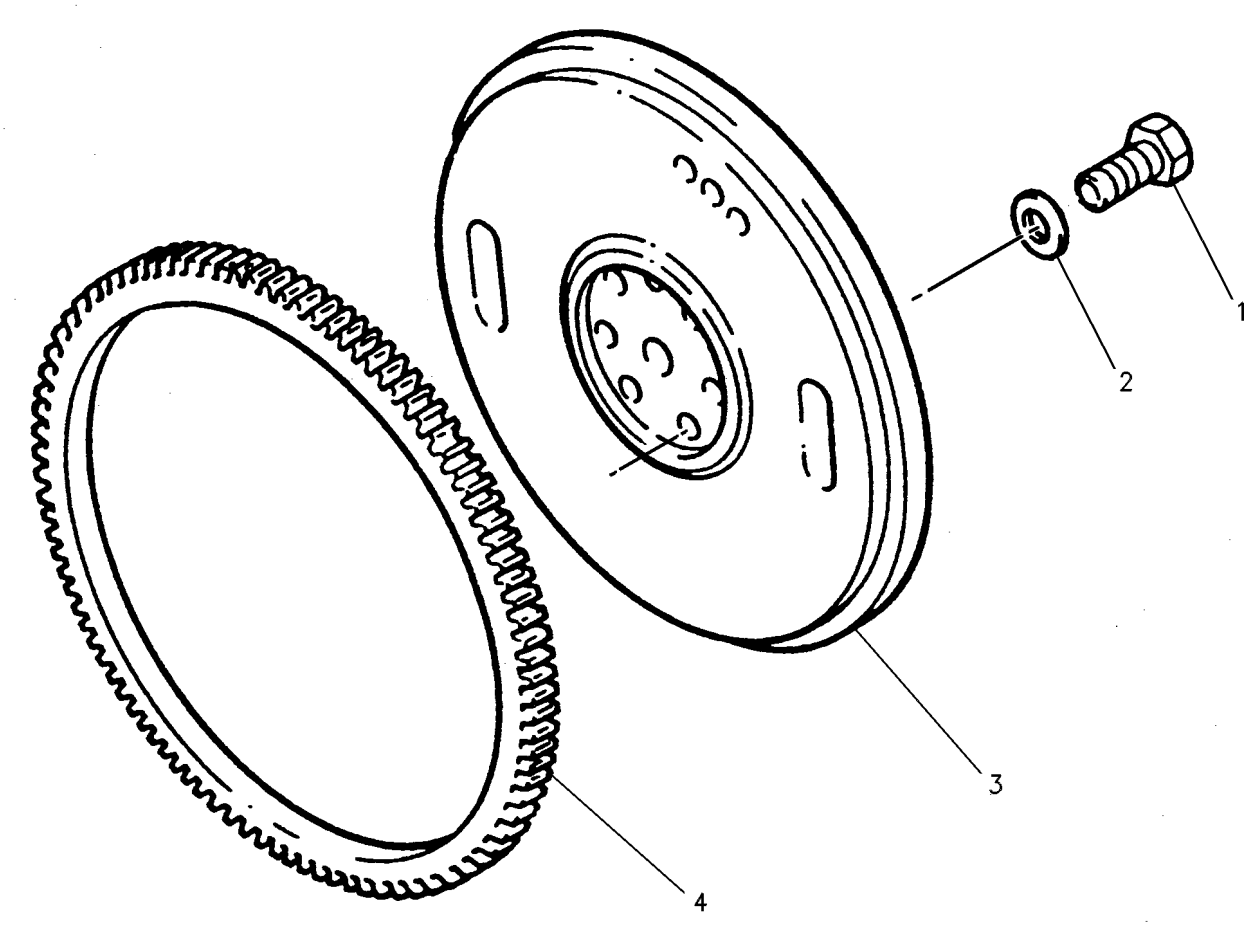

GRAPHIC #1 <END> g00238520

290-7085 FLYWHEEL GP

S/N: 3347103-UP

SMCS-1156 **i02506880**

NOTE	REF NO	GRAPHIC REF	PART NUMBER	QTY	PART NAME 1 2 3 4 5 6 (PRODUCT LEVEL)	SEE PAGE
	1	1	**006-9566**	10	BOLT (1/2-20X1.437-IN) (1/2-20X1.125 IN)	
	2	1	**5P-8245**	10	WASHER-HARD (13.5X25.5X3-MM THK)	
	3	1	**119-4034**	1	FLYWHEEL AS	
	3A	1	**033-7687**	1	RING-STARTING MOTOR (126-TEETH)	

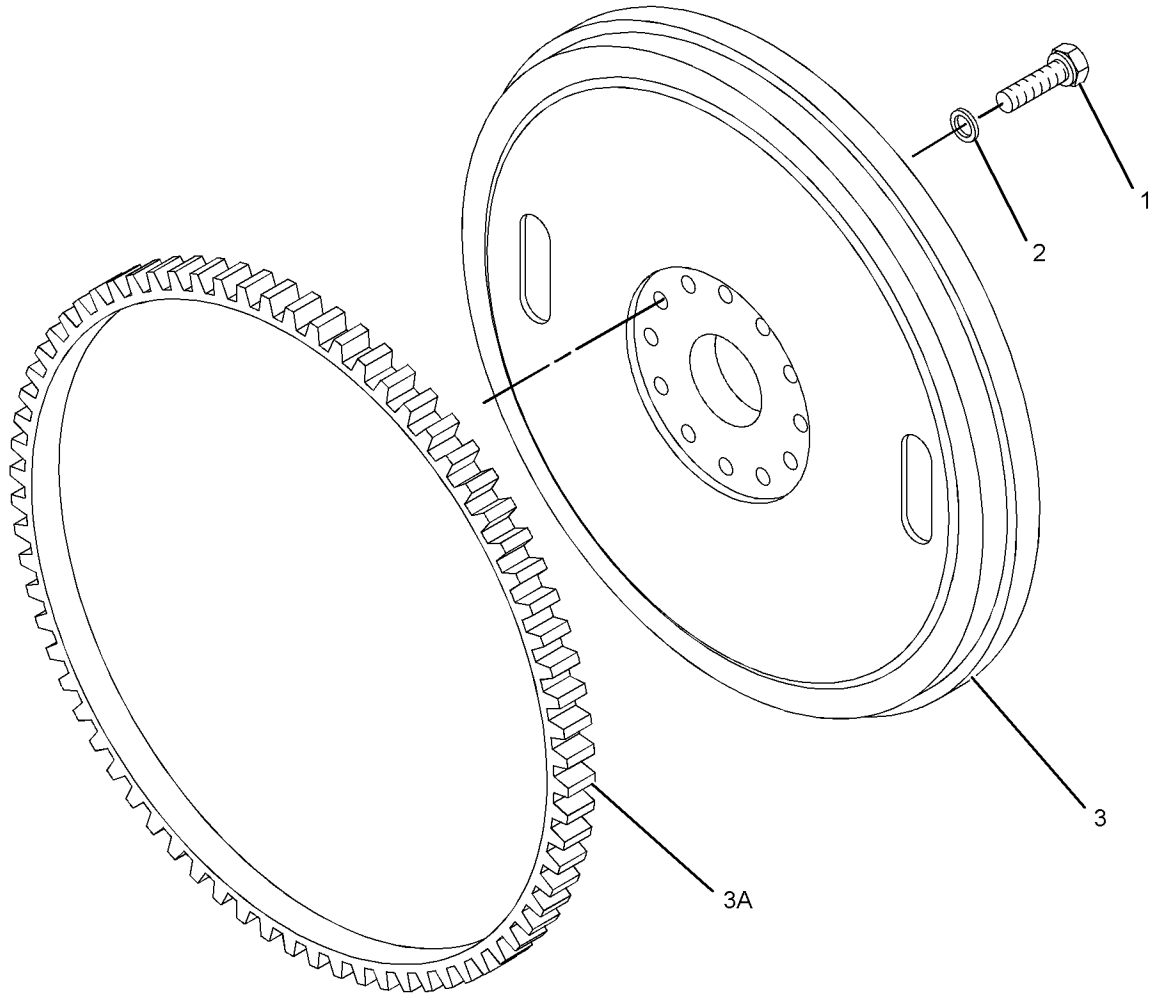

GRAPHIC #1 <END> g01321558

292-2955 FLYWHEEL GP

SMCS-1156 **i02591943**

NOTE	REF NO	GRAPHIC REF	PART NUMBER	QTY	PART NAME 1 2 3 4 5 6 (PRODUCT LEVEL)	SEE PAGE
	1	1	**0S-1603**	1	BOLT (1/2-20X1.5-IN)	
	2	1	**5P-8245**	1	WASHER-HARD (13.5X25.5X3-MM THK)	
	3	1	**292-2924**	1	FLYWHEEL AS	
	3A	1	**033-7687**	1	RING-STARTING MOTOR (126-TEETH)	

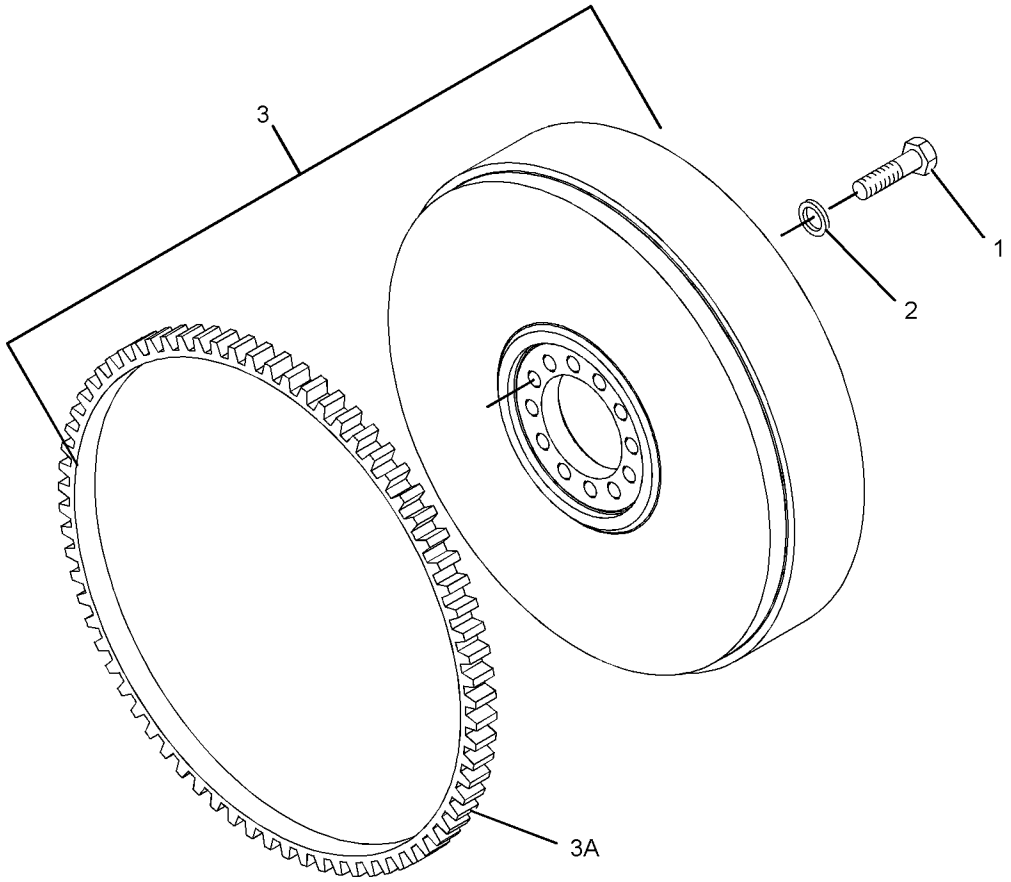

GRAPHIC #1 <END> g01300011

294-8570 FLYWHEEL GP

SMCS-1156 **i02568567**

NOTE	REF NO	GRAPHIC REF	PART NUMBER	QTY	PART NAME 1 2 3 4 5 6 (PRODUCT LEVEL)	SEE PAGE
	1	1	**0S-1603**	10	BOLT (1/2-20X1.5-IN)	
	2	1	**5P-8245**	10	WASHER-HARD (13.5X25.5X3-MM THK)	
	3	1	**292-2924**	1	FLYWHEEL AS	
	3A	1	**033-7687**	1	RING-STARTING MOTOR (126-TEETH)	

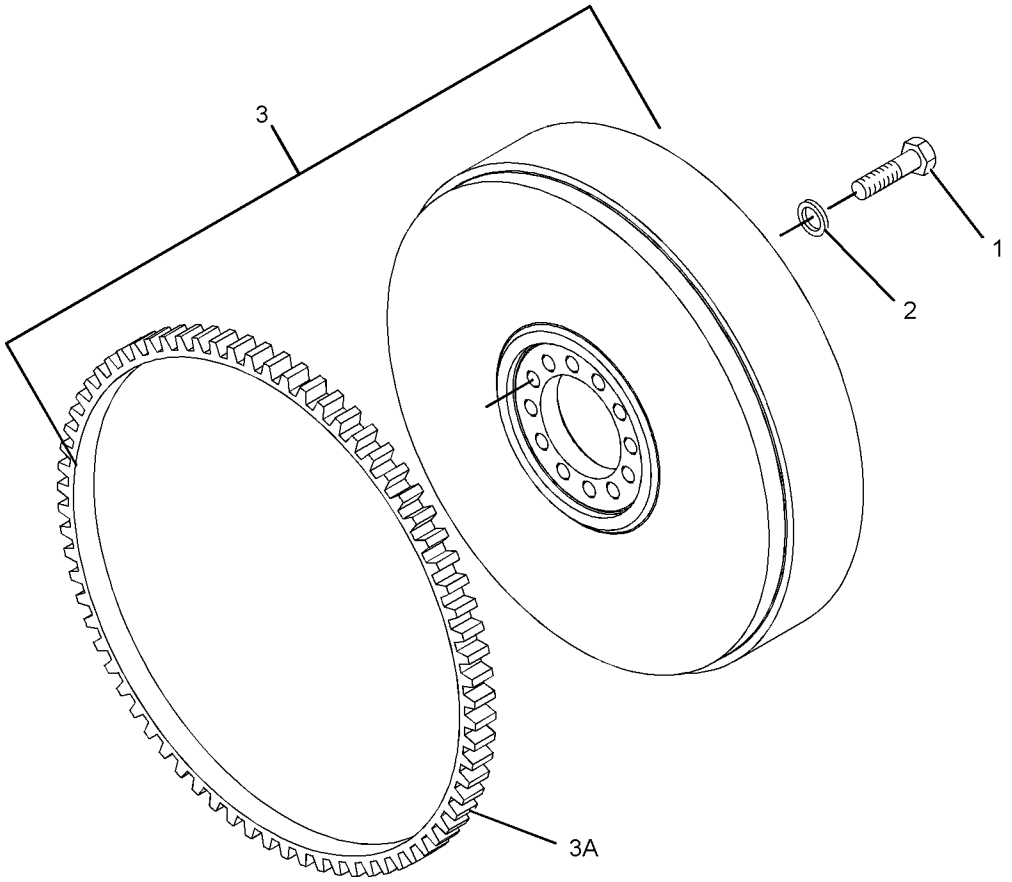

GRAPHIC #1 <END> g01300011

298-3512 FLYWHEEL GP

SMCS-1156 **i02634422**

NOTE	REF NO	GRAPHIC REF	PART NUMBER	QTY	PART NAME 1 2 3 4 5 6 (PRODUCT LEVEL)	SEE PAGE
	1	1	**0S-1603**	6	BOLT (1/2-20X1.5-IN)	
	2	1	**5P-8245**	6	WASHER-HARD (13.5X25.5X3-MM THK)	
	3	1	**298-3513**	1	FLYWHEEL AS	
	3A	1	**033-7687**	1	RING-STARTING MOTOR (126-TEETH)	

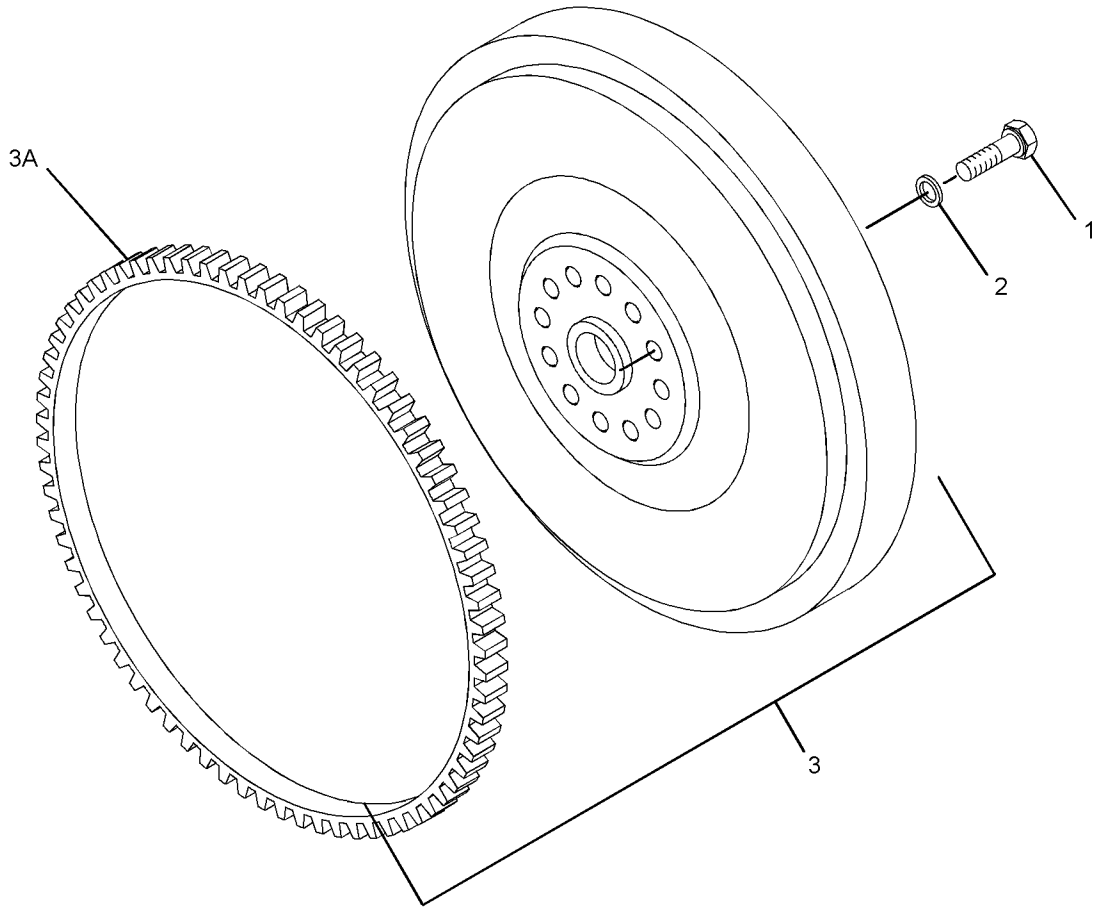

GRAPHIC #1 <END> g01304696

303-2122 FLYWHEEL GP

SMCS-1156 **i02639212**

NOTE	REF NO	GRAPHIC REF	PART NUMBER	QTY	PART NAME 1 2 3 4 5 6 (PRODUCT LEVEL)	SEE PAGE
	1	1	**7W-6247**	1	GEAR (115-TEETH)	

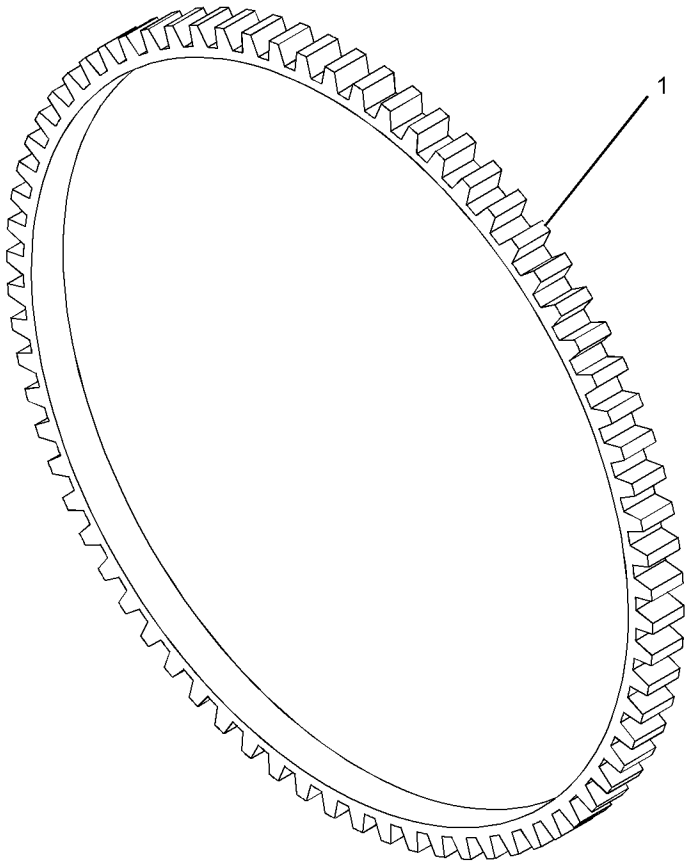

GRAPHIC #1 <END> g01325955

316-9045 FLYWHEEL GP

SMCS-1156 **i02822651**

NOTE	REF NO	GRAPHIC REF	PART NUMBER	QTY	PART NAME 1 2 3 4 5 6 (PRODUCT LEVEL)	SEE PAGE
	1	1	**0S-1603**	10	BOLT (1/2-20X1.5-IN)	
	2	1	**5P-8245**	10	WASHER-HARD (13.5X25.5X3-MM THK)	
	3	1	**316-9044**	1	FLYWHEEL AS	
	3A	1	**033-7687**	1	RING-STARTING MOTOR (126-TEETH)	

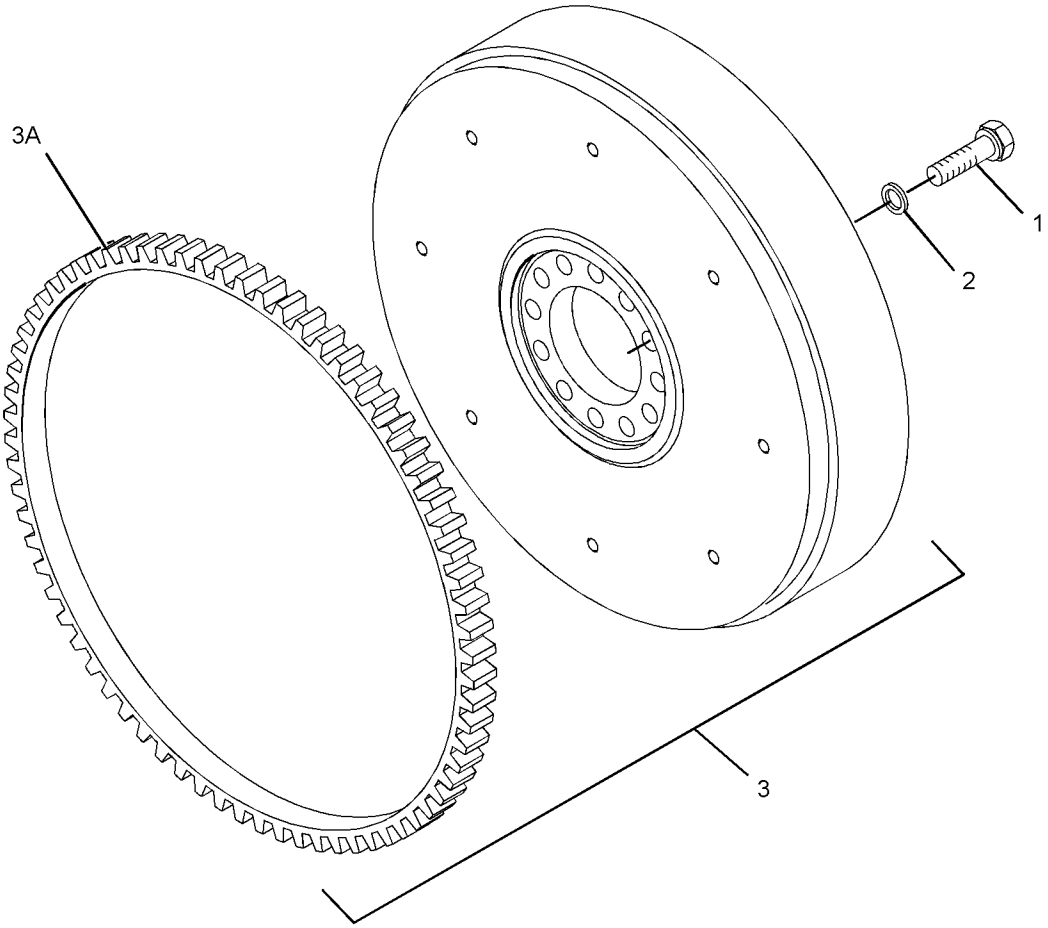

GRAPHIC #1 <END> g01419998

223-7825 HOUSING GP-FLYWHEEL

ALSO AN ATTACHMENT

SMCS-1157 **i06991572**

NOTE	REF NO	GRAPHIC REF	PART NUMBER	QTY	PART NAME 1 2 3 4 5 6 (PRODUCT LEVEL)	SEE PAGE
M	1	1	**6I-0423**	2	BOLT (M12X1.75X30-MM)	
M	2	1	**6I-0631**	2	BOLT (M6X1X12-MM)	
	3	1	**375-9272**	1	PLUG	
M	4	1	**6I-4200**	3	BOLT (M10X1.5X16-MM)	
	5	1	**393-4006**	1	GASKET	
	6	1	**287-8597**	2	DOWEL	
	7	1	**102-1957**	1	PLATE	
M	8	1	**121-0883**	6	BOLT (M10X1.5X30-MM)	
	9	1	**149-9176**	1	HOUSING-FLYWHEEL	
	10	1	**199-3108**	1	PLUG	
	11	1	**199-3109**	1	PLUG	

M - METRIC PART

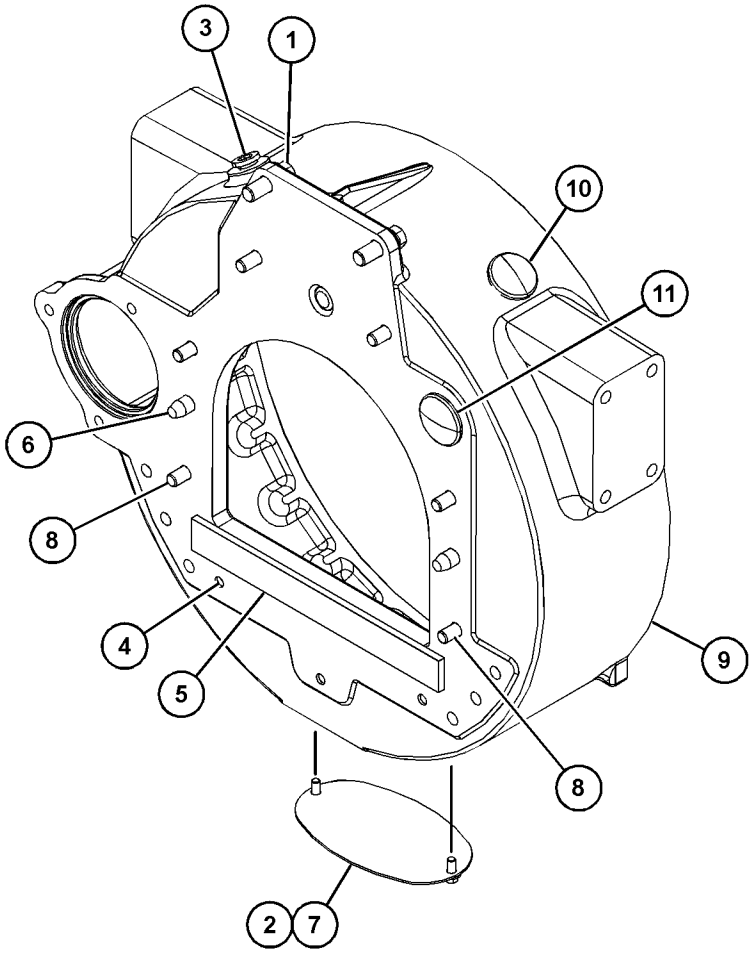

GRAPHIC #1 <END> g06206629

224-2162 HOUSING GP-FLYWHEEL

ALSO AN ATTACHMENT

SMCS-1157 **i06991559**

NOTE	REF NO	GRAPHIC REF	PART NUMBER	QTY	PART NAME 1 2 3 4 5 6 (PRODUCT LEVEL)	SEE PAGE
M	1	1	**6I-0423**	2	BOLT (M12X1.75X30-MM)	
	2	1	**375-9272**	2	PLUG	
	3	1	**7W-1176**	1	PLATE-COVER	
	4	1	**393-4006**	1	GASKET	
	5	1	**287-8597**	2	DOWEL	
	6	1	**4H-0408**	3	PLUG-PROTECTION (10-MM)	
M	7	1	**114-4363**	2	BOLT (M8X1.25X12-MM)	
M	8	1	**121-0883**	6	BOLT (M10X1.5X30-MM)	
	9	1	**199-3109**	1	PLUG	
	10	1	**220-8632**	1	HOUSING-FLYWHEEL	

M - METRIC PART

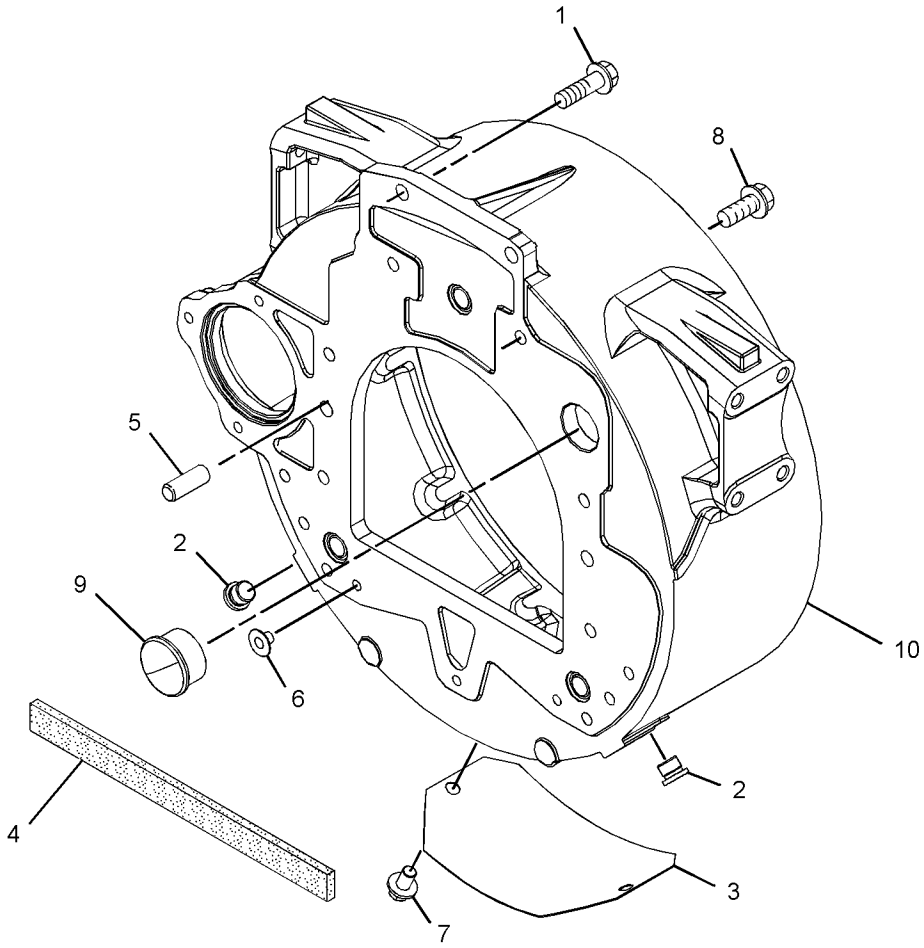

GRAPHIC #1 <END> g03132278

230-7928 HOUSING GP-FLYWHEEL

AN ATTACHMENT

SMCS-1157 **i02554648**

NOTE	REF NO	GRAPHIC REF	PART NUMBER	QTY	PART NAME 1 2 3 4 5 6 (PRODUCT LEVEL)	SEE PAGE
	1	1	**7W-4642**	1	SHIELD-DUST	
	2	1	**287-8597**	2	DOWEL	
M	3	1	**106-8954**	2	BOLT (M12X1.75X35-MM)	
	4	1	**254-6819**	1	PLATE-ADAPTER	
M	5	1	**230-7924**	6	BOLT (M10X1.5X35-MM)	

M - METRIC PART

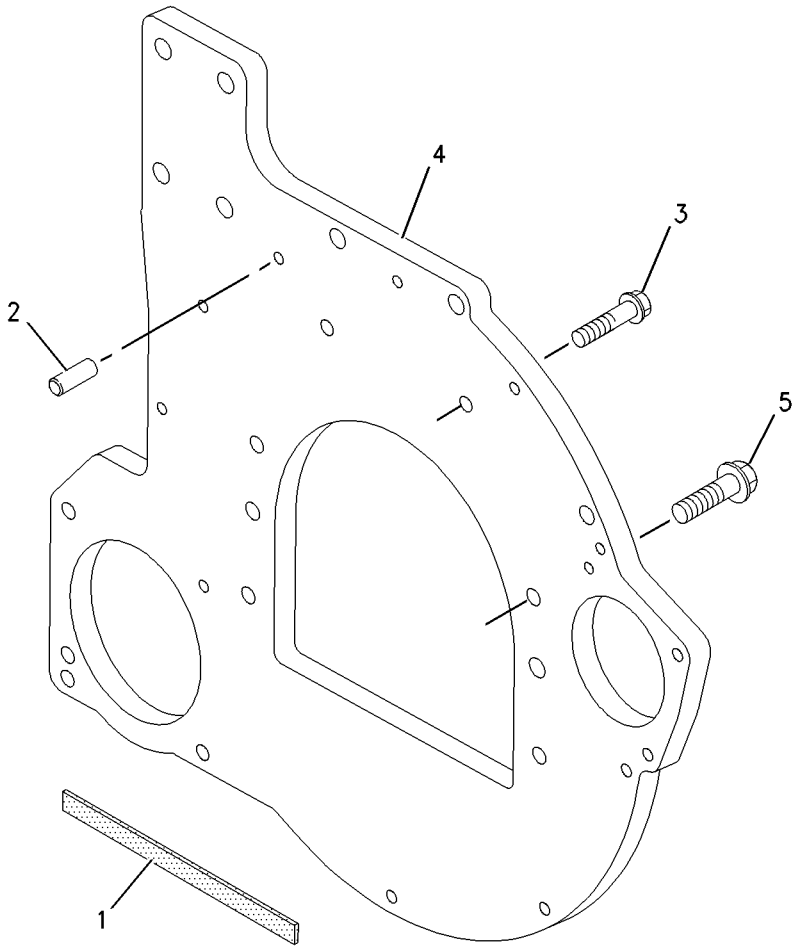

GRAPHIC #1 <END> g00956054

234-9665 HOUSING GP-FLYWHEEL

SMCS-1157 **i07475527**

NOTE	REF NO	GRAPHIC REF	PART NUMBER	QTY	PART NAME 1 2 3 4 5 6 (PRODUCT LEVEL)	SEE PAGE
M	1	1	**121-0883**	6	BOLT (M10X1.5X30-MM)	
M	2	1	**6I-0423**	2	BOLT (M12X1.75X30-MM)	
	3	1	**393-4006**	1	GASKET	
	4	1	**102-1957**	1	PLATE	
	5	1	**164-3289**	1	HOUSING-FLYWHEEL	
	6	1	**164-3300**	1	PLATE	
	7	1	**287-8597**	2	DOWEL	
	8	1	**375-9272**	1	PLUG	
M	9	1	**6I-0631**	2	BOLT (M6X1X12-MM)	
M	10	1	**6I-4200**	6	BOLT (M10X1.5X16-MM)	

M - METRIC PART

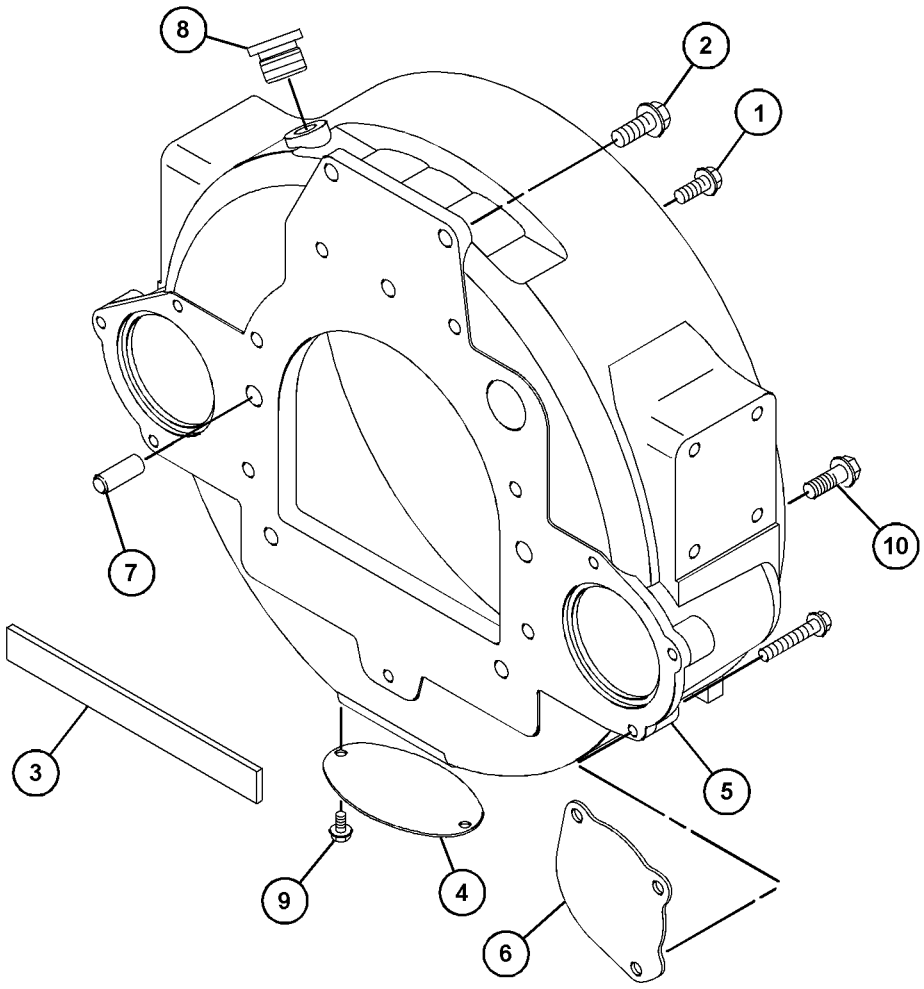

GRAPHIC #1 <END> g06369003

235-0321 HOUSING GP-FLYWHEEL

SMCS-1157 **i04943324**

NOTE	REF NO	GRAPHIC REF	PART NUMBER	QTY	PART NAME 1 2 3 4 5 6 (PRODUCT LEVEL)	SEE PAGE
M	1	1	**6I-0423**	2	BOLT (M12X1.75X30-MM)	
M	2	1	**6I-0593**	3	BOLT (M10X1.5X30-MM)	
	3	1	**375-9272**	2	PLUG	
	4	1	**7W-1176**	1	PLATE-COVER	
	5	1	**287-8597**	2	DOWEL	
M	6	1	**114-4363**	2	BOLT (M8X1.25X12-MM)	
M	7	1	**121-0883**	1	BOLT (M10X1.5X30-MM)	
	8	1	**199-3109**	1	PLUG	
	9	1	**220-8632**	1	HOUSING-FLYWHEEL	

M - METRIC PART

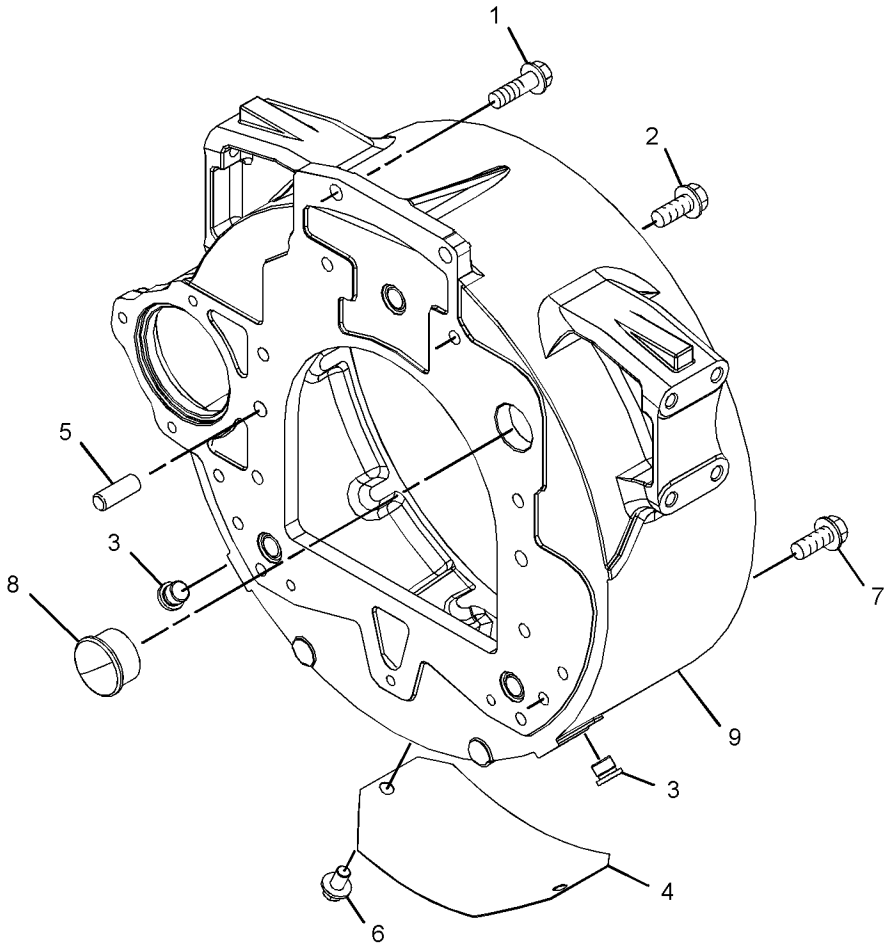

GRAPHIC #1 <END> g03134137

235-2380 HOUSING GP-FLYWHEEL

SMCS-1157 **i06991547**

NOTE	REF NO	GRAPHIC REF	PART NUMBER	QTY	PART NAME 1 2 3 4 5 6 (PRODUCT LEVEL)	SEE PAGE
	1	1	**2B-0858**	1	PLUG-PIPE	
	2	1	**6H-3616**	1	PLUG-PROTECTION	
M	3	1	**6I-0423**	1	BOLT (M12X1.75X30-MM)	
	4	1	**393-4006**	1	GASKET	
	5	1	**287-8597**	2	DOWEL	
M	6	1	**121-0883**	1	BOLT (M10X1.5X30-MM)	
	7	1	**235-2375**	1	HOUSING-FLYWHEEL	

M - METRIC PART

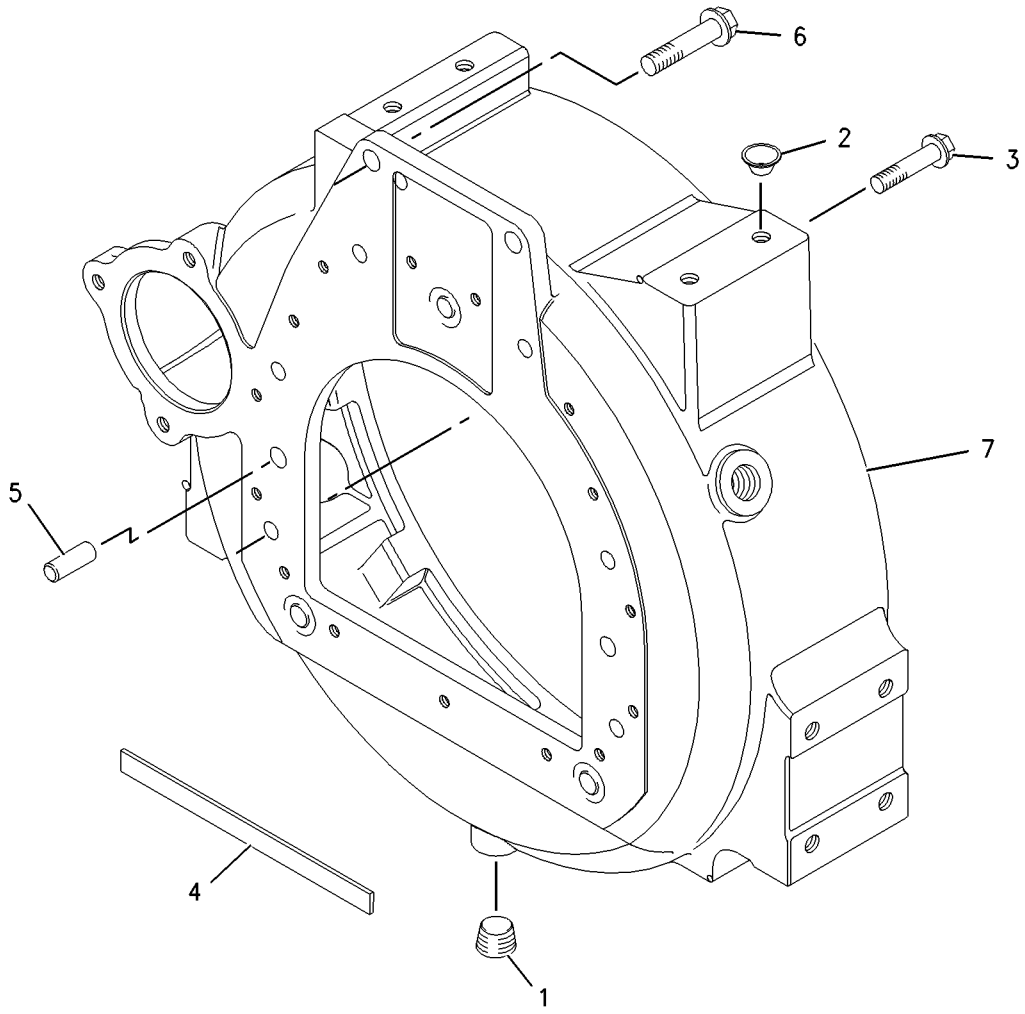

GRAPHIC #1 <END> g00975501

236-8238 HOUSING GP-FLYWHEEL

SMCS-1157 **i07489315**

NOTE	REF NO	GRAPHIC REF	PART NUMBER	QTY	PART NAME 1 2 3 4 5 6 (PRODUCT LEVEL)	SEE PAGE
M	1	1	**6I-0423**	2	BOLT (M12X1.75X30-MM)	
	2	1	**375-9272**	2	PLUG	
	3	1	**7W-1176**	1	PLATE-COVER	
	4	1	**393-4006**	1	GASKET	
	5	1	**287-8597**	2	DOWEL	
M	6	1	**114-4363**	2	BOLT (M8X1.25X12-MM)	
	7	1	**4H-0408**	3	PLUG-PROTECTION (10-MM)	
M	8	1	**121-0883**	6	BOLT (M10X1.5X30-MM)	
	9	1	**220-8631**	1	HOUSING-FLYWHEEL	

M - METRIC PART

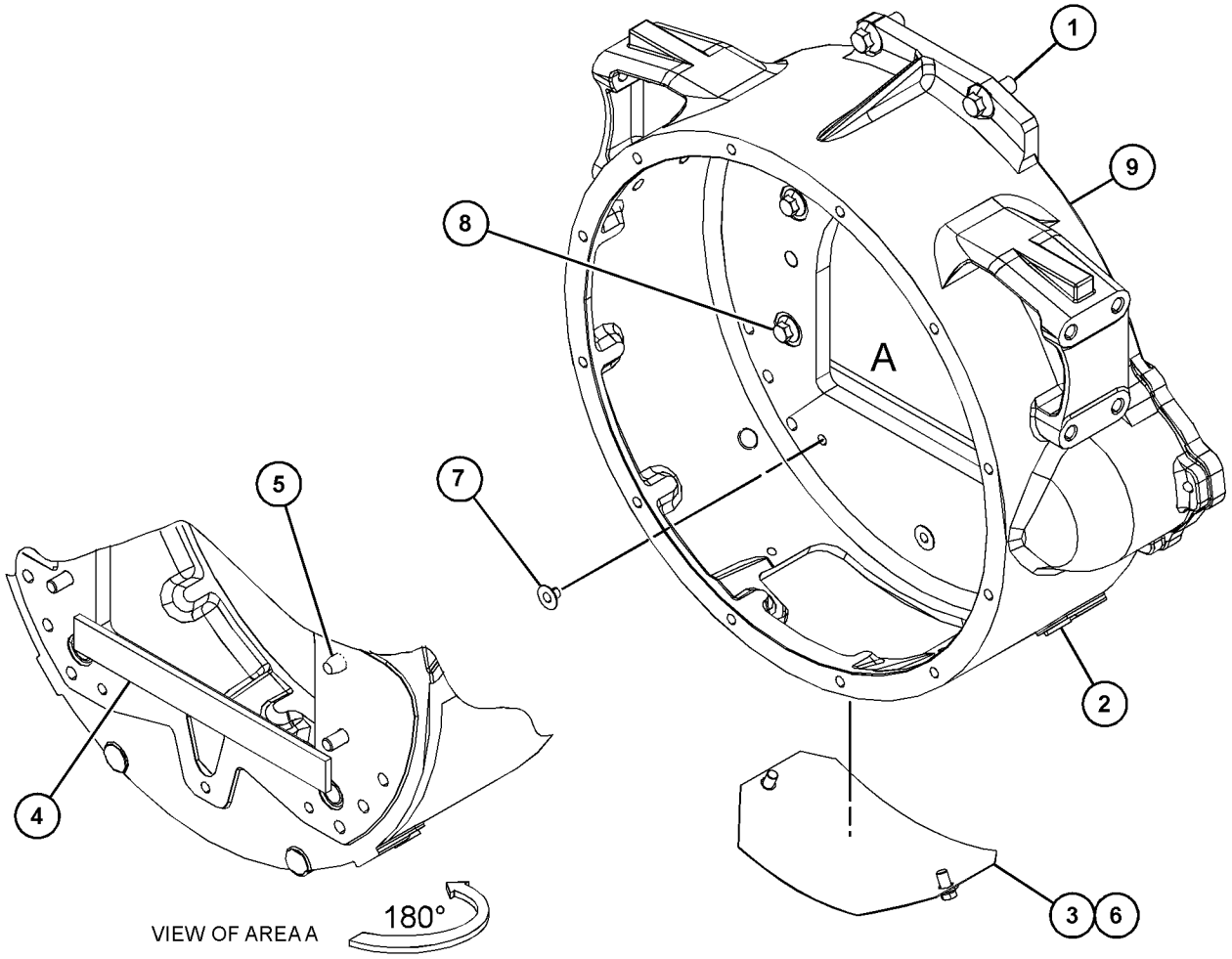

GRAPHIC #1 <END> g06336409

238-3016 HOUSING GP-FLYWHEEL

SMCS-1157 **i07071753**

NOTE	REF NO	GRAPHIC REF	PART NUMBER	QTY	PART NAME 1 2 3 4 5 6 (PRODUCT LEVEL)	SEE PAGE
M	1	1	**6I-0423**	2	BOLT (M12X1.75X30-MM)	
M	2	1	**6I-0631**	2	BOLT (M6X1X12-MM)	
	3	1	**375-9272**	1	PLUG	
M	4	1	**6I-4200**	3	BOLT (M10X1.5X16-MM)	
	5	1	**393-4006**	1	GASKET	
	6	1	**287-8597**	2	DOWEL	
	7	1	**102-1957**	1	PLATE	
M	8	1	**121-0883**	6	BOLT (M10X1.5X30-MM)	
	9	1	**291-0353**	1	HOUSING-FLYWHEEL	
	10	1	**199-3108**	1	PLUG	

M - METRIC PART

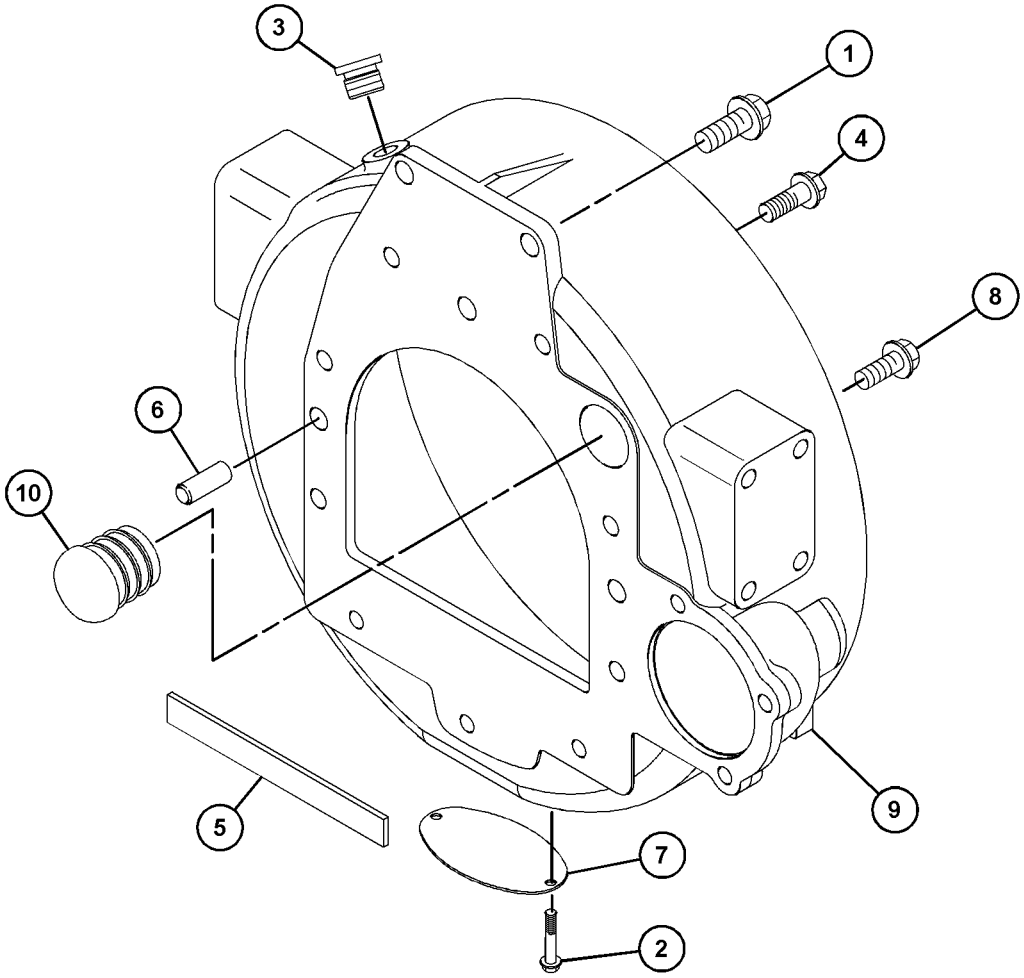

GRAPHIC #1 <END> g06219273

243-2454 HOUSING GP-FLYWHEEL

SMCS-1157 **i05185975**

NOTE	REF NO	GRAPHIC REF	PART NUMBER	QTY	PART NAME 1 2 3 4 5 6 (PRODUCT LEVEL)	SEE PAGE
M	1	1	**6I-0423**	2	BOLT (M12X1.75X30-MM)	
M	2	1	**6I-0631**	2	BOLT (M6X1X12-MM)	
M	3	1	**6I-0654**	12	BOLT (M10X1.5X25-MM)	
	4	1	**375-9272**	1	PLUG	
M	5	1	**6I-4200**	3	BOLT (M10X1.5X16-MM)	
	6	1	**7W-4642**	1	SHIELD-DUST	
	7	1	**287-8597**	2	DOWEL	
	8	1	**102-1957**	1	PLATE	
M	9	1	**121-0883**	6	BOLT (M10X1.5X30-MM)	
	10	1	**149-9176**	1	HOUSING-FLYWHEEL	
	11	1	**166-6189**	1	PLATE	
	12	1	**199-3108**	1	PLUG	
	13	1	**199-3109**	1	PLUG	

M - METRIC PART

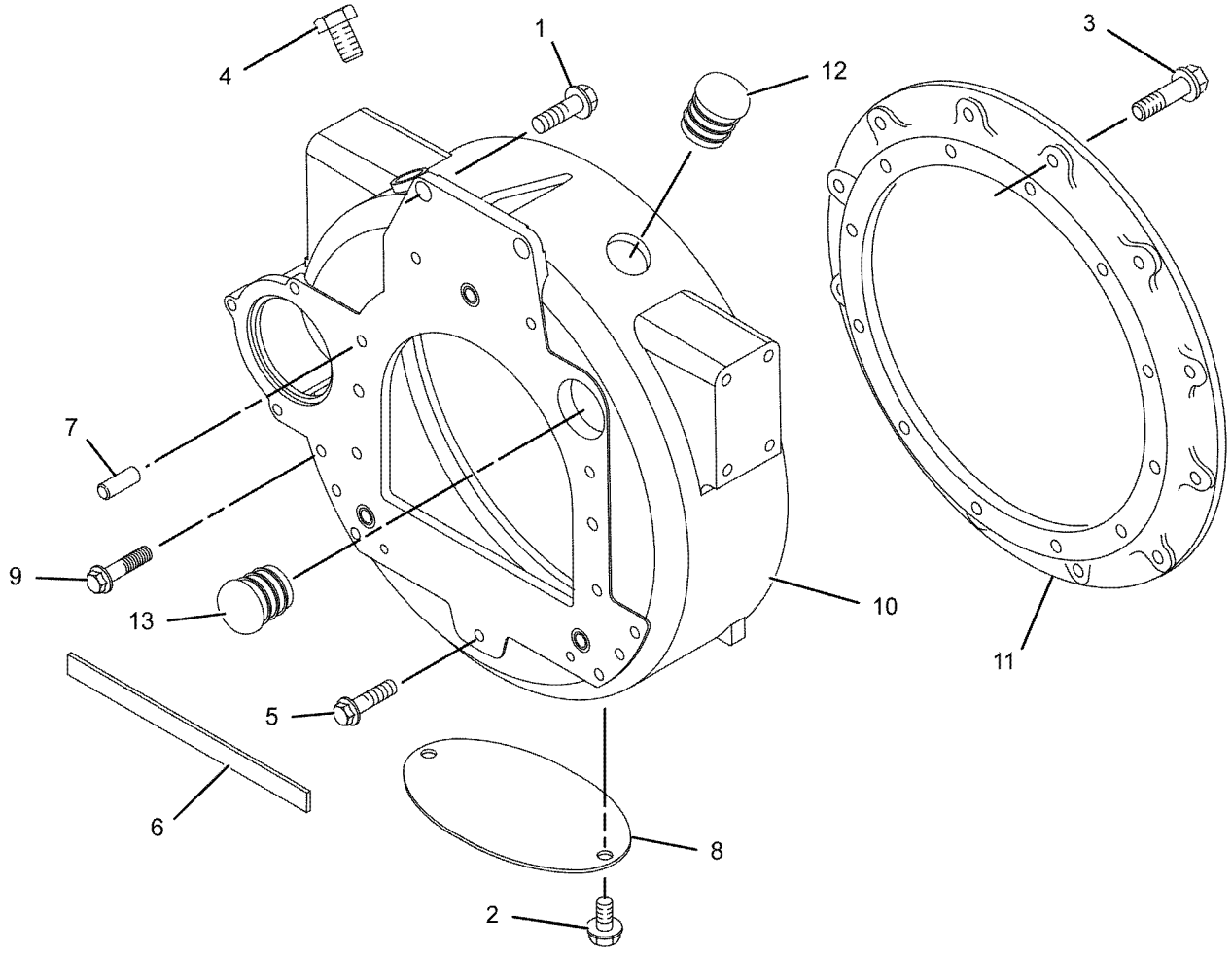

GRAPHIC #1 <END> g01022551

260-3214 HOUSING GP-FLYWHEEL

SMCS-1157 **i04921675**

NOTE	REF NO	GRAPHIC REF	PART NUMBER	QTY	PART NAME 1 2 3 4 5 6 (PRODUCT LEVEL)	SEE PAGE
M	1	1	**6I-0423**	2	BOLT (M12X1.75X30-MM)	
M	2	1	**6I-0631**	2	BOLT (M6X1X12-MM)	
	3	1	**375-9272**	1	PLUG	
	4	1	**287-8597**	2	DOWEL	
	5	1	**102-1957**	1	PLATE	
M	6	1	**121-0883**	9	BOLT (M10X1.5X30-MM)	
	7	1	**149-9176**	1	HOUSING-FLYWHEEL	
	8	1	**199-3108**	1	PLUG	
	9	1	**199-3109**	1	PLUG	

M - METRIC PART

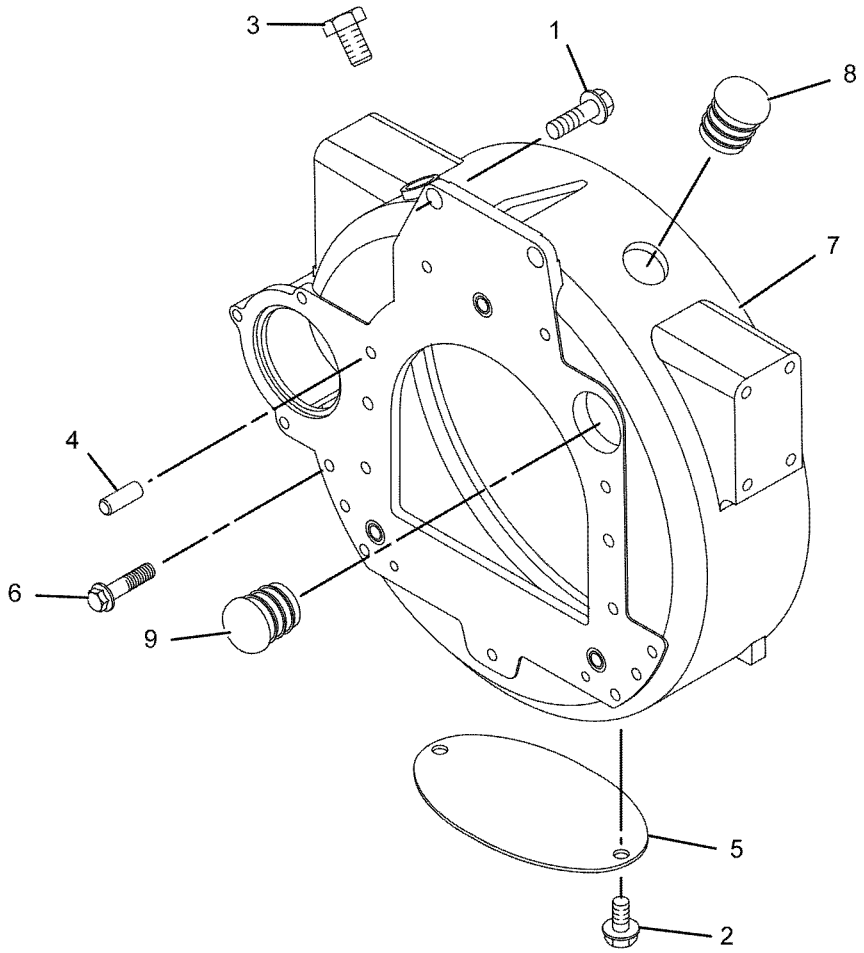

GRAPHIC #1 <END> g01119873

268-3626 HOUSING GP-FLYWHEEL

SMCS-1157 **i02293046**

NOTE	REF NO	GRAPHIC REF	PART NUMBER	QTY	PART NAME 1 2 3 4 5 6 (PRODUCT LEVEL)	SEE PAGE
	1	1	**032-9102**	2	DOWEL	
	2	1	**4B-4278**	3	WASHER (10.2X20.5X1.6-MM THK)	
	3	1	**163-3233**	1	HOUSING-FLYWHEEL	
	4	1	**186-2364**	6	BOLT	
	5	1	**268-3681**	2	BOLT	

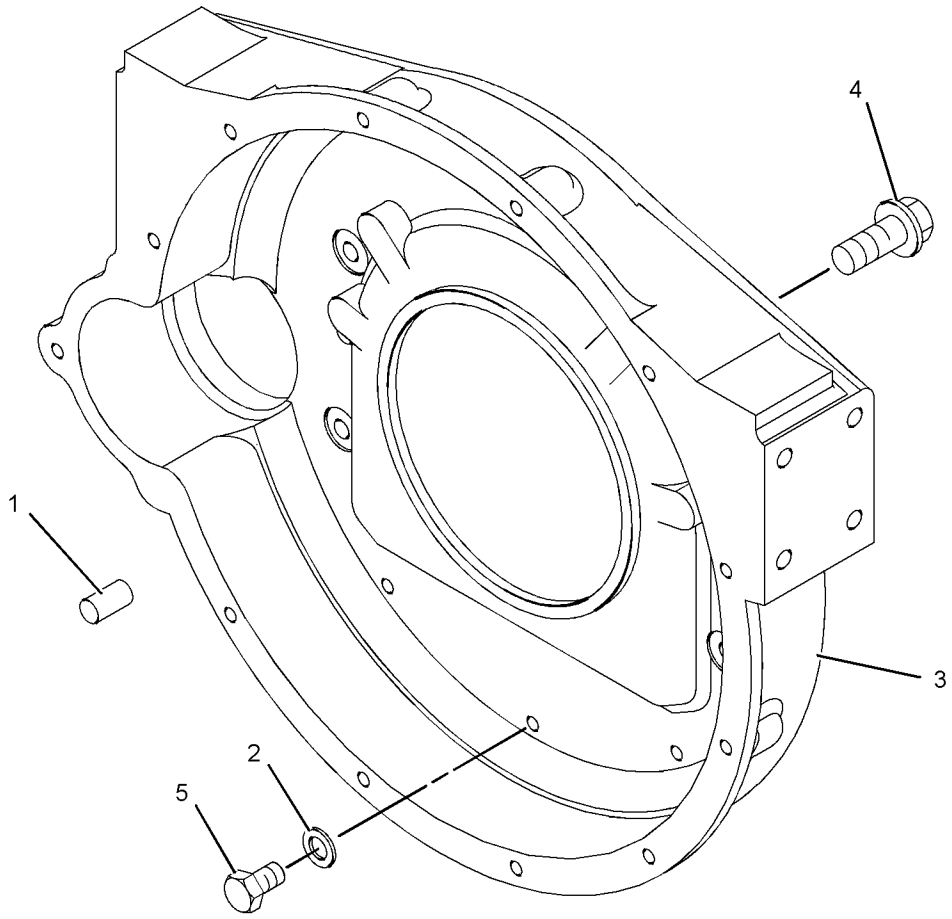

GRAPHIC #1 <END> g01154895

277-2940 HOUSING GP-FLYWHEEL

SMCS-1157 **i06991581**

NOTE	REF NO	GRAPHIC REF	PART NUMBER	QTY	PART NAME 1 2 3 4 5 6 (PRODUCT LEVEL)	SEE PAGE
M	1	1	**6I-0423**	2	BOLT (M12X1.75X30-MM)	
	2	1	**375-9272**	1	PLUG	
M	3	1	**6I-4200**	3	BOLT (M10X1.5X16-MM)	
	4	1	**393-4006**	1	GASKET	
	5	1	**287-8597**	2	DOWEL	
M	6	1	**121-0883**	6	BOLT (M10X1.5X30-MM)	
	7	1	**199-3109**	1	PLUG	
	8	1	**277-2942**	1	HOUSING-FLYWHEEL	

M - METRIC PART

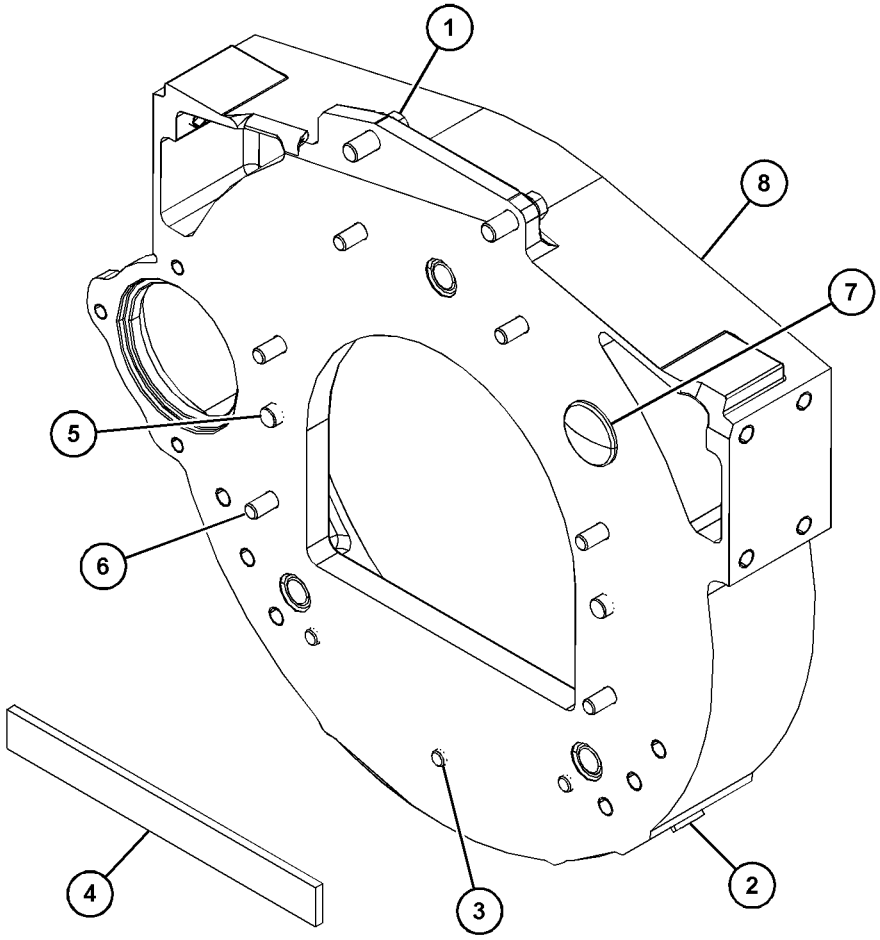

GRAPHIC #1 <END> g06206622

299-0165 HOUSING GP-FLYWHEEL

SMCS-1157 **i05185421**

NOTE	REF NO	GRAPHIC REF	PART NUMBER	QTY	PART NAME 1 2 3 4 5 6 (PRODUCT LEVEL)	SEE PAGE
M	1	1	**6I-0423**	2	BOLT (M12X1.75X30-MM)	
M	2	1	**6I-0593**	3	BOLT (M10X1.5X30-MM)	
M	3	1	**6I-0631**	2	BOLT (M6X1X12-MM)	
	4	1	**375-9272**	1	PLUG	
	5	1	**102-1957**	1	PLATE	
M	6	1	**121-0883**	6	BOLT (M10X1.5X30-MM)	
	7	1	**199-3109**	1	PLUG	
	8	1	**287-8597**	1	DOWEL	
	9	1	**291-0353**	1	HOUSING-FLYWHEEL	

M - METRIC PART

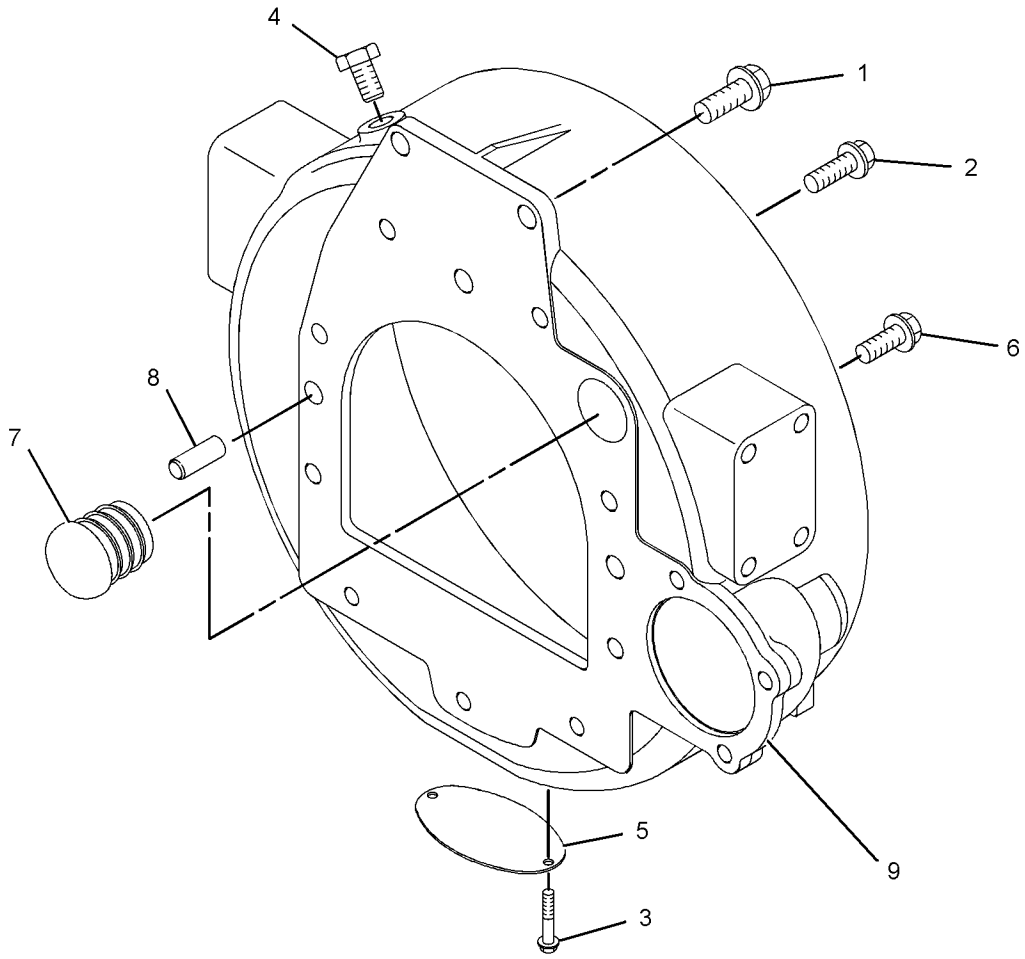

GRAPHIC #1 <END> g01300292

329-1367 HOUSING GP-FLYWHEEL

S/N: 33422540-UP

SMCS-1157 **i03084651**

NOTE	REF NO	GRAPHIC REF	PART NUMBER	QTY	PART NAME 1 2 3 4 5 6 (PRODUCT LEVEL)	SEE PAGE
	1	1	**7W-4642**	1	SHIELD-DUST	
	2	1	**032-9102**	2	DOWEL	
	3	1	**033-7630**	3	PLUG	
	4	1	**067-6810**	3	WASHER	
	5	1	**163-3233**	1	HOUSING-FLYWHEEL	
	6	1	**186-2364**	6	BOLT	

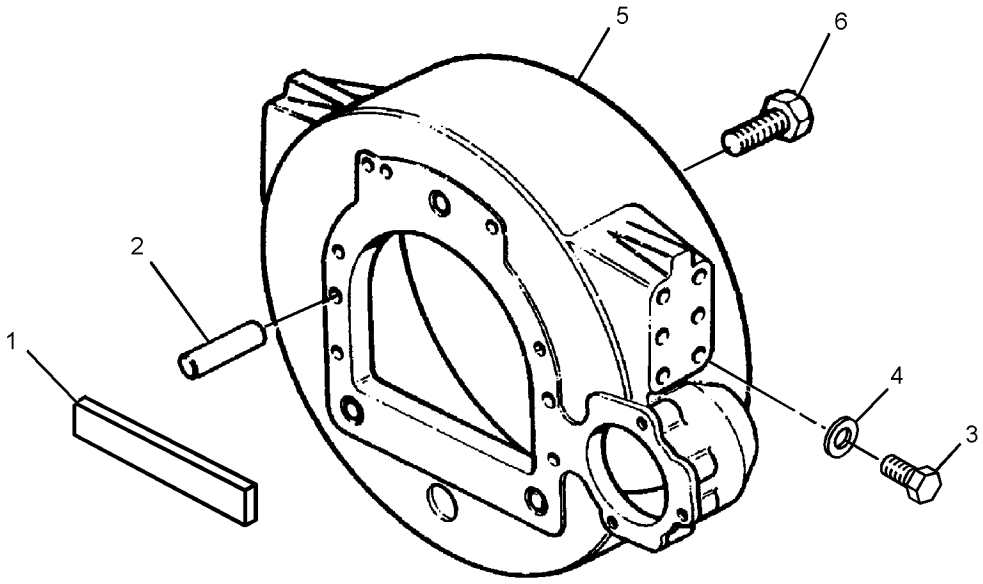

GRAPHIC #1 <END> g01811026

232-3670 HOUSING GP-FRONT

S/N: 3341-24778

SMCS-1151, 1162, 1206 **i02918650**

NOTE	REF NO	GRAPHIC REF	PART NUMBER	QTY	PART NAME 1 2 3 4 5 6 (PRODUCT LEVEL)	SEE PAGE
	1	1	**1B-8736**	1	KEY-WOODRUFF	
M	2	1	**6I-0217**	8	BOLT (M8X1.25X20-MM)	
M	3	1	**6I-0645**	4	BOLT (M8X1.25X25-MM)	
M	4	1	**6I-0650**	3	BOLT (M10X1.5X65-MM)	
M	5	1	**7C-4616**	1	BOLT (M12X1.75X45-MM)	
	6	1	**067-6179**	1	DOWEL	
	7	1	**324-0444**	1	HUB-IDLER GEAR	
	8	1	**295-1711**	1	PLATE-RETAINING	
M	9	1	**100-3751**	5	BOLT (M8X1.25X65-MM)	
M	10	1	**124-3815**	10	BOLT (M8X1.25X16-MM)	
	11	1	**232-3666**	1	WASHER-THRUST	
	12	1	**251-4336**	1	GEAR AS-IDLER (73-TEETH)	
	13	1	**216-8634**	1	GEAR-CAMSHAFT (68-TEETH)	
	14	1	**294-0288**	1	HOUSING-FRONT	
	15	1	**288-0422**	1	SEAL-CRANKSHAFT (FRONT)	
	16	1	**277-3012**	1	GASKET-COVER	
	18	1	**232-3657**	1	COVER AS-FRONT	
	18A	1	**225-8287**	1	GASKET	
	19	1	**133-1011**	1	WASHER	

M - METRIC PART

232-3670 **HOUSING GP-FRONT (**contd.**)** **i02918650**

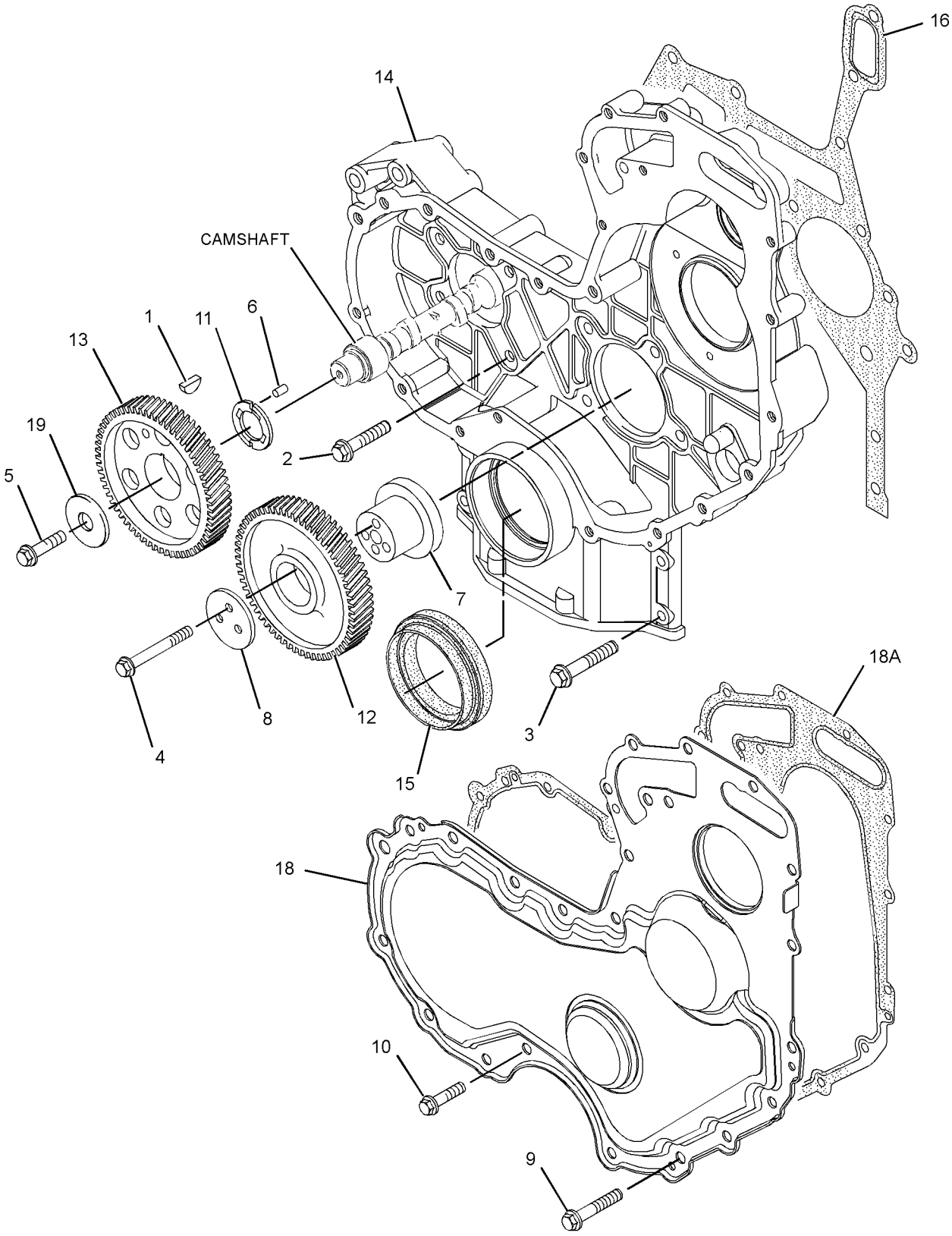

GRAPHIC #1 <END> g01290493

232-3670 HOUSING GP-FRONT

S/N: 33424779-UP

SMCS-1151, 1162, 1206 **i06714880**

NOTE	REF NO	GRAPHIC REF	PART NUMBER	QTY	PART NAME 1 2 3 4 5 6 (PRODUCT LEVEL)	SEE PAGE
M	1	1	**6I-0217**	6	BOLT (M8X1.25X20-MM)	
M	2	1	**101-3895**	2	BOLT (M8X1.25X35-MM)	
M	3	1	**6I-0645**	4	BOLT (M8X1.25X25-MM)	
M	4	1	**6I-0650**	3	BOLT (M10X1.5X65-MM)	
M	5	1	**7C-4616**	1	BOLT (M12X1.75X45-MM)	
	6	1	**067-6179**	1	DOWEL	
J	7	1	**324-0444**	1	HUB-IDLER GEAR	
CJ	8	1	**346-0408**	1	PLATE	
M	9	1	**100-3751**	5	BOLT (M8X1.25X65-MM)	
M	10	1	**124-3815**	10	BOLT (M8X1.25X16-MM)	
	11	1	**232-3666**	1	WASHER-THRUST	
CJ	12	1	**346-0407**	1	GEAR-IDLER (73-TEETH)	
	13	1	**425-7103**	1	GEAR (68-TEETH)	
	14	1	**294-0288**	1	HOUSING-FRONT	
	15	1	**288-0422**	1	SEAL-CRANKSHAFT (FRONT)	
	16	1	**277-3012**	1	GASKET-COVER	
	17	1	**133-1011**	1	WASHER	
	18	1	**232-3657**	1	COVER AS-FRONT	
	18A	1	**225-8287**	1	GASKET	

C - CHANGE FROM PREVIOUS TYPE
J - CAN ONLY BE USED IN CONJUNCTION WITH 346-0408 & 324-0444
M - METRIC PART

232-3670 **HOUSING GP-FRONT (**contd.**)** **i06714880**

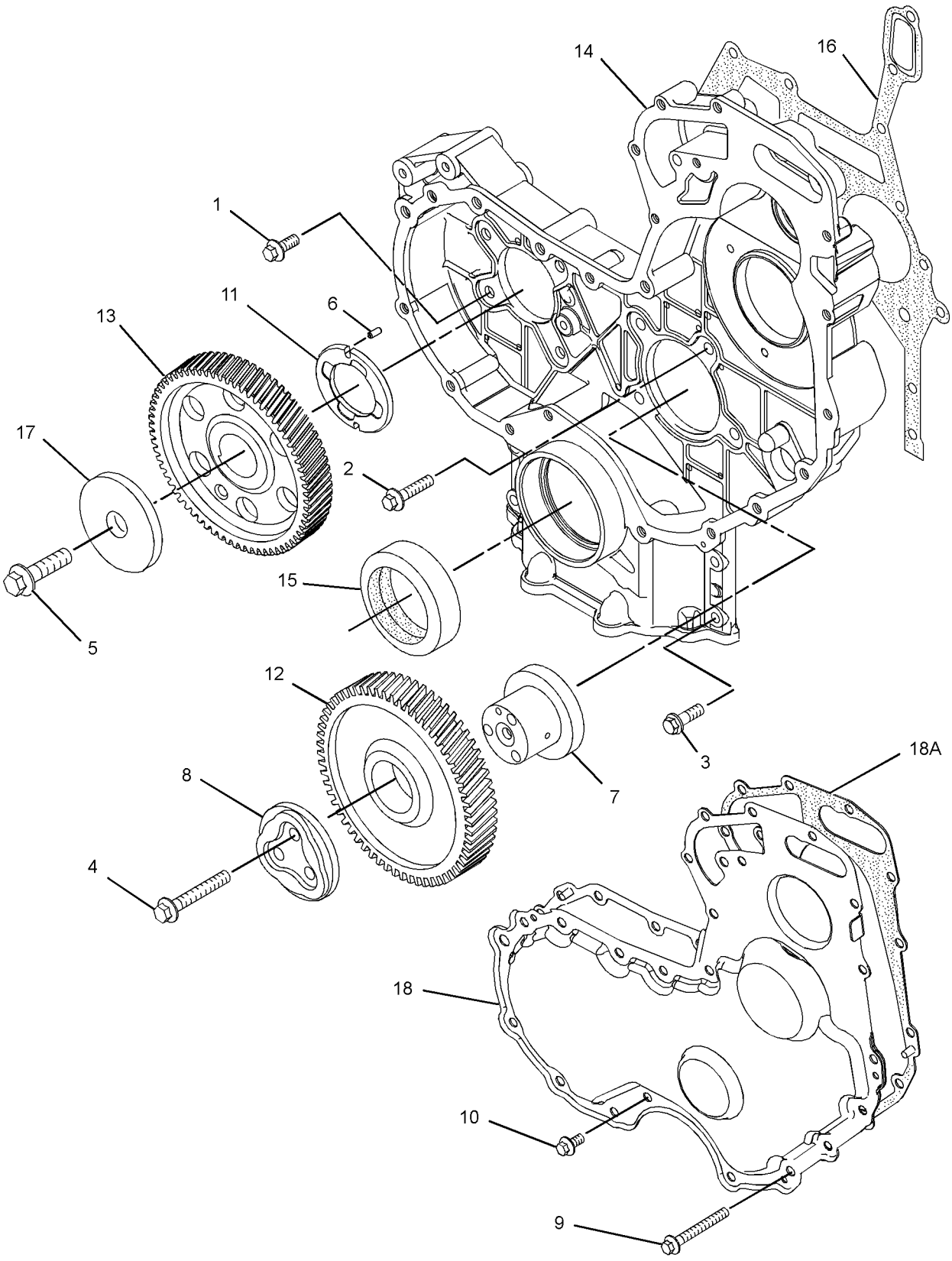

GRAPHIC #1 <END> g02187533

232-6179 HOUSING GP-FRONT

S/N: 3341-1603

ALSO AN ATTACHMENT

SMCS-1151, 1162, 1206 **i03794972**

NOTE	REF NO	GRAPHIC REF	PART NUMBER	QTY	PART NAME 1 2 3 4 5 6 (PRODUCT LEVEL)	SEE PAGE
	1	1	**1B-8736**	2	KEY-WOODRUFF	
	2	1	**4W-5359**	1	SEAL-CRANKSHAFT (FRONT)	
	2A	1	**167-2153**	1	SLEEVE-CRANKSHAFT	
M	3	1	**6I-0217**	8	BOLT (M8X1.25X20-MM)	
M	4	1	**6I-0645**	4	BOLT (M8X1.25X25-MM)	
M	5	1	**6I-0789**	3	BOLT (M10X1.5X60-MM)	
M	6	1	**7C-4616**	1	BOLT (M12X1.75X45-MM)	
	7	1	**067-6179**	1	DOWEL	
	8	1	**067-6897**	1	HUB-IDLER GEAR	
	9	1	**067-6900**	1	PLATE-RETAINING	
M	10	1	**100-3751**	5	BOLT (M8X1.25X65-MM)	
M	11	1	**100-4830**	1	BOLT (M10X1.5X20-MM)	
M	12	1	**124-3815**	9	BOLT (M8X1.25X16-MM)	
	13	1	**232-3666**	1	WASHER-THRUST	
	14	1	**216-8634**	1	GEAR-CAMSHAFT (68-TEETH)	
	15	1	**225-8281**	1	GASKET	
	16	1	**225-8282**	1	GASKET	
	17	1	**226-8767**	1	COVER AS-FRONT	
	17A	1	**226-8766**	1	GASKET-COVER	
	18	1	**133-1011**	1	WASHER	
	19	1	**251-4336**	1	GEAR AS-IDLER (73-TEETH)	
	20	1	**232-6178**	1	HOUSING-FRONT	
					AVAILABLE REPAIR KIT(S):	
			252-8737	1	KIT-REPAIR (FRONT COVER, TIMING GEAR)	
					(INCLUDES SEAL, GEAR, HUB, PLATE & GASKETS)	

M - METRIC PART

232-6179 **HOUSING GP-FRONT (**contd.**)** **i03794972**

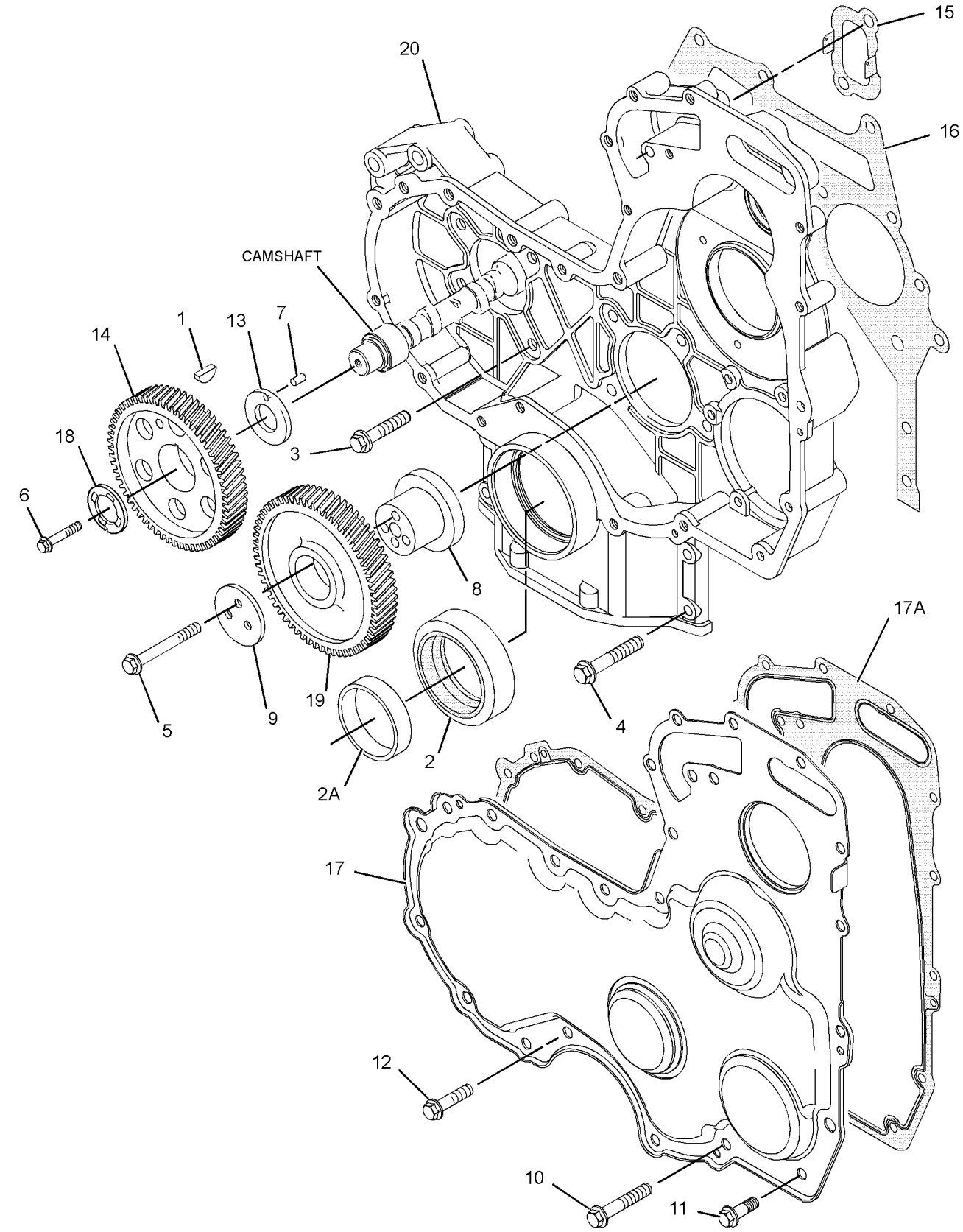

GRAPHIC #1 <END> g02053573

232-6179 HOUSING GP-FRONT

ALSO AN ATTACHMENT

SMCS-1151, 1162, 1206 **i06710257**

NOTE	REF NO	GRAPHIC REF	PART NUMBER	QTY	PART NAME 1 2 3 4 5 6 (PRODUCT LEVEL)	SEE PAGE
	1	1	**288-0422**	1	SEAL-CRANKSHAFT (FRONT)	
	2	1	**323-3515**	1	HOUSING-FRONT	
	2A	1	**225-6522**	1	PLUG-CUP	
M	3	1	**6I-0217**	6	BOLT (M8X1.25X20-MM)	
M	4	1	**6I-0645**	4	BOLT (M8X1.25X25-MM)	
CM	5	1	**6I-0650**	3	BOLT (M10X1.5X65-MM)	
M	6	1	**7C-4616**	1	BOLT (M12X1.75X45-MM)	
	7	1	**067-6179**	1	DOWEL	
C	8	1	**324-0444**	1	HUB-IDLER GEAR	
C	9	1	**346-0408**	1	PLATE	
M	10	1	**100-3751**	5	BOLT (M8X1.25X65-MM)	
M	11	1	**100-4830**	1	BOLT (M10X1.5X20-MM)	
M	12	1	**124-3815**	9	BOLT (M8X1.25X16-MM)	
	13	1	**232-3666**	1	WASHER-THRUST	
	14	1	**425-7103**	1	GEAR (68-TEETH)	
	15	1	**277-3012**	1	GASKET-COVER	
	16	1	**251-4336**	1	GEAR AS-IDLER (73-TEETH)	
	17	1	**226-8767**	1	COVER AS-FRONT	
	17A	1	**226-8766**	1	GASKET-COVER	
	18	1	**133-1011**	1	WASHER	
M	19	1	**101-3895**	2	BOLT (M8X1.25X35-MM)	

C - CHANGE FROM PREVIOUS TYPE
M - METRIC PART

232-6179 **HOUSING GP-FRONT (**contd.**)** **i06710257**

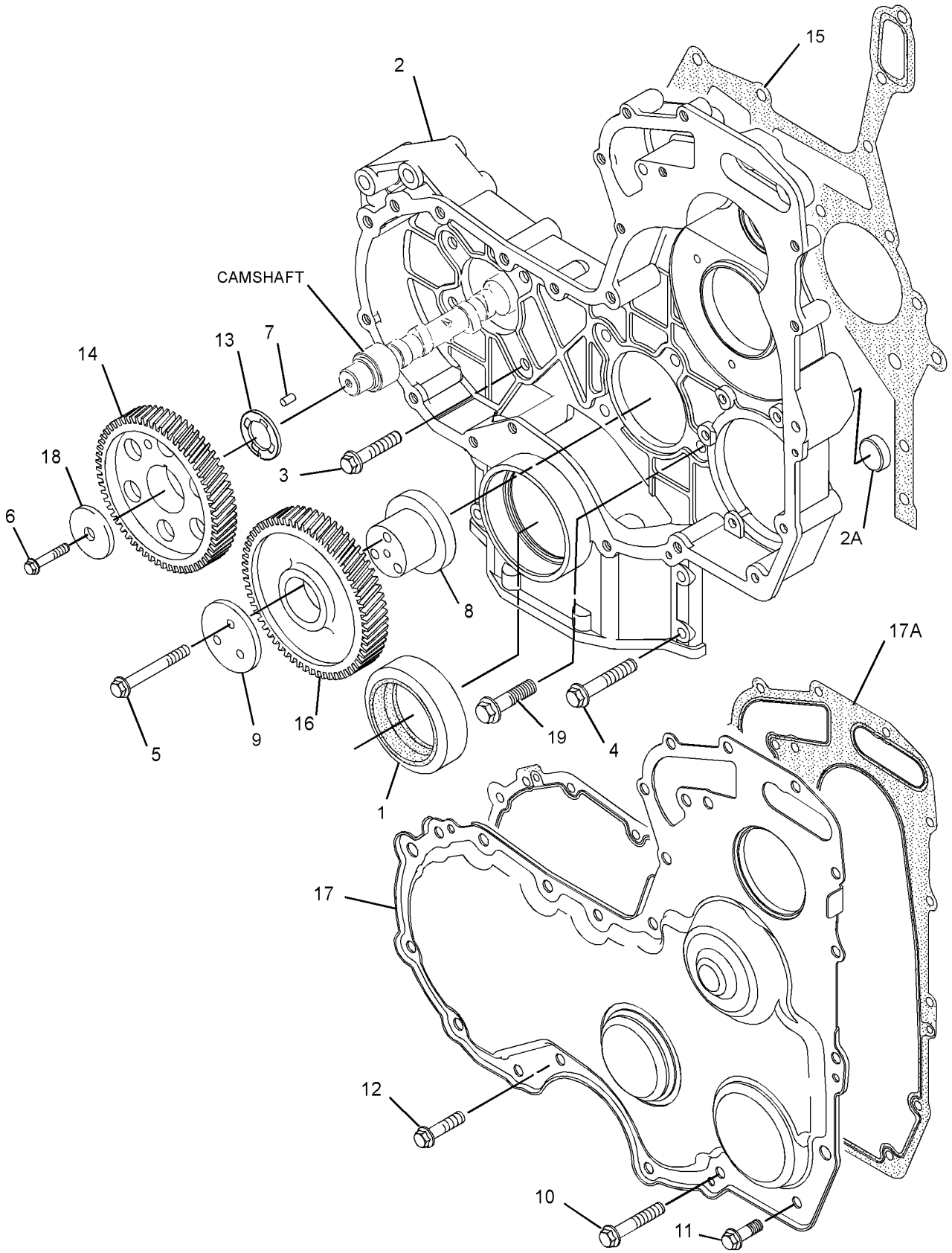

GRAPHIC #1 <END> g02196736

235-1419 HOUSING GP-FRONT

TYPE 1

SMCS-1151, 1162, 1206 **i02556072**

NOTE	REF NO	GRAPHIC REF	PART NUMBER	QTY	PART NAME 1 2 3 4 5 6 (PRODUCT LEVEL)	SEE PAGE
	1	1	**1B-8736**	1	KEY-WOODRUFF	
	2	1	**4W-5359**	1	SEAL-CRANKSHAFT	
	2A	1	**167-2153**	1	SLEEVE-CRANKSHAFT	
M	3	1	**6I-0217**	8	BOLT (M8X1.25X20-MM)	
M	4	1	**6I-0454**	3	BOLT (M10X1.5X70-MM)	
M	5	1	**6I-0645**	4	BOLT (M8X1.25X25-MM)	
M	6	1	**7C-4616**	1	BOLT (M12X1.75X45-MM)	
	7	1	**067-6179**	1	DOWEL	
M	8	1	**100-3751**	5	BOLT (M8X1.25X65-MM)	
M	9	1	**100-4830**	1	BOLT (M10X1.5X20-MM)	
M	10	1	**124-3815**	9	BOLT (M8X1.25X16-MM)	
	11	1	**232-3666**	1	WASHER-THRUST	
	12	1	**216-8634**	1	GEAR-CAMSHAFT (68-TEETH)	
	13	1	**225-8281**	1	GASKET	
	14	1	**225-8282**	1	GASKET	
	15	1	**226-8767**	1	COVER AS-FRONT	
	15A	1	**226-8766**	1	GASKET-COVER	
	17	1	**133-1011**	1	WASHER	
	18	1	**294-0298**	1	HOUSING-FRONT	
	19	1	**235-1418**	1	GEAR AS-IDLER (73-TEETH)	
M	19A	1	**5C-9553**	1	BOLT (M6X1X16-MM)	
	19B	1	**235-1064**	1	PLATE-RETAINING	
	19C	1	**235-1352**	2	CLIP	
	19D	1	**235-1358**	1	BEARING	
	19E	1	**235-1391**	1	HUB-IDLER GEAR	
	19F	1	**235-1398**	2	WASHER-THRUST	

M - METRIC PART

235-1419 **HOUSING GP-FRONT (**contd.**)** **i02556072**

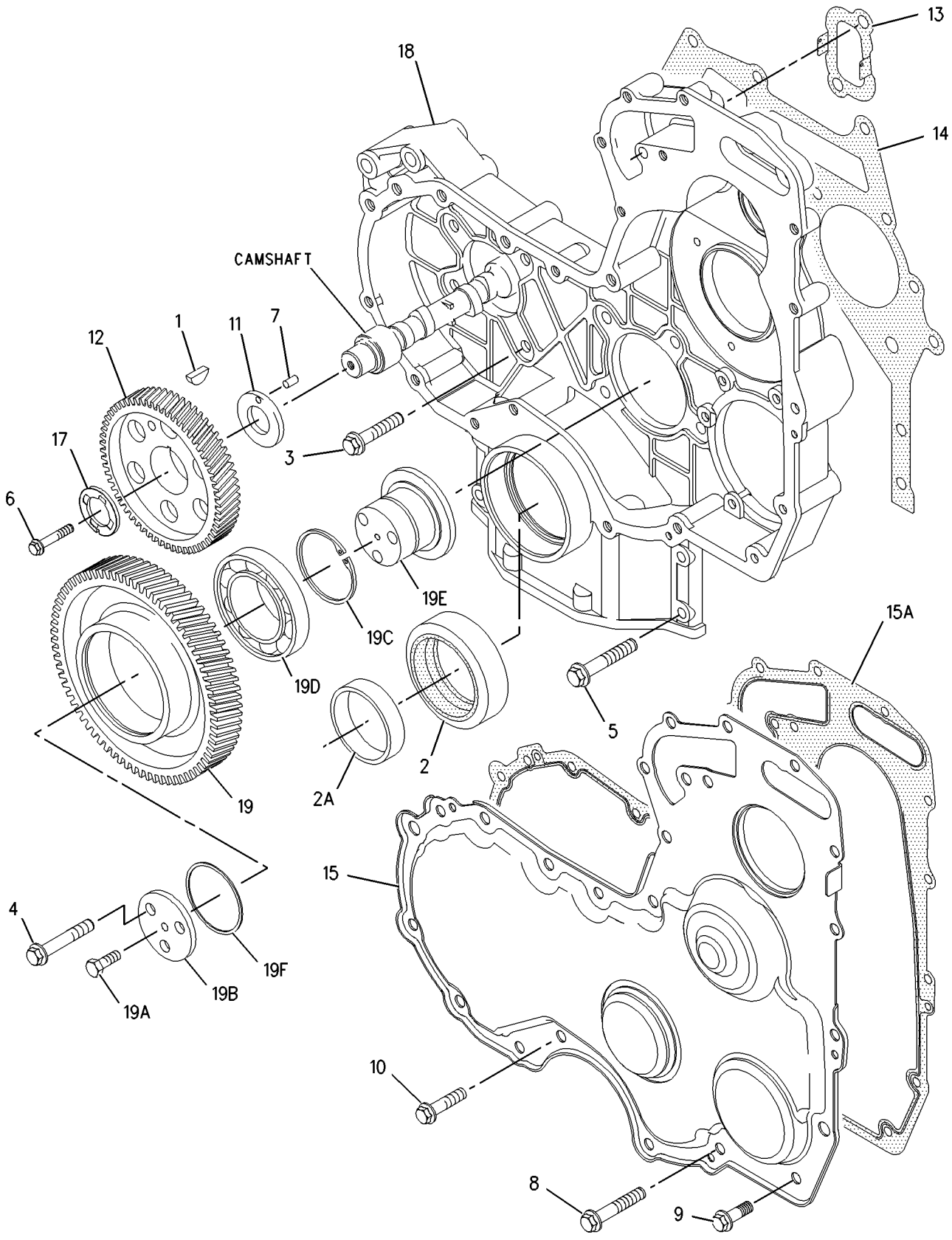

GRAPHIC #1 <END> g00985613

235-1419 HOUSING GP-FRONT

TYPE 2

SMCS-1151, 1162, 1206 **i02908157**

NOTE	REF NO	GRAPHIC REF	PART NUMBER	QTY	PART NAME 1 2 3 4 5 6 (PRODUCT LEVEL)	SEE PAGE
	1	1	**1B-8736**	1	KEY-WOODRUFF	
	2	1	**288-0422**	1	SEAL-CRANKSHAFT	
M	3	1	**6I-0217**	8	BOLT (M8X1.25X20-MM)	
M	4	1	**6I-0454**	3	BOLT (M10X1.5X70-MM)	
M	5	1	**6I-0645**	4	BOLT (M8X1.25X25-MM)	
M	6	1	**7C-4616**	1	BOLT (M12X1.75X45-MM)	
	7	1	**067-6179**	1	DOWEL	
M	8	1	**100-3751**	5	BOLT (M8X1.25X65-MM)	
M	9	1	**100-4830**	1	BOLT (M10X1.5X20-MM)	
M	10	1	**124-3815**	9	BOLT (M8X1.25X16-MM)	
	11	1	**232-3666**	1	WASHER-THRUST	
	12	1	**216-8634**	1	GEAR-CAMSHAFT (68-TEETH)	
C	13	1	**277-3012**	1	GASKET-COVER	
	15	1	**226-8767**	1	COVER AS-FRONT	
	15A	1	**226-8766**	1	GASKET-COVER	
	17	1	**133-1011**	1	WASHER	
	18	1	**323-3515**	1	HOUSING-FRONT	
	19	1	**235-1418**	1	GEAR AS-IDLER (73-TEETH)	
M	19A	1	**5C-9553**	1	BOLT (M6X1X16-MM)	
	19B	1	**235-1064**	1	PLATE-RETAINING	
	19C	1	**235-1352**	2	CLIP	
	19D	1	**235-1358**	1	BEARING	
	19E	1	**235-1391**	1	HUB-IDLER GEAR	
	19F	1	**235-1398**	2	WASHER-THRUST	

C - CHANGE FROM PREVIOUS TYPE
M - METRIC PART

235-1419 **HOUSING GP-FRONT (**contd.**)** **i02908157**

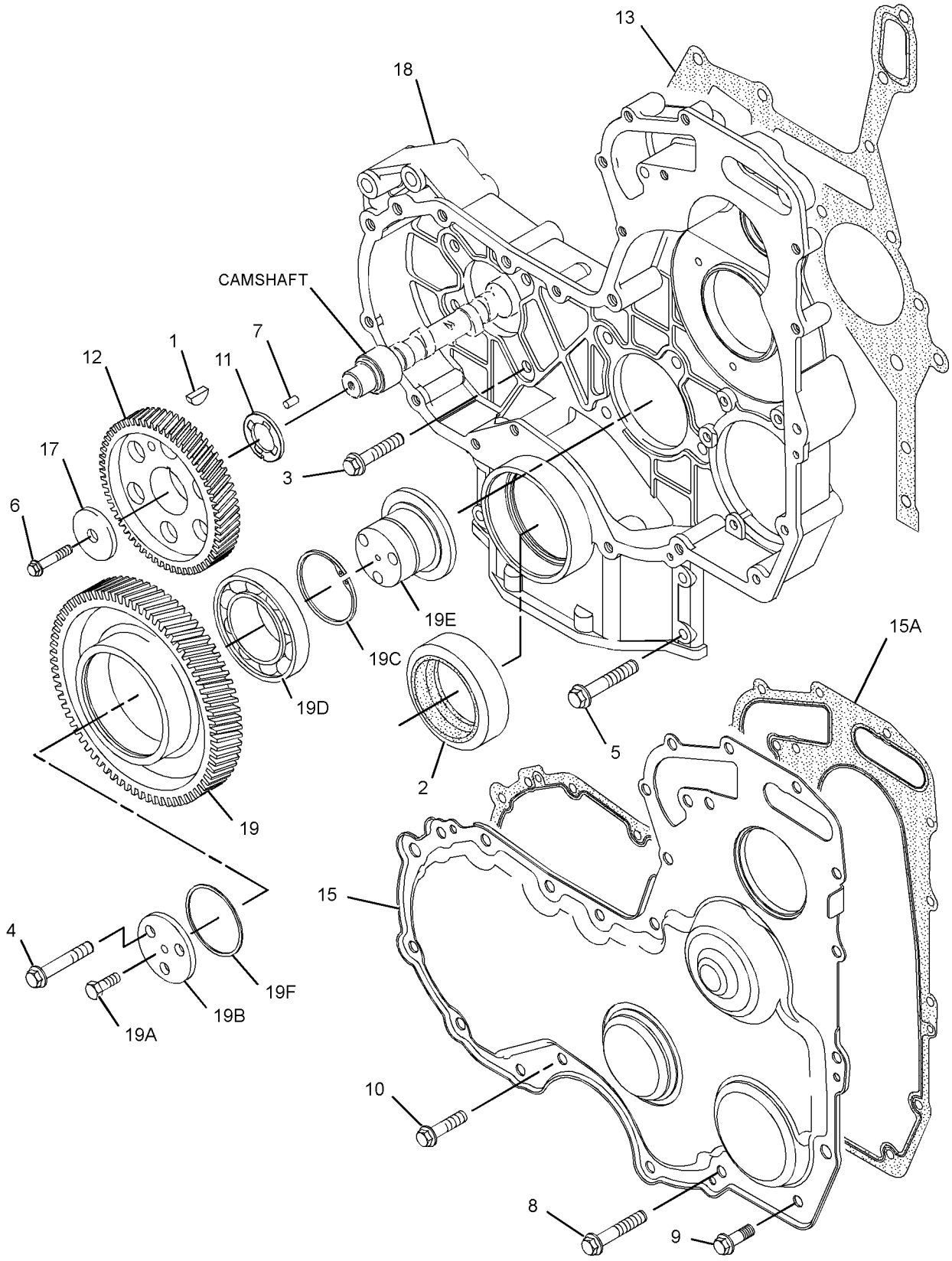

GRAPHIC #1 <END> g01322378

235-1419 HOUSING GP-FRONT

TYPE 3

SMCS-1151, 1162, 1206 **i06715041**

NOTE	REF NO	GRAPHIC REF	PART NUMBER	QTY	PART NAME 1 2 3 4 5 6 (PRODUCT LEVEL)	SEE PAGE
	1	1	**288-0422**	1	SEAL-CRANKSHAFT	
M	2	1	**101-3895**	2	BOLT (M8X1.25X35-MM)	
M	3	1	**6I-0217**	6	BOLT (M8X1.25X20-MM)	
M	4	1	**6I-0454**	3	BOLT (M10X1.5X70-MM)	
M	5	1	**6I-0645**	4	BOLT (M8X1.25X25-MM)	
M	6	1	**7C-4616**	1	BOLT (M12X1.75X45-MM)	
	7	1	**067-6179**	1	DOWEL	
M	8	1	**100-3751**	5	BOLT (M8X1.25X65-MM)	
M	9	1	**100-4830**	1	BOLT (M10X1.5X20-MM)	
M	10	1	**124-3815**	9	BOLT (M8X1.25X16-MM)	
	11	1	**232-3666**	1	WASHER-THRUST	
	12	1	**425-7103**	1	GEAR (68-TEETH)	
	13	1	**277-3012**	1	GASKET-COVER	
	15	1	**226-8767**	1	COVER AS-FRONT	
	15A	1	**226-8766**	1	GASKET-COVER	
	17	1	**133-1011**	1	WASHER	
	18	1	**323-3515**	1	HOUSING-FRONT	
C	19	1	**359-9431**	1	GEAR-IDLER	
C	20	1	**291-6517**	1	PLATE	

C - CHANGE FROM PREVIOUS TYPE
M - METRIC PART

235-1419 **HOUSING GP-FRONT (**contd.**)** **i06715041**

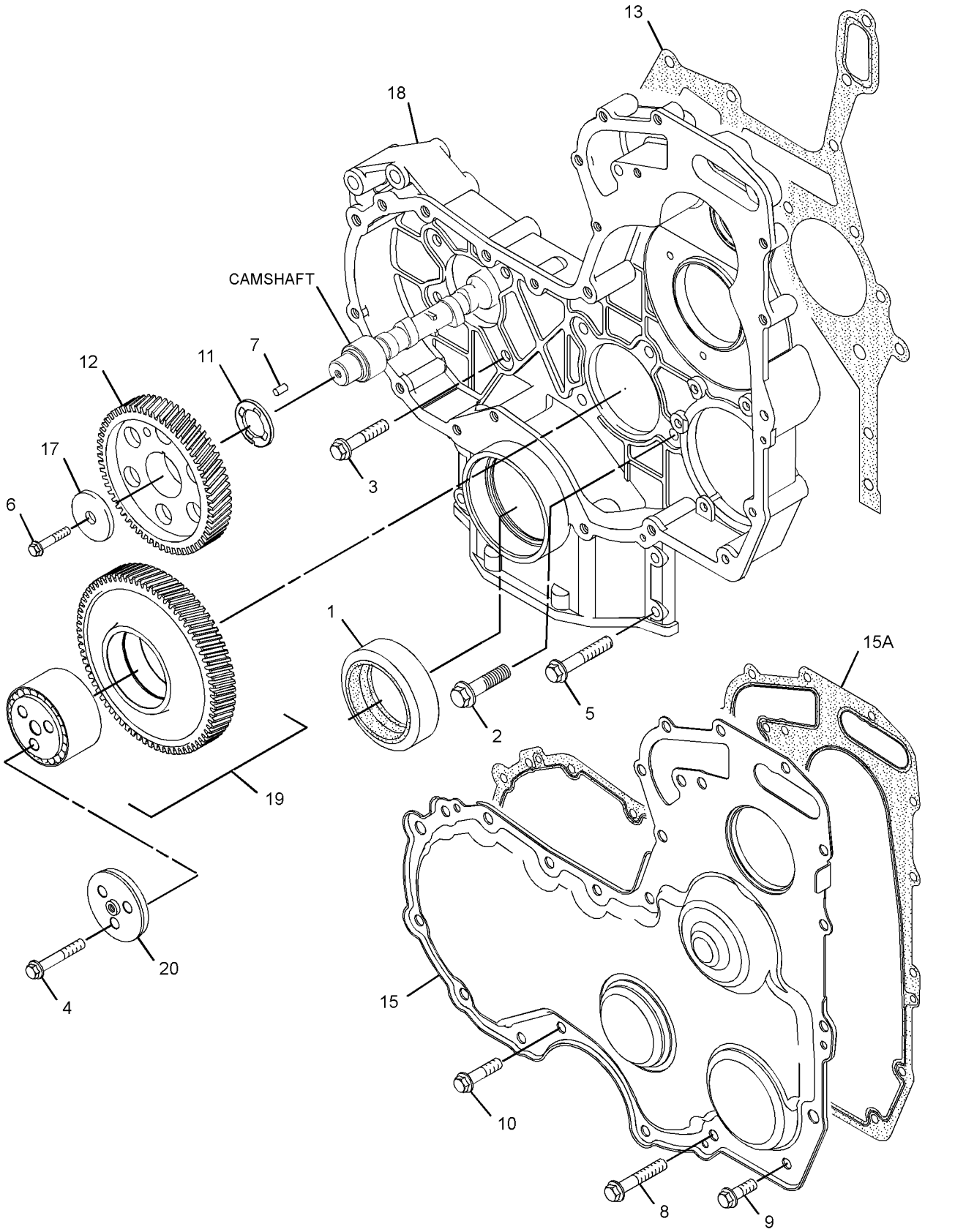

GRAPHIC #1 <END> g02685277

243-3272 HOUSING GP-FRONT

ALSO AN ATTACHMENT

TYPE 1

SMCS-1151, 1162, 1206 **i02650857**

NOTE	REF NO	GRAPHIC REF	PART NUMBER	QTY	PART NAME 1 2 3 4 5 6 (PRODUCT LEVEL)	SEE PAGE
	1	1	**1B-8736**	1	KEY-WOODRUFF	
	2	1	**288-0422**	1	SEAL-CRANKSHAFT	
M	3	1	**6I-0217**	8	BOLT (M8X1.25X20-MM)	
M	4	1	**6I-0645**	4	BOLT (M8X1.25X25-MM)	
M	5	1	**7C-4616**	1	BOLT (M12X1.75X45-MM)	
	6	1	**067-6179**	1	DOWEL	
M	7	1	**100-3751**	5	BOLT (M8X1.25X65-MM)	
M	8	1	**100-4830**	1	BOLT (M10X1.5X20-MM)	
M	9	1	**124-3815**	9	BOLT (M8X1.25X16-MM)	
	10	1	**232-3666**	1	WASHER-THRUST	
	11	1	**225-8281**	1	GASKET	
	12	1	**225-8282**	1	GASKET	
	13	1	**133-1011**	1	WASHER	
	14	1	**226-8767**	1	COVER AS-FRONT	
	14A	1	**226-8766**	1	GASKET-COVER	
	15	1	**235-1418**	1	GEAR AS-IDLER (73-TEETH)	
M	15A	1	**5C-9553**	1	BOLT (M6X1X16-MM)	
	15B	1	**235-1064**	1	PLATE-RETAINING	
	15C	1	**235-1352**	2	CLIP	
	15D	1	**235-1358**	1	BEARING	
	15E	1	**235-1391**	1	HUB-IDLER GEAR	
	15F	1	**235-1398**	2	WASHER-THRUST	
	16	1	**243-3253**	1	HOUSING-FRONT	
	17	1	**243-3264**	1	GEAR-CAMSHAFT (68-TEETH)	

M - METRIC PART

243-3272 **HOUSING GP-FRONT (**contd.**)** **i02650857**

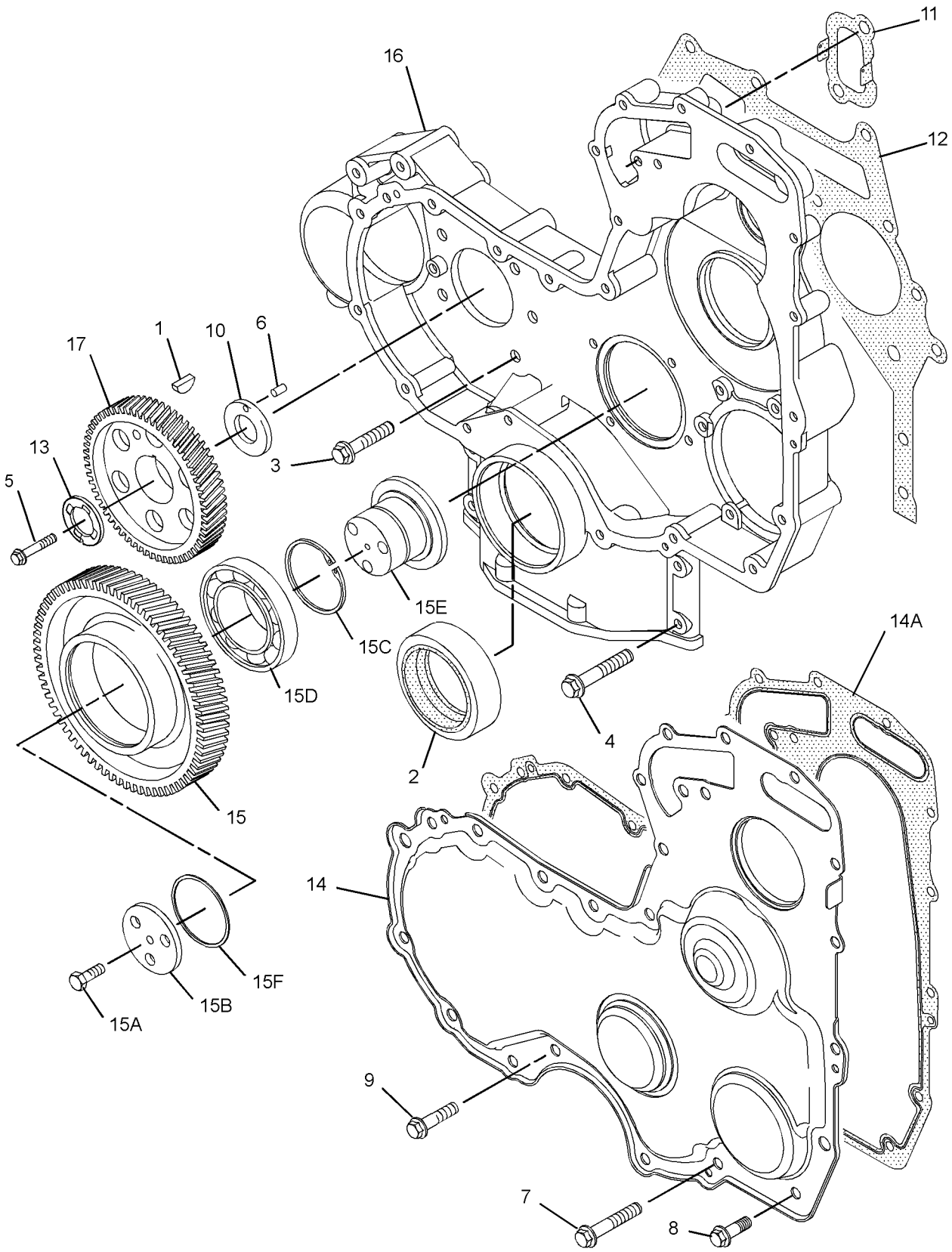

GRAPHIC #1 <END> g01317856

243-3272 HOUSING GP-FRONT

ALSO AN ATTACHMENT

TYPE 2

SMCS-1151, 1162, 1206 **i07006214**

NOTE	REF NO	GRAPHIC REF	PART NUMBER	QTY	PART NAME 1 2 3 4 5 6 (PRODUCT LEVEL)	SEE PAGE
	1	1	**288-0422**	1	SEAL-CRANKSHAFT	
M	2	1	**101-3895**	2	BOLT (M8X1.25X35-MM)	
M	3	1	**6I-0217**	6	BOLT (M8X1.25X20-MM)	
M	4	1	**6I-0645**	4	BOLT (M8X1.25X25-MM)	
M	5	1	**344-3434**	1	BOLT-FLANGE HEAD (M12X1.75X45-MM)	
	6	1	**067-6179**	1	DOWEL	
M	7	1	**100-3751**	5	BOLT (M8X1.25X65-MM)	
M	8	1	**100-4830**	1	BOLT (M10X1.5X20-MM)	
M	9	1	**124-3815**	9	BOLT (M8X1.25X16-MM)	
	10	1	**232-3666**	1	WASHER-THRUST	
C	11	1	**277-3012**	1	GASKET-COVER	
	12	1	**340-3610**	1	GEAR-CAMSHAFT (68-TEETH)	
	13	1	**368-3158**	1	WASHER	
	14	1	**226-8767**	1	COVER AS-FRONT	
	14A	1	**226-8766**	1	GASKET-COVER	
	15	1	**359-9431**	1	GEAR-IDLER (73-TEETH)	
	16	1	**243-3253**	1	HOUSING-FRONT	

C - CHANGE FROM PREVIOUS TYPE
M - METRIC PART

243-3272 **HOUSING GP-FRONT (**contd.**)** **i07006214**

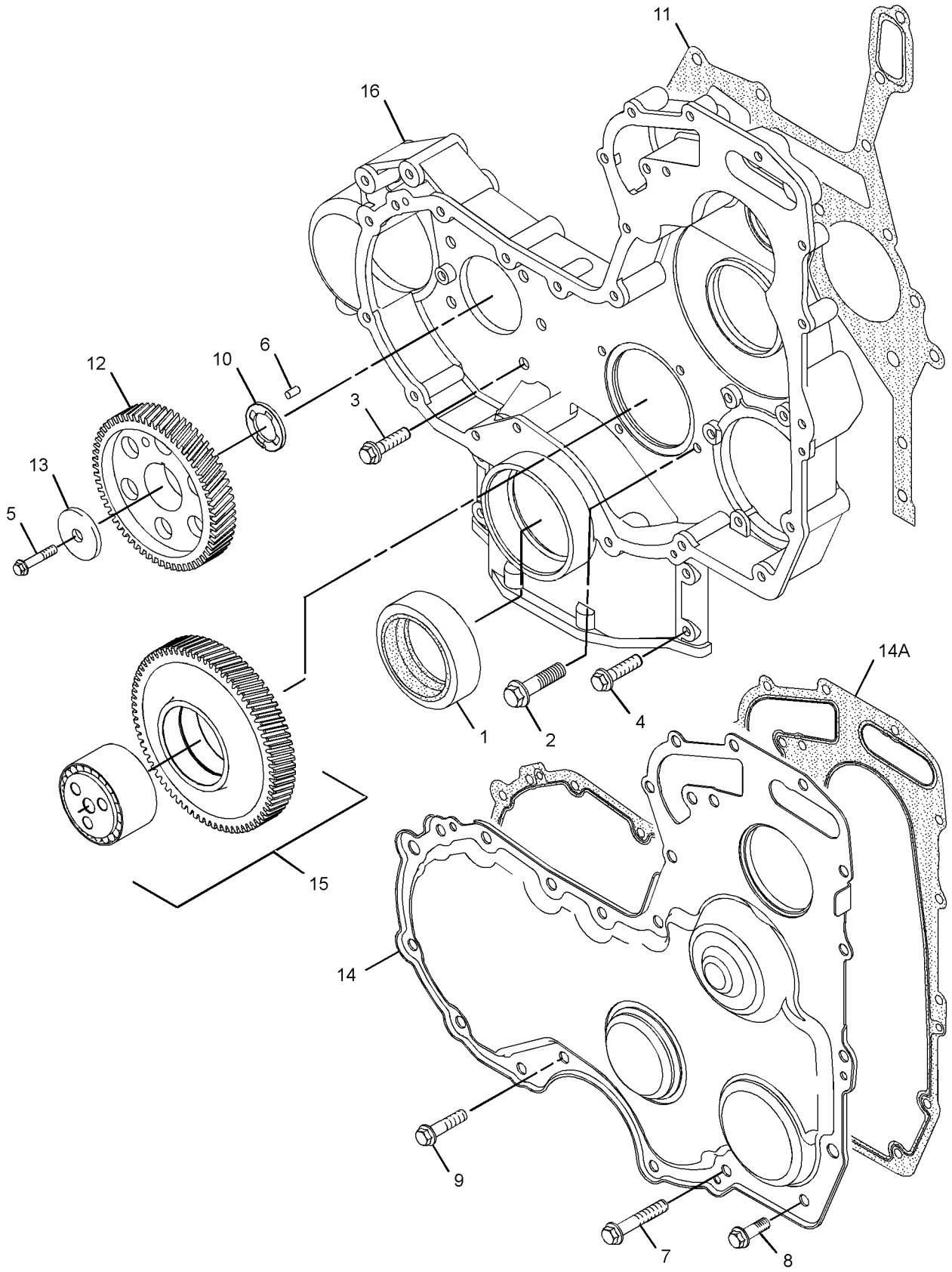

GRAPHIC #1 <END> g02681738

459-5647 HOUSING GP-FRONT

SMCS-1151, 1162, 1206 **i07139445**

NOTE	REF NO	GRAPHIC REF	PART NUMBER	QTY	PART NAME 1 2 3 4 5 6 (PRODUCT LEVEL)	SEE PAGE
M	1	1	**6I-0217**	6	BOLT (M8X1.25X20-MM)	
M	2	1	**6I-0645**	4	BOLT (M8X1.25X25-MM)	
M	3	1	**6I-0650**	3	BOLT (M10X1.5X65-MM)	
M	4	1	**7C-4616**	1	BOLT (M12X1.75X45-MM)	
	5	1	**067-6179**	1	DOWEL	
M	6	1	**100-3751**	5	BOLT (M8X1.25X65-MM)	
M	7	1	**100-4830**	1	BOLT (M10X1.5X20-MM)	
M	8	1	**101-3895**	2	BOLT (M8X1.25X35-MM)	
M	9	1	**124-3815**	9	BOLT (M8X1.25X16-MM)	
	10	1	**133-1011**	1	WASHER	
	11	1	**425-7103**	1	GEAR (68-TEETH)	
	12	1	**226-8767**	1	COVER AS-FRONT	
	12A	1	**226-8766**	1	GASKET-COVER	
	13	1	**232-3666**	1	WASHER-THRUST	
	14	1	**251-4336**	1	GEAR AS-IDLER (73-TEETH)	
	15	1	**277-3012**	1	GASKET-COVER	
	16	1	**288-0422**	1	SEAL-CRANKSHAFT	
	17	1	**346-0408**	1	PLATE	
	18	1	**323-3515**	1	HOUSING-FRONT	
	19	1	**324-0444**	1	HUB-IDLER GEAR	

M - METRIC PART

459-5647 **HOUSING GP-FRONT (**contd.**)** **i07139445**

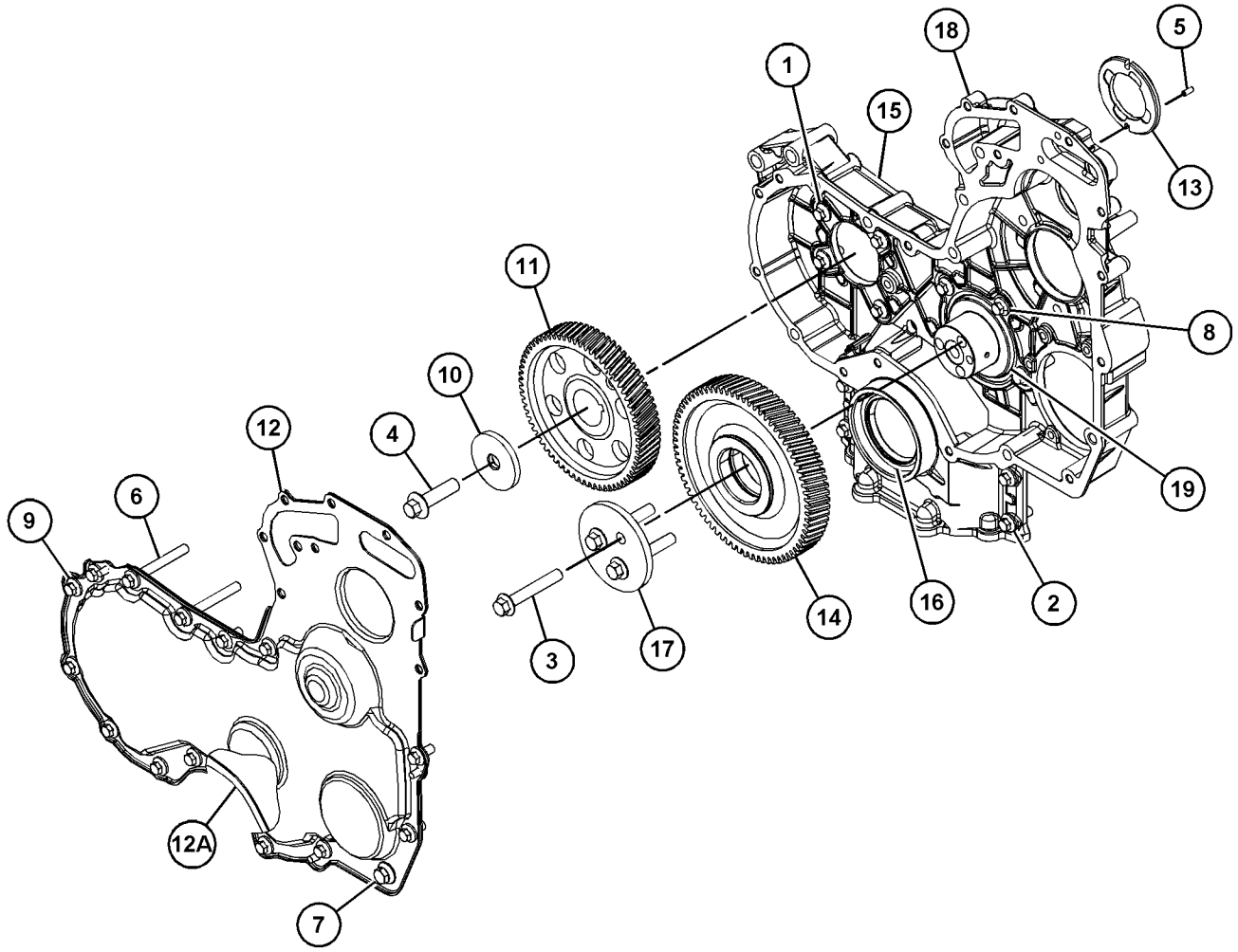

GRAPHIC #1 <END> g03715969

489-1970 HOUSING GP-FRONT

SMCS-1151, 1162, 1206 **i07104492**

NOTE	REF NO	GRAPHIC REF	PART NUMBER	QTY	PART NAME 1 2 3 4 5 6 (PRODUCT LEVEL)	SEE PAGE
	1	1	**288-0422**	1	SEAL-CRANKSHAFT	
M	2	1	**101-3895**	2	BOLT (M8X1.25X35-MM)	
M	3	1	**6I-0217**	6	BOLT (M8X1.25X20-MM)	
M	4	1	**6I-0454**	3	BOLT (M10X1.5X70-MM)	
M	5	1	**6I-0645**	4	BOLT (M8X1.25X25-MM)	
M	6	1	**7C-4616**	1	BOLT (M12X1.75X45-MM)	
	7	1	**067-6179**	1	DOWEL	
M	8	1	**100-3751**	5	BOLT (M8X1.25X65-MM)	
M	9	1	**100-4830**	1	BOLT (M10X1.5X20-MM)	
M	10	1	**124-3815**	9	BOLT (M8X1.25X16-MM)	
	11	1	**232-3666**	1	WASHER-THRUST	
	12	1	**425-7103**	1	GEAR (68-TEETH)	
	13	1	**277-3012**	1	GASKET-COVER	
	15	1	**226-8767**	1	COVER AS-FRONT	
	15A	1	**226-8766**	1	GASKET-COVER	
	17	1	**133-1011**	1	WASHER	
	18	1	**323-3515**	1	HOUSING-FRONT	
	19	1	**359-9431**	1	GEAR-IDLER	
	20	1	**291-6517**	1	PLATE	

M - METRIC PART

489-1970 **HOUSING GP-FRONT (**contd.**)** **i07104492**

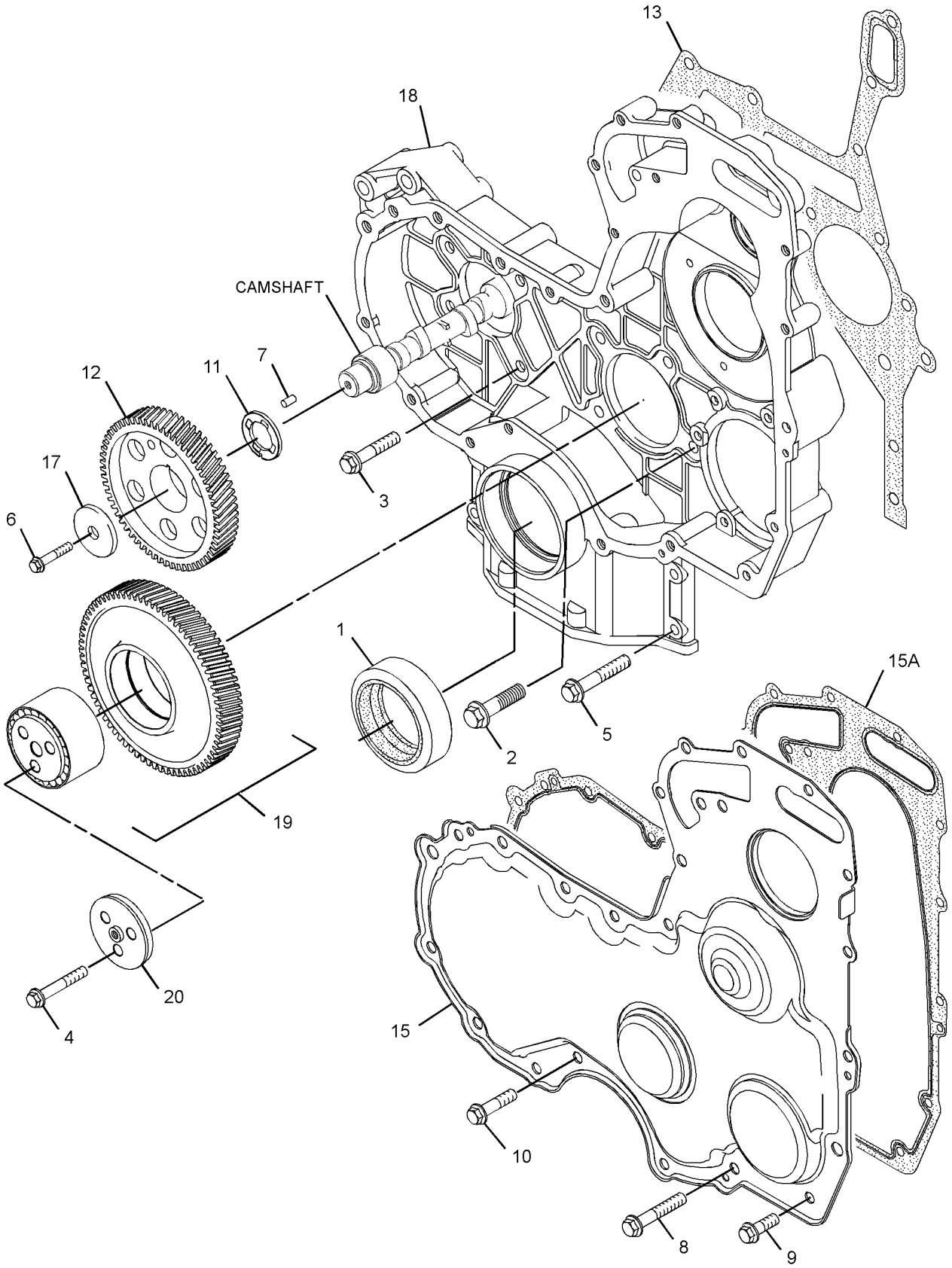

GRAPHIC #1 <END> g02685277

550-2590 HOUSING GP-FRONT

S/N: 33425631-UP

SMCS-1151, 1162, 1206 **i07381887**

NOTE	REF NO	GRAPHIC REF	PART NUMBER	QTY	PART NAME 1 2 3 4 5 6 (PRODUCT LEVEL)	SEE PAGE
M	1	1	**6I-0217**	6	BOLT (M8X1.25X20-MM)	
M	2	1	**6I-0645**	4	BOLT (M8X1.25X25-MM)	
M	3	1	**6I-0650**	3	BOLT (M10X1.5X65-MM)	
M	4	1	**7C-4616**	1	BOLT (M12X1.75X45-MM)	
	5	1	**067-6179**	1	DOWEL	
M	6	1	**100-3751**	5	BOLT (M8X1.25X65-MM)	
M	7	1	**101-3895**	2	BOLT (M8X1.25X35-MM)	
M	8	1	**124-3815**	9	BOLT (M8X1.25X16-MM)	
	9	1	**133-1011**	1	WASHER	
	10	1	**226-8767**	1	COVER AS-FRONT	
	10A	1	**226-8766**	1	GASKET-COVER	
	11	1	**232-3666**	1	WASHER-THRUST	
	12	1	**251-4336**	1	GEAR AS-IDLER (73-TEETH)	
	13	1	**273-3690**	1	BOLT	
	14	1	**277-3012**	1	GASKET-COVER	
	15	1	**288-0422**	1	SEAL-CRANKSHAFT	
	16	1	**323-3515**	1	HOUSING-FRONT	
	17	1	**324-0444**	1	HUB-IDLER GEAR	
	18	1	**346-0408**	1	PLATE	
	19	1	**425-7103**	1	GEAR (68-TEETH)	

M - METRIC PART

550-2590 **HOUSING GP-FRONT (**contd.**)** **i07381887**

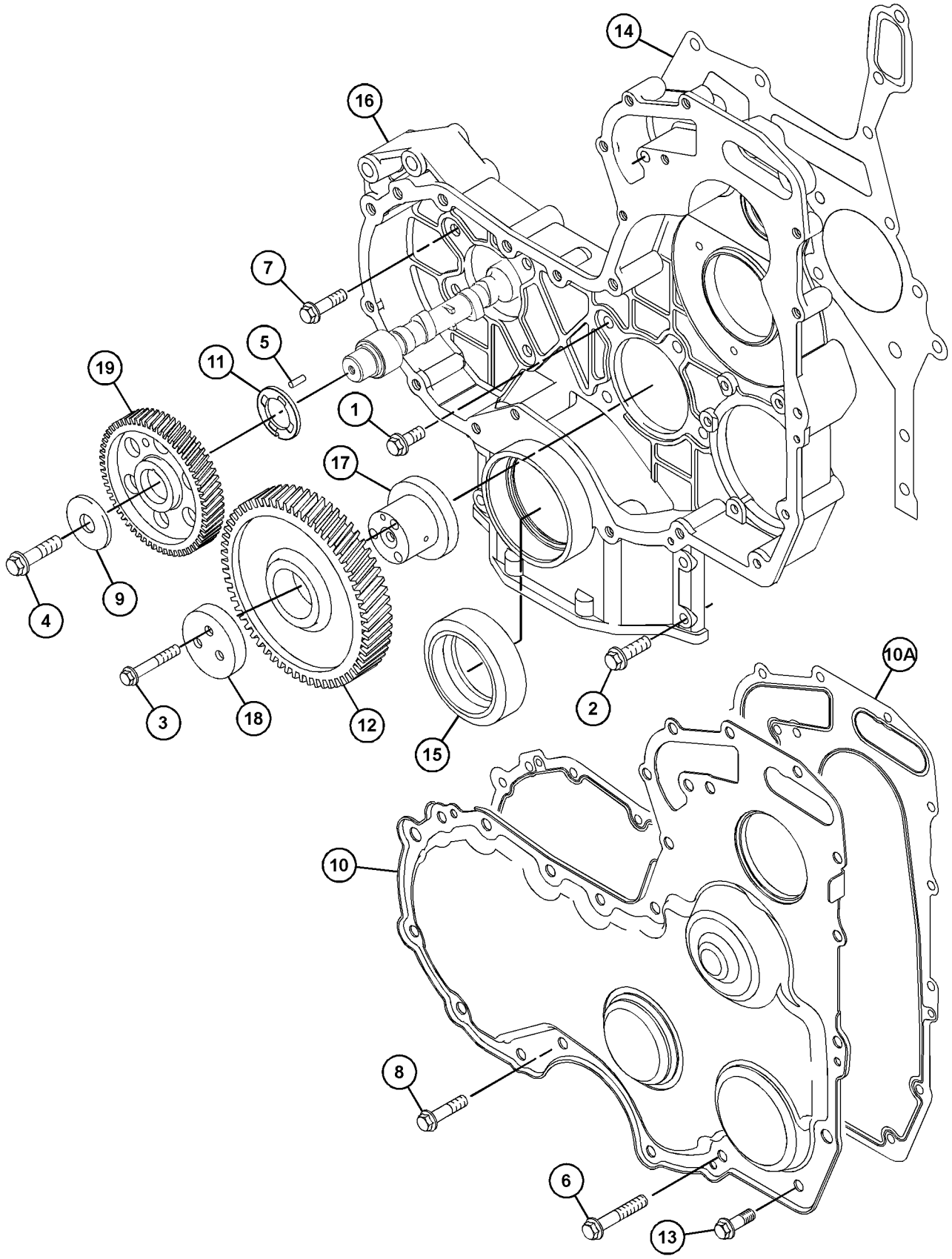

GRAPHIC #1 <END> g06315515

225-8851 LIFTING GP-ENGINE

AN ATTACHMENT

SMCS-1122 **i03126236**

NOTE	REF NO	GRAPHIC REF	PART NUMBER	QTY	PART NAME 1 2 3 4 5 6 (PRODUCT LEVEL)	SEE PAGE
M	1	1	**100-4830**	4	BOLT (M10X1.5X20-MM)	
	2	1	**225-8848**	1	PLATE-LIFTING	
	3	1	**275-2452**	1	PLATE-LIFTING	

M - METRIC PART

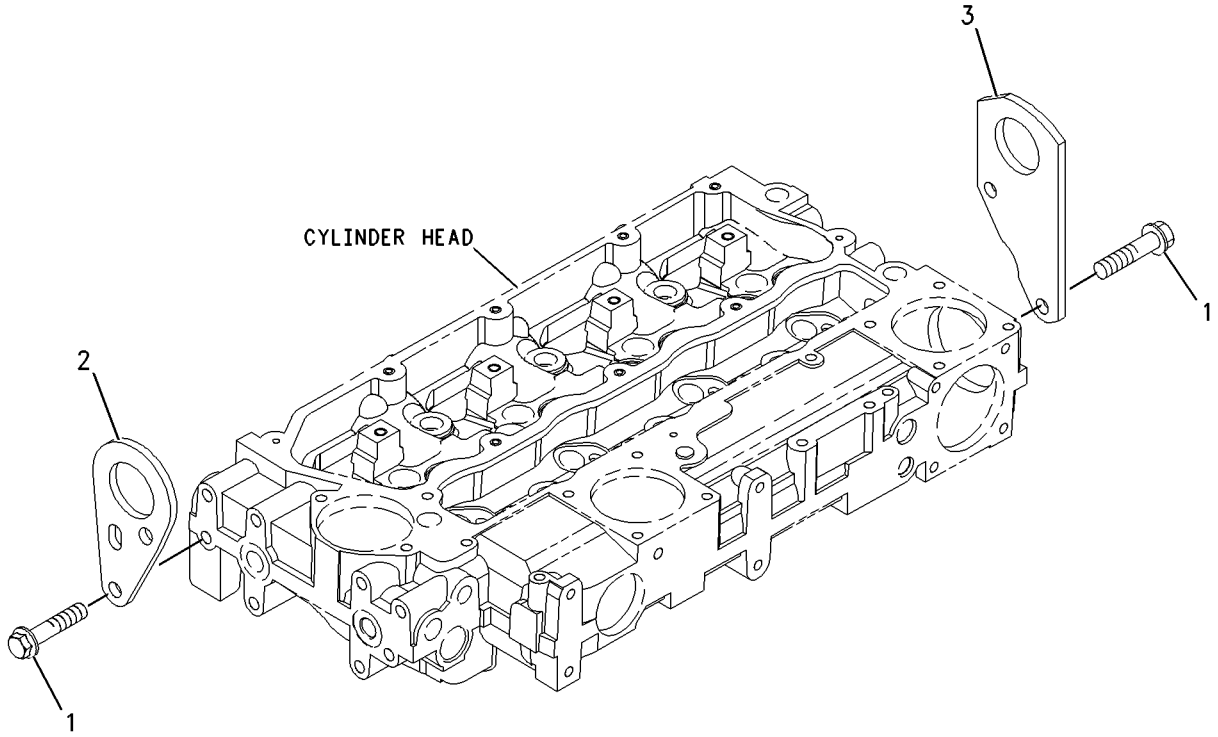

GRAPHIC #1 <END> g00912754

232-3713 LIFTING GP-ENGINE

ALSO AN ATTACHMENT

SMCS-1122 **i02419718**

NOTE	REF NO	GRAPHIC REF	PART NUMBER	QTY	PART NAME 1 2 3 4 5 6 (PRODUCT LEVEL)	SEE PAGE
M	1	1	**100-4830**	4	BOLT (M10X1.5X20-MM)	
	2	1	**225-8848**	1	PLATE-LIFTING	
	3	1	**275-2452**	1	PLATE-LIFTING	

M - METRIC PART

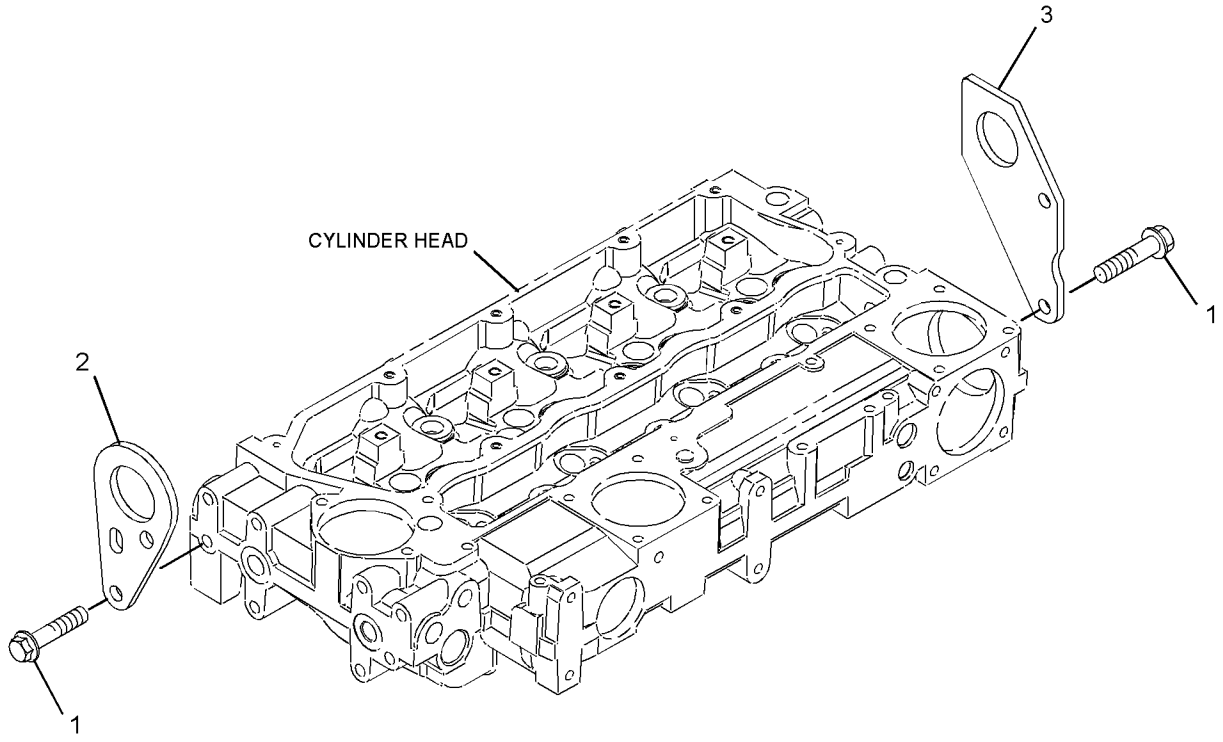

GRAPHIC #1 <END> g01210949

233-7432 LIFTING GP-ENGINE

ALSO AN ATTACHMENT

SMCS-1122 **i01876830**

NOTE	REF NO	GRAPHIC REF	PART NUMBER	QTY	PART NAME 1 2 3 4 5 6 (PRODUCT LEVEL)	SEE PAGE
M	1	1	**100-4830**	4	BOLT (M10X1.5X20-MM)	
	2	1	**225-8848**	2	PLATE-LIFTING	

M - METRIC PART

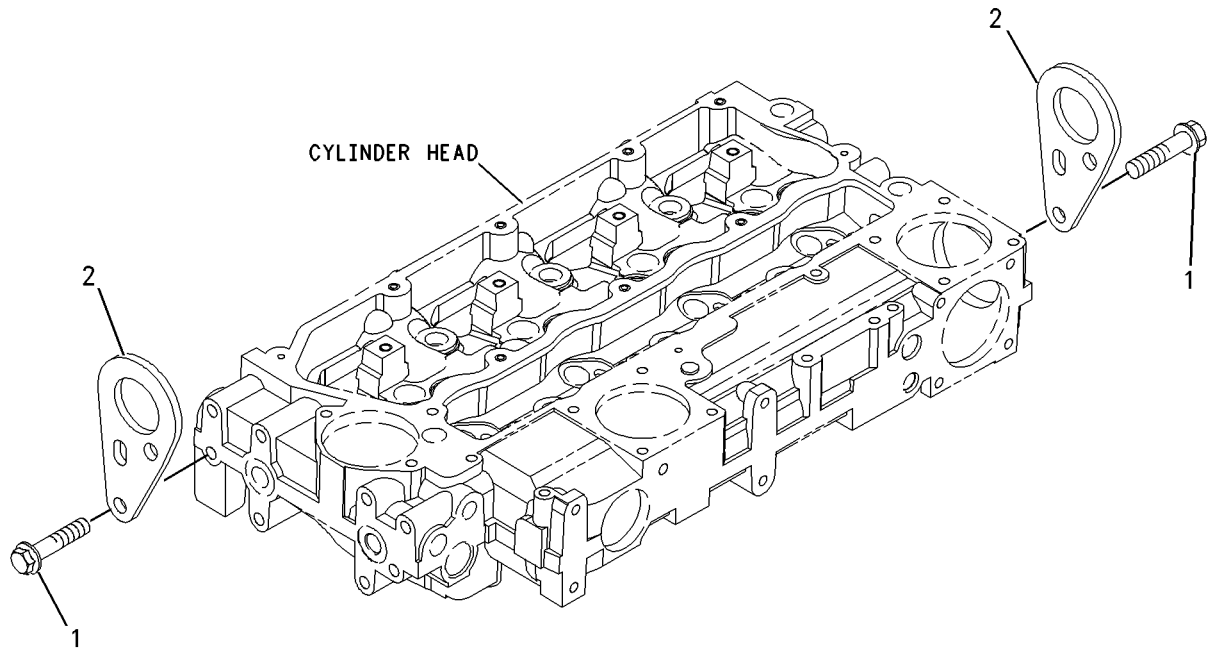

GRAPHIC #1 <END> g00955299

243-2483 LIFTING GP-ENGINE

SMCS-1122 **i02062537**

NOTE	REF NO	GRAPHIC REF	PART NUMBER	QTY	PART NAME 1 2 3 4 5 6 (PRODUCT LEVEL)	SEE PAGE
M	1	1	**100-4830**	4	BOLT (M10X1.5X20-MM)	
	2	1	**225-8848**	1	PLATE-LIFTING	
	3	1	**243-2484**	1	PLATE-LIFTING	

M - METRIC PART

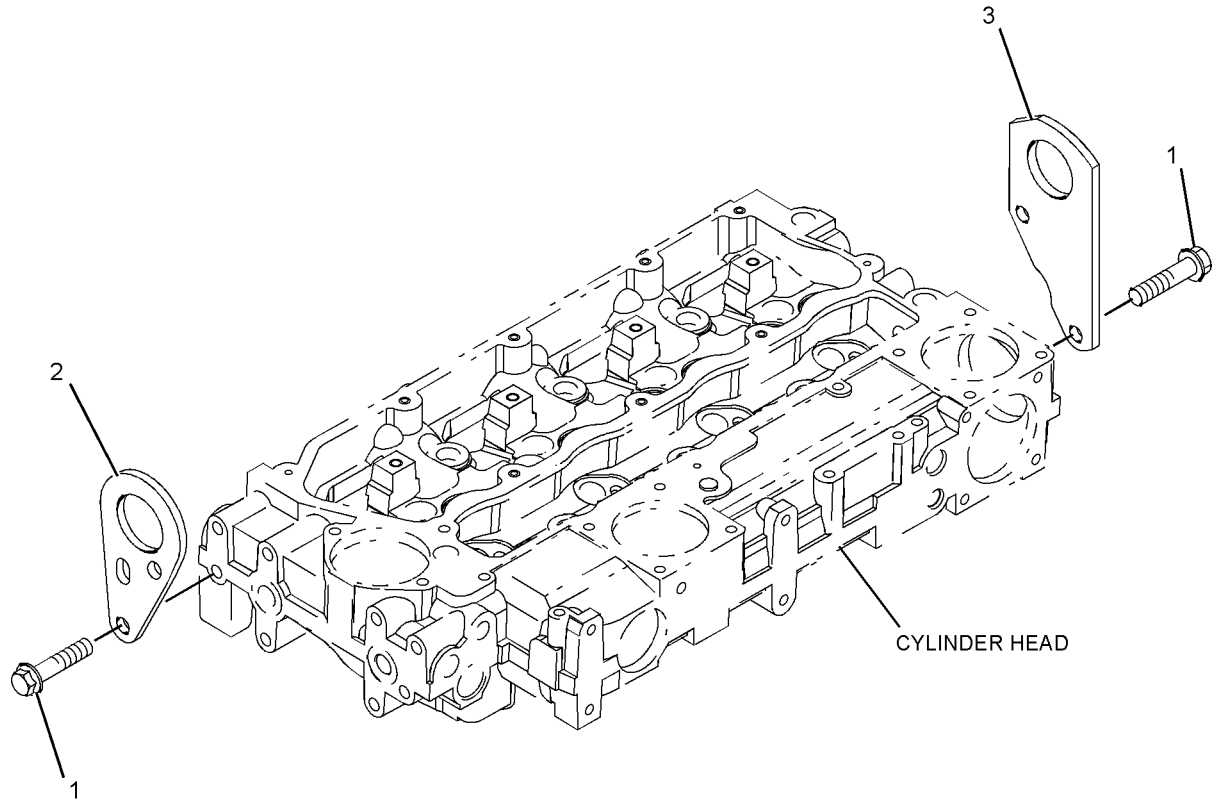

GRAPHIC #1 <END> g01079401

235-1039 MOUNTING GP-ALTERNATOR

SMCS-1154, 1405 **i02159766**

NOTE	REF NO	GRAPHIC REF	PART NUMBER	QTY	PART NAME 1 2 3 4 5 6 (PRODUCT LEVEL)	SEE PAGE
M	1	1	**6I-0594**	2	NUT (M10X1.5-THD)	
M	2	1	**100-4830**	3	BOLT (M10X1.5X20-MM)	
M	3	1	**6I-4045**	2	BOLT (M10X1.5X75-MM)	
	4	1	**255-4922**	1	BRACKET AS (ALTERNATOR AIR)	
	4A	1	**127-6409**	1	SLEEVE	
	4B	1	**255-4923**	1	SLEEVE	
	5	1	**255-4924**	1	BRACKET	
M	6	1	**6I-0217**	1	BOLT (M8X1.25X20-MM)	
M	7	1	**6I-0291**	1	NUT (M8X1.25-THD)	
	8	1	**172-4323**	1	LEVER	

M - METRIC PART

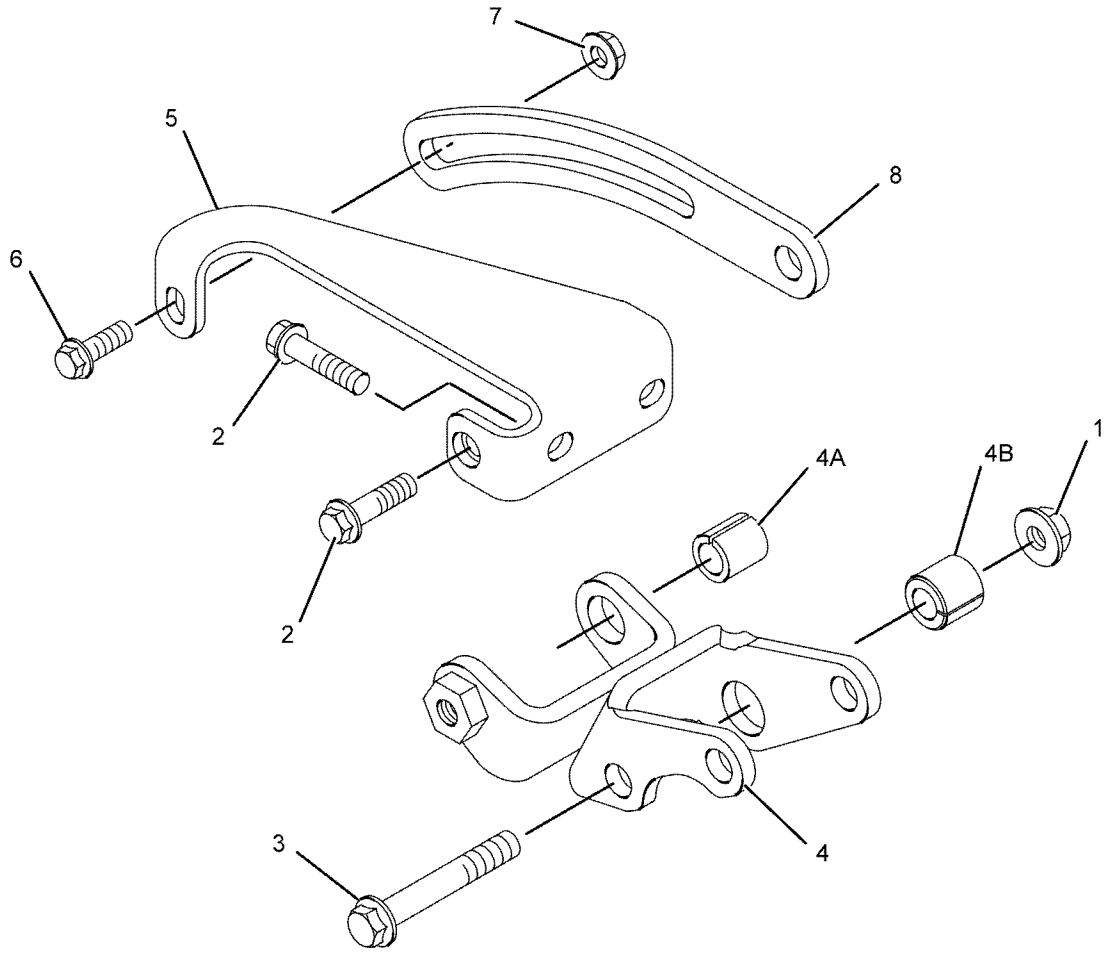

GRAPHIC #1 <END> g01096528

225-8857 MOUNTING GP-ENGINE

AN ATTACHMENT

SMCS-1152, 1153, 1154 **i01777864**

NOTE	REF NO	GRAPHIC REF	PART NUMBER	QTY	PART NAME 1 2 3 4 5 6 (PRODUCT LEVEL)	SEE PAGE
	1	1	**225-8856**	4	PLUG-PROTECTION	

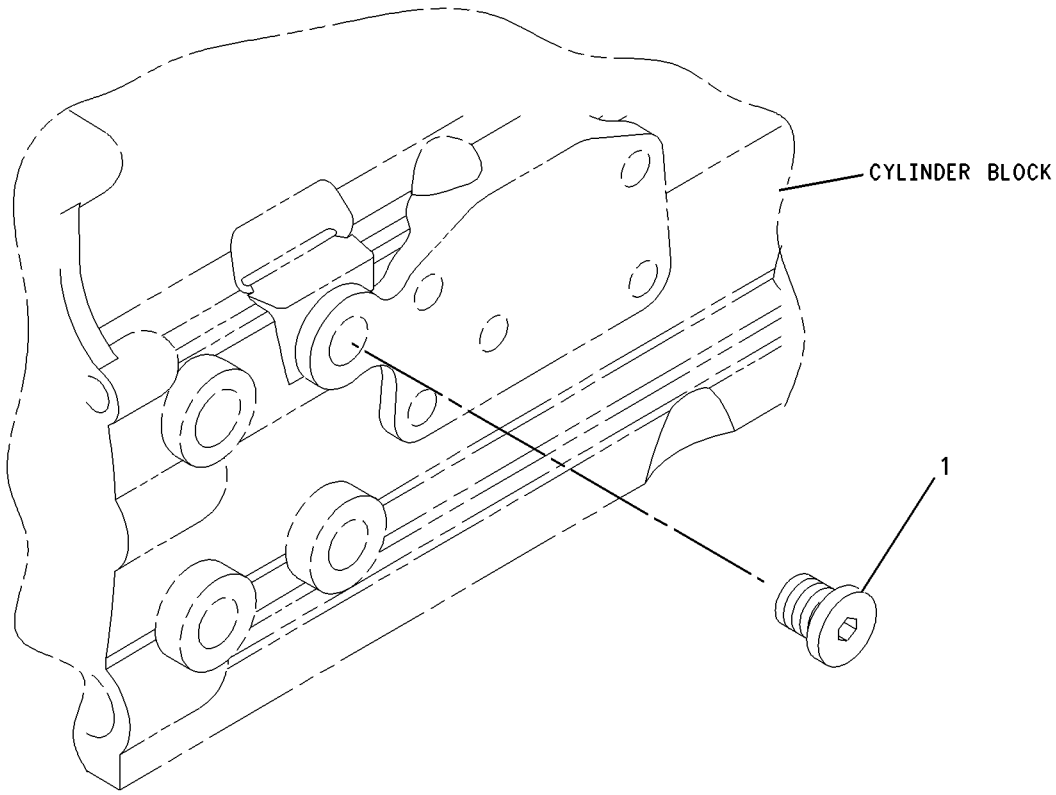

GRAPHIC #1 <END> g00912417

232-6206 MOUNTING GP-ENGINE

ALSO AN ATTACHMENT

SMCS-1152, 1153, 1154 **i05050674**

NOTE	REF NO	GRAPHIC REF	PART NUMBER	QTY	PART NAME 1 2 3 4 5 6 (PRODUCT LEVEL)	SEE PAGE
	1	1	**6H-3616**	6	PLUG-PROTECTION	
M	2	1	**183-1343**	4	STUD (M12X1.75X53-MM)	

M - METRIC PART

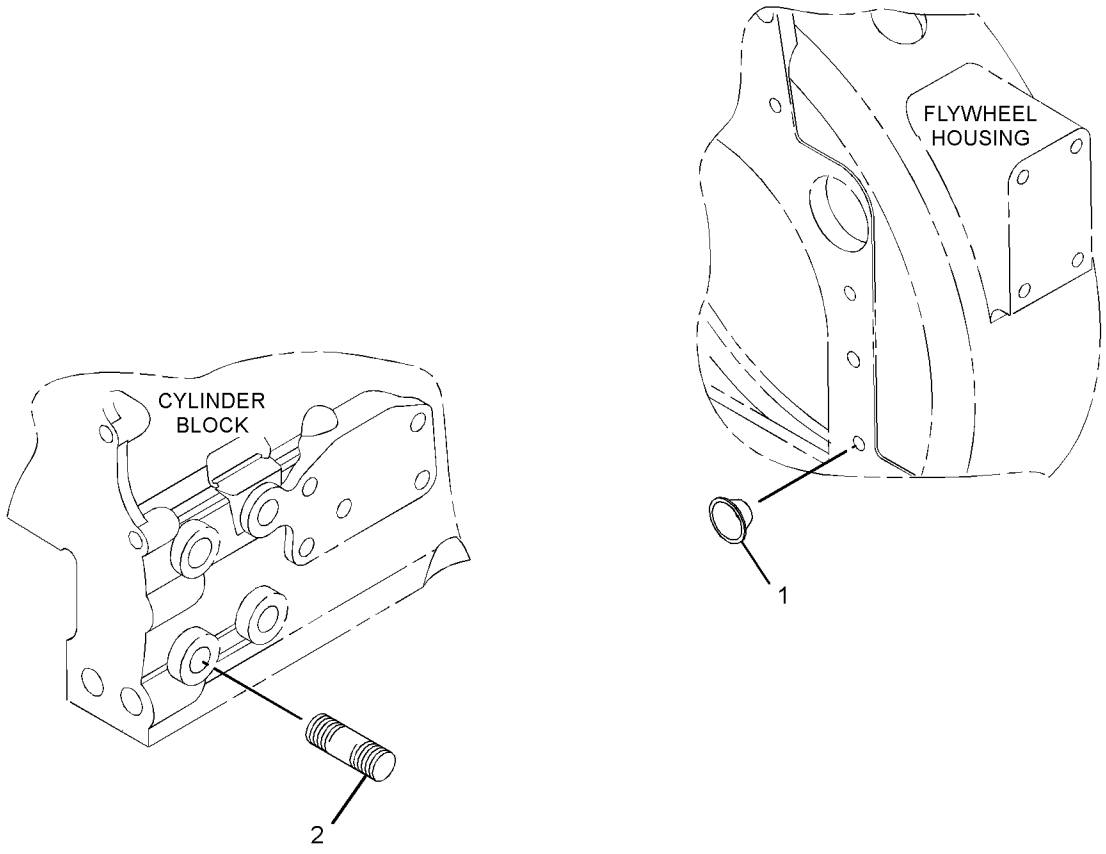

GRAPHIC #1 <END> g03016056

233-9840 MOUNTING GP-ENGINE

HARDWARE

ALSO AN ATTACHMENT

SMCS-1152, 1153, 1154

i01925178

NOTE	REF NO	GRAPHIC REF	PART NUMBER	QTY	PART NAME 1 2 3 4 5 6 (PRODUCT LEVEL)	SEE PAGE
	1	1	**6H-3616**	6	PLUG-PROTECTION	
M	2	1	**6I-0233**	8	NUT (M12X1.75-THD)	
M	3	1	**183-1343**	8	STUD (M12X1.75X53-MM)	

M - METRIC PART

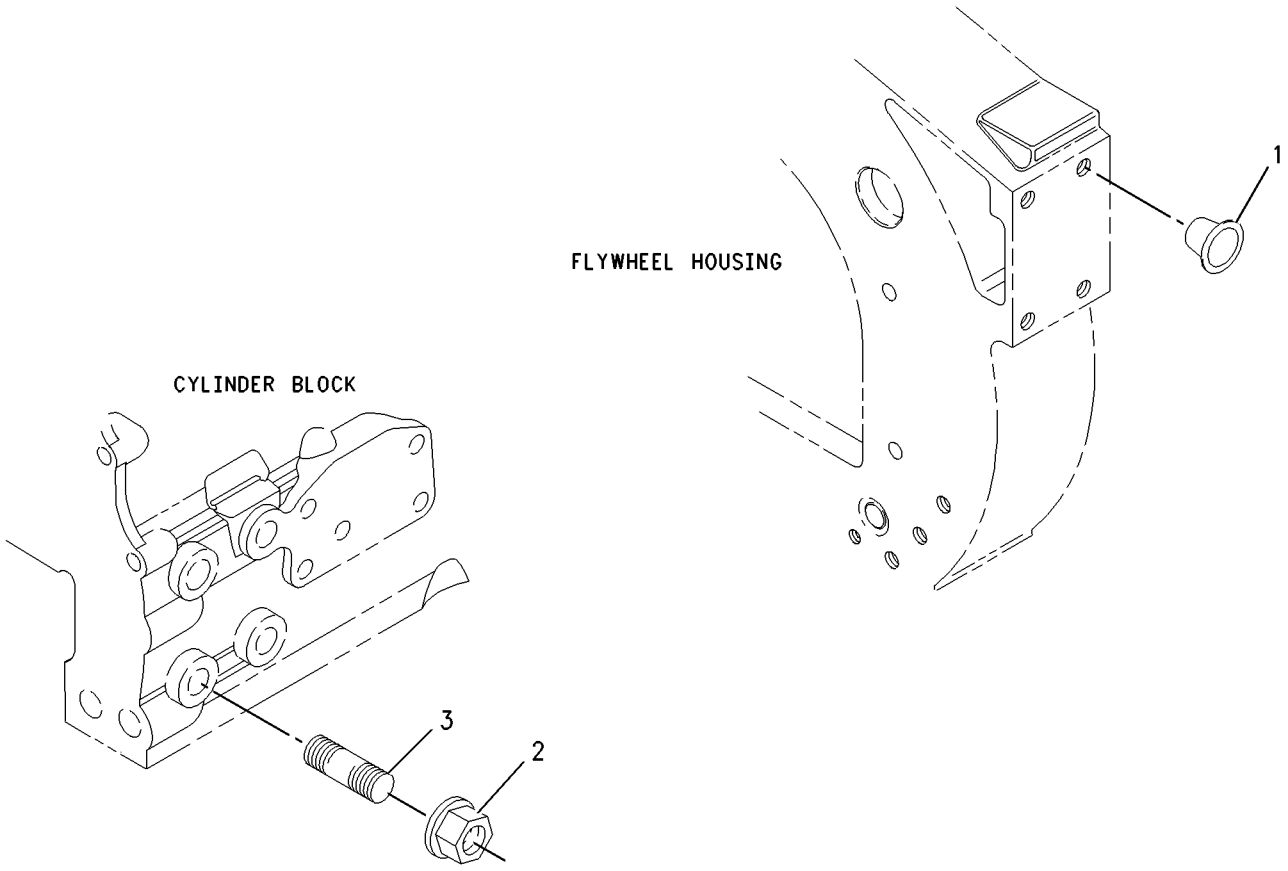

GRAPHIC #1

<END>

g01003075

235-0366 MOUNTING GP-ENGINE

SMCS-1152, 1153, 1154 **i01890327**

NOTE	REF NO	GRAPHIC REF	PART NUMBER	QTY	PART NAME 1 2 3 4 5 6 (PRODUCT LEVEL)	SEE PAGE
	1	1	**6H-3616**	3	PLUG-PROTECTION	
M	2	1	**6I-0423**	6	BOLT (M12X1.75X30-MM)	
	3	1	**101-7185**	1	BRACKET	
	4	1	**101-7186**	1	BRACKET	
	5	1	**233-9436**	4	PLUG	

M - METRIC PART

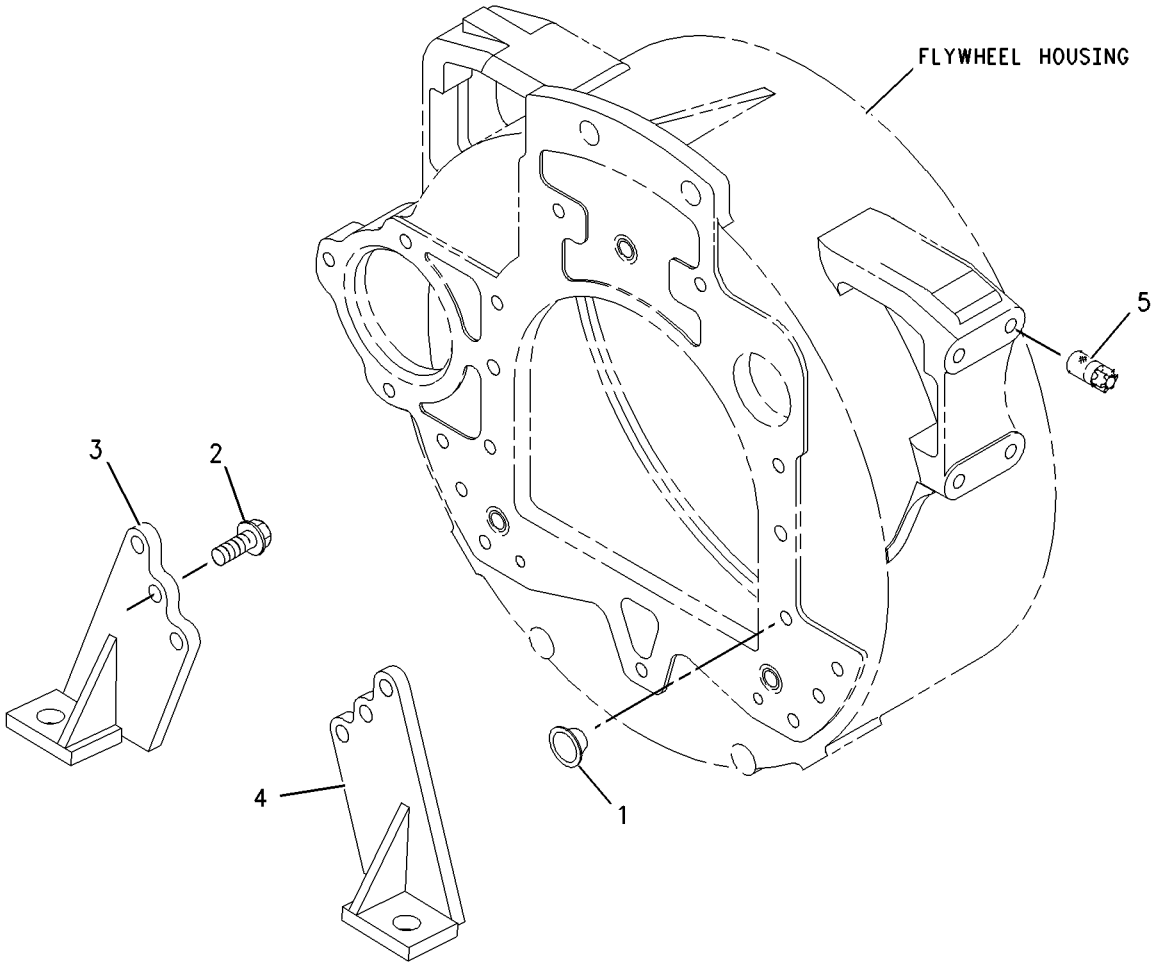

GRAPHIC #1 <END> g00985701

243-3275 MOUNTING GP-ENGINE

SMCS-1152, 1153, 1154 **i01964512**

NOTE	REF NO	GRAPHIC REF	PART NUMBER	QTY	PART NAME 1 2 3 4 5 6 (PRODUCT LEVEL)	SEE PAGE
	1	1	**6H-3616**	4	PLUG-PROTECTION	
M	2	1	**6I-0423**	6	BOLT (M12X1.75X30-MM)	
	3	1	**101-7185**	1	BRACKET	
	4	1	**101-7186**	1	BRACKET	
M	5	1	**101-7537**	4	BOLT (M12X1.75X35-MM)	
	6	1	**139-7007**	1	BRACKET	
	7	1	**145-2881**	1	SPACER	
	8	1	**186-3594**	1	BRACKET	
	9	1	**186-3595**	4	BOLT (M12X1.75X60-MM)	

M - METRIC PART

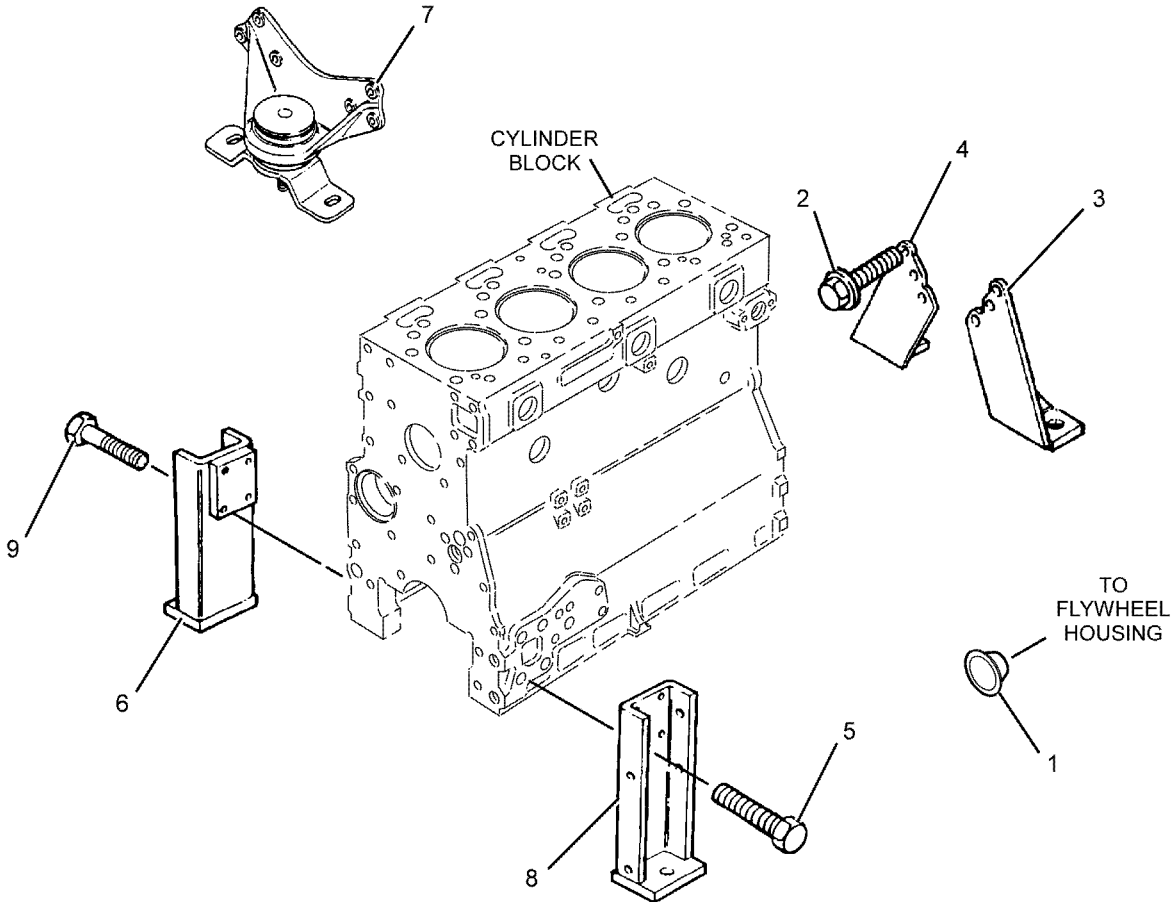

GRAPHIC #1 <END> g01021812

251-8335 MOUNTING GP-ENGINE

SMCS-1152, 1153, 1154 **i03076726**

NOTE	REF NO	GRAPHIC REF	PART NUMBER	QTY	PART NAME 1 2 3 4 5 6 (PRODUCT LEVEL)	SEE PAGE
M	1	1	**6I-0423**	6	BOLT (M12X1.75X30-MM)	
	2	1	**101-7185**	1	BRACKET	
	3	1	**101-7186**	1	BRACKET	
M	4	1	**183-1343**	8	STUD (M12X1.75X53-MM)	
M	5	1	**195-2221**	8	NUT (M12X1.75-THD)	
	6	1	**330-6130**	1	BRACKET-MOUNTING (LH)	
	7	1	**330-6131**	1	BRACKET-MOUNTING (RH)	

M - METRIC PART

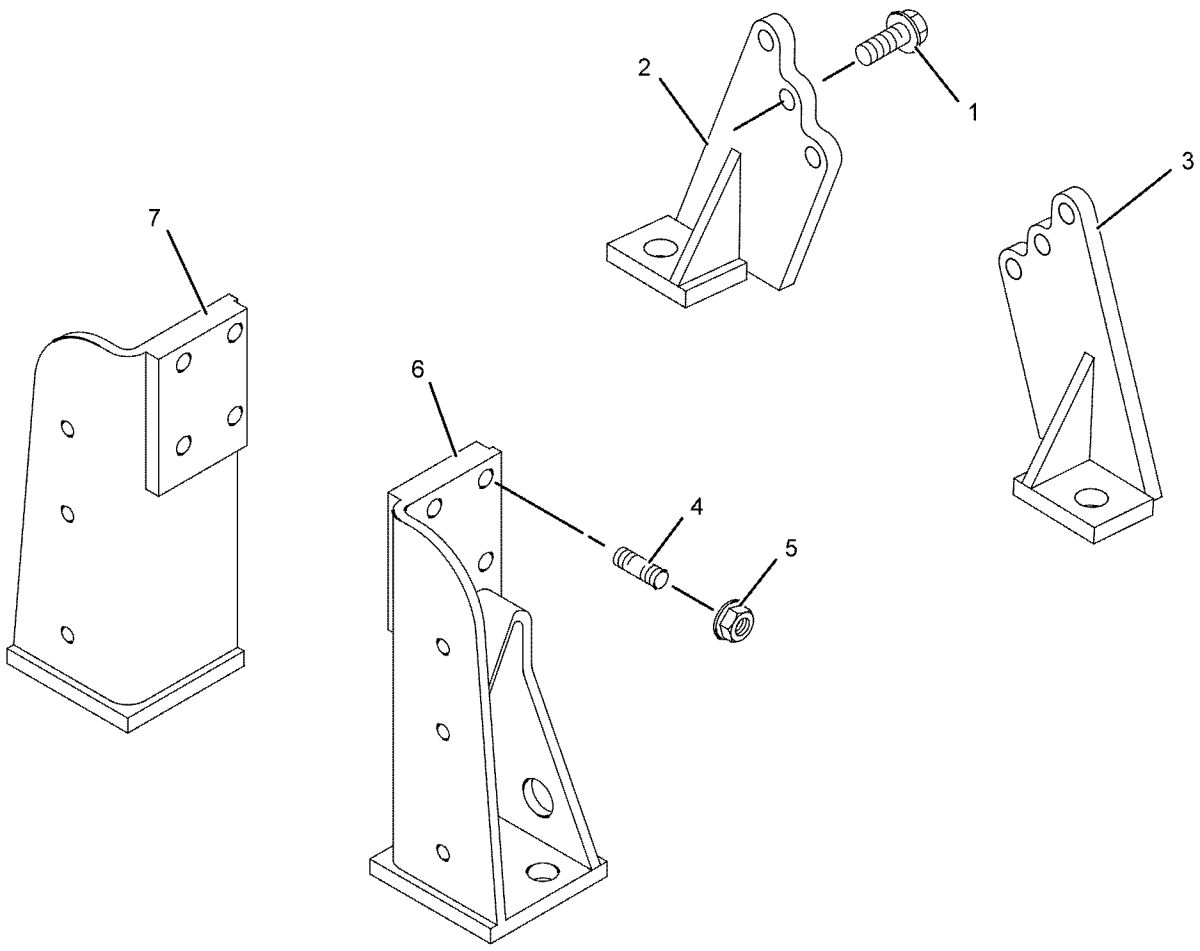

GRAPHIC #1 <END> g01079008

252-4475 MOUNTING GP-ENGINE

SMCS-1152, 1153, 1154 **i03076727**

NOTE	REF NO	GRAPHIC REF	PART NUMBER	QTY	PART NAME 1 2 3 4 5 6 (PRODUCT LEVEL)	SEE PAGE
	1	1	**6H-3616**	4	PLUG-PROTECTION	
M	2	1	**6I-0423**	6	BOLT (M12X1.75X30-MM)	
	3	1	**101-7185**	1	BRACKET	
	4	1	**101-7186**	1	BRACKET	
M	5	1	**183-1343**	8	STUD (M12X1.75X53-MM)	
M	6	1	**195-2221**	8	NUT (M12X1.75-THD)	
	7	1	**330-6130**	1	BRACKET-MOUNTING (LH)	
	8	1	**330-6131**	1	BRACKET-MOUNTING (RH)	

M - METRIC PART

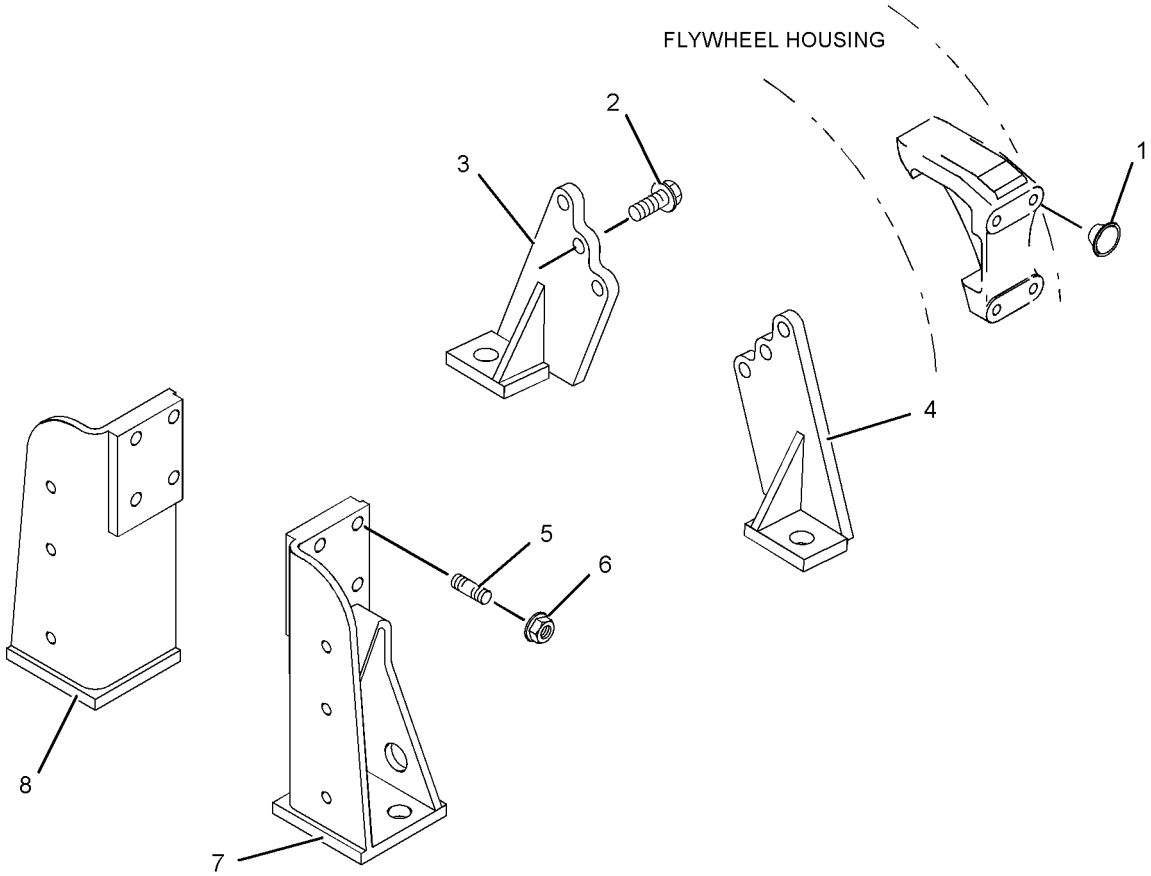

GRAPHIC #1 <END> g01078776

252-6456 MOUNTING GP-ENGINE

SMCS-1152, 1153, 1154 **i03245107**

NOTE	REF NO	GRAPHIC REF	PART NUMBER	QTY	PART NAME 1 2 3 4 5 6 (PRODUCT LEVEL)	SEE PAGE
	1	1	**6H-3616**	3	PLUG-PROTECTION	
	2	1	**195-2132**	1	SUPPORT-FRONT (LH)	
	3	1	**195-2134**	1	SUPPORT-FRONT (RH)	
	4	1	**195-2136**	8	STUD (M12X1.75X48-MM)	
M	5	1	**195-2221**	8	NUT (M12X1.75-THD)	

M - METRIC PART

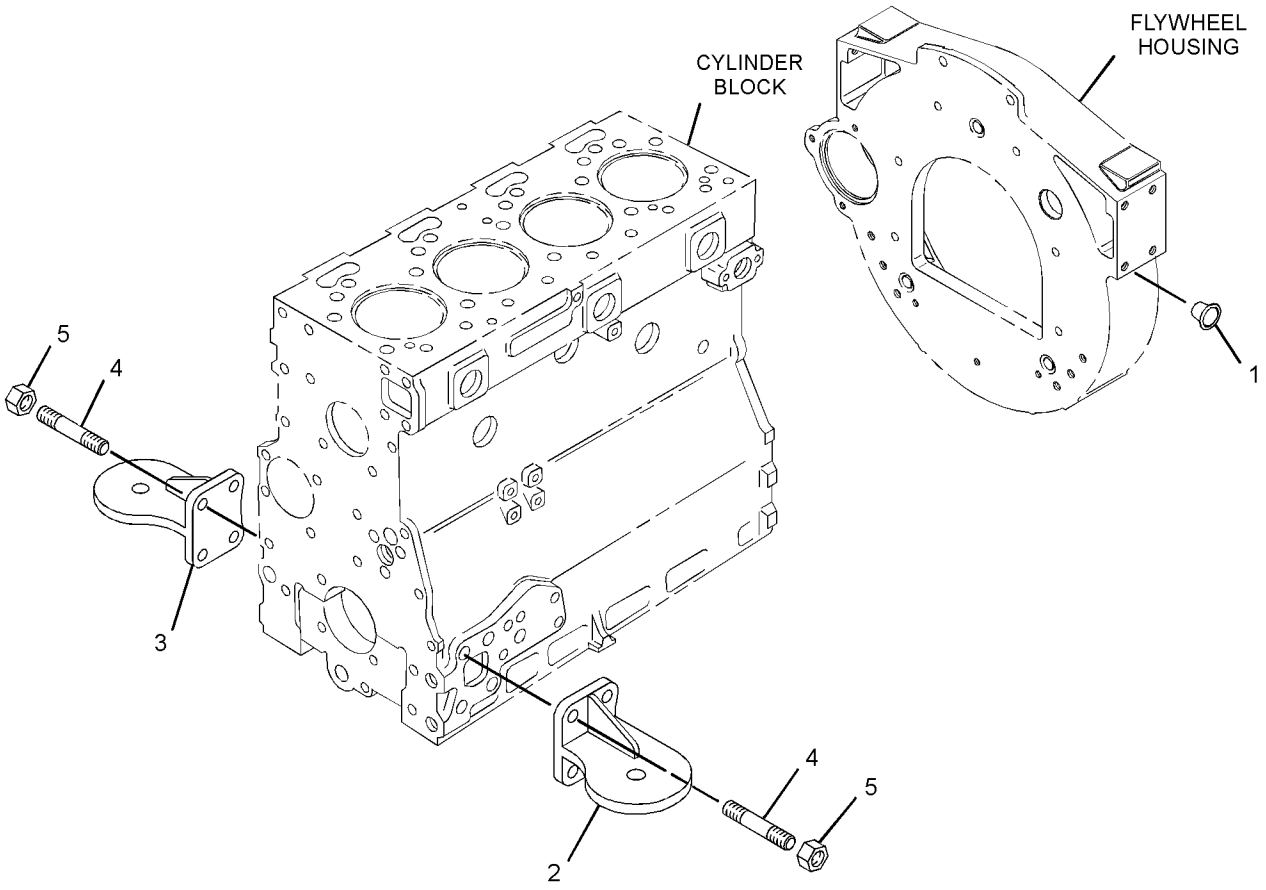

GRAPHIC #1 <END> g01647441

252-7009 MOUNTING GP-ENGINE

SMCS-1152, 1153, 1154 **i02216816**

NOTE	REF NO	GRAPHIC REF	PART NUMBER	QTY	PART NAME 1 2 3 4 5 6 (PRODUCT LEVEL)	SEE PAGE
	1	1	**6H-3616**	10	PLUG-PROTECTION	
M	2	1	**6I-0233**	8	NUT (M12X1.75-THD)	
M	3	1	**183-1343**	8	STUD (M12X1.75X53-MM)	

M - METRIC PART

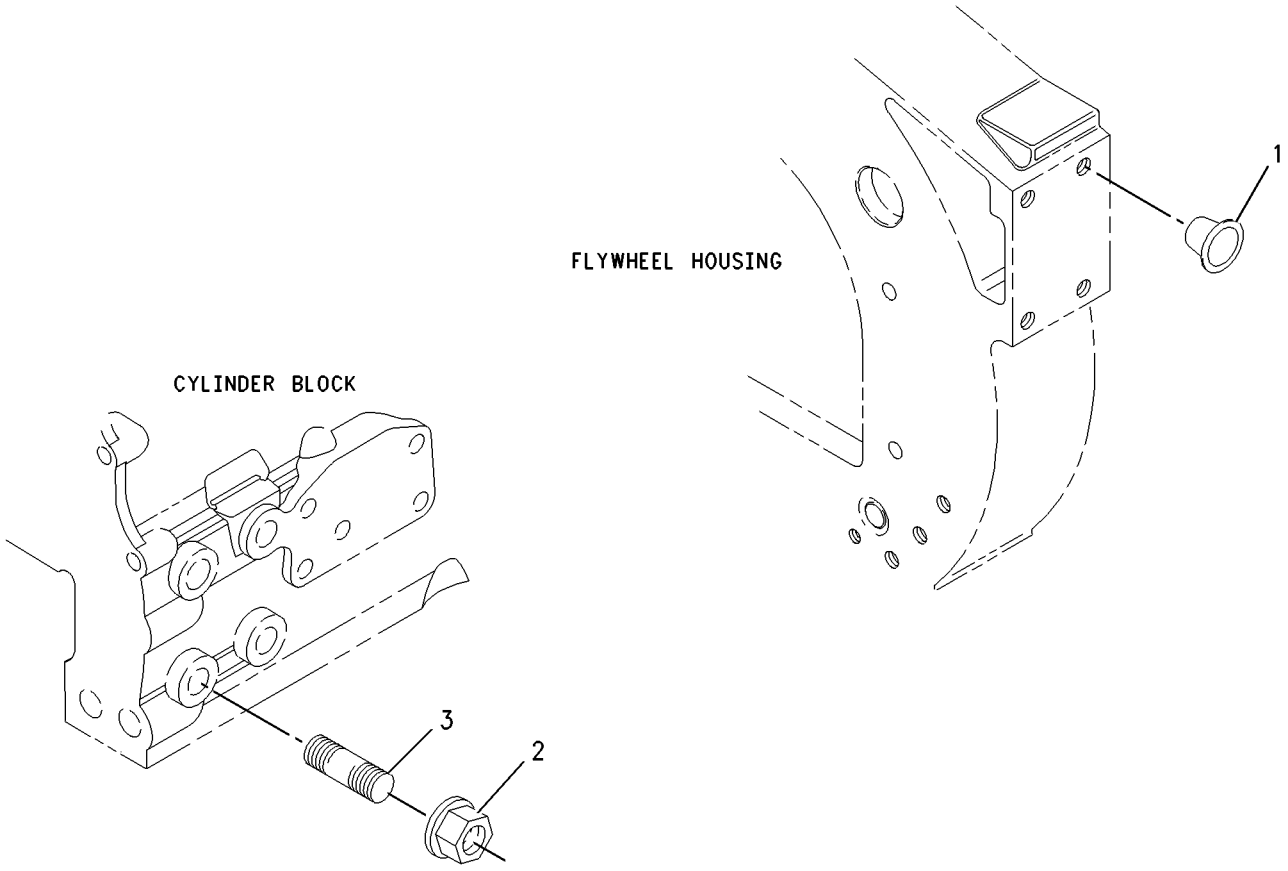

GRAPHIC #1 <END> g01003075

260-3152 MOUNTING GP-ENGINE

ALSO AN ATTACHMENT

SMCS-1152, 1153, 1154 **i02212740**

NOTE	REF NO	GRAPHIC REF	PART NUMBER	QTY	PART NAME 1 2 3 4 5 6 (PRODUCT LEVEL)	SEE PAGE
M	1	1	**6I-0423**	6	BOLT (M12X1.75X30-MM)	
	2	1	**101-7185**	1	BRACKET	
	3	1	**101-7186**	1	BRACKET	
	4	1	**233-9436**	4	PLUG	

M - METRIC PART

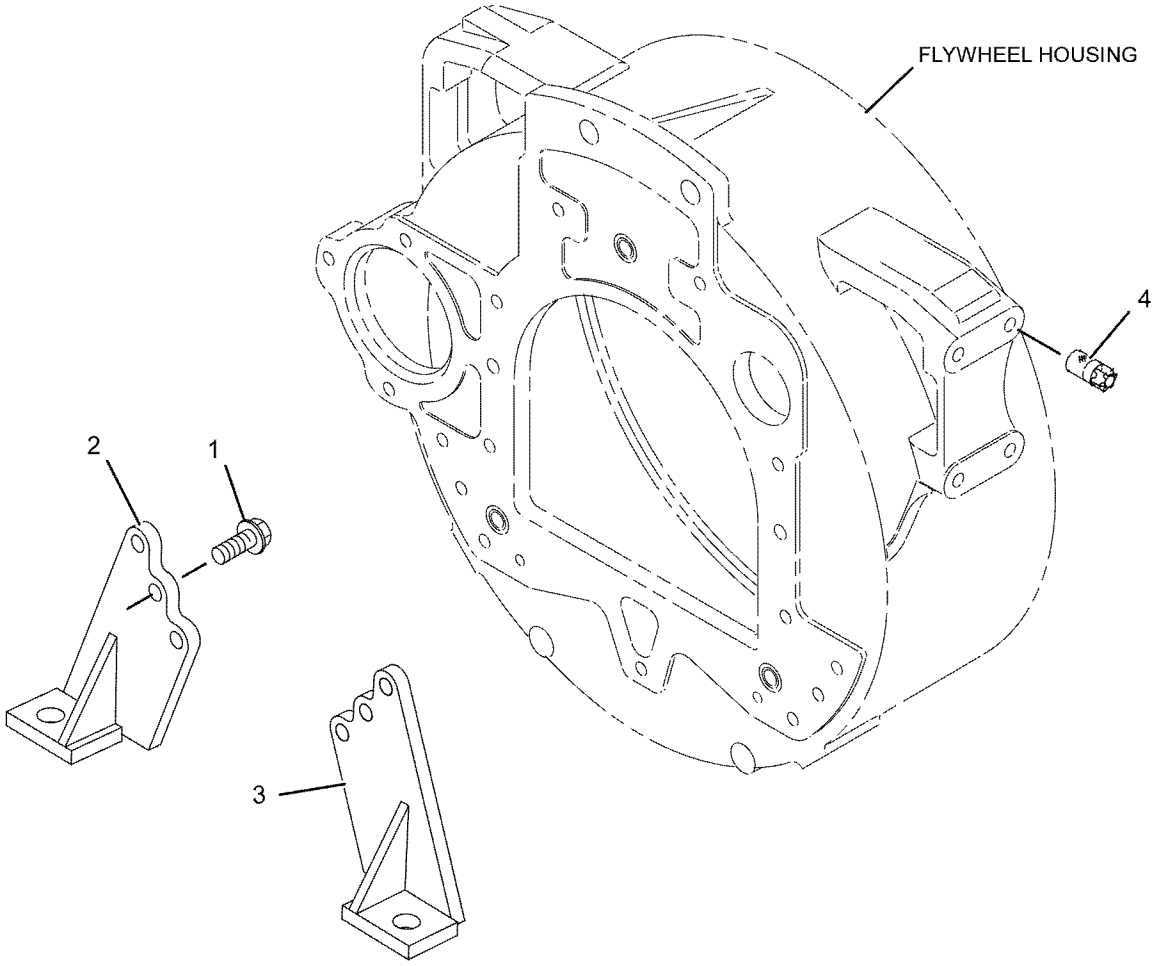

GRAPHIC #1 <END> g01120042

267-5101 MOUNTING GP-ENGINE

SMCS-1152, 1153, 1154 **i02270583**

NOTE	REF NO	GRAPHIC REF	PART NUMBER	QTY	PART NAME 1 2 3 4 5 6 (PRODUCT LEVEL)	SEE PAGE
M	1	1	**6I-0233**	8	NUT (M12X1.75-THD)	
M	2	1	**183-1343**	8	STUD (M12X1.75X53-MM)	

M - METRIC PART

CYLINDER BLOCK

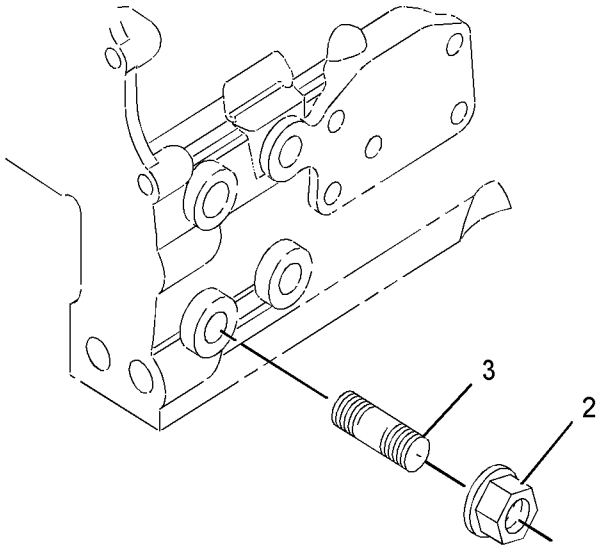

GRAPHIC #1 <END> g01138221

267-5698 MOUNTING GP-ENGINE

ALSO AN ATTACHMENT

SMCS-1152, 1153, 1154 **i02297804**

NOTE	REF NO	GRAPHIC REF	PART NUMBER	QTY	PART NAME 1 2 3 4 5 6 (PRODUCT LEVEL)	SEE PAGE
	1	1	**6H-3616**	4	PLUG-PROTECTION	
M	2	1	**6I-0423**	6	BOLT (M12X1.75X30-MM)	
	3	1	**101-7185**	1	BRACKET	
	4	1	**101-7186**	1	BRACKET	

M - METRIC PART

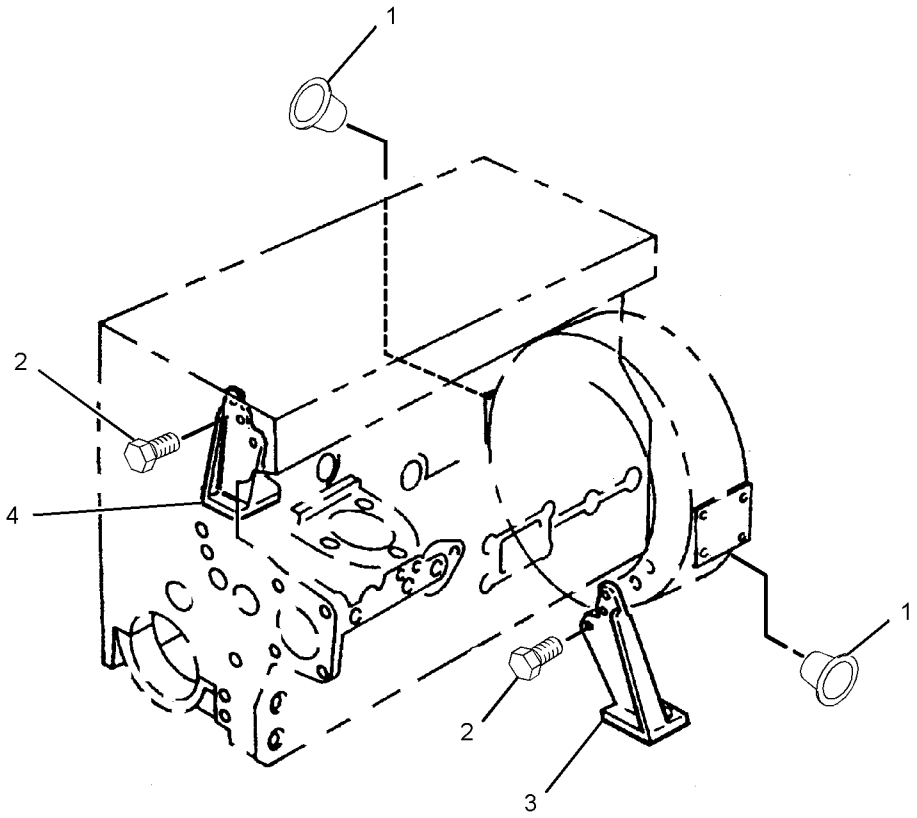

GRAPHIC #1 <END> g01012532

268-5266 MOUNTING GP-ENGINE

SMCS-1152, 1153, 1154 **i08400263**

NOTE	REF NO	GRAPHIC REF	PART NUMBER	QTY	PART NAME 1 2 3 4 5 6 (PRODUCT LEVEL)	SEE PAGE
	1	1	**6H-3616**	10	PLUG-PROTECTION	
M	2	1	**183-1343**	4	STUD (M12X1.75X53-MM)	
	3	1	**379-6462**	1	BRACKET AS-MOUNTING	
M	4	1	**247-8314**	4	STUD (M12X1.75X73-MM)	
	5	1	**145-2881**	1	SPACER	
M	6	1	**195-2221**	8	NUT (M12X1.75-THD)	
	7	1	**379-6461**	1	BRACKET AS-MOUNTING	

M - METRIC PART

268-5266 **MOUNTING GP-ENGINE (**contd.**)** **i08400263**

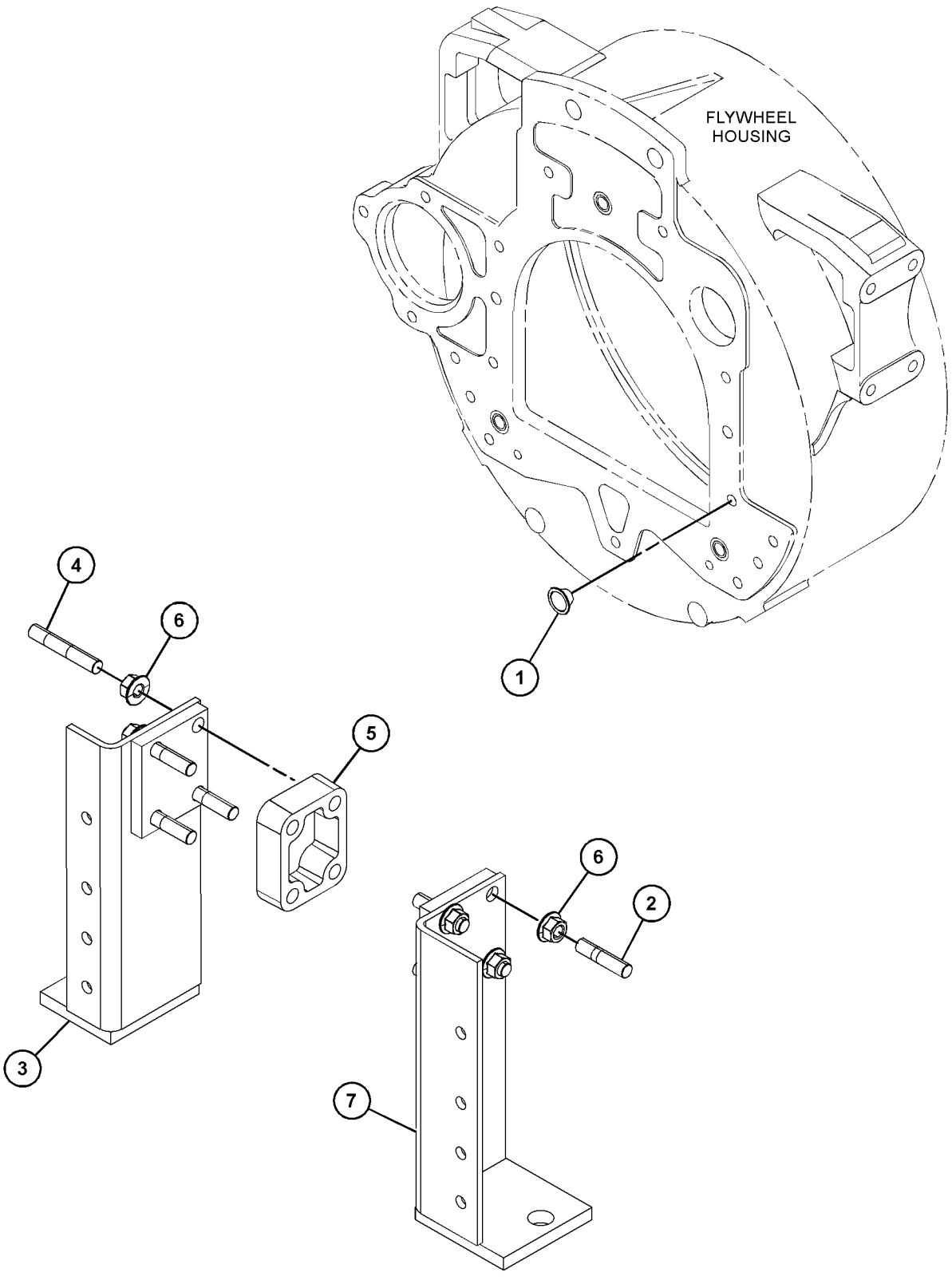

GRAPHIC #1 <END> g06659154

272-2231 MOUNTING GP-ENGINE

SMCS-1152, 1153, 1154 **i06709570**

NOTE	REF NO	GRAPHIC REF	PART NUMBER	QTY	PART NAME 1 2 3 4 5 6 (PRODUCT LEVEL)	SEE PAGE
	1	1	**379-6462**	1	BRACKET AS-MOUNTING	
	2	1	**145-2881**	1	SPACER	
M	3	1	**183-1343**	4	STUD (M12X1.75X53-MM)	
	4	1	**379-6461**	1	BRACKET AS-MOUNTING	
M	5	1	**195-2221**	8	NUT (M12X1.75-THD)	
M	6	1	**247-8314**	4	STUD (M12X1.75X73-MM)	

M - METRIC PART

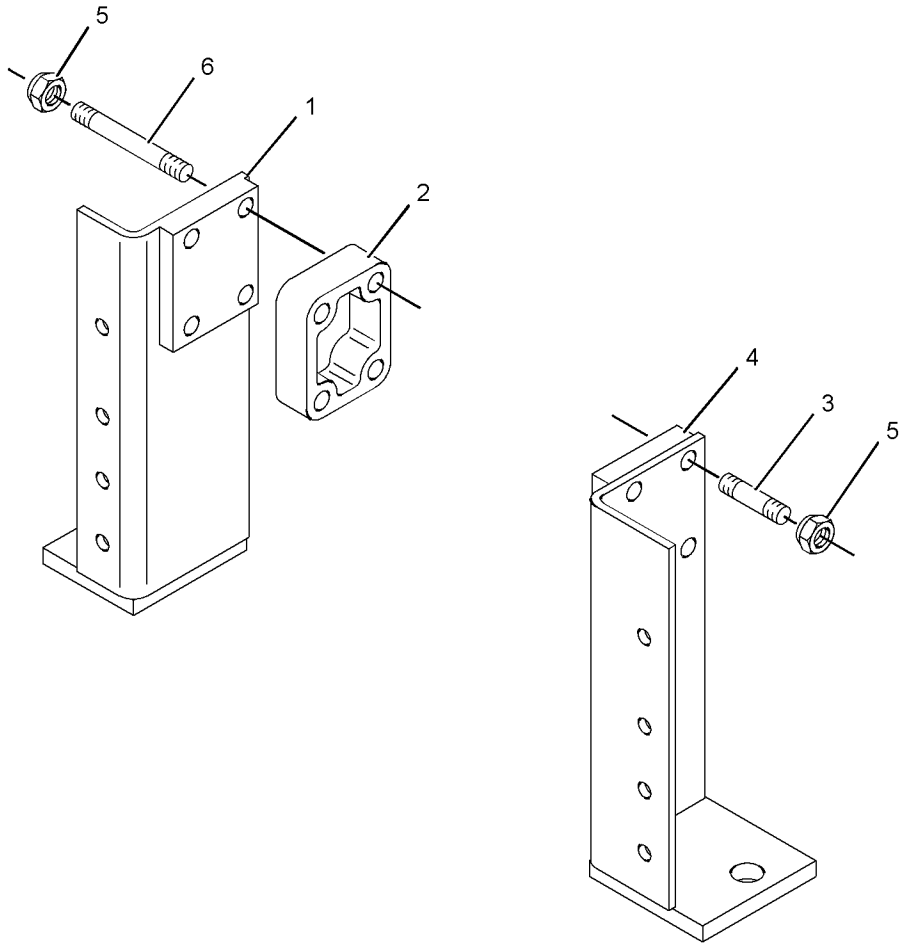

GRAPHIC #1 <END> g01158020

273-6234 MOUNTING GP-ENGINE

SMCS-1152, 1153, 1154 **i02471735**

NOTE	REF NO	GRAPHIC REF	PART NUMBER	QTY	PART NAME 1 2 3 4 5 6 (PRODUCT LEVEL)	SEE PAGE
	1	1	**6H-3616**	4	PLUG-PROTECTION	
M	2	1	**6I-0233**	8	NUT (M12X1.75-THD)	
M	3	1	**183-1343**	8	STUD (M12X1.75X53-MM)	

M - METRIC PART

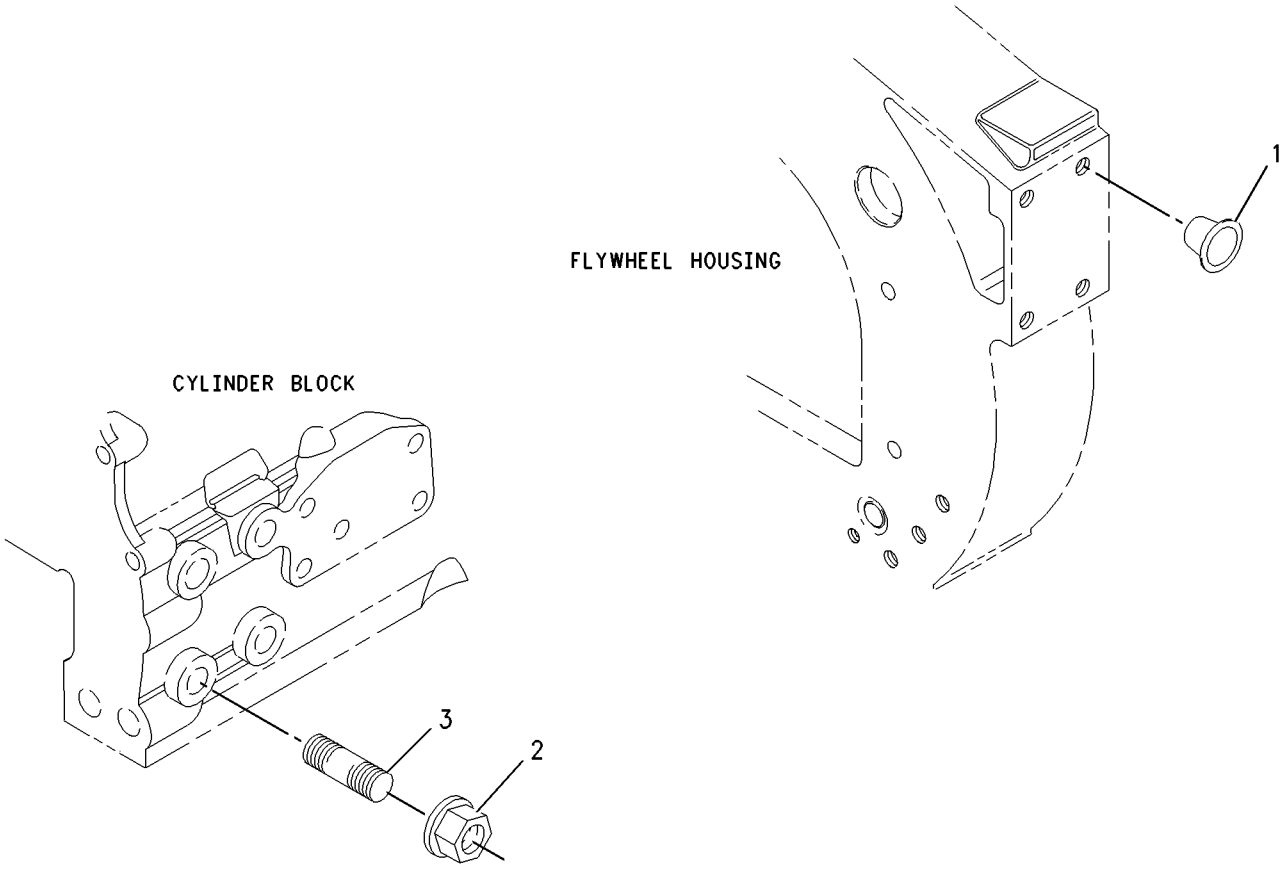

GRAPHIC #1 <END> g01003075

286-1604 MOUNTING GP-ENGINE

TYPE 1

SMCS-1152, 1153, 1154 **i02540797**

NOTE	REF NO	GRAPHIC REF	PART NUMBER	QTY	PART NAME 1 2 3 4 5 6 (PRODUCT LEVEL)	SEE PAGE
M	1	1	**183-1343**	8	STUD (M12X1.75X53-MM)	
M	2	1	**195-2221**	8	NUT (M12X1.75-THD)	
	3	1	**6H-3616**	4	PLUG-PROTECTION	
	4	1	**251-8314**	1	BRACKET	
	5	1	**251-8319**	1	BRACKET	

M - METRIC PART

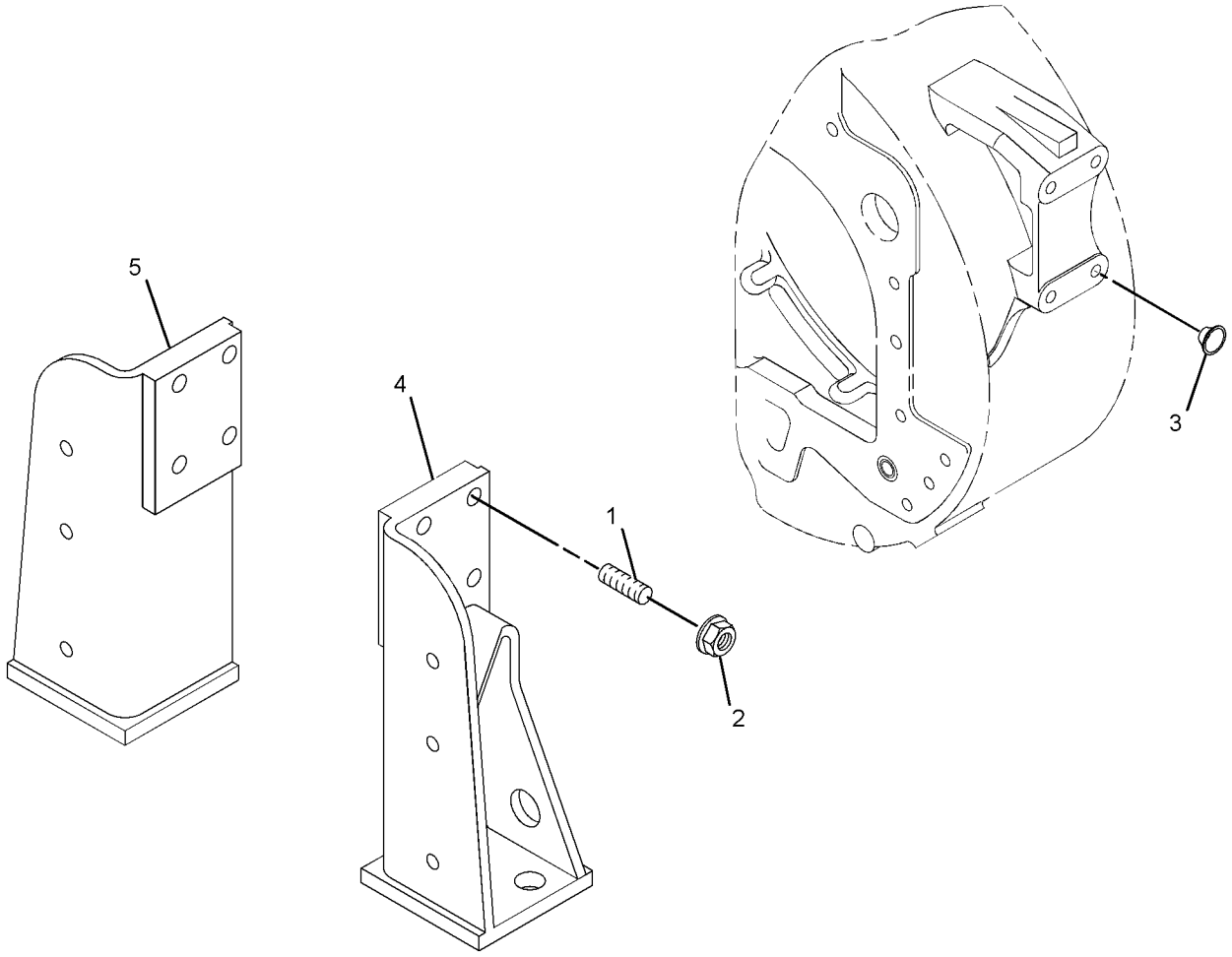

GRAPHIC #1 <END> g01316627

286-1604 MOUNTING GP-ENGINE

TYPE 2

SMCS-1152, 1153, 1154 **i03198332**

NOTE	REF NO	GRAPHIC REF	PART NUMBER	QTY	PART NAME 1 2 3 4 5 6 (PRODUCT LEVEL)	SEE PAGE
M	1	1	**183-1343**	8	STUD (M12X1.75X53-MM)	
M	2	1	**195-2221**	8	NUT (M12X1.75-THD)	
	3	1	**6H-3616**	4	PLUG-PROTECTION	
C	4	1	**330-6130**	1	BRACKET-MOUNTING (LH)	
C	5	1	**330-6131**	1	BRACKET-MOUNTING (RH)	

C - CHANGE FROM PREVIOUS TYPE
M - METRIC PART

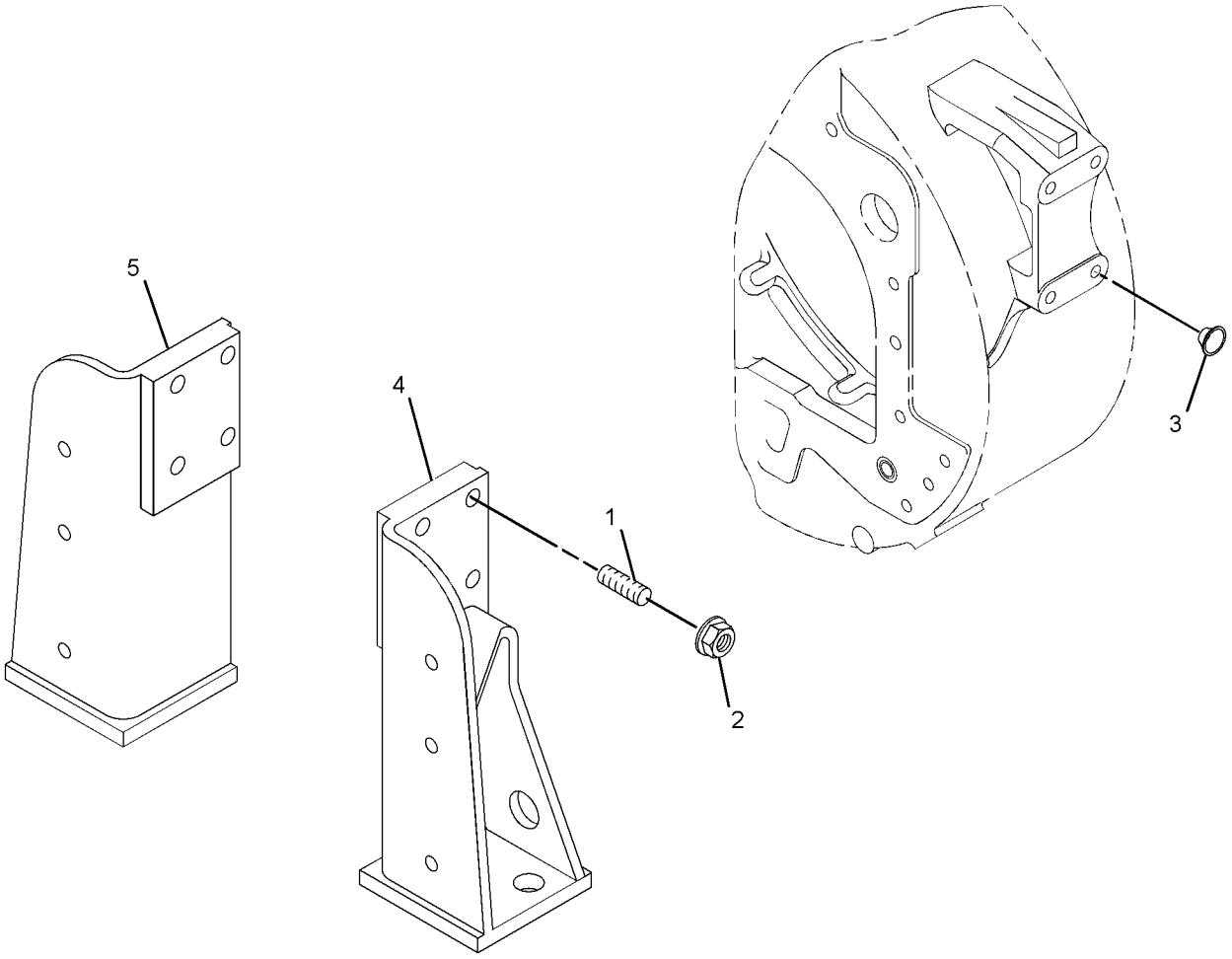

GRAPHIC #1 <END> g01316627

292-2953 MOUNTING GP-ENGINE

TYPE 1

SMCS-1152, 1153, 1154 **i02548077**

NOTE	REF NO	GRAPHIC REF	PART NUMBER	QTY	PART NAME 1 2 3 4 5 6 (PRODUCT LEVEL)	SEE PAGE
	1	1	**6H-3616**	10	PLUG-PROTECTION	
M	2	1	**183-1343**	8	STUD (M12X1.75X53-MM)	
M	3	1	**195-2221**	8	NUT (M12X1.75-THD)	
	4	1	**251-8314**	1	BRACKET	
	5	1	**251-8319**	1	BRACKET	

M - METRIC PART

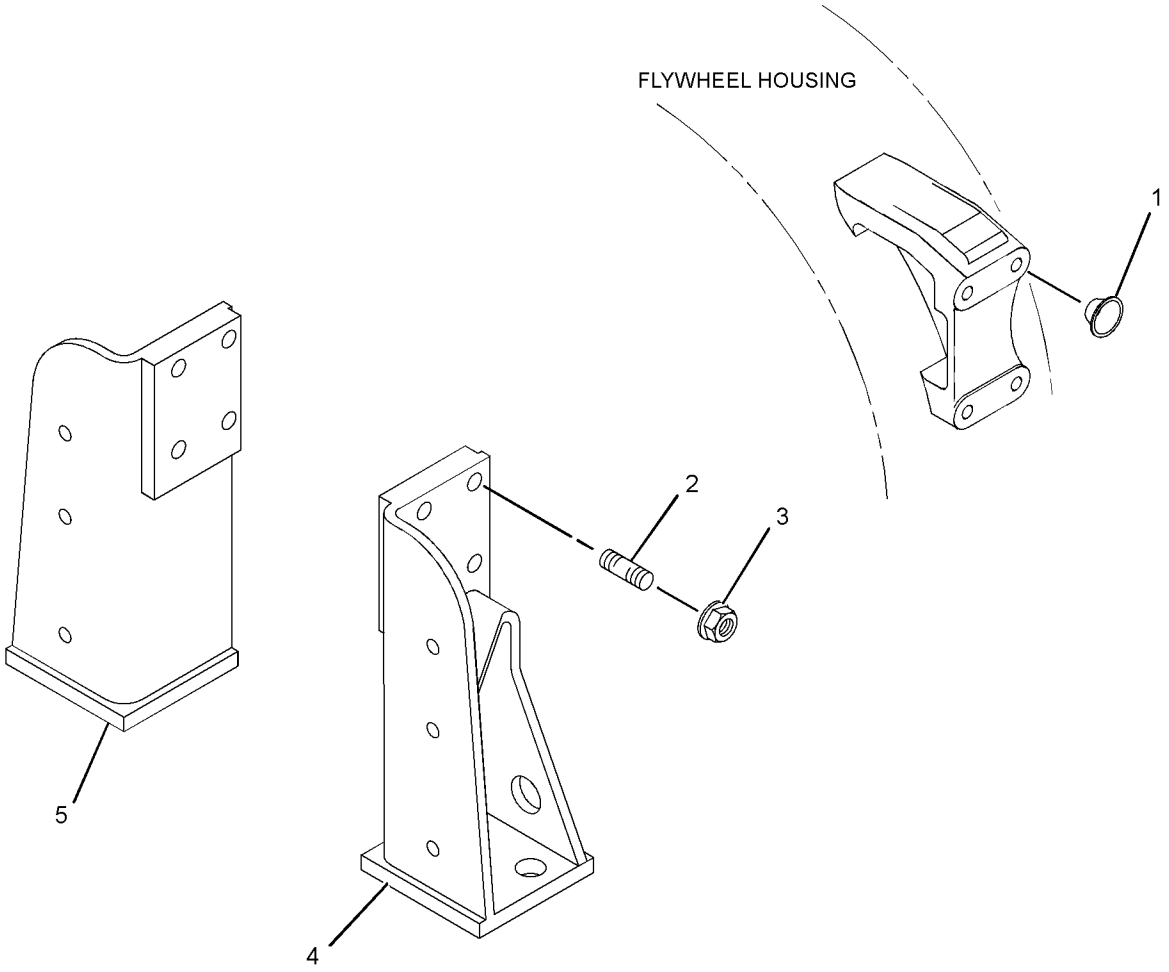

GRAPHIC #1 <END> g01302744

292-2953 MOUNTING GP-ENGINE

TYPE 2

SMCS-1152, 1153, 1154 **i03142554**

NOTE	REF NO	GRAPHIC REF	PART NUMBER	QTY	PART NAME 1 2 3 4 5 6 (PRODUCT LEVEL)	SEE PAGE
	1	1	**6H-3616**	10	PLUG-PROTECTION	
M	2	1	**183-1343**	8	STUD (M12X1.75X53-MM)	
M	3	1	**195-2221**	8	NUT (M12X1.75-THD)	
C	4	1	**330-6130**	1	BRACKET-MOUNTING (LH)	
C	5	1	**330-6131**	1	BRACKET-MOUNTING (RH)	

C - CHANGE FROM PREVIOUS TYPE
M - METRIC PART

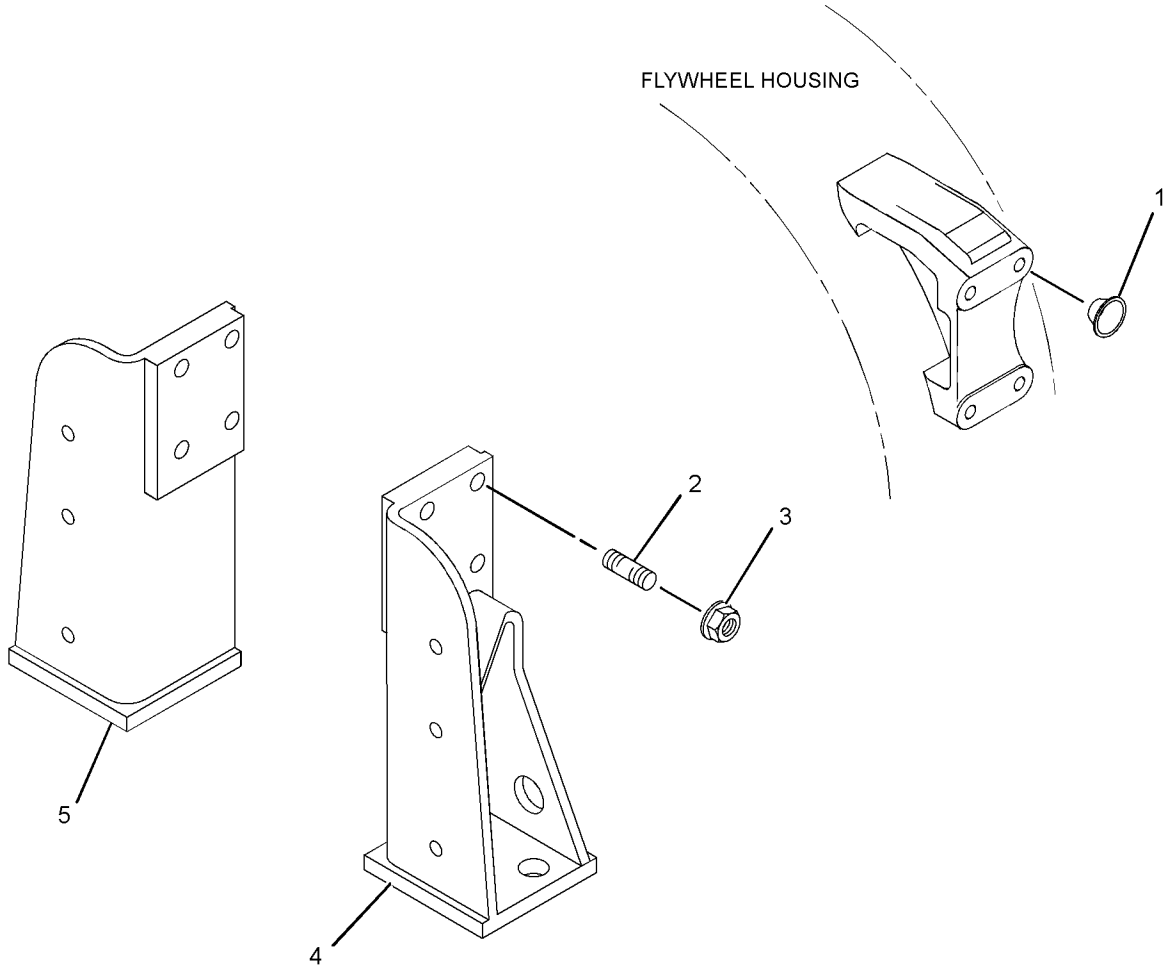

GRAPHIC #1 <END> g01302744

298-7823 MOUNTING GP-ENGINE

SMCS-1152, 1153, 1154 **i02603941**

NOTE	REF NO	GRAPHIC REF	PART NUMBER	QTY	PART NAME 1 2 3 4 5 6 (PRODUCT LEVEL)	SEE PAGE
	1	1	**6H-3616**	6	PLUG-PROTECTION	
	2	1	**139-7007**	1	BRACKET	
	3	1	**145-2881**	1	SPACER	
M	4	1	**183-1343**	4	STUD (M12X1.75X53-MM)	
	5	1	**186-3594**	1	BRACKET	
M	6	1	**195-2221**	8	NUT (M12X1.75-THD)	
M	7	1	**247-8314**	4	STUD (M12X1.75X73-MM)	

M - METRIC PART

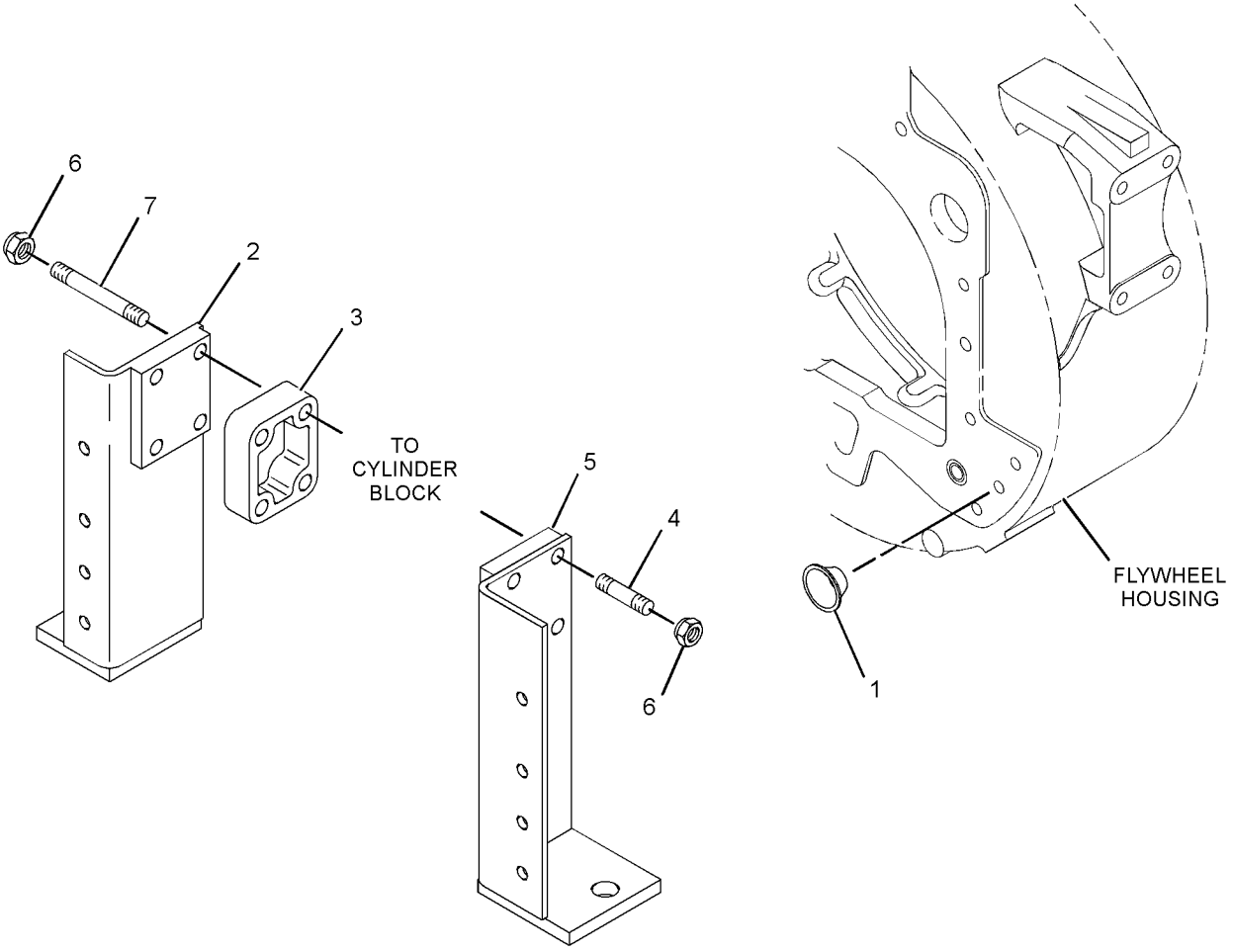

GRAPHIC #1 <END> g01312472

303-1470 MOUNTING GP-ENGINE

SMCS-1152, 1153, 1154 **i02639206**

NOTE	REF NO	GRAPHIC REF	PART NUMBER	QTY	PART NAME 1 2 3 4 5 6 (PRODUCT LEVEL)	SEE PAGE
	1	1	**6H-3616**	4	PLUG-PROTECTION	
	2	1	**195-2132**	1	SUPPORT-FRONT (LH)	
	3	1	**195-2134**	1	SUPPORT-FRONT (RH)	
	4	1	**195-2136**	8	STUD (M12X1.75X48-MM)	
M	5	1	**195-2221**	8	NUT (M12X1.75-THD)	

M - METRIC PART

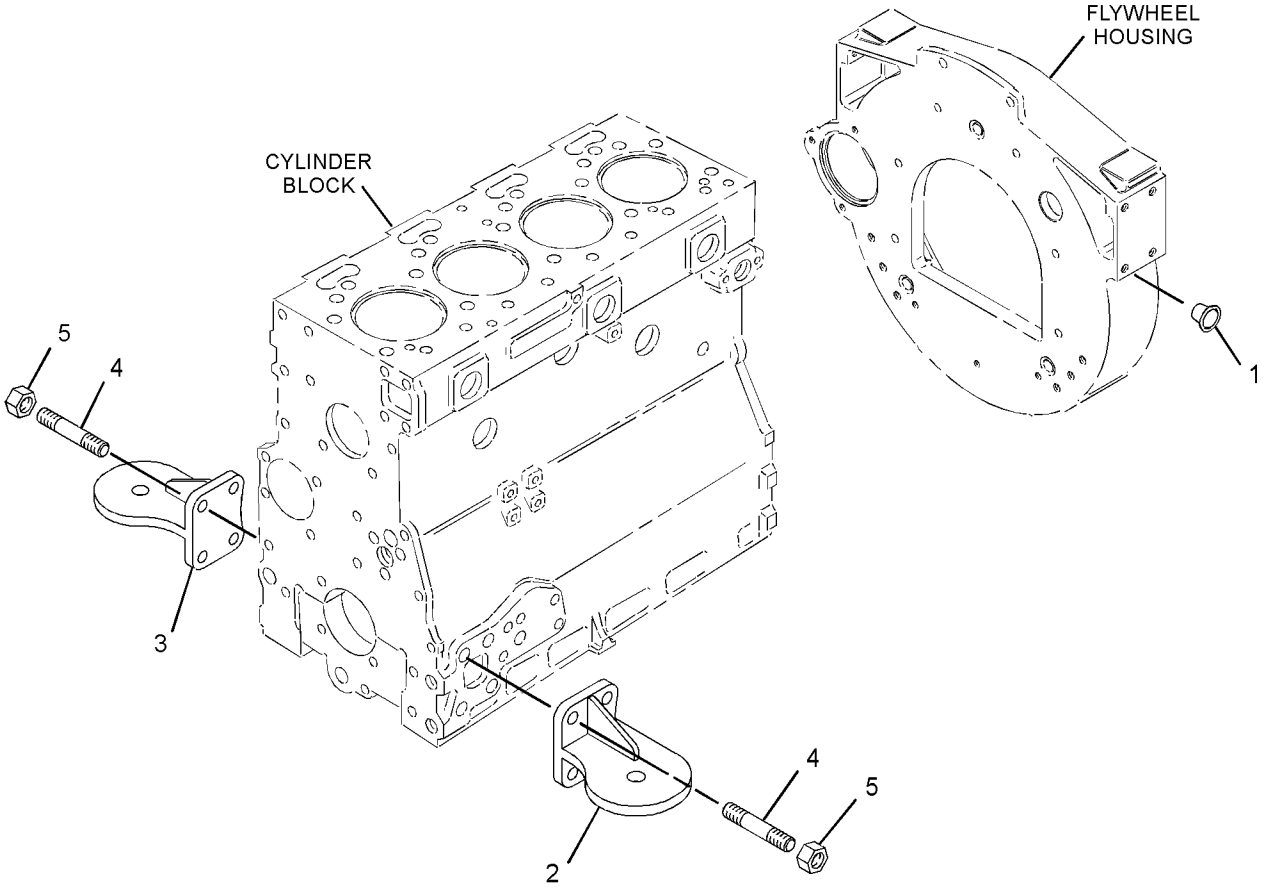

GRAPHIC #1 <END> g01325939

309-9345 MOUNTING GP-ENGINE

SMCS-1152, 1153, 1154 **i02752569**

NOTE	REF NO	GRAPHIC REF	PART NUMBER	QTY	PART NAME 1 2 3 4 5 6 (PRODUCT LEVEL)	SEE PAGE
	1	1	**6H-3616**	4	PLUG-PROTECTION	
	2	1	**195-2132**	1	SUPPORT-FRONT (LH)	
	3	1	**195-2134**	1	SUPPORT-FRONT (RH)	
	4	1	**195-2136**	8	STUD (M12X1.75X48-MM)	
M	5	1	**195-2221**	8	NUT (M12X1.75-THD)	

M - METRIC PART

309-9345 **MOUNTING GP-ENGINE (**contd.**)** **i02752569**

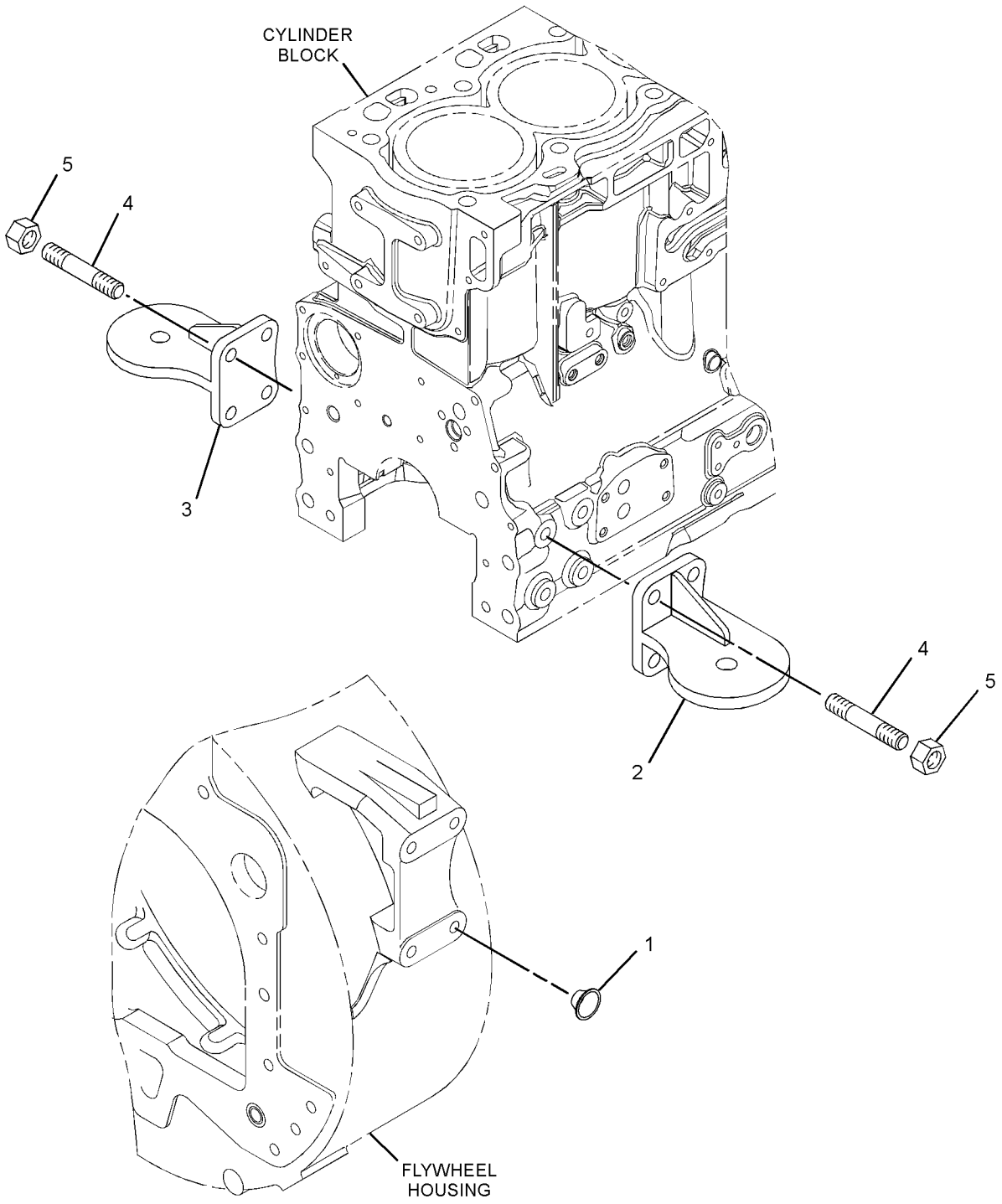

GRAPHIC #1 <END> g01390939

316-5658 MOUNTING GP-ENGINE

SMCS-1152, 1153, 1154 **i02817123**

NOTE	REF NO	GRAPHIC REF	PART NUMBER	QTY	PART NAME 1 2 3 4 5 6 (PRODUCT LEVEL)	SEE PAGE
M	1	1	**6I-0423**	6	BOLT (M12X1.75X30-MM)	
	2	1	**101-7185**	1	BRACKET	
	3	1	**101-7186**	1	BRACKET	
M	4	1	**101-7537**	4	BOLT (M12X1.75X35-MM)	
	5	1	**139-7007**	1	BRACKET	
	6	1	**145-2881**	1	SPACER	
	7	1	**186-3594**	1	BRACKET	
	8	1	**186-3595**	4	BOLT (M12X1.75X60-MM)	

M - METRIC PART

316-5658 **MOUNTING GP-ENGINE** (contd.) **i02817123**

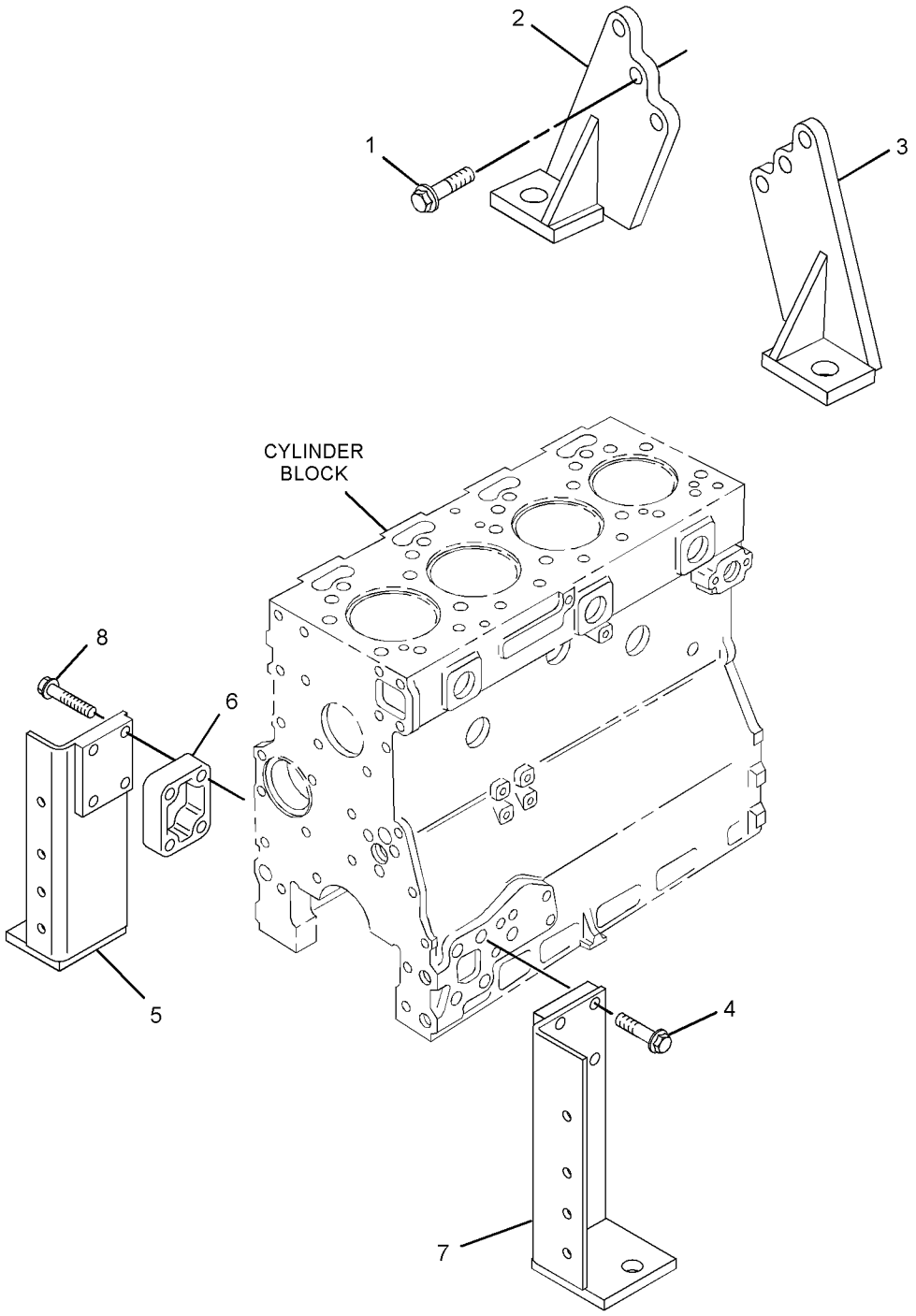

GRAPHIC #1 <END> g01420624

235-0343 MOUNTING GP-FAN DRIVE

SMCS-1359 **i06097232**

NOTE	REF NO	GRAPHIC REF	PART NUMBER	QTY	PART NAME 1 2 3 4 5 6 (PRODUCT LEVEL)	SEE PAGE
M	1	1	**113-6349**	4	NUT (M8X1.25-THD)	
M	2	1	**135-6362**	4	STUD (M8X1.25X103-MM)	
	3	1	**453-9682**	1	EXTENSION-FAN	

M - METRIC PART

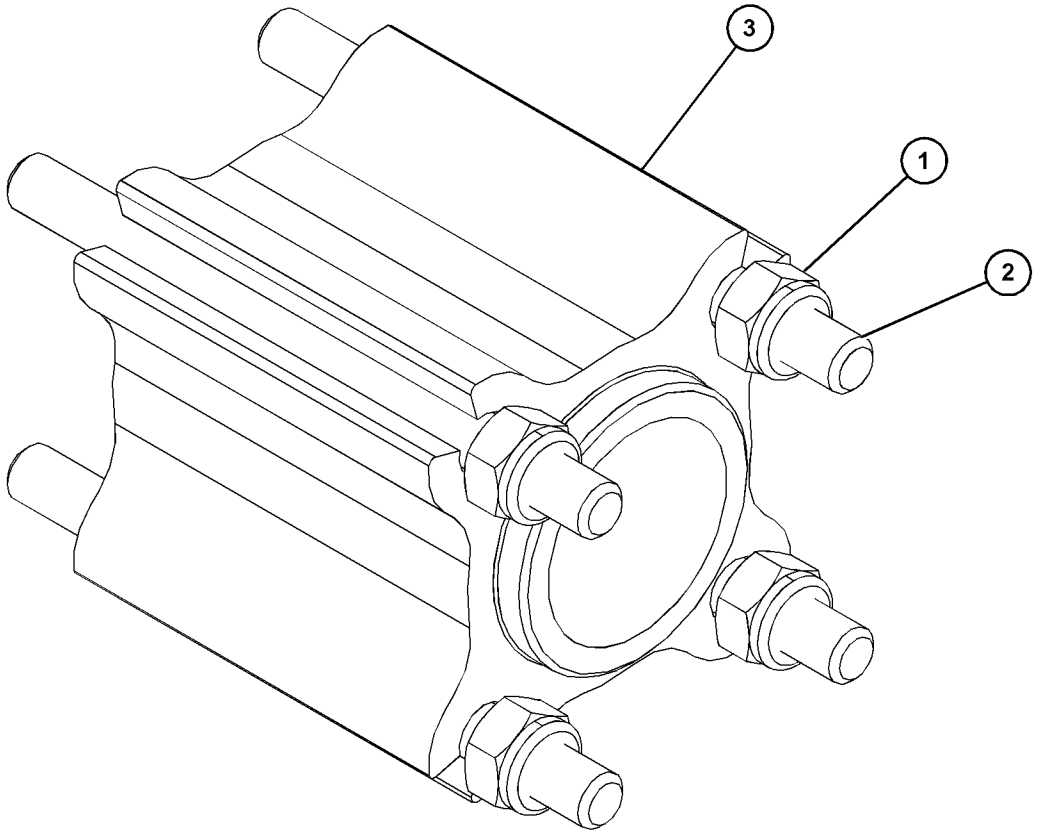

GRAPHIC #1 <END> g03809229

268-5708 MOUNTING GP-FAN DRIVE

SMCS-1359 **i02297878**

NOTE	PART NUMBER	QTY	PART NAME 1 2 3 4 5 6 (PRODUCT LEVEL)	SEE PAGE
	179-7071	4	BOLT (M8X1.25X20-MM)	

<END>

198-5823 PAN GP-OIL—ENGINE

SMCS-1302 **i02138108**

NOTE	REF NO	GRAPHIC REF	PART NUMBER	QTY	PART NAME 1 2 3 4 5 6 (PRODUCT LEVEL)	SEE PAGE
	1	1	**2B-0858**	2	PLUG-PIPE	
	2	1	**5P-6718**	2	SEAL-O-RING	
M	3	1	**6I-0217**	8	BOLT (M8X1.25X20-MM)	
	4	1	**6I-0289**	1	PLUG	
M	5	1	**6I-0291**	2	NUT (M8X1.25-THD)	
M	6	1	**6I-0292**	2	BOLT (M8X1.25X140-MM)	
M	7	1	**6I-0293**	4	BOLT (M8X1.25X80-MM)	
M	8	1	**6I-0363**	2	BOLT (M6X1X20-MM)	
	9	1	**6I-1497**	1	SEAL	
	10	1	**7C-0351**	2	PLUG-DRAIN (ENGINE OIL)	
	11	1	**067-6213**	1	GASKET	
M	12	1	**101-3895**	2	BOLT (M8X1.25X35-MM)	
	13	1	**124-7702**	1	TUBE AS	
	14	1	**6I-4079**	1	NUT	
	15	1	**131-4291**	1	GAUGE AS-OIL LEVEL (DIPSTICK) (ENGINE)	
	16	1	**155-4828**	2	STUD	
M	17	1	**220-8311**	4	BOLT (M8X1.25X115-MM)	
	18	1	**225-6005**	1	GASKET	
	19	1	**230-8094**	1	BRIDGE	
	20	1	**230-8251**	1	PAN-OIL	
	21	1	**233-8148**	1	STRAINER	

M - METRIC PART

198-5823 **PAN GP-OIL (**contd.**)** **i02138108**

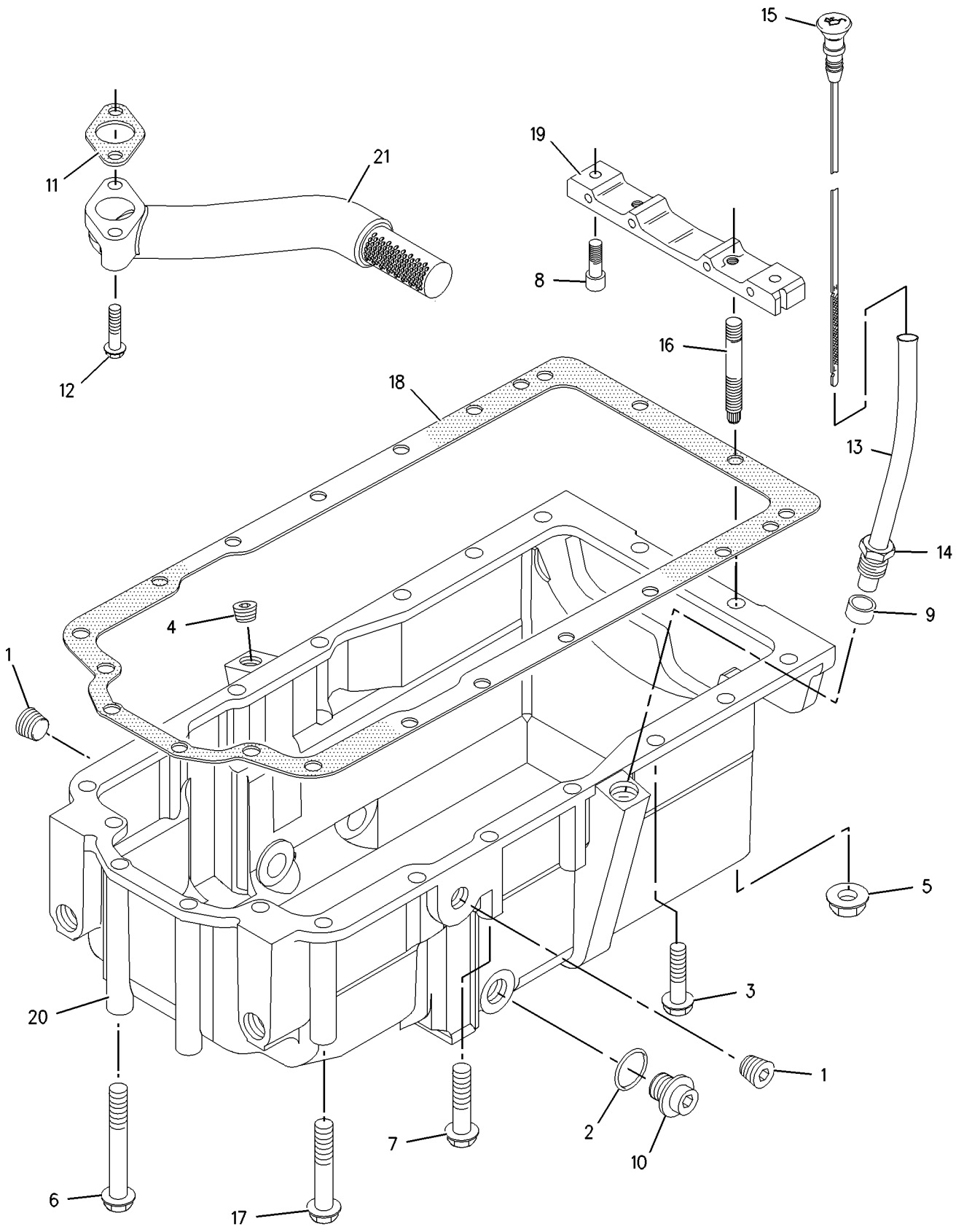

GRAPHIC #1 <END> g00956402

198-5823 PAN GP-OIL—ENGINE

S/N: 3341-26950

SMCS-1302 **i06679776**

NOTE	REF NO	GRAPHIC REF	PART NUMBER	QTY	PART NAME 1 2 3 4 5 6 (PRODUCT LEVEL)	SEE PAGE
	1	1	**067-6823**	2	PLUG	
	2	1	**335-7585**	2	SEAL	
M	3	1	**6I-0217**	8	BOLT (M8X1.25X20-MM)	
	4	1	**6I-0289**	1	PLUG	
M	5	1	**178-3336**	2	NUT-HEX FLANGE (M8X1.25-THD)	
M	6	1	**6I-0292**	2	BOLT (M8X1.25X140-MM)	
M	7	1	**6I-0293**	4	BOLT (M8X1.25X80-MM)	
M	8	1	**6I-0363**	2	BOLT (M6X1X20-MM)	
	9	1	**6I-1497**	1	SEAL	
	10	1	**7C-0351**	2	PLUG-DRAIN (ENGINE OIL)	
	11	1	**067-6213**	1	GASKET	
M	12	1	**101-3895**	2	BOLT (M8X1.25X35-MM)	
C	13	1	**124-7702**	1	TUBE AS	
	13A	1	**6I-4079**	1	NUT	
	15	1	**131-4291**	1	GAUGE AS-OIL LEVEL (DIPSTICK) (ENGINE)	
	16	1	**155-4828**	2	STUD	
M	17	1	**220-8311**	4	BOLT (M8X1.25X115-MM)	
	18	1	**225-6005**	1	GASKET	
	19	1	**230-8094**	1	BRIDGE	
	20	1	**230-8251**	1	PAN-OIL	
	21	1	**233-8148**	1	STRAINER	
F			**275-9883**	2	SEAL	

C - CHANGE FROM PREVIOUS TYPE
F - NOT SHOWN
M - METRIC PART

198-5823 **PAN GP-OIL (**contd.**)** **i06679776**

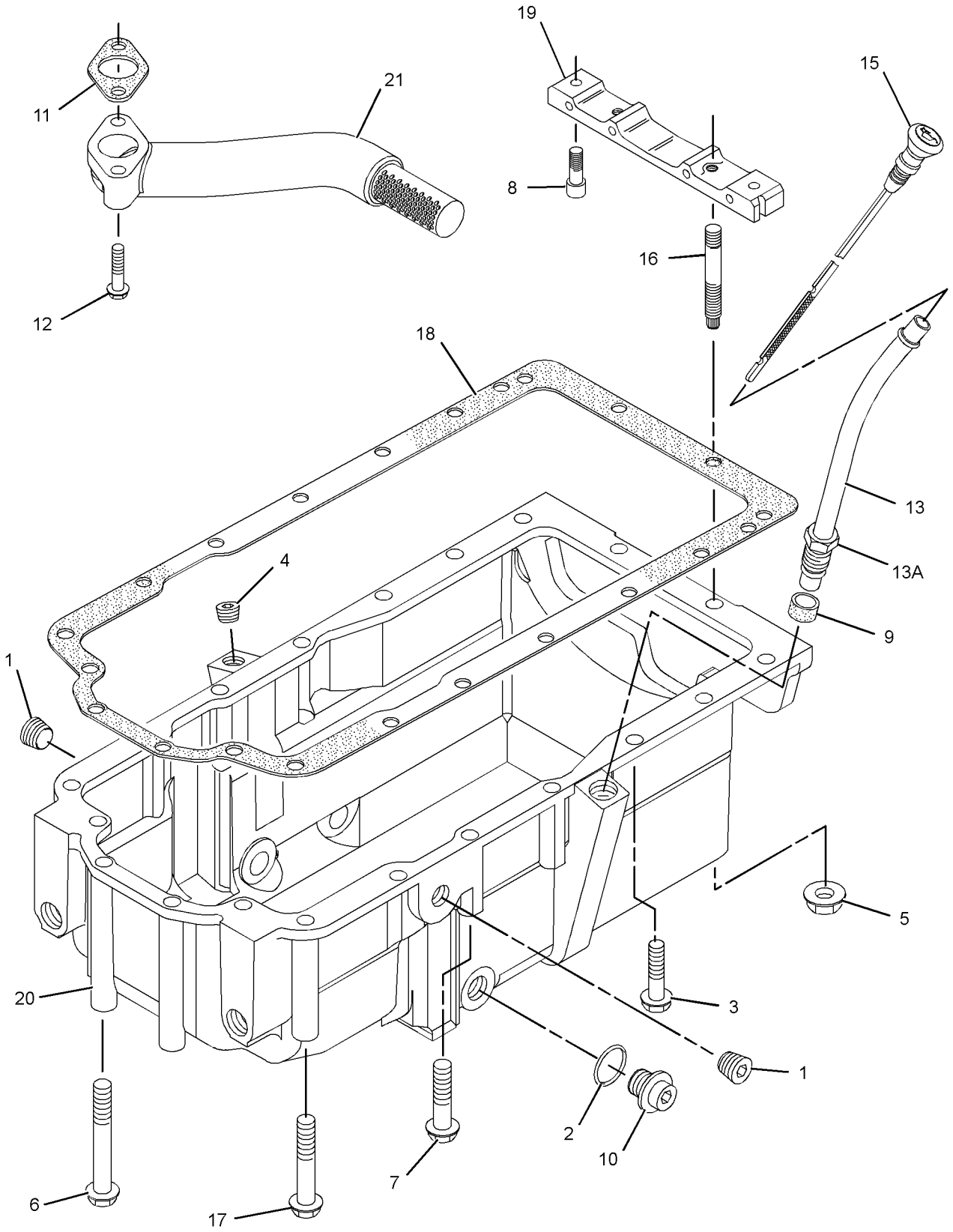

GRAPHIC #1 <END> g01338563

198-5823 PAN GP-OIL—ENGINE

S/N: 33426951-UP

SMCS-1302 **i07027735**

NOTE	REF NO	GRAPHIC REF	PART NUMBER	QTY	PART NAME 1 2 3 4 5 6 (PRODUCT LEVEL)	SEE PAGE
	1	1	**233-8148**	1	STRAINER	
	2	1	**335-7585**	2	SEAL	
CM	3	1	**6I-0260**	2	BOLT (M8X1.25X25-MM)	
	4	1	**6I-0289**	1	PLUG	
M	5	1	**178-3336**	2	NUT-HEX FLANGE (M8X1.25-THD)	
M	8	1	**8T-0269**	2	BOLT-SOCKET HEAD (M6X1X20-MM)	
	9	1	**6I-1497**	1	SEAL	
	10	1	**7C-0351**	2	PLUG-DRAIN (ENGINE OIL)	
	11	1	**067-6213**	1	GASKET	
M	12	1	**101-3895**	2	BOLT (M8X1.25X35-MM)	
	13	1	**124-7702**	1	TUBE AS	
	13A	1	**6I-4079**	1	NUT	
	15	1	**131-4291**	1	GAUGE AS-OIL LEVEL (DIPSTICK) (ENGINE)	
	16	1	**155-4828**	2	STUD	
CM	17	1	**101-3805**	16	BOLT (M8X1.25X90-MM)	
	18	1	**471-2882**	1	GASKET	
	19	1	**230-8094**	1	BRIDGE	
C	20	1	**433-0344**	1	PAN AS-OIL	
F		1	**275-9883**	2	SEAL	

C - CHANGE FROM PREVIOUS TYPE
F - NOT SHOWN
M - METRIC PART

198-5823 **PAN GP-OIL (**contd.**)** **i07027735**

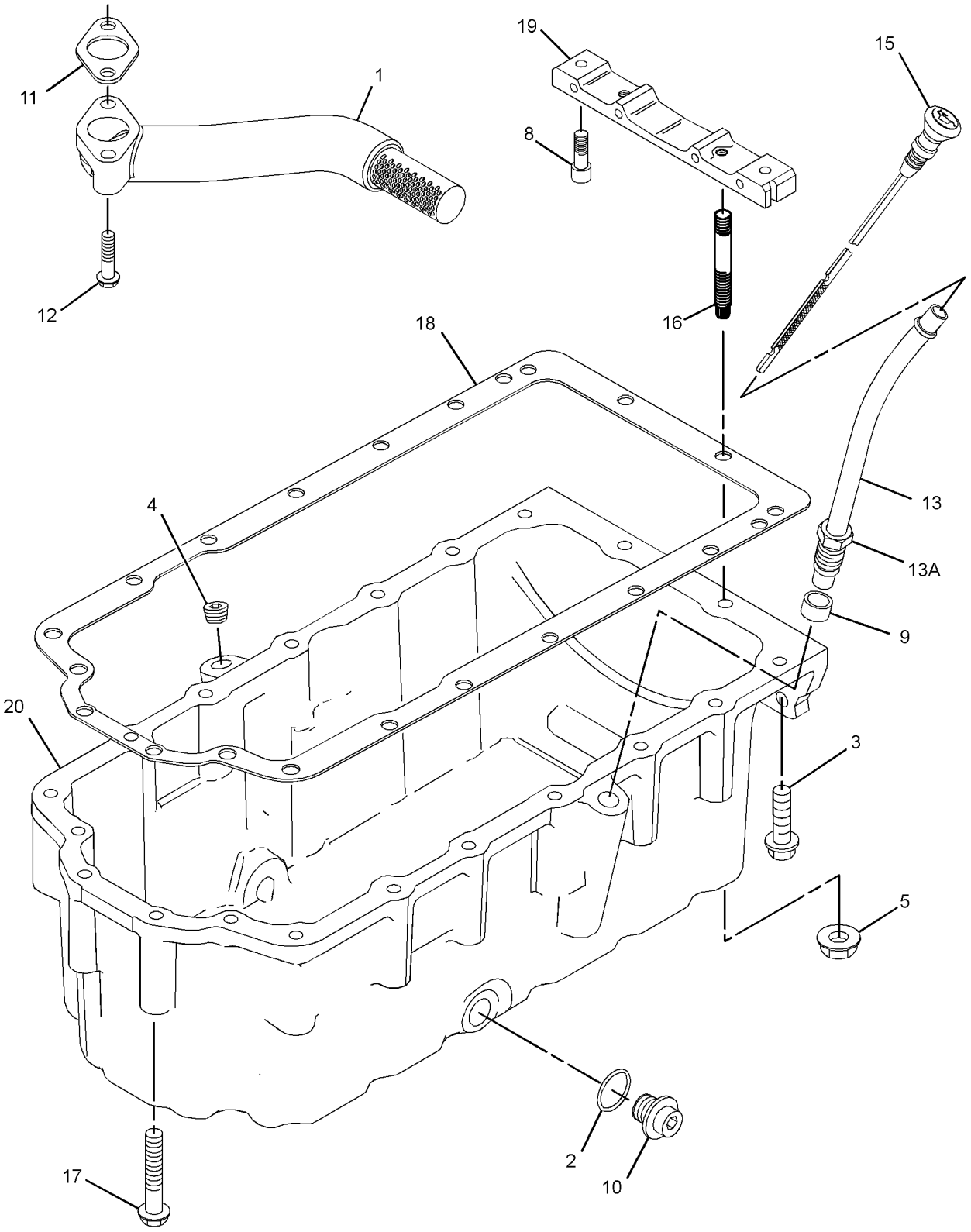

GRAPHIC #1 <END> g06192213

230-8144 PAN GP-OIL—ENGINE

ALSO AN ATTACHMENT

TYPE 1

SMCS-1302 **i04888712**

NOTE	REF NO	GRAPHIC REF	PART NUMBER	QTY	PART NAME 1 2 3 4 5 6 (PRODUCT LEVEL)	SEE PAGE
	1	1	**304-8764**	1	PAN AS-OIL (ENGINE)	
	1A	1	**7C-1224**	2	INSERT	
	2	1	**7C-0351**	2	PLUG-DRAIN (ENGINE OIL)	
	3	1	**275-9883**	2	SEAL	
	4	1	**225-6005**	1	GASKET	
	5	1	**6I-0289**	1	PLUG	
M	6	1	**101-3771**	4	BOLT (M8X1.25X85-MM)	
M	7	1	**6I-0217**	14	BOLT (M8X1.25X20-MM)	
M	8	1	**6I-0572**	2	BOLT (M8X1.25X20-MM)	
	9	1	**230-8094**	1	BRIDGE	
M	10	1	**6I-0363**	2	BOLT (M6X1X20-MM)	
	11	1	**225-6041**	1	TUBE	
	12	1	**067-6213**	1	GASKET	
M	13	1	**6I-0260**	2	BOLT (M8X1.25X25-MM)	
	14	1	**124-7702**	1	TUBE AS	
	14A	1	**6I-4079**	1	NUT	
	15	1	**6I-1497**	1	SEAL	
	16	1	**124-7703**	1	GAUGE AS-OIL LEVEL (DIPSTICK) (ENGINE)	

M - METRIC PART

230-8144 **PAN GP-OIL (**contd.**)** **i04888712**

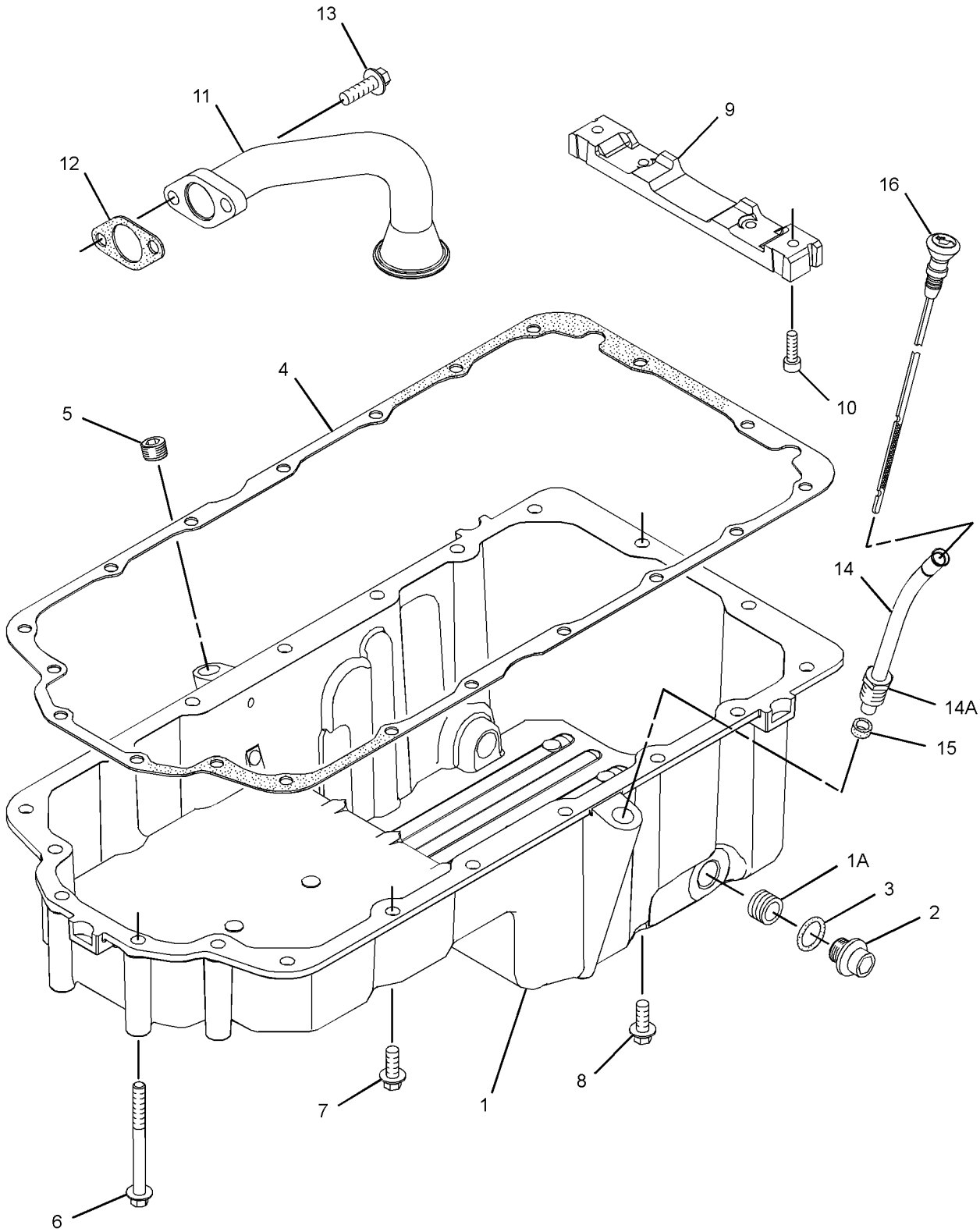

GRAPHIC #1 <END> g01352851

230-8144 PAN GP-OIL—ENGINE

ALSO AN ATTACHMENT

TYPE 2

SMCS-1302 **i07228581**

NOTE	REF NO	GRAPHIC REF	PART NUMBER	QTY	PART NAME 1 2 3 4 5 6 (PRODUCT LEVEL)	SEE PAGE
C	1	1	**480-4406**	1	PAN	
	2	1	**7C-0351**	2	PLUG-DRAIN (ENGINE OIL)	
	3	1	**335-7585**	2	SEAL	
	4	1	**471-2882**	1	GASKET	
	5	1	**6I-0289**	1	PLUG	
M	6	1	**101-3771**	4	BOLT (M8X1.25X85-MM)	
M	7	1	**6I-0217**	14	BOLT (M8X1.25X20-MM)	
M	8	1	**6I-0572**	2	BOLT (M8X1.25X20-MM)	
	9	1	**230-8094**	1	BRIDGE	
M	10	1	**8T-0269**	2	BOLT-SOCKET HEAD (M6X1X20-MM)	
	11	1	**225-6041**	1	TUBE	
	12	1	**067-6213**	1	GASKET	
M	13	1	**6I-0260**	2	BOLT (M8X1.25X25-MM)	
	14	1	**124-7702**	1	TUBE AS	
	14A	1	**6I-4079**	1	NUT	
	15	1	**6I-1497**	1	SEAL	
	16	1	**124-7703**	1	GAUGE AS-OIL LEVEL (DIPSTICK) (ENGINE)	
F			**275-9883**	2	SEAL	

C - CHANGE FROM PREVIOUS TYPE
F - NOT SHOWN
M - METRIC PART

230-8144 **PAN GP-OIL (**contd.**)** **i07228581**

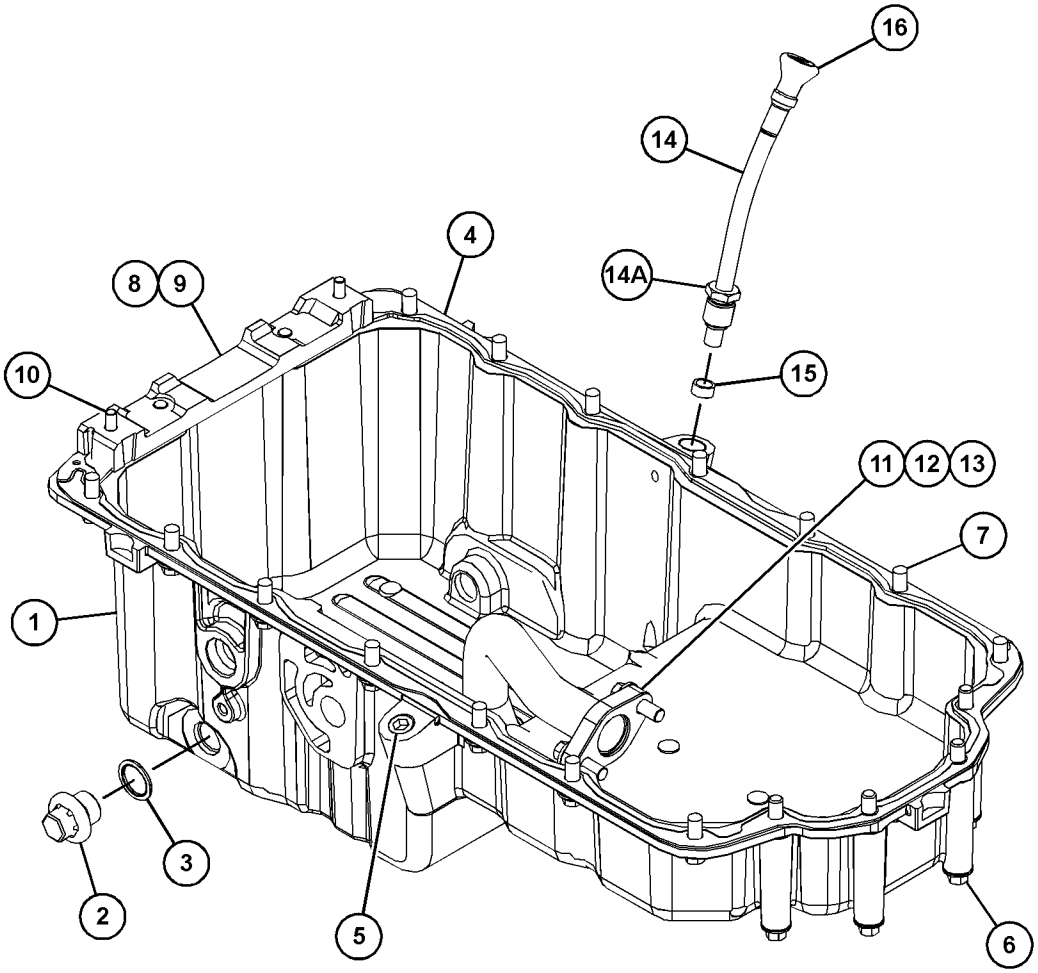

GRAPHIC #1 <END> g03783324

230-8253 PAN GP-OIL—ENGINE

ALSO AN ATTACHMENT

TYPE 1

SMCS-1302 **i06233715**

NOTE	REF NO	GRAPHIC REF	PART NUMBER	QTY	PART NAME 1 2 3 4 5 6 (PRODUCT LEVEL)	SEE PAGE
	1	1	**335-7585**	2	SEAL	
	2	1	**230-8094**	1	BRIDGE	
	3	1	**373-9785**	1	PIPE	
M	4	1	**6I-0260**	2	BOLT (M8X1.25X25-MM)	
M	5	1	**8T-0269**	2	BOLT-SOCKET HEAD (M6X1X20-MM)	
	6	1	**6I-1497**	1	SEAL	
M	7	1	**6I-4072**	2	BOLT (M8X1.25X14-MM)	
	8	1	**7C-0351**	2	PLUG-DRAIN (ENGINE OIL)	
	9	1	**225-6005**	1	GASKET	
M	10	1	**124-3815**	18	BOLT (M8X1.25X16-MM)	
	11	1	**124-7702**	1	TUBE AS	
	11A	1	**6I-4079**	1	NUT	
	12	1	**130-1161**	1	GAUGE AS-OIL LEVEL (DIPSTICK) (ENGINE)	
	13	1	**214-3281**	1	PAN-OIL	
F			**275-9883**	2	SEAL	

F - NOT SHOWN
M - METRIC PART

230-8253 **PAN GP-OIL (**contd.**)** **i06233715**

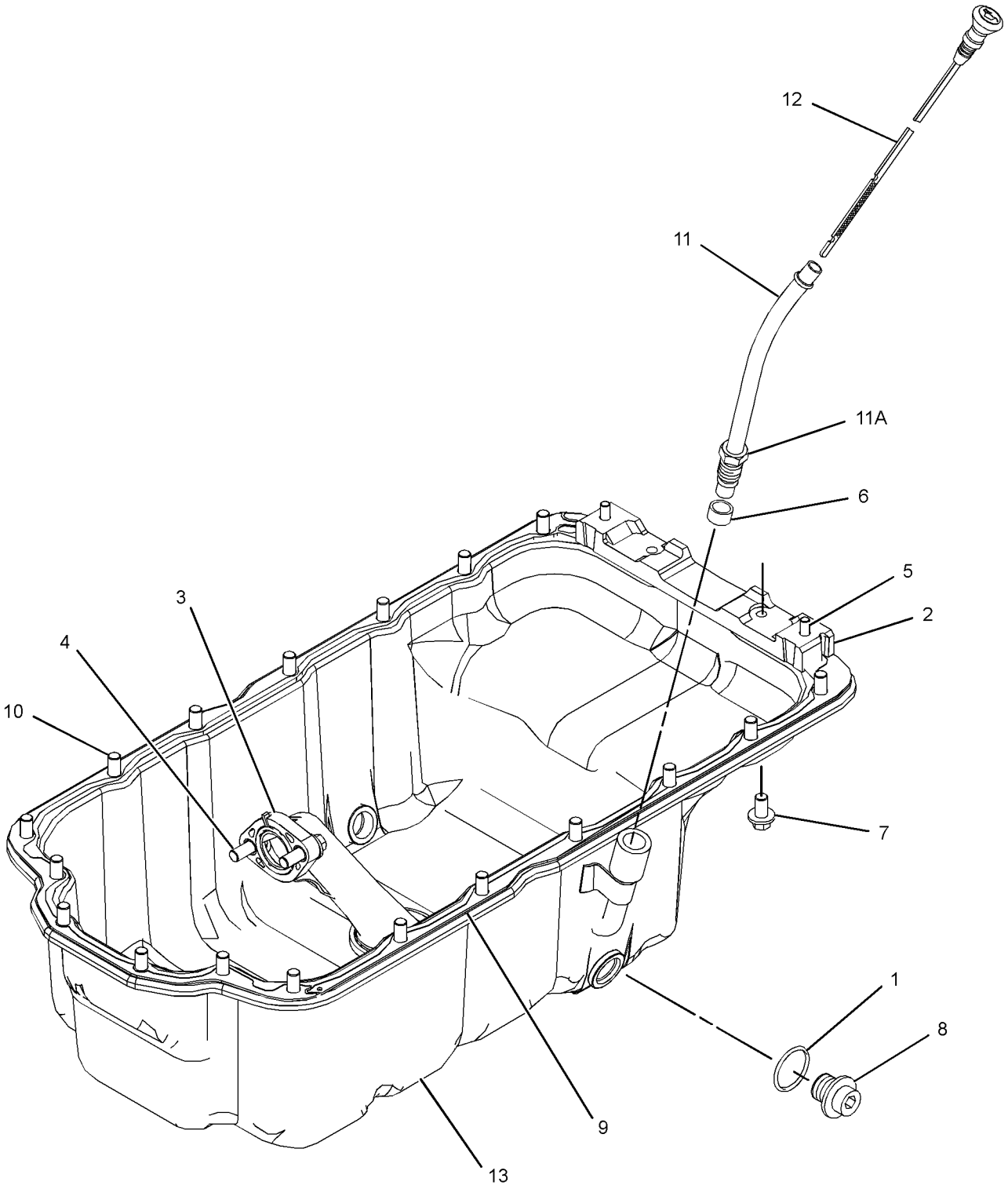

GRAPHIC #1 <END> g03870169

230-8253 PAN GP-OIL—ENGINE

ALSO AN ATTACHMENT

TYPE 2

SMCS-1302 **i06850987**

NOTE	REF NO	GRAPHIC REF	PART NUMBER	QTY	PART NAME 1 2 3 4 5 6 (PRODUCT LEVEL)	SEE PAGE
	1	1	**373-9785**	1	PIPE	
	2	1	**335-7585**	2	SEAL	
	3	1	**230-8094**	1	BRIDGE	
M	4	1	**6I-0260**	2	BOLT (M8X1.25X25-MM)	
M	5	1	**8T-0269**	2	BOLT-SOCKET HEAD (M6X1X20-MM)	
	6	1	**6I-1497**	1	SEAL	
M	7	1	**6I-4072**	2	BOLT (M8X1.25X14-MM)	
	8	1	**7C-0351**	2	PLUG-DRAIN (ENGINE OIL)	
	9	1	**471-2882**	1	GASKET	
M	10	1	**124-3815**	18	BOLT (M8X1.25X16-MM)	
	11	1	**124-7702**	1	TUBE AS	
	11A	1	**6I-4079**	1	NUT	
	12	1	**130-1161**	1	GAUGE AS-OIL LEVEL (DIPSTICK) (ENGINE)	
	13	1	**214-3281**	1	PAN-OIL (ENGINE)	
F		1	**275-9883**	2	SEAL	

F - NOT SHOWN
M - METRIC PART

230-8253 **PAN GP-OIL (**contd.**)** **i06850987**

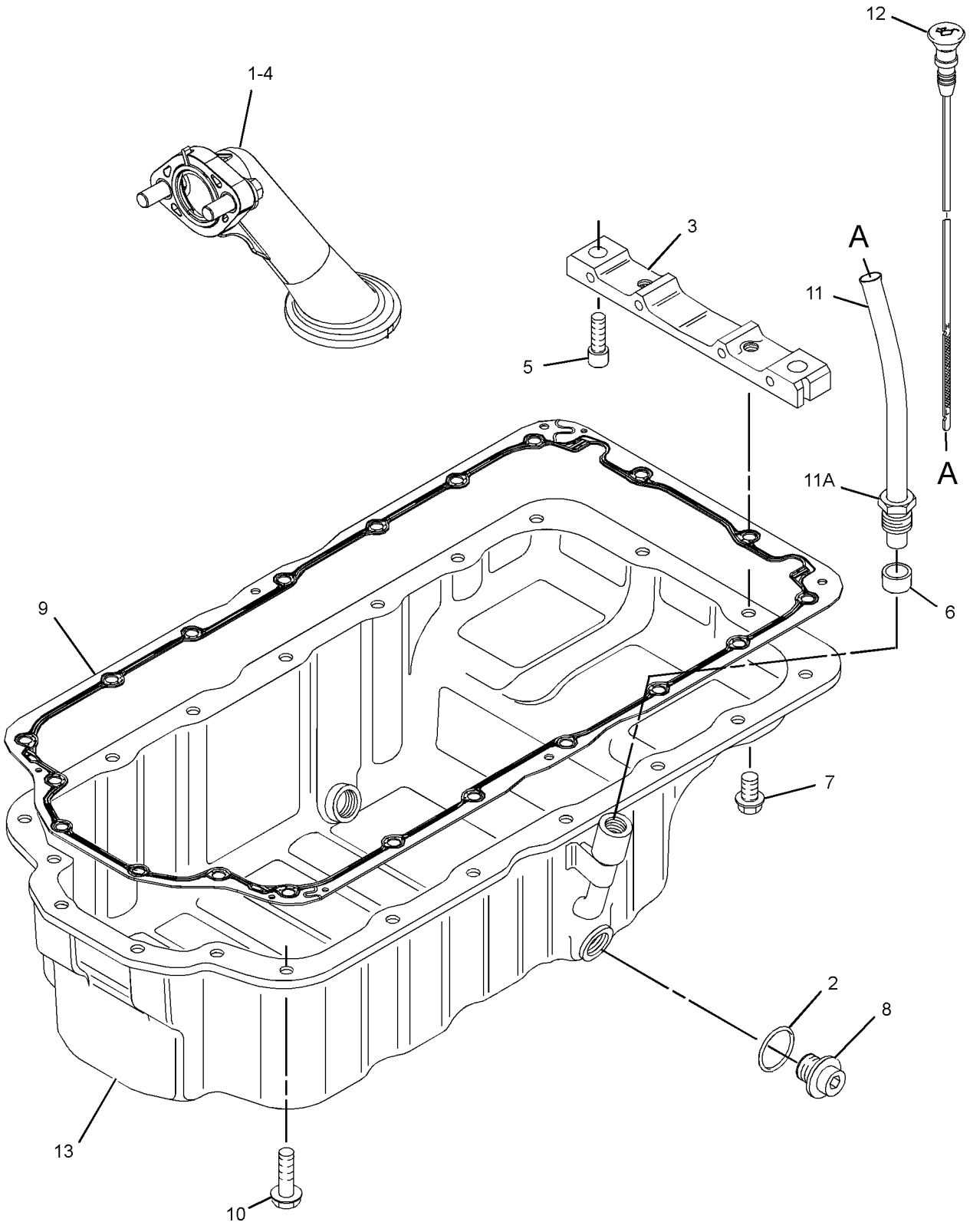

GRAPHIC #1 <END> g06196591

230-8278 PAN GP-OIL—ENGINE

S/N: 3341-24

SMCS-1302 **i02138112**

NOTE	REF NO	GRAPHIC REF	PART NUMBER	QTY	PART NAME 1 2 3 4 5 6 (PRODUCT LEVEL)	SEE PAGE
	1	1	**5P-6718**	2	SEAL-O-RING	
M	2	1	**6I-0217**	12	BOLT (M8X1.25X20-MM)	
M	3	1	**6I-0260**	2	BOLT (M8X1.25X25-MM)	
	4	1	**6I-0289**	1	PLUG	
M	5	1	**6I-0363**	2	BOLT (M6X1X20-MM)	
M	6	1	**6I-0572**	2	BOLT (M8X1.25X20-MM)	
M	7	1	**6I-0631**	1	BOLT (M6X1X12-MM)	
	8	1	**6I-0918**	1	NUT	
	9	1	**6I-1497**	1	SEAL	
	10	1	**7C-0351**	2	PLUG-DRAIN (ENGINE OIL)	
	11	1	**067-6213**	1	GASKET	
M	12	1	**101-3771**	6	BOLT (M8X1.25X85-MM)	
M	13	1	**120-6872**	1	BOLT (M6X1X40-MM)	
	14	1	**225-6004**	1	PAN AS-OIL	
	14A	1	**7C-1224**	2	INSERT	
	15	1	**225-6005**	1	GASKET	
	16	1	**225-6041**	1	TUBE	
	17	1	**230-8094**	1	BRIDGE	
	18	1	**230-8258**	1	TUBE AS	
	18A	1	**6I-4079**	1	NUT	
	18B	1	**230-8275**	1	CLIP-TUBE	
	19	1	**230-8276**	1	BRACKET	
	20	1	**230-8277**	1	GAUGE AS-OIL LEVEL (DIPSTICK) (ENGINE)	

M - METRIC PART

230-8278 **PAN GP-OIL (**contd.**)** **i02138112**

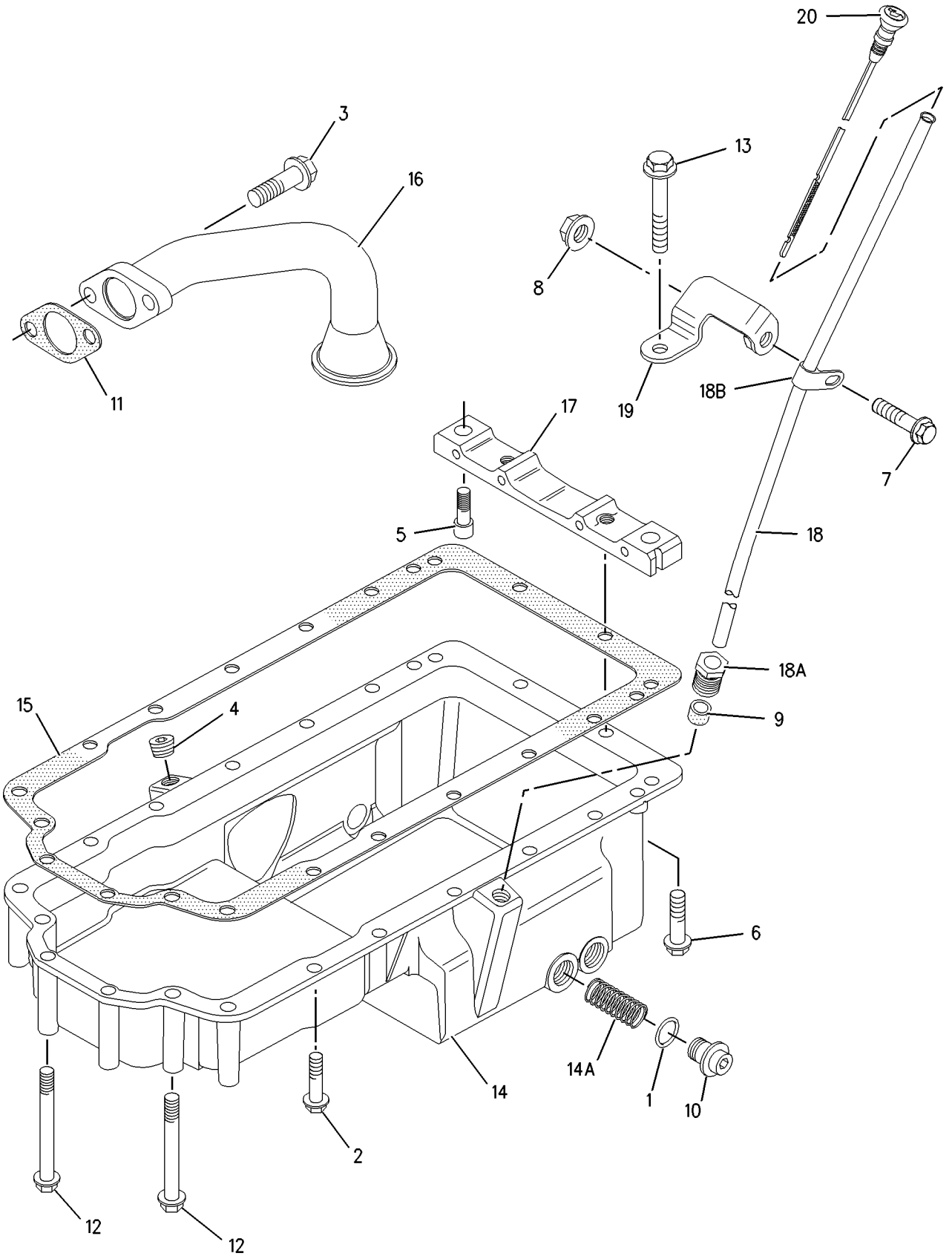

GRAPHIC #1 <END> g00988332

230-8278 PAN GP-OIL—ENGINE

TYPE 1

SMCS-1302 **i04889097**

NOTE	REF NO	GRAPHIC REF	PART NUMBER	QTY	PART NAME 1 2 3 4 5 6 (PRODUCT LEVEL)	SEE PAGE
	1	1	**275-9883**	2	SEAL	
M	2	1	**6I-0217**	14	BOLT (M8X1.25X20-MM)	
M	3	1	**6I-0260**	2	BOLT (M8X1.25X25-MM)	
	4	1	**6I-0289**	1	PLUG	
M	5	1	**6I-0363**	2	BOLT (M6X1X20-MM)	
M	6	1	**6I-0572**	2	BOLT (M8X1.25X20-MM)	
M	7	1	**6I-0631**	1	BOLT (M6X1X12-MM)	
	8	1	**263-2161**	1	GAUGE AS-OIL LEVEL (DIPSTICK) (ENGINE)	
	9	1	**6I-1497**	1	SEAL	
	10	1	**7C-0351**	2	PLUG-DRAIN (ENGINE OIL)	
	11	1	**067-6213**	1	GASKET	
M	12	1	**101-3771**	4	BOLT (M8X1.25X85-MM)	
M	13	1	**120-6872**	1	BOLT (M6X1X40-MM)	
	14	1	**304-8764**	1	PAN AS-OIL (ENGINE)	
	14A	1	**7C-1224**	2	INSERT	
	15	1	**225-6005**	1	GASKET	
	16	1	**225-6041**	1	TUBE	
	17	1	**230-8094**	1	BRIDGE	
	18	1	**230-8258**	1	TUBE AS	
	18A	1	**6I-4079**	1	NUT	
	18B	1	**230-8275**	1	CLIP-TUBE	
C	19	1	**242-5938**	1	BRACKET AS	

C - CHANGE FROM PREVIOUS TYPE
M - METRIC PART

230-8278 **PAN GP-OIL (**contd.**)** **i04889097**

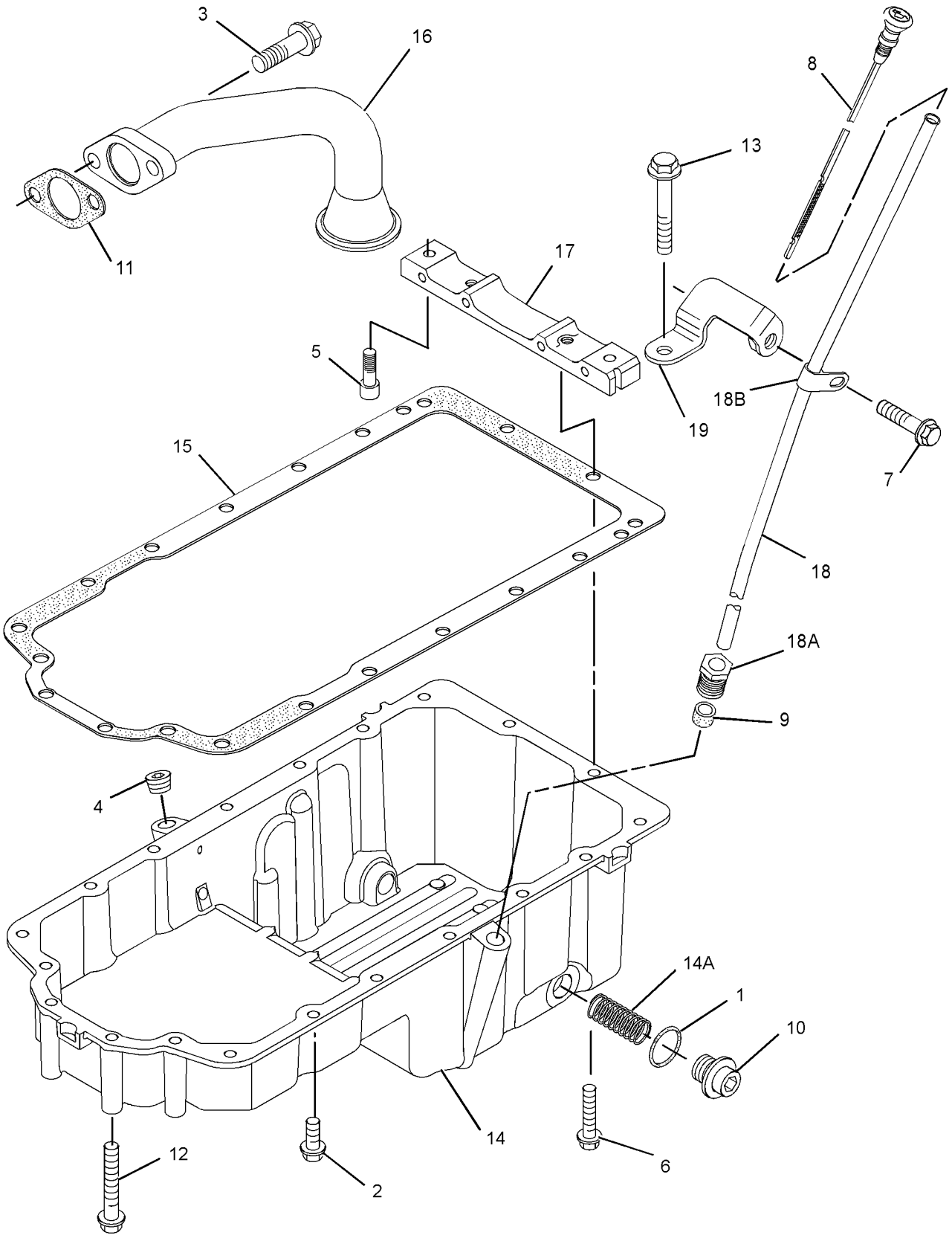

GRAPHIC #1 <END> g02152607

230-8278 PAN GP-OIL—ENGINE

TYPE 2

SMCS-1302 **i07223236**

NOTE	REF NO	GRAPHIC REF	PART NUMBER	QTY	PART NAME 1 2 3 4 5 6 (PRODUCT LEVEL)	SEE PAGE
	1	1	**335-7585**	2	SEAL	
M	2	1	**6I-0217**	14	BOLT (M8X1.25X20-MM)	
M	3	1	**6I-0260**	2	BOLT (M8X1.25X25-MM)	
	4	1	**6I-0289**	1	PLUG	
M	5	1	**8T-0269**	2	BOLT-SOCKET HEAD (M6X1X20-MM)	
M	6	1	**6I-0572**	2	BOLT (M8X1.25X20-MM)	
M	7	1	**6I-0631**	1	BOLT (M6X1X12-MM)	
	8	1	**263-2161**	1	GAUGE AS-OIL LEVEL (DIPSTICK) (ENGINE)	
	9	1	**6I-1497**	1	SEAL	
	10	1	**7C-0351**	2	PLUG-DRAIN (ENGINE OIL)	
	11	1	**067-6213**	1	GASKET	
M	12	1	**101-3771**	4	BOLT (M8X1.25X85-MM)	
M	13	1	**120-6872**	1	BOLT (M6X1X40-MM)	
	14	1	**480-4406**	1	PAN	
	15	1	**471-2882**	1	GASKET	
	16	1	**225-6041**	1	TUBE	
	17	1	**230-8094**	1	BRIDGE	
	18	1	**230-8258**	1	TUBE AS	
	18A	1	**6I-4079**	1	NUT	
	18B	1	**230-8275**	1	CLIP-TUBE	
C	19	1	**242-5938**	1	BRACKET AS	
F			**275-9883**	2	SEAL	

C - CHANGE FROM PREVIOUS TYPE
F - NOT SHOWN
M - METRIC PART

230-8278 **PAN GP-OIL (**contd.**)** **i07223236**

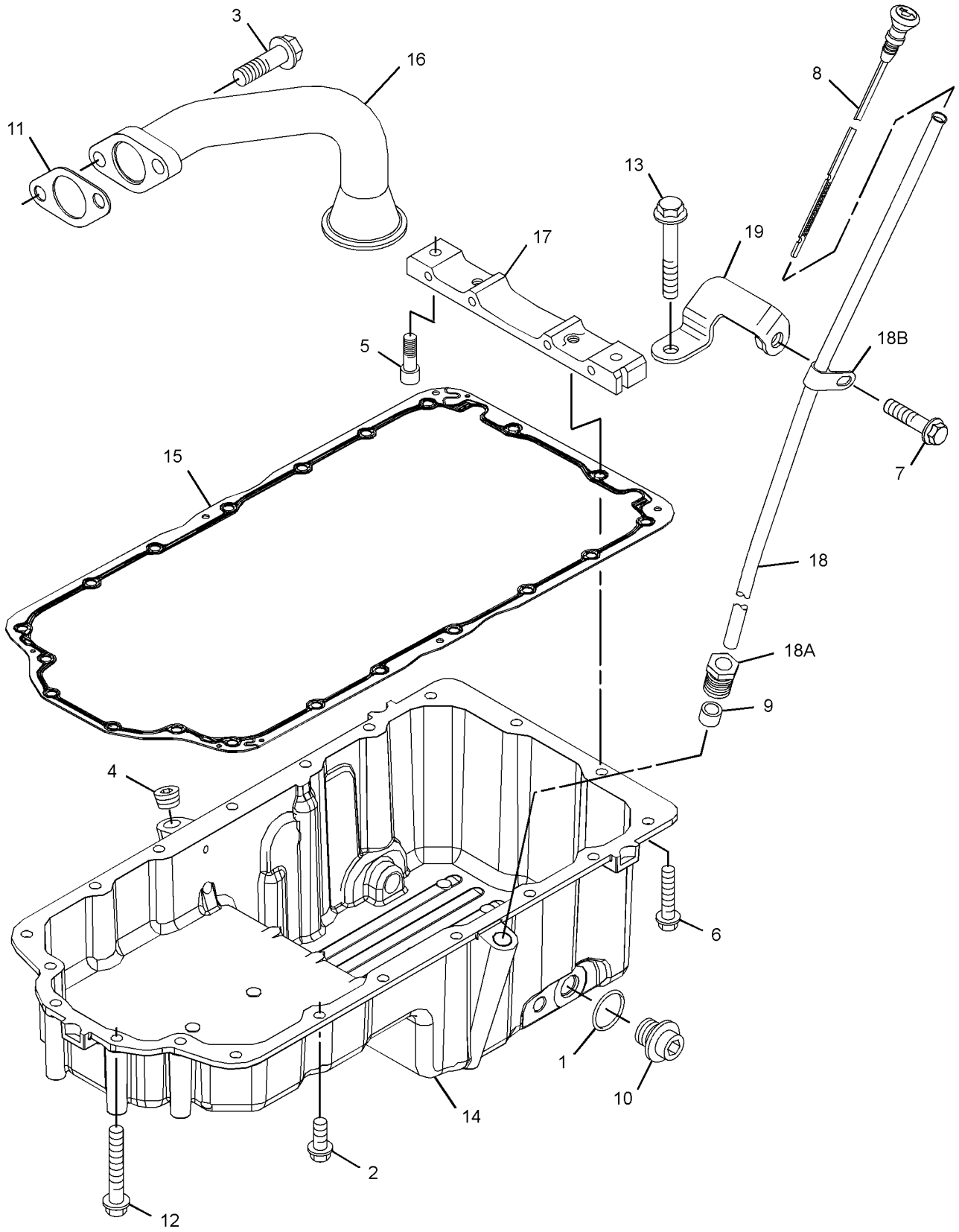

GRAPHIC #1 <END> g06196679

232-2565 PAN GP-OIL—ENGINE

SMCS-1302 **i07228573**

NOTE	REF NO	GRAPHIC REF	PART NUMBER	QTY	PART NAME 1 2 3 4 5 6 (PRODUCT LEVEL)	SEE PAGE
	1	1	**335-7585**	2	SEAL	
M	2	1	**6I-0217**	14	BOLT (M8X1.25X20-MM)	
M	3	1	**6I-0260**	2	BOLT (M8X1.25X25-MM)	
	4	1	**6I-0289**	1	PLUG	
M	5	1	**8T-0269**	2	BOLT-SOCKET HEAD (M6X1X20-MM)	
M	6	1	**6I-0572**	2	BOLT (M8X1.25X20-MM)	
	7	1	**6I-1497**	1	SEAL	
	8	1	**7C-0351**	2	PLUG-DRAIN (ENGINE OIL)	
	9	1	**067-6213**	1	GASKET	
M	10	1	**101-3771**	4	BOLT (M8X1.25X85-MM)	
	11	1	**232-2551**	1	TUBE AS	
	11A	1	**6I-4079**	1	NUT	
	12	1	**225-6041**	1	TUBE	
	13	1	**263-2162**	1	GAUGE AS-OIL LEVEL (DIPSTICK) (ENGINE)	
	14	1	**480-4406**	1	PAN	
	15	1	**230-8094**	1	BRIDGE	
	16	1	**471-2882**	1	GASKET	
F		1	**275-9883**	2	SEAL	

F - NOT SHOWN
M - METRIC PART

232-2565 **PAN GP-OIL (**contd.**)** **i07228573**

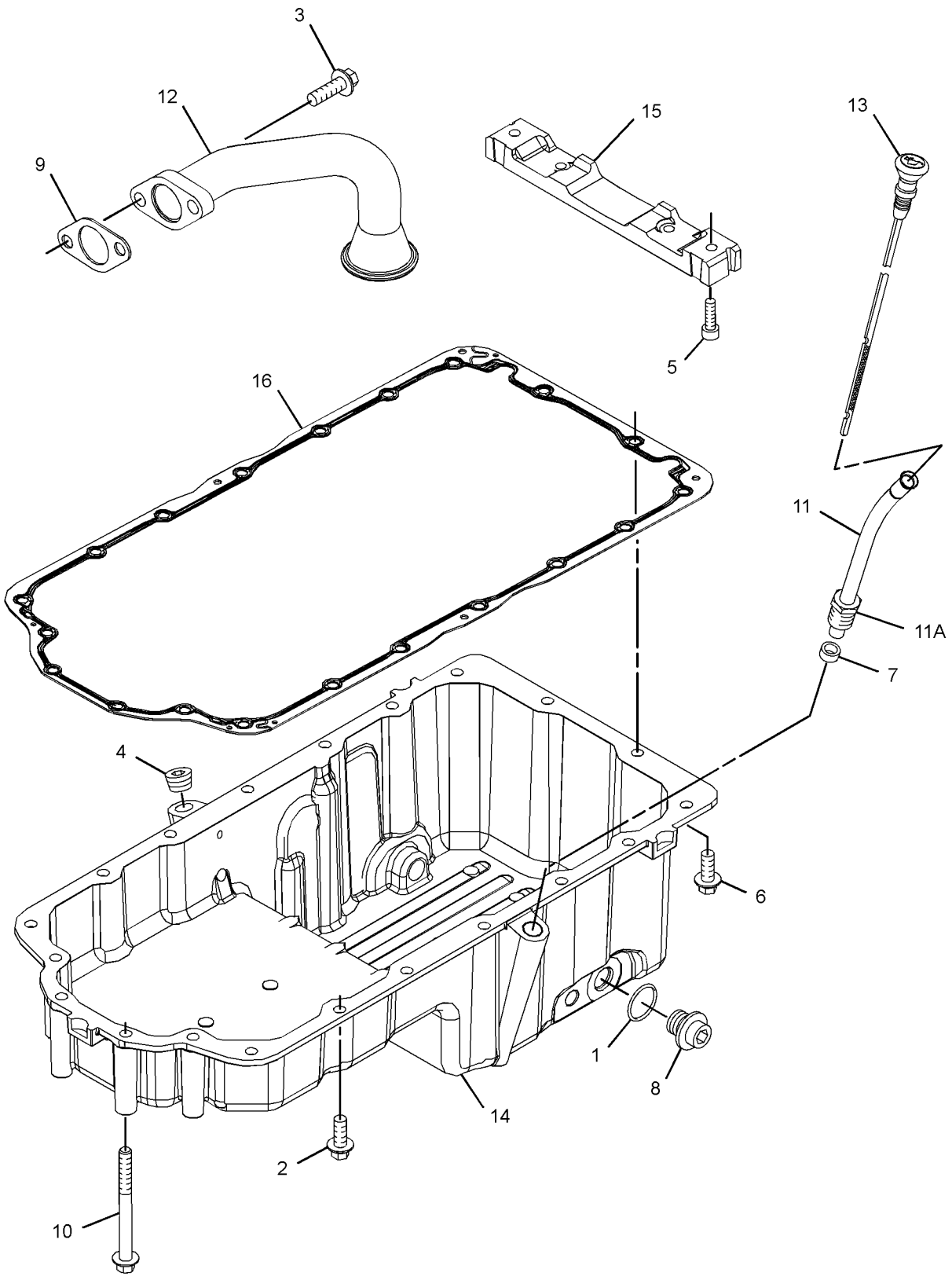

GRAPHIC #1 <END> g06197223

233-8150 PAN GP-OIL—ENGINE

ALSO AN ATTACHMENT

SMCS-1302 **i02251766**

NOTE	REF NO	GRAPHIC REF	PART NUMBER	QTY	PART NAME 1 2 3 4 5 6 (PRODUCT LEVEL)	SEE PAGE
	1	1	**2B-0858**	2	PLUG-PIPE	
	2	1	**5P-6718**	2	SEAL-O-RING	
M	3	1	**6I-0217**	8	BOLT (M8X1.25X20-MM)	
	4	1	**6I-0289**	1	PLUG	
M	5	1	**6I-0291**	2	NUT (M8X1.25-THD)	
M	6	1	**6I-0292**	2	BOLT (M8X1.25X140-MM)	
M	7	1	**6I-0293**	4	BOLT (M8X1.25X80-MM)	
M	8	1	**6I-0363**	2	BOLT (M6X1X20-MM)	
	9	1	**6I-1497**	1	SEAL	
	10	1	**7C-0351**	2	PLUG-DRAIN (ENGINE OIL)	
	11	1	**067-6213**	1	GASKET	
M	12	1	**101-3895**	2	BOLT (M8X1.25X35-MM)	
	13	1	**124-7702**	1	TUBE AS	
	14	1	**6I-4079**	1	NUT	
	15	1	**131-4291**	1	GAUGE AS-OIL LEVEL (DIPSTICK) (ENGINE)	
	16	1	**155-4828**	2	STUD	
M	17	1	**220-8311**	4	BOLT (M8X1.25X115-MM)	
	18	1	**225-6005**	1	GASKET	
	19	1	**230-8094**	1	BRIDGE	
	20	1	**230-8251**	1	PAN-OIL	
	21	1	**233-8148**	1	STRAINER	

M - METRIC PART

233-8150 **PAN GP-OIL (**contd.**)** **i02251766**

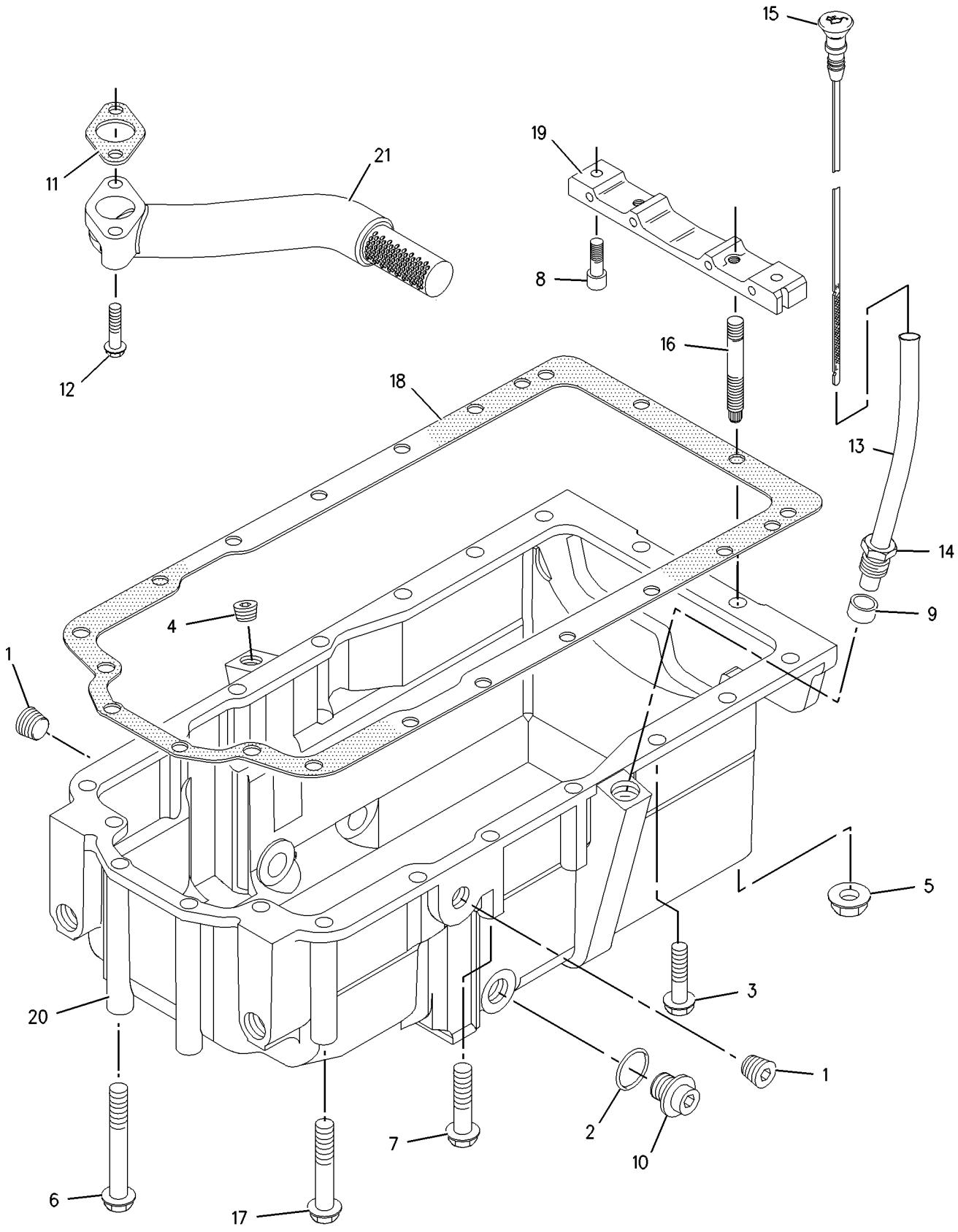

GRAPHIC #1 <END> g00956402

233-8150 PAN GP-OIL—ENGINE

S/N: 3341-27929
ALSO AN ATTACHMENT

SMCS-1302 **i06679831**

NOTE	REF NO	GRAPHIC REF	PART NUMBER	QTY	PART NAME 1 2 3 4 5 6 (PRODUCT LEVEL)	SEE PAGE
	1	1	**067-6823**	2	PLUG	
	2	1	**335-7585**	2	SEAL	
M	3	1	**6I-0217**	8	BOLT (M8X1.25X20-MM)	
	4	1	**6I-0289**	1	PLUG	
M	5	1	**178-3336**	2	NUT-HEX FLANGE (M8X1.25-THD)	
M	6	1	**6I-0292**	2	BOLT (M8X1.25X140-MM)	
M	7	1	**6I-0293**	4	BOLT (M8X1.25X80-MM)	
M	8	1	**6I-0363**	2	BOLT (M6X1X20-MM)	
	9	1	**6I-1497**	1	SEAL	
	10	1	**7C-0351**	2	PLUG-DRAIN (ENGINE OIL)	
	11	1	**067-6213**	1	GASKET	
M	12	1	**101-3895**	2	BOLT (M8X1.25X35-MM)	
	13	1	**124-7702**	1	TUBE AS	
	13A	1	**6I-4079**	1	NUT	
	14	1	**233-8148**	1	STRAINER	
	15	1	**131-4291**	1	GAUGE AS-OIL LEVEL (DIPSTICK) (ENGINE)	
	16	1	**155-4828**	2	STUD	
M	17	1	**220-8311**	4	BOLT (M8X1.25X115-MM)	
	18	1	**225-6005**	1	GASKET	
	19	1	**230-8094**	1	BRIDGE	
	20	1	**230-8251**	1	PAN-OIL	
F			**275-9883**	2	SEAL	

F - NOT SHOWN
M - METRIC PART

233-8150 **PAN GP-OIL (**contd.**)** **i06679831**

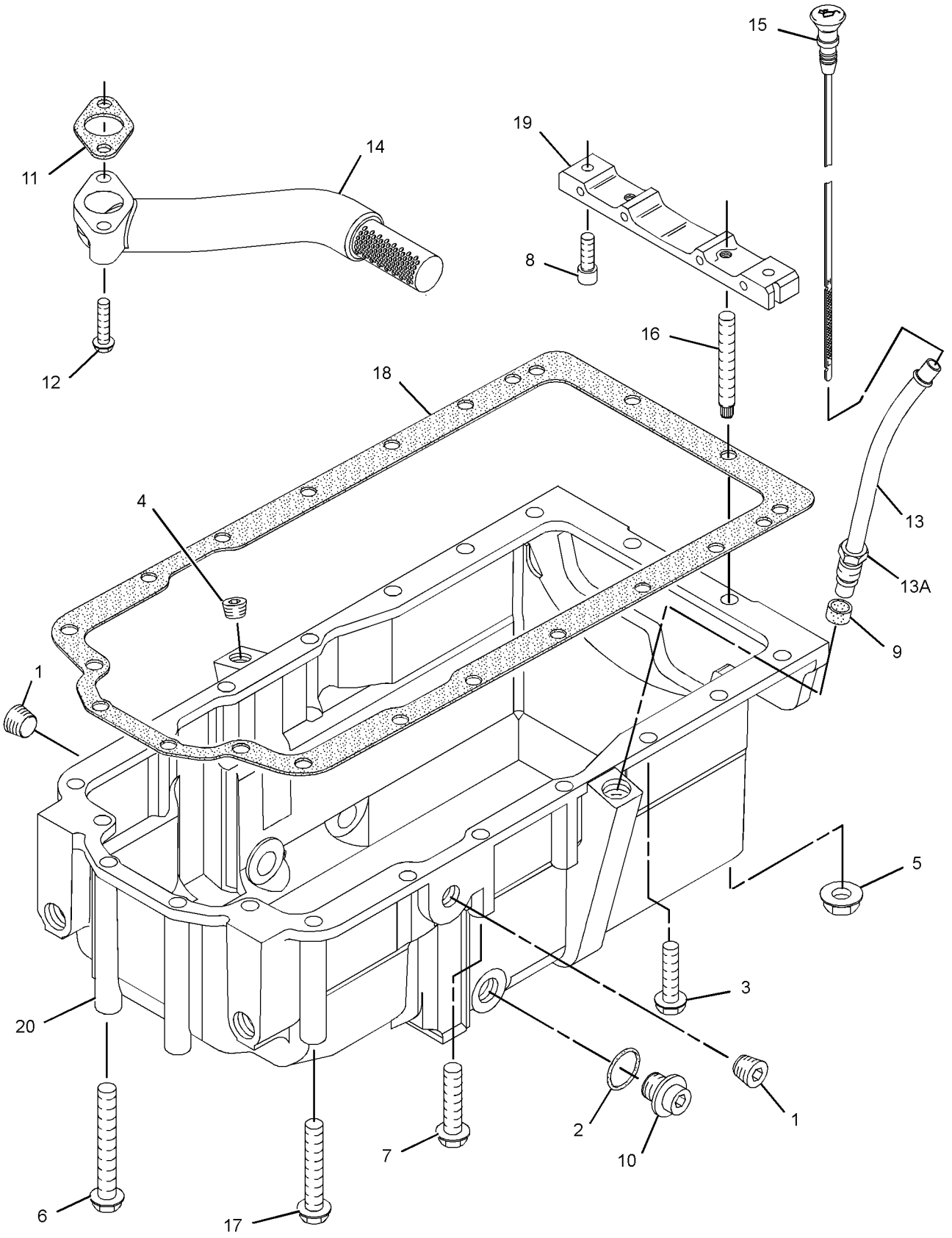

GRAPHIC #1 <END> g01419828

233-8150 PAN GP-OIL—ENGINE

S/N: 33427930-UP
ALSO AN ATTACHMENT

SMCS-1302 **i06850955**

NOTE	REF NO	GRAPHIC REF	PART NUMBER	QTY	PART NAME 1 2 3 4 5 6 (PRODUCT LEVEL)	SEE PAGE
CM	1	1	**6I-0260**	2	BOLT (M8X1.25X25-MM)	
	2	1	**6I-0289**	1	PLUG	
M	3	1	**178-3336**	2	NUT-HEX FLANGE (M8X1.25-THD)	
M	4	1	**8T-0269**	2	BOLT-SOCKET HEAD (M6X1X20-MM)	
	5	1	**6I-1497**	1	SEAL	
	6	1	**7C-0351**	2	PLUG-DRAIN (ENGINE OIL)	
	7	1	**067-6213**	1	GASKET	
CM	8	1	**101-3805**	16	BOLT (M8X1.25X90-MM)	
M	9	1	**101-3895**	2	BOLT (M8X1.25X35-MM)	
	10	1	**124-7702**	1	TUBE AS	
	11	1	**131-4291**	1	GAUGE AS-OIL LEVEL (DIPSTICK)	
	12	1	**155-4828**	2	STUD	
	13	1	**471-2882**	1	GASKET	
	14	1	**230-8094**	1	BRIDGE	
	15	1	**233-8148**	1	STRAINER (ENGINE OIL)	
	16	1	**335-7585**	2	SEAL	
C	17	1	**433-0344**	1	PAN AS-OIL	
	17A	1	**360-0073**	1	PAN	
F			**275-9883**	2	SEAL	

C - CHANGE FROM PREVIOUS TYPE
F - NOT SHOWN
M - METRIC PART

233-8150 **PAN GP-OIL (**contd.**)** **i06850955**

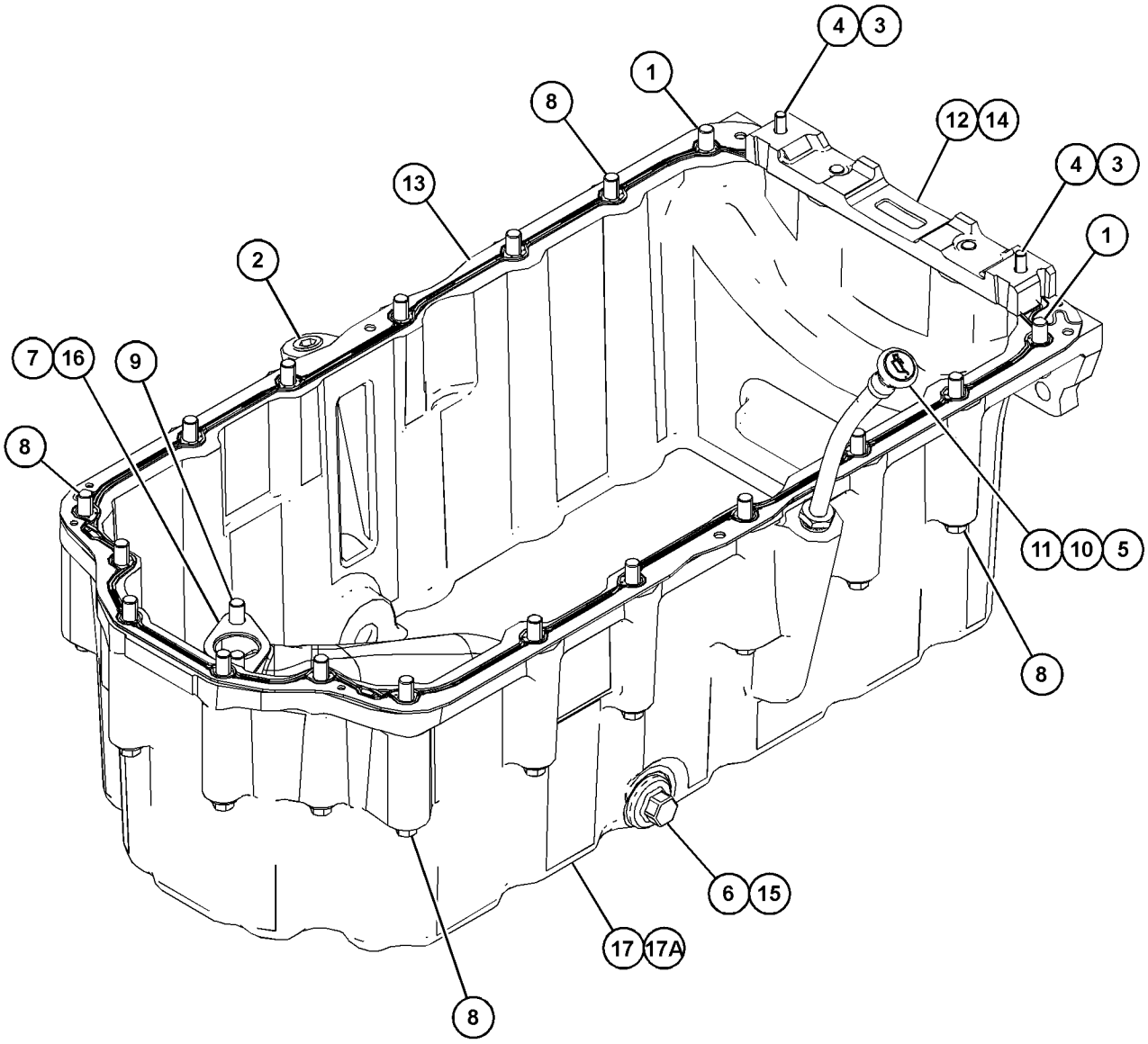

GRAPHIC #1 <END> g06142166

237-5935 PAN GP-OIL

TYPE 1

SMCS-1302 **i03948013**

NOTE	REF NO	GRAPHIC REF	PART NUMBER	QTY	PART NAME 1 2 3 4 5 6 (PRODUCT LEVEL)	SEE PAGE
	1	1	**5P-6718**	2	SEAL-O-RING	
M	2	1	**6I-0291**	2	NUT (M8X1.25-THD)	
M	3	1	**6I-0292**	5	BOLT (M8X1.25X140-MM)	
M	4	1	**6I-0293**	12	BOLT (M8X1.25X80-MM)	
M	5	1	**6I-0363**	2	BOLT (M6X1X20-MM)	
	6	1	**6I-1497**	1	SEAL	
	7	1	**7C-0351**	2	PLUG-DRAIN (ENGINE OIL)	
	8	1	**067-6213**	1	GASKET	
M	9	1	**359-9666**	1	BOLT-FLANGE HEAD (M8X1.25X130-MM)	
M	10	1	**101-3895**	2	BOLT (M8X1.25X35-MM)	
	11	1	**124-7702**	1	TUBE AS	
	11A	1	**6I-4079**	1	NUT	
	12	1	**131-4291**	1	GAUGE AS-OIL LEVEL (DIPSTICK) (ENGINE)	
	13	1	**155-4828**	2	STUD	
	14	1	**230-8094**	1	BRIDGE	
	15	1	**237-5914**	1	PAN-OIL	
	16	1	**237-5932**	1	GASKET	
	17	1	**237-5933**	1	TUBE-OIL SUCTION	

M - METRIC PART

237-5935 **PAN GP-OIL (**contd.**)** **i03948013**

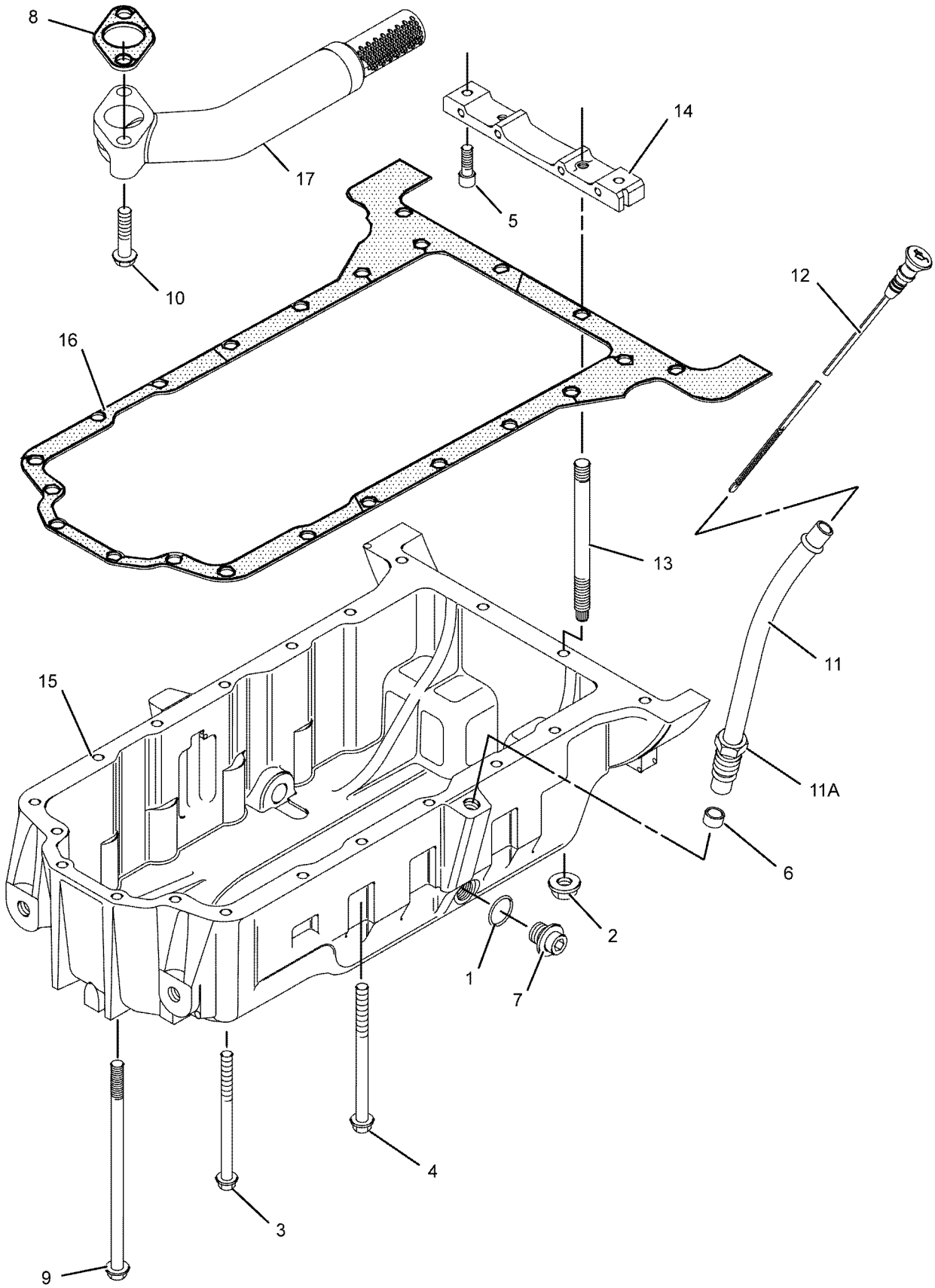

GRAPHIC #1 <END> g01030494

237-5935 PAN GP-OIL

TYPE 2

SMCS-1302 **i03948014**

NOTE	REF NO	GRAPHIC REF	PART NUMBER	QTY	PART NAME 1 2 3 4 5 6 (PRODUCT LEVEL)	SEE PAGE
	1	1	**275-9883**	2	SEAL	
M	2	1	**6I-0291**	2	NUT (M8X1.25-THD)	
M	3	1	**6I-0292**	5	BOLT (M8X1.25X140-MM)	
M	4	1	**6I-0293**	12	BOLT (M8X1.25X80-MM)	
M	5	1	**6I-0363**	2	BOLT (M6X1X20-MM)	
	6	1	**6I-1497**	1	SEAL	
	7	1	**7C-0351**	2	PLUG-DRAIN (ENGINE OIL)	
	8	1	**067-6213**	1	GASKET	
M	9	1	**359-9666**	1	BOLT-FLANGE HEAD (M8X1.25X130-MM)	
M	10	1	**101-3895**	2	BOLT (M8X1.25X35-MM)	
C	11	1	**124-7702**	1	TUBE AS	
	11A	1	**6I-4079**	1	NUT	
	12	1	**131-4291**	1	GAUGE AS-OIL LEVEL (DIPSTICK) (ENGINE)	
	13	1	**155-4828**	2	STUD	
	14	1	**230-8094**	1	BRIDGE	
	15	1	**237-5914**	1	PAN-OIL	
	16	1	**237-5932**	1	GASKET	
	17	1	**237-5933**	1	TUBE-OIL SUCTION	

C - CHANGE FROM PREVIOUS TYPE
M - METRIC PART

237-5935 **PAN GP-OIL (**contd.**)** **i03948014**

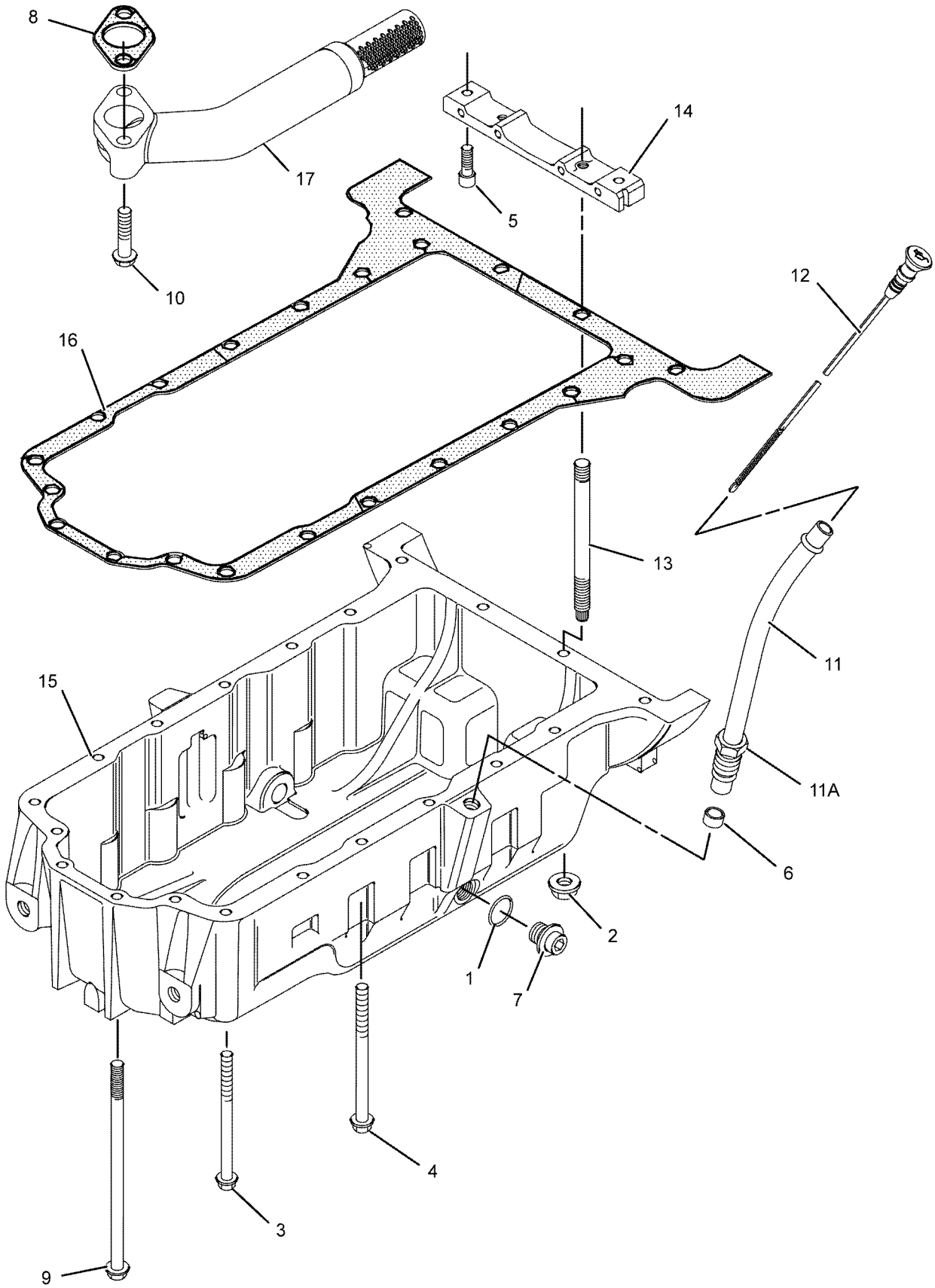

GRAPHIC #1 <END> g01030494

243-1882 PAN GP-OIL

TYPE 1

SMCS-1302 **i02138123**

NOTE	REF NO	GRAPHIC REF	PART NUMBER	QTY	PART NAME 1 2 3 4 5 6 (PRODUCT LEVEL)	SEE PAGE
	1	1	**5P-6718**	2	SEAL-O-RING	
M	2	1	**6I-0291**	2	NUT (M8X1.25-THD)	
M	3	1	**6I-0292**	2	BOLT (M8X1.25X140-MM)	
M	4	1	**6I-0293**	12	BOLT (M8X1.25X80-MM)	
M	5	1	**6I-0363**	2	BOLT (M6X1X20-MM)	
	6	1	**6I-1497**	1	SEAL	
	7	1	**7C-0351**	2	PLUG-DRAIN (ENGINE OIL)	
	8	1	**067-6213**	1	GASKET	
M	9	1	**101-3895**	2	BOLT (M8X1.25X35-MM)	
	10	1	**124-7702**	1	TUBE AS	
	10A	1	**6I-4079**	1	NUT	
	11	1	**155-4828**	2	STUD	
	12	1	**230-8094**	1	BRIDGE	
	13	1	**233-4695**	4	BOLT-FLANGE HEAD	
	14	1	**237-5932**	1	GASKET	
	15	1	**243-1799**	1	PAN-OIL	
	16	1	**243-1800**	1	TUBE-OIL SUCTION	
	17	1	**243-1801**	1	GAUGE-OIL LEVEL (DIPSTICK) (ENGINE)	

M - METRIC PART

243-1882 **PAN GP-OIL (**contd.**)** **i02138123**

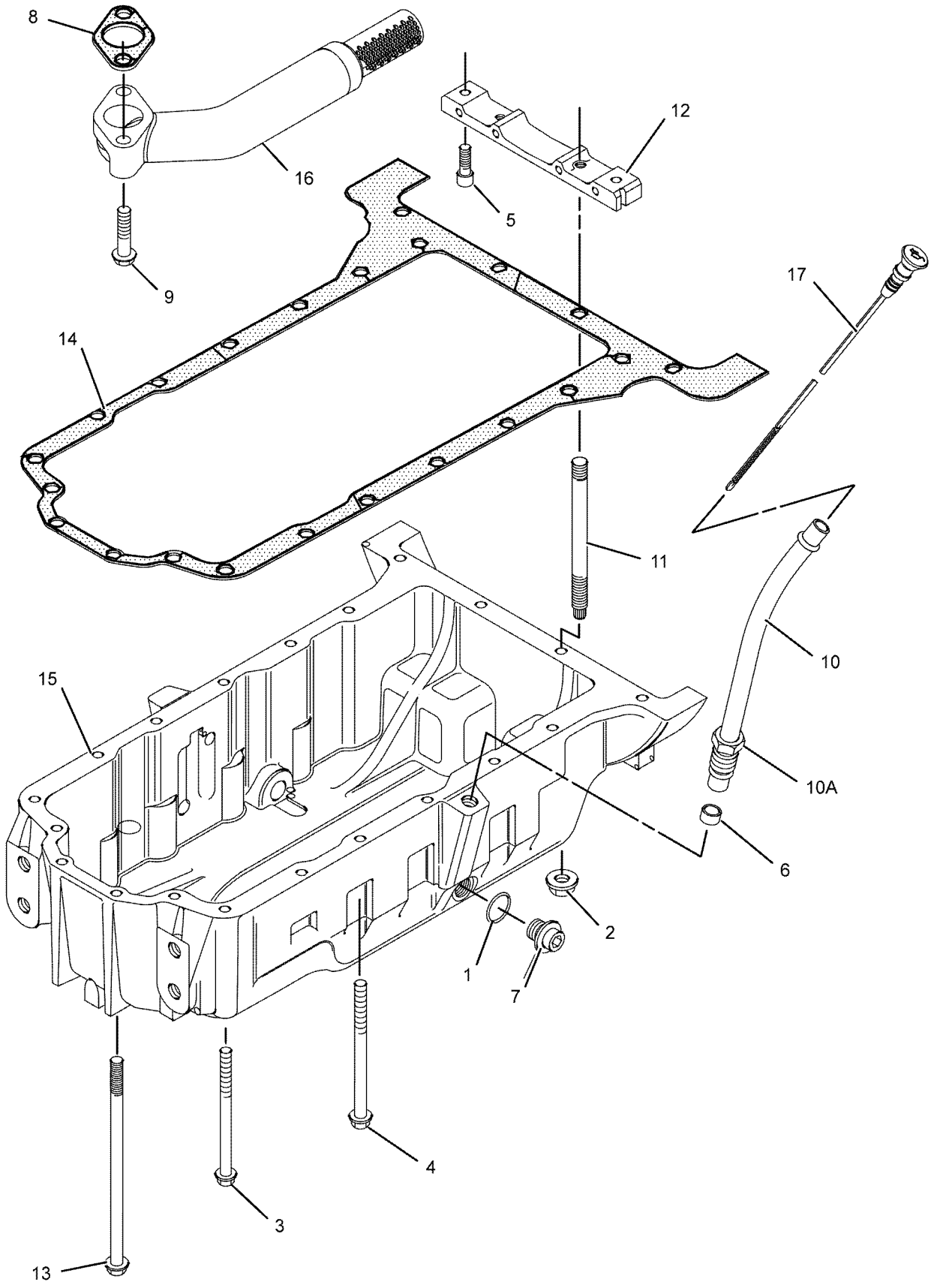

GRAPHIC #1 <END> g01025830

243-1882 PAN GP-OIL

TYPE 2

SMCS-1302 **i06901835**

NOTE	REF NO	GRAPHIC REF	PART NUMBER	QTY	PART NAME 1 2 3 4 5 6 (PRODUCT LEVEL)	SEE PAGE
	1	1	**335-7585**	2	SEAL	
M	2	1	**178-3336**	2	NUT-HEX FLANGE (M8X1.25-THD)	
	3	1	**322-9887**	2	BOLT	
M	4	1	**6I-0293**	12	BOLT (M8X1.25X80-MM)	
M	5	1	**8T-0269**	2	BOLT-SOCKET HEAD (M6X1X20-MM)	
	6	1	**6I-1497**	1	SEAL	
	7	1	**7C-0351**	2	PLUG-DRAIN (ENGINE OIL)	
	8	1	**067-6213**	1	GASKET	
M	9	1	**101-3895**	2	BOLT (M8X1.25X35-MM)	
C	10	1	**124-7702**	1	TUBE AS	
	10A	1	**6I-4079**	1	NUT	
	11	1	**155-4828**	2	STUD	
	12	1	**230-8094**	1	BRIDGE	
	13	1	**233-4695**	4	BOLT-FLANGE HEAD	
	14	1	**471-2881**	1	GASKET-SUMP	
	15	1	**308-4162**	1	PAN-OIL	
	16	1	**243-1800**	1	TUBE-OIL SUCTION	
	17	1	**243-1801**	1	GAUGE-OIL LEVEL (DIPSTICK) (ENGINE)	
F			**275-9883**	2	SEAL	

C - CHANGE FROM PREVIOUS TYPE
F - NOT SHOWN
M - METRIC PART

243-1882 **PAN GP-OIL (**contd.**)** **i06901835**

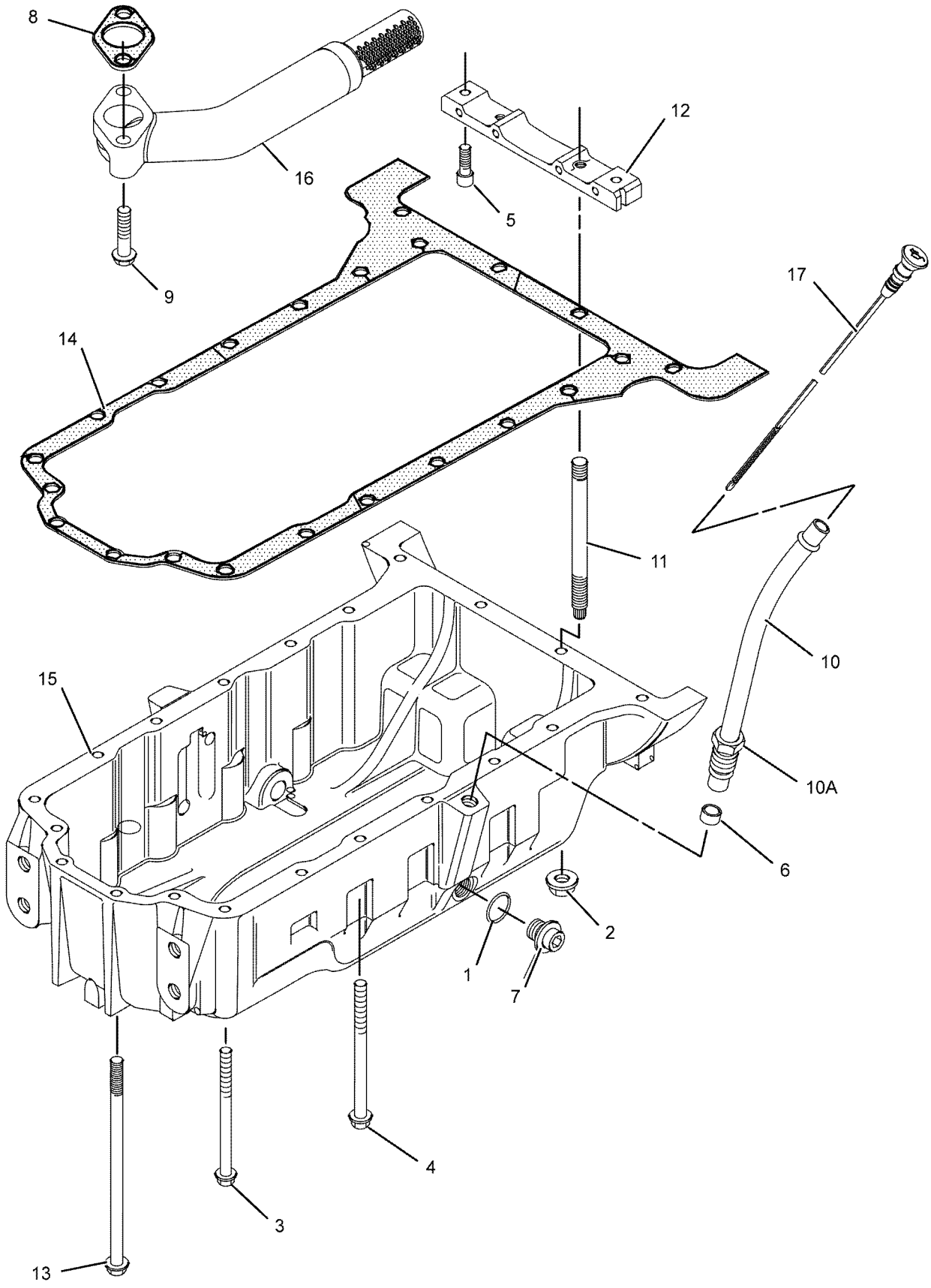

GRAPHIC #1 <END> g01025830

243-2455 PAN GP-OIL—ENGINE

ALSO AN ATTACHMENT

TYPE 1

SMCS-1302 **i02138116**

NOTE	REF NO	GRAPHIC REF	PART NUMBER	QTY	PART NAME 1 2 3 4 5 6 (PRODUCT LEVEL)	SEE PAGE
	1	1	**5C-1809**	1	SPACER (8X19X6.5-MM)	
	2	1	**5P-6718**	2	SEAL-O-RING	
M	3	1	**6I-0217**	1	BOLT (M8X1.25X20-MM)	
M	4	1	**6I-0260**	2	BOLT (M8X1.25X25-MM)	
M	5	1	**6I-0363**	2	BOLT (M6X1X20-MM)	
	6	1	**6I-1497**	1	SEAL	
M	7	1	**6I-4072**	2	BOLT (M8X1.25X14-MM)	
	8	1	**7C-0351**	2	PLUG-DRAIN (ENGINE OIL)	
	9	1	**067-6213**	1	GASKET	
M	10	1	**124-3815**	17	BOLT (M8X1.25X16-MM)	
	11	1	**124-7702**	1	TUBE AS	
	11A	1	**6I-4079**	1	NUT	
	12	1	**130-1161**	1	GAUGE AS-OIL LEVEL (DIPSTICK) (ENGINE)	
	13	1	**214-3281**	1	PAN-OIL	
	14	1	**225-6005**	1	GASKET	
	15	1	**230-8094**	1	BRIDGE	
	16	1	**230-8218**	1	TUBE-SUCTION	

M - METRIC PART

243-2455 **PAN GP-OIL (**contd.**)** **i02138116**

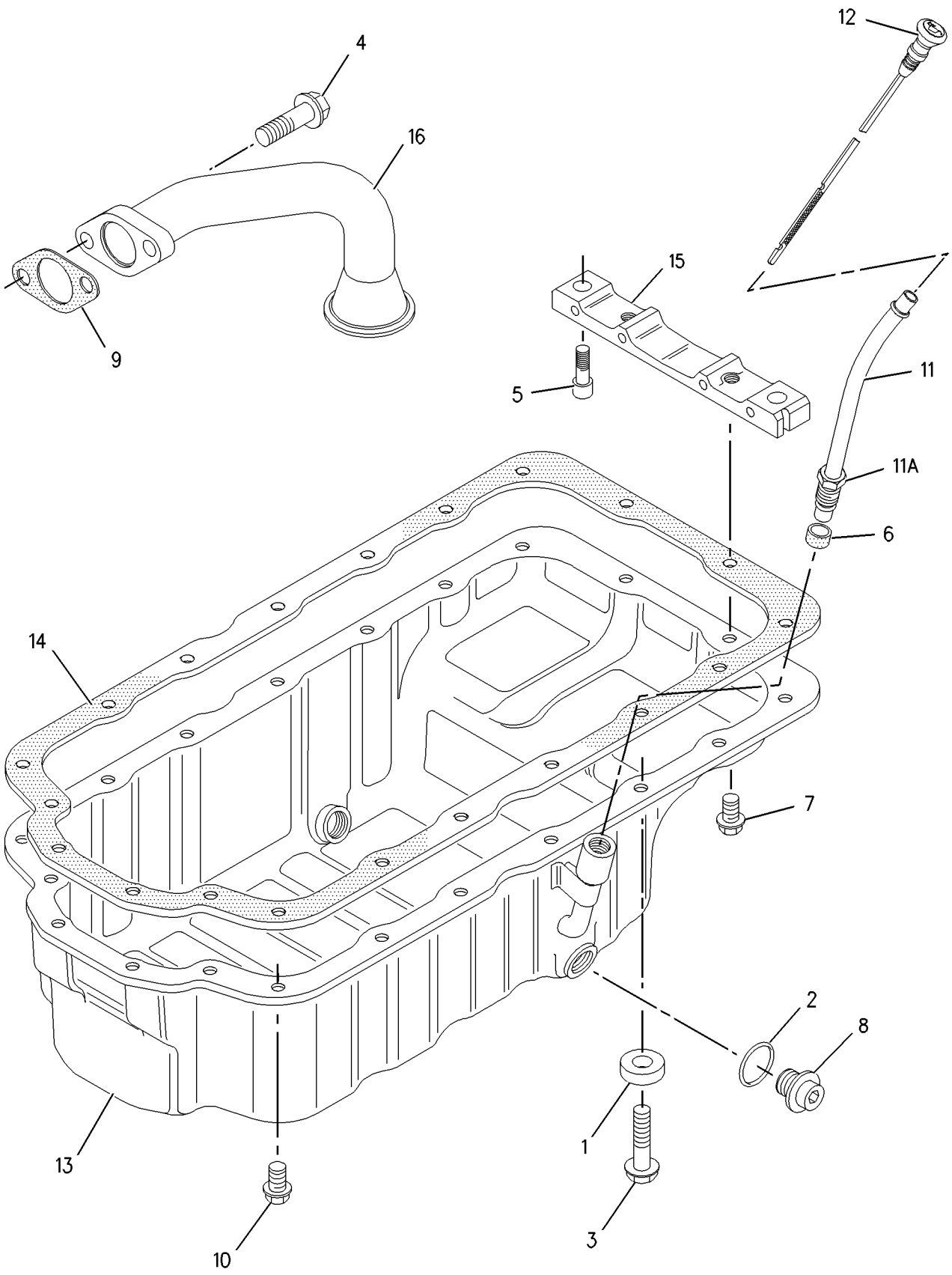

GRAPHIC #1 <END> g00954430

243-2455 PAN GP-OIL—ENGINE

ALSO AN ATTACHMENT

TYPE 2

SMCS-1302 **i06013433**

NOTE	REF NO	GRAPHIC REF	PART NUMBER	QTY	PART NAME 1 2 3 4 5 6 (PRODUCT LEVEL)	SEE PAGE
	1	1	**5C-1809**	1	SPACER (8X19X6.5-MM)	
	2	1	**335-7585**	2	SEAL	
M	3	1	**6I-0217**	1	BOLT (M8X1.25X20-MM)	
M	4	1	**6I-0260**	2	BOLT (M8X1.25X25-MM)	
M	5	1	**6I-0363**	2	BOLT (M6X1X20-MM)	
	6	1	**6I-1497**	1	SEAL	
M	7	1	**6I-4072**	2	BOLT (M8X1.25X14-MM)	
	8	1	**7C-0351**	2	PLUG-DRAIN (ENGINE OIL)	
	9	1	**067-6213**	1	GASKET	
M	10	1	**124-3815**	17	BOLT (M8X1.25X16-MM)	
C	11	1	**124-7702**	1	TUBE AS	
	11A	1	**6I-4079**	1	NUT	
	12	1	**130-1161**	1	GAUGE AS-OIL LEVEL (DIPSTICK) (ENGINE)	
	13	1	**214-3281**	1	PAN-OIL	
	14	1	**225-6005**	1	GASKET	
	15	1	**230-8094**	1	BRIDGE	
	16	1	**230-8218**	1	TUBE-SUCTION	
F			**275-9883**	2	SEAL	

C - CHANGE FROM PREVIOUS TYPE
F - NOT SHOWN
M - METRIC PART

243-2455 **PAN GP-OIL (**contd.**)** **i06013433**

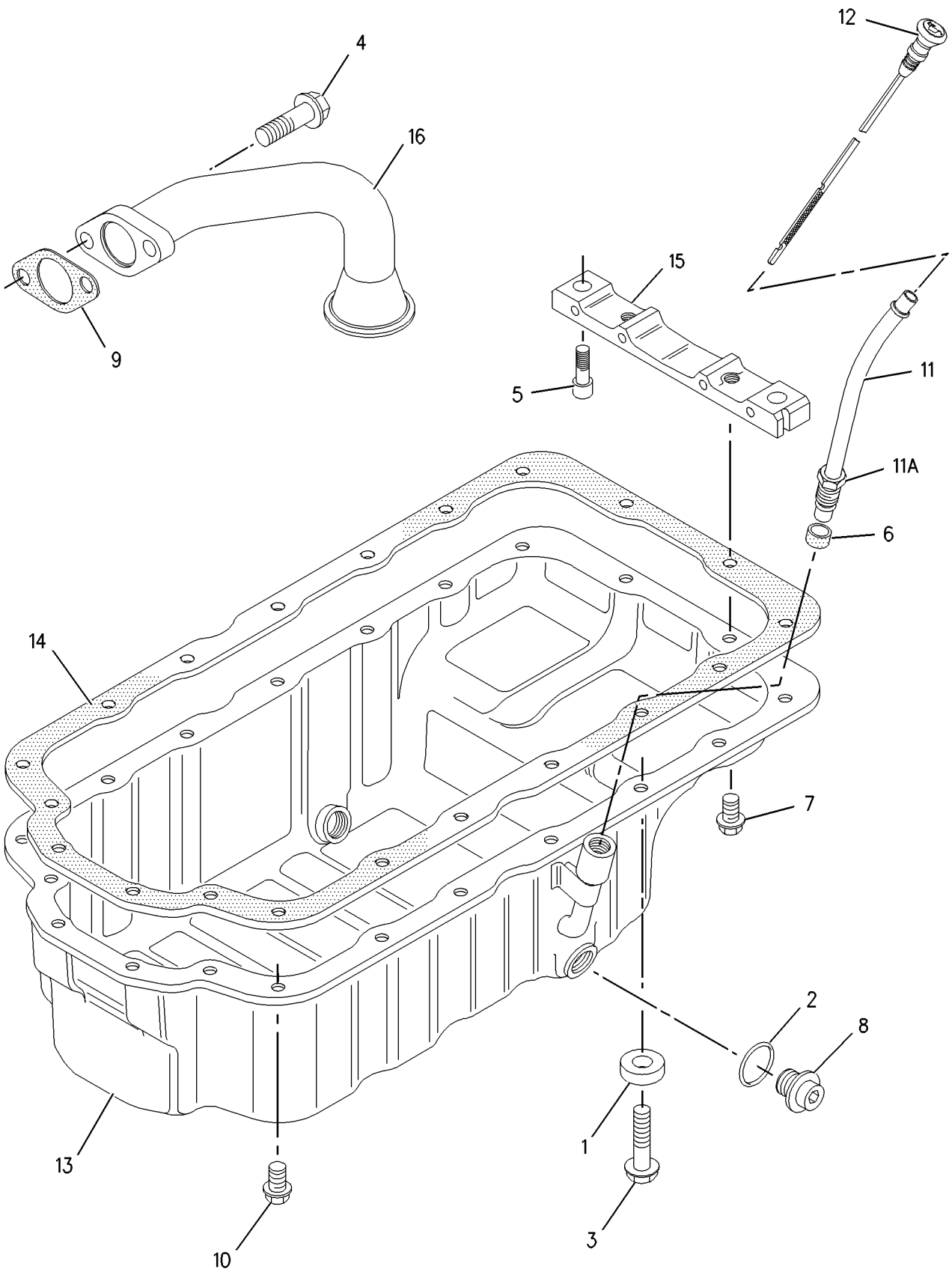

GRAPHIC #1 <END> g00954430

243-2455 PAN GP-OIL—ENGINE

ALSO AN ATTACHMENT

TYPE 3

SMCS-1302 **i06850977**

NOTE	REF NO	GRAPHIC REF	PART NUMBER	QTY	PART NAME 1 2 3 4 5 6 (PRODUCT LEVEL)	SEE PAGE
	1	1	**5C-1809**	1	SPACER (8X19X6.5-MM)	
	2	1	**335-7585**	2	SEAL	
M	3	1	**6I-0217**	1	BOLT (M8X1.25X20-MM)	
M	4	1	**6I-0260**	2	BOLT (M8X1.25X25-MM)	
M	5	1	**8T-0269**	2	BOLT-SOCKET HEAD (M6X1X20-MM)	
	6	1	**6I-1497**	1	SEAL	
M	7	1	**6I-4072**	2	BOLT (M8X1.25X14-MM)	
	8	1	**7C-0351**	2	PLUG-DRAIN (ENGINE OIL)	
M	10	1	**124-3815**	17	BOLT (M8X1.25X16-MM)	
	11	1	**124-7702**	1	TUBE AS	
	11A	1	**6I-4079**	1	NUT	
	12	1	**130-1161**	1	GAUGE AS-OIL LEVEL (DIPSTICK) (ENGINE)	
	13	1	**214-3281**	1	PAN-OIL	
	14	1	**471-2882**	1	GASKET	
	15	1	**230-8094**	1	BRIDGE	
C	16	1	**373-9785**	1	PIPE	
F		1	**275-9883**	2	SEAL	

C - CHANGE FROM PREVIOUS TYPE
F - NOT SHOWN
M - METRIC PART

243-2455 **PAN GP-OIL (**contd.**)** **i06850977**

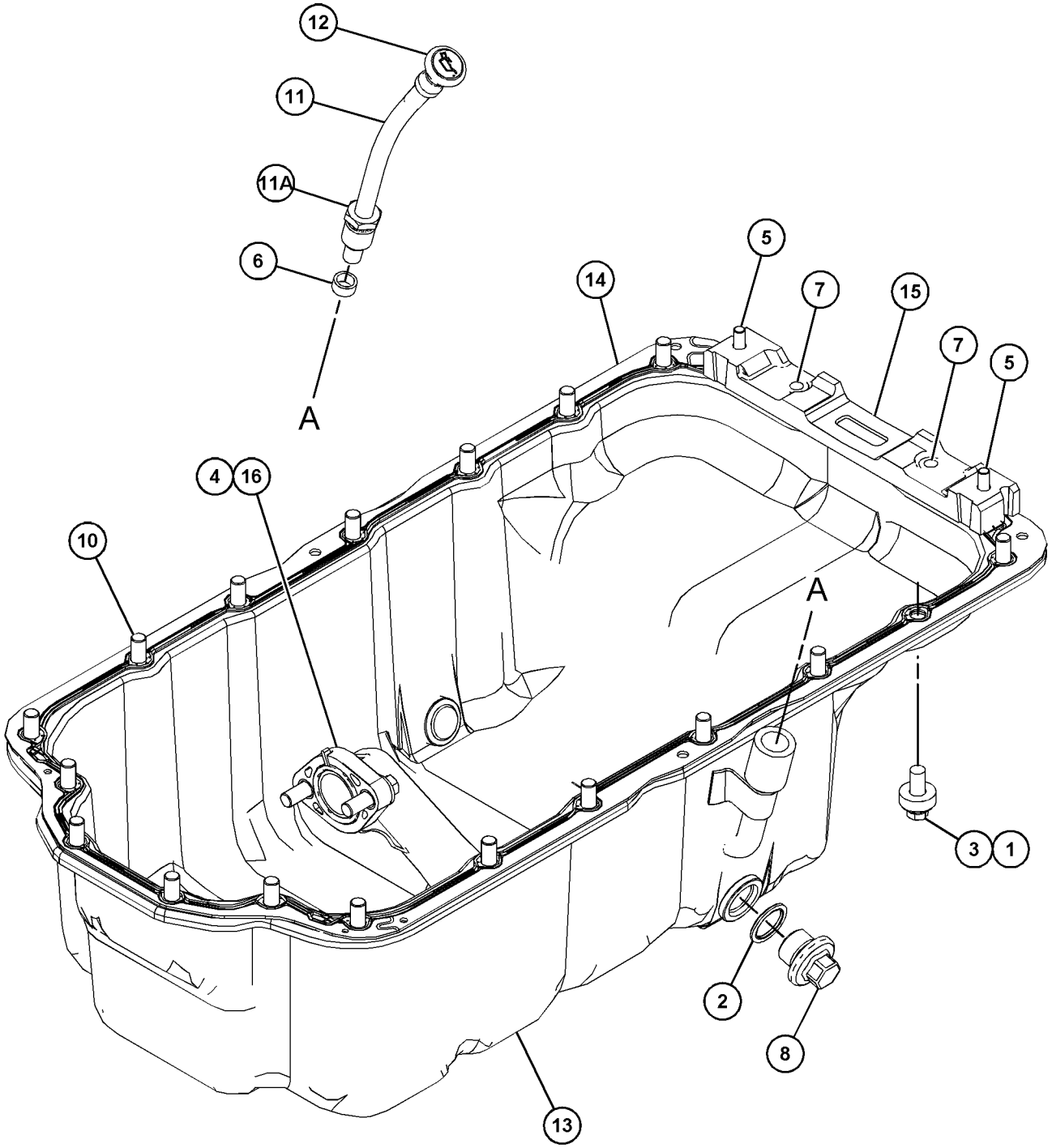

GRAPHIC #1 <END> g06196666

243-3202 PAN GP-OIL

TYPE 1

SMCS-1302 **i02138125**

NOTE	REF NO	GRAPHIC REF	PART NUMBER	QTY	PART NAME 1 2 3 4 5 6 (PRODUCT LEVEL)	SEE PAGE
	1	1	**5C-1809**	1	SPACER (8X19X6.5-MM)	
	2	1	**5P-6718**	2	SEAL-O-RING	
M	3	1	**6I-0217**	1	BOLT (M8X1.25X20-MM)	
M	4	1	**6I-0260**	2	BOLT (M8X1.25X25-MM)	
M	5	1	**6I-0363**	2	BOLT (M6X1X20-MM)	
	6	1	**6I-1497**	1	SEAL	
M	7	1	**6I-4072**	2	BOLT (M8X1.25X14-MM)	
	8	1	**7C-0351**	2	PLUG-DRAIN (ENGINE OIL)	
	9	1	**067-6213**	1	GASKET	
M	10	1	**124-3815**	17	BOLT (M8X1.25X16-MM)	
	11	1	**124-7702**	1	TUBE AS	
	11A	1	**6I-4079**	1	NUT	
	12	1	**130-1161**	1	GAUGE AS-OIL LEVEL (DIPSTICK) (ENGINE)	
	13	1	**219-4136**	1	PAN-OIL	
	14	1	**225-6005**	1	GASKET	
	15	1	**230-8094**	1	BRIDGE	
	16	1	**230-8218**	1	TUBE-SUCTION	

M - METRIC PART

243-3202 **PAN GP-OIL (**contd.**)** **i02138125**

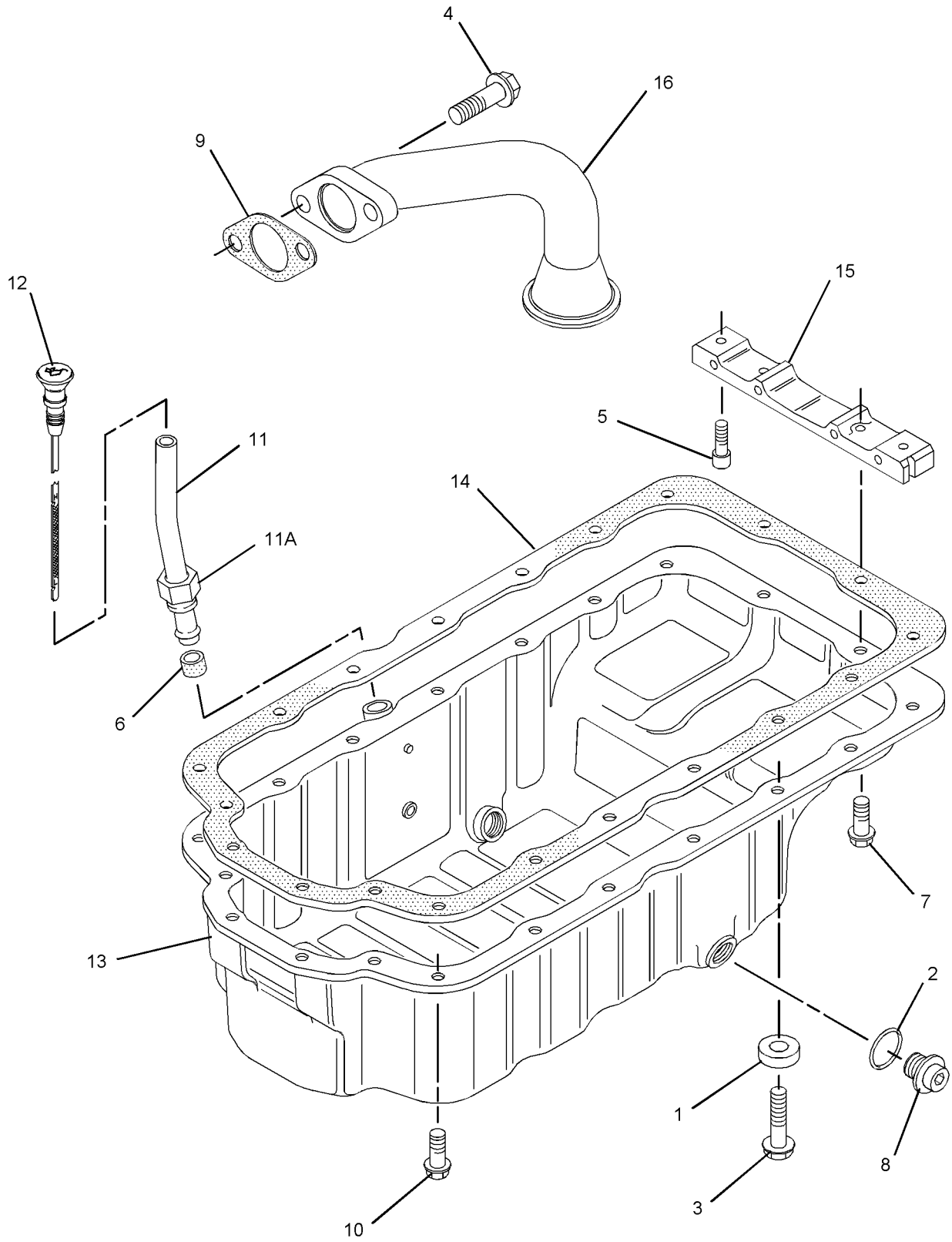

GRAPHIC #1 <END> g01022651

243-3202 PAN GP-OIL

TYPE 2

SMCS-1302 **i06013434**

NOTE	REF NO	GRAPHIC REF	PART NUMBER	QTY	PART NAME 1 2 3 4 5 6 (PRODUCT LEVEL)	SEE PAGE
	1	1	**5C-1809**	1	SPACER (8X19X6.5-MM)	
	2	1	**335-7585**	2	SEAL	
M	3	1	**6I-0217**	1	BOLT (M8X1.25X20-MM)	
M	4	1	**6I-0260**	2	BOLT (M8X1.25X25-MM)	
M	5	1	**6I-0363**	2	BOLT (M6X1X20-MM)	
	6	1	**6I-1497**	1	SEAL	
M	7	1	**6I-4072**	2	BOLT (M8X1.25X14-MM)	
	8	1	**7C-0351**	2	PLUG-DRAIN (ENGINE OIL)	
	9	1	**067-6213**	1	GASKET	
M	10	1	**124-3815**	17	BOLT (M8X1.25X16-MM)	
C	11	1	**124-7702**	1	TUBE AS	
	11A	1	**6I-4079**	1	NUT	
	12	1	**130-1161**	1	GAUGE AS-OIL LEVEL (DIPSTICK) (ENGINE)	
	13	1	**219-4136**	1	PAN-OIL	
	14	1	**225-6005**	1	GASKET	
	15	1	**230-8094**	1	BRIDGE	
	16	1	**230-8218**	1	TUBE-SUCTION	
F			**275-9883**	2	SEAL	

C - CHANGE FROM PREVIOUS TYPE
F - NOT SHOWN
M - METRIC PART

243-3202 **PAN GP-OIL (**contd.**)** **i06013434**

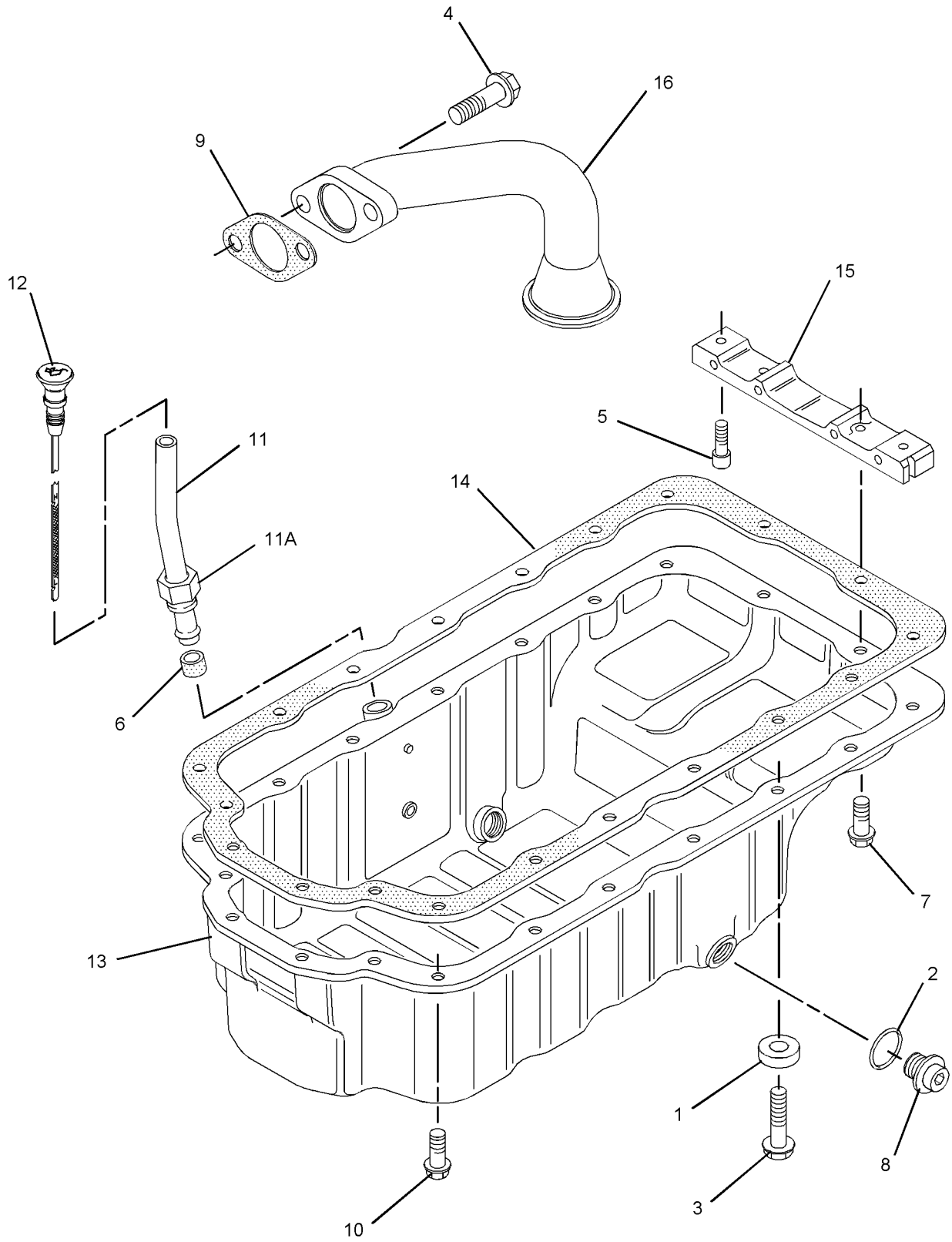

GRAPHIC #1 <END> g01022651

243-3202 PAN GP-OIL

TYPE 3

SMCS-1302 **i06850959**

NOTE	REF NO	GRAPHIC REF	PART NUMBER	QTY	PART NAME 1 2 3 4 5 6 (PRODUCT LEVEL)	SEE PAGE
	1	1	**5C-1809**	1	SPACER (8X19X6.5-MM)	
	2	1	**335-7585**	2	SEAL	
M	3	1	**6I-0217**	1	BOLT (M8X1.25X20-MM)	
M	4	1	**6I-0260**	2	BOLT (M8X1.25X25-MM)	
M	5	1	**6I-0363**	2	BOLT (M6X1X20-MM)	
	6	1	**6I-1497**	1	SEAL	
M	7	1	**6I-4072**	2	BOLT (M8X1.25X14-MM)	
	8	1	**7C-0351**	2	PLUG-DRAIN (ENGINE OIL)	
C	9	1	**373-9785**	1	PIPE	
M	10	1	**124-3815**	17	BOLT (M8X1.25X16-MM)	
	11	1	**124-7702**	1	TUBE AS	
	11A	1	**6I-4079**	1	NUT	
	12	1	**130-1161**	1	GAUGE AS-OIL LEVEL (DIPSTICK) (ENGINE)	
	13	1	**219-4136**	1	PAN-OIL	
	14	1	**471-2882**	1	GASKET	
	15	1	**230-8094**	1	BRIDGE	
F			**275-9883**	2	SEAL	

C - CHANGE FROM PREVIOUS TYPE
F - NOT SHOWN
M - METRIC PART

243-3202 **PAN GP-OIL (**contd.**)** **i06850959**

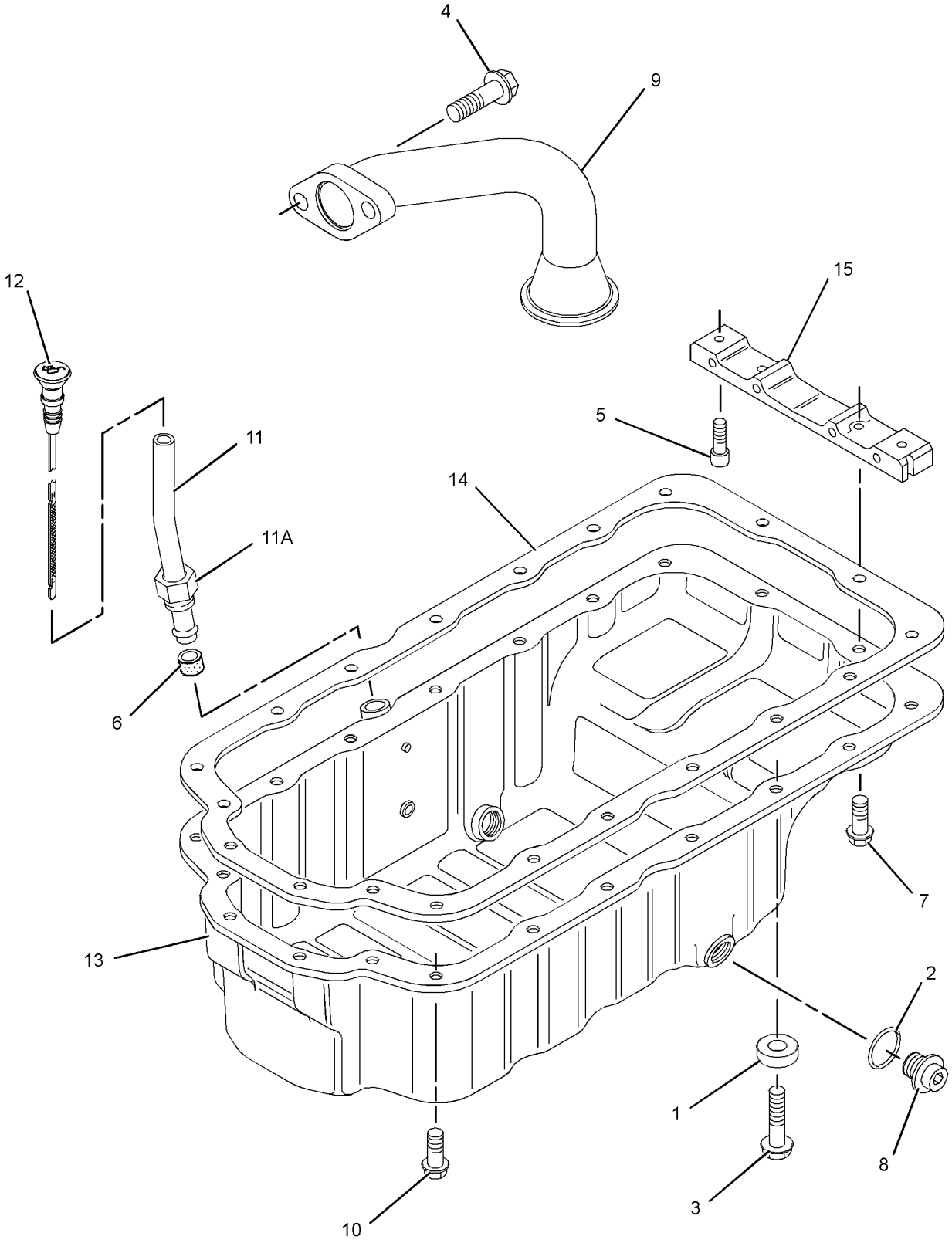

GRAPHIC #1 <END> g03887401

243-3806 PAN GP-OIL

TYPE 1

SMCS-1302 **i06013435**

NOTE	REF NO	GRAPHIC REF	PART NUMBER	QTY	PART NAME 1 2 3 4 5 6 (PRODUCT LEVEL)	SEE PAGE
	1	1	**335-7585**	2	SEAL	
M	2	1	**6I-0260**	2	BOLT (M8X1.25X25-MM)	
M	3	1	**6I-0363**	2	BOLT (M6X1X20-MM)	
M	4	1	**6I-0631**	1	BOLT (M6X1X12-MM)	
	5	1	**6I-1497**	1	SEAL	
M	6	1	**6I-4072**	2	BOLT (M8X1.25X14-MM)	
	7	1	**7C-0351**	2	PLUG-DRAIN (ENGINE OIL)	
	8	1	**067-6213**	1	GASKET	
M	9	1	**124-3815**	18	BOLT (M8X1.25X16-MM)	
	10	1	**214-3281**	1	PAN-OIL (ENGINE)	
	11	1	**225-6005**	1	GASKET	
	12	1	**230-8094**	1	BRIDGE	
	13	1	**230-8218**	1	TUBE-SUCTION	
	14	1	**230-8258**	1	TUBE AS	
	14A	1	**6I-4079**	1	NUT	
	14B	1	**230-8275**	1	CLIP-TUBE	
	15	1	**242-5938**	1	BRACKET AS	
M	16	1	**120-6872**	1	BOLT (M6X1X40-MM)	
	17	1	**261-0425**	1	GAUGE AS-OIL LEVEL (DIPSTICK) (ENGINE)	
F			**275-9883**	2	SEAL	

F - NOT SHOWN
M - METRIC PART

243-3806 **PAN GP-OIL (**contd.**)** **i06013435**

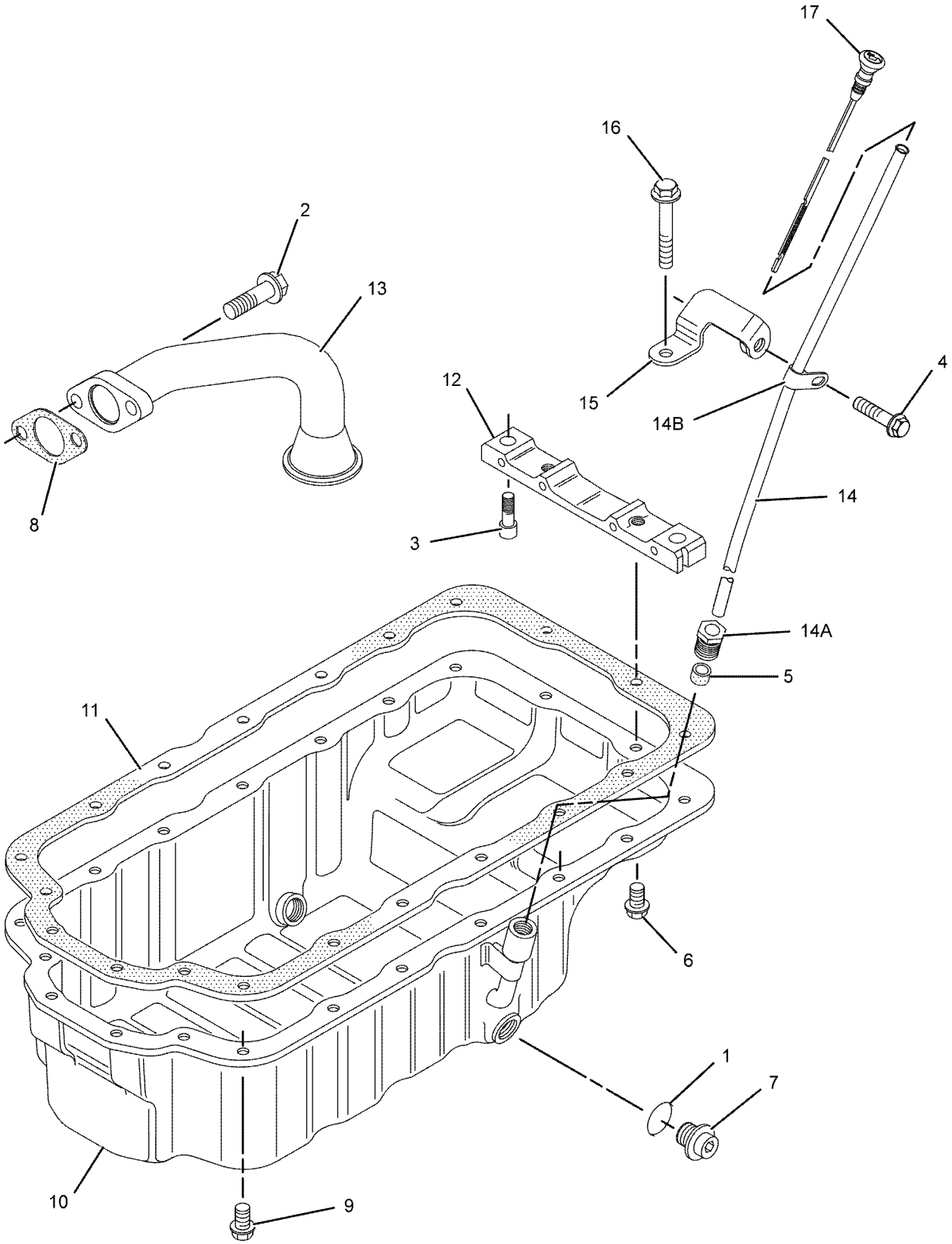

GRAPHIC #1 <END> g01081157

243-3806 PAN GP-OIL

TYPE 2

SMCS-1302 **i06850985**

NOTE	REF NO	GRAPHIC REF	PART NUMBER	QTY	PART NAME 1 2 3 4 5 6 (PRODUCT LEVEL)	SEE PAGE
	1	1	**335-7585**	2	SEAL	
M	2	1	**6I-0260**	2	BOLT (M8X1.25X25-MM)	
M	3	1	**8T-0269**	2	BOLT-SOCKET HEAD (M6X1X20-MM)	
M	4	1	**6I-0631**	1	BOLT (M6X1X12-MM)	
	5	1	**6I-1497**	1	SEAL	
M	6	1	**6I-4072**	2	BOLT (M8X1.25X14-MM)	
	7	1	**7C-0351**	2	PLUG-DRAIN (ENGINE OIL)	
M	9	1	**124-3815**	18	BOLT (M8X1.25X16-MM)	
	10	1	**214-3281**	1	PAN-OIL (ENGINE)	
	11	1	**471-2882**	1	GASKET	
	12	1	**230-8094**	1	BRIDGE	
C	13	1	**373-9785**	1	PIPE	
	14	1	**230-8258**	1	TUBE AS	
	14A	1	**6I-4079**	1	NUT	
	14B	1	**230-8275**	1	CLIP-TUBE	
	15	1	**242-5938**	1	BRACKET AS	
M	16	1	**120-6872**	1	BOLT (M6X1X40-MM)	
	17	1	**261-0425**	1	GAUGE AS-OIL LEVEL (DIPSTICK) (ENGINE)	
F			**275-9883**	2	SEAL	

C - CHANGE FROM PREVIOUS TYPE
F - NOT SHOWN
M - METRIC PART

243-3806 **PAN GP-OIL (**contd.**)** **i06850985**

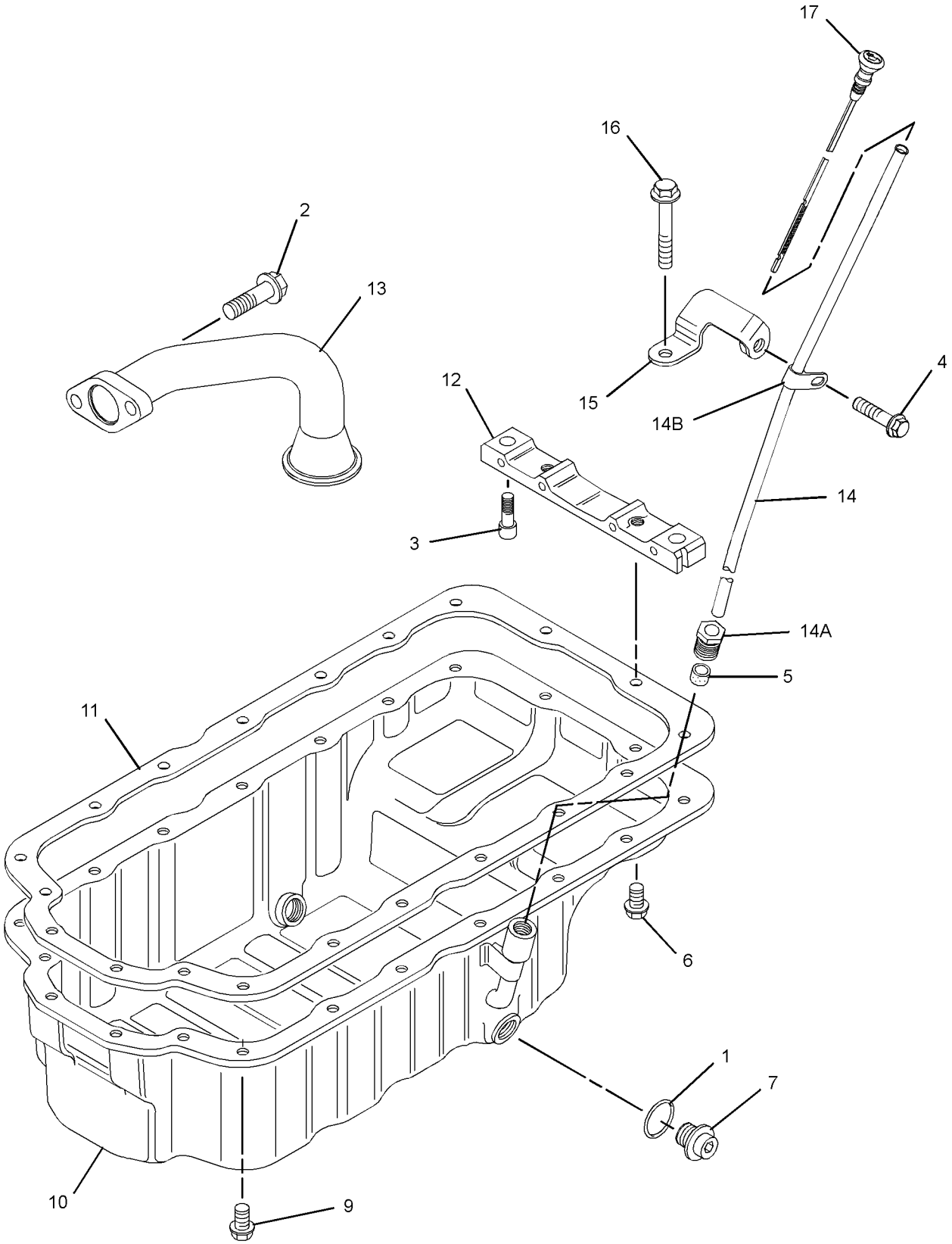

GRAPHIC #1 <END> g03886615

244-1651 PAN GP-OIL—ENGINE

TYPE 1

SMCS-1302 **i02251736**

NOTE	REF NO	GRAPHIC REF	PART NUMBER	QTY	PART NAME 1 2 3 4 5 6 (PRODUCT LEVEL)	SEE PAGE
	1	1	**5P-6718**	2	SEAL-O-RING	
M	2	1	**6I-0217**	12	BOLT (M8X1.25X20-MM)	
M	3	1	**6I-0260**	2	BOLT (M8X1.25X25-MM)	
	4	1	**6I-0289**	1	PLUG	
M	5	1	**6I-0363**	2	BOLT (M6X1X20-MM)	
M	6	1	**6I-0572**	2	BOLT (M8X1.25X20-MM)	
	7	1	**6I-1497**	1	SEAL	
	8	1	**7C-0351**	2	PLUG-DRAIN (ENGINE OIL)	
	9	1	**067-6213**	1	GASKET	
M	10	1	**101-3771**	6	BOLT (M8X1.25X85-MM)	
	11	1	**124-7702**	1	TUBE AS	
	11A	1	**6I-4079**	1	NUT	
	12	1	**124-7703**	1	GAUGE AS-OIL LEVEL (DIPSTICK) (ENGINE)	
	13	1	**225-6004**	1	PAN AS-OIL	
	13A	1	**7C-1224**	2	INSERT	
	14	1	**225-6005**	1	GASKET	
	15	1	**225-6041**	1	TUBE	
	16	1	**230-8094**	1	BRIDGE	

M - METRIC PART

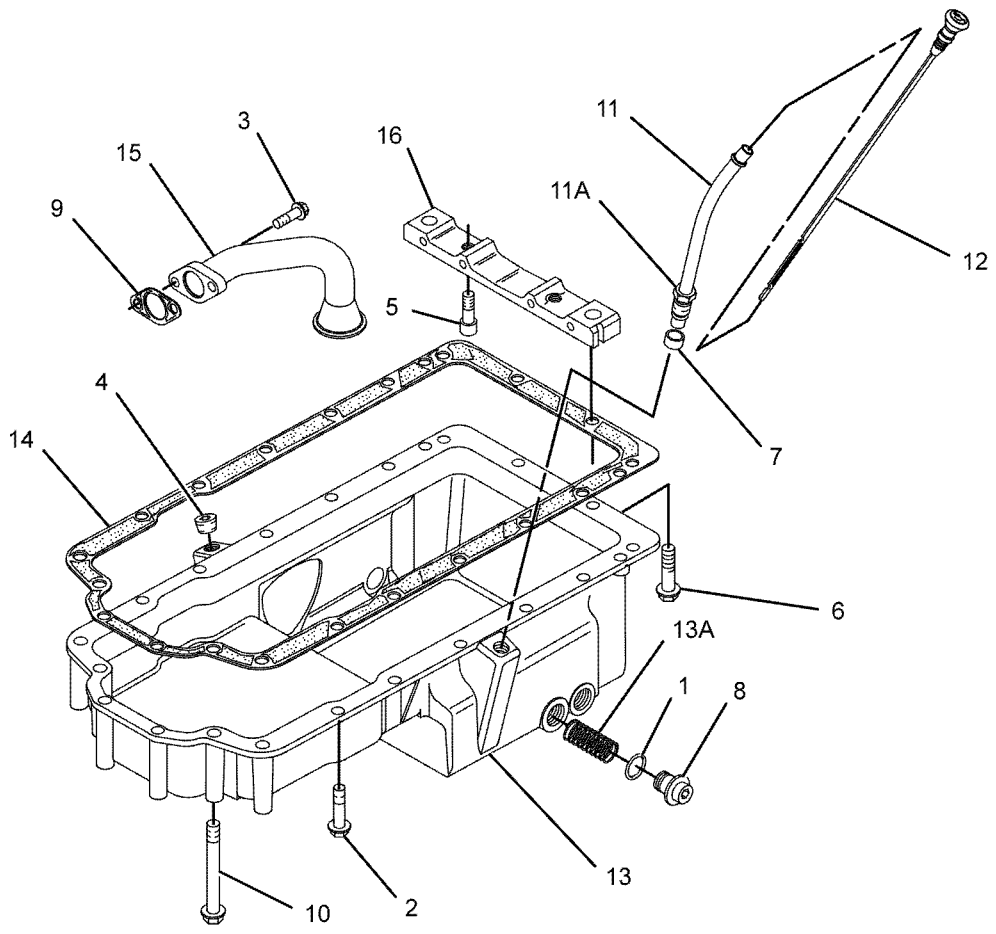

GRAPHIC #1 <END> g01022236

244-1651 PAN GP-OIL—ENGINE

TYPE 2

SMCS-1302 **i03903523**

NOTE	REF NO	GRAPHIC REF	PART NUMBER	QTY	PART NAME 1 2 3 4 5 6 (PRODUCT LEVEL)	SEE PAGE
	1	1	**304-8764**	1	PAN AS-OIL (ENGINE)	
	1A	1	**7C-1224**	2	INSERT	
	2	1	**7C-0351**	2	PLUG-DRAIN (ENGINE OIL)	
	3	1	**275-9883**	2	SEAL	
	4	1	**225-6005**	1	GASKET	
	5	1	**6I-0289**	1	PLUG	
M	6	1	**101-3771**	4	BOLT (M8X1.25X85-MM)	
M	7	1	**6I-0217**	14	BOLT (M8X1.25X20-MM)	
M	8	1	**6I-0572**	2	BOLT (M8X1.25X20-MM)	
	9	1	**230-8094**	1	BRIDGE	
M	10	1	**6I-0363**	2	BOLT (M6X1X20-MM)	
	11	1	**225-6041**	1	TUBE	
	12	1	**067-6213**	1	GASKET	
M	13	1	**6I-0260**	2	BOLT (M8X1.25X25-MM)	
	14	1	**124-7702**	1	TUBE AS	
	14A	1	**6I-4079**	1	NUT	
	15	1	**6I-1497**	1	SEAL	
	16	1	**124-7703**	1	GAUGE AS-OIL LEVEL (DIPSTICK) (ENGINE)	

M - METRIC PART

244-1651 **PAN GP-OIL (**contd.**)** **i03903523**

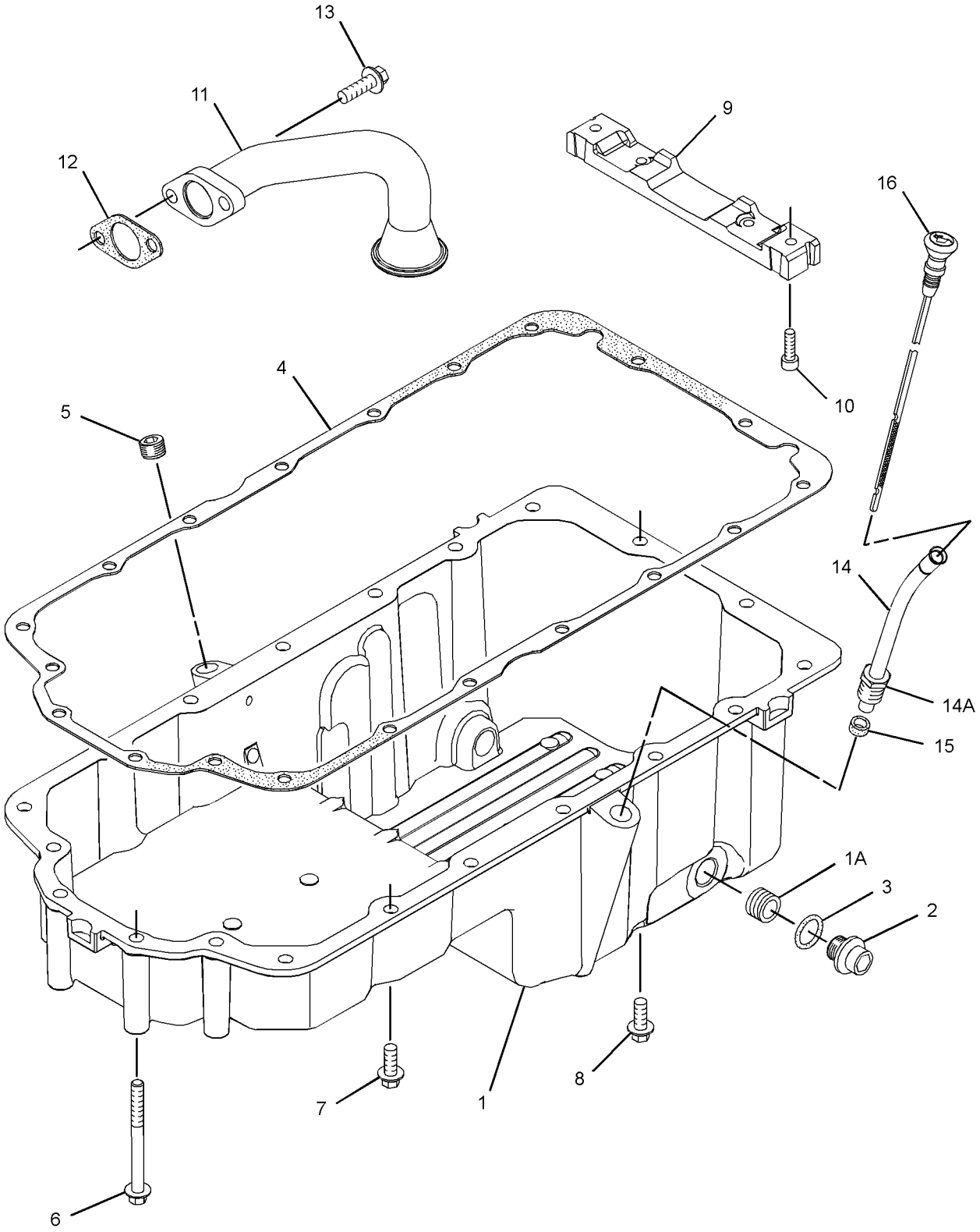

GRAPHIC #1 <END> g01352851

244-1651 PAN GP-OIL—ENGINE

TYPE 3

SMCS-1302 **i07349406**

NOTE	REF NO	GRAPHIC REF	PART NUMBER	QTY	PART NAME 1 2 3 4 5 6 (PRODUCT LEVEL)	SEE PAGE
	1	1	**480-4406**	1	PAN	
	2	1	**7C-0351**	2	PLUG-DRAIN (ENGINE OIL)	
	3	1	**335-7585**	2	SEAL	
	4	1	**471-2882**	1	GASKET	
	5	1	**6I-0289**	1	PLUG	
M	6	1	**101-3771**	4	BOLT (M8X1.25X85-MM)	
M	7	1	**6I-0217**	14	BOLT (M8X1.25X20-MM)	
M	8	1	**6I-0572**	2	BOLT (M8X1.25X20-MM)	
	9	1	**230-8094**	1	BRIDGE	
M	10	1	**8T-0269**	2	BOLT-SOCKET HEAD (M6X1X20-MM)	
	11	1	**225-6041**	1	TUBE	
	12	1	**067-6213**	1	GASKET	
M	13	1	**6I-0260**	2	BOLT (M8X1.25X25-MM)	
	14	1	**124-7702**	1	TUBE AS	
	14A	1	**6I-4079**	1	NUT	
	15	1	**6I-1497**	1	SEAL	
	16	1	**124-7703**	1	GAUGE AS-OIL LEVEL (DIPSTICK) (ENGINE)	
F		1	**275-9883**	2	SEAL	

F - NOT SHOWN
M - METRIC PART

244-1651 **PAN GP-OIL (**contd.**)** **i07349406**

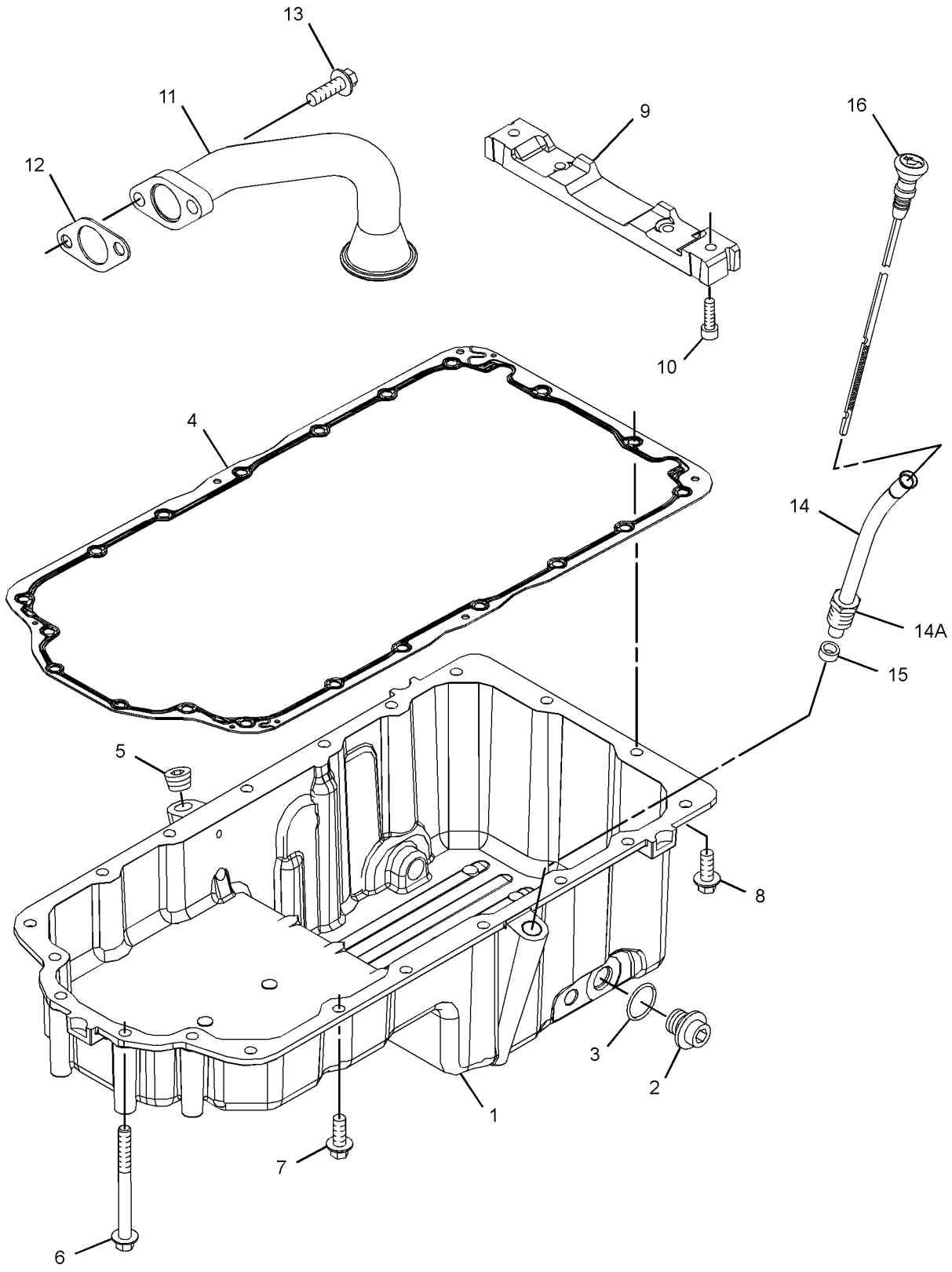

GRAPHIC #1 <END> g06196657

251-8284 PAN GP-OIL

ALSO AN ATTACHMENT

TYPE 1

SMCS-1302 **i02561600**

NOTE	REF NO	GRAPHIC REF	PART NUMBER	QTY	PART NAME 1 2 3 4 5 6 (PRODUCT LEVEL)	SEE PAGE
	1	1	**275-9883**	1	SEAL	
M	2	1	**6I-0217**	11	BOLT (M8X1.25X20-MM)	
M	3	1	**6I-0260**	3	BOLT (M8X1.25X25-MM)	
M	4	1	**6I-0293**	6	BOLT (M8X1.25X80-MM)	
M	5	1	**6I-0363**	2	BOLT (M6X1X20-MM)	
M	6	1	**6I-0572**	2	BOLT (M8X1.25X20-MM)	
	7	1	**7C-0351**	1	PLUG-DRAIN (ENGINE OIL)	
	8	1	**247-4928**	1	WASHER (16.5X20.5X1.6-MM THK)	
	9	1	**067-6213**	1	GASKET	
	10	1	**102-9690**	1	PLUG	
	11	1	**225-6005**	1	GASKET	
	12	1	**230-8094**	1	BRIDGE	
	13	1	**235-2435**	1	TUBE-SUCTION	
	14	1	**293-9309**	1	PAN GP-OIL	
	14A	1	**7C-1224**	1	INSERT	
	15	1	**251-8261**	1	PLUG	
	16	1	**251-8262**	1	WASHER	
	17	1	**251-8282**	1	TUBE AS	
	17A	1	**6I-4079**	1	NUT	
	18	1	**251-8283**	1	GAUGE AS-OIL LEVEL (DIPSTICK) (ENGINE)	

M - METRIC PART

251-8284 **PAN GP-OIL (**contd.**)** **i02561600**

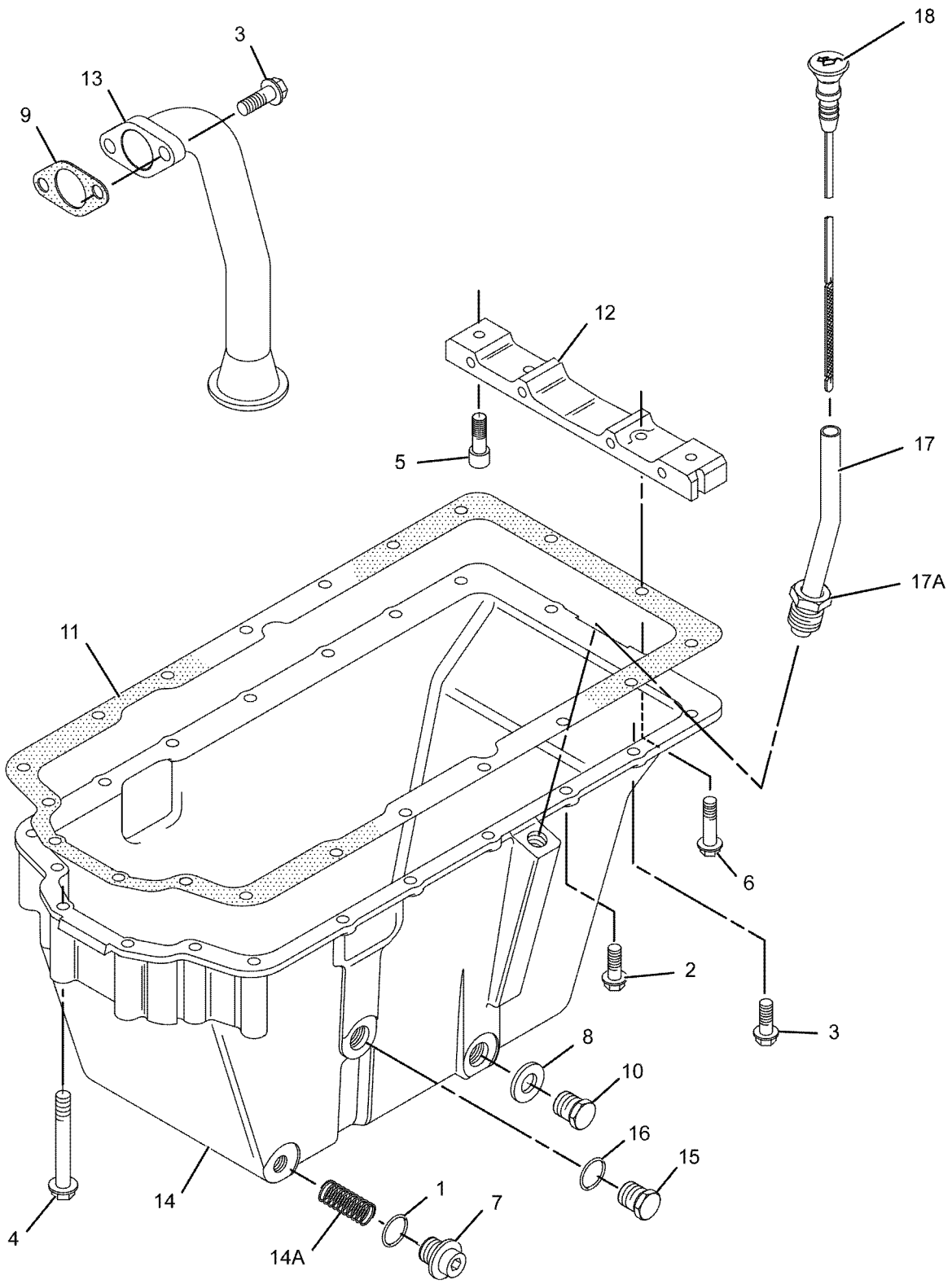

GRAPHIC #1 <END> g01078335

251-8284 PAN GP-OIL

ALSO AN ATTACHMENT

TYPE 2

SMCS-1302 **i06850961**

NOTE	REF NO	GRAPHIC REF	PART NUMBER	QTY	PART NAME 1 2 3 4 5 6 (PRODUCT LEVEL)	SEE PAGE
	1	1	**335-7585**	1	SEAL	
M	2	1	**6I-0217**	11	BOLT (M8X1.25X20-MM)	
M	3	1	**6I-0260**	3	BOLT (M8X1.25X25-MM)	
M	4	1	**6I-0293**	6	BOLT (M8X1.25X80-MM)	
M	5	1	**8T-0269**	2	BOLT-SOCKET HEAD (M6X1X20-MM)	
M	6	1	**6I-0572**	2	BOLT (M8X1.25X20-MM)	
	7	1	**7C-0351**	1	PLUG-DRAIN (ENGINE OIL)	
	8	1	**247-4928**	1	WASHER (16.5X20.5X1.6-MM THK)	
	9	1	**067-6213**	1	GASKET	
	10	1	**102-9690**	1	PLUG	
	11	1	**471-2882**	1	GASKET	
	12	1	**230-8094**	1	BRIDGE	
	13	1	**235-2435**	1	TUBE-SUCTION	
C	14	1	**394-9638**	1	PAN-OIL	
	15	1	**251-8261**	1	PLUG	
	16	1	**251-8262**	1	WASHER	
	17	1	**251-8282**	1	TUBE AS	
	17A	1	**6I-4079**	1	NUT	
	18	1	**251-8283**	1	GAUGE AS-OIL LEVEL (DIPSTICK) (ENGINE)	
F		1	**275-9883**	2	SEAL	

C - CHANGE FROM PREVIOUS TYPE
F - NOT SHOWN
M - METRIC PART

251-8284 **PAN GP-OIL (**contd.**)** **i06850961**

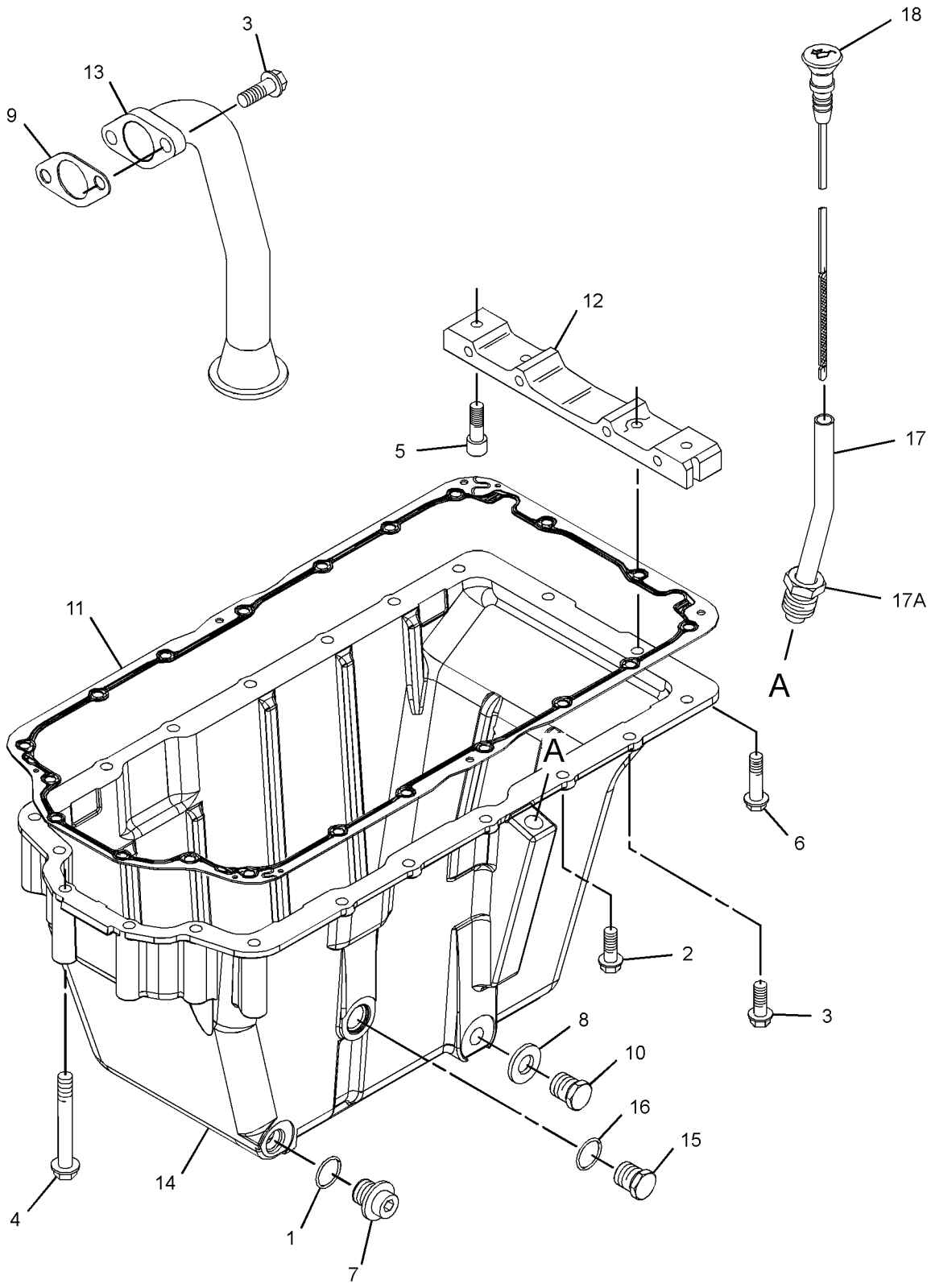

GRAPHIC #1 <END> g06196700

270-4367 PAN GP-OIL

TYPE 1

SMCS-1302 **i02451150**

NOTE	REF NO	GRAPHIC REF	PART NUMBER	QTY	PART NAME 1 2 3 4 5 6 (PRODUCT LEVEL)	SEE PAGE
M	1	1	**6I-0217**	11	BOLT (M8X1.25X20-MM)	
M	2	1	**6I-0260**	3	BOLT (M8X1.25X25-MM)	
M	3	1	**6I-0363**	2	BOLT (M6X1X20-MM)	
M	4	1	**6I-0572**	2	BOLT (M8X1.25X20-MM)	
M	5	1	**101-3771**	6	BOLT (M8X1.25X85-MM)	
	6	1	**230-8094**	1	BRIDGE	
	7	1	**276-5175**	1	SEAL-O-RING	
	8	1	**067-6213**	1	GASKET	
	9	1	**225-6005**	1	GASKET	
	10	1	**123-2934**	1	GAUGE AS-OIL LEVEL (DIPSTICK) (ENGINE)	
	11	1	**234-3558**	1	PAN AS-OIL	
	11A	1	**7C-1224**	1	INSERT	
	12	1	**9S-4190**	1	PLUG-O-RING (7/8-14-THD)	
	13	1	**6I-0289**	1	PLUG	
	14	1	**102-9690**	1	PLUG	
	15	1	**7C-0351**	2	PLUG-DRAIN (ENGINE OIL)	
	16	1	**6I-1497**	1	SEAL	
	17	1	**269-1745**	1	WASHER	
	18	1	**275-9883**	2	SEAL	
	19	1	**225-6041**	1	TUBE	
	20	1	**232-2551**	1	TUBE AS	
	20A	1	**6I-4079**	1	NUT	
	21	1	**247-4928**	1	WASHER (16.5X20.5X1.6-MM THK)	

M - METRIC PART

270-4367 **PAN GP-OIL (**contd.**)** **i02451150**

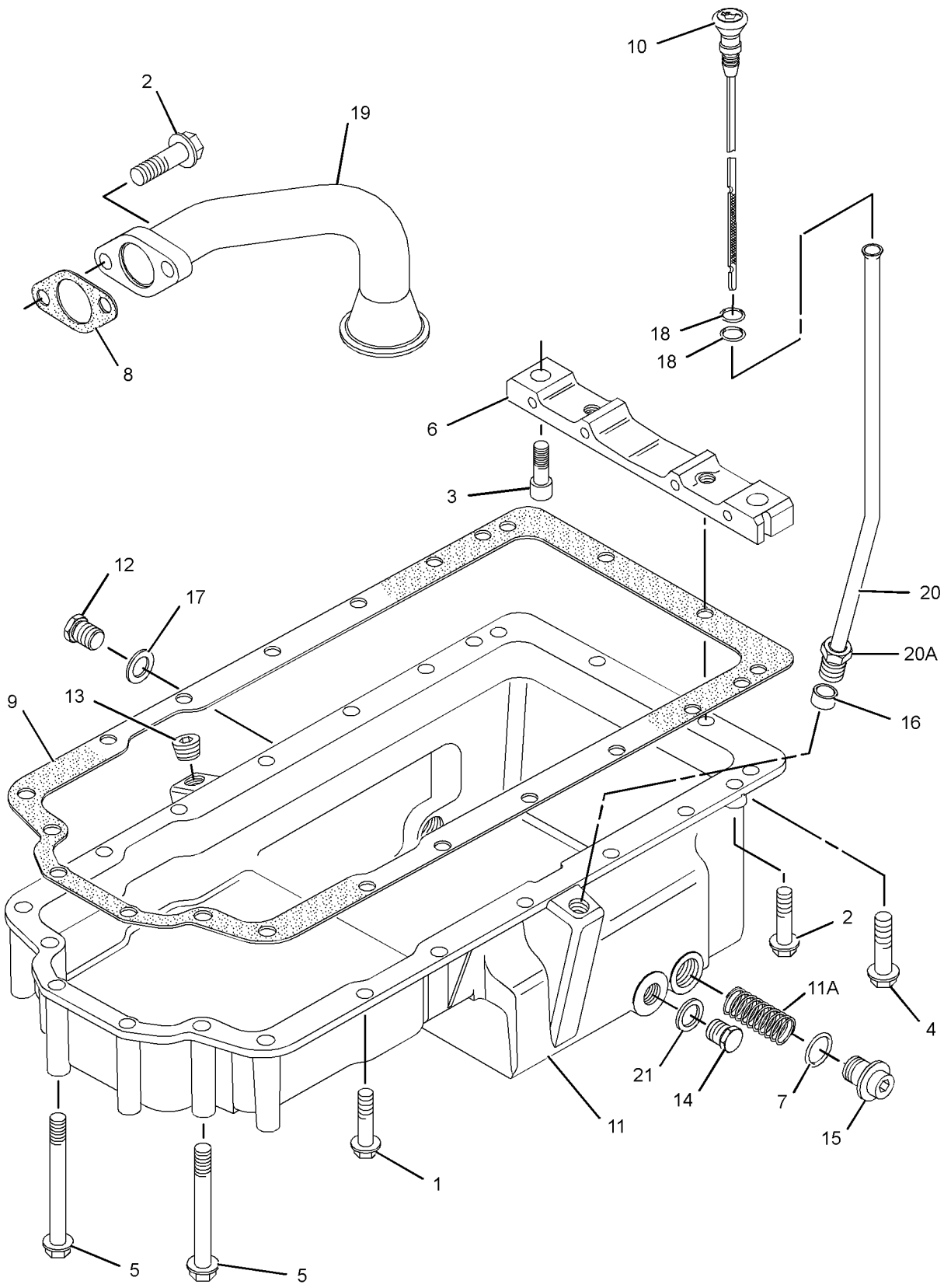

GRAPHIC #1 <END> g01181230

270-4367 PAN GP-OIL

TYPE 2

SMCS-1302 **i03903525**

NOTE	REF NO	GRAPHIC REF	PART NUMBER	QTY	PART NAME 1 2 3 4 5 6 (PRODUCT LEVEL)	SEE PAGE
M	1	1	**6I-0217**	12	BOLT (M8X1.25X20-MM)	
M	2	1	**6I-0260**	2	BOLT (M8X1.25X25-MM)	
M	3	1	**6I-0363**	2	BOLT (M6X1X20-MM)	
M	4	1	**6I-0572**	2	BOLT (M8X1.25X20-MM)	
M	5	1	**101-3771**	6	BOLT (M8X1.25X85-MM)	
	6	1	**230-8094**	1	BRIDGE	
	7	1	**247-4928**	1	WASHER (16.5X20.5X1.6-MM THK)	
	8	1	**067-6213**	1	GASKET	
	9	1	**225-6005**	1	GASKET	
C	10	1	**251-8339**	1	GAUGE AS-OIL LEVEL (DIPSTICK) (ENGINE)	
	10A	1	**275-9891**	2	SEAL-O-RING	
	11	1	**234-3558**	1	PAN AS-OIL	
	11A	1	**7C-1224**	2	INSERT	
	12	1	**9S-4190**	1	PLUG-O-RING (7/8-14-THD)	
	13	1	**6I-0289**	1	PLUG	
	14	1	**102-9690**	1	PLUG	
	15	1	**7C-0351**	2	PLUG-DRAIN (ENGINE OIL)	
	16	1	**6I-1497**	1	SEAL	
	17	1	**269-1745**	1	WASHER	
	18	1	**275-9883**	2	SEAL	
	19	1	**225-6041**	1	TUBE	
C	20	1	**251-8338**	1	TUBE AS	
	20A	1	**6I-4079**	1	NUT	

C - CHANGE FROM PREVIOUS TYPE
M - METRIC PART

270-4367 **PAN GP-OIL (**contd.**)** **i03903525**

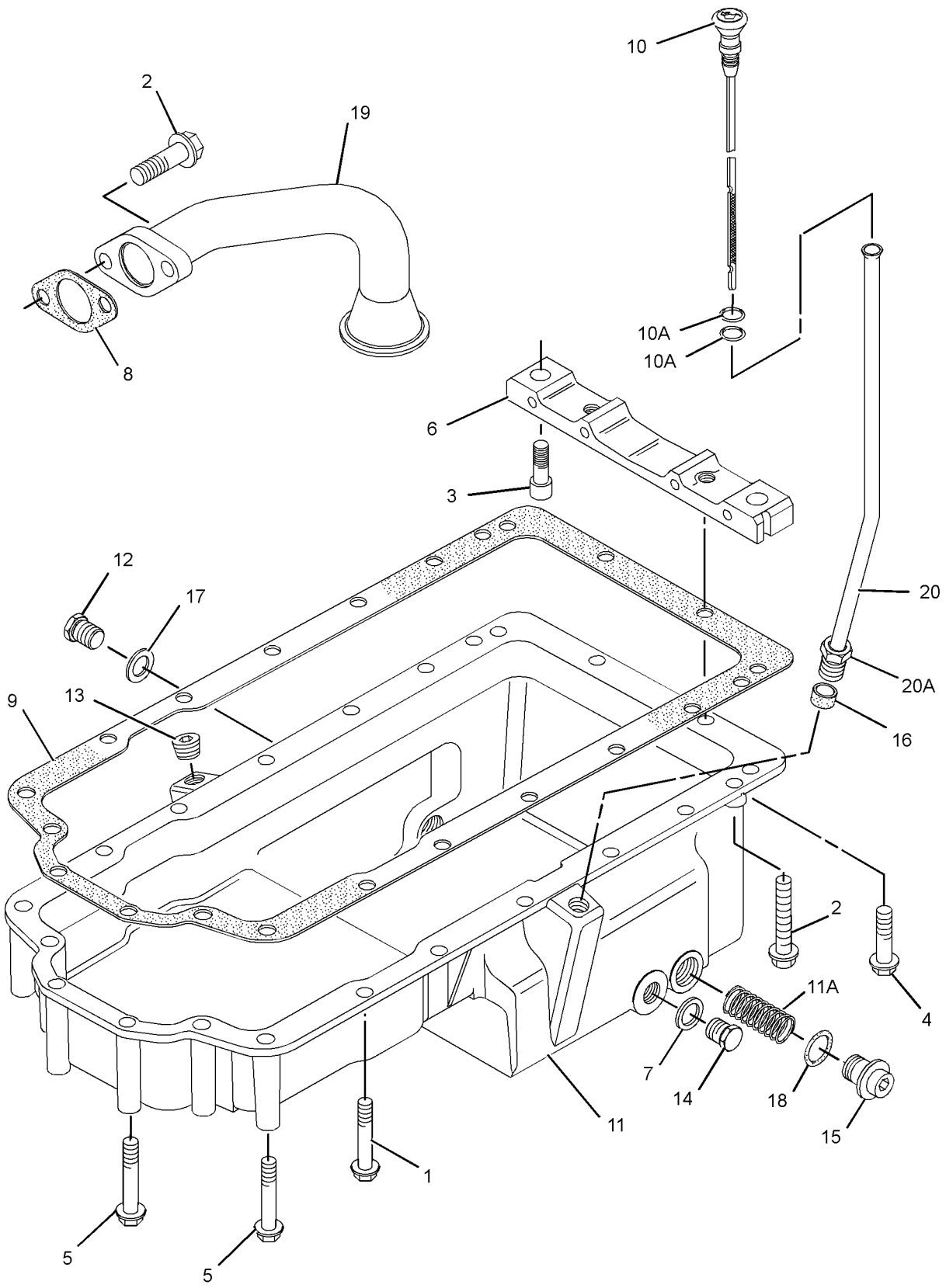

GRAPHIC #1 <END> g02177289

270-4367 PAN GP-OIL

TYPE 3

SMCS-1302 **i06850972**

NOTE	REF NO	GRAPHIC REF	PART NUMBER	QTY	PART NAME 1 2 3 4 5 6 (PRODUCT LEVEL)	SEE PAGE
M	1	1	**6I-0217**	12	BOLT (M8X1.25X20-MM)	
M	2	1	**6I-0260**	2	BOLT (M8X1.25X25-MM)	
M	3	1	**8T-0269**	2	BOLT-SOCKET HEAD (M6X1X20-MM)	
M	4	1	**6I-0572**	2	BOLT (M8X1.25X20-MM)	
M	5	1	**101-3771**	6	BOLT (M8X1.25X85-MM)	
	6	1	**230-8094**	1	BRIDGE	
	7	1	**247-4928**	1	WASHER (16.5X20.5X1.6-MM THK)	
	8	1	**067-6213**	1	GASKET	
	9	1	**471-2882**	1	GASKET	
	10	1	**251-8339**	1	GAUGE AS-OIL LEVEL (DIPSTICK) (ENGINE)	
	10A	1	**275-9891**	2	SEAL-O-RING	
	11	1	**234-3558**	1	PAN AS-OIL	
	11A	1	**7C-1224**	2	INSERT	
	12	1	**9S-4190**	1	PLUG-O-RING (7/8-14-THD)	
	13	1	**6I-0289**	1	PLUG	
	14	1	**102-9690**	1	PLUG	
	15	1	**7C-0351**	2	PLUG-DRAIN (ENGINE OIL)	
	16	1	**6I-1497**	1	SEAL	
	17	1	**269-1745**	1	WASHER	
	18	1	**335-7585**	2	SEAL	
	19	1	**225-6041**	1	TUBE	
C	20	1	**437-5064**	1	TUBE AS	
	20A	1	**228-7089**	1	SEAL-O-RING	
F			**275-9883**	2	SEAL	

C - CHANGE FROM PREVIOUS TYPE
F - NOT SHOWN
M - METRIC PART

270-4367 **PAN GP-OIL (**contd.**)** **i06850972**

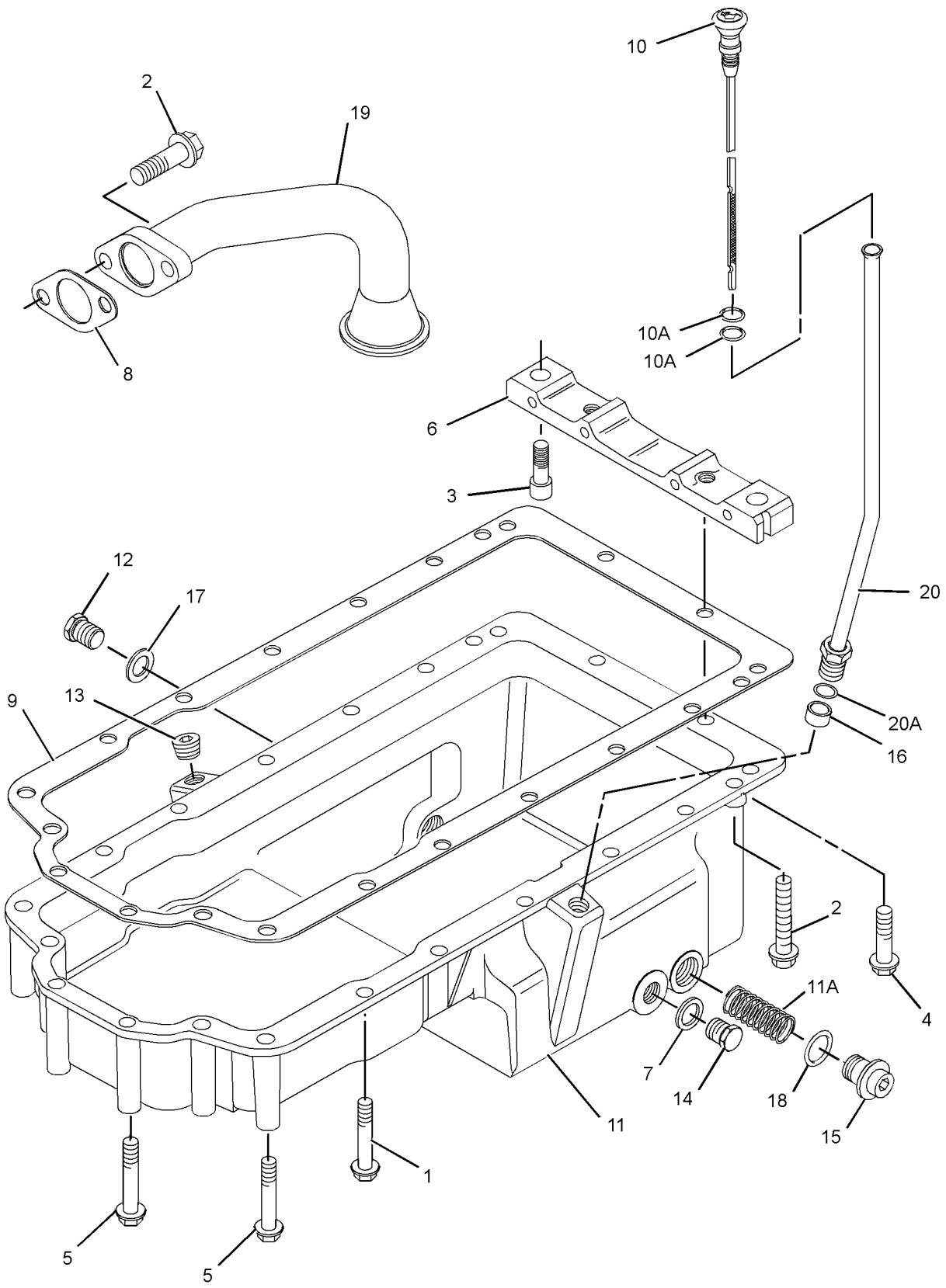

GRAPHIC #1 <END> g03821185

272-2224 PAN GP-OIL

SMCS-1302 **i06736291**

NOTE	REF NO	GRAPHIC REF	PART NUMBER	QTY	PART NAME 1 2 3 4 5 6 (PRODUCT LEVEL)	SEE PAGE
	1	1	**067-6823**	2	PLUG	
	2	1	**5P-6718**	2	SEAL-O-RING	
M	3	1	**6I-0217**	8	BOLT (M8X1.25X20-MM)	
	4	1	**6I-0289**	1	PLUG	
M	5	1	**6I-0291**	2	NUT (M8X1.25-THD)	
M	6	1	**6I-0292**	2	BOLT (M8X1.25X140-MM)	
M	7	1	**6I-0293**	4	BOLT (M8X1.25X80-MM)	
M	8	1	**6I-0363**	2	BOLT (M6X1X20-MM)	
	9	1	**6I-1497**	1	SEAL	
	10	1	**7C-0351**	2	PLUG-DRAIN (ENGINE OIL)	
	11	1	**067-6213**	1	GASKET	
M	12	1	**6I-0260**	2	BOLT (M8X1.25X25-MM)	
	13	1	**124-7702**	1	TUBE AS	
	14	1	**6I-4079**	1	NUT	
	15	1	**131-4291**	1	GAUGE AS-OIL LEVEL (DIPSTICK) (ENGINE)	
	16	1	**155-4828**	2	STUD	
M	17	1	**220-8311**	4	BOLT (M8X1.25X115-MM)	
	18	1	**225-6005**	1	GASKET	
	19	1	**230-8094**	1	BRIDGE	
	20	1	**230-8251**	1	PAN-OIL	
	21	1	**272-2226**	1	TUBE-OIL SUCTION	

M - METRIC PART

272-2224 **PAN GP-OIL (**contd.**)** **i06736291**

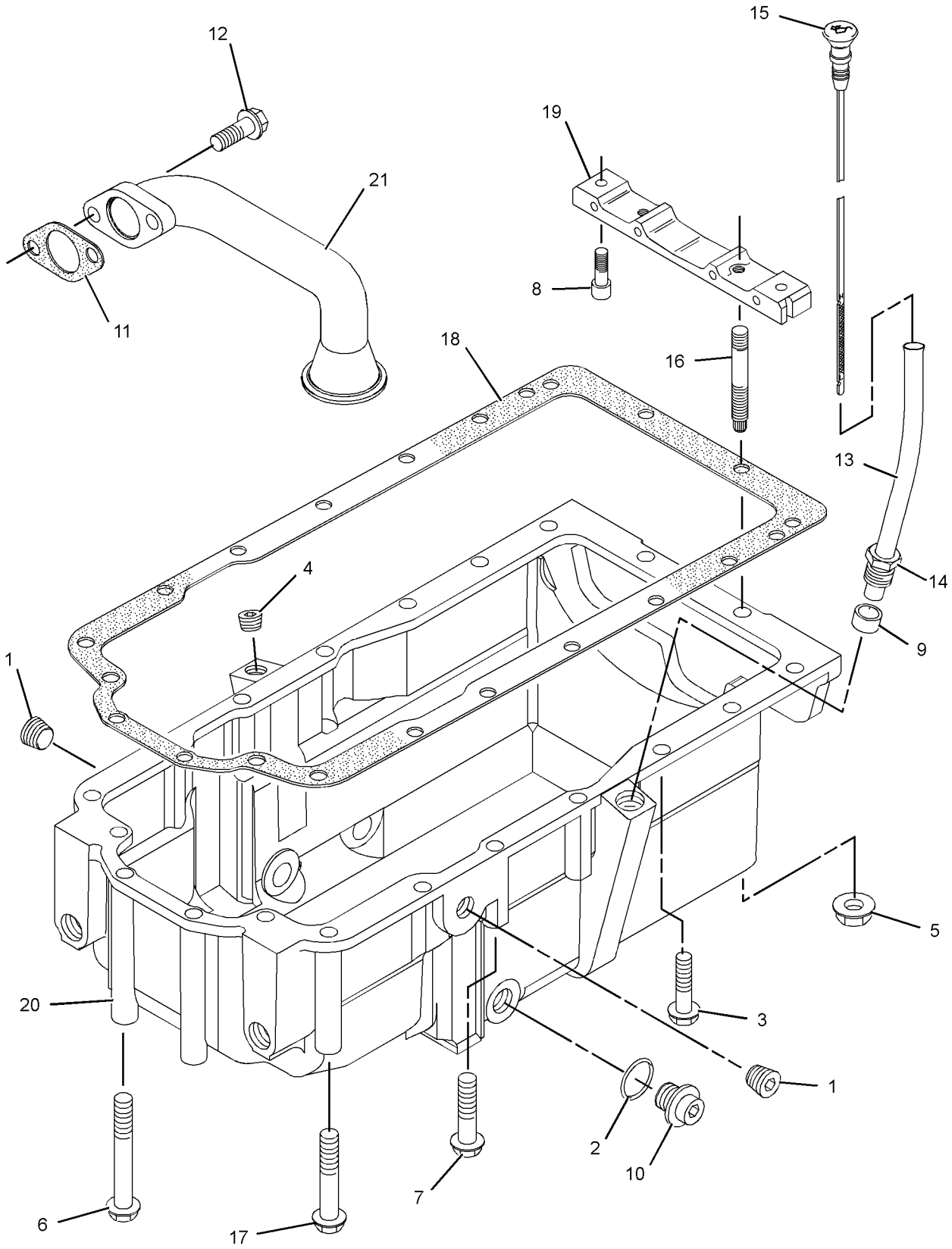

GRAPHIC #1 <END> g01157582

272-2224 PAN GP-OIL

S/N: 3341-28054

SMCS-1302 **i06948819**

NOTE	REF NO	GRAPHIC REF	PART NUMBER	QTY	PART NAME 1 2 3 4 5 6 (PRODUCT LEVEL)	SEE PAGE
	1	1	**067-6823**	2	PLUG	
	2	1	**335-7585**	2	SEAL (SUMP DRAIN PLUG)	
M	3	1	**6I-0217**	8	BOLT (M8X1.25X20-MM)	
	4	1	**6I-0289**	1	PLUG	
M	5	1	**178-3336**	2	NUT-HEX FLANGE (M8X1.25-THD)	
M	6	1	**6I-0292**	2	BOLT (M8X1.25X140-MM)	
M	7	1	**6I-0293**	4	BOLT (M8X1.25X80-MM)	
M	8	1	**6I-0363**	2	BOLT (M6X1X20-MM)	
	9	1	**6I-1497**	1	SEAL	
	10	1	**7C-0351**	2	PLUG-DRAIN (ENGINE OIL)	
	11	1	**067-6213**	1	GASKET	
M	12	1	**6I-0260**	2	BOLT (M8X1.25X25-MM)	
C	13	1	**124-7702**	1	TUBE AS	
	13A	1	**6I-4079**	1	NUT	
	15	1	**131-4291**	1	GAUGE AS-OIL LEVEL (DIPSTICK) (ENGINE)	
	16	1	**155-4828**	2	STUD	
M	17	1	**220-8311**	4	BOLT (M8X1.25X115-MM)	
	18	1	**225-6005**	1	GASKET	
	19	1	**230-8094**	1	BRIDGE	
	20	1	**230-8251**	1	PAN-OIL (ENGINE)	
	21	1	**272-2226**	1	TUBE-OIL SUCTION	
F			**275-9883**	2	SEAL	

C - CHANGE FROM PREVIOUS TYPE
F - NOT SHOWN
M - METRIC PART

272-2224 **PAN GP-OIL (**contd.**)** **i06948819**

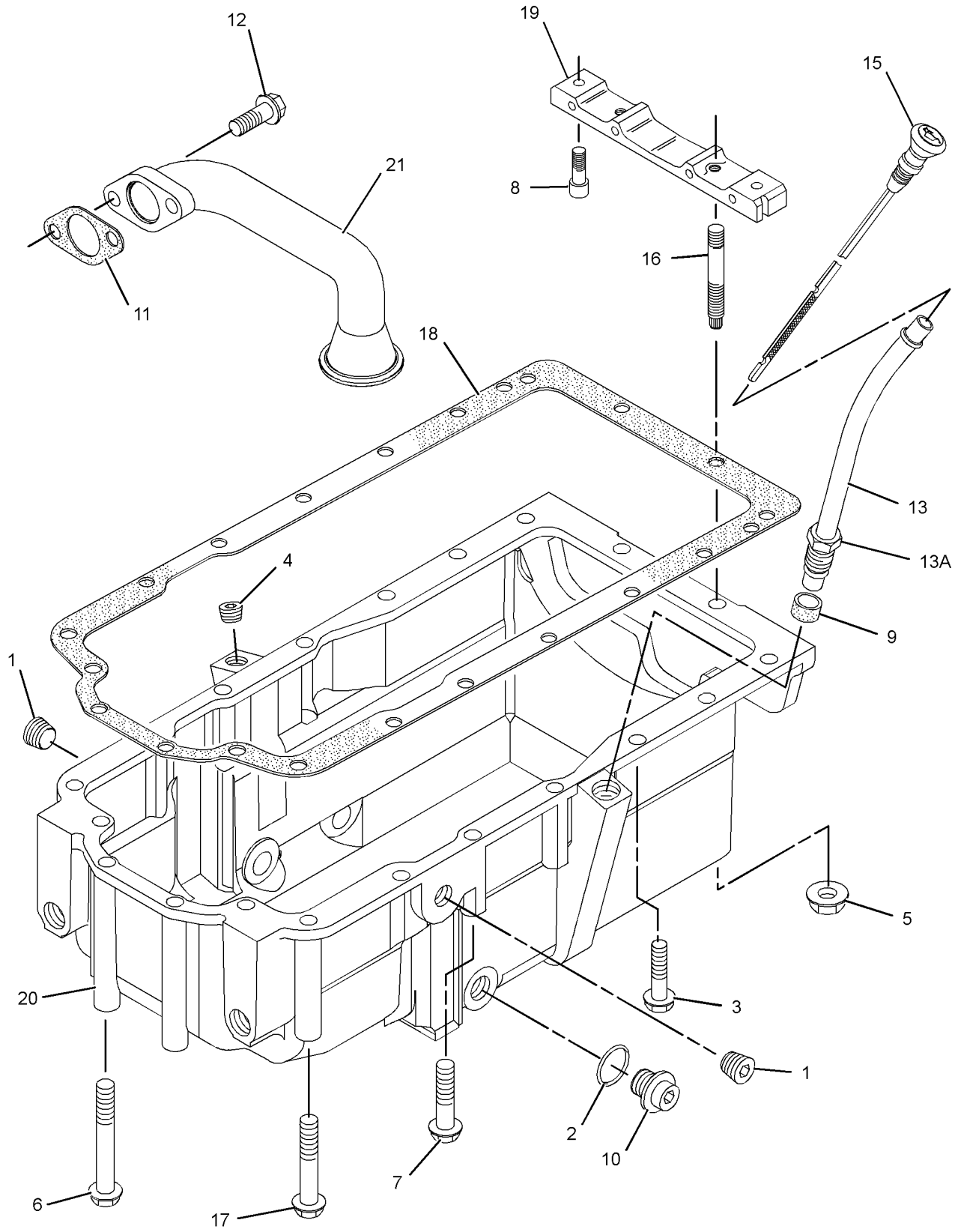

GRAPHIC #1 <END> g01370367

272-2224 PAN GP-OIL

S/N: 33428055-UP

TYPE 1

SMCS-1302 **i06948820**

NOTE	REF NO	GRAPHIC REF	PART NUMBER	QTY	PART NAME 1 2 3 4 5 6 (PRODUCT LEVEL)	SEE PAGE
	1	1	**067-6823**	2	PLUG	
	2	1	**335-7585**	2	SEAL (SUMP DRAIN PLUG)	
M	3	1	**6I-0217**	8	BOLT (M8X1.25X20-MM)	
	4	1	**6I-0289**	1	PLUG	
M	5	1	**178-3336**	2	NUT-HEX FLANGE (M8X1.25-THD)	
M	6	1	**6I-0292**	2	BOLT (M8X1.25X140-MM)	
M	7	1	**6I-0293**	4	BOLT (M8X1.25X80-MM)	
M	8	1	**6I-0363**	2	BOLT (M6X1X20-MM)	
	9	1	**6I-1497**	1	SEAL	
	10	1	**7C-0351**	2	PLUG-DRAIN (ENGINE OIL)	
C	11	1	**373-9786**	1	PIPE AS	
M	12	1	**6I-0260**	2	BOLT (M8X1.25X25-MM)	
	13	1	**124-7702**	1	TUBE AS	
	13A	1	**6I-4079**	1	NUT	
	14	1	**230-8251**	1	PAN-OIL (ENGINE)	
	15	1	**131-4291**	1	GAUGE AS-OIL LEVEL (DIPSTICK) (ENGINE)	
	16	1	**155-4828**	2	STUD	
M	17	1	**220-8311**	4	BOLT (M8X1.25X115-MM)	
	18	1	**225-6005**	1	GASKET	
	19	1	**230-8094**	1	BRIDGE	
F		1	**275-9883**	2	SEAL	

C - CHANGE FROM PREVIOUS TYPE
F - NOT SHOWN
M - METRIC PART

272-2224 **PAN GP-OIL (**contd.**)** **i06948820**

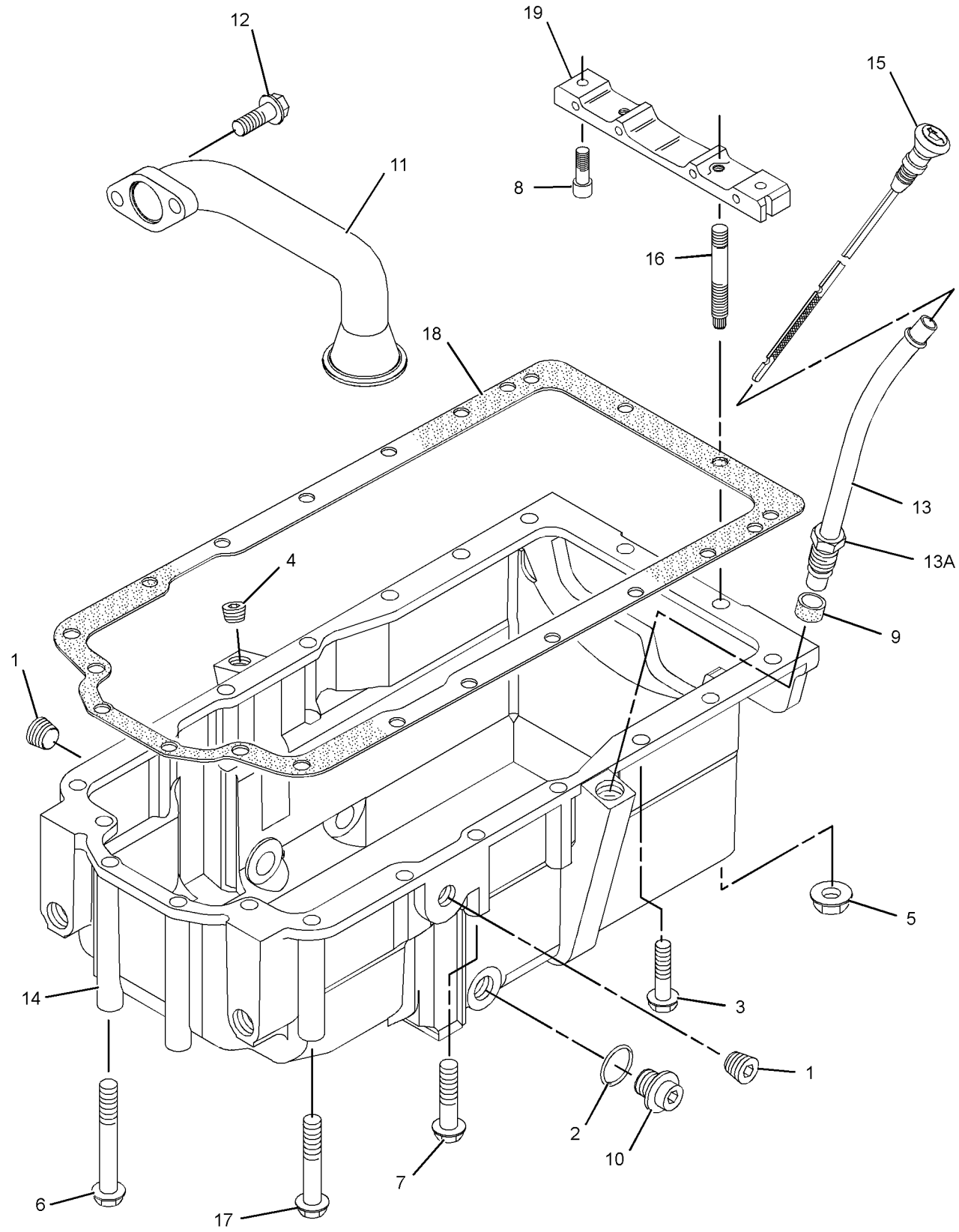

GRAPHIC #1 <END> g06179372

272-2224 PAN GP-OIL

S/N: 33428055-UP

TYPE 2

SMCS-1302 **i06998429**

NOTE	REF NO	GRAPHIC REF	PART NUMBER	QTY	PART NAME 1 2 3 4 5 6 (PRODUCT LEVEL)	SEE PAGE
CM	1	1	**101-3805**	16	BOLT (M8X1.25X90-MM)	
	2	1	**335-7585**	2	SEAL	
	3	1	**373-9786**	1	PIPE AS	
	4	1	**6I-0289**	1	PLUG	
M	5	1	**178-3336**	2	NUT-HEX FLANGE (M8X1.25-THD)	
C	6	1	**433-0344**	1	PAN AS-OIL (ENGINE)	
	6A	1	**360-0073**	1	PAN	
	7	1	**230-8094**	1	BRIDGE	
M	8	1	**8T-0269**	2	BOLT-SOCKET HEAD (M6X1X20-MM)	
	9	1	**6I-1497**	1	SEAL	
	10	1	**7C-0351**	2	PLUG-DRAIN (ENGINE OIL)	
	11	1	**471-2882**	1	GASKET	
CM	12	1	**6I-0260**	4	BOLT (M8X1.25X25-MM)	
	13	1	**124-7702**	1	TUBE AS	
	13A	1	**6I-4079**	1	NUT	
	14	1	**155-4828**	2	STUD	
	15	1	**131-4291**	1	GAUGE AS-OIL LEVEL (DIPSTICK) (ENGINE)	
F		1	**275-9883**	2	SEAL	

C - CHANGE FROM PREVIOUS TYPE
F - NOT SHOWN
M - METRIC PART

272-2224 **PAN GP-OIL (**contd.**)** **i06998429**

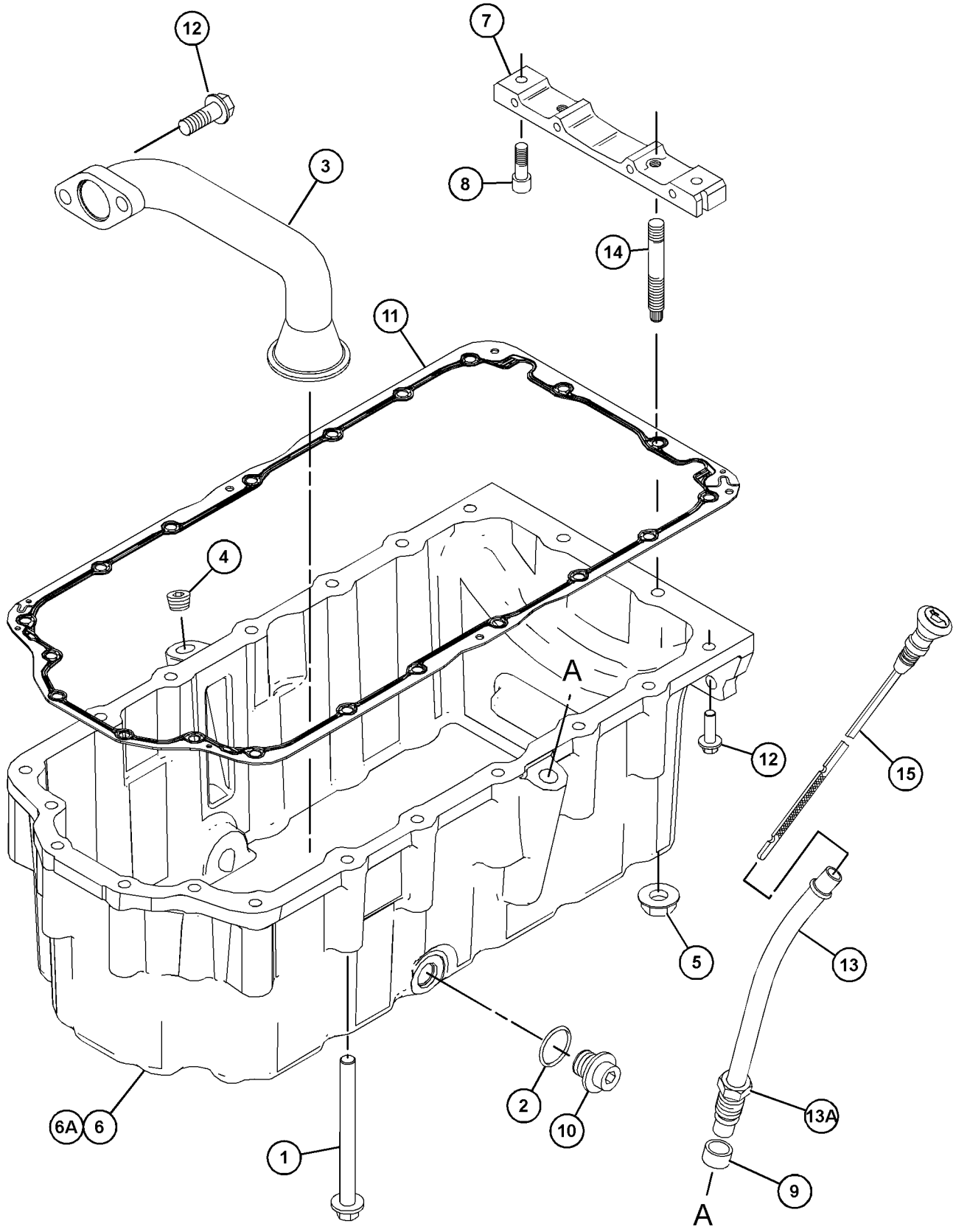

GRAPHIC #1 <END> g06209532

286-1603 PAN GP-OIL

SMCS-1302 **i06919754**

NOTE	REF NO	GRAPHIC REF	PART NUMBER	QTY	PART NAME 1 2 3 4 5 6 (PRODUCT LEVEL)	SEE PAGE
	1	1	**335-7585**	2	SEAL	
M	2	1	**6I-0260**	2	BOLT (M8X1.25X25-MM)	
	3	1	**6I-0289**	1	PLUG	
M	4	1	**6I-0363**	2	BOLT (M6X1X20-MM)	
M	5	1	**6I-4072**	1	BOLT (M8X1.25X14-MM)	
	6	1	**7C-0351**	2	PLUG-DRAIN (ENGINE OIL)	
	7	1	**067-6213**	1	GASKET	
M	8	1	**124-3815**	18	BOLT (M8X1.25X16-MM)	
	9	1	**214-3281**	1	PAN-OIL	
	10	1	**225-6005**	1	GASKET	
	11	1	**230-8094**	1	BRIDGE	
	12	1	**230-8218**	1	TUBE-SUCTION	
F			**275-9883**	2	SEAL	

F - NOT SHOWN
M - METRIC PART

286-1603 **PAN GP-OIL (**contd.**)** **i06919754**

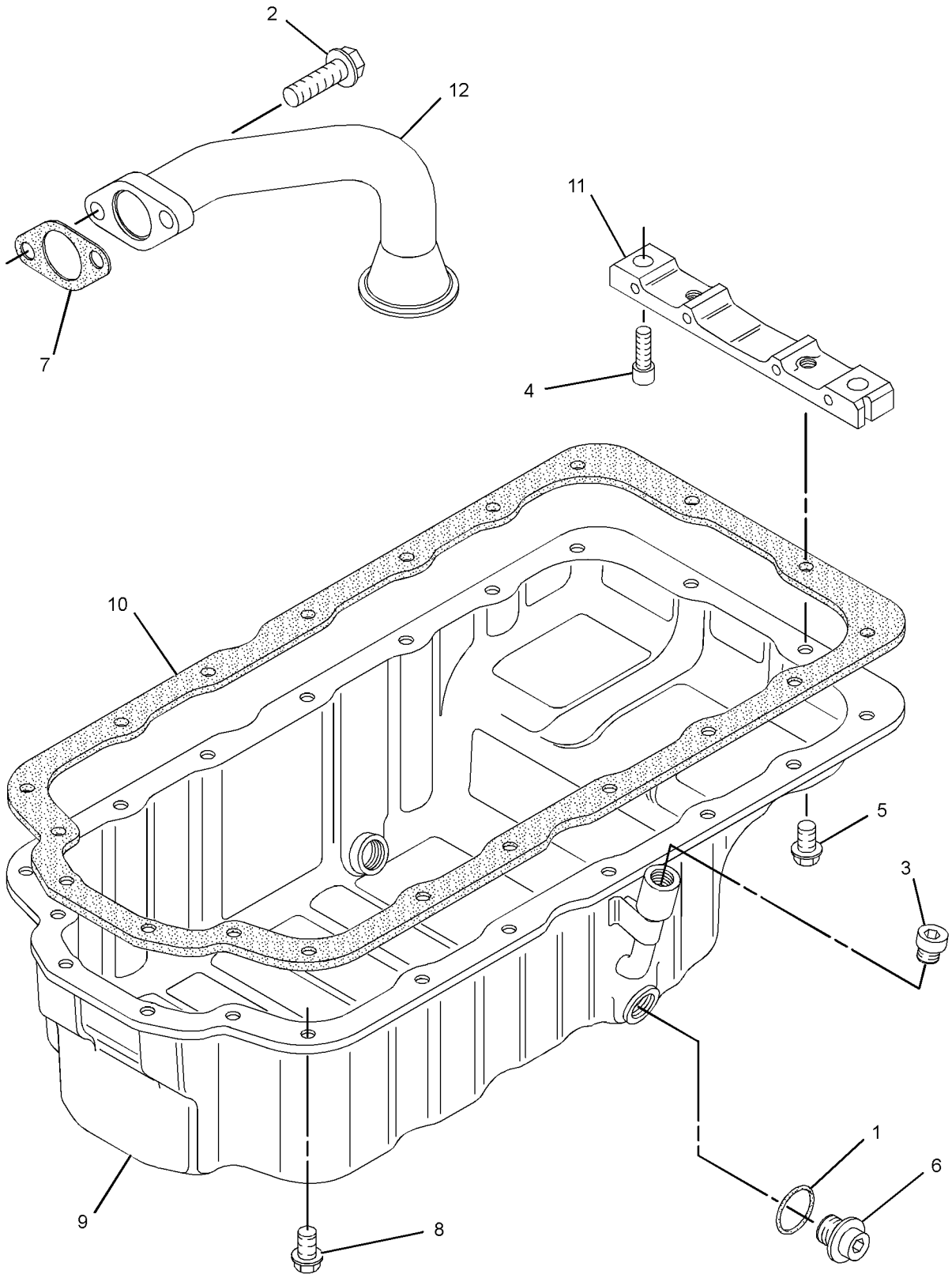

GRAPHIC #1 <END> g01292119

293-7196 PAN GP-OIL

TYPE 1

SMCS-1302 **i02604880**

NOTE	REF NO	GRAPHIC REF	PART NUMBER	QTY	PART NAME 1 2 3 4 5 6 (PRODUCT LEVEL)	SEE PAGE
	1	1	**5P-6718**	2	SEAL-O-RING	
M	2	1	**6I-0217**	12	BOLT (M8X1.25X20-MM)	
	3	1	**6I-0289**	1	PLUG	
M	4	1	**6I-0293**	6	BOLT (M8X1.25X80-MM)	
M	5	1	**6I-0363**	2	BOLT (M6X1X20-MM)	
M	6	1	**6I-0572**	2	BOLT (M8X1.25X20-MM)	
	7	1	**6I-1497**	1	SEAL	
M	8	1	**6I-4793**	2	BOLT (M8X1.25X50-MM)	
	9	1	**7C-0351**	2	PLUG-DRAIN (ENGINE OIL)	
	10	1	**131-4292**	1	TUBE AS	
	10A	1	**6I-4079**	1	NUT	
	11	1	**173-7373**	1	GAUGE AS-OIL LEVEL (DIPSTICK) (ENGINE)	
	12	1	**225-6005**	1	GASKET	
	13	1	**230-8094**	1	BRIDGE	
	14	1	**231-3015**	1	PAN AS-OIL	
	14A	1	**7C-1224**	2	INSERT	
	15	1	**293-7193**	1	TUBE AS	
	15A	1	**195-6011**	1	SEAL-O-RING	

M - METRIC PART

293-7196 **PAN GP-OIL (**contd.**)** **i02604880**

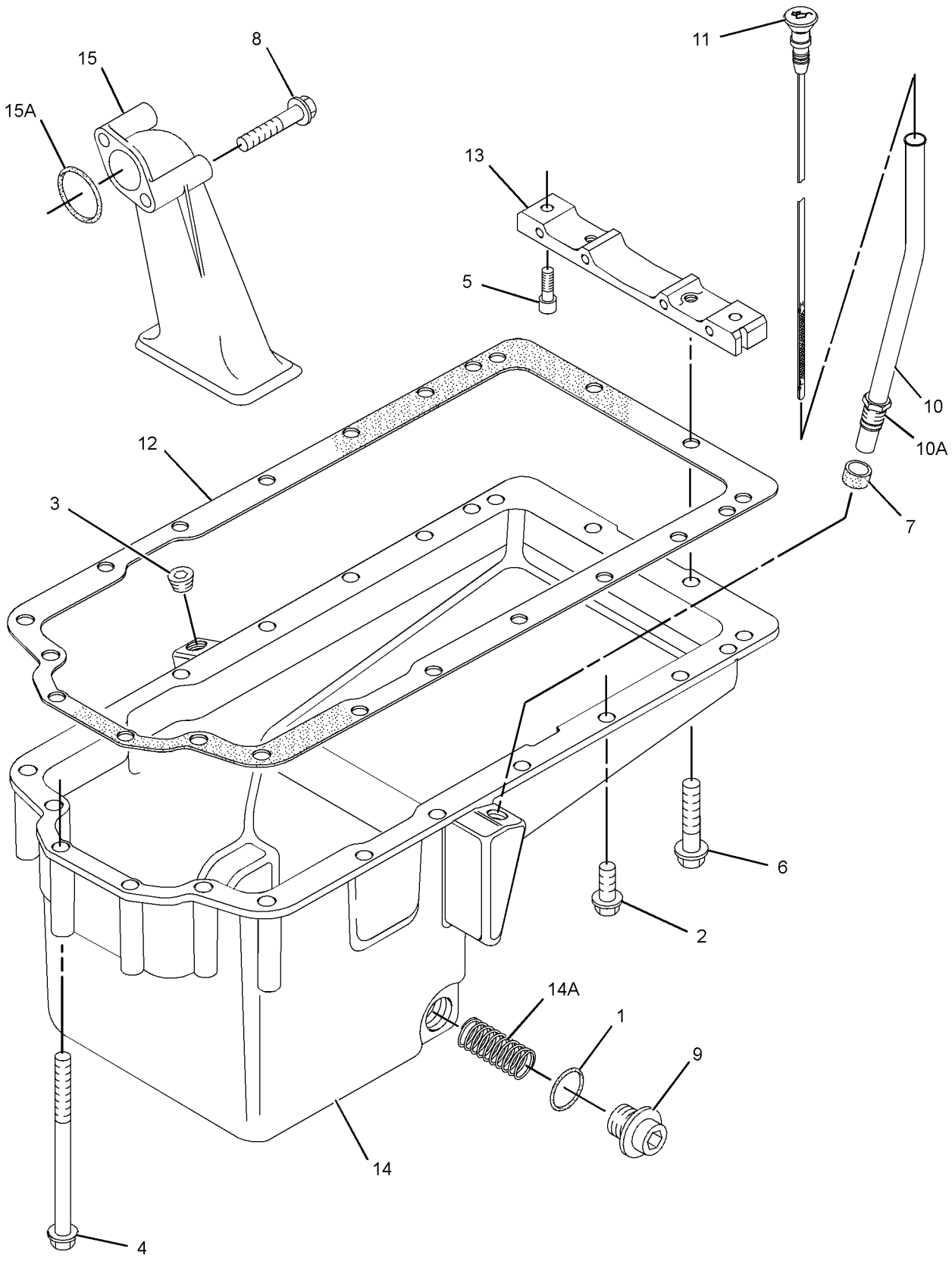

GRAPHIC #1 <END> g01313000

293-7196 PAN GP-OIL

TYPE 2

SMCS-1302 **i02625194**

NOTE	REF NO	GRAPHIC REF	PART NUMBER	QTY	PART NAME 1 2 3 4 5 6 (PRODUCT LEVEL)	SEE PAGE
	1	1	**275-9883**	2	SEAL	
M	2	1	**6I-0217**	12	BOLT (M8X1.25X20-MM)	
	3	1	**6I-0289**	1	PLUG	
M	4	1	**6I-0293**	6	BOLT (M8X1.25X80-MM)	
M	5	1	**6I-0363**	2	BOLT (M6X1X20-MM)	
M	6	1	**6I-0572**	2	BOLT (M8X1.25X20-MM)	
	7	1	**6I-1497**	1	SEAL	
M	8	1	**6I-4793**	2	BOLT (M8X1.25X50-MM)	
	9	1	**7C-0351**	2	PLUG-DRAIN (ENGINE OIL)	
	10	1	**131-4292**	1	TUBE AS	
	10A	1	**6I-4079**	1	NUT	
	11	1	**173-7373**	1	GAUGE AS-OIL LEVEL (DIPSTICK) (ENGINE)	
	12	1	**225-6005**	1	GASKET	
	13	1	**230-8094**	1	BRIDGE	
C	14	1	**293-9307**	1	PAN GP-OIL	
	14A	1	**7C-1224**	2	INSERT	
	15	1	**293-7193**	1	TUBE AS	
	15A	1	**195-6011**	1	SEAL-O-RING	

C - CHANGE FROM PREVIOUS TYPE
M - METRIC PART

293-7196 **PAN GP-OIL (**contd.**)** **i02625194**

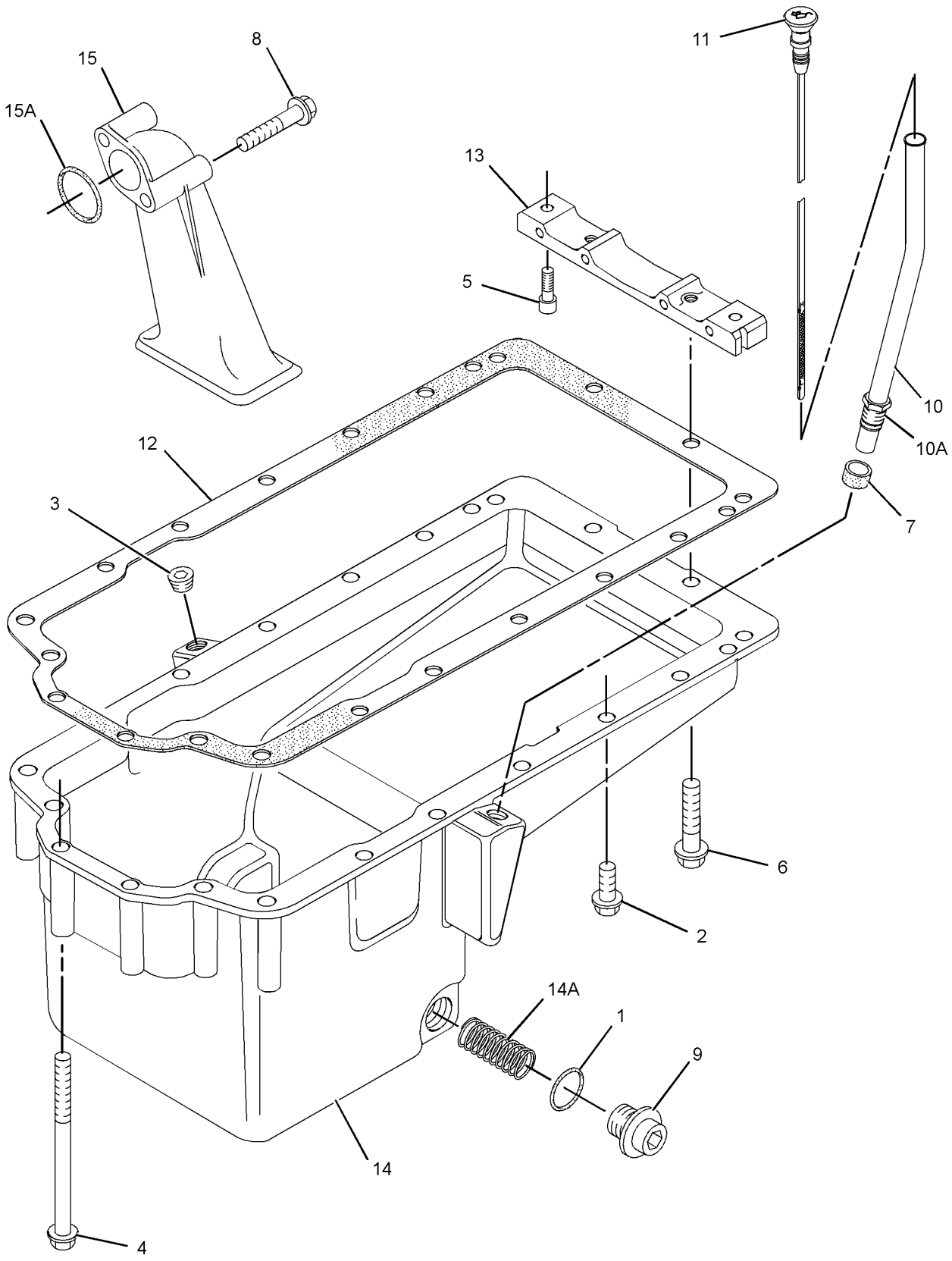

GRAPHIC #1 <END> g01313000

293-7196 PAN GP-OIL

TYPE 3

SMCS-1302 **i07003524**

NOTE	REF NO	GRAPHIC REF	PART NUMBER	QTY	PART NAME 1 2 3 4 5 6 (PRODUCT LEVEL)	SEE PAGE
	1	1	**335-7585**	2	SEAL	
M	2	1	**6I-0217**	12	BOLT (M8X1.25X20-MM)	
	3	1	**6I-0289**	1	PLUG	
M	4	1	**6I-0293**	6	BOLT (M8X1.25X80-MM)	
M	5	1	**8T-0269**	2	BOLT-SOCKET HEAD (M6X1X20-MM)	
M	6	1	**6I-0572**	2	BOLT (M8X1.25X20-MM)	
	7	1	**6I-1497**	1	SEAL	
M	8	1	**6I-4793**	2	BOLT (M8X1.25X50-MM)	
	9	1	**7C-0351**	2	PLUG-DRAIN (ENGINE OIL)	
	10	1	*475-2615*	1	TUBE AS	
	10A	1	**6I-4079**	1	NUT	
	10B	1	**475-2631**	1	TUBE	
	11	1	**173-7373**	1	GAUGE AS-OIL LEVEL (DIPSTICK) (ENGINE)	
	12	1	**471-2882**	1	GASKET	
	13	1	**230-8094**	1	BRIDGE	
C	14	1	**371-6668**	1	PAN-OIL	
	15	1	**293-7193**	1	TUBE AS	
	15A	1	**195-6011**	1	SEAL-O-RING	
F		1	**275-9883**	2	SEAL	

C - CHANGE FROM PREVIOUS TYPE
F - NOT SHOWN
M - METRIC PART

293-7196 **PAN GP-OIL (**contd.**)** **i07003524**

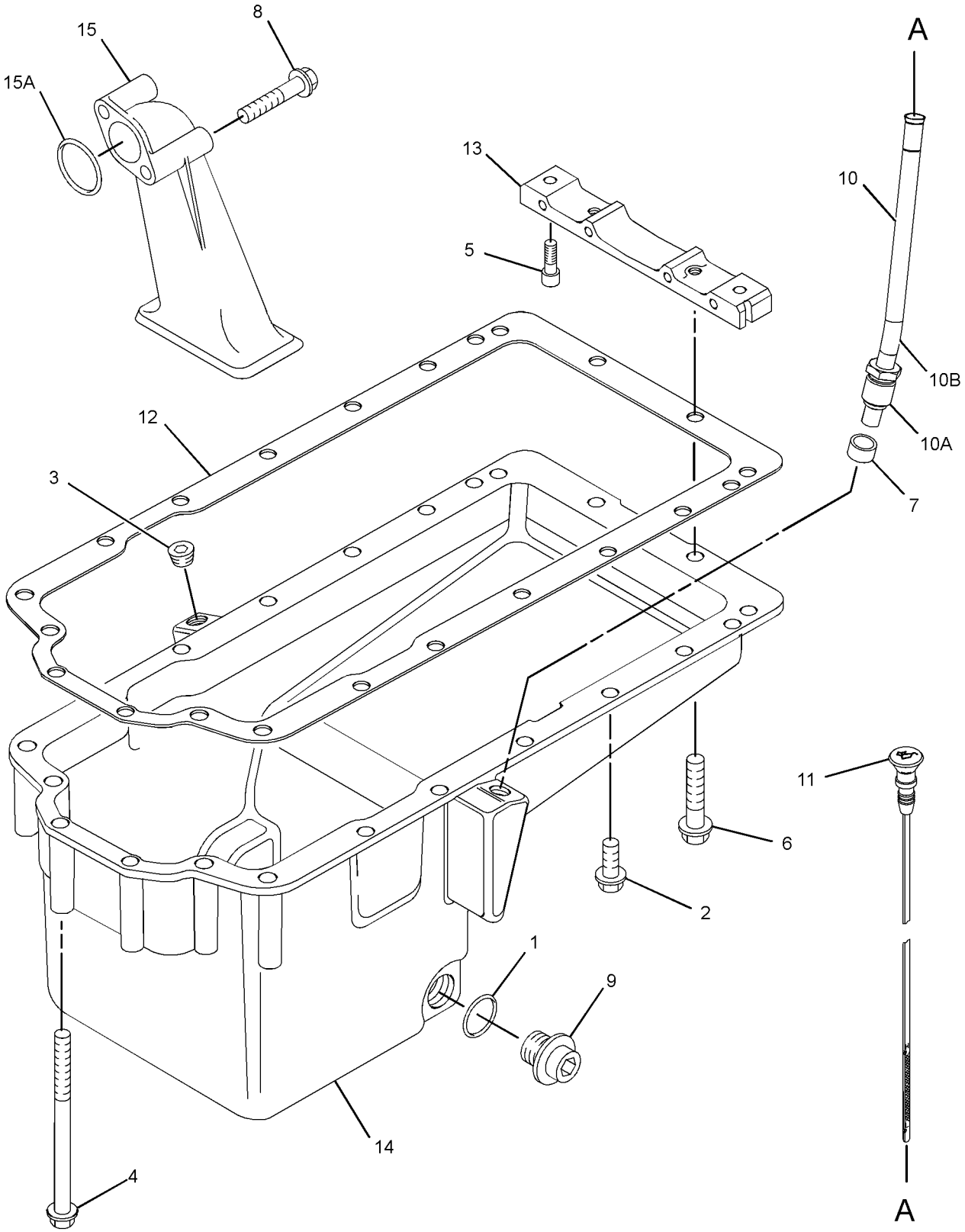

GRAPHIC #1 <END> g06208304

303-2125 PAN GP-OIL

SMCS-1302 **i06901834**

NOTE	REF NO	GRAPHIC REF	PART NUMBER	QTY	PART NAME 1 2 3 4 5 6 (PRODUCT LEVEL)	SEE PAGE
	1	1	**6I-0289**	1	PLUG	
M	2	1	**178-3336**	2	NUT-HEX FLANGE (M8X1.25-THD)	
M	3	1	**6I-0292**	5	BOLT (M8X1.25X140-MM)	
M	4	1	**6I-0293**	12	BOLT (M8X1.25X80-MM)	
M	5	1	**8T-0269**	2	BOLT-SOCKET HEAD (M6X1X20-MM)	
	6	1	**6I-1497**	1	SEAL	
	7	1	**7C-0351**	2	PLUG-DRAIN (ENGINE OIL)	
	8	1	**067-6213**	1	GASKET	
M	9	1	**359-9666**	1	BOLT-FLANGE HEAD (M8X1.25X130-MM)	
M	10	1	**101-3895**	2	BOLT (M8X1.25X35-MM)	
	11	1	**124-7702**	1	TUBE AS	
	11A	1	**6I-4079**	1	NUT	
	12	1	**131-4291**	1	GAUGE AS-OIL LEVEL (DIPSTICK) (ENGINE)	
	13	1	**155-4828**	2	STUD	
	14	1	**230-8094**	1	BRIDGE	
	15	1	**471-2881**	1	GASKET-SUMP	
	16	1	**237-5933**	1	TUBE-OIL SUCTION	
	17	1	**335-7585**	2	SEAL	
	18	1	**303-2124**	1	PAN-OIL	
F		1	**275-9883**	2	SEAL	

F - NOT SHOWN
M - METRIC PART

303-2125 **PAN GP-OIL (**contd.**)** **i06901834**

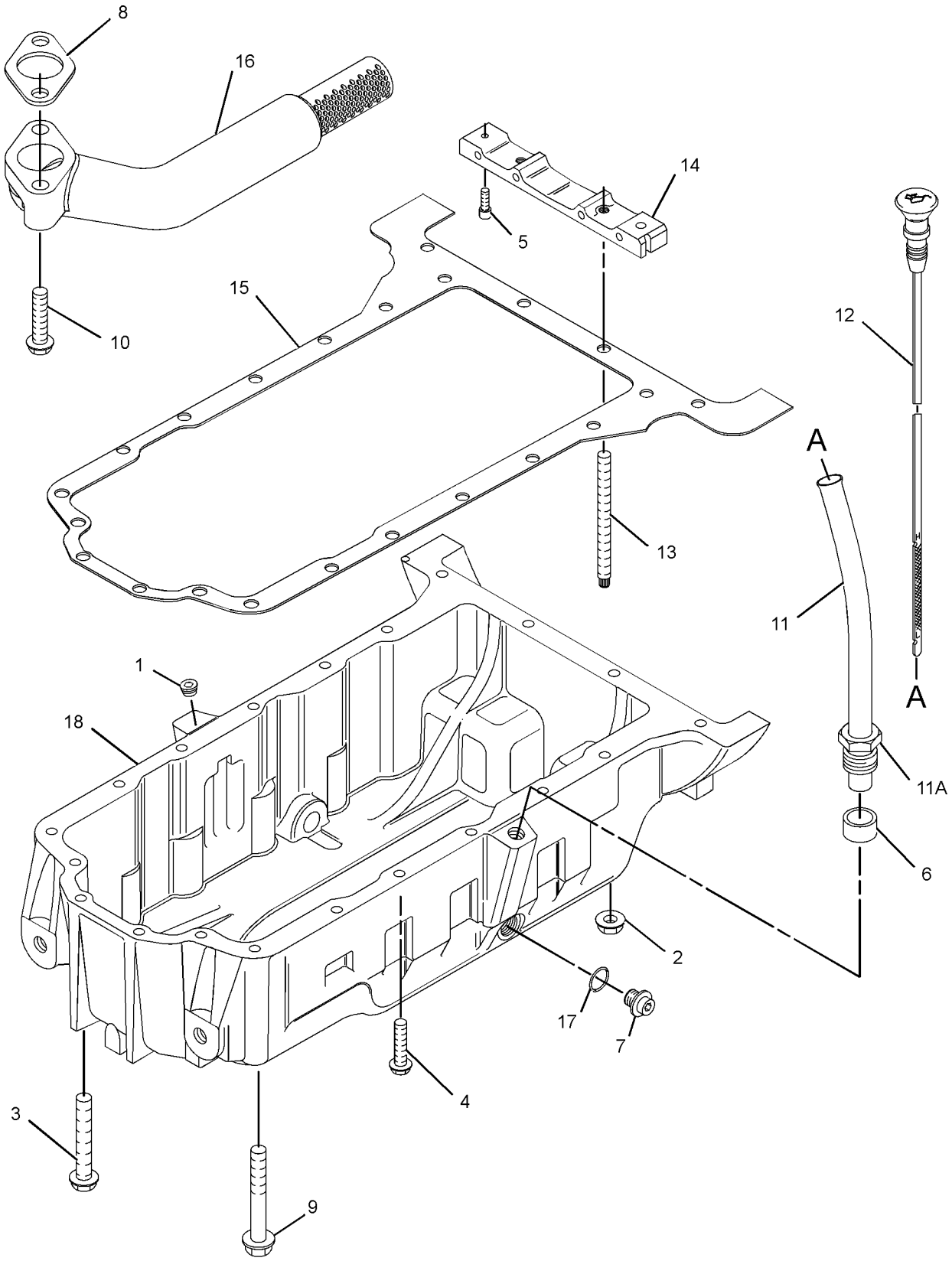

GRAPHIC #1 <END> g06201005

232-7442 PISTON & ROD GP

S/N: 3341-25630
ALSO AN ATTACHMENT

SMCS-1225 **i05296265**

NOTE	REF NO	GRAPHIC REF	PART NUMBER	QTY	PART NAME 1 2 3 4 5 6 (PRODUCT LEVEL)	SEE PAGE
	1	1	**225-5437**	4	PISTON AS	
					(EACH INCLUDES)	
AB		1	**288-1394**		PISTON AS (0.5-MM OS)	
AB		1	**288-1395**		PISTON AS (1-MM OS)	
	2	1	**124-3536**	2	RING-RETAINING	
	3	1	**225-5436**	1	KIT-PISTON RING	
AB		1	**334-2318**		KIT-PISTON RING (1-MM OS) (1-MM OS)	
AB		1	**334-2319**		KIT-PISTON RING (0.5-MM OS) (0.5-MM OS)	
J	4	1	**225-5441**	4	ROD AS-CONNECTING (GRADE L) (L)	
					—OR—	
J		1	**225-5451**	4	ROD AS-CONNECTING (GRADE K) (K)	
					—OR—	
J		1	**225-5453**	4	ROD AS-CONNECTING (GRADE J) (J)	
					—OR—	
J		1	**225-5454**	4	ROD AS-CONNECTING (GRADE H) (H)	
					—OR—	
J		1	**225-5458**	4	ROD AS-CONNECTING (GRADE G) (G)	
					—OR—	
J		1	**225-5459**	4	ROD AS-CONNECTING (GRADE F) (F)	
					(EACH ROD AS INCLUDES)	
	5	1	**225-5438**	1	BUSHING	
	6	1	**225-5439**	2	BOLT-SPECIAL	

A - NOT PART OF THIS GROUP
B - USE AS REQUIRED
J - ENSURE THAT CORRECT ROD LENGTH IS FITTED

232-7442 **PISTON & ROD GP (**contd.**)** **i05296265**

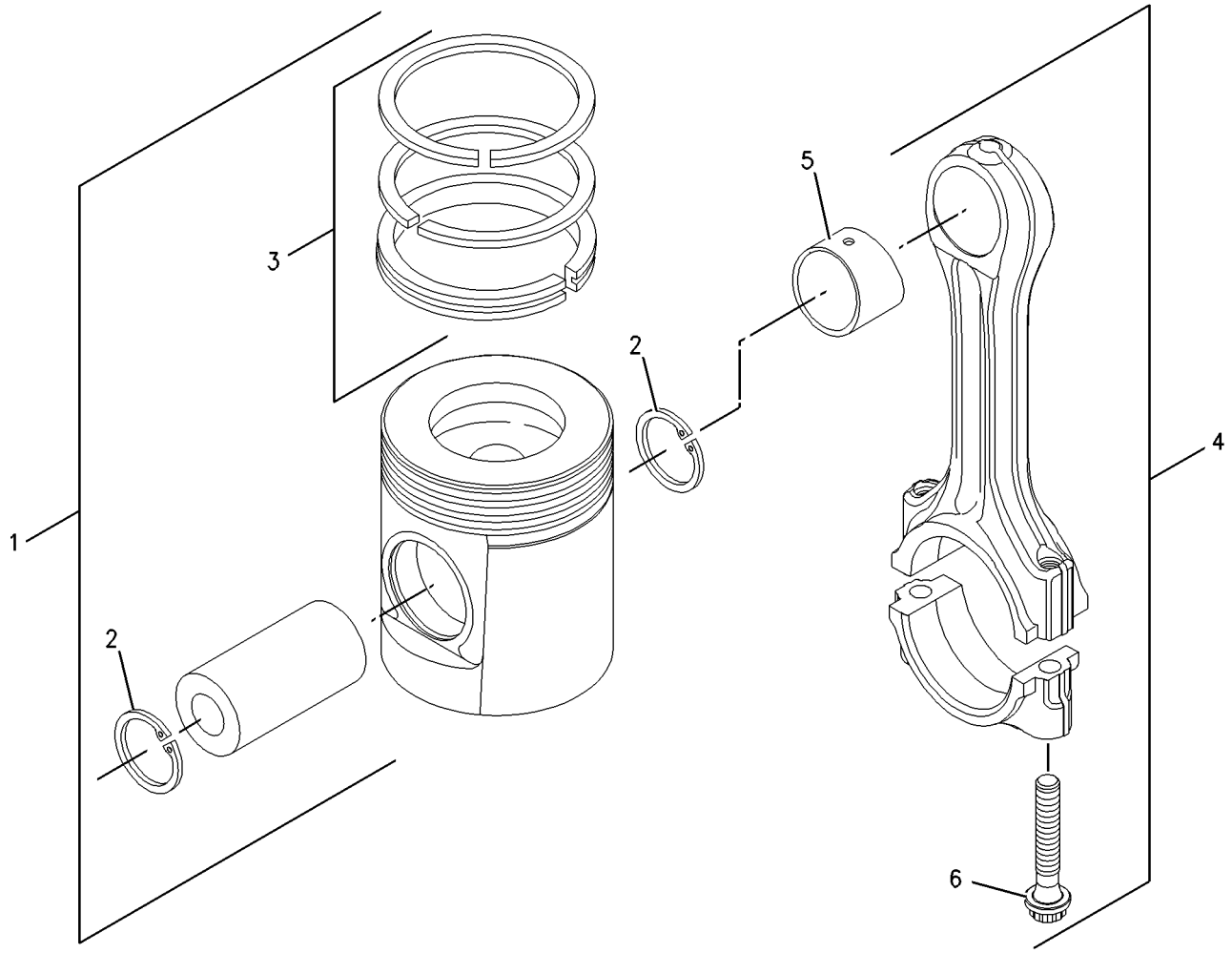

GRAPHIC #1 <END> g00909669

232-7442 PISTON & ROD GP

ALSO AN ATTACHMENT

TYPE 1

SMCS-1225 **i07144533**

NOTE	REF NO	GRAPHIC REF	PART NUMBER	QTY	PART NAME 1 2 3 4 5 6 (PRODUCT LEVEL)	SEE PAGE
	1	1	**225-5437**	4	PISTON AS	
					(EACH PISTON AS INCLUDES)	
	1A	1	**124-3536**	2	RING-RETAINING	
AB		1	**288-1394**		PISTON AS (0.5-MM OS)	
AB		1	**288-1395**		PISTON AS (1-MM OS)	
	1B	1	**225-5436**	1	KIT-PISTON RING	
AB		1	**334-2318**		KIT-PISTON RING (1-MM OS)	
AB		1	**334-2319**		KIT-PISTON RING (0.5-MM OS)	
BJ	2	1	**359-0724**	4	ROD AS-CONNECTING (GRADE B)	
					—OR—	
BJ		1	**359-0723**	4	ROD AS-CONNECTING (GRADE P)	
					—OR—	
BJ		1	**359-0722**	4	ROD AS-CONNECTING (GRADE G)	
					—OR—	
BJ		1	**359-0721**	4	ROD AS-CONNECTING (GRADE W)	
					—OR—	
BJ		1	**359-0720**	4	ROD AS-CONNECTING (GRADE O)	
					—OR—	
BJ		1	**359-0719**	4	ROD AS-CONNECTING (GRADE R)	
					(EACH ROD AS INCLUDES)	
	2A	1	**225-5438**	1	BUSHING	
M	2B	1	**323-9312**	2	BOLT (M10X1X50-MM)	

A - NOT PART OF THIS GROUP
B - USE AS REQUIRED
J - ENSURE THAT CORRECT ROD LENGTH IS FITTED
M - METRIC PART

232-7442 **PISTON & ROD GP (**contd.**)** **i07144533**

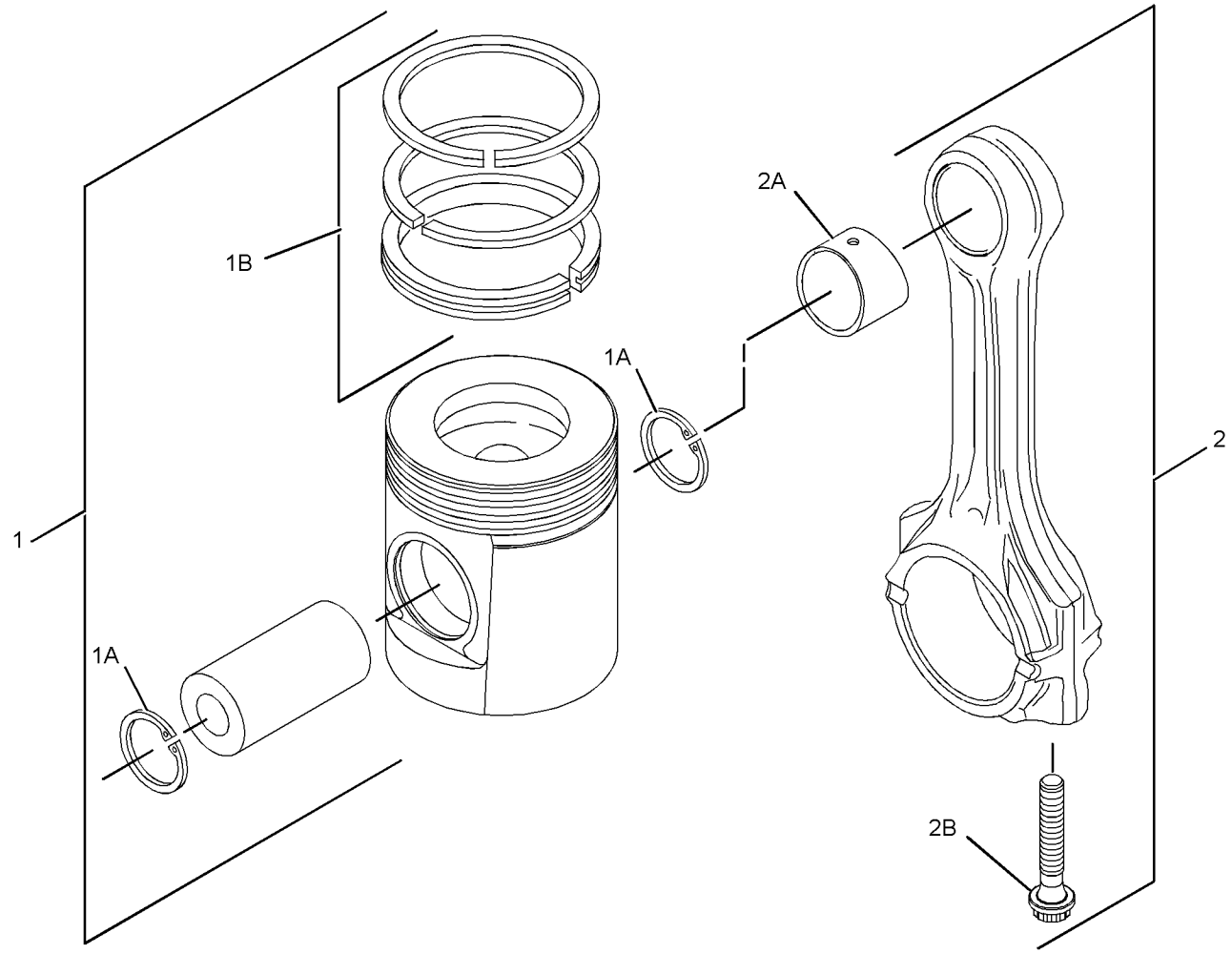

GRAPHIC #1 <END> g02188983

232-7442 PISTON & ROD GP

ALSO AN ATTACHMENT

TYPE 2

SMCS-1225 **i08436307**

NOTE	REF NO	GRAPHIC REF	PART NUMBER	QTY	PART NAME 1 2 3 4 5 6 (PRODUCT LEVEL)	SEE PAGE
CH	1	1	**508-1898**	4	KIT-PISTON	
					(EACH INCLUDES)	
					—OR—	
	1A	1	**124-3536**	2	RING-RETAINING	
					(EACH KIT PISTON ALSO INCLUDES PISTON RINGS, PISTON & PIN)	
AFP			**508-1906**	4	KIT-PISTON (1-MM OS)	
					(EACH INCLUDES)	
					—OR—	
AF			**124-3536**	2	RING-RETAINING	
					(EACH KIT PISTON ALSO INCLUDES PISTON RINGS, PISTON & PIN)	
AFN			**508-1902**	4	KIT-PISTON (0.5-MM OS)	
					(EACH INCLUDES)	
AF			**124-3536**	2	RING-RETAINING	
					(EACH KIT PISTON ALSO INCLUDES PISTON RINGS, PISTON & PIN)	
BJ	2	1	**359-0724**	4	ROD AS-CONNECTING (GRADE B)	
					—OR—	
BJ		1	**359-0723**	4	ROD AS-CONNECTING (GRADE P)	
					—OR—	
BJ		1	**359-0722**	4	ROD AS-CONNECTING (GRADE G)	
					—OR—	
BJ		1	**359-0721**	4	ROD AS-CONNECTING (GRADE W)	
					—OR—	
BJ		1	**359-0720**	4	ROD AS-CONNECTING (GRADE O)	
					—OR—	
BJ		1	**359-0719**	4	ROD AS-CONNECTING (GRADE R)	
					(EACH ROD AS INCLUDES)	
	2A	1	**276-7478**	1	BUSHING	
M	2B	1	**323-9312**	2	BOLT (M10X1X50-MM)	
					AVAILABLE REPAIR KIT(S):	
H			**276-7476**	1	KIT-PISTON RING (STANDARD)	
					(INCLUDES PISTON RINGS)	
N			**380-2065**	1	KIT-PISTON RING (0.5-MM OS)	
					(INCLUDES PISTON RINGS)	
P			**466-4849**	1	KIT-PISTON RING (1-MM OS)	
					(INCLUDES PISTON RINGS)	

A - NOT PART OF THIS GROUP
B - USE AS REQUIRED
C - CHANGE FROM PREVIOUS TYPE
F - NOT SHOWN
H - KIT MARKED H SERVICES PART(S) MARKED H
J - ENSURE THAT CORRECT ROD LENGTH IS FITTED
M - METRIC PART
N - KIT MARKED N SERVICES PART(S) MARKED N
P - KIT MARKED P SERVICES PART(S) MARKED P

232-7442 **PISTON & ROD GP (**contd.**)** **i08436307**

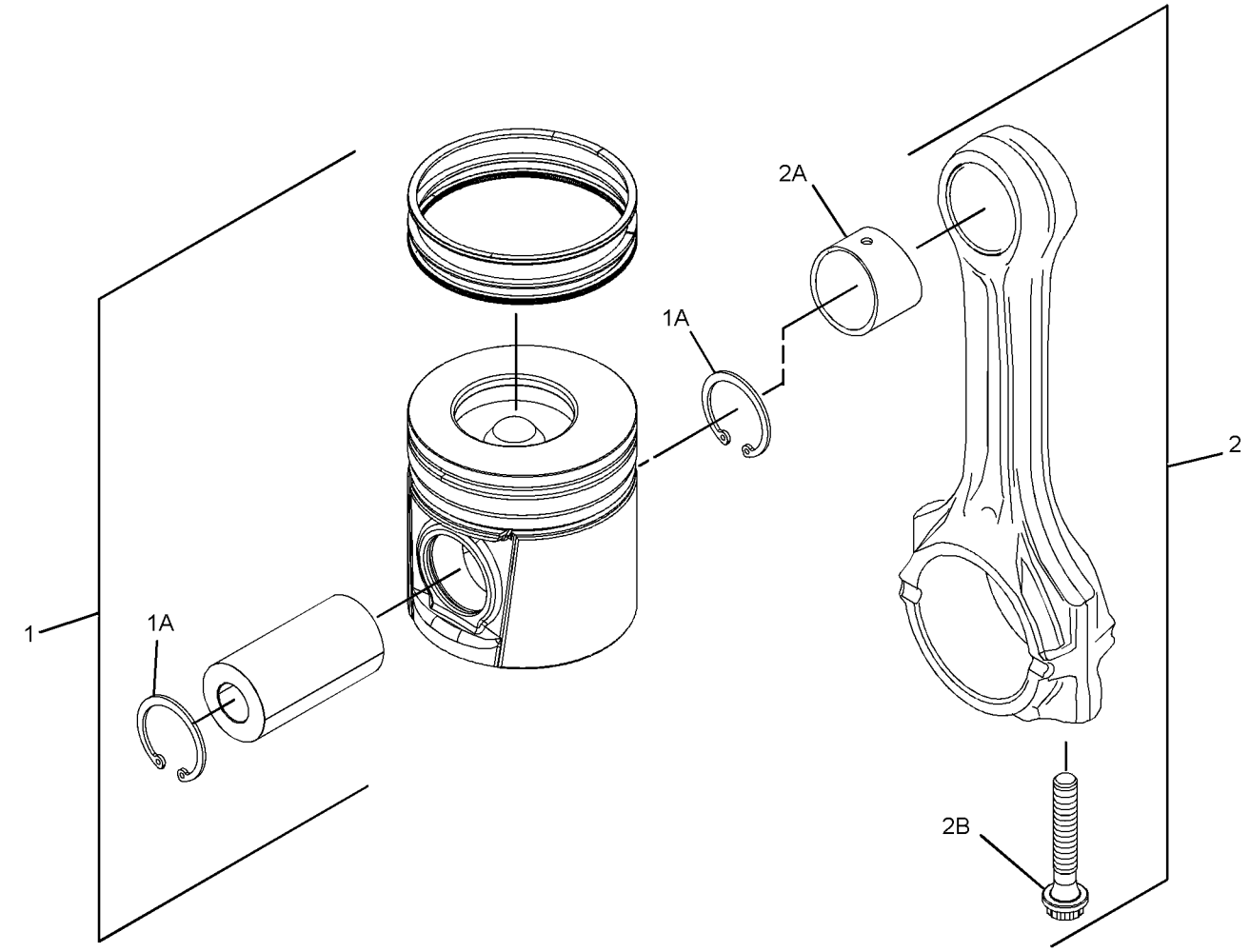

GRAPHIC #1 <END> g06208833

233-7233 PISTON & ROD GP

S/N: 3341-25630

SMCS-1225 **i07144516**

NOTE	REF NO	GRAPHIC REF	PART NUMBER	QTY	PART NAME 1 2 3 4 5 6 (PRODUCT LEVEL)	SEE PAGE
	1	1	**233-7232**	4	PISTON GP	
					(EACH PISTON AS INCLUDES)	
	2	1	**124-3536**	2	RING-RETAINING	
	3	1	**233-7231**	1	RING GP-PISTON	
BJ	4	1	**225-5441**	4	ROD AS-CONNECTING (GRADE L)	
					—OR—	
BJ		1	**225-5451**	4	ROD AS-CONNECTING (GRADE K)	
					—OR—	
BJ		1	**225-5453**	4	ROD AS-CONNECTING (GRADE J)	
					—OR—	
BJ		1	**225-5454**	4	ROD AS-CONNECTING (GRADE H)	
					—OR—	
BJ		1	**225-5458**	4	ROD AS-CONNECTING (GRADE G)	
					—OR—	
BJ		1	**225-5459**	4	ROD AS-CONNECTING (GRADE F)	
					(EACH ROD AS INCLUDES)	
	5	1	**225-5438**	1	BUSHING	
	6	1	**225-5439**	2	BOLT-SPECIAL	
					AVAILABLE REPAIR KIT(S):	
AB			**288-9942**	1	PISTON AS (0.5-MM OS)	
					(INCLUDES RETAINING RINGS & PISTON RING KIT)	
AB			**288-9943**	1	PISTON AS (1-MM OS)	
					(INCLUDES RETAINING RINGS & PISTON RING KIT)	
AB			**334-1996**	1	KIT-PISTON RING (0.5-MM OS)	
AB			**334-1997**	1	KIT-PISTON RING (1-MM OS)	

A - NOT PART OF THIS GROUP
B - USE AS REQUIRED
J - ENSURE THAT CORRECT ROD LENGTH IS FITTED

233-7233 **PISTON & ROD GP (**contd.**)** **i07144516**

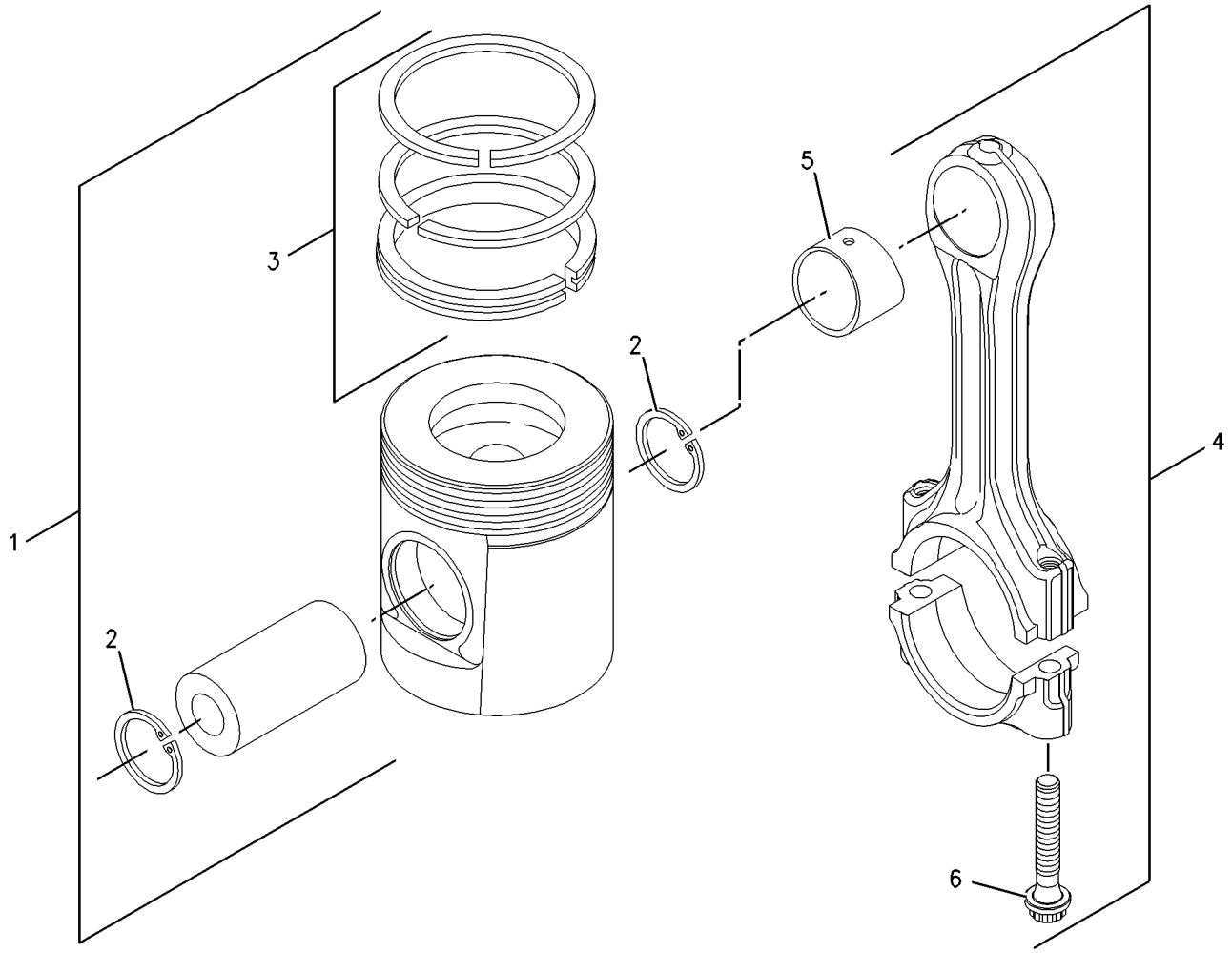

GRAPHIC #1 <END> g00909669

233-7233 PISTON & ROD GP

SMCS-1225 **i07144526**

NOTE	REF NO	GRAPHIC REF	PART NUMBER	QTY	PART NAME 1 2 3 4 5 6 (PRODUCT LEVEL)	SEE PAGE
	1	1	**233-7232**	4	PISTON GP	
					(EACH PISTON AS INCLUDES)	
	1A	1	**124-3536**	2	RING-RETAINING	
	1B	1	**233-7231**	1	RING GP-PISTON	
AB		1	**334-1996**		KIT-PISTON RING (0.5-MM OS)	
AB		1	**334-1997**		KIT-PISTON RING (1-MM OS)	
AB		1	**288-9942**		PISTON AS (0.5-MM OS)	
AB		1	**288-9943**		PISTON AS (1-MM OS)	
BJ	2	1	**359-0724**	4	ROD AS-CONNECTING (GRADE B)	
					—OR—	
BJ		1	**359-0723**	4	ROD AS-CONNECTING (GRADE P)	
					—OR—	
BJ		1	**359-0722**	4	ROD AS-CONNECTING (GRADE G)	
					—OR—	
BJ		1	**359-0721**	4	ROD AS-CONNECTING (GRADE W)	
					—OR—	
BJ		1	**359-0720**	4	ROD AS-CONNECTING (GRADE O)	
					—OR—	
BJ		1	**359-0719**	4	ROD AS-CONNECTING (GRADE R)	
					(EACH ROD AS INCLUDES)	
	2A	1	**225-5438**	1	BUSHING	
M	2B	1	**323-9312**	2	BOLT (M10X1X50-MM)	

A - NOT PART OF THIS GROUP
B - USE AS REQUIRED
J - ENSURE THAT CORRECT ROD LENGTH IS FITTED
M - METRIC PART

233-7233 **PISTON & ROD GP (**contd.**)** **i07144526**

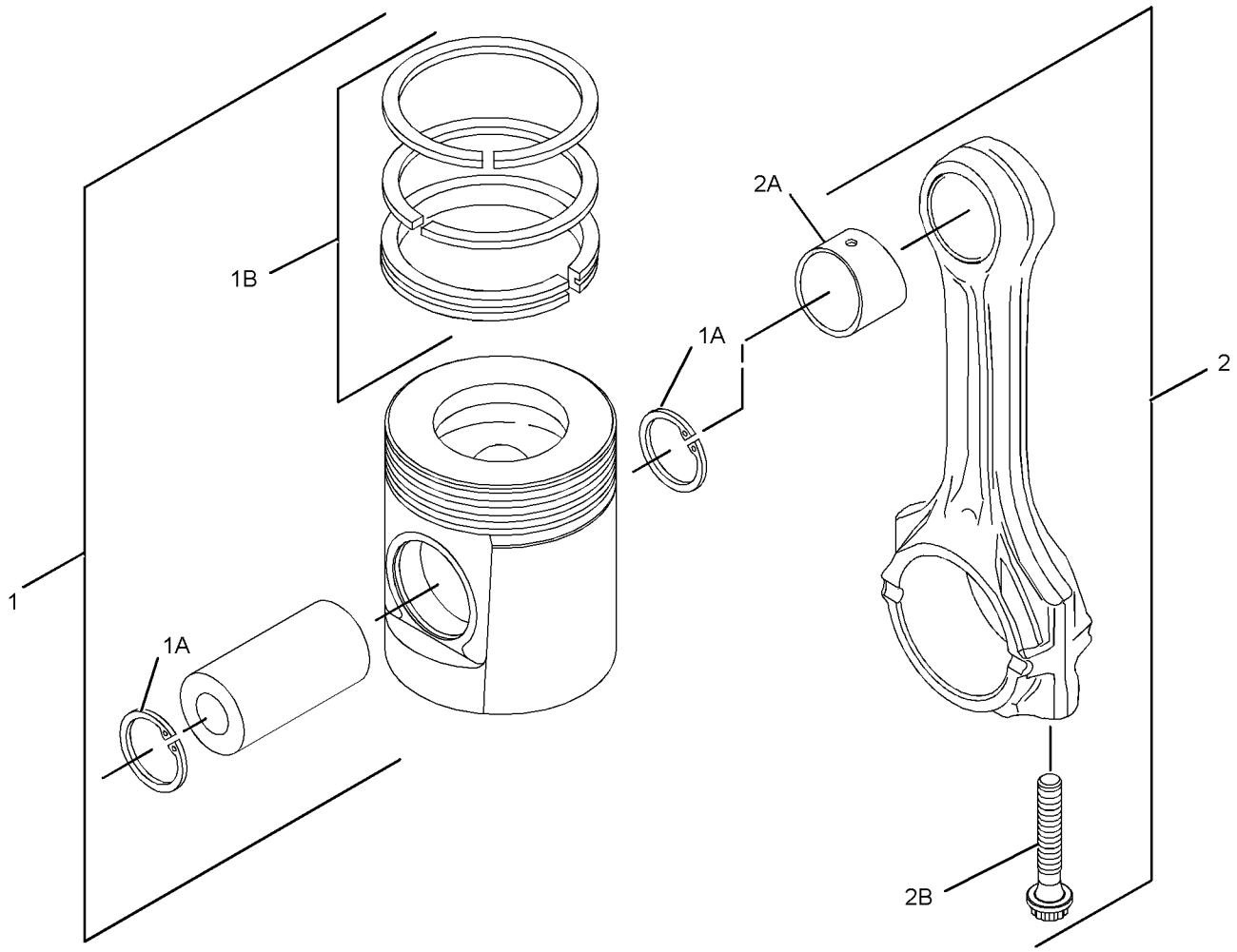

GRAPHIC #1 <END> g02189194

237-5840 PISTON & ROD GP

S/N: 3341-25630

SMCS-1225 **i05297294**

NOTE	REF NO	GRAPHIC REF	PART NUMBER	QTY	PART NAME 1 2 3 4 5 6 (PRODUCT LEVEL)	SEE PAGE
	1	1	**225-5437**	4	PISTON AS	
					(EACH PISTON AS INCLUDES)	
	2	1	**124-3536**	2	RING-RETAINING	
	3	1	**225-5436**	1	KIT-PISTON RING	
AB		1	**334-2318**		KIT-PISTON RING (1-MM OS) (1-MM OS)	
AB		1	**334-2319**		KIT-PISTON RING (0.5-MM OS) (0.5-MM OS)	
AB		1	**288-1394**		PISTON AS (0.5-MM OS)	
AB		1	**288-1395**		PISTON AS (1-MM OS)	
BJ	4	1	**225-5441**	4	ROD AS-CONNECTING (GRADE L)	
					—OR—	
BJ		1	**225-5451**	4	ROD AS-CONNECTING (GRADE K)	
					—OR—	
BJ		1	**225-5453**	4	ROD AS-CONNECTING (GRADE J)	
					—OR—	
BJ		1	**225-5454**	4	ROD AS-CONNECTING (GRADE H)	
					—OR—	
BJ		1	**225-5458**	4	ROD AS-CONNECTING (GRADE G)	
					—OR—	
BJ		1	**225-5459**	4	ROD AS-CONNECTING (GRADE F)	
					(EACH ROD AS INCLUDES)	
	5	1	**225-5438**	1	BUSHING	
	6	1	**225-5439**	2	BOLT-SPECIAL	

A - NOT PART OF THIS GROUP
B - USE AS REQUIRED
J - ENSURE THAT CORRECT ROD LENGTH IS FITTED

237-5840 **PISTON & ROD GP (**contd.**)** **i05297294**

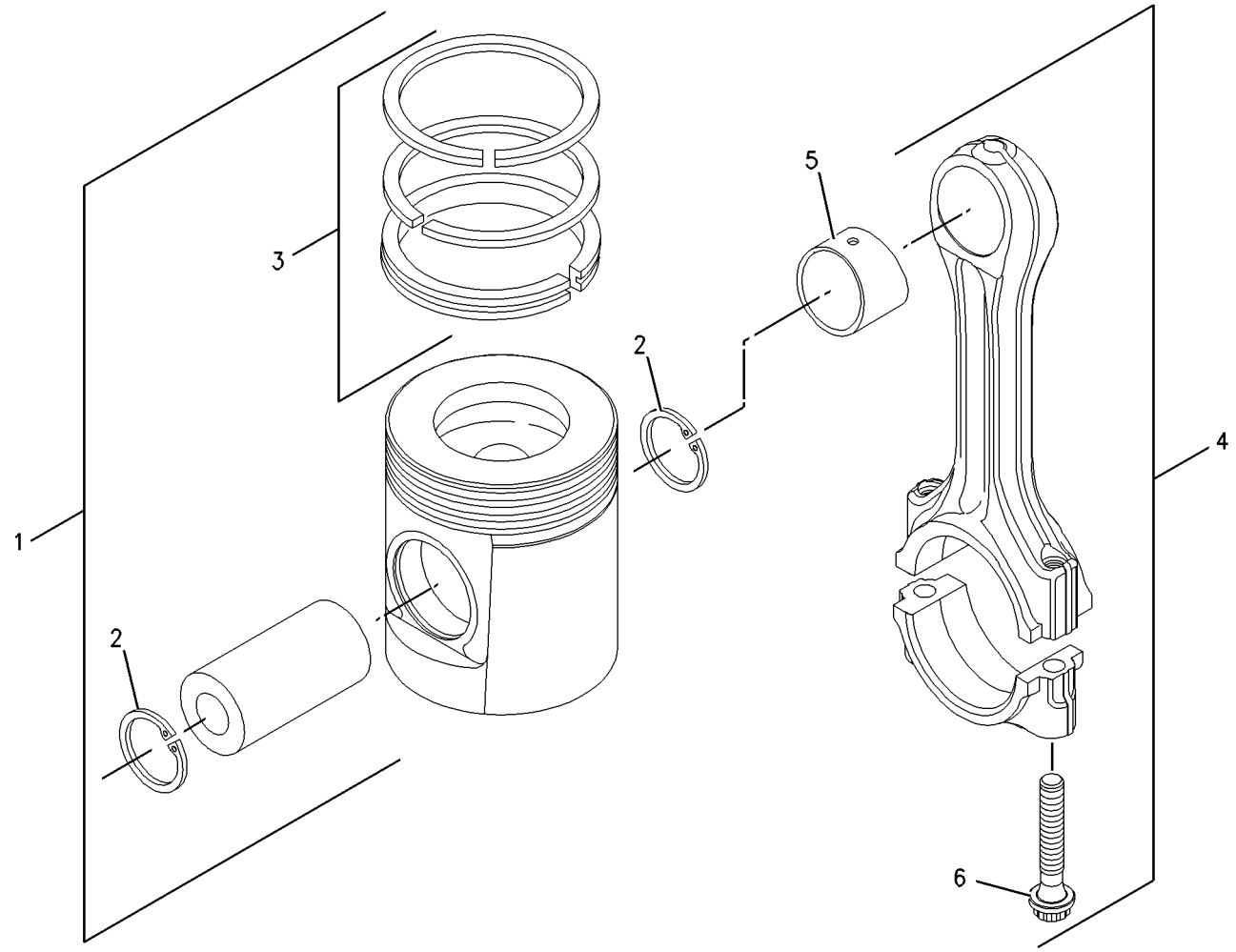

GRAPHIC #1 <END> g00909669

237-5840 PISTON & ROD GP

S/N: 33425631-UP

SMCS-1225 **i07030440**

NOTE	REF NO	GRAPHIC REF	PART NUMBER	QTY	PART NAME 1 2 3 4 5 6 (PRODUCT LEVEL)	SEE PAGE
	1	1	**508-1898**	4	KIT-PISTON	
					(EACH INCLUDES)	
	1A	1	**124-3536**	2	RING-RETAINING	
AB		1	**508-1902**		KIT-PISTON (0.5-MM OS)	
AB		1	**508-1906**		KIT-PISTON (1-MM OS)	
					(EACH KIT PISTON INCLUDES RETAINING RINGS, PISTON RINGS, PISTON, & PIN)	
BCJ	2	1	**359-0724**	4	ROD AS-CONNECTING (GRADE B)	
					—OR—	
BCJ		1	**359-0723**	4	ROD AS-CONNECTING (GRADE P)	
					—OR—	
BCJ		1	**359-0722**	4	ROD AS-CONNECTING (GRADE G)	
					—OR—	
BCJ		1	**359-0721**	4	ROD AS-CONNECTING (GRADE W)	
					—OR—	
BCJ		1	**359-0720**	4	ROD AS-CONNECTING (GRADE O)	
					—OR—	
BCJ		1	**359-0719**	4	ROD AS-CONNECTING (GRADE R)	
					(EACH ROD AS INCLUDES)	
	2A	1	**276-7478**	1	BUSHING	
M	2B	1	**323-9312**	2	BOLT (M10X1X50-MM)	

A - NOT PART OF THIS GROUP
B - USE AS REQUIRED
C - CHANGE FROM PREVIOUS TYPE
J - ENSURE THAT CORRECT ROD LENGTH IS FITTED
M - METRIC PART

237-5840 **PISTON & ROD GP** (contd.) **i07030440**

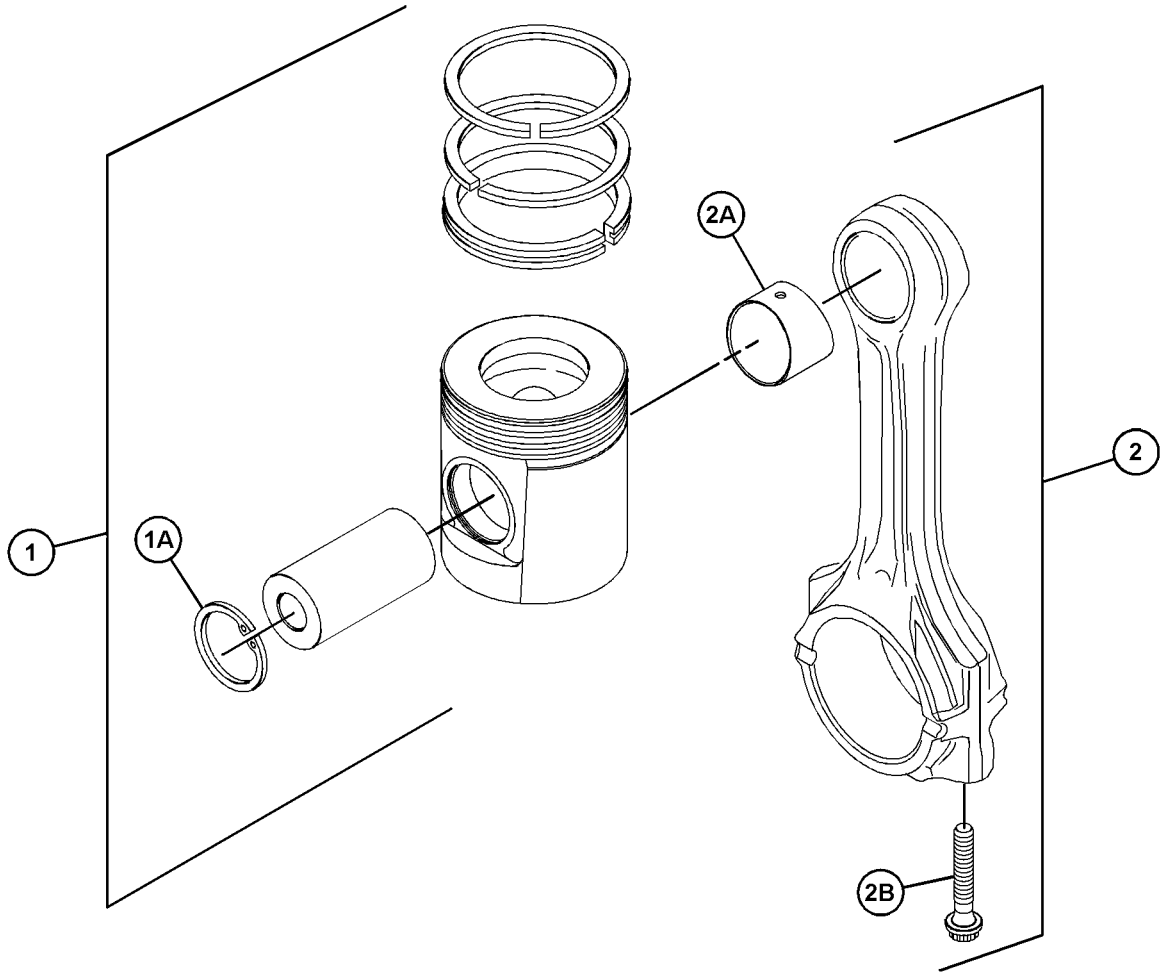

GRAPHIC #1 <END> g06219303

243-1951 PISTON & ROD GP

S/N: 3341-25630

SMCS-1225 **i05297297**

NOTE	REF NO	GRAPHIC REF	PART NUMBER	QTY	PART NAME 1 2 3 4 5 6 (PRODUCT LEVEL)	SEE PAGE
	1	1	**233-7232**	4	PISTON GP	
					(EACH PISTON AS INCLUDES)	
	1A	1	**124-3536**	2	RING-RETAINING	
	1B	1	**233-7231**	1	RING GP-PISTON	
AB		1	**334-1996**		KIT-PISTON RING (0.5-MM OS) (0.5-MM OS)	
AB		1	**334-1997**		KIT-PISTON RING (1-MM OS) (1-MM OS)	
AB		1	**288-9942**		PISTON AS (0.5-MM OS)	
AB		1	**288-9943**		PISTON AS (1-MM OS)	
BJ	2	1	**225-5441**	4	ROD AS-CONNECTING (GRADE L)	
					—OR—	
BJ		1	**225-5451**	4	ROD AS-CONNECTING (GRADE K)	
					—OR—	
BJ		1	**225-5453**	4	ROD AS-CONNECTING (GRADE J)	
					—OR—	
BJ		1	**225-5454**	4	ROD AS-CONNECTING (GRADE H)	
					—OR—	
BJ		1	**225-5458**	4	ROD AS-CONNECTING (GRADE G)	
					—OR—	
BJ		1	**225-5459**	4	ROD AS-CONNECTING (GRADE F)	
					(EACH ROD AS INCLUDES)	
	3	1	**225-5438**	1	BUSHING	
	4	1	**225-5439**	2	BOLT-SPECIAL	

A - NOT PART OF THIS GROUP
B - USE AS REQUIRED
J - ENSURE THAT CORRECT ROD LENGTH IS FITTED

243-1951 **PISTON & ROD GP (**contd.**)** **i05297297**

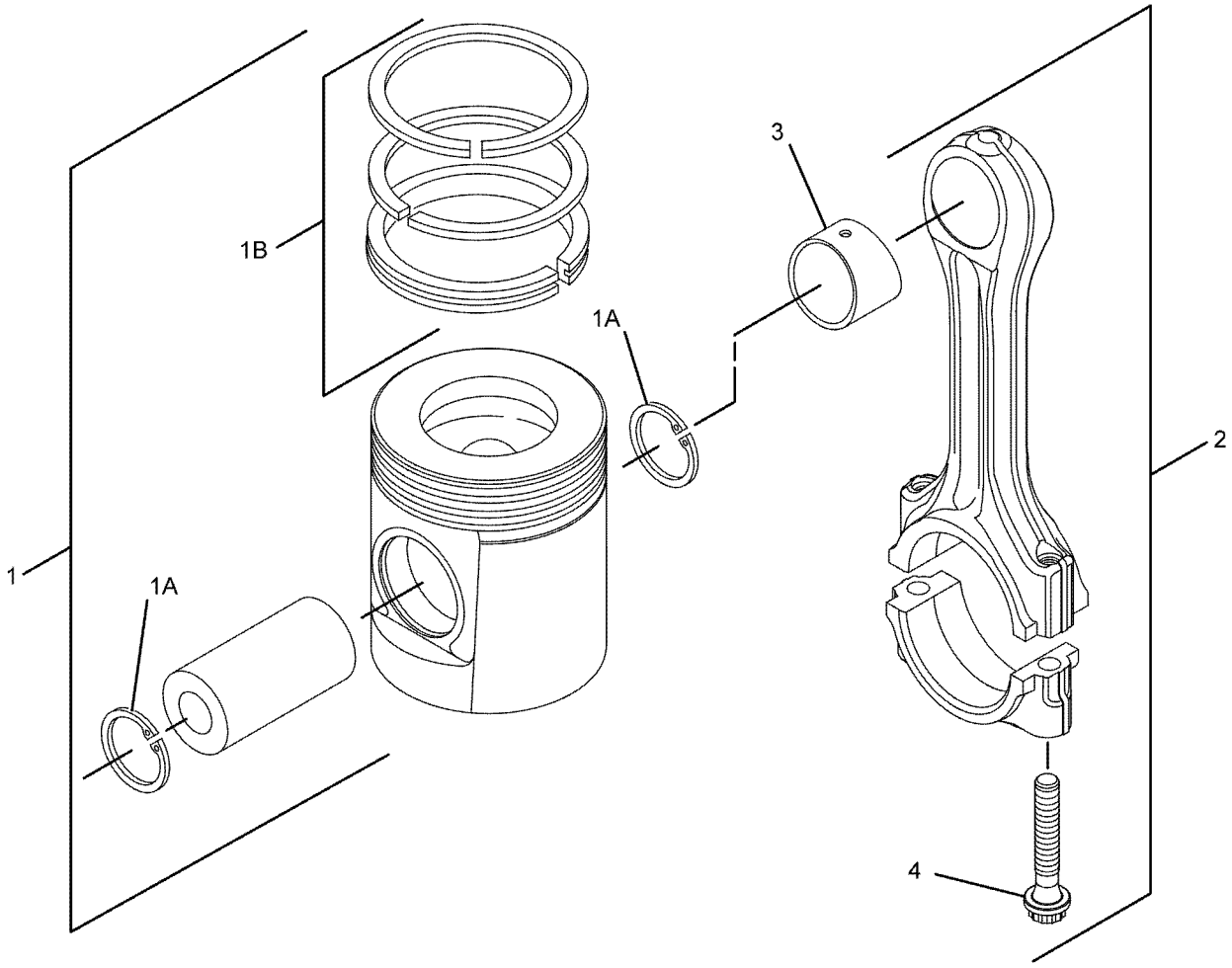

GRAPHIC #1 <END> g01022088

243-1951 PISTON & ROD GP

S/N: 33425631-UP

SMCS-1225 **i05297298**

NOTE	REF NO	GRAPHIC REF	PART NUMBER	QTY	PART NAME 1 2 3 4 5 6 (PRODUCT LEVEL)	SEE PAGE
	1	1	**233-7232**	4	PISTON GP	
					(EACH PISTON AS INCLUDES)	
	1A	1	**124-3536**	2	RING-RETAINING	
	1B	1	**233-7231**	1	RING GP-PISTON	
AB		1	**334-1996**		KIT-PISTON RING (0.5-MM OS) (0.5-MM OS)	
AB		1	**334-1997**		KIT-PISTON RING (1-MM OS) (1-MM OS)	
AB		1	**288-9942**		PISTON AS (0.5-MM OS)	
AB		1	**288-9943**		PISTON AS (1-MM OS)	
BJ	2	1	**359-0724**	4	ROD AS-CONNECTING (GRADE B)	
					—OR—	
BJ		1	**359-0723**	4	ROD AS-CONNECTING (GRADE P)	
					—OR—	
BJ		1	**359-0722**	4	ROD AS-CONNECTING (GRADE G)	
					—OR—	
BJ		1	**359-0721**	4	ROD AS-CONNECTING (GRADE W)	
					—OR—	
BJ		1	**359-0720**	4	ROD AS-CONNECTING (GRADE O)	
					—OR—	
BJ		1	**359-0719**	4	ROD AS-CONNECTING (GRADE R)	
					(EACH ROD AS INCLUDES)	
	3	1	**225-5438**	1	BUSHING	
M	4	1	**323-9312**	2	BOLT (M10X1X50-MM)	

A - NOT PART OF THIS GROUP
B - USE AS REQUIRED
J - ENSURE THAT CORRECT ROD LENGTH IS FITTED
M - METRIC PART

243-1951 **PISTON & ROD GP (**contd.**)** **i05297298**

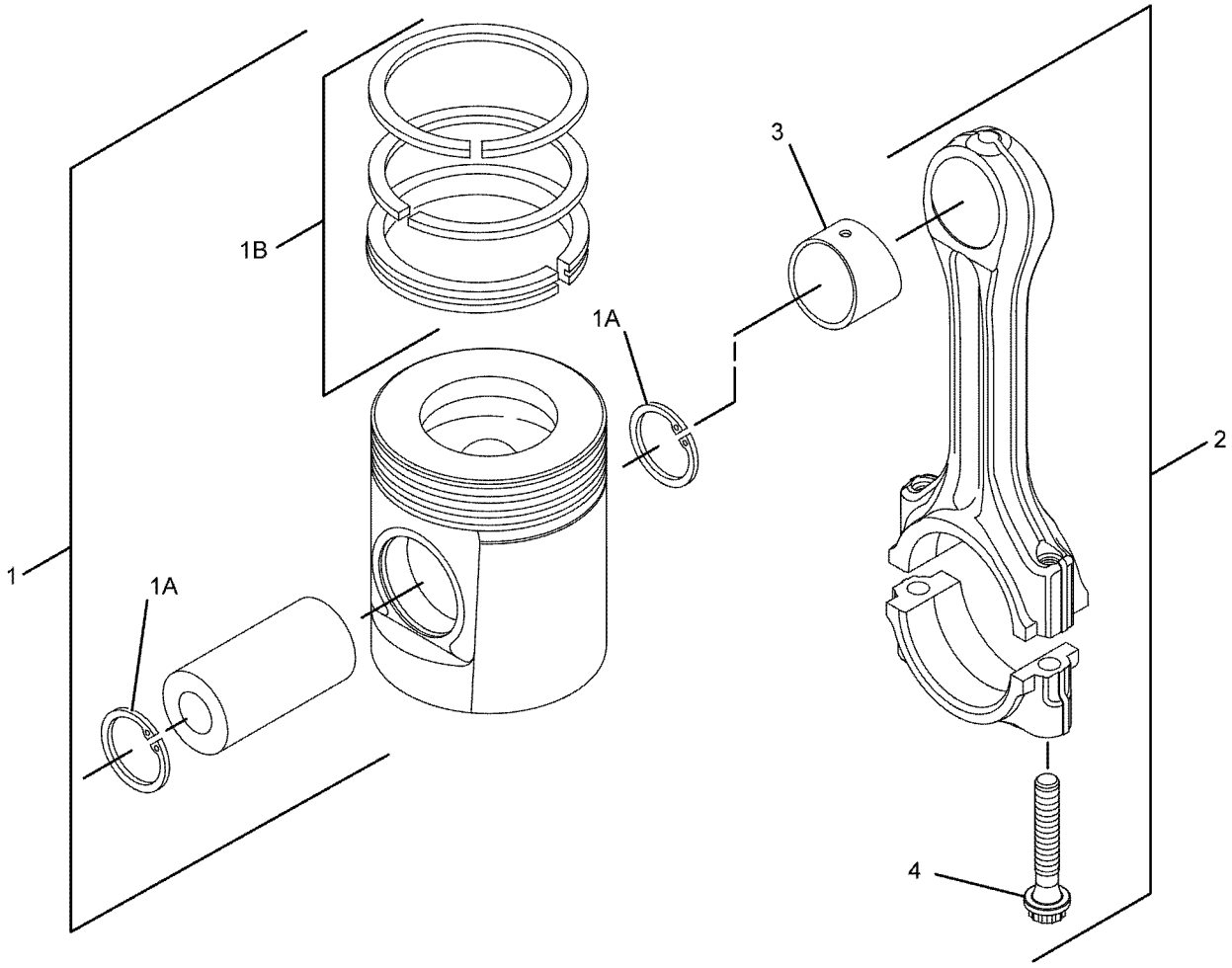

GRAPHIC #1 <END> g01022088

243-3181 PISTON & ROD GP

S/N: 3341-25630
ALSO AN ATTACHMENT

SMCS-1225 **i05297299**

NOTE	REF NO	GRAPHIC REF	PART NUMBER	QTY	PART NAME 1 2 3 4 5 6 (PRODUCT LEVEL)	SEE PAGE
	1	1	**225-5437**	4	PISTON AS	
					(EACH PISTON AS INCLUDES)	
	2	1	**124-3536**	2	RING-RETAINING	
	3	1	**225-5436**	1	KIT-PISTON RING	
AB		1	**334-2318**		KIT-PISTON RING (1-MM OS) (1-MM OS)	
AB		1	**334-2319**		KIT-PISTON RING (0.5-MM OS) (0.5-MM OS)	
AB		1	**288-1394**		PISTON AS (0.5-MM OS)	
AB		1	**288-1395**		PISTON AS (1-MM OS)	
BJ	4	1	**225-5441**	4	ROD AS-CONNECTING (GRADE L)	
					—OR—	
BJ		1	**225-5451**	4	ROD AS-CONNECTING (GRADE K)	
					—OR—	
BJ		1	**225-5453**	4	ROD AS-CONNECTING (GRADE J)	
					—OR—	
BJ		1	**225-5454**	4	ROD AS-CONNECTING (GRADE H)	
					—OR—	
BJ		1	**225-5458**	4	ROD AS-CONNECTING (GRADE G)	
					—OR—	
BJ		1	**225-5459**	4	ROD AS-CONNECTING (GRADE F)	
					(EACH ROD AS INCLUDES)	
	5	1	**225-5438**	1	BUSHING	
	6	1	**225-5439**	2	BOLT-SPECIAL	

A - NOT PART OF THIS GROUP
B - USE AS REQUIRED
J - ENSURE THAT CORRECT ROD LENGTH IS FITTED

243-3181 **PISTON & ROD GP (**contd.**)** **i05297299**

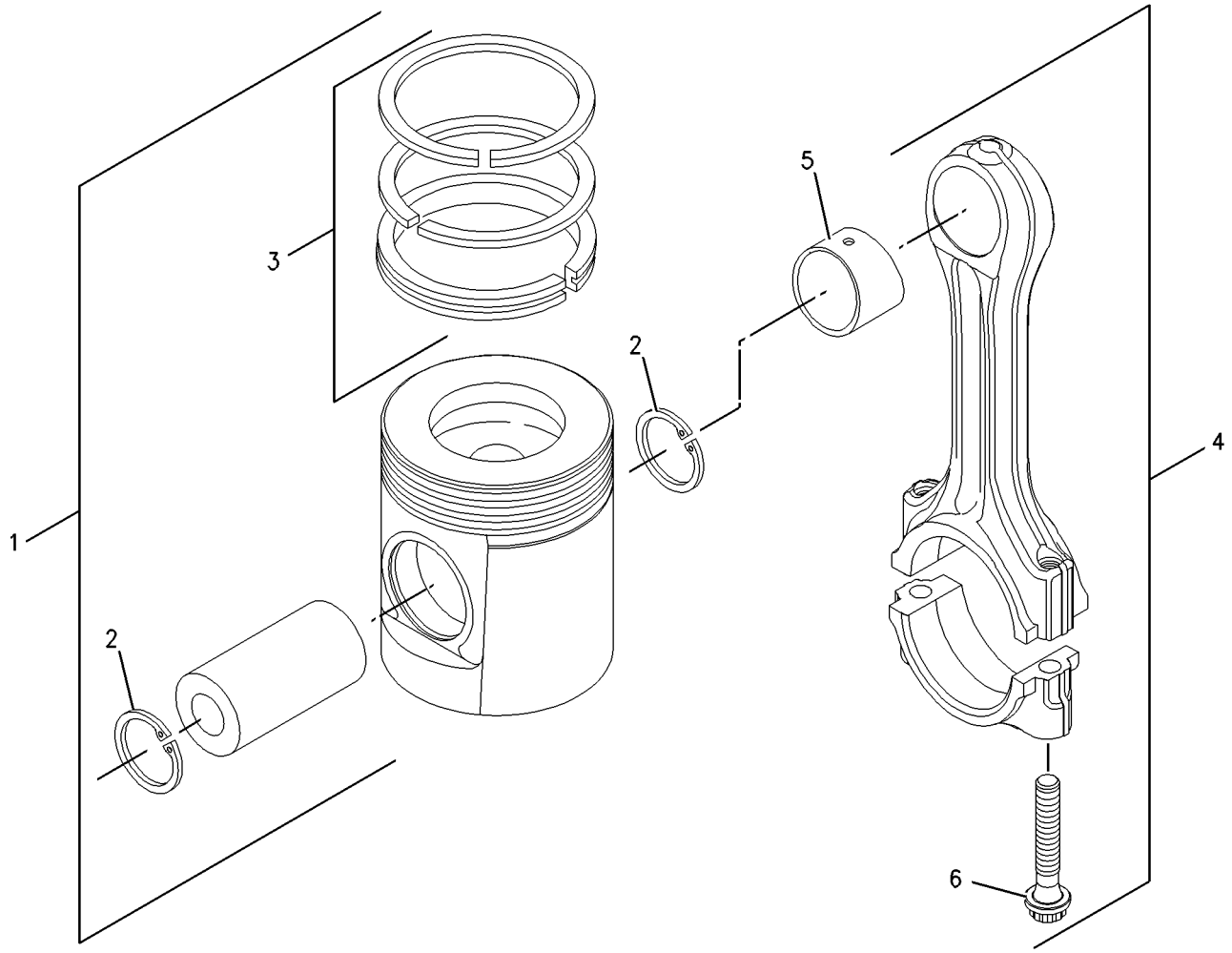

GRAPHIC #1 <END> g00909669

243-3181 PISTON & ROD GP

S/N: 33425631-UP
ALSO AN ATTACHMENT

SMCS-1225 **i07030442**

NOTE	REF NO	GRAPHIC REF	PART NUMBER	QTY	PART NAME 1 2 3 4 5 6 (PRODUCT LEVEL)	SEE PAGE
	1	1	**508-1898**	4	KIT-PISTON	
					(EACH PISTON AS INCLUDES)	
	1A	1	**124-3536**	2	RING-RETAINING	
AB		1	**508-1906**		KIT-PISTON (1-MM OS)	
AB		1	**508-1902**		KIT-PISTON (0.5-MM OS)	
					(EACH KIT PISTON INCLUDES RETAINING RINGS, PISTON RINGS, PISTON, & PIN)	
BCJ	2	1	**359-0719**	4	ROD AS-CONNECTING (GRADE R)	
					—OR—	
BCJ		1	**359-0723**	4	ROD AS-CONNECTING (GRADE P)	
					—OR—	
BCJ		1	**359-0722**	4	ROD AS-CONNECTING (GRADE G)	
					—OR—	
BCJ		1	**359-0721**	4	ROD AS-CONNECTING (GRADE W)	
					—OR—	
BCJ		1	**359-0720**	4	ROD AS-CONNECTING (GRADE O)	
					—OR—	
BCJ		1	**359-0724**	4	ROD AS-CONNECTING (GRADE B)	
					(EACH ROD AS INCLUDES)	
	2A	1	**276-7478**	1	BUSHING	
M	2B	1	**323-9312**	2	BOLT (M10X1X50-MM)	

A - NOT PART OF THIS GROUP
B - USE AS REQUIRED
C - CHANGE FROM PREVIOUS TYPE
J - ENSURE THAT CORRECT ROD LENGTH IS FITTED
M - METRIC PART

243-3181 **PISTON & ROD GP (**contd.**)** **i07030442**

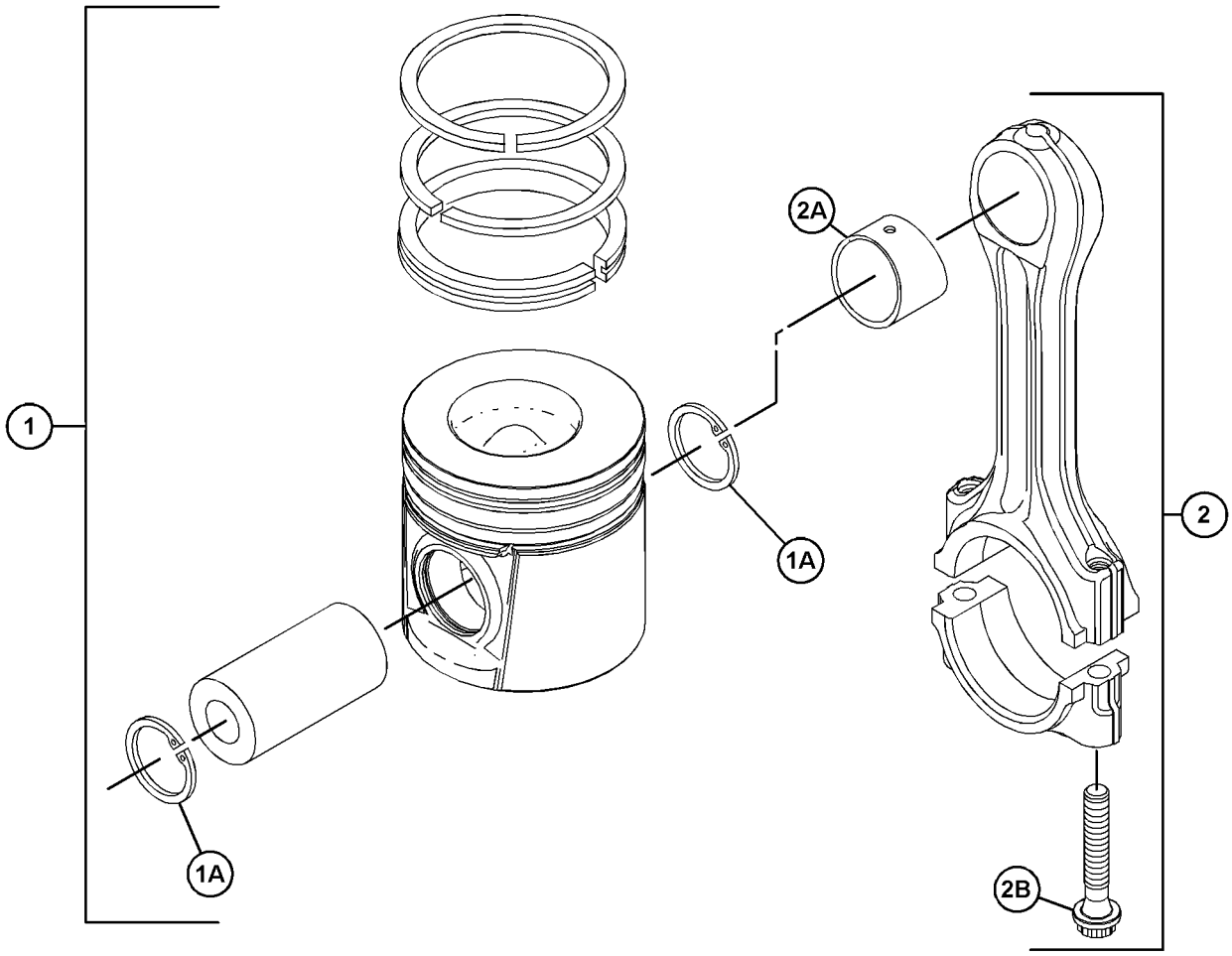

GRAPHIC #1 <END> g06214403

243-4842 PISTON & ROD GP

S/N: 3341-25630

SMCS-1225 **i05297302**

NOTE	REF NO	GRAPHIC REF	PART NUMBER	QTY	PART NAME 1 2 3 4 5 6 (PRODUCT LEVEL)	SEE PAGE
	1	1	**225-5437**	4	PISTON AS	
					(EACH PISTON AS INCLUDES)	
	2	1	**124-3536**	2	RING-RETAINING	
	3	1	**225-5436**	1	KIT-PISTON RING	
AB		1	**334-2318**		KIT-PISTON RING (1-MM OS) (1-MM OS)	
AB		1	**334-2319**		KIT-PISTON RING (0.5-MM OS) (0.5-MM OS)	
AB		1	**288-1394**		PISTON AS (0.5-MM OS)	
AB		1	**288-1395**		PISTON AS (1-MM OS)	
BJ	4	1	**225-5441**	4	ROD AS-CONNECTING (GRADE L)	
					—OR—	
BJ		1	**225-5451**	4	ROD AS-CONNECTING (GRADE K)	
					—OR—	
BJ		1	**225-5453**	4	ROD AS-CONNECTING (GRADE J)	
					—OR—	
BJ		1	**225-5454**	4	ROD AS-CONNECTING (GRADE H)	
					—OR—	
BJ		1	**225-5458**	4	ROD AS-CONNECTING (GRADE G)	
					—OR—	
BJ		1	**225-5459**	4	ROD AS-CONNECTING (GRADE F)	
					(EACH ROD AS INCLUDES)	
	5	1	**225-5438**	1	BUSHING	
	6	1	**225-5439**	2	BOLT-SPECIAL	

A - NOT PART OF THIS GROUP
B - USE AS REQUIRED
J - ENSURE THAT CORRECT ROD LENGTH IS FITTED

243-4842 **PISTON & ROD GP (**contd.**)** **i05297302**

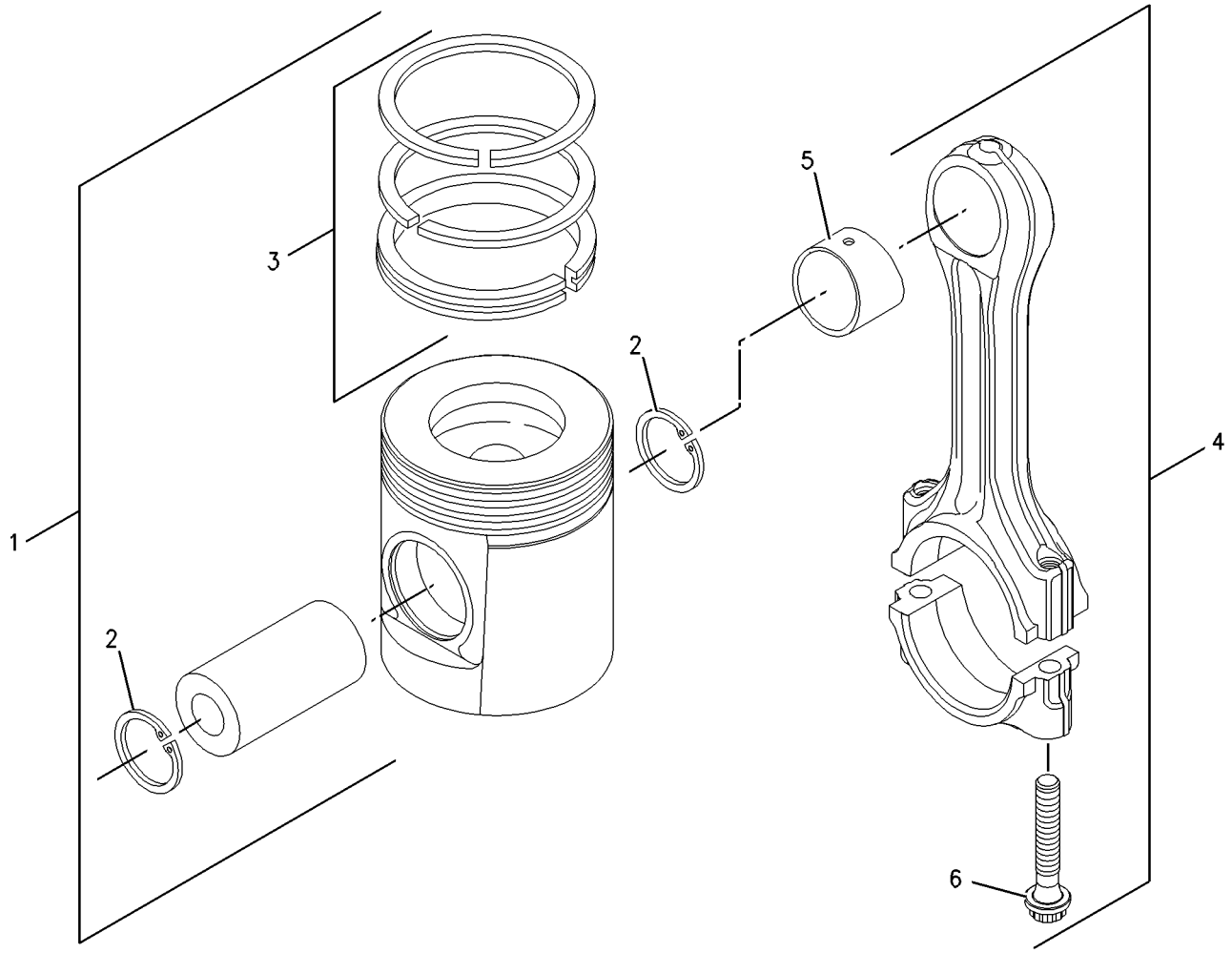

GRAPHIC #1 <END> g00909669

243-4842 PISTON & ROD GP

S/N: 33425631-UP

SMCS-1225 **i07030461**

NOTE	REF NO	GRAPHIC REF	PART NUMBER	QTY	PART NAME 1 2 3 4 5 6 (PRODUCT LEVEL)	SEE PAGE
L	1	1	**508-1898**	4	KIT-PISTON	
					(EACH INCLUDES)	
	1A	1	**124-3536**	2	RING-RETAINING	
BCJ	2	1	**359-0724**	4	ROD AS-CONNECTING (GRADE B)	
					—OR—	
BCJ		1	**359-0723**	4	ROD AS-CONNECTING (GRADE P)	
					—OR—	
BCJ		1	**359-0722**	4	ROD AS-CONNECTING (GRADE G)	
					—OR—	
BCJ		1	**359-0721**	4	ROD AS-CONNECTING (GRADE W)	
					—OR—	
BCJ		1	**359-0720**	4	ROD AS-CONNECTING (GRADE O)	
					—OR—	
BCJ		1	**359-0719**	4	ROD AS-CONNECTING (GRADE R)	
					(EACH ROD AS INCLUDES)	
	2A	1	**276-7478**	1	BUSHING	
M	2B	1	**323-9312**	2	BOLT (M10X1X50-MM)	
					AVAILABLE REPLACEMENT PART(S):	
ABL			**508-1902**		KIT-PISTON (0.5-MM OS)	
					(INCLUDES RETAINING RINGS, PISTON RINGS, PIN, & PISTON)	
ABL			**508-1906**		KIT-PISTON (1-MM OS)	
					(INCLUDES RETAINING RINGS, PISTON RINGS, PIN, & PISTON)	

A - NOT PART OF THIS GROUP
B - USE AS REQUIRED
C - CHANGE FROM PREVIOUS TYPE
J - ENSURE THAT CORRECT ROD LENGTH IS FITTED
L - KIT MARKED L SERVICES PART(S) MARKED L
M - METRIC PART

243-4842 **PISTON & ROD GP (**contd.**)** **i07030461**

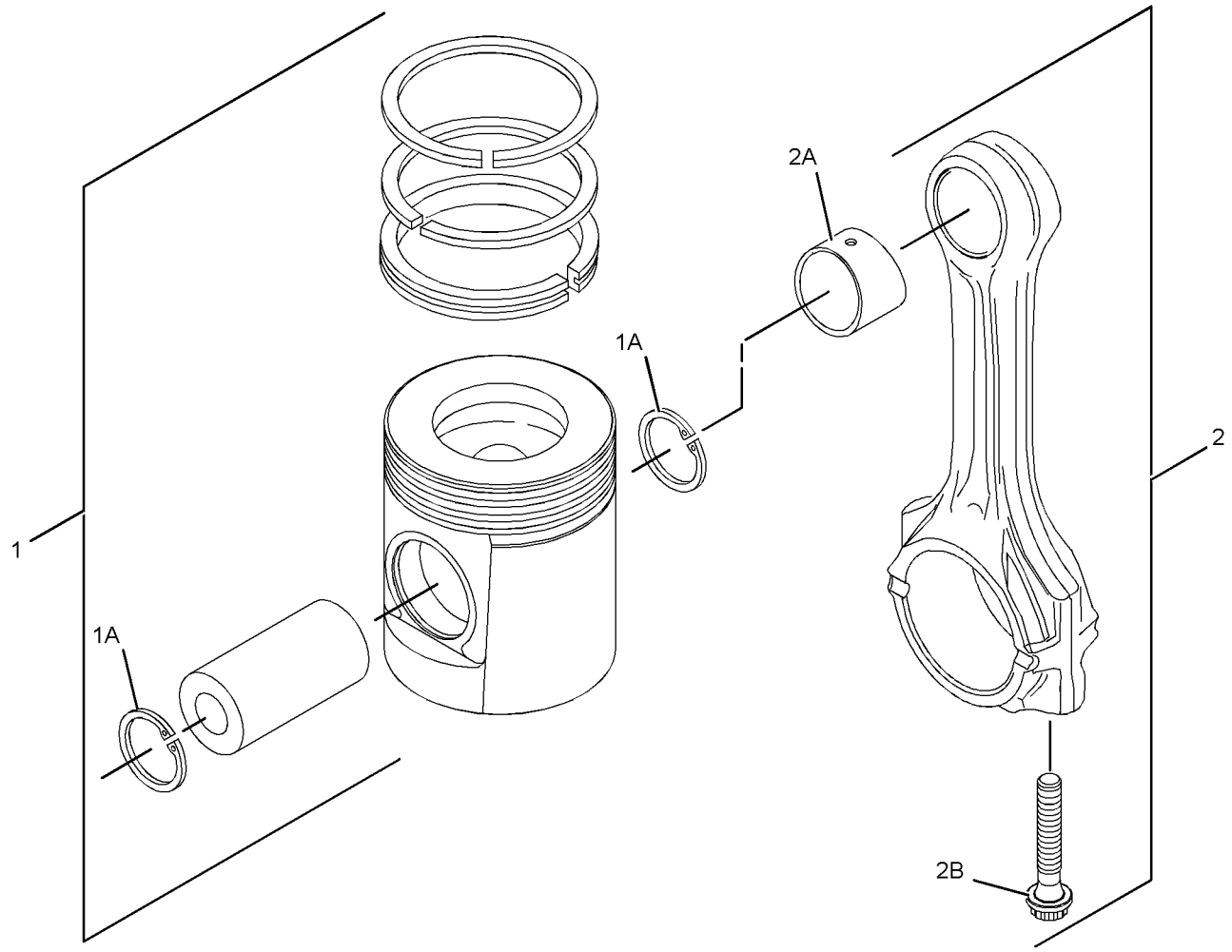

GRAPHIC #1 <END> g06219298

244-2083 PISTON & ROD GP

S/N: 3341-25630

SMCS-1225 **i05297304**

NOTE	REF NO	GRAPHIC REF	PART NUMBER	QTY	PART NAME 1 2 3 4 5 6 (PRODUCT LEVEL)	SEE PAGE
	1	1	**225-5437**	4	PISTON AS	
					(EACH PISTON AS INCLUDES)	
	2	1	**124-3536**	2	RING-RETAINING	
	3	1	**225-5436**	1	KIT-PISTON RING	
AB		1	**334-2319**		KIT-PISTON RING (0.5-MM OS) (0.5-MM OS)	
AB		1	**334-2318**		KIT-PISTON RING (1-MM OS) (1-MM OS)	
AB		1	**288-1394**		PISTON AS (0.5-MM OS)	
AB		1	**288-1395**		PISTON AS (1-MM OS)	
BJ	4	1	**225-5441**	4	ROD AS-CONNECTING (GRADE L)	
					—OR—	
BJ		1	**225-5451**	4	ROD AS-CONNECTING (GRADE K)	
					—OR—	
BJ		1	**225-5453**	4	ROD AS-CONNECTING (GRADE J)	
					—OR—	
BJ		1	**225-5454**	4	ROD AS-CONNECTING (GRADE H)	
					—OR—	
BJ		1	**225-5458**	4	ROD AS-CONNECTING (GRADE G)	
					—OR—	
BJ		1	**225-5459**	4	ROD AS-CONNECTING (GRADE F)	
					(EACH ROD AS INCLUDES)	
	5	1	**225-5438**	1	BUSHING	
	6	1	**225-5439**	2	BOLT-SPECIAL	

A - NOT PART OF THIS GROUP
B - USE AS REQUIRED
J - ENSURE THAT CORRECT ROD LENGTH IS FITTED

244-2083 **PISTON & ROD GP (**contd.**)** **i05297304**

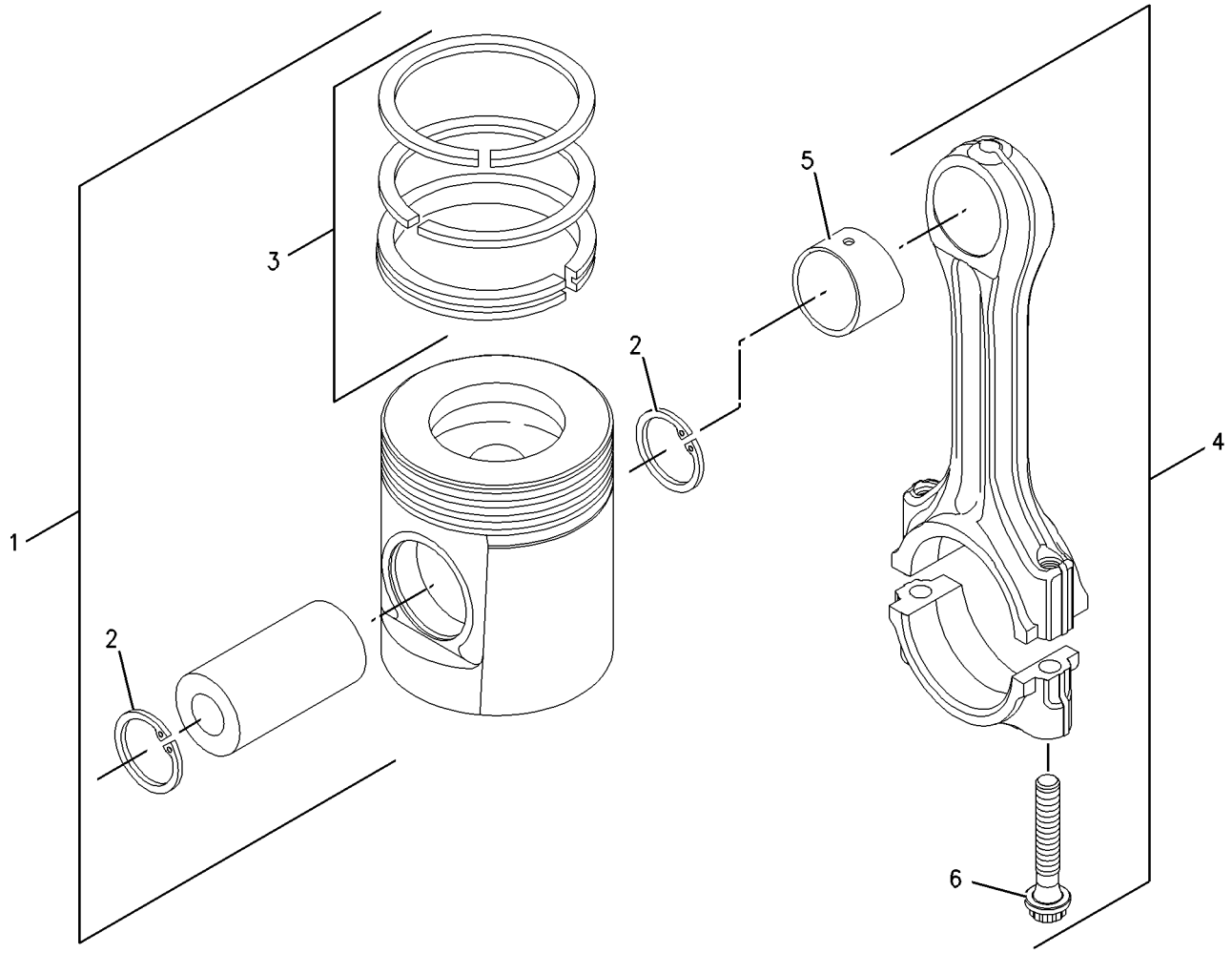

GRAPHIC #1 <END> g00909669

244-2083 PISTON & ROD GP

S/N: 33425631-UP

SMCS-1225 **i07030433**

NOTE	REF NO	GRAPHIC REF	PART NUMBER	QTY	PART NAME 1 2 3 4 5 6 (PRODUCT LEVEL)	SEE PAGE
	1	1	**508-1898**	4	KIT-PISTON	
					(EACH PISTON AS INCLUDES)	
	1A	1	**124-3536**	2	RING-RETAINING	
AB		1	**508-1906**		KIT-PISTON (1-MM OS)	
AB		1	**508-1902**		KIT-PISTON (0.5-MM OS)	
					(EACH KIT PISTON INCLUDES RETAINING RINGS, PISTON RINGS, PISTON, & PIN)	
BCJ	2	1	**359-0724**	4	ROD AS-CONNECTING (GRADE B)	
					—OR—	
BCJ		1	**359-0723**	4	ROD AS-CONNECTING (GRADE P)	
					—OR—	
BCJ		1	**359-0722**	4	ROD AS-CONNECTING (GRADE G)	
					—OR—	
BCJ		1	**359-0721**	4	ROD AS-CONNECTING (GRADE W)	
					—OR—	
BCJ		1	**359-0720**	4	ROD AS-CONNECTING (GRADE O)	
					—OR—	
BCJ		1	**359-0719**	4	ROD AS-CONNECTING (GRADE R)	
					(EACH ROD AS INCLUDES)	
	2A	1	**276-7478**	1	BUSHING	
M	2B	1	**323-9312**	2	BOLT (M10X1X50-MM)	

A - NOT PART OF THIS GROUP
B - USE AS REQUIRED
C - CHANGE FROM PREVIOUS TYPE
J - ENSURE THAT CORRECT ROD LENGTH IS FITTED
M - METRIC PART

244-2083 **PISTON & ROD GP** (contd.) **i07030433**

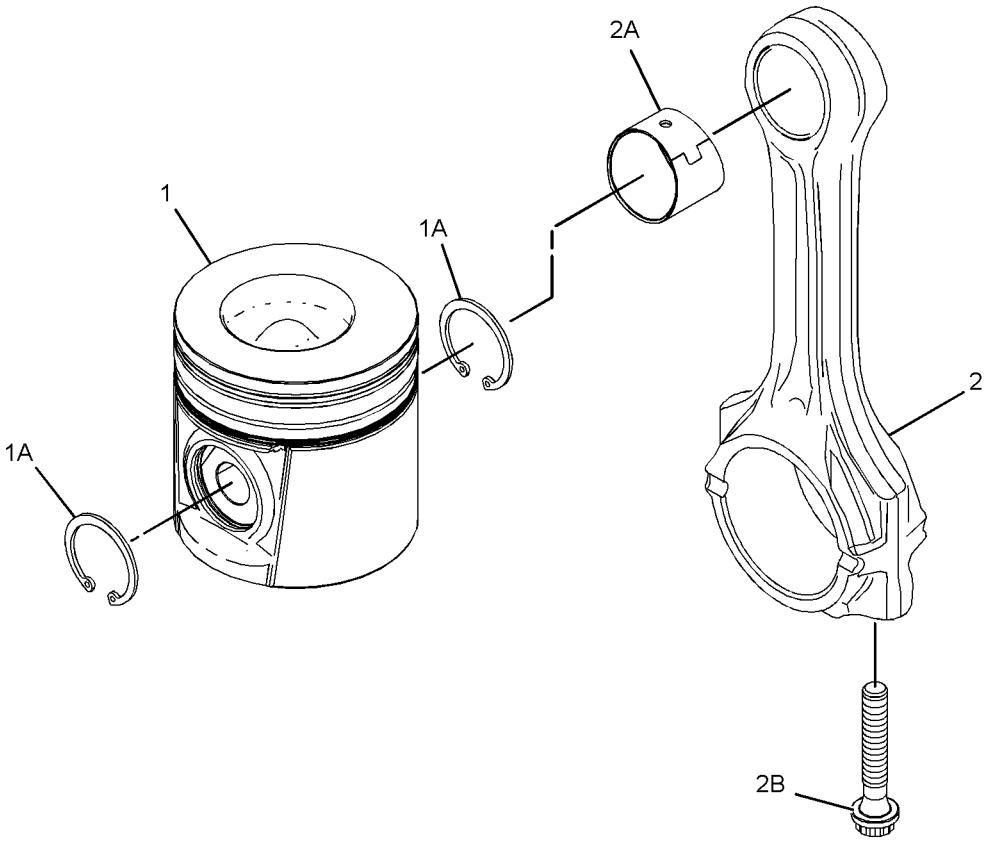

GRAPHIC #1 <END> g06213958

247-4831 PISTON & ROD GP

S/N: 3341-25630

SMCS-1225 **i05297306**

NOTE	REF NO	GRAPHIC REF	PART NUMBER	QTY	PART NAME 1 2 3 4 5 6 (PRODUCT LEVEL)	SEE PAGE
	1	1	**233-7232**	4	PISTON GP	
					(EACH PISTON AS INCLUDES)	
	2	1	**124-3536**	2	RING-RETAINING	
	3	1	**233-7231**	1	RING GP-PISTON	
AB		1	**334-1996**		KIT-PISTON RING (0.5-MM OS) (0.5-MM OS)	
AB		1	**334-1997**		KIT-PISTON RING (1-MM OS) (1-MM OS)	
AB		1	**288-9942**		PISTON AS (0.5-MM OS)	
AB		1	**288-9943**		PISTON AS (1-MM OS)	
J	4	1	**225-5441**	4	ROD AS-CONNECTING (GRADE L) (L)	
					—OR—	
J		1	**225-5451**	4	ROD AS-CONNECTING (GRADE K) (K)	
					—OR—	
J		1	**225-5453**	4	ROD AS-CONNECTING (GRADE J) (J)	
					—OR—	
J		1	**225-5454**	4	ROD AS-CONNECTING (GRADE H) (H)	
					—OR—	
J		1	**225-5458**	4	ROD AS-CONNECTING (GRADE G) (G)	
					—OR—	
J		1	**225-5459**	4	ROD AS-CONNECTING (GRADE F) (F)	
					(EACH ROD AS INCLUDES)	
	5	1	**225-5438**	1	BUSHING	
	6	1	**225-5439**	2	BOLT-SPECIAL	

A - NOT PART OF THIS GROUP
B - USE AS REQUIRED
J - ENSURE THAT CORRECT ROD LENGTH IS FITTED

247-4831 **PISTON & ROD GP (**contd.**)** **i05297306**

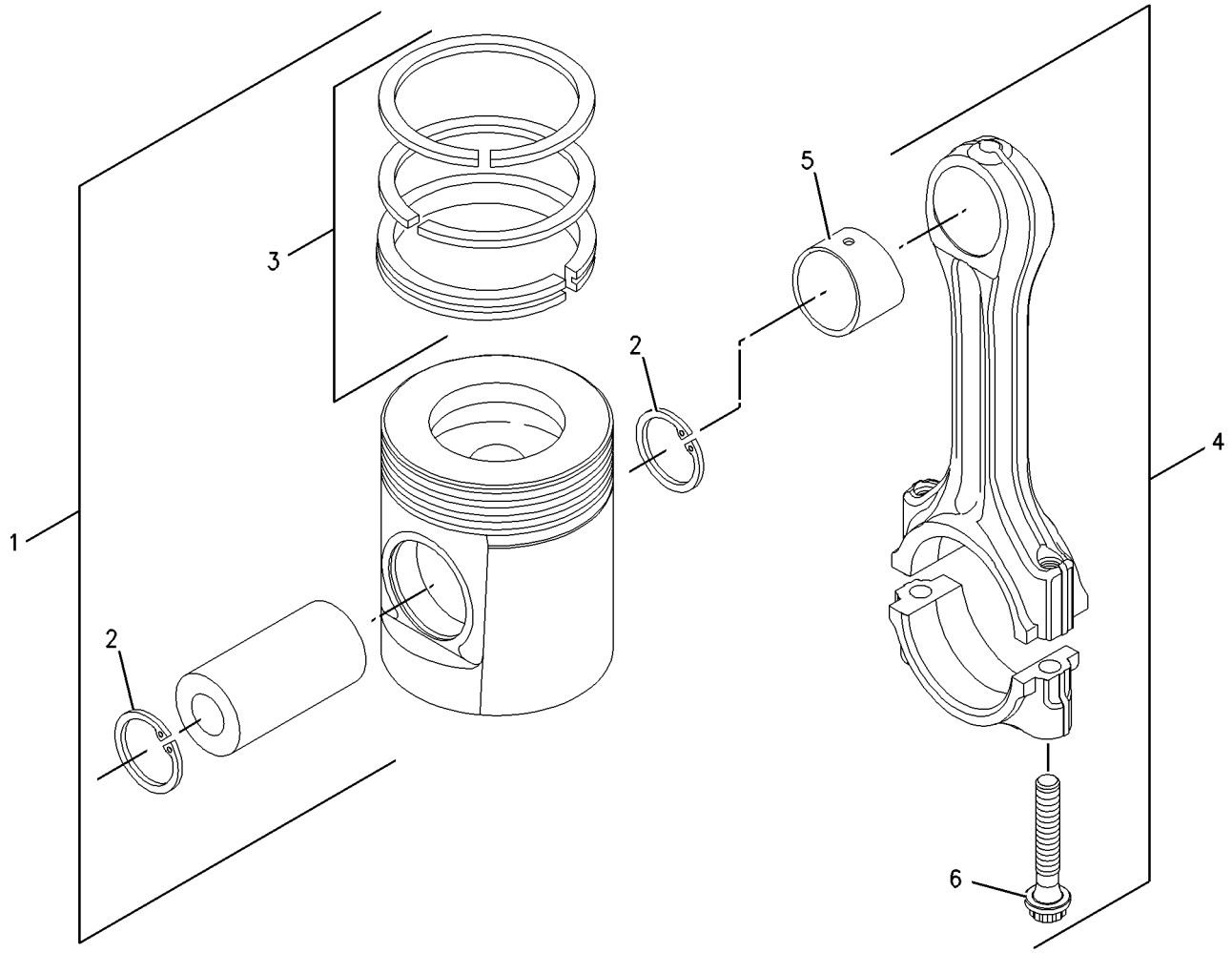

GRAPHIC #1 <END> g00909669

247-4831 PISTON & ROD GP

S/N: 33425631-UP

SMCS-1225 **i05297309**

NOTE	REF NO	GRAPHIC REF	PART NUMBER	QTY	PART NAME 1 2 3 4 5 6 (PRODUCT LEVEL)	SEE PAGE
	1	1	**233-7232**	4	PISTON GP	
					(EACH PISTON AS INCLUDES)	
	1A	1	**124-3536**	2	RING-RETAINING	
	1B	1	**233-7231**	1	RING GP-PISTON	
AB		1	**334-1996**		KIT-PISTON RING (0.5-MM OS) (0.5-MM OS)	
AB		1	**334-1997**		KIT-PISTON RING (1-MM OS) (1-MM OS)	
AB		1	**288-9943**		PISTON AS (1-MM OS)	
AB		1	**288-9942**		PISTON AS (0.5-MM OS)	
BCJ	2	1	**359-0724**	4	ROD AS-CONNECTING (GRADE B)	
					—OR—	
BCJ		1	**359-0723**	4	ROD AS-CONNECTING (GRADE P)	
					—OR—	
BCJ		1	**359-0722**	4	ROD AS-CONNECTING (GRADE G)	
					—OR—	
BCJ		1	**359-0721**	4	ROD AS-CONNECTING (GRADE W)	
					—OR—	
BCJ		1	**359-0720**	4	ROD AS-CONNECTING (GRADE O)	
					—OR—	
BCJ		1	**359-0719**	4	ROD AS-CONNECTING (GRADE R)	
					(EACH ROD AS INCLUDES)	
	2A	1	**225-5438**	1	BUSHING	
M	2B	1	**323-9312**	2	BOLT (M10X1X50-MM)	

A - NOT PART OF THIS GROUP
B - USE AS REQUIRED
C - CHANGE FROM PREVIOUS TYPE
J - ENSURE THAT CORRECT ROD LENGTH IS FITTED
M - METRIC PART

247-4831 **PISTON & ROD GP (**contd.**)** **i05297309**

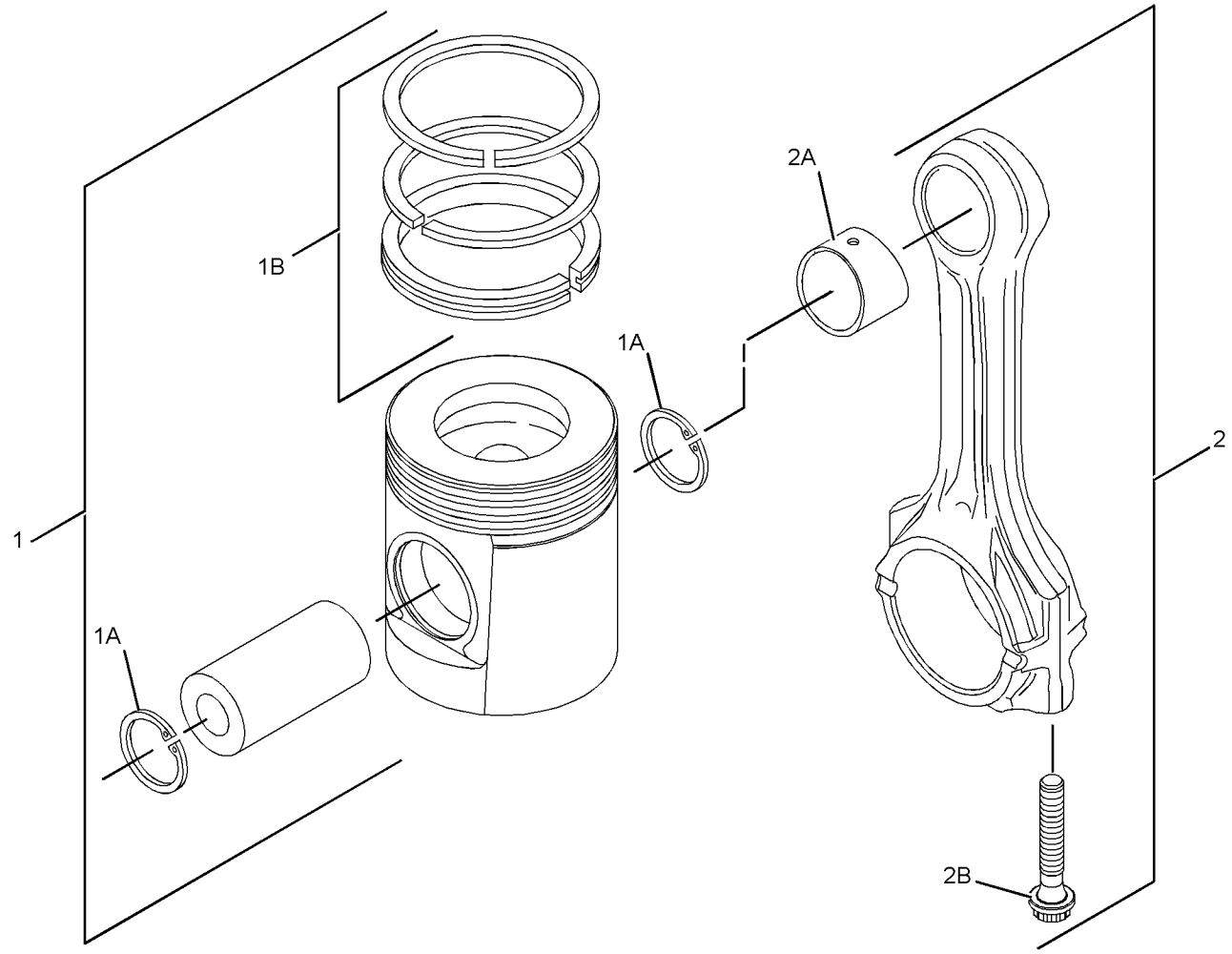

GRAPHIC #1 <END> g02197578

253-8756 PISTON & ROD GP

S/N: 3341-25630

SMCS-1225 **i05297312**

NOTE	REF NO	GRAPHIC REF	PART NUMBER	QTY	PART NAME 1 2 3 4 5 6 (PRODUCT LEVEL)	SEE PAGE
	1	1	**253-8755**	4	PISTON GP	
					(EACH PISTON AS INCLUDES)	
	1A	1	**124-3536**	2	RING-RETAINING	
	1B	1	**233-7231**	1	RING GP-PISTON	
AB		1	**334-1996**		KIT-PISTON RING (0.5-MM OS) (0.5-MM OS)	
AB		1	**334-1997**		KIT-PISTON RING (1-MM OS) (1-MM OS)	
AB		1	**334-2456**		KIT-PISTON (1-MM OS)	
AB		1	**334-2455**		KIT-PISTON (0.5-MM OS)	
BJ	2	1	**225-5441**	4	ROD AS-CONNECTING (GRADE L)	
					—OR—	
BJ		1	**225-5451**	4	ROD AS-CONNECTING (GRADE K)	
					—OR—	
BJ		1	**225-5453**	4	ROD AS-CONNECTING (GRADE J)	
					—OR—	
BJ		1	**225-5454**	4	ROD AS-CONNECTING (GRADE H)	
					—OR—	
BJ		1	**225-5458**	4	ROD AS-CONNECTING (GRADE G)	
					—OR—	
BJ		1	**225-5459**	4	ROD AS-CONNECTING (GRADE F)	
					(EACH ROD AS INCLUDES)	
	2A	1	**225-5438**	1	BUSHING	
	2B	1	**225-5439**	2	BOLT-SPECIAL	

A - NOT PART OF THIS GROUP
B - USE AS REQUIRED
J - ENSURE THAT CORRECT ROD LENGTH IS FITTED

253-8756 **PISTON & ROD GP** (contd.) **i05297312**

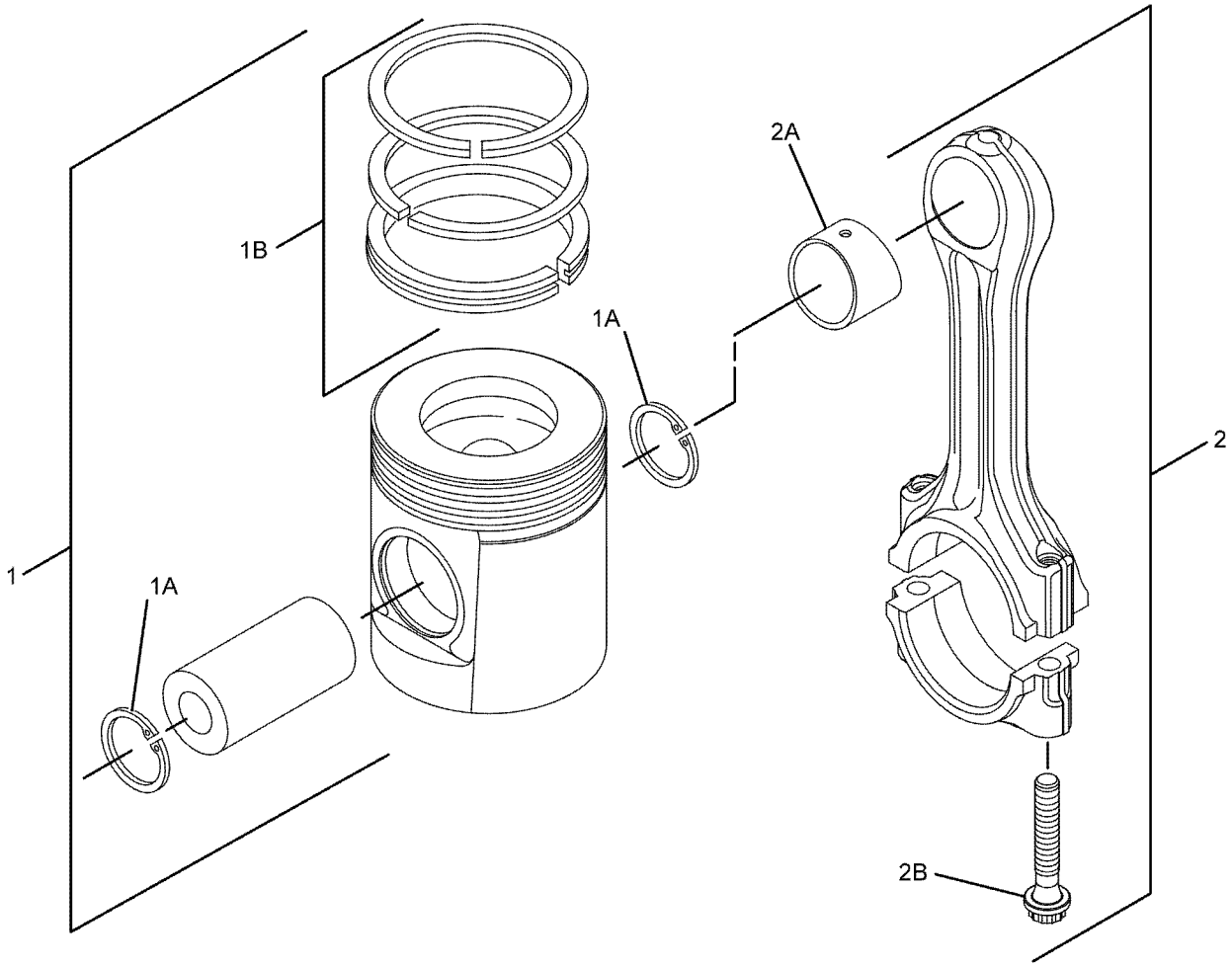

GRAPHIC #1 <END> g01076545

253-8756 PISTON & ROD GP

S/N: 33425631-UP

SMCS-1225 **i05297311**

NOTE	REF NO	GRAPHIC REF	PART NUMBER	QTY	PART NAME 1 2 3 4 5 6 (PRODUCT LEVEL)	SEE PAGE
	1	1	**253-8755**	4	PISTON GP	
					(EACH PISTON AS INCLUDES)	
	1A	1	**124-3536**	2	RING-RETAINING	
	1B	1	**233-7231**	1	RING GP-PISTON	
AB		1	**334-1996**		KIT-PISTON RING (0.5-MM OS) (0.5-MM OS)	
AB		1	**334-1997**		KIT-PISTON RING (1-MM OS) (1-MM OS)	
AB		1	**334-2456**		KIT-PISTON (1-MM OS)	
AB		1	**334-2455**		KIT-PISTON (0.5-MM OS)	
BCJ	2	1	**359-0724**	4	ROD AS-CONNECTING (GRADE B) (LENGTH B)	
					—OR—	
BCJ		1	**359-0723**	4	ROD AS-CONNECTING (GRADE P) (LENGTH P)	
					—OR—	
BCJ		1	**359-0722**	4	ROD AS-CONNECTING (GRADE G) (LENGTH G)	
					—OR—	
BCJ		1	**359-0721**	4	ROD AS-CONNECTING (GRADE W) (LENGTH W)	
					—OR—	
BCJ		1	**359-0720**	4	ROD AS-CONNECTING (GRADE O) (LENGTH O)	
					—OR—	
BCJ		1	**359-0719**	4	ROD AS-CONNECTING (GRADE R) (LENGTH R)	
					(EACH ROD AS INCLUDES)	
	2A	1	**225-5438**	1	BUSHING	
M	2B	1	**323-9312**	2	BOLT (M10X1X50-MM)	

A - NOT PART OF THIS GROUP
B - USE AS REQUIRED
C - CHANGE FROM PREVIOUS TYPE
J - ENSURE THAT CORRECT ROD LENGTH IS FITTED
M - METRIC PART

253-8756 **PISTON & ROD GP** (contd.) **i05297311**

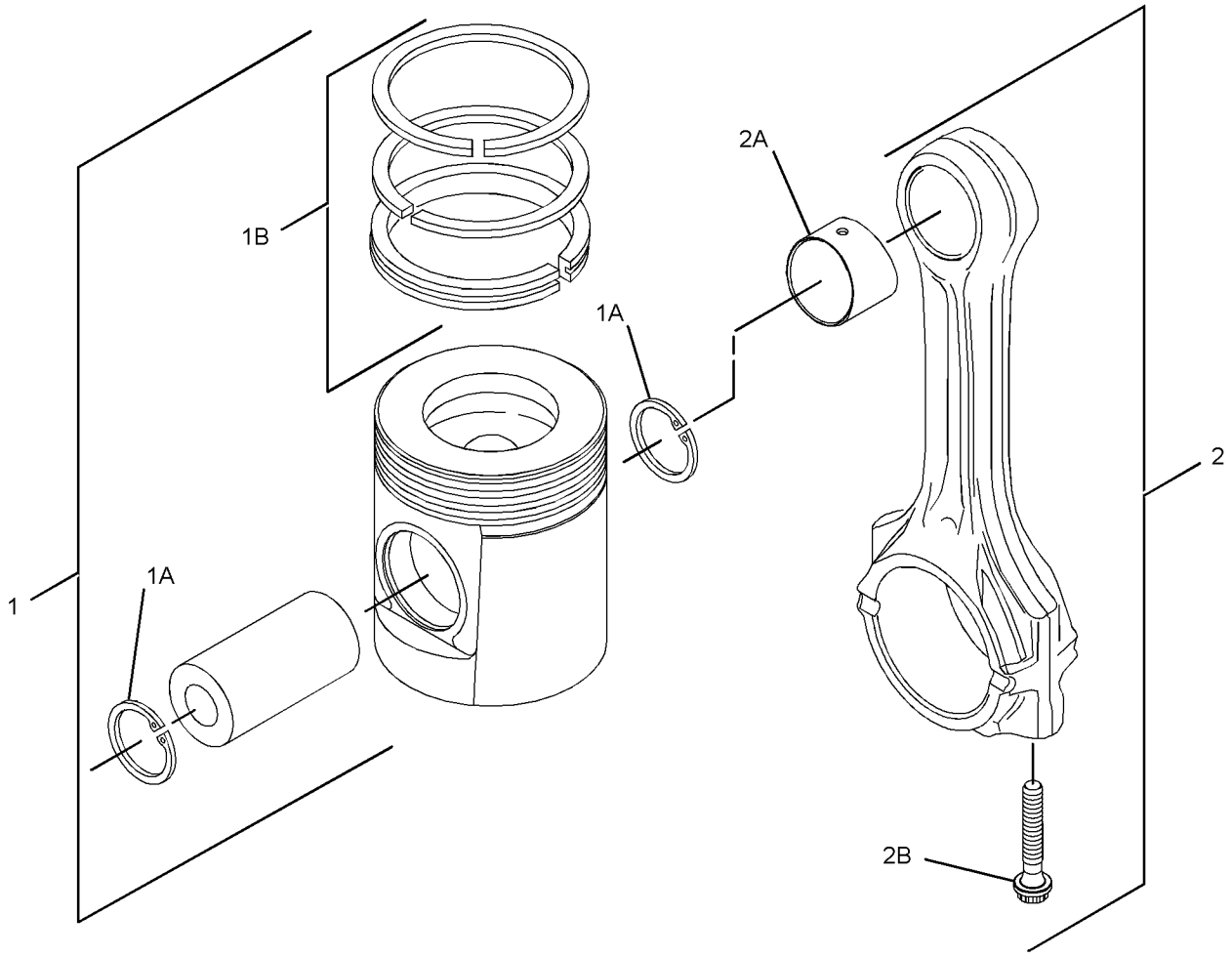

GRAPHIC #1 <END> g02227136

316-8480 PISTON & ROD GP

S/N: 3341-25630

SMCS-1225 **i05297314**

NOTE	REF NO	GRAPHIC REF	PART NUMBER	QTY	PART NAME 1 2 3 4 5 6 (PRODUCT LEVEL)	SEE PAGE
	1	1	**225-5437**	4	PISTON AS	
					(EACH PISTON AS INCLUDES)	
	1A	1	**124-3536**	2	RING-RETAINING	
	1B	1	**225-5436**	1	KIT-PISTON RING	
AB		1	**334-2318**		KIT-PISTON RING (1-MM OS) (1-MM OS)	
AB		1	**334-2319**		KIT-PISTON RING (0.5-MM OS)	
AB		1	**288-1394**		PISTON AS (0.5-MM OS)	
AB		1	**288-1395**		PISTON AS (1-MM OS)	
BJ	2	1	**225-5441**	4	ROD AS-CONNECTING (GRADE L)	
					—OR—	
BJ		1	**225-5451**	4	ROD AS-CONNECTING (GRADE K)	
					—OR—	
BJ		1	**225-5453**	4	ROD AS-CONNECTING (GRADE J)	
					—OR—	
BJ		1	**225-5454**	4	ROD AS-CONNECTING (GRADE H)	
					—OR—	
BJ		1	**225-5458**	4	ROD AS-CONNECTING (GRADE G)	
					—OR—	
BJ		1	**225-5459**	4	ROD AS-CONNECTING (GRADE F)	
					(EACH ROD AS INCLUDES)	
	2A	1	**225-5438**	1	BUSHING	
	2B	1	**225-5439**	2	BOLT-SPECIAL	

A - NOT PART OF THIS GROUP
B - USE AS REQUIRED
J - ENSURE THAT CORRECT ROD LENGTH IS FITTED

316-8480 **PISTON & ROD GP (**contd.**)** **i05297314**

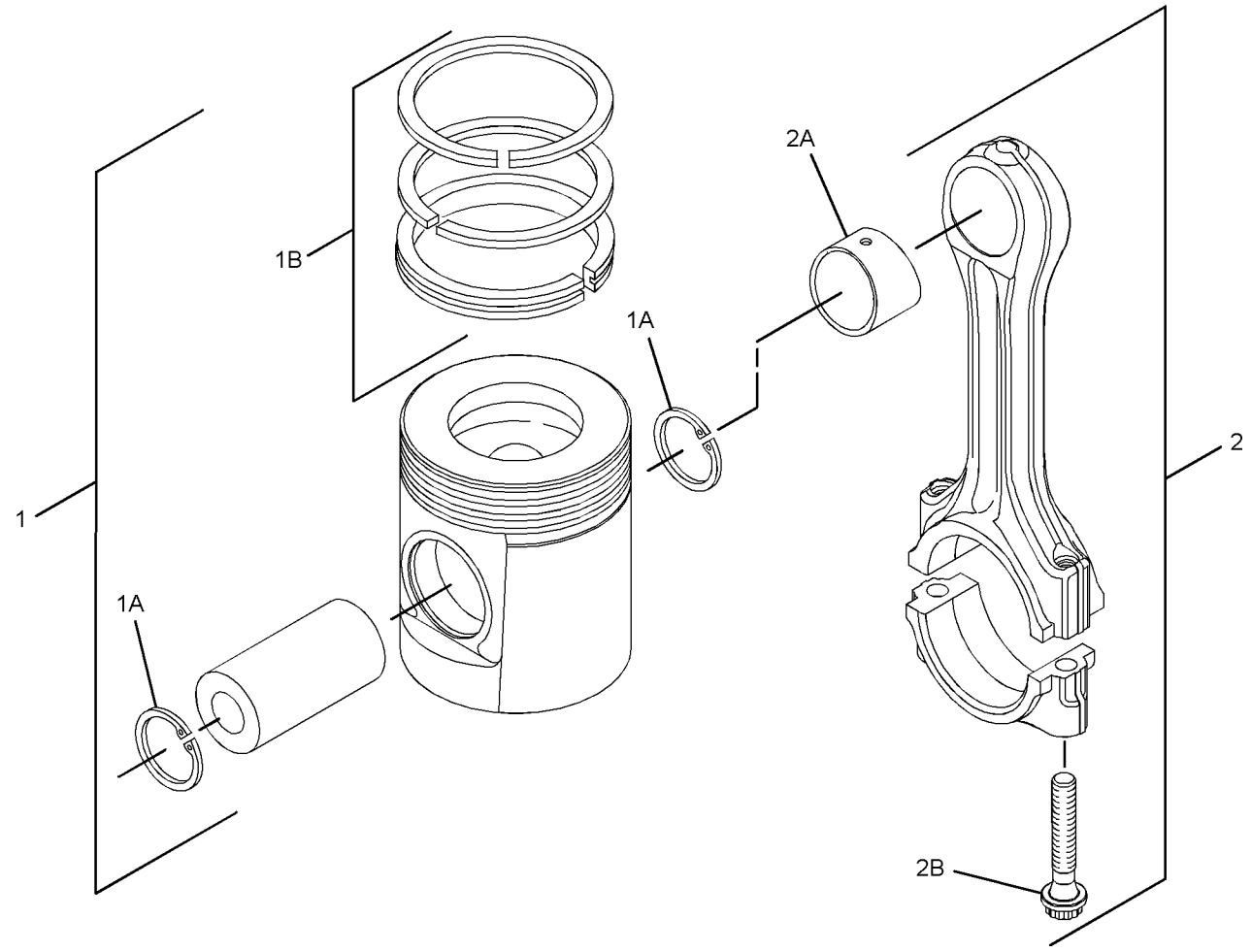

GRAPHIC #1 <END> g01420113

316-8480 PISTON & ROD GP

S/N: 33425631-UP

SMCS-1225 **i05297313**

NOTE	REF NO	GRAPHIC REF	PART NUMBER	QTY	PART NAME 1 2 3 4 5 6 (PRODUCT LEVEL)	SEE PAGE
BCJ	1	1	**359-0724**	4	ROD AS-CONNECTING (GRADE B) (LENGTH B)	
					—OR—	
BCJ		1	**359-0723**	4	ROD AS-CONNECTING (GRADE P) (LENGTH P)	
					—OR—	
BCJ		1	**359-0722**	4	ROD AS-CONNECTING (GRADE G) (LENGTH G)	
					—OR—	
BCJ		1	**359-0721**	4	ROD AS-CONNECTING (GRADE W) (LENGTH W)	
					—OR—	
BCJ		1	**359-0720**	4	ROD AS-CONNECTING (GRADE O) (LENGTH O)	
					—OR—	
BCJ		1	**359-0719**	4	ROD AS-CONNECTING (GRADE R) (LENGTH R)	
					(EACH ROD AS INCLUDES)	
	1A	1	**225-5438**	1	BUSHING	
M	1B	1	**323-9312**	2	BOLT (M10X1X50-MM)	
	2	1	**225-5437**	4	PISTON AS	
					(EACH PISTON AS INCLUDES)	
	2A	1	**124-3536**	2	RING-RETAINING	
	2B	1	**225-5436**	1	KIT-PISTON RING	
AB		1	**334-2318**		KIT-PISTON RING (1-MM OS) (1-MM OS)	
AB		1	**334-2319**		KIT-PISTON RING (0.5-MM OS) (0.5-MM OS)	
AB		1	**288-1394**		PISTON AS (0.5-MM OS)	
AB		1	**288-1395**		PISTON AS (1-MM OS)	

A - NOT PART OF THIS GROUP
B - USE AS REQUIRED
C - CHANGE FROM PREVIOUS TYPE
J - ENSURE THAT CORRECT ROD LENGTH IS FITTED
M - METRIC PART

316-8480 **PISTON & ROD GP (**contd.**)** **i05297313**

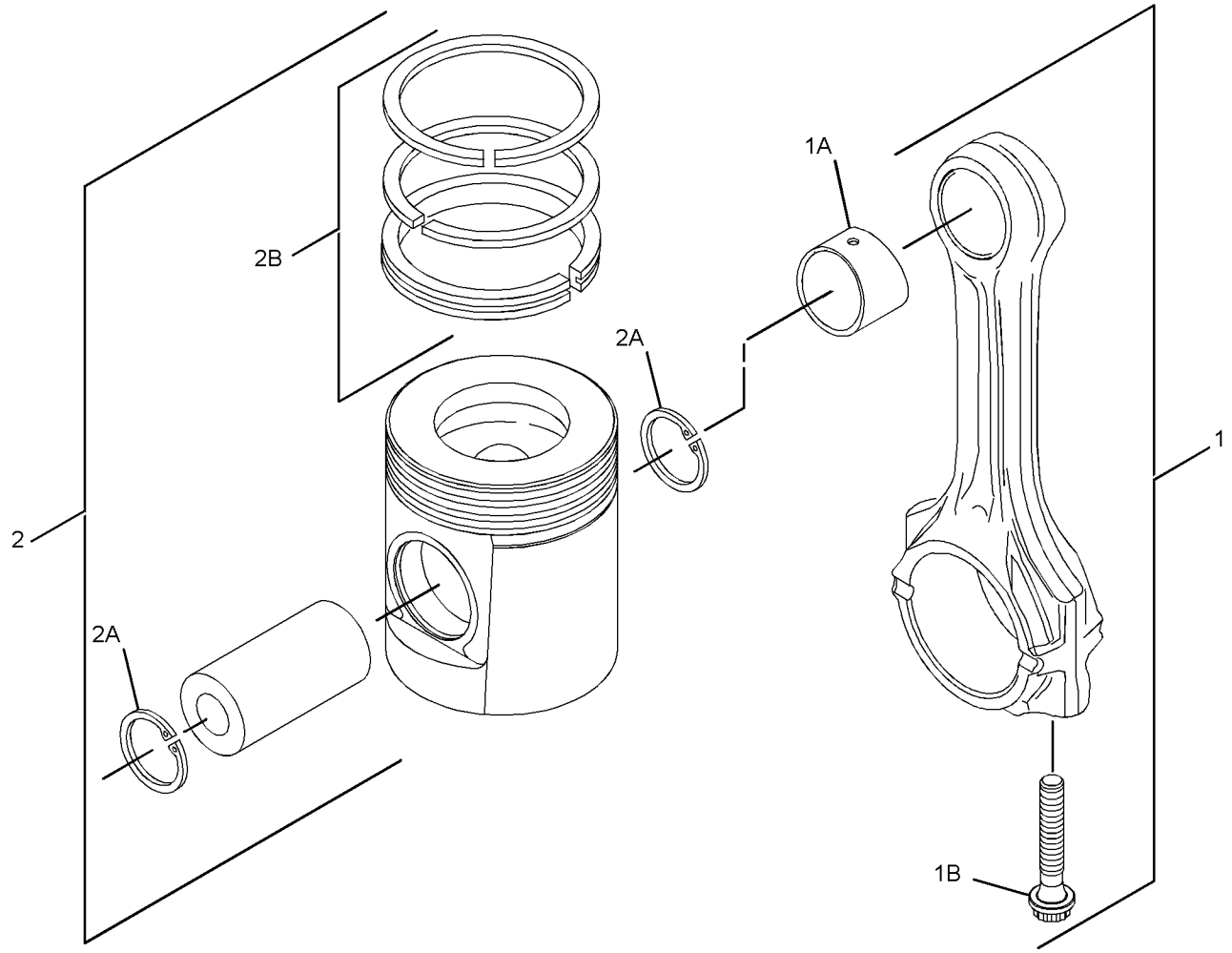

GRAPHIC #1 <END> g02227217

367-2086 PISTON & ROD GP

SMCS-1225 **i05297318**

NOTE	REF NO	GRAPHIC REF	PART NUMBER	QTY	PART NAME 1 2 3 4 5 6 (PRODUCT LEVEL)	SEE PAGE
	1	1	**233-7232**	4	PISTON GP	
					(EACH PISTON AS INCLUDES)	
	2	1	**124-3536**	2	RING-RETAINING	
	3	1	**233-7231**	1	RING GP-PISTON	
BJ	4	1	**225-5441**	4	ROD AS-CONNECTING (GRADE L)	
					—OR—	
BJ		1	**225-5451**	4	ROD AS-CONNECTING (GRADE K)	
					—OR—	
BJ		1	**225-5453**	4	ROD AS-CONNECTING (GRADE J)	
					—OR—	
BJ		1	**225-5454**	4	ROD AS-CONNECTING (GRADE H)	
					—OR—	
BJ		1	**225-5458**	4	ROD AS-CONNECTING (GRADE G)	
					—OR—	
BJ		1	**225-5459**	4	ROD AS-CONNECTING (GRADE F)	
					(EACH ROD AS INCLUDES)	
	5	1	**225-5438**	1	BUSHING	
	6	1	**225-5439**	2	BOLT-SPECIAL	
					AVAILABLE REPAIR KIT(S):	
AB			**288-9942**	1	PISTON AS (0.5-MM OS)	
					(INCLUDES RETAINING RINGS & PISTON RING KIT)	
AB			**288-9943**	1	PISTON AS (1-MM OS)	
					(INCLUDES RETAINING RINGS & PISTON RING KIT)	
AB			**334-1996**	1	KIT-PISTON RING (0.5-MM OS) (0.5-MM OS)	
AB			**334-1997**	1	KIT-PISTON RING (1-MM OS) (1-MM OS)	

A - NOT PART OF THIS GROUP
B - USE AS REQUIRED
J - ENSURE THAT CORRECT ROD LENGTH IS FITTED

367-2086 **PISTON & ROD GP (**contd.**)** **i05297318**

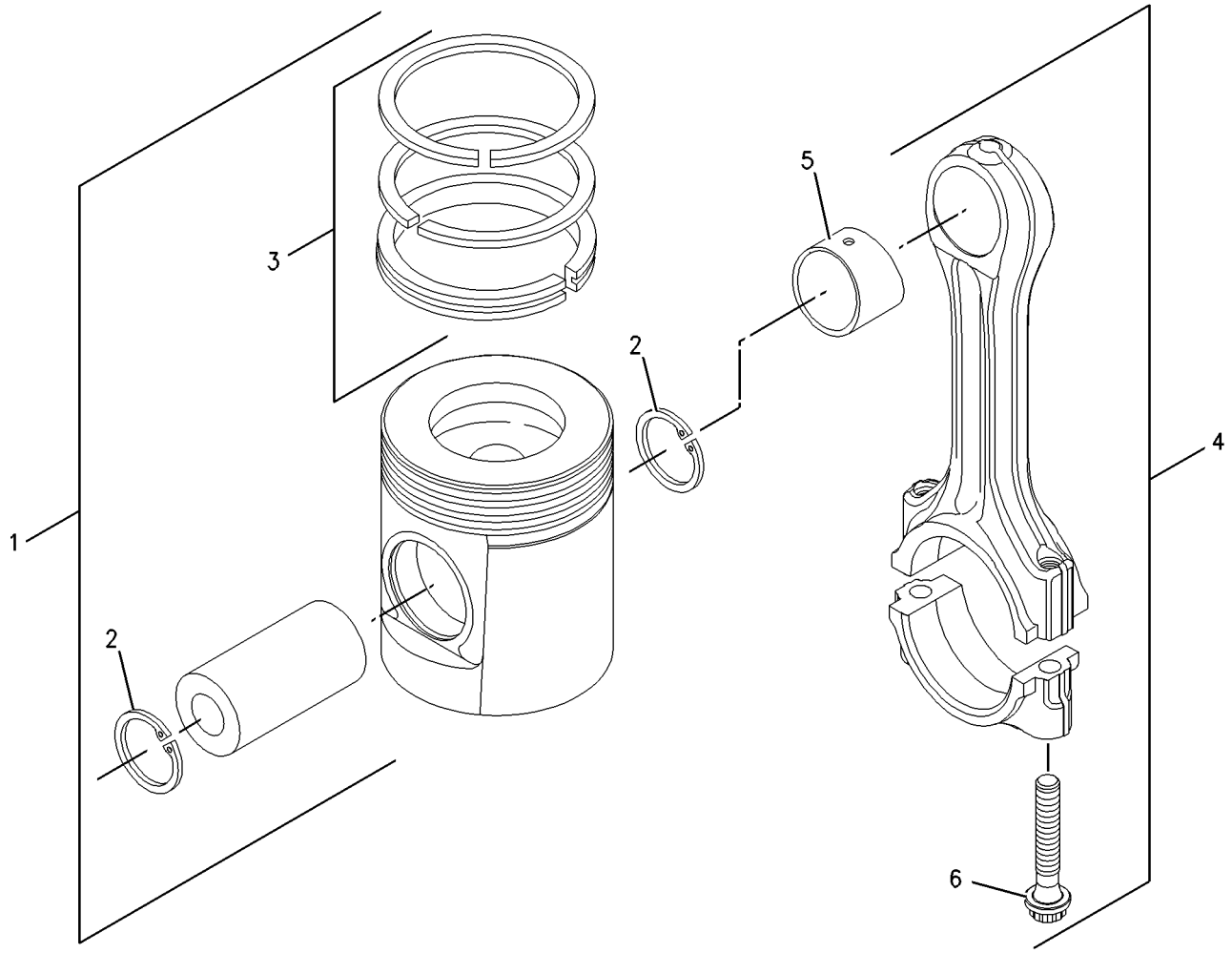

GRAPHIC #1 <END> g00909669

367-2789 PISTON & ROD GP

SMCS-1225 **i05222206**

NOTE	REF NO	GRAPHIC REF	PART NUMBER	QTY	PART NAME 1 2 3 4 5 6 (PRODUCT LEVEL)	SEE PAGE
	1	1	**225-5437**	4	PISTON AS	
					(EACH PISTON AS INCLUDES)	
	1A	1	**124-3536**	2	RING-RETAINING	
	1B	1	**225-5436**	1	KIT-PISTON RING	
AB		1	**334-2318**		KIT-PISTON RING (1-MM OS) (1-MM OS)	
AB		1	**334-2319**		KIT-PISTON RING (0.5-MM OS) (0.5-MM OS)	
AB		1	**288-1394**		PISTON AS (0.5-MM OS)	
AB		1	**288-1395**		PISTON AS (1-MM OS)	
BJ	2	1	**225-5441**	4	ROD AS-CONNECTING (GRADE L)	
					—OR—	
BJ		1	**225-5451**	4	ROD AS-CONNECTING (GRADE K)	
					—OR—	
BJ		1	**225-5453**	4	ROD AS-CONNECTING (GRADE J)	
					—OR—	
BJ		1	**225-5454**	4	ROD AS-CONNECTING (GRADE H)	
					—OR—	
BJ		1	**225-5458**	4	ROD AS-CONNECTING (GRADE G)	
					—OR—	
BJ		1	**225-5459**	4	ROD AS-CONNECTING (GRADE F)	
					(EACH ROD AS INCLUDES)	
	2A	1	**225-5438**	1	BUSHING	
	2B	1	**225-5439**	2	BOLT-SPECIAL	

A - NOT PART OF THIS GROUP
B - USE AS REQUIRED
J - ENSURE THAT CORRECT ROD LENGTH IS FITTED

367-2789 **PISTON & ROD GP (**contd.**)** **i05222206**

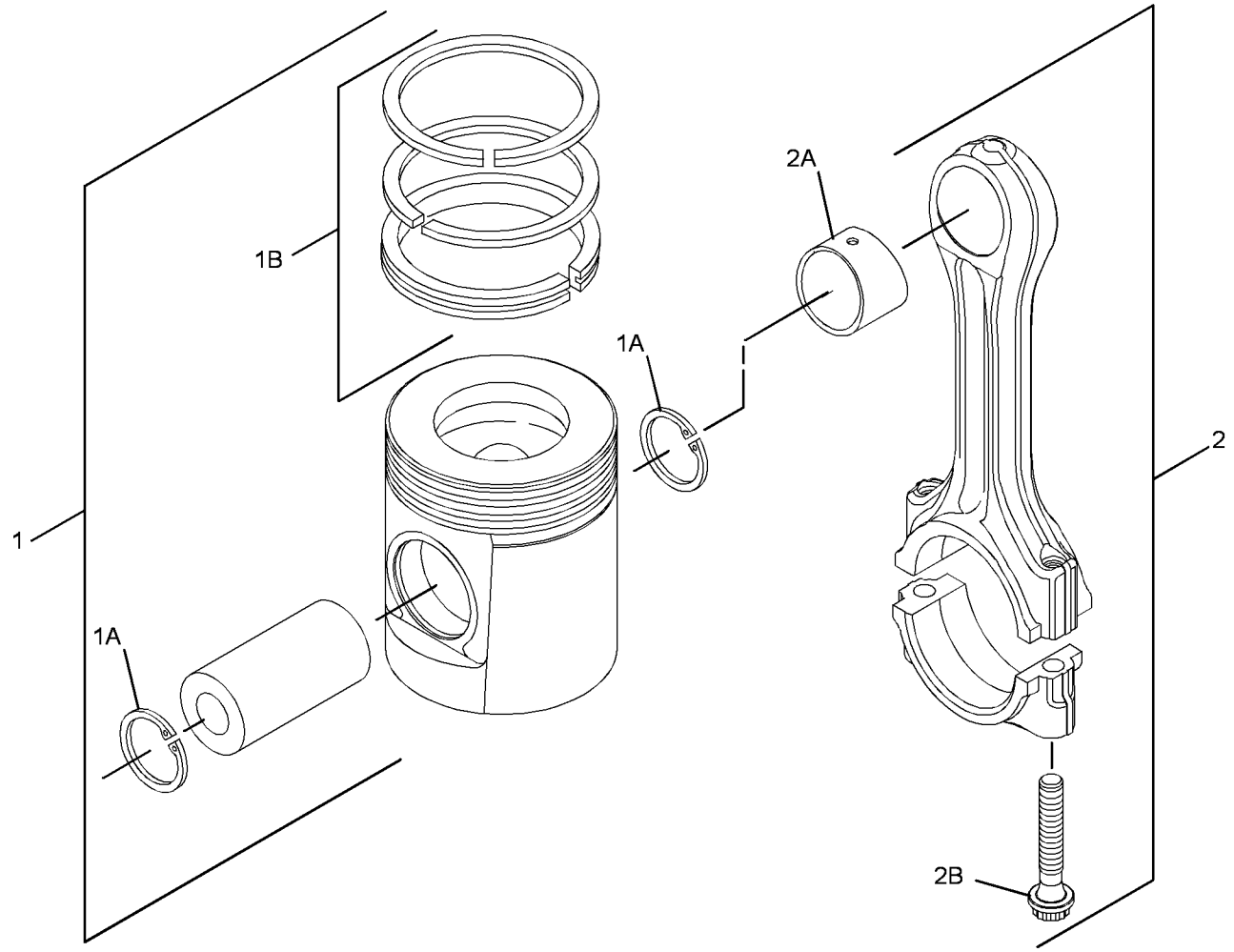

GRAPHIC #1 <END> g01374535

460-0742 PISTON & ROD GP

SMCS-1225 **i05965362**

NOTE	REF NO	GRAPHIC REF	PART NUMBER	QTY	PART NAME 1 2 3 4 5 6 (PRODUCT LEVEL)	SEE PAGE
BJ	1	1	**359-0719**	4	ROD AS-CONNECTING (GRADE R)	
					—OR—	
BJ			**359-0720**	4	ROD AS-CONNECTING (GRADE O)	
					—OR—	
BJ			**359-0721**	4	ROD AS-CONNECTING (GRADE W)	
					—OR—	
BJ			**359-0722**	4	ROD AS-CONNECTING (GRADE G)	
					—OR—	
BJ			**359-0723**	4	ROD AS-CONNECTING (GRADE P)	
					—OR—	
BJ			**359-0724**	4	ROD AS-CONNECTING (GRADE B)	
					(EACH INCLUDES)	
	1A	1	**225-5438**	1	BUSHING	
M	1B	1	**323-9312**	2	BOLT (M10X1X50-MM)	
	2	1	**458-7586**	4	KIT-PISTON & RING	
					(EACH ROD AS INCLUDES)	
	2A	1	**124-3536**	2	RING-RETAINING	
	2B	1	**389-7188**	1	KIT-RING	
					(KIT INCLUDES RING-PISTON)	
					PARTS SHOWN IN GRAPHIC(S) WITHOUT A REFERENCE NUMBER ARE NOT SERVICED SEPARATELY	

B - USE AS REQUIRED
J - ENSURE THAT CORRECT ROD LENGTH IS FITTED
M - METRIC PART

460-0742 **PISTON & ROD GP (**contd.**)** **i05965362**

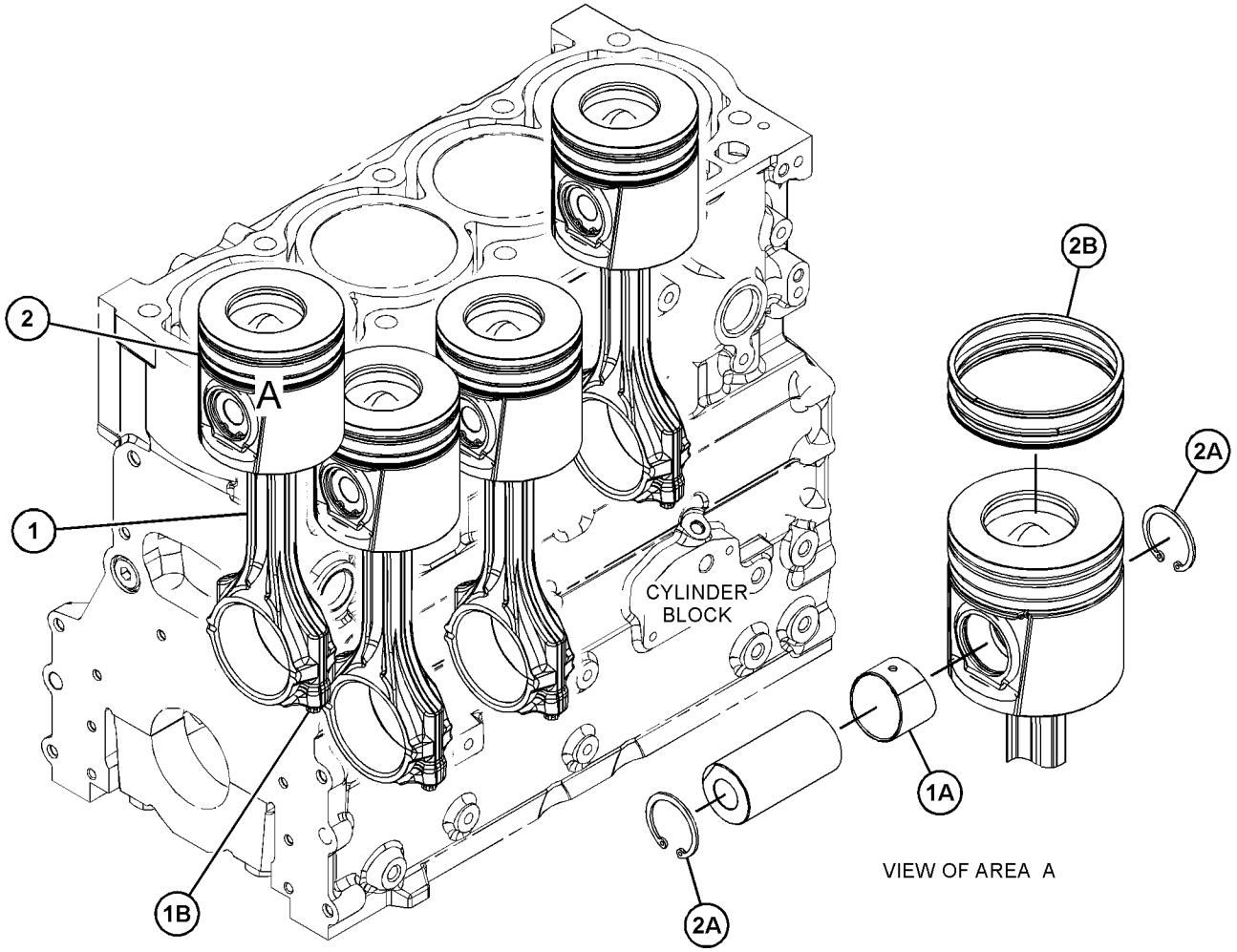

GRAPHIC #1 <END> g03706265

478-6458 PISTON & ROD GP

SMCS-1225 **i06238815**

NOTE	REF NO	GRAPHIC REF	PART NUMBER	QTY	PART NAME 1 2 3 4 5 6 (PRODUCT LEVEL)	SEE PAGE
BJ	1	1	**359-0719**	4	ROD AS-CONNECTING (GRADE R)	
					—OR—	
BJ		1	**359-0720**	4	ROD AS-CONNECTING (GRADE O)	
					—OR—	
BJ		1	**359-0721**	4	ROD AS-CONNECTING (GRADE W)	
					—OR—	
BJ		1	**359-0722**	4	ROD AS-CONNECTING (GRADE G)	
					—OR—	
BJ		1	**359-0723**	4	ROD AS-CONNECTING (GRADE P)	
					—OR—	
BJ		1	**359-0724**	4	ROD AS-CONNECTING (GRADE B)	
					(EACH ROD AS INCLUDES)	
	1A	1	**225-5438**	1	BUSHING	
M	1B	1	**323-9312**	2	BOLT (M10X1X50-MM)	
	2	1	**458-7586**	4	KIT-PISTON & RING	
					(EACH INCLUDES)	
	2A	1	**124-3536**	2	RING-RETAINING	
	2B	1	**389-7188**	1	KIT-RING	
					AVAILABLE REPAIR KIT(S):	
AB			**380-2065**	1	KIT-PISTON RING (0.5-MM OS)	
					(INCLUDES RINGS)	
AB			**466-4849**	1	KIT-PISTON RING (1-MM OS)	
					(INCLUDES RINGS)	

A - NOT PART OF THIS GROUP
B - USE AS REQUIRED
J - ENSURE THAT CORRECT ROD LENGTH IS FITTED
M - METRIC PART

478-6458 **PISTON & ROD GP** (contd.) **i06238815**

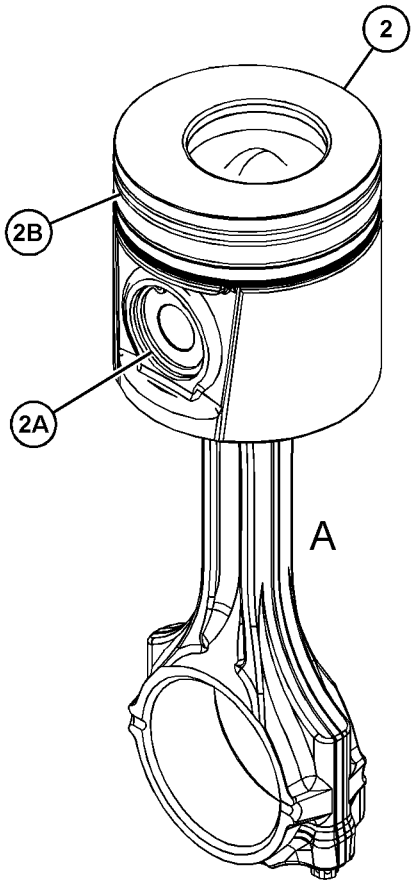

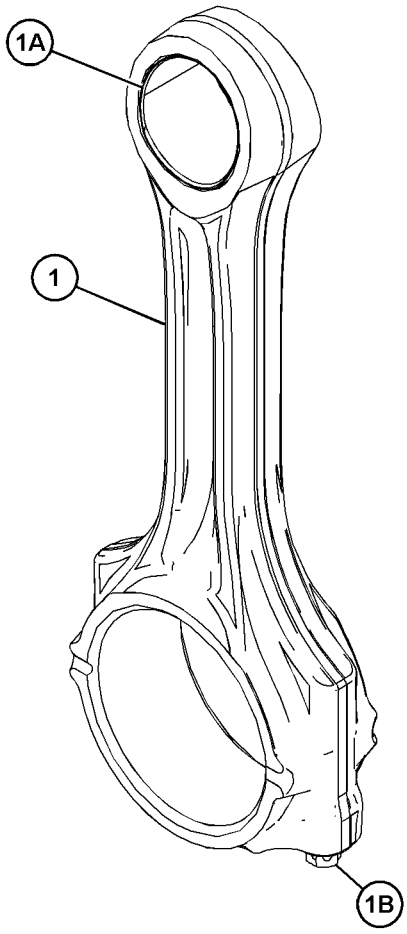

VIEW OF AREA A
(PARTS REMOVED FOR CLARITY)

GRAPHIC #1 <END> g06115178

274-4720 PISTON GP

SMCS-1214 **i09239888**

NOTE	REF NO	GRAPHIC REF	PART NUMBER	QTY	PART NAME 1 2 3 4 5 6 (PRODUCT LEVEL)	SEE PAGE
	1	1	**225-5437**	4	PISTON AS	
					(EACH INCLUDES)	
	1A	1	**124-3536**	2	RING-RETAINING	
	1B	1	**225-5436**	1	KIT-PISTON RING	
AB		1	**334-2318**		KIT-PISTON RING (1-MM OS)	
AB		1	**334-2319**		KIT-PISTON RING (0.5-MM OS)	
AB		1	**288-1394**		PISTON AS (0.5-MM OS)	
AB		1	**288-1395**		PISTON AS (1-MM OS)	
BJ	2	1	**359-0724**	4	ROD AS-CONNECTING (GRADE B)	
					—OR—	
BJ		1	**359-0723**	4	ROD AS-CONNECTING (GRADE P)	
					—OR—	
BJ		1	**359-0722**	4	ROD AS-CONNECTING (GRADE G)	
					—OR—	
BJ		1	**359-0721**	4	ROD AS-CONNECTING (GRADE W)	
					—OR—	
BJ		1	**359-0720**	4	ROD AS-CONNECTING (GRADE O)	
					—OR—	
BJ		1	**359-0719**	4	ROD AS-CONNECTING (GRADE R)	
					(EACH ROD ASSEMBLY INCLUDES)	
	2A	1	**225-5438**	1	BUSHING	
M	2B	1	**323-9312**	2	BOLT (M10X1X50-MM)	

A - NOT PART OF THIS GROUP
B - USE AS REQUIRED
J - INSURE CORRECT ROD LENGTH IS FITTED
M - METRIC PART

274-4720 **PISTON GP (**contd.**)** **i09239888**

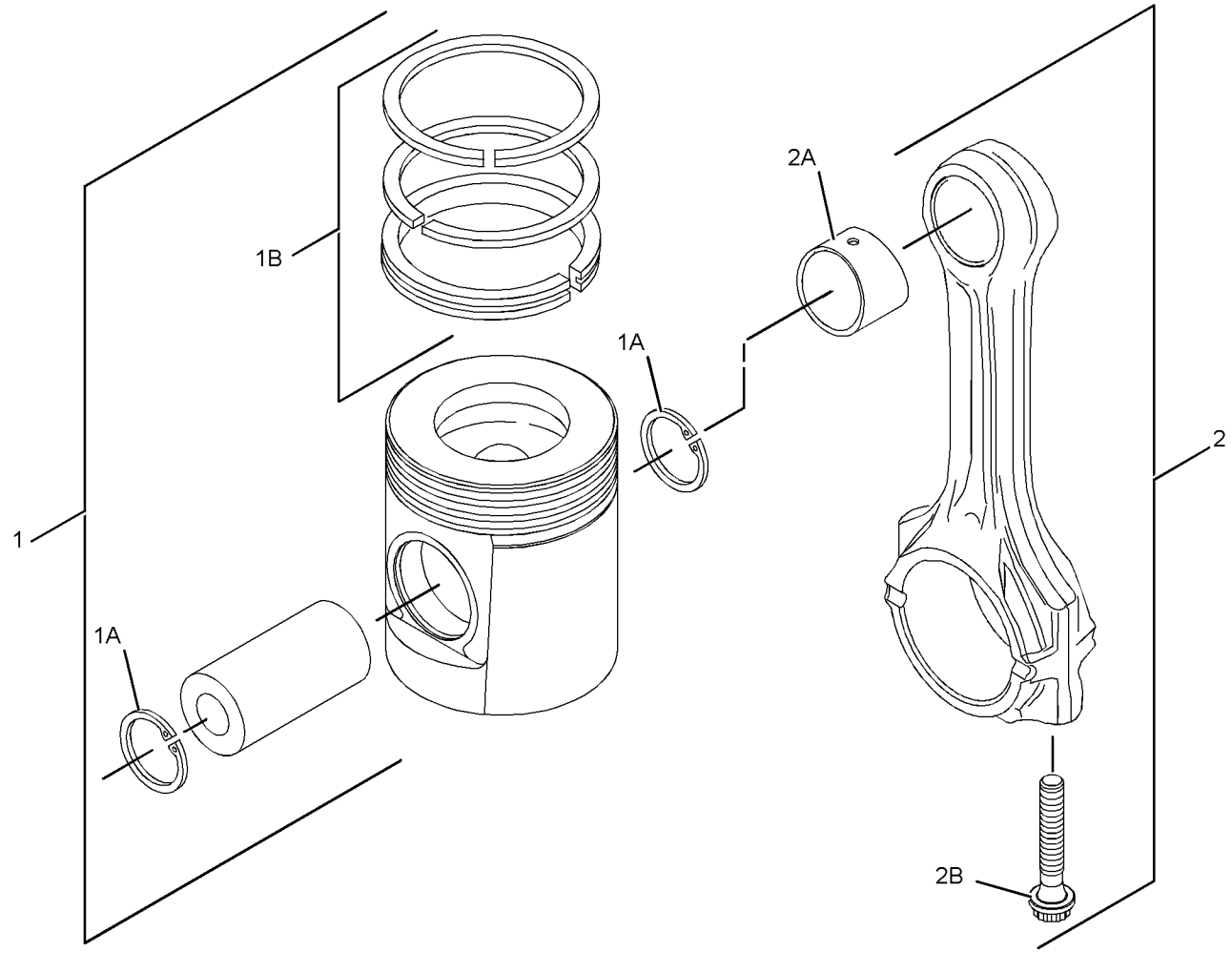

GRAPHIC #1 <END> g02201533

225-4317 PLUG GP-ENGINE

FRONT HOUSING,CYLINDER HEAD
ALSO AN ATTACHMENT

SMCS-1100, 1201 **i01862406**

NOTE	REF NO	GRAPHIC REF	PART NUMBER	QTY	PART NAME 1 2 3 4 5 6 (PRODUCT LEVEL)	SEE PAGE
	1	1	**2B-0858**	3	PLUG-PIPE	

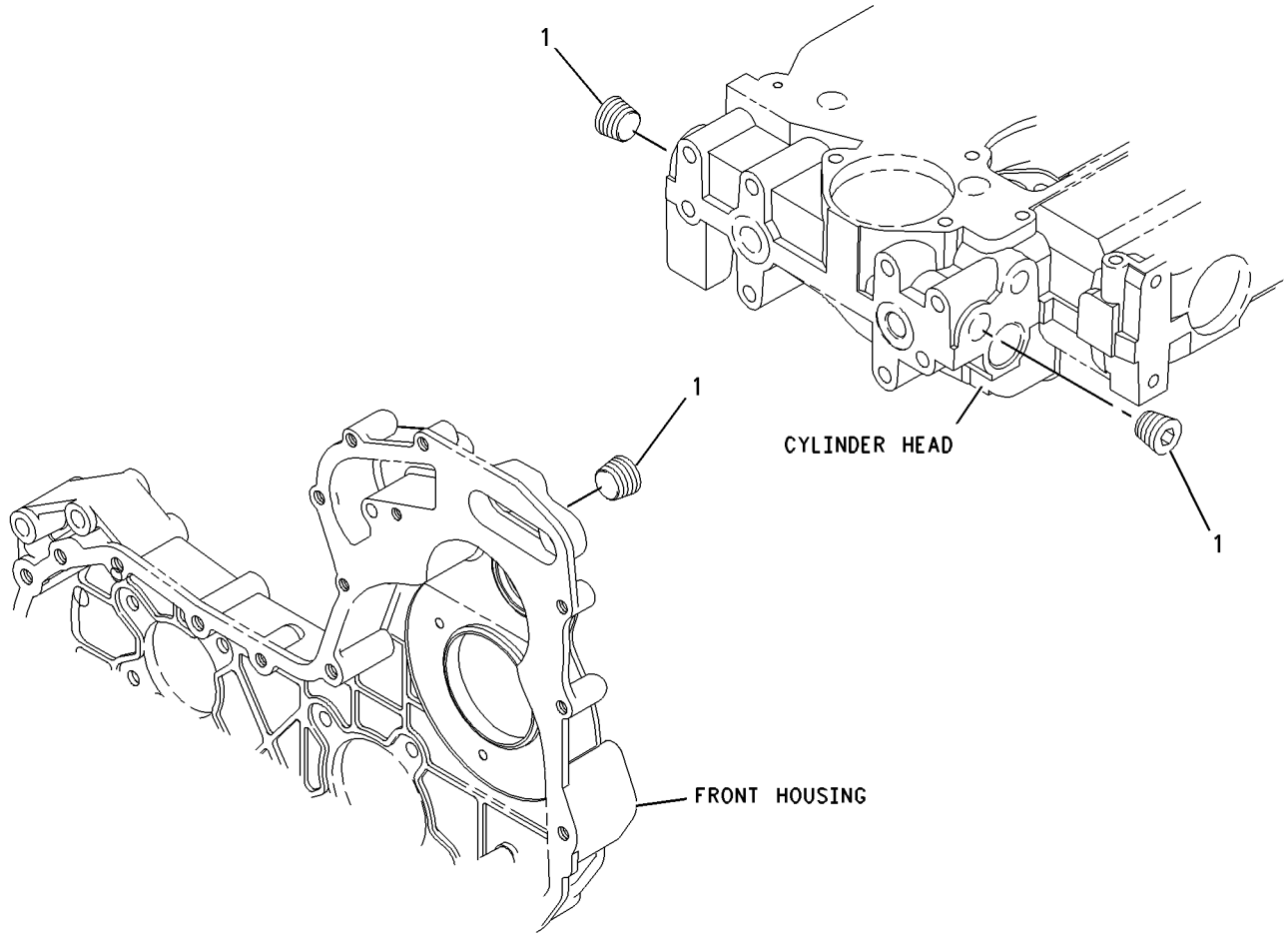

GRAPHIC #1 <END> g00911937

225-8304 PLUG GP-ENGINE

AN ATTACHMENT

SMCS-1100, 1201 **i01979096**

NOTE	REF NO	GRAPHIC REF	PART NUMBER	QTY	PART NAME 1 2 3 4 5 6 (PRODUCT LEVEL)	SEE PAGE
	1	1	**231-0046**	1	PLUG	

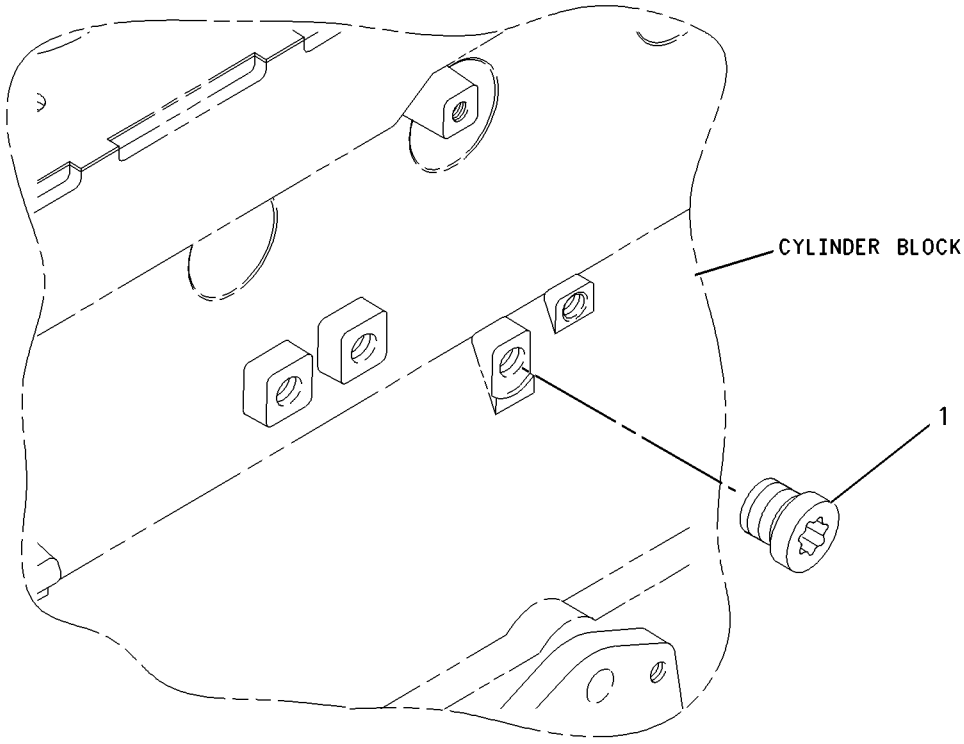

GRAPHIC #1 <END> g00911955

225-8859 PLUG GP-ENGINE

AN ATTACHMENT

SMCS-1100, 1201 **i01874864**

NOTE	REF NO	GRAPHIC REF	PART NUMBER	QTY	PART NAME 1 2 3 4 5 6 (PRODUCT LEVEL)	SEE PAGE
	1	1	**225-8858**	2	PLUG	

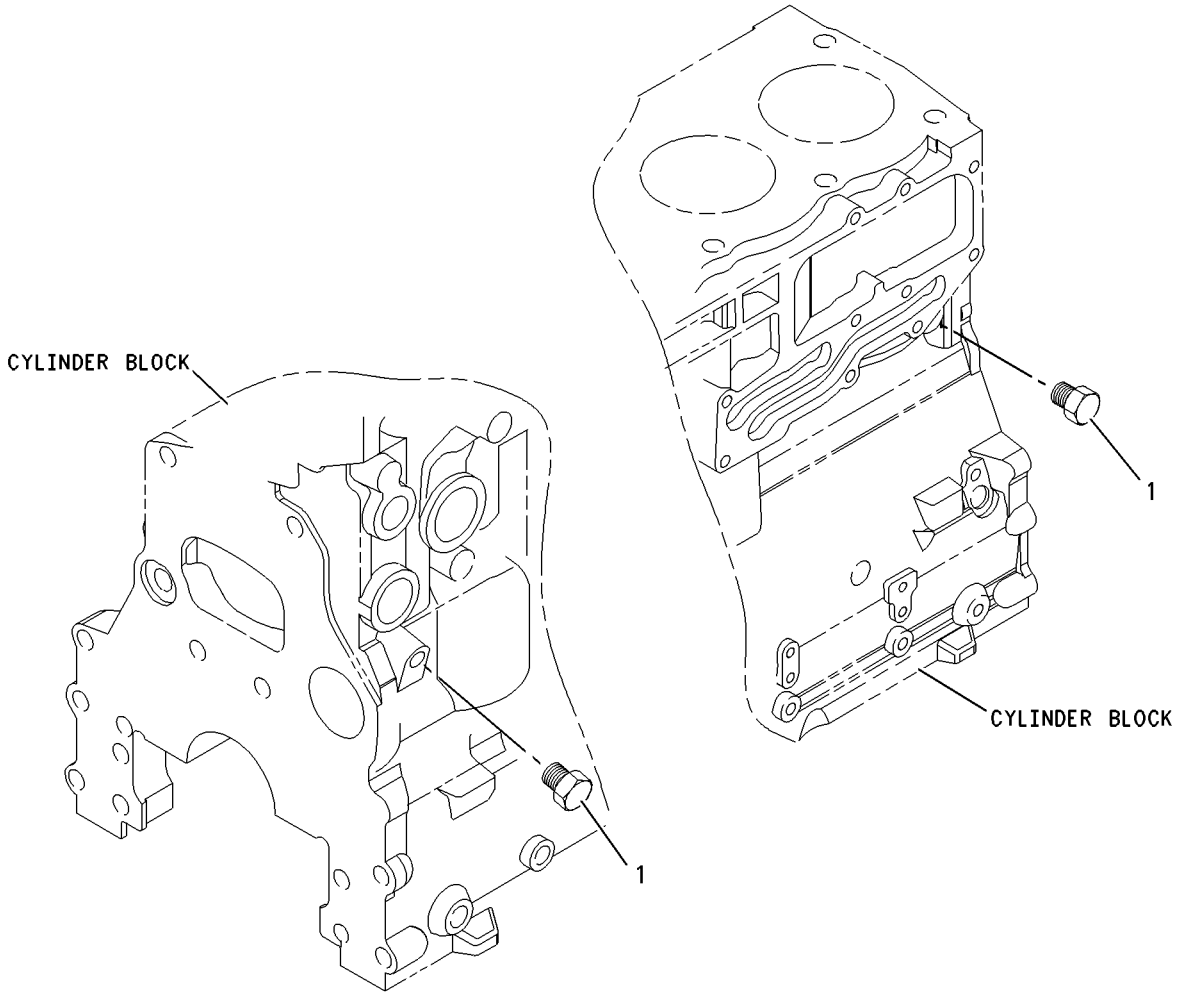

GRAPHIC #1 <END> g00912742

230-7569 PLUG GP-ENGINE

ALSO AN ATTACHMENT

SMCS-1100, 1201 **i01876806**

NOTE	REF NO	GRAPHIC REF	PART NUMBER	QTY	PART NAME 1 2 3 4 5 6 (PRODUCT LEVEL)	SEE PAGE
	1	1	**231-0046**	1	PLUG	

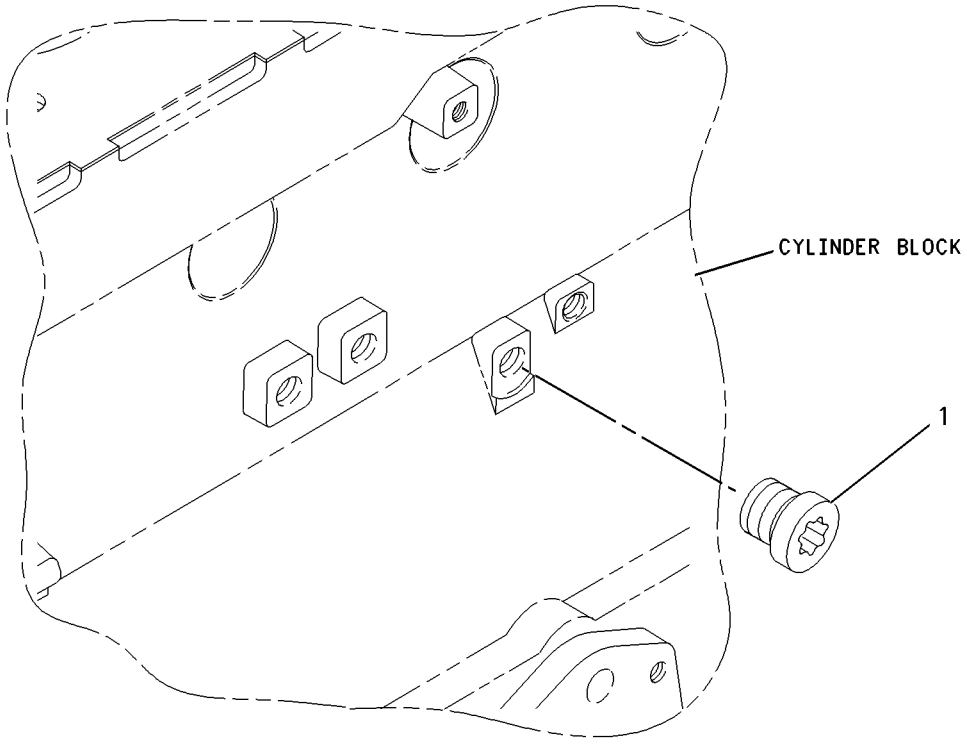

GRAPHIC #1 <END> g00911955

232-3716 PLUG GP-ENGINE

CYLINDER BLOCK

ALSO AN ATTACHMENT

SMCS-1100, 1201 **i01863028**

NOTE	REF NO	GRAPHIC REF	PART NUMBER	QTY	PART NAME 1 2 3 4 5 6 (PRODUCT LEVEL)	SEE PAGE
	1	1	**035-8063**	1	PLUG	

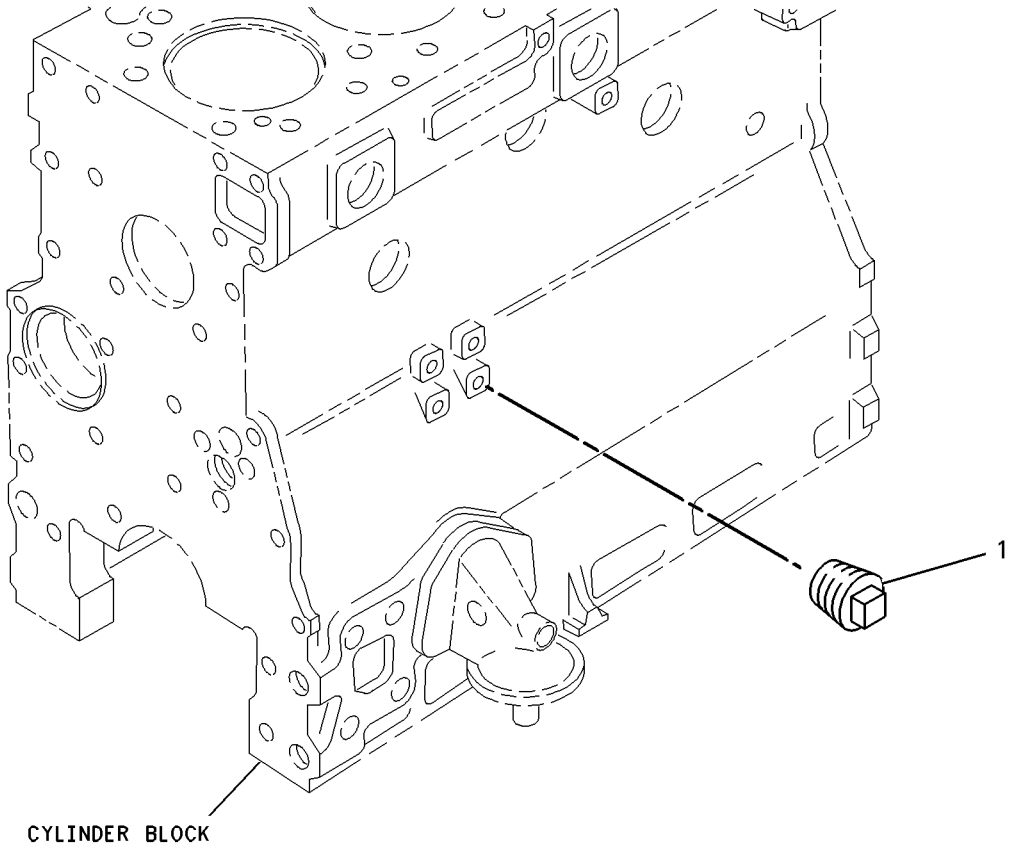

GRAPHIC #1 <END> g00777007

232-6204 PLUG GP-ENGINE

CYLINDER HEAD
ALSO AN ATTACHMENT
TYPE 1

SMCS-1100, 1201 **i01863022**

NOTE	REF NO	GRAPHIC REF	PART NUMBER	QTY	PART NAME 1 2 3 4 5 6 (PRODUCT LEVEL)	SEE PAGE
	1	1	**199-9751**	1	SEAL-O-RING	
	2	1	**232-1322**	1	PLUG	

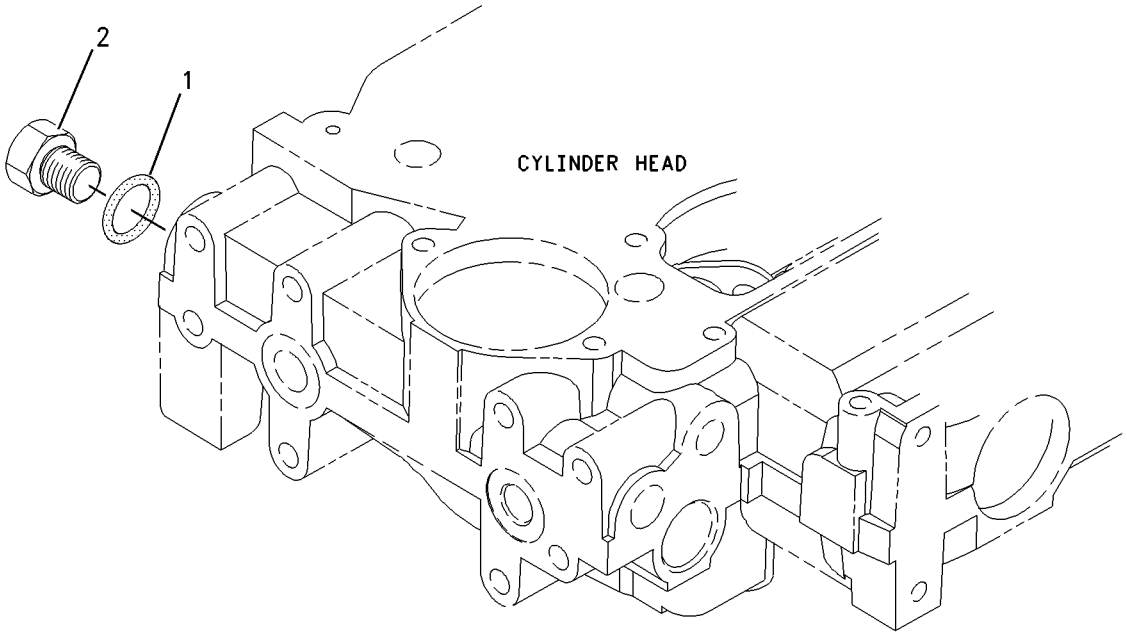

GRAPHIC #1 <END> g00950934

232-6204 PLUG GP-ENGINE

CYLINDER HEAD
ALSO AN ATTACHMENT
TYPE 2

SMCS-1100, 1201

i09734227

NOTE	REF NO	GRAPHIC REF	PART NUMBER	QTY	PART NAME 1 2 3 4 5 6 (PRODUCT LEVEL)	SEE PAGE
C	1	1	**470-4925**	1	PLUG	

C - CHANGE FROM PREVIOUS TYPE

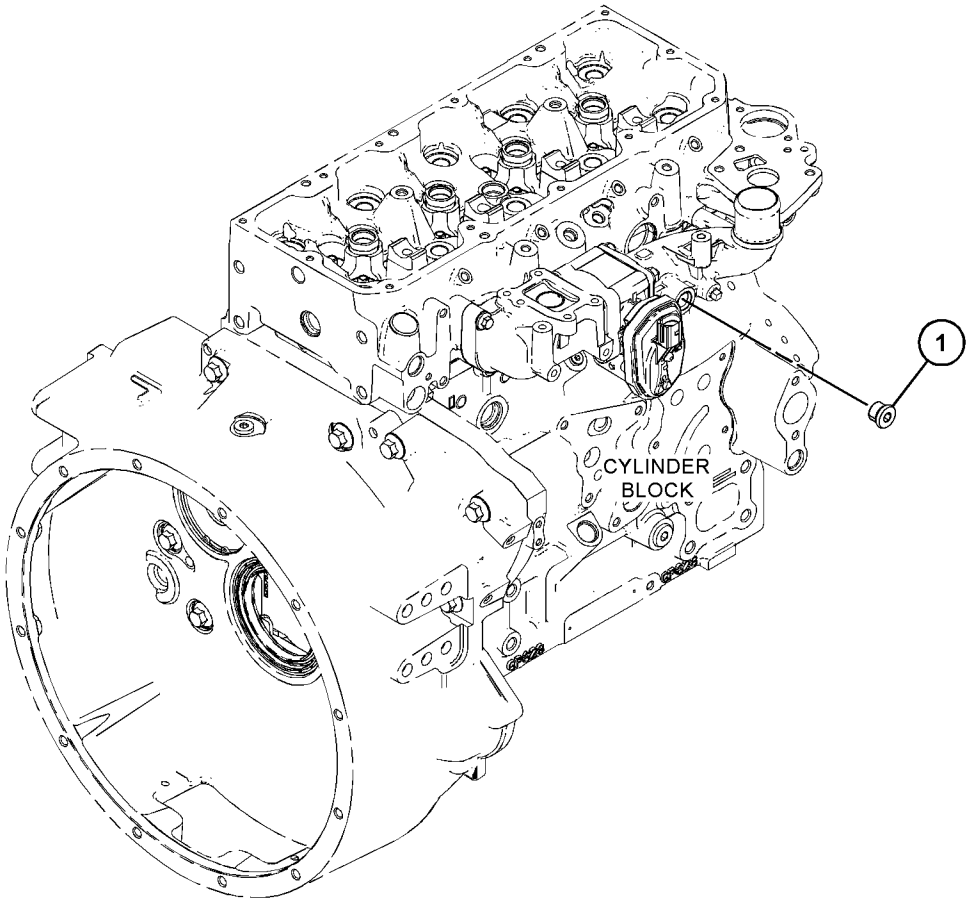

GRAPHIC #1 <END> g07577163

233-9426 PLUG GP-ENGINE

ALSO AN ATTACHMENT

SMCS-1100, 1201 **i01872169**

NOTE	REF NO	GRAPHIC REF	PART NUMBER	QTY	PART NAME 1 2 3 4 5 6 (PRODUCT LEVEL)	SEE PAGE
	1	1	**233-9436**	4	PLUG	

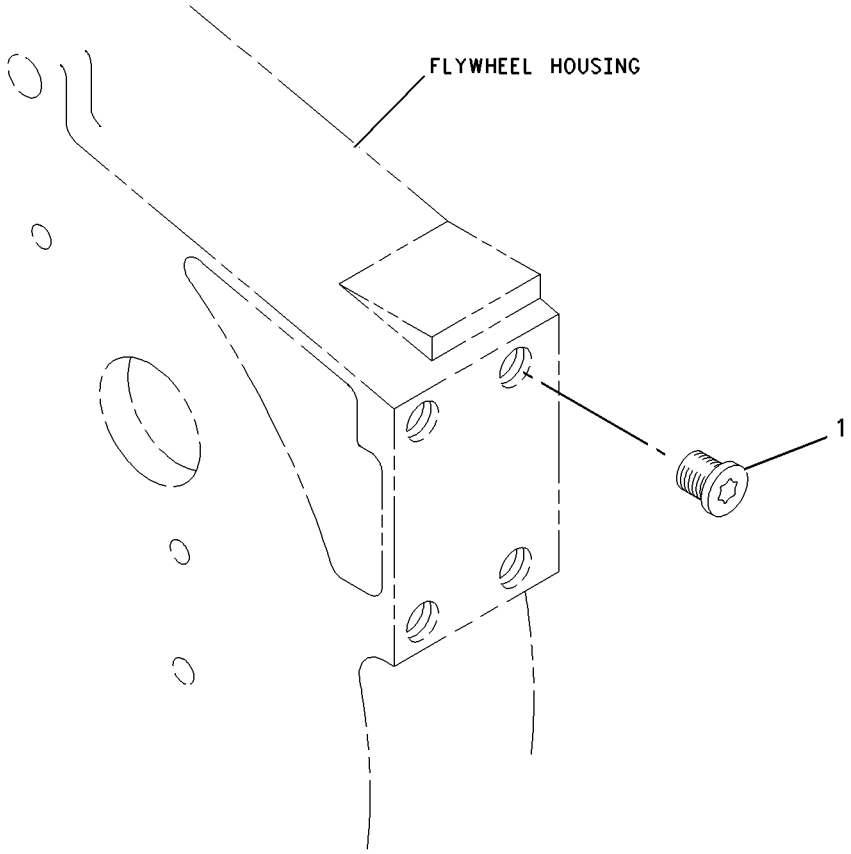

GRAPHIC #1 <END> g00954990

234-4215 PLUG GP-ENGINE

SMCS-1100, 1201 **i06811041**

NOTE	REF NO	GRAPHIC REF	PART NUMBER	QTY	PART NAME 1 2 3 4 5 6 (PRODUCT LEVEL)	SEE PAGE
	1	1	**2B-0858**	1	PLUG-PIPE	
	2	1	**474-1553**	1	ADAPTER	
	3	1	**9X-3959**	1	ELBOW	

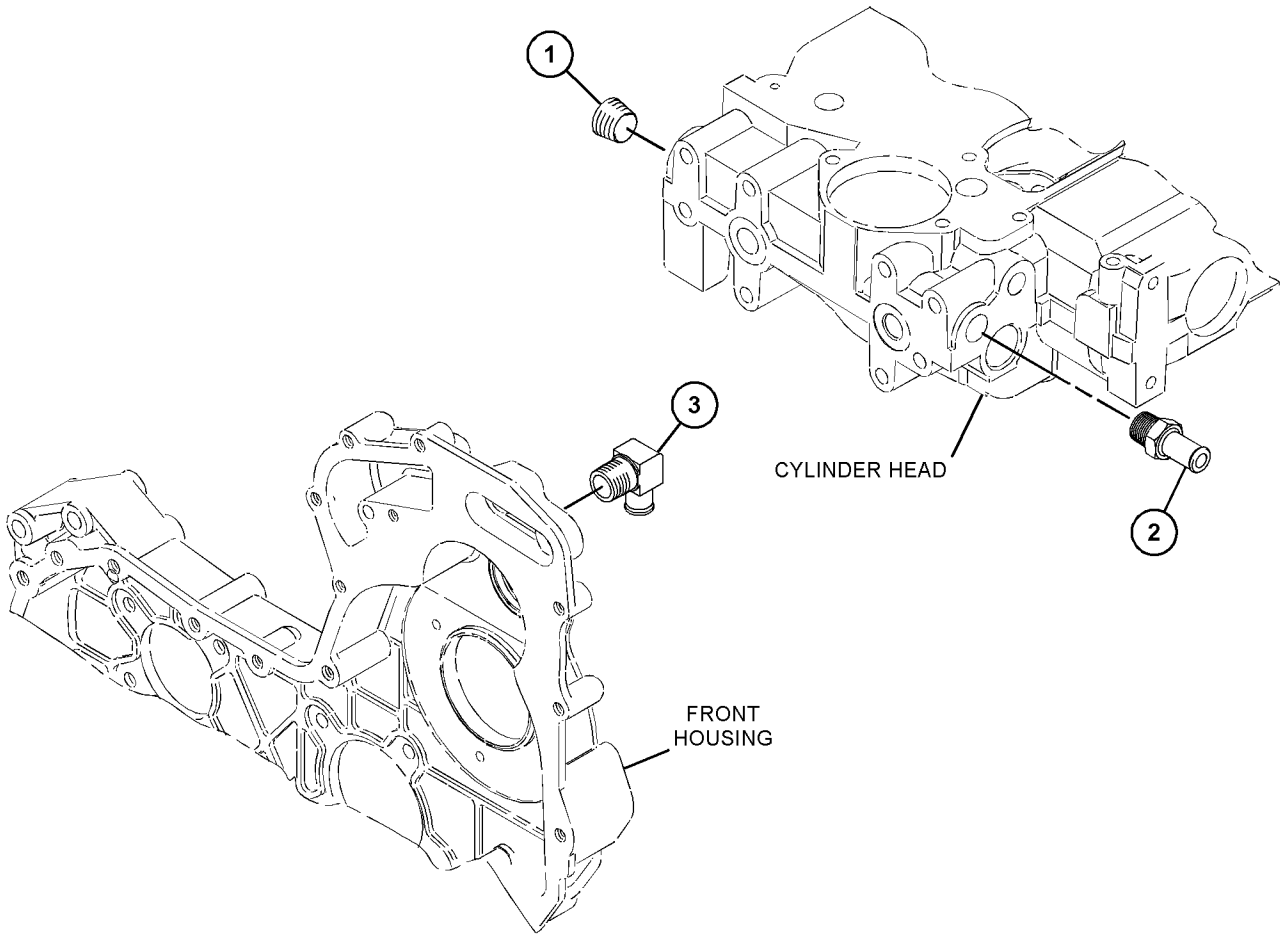

GRAPHIC #1 <END> g06195362

235-2624 PLUG GP-ENGINE

SMCS-1100, 1201

i01889975

NOTE	REF NO	GRAPHIC REF	PART NUMBER	QTY	PART NAME 1 2 3 4 5 6 (PRODUCT LEVEL)	SEE PAGE
	1	1	**6H-3616**	4	PLUG-PROTECTION	
	2	1	**233-9436**	4	PLUG	

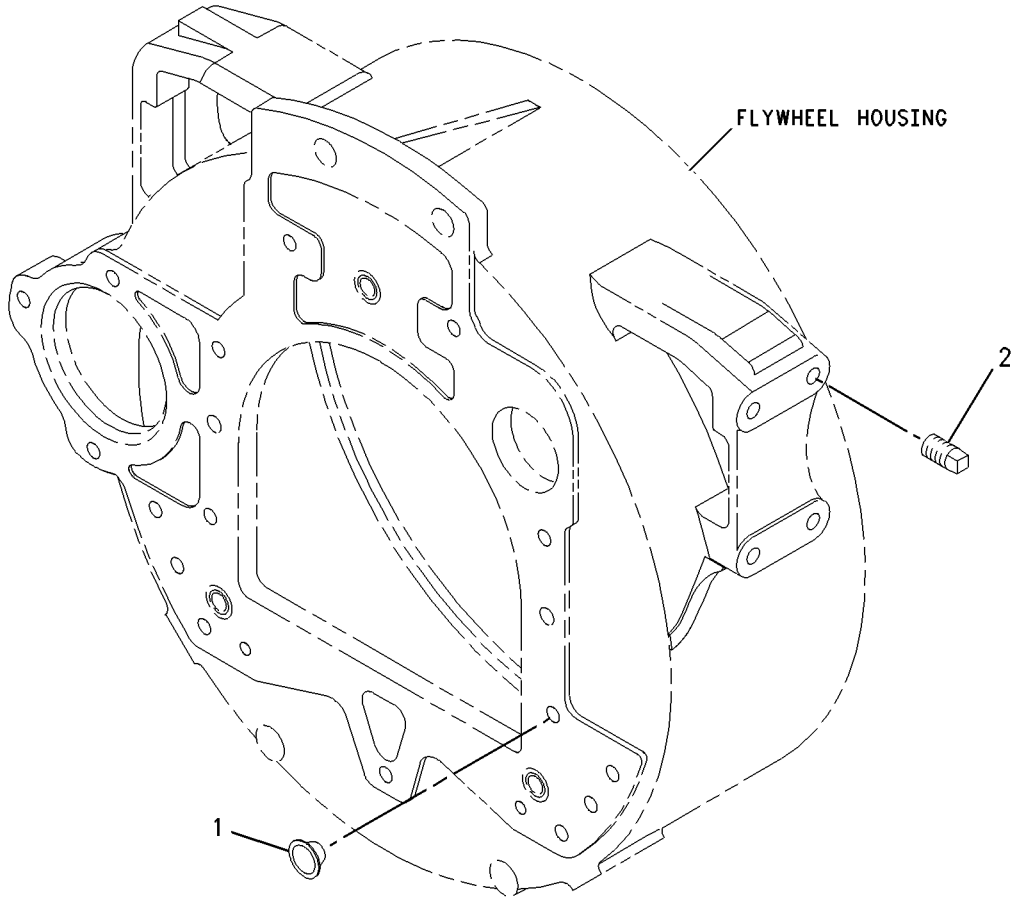

GRAPHIC #1 <END> g00985106

243-2416 PLUG GP-ENGINE

SMCS-1100, 1201 **i01964473**

NOTE	REF NO	GRAPHIC REF	PART NUMBER	QTY	PART NAME 1 2 3 4 5 6 (PRODUCT LEVEL)	SEE PAGE
	1	1	**6H-3616**	6	PLUG-PROTECTION	
	2	1	**233-9436**	4	PLUG	

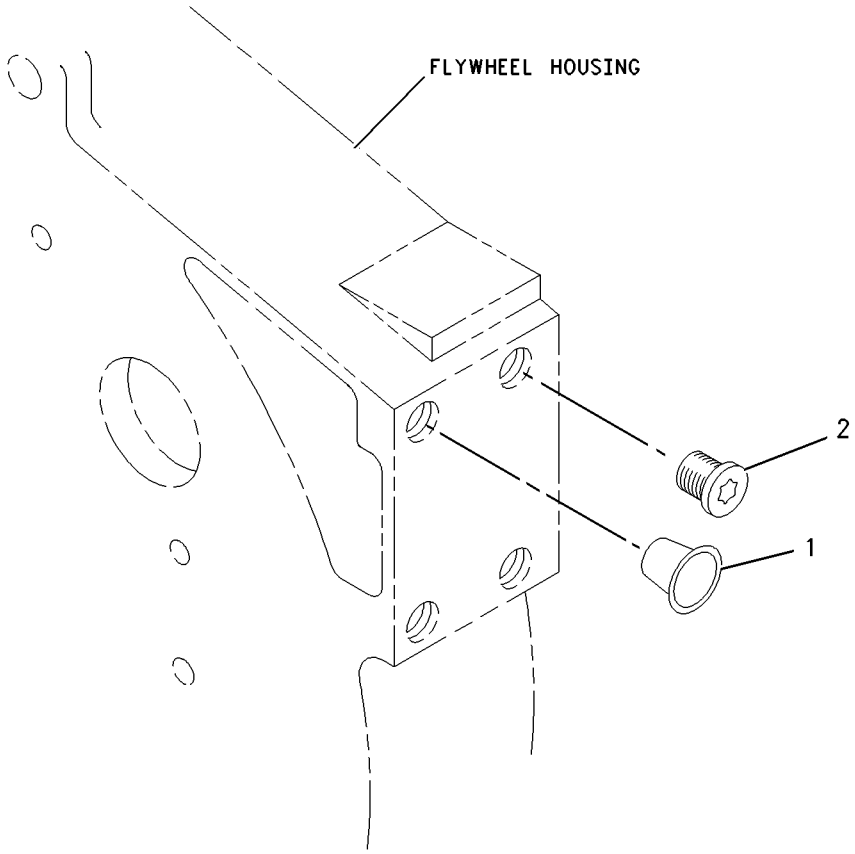

GRAPHIC #1 <END> g00984468

253-2479 PLUG GP-ENGINE—CYLINDER BLOCK

SMCS-1100, 1201 **i02091108**

NOTE	REF NO	GRAPHIC REF	PART NUMBER	QTY	PART NAME 1 2 3 4 5 6 (PRODUCT LEVEL)	SEE PAGE
	1	1	**035-8063**	1	PLUG	
	2	1	**199-9267**	1	SEAL-O-RING	
	3	1	**232-3861**	1	PLUG (BLANKING)	

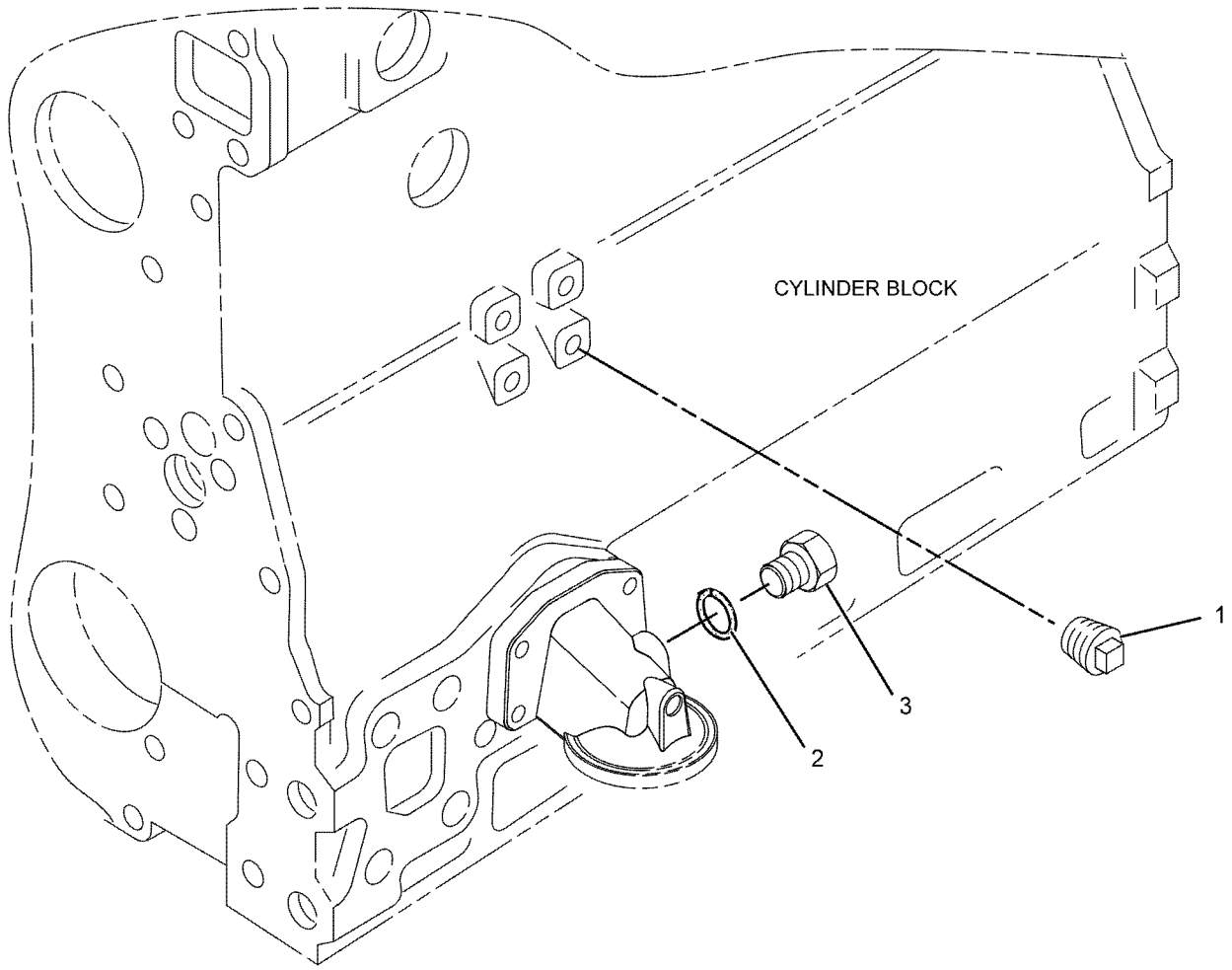

GRAPHIC #1 <END> g01079757

234-3542 PLUG GP-FLYWHEEL HOUSING

SMCS-1157 **i01889650**

NOTE	REF NO	GRAPHIC REF	PART NUMBER	QTY	PART NAME 1 2 3 4 5 6 (PRODUCT LEVEL)	SEE PAGE
	1	1	**6H-3616**	10	PLUG-PROTECTION	
	2	1	**233-9436**	4	PLUG	

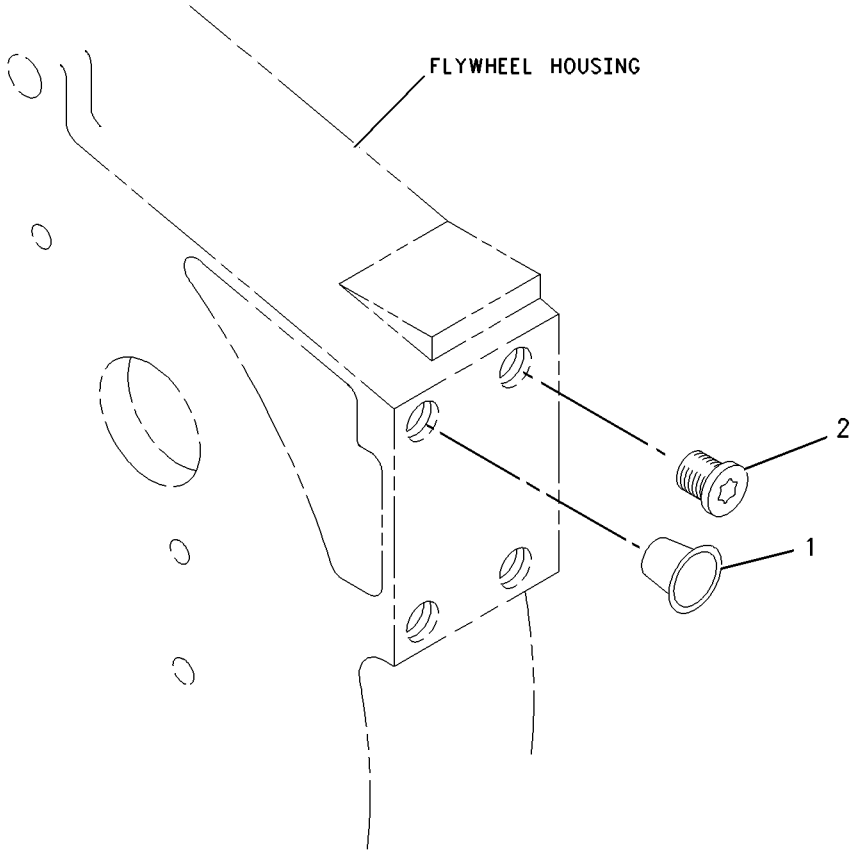

GRAPHIC #1 <END> g00984468

230-7552 PULLEY GP–FAN AUX

ALSO AN ATTACHMENT

SMCS-1205, 1359, 1384, 1425 **i01876807**

NOTE	REF NO	GRAPHIC REF	PART NUMBER	QTY	PART NAME 1 2 3 4 5 6 (PRODUCT LEVEL)	SEE PAGE
	1	1	**130-3881**	1	PULLEY-FAN	

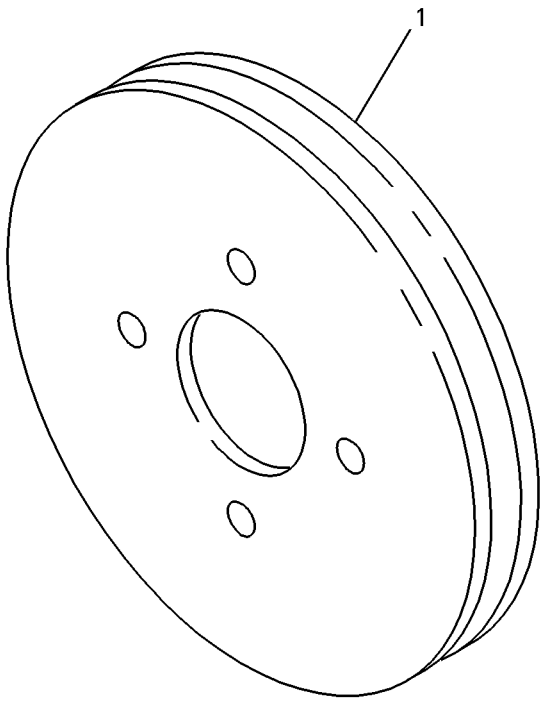

GRAPHIC #1 <END> g00734082

230-7351 PULLEY GP-CRANKSHAFT

ALSO AN ATTACHMENT

SMCS-1205 **i01912200**

NOTE	REF NO	GRAPHIC REF	PART NUMBER	QTY	PART NAME 1 2 3 4 5 6 (PRODUCT LEVEL)	SEE PAGE
	1	1	**6I-0501**	1	BLOCK	
	2	1	**6I-3981**	1	PULLEY	
	3	1	**7W-4634**	3	BOLT (7/16-20X1.5-IN)	

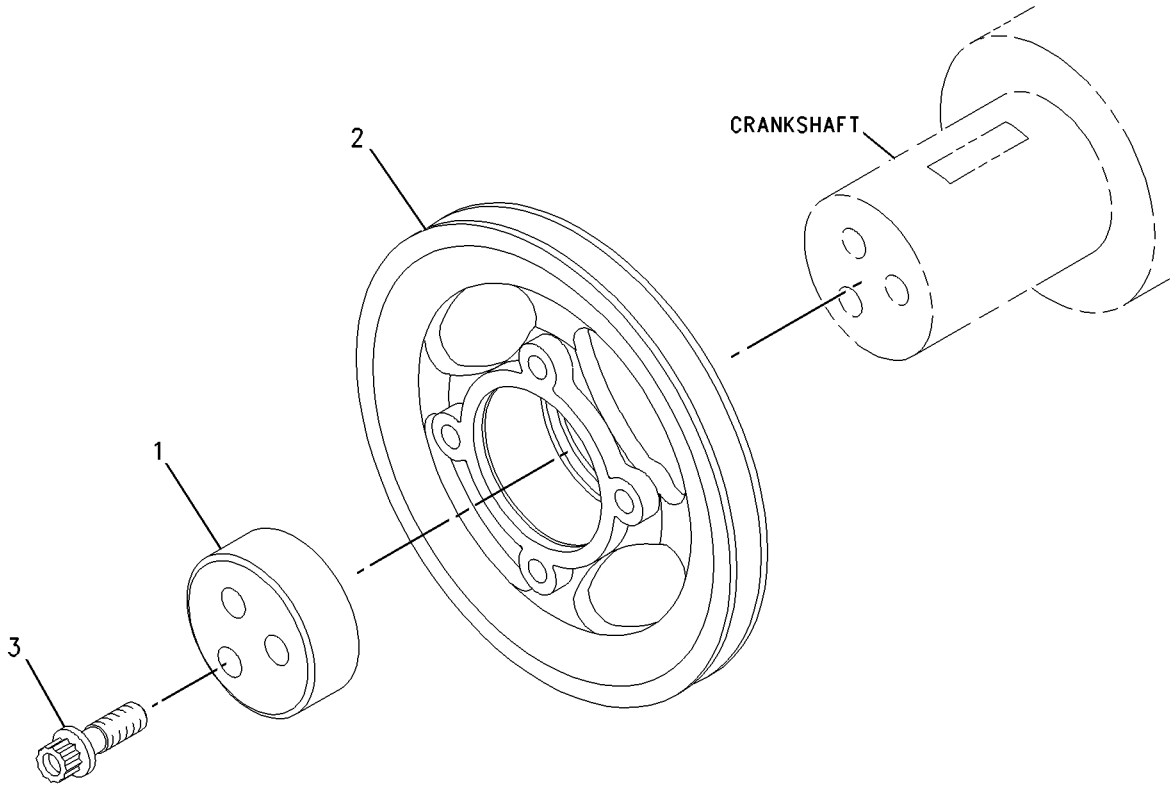

GRAPHIC #1 <END> g00997461

230-7352 PULLEY GP-CRANKSHAFT

ALSO AN ATTACHMENT

SMCS-1205 **i01872192**

NOTE	REF NO	GRAPHIC REF	PART NUMBER	QTY	PART NAME 1 2 3 4 5 6 (PRODUCT LEVEL)	SEE PAGE
	1	1	**6I-0501**	1	BLOCK	
	2	1	**7W-4634**	3	BOLT (7/16-20X1.5-IN)	
	3	1	**111-3297**	1	PULLEY	

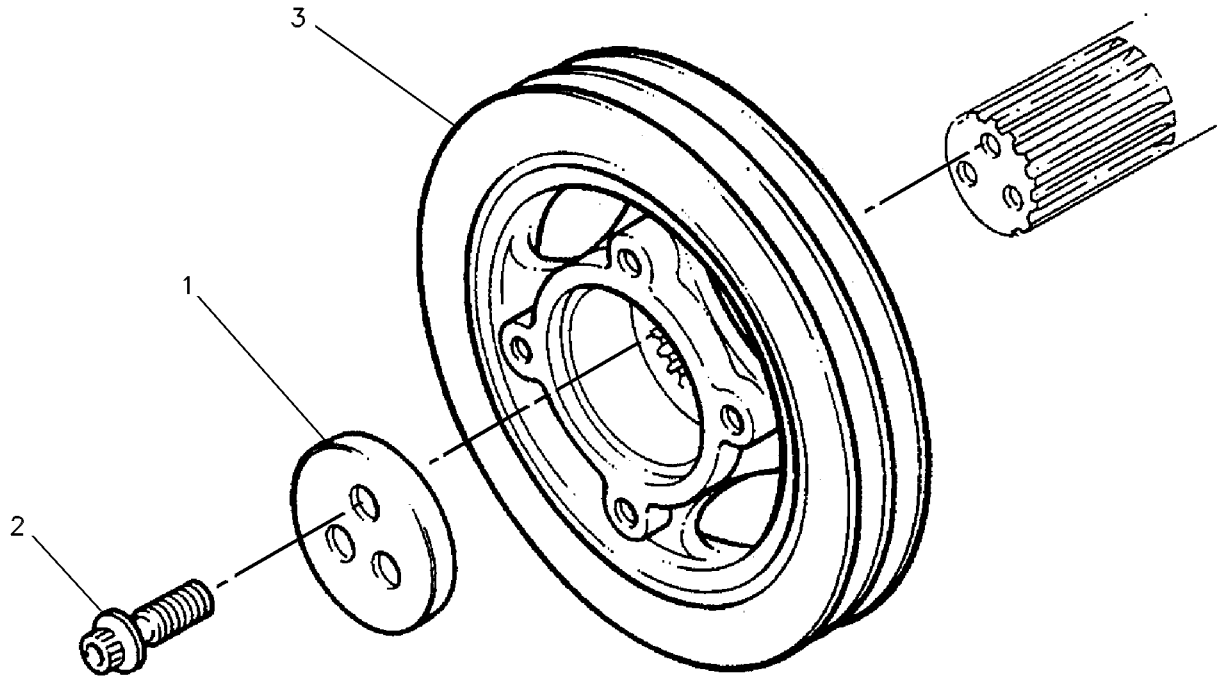

GRAPHIC #1 <END> g00658339

230-7353 PULLEY GP-CRANKSHAFT

ALSO AN ATTACHMENT

SMCS-1205 **i02009617**

NOTE	REF NO	GRAPHIC REF	PART NUMBER	QTY	PART NAME 1 2 3 4 5 6 (PRODUCT LEVEL)	SEE PAGE
	1	1	**6I-0501**	1	BLOCK	
	2	1	**6I-0502**	1	PULLEY	
	3	1	**7W-4634**	3	BOLT (7/16-20X1.5-IN)	

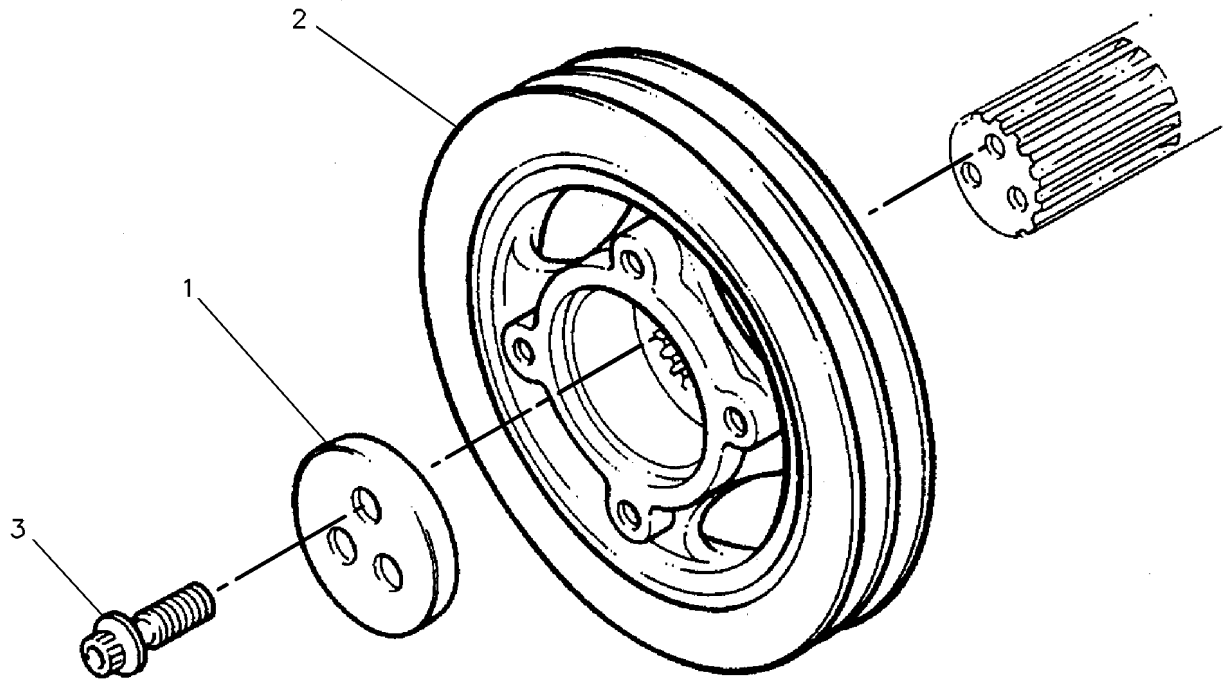

GRAPHIC #1 <END> g00130941

246-3196 PULLEY GP-CRANKSHAFT

S/N: 3341-25630

SMCS-1205 **i02056045**

NOTE	REF NO	GRAPHIC REF	PART NUMBER	QTY	PART NAME 1 2 3 4 5 6 (PRODUCT LEVEL)	SEE PAGE
	1	1	**6I-0501**	1	BLOCK	
	2	1	**7W-4634**	3	BOLT (7/16-20X1.5-IN)	
	3	1	**246-3195**	1	PULLEY	

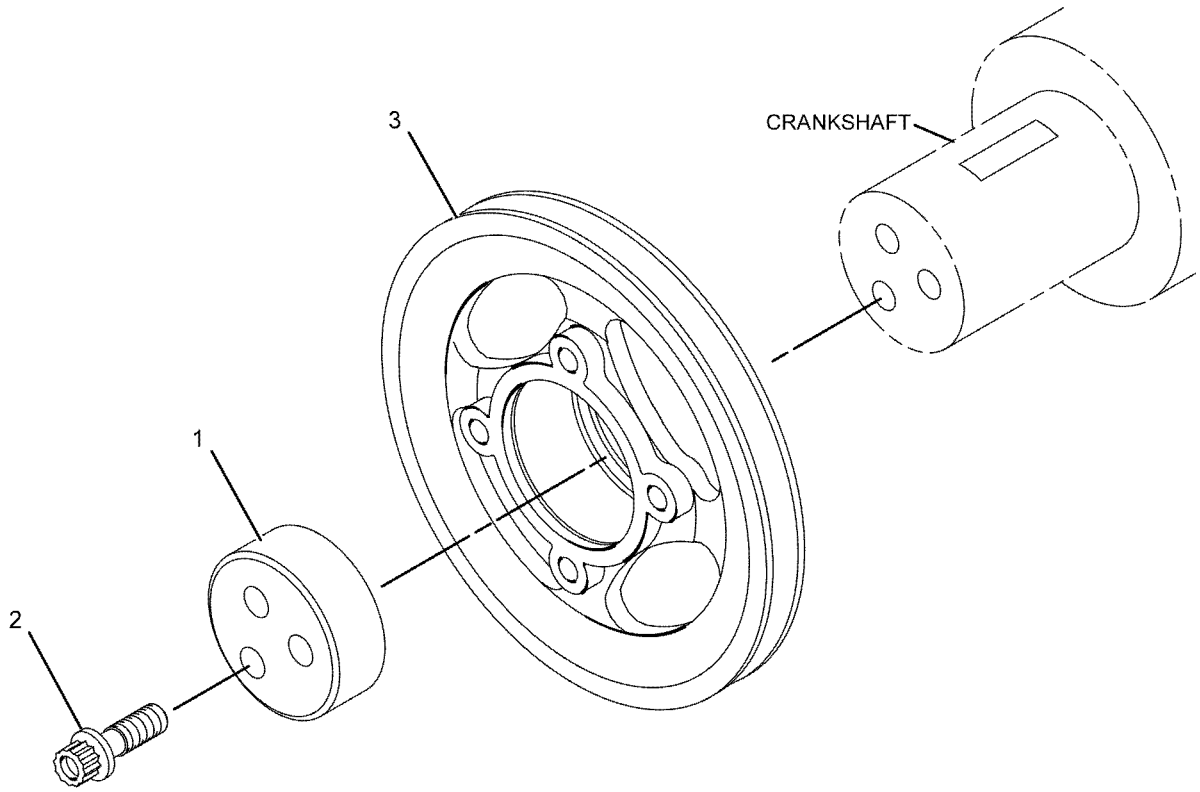

GRAPHIC #1 <END> g01080419

360-7349 PULLEY GP-CRANKSHAFT

SMCS-1205 **i03900177**

NOTE	REF NO	GRAPHIC REF	PART NUMBER	QTY	PART NAME 1 2 3 4 5 6 (PRODUCT LEVEL)	SEE PAGE
	1	1	**334-9334**	3	BOLT	
	2	1	**359-0745**	1	PULLEY-CRANKSHAFT	

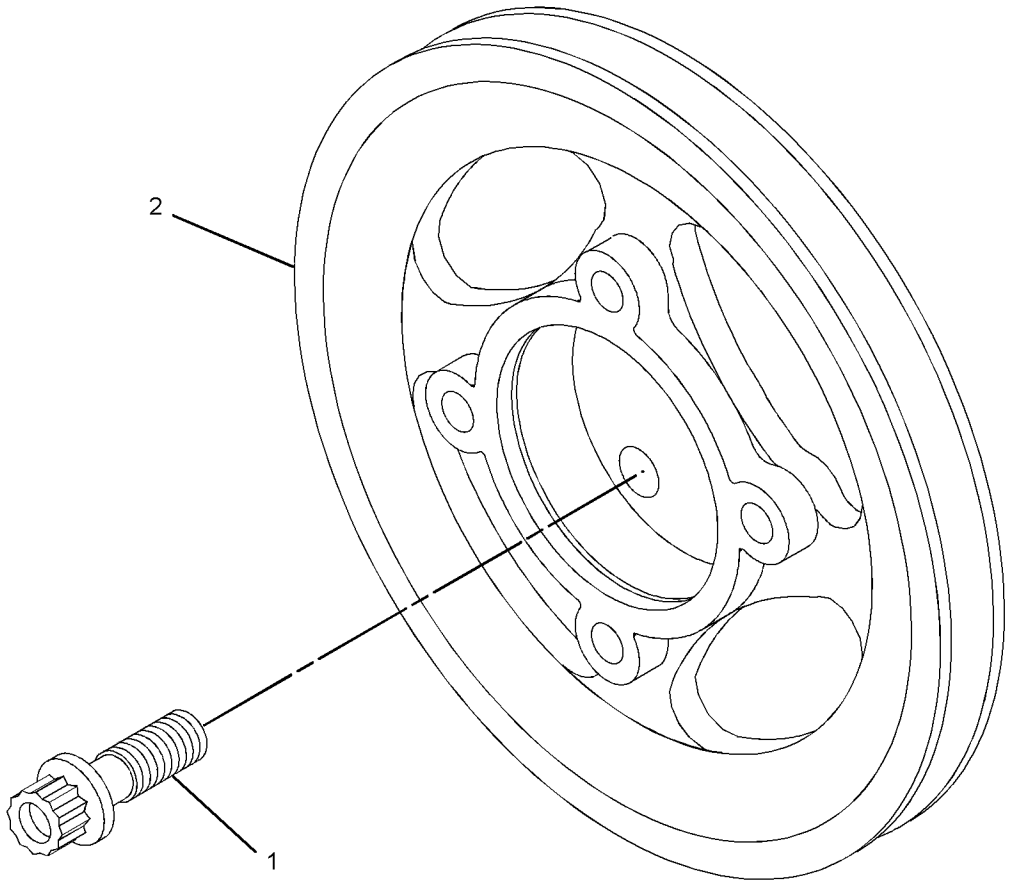

GRAPHIC #1 <END> g02154849

360-7350 PULLEY GP-CRANKSHAFT

ALSO AN ATTACHMENT

SMCS-1205 **i03900160**

NOTE	REF NO	GRAPHIC REF	PART NUMBER	QTY	PART NAME 1 2 3 4 5 6 (PRODUCT LEVEL)	SEE PAGE
	1	1	**334-9334**	3	BOLT	
	2	1	**359-0746**	1	PULLEY-CRANKSHAFT	

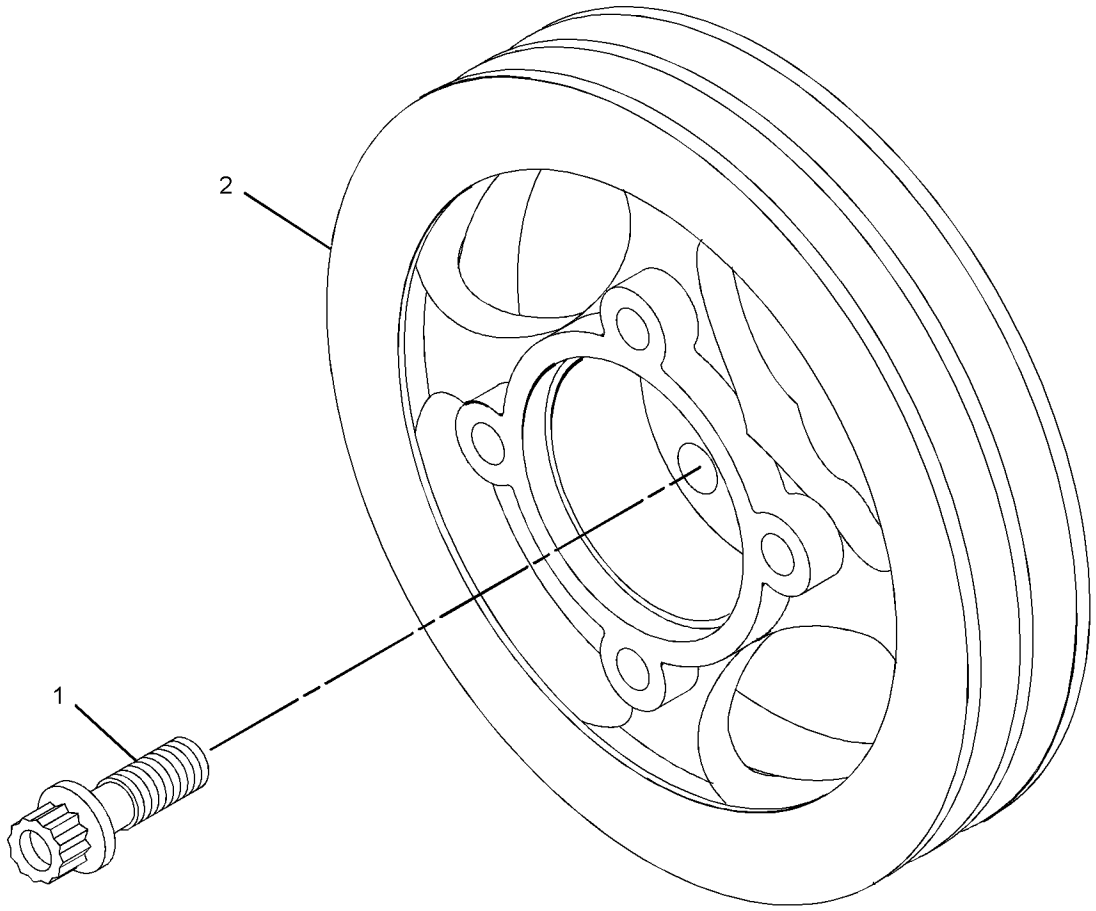

GRAPHIC #1 <END> g02154868

360-7351 PULLEY GP-CRANKSHAFT

SMCS-1205 **i03907352**

NOTE	REF NO	GRAPHIC REF	PART NUMBER	QTY	PART NAME 1 2 3 4 5 6 (PRODUCT LEVEL)	SEE PAGE
	1	1	**334-9334**	3	BOLT	
	2	1	**359-0747**	1	PULLEY-CRANKSHAFT	

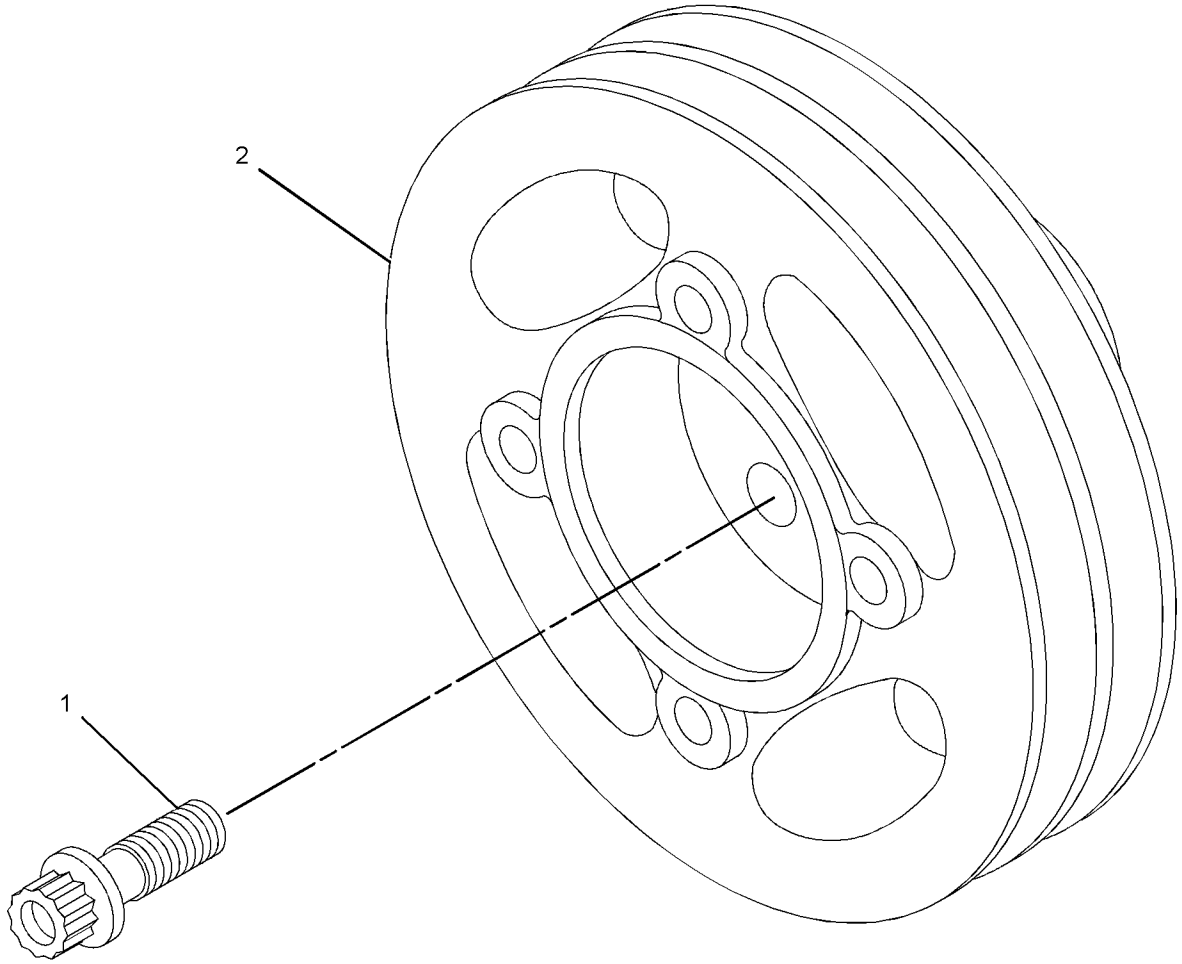

GRAPHIC #1 <END> g02154837

360-7353 PULLEY GP-CRANKSHAFT

S/N: 33425631-UP

SMCS-1205 **i04005555**

NOTE	REF NO	GRAPHIC REF	PART NUMBER	QTY	PART NAME 1 2 3 4 5 6 (PRODUCT LEVEL)	SEE PAGE
	1	1	**334-9334**	3	BOLT	
	2	1	**359-0748**	1	PULLEY-CRANKSHAFT	

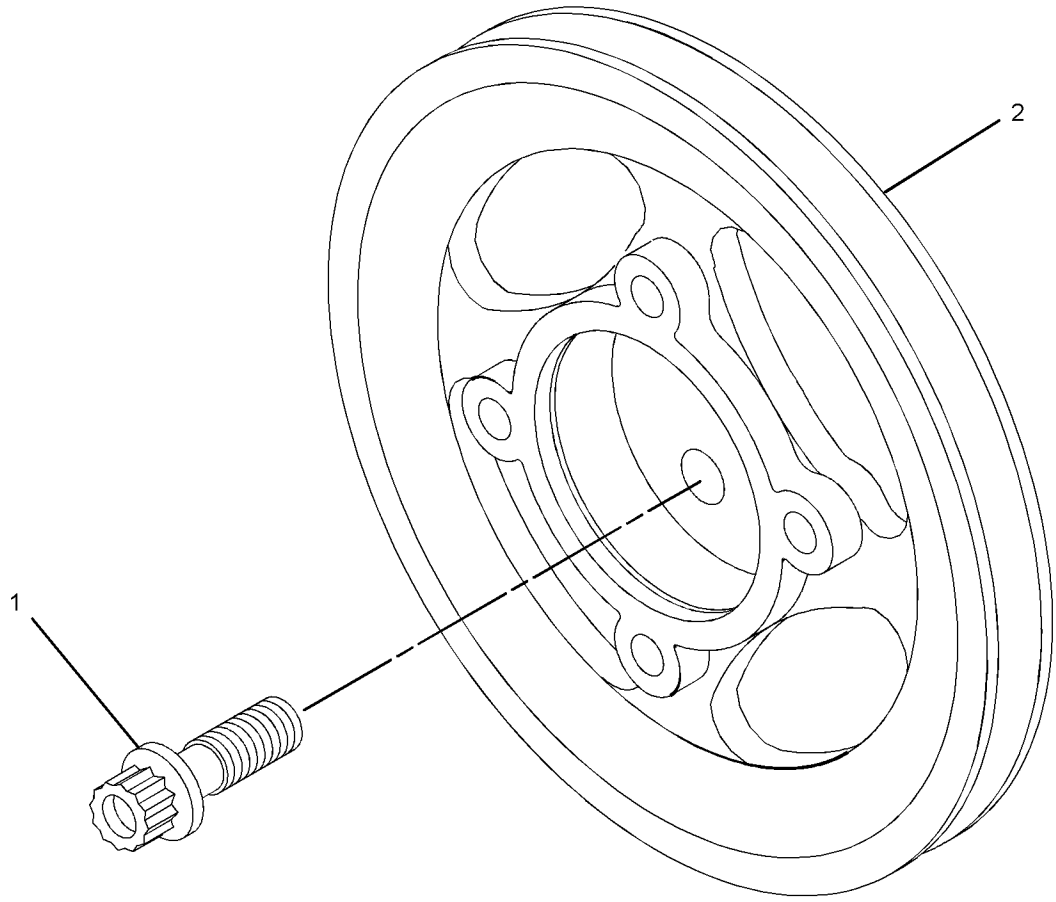

GRAPHIC #1 <END> g02211616

225-5963 ROCKER ARM GP

PART OF 316-8483, 367-2088, 367-2791, 460-0744, 478-6460 VALVE MECHANISM GP

SMCS-1123 **i03255454**

NOTE	REF NO	GRAPHIC REF	PART NUMBER	QTY	PART NAME 1 2 3 4 5 6 (PRODUCT LEVEL)	SEE PAGE
	1	1	**225-5625**	4	LEVER AS	
					(EACH INCLUDES)	
	1A	1	**5B-9079**	1	NUT-JAM (3/8-24-THD)	
	1B	1	**185-1546**	1	SCREW	
	2	1	**225-5634**	1	SHAFT AS	
	2A	1	**225-5629**	2	PLUG	
	3	1	**225-5638**	3	SPRING	
	4	1	**225-5640**	4	LEVER AS	
					(EACH INCLUDES)	
	4A	1	**5B-9079**	1	NUT-JAM (3/8-24-THD)	
	4B	1	**185-1546**	1	SCREW	
	5	1	**225-5959**	2	CLIP	
	6	1	**225-5960**	1	BOLT (M8X1.25X60-MM)	
	7	1	**225-5961**	2	WASHER (26.7X34.32X0.38-MM THK)	
M	8	1	**225-5962**	3	BOLT (M8X1.25X30-MM)	

M - METRIC PART

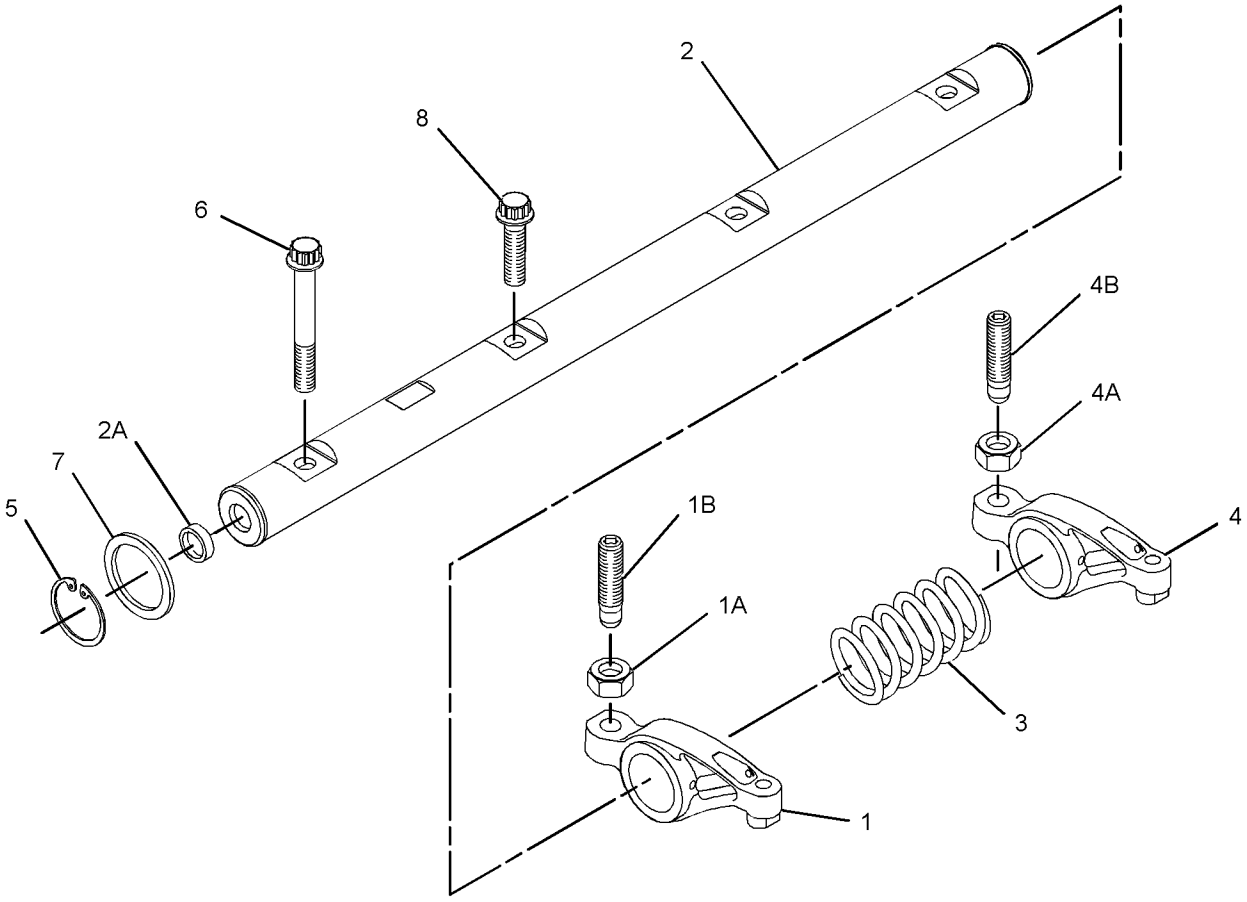

GRAPHIC #1 <END> g01368510

232-7526 VALVE MECHANISM GP

ALSO AN ATTACHMENT

SMCS-1102, 1121, 1123, 1209 **i06679858**

NOTE	REF NO	GRAPHIC REF	PART NUMBER	QTY	PART NAME 1 2 3 4 5 6 (PRODUCT LEVEL)	SEE PAGE
	1	1	**067-6095**	8	ROD	
	2	1	**464-6253**	8	LIFTER-VALVE	
	3	1	**225-5963**	1	ROCKER ARM GP	
	3A	1	**225-5625**	4	LEVER AS	
					(EACH INCLUDES)	
	3B	1	**5B-9079**	1	NUT-JAM (3/8-24-THD)	
	3C	1	**185-1546**	1	SCREW	
	3D	1	**225-5634**	1	SHAFT AS	
	3E	1	**225-5629**	2	PLUG	
	3F	1	**225-5638**	3	SPRING	
	3G	1	**225-5640**	4	LEVER AS	
					(EACH INCLUDES)	
	3H	1	**5B-9079**	1	NUT-JAM (3/8-24-THD)	
	3J	1	**185-1546**	1	SCREW	
	3K	1	**225-5959**	2	CLIP	
	3M	1	**225-5960**	1	BOLT (M8X1.25X60-MM)	
	3N	1	**225-5961**	2	WASHER (26.7X34.32X0.38-MM THK)	
M	3P	1	**225-5962**	3	BOLT (M8X1.25X30-MM)	

M - METRIC PART

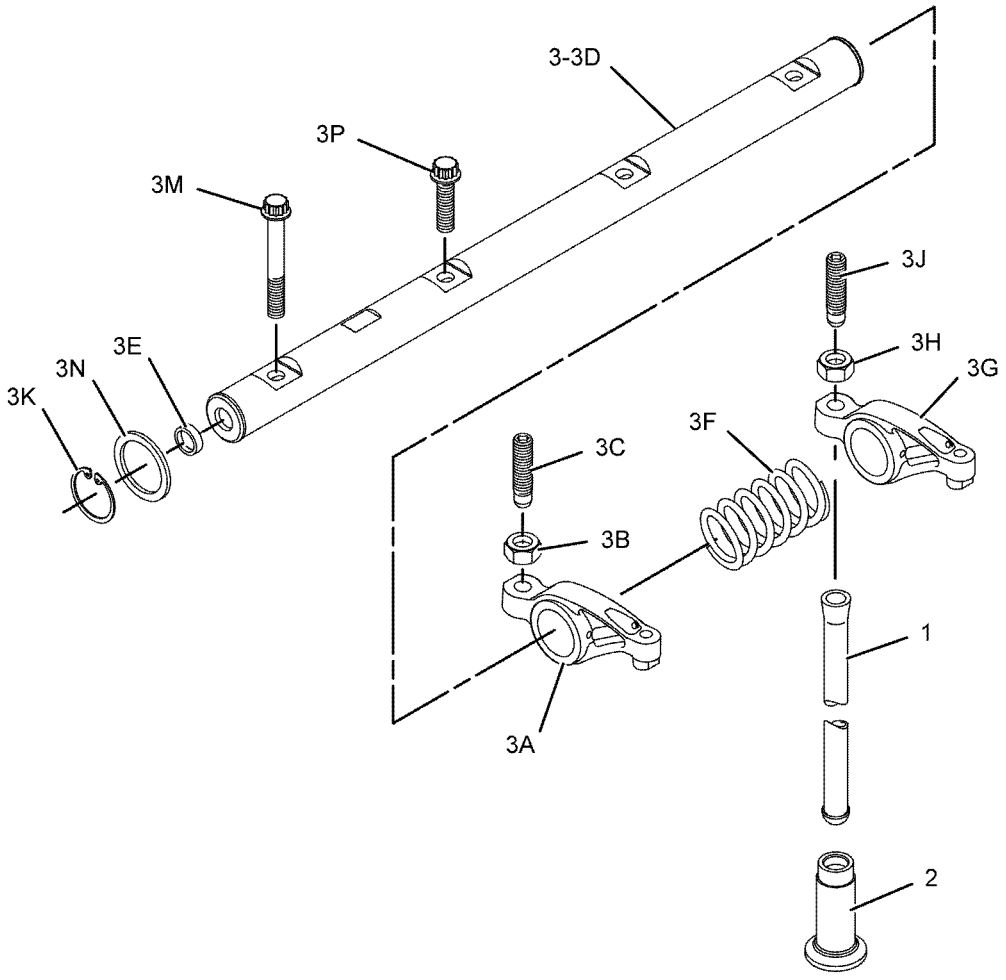

GRAPHIC #1 <END> g01022024

233-7235 VALVE MECHANISM GP

SMCS-1102, 1121, 1123, 1209 **i06679881**

NOTE	REF NO	GRAPHIC REF	PART NUMBER	QTY	PART NAME 1 2 3 4 5 6 (PRODUCT LEVEL)	SEE PAGE
	1	1	**067-6095**	8	ROD	
	2	1	**464-6253**	8	LIFTER-VALVE	
	3	1	**225-5963**	1	ROCKER ARM GP	
	4	1	**225-5625**	4	LEVER AS	
					(EACH INCLUDES)	
	5	1	**5B-9079**	1	NUT-JAM (3/8-24-THD)	
	6	1	**185-1546**	1	SCREW	
	7	1	**225-5634**	1	SHAFT AS	
	8	1	**225-5629**	2	PLUG	
	9	1	**225-5638**	3	SPRING	
	10	1	**225-5640**	4	LEVER AS	
					(EACH INCLUDES)	
	11	1	**5B-9079**	1	NUT-JAM (3/8-24-THD)	
	12	1	**185-1546**	1	SCREW	
	13	1	**225-5959**	2	CLIP	
	14	1	**225-5960**	1	BOLT (M8X1.25X60-MM)	
	15	1	**225-5961**	2	WASHER (26.7X34.32X0.38-MM THK)	
M	16	1	**225-5962**	3	BOLT (M8X1.25X30-MM)	

M - METRIC PART

233-7235 **VALVE MECHANISM GP (**contd.**)** **i06679881**

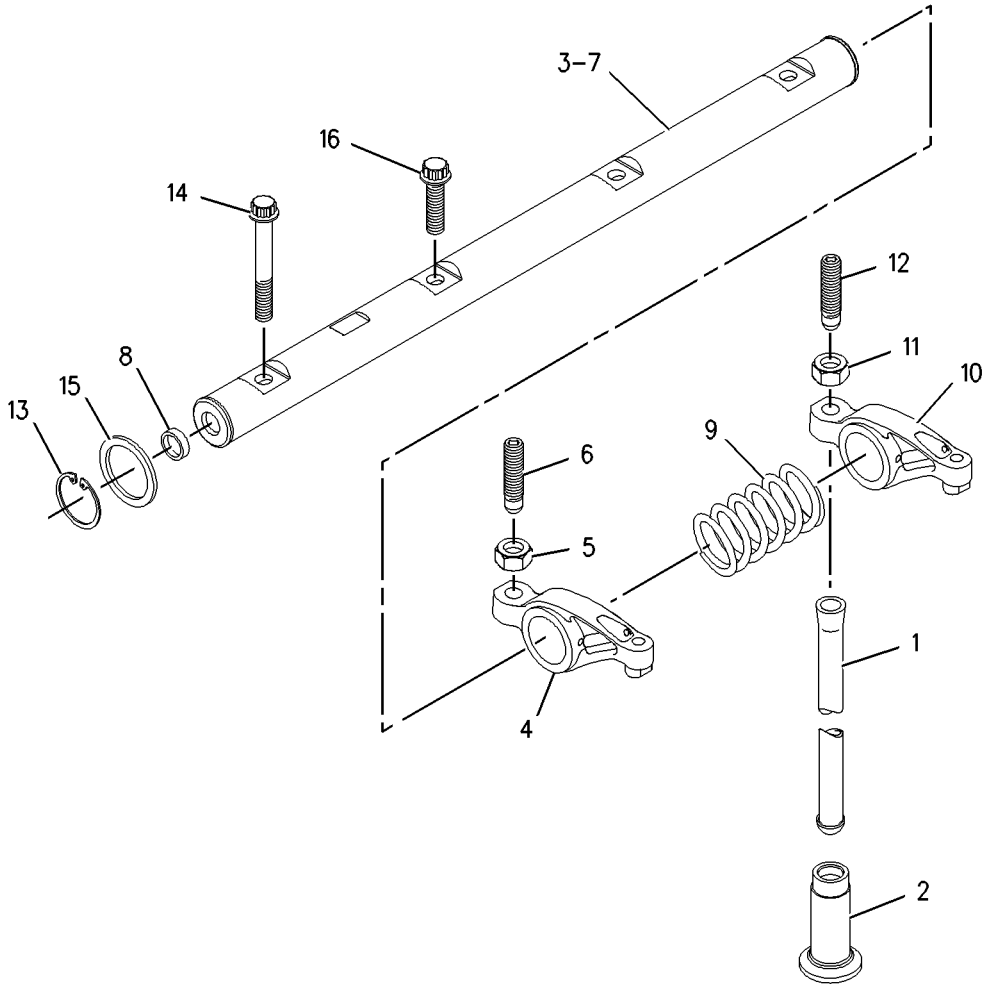

GRAPHIC #1 <END> g00910253

237-5856 VALVE MECHANISM GP

SMCS-1102, 1121, 1123, 1209 **i06569576**

NOTE	REF NO	GRAPHIC REF	PART NUMBER	QTY	PART NAME 1 2 3 4 5 6 (PRODUCT LEVEL)	SEE PAGE
	1	1	**067-6095**	8	ROD	
	2	1	**464-6253**	8	LIFTER-VALVE	
	3	1	**225-5963**	1	ROCKER ARM GP	
	3A	1	**225-5625**	4	LEVER AS	
					(EACH INCLUDES)	
	3B	1	**5B-9079**	1	NUT-JAM (3/8-24-THD)	
	3C	1	**185-1546**	1	SCREW	
	3D	1	**225-5634**	1	SHAFT AS	
	3E	1	**225-5629**	2	PLUG	
	3F	1	**225-5638**	3	SPRING	
	3G	1	**225-5640**	4	LEVER AS	
					(EACH INCLUDES)	
	3H	1	**5B-9079**	1	NUT-JAM (3/8-24-THD)	
	3J	1	**185-1546**	1	SCREW	
	3K	1	**225-5959**	2	CLIP	
	3M	1	**225-5960**	1	BOLT (M8X1.25X60-MM)	
	3N	1	**225-5961**	2	WASHER (26.7X34.32X0.38-MM THK)	
M	3P	1	**225-5962**	3	BOLT (M8X1.25X30-MM)	

M - METRIC PART

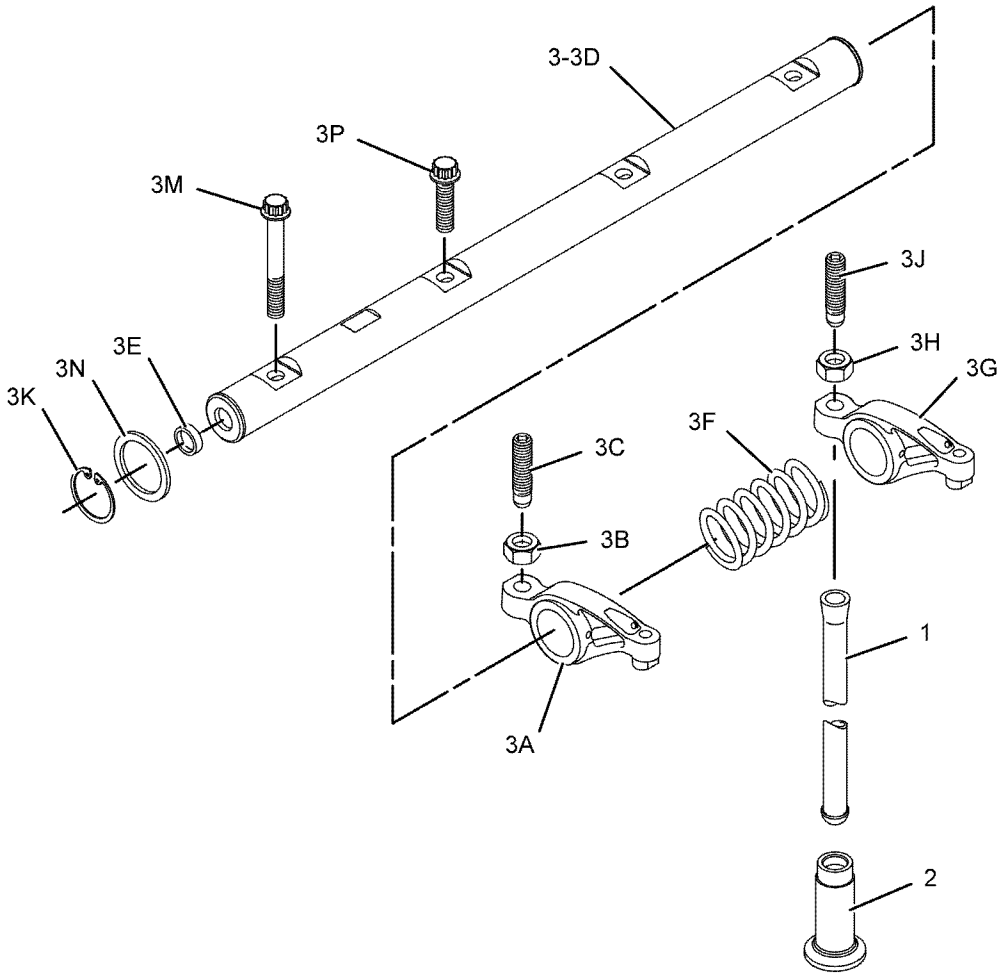

GRAPHIC #1 <END> g01022024

243-1953 VALVE MECHANISM GP

SMCS-1102, 1121, 1123, 1209 **i06569593**

NOTE	REF NO	GRAPHIC REF	PART NUMBER	QTY	PART NAME 1 2 3 4 5 6 (PRODUCT LEVEL)	SEE PAGE
	1	1	**067-6095**	8	ROD	
	2	1	**464-6253**	8	LIFTER-VALVE	
	3	1	**225-5963**	1	ROCKER ARM GP	
	3A	1	**225-5625**	4	LEVER AS	
					(EACH INCLUDES)	
	3B	1	**5B-9079**	1	NUT-JAM (3/8-24-THD)	
	3C	1	**185-1546**	1	SCREW	
	3D	1	**225-5634**	1	SHAFT AS	
	3E	1	**225-5629**	2	PLUG	
	3F	1	**225-5638**	3	SPRING	
	3G	1	**225-5640**	4	LEVER AS	
					(EACH INCLUDES)	
	3H	1	**5B-9079**	1	NUT-JAM (3/8-24-THD)	
	3J	1	**185-1546**	1	SCREW	
	3K	1	**225-5959**	2	CLIP	
	3M	1	**225-5960**	1	BOLT (M8X1.25X60-MM)	
	3N	1	**225-5961**	2	WASHER (26.7X34.32X0.38-MM THK)	
M	3P	1	**225-5962**	3	BOLT (M8X1.25X30-MM)	

M - METRIC PART

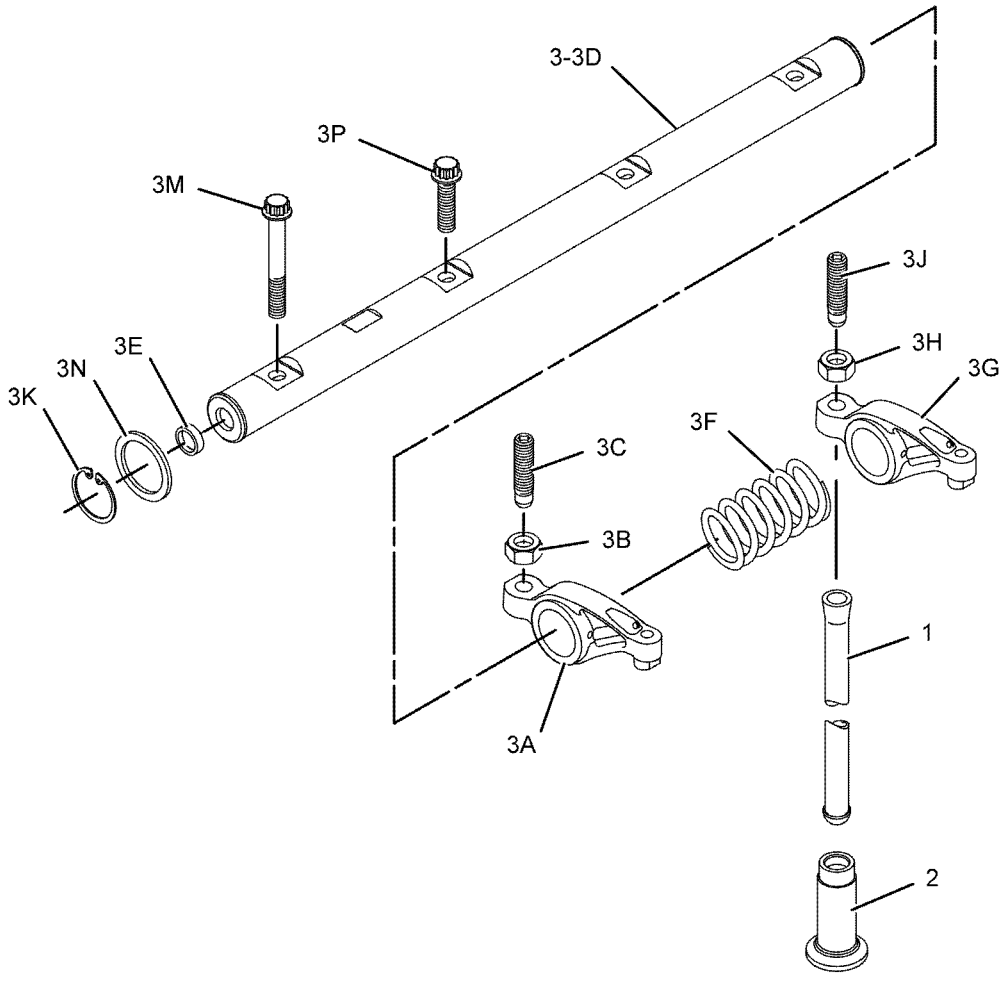

GRAPHIC #1 <END> g01022024

243-3183 VALVE MECHANISM GP

ALSO AN ATTACHMENT

SMCS-1102, 1121, 1123, 1209 **i06569537**

NOTE	REF NO	GRAPHIC REF	PART NUMBER	QTY	PART NAME 1 2 3 4 5 6 (PRODUCT LEVEL)	SEE PAGE
	1	1	**067-6095**	8	ROD	
	2	1	**464-6253**	8	LIFTER-VALVE	
	3	1	**225-5963**	1	ROCKER ARM GP	
	4	1	**225-5625**	4	LEVER AS	
					(EACH INCLUDES)	
	5	1	**5B-9079**	1	NUT-JAM (3/8-24-THD)	
	6	1	**185-1546**	1	SCREW	
	7	1	**225-5634**	1	SHAFT AS	
	8	1	**225-5629**	2	PLUG	
	9	1	**225-5638**	3	SPRING	
	10	1	**225-5640**	4	LEVER AS	
					(EACH INCLUDES)	
	11	1	**5B-9079**	1	NUT-JAM (3/8-24-THD)	
	12	1	**185-1546**	1	SCREW	
	13	1	**225-5959**	2	CLIP	
	14	1	**225-5960**	1	BOLT (M8X1.25X60-MM)	
	15	1	**225-5961**	2	WASHER (26.7X34.32X0.38-MM THK)	
M	16	1	**225-5962**	3	BOLT (M8X1.25X30-MM)	

M - METRIC PART

243-3183 **VALVE MECHANISM GP (**contd.**)** **i06569537**

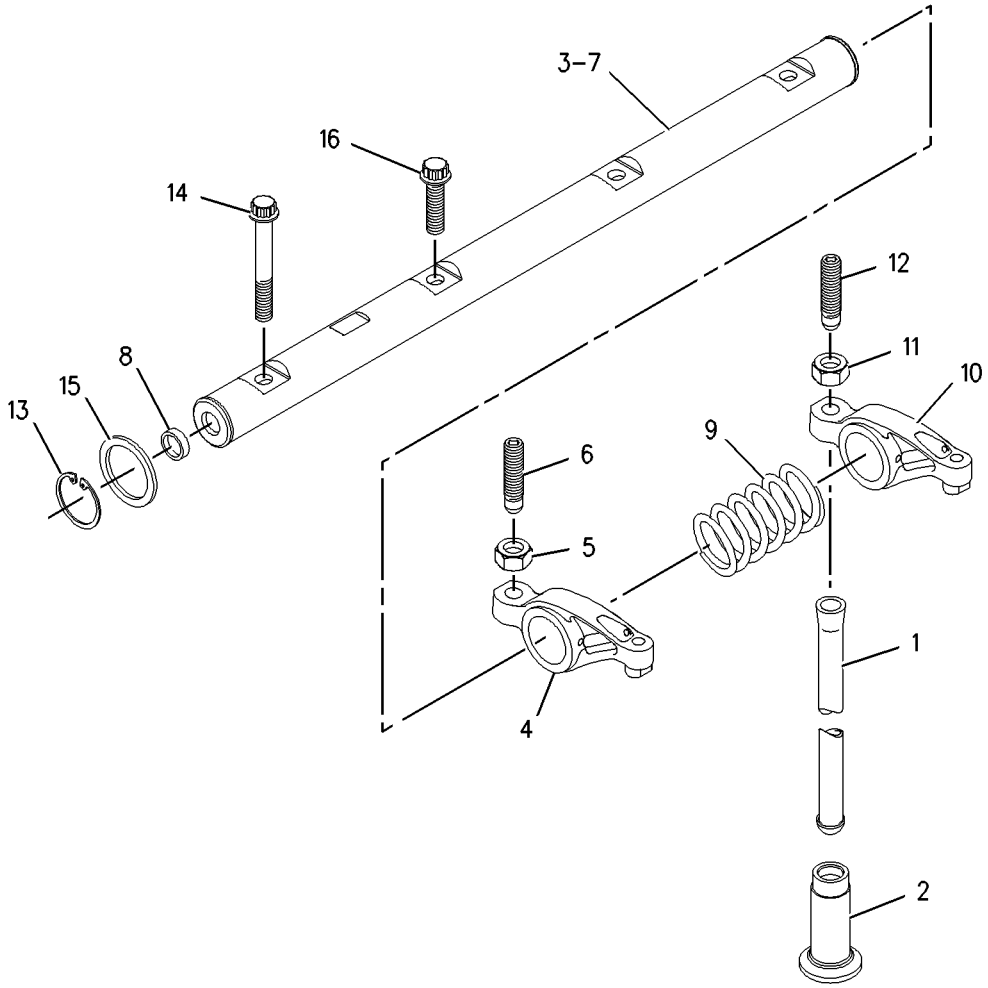

GRAPHIC #1 <END> g00910253

243-4844 VALVE MECHANISM GP

SMCS-1102, 1121, 1123, 1209 **i06569855**

NOTE	REF NO	GRAPHIC REF	PART NUMBER	QTY	PART NAME 1 2 3 4 5 6 (PRODUCT LEVEL)	SEE PAGE
	1	1	**067-6095**	8	ROD	
	2	1	**464-6253**	8	LIFTER-VALVE	
	3	1	**225-5963**	1	ROCKER ARM GP	
	3A	1	**225-5625**	4	LEVER AS	
					(EACH INCLUDES)	
	3B	1	**5B-9079**	1	NUT-JAM (3/8-24-THD)	
	3C	1	**185-1546**	1	SCREW	
	3D	1	**225-5634**	1	SHAFT AS	
	3E	1	**225-5629**	2	PLUG	
	3F	1	**225-5638**	3	SPRING	
	3G	1	**225-5640**	4	LEVER AS	
					(EACH INCLUDES)	
	3H	1	**5B-9079**	1	NUT-JAM (3/8-24-THD)	
	3J	1	**185-1546**	1	SCREW	
	3K	1	**225-5959**	2	CLIP	
	3M	1	**225-5960**	1	BOLT (M8X1.25X60-MM)	
	3N	1	**225-5961**	2	WASHER (26.7X34.32X0.38-MM THK)	
M	3P	1	**225-5962**	3	BOLT (M8X1.25X30-MM)	

M - METRIC PART

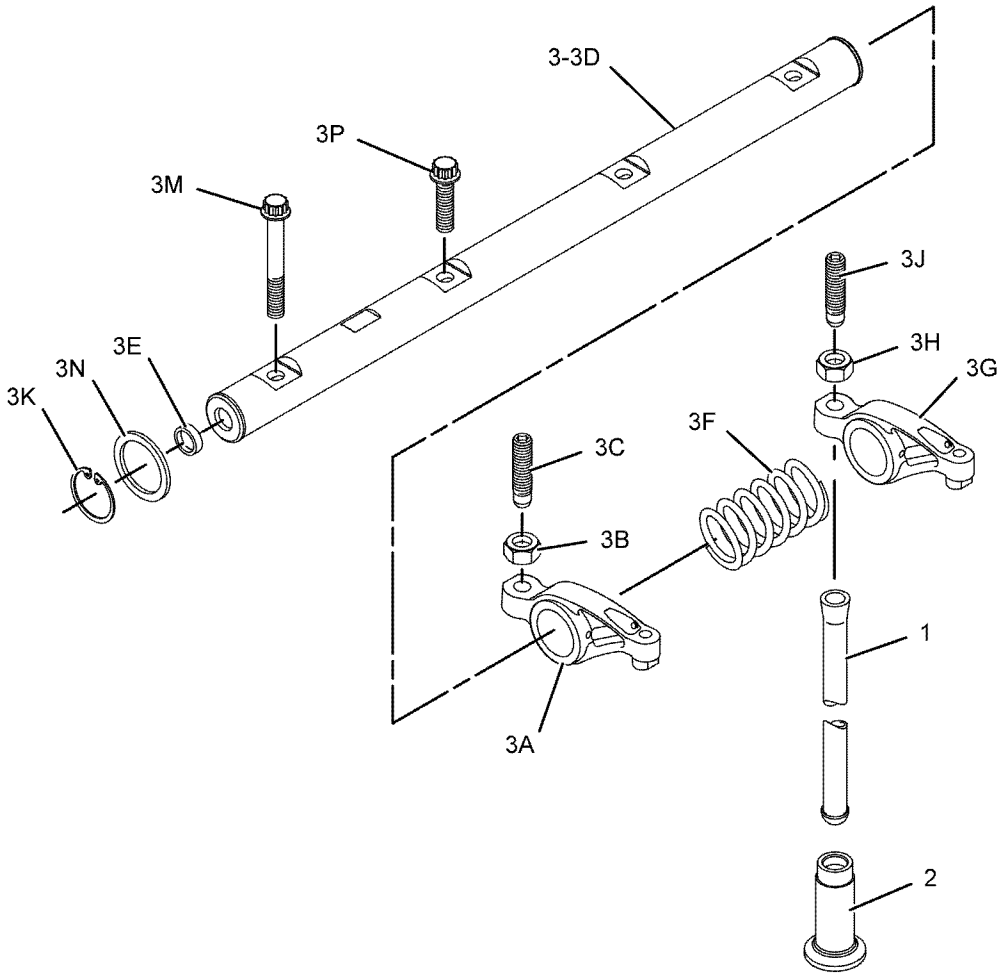

GRAPHIC #1 <END> g01022024

244-2093 VALVE MECHANISM GP

SMCS-1102, 1121, 1123, 1209 **i06569574**

NOTE	REF NO	GRAPHIC REF	PART NUMBER	QTY	PART NAME 1 2 3 4 5 6 (PRODUCT LEVEL)	SEE PAGE
	1	1	**067-6095**	8	ROD	
	2	1	**464-6253**	8	LIFTER-VALVE	
	3	1	**225-5963**	1	ROCKER ARM GP	
	4	1	**225-5625**	4	LEVER AS	
					(EACH INCLUDES)	
	5	1	**5B-9079**	1	NUT-JAM (3/8-24-THD)	
	6	1	**185-1546**	1	SCREW	
	7	1	**225-5634**	1	SHAFT AS	
	8	1	**225-5629**	2	PLUG	
	9	1	**225-5638**	3	SPRING	
	10	1	**225-5640**	4	LEVER AS	
					(EACH INCLUDES)	
	11	1	**5B-9079**	1	NUT-JAM (3/8-24-THD)	
	12	1	**185-1546**	1	SCREW	
	13	1	**225-5959**	2	CLIP	
	14	1	**225-5960**	1	BOLT (M8X1.25X60-MM)	
	15	1	**225-5961**	2	WASHER (26.7X34.32X0.38-MM THK)	
M	16	1	**225-5962**	3	BOLT (M8X1.25X30-MM)	

M - METRIC PART

244-2093 **VALVE MECHANISM GP (**contd.**)** **i06569574**

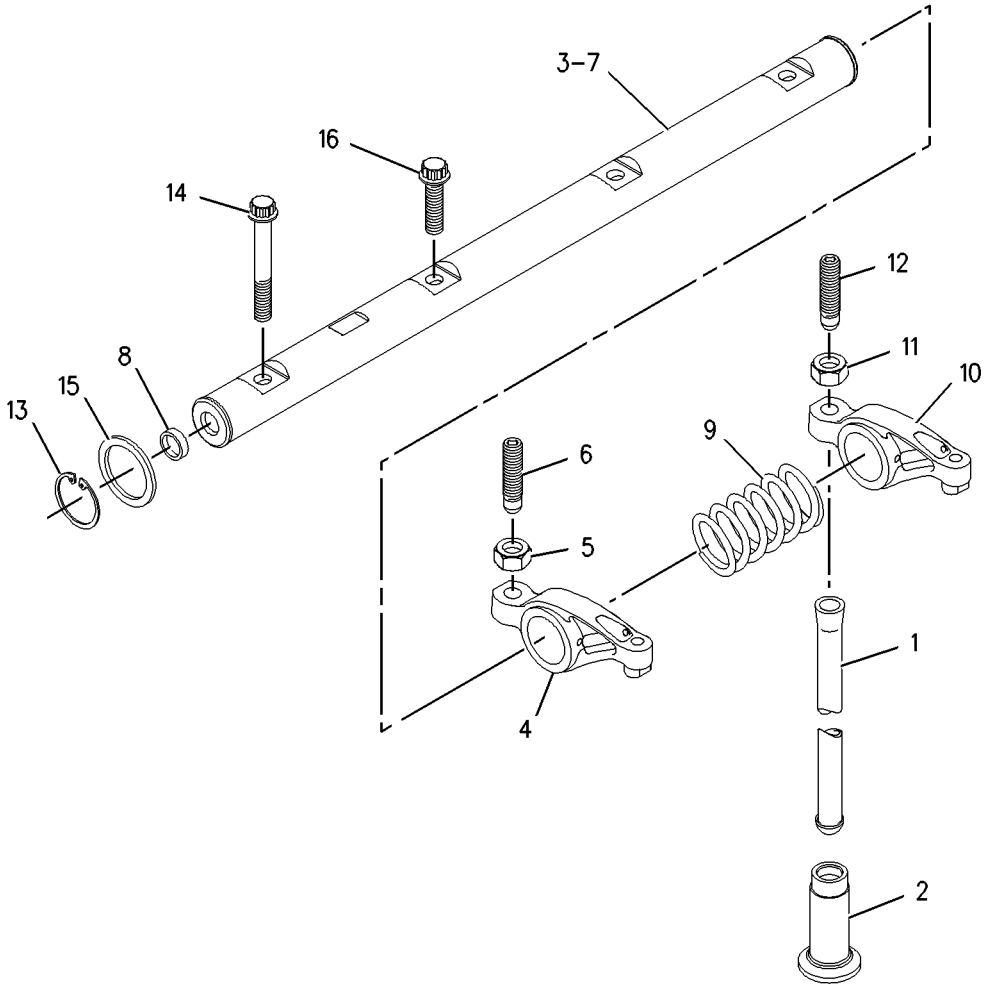

GRAPHIC #1 <END> g00910253

247-4876 VALVE MECHANISM GP

SMCS-1102, 1121, 1123, 1209 **i06569582**

NOTE	REF NO	GRAPHIC REF	PART NUMBER	QTY	PART NAME 1 2 3 4 5 6 (PRODUCT LEVEL)	SEE PAGE
	1	1	**067-6095**	8	ROD	
	2	1	**464-6253**	8	LIFTER-VALVE	
	3	1	**225-5963**	1	ROCKER ARM GP	
	4	1	**225-5625**	4	LEVER AS	
					(EACH INCLUDES)	
	5	1	**5B-9079**	1	NUT-JAM (3/8-24-THD)	
	6	1	**185-1546**	1	SCREW	
	7	1	**225-5634**	1	SHAFT AS	
	8	1	**225-5629**	2	PLUG	
	9	1	**225-5638**	3	SPRING	
	10	1	**225-5640**	4	LEVER AS	
					(EACH INCLUDES)	
	11	1	**5B-9079**	1	NUT-JAM (3/8-24-THD)	
	12	1	**185-1546**	1	SCREW	
	13	1	**225-5959**	2	CLIP	
	14	1	**225-5960**	1	BOLT (M8X1.25X60-MM)	
	15	1	**225-5961**	2	WASHER (26.7X34.32X0.38-MM THK)	
M	16	1	**225-5962**	3	BOLT (M8X1.25X30-MM)	

M - METRIC PART

247-4876 **VALVE MECHANISM GP (**contd.**)** **i06569582**

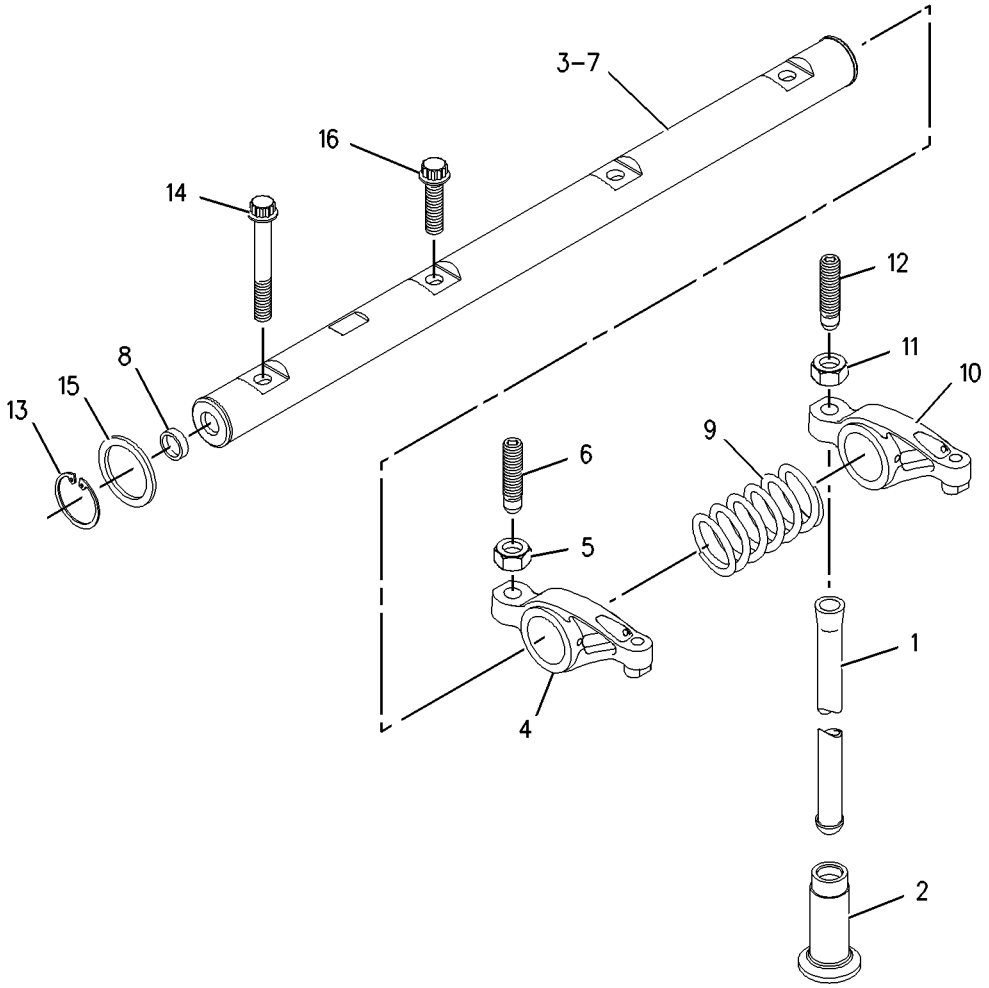

GRAPHIC #1 <END> g00910253

253-8763 VALVE MECHANISM GP

SMCS-1102, 1121, 1123, 1209 **i02344912**

NOTE	REF NO	GRAPHIC REF	PART NUMBER	QTY	PART NAME 1 2 3 4 5 6 (PRODUCT LEVEL)	SEE PAGE
	1	1	**067-6095**	8	ROD	
	2	1	**138-2053**	8	TAPPET	
	3	1	**225-5963**	1	ROCKER ARM GP	
	4	1	**225-5625**	4	LEVER AS	
					(EACH INCLUDES)	
	5	1	**5B-9079**	1	NUT-JAM (3/8-24-THD)	
	6	1	**185-1546**	1	SCREW	
	7	1	**225-5634**	1	SHAFT AS	
	8	1	**225-5629**	2	PLUG	
	9	1	**225-5638**	3	SPRING	
	10	1	**225-5640**	4	LEVER AS	
					(EACH INCLUDES)	
	11	1	**5B-9079**	1	NUT-JAM (3/8-24-THD)	
	12	1	**185-1546**	1	SCREW	
	13	1	**225-5959**	2	CLIP	
	14	1	**225-5960**	1	BOLT (M8X1.25X60-MM)	
	15	1	**225-5961**	2	WASHER (26.7X34.32X0.38-MM THK)	
M	16	1	**225-5962**	3	BOLT (M8X1.25X30-MM)	

M - METRIC PART

253-8763 **VALVE MECHANISM GP** (contd.) **i02344912**

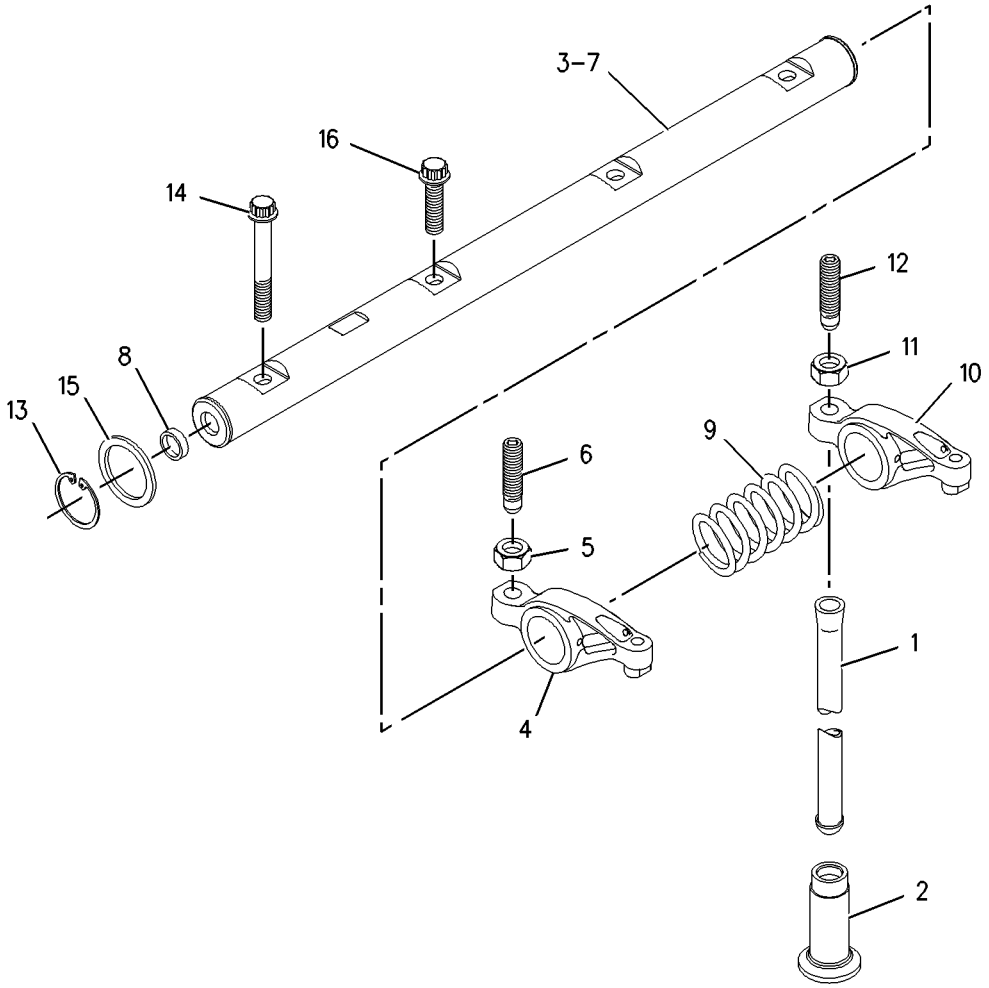

GRAPHIC #1 <END> g00910253

275-0170 VALVE MECHANISM GP

SMCS-1102, 1121, 1123, 1209 **i05265949**

NOTE	REF NO	GRAPHIC REF	PART NUMBER	QTY	PART NAME 1 2 3 4 5 6 (PRODUCT LEVEL)	SEE PAGE
	4	1	**225-5963**	1	ROCKER ARM GP	
	5	1	**225-5625**	4	LEVER AS	
					(EACH INCLUDES)	
	6	1	**5B-9079**	1	NUT-JAM (3/8-24-THD)	
	7	1	**185-1546**	1	SCREW	
	8	1	**225-5634**	1	SHAFT AS	
	9	1	**225-5629**	2	PLUG	
	10	1	**225-5638**	3	SPRING	
	11	1	**225-5640**	4	LEVER AS	
					(EACH INCLUDES)	
	12	1	**5B-9079**	1	NUT-JAM (3/8-24-THD)	
	13	1	**185-1546**	1	SCREW	
	14	1	**225-5959**	2	CLIP	
	15	1	**225-5960**	1	BOLT (M8X1.25X60-MM)	
	16	1	**225-5961**	2	WASHER (26.7X34.32X0.38-MM THK)	
M	17	1	**225-5962**	3	BOLT (M8X1.25X30-MM)	

M - METRIC PART

275-0170 **VALVE MECHANISM GP (**contd.**)** **i05265949**

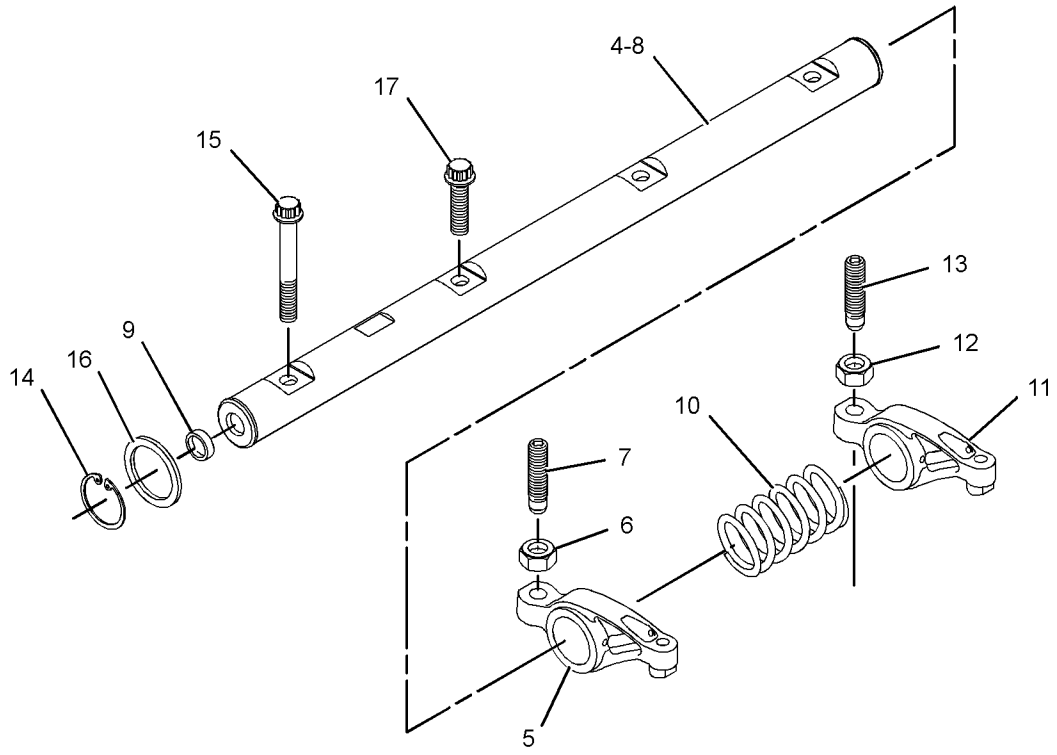

GRAPHIC #1 <END> g01282738

316-8483 VALVE MECHANISM GP

SMCS-1102, 1121, 1123, 1209 **i02822652**

NOTE	REF NO	GRAPHIC REF	PART NUMBER	QTY	PART NAME 1 2 3 4 5 6 (PRODUCT LEVEL)	SEE PAGE
Y	1	1	**225-5963**	1	ROCKER ARM GP	838

Y - SEPARATE ILLUSTRATION

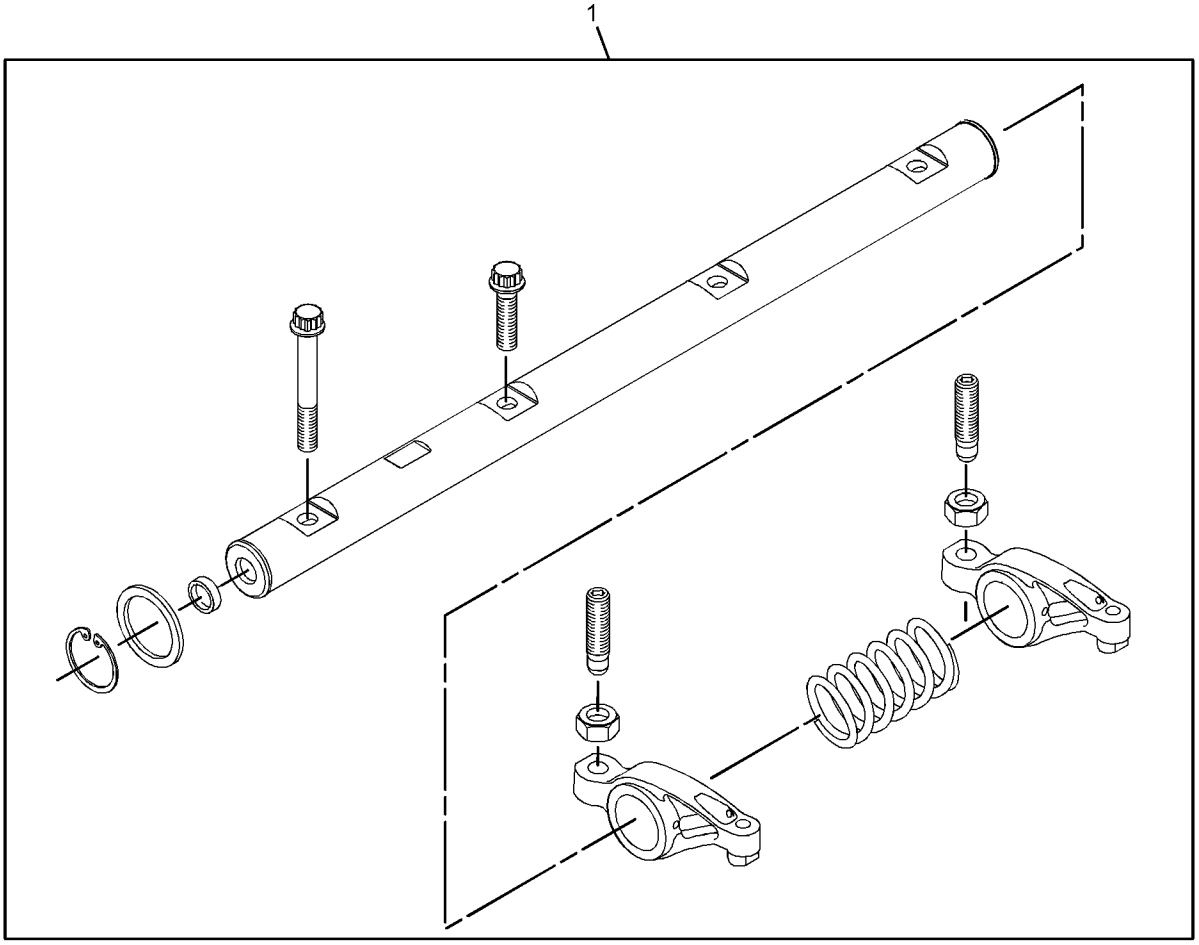

GRAPHIC #1 <END> g01419866

367-2088 VALVE MECHANISM GP

SMCS-1102, 1121, 1123, 1209 **i05206958**

NOTE	PART NUMBER	QTY	PART NAME 1 2 3 4 5 6 (PRODUCT LEVEL)	SEE PAGE
Y	**225-5963**	1	ROCKER ARM GP	838

Y - SEPARATE ILLUSTRATION

<END>

367-2791 VALVE MECHANISM GP

SMCS-1102, 1121, 1123, 1209 **i05266710**

NOTE	REF NO	GRAPHIC REF	PART NUMBER	QTY	PART NAME 1 2 3 4 5 6 (PRODUCT LEVEL)	SEE PAGE
Y	1	1	**225-5963**	1	ROCKER ARM GP	838

Y - SEPARATE ILLUSTRATION

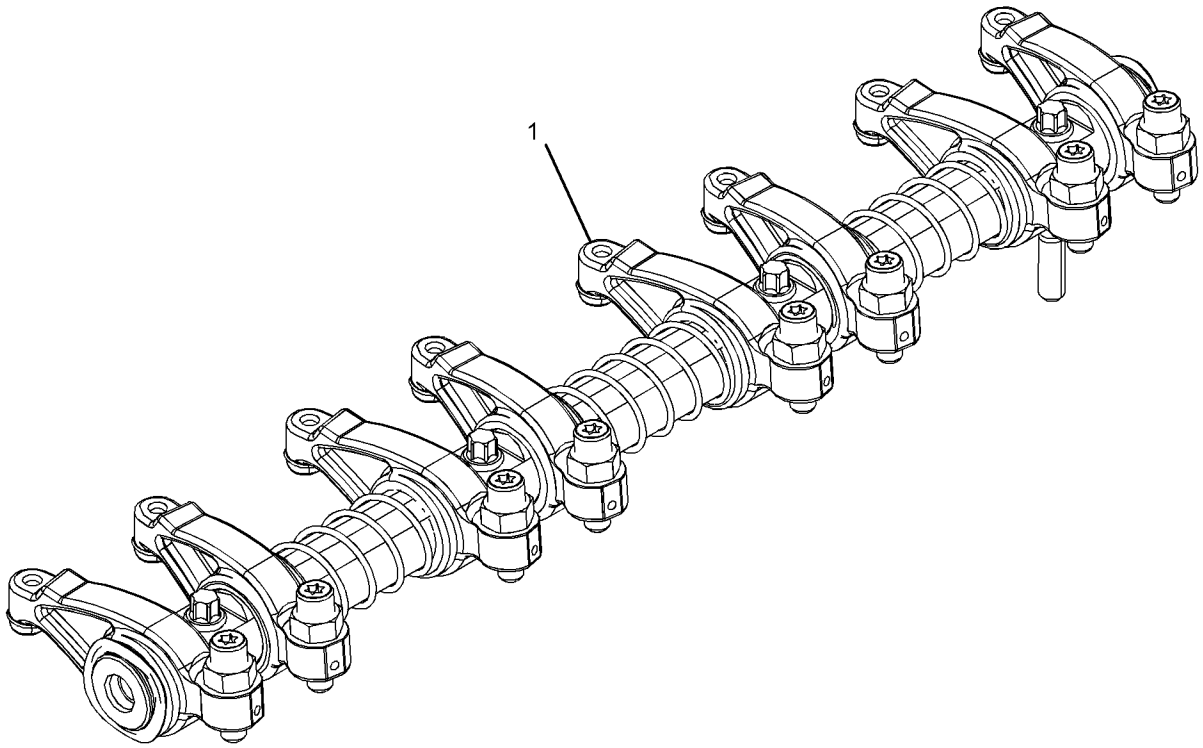

GRAPHIC #1 <END> g03349465

460-0744 VALVE MECHANISM GP

SMCS-1102, 1121, 1123, 1209 **i05965372**

NOTE	REF NO	GRAPHIC REF	PART NUMBER	QTY	PART NAME 1 2 3 4 5 6 (PRODUCT LEVEL)	SEE PAGE
Y	1	1	**225-5963**	1	ROCKER ARM GP	838

Y - SEPARATE ILLUSTRATION

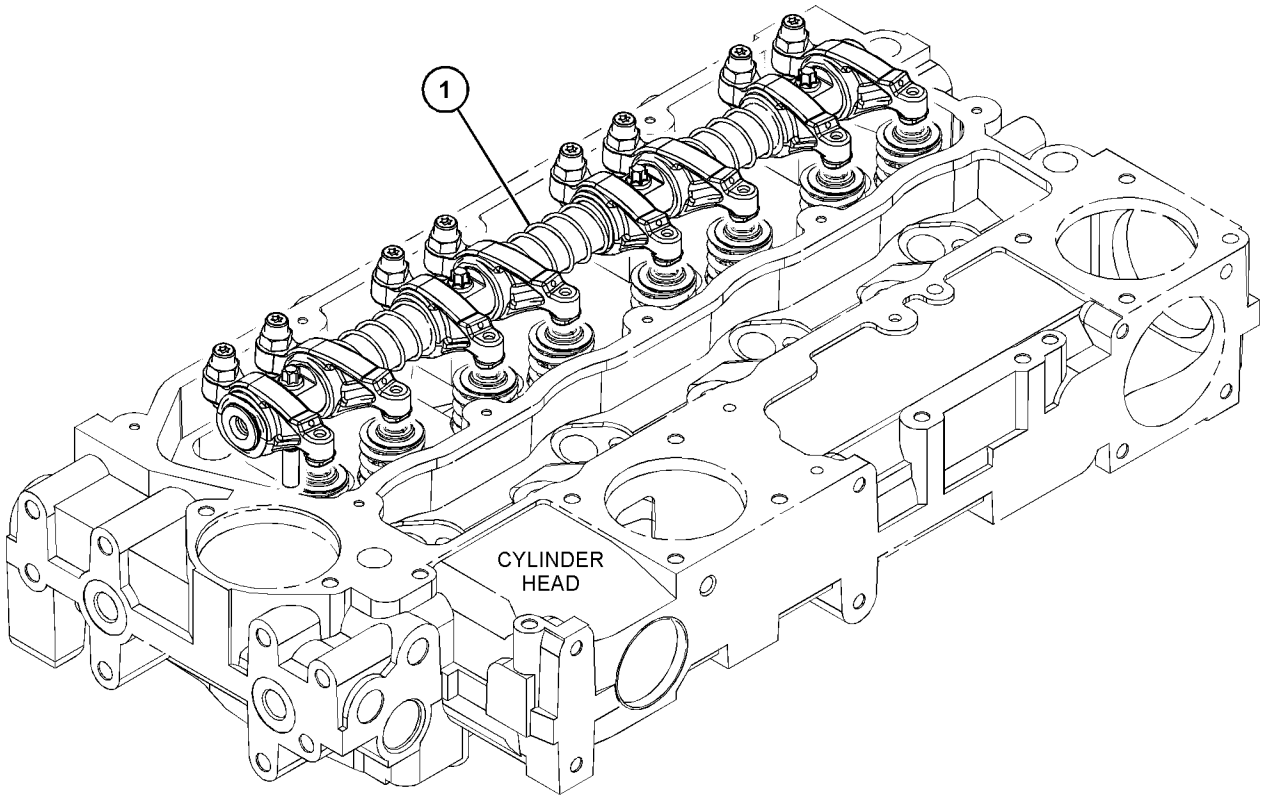

GRAPHIC #1 <END> g03703711

478-6460 VALVE MECHANISM GP

SMCS-1102, 1121, 1123, 1209 **i06238817**

NOTE	REF NO	GRAPHIC REF	PART NUMBER	QTY	PART NAME 1 2 3 4 5 6 (PRODUCT LEVEL)	SEE PAGE
Y	1	1	**225-5963**	1	ROCKER ARM GP	838

Y - SEPARATE ILLUSTRATION

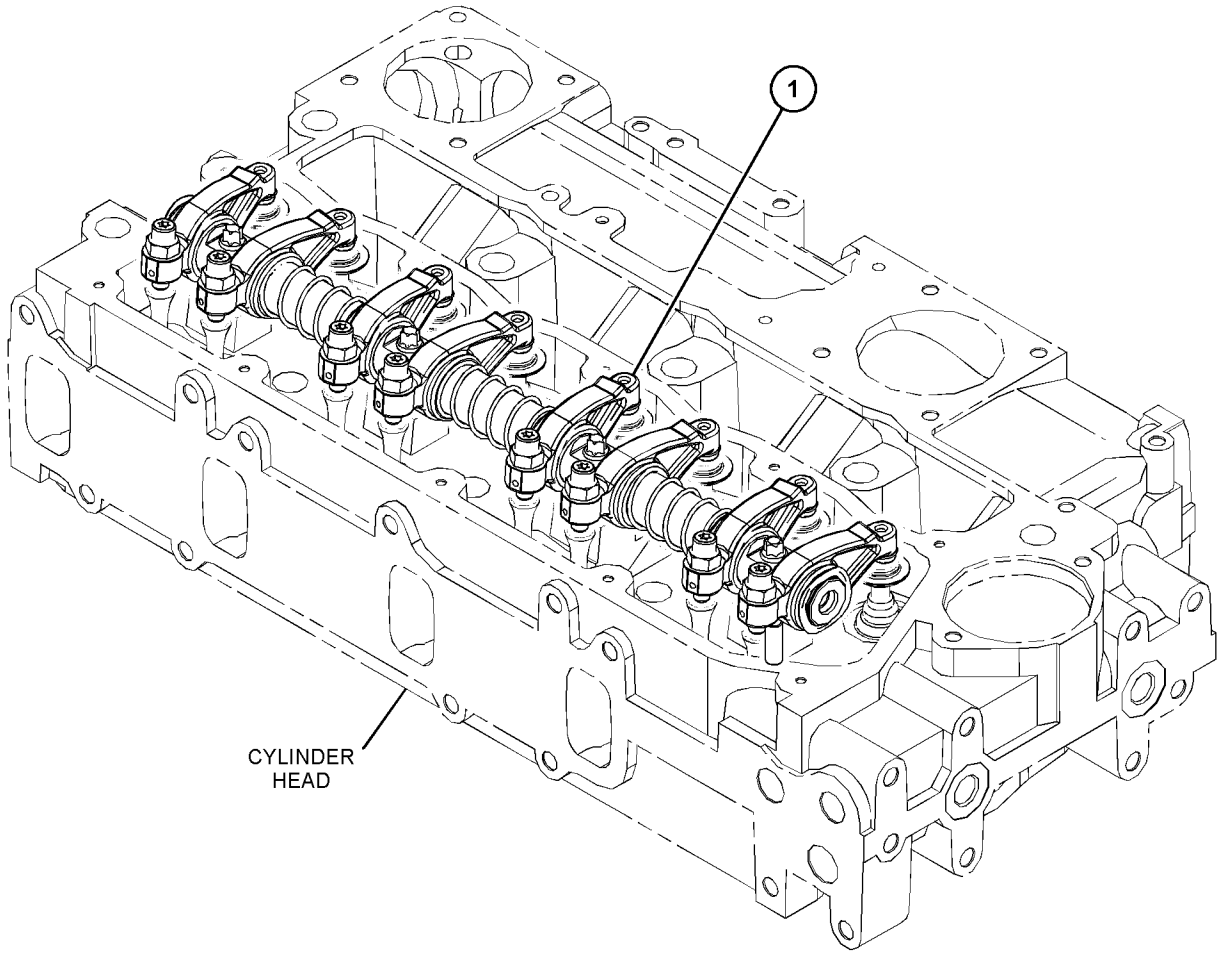

GRAPHIC #1 <END> g03875130

225-7942 FILTER GP-ENGINE OIL

ALSO AN ATTACHMENT

SMCS-1306, 1308 **i02159850**

NOTE	REF NO	GRAPHIC REF	PART NUMBER	QTY	PART NAME 1 2 3 4 5 6 (PRODUCT LEVEL)	SEE PAGE
	1	1	**1R-1801**	1	FILTER ELEMENT AS-ENGINE OIL	
	2	1	**225-7939**	1	HOUSING AS	
	2A	1	**3J-1907**	1	SEAL-O-RING (ENGINE OIL FILTER DRAIN)	
	2B	1	**9S-4191**	1	PLUG (9/16-18-THD) (ENGINE OIL FILTER DRAIN)	

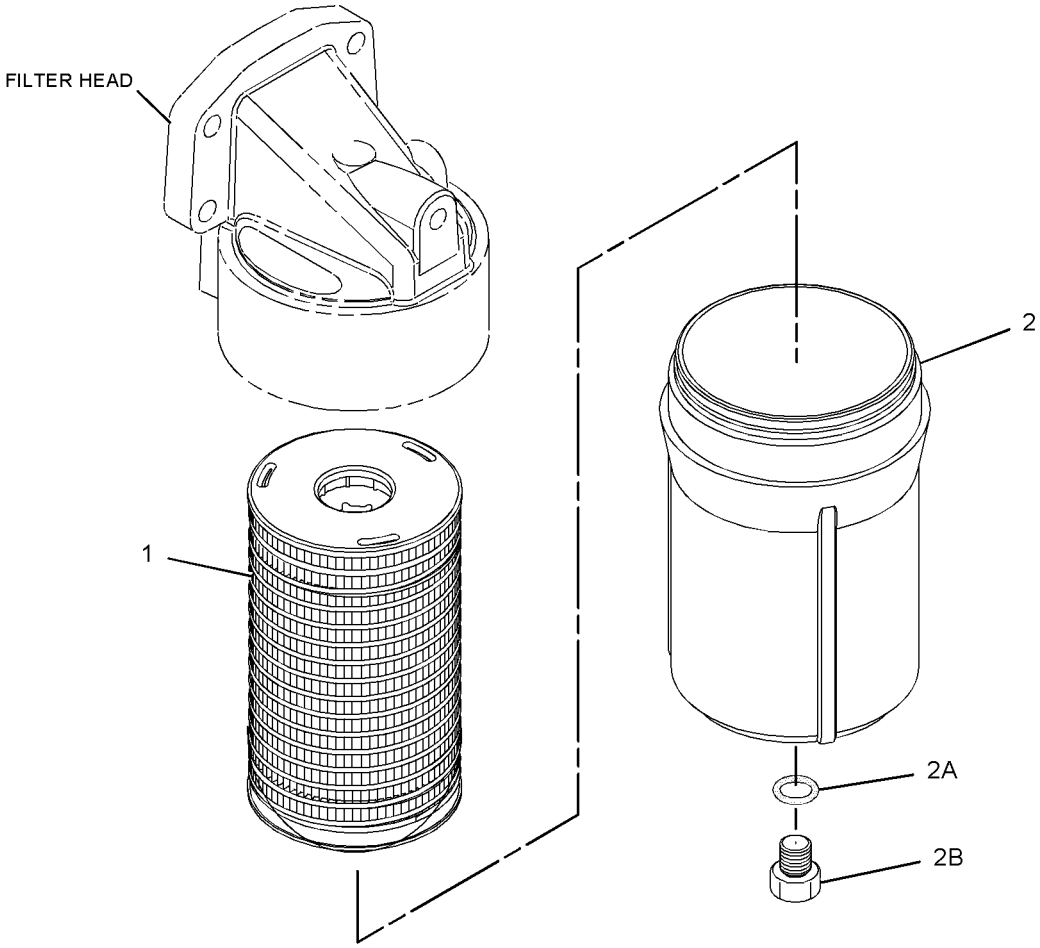

GRAPHIC #1 <END> g01095460

232-7378 FILTER GP-ENGINE OIL

ALSO AN ATTACHMENT

SMCS-1306, 1308 **i01863019**

NOTE	REF NO	GRAPHIC REF	PART NUMBER	QTY	PART NAME 1 2 3 4 5 6 (PRODUCT LEVEL)	SEE PAGE
	1	1	**7W-2326**	1	FILTER AS-ENGINE OIL	

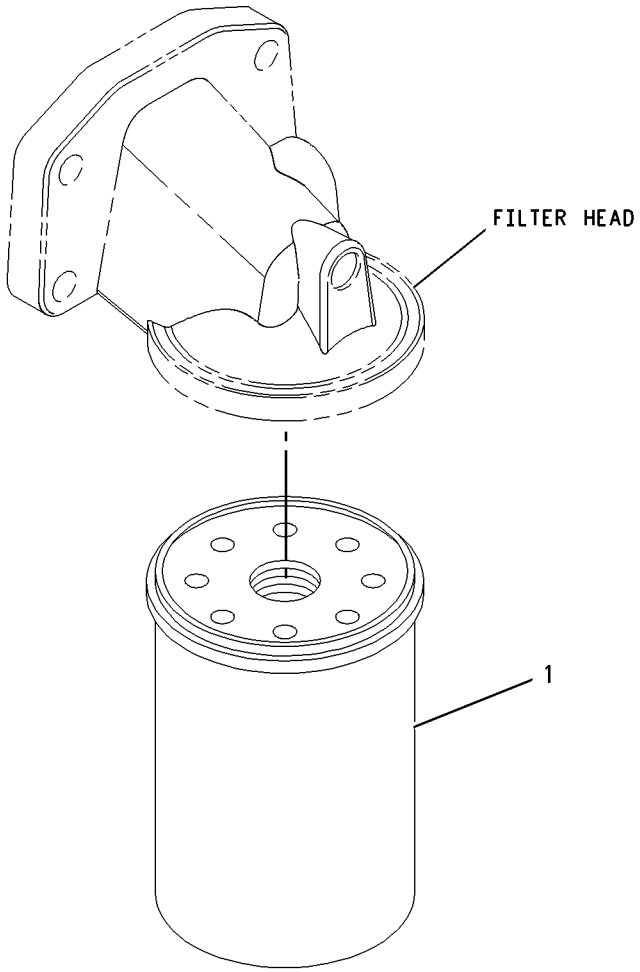

GRAPHIC #1 <END> g00950898

272-2229 FILTER GP-ENGINE OIL

SMCS-1306, 1308 **i02310387**

NOTE	REF NO	GRAPHIC REF	PART NUMBER	QTY	PART NAME 1 2 3 4 5 6 (PRODUCT LEVEL)	SEE PAGE
	1	1	**7W-2326**	1	FILTER AS-ENGINE OIL	

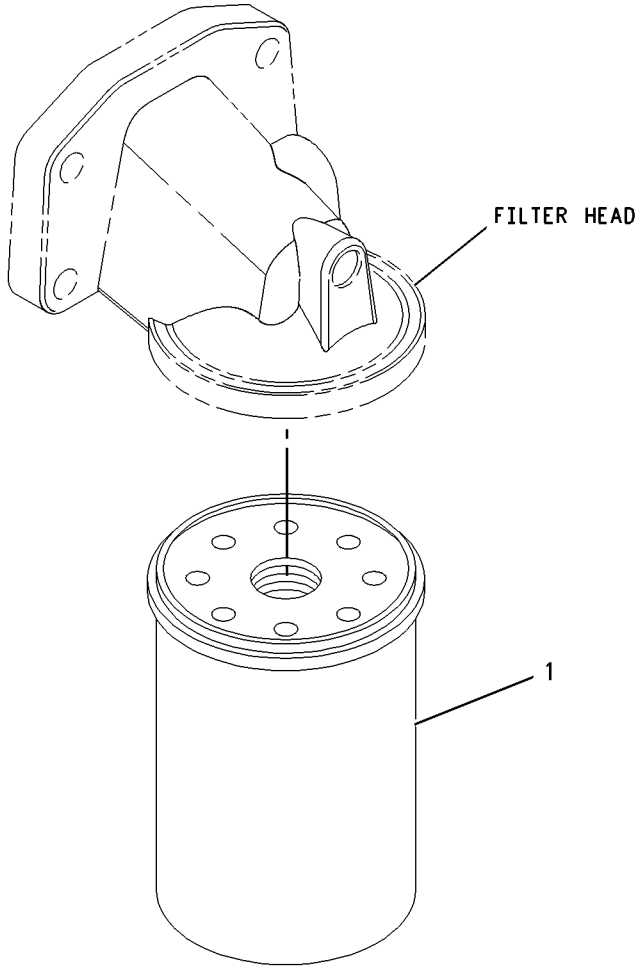

GRAPHIC #1 <END> g00950898

230-7578 PUMP GP-ENGINE OIL

ALSO AN ATTACHMENT

SMCS-1304, 1315 **i01862499**

NOTE	REF NO	GRAPHIC REF	PART NUMBER	QTY	PART NAME 1 2 3 4 5 6 (PRODUCT LEVEL)	SEE PAGE
M	1	1	**100-4461**	5	BOLT (M10X1.5X50-MM)	
	2	1	**225-8329**	1	PUMP AS-ENGINE OIL	

M - METRIC PART

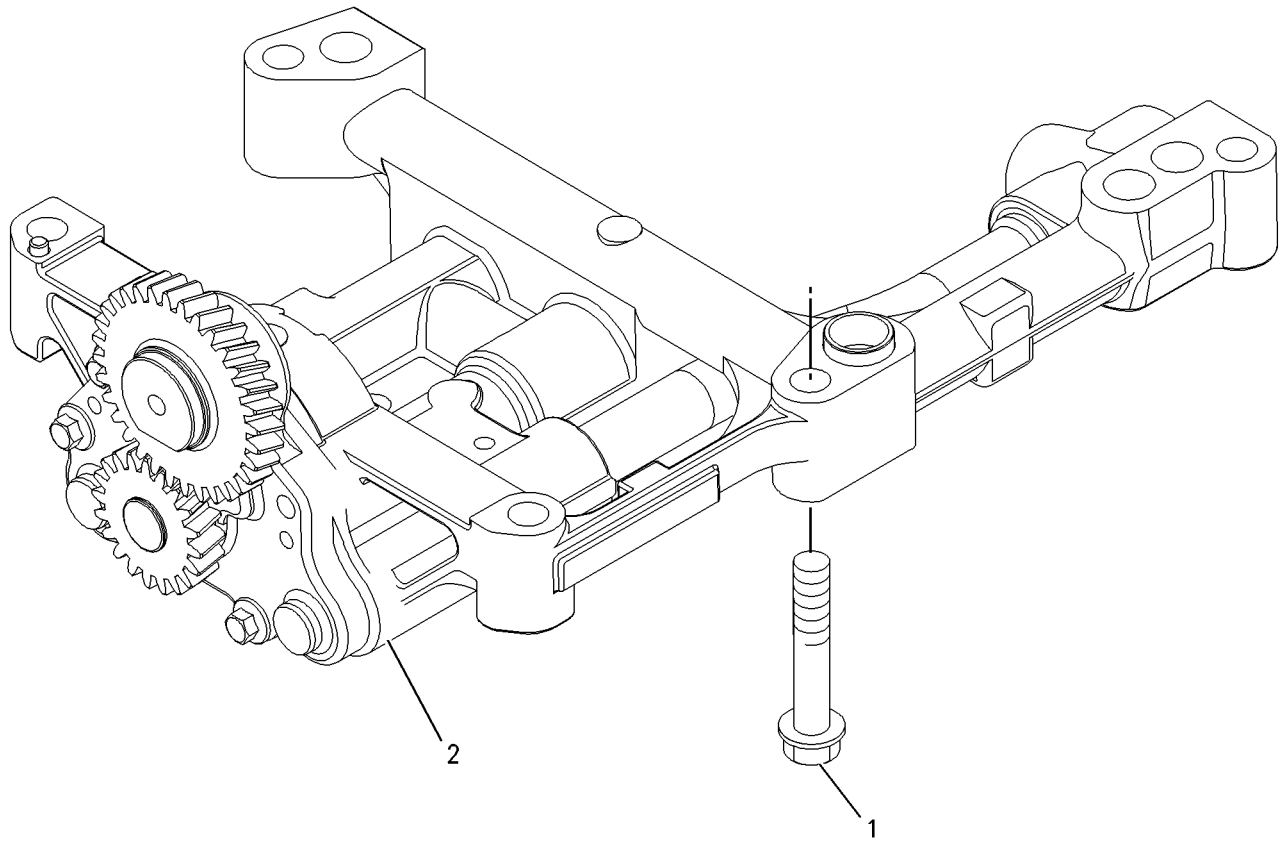

GRAPHIC #1 <END> g00911993

243-4305 PUMP GP-ENGINE OIL

S/N: 3341-26097

SMCS-1304, 1315 **i01985298**

NOTE	REF NO	GRAPHIC REF	PART NUMBER	QTY	PART NAME 1 2 3 4 5 6 (PRODUCT LEVEL)	SEE PAGE
M	1	1	**100-4461**	1	BOLT (M10X1.5X50-MM)	
	2	1	**243-4304**	1	PUMP AS-ENGINE OIL	

M - METRIC PART

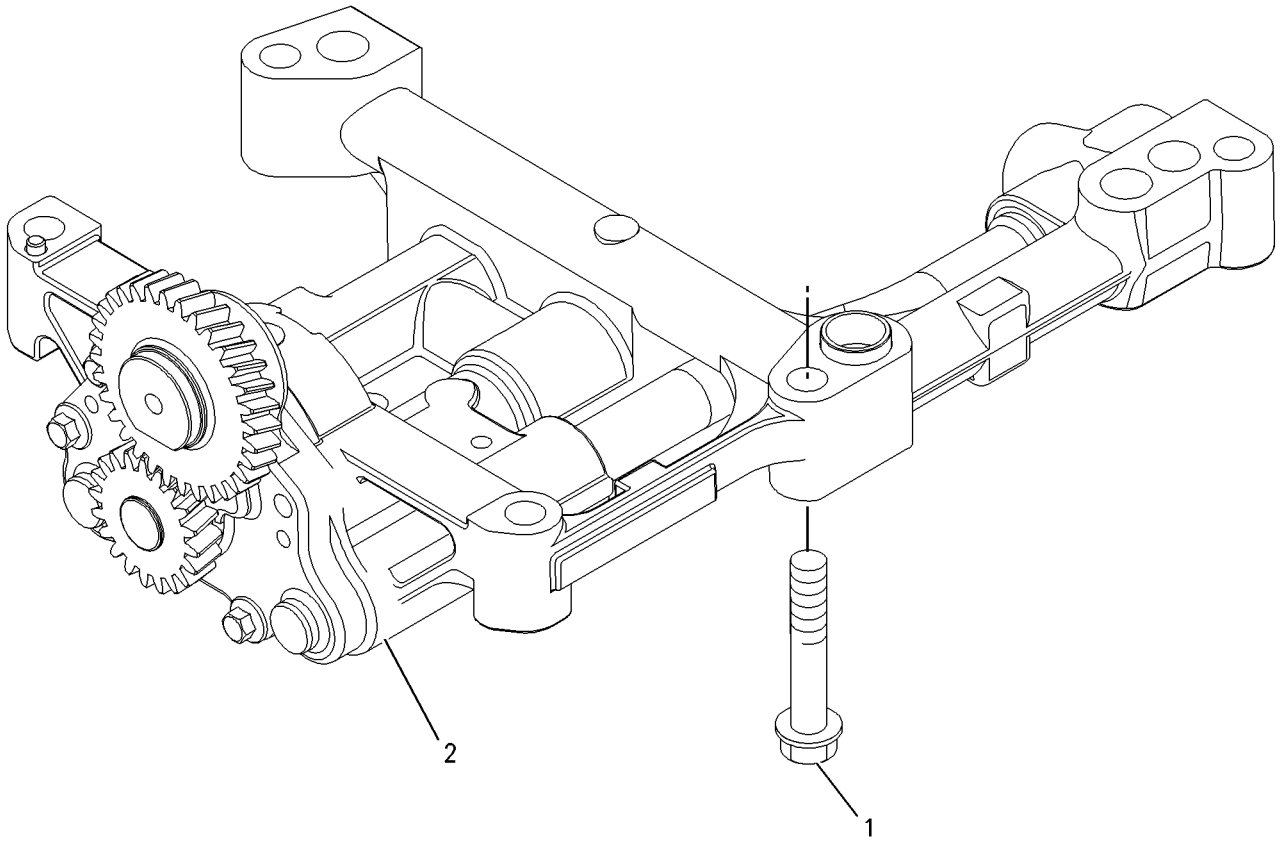

GRAPHIC #1 <END> g00911993

243-4305 PUMP GP-ENGINE OIL

S/N: 33426098-UP

SMCS-1304, 1315 **i06835811**

NOTE	REF NO	GRAPHIC REF	PART NUMBER	QTY	PART NAME 1 2 3 4 5 6 (PRODUCT LEVEL)	SEE PAGE
M	1	1	**100-4461**	4	BOLT (M10X1.5X50-MM)	
C	2	1	**447-8575**	1	PUMP AS-OIL (ENGINE)	

C - CHANGE FROM PREVIOUS TYPE
M - METRIC PART

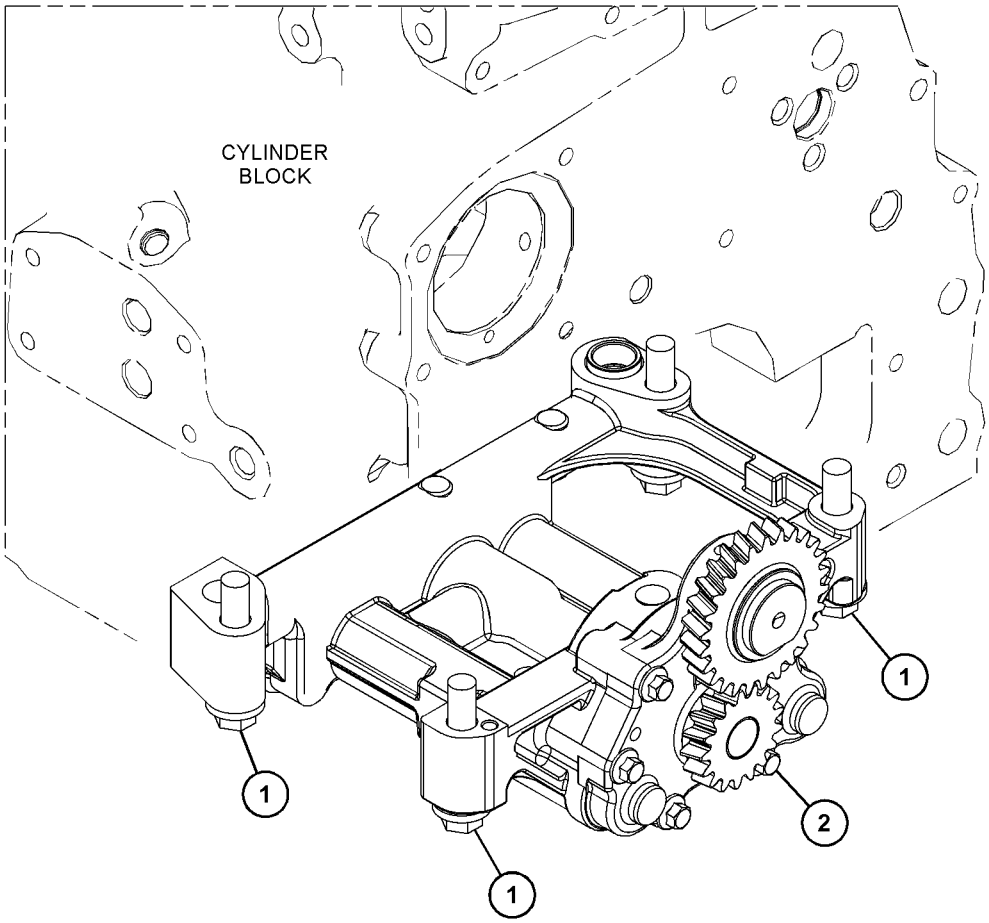

GRAPHIC #1 <END> g06196913

225-6906 CONNECTION GP-WATER

AN ATTACHMENT

SMCS-1380 **i02344915**

NOTE	REF NO	GRAPHIC REF	PART NUMBER	QTY	PART NAME 1 2 3 4 5 6 (PRODUCT LEVEL)	SEE PAGE
M	1	1	**6I-0260**	1	BOLT (M8X1.25X25-MM)	
M	2	1	**100-3751**	1	BOLT (M8X1.25X65-MM)	
	3	1	**254-2269**	1	CONNECTION GP-WATER	
	4	1	**254-2270**	1	SEAL-O-RING (WATER TEMPERATURE REGULATOR)	

M - METRIC PART

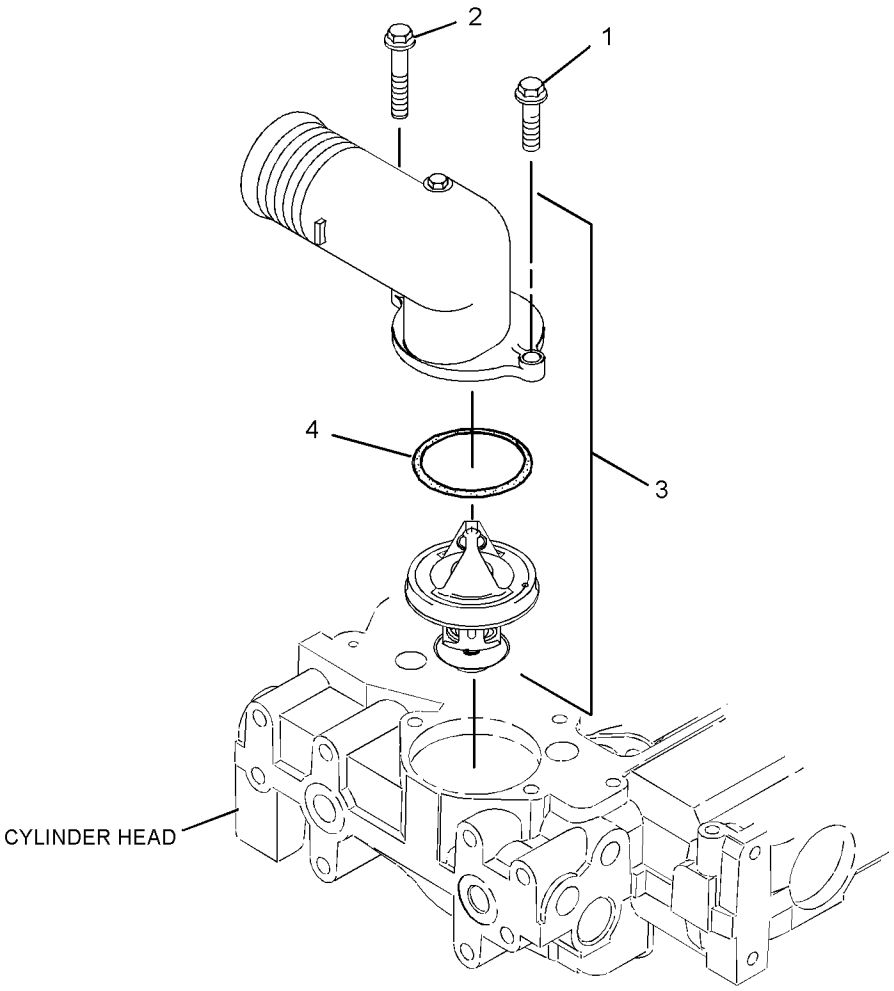

GRAPHIC #1 <END> g01156772

230-8086 CONNECTION GP-WATER

ALSO AN ATTACHMENT

SMCS-1380 **i02654163**

NOTE	REF NO	GRAPHIC REF	PART NUMBER	QTY	PART NAME 1 2 3 4 5 6 (PRODUCT LEVEL)	SEE PAGE
M	1	1	**6I-0260**	1	BOLT (M8X1.25X25-MM)	
M	2	1	**100-3751**	1	BOLT (M8X1.25X65-MM)	
	3	1	**254-2268**	1	REGULATOR AS-WATER TEMPERATURE (CONNECTOR INCLUDED)	
	3A	1	**291-8813**	1	PLUG	
	3B	1	**291-8845**	1	SEAL-O-RING	
	3C	1	**254-2270**	1	SEAL-O-RING (WATER TEMPERATURE REGULATOR)	

M - METRIC PART

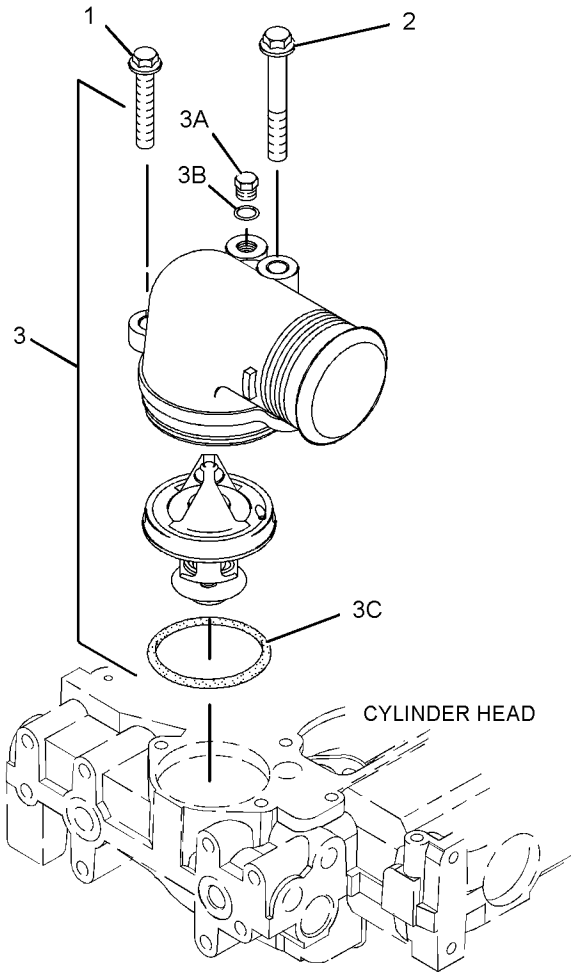

GRAPHIC #1 <END> g01263922

231-0033 CONNECTION GP-WATER

ALSO AN ATTACHMENT

SMCS-1380 **i09733393**

NOTE	REF NO	GRAPHIC REF	PART NUMBER	QTY	PART NAME 1 2 3 4 5 6 (PRODUCT LEVEL)	SEE PAGE
M	1	1	**6I-0260**	2	BOLT (M8X1.25X25-MM)	
	2	1	**254-2267**	1	REGULATOR AS-WATER TEMPERATURE (INCLUDES CONNECTOR)	
	2A	1	**254-2270**	1	SEAL-O-RING	

M - METRIC PART

231-0033 **CONNECTION GP-WATER (**contd.**)** **i09733393**

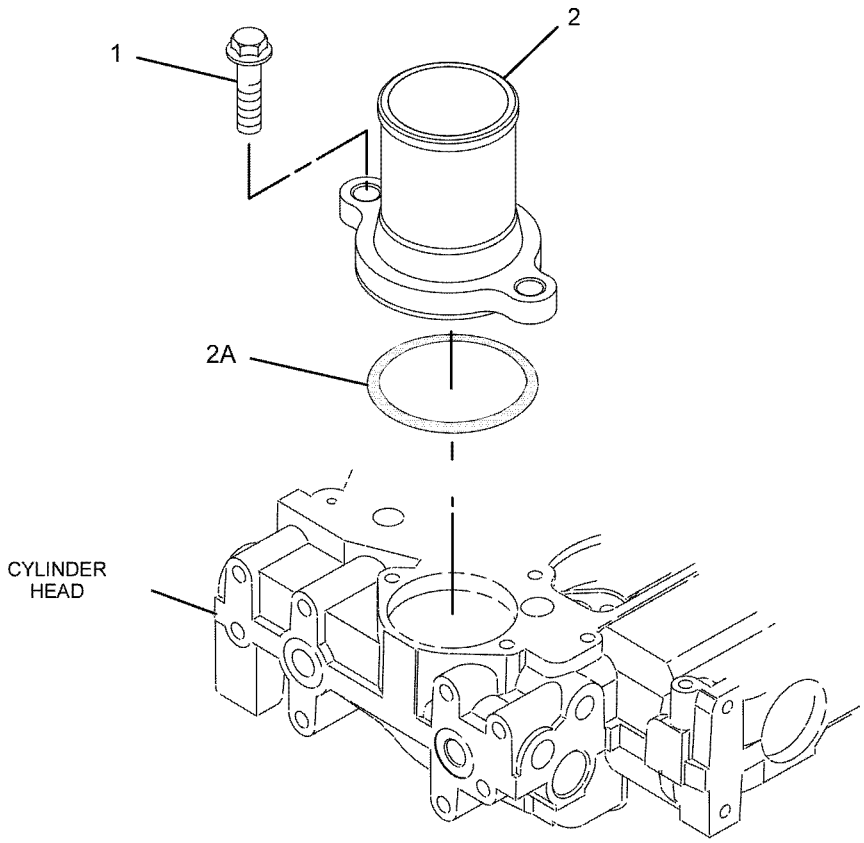

GRAPHIC #1 <END> g01081626

231-0038 CONNECTION GP-WATER

S/N: 3341-1650

ALSO AN ATTACHMENT

SMCS-1380 **i02131563**

NOTE	REF NO	GRAPHIC REF	PART NUMBER	QTY	PART NAME 1 2 3 4 5 6 (PRODUCT LEVEL)	SEE PAGE
M	1	1	**6I-0260**	1	BOLT (M8X1.25X25-MM)	
M	2	1	**100-3751**	1	BOLT (M8X1.25X65-MM)	
	3	1	**225-6907**	1	CONNECTION AS	
	4	1	**225-6908**	1	REGULATOR-WATER TEMPERATURE	
	5	1	**252-1821**	1	SEAL-O-RING (WATER TEMPERATURE REGULATOR)	

M - METRIC PART

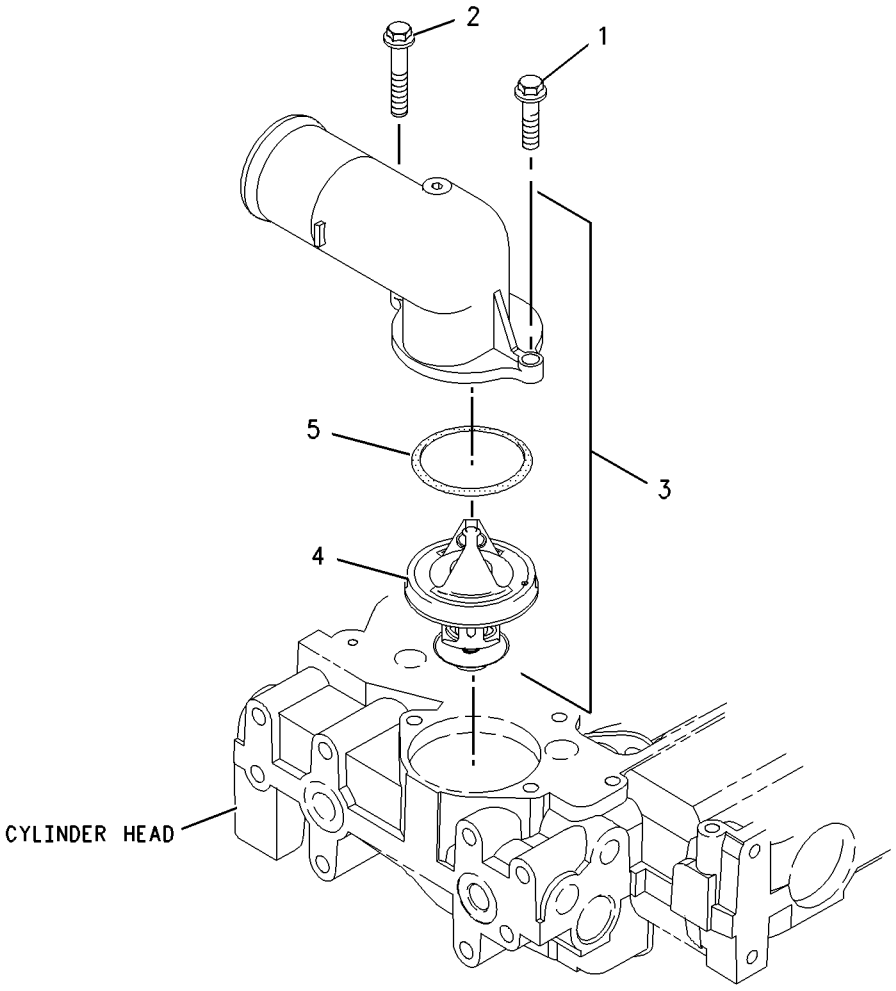

GRAPHIC #1 <END> g00956620

231-0038 CONNECTION GP-WATER

S/N: 3341651-UP

ALSO AN ATTACHMENT

SMCS-1380 **i02309389**

NOTE	REF NO	GRAPHIC REF	PART NUMBER	QTY	PART NAME 1 2 3 4 5 6 (PRODUCT LEVEL)	SEE PAGE
M	1	1	**6I-0260**	1	BOLT (M8X1.25X25-MM)	
M	2	1	**100-3751**	1	BOLT (M8X1.25X65-MM)	
	3	1	**254-2269**	1	CONNECTION GP-WATER	
	4	1	**254-2270**	1	SEAL-O-RING (WATER TEMPERATURE REGULATOR)	

M - METRIC PART

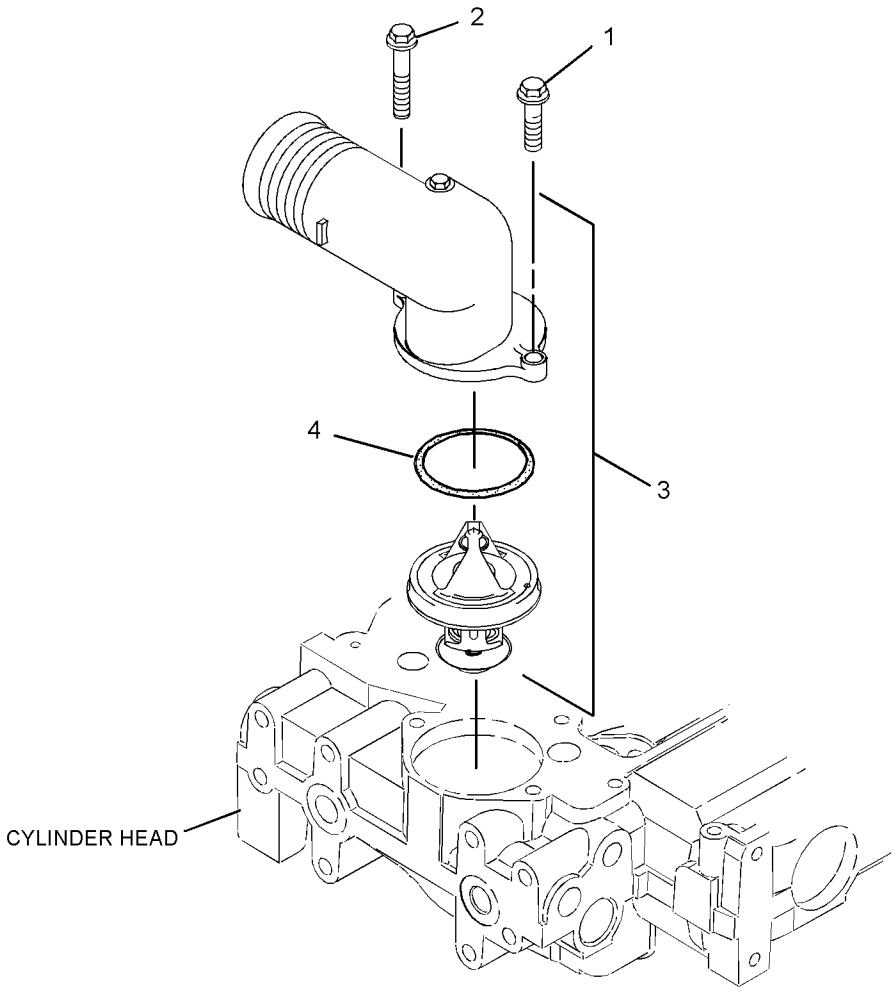

GRAPHIC #1 <END> g01156772

245-4665 CONNECTOR GP-CAB HEATER LINES

SMCS-1380 **i06252200**

NOTE	REF NO	GRAPHIC REF	PART NUMBER	QTY	PART NAME 1 2 3 4 5 6 (PRODUCT LEVEL)	SEE PAGE
	1	1	**2B-0858**	2	PLUG-PIPE	
	2	1	**7W-4669**	1	ADAPTER	
	3	1	**398-1564**	1	ADAPTER	

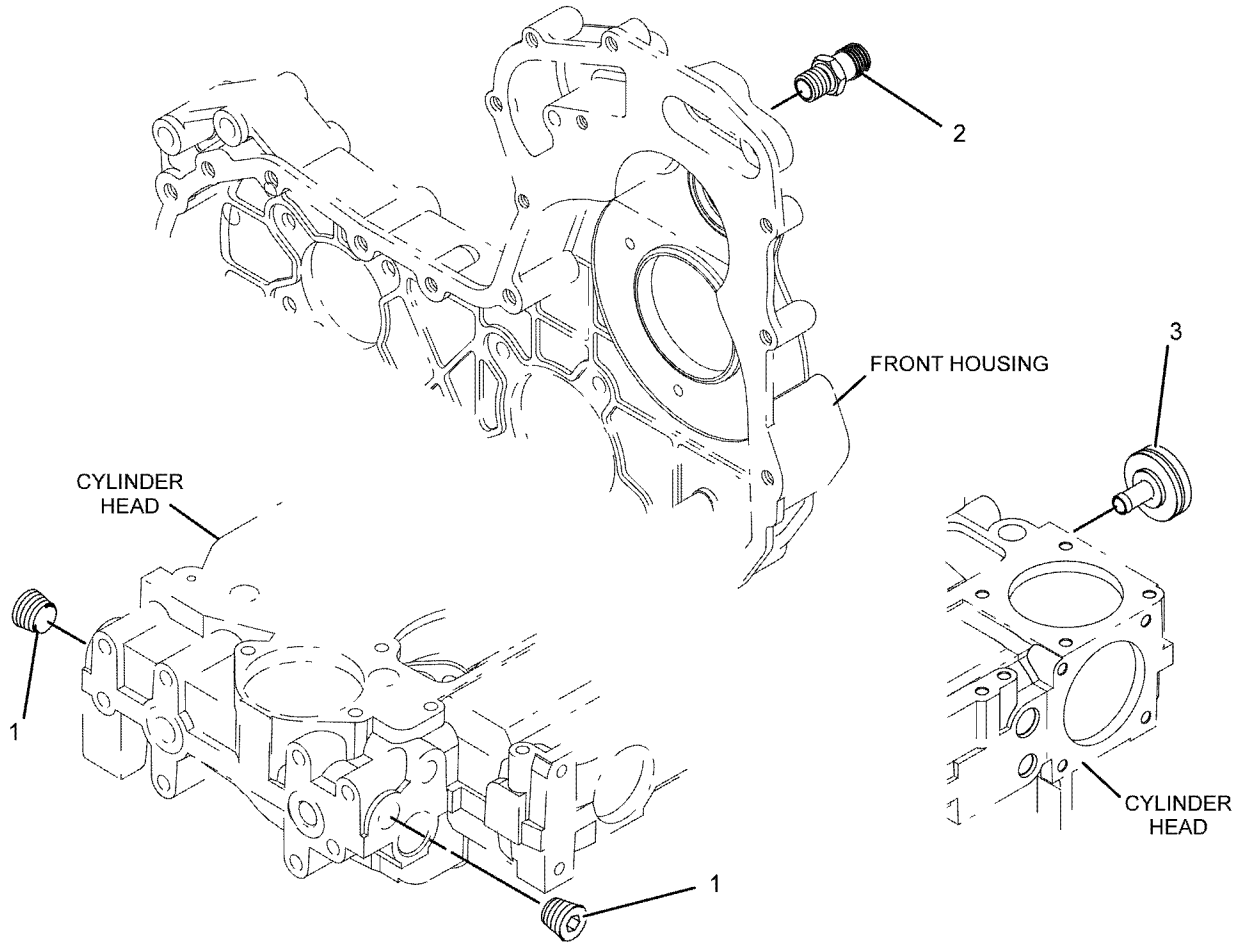

GRAPHIC #1 <END> g01029823

247-4926 CONNECTOR GP-CAB HEATER LINES

SMCS-1380 **i06939857**

NOTE	REF NO	GRAPHIC REF	PART NUMBER	QTY	PART NAME 1 2 3 4 5 6 (PRODUCT LEVEL)	SEE PAGE
	1	1	**474-1553**	2	ADAPTER	
	2	1	**2B-0858**	1	PLUG-PIPE	

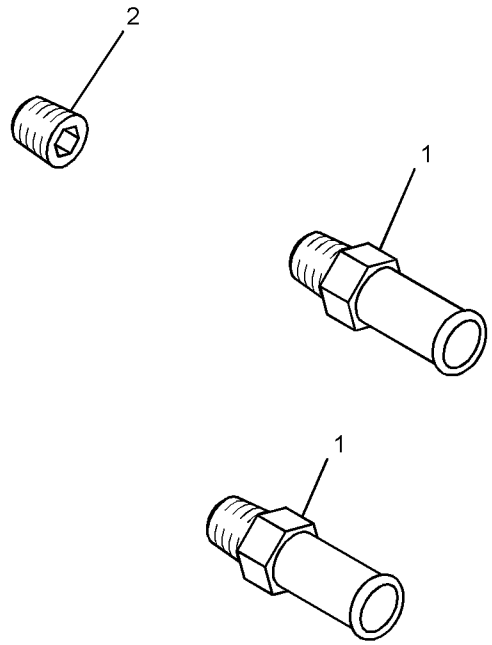

GRAPHIC #1 <END> g01124694

316-5635 CONNECTOR GP-CAB HEATER LINES

SMCS-1380 **i06916968**

NOTE	REF NO	GRAPHIC REF	PART NUMBER	QTY	PART NAME 1 2 3 4 5 6 (PRODUCT LEVEL)	SEE PAGE
	1	1	**2B-0858**	3	PLUG-PIPE	
	2	1	**474-1553**	1	ADAPTER	
	3	1	**251-6262**	1	CONNECTOR	

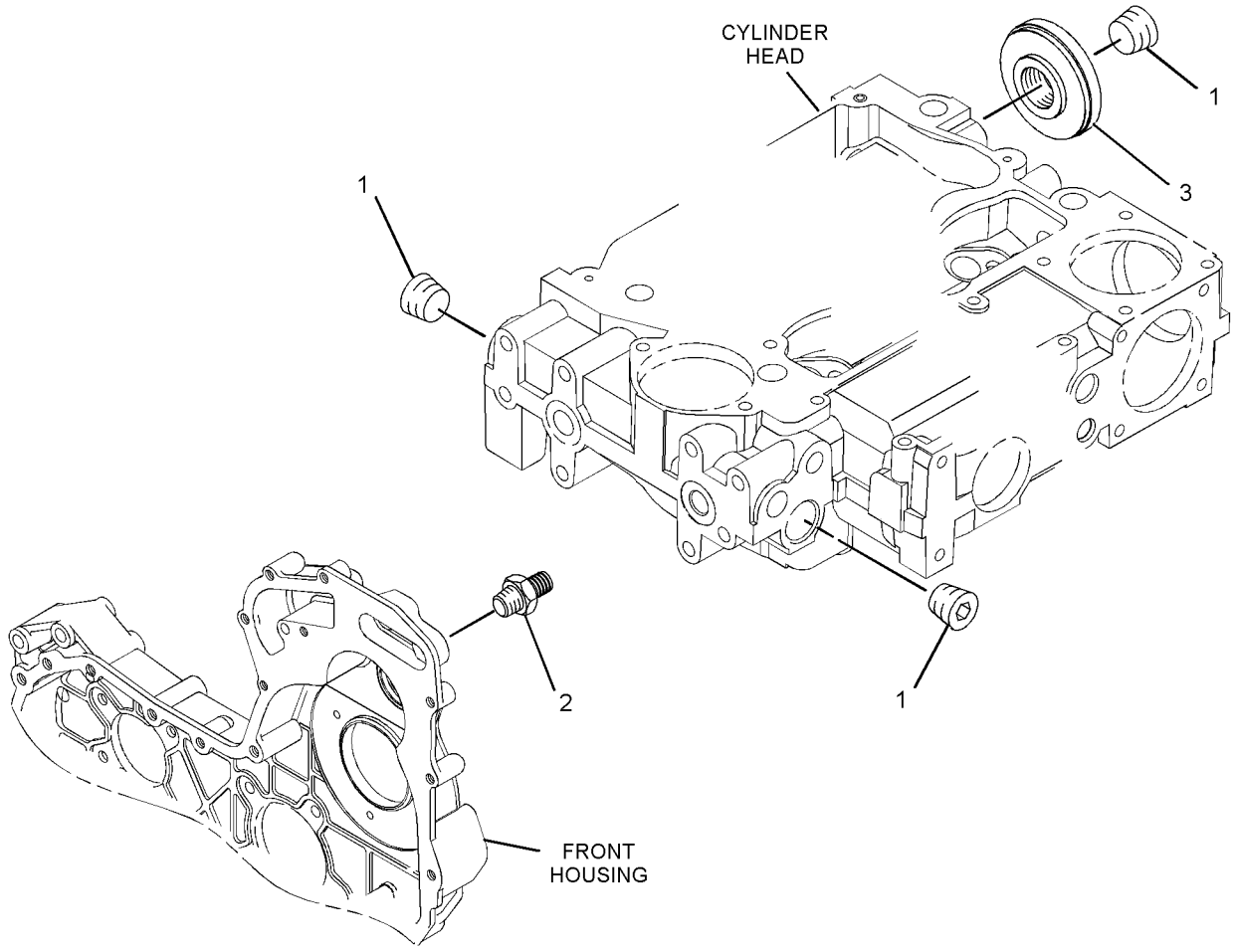

GRAPHIC #1 <END> g01419801

355-6224 COOLER AS-OIL

PART OF 234-1546, 235-8562, 237-6452, 253-8786, 271-7078 COOLER GP-FLTR BASE & ENG OIL, 316-5656, 316-5671 COOLER GP-OIL
ALSO AN ATTACHMENT

SMCS-3320 **i03864327**

NOTE	REF NO	GRAPHIC REF	PART NUMBER	QTY	PART NAME 1 2 3 4 5 6 (PRODUCT LEVEL)	SEE PAGE
M	1	1	**6I-0260**	10	BOLT (M8X1.25X25-MM)	
M	2	1	**6I-4374**	3	BOLT (M8X1.25X60-MM)	
M	3	1	**101-3895**	4	BOLT (M8X1.25X35-MM)	
	4	1	**225-6818**	2	SEAL	
	5	1	**233-7222**	1	COOLER-OIL (ENGINE)	
	6	1	**272-2265**	1	SEAL	

M - METRIC PART

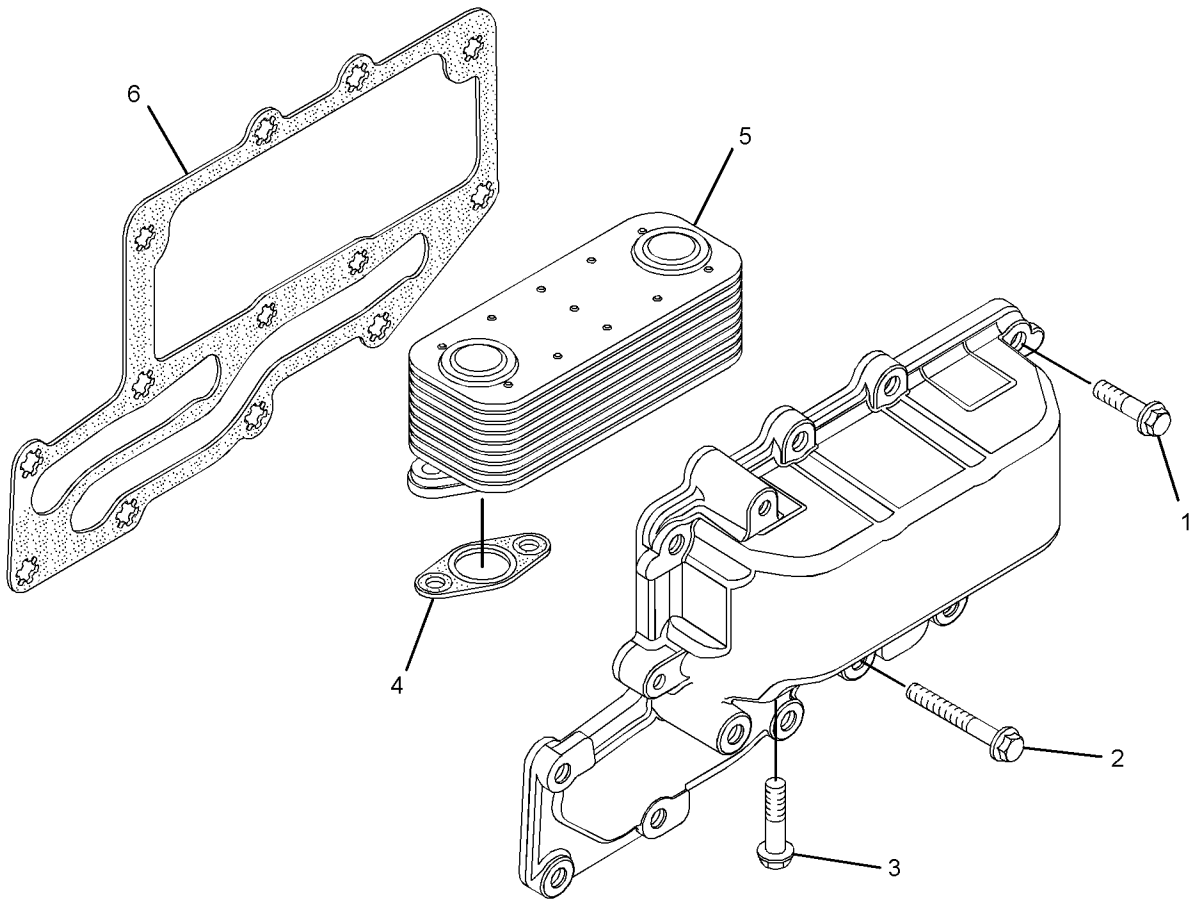

GRAPHIC #1 <END> g02146921

232-3722 COOLER GP-ENGINE OIL

PART OF 233-9406, 238-2799, 265-5299 COOLER GP-FLTR BASE & ENG OIL
ALSO AN ATTACHMENT

SMCS-1378 **i07395663**

NOTE	REF NO	GRAPHIC REF	PART NUMBER	QTY	PART NAME 1 2 3 4 5 6 (PRODUCT LEVEL)	SEE PAGE
M	1	1	**6I-0260**	10	BOLT (M8X1.25X25-MM)	
M	2	1	**6I-4374**	3	BOLT (M8X1.25X60-MM)	
M	3	1	**101-3895**	4	BOLT (M8X1.25X35-MM)	
	4	1	**225-6817**	1	COOLER-OIL (ENGINE)	
	5	1	**225-6818**	2	SEAL	
	6	1	**272-2265**	1	SEAL	

M - METRIC PART

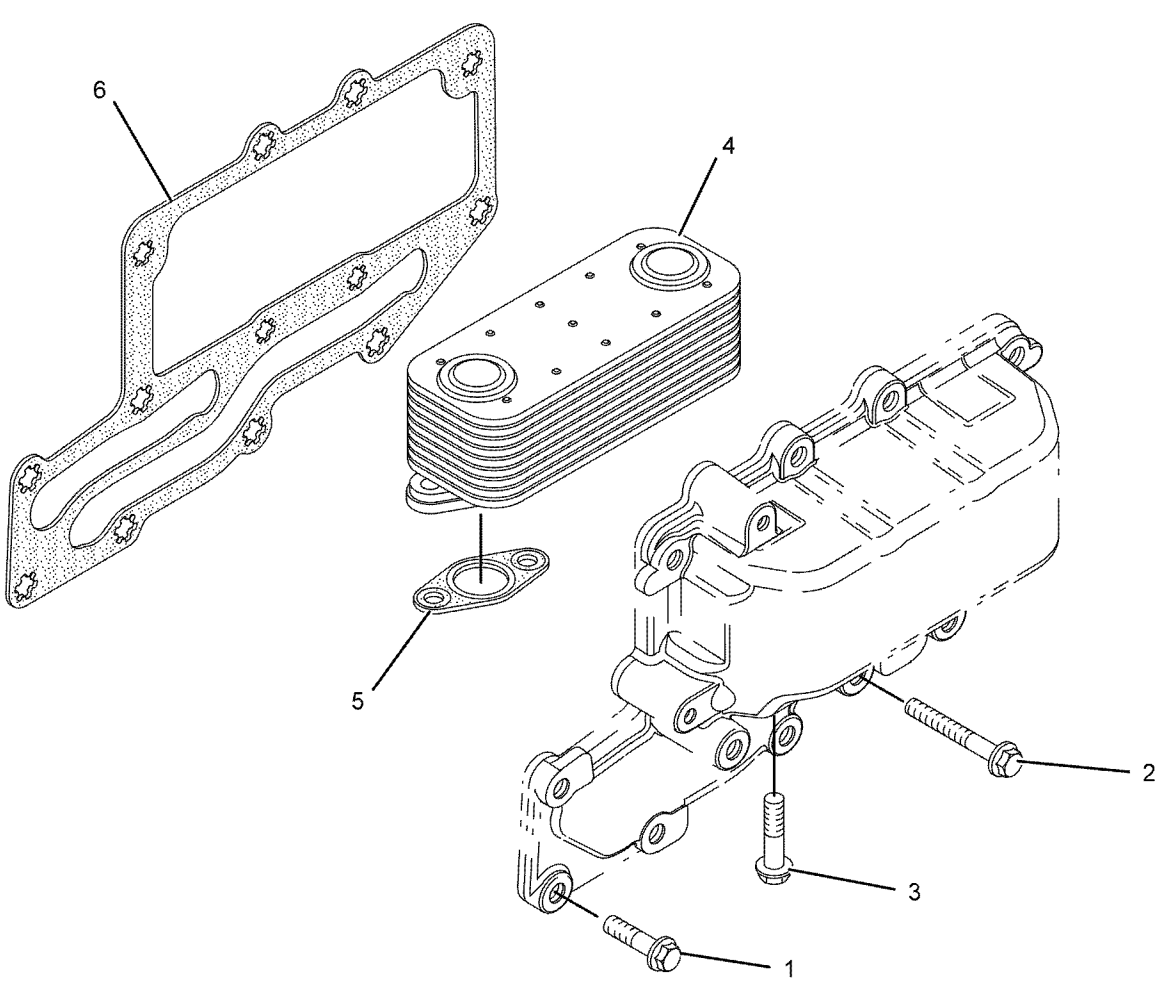

GRAPHIC #1 <END> g01111678

354-1274 COOLER GP-ENGINE OIL

PART OF 476-3073 COOLER GP-ENGINE OIL, 232-6177, 233-9406, 234-2941, 235-5230, 238-2799, 253-2474, 253-2475, 265-5299, 268-0868, 323-6679, 459-5504 COOLER GP-FLTR BASE & ENG OIL
ALSO AN ATTACHMENT

SMCS-1378 **i07395031**

NOTE	REF NO	GRAPHIC REF	PART NUMBER	QTY	PART NAME 1 2 3 4 5 6 (PRODUCT LEVEL)	SEE PAGE
M	1	1	**6I-0260**	10	BOLT (M8X1.25X25-MM)	
M	2	1	**6I-4374**	3	BOLT (M8X1.25X60-MM)	
M	3	1	**101-3895**	4	BOLT (M8X1.25X35-MM)	
	4	1	**225-6817**	1	COOLER-OIL	
J	5	1	**225-6818**	2	SEAL	
	6	1	**272-2265**	1	SEAL	
					AVAILABLE REPAIR KIT(S):	
J			**416-8777**	1	KIT-SEAL (ENGINE OIL COOLER)	
					(INCLUDES SEALS & LEAFLET)	

J - KIT MARKED J SERVICES PART(S) MARKED J
M - METRIC PART

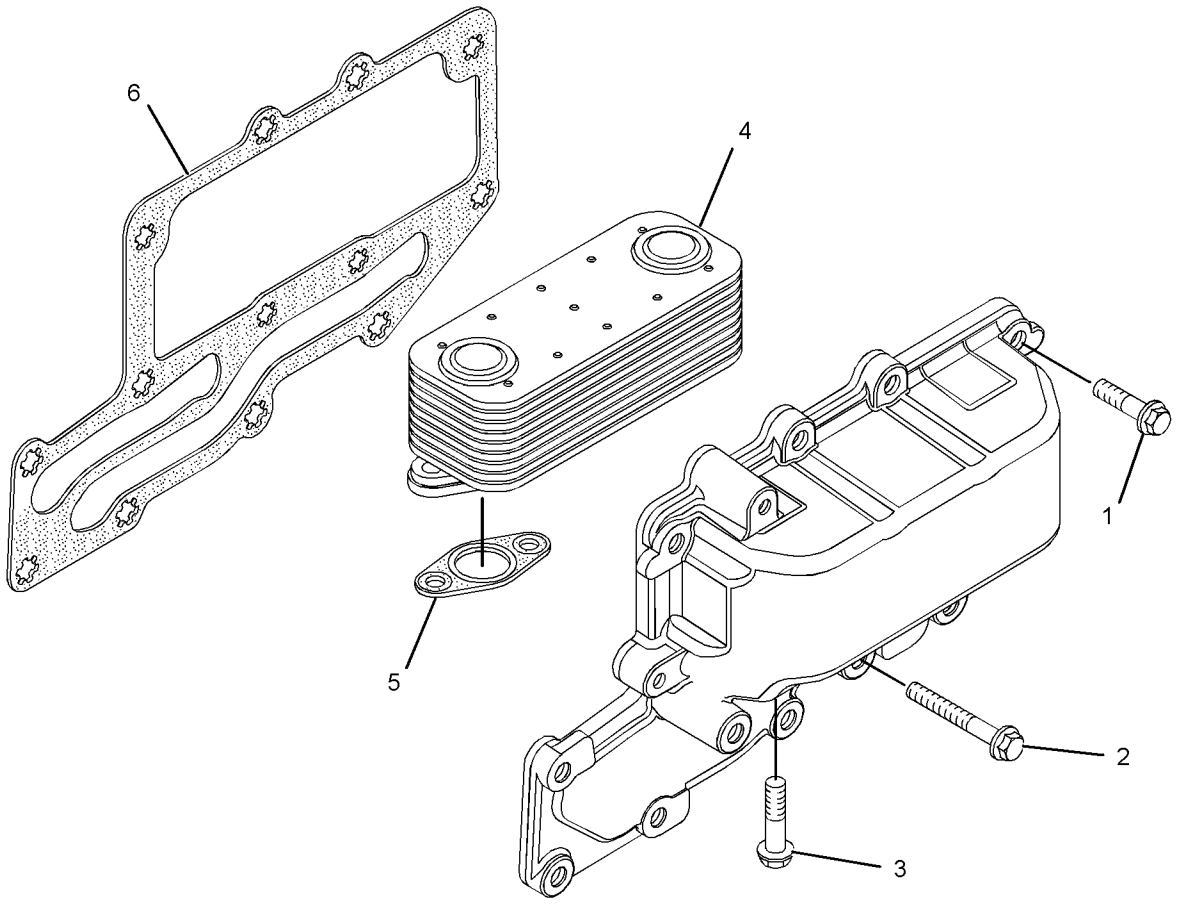

GRAPHIC #1 <END> g02140458

356-6541 COOLER GP-ENGINE OIL

PART OF 476-3073 COOLER GP-ENGINE OIL, 235-5230, 238-2799, 253-2474, 253-2475, 265-5299, 268-0868, 323-6679, 459-5504 COOLER GP-FLTR BASE & ENG OIL
ALSO AN ATTACHMENT

SMCS-1378 **i09727947**

NOTE	REF NO	GRAPHIC REF	PART NUMBER	QTY	PART NAME 1 2 3 4 5 6 (PRODUCT LEVEL)	SEE PAGE
LM	1	1	**6I-0260**	10	BOLT (M8X1.25X25-MM)	
LM	2	1	**6I-4374**	3	BOLT (M8X1.25X60-MM)	
LM	3	1	**101-3895**	4	BOLT (M8X1.25X35-MM)	
JL	4	1	**272-2265**	1	SEAL	
JL	5	1	**356-6540**	2	SEAL-O-RING	
L	6	1	**356-6542**	1	CORE AS-OIL COOLER	
					AVAILABLE REPAIR KIT(S):	
J			**416-8777**	1	KIT-SEAL	
					(ALSO INCLUDES SEALS & LEAFLET)	
LY			**614-2921**	1	KIT-OIL COOLER & LINES GASKET	990

J - KIT MARKED J SERVICES PART(S) MARKED J
L - KIT MARKED L SERVICES PART(S) MARKED L
M - METRIC PART
Y - SEPARATE ILLUSTRATION

356-6541 **COOLER GP-ENGINE OIL (**contd.**)** **i09727947**

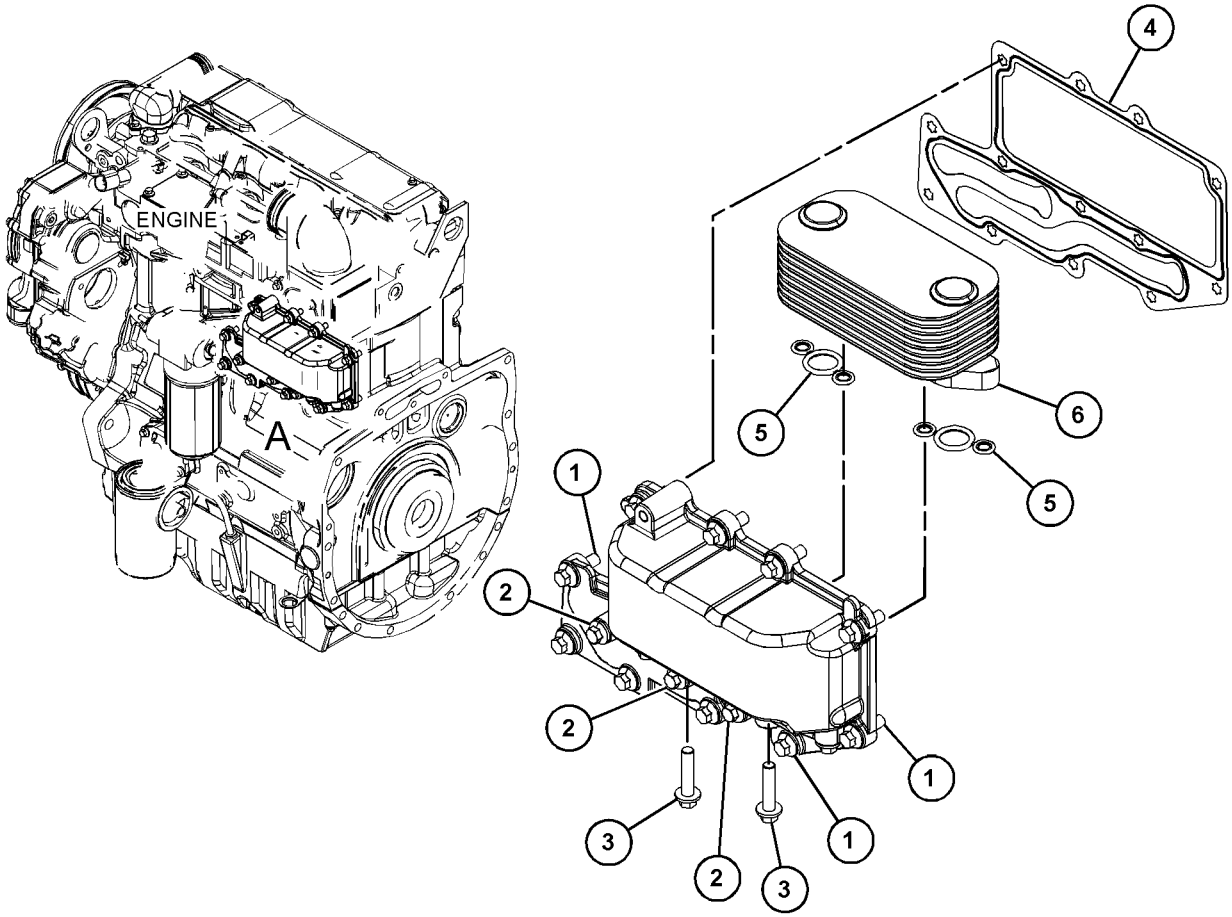

VIEW OF AREA A
(PARTS EXPLODED FOR CLARITY)

GRAPHIC #1 <END> g06587103

392-4903 COOLER GP-ENGINE OIL

5 PLATES

PART OF 237-6452, 253-2472, 271-7078 COOLER GP-FLTR BASE & ENG OIL, 316-5656 COOLER GP-OIL

SMCS-1378 **i08194439**

NOTE	REF NO	GRAPHIC REF	PART NUMBER	QTY	PART NAME 1 2 3 4 5 6 (PRODUCT LEVEL)	SEE PAGE
M	1	1	**101-3895**	4	BOLT (M8X1.25X35-MM)	
M	2	1	**6I-4374**	3	BOLT (M8X1.25X60-MM)	
J	3	1	**272-2265**	1	SEAL	
J	4	1	**356-6540**	2	SEAL-O-RING	
M	5	1	**6I-0260**	10	BOLT (M8X1.25X25-MM)	
	6	1	**392-4902**	1	CORE AS-OIL COOLER	
					AVAILABLE REPAIR KIT(S):	
J			**416-8777**	1	KIT-SEAL (ENGINE OIL COOLER)	
					(INCLUDES SEALS, SEAL-OIL RINGS & LEAFLET)	

J - KIT MARKED J SERVICES PART(S) MARKED J
M - METRIC PART

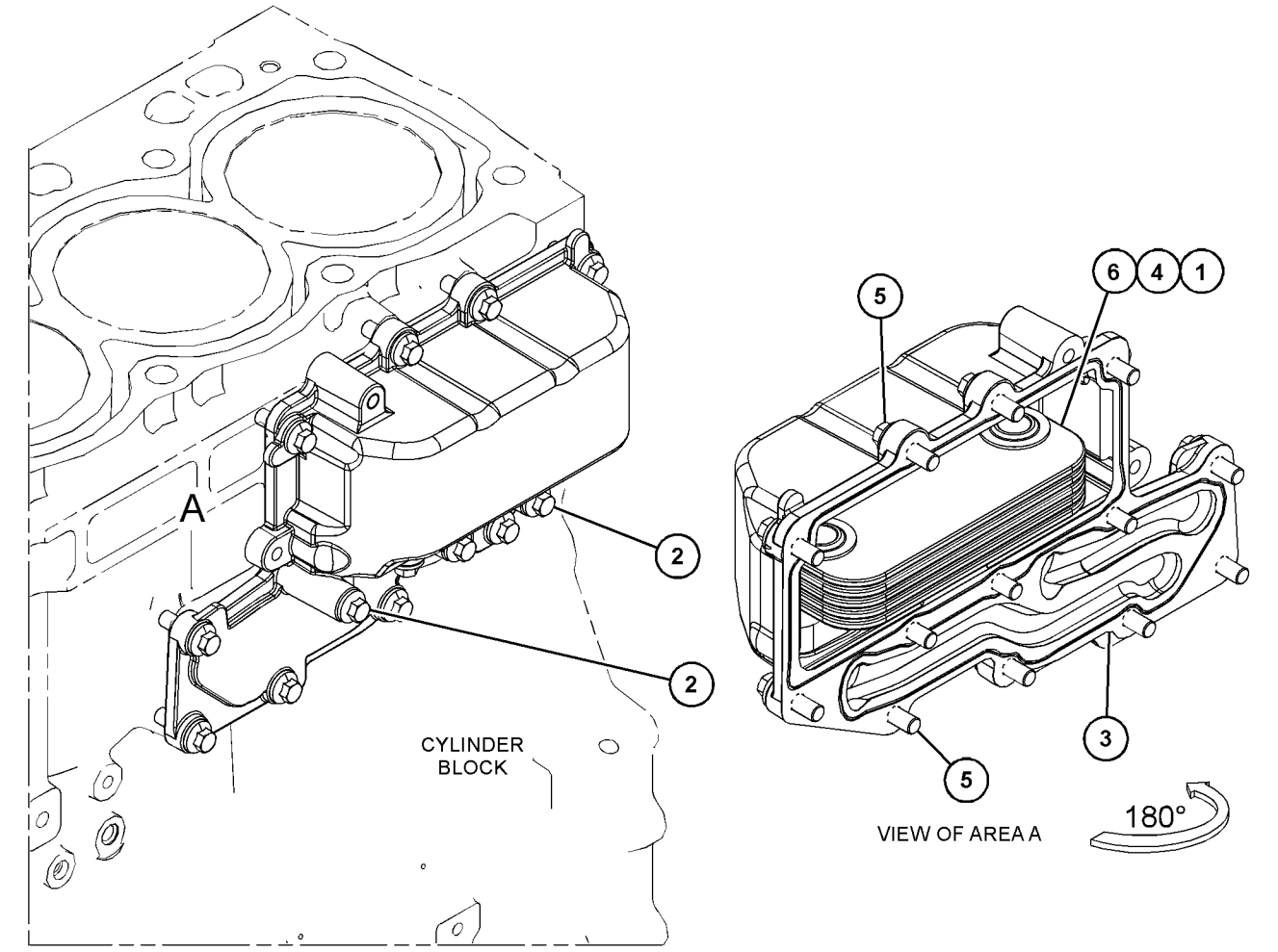

GRAPHIC #1 <END> g06497939

476-3073 COOLER GP-ENGINE OIL

TYPE 1

SMCS-1378 **i06589839**

NOTE	REF NO	GRAPHIC REF	PART NUMBER	QTY	PART NAME 1 2 3 4 5 6 (PRODUCT LEVEL)	SEE PAGE
M	1	1	**6I-0645**	4	BOLT (M8X1.25X25-MM)	
	2	1	**225-7941**	1	PLUG	
	3	1	**225-7944**	1	GASKET	
	4	1	**233-9408**	2	GASKET	
M	5	1	**235-2451**	4	BOLT (M8X1.25X45-MM)	
	6	1	**244-6872**	1	ADAPTER-FILTER	
	7	1	**249-0975**	1	HEAD AS-OIL FILTER	
	8	1	**252-6318**	1	PLATE	
	9	1	**330-5898**	1	SEAL-O-RING	
Y	10	1	**354-1274**	1	COOLER GP-ENGINE OIL	877
					—OR—	
Y		1	*356-6541*	1	COOLER GP-ENGINE OIL	878

M - METRIC PART
Y - SEPARATE ILLUSTRATION

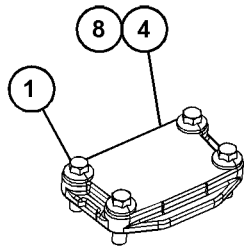

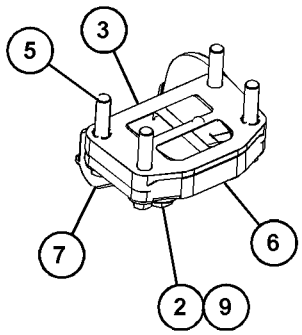

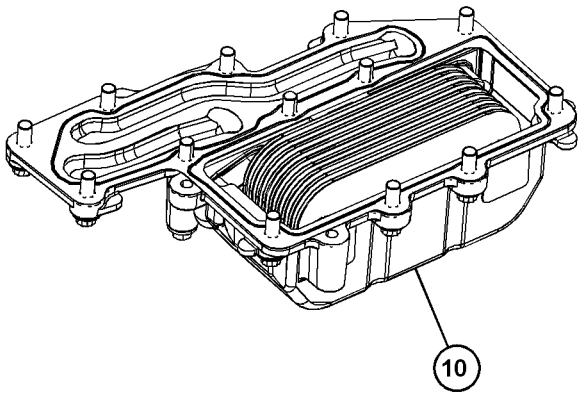

GRAPHIC #1 <END> g06113895

476-3073 COOLER GP-ENGINE OIL

TYPE 2

SMCS-1378 **i07711640**

NOTE	REF NO	GRAPHIC REF	PART NUMBER	QTY	PART NAME 1 2 3 4 5 6 (PRODUCT LEVEL)	SEE PAGE
M	1	1	**6I-0645**	4	BOLT (M8X1.25X25-MM)	
	2	1	**225-7941**	1	PLUG	
	3	1	**225-7944**	1	GASKET	
	4	1	**233-9408**	2	GASKET	
M	5	1	**235-2451**	4	BOLT (M8X1.25X45-MM)	
	6	1	**244-6872**	1	ADAPTER-FILTER	
	7	1	**249-0975**	1	HEAD AS-OIL FILTER	
	8	1	**252-6318**	1	PLATE	
	9	1	**330-5898**	1	SEAL-O-RING	
CY	10	1	*356-6541*	1	COOLER GP-ENGINE OIL	878

C - CHANGE FROM PREVIOUS TYPE
M - METRIC PART
Y - SEPARATE ILLUSTRATION

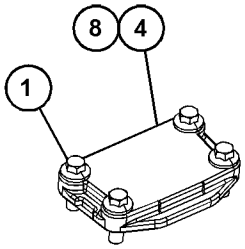

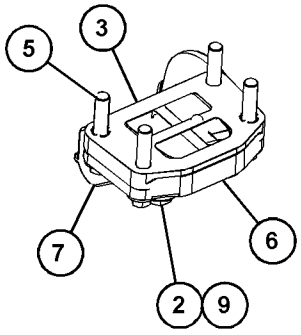

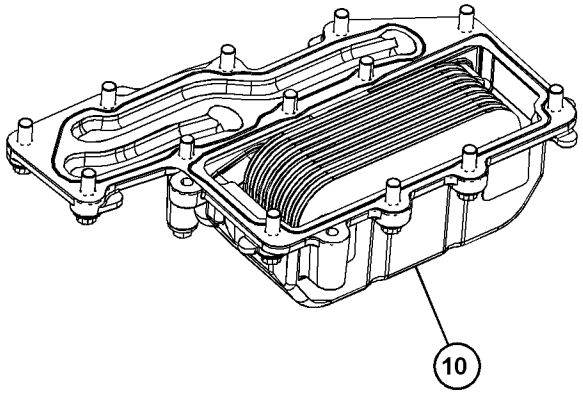

GRAPHIC #1 <END> g06113895

232-6177 COOLER GP-FLTR BASE & ENG OIL

AN ATTACHMENT

SMCS-1306, 1378 **i03868289**

NOTE	REF NO	GRAPHIC REF	PART NUMBER	QTY	PART NAME 1 2 3 4 5 6 (PRODUCT LEVEL)	SEE PAGE
M	1	1	**6I-0572**	4	BOLT (M8X1.25X20-MM)	
M	2	1	**6I-0645**	4	BOLT (M8X1.25X25-MM)	
	3	1	**199-9267**	1	SEAL-O-RING	
	4	1	**225-7941**	1	PLUG	
	5	1	**225-7944**	2	GASKET	
	6	1	**249-0974**	1	HEAD AS-OIL FILTER (ENGINE)	
Y	7	1	**354-1274**	1	COOLER GP-ENGINE OIL	877
	8	1	**232-3751**	1	PLATE	
	9	1	**232-3861**	1	PLUG (BLANKING)	
	10	1	**8T-7876**	1	SEAL-O-RING	

M - METRIC PART
Y - SEPARATE ILLUSTRATION

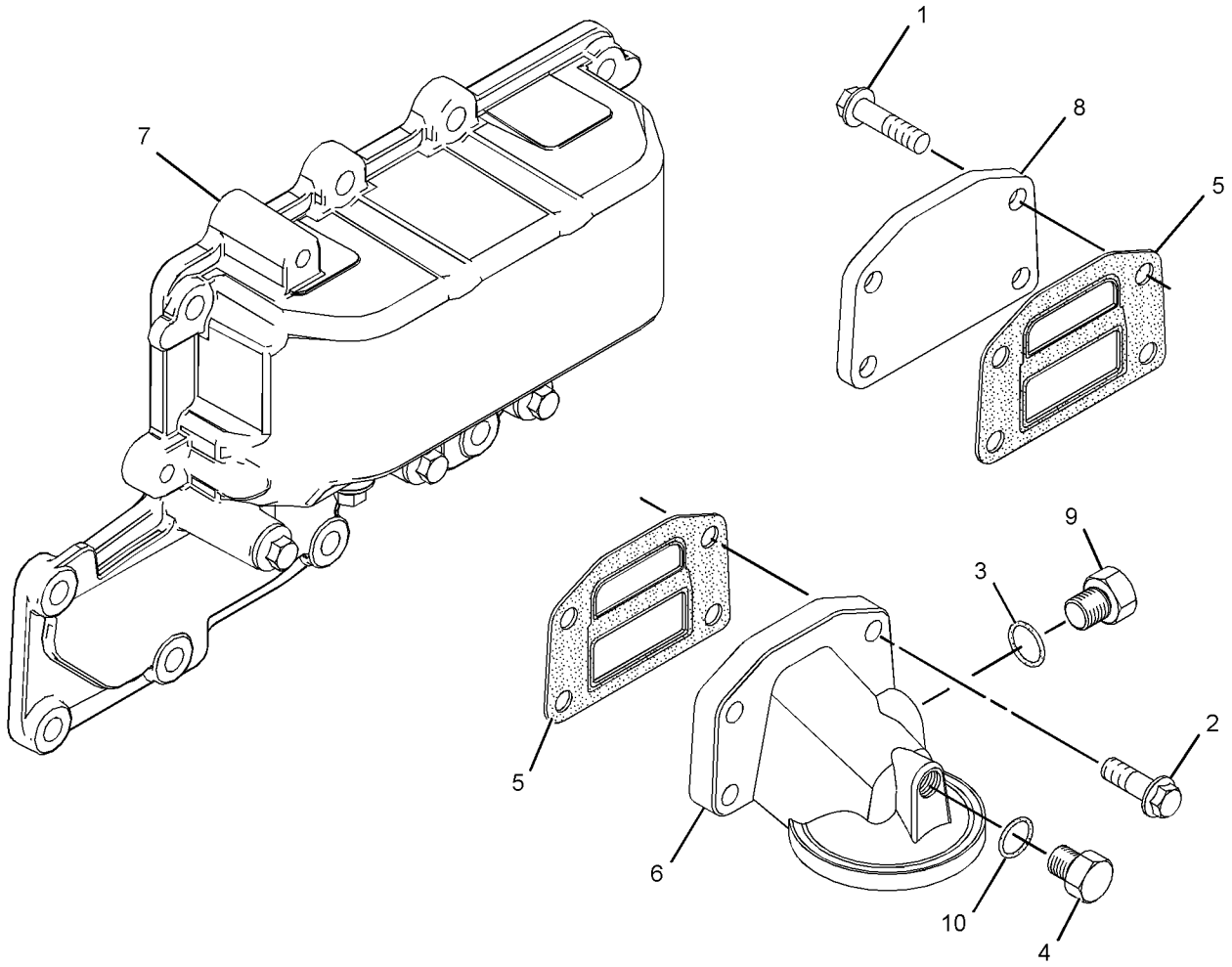

GRAPHIC #1 <END> g02150978

233-9406 COOLER GP-FLTR BASE & ENG OIL

AN ATTACHMENT

TYPE 1

SMCS-1306, 1378 **i03114246**

NOTE	REF NO	GRAPHIC REF	PART NUMBER	QTY	PART NAME 1 2 3 4 5 6 (PRODUCT LEVEL)	SEE PAGE
M	1	1	**6I-0645**	8	BOLT (M8X1.25X25-MM)	
	2	1	**199-9267**	1	SEAL-O-RING	
	3	1	**225-7941**	1	PLUG	
	4	1	**225-7944**	1	GASKET	
	5	1	**249-0974**	1	HEAD AS-OIL FILTER (ENGINE)	
	5A	1	**118-9145**	1	CONNECTOR	
	6	1	**232-3861**	1	PLUG (BLANKING)	
Y	7	1	**232-3722**	1	COOLER GP-ENGINE OIL	876
	8	1	**252-6318**	1	PLATE	
	9	1	**233-9408**	1	GASKET	
	10	1	**8T-7876**	1	SEAL-O-RING	

M - METRIC PART
Y - SEPARATE ILLUSTRATION

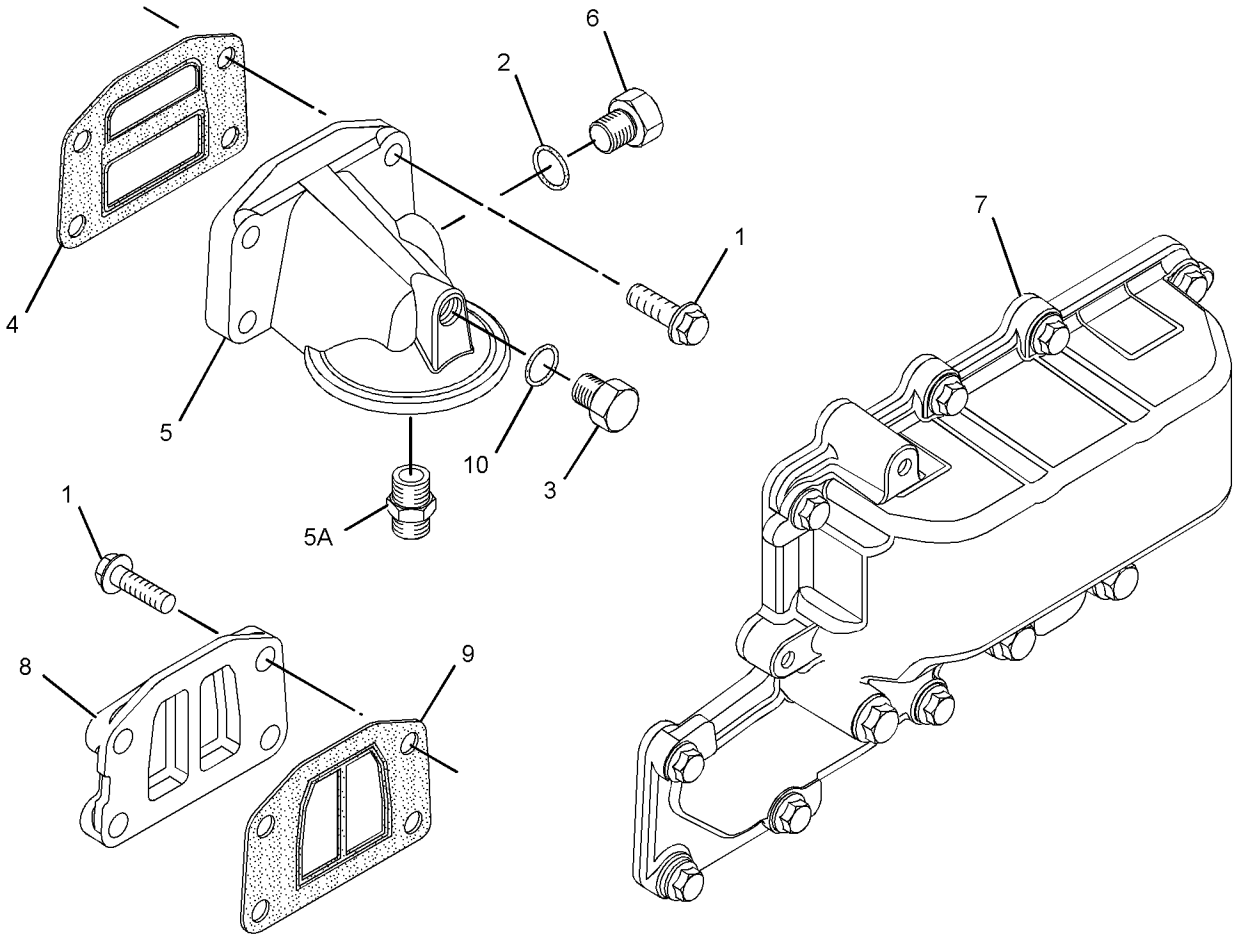

GRAPHIC #1 <END> g01620558

233-9406 COOLER GP-FLTR BASE & ENG OIL

AN ATTACHMENT

TYPE 2

SMCS-1306, 1378 **i03890750**

NOTE	REF NO	GRAPHIC REF	PART NUMBER	QTY	PART NAME 1 2 3 4 5 6 (PRODUCT LEVEL)	SEE PAGE
M	1	1	**6I-0645**	8	BOLT (M8X1.25X25-MM)	
	2	1	**199-9267**	1	SEAL-O-RING	
	3	1	**225-7941**	1	PLUG	
	4	1	**225-7944**	1	GASKET	
	5	1	**249-0974**	1	HEAD AS-OIL FILTER (ENGINE)	
	6	1	**232-3861**	1	PLUG (BLANKING)	
CY	7	1	**354-1274**	1	COOLER GP-ENGINE OIL	877
	8	1	**252-6318**	1	PLATE	
	9	1	**233-9408**	1	GASKET	
	10	1	**8T-7876**	1	SEAL-O-RING	

C - CHANGE FROM PREVIOUS TYPE
M - METRIC PART
Y - SEPARATE ILLUSTRATION

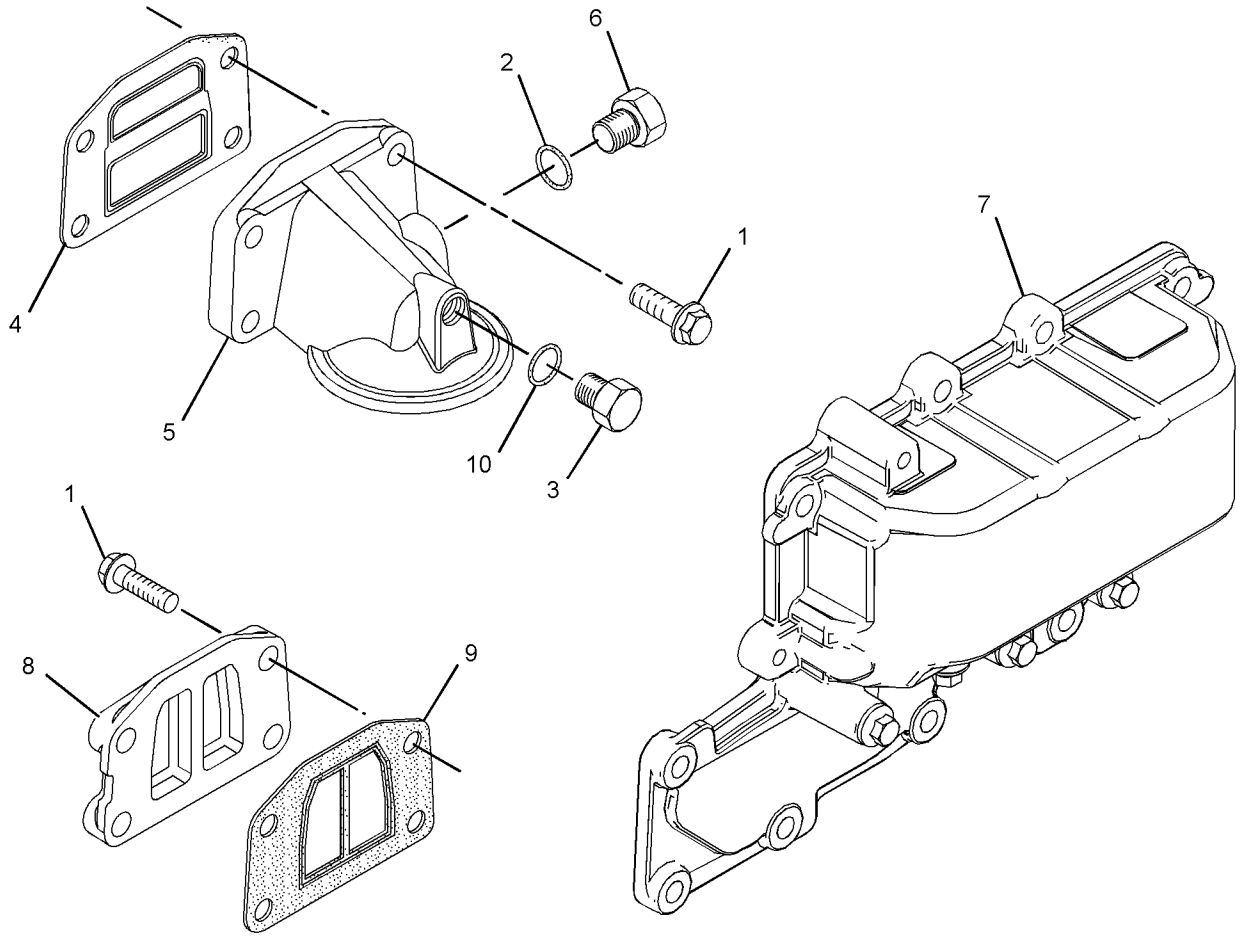

GRAPHIC #1 <END> g02151066

234-1546 COOLER GP-FLTR BASE & ENG OIL

ALSO AN ATTACHMENT

TYPE 1

SMCS-1306, 1378

i02634309

NOTE	REF NO	GRAPHIC REF	PART NUMBER	QTY	PART NAME 1 2 3 4 5 6 (PRODUCT LEVEL)	SEE PAGE
M	1	1	**6I-0645**	8	BOLT (M8X1.25X25-MM)	
	2	1	**225-7941**	1	PLUG	
	3	1	**225-7944**	1	GASKET	
	4	1	**249-0974**	1	HEAD AS-OIL FILTER	
	5	1	**233-7223**	1	COOLER AS-OIL (ENGINE)	
M	5A	1	**6I-0260**	10	BOLT (M8X1.25X25-MM)	
M	5B	1	**6I-4374**	3	BOLT (M8X1.25X60-MM)	
M	5C	1	**101-3895**	4	BOLT (M8X1.25X35-MM)	
	5D	1	**225-6818**	2	SEAL	
	5E	1	**225-6820**	1	GASKET	
	5F	1	**233-7222**	1	COOLER-OIL (ENGINE)	
	6	1	**252-6318**	1	PLATE (BLANKING)	
	7	1	**233-9408**	1	GASKET	
	8	1	**8T-7876**	1	SEAL-O-RING	

M - METRIC PART

234-1546 **COOLER GP-FLTR BASE & ENG OIL (**contd.**)** **i02634309**

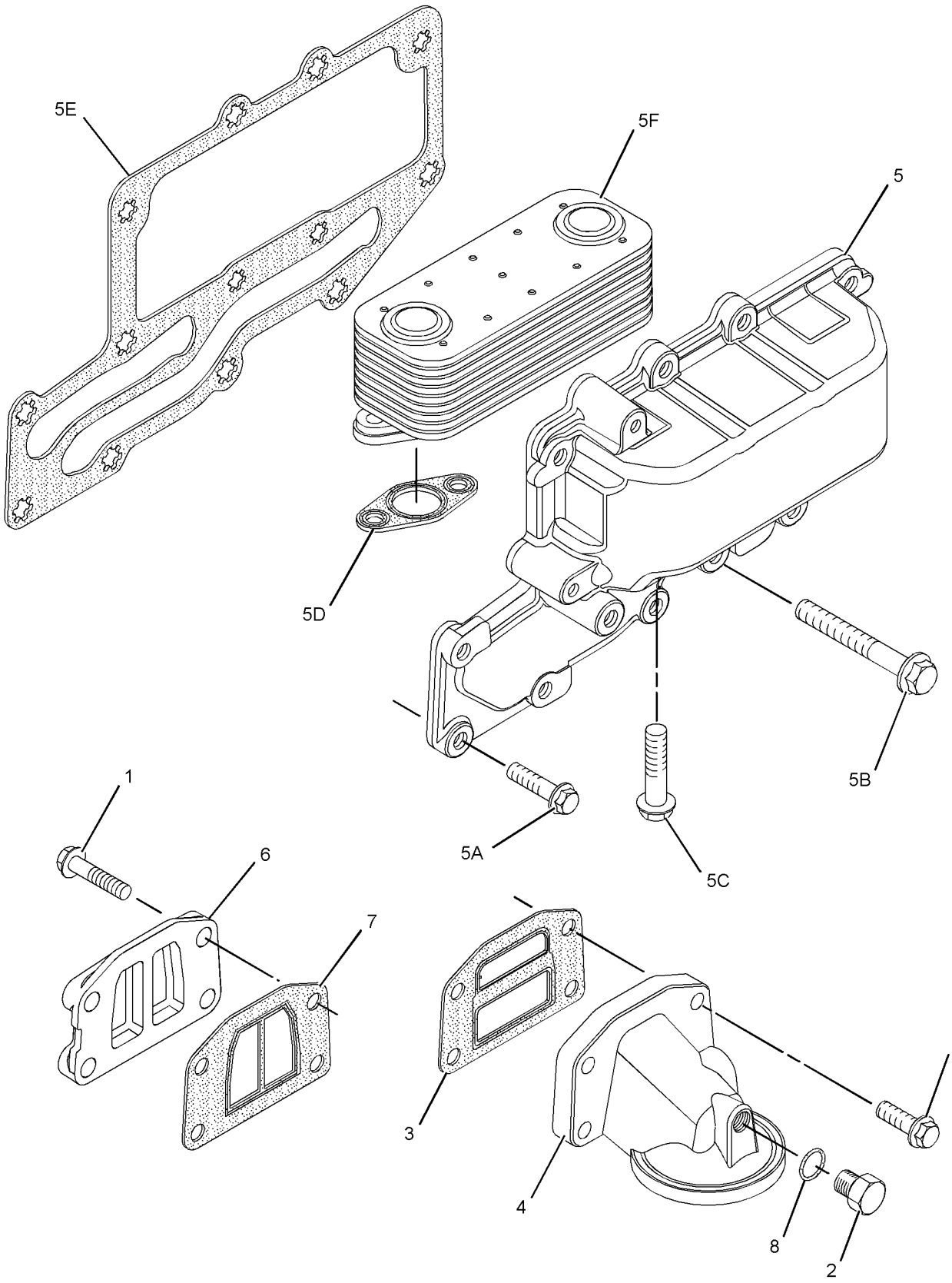

GRAPHIC #1 <END> g01282255

234-1546 COOLER GP-FLTR BASE & ENG OIL

ALSO AN ATTACHMENT
TYPE 2

SMCS-1306, 1378 **i03858097**

NOTE	REF NO	GRAPHIC REF	PART NUMBER	QTY	PART NAME 1 2 3 4 5 6 (PRODUCT LEVEL)	SEE PAGE
M	1	1	**6I-0645**	8	BOLT (M8X1.25X25-MM)	
	2	1	**225-7941**	1	PLUG	
	3	1	**225-7944**	1	GASKET	
	4	1	**249-0974**	1	HEAD AS-OIL FILTER	
CY	5	1	**355-6224**	1	COOLER AS-OIL	875
	6	1	**252-6318**	1	PLATE (BLANKING)	
	7	1	**233-9408**	1	GASKET	
	8	1	**8T-7876**	1	SEAL-O-RING	

C - CHANGE FROM PREVIOUS TYPE
M - METRIC PART
Y - SEPARATE ILLUSTRATION

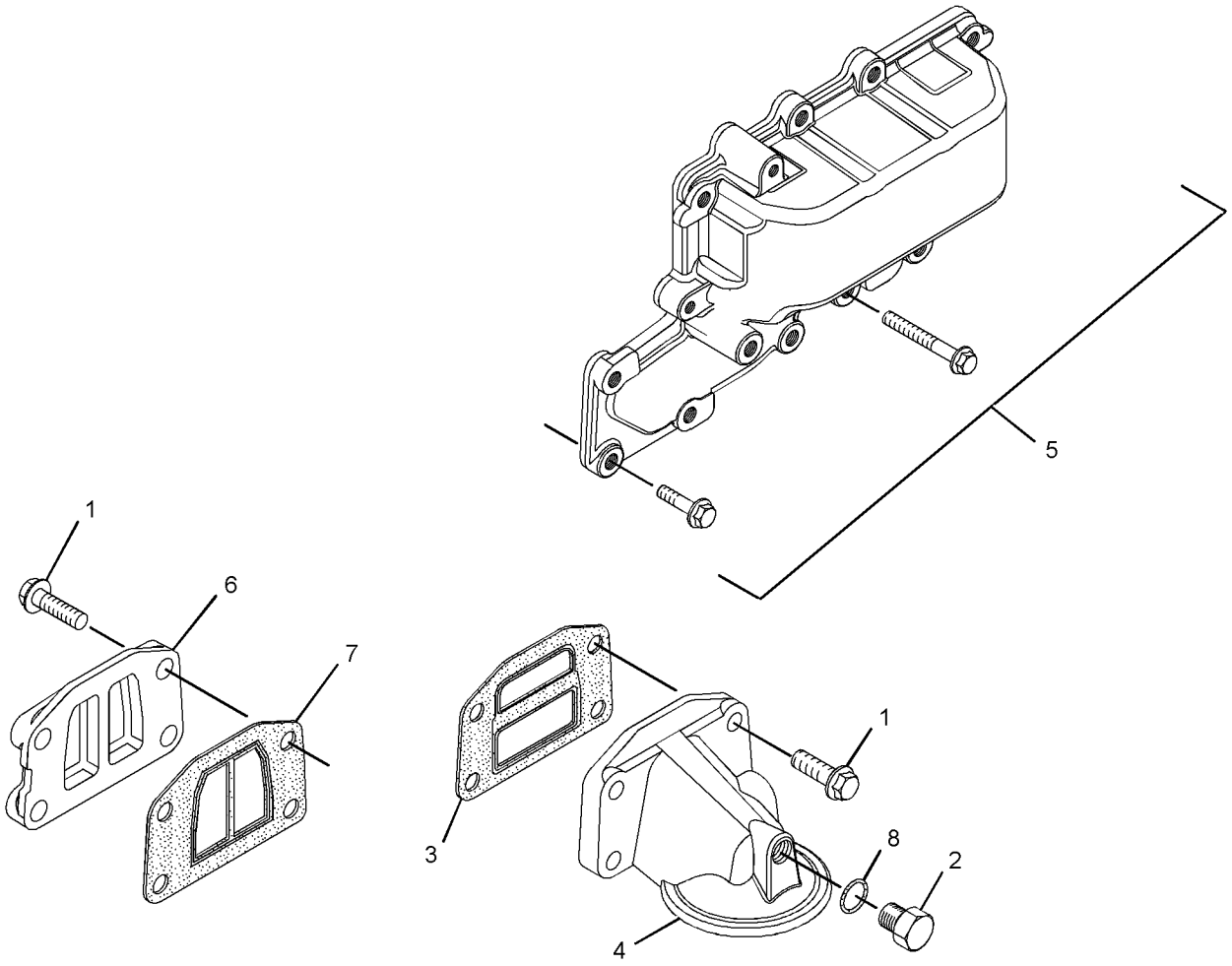

GRAPHIC #1 <END> g02154494

234-2941 COOLER GP-FLTR BASE & ENG OIL

SMCS-1306, 1378 **i04497272**

NOTE	REF NO	GRAPHIC REF	PART NUMBER	QTY	PART NAME 1 2 3 4 5 6 (PRODUCT LEVEL)	SEE PAGE
M	1	1	**6I-0572**	4	BOLT (M8X1.25X20-MM)	
M	2	1	**6I-0645**	4	BOLT (M8X1.25X25-MM)	
	3	1	**216-9633**	1	VALVE AS-FLUID SAMPLING (ENGINE OIL)	
	4	1	**8C-3445**	1	CAP-DUST (ENGINE OIL SAMPLING VALVE)	
	5	1	**225-7944**	2	GASKET	
	6	1	**249-0974**	1	HEAD AS-OIL FILTER	
	7	1	**232-3751**	1	PLATE	
CY	8	1	**354-1274**	1	COOLER GP-ENGINE OIL	877

C - CHANGE FROM PREVIOUS TYPE
M - METRIC PART
Y - SEPARATE ILLUSTRATION

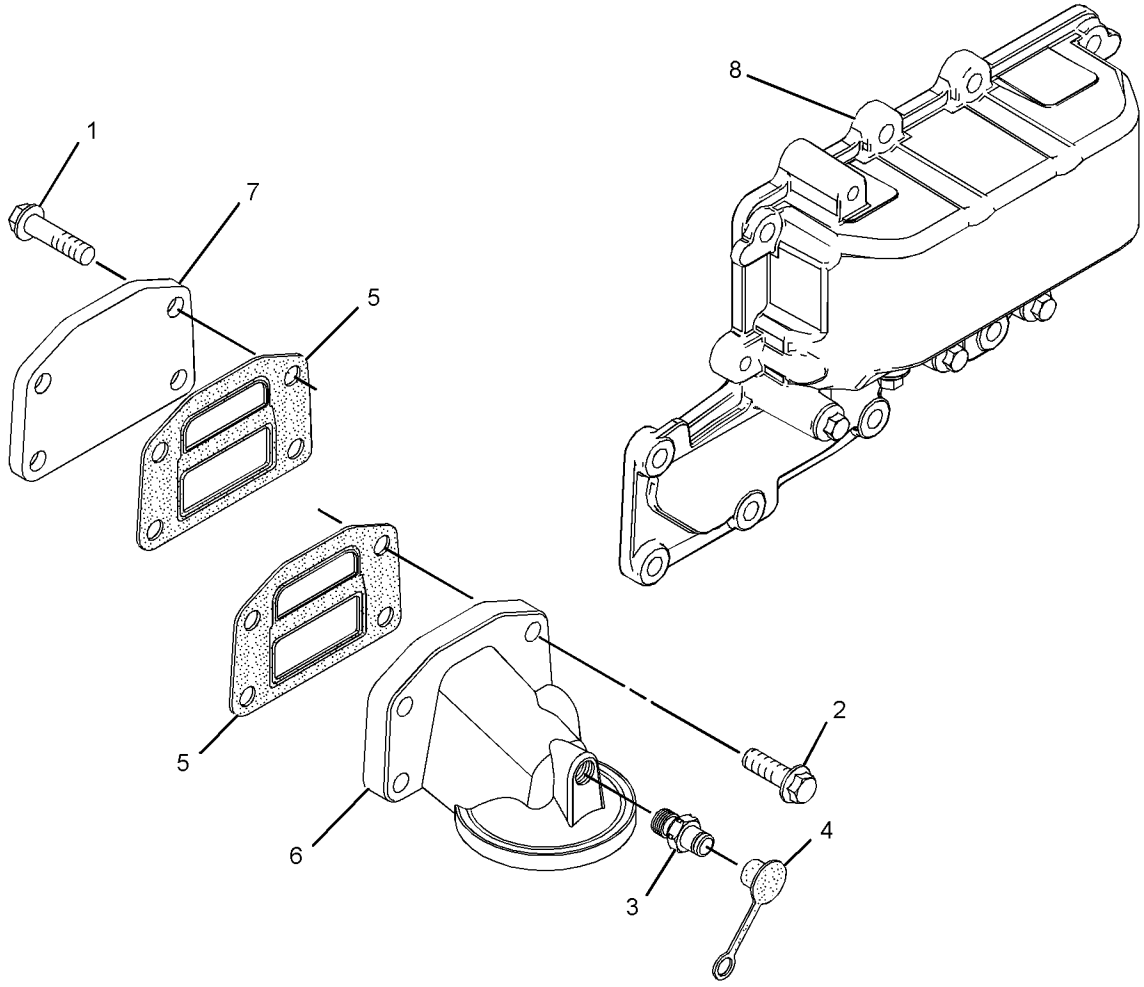

GRAPHIC #1 <END> g02151226

235-5230 COOLER GP-FLTR BASE & ENG OIL

TYPE 1

SMCS-1306, 1378 **i02472335**

NOTE	REF NO	GRAPHIC REF	PART NUMBER	QTY	PART NAME 1 2 3 4 5 6 (PRODUCT LEVEL)	SEE PAGE
M	1	1	**6I-0645**	8	BOLT (M8X1.25X25-MM)	
	2	1	**8T-7876**	1	SEAL-O-RING	
	3	1	**225-7941**	1	PLUG	
	4	1	**225-7944**	1	GASKET	
	5	1	**249-0974**	1	HEAD AS-OIL FILTER (ENGINE)	
	7	1	**232-3722**	1	COOLER GP-ENGINE OIL	
M	8	1	**6I-0260**	10	BOLT (M8X1.25X25-MM)	
M	9	1	**6I-4374**	3	BOLT (M8X1.25X60-MM)	
M	10	1	**101-3895**	4	BOLT (M8X1.25X35-MM)	
	11	1	**225-6818**	2	SEAL	
	12	1	**225-6820**	1	GASKET	
	13	1	**225-6817**	1	COOLER-OIL (ENGINE)	
	14	1	**252-6318**	1	PLATE	
	15	1	**233-9408**	1	GASKET	

M - METRIC PART

235-5230 **COOLER GP-FLTR BASE & ENG OIL (**contd.**)** **i02472335**

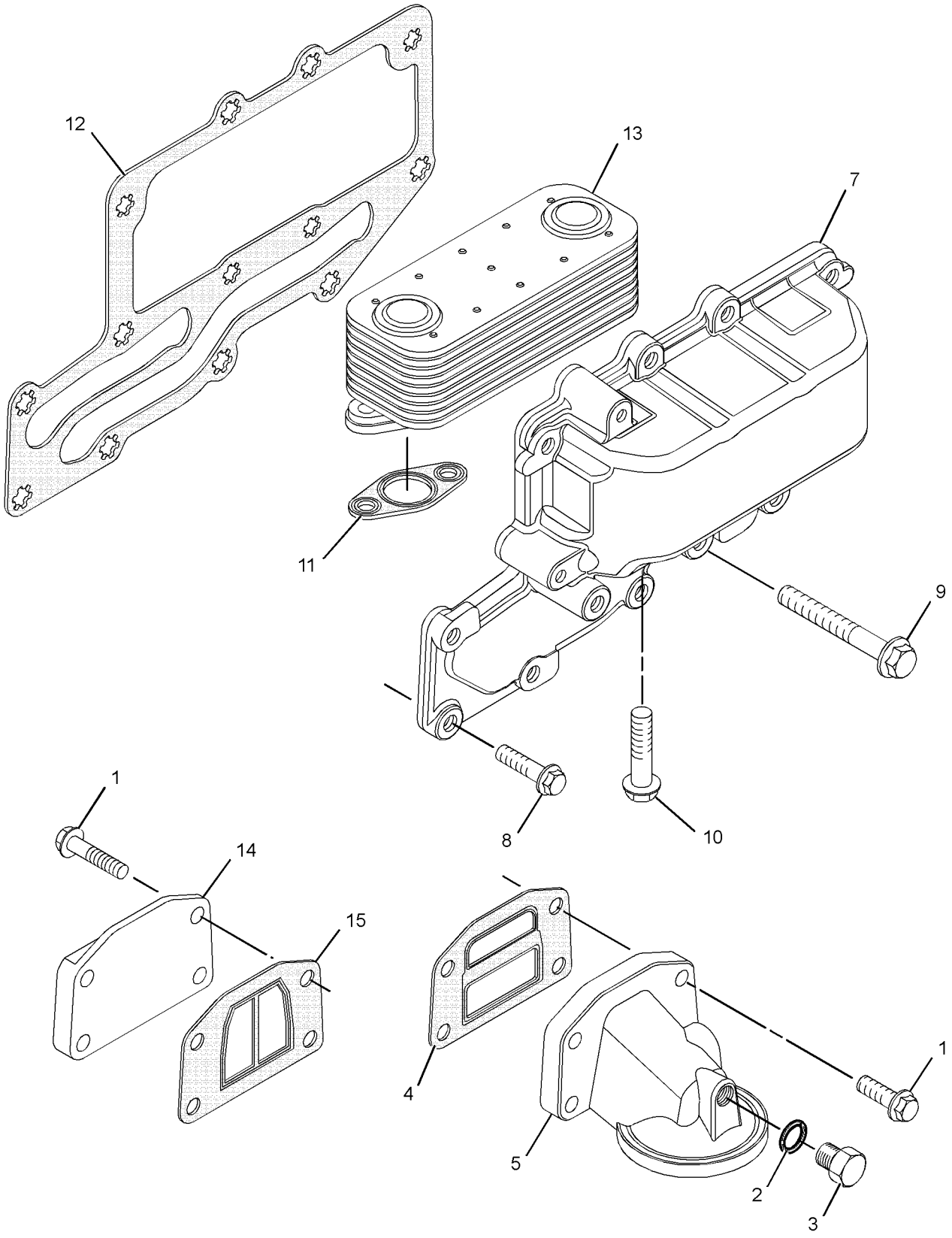

GRAPHIC #1 <END> g01233391

235-5230 COOLER GP-FLTR BASE & ENG OIL

TYPE 2

SMCS-1306, 1378 **i03927889**

NOTE	REF NO	GRAPHIC REF	PART NUMBER	QTY	PART NAME 1 2 3 4 5 6 (PRODUCT LEVEL)	SEE PAGE
M	1	1	**6I-0645**	8	BOLT (M8X1.25X25-MM)	
	2	1	**8T-7876**	1	SEAL-O-RING	
	3	1	**225-7941**	1	PLUG	
	4	1	**225-7944**	1	GASKET	
	5	1	**249-0974**	1	HEAD AS-OIL FILTER (ENGINE)	
	6	1	**233-9408**	1	GASKET	
CY	7	1	**354-1274**	1	COOLER GP-ENGINE OIL	877
	8	1	**252-6318**	1	PLATE	

C - CHANGE FROM PREVIOUS TYPE
M - METRIC PART
Y - SEPARATE ILLUSTRATION

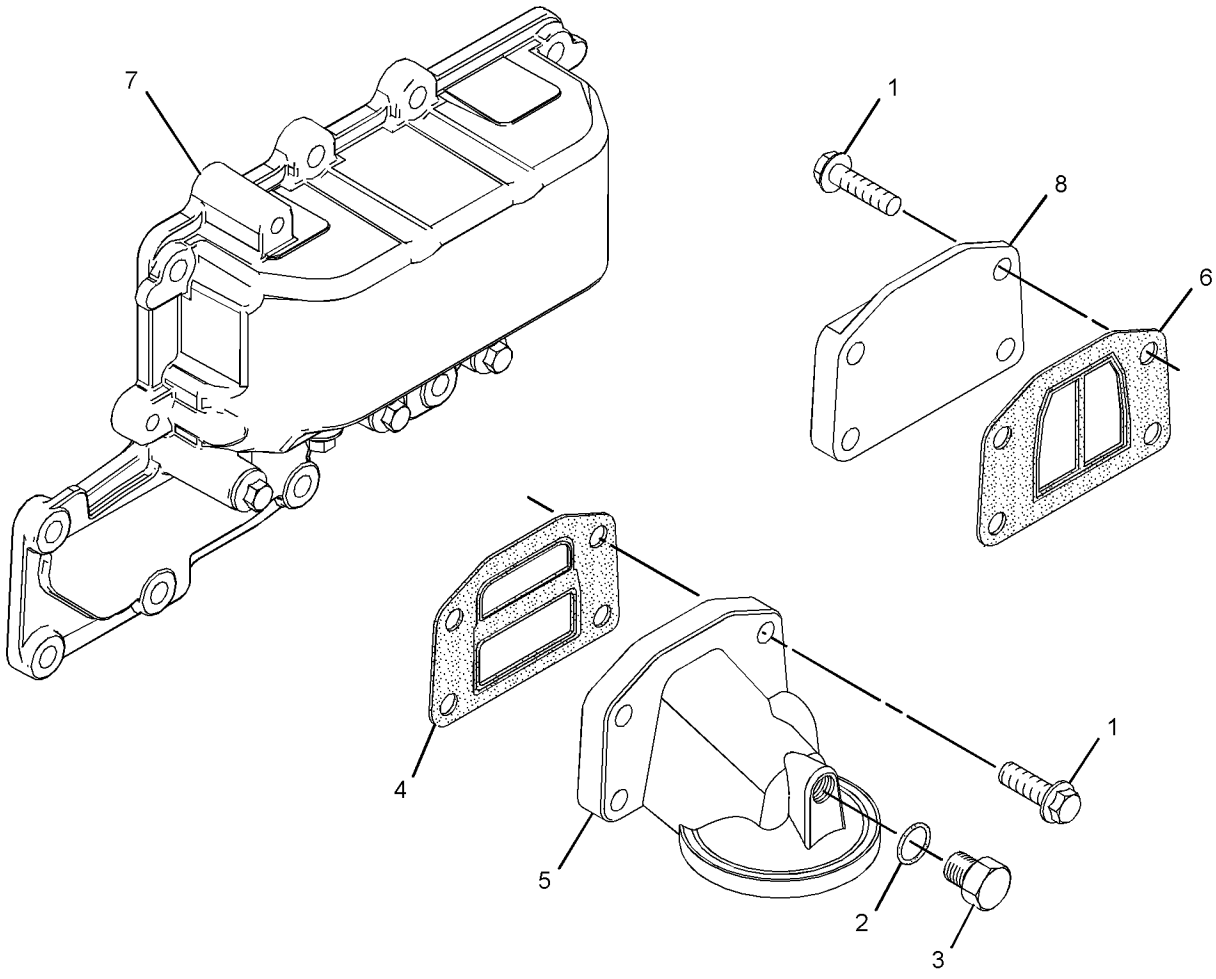

GRAPHIC #1 <END> g02153286

235-5230 COOLER GP-FLTR BASE & ENG OIL

TYPE 3

SMCS-1306, 1378 **i08195275**

NOTE	REF NO	GRAPHIC REF	PART NUMBER	QTY	PART NAME 1 2 3 4 5 6 (PRODUCT LEVEL)	SEE PAGE
M	1	1	**6I-0645**	8	BOLT (M8X1.25X25-MM)	
	2	1	**8T-7876**	1	SEAL-O-RING	
	3	1	**225-7941**	1	PLUG	
	4	1	**225-7944**	1	GASKET	
	5	1	**249-0974**	1	HEAD AS-OIL FILTER (ENGINE)	
	6	1	**233-9408**	1	GASKET	
CY	7	1	**356-6541**	1	COOLER GP-ENGINE OIL	878
	8	1	**252-6318**	1	PLATE	

C - CHANGE FROM PREVIOUS TYPE
M - METRIC PART
Y - SEPARATE ILLUSTRATION

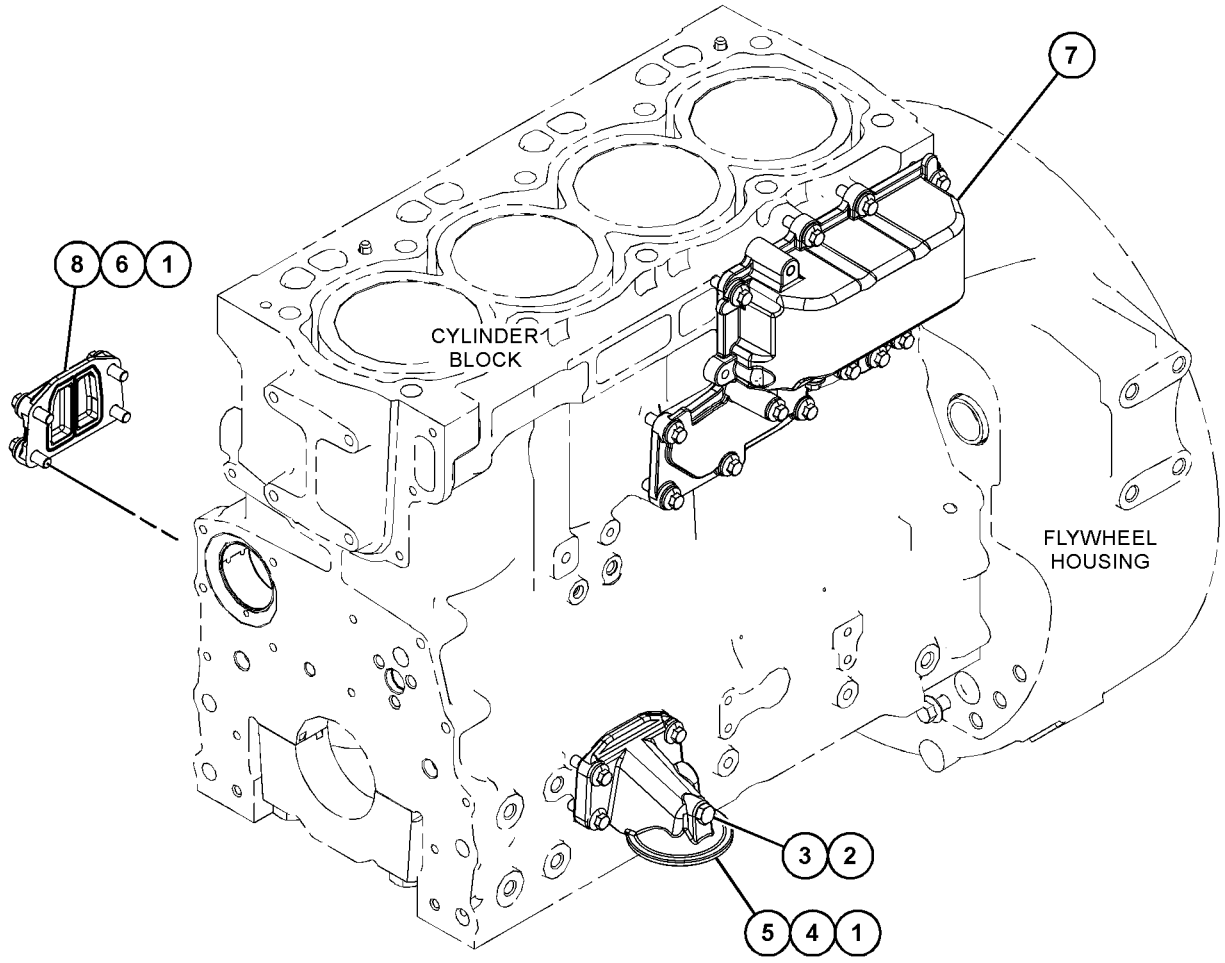

GRAPHIC #1 <END> g06741954

235-8562 COOLER GP-FLTR BASE & ENG OIL

TYPE 1

SMCS-1306, 1378 **i02475161**

NOTE	REF NO	GRAPHIC REF	PART NUMBER	QTY	PART NAME 1 2 3 4 5 6 (PRODUCT LEVEL)	SEE PAGE
M	1	1	**6I-0572**	4	BOLT (M8X1.25X20-MM)	
	2	1	**199-9267**	1	SEAL-O-RING	
	3	1	**225-7941**	1	PLUG	
	4	1	**225-7944**	2	GASKET	
	5	1	**233-7223**	1	COOLER AS-OIL (ENGINE)	
M	5A	1	**6I-0260**	10	BOLT (M8X1.25X25-MM)	
M	5B	1	**6I-4374**	3	BOLT (M8X1.25X60-MM)	
M	5C	1	**101-3895**	4	BOLT (M8X1.25X35-MM)	
	5D	1	**233-7222**	1	COOLER-OIL (ENGINE)	
	5E	1	**225-6818**	2	SEAL	
	5F	1	**225-6820**	1	GASKET	
	6	1	**232-3751**	1	PLATE	
	7	1	**232-3861**	1	PLUG (BLANKING)	
	8	1	**233-9408**	1	GASKET	
M	9	1	**235-2451**	4	BOLT (M8X1.25X45-MM)	
	10	1	**249-0975**	1	HEAD AS-OIL FILTER (ENGINE)	
	11	1	**244-6872**	1	ADAPTER-FILTER	
	12	1	**8T-7876**	1	SEAL-O-RING	

M - METRIC PART

235-8562 **COOLER GP-FLTR BASE & ENG OIL** (contd.) **i02475161**

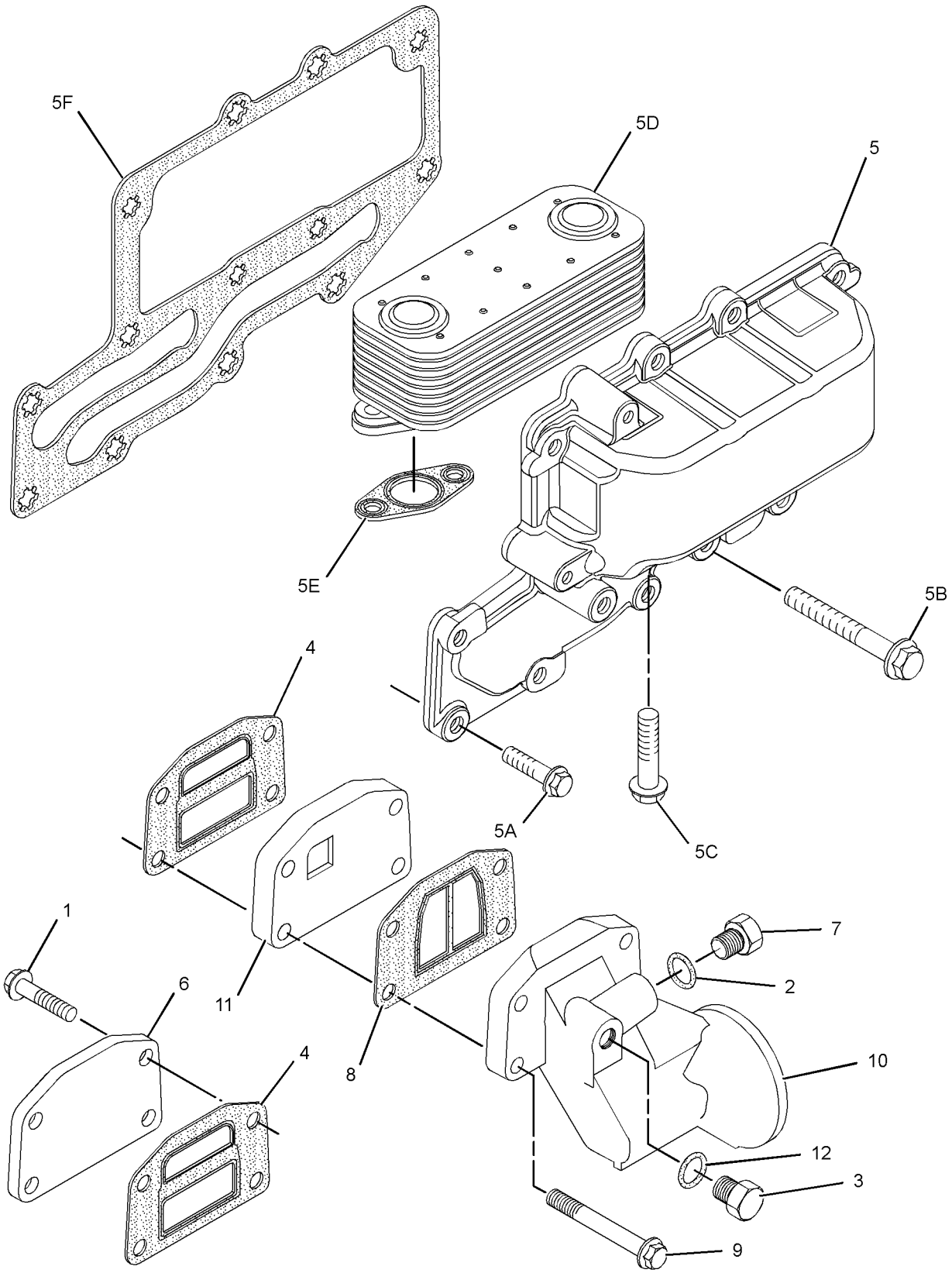

GRAPHIC #1 <END> g01243910

235-8562 COOLER GP-FLTR BASE & ENG OIL

TYPE 2

SMCS-1306, 1378 **i03858099**

NOTE	REF NO	GRAPHIC REF	PART NUMBER	QTY	PART NAME 1 2 3 4 5 6 (PRODUCT LEVEL)	SEE PAGE
M	1	1	**6I-0572**	4	BOLT (M8X1.25X20-MM)	
	2	1	**199-9267**	1	SEAL-O-RING	
	3	1	**225-7941**	1	PLUG	
	4	1	**225-7944**	2	GASKET	
CY	5	1	**355-6224**	1	COOLER AS-OIL (ENGINE)	875
	6	1	**232-3751**	1	PLATE	
	7	1	**232-3861**	1	PLUG (BLANKING)	
	8	1	**233-9408**	1	GASKET	
M	9	1	**235-2451**	4	BOLT (M8X1.25X45-MM)	
	10	1	**249-0975**	1	HEAD AS-OIL FILTER (ENGINE)	
	11	1	**244-6872**	1	ADAPTER-FILTER	
	12	1	**8T-7876**	1	SEAL-O-RING	

C - CHANGE FROM PREVIOUS TYPE
M - METRIC PART
Y - SEPARATE ILLUSTRATION

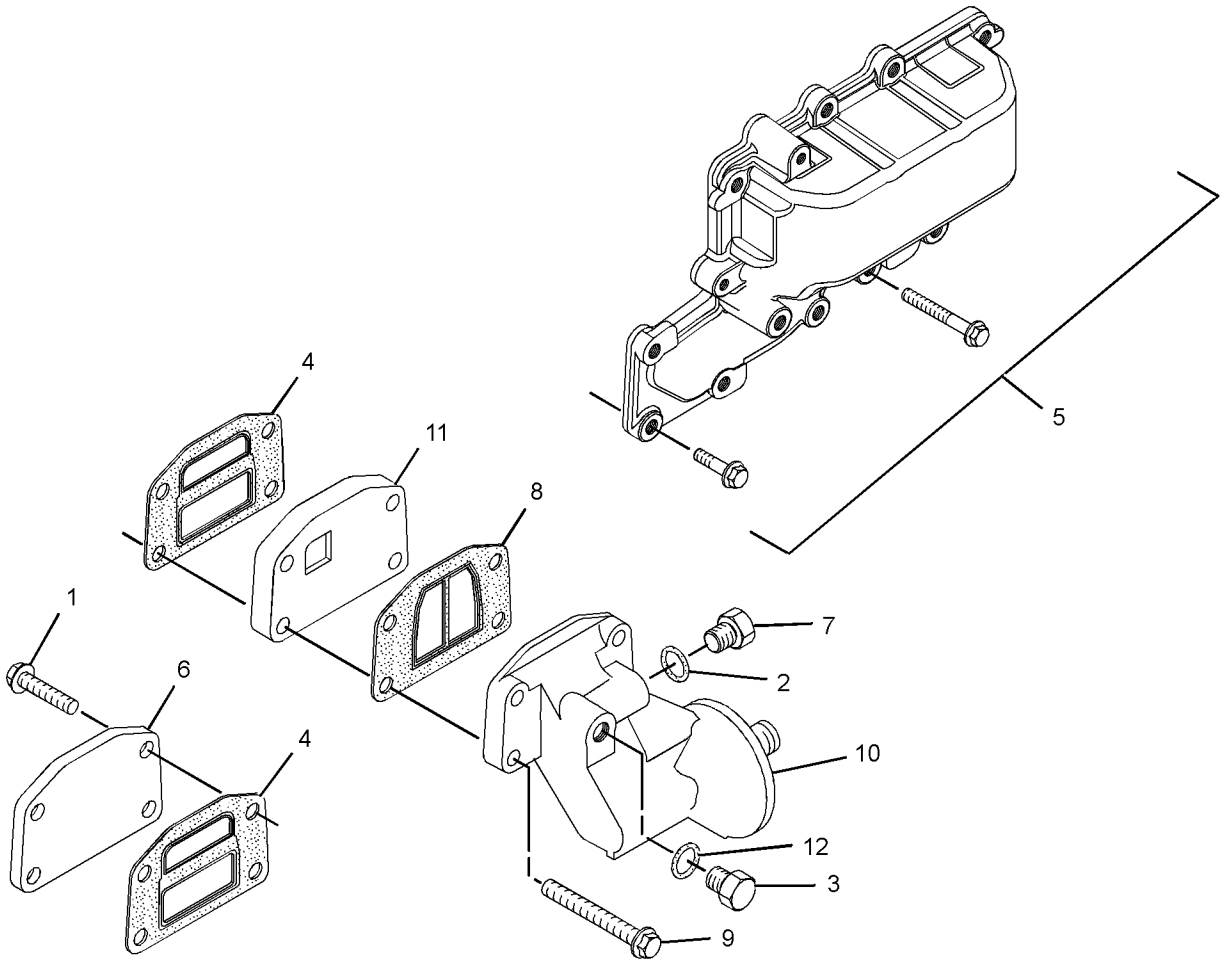

GRAPHIC #1 <END> g02154450

237-6452 COOLER GP-FLTR BASE & ENG OIL

TYPE 1

SMCS-1306, 1378 **i02499100**

NOTE	REF NO	GRAPHIC REF	PART NUMBER	QTY	PART NAME 1 2 3 4 5 6 (PRODUCT LEVEL)	SEE PAGE
M	1	1	**6I-0645**	4	BOLT (M8X1.25X25-MM)	
	3	1	**225-7941**	1	PLUG	
	4	1	**225-7944**	1	GASKET	
	6	1	**233-7223**	1	COOLER AS-OIL (ENGINE)	
M	6A	1	**6I-0260**	10	BOLT (M8X1.25X25-MM)	
M	6B	1	**6I-4374**	3	BOLT (M8X1.25X60-MM)	
M	6C	1	**101-3895**	4	BOLT (M8X1.25X35-MM)	
	6D	1	**225-6818**	2	SEAL	
	6E	1	**225-6820**	1	GASKET	
	6F	1	**233-7222**	1	COOLER-OIL (ENGINE)	
	7	1	**252-6318**	1	PLATE	
	8	1	**233-9408**	2	GASKET	
M	9	1	**235-2451**	4	BOLT (M8X1.25X45-MM)	
	10	1	**249-0975**	1	HEAD AS-OIL FILTER (ENGINE)	
	11	1	**244-6872**	1	ADAPTER-FILTER	
	12	1	**8T-7876**	1	SEAL-O-RING	

M - METRIC PART

237-6452 **COOLER GP-FLTR BASE & ENG OIL** (contd.) **i02499100**

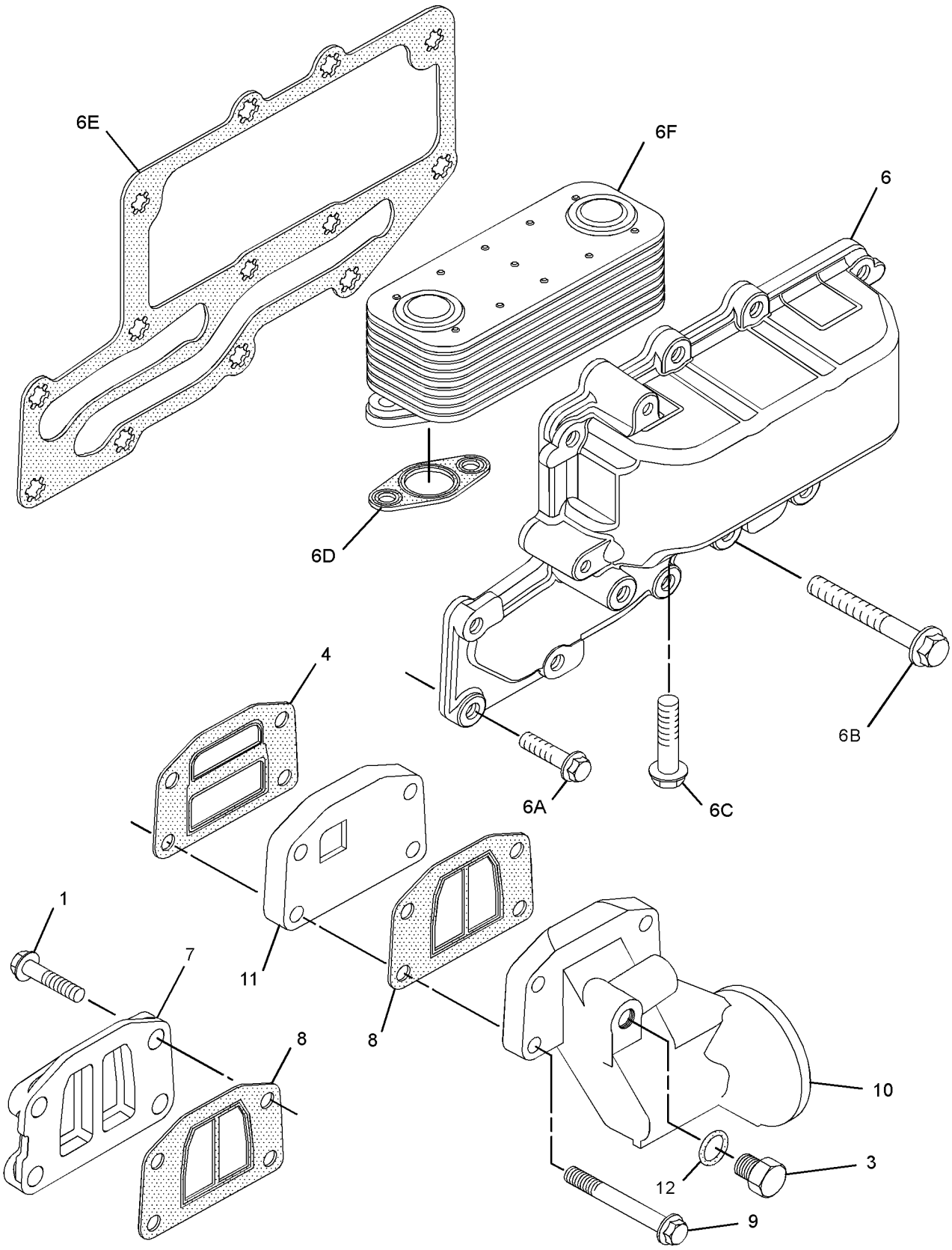

GRAPHIC #1 <END> g01324434

237-6452 COOLER GP-FLTR BASE & ENG OIL

TYPE 2

SMCS-1306, 1378 **i03858100**

NOTE	REF NO	GRAPHIC REF	PART NUMBER	QTY	PART NAME 1 2 3 4 5 6 (PRODUCT LEVEL)	SEE PAGE
M	1	1	**6I-0645**	4	BOLT (M8X1.25X25-MM)	
	2	1	**8T-7876**	1	SEAL-O-RING	
	3	1	**225-7941**	1	PLUG	
	4	1	**225-7944**	1	GASKET	
	5	1	**244-6872**	1	ADAPTER-FILTER	
Y	6	1	**355-6224**	1	COOLER AS-OIL (ENGINE)	875
	7	1	**252-6318**	1	PLATE	
	8	1	**233-9408**	2	GASKET	
M	9	1	**235-2451**	4	BOLT (M8X1.25X45-MM)	
	10	1	**249-0975**	1	HEAD AS-OIL FILTER (ENGINE)	

M - METRIC PART
Y - SEPARATE ILLUSTRATION

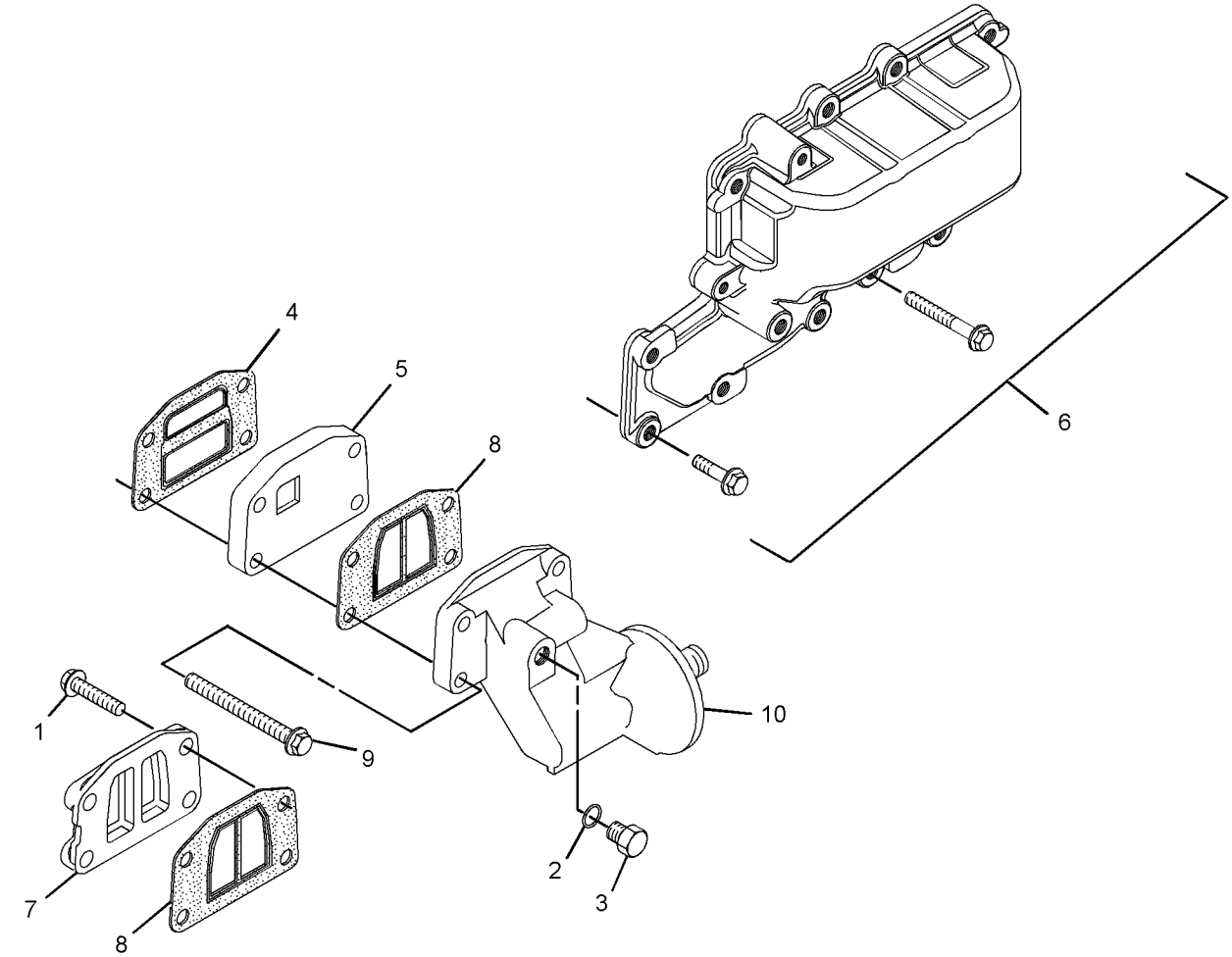

GRAPHIC #1 <END> g02154213

237-6452 COOLER GP-FLTR BASE & ENG OIL

TYPE 3

SMCS-1306, 1378 **i08205318**

NOTE	REF NO	GRAPHIC REF	PART NUMBER	QTY	PART NAME 1 2 3 4 5 6 (PRODUCT LEVEL)	SEE PAGE
M	1	1	**6I-0645**	4	BOLT (M8X1.25X25-MM)	
	2	1	**8T-7876**	1	SEAL-O-RING	
	3	1	**225-7941**	1	PLUG	
	4	1	**225-7944**	1	GASKET	
	5	1	**244-6872**	1	ADAPTER-FILTER	
CY	6	1	**392-4903**	1	COOLER GP-ENGINE OIL (ENGINE)	880
	7	1	**252-6318**	1	PLATE	
	8	1	**233-9408**	2	GASKET	
M	9	1	**6I-0456**	4	BOLT (M8X1.25X45-MM)	
	10	1	**249-0975**	1	HEAD AS-OIL FILTER (ENGINE)	

C - CHANGE FROM PREVIOUS TYPE
M - METRIC PART
Y - SEPARATE ILLUSTRATION

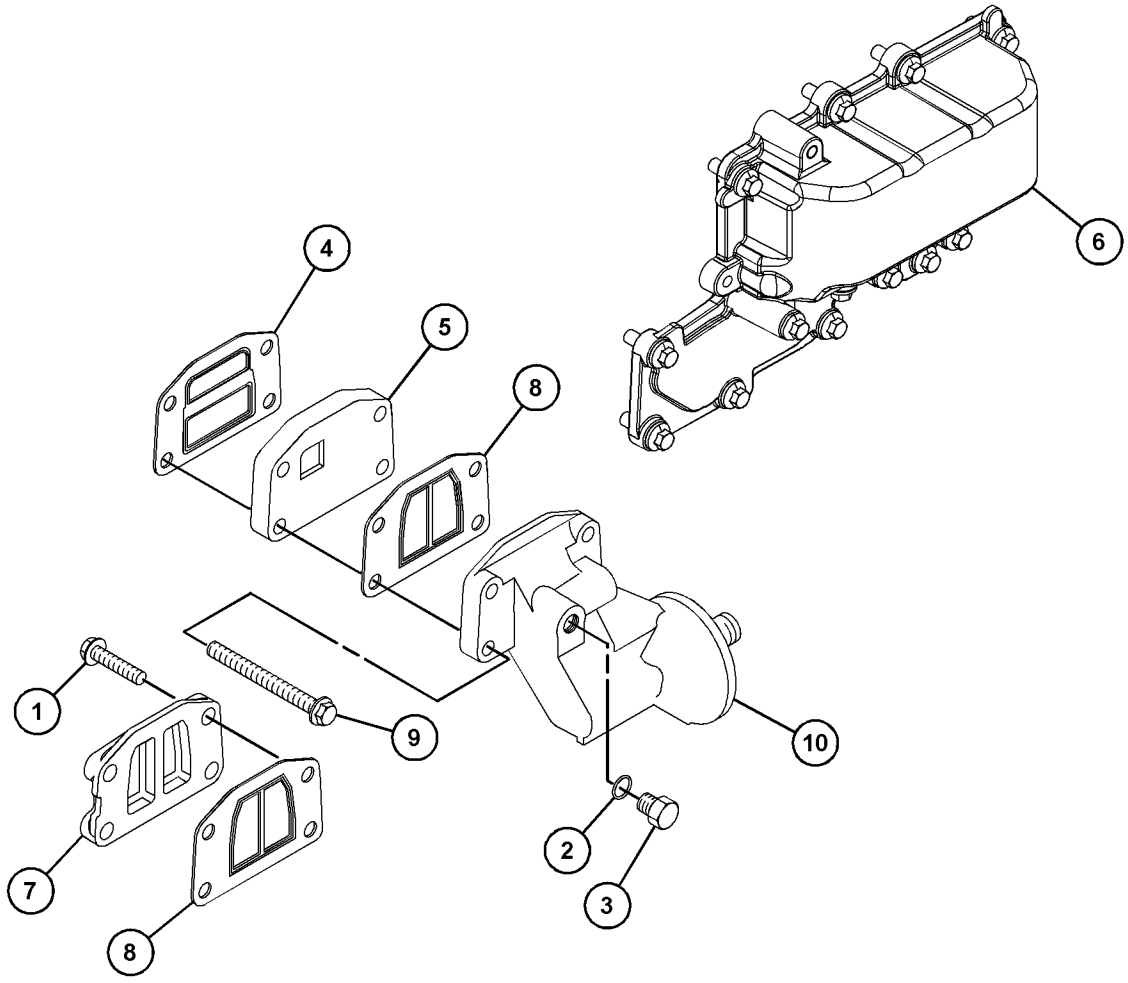

GRAPHIC #1 <END> g06749776

238-2799 COOLER GP-FLTR BASE & ENG OIL

ALSO AN ATTACHMENT

SMCS-1306, 1378 **i07395035**

NOTE	REF NO	GRAPHIC REF	PART NUMBER	QTY	PART NAME 1 2 3 4 5 6 (PRODUCT LEVEL)	SEE PAGE
M	1	1	**6I-0572**	4	BOLT (M8X1.25X20-MM)	
M	2	1	**6I-0645**	4	BOLT (M8X1.25X25-MM)	
	3	1	**8T-7876**	1	SEAL-O-RING	
	4	1	**225-7941**	1	PLUG	
	5	1	**225-7944**	2	GASKET	
	6	1	**249-0974**	1	HEAD AS-OIL FILTER	
Y	7	1	**232-3722**	1	COOLER GP-ENGINE OIL	876
	8	1	**232-3751**	1	PLATE	

M - METRIC PART
Y - SEPARATE ILLUSTRATION

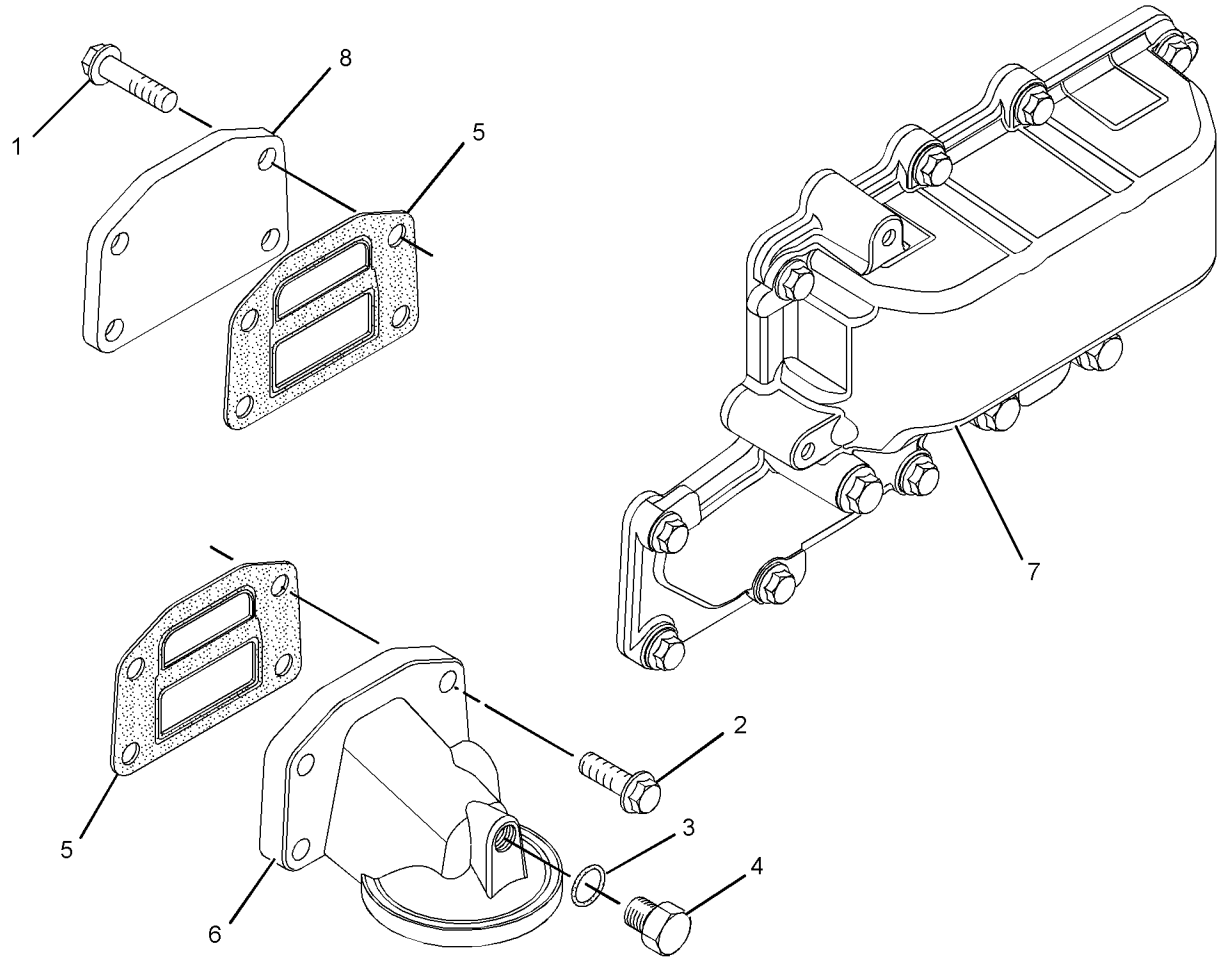

GRAPHIC #1 <END> g01289551

238-2799 COOLER GP-FLTR BASE & ENG OIL

S/N: 3341-28939
ALSO AN ATTACHMENT

SMCS-1306, 1378 **i03890790**

NOTE	REF NO	GRAPHIC REF	PART NUMBER	QTY	PART NAME 1 2 3 4 5 6 (PRODUCT LEVEL)	SEE PAGE
M	1	1	**6I-0572**	4	BOLT (M8X1.25X20-MM)	
M	2	1	**6I-0645**	4	BOLT (M8X1.25X25-MM)	
	3	1	**8T-7876**	1	SEAL-O-RING	
	4	1	**225-7941**	1	PLUG	
	5	1	**225-7944**	2	GASKET	
	6	1	**249-0974**	1	HEAD AS-OIL FILTER	
CY	7	1	**354-1274**	1	COOLER GP-ENGINE OIL	877
	8	1	**232-3751**	1	PLATE	

C - CHANGE FROM PREVIOUS TYPE
M - METRIC PART
Y - SEPARATE ILLUSTRATION

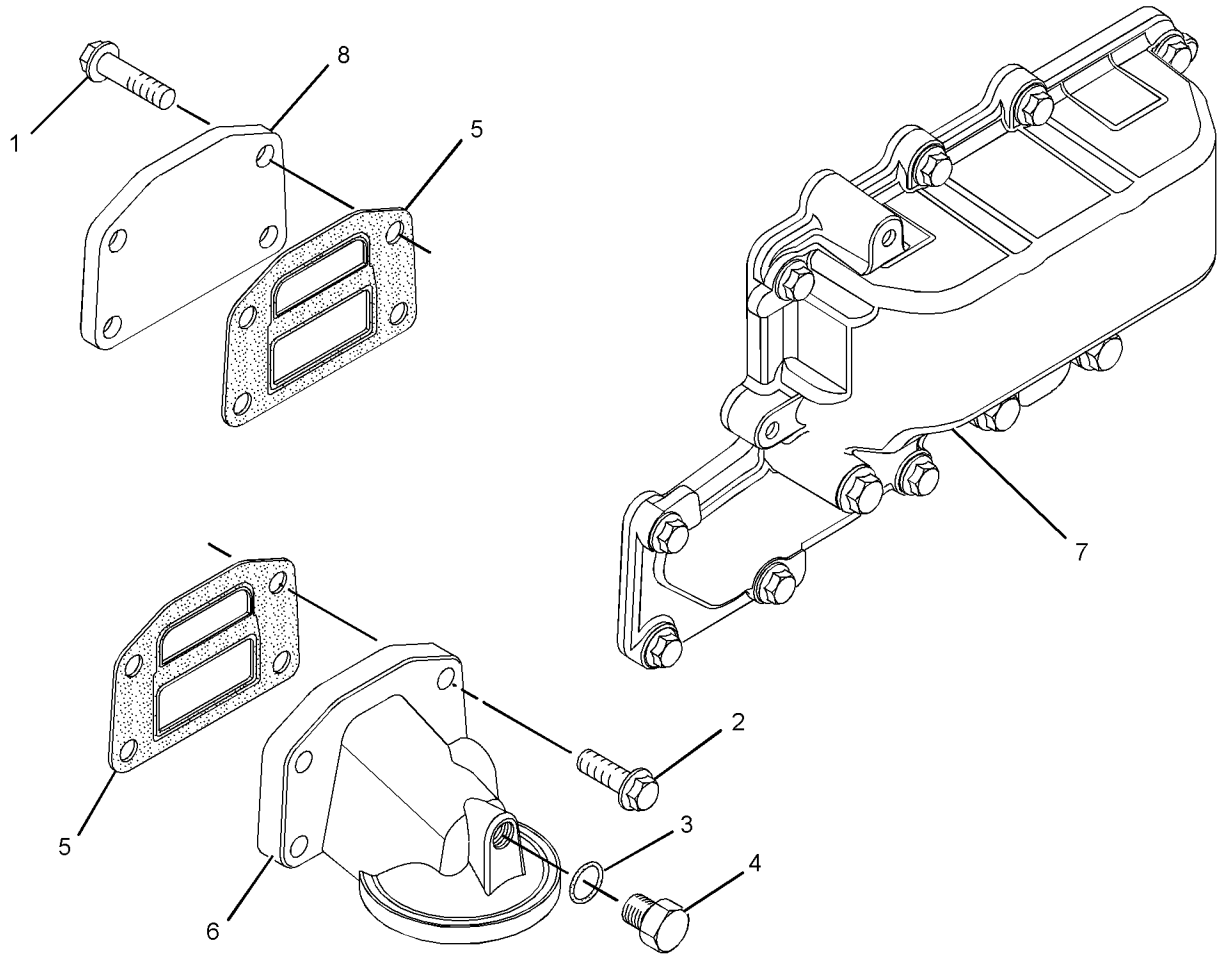

GRAPHIC #1 <END> g02140432

238-2799 COOLER GP-FLTR BASE & ENG OIL

S/N: 33428940-UP
ALSO AN ATTACHMENT

SMCS-1306, 1378 **i08463168**

NOTE	REF NO	GRAPHIC REF	PART NUMBER	QTY	PART NAME 1 2 3 4 5 6 (PRODUCT LEVEL)	SEE PAGE
M	1	1	**6I-0572**	4	BOLT (M8X1.25X20-MM)	
M	2	1	**6I-0645**	4	BOLT (M8X1.25X25-MM)	
	3	1	**8T-7876**	1	SEAL-O-RING	
	4	1	**225-7941**	1	PLUG	
	5	1	**225-7944**	2	GASKET	
	6	1	**249-0974**	1	HEAD AS-OIL FILTER	
CY	7	1	**356-6541**	1	COOLER GP-ENGINE OIL	878
	8	1	**232-3751**	1	PLATE	

C - CHANGE FROM PREVIOUS TYPE
M - METRIC PART
Y - SEPARATE ILLUSTRATION

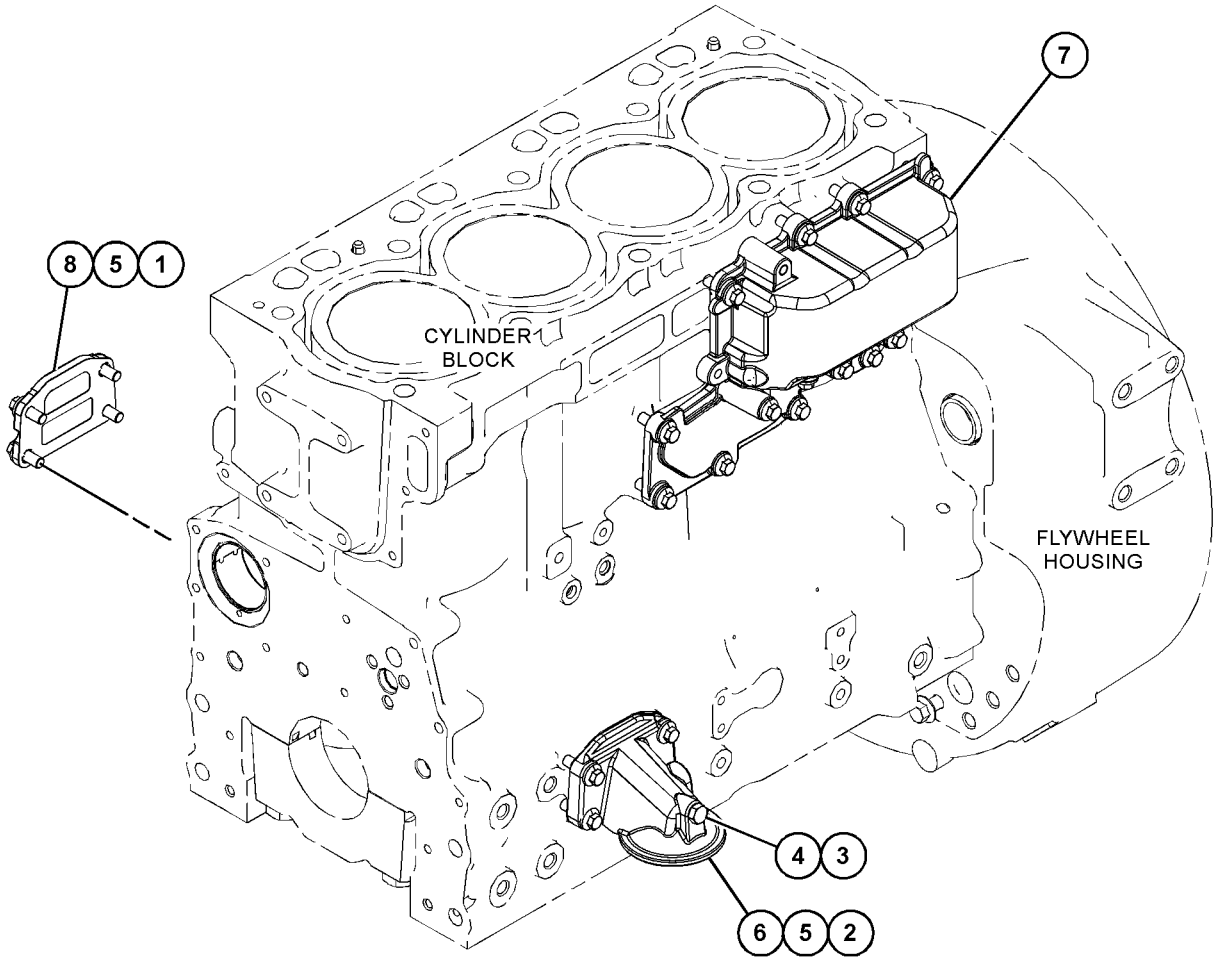

GRAPHIC #1 <END> g06772562

253-2472 COOLER GP-FLTR BASE & ENG OIL

TYPE 1

SMCS-1306, 1378 **i02578008**

NOTE	REF NO	GRAPHIC REF	PART NUMBER	QTY	PART NAME 1 2 3 4 5 6 (PRODUCT LEVEL)	SEE PAGE
M	1	1	**6I-0572**	4	BOLT (M8X1.25X20-MM)	
M	2	1	**6I-0645**	4	BOLT (M8X1.25X25-MM)	
	3	1	**8T-7876**	1	SEAL-O-RING	
	4	1	**225-7941**	1	PLUG	
	5	1	**225-7944**	2	GASKET	
	6	1	**249-0974**	1	HEAD AS-OIL FILTER (ENGINE)	
	7	1	**232-3751**	1	PLATE	
	8	1	**233-7223**	1	COOLER AS-OIL (ENGINE)	
M	8A	1	**6I-0260**	10	BOLT (M8X1.25X25-MM)	
M	8B	1	**6I-4374**	3	BOLT (M8X1.25X60-MM)	
M	8C	1	**101-3895**	4	BOLT (M8X1.25X35-MM)	
	8D	1	**225-6818**	2	SEAL	
	8E	1	**225-6820**	1	GASKET	
	8F	1	**233-7222**	1	COOLER-OIL (ENGINE)	

M - METRIC PART

253-2472 **COOLER GP-FLTR BASE & ENG OIL** (contd.) **i02578008**

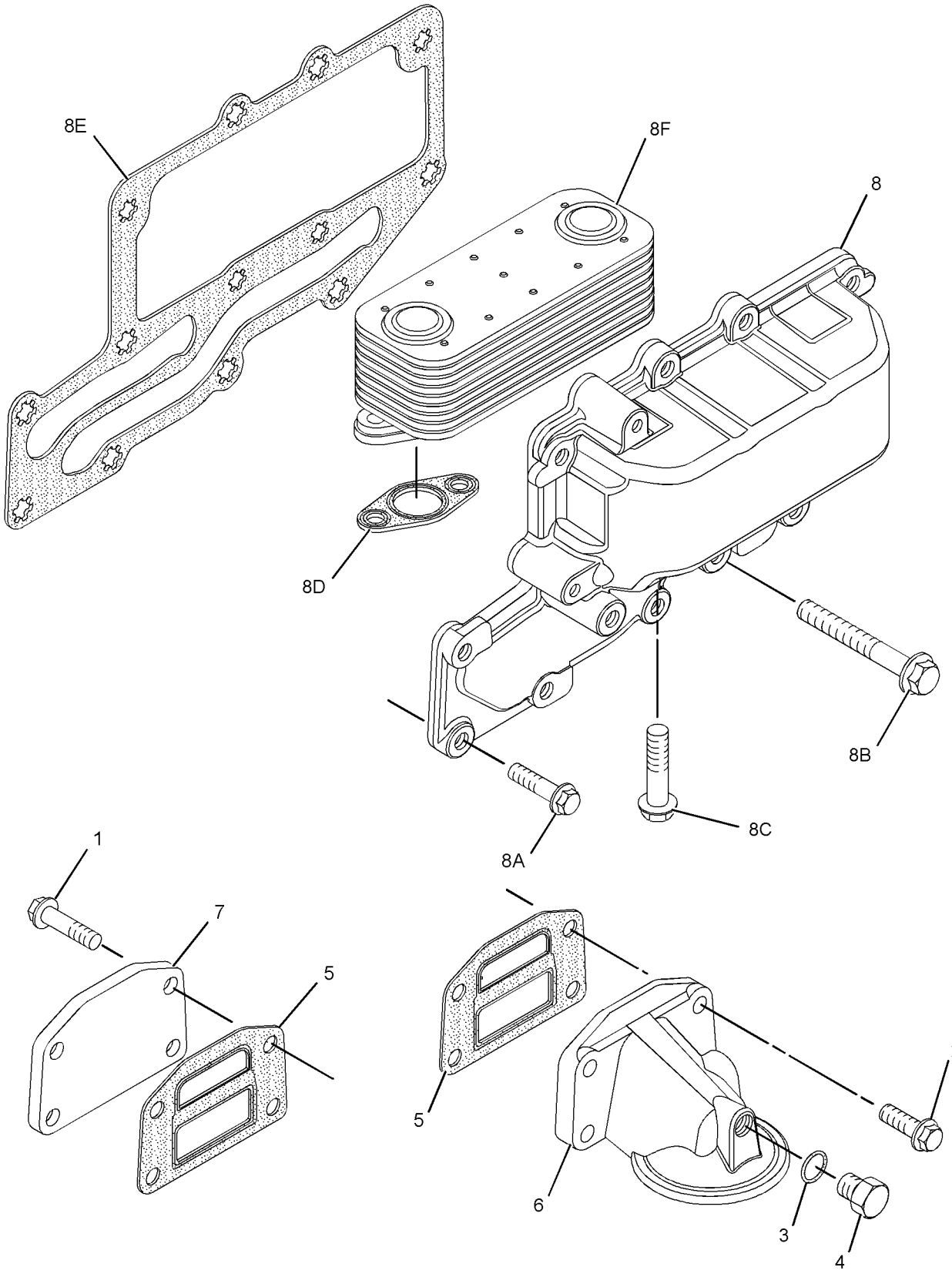

GRAPHIC #1 <END> g01300525

253-2472 COOLER GP-FLTR BASE & ENG OIL

TYPE 2

SMCS-1306, 1378 **i04025651**

NOTE	REF NO	GRAPHIC REF	PART NUMBER	QTY	PART NAME 1 2 3 4 5 6 (PRODUCT LEVEL)	SEE PAGE
M	1	1	**6I-0572**	4	BOLT (M8X1.25X20-MM)	
M	2	1	**6I-0645**	4	BOLT (M8X1.25X25-MM)	
	3	1	**8T-7876**	1	SEAL-O-RING	
	4	1	**225-7941**	1	PLUG	
	5	1	**225-7944**	2	GASKET	
	6	1	**249-0974**	1	HEAD AS-OIL FILTER	
	7	1	**232-3751**	1	PLATE	
C	8	1	*355-6224*	1	COOLER AS-OIL (ENGINE)	
	8A	1	**272-2265**	1	SEAL	
M	8B	1	**6I-0260**	10	BOLT (M8X1.25X25-MM)	
M	8C	1	**6I-4374**	3	BOLT (M8X1.25X60-MM)	
M	8D	1	**101-3895**	4	BOLT (M8X1.25X35-MM)	
	8E	1	**225-6818**	2	SEAL	
	8F	1	**233-7222**	1	COOLER-OIL (ENGINE)	

C - CHANGE FROM PREVIOUS TYPE
M - METRIC PART

253-2472 **COOLER GP-FLTR BASE & ENG OIL** (contd.) **i04025651**

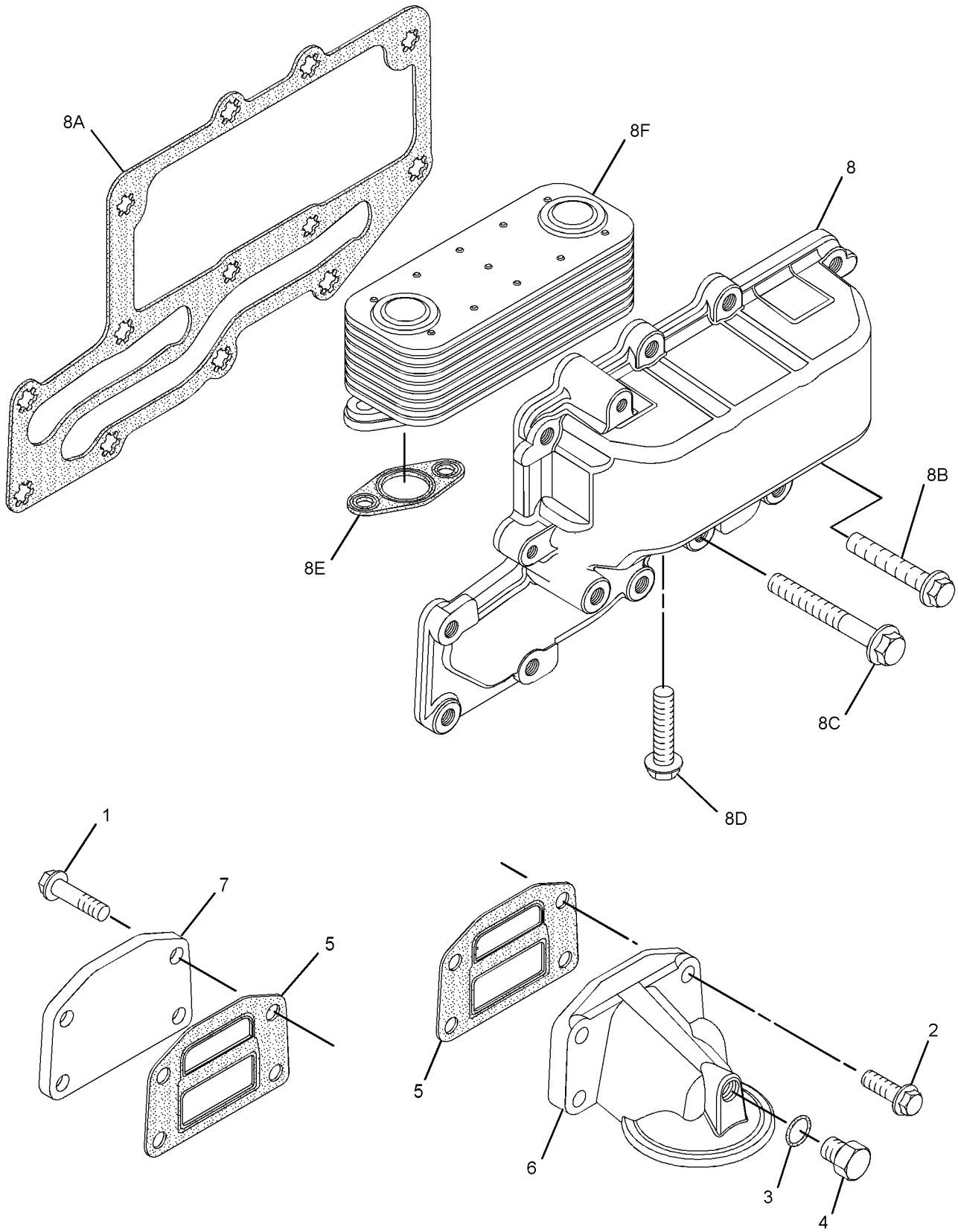

GRAPHIC #1 <END> g02208493

253-2472 COOLER GP-FLTR BASE & ENG OIL

TYPE 3

SMCS-1306, 1378 **i08201668**

NOTE	REF NO	GRAPHIC REF	PART NUMBER	QTY	PART NAME 1 2 3 4 5 6 (PRODUCT LEVEL)	SEE PAGE
M	1	1	**6I-0572**	4	BOLT (M8X1.25X20-MM)	
M	2	1	**6I-0645**	4	BOLT (M8X1.25X25-MM)	
	3	1	**8T-7876**	1	SEAL-O-RING	
	4	1	**225-7941**	1	PLUG	
	5	1	**225-7944**	2	GASKET	
	6	1	**249-0974**	1	HEAD AS-OIL FILTER	
	7	1	**232-3751**	1	PLATE	
CY	8	1	**392-4903**	1	COOLER GP-ENGINE OIL	880

C - CHANGE FROM PREVIOUS TYPE
M - METRIC PART
Y - SEPARATE ILLUSTRATION

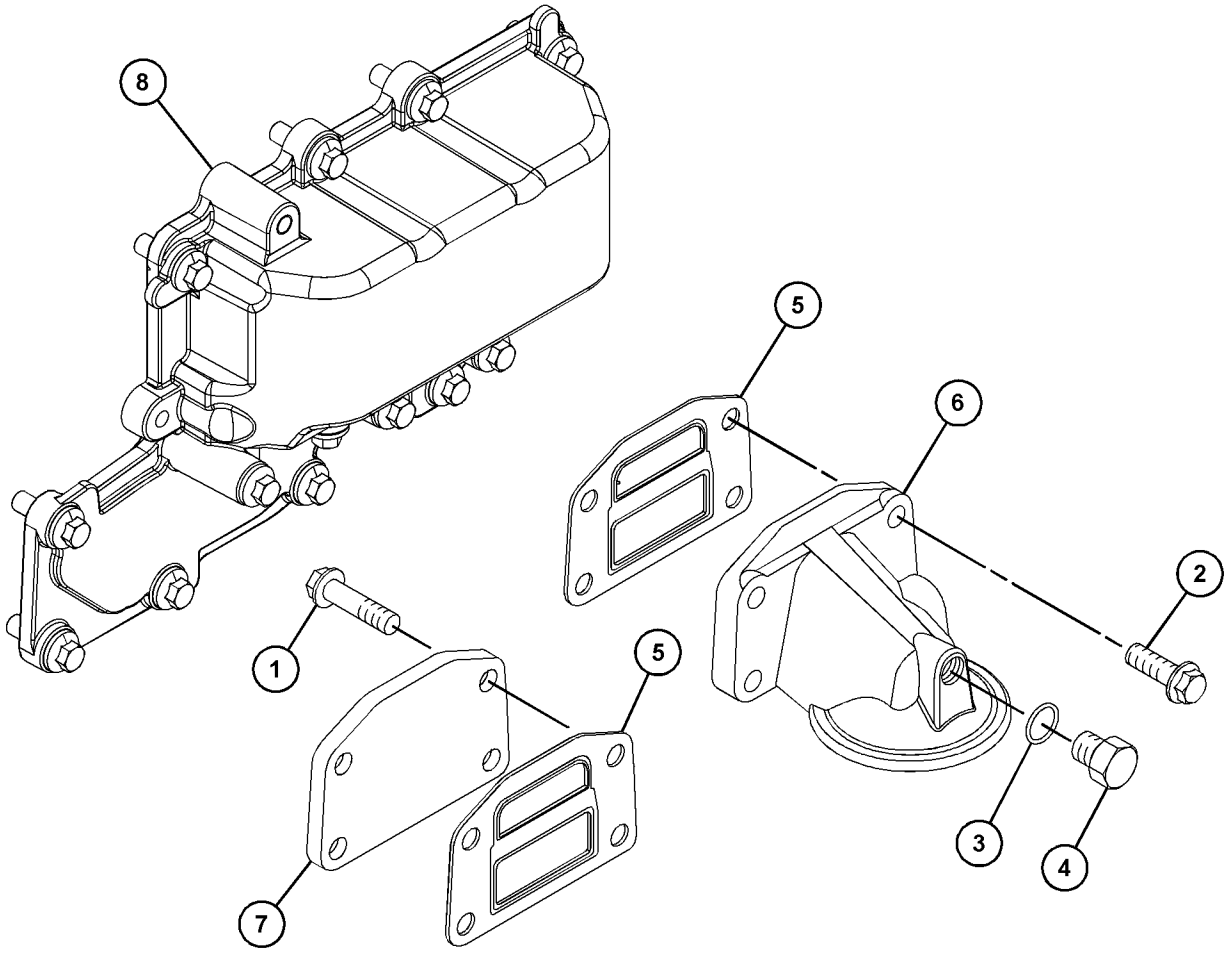

GRAPHIC #1 <END> g06742549

253-2473 COOLER GP-FLTR BASE & ENG OIL

TYPE 1

SMCS-1306, 1378 **i02499098**

NOTE	REF NO	GRAPHIC REF	PART NUMBER	QTY	PART NAME 1 2 3 4 5 6 (PRODUCT LEVEL)	SEE PAGE
M	1	1	**6I-0572**	4	BOLT (M8X1.25X20-MM)	
M	2	1	**6I-0645**	4	BOLT (M8X1.25X25-MM)	
	3	1	**8T-7876**	1	SEAL-O-RING	
	4	1	**225-7941**	1	PLUG	
	5	1	**225-7944**	2	GASKET	
	6	1	**249-0974**	1	HEAD AS-OIL FILTER (ENGINE)	
	7	1	**232-3751**	1	PLATE	
	8	1	**243-4288**	1	COOLER AS-OIL (ENGINE)	
M	8A	1	**6I-0260**	10	BOLT (M8X1.25X25-MM)	
M	8B	1	**6I-4374**	3	BOLT (M8X1.25X60-MM)	
	8C	1	**225-6820**	1	GASKET	

M - METRIC PART

253-2473 **COOLER GP-FLTR BASE & ENG OIL** (contd.) **i02499098**

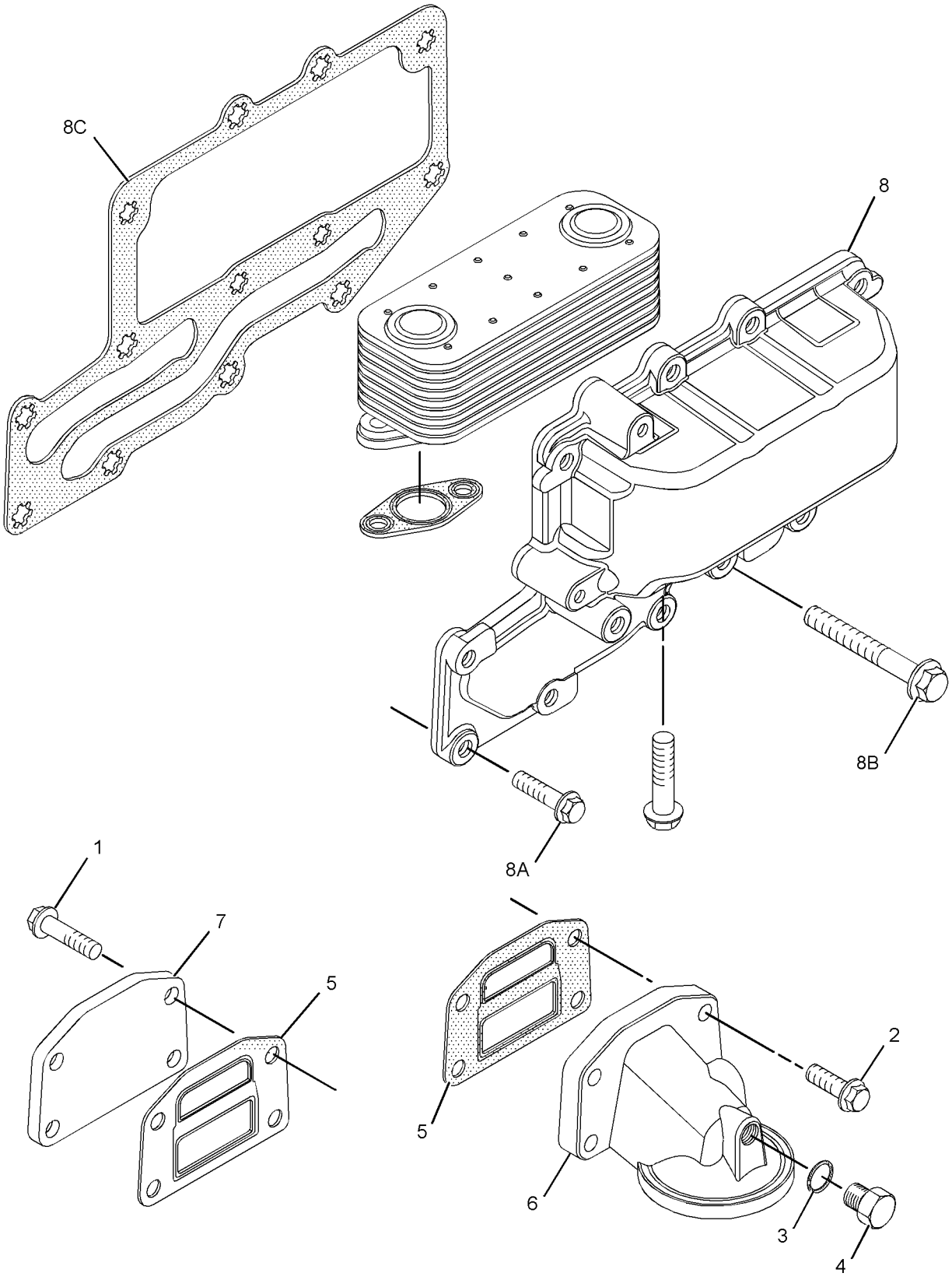

GRAPHIC #1 <END> g01264318

253-2473 COOLER GP-FLTR BASE & ENG OIL

TYPE 2

SMCS-1306, 1378 **i02578233**

NOTE	REF NO	GRAPHIC REF	PART NUMBER	QTY	PART NAME 1 2 3 4 5 6 (PRODUCT LEVEL)	SEE PAGE
M	1	1	**6I-0572**	4	BOLT (M8X1.25X20-MM)	
M	2	1	**6I-0645**	4	BOLT (M8X1.25X25-MM)	
	3	1	**8T-7876**	1	SEAL-O-RING	
	4	1	**225-7941**	1	PLUG	
	5	1	**225-7944**	2	GASKET	
	6	1	**232-3751**	1	PLATE	
C	7	1	*296-5614*	1	COOLER AS-OIL (ENGINE)	
M	7A	1	**6I-0260**	8	BOLT (M8X1.25X25-MM)	
M	7B	1	**6I-4374**	3	BOLT (M8X1.25X60-MM)	
	7C	1	**272-2265**	1	SEAL	
	7D	1	**6I-0218**	2	BOLT (M8X1.25X25-MM)	
	8	1	**249-0974**	1	HEAD AS-OIL FILTER (ENGINE)	

C - CHANGE FROM PREVIOUS TYPE
M - METRIC PART

253-2473 **COOLER GP-FLTR BASE & ENG OIL (**contd.**)** **i02578233**

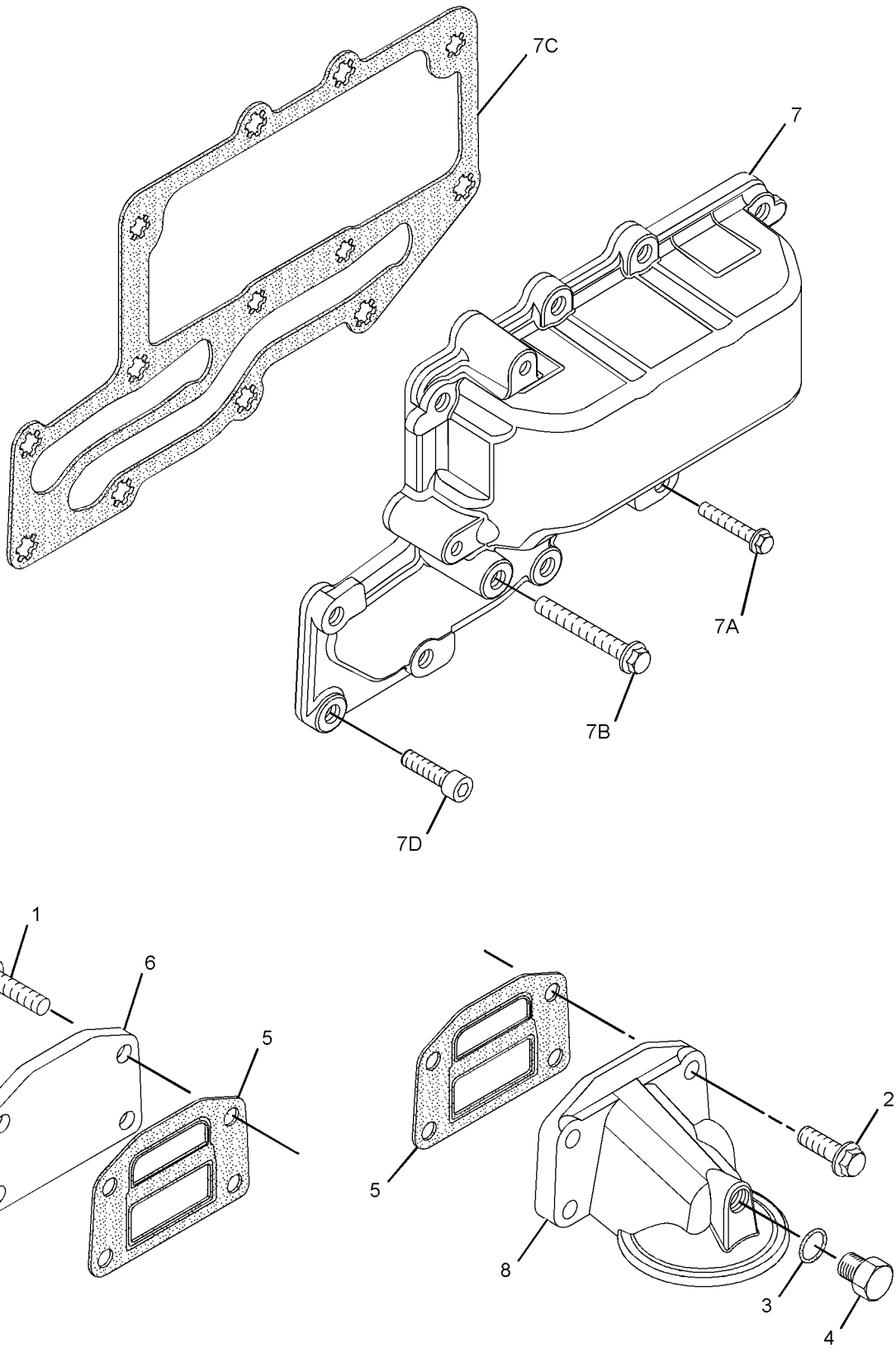

GRAPHIC #1 <END> g01312127

253-2473 COOLER GP-FLTR BASE & ENG OIL

TYPE 3

SMCS-1306, 1378 **i04398002**

NOTE	REF NO	GRAPHIC REF	PART NUMBER	QTY	PART NAME 1 2 3 4 5 6 (PRODUCT LEVEL)	SEE PAGE
M	1	1	**6I-0572**	4	BOLT (M8X1.25X20-MM)	
M	2	1	**6I-0645**	4	BOLT (M8X1.25X25-MM)	
	3	1	**8T-7876**	1	SEAL-O-RING	
	4	1	**225-7941**	1	PLUG	
	5	1	**225-7944**	2	GASKET	
	6	1	**249-0974**	1	HEAD AS-OIL FILTER (ENGINE)	
	7	1	**232-3751**	1	PLATE	
	8	1	**355-8329**	1	COOLER AS-OIL (ENGINE)	
M	8A	1	**6I-0260**	10	BOLT (M8X1.25X25-MM)	
M	8B	1	**6I-4374**	3	BOLT (M8X1.25X60-MM)	
	8C	1	**225-6820**	1	GASKET	

M - METRIC PART

253-2473 **COOLER GP-FLTR BASE & ENG OIL** (contd.) **i04398002**

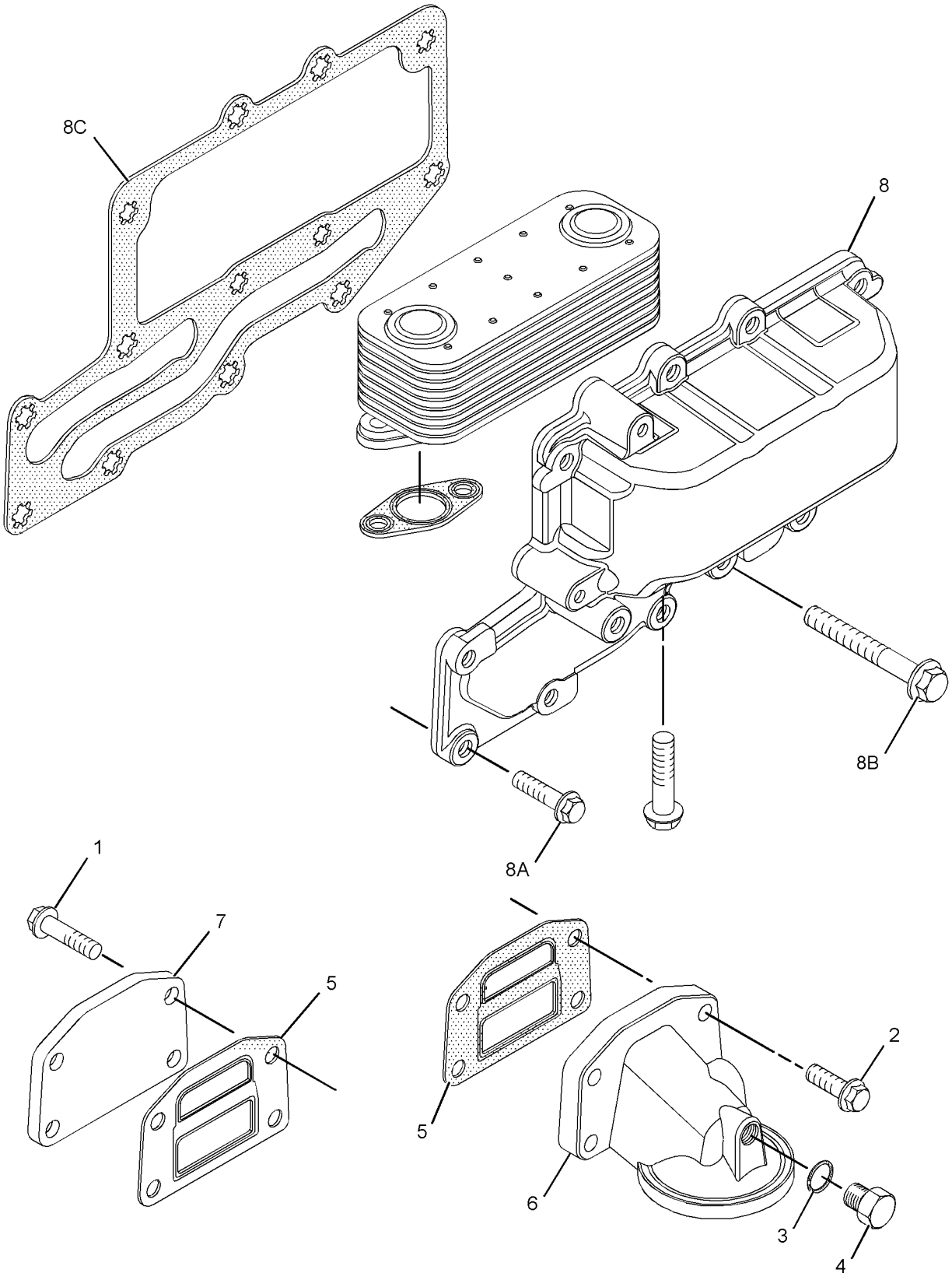

GRAPHIC #1 <END> g01264318

253-2474 COOLER GP-FLTR BASE & ENG OIL

TYPE 1

SMCS-1306, 1378 **i02645860**

NOTE	REF NO	GRAPHIC REF	PART NUMBER	QTY	PART NAME 1 2 3 4 5 6 (PRODUCT LEVEL)	SEE PAGE
M	1	1	**6I-0645**	4	BOLT (M8X1.25X25-MM)	
	2	1	**8T-7876**	1	SEAL-O-RING	
	3	1	**225-7941**	1	PLUG	
	4	1	**225-7944**	1	GASKET	
	5	1	**232-3722**	1	COOLER GP-ENGINE OIL	
M	5A	1	**6I-0260**	10	BOLT (M8X1.25X25-MM)	
M	5B	1	**6I-4374**	3	BOLT (M8X1.25X60-MM)	
M	5C	1	**101-3895**	4	BOLT (M8X1.25X35-MM)	
	5D	1	**225-6817**	1	COOLER-OIL (ENGINE)	
	5E	1	**225-6818**	2	SEAL	
	5F	1	**225-6820**	1	GASKET	
	6	1	**252-6318**	1	PLATE (BLANKING)	
	7	1	**233-9408**	2	GASKET	
M	8	1	**235-2451**	4	BOLT (M8X1.25X45-MM)	
	9	1	**249-0975**	1	HEAD AS-OIL FILTER (ENGINE)	
	10	1	**244-6872**	1	ADAPTER-FILTER	

M - METRIC PART

253-2474 **COOLER GP-FLTR BASE & ENG OIL (**contd.**)** **i02645860**

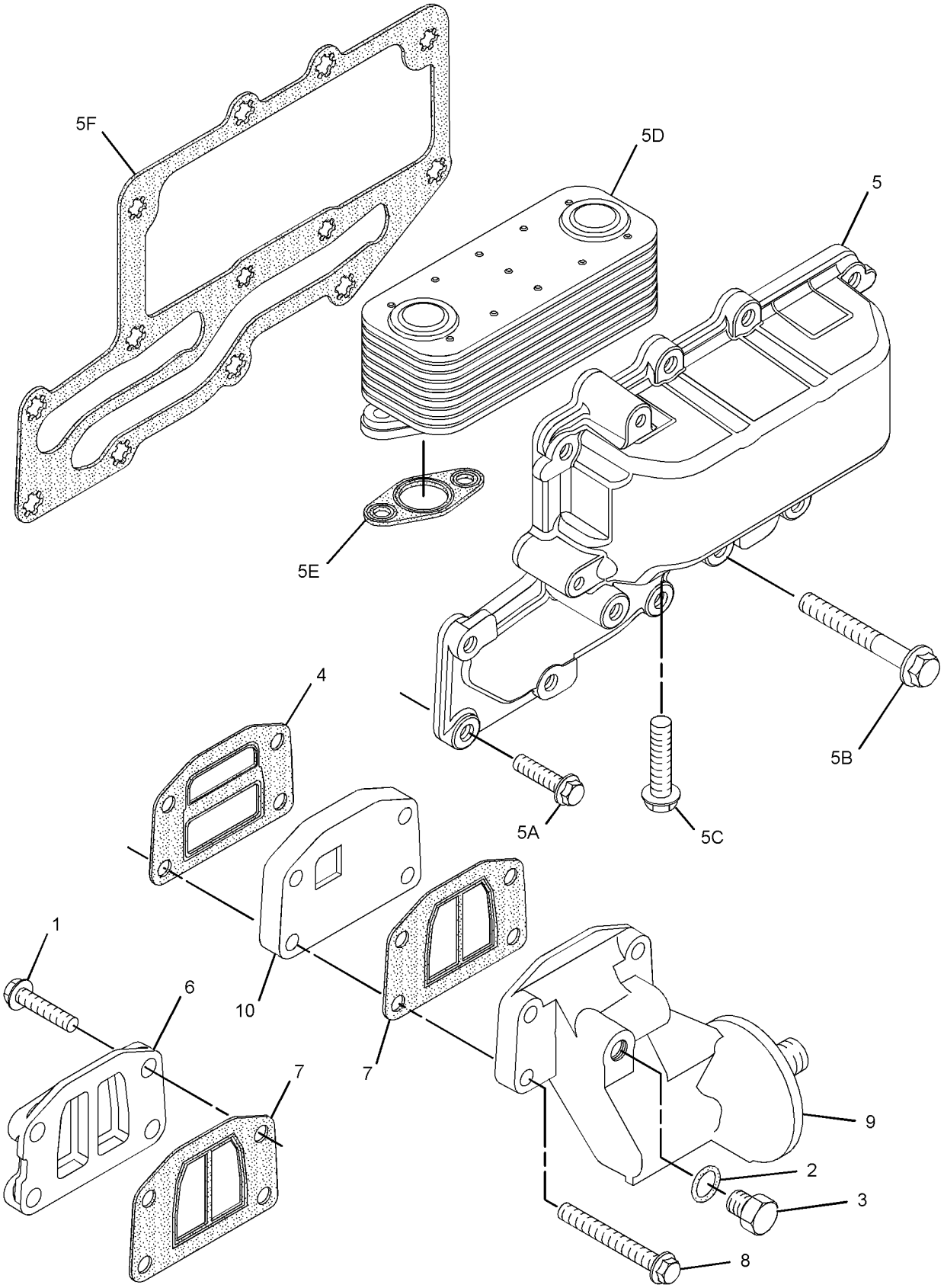

GRAPHIC #1 <END> g01264350

253-2474 COOLER GP-FLTR BASE & ENG OIL

TYPE 2

SMCS-1306, 1378 **i03927888**

NOTE	REF NO	GRAPHIC REF	PART NUMBER	QTY	PART NAME 1 2 3 4 5 6 (PRODUCT LEVEL)	SEE PAGE
M	1	1	**6I-0645**	4	BOLT (M8X1.25X25-MM)	
	2	1	**8T-7876**	1	SEAL-O-RING	
	3	1	**225-7941**	1	PLUG	
	4	1	**225-7944**	1	GASKET	
CY	5	1	**354-1274**	1	COOLER GP-ENGINE OIL	877
	6	1	**252-6318**	1	PLATE (BLANKING)	
	7	1	**233-9408**	2	GASKET	
M	8	1	**235-2451**	4	BOLT (M8X1.25X45-MM)	
	9	1	**249-0975**	1	HEAD AS-OIL FILTER (ENGINE)	
	10	1	**244-6872**	1	ADAPTER-FILTER	

C - CHANGE FROM PREVIOUS TYPE
M - METRIC PART
Y - SEPARATE ILLUSTRATION

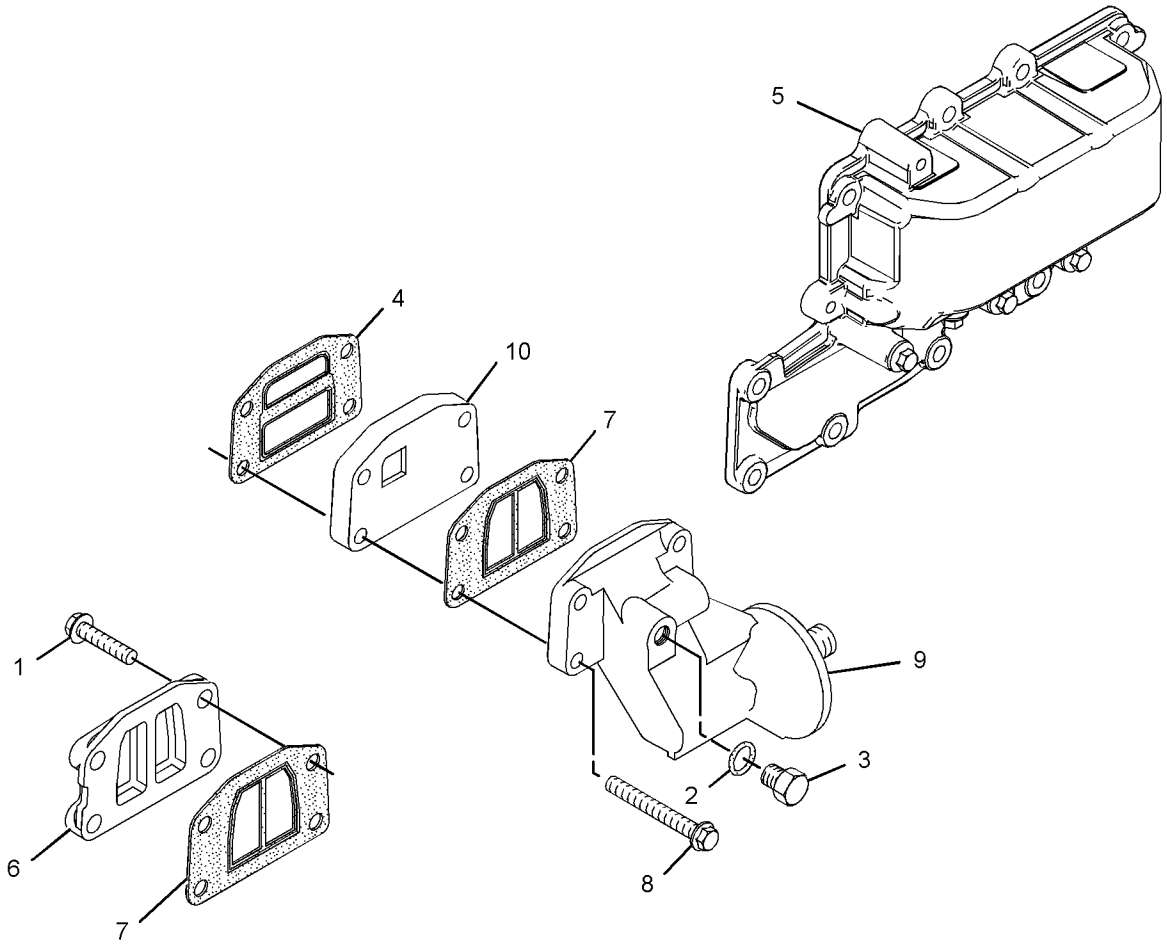

GRAPHIC #1 <END> g02151484

253-2474 COOLER GP-FLTR BASE & ENG OIL

TYPE 3

SMCS-1306, 1378 **i08260581**

NOTE	REF NO	GRAPHIC REF	PART NUMBER	QTY	PART NAME 1 2 3 4 5 6 (PRODUCT LEVEL)	SEE PAGE
M	1	1	**6I-0645**	4	BOLT (M8X1.25X25-MM)	
	2	1	**8T-7876**	1	SEAL-O-RING	
	3	1	**225-7941**	1	PLUG	
	4	1	**225-7944**	1	GASKET	
CY	5	1	**356-6541**	1	COOLER GP-ENGINE OIL	878
	6	1	**252-6318**	1	PLATE (BLANKING)	
	7	1	**233-9408**	2	GASKET	
M	8	1	**6I-0456**	4	BOLT (M8X1.25X45-MM)	
	9	1	**249-0975**	1	HEAD AS-OIL FILTER (ENGINE)	
	10	1	**244-6872**	1	ADAPTER-FILTER	

C - CHANGE FROM PREVIOUS TYPE
M - METRIC PART
Y - SEPARATE ILLUSTRATION

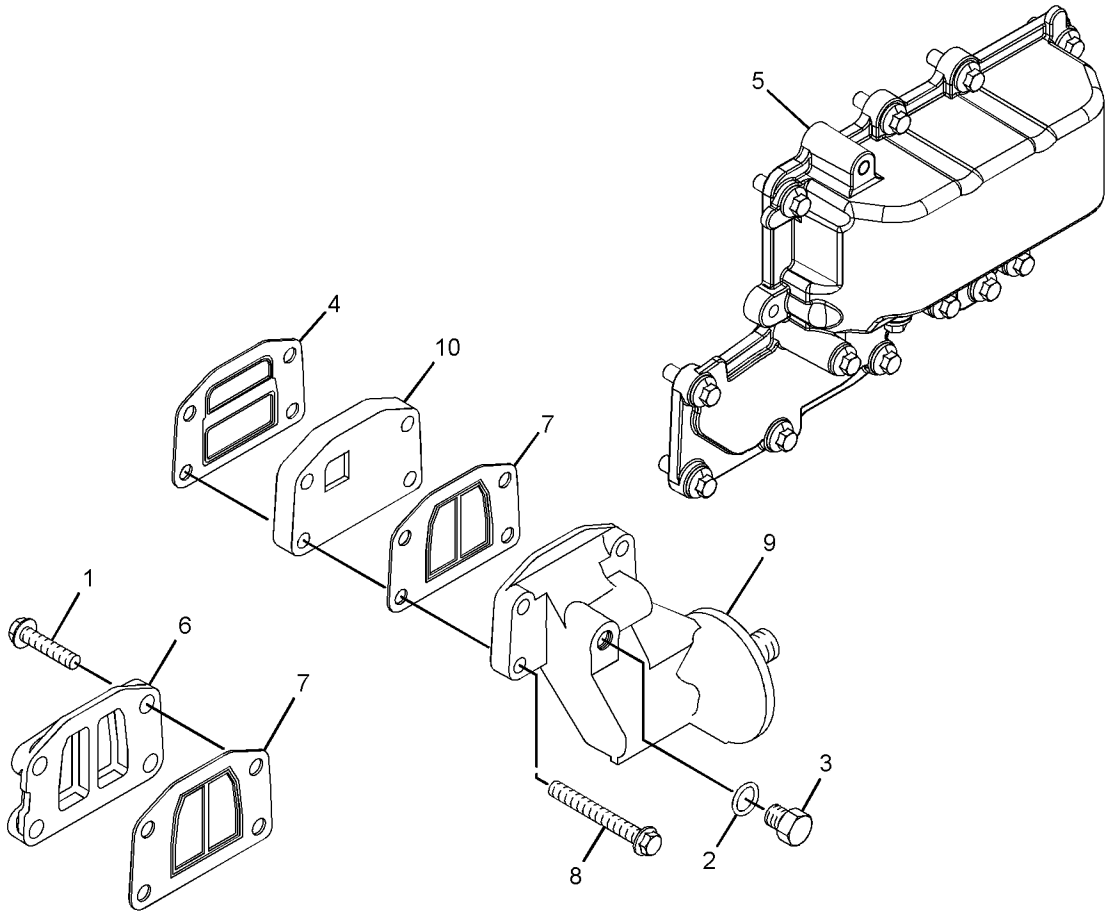

GRAPHIC #1 <END> g06755158

253-2475 COOLER GP-FLTR BASE & ENG OIL

TYPE 1

SMCS-1306, 1378 **i02473033**

NOTE	REF NO	GRAPHIC REF	PART NUMBER	QTY	PART NAME 1 2 3 4 5 6 (PRODUCT LEVEL)	SEE PAGE
M	1	1	**6I-0572**	4	BOLT (M8X1.25X20-MM)	
	2	1	**8T-7876**	1	SEAL-O-RING	
	3	1	**225-7941**	1	PLUG	
	4	1	**225-7944**	2	GASKET	
	5	1	**232-3722**	1	COOLER GP-ENGINE OIL	
M	5A	1	**6I-0260**	10	BOLT (M8X1.25X25-MM)	
M	5B	1	**6I-4374**	3	BOLT (M8X1.25X60-MM)	
M	5C	1	**101-3895**	4	BOLT (M8X1.25X35-MM)	
	5D	1	**225-6817**	1	COOLER-OIL (ENGINE)	
	5E	1	**225-6818**	2	SEAL	
	5F	1	**225-6820**	1	GASKET	
	6	1	**232-3751**	1	PLATE	
	7	1	**233-9408**	1	GASKET	
M	8	1	**235-2451**	4	BOLT (M8X1.25X45-MM)	
	9	1	**249-0975**	1	HEAD AS-OIL FILTER (ENGINE)	
	10	1	**244-6872**	1	ADAPTER-FILTER	

M - METRIC PART

253-2475 **COOLER GP-FLTR BASE & ENG OIL (**contd.**)** **i02473033**

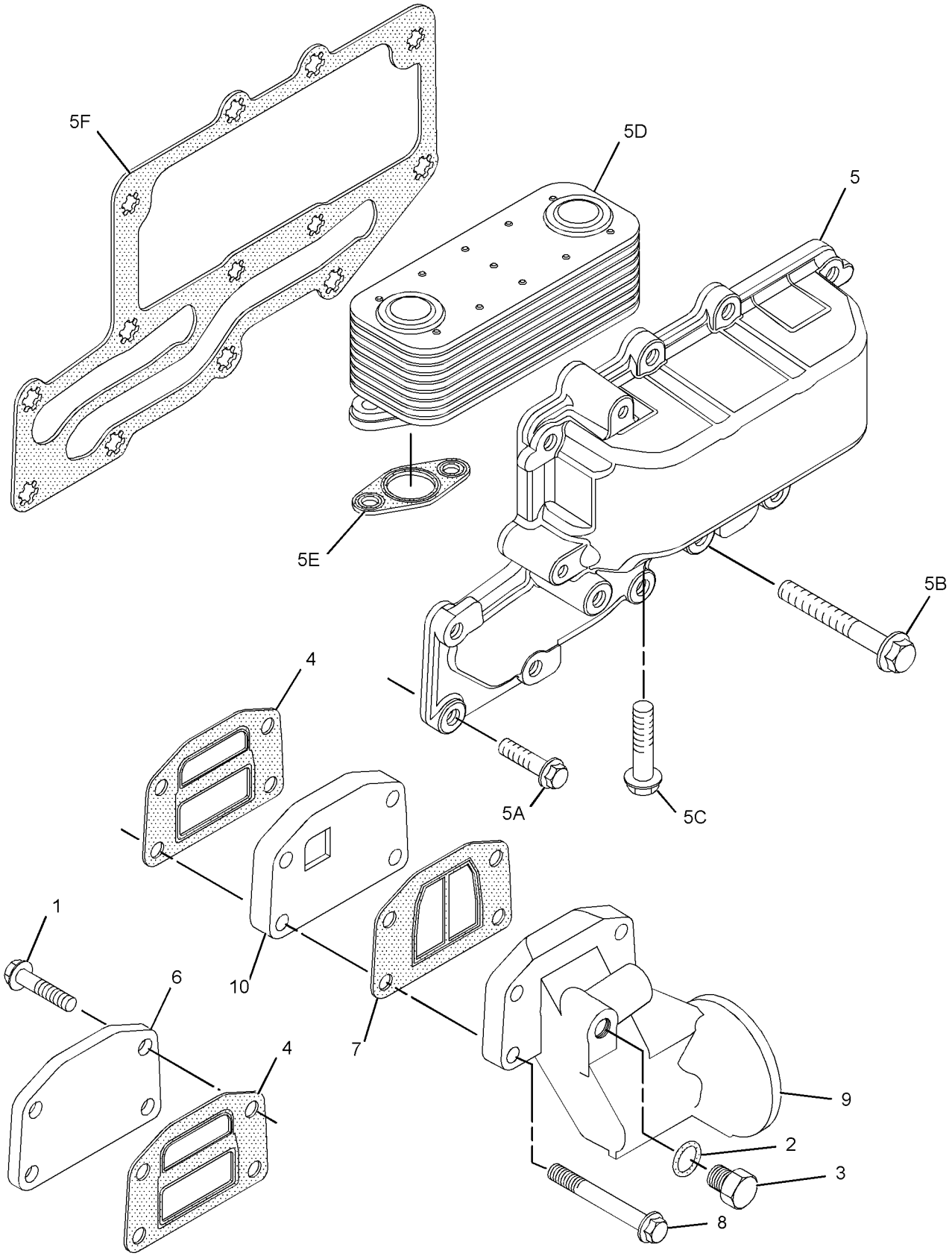

GRAPHIC #1 <END> g01233226

253-2475 COOLER GP-FLTR BASE & ENG OIL

TYPE 2

SMCS-1306, 1378 **i03927887**

NOTE	REF NO	GRAPHIC REF	PART NUMBER	QTY	PART NAME 1 2 3 4 5 6 (PRODUCT LEVEL)	SEE PAGE
M	1	1	**6I-0572**	4	BOLT (M8X1.25X20-MM)	
	2	1	**8T-7876**	1	SEAL-O-RING	
	3	1	**225-7941**	1	PLUG	
	4	1	**225-7944**	2	GASKET	
CY	5	1	**354-1274**	1	COOLER GP-ENGINE OIL	877
	6	1	**232-3751**	1	PLATE	
	7	1	**233-9408**	1	GASKET	
M	8	1	**235-2451**	4	BOLT (M8X1.25X45-MM)	
	9	1	**249-0975**	1	HEAD AS-OIL FILTER (ENGINE)	
	10	1	**244-6872**	1	ADAPTER-FILTER	

C - CHANGE FROM PREVIOUS TYPE
M - METRIC PART
Y - SEPARATE ILLUSTRATION

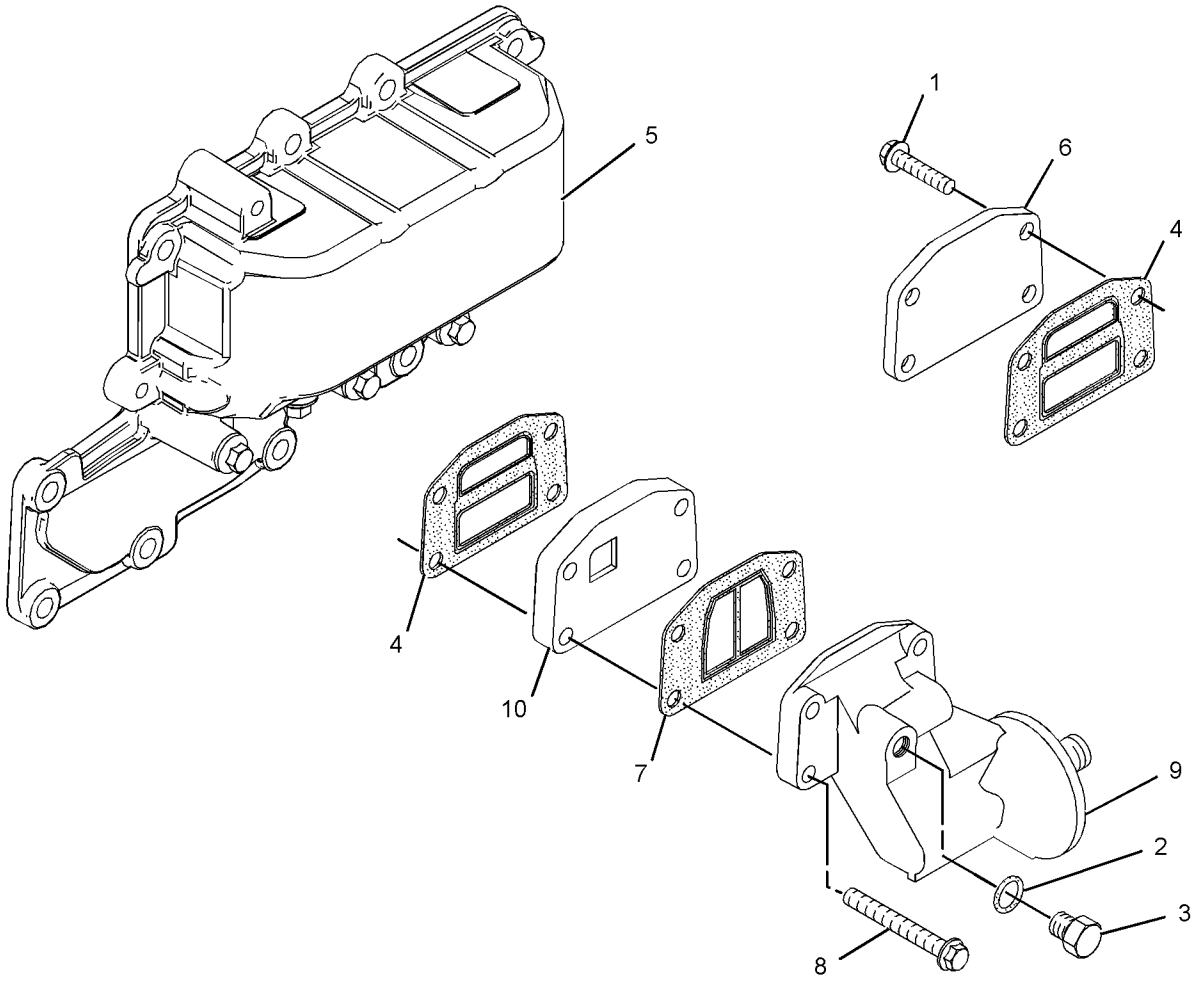

GRAPHIC #1 <END> g02152650

253-2475 COOLER GP-FLTR BASE & ENG OIL

TYPE 3

SMCS-1306, 1378 **i08220207**

NOTE	REF NO	GRAPHIC REF	PART NUMBER	QTY	PART NAME 1 2 3 4 5 6 (PRODUCT LEVEL)	SEE PAGE
M	1	1	**6I-0572**	4	BOLT (M8X1.25X20-MM)	
	2	1	**8T-7876**	1	SEAL-O-RING	
	3	1	**225-7941**	1	PLUG	
	4	1	**225-7944**	2	GASKET	
CY	5	1	**356-6541**	1	COOLER GP-ENGINE OIL (ENGINE)	878
	6	1	**232-3751**	1	PLATE	
	7	1	**233-9408**	1	GASKET	
M	8	1	**6I-0456**	4	BOLT (M8X1.25X45-MM)	
	9	1	**249-0975**	1	HEAD AS-OIL FILTER (ENGINE)	
	10	1	**244-6872**	1	ADAPTER-FILTER	

C - CHANGE FROM PREVIOUS TYPE
M - METRIC PART
Y - SEPARATE ILLUSTRATION

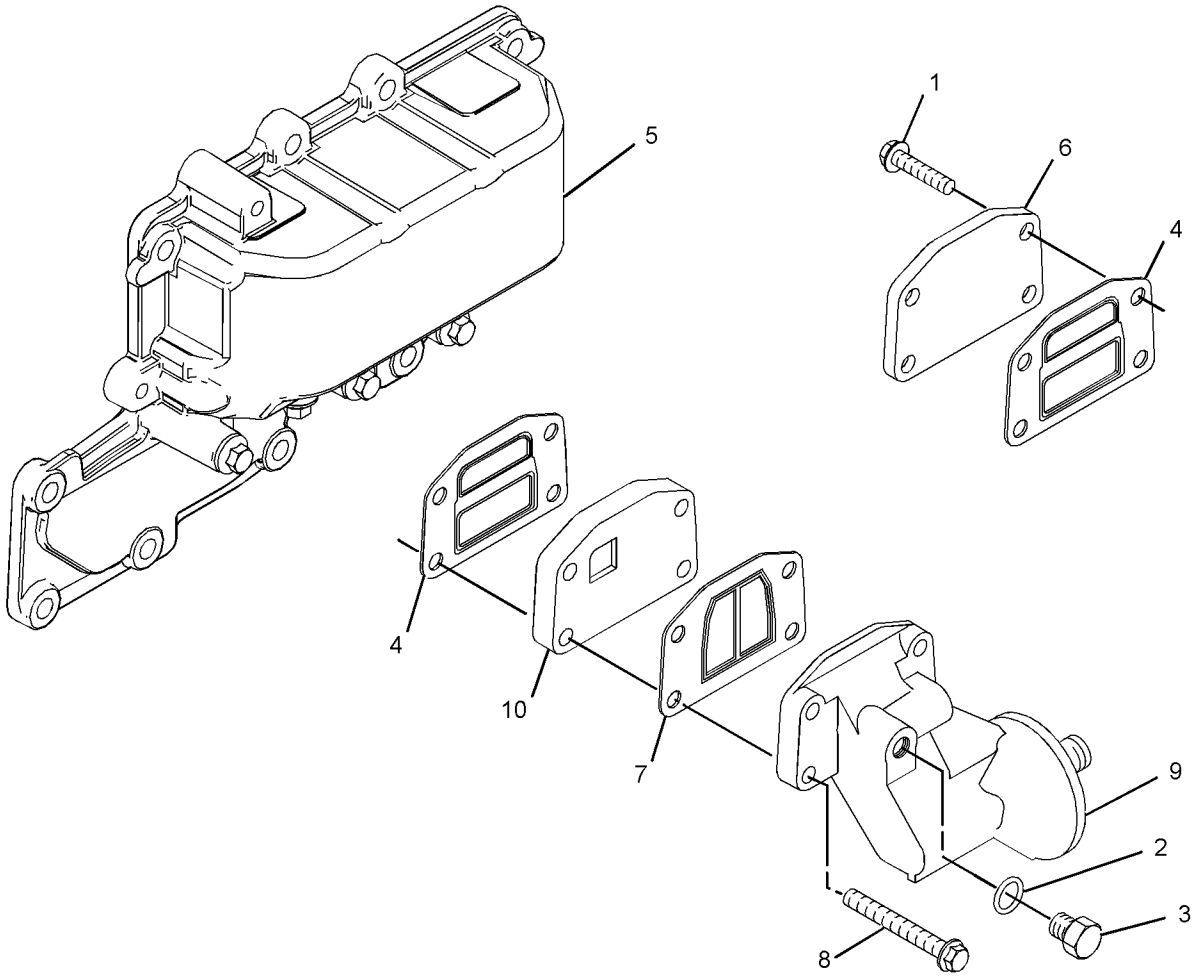

GRAPHIC #1 <END> g06782663

253-6184 COOLER GP-FLTR BASE & ENG OIL

TYPE 1

SMCS-1306, 1378 **i02450975**

NOTE	REF NO	GRAPHIC REF	PART NUMBER	QTY	PART NAME 1 2 3 4 5 6 (PRODUCT LEVEL)	SEE PAGE
M	1	1	**6I-0572**	4	BOLT (M8X1.25X20-MM)	
M	2	1	**6I-0645**	4	BOLT (M8X1.25X25-MM)	
	3	1	**8T-7876**	1	SEAL-O-RING	
	4	1	**225-7941**	1	PLUG	
	5	1	**225-7944**	2	GASKET	
	6	1	**232-3751**	1	PLATE	
	7	1	**243-4288**	1	COOLER AS-OIL (ENGINE)	
M	7A	1	**6I-0260**	10	BOLT (M8X1.25X25-MM)	
M	7B	1	**6I-4374**	3	BOLT (M8X1.25X60-MM)	
	7C	1	**225-6820**	1	GASKET	
	8	1	**249-0974**	1	HEAD AS-OIL FILTER (ENGINE)	

M - METRIC PART

253-6184 **COOLER GP-FLTR BASE & ENG OIL** (contd.) **i02450975**

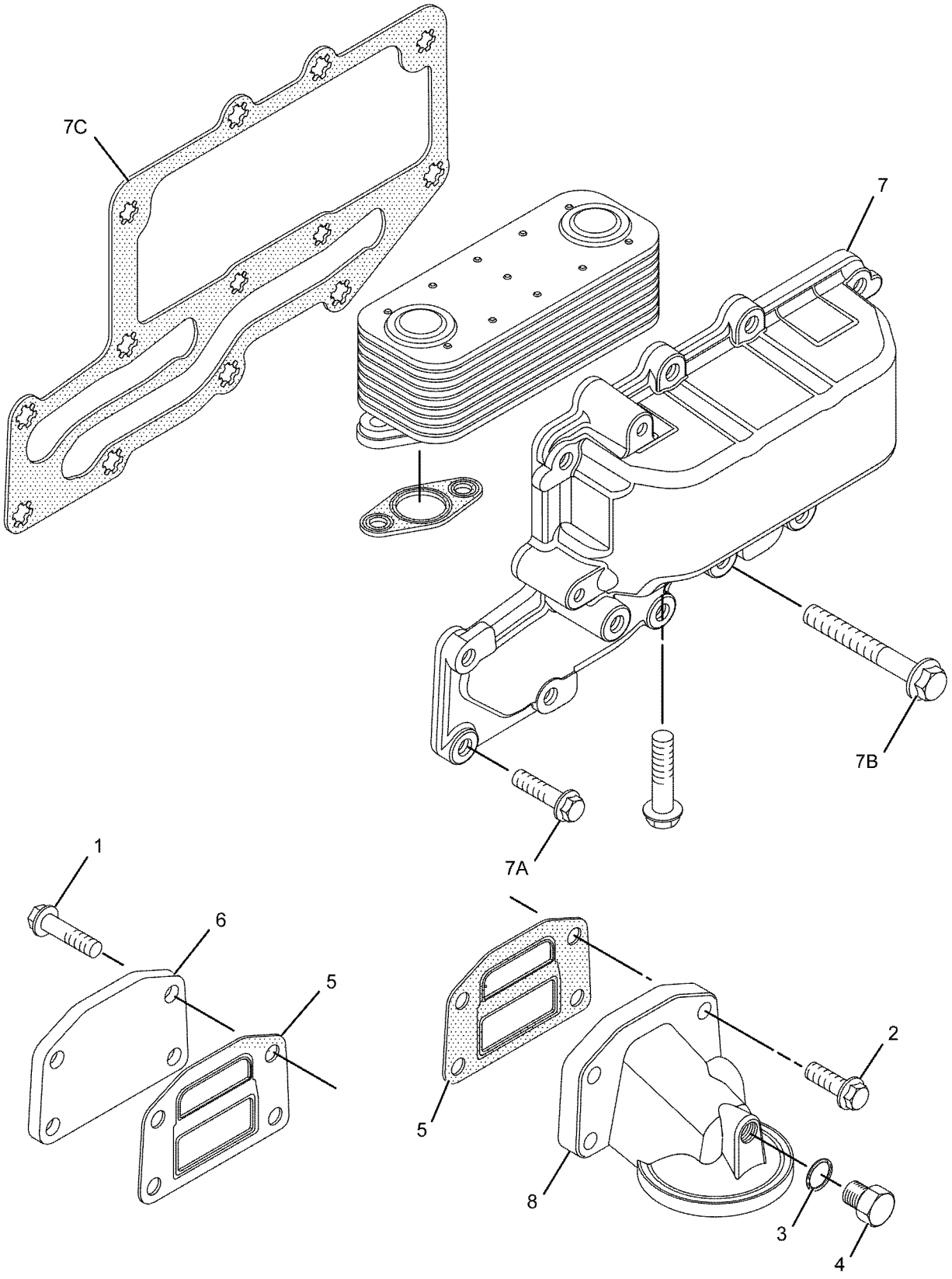

GRAPHIC #1 <END> g01079522

253-6184 COOLER GP-FLTR BASE & ENG OIL

TYPE 2

SMCS-1306, 1378 **i02578228**

NOTE	REF NO	GRAPHIC REF	PART NUMBER	QTY	PART NAME 1 2 3 4 5 6 (PRODUCT LEVEL)	SEE PAGE
M	1	1	**6I-0572**	4	BOLT (M8X1.25X20-MM)	
M	2	1	**6I-0645**	4	BOLT (M8X1.25X25-MM)	
	3	1	**8T-7876**	1	SEAL-O-RING	
	4	1	**225-7941**	1	PLUG	
	5	1	**225-7944**	2	GASKET	
	6	1	**232-3751**	1	PLATE	
C	7	1	**296-5614**	1	COOLER AS-OIL (ENGINE)	
M	7A	1	**6I-0260**	8	BOLT (M8X1.25X25-MM)	
M	7B	1	**6I-4374**	3	BOLT (M8X1.25X60-MM)	
	7C	1	**272-2265**	1	SEAL	
	7D	1	**6I-0218**	2	BOLT (M8X1.25X25-MM)	
	8	1	**249-0974**	1	HEAD AS-OIL FILTER (ENGINE)	

C - CHANGE FROM PREVIOUS TYPE
M - METRIC PART

253-6184 **COOLER GP-FLTR BASE & ENG OIL (**contd.**)** **i02578228**

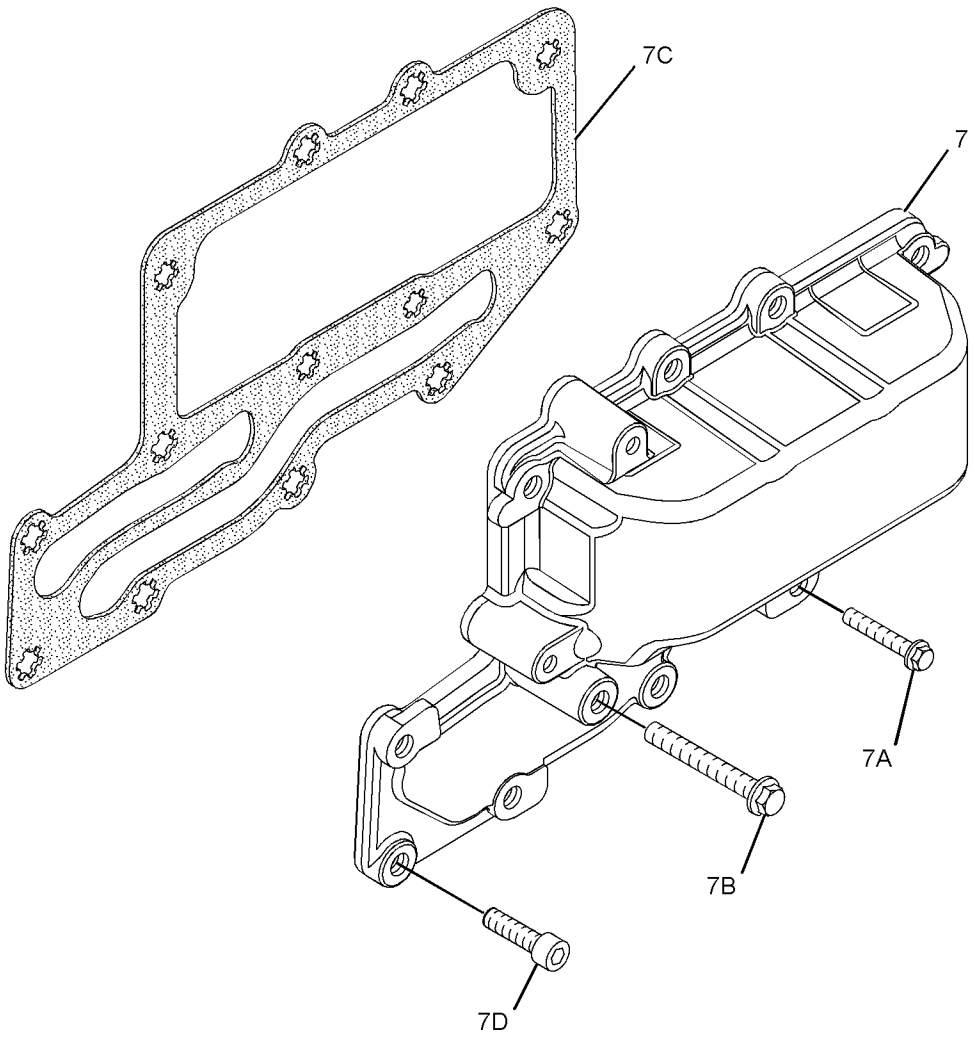

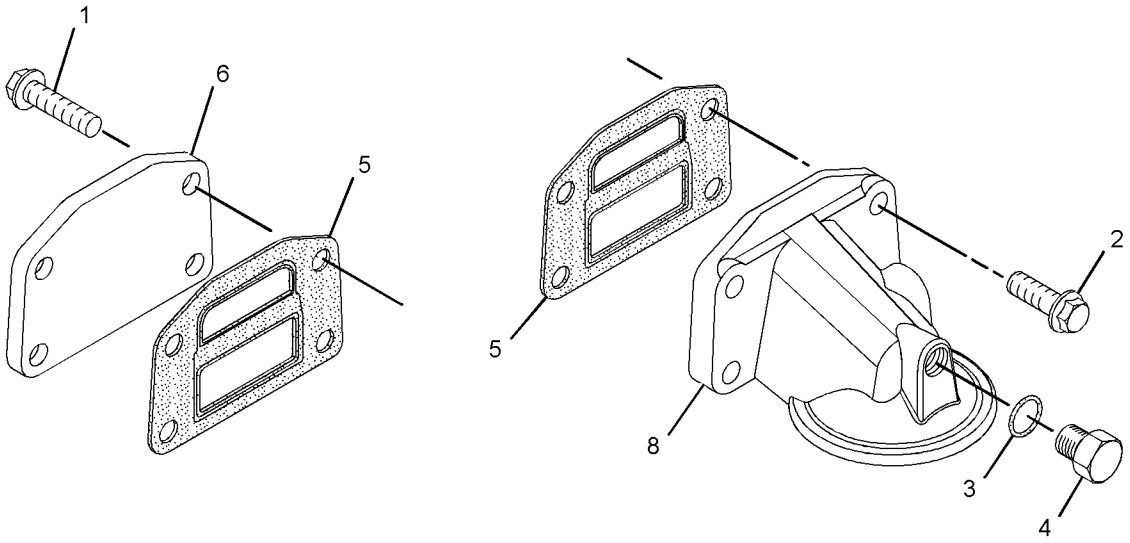

GRAPHIC #1 <END> g01312127

253-6184 COOLER GP-FLTR BASE & ENG OIL

TYPE 3

SMCS-1306, 1378 **i04399012**

NOTE	REF NO	GRAPHIC REF	PART NUMBER	QTY	PART NAME 1 2 3 4 5 6 (PRODUCT LEVEL)	SEE PAGE
M	1	1	**6I-0572**	4	BOLT (M8X1.25X20-MM)	
M	2	1	**6I-0645**	4	BOLT (M8X1.25X25-MM)	
	3	1	**8T-7876**	1	SEAL-O-RING	
	4	1	**225-7941**	1	PLUG	
	5	1	**225-7944**	2	GASKET	
	6	1	**232-3751**	1	PLATE	
C	7	1	**355-8329**	1	COOLER AS-OIL (ENGINE)	
M	7A	1	**6I-0260**	10	BOLT (M8X1.25X25-MM)	
M	7B	1	**6I-4374**	3	BOLT (M8X1.25X60-MM)	
	7C	1	**225-6820**	1	GASKET	
	8	1	**249-0974**	1	HEAD AS-OIL FILTER (ENGINE)	

C - CHANGE FROM PREVIOUS TYPE
M - METRIC PART

253-6184 **COOLER GP-FLTR BASE & ENG OIL** (contd.) **i04399012**

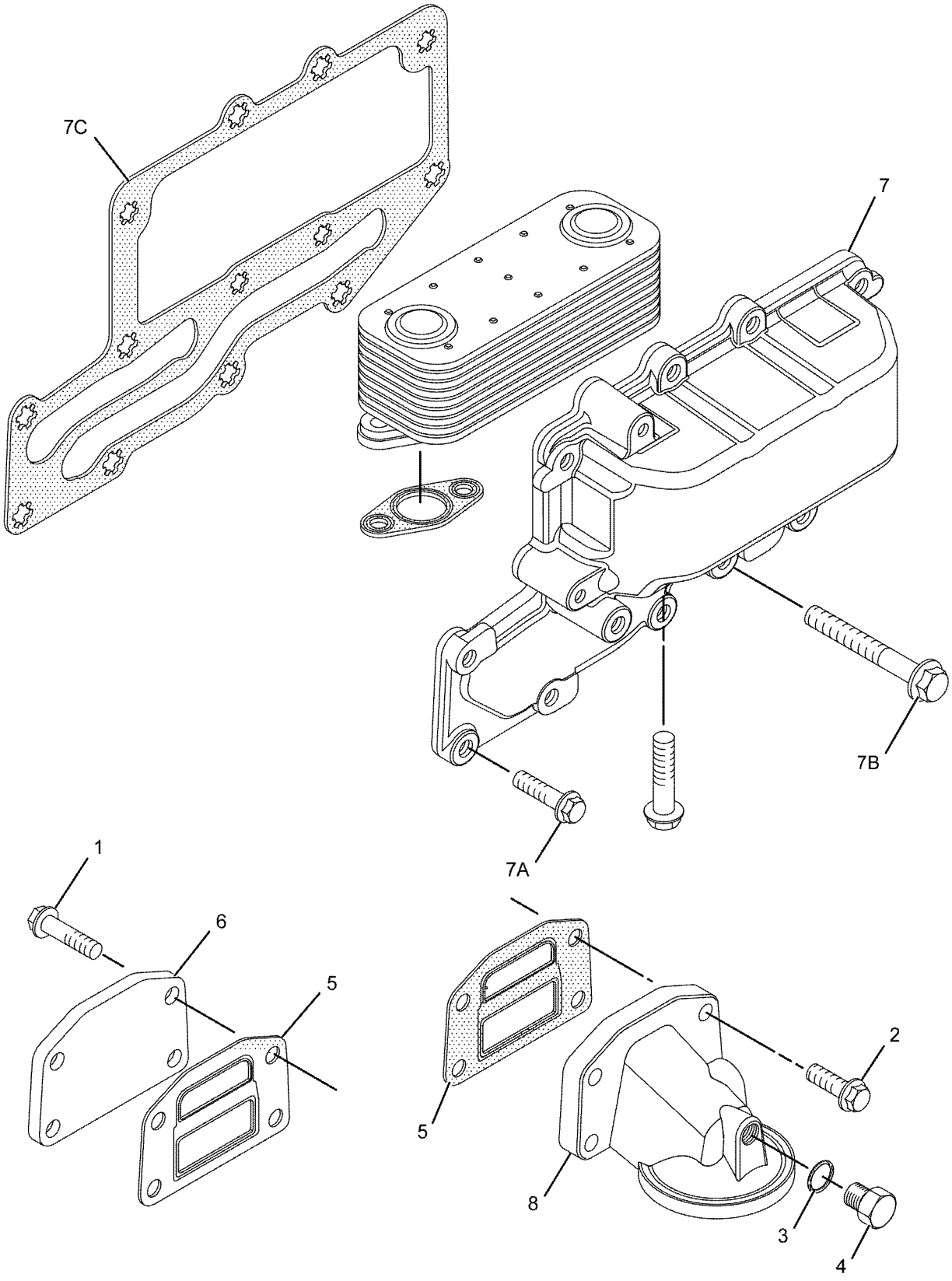

GRAPHIC #1 <END> g01079522

253-8786 COOLER GP-FLTR BASE & ENG OIL

TYPE 1

SMCS-1306, 1378 **i02450976**

NOTE	REF NO	GRAPHIC REF	PART NUMBER	QTY	PART NAME 1 2 3 4 5 6 (PRODUCT LEVEL)	SEE PAGE
M	2	1	**6I-0645**	8	BOLT (M8X1.25X25-MM)	
	3	1	**8T-7876**	1	SEAL-O-RING	
	4	1	**225-7941**	1	PLUG	
	5	1	**225-7944**	2	GASKET	
	6	1	**233-7223**	1	COOLER AS-OIL (ENGINE)	
M	6A	1	**6I-0260**	10	BOLT (M8X1.25X25-MM)	
M	6B	1	**6I-4374**	3	BOLT (M8X1.25X60-MM)	
M	6C	1	**101-3895**	4	BOLT (M8X1.25X35-MM)	
	6D	1	**225-6818**	2	SEAL	
	6E	1	**225-6820**	1	GASKET	
	6F	1	**233-7222**	1	COOLER-OIL (ENGINE)	
	7	1	**249-0974**	1	HEAD AS-OIL FILTER (ENGINE)	
	8	1	**253-8782**	1	PLATE	

M - METRIC PART

253-8786 **COOLER GP-FLTR BASE & ENG OIL** (contd.) **i02450976**

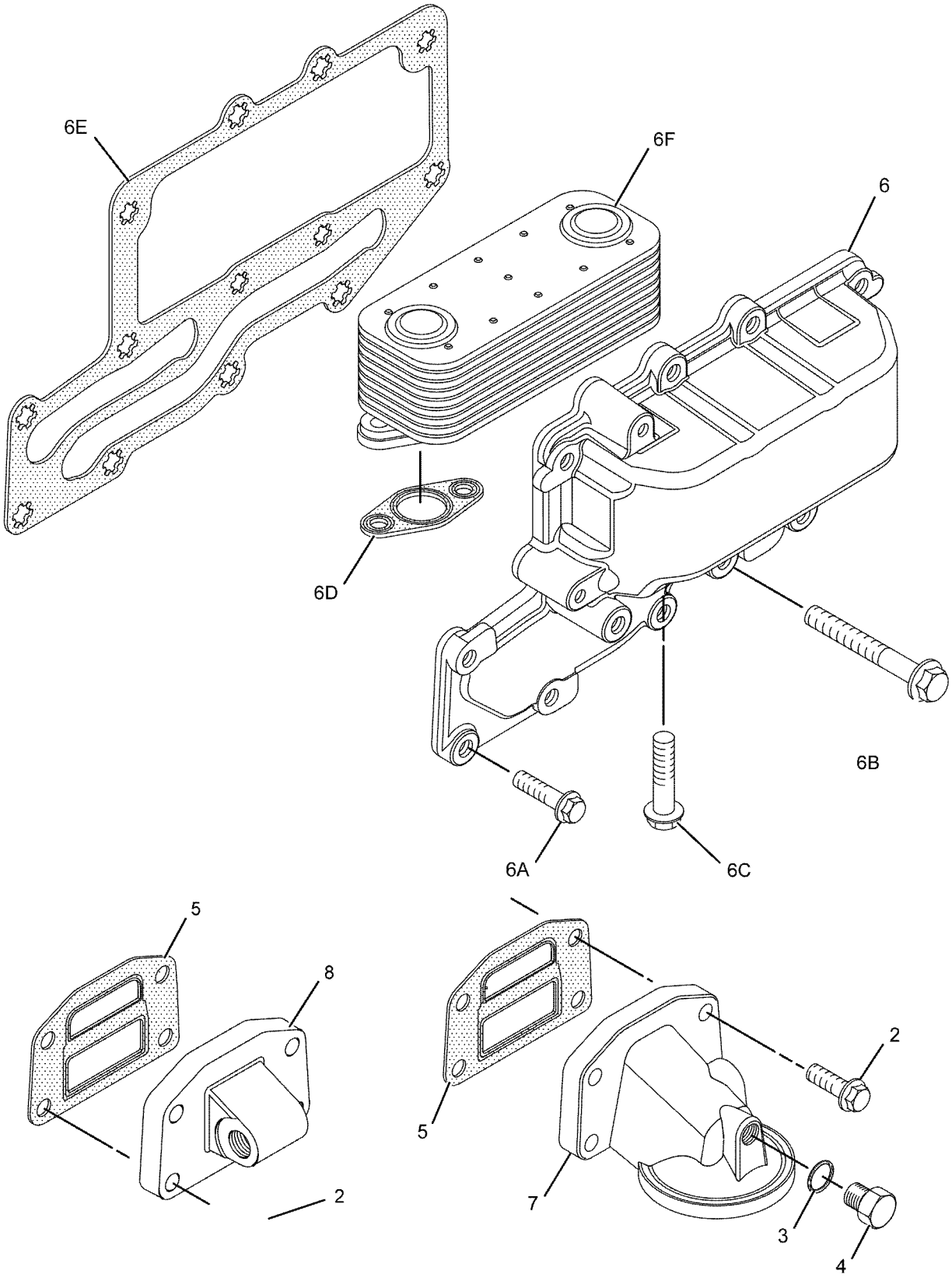

GRAPHIC #1 <END> g01139320

253-8786 COOLER GP-FLTR BASE & ENG OIL

TYPE 2

SMCS-1306, 1378 **i03858102**

NOTE	REF NO	GRAPHIC REF	PART NUMBER	QTY	PART NAME 1 2 3 4 5 6 (PRODUCT LEVEL)	SEE PAGE
	1	1	**253-8782**	1	PLATE	
M	2	1	**6I-0645**	8	BOLT (M8X1.25X25-MM)	
	3	1	**8T-7876**	1	SEAL-O-RING	
	4	1	**225-7941**	1	PLUG	
	5	1	**225-7944**	2	GASKET	
CY	6	1	**355-6224**	1	COOLER AS-OIL	875
	7	1	**249-0974**	1	HEAD AS-OIL FILTER (ENGINE)	

C - CHANGE FROM PREVIOUS TYPE
M - METRIC PART
Y - SEPARATE ILLUSTRATION

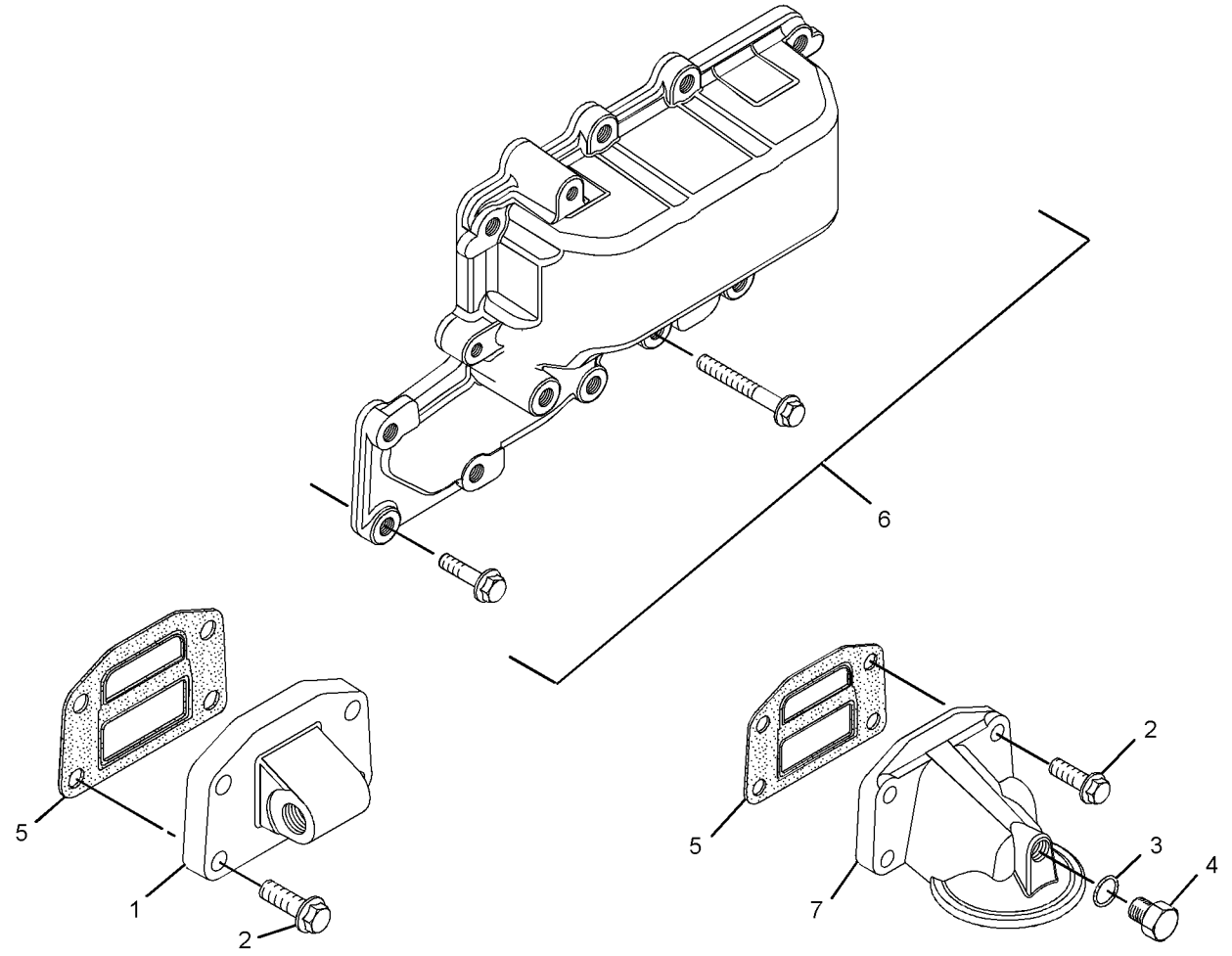

GRAPHIC #1 <END> g02154198

265-5299 COOLER GP-FLTR BASE & ENG OIL

ALSO AN ATTACHMENT

SMCS-1306, 1378 **i02451144**

NOTE	REF NO	GRAPHIC REF	PART NUMBER	QTY	PART NAME 1 2 3 4 5 6 (PRODUCT LEVEL)	SEE PAGE
Y	1	1	**232-3722**	1	COOLER GP-ENGINE OIL	876
	2	1	**249-0974**	1	HEAD AS-OIL FILTER (ENGINE)	
	3	1	**253-8782**	1	PLATE	
	4	1	**225-7944**	2	GASKET	
M	5	1	**6I-0645**	8	BOLT (M8X1.25X25-MM)	
	6	1	**8T-7876**	1	SEAL-O-RING	
	7	1	**225-7941**	1	PLUG	

M - METRIC PART
Y - SEPARATE ILLUSTRATION

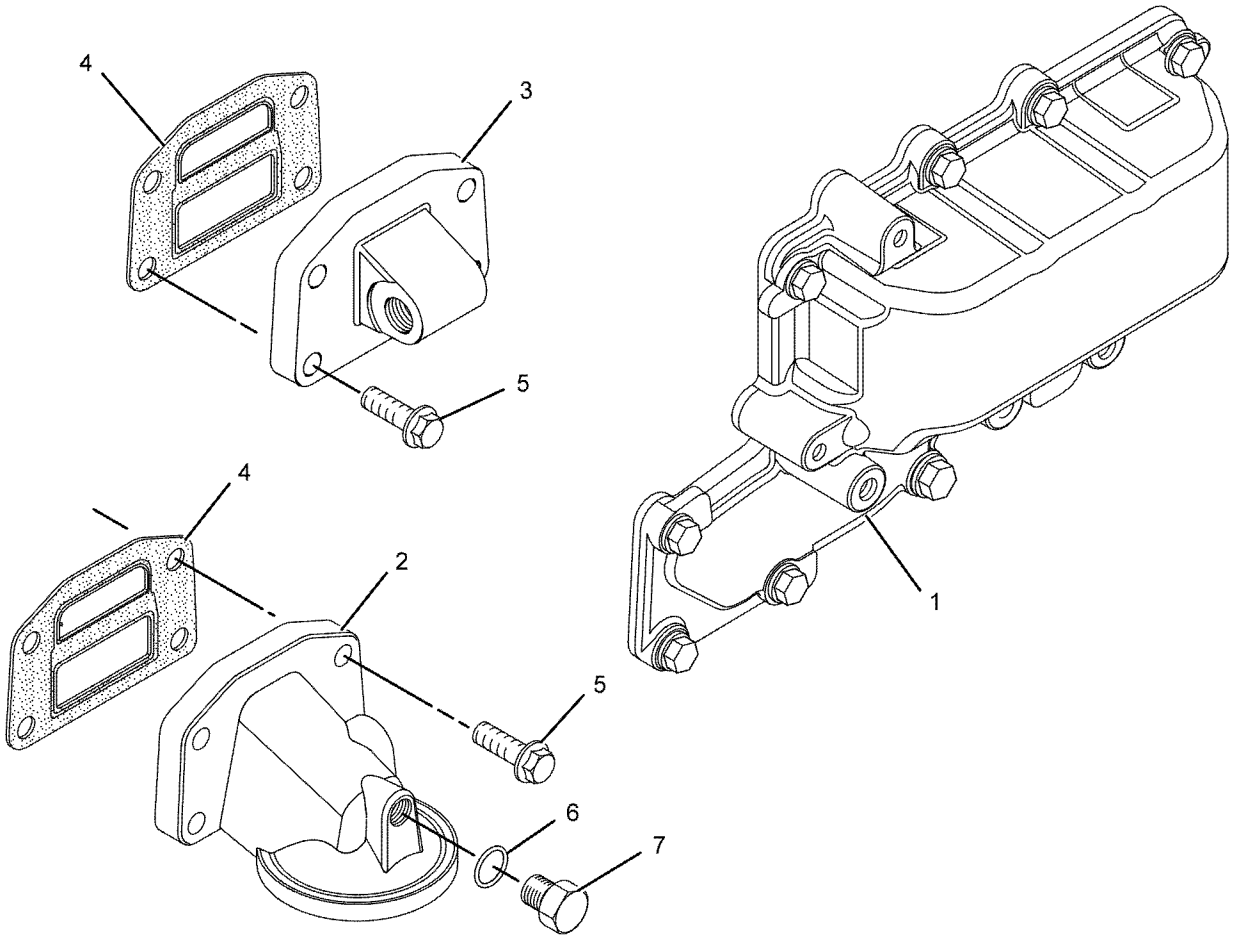

GRAPHIC #1 <END> g01126116

265-5299 COOLER GP-FLTR BASE & ENG OIL

S/N: 3341-28670
ALSO AN ATTACHMENT

SMCS-1306, 1378 **i03890797**

NOTE	REF NO	GRAPHIC REF	PART NUMBER	QTY	PART NAME 1 2 3 4 5 6 (PRODUCT LEVEL)	SEE PAGE
CY	1	1	**354-1274**	1	COOLER GP-ENGINE OIL	877
	2	1	**249-0974**	1	HEAD AS-OIL FILTER (ENGINE)	
	3	1	**253-8782**	1	PLATE	
	4	1	**225-7944**	2	GASKET	
M	5	1	**6I-0645**	8	BOLT (M8X1.25X25-MM)	
	6	1	**8T-7876**	1	SEAL-O-RING	
	7	1	**225-7941**	1	PLUG	

C - CHANGE FROM PREVIOUS TYPE
M - METRIC PART
Y - SEPARATE ILLUSTRATION

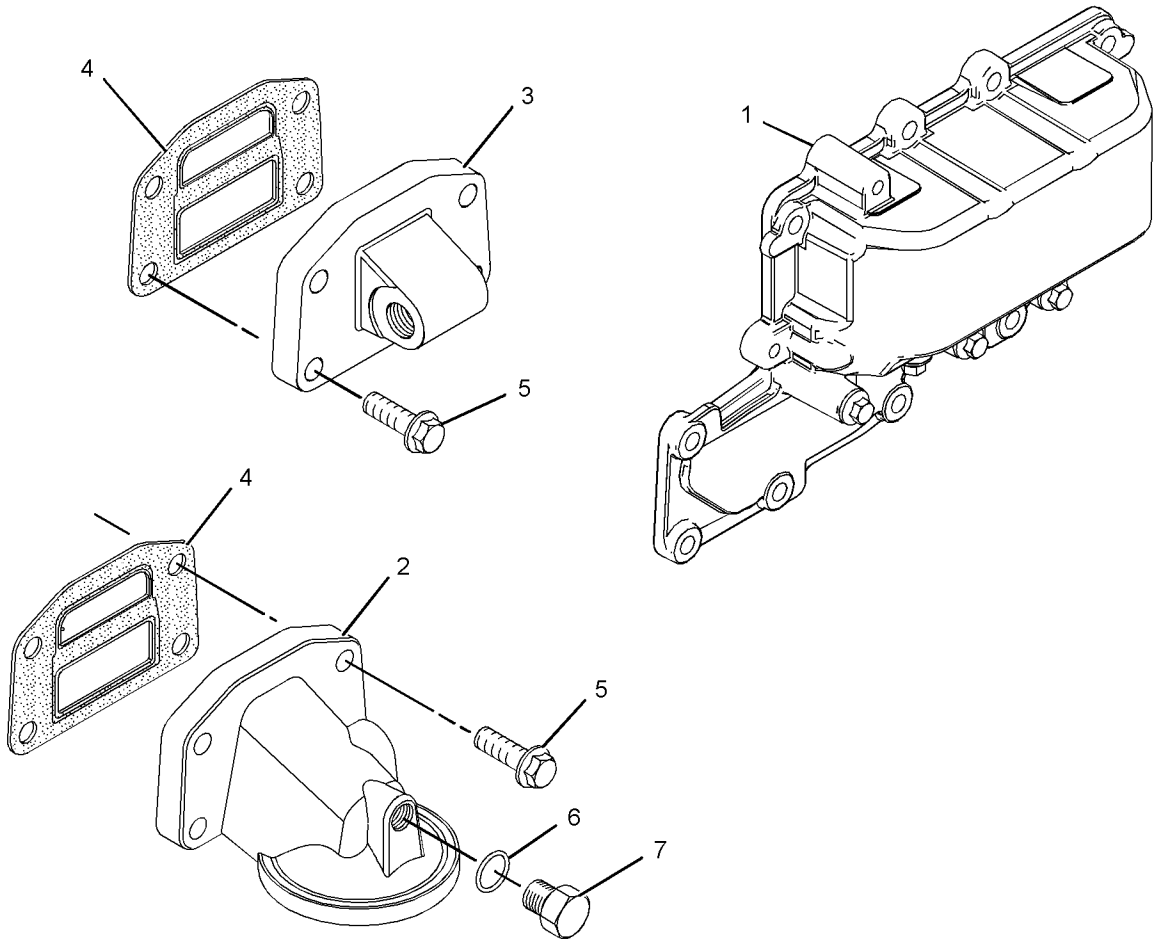

GRAPHIC #1 <END> g02151615

265-5299 COOLER GP-FLTR BASE & ENG OIL

S/N: 33428671-UP
ALSO AN ATTACHMENT

SMCS-1306, 1378 **i08204652**

NOTE	REF NO	GRAPHIC REF	PART NUMBER	QTY	PART NAME 1 2 3 4 5 6 (PRODUCT LEVEL)	SEE PAGE
CY	1	1	**356-6541**	1	COOLER GP-ENGINE OIL	878
	2	1	**249-0974**	1	HEAD AS-OIL FILTER (ENGINE)	
	3	1	**253-8782**	1	PLATE	
	4	1	**225-7944**	2	GASKET	
M	5	1	**6I-0645**	8	BOLT (M8X1.25X25-MM)	
	6	1	**8T-7876**	1	SEAL-O-RING	
	7	1	**225-7941**	1	PLUG	

C - CHANGE FROM PREVIOUS TYPE
M - METRIC PART
Y - SEPARATE ILLUSTRATION

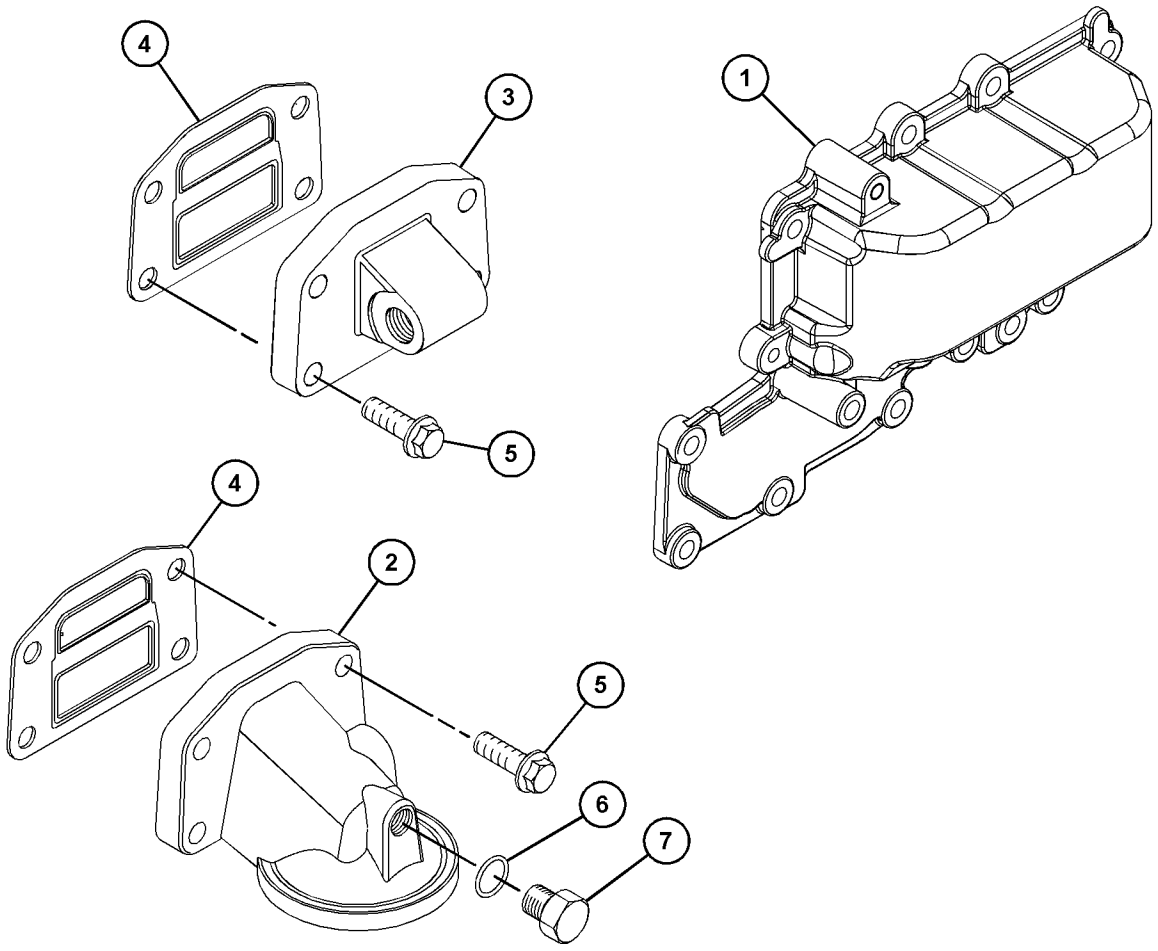

GRAPHIC #1 <END> g06743371

267-5081 COOLER GP-FLTR BASE & ENG OIL

TYPE 1

SMCS-1306, 1378 **i02451145**

NOTE	REF NO	GRAPHIC REF	PART NUMBER	QTY	PART NAME 1 2 3 4 5 6 (PRODUCT LEVEL)	SEE PAGE
M	1	1	**6I-0572**	4	BOLT (M8X1.25X20-MM)	
	2	1	**8T-7876**	1	SEAL-O-RING	
	3	1	**225-7941**	1	PLUG	
	4	1	**225-7944**	2	GASKET	
	5	1	**232-3751**	1	PLATE	
	6	1	**233-9408**	1	GASKET	
M	7	1	**235-2451**	4	BOLT (M8X1.25X45-MM)	
	8	1	**243-4288**	1	COOLER AS-OIL (ENGINE)	
M	8A	1	**6I-0260**	10	BOLT (M8X1.25X25-MM)	
M	8B	1	**6I-4374**	3	BOLT (M8X1.25X60-MM)	
	8C	1	**225-6820**	1	GASKET	
	9	1	**244-6872**	1	ADAPTER-FILTER	
	10	1	**249-0975**	1	HEAD AS-OIL FILTER (ENGINE)	

M - METRIC PART

267-5081 **COOLER GP-FLTR BASE & ENG OIL** (contd.) **i02451145**

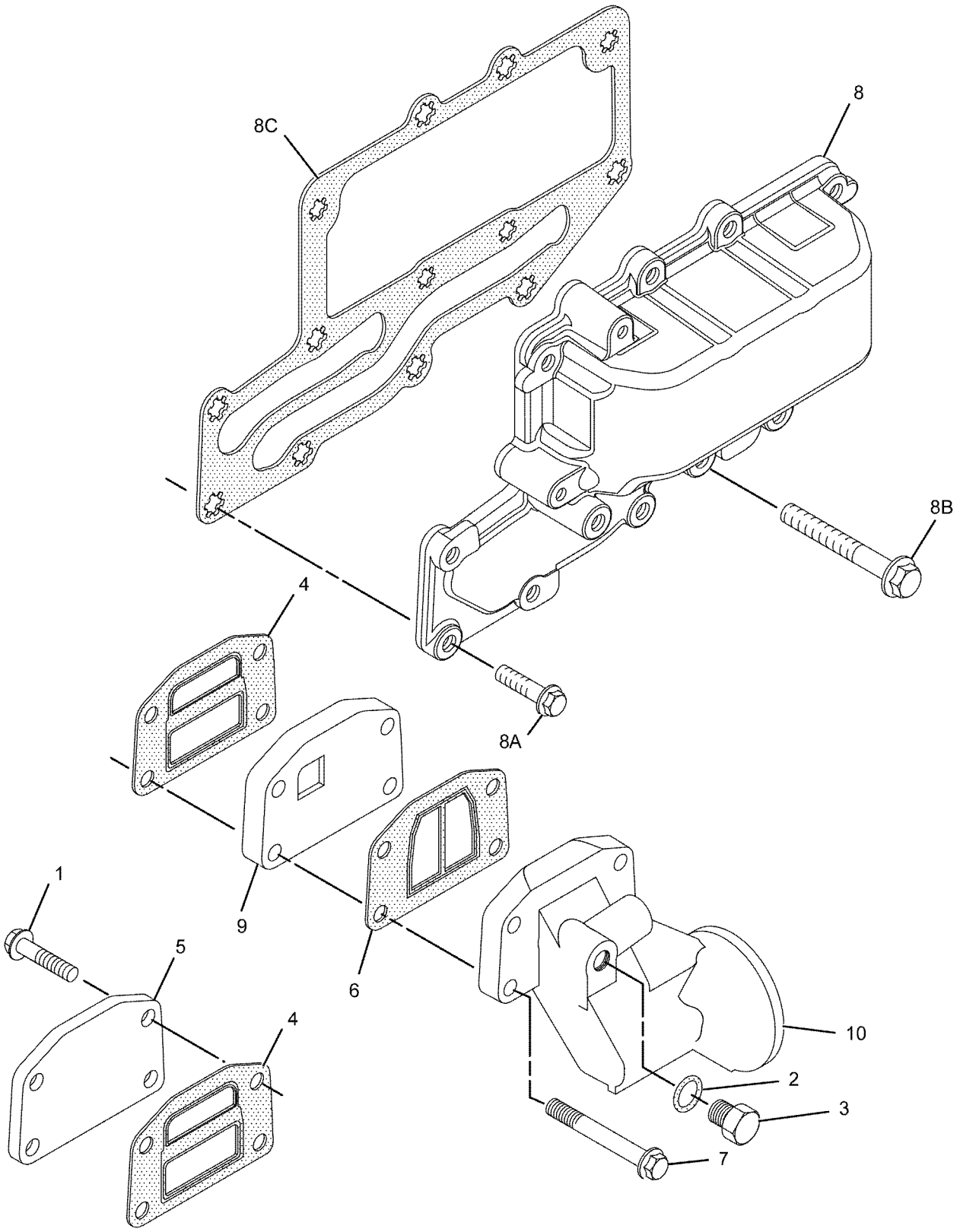

GRAPHIC #1 <END> g01139261

267-5081 COOLER GP-FLTR BASE & ENG OIL

TYPE 2

SMCS-1306, 1378 **i02585886**

NOTE	REF NO	GRAPHIC REF	PART NUMBER	QTY	PART NAME 1 2 3 4 5 6 (PRODUCT LEVEL)	SEE PAGE
M	1	1	**6I-0572**	4	BOLT (M8X1.25X20-MM)	
	2	1	**8T-7876**	1	SEAL-O-RING	
	3	1	**225-7941**	1	PLUG	
	4	1	**225-7944**	2	GASKET	
	5	1	**232-3751**	1	PLATE	
	6	1	**233-9408**	1	GASKET	
M	7	1	**235-2451**	4	BOLT (M8X1.25X45-MM)	
C	8	1	*296-5614*	1	COOLER AS-OIL (ENGINE)	
	8A	1	**6I-0218**	2	BOLT (M8X1.25X25-MM)	
M	8B	1	**6I-0260**	8	BOLT (M8X1.25X25-MM)	
M	8C	1	**6I-4374**	3	BOLT (M8X1.25X60-MM)	
	8D	1	**272-2265**	1	SEAL	
	9	1	**244-6872**	1	ADAPTER-FILTER	
	10	1	**249-0975**	1	HEAD AS-OIL FILTER (ENGINE)	

C - CHANGE FROM PREVIOUS TYPE
M - METRIC PART

267-5081 **COOLER GP-FLTR BASE & ENG OIL (**contd.**)** **i02585886**

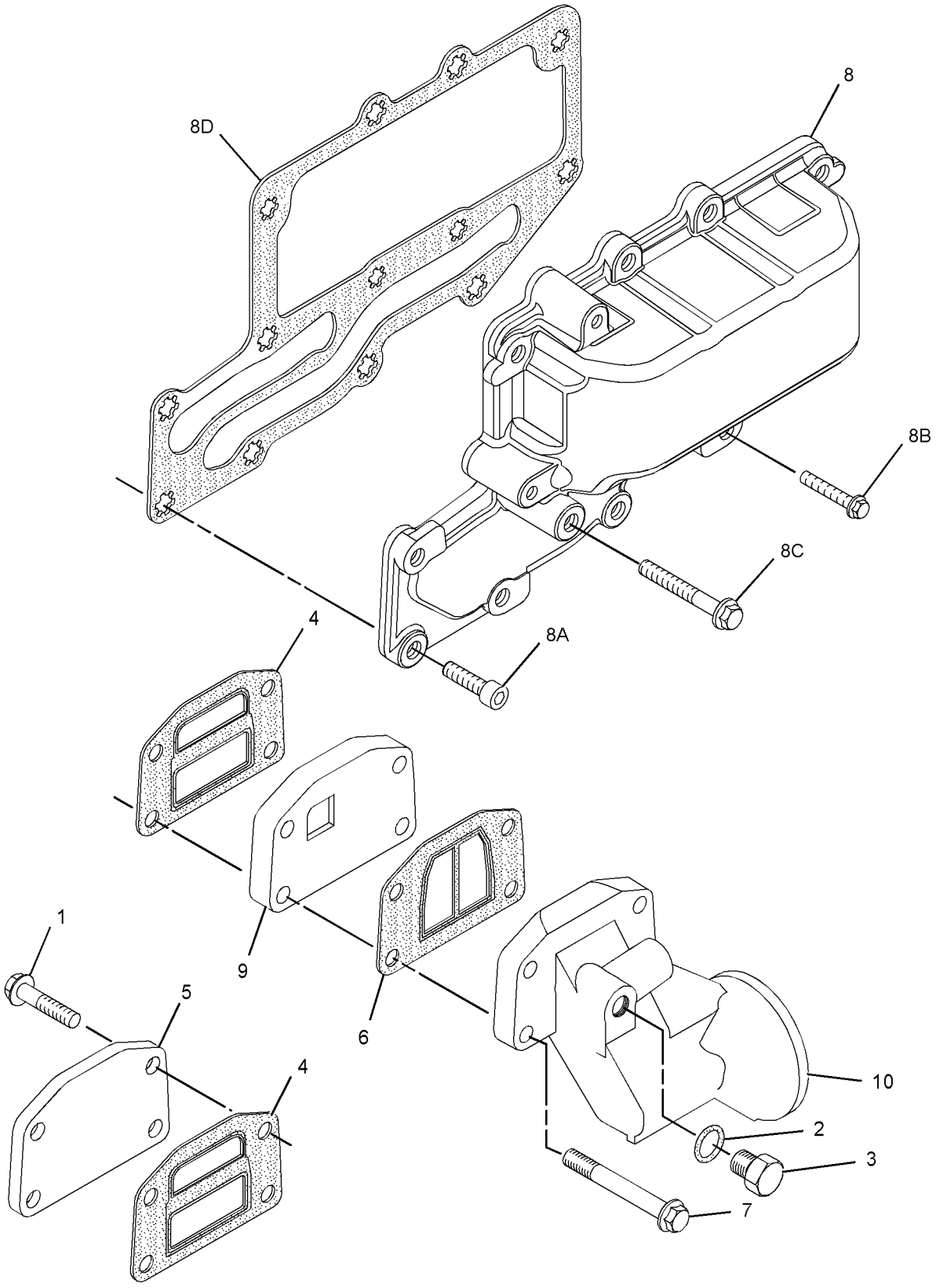

GRAPHIC #1 <END> g01317908

267-5081 COOLER GP-FLTR BASE & ENG OIL

TYPE 3

SMCS-1306, 1378 **i04398971**

NOTE	REF NO	GRAPHIC REF	PART NUMBER	QTY	PART NAME 1 2 3 4 5 6 (PRODUCT LEVEL)	SEE PAGE
M	1	1	**6I-0572**	4	BOLT (M8X1.25X20-MM)	
	2	1	**8T-7876**	1	SEAL-O-RING	
	3	1	**225-7941**	1	PLUG	
	4	1	**225-7944**	2	GASKET	
	5	1	**232-3751**	1	PLATE	
	6	1	**233-9408**	1	GASKET	
M	7	1	**235-2451**	4	BOLT (M8X1.25X45-MM)	
C	8	1	**355-8329**	1	COOLER AS-OIL (ENGINE)	
M	8A	1	**6I-0260**	10	BOLT (M8X1.25X25-MM)	
M	8B	1	**6I-4374**	3	BOLT (M8X1.25X60-MM)	
	8C	1	**225-6820**	1	GASKET	
	9	1	**244-6872**	1	ADAPTER-FILTER	
	10	1	**249-0975**	1	HEAD AS-OIL FILTER (ENGINE)	

C - CHANGE FROM PREVIOUS TYPE
M - METRIC PART

267-5081 **COOLER GP-FLTR BASE & ENG OIL** (contd.) **i04398971**

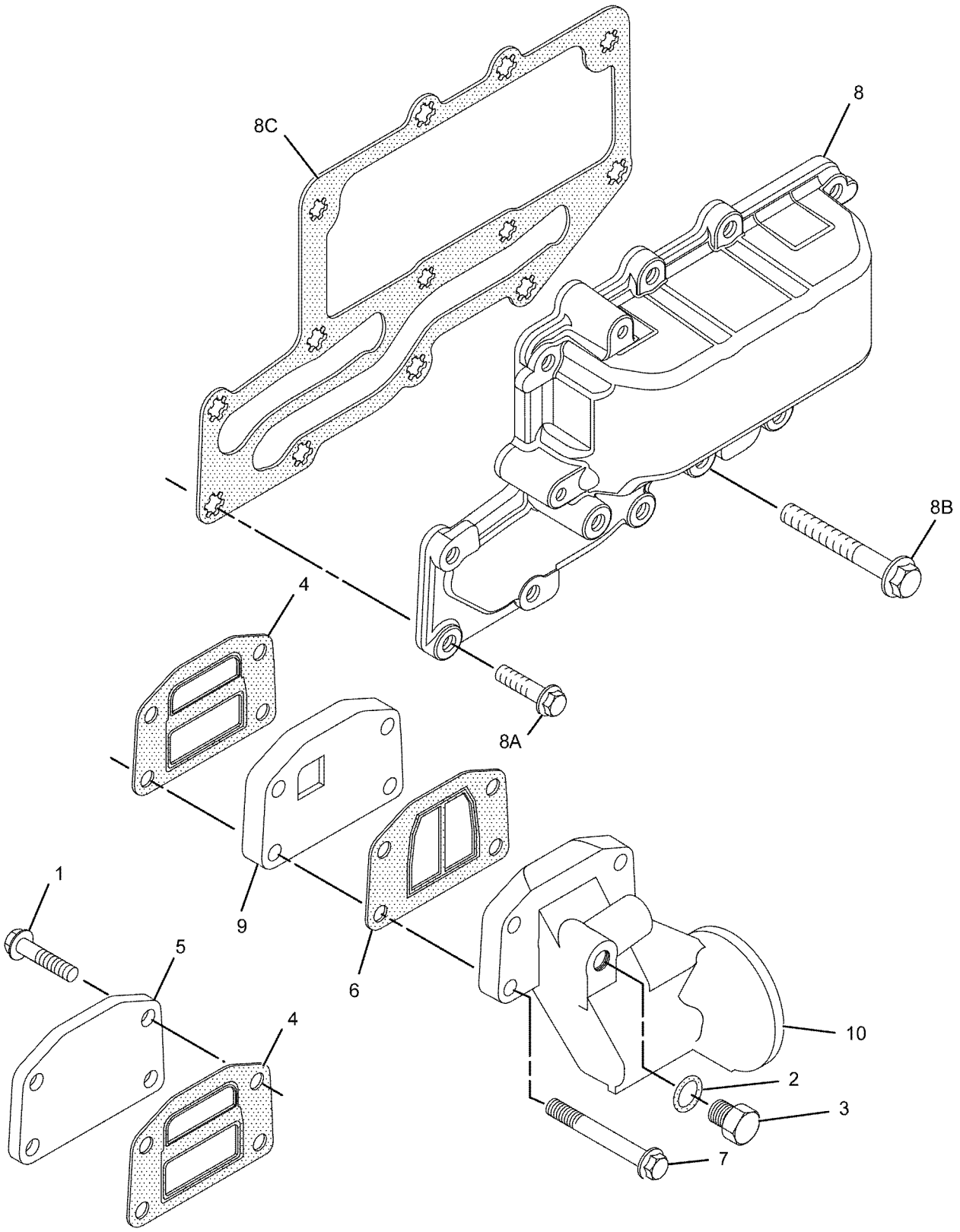

GRAPHIC #1 <END> g01139261

267-8797 COOLER GP-FLTR BASE & ENG OIL

TYPE 1

SMCS-1306, 1378 **i02545729**

NOTE	REF NO	GRAPHIC REF	PART NUMBER	QTY	PART NAME 1 2 3 4 5 6 (PRODUCT LEVEL)	SEE PAGE
M	1	1	**6I-0572**	4	BOLT (M8X1.25X20-MM)	
M	2	1	**6I-0645**	4	BOLT (M8X1.25X25-MM)	
	3	1	**8T-7876**	1	SEAL-O-RING	
	5	1	**225-7941**	1	PLUG	
	6	1	**225-7944**	2	GASKET	
	7	1	**232-3751**	1	PLATE	
	8	1	**234-3458**	1	HEAD AS	
	10	1	**243-4288**	1	COOLER AS-OIL (ENGINE)	
M	10A	1	**6I-0260**	10	BOLT (M8X1.25X25-MM)	
M	10B	1	**6I-4374**	3	BOLT (M8X1.25X60-MM)	
	10C	1	**272-2265**	1	SEAL	

M - METRIC PART

267-8797 **COOLER GP-FLTR BASE & ENG OIL** (contd.) **i02545729**

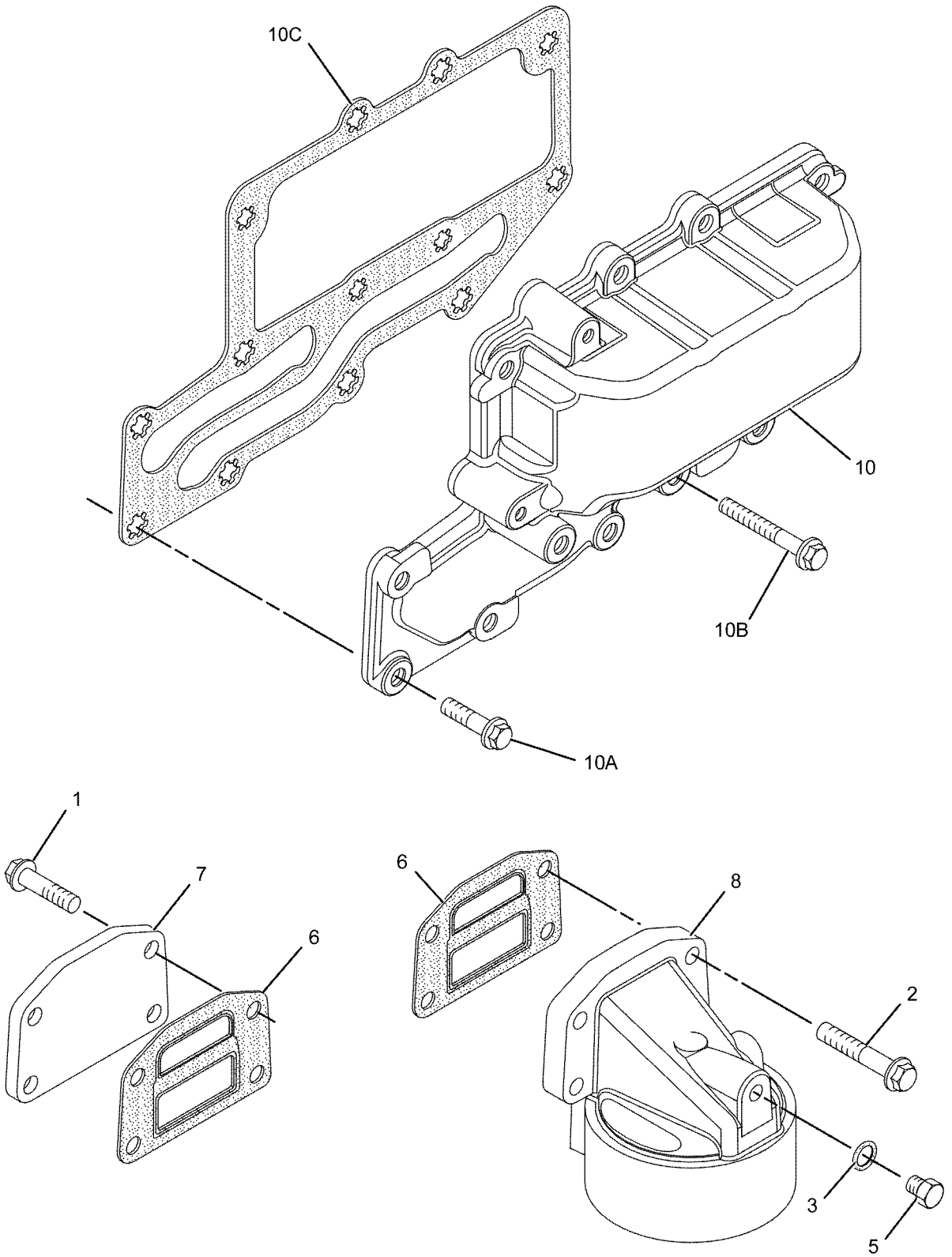

GRAPHIC #1 <END> g01139427

267-8797 COOLER GP-FLTR BASE & ENG OIL

TYPE 2

SMCS-1306, 1378 **i02585885**

NOTE	REF NO	GRAPHIC REF	PART NUMBER	QTY	PART NAME 1 2 3 4 5 6 (PRODUCT LEVEL)	SEE PAGE
M	1	1	**6I-0572**	4	BOLT (M8X1.25X20-MM)	
M	2	1	**6I-0645**	4	BOLT (M8X1.25X25-MM)	
	3	1	**8T-7876**	1	SEAL-O-RING	
	5	1	**225-7941**	1	PLUG	
	6	1	**225-7944**	2	GASKET	
	7	1	**232-3751**	1	PLATE	
	8	1	**234-3458**	1	HEAD AS	
C	9	1	*296-5614*	1	COOLER AS-OIL	
	9A	1	**6I-0218**	2	BOLT (M8X1.25X25-MM)	
M	9B	1	**6I-0260**	8	BOLT (M8X1.25X25-MM)	
M	9C	1	**6I-4374**	3	BOLT (M8X1.25X60-MM)	
	9D	1	**272-2265**	1	SEAL	

C - CHANGE FROM PREVIOUS TYPE
M - METRIC PART

267-8797 **COOLER GP-FLTR BASE & ENG OIL (**contd.**)** **i02585885**

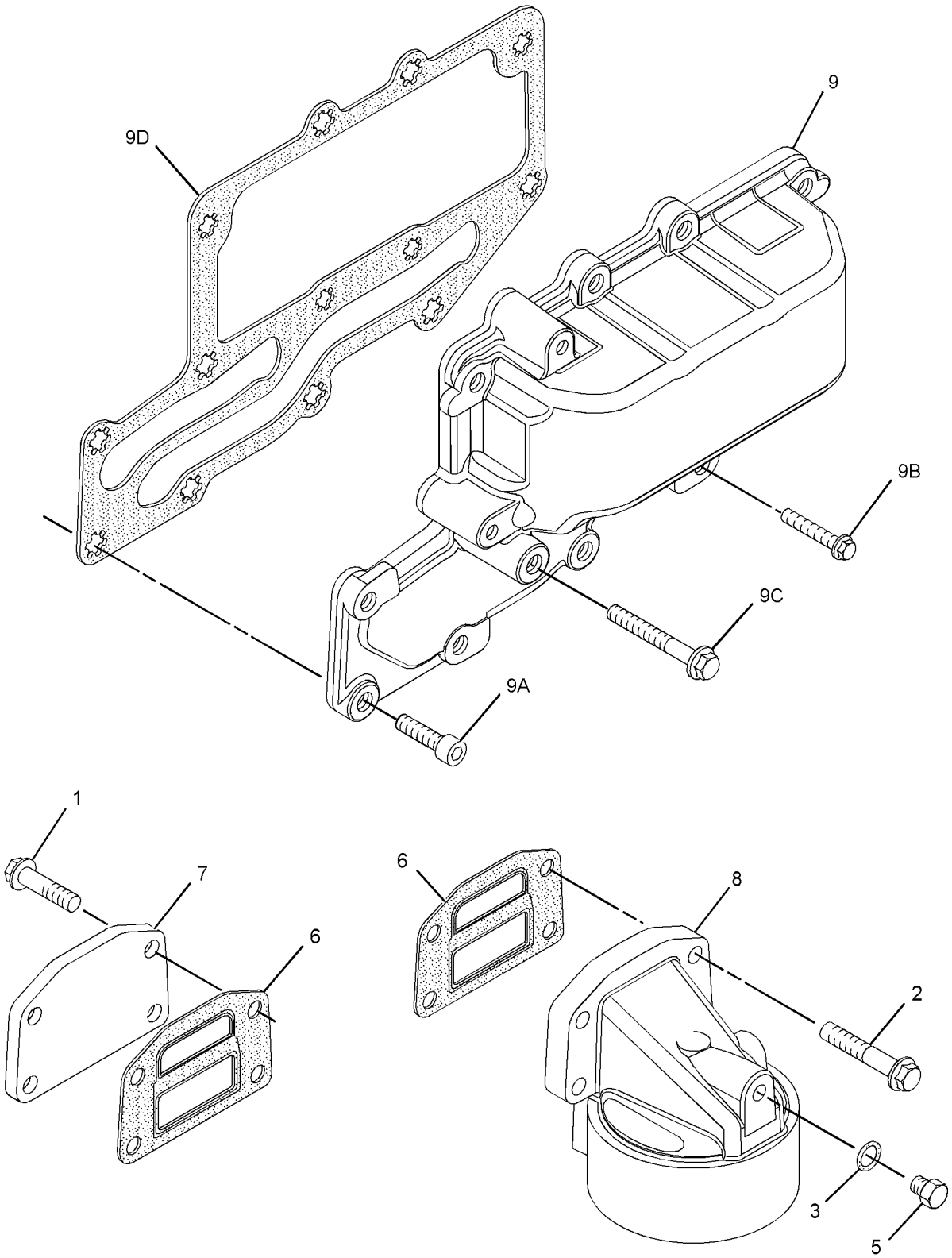

GRAPHIC #1 <END> g01317867

267-8797 COOLER GP-FLTR BASE & ENG OIL

TYPE 3

SMCS-1306, 1378 **i04398972**

NOTE	REF NO	GRAPHIC REF	PART NUMBER	QTY	PART NAME 1 2 3 4 5 6 (PRODUCT LEVEL)	SEE PAGE
M	1	1	**6I-0572**	4	BOLT (M8X1.25X20-MM)	
M	2	1	**6I-0645**	4	BOLT (M8X1.25X25-MM)	
	3	1	**8T-7876**	1	SEAL-O-RING	
	5	1	**225-7941**	1	PLUG	
	6	1	**225-7944**	2	GASKET	
	7	1	**232-3751**	1	PLATE	
	8	1	**234-3458**	1	HEAD AS	
C	10	1	**355-8329**	1	COOLER AS-OIL (ENGINE)	
M	10A	1	**6I-0260**	10	BOLT (M8X1.25X25-MM)	
M	10B	1	**6I-4374**	3	BOLT (M8X1.25X60-MM)	
	10C	1	**272-2265**	1	SEAL	

C - CHANGE FROM PREVIOUS TYPE
M - METRIC PART

267-8797 **COOLER GP-FLTR BASE & ENG OIL** (contd.) **i04398972**

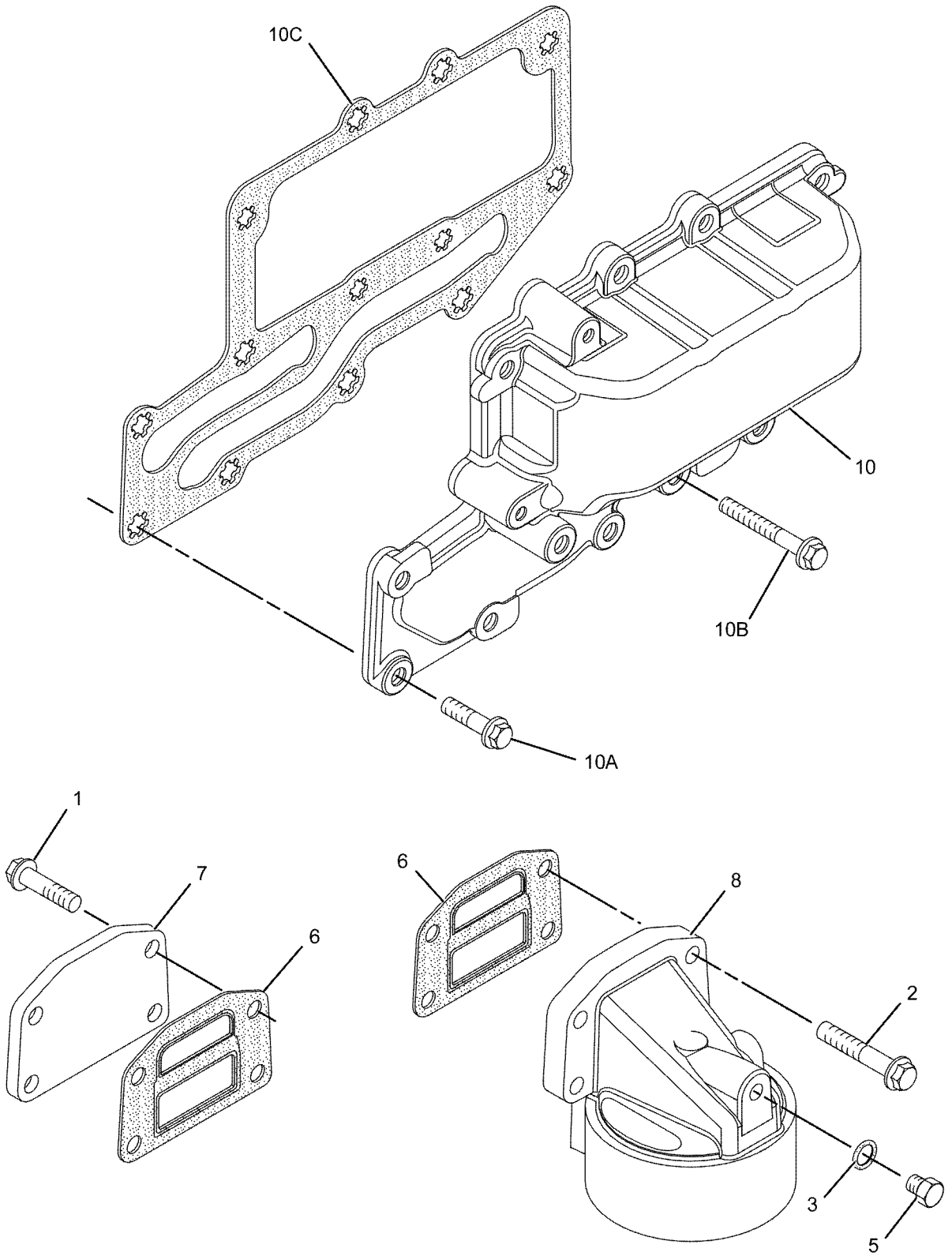

GRAPHIC #1 <END> g01139427

267-9422 COOLER GP-FLTR BASE & ENG OIL

TYPE 1

SMCS-1306, 1378 **i02451146**

NOTE	REF NO	GRAPHIC REF	PART NUMBER	QTY	PART NAME 1 2 3 4 5 6 (PRODUCT LEVEL)	SEE PAGE
M	1	1	**6I-0645**	8	BOLT (M8X1.25X25-MM)	
	2	1	**8T-7876**	1	SEAL-O-RING	
	3	1	**199-9267**	1	SEAL-O-RING	
	4	1	**225-7941**	1	PLUG	
	5	1	**225-7944**	1	GASKET	
	6	1	**232-3861**	1	PLUG (BLANKING)	
	7	1	**233-9408**	1	GASKET	
	8	1	**234-3458**	1	HEAD AS (OIL FILTER ENGINE)	
	9	1	**243-4288**	1	COOLER AS-OIL (ENGINE)	
M	9A	1	**6I-0260**	10	BOLT (M8X1.25X25-MM)	
M	9B	1	**6I-4374**	3	BOLT (M8X1.25X60-MM)	
	9C	1	**225-6820**	1	GASKET	
	10	1	**252-6318**	1	PLATE	

M - METRIC PART

267-9422 **COOLER GP-FLTR BASE & ENG OIL (**contd.**)** **i02451146**

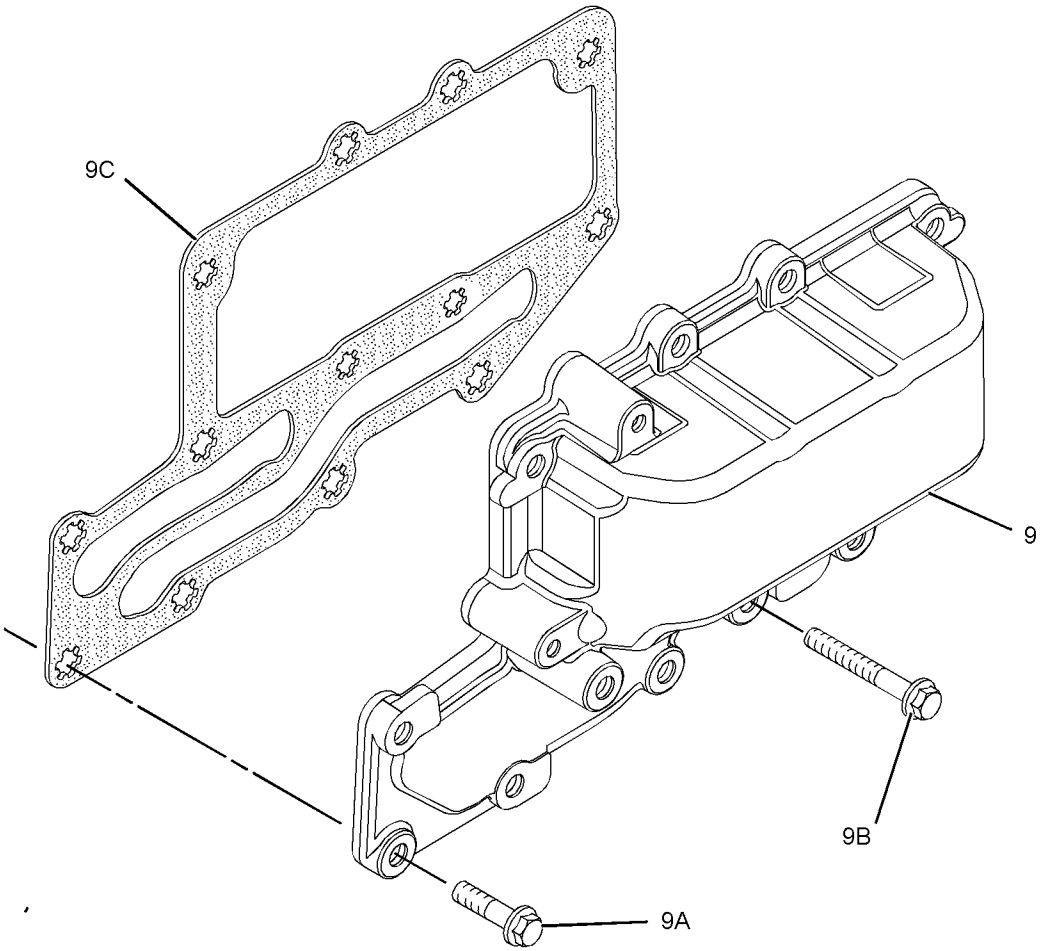

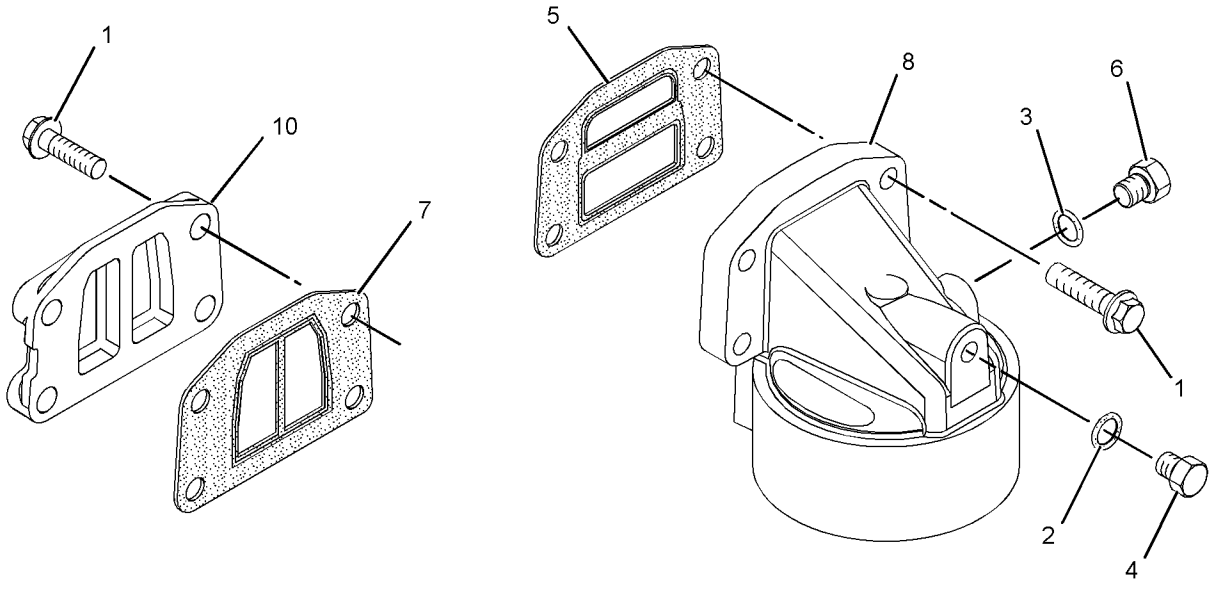

GRAPHIC #1 <END> g01154423

267-9422 COOLER GP-FLTR BASE & ENG OIL

TYPE 2

SMCS-1306, 1378 **i02585883**

NOTE	REF NO	GRAPHIC REF	PART NUMBER	QTY	PART NAME 1 2 3 4 5 6 (PRODUCT LEVEL)	SEE PAGE
M	1	1	**6I-0645**	8	BOLT (M8X1.25X25-MM)	
	2	1	**8T-7876**	1	SEAL-O-RING	
	3	1	**199-9267**	1	SEAL-O-RING	
	4	1	**225-7941**	1	PLUG	
	5	1	**225-7944**	1	GASKET	
	6	1	**232-3861**	1	PLUG (BLANKING)	
	7	1	**233-9408**	1	GASKET	
	8	1	**234-3458**	1	HEAD AS (OIL FILTER ENGINE)	
C	9	1	*296-5614*	1	COOLER AS-OIL (ENGINE)	
M	9A	1	**6I-0260**	8	BOLT (M8X1.25X25-MM)	
M	9B	1	**6I-4374**	3	BOLT (M8X1.25X60-MM)	
	9C	1	**272-2265**	1	SEAL	
	9D	1	**6I-0218**	2	BOLT (M8X1.25X25-MM)	
	10	1	**252-6318**	1	PLATE	

C - CHANGE FROM PREVIOUS TYPE
M - METRIC PART

267-9422 **COOLER GP-FLTR BASE & ENG OIL (**contd.**)** **i02585883**

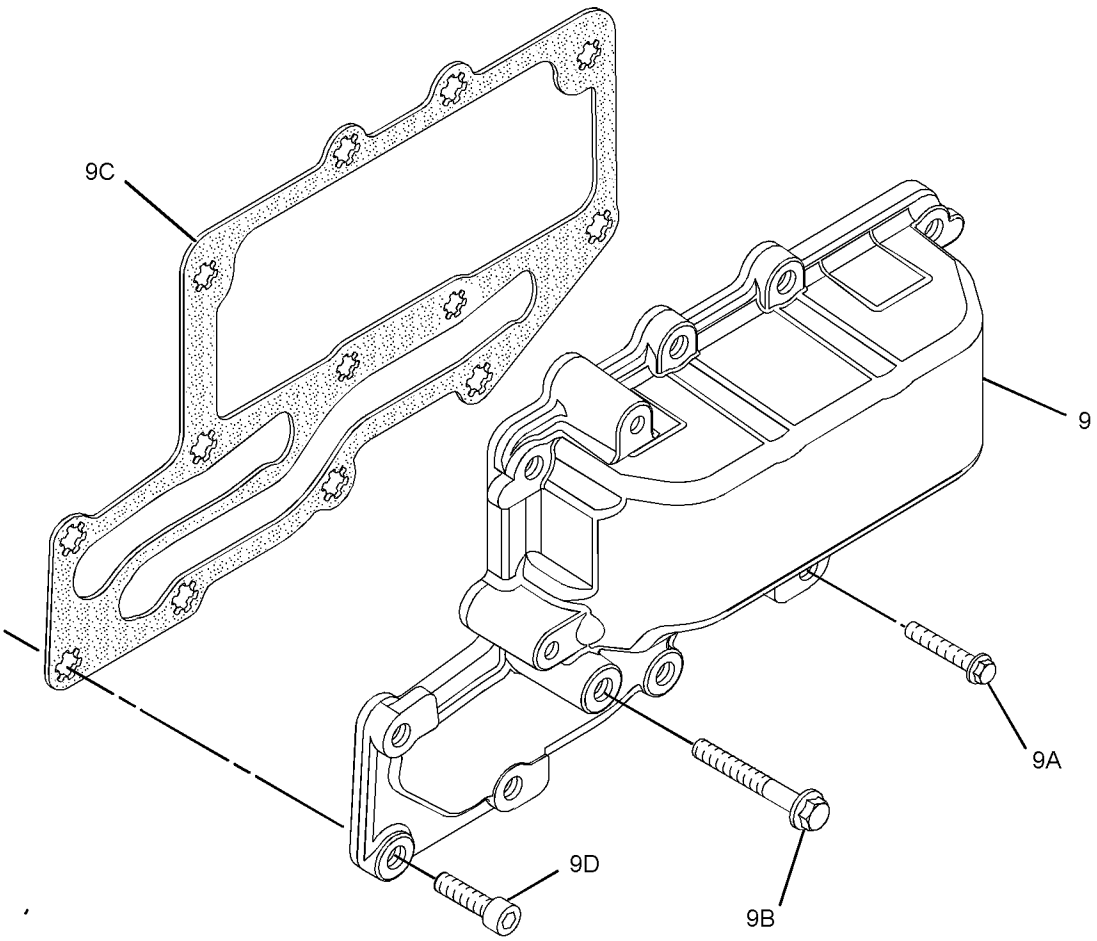

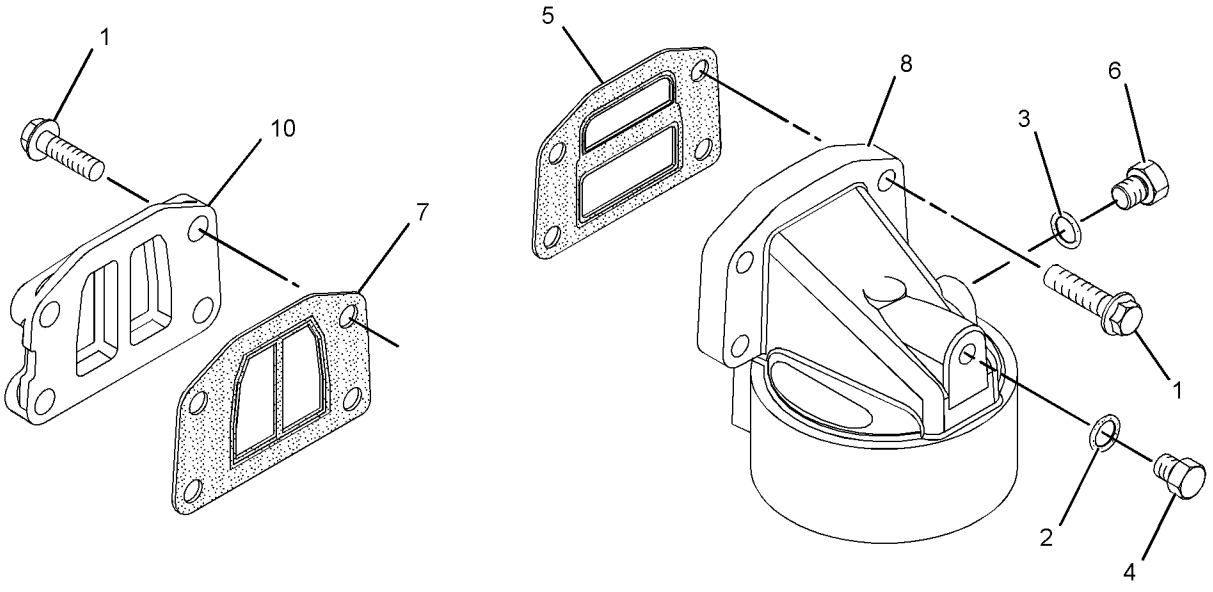

GRAPHIC #1 <END> g01312199

267-9422 COOLER GP-FLTR BASE & ENG OIL

TYPE 3

SMCS-1306, 1378 **i04398970**

NOTE	REF NO	GRAPHIC REF	PART NUMBER	QTY	PART NAME 1 2 3 4 5 6 (PRODUCT LEVEL)	SEE PAGE
M	1	1	**6I-0645**	8	BOLT (M8X1.25X25-MM)	
	2	1	**8T-7876**	1	SEAL-O-RING	
	3	1	**199-9267**	1	SEAL-O-RING	
	4	1	**225-7941**	1	PLUG	
	5	1	**225-7944**	1	GASKET	
	6	1	**232-3861**	1	PLUG (BLANKING)	
	7	1	**233-9408**	1	GASKET	
	8	1	**234-3458**	1	HEAD AS (OIL FILTER ENGINE)	
C	9	1	**355-8329**	1	COOLER AS-OIL (ENGINE)	
M	9A	1	**6I-0260**	10	BOLT (M8X1.25X25-MM)	
M	9B	1	**6I-4374**	3	BOLT (M8X1.25X60-MM)	
	9C	1	**225-6820**	1	GASKET	
	10	1	**252-6318**	1	PLATE	

C - CHANGE FROM PREVIOUS TYPE
M - METRIC PART

267-9422 **COOLER GP-FLTR BASE & ENG OIL (**contd.**)** **i04398970**

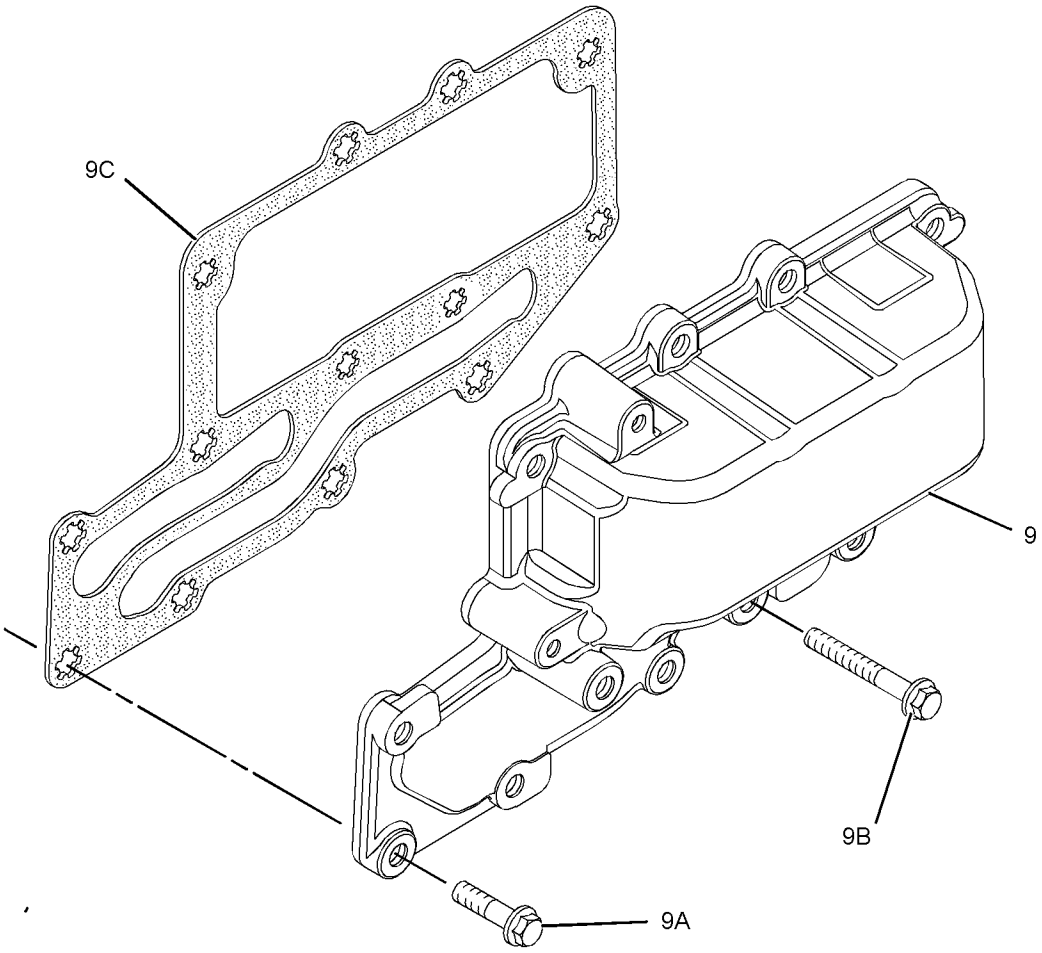

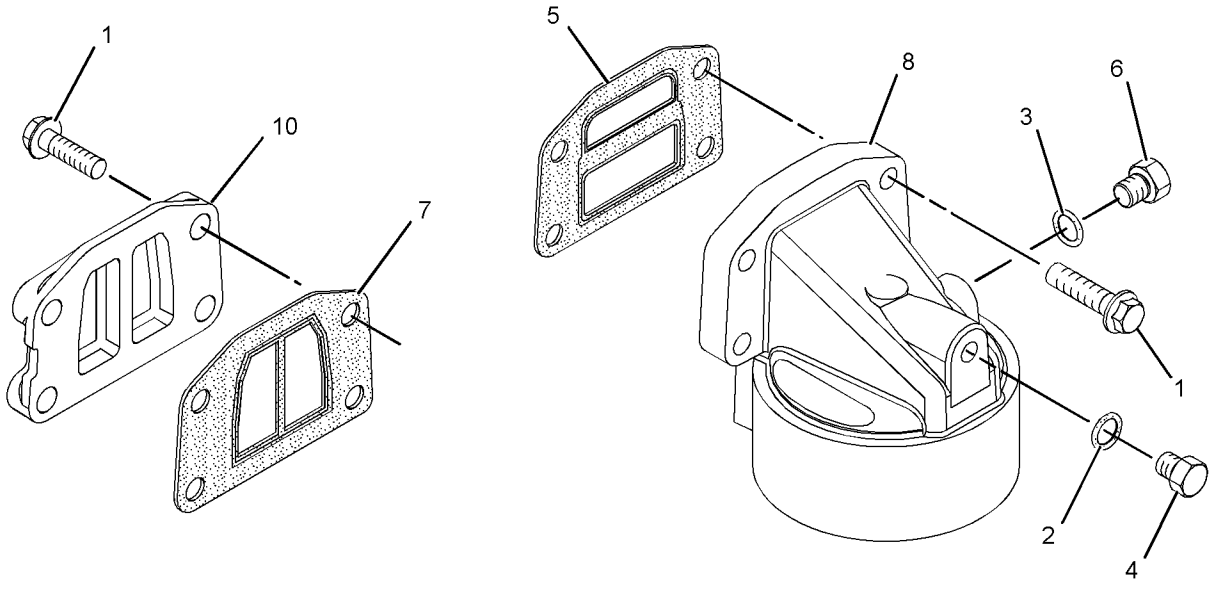

GRAPHIC #1 <END> g01154423

268-0868 COOLER GP-FLTR BASE & ENG OIL

TYPE 1

SMCS-1306, 1378 **i02645863**

NOTE	REF NO	GRAPHIC REF	PART NUMBER	QTY	PART NAME 1 2 3 4 5 6 (PRODUCT LEVEL)	SEE PAGE
M	1	1	**6I-0572**	4	BOLT (M8X1.25X20-MM)	
M	2	1	**6I-0645**	4	BOLT (M8X1.25X25-MM)	
	3	1	**8T-7876**	1	SEAL-O-RING	
	4	1	**199-9267**	1	SEAL-O-RING	
	5	1	**225-7941**	1	PLUG	
	6	1	**225-7944**	2	GASKET	
	7	1	**249-0974**	1	HEAD AS-OIL FILTER (ENGINE)	
	8	1	**232-3722**	1	COOLER GP-ENGINE OIL	
M	8A	1	**6I-0260**	10	BOLT (M8X1.25X25-MM)	
M	8B	1	**6I-4374**	3	BOLT (M8X1.25X60-MM)	
M	8C	1	**101-3895**	4	BOLT (M8X1.25X35-MM)	
	8D	1	**225-6817**	1	COOLER-OIL (ENGINE)	
	8E	1	**225-6818**	2	SEAL	
	8F	1	**225-6820**	1	GASKET	
	9	1	**232-3751**	1	PLATE	
	10	1	**232-3861**	1	PLUG (BLANKING)	

M - METRIC PART

268-0868 **COOLER GP-FLTR BASE & ENG OIL** (contd.) **i02645863**

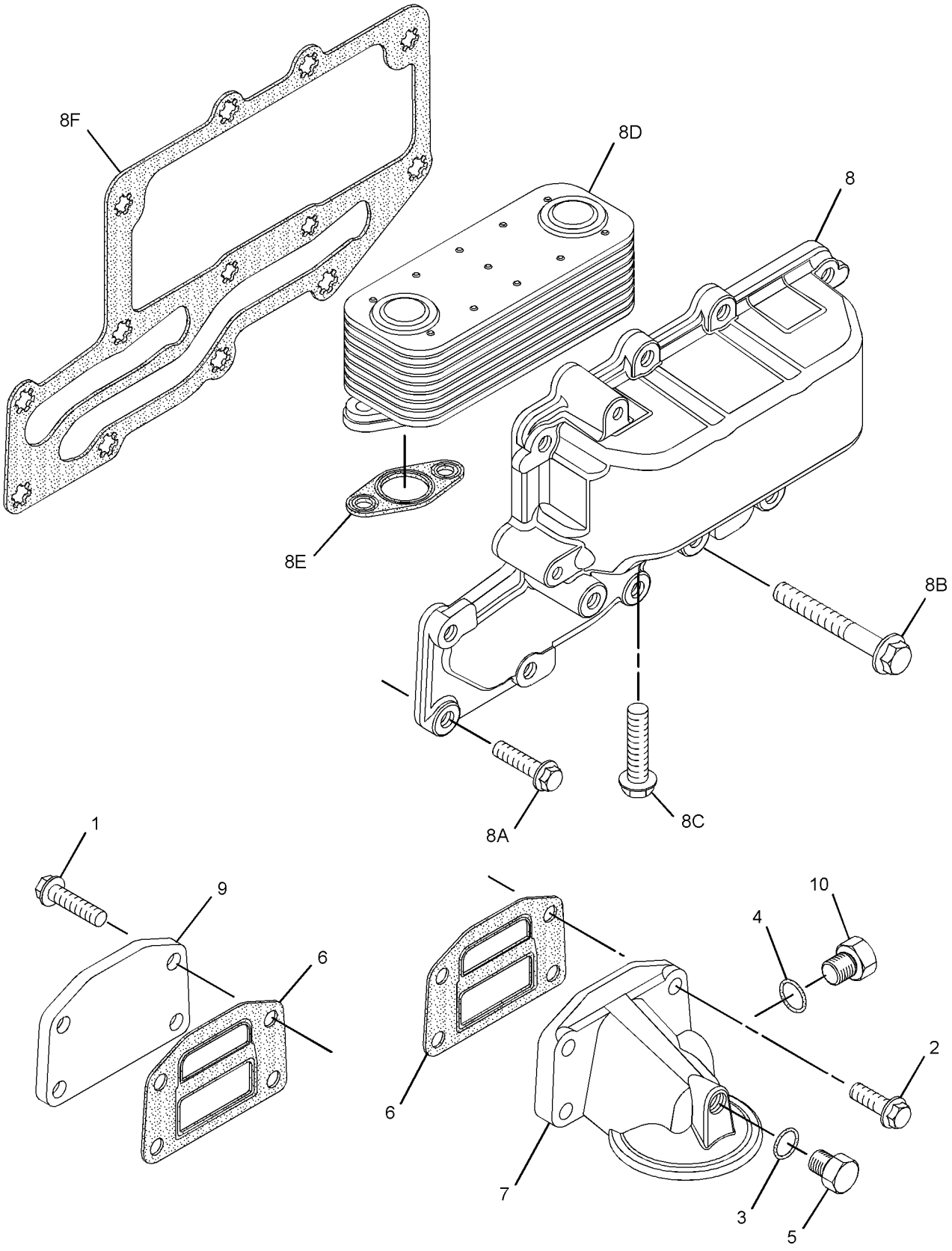

GRAPHIC #1 <END> g01265799

268-0868 COOLER GP-FLTR BASE & ENG OIL

TYPE 2

SMCS-1306, 1378 **i03890798**

NOTE	REF NO	GRAPHIC REF	PART NUMBER	QTY	PART NAME 1 2 3 4 5 6 (PRODUCT LEVEL)	SEE PAGE
M	1	1	**6I-0572**	4	BOLT (M8X1.25X20-MM)	
M	2	1	**6I-0645**	4	BOLT (M8X1.25X25-MM)	
	3	1	**8T-7876**	1	SEAL-O-RING	
	4	1	**199-9267**	1	SEAL-O-RING	
	5	1	**225-7941**	1	PLUG	
	6	1	**225-7944**	2	GASKET	
	7	1	**249-0974**	1	HEAD AS-OIL FILTER (ENGINE)	
CY	8	1	**354-1274**	1	COOLER GP-ENGINE OIL (ENGINE)	877
	9	1	**232-3751**	1	PLATE	
	10	1	**232-3861**	1	PLUG (BLANKING)	

C - CHANGE FROM PREVIOUS TYPE
M - METRIC PART
Y - SEPARATE ILLUSTRATION

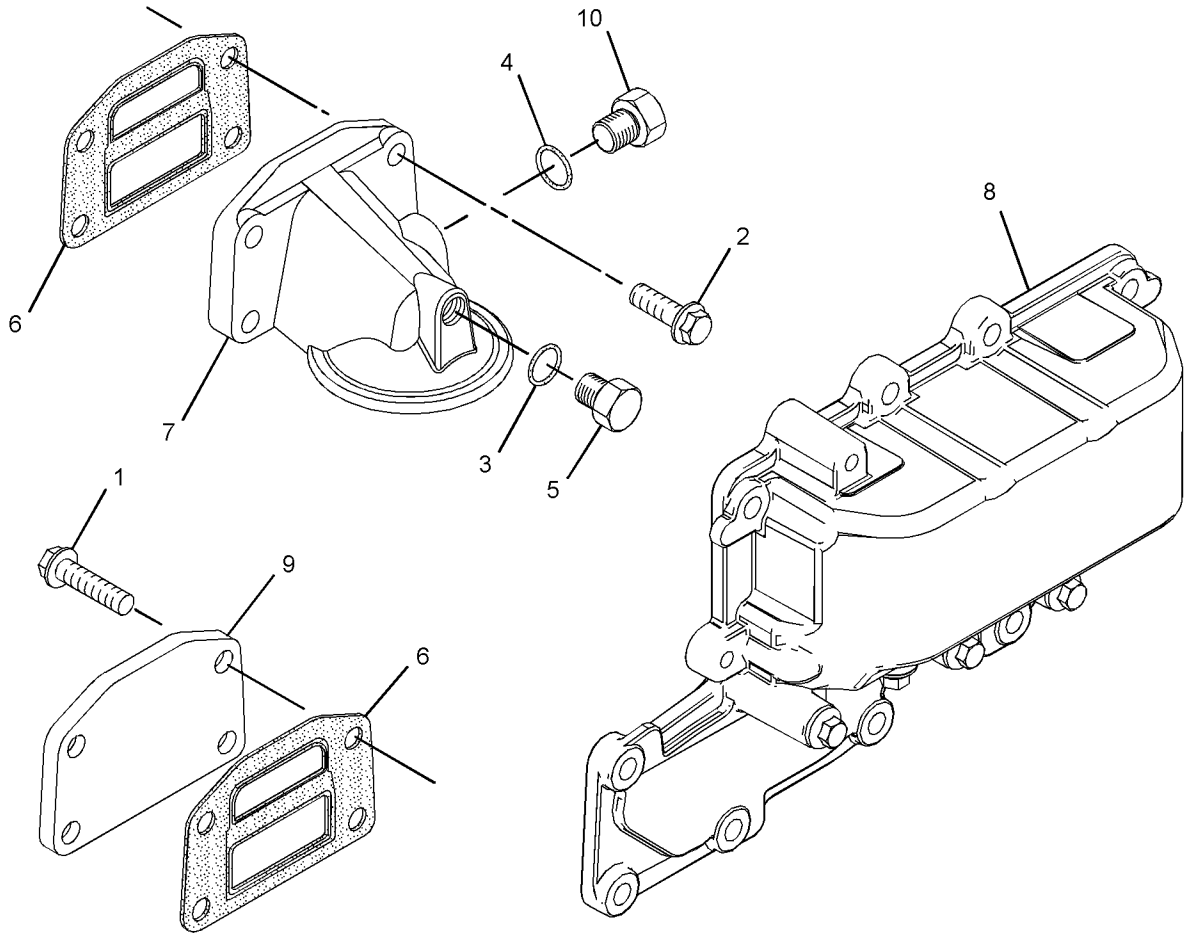

GRAPHIC #1 <END> g02151001

268-0868 COOLER GP-FLTR BASE & ENG OIL

TYPE 3

SMCS-1306, 1378 **i08217814**

NOTE	REF NO	GRAPHIC REF	PART NUMBER	QTY	PART NAME 1 2 3 4 5 6 (PRODUCT LEVEL)	SEE PAGE
M	1	1	**6I-0572**	4	BOLT (M8X1.25X20-MM)	
M	2	1	**6I-0645**	4	BOLT (M8X1.25X25-MM)	
	3	1	**8T-7876**	1	SEAL-O-RING	
	4	1	**199-9267**	1	SEAL-O-RING	
	5	1	**225-7941**	1	PLUG	
	6	1	**225-7944**	2	GASKET	
	7	1	**249-0974**	1	HEAD AS-OIL FILTER (ENGINE)	
CY	8	1	**356-6541**	1	COOLER GP-ENGINE OIL (ENGINE)	878
	9	1	**232-3751**	1	PLATE	
	10	1	**232-3861**	1	PLUG (BLANKING)	

C - CHANGE FROM PREVIOUS TYPE
M - METRIC PART
Y - SEPARATE ILLUSTRATION

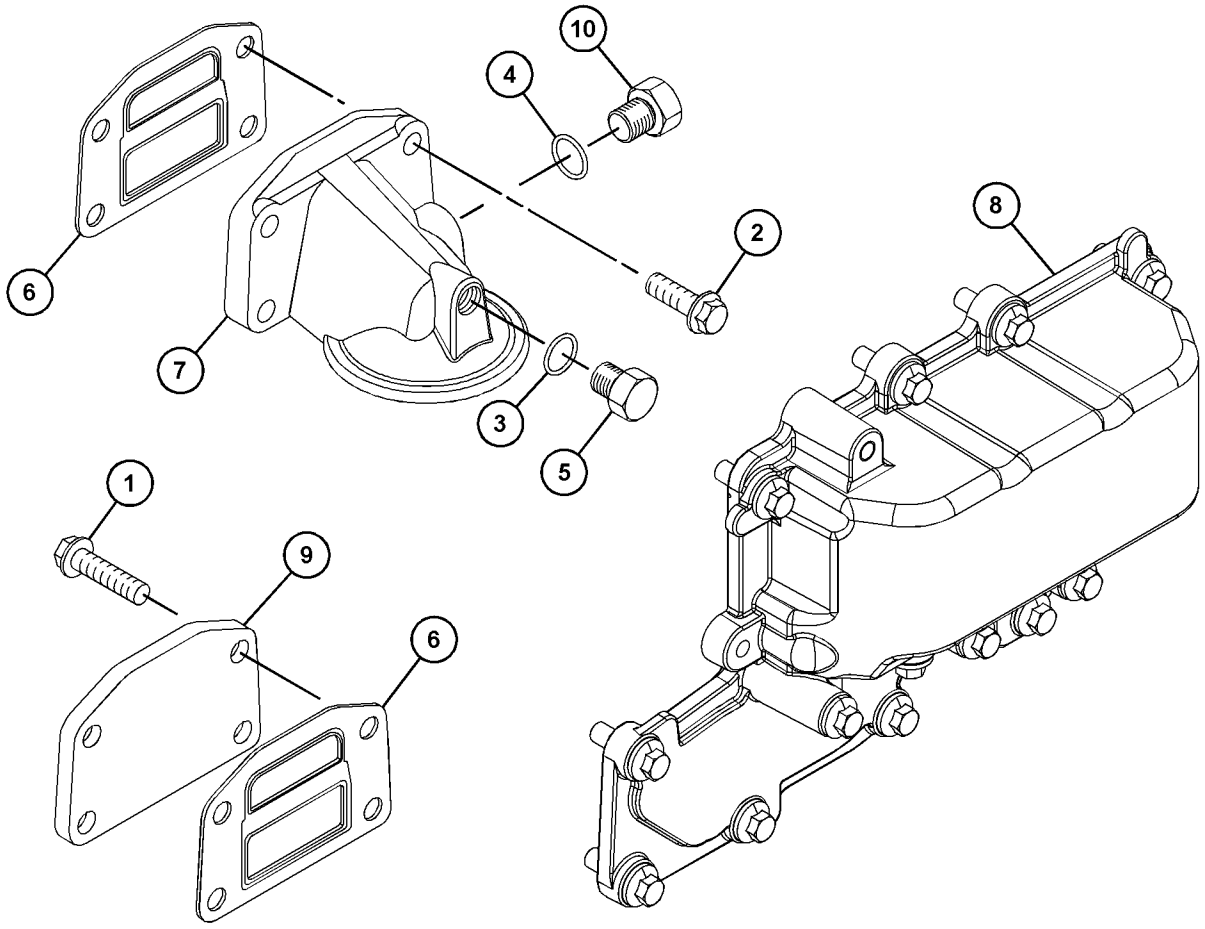

GRAPHIC #1 <END> g06749754

268-9708 COOLER GP-FLTR BASE & ENG OIL

TYPE 1

SMCS-1306, 1378 **i02451341**

NOTE	REF NO	GRAPHIC REF	PART NUMBER	QTY	PART NAME 1 2 3 4 5 6 (PRODUCT LEVEL)	SEE PAGE
M	1	1	**6I-0645**	8	BOLT (M8X1.25X25-MM)	
	2	1	**8T-7876**	1	SEAL-O-RING	
	3	1	**225-7941**	1	PLUG	
	4	1	**225-7944**	1	GASKET (ENGINE OIL FILTER BASE)	
	5	1	**233-9408**	1	GASKET	
	6	1	**243-4288**	1	COOLER AS-OIL (ENGINE)	
M	6A	1	**6I-0260**	10	BOLT (M8X1.25X25-MM)	
M	6B	1	**6I-4374**	3	BOLT (M8X1.25X60-MM)	
	6C	1	**225-6820**	1	GASKET	
	7	1	**249-0974**	1	HEAD AS-OIL FILTER (ENGINE)	
	8	1	**252-6318**	1	PLATE	

M - METRIC PART

268-9708 **COOLER GP-FLTR BASE & ENG OIL (**contd.**)** **i02451341**

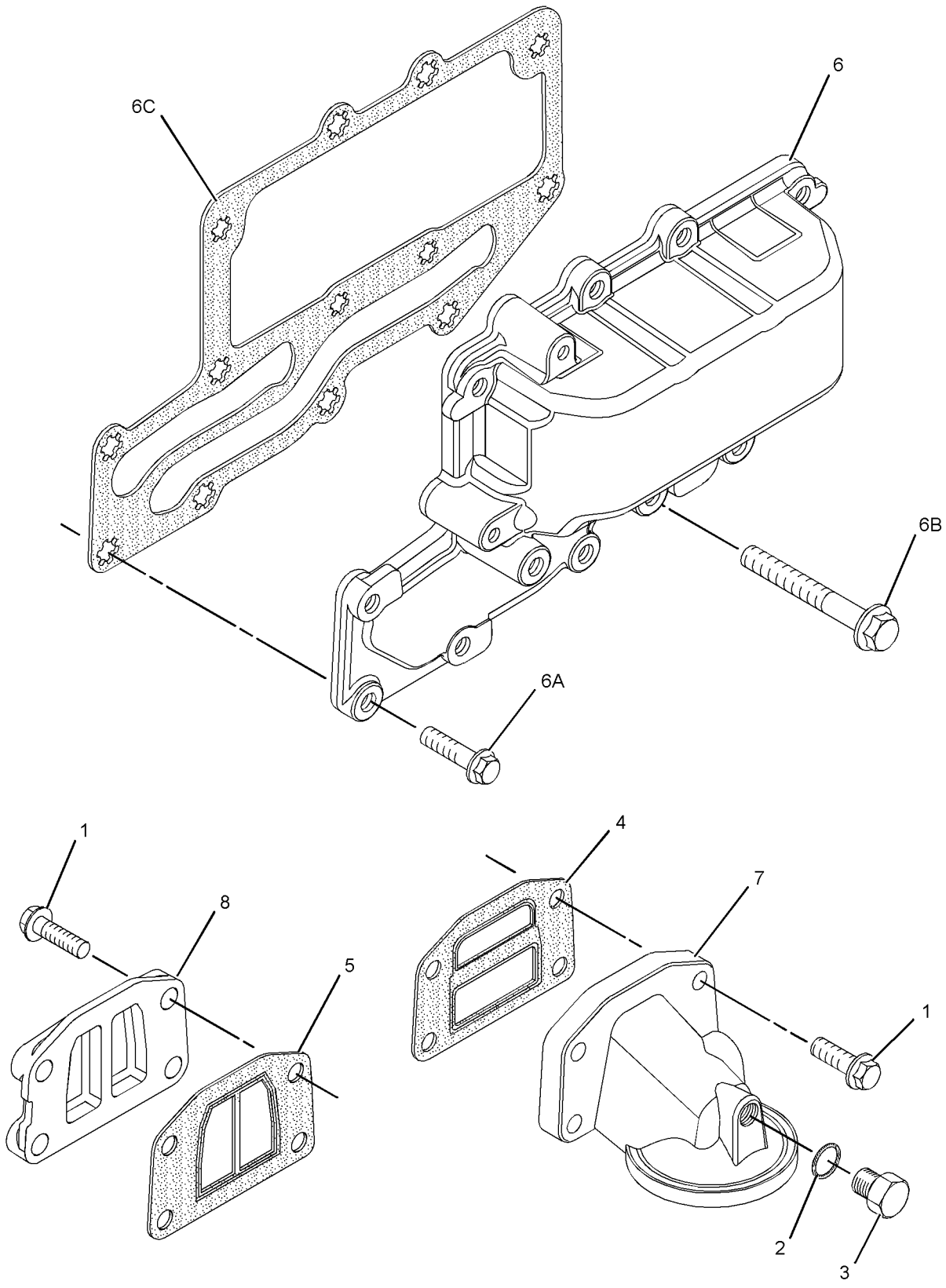

GRAPHIC #1 <END> g01153873

268-9708 COOLER GP-FLTR BASE & ENG OIL

TYPE 2

SMCS-1306, 1378 **i02585879**

NOTE	REF NO	GRAPHIC REF	PART NUMBER	QTY	PART NAME 1 2 3 4 5 6 (PRODUCT LEVEL)	SEE PAGE
M	1	1	**6I-0645**	8	BOLT (M8X1.25X25-MM)	
	2	1	**8T-7876**	1	SEAL-O-RING	
	3	1	**225-7941**	1	PLUG	
	4	1	**225-7944**	1	GASKET	
	5	1	**233-9408**	1	GASKET	
C	6	1	*296-5614*	1	COOLER AS-OIL	
	6A	1	**6I-0218**	2	BOLT (M8X1.25X25-MM)	
M	6B	1	**6I-0260**	8	BOLT (M8X1.25X25-MM)	
M	6C	1	**6I-4374**	3	BOLT (M8X1.25X60-MM)	
	6D	1	**272-2265**	1	SEAL	
	7	1	**249-0974**	1	HEAD AS-OIL FILTER (ENGINE)	
	8	1	**252-6318**	1	PLATE	

C - CHANGE FROM PREVIOUS TYPE
M - METRIC PART

268-9708 **COOLER GP-FLTR BASE & ENG OIL (**contd.**)** **i02585879**

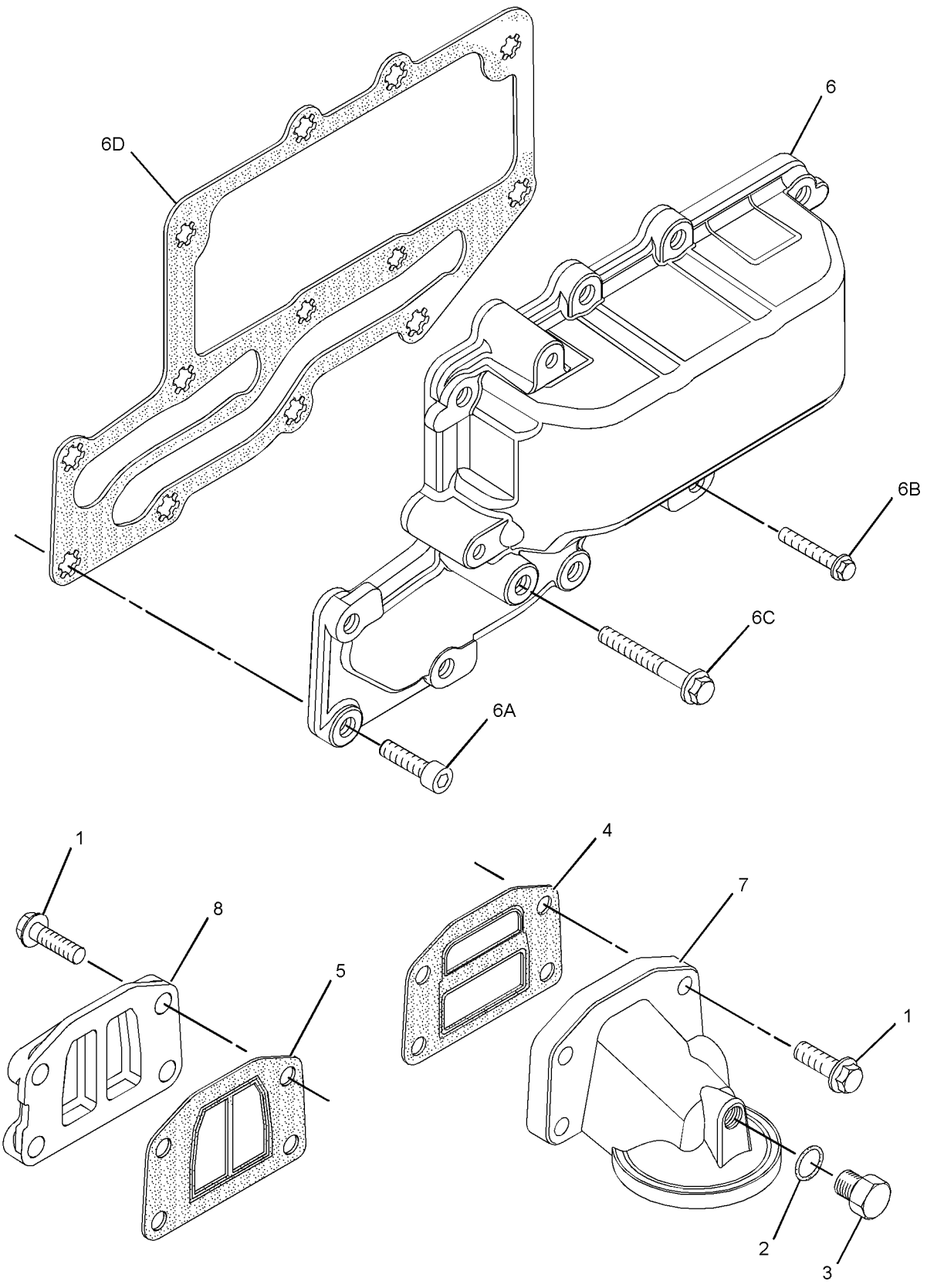

GRAPHIC #1 <END> g01317853

268-9708 COOLER GP-FLTR BASE & ENG OIL

TYPE 3

SMCS-1306, 1378 **i04398969**

NOTE	REF NO	GRAPHIC REF	PART NUMBER	QTY	PART NAME 1 2 3 4 5 6 (PRODUCT LEVEL)	SEE PAGE
M	1	1	**6I-0645**	8	BOLT (M8X1.25X25-MM)	
	2	1	**8T-7876**	1	SEAL-O-RING	
	3	1	**225-7941**	1	PLUG	
	4	1	**225-7944**	1	GASKET (ENGINE OIL FILTER BASE)	
	5	1	**233-9408**	1	GASKET	
C	6	1	**355-8329**	1	COOLER AS-OIL (ENGINE)	
M	6A	1	**6I-0260**	10	BOLT (M8X1.25X25-MM)	
M	6B	1	**6I-4374**	3	BOLT (M8X1.25X60-MM)	
	6C	1	**225-6820**	1	GASKET	
	7	1	**249-0974**	1	HEAD AS-OIL FILTER (ENGINE)	
	8	1	**252-6318**	1	PLATE	

C - CHANGE FROM PREVIOUS TYPE
M - METRIC PART

268-9708 **COOLER GP-FLTR BASE & ENG OIL (**contd.**)** **i04398969**

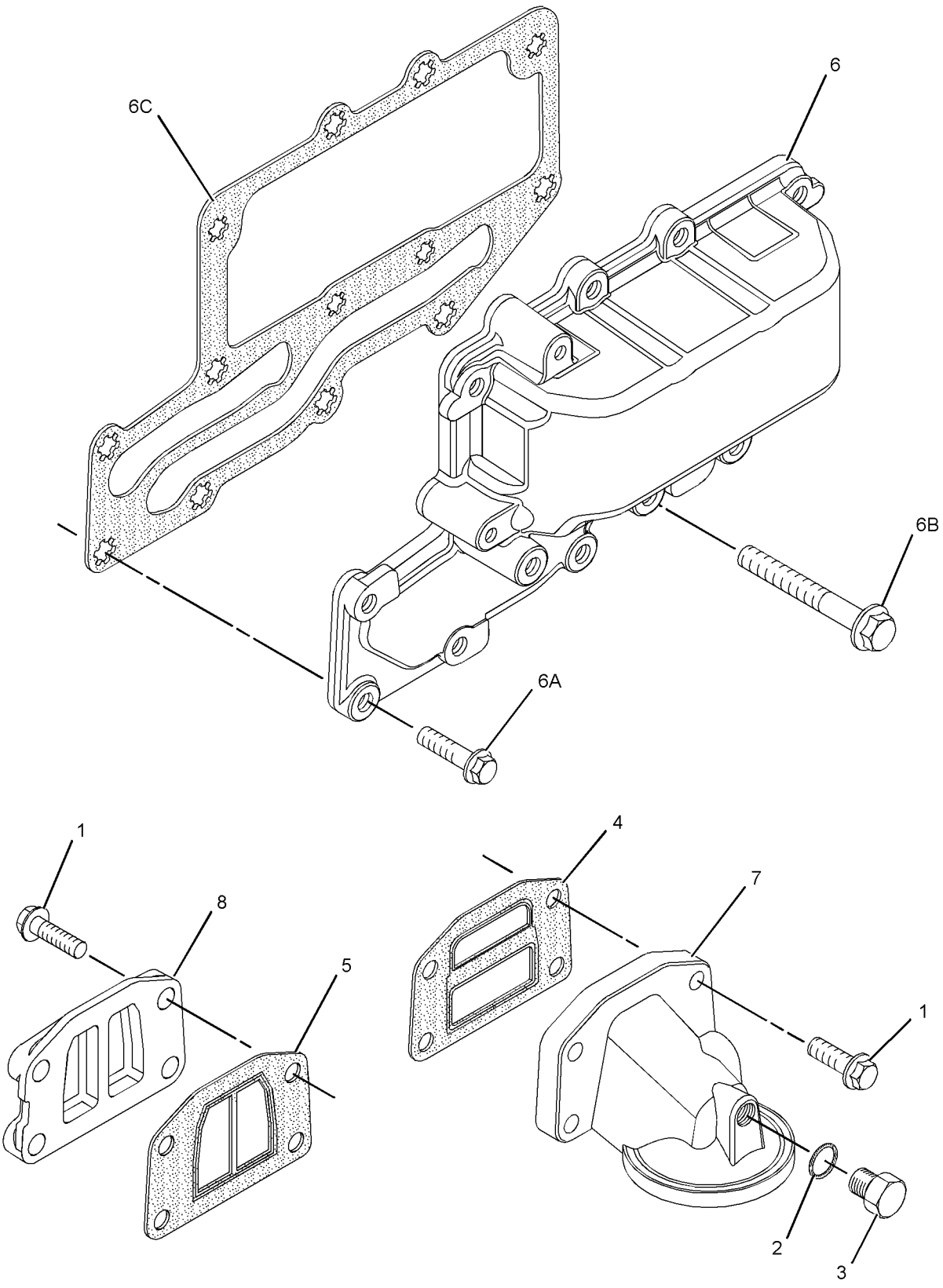

GRAPHIC #1 <END> g01153873

271-7078 COOLER GP-FLTR BASE & ENG OIL

TYPE 1

SMCS-1306, 1378 **i04026880**

NOTE	REF NO	GRAPHIC REF	PART NUMBER	QTY	PART NAME 1 2 3 4 5 6 (PRODUCT LEVEL)	SEE PAGE
M	1	1	**6I-0572**	4	BOLT (M8X1.25X20-MM)	
M	2	1	**6I-0645**	4	BOLT (M8X1.25X25-MM)	
	3	1	**8T-7876**	1	SEAL-O-RING	
	4	1	**199-9267**	1	SEAL-O-RING	
	5	1	**225-7941**	1	PLUG	
	6	1	**225-7944**	2	GASKET (ENGINE OIL FILTER BASE)	
	7	1	**232-3751**	1	PLATE	
	8	1	**232-3861**	1	PLUG (BLANKING)	
	9	1	**249-0974**	1	HEAD AS-OIL FILTER	
Y	10	1	**355-6224**	1	COOLER AS-OIL	875

M - METRIC PART
Y - SEPARATE ILLUSTRATION

271-7078 **COOLER GP-FLTR BASE & ENG OIL (**contd.**)** **i04026880**

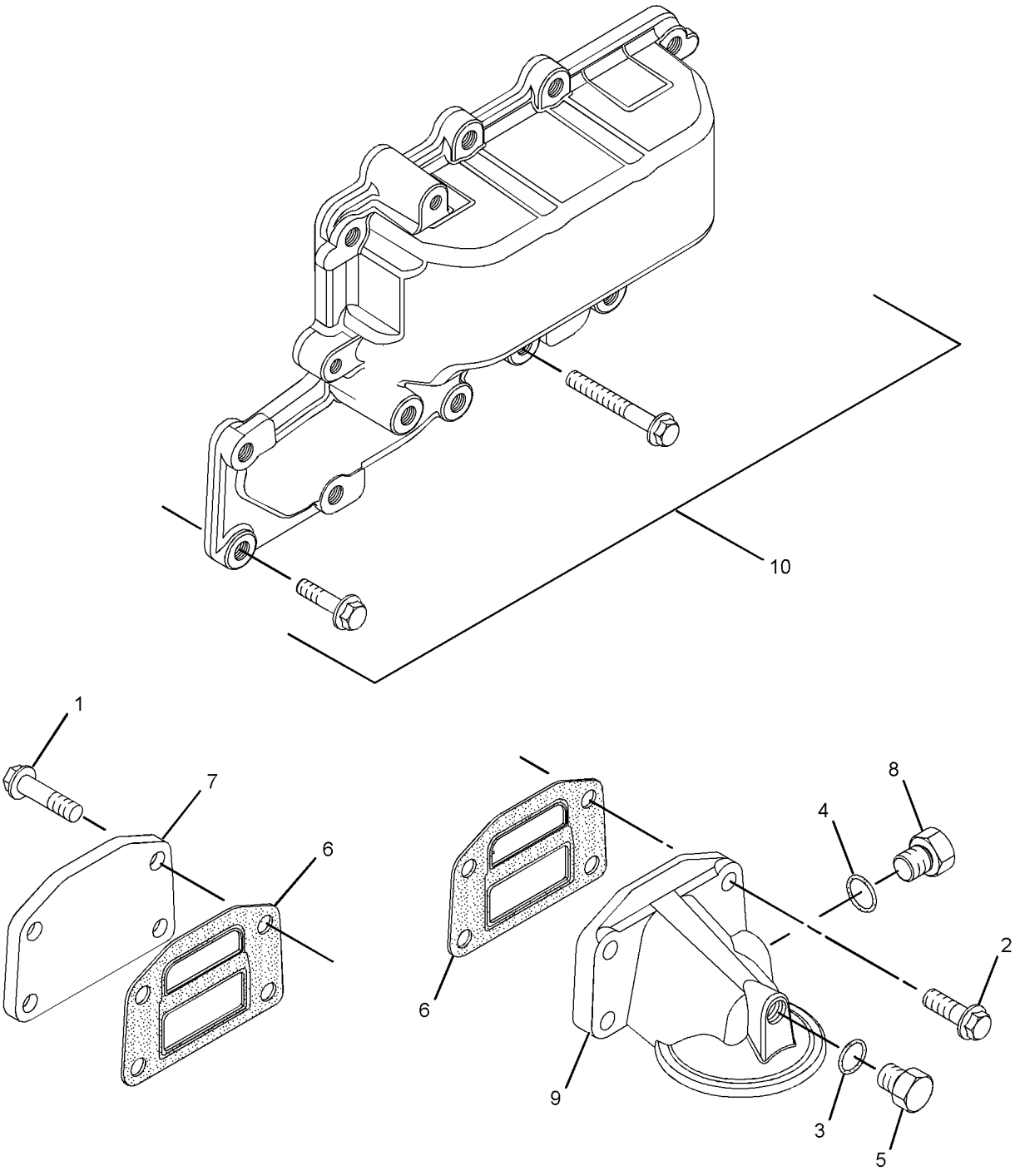

GRAPHIC #1 <END> g02228795

271-7078 COOLER GP-FLTR BASE & ENG OIL

TYPE 2

SMCS-1306, 1378 **i08193786**

NOTE	REF NO	GRAPHIC REF	PART NUMBER	QTY	PART NAME 1 2 3 4 5 6 (PRODUCT LEVEL)	SEE PAGE
M	1	1	**6I-0572**	4	BOLT (M8X1.25X20-MM)	
M	2	1	**6I-0645**	4	BOLT (M8X1.25X25-MM)	
	3	1	**8T-7876**	1	SEAL-O-RING	
	4	1	**199-9267**	1	SEAL-O-RING	
	5	1	**225-7941**	1	PLUG	
	6	1	**225-7944**	2	GASKET (ENGINE OIL FILTER BASE)	
	7	1	**232-3751**	1	PLATE	
	8	1	**232-3861**	1	PLUG (BLANKING)	
	9	1	**249-0974**	1	HEAD AS-OIL FILTER	
CY	10	1	**392-4903**	1	COOLER GP-ENGINE OIL (5 PLATES)	880

C - CHANGE FROM PREVIOUS TYPE
M - METRIC PART
Y - SEPARATE ILLUSTRATION

271-7078 **COOLER GP-FLTR BASE & ENG OIL (**contd.**)** **i08193786**

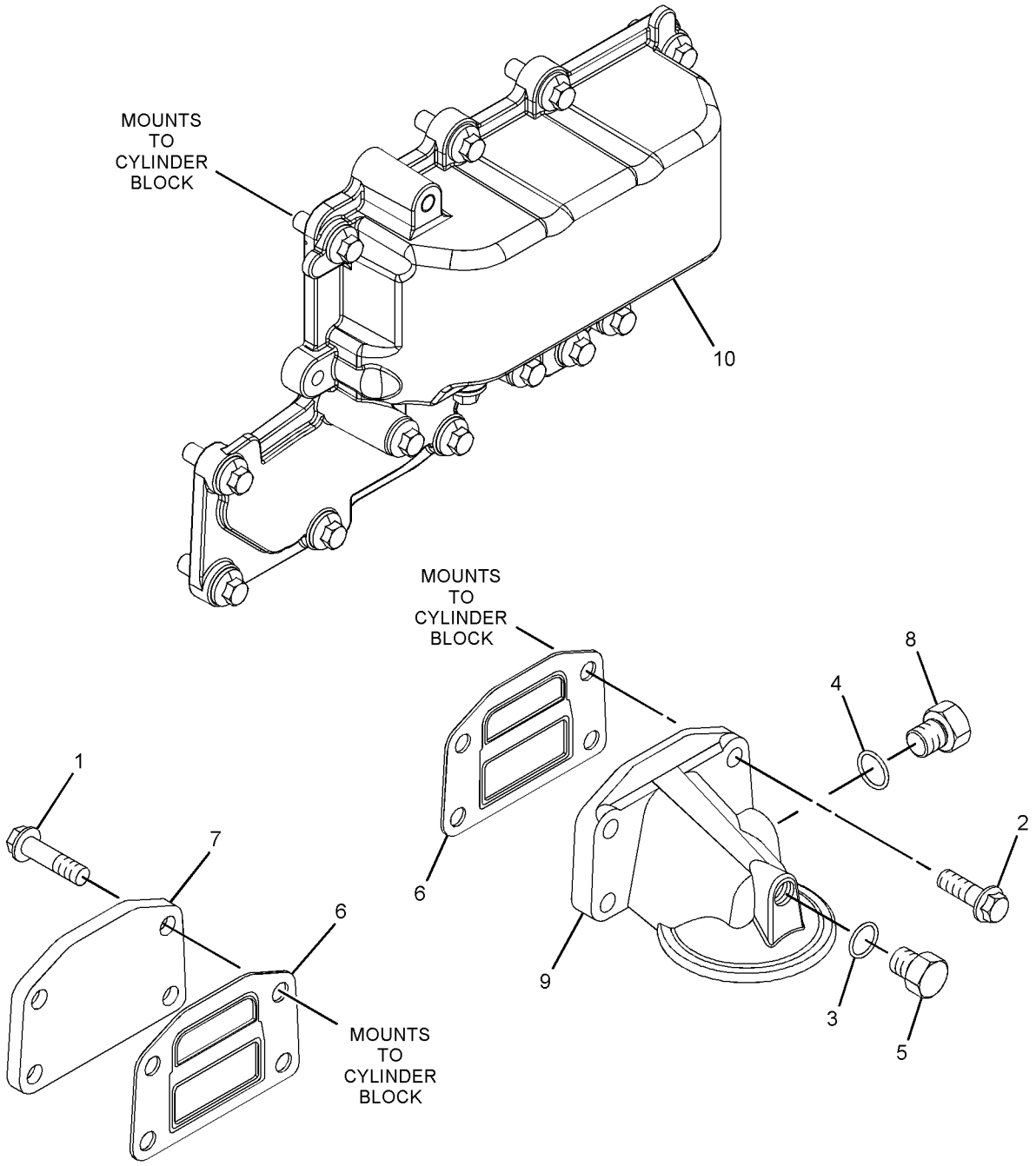

GRAPHIC #1 <END> g06741313

323-6679 COOLER GP-FLTR BASE & ENG OIL

TYPE 1

SMCS-1306, 1378 **i06138620**

NOTE	REF NO	GRAPHIC REF	PART NUMBER	QTY	PART NAME 1 2 3 4 5 6 (PRODUCT LEVEL)	SEE PAGE
M	1	1	**6I-0572**	4	BOLT (M8X1.25X20-MM)	
M	2	1	**6I-0645**	4	BOLT (M8X1.25X25-MM)	
	3	1	**8T-7876**	1	SEAL-O-RING	
	4	1	**225-7941**	1	PLUG	
	5	1	**225-7944**	2	GASKET (ENGINE OIL FILTER BASE)	
	6	1	**249-0974**	1	HEAD AS-OIL FILTER	
Y	7	1	**354-1274**	1	COOLER GP-ENGINE OIL	877
	8	1	**232-3751**	1	PLATE	

M - METRIC PART
Y - SEPARATE ILLUSTRATION

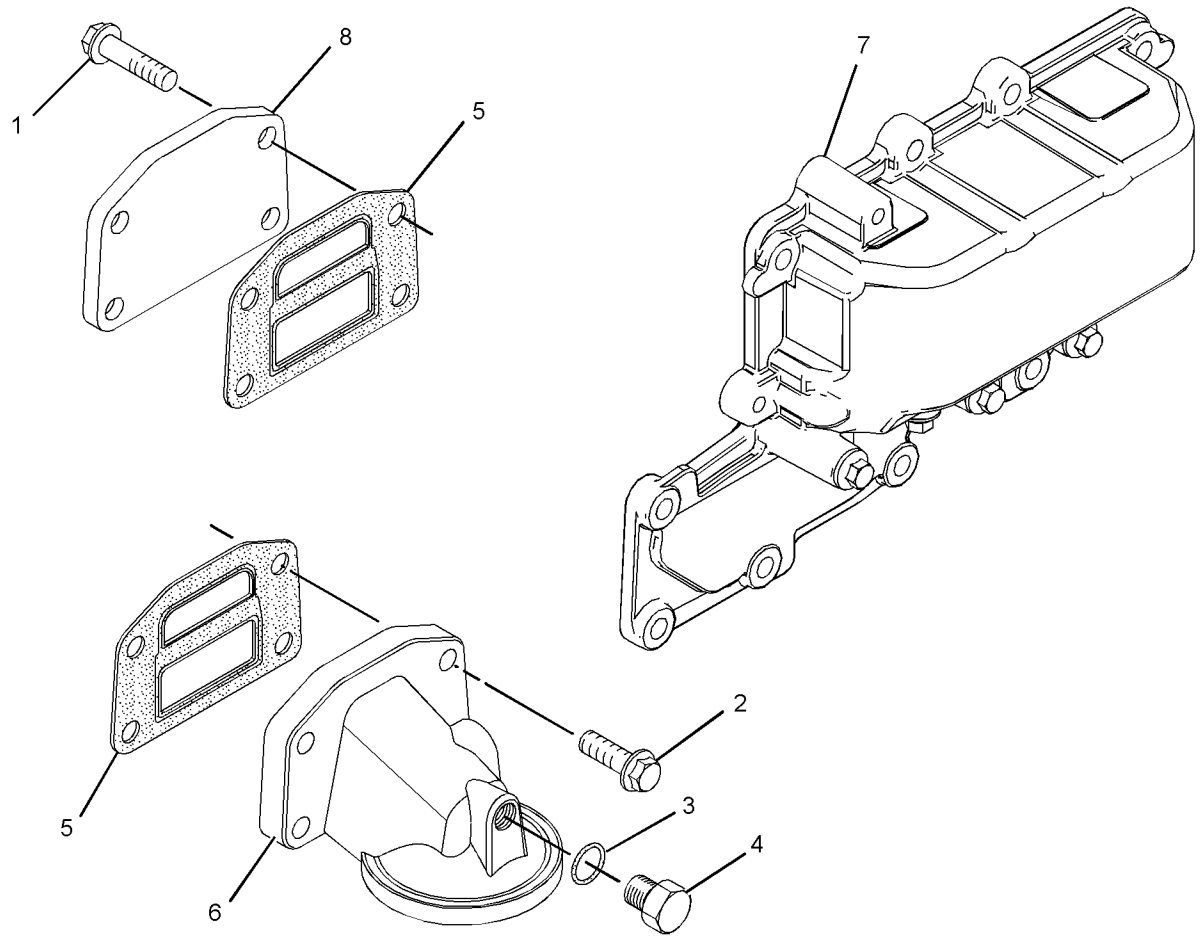

GRAPHIC #1 <END> g02151492

323-6679 COOLER GP-FLTR BASE & ENG OIL

TYPE 2

SMCS-1306, 1378 **i08507724**

NOTE	REF NO	GRAPHIC REF	PART NUMBER	QTY	PART NAME 1 2 3 4 5 6 (PRODUCT LEVEL)	SEE PAGE
M	1	1	**6I-0572**	4	BOLT (M8X1.25X20-MM)	
M	2	1	**6I-0645**	4	BOLT (M8X1.25X25-MM)	
	3	1	**8T-7876**	1	SEAL-O-RING	
	4	1	**225-7941**	1	PLUG	
	5	1	**225-7944**	2	GASKET (ENGINE OIL FILTER BASE)	
	6	1	**249-0974**	1	HEAD AS-OIL FILTER	
CY	7	1	**356-6541**	1	COOLER GP-ENGINE OIL	878
	8	1	**232-3751**	1	PLATE	

C - CHANGE FROM PREVIOUS TYPE
M - METRIC PART
Y - SEPARATE ILLUSTRATION

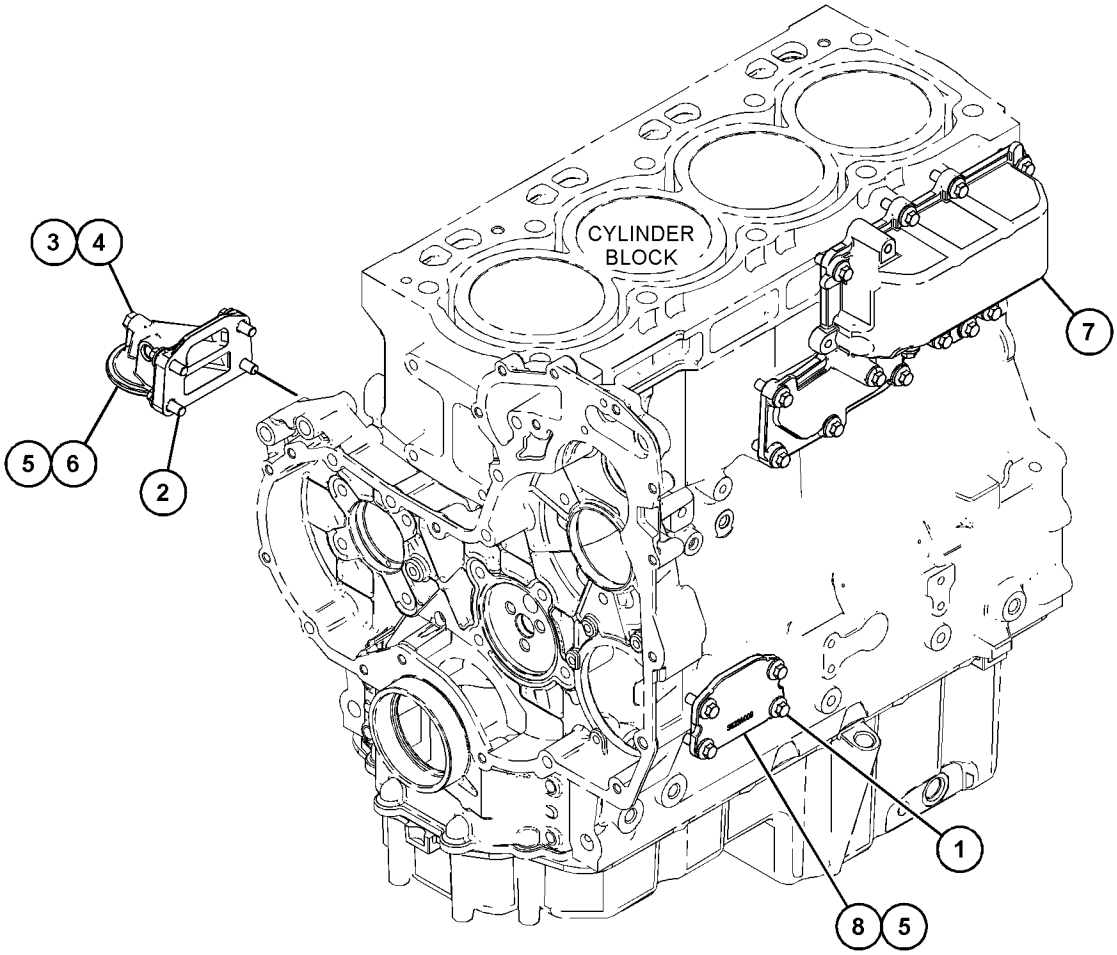

GRAPHIC #1 <END> g07485415

459-5504 COOLER GP-FLTR BASE & ENG OIL

TYPE 1

SMCS-1306, 1378 **i05993650**

NOTE	REF NO	GRAPHIC REF	PART NUMBER	QTY	PART NAME 1 2 3 4 5 6 (PRODUCT LEVEL)	SEE PAGE
M	1	1	**6I-0645**	8	BOLT (M8X1.25X25-MM)	
	2	1	**225-7941**	1	PLUG	
	3	1	**225-7944**	1	GASKET	
	4	1	**233-9408**	1	GASKET	
	5	1	**249-0974**	1	HEAD AS-OIL FILTER	
	6	1	**252-6318**	1	PLATE	
	7	1	**330-5898**	1	SEAL-O-RING	
Y	8	1	**354-1274**	1	COOLER GP-ENGINE OIL	877

M - METRIC PART
Y - SEPARATE ILLUSTRATION

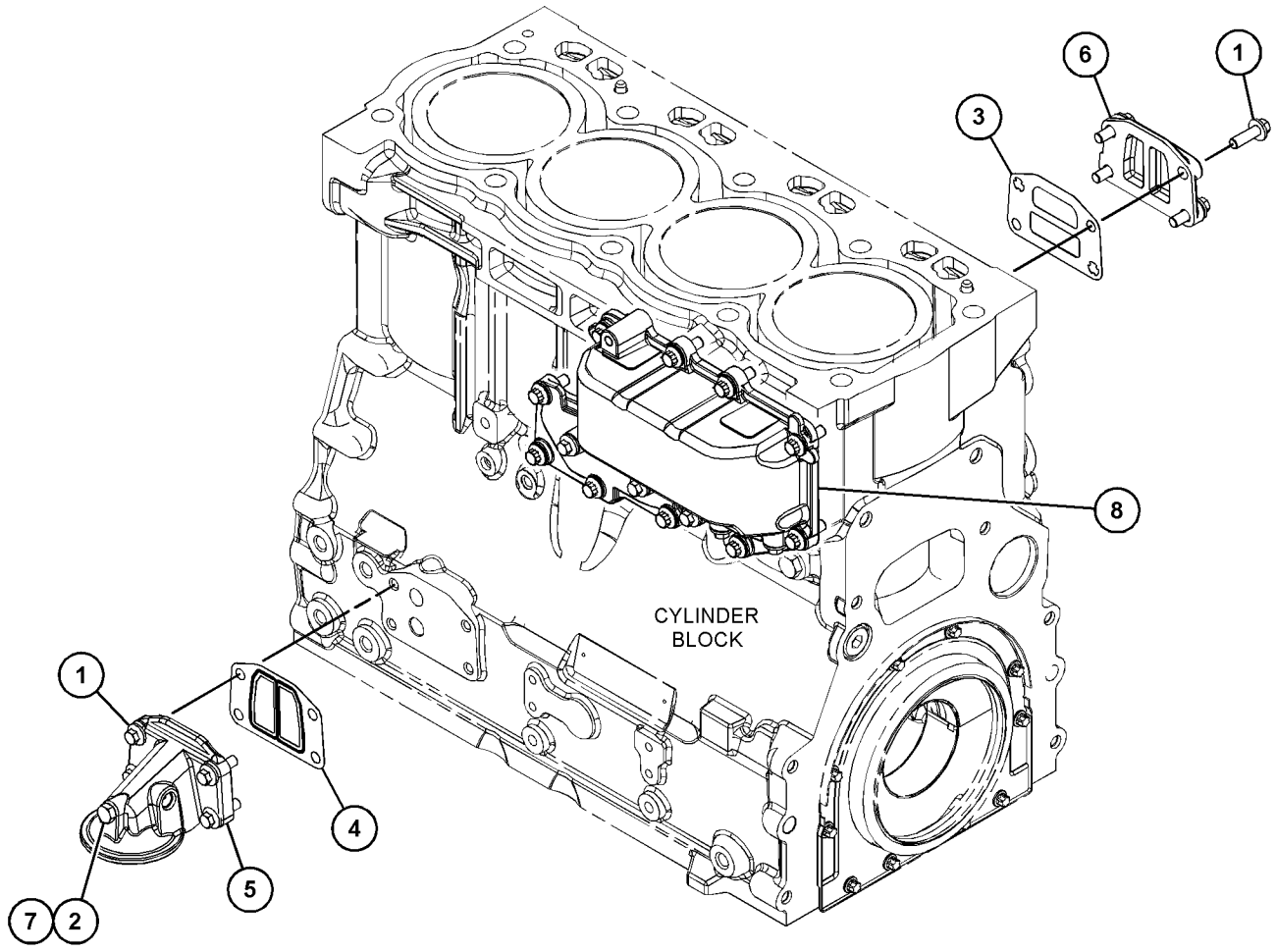

GRAPHIC #1 <END> g03716055

459-5504 COOLER GP-FLTR BASE & ENG OIL

TYPE 2

SMCS-1306, 1378 **i08193694**

NOTE	REF NO	GRAPHIC REF	PART NUMBER	QTY	PART NAME 1 2 3 4 5 6 (PRODUCT LEVEL)	SEE PAGE
M	1	1	**6I-0645**	8	BOLT (M8X1.25X25-MM)	
	2	1	**225-7941**	1	PLUG	
	3	1	**225-7944**	1	GASKET	
	4	1	**233-9408**	1	GASKET	
	5	1	**249-0974**	1	HEAD AS-OIL FILTER	
	6	1	**252-6318**	1	PLATE	
	7	1	**330-5898**	1	SEAL-O-RING	
CY	8	1	**356-6541**	1	COOLER GP-ENGINE OIL	878

C - CHANGE FROM PREVIOUS TYPE
M - METRIC PART
Y - SEPARATE ILLUSTRATION

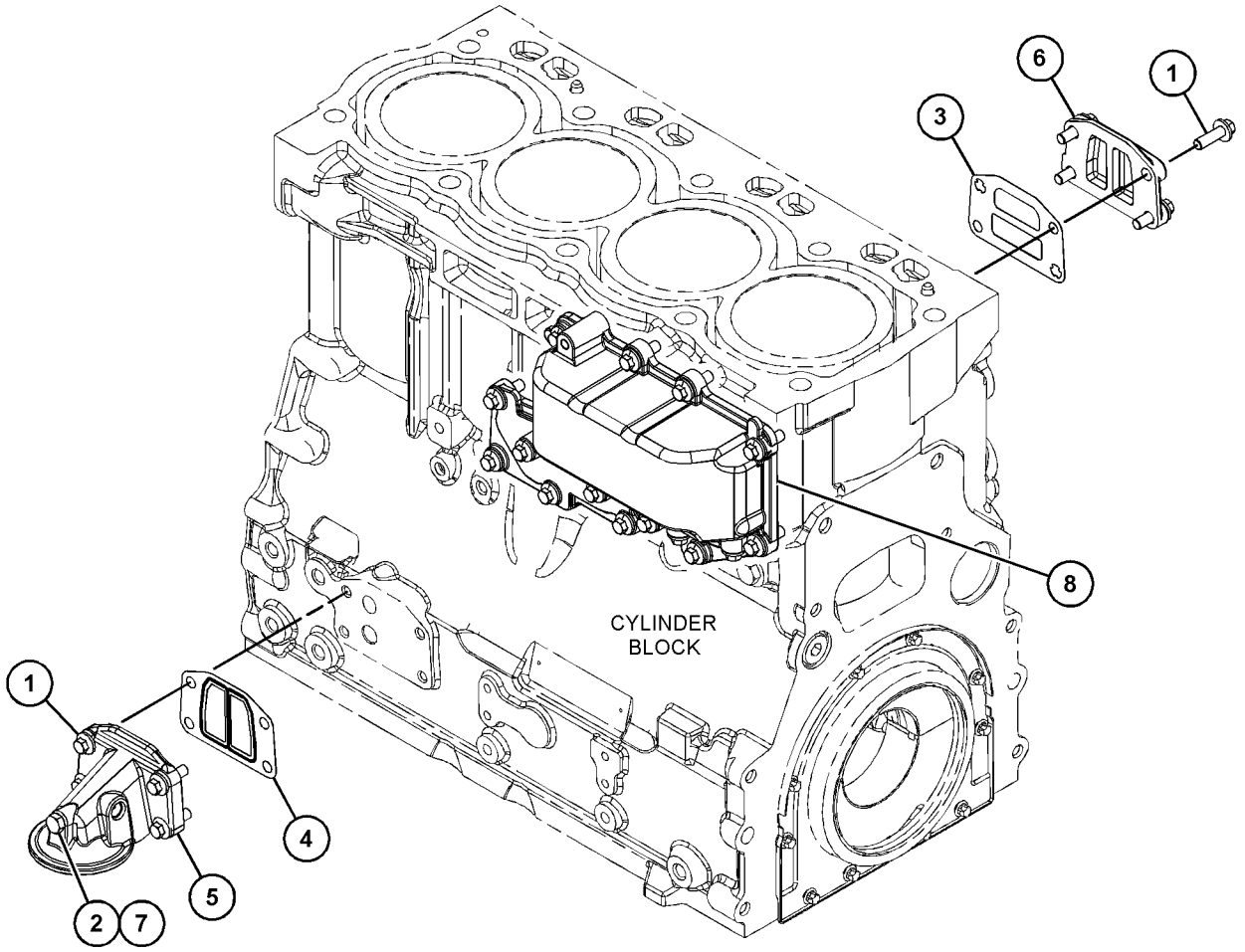

GRAPHIC #1 <END> g06741325

316-5656 COOLER GP-OIL–ENGINE

S/N: 3341-16979

SMCS-1374 **i03917891**

NOTE	REF NO	GRAPHIC REF	PART NUMBER	QTY	PART NAME 1 2 3 4 5 6 (PRODUCT LEVEL)	SEE PAGE
M	1	1	**6I-0572**	4	BOLT (M8X1.25X20-MM)	
	2	1	**8T-7876**	1	SEAL-O-RING	
	3	1	**225-7941**	1	PLUG	
	4	1	**225-7944**	2	GASKET	
	5	1	**232-3751**	1	PLATE	
	6	1	**233-9408**	1	GASKET	
M	7	1	**235-2451**	4	BOLT (M8X1.25X45-MM)	
	8	1	**244-6872**	1	ADAPTER-FILTER	
	9	1	**249-0975**	1	HEAD AS-OIL FILTER	
Y	10	1	**355-6224**	1	COOLER AS-OIL	875

M - METRIC PART
Y - SEPARATE ILLUSTRATION

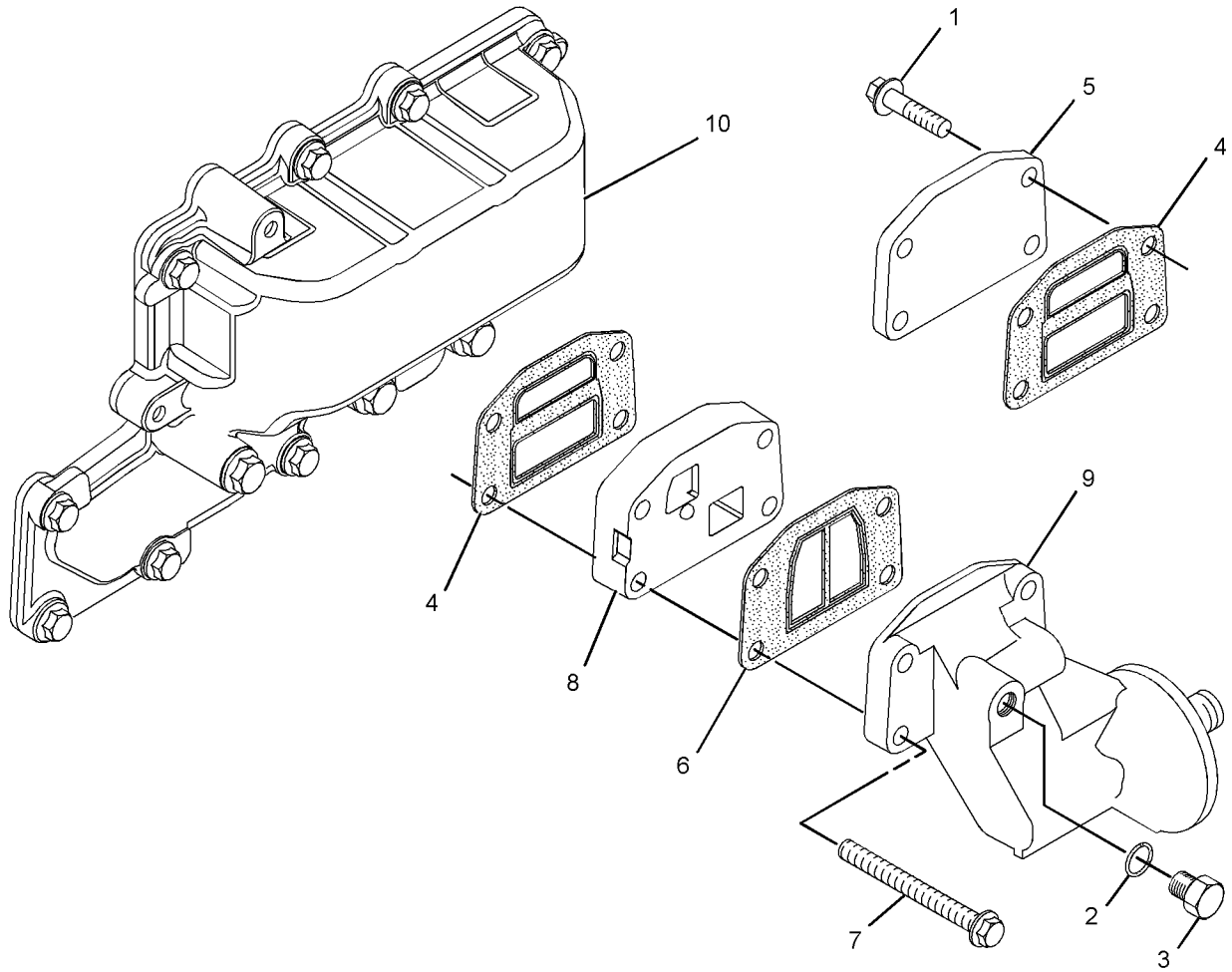

GRAPHIC #1 <END> g02154254

316-5656 COOLER GP-OIL—ENGINE

S/N: 33416980-UP

SMCS-1374 **i08581237**

NOTE	REF NO	GRAPHIC REF	PART NUMBER	QTY	PART NAME 1 2 3 4 5 6 (PRODUCT LEVEL)	SEE PAGE
M	1	1	**6I-0572**	4	BOLT (M8X1.25X20-MM)	
	2	1	**8T-7876**	1	SEAL-O-RING	
	3	1	**225-7941**	1	PLUG	
	4	1	**225-7944**	2	GASKET	
	5	1	**232-3751**	1	PLATE	
	6	1	**233-9408**	1	GASKET	
M	7	1	**6I-0456**	4	BOLT (M8X1.25X45-MM)	
	8	1	**244-6872**	1	ADAPTER-FILTER	
	9	1	**249-0975**	1	HEAD AS-OIL FILTER	
CY	10	1	**392-4903**	1	COOLER GP-ENGINE OIL	880

C - CHANGE FROM PREVIOUS TYPE
M - METRIC PART
Y - SEPARATE ILLUSTRATION

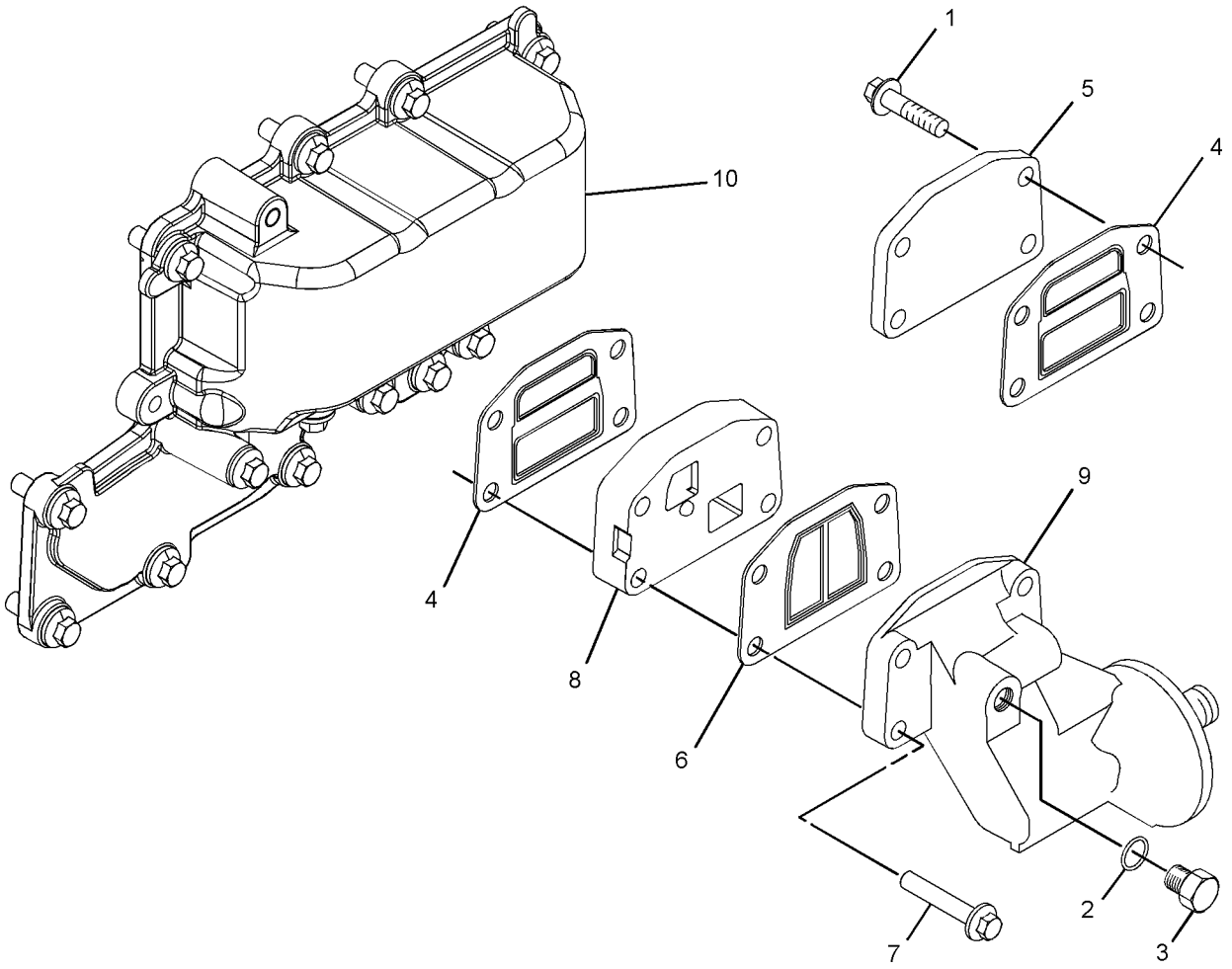

GRAPHIC #1 <END> g07501141

316-5671 COOLER GP-OIL–ENGINE

SMCS-1374 **i03917893**

NOTE	REF NO	GRAPHIC REF	PART NUMBER	QTY	PART NAME 1 2 3 4 5 6 (PRODUCT LEVEL)	SEE PAGE
M	1	1	**6I-0645**	8	BOLT (M8X1.25X25-MM)	
	2	1	**199-9267**	1	SEAL-O-RING	
	3	1	**225-7944**	1	GASKET	
	4	1	**232-3861**	1	PLUG (BLANKING)	
	5	1	**233-9408**	1	GASKET	
	6	1	**242-8660**	1	HEAD AS	
	7	1	**252-6318**	1	PLATE	
Y	8	1	**355-6224**	1	COOLER AS-OIL	875

M - METRIC PART
Y - SEPARATE ILLUSTRATION

316-5671 **COOLER GP-OIL (**contd.**)** **i03917893**

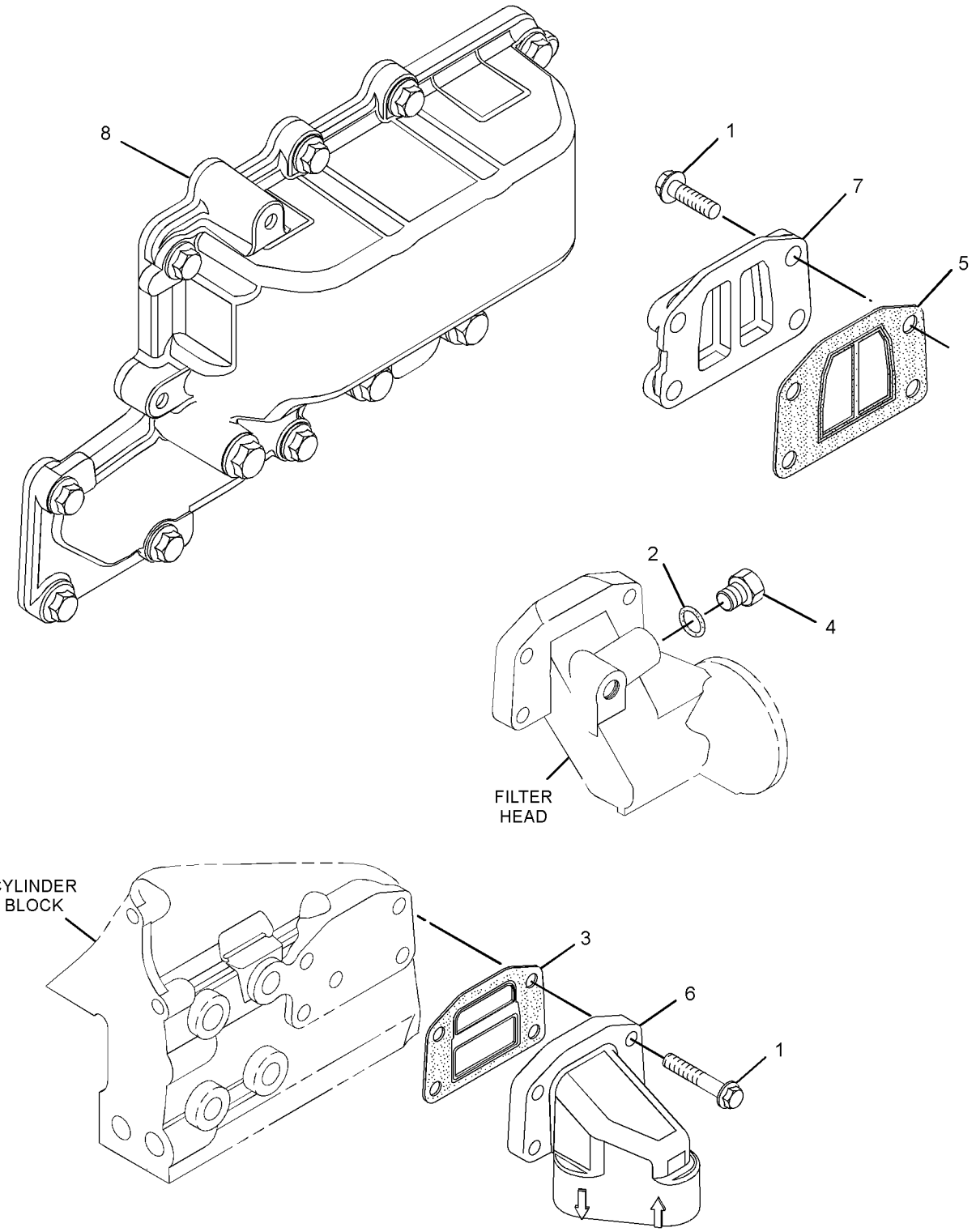

GRAPHIC #1 <END> g02154275

292-3516 FAN GP

SMCS-1356 **i06648244**

NOTE	REF NO	GRAPHIC REF	PART NUMBER	QTY	PART NAME 1 2 3 4 5 6 (PRODUCT LEVEL)	SEE PAGE
	1	1	**453-9700**	1	EXTENSION (FAN PULLEY)	
	2	1	**103-5916**	1	FAN (10-BLADE)	
M	3	1	**6V-9189**	4	LOCKNUT (M8X1.25-THD)	
	4	1	**135-5417**	4	STUD (M8X1.25X91-MM)	

M - METRIC PART

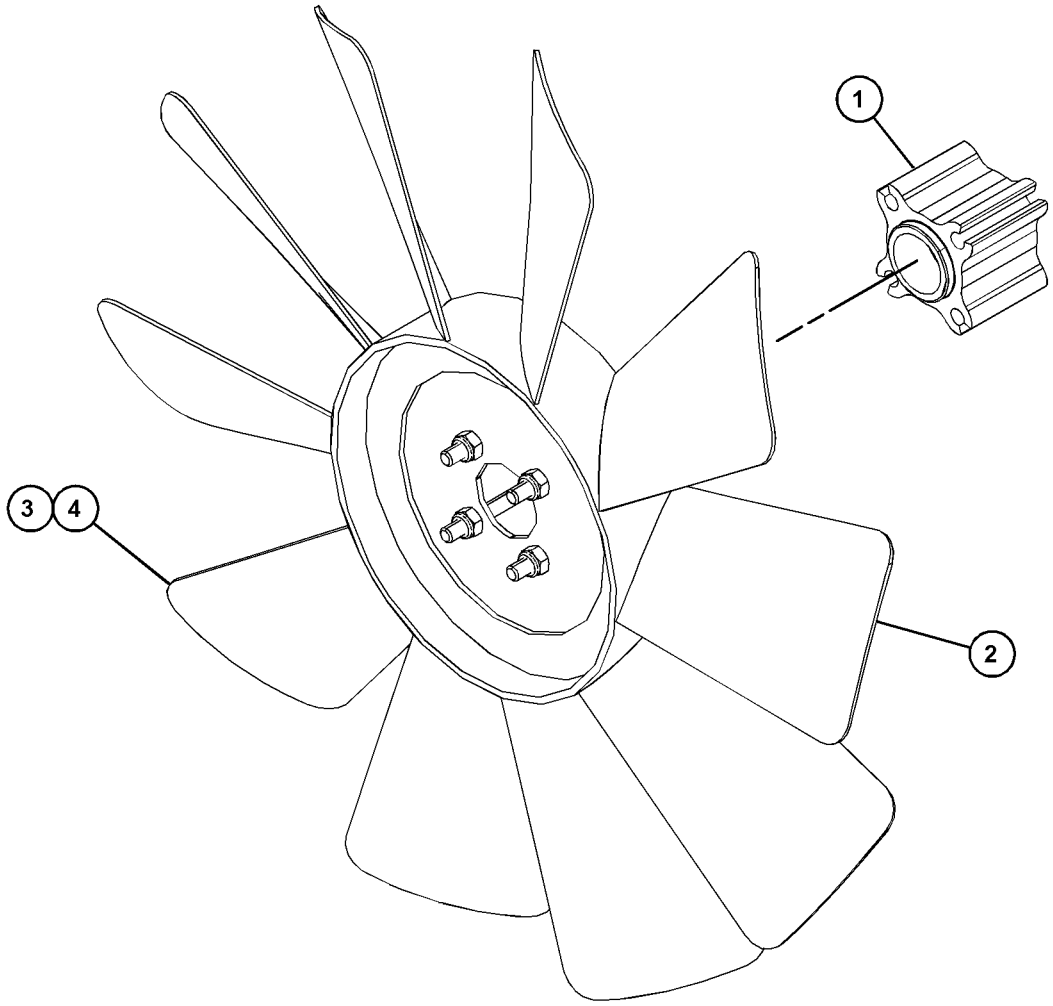

GRAPHIC #1 <END> g06136957

298-7821 FAN GP

SMCS-1356 **i06233757**

NOTE	REF NO	GRAPHIC REF	PART NUMBER	QTY	PART NAME 1 2 3 4 5 6 (PRODUCT LEVEL)	SEE PAGE
M	1	1	**6V-9189**	4	LOCKNUT (M8X1.25-THD)	
	2	1	**453-9679**	1	EXTENSION	
	3	1	**134-4139**	4	STUD	
	4	1	**185-9538**	1	FAN	

M - METRIC PART

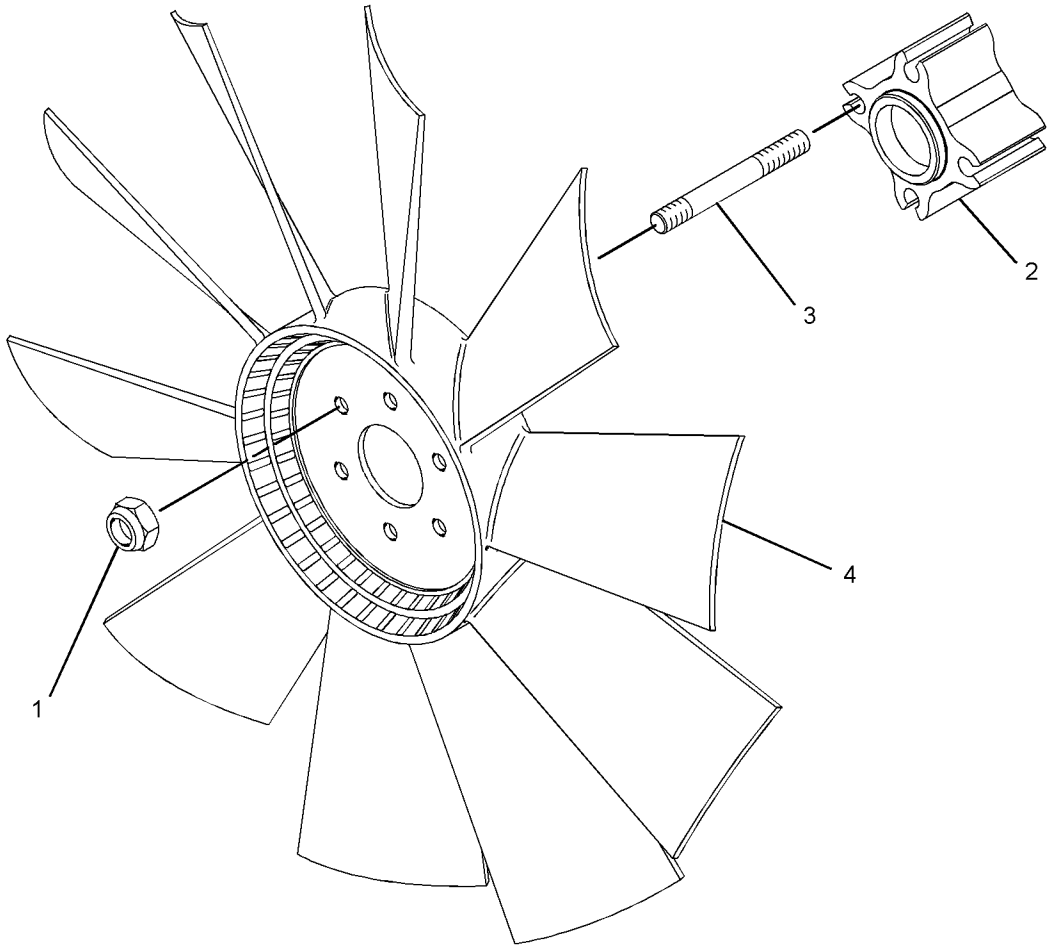

GRAPHIC #1 <END> g06055136

303-2128 FAN GP

SMCS-1356 **i06233747**

NOTE	REF NO	GRAPHIC REF	PART NUMBER	QTY	PART NAME 1 2 3 4 5 6 (PRODUCT LEVEL)	SEE PAGE
M	1	1	**6V-9189**	4	LOCKNUT (M8X1.25-THD)	
M	2	1	**135-6362**	4	STUD (M8X1.25X103-MM)	
	3	1	**453-9682**	1	EXTENSION-FAN	
	4	1	**185-9538**	1	FAN	

M - METRIC PART

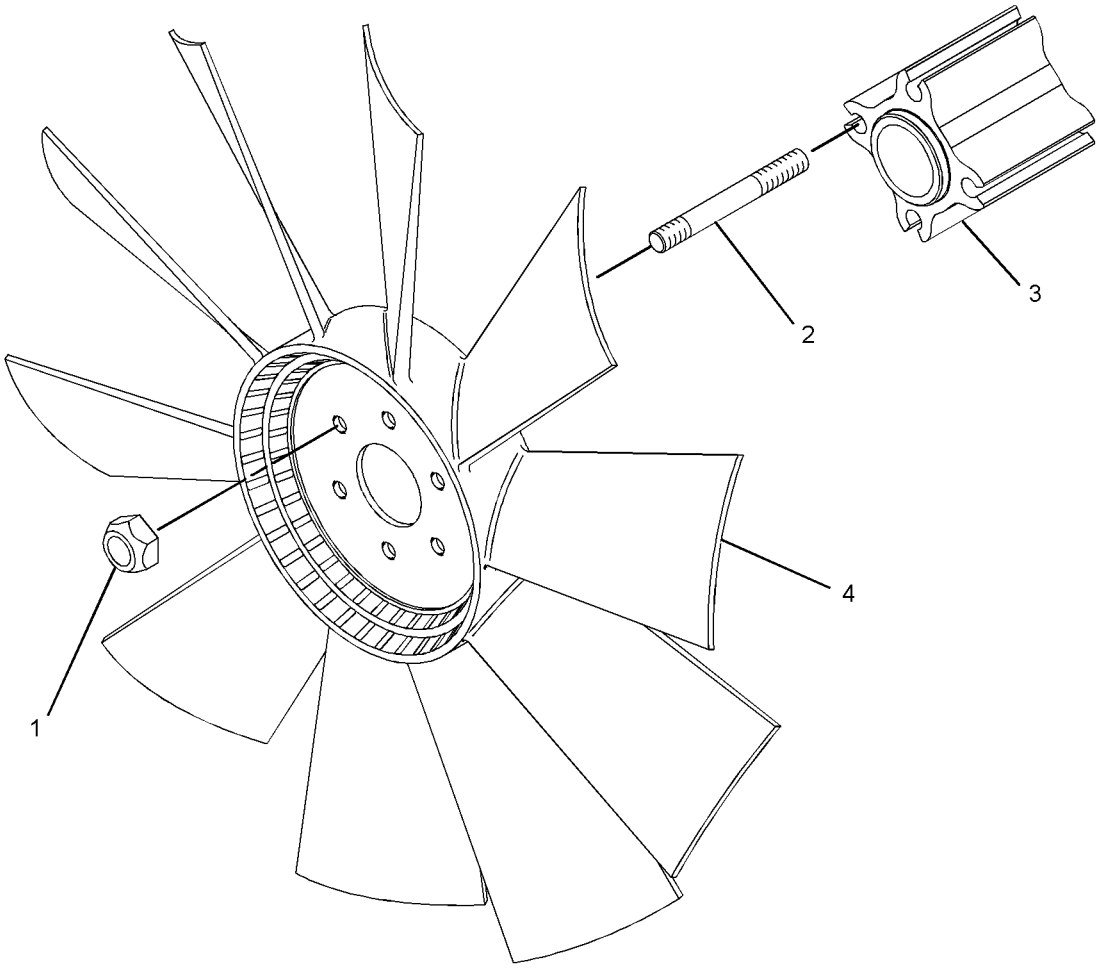

GRAPHIC #1 <END> g06012344

316-8485 FAN GP

SMCS-1356 **i07141134**

NOTE	REF NO	GRAPHIC REF	PART NUMBER	QTY	PART NAME 1 2 3 4 5 6 (PRODUCT LEVEL)	SEE PAGE
	1	1	**106-7637**	1	FAN AS (7-BLADE)	
M	2	1	**6V-9189**	4	LOCKNUT (M8X1.25-THD)	
M	3	1	**135-6362**	4	STUD (M8X1.25X103-MM)	
	4	1	**453-9682**	1	EXTENSION-FAN	

M - METRIC PART

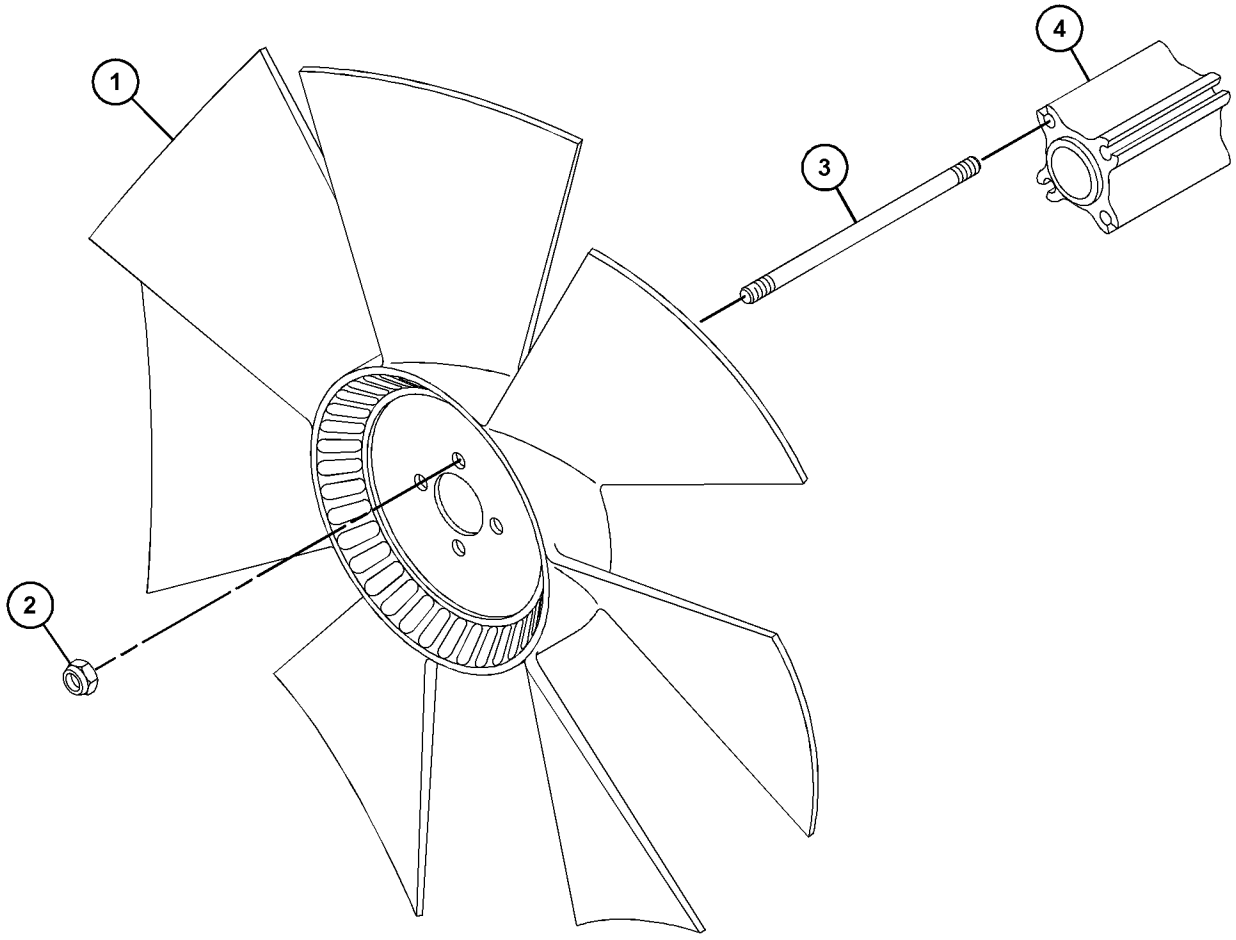

GRAPHIC #1 <END> g06196743

236-9963 FAN GP-BLOWER

SMCS-1356, 1360 **i06151695**

NOTE	REF NO	GRAPHIC REF	PART NUMBER	QTY	PART NAME 1 2 3 4 5 6 (PRODUCT LEVEL)	SEE PAGE
	1	1	**106-7637**	1	FAN AS (7-BLADE)	
M	2	1	**6V-9189**	4	LOCKNUT (M8X1.25-THD)	
M	3	1	**135-6362**	4	STUD (M8X1.25X103-MM)	
	4	1	**453-9682**	1	EXTENSION-FAN	

M - METRIC PART

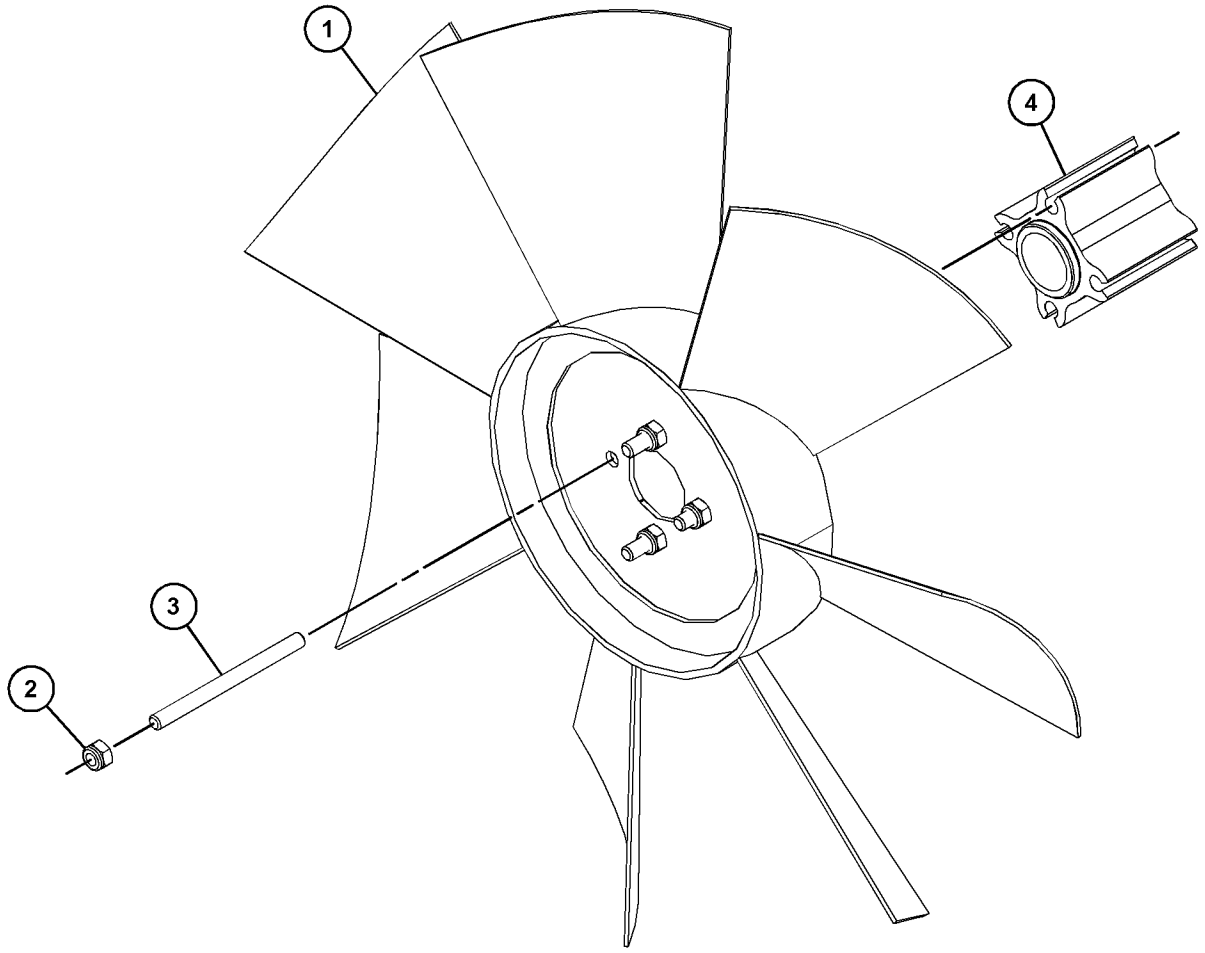

GRAPHIC #1 <END> g03833772

252-4441 FAN GP-BLOWER

SMCS-1356, 1360 **i07155682**

NOTE	REF NO	GRAPHIC REF	PART NUMBER	QTY	PART NAME 1 2 3 4 5 6 (PRODUCT LEVEL)	SEE PAGE
M	1	1	**113-6349**	4	NUT (M8X1.25-THD)	
M	2	1	**135-6362**	4	STUD (M8X1.25X103-MM)	
	3	1	**453-9682**	1	EXTENSION-FAN	
	4	1	**252-4442**	1	FAN-BLOWER	

M - METRIC PART

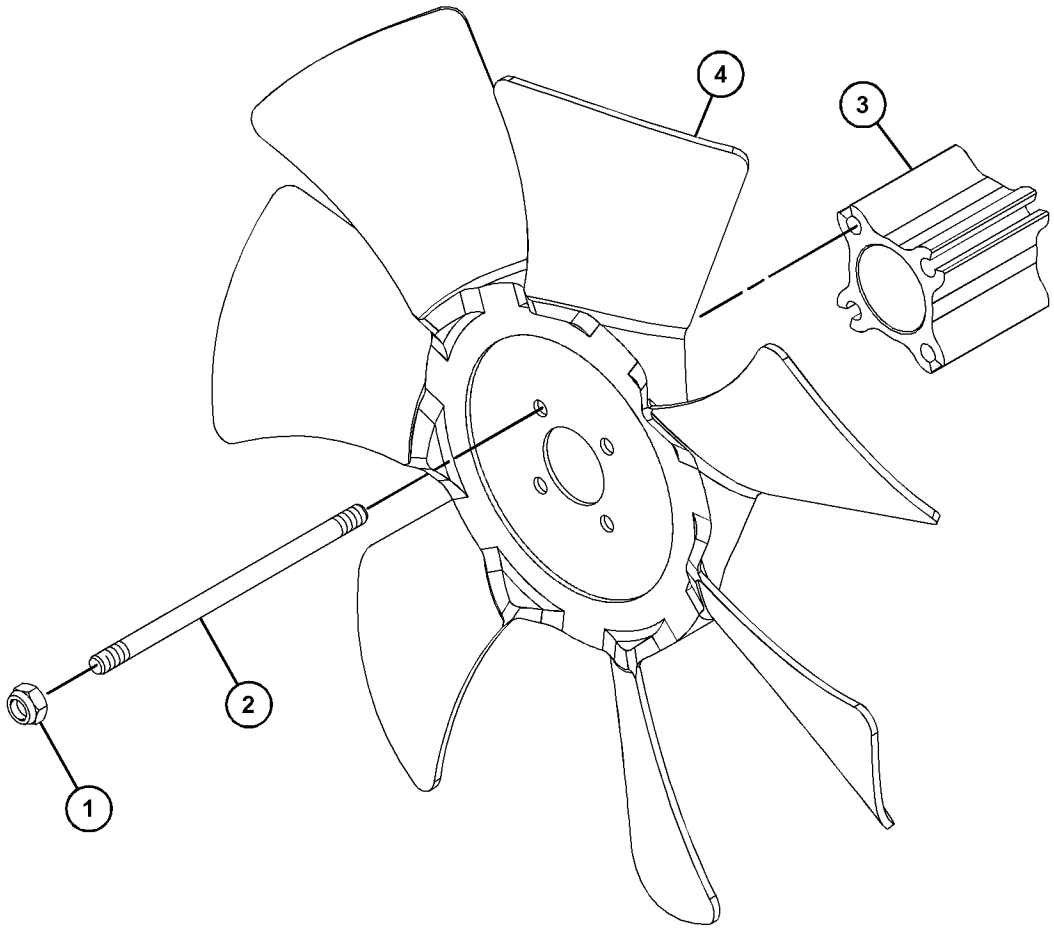

GRAPHIC #1 <END> g06238638

268-5339 FAN GP-BLOWER

SMCS-1356, 1360 **i06151702**

NOTE	REF NO	GRAPHIC REF	PART NUMBER	QTY	PART NAME 1 2 3 4 5 6 (PRODUCT LEVEL)	SEE PAGE
M	1	1	**6V-9189**	4	LOCKNUT (M8X1.25-THD)	
M	2	1	**135-6362**	4	STUD (M8X1.25X103-MM)	
	3	1	**453-9682**	1	EXTENSION-FAN	
	4	1	**252-4442**	1	FAN-BLOWER (7-BLADE)	

M - METRIC PART

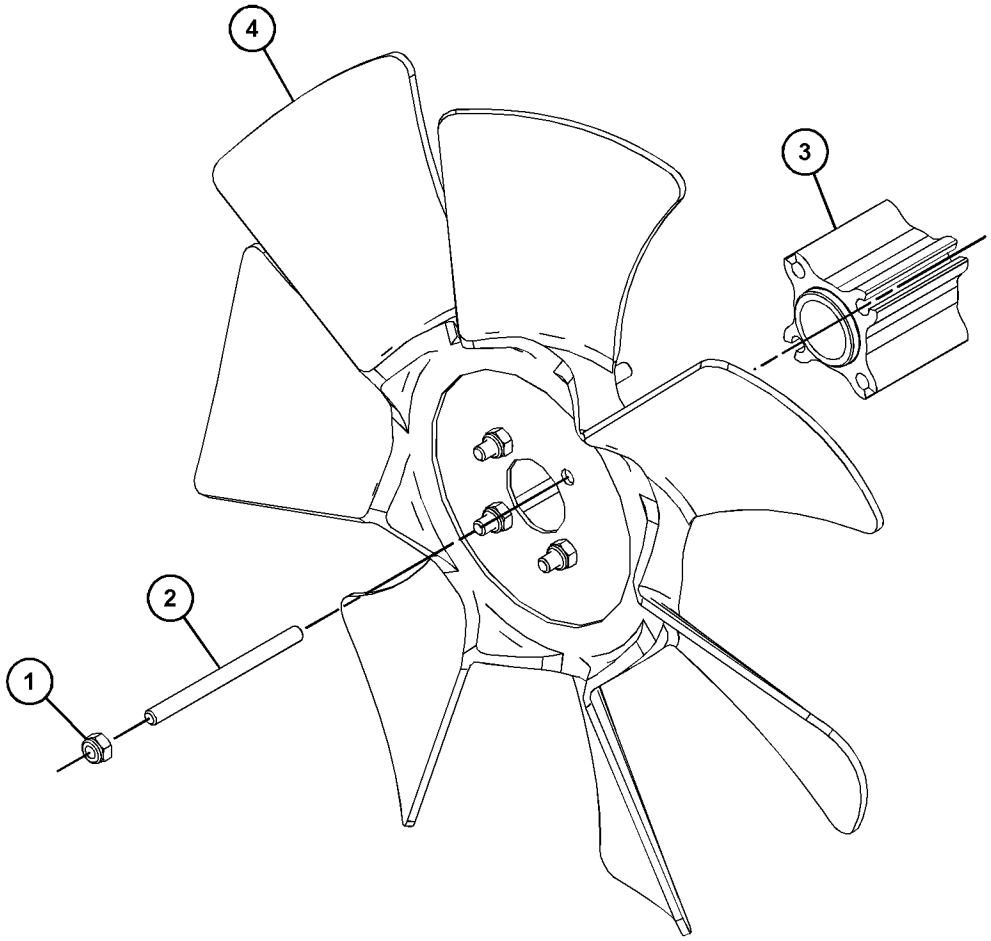

GRAPHIC #1 <END> g03834070

271-7800 FAN GP-BLOWER

SMCS-1356, 1360 **i06233712**

NOTE	REF NO	GRAPHIC REF	PART NUMBER	QTY	PART NAME 1 2 3 4 5 6 (PRODUCT LEVEL)	SEE PAGE
	1	1	**106-7637**	1	FAN AS (7-BLADE)	
M	2	1	**6V-9189**	4	LOCKNUT (M8X1.25-THD)	
M	3	1	**133-7668**	4	STUD (M8X1.25X116-MM)	
	4	1	**453-9700**	1	EXTENSION (FAN PULLEY)	

M - METRIC PART

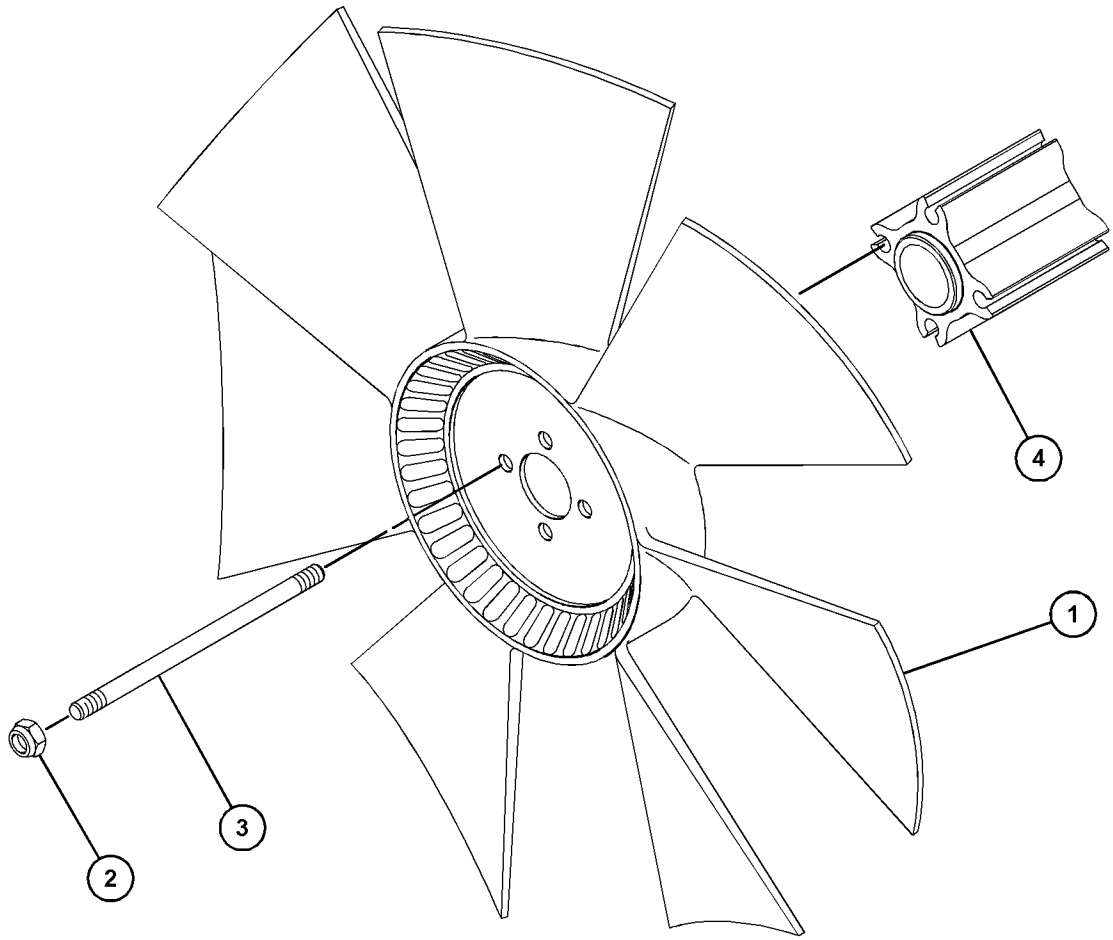

GRAPHIC #1 <END> g06011892

236-8195 FAN GP-SUCTION

SMCS-1356 **i06151698**

NOTE	REF NO	GRAPHIC REF	PART NUMBER	QTY	PART NAME 1 2 3 4 5 6 (PRODUCT LEVEL)	SEE PAGE
M	1	1	**6V-9189**	4	LOCKNUT (M8X1.25-THD)	
M	2	1	**135-6362**	4	STUD (M8X1.25X103-MM)	
	3	1	**453-9682**	1	EXTENSION-FAN	
	4	1	**103-5916**	1	FAN (10-BLADE)	

M - METRIC PART

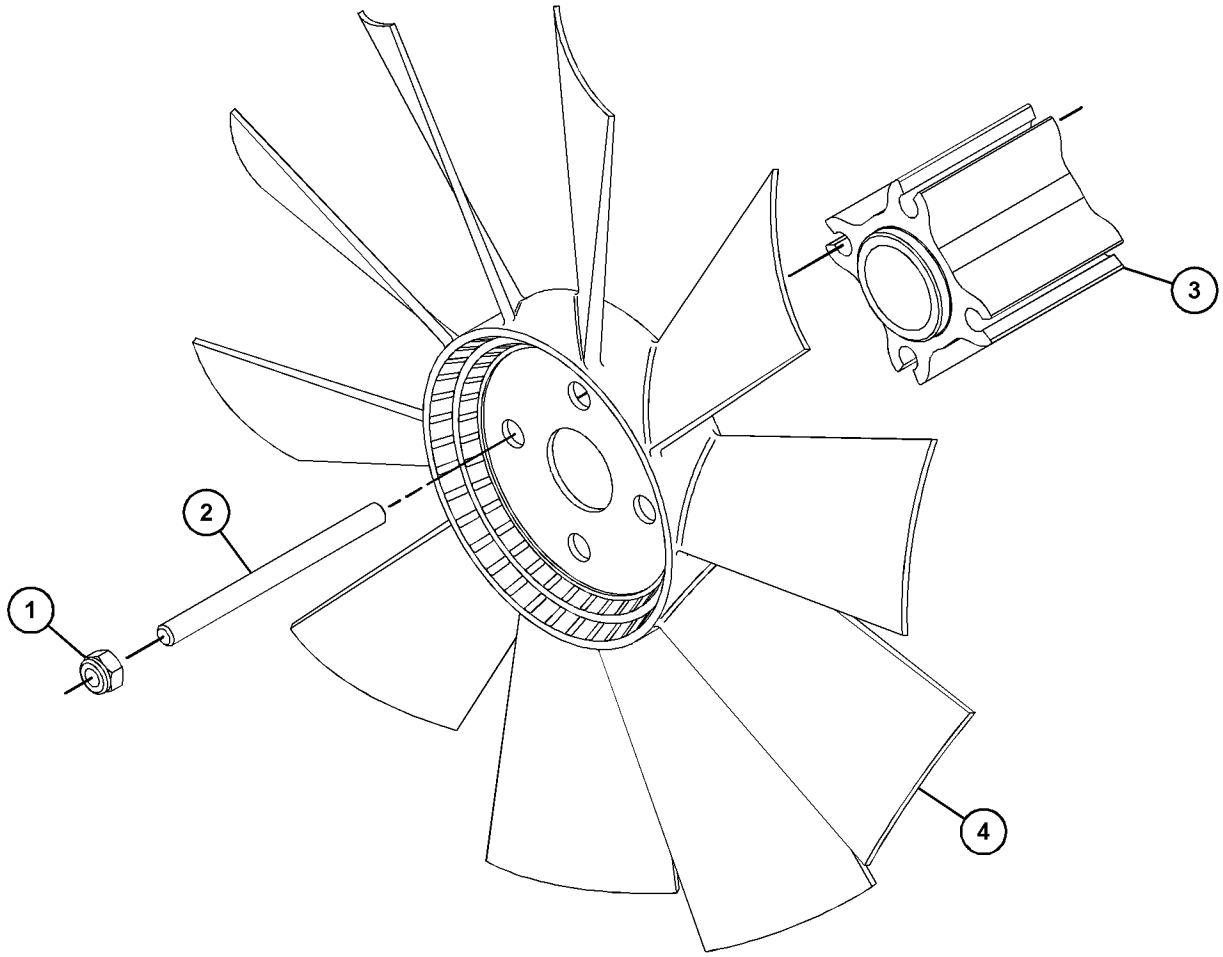

GRAPHIC #1 <END> g03849959

243-2411 FAN GP-SUCTION

SMCS-1356 **i06198209**

NOTE	REF NO	GRAPHIC REF	PART NUMBER	QTY	PART NAME 1 2 3 4 5 6 (PRODUCT LEVEL)	SEE PAGE
	1	1	**453-9700**	1	EXTENSION (FAN PULLEY)	
	2	1	**101-3770**	1	FAN	
M	3	1	**133-7668**	4	STUD (M8X1.25X116-MM)	
M	4	1	**6V-9189**	4	LOCKNUT (M8X1.25-THD)	

M - METRIC PART

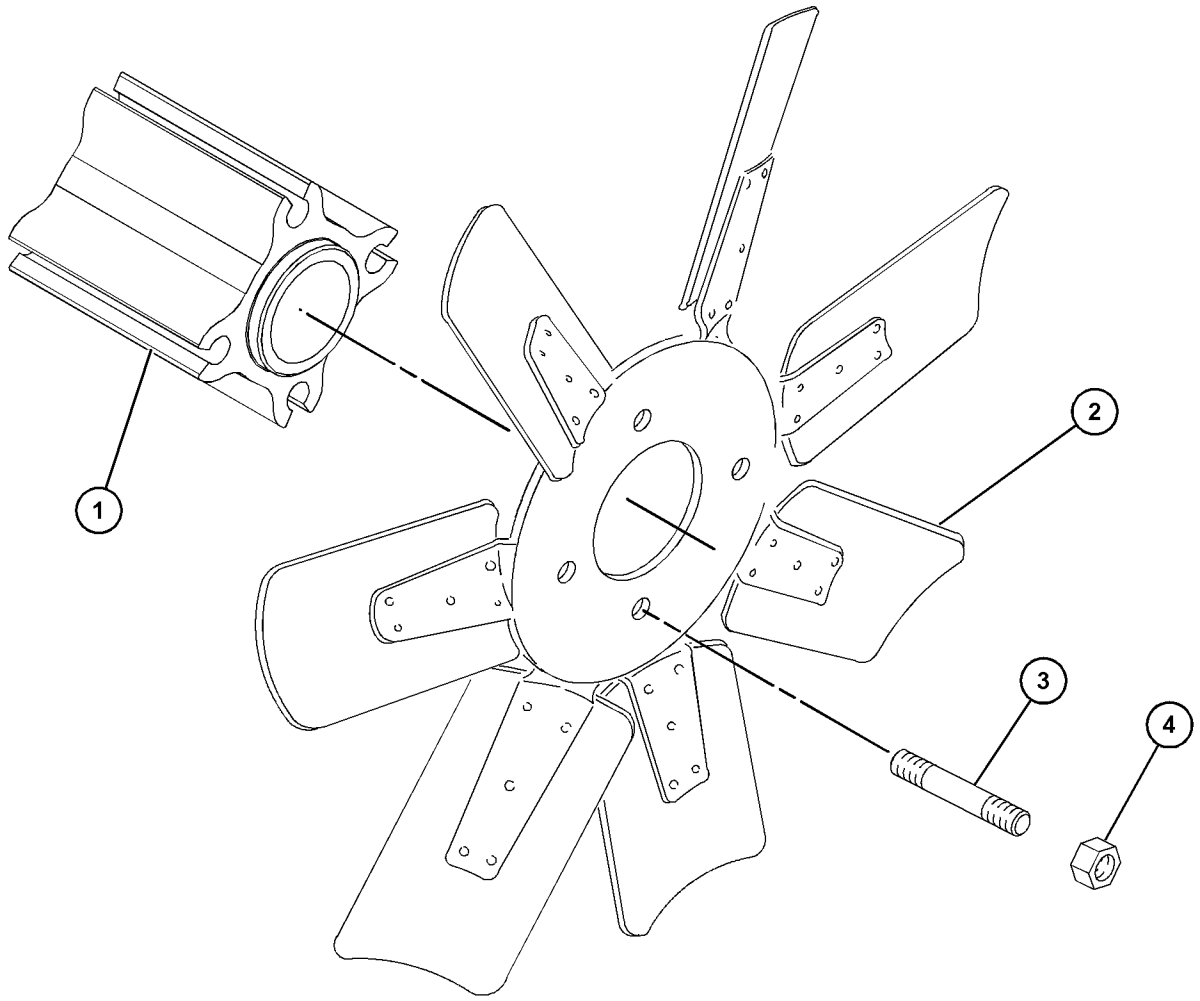

GRAPHIC #1 <END> g06011866

243-3203 FAN GP-SUCTION

SMCS-1356 **i06710699**

NOTE	REF NO	GRAPHIC REF	PART NUMBER	QTY	PART NAME 1 2 3 4 5 6 (PRODUCT LEVEL)	SEE PAGE
	1	1	**453-9700**	1	EXTENSION (FAN PULLEY)	
	2	1	**103-5916**	1	FAN (10-BLADE)	
M	3	1	**133-7668**	4	STUD (M8X1.25X116-MM)	
M	4	1	**113-6349**	4	NUT (M8X1.25-THD)	

M - METRIC PART

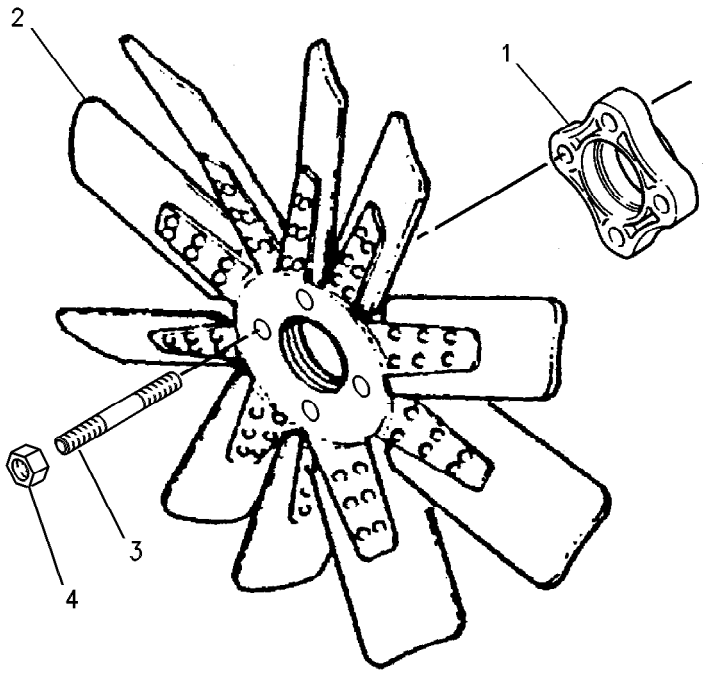

GRAPHIC #1 <END> g00288234

251-8298 FAN GP-SUCTION

SMCS-1356 **i06151696**

NOTE	REF NO	GRAPHIC REF	PART NUMBER	QTY	PART NAME 1 2 3 4 5 6 (PRODUCT LEVEL)	SEE PAGE
M	1	1	**6V-9189**	4	LOCKNUT (M8X1.25-THD)	
M	2	1	**135-6362**	4	STUD (M8X1.25X103-MM)	
	3	1	**453-9682**	1	EXTENSION-FAN	
	4	1	**251-8297**	1	FAN-SUCTION (7-BLADE)	

M - METRIC PART

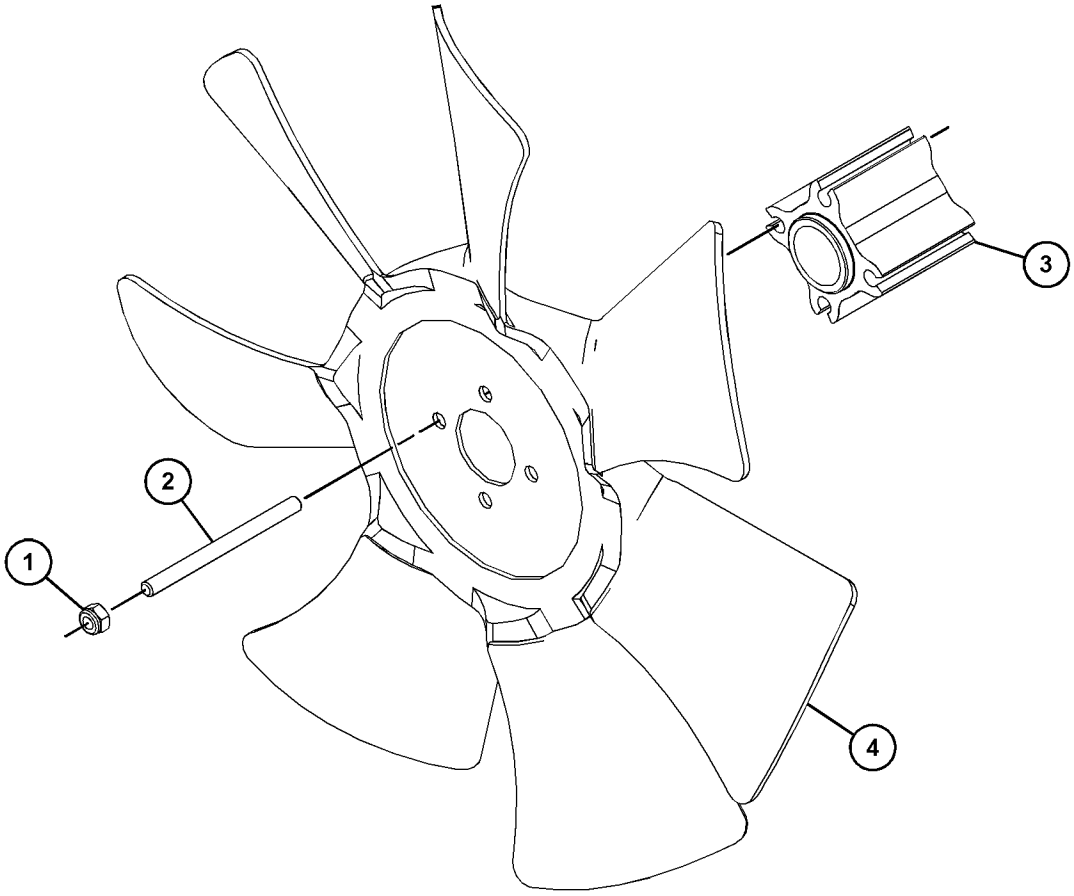

GRAPHIC #1 <END> g03850043

260-3215 FAN GP-SUCTION

SMCS-1356 **i07162230**

NOTE	REF NO	GRAPHIC REF	PART NUMBER	QTY	PART NAME 1 2 3 4 5 6 (PRODUCT LEVEL)	SEE PAGE
M	1	1	**6V-9189**	4	LOCKNUT (M8X1.25-THD)	
M	2	1	**135-6362**	4	STUD (M8X1.25X103-MM)	
	3	1	**453-9682**	1	EXTENSION-FAN (PULLEY)	
	4	1	**251-8297**	1	FAN-SUCTION (7-BLADE)	

M - METRIC PART

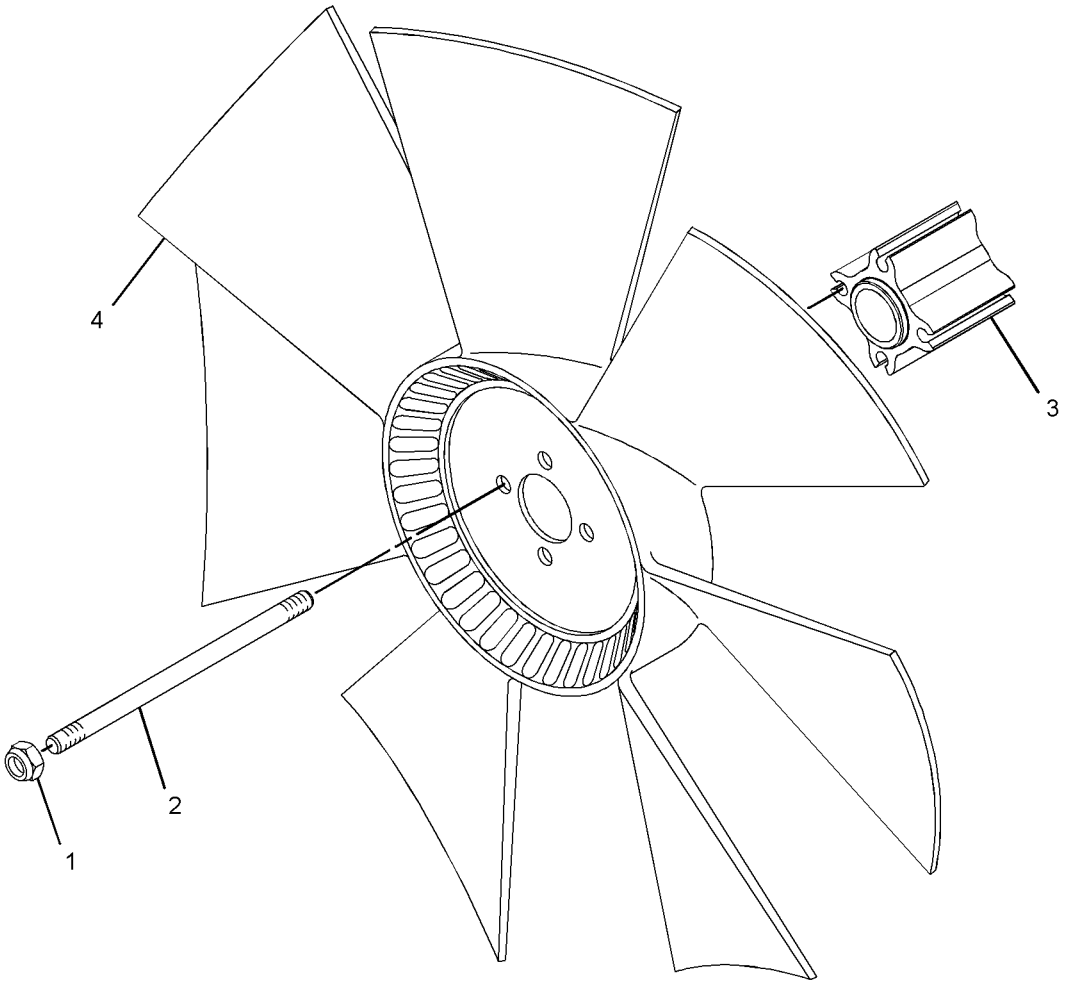

GRAPHIC #1 <END> g06239752

267-5695 FAN GP-SUCTION

ALSO AN ATTACHMENT

SMCS-1356 **i06151701**

NOTE	REF NO	GRAPHIC REF	PART NUMBER	QTY	PART NAME 1 2 3 4 5 6 (PRODUCT LEVEL)	SEE PAGE
M	1	1	**6V-9189**	4	LOCKNUT (M8X1.25-THD)	
M	2	1	**135-6362**	4	STUD (M8X1.25X103-MM)	
	3	1	**453-9682**	1	EXTENSION-FAN	
	4	1	**103-5916**	1	FAN (10-BLADE)	

M - METRIC PART

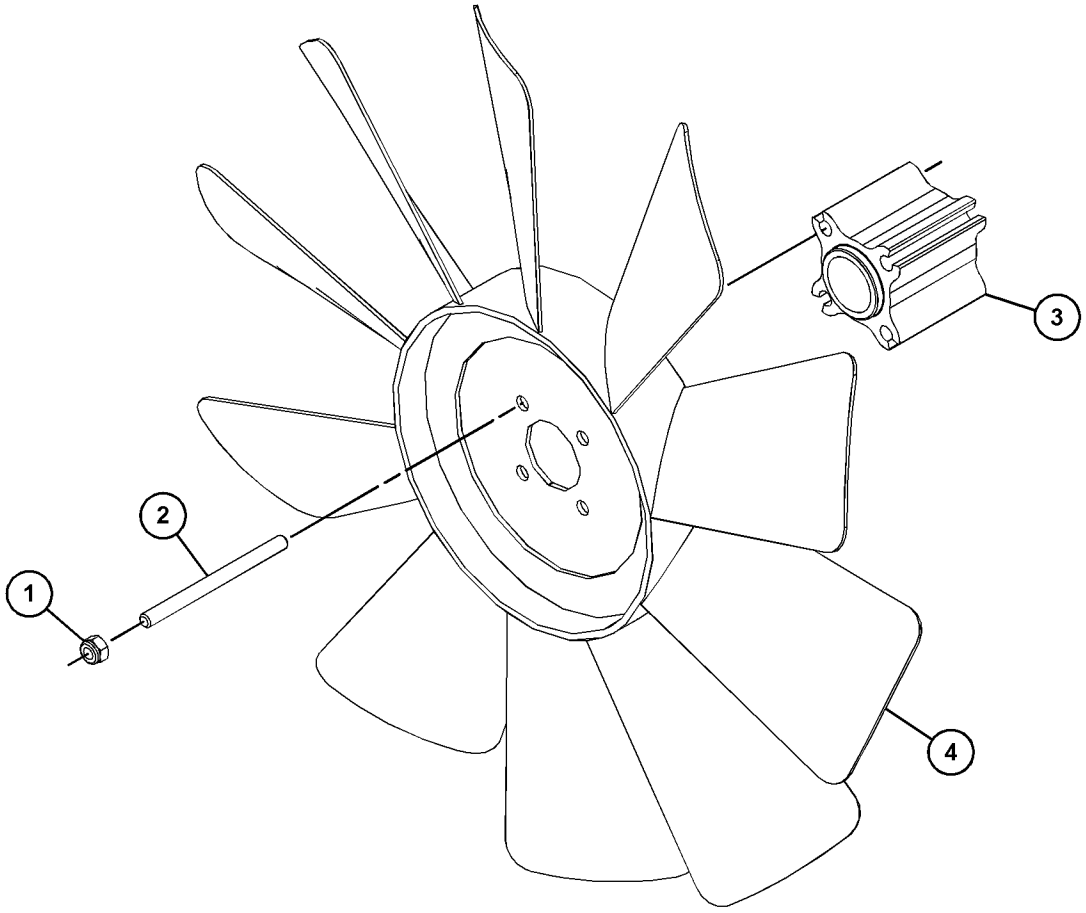

GRAPHIC #1 <END> g03850425

277-2972 FAN GP-SUCTION

SMCS-1356 **i07155895**

NOTE	REF NO	GRAPHIC REF	PART NUMBER	QTY	PART NAME 1 2 3 4 5 6 (PRODUCT LEVEL)	SEE PAGE
M	1	1	**113-6349**	4	NUT (M8X1.25-THD)	
	2	1	**103-5916**	1	FAN (10-BLADE)	
	3	1	**453-9679**	1	EXTENSION	
	4	1	**134-4139**	4	STUD	

M - METRIC PART

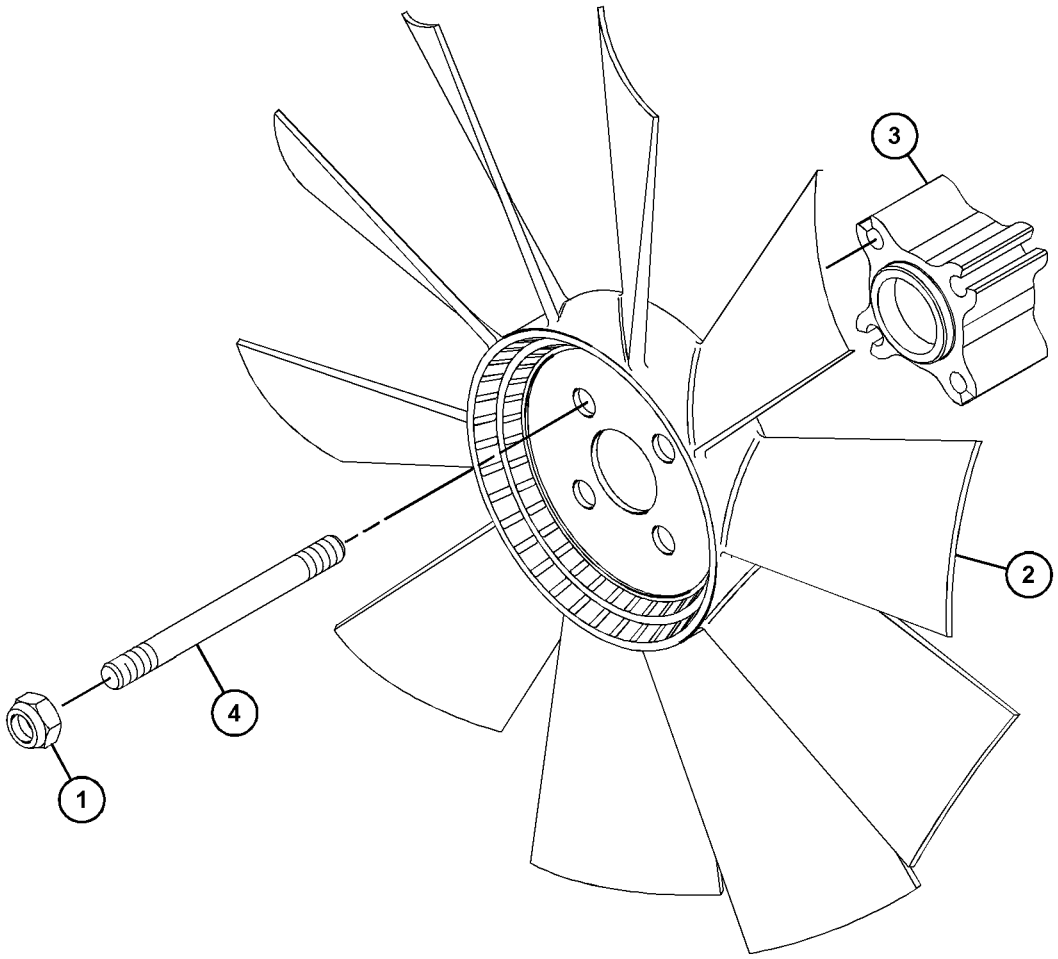

GRAPHIC #1 <END> g06238408

614-2921 KIT-OIL COOLER & LINES GASKET

PART OF 356-6541 COOLER GP-ENGINE OIL

ALSO AN ATTACHMENT

SMCS-1378 **i09728000**

NOTE	REF NO	GRAPHIC REF	PART NUMBER	QTY	PART NAME 1 2 3 4 5 6 (PRODUCT LEVEL)	SEE PAGE
M	1	1	**6I-0260**	10	BOLT (M8X1.25X25-MM)	
M	2	1	**6I-4374**	3	BOLT (M8X1.25X60-MM)	
	3	1	**272-2265**	1	SEAL	
	4	1	**356-6540**	2	SEAL-O-RING	
M	5	1	**101-3895**	4	BOLT (M8X1.25X35-MM)	
	6	1	**356-6542**	1	CORE AS-OIL COOLER	

M - METRIC PART

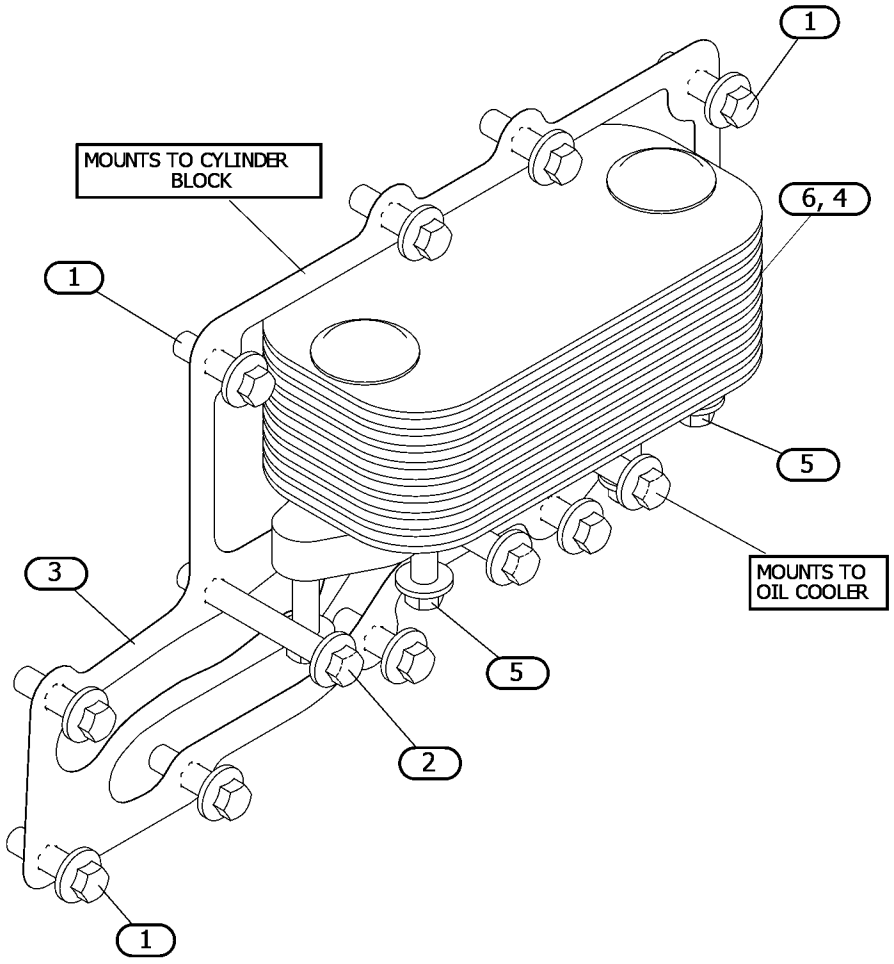

GRAPHIC #1 <END> g07573408

234-9738 MOUNTING GP-FAN

SMCS-1356 **i06731802**

NOTE	REF NO	GRAPHIC REF	PART NUMBER	QTY	PART NAME 1 2 3 4 5 6 (PRODUCT LEVEL)	SEE PAGE
M	1	1	**6V-9189**	4	LOCKNUT (M8X1.25-THD)	
M	2	1	**133-7668**	4	STUD (M8X1.25X116-MM)	
	3	1	**453-9700**	1	EXTENSION (FAN PULLEY)	

M - METRIC PART

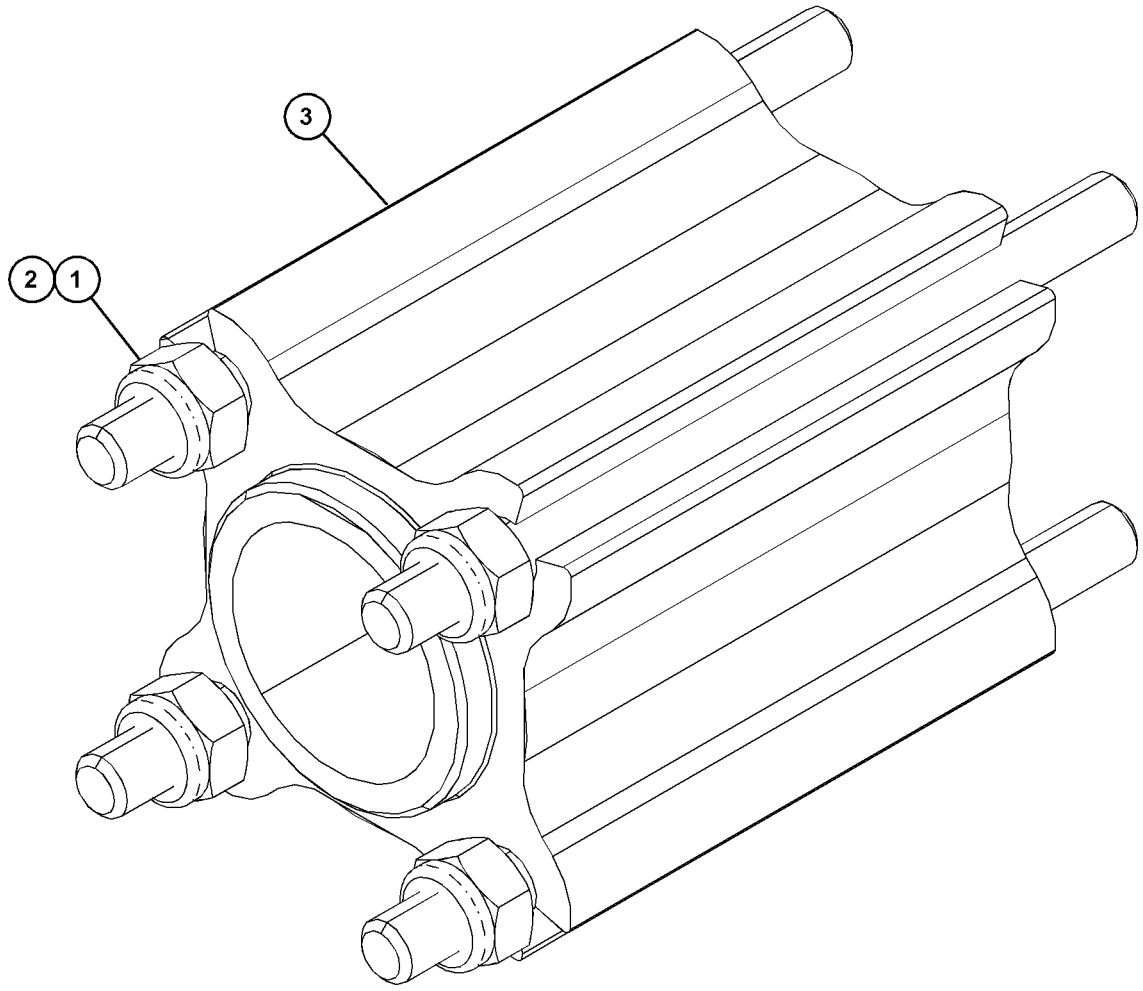

GRAPHIC #1 <END> g06130549

230-7355 PUMP GP-WATER

ALSO AN ATTACHMENT

TYPE 1

SMCS-1361 **i05907305**

NOTE	REF NO	GRAPHIC REF	PART NUMBER	QTY	PART NAME 1 2 3 4 5 6 (PRODUCT LEVEL)	SEE PAGE
M	1	1	**6I-0217**	2	BOLT (M8X1.25X20-MM)	
M	2	1	**6I-0254**	2	BOLT (M8X1.25X30-MM)	
M	3	1	**100-3751**	5	BOLT (M8X1.25X65-MM)	
M	4	1	**113-8129**	2	BOLT (M8X1.25X75-MM)	
	5	1	**225-7741**	1	CONNECTION AS	
	6	1	**225-7738**	1	SEAL-O-RING	
	7	1	**225-7739**	1	SEAL-O-RING	
	8	1	**225-8016**	1	PUMP GP-WATER	
	8A	1	**225-8019**	1	GASKET	
	8B	1	**286-3592**	1	GEAR-WATER PUMP	
					AVAILABLE REPAIR KIT(S):	
			247-0144	1	KIT-GASKET (WATER PUMP)	
					(INCLUDES PUMP HOUSING GASKET & COVER GASKET)	

M - METRIC PART

230-7355 **PUMP GP-WATER (**contd.**)** **i05907305**

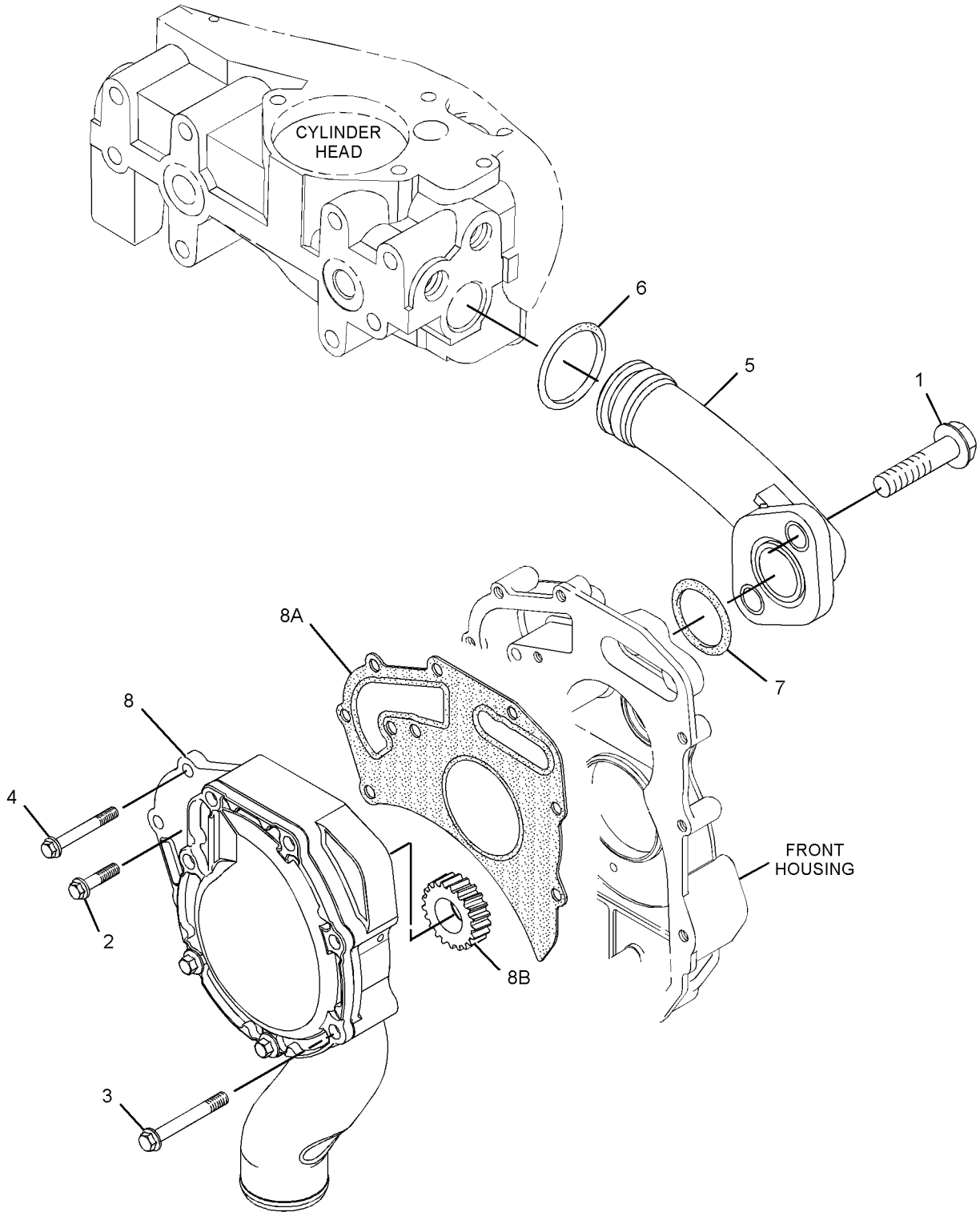

GRAPHIC #1 <END> g01897273

230-7355 PUMP GP-WATER

ALSO AN ATTACHMENT

TYPE 2

SMCS-1361 **i05907290**

NOTE	REF NO	GRAPHIC REF	PART NUMBER	QTY	PART NAME 1 2 3 4 5 6 (PRODUCT LEVEL)	SEE PAGE
M	1	1	**6I-0217**	2	BOLT (M8X1.25X20-MM)	
M	2	1	**6I-0254**	2	BOLT (M8X1.25X30-MM)	
M	3	1	**100-3751**	5	BOLT (M8X1.25X65-MM)	
M	4	1	**113-8129**	2	BOLT (M8X1.25X75-MM)	
	5	1	**225-7741**	1	CONNECTION AS	
	5A	1	**225-7738**	1	SEAL-O-RING	
	5B	1	**225-7739**	1	SEAL-O-RING	
C	6	1	**354-1672**	1	PUMP GP-WATER	
	6A	1	**225-8019**	1	GASKET	
					AVAILABLE REPAIR KIT(S):	
			247-0144	1	KIT-GASKET (WATER PUMP)	
					(INCLUDES PUMP HOUSING GASKET & COVER GASKET)	

C - CHANGE FROM PREVIOUS TYPE
M - METRIC PART

230-7355 **PUMP GP-WATER (**contd.**)** **i05907290**

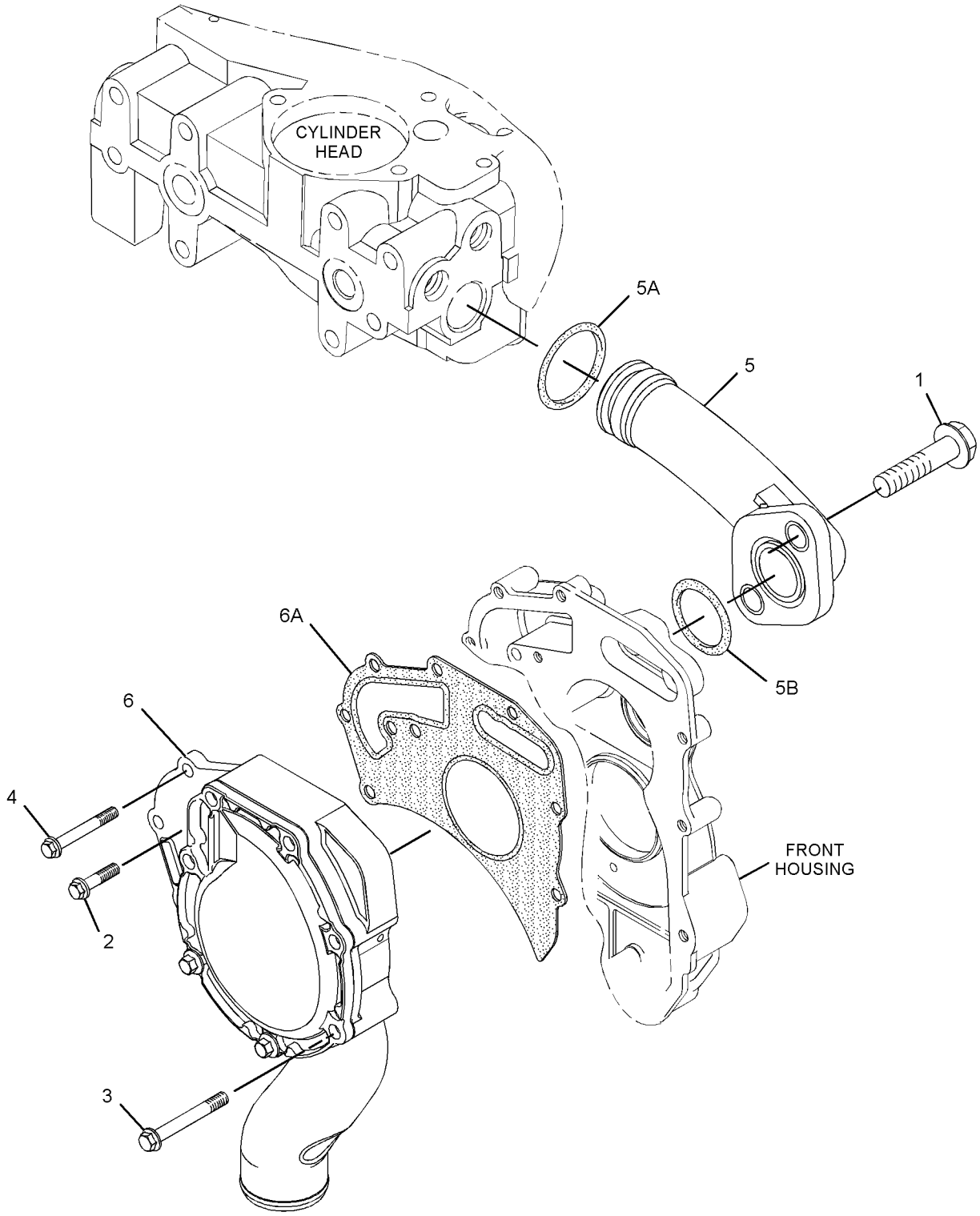

GRAPHIC #1 <END> g02137998

236-8785 RADIATOR GP

S/N: 3341-25959

ALSO AN ATTACHMENT

SMCS-1353 **i07600706**

NOTE	REF NO	GRAPHIC REF	PART NUMBER	QTY	PART NAME 1 2 3 4 5 6 (PRODUCT LEVEL)	SEE PAGE
	1	2	**324-3528**	5	CLAMP-HOSE	
	2	2	**265-6527**	2	CLIP	
M	3	1	**6I-0260**	1	BOLT (M8X1.25X25-MM)	
M	4	1	**6I-0291**	1	NUT (M8X1.25-THD)	
M	5	1	**6I-0594**	3	NUT (M10X1.5-THD)	
	6	1	**7W-2601**	2	SPACER (10.3X19X3.2-MM THK)	
M	7	1	**100-4458**	4	BOLT (M8X1.25X14-MM)	
M	8	1	**100-4461**	2	BOLT (M10X1.5X50-MM)	
M	9	1	**100-4830**	2	BOLT (M10X1.5X20-MM)	
M	10	1	**101-7537**	8	BOLT (M12X1.75X35-MM)	
	11	1	**101-7538**	2	MOUNT	
	12	1	**101-7540**	2	WASHER (11.9X38.2X1.6-MM THK)	
M	13	1	**101-7541**	4	SCREW-FLAT HEAD (M8X1.25X25-MM)	
	14	1	**101-7546**	1	MOUNT	
	15	1	**101-7547**	2	LOCKWASHER	
	17	2	**317-9229**	2	CLAMP-HOSE (UPPER)	
	18	2	**236-7734**	1	HOSE	
	19	2	**236-7735**	2	HOSE	
	20	3	**236-8741**	1	RADIATOR AS	
M	20A	3	**114-4363**	12	BOLT (M8X1.25X12-MM)	
	20B	3	**236-7763**	1	BRACKET-MOUNTING	
	20C	3	**236-7764**	1	CAP-RADIATOR	
	20D	3	**236-7765**	1	PLUG-DRAIN (RADIATOR)	
	20E	3	**236-8742**	1	GUARD-RADIATOR	
	21	1	**236-8773**	1	BRACKET-MOUNTING	
	22	1	**311-4621**	1	BRACKET	
	23	1	**367-4171**	1	BRACKET	
	24	2	**236-8776**	1	CONNECTOR	
	25	2	**236-8777**	1	HOSE-AIR INLET	
	26	2	**236-8780**	1	TUBE	
	27	2	**236-8781**	1	HOSE-RADIATOR (LOWER)	
	28	1	**236-8782**	1	GUARD (RADIATOR) (LH)	
	29	1	**330-9698**	1	GUARD-RADIATOR (RH)	
	30	2	**103-1067**	3	CLAMP-HOSE	
	31	2	**236-7722**	1	HOSE-RADIATOR (UPPER)	
	32	1	**236-8784**	1	GUARD-FAN	

M - METRIC PART

236-8785 **RADIATOR GP (**contd.**)** **i07600706**

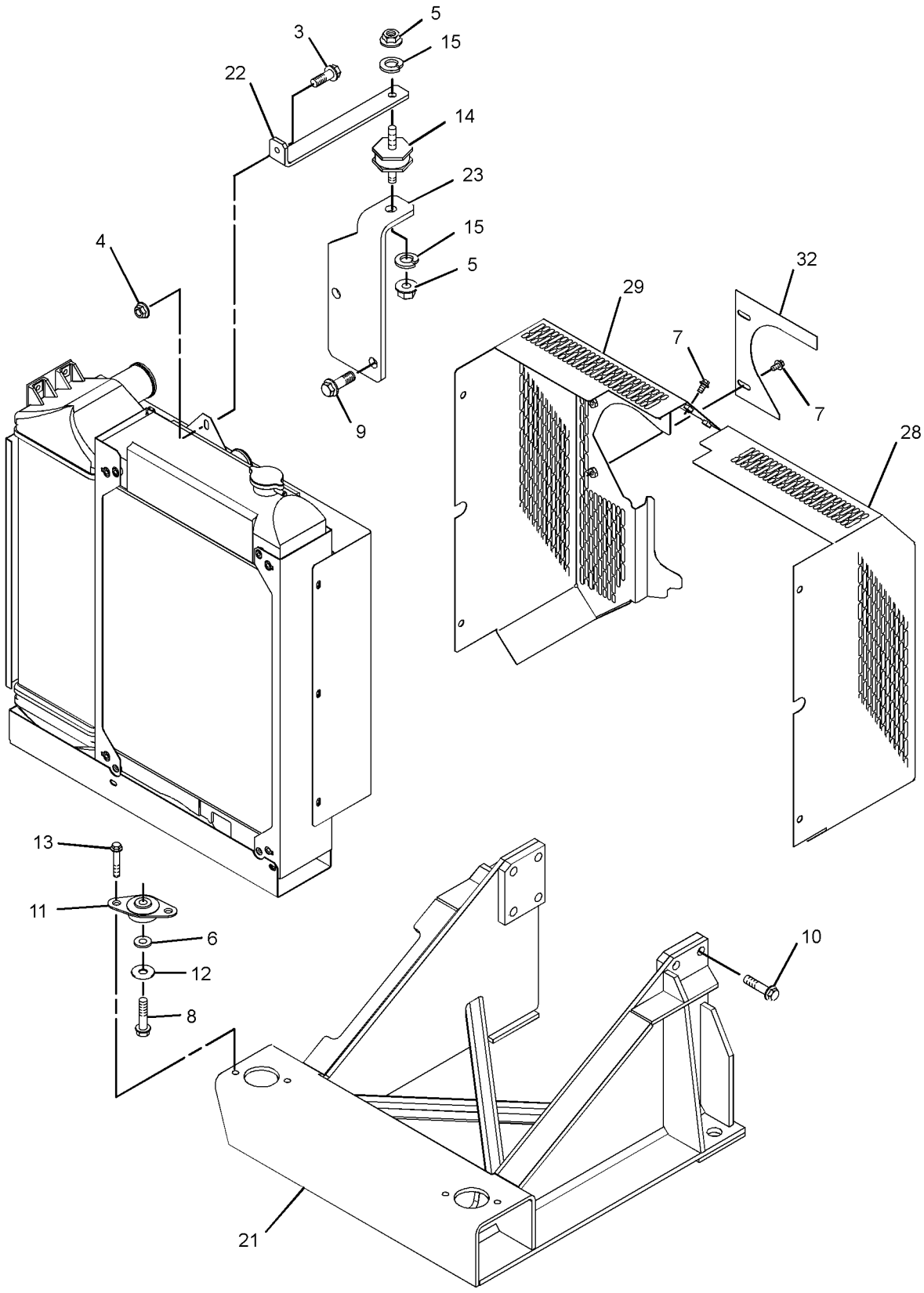

GRAPHIC #1 g01618223

236-8785 **RADIATOR GP** (contd.) **i07600706**

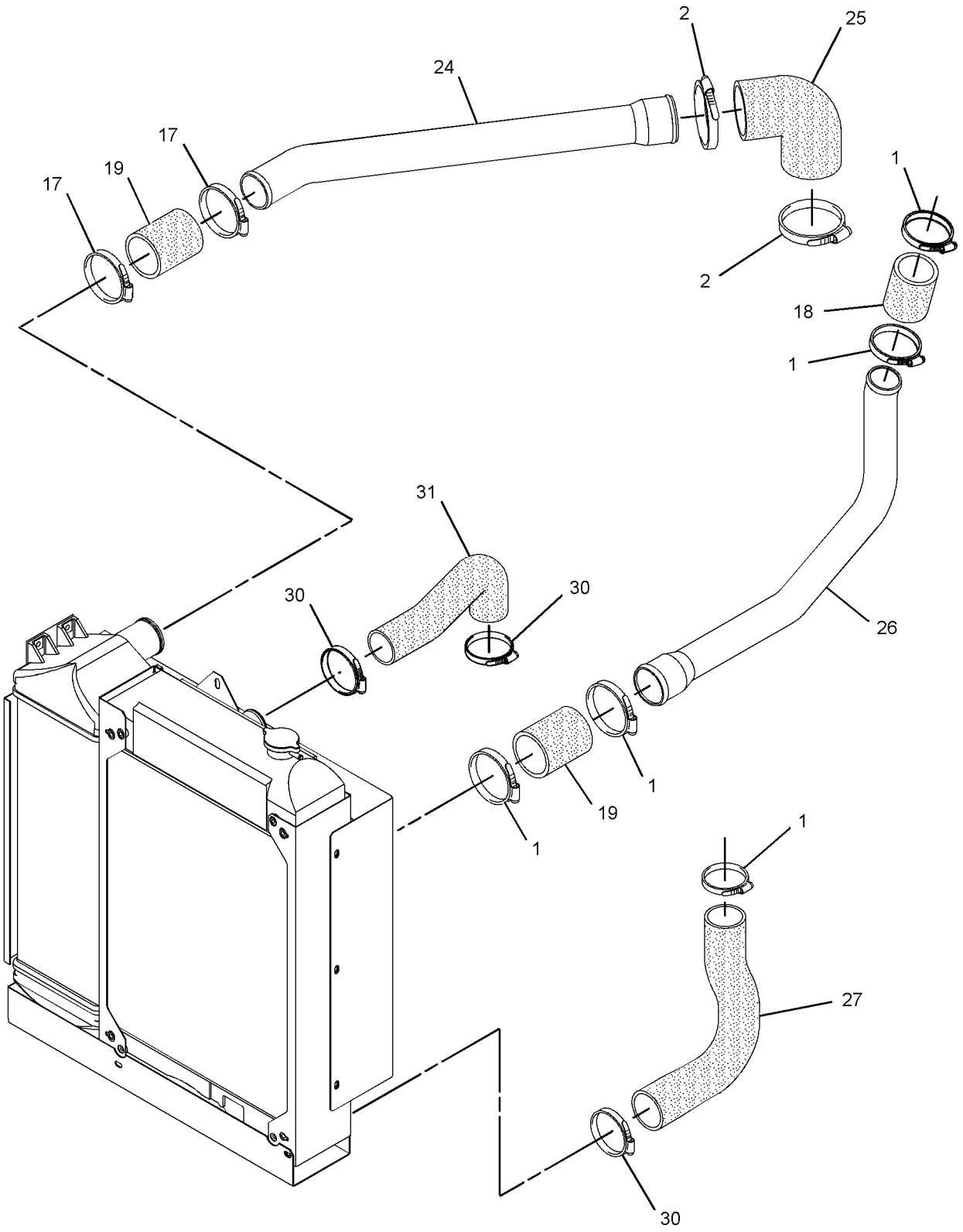

GRAPHIC #2 g06375237

236-8785 **RADIATOR GP (**contd.**)** **i07600706**

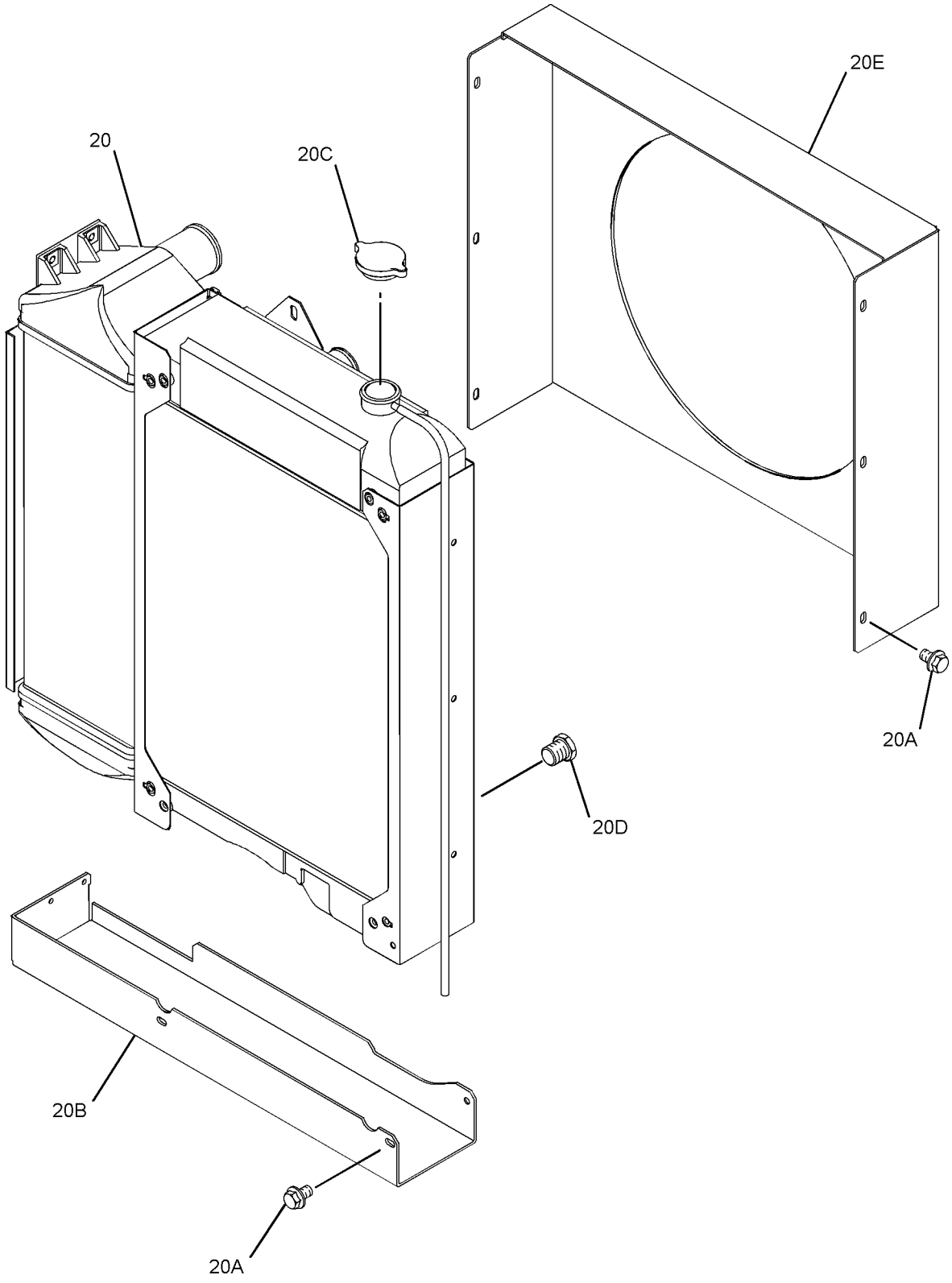

GRAPHIC #3 <END> g01618226

236-8785 RADIATOR GP

S/N: 33425960-UP

ALSO AN ATTACHMENT

SMCS-1353 **i07589866**

NOTE	REF NO	GRAPHIC REF	PART NUMBER	QTY	PART NAME 1 2 3 4 5 6 (PRODUCT LEVEL)	SEE PAGE
	1	2	**324-3528**	4	CLAMP-HOSE	
	2	2	**265-6527**	2	CLIP	
M	3	1	**6I-0260**	1	BOLT (M8X1.25X25-MM)	
M	4	1	**178-3336**	1	NUT-HEX FLANGE (M8X1.25-THD)	
M	5	1	**175-7141**	3	NUT-HEX FLANGE (M10X1.5-THD)	
	6	1	**7W-2601**	2	SPACER (10.3X19X3.2-MM THK)	
CM	7	1	**100-4458**	2	BOLT (M8X1.25X14-MM)	
M	8	1	**100-4461**	2	BOLT (M10X1.5X50-MM)	
M	9	1	**100-4830**	2	BOLT (M10X1.5X20-MM)	
M	10	1	**101-7537**	8	BOLT (M12X1.75X35-MM)	
	11	1	**101-7538**	2	MOUNT	
	12	1	**101-7540**	2	WASHER (11.9X38.2X1.6-MM THK)	
M	13	1	**101-7541**	4	SCREW-FLAT HEAD (M8X1.25X25-MM)	
	14	1	**101-7546**	1	MOUNT	
	15	1	**101-7547**	2	LOCKWASHER	
	17	2	**317-9229**	2	CLAMP-HOSE (UPPER)	
	18	2	**236-7734**	1	HOSE	
	19	2	**236-7735**	2	HOSE	
	20	3	**236-8741**	1	RADIATOR AS	
M	20A	3	**114-4363**	12	BOLT (M8X1.25X12-MM)	
	20B	3	**236-7763**	1	BRACKET-MOUNTING	
	20C	3	**236-7764**	1	CAP-RADIATOR	
	20D	3	**236-7765**	1	PLUG-DRAIN (RADIATOR)	
	20E	3	**236-8742**	1	GUARD-RADIATOR	
	21	1	**236-8773**	1	BRACKET-MOUNTING	
	22	1	**311-4621**	1	BRACKET	
	23	1	**367-4171**	1	BRACKET	
	24	2	**236-8776**	1	CONNECTOR	
	25	2	**236-8777**	1	HOSE-AIR INLET	
	26	2	**236-8780**	1	TUBE	
	27	2	**236-8781**	1	HOSE-RADIATOR (LOWER)	
	28	1	**236-8782**	1	GUARD (RADIATOR) (LH)	
C	29	1	**368-5398**	1	GUARD AS-FAN (RH)	
	31	2	**236-7722**	1	HOSE-RADIATOR (UPPER)	
C	32	1	**368-5399**	1	GUARD-FAN	
	33	2	**103-6714**	4	CLIP	

C - CHANGE FROM PREVIOUS TYPE
M - METRIC PART

236-8785 **RADIATOR GP (**contd.**)** **i07589866**

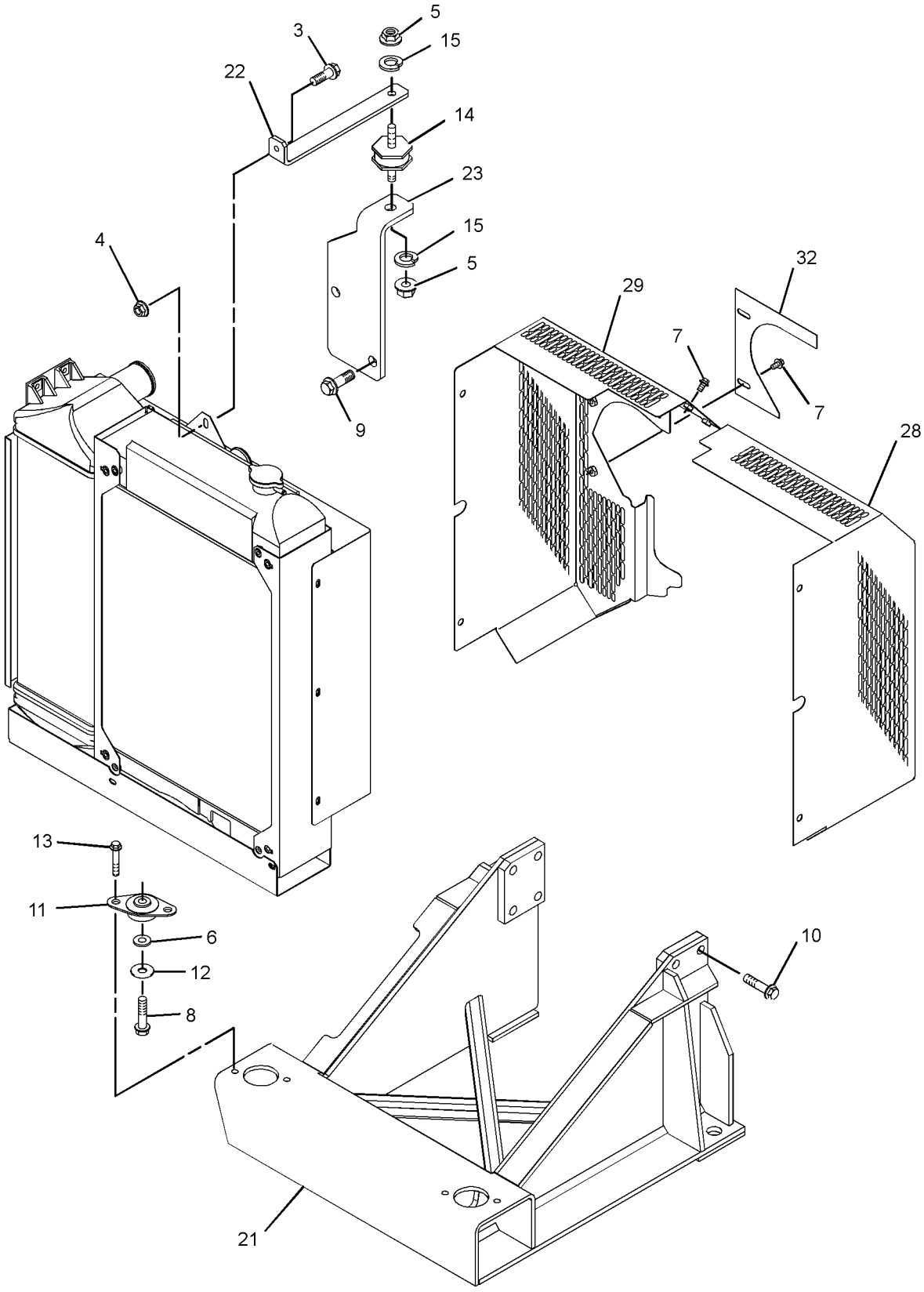

GRAPHIC #1 g06375040

236-8785 **RADIATOR GP (**contd.**)** **i07589866**

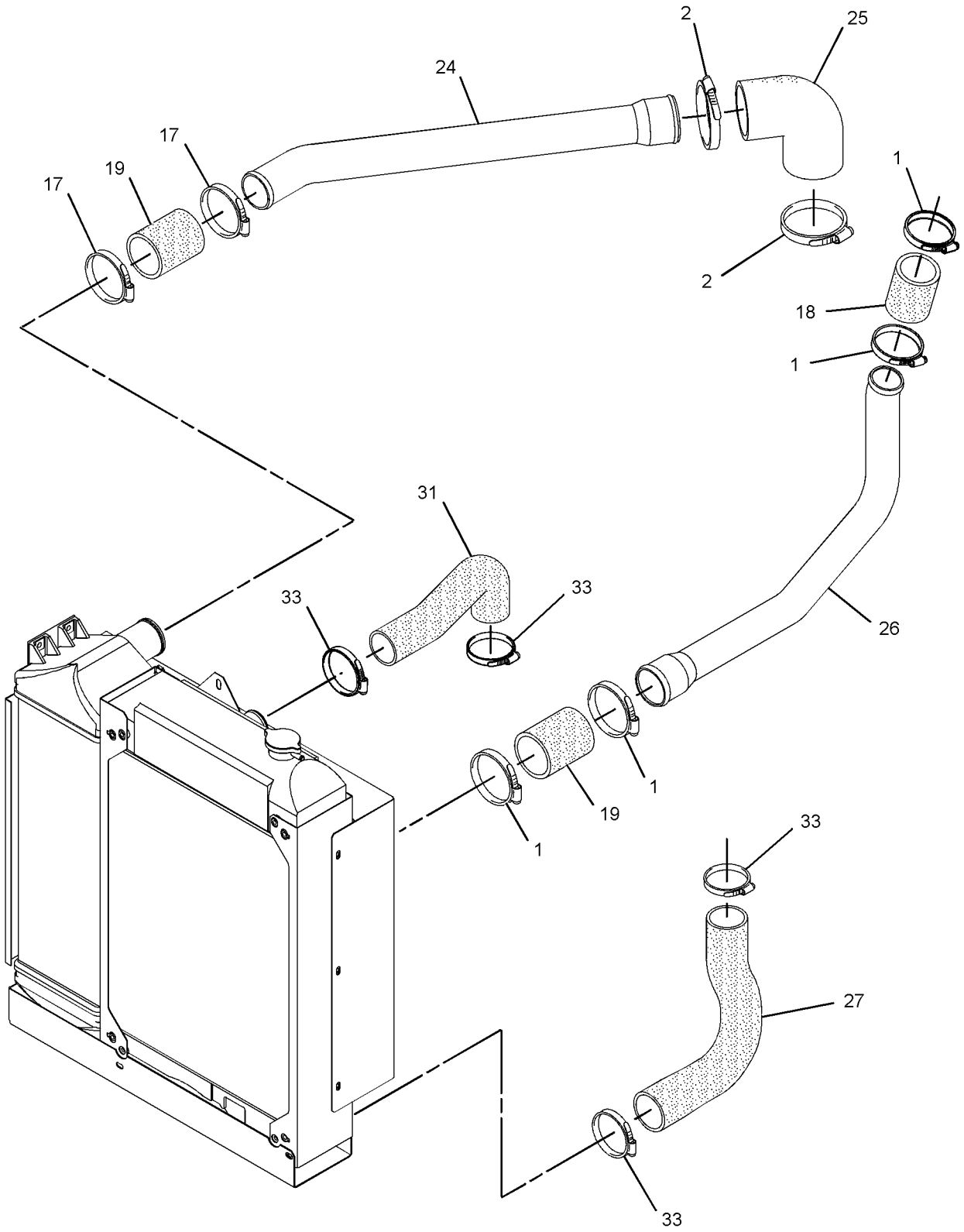

GRAPHIC #2 g06372375

236-8785 **RADIATOR GP (**contd.**)** **i07589866**

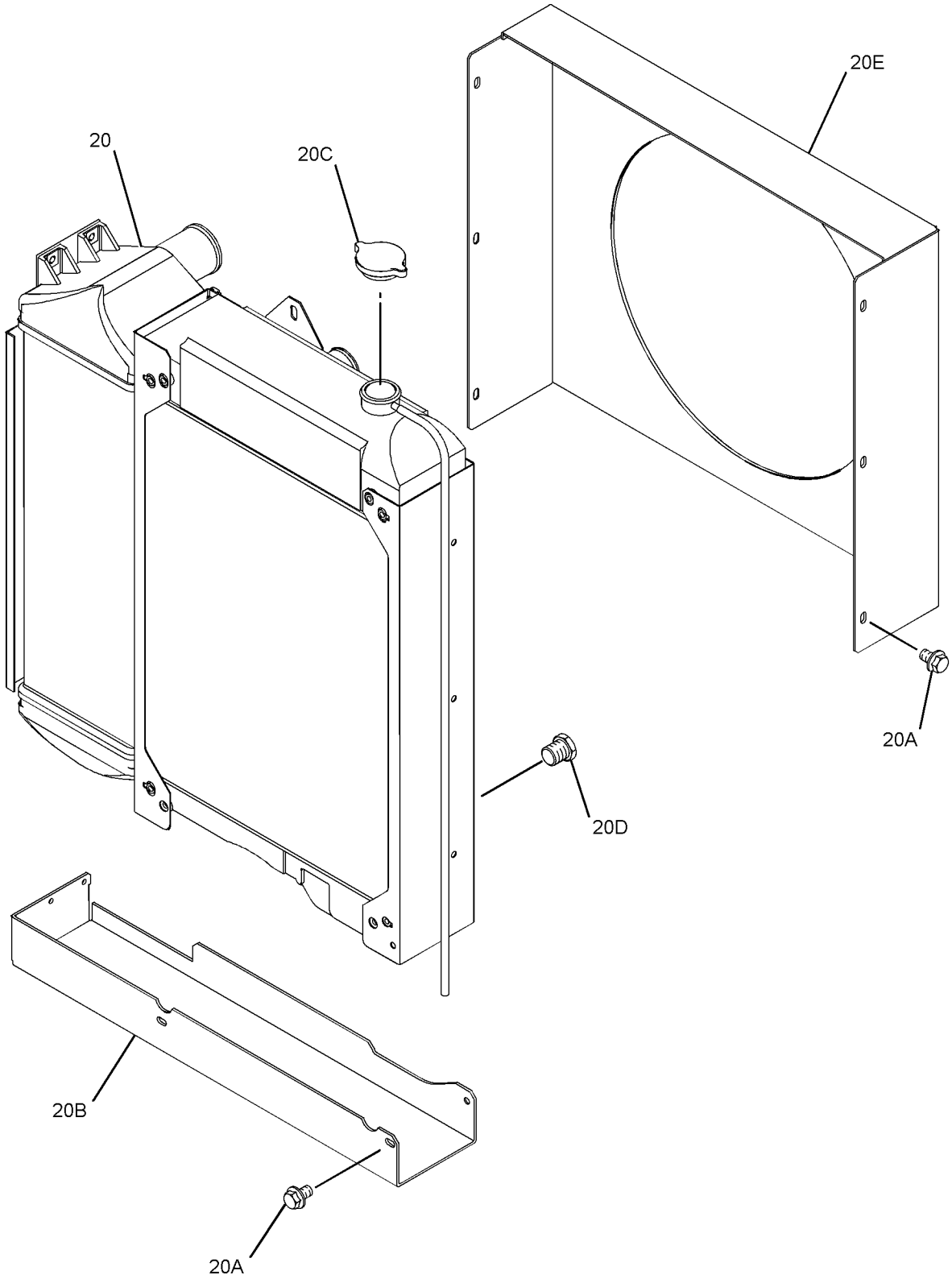

GRAPHIC #3 <END> g01618226

236-9971 RADIATOR GP

SMCS-1353 **i02162719**

NOTE	REF NO	GRAPHIC REF	PART NUMBER	QTY	PART NAME 1 2 3 4 5 6 (PRODUCT LEVEL)	SEE PAGE
	1	2	**5P-0597**	6	CLAMP-HOSE	
	2	2	**5P-0598**	2	CLAMP-HOSE	
M	3	1	**6I-0260**	1	BOLT (M8X1.25X25-MM)	
M	4	1	**6I-0291**	1	NUT (M8X1.25-THD)	
M	5	1	**6I-0594**	3	NUT (M10X1.5-THD)	
	6	1	**7W-2601**	2	SPACER (10.3X19X3.2-MM THK)	
M	7	3	**100-4458**	2	BOLT (M8X1.25X14-MM)	
M	8	1	**100-4461**	2	BOLT (M10X1.5X50-MM)	
M	9	1	**100-4830**	2	BOLT (M10X1.5X20-MM)	
M	10	1	**101-7537**	8	BOLT (M12X1.75X35-MM)	
	11	1	**101-7538**	2	MOUNT	
	12	1	**101-7540**	2	WASHER (11.9X38.2X1.6-MM THK)	
M	13	1	**101-7541**	4	SCREW-FLAT HEAD (M8X1.25X25-MM)	
	14	1	**101-7546**	1	MOUNT	
	15	1	**101-7547**	2	LOCKWASHER	
	16	2	**141-1667**	4	CLAMP-HOSE	
	17	2	**236-7722**	1	HOSE-RADIATOR (UPPER)	
	18	2	**236-7734**	1	HOSE	
	19	2	**236-7735**	2	HOSE	
	20	3	**236-8741**	1	RADIATOR AS	
M	20A	3	**114-4363**	12	BOLT (M8X1.25X12-MM)	
	20B	3	**236-7763**	1	BRACKET-MOUNTING	
	20C	3	**236-7764**	1	CAP-RADIATOR	
	20D	3	**236-7765**	1	PLUG-DRAIN	
	20E	3	**236-8742**	1	GUARD-RADIATOR	
	21	1	**236-8773**	1	BRACKET-MOUNTING	
	22	1	**236-8774**	1	BRACKET	
	23	1	**236-8775**	1	BRACKET	
	24	2	**236-8776**	1	CONNECTOR	
	25	2	**236-8777**	1	HOSE-AIR INLET	
	26	2	**236-8780**	1	TUBE	
	27	2	**236-8781**	1	HOSE-RADIATOR	
	28	3	**236-8782**	1	GUARD (RADIATOR) (RADIATOR) (LEFT HAND)	
	29	3	**236-8783**	1	GUARD (RADIATOR) (RIGHT HAND)	

M - METRIC PART

236-9971 **RADIATOR GP (**contd.**)** **i02162719**

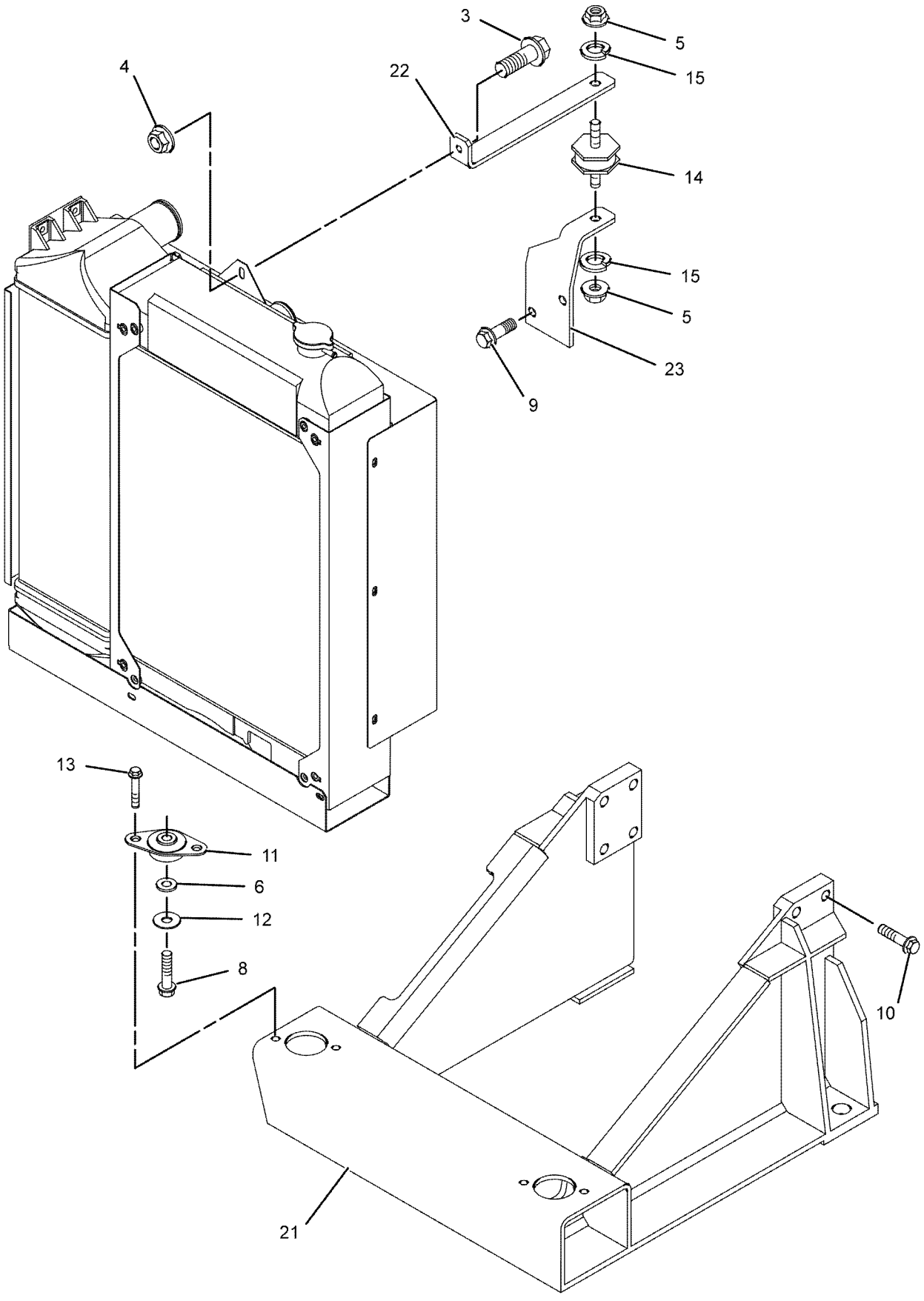

GRAPHIC #1 g01030400

236-9971 **RADIATOR GP** (contd.) **i02162719**

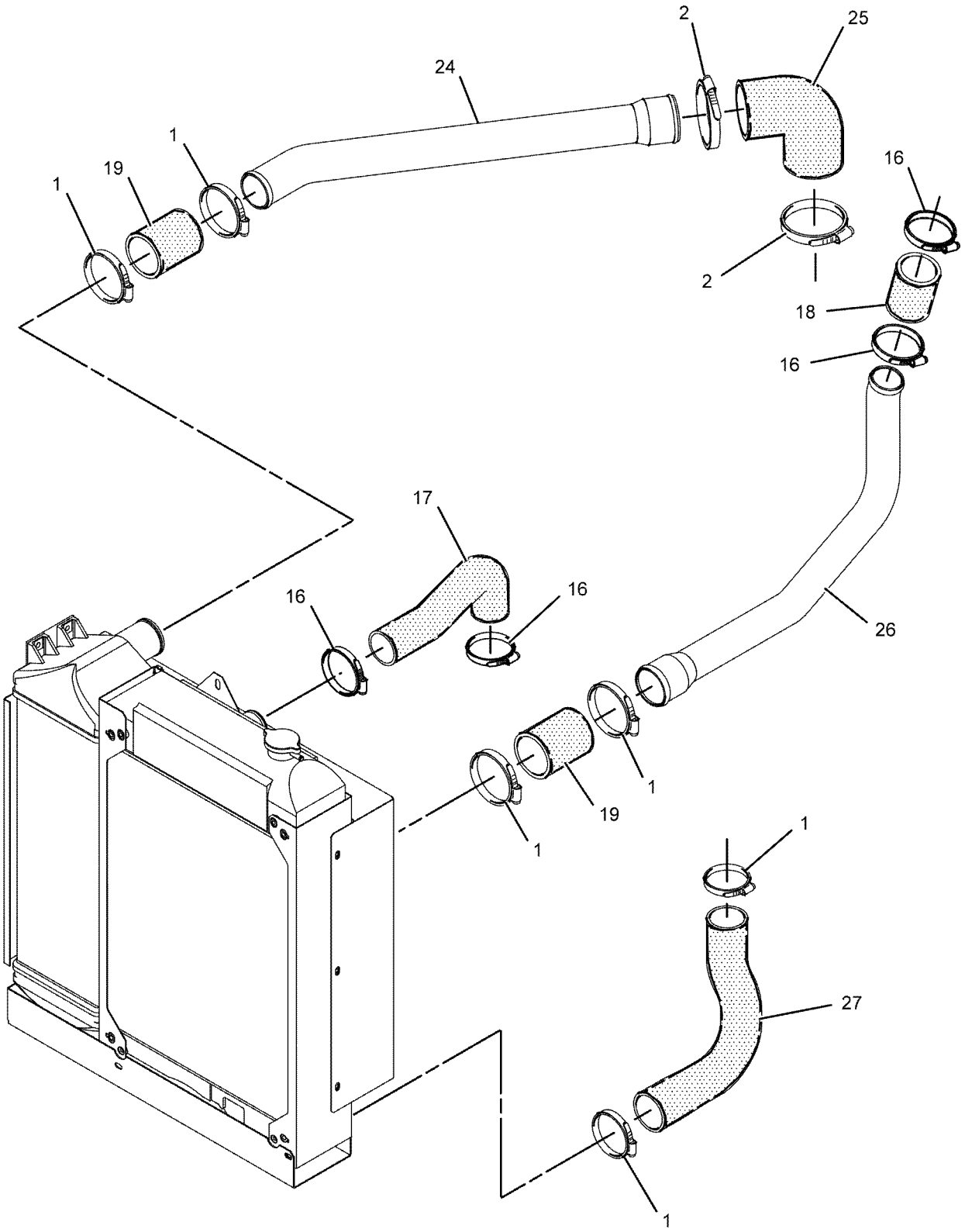

GRAPHIC #2 g01030402

236-9971 **RADIATOR GP (**contd.**)** **i02162719**

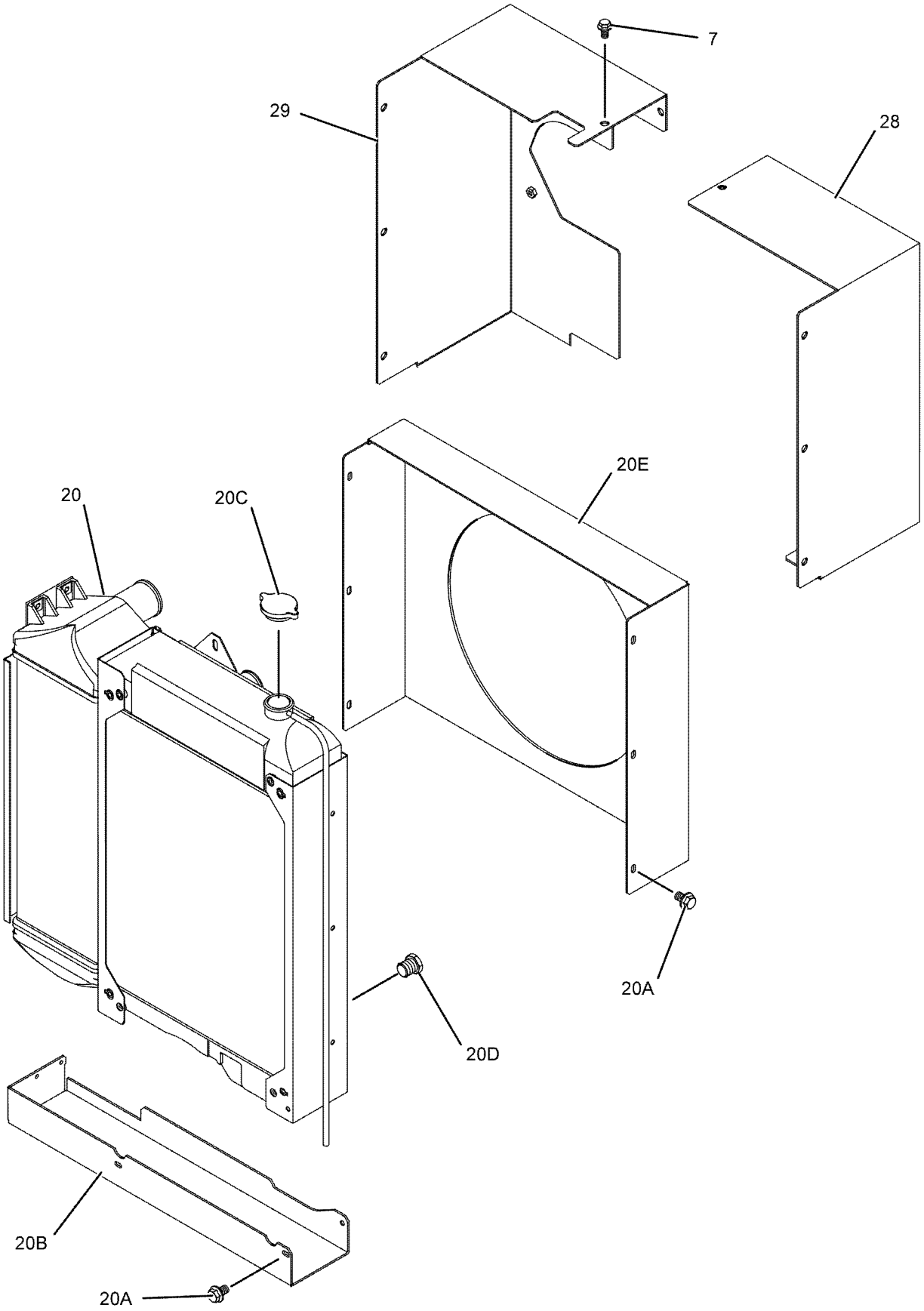

GRAPHIC #3 <END> g01030404

251-8423 RADIATOR GP

TYPE 1

SMCS-1353 **i03658519**

NOTE	REF NO	GRAPHIC REF	PART NUMBER	QTY	PART NAME 1 2 3 4 5 6 (PRODUCT LEVEL)	SEE PAGE
	1	3	**324-3528**	1	CLAMP-HOSE	
M	2	2	**6I-0593**	4	BOLT (M10X1.5X30-MM)	
M	3	2	**6I-0594**	2	NUT (M10X1.5-THD)	
	4	2	**7W-2601**	2	SPACER (10.3X19X3.2-MM THK)	
M	5	2	**100-4461**	2	BOLT (M10X1.5X50-MM)	
M	6	2	**100-4830**	2	BOLT (M10X1.5X20-MM)	
	7	2	**320-9211**	2	MOUNTING	
	8	2	**101-7540**	2	WASHER (11.9X38.2X1.6-MM THK)	
M	9	2	**101-7541**	4	SCREW-FLAT HEAD (M8X1.25X25-MM)	
	10	2	**101-7546**	1	MOUNT	
	11	2	**101-7547**	2	LOCKWASHER	
M	12	2,3	**124-3815**	14	BOLT (M8X1.25X16-MM)	
	13	1	**251-8371**	1	RADIATOR AS	
	13A	1	**103-6710**	1	CAP-RADIATOR	
	14	2	**251-8404**	1	BRACKET	
	15	3	**292-2946**	1	HOSE-RADIATOR (UPPER)	
	16	3	**251-8410**	1	HOSE-RADIATOR (LOWER)	
	17	3	**251-8417**	1	GUARD-FAN	
	18	3	**251-8418**	1	GUARD (RADIATOR, LH)	
	19	3	**251-8419**	1	GUARD (RADIATOR, RH)	
	20	2	**292-2949**	1	BRACKET-SUPPORT	
	21	2	**292-2951**	1	BRACKET	
	22	3	**103-1067**	3	CLAMP-HOSE	

M - METRIC PART

251-8423 **RADIATOR GP (**contd.**)** **i03658519**

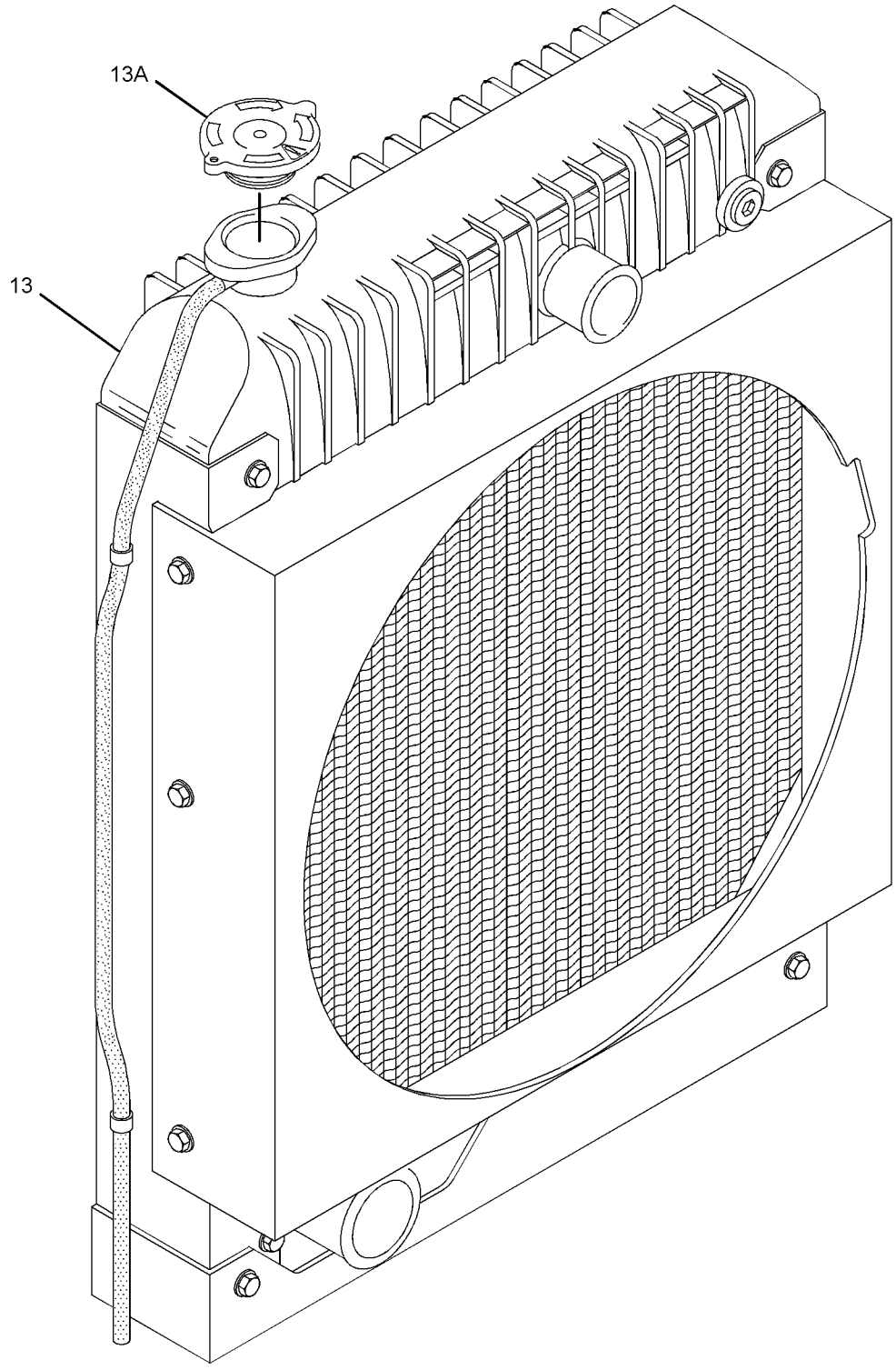

GRAPHIC #1 g01407278

251-8423 **RADIATOR GP (**contd.**)** **i03658519**

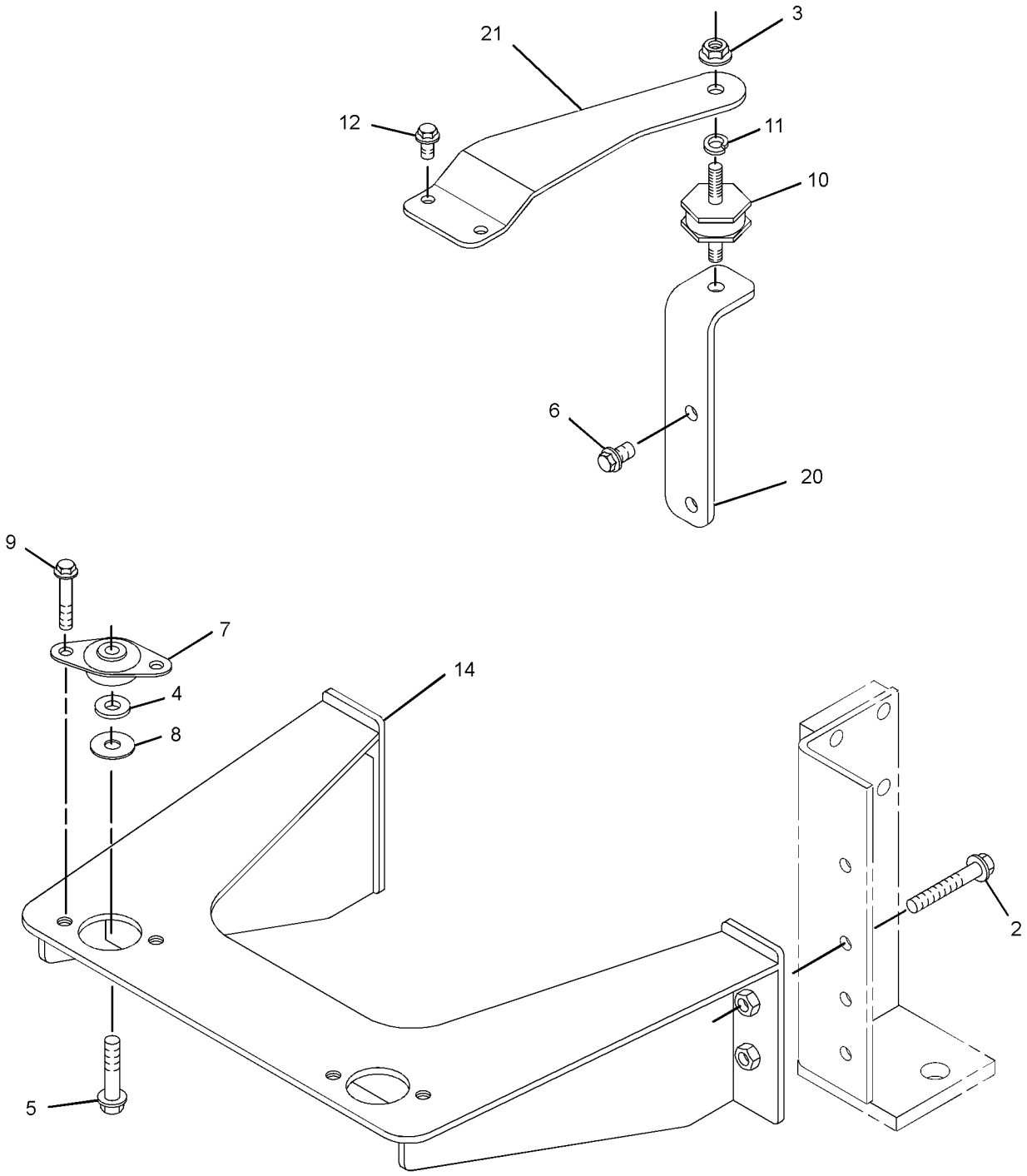

GRAPHIC #2 g01407279

251-8423 **RADIATOR GP (**contd.**)** **i03658519**

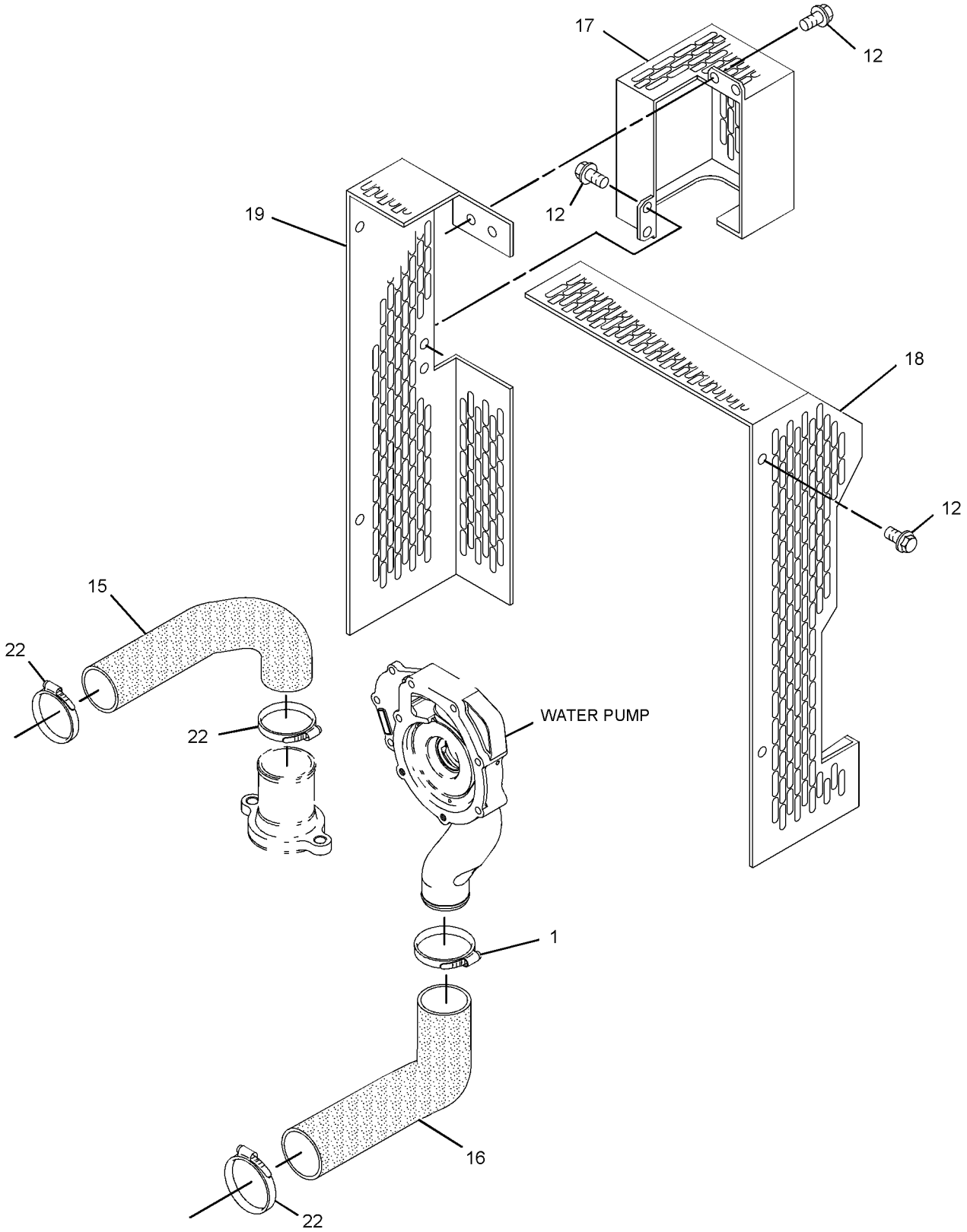

GRAPHIC #3 <END> g01407280

251-8423 RADIATOR GP

TYPE 2

SMCS-1353 **i06715040**

NOTE	REF NO	GRAPHIC REF	PART NUMBER	QTY	PART NAME 1 2 3 4 5 6 (PRODUCT LEVEL)	SEE PAGE
	1	3	**103-6714**	1	CLIP	
M	2	2	**6I-0593**	4	BOLT (M10X1.5X30-MM)	
M	3	2	**6I-0594**	2	NUT (M10X1.5-THD)	
	4	2	**7W-2601**	2	SPACER (10.3X19X3.2-MM THK)	
M	5	2	**100-4461**	2	BOLT (M10X1.5X50-MM)	
M	6	2	**100-4830**	2	BOLT (M10X1.5X20-MM)	
	7	2	**320-9211**	2	MOUNTING	
	8	2	**101-7540**	2	WASHER (11.9X38.2X1.6-MM THK)	
M	9	2	**101-7541**	4	SCREW-FLAT HEAD (M8X1.25X25-MM)	
	10	2	**101-7546**	1	MOUNT	
	11	2	**101-7547**	2	LOCKWASHER	
CM	12	2,3	**124-3815**	10	BOLT (M8X1.25X16-MM)	
	13	1	**251-8371**	1	RADIATOR AS	
	13A	1	**103-6710**	1	CAP-RADIATOR	
	14	2	**382-8906**	1	BRACKET	
	15	3	**292-2946**	1	HOSE-RADIATOR (UPPER)	
	16	3	**251-8410**	1	HOSE-RADIATOR (LOWER)	
C	17	3	**390-9495**	1	GUARD-FAN	
	18	3	**251-8418**	1	GUARD (RADIATOR, LH)	
C	19	3	**390-9138**	1	GUARD AS-FAN (RADIATOR, RH)	
	20	2	**292-2949**	1	BRACKET-SUPPORT	
	21	2	**292-2951**	1	BRACKET	
	22	3	**103-1067**	3	CLAMP-HOSE	

C - CHANGE FROM PREVIOUS TYPE
M - METRIC PART

251-8423 **RADIATOR GP (**contd.**)** **i06715040**

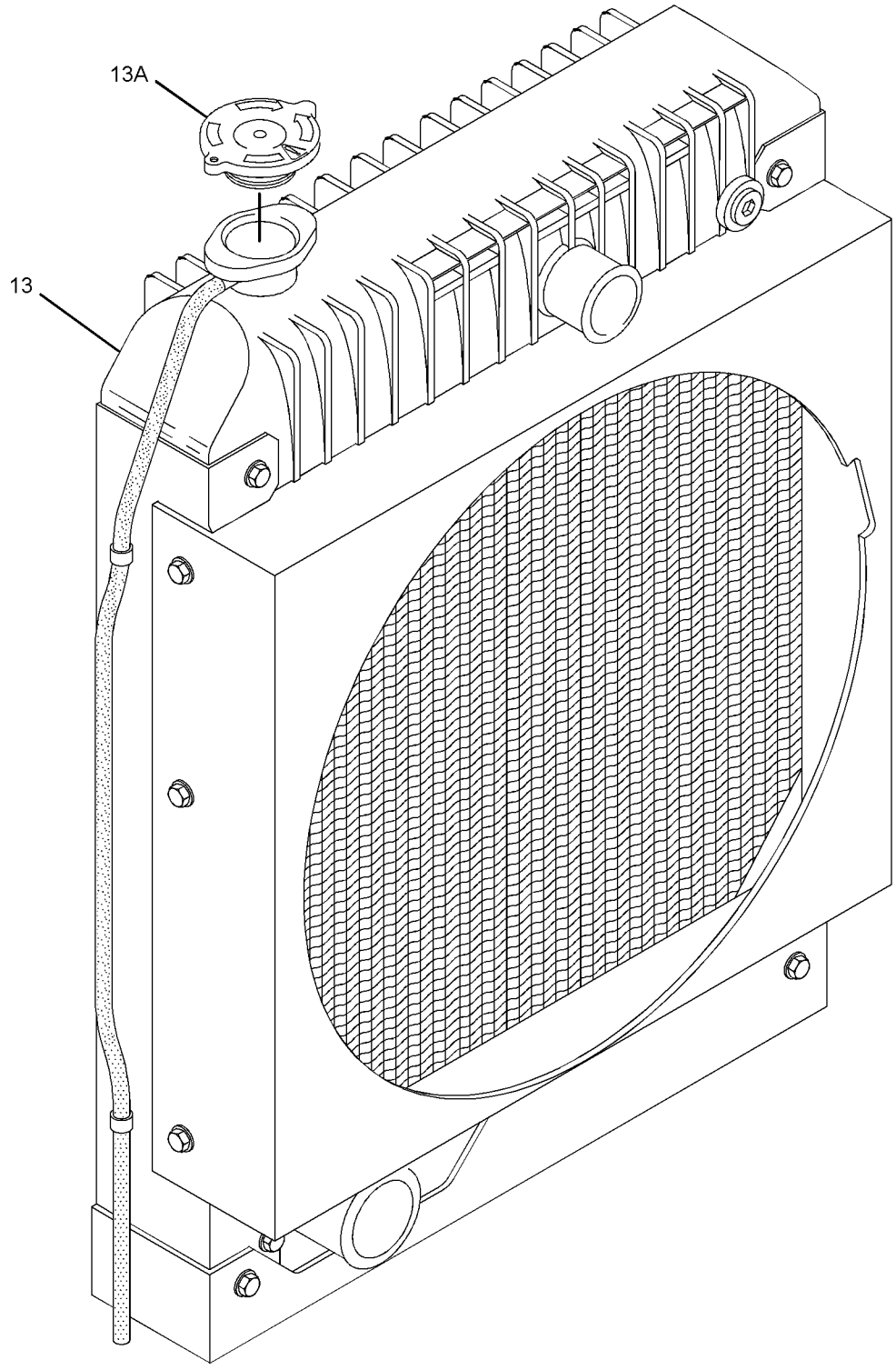

GRAPHIC #1 g01407278

251-8423 **RADIATOR GP (**contd.**)** **i06715040**

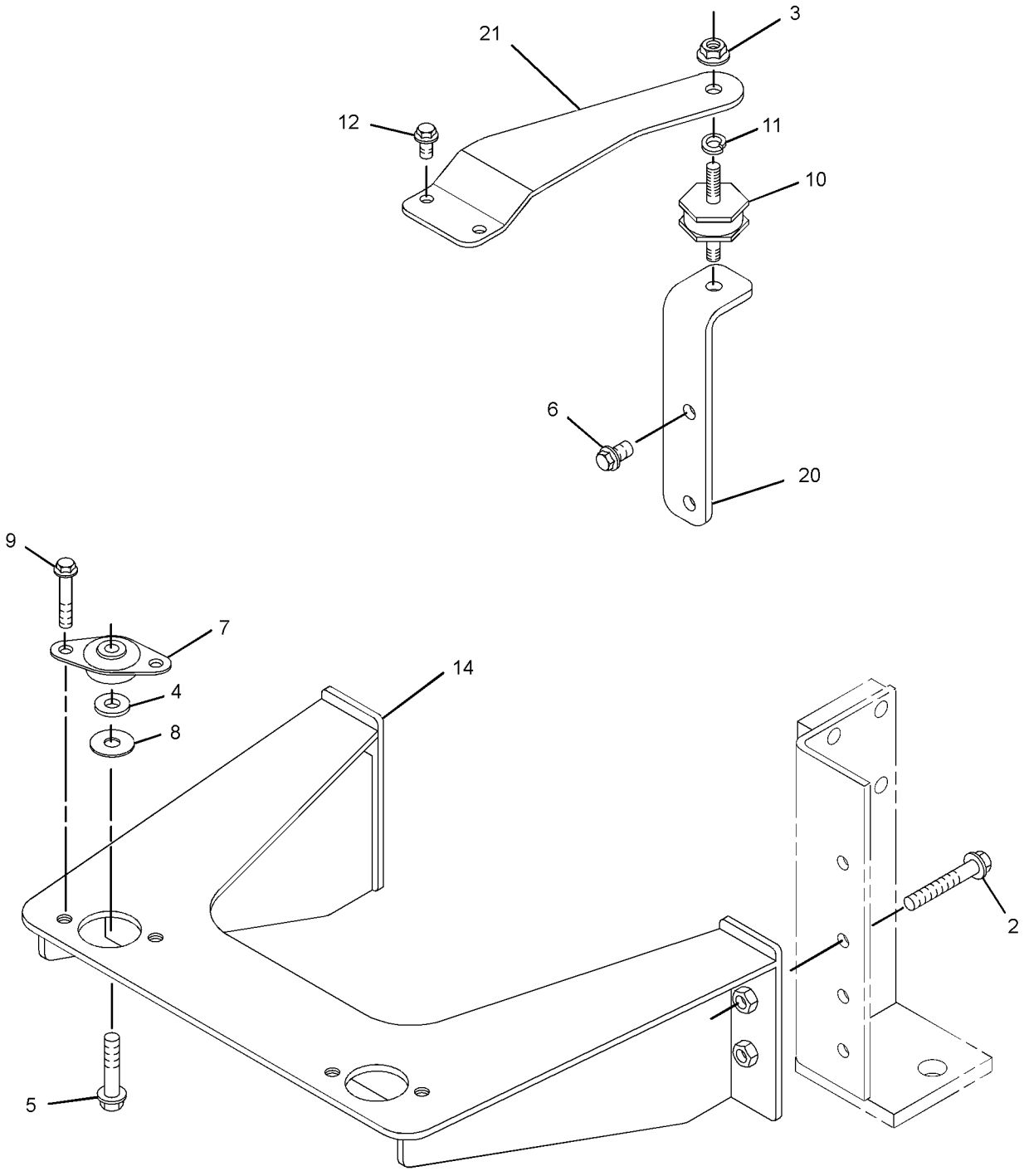

GRAPHIC #2 g01407279

251-8423 **RADIATOR GP (**contd.**)** **i06715040**

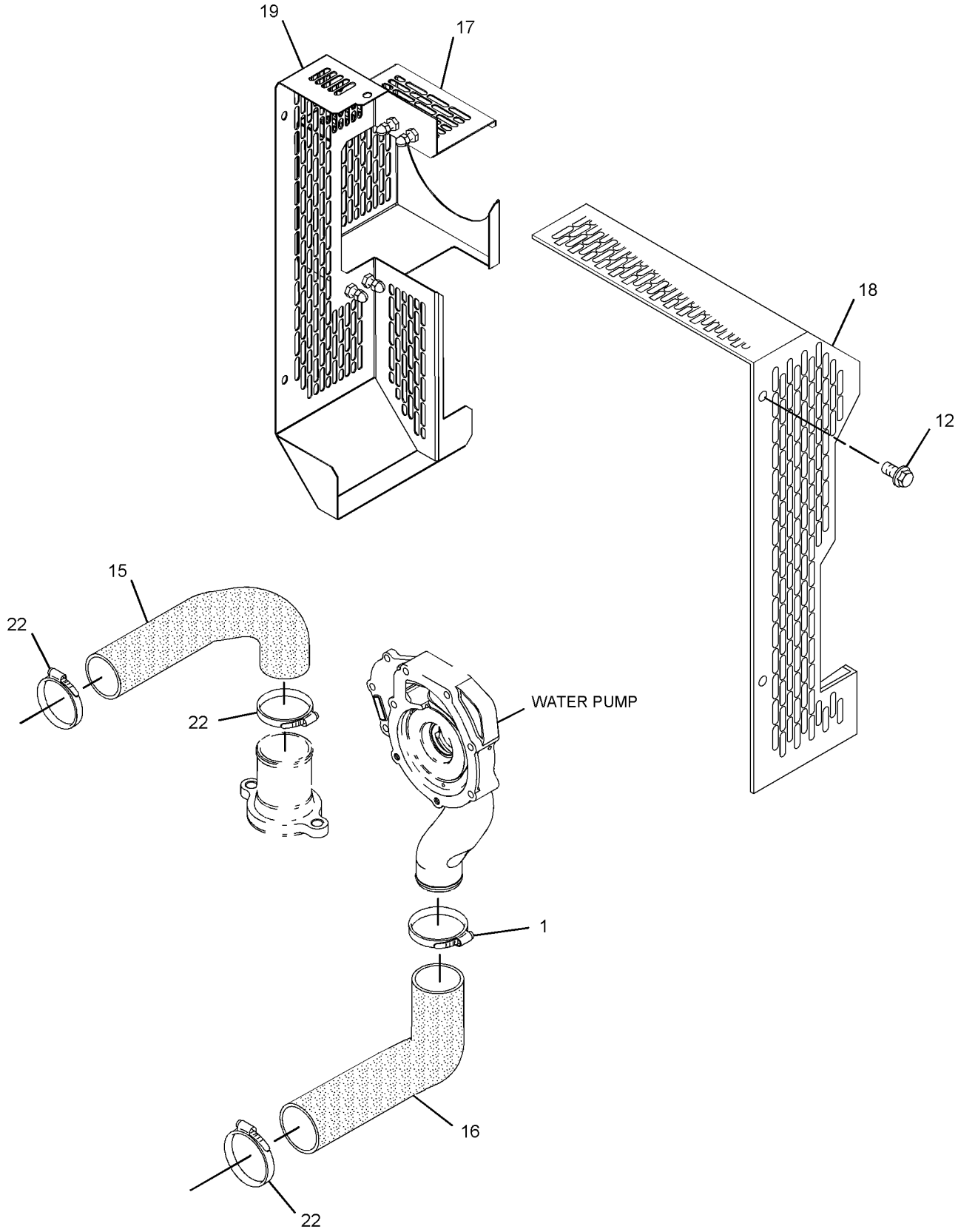

GRAPHIC #3 <END> g03352374

270-8267 RADIATOR GP

ALSO AN ATTACHMENT

SMCS-1353 **i05093168**

NOTE	REF NO	GRAPHIC REF	PART NUMBER	QTY	PART NAME 1 2 3 4 5 6 (PRODUCT LEVEL)	SEE PAGE
	1	2	**324-3528**	3	CLAMP-HOSE	
	2	2	**265-6527**	2	CLIP	
M	3	1	**6I-0260**	1	BOLT (M8X1.25X25-MM)	
M	4	1	**6I-0291**	1	NUT (M8X1.25-THD)	
M	5	1	**6I-0594**	3	NUT (M10X1.5-THD)	
	6	1	**7W-2601**	2	SPACER (10.3X19X3.2-MM THK)	
M	7	1	**100-4461**	2	BOLT (M10X1.5X50-MM)	
M	8	1	**100-4830**	2	BOLT (M10X1.5X20-MM)	
M	9	1	**101-7537**	8	BOLT (M12X1.75X35-MM)	
	10	1	**101-7538**	2	MOUNT	
	11	1	**101-7540**	2	WASHER (11.9X38.2X1.6-MM THK)	
M	12	1	**101-7541**	4	SCREW-FLAT HEAD (M8X1.25X25-MM)	
	13	1	**101-7546**	1	MOUNT	
	14	1	**101-7547**	2	LOCKWASHER	
	15	2	**236-7722**	1	HOSE-RADIATOR (UPPER)	
	16	2	**236-7734**	1	HOSE	
	17	2	**236-7735**	2	HOSE	
	18	3	**236-8741**	1	RADIATOR AS	
M	18A	3	**114-4363**	12	BOLT (M8X1.25X12-MM)	
	18B	3	**236-7763**	1	BRACKET-MOUNTING	
	18C	3	**236-7764**	1	CAP-RADIATOR	
	18D	3	**236-7765**	1	PLUG-DRAIN	
	18E	3	**236-8742**	1	GUARD-RADIATOR	
	19	1	**236-8773**	1	BRACKET-MOUNTING	
	20	1	**311-4621**	1	BRACKET	
	21	1	**367-4171**	1	BRACKET	
	22	2	**236-8776**	1	CONNECTOR	
	23	2	**236-8777**	1	HOSE-AIR INLET	
	24	2	**236-8780**	1	TUBE	
	25	2	**236-8781**	1	HOSE-RADIATOR	
	26	2	**103-1067**	3	CLAMP-HOSE	
	27	2	**317-9229**	4	CLAMP-HOSE	

M - METRIC PART

270-8267 **RADIATOR GP (**contd.**)** **i05093168**

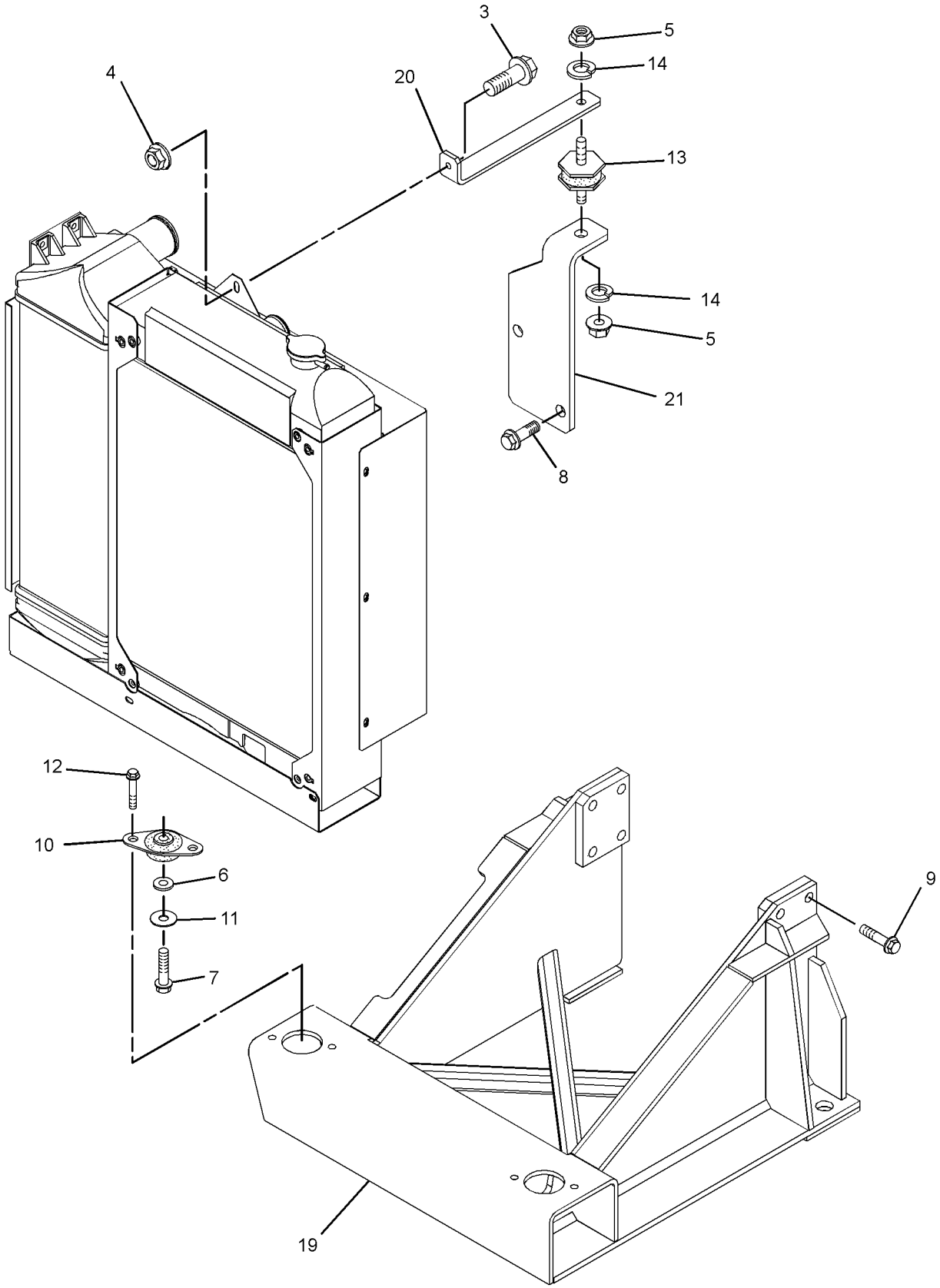

GRAPHIC #1 g01741298

270-8267 **RADIATOR GP** (contd.) **i05093168**

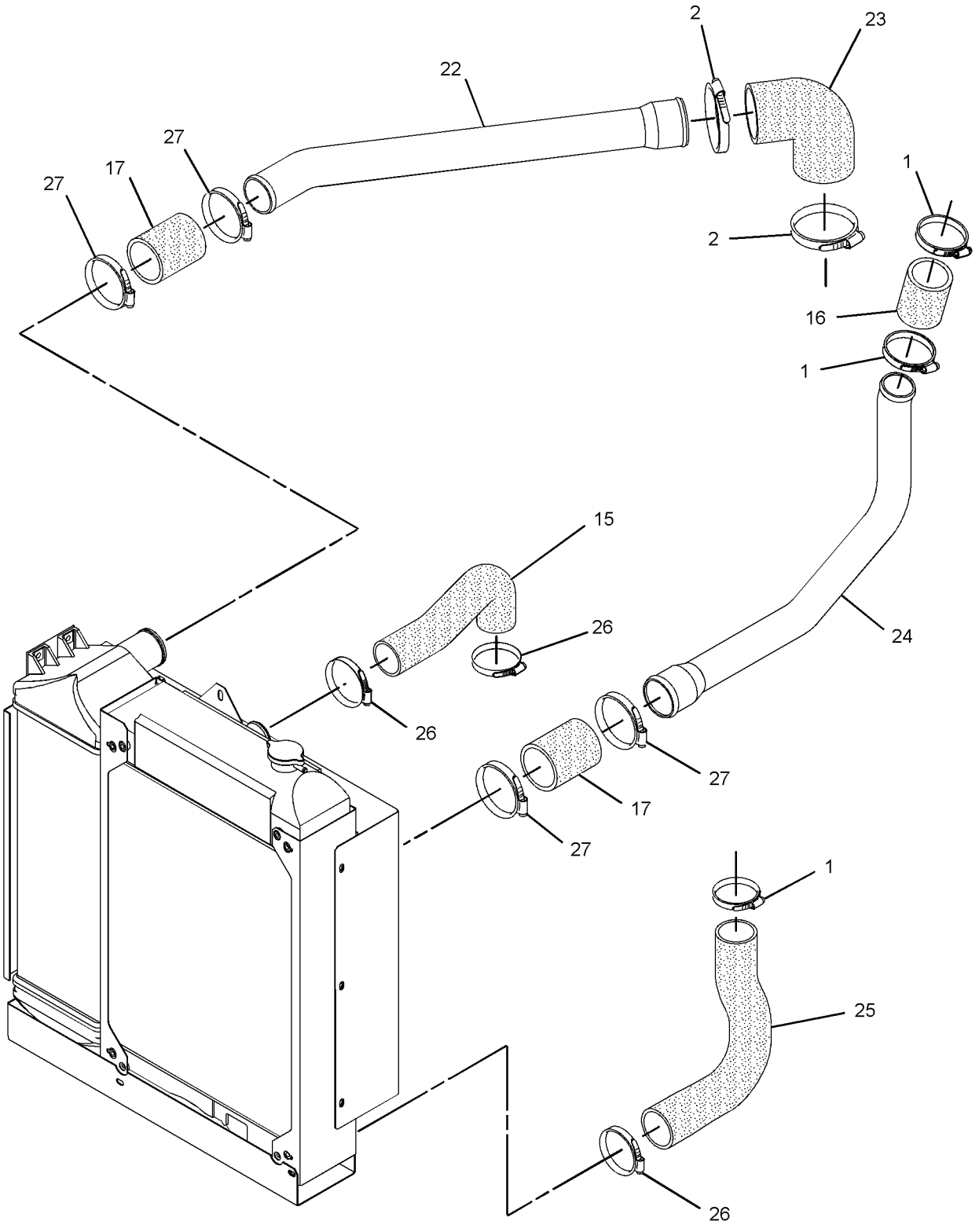

GRAPHIC #2 g01480172

270-8267 **RADIATOR GP (**contd.**)** **i05093168**

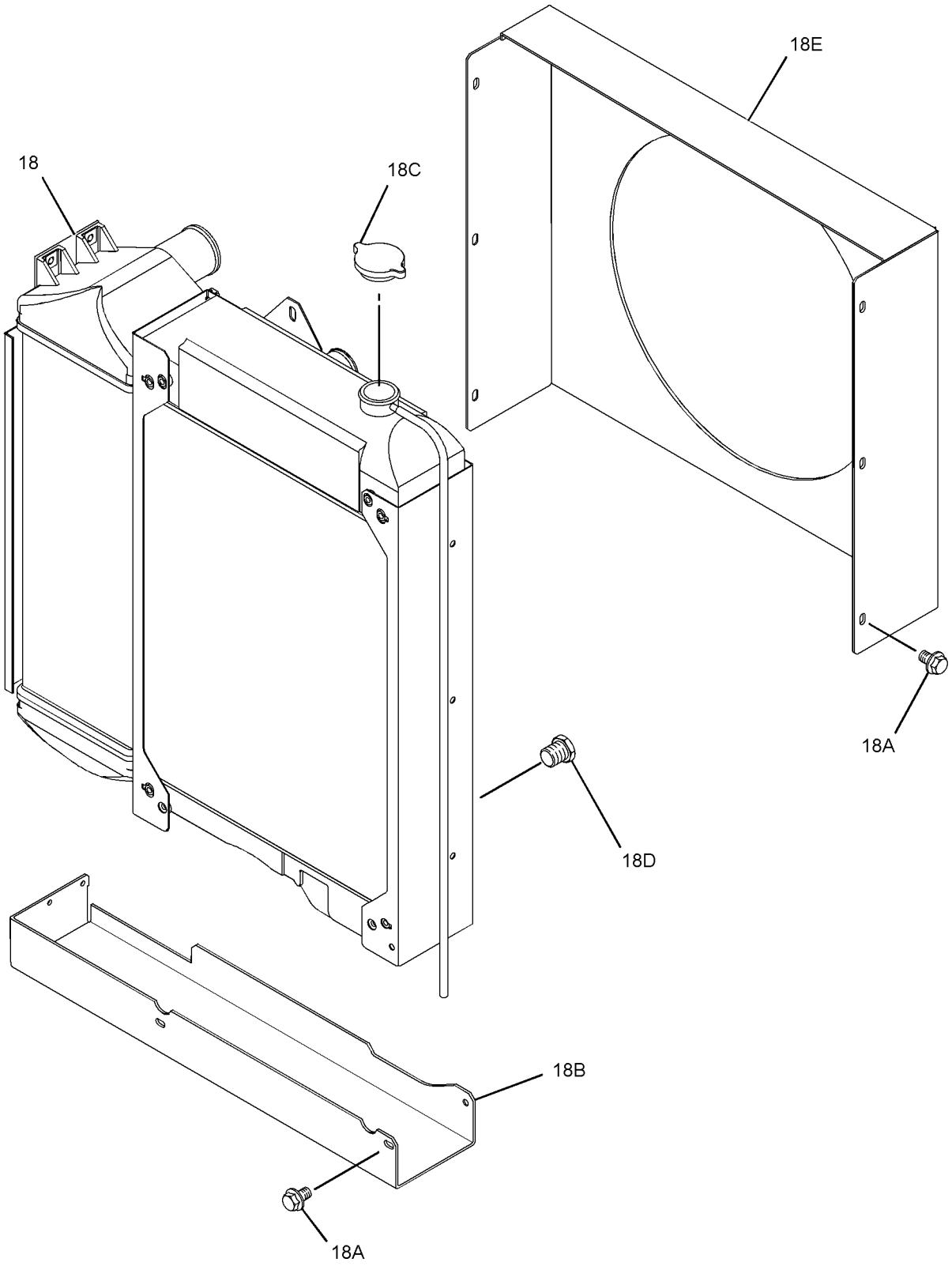

GRAPHIC #3 <END> g01480213

316-5670 RADIATOR GP

SMCS-1353 **i05264159**

NOTE	REF NO	GRAPHIC REF	PART NUMBER	QTY	PART NAME 1 2 3 4 5 6 (PRODUCT LEVEL)	SEE PAGE
	1	2	**103-6714**	1	CLIP	
M	2	2	**6I-0594**	2	NUT (M10X1.5-THD)	
	3	2	**7W-2601**	2	SPACER (10.3X19X3.2-MM THK)	
M	4	2	**100-4461**	2	BOLT (M10X1.5X50-MM)	
M	5	2	**100-4830**	2	BOLT (M10X1.5X20-MM)	
	6	2	**101-7539**	2	WASHER (11.91X47.63X1.625-MM THK)	
	7	2	**101-7540**	2	WASHER (11.9X38.2X1.6-MM THK)	
M	8	2	**101-7541**	4	SCREW-FLAT HEAD (M8X1.25X25-MM)	
	9	2	**101-7546**	1	MOUNT	
	10	2	**103-1067**	3	CLAMP-HOSE	
M	11	2	**124-3815**	2	BOLT (M8X1.25X16-MM)	
	12	1	**251-8371**	1	RADIATOR AS	
	12A	1	**103-6710**	1	CAP-RADIATOR	
	13	2	**251-8410**	1	HOSE-RADIATOR	
	14	2	**320-9211**	1	MOUNTING	
	15	2	**292-2946**	1	HOSE-RADIATOR (UPPER)	
	16	2	**292-2949**	1	BRACKET-SUPPORT	
	17	2	**292-2951**	1	BRACKET	

M - METRIC PART

316-5670 **RADIATOR GP (**contd.**)** **i05264159**

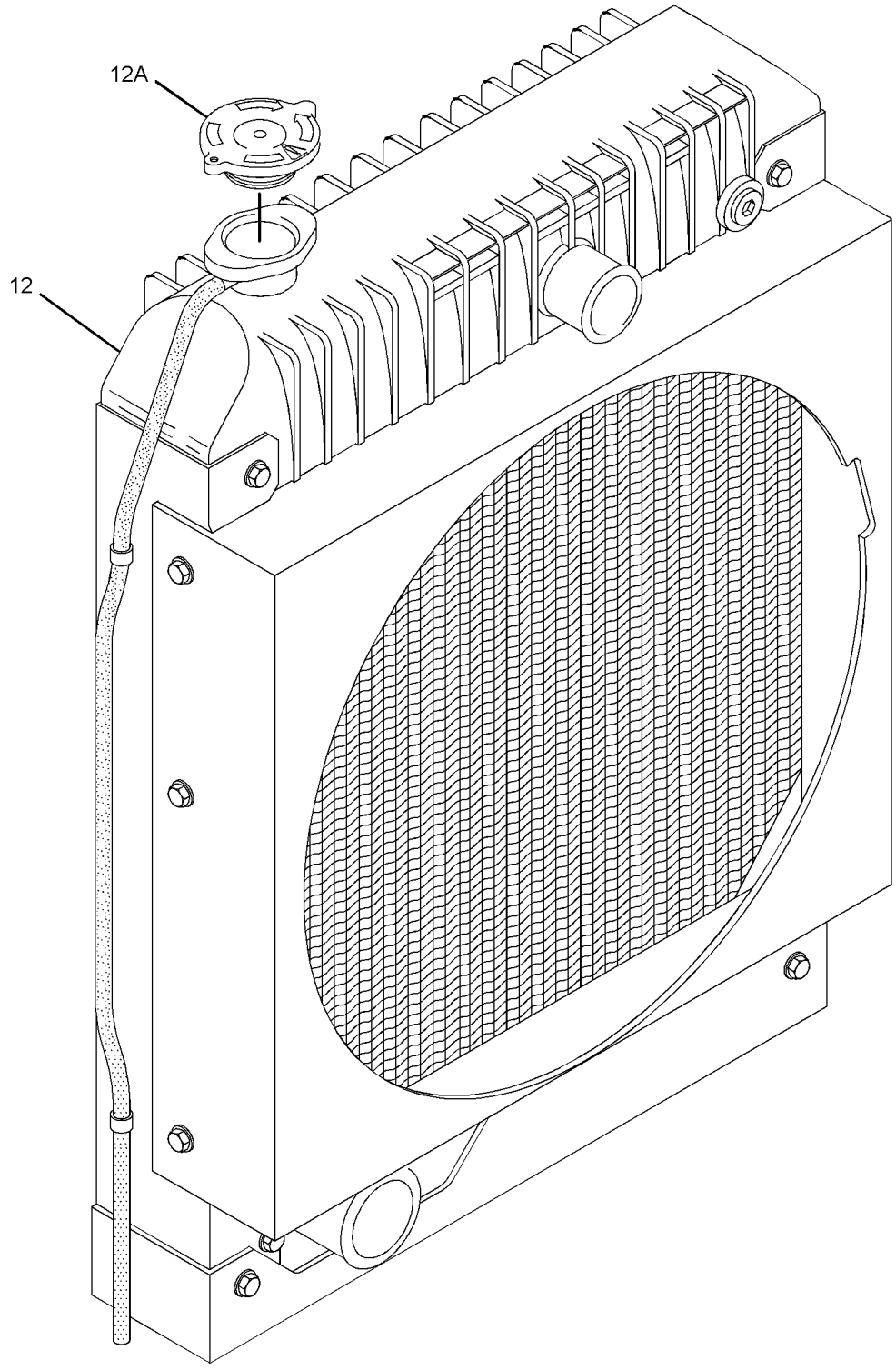

GRAPHIC #1 g01420520

316-5670 **RADIATOR GP (**contd.**)** **i05264159**

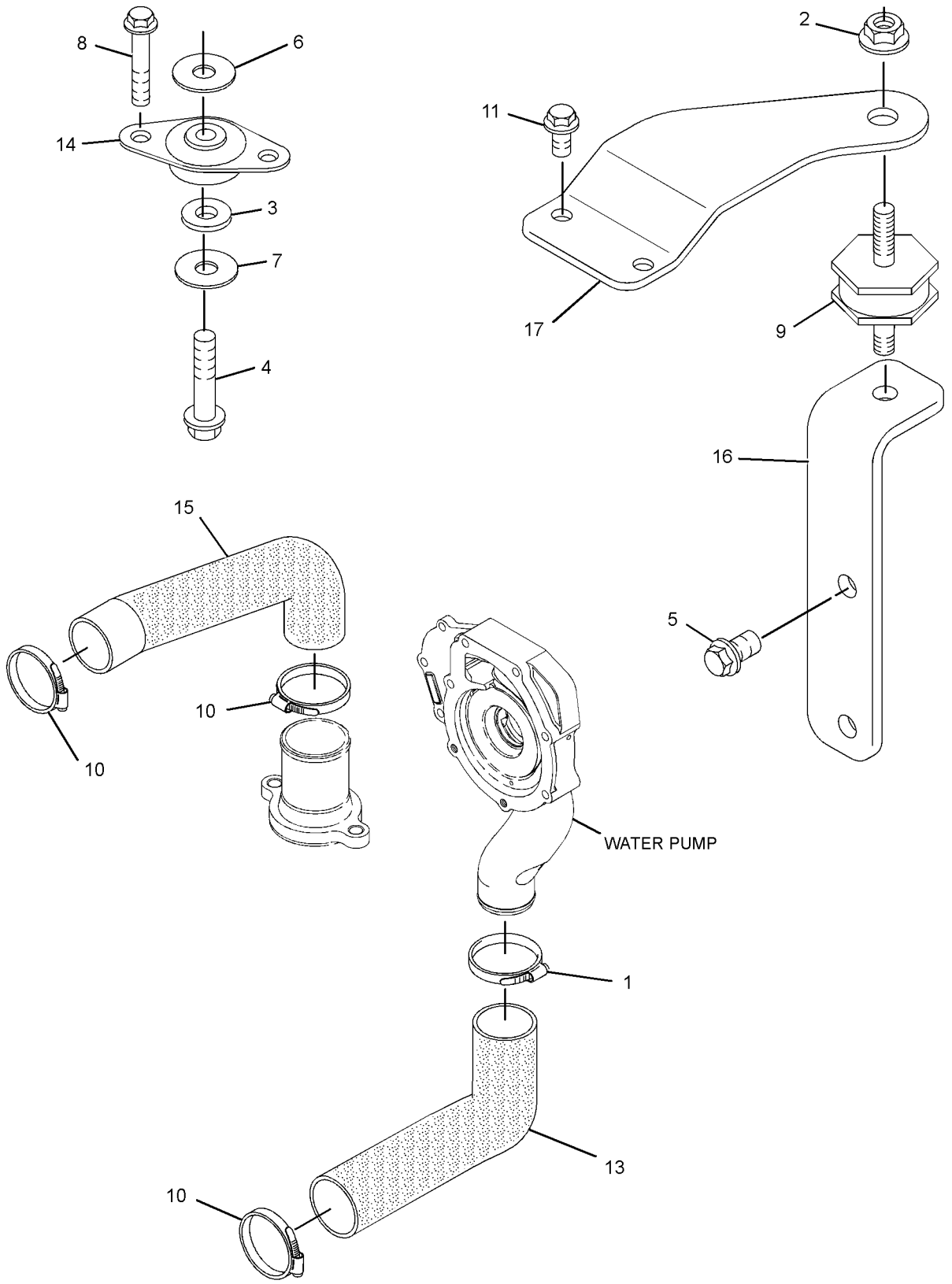

GRAPHIC #2 <END> g01420521

110-2556 AIR CLEANER GP

PART OF 253-0888 AIR CLEANER GP, 290-2045 TURBOCHARGER GP

SMCS-1051, 1054

i04871775

NOTE	REF NO	GRAPHIC REF	PART NUMBER	QTY	PART NAME 1 2 3 4 5 6 (PRODUCT LEVEL)	SEE PAGE
	1	1	**110-6326**	1	FILTER ELEMENT-AIR (PRIMARY)	
	2	1	**110-6331**	1	FILTER ELEMENT-AIR (SECONDARY)	
					PARTS SHOWN IN GRAPHIC(S) WITHOUT A REFERENCE NUMBER ARE NOT SERVICED SEPARATELY	

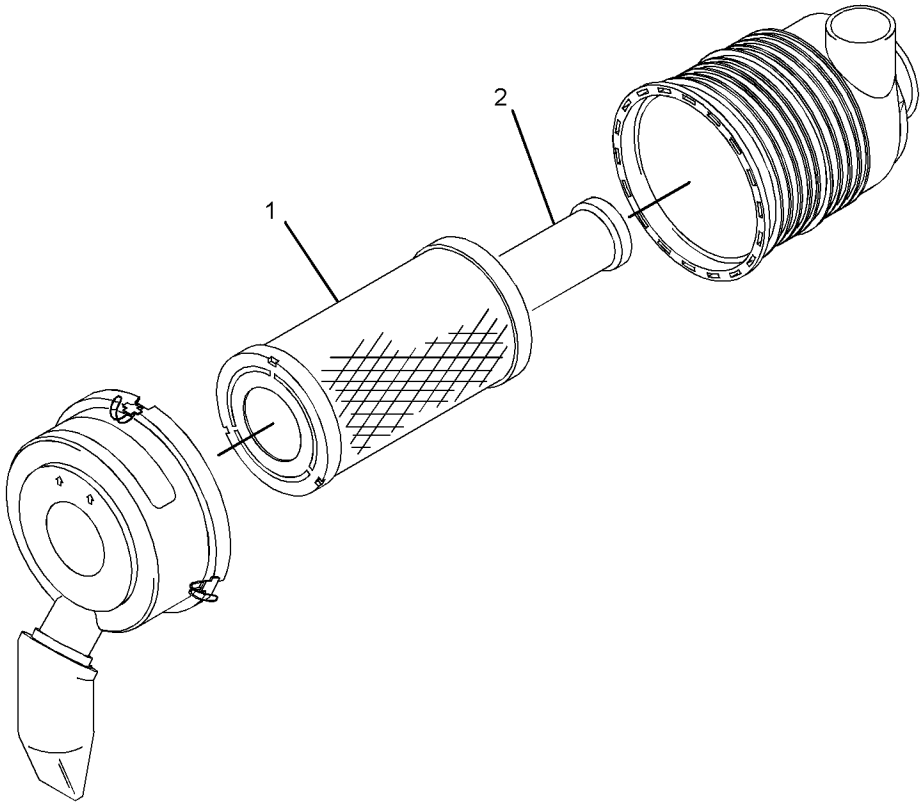

GRAPHIC #1

<END>

g02997556

233-5180 AIR CLEANER GP

PART OF 251-4551 AIR CLEANER GP, 243-4185, 290-2489 TURBOCHARGER GP

SMCS-1051, 1054

i02140345

NOTE	REF NO	GRAPHIC REF	PART NUMBER	QTY	PART NAME 1 2 3 4 5 6 (PRODUCT LEVEL)	SEE PAGE
	1	1	**233-5182**	1	FILTER ELEMENT AS-AIR (PRIMARY)	
	2	1	**233-5184**	1	FILTER ELEMENT AS-AIR (SECONDARY)	

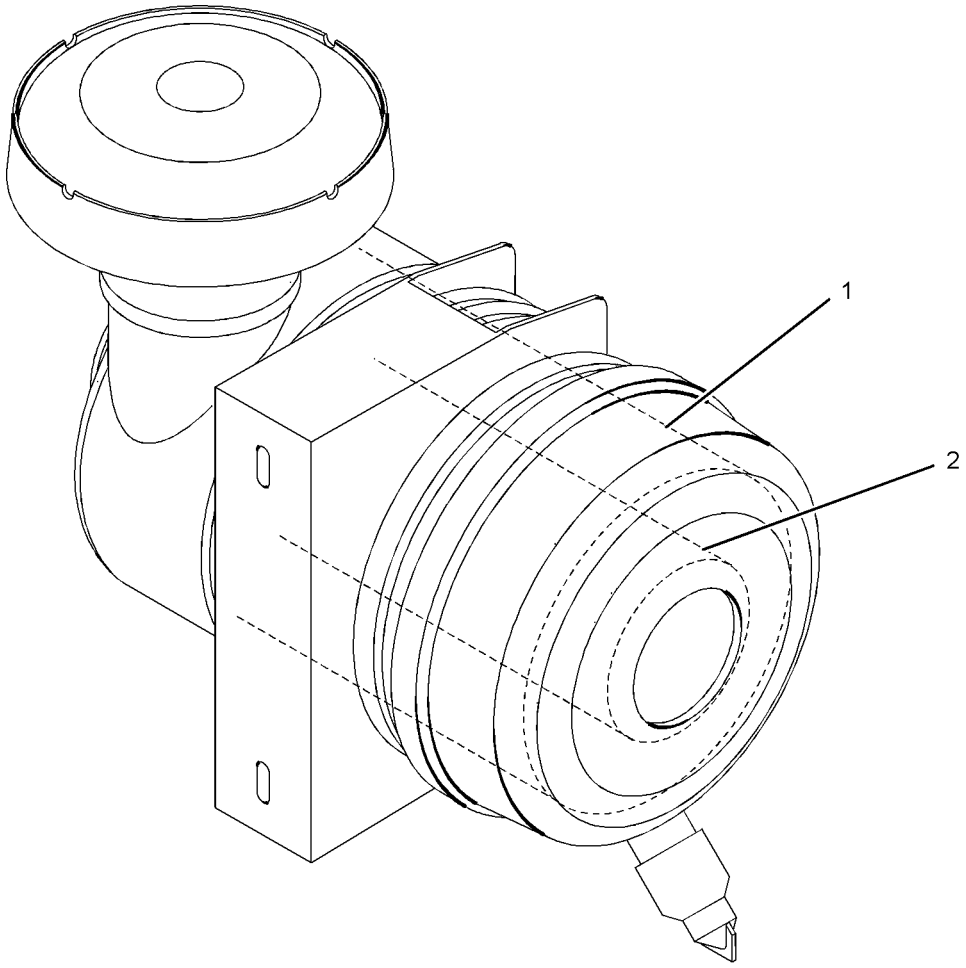

GRAPHIC #1 <END> g01086817

241-8187 AIR CLEANER GP

PART OF 265-5303, 270-8890 TURBOCHARGER GP
ALSO AN ATTACHMENT

SMCS-1051, 1054

i04389929

NOTE	REF NO	GRAPHIC REF	PART NUMBER	QTY	PART NAME 1 2 3 4 5 6 (PRODUCT LEVEL)	SEE PAGE
	1	1	**233-5182**	1	FILTER ELEMENT AS-AIR (PRIMARY)	
	2	1	**233-5184**	1	FILTER ELEMENT AS-AIR (SECONDARY)	
	3	1	**241-8449**	1	BRACKET	
	4	1	**271-5062**	1	VALVE-DUST	
	5	1	**281-8728**	1	INDICATOR AS-AIR FILTER CHANGE	
	6	1	**284-8196**	1	STRAP-RUBBER	
	7	1	**284-8197**	1	CONNECTOR	

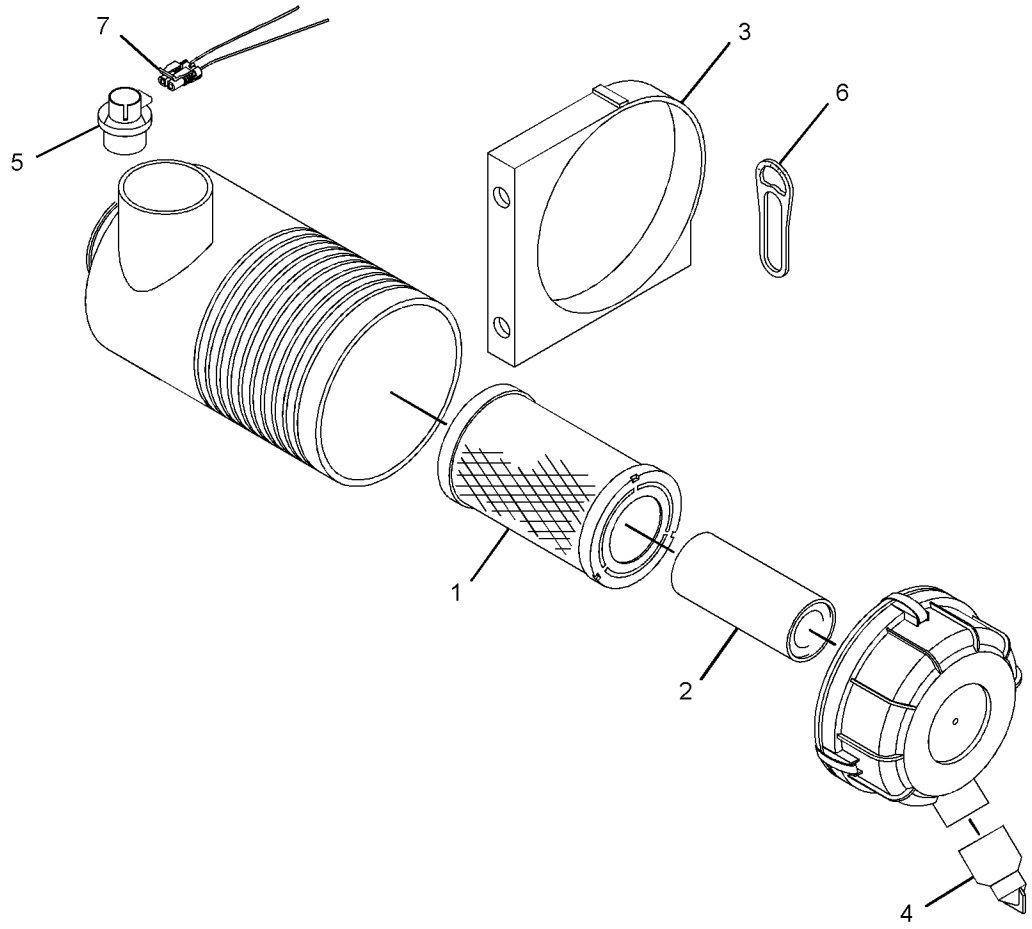

GRAPHIC #1 <END> g02579156

251-4551 AIR CLEANER GP

TYPE 1

SMCS-1051, 1054 **i02140366**

NOTE	REF NO	GRAPHIC REF	PART NUMBER	QTY	PART NAME 1 2 3 4 5 6 (PRODUCT LEVEL)	SEE PAGE
	1	1	**5P-0598**	1	CLAMP-HOSE	
M	2	1	**6I-0254**	2	BOLT (M8X1.25X30-MM)	
M	3	1	**6I-0291**	2	NUT (M8X1.25-THD)	
M	4	1	**6I-0572**	2	BOLT (M8X1.25X20-MM)	
M	5	1	**140-8783**	2	BOLT (M10X1.5X45-MM)	
	6	1	**141-1667**	1	CLAMP-HOSE	
Y	7	1	**233-5180**	1	AIR CLEANER GP	1024
	8	1	**236-8748**	1	BRACKET-MOUNTING	
	9	1	**236-8750**	1	HOSE-AIR	

M - METRIC PART
Y - SEPARATE ILLUSTRATION

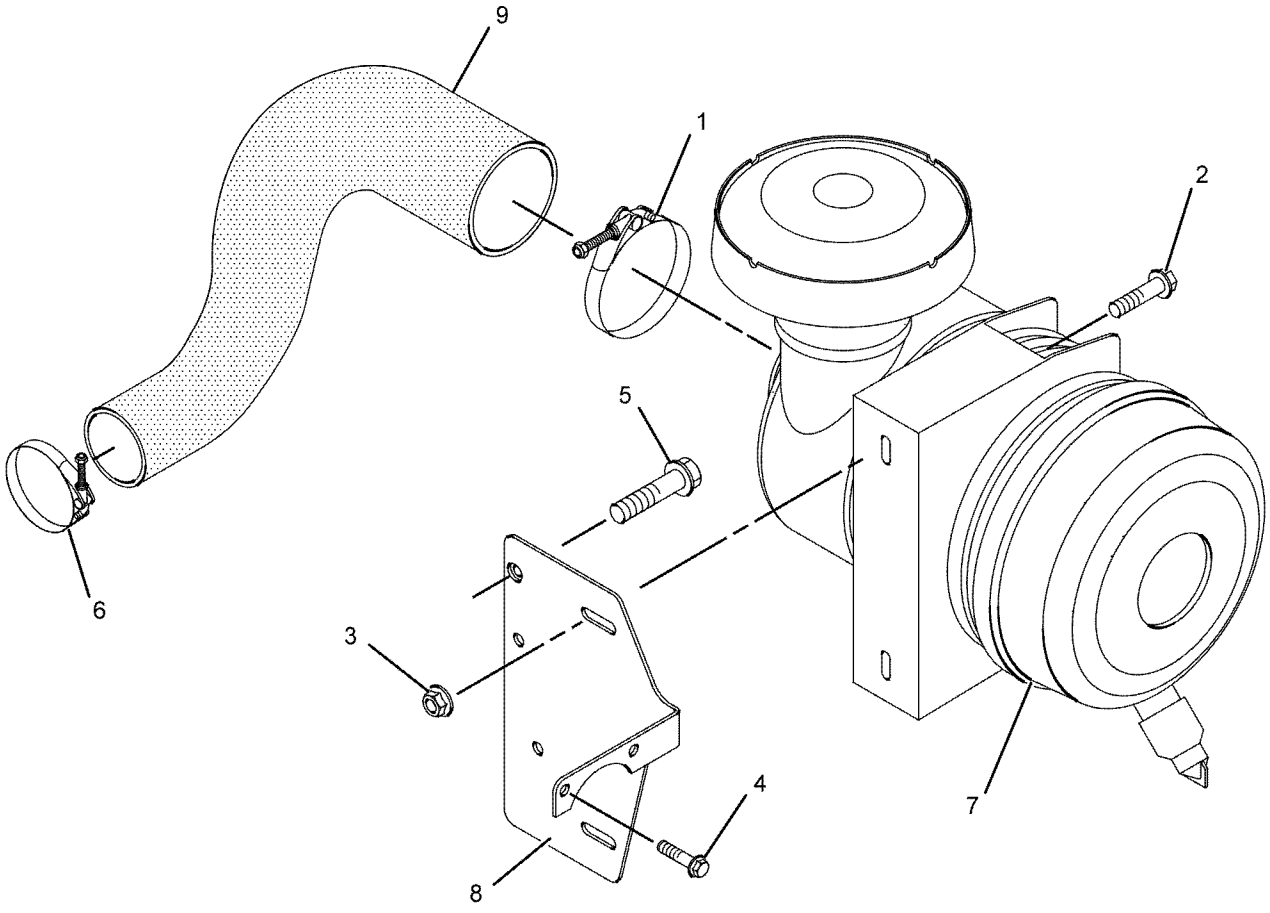

GRAPHIC #1 <END> g01086829

251-4551 AIR CLEANER GP

TYPE 2

SMCS-1051, 1054 **i02635207**

NOTE	REF NO	GRAPHIC REF	PART NUMBER	QTY	PART NAME 1 2 3 4 5 6 (PRODUCT LEVEL)	SEE PAGE
	1	1	**5P-0598**	1	CLAMP-HOSE	
M	2	1	**6I-0254**	2	BOLT (M8X1.25X30-MM)	
M	3	1	**6I-0291**	2	NUT (M8X1.25-THD)	
CM	4	1	**100-4830**	1	BOLT (M10X1.5X20-MM)	
	6	1	**141-1667**	1	CLAMP-HOSE	
Y	7	1	**233-5180**	1	AIR CLEANER GP	1024
C	8	1	**290-2488**	1	BRACKET-MOUNTING	
	9	1	**236-8750**	1	HOSE-AIR	

C - CHANGE FROM PREVIOUS TYPE
M - METRIC PART
Y - SEPARATE ILLUSTRATION

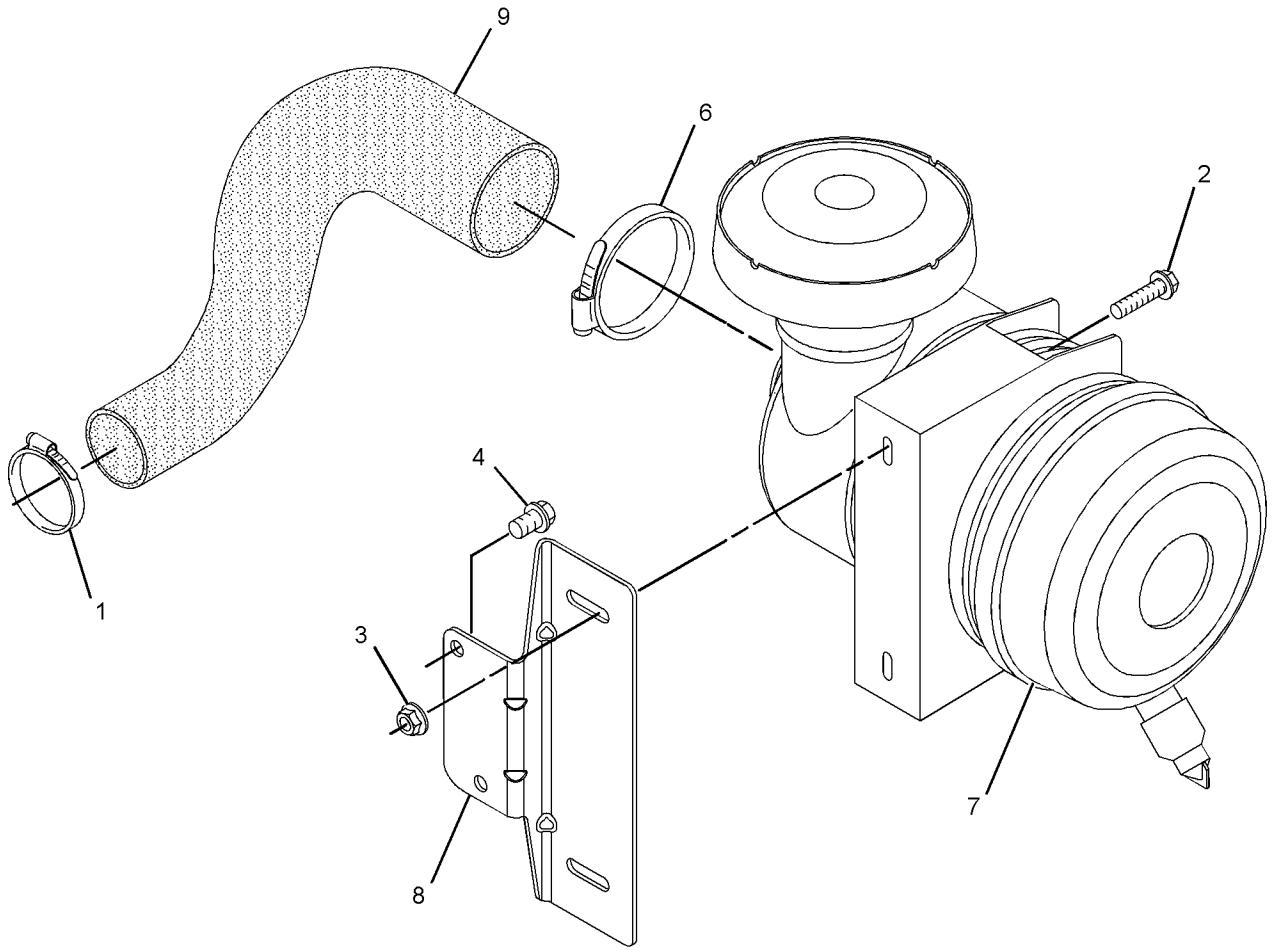

GRAPHIC #1 <END> g01320891

252-8751 AIR CLEANER GP

PART OF 253-0888 AIR CLEANER GP, 290-2045 TURBOCHARGER GP

SMCS-1051, 1054

i02456225

NOTE	REF NO	GRAPHIC REF	PART NUMBER	QTY	PART NAME 1 2 3 4 5 6 (PRODUCT LEVEL)	SEE PAGE
	1	1	**110-6326**	1	FILTER ELEMENT-AIR (PRIMARY)	
	2	1	**110-6331**	1	FILTER ELEMENT-AIR (SECONDARY)	
	3	1	**9M-6738**	1	CLAMP-HOSE	
	4	1	**101-7856**	1	CAP (AIR CLEANER)	
	5	1	**127-9376**	1	COVER	
	6	1	**127-9377**	1	VALVE-DUST	
	7	1	**175-2584**	1	BRACKET	
	8	1	**252-9208**	1	INDICATOR-AIR FILTER CHANGE	

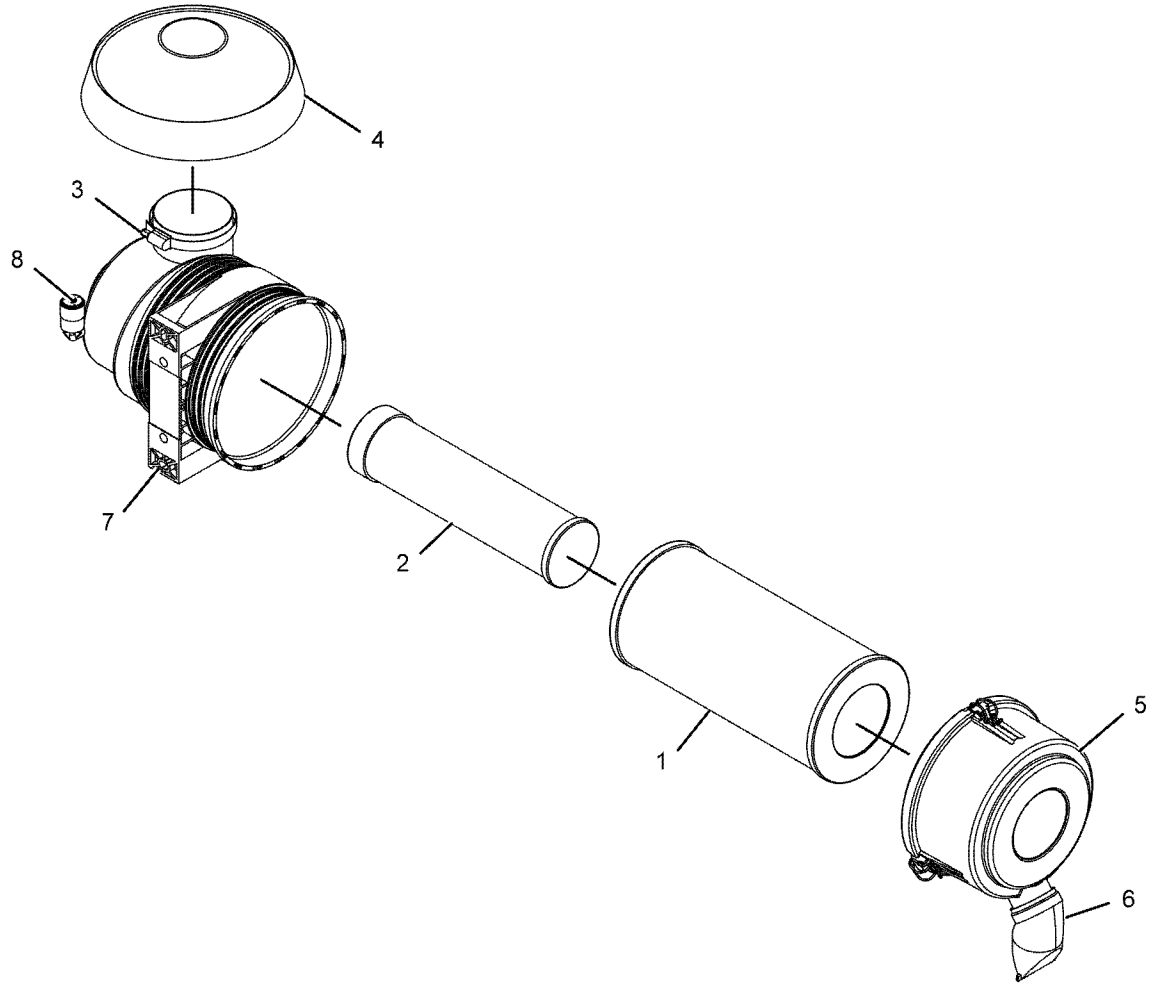

GRAPHIC #1 <END> g01078182

253-0888 AIR CLEANER GP

TYPE 1

SMCS-1051, 1054 **i02513569**

NOTE	REF NO	GRAPHIC REF	PART NUMBER	QTY	PART NAME 1 2 3 4 5 6 (PRODUCT LEVEL)	SEE PAGE
	1	1	**5P-0598**	1	CLAMP-HOSE	
M	2	1	**6I-0260**	2	BOLT (M8X1.25X25-MM)	
M	3	1	**100-4830**	2	BOLT (M10X1.5X20-MM)	
	4	1	**6L-4725**	1	CLAMP-HOSE	
	5	1	**286-4339**	1	BRACKET-MOUNTING	
	6	1	**252-6292**	1	HOSE-AIR	
Y	7	1	**252-8751**	1	AIR CLEANER GP	1028

M - METRIC PART
Y - SEPARATE ILLUSTRATION

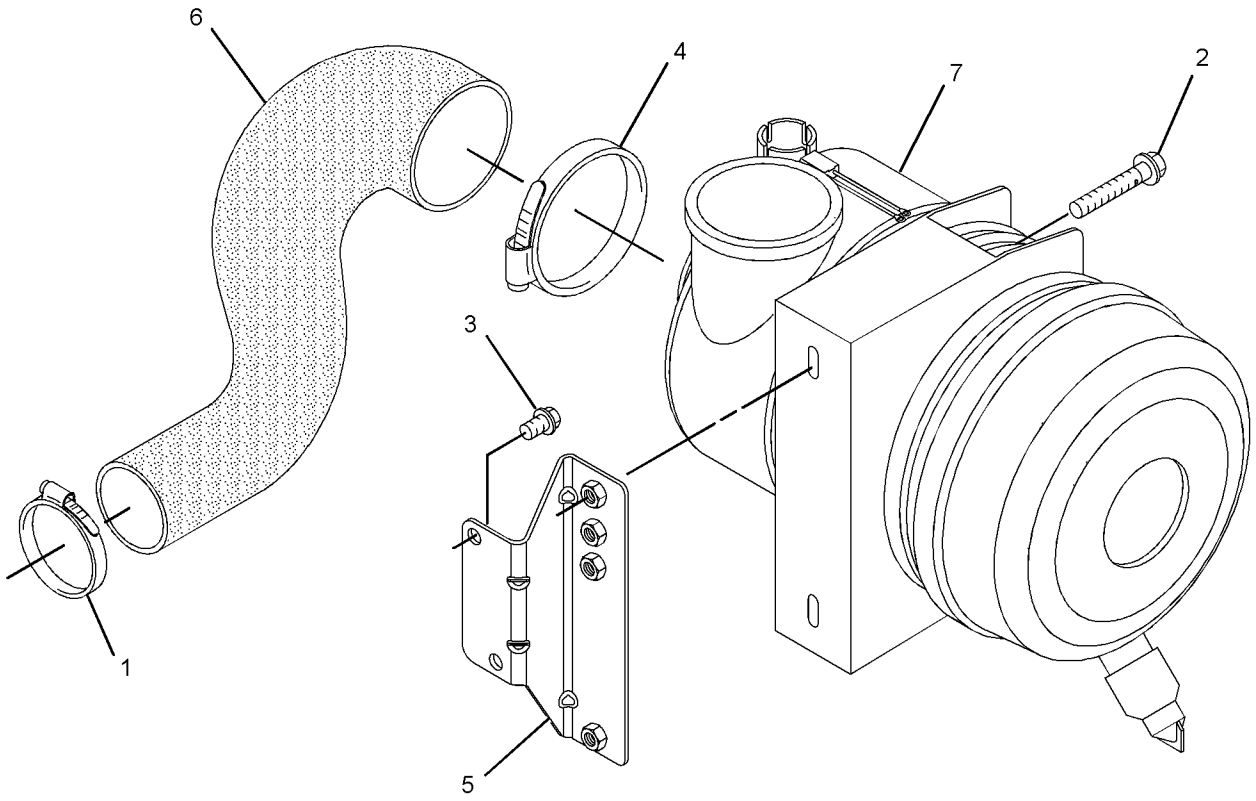

GRAPHIC #1 <END> g01419793

253-0888 AIR CLEANER GP

TYPE 2

SMCS-1051, 1054 **i05897240**

NOTE	REF NO	GRAPHIC REF	PART NUMBER	QTY	PART NAME 1 2 3 4 5 6 (PRODUCT LEVEL)	SEE PAGE
	1	1	**5P-0598**	1	CLAMP-HOSE	
M	2	1	**6I-0260**	2	BOLT (M8X1.25X25-MM)	
M	3	1	**100-4830**	2	BOLT (M10X1.5X20-MM)	
	4	1	**6L-4725**	1	CLAMP-HOSE	
	5	1	**286-4339**	1	BRACKET-MOUNTING	
C	6	1	**268-5354**	1	HOSE	
CY	7	1	**110-2556**	1	AIR CLEANER GP	1023
C	8	1	**101-7856**	1	CAP (AIR CLEANER)	
C	9	1	**418-3216**	1	BRACKET	
C	10	1	**315-4691**	1	INDICATOR-AIR FILTER CHANGE	

C - CHANGE FROM PREVIOUS TYPE
M - METRIC PART
Y - SEPARATE ILLUSTRATION

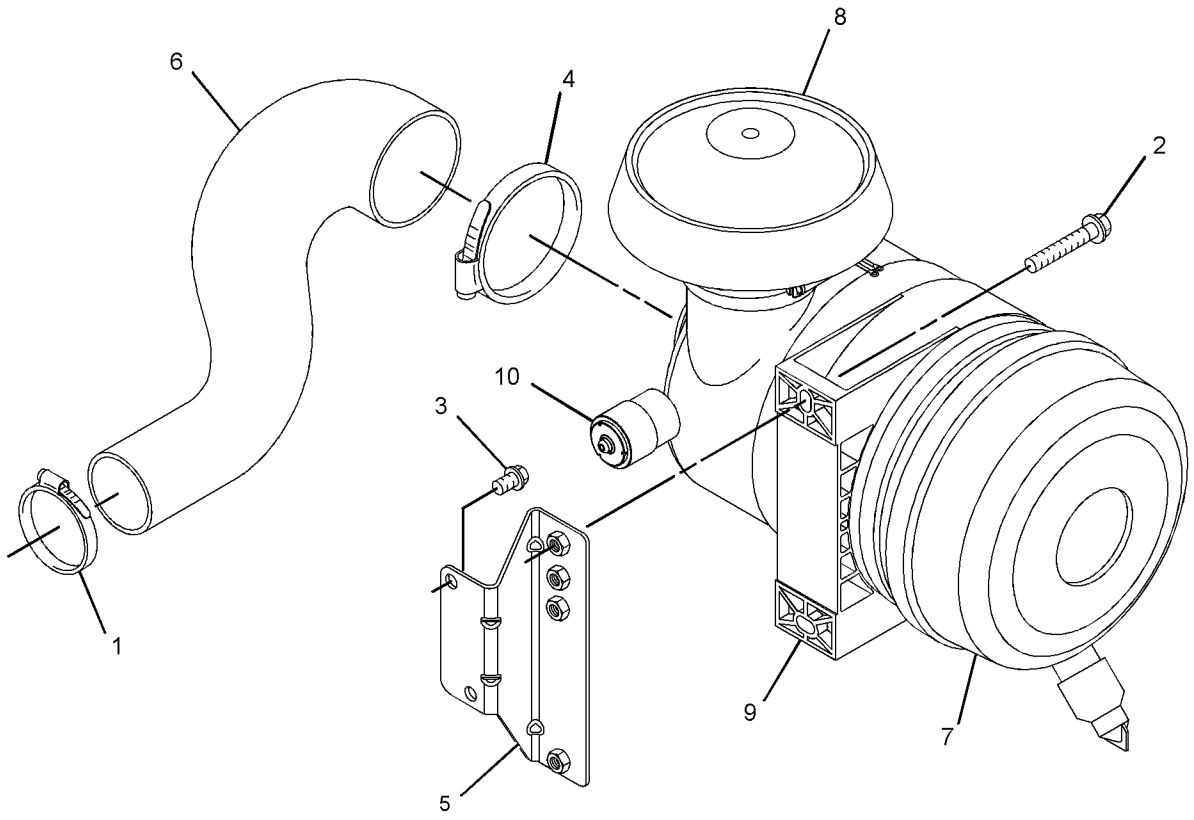

GRAPHIC #1 <END> g03709123

254-0076 AIR CLEANER GP

PART OF 254-3309 AIR CLEANER GP, 267-8817 CONNECTION GP-INLET

SMCS-1051, 1054 **i03260823**

NOTE	REF NO	GRAPHIC REF	PART NUMBER	QTY	PART NAME 1 2 3 4 5 6 (PRODUCT LEVEL)	SEE PAGE
	1	1	**9M-7959**	1	CLAMP-HOSE	
	2	1	**101-7856**	1	CAP (AIR CLEANER)	
	3	1	**123-2367**	1	FILTER ELEMENT-AIR (PRIMARY)	
	4	1	**123-2368**	1	FILTER ELEMENT-AIR (SECONDARY)	
	5	1	**127-9674**	1	COVER	
	6	1	**127-9675**	1	VALVE-DUST	
	7	1	**127-9676**	1	CLAMP	
	8	1	**252-9208**	1	INDICATOR-AIR FILTER CHANGE	

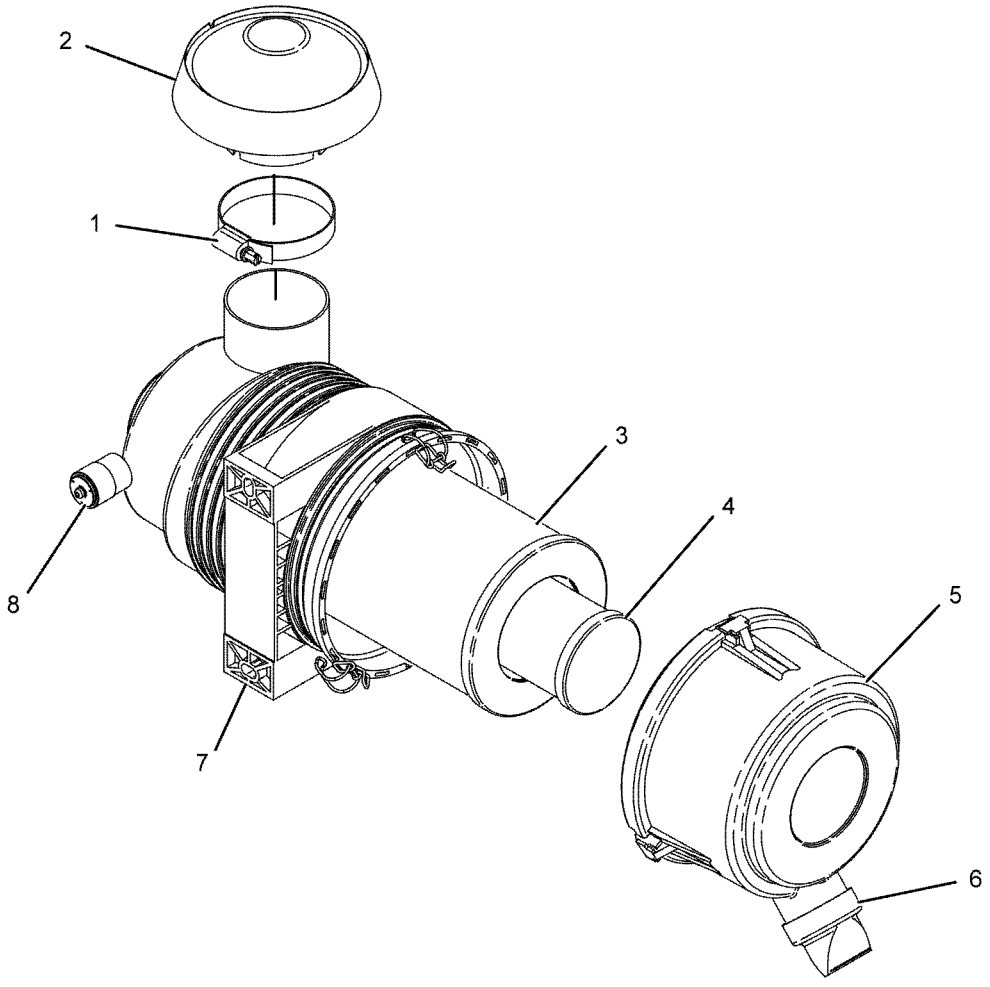

GRAPHIC #1 <END> g01095628

254-3309 AIR CLEANER GP

TYPE 1

SMCS-1051, 1054 **i02635064**

NOTE	REF NO	GRAPHIC REF	PART NUMBER	QTY	PART NAME 1 2 3 4 5 6 (PRODUCT LEVEL)	SEE PAGE
	1	1	**5P-0598**	2	CLAMP-HOSE	
M	2	1	**6I-0260**	2	BOLT (M8X1.25X25-MM)	
M	3	1	**6I-0650**	2	BOLT (M10X1.5X65-MM)	
	4	1	**252-6291**	1	BRACKET-MOUNTING	
	5	1	**253-9945**	1	HOSE-AIR	
Y	6	1	**254-0076**	1	AIR CLEANER GP	1031

M - METRIC PART
Y - SEPARATE ILLUSTRATION

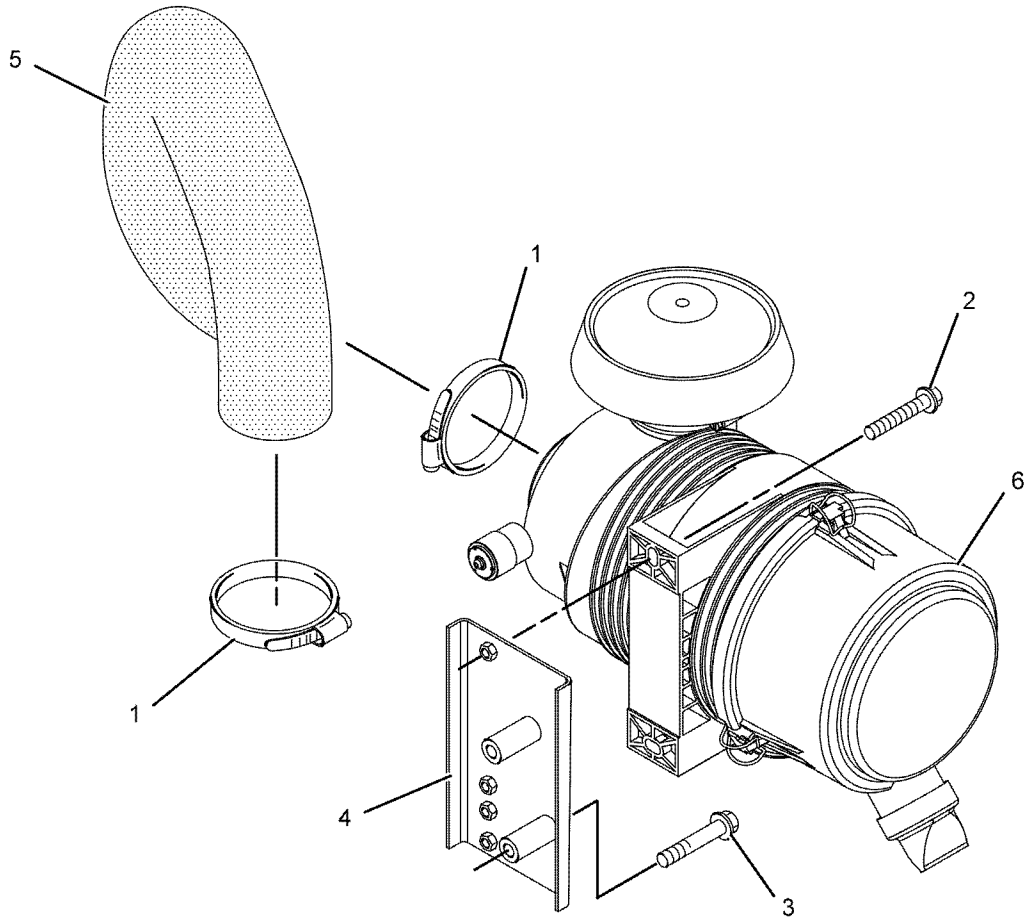

GRAPHIC #1 <END> g01096192

254-3309 AIR CLEANER GP

TYPE 2

SMCS-1051, 1054 **i02964700**

NOTE	REF NO	GRAPHIC REF	PART NUMBER	QTY	PART NAME 1 2 3 4 5 6 (PRODUCT LEVEL)	SEE PAGE
	1	1	**326-1010**	2	CLAMP-HOSE	
M	2	1	**6I-0260**	2	BOLT (M8X1.25X25-MM)	
CM	3	1	**100-4830**	2	BOLT (M10X1.5X20-MM)	
C	4	1	**286-4339**	1	BRACKET-MOUNTING	
	5	1	**253-9945**	1	HOSE-AIR	
Y	6	1	**254-0076**	1	AIR CLEANER GP	1031

C - CHANGE FROM PREVIOUS TYPE
M - METRIC PART
Y - SEPARATE ILLUSTRATION

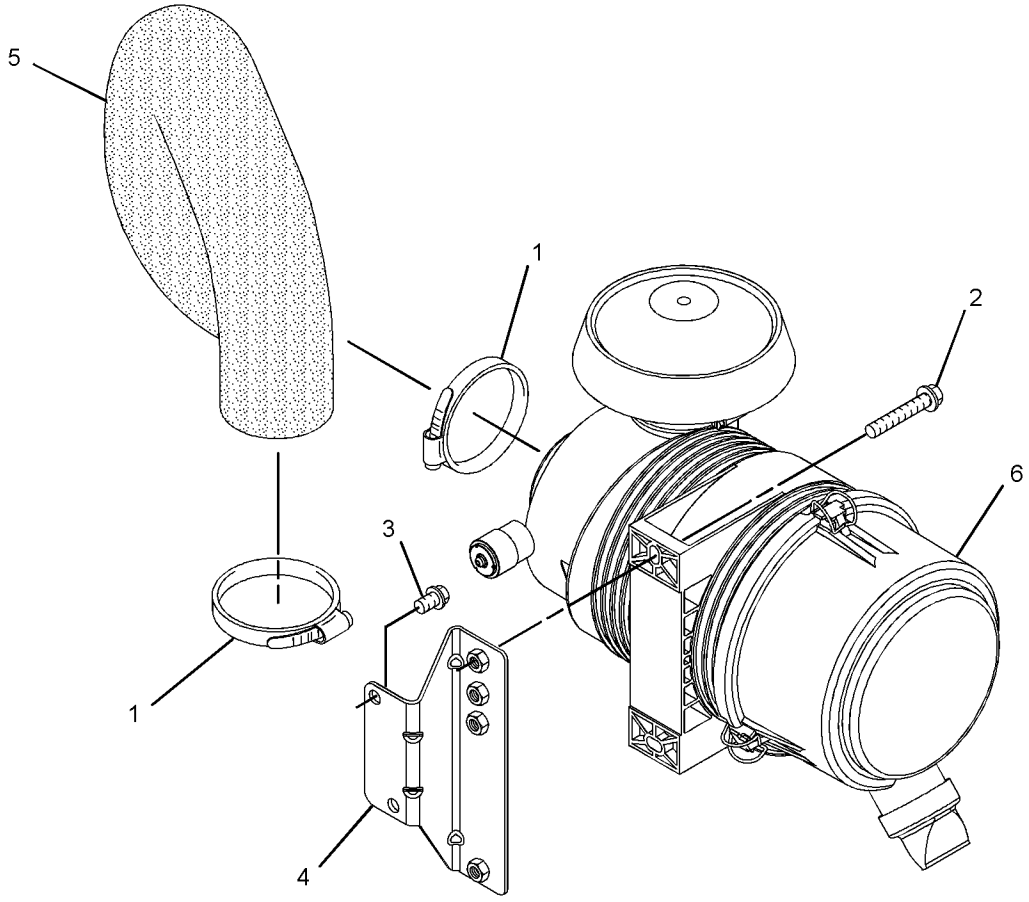

GRAPHIC #1 <END> g01528770

254-3309 AIR CLEANER GP

TYPE 3

SMCS-1051, 1054 **i05494729**

NOTE	REF NO	GRAPHIC REF	PART NUMBER	QTY	PART NAME 1 2 3 4 5 6 (PRODUCT LEVEL)	SEE PAGE
	1	1	**326-1010**	2	CLAMP-HOSE	
M	2	1	**6I-0260**	2	BOLT (M8X1.25X25-MM)	
M	3	1	**100-4830**	2	BOLT (M10X1.5X20-MM)	
	4	1	**286-4339**	1	BRACKET-MOUNTING	
	5	1	**253-9945**	1	HOSE-AIR	
C	6	1	**381-9374**	1	AIR CLEANER GP	

C - CHANGE FROM PREVIOUS TYPE
M - METRIC PART

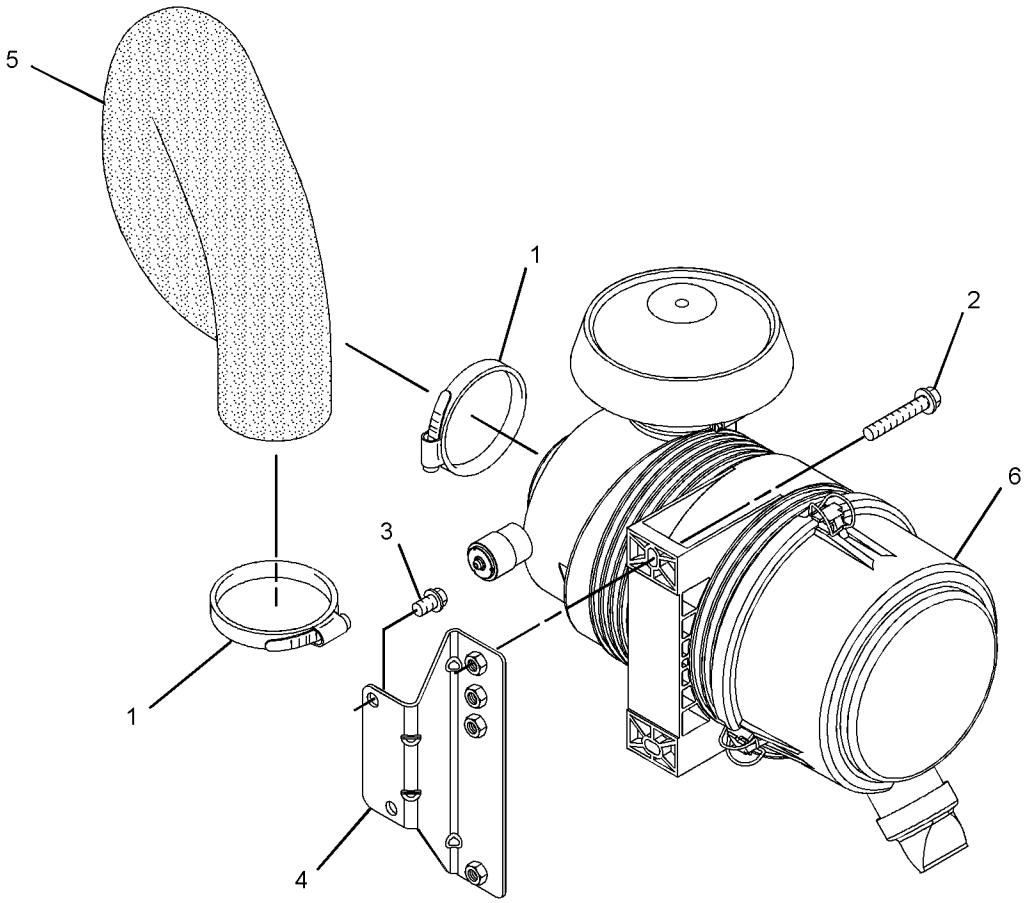

GRAPHIC #1 <END> g01528770

265-5300 AIR CLEANER GP

SMCS-1051, 1054 **i03819761**

NOTE	REF NO	GRAPHIC REF	PART NUMBER	QTY	PART NAME 1 2 3 4 5 6 (PRODUCT LEVEL)	SEE PAGE
M	1	1	**111-8222**	12	BOLT (M8X1.25X16-MM)	
M	2	1	**251-6241**	4	SCREW (M8X1.25X20-MM)	
	3	1	**114-2579**	3	GASKET	
	4	1	**185-6627**	3	PLATE	
	5	1	**238-8289**	1	PIPE AS	
	5A	1	**238-8288**	1	GASKET-INLET	
	6	1	**241-8185**	1	AIR CLEANER GP	
	6A	1	**233-5182**	1	FILTER ELEMENT AS-AIR (PRIMARY)	
	6B	1	**233-5184**	1	FILTER ELEMENT AS-AIR (SECONDARY)	
	6C	1	**271-5062**	1	VALVE-DUST	
	6D	1	**241-8449**	1	BRACKET	

M - METRIC PART

265-5300 **AIR CLEANER GP (**contd.**)** **i03819761**

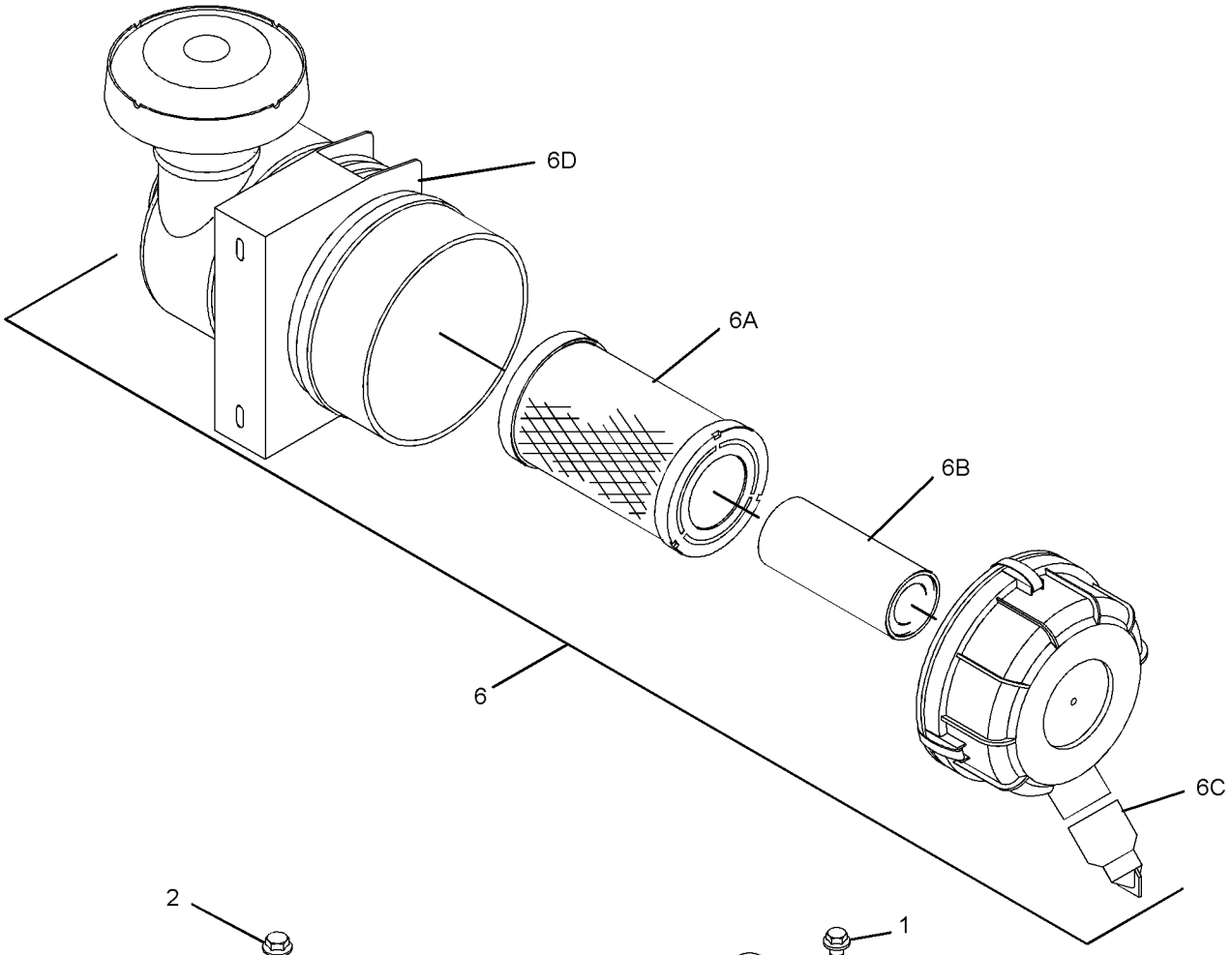

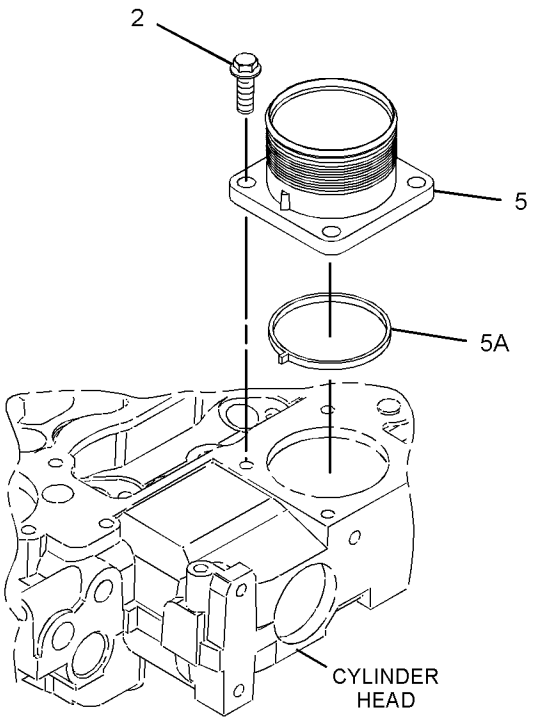

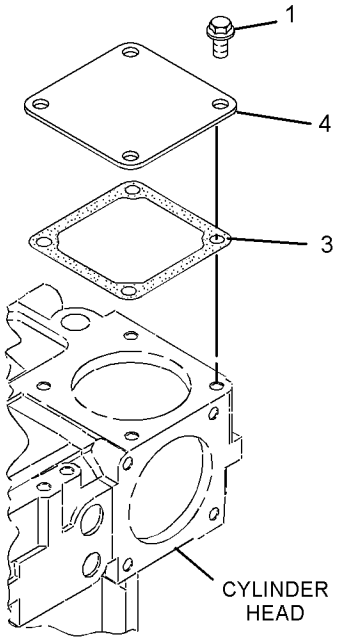

GRAPHIC #1 <END> g02080393

230-7581 CONNECTION GP-INLET

S/N: 3341-15320

ALSO AN ATTACHMENT

SMCS-1087 **i02020716**

NOTE	REF NO	GRAPHIC REF	PART NUMBER	QTY	PART NAME 1 2 3 4 5 6 (PRODUCT LEVEL)	SEE PAGE
M	1	1	**6I-0572**	12	BOLT (M8X1.25X20-MM)	
M	2	1	**6I-0645**	4	BOLT (M8X1.25X25-MM)	
	3	1	**114-2579**	3	GASKET	
	4	1	**115-1162**	3	PLATE	
	5	1	**238-8289**	1	PIPE AS	
	5A	1	**238-8288**	1	GASKET-INLET	

M - METRIC PART

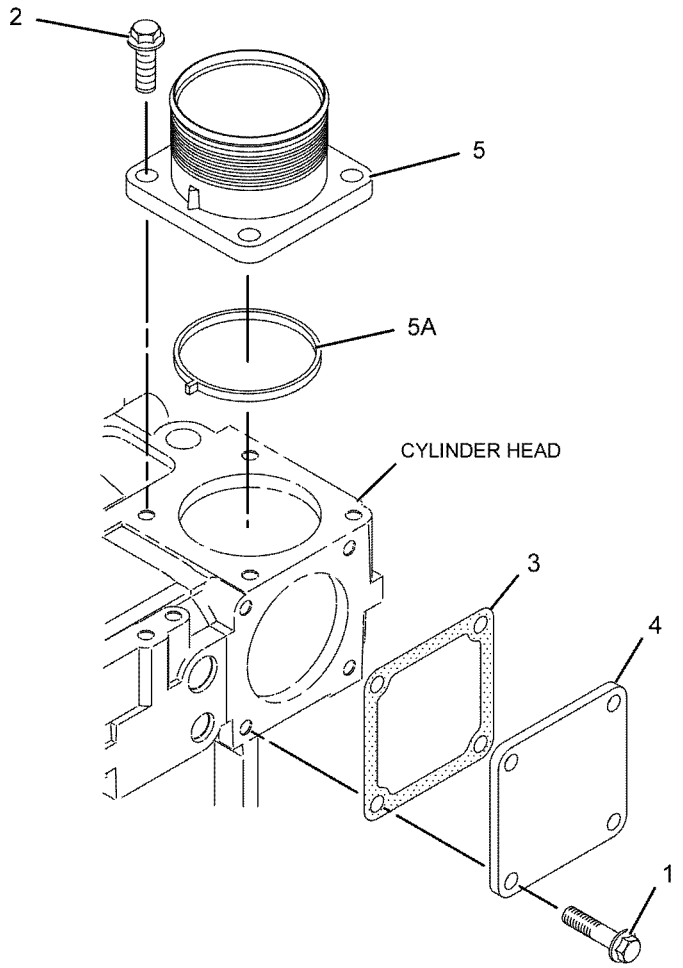

GRAPHIC #1 <END> g01053282

230-7581 CONNECTION GP-INLET

ALSO AN ATTACHMENT

SMCS-1087 **i03798754**

NOTE	REF NO	GRAPHIC REF	PART NUMBER	QTY	PART NAME 1 2 3 4 5 6 (PRODUCT LEVEL)	SEE PAGE
CM	1	1	**111-8222**	12	BOLT (M8X1.25X16-MM)	
M	2	1	**6I-0645**	4	BOLT (M8X1.25X25-MM)	
	3	1	**114-2579**	3	GASKET	
C	4	1	**185-6627**	3	PLATE	
	5	1	**238-8289**	1	PIPE AS	
	5A	1	**238-8288**	1	GASKET-INLET	

C - CHANGE FROM PREVIOUS TYPE
M - METRIC PART

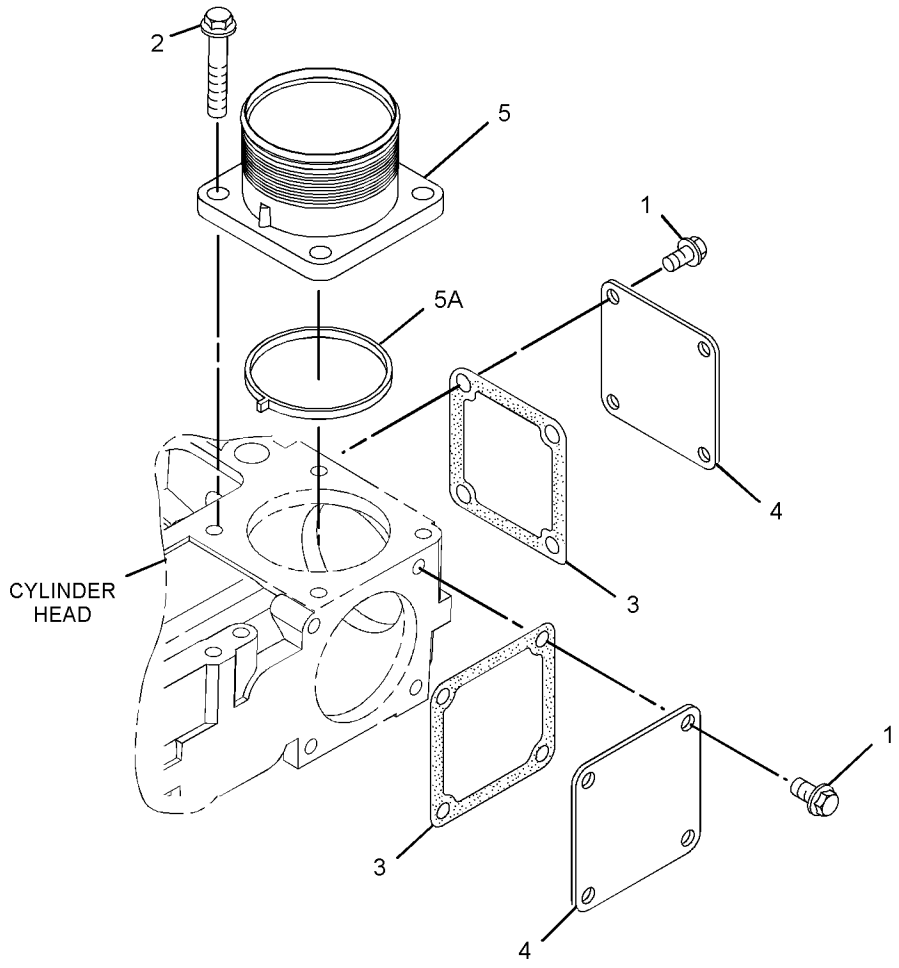

GRAPHIC #1 <END> g02073728

238-8290 CONNECTION GP-INLET—AIR

SMCS-1087 **i03821190**

NOTE	REF NO	GRAPHIC REF	PART NUMBER	QTY	PART NAME 1 2 3 4 5 6 (PRODUCT LEVEL)	SEE PAGE
M	1	1	**111-8222**	12	BOLT (M8X1.25X16-MM)	
M	2	1	**6I-0645**	4	BOLT (M8X1.25X25-MM)	
	3	1	**114-2579**	3	GASKET	
	4	1	**185-6627**	3	PLATE	
	5	1	**238-8289**	1	PIPE AS	
	5A	1	**238-8288**	1	GASKET-INLET	

M - METRIC PART

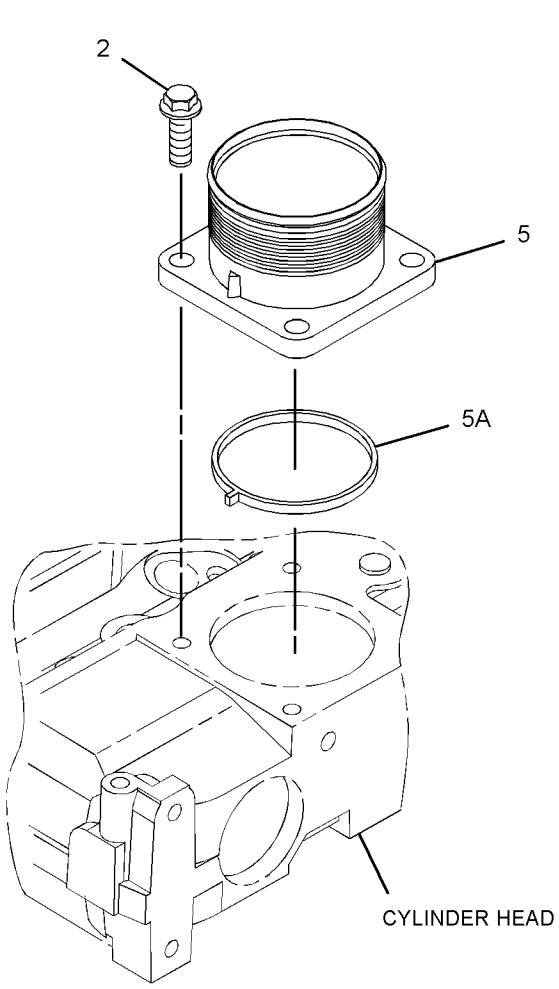

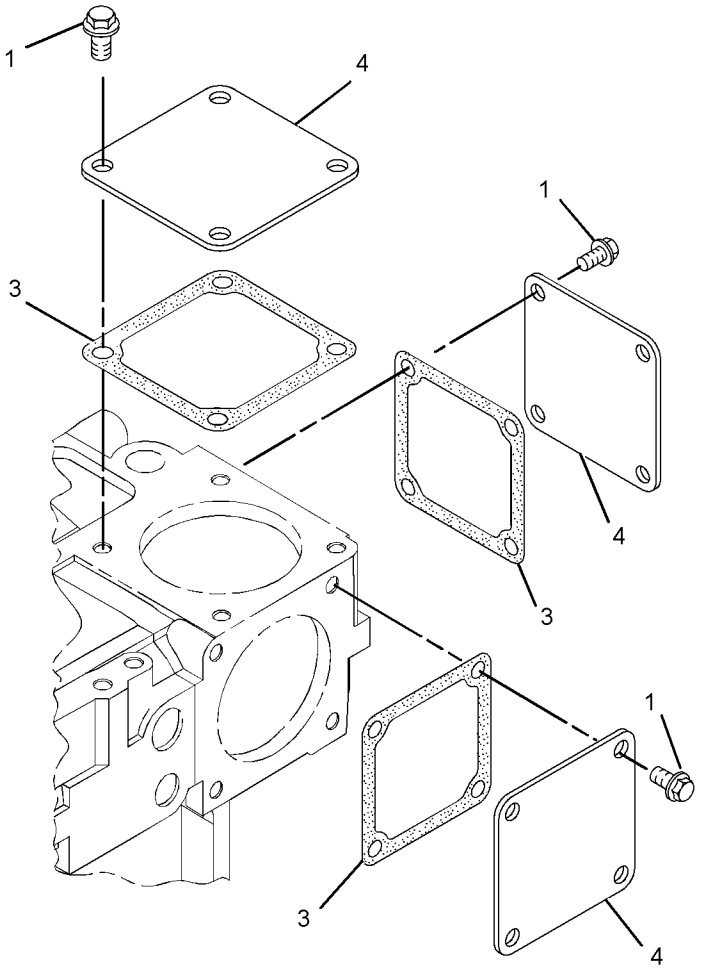

GRAPHIC #1 <END> g02133734

253-6204 CONNECTION GP-INLET–AIR

SMCS-1087 **i03819634**

NOTE	REF NO	GRAPHIC REF	PART NUMBER	QTY	PART NAME 1 2 3 4 5 6 (PRODUCT LEVEL)	SEE PAGE
M	1	1	**111-8222**	12	BOLT (M8X1.25X16-MM)	
M	2	1	**6I-0645**	4	BOLT (M8X1.25X25-MM)	
	3	1	**114-2579**	3	GASKET	
	4	1	**185-6627**	3	PLATE	
	5	1	**238-8289**	1	PIPE AS	
	5A	1	**238-8288**	1	GASKET-INLET	

M - METRIC PART

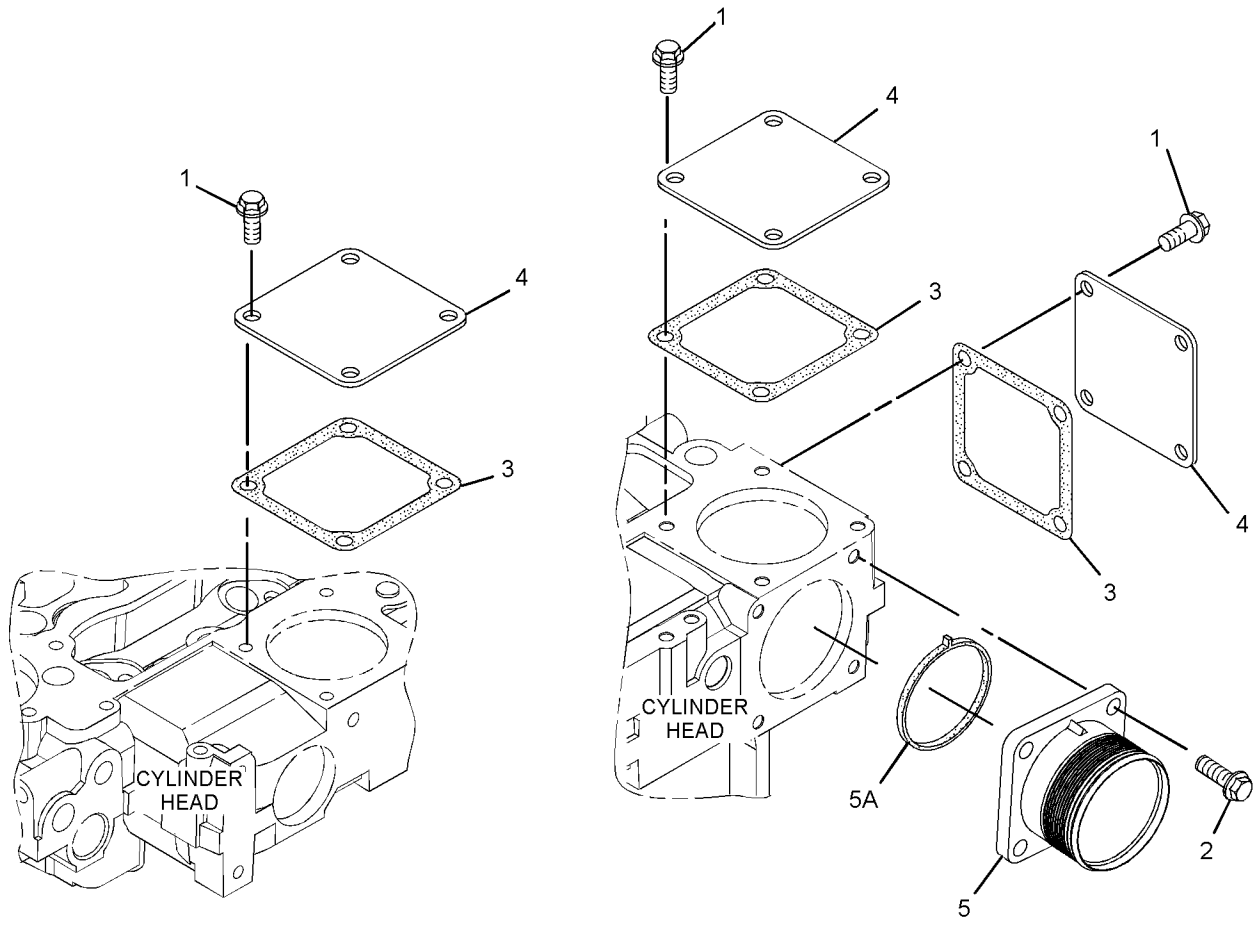

GRAPHIC #1 <END> g02107554

254-3312 CONNECTION GP-INLET—AIR

SMCS-1087 **i03819636**

NOTE	REF NO	GRAPHIC REF	PART NUMBER	QTY	PART NAME 1 2 3 4 5 6 (PRODUCT LEVEL)	SEE PAGE
M	1	1	**111-8222**	12	BOLT (M8X1.25X16-MM)	
M	2	1	**6I-0645**	4	BOLT (M8X1.25X25-MM)	
	3	1	**114-2579**	3	GASKET	
	4	1	**185-6627**	3	PLATE	
	5	1	**238-8289**	1	PIPE AS	
	5A	1	**238-8288**	1	GASKET-INLET	

M - METRIC PART

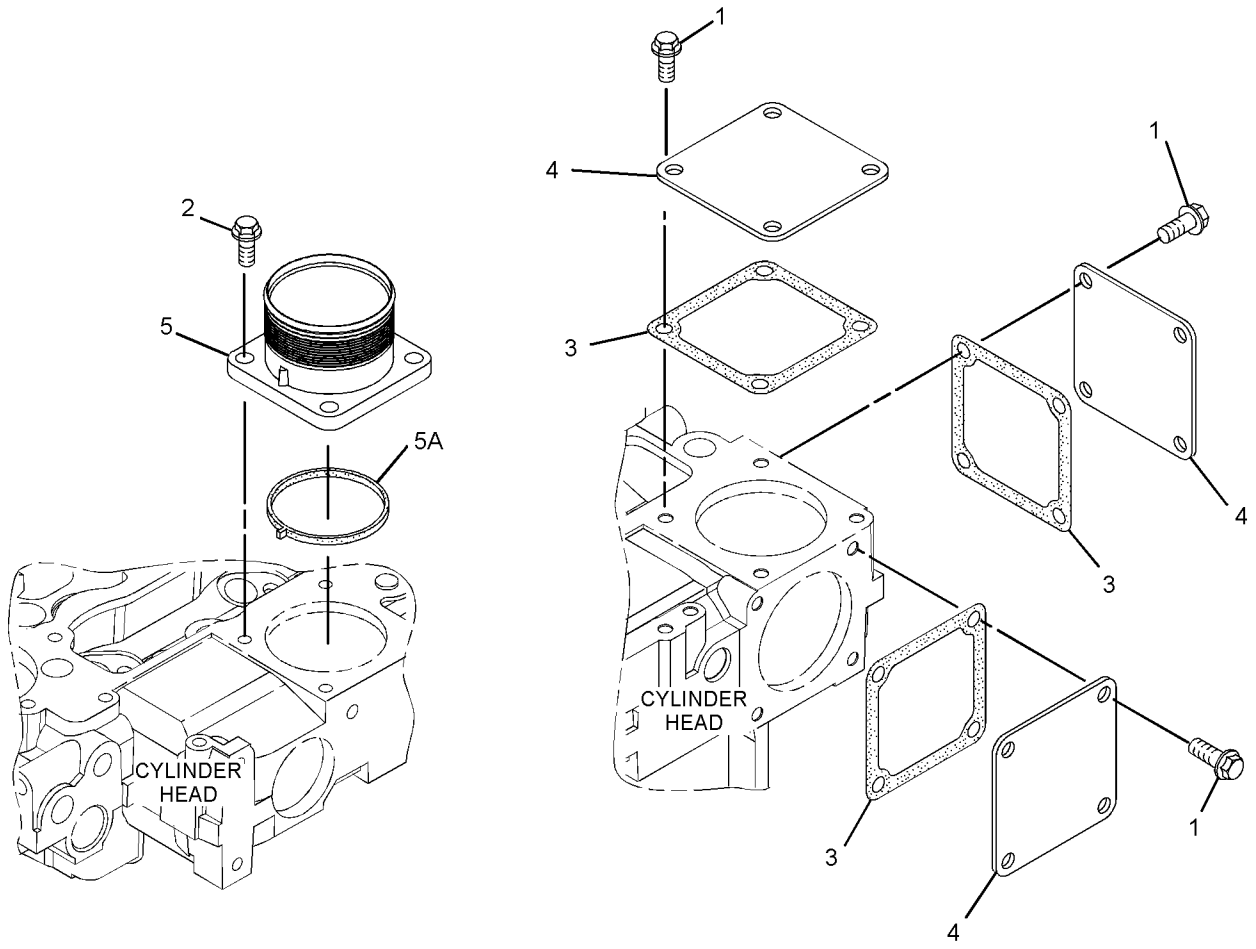

GRAPHIC #1 <END> g02111602

254-3775 CONNECTION GP-INLET

ALSO AN ATTACHMENT

SMCS-1087 **i09734186**

NOTE	REF NO	GRAPHIC REF	PART NUMBER	QTY	PART NAME 1 2 3 4 5 6 (PRODUCT LEVEL)	SEE PAGE
M	1	1	**6I-0572**	12	BOLT (M8X1.25X20-MM)	
M	2	1	**6I-0645**	4	BOLT (M8X1.25X25-MM)	
	3	1	**114-2579**	3	GASKET	
	4	1	**115-1162**	3	PLATE	
	5	1	**238-8289**	1	PIPE AS	
	5A	1	**238-8288**	1	GASKET-INLET	

M - METRIC PART

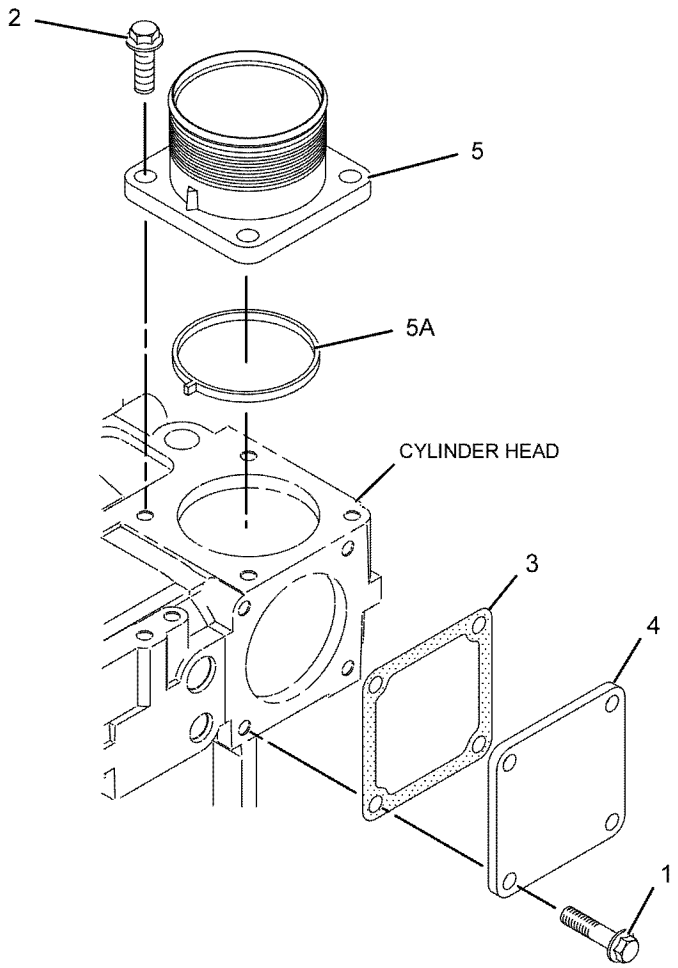

GRAPHIC #1 <END> g01053282

256-4441 CONNECTION GP-INLET

SMCS-1087 **i03819759**

NOTE	REF NO	GRAPHIC REF	PART NUMBER	QTY	PART NAME 1 2 3 4 5 6 (PRODUCT LEVEL)	SEE PAGE
M	1	1	**111-8222**	12	BOLT (M8X1.25X16-MM)	
M	2	1	**6I-0645**	2	BOLT (M8X1.25X25-MM)	
	3	1	**114-2579**	3	GASKET	
	4	1	**185-6627**	3	PLATE	
	5	1	**238-8289**	1	PIPE AS	
	5A	1	**238-8288**	1	GASKET-INLET	

M - METRIC PART

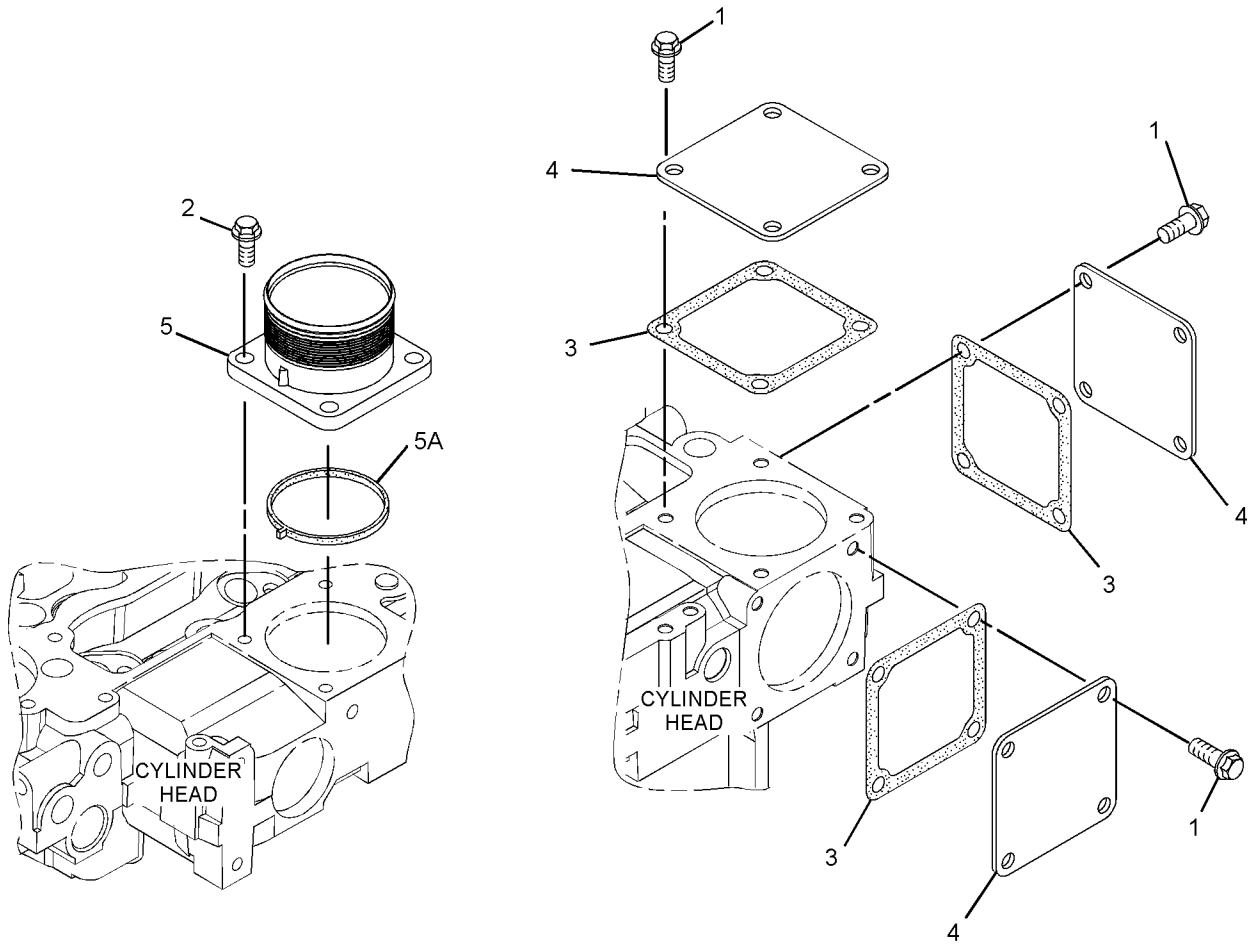

GRAPHIC #1 <END> g02111602

260-3135 CONNECTION GP-INLET–AIR

TYPE 1

SMCS-1087 **i03819760**

NOTE	REF NO	GRAPHIC REF	PART NUMBER	QTY	PART NAME 1 2 3 4 5 6 (PRODUCT LEVEL)	SEE PAGE
M	1	1	**111-8222**	8	BOLT (M8X1.25X16-MM)	
M	2	1	**6I-0645**	4	BOLT (M8X1.25X25-MM)	
	3	1	**114-2579**	3	GASKET	
	4	1	**185-6627**	3	PLATE	
	5	1	**238-8289**	1	PIPE AS	
	5A	1	**238-8288**	1	GASKET-INLET	
M	6	1	**251-6241**	4	SCREW (M8X1.25X20-MM)	

M - METRIC PART

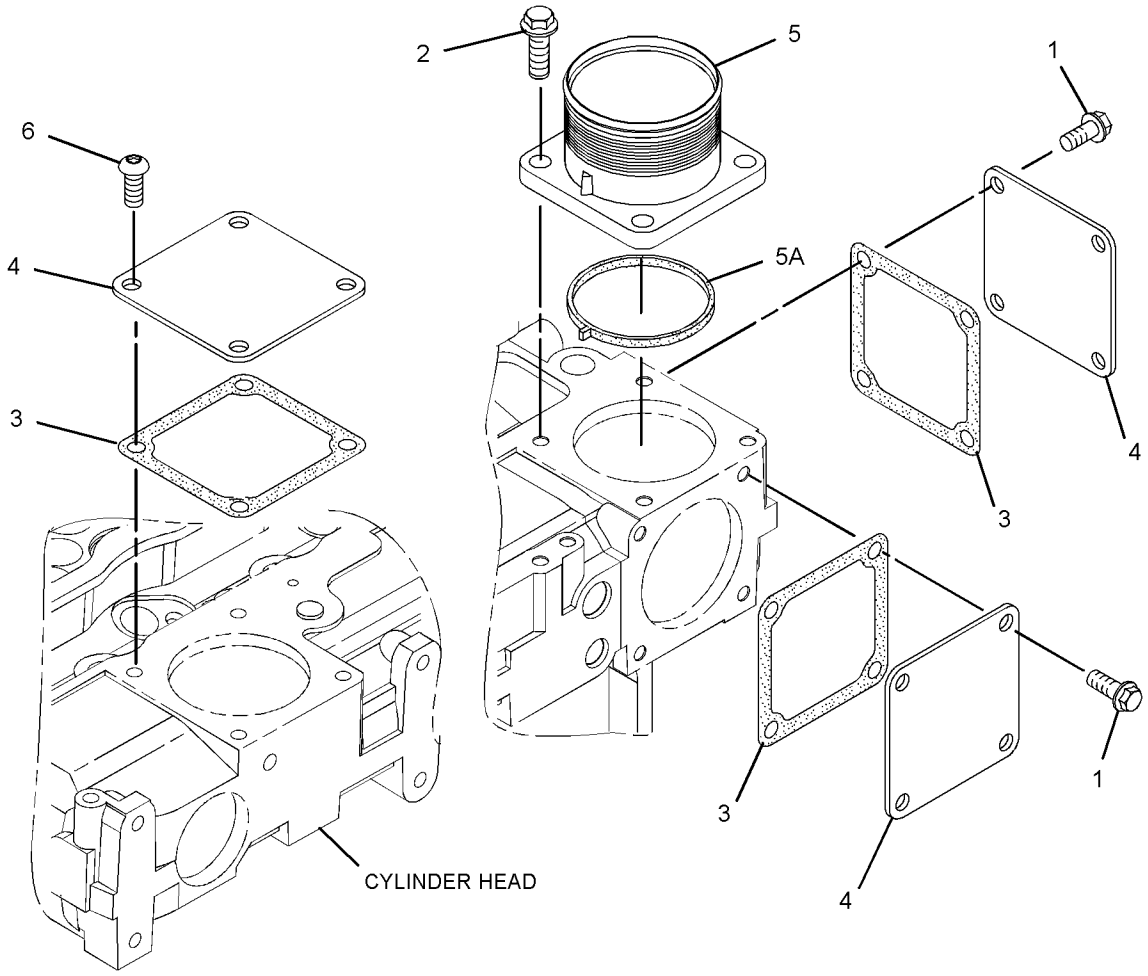

GRAPHIC #1 <END> g02107434

260-3135 CONNECTION GP-INLET–AIR

TYPE 2

SMCS-1087 **i05141040**

NOTE	REF NO	GRAPHIC REF	PART NUMBER	QTY	PART NAME 1 2 3 4 5 6 (PRODUCT LEVEL)	SEE PAGE
CM	1	1	**111-8222**	8	BOLT (M8X1.25X16-MM)	
M	2	1	**6I-0645**	4	BOLT (M8X1.25X25-MM)	
	3	1	**114-2579**	3	GASKET	
C	4	1	**185-6627**	2	PLATE	
	5	1	**238-8289**	1	PIPE AS	
	5A	1	**238-8288**	1	GASKET-INLET	
CM	6	1	**251-6241**	4	SCREW (M8X1.25X20-MM)	

C - CHANGE FROM PREVIOUS TYPE
M - METRIC PART

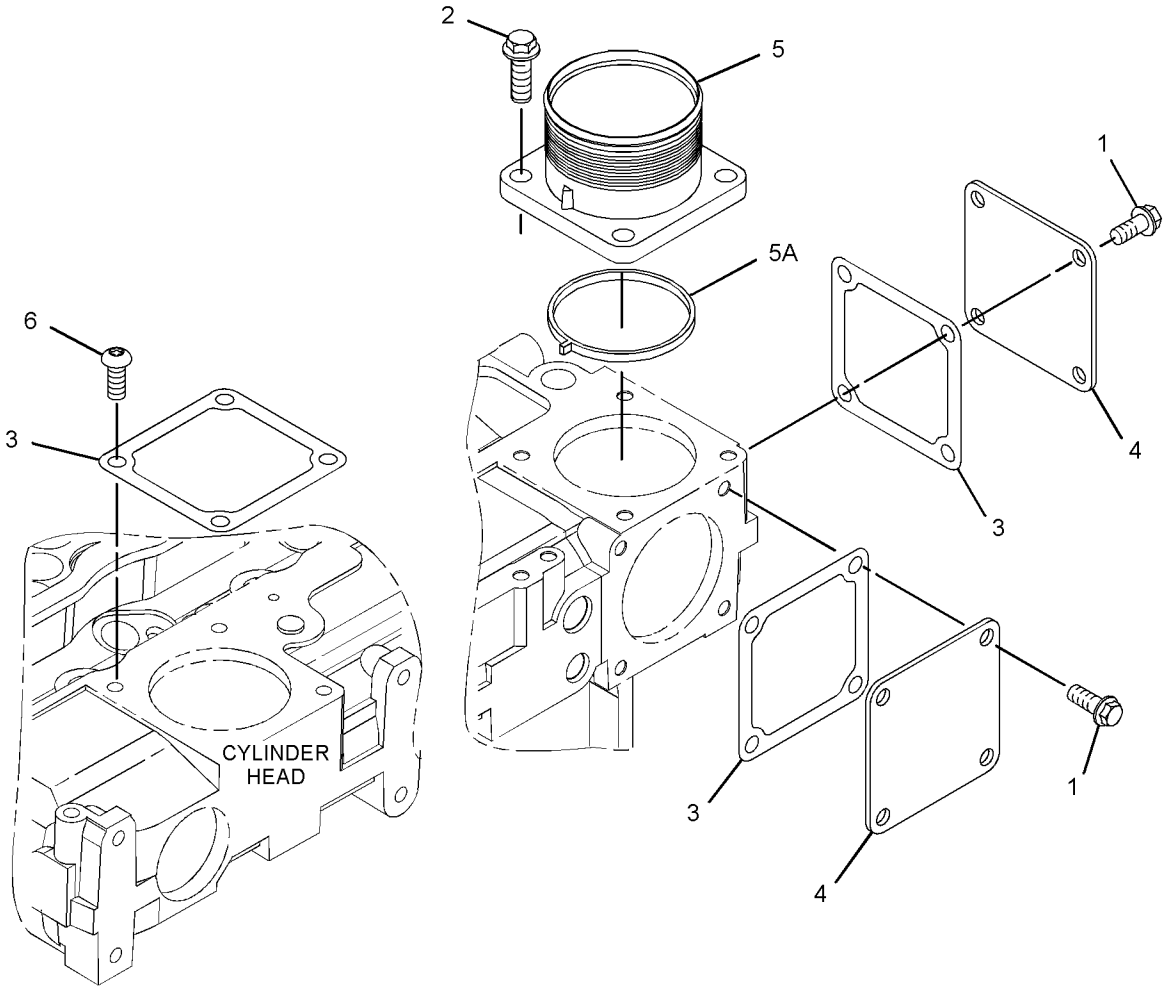

GRAPHIC #1 <END> g03337339

267-5696 CONNECTION GP-INLET

ALSO AN ATTACHMENT

SMCS-1087 **i02304444**

NOTE	REF NO	GRAPHIC REF	PART NUMBER	QTY	PART NAME 1 2 3 4 5 6 (PRODUCT LEVEL)	SEE PAGE
M	1	1	**6I-0572**	12	BOLT (M8X1.25X20-MM)	
M	2	1	**6I-0645**	2	BOLT (M8X1.25X25-MM)	
	3	1	**114-2579**	3	GASKET	
	4	1	**115-1162**	3	PLATE	
	5	1	**238-8289**	1	PIPE AS	
	5A	1	**238-8288**	1	GASKET-INLET	

M - METRIC PART

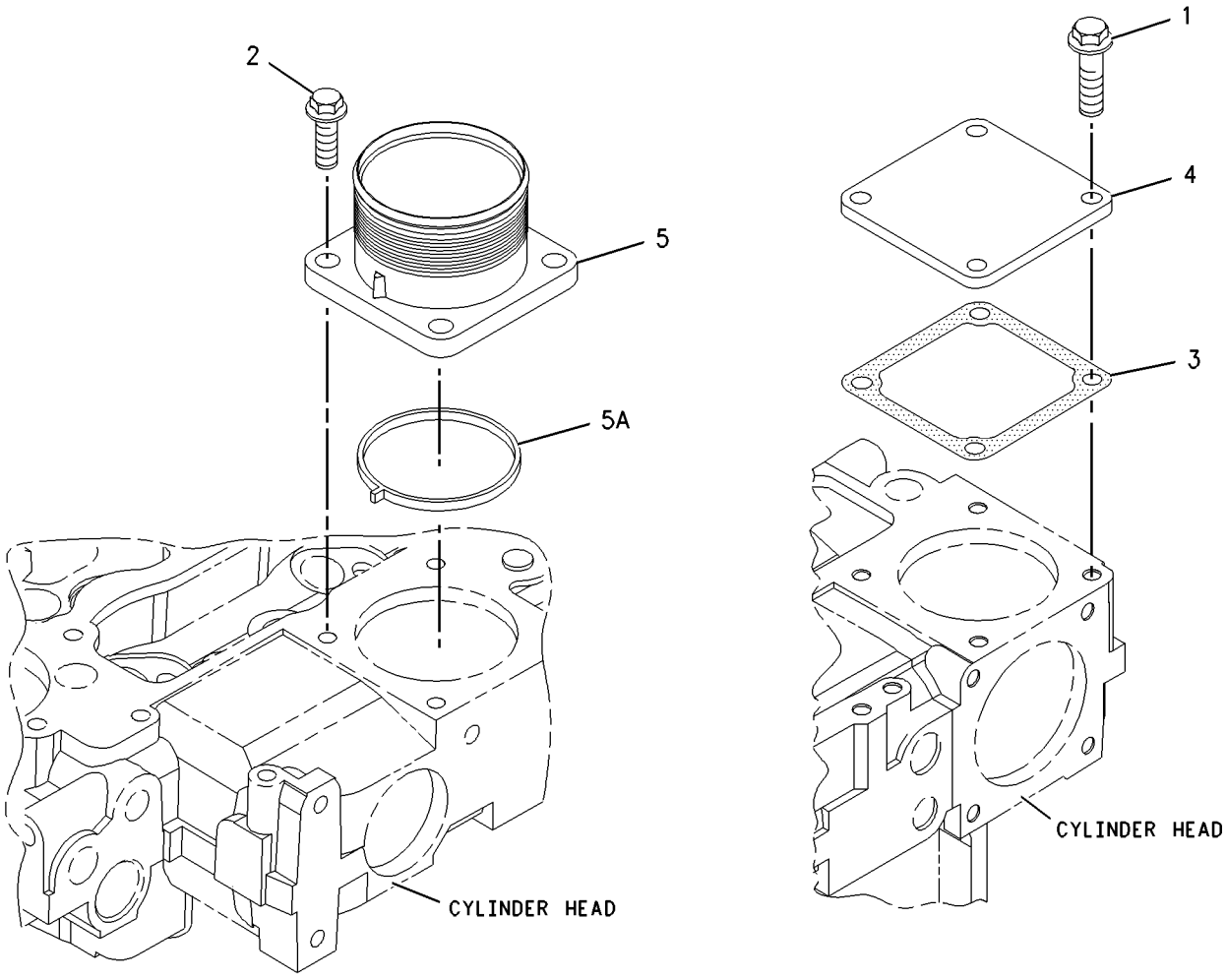

GRAPHIC #1 <END> g00999221

267-8817 CONNECTION GP-INLET

TYPE 1

SMCS-1087 **i03819765**

NOTE	REF NO	GRAPHIC REF	PART NUMBER	QTY	PART NAME 1 2 3 4 5 6 (PRODUCT LEVEL)	SEE PAGE
	1	1	**326-1010**	2	CLAMP-HOSE	
M	2	1	**6I-0260**	2	BOLT (M8X1.25X25-MM)	
M	3	1	**111-8222**	8	BOLT (M8X1.25X16-MM)	
M	4	1	**6I-0645**	4	BOLT (M8X1.25X25-MM)	
M	5	1	**100-4830**	2	BOLT (M10X1.5X20-MM)	
	6	1	**114-2579**	3	GASKET	
	7	1	**185-6627**	3	PLATE	
	8	1	**238-8289**	1	PIPE AS	
	8A	1	**238-8288**	1	GASKET-INLET	
M	9	1	**251-6241**	4	SCREW (M8X1.25X20-MM)	
	10	1	**286-4339**	1	BRACKET-MOUNTING	
	11	1	**253-9945**	1	HOSE-AIR	
Y	12	1	**254-0076**	1	AIR CLEANER GP	1031

M - METRIC PART
Y - SEPARATE ILLUSTRATION

267-8817 **CONNECTION GP-INLET (**contd.**)** **i03819765**

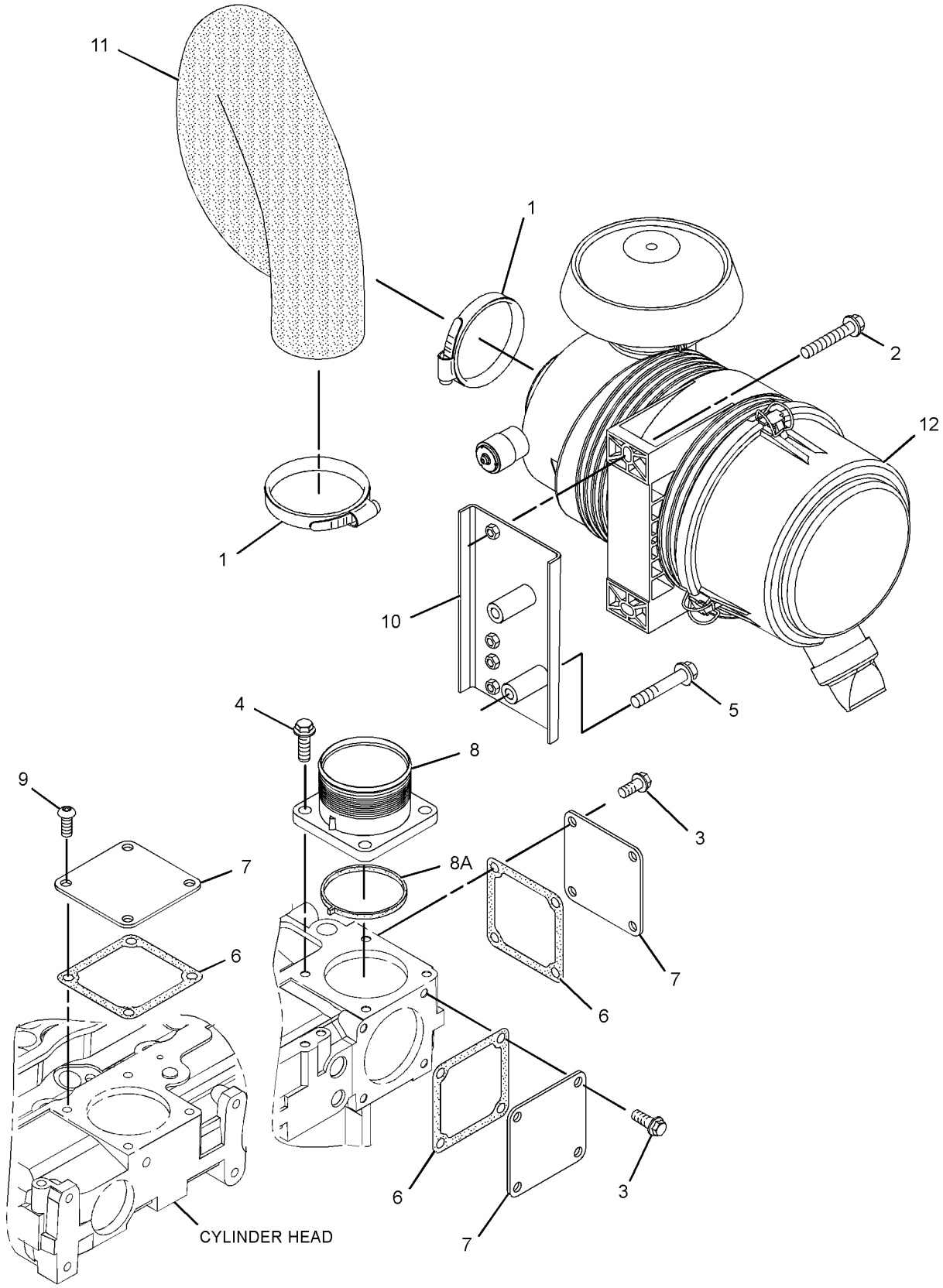

GRAPHIC #1 <END> g02107153

267-8817 CONNECTION GP-INLET

TYPE 2

SMCS-1087 **i05494772**

NOTE	REF NO	GRAPHIC REF	PART NUMBER	QTY	PART NAME 1 2 3 4 5 6 (PRODUCT LEVEL)	SEE PAGE
	1	1	**326-1010**	2	CLAMP-HOSE	
M	2	1	**6I-0260**	2	BOLT (M8X1.25X25-MM)	
M	3	1	**111-8222**	9	BOLT (M8X1.25X16-MM)	
M	4	1	**6I-0645**	4	BOLT (M8X1.25X25-MM)	
M	5	1	**100-4830**	2	BOLT (M10X1.5X20-MM)	
	6	1	**114-2579**	3	GASKET	
	7	1	**185-6627**	2	PLATE	
	8	1	**238-8289**	1	PIPE AS	
	8A	1	**238-8288**	1	GASKET-INLET	
M	9	1	**251-6241**	3	SCREW (M8X1.25X20-MM)	
	10	1	**286-4339**	1	BRACKET-MOUNTING	
	11	1	**253-9945**	1	HOSE-AIR	
C	12	1	**381-9374**	1	AIR CLEANER GP	

C - CHANGE FROM PREVIOUS TYPE
M - METRIC PART

267-8817 **CONNECTION GP-INLET (**contd.**)** **i05494772**

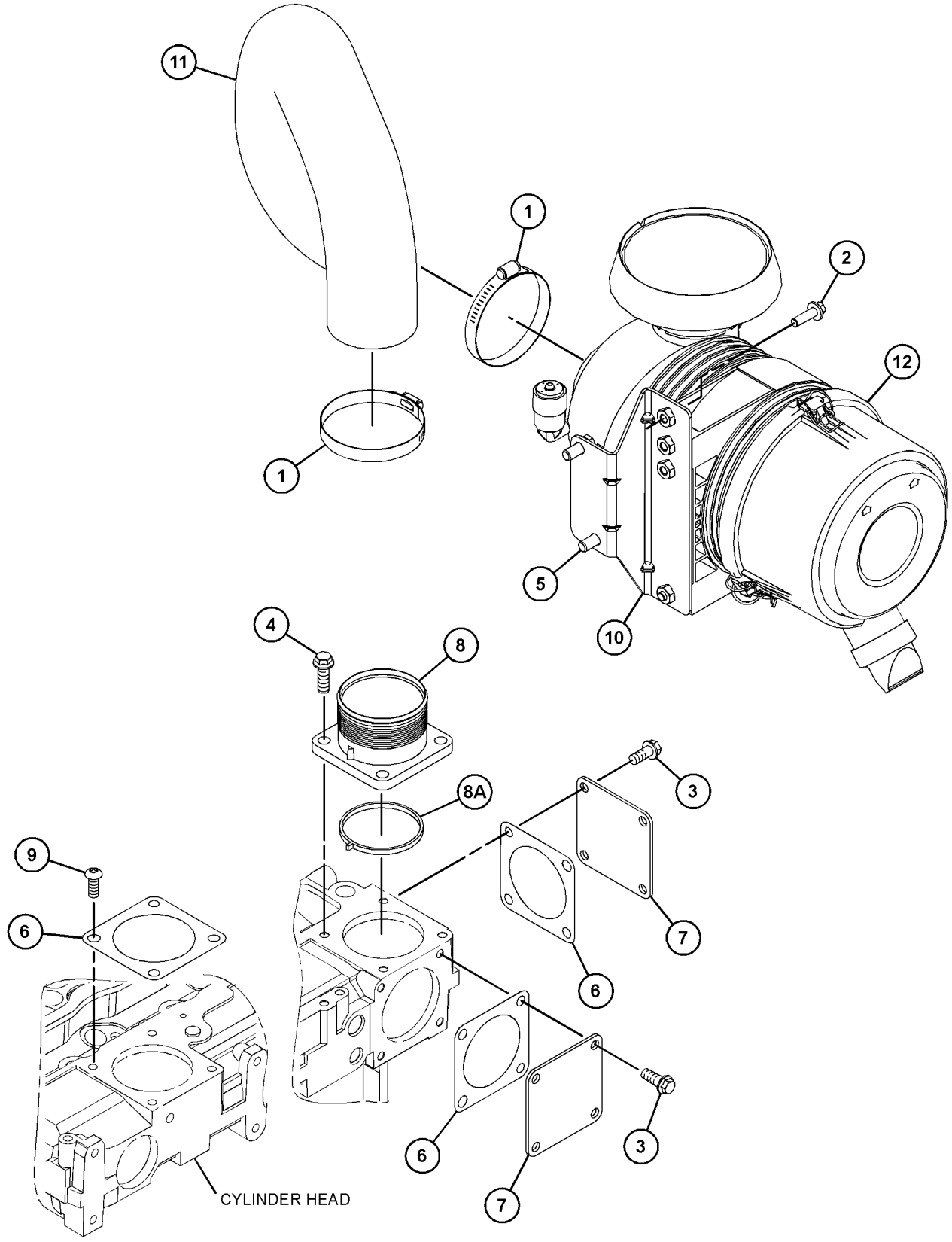

GRAPHIC #1 <END> g03849510

289-3198 CONNECTION GP-INLET

SMCS-1087 **i05348850**

NOTE	REF NO	GRAPHIC REF	PART NUMBER	QTY	PART NAME 1 2 3 4 5 6 (PRODUCT LEVEL)	SEE PAGE
M	1	1	**111-8222**	9	BOLT (M8X1.25X16-MM)	
	2	1	**114-2579**	3	GASKET	
	3	1	**185-6627**	2	PLATE	
	4	1	**238-8289**	1	PIPE AS	
	4A	1	**238-8288**	1	GASKET-INLET	
M	5	1	**251-6241**	7	SCREW (M8X1.25X20-MM)	

M - METRIC PART

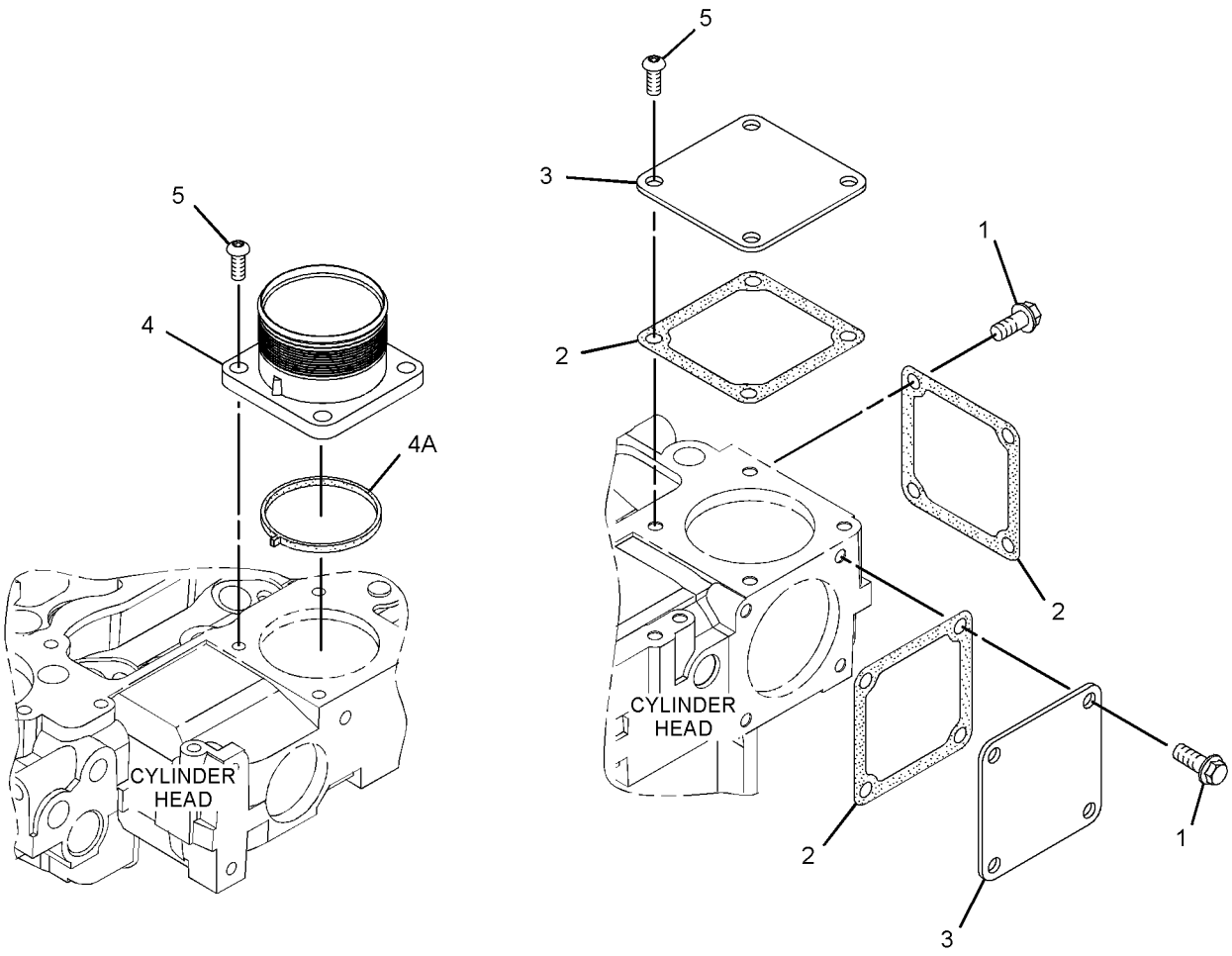

GRAPHIC #1 <END> g03709252

231-0149 COVER GP-INLET MANIFOLD

SMCS-1058 **i03821232**

NOTE	REF NO	GRAPHIC REF	PART NUMBER	QTY	PART NAME 1 2 3 4 5 6 (PRODUCT LEVEL)	SEE PAGE
M	1	1	**111-8222**	12	BOLT (M8X1.25X16-MM)	
	2	1	**114-2579**	3	GASKET	
	3	1	**185-6627**	3	PLATE	

M - METRIC PART

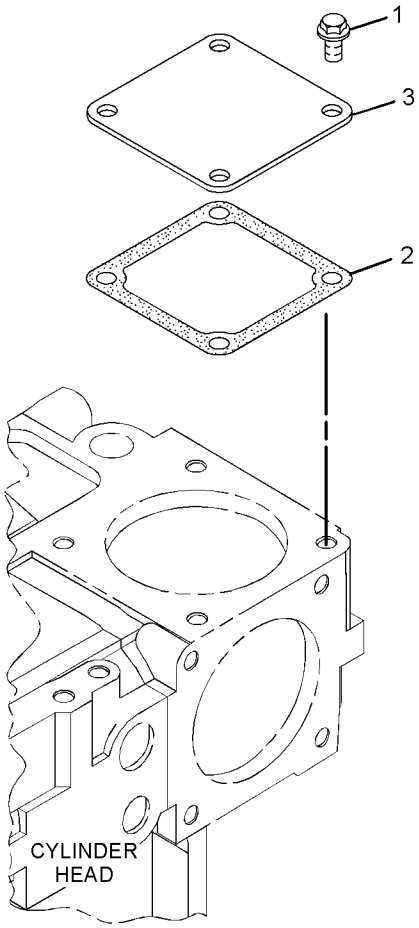

GRAPHIC #1 <END> g02090293

225-4312 ELBOW GP-AIR INLET

AN ATTACHMENT

SMCS-1087 **i02425483**

NOTE	REF NO	GRAPHIC REF	PART NUMBER	QTY	PART NAME 1 2 3 4 5 6 (PRODUCT LEVEL)	SEE PAGE
M	1	1	**6I-4709**	2	BOLT (M8X1.25X100-MM)	
M	2	1	**105-2740**	2	BOLT (M8X1.25X40-MM)	
M	3	1	**111-8222**	12	BOLT (M8X1.25X16-MM)	
	4	1	**114-2579**	4	GASKET	
	5	1	**115-1161**	1	PIPE	
	6	1	**115-1162**	3	PLATE	

M - METRIC PART

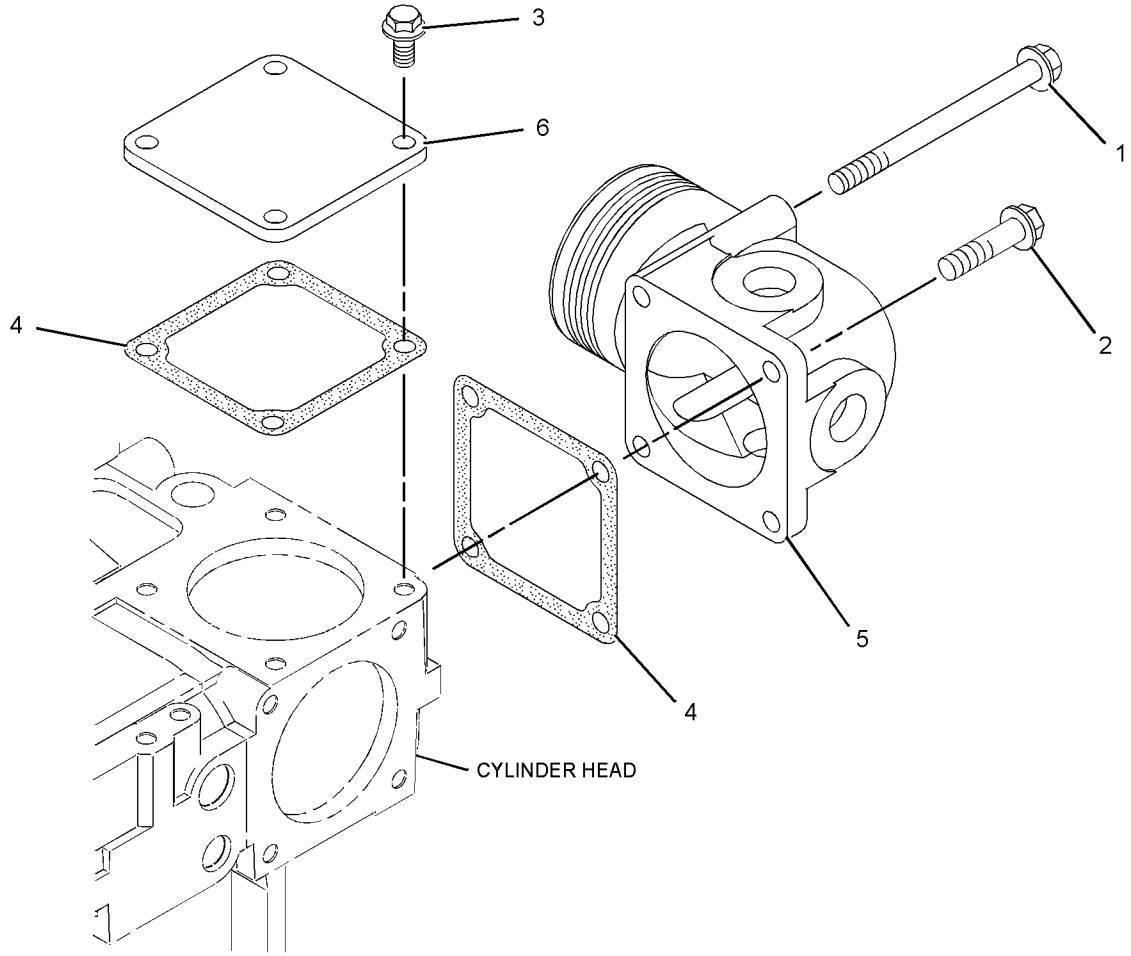

GRAPHIC #1 <END> g01218253

233-7491 ELBOW GP-AIR INLET

SMCS-1087 **i03798910**

NOTE	REF NO	GRAPHIC REF	PART NUMBER	QTY	PART NAME 1 2 3 4 5 6 (PRODUCT LEVEL)	SEE PAGE
M	1	1	**6I-0572**	2	BOLT (M8X1.25X20-MM)	
M	2	1	**111-8222**	12	BOLT (M8X1.25X16-MM)	
	3	1	**114-2579**	4	GASKET	
	4	1	**256-4447**	1	ELBOW AS-AIR INLET	
	4A	1	**238-8288**	1	GASKET-INLET	
	5	1	**185-6627**	3	PLATE	
M	6	1	**233-7489**	2	BOLT (M8X1.25X110-MM)	

M - METRIC PART

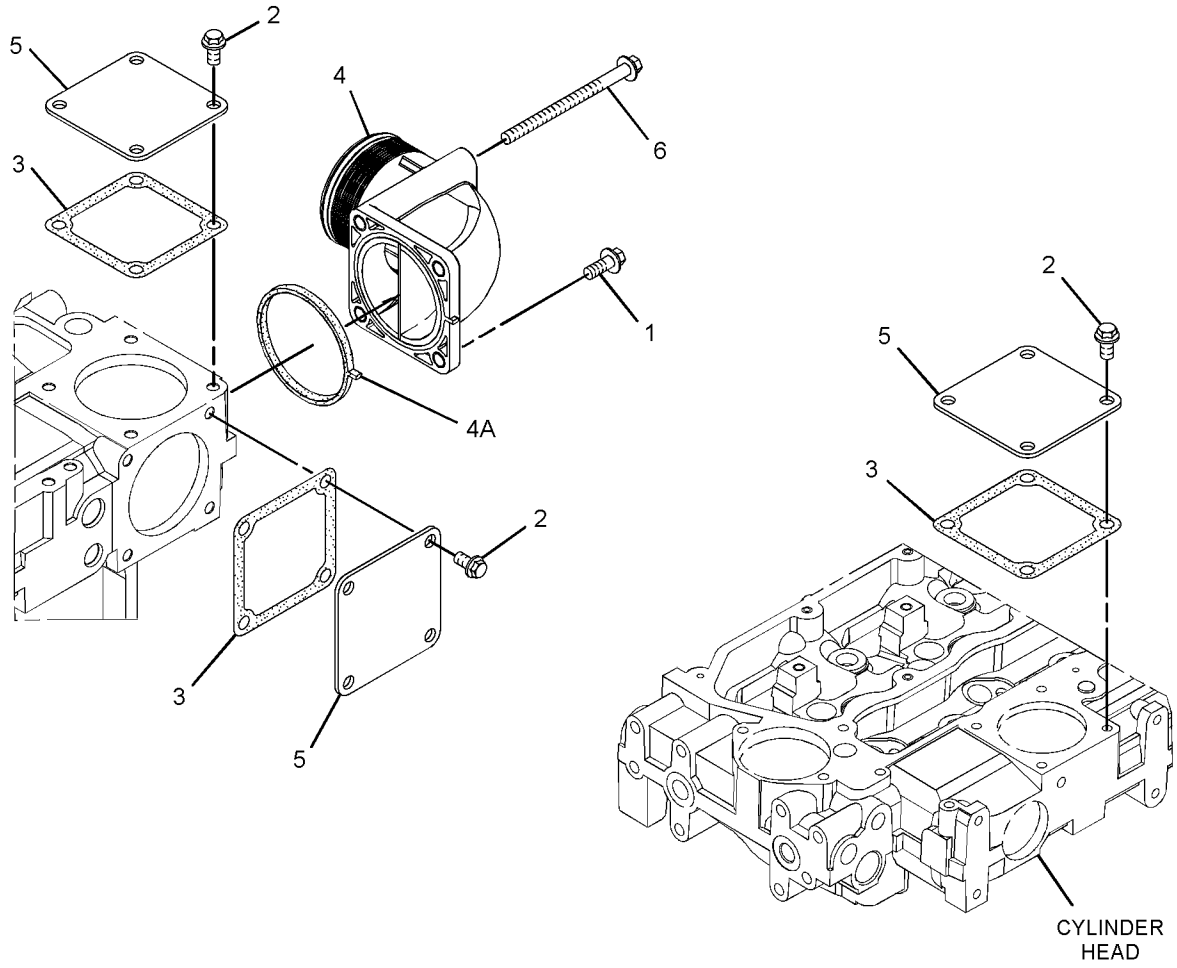

GRAPHIC #1 <END> g02076879

233-9542 ELBOW GP-AIR INLET

ALSO AN ATTACHMENT

SMCS-1087 **i03821132**

NOTE	REF NO	GRAPHIC REF	PART NUMBER	QTY	PART NAME 1 2 3 4 5 6 (PRODUCT LEVEL)	SEE PAGE
M	1	1	**6I-0572**	2	BOLT (M8X1.25X20-MM)	
	2	1	**114-2579**	4	GASKET	
	3	1	**185-6627**	3	PLATE	
M	4	1	**233-7489**	2	BOLT (M8X1.25X110-MM)	
	5	1	**256-4447**	1	ELBOW AS-AIR INLET	
	5A	1	**238-8288**	1	GASKET-INLET	
M	6	1	**111-8222**	12	BOLT (M8X1.25X16-MM)	

M - METRIC PART

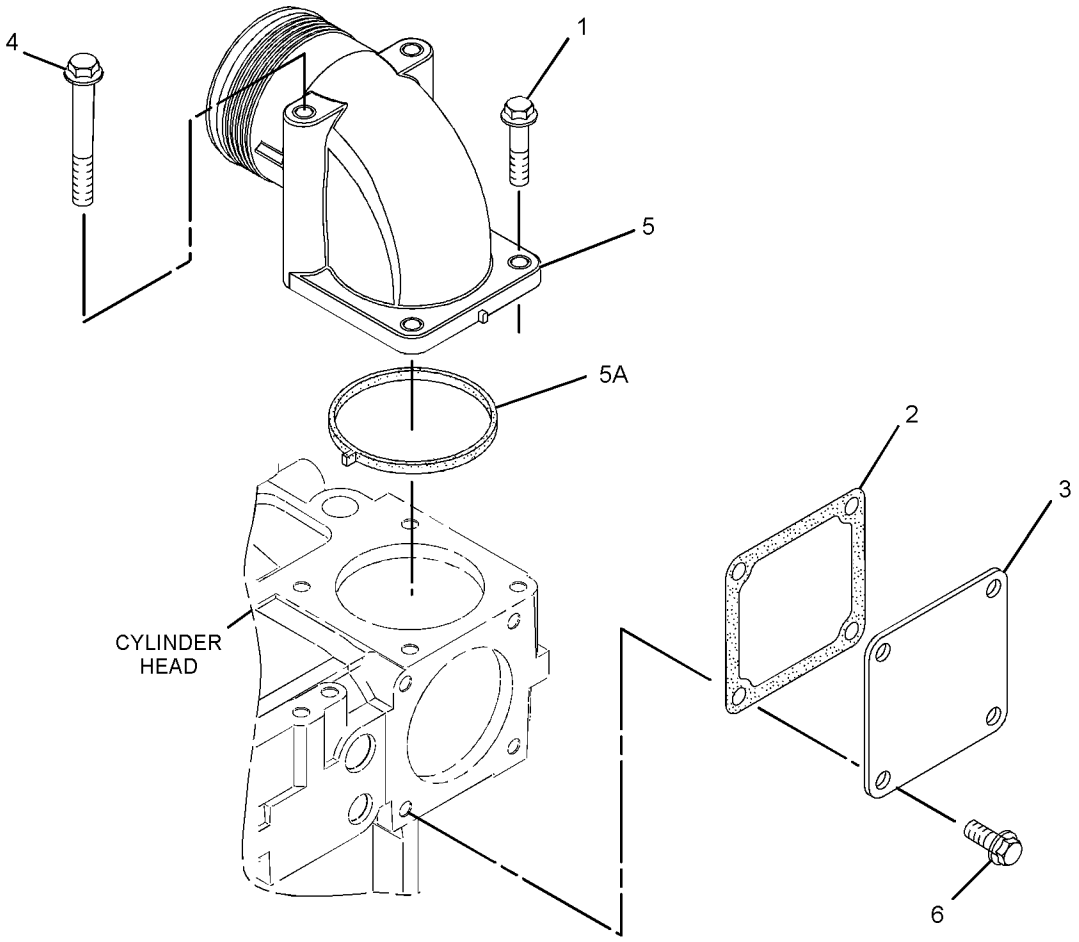

GRAPHIC #1 <END> g02092715

235-2489 ELBOW GP-AIR INLET

TYPE 1

SMCS-1087 **i01964463**

NOTE	REF NO	GRAPHIC REF	PART NUMBER	QTY	PART NAME 1 2 3 4 5 6 (PRODUCT LEVEL)	SEE PAGE
M	1	1	**6I-0572**	12	BOLT (M8X1.25X20-MM)	
M	2	1	**100-8451**	2	BOLT (M8X1.25X130-MM)	
	3	1	**114-2579**	5	GASKET	
	4	1	**115-1162**	3	PLATE	
	5	1	**233-7490**	1	ELBOW	
M	6	1	**235-2451**	2	BOLT (M8X1.25X45-MM)	
	7	1	**235-2488**	1	SPACER	

M - METRIC PART

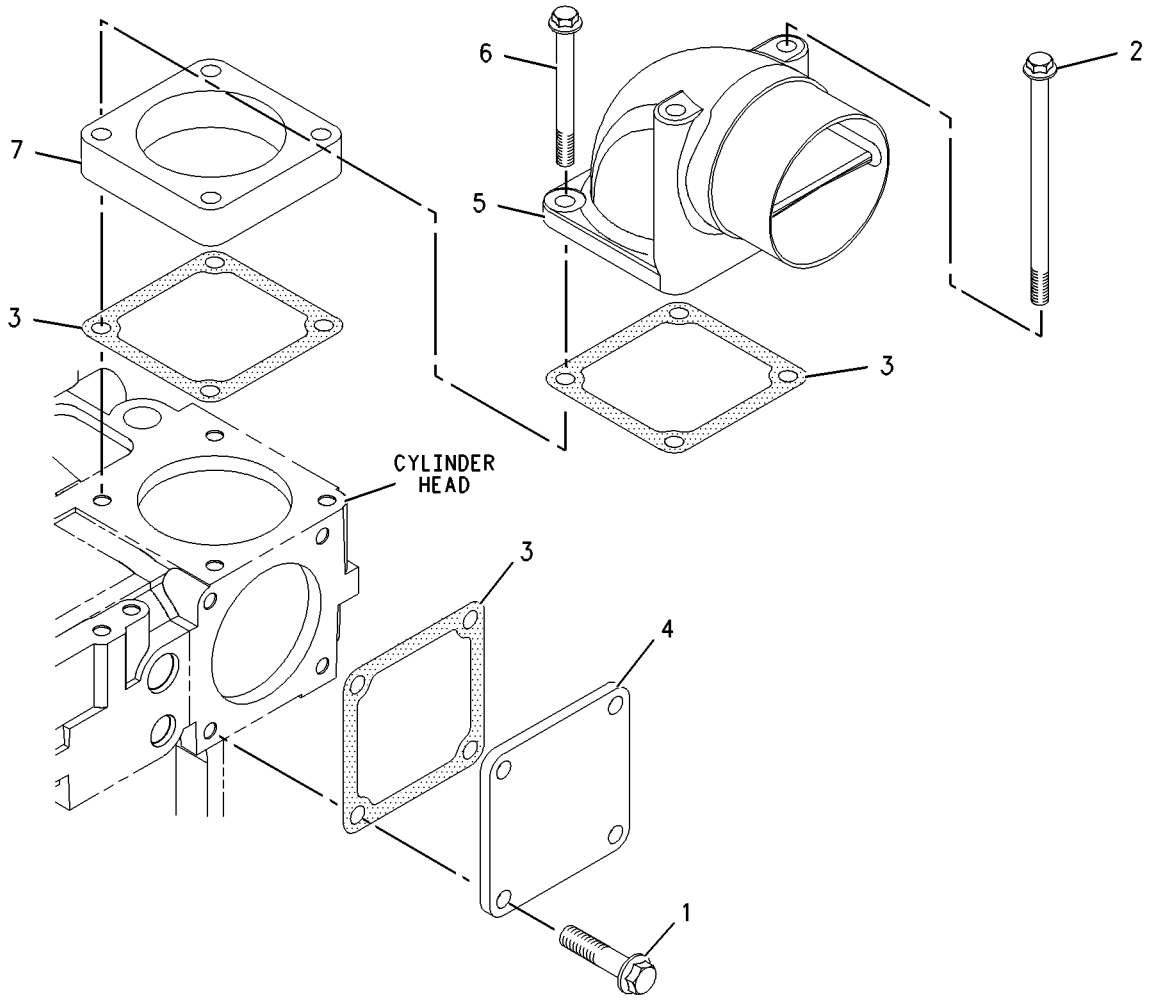

GRAPHIC #1 <END> g00975132

235-2489 ELBOW GP-AIR INLET

TYPE 2

SMCS-1087 **i03821158**

NOTE	REF NO	GRAPHIC REF	PART NUMBER	QTY	PART NAME 1 2 3 4 5 6 (PRODUCT LEVEL)	SEE PAGE
M	1	1	**111-8222**	12	BOLT (M8X1.25X16-MM)	
M	2	1	**100-8451**	2	BOLT (M8X1.25X130-MM)	
C	3	1	**114-2579**	4	GASKET	
	4	1	**185-6627**	3	PLATE	
C	5	1	**256-4447**	1	ELBOW AS-AIR INLET	
	5A	1	**238-8288**	1	GASKET-INLET	
M	6	1	**235-2451**	2	BOLT (M8X1.25X45-MM)	
C	7	1	**261-6700**	1	SPACER	

C - CHANGE FROM PREVIOUS TYPE
M - METRIC PART

235-2489 **ELBOW GP-AIR INLET (**contd.**)** **i03821158**

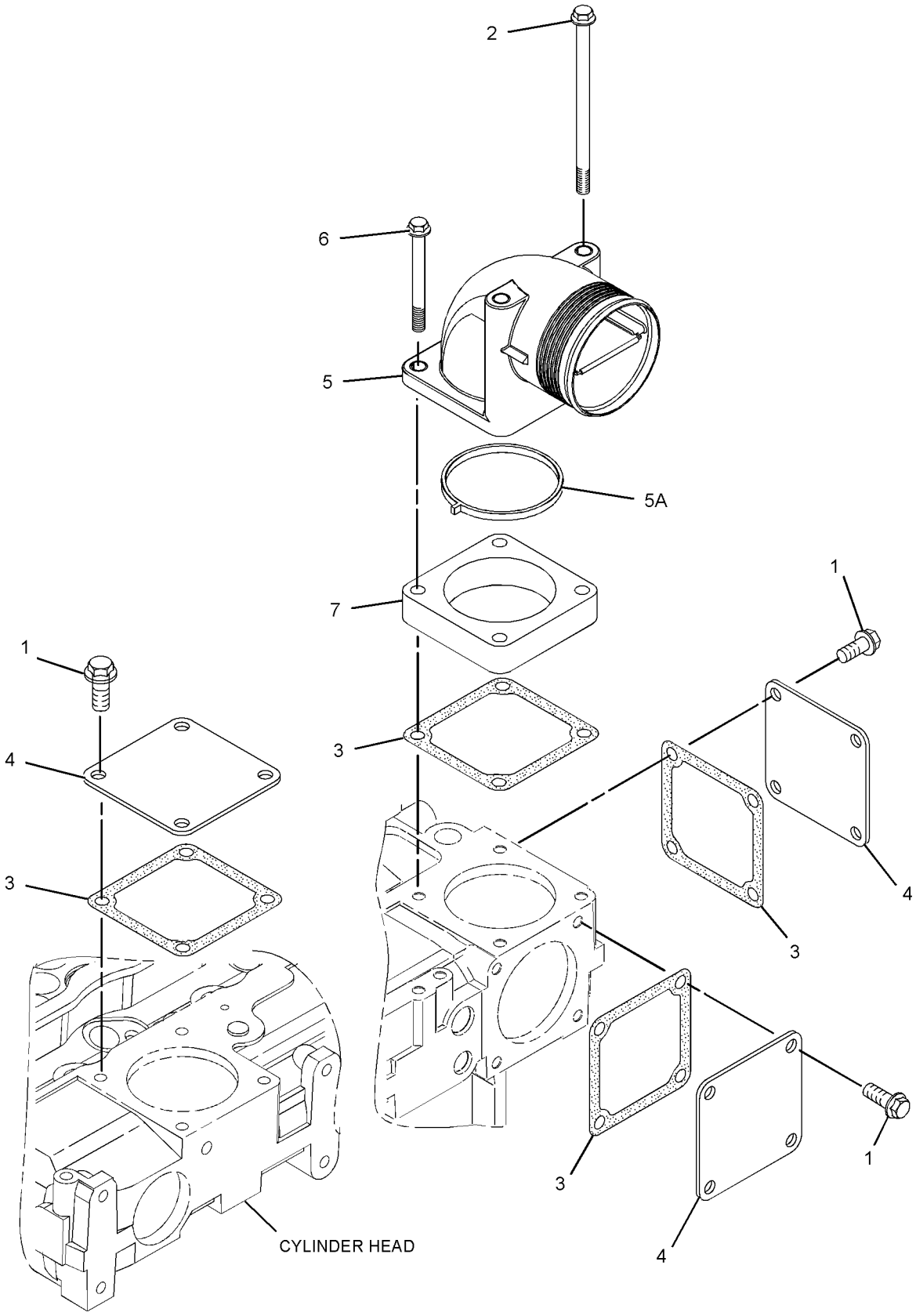

GRAPHIC #1 <END> g02099654

256-4440 ELBOW GP-AIR INLET

TYPE 1

SMCS-1087 **i02158959**

NOTE	REF NO	GRAPHIC REF	PART NUMBER	QTY	PART NAME 1 2 3 4 5 6 (PRODUCT LEVEL)	SEE PAGE
M	1	1	**6I-0572**	12	BOLT (M8X1.25X20-MM)	
M	2	1	**100-8451**	2	BOLT (M8X1.25X130-MM)	
	3	1	**114-2579**	5	GASKET	
	4	1	**115-1162**	3	PLATE	
	5	1	**233-7490**	1	ELBOW	
M	6	1	**235-2451**	2	BOLT (M8X1.25X45-MM)	
	7	1	**235-2488**	1	SPACER	

M - METRIC PART

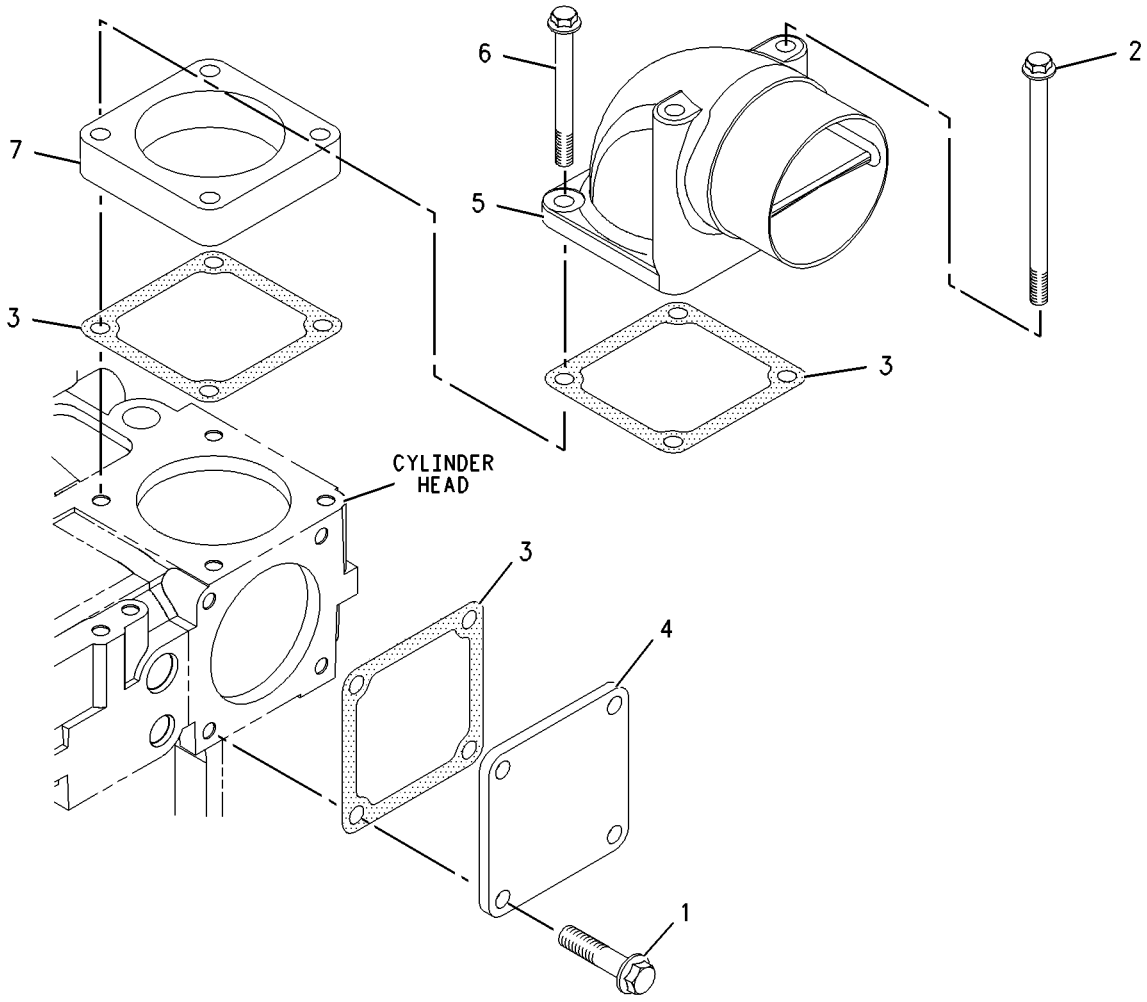

GRAPHIC #1 <END> g00975132

256-4440 ELBOW GP-AIR INLET

TYPE 2

SMCS-1087 **i03819660**

NOTE	REF NO	GRAPHIC REF	PART NUMBER	QTY	PART NAME 1 2 3 4 5 6 (PRODUCT LEVEL)	SEE PAGE
M	1	1	**111-8222**	12	BOLT (M8X1.25X16-MM)	
M	2	1	**100-8451**	2	BOLT (M8X1.25X130-MM)	
C	3	1	**114-2579**	4	GASKET	
	4	1	**185-6627**	3	PLATE	
C	5	1	**256-4447**	1	ELBOW AS-AIR INLET	
	5A	1	**238-8288**	1	GASKET-INLET	
M	6	1	**235-2451**	2	BOLT (M8X1.25X45-MM)	
C	7	1	**261-6700**	1	SPACER	

C - CHANGE FROM PREVIOUS TYPE
M - METRIC PART

256-4440 **ELBOW GP-AIR INLET (**contd.**)** **i03819660**

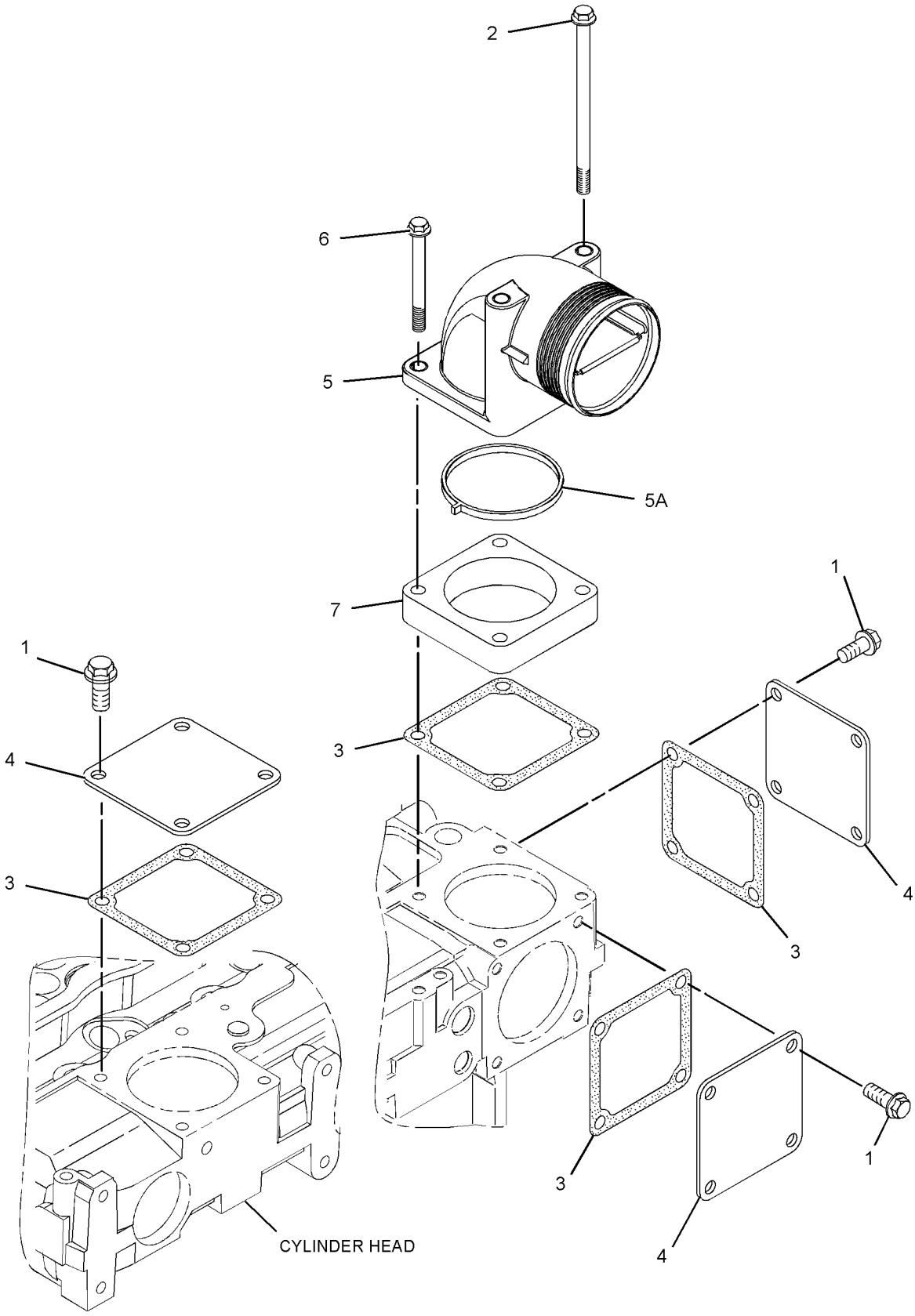

GRAPHIC #1 <END> g02099654

269-8077 ELBOW GP-AIR INLET

SMCS-1087 **i03819767**

NOTE	REF NO	GRAPHIC REF	PART NUMBER	QTY	PART NAME 1 2 3 4 5 6 (PRODUCT LEVEL)	SEE PAGE
M	1	1	**6I-0572**	2	BOLT (M8X1.25X20-MM)	
	2	1	**114-2579**	3	GASKET	
	3	1	**185-6627**	3	PLATE	
M	4	1	**233-7489**	2	BOLT (M8X1.25X110-MM)	
	5	1	**256-4447**	1	ELBOW AS-AIR INLET	
	5A	1	**238-8288**	1	GASKET-INLET	
M	6	1	**111-8222**	12	BOLT (M8X1.25X16-MM)	

M - METRIC PART

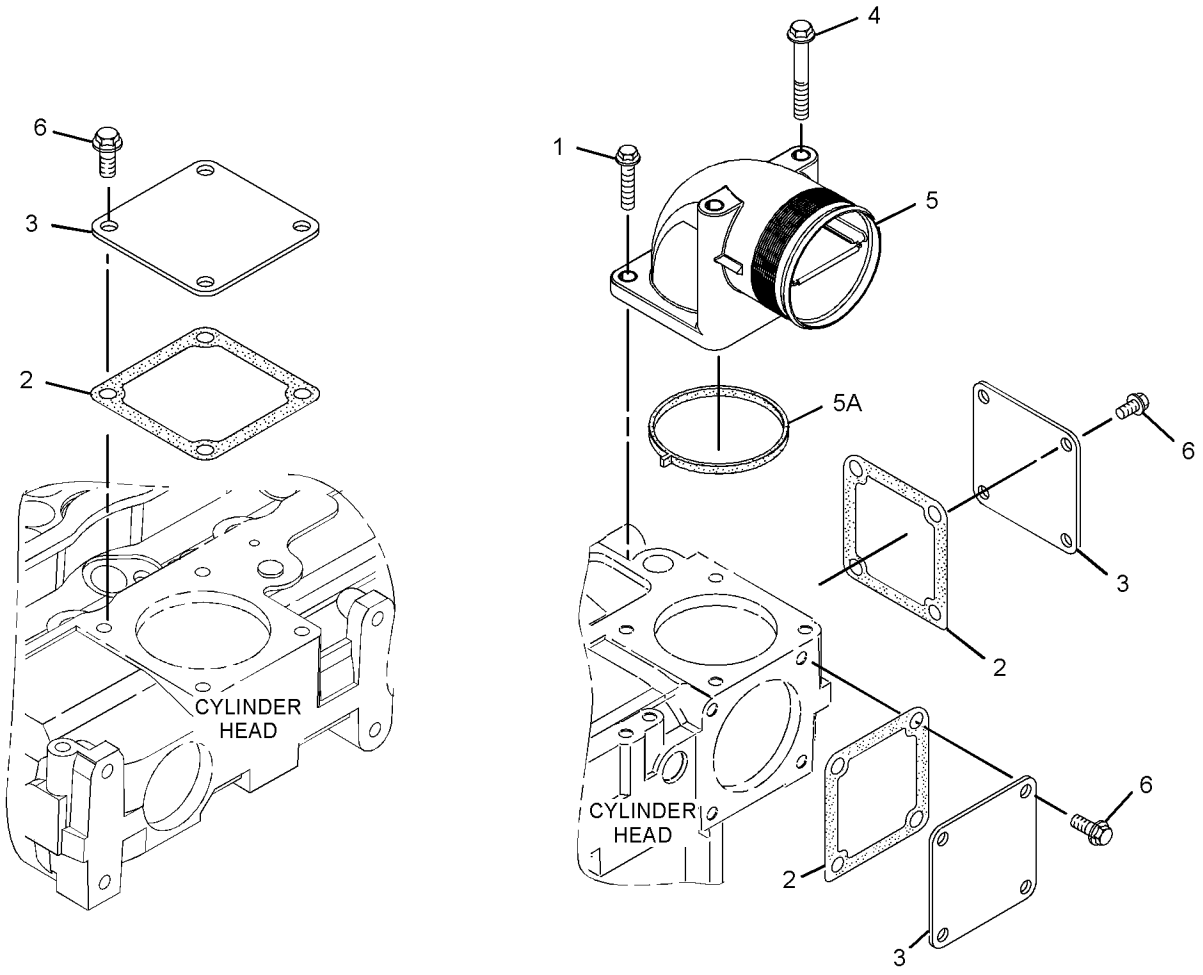

GRAPHIC #1 <END> g02093153

270-4374 ELBOW GP-AIR INLET

SMCS-1087 **i03819772**

NOTE	REF NO	GRAPHIC REF	PART NUMBER	QTY	PART NAME 1 2 3 4 5 6 (PRODUCT LEVEL)	SEE PAGE
M	1	1	**6I-0572**	2	BOLT (M8X1.25X20-MM)	
	2	1	**114-2579**	3	GASKET	
	3	1	**185-6627**	3	PLATE	
M	4	1	**233-7489**	2	BOLT (M8X1.25X110-MM)	
M	5	1	**251-6241**	4	SCREW (M8X1.25X20-MM)	
	6	1	**256-4447**	1	ELBOW AS-AIR INLET	
	6A	1	**238-8288**	1	GASKET-INLET	
M	7	1	**111-8222**	8	BOLT (M8X1.25X16-MM)	

M - METRIC PART

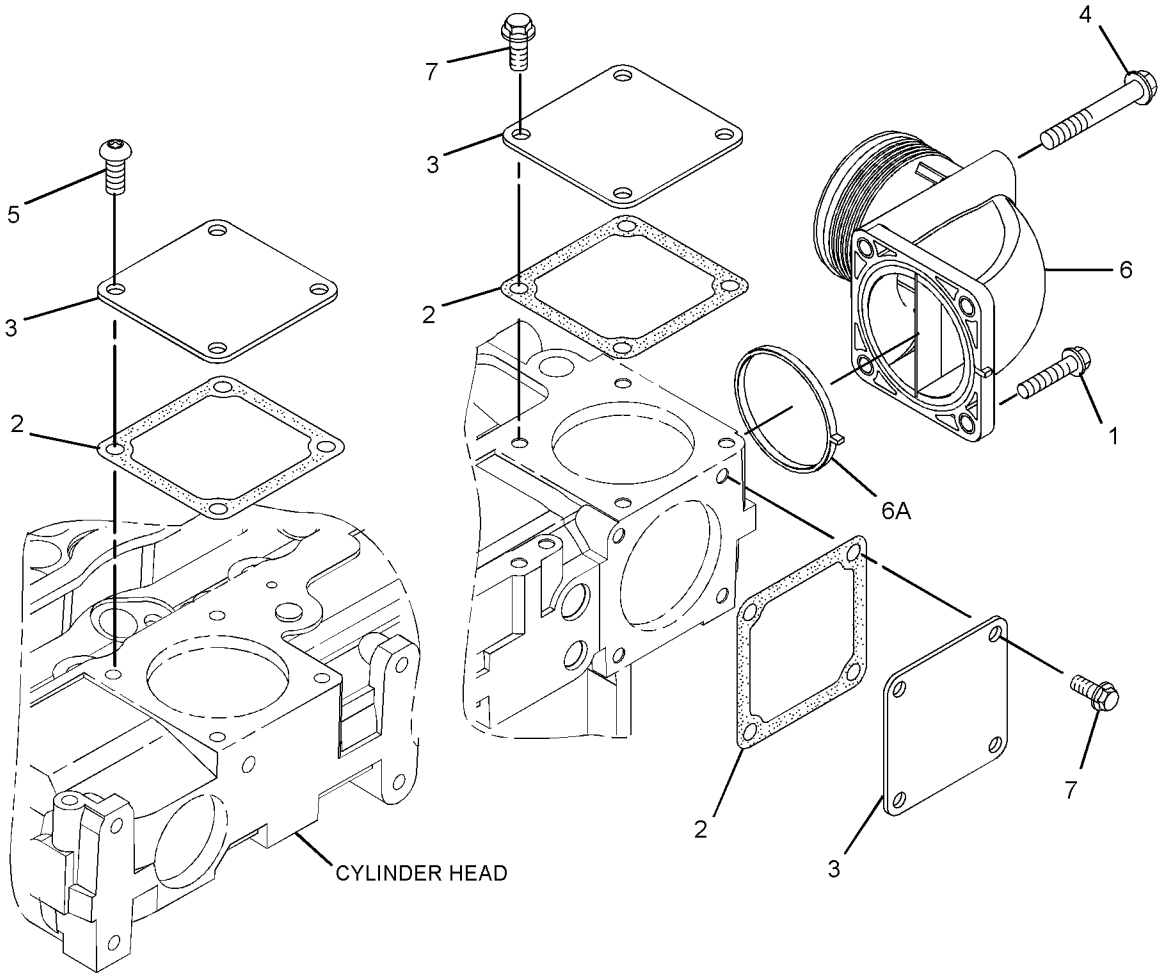

GRAPHIC #1 <END> g02094638

235-0365 ELBOW GP-EXHAUST

SMCS-1061 **i01890328**

NOTE	REF NO	GRAPHIC REF	PART NUMBER	QTY	PART NAME 1 2 3 4 5 6 (PRODUCT LEVEL)	SEE PAGE
M	1	1	**6I-0364**	3	STUD (M10X1.5X45-MM)	
M	2	1	**6I-0563**	6	NUT (M10X1.5-THD)	
	3	1	**6I-4013**	1	FLANGE	
	4	1	**6I-4039**	2	GASKET	
	5	1	**102-2100**	1	ELBOW	
M	6	1	**111-0859**	3	BOLT (M10X1.5X35-MM)	

M - METRIC PART

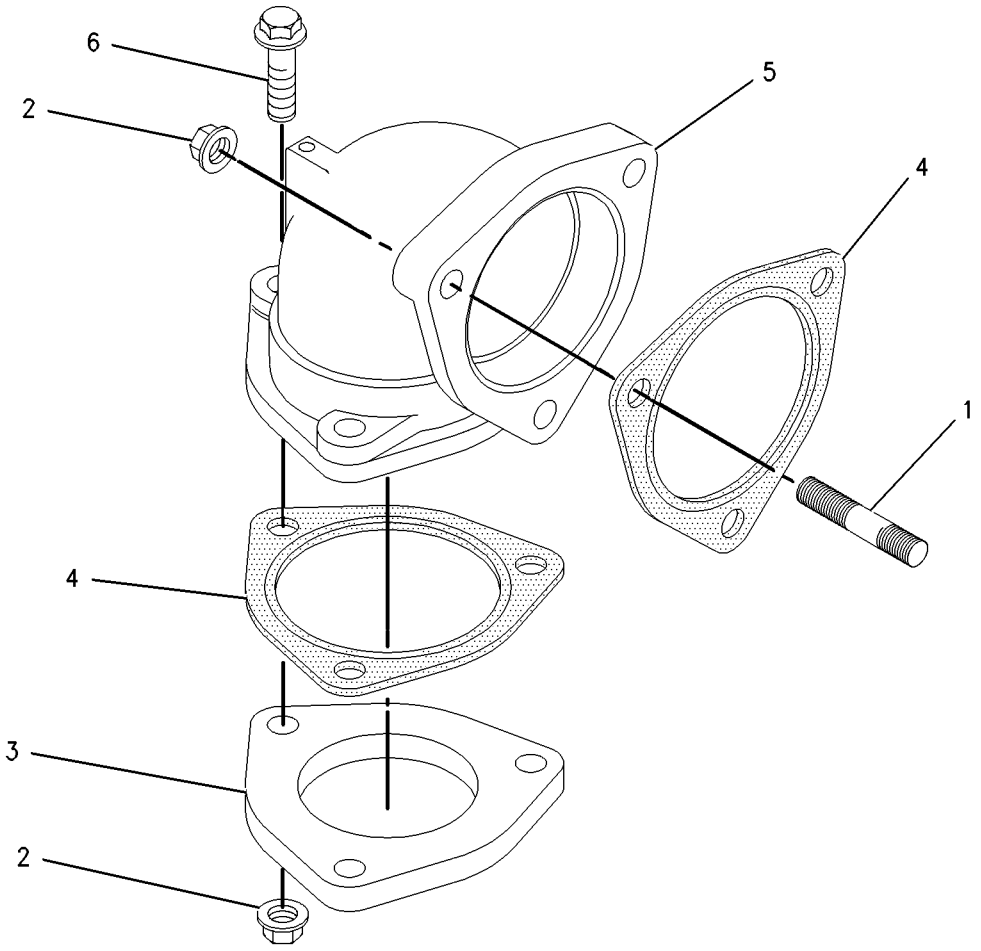

GRAPHIC #1 <END> g00985775

235-8175 ELBOW GP-EXHAUST

SMCS-1061 **i01985268**

NOTE	REF NO	GRAPHIC REF	PART NUMBER	QTY	PART NAME 1 2 3 4 5 6 (PRODUCT LEVEL)	SEE PAGE
M	1	1	**6I-0364**	3	STUD (M10X1.5X45-MM)	
M	2	1	**6I-0563**	3	NUT (M10X1.5-THD)	
	3	1	**102-2100**	1	ELBOW	
	4	1	**6I-4039**	1	GASKET	

M - METRIC PART

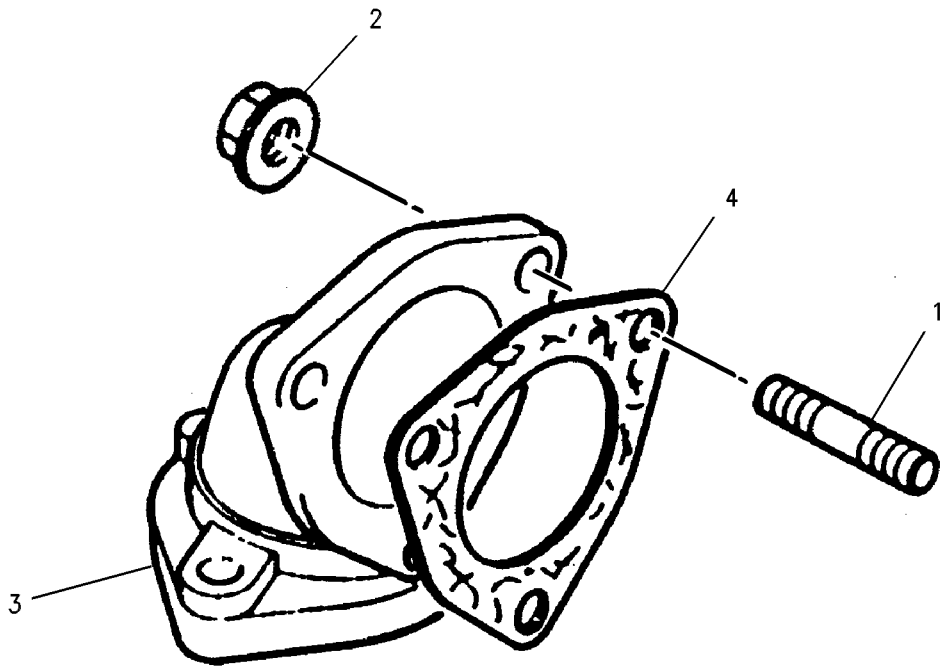

GRAPHIC #1 <END> g00567997

268-3643 ELBOW GP-EXHAUST

SMCS-1061 **i02297963**

NOTE	REF NO	GRAPHIC REF	PART NUMBER	QTY	PART NAME 1 2 3 4 5 6 (PRODUCT LEVEL)	SEE PAGE
M	1	1	**6I-0364**	3	STUD (M10X1.5X45-MM)	
M	2	1	**6I-0563**	3	NUT (M10X1.5-THD)	
	3	1	**102-2100**	1	ELBOW	
	4	1	**6I-4039**	1	GASKET	

M - METRIC PART

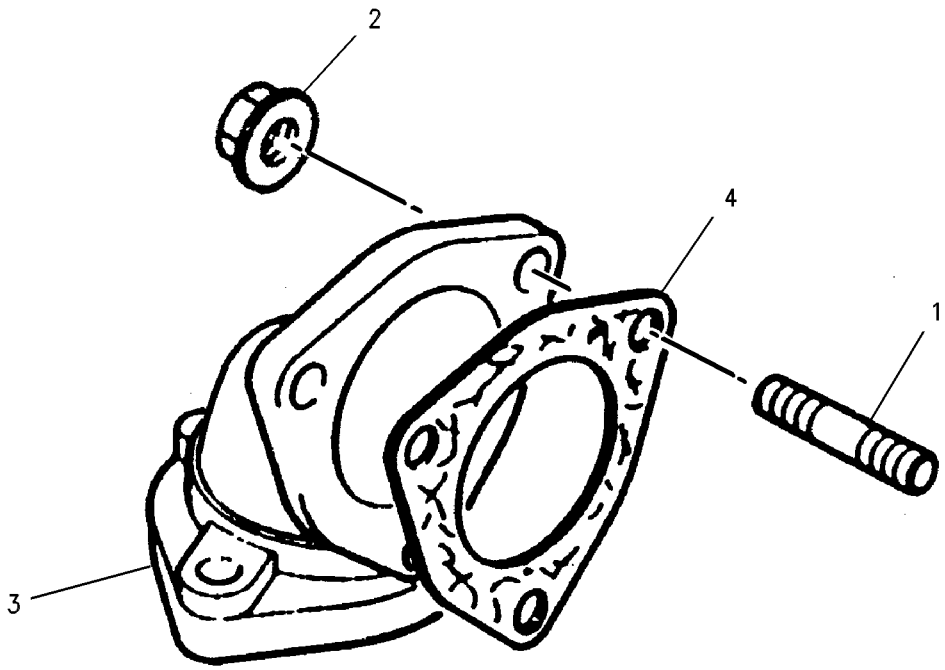

GRAPHIC #1 <END> g00567997

238-4769 FLANGE GP-EXHAUST

SMCS-1061 **i02645858**

NOTE	REF NO	GRAPHIC REF	PART NUMBER	QTY	PART NAME 1 2 3 4 5 6 (PRODUCT LEVEL)	SEE PAGE
	1	1	**6I-4013**	1	FLANGE	
	2	1	**6I-4039**	1	GASKET	
M	3	1	**6I-4012**	3	STUD (M10X1.5X40-MM)	
M	4	1	**6I-0563**	3	NUT (M10X1.5-THD)	

M - METRIC PART

238-4769 **FLANGE GP-EXHAUST** (contd.) **i02645858**

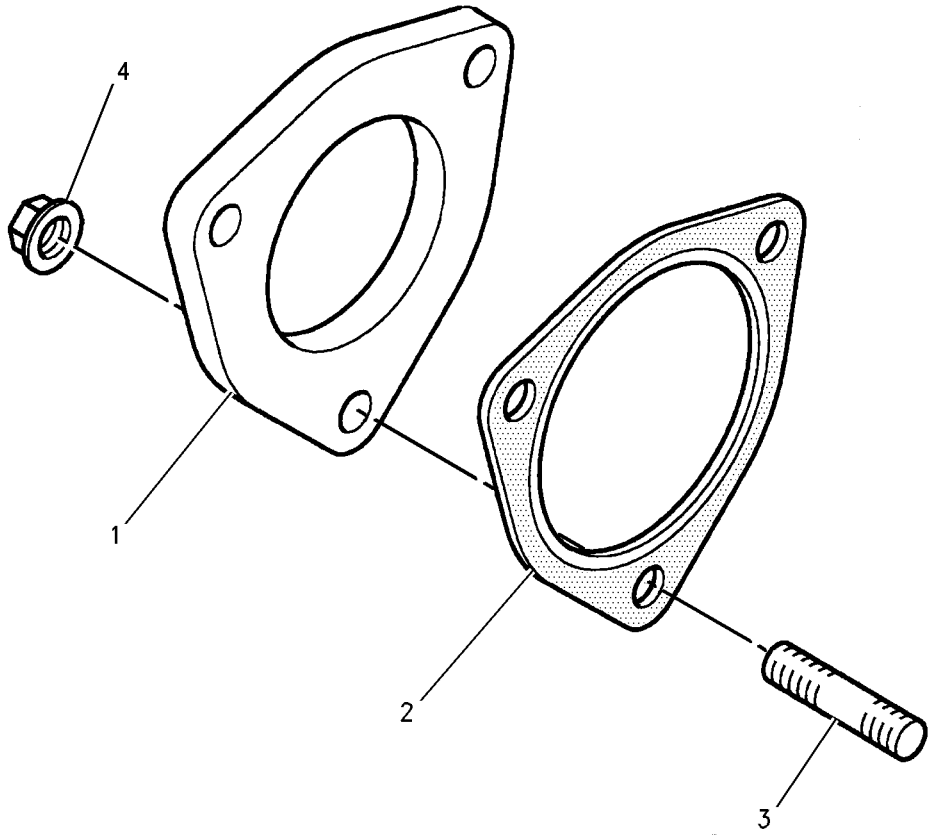

GRAPHIC #1 <END> g00998798

231-0286 MANIFOLD GP-EXHAUST

ALSO AN ATTACHMENT

SMCS-1059 **i05190666**

NOTE	REF NO	GRAPHIC REF	PART NUMBER	QTY	PART NAME 1 2 3 4 5 6 (PRODUCT LEVEL)	SEE PAGE
M	1	1	**174-9638**	8	BOLT (M10X1.5X30-MM)	
	2	1	**225-8536**	1	GASKET	
	3	1	**371-6658**	1	MANIFOLD-EXHAUST	

M - METRIC PART

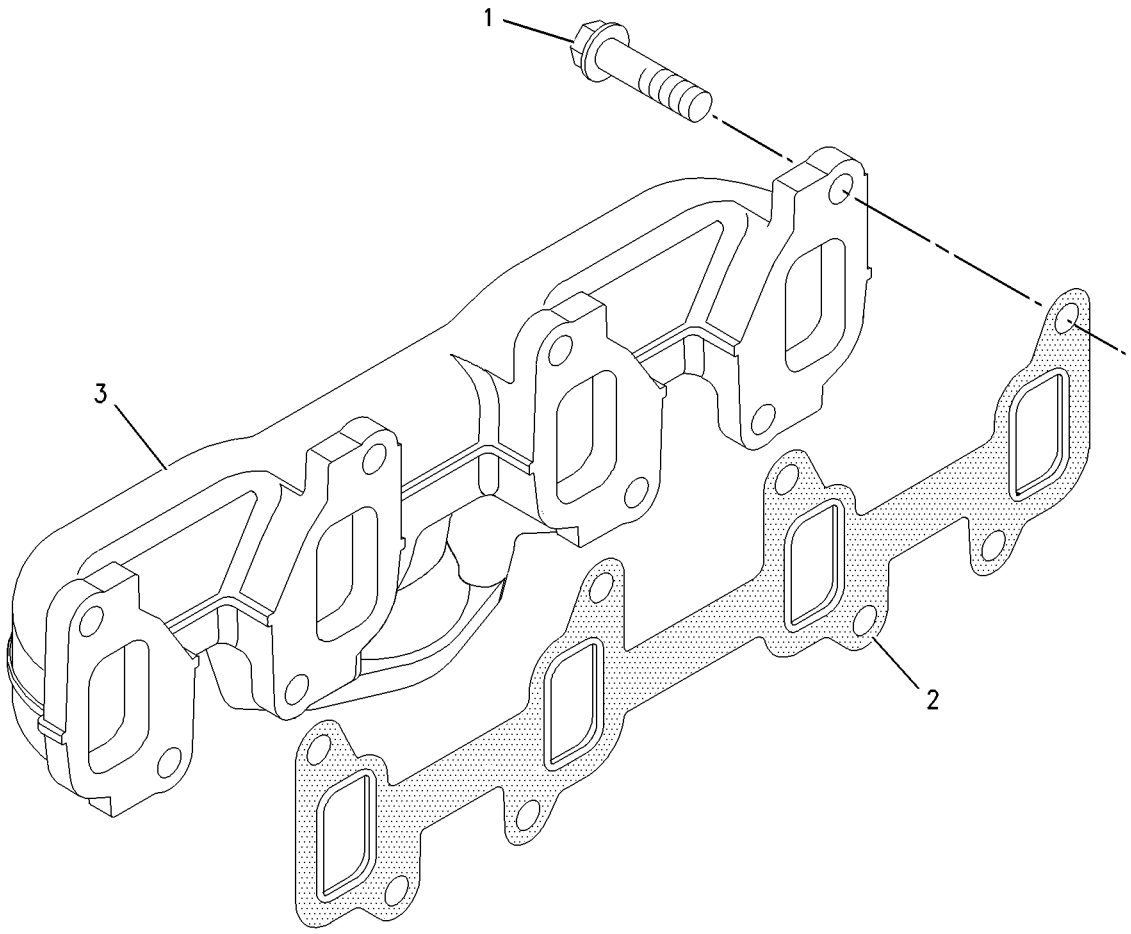

GRAPHIC #1 <END> g00956599

231-0292 MANIFOLD GP-EXHAUST

ALSO AN ATTACHMENT

SMCS-1059 **i04877056**

NOTE	REF NO	GRAPHIC REF	PART NUMBER	QTY	PART NAME 1 2 3 4 5 6 (PRODUCT LEVEL)	SEE PAGE
M	1	1	**174-9638**	8	BOLT (M10X1.5X30-MM)	
	2	1	**225-8536**	1	GASKET	
	3	1	**371-5684**	1	MANIFOLD-EXHAUST	

M - METRIC PART

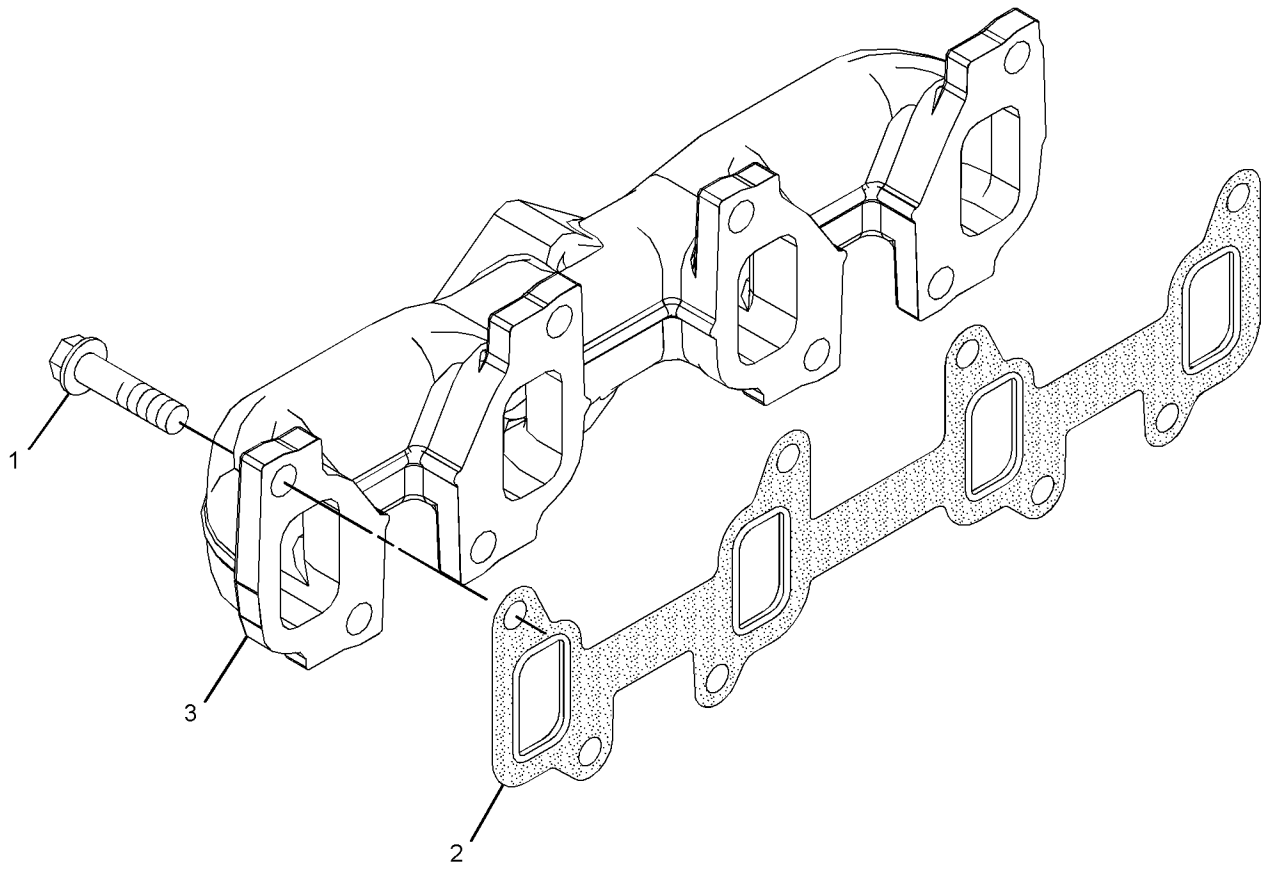

GRAPHIC #1 <END> g03015839

237-5408 MANIFOLD GP-EXHAUST

SMCS-1059 **i04940446**

NOTE	REF NO	GRAPHIC REF	PART NUMBER	QTY	PART NAME 1 2 3 4 5 6 (PRODUCT LEVEL)	SEE PAGE
M	1	1	**174-9638**	8	BOLT (M10X1.5X30-MM)	
	2	1	**225-8536**	1	GASKET (MANIFOLD)	
	3	1	**371-5674**	1	MANIFOLD-EXHAUST	

M - METRIC PART

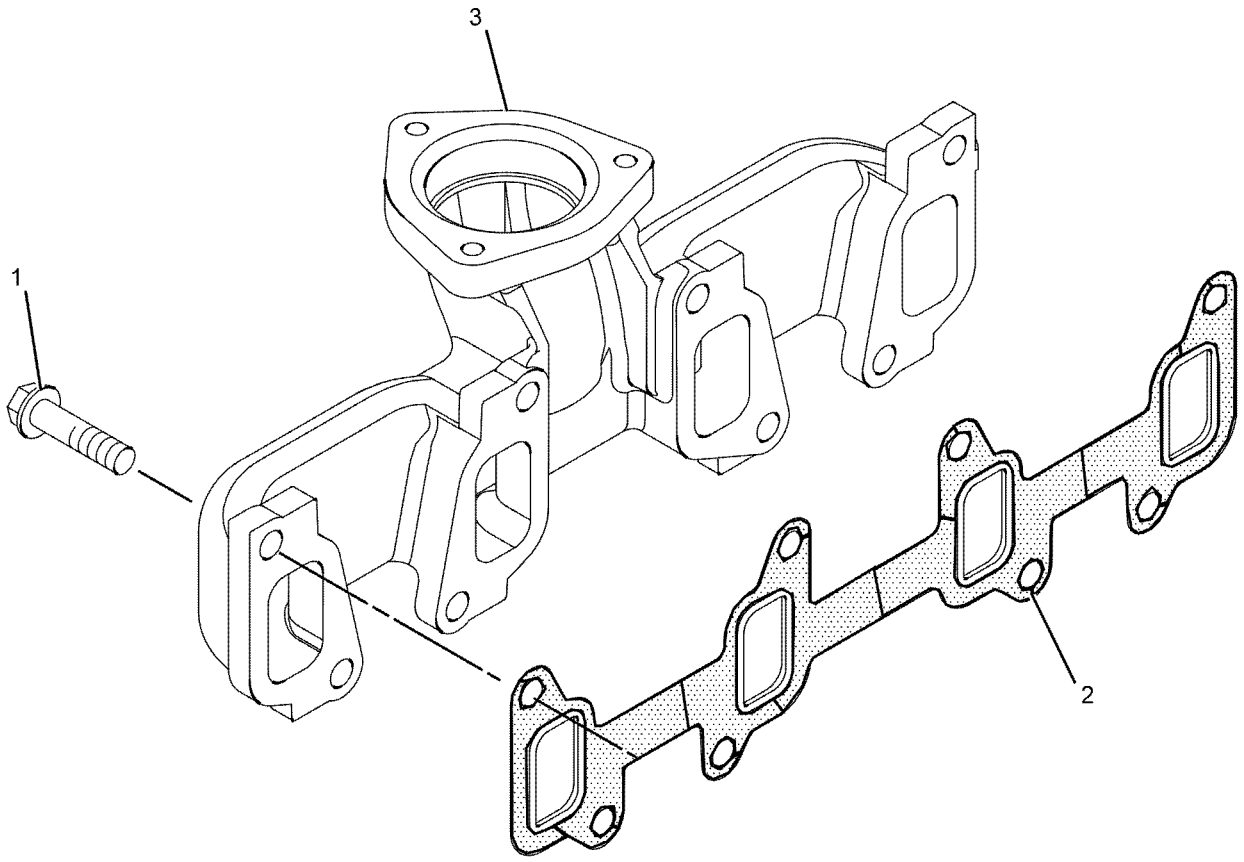

GRAPHIC #1 <END> g01084131

234-1421 MOUNTING GP-EXHAUST–TURBO EXHAUST

ALSO AN ATTACHMENT

SMCS-1061 **i01872165**

NOTE	REF NO	GRAPHIC REF	PART NUMBER	QTY	PART NAME 1 2 3 4 5 6 (PRODUCT LEVEL)	SEE PAGE
M	1	1	**6I-0563**	3	NUT (M10X1.5-THD)	
M	2	1	**6I-4012**	3	STUD (M10X1.5X40-MM)	

M - METRIC PART

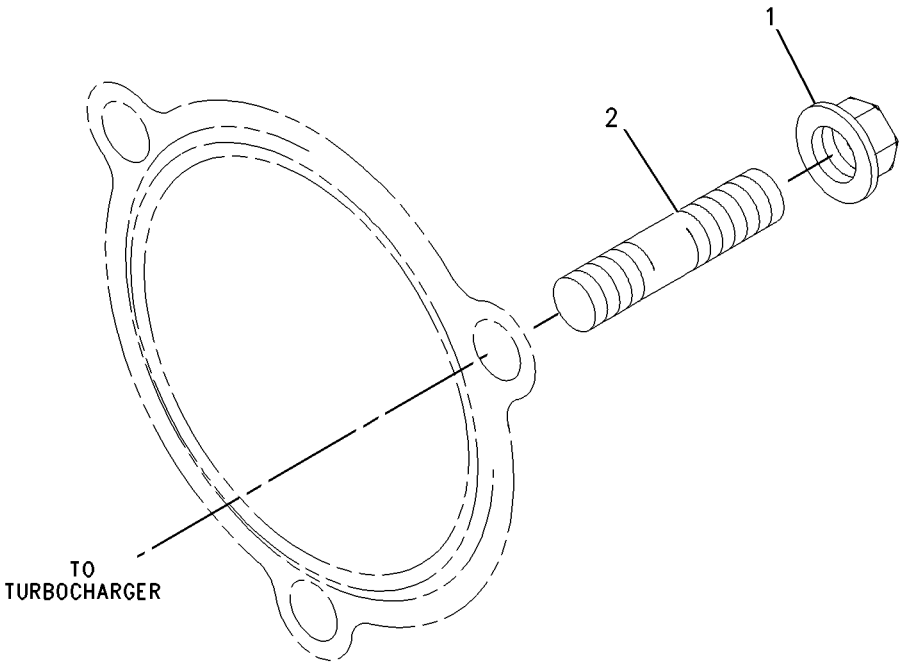

GRAPHIC #1 <END> g00954789

225-8537 TURBOCHARGER GP

AN ATTACHMENT

SMCS-1052, 1053 **i05171151**

NOTE	REF NO	GRAPHIC REF	PART NUMBER	QTY	PART NAME 1 2 3 4 5 6 (PRODUCT LEVEL)	SEE PAGE
M	1	1	**6I-0217**	2	BOLT (M8X1.25X20-MM)	
M	2	1	**6I-0563**	4	NUT (M10X1.5-THD)	
M	3	1	**106-8916**	2	BOLT (M6X1X16-MM)	
	4	1	**149-4236**	4	STUD (M10X1.5X37-MM)	
M	5	1	**174-9638**	8	BOLT (M10X1.5X30-MM)	
	6	1	**194-5390**	1	GASKET-MANIFOLD	
	7	1	**225-8525**	1	TUBE AS	
M	8	1	**225-8524**	2	BOLT-SPECIAL (M10X1.5X23-MM)	
	9	1	**225-8526**	4	WASHER (10.4X13.75X1.37-MM THK)	
	10	1	**225-8529**	1	TURBOCHARGER GP	
	11	1	**225-8530**	1	GASKET (ELBOW)	
	12	1	**232-6189**	1	TUBE AS	
	13	1	**353-3477**	1	GASKET-TURBOCHARGER	
	14	1	**353-3478**	1	GASKET-TURBOCHARGER	
	15	1	**371-6059**	1	MANIFOLD-EXHAUST	
	16	1	**225-8536**	1	GASKET (MANIFOLD)	

M - METRIC PART

225-8537 **TURBOCHARGER GP** (contd.) **i05171151**

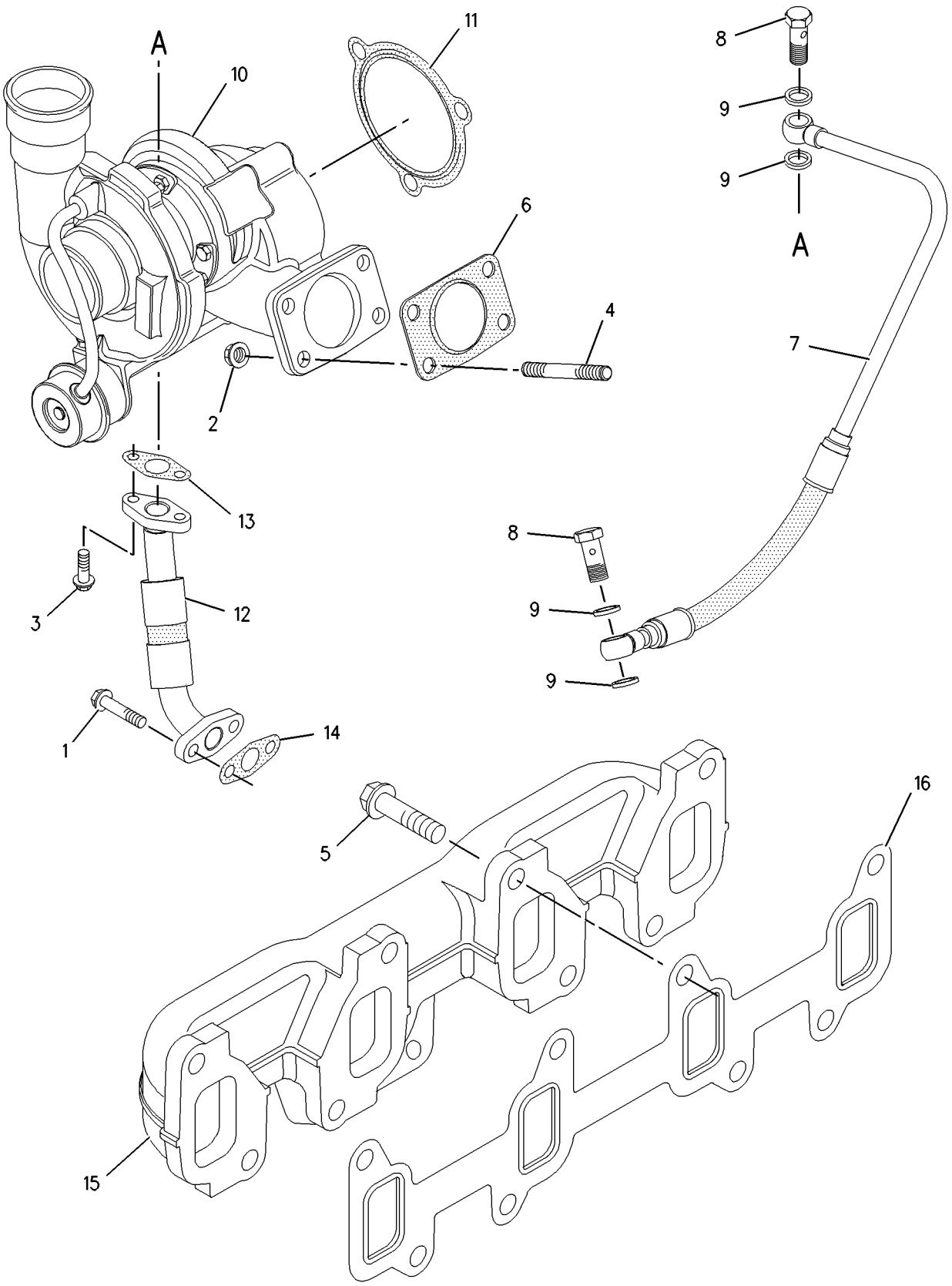

GRAPHIC #1 <END> g00912337

232-6197 TURBOCHARGER GP

ALSO AN ATTACHMENT

SMCS-1052, 1053 **i08526179**

NOTE	REF NO	GRAPHIC REF	PART NUMBER	QTY	PART NAME 1 2 3 4 5 6 (PRODUCT LEVEL)	SEE PAGE
M	1	1	**6I-0217**	2	BOLT (M8X1.25X20-MM)	
M	2	1	**6I-0563**	7	NUT (M10X1.5-THD)	
M	3	1	**6I-0593**	2	BOLT (M10X1.5X30-MM)	
M	4	1	**6I-0654**	3	BOLT (M10X1.5X25-MM)	
	5	1	**361-7519**	7	ROD-THREADED	
M	6	1	**174-9638**	8	BOLT (M10X1.5X30-MM)	
	7	1	**194-5390**	1	GASKET-MANIFOLD	
	8	1	**225-8525**	1	TUBE AS	
M	8A	1	**225-8524**	2	BOLT-SPECIAL (M10X1.5X23-MM)	
	8B	1	**225-8526**	4	WASHER (10.4X13.75X1.37-MM THK)	
	9	1	**225-8529**	1	TURBOCHARGER GP	
	10	1	**353-3477**	1	GASKET-TURBOCHARGER	
	11	1	**353-3478**	1	GASKET-TURBOCHARGER	
	12	1	**371-6059**	1	MANIFOLD-EXHAUST	
	13	1	**225-8536**	1	GASKET	
	14	1	**227-4562**	1	ELBOW-EXHAUST	
	15	1	**302-0581**	1	ADAPTER-EXHAUST	
	16	1	**232-6189**	1	TUBE AS	
M	17	1	**106-8916**	2	BOLT (M6X1X16-MM)	
	18	1	**307-2805**	1	BRACKET	

M - METRIC PART

232-6197 **TURBOCHARGER GP** (contd.) **i08526179**

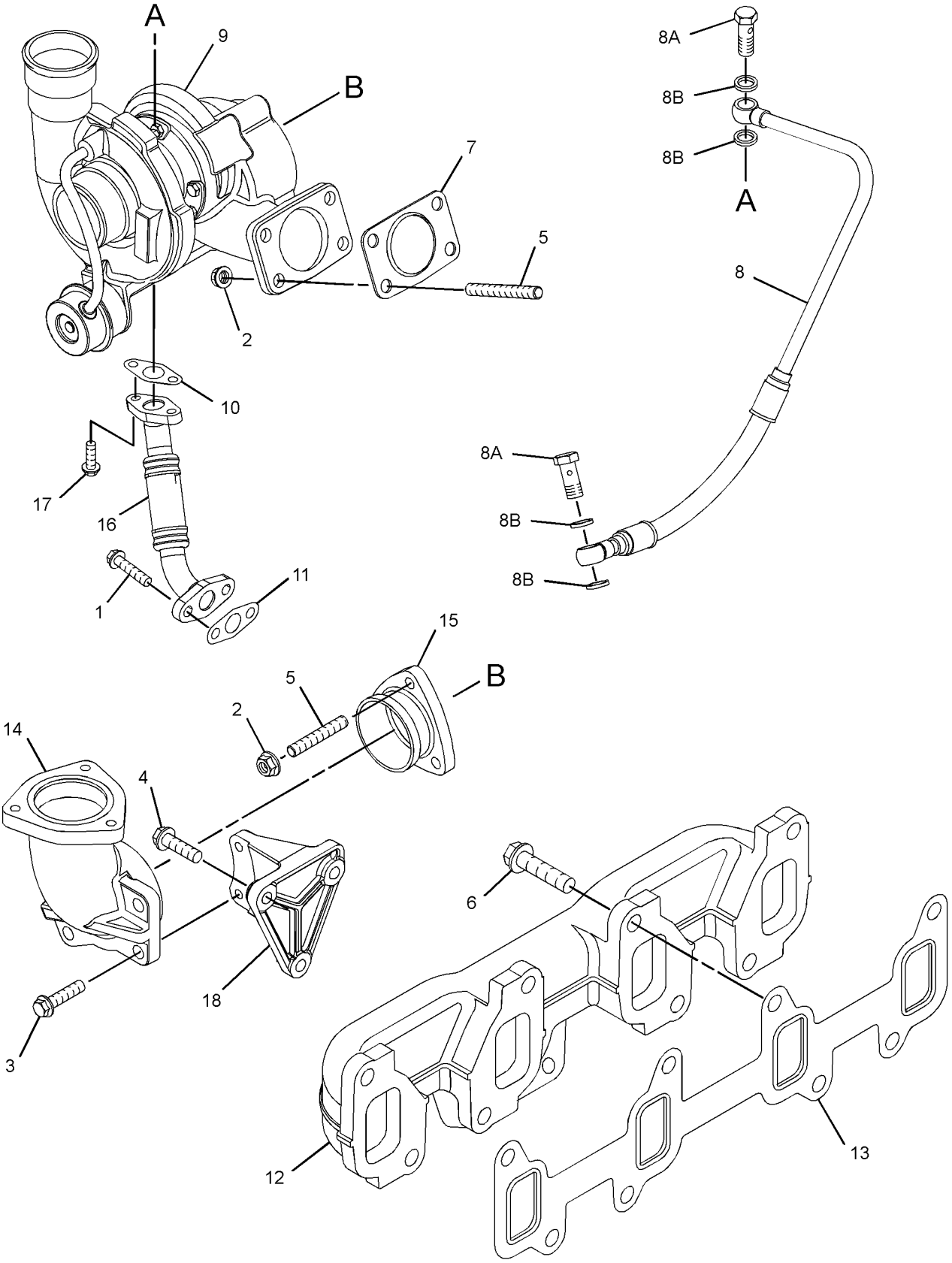

GRAPHIC #1 <END> g07489121

233-9539 TURBOCHARGER GP

ALSO AN ATTACHMENT

SMCS-1052, 1053 **i05988259**

NOTE	REF NO	GRAPHIC REF	PART NUMBER	QTY	PART NAME 1 2 3 4 5 6 (PRODUCT LEVEL)	SEE PAGE
M	1	1	**6I-0217**	2	BOLT (M8X1.25X20-MM)	
M	2	1	**6I-0563**	7	NUT (M10X1.5-THD)	
M	3	1	**6I-0593**	2	BOLT (M10X1.5X30-MM)	
M	4	1	**6I-0654**	3	BOLT (M10X1.5X25-MM)	
	5	1	**361-7519**	7	ROD-THREADED	
M	6	1	**174-9638**	8	BOLT (M10X1.5X30-MM)	
	7	1	**194-5390**	1	GASKET-MANIFOLD	
	8	1	**353-3477**	1	GASKET-TURBOCHARGER	
	9	1	**353-3478**	1	GASKET-TURBOCHARGER	
	10	1	**225-8536**	1	GASKET	
	11	1	**227-4562**	1	ELBOW-EXHAUST	
	12	1	**302-0581**	1	ADAPTER-EXHAUST	
M	13	1	**106-8916**	2	BOLT (M6X1X16-MM)	
R	14	1	**233-9534**	1	TURBOCHARGER GP	
	15	1	**233-9536**	1	TUBE AS	
M	15A	1	**225-8524**	3	BOLT-SPECIAL (M10X1.5X23-MM)	
	15B	1	**225-8526**	7	WASHER (10.4X13.75X1.37-MM THK)	
	16	1	**233-9537**	1	TUBE AS	
	17	1	**371-6116**	1	MANIFOLD-EXHAUST	
	18	1	**249-7106**	1	BRACKET	

M - METRIC PART
R - REMANUFACTURED PART MAY BE AVAILABLE

233-9539 **TURBOCHARGER GP (**contd.**)** **i05988259**

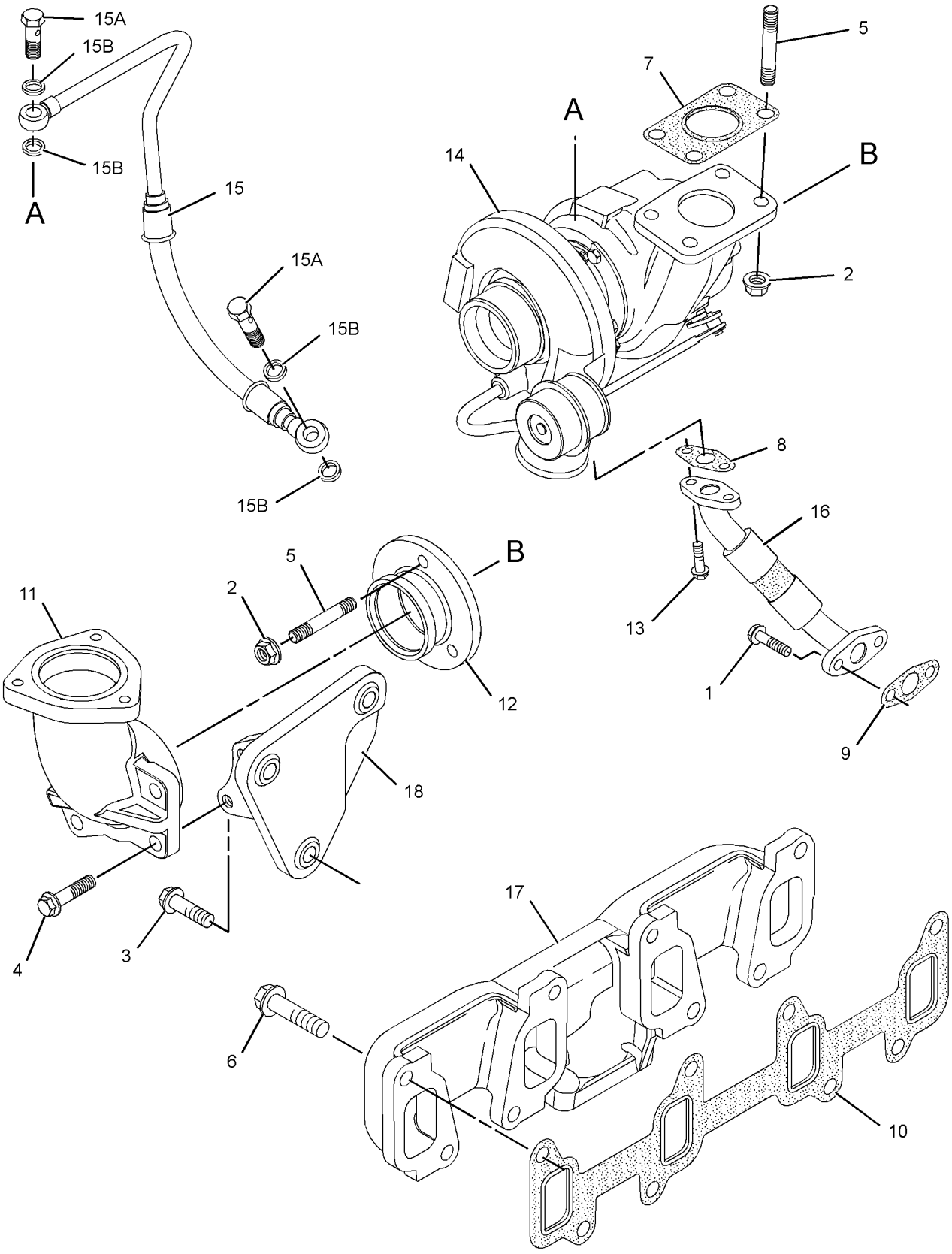

GRAPHIC #1 <END> g01327108

233-9780 TURBOCHARGER GP

ALSO AN ATTACHMENT

SMCS-1052, 1053 **i08156010**

NOTE	REF NO	GRAPHIC REF	PART NUMBER	QTY	PART NAME 1 2 3 4 5 6 (PRODUCT LEVEL)	SEE PAGE
M	1	1	**6I-0217**	1	BOLT (M8X1.25X20-MM)	
M	2	1	**6I-0563**	7	NUT (M10X1.5-THD)	
M	3	1	**6I-0593**	1	BOLT (M10X1.5X30-MM)	
M	4	1	**6I-0654**	3	BOLT (M10X1.5X25-MM)	
	5	1	**361-7519**	7	ROD-THREADED	
M	7	1	**174-9638**	8	BOLT (M10X1.5X30-MM)	
	8	1	**194-5390**	1	GASKET-MANIFOLD	
	9	1	**225-8525**	1	TUBE AS	
M	9A	1	**225-8524**	2	BOLT-SPECIAL (M10X1.5X23-MM)	
	9B	1	**225-8526**	4	WASHER (10.4X13.75X1.37-MM THK)	
	12	1	**353-3477**	1	GASKET-TURBOCHARGER	
	13	1	**353-3478**	1	GASKET-TURBOCHARGER	
	14	1	**371-6059**	1	MANIFOLD-EXHAUST	
	15	1	**225-8536**	1	GASKET	
	16	1	**227-4562**	1	ELBOW-EXHAUST	
	17	1	**302-0581**	1	ADAPTER-EXHAUST	
	18	1	**232-6189**	1	TUBE AS	
M	19	1	**106-8916**	1	BOLT (M6X1X16-MM)	
	20	1	**307-2805**	1	BRACKET	
	21	1	**233-9779**	1	TURBOCHARGER GP	

M - METRIC PART

233-9780 **TURBOCHARGER GP (**contd.**)** **i08156010**

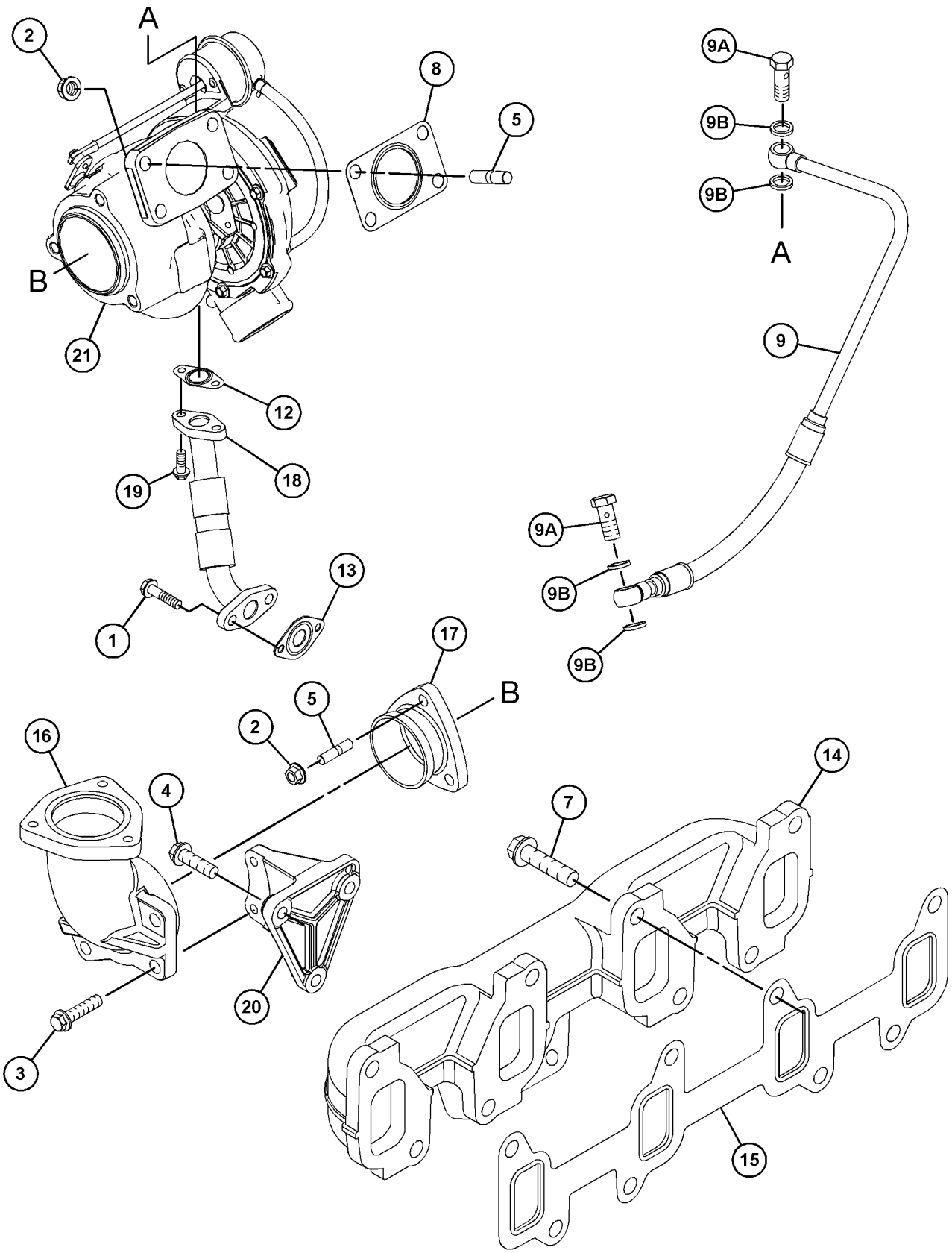

GRAPHIC #1 <END> g06659688

235-5234 TURBOCHARGER GP

SMCS-1052, 1053 **i05988350**

NOTE	REF NO	GRAPHIC REF	PART NUMBER	QTY	PART NAME 1 2 3 4 5 6 (PRODUCT LEVEL)	SEE PAGE
M	1	1	**6I-0217**	2	BOLT (M8X1.25X20-MM)	
M	2	1	**6I-0563**	7	NUT (M10X1.5-THD)	
M	3	1	**6I-0572**	4	BOLT (M8X1.25X20-MM)	
M	4	1	**6I-0593**	2	BOLT (M10X1.5X30-MM)	
M	5	1	**6I-0654**	3	BOLT (M10X1.5X25-MM)	
	6	1	**141-1667**	2	CLAMP-HOSE	
	7	1	**361-7519**	7	ROD-THREADED	
M	8	1	**174-9638**	8	BOLT (M10X1.5X30-MM)	
	9	1	**194-5390**	1	GASKET-MANIFOLD	
	10	1	**225-8525**	1	TUBE AS	
M	10A	1	**225-8524**	2	BOLT-SPECIAL (M10X1.5X23-MM)	
	10B	1	**225-8526**	4	WASHER (10.4X13.75X1.37-MM THK)	
	13	1	**353-3477**	1	GASKET-TURBOCHARGER	
	14	1	**353-3478**	1	GASKET-TURBOCHARGER	
	15	1	**371-6059**	1	MANIFOLD-EXHAUST	
	16	1	**225-8536**	1	GASKET	
	17	1	**227-4562**	1	ELBOW-EXHAUST	
	18	1	**302-0581**	1	ADAPTER-EXHAUST	
	19	1	**232-6189**	1	TUBE AS	
M	20	1	**106-8916**	2	BOLT (M6X1X16-MM)	
	21	1	**307-2805**	1	BRACKET	
	22	1	**238-8567**	1	TURBOCHARGER GP	
	23	1	**234-3029**	1	HOSE	
	24	1	**234-3030**	1	GASKET-INLET	
	25	1	**367-5799**	1	TUBE	

M - METRIC PART

235-5234 **TURBOCHARGER GP (**contd.**)** **i05988350**

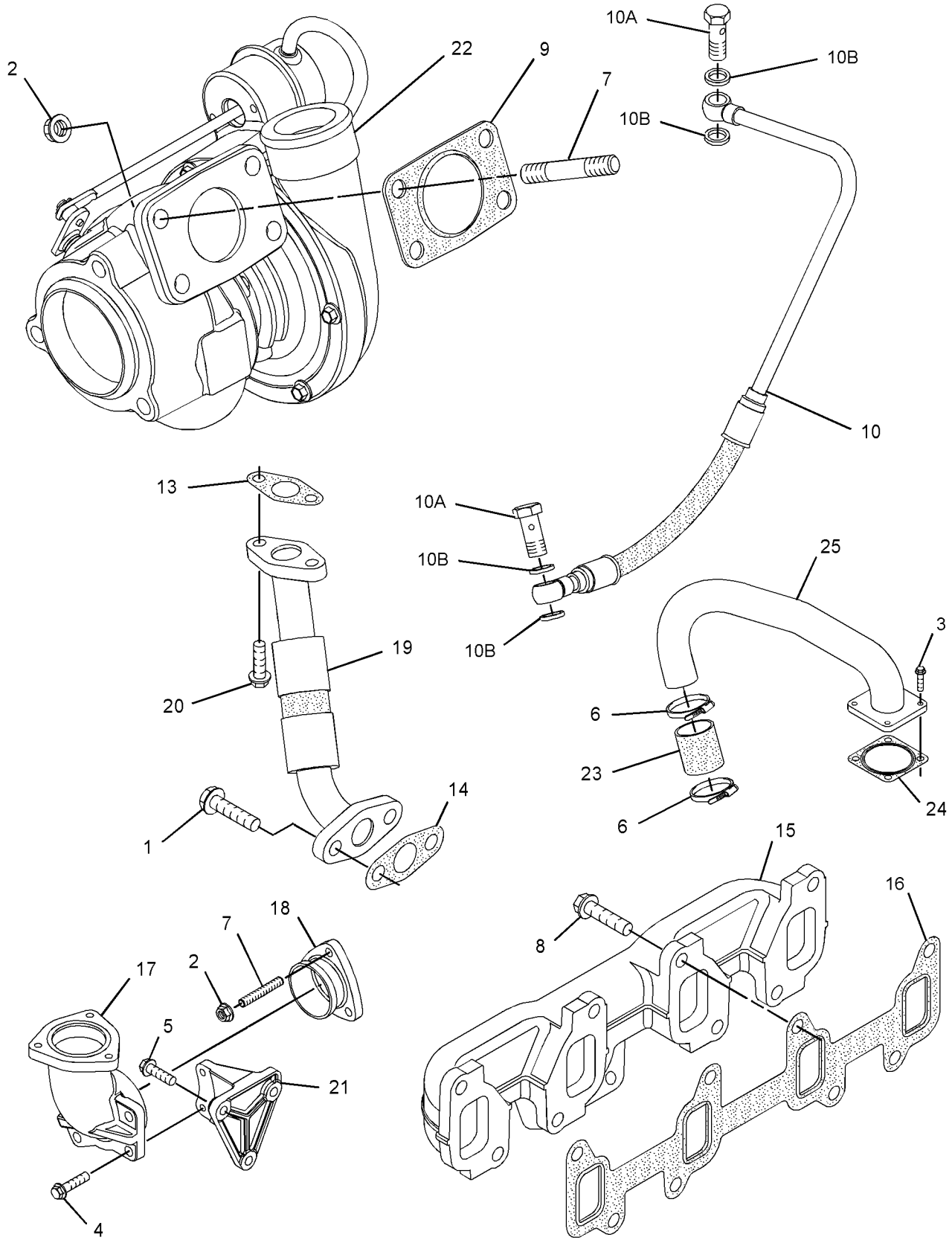

GRAPHIC #1 <END> g01623896

236-1269 TURBOCHARGER GP

S/N: 3341-669

SMCS-1052, 1053 **i02345103**

NOTE	REF NO	GRAPHIC REF	PART NUMBER	QTY	PART NAME 1 2 3 4 5 6 (PRODUCT LEVEL)	SEE PAGE
M	1	1	**6I-0217**	2	BOLT (M8X1.25X20-MM)	
M	2	1	**6I-0563**	7	NUT (M10X1.5-THD)	
M	3	1	**6I-0572**	4	BOLT (M8X1.25X20-MM)	
M	4	1	**6I-0593**	2	BOLT (M10X1.5X30-MM)	
M	5	1	**6I-0654**	3	BOLT (M10X1.5X25-MM)	
	6	1	**141-1667**	2	CLAMP-HOSE	
M	7	1	**147-5553**	3	STUD (M10X1.5X40-MM)	
	8	1	**149-4236**	4	STUD (M10X1.5X37-MM)	
M	9	1	**174-9638**	8	BOLT (M10X1.5X30-MM)	
	10	1	**194-5390**	1	GASKET-MANIFOLD	
	11	1	**225-8525**	1	TUBE AS	
M	11A	1	**225-8524**	2	BOLT-SPECIAL (M10X1.5X23-MM)	
	11B	1	**225-8526**	4	WASHER (10.4X13.75X1.37-MM THK)	
	12	1	**225-8533**	1	GASKET (TURBOCHARGER)	
	13	1	**225-8534**	1	GASKET (TURBOCHARGER)	
	14	1	**225-8535**	1	MANIFOLD-EXHAUST	
	15	1	**225-8536**	1	GASKET (MANIFOLD)	
	16	1	**227-4562**	1	ELBOW-EXHAUST	
	17	1	**227-4563**	1	ADAPTER-EXHAUST	
	18	1	**232-6189**	1	TUBE AS	
M	19	1	**106-8916**	2	BOLT (M6X1X16-MM)	
	20	1	**232-6194**	1	BRACKET	
R	21	1	**234-2988**	1	TURBOCHARGER GP	
	22	1	**234-3029**	1	HOSE	
	23	1	**234-3030**	1	GASKET-INLET	
	24	1	**235-5233**	1	TUBE	

M - METRIC PART
R - REMANUFACTURED PART MAY BE AVAILABLE

236-1269 **TURBOCHARGER GP** (contd.) **i02345103**

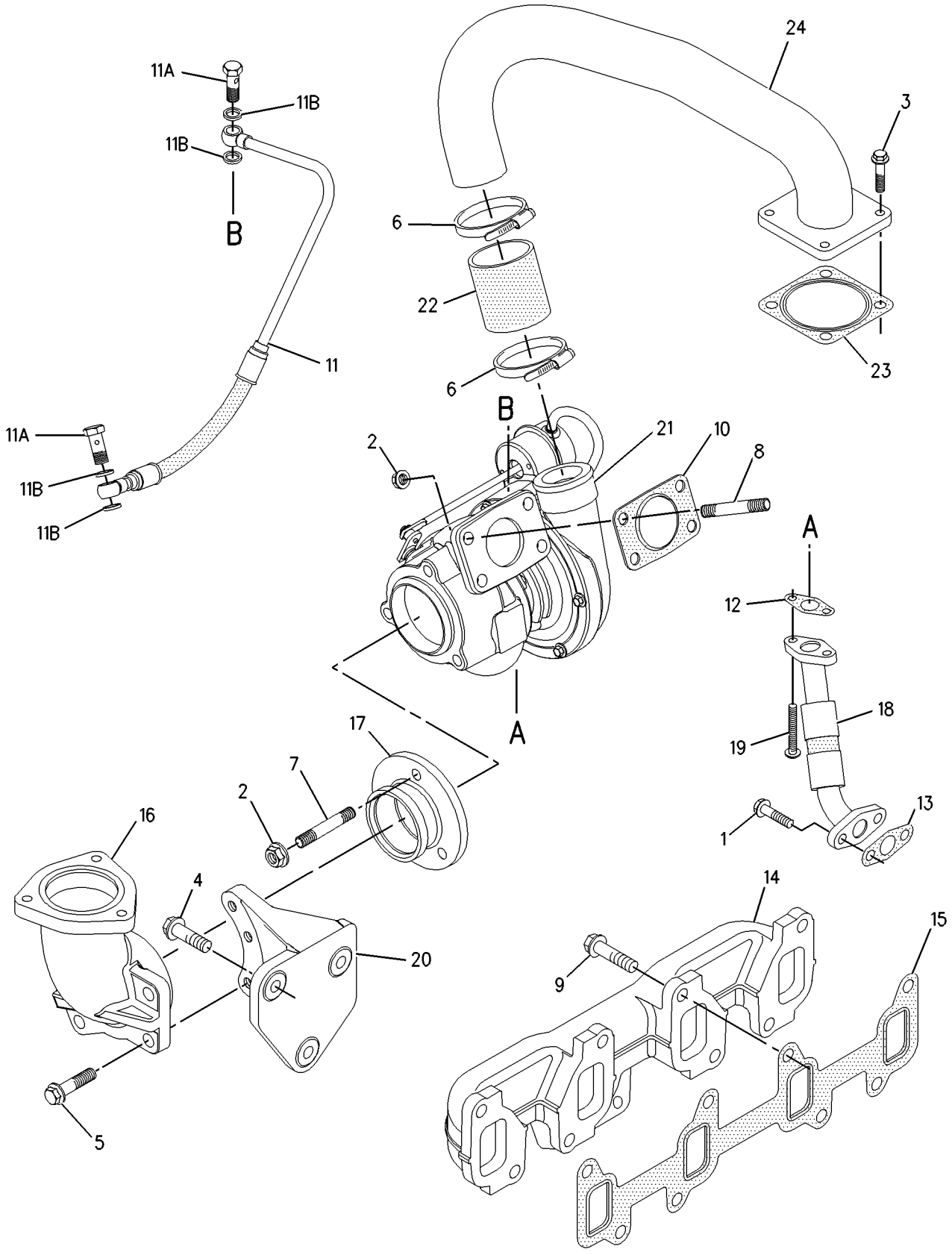

GRAPHIC #1 <END> g00998712

236-1269 TURBOCHARGER GP

S/N: 334670-UP

TYPE 1

SMCS-1052, 1053 **i07030392**

NOTE	REF NO	GRAPHIC REF	PART NUMBER	QTY	PART NAME 1 2 3 4 5 6 (PRODUCT LEVEL)	SEE PAGE
M	1	1	**6I-0217**	2	BOLT (M8X1.25X20-MM)	
CM	2	1	**6I-0563**	4	NUT (M10X1.5-THD)	
M	3	1	**6I-0572**	4	BOLT (M8X1.25X20-MM)	
	4	1	**141-1667**	2	CLAMP-HOSE	
	5	1	**361-7519**	4	ROD-THREADED	
M	6	1	**174-9638**	8	BOLT (M10X1.5X30-MM)	
	7	1	**194-5390**	1	GASKET-MANIFOLD	
	8	1	**225-8525**	1	TUBE AS	
M	8A	1	**225-8524**	2	BOLT-SPECIAL (M10X1.5X23-MM)	
	8B	1	**225-8526**	4	WASHER (10.4X13.75X1.37-MM THK)	
	10	1	**353-3477**	1	GASKET-TURBOCHARGER	
	11	1	**353-3478**	1	GASKET-TURBOCHARGER	
	12	1	**371-6059**	1	MANIFOLD-EXHAUST	
	13	1	**225-8536**	1	GASKET (MANIFOLD)	
	14	1	**507-5019**	1	LINE AS-OIL	
	14A	1	**269-3086**	2	CLAMP-BAND	
M	15	1	**106-8916**	2	BOLT (M6X1X16-MM)	
R	16	1	**234-2988**	1	TURBOCHARGER GP	
	17	1	**234-3029**	1	HOSE	
	18	1	**492-3310**	1	GASKET	
	19	1	**367-5799**	1	TUBE	

C - CHANGE FROM PREVIOUS TYPE
M - METRIC PART
R - REMANUFACTURED PART MAY BE AVAILABLE

236-1269 **TURBOCHARGER GP (**contd.**)** **i07030392**

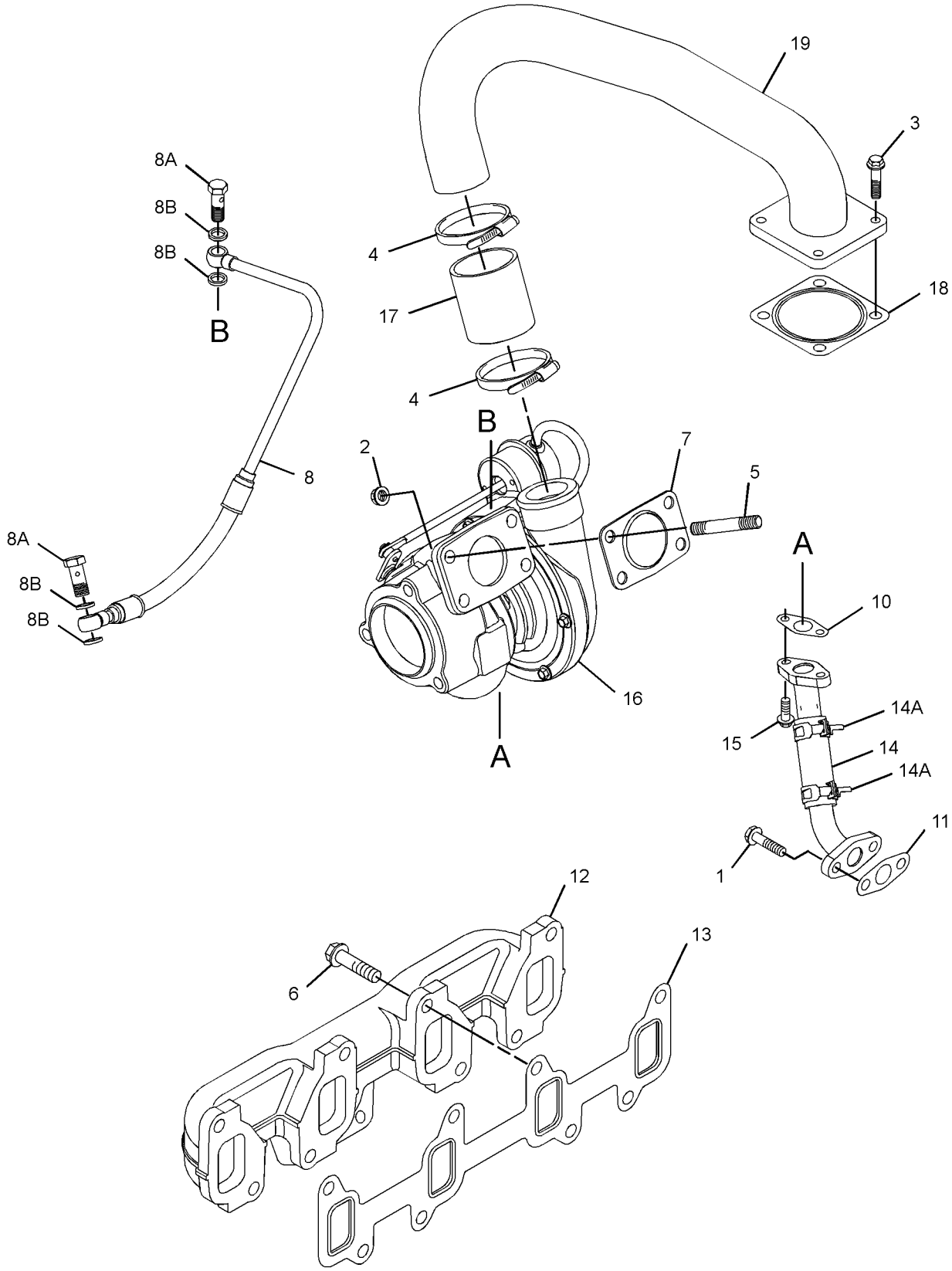

GRAPHIC #1 <END> g06209062

236-1269 TURBOCHARGER GP

S/N: 334670-UP

TYPE 2

SMCS-1052, 1053 **i08159462**

NOTE	REF NO	GRAPHIC REF	PART NUMBER	QTY	PART NAME 1 2 3 4 5 6 (PRODUCT LEVEL)	SEE PAGE
M	1	1	**6I-0217**	2	BOLT (M8X1.25X20-MM)	
M	2	1	**6I-0563**	4	NUT (M10X1.5-THD)	
M	3	1	**6I-0572**	4	BOLT (M8X1.25X20-MM)	
	4	1	**141-1667**	2	CLAMP-HOSE	
	5	1	**361-7519**	4	ROD-THREADED	
M	6	1	**174-9638**	8	BOLT (M10X1.5X30-MM)	
	7	1	**194-5390**	1	GASKET-MANIFOLD	
	8	1	**225-8525**	1	TUBE AS	
M	8A	1	**225-8524**	2	BOLT-SPECIAL (M10X1.5X23-MM)	
	8B	1	**225-8526**	4	WASHER (10.4X13.75X1.37-MM THK)	
	10	1	**353-3477**	1	GASKET-TURBOCHARGER	
	11	1	**353-3478**	1	GASKET-TURBOCHARGER	
	12	1	**371-6059**	1	MANIFOLD-EXHAUST	
	13	1	**225-8536**	1	GASKET (MANIFOLD)	
	14	1	**507-5019**	1	LINE AS-OIL	
	14A	1	**269-3086**	2	CLAMP-BAND	
M	15	1	**106-8916**	2	BOLT (M6X1X16-MM)	
C	16	1	**558-6969**	1	TURBOCHARGER AS	
	17	1	**234-3029**	1	HOSE	
	18	1	**492-3310**	1	GASKET	
	19	1	**367-5799**	1	TUBE	

C - CHANGE FROM PREVIOUS TYPE
M - METRIC PART

236-1269 **TURBOCHARGER GP (**contd.**)** **i08159462**

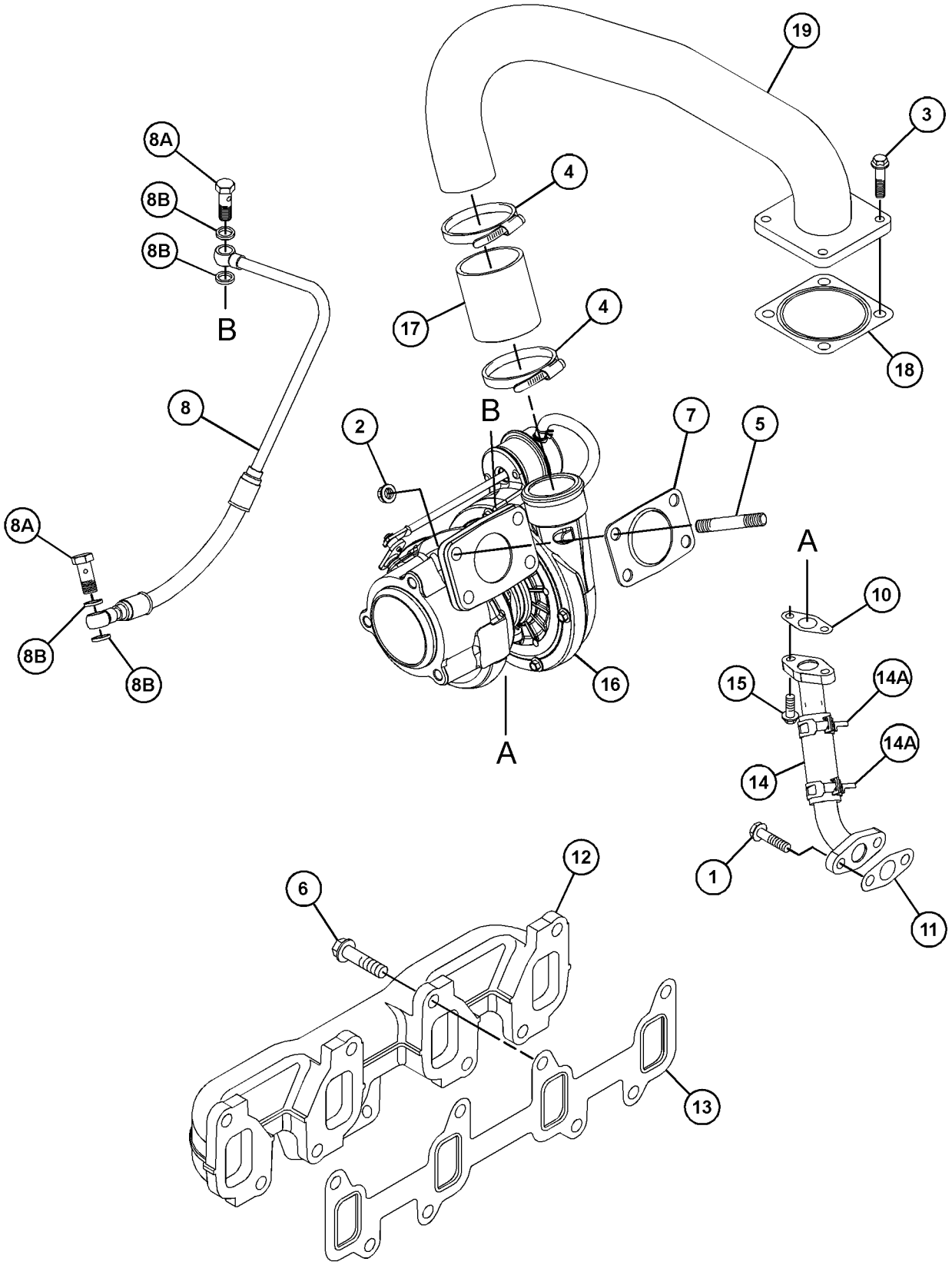

GRAPHIC #1 <END> g06691294

236-8760 TURBOCHARGER GP

ALSO AN ATTACHMENT

SMCS-1052, 1053 **i08546327**

NOTE	REF NO	GRAPHIC REF	PART NUMBER	QTY	PART NAME 1 2 3 4 5 6 (PRODUCT LEVEL)	SEE PAGE
M	1	1	**6I-0217**	2	BOLT (M8X1.25X20-MM)	
M	2	1	**6I-0563**	7	NUT (M10X1.5-THD)	
M	3	1	**6I-0593**	2	BOLT (M10X1.5X30-MM)	
M	4	1	**6I-0654**	3	BOLT (M10X1.5X25-MM)	
M	5	1	**106-8916**	2	BOLT (M6X1X16-MM)	
	6	1	**361-7519**	7	ROD-THREADED	
M	7	1	**174-9638**	8	BOLT (M10X1.5X30-MM)	
	8	1	**194-5390**	1	GASKET-MANIFOLD	
	9	1	**225-8525**	1	TUBE AS	
M	9A	1	**225-8524**	2	BOLT-SPECIAL (M10X1.5X23-MM)	
	9B	1	**225-8526**	4	WASHER (10.4X13.75X1.37-MM THK)	
	10	1	**353-3477**	1	GASKET-TURBOCHARGER	
	11	1	**353-3478**	1	GASKET-TURBOCHARGER	
	12	1	**371-6059**	1	MANIFOLD-EXHAUST	
	13	1	**225-8536**	1	GASKET (MANIFOLD)	
	14	1	**227-4562**	1	ELBOW-EXHAUST	
	15	1	**302-0581**	1	ADAPTER-EXHAUST	
	16	1	**232-6189**	1	TUBE AS	
	17	1	**307-2805**	1	BRACKET	
	18	1	**558-6985**	1	TURBOCHARGER AS	

M - METRIC PART

236-8760 **TURBOCHARGER GP (**contd.**)** **i08546327**

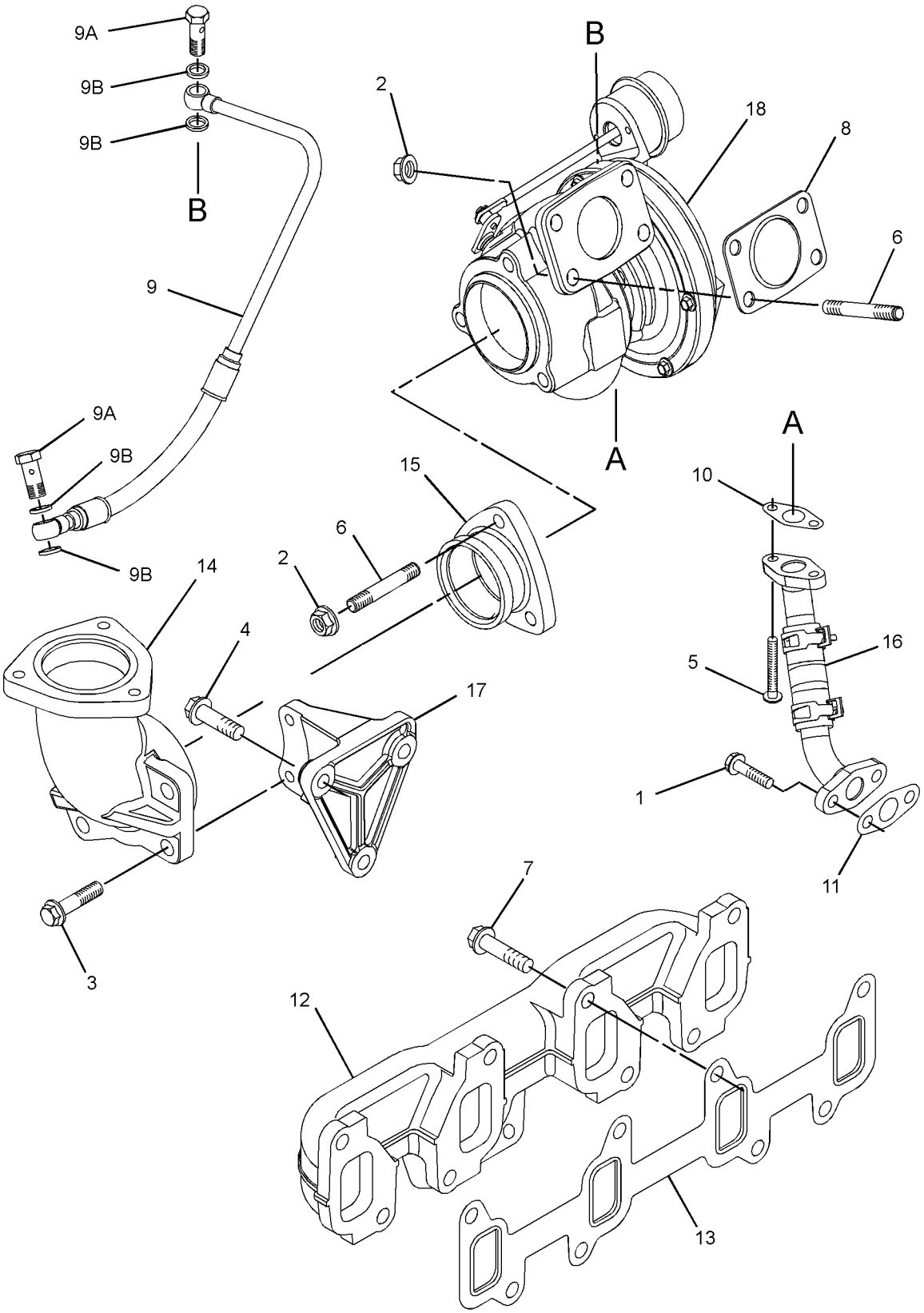

GRAPHIC #1 <END> g07500345

237-3924 TURBOCHARGER GP

SMCS-1052, 1053 **i08699435**

NOTE	REF NO	GRAPHIC REF	PART NUMBER	QTY	PART NAME 1 2 3 4 5 6 (PRODUCT LEVEL)	SEE PAGE
M	1	2	**6I-0217**	2	BOLT (M8X1.25X20-MM)	
M	2	1	**6I-0563**	4	NUT (M10X1.5-THD)	
M	3	1	**6I-0572**	4	BOLT (M8X1.25X20-MM)	
M	4	2	**106-8916**	2	BOLT (M6X1X16-MM)	
	5	1	**141-1667**	2	CLAMP-HOSE	
	6	1	**361-7519**	4	ROD-THREADED	
M	7	2	**174-9638**	8	BOLT (M10X1.5X30-MM)	
	8	1	**194-5390**	1	GASKET-MANIFOLD	
	9	2	**371-5700**	1	MANIFOLD-EXHAUST	
	10	2	**353-3477**	1	GASKET-TURBOCHARGER	
	11	2	**353-3478**	1	GASKET-TURBOCHARGER	
	12	2	**225-8536**	1	GASKET (MANIFOLD)	
	13	1	**263-5376**	1	HOSE	
	14	1	**492-3310**	1	GASKET	
	15	3	**322-9616**	1	TUBE AS-TURBOCHARGER	
M	15A	3	**225-8524**	2	BOLT-SPECIAL (M10X1.5X23-MM)	
	15B	3	**225-8526**	4	WASHER (10.4X13.75X1.37-MM THK)	
R	16	1	**558-6980**	1	TURBOCHARGER AS	
	17	2	**322-9615**	1	TUBE-TURBOCHARGER	
M	18	2	**237-3794**	1	BOLT (M10X1.5X12-MM) (M10X1.5-6 THD)	
	19	2	**237-3921**	1	CLIP	
	20	1	**237-3922**	1	TUBE	

M - METRIC PART
R - REMANUFACTURED PART MAY BE AVAILABLE

237-3924 **TURBOCHARGER GP** (contd.) **i08699435**

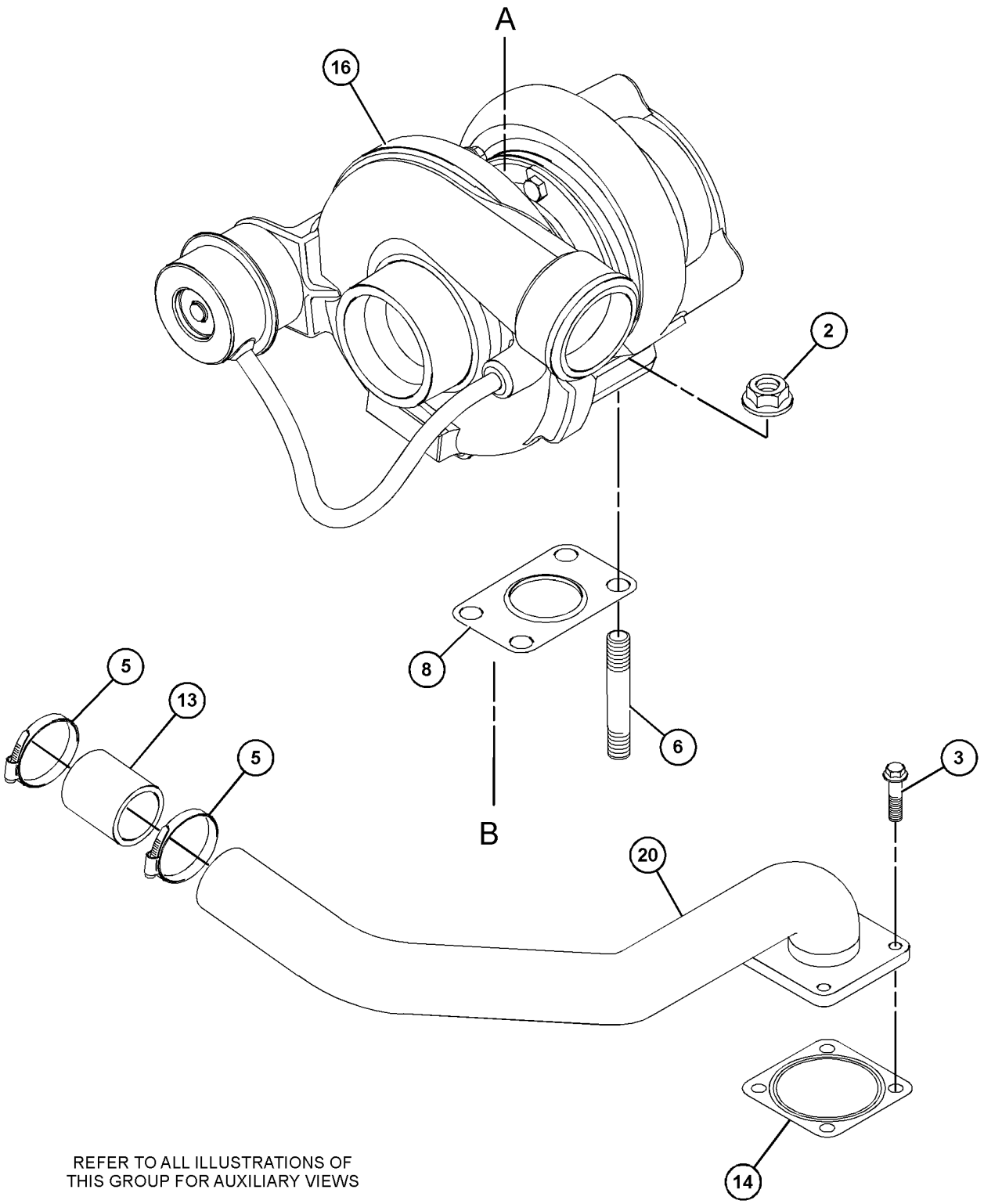

GRAPHIC #1 g06773130

237-3924 **TURBOCHARGER GP (**contd.**)** **i08699435**

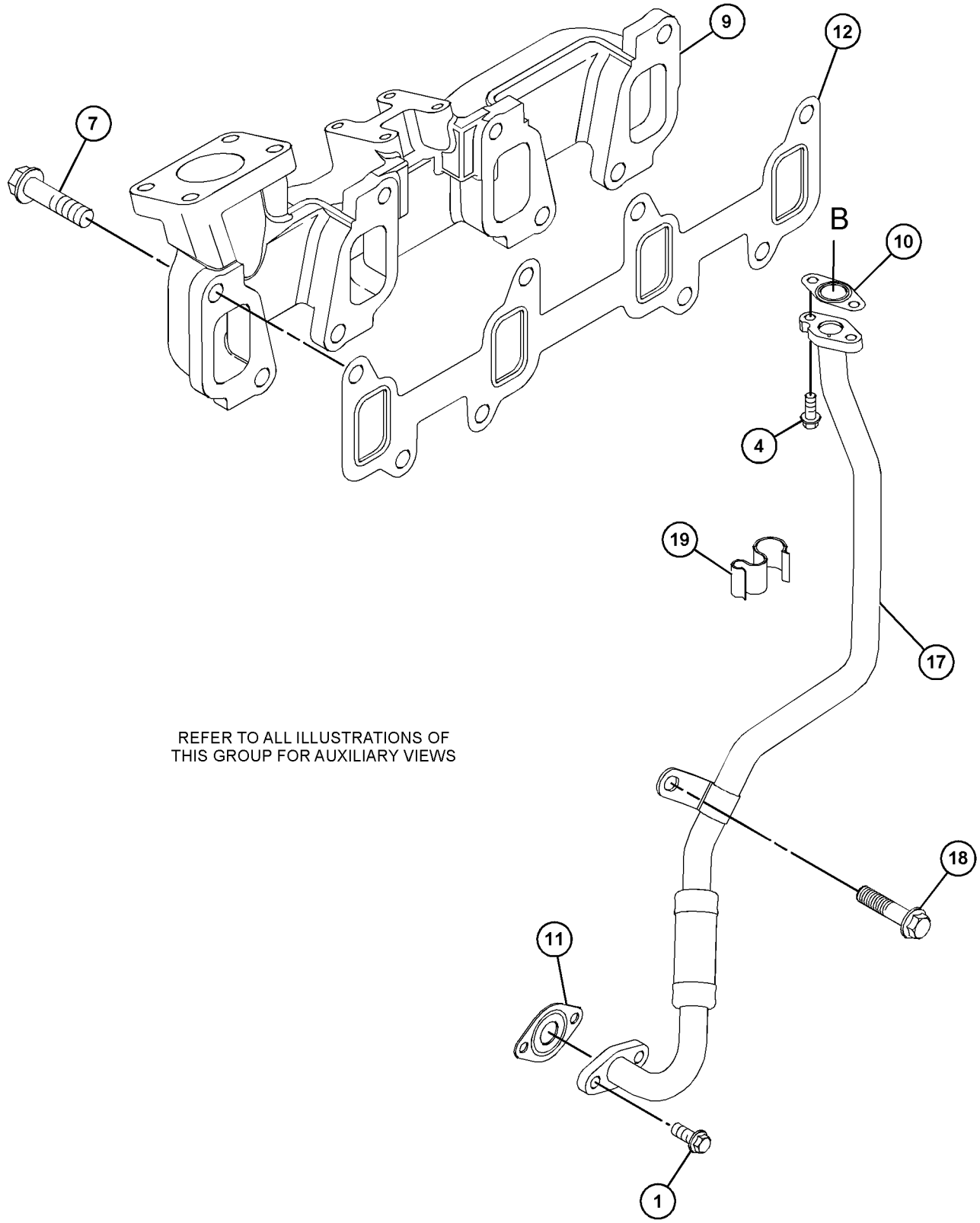

GRAPHIC #2 g06773131

237-3924 **TURBOCHARGER GP (**contd.**)** **i08699435**

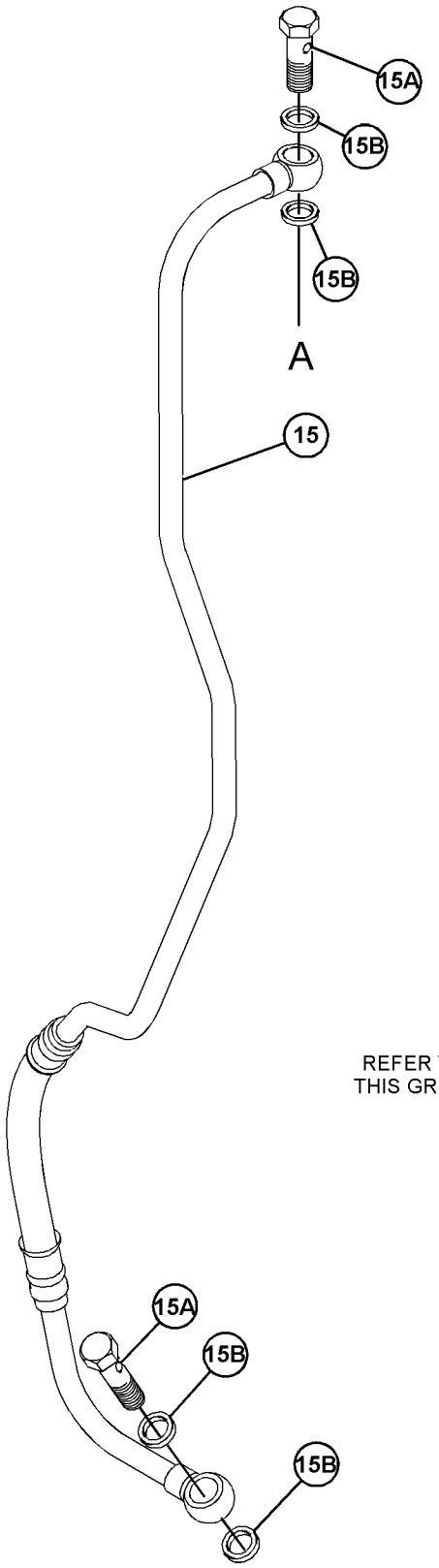

REFER TO ALL ILLUSTRATIONS OF
THIS GROUP FOR AUXILIARY VIEWS

GRAPHIC #3 <END> g06773132

241-1699 TURBOCHARGER GP

TYPE 1

SMCS-1052, 1053 **i07030389**

NOTE	REF NO	GRAPHIC REF	PART NUMBER	QTY	PART NAME 1 2 3 4 5 6 (PRODUCT LEVEL)	SEE PAGE
M	1	1	**6I-0217**	2	BOLT (M8X1.25X20-MM)	
M	2	1	**6I-0563**	7	NUT (M10X1.5-THD)	
M	3	1	**6I-0572**	4	BOLT (M8X1.25X20-MM)	
M	4	1	**6I-0593**	2	BOLT (M10X1.5X30-MM)	
M	5	1	**6I-0654**	3	BOLT (M10X1.5X25-MM)	
	6	1	**141-1667**	2	CLAMP-HOSE	
	7	1	**361-7519**	7	ROD-THREADED	
M	8	1	**174-9638**	8	BOLT (M10X1.5X30-MM)	
	9	1	**194-5390**	1	GASKET-MANIFOLD	
	10	1	**225-8525**	1	TUBE AS	
M	10A	1	**225-8524**	2	BOLT-SPECIAL (M10X1.5X23-MM)	
	10B	1	**225-8526**	4	WASHER (10.4X13.75X1.37-MM THK)	
	11	1	**353-3477**	1	GASKET-TURBOCHARGER	
	12	1	**353-3478**	1	GASKET-TURBOCHARGER	
	13	1	**371-6059**	1	MANIFOLD-EXHAUST	
	14	1	**225-8536**	1	GASKET	
	15	1	**227-4562**	1	ELBOW-EXHAUST	
	16	1	**302-0581**	1	ADAPTER-EXHAUST	
	17	1	**507-5019**	1	LINE AS-OIL	
	17A	1	**269-3086**	2	CLAMP-BAND	
M	18	1	**106-8916**	2	BOLT (M6X1X16-MM)	
	19	1	**307-2805**	1	BRACKET	
	20	1	**234-3029**	1	HOSE	
	21	1	**492-3310**	1	GASKET	
	22	1	**367-5799**	1	TUBE	
R	23	1	**234-2988**	1	TURBOCHARGER GP	

M - METRIC PART
R - REMANUFACTURED PART MAY BE AVAILABLE

241-1699 **TURBOCHARGER GP (**contd.**)** **i07030389**

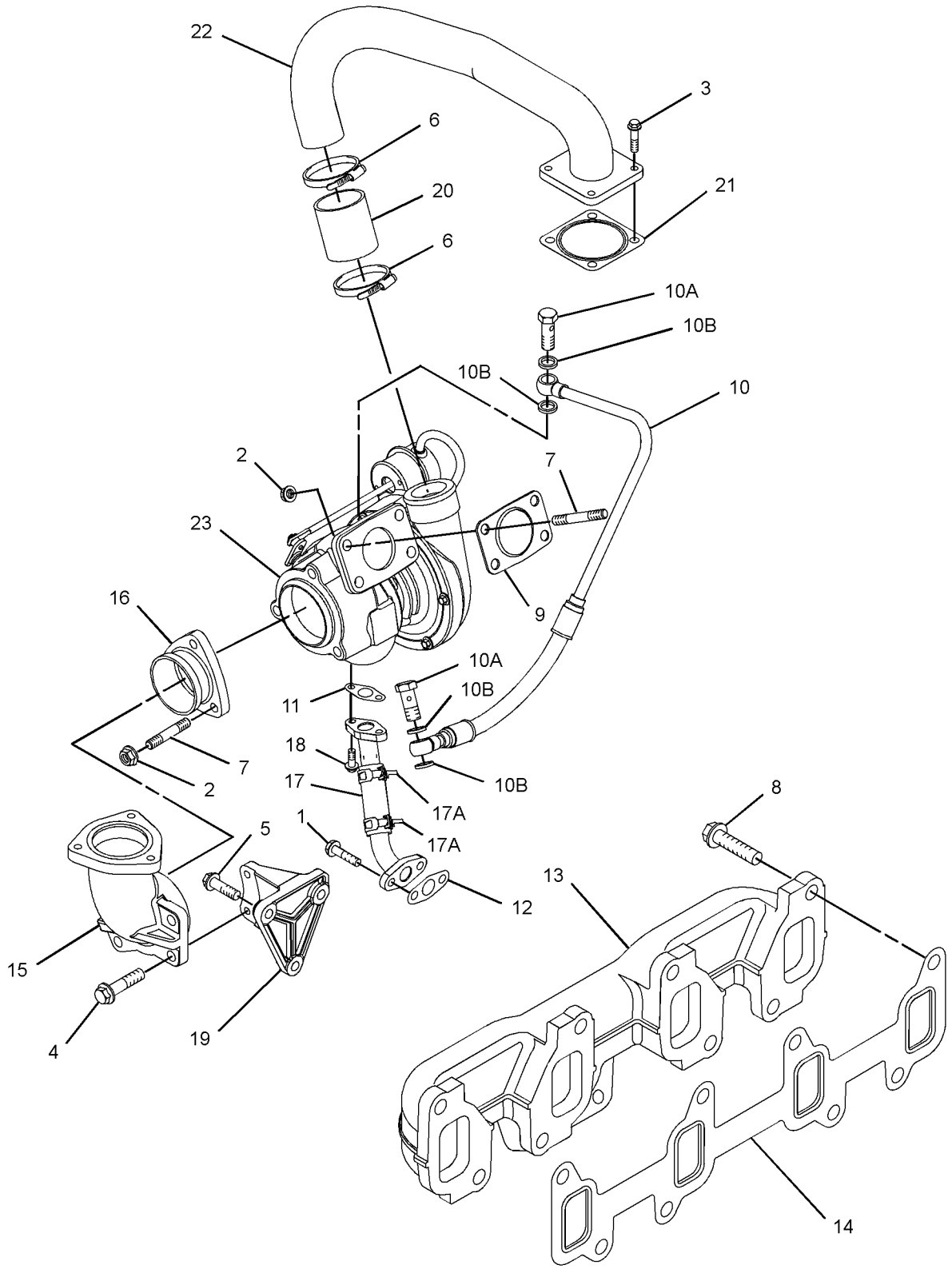

GRAPHIC #1 <END> g06208917

241-1699 TURBOCHARGER GP

TYPE 2

SMCS-1052, 1053 **i08298811**

NOTE	REF NO	GRAPHIC REF	PART NUMBER	QTY	PART NAME 1 2 3 4 5 6 (PRODUCT LEVEL)	SEE PAGE
M	1	1	**6I-0217**	2	BOLT (M8X1.25X20-MM)	
M	2	1	**6I-0563**	7	NUT (M10X1.5-THD)	
M	3	1	**6I-0572**	4	BOLT (M8X1.25X20-MM)	
M	4	1	**6I-0593**	2	BOLT (M10X1.5X30-MM)	
M	5	1	**6I-0654**	3	BOLT (M10X1.5X25-MM)	
	6	1	**141-1667**	2	CLAMP-HOSE	
	7	1	**361-7519**	7	ROD-THREADED	
M	8	1	**174-9638**	8	BOLT (M10X1.5X30-MM)	
	9	1	**194-5390**	1	GASKET-MANIFOLD	
	10	1	**225-8525**	1	TUBE AS	
M	10A	1	**225-8524**	2	BOLT-SPECIAL (M10X1.5X23-MM)	
	10B	1	**225-8526**	4	WASHER (10.4X13.75X1.37-MM THK)	
	11	1	**353-3477**	1	GASKET-TURBOCHARGER	
	12	1	**353-3478**	1	GASKET-TURBOCHARGER	
	13	1	**371-6059**	1	MANIFOLD-EXHAUST	
	14	1	**225-8536**	1	GASKET	
	15	1	**227-4562**	1	ELBOW-EXHAUST	
	16	1	**302-0581**	1	ADAPTER-EXHAUST	
	17	1	**232-6189**	1	TUBE AS	
M	18	1	**106-8916**	2	BOLT (M6X1X16-MM)	
	19	1	**307-2805**	1	BRACKET	
	20	1	**234-3029**	1	HOSE	
	21	1	**492-3310**	1	GASKET	
	22	1	**367-5799**	1	TUBE	
C	23	1	**558-6969**	1	TURBOCHARGER AS	

C - CHANGE FROM PREVIOUS TYPE
M - METRIC PART

241-1699 **TURBOCHARGER GP (**contd.**)** **i08298811**

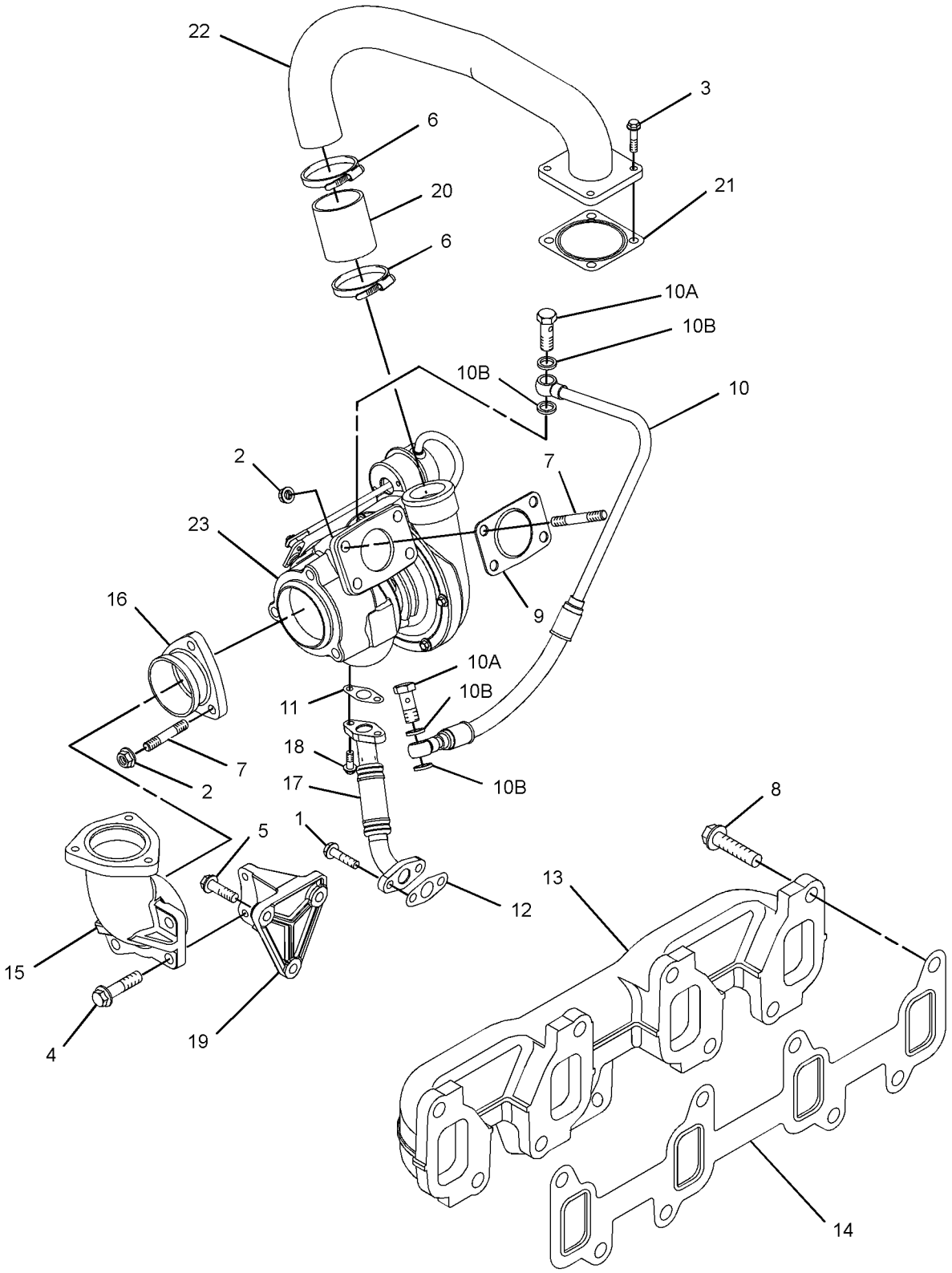

GRAPHIC #1 <END> g06799933

243-4143 TURBOCHARGER GP

SMCS-1052, 1053 **i08526180**

NOTE	REF NO	GRAPHIC REF	PART NUMBER	QTY	PART NAME 1 2 3 4 5 6 (PRODUCT LEVEL)	SEE PAGE
M	1	1	**6I-0217**	2	BOLT (M8X1.25X20-MM)	
M	2	1	**6I-0563**	4	NUT (M10X1.5-THD)	
M	3	1	**106-8916**	2	BOLT (M6X1X16-MM)	
	4	1	**361-7519**	4	ROD-THREADED	
M	5	1	**174-9638**	8	BOLT (M10X1.5X30-MM)	
	6	1	**194-5390**	1	GASKET-MANIFOLD	
	8	1	**353-3477**	1	GASKET-TURBOCHARGER	
	9	1	**353-3478**	1	GASKET-TURBOCHARGER	
	10	1	**225-8536**	1	GASKET (MANIFOLD)	
	11	1	**322-9616**	1	TUBE AS-TURBOCHARGER (OIL DRAIN)	
M	11A	1	**225-8524**	2	BOLT-SPECIAL (M10X1.5X23-MM)	
	11B	1	**225-8526**	4	WASHER (10.4X13.75X1.37-MM THK)	
	12	1	**322-9615**	1	TUBE-TURBOCHARGER	
M	13	1	**237-3794**	1	BOLT (M10X1.5X12-MM)	
	14	1	**237-3921**	1	CLIP	
	15	1	**371-5700**	1	MANIFOLD-EXHAUST	
	16	1	**243-3164**	1	TURBOCHARGER GP	
F			**225-8530**	1	GASKET (ELBOW)	

F - NOT SHOWN
M - METRIC PART

243-4143 **TURBOCHARGER GP (**contd.**)** **i08526180**

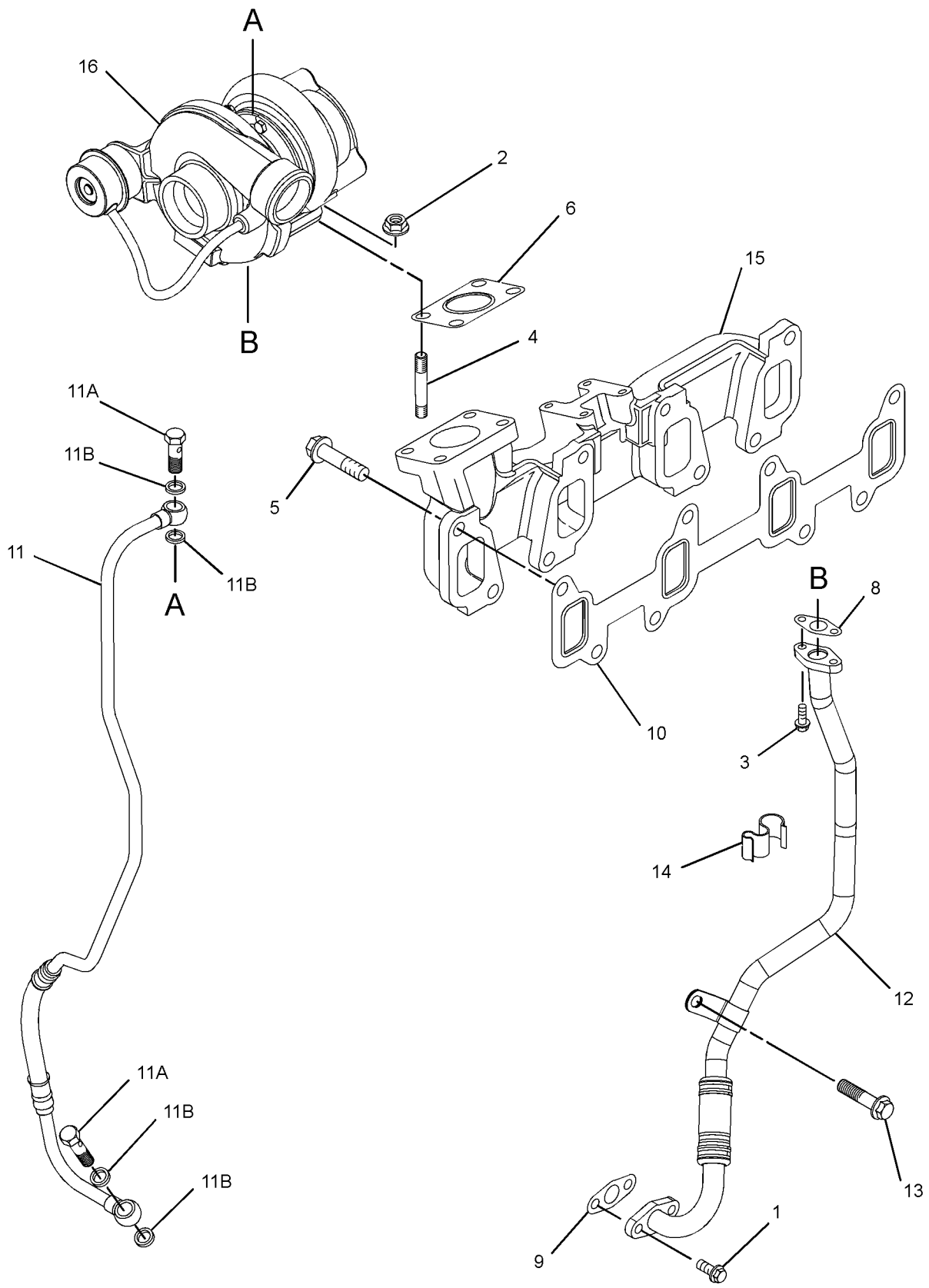

GRAPHIC #1 <END> g07489101

243-4185 TURBOCHARGER GP

TYPE 1

SMCS-1052, 1053 **i05988429**

NOTE	REF NO	GRAPHIC REF	PART NUMBER	QTY	PART NAME 1 2 3 4 5 6 (PRODUCT LEVEL)	SEE PAGE
	1	2	**268-5341**	1	CLAMP-HOSE	
M	2	1	**6I-0217**	2	BOLT (M8X1.25X20-MM)	
M	3	2	**6I-0254**	2	BOLT (M8X1.25X30-MM)	
M	4	2	**6I-0291**	2	NUT (M8X1.25-THD)	
M	5	1	**6I-0563**	7	NUT (M10X1.5-THD)	
M	6	2	**6I-0572**	2	BOLT (M8X1.25X20-MM)	
M	7	1	**6I-0593**	1	BOLT (M10X1.5X30-MM)	
M	8	1	**6I-0654**	3	BOLT (M10X1.5X25-MM)	
M	9	1	**106-8916**	2	BOLT (M6X1X16-MM)	
M	10	2	**140-8783**	2	BOLT (M10X1.5X45-MM)	
M	11	1	**147-5553**	7	STUD (M10X1.5X40-MM)	
M	12	1	**174-9638**	8	BOLT (M10X1.5X30-MM)	
	13	1	**194-5390**	1	GASKET-MANIFOLD	
	14	1	**225-8525**	1	TUBE AS	
M	14A	1	**225-8524**	2	BOLT-SPECIAL (M10X1.5X23-MM)	
	14B	1	**225-8526**	4	WASHER (10.4X13.75X1.37-MM THK)	
	15	1	**225-8533**	1	GASKET	
	16	1	**225-8534**	1	GASKET	
	17	1	**255-3448**	1	MANIFOLD-EXHAUST	
	18	1	**225-8536**	1	GASKET	
	19	1	**227-4562**	1	ELBOW-EXHAUST	
	20	1	**227-4563**	1	ADAPTER-EXHAUST	
	21	1	**232-6189**	1	TUBE AS	
	22	1	**232-6194**	1	BRACKET	
Y	23	2	**233-5180**	1	AIR CLEANER GP	1024
	24	2	**236-8748**	1	BRACKET-MOUNTING	
	25	2	**236-8750**	1	HOSE-AIR	
	26	1	**243-4173**	1	TURBOCHARGER GP	

M - METRIC PART
Y - SEPARATE ILLUSTRATION

243-4185 **TURBOCHARGER GP (**contd.**)** **i05988429**

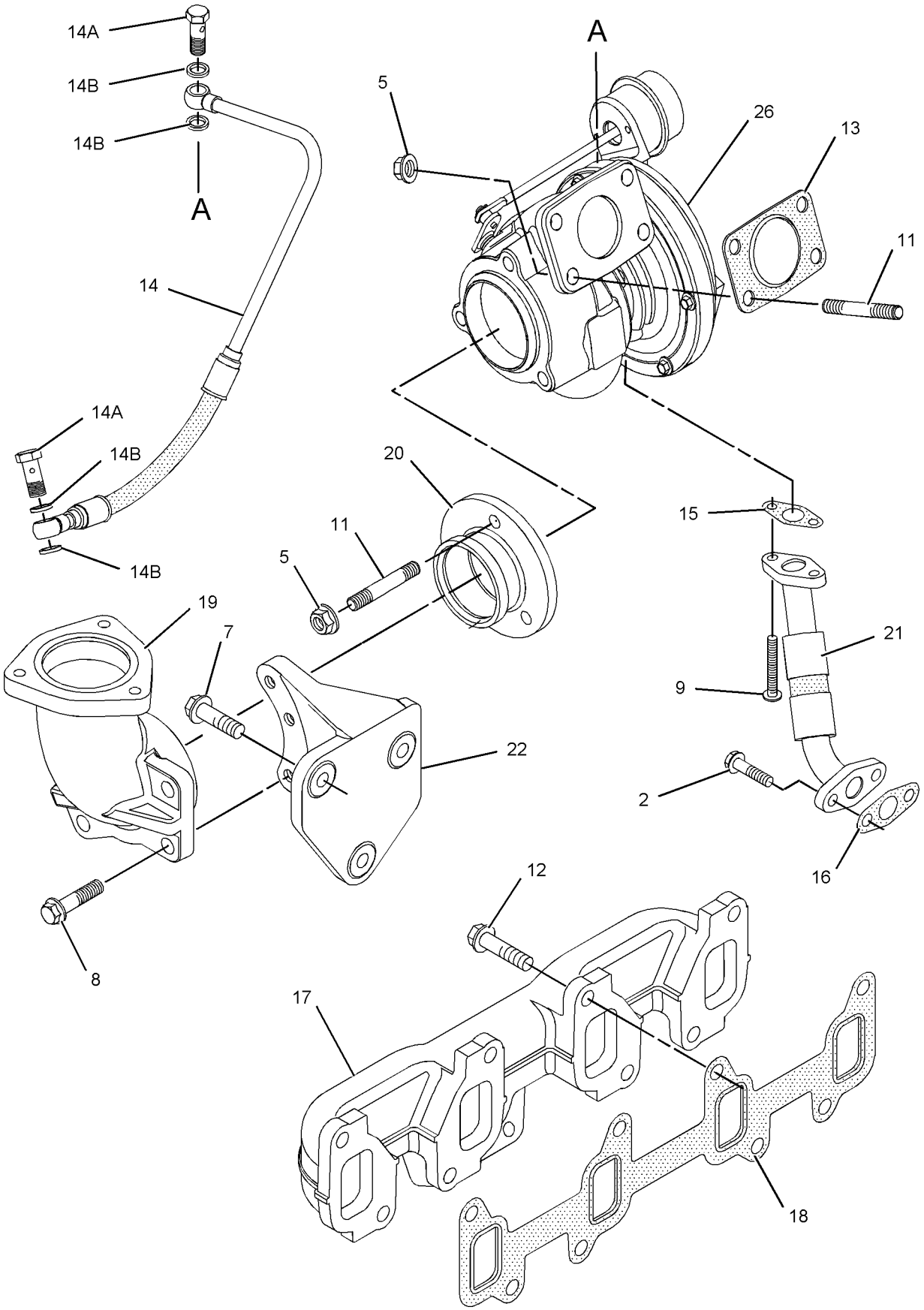

GRAPHIC #1 g01029370

243-4185 **TURBOCHARGER GP (**contd.**)** **i05988429**

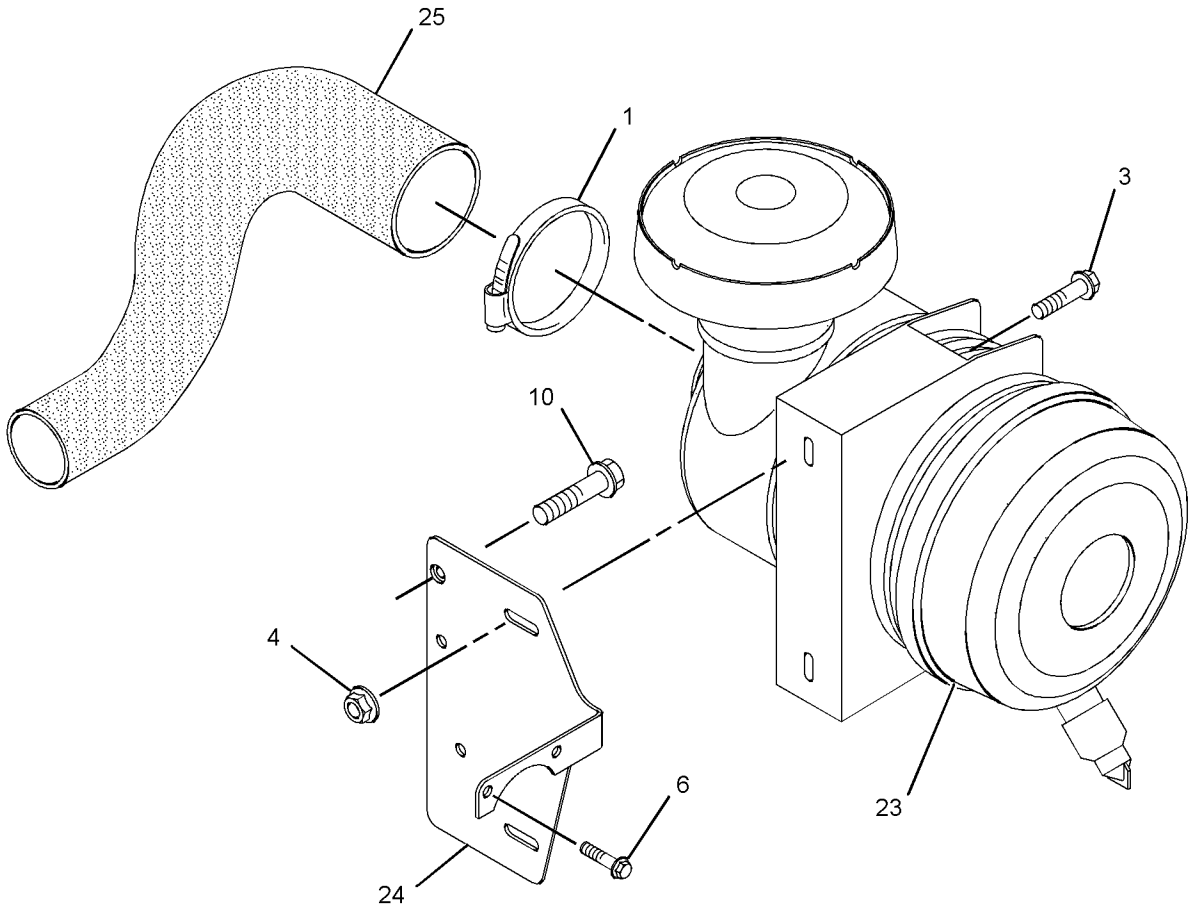

GRAPHIC #2 <END> g01317451

AIR INLET AND EXHAUST SYSTEM

243-4185 TURBOCHARGER GP

TYPE 2

SMCS-1052, 1053 **i07030487**

NOTE	REF NO	GRAPHIC REF	PART NUMBER	QTY	PART NAME 1 2 3 4 5 6 (PRODUCT LEVEL)	SEE PAGE
	1	2	**101-7860**	1	CLIP	
M	2	1	**6I-0217**	2	BOLT (M8X1.25X20-MM)	
M	3	2	**6I-0254**	2	BOLT (M8X1.25X30-MM)	
M	4	2	**178-3336**	2	NUT-HEX FLANGE (M8X1.25-THD)	
M	5	1	**6I-0563**	7	NUT (M10X1.5-THD)	
CM	6	2	**100-4830**	2	BOLT (M10X1.5X20-MM)	
M	7	1	**6I-0593**	1	BOLT (M10X1.5X30-MM)	
M	8	1	**6I-0654**	3	BOLT (M10X1.5X25-MM)	
M	9	1	**106-8916**	2	BOLT (M6X1X16-MM)	
	11	1	**361-7519**	7	ROD-THREADED	
M	12	1	**174-9638**	8	BOLT (M10X1.5X30-MM)	
	13	1	**194-5390**	1	GASKET-MANIFOLD	
	14	1	**225-8525**	1	TUBE AS	
M	14A	1	**225-8524**	2	BOLT-SPECIAL (M10X1.5X23-MM)	
	14B	1	**225-8526**	4	WASHER (10.4X13.75X1.37-MM THK)	
	15	1	**353-3477**	1	GASKET-TURBOCHARGER	
	16	1	**353-3478**	1	GASKET-TURBOCHARGER	
	17	1	**371-6059**	1	MANIFOLD-EXHAUST	
	18	1	**225-8536**	1	GASKET	
	19	1	**227-4562**	1	ELBOW-EXHAUST	
	20	1	**302-0581**	1	ADAPTER-EXHAUST	
	21	1	**507-5019**	1	LINE AS-OIL	
	21A	1	**269-3086**	2	CLAMP-BAND	
	22	1	**307-2805**	1	BRACKET	
Y	23	2	**233-5180**	1	AIR CLEANER GP	1024
C	24	2	**290-2488**	1	BRACKET-MOUNTING	
	25	2	**236-8750**	1	HOSE-AIR	
	26	1	**243-4173**	1	TURBOCHARGER GP	

C - CHANGE FROM PREVIOUS TYPE
M - METRIC PART
Y - SEPARATE ILLUSTRATION

243-4185 **TURBOCHARGER GP** (contd.) **i07030487**

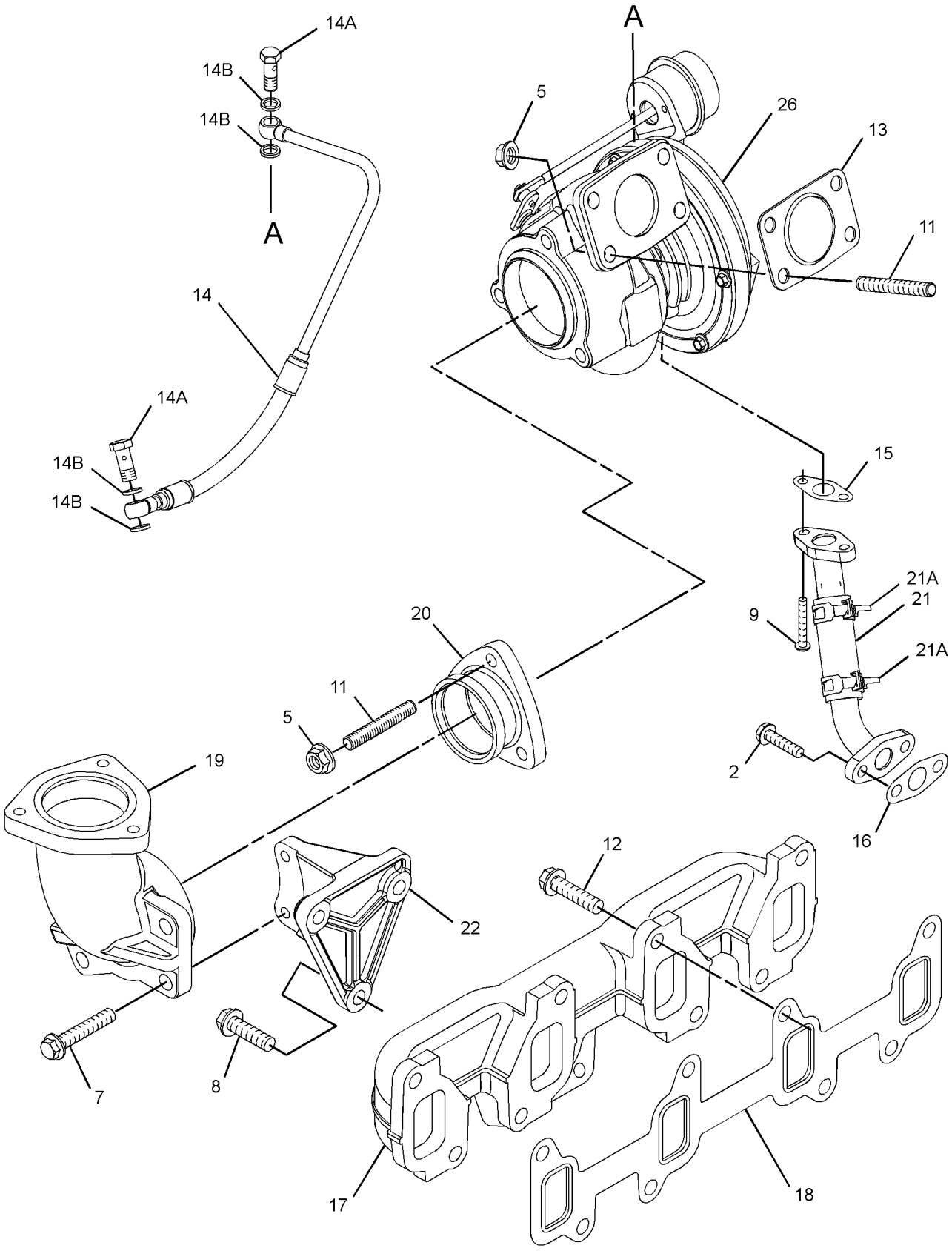

GRAPHIC #1 g06208964

243-4185 **TURBOCHARGER GP (**contd.**)** **i07030487**

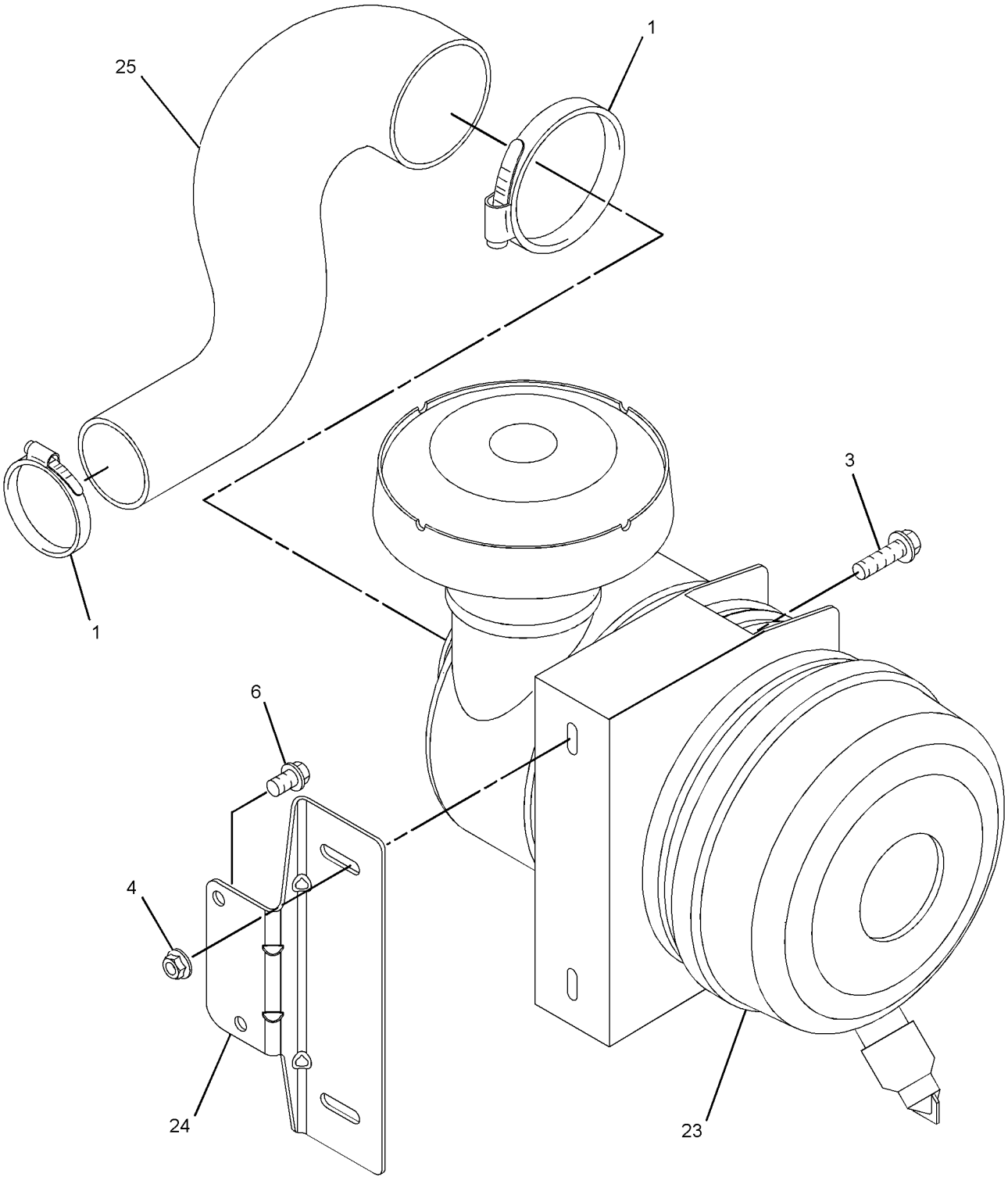

GRAPHIC #2 <END> g06208969

249-0106 TURBOCHARGER GP

SMCS-1052, 1053 **i07512418**

NOTE	REF NO	GRAPHIC REF	PART NUMBER	QTY	PART NAME 1 2 3 4 5 6 (PRODUCT LEVEL)	SEE PAGE
M	1	1	**6I-0217**	2	BOLT (M8X1.25X20-MM)	
M	2	1	**6I-0563**	7	NUT (M10X1.5-THD)	
M	3	1	**6I-0593**	2	BOLT (M10X1.5X30-MM)	
M	4	1	**6I-0654**	3	BOLT (M10X1.5X25-MM)	
M	5	1	**106-8916**	2	BOLT (M6X1X16-MM)	
	6	1	**361-7519**	7	ROD-THREADED	
M	7	1	**174-9638**	1	BOLT (M10X1.5X30-MM)	
	8	1	**194-5390**	1	GASKET-MANIFOLD	
	9	1	**353-3477**	1	GASKET-TURBOCHARGER	
	10	1	**353-3478**	1	GASKET-TURBOCHARGER	
	11	1	**225-8536**	1	GASKET (MANIFOLD)	
	12	1	**227-4562**	1	ELBOW-EXHAUST	
	13	1	**302-0581**	1	ADAPTER-EXHAUST	
	14	1	**233-9536**	1	TUBE AS	
M	14A	1	**225-8524**	2	BOLT-SPECIAL (M10X1.5X23-MM)	
	14B	1	**225-8526**	4	WASHER (10.4X13.75X1.37-MM THK)	
	15	1	**507-5021**	1	LINES GP-OIL	
	15A	1	**269-3086**	2	CLAMP-BAND	
	16	1	**371-6116**	1	MANIFOLD-EXHAUST	
	17	1	**234-2418**	1	TURBOCHARGER GP	
	18	1	**249-7106**	1	BRACKET	

M - METRIC PART

249-0106 **TURBOCHARGER GP (**contd.**)** **i07512418**

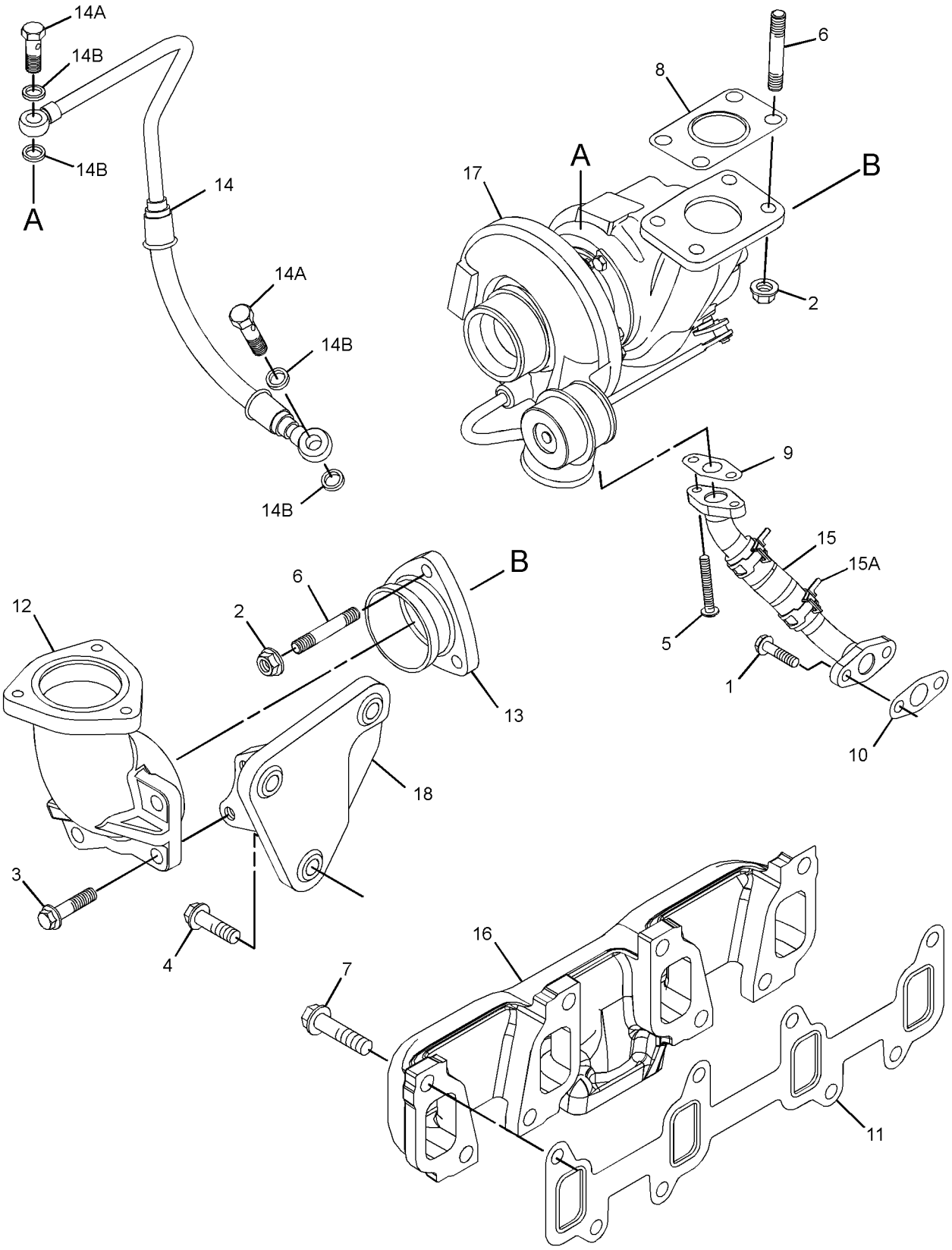

GRAPHIC #1 <END> g06385926

251-6806 TURBOCHARGER GP

S/N: 3341-1605

SMCS-1052, 1053 **i02345155**

NOTE	REF NO	GRAPHIC REF	PART NUMBER	QTY	PART NAME 1 2 3 4 5 6 (PRODUCT LEVEL)	SEE PAGE
M	1	1	**6I-0217**	2	BOLT (M8X1.25X20-MM)	
M	2	1	**6I-0563**	7	NUT (M10X1.5-THD)	
M	3	1	**6I-0572**	4	BOLT (M8X1.25X20-MM)	
M	4	1	**6I-0593**	2	BOLT (M10X1.5X30-MM)	
M	5	1	**6I-0654**	3	BOLT (M10X1.5X25-MM)	
M	6	1	**6I-4012**	3	STUD (M10X1.5X40-MM)	
M	7	1	**106-8916**	2	BOLT (M6X1X16-MM)	
	8	1	**141-1667**	2	CLAMP-HOSE	
M	9	1	**147-5553**	7	STUD (M10X1.5X40-MM)	
M	10	1	**174-9638**	8	BOLT (M10X1.5X30-MM)	
	11	1	**194-5390**	1	GASKET-MANIFOLD	
	12	1	**225-8525**	1	TUBE AS	
M	12A	1	**225-8524**	2	BOLT-SPECIAL (M10X1.5X23-MM)	
	12B	1	**225-8526**	4	WASHER (10.4X13.75X1.37-MM THK)	
	13	1	**225-8533**	1	GASKET (TURBOCHARGER)	
	14	1	**225-8534**	1	GASKET (TURBOCHARGER)	
	15	1	**225-8535**	1	MANIFOLD-EXHAUST	
	16	1	**225-8536**	1	GASKET (MANIFOLD)	
	17	1	**227-4562**	1	ELBOW-EXHAUST	
	18	1	**227-4563**	1	ADAPTER-EXHAUST	
	19	1	**232-6189**	1	TUBE AS	
	20	1	**232-6194**	1	BRACKET	
R	21	1	**234-2988**	1	TURBOCHARGER GP	
	22	1	**234-3029**	1	HOSE	
	23	1	**234-3030**	1	GASKET-INLET	
	24	1	**235-5233**	1	TUBE	

M - METRIC PART
R - REMANUFACTURED PART MAY BE AVAILABLE

251-6806 **TURBOCHARGER GP** (contd.) **i02345155**

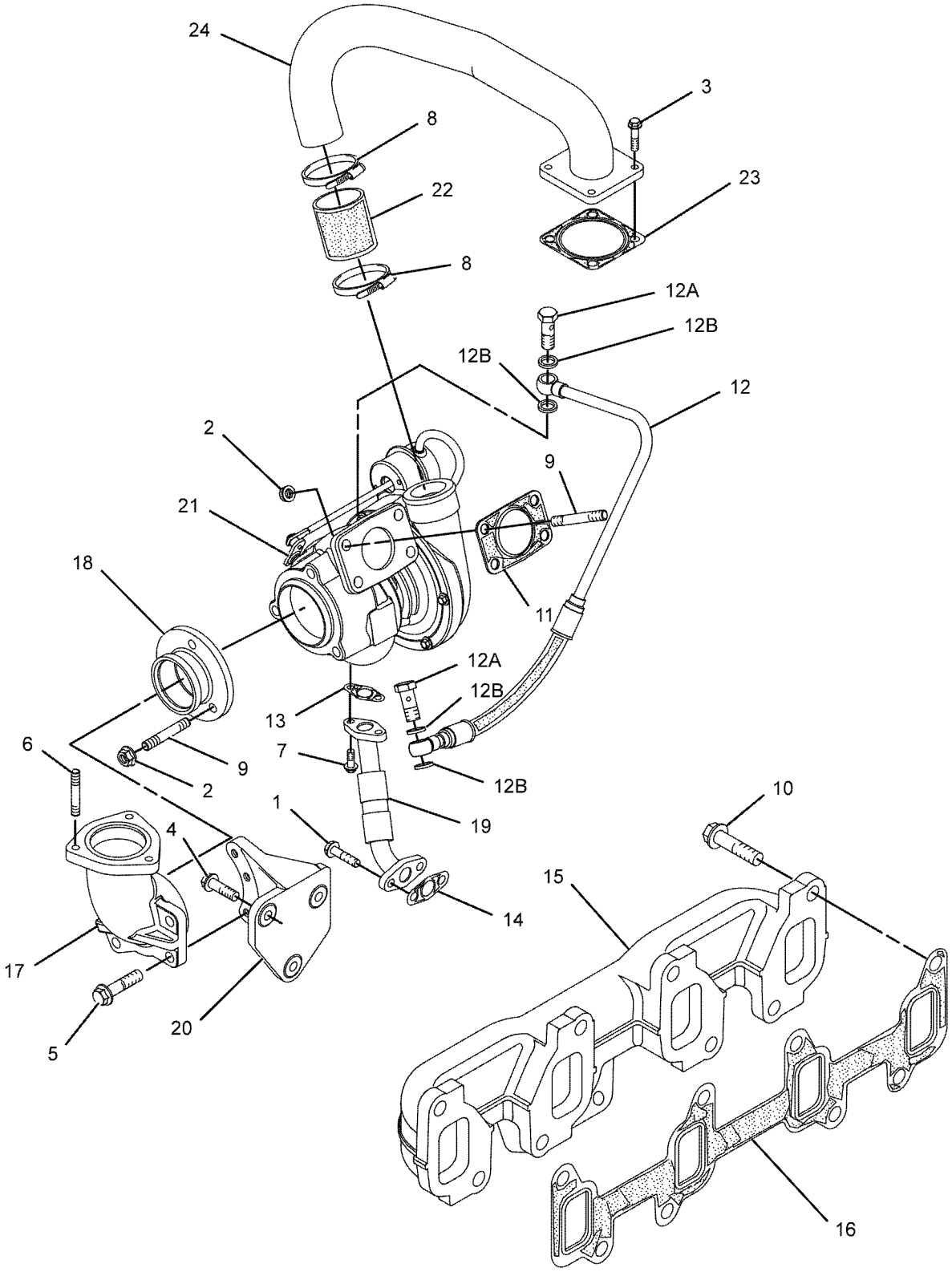

GRAPHIC #1 <END> g01079169

253-0774 TURBOCHARGER GP

TYPE 1

SMCS-1052, 1053 **i02345157**

NOTE	REF NO	GRAPHIC REF	PART NUMBER	QTY	PART NAME 1 2 3 4 5 6 (PRODUCT LEVEL)	SEE PAGE
M	1	1	**6I-0217**	2	BOLT (M8X1.25X20-MM)	
M	2	1	**6I-0563**	7	NUT (M10X1.5-THD)	
M	3	1	**6I-0572**	4	BOLT (M8X1.25X20-MM)	
M	4	1	**6I-0593**	2	BOLT (M10X1.5X30-MM)	
M	5	1	**6I-0654**	3	BOLT (M10X1.5X25-MM)	
	6	1	**141-1667**	2	CLAMP-HOSE	
M	7	1	**147-5553**	7	STUD (M10X1.5X40-MM)	
M	8	1	**174-9638**	8	BOLT (M10X1.5X30-MM)	
	9	1	**194-5390**	1	GASKET-MANIFOLD	
	10	1	**225-8525**	1	TUBE AS	
M	10A	1	**225-8524**	2	BOLT-SPECIAL (M10X1.5X23-MM)	
	10B	1	**225-8526**	4	WASHER (10.4X13.75X1.37-MM THK)	
	11	1	**225-8533**	1	GASKET (TURBOCHARGER)	
	12	1	**225-8534**	1	GASKET (TURBOCHARGER)	
	13	1	**225-8535**	1	MANIFOLD-EXHAUST	
	14	1	**225-8536**	1	GASKET (MANIFOLD)	
	15	1	**227-4562**	1	ELBOW-EXHAUST	
	16	1	**227-4563**	1	ADAPTER-EXHAUST	
	17	1	**232-6189**	1	TUBE AS	
M	18	1	**106-8916**	2	BOLT (M6X1X16-MM)	
	19	1	**232-6194**	1	BRACKET	
	20	1	**234-3029**	1	HOSE	
	21	1	**234-3030**	1	GASKET-INLET	
	22	1	**235-5233**	1	TUBE	
R	23	1	**234-2988**	1	TURBOCHARGER GP	

M - METRIC PART
R - REMANUFACTURED PART MAY BE AVAILABLE

253-0774 **TURBOCHARGER GP (**contd.**)** **i02345157**

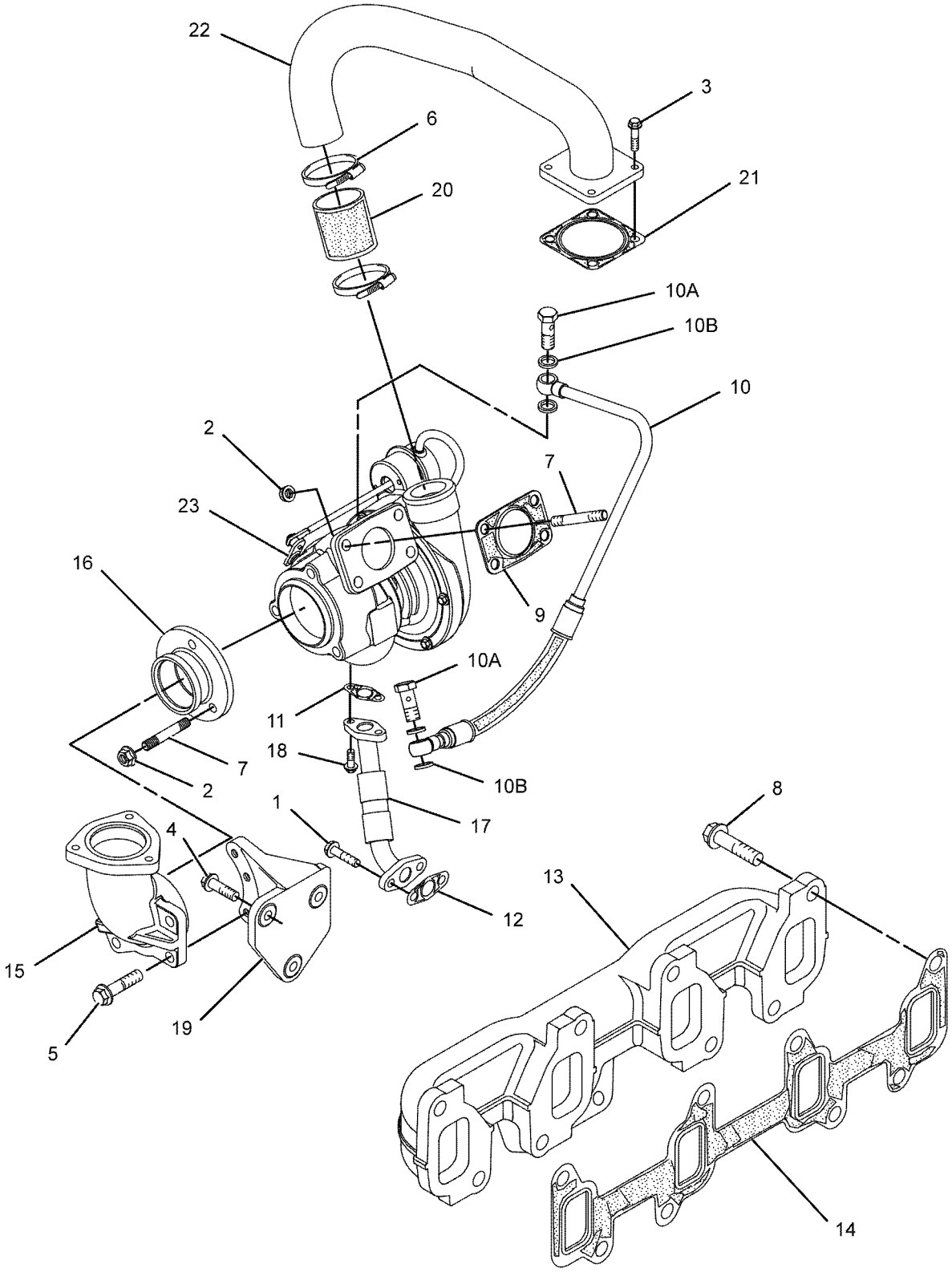

GRAPHIC #1 <END> g01021770

253-0774 TURBOCHARGER GP

TYPE 2

SMCS-1052, 1053 **i05988509**

NOTE	REF NO	GRAPHIC REF	PART NUMBER	QTY	PART NAME 1 2 3 4 5 6 (PRODUCT LEVEL)	SEE PAGE
M	1	1	**6I-0217**	2	BOLT (M8X1.25X20-MM)	
M	2	1	**6I-0563**	7	NUT (M10X1.5-THD)	
M	3	1	**6I-0572**	4	BOLT (M8X1.25X20-MM)	
M	4	1	**6I-0593**	2	BOLT (M10X1.5X30-MM)	
M	5	1	**6I-0654**	3	BOLT (M10X1.5X25-MM)	
M	6	1	**106-8916**	2	BOLT (M6X1X16-MM)	
	7	1	**141-1667**	2	CLAMP-HOSE	
	8	1	**361-7519**	7	ROD-THREADED	
M	9	1	**174-9638**	8	BOLT (M10X1.5X30-MM)	
	10	1	**194-5390**	1	GASKET-MANIFOLD	
	11	1	**225-8525**	1	TUBE AS	
M	11A	1	**225-8524**	2	BOLT-SPECIAL (M10X1.5X23-MM)	
	11B	1	**225-8526**	4	WASHER (10.4X13.75X1.37-MM THK)	
	12	1	**353-3477**	1	GASKET-TURBOCHARGER	
	13	1	**353-3478**	1	GASKET-TURBOCHARGER	
	14	1	**371-6059**	1	MANIFOLD-EXHAUST	
	15	1	**225-8536**	1	GASKET (MANIFOLD)	
	16	1	**227-4562**	1	ELBOW-EXHAUST	
	17	1	**302-0581**	1	ADAPTER-EXHAUST	
	18	1	**232-6189**	1	TUBE AS	
R	19	1	**234-2988**	1	TURBOCHARGER GP	
	20	1	**234-3030**	1	GASKET-INLET	
	21	1	**367-5799**	1	TUBE	
C	22	2	**236-8750**	1	HOSE-AIR	
C	23	2	**286-4339**	1	BRACKET-MOUNTING	

C - CHANGE FROM PREVIOUS TYPE
M - METRIC PART
R - REMANUFACTURED PART MAY BE AVAILABLE

253-0774 **TURBOCHARGER GP (**contd.**)** **i05988509**

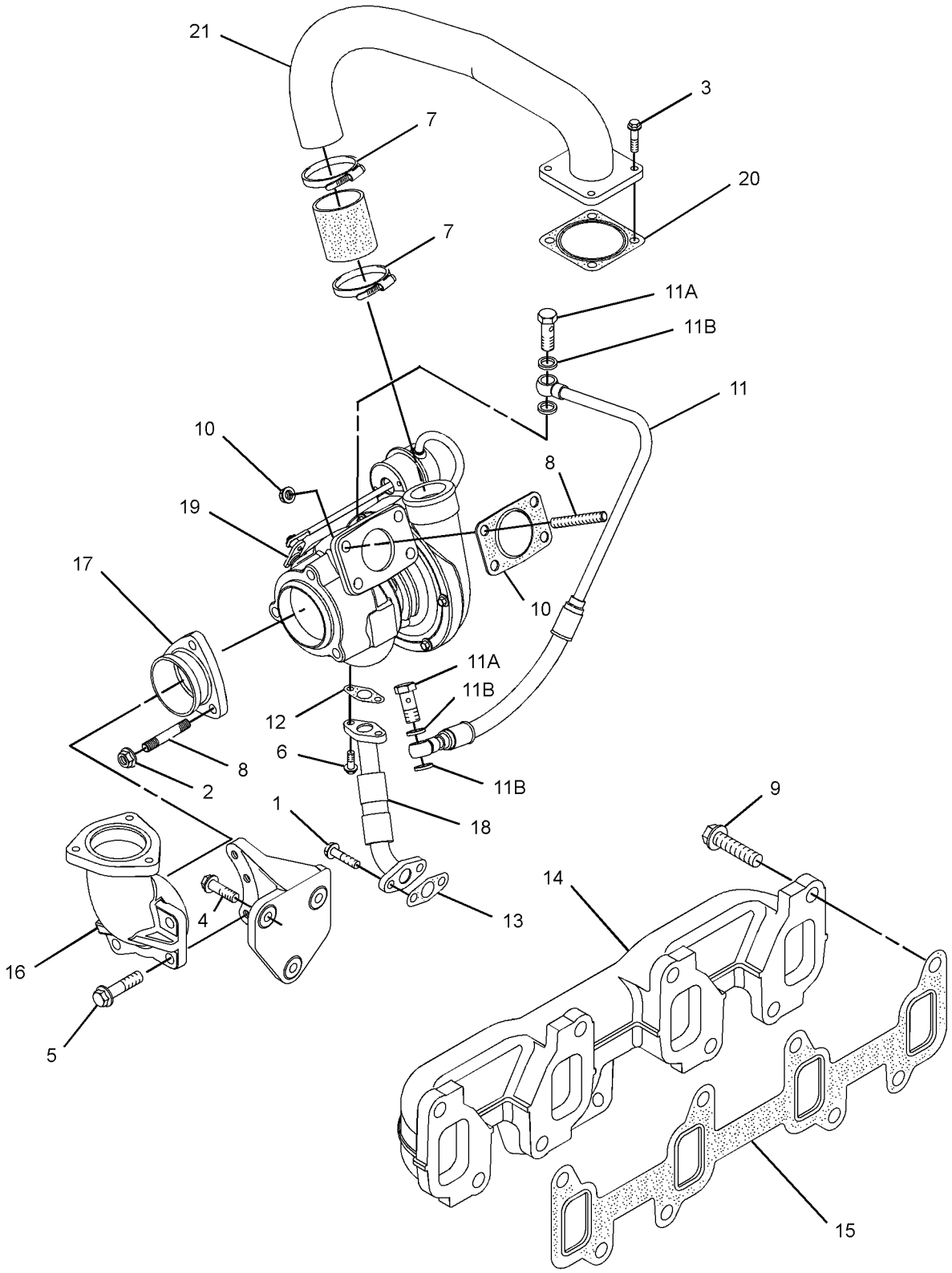

GRAPHIC #1 g01386853

253-0774 **TURBOCHARGER GP (**contd.**)** **i05988509**

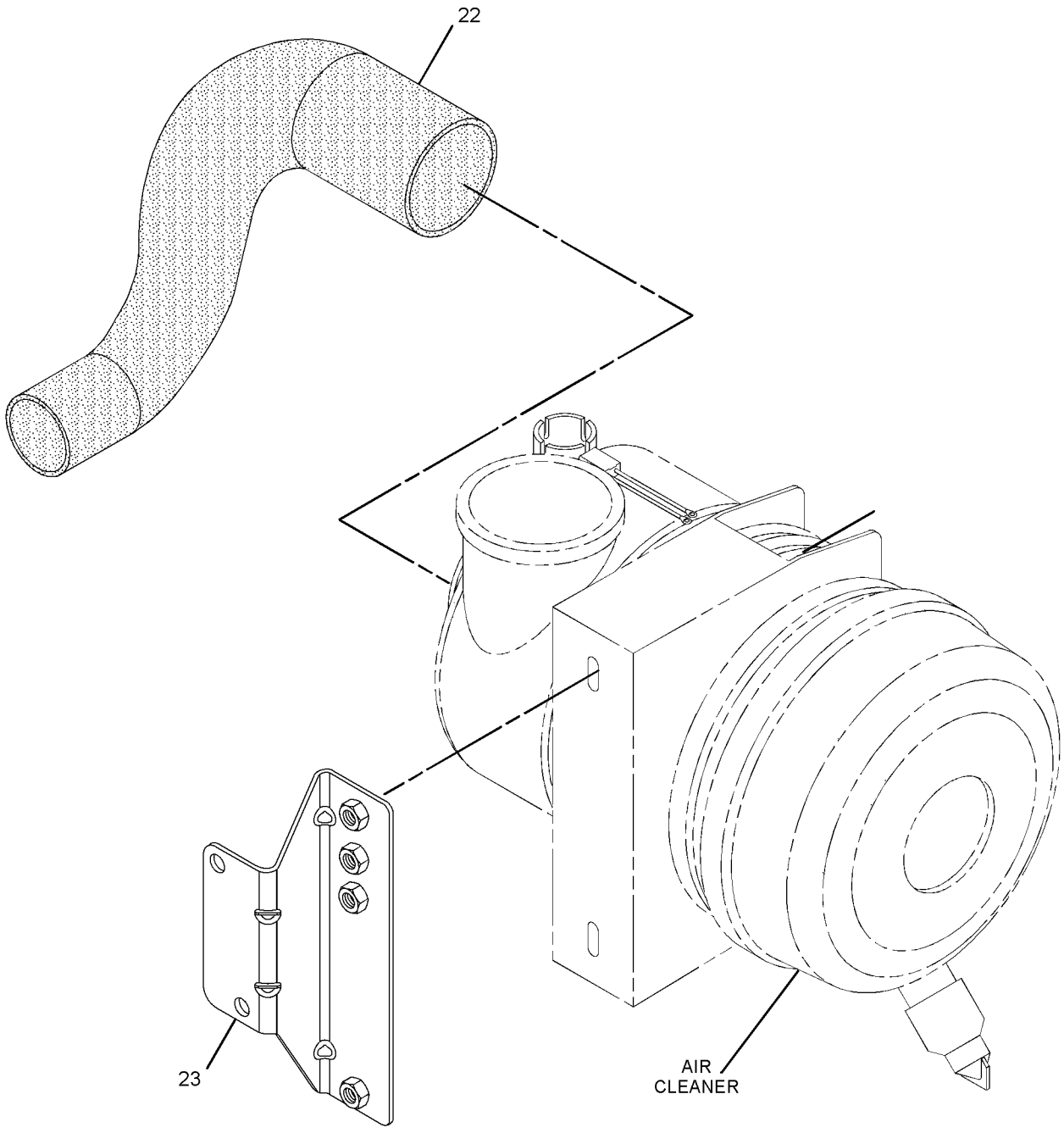

GRAPHIC #2 <END> g01313046

265-5303 TURBOCHARGER GP

SMCS-1052, 1053 **i07030489**

NOTE	REF NO	GRAPHIC REF	PART NUMBER	QTY	PART NAME 1 2 3 4 5 6 (PRODUCT LEVEL)	SEE PAGE
M	1	1	**6I-0217**	2	BOLT (M8X1.25X20-MM)	
M	2	1	**6I-0563**	10	NUT (M10X1.5-THD)	
M	3	1	**6I-0572**	4	BOLT (M8X1.25X20-MM)	
M	4	1	**6I-0593**	2	BOLT (M10X1.5X30-MM)	
M	5	1	**6I-0654**	3	BOLT (M10X1.5X25-MM)	
M	6	1	**6I-4012**	3	STUD (M10X1.5X40-MM)	
	7	1	**6I-4013**	1	FLANGE	
	8	1	**6I-4039**	1	GASKET	
M	9	1	**106-8916**	2	BOLT (M6X1X16-MM)	
	10	1	**141-1667**	2	CLAMP-HOSE	
	11	1	**361-7519**	7	ROD-THREADED	
M	12	1	**174-9638**	8	BOLT (M10X1.5X30-MM)	
	13	1	**194-5390**	1	GASKET-MANIFOLD	
	14	1	**225-8525**	1	TUBE AS	
M	14A	1	**225-8524**	2	BOLT-SPECIAL (M10X1.5X23-MM)	
	14B	1	**225-8526**	4	WASHER (10.4X13.75X1.37-MM THK)	
	15	1	**353-3477**	1	GASKET-TURBOCHARGER	
	16	1	**353-3478**	1	GASKET-TURBOCHARGER	
	17	1	**225-8536**	1	GASKET (MANIFOLD)	
	18	1	**227-4562**	1	ELBOW-EXHAUST	
	19	1	**302-0581**	1	ADAPTER-EXHAUST	
	20	1	**507-5019**	1	LINE AS-OIL	
	20A	1	**269-3086**	2	CLAMP-BAND	
	21	1	**307-2805**	1	BRACKET	
R	22	1	**234-2988**	1	TURBOCHARGER GP	
	23	1	**234-3029**	1	HOSE	
	24	1	**492-3310**	1	GASKET	
	25	1	**367-5799**	1	TUBE	
Y	26	2	**241-8187**	1	AIR CLEANER GP	1025
	27	1	**371-6059**	1	MANIFOLD-EXHAUST	

M - METRIC PART
R - REMANUFACTURED PART MAY BE AVAILABLE
Y - SEPARATE ILLUSTRATION

265-5303 **TURBOCHARGER GP (**contd.**)** **i07030489**

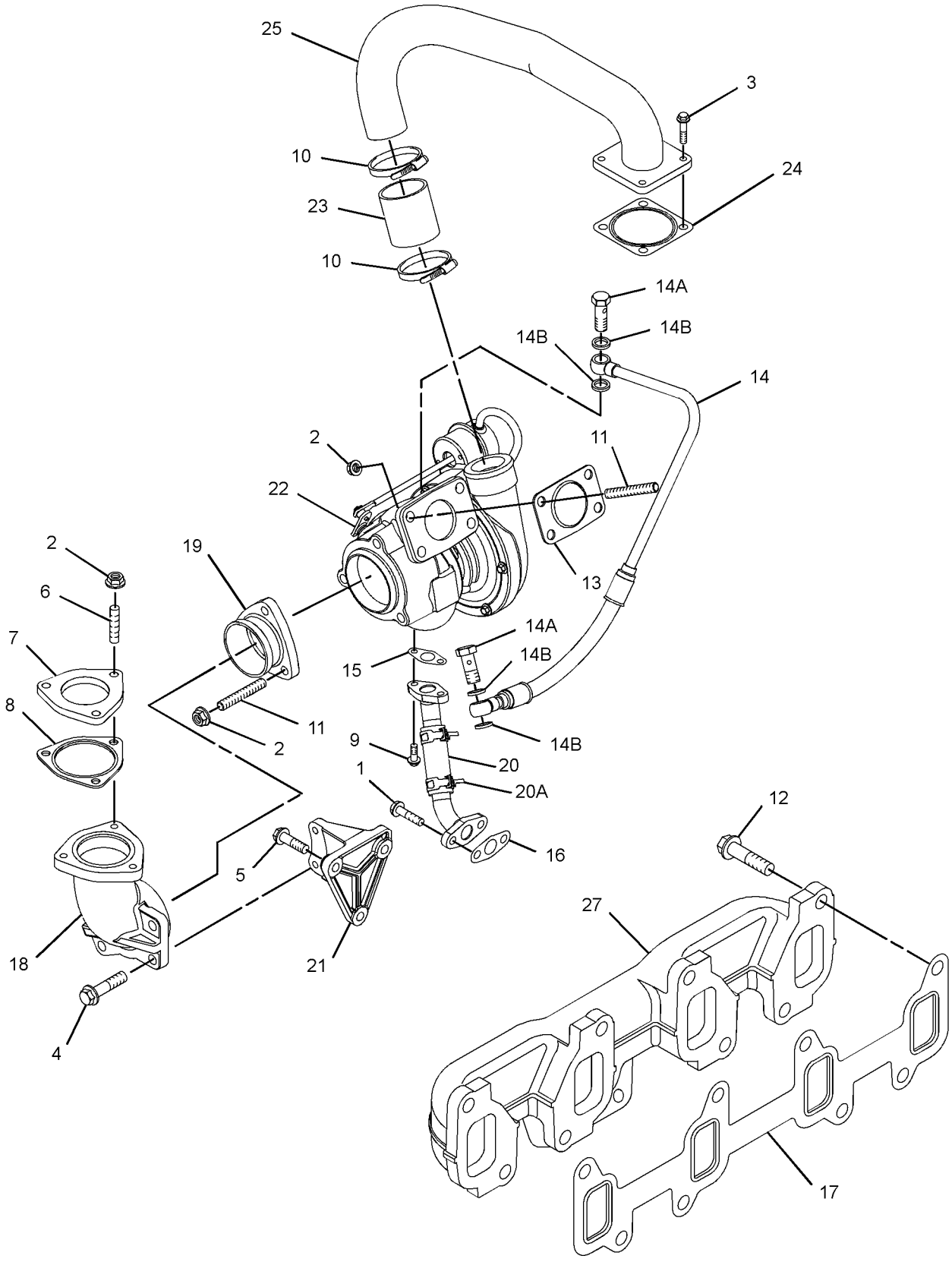

GRAPHIC #1 g06217190

265-5303 **TURBOCHARGER GP (**contd.**)** **i07030489**

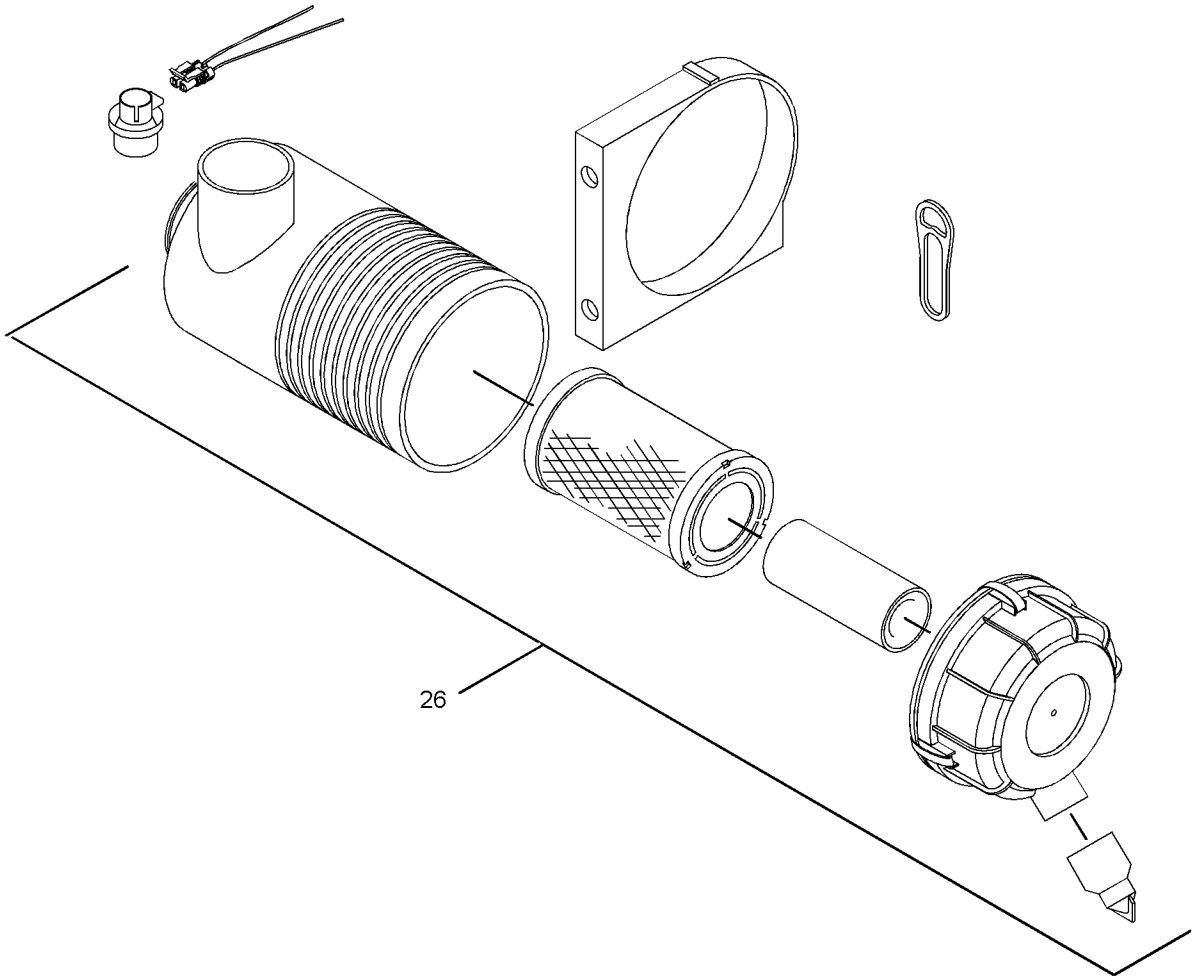

GRAPHIC #2 <END> g02566796

269-8489 TURBOCHARGER GP

SMCS-1052, 1053 **i08312594**

NOTE	REF NO	GRAPHIC REF	PART NUMBER	QTY	PART NAME 1 2 3 4 5 6 (PRODUCT LEVEL)	SEE PAGE
M	1	1	**6I-0217**	2	BOLT (M8X1.25X20-MM)	
M	2	1	**6I-0563**	7	NUT (M10X1.5-THD)	
M	3	1	**6I-0572**	4	BOLT (M8X1.25X20-MM)	
M	4	1	**6I-0593**	2	BOLT (M10X1.5X30-MM)	
M	5	1	**6I-0654**	3	BOLT (M10X1.5X25-MM)	
M	6	1	**106-8916**	2	BOLT (M6X1X16-MM)	
	7	1	**141-1667**	2	CLAMP-HOSE	
	8	1	**361-7519**	7	ROD-THREADED	
M	9	1	**174-9638**	8	BOLT (M10X1.5X30-MM)	
	10	1	**194-5390**	1	GASKET-MANIFOLD	
	11	1	**225-8525**	1	TUBE AS	
M	11A	1	**225-8524**	2	BOLT-SPECIAL (M10X1.5X23-MM)	
	11B	1	**225-8526**	4	WASHER (10.4X13.75X1.37-MM THK)	
	12	1	**353-3477**	1	GASKET-TURBOCHARGER	
	13	1	**353-3478**	1	GASKET-TURBOCHARGER	
	14	1	**225-8536**	1	GASKET	
	15	1	**227-4562**	1	ELBOW-EXHAUST	
	16	1	**302-0581**	1	ADAPTER-EXHAUST	
	17	1	**232-6189**	1	TUBE AS	
	18	1	**307-2805**	1	BRACKET	
	19	1	**234-3024**	1	PIPE	
	20	1	**234-3029**	1	HOSE	
	21	1	**492-3310**	1	GASKET	
	22	1	**558-6969**	1	TURBOCHARGER AS	
	23	1	**371-6059**	1	MANIFOLD-EXHAUST	

M - METRIC PART

269-8489 **TURBOCHARGER GP (**contd.**)** **i08312594**

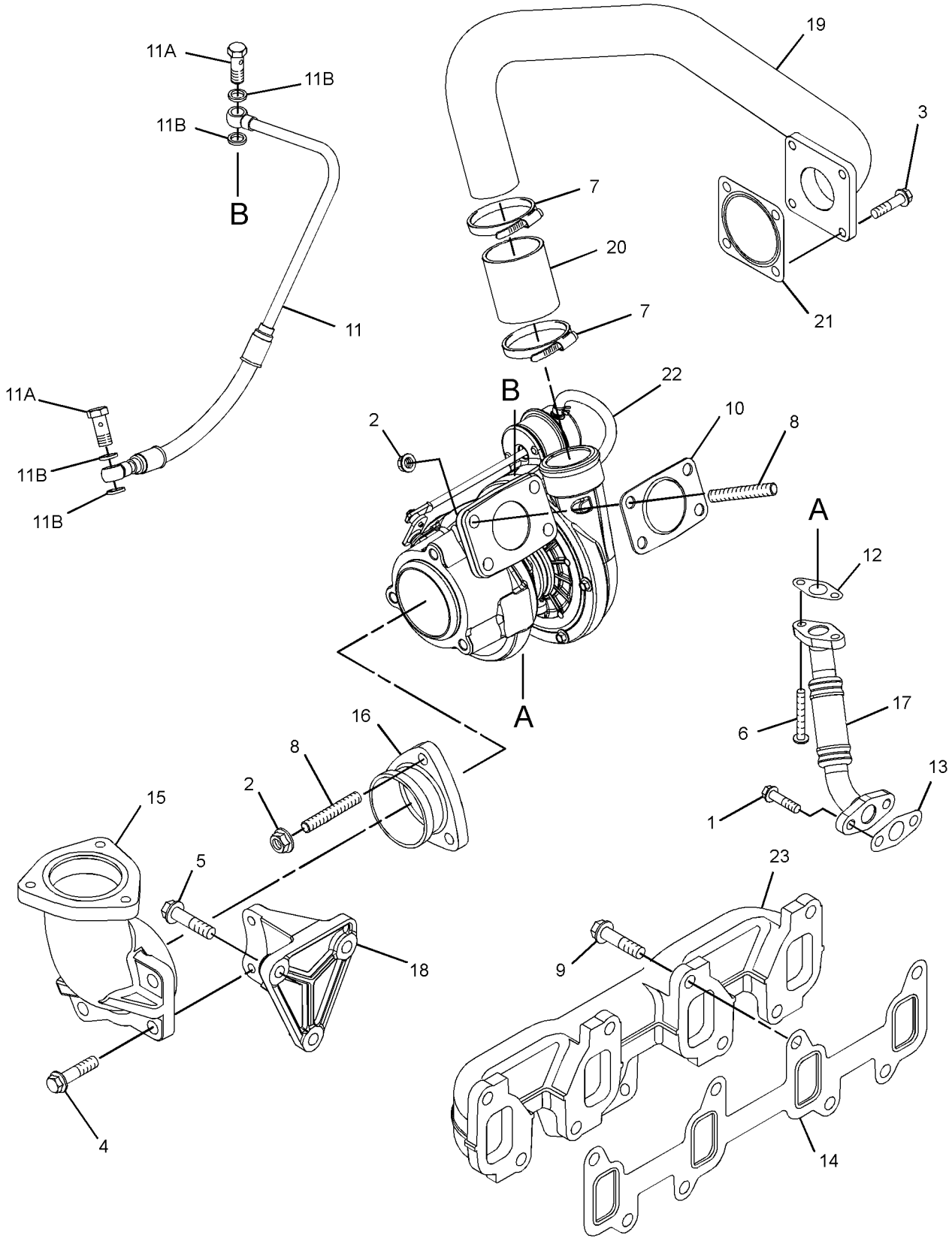

GRAPHIC #1 <END> g06755002

270-8890 TURBOCHARGER GP

ALSO AN ATTACHMENT

SMCS-1052, 1053 **i05988410**

NOTE	REF NO	GRAPHIC REF	PART NUMBER	QTY	PART NAME 1 2 3 4 5 6 (PRODUCT LEVEL)	SEE PAGE
M	1	1	**6I-0217**	2	BOLT (M8X1.25X20-MM)	
M	2	1	**6I-0563**	10	NUT (M10X1.5-THD)	
M	3	1	**6I-0593**	2	BOLT (M10X1.5X30-MM)	
M	4	1	**6I-0654**	3	BOLT (M10X1.5X25-MM)	
M	5	1	**6I-4012**	3	STUD (M10X1.5X40-MM)	
	6	1	**6I-4013**	1	FLANGE	
	7	1	**6I-4039**	1	GASKET	
M	8	1	**106-8916**	2	BOLT (M6X1X16-MM)	
	9	1	**361-7519**	7	ROD-THREADED	
M	10	1	**174-9638**	8	BOLT (M10X1.5X30-MM)	
	11	1	**194-5390**	1	GASKET-MANIFOLD	
	12	1	**225-8525**	1	TUBE AS	
M	12A	1	**225-8524**	2	BOLT-SPECIAL (M10X1.5X23-MM)	
	12B	1	**225-8526**	4	WASHER (10.4X13.75X1.37-MM THK)	
	13	1	**353-3477**	1	GASKET-TURBOCHARGER	
	14	1	**353-3478**	1	GASKET-TURBOCHARGER	
	15	1	**225-8536**	1	GASKET	
	16	1	**227-4562**	1	ELBOW-EXHAUST	
	17	1	**302-0581**	1	ADAPTER-EXHAUST	
	18	1	**232-6189**	1	TUBE AS	
	19	1	**307-2805**	1	BRACKET	
Y	20	2	**241-8187**	1	AIR CLEANER GP	1025
	21	1	**243-4173**	1	TURBOCHARGER GP	
	22	1	**371-6059**	1	MANIFOLD-EXHAUST	

M - METRIC PART
Y - SEPARATE ILLUSTRATION

270-8890 **TURBOCHARGER GP (**contd.**)** **i05988410**

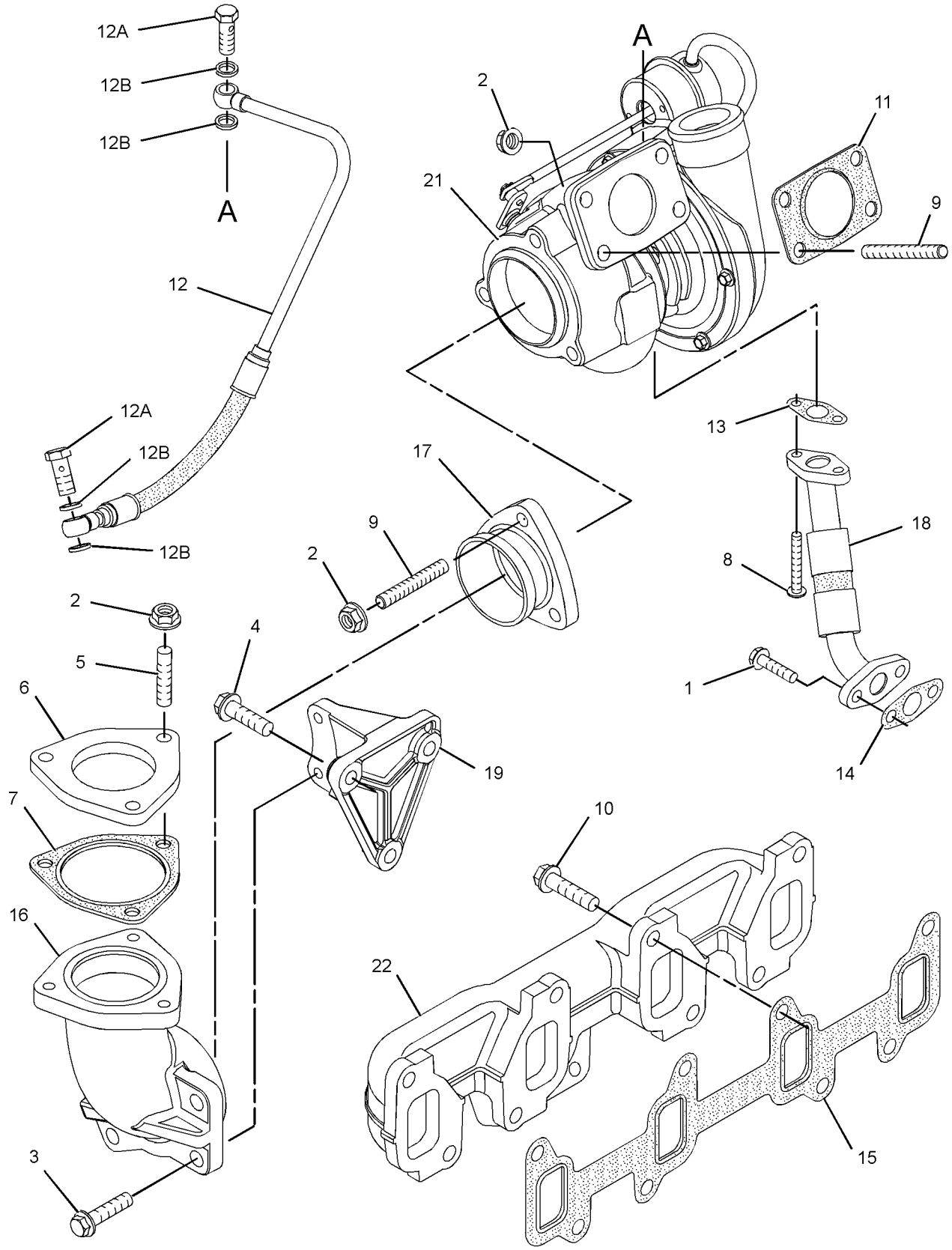

GRAPHIC #1 g01624751

270-8890 **TURBOCHARGER GP (**contd.**)** **i05988410**

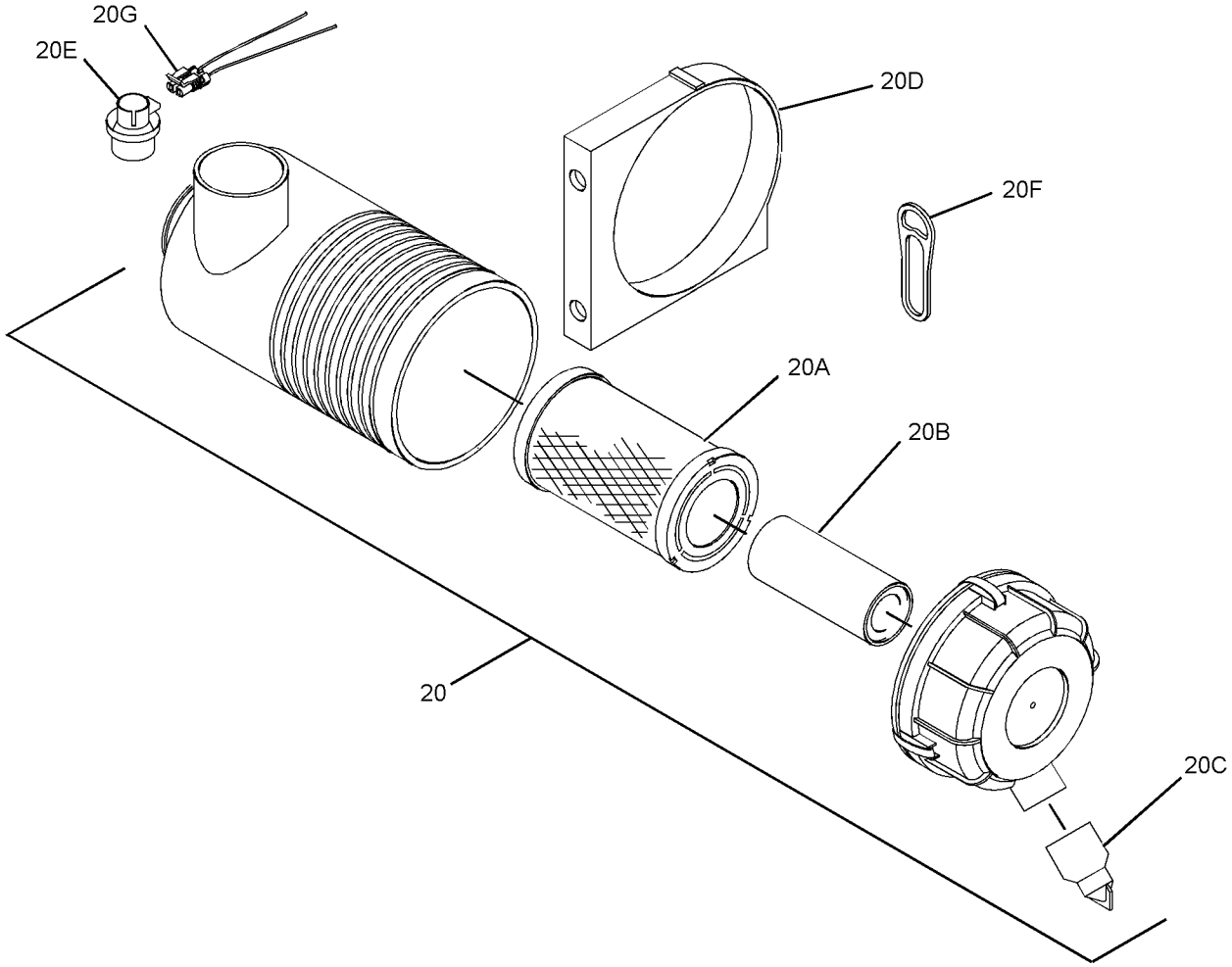

GRAPHIC #2 <END> g01220970

AIR INLET AND EXHAUST SYSTEM

283-3327 TURBOCHARGER GP

SMCS-1052, 1053 **i07030500**

NOTE	REF NO	GRAPHIC REF	PART NUMBER	QTY	PART NAME 1 2 3 4 5 6 (PRODUCT LEVEL)	SEE PAGE
M	1	1	**6I-0217**	2	BOLT (M8X1.25X20-MM)	
M	2	1	**6I-0563**	7	NUT (M10X1.5-THD)	
M	3	1	**6I-0593**	2	BOLT (M10X1.5X30-MM)	
M	4	1	**6I-0654**	3	BOLT (M10X1.5X25-MM)	
M	5	1	**106-8916**	2	BOLT (M6X1X16-MM)	
	7	1	**361-7519**	7	ROD-THREADED	
	9	1	**194-5390**	1	GASKET-MANIFOLD	
	10	1	**225-8525**	1	TUBE AS	
M	10A	1	**225-8524**	2	BOLT-SPECIAL (M10X1.5X23-MM)	
	10B	1	**225-8526**	4	WASHER (10.4X13.75X1.37-MM THK)	
	11	1	**353-3477**	1	GASKET-TURBOCHARGER	
	12	1	**353-3478**	1	GASKET-TURBOCHARGER	
	13	1	**225-8536**	1	GASKET (MANIFOLD)	
	14	1	**227-4562**	1	ELBOW-EXHAUST	
	15	1	**302-0581**	1	ADAPTER-EXHAUST	
	16	1	**507-5019**	1	LINE AS-OIL	
	16A	1	**269-3086**	2	CLAMP-BAND	
	17	1	**307-2805**	1	BRACKET	
	18	1	**236-4927**	1	TURBOCHARGER GP	
	19	1	**371-6059**	1	MANIFOLD-EXHAUST	

M - METRIC PART

283-3327 **TURBOCHARGER GP** (contd.) **i07030500**

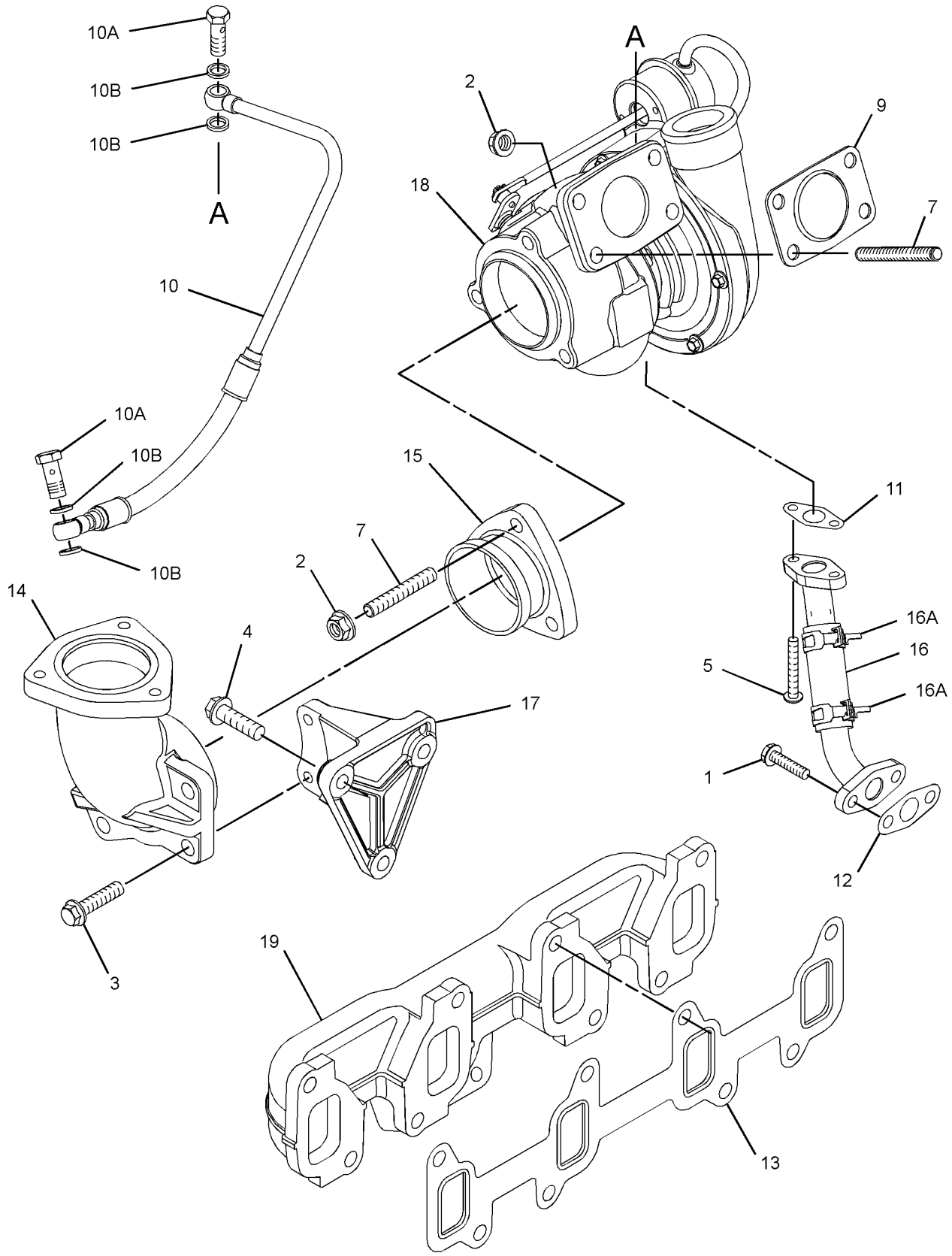

GRAPHIC #1 <END> g06209101

AIR INLET AND EXHAUST SYSTEM

290-2045 TURBOCHARGER GP

SMCS-1052, 1053 **i05997490**

NOTE	REF NO	GRAPHIC REF	PART NUMBER	QTY	PART NAME 1 2 3 4 5 6 (PRODUCT LEVEL)	SEE PAGE
	1	2	**5P-0598**	1	CLAMP-HOSE	
M	2	1	**6I-0217**	2	BOLT (M8X1.25X20-MM)	
M	3	2	**6I-0260**	2	BOLT (M8X1.25X25-MM)	
M	4	1	**6I-0563**	10	NUT (M10X1.5-THD)	
M	5	1	**6I-0572**	4	BOLT (M8X1.25X20-MM)	
M	6	1	**6I-0593**	2	BOLT (M10X1.5X30-MM)	
M	7	1	**6I-0654**	3	BOLT (M10X1.5X25-MM)	
M	8	1	**6I-4012**	3	STUD (M10X1.5X40-MM)	
	9	1	**6I-4013**	1	FLANGE	
	10	1	**6I-4039**	1	GASKET	
M	11	2	**100-4830**	2	BOLT (M10X1.5X20-MM)	
M	12	1	**106-8916**	2	BOLT (M6X1X16-MM)	
	13	1	**141-1667**	1	CLAMP-HOSE	
M	14	1	**147-5553**	7	STUD (M10X1.5X40-MM)	
M	15	1	**174-9638**	8	BOLT (M10X1.5X30-MM)	
	16	1	**194-5390**	1	GASKET-MANIFOLD	
	17	1	**225-8525**	1	TUBE AS	
M	17A	1	**225-8524**	2	BOLT-SPECIAL (M10X1.5X23-MM)	
	17B	1	**225-8526**	4	WASHER (10.4X13.75X1.37-MM THK)	
	18	1	**225-8533**	1	GASKET	
	19	1	**225-8534**	1	GASKET	
	20	1	**225-8536**	1	GASKET	
	21	1	**227-4562**	1	ELBOW-EXHAUST	
	22	1	**302-0581**	1	ADAPTER-EXHAUST	
	23	1	**232-6189**	1	TUBE AS	
R	24	1	**234-2988**	1	TURBOCHARGER GP	
	25	1	**234-3029**	1	HOSE	
	26	1	**234-3030**	1	GASKET-INLET	
	27	1	**367-5799**	1	TUBE	
	28	2	**236-8750**	1	HOSE-AIR	
Y	29	2	**252-8751**	1	AIR CLEANER GP	1028
	30	1	**371-6059**	1	MANIFOLD-EXHAUST	
	31	1	**307-2805**	1	BRACKET	
	32	2	**101-7860**	1	CLIP	
	33	2	**286-4339**	1	BRACKET-MOUNTING	

M - METRIC PART
R - REMANUFACTURED PART MAY BE AVAILABLE
Y - SEPARATE ILLUSTRATION

290-2045 **TURBOCHARGER GP (**contd.**)** **i05997490**

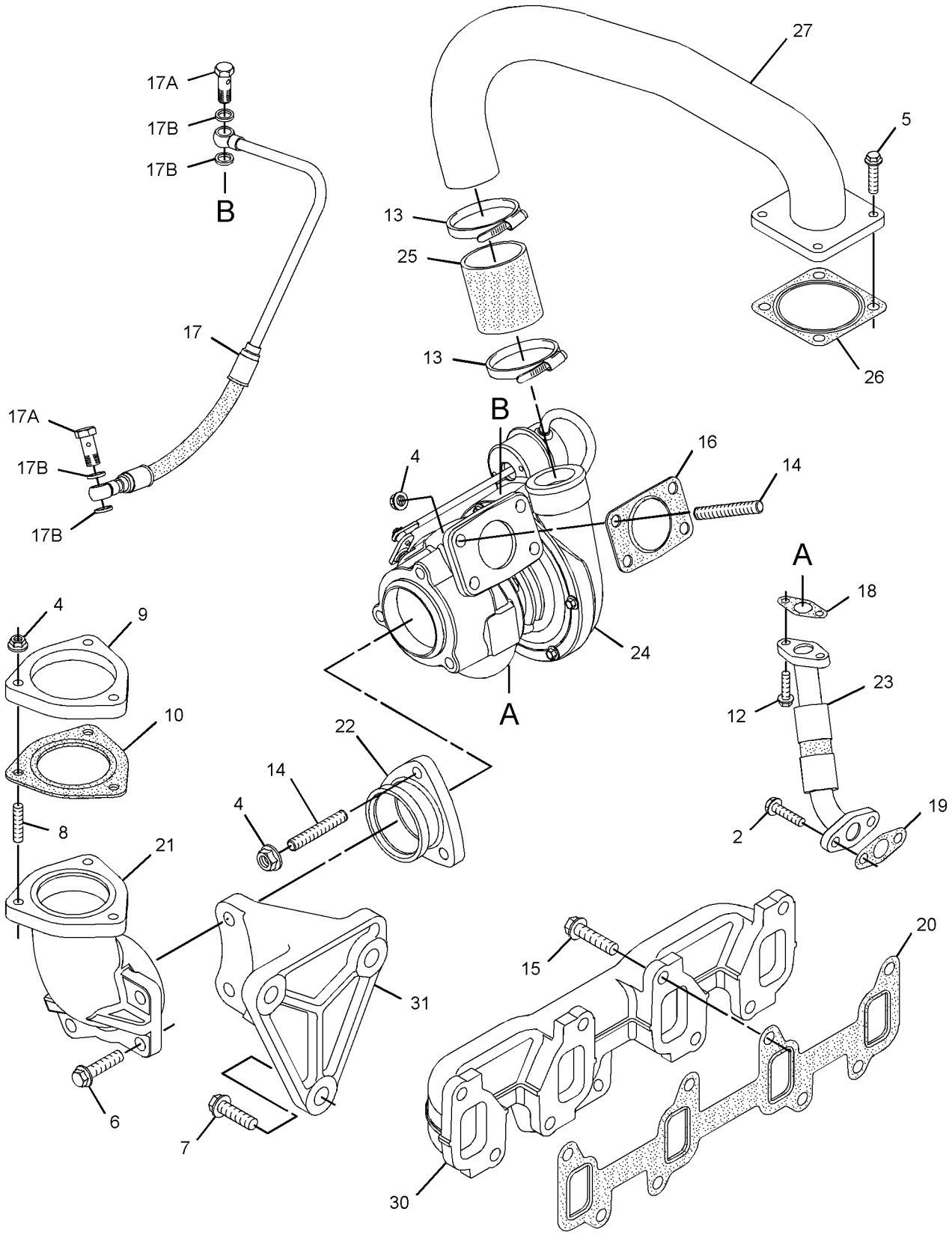

GRAPHIC #1 g02975457

290-2045 **TURBOCHARGER GP (**contd.**)** **i05997490**

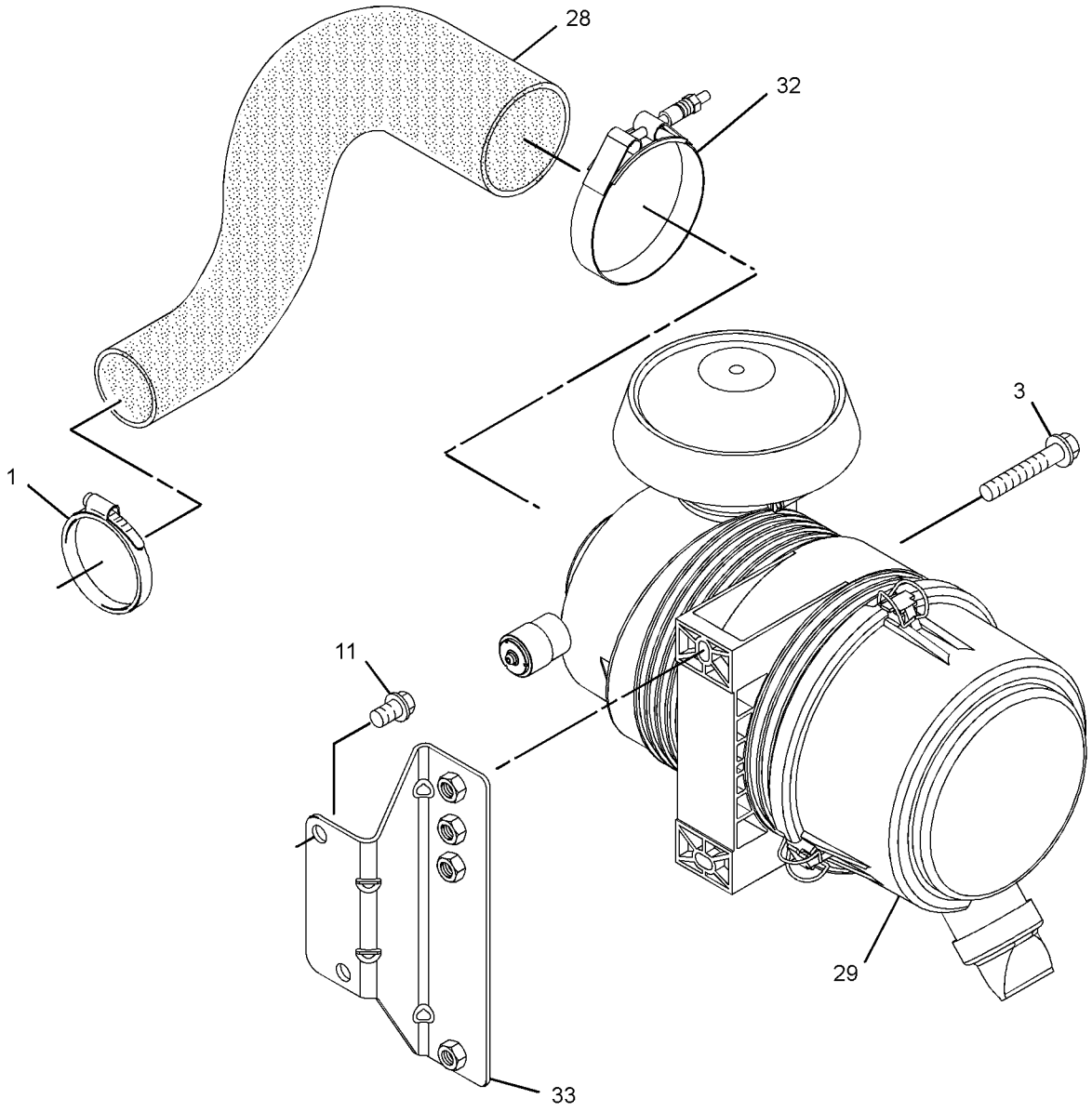

GRAPHIC #2 <END> g02975456

290-2045 TURBOCHARGER GP

SMCS-1052, 1053 **i07030523**

NOTE	REF NO	GRAPHIC REF	PART NUMBER	QTY	PART NAME 1 2 3 4 5 6 (PRODUCT LEVEL)	SEE PAGE
	1	2	**5P-0598**	1	CLAMP-HOSE	
M	2	1	**6I-0217**	2	BOLT (M8X1.25X20-MM)	
M	3	2	**6I-0260**	2	BOLT (M8X1.25X25-MM)	
M	4	1	**6I-0563**	10	NUT (M10X1.5-THD)	
M	5	1	**6I-0572**	4	BOLT (M8X1.25X20-MM)	
M	6	1	**6I-0593**	2	BOLT (M10X1.5X30-MM)	
M	7	1	**6I-0654**	3	BOLT (M10X1.5X25-MM)	
M	8	1	**6I-4012**	3	STUD (M10X1.5X40-MM)	
	9	1	**6I-4013**	1	FLANGE	
	10	1	**6I-4039**	1	GASKET	
M	11	2	**100-4830**	2	BOLT (M10X1.5X20-MM)	
M	12	1	**106-8916**	2	BOLT (M6X1X16-MM)	
	13	1	**141-1667**	1	CLAMP-HOSE	
	14	1	**361-7519**	7	ROD-THREADED	
M	15	1	**174-9638**	8	BOLT (M10X1.5X30-MM)	
	16	1	**194-5390**	1	GASKET-MANIFOLD	
	17	1	**225-8525**	1	TUBE AS	
M	17A	1	**225-8524**	2	BOLT-SPECIAL (M10X1.5X23-MM)	
	17B	1	**225-8526**	4	WASHER (10.4X13.75X1.37-MM THK)	
	18	1	**353-3477**	1	GASKET-TURBOCHARGER	
	19	1	**353-3478**	1	GASKET-TURBOCHARGER	
	20	1	**225-8536**	1	GASKET	
	21	1	**227-4562**	1	ELBOW-EXHAUST	
	22	1	**302-0581**	1	ADAPTER-EXHAUST	
	23	1	**507-5019**	1	LINE AS-OIL	
	23A	1	**269-3086**	2	CLAMP-BAND	
R	24	1	**234-2988**	1	TURBOCHARGER GP	
	25	1	**234-3029**	1	HOSE	
	26	1	**492-3310**	1	GASKET (INLET)	
	27	1	**367-5799**	1	TUBE	
	28	2	**236-8750**	1	HOSE-AIR	
	30	1	**371-6059**	1	MANIFOLD-EXHAUST	
	31	1	**307-2805**	1	BRACKET	
	32	2	**101-7860**	1	CLIP	
	33	2	**286-4339**	1	BRACKET-MOUNTING	
	34	2	**315-4691**	1	INDICATOR-AIR FILTER CHANGE	
	35	2	**418-3216**	1	BRACKET	
Y	36	2	**110-2556**	1	AIR CLEANER GP	1023
	37	2	**101-7856**	1	CAP (AIR CLEANER)	

M - METRIC PART
R - REMANUFACTURED PART MAY BE AVAILABLE
Y - SEPARATE ILLUSTRATION

290-2045 **TURBOCHARGER GP (**contd.**)** **i07030523**

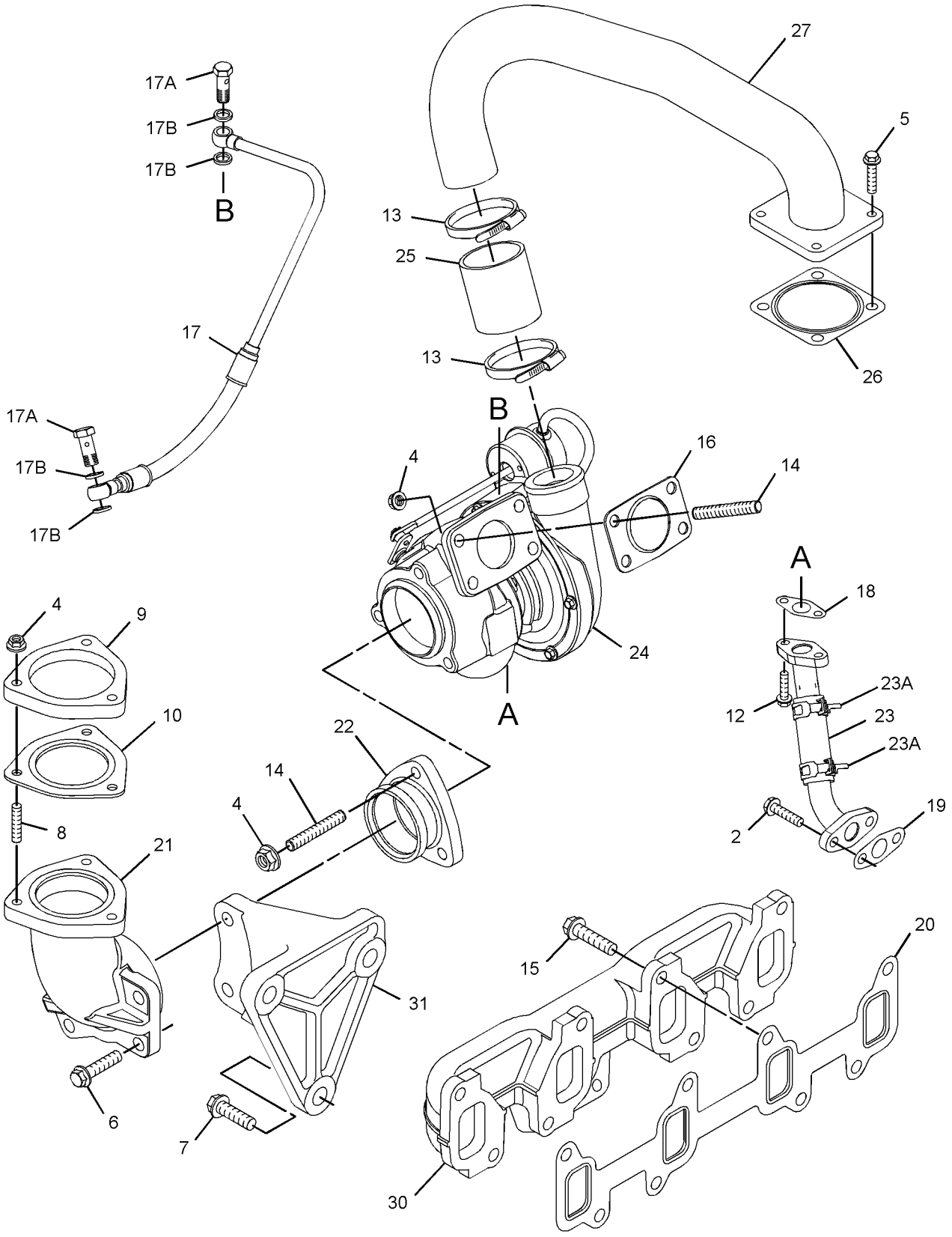

GRAPHIC #1 g06207071

290-2045 **TURBOCHARGER GP (**contd.**)** **i07030523**

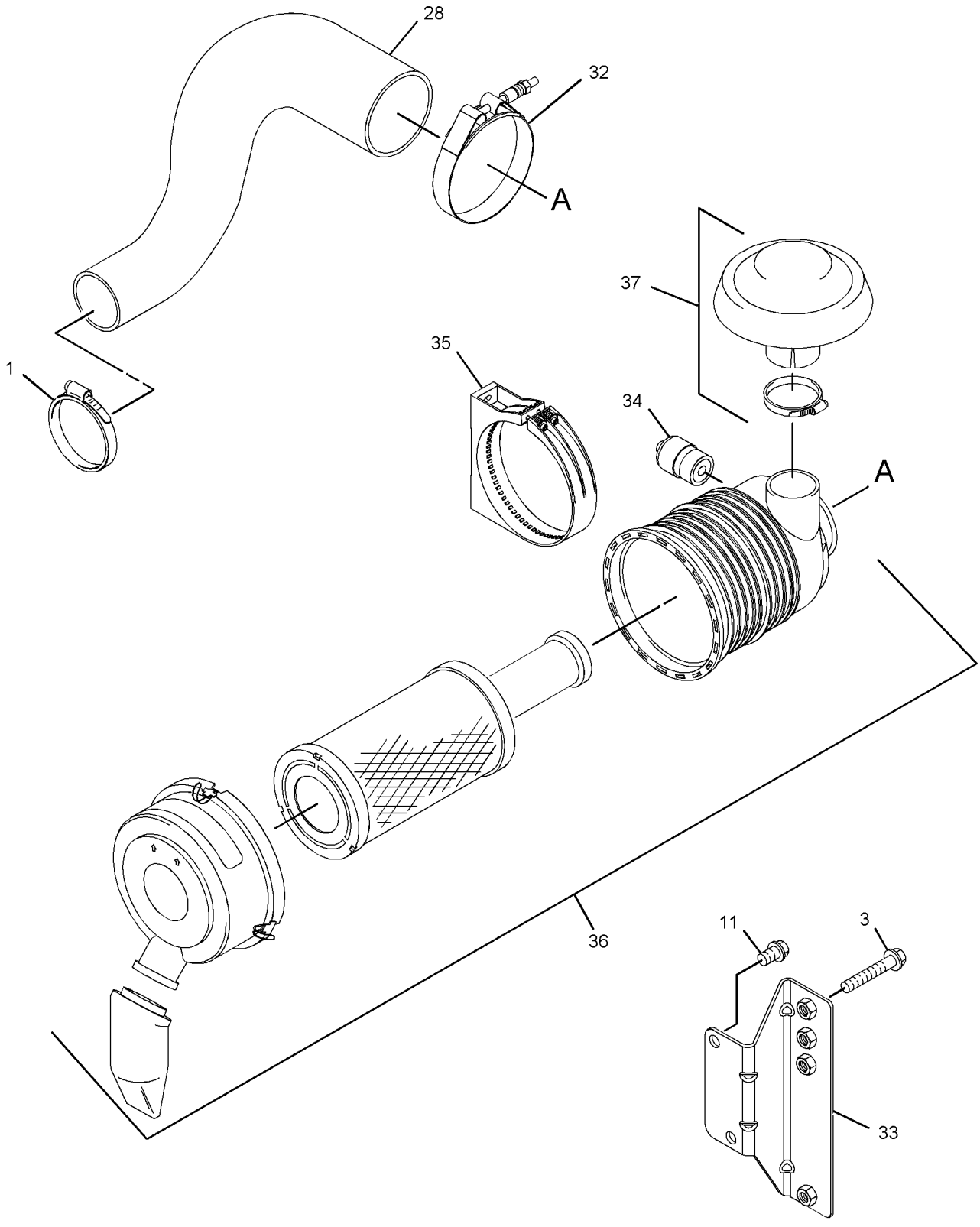

GRAPHIC #2 <END> g06207072

AIR INLET AND EXHAUST SYSTEM

290-2489 TURBOCHARGER GP

SMCS-1052, 1053 **i08525782**

NOTE	REF NO	GRAPHIC REF	PART NUMBER	QTY	PART NAME 1 2 3 4 5 6 (PRODUCT LEVEL)	SEE PAGE
	1	2	**5P-0598**	1	CLAMP-HOSE	
M	2	1	**6I-0217**	2	BOLT (M8X1.25X20-MM)	
M	3	2	**6I-0254**	2	BOLT (M8X1.25X30-MM)	
M	4	2	**178-3336**	2	NUT-HEX FLANGE (M8X1.25-THD)	
M	5	1	**6I-0563**	10	NUT (M10X1.5-THD)	
M	6	1	**6I-0593**	2	BOLT (M10X1.5X30-MM)	
M	7	1	**6I-0654**	3	BOLT (M10X1.5X25-MM)	
M	8	1	**6I-4012**	3	STUD (M10X1.5X40-MM)	
	9	1	**6I-4013**	1	FLANGE	
	10	1	**6I-4039**	1	GASKET	
M	11	2	**100-4830**	2	BOLT (M10X1.5X20-MM)	
M	12	1	**106-8916**	2	BOLT (M6X1X16-MM)	
	13	1	**361-7519**	7	ROD-THREADED	
M	14	1	**174-9638**	8	BOLT (M10X1.5X30-MM)	
	15	1	**194-5390**	1	GASKET-MANIFOLD	
	16	1	**225-8525**	1	TUBE AS	
M	16A	1	**225-8524**	2	BOLT-SPECIAL (M10X1.5X23-MM)	
	16B	1	**225-8526**	4	WASHER (10.4X13.75X1.37-MM THK)	
	17	1	**353-3477**	1	GASKET-TURBOCHARGER	
	18	1	**353-3478**	1	GASKET-TURBOCHARGER	
	19	1	**225-8536**	1	GASKET	
	20	1	**227-4562**	1	ELBOW-EXHAUST	
	21	1	**302-0581**	1	ADAPTER-EXHAUST	
	22	1	**232-6189**	1	TUBE AS	
	23	1	**307-2805**	1	BRACKET	
Y	24	2	**233-5180**	1	AIR CLEANER GP	1024
	25	2	**236-8750**	1	HOSE-AIR	
	26	1	**243-4173**	1	TURBOCHARGER GP	
	27	1	**371-6059**	1	MANIFOLD-EXHAUST	
	28	2	**101-7860**	1	CLIP	
	29	2	**290-2488**	1	BRACKET-MOUNTING	
	30	2	**217-0099**	2	SPACER (8.2X25X2-MM THK)	

M - METRIC PART
Y - SEPARATE ILLUSTRATION

290-2489 **TURBOCHARGER GP** (contd.) **i08525782**

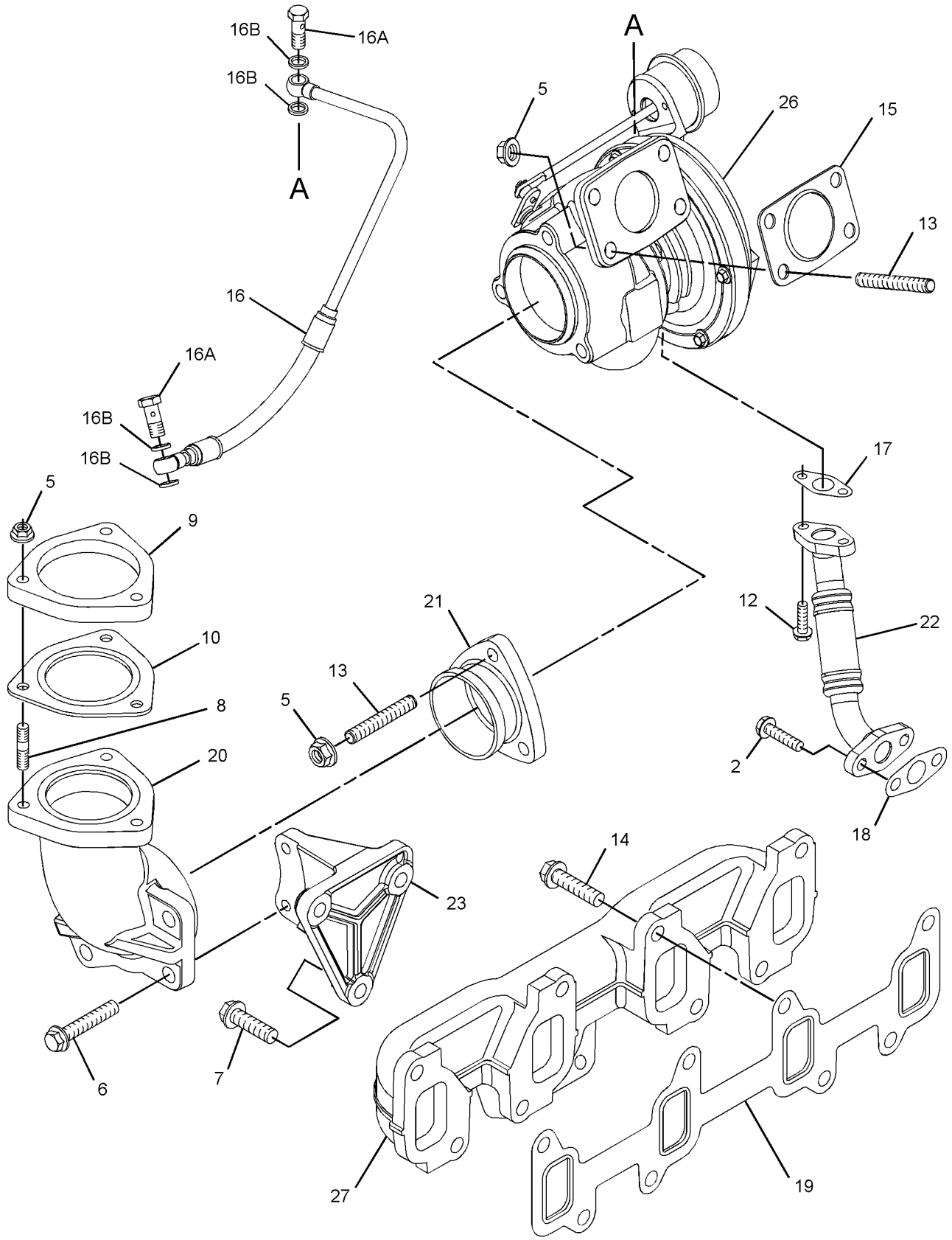

GRAPHIC #1 g07488815

290-2489 **TURBOCHARGER GP (**contd.**)** **i08525782**

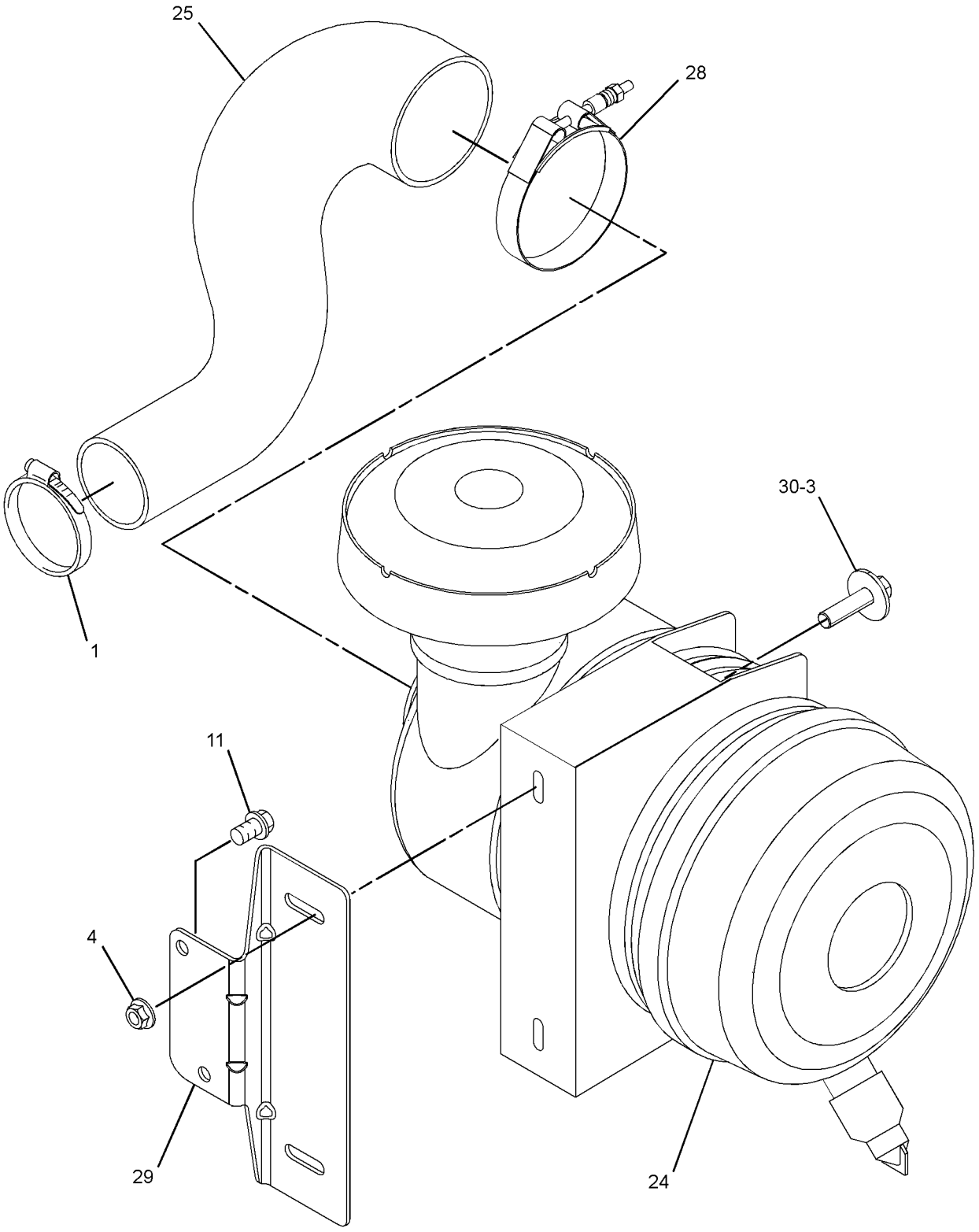

GRAPHIC #2 <END> g06209040

292-3518 TURBOCHARGER GP

SMCS-1052, 1053 **i08197276**

NOTE	REF NO	GRAPHIC REF	PART NUMBER	QTY	PART NAME 1 2 3 4 5 6 (PRODUCT LEVEL)	SEE PAGE
M	1	1	**6I-0217**	2	BOLT (M8X1.25X20-MM)	
M	2	1	**6I-0563**	7	NUT (M10X1.5-THD)	
M	3	1	**6I-0572**	4	BOLT (M8X1.25X20-MM)	
M	4	1	**106-8916**	2	BOLT (M6X1X16-MM)	
	5	1	**141-1667**	2	CLAMP-HOSE	
	6	1	**361-7519**	7	ROD-THREADED	
	7	1	**194-5390**	1	GASKET-MANIFOLD	
	8	1	**353-3477**	1	GASKET-TURBOCHARGER	
	9	1	**353-3478**	1	GASKET-TURBOCHARGER	
	10	1	**233-9536**	1	TUBE AS	
M	10A	1	**225-8524**	2	BOLT-SPECIAL (M10X1.5X23-MM)	
	10B	1	**225-8526**	4	WASHER (10.4X13.75X1.37-MM THK)	
	11	1	**233-9537**	1	TUBE AS	
	12	1	**492-3310**	1	GASKET	
R	13	1	**558-6973**	1	TURBOCHARGER AS	
	14	1	**263-5376**	1	HOSE	
	15	1	**367-5798**	1	TUBE	
	16	1	**371-6116**	1	MANIFOLD-EXHAUST	
M	17	1	**174-9638**	8	BOLT (M10X1.5X30-MM)	
	18	1	**225-8536**	1	GASKET	

M - METRIC PART
R - REMANUFACTURED PART MAY BE AVAILABLE

292-3518 **TURBOCHARGER GP (**contd.**)** **i08197276**

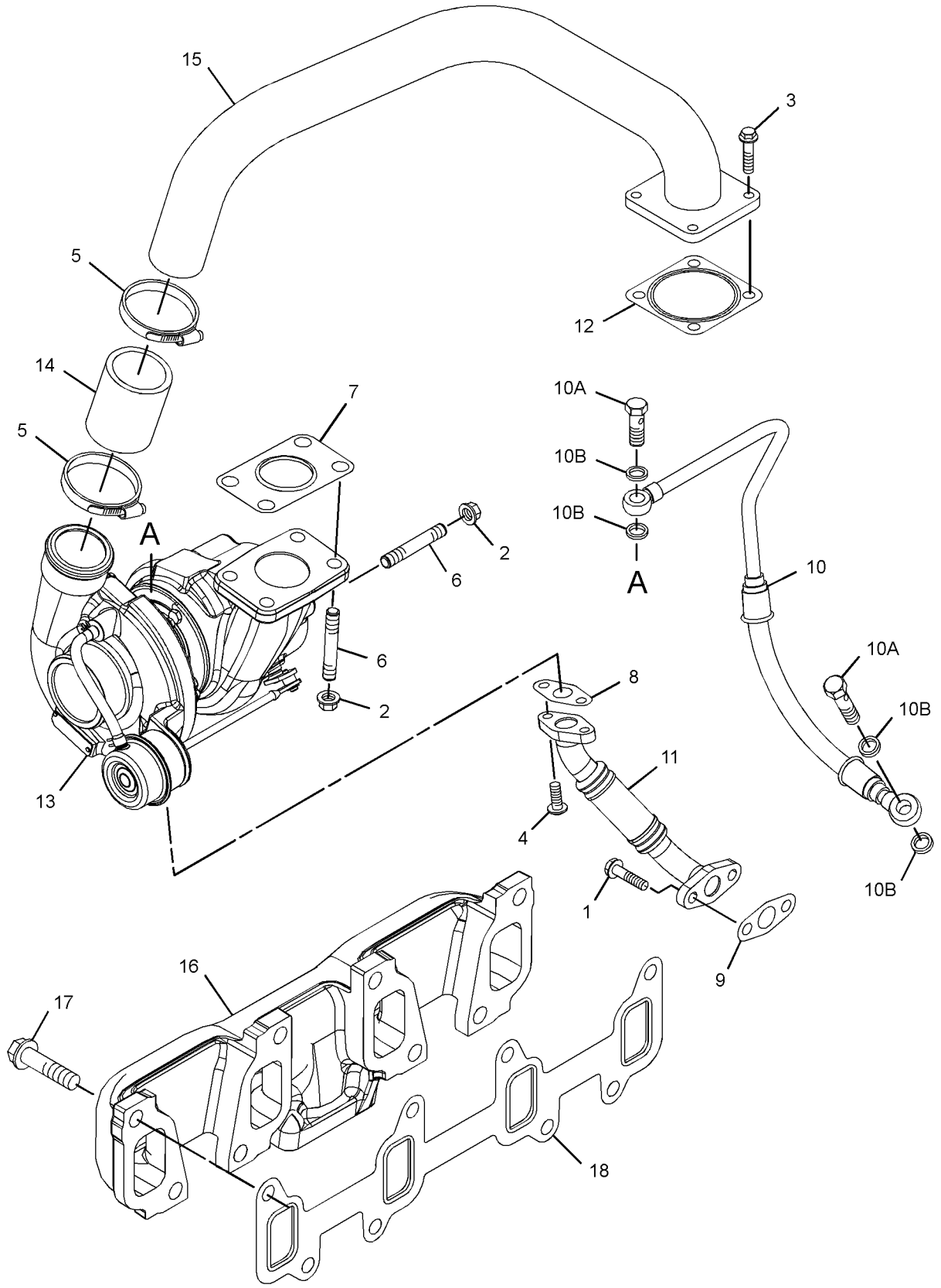

GRAPHIC #1 <END> g06741806

316-5634 TURBOCHARGER GP

SMCS-1052, 1053 **i08312553**

NOTE	REF NO	GRAPHIC REF	PART NUMBER	QTY	PART NAME 1 2 3 4 5 6 (PRODUCT LEVEL)	SEE PAGE
M	1	1	**6I-0217**	2	BOLT (M8X1.25X20-MM)	
M	2	1	**6I-0563**	7	NUT (M10X1.5-THD)	
M	3	1	**6I-0593**	2	BOLT (M10X1.5X30-MM)	
M	4	1	**6I-0654**	3	BOLT (M10X1.5X25-MM)	
M	5	1	**106-8916**	2	BOLT (M6X1X16-MM)	
	6	1	**361-7519**	7	ROD-THREADED	
M	7	1	**174-9638**	8	BOLT (M10X1.5X30-MM)	
	8	1	**194-5390**	1	GASKET-MANIFOLD	
	9	1	**225-8525**	1	TUBE AS	
M	9A	1	**225-8524**	2	BOLT-SPECIAL (M10X1.5X23-MM)	
	9B	1	**225-8526**	4	WASHER (10.4X13.75X1.37-MM THK)	
	10	1	**353-3477**	1	GASKET-TURBOCHARGER	
	11	1	**353-3478**	1	GASKET-TURBOCHARGER	
	12	1	**225-8536**	1	GASKET	
	13	1	**227-4562**	1	ELBOW-EXHAUST	
	14	1	**232-6189**	1	TUBE AS	
	15	1	**307-2805**	1	BRACKET	
	16	1	**243-4173**	1	TURBOCHARGER GP	
	17	1	**371-6059**	1	MANIFOLD-EXHAUST	
	18	1	**302-0581**	1	ADAPTER-EXHAUST	

M - METRIC PART

316-5634 **TURBOCHARGER GP** (contd.) **i08312553**

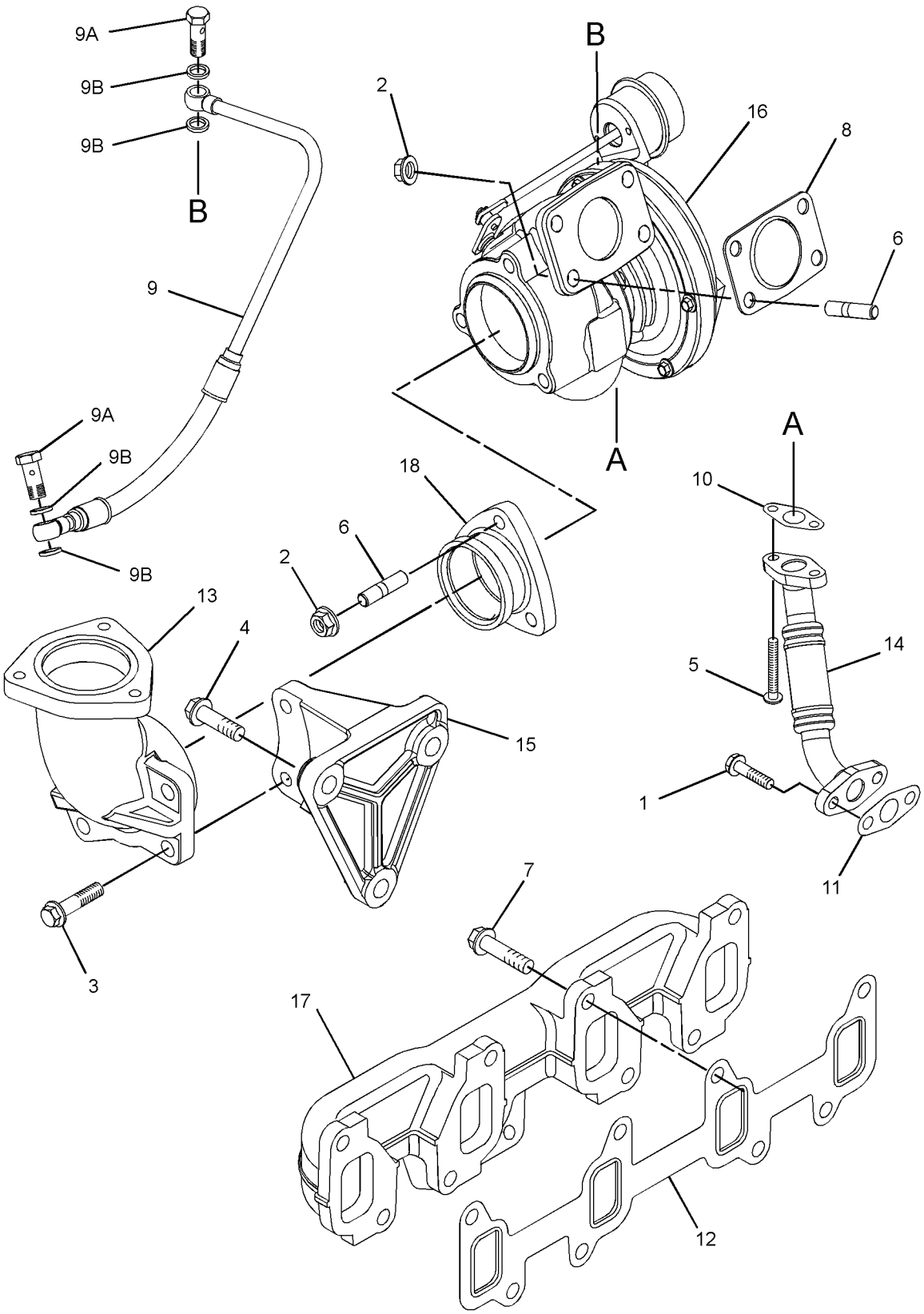

GRAPHIC #1 <END> g06755004

215-9512 CONNECTOR-HOSE—FUEL LINES

7.89-MM STRAIGHT MALE CONNECTOR. QUICK DISCONNECT
FIELD INSTALLATION

SMCS-7553 **i02140046**

NOTE	PART NUMBER	QTY	PART NAME 1 2 3 4 5 6 (PRODUCT LEVEL)	SEE PAGE
			(NO SERVICED PARTS)	
			<END>	

215-9513 CONNECTOR-HOSE—FUEL LINES

7.89-MM STRAIGHT FEMALE CONNECTOR. QUICK DISCONNECT
FIELD INSTALLATION

SMCS-7553 **i02140037**

NOTE	PART NUMBER	QTY	PART NAME 1 2 3 4 5 6 (PRODUCT LEVEL)	SEE PAGE
			(NO SERVICED PARTS)	
			<END>	

215-9515 CONNECTOR-HOSE—FUEL LINES

7.89-MM, 90-DEG ELBOW FEMALE CONNECTOR. QUICK DISCONNECT
FIELD INSTALLATION

SMCS-7553 **i02140044**

NOTE	PART NUMBER	QTY	PART NAME 1 2 3 4 5 6 (PRODUCT LEVEL)	SEE PAGE
			(NO SERVICED PARTS)	
			<END>	

260-3128 FILTER & LINES GP-FUEL

ALSO AN ATTACHMENT

TYPE 1

SMCS-1261, 1274 **i02359047**

NOTE	REF NO	GRAPHIC REF	PART NUMBER	QTY	PART NAME 1 2 3 4 5 6 (PRODUCT LEVEL)	SEE PAGE
	1	1	**033-7849**	2	PLUG	
	2	1	**067-6268**	2	NUT-FUEL LINE	
	3	1	**224-8978**	2	FITTING-COMPRESSION	
	4	1	**241-3359**	2	WASHER-SEALING (13.25X18.45X1.6-MM THK)	
Y	5	1	**252-6334**	1	FILTER GP-WATER SEP & FUEL	1168

Y - SEPARATE ILLUSTRATION

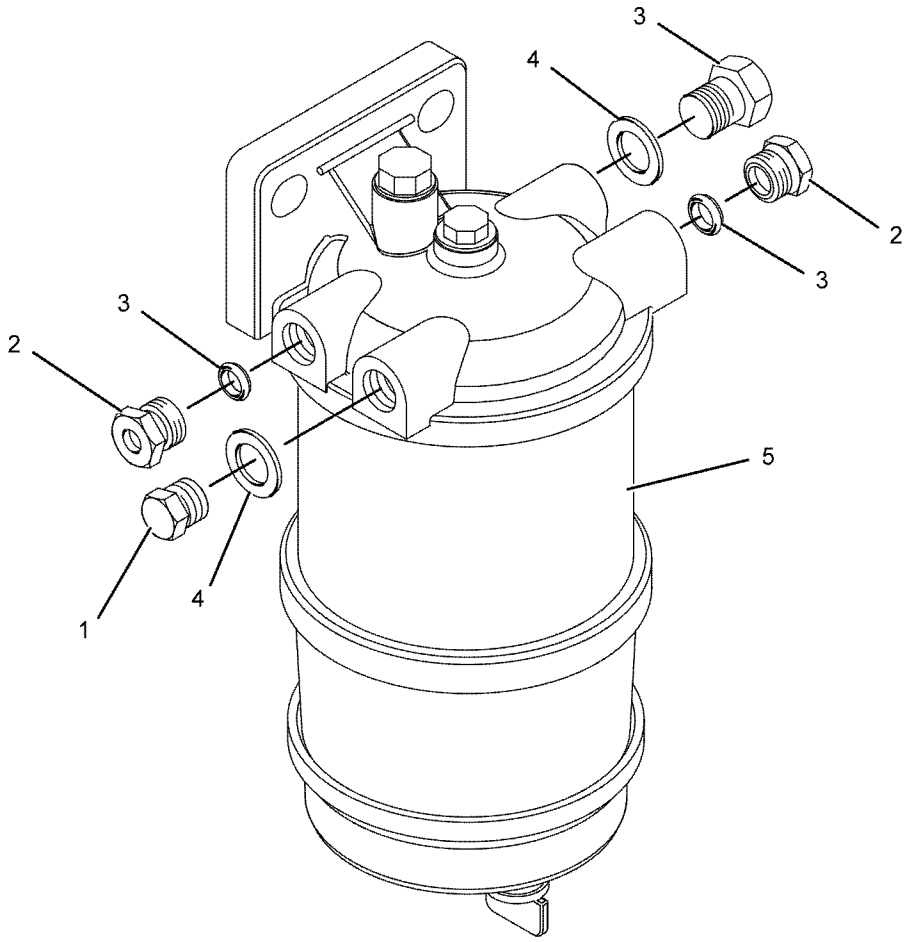

GRAPHIC #1 <END> g01119572

260-3128 FILTER & LINES GP-FUEL

ALSO AN ATTACHMENT
TYPE 2

SMCS-1261, 1274 **i06709319**

NOTE	REF NO	GRAPHIC REF	PART NUMBER	QTY	PART NAME 1 2 3 4 5 6 (PRODUCT LEVEL)	SEE PAGE
	1	1	**033-7849**	2	PLUG	
	2	1	**067-6268**	2	NUT-FUEL LINE	
	3	1	**224-8978**	2	FITTING-COMPRESSION	
	4	1	**241-3359**	2	WASHER-SEALING (13.25X18.45X1.6-MM THK)	
CY	5	1	**441-5108**	1	FILTER GP-FUEL	1167

C - CHANGE FROM PREVIOUS TYPE
Y - SEPARATE ILLUSTRATION

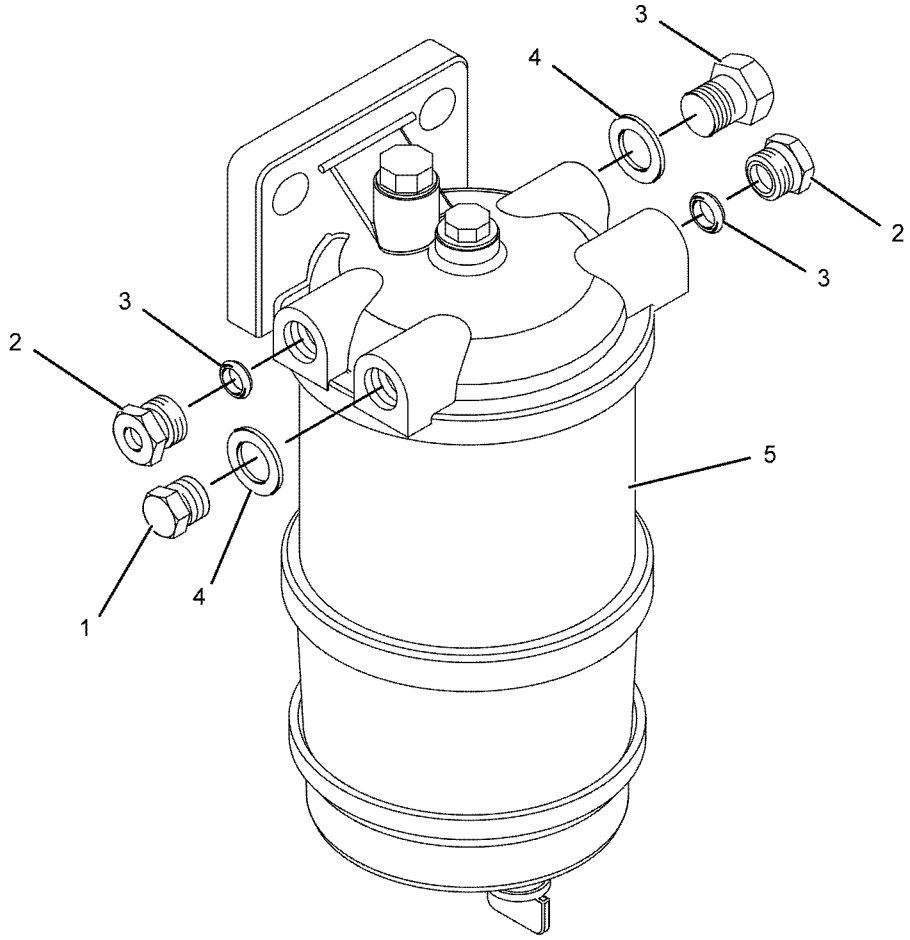

GRAPHIC #1 <END> g01119572

386-0189 FILTER AS-FUEL

PART OF 467-7011 KIT-FUEL PRIMING PUMP
ALSO AN ATTACHMENT

SMCS-1261 **i07861928**

NOTE	REF NO	GRAPHIC REF	PART NUMBER	QTY	PART NAME 1 2 3 4 5 6 (PRODUCT LEVEL)	SEE PAGE
	1	1	**395-3437**	1	VALVE AS-DRAIN (FUEL FILTER)	
	2	1	**395-3439**	1	BOWL AS (FUEL FILTER)	
	3	1	**1R-1804**	1	FILTER ELEMENT-WTR SEP & FUEL	
	3A	1	**207-2757**	1	SEAL	
	4	1	**387-6403**	1	STRAINER (FUEL FILTER)	

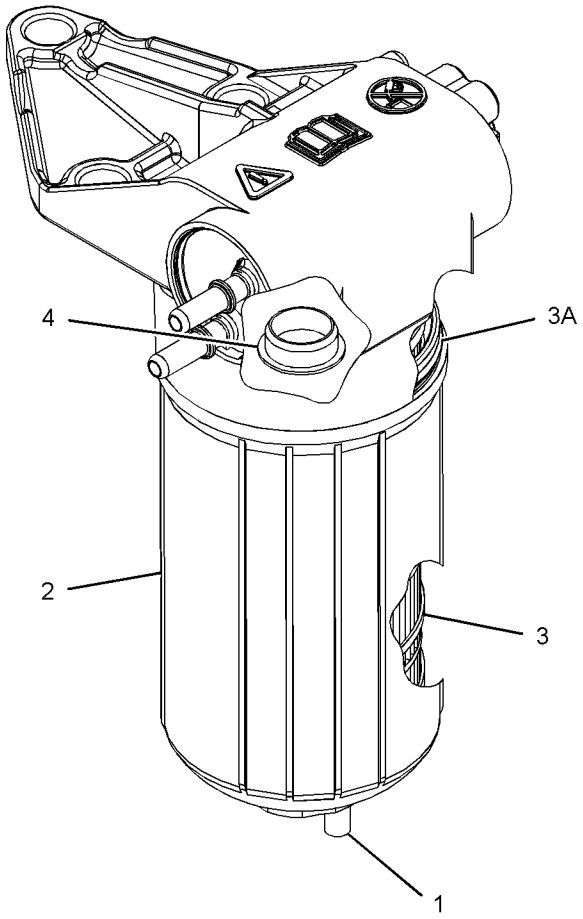

GRAPHIC #1 <END> g03596859

233-9832 FILTER GP-FUEL

S/N: 334281-UP

AN ATTACHMENT

SMCS-1261 **i03196705**

NOTE	REF NO	GRAPHIC REF	PART NUMBER	QTY	PART NAME 1 2 3 4 5 6 (PRODUCT LEVEL)	SEE PAGE
M	1	1	**106-8916**	2	BOLT (M6X1X16-MM)	
M	2	1	**120-6872**	3	BOLT (M6X1X40-MM)	
	3	1	**154-8045**	2	NUT	
	4	1	**318-2365**	1	CLIP	
	5	1	**215-9508**	1	FITTING (QUICK DISCONNECT, FEMALE)	
	6	1	**215-9509**	1	FITTING (QUICK DISCONNECT, MALE)	
	7	1	**217-9039**	2	STRAP-CABLE	
	8	1	**226-8773**	1	REGULATOR AS-VOLTAGE (24-VOLT) (FUEL FILTER)	
C	9	1	**232-1115**	2	CLIP-PIPE	
	10	1	**232-3126**	1	CLIP	
Y	11	1	**299-9265**	1	PUMP GP-FUEL PRM & PRIM FILTER	1516
	12	1	**232-9758**	3	WASHER (6.51X17.785X1.6-MM THK)	
	13	1	**232-9759**	1	LINE AS-FUEL INJECTION (LOW PRESSURE FEED)	
	14	1	**233-9831**	1	BRACKET	
C	15	1	**237-0284**	1	LINE AS-FUEL (LOW PRESSURE RETURN)	
C	16	1	**237-0285**	1	BRACKET	
C	17	1	**237-0286**	1	PLUG	

C - CHANGE FROM PREVIOUS TYPE
M - METRIC PART
Y - SEPARATE ILLUSTRATION

233-9832 **FILTER GP-FUEL (**contd.**)** **i03196705**

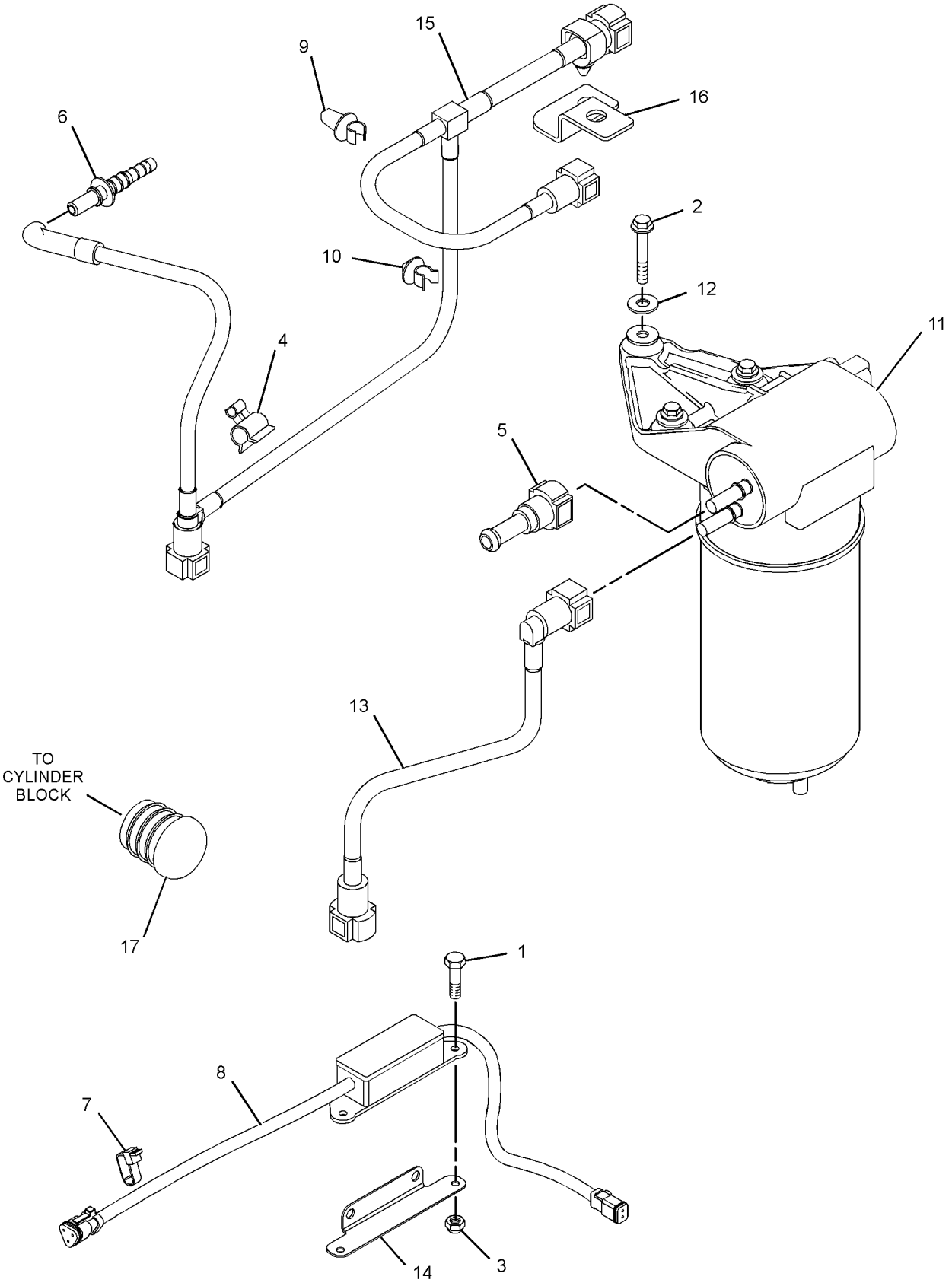

GRAPHIC #1 <END> g01721853

234-2431 FILTER GP-FUEL

S/N: 3341-280

SMCS-1261 **i02064175**

NOTE	REF NO	GRAPHIC REF	PART NUMBER	QTY	PART NAME 1 2 3 4 5 6 (PRODUCT LEVEL)	SEE PAGE
M	1	1	**6I-0456**	1	BOLT (M8X1.25X45-MM)	
M	2	1	**120-6872**	3	BOLT (M6X1X40-MM)	
	4	1	**167-7418**	1	SPACER (8.3X18X30-MM THK)	
	5	1	**215-9508**	1	FITTING (QUICK DISCONNECT, FEMALE)	
	6	1	**215-9509**	1	FITTING (QUICK DISCONNECT, MALE)	
	7	1	**232-3126**	1	CLIP	
	8	1	**232-7808**	1	PUMP AS-FUEL TRANSFER	
	8A	1	**1R-1804**	1	FILTER ELEMENT-WTR SEP & FUEL	
	9	1	**232-9758**	3	WASHER (6.51X17.785X1.6-MM THK)	
	10	1	**232-9759**	1	LINE AS-FUEL INJECTION (LOW PRESSURE FEED)	
	11	1	**232-9760**	1	LINE AS-FUEL	
	12	1	**232-9762**	1	BRACKET	

M - METRIC PART

234-2431 **FILTER GP-FUEL (**contd.**)** **i02064175**

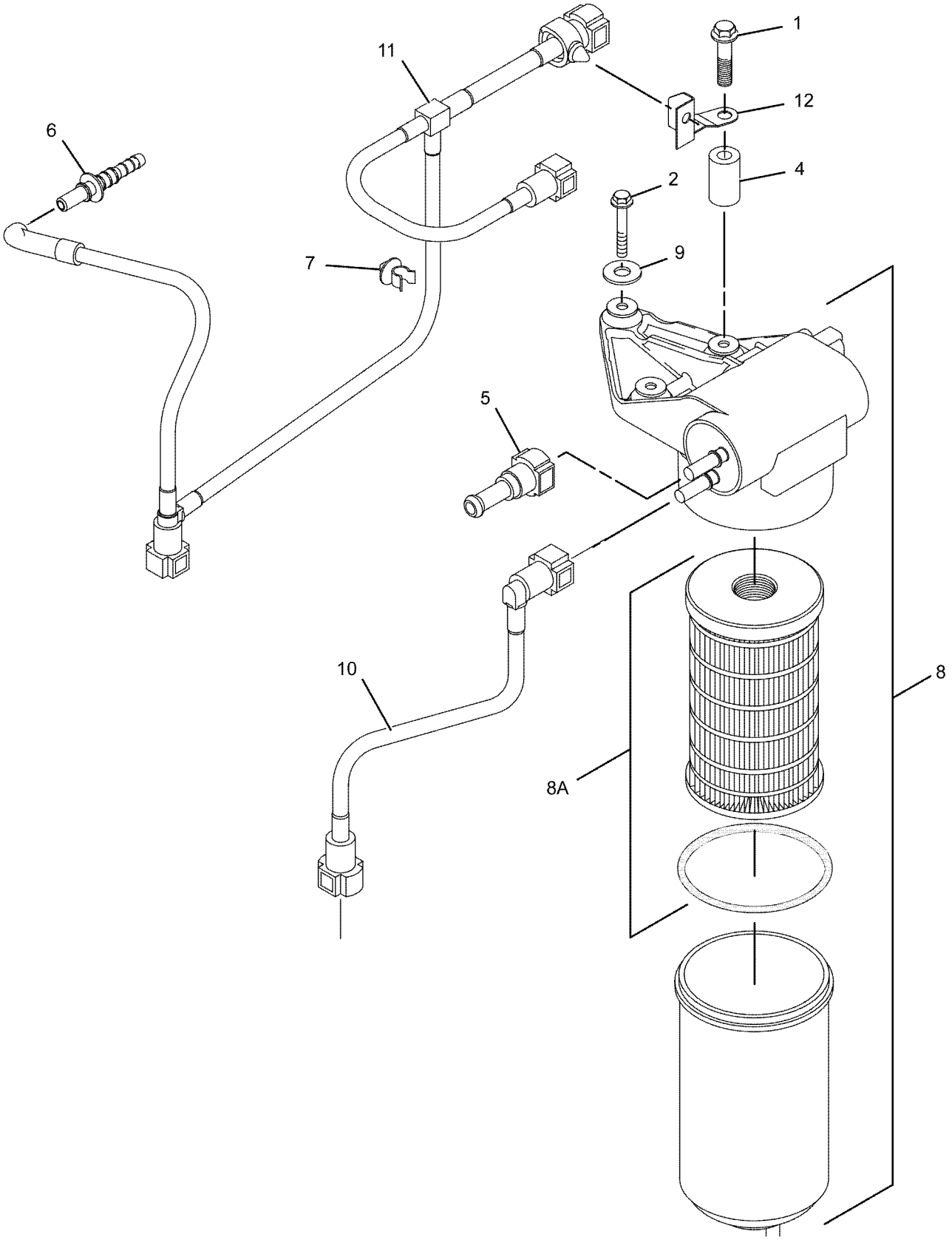

GRAPHIC #1 <END> g01066634

234-2431 FILTER GP-FUEL

TYPE 1

SMCS-1261 **i02049468**

NOTE	REF NO	GRAPHIC REF	PART NUMBER	QTY	PART NAME 1 2 3 4 5 6 (PRODUCT LEVEL)	SEE PAGE
M	1	1	**120-6872**	3	BOLT (M6X1X40-MM)	
	3	1	**215-9508**	1	FITTING (QUICK DISCONNECT, FEMALE)	
	4	1	**215-9509**	1	FITTING (QUICK DISCONNECT, MALE)	
C	5	1	**232-1115**	2	CLIP-PIPE	
	6	1	**232-3126**	1	CLIP	
	7	1	**238-8864**	1	PUMP GP-FUEL PRIMING	
	7A	1	**1R-1804**	1	FILTER ELEMENT-WTR SEP & FUEL	
	8	1	**232-9758**	3	WASHER (6.51X17.785X1.6-MM THK)	
	9	1	**232-9759**	1	LINE AS-FUEL INJECTION (LOW PRESSURE FEED)	
C	10	1	**237-0284**	1	LINE AS-FUEL (LOW PRESSURE RETURN)	
C	11	1	**237-0285**	1	BRACKET	
C	12	1	**237-0286**	1	PLUG	

C - CHANGE FROM PREVIOUS TYPE
M - METRIC PART

234-2431 **FILTER GP-FUEL (**contd.**)** **i02049468**

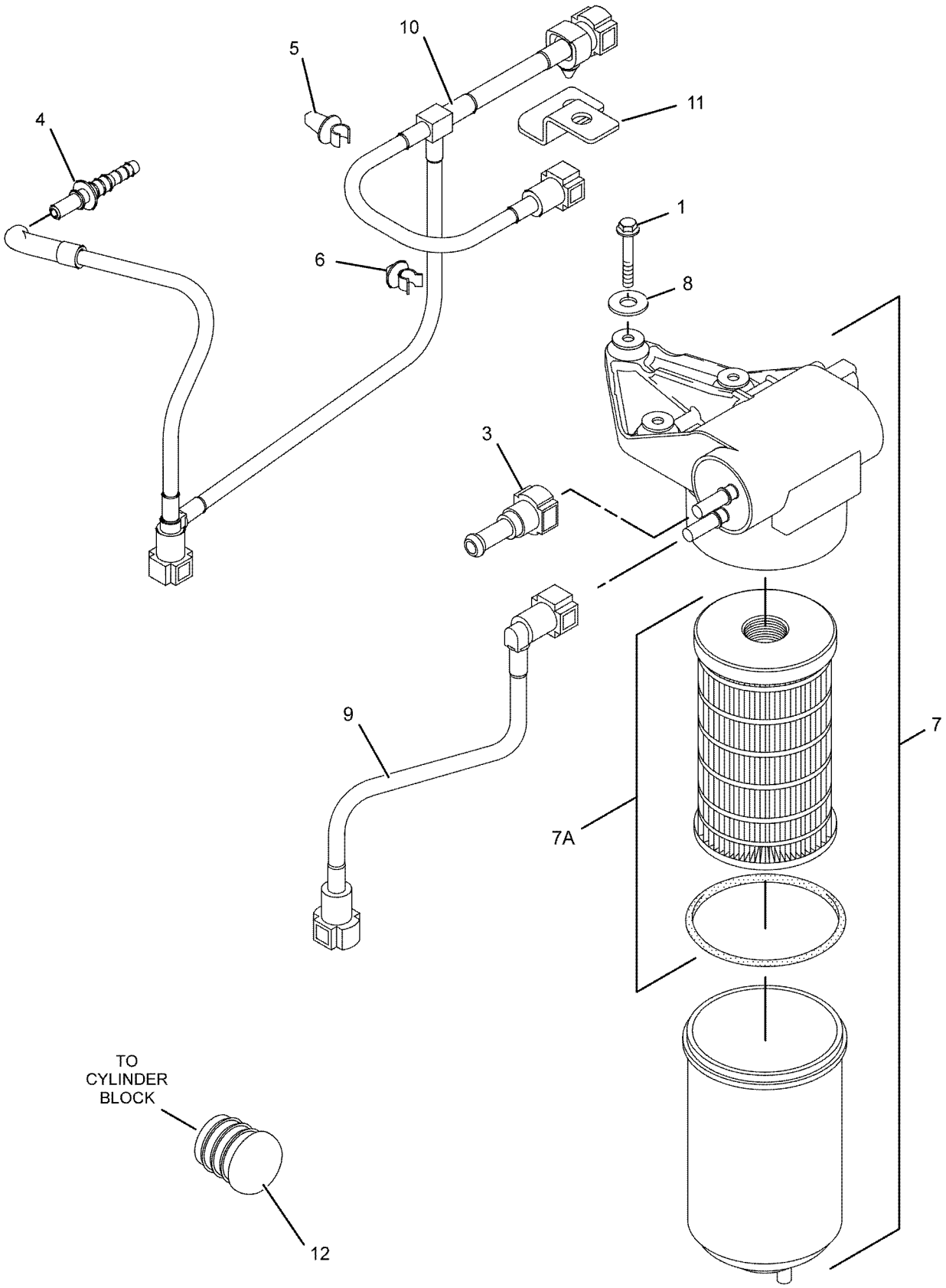

GRAPHIC #1 <END> g01066940

234-2431 FILTER GP-FUEL
TYPE 2

SMCS-1261 **i04525124**

NOTE	REF NO	GRAPHIC REF	PART NUMBER	QTY	PART NAME 1 2 3 4 5 6 (PRODUCT LEVEL)	SEE PAGE
JM	1	1	**120-6872**	3	BOLT (M6X1X40-MM)	
C	2	1	**311-6822**	1	CLIP-TUBE	
	3	1	**215-9508**	1	FITTING (QUICK DISCONNECT, FEMALE)	
	4	1	**215-9509**	1	FITTING (QUICK DISCONNECT, MALE)	
C	5	1	**232-1115**	1	CLIP-PIPE	
	6	1	**232-3126**	1	CLIP	
J	8	1	**232-9758**	3	WASHER (6.51X17.785X1.6-MM THK)	
	9	1	**232-9759**	1	LINE AS-FUEL INJECTION (LOW PRESSURE FEED)	
	10	1	**237-0284**	1	LINE AS-FUEL (LOW PRESSURE RETURN)	
	11	1	**237-0285**	1	BRACKET	
	12	1	**237-0286**	1	PLUG	
					AVAILABLE REPAIR KIT(S):	
J			**240-9756**	1	KIT-MOUNTING (FUEL PRIMING PUMP)	
			357-4187	1	KIT-FUEL PRIMING PUMP	
					(INCLUDES SPACERS & ISOLATORS)	

C - CHANGE FROM PREVIOUS TYPE
J - PARTS MARKED J INCLUDED IN KIT MARKED J
M - METRIC PART

234-2431 **FILTER GP-FUEL (**contd.**)** **i04525124**

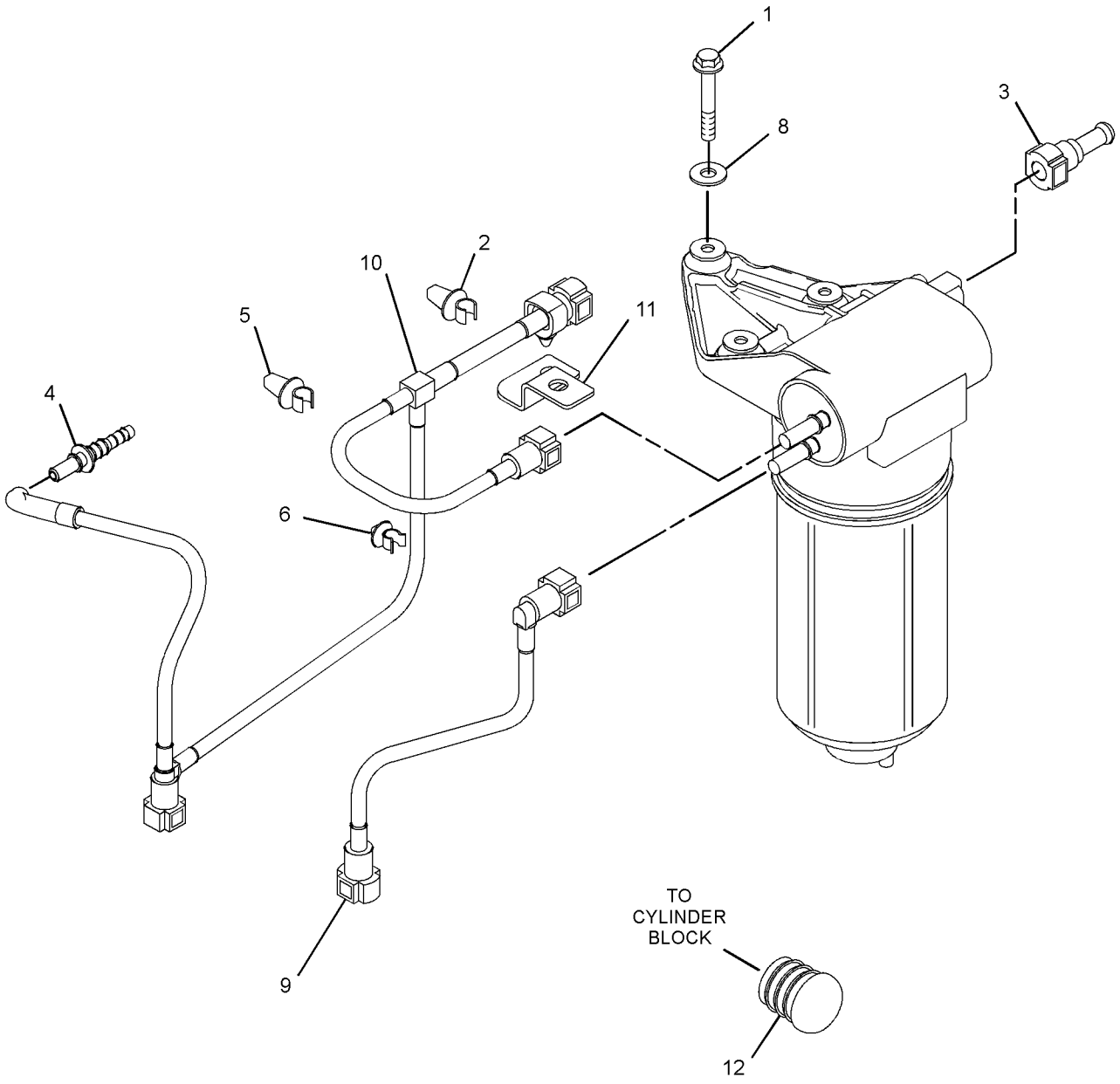

GRAPHIC #1 <END> g02711655

234-2431 FILTER GP-FUEL
TYPE 3

SMCS-1261 **i05976710**

NOTE	REF NO	GRAPHIC REF	PART NUMBER	QTY	PART NAME 1 2 3 4 5 6 (PRODUCT LEVEL)	SEE PAGE
JM	1	1	**120-6872**	3	BOLT (M6X1X40-MM)	
	2	1	**311-6822**	1	CLIP-TUBE	
	3	1	**215-9508**	1	FITTING (QUICK DISCONNECT, FEMALE)	
	4	1	**215-9509**	1	FITTING (QUICK DISCONNECT, MALE)	
	5	1	**232-1115**	1	CLIP-PIPE	
	6	1	**232-3126**	1	CLIP	
	7	1	**237-0286**	1	PLUG	
J	8	1	**232-9758**	3	WASHER (6.51X17.785X1.6-MM THK)	
	9	1	**232-9759**	1	LINE AS-FUEL INJECTION (LOW PRESSURE FEED)	
	10	1	**237-0284**	1	LINE AS-FUEL (LOW PRESSURE RETURN)	
	11	1	**237-0285**	1	BRACKET	
					AVAILABLE REPAIR KIT(S):	
J			**240-9756**	1	KIT-MOUNTING (FUEL PRIMING PUMP)	
CY			**467-7011**	1	KIT-FUEL PRIMING PUMP	1169

C - CHANGE FROM PREVIOUS TYPE
J - PARTS MARKED J INCLUDED IN KIT MARKED J
M - METRIC PART
Y - SEPARATE ILLUSTRATION

234-2431 **FILTER GP-FUEL (**contd.**)** **i05976710**

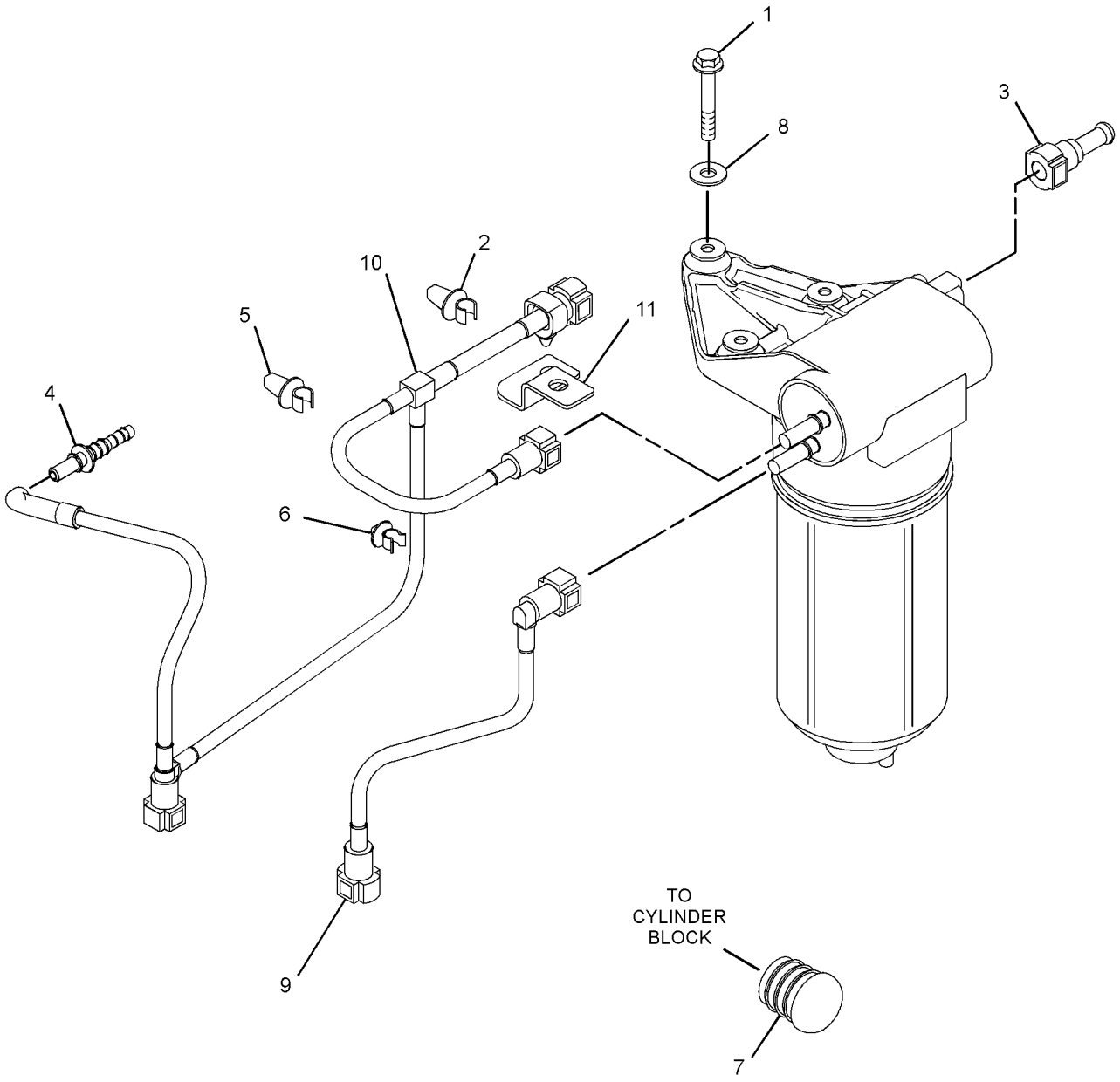

GRAPHIC #1 <END> g03747022

243-4334 FILTER GP-FUEL

TYPE 1

SMCS-1261 **i02853849**

NOTE	REF NO	GRAPHIC REF	PART NUMBER	QTY	PART NAME 1 2 3 4 5 6 (PRODUCT LEVEL)	SEE PAGE
	1	1	**215-9508**	1	FITTING (QUICK DISCONNECT, FEMALE)	
	2	1	**215-9509**	1	FITTING (QUICK DISCONNECT, MALE)	
	3	1	**232-1115**	1	CLIP-PIPE	
	4	1	**233-7421**	1	LINE AS-FUEL	
	5	1	**274-5043**	1	TUBE	
	6	1	**237-0285**	1	BRACKET	
Y	7	1	**270-6992**	1	PUMP GP-FUEL PRM & PRIM FILTER	1515
JM	8	1	**120-6872**	2	BOLT (M6X1X40-MM)	
J	9	1	**232-9758**	2	WASHER (6.51X17.785X1.6-MM THK)	
	10	1	**235-6281**	2	TIE-CABLE	
					AVAILABLE REPAIR KIT(S):	
J			**240-9756**	1	KIT-MOUNTING (FUEL PRIMING PUMP)	

J - KIT MARKED J COANTAINS PARTS MARKED J
M - METRIC PART
Y - SEPARATE ILLUSTRATION

243-4334 **FILTER GP-FUEL (**contd.**)** **i02853849**

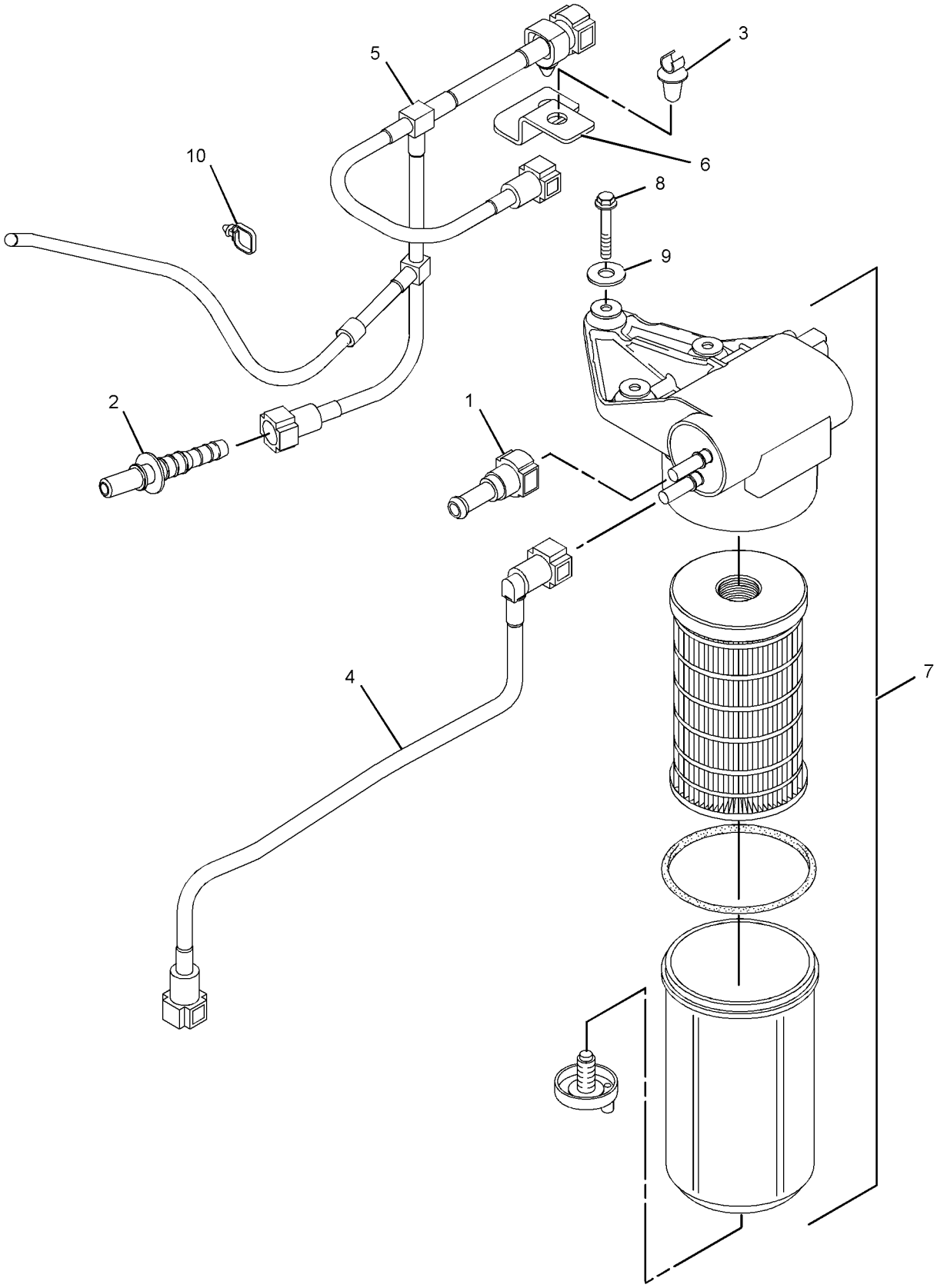

GRAPHIC #1 <END> g01421397

243-4334 FILTER GP-FUEL
TYPE 2

SMCS-1261 **i06061106**

NOTE	REF NO	GRAPHIC REF	PART NUMBER	QTY	PART NAME 1 2 3 4 5 6 (PRODUCT LEVEL)	SEE PAGE
	1	1	**215-9508**	1	FITTING (QUICK DISCONNECT, FEMALE)	
	2	1	**215-9509**	1	FITTING (QUICK DISCONNECT, MALE)	
C	3	1	**311-6822**	2	CLIP-TUBE	
	4	1	**233-7421**	1	LINE AS-FUEL	
	5	1	**274-5043**	1	TUBE	
	6	1	**237-0285**	1	BRACKET	
	7	1	**235-6281**	2	TIE-CABLE	
JM	8	1	**120-6872**	2	BOLT (M6X1X40-MM)	
J	9	1	**232-9758**	2	WASHER (6.51X17.785X1.6-MM THK)	
					AVAILABLE REPAIR KIT(S):	
Y			**467-7011**	1	KIT-FUEL PRIMING PUMP	1169
J			**240-9756**	1	KIT-MOUNTING (FUEL PRIMING PUMP)	

C - CHANGE FROM PREVIOUS TYPE
J - KIT MARKED J COANTAINS PARTS MARKED J
M - METRIC PART
Y - SEPARATE ILLUSTRATION

243-4334 **FILTER GP-FUEL (**contd.**)** **i06061106**

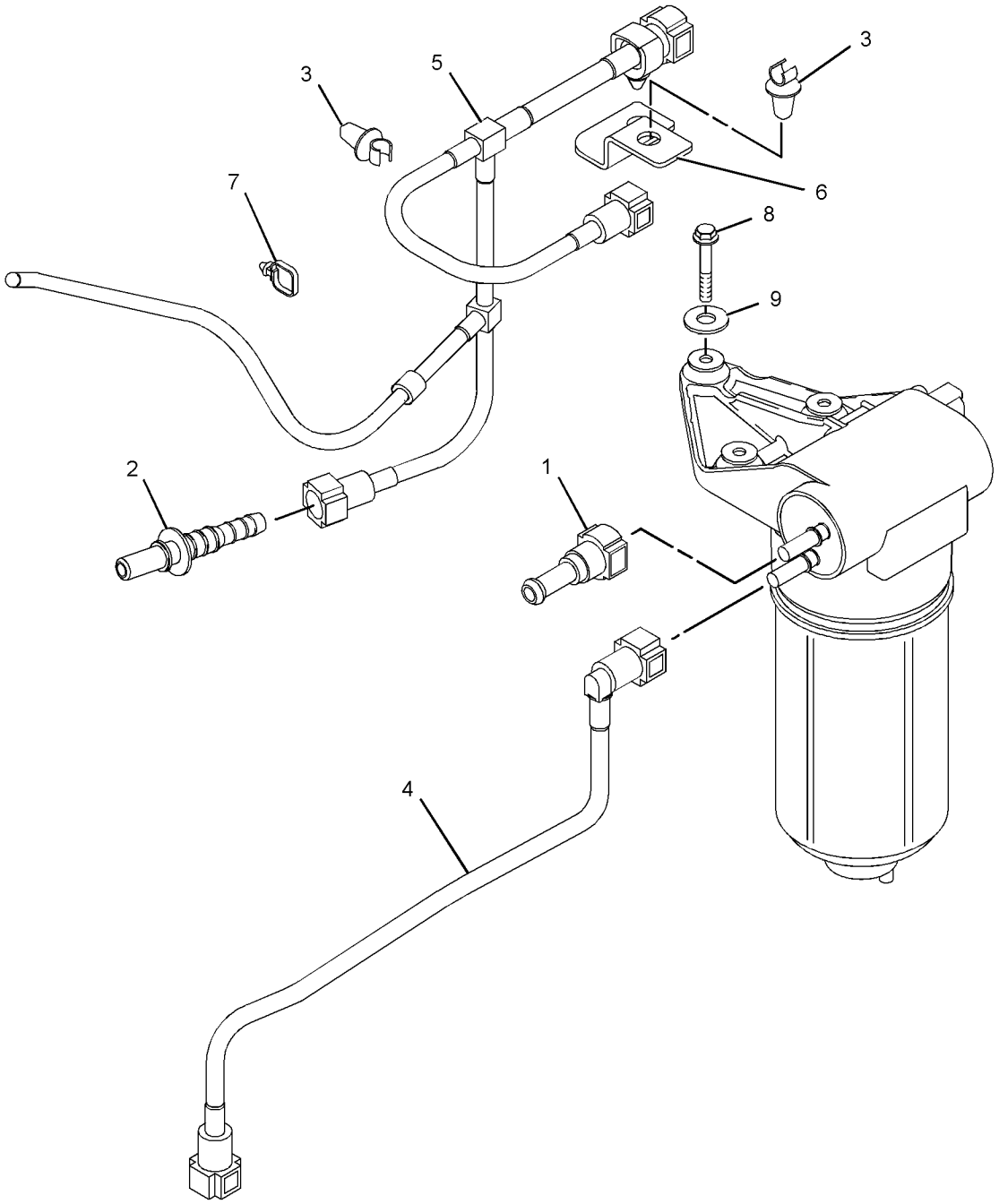

GRAPHIC #1 <END> g02707298

298-7693 FILTER GP-FUEL

TYPE 1

SMCS-1261 **i02645890**

NOTE	REF NO	GRAPHIC REF	PART NUMBER	QTY	PART NAME 1 2 3 4 5 6 (PRODUCT LEVEL)	SEE PAGE
	1	1	**232-3126**	1	CLIP	
JM	2	1	**120-6872**	3	BOLT (M6X1X40-MM)	
J	3	1	**232-9758**	3	WASHER (6.51X17.785X1.6-MM THK)	
	4	1	**247-4884**	1	TUBE AS	
	5	1	**270-6992**	1	PUMP GP-FUEL PRM & PRIM FILTER	
		1	**207-2757**	1	SEAL	
	5A	1	**1R-1804**	1	FILTER ELEMENT-WTR SEP & FUEL (WATER SEPARATOR)	
	5B	1	**221-2014**	1	BOWL AS	
	5C	1	**222-6617**	1	DRAIN AS (WATER SEPARATOR)	
FJ			**240-9756**	1	KIT-MOUNTING (FUEL PRIMING PUMP)	

F - NOT SHOWN
J - PARTS MARKED J INCLUDED IN KIT MARKED J
M - METRIC PART

298-7693 **FILTER GP-FUEL (**contd.**)** **i02645890**

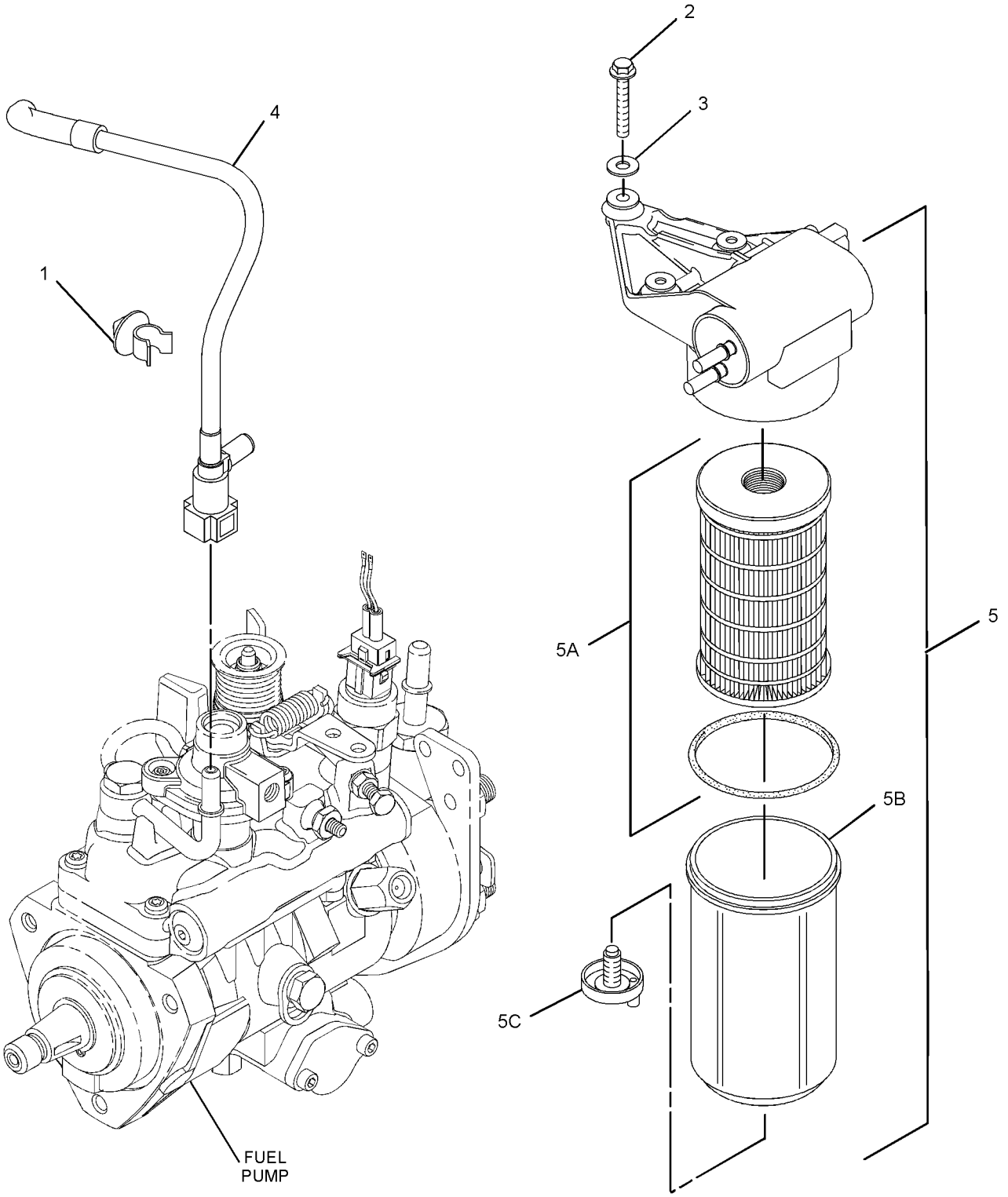

GRAPHIC #1 <END> g01313684

298-7693 FILTER GP-FUEL
TYPE 2

SMCS-1261 **i04525112**

NOTE	REF NO	GRAPHIC REF	PART NUMBER	QTY	PART NAME 1 2 3 4 5 6 (PRODUCT LEVEL)	SEE PAGE
	1	1	**232-3126**	1	CLIP	
JM	2	1	**120-6872**	3	BOLT (M6X1X40-MM)	
J	3	1	**232-9758**	3	WASHER (6.51X17.785X1.6-MM THK)	
	4	1	**247-4884**	1	TUBE AS	
					AVAILABLE REPAIR KIT(S):	
J			**240-9756**	1	KIT-MOUNTING (FUEL PRIMING PUMP)	
			357-4187	1	KIT-FUEL PRIMING PUMP	
					(INCLUDES SPACERS & ISOLATORS)	

J - PARTS MARKED J INCLUDED IN KIT MARKED J
M - METRIC PART

298-7693 **FILTER GP-FUEL (**contd.**)** **i04525112**

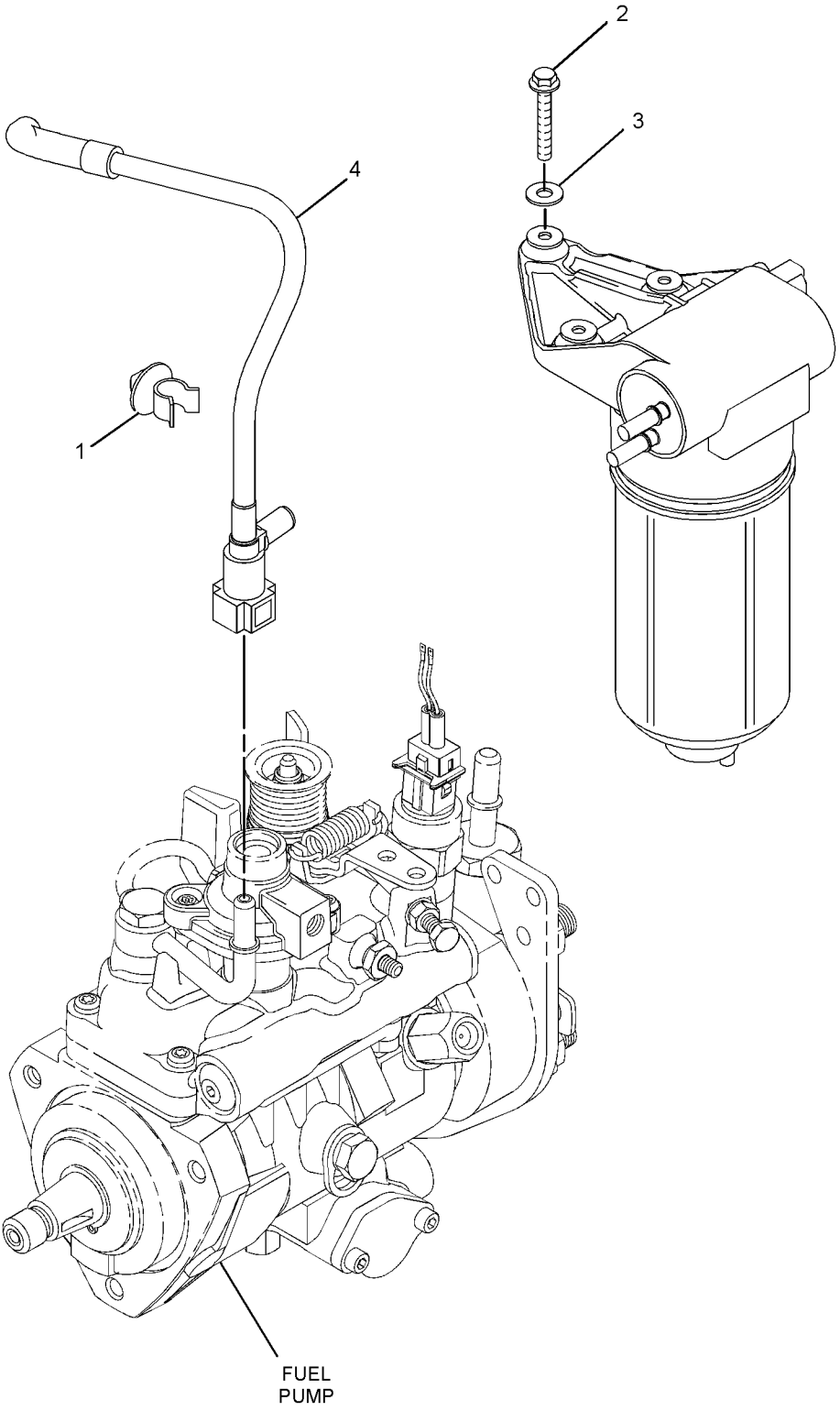

GRAPHIC #1 <END> g02708364

298-7693 FILTER GP-FUEL

TYPE 3

SMCS-1261 **i05983148**

NOTE	REF NO	GRAPHIC REF	PART NUMBER	QTY	PART NAME 1 2 3 4 5 6 (PRODUCT LEVEL)	SEE PAGE
	1	1	**232-3126**	1	CLIP	
JM	2	1	**120-6872**	3	BOLT (M6X1X40-MM)	
J	3	1	**232-9758**	3	WASHER (6.51X17.785X1.6-MM THK)	
	4	1	**247-4884**	1	TUBE AS	
					AVAILABLE REPAIR KIT(S):	
J			**240-9756**	1	KIT-MOUNTING (FUEL PRIMING PUMP)	
CY			**467-7011**	1	KIT-FUEL PRIMING PUMP	1169

C - CHANGE FROM PREVIOUS TYPE
J - PARTS MARKED J INCLUDED IN KIT MARKED J
M - METRIC PART
Y - SEPARATE ILLUSTRATION

298-7693 **FILTER GP-FUEL (**contd.**)** **i05983148**

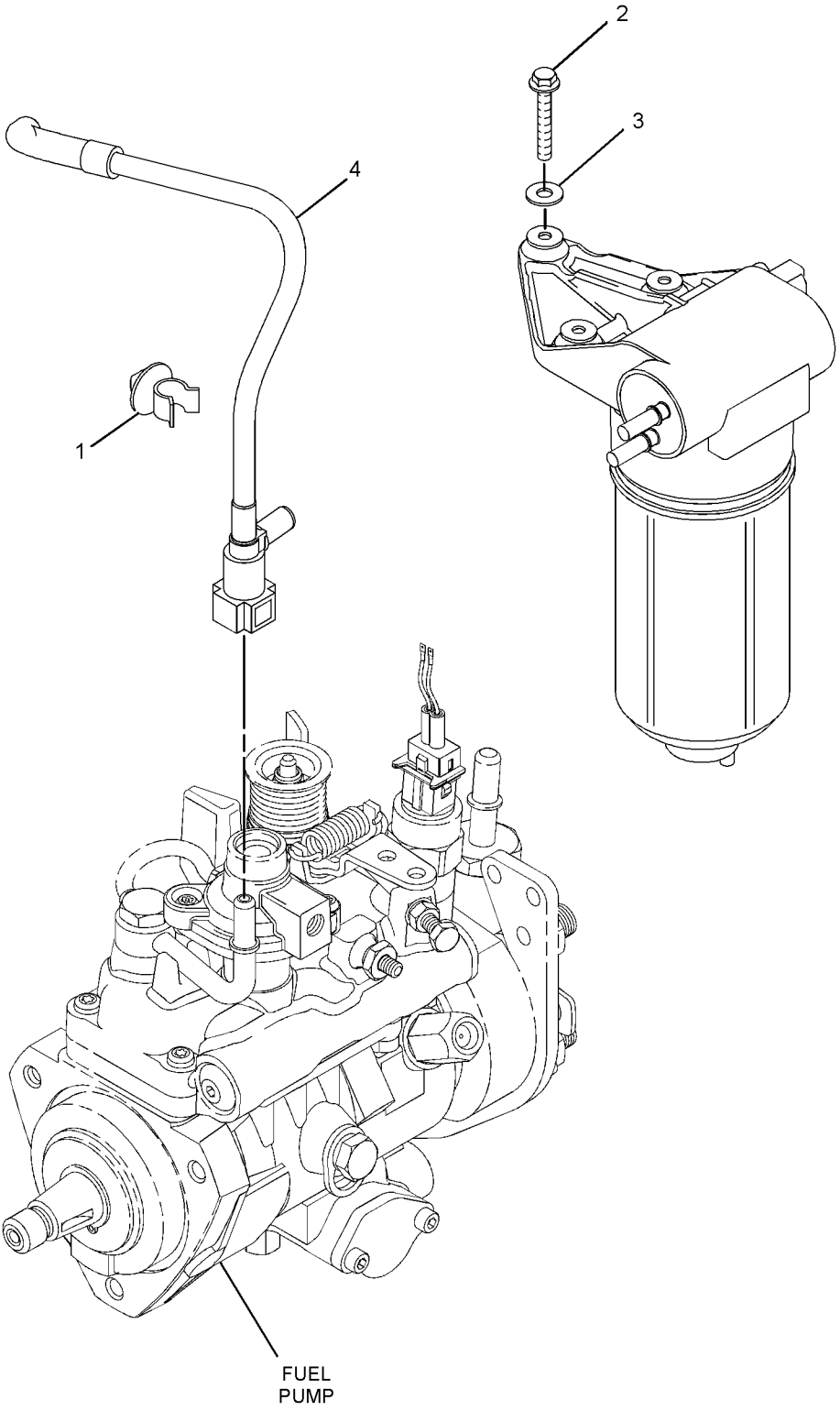

GRAPHIC #1 <END> g02708364

328-8204 FILTER GP-FUEL

TYPE 1

SMCS-1261 **i04525139**

NOTE	REF NO	GRAPHIC REF	PART NUMBER	QTY	PART NAME 1 2 3 4 5 6 (PRODUCT LEVEL)	SEE PAGE
	1	1	**215-9508**	1	FITTING (QUICK DISCONNECT, FEMALE)	
	2	1	**215-9509**	1	FITTING (QUICK DISCONNECT, MALE)	
	3	1	**232-3126**	1	CLIP	
	4	1	**232-9759**	1	LINE AS-FUEL INJECTION (LOW PRESSURE FEED)	
	5	1	**237-0284**	1	LINE AS-FUEL (LOW PRESSURE RETURN)	
	6	1	**237-0285**	1	BRACKET	
	7	1	**237-0286**	1	PLUG	
	8	1	**311-6822**	1	CLIP-TUBE	
					AVAILABLE REPAIR KIT(S):	
			240-9756	1	KIT-MOUNTING (FUEL PRIMING PUMP)	
					(INCLUDES BOLTS & WASHERS)	
			357-4187	1	KIT-FUEL PRIMING PUMP	
					(INCLUDES SPACERS & ISOLATORS)	

328-8204 **FILTER GP-FUEL (**contd.**)** **i04525139**

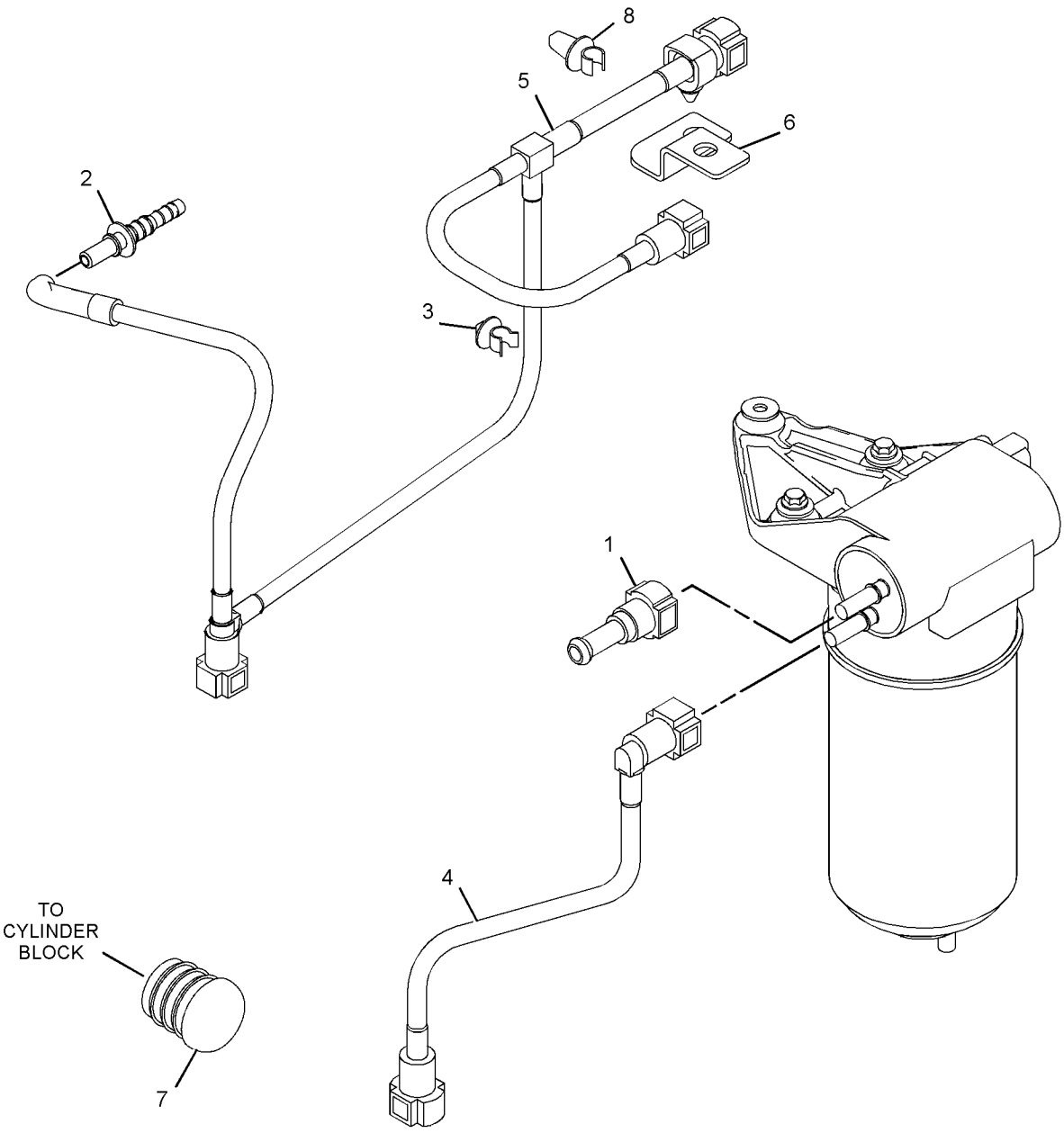

GRAPHIC #1 <END> g02707498

328-8204 FILTER GP-FUEL

TYPE 2

SMCS-1261 **i08687072**

NOTE	REF NO	GRAPHIC REF	PART NUMBER	QTY	PART NAME 1 2 3 4 5 6 (PRODUCT LEVEL)	SEE PAGE
	1	1	**215-9508**	1	FITTING (QUICK DISCONNECT, FEMALE)	
	2	1	**215-9509**	1	FITTING (QUICK DISCONNECT, MALE)	
	3	1	**232-1115**	1	CLIP-PIPE	
	4	1	**232-9759**	1	LINE AS-FUEL INJECTION (LOW PRESSURE FEED)	
	5	1	**237-0284**	1	LINE AS-FUEL (LOW PRESSURE RETURN)	
	6	1	**237-0285**	1	BRACKET	
	7	1	**237-0286**	1	PLUG	
	8	1	**311-6822**	1	CLIP-TUBE	
					AVAILABLE REPAIR KIT(S):	
			240-9756	1	KIT-MOUNTING (FUEL PRIMING PUMP)	
					(INCLUDES BOLTS & WASHERS)	
CY			**467-7011**	1	KIT-FUEL PRIMING PUMP	1169

C - CHANGE FROM PREVIOUS TYPE
Y - SEPARATE ILLUSTRATION

328-8204 **FILTER GP-FUEL (**contd.**)** **i08687072**

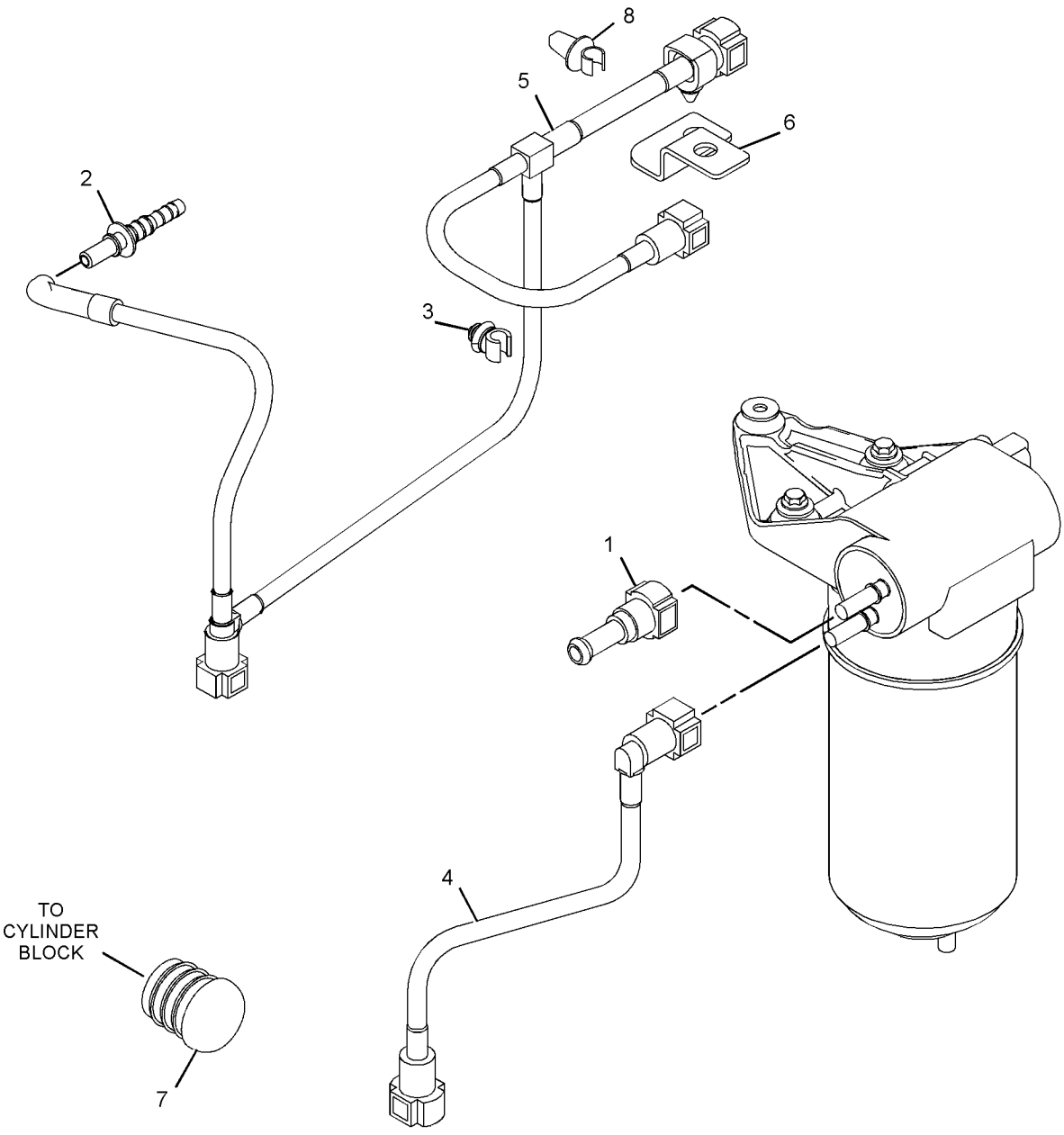

GRAPHIC #1 <END> g07513517

441-5108 FILTER GP-FUEL

WATER SEPARATOR
PART OF 260-3128 FILTER & LINES GP-FUEL
ALSO AN ATTACHMENT

SMCS-1261 **i09769093**

NOTE	REF NO	GRAPHIC REF	PART NUMBER	QTY	PART NAME 1 2 3 4 5 6 (PRODUCT LEVEL)	SEE PAGE
	1	1	**214-8857**	1	PLUG	
	2	1	**441-5111**	1	FILTER AS-FUEL (WATER SEPARATOR)	

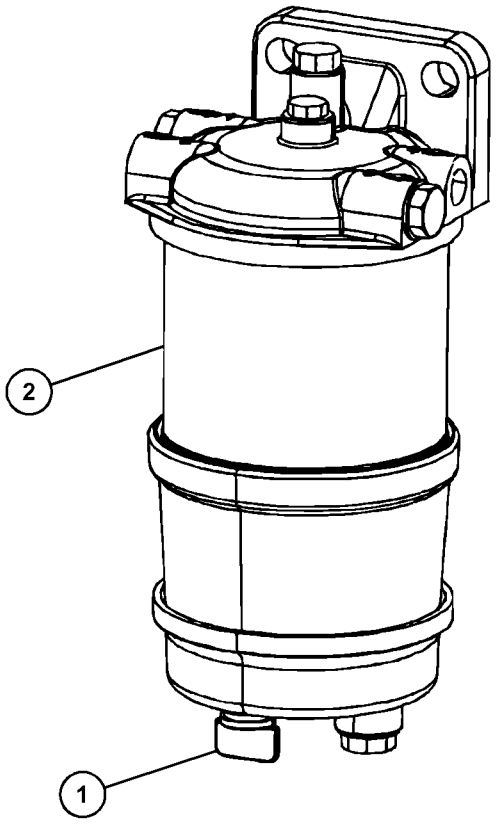

GRAPHIC #1 <END> g07586051

252-6334 FILTER GP-WATER SEP & FUEL

PART OF 260-3128 FILTER & LINES GP-FUEL

ALSO AN ATTACHMENT

SMCS-1261, 1263 **i05841378**

NOTE	REF NO	GRAPHIC REF	PART NUMBER	QTY	PART NAME 1 2 3 4 5 6 (PRODUCT LEVEL)	SEE PAGE
	1	1	**441-5111**	1	FILTER AS-FUEL (FUEL FILTER, WATER SEPARATOR)	

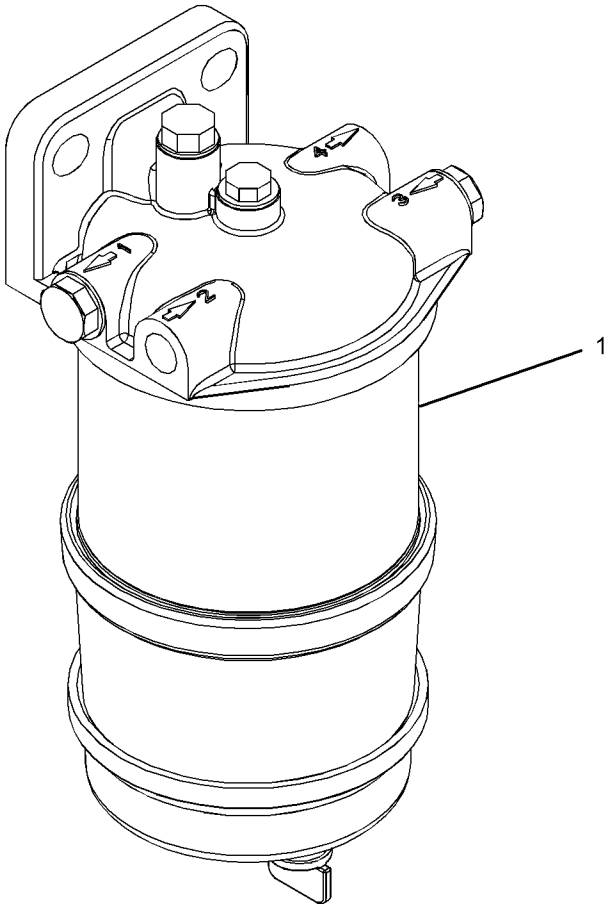

GRAPHIC #1 <END> g03695168

357-4187 KIT-FUEL PRIMING PUMP

S/N: 33416200-UP

PART OF 353-9830 PUMP GP-FUEL PRM & PRIM FILTER

SMCS-1258 **i05781381**

NOTE	PART NUMBER	QTY	PART NAME 1 2 3 4 5 6 (PRODUCT LEVEL)	SEE PAGE
Y	*299-9265*	1	PUMP GP-FUEL PRM & PRIM FILTER	1516

Y - SEPARATE ILLUSTRATION

<END>

467-7011 KIT-FUEL PRIMING PUMP

PART OF 234-2431, 243-4334, 298-7693, 328-8204 FILTER GP-FUEL, 233-7425, 233-9417, 353-9830 PUMP GP-FUEL PRM & PRIM FILTER

ALSO AN ATTACHMENT

SMCS-1258 **i05983926**

NOTE	PART NUMBER	QTY	PART NAME 1 2 3 4 5 6 (PRODUCT LEVEL)	SEE PAGE
Y	*386-0189*	1	FILTER AS-FUEL (12-VOLT) (12V)	1142
Y	**434-2751**	1	HARNESS AS-PUMP	1552

Y - SEPARATE ILLUSTRATION

<END>

267-7069 LINES GP-FUEL

FOR USE WITH REMOTE FUEL FILTER

SMCS-1274 **i02336352**

NOTE	REF NO	GRAPHIC REF	PART NUMBER	QTY	PART NAME 1 2 3 4 5 6 (PRODUCT LEVEL)	SEE PAGE
	1	1	**235-6281**	1	TIE-CABLE	
	2	1	**267-7065**	1	TUBE	

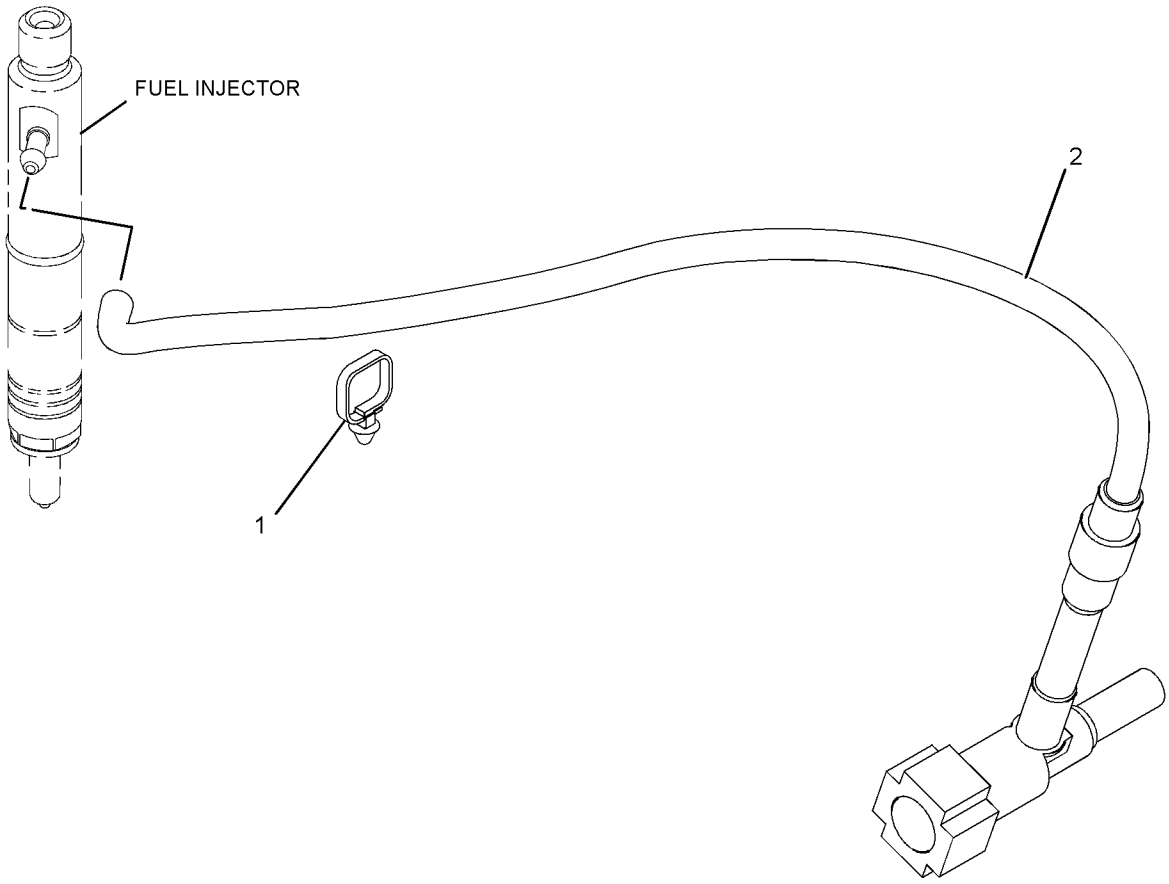

GRAPHIC #1 <END> g01160595

247-4885 LINES GP-FUEL FILTER

SMCS-1261, 1274 **i02225715**

NOTE	REF NO	GRAPHIC REF	PART NUMBER	QTY	PART NAME 1 2 3 4 5 6 (PRODUCT LEVEL)	SEE PAGE
	1	1	**247-4884**	1	TUBE AS	
	2	1	**232-3126**	1	CLIP	

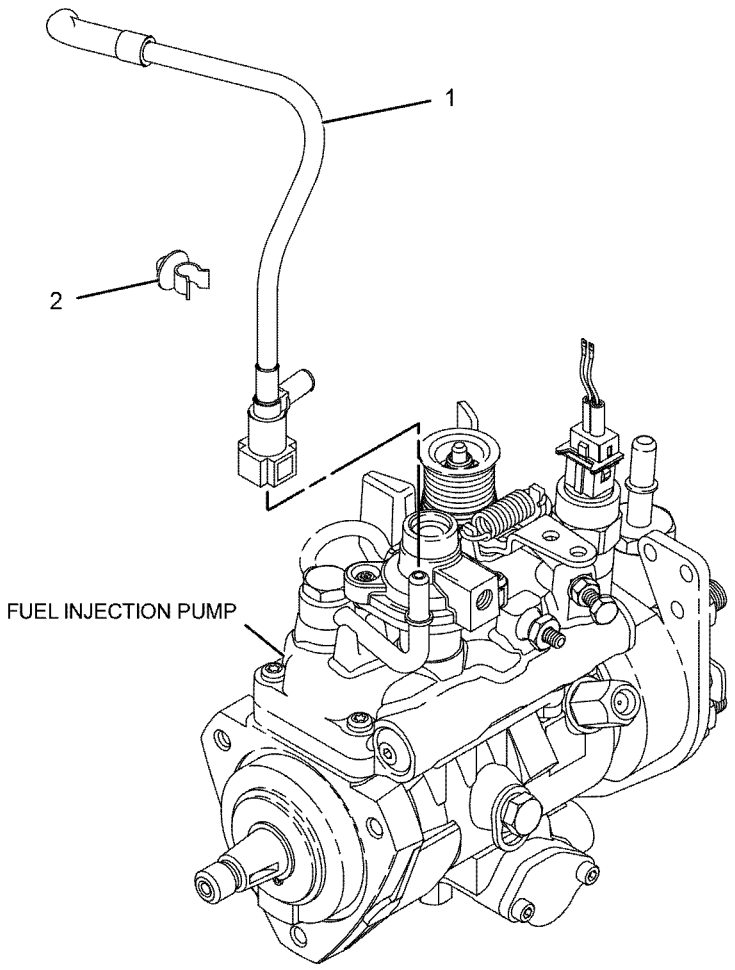

GRAPHIC #1 <END> g01123693

486-3678 LINES GP-FUEL INJECTION

PART OF 298-7691 PUMP GP-FUEL INJECTION

SMCS-1252, 1254 **i08253841**

NOTE	REF NO	GRAPHIC REF	PART NUMBER	QTY	PART NAME 1 2 3 4 5 6 (PRODUCT LEVEL)	SEE PAGE
	1	1	**232-2725**	2	CLIP	
	2	1	**499-1558**	1	TUBE AS (FUEL)	
	3	1	**499-1559**	1	TUBE AS (FUEL)	
	4	1	**499-1560**	1	TUBE AS (FUEL)	
	5	1	**499-1561**	1	TUBE AS (FUEL)	
	6	1	**140-8714**	1	CLIP	
	7	1	**232-2726**	1	CLIP	

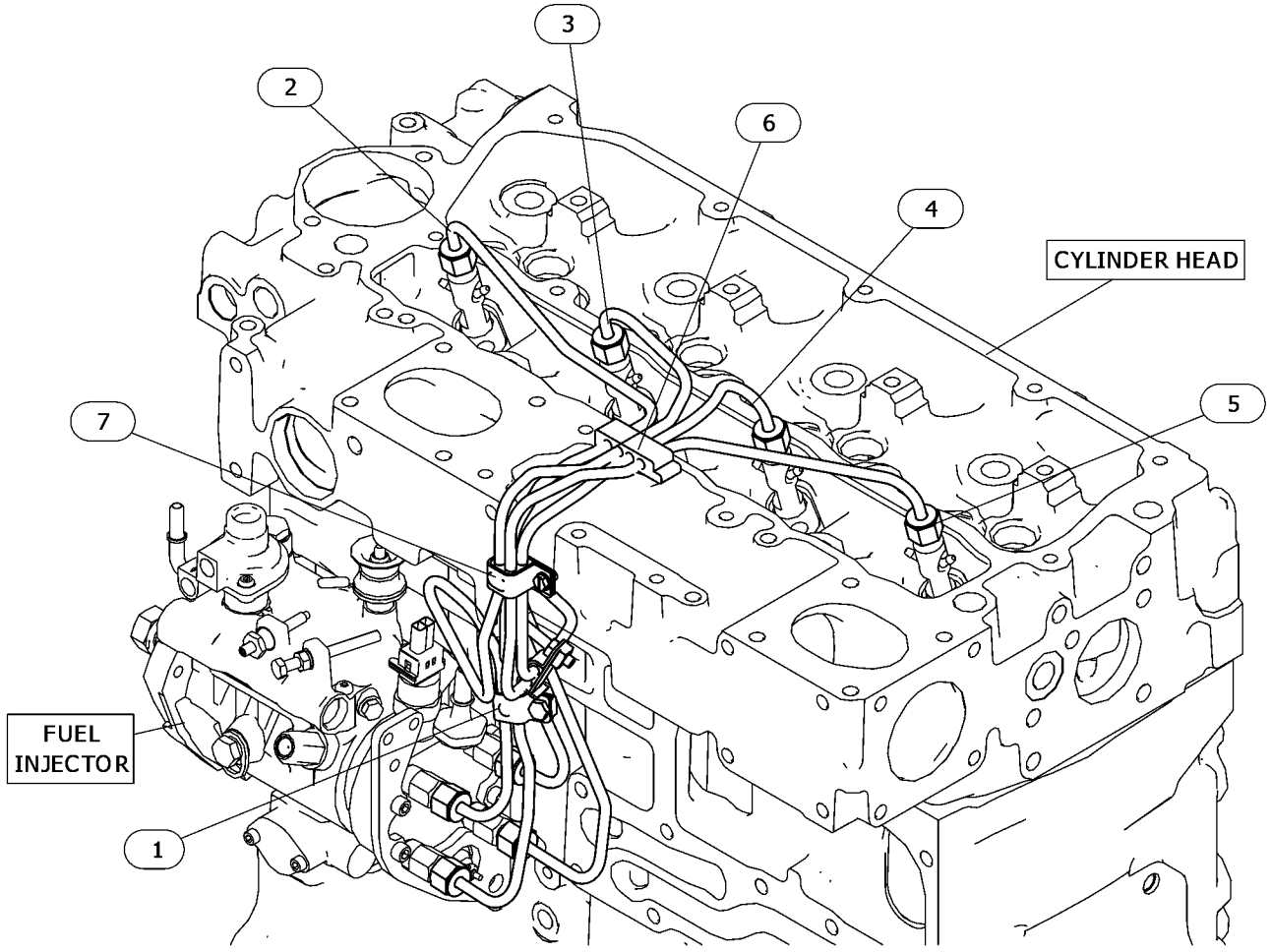

GRAPHIC #1 <END> g06661426

495-3762 LINES GP-FUEL INJECTION

PART OF 232-1827, 233-9405, 233-9526, 234-2414, 236-2140, 236-8229, 237-5214, 237-7999, 237-8259, 269-8487, 272-1393, 272-2799, 290-5525, 303-2915, 367-2070, 441-4311 PUMP GP-FUEL INJECTION
ALSO AN ATTACHMENT

SMCS-1252, 1254

i08290763

NOTE	REF NO	GRAPHIC REF	PART NUMBER	QTY	PART NAME 1 2 3 4 5 6 (PRODUCT LEVEL)	SEE PAGE
	1	1	**140-8714**	1	CLIP	
	2	1	**230-8995**	1	TUBE AS (CYL NO. 1)	
	3	1	**230-8996**	1	TUBE AS (CYL NO. 2)	
	4	1	**230-8997**	1	TUBE AS (CYL NO. 3)	
	5	1	**230-8998**	1	TUBE AS (CYL NO. 4)	
	6	1	**232-2725**	2	CLIP	
	7	1	**232-2726**	1	CLIP	

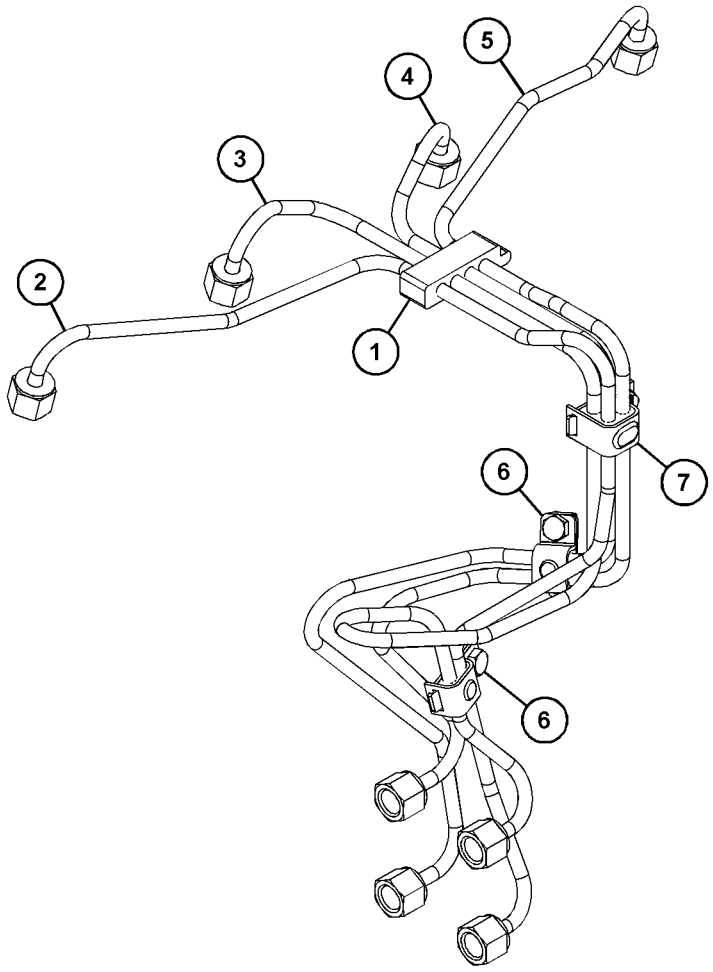

GRAPHIC #1

<END>

g06381085

463-0651 PUMP AS-FUEL INJECTION

24-VOLT, 97 BRAKE KW AT 2200 RPM
AN ATTACHMENT

SMCS-1251, 1290 **i07976739**

NOTE	REF NO	GRAPHIC REF	PART NUMBER	QTY	PART NAME 1 2 3 4 5 6 (PRODUCT LEVEL)	SEE PAGE
	1	1	*476-6899*	1	PUMP AS-FUEL INJECTION	
M		1	**111-3422**	1	NUT (M14X1.5-THD)	
		1	**111-3423**	1	WASHER	
		1	**152-3968**	1	SEAL-O-RING	
	2	1	**147-2645**	1	SOLENOID-SHUTOFF (24-VOLT)	

M - METRIC PART

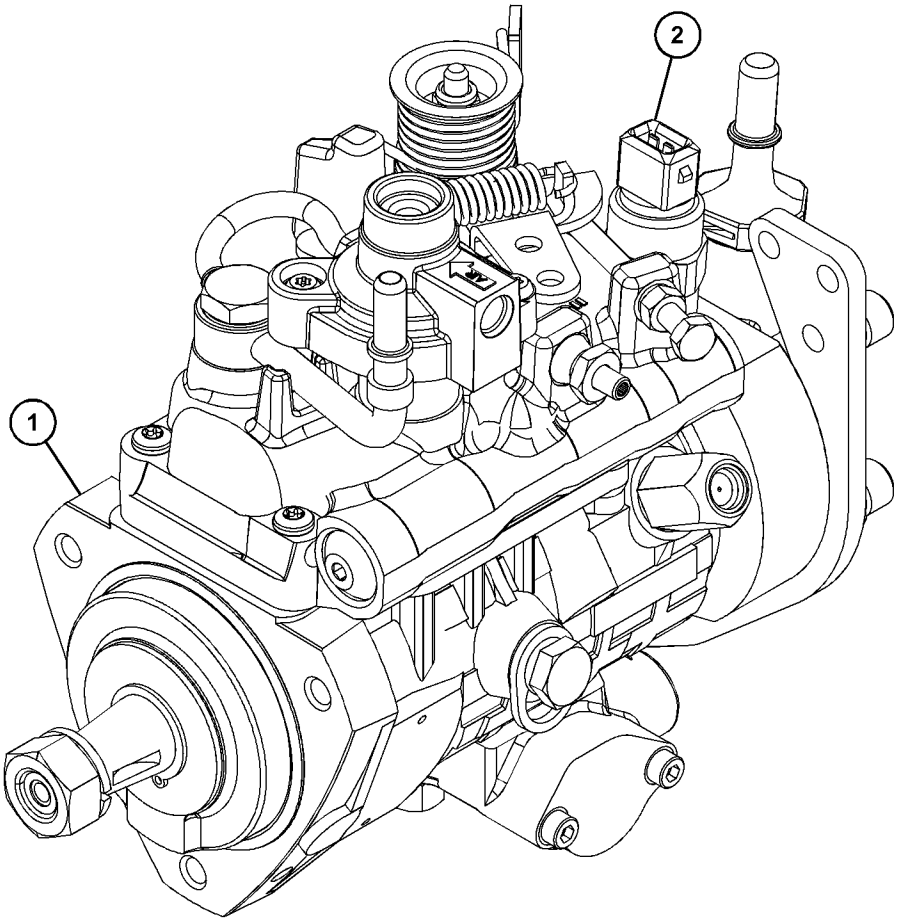

GRAPHIC #1 <END> g06506118

232-1827 PUMP GP-FUEL INJECTION

S/N: 3341-280
ALSO AN ATTACHMENT

SMCS-1251, 1290 **i04539241**

NOTE	REF NO	GRAPHIC REF	PART NUMBER	QTY	PART NAME 1 2 3 4 5 6 (PRODUCT LEVEL)	SEE PAGE
M	1	1	**6I-0217**	1	BOLT (M8X1.25X20-MM)	
M	2	1	**6I-0260**	3	BOLT (M8X1.25X25-MM)	
M	3	1	**6I-0291**	1	NUT (M8X1.25-THD)	
	4	1	**035-8017**	1	UNION	
	5	1	**365-3308**	1	NUT-COMPRESSION (3/8-24-THD)	
	6	1	**067-6265**	1	FITTING-BRASS	
M	7	1	**100-4830**	1	BOLT (M10X1.5X20-MM)	
M	8	1	**111-3422**	1	NUT (M14X1.5-THD)	
	9	1	**111-3423**	1	WASHER	
M	10	1	**124-3815**	1	BOLT (M8X1.25X16-MM)	
	11	1	**140-8714**	1	CLIP	
	12	2	**235-1790**	1	SWITCH-TEMPERATURE (TIMING ADVANCE)	
	13	2	**199-9252**	1	SEAL-O-RING	
	14	2	**199-9751**	2	SEAL-O-RING	
	15	1	**205-7644**	3	WASHER	
	16	1	**232-3157**	1	BRACKET	
	17	1	**236-2144**	1	TUBE AS	
	17A	1	**067-6999**	1	FERRULE	
	17B	1	**106-8835**	1	NUT	
	18	1	**230-8989**	1	GEAR-FUEL PUMP (68-TEETH)	
	19	1	**230-8995**	1	TUBE AS (CYL NO. 1)	
	20	1	**230-8996**	1	TUBE AS (CYL NO. 2)	
	21	1	**230-8997**	1	TUBE AS (CYL NO. 3)	
	22	1	**230-8998**	1	TUBE AS (CYL NO. 4)	
R	23	1	**230-8999**	4	INJECTOR AS-FUEL	
					(EACH INCLUDES)	
	23A	1	**140-8718**	1	WASHER (7.49X15.75X1.68-MM THK)	
Y	24	1	**236-5707**	1	PUMP GP-FUEL INJECTION	1252
	25	1	**232-3158**	4	CLAMP-INJECTOR	
M	26	1	**232-3274**	4	BOLT (M8X1.25X48.1-MM)	
	27	1	**230-9527**	1	BRACKET	
	29	1	**232-1117**	1	CLIP-PIPE	
	30	2	**232-1295**	1	PLUG	
	31	2	**232-1322**	2	PLUG	
	32	2	**232-1323**	1	PLUG-CUP	
	33	1	**232-1328**	1	CAP	
	34	2	**232-1793**	1	CABLE	
	35	1	**232-1794**	3	HOSE	
	36	1	**232-2725**	2	CLIP	
	37	1	**232-2726**	1	CLIP	
	38	1	**9X-0506**	1	TIE	
	39	1	**160-7197**	1	CLIP	
F			**232-3263**	3	CLIP-PIPE	

F - NOT SHOWN
M - METRIC PART
R - REMANUFACTURED PART MAY BE AVAILABLE
Y - SEPARATE ILLUSTRATION

232-1827 **PUMP GP-FUEL INJECTION (**contd.**)** **i04539241**

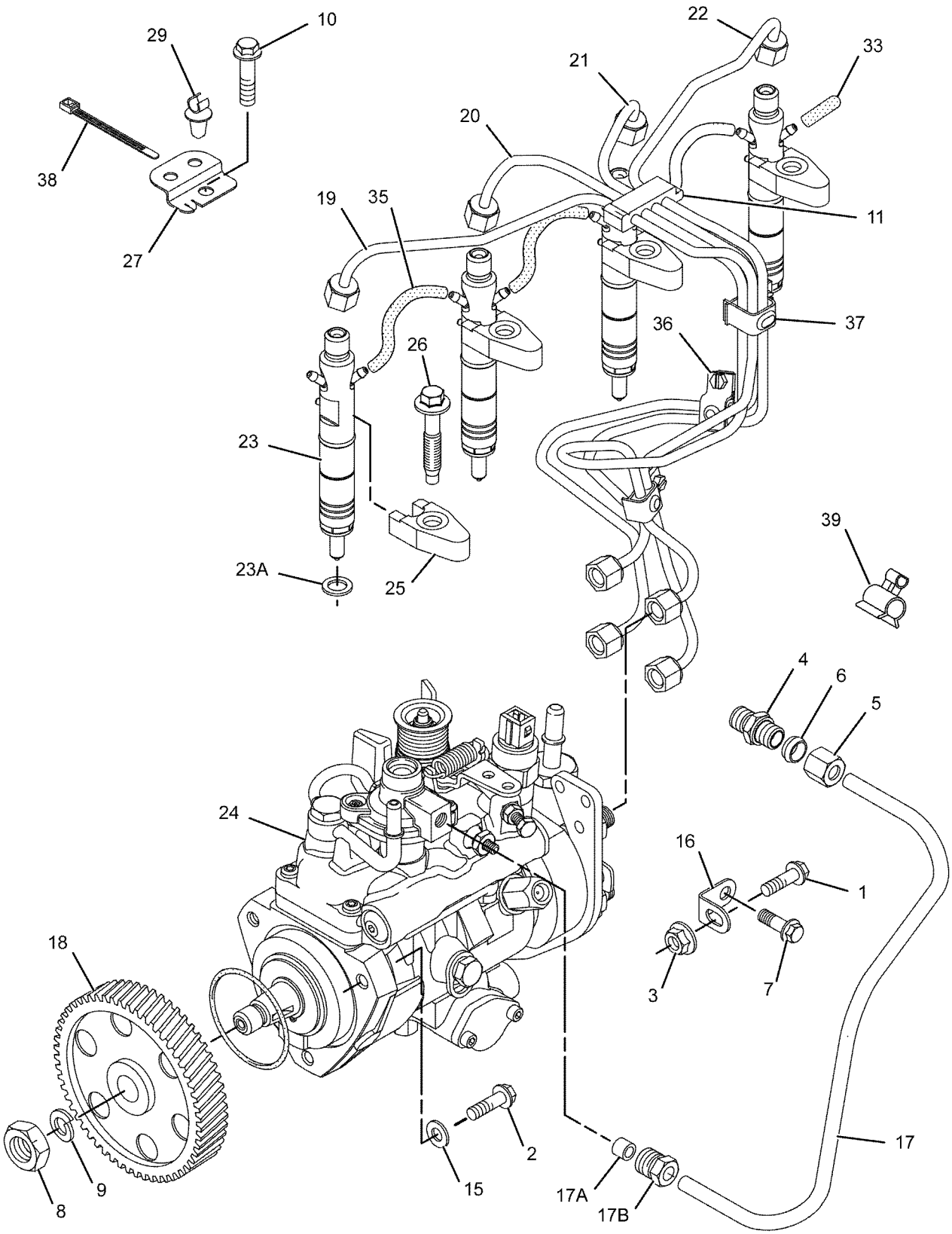

GRAPHIC #1 g01064319

232-1827 **PUMP GP-FUEL INJECTION (**contd.**)** **i04539241**

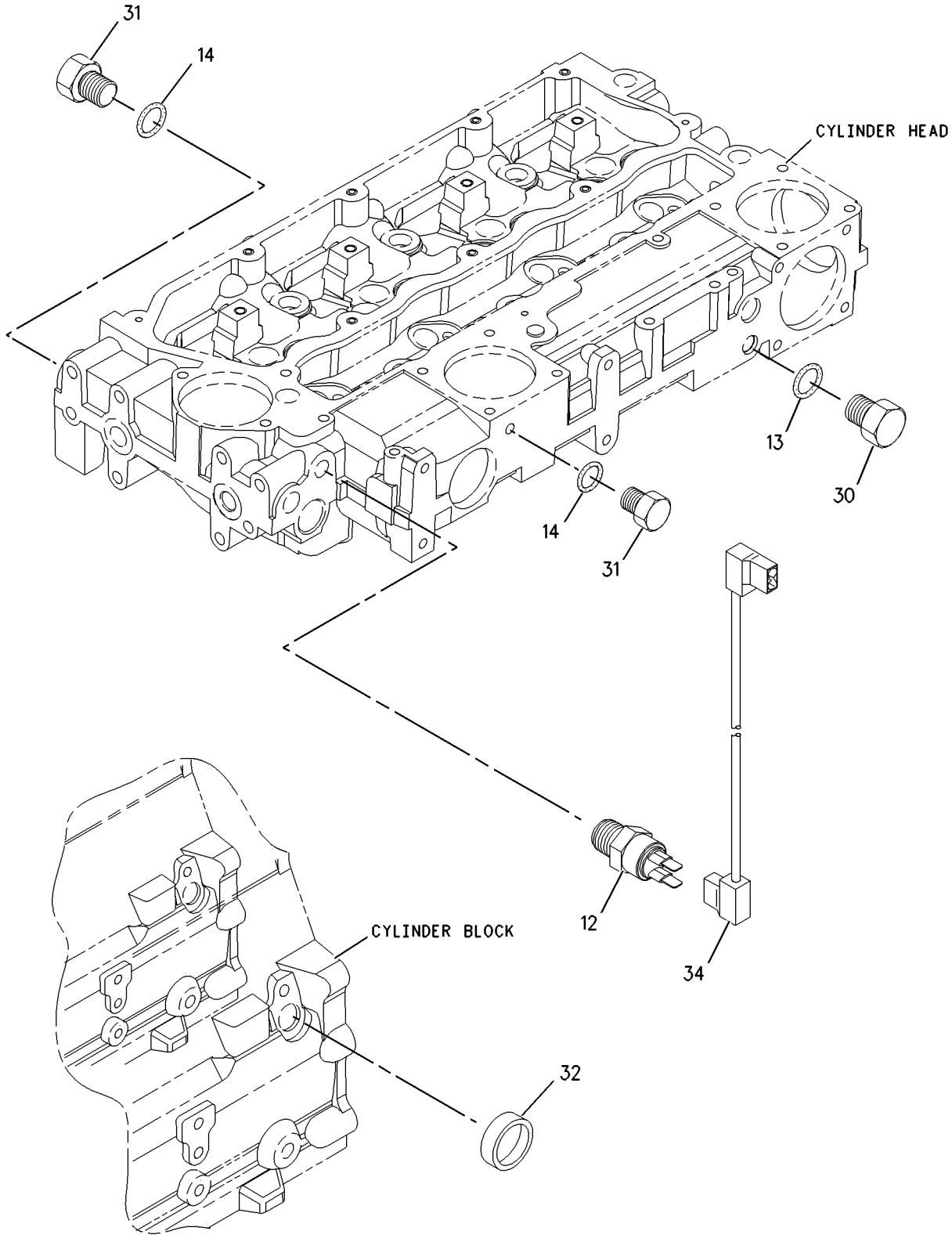

GRAPHIC #2 <END> g00951900

232-1827 PUMP GP-FUEL INJECTION

S/N: 334281-UP
ALSO AN ATTACHMENT

SMCS-1251, 1290 **i04539240**

NOTE	REF NO	GRAPHIC REF	PART NUMBER	QTY	PART NAME 1 2 3 4 5 6 (PRODUCT LEVEL)	SEE PAGE
M	1	1	**6I-0217**	1	BOLT (M8X1.25X20-MM)	
M	2	1	**6I-0260**	3	BOLT (M8X1.25X25-MM)	
M	3	1	**6I-0291**	1	NUT (M8X1.25-THD)	
	4	1	**035-8017**	1	UNION	
	5	1	**365-3308**	1	NUT-COMPRESSION (3/8-24-THD)	
	6	1	**067-6265**	1	FITTING-BRASS	
M	7	1	**100-4830**	1	BOLT (M10X1.5X20-MM)	
M	8	1	**111-3422**	1	NUT (M14X1.5-THD)	
	9	1	**111-3423**	1	WASHER	
M	10	1	**124-3815**	1	BOLT (M8X1.25X16-MM)	
	11	1	**140-8714**	1	CLIP	
	12	2	**235-1790**	1	SWITCH-TEMPERATURE (TIMING ADVANCE)	
	13	2	**199-9252**	1	SEAL-O-RING	
	14	2	**199-9751**	2	SEAL-O-RING	
	15	1	**205-7644**	3	WASHER	
	16	1	**232-3157**	1	BRACKET	
	17	1	**236-2144**	1	TUBE AS	
	17A	1	**067-6999**	1	FERRULE	
	17B	1	**106-8835**	1	NUT	
	18	1	**230-8989**	1	GEAR-FUEL PUMP (68-TEETH)	
	19	1	**230-8995**	1	TUBE AS (CYL NO. 1)	
	20	1	**230-8996**	1	TUBE AS (CYL NO. 2)	
	21	1	**230-8997**	1	TUBE AS (CYL NO. 3)	
	22	1	**230-8998**	1	TUBE AS (CYL NO. 4)	
R	23	1	**230-8999**	4	INJECTOR AS-FUEL	
					(EACH INCLUDES)	
	23A	1	**140-8718**	1	WASHER (7.49X15.75X1.68-MM THK)	
	23B	1	**232-2724**	1	NOZZLE	
		1	**275-1038**	1	SEAL-O-RING	
Y	24	1	**236-5707**	1	PUMP GP-FUEL INJECTION	1252
	25	1	**238-8671**	4	CLAMP-INJECTOR	
M	26	1	**232-3274**	4	BOLT (M8X1.25X48.1-MM)	
	27	1	**240-5571**	1	BRACKET	
	29	1	**232-3126**	1	CLIP	
	30	2	**232-1295**	1	PLUG	
	31	2	**232-1322**	2	PLUG	
	32	2	**232-1323**	1	PLUG-CUP	
	33	1	**232-1328**	1	CAP	
	34	2	**232-1793**	1	CABLE	
	35	1	**232-1794**	3	HOSE	
	36	1	**232-2725**	2	CLIP	
	37	1	**232-2726**	1	CLIP	
	39	1	**160-7197**	1	CLIP	
F			**232-3263**	3	CLIP-PIPE	

F - NOT SHOWN
M - METRIC PART
R - REMANUFACTURED PART MAY BE AVAILABLE
Y - SEPARATE ILLUSTRATION

232-1827 **PUMP GP-FUEL INJECTION (**contd.**)** **i04539240**

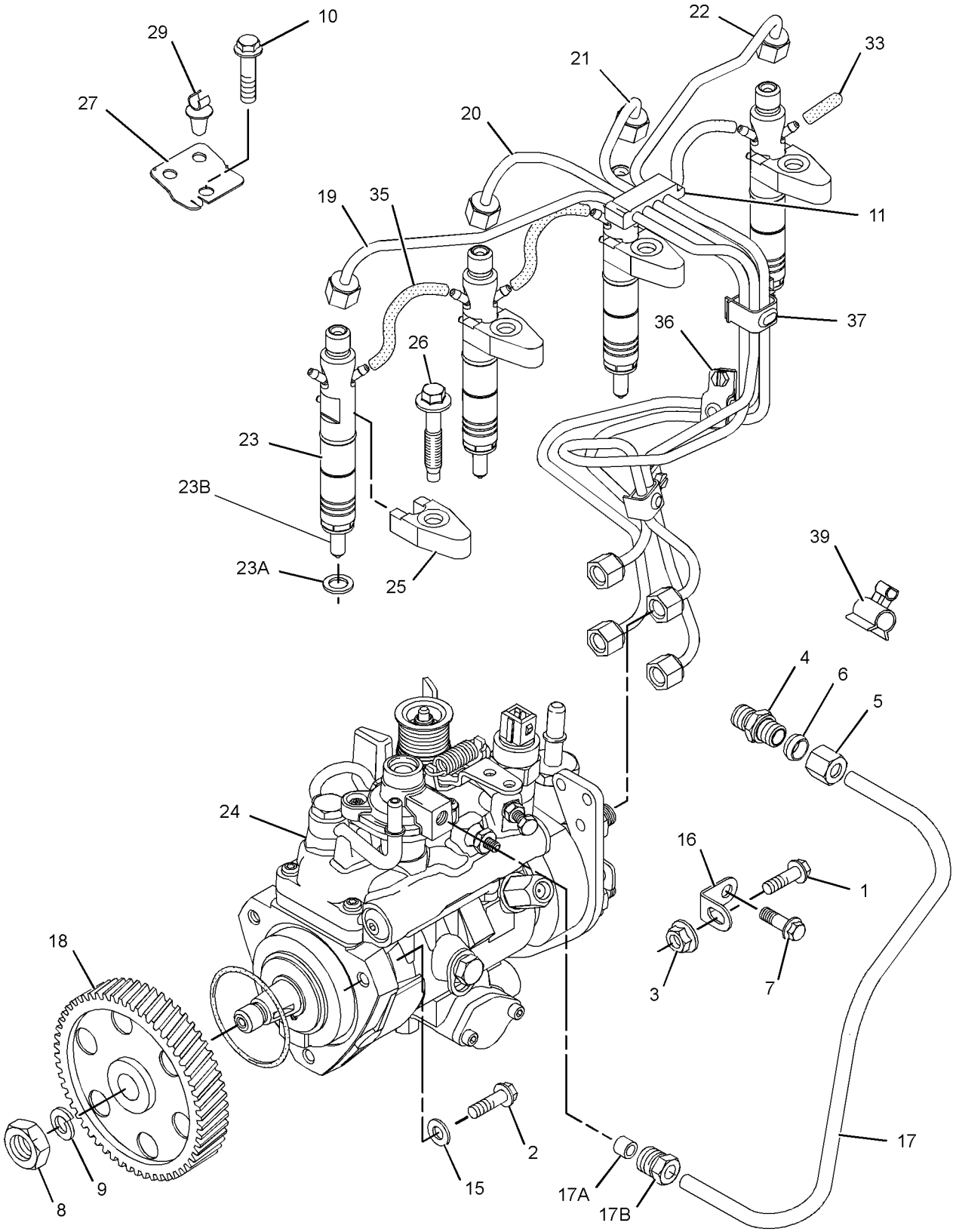

GRAPHIC #1 g01248900

232-1827 **PUMP GP-FUEL INJECTION (**contd.**)** **i04539240**

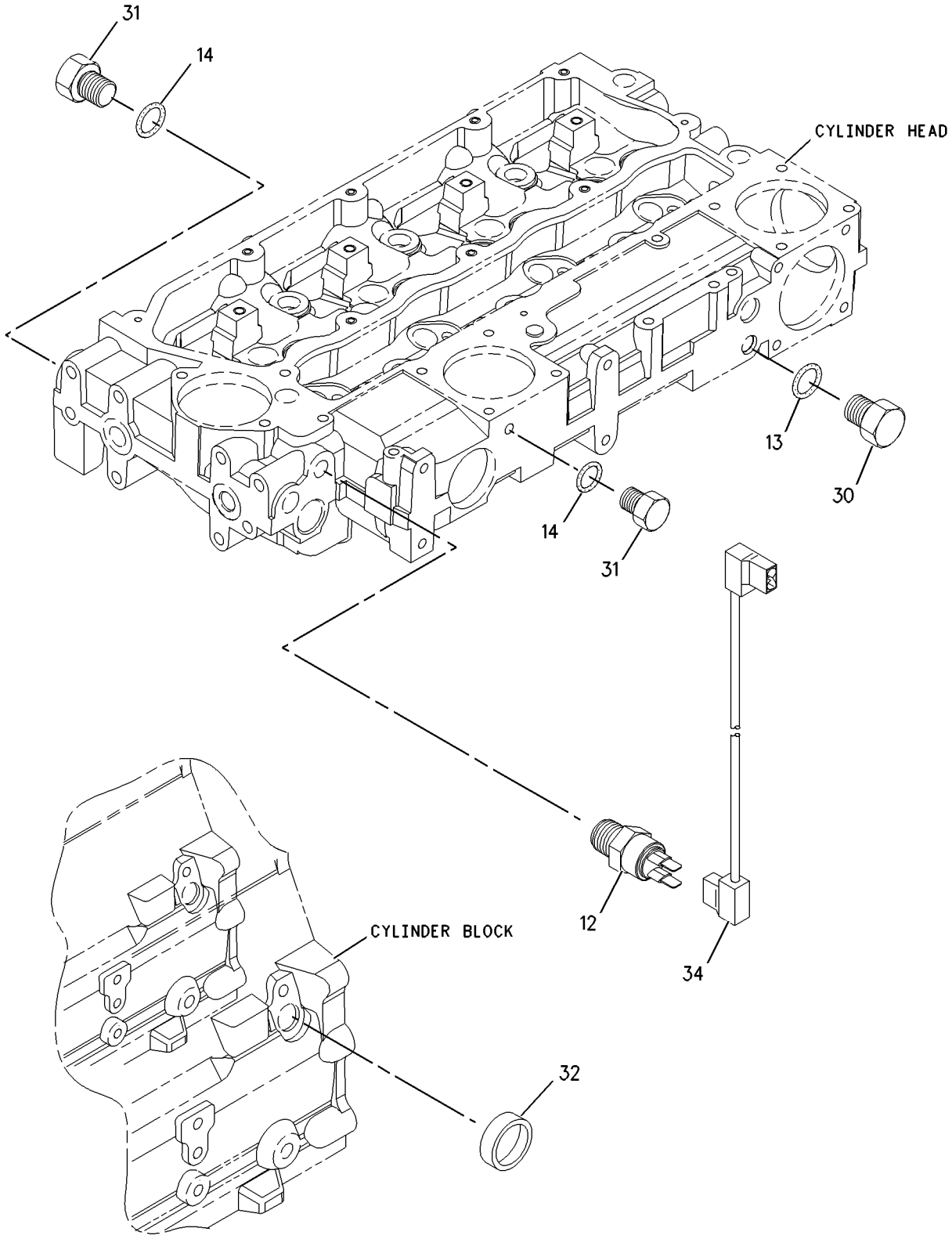

GRAPHIC #2 <END> g00951900

232-1827 PUMP GP-FUEL INJECTION

ALSO AN ATTACHMENT

TYPE 1

SMCS-1251, 1290 **i04539243**

NOTE	REF NO	GRAPHIC REF	PART NUMBER	QTY	PART NAME 1 2 3 4 5 6 (PRODUCT LEVEL)	SEE PAGE
M	1	1	**6I-0217**	1	BOLT (M8X1.25X20-MM)	
M	2	1	**6I-0260**	3	BOLT (M8X1.25X25-MM)	
M	3	1	**6I-0291**	1	NUT (M8X1.25-THD)	
	4	1	**035-8017**	1	UNION	
	5	1	**365-3308**	1	NUT-COMPRESSION (3/8-24-THD)	
	6	1	**067-6265**	1	FITTING-BRASS	
M	7	1	**100-4830**	1	BOLT (M10X1.5X20-MM)	
M	8	1	**111-3422**	1	NUT (M14X1.5-THD)	
	9	1	**111-3423**	1	WASHER	
M	10	1	**124-3815**	1	BOLT (M8X1.25X16-MM)	
	11	1	**140-8714**	1	CLIP	
	12	2	**169-5326**	1	SWITCH-TEMPERATURE (ENGINE COOLANT)	
	13	2	**199-9252**	1	SEAL-O-RING	
	14	2	**199-9751**	2	SEAL-O-RING	
	15	1	**205-7644**	3	WASHER	
	16	1	**232-3157**	1	BRACKET	
	17	1	**236-2144**	1	TUBE AS	
	17A	1	**067-6999**	1	FERRULE	
	18	1	**230-8989**	1	GEAR-FUEL PUMP (68-TEETH)	
	19	1	**230-8995**	1	TUBE AS (CYL NO. 1)	
	20	1	**230-8996**	1	TUBE AS (CYL NO. 2)	
	21	1	**230-8997**	1	TUBE AS (CYL NO. 3)	
	22	1	**230-8998**	1	TUBE AS (CYL NO. 4)	
R	23	1	**230-8999**	4	INJECTOR AS-FUEL	
					(EACH INCLUDES)	
	23A	1	**140-8718**	1	WASHER (7.49X15.75X1.68-MM THK)	
	23B	1	**232-2724**	1	NOZZLE	
	23C	1	**275-1038**	1	SEAL-O-RING	
CR	24	1	**284-4990**	1	PUMP GP-FUEL INJECTION	
	25	1	**238-8671**	4	CLAMP-INJECTOR	
M	26	1	**232-3274**	4	BOLT (M8X1.25X48.1-MM)	
	27	1	**240-5571**	1	BRACKET	
	29	1	**232-3126**	1	CLIP	
	30	2	**232-1295**	1	PLUG	
	31	2	**232-1322**	2	PLUG	
	32	2	**232-1323**	1	PLUG-CUP	
	33	1	**232-1328**	1	CAP	
	34	2	**232-1793**	1	CABLE	
	35	1	**232-1794**	3	HOSE	
	36	1	**232-2725**	2	CLIP	
	37	1	**232-2726**	1	CLIP	
	39	1	**318-2365**	1	CLIP	
F			**232-3263**	3	CLIP-PIPE	

C - CHANGE FROM PREVIOUS TYPE
F - NOT SHOWN
M - METRIC PART
R - REMANUFACTURED PART MAY BE AVAILABLE

232-1827 **PUMP GP-FUEL INJECTION (**contd.**)** **i04539243**

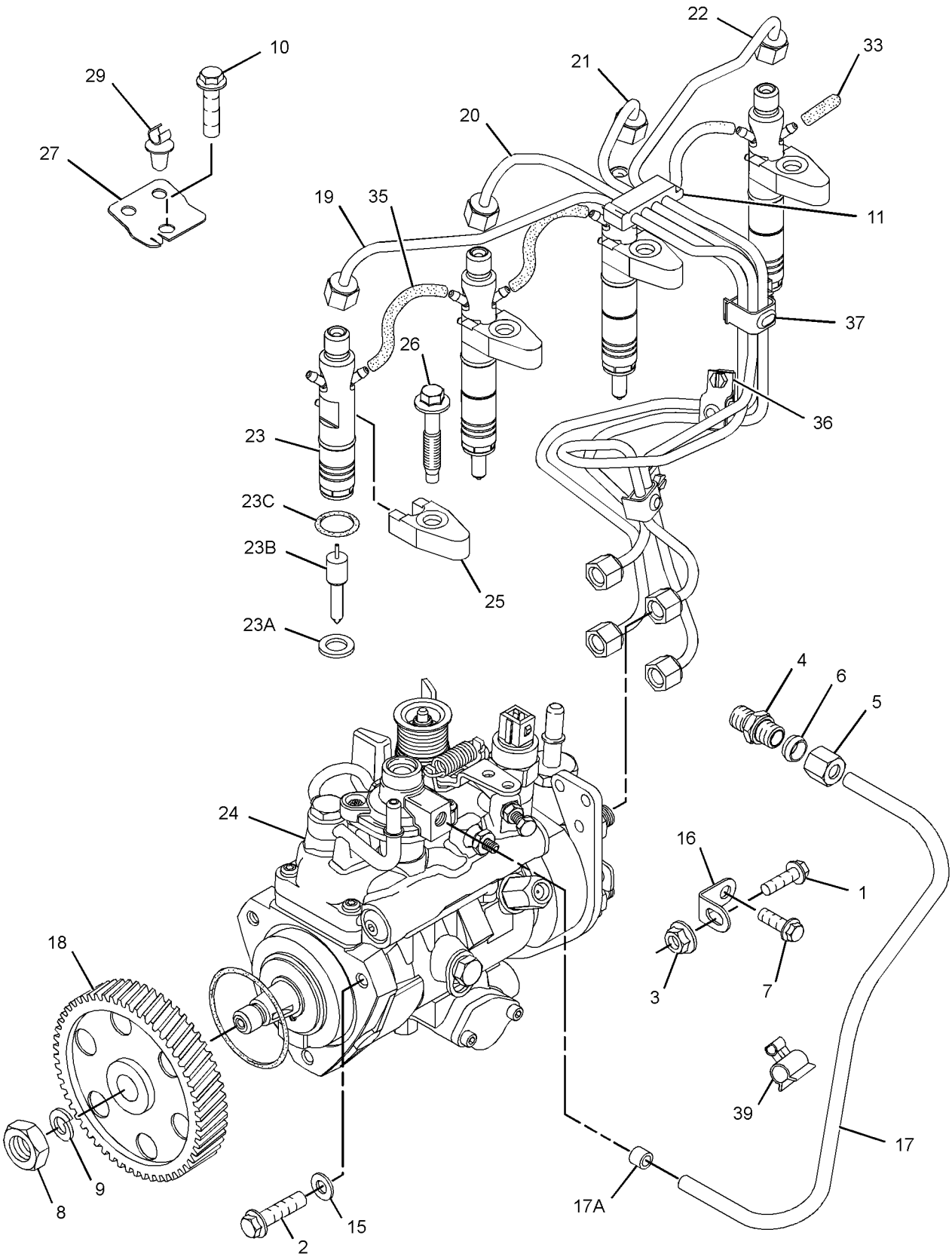

GRAPHIC #1 g01636922

232-1827 **PUMP GP-FUEL INJECTION (**contd.**)** **i04539243**

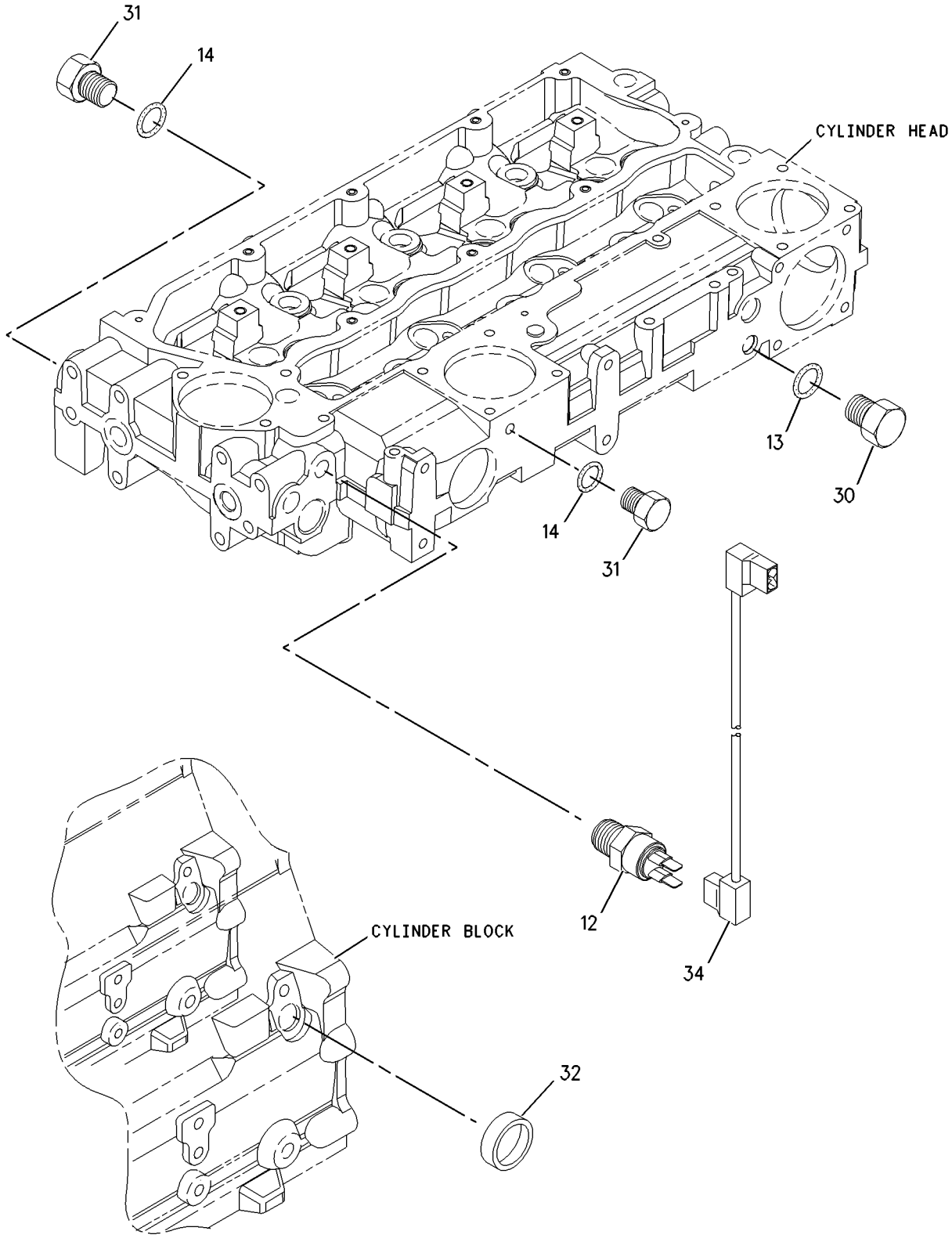

GRAPHIC #2 <END> g00951900

232-1827 PUMP GP-FUEL INJECTION

ALSO AN ATTACHMENT
TYPE 2

SMCS-1251, 1290 **i04711591**

NOTE	REF NO	GRAPHIC REF	PART NUMBER	QTY	PART NAME 1 2 3 4 5 6 (PRODUCT LEVEL)	SEE PAGE
M	1	1	**6I-0217**	1	BOLT (M8X1.25X20-MM)	
M	2	1	**6I-0260**	3	BOLT (M8X1.25X25-MM)	
M	3	1	**6I-0291**	1	NUT (M8X1.25-THD)	
	4	1	**035-8017**	1	UNION	
	5	1	**365-3308**	1	NUT-COMPRESSION (3/8-24-THD)	
	6	1	**067-6265**	1	FITTING-BRASS	
M	7	1	**100-4830**	1	BOLT (M10X1.5X20-MM)	
M	8	1	**111-3422**	1	NUT (M14X1.5-THD)	
	9	1	**111-3423**	1	WASHER	
M	10	1	**124-3815**	1	BOLT (M8X1.25X16-MM)	
	11	1	**140-8714**	1	CLIP	
	12	2	**169-5326**	1	SWITCH-TEMPERATURE (ENGINE COOLANT)	
	13	2	**199-9252**	1	SEAL-O-RING	
	14	2	**199-9751**	2	SEAL-O-RING	
	15	1	**205-7644**	3	WASHER	
	16	1	**232-3157**	1	BRACKET	
	17	1	**236-2144**	1	TUBE AS	
	17A	1	**067-6999**	1	FERRULE	
	18	1	**230-8989**	1	GEAR-FUEL PUMP (68-TEETH)	
	19	1	**230-8995**	1	TUBE AS (CYL NO. 1)	
	20	1	**230-8996**	1	TUBE AS (CYL NO. 2)	
	21	1	**230-8997**	1	TUBE AS (CYL NO. 3)	
	22	1	**230-8998**	1	TUBE AS (CYL NO. 4)	
R	23	1	**230-8999**	4	INJECTOR AS-FUEL	
					(EACH INCLUDES)	
	23A	1	**140-8718**	1	WASHER (7.49X15.75X1.68-MM THK)	
	23B	1	**232-2724**	1	NOZZLE	
	23C	1	**275-1038**	1	SEAL-O-RING	
CR	24	1	**284-4990**	1	PUMP GP-FUEL INJECTION	
	25	1	**238-8671**	4	CLAMP-INJECTOR	
M	26	1	**232-3274**	4	BOLT (M8X1.25X48.1-MM)	
	27	1	**240-5571**	1	BRACKET	
	29	1	**232-3126**	1	CLIP	
	30	2	**232-1295**	1	PLUG	
	31	2	**232-1322**	2	PLUG	
	33	1	**232-1328**	1	CAP	
	34	2	**232-1793**	1	CABLE	
	35	1	**232-1794**	3	HOSE	
	36	1	**232-2725**	2	CLIP	
	37	1	**232-2726**	1	CLIP	
	39	1	**318-2365**	1	CLIP	
F			**232-3263**	3	CLIP-PIPE	

C - CHANGE FROM PREVIOUS TYPE
F - NOT SHOWN
M - METRIC PART
R - REMANUFACTURED PART MAY BE AVAILABLE

232-1827 **PUMP GP-FUEL INJECTION (**contd.**)** **i04711591**

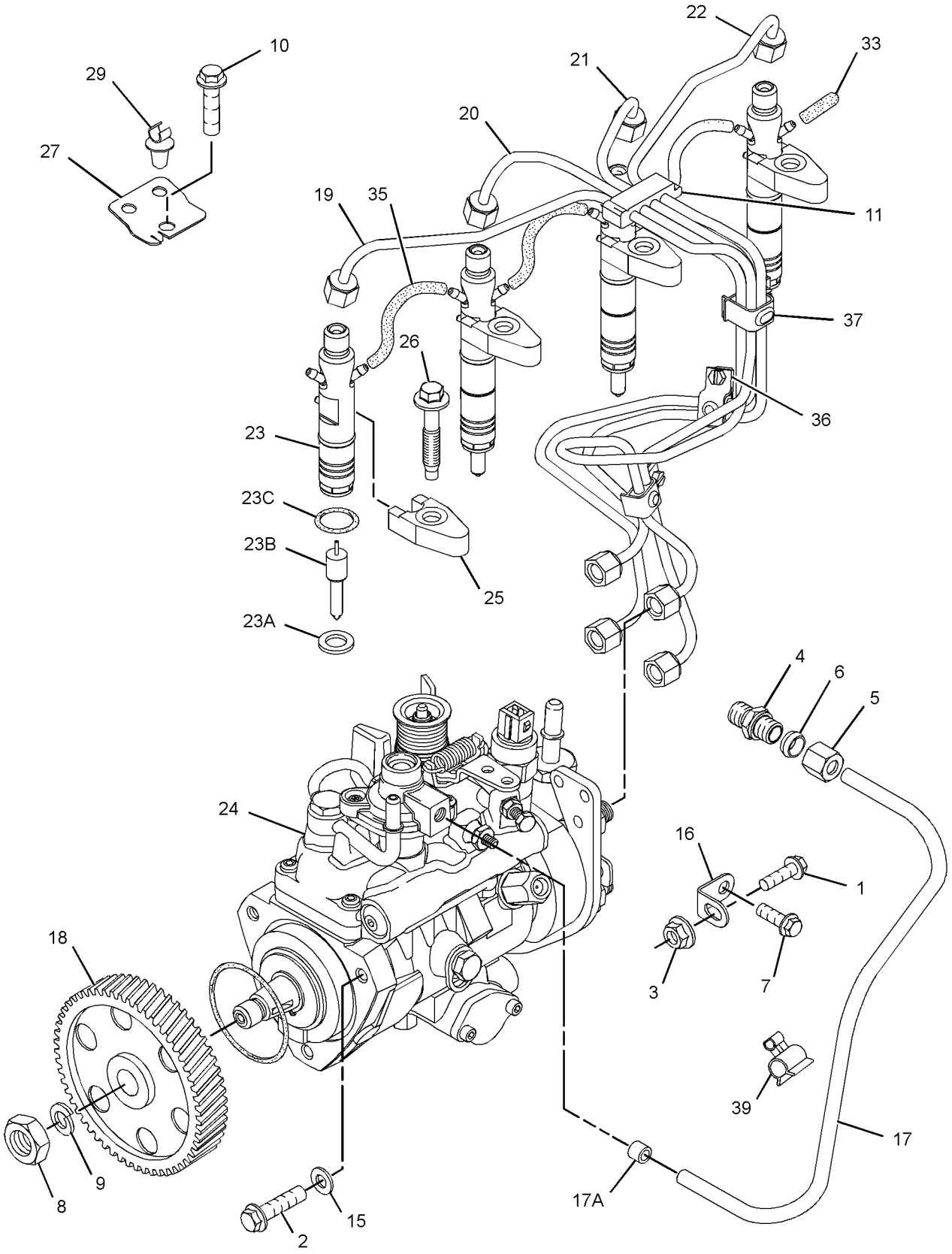

GRAPHIC #1 g01636922

232-1827 **PUMP GP-FUEL INJECTION (**contd.**)** **i04711591**

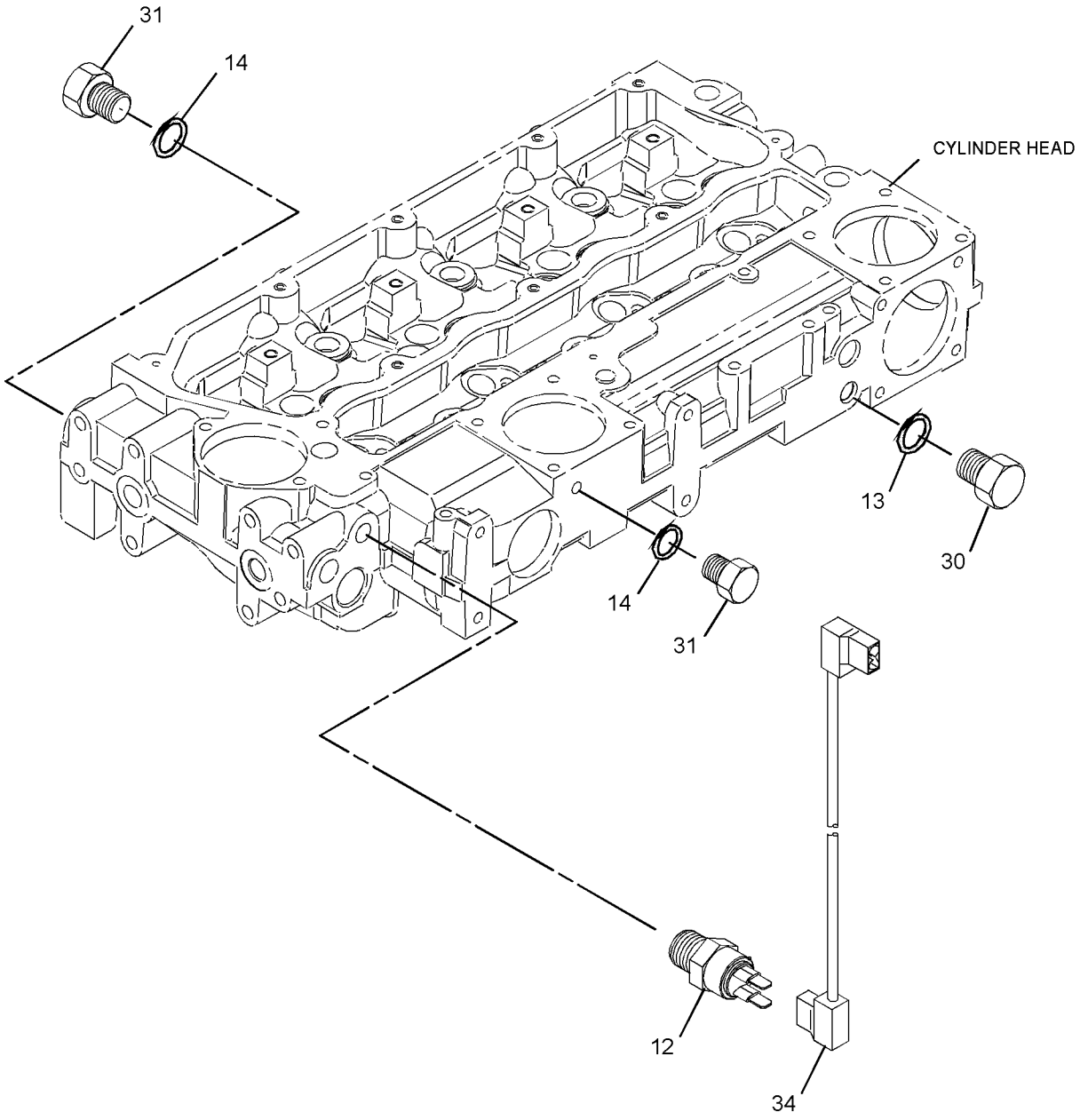

GRAPHIC #2 <END> g02819922

232-1827 PUMP GP-FUEL INJECTION

ALSO AN ATTACHMENT
TYPE 3

SMCS-1251, 1290 **i08271874**

NOTE	REF NO	GRAPHIC REF	PART NUMBER	QTY	PART NAME 1 2 3 4 5 6 (PRODUCT LEVEL)	SEE PAGE
M	1	1	**6I-0217**	1	BOLT (M8X1.25X20-MM)	
M	2	1	**6I-0260**	3	BOLT (M8X1.25X25-MM)	
M	3	1	**178-3336**	1	NUT-HEX FLANGE (M8X1.25-THD)	
	4	1	**035-8017**	1	UNION	
	5	1	**365-3308**	1	NUT-COMPRESSION (3/8-24-THD)	
	6	1	**067-6265**	1	FITTING-BRASS	
M	7	1	**100-4830**	1	BOLT (M10X1.5X20-MM)	
M	8	1	**124-3815**	1	BOLT (M8X1.25X16-MM)	
	10	2	**169-5326**	1	SWITCH-TEMPERATURE (ENGINE COOLANT)	
	11	2	**199-9252**	1	SEAL-O-RING	
	12	2	**199-9751**	2	SEAL-O-RING	
	13	1	**205-7644**	3	WASHER (SEALING)	
	14	1	**232-3157**	1	BRACKET	
	15	1	**236-2144**	1	TUBE AS	
	15A	1	**067-6999**	1	FERRULE	
	16	1	**425-7107**	1	GEAR-FUEL PUMP (68-TEETH)	
R	21	1	**230-8999**	4	INJECTOR AS-FUEL	
					(EACH INCLUDES)	
	21A	1	**140-8718**	1	WASHER (7.49X15.75X1.68-MM THK)	
	21B	1	**232-2724**	1	NOZZLE	
	21C	1	**275-1038**	1	SEAL-O-RING	
C	22	1	**483-2353**	1	PUMP AS-FUEL INJECTION	
M	22A	1	**111-3422**	1	NUT (M14X1.5-THD)	
	22B	1	**111-3423**	1	WASHER	
	22C	1	**152-3968**	1	SEAL-O-RING	
	22D	1	**176-6219**	1	SOLENOID (12-VOLT)	
	23	1	**238-8671**	4	CLAMP-INJECTOR	
M	24	1	**232-3274**	4	BOLT (M8X1.25X48.1-MM)	
	25	1	**240-5571**	1	BRACKET	
	26	1	**232-3126**	1	CLIP	
	27	2	**232-1295**	1	PLUG (BLANKING)	
	28	2	**232-1322**	2	PLUG (BLANKING)	
	29	1	**232-1328**	1	CAP (FUEL INJECTOR)	
	30	2	**232-1793**	1	CABLE	
	31	1	**232-1794**	3	HOSE	
	34	1	**318-2365**	1	CLIP	
Y	35	1	*495-3762*	1	LINES GP-FUEL INJECTION	1173
F			**232-3263**	3	CLIP-PIPE	

C - CHANGE FROM PREVIOUS TYPE
F - NOT SHOWN
M - METRIC PART
R - REMANUFACTURED PART MAY BE AVAILABLE
Y - SEPARATE ILLUSTRATION

232-1827 **PUMP GP-FUEL INJECTION (**contd.**)** **i08271874**

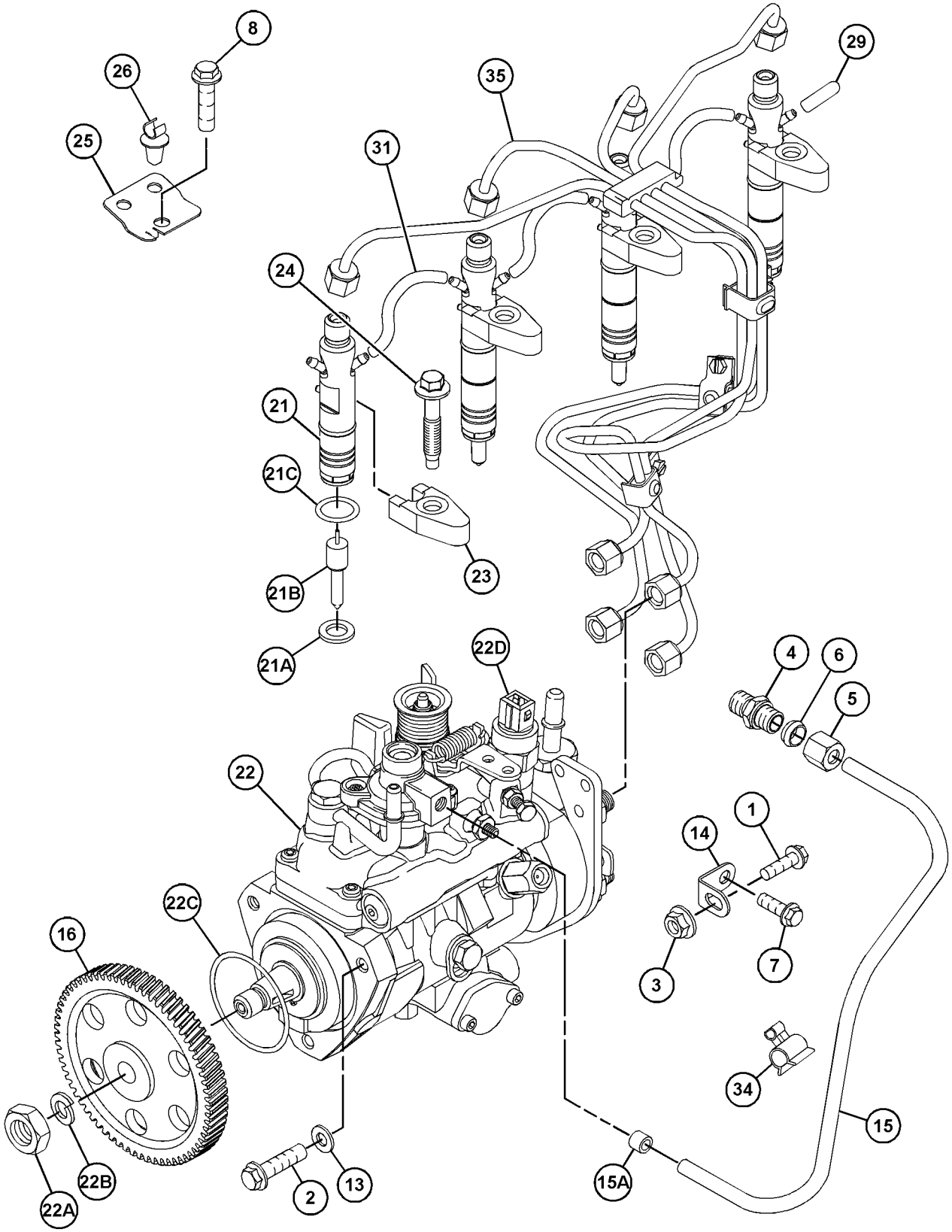

GRAPHIC #1 g06748816

232-1827 **PUMP GP-FUEL INJECTION (**contd.**)** **i08271874**

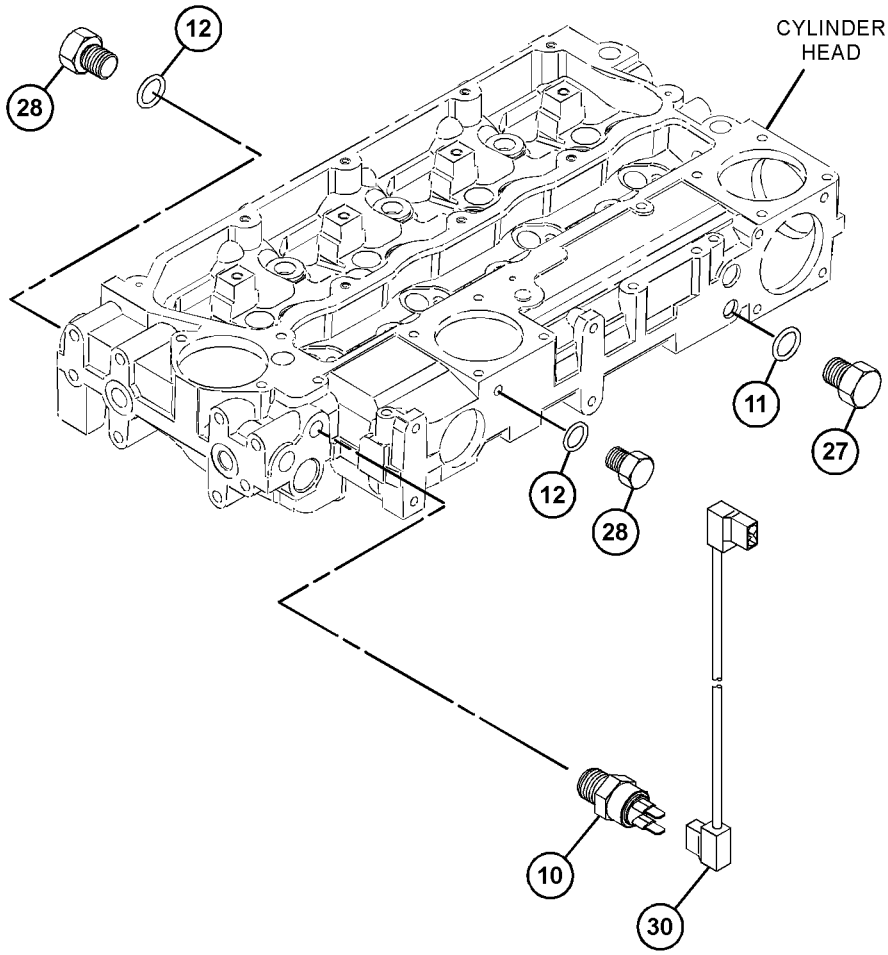

GRAPHIC #2 <END> g06305821

233-7094 PUMP GP-FUEL INJECTION

FIELD REPLACEMENT ORDER 248-2350—PAGE: 1315, 248-2351—PAGE: 1316, 248-2352—PAGE: 1317

REPLACED BY 266-2994 KIT-INJECTOR, 266-3718—PAGE: 1337

PART OF 233-7974 PUMP GP-FUEL INJECTION

ALSO AN ATTACHMENT

SMCS-1251, 1290

i02170816

NOTE	REF NO	GRAPHIC REF	PART NUMBER	QTY	PART NAME 1 2 3 4 5 6 (PRODUCT LEVEL)	SEE PAGE
	1	1	**208-5029**	1	VALVE GP-SOLENOID (12-VOLT) (FUEL SHUTOFF)	

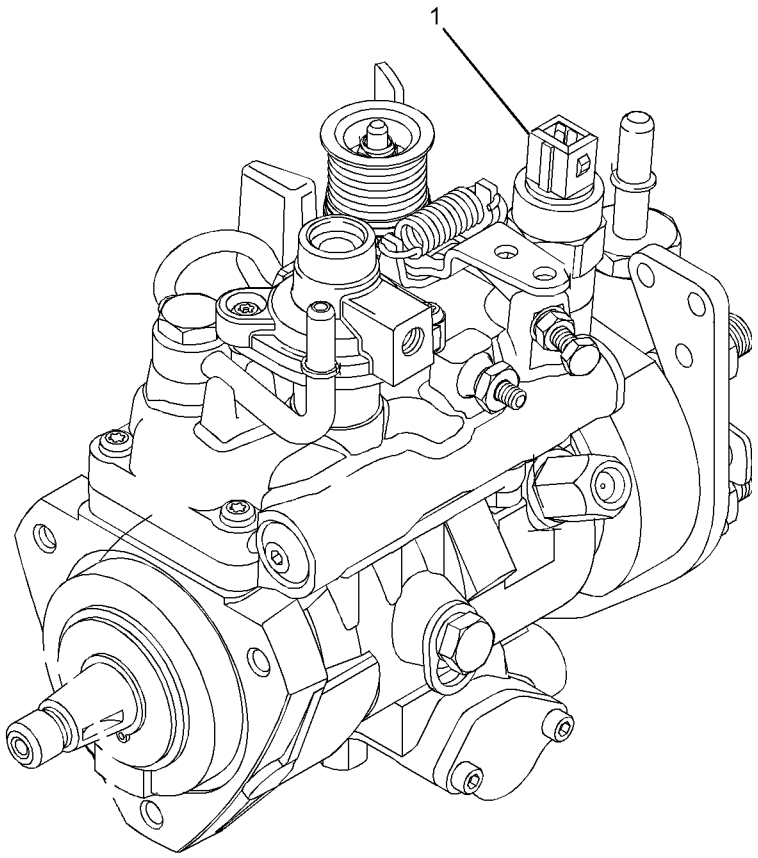

GRAPHIC #1

<END>

g01076845

233-7974 PUMP GP-FUEL INJECTION

S/N: 3341-280
ALSO AN ATTACHMENT

SMCS-1251, 1290 **i02428627**

NOTE	REF NO	GRAPHIC REF	PART NUMBER	QTY	PART NAME 1 2 3 4 5 6 (PRODUCT LEVEL)	SEE PAGE
M	1	1	**6I-0217**	1	BOLT (M8X1.25X20-MM)	
	2	1	**232-3149**	3	WASHER (8.35X16.85X1.55-MM THK)	
M	3	1	**6I-0291**	1	NUT (M8X1.25-THD)	
M	4	1	**100-4830**	1	BOLT (M10X1.5X20-MM)	
M	5	1	**124-3815**	1	BOLT (M8X1.25X16-MM)	
	6	1	**140-8714**	1	CLIP	
	7	1	**145-8327**	1	SEAL-O-RING	
	8	1	**155-8804**	1	CAP	
	9	2	**235-1790**	1	SWITCH-TEMPERATURE (TIMING ADVANCE)	
	10	2	**199-9252**	1	SEAL-O-RING	
	11	2	**199-9751**	1	SEAL-O-RING	
	12	1	**230-9527**	1	BRACKET	
	13	1	**232-1117**	1	CLIP-PIPE	
	14	2	**232-1295**	1	PLUG	
	15	2	**232-1322**	1	PLUG	
	16	2	**232-1323**	1	PLUG-CUP	
	17	1	**232-2720**	1	TUBE AS (CYL NO. 1)	
	18	1	**232-2721**	1	TUBE AS (CYL NO. 2)	
	19	1	**232-2722**	1	TUBE AS (CYL NO. 3)	
	20	1	**232-2723**	1	TUBE AS (CYL NO. 4)	
	21	1	**232-2725**	2	CLIP	
	22	1	**232-2726**	1	CLIP	
M	23	1	**6I-0260**	3	BOLT (M8X1.25X25-MM)	
	24	1	**232-3157**	1	BRACKET	
	25	1	**232-3158**	4	CLAMP-INJECTOR	
M	27	1	**232-3274**	4	BOLT (M8X1.25X48.1-MM)	
Y	28	1	**233-7094**	1	PUMP GP-FUEL INJECTION	1190
	29	1	**233-7104**	1	GEAR-PUMP	
	30	2	**233-7214**	1	CABLE	
R	31	1	**233-7972**	4	INJECTOR AS-FUEL	
					(EACH INCLUDES)	
	32	1	**140-8718**	1	WASHER (7.49X15.75X1.68-MM THK)	
	33	1	**234-0387**	1	NOZZLE	
F			**232-3263**	1	CLIP-PIPE	

F - NOT SHOWN
M - METRIC PART
R - REMANUFACTURED PART MAY BE AVAILABLE
Y - SEPARATE ILLUSTRATION

233-7974 **PUMP GP-FUEL INJECTION (**contd.**)** **i02428627**

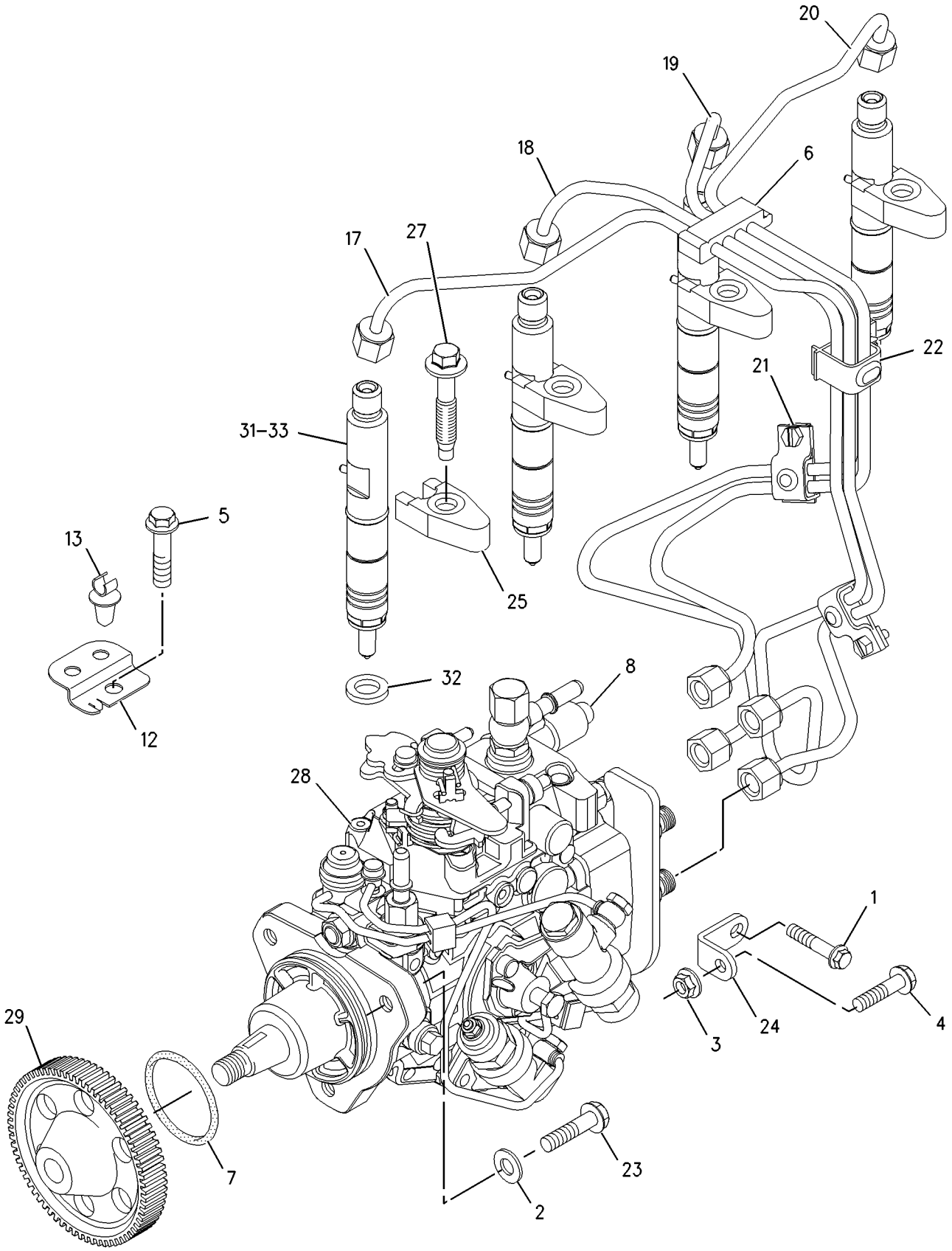

GRAPHIC #1 g00997402

233-7974 **PUMP GP-FUEL INJECTION (**contd.**)** **i02428627**

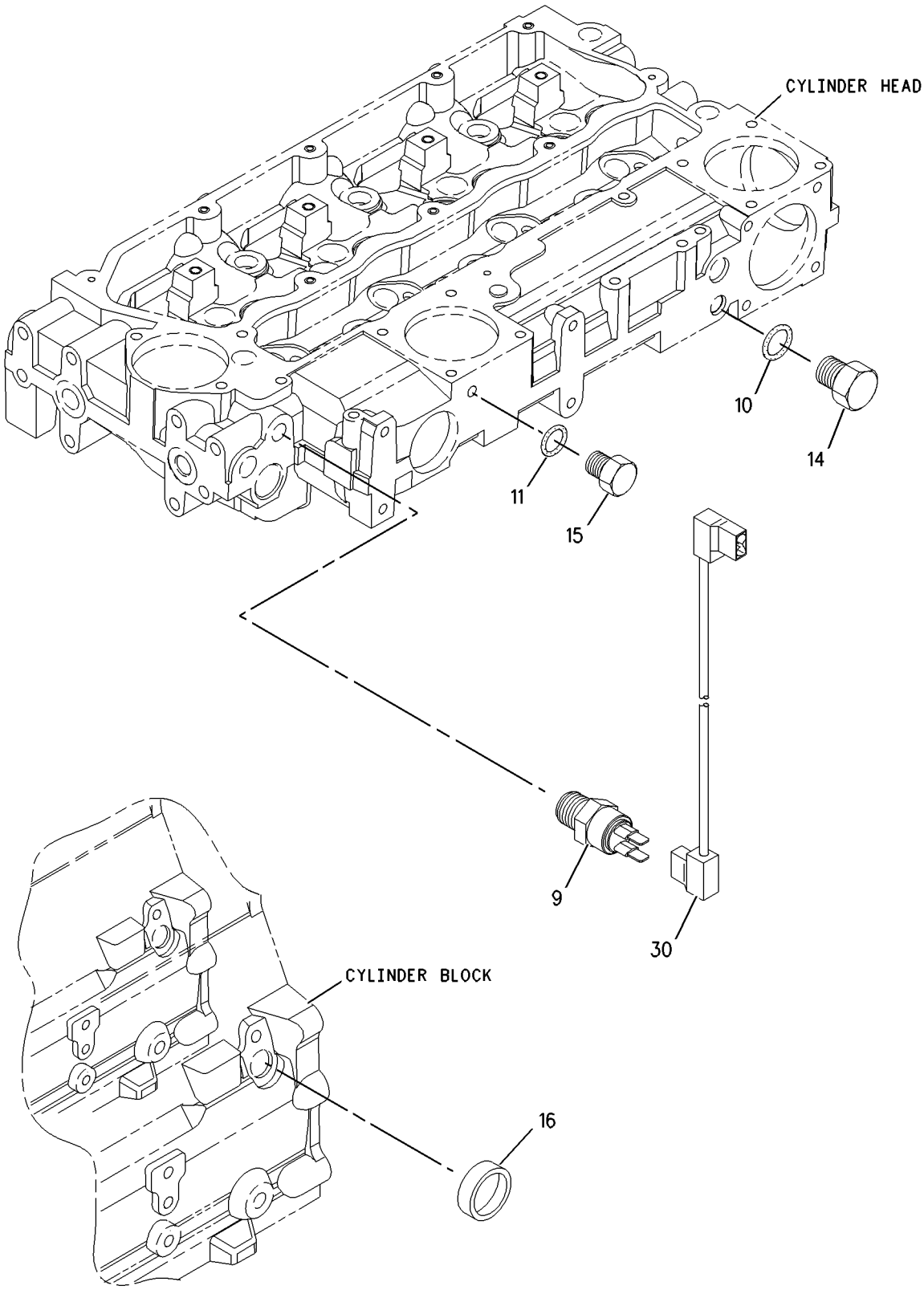

GRAPHIC #2 <END> g00955784

233-7974 PUMP GP-FUEL INJECTION

S/N: 334281-6334
ALSO AN ATTACHMENT

SMCS-1251, 1290 **i02756236**

NOTE	REF NO	GRAPHIC REF	PART NUMBER	QTY	PART NAME 1 2 3 4 5 6 (PRODUCT LEVEL)	SEE PAGE
M	1	1	**6I-0217**	1	BOLT (M8X1.25X20-MM)	
	2	1	**232-3149**	3	WASHER (8.35X16.85X1.55-MM THK)	
M	3	1	**6I-0291**	1	NUT (M8X1.25-THD)	
M	4	1	**100-4830**	1	BOLT (M10X1.5X20-MM)	
M	5	1	**124-3815**	1	BOLT (M8X1.25X16-MM)	
	6	1	**140-8714**	1	CLIP	
	7	1	**145-8327**	1	SEAL-O-RING	
	8	1	**155-8804**	1	CAP	
	9	2	**235-1790**	1	SWITCH-TEMPERATURE (TIMING ADVANCE)	
C	12	1	**240-5571**	1	BRACKET	
	16	2	**232-1323**	1	PLUG-CUP	
	17	1	**232-2720**	1	TUBE AS (CYL NO. 1)	
	18	1	**232-2721**	1	TUBE AS (CYL NO. 2)	
	19	1	**232-2722**	1	TUBE AS (CYL NO. 3)	
	20	1	**232-2723**	1	TUBE AS (CYL NO. 4)	
	21	1	**232-2725**	2	CLIP	
	22	1	**232-2726**	1	CLIP	
M	23	1	**6I-0260**	3	BOLT (M8X1.25X25-MM)	
	24	1	**232-3157**	1	BRACKET	
	25	1	**232-3158**	4	CLAMP-INJECTOR	
M	27	1	**232-3274**	4	BOLT (M8X1.25X48.1-MM)	
Y	28	1	**233-7094**	1	PUMP GP-FUEL INJECTION	1190
	29	1	**233-7104**	1	GEAR-PUMP	
	30	2	**233-7214**	1	CABLE	
R	31	1	**233-7972**	4	INJECTOR AS-FUEL	
					(EACH INCLUDES)	
	32	1	**140-8718**	1	WASHER (7.49X15.75X1.68-MM THK)	
	33	1	**234-0387**	1	NOZZLE	
C	34	1	**232-1115**	1	CLIP-PIPE	

C - CHANGE FROM PREVIOUS TYPE
M - METRIC PART
R - REMANUFACTURED PART MAY BE AVAILABLE
Y - SEPARATE ILLUSTRATION

233-7974 **PUMP GP-FUEL INJECTION (**contd.**)** **i02756236**

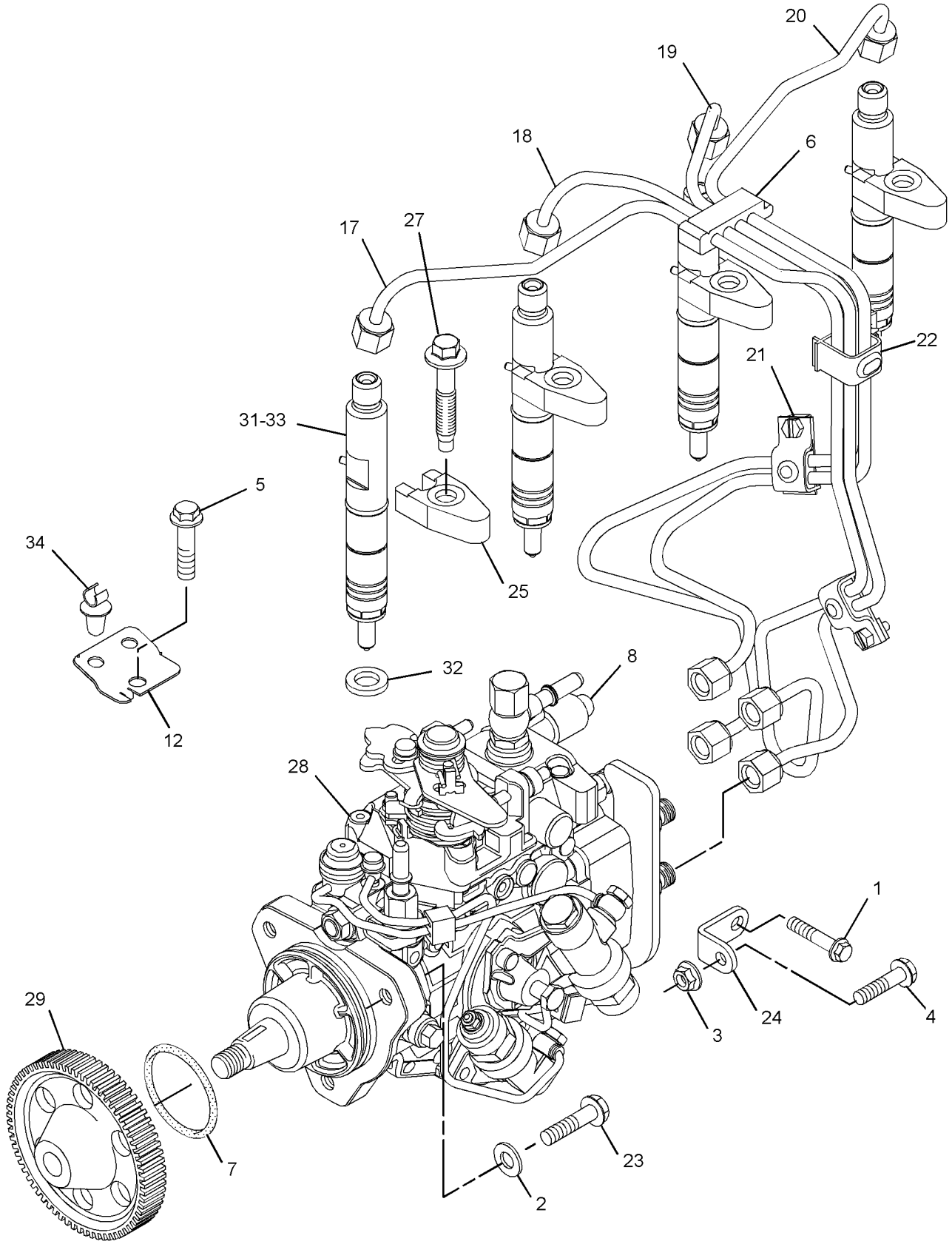

GRAPHIC #1 g01394311

233-7974 **PUMP GP-FUEL INJECTION (**contd.**)** **i02756236**

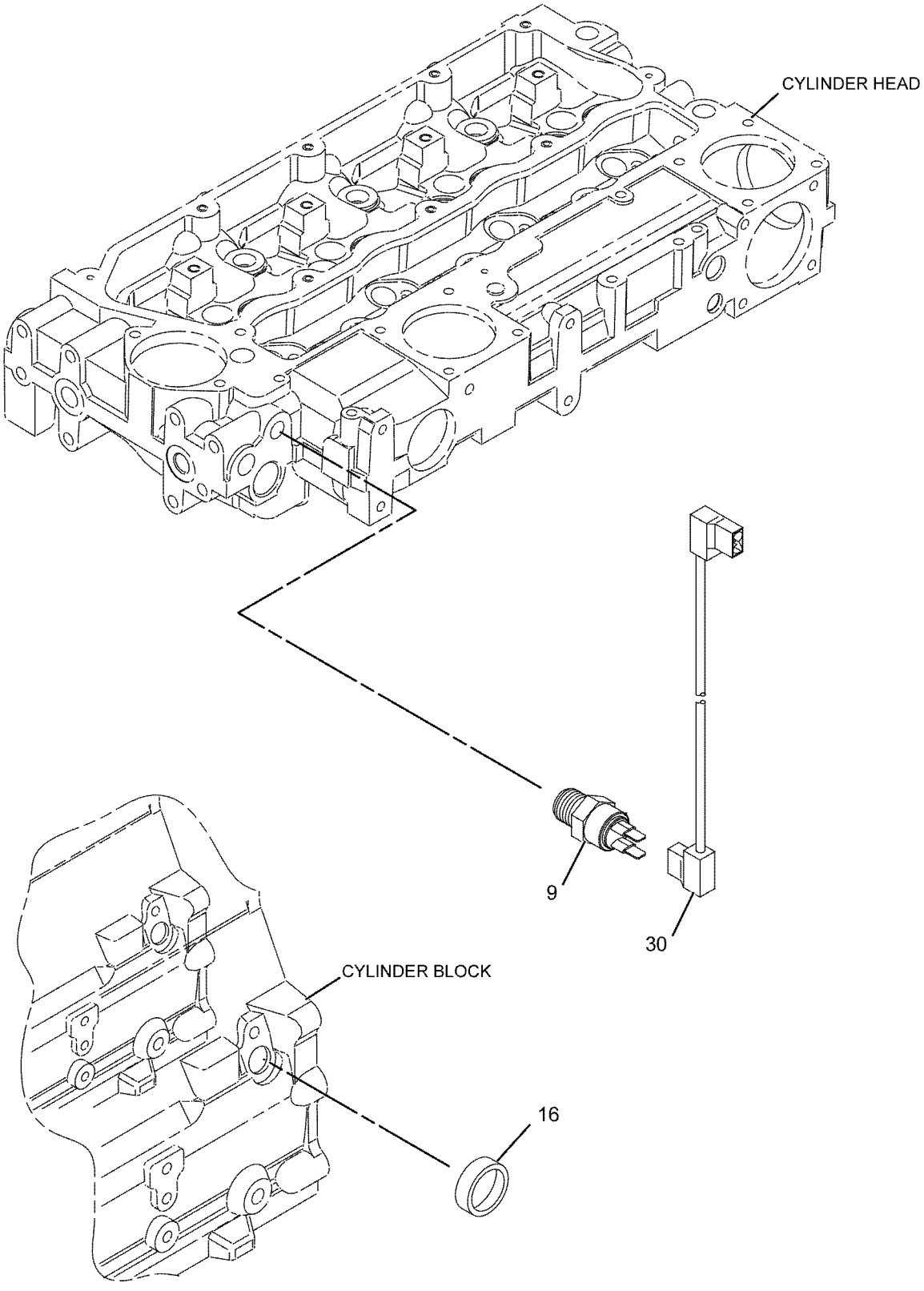

GRAPHIC #2 <END> g01068258

233-7974 PUMP GP-FUEL INJECTION

ALSO AN ATTACHMENT

TYPE 1

SMCS-1251, 1290 **i03232526**

NOTE	REF NO	GRAPHIC REF	PART NUMBER	QTY	PART NAME 1 2 3 4 5 6 (PRODUCT LEVEL)	SEE PAGE
M	1	1	**6I-0217**	1	BOLT (M8X1.25X20-MM)	
	2	1	**232-3149**	3	WASHER (8.35X16.85X1.55-MM THK)	
M	3	1	**6I-0291**	1	NUT (M8X1.25-THD)	
M	4	1	**100-4830**	1	BOLT (M10X1.5X20-MM)	
M	5	1	**124-3815**	1	BOLT (M8X1.25X16-MM)	
	6	1	**140-8714**	1	CLIP	
	7	1	**332-7549**	1	SEAL-O-RING	
	8	1	**155-8804**	1	CAP	
	9	2	**169-5326**	1	SWITCH-TEMPERATURE (TIMING ADVANCE)	
	10	1	**232-1328**	1	CAP (FUEL INJECTOR)	
	11	1	**232-1794**	3	HOSE (LEAK OFF)	
C	12	1	**240-5571**	1	BRACKET	
	16	2	**232-1323**	1	PLUG-CUP	
	17	1	**232-2720**	1	TUBE AS (CYL NO. 1) (CYL NO. 1)	
	18	1	**232-2721**	1	TUBE AS (CYL NO. 2) (CYL NO. 2)	
	19	1	**232-2722**	1	TUBE AS (CYL NO. 3) (CYL NO. 3)	
	20	1	**232-2723**	1	TUBE AS (CYL NO. 4) (CYL NO. 4)	
	21	1	**232-2725**	2	CLIP	
	22	1	**232-2726**	1	CLIP	
M	23	1	**6I-0260**	3	BOLT (M8X1.25X25-MM)	
	24	1	**232-3157**	1	BRACKET	
	25	1	**238-8671**	4	CLAMP-INJECTOR	
M	27	1	**232-3274**	4	BOLT (M8X1.25X48.1-MM)	
BJYR	28	1	**266-3715**	1	PUMP GP-FUEL INJECTION	1335
					—OR—	
BLYR		1	**266-3716**	1	PUMP GP-FUEL INJECTION	1336
					—OR—	
BNYR		1	**266-3718**	1	PUMP GP-FUEL INJECTION	1337
	29	1	**233-7104**	1	GEAR-PUMP	
	30	2	**232-1793**	1	CABLE	
R	31	1	**266-6830**	4	INJECTOR AS-FUEL	
					(EACH INCLUDES)	
	31A	1	**140-8718**	1	WASHER (7.49X15.75X1.68-MM THK)	
	31B	1	**234-0387**	1	NOZZLE	
	31C	1	**275-1038**	1	SEAL-O-RING	
C	32	1	**232-1115**	1	CLIP-PIPE	
F			**266-2994**	1	KIT-INJECTOR (FUEL)	

B - USE AS REQUIRED
C - CHANGE FROM PREVIOUS TYPE
F - NOT SHOWN
J - PUMP MARKED J IS FOR 2,200 RPM ENGINES ONLY
L - PUMP MARKED L IS FOR 2,300 RPM ENGINES ONLY
M - METRIC PART
N - PUMP MARKED N IS FOR 2,400 RPM ENGINES ONLY
R - REMANUFACTURED PART MAY BE AVAILABLE
Y - SEPARATE ILLUSTRATION

233-7974 **PUMP GP-FUEL INJECTION (**contd.**)** **i03232526**

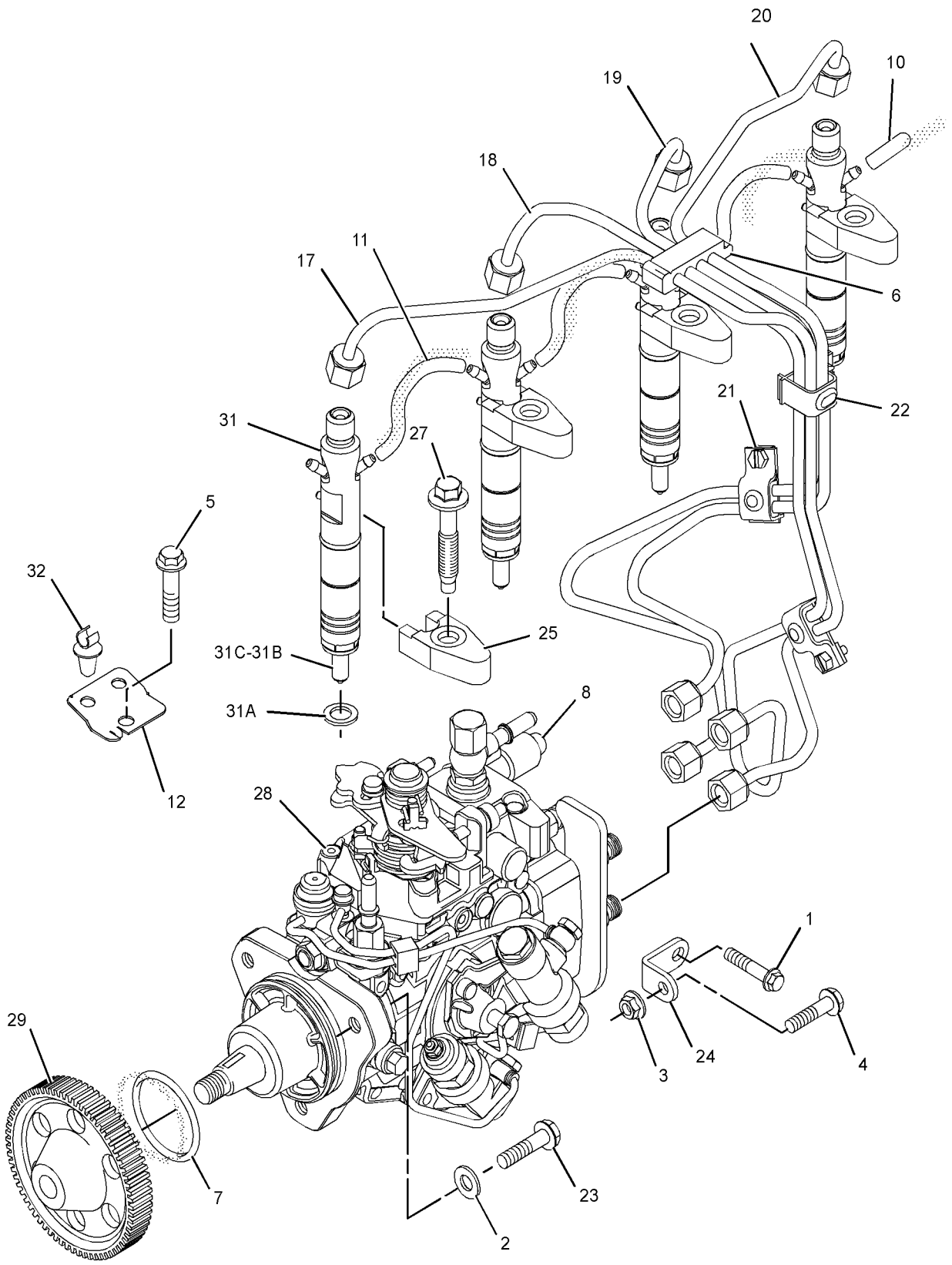

GRAPHIC #1 g01394288

233-7974 **PUMP GP-FUEL INJECTION (**contd.**)** **i03232526**

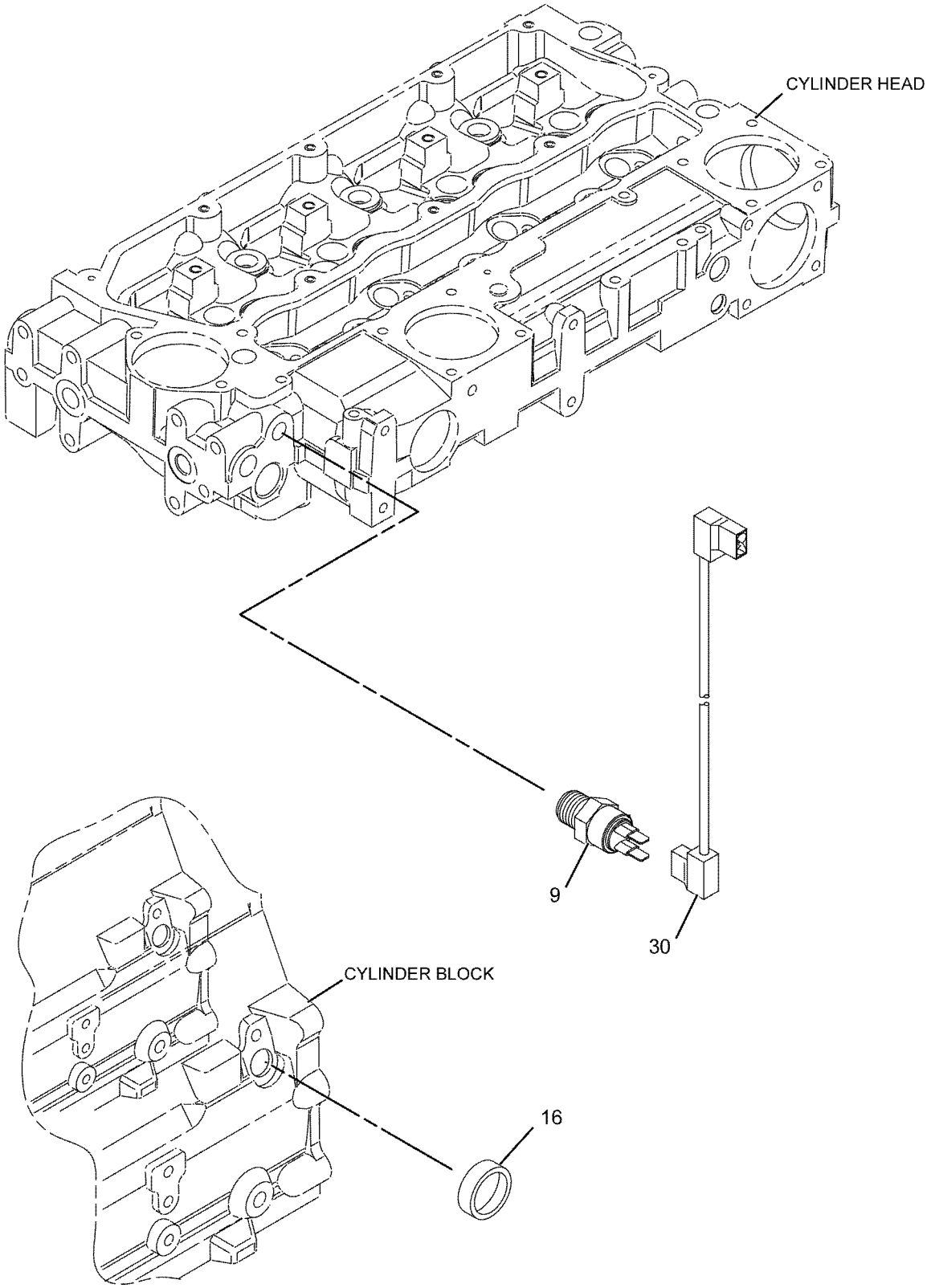

GRAPHIC #2 <END> g01068258

233-7974 PUMP GP-FUEL INJECTION

ALSO AN ATTACHMENT
TYPE 2

SMCS-1251, 1290 **i04711550**

NOTE	REF NO	GRAPHIC REF	PART NUMBER	QTY	PART NAME 1 2 3 4 5 6 (PRODUCT LEVEL)	SEE PAGE
M	1	1	**6I-0217**	1	BOLT (M8X1.25X20-MM)	
	2	1	**232-3149**	3	WASHER (8.35X16.85X1.55-MM THK)	
M	3	1	**6I-0291**	1	NUT (M8X1.25-THD)	
M	4	1	**100-4830**	1	BOLT (M10X1.5X20-MM)	
M	5	1	**124-3815**	1	BOLT (M8X1.25X16-MM)	
	6	1	**140-8714**	1	CLIP	
	7	1	**332-7549**	1	SEAL-O-RING	
	8	1	**155-8804**	1	CAP	
	9	2	**169-5326**	1	SWITCH-TEMPERATURE (TIMING ADVANCE)	
	10	1	**232-1328**	1	CAP (FUEL INJECTOR)	
	11	1	**232-1794**	3	HOSE (LEAK OFF)	
	12	1	**240-5571**	1	BRACKET	
	17	1	**232-2720**	1	TUBE AS (CYL NO. 1) (CYL NO. 1)	
	18	1	**232-2721**	1	TUBE AS (CYL NO. 2) (CYL NO. 2)	
	19	1	**232-2722**	1	TUBE AS (CYL NO. 3) (CYL NO. 3)	
	20	1	**232-2723**	1	TUBE AS (CYL NO. 4) (CYL NO. 4)	
	21	1	**232-2725**	2	CLIP	
	22	1	**232-2726**	1	CLIP	
M	23	1	**6I-0260**	3	BOLT (M8X1.25X25-MM)	
	24	1	**232-3157**	1	BRACKET	
	25	1	**238-8671**	4	CLAMP-INJECTOR	
M	27	1	**232-3274**	4	BOLT (M8X1.25X48.1-MM)	
BJYR	28	1	**266-3715**	1	PUMP GP-FUEL INJECTION	1335
					—OR—	
BLYR		1	**266-3716**	1	PUMP GP-FUEL INJECTION	1336
					—OR—	
BNYR		1	**266-3718**	1	PUMP GP-FUEL INJECTION	1337
	29	1	**233-7104**	1	GEAR-PUMP	
	30	2	**232-1793**	1	CABLE	
R	31	1	**266-6830**	4	INJECTOR AS-FUEL	
					(EACH INCLUDES)	
	31A	1	**140-8718**	1	WASHER (7.49X15.75X1.68-MM THK)	
	31B	1	**234-0387**	1	NOZZLE	
	31C	1	**275-1038**	1	SEAL-O-RING	
	32	1	**232-1115**	1	CLIP-PIPE	
F			**266-2994**	1	KIT-INJECTOR (FUEL)	

B - USE AS REQUIRED
F - NOT SHOWN
J - PUMP MARKED J IS FOR 2,200 RPM ENGINES ONLY
L - PUMP MARKED L IS FOR 2,300 RPM ENGINES ONLY
M - METRIC PART
N - PUMP MARKED N IS FOR 2,400 RPM ENGINES ONLY
R - REMANUFACTURED PART MAY BE AVAILABLE
Y - SEPARATE ILLUSTRATION

233-7974 **PUMP GP-FUEL INJECTION (**contd.**)** **i04711550**

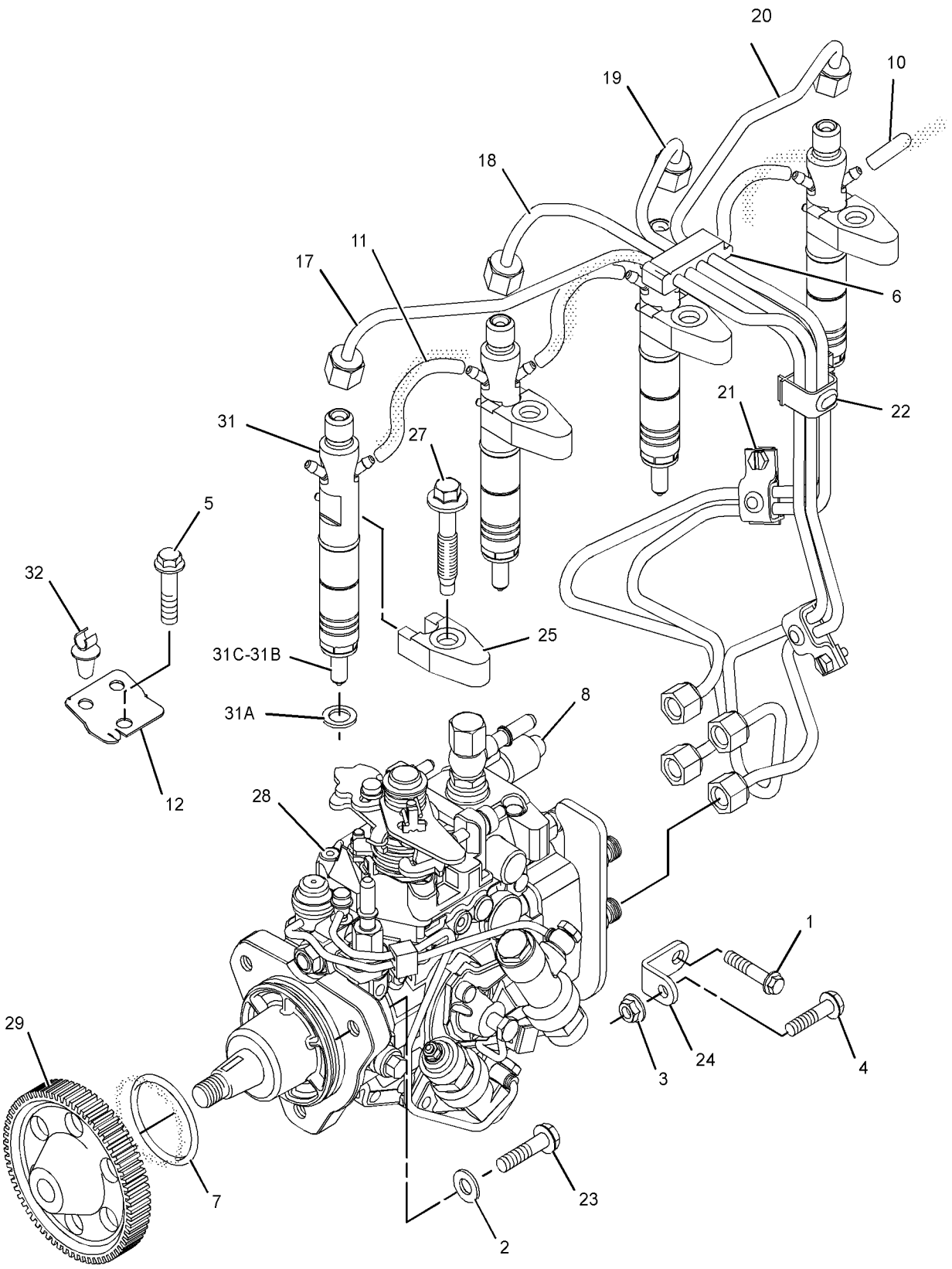

GRAPHIC #1 g01394288

233-7974 **PUMP GP-FUEL INJECTION (**contd.**)** **i04711550**

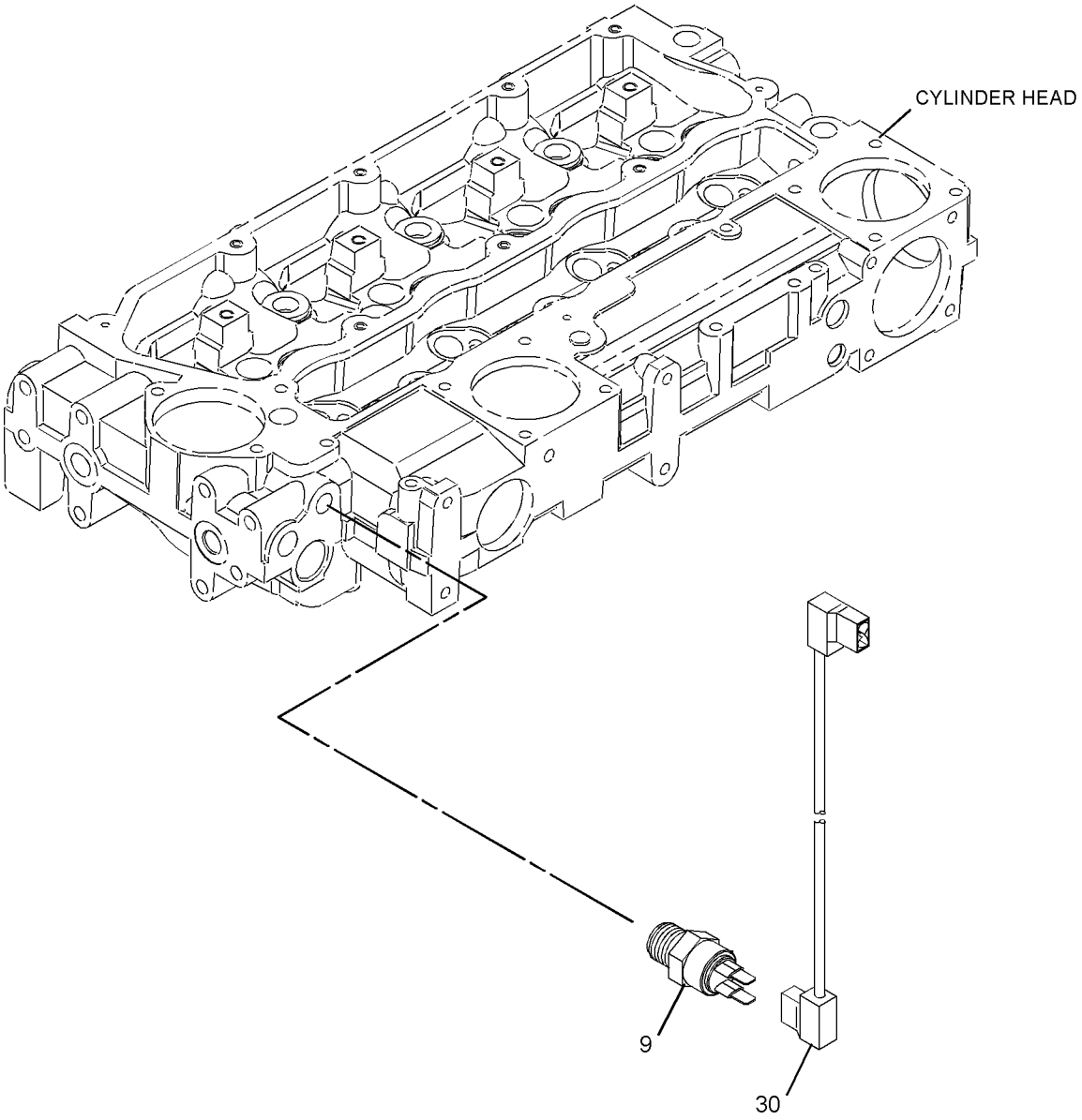

GRAPHIC #2 <END> g02819557

233-9404 PUMP GP-FUEL INJECTION

S/N: 3341-12706

FIELD REPLACEMENT ORDER 248-2359—PAGE: 1324, 248-2360—PAGE: 1325, 248-2361—PAGE: 1326

PART OF 233-9405 PUMP GP-FUEL INJECTION

ALSO AN ATTACHMENT

SMCS-1251, 1290

i02138791

NOTE	REF NO	GRAPHIC REF	PART NUMBER	QTY	PART NAME 1 2 3 4 5 6 (PRODUCT LEVEL)	SEE PAGE
	1	1	**152-3968**	1	SEAL-O-RING	
	2	1	**176-6219**	1	SOLENOID (12-VOLT) (FUEL SHUTOFF)	

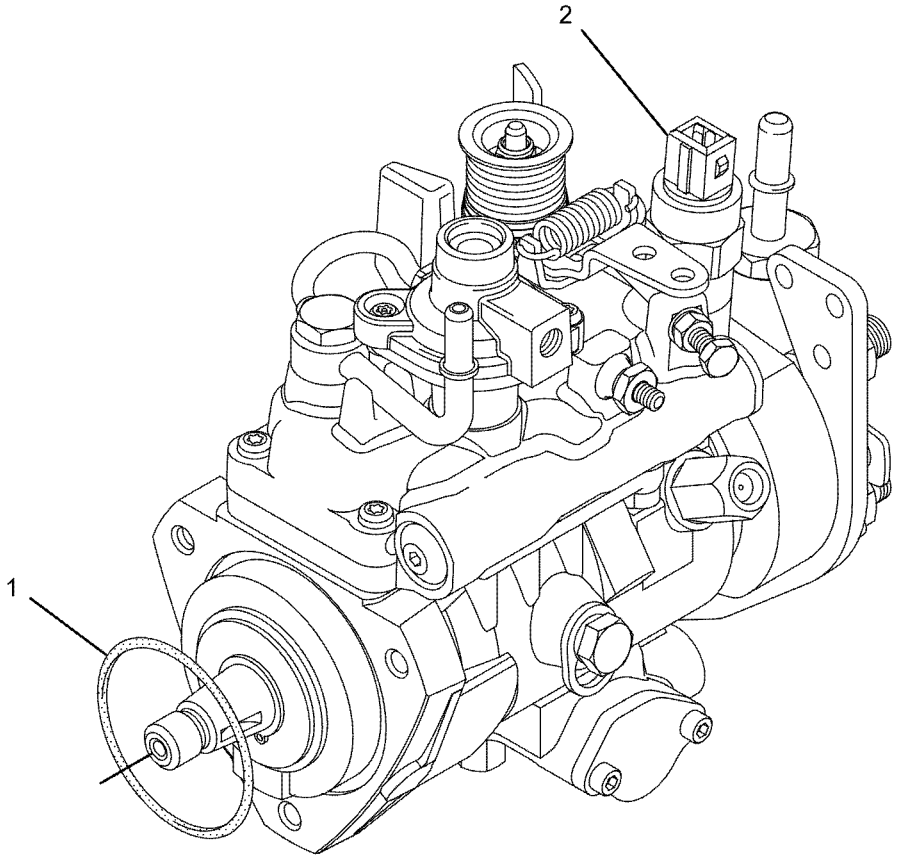

GRAPHIC #1

<END>

g01063733

233-9405 PUMP GP-FUEL INJECTION

S/N: 3341-280
ALSO AN ATTACHMENT

SMCS-1251, 1290 **i04711492**

NOTE	REF NO	GRAPHIC REF	PART NUMBER	QTY	PART NAME 1 2 3 4 5 6 (PRODUCT LEVEL)	SEE PAGE
M	1	1	**6I-0217**	1	BOLT (M8X1.25X20-MM)	
M	2	1	**6I-0260**	3	BOLT (M8X1.25X25-MM)	
M	3	1	**6I-0291**	1	NUT (M8X1.25-THD)	
	4	1	**035-8017**	1	UNION	
	5	1	**365-3308**	1	NUT-COMPRESSION (3/8-24-THD)	
	6	1	**067-6265**	1	FITTING-BRASS	
M	7	1	**100-4830**	1	BOLT (M10X1.5X20-MM)	
M	10	1	**124-3815**	1	BOLT (M8X1.25X16-MM)	
	11	1	**140-8714**	1	CLIP	
	12	2	**169-5326**	1	SWITCH-TEMPERATURE (TIMING ADVANCE)	
	13	2	**199-9252**	1	SEAL-O-RING	
	14	2	**199-9751**	1	SEAL-O-RING	
	15	1	**236-2144**	1	TUBE AS	
	16	1	**067-6999**	1	FERRULE	
	18	1	**230-8989**	1	GEAR-FUEL PUMP (68-TEETH)	
	19	1	**230-8995**	1	TUBE AS (CYL NO. 1)	
	20	1	**230-8996**	1	TUBE AS (CYL NO. 2)	
	21	1	**230-8997**	1	TUBE AS (CYL NO. 3)	
	22	1	**230-8998**	1	TUBE AS (CYL NO. 4)	
R	23	1	**236-1674**	4	INJECTOR AS-FUEL	
					(EACH INCLUDES)	
	23A	1	**140-8718**	1	WASHER (7.49X15.75X1.68-MM THK)	
	23B	1	**236-1673**	1	NOZZLE	
	23C	1	**275-1038**	1	SEAL-O-RING	
	25	1	**230-9527**	1	BRACKET	
	27	1	**232-1117**	1	CLIP-PIPE	
	28	2	**232-1295**	1	PLUG	
	29	2	**232-1322**	1	PLUG	
	30	2	**232-1323**	1	PLUG-CUP	
	31	1	**232-1328**	1	CAP	
	32	2	**232-1793**	1	CABLE	
	33	1	**232-1794**	3	HOSE	
	34	1	**232-2725**	2	CLIP	
	35	1	**232-2726**	1	CLIP	
	36	1	**232-3149**	3	WASHER (8.35X16.85X1.55-MM THK)	
	37	1	**232-3157**	2	BRACKET	
	38	1	**232-3158**	4	CLAMP-INJECTOR	
M	40	1	**232-3274**	4	BOLT (M8X1.25X48.1-MM)	
Y	41	1	**233-9404**	1	PUMP GP-FUEL INJECTION	1203
	42	1	**9X-0506**	1	TIE	
	43	1	**160-7197**	1	CLIP	

M - METRIC PART
R - REMANUFACTURED PART MAY BE AVAILABLE
Y - SEPARATE ILLUSTRATION

233-9405 **PUMP GP-FUEL INJECTION (**contd.**)** **i04711492**

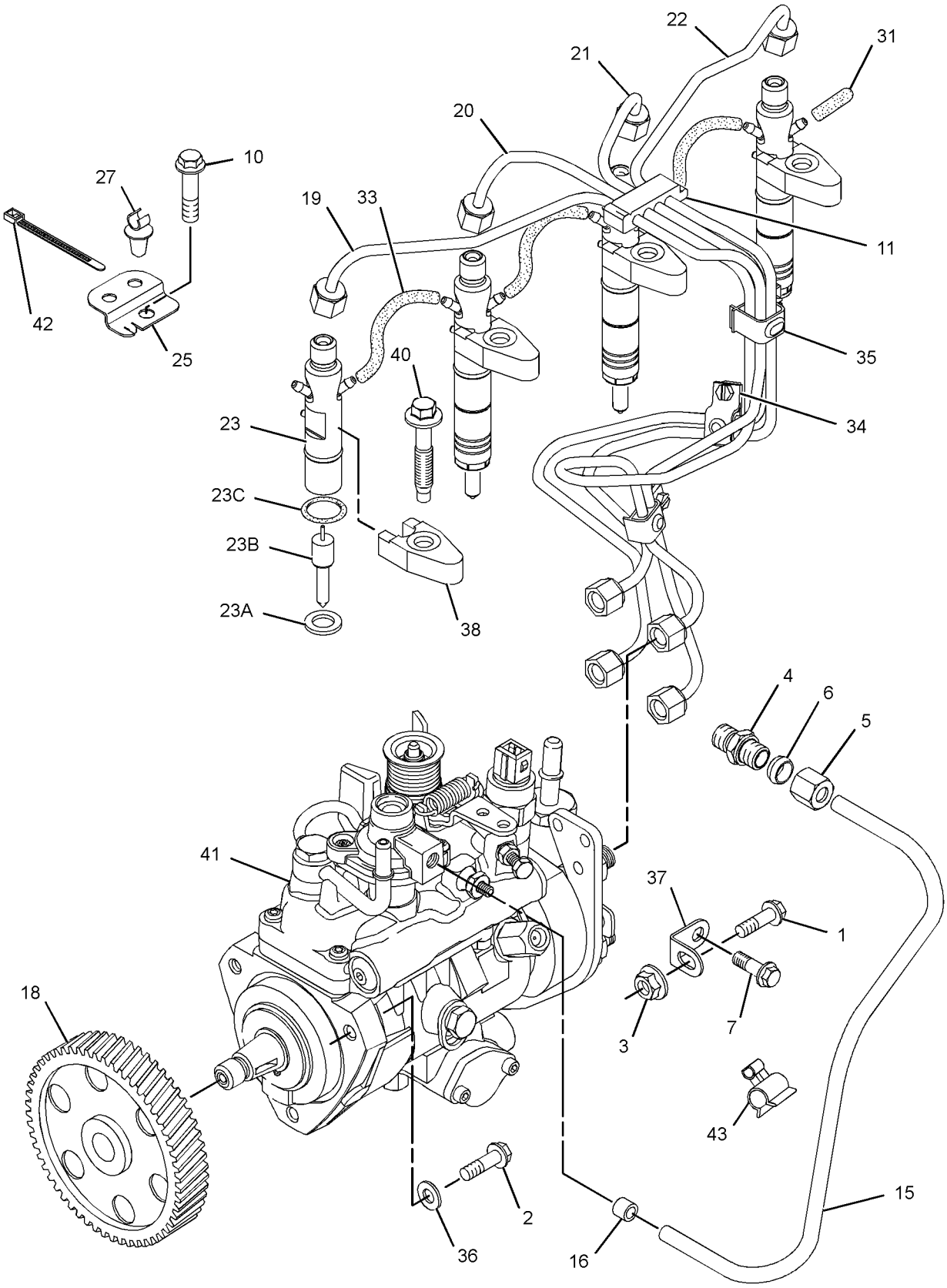

GRAPHIC #1 g01783355

233-9405 **PUMP GP-FUEL INJECTION (**contd.**)** **i04711492**

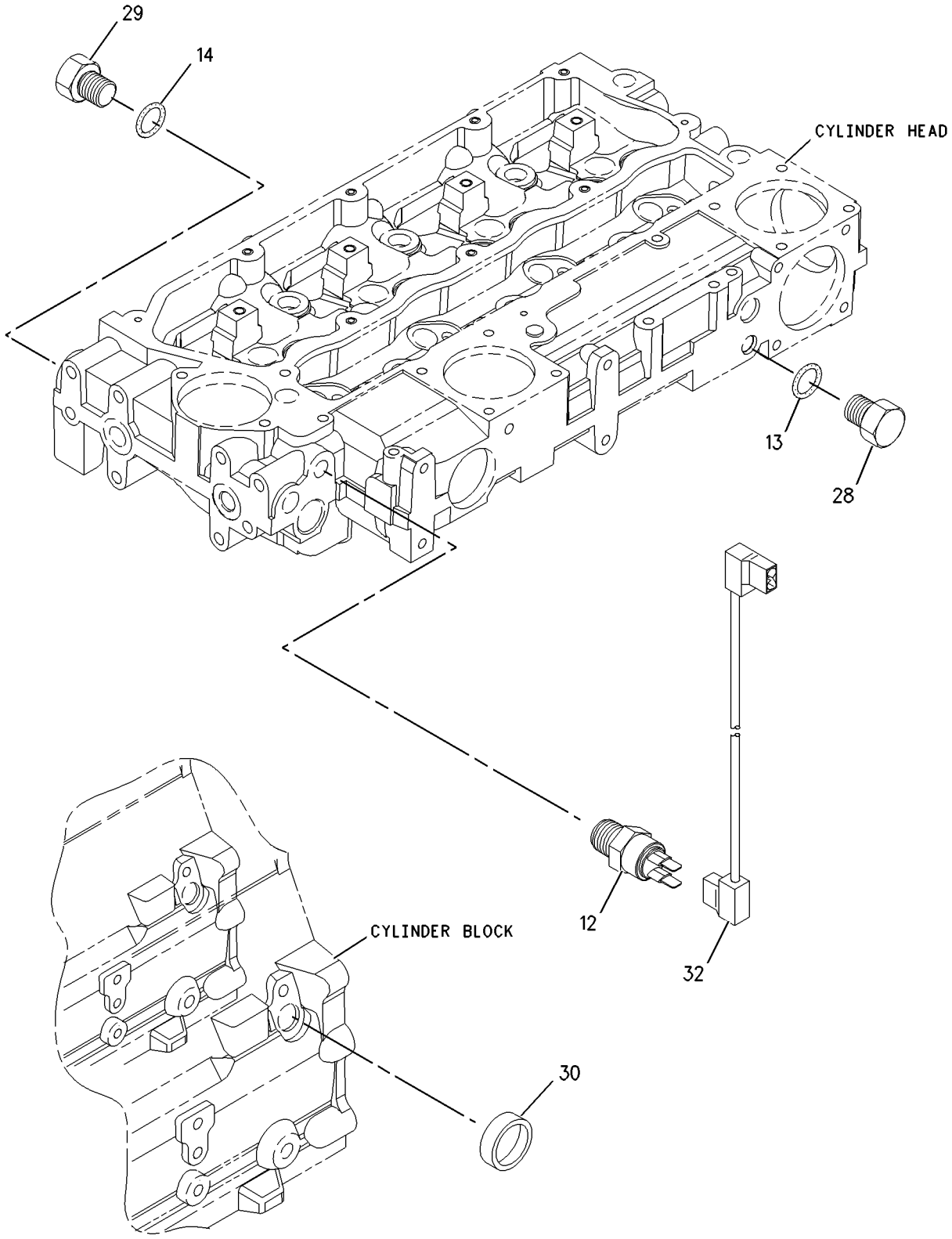

GRAPHIC #2 <END> g00956044

233-9405 PUMP GP-FUEL INJECTION

S/N: 3341-12706
ALSO AN ATTACHMENT

SMCS-1251, 1290 **i04711493**

NOTE	REF NO	GRAPHIC REF	PART NUMBER	QTY	PART NAME 1 2 3 4 5 6 (PRODUCT LEVEL)	SEE PAGE
M	1	1	**6I-0217**	1	BOLT (M8X1.25X20-MM)	
M	2	1	**6I-0260**	3	BOLT (M8X1.25X25-MM)	
M	3	1	**6I-0291**	1	NUT (M8X1.25-THD)	
	4	1	**035-8017**	1	UNION	
	5	1	**365-3308**	1	NUT-COMPRESSION (3/8-24-THD)	
	6	1	**067-6265**	1	FITTING-BRASS	
M	7	1	**100-4830**	1	BOLT (M10X1.5X20-MM)	
M	10	1	**124-3815**	1	BOLT (M8X1.25X16-MM)	
	11	1	**140-8714**	1	CLIP	
	12	2	**169-5326**	1	SWITCH-TEMPERATURE (TIMING ADVANCE)	
	13	2	**199-9252**	1	SEAL-O-RING	
	14	2	**199-9751**	1	SEAL-O-RING	
	15	1	**236-2144**	1	TUBE AS	
	15A	1	**067-6999**	1	FERRULE	
	18	1	**230-8989**	1	GEAR-FUEL PUMP (68-TEETH)	
	19	1	**230-8995**	1	TUBE AS (CYL NO. 1)	
	20	1	**230-8996**	1	TUBE AS (CYL NO. 2)	
	21	1	**230-8997**	1	TUBE AS (CYL NO. 3)	
	22	1	**230-8998**	1	TUBE AS (CYL NO. 4)	
R	23	1	**236-1674**	4	INJECTOR AS-FUEL	
					(EACH INCLUDES)	
	23A	1	**140-8718**	1	WASHER (7.49X15.75X1.68-MM THK)	
	23B	1	**236-1673**	1	NOZZLE	
	23C	1	**275-1038**	1	SEAL-O-RING	
C	25	1	**240-5571**	1	BRACKET	
C	27	1	**232-3126**	1	CLIP	
	28	2	**232-1295**	1	PLUG	
	29	2	**232-1322**	1	PLUG	
	30	2	**232-1323**	1	PLUG-CUP	
	31	1	**232-1328**	1	CAP	
	32	2	**232-1793**	1	CABLE	
	33	1	**232-1794**	3	HOSE	
	34	1	**232-2725**	2	CLIP	
	35	1	**232-2726**	1	CLIP	
	36	1	**232-3149**	3	WASHER (8.35X16.85X1.55-MM THK)	
	37	1	**232-3157**	2	BRACKET	
	38	1	**238-8671**	4	CLAMP-INJECTOR	
M	40	1	**232-3274**	4	BOLT (M8X1.25X48.1-MM)	
Y	41	1	**233-9404**	1	PUMP GP-FUEL INJECTION	1203
	42	1	**318-2365**	1	CLIP	

C - CHANGE FROM PREVIOUS TYPE
M - METRIC PART
R - REMANUFACTURED PART MAY BE AVAILABLE
Y - SEPARATE ILLUSTRATION

233-9405 **PUMP GP-FUEL INJECTION (**contd.**)** **i04711493**

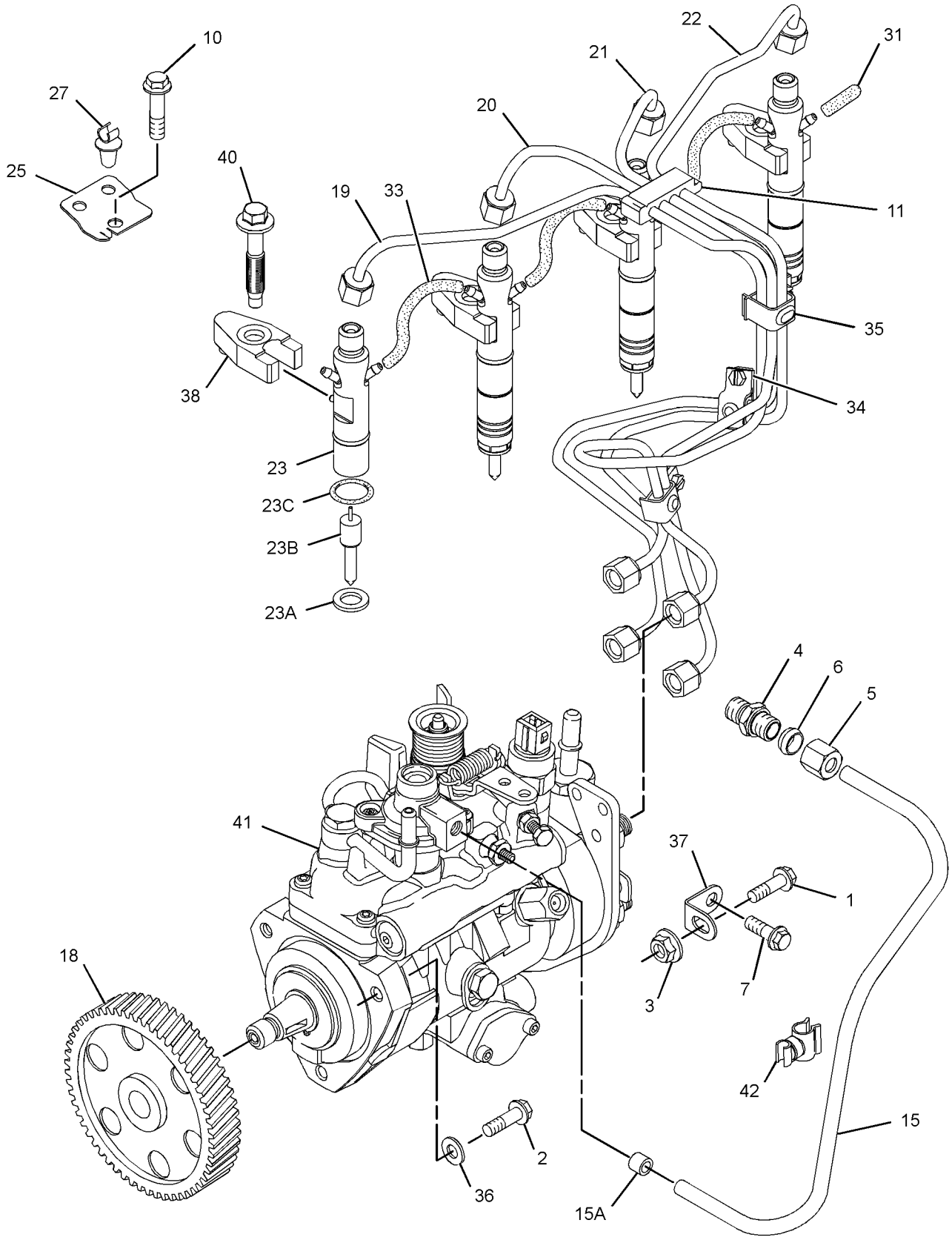

GRAPHIC #1 g01734154

233-9405 **PUMP GP-FUEL INJECTION (**contd.**)** **i04711493**

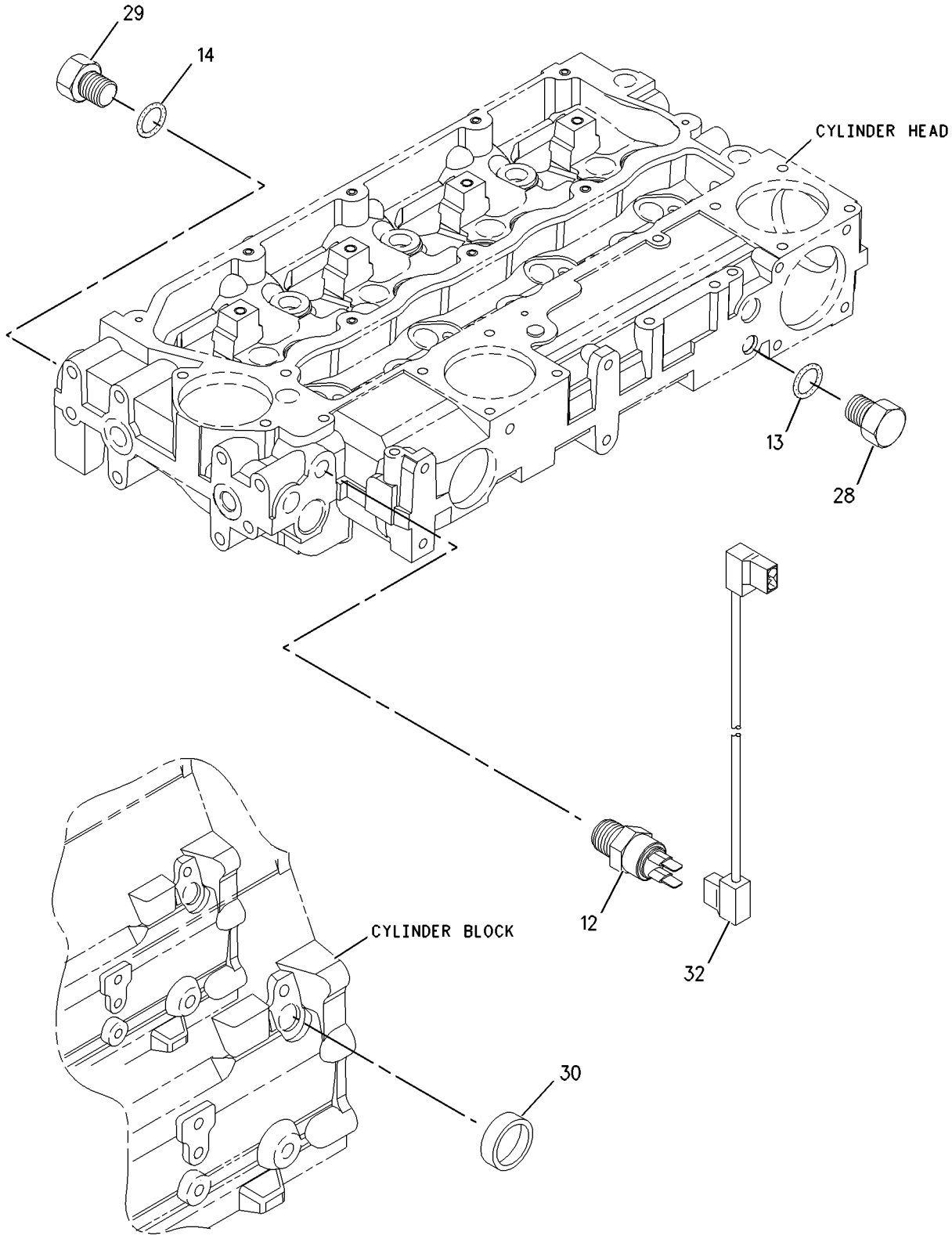

GRAPHIC #2 <END> g00956044

233-9405 PUMP GP-FUEL INJECTION

S/N: 33412707-UP
ALSO AN ATTACHMENT
TYPE 1

SMCS-1251, 1290 **i04711494**

NOTE	REF NO	GRAPHIC REF	PART NUMBER	QTY	PART NAME 1 2 3 4 5 6 (PRODUCT LEVEL)	SEE PAGE
M	1	1	**6I-0217**	1	BOLT (M8X1.25X20-MM)	
M	2	1	**6I-0260**	3	BOLT (M8X1.25X25-MM)	
M	3	1	**6I-0291**	1	NUT (M8X1.25-THD)	
	4	1	**035-8017**	1	UNION	
	5	1	**365-3308**	1	NUT-COMPRESSION (3/8-24-THD)	
	6	1	**067-6265**	1	FITTING-BRASS	
M	7	1	**100-4830**	1	BOLT (M10X1.5X20-MM)	
M	10	1	**124-3815**	1	BOLT (M8X1.25X16-MM)	
	11	1	**140-8714**	1	CLIP	
	12	2	**169-5326**	1	SWITCH-TEMPERATURE (TIMING ADVANCE)	
	13	2	**199-9252**	1	SEAL-O-RING	
	14	2	**199-9751**	1	SEAL-O-RING	
	15	1	**236-2144**	1	TUBE AS	
	15A	1	**067-6999**	1	FERRULE	
	18	1	**230-8989**	1	GEAR-FUEL PUMP (68-TEETH)	
	19	1	**230-8995**	1	TUBE AS (CYL NO. 1)	
	20	1	**230-8996**	1	TUBE AS (CYL NO. 2)	
	21	1	**230-8997**	1	TUBE AS (CYL NO. 3)	
	22	1	**230-8998**	1	TUBE AS (CYL NO. 4)	
R	23	1	**236-1674**	4	INJECTOR AS-FUEL	
					(EACH INCLUDES)	
	23A	1	**140-8718**	1	WASHER (7.49X15.75X1.68-MM THK)	
	23B	1	**236-1673**	1	NOZZLE	
	23C	1	**275-1038**	1	SEAL-O-RING	
	25	1	**240-5571**	1	BRACKET	
	27	1	**232-3126**	1	CLIP	
	28	2	**232-1295**	1	PLUG	
	29	2	**232-1322**	1	PLUG	
	30	2	**232-1323**	1	PLUG-CUP	
	31	1	**232-1328**	1	CAP	
	32	2	**232-1793**	1	CABLE	
	33	1	**232-1794**	3	HOSE	
	34	1	**232-2725**	2	CLIP	
	35	1	**232-2726**	1	CLIP	
	36	1	**232-3149**	3	WASHER (8.35X16.85X1.55-MM THK)	
	37	1	**232-3157**	2	BRACKET	
	38	1	**238-8671**	4	CLAMP-INJECTOR	
M	40	1	**232-3274**	4	BOLT (M8X1.25X48.1-MM)	
CY	41	1	**333-8056**	1	PUMP GP-FUEL INJECTION	1480
	42	1	**318-2365**	1	CLIP	

C - CHANGE FROM PREVIOUS TYPE
M - METRIC PART
R - REMANUFACTURED PART MAY BE AVAILABLE
Y - SEPARATE ILLUSTRATION

233-9405 **PUMP GP-FUEL INJECTION (**contd.**)** **i04711494**

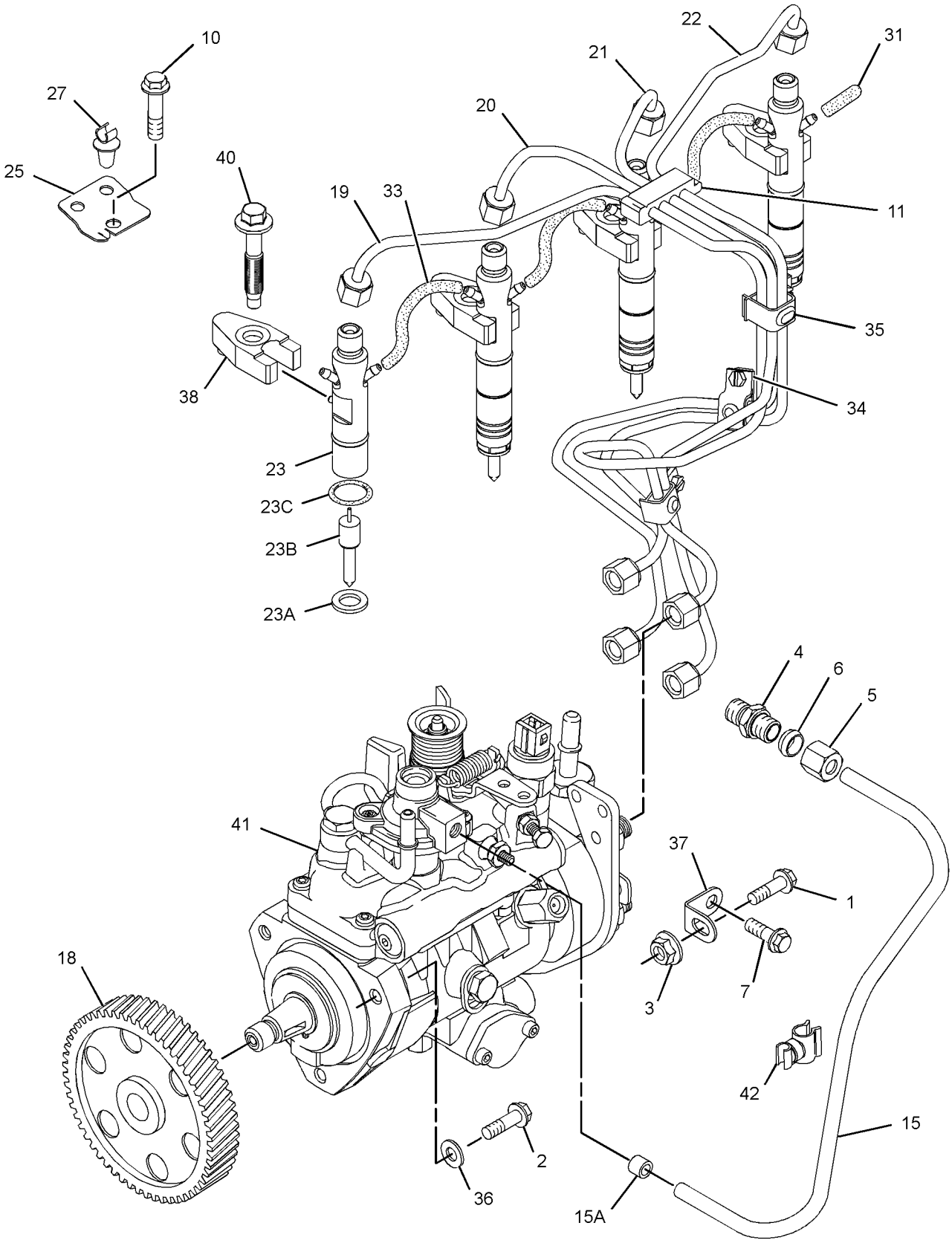

GRAPHIC #1 g01734154

233-9405 **PUMP GP-FUEL INJECTION (**contd.**)** **i04711494**

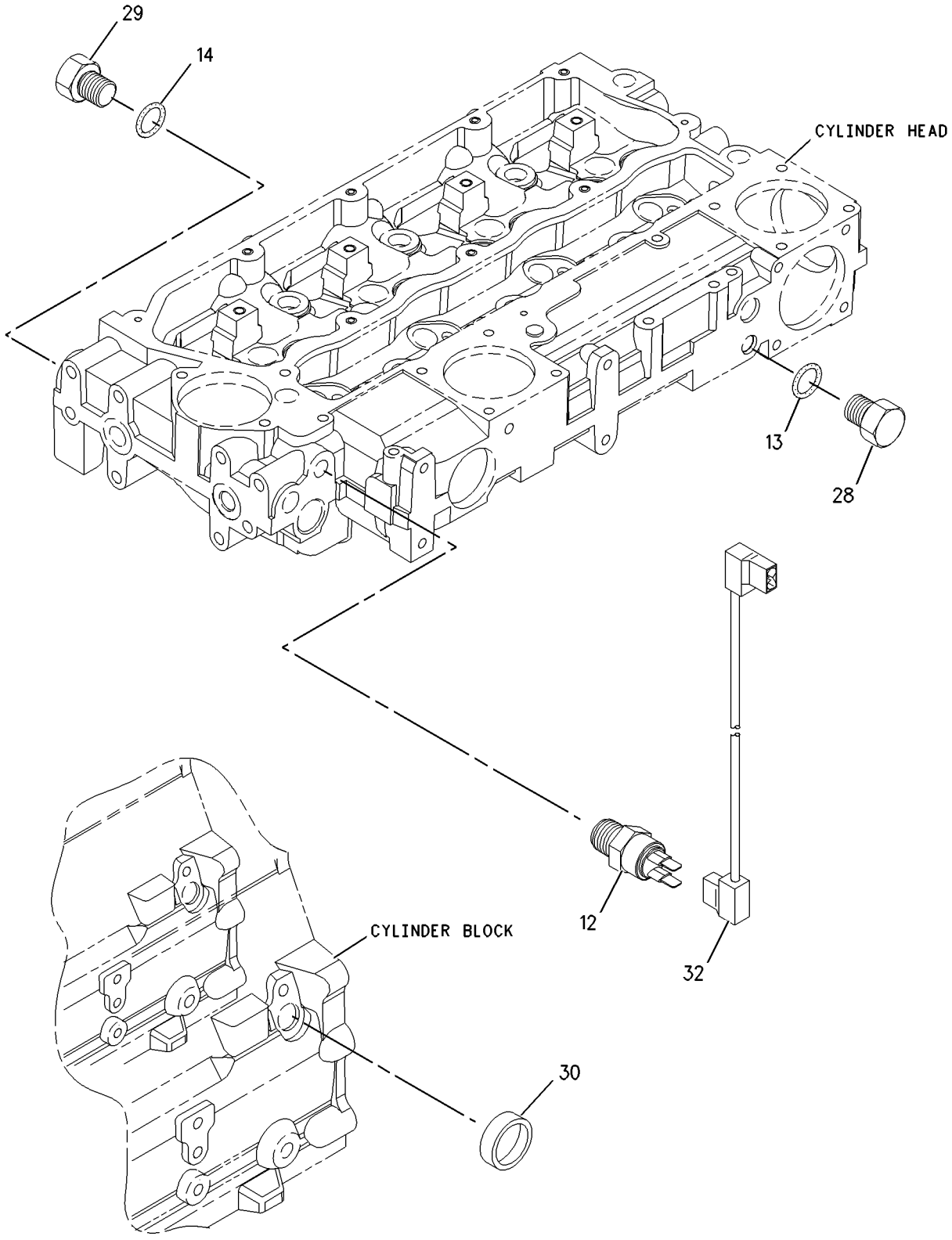

GRAPHIC #2 <END> g00956044

233-9405 PUMP GP-FUEL INJECTION

S/N: 33412707-UP
ALSO AN ATTACHMENT
TYPE 2

SMCS-1251, 1290 **i08268892**

NOTE	REF NO	GRAPHIC REF	PART NUMBER	QTY	PART NAME 1 2 3 4 5 6 (PRODUCT LEVEL)	SEE PAGE
M	1	1	**6I-0217**	1	BOLT (M8X1.25X20-MM)	
M	2	1	**6I-0260**	3	BOLT (M8X1.25X25-MM)	
M	3	1	**6I-0291**	1	NUT (M8X1.25-THD)	
	4	1	**035-8017**	1	UNION	
	5	1	**365-3308**	1	NUT-COMPRESSION (3/8-24-THD)	
	6	1	**067-6265**	1	FITTING-BRASS	
M	7	1	**100-4830**	1	BOLT (M10X1.5X20-MM)	
M	10	1	**124-3815**	1	BOLT (M8X1.25X16-MM)	
	12	2	**169-5326**	1	SWITCH-TEMPERATURE (TIMING ADVANCE)	
	13	2	**199-9252**	1	SEAL-O-RING	
	14	2	**199-9751**	1	SEAL-O-RING	
	15	1	**236-2144**	1	TUBE AS	
	18	1	**425-7107**	1	GEAR-FUEL PUMP (68-TEETH)	
R	23	1	**236-1674**	4	INJECTOR AS-FUEL	
					(EACH INCLUDES)	
	23A	1	**140-8718**	1	WASHER (7.49X15.75X1.68-MM THK)	
	23B	1	**236-1673**	1	NOZZLE	
	23C	1	**275-1038**	1	SEAL-O-RING	
	25	1	**240-5571**	1	BRACKET	
	27	1	**232-3126**	1	CLIP	
	28	2	**232-1295**	1	PLUG	
	29	2	**232-1322**	1	PLUG	
	31	1	**232-1328**	1	CAP	
	32	2	**232-1793**	1	CABLE	
	33	1	**232-1794**	3	HOSE	
	36	1	**232-3149**	3	WASHER (8.35X16.85X1.55-MM THK)	
	37	1	**232-3157**	2	BRACKET	
	38	1	**238-8671**	4	CLAMP-INJECTOR	
M	40	1	**232-3274**	4	BOLT (M8X1.25X48.1-MM)	
Y	41	1	**333-8056**	1	PUMP GP-FUEL INJECTION	1480
	42	1	**318-2365**	1	CLIP	
Y	43	1	*495-3762*	1	LINES GP-FUEL INJECTION	1173

M - METRIC PART
R - REMANUFACTURED PART MAY BE AVAILABLE
Y - SEPARATE ILLUSTRATION

233-9405 **PUMP GP-FUEL INJECTION (**contd.**)** **i08268892**

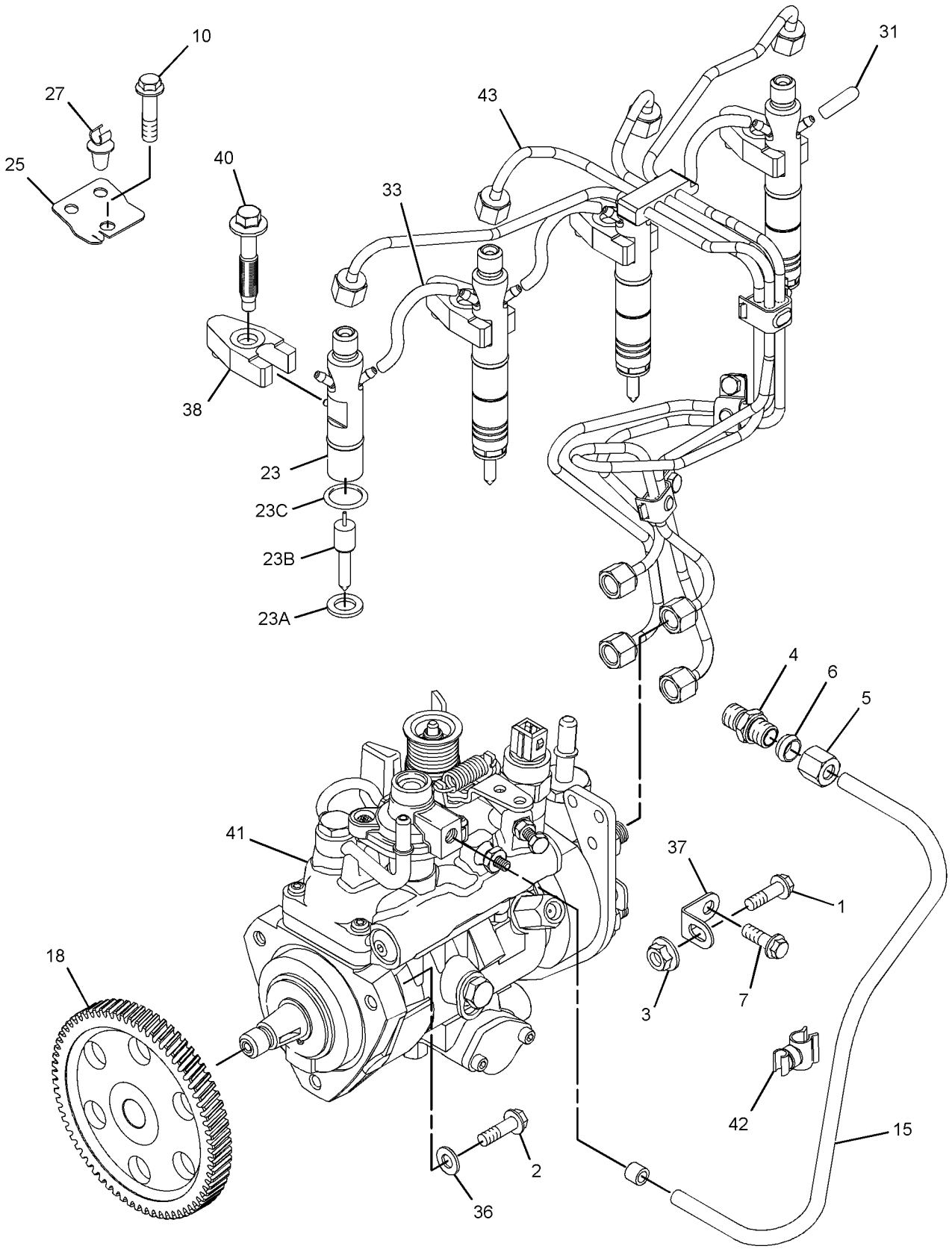

GRAPHIC #1 g06747475

233-9405 **PUMP GP-FUEL INJECTION (**contd.**)** **i08268892**

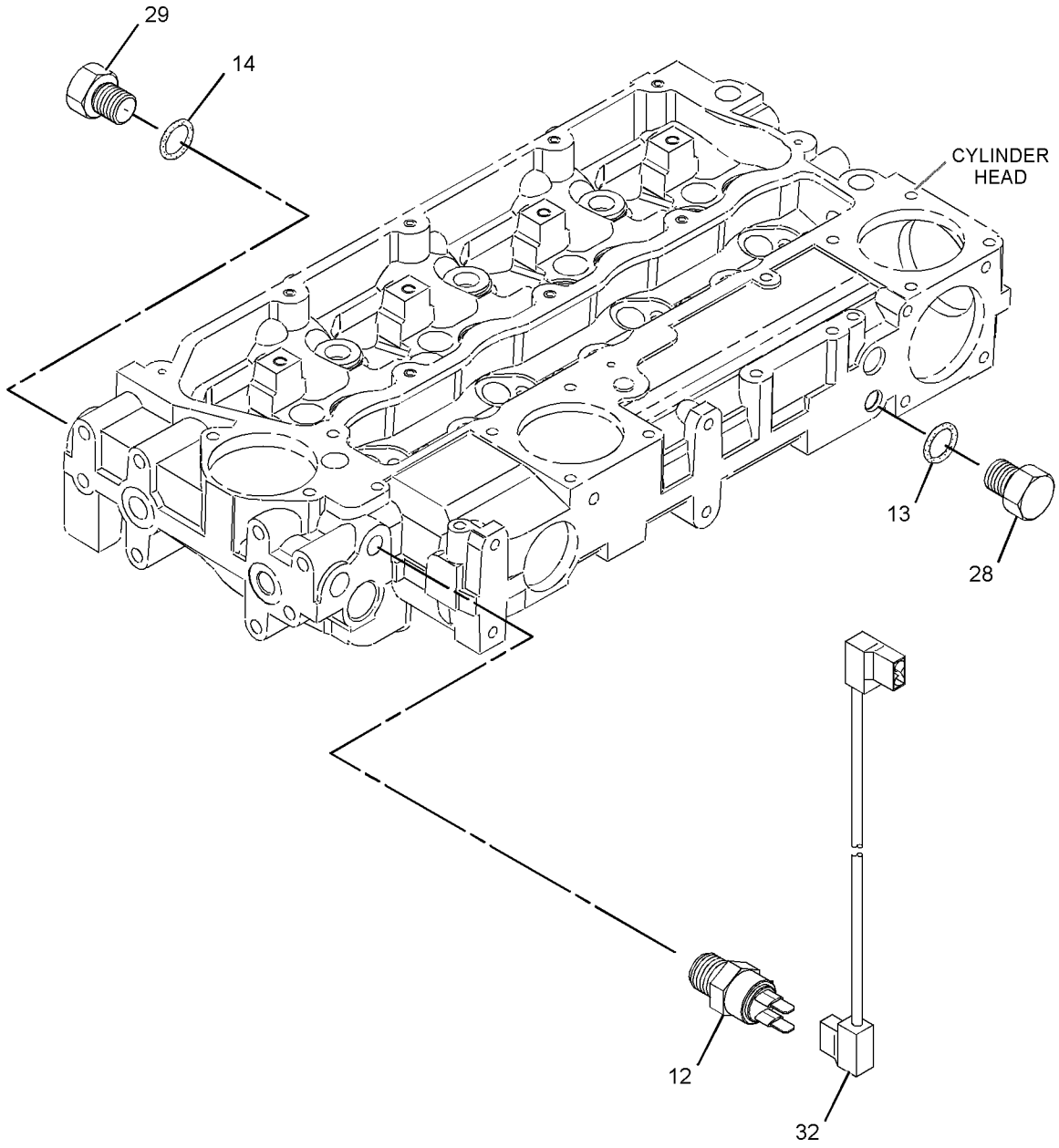

GRAPHIC #2 <END> g03011425

233-9526 PUMP GP-FUEL INJECTION

S/N: 3341-280
ALSO AN ATTACHMENT

SMCS-1251, 1290 **i04882572**

NOTE	REF NO	GRAPHIC REF	PART NUMBER	QTY	PART NAME 1 2 3 4 5 6 (PRODUCT LEVEL)	SEE PAGE
M	1	1	**6I-0217**	1	BOLT (M8X1.25X20-MM)	
M	2	1	**6I-0260**	3	BOLT (M8X1.25X25-MM)	
M	3	1	**6I-0291**	1	NUT (M8X1.25-THD)	
	4	1	**035-8017**	1	UNION	
	5	1	**365-3308**	1	NUT-COMPRESSION (3/8-24-THD)	
	6	1	**067-6265**	1	FITTING-BRASS	
M	7	1	**100-4830**	1	BOLT (M10X1.5X20-MM)	
M	8	1	**111-3422**	1	NUT (M14X1.5-THD)	
	9	1	**111-3423**	1	WASHER	
M	10	1	**124-3815**	1	BOLT (M8X1.25X16-MM)	
	11	1	**140-8714**	1	CLIP	
	12	2	**169-5326**	1	SWITCH-TEMPERATURE (TIMING ADVANCE)	
	13	2	**199-9252**	1	SEAL-O-RING	
	14	2	**199-9751**	2	SEAL-O-RING	
	15	1	**236-2144**	1	TUBE AS	
	15A	1	**067-6999**	1	FERRULE	
	15B	1	**106-8835**	1	NUT	
	16	1	**230-8989**	1	GEAR-FUEL PUMP (68-TEETH)	
	17	1	**230-8995**	1	TUBE AS (CYL NO. 1)	
	18	1	**230-8996**	1	TUBE AS (CYL NO. 2)	
	19	1	**230-8997**	1	TUBE AS (CYL NO. 3)	
	20	1	**230-8998**	1	TUBE AS (CYL NO. 4)	
R	21	1	**230-8999**	4	INJECTOR AS-FUEL	
					(EACH INCLUDES)	
	21A	1	**140-8718**	1	WASHER (7.49X15.75X1.68-MM THK)	
	22	1	**230-9527**	1	BRACKET	
	24	1	**232-1117**	1	CLIP-PIPE	
	25	2	**232-1295**	1	PLUG	
	26	2	**232-1322**	2	PLUG	
	27	2	**232-1323**	1	PLUG-CUP	
	28	1	**232-1328**	1	CAP	
	29	2	**232-1793**	1	CABLE	
	30	1	**232-1794**	3	HOSE	
	31	1	**232-2725**	2	CLIP	
	32	1	**232-2726**	1	CLIP	
	33	1	**232-3149**	3	WASHER (8.35X16.85X1.55-MM THK)	
	34	1	**232-3157**	1	BRACKET	
	35	1	**232-3158**	4	CLAMP-INJECTOR	
M	36	1	**232-3274**	4	BOLT (M8X1.25X48.1-MM)	
Y	37	1	**236-6910**	1	PUMP GP-FUEL INJECTION	1253
	38	1	**9X-0506**	1	TIE	
F			**232-3263**	3	CLIP-PIPE	

F - NOT SHOWN
M - METRIC PART
R - REMANUFACTURED PART MAY BE AVAILABLE
Y - SEPARATE ILLUSTRATION

233-9526 **PUMP GP-FUEL INJECTION (**contd.**)** **i04882572**

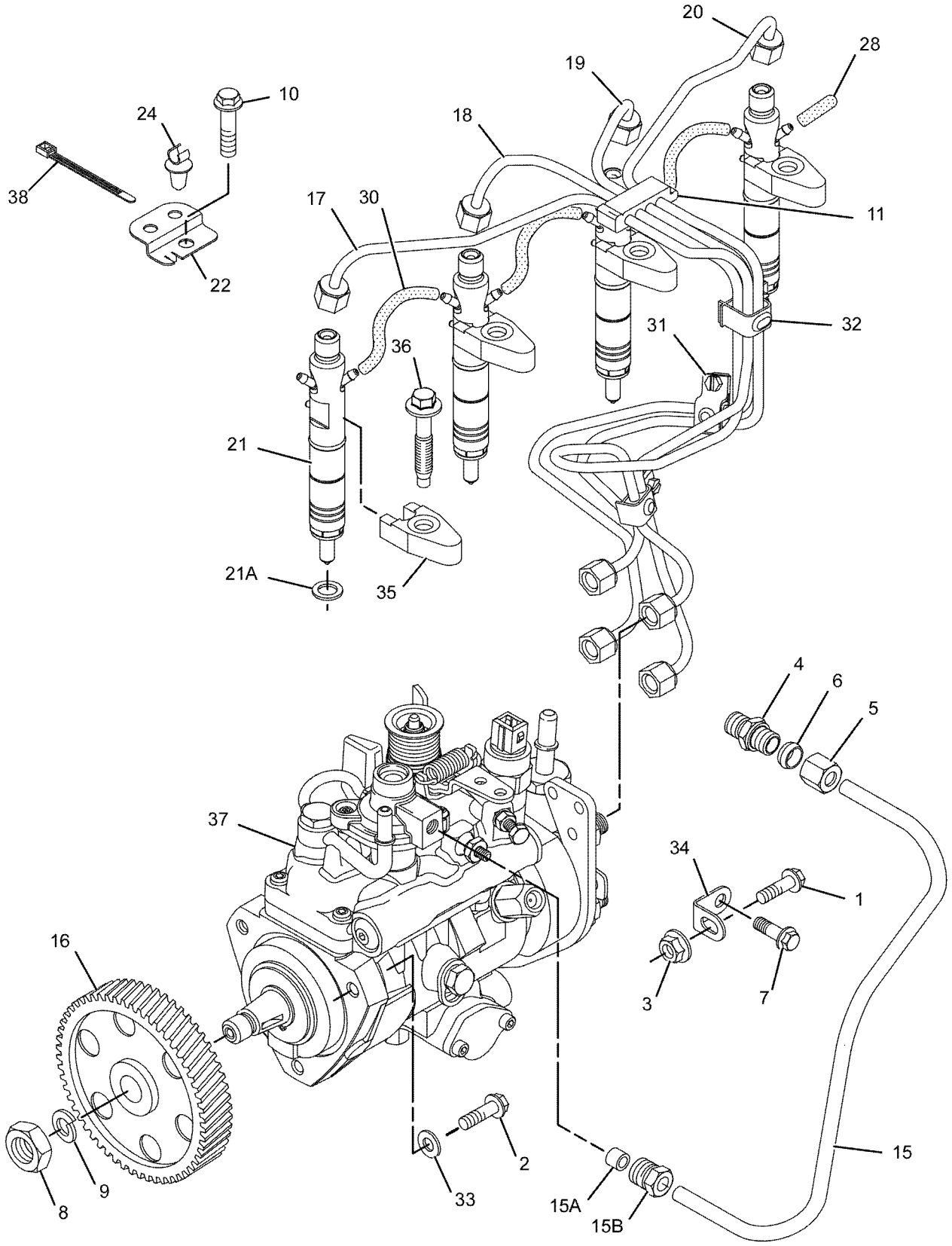

GRAPHIC #1 g01086714

233-9526 **PUMP GP-FUEL INJECTION (**contd.**)** **i04882572**

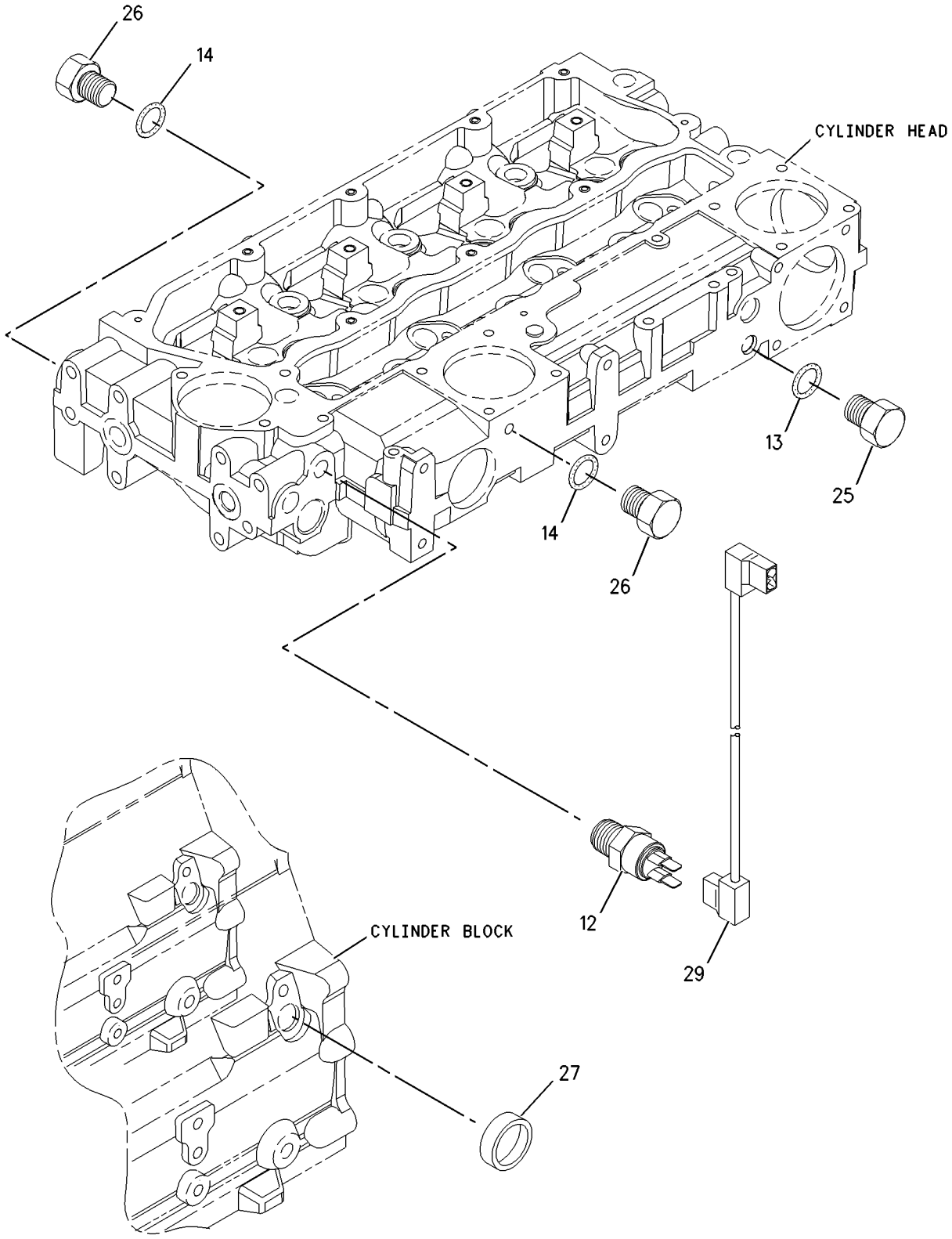

GRAPHIC #2 <END> g01003060

233-9526 PUMP GP-FUEL INJECTION

S/N: 334281-UP
ALSO AN ATTACHMENT
TYPE 1

SMCS-1251, 1290 **i04882571**

NOTE	REF NO	GRAPHIC REF	PART NUMBER	QTY	PART NAME 1 2 3 4 5 6 (PRODUCT LEVEL)	SEE PAGE
M	1	1	**6I-0217**	1	BOLT (M8X1.25X20-MM)	
M	2	1	**6I-0260**	3	BOLT (M8X1.25X25-MM)	
M	3	1	**6I-0291**	1	NUT (M8X1.25-THD)	
	4	1	**035-8017**	1	UNION	
	5	1	**365-3308**	1	NUT-COMPRESSION (3/8-24-THD)	
	6	1	**067-6265**	1	FITTING-BRASS	
M	7	1	**100-4830**	1	BOLT (M10X1.5X20-MM)	
M	8	1	**111-3422**	1	NUT (M14X1.5-THD)	
	9	1	**111-3423**	1	WASHER	
M	10	1	**124-3815**	1	BOLT (M8X1.25X16-MM)	
	11	1	**140-8714**	1	CLIP	
	12	2	**169-5326**	1	SWITCH-TEMPERATURE (TIMING ADVANCE)	
	13	2	**199-9252**	1	SEAL-O-RING	
	14	2	**199-9751**	2	SEAL-O-RING	
	15	1	**236-2144**	1	TUBE AS	
	15A	1	**067-6999**	1	FERRULE	
	15B	1	**106-8835**	1	NUT	
	16	1	**230-8989**	1	GEAR-FUEL PUMP (68-TEETH)	
	17	1	**230-8995**	1	TUBE AS (CYL NO. 1)	
	18	1	**230-8996**	1	TUBE AS (CYL NO. 2)	
	19	1	**230-8997**	1	TUBE AS (CYL NO. 3)	
	20	1	**230-8998**	1	TUBE AS (CYL NO. 4)	
R	21	1	**230-8999**	4	INJECTOR AS-FUEL	
					(EACH INCLUDES)	
	21A	1	**140-8718**	1	WASHER (7.49X15.75X1.68-MM THK)	
C	22	1	**240-5571**	1	BRACKET	
	25	2	**232-1295**	1	PLUG	
	26	2	**232-1322**	2	PLUG	
	27	2	**232-1323**	1	PLUG-CUP	
	28	1	**232-1328**	1	CAP	
	29	2	**232-1793**	1	CABLE	
	30	1	**232-1794**	3	HOSE	
	31	1	**232-2725**	2	CLIP	
	32	1	**232-2726**	1	CLIP	
	33	1	**232-3149**	3	WASHER (8.35X16.85X1.55-MM THK)	
	34	1	**232-3157**	1	BRACKET	
	35	1	**238-8671**	4	CLAMP-INJECTOR	
M	36	1	**232-3274**	4	BOLT (M8X1.25X48.1-MM)	
Y	37	1	**236-6910**	1	PUMP GP-FUEL INJECTION	1253
	38	1	**160-7197**	1	CLIP	
F			**232-3263**	3	CLIP-PIPE	

C - CHANGE FROM PREVIOUS TYPE
F - NOT SHOWN
M - METRIC PART
R - REMANUFACTURED PART MAY BE AVAILABLE
Y - SEPARATE ILLUSTRATION

233-9526 **PUMP GP-FUEL INJECTION (**contd.**)** **i04882571**

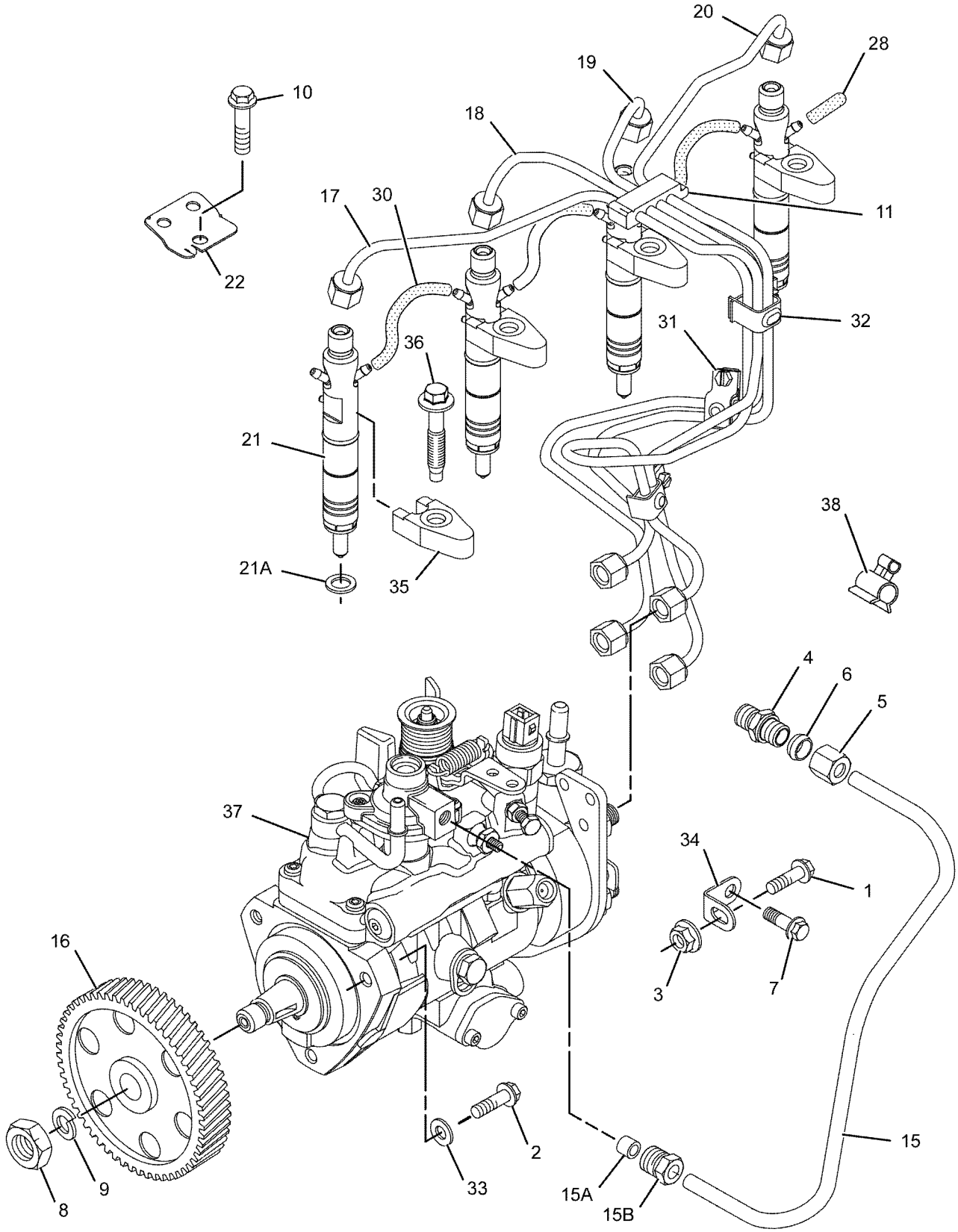

GRAPHIC #1 g01047405

233-9526 **PUMP GP-FUEL INJECTION (**contd.**)** **i04882571**

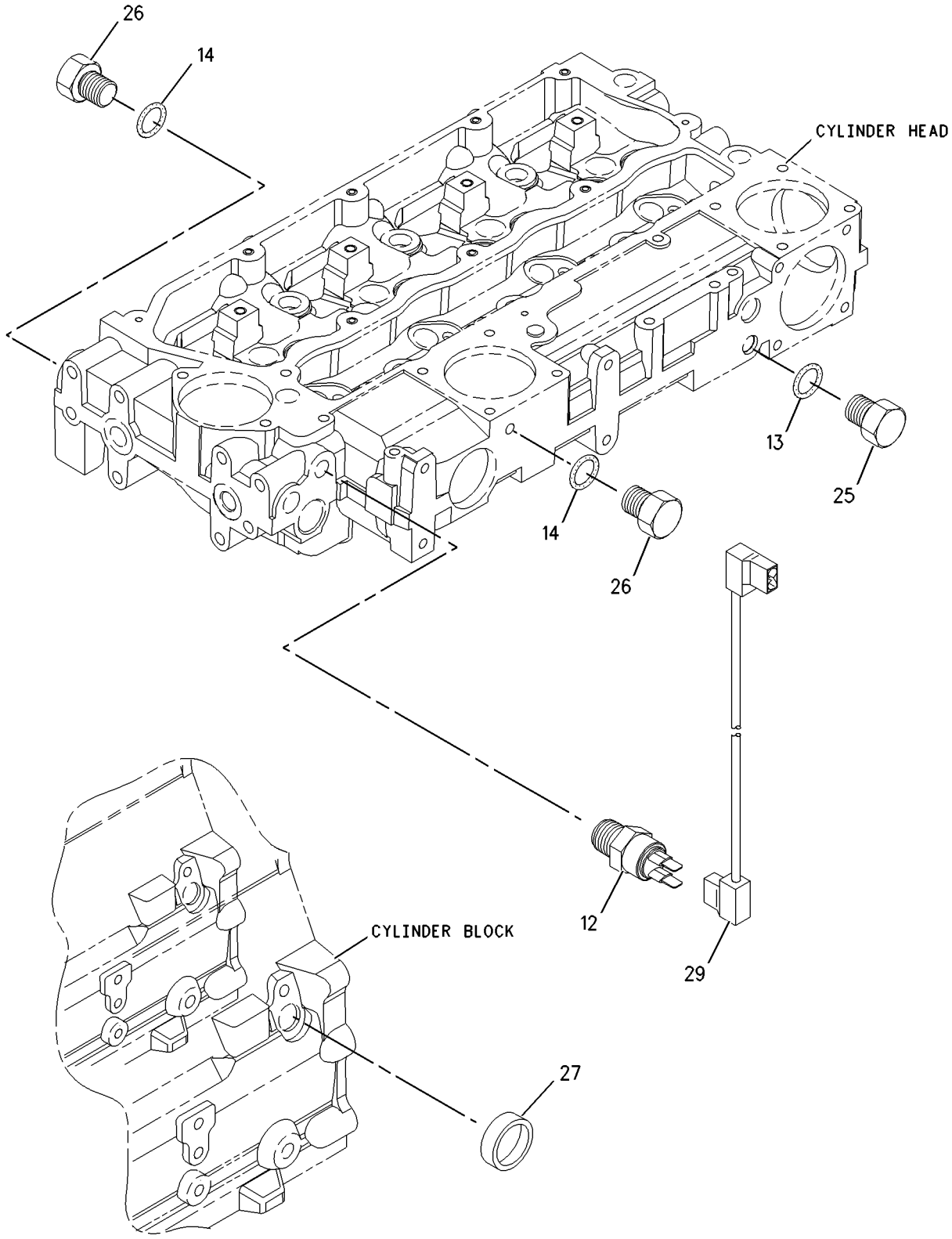

GRAPHIC #2 <END> g01003060

233-9526 PUMP GP-FUEL INJECTION

S/N: 334281-UP
ALSO AN ATTACHMENT
TYPE 2

SMCS-1251, 1290

i04882570

NOTE	REF NO	GRAPHIC REF	PART NUMBER	QTY	PART NAME 1 2 3 4 5 6 (PRODUCT LEVEL)	SEE PAGE
M	1	1	**6I-0217**	1	BOLT (M8X1.25X20-MM)	
M	2	1	**6I-0260**	3	BOLT (M8X1.25X25-MM)	
M	3	1	**6I-0291**	1	NUT (M8X1.25-THD)	
	4	1	**035-8017**	1	UNION	
	5	1	**365-3308**	1	NUT-COMPRESSION (3/8-24-THD)	
	6	1	**067-6265**	1	FITTING-BRASS	
M	7	1	**100-4830**	1	BOLT (M10X1.5X20-MM)	
M	8	1	**111-3422**	1	NUT (M14X1.5-THD)	
	9	1	**111-3423**	1	WASHER	
M	10	1	**124-3815**	1	BOLT (M8X1.25X16-MM)	
	11	1	**140-8714**	1	CLIP	
	12	2	**169-5326**	1	SWITCH-TEMPERATURE (TIMING ADVANCE)	
	13	2	**199-9252**	1	SEAL-O-RING	
	14	2	**199-9751**	2	SEAL-O-RING	
	15	1	**236-2144**	1	TUBE AS	
	15A	1	**067-6999**	1	FERRULE	
	16	1	**230-8989**	1	GEAR-FUEL PUMP (68-TEETH)	
	17	1	**230-8995**	1	TUBE AS (CYL NO. 1)	
	18	1	**230-8996**	1	TUBE AS (CYL NO. 2)	
	19	1	**230-8997**	1	TUBE AS (CYL NO. 3)	
	20	1	**230-8998**	1	TUBE AS (CYL NO. 4)	
R	21	1	**230-8999**	4	INJECTOR AS-FUEL	
					(EACH INCLUDES)	
	21A	1	**140-8718**	1	WASHER (7.49X15.75X1.68-MM THK)	
	21B	1	**232-2724**	1	NOZZLE	
	21C	1	**275-1038**	1	SEAL-O-RING	
C	22	1	**240-5571**	1	BRACKET	
	25	2	**232-1295**	1	PLUG	
	26	2	**232-1322**	2	PLUG	
	27	2	**232-1323**	1	PLUG-CUP	
	28	1	**232-1328**	1	CAP	
	29	2	**232-1793**	1	CABLE	
	30	1	**232-1794**	3	HOSE	
	31	1	**232-2725**	2	CLIP	
	32	1	**232-2726**	1	CLIP	
	33	1	**232-3149**	3	WASHER (8.35X16.85X1.55-MM THK)	
	34	1	**232-3157**	1	BRACKET	
	35	1	**238-8671**	4	CLAMP-INJECTOR	
M	36	1	**232-3274**	4	BOLT (M8X1.25X48.1-MM)	
Y	37	1	*284-4999*	1	PUMP GP-FUEL INJECTION	1436
	38	1	**318-2365**	1	CLIP	
F			**232-3263**	3	CLIP-PIPE	

C - CHANGE FROM PREVIOUS TYPE
F - NOT SHOWN
M - METRIC PART
R - REMANUFACTURED PART MAY BE AVAILABLE
Y - SEPARATE ILLUSTRATION

233-9526 **PUMP GP-FUEL INJECTION (**contd.**)** **i04882570**

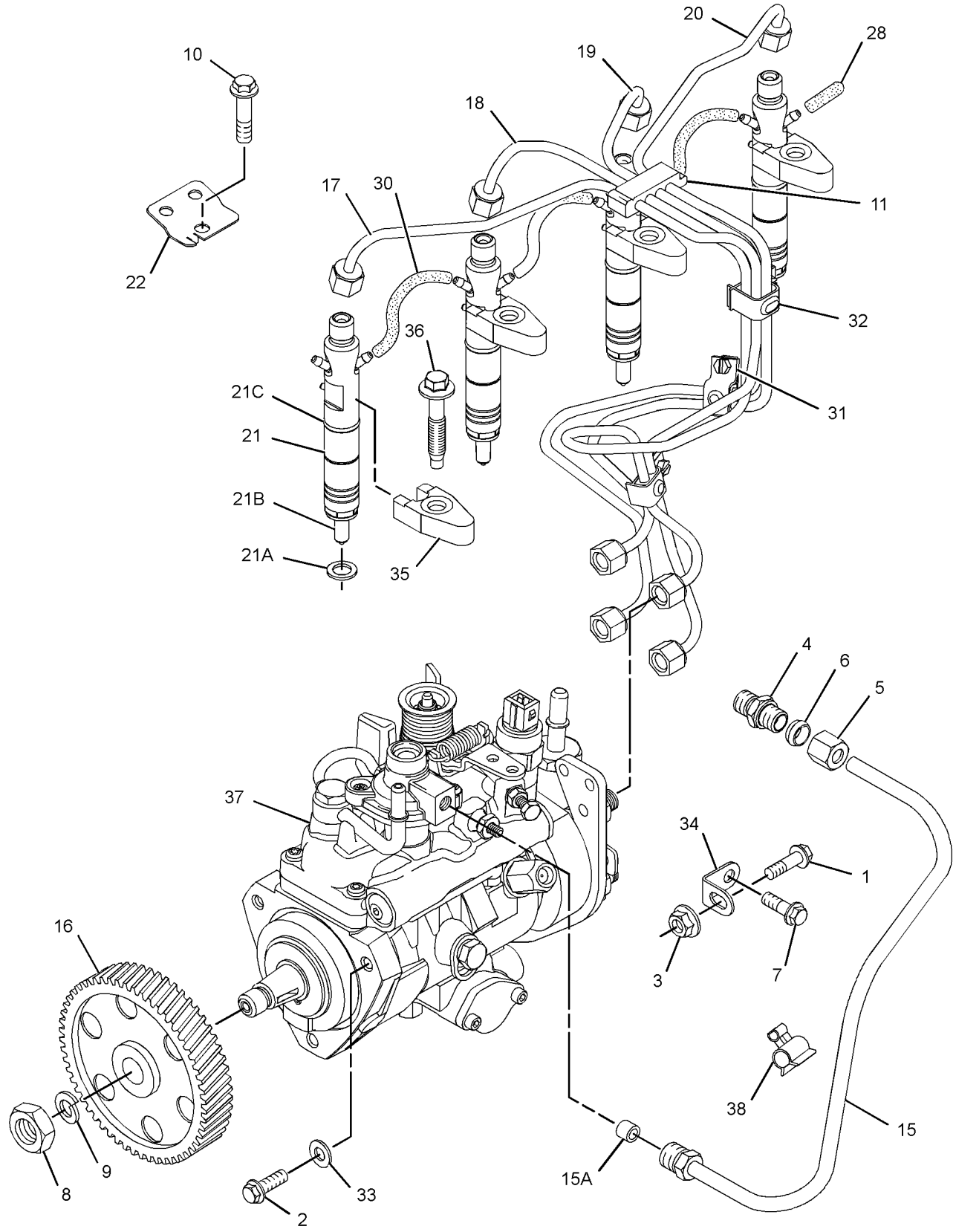

GRAPHIC #1 g01720798

233-9526 **PUMP GP-FUEL INJECTION (**contd.**)** **i04882570**

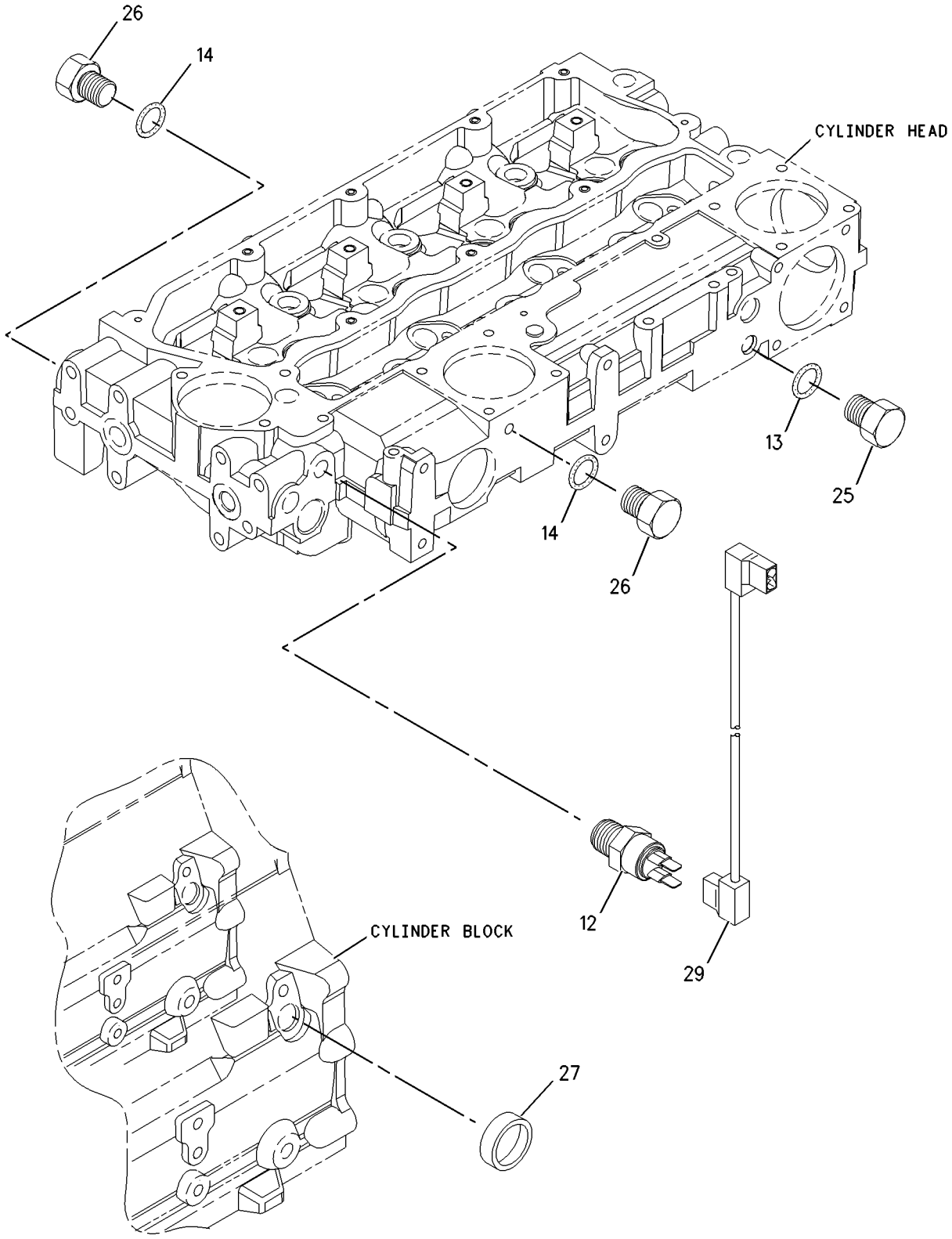

GRAPHIC #2 <END> g01003060

233-9526 PUMP GP-FUEL INJECTION

S/N: 334281-UP
ALSO AN ATTACHMENT
TYPE 3

SMCS-1251, 1290 **i04882770**

NOTE	REF NO	GRAPHIC REF	PART NUMBER	QTY	PART NAME 1 2 3 4 5 6 (PRODUCT LEVEL)	SEE PAGE
M	1	1	**6I-0217**	1	BOLT (M8X1.25X20-MM)	
M	2	1	**6I-0260**	3	BOLT (M8X1.25X25-MM)	
M	3	1	**6I-0291**	1	NUT (M8X1.25-THD)	
	4	1	**035-8017**	1	UNION	
	5	1	**365-3308**	1	NUT-COMPRESSION (3/8-24-THD)	
	6	1	**067-6265**	1	FITTING-BRASS	
M	7	1	**100-4830**	1	BOLT (M10X1.5X20-MM)	
M	8	1	**111-3422**	1	NUT (M14X1.5-THD)	
	9	1	**111-3423**	1	WASHER	
M	10	1	**124-3815**	1	BOLT (M8X1.25X16-MM)	
	11	1	**140-8714**	1	CLIP	
	12	2	**169-5326**	1	SWITCH-TEMPERATURE (TIMING ADVANCE)	
	13	2	**199-9252**	1	SEAL-O-RING	
	14	2	**199-9751**	2	SEAL-O-RING	
	15	1	**236-2144**	1	TUBE AS	
	15A	1	**067-6999**	1	FERRULE	
	16	1	**230-8989**	1	GEAR-FUEL PUMP (68-TEETH)	
	17	1	**230-8995**	1	TUBE AS (CYL NO. 1)	
	18	1	**230-8996**	1	TUBE AS (CYL NO. 2)	
	19	1	**230-8997**	1	TUBE AS (CYL NO. 3)	
	20	1	**230-8998**	1	TUBE AS (CYL NO. 4)	
R	21	1	**230-8999**	4	INJECTOR AS-FUEL	
					(EACH INCLUDES)	
	21A	1	**140-8718**	1	WASHER (7.49X15.75X1.68-MM THK)	
	21B	1	**232-2724**	1	NOZZLE	
	21C	1	**275-1038**	1	SEAL-O-RING	
	22	1	**240-5571**	1	BRACKET	
	25	2	**232-1295**	1	PLUG	
	26	2	**232-1322**	2	PLUG	
	27	2	**232-1323**	1	PLUG-CUP	
	28	1	**232-1328**	1	CAP	
	29	2	**232-1793**	1	CABLE	
	30	1	**232-1794**	3	HOSE	
	31	1	**232-2725**	2	CLIP	
	32	1	**232-2726**	1	CLIP	
	33	1	**232-3149**	3	WASHER (8.35X16.85X1.55-MM THK)	
	34	1	**232-3157**	1	BRACKET	
	35	1	**238-8671**	4	CLAMP-INJECTOR	
M	36	1	**232-3274**	4	BOLT (M8X1.25X48.1-MM)	
CYR	37	1	**284-5000**	1	PUMP GP-FUEL INJECTION	1437
	38	1	**318-2365**	1	CLIP	
F			**232-3263**	3	CLIP-PIPE	

C - CHANGE FROM PREVIOUS TYPE
F - NOT SHOWN
M - METRIC PART
R - REMANUFACTURED PART MAY BE AVAILABLE
Y - SEPARATE ILLUSTRATION

233-9526 **PUMP GP-FUEL INJECTION (**contd.**)** **i04882770**

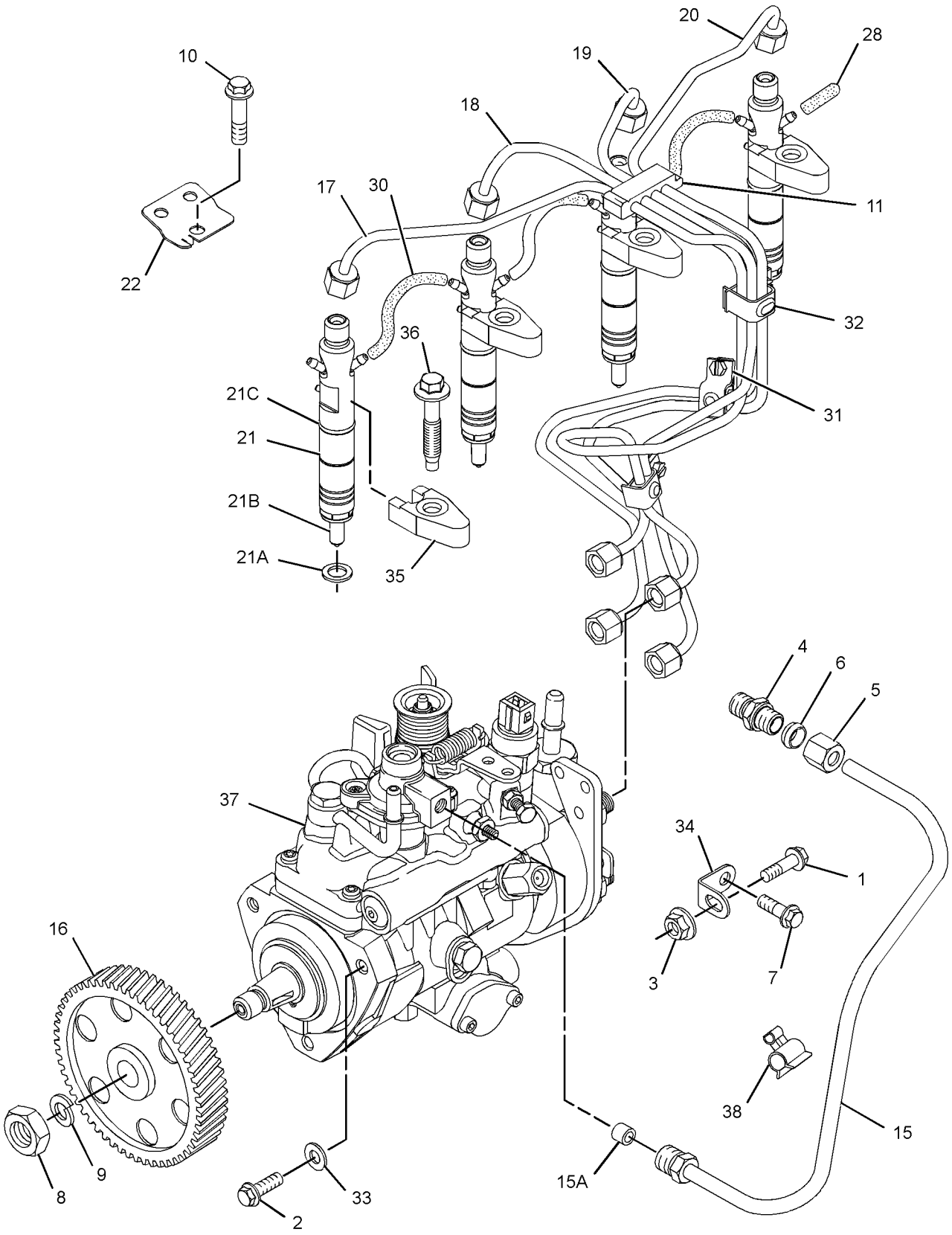

GRAPHIC #1 g01720798

233-9526 **PUMP GP-FUEL INJECTION (**contd.**)** **i04882770**

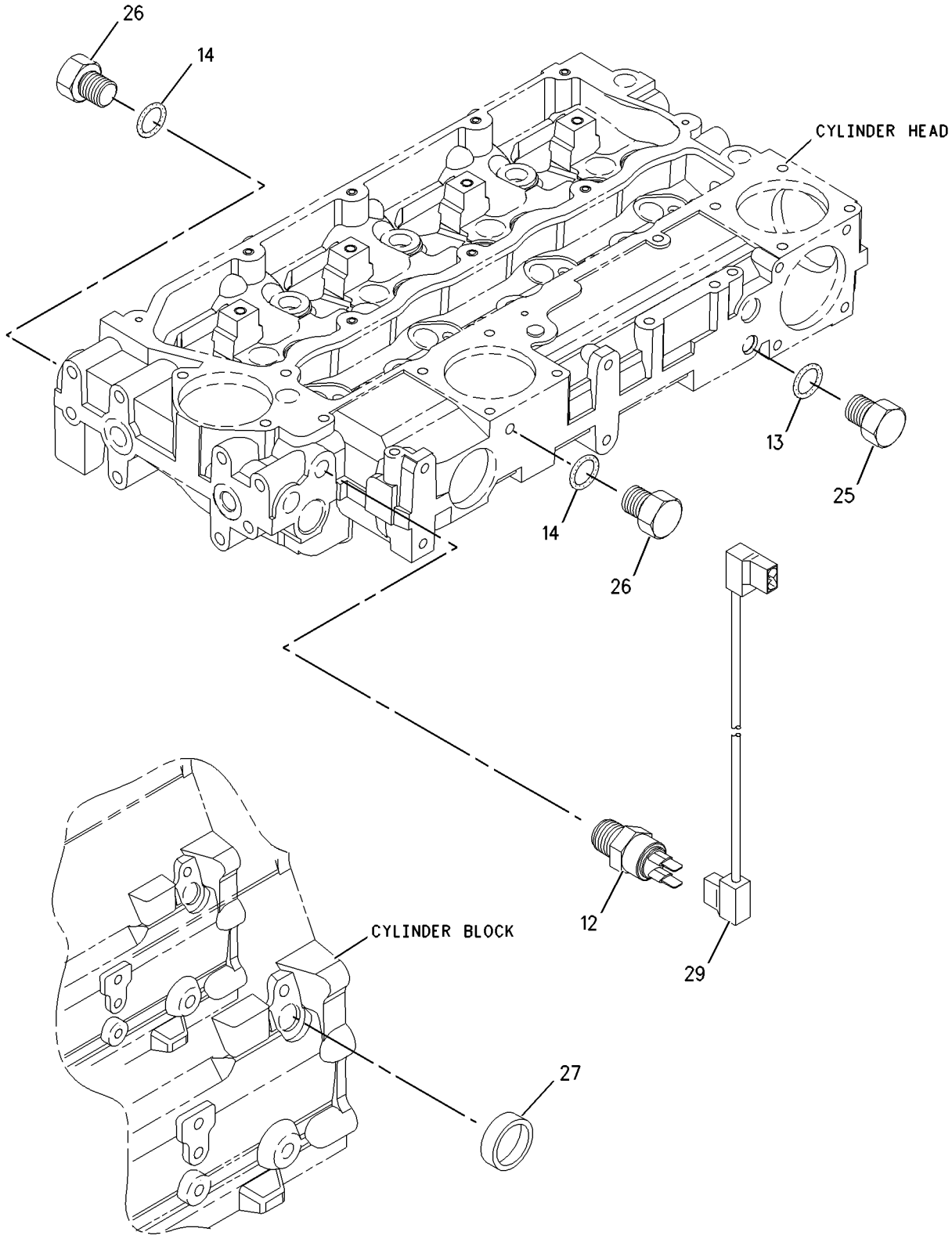

GRAPHIC #2 <END> g01003060

233-9526 PUMP GP-FUEL INJECTION

ALSO AN ATTACHMENT

SMCS-1251, 1290 **i08269293**

NOTE	REF NO	GRAPHIC REF	PART NUMBER	QTY	PART NAME 1 2 3 4 5 6 (PRODUCT LEVEL)	SEE PAGE
M	1	1	**6I-0217**	1	BOLT (M8X1.25X20-MM)	
M	2	1	**6I-0260**	3	BOLT (M8X1.25X25-MM)	
M	3	1	**178-3336**	1	NUT-HEX FLANGE (M8X1.25-THD)	
	4	1	**035-8017**	1	UNION	
	5	1	**365-3308**	1	NUT-COMPRESSION (3/8-24-THD)	
	6	1	**067-6265**	1	FITTING-BRASS	
M	7	1	**100-4830**	1	BOLT (M10X1.5X20-MM)	
M	8	1	**111-3422**	1	NUT (M14X1.5-THD)	
	9	1	**111-3423**	1	WASHER	
M	10	1	**124-3815**	1	BOLT (M8X1.25X16-MM)	
	12	2	**169-5326**	1	SWITCH-TEMPERATURE (TIMING ADVANCE)	
	13	2	**199-9252**	1	SEAL-O-RING	
	14	2	**199-9751**	2	SEAL-O-RING	
	15	1	**236-2144**	1	TUBE AS	
	16	1	**425-7107**	1	GEAR-FUEL PUMP (68-TEETH)	
R	21	1	**230-8999**	4	INJECTOR AS-FUEL	
					(EACH INCLUDES)	
	21A	1	**140-8718**	1	WASHER (7.49X15.75X1.68-MM THK)	
	21B	1	**232-2724**	1	NOZZLE	
	21C	1	**275-1038**	1	SEAL-O-RING	
	22	1	**240-5571**	1	BRACKET	
	25	2	**232-1295**	1	PLUG	
	26	2	**232-1322**	2	PLUG	
	28	1	**232-1328**	1	CAP	
	29	2	**232-1793**	1	CABLE	
	30	1	**232-1794**	3	HOSE	
	33	1	**232-3149**	3	WASHER (8.35X16.85X1.55-MM THK)	
	34	1	**232-3157**	1	BRACKET	
	35	1	**238-8671**	4	CLAMP-INJECTOR	
M	36	1	**232-3274**	4	BOLT (M8X1.25X48.1-MM)	
YR	37	1	**483-2328**	1	PUMP GP-FUEL INJECTION	1494
	38	1	**318-2365**	1	CLIP	
Y	39	1	*495-3762*	1	LINES GP-FUEL INJECTION	1173
F			**232-3263**	3	CLIP-PIPE	

F - NOT SHOWN
M - METRIC PART
R - REMANUFACTURED PART MAY BE AVAILABLE
Y - SEPARATE ILLUSTRATION

233-9526 **PUMP GP-FUEL INJECTION (**contd.**)** **i08269293**

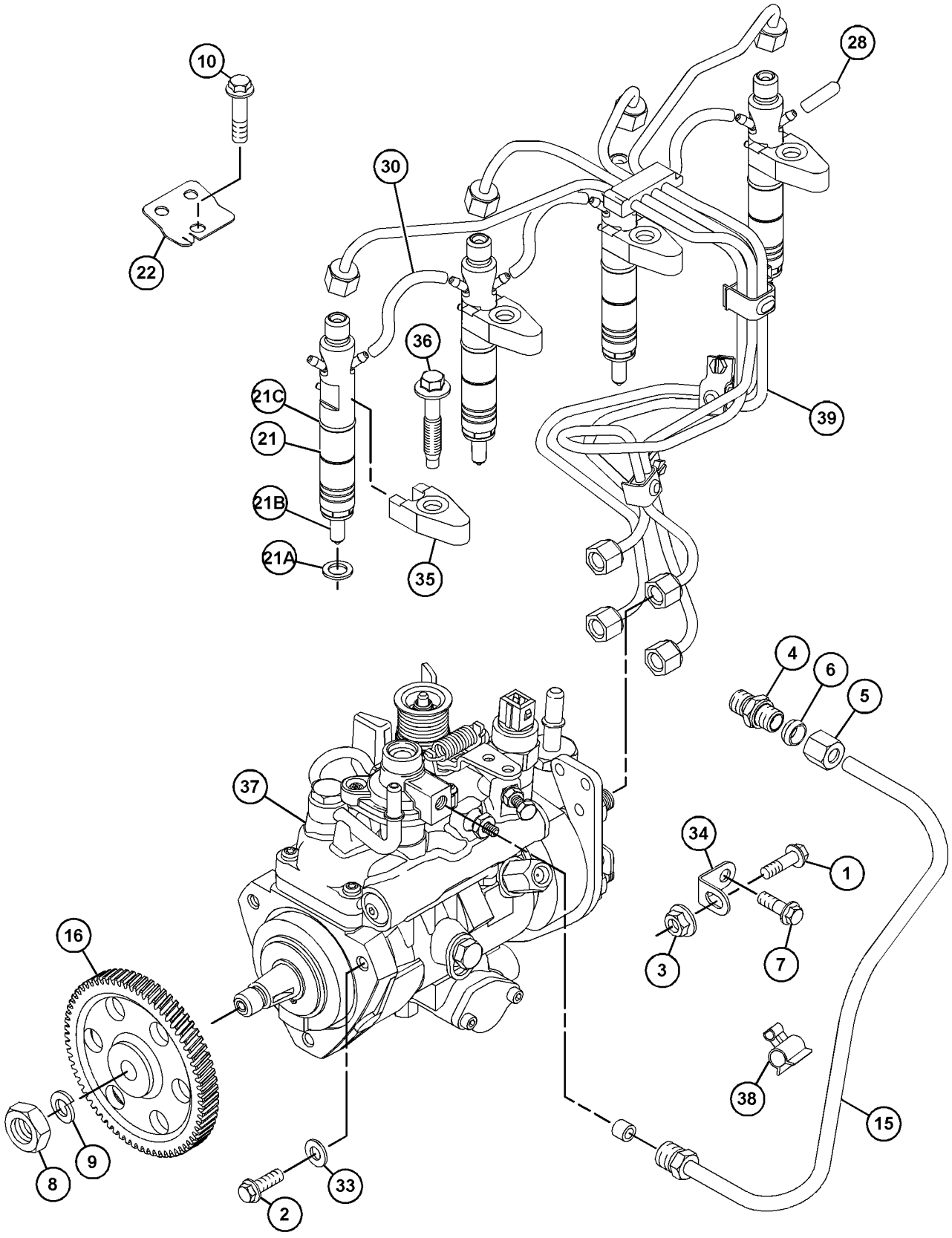

GRAPHIC #1 g06747532

233-9526 **PUMP GP-FUEL INJECTION (**contd.**)** **i08269293**

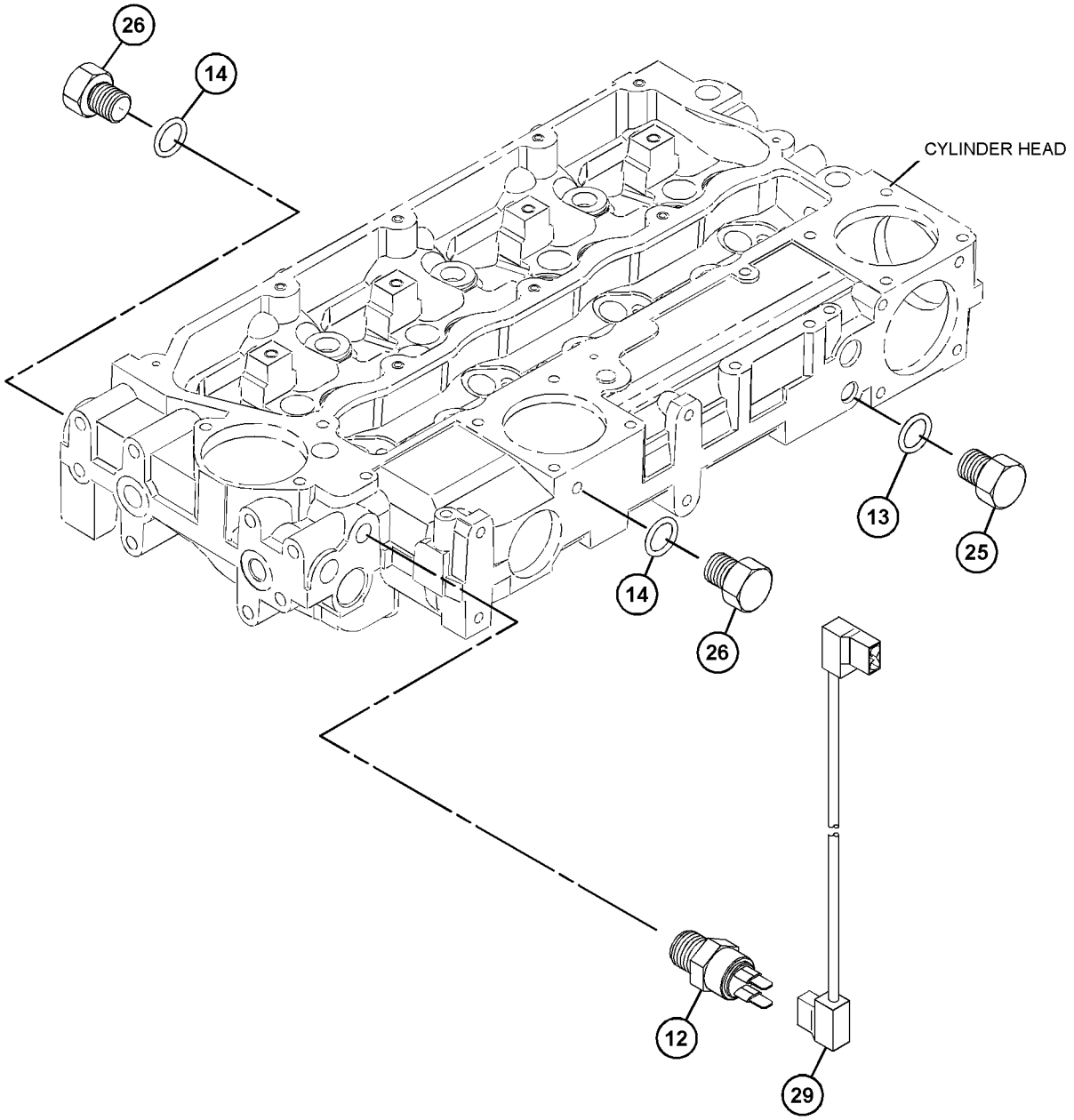

GRAPHIC #2 <END> g06283746

234-2414 PUMP GP-FUEL INJECTION

S/N: 3341-280

SMCS-1251, 1290 **i04711481**

NOTE	REF NO	GRAPHIC REF	PART NUMBER	QTY	PART NAME 1 2 3 4 5 6 (PRODUCT LEVEL)	SEE PAGE
M	1	1	**6I-0217**	1	BOLT (M8X1.25X20-MM)	
M	2	1	**6I-0260**	3	BOLT (M8X1.25X25-MM)	
M	3	1	**6I-0291**	1	NUT (M8X1.25-THD)	
	4	1	**035-8017**	1	UNION	
	5	1	**365-3308**	1	NUT-COMPRESSION (3/8-24-THD)	
	6	1	**067-6265**	1	FITTING-BRASS	
M	7	1	**100-4830**	1	BOLT (M10X1.5X20-MM)	
M	8	1	**111-3422**	1	NUT (M14X1.5-THD)	
	9	1	**111-3423**	1	WASHER	
M	10	1	**124-3815**	1	BOLT (M8X1.25X16-MM)	
	11	1	**140-8714**	1	CLIP	
	12	2	**235-1790**	1	SWITCH-TEMPERATURE (TIMING ADVANCE)	
	13	2	**199-9252**	1	SEAL-O-RING	
	14	2	**199-9751**	2	SEAL-O-RING	
	15	1	**205-7644**	3	WASHER	
	16	1	**232-3157**	1	BRACKET	
	17	1	**236-2144**	1	TUBE AS	
	17A	1	**067-6999**	1	FERRULE	
	17B	1	**106-8835**	1	NUT	
	18	1	**230-8989**	1	GEAR-FUEL PUMP (68-TEETH)	
	19	1	**230-8995**	1	TUBE AS (CYL NO. 1)	
	20	1	**230-8996**	1	TUBE AS (CYL NO. 2)	
	21	1	**230-8997**	1	TUBE AS (CYL NO. 3)	
	22	1	**230-8998**	1	TUBE AS (CYL NO. 4)	
R	23	1	**230-8999**	4	INJECTOR AS-FUEL	
					(EACH INCLUDES)	
	23A	1	**140-8718**	1	WASHER (7.49X15.75X1.68-MM THK)	
	24	1	**236-6909**	1	PUMP GP-FUEL INJECTION	
	24A	1	**152-3968**	1	SEAL-O-RING	
	24B	1	**176-6219**	1	SOLENOID (12-VOLT) (FUEL SHUTOFF)	
	25	1	**230-9516**	4	CLAMP-INJECTOR	
	26	1	**230-9523**	4	BOLT	
	27	1	**230-9527**	1	BRACKET	
	29	1	**232-1117**	1	CLIP-PIPE	
	30	2	**232-1295**	1	PLUG	
	31	2	**232-1322**	2	PLUG	
	32	2	**232-1323**	1	PLUG-CUP	
	33	1	**232-1328**	1	CAP	
	34	2	**232-1793**	1	CABLE	
	35	1	**232-1794**	3	HOSE	
	36	1	**232-2725**	1	CLIP	
	37	1	**232-2726**	1	CLIP	
	38	1	**160-7197**	1	CLIP	

M - METRIC PART
R - REMANUFACTURED PART MAY BE AVAILABLE

234-2414 **PUMP GP-FUEL INJECTION (**contd.**)** **i04711481**

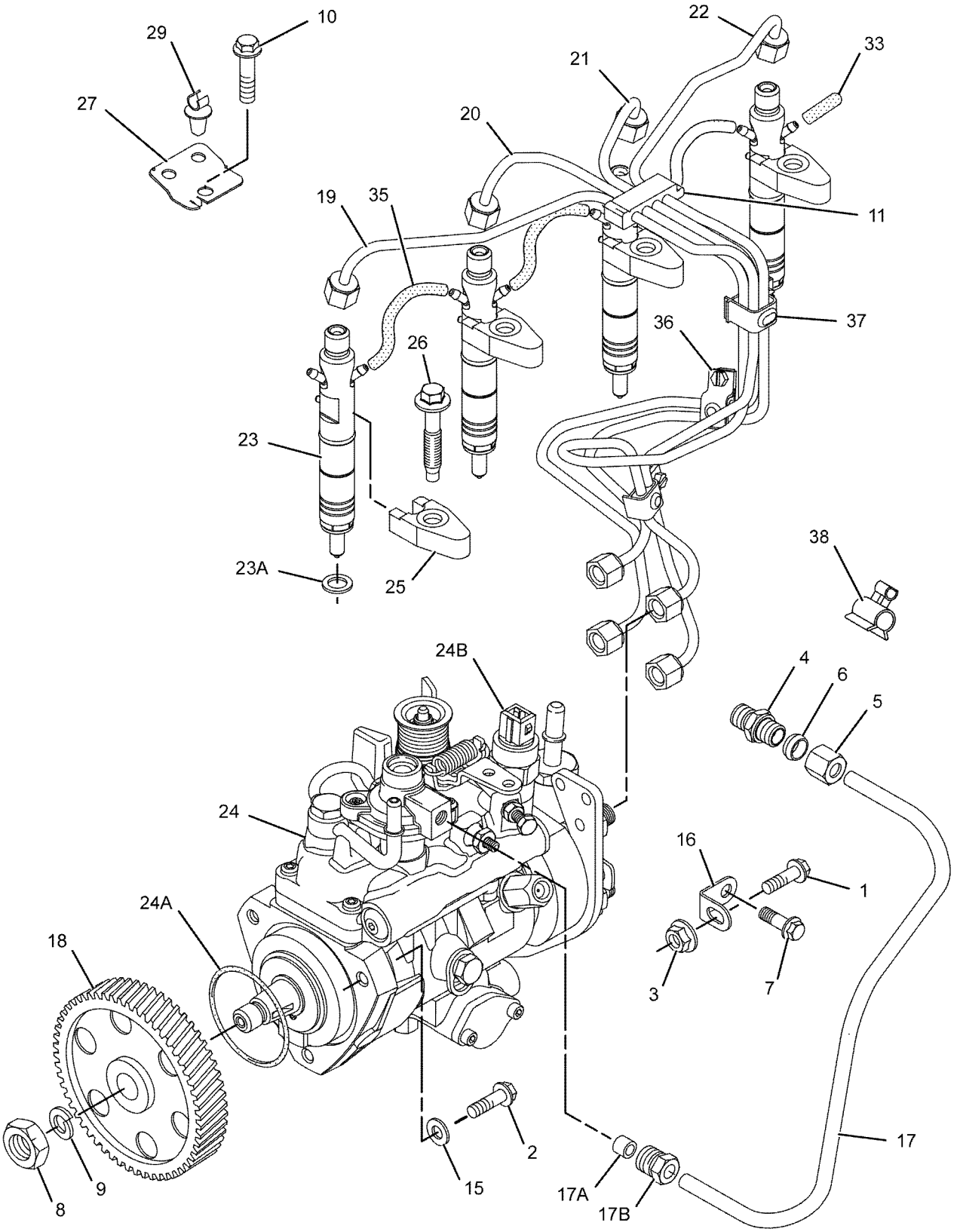

GRAPHIC #1 g01060199

234-2414 **PUMP GP-FUEL INJECTION (**contd.**)** **i04711481**

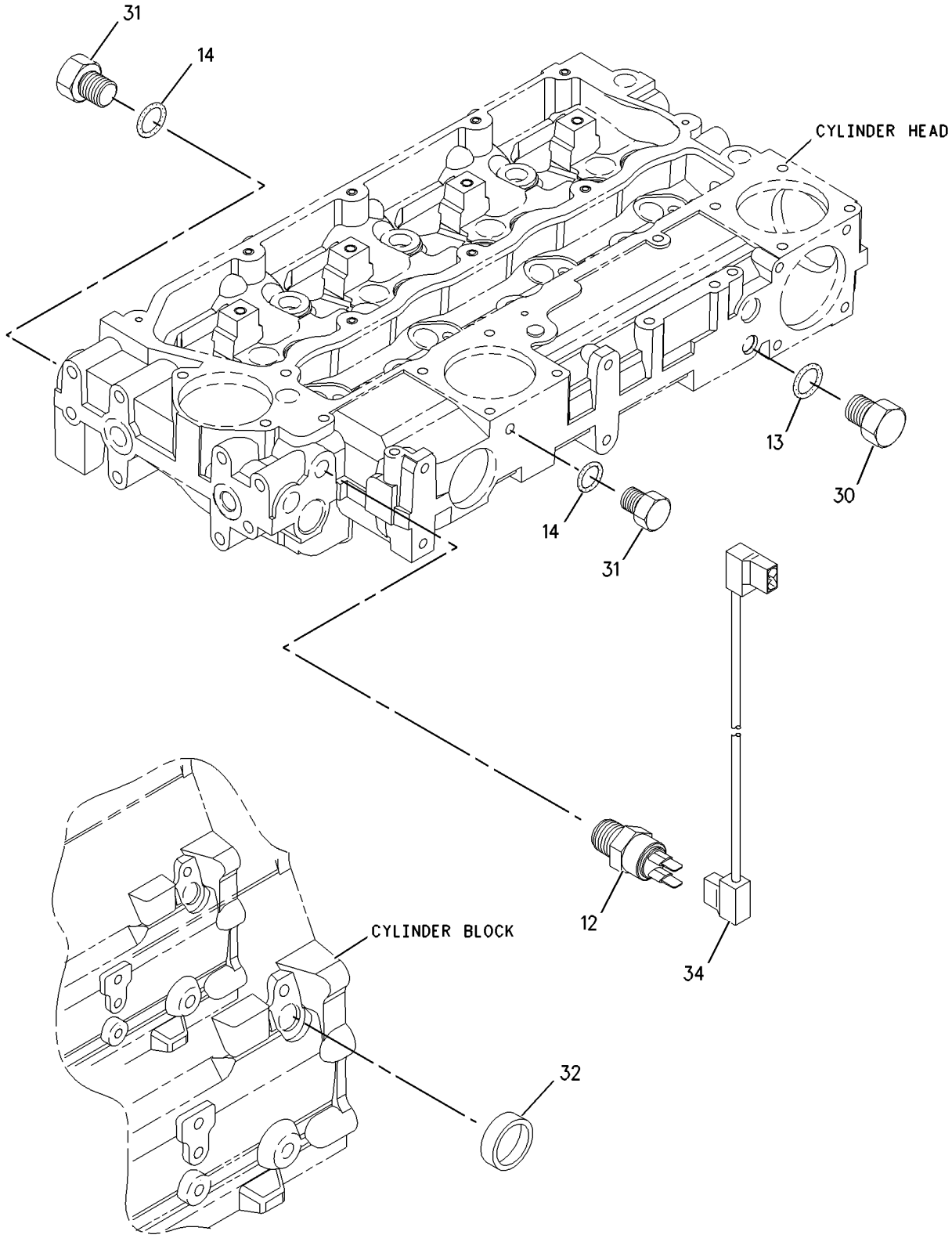

GRAPHIC #2 <END> g00985415

234-2414 PUMP GP-FUEL INJECTION

S/N: 334281-UP

TYPE 1

SMCS-1251, 1290 **i04711482**

NOTE	REF NO	GRAPHIC REF	PART NUMBER	QTY	PART NAME 1 2 3 4 5 6 (PRODUCT LEVEL)	SEE PAGE
M	1	1	**6I-0217**	1	BOLT (M8X1.25X20-MM)	
M	2	1	**6I-0260**	3	BOLT (M8X1.25X25-MM)	
M	3	1	**6I-0291**	1	NUT (M8X1.25-THD)	
	4	1	**035-8017**	1	UNION	
	5	1	**365-3308**	1	NUT-COMPRESSION (3/8-24-THD)	
	6	1	**067-6265**	1	FITTING-BRASS	
M	7	1	**100-4830**	1	BOLT (M10X1.5X20-MM)	
M	8	1	**111-3422**	1	NUT (M14X1.5-THD)	
	9	1	**111-3423**	1	WASHER	
M	10	1	**124-3815**	1	BOLT (M8X1.25X16-MM)	
	11	1	**140-8714**	1	CLIP	
	12	2	**169-5326**	1	SWITCH-TEMPERATURE (TIMING ADVANCE)	
	13	2	**199-9252**	1	SEAL-O-RING	
	14	2	**199-9751**	2	SEAL-O-RING	
	15	1	**205-7644**	3	WASHER	
	16	1	**232-3157**	1	BRACKET	
	17	1	**236-2144**	1	TUBE AS	
	17A	1	**067-6999**	1	FERRULE	
	18	1	**230-8989**	1	GEAR-FUEL PUMP (68-TEETH)	
	19	1	**230-8995**	1	TUBE AS (CYL NO. 1)	
	20	1	**230-8996**	1	TUBE AS (CYL NO. 2)	
	21	1	**230-8997**	1	TUBE AS (CYL NO. 3)	
	22	1	**230-8998**	1	TUBE AS (CYL NO. 4)	
R	23	1	**230-8999**	4	INJECTOR AS-FUEL	
					(EACH INCLUDES)	
	23A	1	**140-8718**	1	WASHER (7.49X15.75X1.68-MM THK)	
	23B	1	**232-2724**	1	NOZZLE	
	23C	1	**275-1038**	1	SEAL-O-RING	
C	24	1	**290-4525**	1	PUMP GP-FUEL INJECTION	
	25	1	**238-8671**	4	CLAMP-INJECTOR	
	26	1	**230-9523**	4	BOLT	
	27	1	**240-5571**	1	BRACKET	
	30	2	**232-1295**	1	PLUG	
	31	2	**232-1322**	2	PLUG	
	32	2	**232-1323**	1	PLUG-CUP	
	33	1	**232-1328**	1	CAP	
	34	2	**232-1793**	1	CABLE	
	35	1	**232-1794**	3	HOSE	
	36	1	**232-2725**	1	CLIP	
	37	1	**232-2726**	1	CLIP	
	38	1	**318-2365**	1	CLIP	
F			**232-3263**	1	CLIP-PIPE	

C - CHANGE FROM PREVIOUS TYPE
F - NOT SHOWN
M - METRIC PART
R - REMANUFACTURED PART MAY BE AVAILABLE

234-2414 **PUMP GP-FUEL INJECTION (**contd.**)** **i04711482**

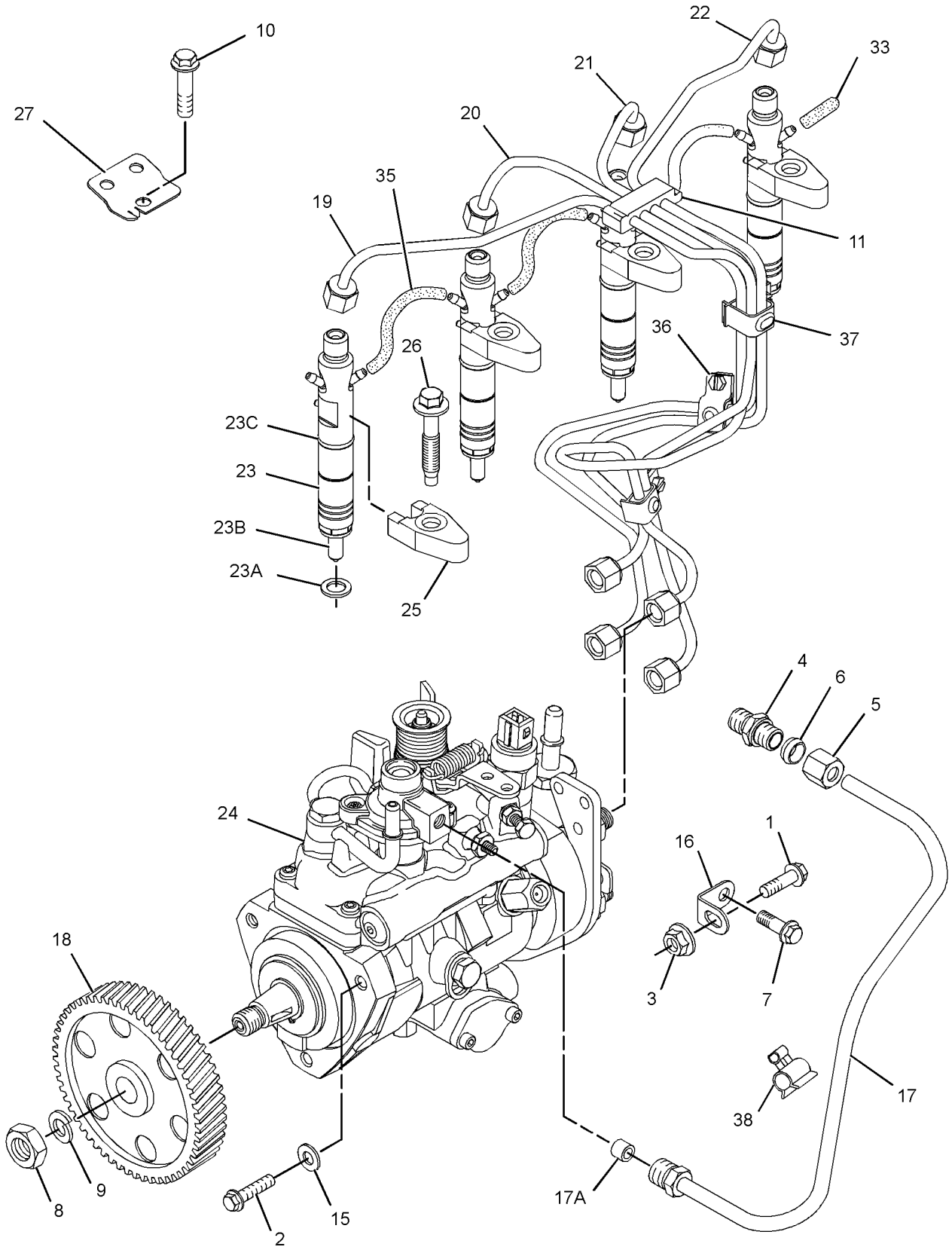

GRAPHIC #1 g01721923

234-2414 **PUMP GP-FUEL INJECTION (**contd.**)** **i04711482**

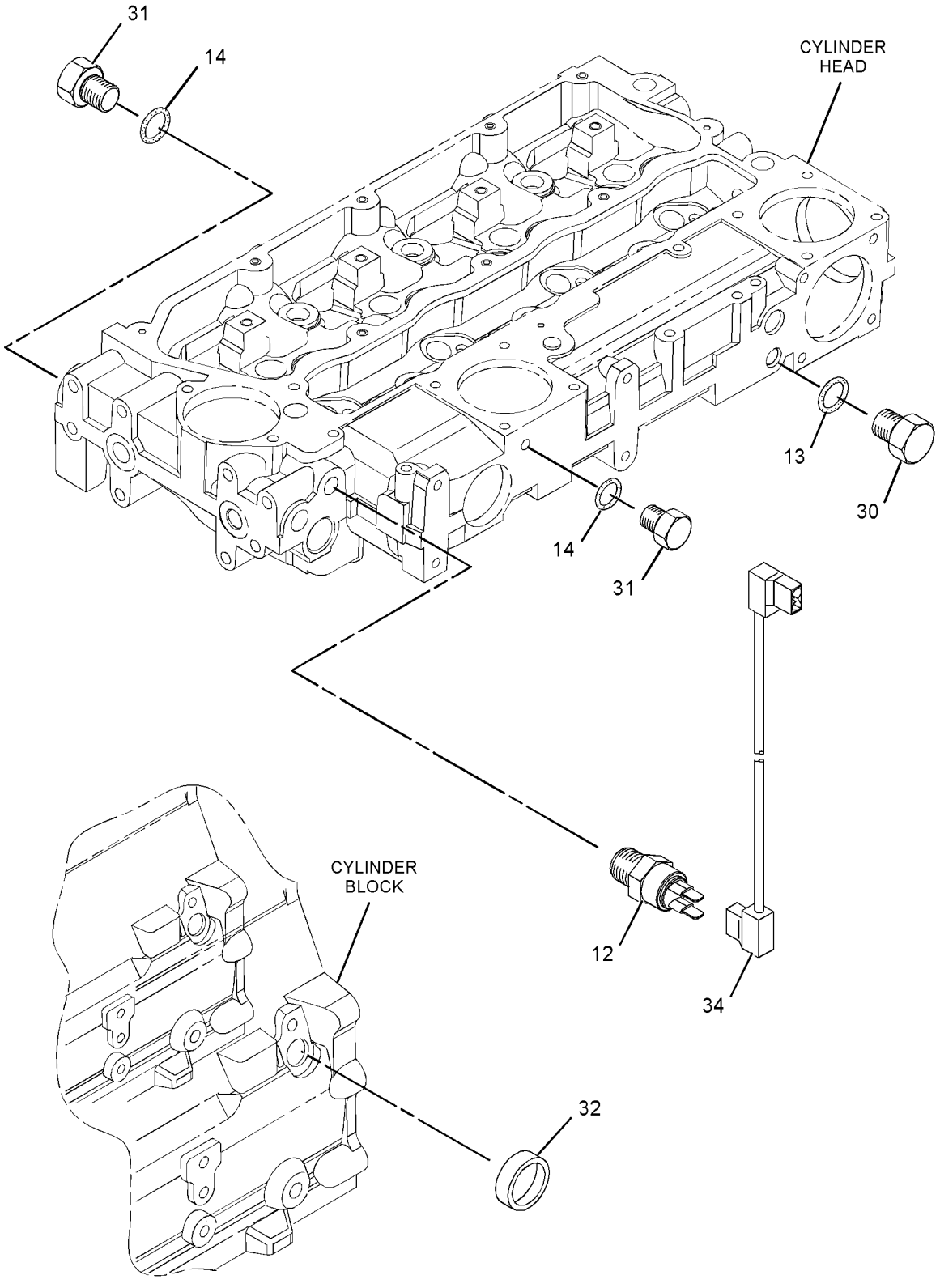

GRAPHIC #2 <END> g01420285

234-2414 PUMP GP-FUEL INJECTION

S/N: 334281-UP
TYPE 2

SMCS-1251, 1290 **i07349476**

NOTE	REF NO	GRAPHIC REF	PART NUMBER	QTY	PART NAME 1 2 3 4 5 6 (PRODUCT LEVEL)	SEE PAGE
M	1	1	**6I-0217**	1	BOLT (M8X1.25X20-MM)	
M	2	1	**6I-0260**	3	BOLT (M8X1.25X25-MM)	
M	3	1	**6I-0291**	1	NUT (M8X1.25-THD)	
	4	1	**035-8017**	1	UNION	
	5	1	**365-3308**	1	NUT-COMPRESSION (3/8-24-THD)	
	6	1	**067-6265**	1	FITTING-BRASS	
M	7	1	**100-4830**	1	BOLT (M10X1.5X20-MM)	
M	8	1	**111-3422**	1	NUT (M14X1.5-THD)	
	9	1	**111-3423**	1	WASHER	
M	10	1	**124-3815**	1	BOLT (M8X1.25X16-MM)	
	11	1	**140-8714**	1	CLIP	
	12	2	**169-5326**	1	SWITCH-TEMPERATURE (TIMING ADVANCE)	
	13	2	**199-9252**	1	SEAL-O-RING	
	14	2	**199-9751**	2	SEAL-O-RING	
	15	1	**205-7644**	3	WASHER	
	16	1	**232-3157**	1	BRACKET	
	17	1	**236-2144**	1	TUBE AS	
	18	1	**425-7107**	1	GEAR-FUEL PUMP (68-TEETH)	
	19	1	**230-8995**	1	TUBE AS (CYL NO. 1)	
	20	1	**230-8996**	1	TUBE AS (CYL NO. 2)	
	21	1	**230-8997**	1	TUBE AS (CYL NO. 3)	
	22	1	**230-8998**	1	TUBE AS (CYL NO. 4)	
R	23	1	**230-8999**	4	INJECTOR AS-FUEL	
					(EACH INCLUDES)	
	23A	1	**140-8718**	1	WASHER (7.49X15.75X1.68-MM THK)	
	23B	1	**232-2724**	1	NOZZLE	
	23C	1	**275-1038**	1	SEAL-O-RING	
	24	1	**290-4525**	1	PUMP GP-FUEL INJECTION	
	25	1	**238-8671**	4	CLAMP-INJECTOR	
M	26	1	**232-3274**	4	BOLT (M8X1.25X48.1-MM)	
	27	1	**240-5571**	1	BRACKET	
	30	2	**232-1295**	1	PLUG	
	31	2	**232-1322**	2	PLUG	
	33	1	**232-1328**	1	CAP	
	34	2	**232-1793**	1	CABLE	
	35	1	**232-1794**	3	HOSE	
	36	1	**232-2725**	1	CLIP	
	37	1	**232-2726**	1	CLIP	
	38	1	**318-2365**	1	CLIP	
F			**232-3263**	1	CLIP-PIPE	

F - NOT SHOWN
M - METRIC PART
R - REMANUFACTURED PART MAY BE AVAILABLE

234-2414 **PUMP GP-FUEL INJECTION (**contd.**)** **i07349476**

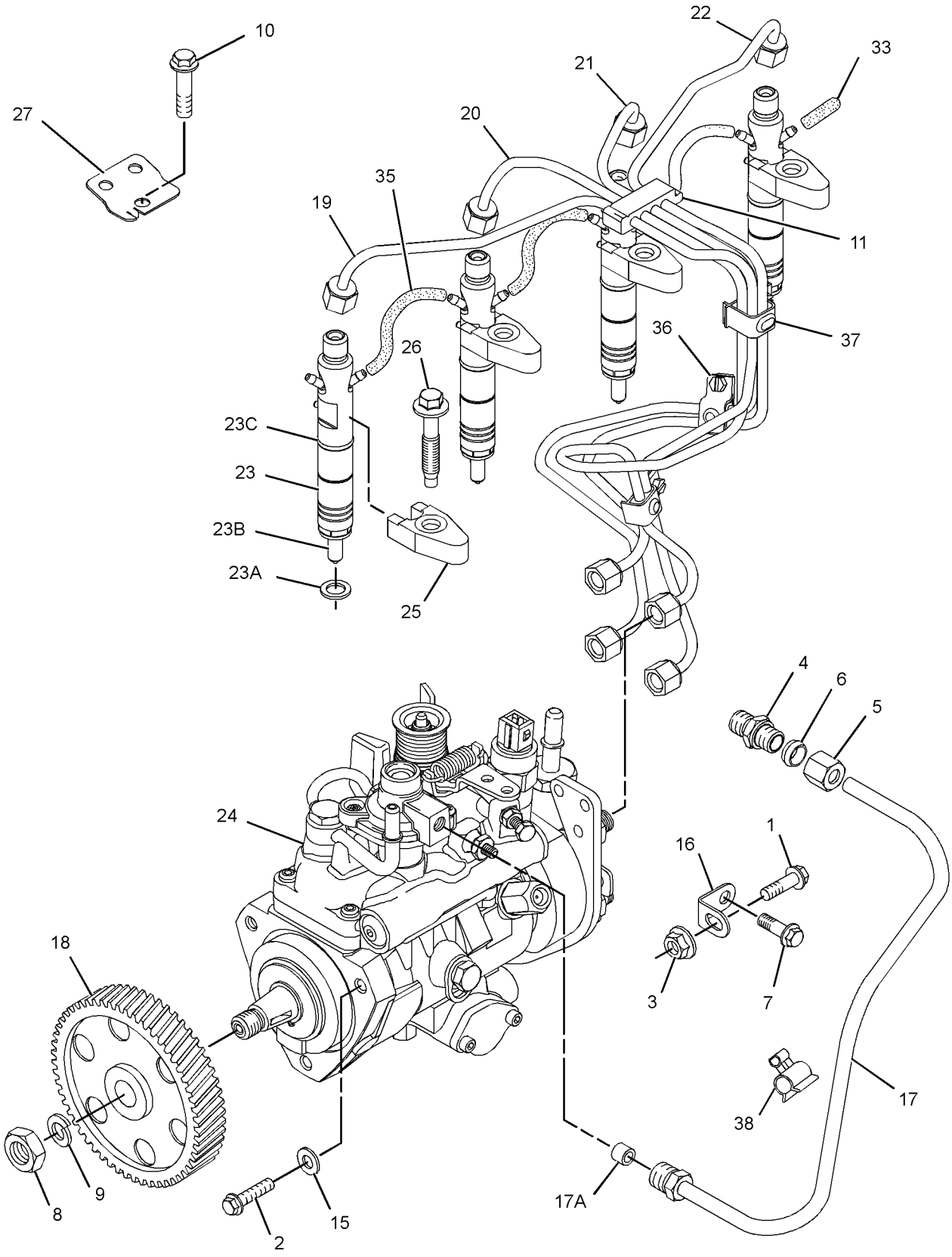

GRAPHIC #1 g01721923

234-2414 **PUMP GP-FUEL INJECTION (**contd.**)** **i07349476**

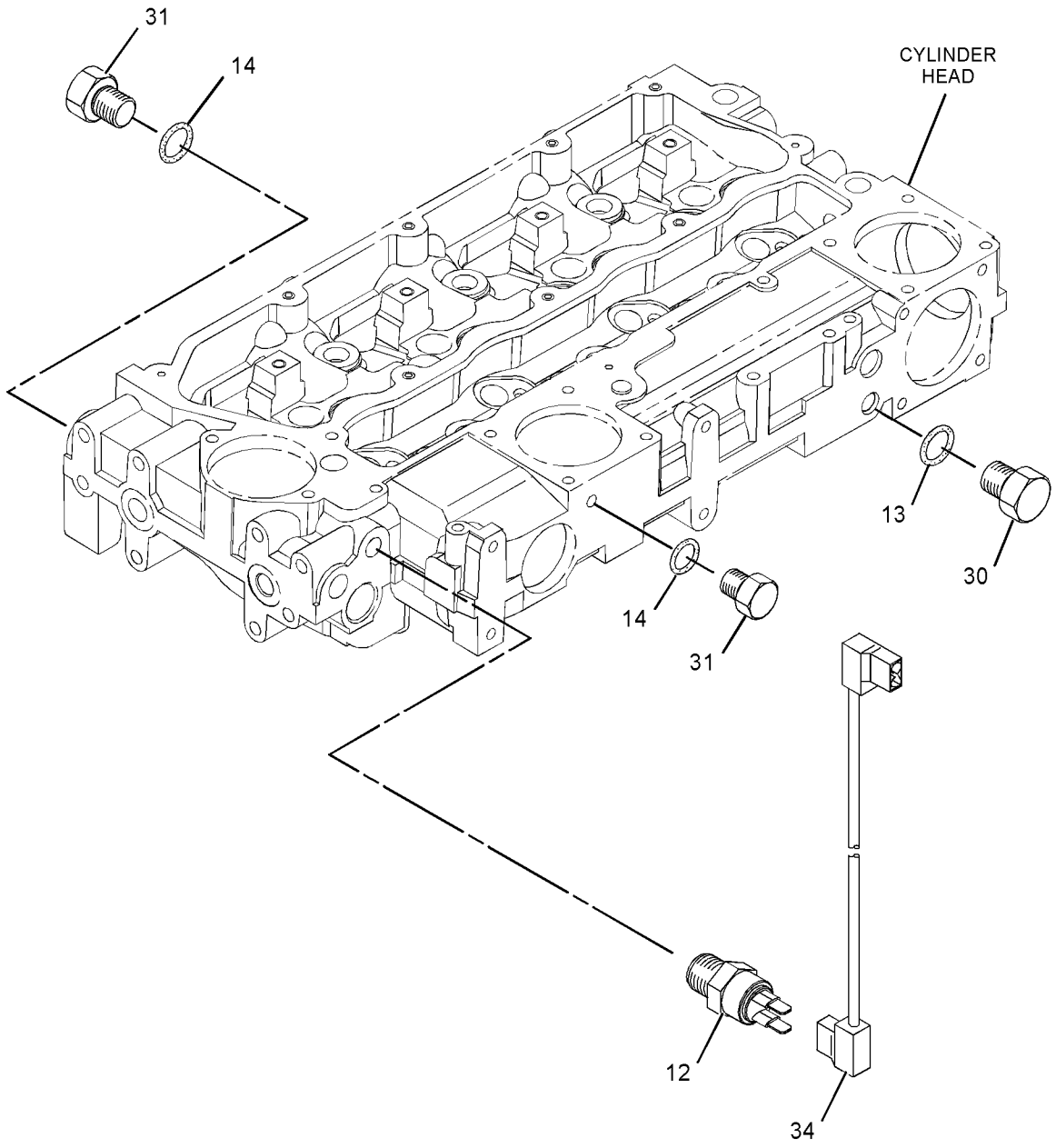

GRAPHIC #2 <END> g03114603

234-2414 PUMP GP-FUEL INJECTION

S/N: 334281-UP
TYPE 3

SMCS-1251, 1290 **i08268883**

NOTE	REF NO	GRAPHIC REF	PART NUMBER	QTY	PART NAME 1 2 3 4 5 6 (PRODUCT LEVEL)	SEE PAGE
M	1	1	**6I-0217**	1	BOLT (M8X1.25X20-MM)	
M	2	1	**6I-0260**	3	BOLT (M8X1.25X25-MM)	
M	3	1	**178-3336**	1	NUT-HEX FLANGE (M8X1.25-THD)	
	4	1	**035-8017**	1	UNION	
	5	1	**067-6265**	1	FITTING-BRASS	
M	6	1	**100-4830**	1	BOLT (M10X1.5X20-MM)	
M	7	1	**111-3422**	1	NUT (M14X1.5-THD)	
	8	1	**111-3423**	1	WASHER	
M	9	1	**124-3815**	1	BOLT (M8X1.25X16-MM)	
	10	2	**169-5326**	1	SWITCH-TEMPERATURE (TIMING ADVANCE)	
	11	2	**199-9252**	1	SEAL-O-RING	
	12	2	**199-9751**	2	SEAL-O-RING	
	13	1	**205-7644**	3	WASHER	
R	14	1	**230-8999**	4	INJECTOR AS-FUEL	
					(EACH INCLUDES)	
	14A	1	**140-8718**	1	WASHER (7.49X15.75X1.68-MM THK)	
	14B	1	**232-2724**	1	NOZZLE	
	14C	1	**275-1038**	1	SEAL-O-RING	
	15	2	**232-1295**	1	PLUG	
	16	2	**232-1322**	2	PLUG	
	17	1	**232-1328**	1	CAP	
	18	2	**232-1793**	1	CABLE	
	19	1	**232-1794**	3	HOSE	
	20	1	**232-3157**	1	BRACKET	
M	22	1	**232-3274**	4	BOLT (M8X1.25X48.1-MM)	
	23	1	**236-2144**	1	TUBE AS	
	23A	1	**067-6999**	1	FERRULE	
	24	1	**238-8671**	4	CLAMP-INJECTOR	
	25	1	**240-5571**	1	BRACKET	
	26	1	**365-3308**	1	NUT-COMPRESSION (3/8-24-THD)	
	27	1	**425-7107**	1	GEAR-FUEL PUMP (68-TEETH)	
Y	28	1	*495-3762*	1	LINES GP-FUEL INJECTION	1173
	29	1	**290-4525**	1	PUMP GP-FUEL INJECTION	
F			**232-3263**	3	CLIP-PIPE	

F - NOT SHOWN
M - METRIC PART
R - REMANUFACTURED PART MAY BE AVAILABLE
Y - SEPARATE ILLUSTRATION

234-2414 **PUMP GP-FUEL INJECTION (**contd.**)** **i08268883**

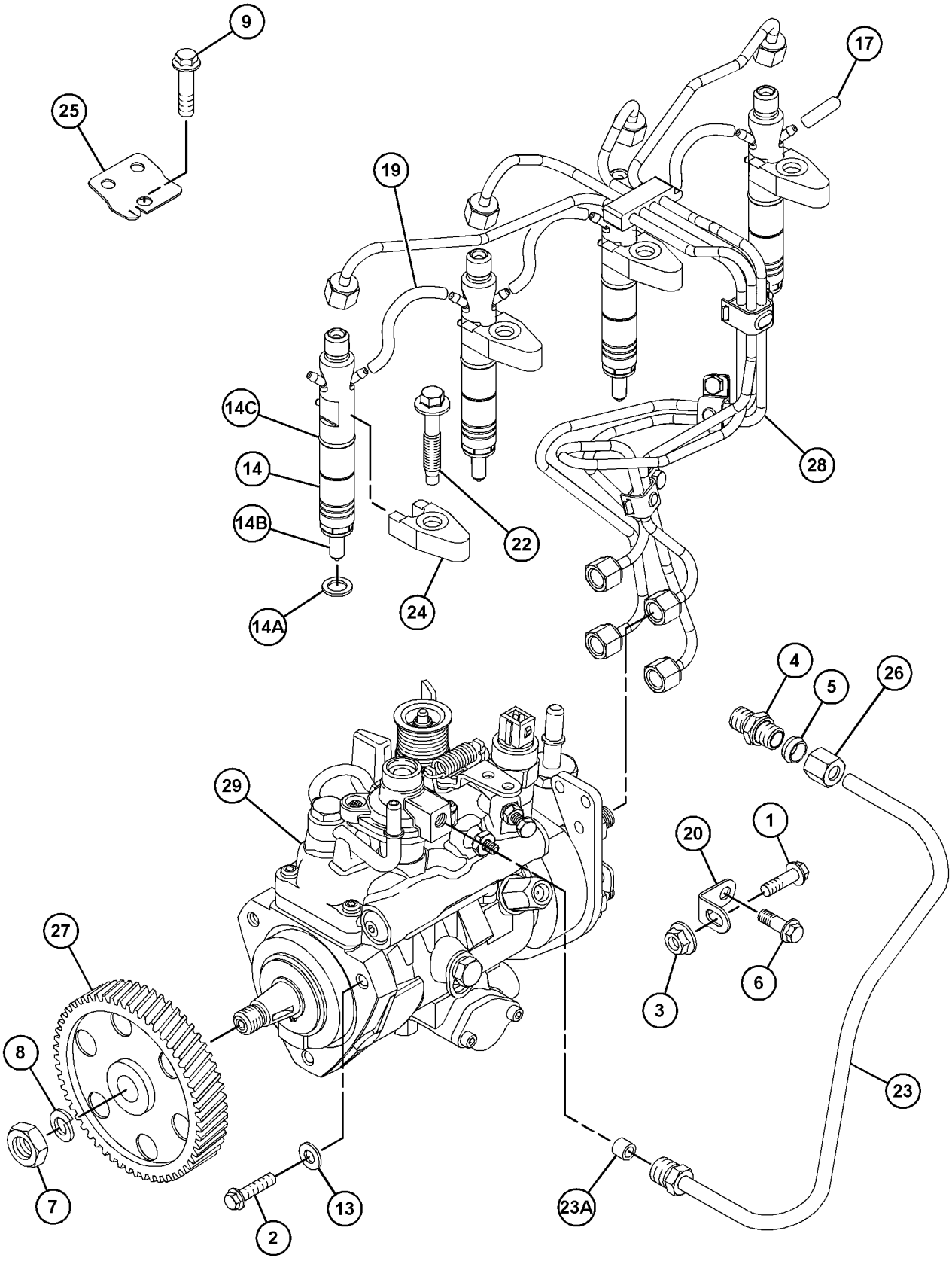

GRAPHIC #1 g06746061

234-2414 **PUMP GP-FUEL INJECTION (**contd.**)** **i08268883**

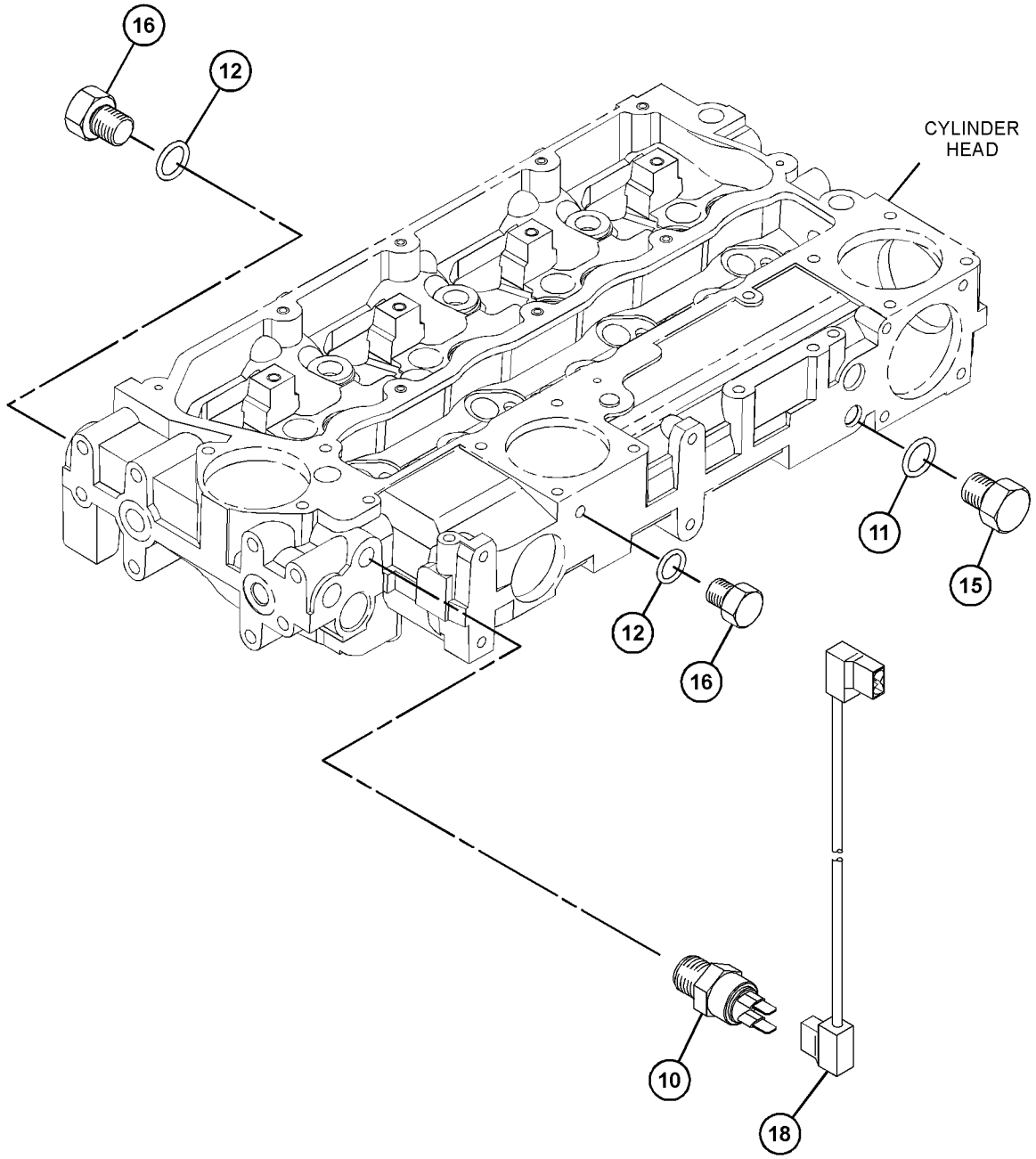

GRAPHIC #2 <END> g06746062

236-2140 PUMP GP-FUEL INJECTION

S/N: 3341-280

SMCS-1251, 1290 **i04711480**

NOTE	REF NO	GRAPHIC REF	PART NUMBER	QTY	PART NAME 1 2 3 4 5 6 (PRODUCT LEVEL)	SEE PAGE
M	1	1	**6I-0217**	1	BOLT (M8X1.25X20-MM)	
M	2	1	**6I-0260**	3	BOLT (M8X1.25X25-MM)	
M	3	1	**6I-0291**	1	NUT (M8X1.25-THD)	
	4	1	**035-8017**	1	UNION	
	5	1	**365-3308**	1	NUT-COMPRESSION (3/8-24-THD)	
	6	1	**067-6265**	1	FITTING-BRASS	
M	7	1	**100-4830**	1	BOLT (M10X1.5X20-MM)	
	8	1	**110-8760**	1	STRAP	
M	9	1	**111-3422**	1	NUT (M14X1.5-THD)	
	10	1	**111-3423**	1	WASHER	
M	11	1	**124-3815**	1	BOLT (M8X1.25X16-MM)	
	12	1	**140-8714**	1	CLIP	
	13	2	**235-1790**	1	SWITCH-TEMPERATURE (TIMING ADVANCE)	
	14	1	**230-8989**	1	GEAR-FUEL PUMP (68-TEETH)	
	15	1	**230-8995**	1	TUBE AS (CYL NO. 1)	
	16	1	**230-8996**	1	TUBE AS (CYL NO. 2)	
	17	1	**230-8997**	1	TUBE AS (CYL NO. 3)	
	18	1	**230-8998**	1	TUBE AS (CYL NO. 4)	
	19	1	**230-9527**	1	BRACKET	
	20	1	**232-1117**	1	CLIP-PIPE	
	21	2	**232-1323**	1	PLUG-CUP	
	22	1	**232-1328**	1	CAP	
	23	2	**232-1793**	1	CABLE	
	24	1	**232-1794**	3	HOSE	
	25	1	**232-3149**	1	WASHER (8.35X16.85X1.55-MM THK)	
	26	1	**232-3157**	1	BRACKET	
	27	1	**232-3158**	4	CLAMP-INJECTOR	
M	29	1	**232-3274**	4	BOLT (M8X1.25X48.1-MM)	
R	30	1	**236-1674**	4	INJECTOR AS-FUEL	
					(EACH INCLUDES)	
		1	**236-1673**	1	NOZZLE	
	30A	1	**140-8718**	1	WASHER (7.49X15.75X1.68-MM THK)	
	31	1	**236-1812**	1	PUMP GP-FUEL INJECTION	
	31A	1	**152-3968**	1	SEAL-O-RING	
	31B	1	**193-0161**	1	CABLE AS-ADAPTER	
	32	1	**236-2144**	1	TUBE AS	
	32A	1	**067-6999**	1	FERRULE	
	32B	1	**106-8835**	1	NUT	
	33	1	**232-2725**	2	CLIP	
	34	1	**232-2726**	1	CLIP	
	35	1	**160-7197**	1	CLIP	

M - METRIC PART
R - REMANUFACTURED PART MAY BE AVAILABLE

236-2140 **PUMP GP-FUEL INJECTION (**contd.**)** **i04711480**

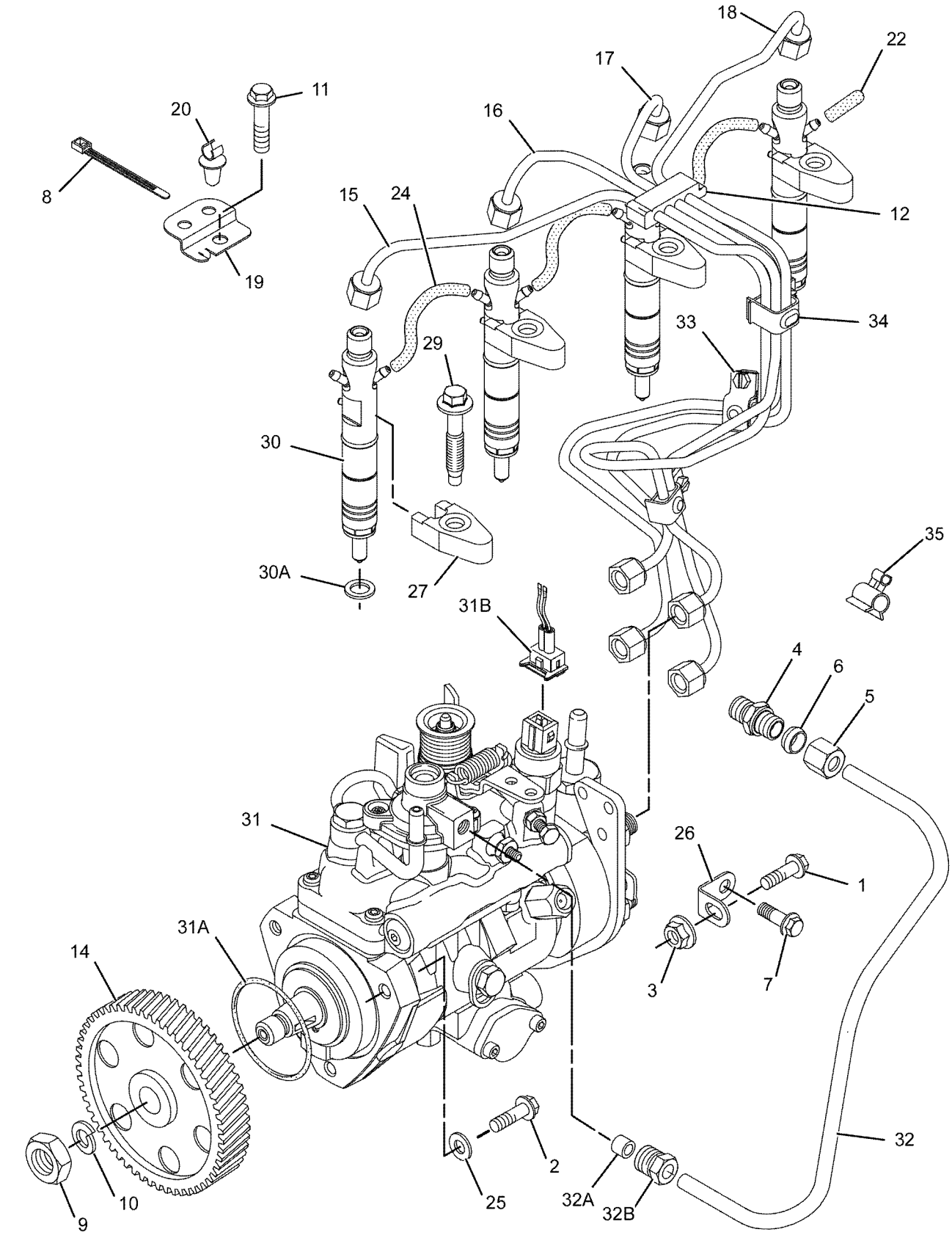

GRAPHIC #1 g01071349

236-2140 **PUMP GP-FUEL INJECTION (**contd.**)** **i04711480**

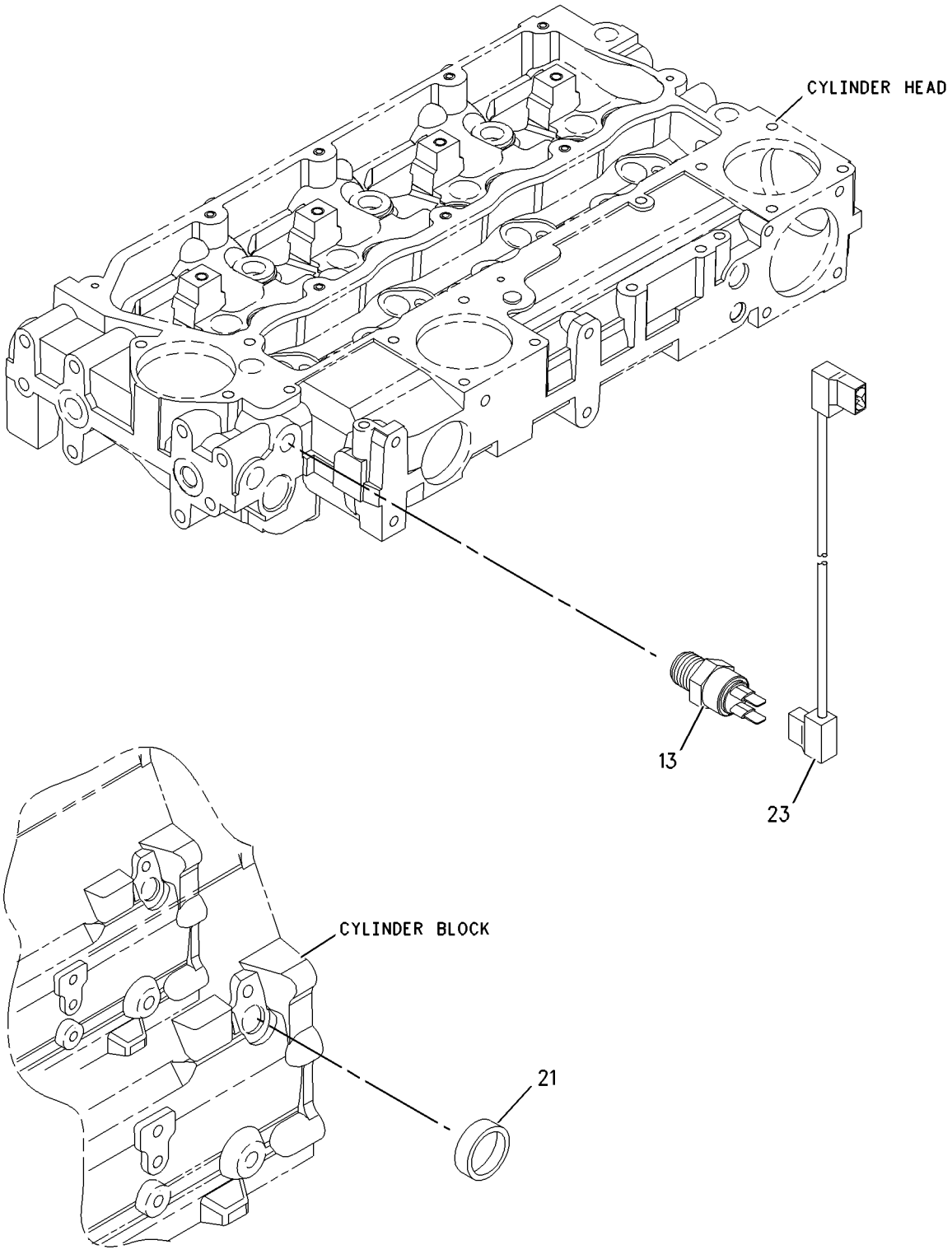

GRAPHIC #2 <END> g00998444

236-2140 PUMP GP-FUEL INJECTION

S/N: 334281-UP

TYPE 1

SMCS-1251, 1290 **i04711479**

NOTE	REF NO	GRAPHIC REF	PART NUMBER	QTY	PART NAME 1 2 3 4 5 6 (PRODUCT LEVEL)	SEE PAGE
M	1	1	**6I-0217**	1	BOLT (M8X1.25X20-MM)	
M	2	1	**6I-0260**	3	BOLT (M8X1.25X25-MM)	
M	3	1	**6I-0291**	1	NUT (M8X1.25-THD)	
	4	1	**035-8017**	1	UNION	
	5	1	**365-3308**	1	NUT-COMPRESSION (3/8-24-THD)	
	6	1	**067-6265**	1	FITTING-BRASS	
M	7	1	**100-4830**	1	BOLT (M10X1.5X20-MM)	
M	9	1	**111-3422**	1	NUT (M14X1.5-THD)	
	10	1	**111-3423**	1	WASHER	
M	11	1	**124-3815**	1	BOLT (M8X1.25X16-MM)	
	12	1	**140-8714**	1	CLIP	
	13	2	**169-5326**	1	SWITCH-TEMPERATURE (TIMING ADVANCE)	
	14	1	**230-8989**	1	GEAR-FUEL PUMP (68-TEETH)	
	15	1	**230-8995**	1	TUBE AS (CYL NO. 1)	
	16	1	**230-8996**	1	TUBE AS (CYL NO. 2)	
	17	1	**230-8997**	1	TUBE AS (CYL NO. 3)	
	18	1	**230-8998**	1	TUBE AS (CYL NO. 4)	
C	19	1	**240-5571**	1	BRACKET	
	21	2	**232-1323**	1	PLUG-CUP	
	22	1	**232-1328**	1	CAP	
	23	2	**232-1793**	1	CABLE	
	24	1	**232-1794**	3	HOSE	
	25	1	**232-3149**	1	WASHER (8.35X16.85X1.55-MM THK)	
	26	1	**232-3157**	1	BRACKET	
	27	1	**238-8671**	4	CLAMP-INJECTOR	
M	29	1	**232-3274**	4	BOLT (M8X1.25X48.1-MM)	
R	30	1	**236-1674**	4	INJECTOR AS-FUEL	
					(EACH INCLUDES)	
	30A	1	**140-8718**	1	WASHER (7.49X15.75X1.68-MM THK)	
	30B	1	**275-1038**	1	SEAL-O-RING	
	30C	1	**236-1673**	1	NOZZLE	
C	31	1	**246-6615**	1	PUMP GP-FUEL INJECTION	
	31A	1	**152-3968**	1	SEAL-O-RING	
	31B	1	**176-6219**	1	SOLENOID (12-VOLT) (FUEL SHUTOFF)	
	32	1	**236-2144**	1	TUBE AS	
	32A	1	**067-6999**	1	FERRULE	
	33	1	**232-2725**	2	CLIP	
	34	1	**232-2726**	1	CLIP	
	35	1	**318-2365**	1	CLIP	

C - CHANGE FROM PREVIOUS TYPE
M - METRIC PART
R - REMANUFACTURED PART MAY BE AVAILABLE

236-2140 **PUMP GP-FUEL INJECTION (**contd.**)** **i04711479**

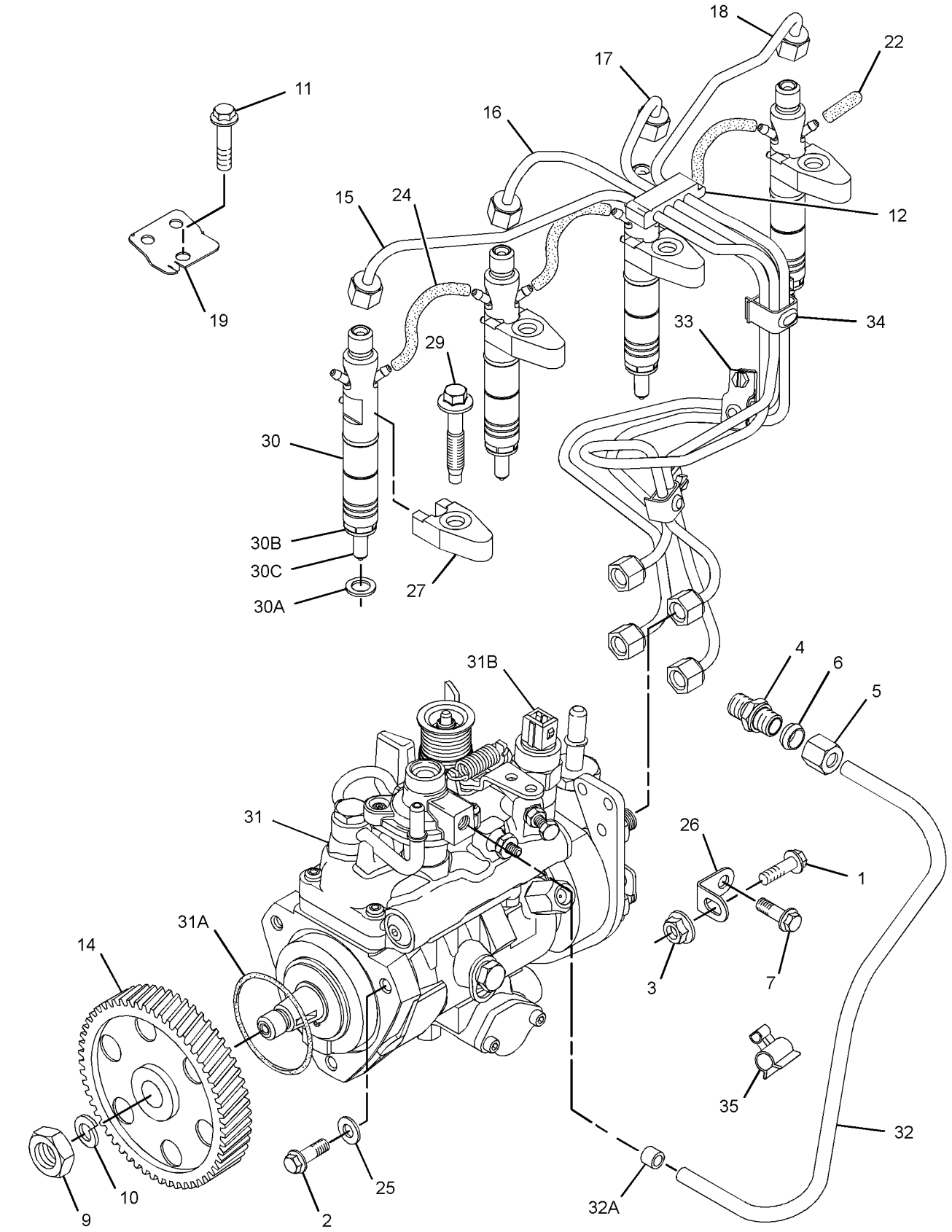

GRAPHIC #1 g01739254

236-2140 **PUMP GP-FUEL INJECTION (**contd.**)** **i04711479**

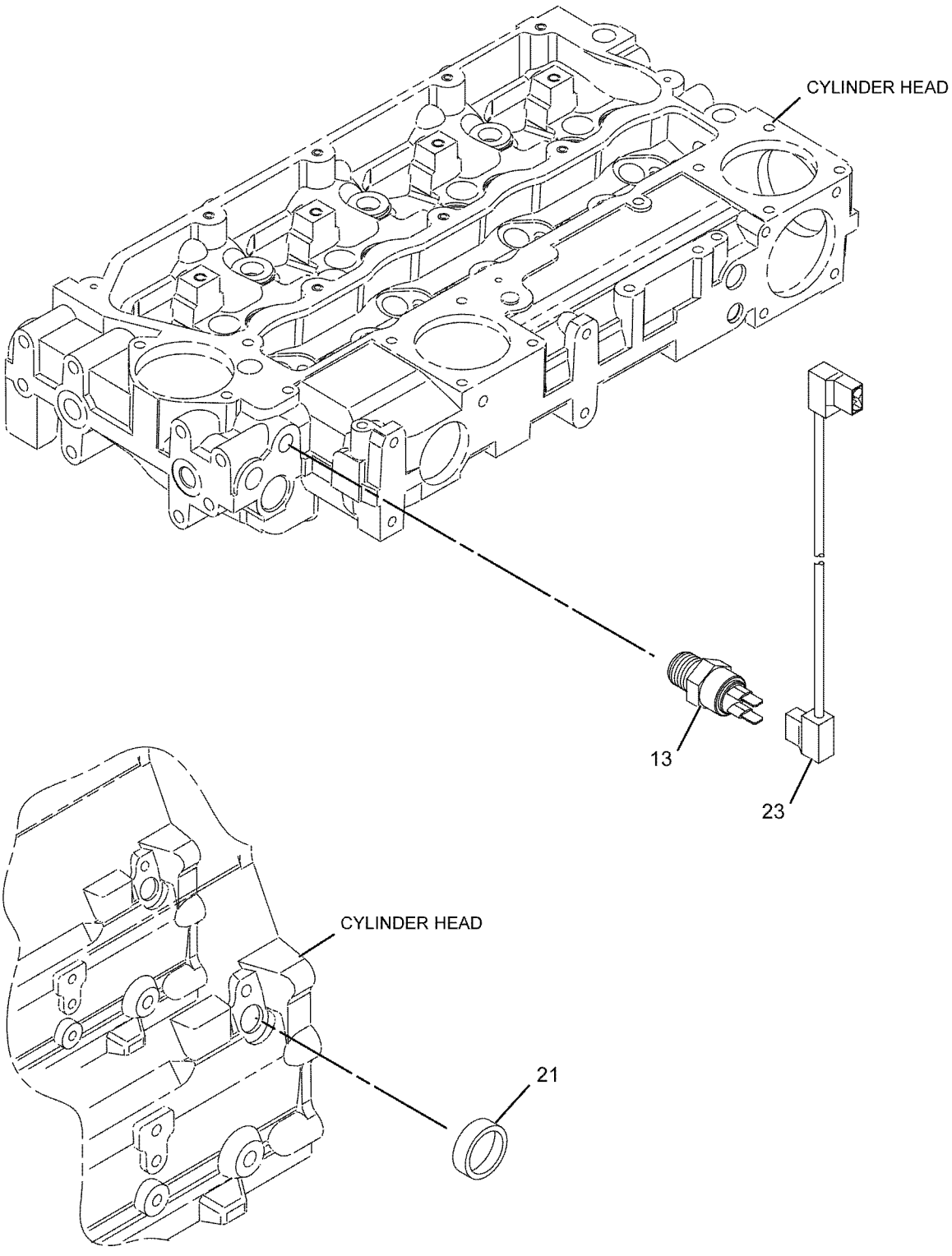

GRAPHIC #2 <END> g01077917

236-2140 PUMP GP-FUEL INJECTION

S/N: 334281-UP
TYPE 2

SMCS-1251, 1290 **i08268894**

NOTE	REF NO	GRAPHIC REF	PART NUMBER	QTY	PART NAME 1 2 3 4 5 6 (PRODUCT LEVEL)	SEE PAGE
M	1	1	**6I-0217**	1	BOLT (M8X1.25X20-MM)	
M	2	1	**6I-0260**	3	BOLT (M8X1.25X25-MM)	
M	3	1	**178-3336**	1	NUT-HEX FLANGE (M8X1.25-THD)	
	4	1	**035-8017**	1	UNION	
	5	1	**365-3308**	1	NUT-COMPRESSION (3/8-24-THD)	
	6	1	**067-6265**	1	FITTING-BRASS	
M	7	1	**100-4830**	1	BOLT (M10X1.5X20-MM)	
M	9	1	**111-3422**	1	NUT (M14X1.5-THD)	
	10	1	**111-3423**	1	WASHER	
M	11	1	**124-3815**	1	BOLT (M8X1.25X16-MM)	
	13	2	**169-5326**	1	SWITCH-TEMPERATURE (TIMING ADVANCE)	
	14	1	**425-7107**	1	GEAR-FUEL PUMP (68-TEETH)	
	19	1	**240-5571**	1	BRACKET	
	22	1	**232-1328**	1	CAP	
	23	2	**232-1793**	1	CABLE	
	24	1	**232-1794**	3	HOSE	
	25	1	**232-3149**	1	WASHER (8.35X16.85X1.55-MM THK)	
	26	1	**232-3157**	1	BRACKET	
	27	1	**238-8671**	4	CLAMP-INJECTOR	
M	29	1	**232-3274**	4	BOLT (M8X1.25X48.1-MM)	
R	30	1	**236-1674**	4	INJECTOR AS-FUEL	
					(EACH INCLUDES)	
	30A	1	**140-8718**	1	WASHER (7.49X15.75X1.68-MM THK)	
	30B	1	**275-1038**	1	SEAL-O-RING	
	30C	1	**236-1673**	1	NOZZLE	
	31	1	**246-6615**	1	PUMP GP-FUEL INJECTION	
	31A	1	**152-3968**	1	SEAL-O-RING	
	31B	1	**176-6219**	1	SOLENOID (12-VOLT) (FUEL SHUTOFF)	
	32	1	**236-2144**	1	TUBE AS	
	35	1	**318-2365**	1	CLIP	
Y	36	1	*495-3762*	1	LINES GP-FUEL INJECTION	1173

M - METRIC PART
R - REMANUFACTURED PART MAY BE AVAILABLE
Y - SEPARATE ILLUSTRATION

236-2140 **PUMP GP-FUEL INJECTION (**contd.**)** **i08268894**

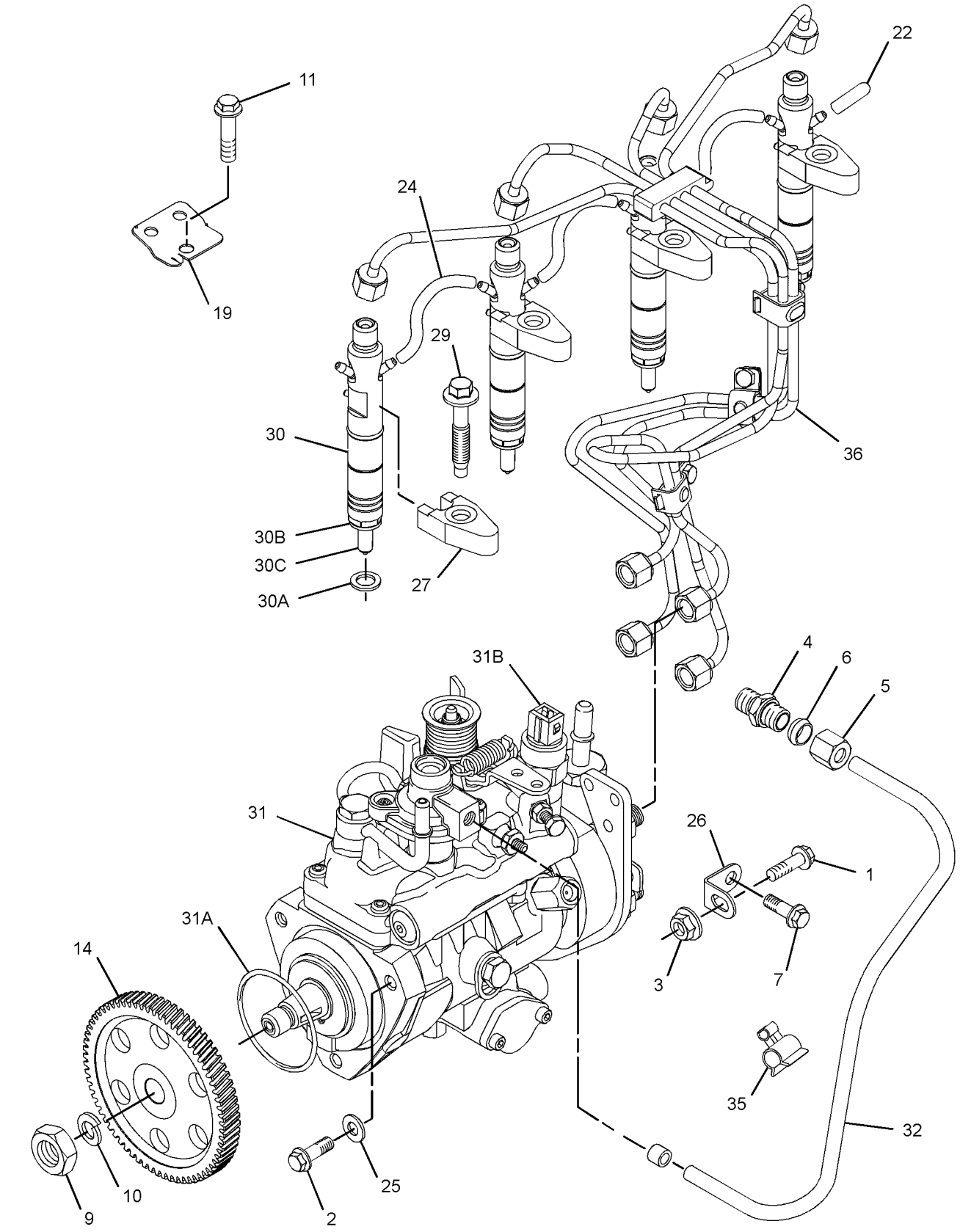

GRAPHIC #1 g06749647

236-2140 **PUMP GP-FUEL INJECTION (**contd.**)** **i08268894**

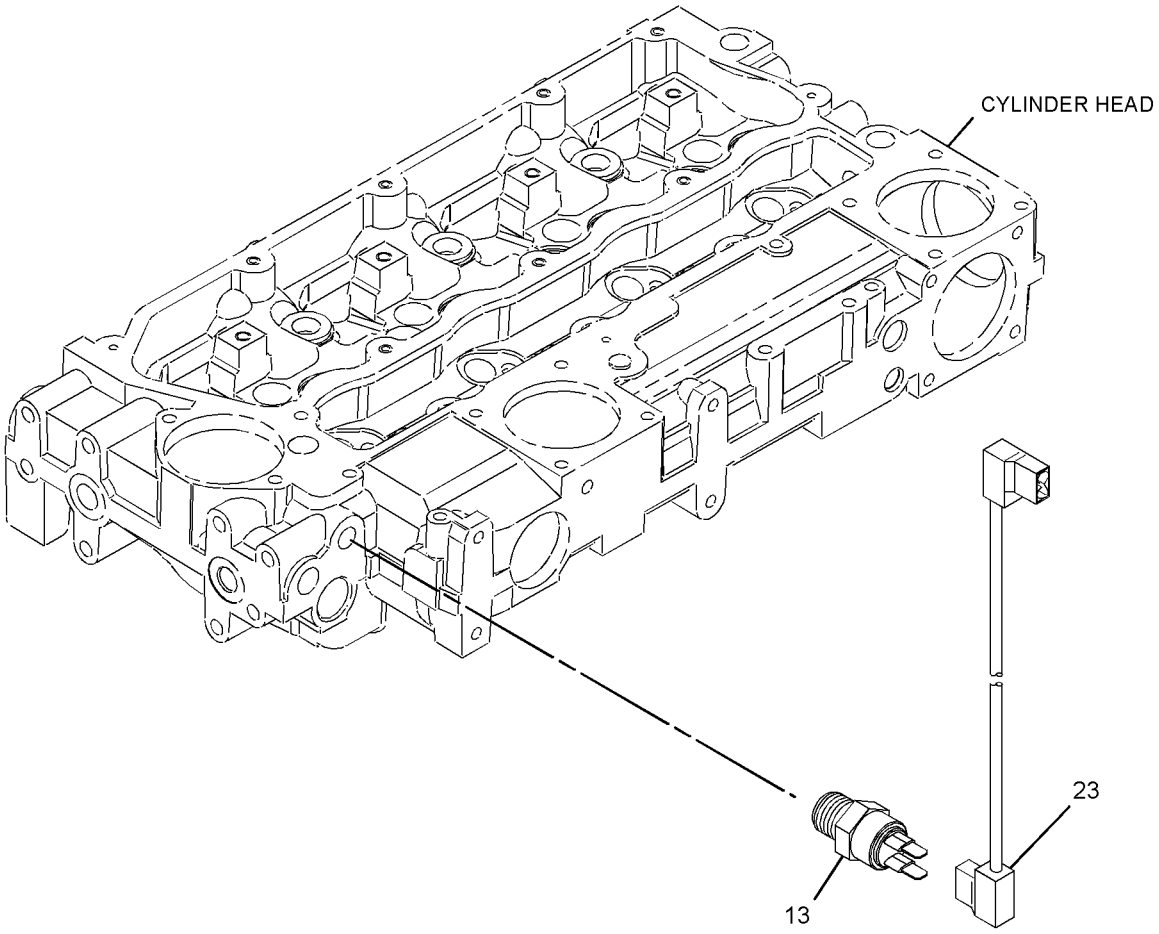

GRAPHIC #2 <END> g06749648

236-5707 PUMP GP-FUEL INJECTION

FIELD REPLACEMENT ORDER 247-1285—PAGE: 1312, 247-1286—PAGE: 1313, 247-1287—PAGE: 1314

PART OF 232-1827, 270-8261 PUMP GP-FUEL INJECTION

ALSO AN ATTACHMENT

SMCS-1251, 1290

i02473524

NOTE	REF NO	GRAPHIC REF	PART NUMBER	QTY	PART NAME 1 2 3 4 5 6 (PRODUCT LEVEL)	SEE PAGE
	1	1	**152-3968**	1	SEAL-O-RING	
	2	1	**176-6219**	1	SOLENOID (12-VOLT) (FUEL SHUTOFF)	

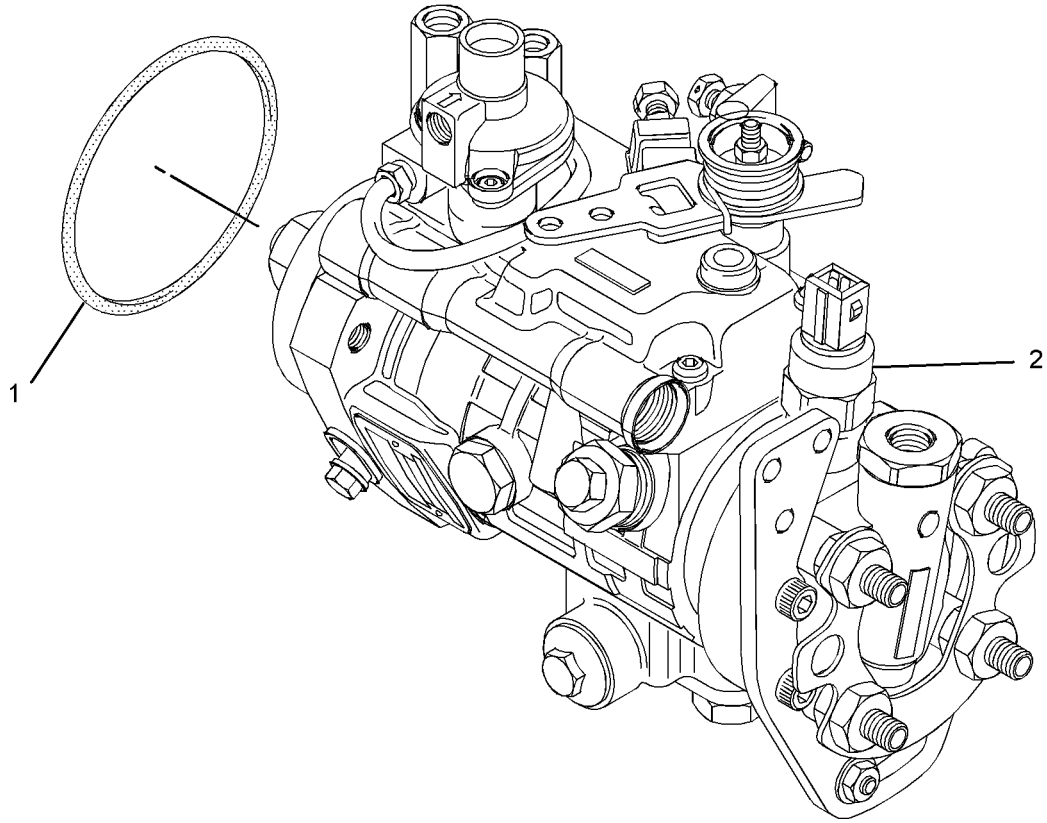

GRAPHIC #1 <END> g01059219

236-6910 PUMP GP-FUEL INJECTION

FIELD REPLACEMENT ORDER 248-2367—PAGE: 1330, 248-2368—PAGE: 1331, 248-2369—PAGE: 1332

PART OF 233-9526 PUMP GP-FUEL INJECTION

ALSO AN ATTACHMENT

SMCS-1251, 1290

i03091341

NOTE	REF NO	GRAPHIC REF	PART NUMBER	QTY	PART NAME 1 2 3 4 5 6 (PRODUCT LEVEL)	SEE PAGE
	1	1	**152-3968**	1	SEAL-O-RING	
	2	1	**147-2645**	1	SOLENOID-SHUTOFF (24-VOLT) (FUEL SHUTOFF)	

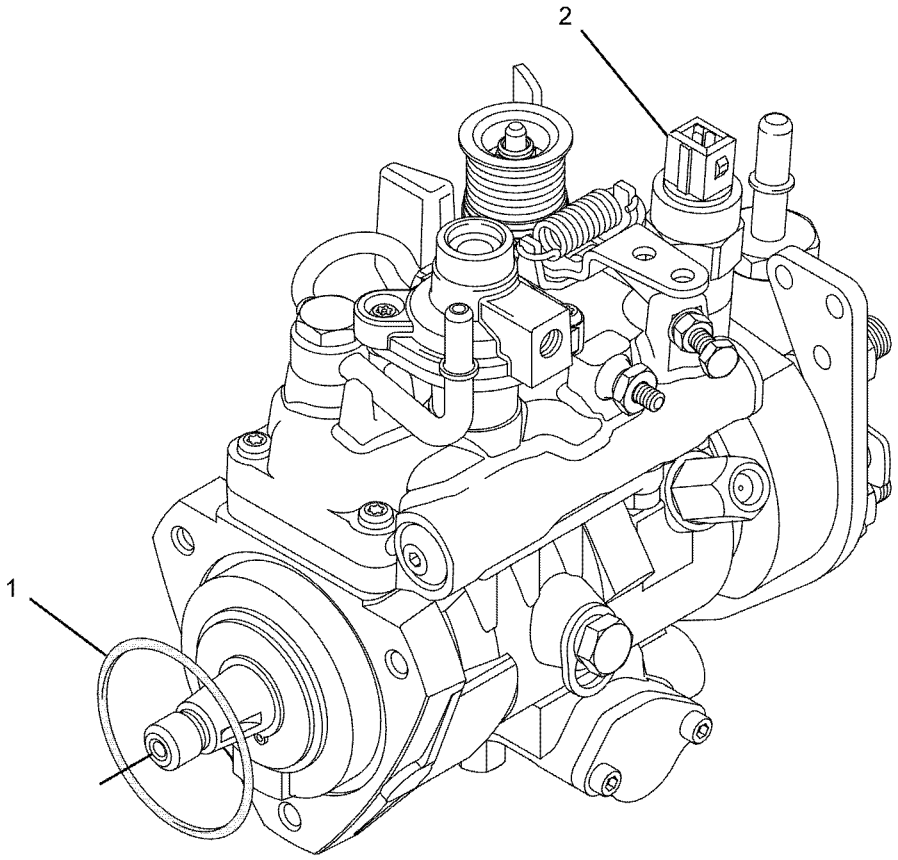

GRAPHIC #1 <END> g01085467

236-8228 PUMP GP-FUEL INJECTION

FIELD REPLACEMENT ORDER 248-2356—PAGE: 1321, 248-2357—PAGE: 1322, 248-2358—PAGE: 1323

PART OF 236-8229, 270-3084 PUMP GP-FUEL INJECTION

SMCS-1251, 1290 **i06298321**

NOTE	REF NO	GRAPHIC REF	PART NUMBER	QTY	PART NAME 1 2 3 4 5 6 (PRODUCT LEVEL)	SEE PAGE
	1	1	**152-3968**	1	SEAL-O-RING	
	2	1	**176-6219**	1	SOLENOID (12-VOLT) (FUEL SHUTOFF)	
					—OR—	
		1	**147-2645**	1	SOLENOID-SHUTOFF (24-VOLT) (FUEL SHUTOFF)	

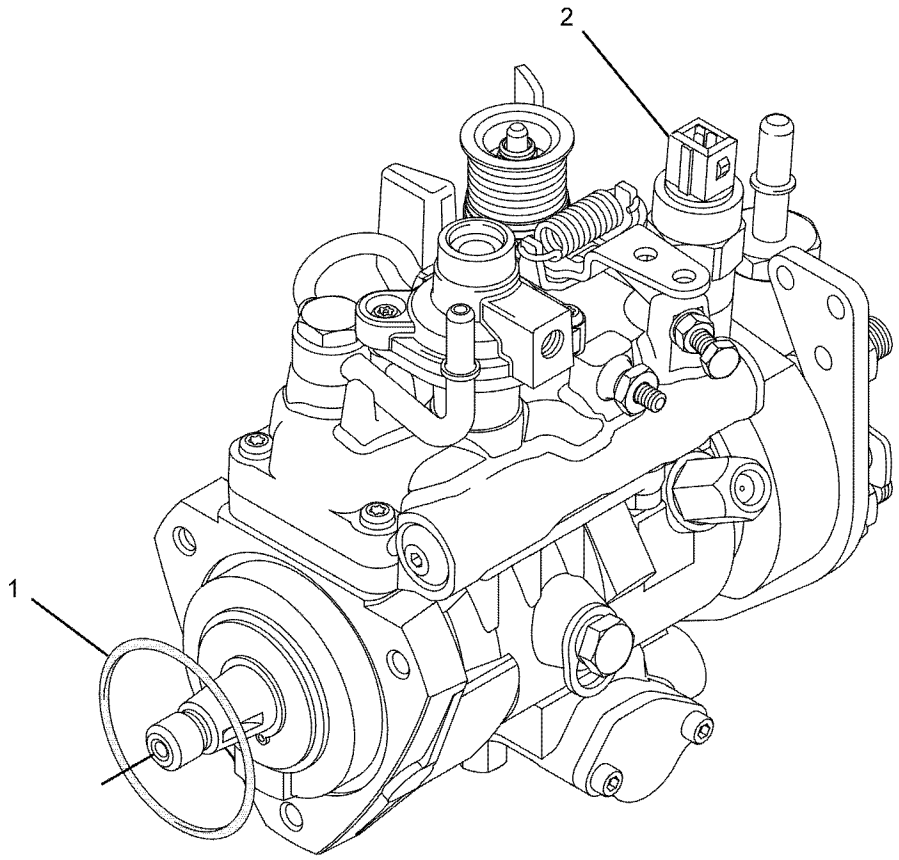

GRAPHIC #1 <END> g01085467

236-8229 PUMP GP-FUEL INJECTION

TYPE 1

SMCS-1251, 1290 **i05122576**

NOTE	REF NO	GRAPHIC REF	PART NUMBER	QTY	PART NAME 1 2 3 4 5 6 (PRODUCT LEVEL)	SEE PAGE
M	1	1	**6I-0217**	1	BOLT (M8X1.25X20-MM)	
M	2	1	**6I-0260**	3	BOLT (M8X1.25X25-MM)	
M	3	1	**6I-0291**	1	NUT (M8X1.25-THD)	
	4	1	**035-8017**	1	UNION	
	5	1	**365-3308**	1	NUT-COMPRESSION (3/8-24-THD)	
	6	1	**067-6265**	1	FITTING-BRASS	
M	7	1	**100-4830**	1	BOLT (M10X1.5X20-MM)	
M	8	1	**111-3422**	1	NUT (M14X1.5-THD)	
	9	1	**111-3423**	1	WASHER	
	10	1	**140-8714**	1	CLIP	
	11	1	**230-7886**	1	TUBE AS	
	11A	1	**067-6999**	1	FERRULE	
	11B	1	**106-8835**	1	NUT	
	12	1	**230-8989**	1	GEAR-FUEL PUMP (68-TEETH)	
	13	1	**230-8995**	1	TUBE AS (CYL NO. 1)	
	14	1	**230-8996**	1	TUBE AS (CYL NO. 2)	
	15	1	**230-8997**	1	TUBE AS (CYL NO. 3)	
	16	1	**230-8998**	1	TUBE AS (CYL NO. 4)	
	17	2	**232-1323**	1	PLUG-CUP	
	18	1	**232-1328**	1	CAP	
	19	1	**232-1794**	3	HOSE	
	20	1	**232-2725**	2	CLIP	
	21	1	**232-2726**	1	CLIP	
	22	1	**232-3149**	1	WASHER (8.35X16.85X1.55-MM THK) (SEALING)	
	23	1	**232-3157**	1	BRACKET	
	24	1	**238-8671**	4	CLAMP-INJECTOR	
M	25	1	**232-3274**	4	BOLT (M8X1.25X48.1-MM)	
	26	2	**235-1790**	1	SWITCH-TEMPERATURE (TIMING ADVANCE)	
R	27	1	**236-1674**	4	INJECTOR AS-FUEL	
					(EACH INCLUDES)	
	27A	1	**236-1673**	1	NOZZLE	
	27B	1	**140-8718**	1	WASHER (7.49X15.75X1.68-MM THK)	
	27C	1	**275-1038**	1	SEAL-O-RING	
Y	28	1	**236-8228**	1	PUMP GP-FUEL INJECTION	1254
	29	1	**318-2365**	1	CLIP	
	30	1	**240-5571**	1	BRACKET	
M	31	1	**124-3815**	1	BOLT (M8X1.25X16-MM)	

M - METRIC PART
R - REMANUFACTURED PART MAY BE AVAILABLE
Y - SEPARATE ILLUSTRATION

236-8229 **PUMP GP-FUEL INJECTION (**contd.**)** **i05122576**

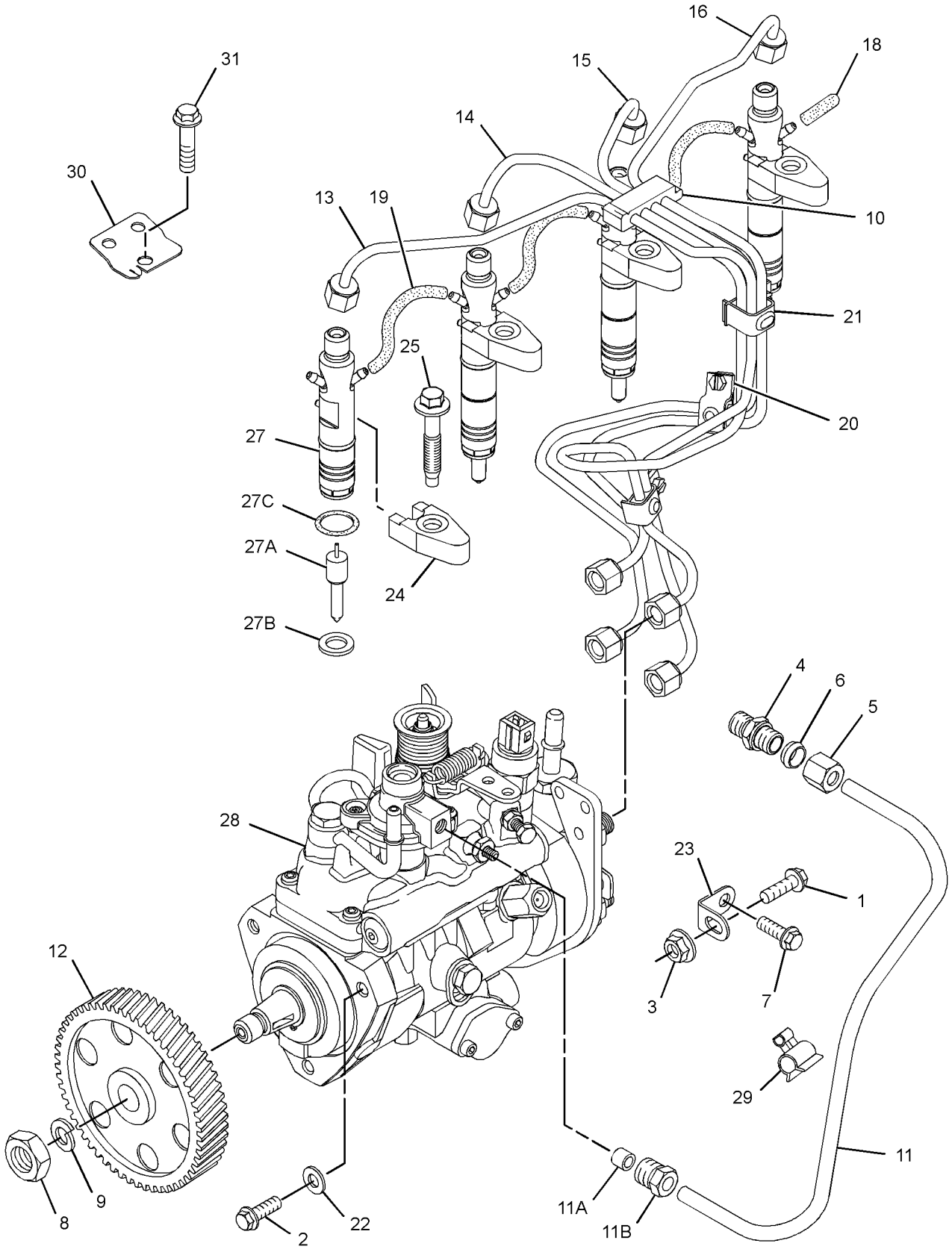

GRAPHIC #1 g03292018

236-8229 **PUMP GP-FUEL INJECTION (**contd.**)** **i05122576**

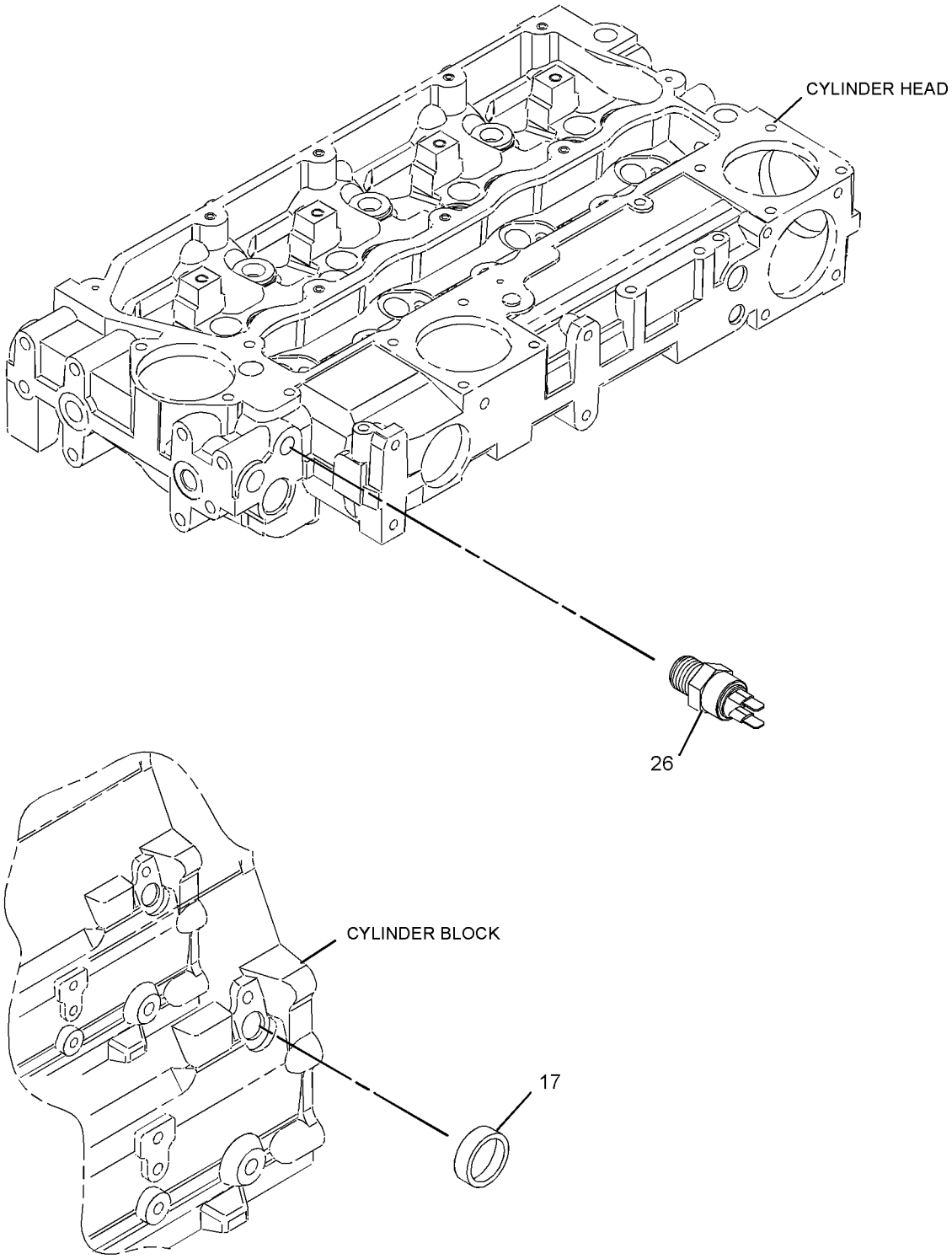

GRAPHIC #2 <END> g01022785

236-8229 PUMP GP-FUEL INJECTION

TYPE 2

SMCS-1251, 1290 **i07255083**

NOTE	REF NO	GRAPHIC REF	PART NUMBER	QTY	PART NAME 1 2 3 4 5 6 (PRODUCT LEVEL)	SEE PAGE
M	1	1	**6I-0217**	1	BOLT (M8X1.25X20-MM)	
M	2	1	**6I-0260**	3	BOLT (M8X1.25X25-MM)	
M	3	1	**6I-0291**	1	NUT (M8X1.25-THD)	
	4	1	**035-8017**	1	UNION	
	5	1	**365-3308**	1	NUT-COMPRESSION (3/8-24-THD)	
	6	1	**067-6265**	1	FITTING-BRASS	
M	7	1	**100-4830**	1	BOLT (M10X1.5X20-MM)	
M	8	1	**111-3422**	1	NUT (M14X1.5-THD)	
	9	1	**111-3423**	1	WASHER	
	10	1	**140-8714**	1	CLIP	
	11	1	**230-7886**	1	TUBE AS	
	11A	1	**067-6999**	1	FERRULE	
	11B	1	**106-8835**	1	NUT	
	12	1	**425-7107**	1	GEAR-FUEL PUMP (68-TEETH)	
	13	1	**230-8995**	1	TUBE AS (CYL NO. 1)	
	14	1	**230-8996**	1	TUBE AS (CYL NO. 2)	
	15	1	**230-8997**	1	TUBE AS (CYL NO. 3)	
	16	1	**230-8998**	1	TUBE AS (CYL NO. 4)	
	18	1	**232-1328**	1	CAP	
	19	1	**232-1794**	3	HOSE	
	20	1	**232-2725**	2	CLIP	
	21	1	**232-2726**	1	CLIP	
	22	1	**232-3149**	1	WASHER (8.35X16.85X1.55-MM THK) (SEALING)	
	23	1	**232-3157**	1	BRACKET	
	24	1	**238-8671**	4	CLAMP-INJECTOR	
M	25	1	**232-3274**	4	BOLT (M8X1.25X48.1-MM)	
	26	2	**235-1790**	1	SWITCH-TEMPERATURE (TIMING ADVANCE)	
R	27	1	**236-1674**	4	INJECTOR AS-FUEL	
					(EACH INCLUDES)	
	27A	1	**236-1673**	1	NOZZLE	
	27B	1	**140-8718**	1	WASHER (7.49X15.75X1.68-MM THK)	
	27C	1	**275-1038**	1	SEAL-O-RING	
Y	28	1	**236-8228**	1	PUMP GP-FUEL INJECTION	1254
	29	1	**318-2365**	1	CLIP	
	30	1	**240-5571**	1	BRACKET	
M	31	1	**124-3815**	1	BOLT (M8X1.25X16-MM)	

M - METRIC PART
R - REMANUFACTURED PART MAY BE AVAILABLE
Y - SEPARATE ILLUSTRATION

236-8229 **PUMP GP-FUEL INJECTION (**contd.**)** **i07255083**

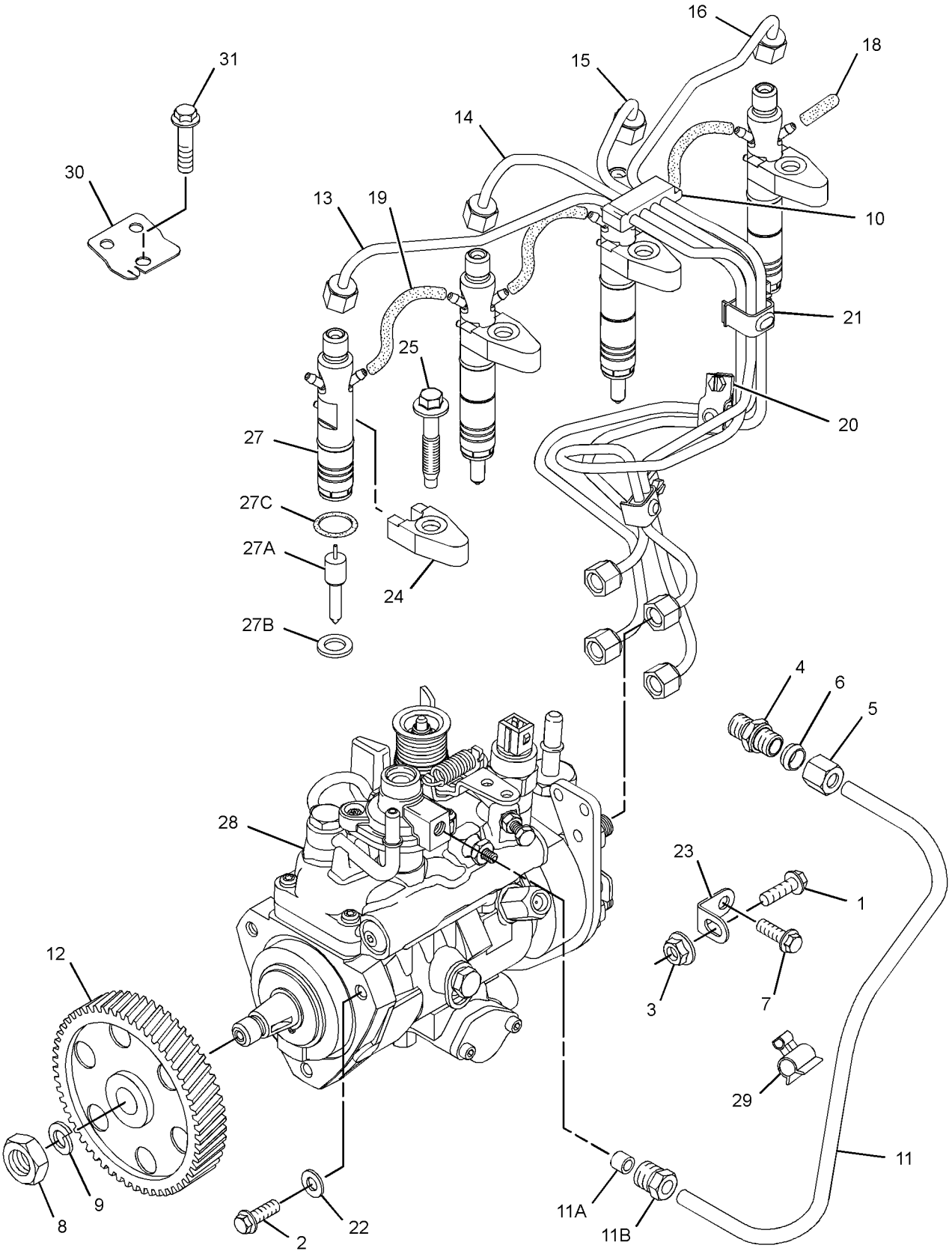

GRAPHIC #1 g03292018

236-8229 **PUMP GP-FUEL INJECTION (**contd.**)** **i07255083**

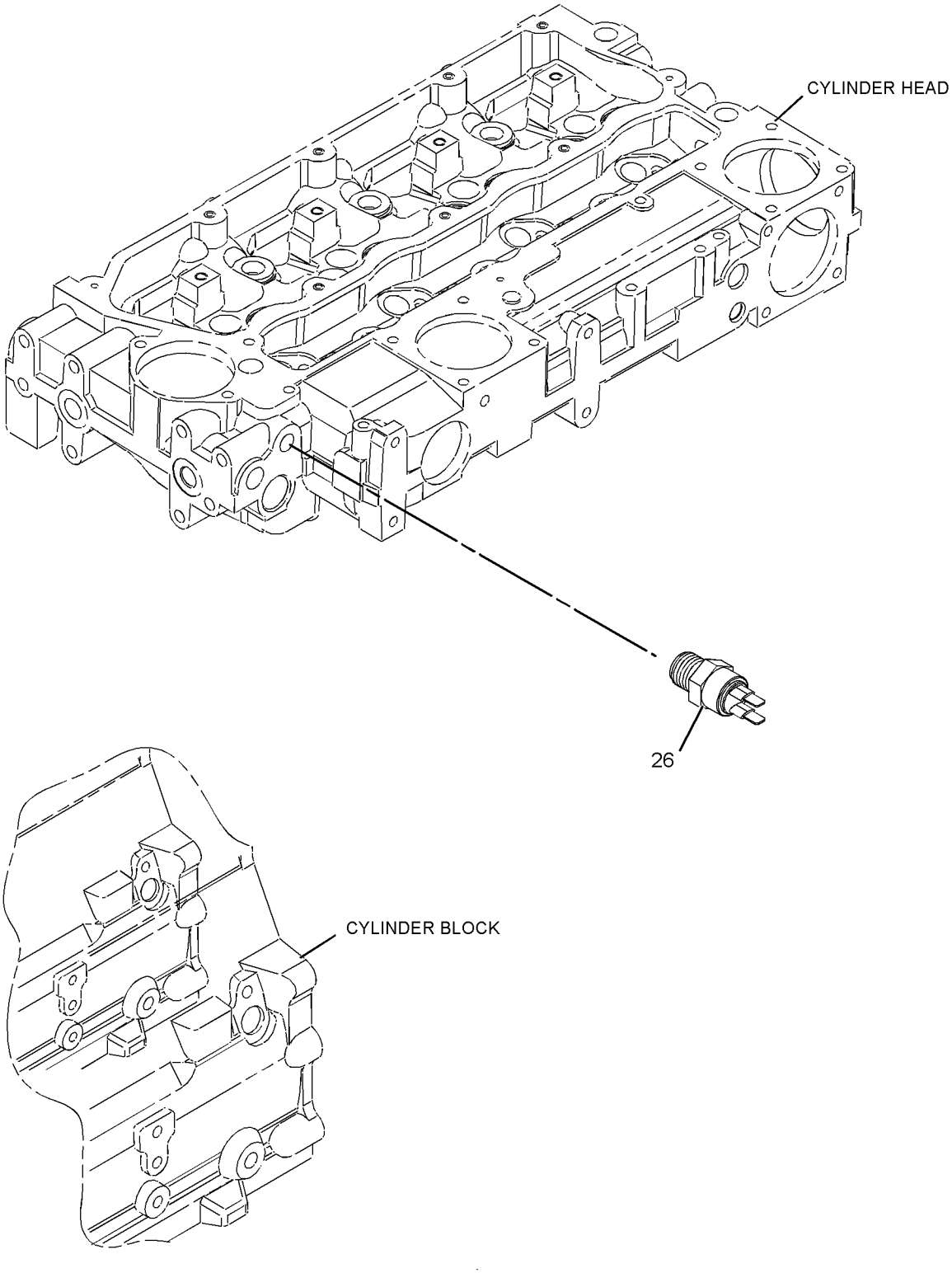

GRAPHIC #2 <END> g02796513

236-8229 PUMP GP-FUEL INJECTION

TYPE 3

SMCS-1251, 1290 **i08274396**

NOTE	REF NO	GRAPHIC REF	PART NUMBER	QTY	PART NAME 1 2 3 4 5 6 (PRODUCT LEVEL)	SEE PAGE
M	1	1	**6I-0217**	1	BOLT (M8X1.25X20-MM)	
M	2	1	**6I-0260**	3	BOLT (M8X1.25X25-MM)	
M	3	1	**178-3336**	1	NUT-HEX FLANGE (M8X1.25-THD)	
	4	1	**035-8017**	1	UNION	
	5	1	**365-3308**	1	NUT-COMPRESSION (3/8-24-THD)	
	6	1	**067-6265**	1	FITTING-BRASS	
M	7	1	**100-4830**	1	BOLT (M10X1.5X20-MM)	
M	8	1	**111-3422**	1	NUT (M14X1.5-THD)	
	9	1	**111-3423**	1	WASHER	
	11	1	**230-7886**	1	TUBE AS	
	11A	1	**067-6999**	1	FERRULE	
	11B	1	**106-8835**	1	NUT	
	12	1	**425-7107**	1	GEAR-FUEL PUMP (68-TEETH)	
	18	1	**232-1328**	1	CAP	
	19	1	**232-1794**	3	HOSE	
	22	1	**232-3149**	1	WASHER (8.35X16.85X1.55-MM THK) (SEALING)	
	23	1	**232-3157**	1	BRACKET	
	24	1	**238-8671**	4	CLAMP-INJECTOR	
M	25	1	**232-3274**	4	BOLT (M8X1.25X48.1-MM)	
	26	2	**235-1790**	1	SWITCH-TEMPERATURE (TIMING ADVANCE)	
R	27	1	**236-1674**	4	INJECTOR AS-FUEL	
					(EACH INCLUDES)	
	27A	1	**236-1673**	1	NOZZLE	
	27B	1	**140-8718**	1	WASHER (7.49X15.75X1.68-MM THK)	
	27C	1	**275-1038**	1	SEAL-O-RING	
Y	28	1	*236-8228*	1	PUMP GP-FUEL INJECTION	1254
	29	1	**318-2365**	1	CLIP	
	30	1	**240-5571**	1	BRACKET	
M	31	1	**124-3815**	1	BOLT (M8X1.25X16-MM)	
CY	32	1	*495-3762*	1	LINES GP-FUEL INJECTION	1173

C - CHANGE FROM PREVIOUS TYPE
M - METRIC PART
R - REMANUFACTURED PART MAY BE AVAILABLE
Y - SEPARATE ILLUSTRATION

236-8229 **PUMP GP-FUEL INJECTION (**contd.**)** **i08274396**

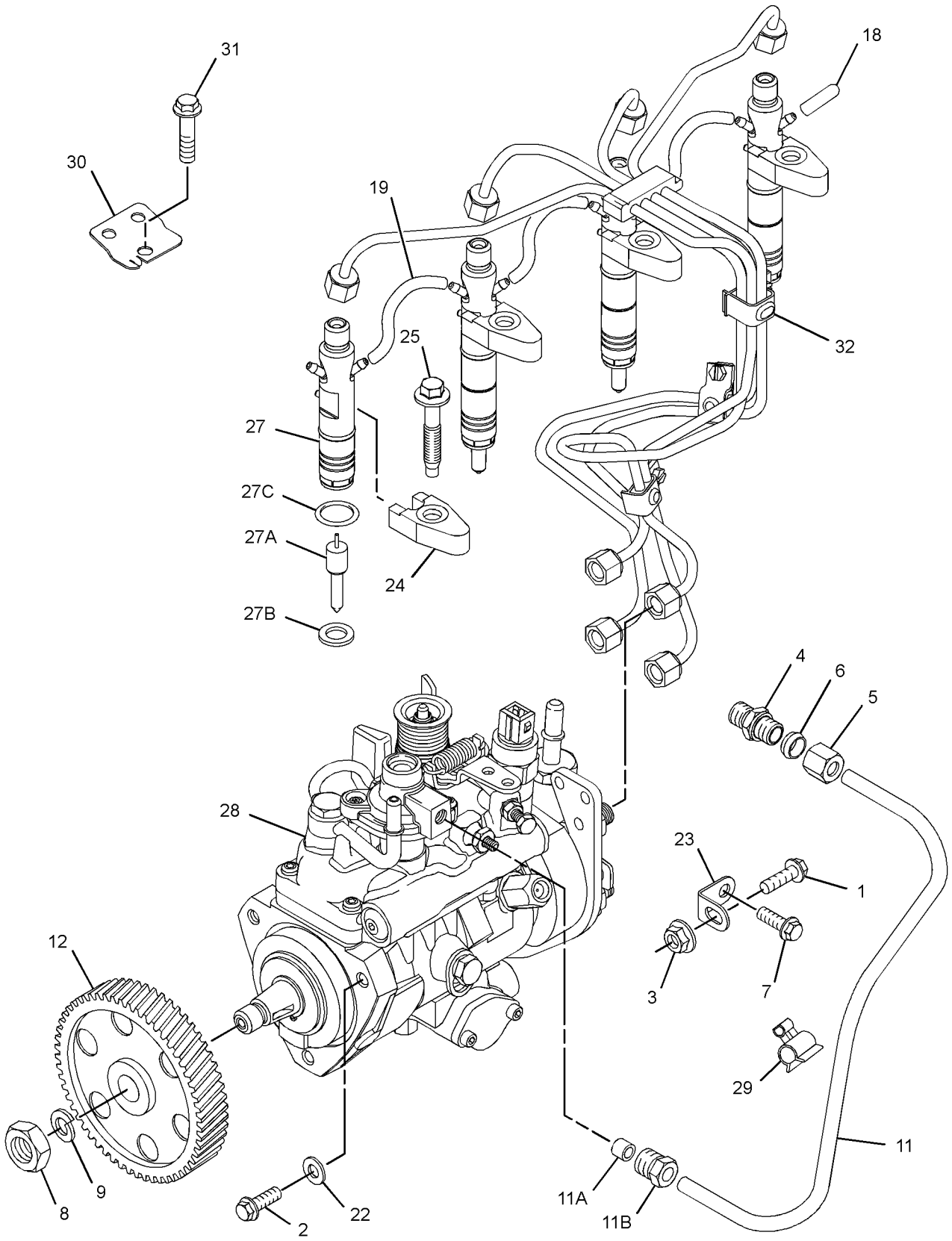

GRAPHIC #1 g06651706

236-8229 **PUMP GP-FUEL INJECTION (**contd.**)** **i08274396**

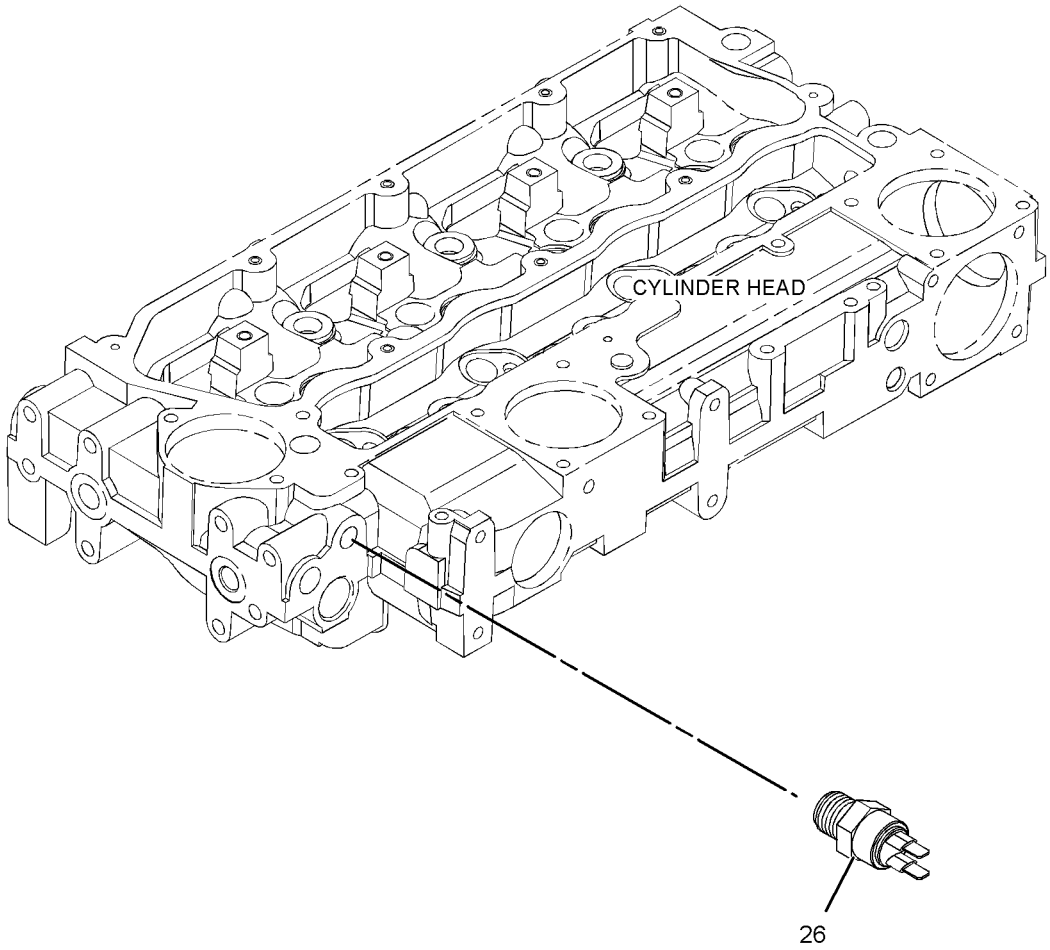

GRAPHIC #2 <END> g06651707

237-5214 PUMP GP-FUEL INJECTION

S/N: 3341-280

SMCS-1251, 1290 **i02145849**

NOTE	REF NO	GRAPHIC REF	PART NUMBER	QTY	PART NAME 1 2 3 4 5 6 (PRODUCT LEVEL)	SEE PAGE
M	1	1	**6I-0217**	1	BOLT (M8X1.25X20-MM)	
M	2	1	**6I-0260**	3	BOLT (M8X1.25X25-MM)	
M	3	1	**6I-0291**	1	NUT (M8X1.25-THD)	
	4	2	**9F-2247**	1	PLUG-PIPE (1/8-27-THD)	
M	5	1	**100-4830**	1	BOLT (M10X1.5X20-MM)	
	6	1	**110-8760**	1	STRAP	
M	7	1	**111-3422**	1	NUT (M14X1.5-THD)	
	8	1	**111-3423**	1	WASHER	
M	9	1	**124-3815**	1	BOLT (M8X1.25X16-MM)	
	10	1	**140-8714**	1	CLIP	
	11	1	**230-8989**	1	GEAR-FUEL PUMP (68-TEETH)	
	12	1	**230-8995**	1	TUBE AS (CYL NO. 1)	
	13	1	**230-8996**	1	TUBE AS (CYL NO. 2)	
	14	1	**230-8997**	1	TUBE AS (CYL NO. 3)	
	15	1	**230-8998**	1	TUBE AS (CYL NO. 4)	
	16	1	**230-9527**	1	BRACKET	
	17	1	**232-1117**	1	CLIP-PIPE	
	18	2	**232-1323**	1	PLUG-CUP	
	19	1	**232-1328**	1	CAP	
	20	2	**232-1793**	1	CABLE (TIMING ADVANCE SWITCH)	
	21	1	**232-1794**	3	HOSE	
	22	1	**232-2725**	1	CLIP	
	23	1	**232-2726**	1	CLIP	
	24	1	**232-3149**	3	WASHER (8.35X16.85X1.55-MM THK)	
	25	1	**232-3157**	1	BRACKET	
	26	1	**232-3158**	4	CLAMP-INJECTOR	
M	27	1	**232-3274**	4	BOLT (M8X1.25X48.1-MM)	
	28	2	**235-1790**	1	SWITCH-TEMPERATURE (TIMING ADVANCE)	
R	29	1	**236-1674**	4	INJECTOR AS-FUEL	
					(EACH INCLUDES)	
	29A	1	**140-8718**	1	WASHER (7.49X15.75X1.68-MM THK)	
	29B	1	**236-1673**	1	NOZZLE	
	30	1	**237-5213**	1	PUMP GP-FUEL INJECTION	
	30A	1	**152-3968**	1	SEAL-O-RING	
	30B	1	**176-6219**	1	SOLENOID (12-VOLT) (FUEL SHUTOFF)	
	30C	1	**193-0161**	1	CABLE AS-ADAPTER	

M - METRIC PART
R - REMANUFACTURED PART MAY BE AVAILABLE

237-5214 **PUMP GP-FUEL INJECTION (**contd.**)** **i02145849**

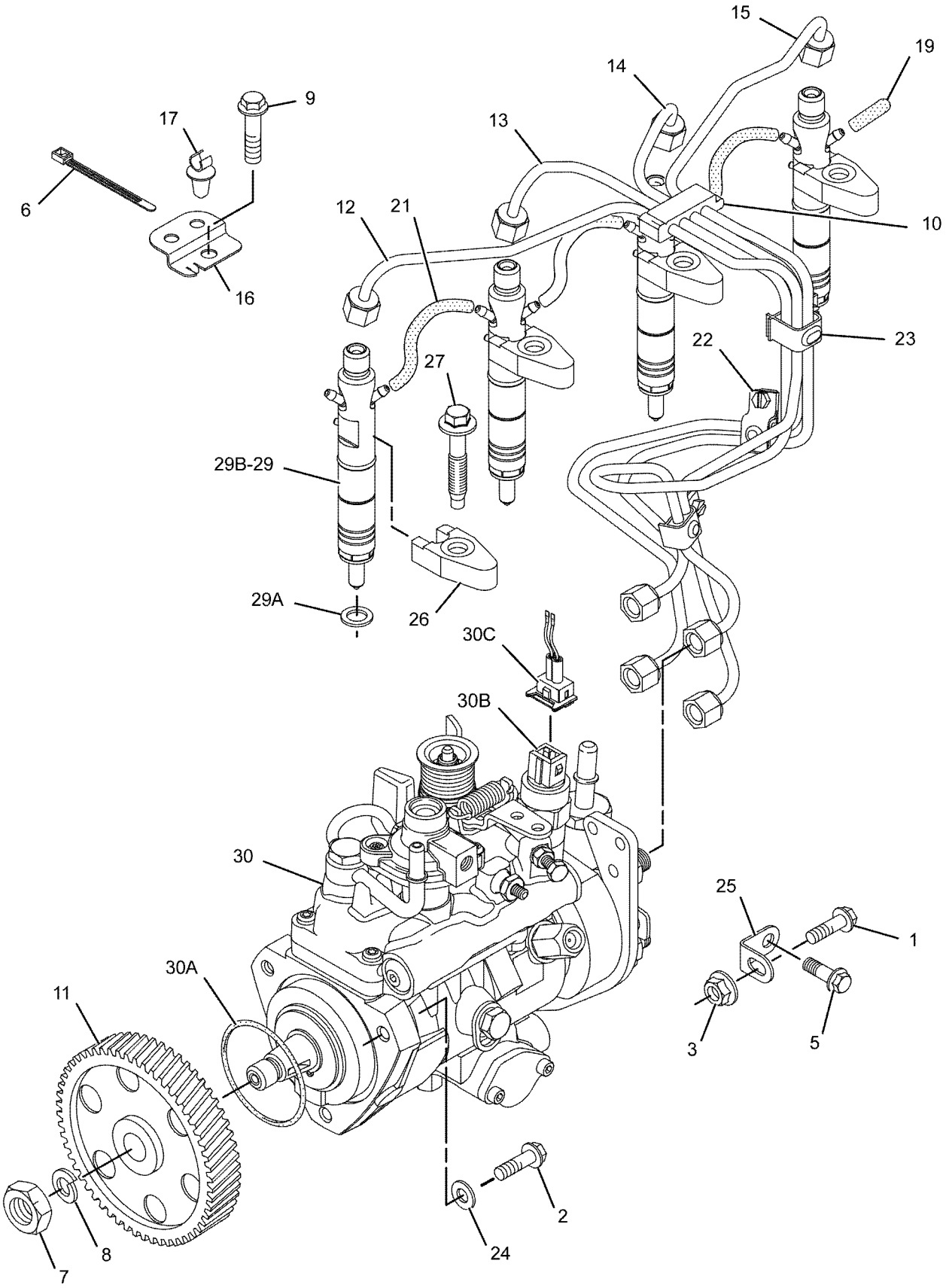

GRAPHIC #1 g01030127

237-5214 **PUMP GP-FUEL INJECTION (**contd.**)** **i02145849**

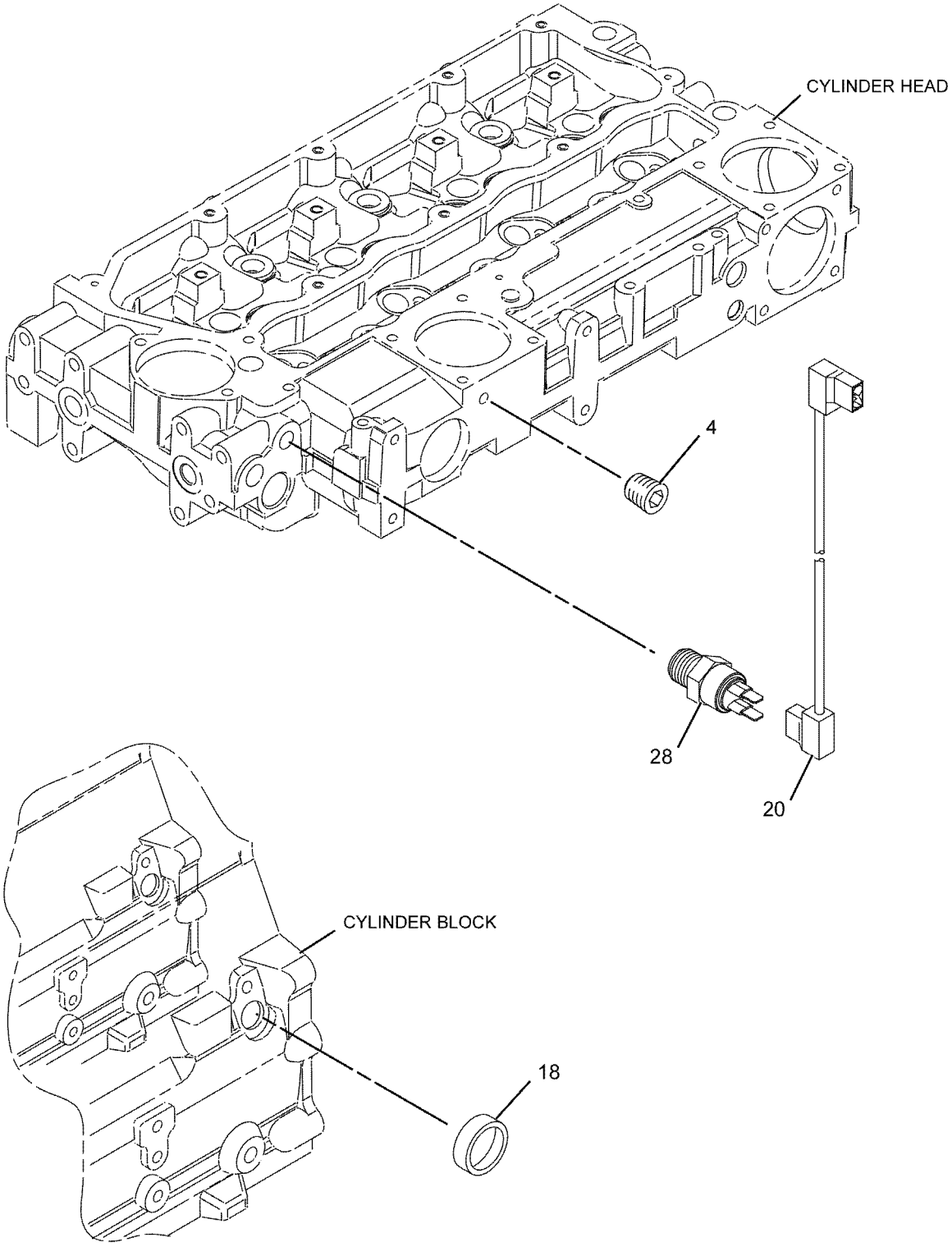

GRAPHIC #2 <END> g01030128

237-5214 PUMP GP-FUEL INJECTION

S/N: 334281-605

SMCS-1251, 1290 **i02743364**

NOTE	REF NO	GRAPHIC REF	PART NUMBER	QTY	PART NAME 1 2 3 4 5 6 (PRODUCT LEVEL)	SEE PAGE
M	1	1	**6I-0217**	1	BOLT (M8X1.25X20-MM)	
M	2	1	**6I-0260**	3	BOLT (M8X1.25X25-MM)	
M	3	1	**6I-0291**	1	NUT (M8X1.25-THD)	
	4	2	**9F-2247**	1	PLUG-PIPE (1/8-27-THD)	
M	5	1	**100-4830**	1	BOLT (M10X1.5X20-MM)	
M	7	1	**111-3422**	1	NUT (M14X1.5-THD)	
	8	1	**111-3423**	1	WASHER	
M	9	1	**124-3815**	1	BOLT (M8X1.25X16-MM)	
	10	1	**140-8714**	1	CLIP	
	11	1	**230-8989**	1	GEAR-FUEL PUMP (68-TEETH)	
	12	1	**230-8995**	1	TUBE AS (CYL NO. 1)	
	13	1	**230-8996**	1	TUBE AS (CYL NO. 2)	
	14	1	**230-8997**	1	TUBE AS (CYL NO. 3)	
	15	1	**230-8998**	1	TUBE AS (CYL NO. 4)	
	16	1	**240-5571**	1	BRACKET	
	18	2	**232-1323**	1	PLUG-CUP	
	19	1	**232-1328**	1	CAP	
	20	2	**232-1793**	1	CABLE (TIMING ADVANCE SWITCH)	
	21	1	**232-1794**	3	HOSE	
	22	1	**232-2725**	1	CLIP	
	23	1	**232-2726**	1	CLIP	
	24	1	**232-3149**	3	WASHER (8.35X16.85X1.55-MM THK)	
	25	1	**232-3157**	1	BRACKET	
	26	1	**232-3158**	4	CLAMP-INJECTOR	
M	27	1	**232-3274**	4	BOLT (M8X1.25X48.1-MM)	
	28	2	**235-1790**	1	SWITCH-TEMPERATURE (TIMING ADVANCE)	
R	29	1	**236-1674**	4	INJECTOR AS-FUEL	
					(EACH INCLUDES)	
	29A	1	**140-8718**	1	WASHER (7.49X15.75X1.68-MM THK)	
	29B	1	**236-1673**	1	NOZZLE	
	30	1	**237-5213**	1	PUMP GP-FUEL INJECTION	
	30A	1	**152-3968**	1	SEAL-O-RING	
	30B	1	**176-6219**	1	SOLENOID (12-VOLT) (FUEL SHUTOFF)	
	30C	1	**193-0161**	1	CABLE AS-ADAPTER	

M - METRIC PART
R - REMANUFACTURED PART MAY BE AVAILABLE

237-5214 **PUMP GP-FUEL INJECTION (**contd.**)** **i02743364**

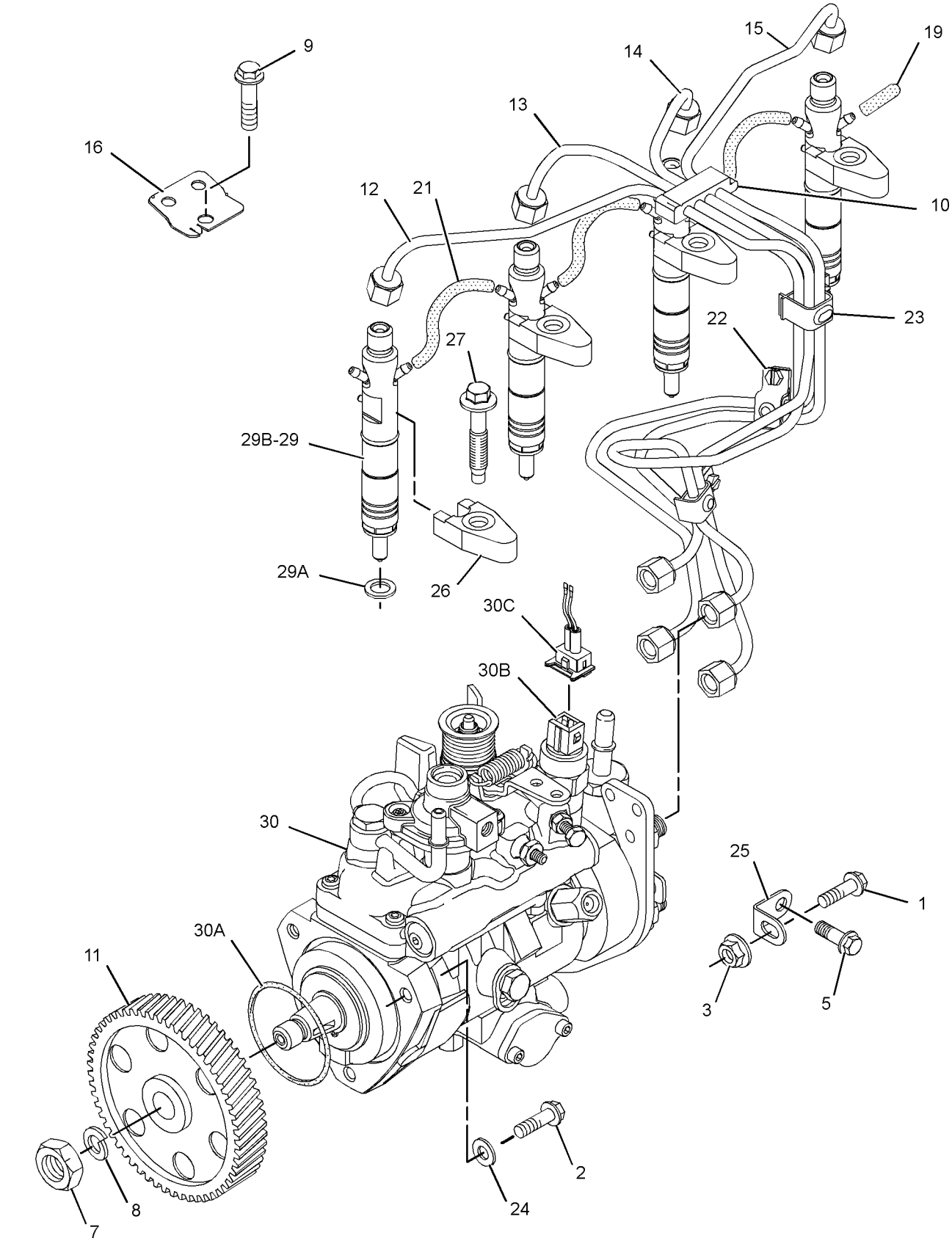

GRAPHIC #1 g01378355

237-5214 **PUMP GP-FUEL INJECTION (**contd.**)** **i02743364**

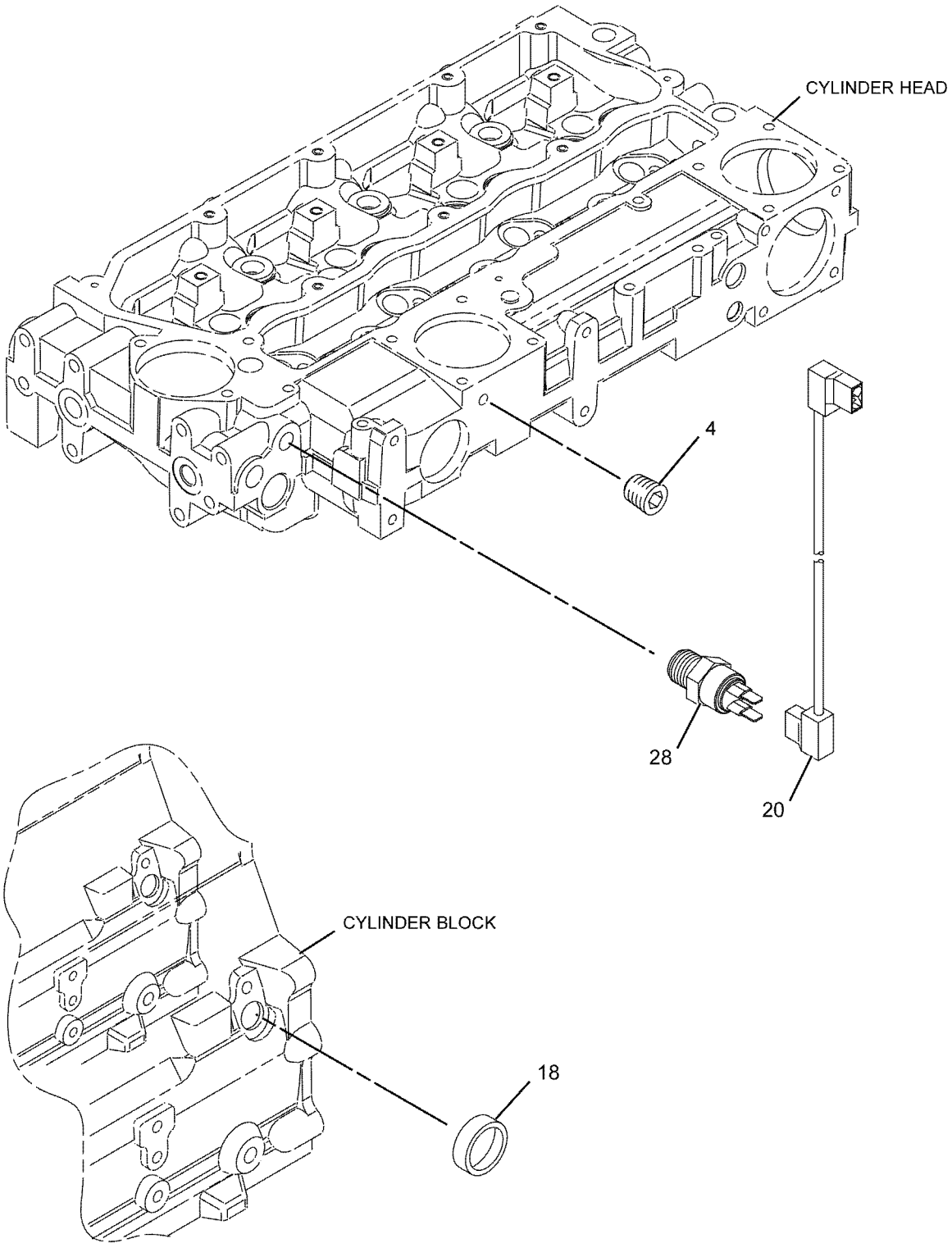

GRAPHIC #2 <END> g01030128

237-5214 PUMP GP-FUEL INJECTION

TYPE 1

SMCS-1251, 1290 **i04677989**

NOTE	REF NO	GRAPHIC REF	PART NUMBER	QTY	PART NAME 1 2 3 4 5 6 (PRODUCT LEVEL)	SEE PAGE
M	1	1	**6I-0217**	1	BOLT (M8X1.25X20-MM)	
M	2	1	**6I-0260**	3	BOLT (M8X1.25X25-MM)	
M	3	1	**6I-0291**	1	NUT (M8X1.25-THD)	
C	4	1	**035-8017**	1	UNION	
C	5	1	**365-3308**	1	NUT-COMPRESSION (3/8-24-THD)	
C	6	1	**067-6265**	1	FITTING-BRASS	
M	7	1	**100-4830**	1	BOLT (M10X1.5X20-MM)	
M	8	1	**111-3422**	1	NUT (M14X1.5-THD)	
	9	1	**111-3423**	1	WASHER	
M	10	1	**124-3815**	1	BOLT (M8X1.25X16-MM)	
	11	1	**140-8714**	1	CLIP	
C	12	1	**318-2365**	1	CLIP	
	13	1	**230-8989**	1	GEAR-FUEL PUMP (68-TEETH)	
	14	1	**230-8995**	1	TUBE AS (CYL NO. 1)	
	15	1	**230-8996**	1	TUBE AS (CYL NO. 2)	
	16	1	**230-8997**	1	TUBE AS (CYL NO. 3)	
	17	1	**230-8998**	1	TUBE AS (CYL NO. 4)	
	18	2	**232-1323**	1	PLUG-CUP	
	19	1	**232-1328**	1	CAP	
	20	2	**232-1793**	1	CABLE	
	21	1	**232-1794**	3	HOSE	
	22	1	**232-2725**	1	CLIP	
	23	1	**232-2726**	1	CLIP	
	25	1	**232-3149**	3	WASHER (8.35X16.85X1.55-MM THK)	
	26	1	**232-3157**	1	BRACKET	
M	27	1	**232-3274**	4	BOLT (M8X1.25X48.1-MM)	
	28	2	**235-1790**	1	SWITCH-TEMPERATURE (TIMING ADVANCE)	
R	29	1	**236-1674**	4	INJECTOR AS-FUEL	
					(EACH INCLUDES)	
		1	**236-1673**	1	NOZZLE	
		1	**275-1038**	1	SEAL-O-RING	
	29A	1	**140-8718**	1	WASHER (7.49X15.75X1.68-MM THK)	
C	30	1	**236-2144**	1	TUBE AS	
	30A	1	**067-6999**	1	FERRULE	
C	31	1	**238-8671**	4	CLAMP-INJECTOR	
	32	1	**240-5571**	1	BRACKET	
CR	33	1	**249-9226**	1	PUMP GP-FUEL INJECTION	
	33A	1	**152-3968**	1	SEAL-O-RING	
	33B	1	**176-6219**	1	SOLENOID (12-VOLT) (FUEL SHUTOFF)	

C - CHANGE FROM PREVIOUS TYPE
M - METRIC PART
R - REMANUFACTURED PART MAY BE AVAILABLE

237-5214 **PUMP GP-FUEL INJECTION (**contd.**)** **i04677989**

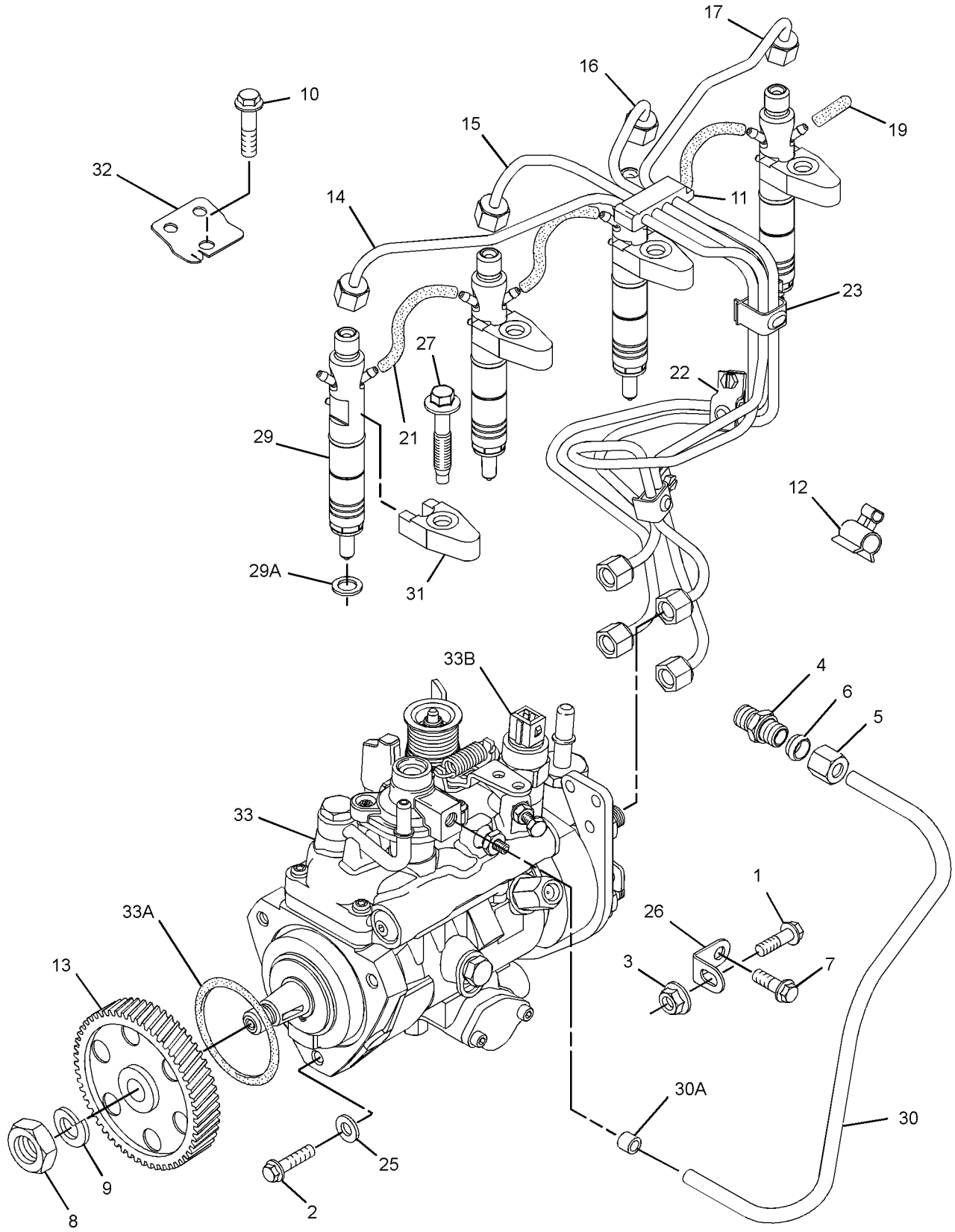

GRAPHIC #1 g01621304

237-5214 **PUMP GP-FUEL INJECTION (**contd.**)** **i04677989**

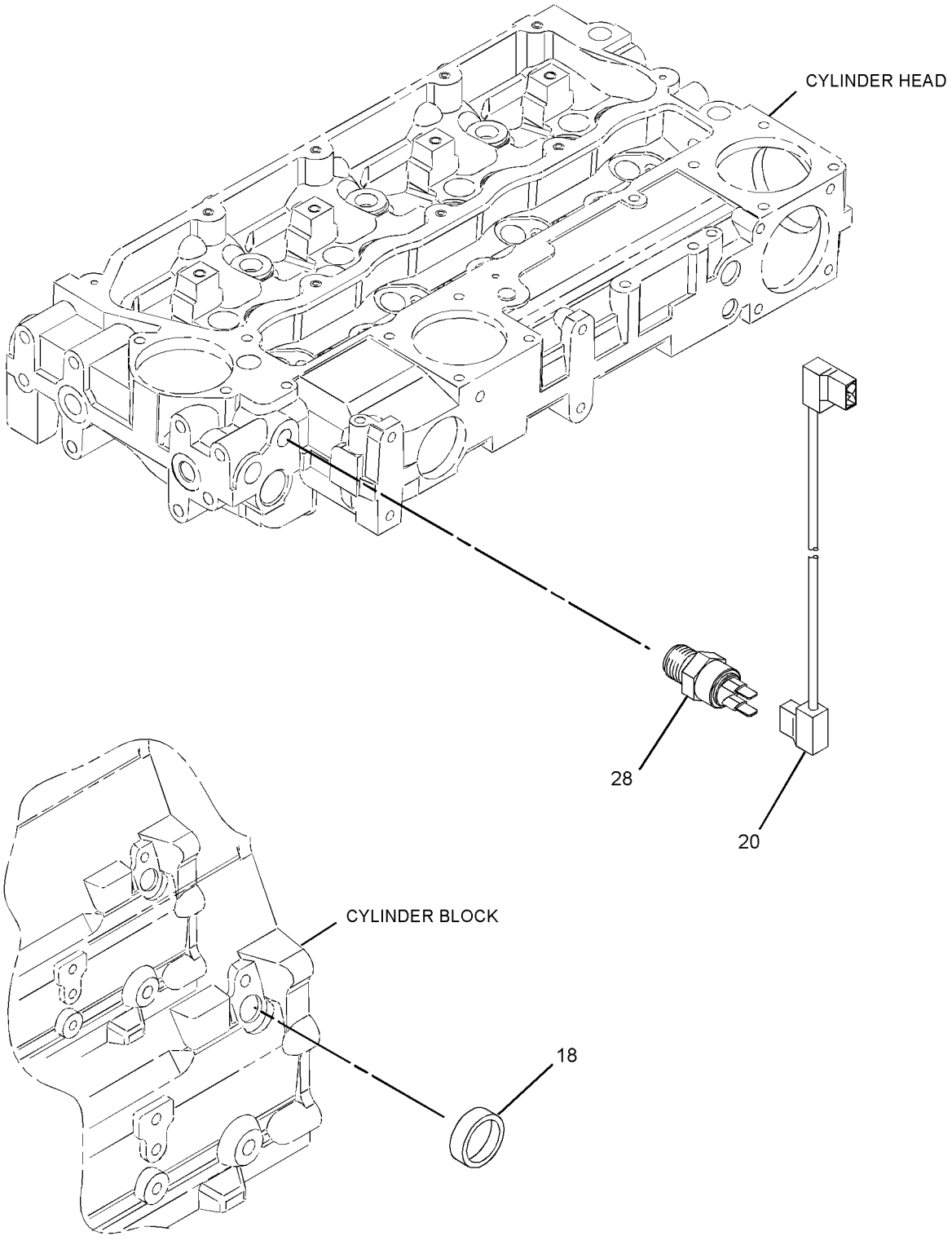

GRAPHIC #2 <END> g01347408

237-5214 PUMP GP-FUEL INJECTION

TYPE 2

SMCS-1251, 1290 **i08271847**

NOTE	REF NO	GRAPHIC REF	PART NUMBER	QTY	PART NAME 1 2 3 4 5 6 (PRODUCT LEVEL)	SEE PAGE
M	1	1	**6I-0217**	1	BOLT (M8X1.25X20-MM)	
M	2	1	**6I-0260**	3	BOLT (M8X1.25X25-MM)	
M	3	1	**178-3336**	1	NUT-HEX FLANGE (M8X1.25-THD)	
	4	2	**035-8017**	1	UNION	
	5	2	**067-6265**	1	FITTING-BRASS	
M	6	1	**100-4830**	1	BOLT (M10X1.5X20-MM)	
M	7	1	**111-3422**	1	NUT (M14X1.5-THD)	
	8	1	**111-3423**	1	WASHER	
M	9	2	**124-3815**	1	BOLT (M8X1.25X16-MM)	
	10	2	**232-1328**	1	CAP	
	11	2	**232-1793**	1	CABLE	
	12	2	**232-1794**	3	HOSE	
	13	1	**232-3149**	3	WASHER (8.35X16.85X1.55-MM THK)	
	14	1	**232-3157**	1	BRACKET	
M	15	1	**232-3274**	4	BOLT (M8X1.25X48.1-MM)	
	16	2	**235-1790**	1	SWITCH-TEMPERATURE (TIMING ADVANCE)	
R	17	1	**236-1674**	4	INJECTOR AS-FUEL	
					(EACH INCLUDES)	
	17A	1	**140-8718**	1	WASHER (7.49X15.75X1.68-MM THK)	
	17B	1	**236-1673**	1	NOZZLE	
	17C	1	**275-1038**	1	SEAL-O-RING	
	18	2	**236-2144**	1	TUBE AS	
	18A	2	**067-6999**	1	FERRULE	
	19	1	**238-8671**	4	CLAMP-INJECTOR	
	20	2	**240-5571**	1	BRACKET	
	21	2	**318-2365**	1	CLIP	
	22	2	**365-3308**	1	NUT-COMPRESSION (3/8-24-THD)	
	23	1	**425-7107**	1	GEAR-FUEL PUMP (68-TEETH)	
Y	24	1	*495-3762*	1	LINES GP-FUEL INJECTION	1173
R	25	1	**249-9226**	1	PUMP GP-FUEL INJECTION	
	25A	1	**152-3968**	1	SEAL-O-RING	
	25B	1	**176-6219**	1	SOLENOID (12-VOLT) (FUEL SHUTOFF)	
					PARTS SHOWN IN GRAPHIC(S) WITHOUT A REFERENCE NUMBER ARE NOT SERVICED SEPARATELY	

M - METRIC PART
R - REMANUFACTURED PART MAY BE AVAILABLE
Y - SEPARATE ILLUSTRATION

237-5214 **PUMP GP-FUEL INJECTION (**contd.**)** **i08271847**

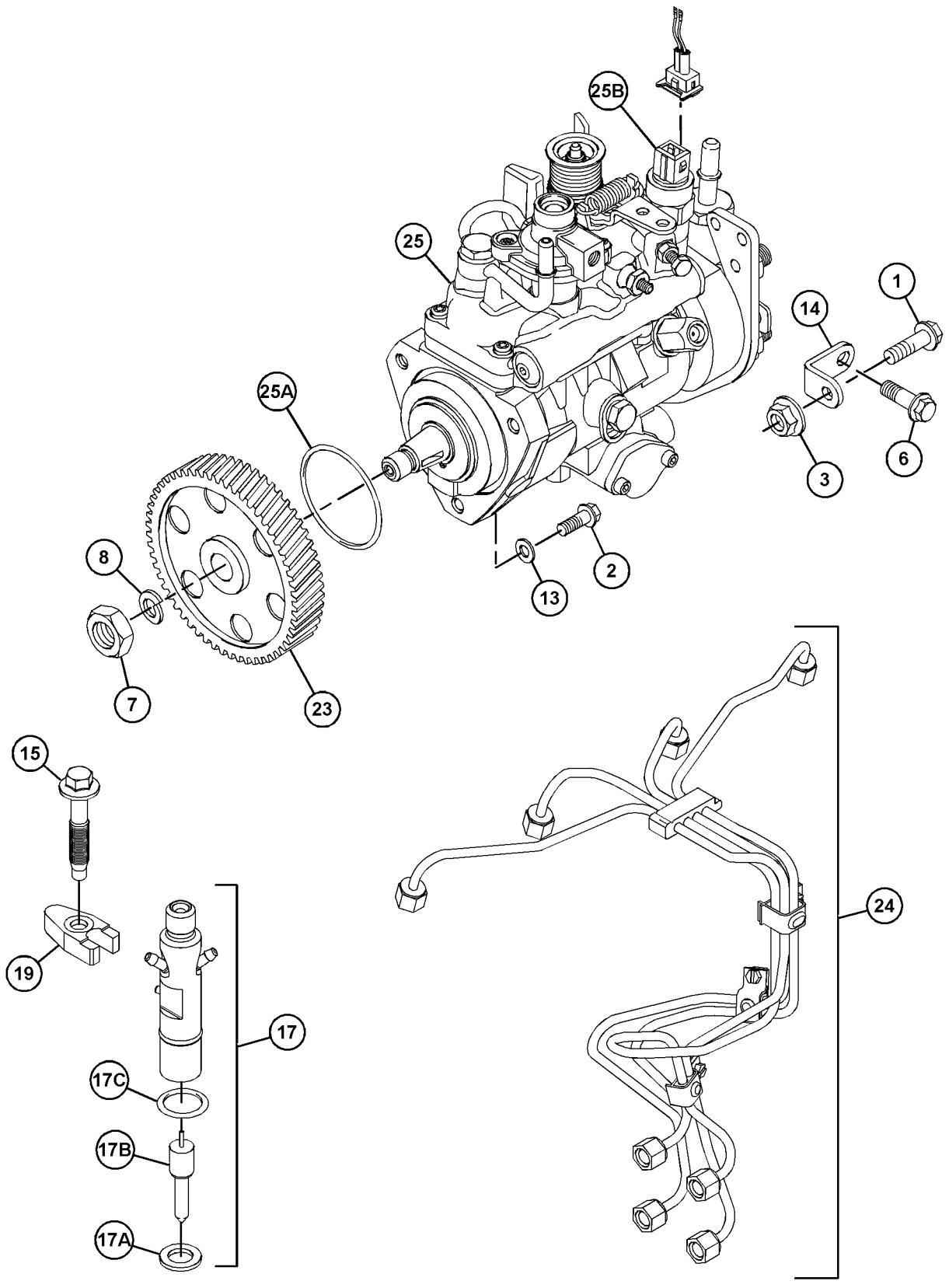

GRAPHIC #1 g06651825

237-5214 **PUMP GP-FUEL INJECTION (**contd.**)** **i08271847**

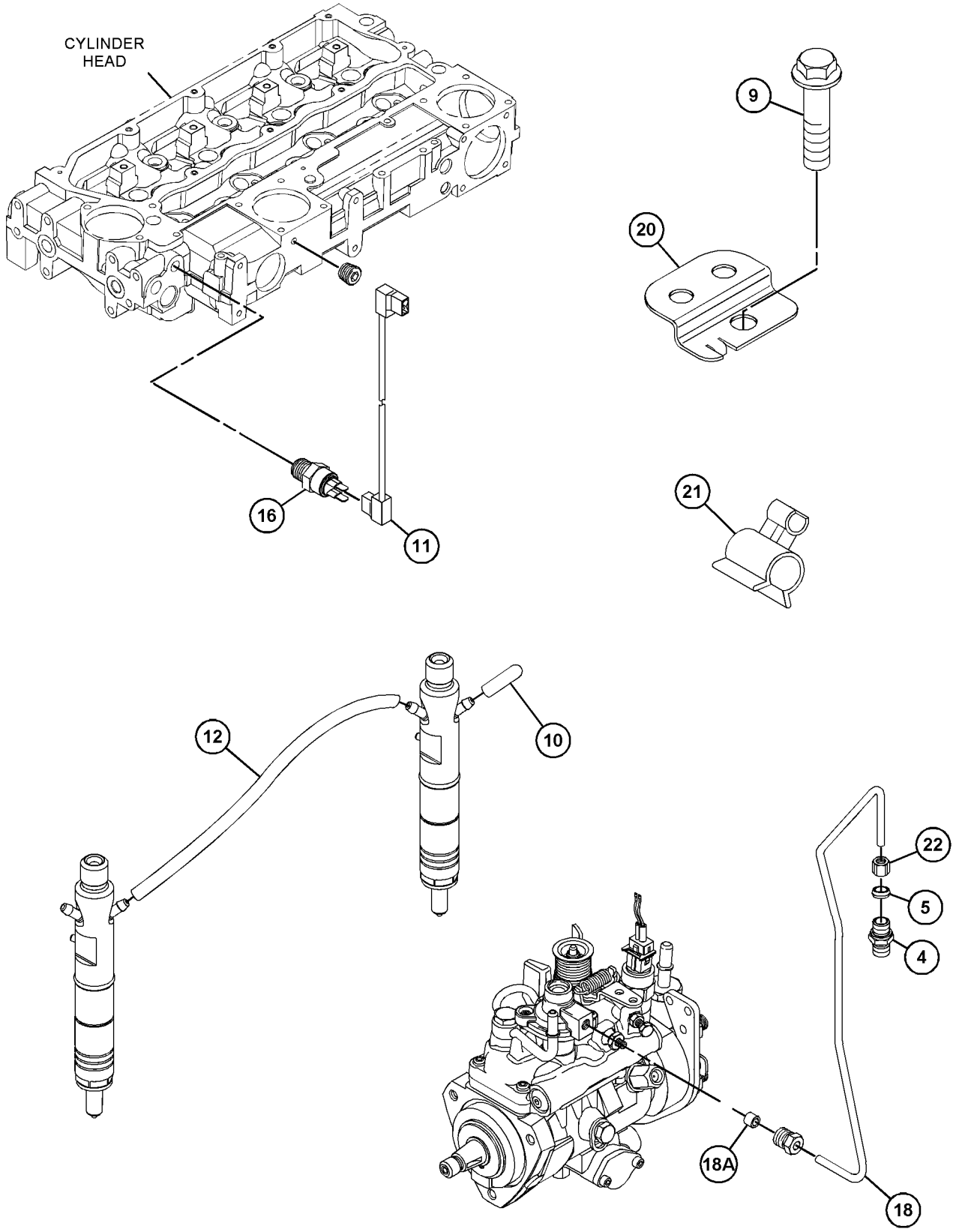

GRAPHIC #2 <END> g06651826

237-5394 PUMP GP-FUEL INJECTION

TYPE 1

SMCS-1251, 1290 **i07144527**

NOTE	REF NO	GRAPHIC REF	PART NUMBER	QTY	PART NAME 1 2 3 4 5 6 (PRODUCT LEVEL)	SEE PAGE
M	1	1	**6I-0217**	1	BOLT (M8X1.25X20-MM)	
	2	1	**232-3149**	3	WASHER (8.35X16.85X1.55-MM THK)	
M	3	1	**6I-0291**	1	NUT (M8X1.25-THD)	
M	4	1	**100-4830**	1	BOLT (M10X1.5X20-MM)	
M	5	1	**124-3815**	1	BOLT (M8X1.25X16-MM)	
	6	1	**140-8714**	1	CLIP	
	7	1	**332-7549**	1	SEAL-O-RING	
	8	1	**155-8804**	1	CAP	
	12	1	**230-9527**	1	BRACKET	
	16	2	**232-1323**	1	PLUG-CUP	
	17	1	**232-2720**	1	TUBE AS (CYL NO. 1)	
	18	1	**232-2721**	1	TUBE AS (CYL NO. 2)	
	19	1	**232-2722**	1	TUBE AS (CYL NO. 3)	
	20	1	**232-2723**	1	TUBE AS (CYL NO. 4)	
	21	1	**232-2725**	2	CLIP	
	22	1	**232-2726**	1	CLIP	
M	23	1	**6I-0260**	3	BOLT (M8X1.25X25-MM)	
	24	1	**232-3157**	1	BRACKET	
	25	1	**238-8671**	4	CLAMP-INJECTOR	
M	27	1	**232-3274**	4	BOLT (M8X1.25X48.1-MM)	
CR	28	1	**266-3712**	1	PUMP GP-FUEL INJECTION	
		1	**208-5029**	1	VALVE GP-SOLENOID (12-VOLT)	
	29	1	**233-7104**	1	GEAR-PUMP	
	30	2	**232-1793**	1	CABLE (TIMING ADVANCE)	
CR	31	1	**266-6830**	4	INJECTOR AS-FUEL	
					(EACH INCLUDES)	
C	32	1	**140-8718**	1	WASHER (7.49X15.75X1.68-MM THK)	
C	33	1	**234-0387**	1	NOZZLE	
C	34	1	**275-1038**	1	SEAL-O-RING	
C	35	1	**232-1794**	3	HOSE	
C	36	1	**232-1328**	1	CAP	
CF			**266-2994**	1	KIT-INJECTOR	

C - CHANGE FROM PREVIOUS TYPE
F - NOT SHOWN
M - METRIC PART
R - REMANUFACTURED PART MAY BE AVAILABLE

237-5394 **PUMP GP-FUEL INJECTION (**contd.**)** **i07144527**

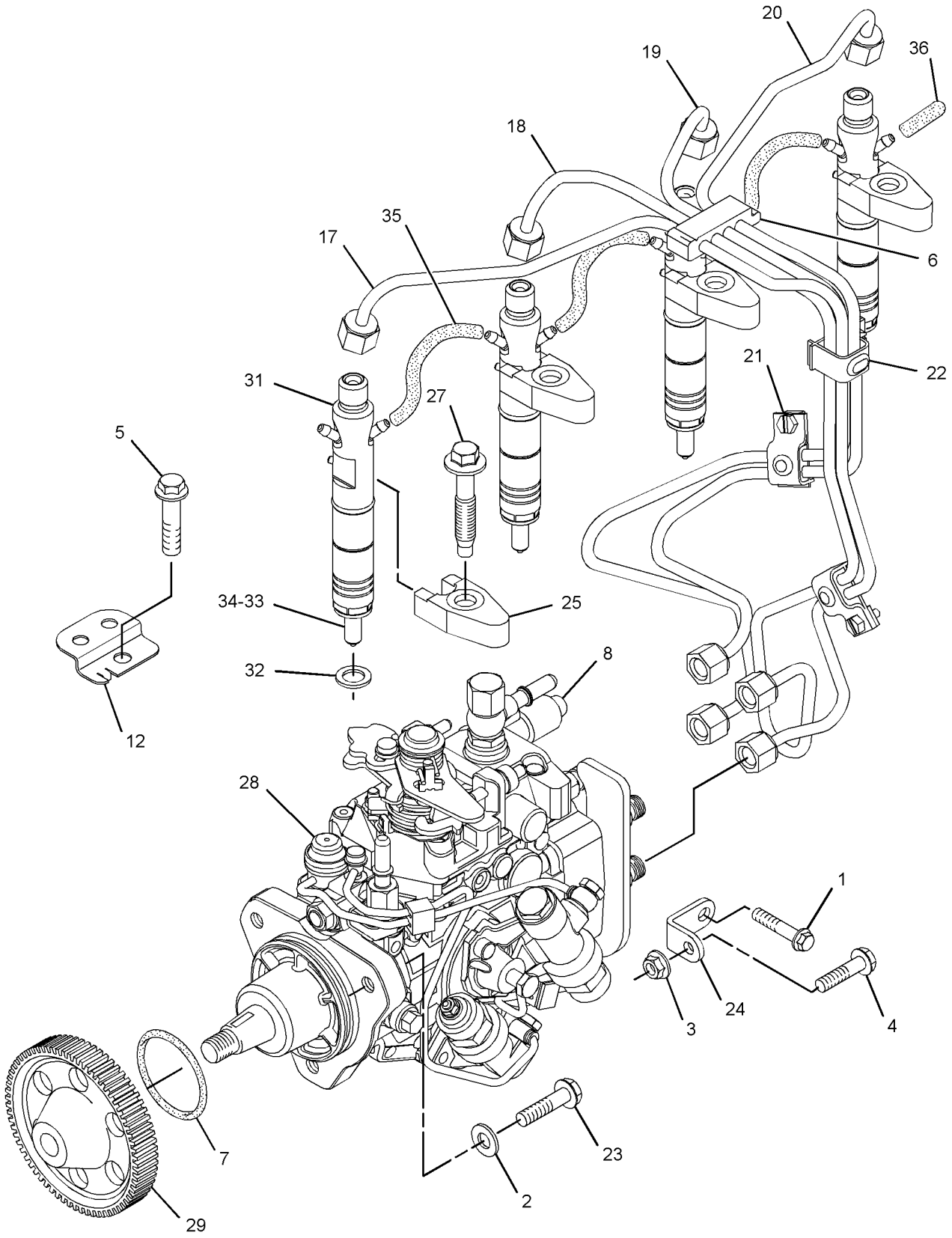

GRAPHIC #1 g01653891

237-5394 **PUMP GP-FUEL INJECTION (**contd.**)** **i07144527**

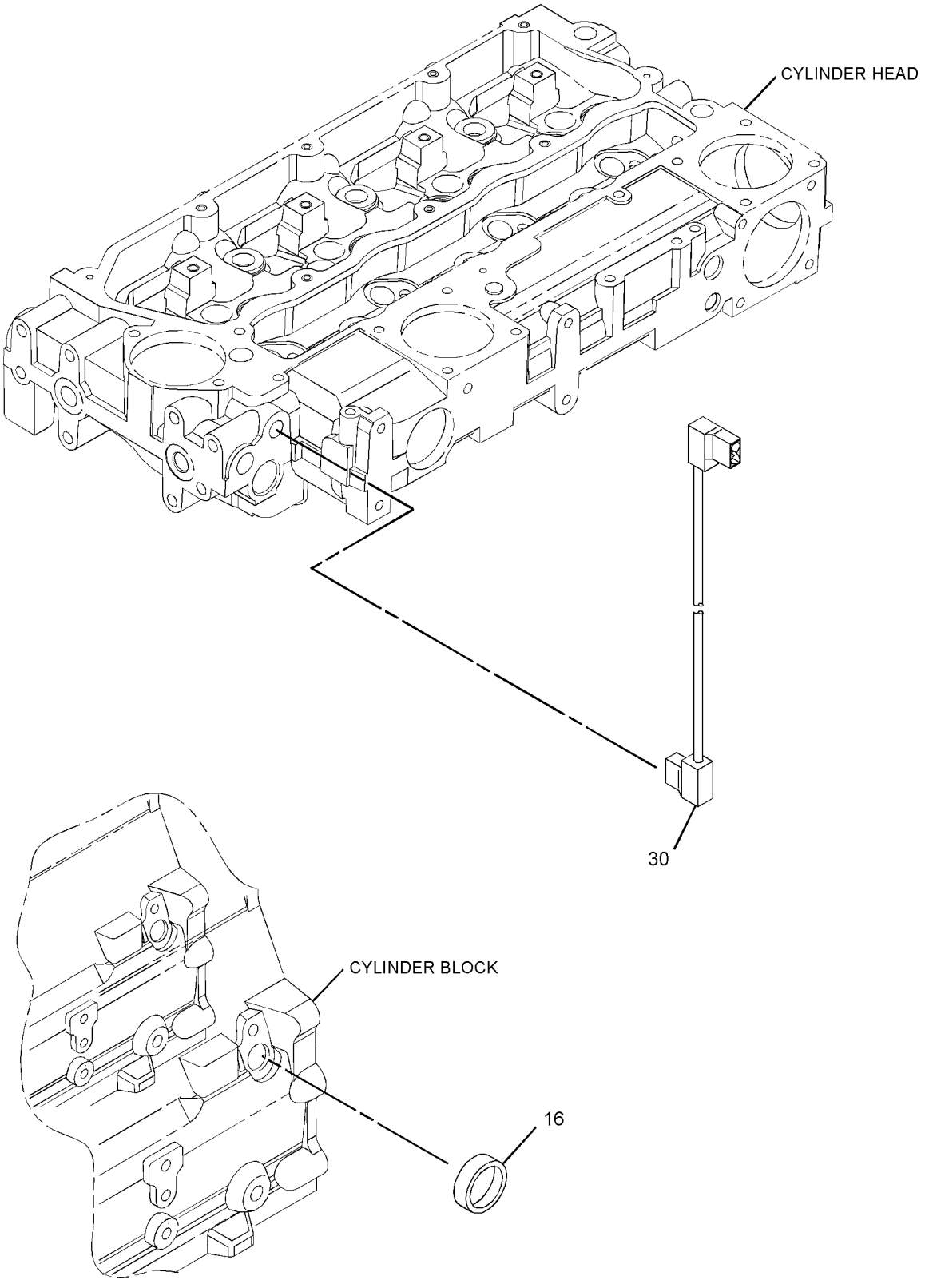

GRAPHIC #2 <END> g01653892

237-5394 PUMP GP-FUEL INJECTION

TYPE 2

SMCS-1251, 1290 **i07144530**

NOTE	REF NO	GRAPHIC REF	PART NUMBER	QTY	PART NAME 1 2 3 4 5 6 (PRODUCT LEVEL)	SEE PAGE
M	1	1	**6I-0217**	1	BOLT (M8X1.25X20-MM)	
	2	1	**232-3149**	3	WASHER (8.35X16.85X1.55-MM THK)	
M	3	1	**6I-0291**	1	NUT (M8X1.25-THD)	
M	4	1	**100-4830**	1	BOLT (M10X1.5X20-MM)	
M	5	1	**124-3815**	1	BOLT (M8X1.25X16-MM)	
	6	1	**140-8714**	1	CLIP	
	7	1	**332-7549**	1	SEAL-O-RING	
	8	1	**155-8804**	1	CAP	
	12	1	**240-5571**	1	BRACKET	
	17	1	**232-2720**	1	TUBE AS (CYL NO. 1)	
	18	1	**232-2721**	1	TUBE AS (CYL NO. 2)	
	19	1	**232-2722**	1	TUBE AS (CYL NO. 3)	
	20	1	**232-2723**	1	TUBE AS (CYL NO. 4)	
	21	1	**232-2725**	2	CLIP	
	22	1	**232-2726**	1	CLIP	
M	23	1	**6I-0260**	3	BOLT (M8X1.25X25-MM)	
	24	1	**232-3157**	1	BRACKET	
	25	1	**238-8671**	4	CLAMP-INJECTOR	
M	27	1	**232-3274**	4	BOLT (M8X1.25X48.1-MM)	
R	28	1	**266-3712**	1	PUMP GP-FUEL INJECTION	
		1	**208-5029**	1	VALVE GP-SOLENOID (12-VOLT)	
	29	1	**233-7104**	1	GEAR-PUMP	
	30	2	**232-1793**	1	CABLE (TIMING ADVANCE)	
R	31	1	**266-6830**	4	INJECTOR AS-FUEL	
					(EACH INCLUDES)	
	32	1	**140-8718**	1	WASHER (7.49X15.75X1.68-MM THK)	
	33	1	**234-0387**	1	NOZZLE	
	34	1	**275-1038**	1	SEAL-O-RING	
	35	1	**232-1794**	3	HOSE	
	36	1	**232-1328**	1	CAP	
F			**266-2994**	1	KIT-INJECTOR	

F - NOT SHOWN
M - METRIC PART
R - REMANUFACTURED PART MAY BE AVAILABLE

237-5394 **PUMP GP-FUEL INJECTION (**contd.**)** **i07144530**

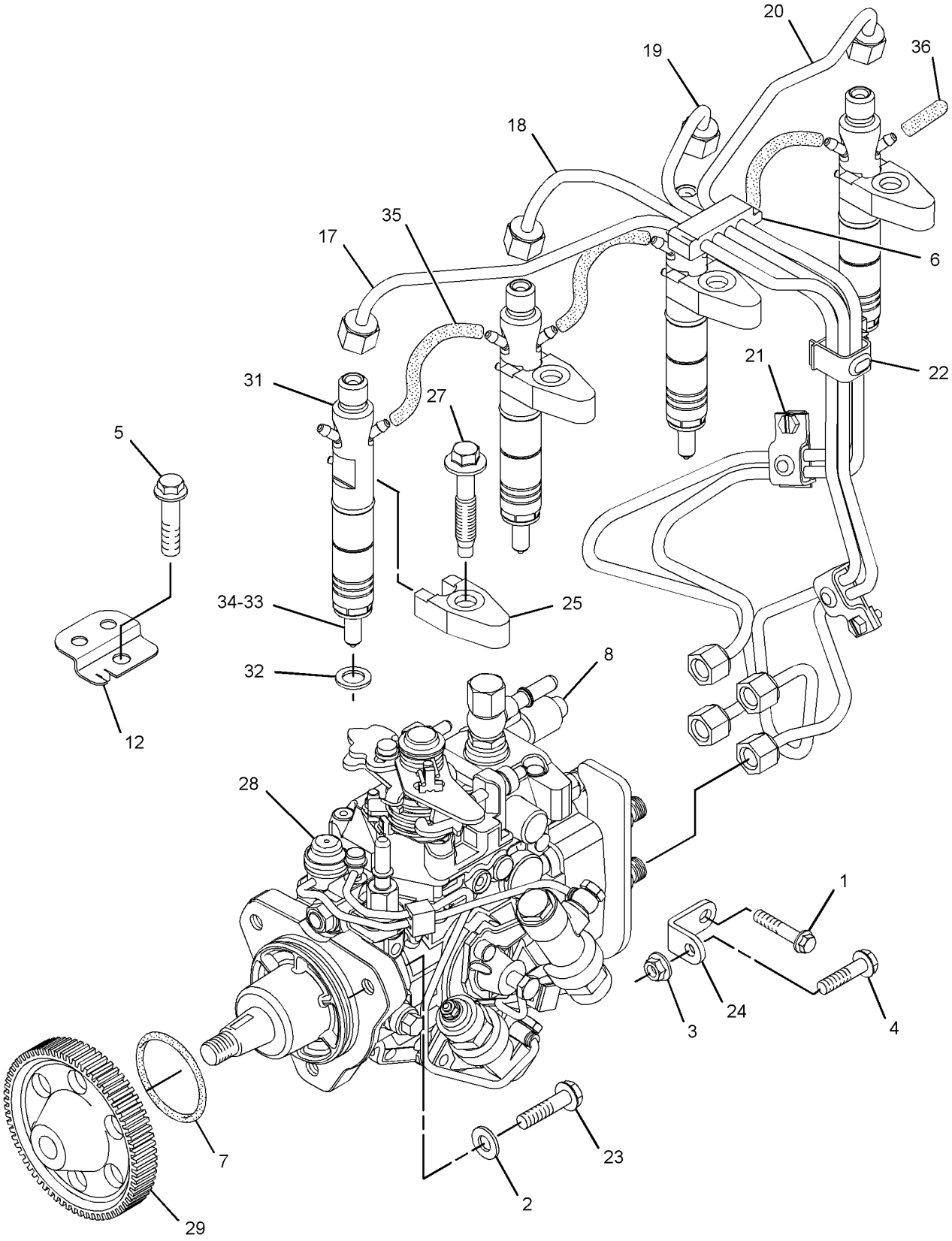

GRAPHIC #1 g01653891

237-5394 **PUMP GP-FUEL INJECTION (**contd.**)** **i07144530**

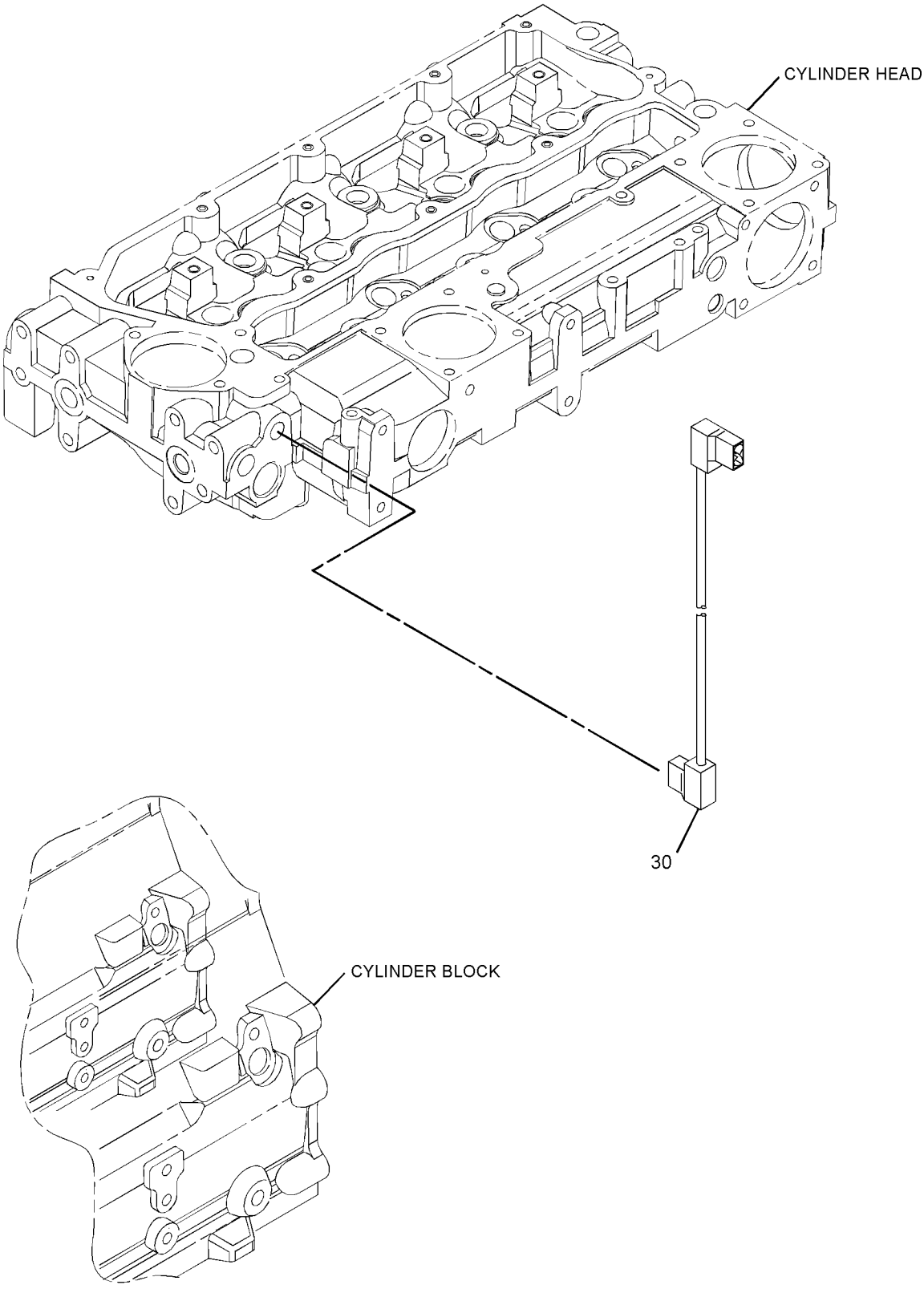

GRAPHIC #2 <END> g02792318

237-7997 PUMP GP-FUEL INJECTION

S/N: 3341-280

FIELD REPLACEMENT ORDER 248-2371—PAGE: 1334

PART OF 237-7999 PUMP GP-FUEL INJECTION

SMCS-1251, 1290

i02158495

NOTE	REF NO	GRAPHIC REF	PART NUMBER	QTY	PART NAME 1 2 3 4 5 6 (PRODUCT LEVEL)	SEE PAGE
	1	1	**152-3968**	1	SEAL-O-RING	
	2	1	**176-6219**	1	SOLENOID (12-VOLT) (FUEL SHUTOFF)	

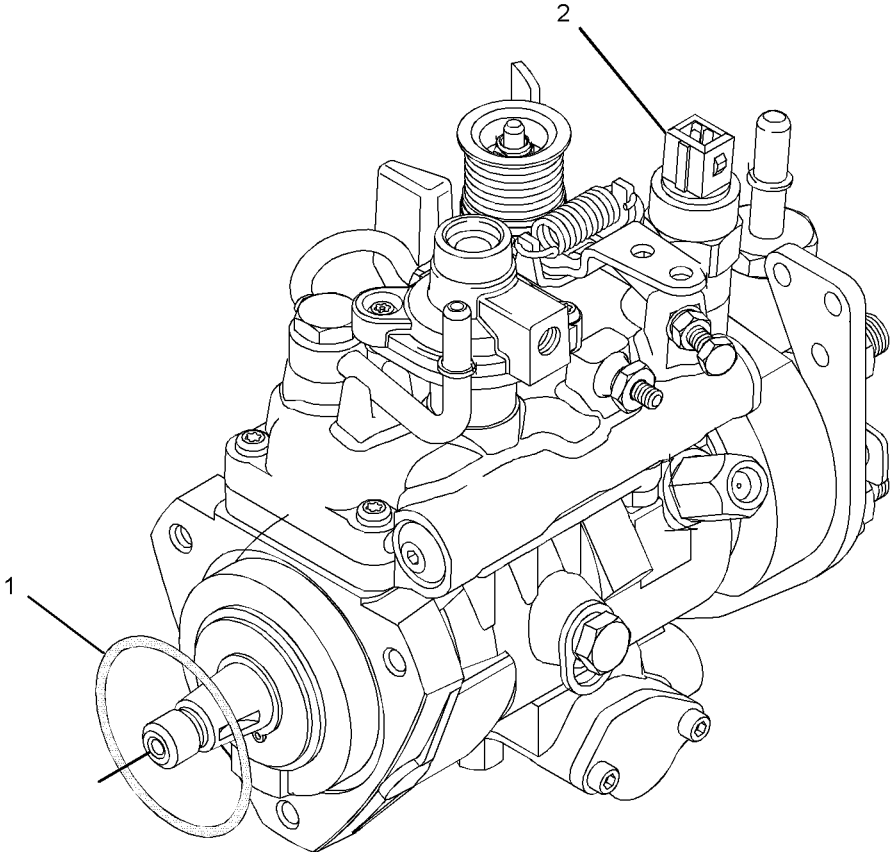

GRAPHIC #1

<END>

g01068659

237-7999 PUMP GP-FUEL INJECTION

S/N: 3341-280

SMCS-1251, 1290 **i04711694**

NOTE	REF NO	GRAPHIC REF	PART NUMBER	QTY	PART NAME 1 2 3 4 5 6 (PRODUCT LEVEL)	SEE PAGE
M	1	1	**6I-0217**	1	BOLT (M8X1.25X20-MM)	
M	2	1	**6I-0260**	3	BOLT (M8X1.25X25-MM)	
M	3	1	**6I-0291**	1	NUT (M8X1.25-THD)	
	4	1	**035-8017**	1	UNION	
	5	1	**365-3308**	1	NUT-COMPRESSION (3/8-24-THD)	
	6	1	**067-6265**	1	FITTING-BRASS	
M	7	1	**100-4830**	1	BOLT (M10X1.5X20-MM)	
	8	1	**110-8760**	1	STRAP	
M	9	1	**111-3422**	1	NUT (M14X1.5-THD)	
	10	1	**111-3423**	1	WASHER	
M	11	1	**124-3815**	1	BOLT (M8X1.25X16-MM)	
	12	1	**140-8714**	1	CLIP	
	13	1	**230-8989**	1	GEAR-FUEL PUMP (68-TEETH)	
	14	1	**230-8995**	1	TUBE AS (CYL NO. 1)	
	15	1	**230-8996**	1	TUBE AS (CYL NO. 2)	
	16	1	**230-8997**	1	TUBE AS (CYL NO. 3)	
	17	1	**230-8998**	1	TUBE AS (CYL NO. 4)	
R	18	1	**230-8999**	4	INJECTOR AS-FUEL	
					(EACH INCLUDES)	
	18A	1	**140-8718**	1	WASHER (7.49X15.75X1.68-MM THK)	
	19	1	**230-9527**	1	BRACKET	
	20	1	**232-1117**	1	CLIP-PIPE	
	21	2	**232-1323**	1	PLUG-CUP	
	22	1	**232-1328**	1	CAP	
	23	2	**232-1793**	1	CABLE	
	24	1	**232-1794**	3	HOSE	
	25	1	**232-2725**	2	CLIP	
	26	1	**232-2726**	1	CLIP	
	27	1	**232-3149**	1	WASHER (8.35X16.85X1.55-MM THK)	
	28	1	**232-3157**	1	BRACKET	
	29	1	**232-3158**	4	CLAMP-INJECTOR	
M	30	1	**232-3274**	4	BOLT (M8X1.25X48.1-MM)	
	31	2	**235-1790**	1	SWITCH-TEMPERATURE (TIMING ADVANCE)	
	32	1	**236-2144**	1	TUBE AS	
	32A	1	**067-6999**	1	FERRULE	
	32B	1	**106-8835**	1	NUT	
Y	33	1	**237-7997**	1	PUMP GP-FUEL INJECTION	1282
	34	1	**160-7197**	1	CLIP	

M - METRIC PART
R - REMANUFACTURED PART MAY BE AVAILABLE
Y - SEPARATE ILLUSTRATION

237-7999 **PUMP GP-FUEL INJECTION (**contd.**)** **i04711694**

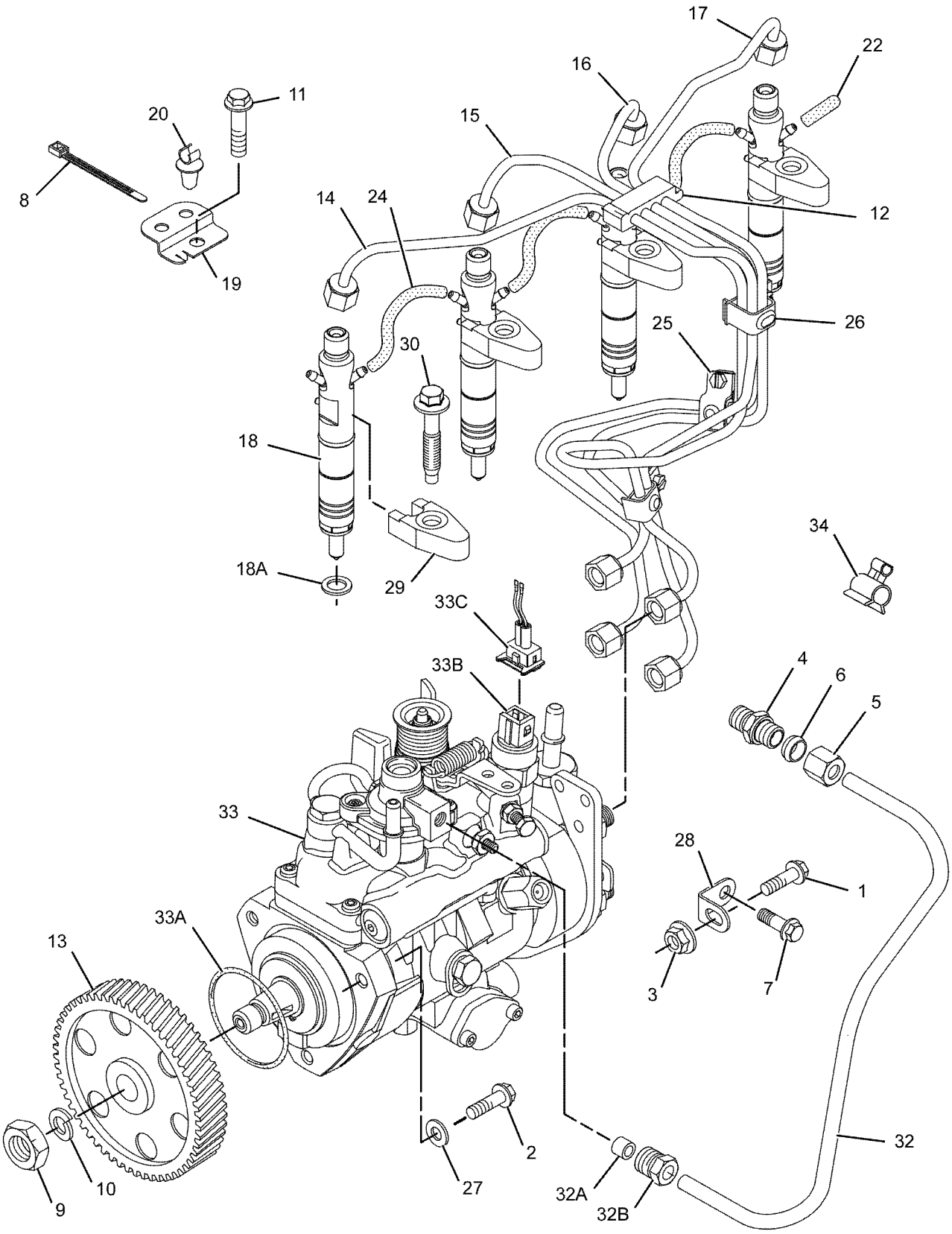

GRAPHIC #1 g01056329

237-7999 **PUMP GP-FUEL INJECTION (**contd.**)** **i04711694**

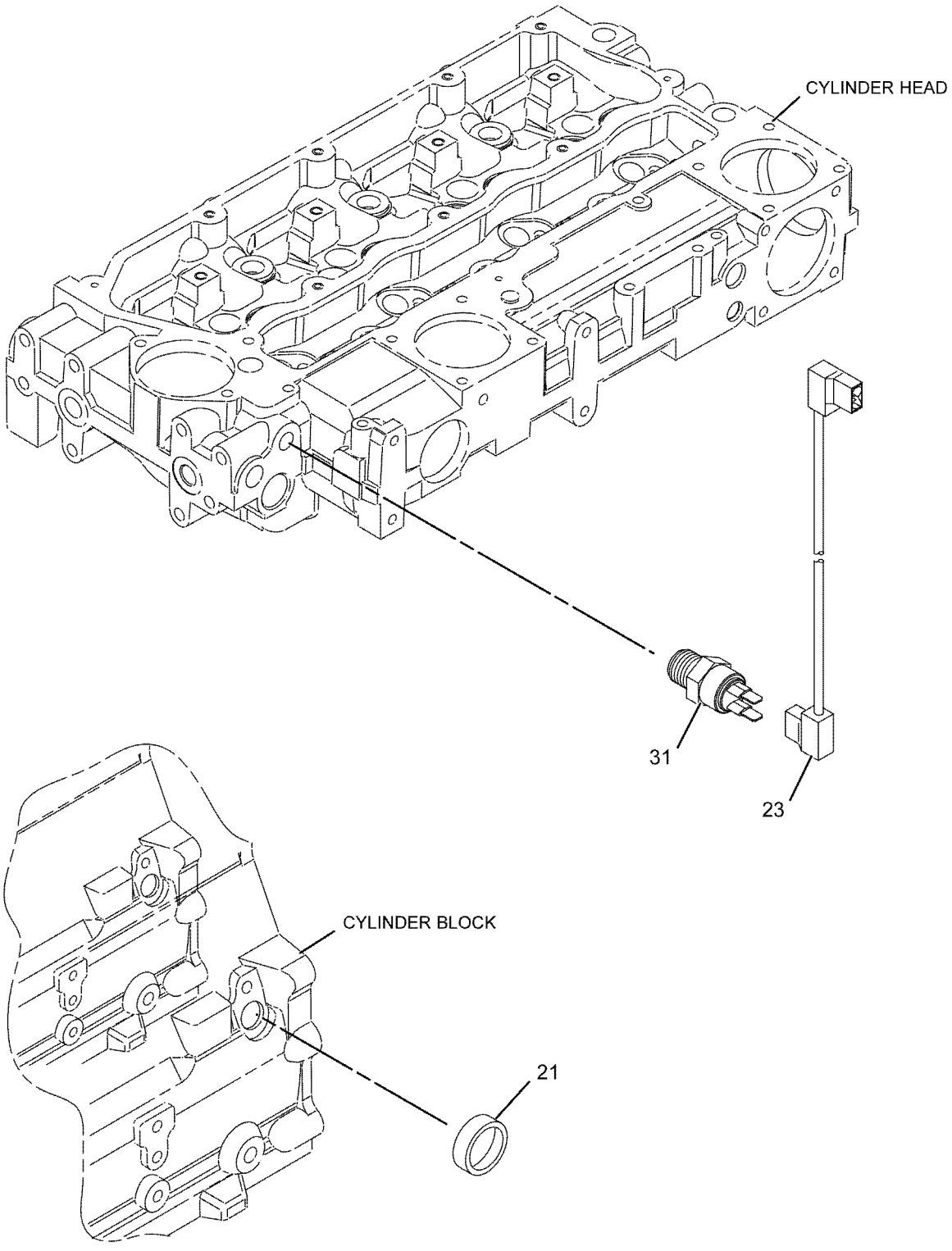

GRAPHIC #2 <END> g01030048

237-7999 PUMP GP-FUEL INJECTION

S/N: 334281-UP
TYPE 1

SMCS-1251, 1290 **i04711693**

NOTE	REF NO	GRAPHIC REF	PART NUMBER	QTY	PART NAME 1 2 3 4 5 6 (PRODUCT LEVEL)	SEE PAGE
M	1	1	**6I-0217**	1	BOLT (M8X1.25X20-MM)	
M	2	1	**6I-0260**	3	BOLT (M8X1.25X25-MM)	
M	3	1	**6I-0291**	1	NUT (M8X1.25-THD)	
	4	1	**035-8017**	1	UNION	
	5	1	**365-3308**	1	NUT-COMPRESSION (3/8-24-THD)	
	6	1	**067-6265**	1	FITTING-BRASS	
M	7	1	**100-4830**	1	BOLT (M10X1.5X20-MM)	
M	9	1	**111-3422**	1	NUT (M14X1.5-THD)	
	10	1	**111-3423**	1	WASHER	
M	11	1	**124-3815**	1	BOLT (M8X1.25X16-MM)	
	12	1	**140-8714**	1	CLIP	
	13	1	**230-8989**	1	GEAR-FUEL PUMP (68-TEETH)	
	14	1	**230-8995**	1	TUBE AS (CYL NO. 1)	
	15	1	**230-8996**	1	TUBE AS (CYL NO. 2)	
	16	1	**230-8997**	1	TUBE AS (CYL NO. 3)	
	17	1	**230-8998**	1	TUBE AS (CYL NO. 4)	
R	18	1	**230-8999**	4	INJECTOR AS-FUEL	
					(EACH INCLUDES)	
	18A	1	**140-8718**	1	WASHER (7.49X15.75X1.68-MM THK)	
	19	1	**240-5571**	1	BRACKET	
	20	1	**232-3126**	1	CLIP	
	21	2	**232-1323**	1	PLUG-CUP	
	22	1	**232-1328**	1	CAP	
	23	2	**232-1793**	1	CABLE	
	24	1	**232-1794**	3	HOSE	
	25	1	**232-2725**	2	CLIP	
	26	1	**232-2726**	1	CLIP	
	27	1	**232-3149**	1	WASHER (8.35X16.85X1.55-MM THK)	
	28	1	**232-3157**	1	BRACKET	
	29	1	**238-8671**	4	CLAMP-INJECTOR	
M	30	1	**232-3274**	4	BOLT (M8X1.25X48.1-MM)	
	31	2	**235-1790**	1	SWITCH-TEMPERATURE (TIMING ADVANCE)	
	32	1	**236-2144**	1	TUBE AS	
	32A	1	**067-6999**	1	FERRULE	
	32B	1	**106-8835**	1	NUT	
CY	33	1	**290-2550**	1	PUMP GP-FUEL INJECTION	1444
	34	1	**318-2365**	1	CLIP	

C - CHANGE FROM PREVIOUS TYPE
M - METRIC PART
R - REMANUFACTURED PART MAY BE AVAILABLE
Y - SEPARATE ILLUSTRATION

237-7999 **PUMP GP-FUEL INJECTION (**contd.**)** **i04711693**

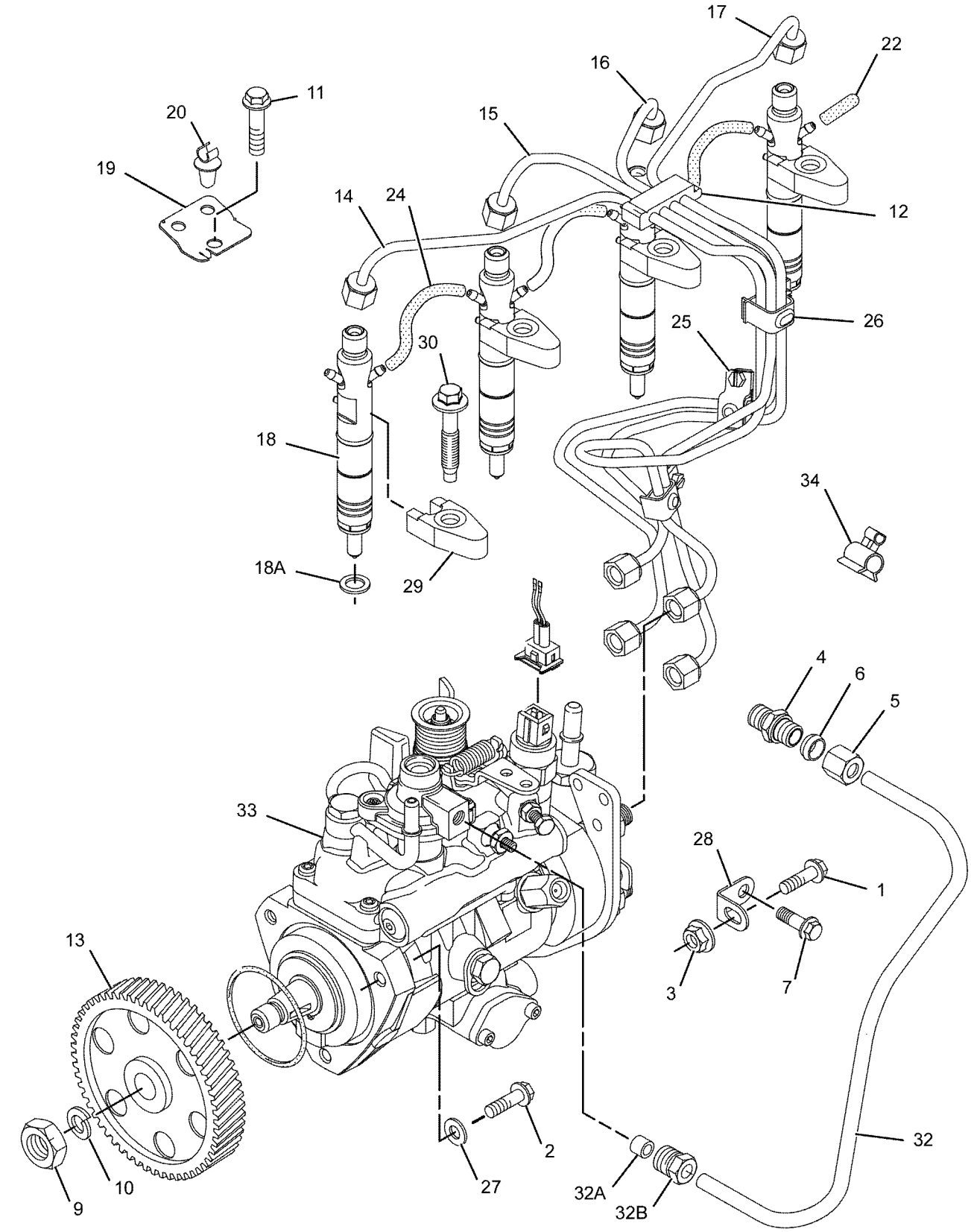

GRAPHIC #1 g01067906

237-7999 **PUMP GP-FUEL INJECTION (**contd.**)** **i04711693**

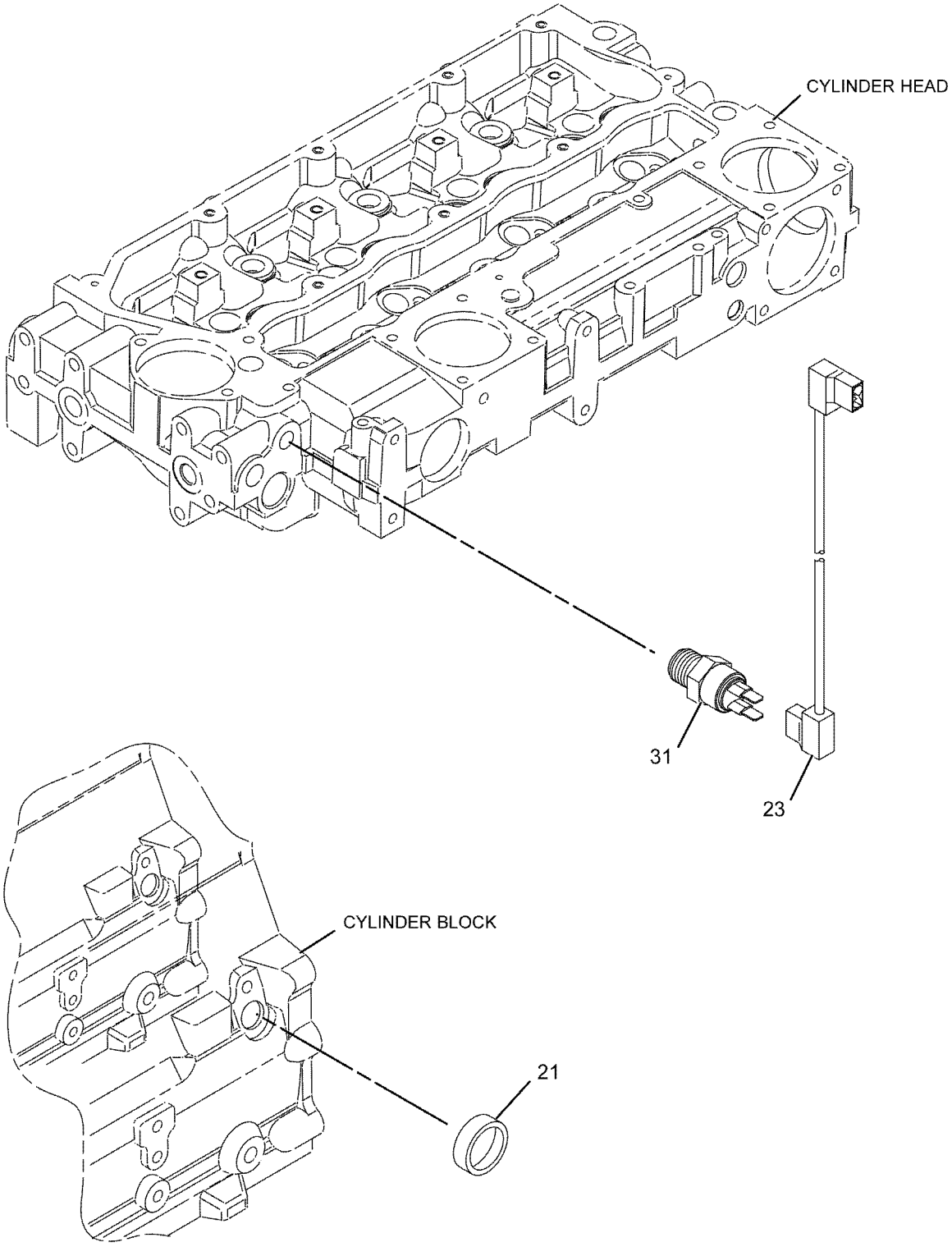

GRAPHIC #2 <END> g01030014

237-7999 PUMP GP-FUEL INJECTION

S/N: 334281-UP
TYPE 2

SMCS-1251, 1290 **i07305743**

NOTE	REF NO	GRAPHIC REF	PART NUMBER	QTY	PART NAME 1 2 3 4 5 6 (PRODUCT LEVEL)	SEE PAGE
M	1	1	**6I-0217**	1	BOLT (M8X1.25X20-MM)	
M	2	1	**6I-0260**	3	BOLT (M8X1.25X25-MM)	
M	3	1	**6I-0291**	1	NUT (M8X1.25-THD)	
	4	1	**035-8017**	1	UNION	
	5	1	**365-3308**	1	NUT-COMPRESSION (3/8-24-THD)	
	6	1	**067-6265**	1	FITTING-BRASS	
M	7	1	**100-4830**	1	BOLT (M10X1.5X20-MM)	
M	9	1	**111-3422**	1	NUT (M14X1.5-THD)	
	10	1	**111-3423**	1	WASHER	
M	11	1	**124-3815**	1	BOLT (M8X1.25X16-MM)	
	12	1	**140-8714**	1	CLIP	
	13	1	**425-7107**	1	GEAR-FUEL PUMP (68-TEETH)	
	14	1	**230-8995**	1	TUBE AS (CYL NO. 1)	
	15	1	**230-8996**	1	TUBE AS (CYL NO. 2)	
	16	1	**230-8997**	1	TUBE AS (CYL NO. 3)	
	17	1	**230-8998**	1	TUBE AS (CYL NO. 4)	
R	18	1	**230-8999**	4	INJECTOR AS-FUEL	
					(EACH INCLUDES)	
	18A	1	**140-8718**	1	WASHER (7.49X15.75X1.68-MM THK)	
	18B	1	**232-2724**	1	NOZZLE	
	18C	1	**275-1038**	1	SEAL-O-RING	
	19	1	**240-5571**	1	BRACKET	
	20	1	**232-3126**	1	CLIP	
	22	1	**232-1328**	1	CAP	
	23	2	**232-1793**	1	CABLE	
	24	1	**232-1794**	3	HOSE	
	25	1	**232-2725**	2	CLIP	
	26	1	**232-2726**	1	CLIP	
	27	1	**232-3149**	1	WASHER (8.35X16.85X1.55-MM THK)	
	28	1	**232-3157**	1	BRACKET	
	29	1	**238-8671**	4	CLAMP-INJECTOR	
M	30	1	**232-3274**	4	BOLT (M8X1.25X48.1-MM)	
	31	2	**235-1790**	1	SWITCH-TEMPERATURE (TIMING ADVANCE)	
	32	1	**236-2144**	1	TUBE AS	
Y	33	1	**290-2550**	1	PUMP GP-FUEL INJECTION	1444
	34	1	**318-2365**	1	CLIP	

M - METRIC PART
R - REMANUFACTURED PART MAY BE AVAILABLE
Y - SEPARATE ILLUSTRATION

237-7999 **PUMP GP-FUEL INJECTION (**contd.**)** **i07305743**

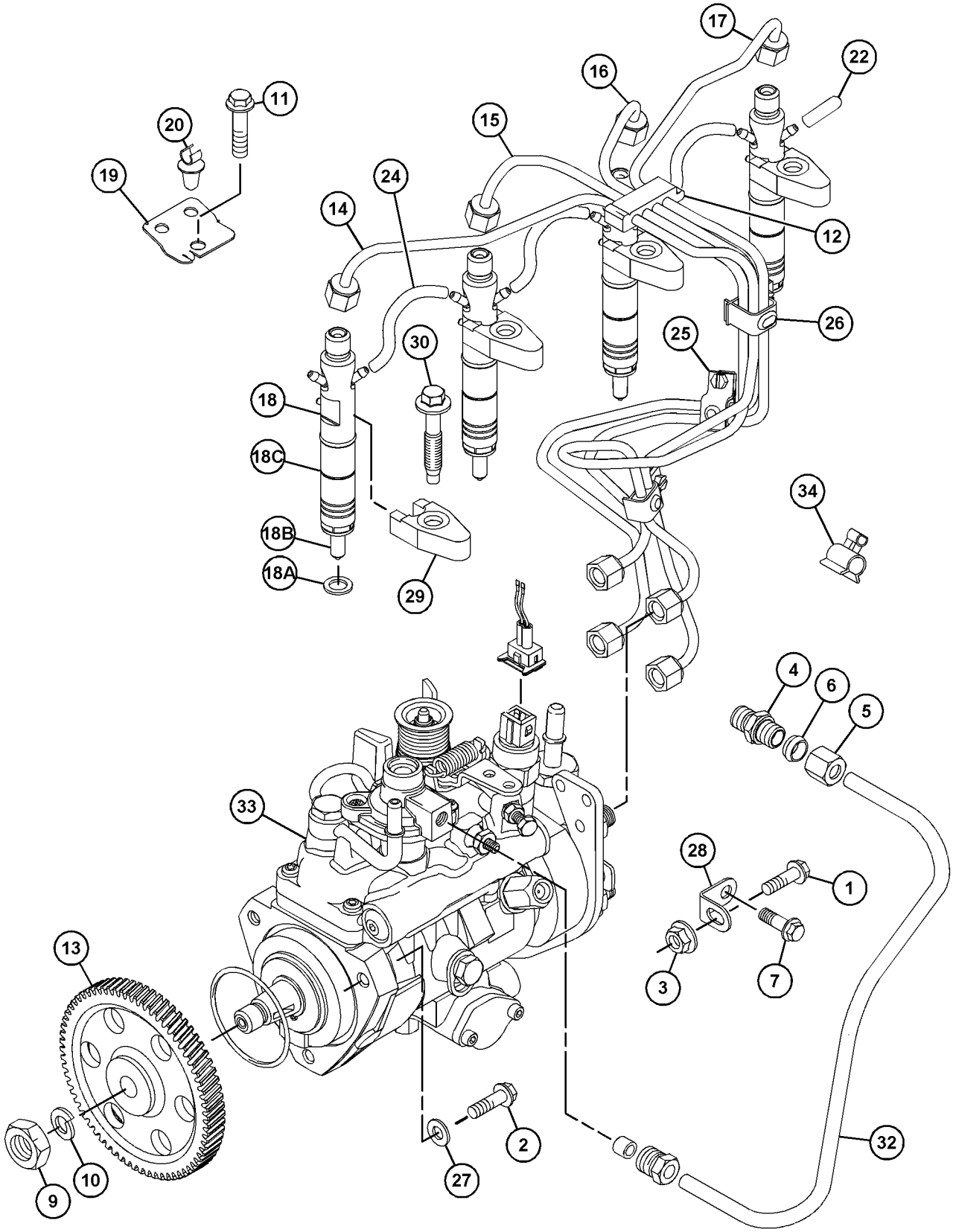

GRAPHIC #1 g06283728

237-7999 **PUMP GP-FUEL INJECTION (**contd.**)** **i07305743**

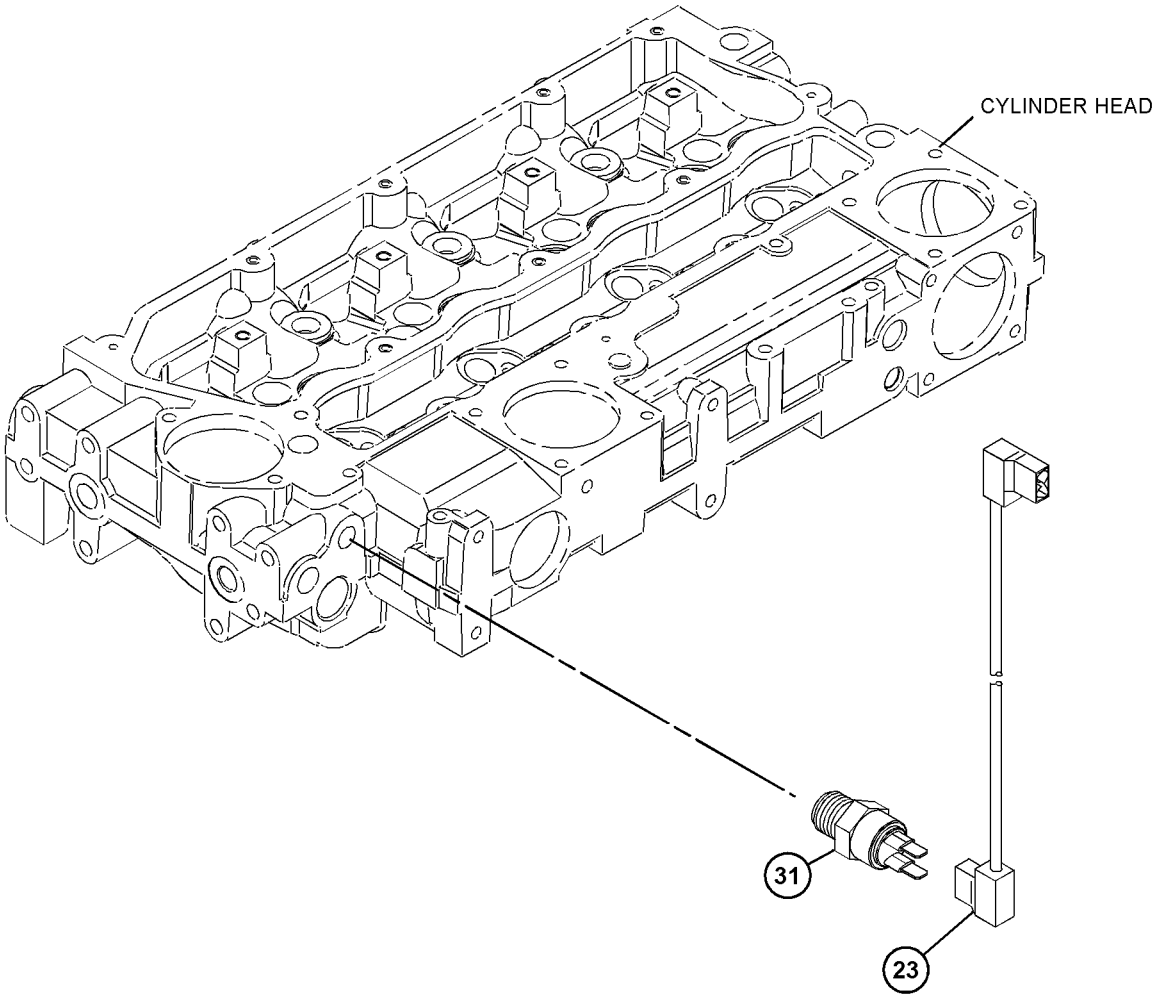

GRAPHIC #2 <END> g06283739

237-7999 PUMP GP-FUEL INJECTION

S/N: 334281-UP
TYPE 3

SMCS-1251, 1290 **i08704210**

NOTE	REF NO	GRAPHIC REF	PART NUMBER	QTY	PART NAME 1 2 3 4 5 6 (PRODUCT LEVEL)	SEE PAGE
M	1	1	**6I-0217**	1	BOLT (M8X1.25X20-MM)	
M	2	1	**6I-0260**	3	BOLT (M8X1.25X25-MM)	
M	3	1	**178-3336**	1	NUT-HEX FLANGE (M8X1.25-THD)	
	4	1	**035-8017**	1	UNION	
	5	1	**365-3308**	1	NUT-COMPRESSION (3/8-24-THD)	
	6	1	**067-6265**	1	FITTING-BRASS	
M	7	1	**100-4830**	1	BOLT (M10X1.5X20-MM)	
M	9	1	**111-3422**	1	NUT (M14X1.5-THD)	
	10	1	**111-3423**	1	WASHER	
M	11	1	**124-3815**	1	BOLT (M8X1.25X16-MM)	
	13	1	**425-7107**	1	GEAR-FUEL PUMP (68-TEETH)	
R	18	1	**230-8999**	4	INJECTOR AS-FUEL	
					(EACH INCLUDES)	
	18A	1	**140-8718**	1	WASHER (7.49X15.75X1.68-MM THK)	
	18B	1	**232-2724**	1	NOZZLE	
	18C	1	**275-1038**	1	SEAL-O-RING	
	19	1	**240-5571**	1	BRACKET	
	20	1	**232-3126**	1	CLIP	
	22	1	**232-1328**	1	CAP	
	23	2	**232-1793**	1	CABLE	
	24	1	**232-1794**	3	HOSE	
	27	1	**232-3149**	1	WASHER (8.35X16.85X1.55-MM THK)	
	28	1	**232-3157**	1	BRACKET	
	29	1	**238-8671**	4	CLAMP-INJECTOR	
M	30	1	**232-3274**	4	BOLT (M8X1.25X48.1-MM)	
	31	2	**235-1790**	1	SWITCH-TEMPERATURE (TIMING ADVANCE)	
	32	1	**236-2144**	1	TUBE AS	
Y	33	1	**290-2550**	1	PUMP GP-FUEL INJECTION	1444
Y	34	1	*495-3762*	1	LINES GP-FUEL INJECTION	1173

PARTS SHOWN IN GRAPHIC(S) WITHOUT A REFERENCE NUMBER ARE NOT SERVICED SEPARATELY

M - METRIC PART
R - REMANUFACTURED PART MAY BE AVAILABLE
Y - SEPARATE ILLUSTRATION

237-7999 **PUMP GP-FUEL INJECTION (**contd.**)** **i08704210**

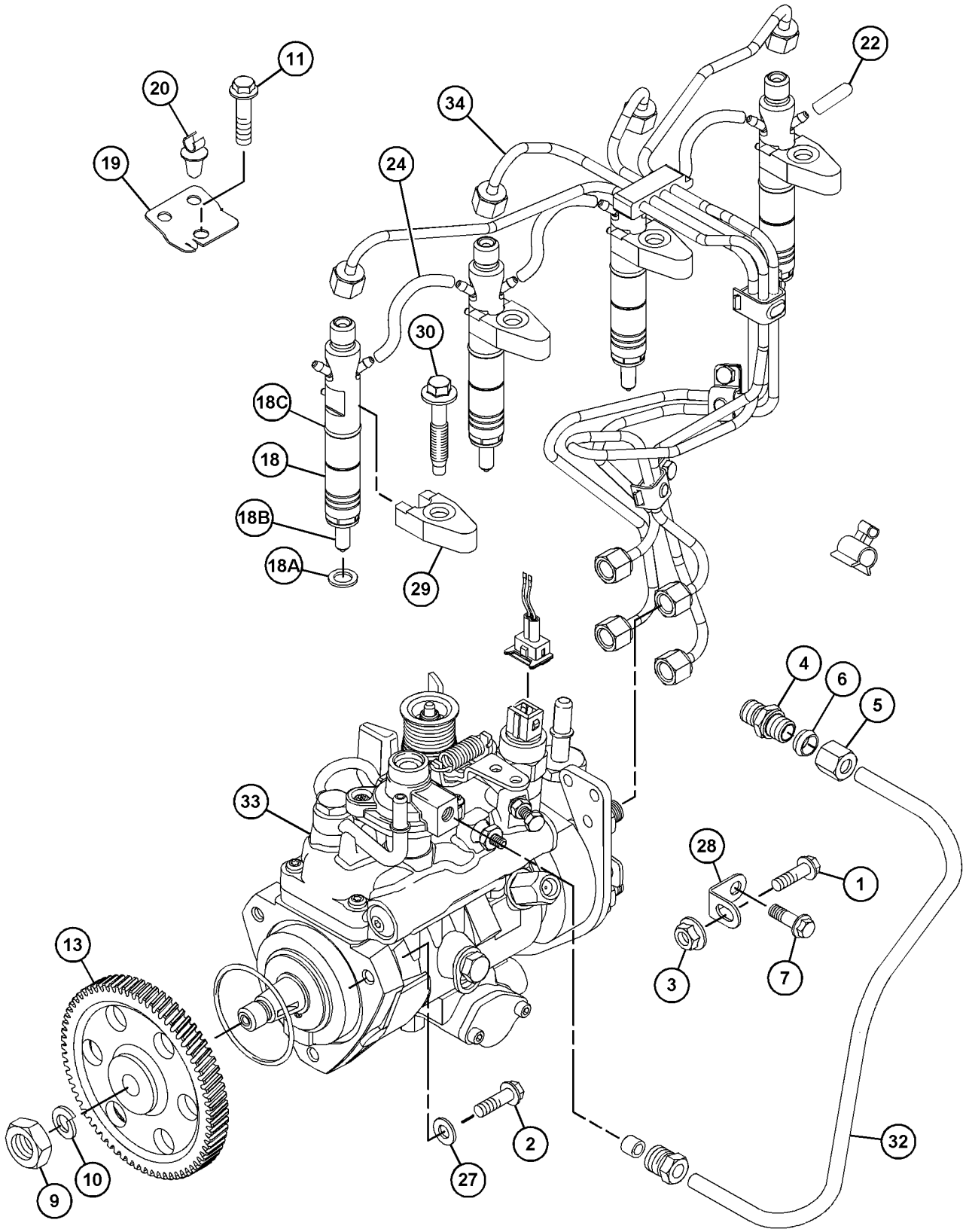

GRAPHIC #1 g06747079

237-7999 **PUMP GP-FUEL INJECTION (**contd.**)** **i08704210**

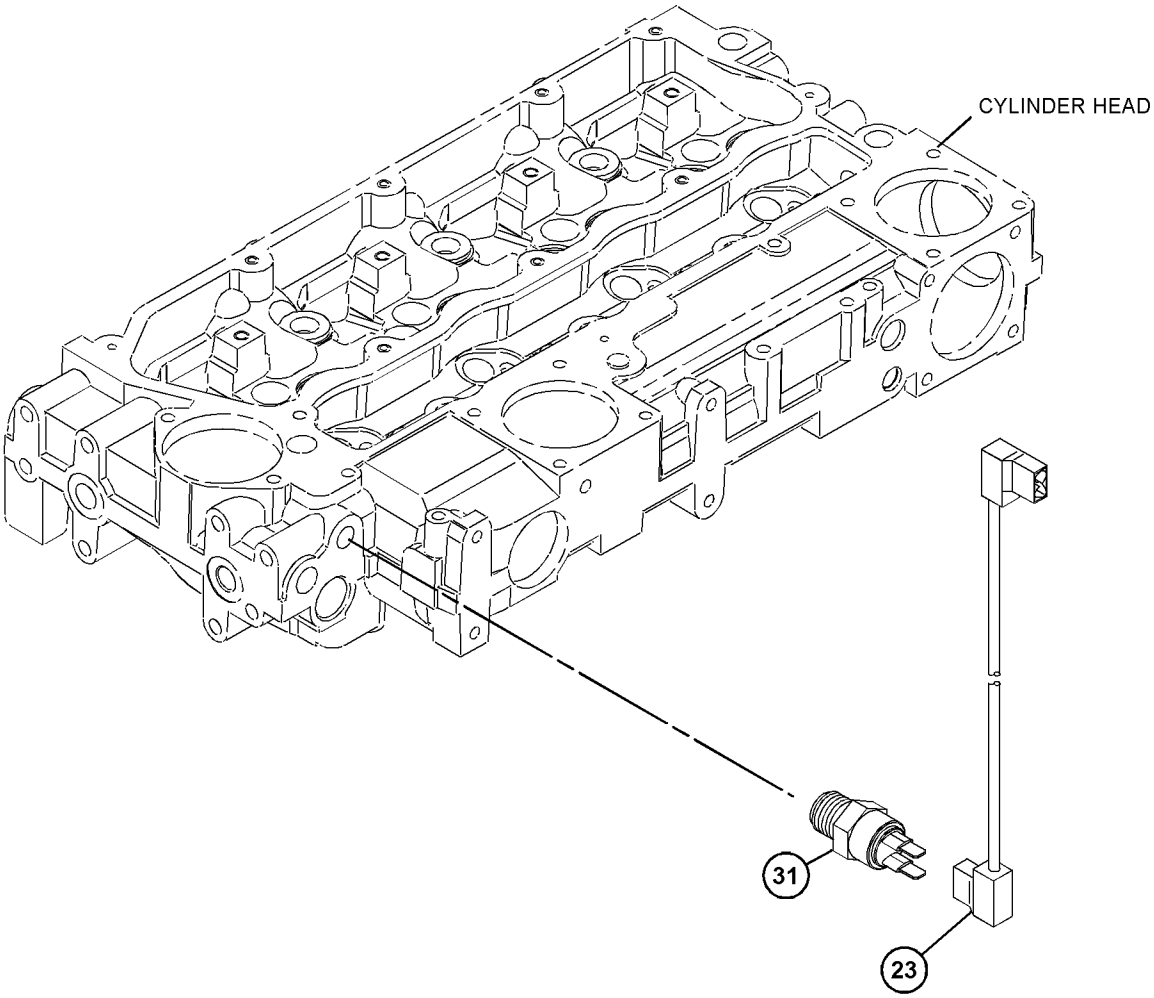

GRAPHIC #2 <END> g06747080

237-8185 PUMP GP-FUEL INJECTION

FIELD REPLACEMENT ORDER 248-2364—PAGE: 1327, 248-2365—PAGE: 1328, 248-2366—PAGE: 1329

PART OF 237-8259, 298-7691 PUMP GP-FUEL INJECTION

SMCS-1251, 1290

i03789652

NOTE	REF NO	GRAPHIC REF	PART NUMBER	QTY	PART NAME 1 2 3 4 5 6 (PRODUCT LEVEL)	SEE PAGE
	1	1	**152-3968**	1	SEAL-O-RING	
	2	1	**147-2645**	1	SOLENOID-SHUTOFF (24-VOLT) (FUEL SHUTOFF)	

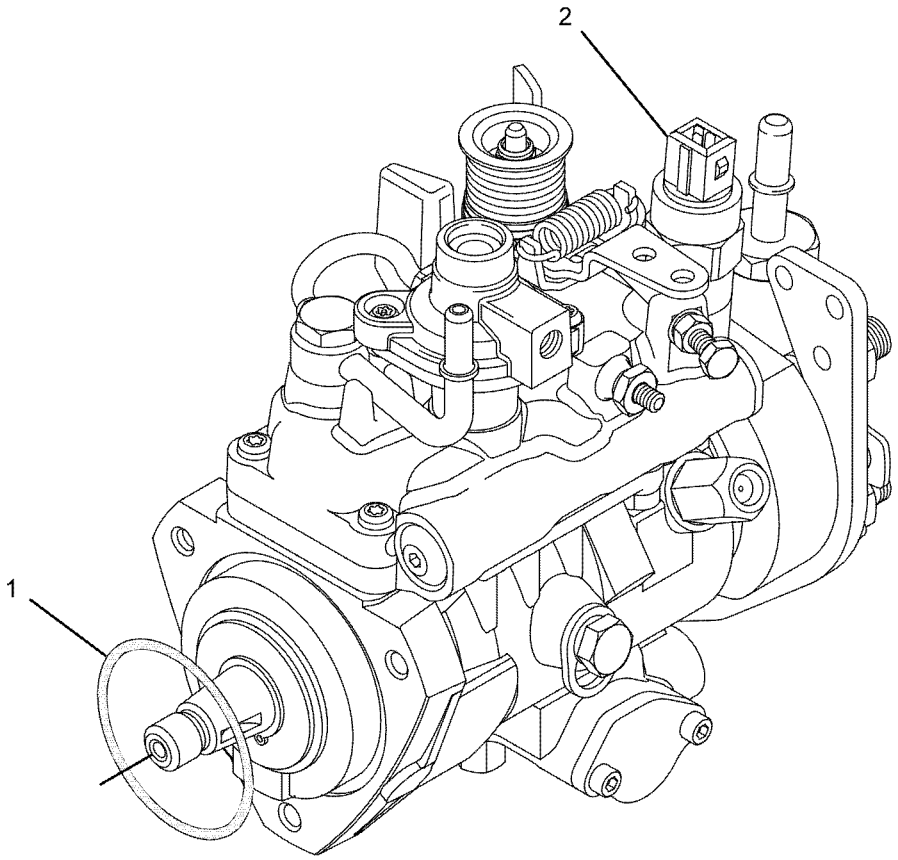

GRAPHIC #1

<END>

g01059115

237-8259 PUMP GP-FUEL INJECTION

TYPE 1

SMCS-1251, 1290 **i04711911**

NOTE	REF NO	GRAPHIC REF	PART NUMBER	QTY	PART NAME 1 2 3 4 5 6 (PRODUCT LEVEL)	SEE PAGE
M	1	1	**6I-0217**	1	BOLT (M8X1.25X20-MM)	
M	2	1	**6I-0260**	3	BOLT (M8X1.25X25-MM)	
M	3	1	**6I-0291**	1	NUT (M8X1.25-THD)	
	4	1	**035-8017**	1	UNION	
	5	1	**365-3308**	1	NUT-COMPRESSION (3/8-24-THD)	
	6	1	**067-6265**	1	FITTING-BRASS	
M	7	1	**100-4830**	1	BOLT (M10X1.5X20-MM)	
Y	8	1	**237-8185**	1	PUMP GP-FUEL INJECTION	1295
M	9	1	**111-3422**	1	NUT (M14X1.5-THD)	
	10	1	**111-3423**	1	WASHER	
M	11	1	**124-3815**	1	BOLT (M8X1.25X16-MM)	
	12	1	**140-8714**	1	CLIP	
	13	1	**230-8989**	1	GEAR-FUEL PUMP (68-TEETH)	
	14	1	**230-8995**	1	TUBE AS (CYL NO. 1)	
	15	1	**230-8996**	1	TUBE AS (CYL NO. 2)	
	16	1	**230-8997**	1	TUBE AS (CYL NO. 3)	
	17	1	**230-8998**	1	TUBE AS (CYL NO. 4)	
	18	1	**240-5571**	1	BRACKET	
	20	1	**232-1323**	1	PLUG-CUP	
	21	1	**232-1328**	1	CAP	
	22	1	**232-1793**	1	CABLE	
	23	1	**232-1794**	3	HOSE	
	24	1	**232-2725**	2	CLIP	
	25	1	**232-2726**	1	CLIP	
	26	1	**232-3149**	3	WASHER (8.35X16.85X1.55-MM THK)	
	27	1	**232-3157**	1	BRACKET	
	28	1	**238-8671**	1	CLAMP-INJECTOR	
M	29	1	**232-3274**	4	BOLT (M8X1.25X48.1-MM)	
	30	1	**235-1790**	1	SWITCH-TEMPERATURE (TIMING ADVANCE)	
R	31	1	**236-1674**	4	INJECTOR AS-FUEL	
					(EACH INCLUDES)	
	31A	1	**140-8718**	1	WASHER (7.49X15.75X1.68-MM THK)	
	31B	1	**236-1673**	1	NOZZLE	
	32	1	**236-2144**	1	TUBE AS	
	32A	1	**067-6999**	1	FERRULE	
	32B	1	**106-8835**	1	NUT	
	33	1	**318-2365**	1	CLIP	

M - METRIC PART
R - REMANUFACTURED PART MAY BE AVAILABLE
Y - SEPARATE ILLUSTRATION

237-8259 **PUMP GP-FUEL INJECTION (**contd.**)** **i04711911**

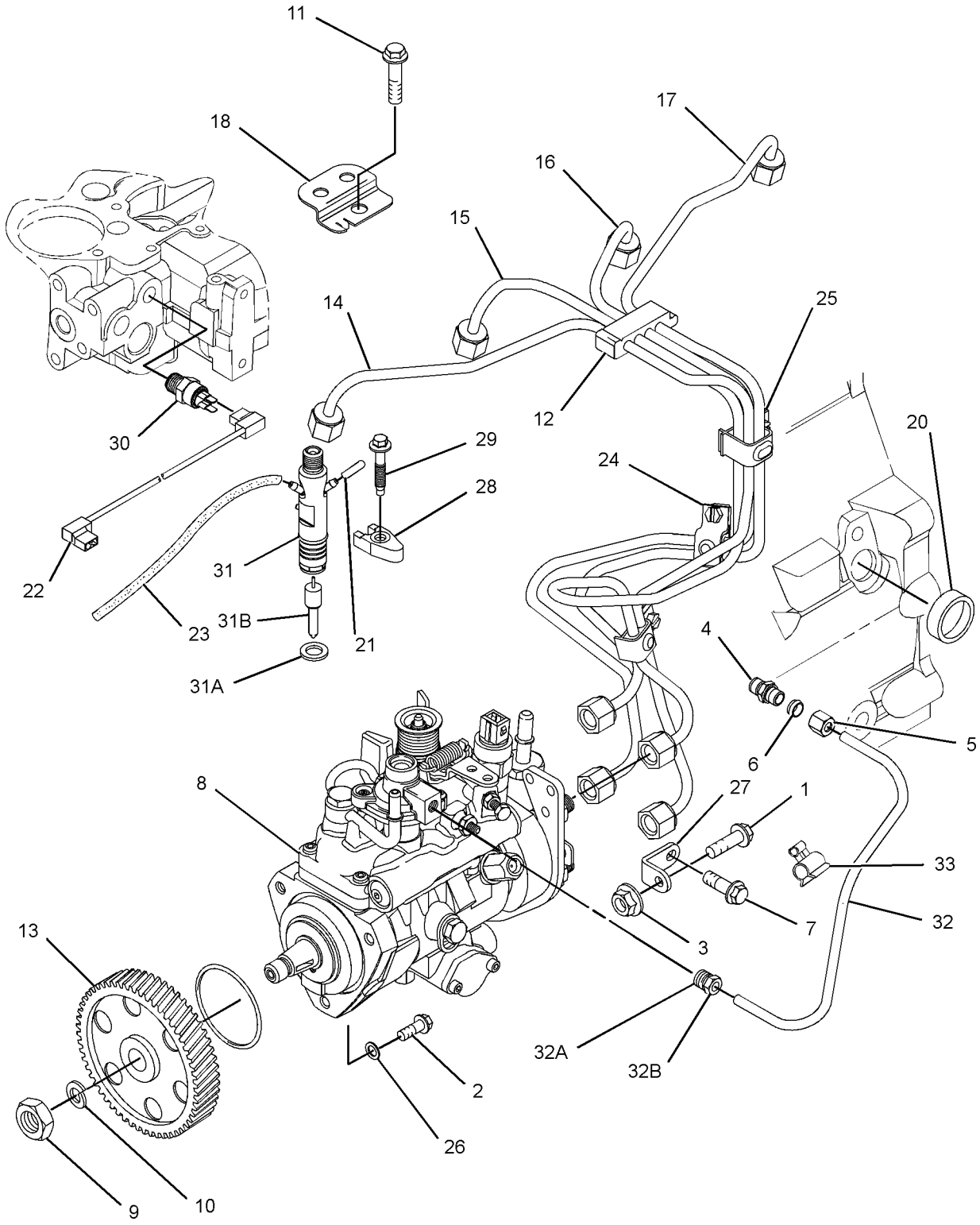

GRAPHIC #1 <END> g01420344

237-8259 PUMP GP-FUEL INJECTION

TYPE 2

SMCS-1251, 1290 **i04895365**

NOTE	REF NO	GRAPHIC REF	PART NUMBER	QTY	PART NAME 1 2 3 4 5 6 (PRODUCT LEVEL)	SEE PAGE
M	1	1	**6I-0217**	1	BOLT (M8X1.25X20-MM)	
M	2	1	**6I-0260**	3	BOLT (M8X1.25X25-MM)	
M	3	1	**6I-0291**	1	NUT (M8X1.25-THD)	
	4	1	**035-8017**	1	UNION	
	5	1	**365-3308**	1	NUT-COMPRESSION (3/8-24-THD)	
	6	1	**067-6265**	1	FITTING-BRASS	
M	7	1	**100-4830**	1	BOLT (M10X1.5X20-MM)	
Y	8	1	**237-8185**	1	PUMP GP-FUEL INJECTION	1295
M	9	1	**111-3422**	1	NUT (M14X1.5-THD)	
	10	1	**111-3423**	1	WASHER	
M	11	1	**124-3815**	1	BOLT (M8X1.25X16-MM)	
	12	1	**140-8714**	1	CLIP	
	13	1	**230-8989**	1	GEAR-FUEL PUMP (68-TEETH)	
	14	1	**230-8995**	1	TUBE AS (CYL NO. 1)	
	15	1	**230-8996**	1	TUBE AS (CYL NO. 2)	
	16	1	**230-8997**	1	TUBE AS (CYL NO. 3)	
	17	1	**230-8998**	1	TUBE AS (CYL NO. 4)	
	18	1	**240-5571**	1	BRACKET	
	21	1	**232-1328**	1	CAP	
	22	1	**232-1793**	1	CABLE	
	23	1	**232-1794**	3	HOSE	
	24	1	**232-2725**	2	CLIP	
	25	1	**232-2726**	1	CLIP	
	26	1	**232-3149**	3	WASHER (8.35X16.85X1.55-MM THK)	
	27	1	**232-3157**	1	BRACKET	
	28	1	**238-8671**	1	CLAMP-INJECTOR	
M	29	1	**232-3274**	4	BOLT (M8X1.25X48.1-MM)	
	30	1	**235-1790**	1	SWITCH-TEMPERATURE (TIMING ADVANCE)	
R	31	1	**236-1674**	4	INJECTOR AS-FUEL	
					(EACH INCLUDES)	
	31A	1	**140-8718**	1	WASHER (7.49X15.75X1.68-MM THK)	
	31B	1	**236-1673**	1	NOZZLE	
	32	1	**236-2144**	1	TUBE AS	
	32A	1	**067-6999**	1	FERRULE	
	32B	1	**106-8835**	1	NUT	
	33	1	**318-2365**	1	CLIP	

M - METRIC PART
R - REMANUFACTURED PART MAY BE AVAILABLE
Y - SEPARATE ILLUSTRATION

237-8259 **PUMP GP-FUEL INJECTION (**contd.**)** **i04895365**

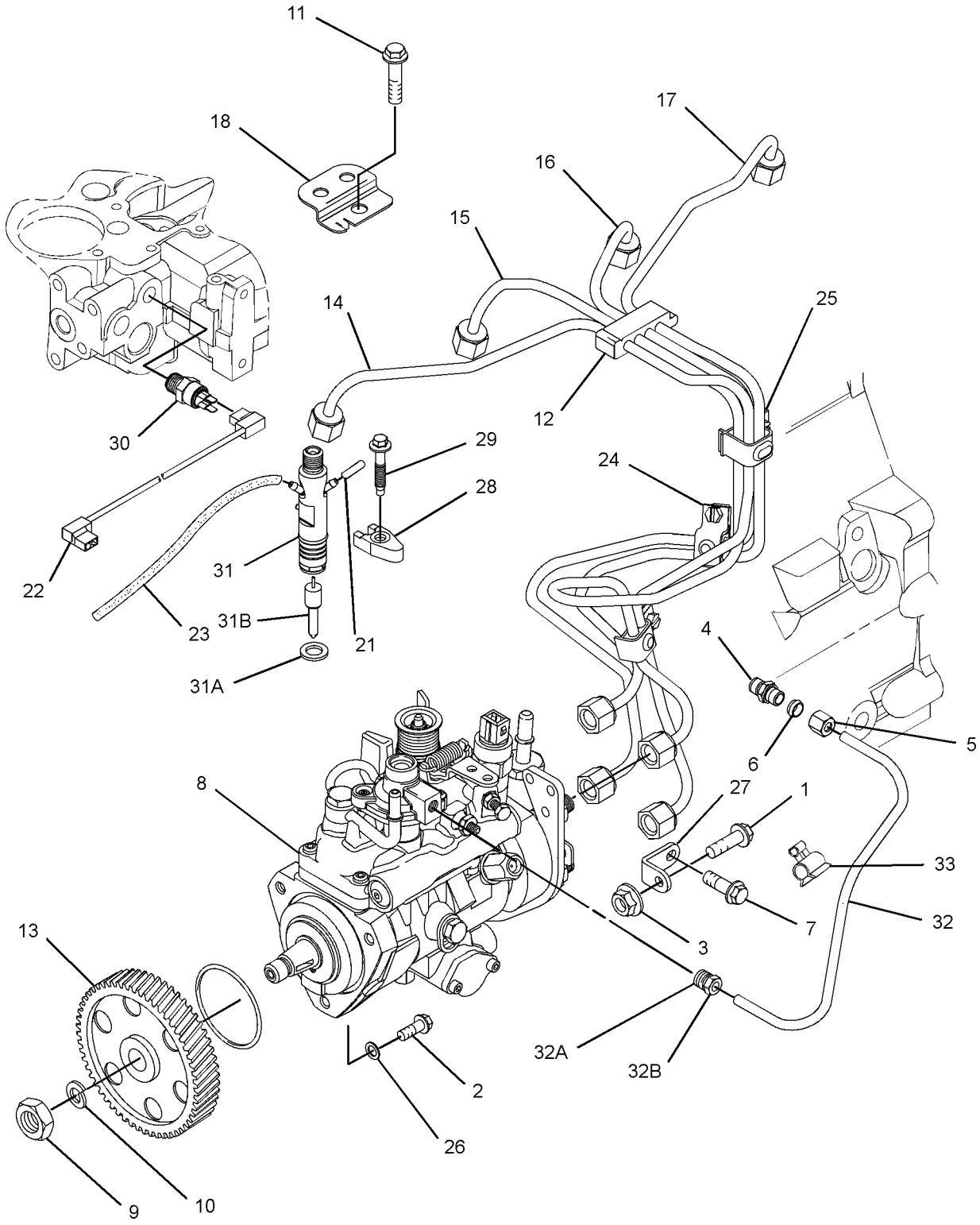

GRAPHIC #1 <END> g03043076

237-8259 PUMP GP-FUEL INJECTION

TYPE 3

SMCS-1251, 1290 **i08291993**

NOTE	REF NO	GRAPHIC REF	PART NUMBER	QTY	PART NAME 1 2 3 4 5 6 (PRODUCT LEVEL)	SEE PAGE
M	1	1	**6I-0217**	1	BOLT (M8X1.25X20-MM)	
M	2	1	**6I-0260**	3	BOLT (M8X1.25X25-MM)	
M	3	1	**178-3336**	1	NUT-HEX FLANGE (M8X1.25-THD)	
	4	1	**035-8017**	1	UNION	
	5	1	**365-3308**	1	NUT-COMPRESSION (3/8-24-THD)	
	6	1	**067-6265**	1	FITTING-BRASS	
M	7	1	**100-4830**	1	BOLT (M10X1.5X20-MM)	
C	8	1	**464-0296**	1	PUMP AS-FUEL INJECTION	
M		1	**111-3422**	1	NUT (M14X1.5-THD)	
		1	**111-3423**	1	WASHER	
		1	**147-2645**	1	SOLENOID-SHUTOFF (24-VOLT)	
		1	**152-3968**	1	SEAL-O-RING	
M	9	1	**111-3422**	1	NUT (M14X1.5-THD)	
	10	1	**111-3423**	1	WASHER	
M	11	1	**124-3815**	1	BOLT (M8X1.25X16-MM)	
	13	1	**425-7107**	1	GEAR-FUEL PUMP (68-TEETH)	
	18	1	**240-5571**	1	BRACKET	
	21	1	**232-1328**	1	CAP	
	22	1	**232-1793**	1	CABLE (TIMING ADVANCE SWITCH)	
	23	1	**232-1794**	3	HOSE	
	26	1	**232-3149**	3	WASHER (8.35X16.85X1.55-MM THK)	
	27	1	**232-3157**	1	BRACKET	
	28	1	**238-8671**	4	CLAMP-INJECTOR	
M	29	1	**232-3274**	4	BOLT (M8X1.25X48.1-MM)	
	30	1	**235-1790**	1	SWITCH-TEMPERATURE (TIMING ADVANCE)	
R	31	1	**236-1674**	4	INJECTOR AS-FUEL	
					(EACH INCLUDES)	
	31A	1	**140-8718**	1	WASHER (7.49X15.75X1.68-MM THK)	
	31B	1	**236-1673**	1	NOZZLE	
	31C	1	**275-1038**	1	SEAL-O-RING	
	32	1	**236-2144**	1	TUBE AS	
	32A	1	**067-6999**	1	FERRULE	
	33	1	**318-2365**	1	CLIP	
Y	34	1	*495-3762*	1	LINES GP-FUEL INJECTION	1173

C - CHANGE FROM PREVIOUS TYPE
M - METRIC PART
R - REMANUFACTURED PART MAY BE AVAILABLE
Y - SEPARATE ILLUSTRATION

237-8259 **PUMP GP-FUEL INJECTION (**contd.**)** **i08291993**

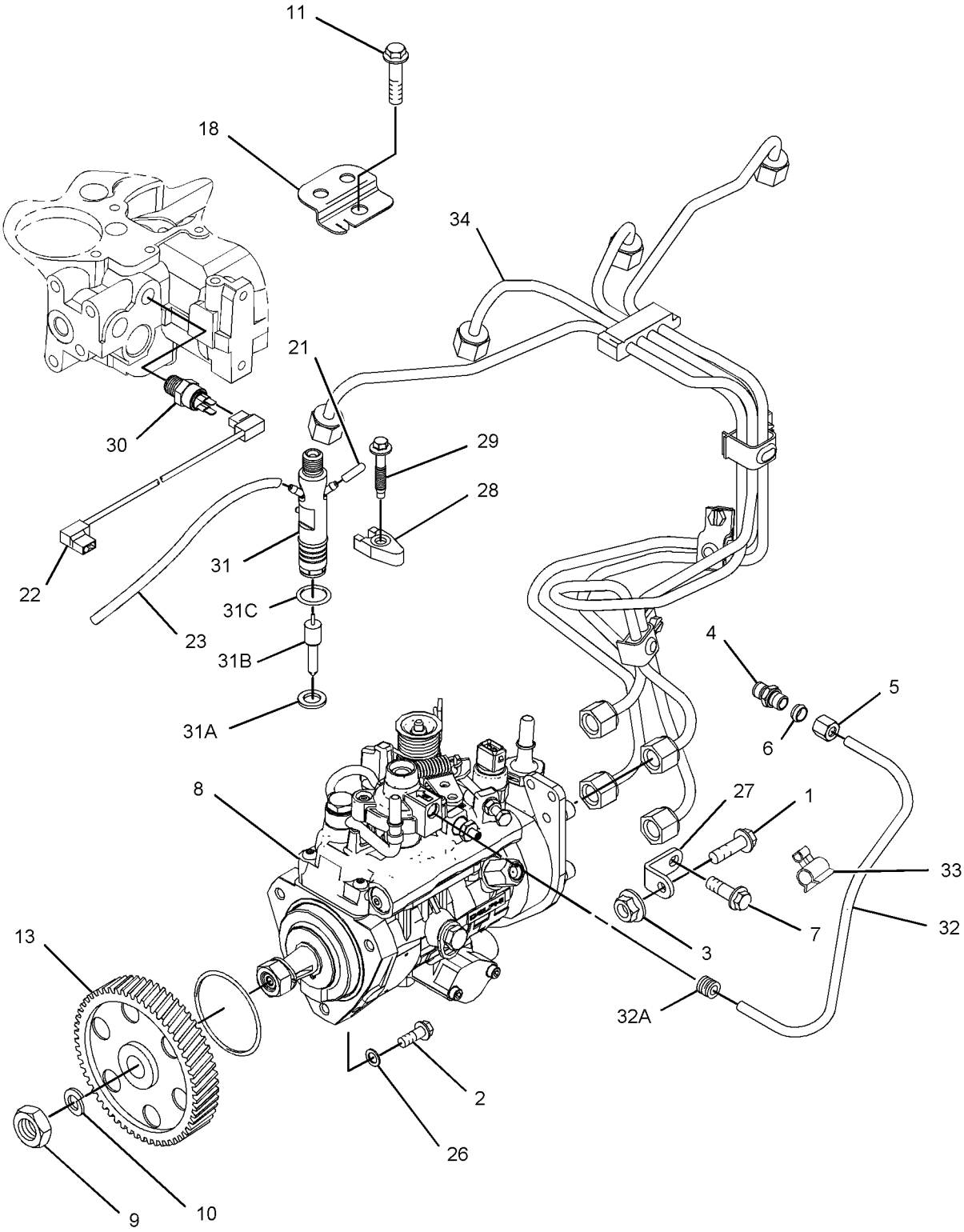

GRAPHIC #1 <END> g06615577

240-5570 PUMP GP-FUEL INJECTION

FIELD REPLACEMENT ORDER 248-2353—PAGE: 1318, 248-2354—PAGE: 1319, 248-2355—PAGE: 1320

PART OF 240-5572 PUMP GP-FUEL INJECTION

SMCS-1251, 1290

i02345183

NOTE	REF NO	GRAPHIC REF	PART NUMBER	QTY	PART NAME 1 2 3 4 5 6 (PRODUCT LEVEL)	SEE PAGE
	1	1	**248-2641**	1	SOLENOID AS (24-VOLT) (FUEL SHUTOFF)	

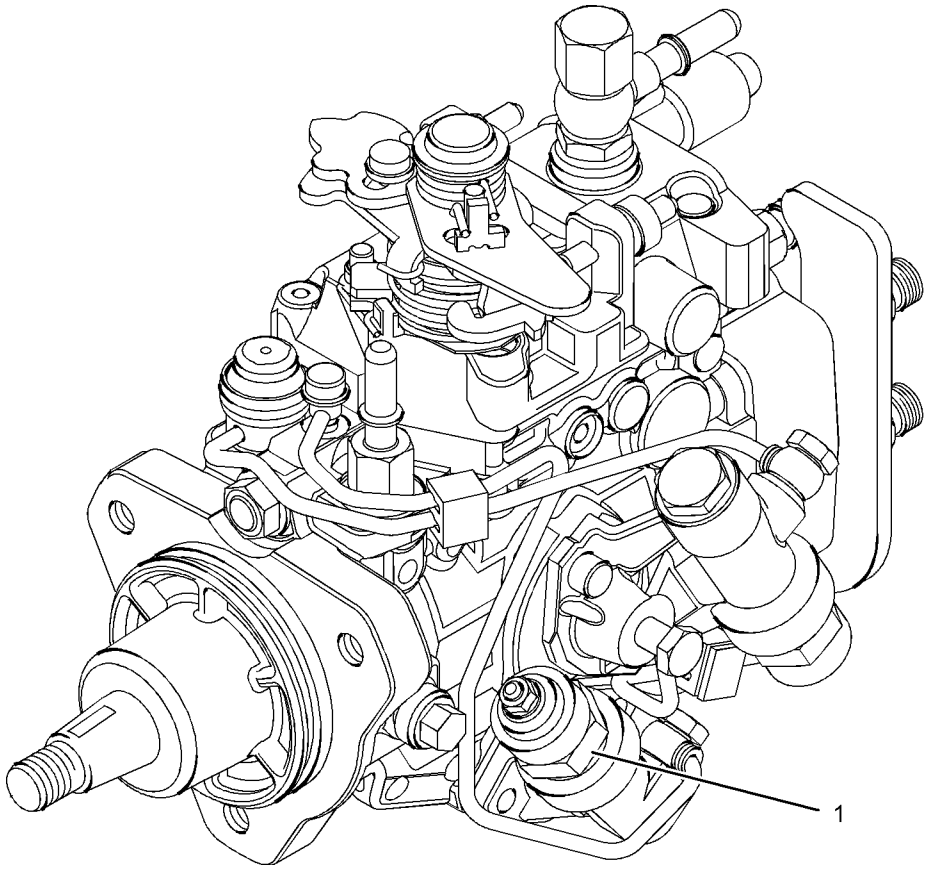

GRAPHIC #1 <END> g01084868

240-5572 PUMP GP-FUEL INJECTION

TYPE 1

SMCS-1251, 1290 **i05384894**

NOTE	REF NO	GRAPHIC REF	PART NUMBER	QTY	PART NAME 1 2 3 4 5 6 (PRODUCT LEVEL)	SEE PAGE
M	1	1	**6I-0217**	1	BOLT (M8X1.25X20-MM)	
	2	1	**232-3149**	3	WASHER (8.35X16.85X1.55-MM THK)	
M	3	1	**6I-0291**	1	NUT (M8X1.25-THD)	
M	4	1	**100-4830**	1	BOLT (M10X1.5X20-MM)	
M	5	1	**124-3815**	1	BOLT (M8X1.25X16-MM)	
	6	1	**140-8714**	1	CLIP	
	7	1	**145-8327**	1	SEAL-O-RING	
	8	1	**155-8804**	1	CAP	
	9	2	**235-1790**	1	SWITCH-TEMPERATURE (ENGINE COOLANT)	
	10	2	**199-9252**	1	SEAL-O-RING	
	11	2	**199-9751**	1	SEAL-O-RING	
	12	1	**240-5571**	1	BRACKET	
	14	2	**232-1295**	1	PLUG	
	15	2	**232-1322**	1	PLUG	
	16	2	**232-1323**	1	PLUG-CUP	
	17	1	**232-2720**	1	TUBE AS (CYL NO. 1)	
	18	1	**232-2721**	1	TUBE AS (CYL NO. 2)	
	19	1	**232-2722**	1	TUBE AS (CYL NO. 3)	
	20	1	**232-2723**	1	TUBE AS (CYL NO. 4)	
	21	1	**232-2725**	2	CLIP	
	22	1	**232-2726**	1	CLIP	
M	23	1	**6I-0260**	3	BOLT (M8X1.25X25-MM)	
	24	1	**232-3157**	1	BRACKET	
	25	1	**238-8671**	4	CLAMP-INJECTOR	
M	27	1	**232-3274**	4	BOLT (M8X1.25X48.1-MM)	
Y	28	1	**240-5570**	1	PUMP GP-FUEL INJECTION	1302
	29	1	**233-7104**	1	GEAR-PUMP	
	30	2	**232-1793**	1	CABLE	
R	31	1	**233-7972**	4	INJECTOR AS-FUEL	
					(EACH INCLUDES)	
	32	1	**140-8718**	1	WASHER (7.49X15.75X1.68-MM THK)	
	33	1	**234-0387**	1	NOZZLE	

M - METRIC PART
R - REMANUFACTURED PART MAY BE AVAILABLE
Y - SEPARATE ILLUSTRATION

240-5572 **PUMP GP-FUEL INJECTION (**contd.**)** **i05384894**

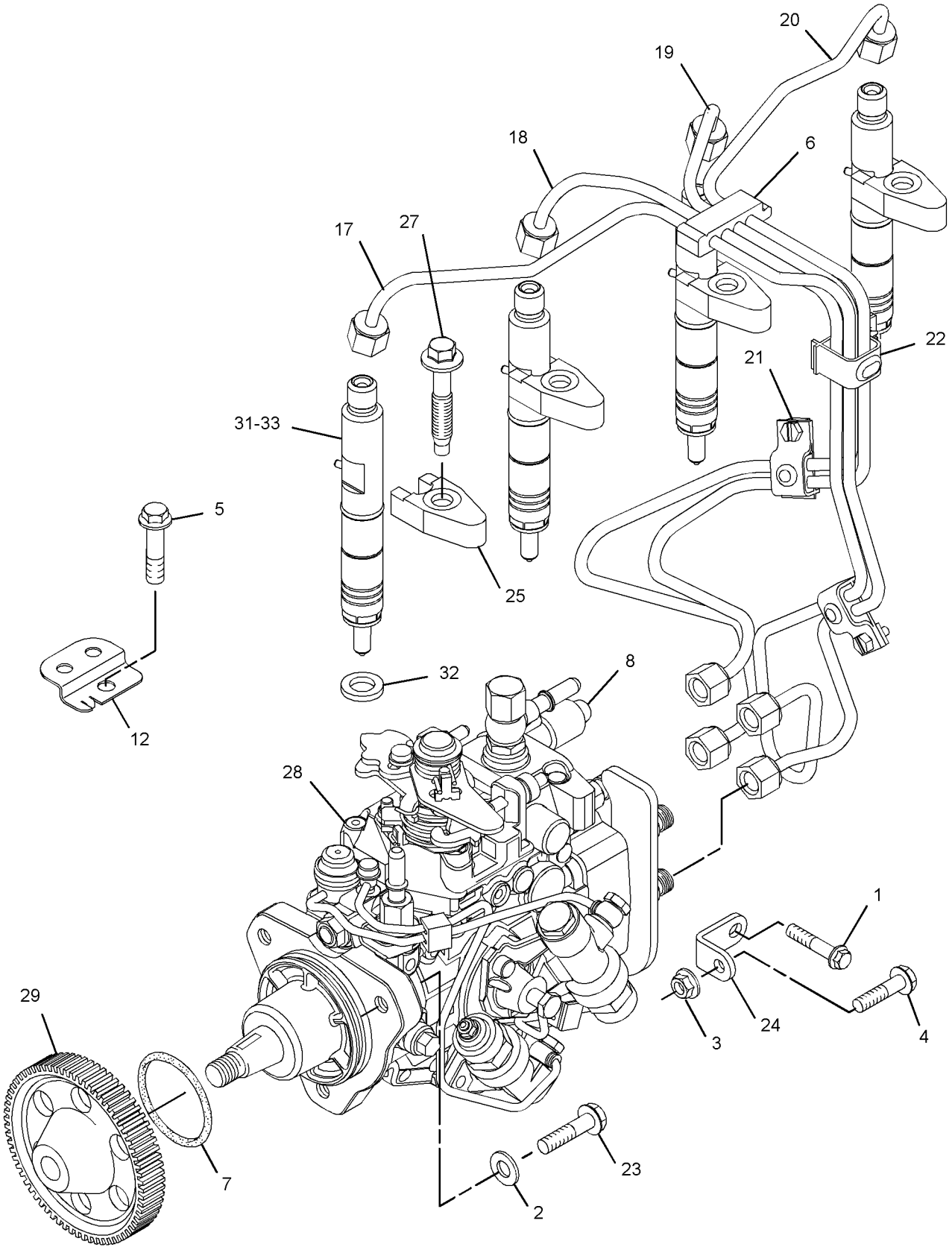

GRAPHIC #1 g01420313

240-5572 **PUMP GP-FUEL INJECTION (**contd.**)** **i05384894**

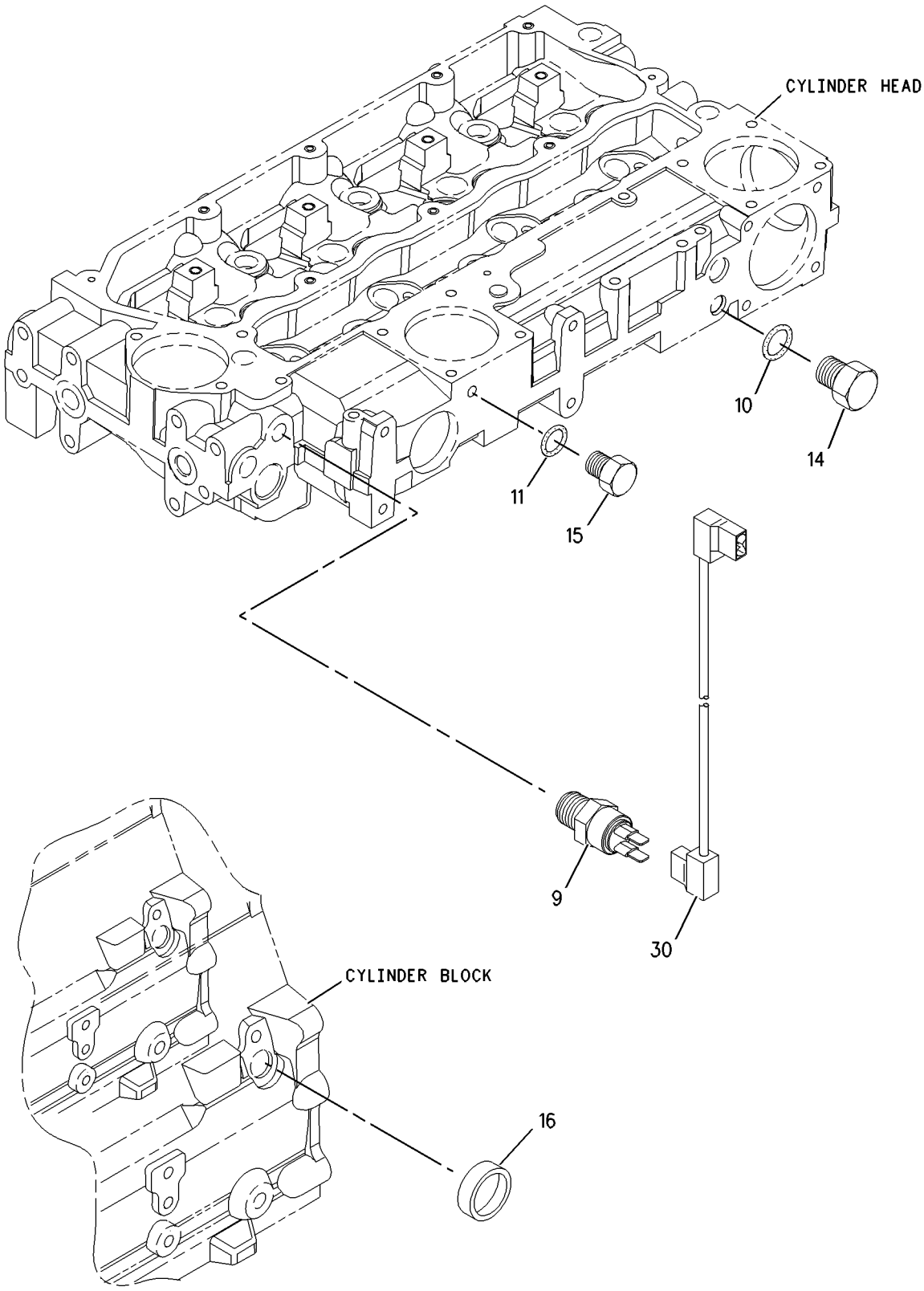

GRAPHIC #2 <END> g00955784

240-5572 PUMP GP-FUEL INJECTION

TYPE 2

SMCS-1251, 1290 **i05384873**

NOTE	REF NO	GRAPHIC REF	PART NUMBER	QTY	PART NAME 1 2 3 4 5 6 (PRODUCT LEVEL)	SEE PAGE
M	1	1	**6I-0217**	1	BOLT (M8X1.25X20-MM)	
	2	1	**232-3149**	3	WASHER (8.35X16.85X1.55-MM THK)	
M	3	1	**6I-0291**	1	NUT (M8X1.25-THD)	
M	4	1	**100-4830**	1	BOLT (M10X1.5X20-MM)	
M	5	1	**124-3815**	1	BOLT (M8X1.25X16-MM)	
	6	1	**140-8714**	1	CLIP	
	7	1	**332-7549**	1	SEAL-O-RING	
	8	1	**155-8804**	1	CAP	
	9	2	**235-1790**	1	SWITCH-TEMPERATURE (ENGINE COOLANT)	
	12	1	**240-5571**	1	BRACKET	
	16	2	**232-1323**	1	PLUG-CUP	
	17	1	**232-2720**	1	TUBE AS (CYL NO. 1)	
	18	1	**232-2721**	1	TUBE AS (CYL NO. 2)	
	19	1	**232-2722**	1	TUBE AS (CYL NO. 3)	
	20	1	**232-2723**	1	TUBE AS (CYL NO. 4)	
	21	1	**232-2725**	2	CLIP	
	22	1	**232-2726**	1	CLIP	
M	23	1	**6I-0260**	3	BOLT (M8X1.25X25-MM)	
	24	1	**232-3157**	1	BRACKET	
	25	1	**238-8671**	4	CLAMP-INJECTOR	
M	27	1	**232-3274**	4	BOLT (M8X1.25X48.1-MM)	
	28	1	**274-5007**	1	PUMP GP-FUEL INJECTION	
J	29	1	**233-7104**	1	GEAR-PUMP	
	30	2	**232-1793**	1	CABLE	
R	31	1	**266-6830**	4	INJECTOR AS-FUEL	
					(EACH INCLUDES)	
	31A	1	**140-8718**	1	WASHER (7.49X15.75X1.68-MM THK)	
	31B	1	**234-0387**	1	NOZZLE	
	31C	1	**275-1038**	1	SEAL-O-RING	
	34	1	**232-1328**	1	CAP (FUEL INJECTOR)	
	35	1	**232-1794**	3	HOSE (LEAK OFF)	
JM		1	**111-3422**	1	NUT (M14X1.5-THD)	
J		1	**111-3423**	1	WASHER	

J - USE NUT & WASHER TO SECURE GEAR TO PUMP
M - METRIC PART
R - REMANUFACTURED PART MAY BE AVAILABLE

240-5572 **PUMP GP-FUEL INJECTION (**contd.**)** **i05384873**

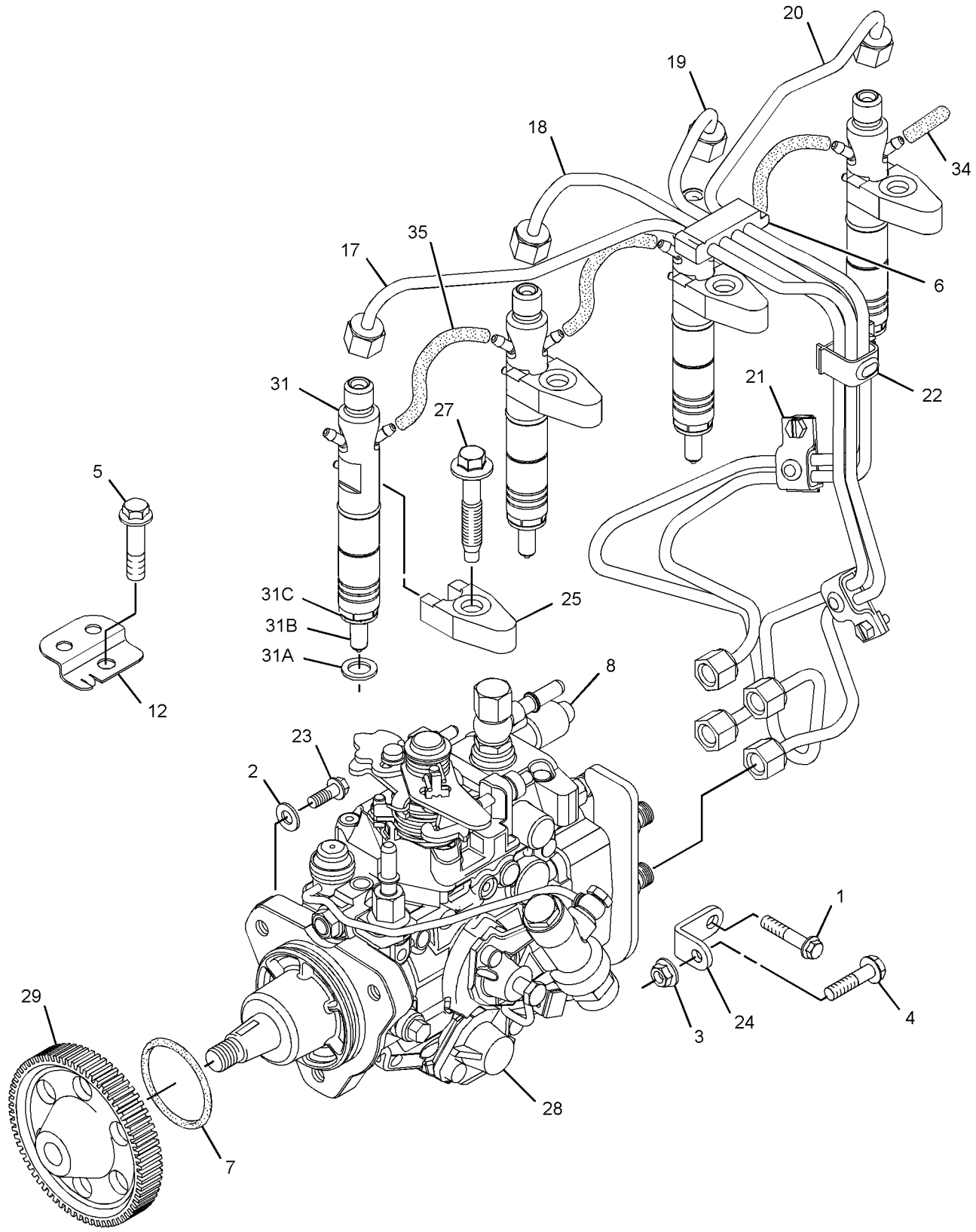

GRAPHIC #1 g02819036

240-5572 **PUMP GP-FUEL INJECTION (**contd.**)** **i05384873**

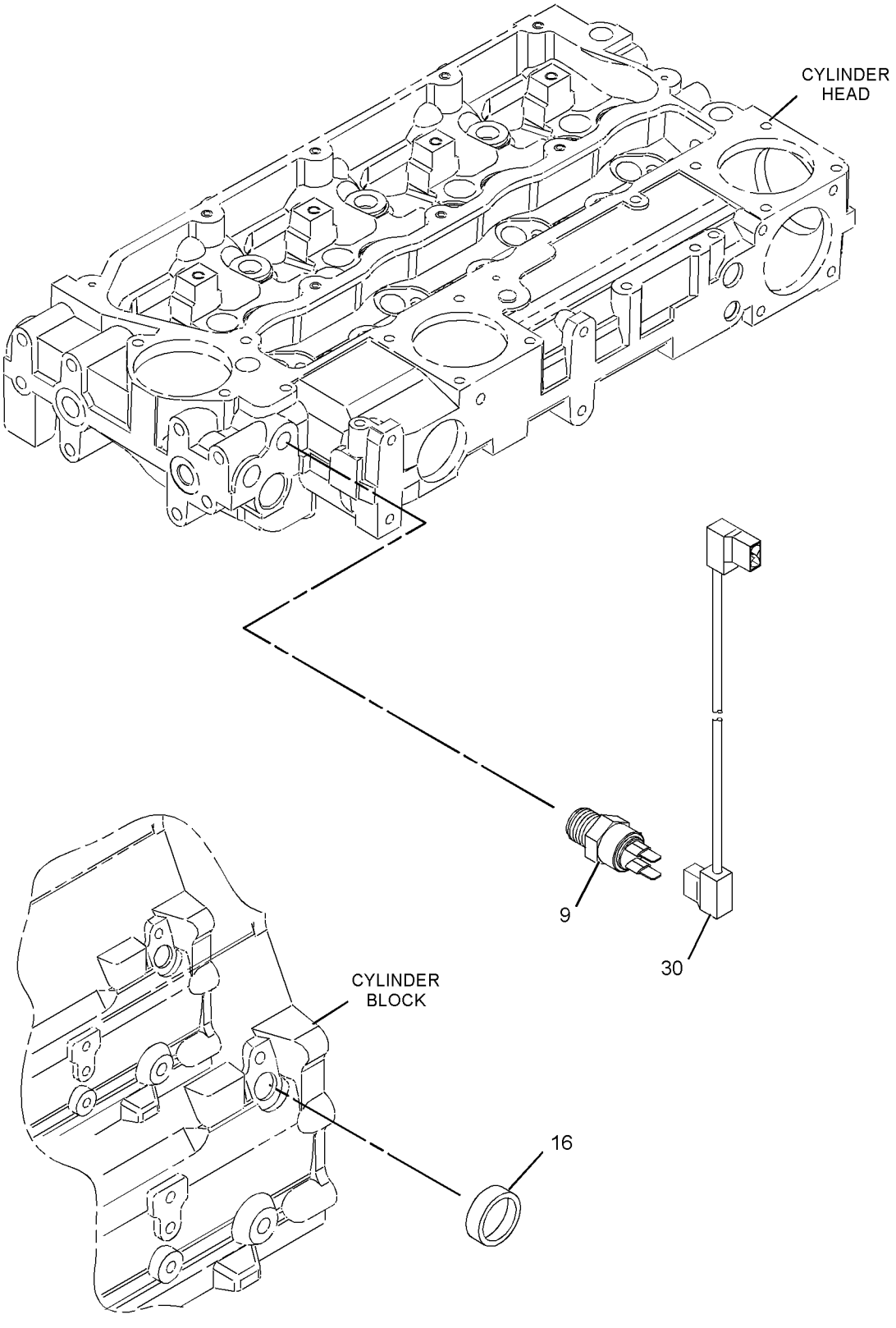

GRAPHIC #2 <END> g01204646

240-5572 PUMP GP-FUEL INJECTION

TYPE 3

SMCS-1251, 1290 **i05384870**

NOTE	REF NO	GRAPHIC REF	PART NUMBER	QTY	PART NAME 1 2 3 4 5 6 (PRODUCT LEVEL)	SEE PAGE
M	1	1	**6I-0217**	1	BOLT (M8X1.25X20-MM)	
	2	1	**232-3149**	3	WASHER (8.35X16.85X1.55-MM THK)	
M	3	1	**6I-0291**	1	NUT (M8X1.25-THD)	
M	4	1	**100-4830**	1	BOLT (M10X1.5X20-MM)	
M	5	1	**124-3815**	1	BOLT (M8X1.25X16-MM)	
	6	1	**140-8714**	1	CLIP	
	7	1	**332-7549**	1	SEAL-O-RING	
	8	1	**155-8804**	1	CAP	
	9	2	**235-1790**	1	SWITCH-TEMPERATURE (ENGINE COOLANT)	
	12	1	**240-5571**	1	BRACKET	
	17	1	**232-2720**	1	TUBE AS (CYL NO. 1)	
	18	1	**232-2721**	1	TUBE AS (CYL NO. 2)	
	19	1	**232-2722**	1	TUBE AS (CYL NO. 3)	
	20	1	**232-2723**	1	TUBE AS (CYL NO. 4)	
	21	1	**232-2725**	2	CLIP	
	22	1	**232-2726**	1	CLIP	
M	23	1	**6I-0260**	3	BOLT (M8X1.25X25-MM)	
	24	1	**232-3157**	1	BRACKET	
	25	1	**238-8671**	4	CLAMP-INJECTOR	
M	27	1	**232-3274**	4	BOLT (M8X1.25X48.1-MM)	
	28	1	**274-5007**	1	PUMP GP-FUEL INJECTION	
J	29	1	**233-7104**	1	GEAR-PUMP	
	30	2	**232-1793**	1	CABLE	
R	31	1	**266-6830**	4	INJECTOR AS-FUEL	
					(EACH INCLUDES)	
	31A	1	**140-8718**	1	WASHER (7.49X15.75X1.68-MM THK)	
	31B	1	**234-0387**	1	NOZZLE	
	31C	1	**275-1038**	1	SEAL-O-RING	
	34	1	**232-1328**	1	CAP (FUEL INJECTOR)	
	35	1	**232-1794**	3	HOSE (LEAK OFF)	
JM		1	**111-3422**	1	NUT (M14X1.5-THD)	
J		1	**111-3423**	1	WASHER	

J - USE NUT & WASHER TO SECURE GEAR TO PUMP
M - METRIC PART
R - REMANUFACTURED PART MAY BE AVAILABLE

240-5572 **PUMP GP-FUEL INJECTION (**contd.**)** **i05384870**

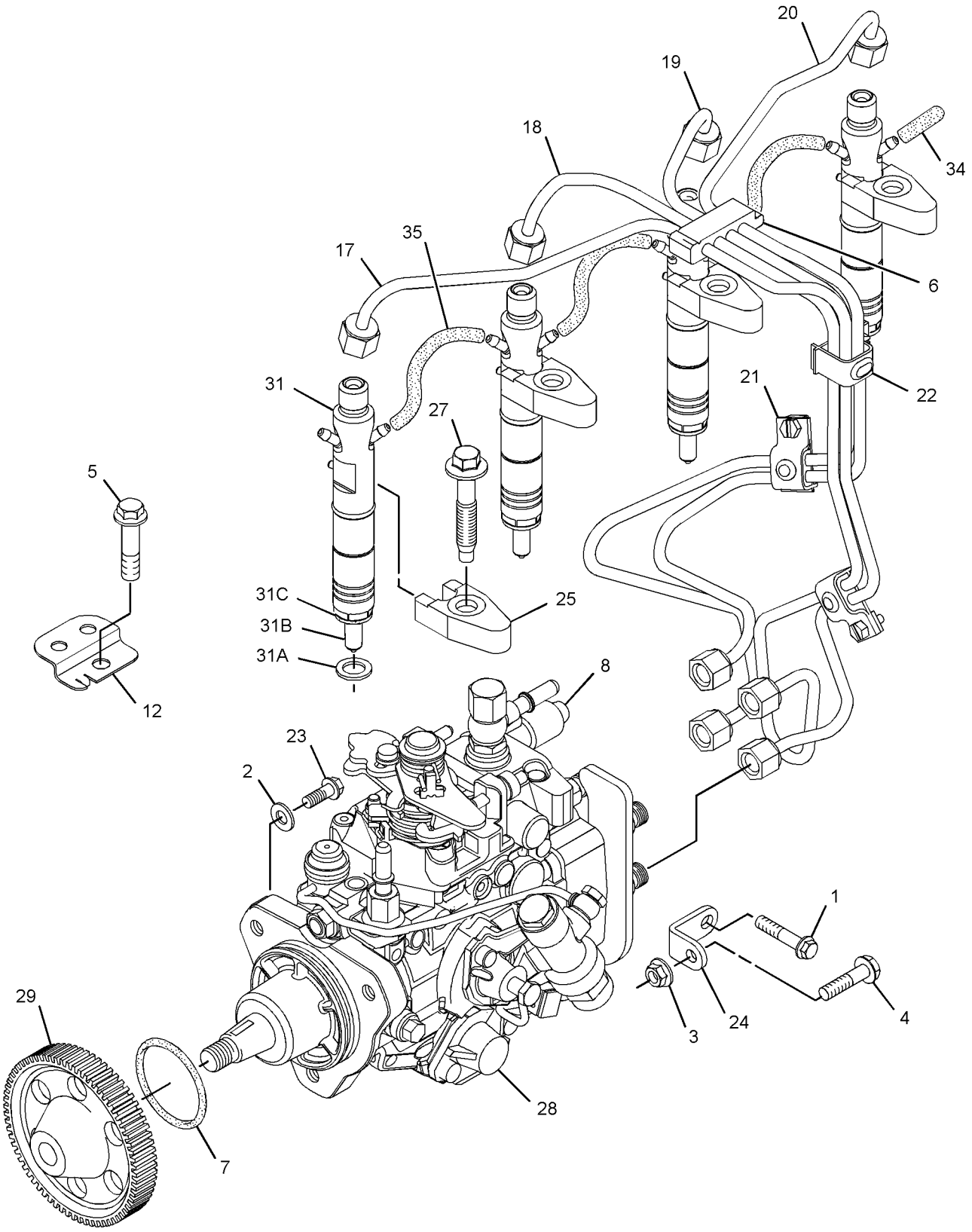

GRAPHIC #1 g02819036

240-5572 **PUMP GP-FUEL INJECTION (**contd.**)** **i05384870**

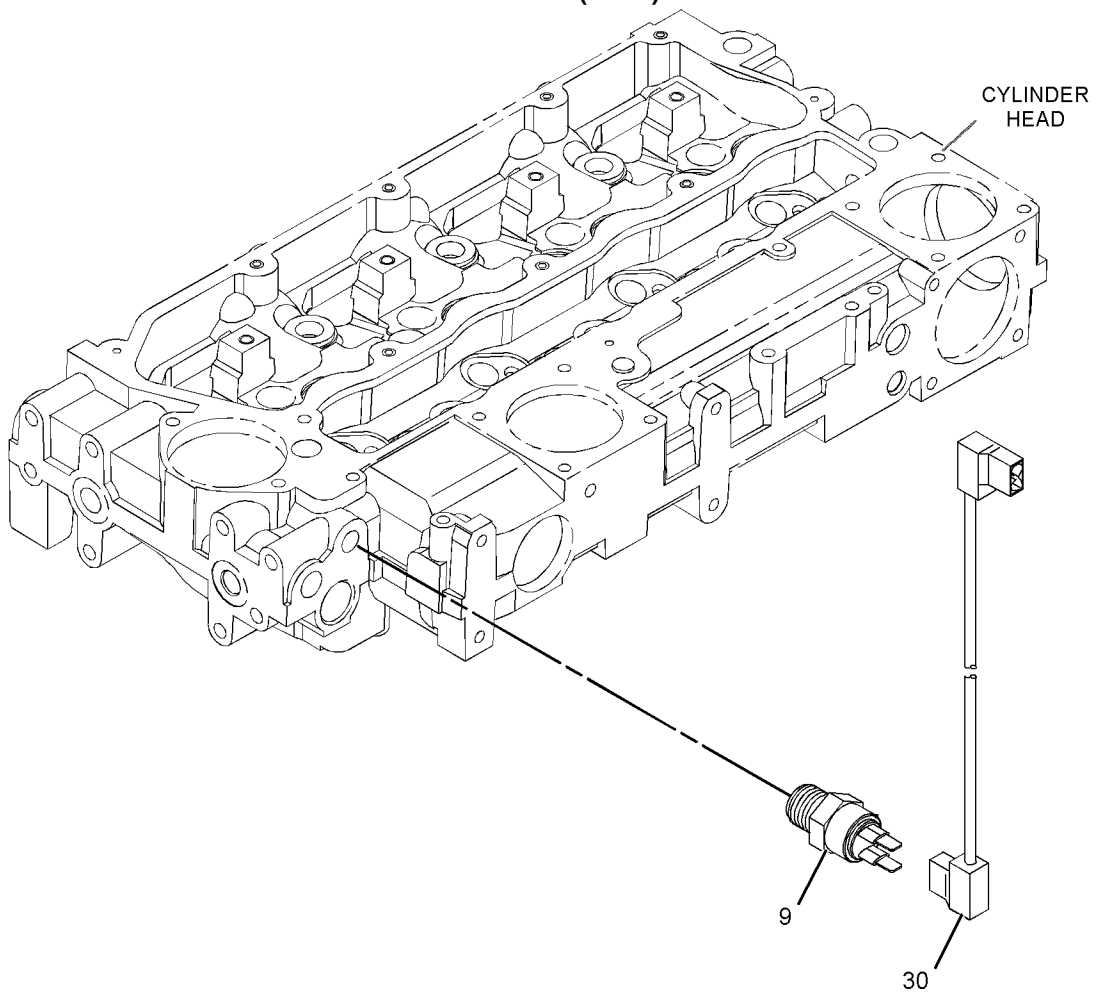

GRAPHIC #2 <END> g03011377

247-1285 PUMP GP-FUEL INJECTION*R

S/N: 334281-UP

FIELD REPLACEMENT FOR 236-5707—PAGE: 1252

FOR USE WITH 2200 RPM ENGINE RATINGS

SMCS-1251, 1290

i02473523

NOTE	REF NO	GRAPHIC REF	PART NUMBER	QTY	PART NAME 1 2 3 4 5 6 (PRODUCT LEVEL)	SEE PAGE
	1	1	**152-3968**	1	SEAL-O-RING	
	2	1	**176-6219**	1	SOLENOID (12-VOLT) (FUEL SHUTOFF)	

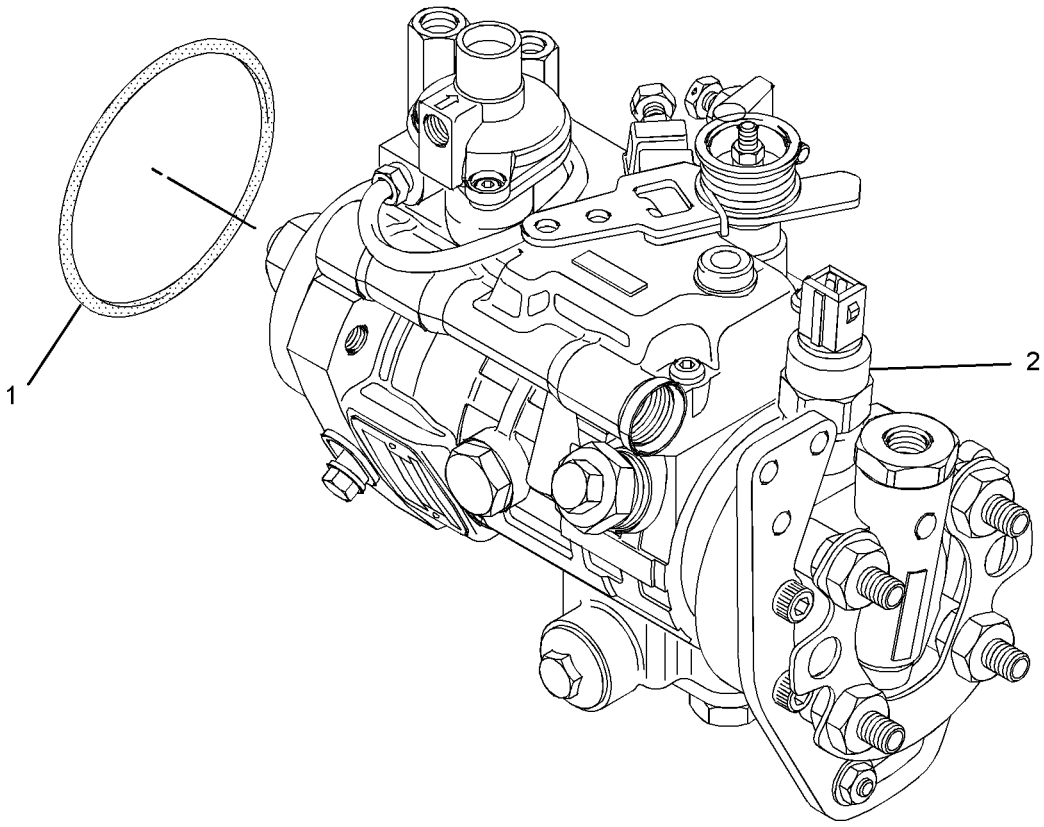

GRAPHIC #1

<END>

g01059219

247-1286 PUMP GP-FUEL INJECTION

S/N: 334281-UP

FIELD REPLACEMENT FOR 236-5707—PAGE: 1252

FOR USE WITH 2100 RPM ENGINE RATINGS

SMCS-1251, 1290

i02473521

NOTE	REF NO	GRAPHIC REF	PART NUMBER	QTY	PART NAME 1 2 3 4 5 6 (PRODUCT LEVEL)	SEE PAGE
	1	1	**152-3968**	1	SEAL-O-RING	
	2	1	**176-6219**	1	SOLENOID (12-VOLT) (FUEL SHUTOFF)	

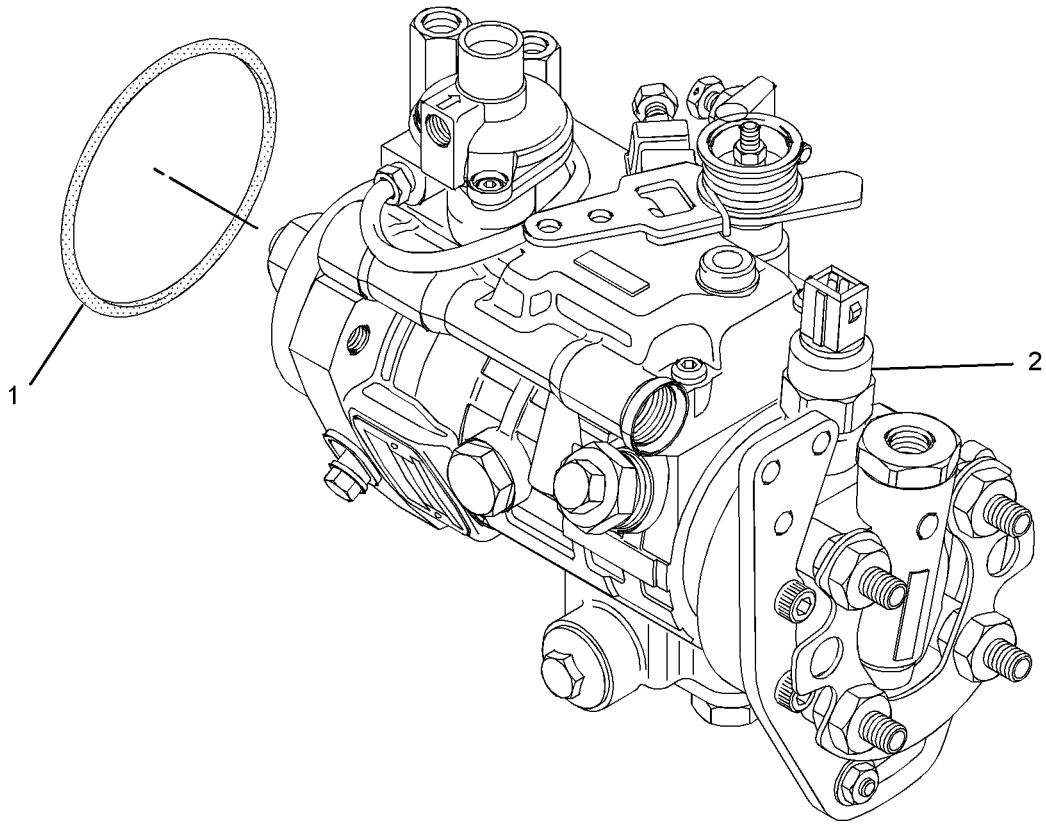

GRAPHIC #1 <END> g01059219

247-1287 PUMP GP-FUEL INJECTION

S/N: 334281-UP

FIELD REPLACEMENT FOR 236-5707—PAGE: 1252

FOR USE WITH 2000 RPM ENGINE RATINGS

SMCS-1251, 1290

i02473519

NOTE	REF NO	GRAPHIC REF	PART NUMBER	QTY	PART NAME 1 2 3 4 5 6 (PRODUCT LEVEL)	SEE PAGE
	1	1	**152-3968**	1	SEAL-O-RING	
	2	1	**176-6219**	1	SOLENOID (12-VOLT) (FUEL SHUTOFF)	

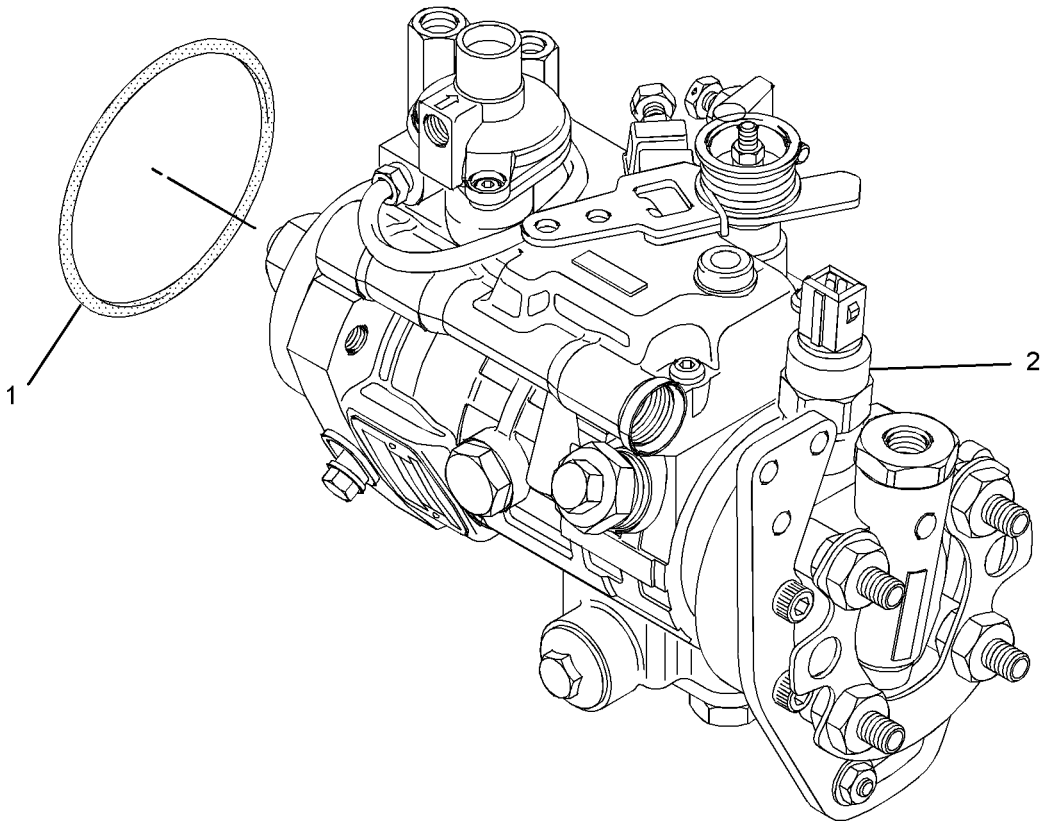

GRAPHIC #1

<END>

g01059219

248-2350 PUMP GP-FUEL INJECTION

S/N: 334281-UP

FIELD REPLACEMENT FOR 233-7094—PAGE: 1190

FOR USE WITH ENGINES RATED AT 2400 RPM

SMCS-1251, 1290

i02170721

NOTE	REF NO	GRAPHIC REF	PART NUMBER	QTY	PART NAME 1 2 3 4 5 6 (PRODUCT LEVEL)	SEE PAGE
	1	1	**208-5029**	1	VALVE GP-SOLENOID (12-VOLT) (FUEL SHUTOFF)	

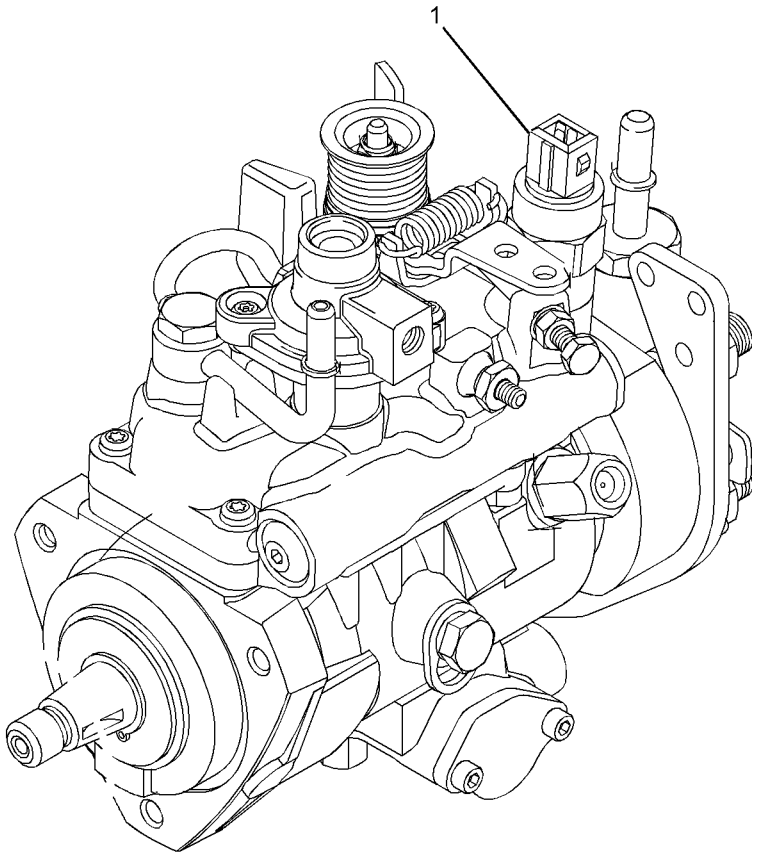

GRAPHIC #1

<END>

g01076845

248-2351 PUMP GP-FUEL INJECTION

S/N: 334281-UP
FIELD REPLACEMENT FOR 233-7094—PAGE: 1190
FOR USE WITH ENGINES RATED AT 2300 RPM

SMCS-1251, 1290

i02170720

NOTE	REF NO	GRAPHIC REF	PART NUMBER	QTY	PART NAME 1 2 3 4 5 6 (PRODUCT LEVEL)	SEE PAGE
	1	1	**208-5029**	1	VALVE GP-SOLENOID (12-VOLT) (FUEL SHUTOFF)	

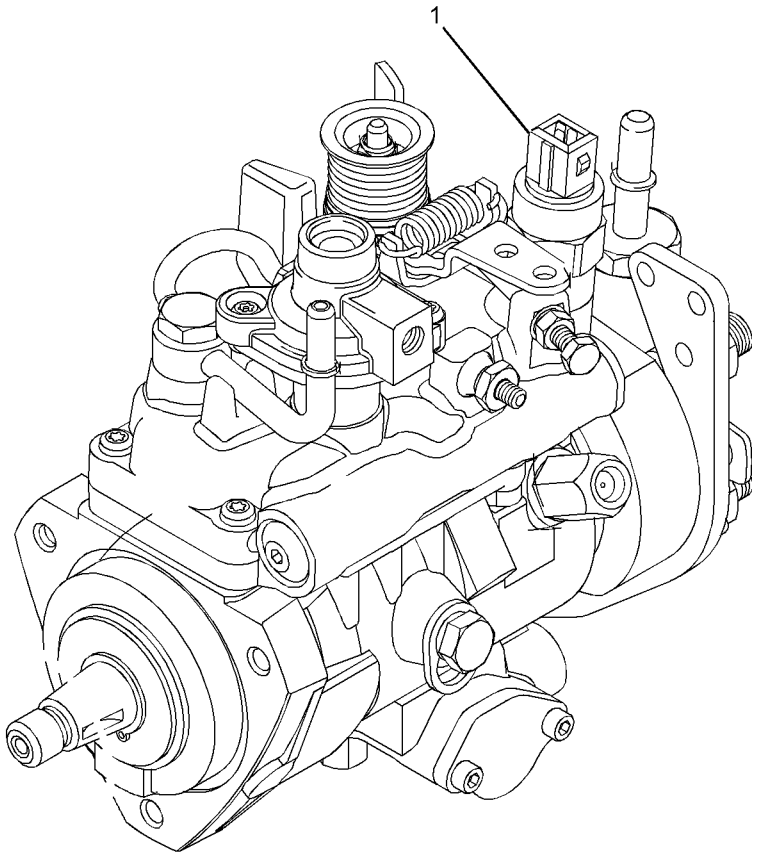

GRAPHIC #1

<END>

g01076845

248-2352 PUMP GP-FUEL INJECTION

S/N: 334281-UP

FIELD REPLACEMENT FOR 233-7094—PAGE: 1190

FOR USE WITH ENGINES RATED AT 2200 RPM

SMCS-1251, 1290

i02170719

NOTE	REF NO	GRAPHIC REF	PART NUMBER	QTY	PART NAME 1 2 3 4 5 6 (PRODUCT LEVEL)	SEE PAGE
	1	1	**208-5029**	1	VALVE GP-SOLENOID (12-VOLT) (FUEL SHUTOFF)	

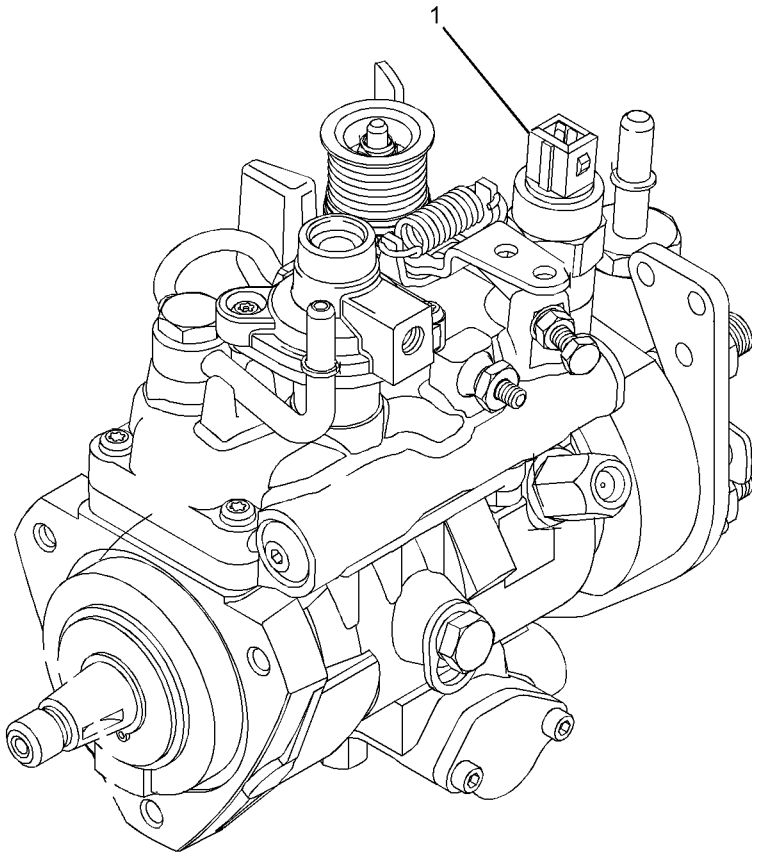

GRAPHIC #1

<END>

g01076845

248-2353 PUMP GP-FUEL INJECTION

2400 RPM ENGINE RATINGS

FIELD REPLACEMENT FOR 240-5570—PAGE: 1302

SMCS-1251, 1290

i02061318

NOTE	REF NO	GRAPHIC REF	PART NUMBER	QTY	PART NAME 1 2 3 4 5 6 (PRODUCT LEVEL)	SEE PAGE
	1	1	**248-2641**	1	SOLENOID AS (24-VOLT)	

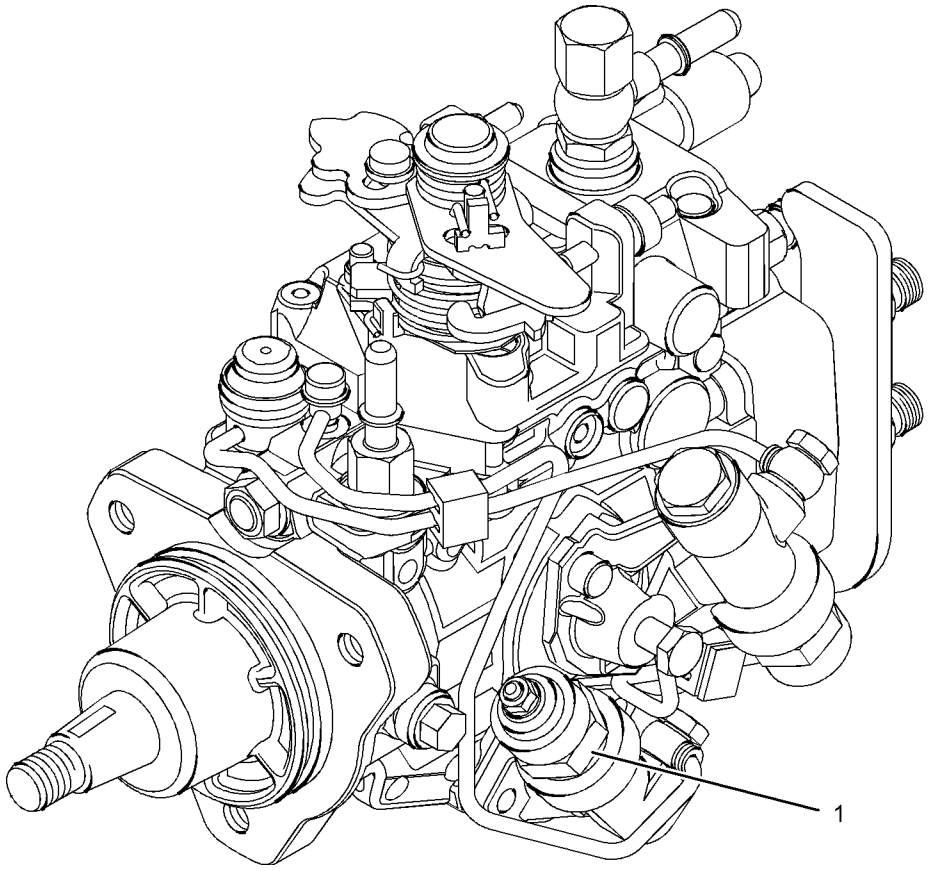

GRAPHIC #1 <END> g01084868

248-2354 PUMP GP-FUEL INJECTION

2300 RPM ENGINE RATINGS

FIELD REPLACEMENT FOR 240-5570—PAGE: 1302

SMCS-1251, 1290

i02061324

NOTE	REF NO	GRAPHIC REF	PART NUMBER	QTY	PART NAME 1 2 3 4 5 6 (PRODUCT LEVEL)	SEE PAGE
	1	1	**248-2641**	1	SOLENOID AS (24-VOLT)	

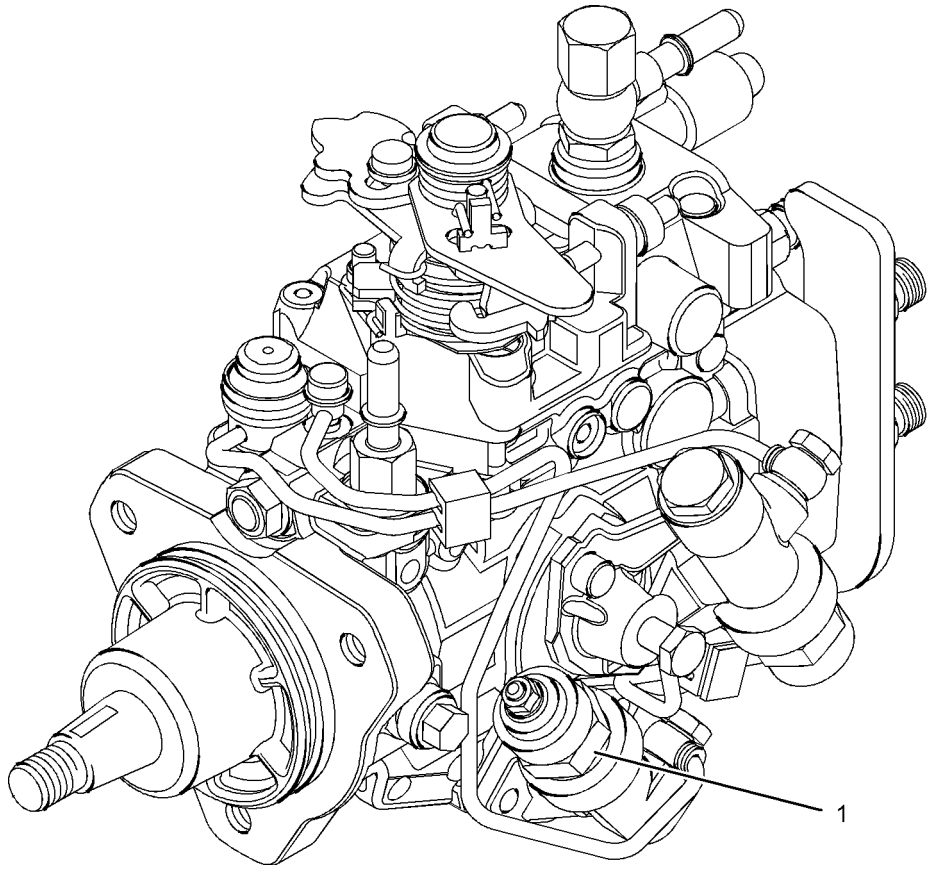

GRAPHIC #1

<END>

g01084868

248-2355 PUMP GP-FUEL INJECTION

2200 RPM ENGINE RATINGS

FIELD REPLACEMENT FOR 240-5570—PAGE: 1302

SMCS-1251, 1290

i02061329

NOTE	REF NO	GRAPHIC REF	PART NUMBER	QTY	PART NAME 1 2 3 4 5 6 (PRODUCT LEVEL)	SEE PAGE
	1	1	**248-2641**	1	SOLENOID AS (24-VOLT)	

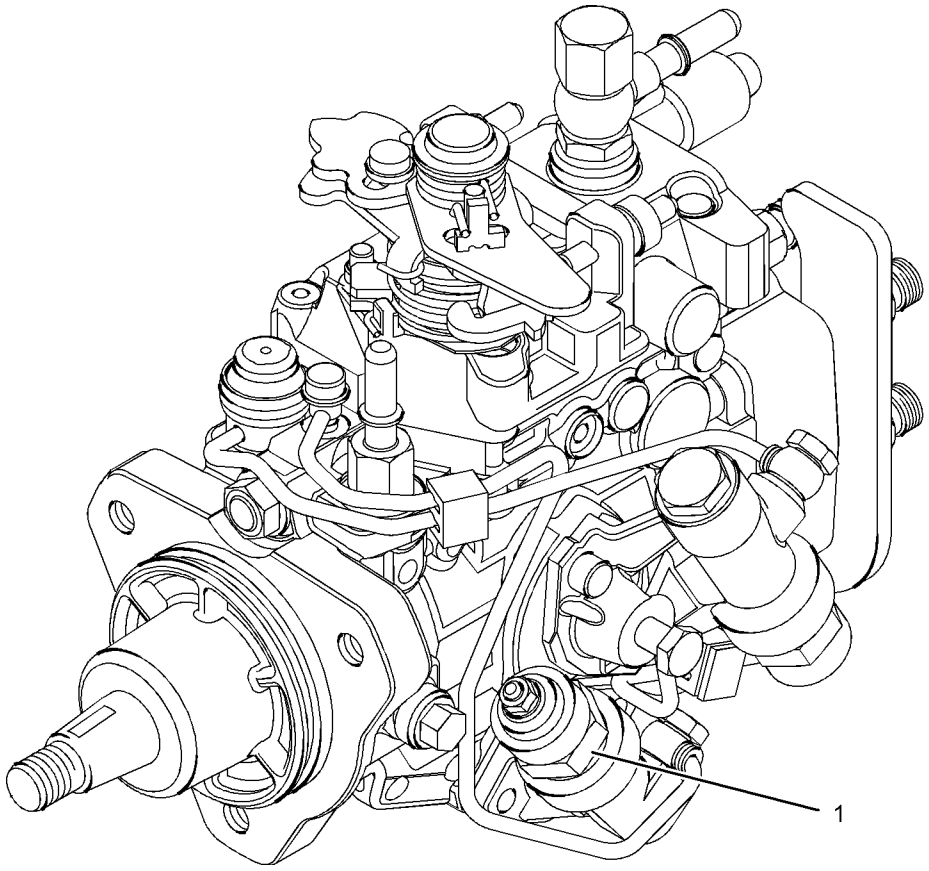

GRAPHIC #1 <END> g01084868

248-2356 PUMP GP-FUEL INJECTION*R

FIELD REPLACEMENT FOR 236-8228—PAGE: 1254
FOR USE WITH 2200 RPM RATED ENGINES

SMCS-1251, 1290

i02100164

NOTE	REF NO	GRAPHIC REF	PART NUMBER	QTY	PART NAME 1 2 3 4 5 6 (PRODUCT LEVEL)	SEE PAGE
	1	1	**176-6219**	1	SOLENOID (12-VOLT) (FUEL SHUTOFF)	
	2	1	**152-3968**	1	SEAL-O-RING	

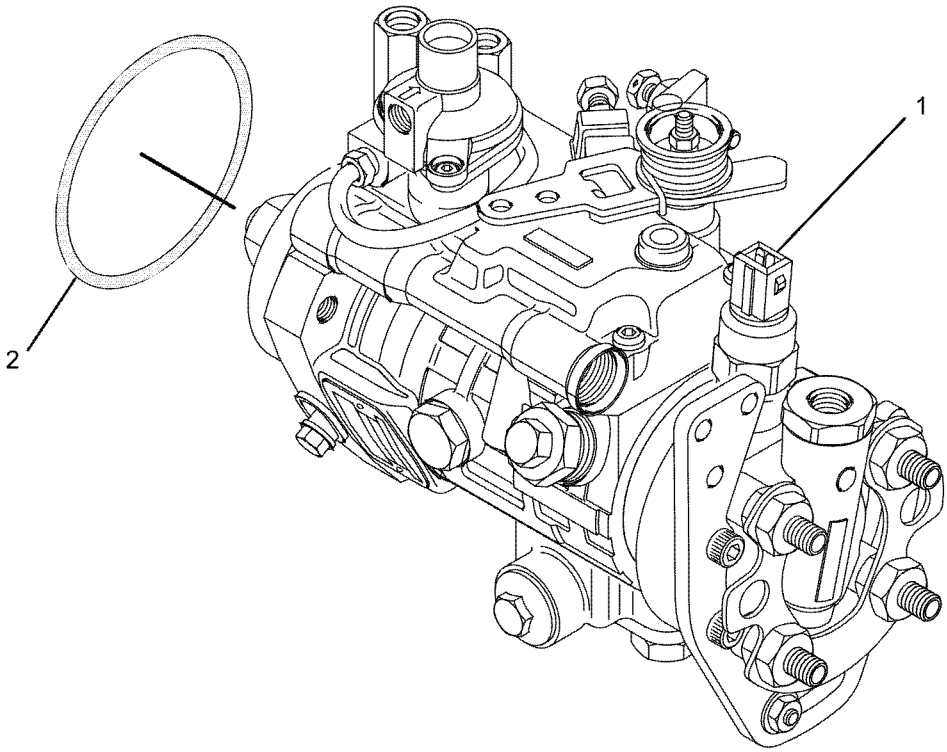

GRAPHIC #1 <END> g01072427

248-2357 PUMP GP-FUEL INJECTION

FIELD REPLACEMENT FOR 236-8228—PAGE: 1254
FOR USE WITH 2100 RPM RATED ENGINES

SMCS-1251, 1290 **i02100173**

NOTE	REF NO	GRAPHIC REF	PART NUMBER	QTY	PART NAME 1 2 3 4 5 6 (PRODUCT LEVEL)	SEE PAGE
	1	1	**176-6219**	1	SOLENOID (12-VOLT) (FUEL SHUTOFF)	
	2	1	**152-3968**	1	SEAL-O-RING	

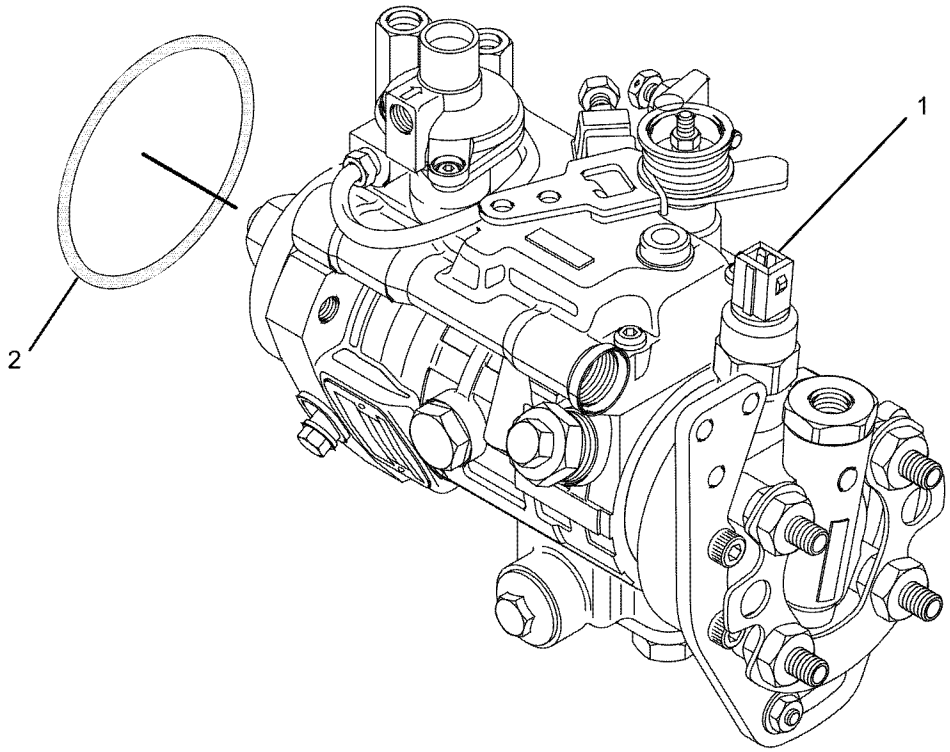

GRAPHIC #1 <END> g01072427

248-2358 PUMP GP-FUEL INJECTION*R

FIELD REPLACEMENT FOR 236-8228—PAGE: 1254
FOR USE WITH 2000 RPM RATED ENGINES

SMCS-1251, 1290

i07731917

NOTE	REF NO	GRAPHIC REF	PART NUMBER	QTY	PART NAME 1 2 3 4 5 6 (PRODUCT LEVEL)	SEE PAGE
	1	1	**176-6219**	1	SOLENOID (12-VOLT) (FUEL SHUTOFF)	
	2	1	**152-3968**	1	SEAL-O-RING	

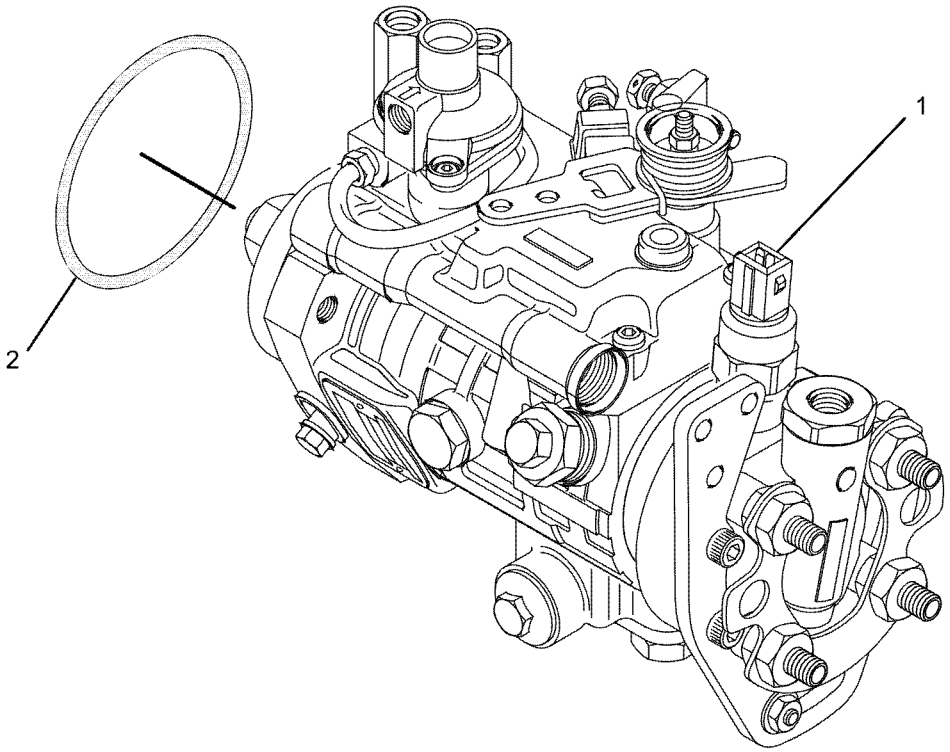

GRAPHIC #1

<END>

g01072427

248-2359 PUMP GP-FUEL INJECTION

FIELD REPLACEMENT FOR 233-9404—PAGE: 1203

SMCS-1251, 1290 **i02131555**

NOTE	REF NO	GRAPHIC REF	PART NUMBER	QTY	PART NAME 1 2 3 4 5 6 (PRODUCT LEVEL)	SEE PAGE
	1	1	**152-3968**	1	SEAL-O-RING	
	2	1	**176-6219**	1	SOLENOID (12-VOLT) (FUEL SHUTOFF)	

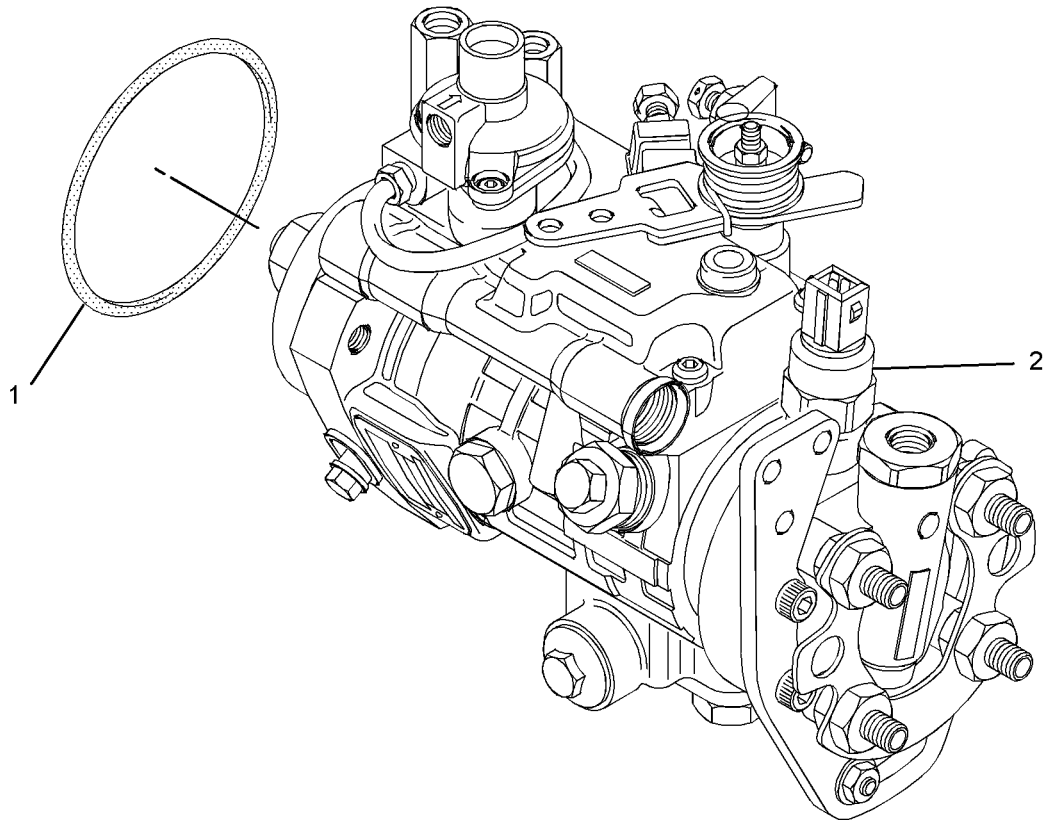

GRAPHIC #1 <END> g01059219

248-2360 PUMP GP-FUEL INJECTION

2300 RPM ENGINE RATINGS

FIELD REPLACEMENT FOR 233-9404—PAGE: 1203

SMCS-1251, 1290

i02138894

NOTE	REF NO	GRAPHIC REF	PART NUMBER	QTY	PART NAME 1 2 3 4 5 6 (PRODUCT LEVEL)	SEE PAGE
	1	1	**152-3968**	1	SEAL-O-RING	
	2	1	**176-6219**	1	SOLENOID (12-VOLT) (FUEL SHUTOFF)	

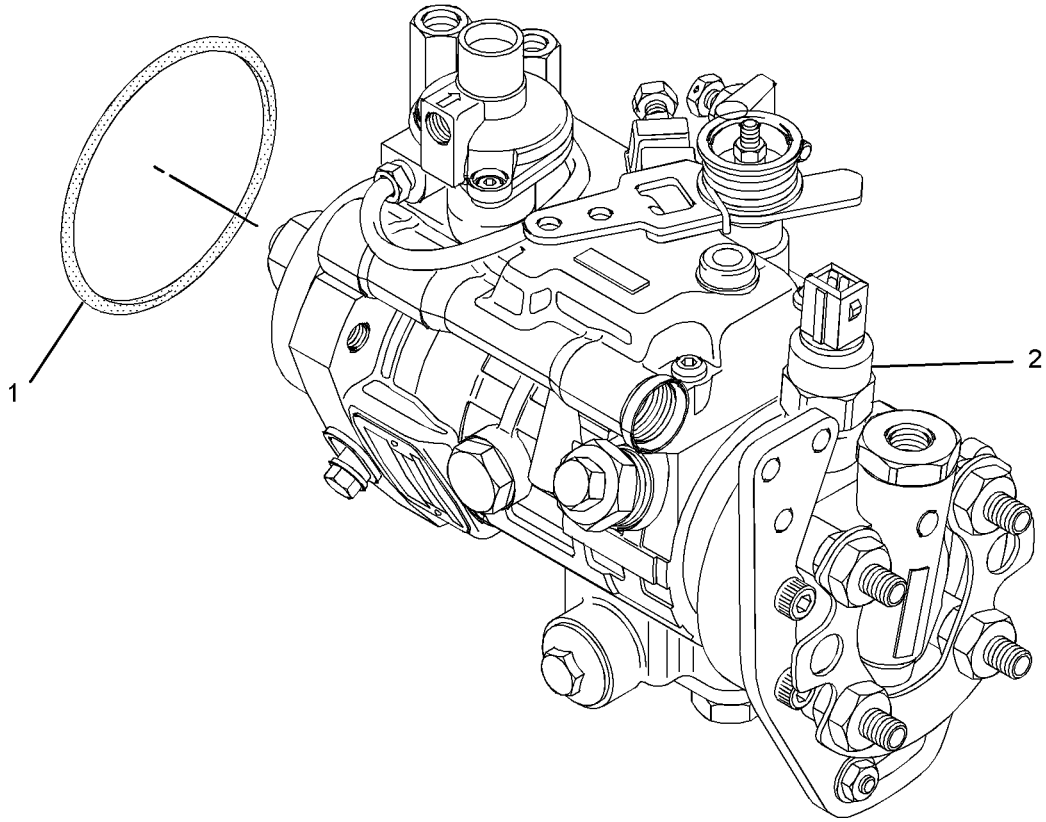

GRAPHIC #1

<END>

g01059219

248-2361 PUMP GP-FUEL INJECTION

2200 RPM ENGINE RATINGS

FIELD REPLACEMENT FOR 233-9404—PAGE: 1203

SMCS-1251, 1290 **i02138893**

NOTE	REF NO	GRAPHIC REF	PART NUMBER	QTY	PART NAME 1 2 3 4 5 6 (PRODUCT LEVEL)	SEE PAGE
	1	1	**152-3968**	1	SEAL-O-RING	
	2	1	**176-6219**	1	SOLENOID (12-VOLT) (FUEL SHUTOFF)	

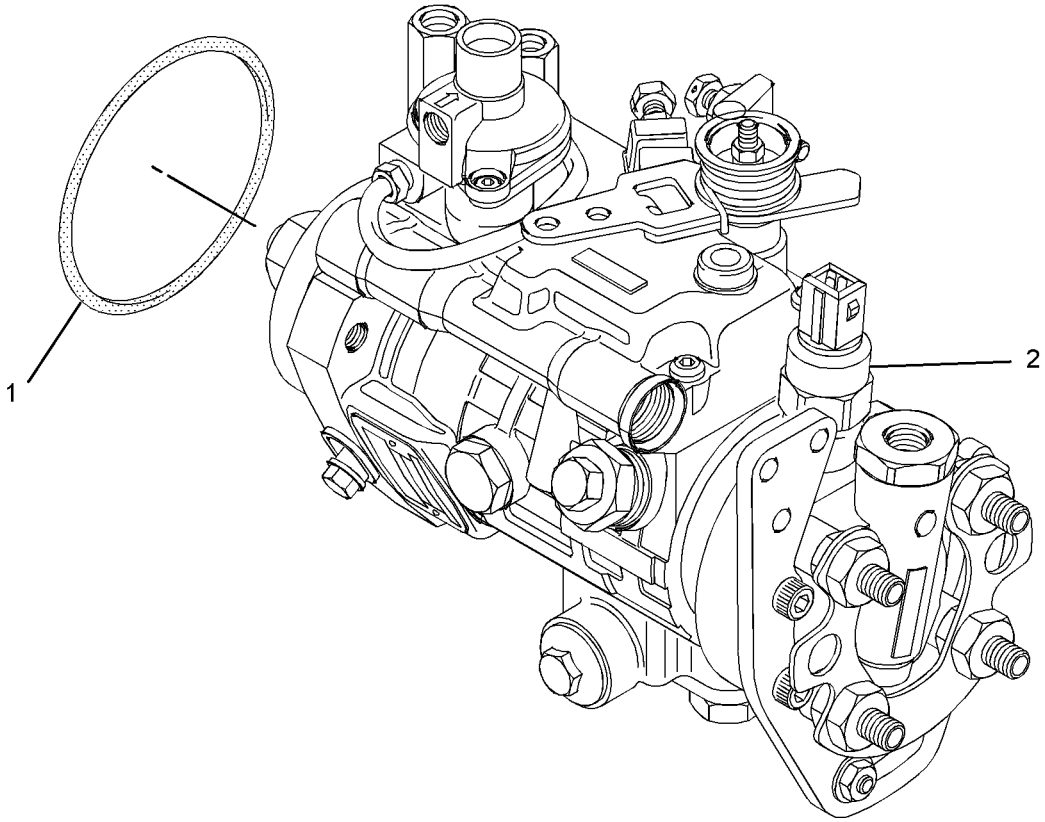

GRAPHIC #1 <END> g01059219

248-2364 PUMP GP-FUEL INJECTION*R

2200 RPM ENGINE RATINGS

FIELD REPLACEMENT FOR 237-8185—PAGE: 1295

SMCS-1251, 1290

i07072322

NOTE	REF NO	GRAPHIC REF	PART NUMBER	QTY	PART NAME 1 2 3 4 5 6 (PRODUCT LEVEL)	SEE PAGE
	1	1	**152-3968**	1	SEAL-O-RING	
	2	1	**147-2645**	1	SOLENOID-SHUTOFF (24-VOLT) (FUEL SHUTOFF)	

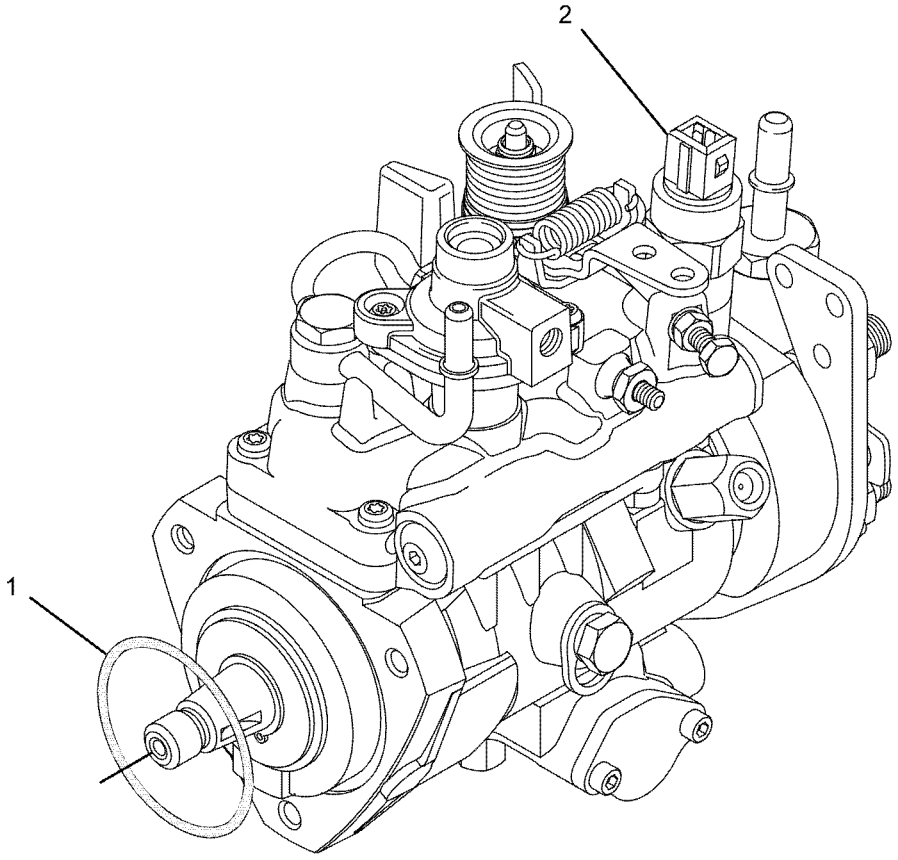

GRAPHIC #1

<END>

g01059115

248-2365 PUMP GP-FUEL INJECTION

2100 RPM ENGINE RATINGS

FIELD REPLACEMENT FOR 237-8185—PAGE: 1295

SMCS-1251, 1290 **i07152451**

NOTE	REF NO	GRAPHIC REF	PART NUMBER	QTY	PART NAME 1 2 3 4 5 6 (PRODUCT LEVEL)	SEE PAGE
	1	1	**152-3968**	1	SEAL-O-RING	
	2	1	**147-2645**	1	SOLENOID-SHUTOFF (24-VOLT) (FUEL SHUTOFF)	

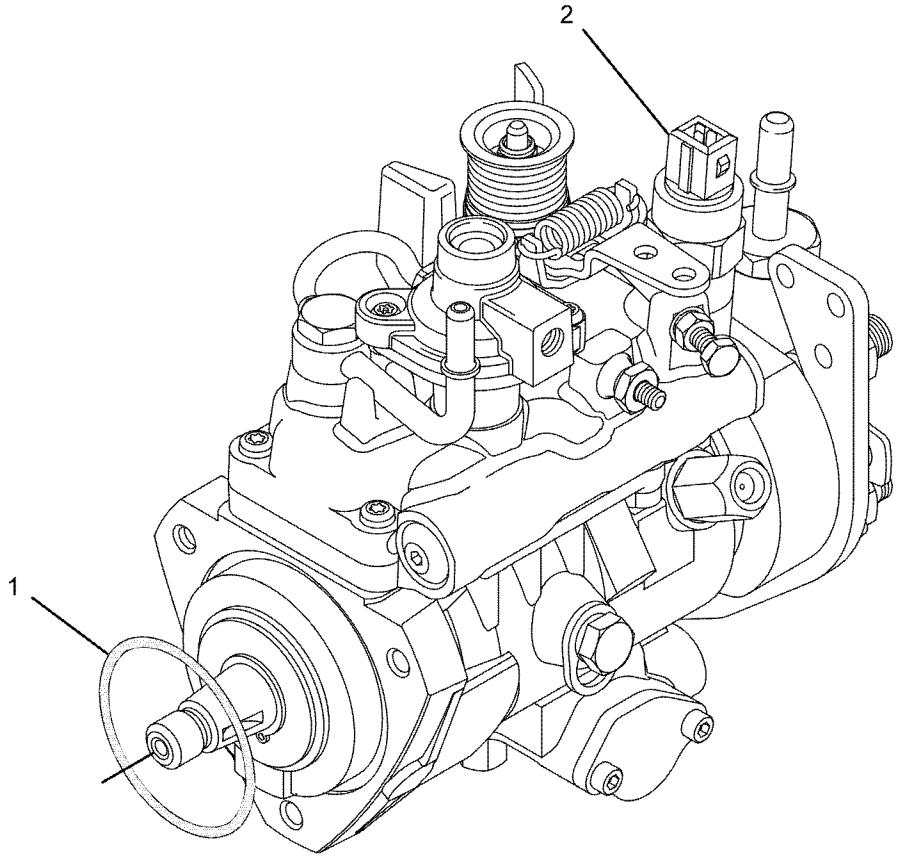

GRAPHIC #1 <END> g01059115

248-2366 PUMP GP-FUEL INJECTION*R

2000 RPM ENGINE RATINGS

FIELD REPLACEMENT FOR 237-8185—PAGE: 1295

SMCS-1251, 1290

i05836631

NOTE	REF NO	GRAPHIC REF	PART NUMBER	QTY	PART NAME 1 2 3 4 5 6 (PRODUCT LEVEL)	SEE PAGE
	1	1	**152-3968**	1	SEAL-O-RING	
	2	1	**147-2645**	1	SOLENOID-SHUTOFF (24-VOLT) (FUEL SHUTOFF)	
M	3	1	**111-3422**	1	NUT (M14X1.5-THD)	
	4	1	**111-3423**	1	WASHER	

M - METRIC PART

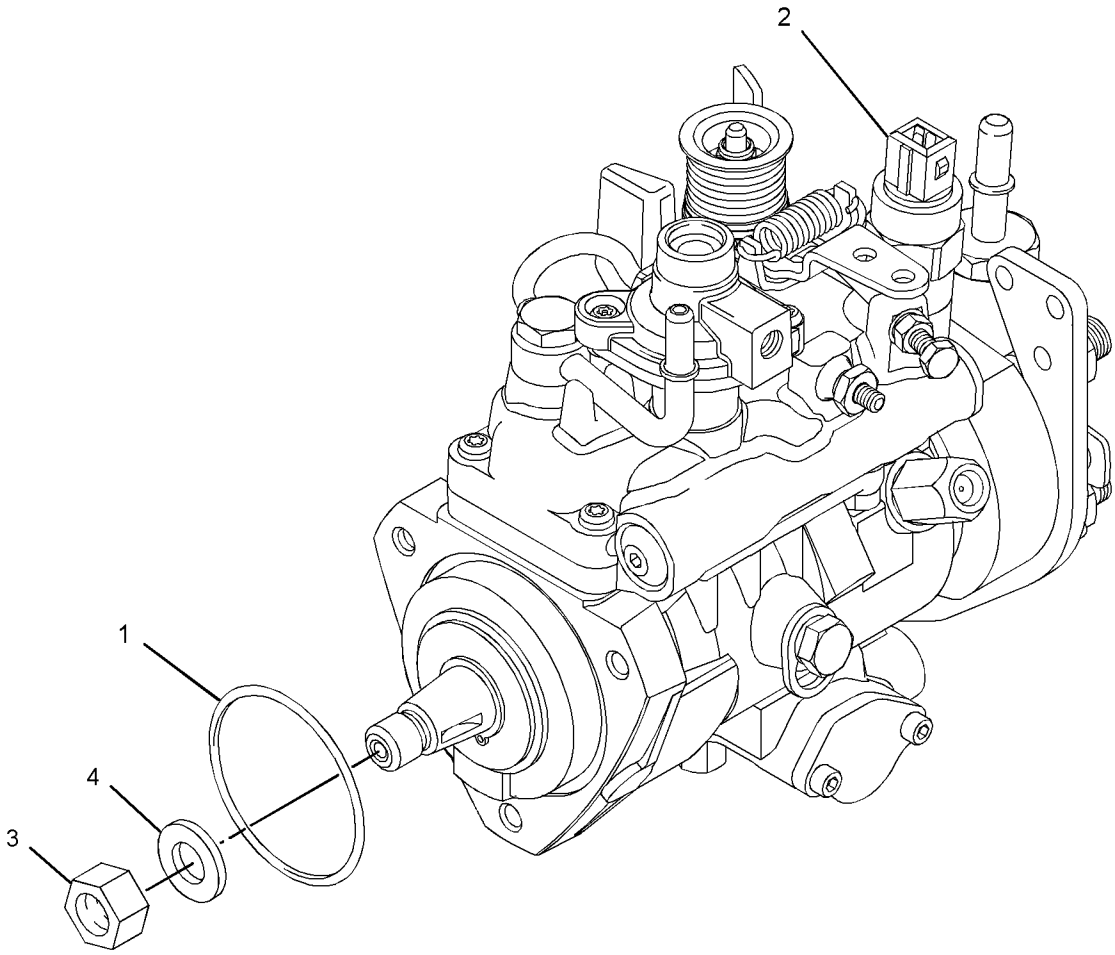

GRAPHIC #1 <END> g03694618

248-2367 PUMP GP-FUEL INJECTION

FIELD REPLACEMENT FOR 236-6910—PAGE: 1253
FOR USE WITH 2200 RPM RATED ENGINE

SMCS-1251, 1290 **i03091340**

NOTE	REF NO	GRAPHIC REF	PART NUMBER	QTY	PART NAME 1 2 3 4 5 6 (PRODUCT LEVEL)	SEE PAGE
	1	1	**152-3968**	1	SEAL-O-RING	
	2	1	**147-2645**	1	SOLENOID-SHUTOFF (24-VOLT) (FUEL SHUTOFF)	

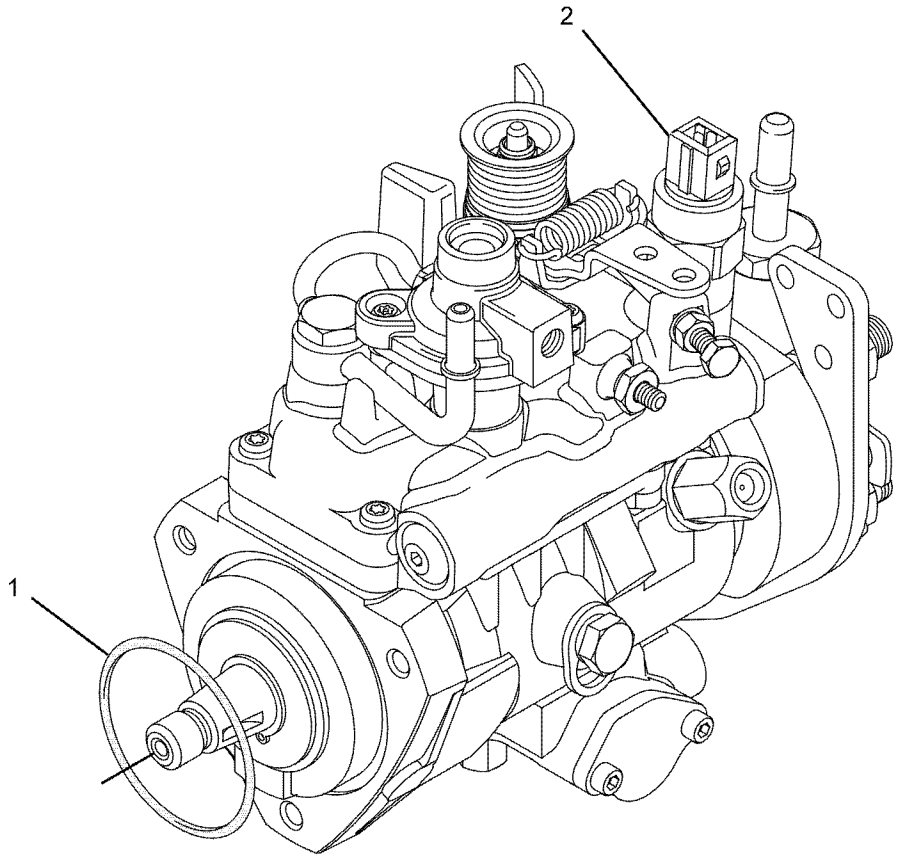

GRAPHIC #1 <END> g01085467

248-2368 PUMP GP-FUEL INJECTION

FIELD REPLACEMENT ORDER 292-4758—PAGE: 1458
FIELD REPLACEMENT FOR 236-6910—PAGE: 1253
FOR USE WITH 2100 RPM RATED ENGINES

SMCS-1251, 1290

i02359072

NOTE	REF NO	GRAPHIC REF	PART NUMBER	QTY	PART NAME 1 2 3 4 5 6 (PRODUCT LEVEL)	SEE PAGE
	1	1	**152-3968**	1	SEAL-O-RING	
	2	1	**147-2645**	1	SOLENOID-SHUTOFF (24-VOLT) (FUEL SHUTOFF)	

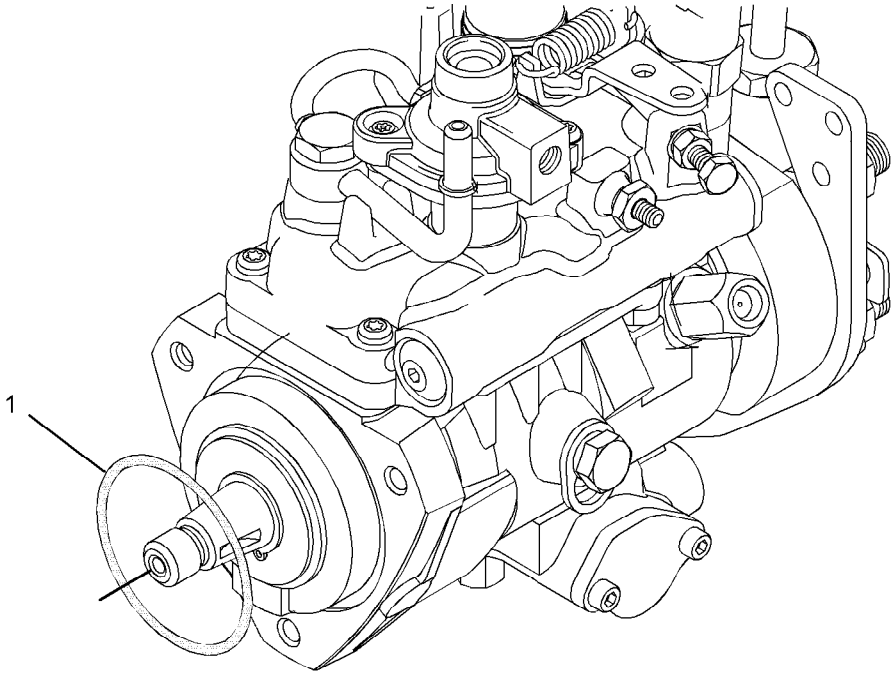

GRAPHIC #1

<END>

g01085043

248-2369 PUMP GP-FUEL INJECTION

FIELD REPLACEMENT FOR 236-6910—PAGE: 1253
FOR USE WITH 2000 RPM RATED ENGINE

SMCS-1251, 1290 **i02158498**

NOTE	REF NO	GRAPHIC REF	PART NUMBER	QTY	PART NAME 1 2 3 4 5 6 (PRODUCT LEVEL)	SEE PAGE
	1	1	**152-3968**	1	SEAL-O-RING	
	2	1	**147-2645**	1	SOLENOID-SHUTOFF (24-VOLT) (FUEL SHUTOFF)	

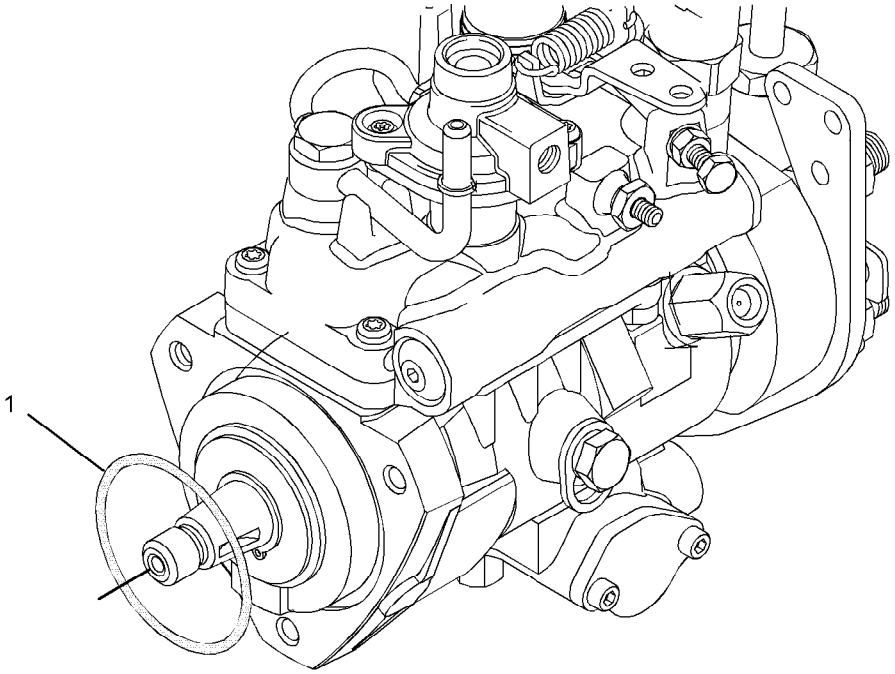

GRAPHIC #1 <END> g01085043

248-2370 PUMP GP-FUEL INJECTION

FIELD REPLACEMENT FOR 237-7997—PAGE: 1282

SMCS-1251, 1290 **i02139047**

NOTE	REF NO	GRAPHIC REF	PART NUMBER	QTY	PART NAME 1 2 3 4 5 6 (PRODUCT LEVEL)	SEE PAGE
	1	1	**152-3968**	1	SEAL-O-RING	
	2	1	**176-6219**	1	SOLENOID (12-VOLT) (FUEL SHUTOFF)	

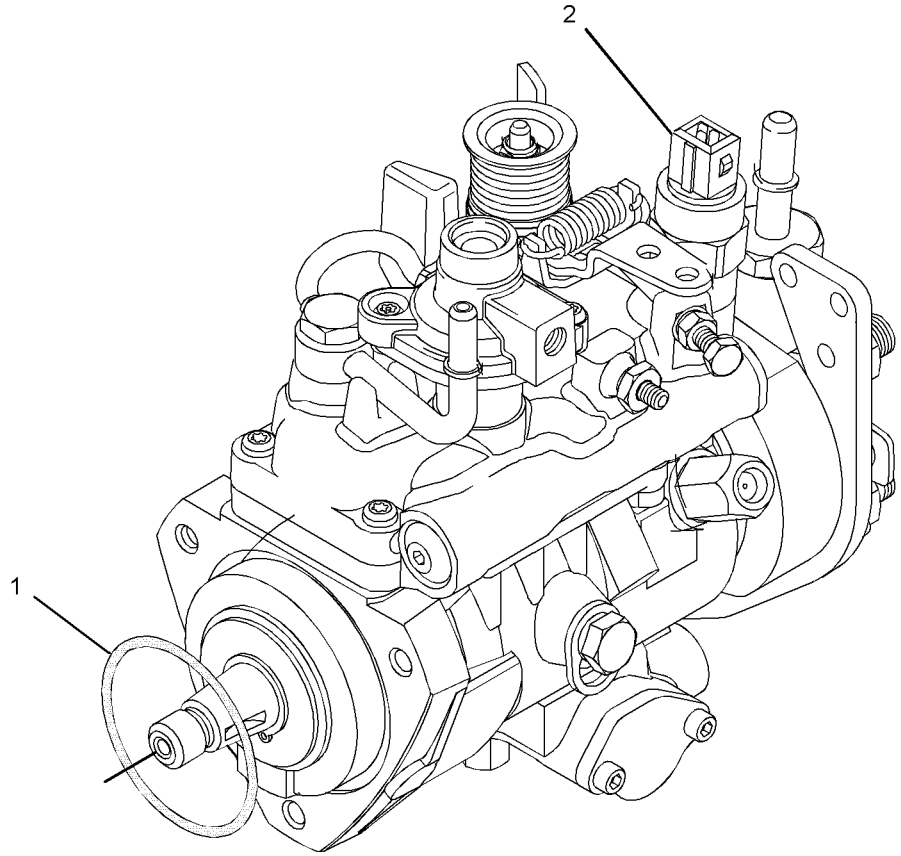

GRAPHIC #1 <END> g01068659

248-2371 PUMP GP-FUEL INJECTION

S/N: 3341-280

FIELD REPLACEMENT FOR 237-7997—PAGE: 1282

SMCS-1251, 1290

i02139048

NOTE	REF NO	GRAPHIC REF	PART NUMBER	QTY	PART NAME 1 2 3 4 5 6 (PRODUCT LEVEL)	SEE PAGE
	1	1	**152-3968**	1	SEAL-O-RING	
	2	1	**176-6219**	1	SOLENOID (12-VOLT) (FUEL SHUTOFF)	

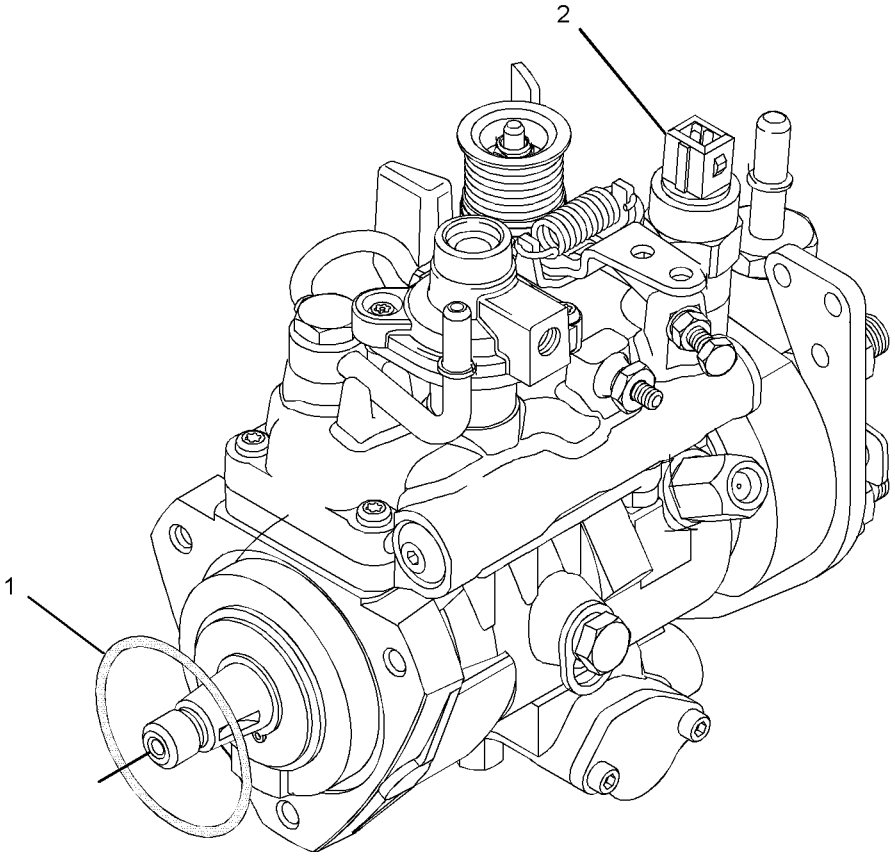

GRAPHIC #1

<END>

g01068659

266-3715 PUMP GP-FUEL INJECTION*R

FOR USE WITH 2200 RPM ENGINES ONLY

PART OF 233-7974, 267-9413, 274-4964 PUMP GP-FUEL INJECTION

ALSO AN ATTACHMENT

SMCS-1251, 1290

i02695034

NOTE	REF NO	GRAPHIC REF	PART NUMBER	QTY	PART NAME 1 2 3 4 5 6 (PRODUCT LEVEL)	SEE PAGE
F			**208-5029**	1	VALVE GP-SOLENOID (12-VOLT) (FUEL SHUTOFF)	

F - NOT SHOWN

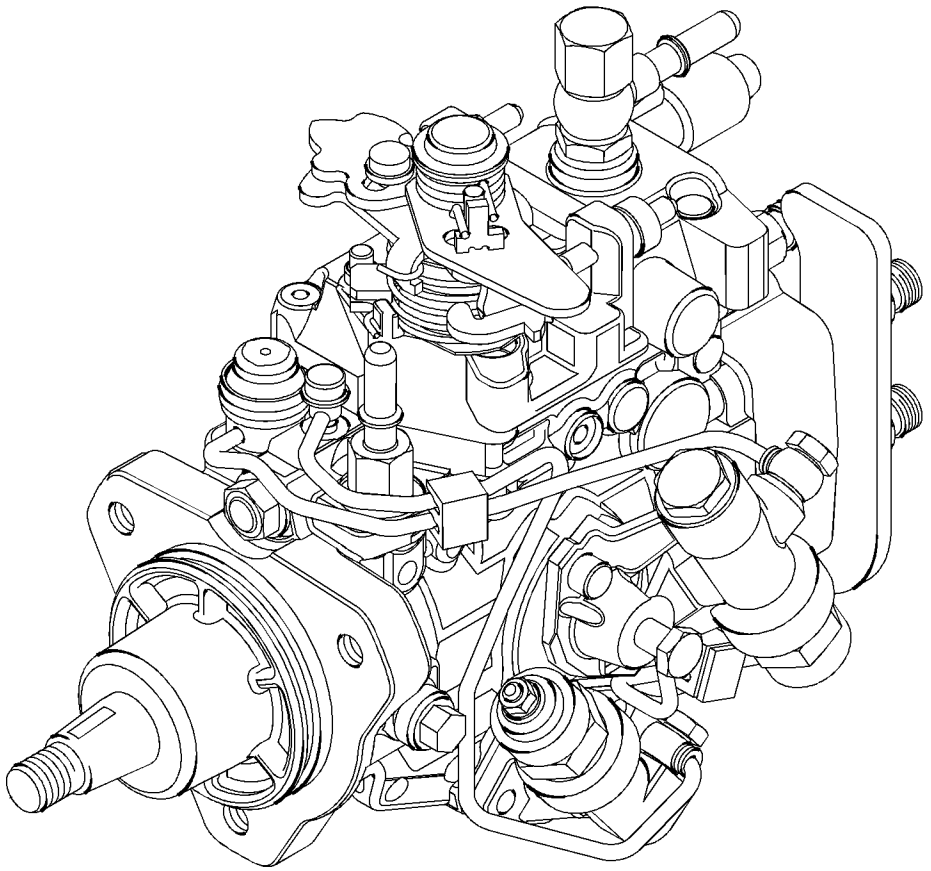

GRAPHIC #1

<END>

g01351892

266-3716 PUMP GP-FUEL INJECTION*R

FOR USE WITH 2300 RPM ENGINES ONLY
PART OF 233-7974, 274-4964 PUMP GP-FUEL INJECTION
ALSO AN ATTACHMENT

SMCS-1251, 1290

i02379286

NOTE	REF NO	GRAPHIC REF	PART NUMBER	QTY	PART NAME 1 2 3 4 5 6 (PRODUCT LEVEL)	SEE PAGE
	1	1	**208-5029**	1	VALVE GP-SOLENOID (12-VOLT) (FUEL SHUTOFF)	

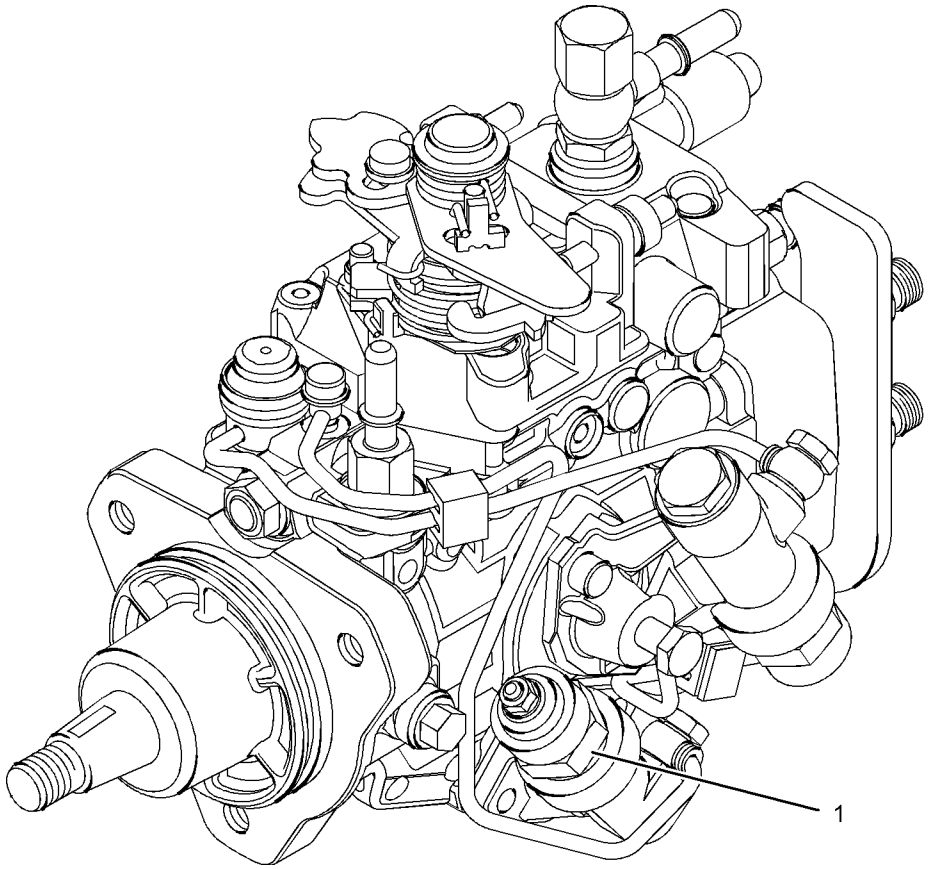

GRAPHIC #1 <END> g01084868

266-3718 PUMP GP-FUEL INJECTION*R

FOR USE WITH 2400 RPM ENGINES ONLY
PART OF 233-7974, 274-4964 PUMP GP-FUEL INJECTION
ALSO AN ATTACHMENT

SMCS-1251, 1290

i02379437

NOTE	REF NO	GRAPHIC REF	PART NUMBER	QTY	PART NAME 1 2 3 4 5 6 (PRODUCT LEVEL)	SEE PAGE
	1	1	**208-5029**	1	VALVE GP-SOLENOID (12-VOLT) (FUEL SHUTOFF)	

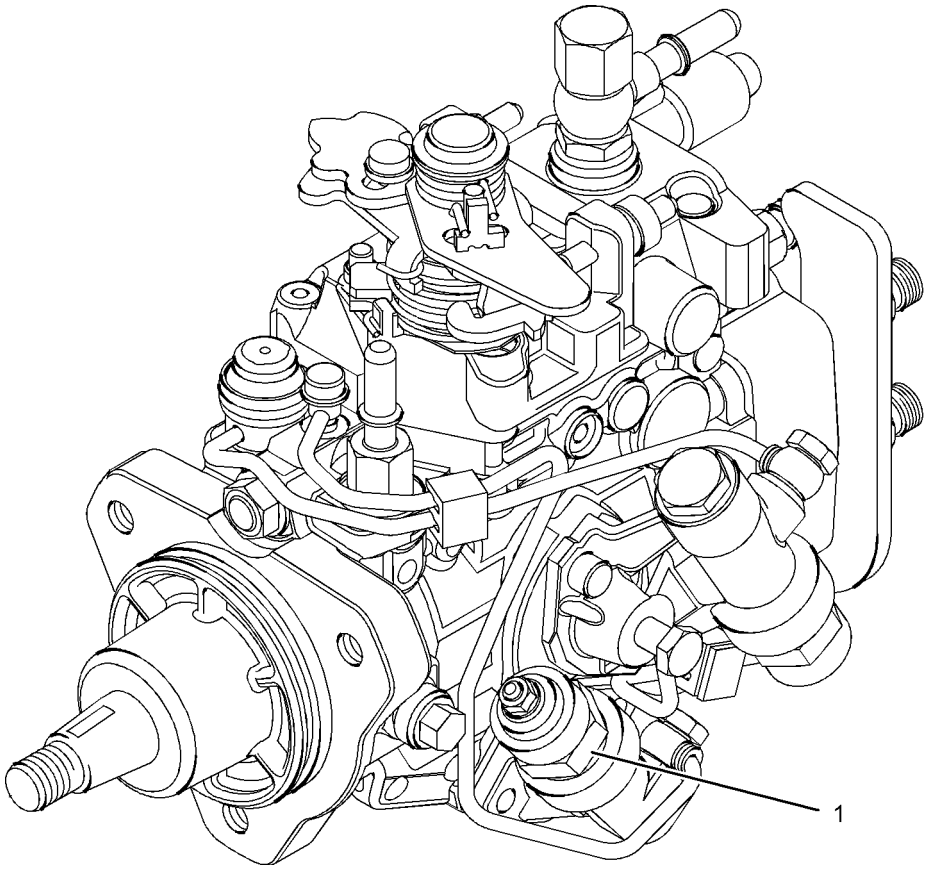

GRAPHIC #1 <END> g01084868

266-3719 PUMP GP-FUEL INJECTION

PART OF 274-5006 PUMP GP-FUEL INJECTION

SMCS-1251, 1290 **i04850895**

NOTE	REF NO	GRAPHIC REF	PART NUMBER	QTY	PART NAME 1 2 3 4 5 6 (PRODUCT LEVEL)	SEE PAGE
	1	1	**248-2641**	1	SOLENOID AS (24-VOLT) (FUEL SHUTOFF)	

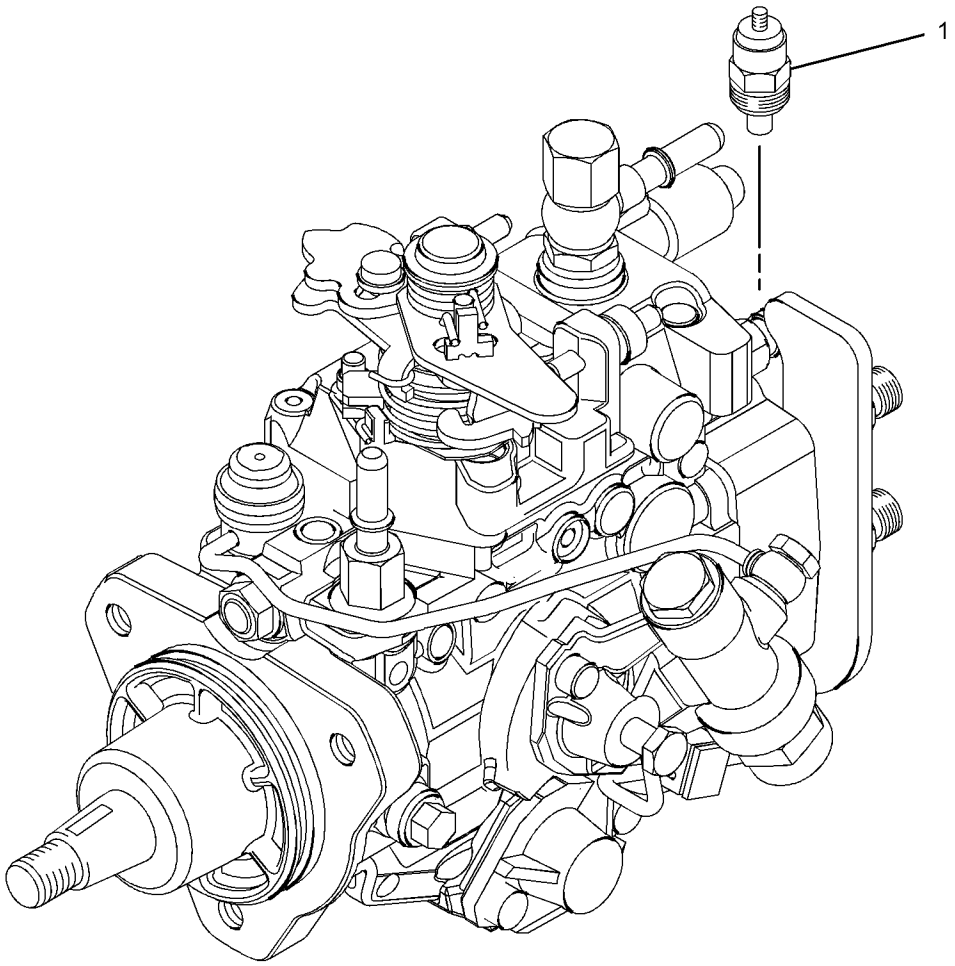

GRAPHIC #1 <END> g01386605

267-9413 PUMP GP-FUEL INJECTION

TYPE 1

SMCS-1251, 1290 **i03232557**

NOTE	REF NO	GRAPHIC REF	PART NUMBER	QTY	PART NAME 1 2 3 4 5 6 (PRODUCT LEVEL)	SEE PAGE
M	1	1	**6I-0217**	1	BOLT (M8X1.25X20-MM)	
M	2	1	**6I-0260**	3	BOLT (M8X1.25X25-MM)	
M	3	1	**6I-0291**	1	NUT (M8X1.25-THD)	
M	4	1	**100-4830**	1	BOLT (M10X1.5X20-MM)	
M	5	1	**124-3815**	1	BOLT (M8X1.25X16-MM)	
	6	1	**140-8714**	1	CLIP	
	7	1	**332-7549**	1	SEAL-O-RING	
	8	1	**155-8804**	1	CAP	
	9	2	**232-1323**	1	PLUG-CUP	
	10	1	**232-1328**	1	CAP	
	11	2	**232-1793**	1	CABLE	
	12	1	**232-1794**	3	HOSE	
	13	1	**232-2720**	1	TUBE AS (CYL NO. 1) (NO. 1)	
	14	1	**232-2721**	1	TUBE AS (CYL NO. 2) (NO. 2)	
	15	1	**232-2722**	1	TUBE AS (CYL NO. 3) (NO. 3)	
	16	1	**232-2723**	1	TUBE AS (CYL NO. 4) (NO. 4)	
	17	1	**232-2725**	2	CLIP	
	18	1	**232-2726**	1	CLIP	
	20	1	**232-3149**	3	WASHER (8.35X16.85X1.55-MM THK)	
	21	1	**232-3157**	1	BRACKET	
M	22	1	**232-3274**	4	BOLT (M8X1.25X48.1-MM)	
	23	1	**233-7104**	1	GEAR-PUMP	
	24	2	**235-1790**	1	SWITCH-TEMPERATURE (TIMING ADVANCE)	
	25	1	**238-8671**	4	CLAMP-INJECTOR	
	26	1	**240-5571**	1	BRACKET	
YR	27	1	**266-3715**	1	PUMP GP-FUEL INJECTION	1335
R	28	1	**266-6830**	4	INJECTOR AS-FUEL	
					(EACH INCLUDES)	
	28A	1	**140-8718**	1	WASHER (7.49X15.75X1.68-MM THK)	
	28B	1	**234-0387**	1	NOZZLE	
	28C	1	**275-1038**	1	SEAL-O-RING	
	29	1	**266-2994**	1	KIT-INJECTOR	

M - METRIC PART
R - REMANUFACTURED PART MAY BE AVAILABLE
Y - SEPARATE ILLUSTRATION

267-9413 **PUMP GP-FUEL INJECTION (**contd.**)** **i03232557**

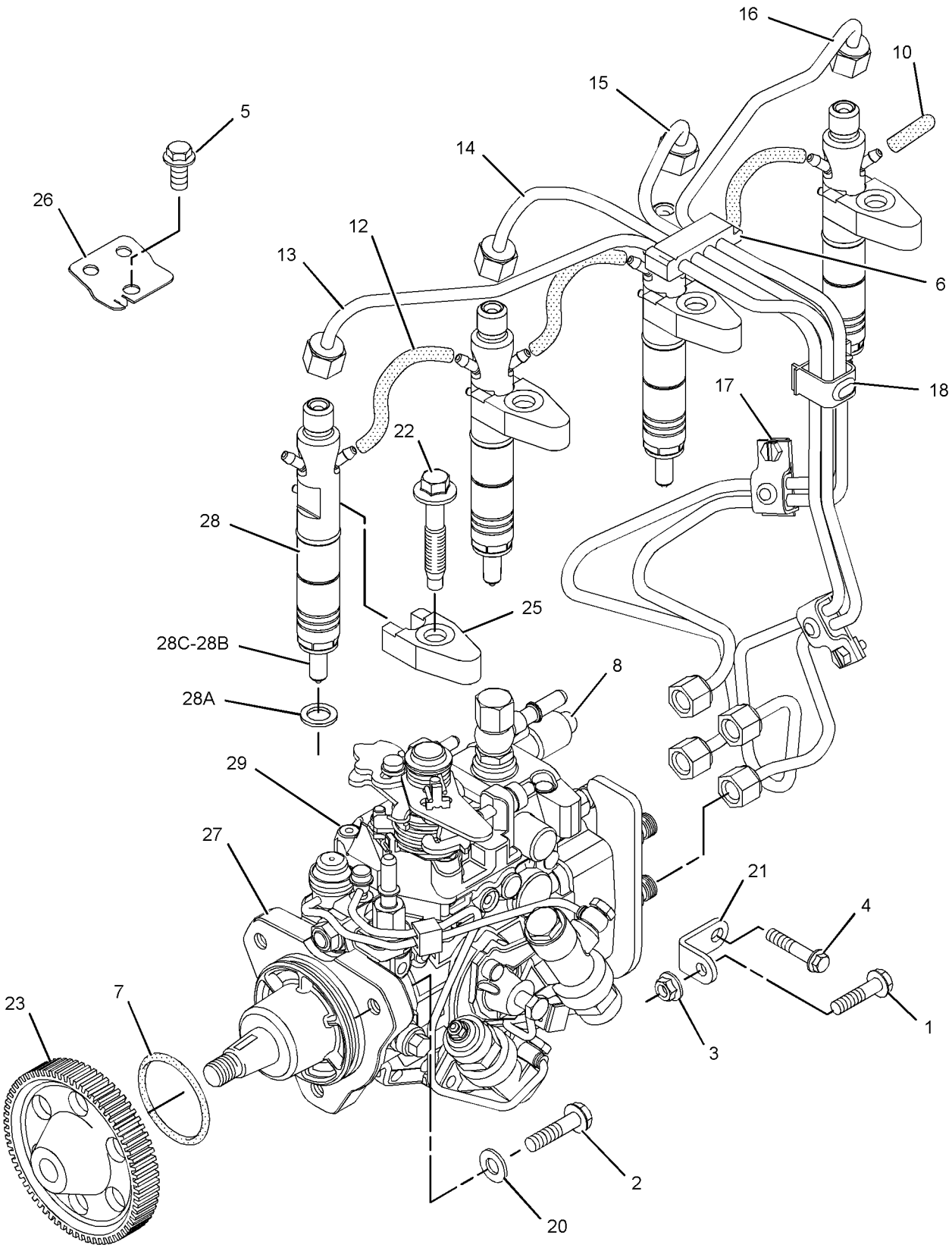

GRAPHIC #1 g01382228

267-9413 **PUMP GP-FUEL INJECTION (**contd.**)** **i03232557**

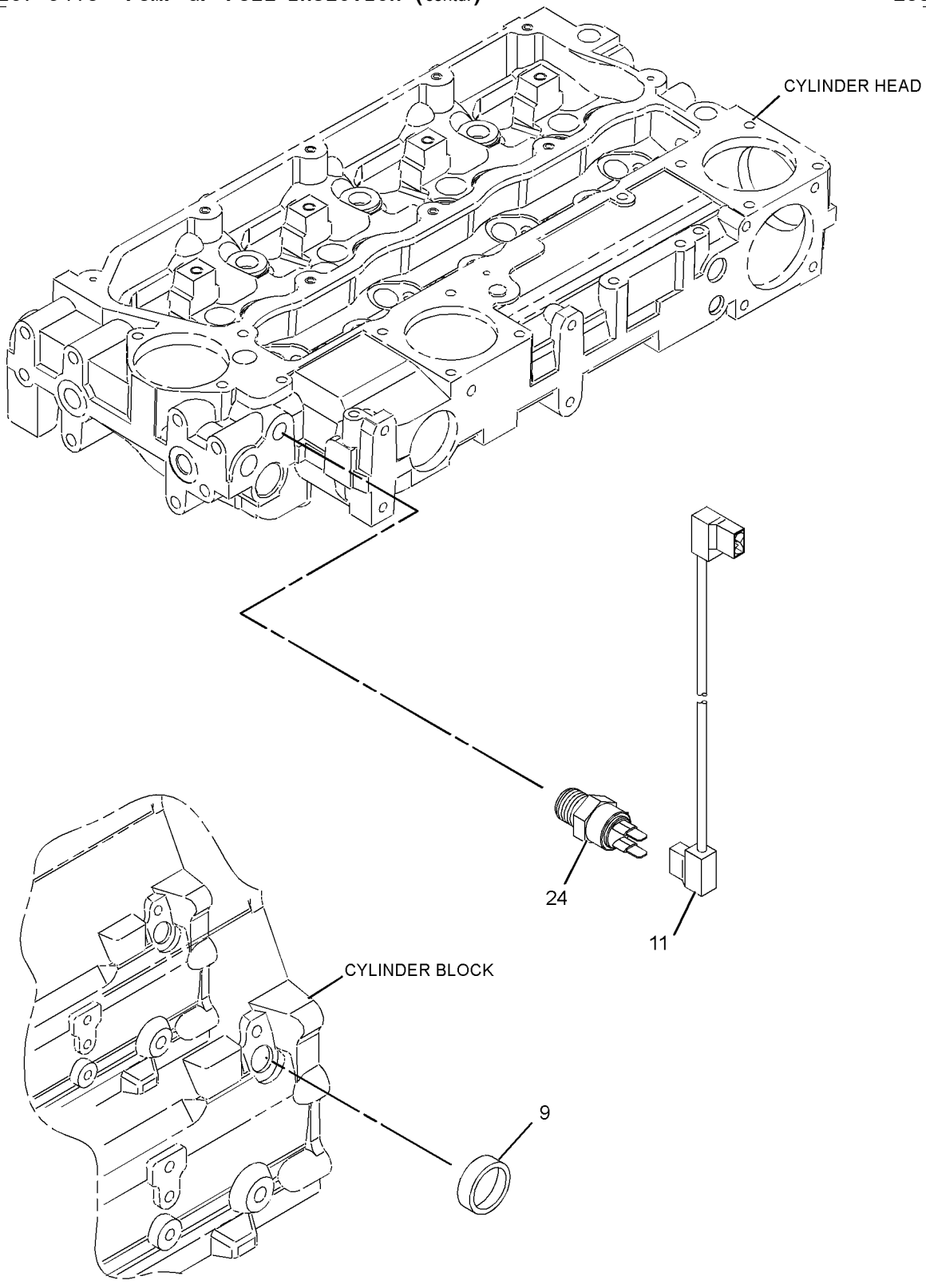

GRAPHIC #2 <END> g01153261

267-9413 PUMP GP-FUEL INJECTION

TYPE 2

SMCS-1251, 1290 **i04712009**

NOTE	REF NO	GRAPHIC REF	PART NUMBER	QTY	PART NAME 1 2 3 4 5 6 (PRODUCT LEVEL)	SEE PAGE
M	1	1	**6I-0217**	1	BOLT (M8X1.25X20-MM)	
M	2	1	**6I-0260**	3	BOLT (M8X1.25X25-MM)	
M	3	1	**6I-0291**	1	NUT (M8X1.25-THD)	
M	4	1	**100-4830**	1	BOLT (M10X1.5X20-MM)	
M	5	1	**124-3815**	1	BOLT (M8X1.25X16-MM)	
	6	1	**140-8714**	1	CLIP	
	7	1	**332-7549**	1	SEAL-O-RING	
	8	1	**155-8804**	1	CAP	
	10	1	**232-1328**	1	CAP	
	11	2	**232-1793**	1	CABLE	
	12	1	**232-1794**	3	HOSE	
	13	1	**232-2720**	1	TUBE AS (CYL NO. 1)	
	14	1	**232-2721**	1	TUBE AS (CYL NO. 2)	
	15	1	**232-2722**	1	TUBE AS (CYL NO. 3)	
	16	1	**232-2723**	1	TUBE AS (CYL NO. 4)	
	17	1	**232-2725**	2	CLIP	
	18	1	**232-2726**	1	CLIP	
	20	1	**232-3149**	3	WASHER (8.35X16.85X1.55-MM THK)	
	21	1	**232-3157**	1	BRACKET	
M	22	1	**232-3274**	4	BOLT (M8X1.25X48.1-MM)	
	23	1	**233-7104**	1	GEAR-PUMP	
	24	2	**235-1790**	1	SWITCH-TEMPERATURE (TIMING ADVANCE)	
	25	1	**238-8671**	4	CLAMP-INJECTOR	
	26	1	**240-5571**	1	BRACKET	
YR	27	1	**266-3715**	1	PUMP GP-FUEL INJECTION	1335
R	28	1	**266-6830**	4	INJECTOR AS-FUEL	
					(EACH INCLUDES)	
	28A	1	**140-8718**	1	WASHER (7.49X15.75X1.68-MM THK)	
	28B	1	**234-0387**	1	NOZZLE	
	28C	1	**275-1038**	1	SEAL-O-RING	
	29	1	**266-2994**	1	KIT-INJECTOR	

M - METRIC PART
R - REMANUFACTURED PART MAY BE AVAILABLE
Y - SEPARATE ILLUSTRATION

267-9413 **PUMP GP-FUEL INJECTION** (contd.) **i04712009**

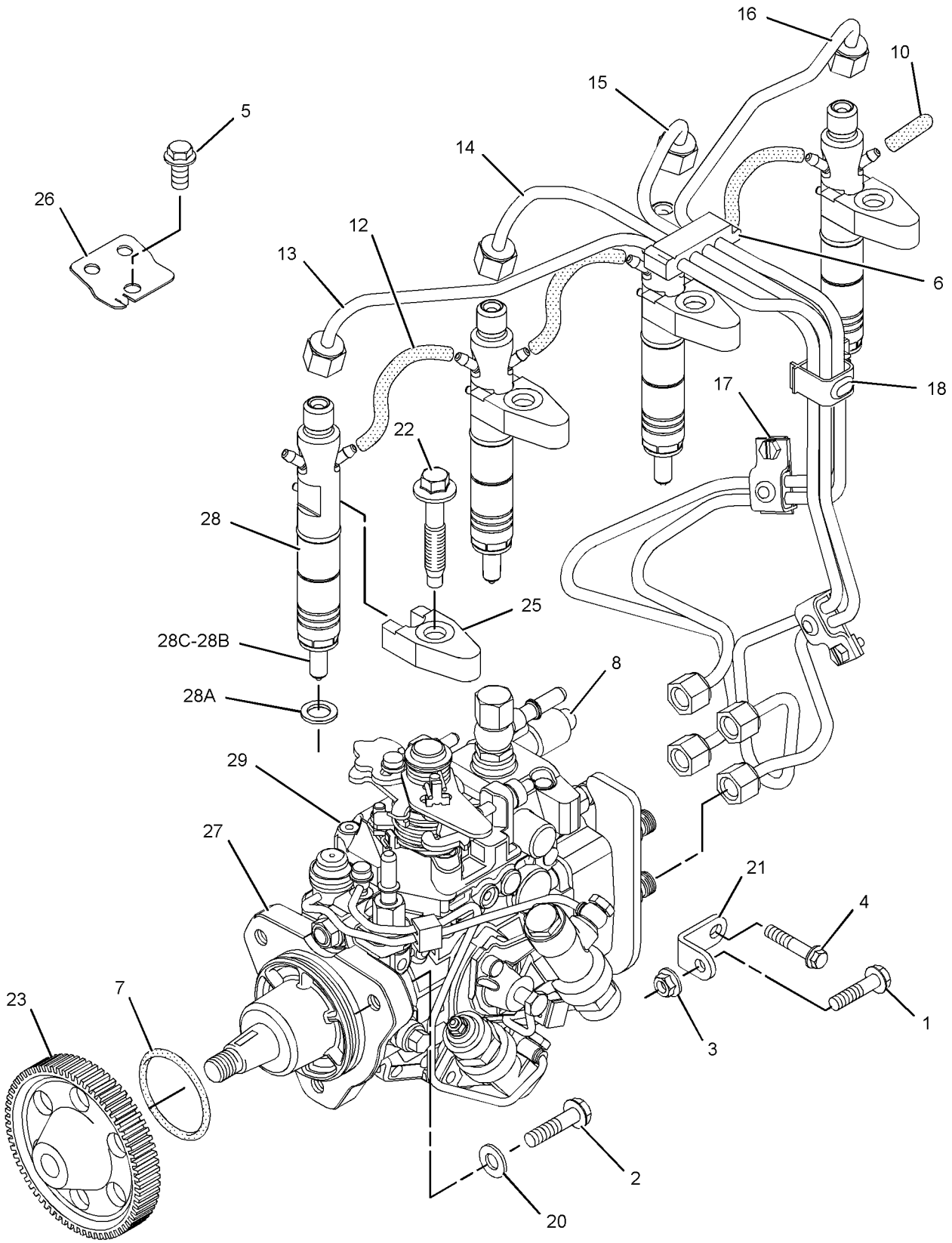

GRAPHIC #1 g01382228

267-9413 **PUMP GP-FUEL INJECTION (**contd.**)** **i04712009**

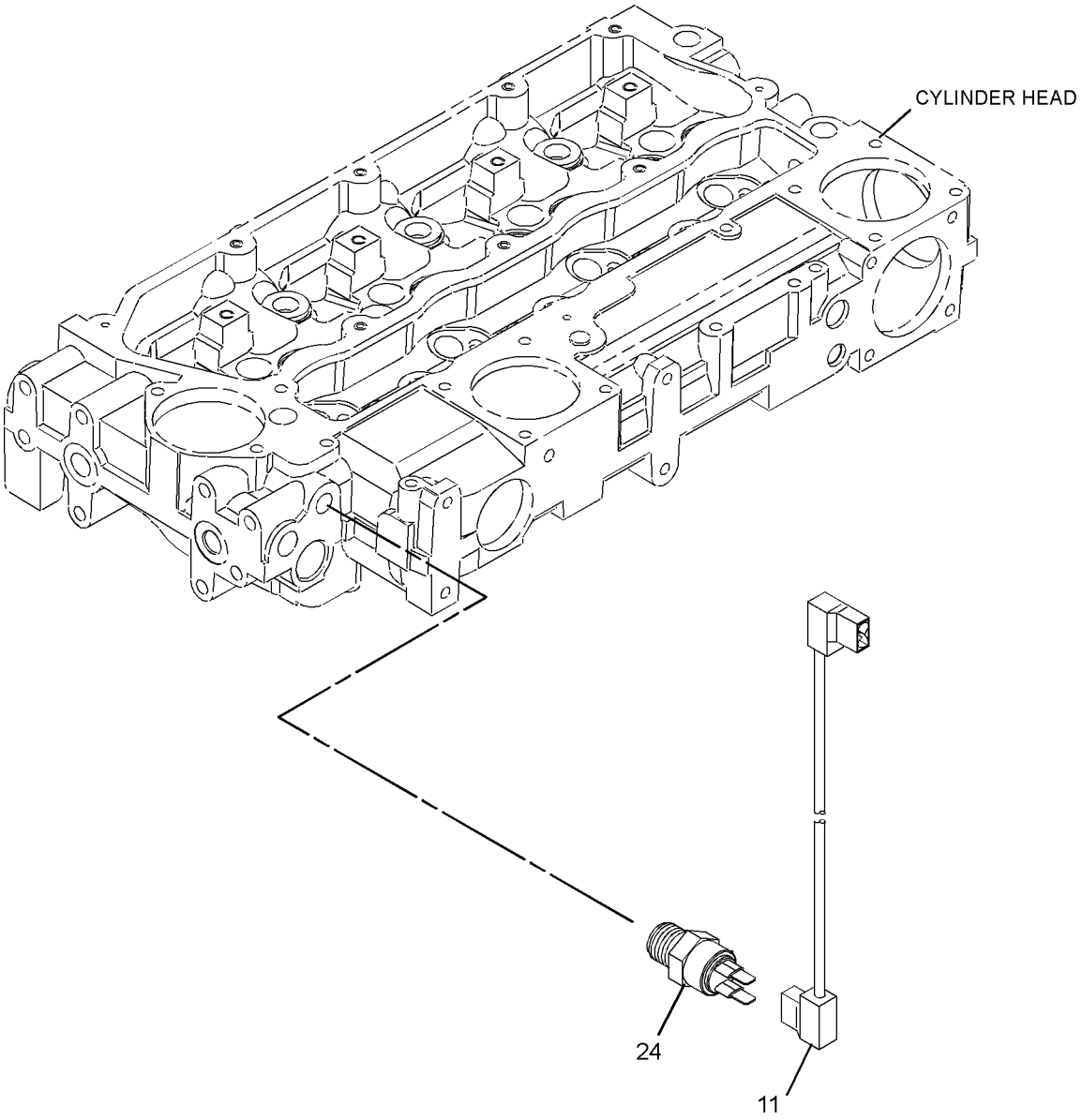

GRAPHIC #2 <END> g02819636

269-8487 PUMP GP-FUEL INJECTION

TYPE 1

SMCS-1251, 1290 **i02854127**

NOTE	REF NO	GRAPHIC REF	PART NUMBER	QTY	PART NAME 1 2 3 4 5 6 (PRODUCT LEVEL)	SEE PAGE
M	1	1	**6I-0217**	1	BOLT (M8X1.25X20-MM)	
M	2	1	**6I-0260**	3	BOLT (M8X1.25X25-MM)	
M	3	1	**6I-0291**	1	NUT (M8X1.25-THD)	
	4	2	**9F-2247**	1	PLUG-PIPE (1/8-27-THD)	
M	5	1	**100-4830**	1	BOLT (M10X1.5X20-MM)	
	6	1	**110-8760**	1	STRAP	
M	7	1	**124-3815**	1	BOLT (M8X1.25X16-MM)	
	8	1	**140-8714**	1	CLIP	
	9	2	**169-5326**	1	SWITCH-TEMPERATURE (TIMING ADVANCE)	
	10	1	**230-8989**	1	GEAR-FUEL PUMP (68-TEETH)	
	11	1	**230-8995**	1	TUBE AS (CYL NO. 1)	
	12	1	**230-8996**	1	TUBE AS (CYL NO. 2)	
	13	1	**230-8997**	1	TUBE AS (CYL NO. 3)	
	14	1	**230-8998**	1	TUBE AS (CYL NO. 4)	
	15	1	**230-9527**	1	BRACKET	
	16	1	**232-1115**	1	CLIP-PIPE	
	17	2	**232-1323**	1	PLUG-CUP	
	18	1	**232-1328**	1	CAP	
	19	2	**232-1793**	1	CABLE	
	20	1	**232-1794**	3	HOSE	
	21	1	**232-2725**	2	CLIP	
	22	1	**232-2726**	1	CLIP	
	23	1	**232-3149**	3	WASHER (8.35X16.85X1.55-MM THK)	
	24	1	**232-3157**	1	BRACKET	
M	25	1	**232-3274**	4	BOLT (M8X1.25X48.1-MM)	
R	26	1	**236-1674**	4	INJECTOR AS-FUEL	
					(EACH INCLUDES)	
		1	**236-1673**	1	NOZZLE	
	26A	1	**140-8718**	1	WASHER (7.49X15.75X1.68-MM THK)	
	27	1	**238-8671**	4	CLAMP-INJECTOR	
Y	28	1	**269-8488**	1	PUMP GP-FUEL INJECTION	1357
	29	1	**232-3126**	1	CLIP	

M - METRIC PART
R - REMANUFACTURED PART MAY BE AVAILABLE
Y - SEPARATE ILLUSTRATION

269-8487 **PUMP GP-FUEL INJECTION (**contd.**)** **i02854127**

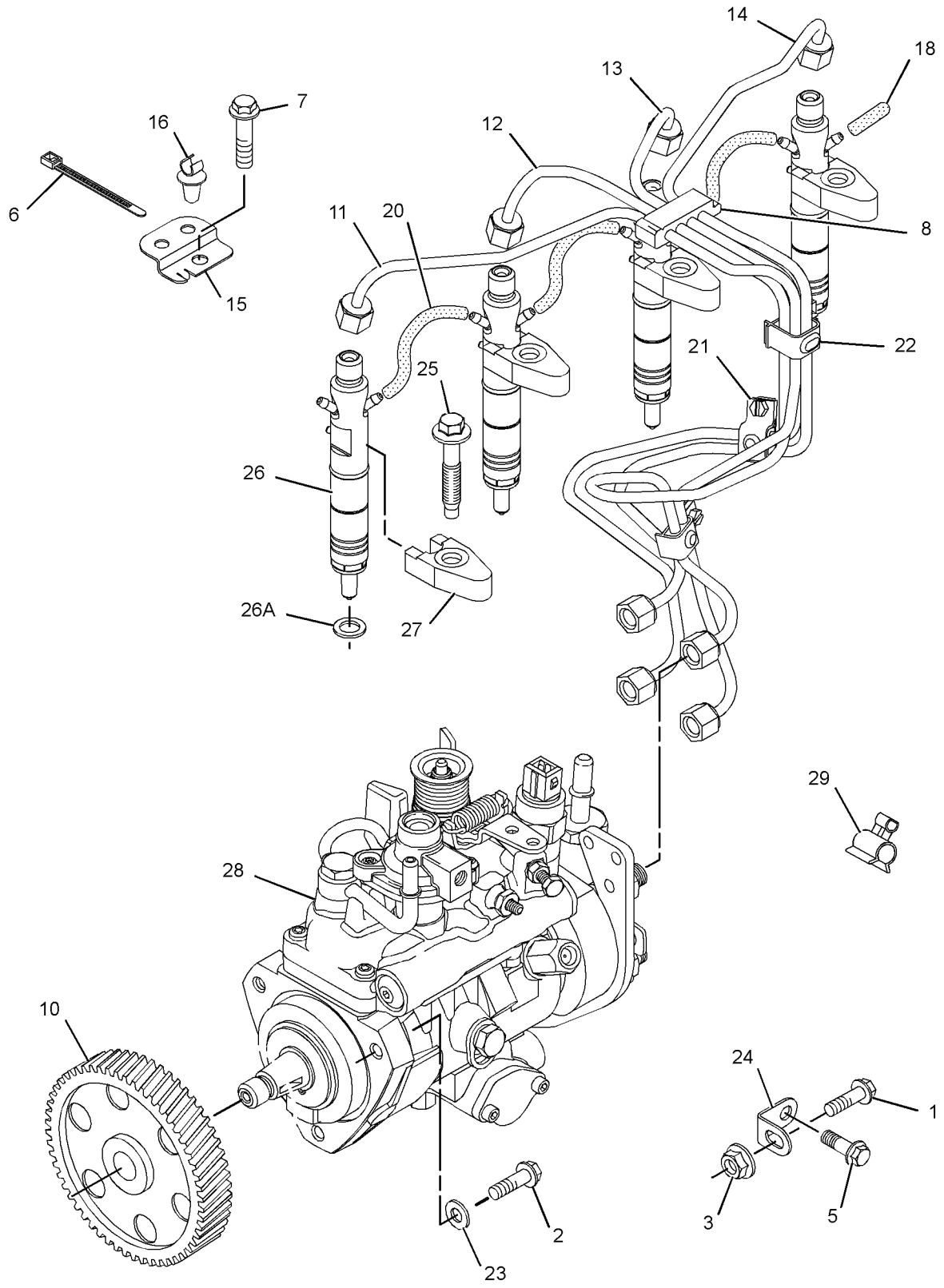

GRAPHIC #1 g01156894

269-8487 **PUMP GP-FUEL INJECTION (**contd.**)** **i02854127**

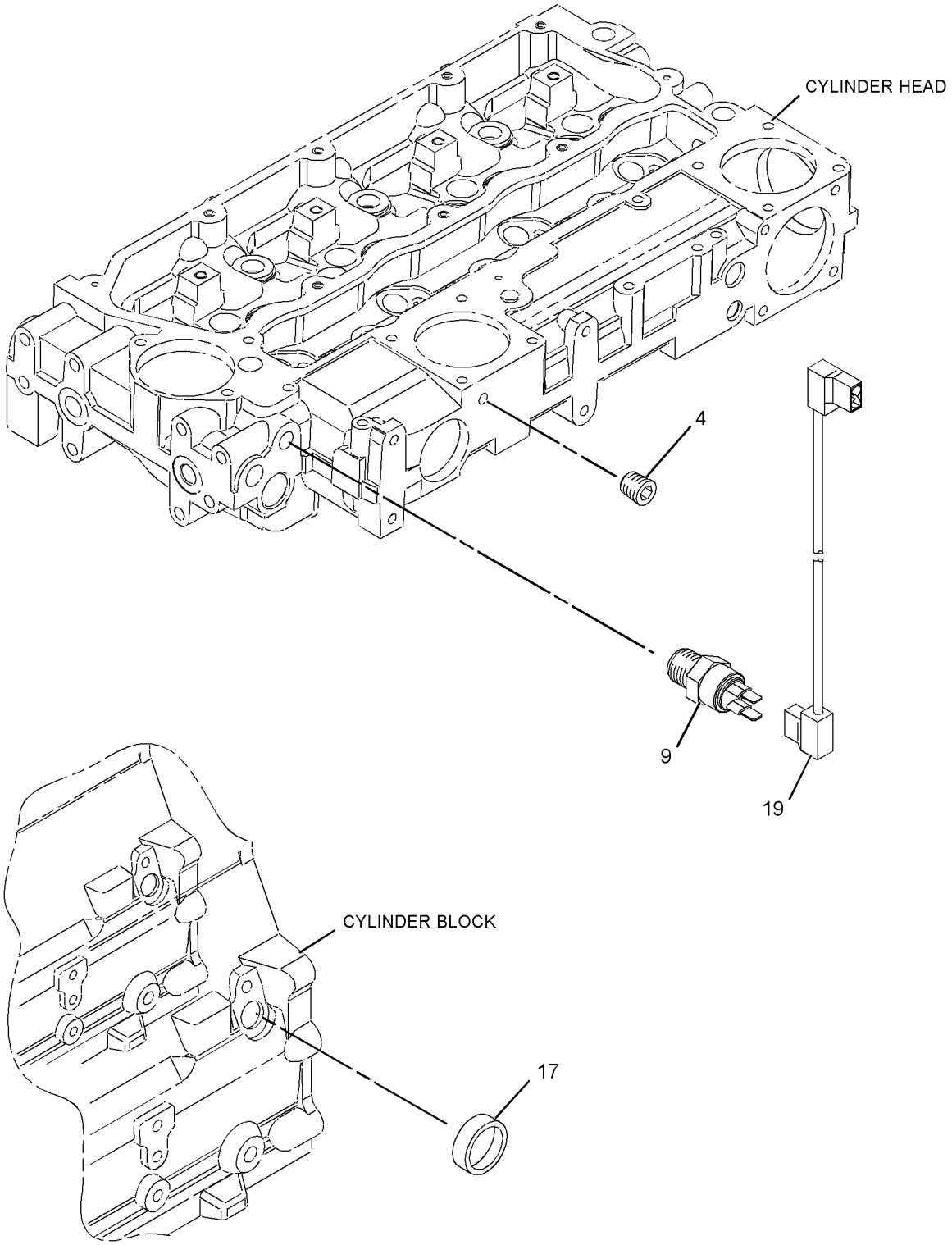

GRAPHIC #2 <END> g01156895

269-8487 PUMP GP-FUEL INJECTION

TYPE 2

SMCS-1251, 1290 **i02854128**

NOTE	REF NO	GRAPHIC REF	PART NUMBER	QTY	PART NAME 1 2 3 4 5 6 (PRODUCT LEVEL)	SEE PAGE
M	1	1	**6I-0217**	1	BOLT (M8X1.25X20-MM)	
M	2	1	**6I-0260**	3	BOLT (M8X1.25X25-MM)	
M	3	1	**6I-0291**	1	NUT (M8X1.25-THD)	
	4	2	**9F-2247**	1	PLUG-PIPE (1/8-27-THD)	
M	5	1	**100-4830**	1	BOLT (M10X1.5X20-MM)	
	6	1	**110-8760**	1	STRAP	
M	7	1	**124-3815**	1	BOLT (M8X1.25X16-MM)	
	8	1	**140-8714**	1	CLIP	
	9	2	**169-5326**	1	SWITCH-TEMPERATURE (TIMING ADVANCE)	
	10	1	**230-8989**	1	GEAR-FUEL PUMP (68-TEETH)	
	11	1	**230-8995**	1	TUBE AS (CYL NO. 1)	
	12	1	**230-8996**	1	TUBE AS (CYL NO. 2)	
	13	1	**230-8997**	1	TUBE AS (CYL NO. 3)	
	14	1	**230-8998**	1	TUBE AS (CYL NO. 4)	
	15	1	**230-9527**	1	BRACKET	
	16	1	**232-1115**	1	CLIP-PIPE	
	17	2	**232-1323**	1	PLUG-CUP	
	18	1	**232-1328**	1	CAP	
	19	2	**232-1793**	1	CABLE	
	20	1	**232-1794**	3	HOSE	
	21	1	**232-2725**	2	CLIP	
	22	1	**232-2726**	1	CLIP	
	23	1	**232-3149**	3	WASHER (8.35X16.85X1.55-MM THK)	
	24	1	**232-3157**	1	BRACKET	
M	25	1	**232-3274**	4	BOLT (M8X1.25X48.1-MM)	
R	26	1	**236-1674**	4	INJECTOR AS-FUEL	
					(EACH INCLUDES)	
		1	**236-1673**	1	NOZZLE	
	26A	1	**140-8718**	1	WASHER (7.49X15.75X1.68-MM THK)	
	27	1	**238-8671**	4	CLAMP-INJECTOR	
CY	28	1	**274-5460**	1	PUMP GP-FUEL INJECTION	1433

C - CHANGE FROM PREVIOUS TYPE
M - METRIC PART
R - REMANUFACTURED PART MAY BE AVAILABLE
Y - SEPARATE ILLUSTRATION

269-8487 **PUMP GP-FUEL INJECTION (**contd.**)** **i02854128**

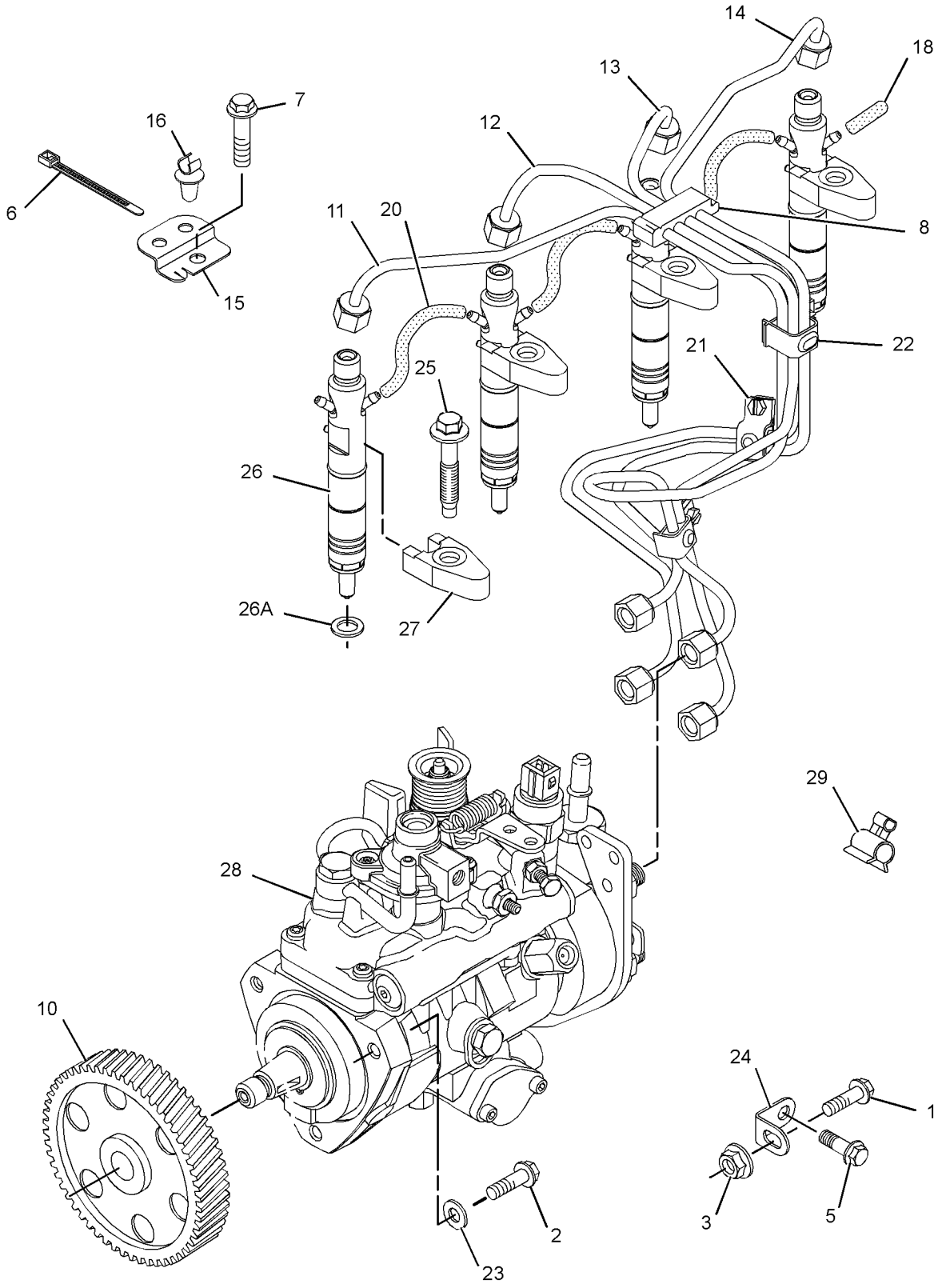

GRAPHIC #1 g01156894

269-8487 **PUMP GP-FUEL INJECTION (**contd.**)** **i02854128**

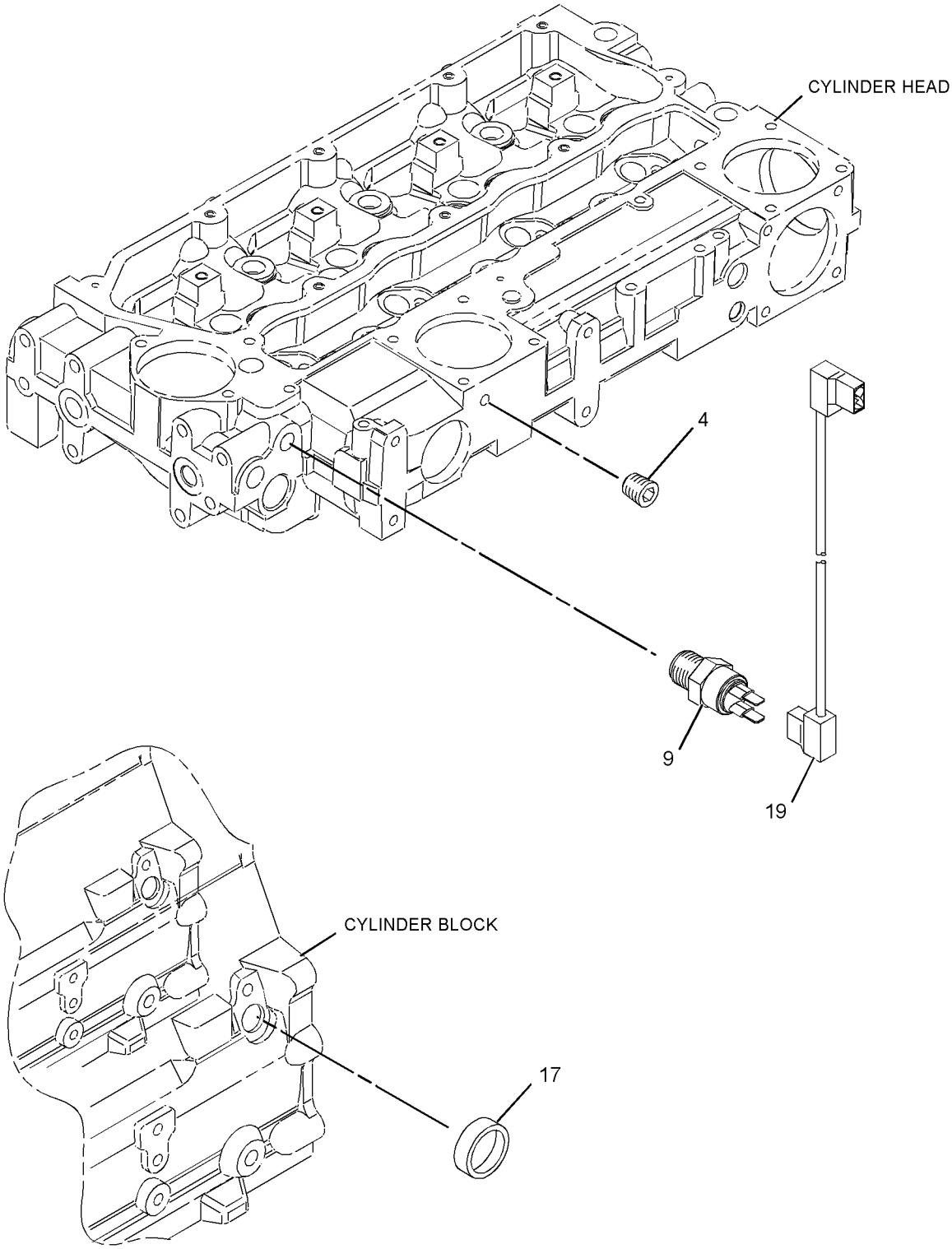

GRAPHIC #2 <END> g01156895

269-8487 PUMP GP-FUEL INJECTION

TYPE 3

SMCS-1251, 1290 **i04712619**

NOTE	REF NO	GRAPHIC REF	PART NUMBER	QTY	PART NAME 1 2 3 4 5 6 (PRODUCT LEVEL)	SEE PAGE
M	1	1	**6I-0217**	1	BOLT (M8X1.25X20-MM)	
M	2	1	**6I-0260**	3	BOLT (M8X1.25X25-MM)	
M	3	1	**6I-0291**	1	NUT (M8X1.25-THD)	
	4	1	**365-3308**	1	NUT-COMPRESSION (3/8-24-THD)	
M	5	1	**100-4830**	1	BOLT (M10X1.5X20-MM)	
	6	1	**110-8760**	1	STRAP	
M	7	1	**124-3815**	1	BOLT (M8X1.25X16-MM)	
	8	1	**140-8714**	1	CLIP	
	9	2	**235-1790**	1	SWITCH-TEMPERATURE	
	10	1	**230-8989**	1	GEAR-FUEL PUMP (68-TEETH)	
	11	1	**230-8995**	1	TUBE AS (CYL NO. 1)	
	12	1	**230-8996**	1	TUBE AS (CYL NO. 2)	
	13	1	**230-8997**	1	TUBE AS (CYL NO. 3)	
	14	1	**230-8998**	1	TUBE AS (CYL NO. 4)	
	15	1	**230-9527**	1	BRACKET	
	16	1	**232-1115**	1	CLIP-PIPE	
	17	2	**232-1323**	1	PLUG-CUP	
	18	1	**232-1328**	1	CAP	
	19	2	**232-1793**	1	CABLE	
	20	1	**232-1794**	3	HOSE	
	21	1	**232-2725**	2	CLIP	
	22	1	**232-2726**	1	CLIP	
	23	1	**232-3149**	3	WASHER (8.35X16.85X1.55-MM THK)	
	24	1	**232-3157**	1	BRACKET	
M	25	1	**232-3274**	4	BOLT (M8X1.25X48.1-MM)	
R	26	1	**236-1674**	4	INJECTOR AS-FUEL	
					(EACH INCLUDES)	
	26A	1	**236-1673**	1	NOZZLE	
	26B	1	**275-1038**	1	SEAL-O-RING	
	26C	1	**140-8718**	1	WASHER (7.49X15.75X1.68-MM THK)	
	27	1	**238-8671**	4	CLAMP-INJECTOR	
CYR	28	1	**292-3461**	1	PUMP GP-FUEL INJECTION	1457
C	31	2	**292-3462**	1	PLUG-PIPE	
C	32	1	**236-2144**	1	TUBE AS	
	32A	1	**067-6999**	1	FERRULE	
C	33	1	**067-6265**	1	FITTING-BRASS	
C	34	1	**035-8017**	1	UNION	

C - CHANGE FROM PREVIOUS TYPE
M - METRIC PART
R - REMANUFACTURED PART MAY BE AVAILABLE
Y - SEPARATE ILLUSTRATION

269-8487 **PUMP GP-FUEL INJECTION (**contd.**)** **i04712619**

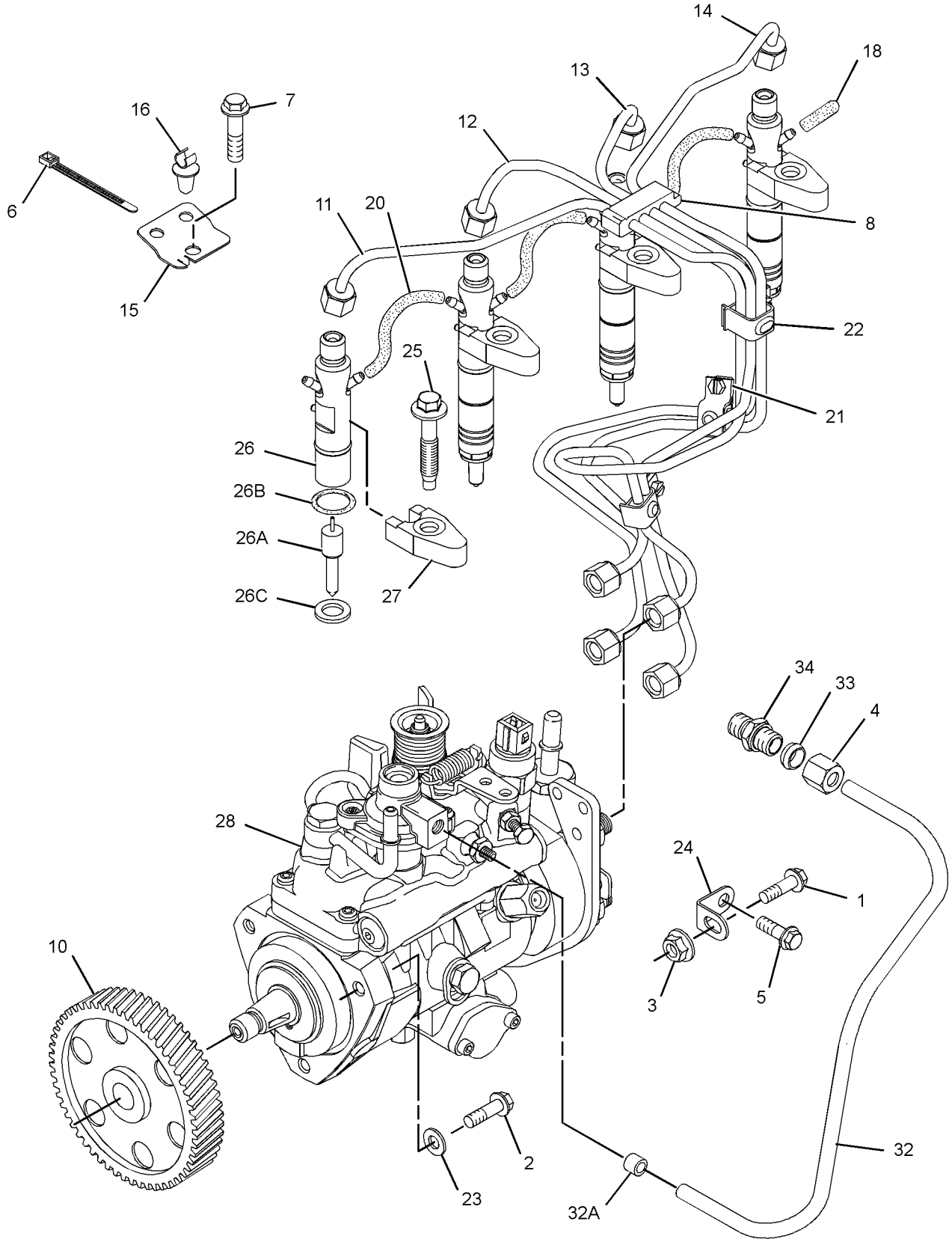

GRAPHIC #1 g01759953

269-8487 **PUMP GP-FUEL INJECTION (**contd.**)** **i04712619**

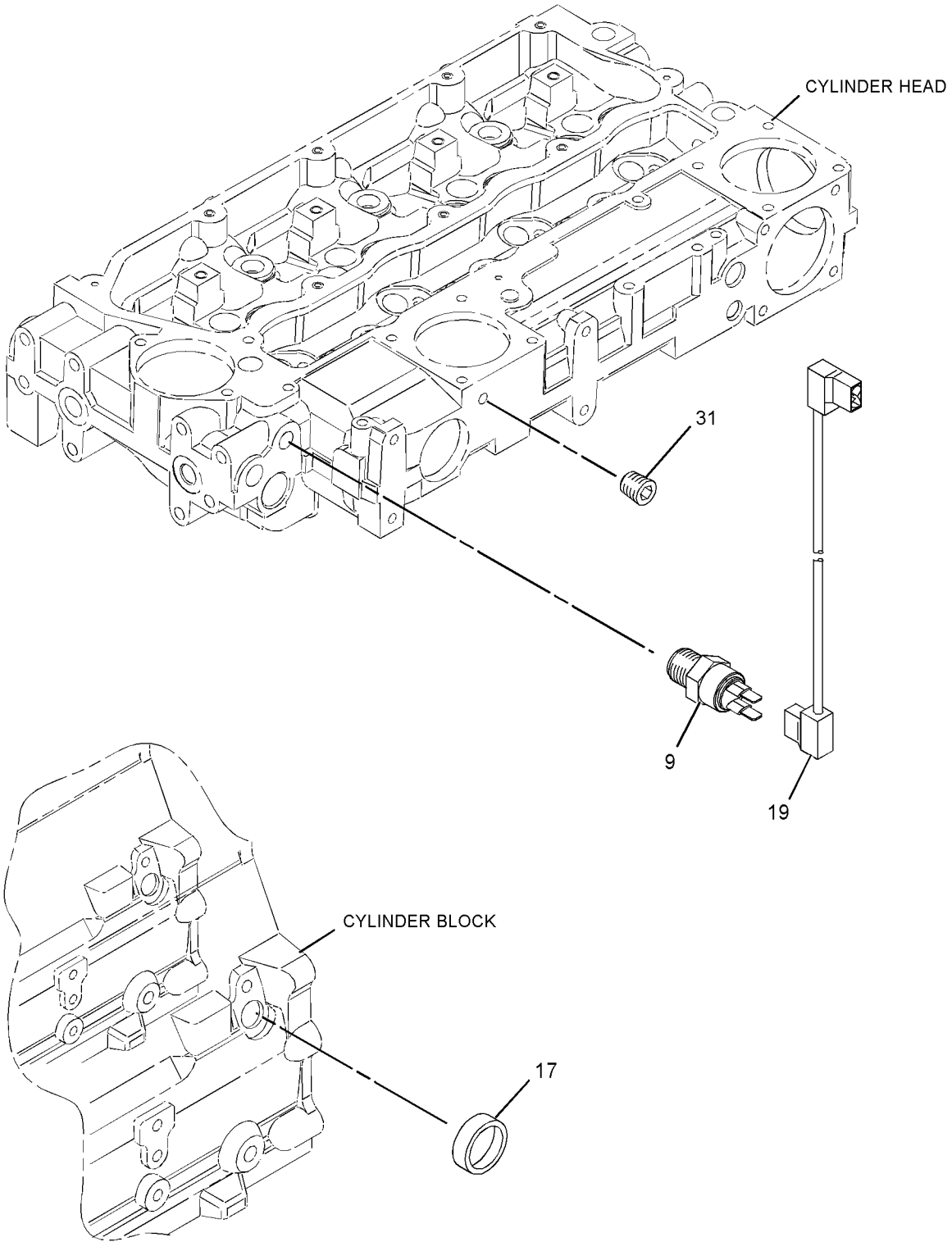

GRAPHIC #2 <END> g01317160

269-8487 PUMP GP-FUEL INJECTION

TYPE 4

SMCS-1251, 1290 **i08268884**

NOTE	REF NO	GRAPHIC REF	PART NUMBER	QTY	PART NAME 1 2 3 4 5 6 (PRODUCT LEVEL)	SEE PAGE
M	1	1	**6I-0217**	1	BOLT (M8X1.25X20-MM)	
M	2	1	**6I-0260**	3	BOLT (M8X1.25X25-MM)	
M	3	1	**178-3336**	1	NUT-HEX FLANGE (M8X1.25-THD)	
	4	1	**035-8017**	1	UNION	
	5	1	**067-6265**	1	FITTING-BRASS	
M	6	1	**100-4830**	1	BOLT (M10X1.5X20-MM)	
	7	1	**034-1432**	1	STRAP-CABLE	
M	8	1	**124-3815**	1	BOLT (M8X1.25X16-MM)	
	9	1	**232-1115**	1	CLIP-PIPE	
	10	1	**232-1328**	1	CAP	
	11	2	**232-1793**	1	CABLE	
	12	1	**232-1794**	3	HOSE	
	13	1	**232-3149**	3	WASHER (8.35X16.85X1.55-MM THK)	
	14	1	**232-3157**	1	BRACKET	
M	15	1	**232-3274**	4	BOLT (M8X1.25X48.1-MM)	
	16	2	**235-1790**	1	SWITCH-TEMPERATURE (TIMING ADVANCE)	
R	17	1	**236-1674**	4	INJECTOR AS-FUEL	
					(EACH INCLUDES)	
	17A	1	**236-1673**	1	NOZZLE	
	17B	1	**275-1038**	1	SEAL-O-RING	
	17C	1	**140-8718**	1	WASHER (7.49X15.75X1.68-MM THK)	
	18	1	**236-2144**	1	TUBE AS	
	18A	1	**067-6999**	1	FERRULE	
	19	1	**238-8671**	4	CLAMP-INJECTOR	
	20	1	**240-5571**	1	BRACKET	
YR	21	1	**292-3461**	1	PUMP GP-FUEL INJECTION	1457
	22	2	**292-3462**	1	PLUG-PIPE	
	23	1	**318-2365**	1	CLIP	
	24	1	**365-3308**	1	NUT-COMPRESSION (3/8-24-THD)	
	25	1	**425-7107**	1	GEAR-FUEL PUMP (68-TEETH)	
Y	26	1	*495-3762*	1	LINES GP-FUEL INJECTION	1173

M - METRIC PART
R - REMANUFACTURED PART MAY BE AVAILABLE
Y - SEPARATE ILLUSTRATION

269-8487 **PUMP GP-FUEL INJECTION (**contd.**)** **i08268884**

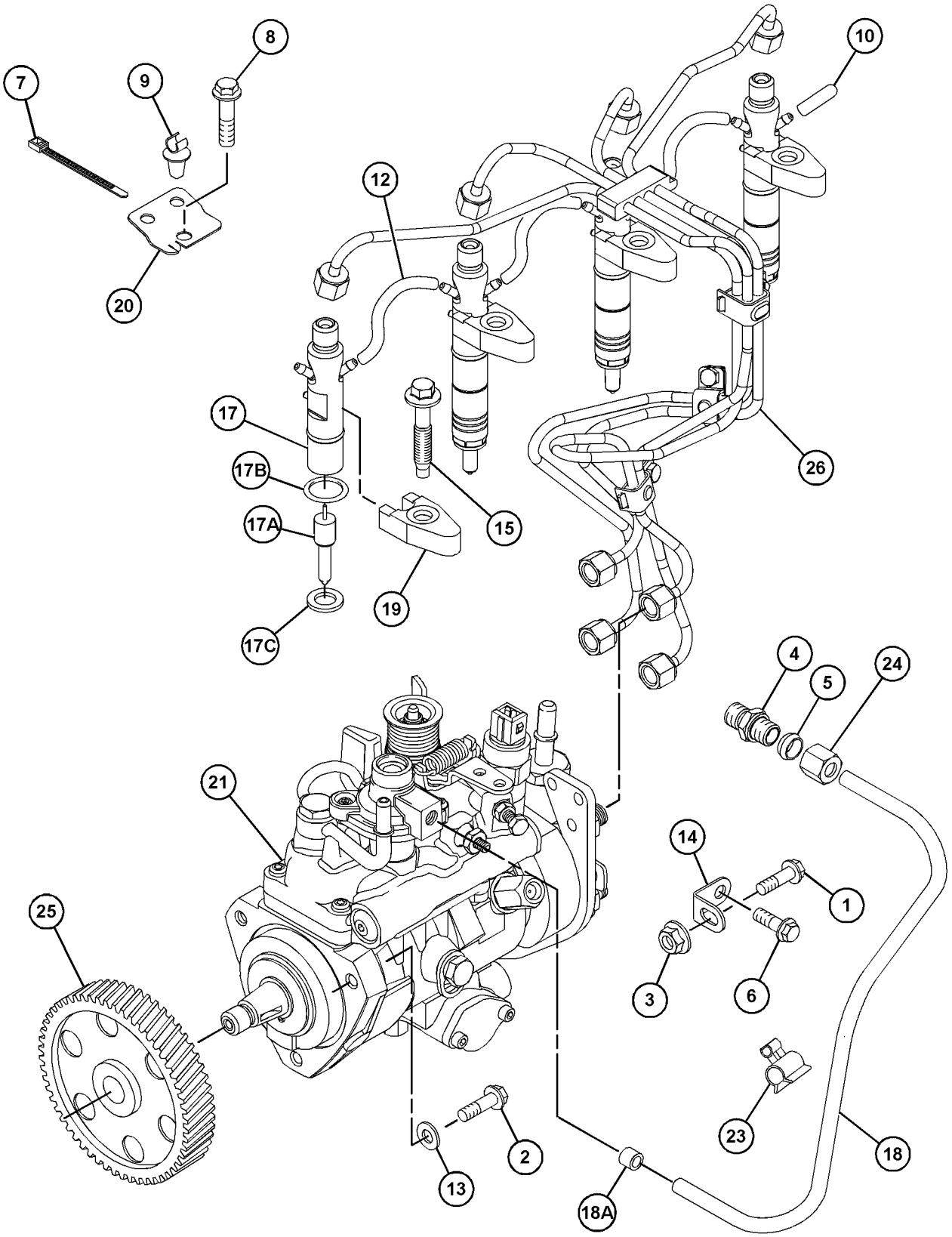

GRAPHIC #1 g06746059

269-8487 **PUMP GP-FUEL INJECTION (**contd.**)** **i08268884**

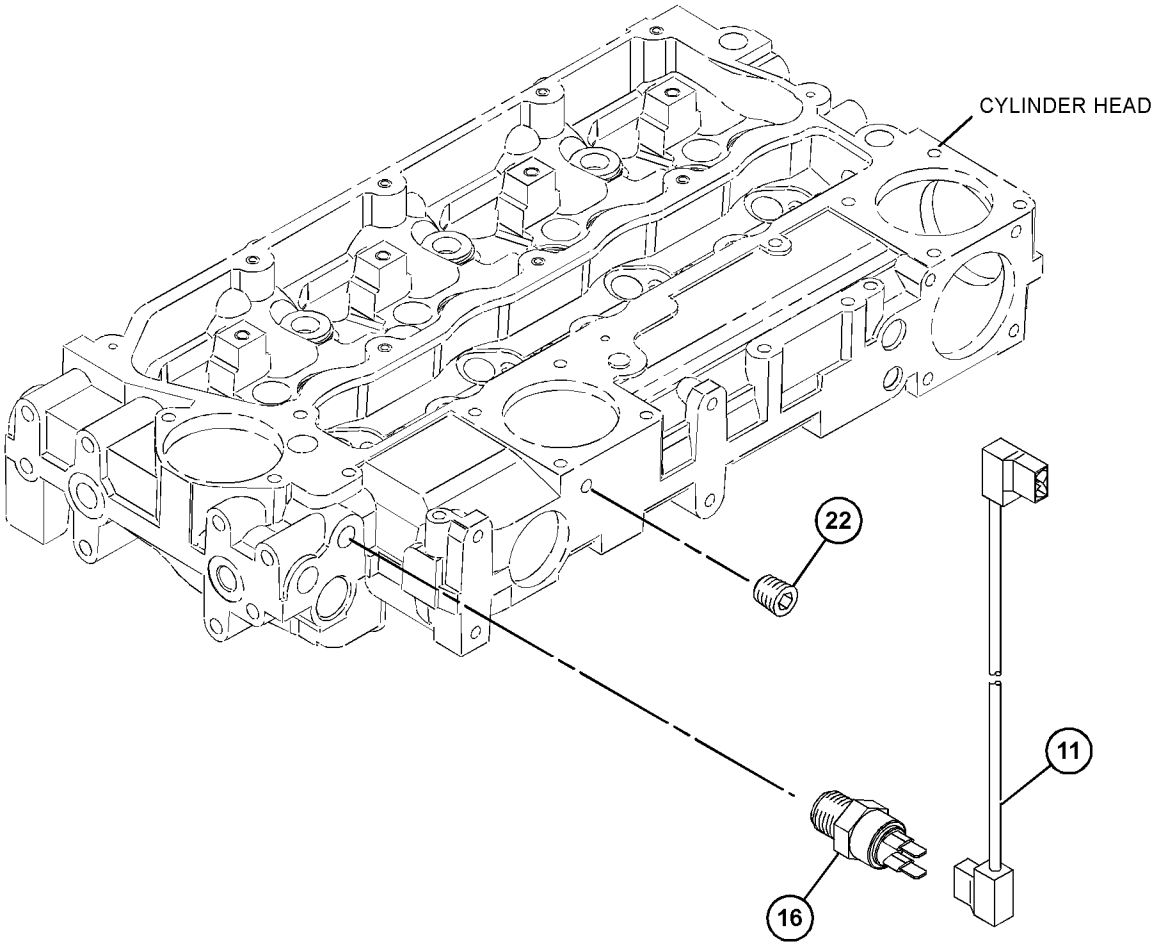

GRAPHIC #2 <END> g06746060

269-8488 PUMP GP-FUEL INJECTION

FIELD REPLACEMENT ORDER 274-5460—PAGE: 1433

PART OF 269-8487 PUMP GP-FUEL INJECTION

SMCS-1251, 1290

i02361242

NOTE	REF NO	GRAPHIC REF	PART NUMBER	QTY	PART NAME 1 2 3 4 5 6 (PRODUCT LEVEL)	SEE PAGE
M	1	1	**111-3422**	1	NUT (M14X1.5-THD)	
	2	1	**111-3423**	1	WASHER	
	3	1	**152-3968**	1	SEAL-O-RING	
	4	1	**176-6219**	1	SOLENOID (12-VOLT) (FUEL SHUTOFF)	
	5	1	**193-0161**	1	CABLE AS-ADAPTER	

M - METRIC PART

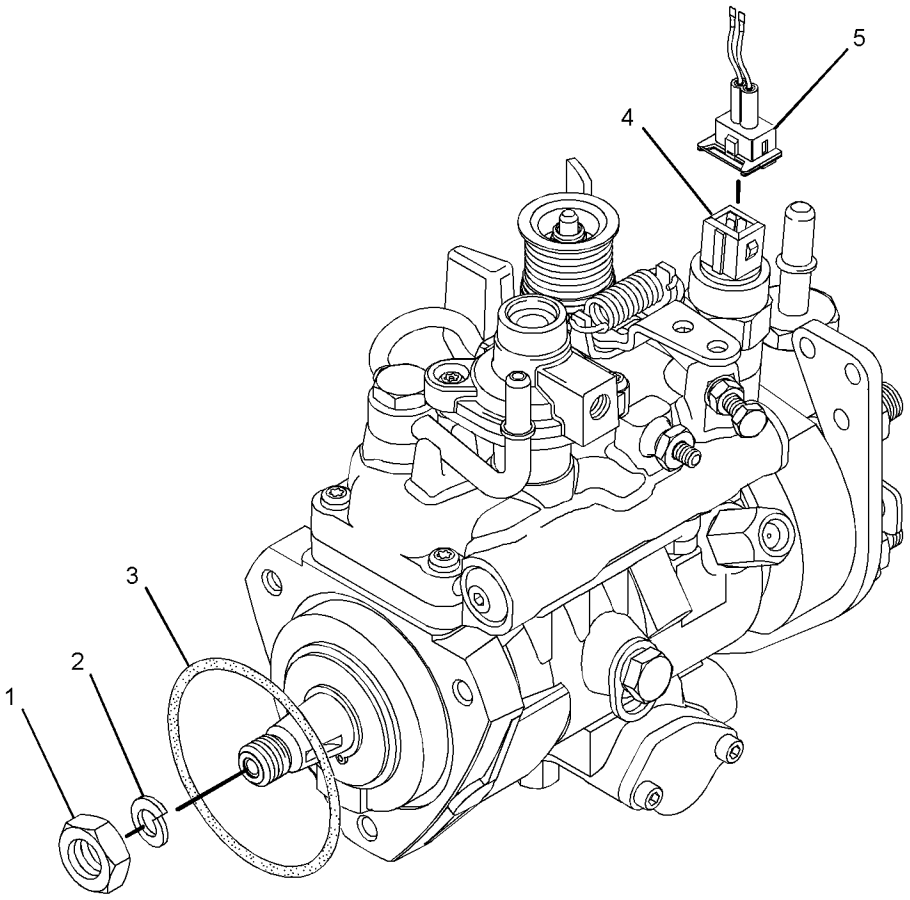

GRAPHIC #1 <END> g01175049

270-3084 PUMP GP-FUEL INJECTION

TYPE 1

SMCS-1251, 1290 **i04712527**

NOTE	REF NO	GRAPHIC REF	PART NUMBER	QTY	PART NAME 1 2 3 4 5 6 (PRODUCT LEVEL)	SEE PAGE
M	1	1	**6I-0217**	1	BOLT (M8X1.25X20-MM)	
M	2	1	**6I-0260**	3	BOLT (M8X1.25X25-MM)	
M	3	1	**6I-0291**	1	NUT (M8X1.25-THD)	
	4	1	**035-8017**	1	UNION	
	5	1	**365-3308**	1	NUT-COMPRESSION (3/8-24-THD)	
	6	1	**067-6265**	1	FITTING-BRASS	
M	7	1	**100-4830**	1	BOLT (M10X1.5X20-MM)	
M	8	1	**124-3815**	1	BOLT (M8X1.25X16-MM)	
	9	1	**140-8714**	1	CLIP	
	10	1	**318-2365**	1	CLIP	
	11	1	**230-8989**	1	GEAR-FUEL PUMP (68-TEETH)	
	12	1	**230-8995**	1	TUBE AS (CYL NO. 1)	
	13	1	**230-8996**	1	TUBE AS (CYL NO. 2)	
	14	1	**230-8997**	1	TUBE AS (CYL NO. 3)	
	15	1	**230-8998**	1	TUBE AS (CYL NO. 4)	
R	16	1	**236-1674**	4	INJECTOR AS-FUEL	
					(EACH INCLUDES)	
		1	**236-1673**	1	NOZZLE	
		1	**275-1038**	1	SEAL-O-RING	
	16A	1	**140-8718**	1	WASHER (7.49X15.75X1.68-MM THK) (SEATING)	
	17	2	**232-1323**	1	PLUG-CUP	
	18	1	**232-1328**	1	CAP (FUEL INJECTOR)	
	19	2	**232-1793**	1	CABLE	
	20	1	**232-1794**	3	HOSE	
	21	1	**232-2725**	2	CLIP	
	22	1	**232-2726**	1	CLIP	
	24	1	**232-3149**	3	WASHER (8.35X16.85X1.55-MM THK)	
	25	1	**232-3157**	1	BRACKET	
M	26	1	**232-3274**	4	BOLT (M8X1.25X48.1-MM)	
	27	2	**235-1790**	1	SWITCH-TEMPERATURE (TIMING ADVANCE)	
	28	1	**236-2144**	1	TUBE AS	
	28A	1	**067-6999**	1	FERRULE	
Y	29	1	**236-8228**	1	PUMP GP-FUEL INJECTION	1254
	30	1	**238-8671**	4	CLAMP-INJECTOR	
	31	1	**240-5571**	1	BRACKET	

M - METRIC PART
R - REMANUFACTURED PART MAY BE AVAILABLE
Y - SEPARATE ILLUSTRATION

270-3084 **PUMP GP-FUEL INJECTION (**contd.**)** **i04712527**

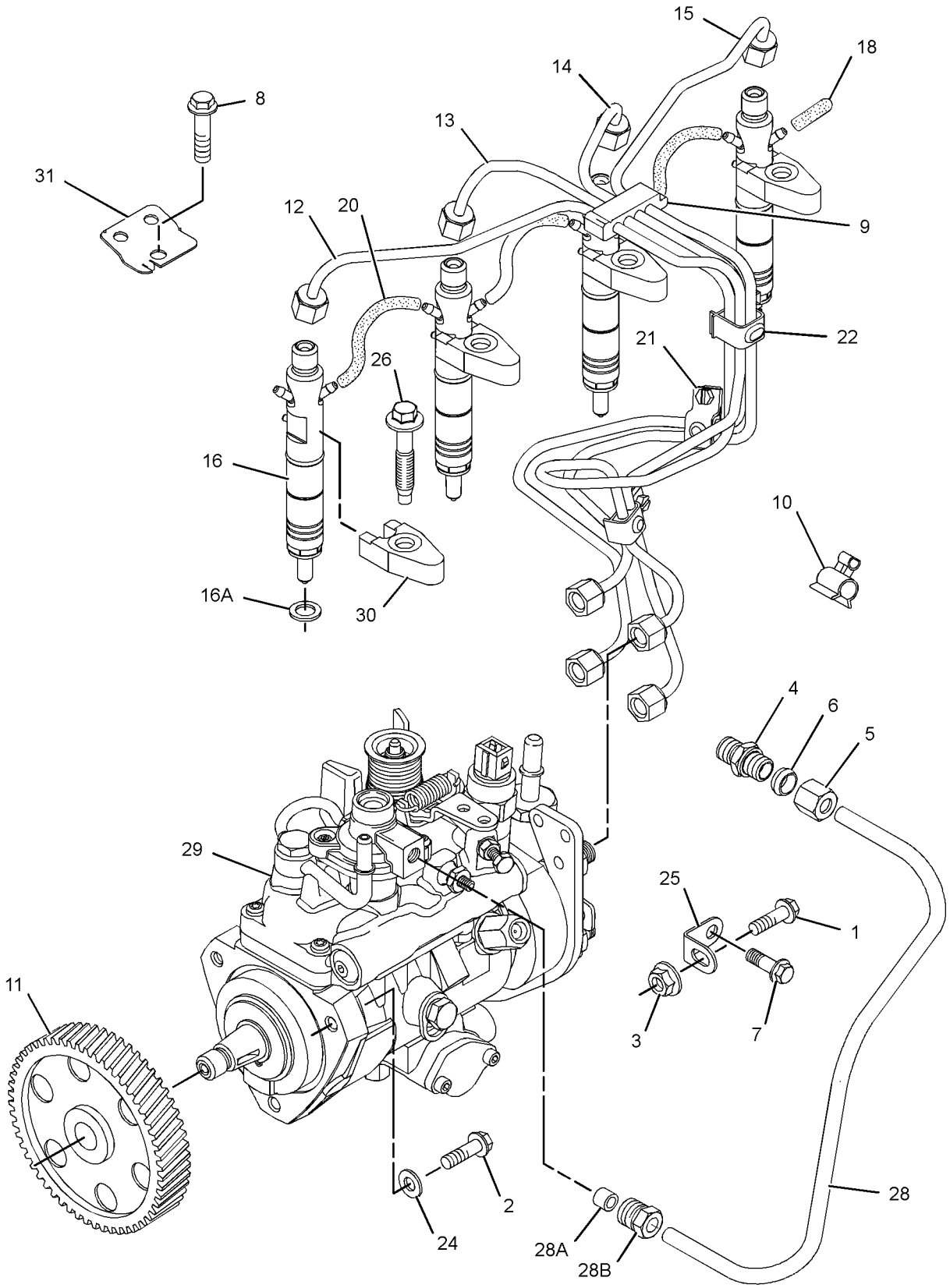

GRAPHIC #1 g01633313

270-3084 **PUMP GP-FUEL INJECTION (**contd.**)** **i04712527**

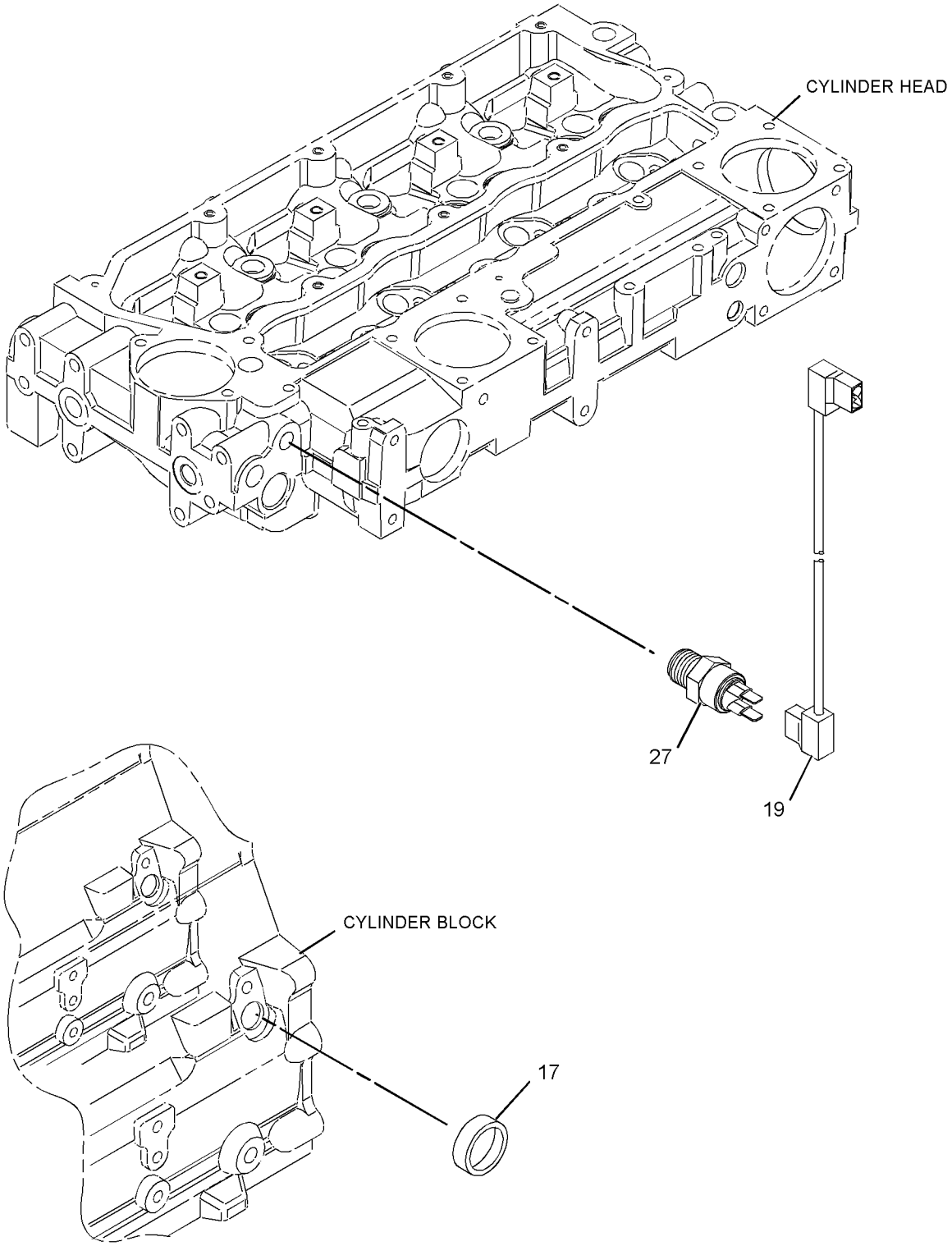

GRAPHIC #2 <END> g01156189

270-3084 PUMP GP-FUEL INJECTION

TYPE 2

SMCS-1251, 1290 **i04895494**

NOTE	REF NO	GRAPHIC REF	PART NUMBER	QTY	PART NAME 1 2 3 4 5 6 (PRODUCT LEVEL)	SEE PAGE
M	1	1	**6I-0217**	1	BOLT (M8X1.25X20-MM)	
M	2	1	**6I-0260**	3	BOLT (M8X1.25X25-MM)	
M	3	1	**6I-0291**	1	NUT (M8X1.25-THD)	
	4	1	**035-8017**	1	UNION	
	5	1	**365-3308**	1	NUT-COMPRESSION (3/8-24-THD)	
	6	1	**067-6265**	1	FITTING-BRASS	
M	7	1	**100-4830**	1	BOLT (M10X1.5X20-MM)	
M	8	1	**124-3815**	1	BOLT (M8X1.25X16-MM)	
	9	1	**140-8714**	1	CLIP	
	10	1	**318-2365**	1	CLIP	
	11	1	**230-8989**	1	GEAR-FUEL PUMP (68-TEETH)	
	12	1	**230-8995**	1	TUBE AS (CYL NO. 1)	
	13	1	**230-8996**	1	TUBE AS (CYL NO. 2)	
	14	1	**230-8997**	1	TUBE AS (CYL NO. 3)	
	15	1	**230-8998**	1	TUBE AS (CYL NO. 4)	
R	16	1	**236-1674**	4	INJECTOR AS-FUEL	
					(EACH INCLUDES)	
		1	**236-1673**	1	NOZZLE	
		1	**275-1038**	1	SEAL-O-RING	
	16A	1	**140-8718**	1	WASHER (7.49X15.75X1.68-MM THK) (SEATING)	
	18	1	**232-1328**	1	CAP (FUEL INJECTOR)	
	19	2	**232-1793**	1	CABLE	
	20	1	**232-1794**	3	HOSE	
	21	1	**232-2725**	2	CLIP	
	22	1	**232-2726**	1	CLIP	
	24	1	**232-3149**	3	WASHER (8.35X16.85X1.55-MM THK)	
	25	1	**232-3157**	1	BRACKET	
M	26	1	**232-3274**	4	BOLT (M8X1.25X48.1-MM)	
	27	2	**235-1790**	1	SWITCH-TEMPERATURE (TIMING ADVANCE)	
	28	1	**236-2144**	1	TUBE AS	
	28A	1	**067-6999**	1	FERRULE	
Y	29	1	**236-8228**	1	PUMP GP-FUEL INJECTION	1254
	30	1	**238-8671**	4	CLAMP-INJECTOR	
	31	1	**240-5571**	1	BRACKET	

M - METRIC PART
R - REMANUFACTURED PART MAY BE AVAILABLE
Y - SEPARATE ILLUSTRATION

270-3084 **PUMP GP-FUEL INJECTION (**contd.**)** **i04895494**

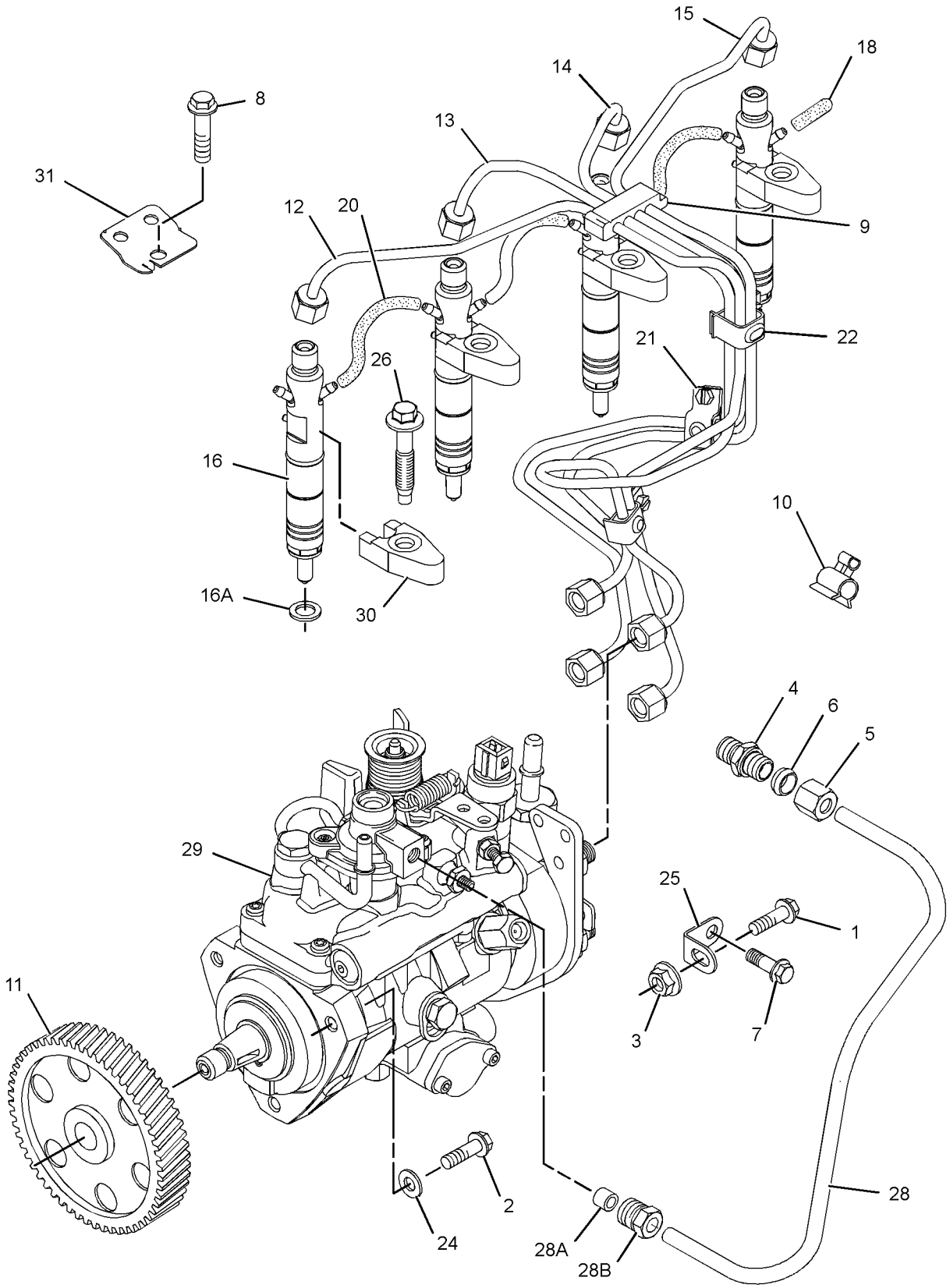

GRAPHIC #1 g01633313

270-3084 **PUMP GP-FUEL INJECTION (**contd.**)** **i04895494**

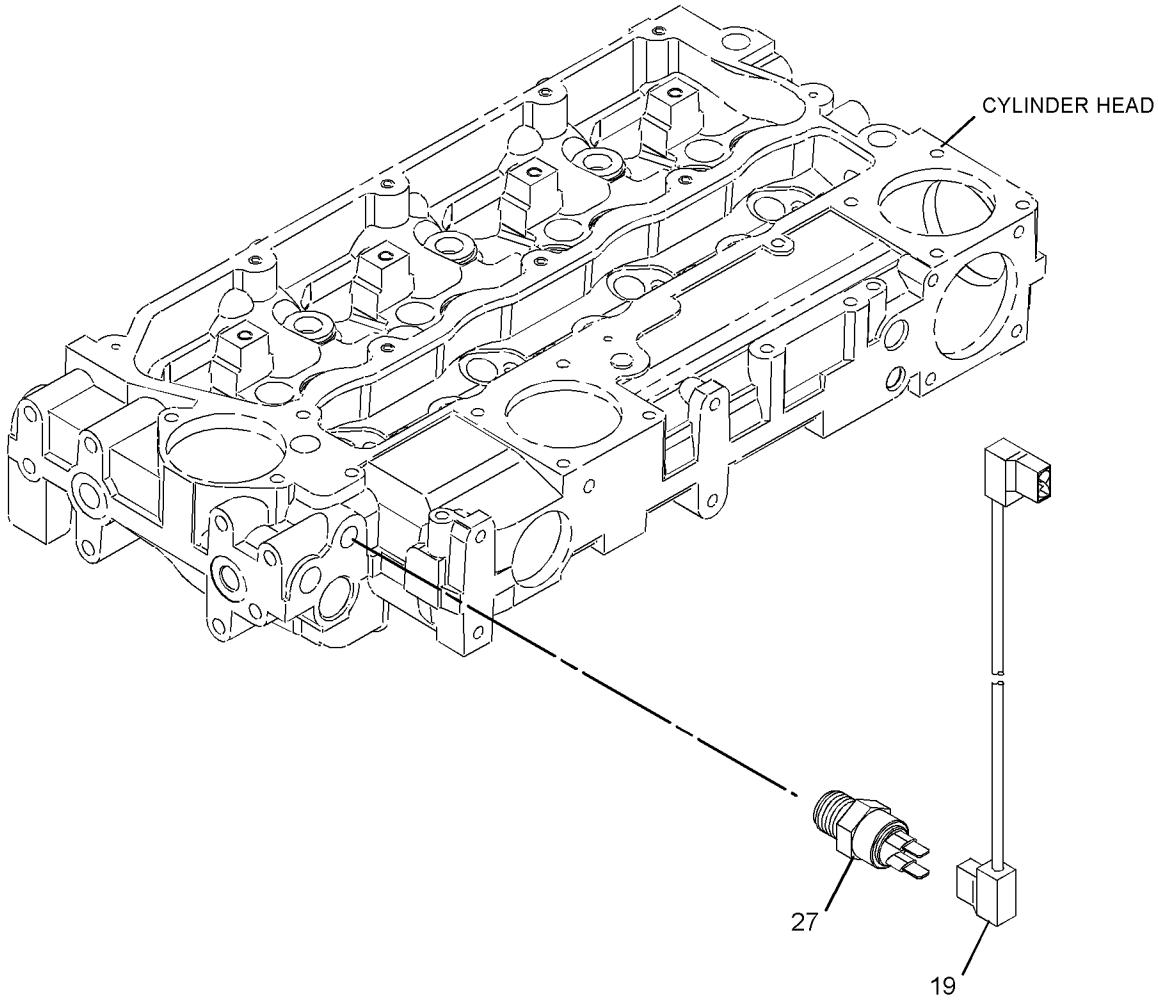

GRAPHIC #2 <END> g03042738

270-4364 PUMP GP-FUEL INJECTION

TYPE 1

SMCS-1251, 1290 **i04712617**

NOTE	REF NO	GRAPHIC REF	PART NUMBER	QTY	PART NAME 1 2 3 4 5 6 (PRODUCT LEVEL)	SEE PAGE
M	1	1	**6I-0217**	1	BOLT (M8X1.25X20-MM)	
M	2	1	**6I-0260**	3	BOLT (M8X1.25X25-MM)	
M	3	1	**6I-0291**	1	NUT (M8X1.25-THD)	
	4	1	**035-8017**	1	UNION	
	5	1	**365-3308**	1	NUT-COMPRESSION (3/8-24-THD)	
	6	1	**067-6265**	1	FITTING-BRASS	
M	7	1	**100-4830**	1	BOLT (M10X1.5X20-MM)	
M	8	1	**124-3815**	1	BOLT (M8X1.25X16-MM)	
	9	1	**140-8714**	1	CLIP	
	10	1	**318-2365**	2	CLIP	
	11	1	**230-7886**	1	TUBE AS	
	11A	1	**067-6999**	1	FERRULE	
	11B	1	**106-8835**	1	NUT	
	12	1	**230-8989**	1	GEAR-FUEL PUMP (68-TEETH)	
	13	1	**230-8995**	1	TUBE AS (CYL NO. 1)	
	14	1	**230-8996**	1	TUBE AS (CYL NO. 2)	
	15	1	**230-8997**	1	TUBE AS (CYL NO. 3)	
	16	1	**230-8998**	1	TUBE AS (CYL NO. 4)	
R	17	1	**230-8999**	4	INJECTOR AS-FUEL	
					(EACH INCLUDES)	
		1	**232-2724**	1	NOZZLE	
		1	**275-1038**	1	SEAL-O-RING	
	17A	1	**140-8718**	1	WASHER (7.49X15.75X1.68-MM THK)	
	18	1	**240-5571**	1	BRACKET	
	19	1	**232-1115**	1	CLIP-PIPE	
	20	1	**232-1117**	1	CLIP-PIPE	
	21	2	**232-1323**	1	PLUG-CUP	
	22	1	**232-1328**	1	CAP	
	23	2	**232-1793**	1	CABLE	
	24	1	**232-1794**	3	HOSE	
	25	1	**232-2725**	2	CLIP	
	26	1	**232-2726**	1	CLIP	
	27	1	**232-3149**	3	WASHER (8.35X16.85X1.55-MM THK)	
	28	1	**232-3157**	1	BRACKET	
M	29	1	**232-3274**	4	BOLT (M8X1.25X48.1-MM)	
	30	2	**235-1790**	1	SWITCH-TEMPERATURE (TIMING ADVANCE)	
	31	1	**238-8671**	4	CLAMP-INJECTOR	
Y	32	1	**278-4118**	1	PUMP GP-FUEL INJECTION	1434
F			**232-3263**	2	CLIP-PIPE	

F - NOT SHOWN
M - METRIC PART
R - REMANUFACTURED PART MAY BE AVAILABLE
Y - SEPARATE ILLUSTRATION

270-4364 **PUMP GP-FUEL INJECTION (**contd.**)** **i04712617**

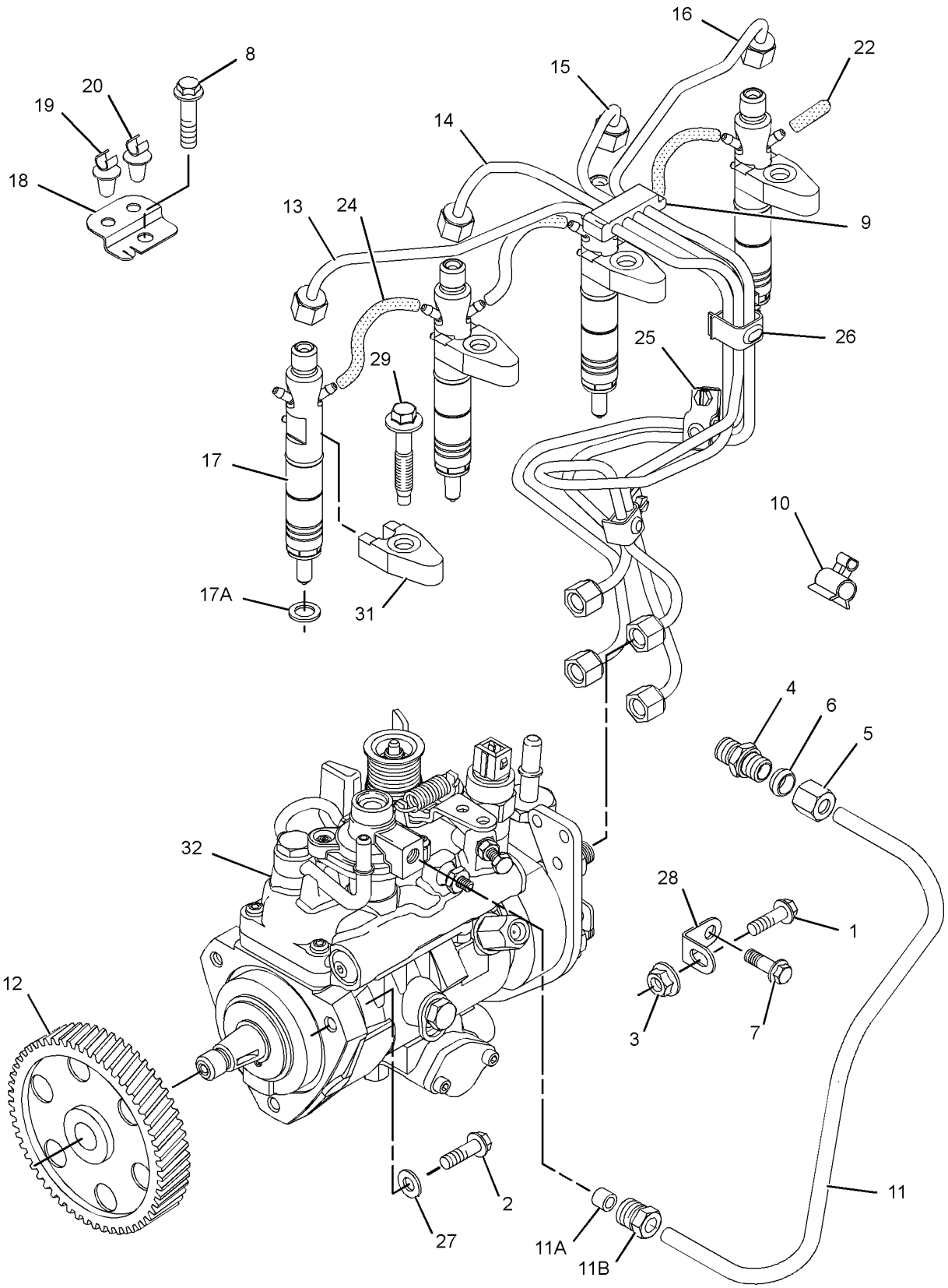

GRAPHIC #1 g01180013

270-4364 **PUMP GP-FUEL INJECTION (**contd.**)** **i04712617**

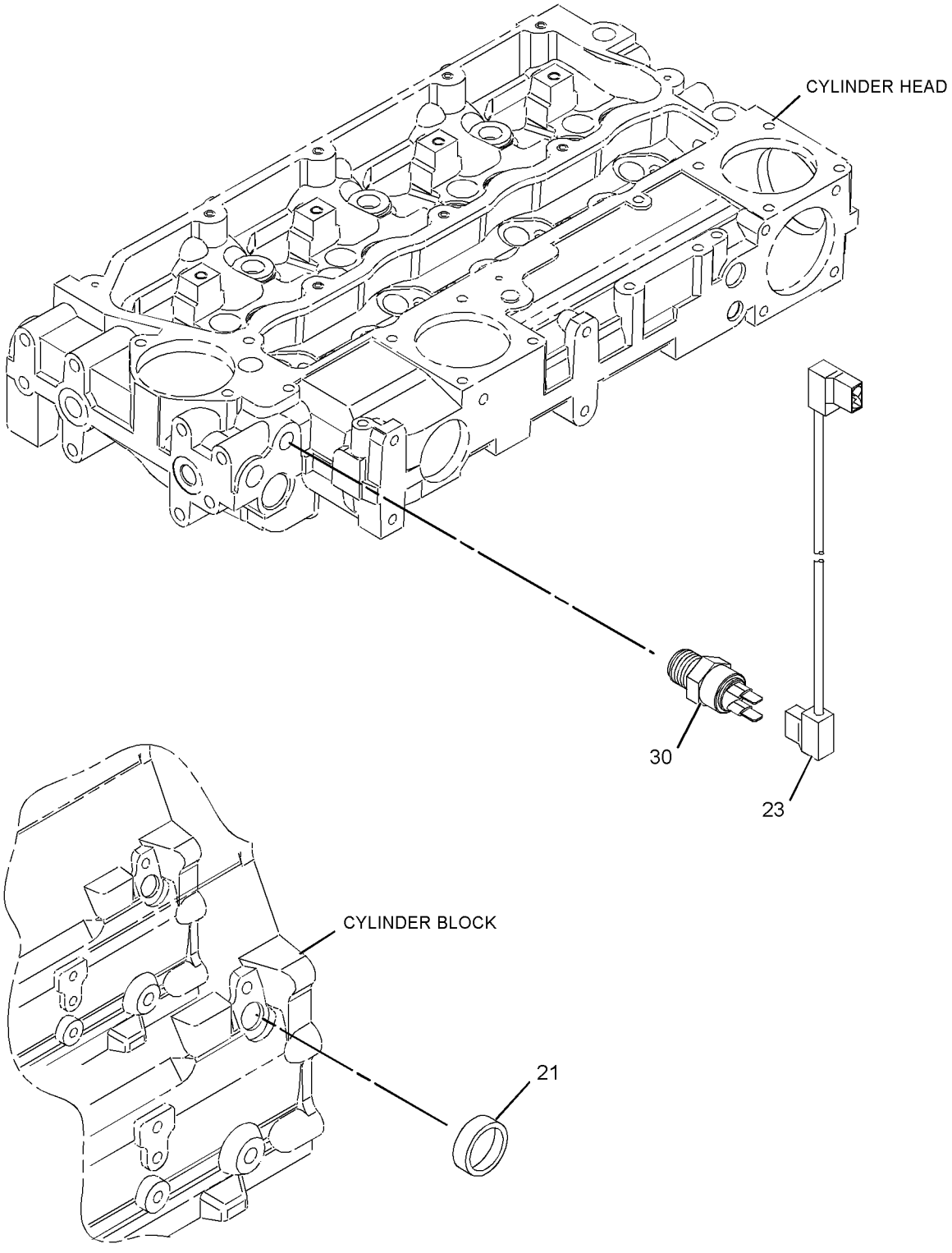

GRAPHIC #2 <END> g01180015

270-4364 PUMP GP-FUEL INJECTION

TYPE 2

SMCS-1251, 1290 **i05195480**

NOTE	REF NO	GRAPHIC REF	PART NUMBER	QTY	PART NAME 1 2 3 4 5 6 (PRODUCT LEVEL)	SEE PAGE
M	1	1	**6I-0217**	1	BOLT (M8X1.25X20-MM)	
M	2	1	**6I-0260**	3	BOLT (M8X1.25X25-MM)	
M	3	1	**6I-0291**	1	NUT (M8X1.25-THD)	
	4	1	**035-8017**	1	UNION	
	5	1	**365-3308**	1	NUT-COMPRESSION (3/8-24-THD)	
	6	1	**067-6265**	1	FITTING-BRASS	
M	7	1	**100-4830**	1	BOLT (M10X1.5X20-MM)	
M	8	1	**124-3815**	1	BOLT (M8X1.25X16-MM)	
	9	1	**140-8714**	1	CLIP	
	10	1	**318-2365**	2	CLIP	
	11	1	**230-7886**	1	TUBE AS	
	11A	1	**067-6999**	1	FERRULE	
	11B	1	**106-8835**	1	NUT	
	12	1	**230-8989**	1	GEAR-FUEL PUMP (68-TEETH)	
	13	1	**230-8995**	1	TUBE AS (CYL NO. 1)	
	14	1	**230-8996**	1	TUBE AS (CYL NO. 2)	
	15	1	**230-8997**	1	TUBE AS (CYL NO. 3)	
	16	1	**230-8998**	1	TUBE AS (CYL NO. 4)	
R	17	1	**230-8999**	4	INJECTOR AS-FUEL	
					(EACH INCLUDES)	
		1	**232-2724**	1	NOZZLE	
		1	**275-1038**	1	SEAL-O-RING	
	17A	1	**140-8718**	1	WASHER (7.49X15.75X1.68-MM THK)	
	18	1	**240-5571**	1	BRACKET	
	19	1	**232-1115**	1	CLIP-PIPE	
	20	1	**232-1117**	1	CLIP-PIPE	
	22	1	**232-1328**	1	CAP	
	23	2	**232-1793**	1	CABLE	
	24	1	**232-1794**	3	HOSE	
	25	1	**232-2725**	2	CLIP	
	26	1	**232-2726**	1	CLIP	
	27	1	**232-3149**	3	WASHER (8.35X16.85X1.55-MM THK)	
	28	1	**232-3157**	1	BRACKET	
M	29	1	**232-3274**	4	BOLT (M8X1.25X48.1-MM)	
	30	2	**235-1790**	1	SWITCH-TEMPERATURE (TIMING ADVANCE)	
	31	1	**238-8671**	4	CLAMP-INJECTOR	
Y	32	1	**278-4118**	1	PUMP GP-FUEL INJECTION	1434
F			**232-3263**	2	CLIP-PIPE	

F - NOT SHOWN
M - METRIC PART
R - REMANUFACTURED PART MAY BE AVAILABLE
Y - SEPARATE ILLUSTRATION

270-4364 **PUMP GP-FUEL INJECTION (**contd.**)** **i05195480**

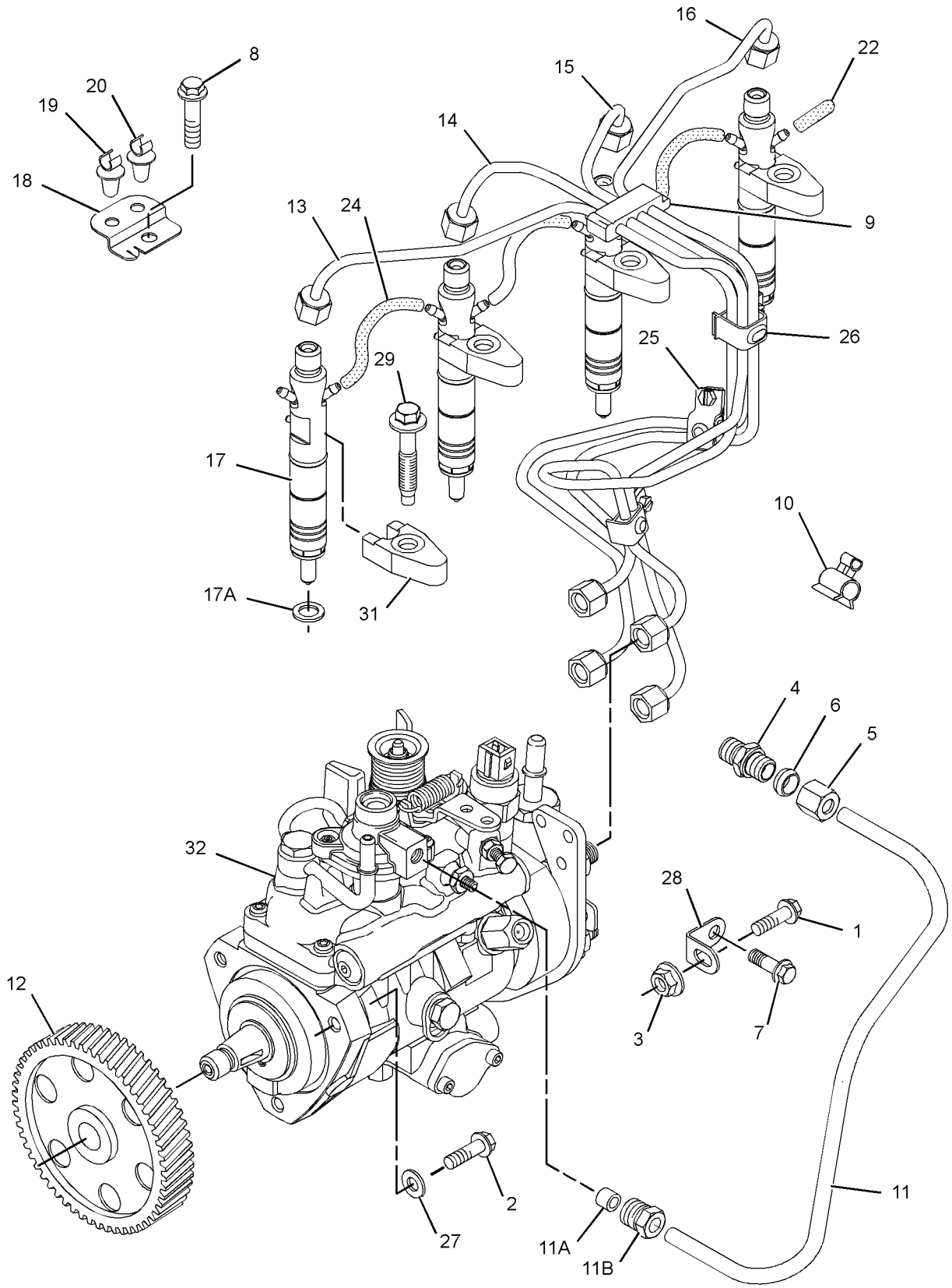

GRAPHIC #1 g01180013

270-4364 **PUMP GP-FUEL INJECTION (**contd.**)** **i05195480**

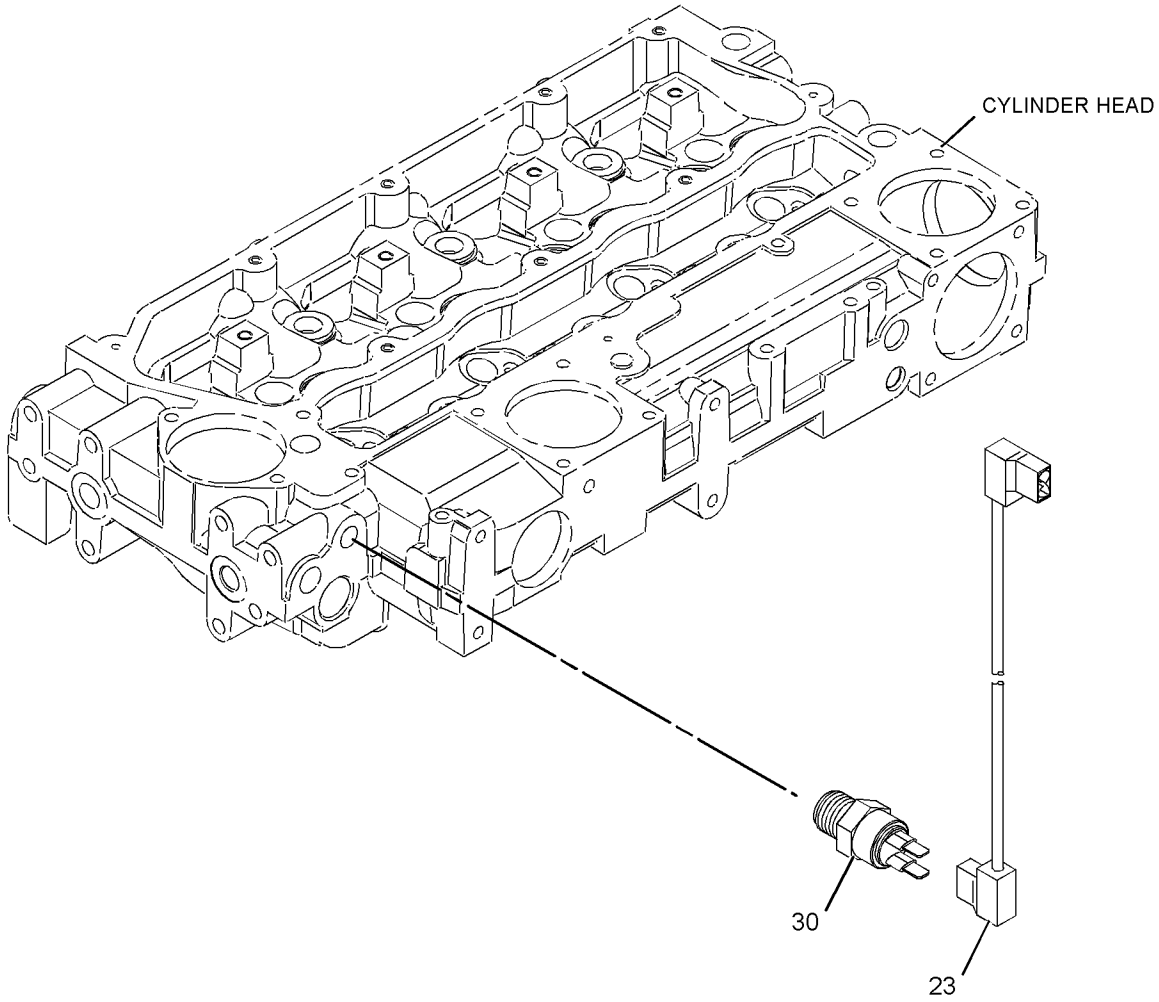

GRAPHIC #2 <END> g02936597

270-8261 PUMP GP-FUEL INJECTION

ALSO AN ATTACHMENT
TYPE 1

SMCS-1251, 1290 **i04712729**

NOTE	REF NO	GRAPHIC REF	PART NUMBER	QTY	PART NAME 1 2 3 4 5 6 (PRODUCT LEVEL)	SEE PAGE
M	1	1	**6I-0217**	1	BOLT (M8X1.25X20-MM)	
M	2	1	**6I-0260**	3	BOLT (M8X1.25X25-MM)	
M	3	1	**6I-0291**	1	NUT (M8X1.25-THD)	
	4	1	**035-8017**	1	UNION	
	5	1	**365-3308**	1	NUT-COMPRESSION (3/8-24-THD)	
	6	1	**067-6265**	1	FITTING-BRASS	
M	7	1	**100-4830**	1	BOLT (M10X1.5X20-MM)	
M	8	1	**124-3815**	1	BOLT (M8X1.25X16-MM)	
	9	1	**140-8714**	1	CLIP	
	10	1	**160-7197**	1	CLIP	
	11	1	**230-8989**	1	GEAR-FUEL PUMP (68-TEETH)	
	12	1	**230-8995**	1	TUBE AS (CYL NO. 1)	
	13	1	**230-8996**	1	TUBE AS (CYL NO. 2)	
	14	1	**230-8997**	1	TUBE AS (CYL NO. 3)	
	15	1	**230-8998**	1	TUBE AS (CYL NO. 4)	
R	16	1	**230-8999**	4	INJECTOR AS-FUEL	
					(EACH INCLUDES)	
	16A	1	**140-8718**	1	WASHER (7.49X15.75X1.68-MM THK)	
	17	2	**232-1323**	1	PLUG-CUP	
	18	1	**232-1328**	1	CAP	
	19	2	**232-1793**	1	CABLE	
	20	1	**232-1794**	3	HOSE	
	21	1	**232-2725**	2	CLIP	
	22	1	**232-2726**	1	CLIP	
	24	1	**232-3149**	3	WASHER (8.35X16.85X1.55-MM THK)	
	25	1	**232-3157**	1	BRACKET	
M	26	1	**232-3274**	4	BOLT (M8X1.25X48.1-MM)	
	27	2	**235-1790**	1	SWITCH-TEMPERATURE (TIMING ADVANCE)	
	28	1	**236-2144**	1	TUBE AS	
	28A	1	**067-6999**	1	FERRULE	
	28B	1	**106-8835**	1	NUT	
Y	29	1	**236-5707**	1	PUMP GP-FUEL INJECTION	1252
	30	1	**238-8671**	4	CLAMP-INJECTOR	
	31	1	**240-5571**	1	BRACKET	

M - METRIC PART
R - REMANUFACTURED PART MAY BE AVAILABLE
Y - SEPARATE ILLUSTRATION

270-8261 **PUMP GP-FUEL INJECTION (**contd.**)** **i04712729**

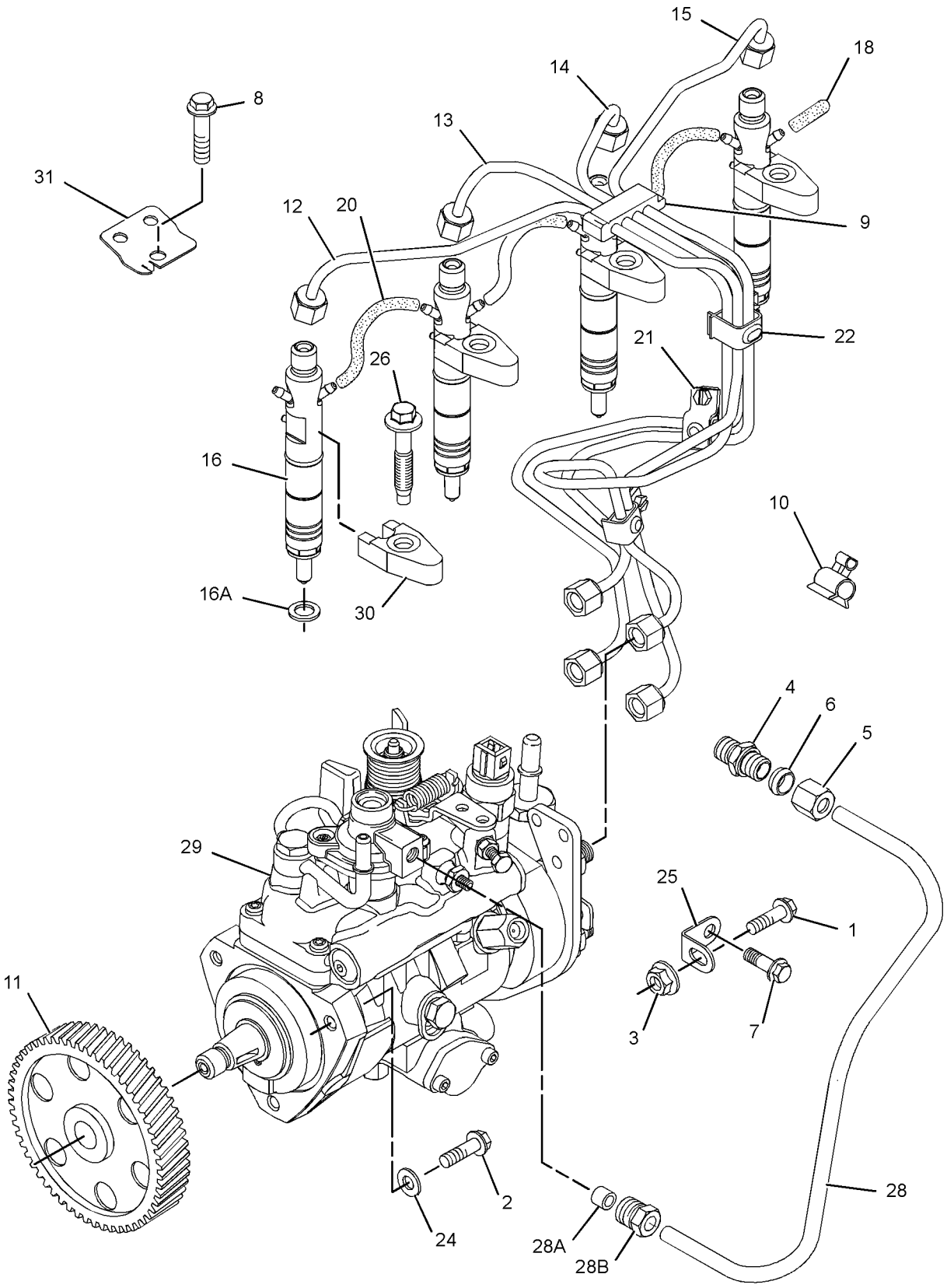

GRAPHIC #1 g01419773

270-8261 **PUMP GP-FUEL INJECTION (**contd.**)** **i04712729**

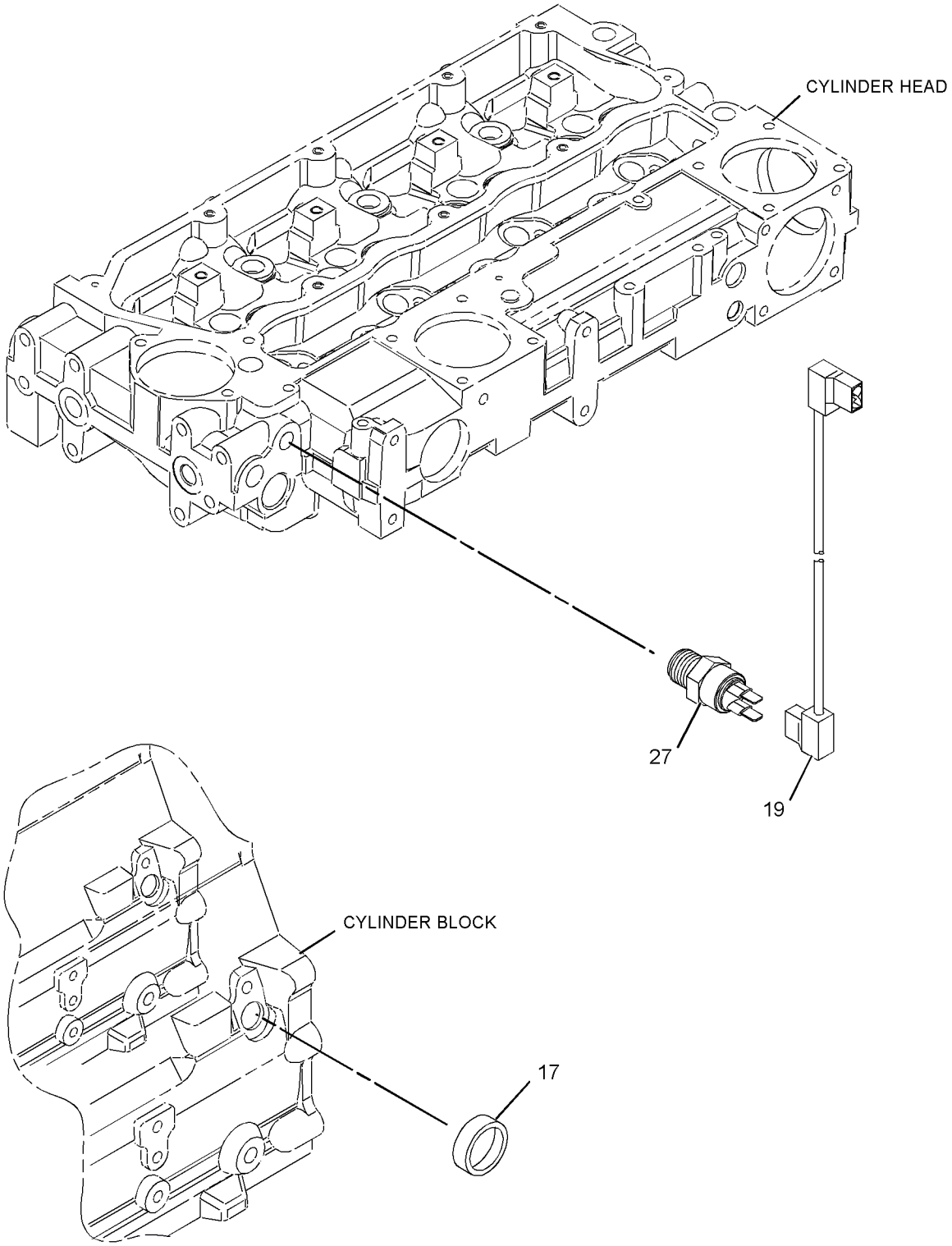

GRAPHIC #2 <END> g01156189

270-8261 PUMP GP-FUEL INJECTION

ALSO AN ATTACHMENT
TYPE 2

SMCS-1251, 1290 **i04712793**

NOTE	REF NO	GRAPHIC REF	PART NUMBER	QTY	PART NAME 1 2 3 4 5 6 (PRODUCT LEVEL)	SEE PAGE
M	1	1	**6I-0217**	1	BOLT (M8X1.25X20-MM)	
M	2	1	**6I-0260**	3	BOLT (M8X1.25X25-MM)	
M	3	1	**6I-0291**	1	NUT (M8X1.25-THD)	
	4	1	**035-8017**	1	UNION	
	5	1	**365-3308**	1	NUT-COMPRESSION (3/8-24-THD)	
	6	1	**067-6265**	1	FITTING-BRASS	
M	7	1	**100-4830**	1	BOLT (M10X1.5X20-MM)	
M	8	1	**124-3815**	1	BOLT (M8X1.25X16-MM)	
	9	1	**140-8714**	1	CLIP	
	10	1	**160-7197**	1	CLIP	
	11	1	**230-8989**	1	GEAR-FUEL PUMP (68-TEETH)	
	12	1	**230-8995**	1	TUBE AS (CYL NO. 1)	
	13	1	**230-8996**	1	TUBE AS (CYL NO. 2)	
	14	1	**230-8997**	1	TUBE AS (CYL NO. 3)	
	15	1	**230-8998**	1	TUBE AS (CYL NO. 4)	
R	16	1	**230-8999**	4	INJECTOR AS-FUEL	
					(EACH INCLUDES)	
	16A	1	**140-8718**	1	WASHER (7.49X15.75X1.68-MM THK)	
	16B	1	**232-2724**	1	NOZZLE	
	16C	1	**275-1038**	1	SEAL-O-RING	
	17	2	**232-1323**	1	PLUG-CUP	
	18	1	**232-1328**	1	CAP (FUEL INJECTOR)	
	19	2	**232-1793**	1	CABLE	
	20	1	**232-1794**	3	HOSE	
	21	1	**232-2725**	2	CLIP	
	22	1	**232-2726**	1	CLIP	
	24	1	**232-3149**	3	WASHER (8.35X16.85X1.55-MM THK)	
	25	1	**232-3157**	1	BRACKET	
M	26	1	**232-3274**	4	BOLT (M8X1.25X48.1-MM)	
	27	2	**235-1790**	1	SWITCH-TEMPERATURE (TIMING ADVANCE)	
	28	1	**236-2144**	1	TUBE AS	
CY	29	1	**284-4988**	1	PUMP GP-FUEL INJECTION	1435
	30	1	**238-8671**	4	CLAMP-INJECTOR	
	31	1	**240-5571**	1	BRACKET	

C - CHANGE FROM PREVIOUS TYPE
M - METRIC PART
R - REMANUFACTURED PART MAY BE AVAILABLE
Y - SEPARATE ILLUSTRATION

270-8261 **PUMP GP-FUEL INJECTION (**contd.**)** **i04712793**

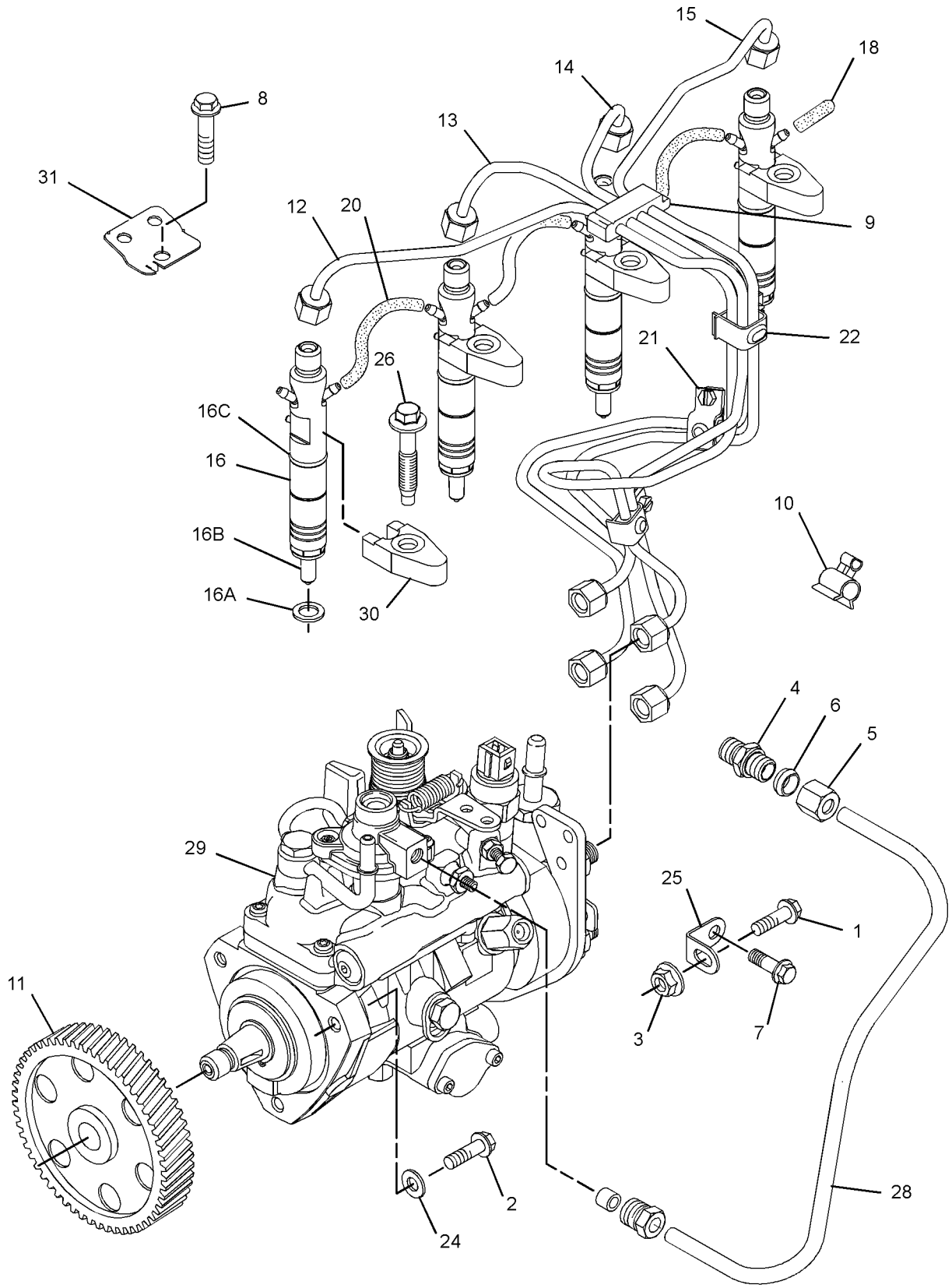

GRAPHIC #1 g01419776

270-8261 **PUMP GP-FUEL INJECTION (**contd.**)** **i04712793**

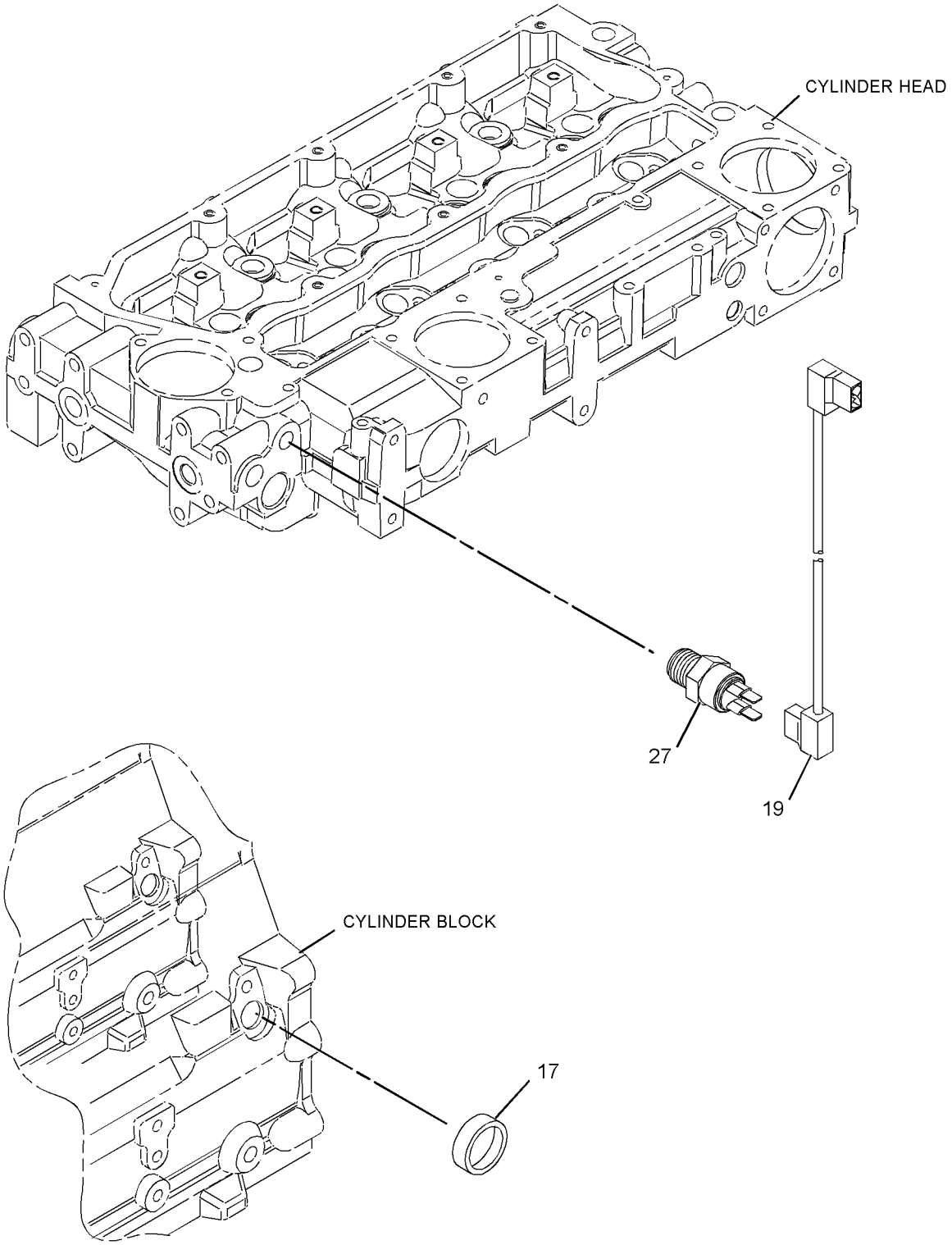

GRAPHIC #2 <END> g01156189

270-8261 PUMP GP-FUEL INJECTION

ALSO AN ATTACHMENT
TYPE 3

SMCS-1251, 1290 **i04712792**

NOTE	REF NO	GRAPHIC REF	PART NUMBER	QTY	PART NAME 1 2 3 4 5 6 (PRODUCT LEVEL)	SEE PAGE
M	1	1	**6I-0217**	1	BOLT (M8X1.25X20-MM)	
M	2	1	**6I-0260**	3	BOLT (M8X1.25X25-MM)	
M	3	1	**6I-0291**	1	NUT (M8X1.25-THD)	
	4	1	**035-8017**	1	UNION	
	5	1	**365-3308**	1	NUT-COMPRESSION (3/8-24-THD)	
	6	1	**067-6265**	1	FITTING-BRASS	
M	7	1	**100-4830**	1	BOLT (M10X1.5X20-MM)	
M	8	1	**124-3815**	1	BOLT (M8X1.25X16-MM)	
	9	1	**140-8714**	1	CLIP	
	10	1	**318-2365**	1	CLIP	
	11	1	**230-8989**	1	GEAR-FUEL PUMP (68-TEETH)	
	12	1	**230-8995**	1	TUBE AS (CYL NO. 1)	
	13	1	**230-8996**	1	TUBE AS (CYL NO. 2)	
	14	1	**230-8997**	1	TUBE AS (CYL NO. 3)	
	15	1	**230-8998**	1	TUBE AS (CYL NO. 4)	
R	16	1	**230-8999**	4	INJECTOR AS-FUEL	
					(EACH INCLUDES)	
	16A	1	**140-8718**	1	WASHER (7.49X15.75X1.68-MM THK)	
	16B	1	**232-2724**	1	NOZZLE	
	16C	1	**275-1038**	1	SEAL-O-RING	
	17	2	**232-1323**	1	PLUG-CUP	
	18	1	**232-1328**	1	CAP	
	19	2	**232-1793**	1	CABLE	
	20	1	**232-1794**	3	HOSE	
	21	1	**232-2725**	2	CLIP	
	22	1	**232-2726**	1	CLIP	
	24	1	**232-3149**	3	WASHER (8.35X16.85X1.55-MM THK)	
	25	1	**232-3157**	1	BRACKET	
M	26	1	**232-3274**	4	BOLT (M8X1.25X48.1-MM)	
	27	2	**235-1790**	1	SWITCH-TEMPERATURE (ENGINE COOLANT)	
	28	1	**236-2144**	1	TUBE AS	
	28A	1	**067-6999**	1	FERRULE	
C	29	1	**284-4989**	1	PUMP GP-FUEL INJECTION	
	30	1	**238-8671**	4	CLAMP-INJECTOR	
	31	1	**240-5571**	1	BRACKET	

C - CHANGE FROM PREVIOUS TYPE
M - METRIC PART
R - REMANUFACTURED PART MAY BE AVAILABLE

270-8261 **PUMP GP-FUEL INJECTION (**contd.**)** **i04712792**

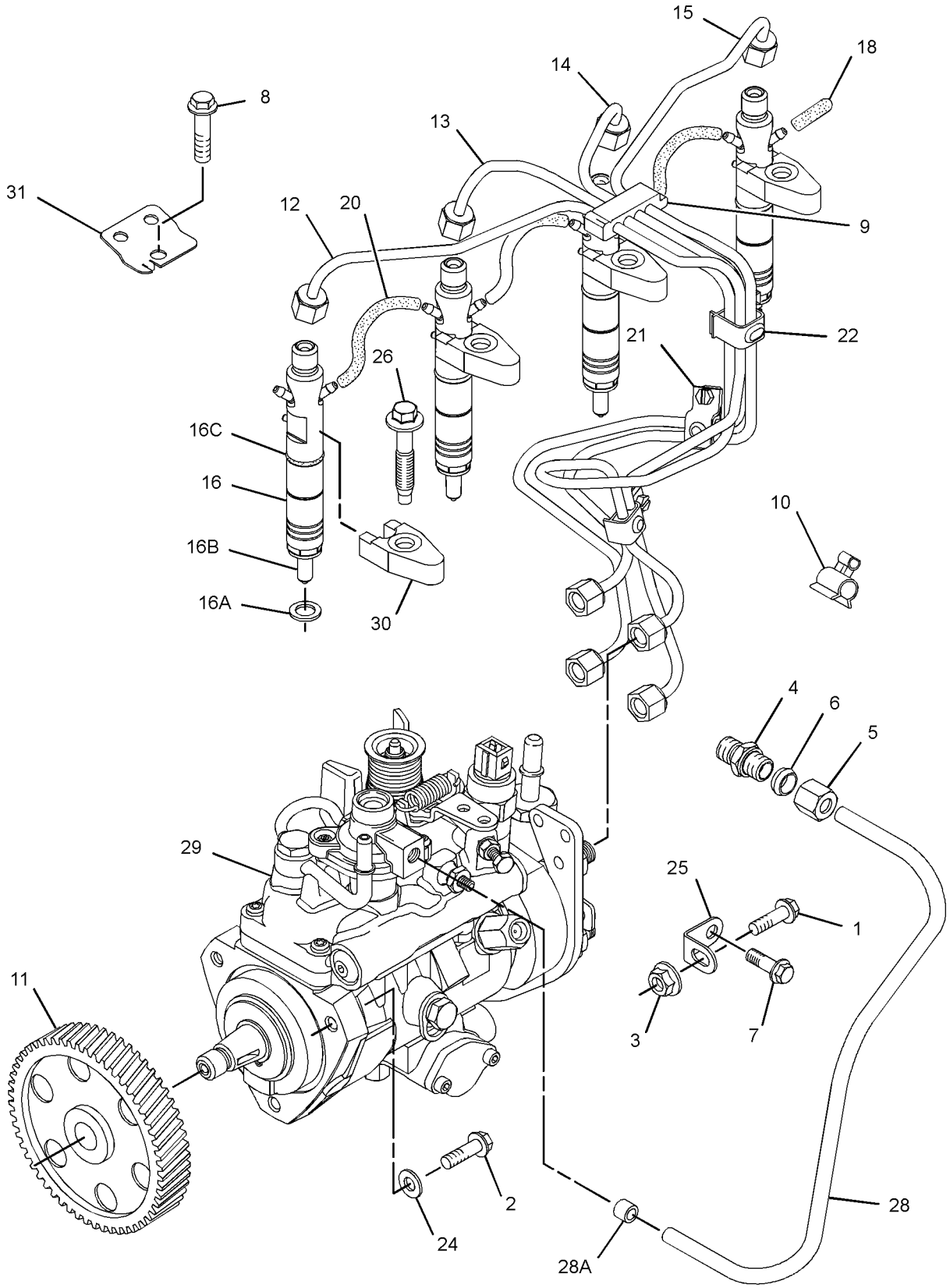

GRAPHIC #1 g01741376

270-8261 **PUMP GP-FUEL INJECTION (**contd.**)** **i04712792**

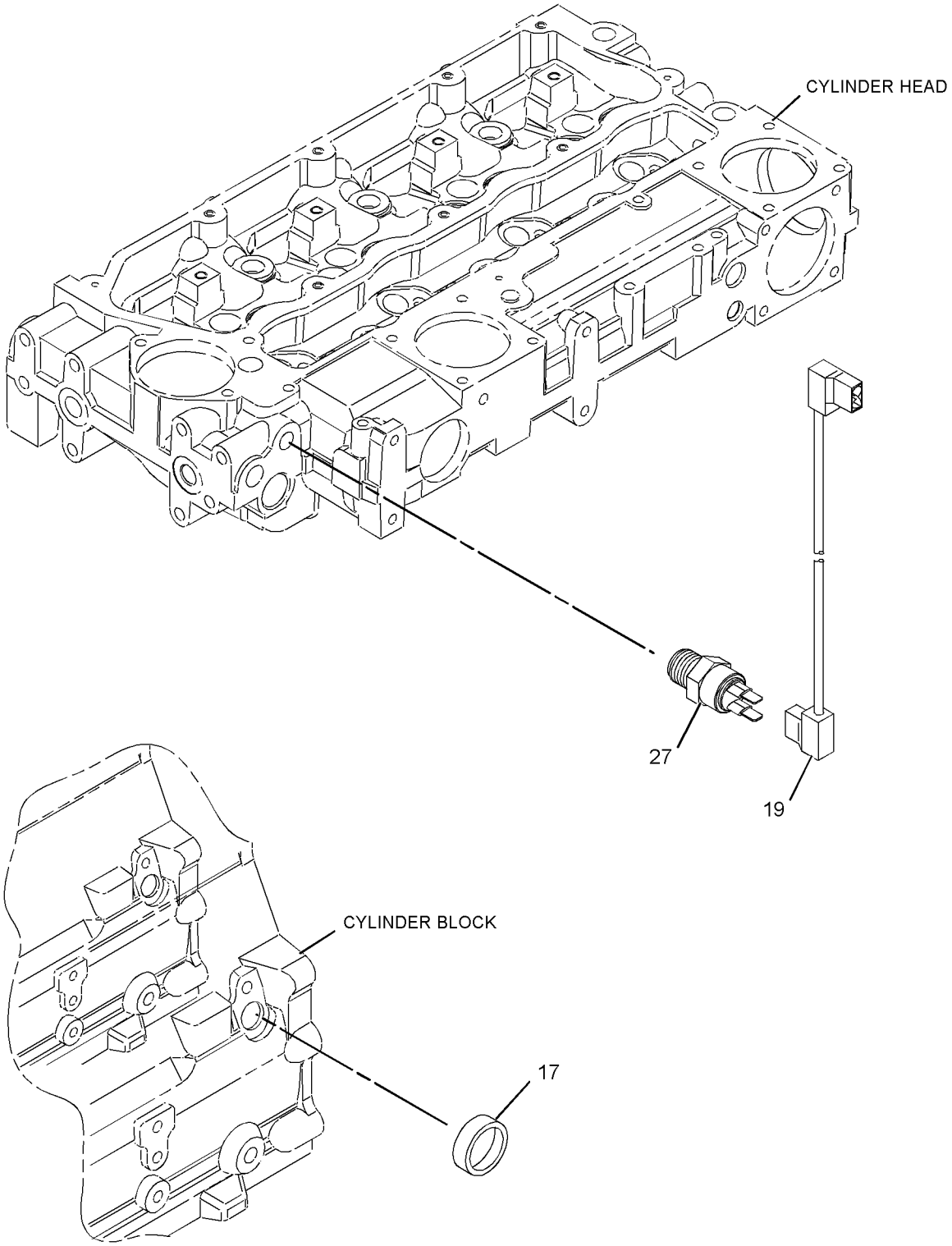

GRAPHIC #2 <END> g01156189

270-8261 PUMP GP-FUEL INJECTION

ALSO AN ATTACHMENT
TYPE 4

SMCS-1251, 1290 **i04895497**

NOTE	REF NO	GRAPHIC REF	PART NUMBER	QTY	PART NAME 1 2 3 4 5 6 (PRODUCT LEVEL)	SEE PAGE
M	1	1	**6I-0217**	1	BOLT (M8X1.25X20-MM)	
M	2	1	**6I-0260**	3	BOLT (M8X1.25X25-MM)	
M	3	1	**6I-0291**	1	NUT (M8X1.25-THD)	
	4	1	**035-8017**	1	UNION	
	5	1	**365-3308**	1	NUT-COMPRESSION (3/8-24-THD)	
	6	1	**067-6265**	1	FITTING-BRASS	
M	7	1	**100-4830**	1	BOLT (M10X1.5X20-MM)	
M	8	1	**124-3815**	1	BOLT (M8X1.25X16-MM)	
	9	1	**140-8714**	1	CLIP	
	10	1	**318-2365**	1	CLIP	
	11	1	**230-8989**	1	GEAR-FUEL PUMP (68-TEETH)	
	12	1	**230-8995**	1	TUBE AS (CYL NO. 1)	
	13	1	**230-8996**	1	TUBE AS (CYL NO. 2)	
	14	1	**230-8997**	1	TUBE AS (CYL NO. 3)	
	15	1	**230-8998**	1	TUBE AS (CYL NO. 4)	
R	16	1	**230-8999**	4	INJECTOR AS-FUEL	
					(EACH INCLUDES)	
	16A	1	**140-8718**	1	WASHER (7.49X15.75X1.68-MM THK)	
	16B	1	**232-2724**	1	NOZZLE	
	16C	1	**275-1038**	1	SEAL-O-RING	
	18	1	**232-1328**	1	CAP	
	19	2	**232-1793**	1	CABLE	
	20	1	**232-1794**	3	HOSE	
	21	1	**232-2725**	2	CLIP	
	22	1	**232-2726**	1	CLIP	
	24	1	**232-3149**	3	WASHER (8.35X16.85X1.55-MM THK)	
	25	1	**232-3157**	1	BRACKET	
M	26	1	**232-3274**	4	BOLT (M8X1.25X48.1-MM)	
	27	2	**235-1790**	1	SWITCH-TEMPERATURE (ENGINE COOLANT)	
	28	1	**236-2144**	1	TUBE AS	
	28A	1	**067-6999**	1	FERRULE	
	29	1	**284-4989**	1	PUMP GP-FUEL INJECTION	
	30	1	**238-8671**	4	CLAMP-INJECTOR	
	31	1	**240-5571**	1	BRACKET	

M - METRIC PART
R - REMANUFACTURED PART MAY BE AVAILABLE

270-8261 **PUMP GP-FUEL INJECTION (**contd.**)** **i04895497**

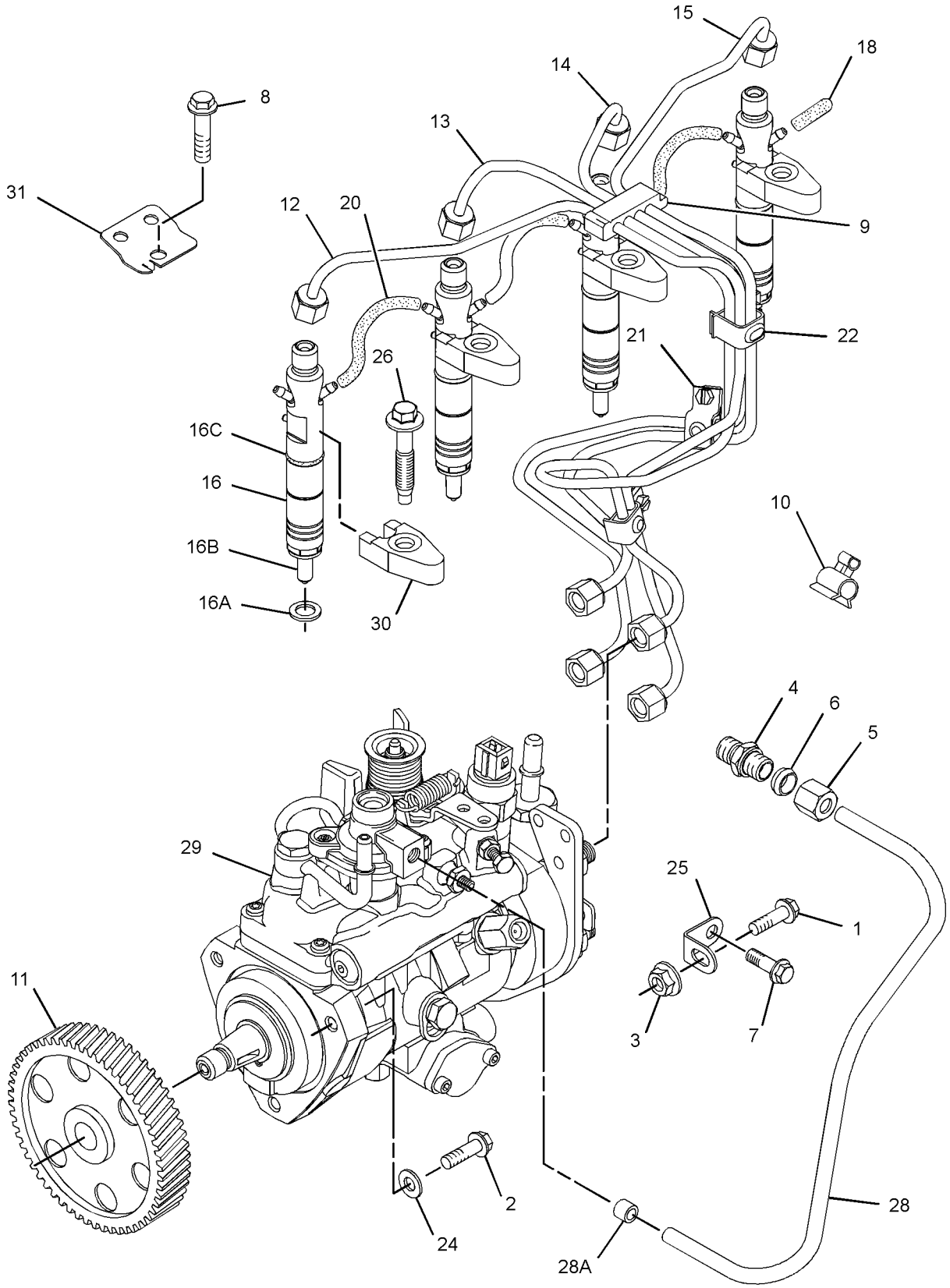

GRAPHIC #1 g01741376

270-8261 **PUMP GP-FUEL INJECTION (**contd.**)** **i04895497**

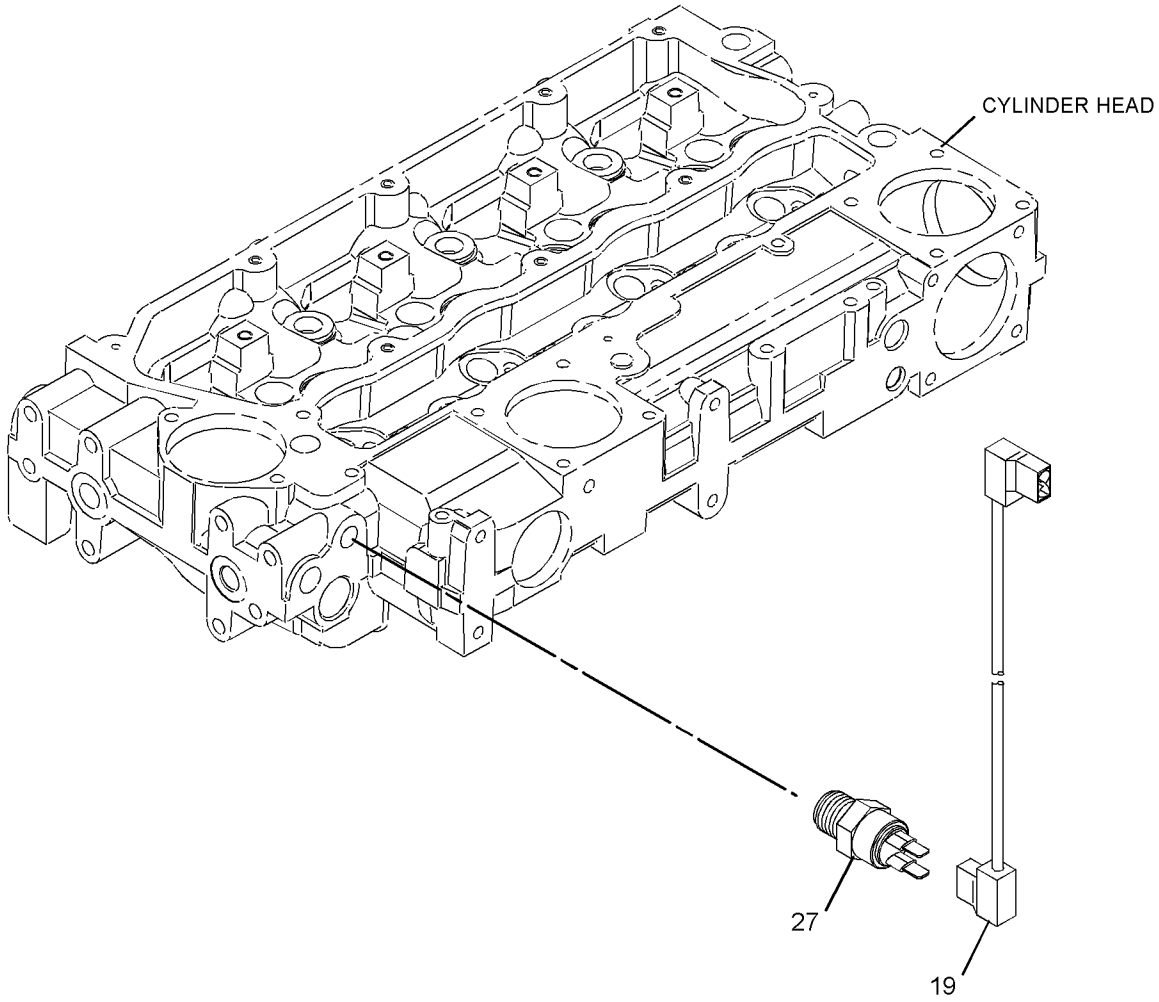

GRAPHIC #2 <END> g03042582

271-8874 PUMP GP-FUEL INJECTION

PART OF 271-8875 PUMP GP-FUEL INJECTION

SMCS-1251, 1290 **i02361591**

NOTE	REF NO	GRAPHIC REF	PART NUMBER	QTY	PART NAME 1 2 3 4 5 6 (PRODUCT LEVEL)	SEE PAGE
M	1	1	**111-3422**	1	NUT (M14X1.5-THD)	
	2	1	**111-3423**	1	WASHER	
	3	1	**152-3968**	1	SEAL-O-RING	
	4	1	**176-6219**	1	SOLENOID (12-VOLT) (FUEL SHUTOFF)	
	5	1	**193-0161**	1	CABLE AS-ADAPTER	

M - METRIC PART

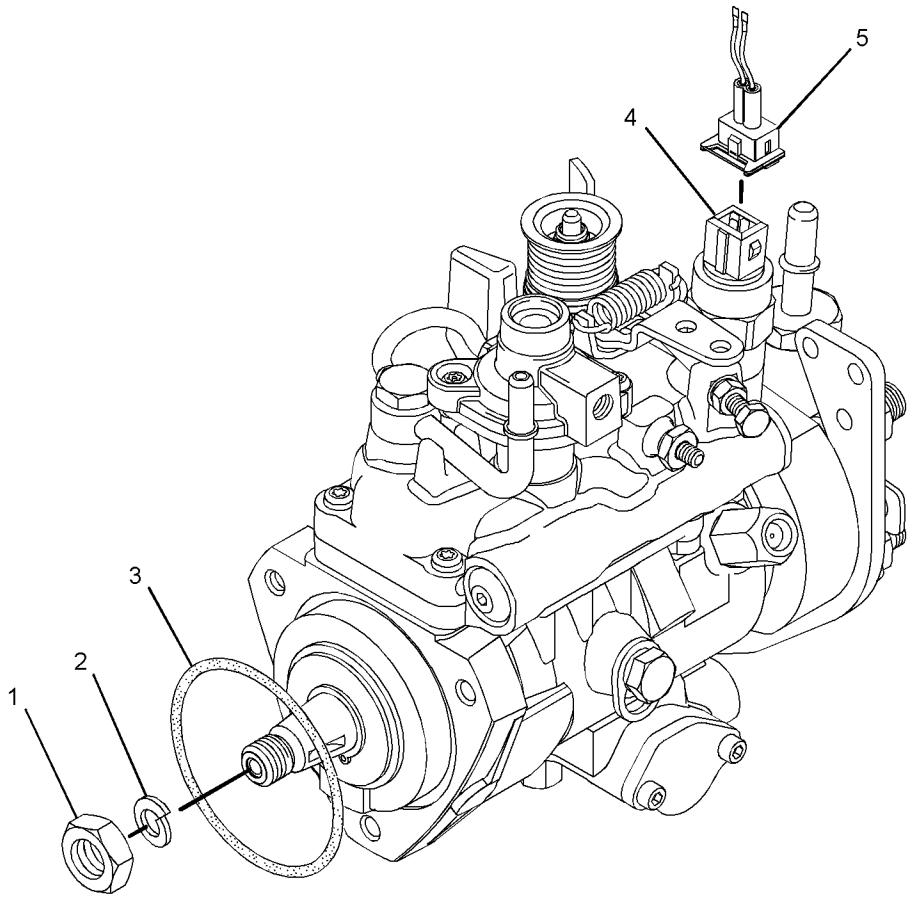

GRAPHIC #1 <END> g01175049

271-8875 PUMP GP-FUEL INJECTION

TYPE 1

SMCS-1251, 1290 **i04712749**

NOTE	REF NO	GRAPHIC REF	PART NUMBER	QTY	PART NAME 1 2 3 4 5 6 (PRODUCT LEVEL)	SEE PAGE
M	1	1	**6I-0217**	1	BOLT (M8X1.25X20-MM)	
M	2	1	**6I-0260**	3	BOLT (M8X1.25X25-MM)	
M	3	1	**6I-0291**	1	NUT (M8X1.25-THD)	
	4	1	**035-8017**	1	UNION	
	5	1	**365-3308**	1	NUT-COMPRESSION (3/8-24-THD)	
	6	1	**067-6265**	1	FITTING-BRASS	
M	7	1	**100-4830**	1	BOLT (M10X1.5X20-MM)	
M	8	1	**124-3815**	1	BOLT (M8X1.25X16-MM)	
	9	1	**140-8714**	1	CLIP	
	10	1	**160-7197**	1	CLIP	
	11	2	**169-5326**	1	SWITCH-TEMPERATURE (TIMING ADVANCE)	
	12	1	**230-8989**	1	GEAR-FUEL PUMP (68-TEETH)	
	13	1	**230-8995**	1	TUBE AS (CYL NO. 1)	
	14	1	**230-8996**	1	TUBE AS (CYL NO. 2)	
	15	1	**230-8997**	1	TUBE AS (CYL NO. 3)	
	16	1	**230-8998**	1	TUBE AS (CYL NO. 4)	
	17	2	**232-1323**	1	PLUG-CUP	
	18	1	**232-1328**	1	CAP	
	19	2	**232-1793**	1	CABLE	
	20	1	**232-1794**	3	HOSE	
	21	1	**232-2725**	2	CLIP	
	22	1	**232-2726**	1	CLIP	
	24	1	**232-3149**	3	WASHER (8.35X16.85X1.55-MM THK)	
	25	1	**232-3157**	1	BRACKET	
M	26	1	**232-3274**	4	BOLT (M8X1.25X48.1-MM)	
R	27	1	**236-1674**	4	INJECTOR AS-FUEL	
					(EACH INCLUDES)	
		1	**236-1673**	1	NOZZLE	
	27A	1	**140-8718**	1	WASHER (7.49X15.75X1.68-MM THK)	
	28	1	**236-2144**	1	TUBE AS	
	28A	1	**067-6999**	1	FERRULE	
	28B	1	**106-8835**	1	NUT	
	29	1	**238-8671**	4	CLAMP-INJECTOR	
	30	1	**240-5571**	1	BRACKET	
Y	31	1	**271-8874**	1	PUMP GP-FUEL INJECTION	1382

M - METRIC PART
R - REMANUFACTURED PART MAY BE AVAILABLE
Y - SEPARATE ILLUSTRATION

271-8875 **PUMP GP-FUEL INJECTION (**contd.**)** **i04712749**

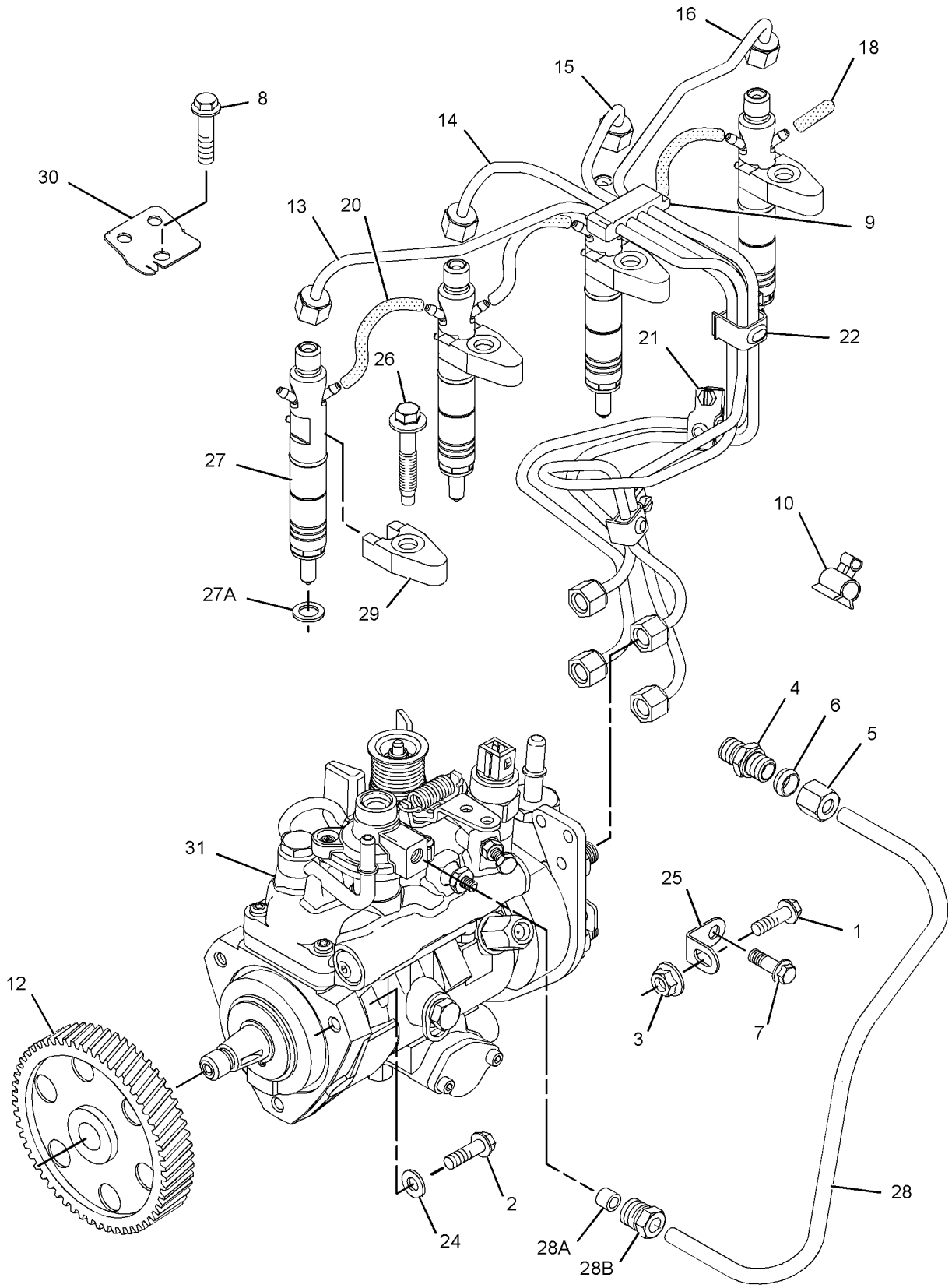

GRAPHIC #1 g01378869

271-8875 **PUMP GP-FUEL INJECTION (**contd.**)** **i04712749**

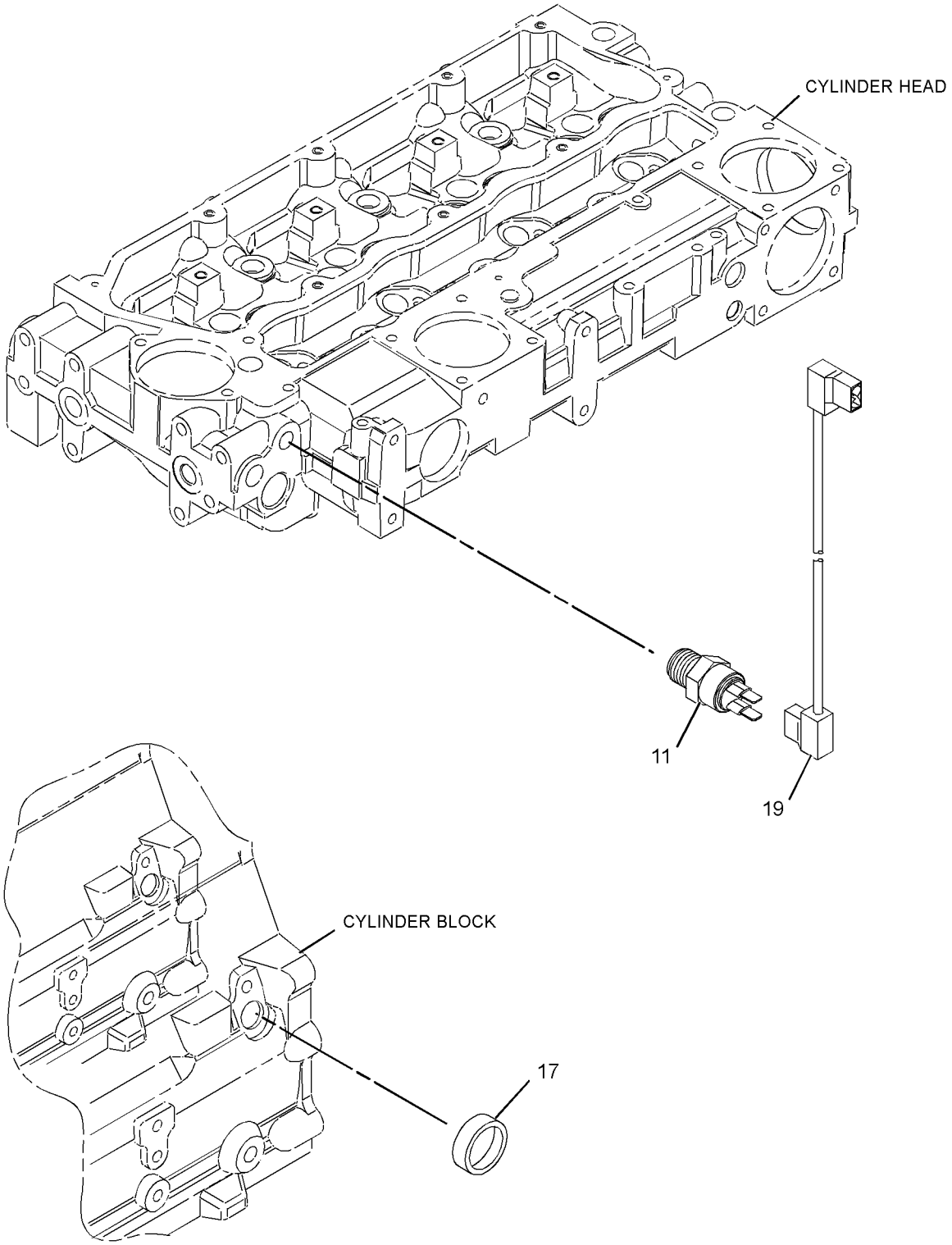

GRAPHIC #2 <END> g01179906

271-8875 PUMP GP-FUEL INJECTION

TYPE 2

SMCS-1251, 1290 **i04712794**

NOTE	REF NO	GRAPHIC REF	PART NUMBER	QTY	PART NAME 1 2 3 4 5 6 (PRODUCT LEVEL)	SEE PAGE
M	1	1	**6I-0217**	1	BOLT (M8X1.25X20-MM)	
M	2	1	**6I-0260**	3	BOLT (M8X1.25X25-MM)	
M	3	1	**6I-0291**	1	NUT (M8X1.25-THD)	
	4	1	**035-8017**	1	UNION	
	5	1	**365-3308**	1	NUT-COMPRESSION (3/8-24-THD)	
	6	1	**067-6265**	1	FITTING-BRASS	
M	7	1	**100-4830**	1	BOLT (M10X1.5X20-MM)	
M	8	1	**124-3815**	1	BOLT (M8X1.25X16-MM)	
	9	1	**140-8714**	1	CLIP	
	10	1	**318-2365**	1	CLIP	
	11	2	**235-1790**	1	SWITCH-TEMPERATURE (TIMING ADVANCE)	
	12	1	**230-8989**	1	GEAR-FUEL PUMP (68-TEETH)	
	13	1	**230-8995**	1	TUBE AS (CYL NO. 1)	
	14	1	**230-8996**	1	TUBE AS (CYL NO. 2)	
	15	1	**230-8997**	1	TUBE AS (CYL NO. 3)	
	16	1	**230-8998**	1	TUBE AS (CYL NO. 4)	
	17	2	**232-1323**	1	PLUG-CUP	
	18	1	**232-1328**	1	CAP	
	19	2	**232-1793**	1	CABLE	
	20	1	**232-1794**	3	HOSE	
	21	1	**232-2725**	2	CLIP	
	22	1	**232-2726**	1	CLIP	
	24	1	**232-3149**	3	WASHER (8.35X16.85X1.55-MM THK)	
	25	1	**232-3157**	1	BRACKET	
M	26	1	**232-3274**	4	BOLT (M8X1.25X48.1-MM)	
R	27	1	**236-1674**	4	INJECTOR AS-FUEL	
					(EACH INCLUDES)	
	27A	1	**140-8718**	1	WASHER (7.49X15.75X1.68-MM THK)	
	27B	1	**275-1038**	1	SEAL-O-RING	
	27C	1	**236-1673**	1	NOZZLE	
	28	1	**236-2144**	1	TUBE AS	
	28A	1	**067-6999**	1	FERRULE	
	29	1	**238-8671**	4	CLAMP-INJECTOR	
	30	1	**240-5571**	1	BRACKET	
CY	31	1	**292-5839**	1	PUMP GP-FUEL INJECTION	1460

C - CHANGE FROM PREVIOUS TYPE
M - METRIC PART
R - REMANUFACTURED PART MAY BE AVAILABLE
Y - SEPARATE ILLUSTRATION

271-8875 **PUMP GP-FUEL INJECTION** (contd.) **i04712794**

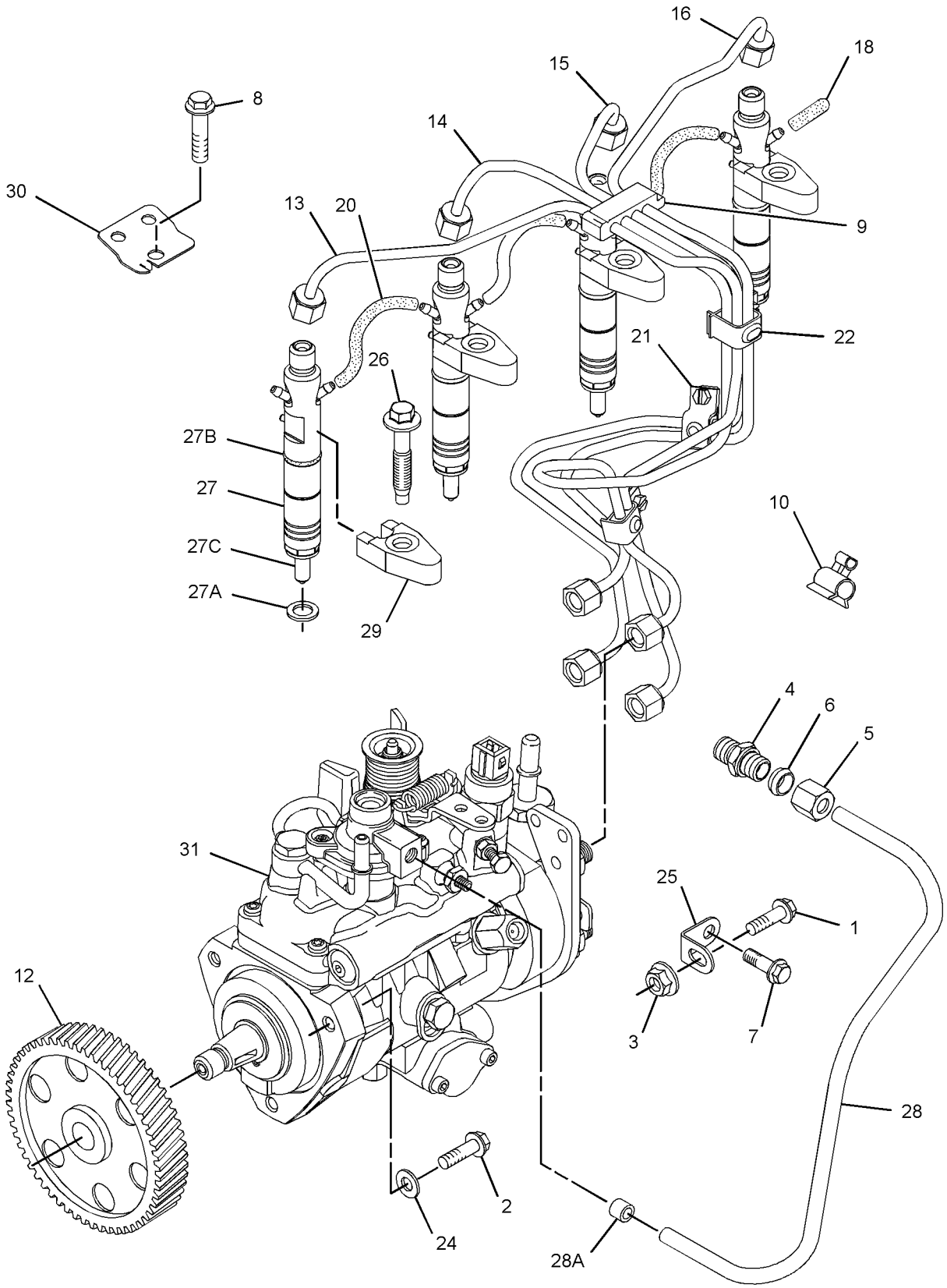

GRAPHIC #1 g01745533

271-8875 **PUMP GP-FUEL INJECTION (**contd.**)** **i04712794**

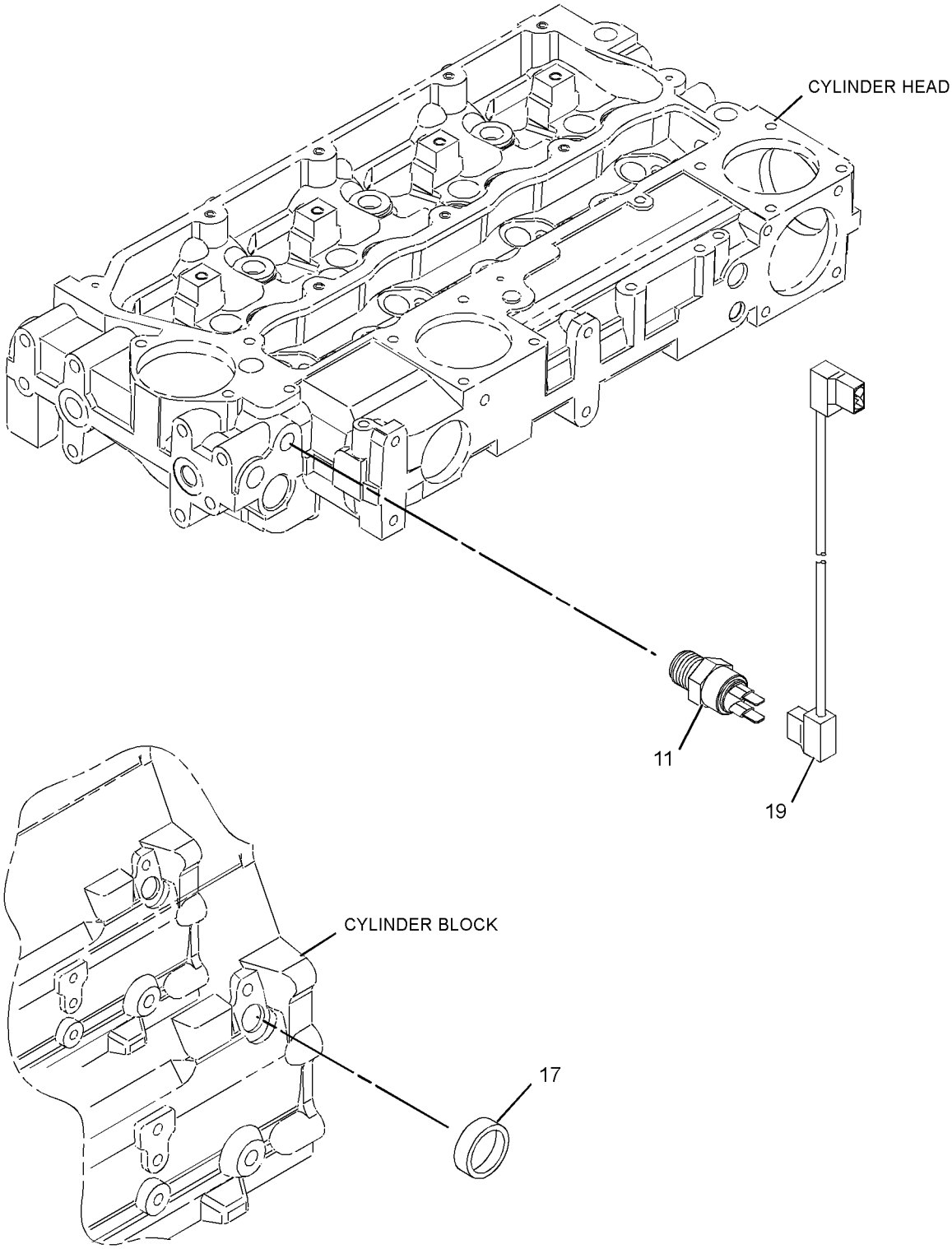

GRAPHIC #2 <END> g01179906

271-8875 PUMP GP-FUEL INJECTION

TYPE 3

SMCS-1251, 1290 **i04895562**

NOTE	REF NO	GRAPHIC REF	PART NUMBER	QTY	PART NAME 1 2 3 4 5 6 (PRODUCT LEVEL)	SEE PAGE
M	1	1	**6I-0217**	1	BOLT (M8X1.25X20-MM)	
M	2	1	**6I-0260**	3	BOLT (M8X1.25X25-MM)	
M	3	1	**6I-0291**	1	NUT (M8X1.25-THD)	
	4	1	**035-8017**	1	UNION	
	5	1	**365-3308**	1	NUT-COMPRESSION (3/8-24-THD)	
	6	1	**067-6265**	1	FITTING-BRASS	
M	7	1	**100-4830**	1	BOLT (M10X1.5X20-MM)	
M	8	1	**124-3815**	1	BOLT (M8X1.25X16-MM)	
	9	1	**140-8714**	1	CLIP	
	10	1	**318-2365**	1	CLIP	
	11	2	**235-1790**	1	SWITCH-TEMPERATURE (TIMING ADVANCE)	
	12	1	**230-8989**	1	GEAR-FUEL PUMP (68-TEETH)	
	13	1	**230-8995**	1	TUBE AS (CYL NO. 1)	
	14	1	**230-8996**	1	TUBE AS (CYL NO. 2)	
	15	1	**230-8997**	1	TUBE AS (CYL NO. 3)	
	16	1	**230-8998**	1	TUBE AS (CYL NO. 4)	
	18	1	**232-1328**	1	CAP	
	19	2	**232-1793**	1	CABLE	
	20	1	**232-1794**	3	HOSE	
	21	1	**232-2725**	2	CLIP	
	22	1	**232-2726**	1	CLIP	
	24	1	**232-3149**	3	WASHER (8.35X16.85X1.55-MM THK)	
	25	1	**232-3157**	1	BRACKET	
M	26	1	**232-3274**	4	BOLT (M8X1.25X48.1-MM)	
R	27	1	**236-1674**	4	INJECTOR AS-FUEL	
					(EACH INCLUDES)	
	27A	1	**140-8718**	1	WASHER (7.49X15.75X1.68-MM THK)	
	27B	1	**275-1038**	1	SEAL-O-RING	
	27C	1	**236-1673**	1	NOZZLE	
	28	1	**236-2144**	1	TUBE AS	
	28A	1	**067-6999**	1	FERRULE	
	29	1	**238-8671**	4	CLAMP-INJECTOR	
	30	1	**240-5571**	1	BRACKET	
Y	31	1	**292-5839**	1	PUMP GP-FUEL INJECTION	1460

M - METRIC PART
R - REMANUFACTURED PART MAY BE AVAILABLE
Y - SEPARATE ILLUSTRATION

271-8875 **PUMP GP-FUEL INJECTION (**contd.**)** **i04895562**

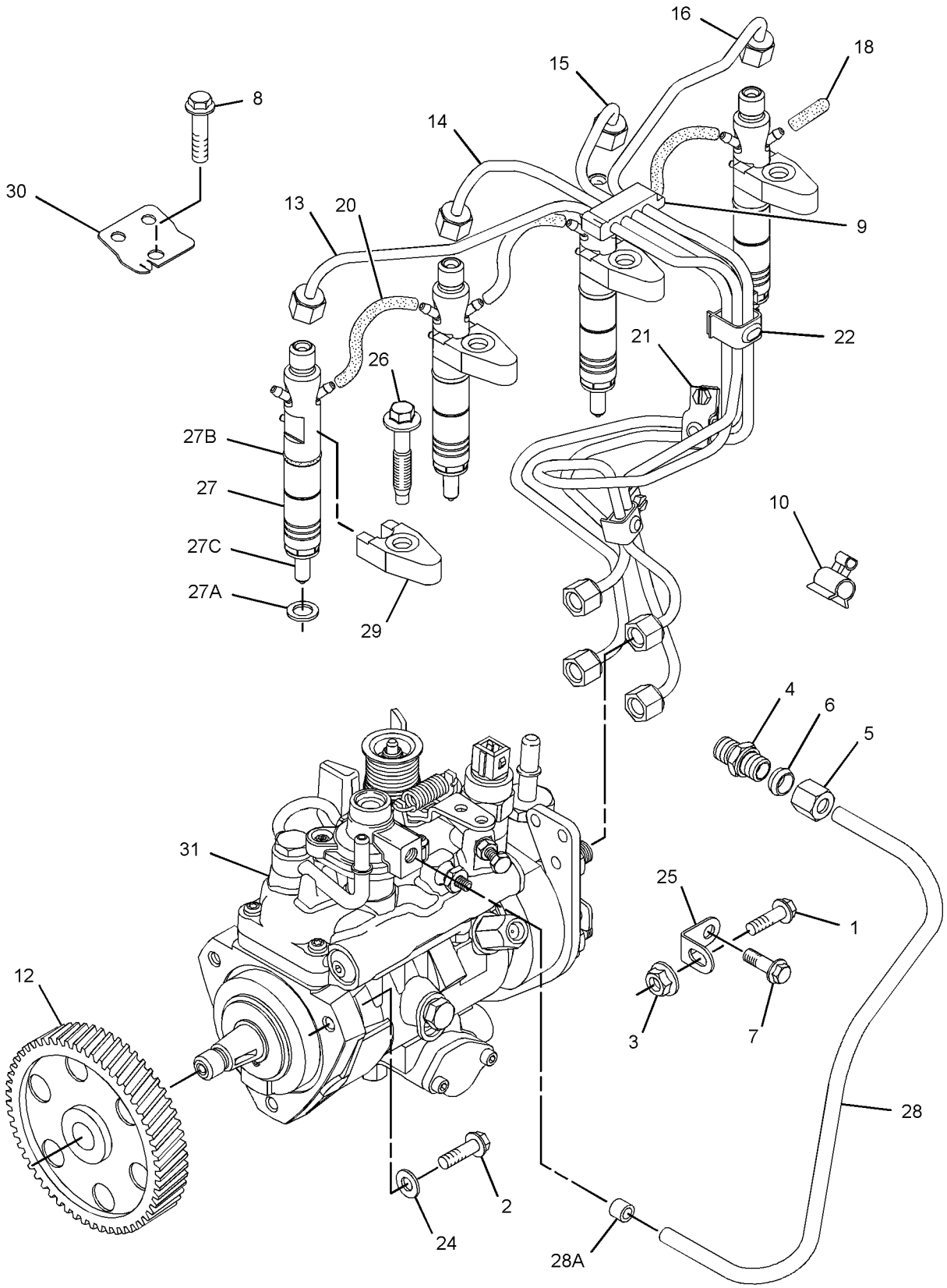

GRAPHIC #1 g01745533

271-8875 **PUMP GP-FUEL INJECTION (**contd.**)** **i04895562**

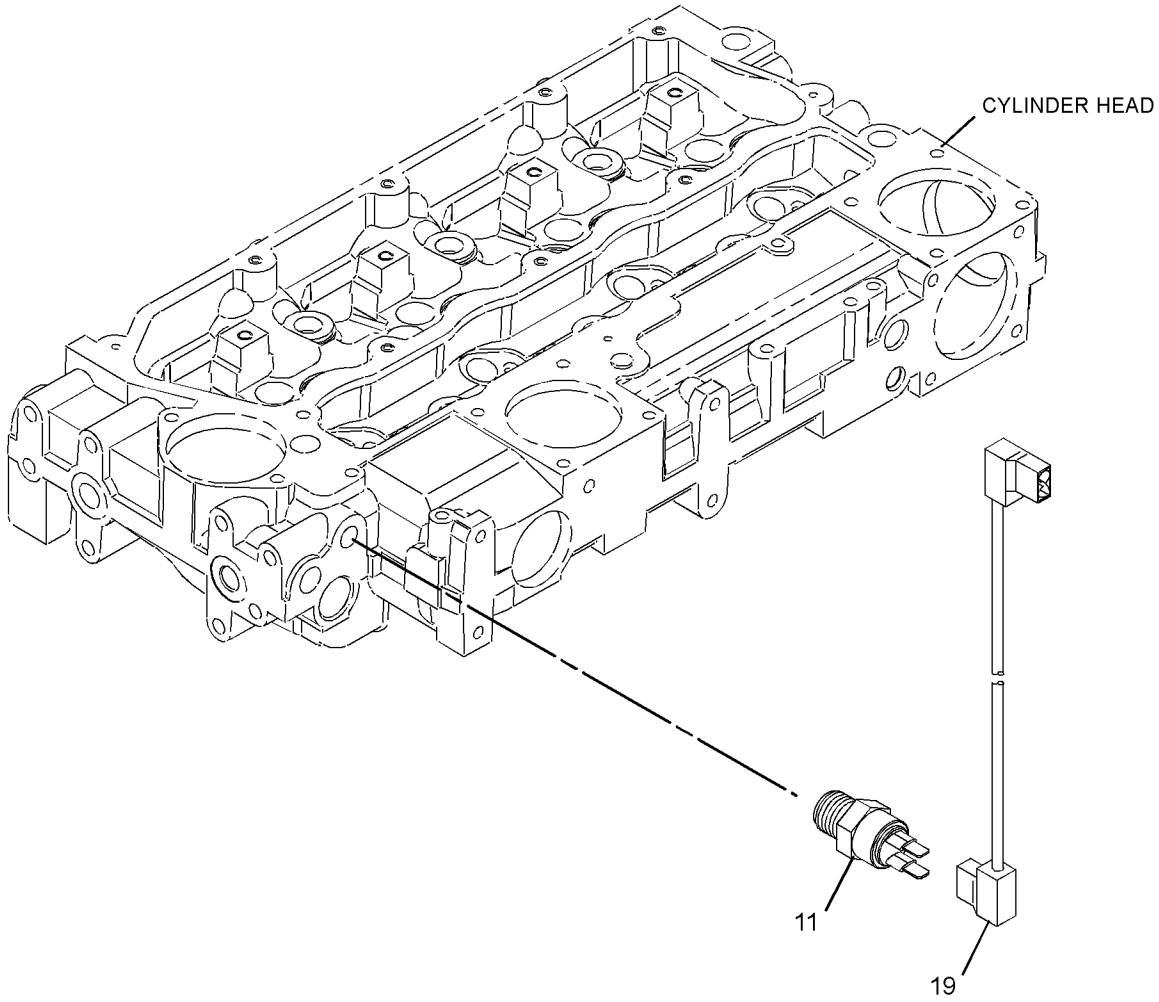

GRAPHIC #2 <END> g03042537

272-1393 PUMP GP-FUEL INJECTION

TYPE 1

SMCS-1251, 1290 **i04889162**

NOTE	REF NO	GRAPHIC REF	PART NUMBER	QTY	PART NAME 1 2 3 4 5 6 (PRODUCT LEVEL)	SEE PAGE
M	1	1	**6I-0217**	1	BOLT (M8X1.25X20-MM)	
M	2	1	**6I-0260**	3	BOLT (M8X1.25X25-MM)	
M	3	1	**6I-0291**	1	NUT (M8X1.25-THD)	
	4	1	**035-8017**	1	UNION	
	5	1	**365-3308**	1	NUT-COMPRESSION (3/8-24-THD)	
	6	1	**067-6265**	1	FITTING-BRASS	
M	7	1	**100-4830**	1	BOLT (M10X1.5X20-MM)	
M	8	1	**124-3815**	1	BOLT (M8X1.25X16-MM)	
	9	1	**140-8714**	1	CLIP	
	10	1	**318-2365**	1	CLIP	
	11	1	**230-8989**	1	GEAR-FUEL PUMP (68-TEETH)	
	12	1	**230-8995**	1	TUBE AS (CYL NO. 1)	
	13	1	**230-8996**	1	TUBE AS (CYL NO. 2)	
	14	1	**230-8997**	1	TUBE AS (CYL NO. 3)	
	15	1	**230-8998**	1	TUBE AS (CYL NO. 4)	
R	16	1	**230-8999**	4	INJECTOR AS-FUEL	
					(EACH INCLUDES)	
	16A	1	**232-2724**	1	NOZZLE	
	16B	1	**140-8718**	1	WASHER (7.49X15.75X1.68-MM THK) (SEATING)	
	16C	1	**275-1038**	1	SEAL-O-RING	
	17	2	**232-1323**	1	PLUG-CUP	
	18	1	**232-1328**	1	CAP	
	19	2	**232-1793**	1	CABLE	
	20	1	**232-1794**	3	HOSE	
	21	1	**232-2725**	2	CLIP	
	22	1	**232-2726**	1	CLIP	
	24	1	**232-3149**	3	WASHER (8.35X16.85X1.55-MM THK)	
	25	1	**232-3157**	1	BRACKET	
M	26	1	**232-3274**	4	BOLT (M8X1.25X48.1-MM)	
	27	2	**235-1790**	1	SWITCH-TEMPERATURE (ENGINE COOLANT)	
	28	1	**236-2144**	1	TUBE AS	
	28A	1	**067-6999**	1	FERRULE	
	29	1	**290-2608**	1	PUMP AS-FUEL INJECTION	
	29A	1	**152-3968**	1	SEAL-O-RING	
	29B	1	**176-6219**	1	SOLENOID (12-VOLT) (FUEL SHUTOFF)	
	30	1	**238-8671**	4	CLAMP-INJECTOR	
	31	1	**240-5571**	1	BRACKET	

M - METRIC PART
R - REMANUFACTURED PART MAY BE AVAILABLE

272-1393 **PUMP GP-FUEL INJECTION (**contd.**)** **i04889162**

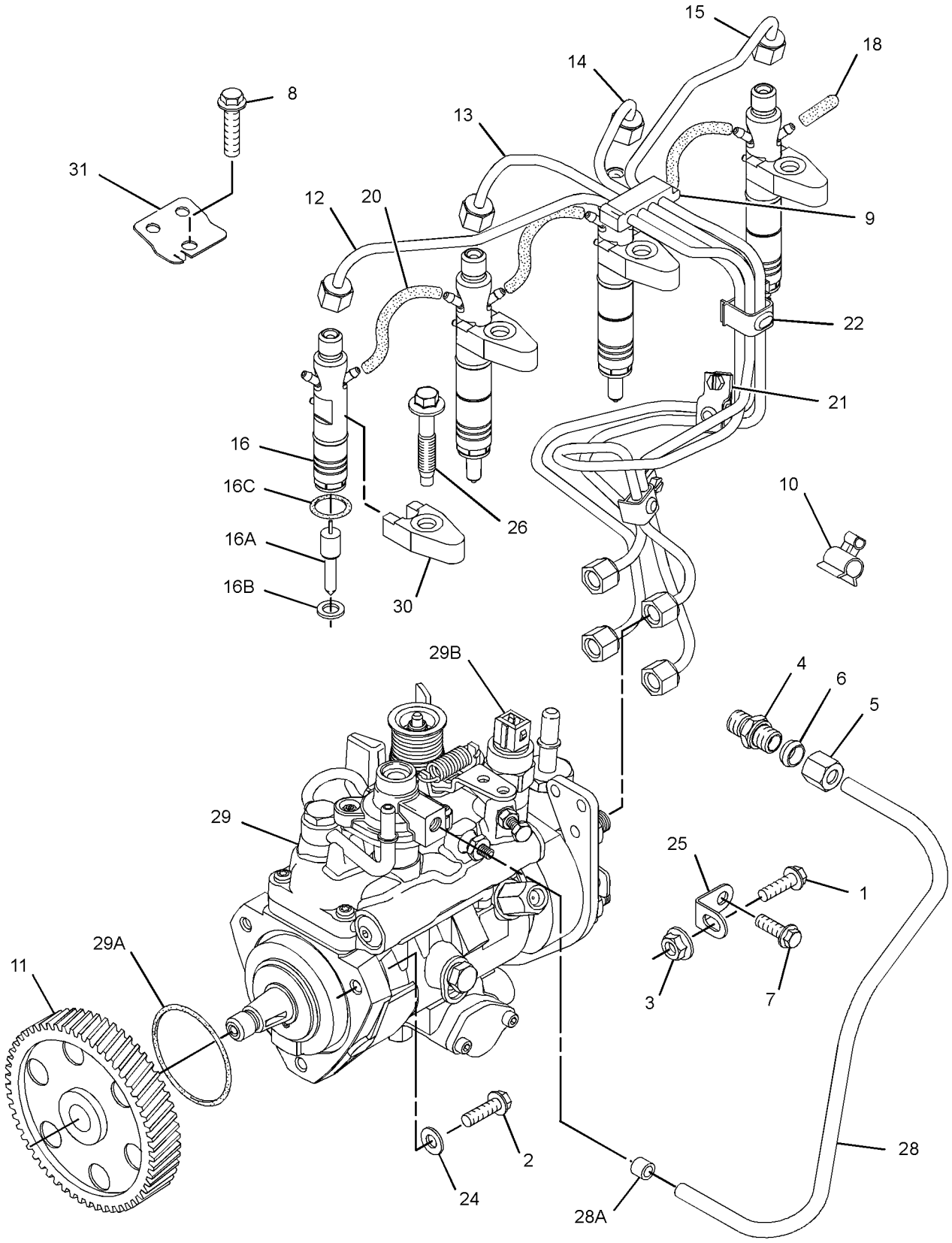

GRAPHIC #1 g01741833

272-1393 **PUMP GP-FUEL INJECTION (**contd.**)** **i04889162**

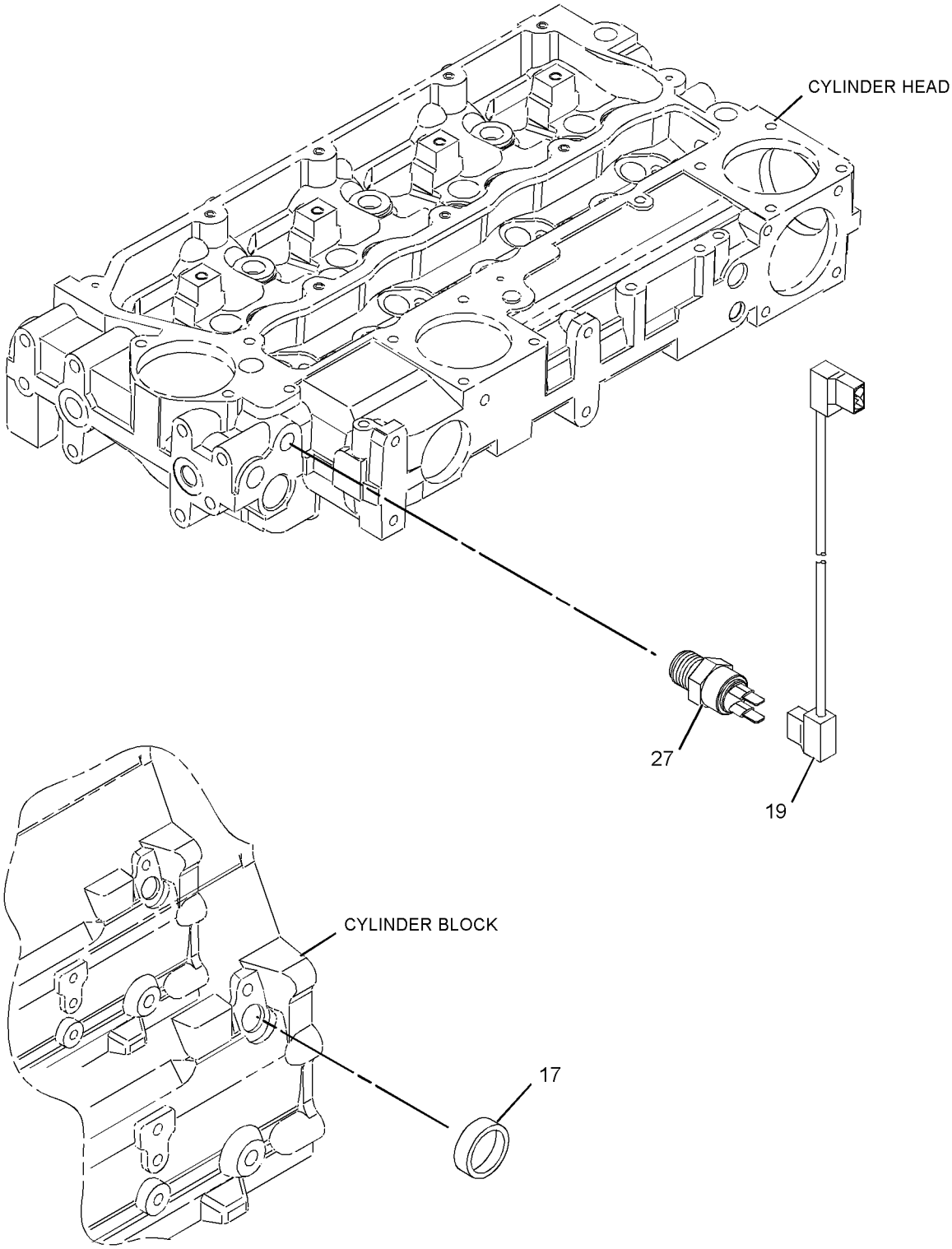

GRAPHIC #2 <END> g01156189

272-1393 PUMP GP-FUEL INJECTION

TYPE 2

SMCS-1251, 1290 **i08268882**

NOTE	REF NO	GRAPHIC REF	PART NUMBER	QTY	PART NAME 1 2 3 4 5 6 (PRODUCT LEVEL)	SEE PAGE
M	1	2	**6I-0217**	1	BOLT (M8X1.25X20-MM)	
M	2	1,2	**6I-0260**	3	BOLT (M8X1.25X25-MM)	
M	3	2	**178-3336**	1	NUT-HEX FLANGE (M8X1.25-THD)	
	4	2	**035-8017**	1	UNION	
	5	2	**067-6265**	1	FITTING-BRASS	
M	6	2	**100-4830**	1	BOLT (M10X1.5X20-MM)	
M	7	1	**124-3815**	1	BOLT (M8X1.25X16-MM)	
R	8	1	**230-8999**	4	INJECTOR AS-FUEL	
					(EACH INCLUDES)	
	8A	1	**232-2724**	1	NOZZLE	
	8B	1	**140-8718**	1	WASHER (7.49X15.75X1.68-MM THK) (SEATING)	
	8C	1	**275-1038**	1	SEAL-O-RING	
	9	1	**232-1328**	1	CAP (FUEL INJECTOR)	
	10	1	**232-1793**	1	CABLE	
	11	1	**232-1794**	3	HOSE	
	12	1,2	**232-3149**	3	WASHER (8.35X16.85X1.55-MM THK)	
	13	2	**232-3157**	1	BRACKET	
M	14	1	**232-3274**	4	BOLT (M8X1.25X48.1-MM)	
	15	2	**236-2144**	1	TUBE AS	
	15A	2	**067-6999**	1	FERRULE	
	16	1	**238-8671**	4	CLAMP-INJECTOR	
	17	1	**240-5571**	1	BRACKET	
	18	2	**290-2608**	1	PUMP AS-FUEL INJECTION	
	18A	2	**152-3968**	1	SEAL-O-RING	
	18B	2	**176-6219**	1	SOLENOID (12-VOLT) (FUEL INJECTION PUMP)	
	19	2	**318-2365**	1	CLIP	
	20	2	**365-3308**	1	NUT-COMPRESSION (3/8-24-THD)	
	21	2	**425-7107**	1	GEAR-FUEL PUMP (68-TEETH)	
Y	22	1	*495-3762*	1	LINES GP-FUEL INJECTION	1173
	23	1	**235-1790**	1	SWITCH-TEMPERATURE (TIMING ADVANCE)	

M - METRIC PART
R - REMANUFACTURED PART MAY BE AVAILABLE
Y - SEPARATE ILLUSTRATION

272-1393 **PUMP GP-FUEL INJECTION (**contd.**)** **i08268882**

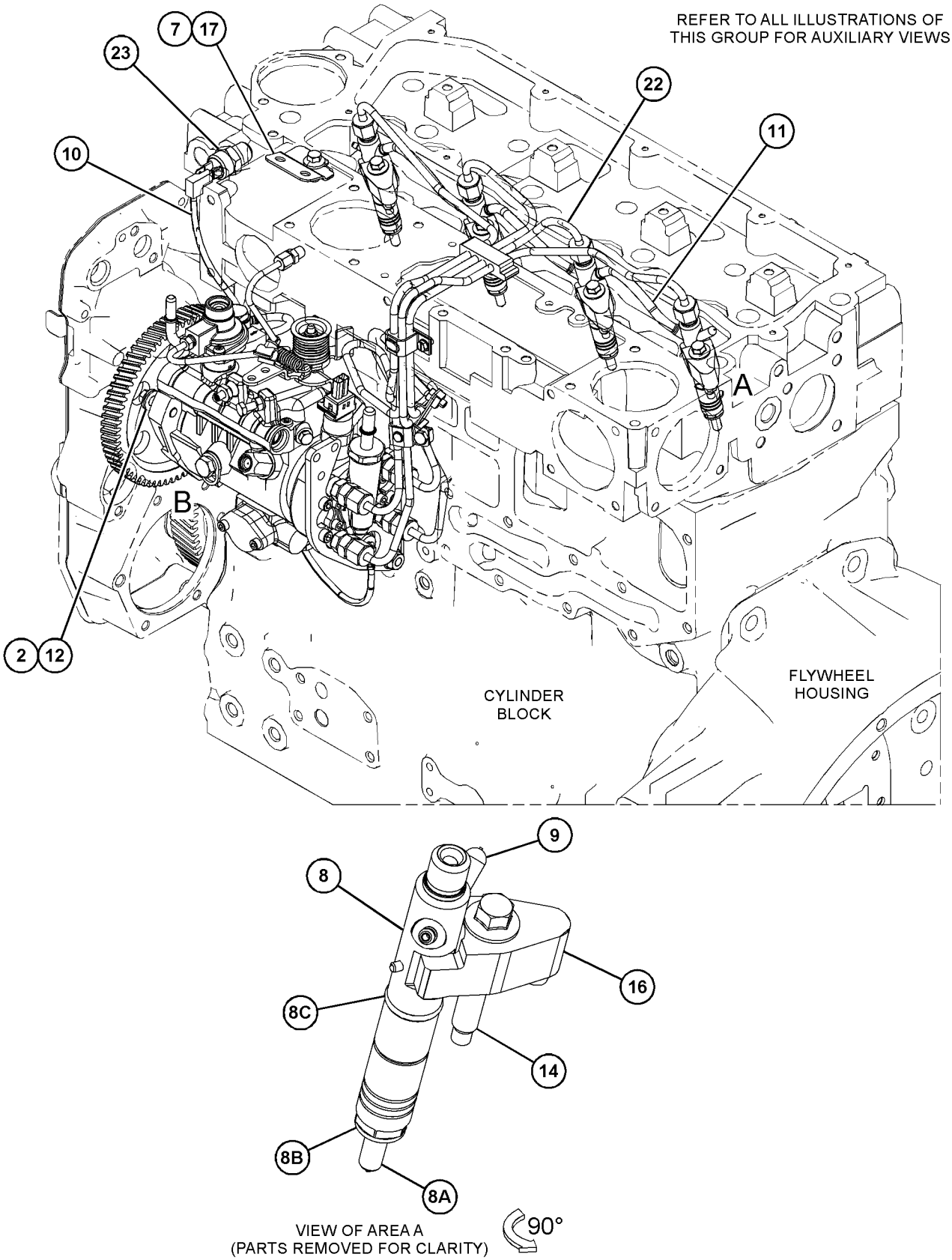

GRAPHIC #1 g06746200

272-1393 **PUMP GP-FUEL INJECTION (**contd.**)** **i08268882**

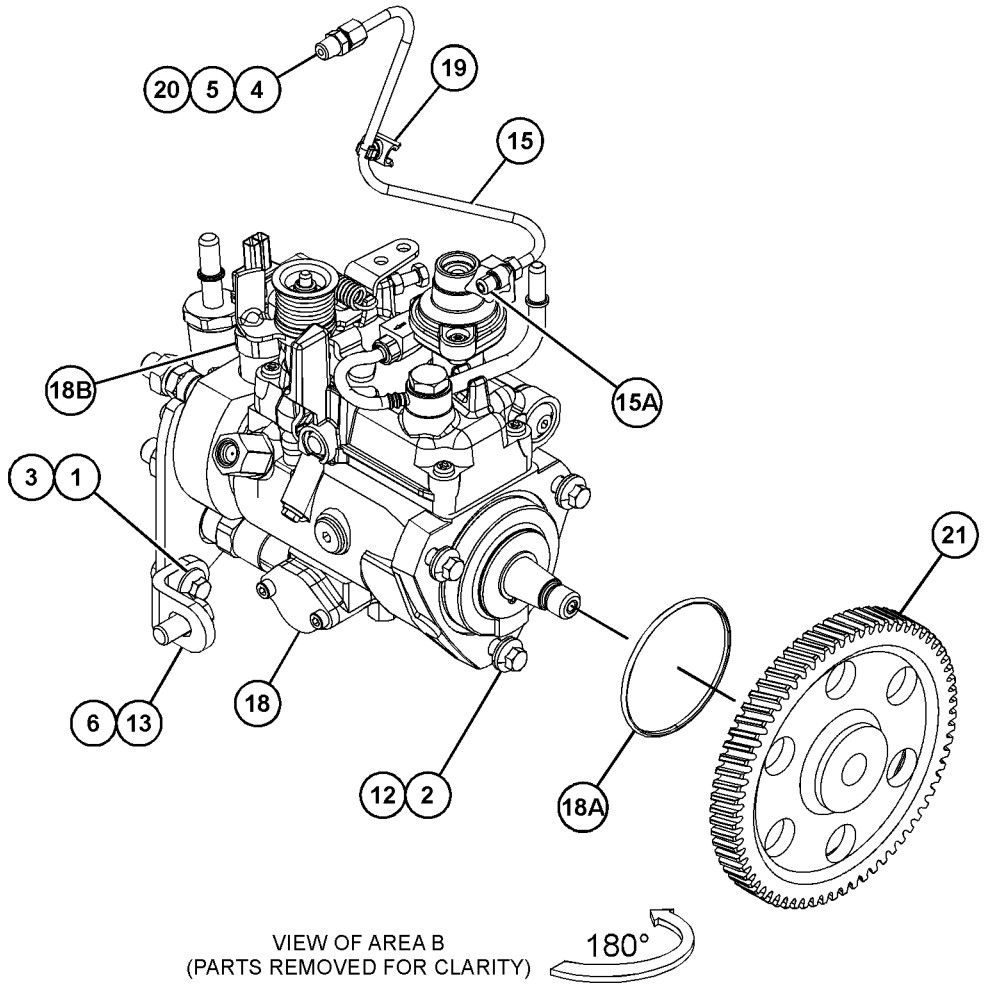

GRAPHIC #2 <END> g06746201

272-2290 PUMP GP-FUEL INJECTION*R

PART OF 272-2291 PUMP GP-FUEL INJECTION

SMCS-1251, 1290 **i02359101**

NOTE	REF NO	GRAPHIC REF	PART NUMBER	QTY	PART NAME 1 2 3 4 5 6 (PRODUCT LEVEL)	SEE PAGE
M	1	1	**111-3422**	1	NUT (M14X1.5-THD)	
	2	1	**111-3423**	1	WASHER	
	3	1	**152-3968**	1	SEAL-O-RING	
	4	1	**176-6219**	1	SOLENOID (12-VOLT) (FUEL SHUTOFF)	

M - METRIC PART

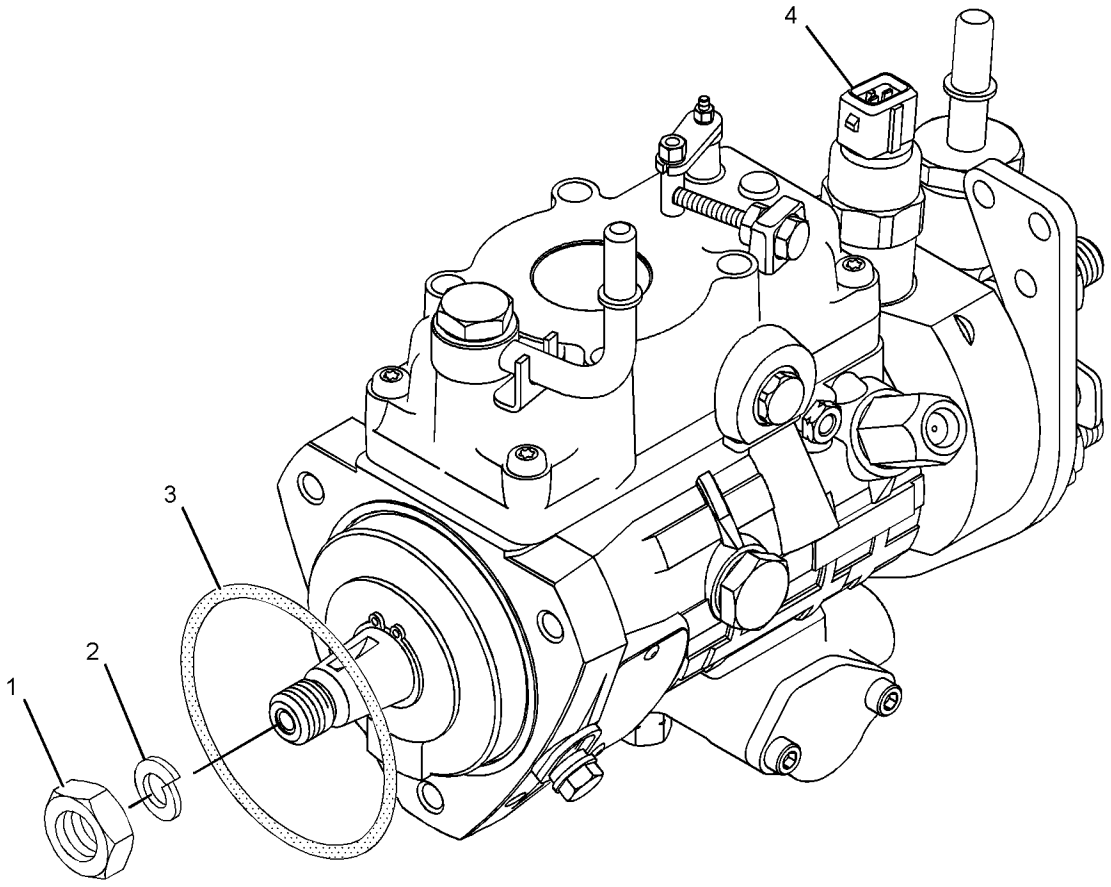

GRAPHIC #1 <END> g01160107

272-2291 PUMP GP-FUEL INJECTION

TYPE 1

SMCS-1251, 1290 **i07025046**

NOTE	REF NO	GRAPHIC REF	PART NUMBER	QTY	PART NAME 1 2 3 4 5 6 (PRODUCT LEVEL)	SEE PAGE
M	1	1	**6I-0260**	3	BOLT (M8X1.25X25-MM)	
	4	2	**7M-7410**	1	PLUG-PIPE (3/8-18-THD)	
	5	2	**9F-2247**	1	PLUG-PIPE (1/8-27-THD)	
	7	1	**110-8760**	1	STRAP	
M	8	1	**124-3815**	1	BOLT (M8X1.25X16-MM)	
	9	1	**140-8714**	1	CLIP	
	10	2	**203-6797**	1	SENSOR-SPEED	
	11	2	**203-6798**	1	ADAPTER	
	12	1	**230-8989**	1	GEAR-FUEL PUMP (68-TEETH)	
	13	1	**230-8995**	1	TUBE AS (CYL NO. 1)	
	14	1	**230-8996**	1	TUBE AS (CYL NO. 2)	
	15	1	**230-8997**	1	TUBE AS (CYL NO. 3)	
	16	1	**230-8998**	1	TUBE AS (CYL NO. 4)	
R	17	1	**230-8999**	4	INJECTOR AS-FUEL	
					(EACH INCLUDES)	
	17A	1	**140-8718**	1	WASHER (7.49X15.75X1.68-MM THK)	
	18	1	**230-9527**	1	BRACKET	
	19	2	**232-1323**	1	PLUG-CUP	
	20	1	**232-1328**	1	CAP	
	21	1	**232-1794**	3	HOSE	
	22	1	**232-2725**	2	CLIP	
	23	1	**232-2726**	1	CLIP	
	24	1	**232-3149**	3	WASHER (8.35X16.85X1.55-MM THK)	
M	26	1	**232-3274**	4	BOLT (M8X1.25X48.1-MM)	
	27	1	**238-8671**	4	CLAMP-INJECTOR	
	28	1	**272-2223**	1	ACTUATOR GP-GOVERNOR	
	28A	1	**241-4288**	1	SEAL-O-RING	
M	28B	1	**241-4291**	4	SCREW (M5X0.8X16-MM)	
YR	29	1	**272-2290**	1	PUMP GP-FUEL INJECTION	1398

M - METRIC PART
R - REMANUFACTURED PART MAY BE AVAILABLE
Y - SEPARATE ILLUSTRATION

272-2291 **PUMP GP-FUEL INJECTION (**contd.**)** **i07025046**

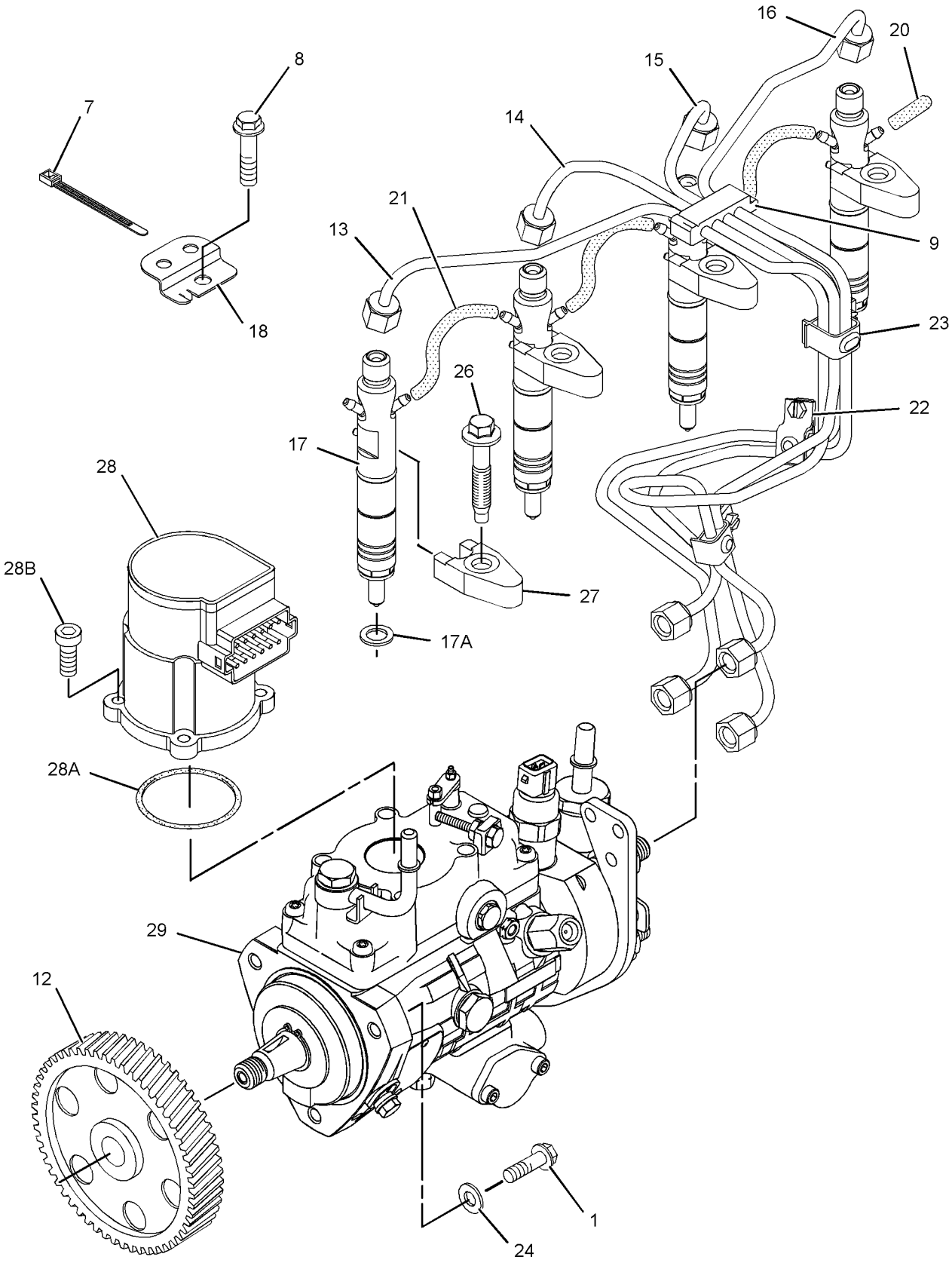

GRAPHIC #1 g01300567

272-2291 **PUMP GP-FUEL INJECTION (**contd.**)** **i07025046**

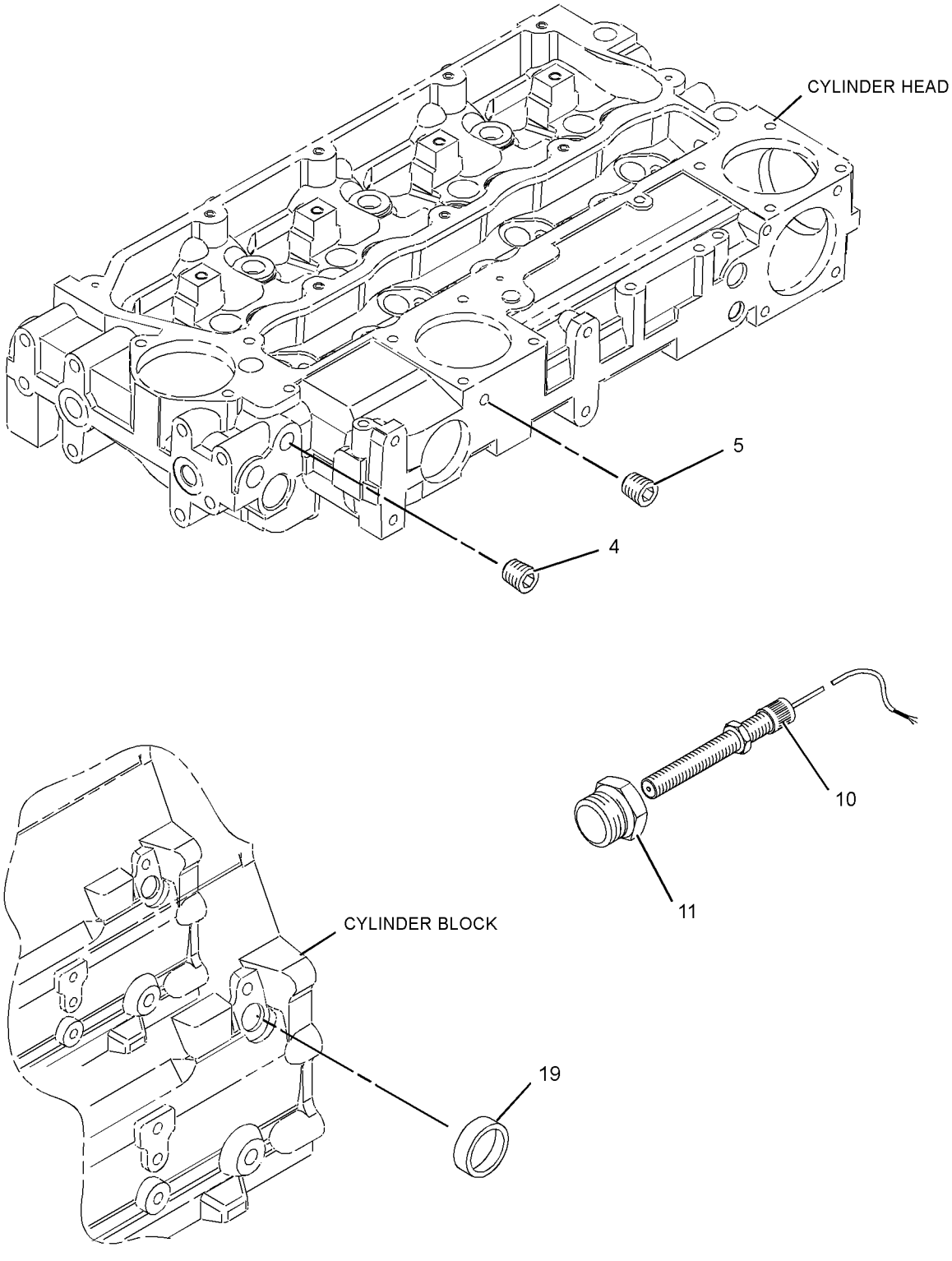

GRAPHIC #2 <END> g01160857

272-2291 PUMP GP-FUEL INJECTION

TYPE 2

SMCS-1251, 1290 **i07359971**

NOTE	REF NO	GRAPHIC REF	PART NUMBER	QTY	PART NAME 1 2 3 4 5 6 (PRODUCT LEVEL)	SEE PAGE
M	1	1	**6I-0260**	3	BOLT (M8X1.25X25-MM)	
	4	2	**7M-7410**	1	PLUG-PIPE (3/8-18-THD)	
	5	2	**9F-2247**	1	PLUG-PIPE (1/8-27-THD)	
	7	1	**110-8760**	1	STRAP	
M	8	1	**124-3815**	1	BOLT (M8X1.25X16-MM)	
	9	1	**140-8714**	1	CLIP	
	10	2	**203-6797**	1	SENSOR-SPEED	
	11	2	**203-6798**	1	ADAPTER	
	12	1	**425-7107**	1	GEAR-FUEL PUMP (68-TEETH)	
	13	1	**230-8995**	1	TUBE AS (CYL NO. 1)	
	14	1	**230-8996**	1	TUBE AS (CYL NO. 2)	
	15	1	**230-8997**	1	TUBE AS (CYL NO. 3)	
	16	1	**230-8998**	1	TUBE AS (CYL NO. 4)	
R	17	1	**230-8999**	4	INJECTOR AS-FUEL	
					(EACH INCLUDES)	
		1	**232-2724**	1	NOZZLE	
		1	**275-1038**	1	SEAL-O-RING	
	17A	1	**140-8718**	1	WASHER (7.49X15.75X1.68-MM THK)	
	18	1	**240-5571**	1	BRACKET	
	20	1	**232-1328**	1	CAP	
	21	1	**232-1794**	3	HOSE	
	22	1	**232-2725**	2	CLIP	
	23	1	**232-2726**	1	CLIP	
	24	1	**232-3149**	3	WASHER (8.35X16.85X1.55-MM THK)	
M	26	1	**232-3274**	4	BOLT (M8X1.25X48.1-MM)	
	27	1	**238-8671**	4	CLAMP-INJECTOR	
	28	1	**272-2223**	1	ACTUATOR GP-GOVERNOR	
	28A	1	**241-4288**	1	SEAL-O-RING	
M	28B	1	**241-4291**	4	SCREW (M5X0.8X16-MM)	
YR	29	1	**272-2290**	1	PUMP GP-FUEL INJECTION	1398

M - METRIC PART
R - REMANUFACTURED PART MAY BE AVAILABLE
Y - SEPARATE ILLUSTRATION

272-2291 **PUMP GP-FUEL INJECTION (**contd.**)** **i07359971**

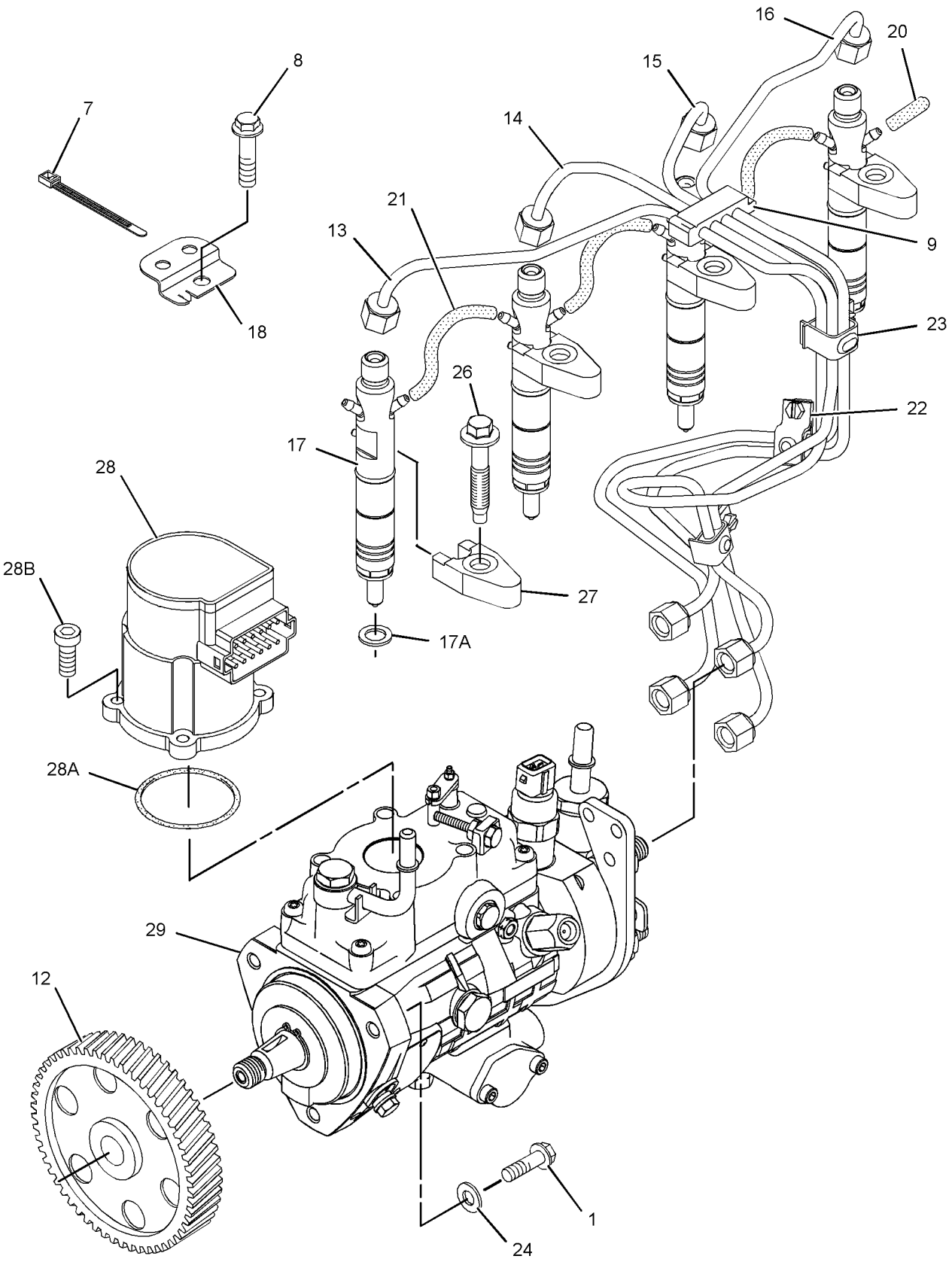

GRAPHIC #1 g01300567

272-2291 **PUMP GP-FUEL INJECTION (**contd.**)** **i07359971**

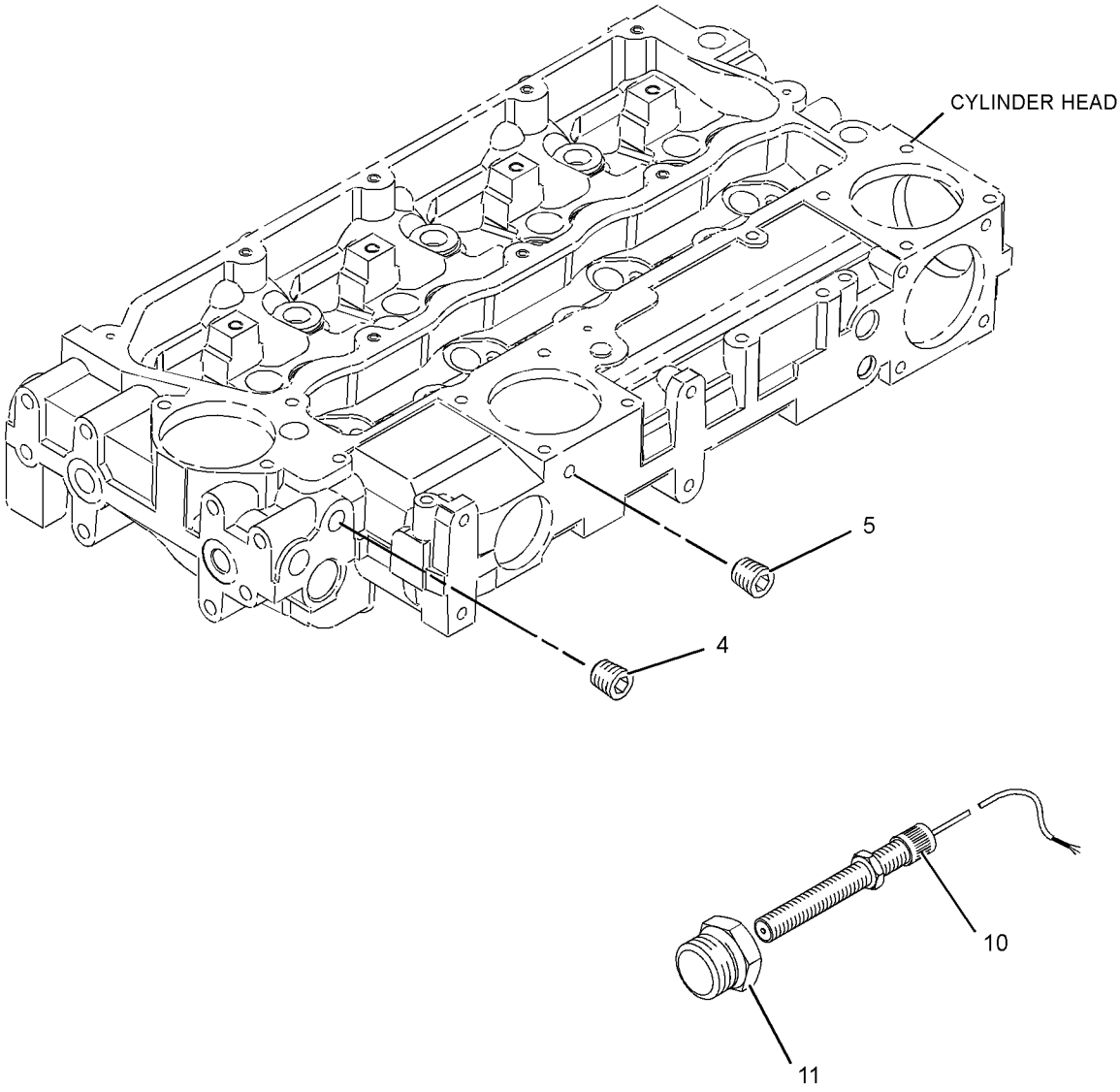

GRAPHIC #2 <END> g03028156

272-2291 PUMP GP-FUEL INJECTION

TYPE 3

SMCS-1251, 1290 **i08254423**

NOTE	REF NO	GRAPHIC REF	PART NUMBER	QTY	PART NAME 1 2 3 4 5 6 (PRODUCT LEVEL)	SEE PAGE
M	1	1	**6I-0260**	3	BOLT (M8X1.25X25-MM)	
	4	2	**7M-7410**	1	PLUG-PIPE (3/8-18-THD)	
	5	2	**9F-2247**	1	PLUG-PIPE (1/8-27-THD)	
	7	1	**034-1432**	1	STRAP-CABLE	
M	8	1	**124-3815**	1	BOLT (M8X1.25X16-MM)	
	9	1	**140-8714**	1	CLIP	
C	10	2	**550-9106**	1	SENSOR AS-SPEED (FUEL PUMP)	
	11	2	**203-6798**	1	ADAPTER	
	12	1	**425-7107**	1	GEAR-FUEL PUMP (68-TEETH)	
	13	1	**230-8995**	1	TUBE AS (CYL NO. 1)	
	14	1	**230-8996**	1	TUBE AS (CYL NO. 2)	
	15	1	**230-8997**	1	TUBE AS (CYL NO. 3)	
	16	1	**230-8998**	1	TUBE AS (CYL NO. 4)	
R	17	1	**230-8999**	4	INJECTOR AS-FUEL	
					(EACH INCLUDES)	
		1	**232-2724**	1	NOZZLE	
		1	**275-1038**	1	SEAL-O-RING	
	17A	1	**140-8718**	1	WASHER (7.49X15.75X1.68-MM THK)	
	18	1	**240-5571**	1	BRACKET	
	20	1	**232-1328**	1	CAP	
	21	1	**232-1794**	3	HOSE	
	22	1	**232-2725**	2	CLIP	
	23	1	**232-2726**	1	CLIP	
	24	1	**232-3149**	3	WASHER (8.35X16.85X1.55-MM THK)	
M	26	1	**232-3274**	4	BOLT (M8X1.25X48.1-MM)	
	27	1	**238-8671**	4	CLAMP-INJECTOR	
	28	1	**272-2223**	1	ACTUATOR GP-GOVERNOR	
	28A	1	**241-4288**	1	SEAL-O-RING	
M	28B	1	**241-4291**	4	SCREW (M5X0.8X16-MM)	
YR	29	1	**272-2290**	1	PUMP GP-FUEL INJECTION	1398

C - CHANGE FROM PREVIOUS TYPE
M - METRIC PART
R - REMANUFACTURED PART MAY BE AVAILABLE
Y - SEPARATE ILLUSTRATION

272-2291 **PUMP GP-FUEL INJECTION (**contd.**)** **i08254423**

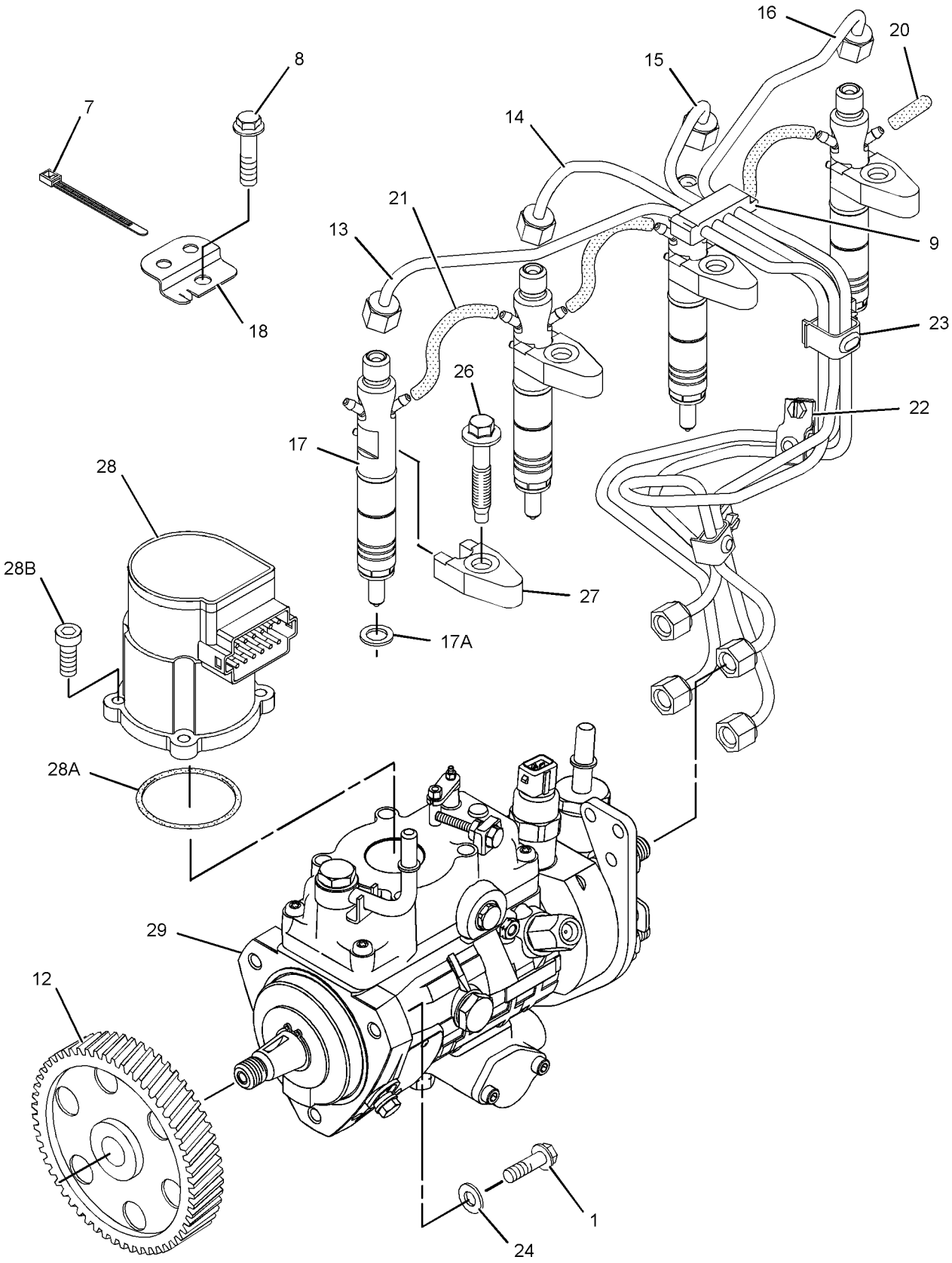

GRAPHIC #1 g01300567

272-2291 **PUMP GP-FUEL INJECTION (**contd.**)** **i08254423**

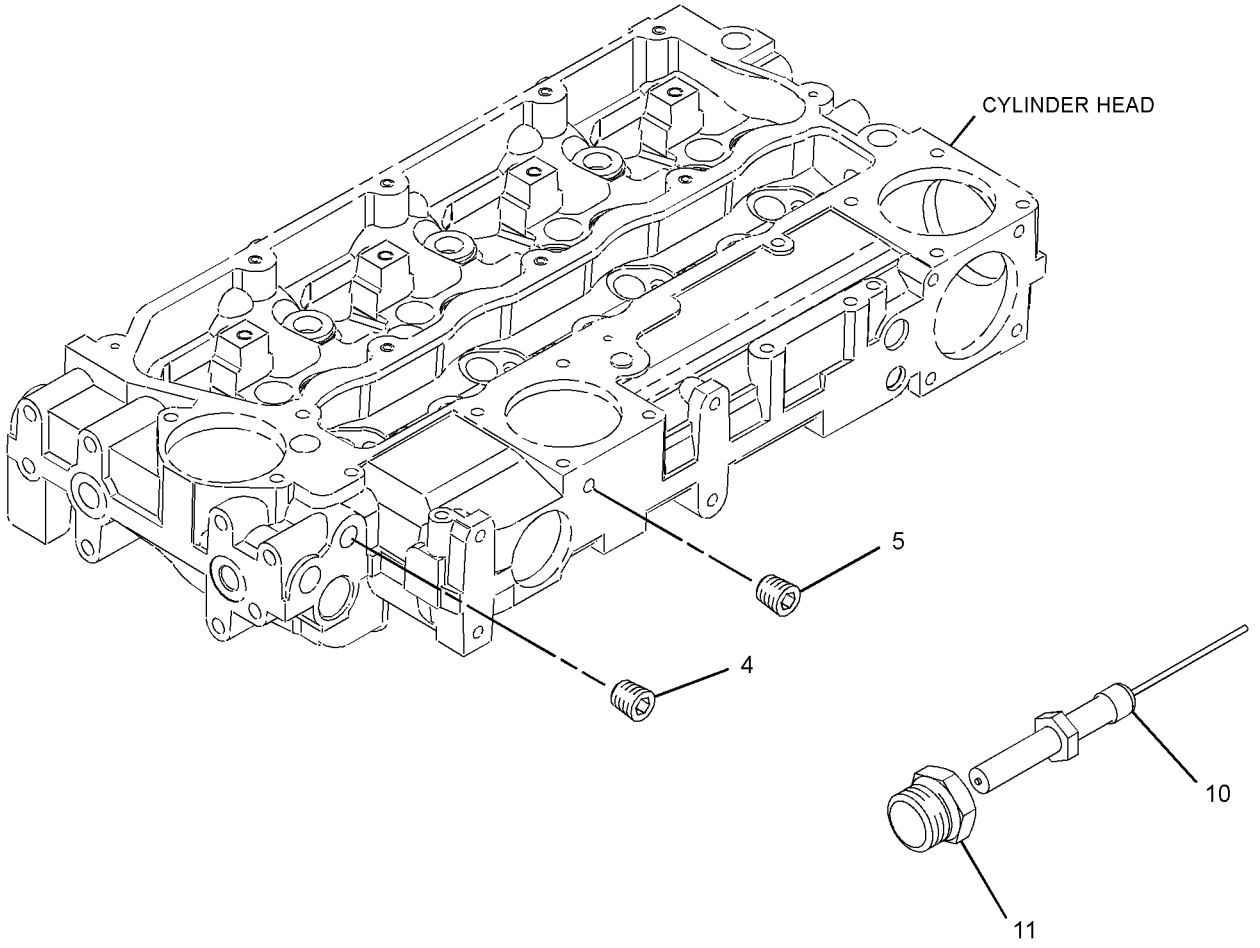

GRAPHIC #2 <END> g06754781

272-2797 PUMP GP-FUEL INJECTION*R

PART OF 272-2799 PUMP GP-FUEL INJECTION

SMCS-1251, 1290 **i02322857**

NOTE	REF NO	GRAPHIC REF	PART NUMBER	QTY	PART NAME 1 2 3 4 5 6 (PRODUCT LEVEL)	SEE PAGE
M	1	1	**111-3422**	1	NUT (M14X1.5-THD)	
	2	1	**111-3423**	1	WASHER	
	3	1	**152-3968**	1	SEAL-O-RING	
	4	1	**176-6219**	1	SOLENOID (12-VOLT) (FUEL SHUTOFF)	

M - METRIC PART

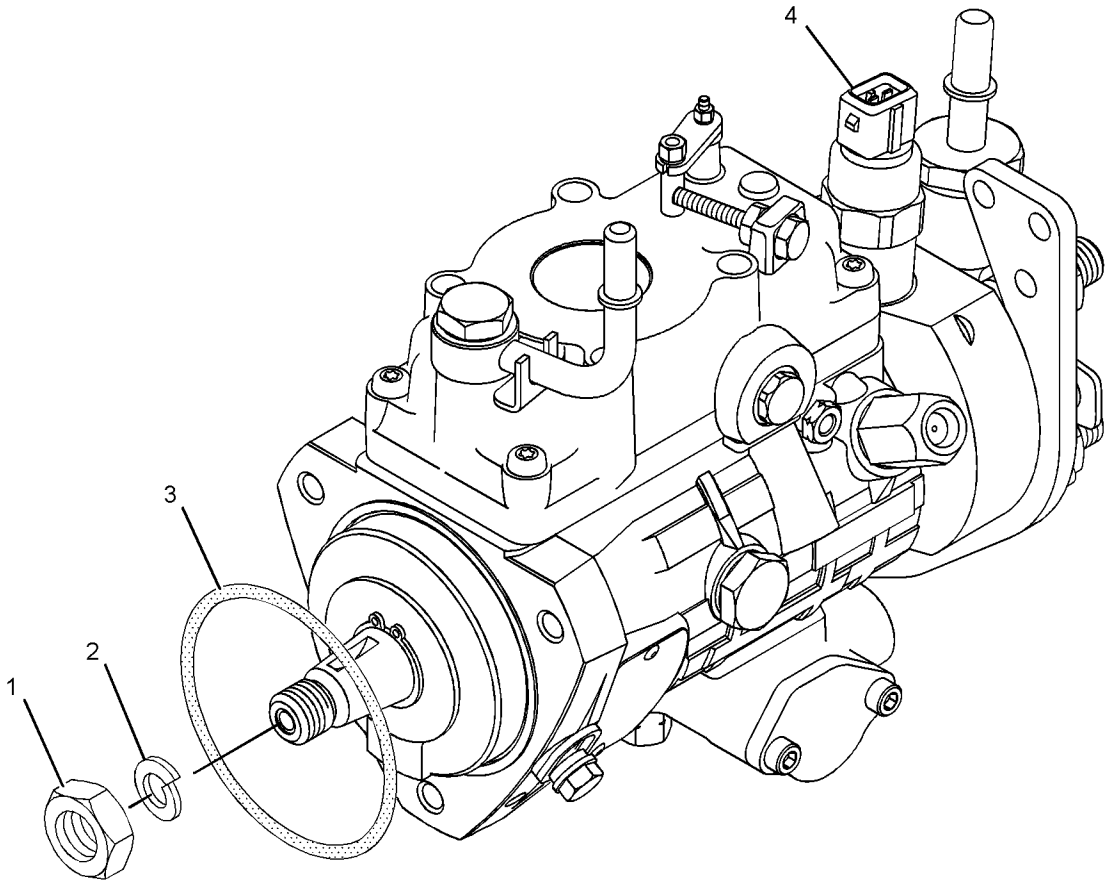

GRAPHIC #1 <END> g01160107

272-2799 PUMP GP-FUEL INJECTION

TYPE 1

SMCS-1251, 1290 **i02942834**

NOTE	REF NO	GRAPHIC REF	PART NUMBER	QTY	PART NAME 1 2 3 4 5 6 (PRODUCT LEVEL)	SEE PAGE
M	1	1	**6I-0260**	3	BOLT (M8X1.25X25-MM)	
	4	2	**7M-7410**	1	PLUG-PIPE (3/8-18-THD)	
	5	2	**9F-2247**	1	PLUG-PIPE (1/8-27-THD)	
	7	1	**110-8760**	1	STRAP	
M	8	1	**124-3815**	1	BOLT (M8X1.25X16-MM)	
	9	1	**140-8714**	1	CLIP	
	10	2	**203-6797**	1	SENSOR-SPEED (ENGINE)	
	11	2	**203-6798**	1	ADAPTER	
	12	1	**230-8989**	1	GEAR-FUEL PUMP (68-TEETH)	
	13	1	**230-8995**	1	TUBE AS (CYL NO. 1)	
	14	1	**230-8996**	1	TUBE AS (CYL NO. 2)	
	15	1	**230-8997**	1	TUBE AS (CYL NO. 3)	
	16	1	**230-8998**	1	TUBE AS (CYL NO. 4)	
R	17	1	**230-8999**	4	INJECTOR AS-FUEL	
					(EACH INCLUDES)	
	17A	1	**140-8718**	1	WASHER (7.49X15.75X1.68-MM THK)	
	17B	1	**232-2724**	1	NOZZLE	
	17C	1	**275-1038**	1	SEAL-O-RING	
	18	1	**230-9527**	1	BRACKET	
	19	1	**232-1115**	1	CLIP-PIPE	
	20	2	**232-1323**	1	PLUG-CUP	
	21	1	**232-1328**	1	CAP	
	22	1	**232-1794**	3	HOSE	
	23	1	**232-2725**	2	CLIP	
	24	1	**232-2726**	1	CLIP	
	25	1	**232-3149**	3	WASHER (8.35X16.85X1.55-MM THK)	
M	27	1	**232-3274**	1	BOLT (M8X1.25X48.1-MM)	
	28	1	**238-8671**	4	CLAMP-INJECTOR	
	29	1	**272-2223**	1	ACTUATOR GP-GOVERNOR	
	29A	1	**241-4288**	1	SEAL-O-RING	
M	29B	1	**241-4291**	4	SCREW (M5X0.8X16-MM)	
YR	30	1	**272-2797**	1	PUMP GP-FUEL INJECTION	1408

M - METRIC PART
R - REMANUFACTURED PART MAY BE AVAILABLE
Y - SEPARATE ILLUSTRATION

272-2799 **PUMP GP-FUEL INJECTION (**contd.**)** **i02942834**

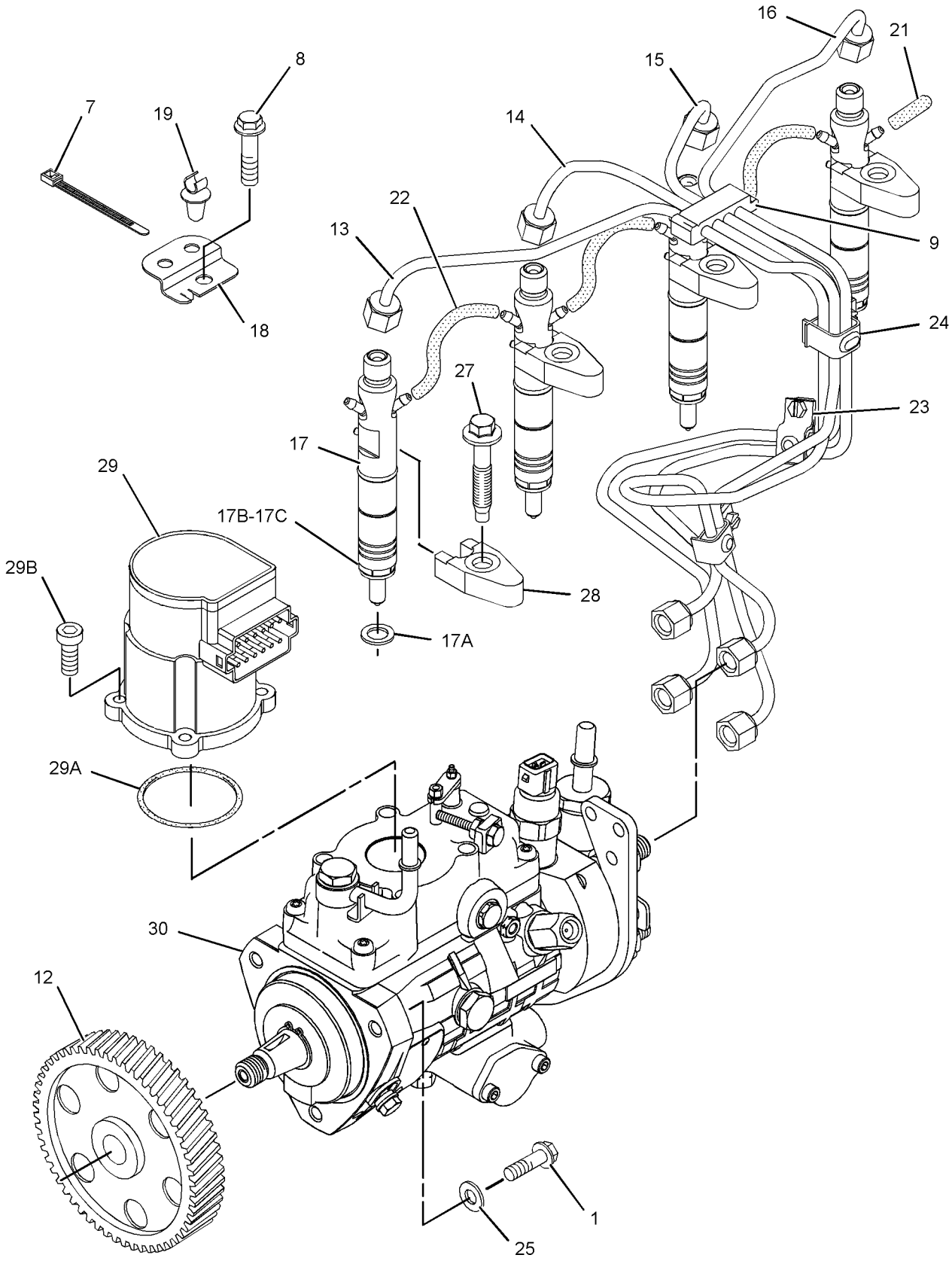

GRAPHIC #1 g01295166

272-2799 **PUMP GP-FUEL INJECTION (**contd.**)** **i02942834**

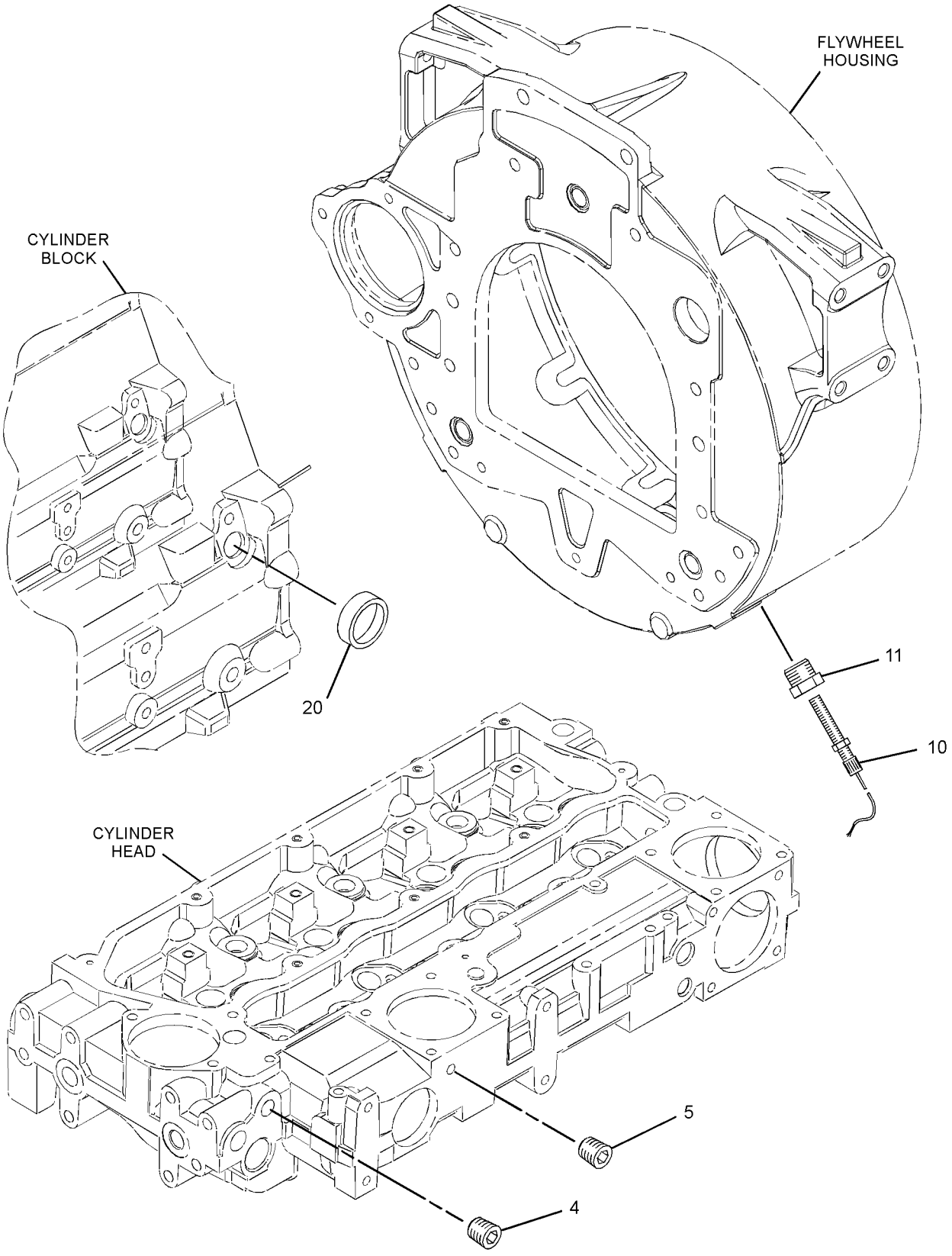

GRAPHIC #2 <END> g01458572

272-2799 PUMP GP-FUEL INJECTION

TYPE 2

SMCS-1251, 1290 **i07443008**

NOTE	REF NO	GRAPHIC REF	PART NUMBER	QTY	PART NAME 1 2 3 4 5 6 (PRODUCT LEVEL)	SEE PAGE
M	1	1	**6I-0260**	3	BOLT (M8X1.25X25-MM)	
	4	2	**7M-7410**	1	PLUG-PIPE (3/8-18-THD)	
	5	2	**9F-2247**	1	PLUG-PIPE (1/8-27-THD)	
	7	1	**110-8760**	1	STRAP	
M	8	1	**124-3815**	1	BOLT (M8X1.25X16-MM)	
	9	1	**140-8714**	1	CLIP	
	10	2	**203-6797**	1	SENSOR-SPEED (ENGINE)	
	11	2	**203-6798**	1	ADAPTER	
	12	1	**425-7107**	1	GEAR-FUEL PUMP (68-TEETH)	
	13	1	**230-8995**	1	TUBE AS (CYL NO. 1)	
	14	1	**230-8996**	1	TUBE AS (CYL NO. 2)	
	15	1	**230-8997**	1	TUBE AS (CYL NO. 3)	
	16	1	**230-8998**	1	TUBE AS (CYL NO. 4)	
R	17	1	**230-8999**	4	INJECTOR AS-FUEL	
					(EACH INCLUDES)	
	17A	1	**140-8718**	1	WASHER (7.49X15.75X1.68-MM THK)	
	17B	1	**232-2724**	1	NOZZLE	
	17C	1	**275-1038**	1	SEAL-O-RING	
	18	1	**240-5571**	1	BRACKET	
	19	1	**232-1115**	1	CLIP-PIPE	
	21	1	**232-1328**	1	CAP	
	22	1	**232-1794**	3	HOSE	
	23	1	**232-2725**	2	CLIP	
	24	1	**232-2726**	1	CLIP	
	25	1	**232-3149**	3	WASHER (8.35X16.85X1.55-MM THK)	
M	27	1	**232-3274**	1	BOLT (M8X1.25X48.1-MM)	
	28	1	**238-8671**	4	CLAMP-INJECTOR	
	29	1	**272-2223**	1	ACTUATOR GP-GOVERNOR	
	29A	1	**241-4288**	1	SEAL-O-RING	
M	29B	1	**241-4291**	4	SCREW (M5X0.8X16-MM)	
YR	30	1	**272-2797**	1	PUMP GP-FUEL INJECTION	1408

M - METRIC PART
R - REMANUFACTURED PART MAY BE AVAILABLE
Y - SEPARATE ILLUSTRATION

272-2799 **PUMP GP-FUEL INJECTION (**contd.**)** **i07443008**

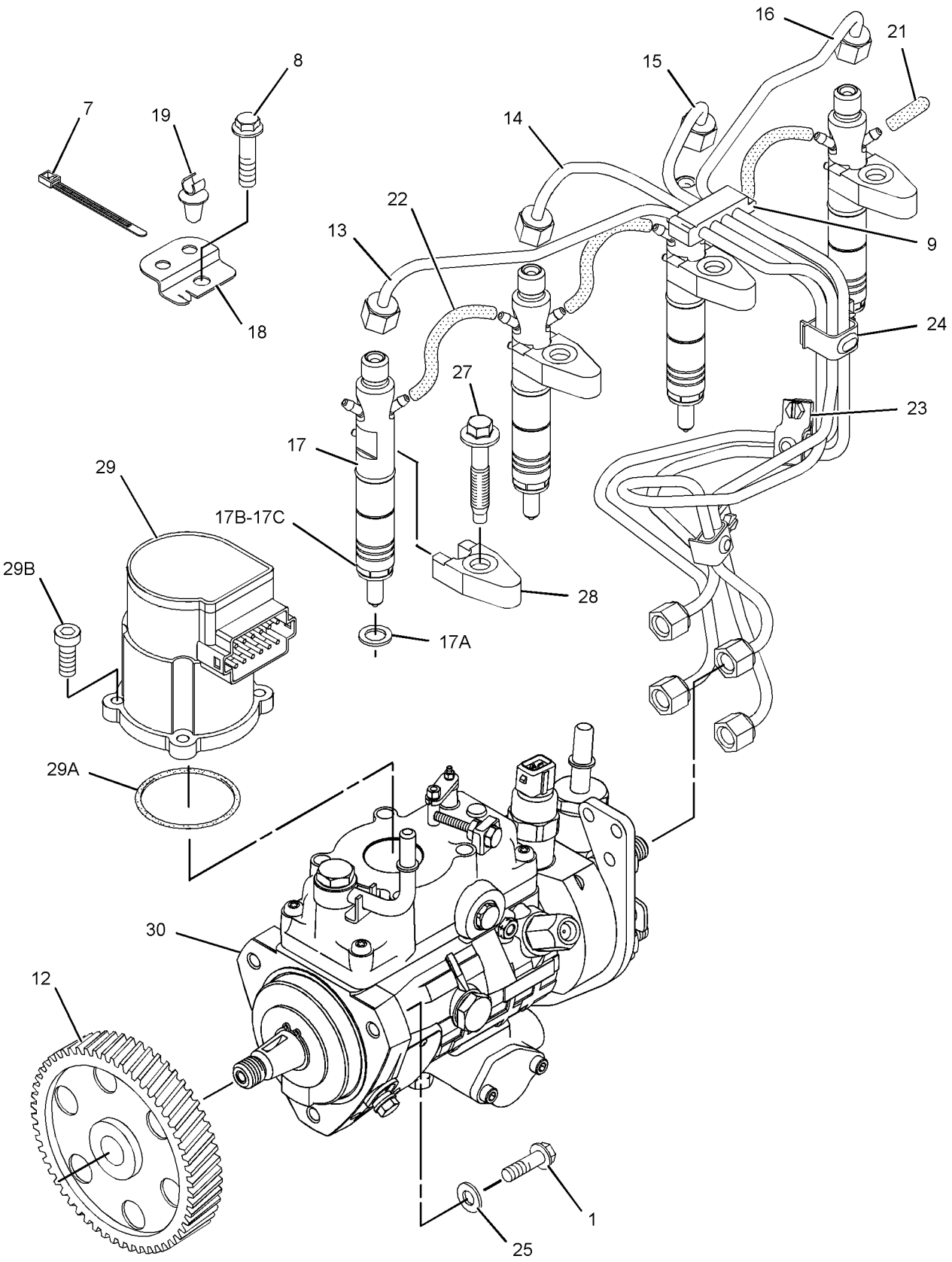

GRAPHIC #1 g01295166

272-2799 **PUMP GP-FUEL INJECTION (**contd.**)** **i07443008**

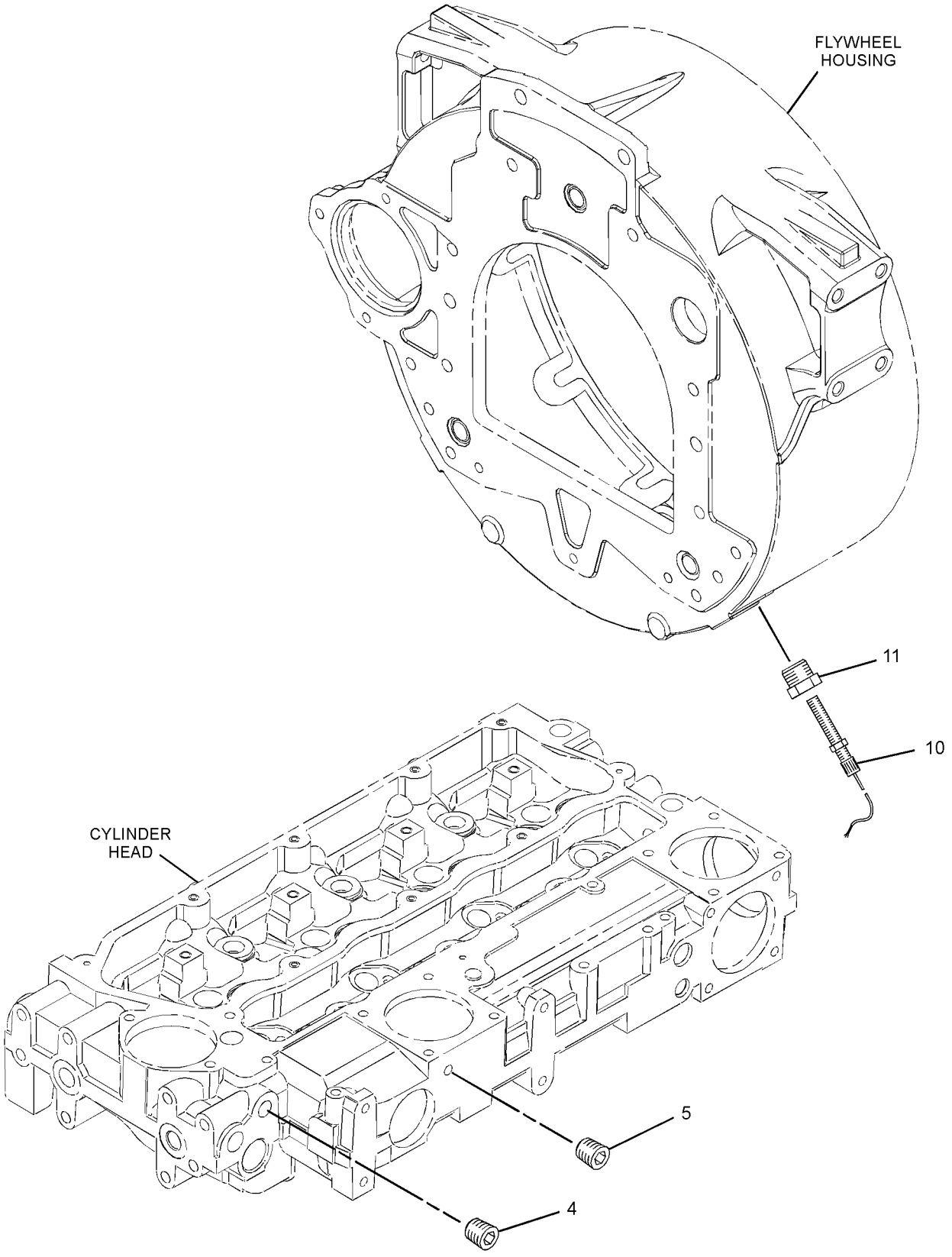

GRAPHIC #2 <END> g03036062

272-2799 PUMP GP-FUEL INJECTION

TYPE 3

SMCS-1251, 1290 **i08711715**

NOTE	REF NO	GRAPHIC REF	PART NUMBER	QTY	PART NAME 1 2 3 4 5 6 (PRODUCT LEVEL)	SEE PAGE
M	1	1	**6I-0260**	3	BOLT (M8X1.25X25-MM)	
	2	1	**232-3149**	3	WASHER (8.35X16.85X1.55-MM THK)	
M	3	1	**232-3274**	1	BOLT (M8X1.25X48.1-MM)	
	4	2	**7M-7410**	1	PLUG-PIPE (3/8-18-THD)	
	5	2	**9F-2247**	1	PLUG-PIPE (1/8-27-THD)	
	6	1	**238-8671**	4	CLAMP-INJECTOR	
	7	1	**034-1432**	1	STRAP-CABLE	
M	8	1	**124-3815**	1	BOLT (M8X1.25X16-MM)	
Y	9	1	*495-3762*	1	LINES GP-FUEL INJECTION	1173
C	10	2	**550-9106**	1	SENSOR AS-SPEED (ENGINE)	
	11	2	**203-6798**	1	ADAPTER	
	12	1	**425-7107**	1	GEAR-FUEL PUMP (68-TEETH)	
	13	1	**272-2223**	1	ACTUATOR GP-GOVERNOR	
	13A	1	**241-4288**	1	SEAL-O-RING	
M	13B	1	**260-6686**	4	BOLT-SOCKET HEAD (M5X0.8X16-MM)	
YR	14	1	**272-2797**	1	PUMP GP-FUEL INJECTION	1408
	15	1	**232-1794**	3	HOSE	
	16	1	**232-1328**	1	CAP	
R	17	1	**230-8999**	4	INJECTOR AS-FUEL	
					(EACH INCLUDES)	
	17A	1	**140-8718**	1	WASHER (7.49X15.75X1.68-MM THK)	
	17B	1	**232-2724**	1	NOZZLE	
	17C	1	**275-1038**	1	SEAL-O-RING	
	18	1	**240-5571**	1	BRACKET	
	19	1	**232-1115**	1	CLIP-PIPE	

C - CHANGE FROM PREVIOUS TYPE
M - METRIC PART
R - REMANUFACTURED PART MAY BE AVAILABLE
Y - SEPARATE ILLUSTRATION

272-2799 **PUMP GP-FUEL INJECTION (**contd.**)** **i08711715**

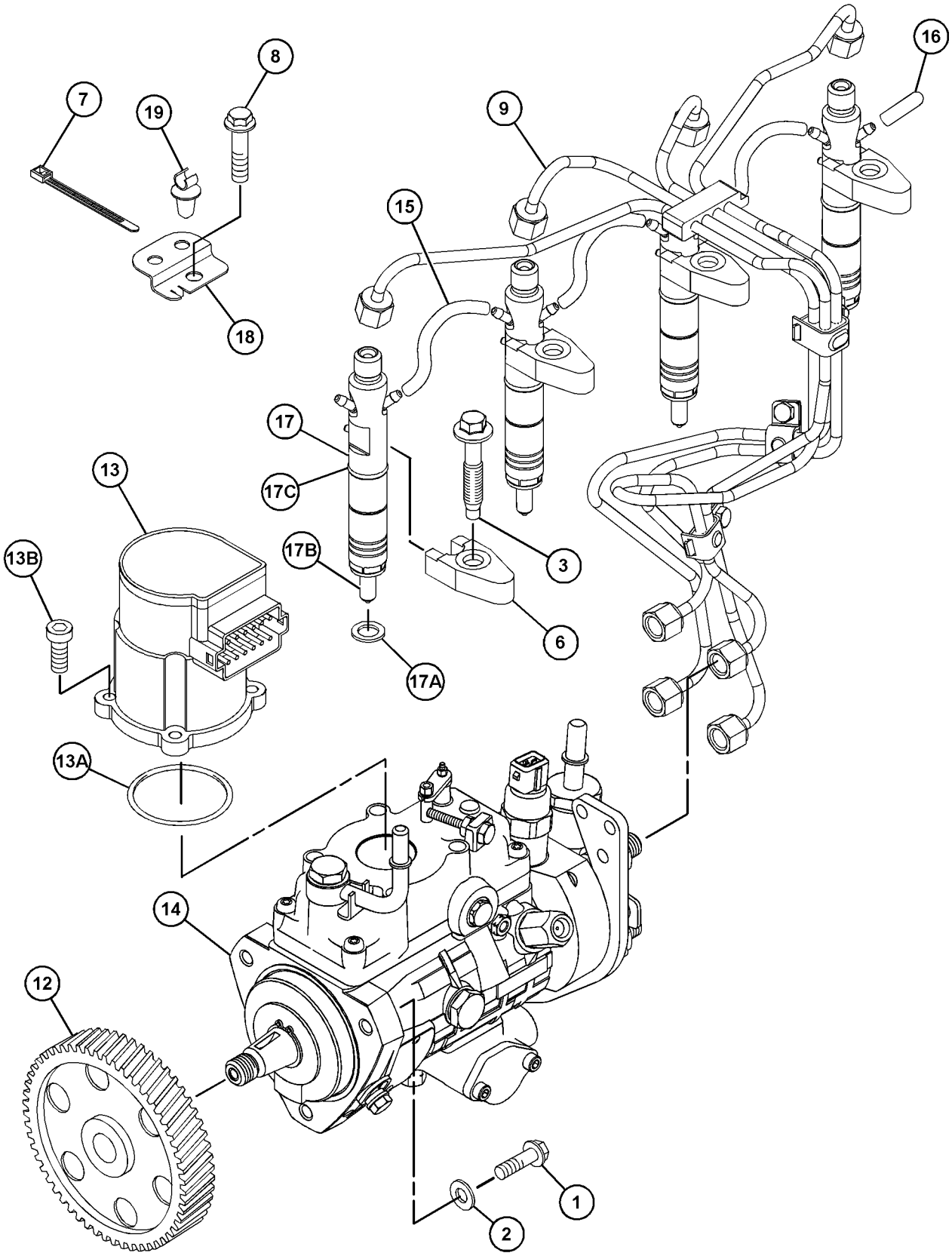

GRAPHIC #1 g06754221

272-2799 **PUMP GP-FUEL INJECTION (**contd.**)** **i08711715**

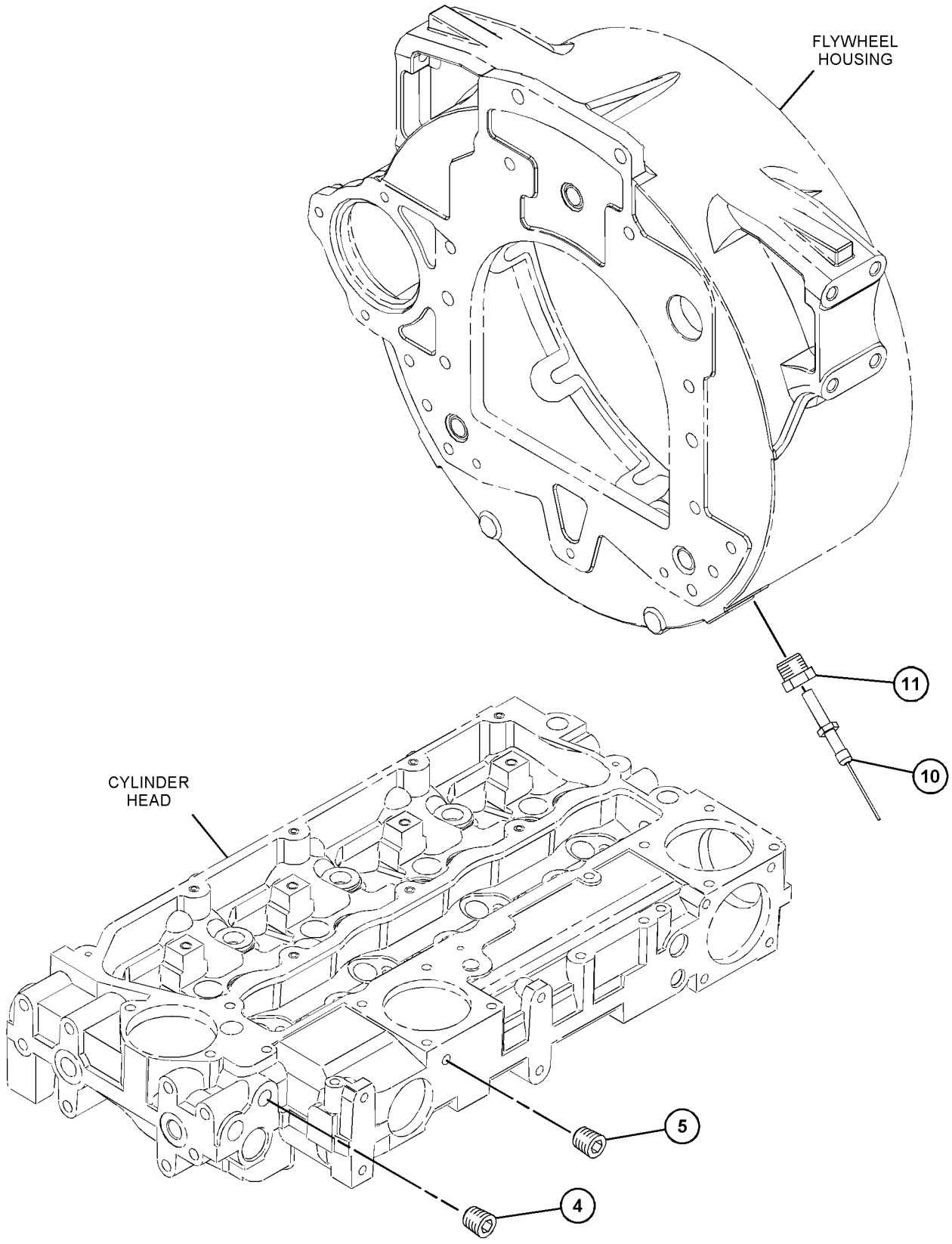

GRAPHIC #2 <END> g06750388

273-0869 PUMP GP-FUEL INJECTION

SMCS-1251, 1290 **i09667594**

NOTE	REF NO	GRAPHIC REF	PART NUMBER	QTY	PART NAME 1 2 3 4 5 6 (PRODUCT LEVEL)	SEE PAGE
M	1	1	**6I-0260**	3	BOLT (M8X1.25X25-MM)	
M	5	1	**124-3815**	1	BOLT (M8X1.25X16-MM)	
	6	1	**140-8714**	1	CLIP	
	7	2	**235-1790**	1	SWITCH-TEMPERATURE (ENGINE COOLANT)	
	8	2	**550-9106**	1	SENSOR AS-SPEED (ENGINE)	
	9	2	**203-6798**	1	ADAPTER	
	10	1	**425-7107**	1	GEAR-FUEL PUMP (68-TEETH)	
	11	1	**230-8995**	1	TUBE AS (CYL NO. 1)	
	12	1	**230-8996**	1	TUBE AS (CYL NO. 2)	
	13	1	**230-8997**	1	TUBE AS (CYL NO. 3)	
	14	1	**230-8998**	1	TUBE AS (CYL NO. 4)	
	16	1	**232-1328**	1	CAP	
	17	2	**232-1793**	1	CABLE	
	18	1	**232-1794**	2	HOSE	
	19	1	**232-2725**	2	CLIP	
	20	1	**232-2726**	1	CLIP	
	22	1	**232-3149**	3	WASHER (8.35X16.85X1.55-MM THK)	
M	24	1	**232-3274**	4	BOLT (M8X1.25X48.1-MM)	
	25	1	**238-8671**	4	CLAMP-INJECTOR	
	26	1	**240-5571**	1	BRACKET	
R	27	1	**266-6830**	4	INJECTOR AS-FUEL	
					(EACH INCLUDES)	
	27A	1	**140-8718**	1	WASHER (7.49X15.75X1.68-MM THK)	
	27B	1	**275-1038**	1	SEAL-O-RING	
	28	1	**272-2223**	1	ACTUATOR GP-GOVERNOR	
	28A	1	**241-4288**	1	SEAL-O-RING	
M	28B	1	**260-6686**	4	BOLT-SOCKET HEAD (M5X0.8X16-MM)	
R	29	1	**273-0870**	1	PUMP GP-FUEL INJECTION	
					PARTS SHOWN IN GRAPHIC(S) WITHOUT A REFERENCE NUMBER ARE NOT SERVICED SEPARATELY	

M - METRIC PART
R - REMANUFACTURED PART MAY BE AVAILABLE

273-0869 **PUMP GP-FUEL INJECTION (**contd.**)** **i09667594**

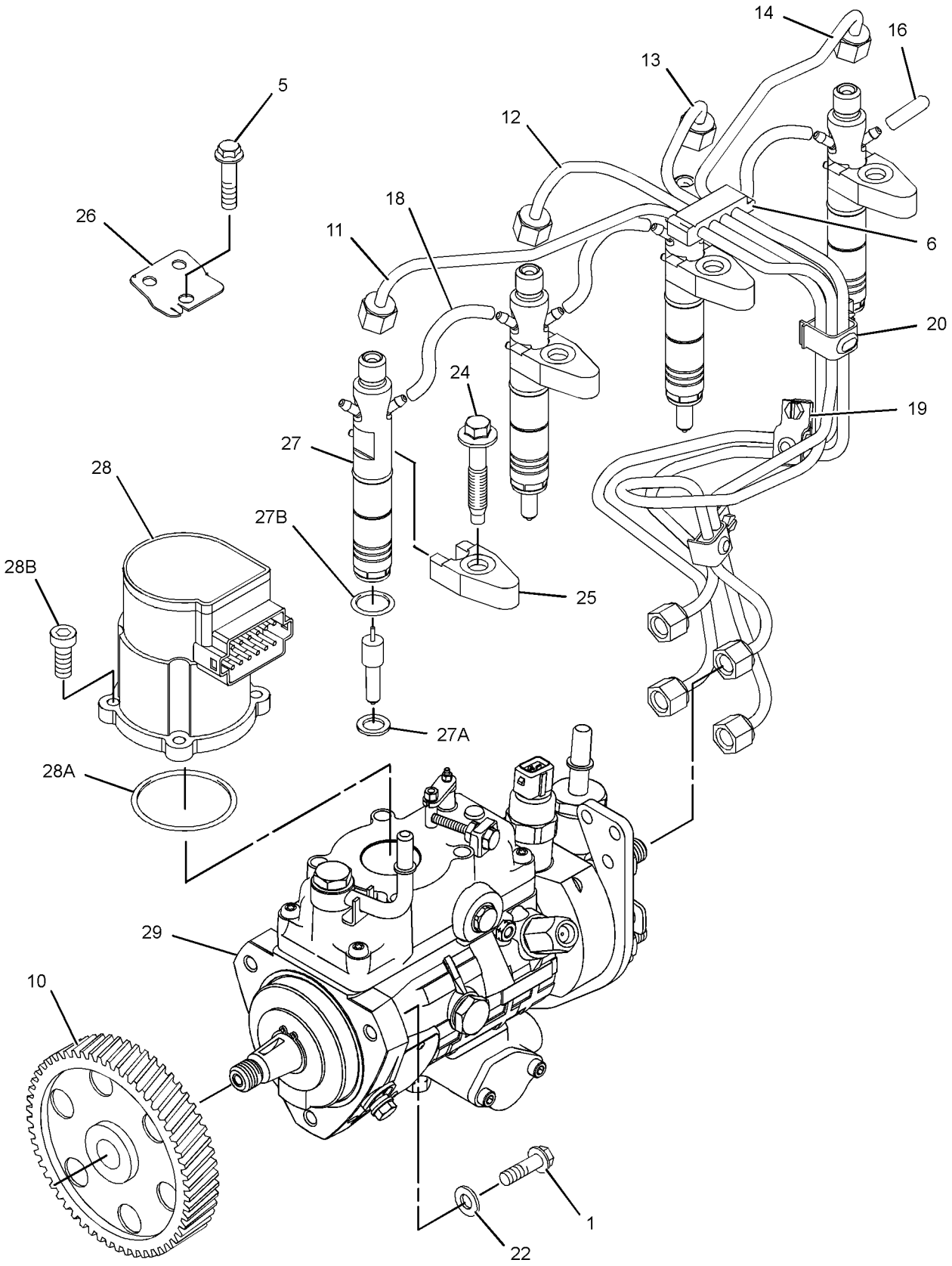

GRAPHIC #1 g07542475

273-0869 **PUMP GP-FUEL INJECTION (**contd.**)** **i09667594**

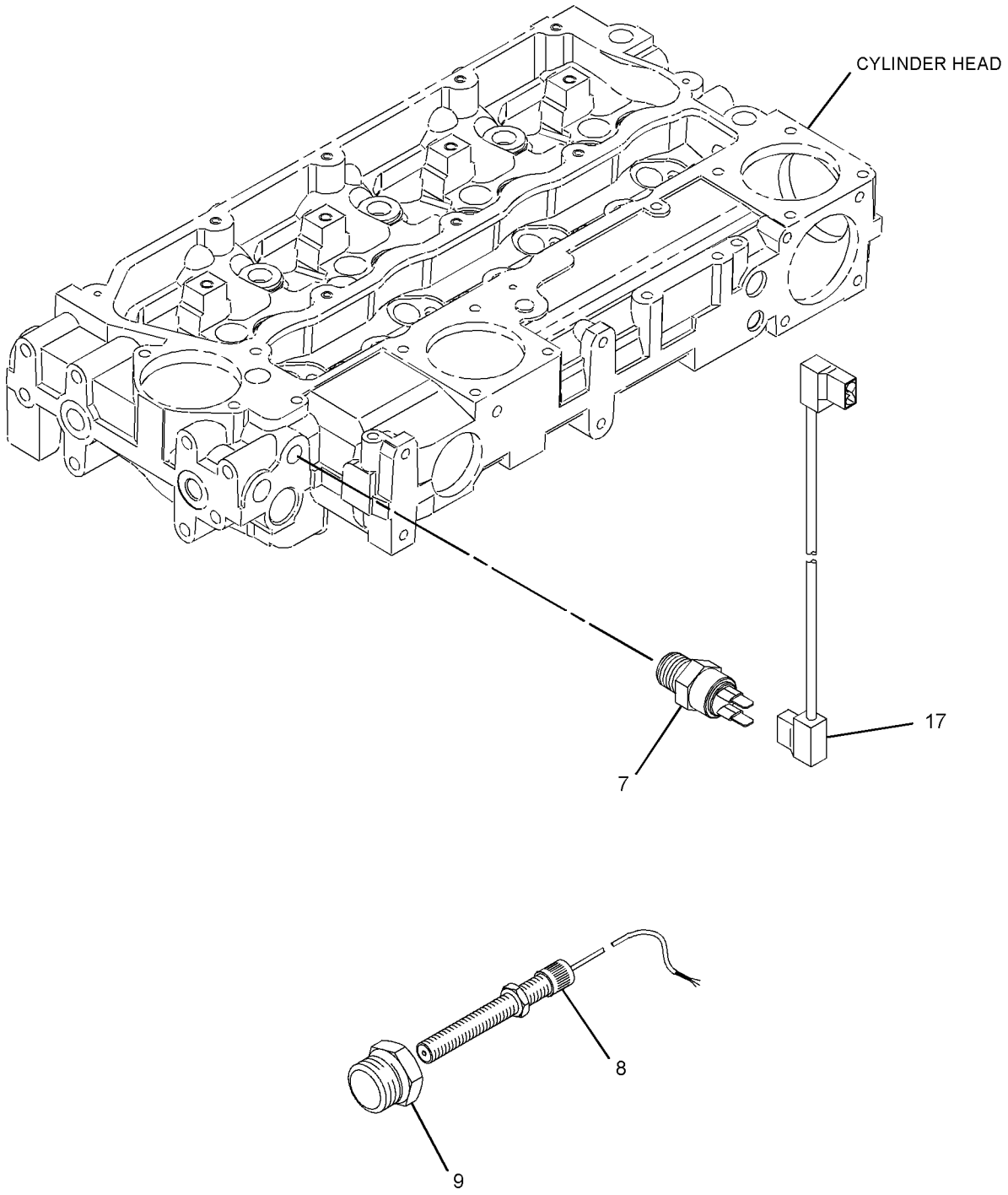

GRAPHIC #2 <END> g07542476

274-4964 PUMP GP-FUEL INJECTION

TYPE 1

SMCS-1251, 1290 **i03232559**

NOTE	REF NO	GRAPHIC REF	PART NUMBER	QTY	PART NAME 1 2 3 4 5 6 (PRODUCT LEVEL)	SEE PAGE
M	1	1	**6I-0217**	1	BOLT (M8X1.25X20-MM)	
M	2	1	**6I-0260**	3	BOLT (M8X1.25X25-MM)	
M	3	1	**6I-0291**	1	NUT (M8X1.25-THD)	
M	4	1	**100-4830**	1	BOLT (M10X1.5X20-MM)	
M	5	1	**124-3815**	1	BOLT (M8X1.25X16-MM)	
	6	1	**140-8714**	1	CLIP	
	7	1	**332-7549**	1	SEAL-O-RING	
	8	1	**155-8804**	1	CAP	
	9	2	**232-1323**	1	PLUG-CUP	
	10	1	**232-1328**	1	CAP	
	11	2	**232-1793**	1	CABLE	
	12	1	**232-1794**	3	HOSE	
	13	1	**232-2720**	1	TUBE AS (CYL NO. 1)	
	14	1	**232-2721**	1	TUBE AS (CYL NO. 2)	
	15	1	**232-2722**	1	TUBE AS (CYL NO. 3)	
	16	1	**232-2723**	1	TUBE AS (CYL NO. 4)	
	17	1	**232-2725**	2	CLIP	
	18	1	**232-2726**	1	CLIP	
	20	1	**232-3149**	3	WASHER (8.35X16.85X1.55-MM THK)	
	21	1	**232-3157**	1	BRACKET	
M	22	1	**232-3274**	4	BOLT (M8X1.25X48.1-MM)	
	23	1	**233-7104**	1	GEAR-PUMP	
	24	2	**235-1790**	1	SWITCH-TEMPERATURE (ENGINE COOLANT)	
	25	1	**238-8671**	4	CLAMP-INJECTOR	
	26	1	**240-5571**	1	BRACKET	
BYR	27	1	**266-3715**	1	PUMP GP-FUEL INJECTION	1335
					—OR—	
BYR		1	**266-3716**	1	PUMP GP-FUEL INJECTION	1336
					—OR—	
BYR		1	**266-3718**	1	PUMP GP-FUEL INJECTION	1337
R	28	1	**266-6830**	4	INJECTOR AS-FUEL	
					(EACH INCLUDES)	
	28A	1	**140-8718**	1	WASHER (7.49X15.75X1.68-MM THK)	
		1	**234-0387**	1	NOZZLE	
		1	**275-1038**	1	SEAL-O-RING	
F			**266-2994**	1	KIT-INJECTOR (FUEL)	

B - USE AS REQUIRED
F - NOT SHOWN
M - METRIC PART
R - REMANUFACTURED PART MAY BE AVAILABLE
Y - SEPARATE ILLUSTRATION

274-4964 **PUMP GP-FUEL INJECTION (**contd.**)** **i03232559**

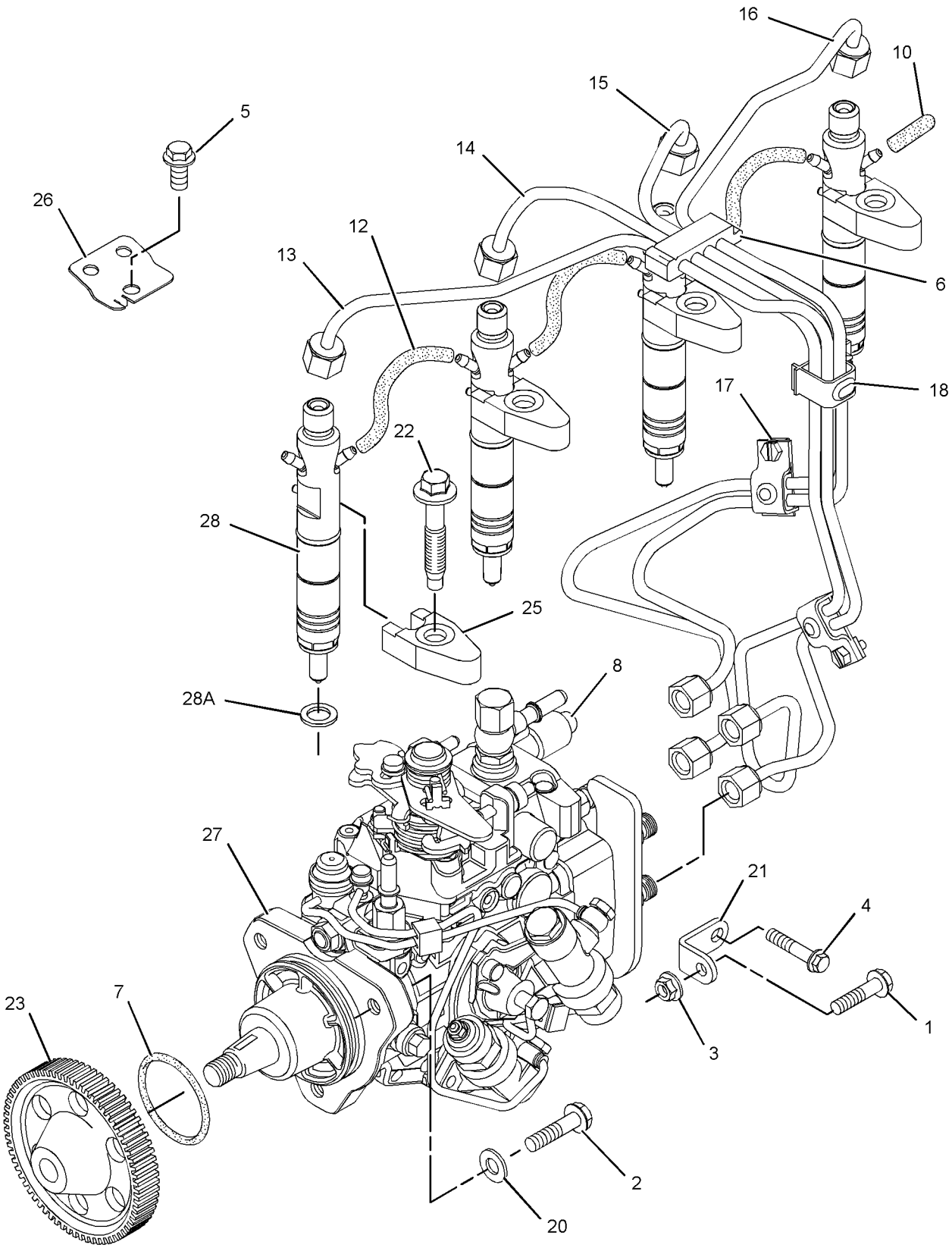

GRAPHIC #1 g01414350

274-4964 **PUMP GP-FUEL INJECTION (**contd.**)** **i03232559**

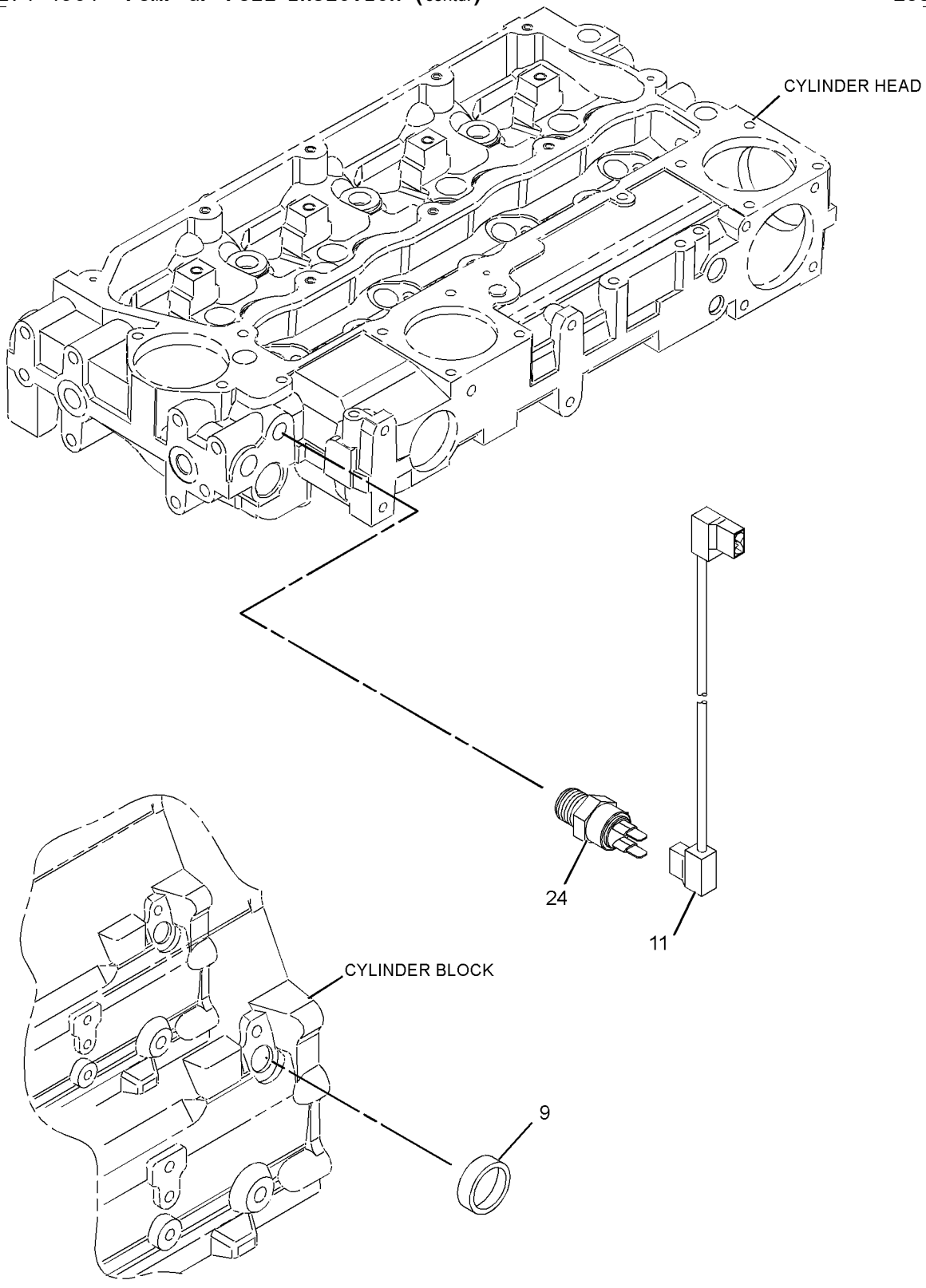

GRAPHIC #2 <END> g01153261

274-4964 PUMP GP-FUEL INJECTION

TYPE 2

SMCS-1251, 1290 **i04895544**

NOTE	REF NO	GRAPHIC REF	PART NUMBER	QTY	PART NAME 1 2 3 4 5 6 (PRODUCT LEVEL)	SEE PAGE
M	1	1	**6I-0217**	1	BOLT (M8X1.25X20-MM)	
M	2	1	**6I-0260**	3	BOLT (M8X1.25X25-MM)	
M	3	1	**6I-0291**	1	NUT (M8X1.25-THD)	
M	4	1	**100-4830**	1	BOLT (M10X1.5X20-MM)	
M	5	1	**124-3815**	1	BOLT (M8X1.25X16-MM)	
	6	1	**140-8714**	1	CLIP	
	7	1	**332-7549**	1	SEAL-O-RING	
	8	1	**155-8804**	1	CAP	
	10	1	**232-1328**	1	CAP	
	11	2	**232-1793**	1	CABLE	
	12	1	**232-1794**	3	HOSE	
	13	1	**232-2720**	1	TUBE AS (CYL NO. 1)	
	14	1	**232-2721**	1	TUBE AS (CYL NO. 2)	
	15	1	**232-2722**	1	TUBE AS (CYL NO. 3)	
	16	1	**232-2723**	1	TUBE AS (CYL NO. 4)	
	17	1	**232-2725**	2	CLIP	
	18	1	**232-2726**	1	CLIP	
	20	1	**232-3149**	3	WASHER (8.35X16.85X1.55-MM THK)	
	21	1	**232-3157**	1	BRACKET	
M	22	1	**232-3274**	4	BOLT (M8X1.25X48.1-MM)	
	23	1	**233-7104**	1	GEAR-PUMP	
	24	2	**235-1790**	1	SWITCH-TEMPERATURE (ENGINE COOLANT)	
	25	1	**238-8671**	4	CLAMP-INJECTOR	
	26	1	**240-5571**	1	BRACKET	
BYR	27	1	**266-3715**	1	PUMP GP-FUEL INJECTION	1335
					—OR—	
BYR		1	**266-3716**	1	PUMP GP-FUEL INJECTION	1336
					—OR—	
BYR		1	**266-3718**	1	PUMP GP-FUEL INJECTION	1337
R	28	1	**266-6830**	4	INJECTOR AS-FUEL	
					(EACH INCLUDES)	
	28A	1	**140-8718**	1	WASHER (7.49X15.75X1.68-MM THK)	
		1	**234-0387**	1	NOZZLE	
		1	**275-1038**	1	SEAL-O-RING	
F			**266-2994**	1	KIT-INJECTOR (FUEL)	

B - USE AS REQUIRED
F - NOT SHOWN
M - METRIC PART
R - REMANUFACTURED PART MAY BE AVAILABLE
Y - SEPARATE ILLUSTRATION

274-4964 **PUMP GP-FUEL INJECTION (**contd.**)** **i04895544**

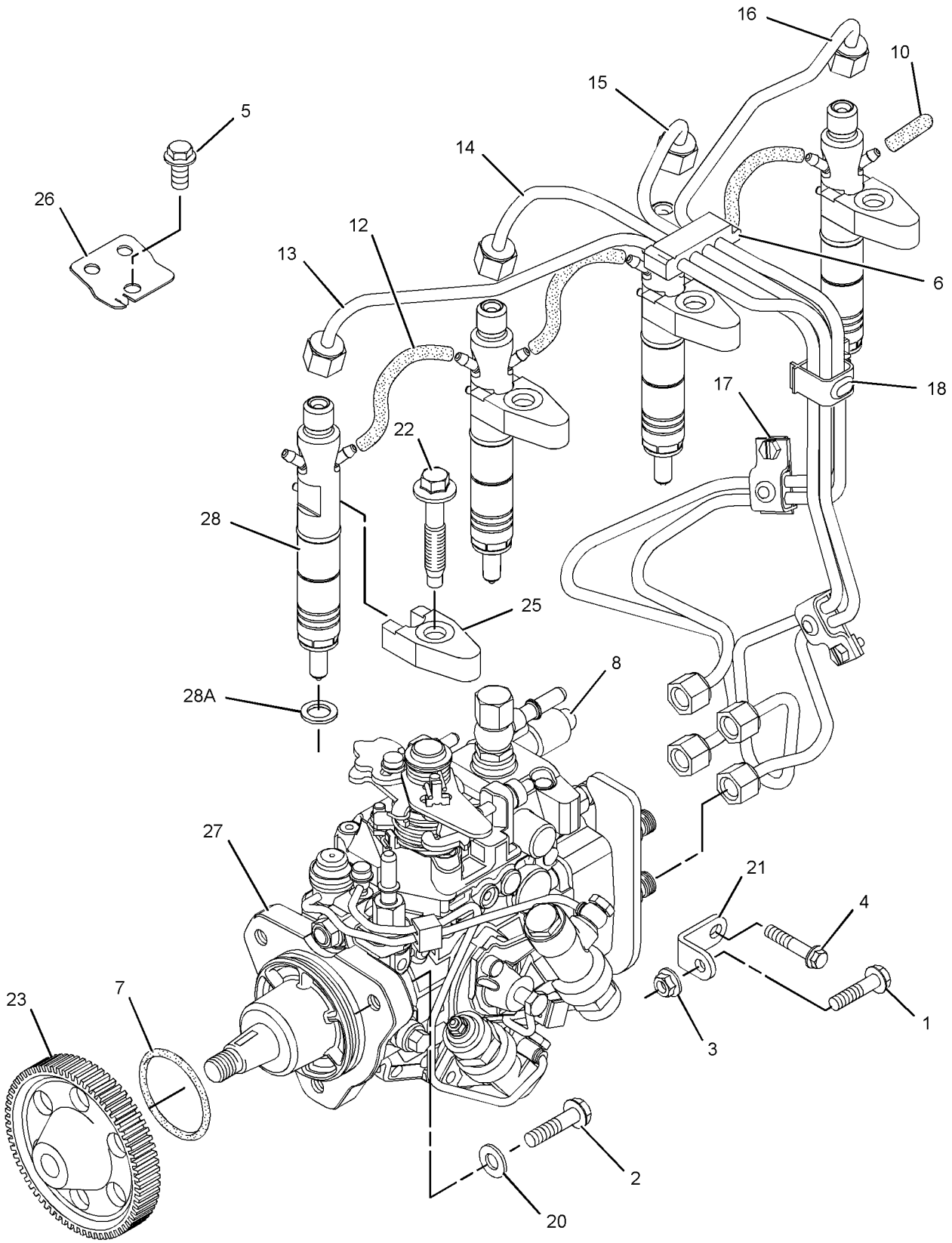

GRAPHIC #1 g01414350

274-4964 **PUMP GP-FUEL INJECTION (**contd.**)** **i04895544**

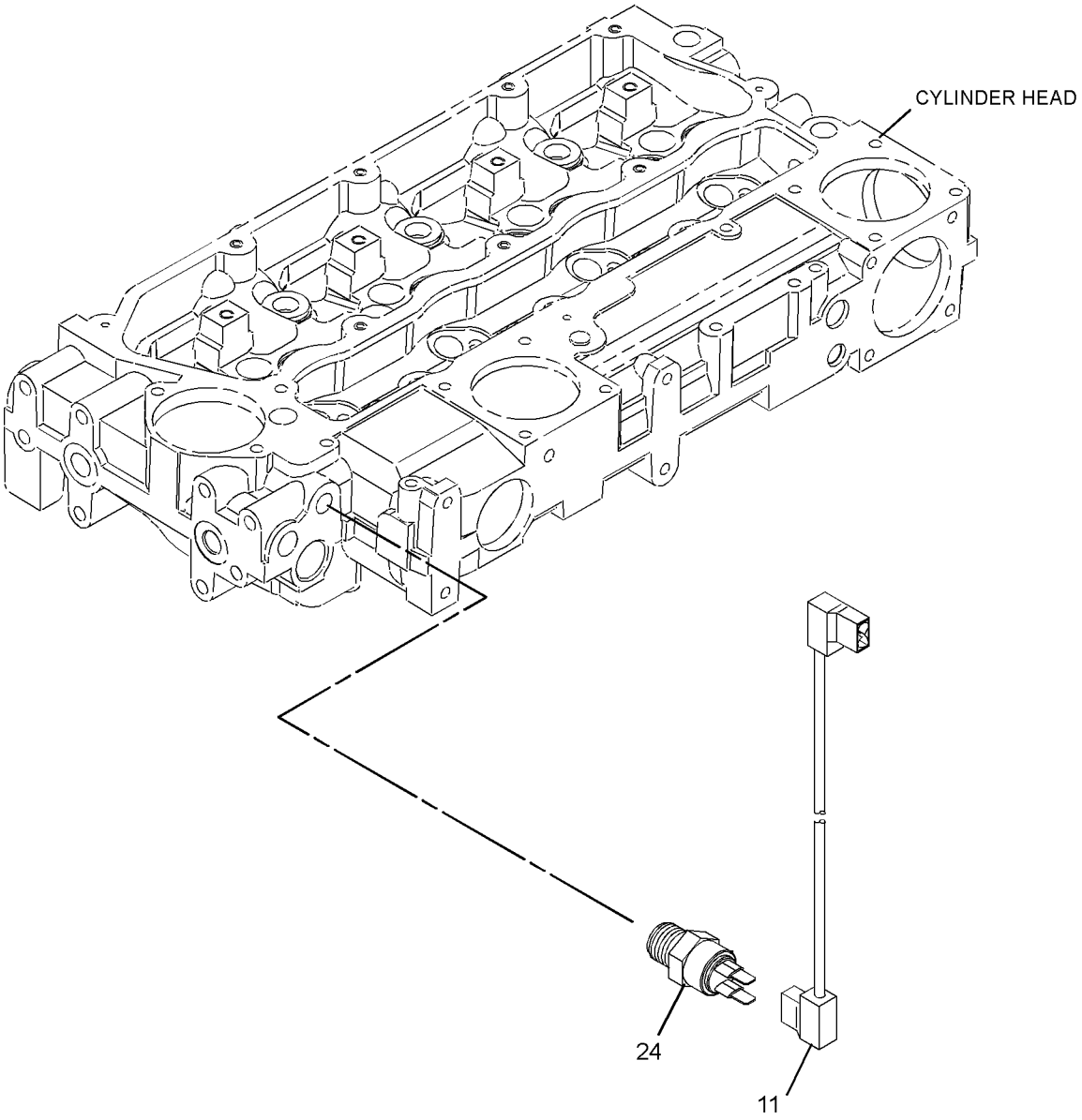

GRAPHIC #2 <END> g03043057

274-5006 PUMP GP-FUEL INJECTION

TYPE 1

SMCS-1251, 1290 **i03232561**

NOTE	REF NO	GRAPHIC REF	PART NUMBER	QTY	PART NAME 1 2 3 4 5 6 (PRODUCT LEVEL)	SEE PAGE
Y	1	1	**266-3719**	1	PUMP GP-FUEL INJECTION	1338
M	2	1	**6I-0217**	1	BOLT (M8X1.25X20-MM)	
M	3	1	**6I-0260**	3	BOLT (M8X1.25X25-MM)	
M	4	1	**100-4830**	1	BOLT (M10X1.5X20-MM)	
M	5	1	**124-3815**	1	BOLT (M8X1.25X16-MM)	
M	6	1	**232-3274**	4	BOLT (M8X1.25X48.1-MM)	
	7	1	**232-3157**	1	BRACKET	
	8	1	**240-5571**	1	BRACKET	
	9	2	**232-1793**	1	CABLE	
	10	1	**155-8804**	1	CAP	
	11	1	**232-1328**	1	CAP	
	12	1	**238-8671**	4	CLAMP-INJECTOR	
	13	1	**140-8714**	1	CLIP	
	14	1	**232-2725**	2	CLIP	
	15	1	**232-2726**	1	CLIP	
	16	1	**233-7104**	1	GEAR-PUMP	
	17	1	**232-1794**	3	HOSE	
R	18	1	**266-6830**	4	INJECTOR AS-FUEL	
					(EACH INCLUDES)	
		1	**234-0387**	1	NOZZLE	
		1	**275-1038**	1	SEAL-O-RING	
	18A	1	**140-8718**	1	WASHER (7.49X15.75X1.68-MM THK)	
M	20	1	**6I-0291**	1	NUT (M8X1.25-THD)	
	21	2	**232-1323**	1	PLUG-CUP	
	22	1	**332-7549**	1	SEAL-O-RING	
	23	2	**235-1790**	1	SWITCH-TEMPERATURE (TIMING ADVANCE)	
	24	1	**232-2720**	1	TUBE AS (CYL NO. 1) (NO. 1)	
	25	1	**232-2721**	1	TUBE AS (CYL NO. 2) (NO. 2)	
	26	1	**232-2722**	1	TUBE AS (CYL NO. 3) (NO. 3)	
	27	1	**232-2723**	1	TUBE AS (CYL NO. 4) (NO. 4)	
	28	1	**232-3149**	3	WASHER (8.35X16.85X1.55-MM THK)	
F			**266-2994**	1	KIT-INJECTOR	

F - NOT SHOWN
M - METRIC PART
R - REMANUFACTURED PART MAY BE AVAILABLE
Y - SEPARATE ILLUSTRATION

274-5006 **PUMP GP-FUEL INJECTION (**contd.**)** **i03232561**

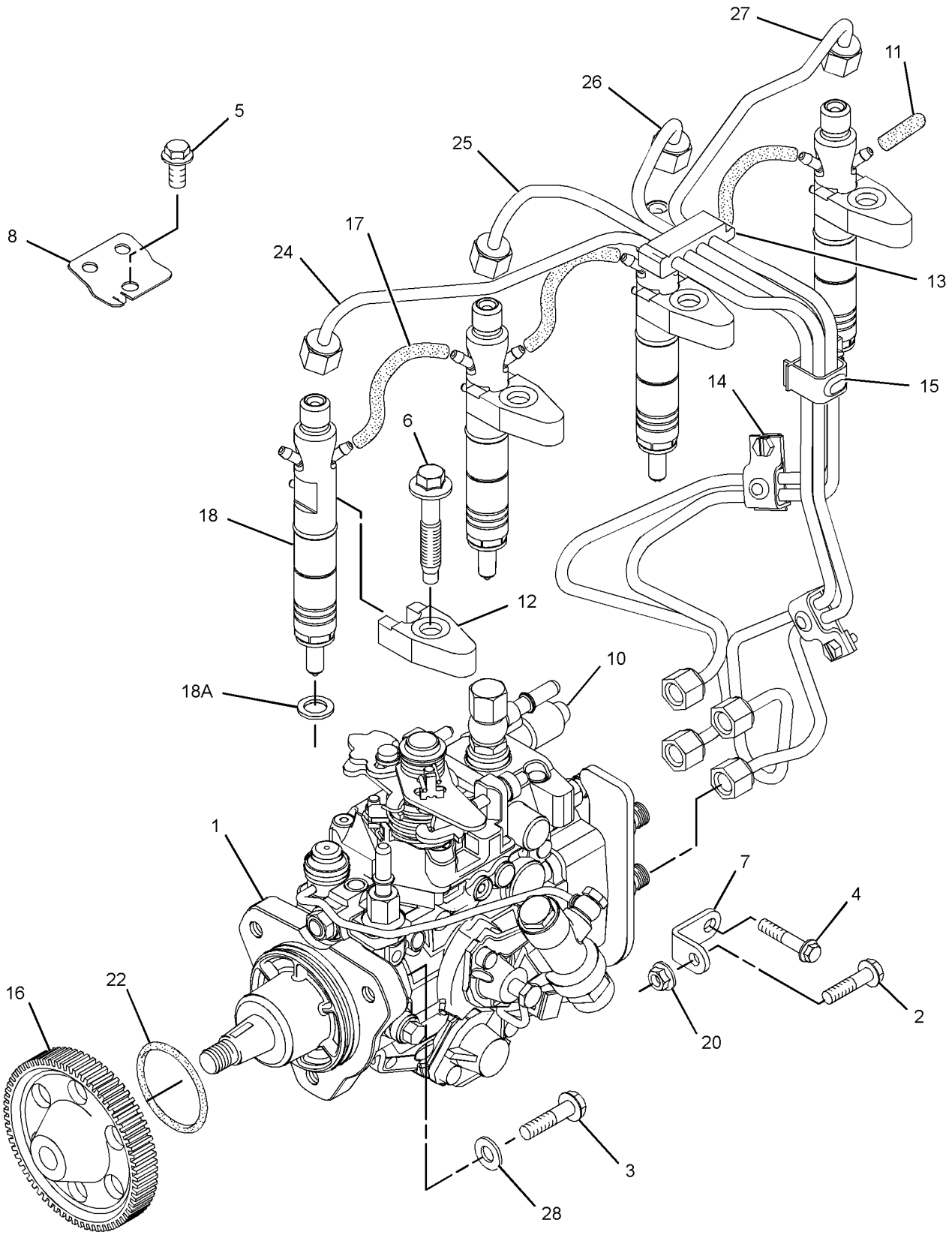

GRAPHIC #1 g01386569

274-5006 **PUMP GP-FUEL INJECTION (**contd.**)** **i03232561**

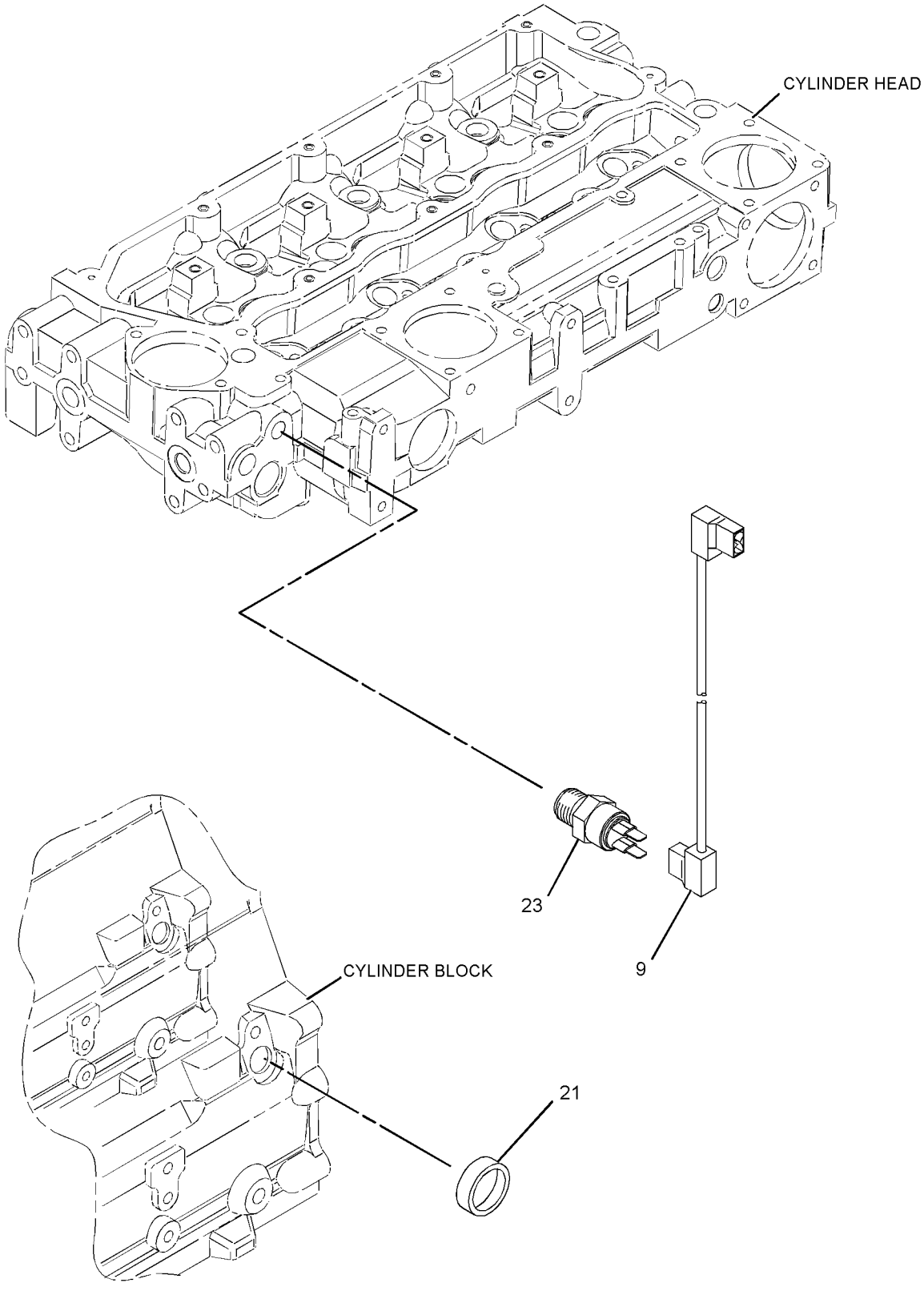

GRAPHIC #2 <END> g01386570

274-5006 PUMP GP-FUEL INJECTION

TYPE 2

SMCS-1251, 1290 **i04895567**

NOTE	REF NO	GRAPHIC REF	PART NUMBER	QTY	PART NAME 1 2 3 4 5 6 (PRODUCT LEVEL)	SEE PAGE
Y	1	1	**266-3719**	1	PUMP GP-FUEL INJECTION	1338
M	2	1	**6I-0217**	1	BOLT (M8X1.25X20-MM)	
M	3	1	**6I-0260**	3	BOLT (M8X1.25X25-MM)	
M	4	1	**100-4830**	1	BOLT (M10X1.5X20-MM)	
M	5	1	**124-3815**	1	BOLT (M8X1.25X16-MM)	
M	6	1	**232-3274**	4	BOLT (M8X1.25X48.1-MM)	
	7	1	**232-3157**	1	BRACKET	
	8	1	**240-5571**	1	BRACKET	
	9	2	**232-1793**	1	CABLE	
	10	1	**155-8804**	1	CAP	
	11	1	**232-1328**	1	CAP	
	12	1	**238-8671**	4	CLAMP-INJECTOR	
	13	1	**140-8714**	1	CLIP	
	14	1	**232-2725**	2	CLIP	
	15	1	**232-2726**	1	CLIP	
	16	1	**233-7104**	1	GEAR-PUMP	
	17	1	**232-1794**	3	HOSE	
R	18	1	**266-6830**	4	INJECTOR AS-FUEL	
					(EACH INCLUDES)	
		1	**234-0387**	1	NOZZLE	
		1	**275-1038**	1	SEAL-O-RING	
	18A	1	**140-8718**	1	WASHER (7.49X15.75X1.68-MM THK)	
M	20	1	**6I-0291**	1	NUT (M8X1.25-THD)	
	22	1	**332-7549**	1	SEAL-O-RING	
	23	2	**235-1790**	1	SWITCH-TEMPERATURE (TIMING ADVANCE)	
	24	1	**232-2720**	1	TUBE AS (CYL NO. 1) (NO. 1)	
	25	1	**232-2721**	1	TUBE AS (CYL NO. 2) (NO. 2)	
	26	1	**232-2722**	1	TUBE AS (CYL NO. 3) (NO. 3)	
	27	1	**232-2723**	1	TUBE AS (CYL NO. 4) (NO. 4)	
	28	1	**232-3149**	3	WASHER (8.35X16.85X1.55-MM THK)	
F			**266-2994**	1	KIT-INJECTOR	

F - NOT SHOWN
M - METRIC PART
R - REMANUFACTURED PART MAY BE AVAILABLE
Y - SEPARATE ILLUSTRATION

274-5006 **PUMP GP-FUEL INJECTION (**contd.**)** **i04895567**

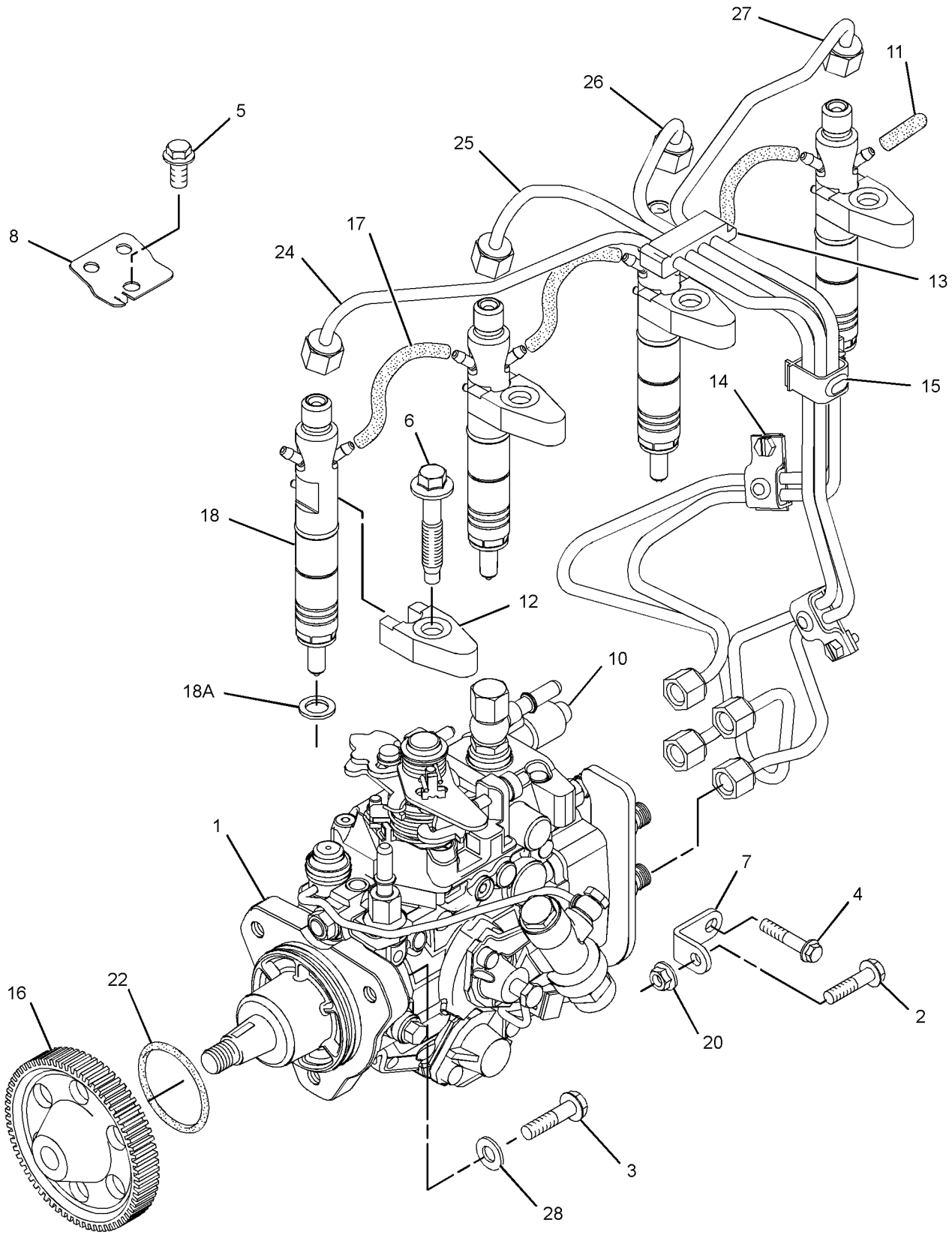

GRAPHIC #1 g01386569

274-5006 **PUMP GP-FUEL INJECTION (**contd.**)** **i04895567**

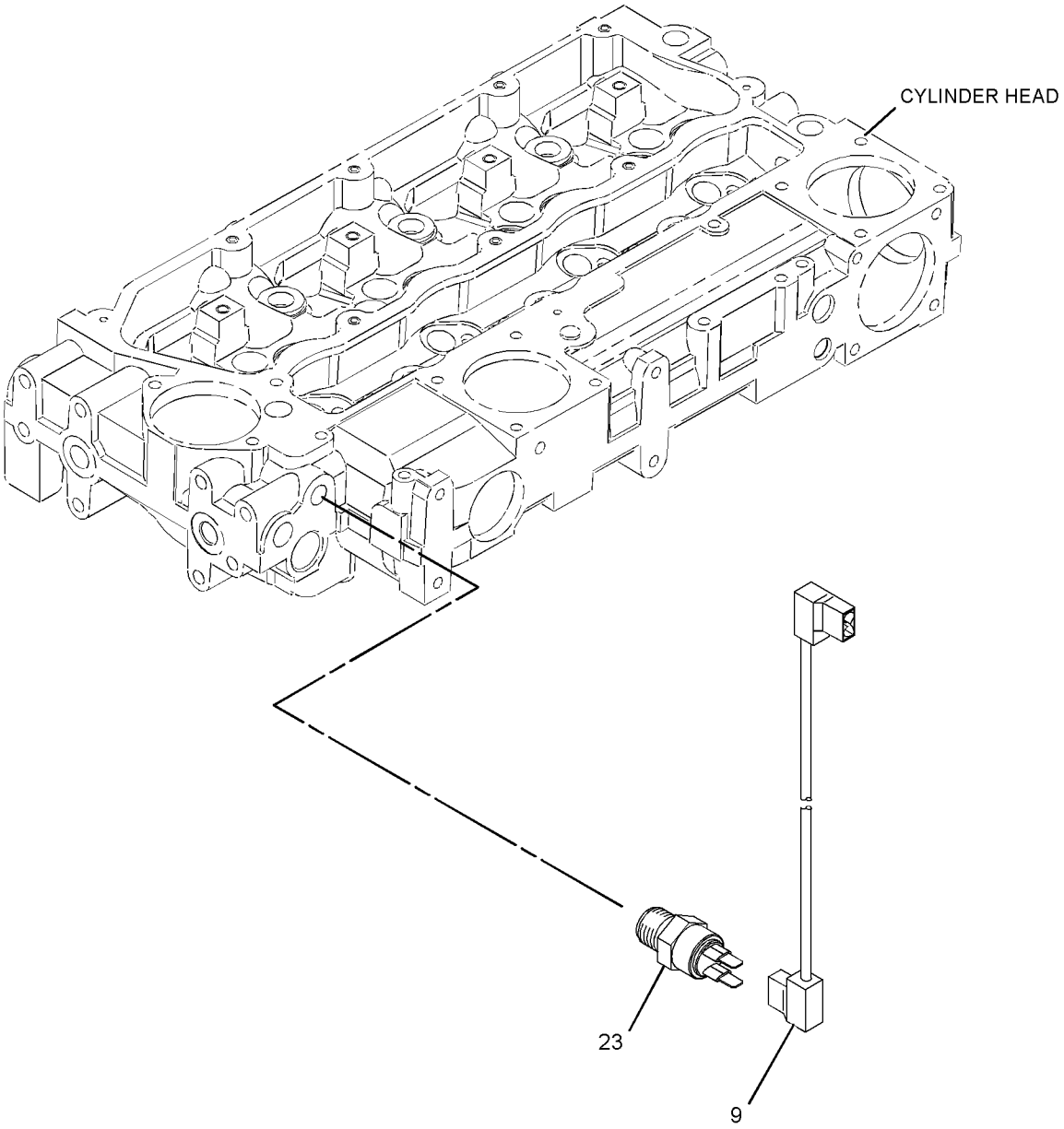

GRAPHIC #2 <END> g03042453

274-5460 PUMP GP-FUEL INJECTION

FIELD REPLACEMENT FOR 269-8488—PAGE: 1357
PART OF 269-8487 PUMP GP-FUEL INJECTION

SMCS-1251, 1290 **i02645879**

NOTE	REF NO	GRAPHIC REF	PART NUMBER	QTY	PART NAME 1 2 3 4 5 6 (PRODUCT LEVEL)	SEE PAGE
M	1	1	**111-3422**	1	NUT (M14X1.5-THD)	
	2	1	**111-3423**	1	WASHER	
	3	1	**152-3968**	1	SEAL-O-RING	
	4	1	**176-6219**	1	SOLENOID (12-VOLT) (FUEL SHUTOFF)	
	5	1	**193-0161**	1	CABLE AS-ADAPTER	

M - METRIC PART

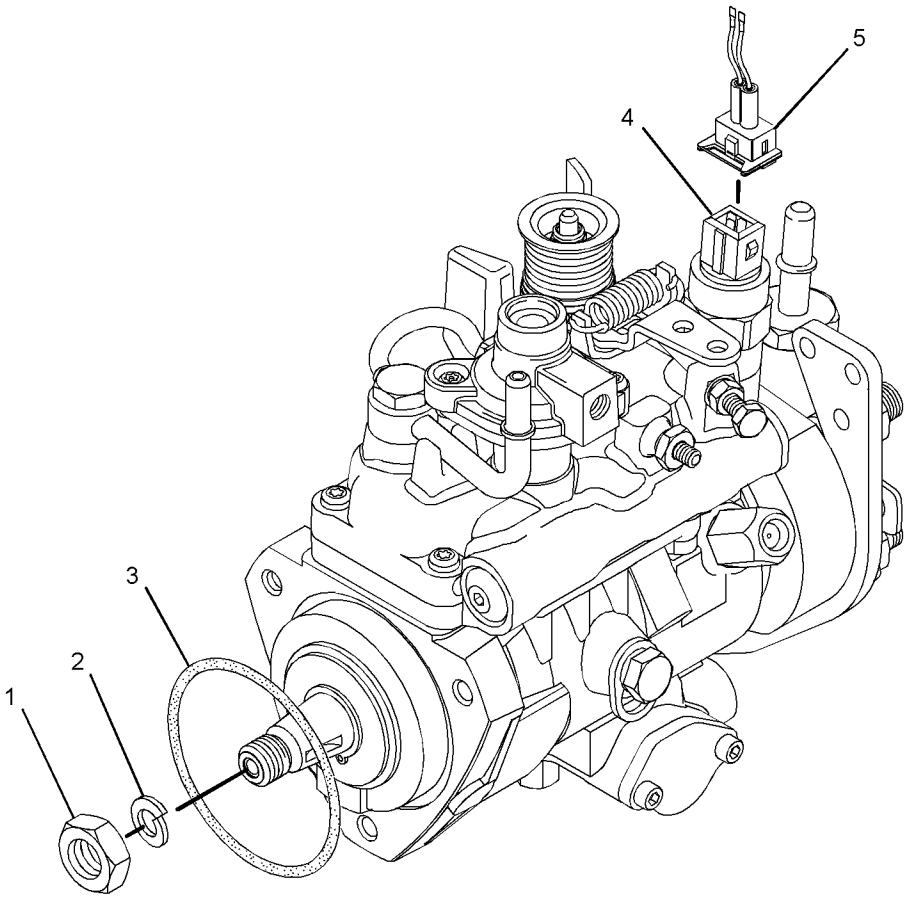

GRAPHIC #1 <END> g01175049

278-4118 PUMP GP-FUEL INJECTION

PART OF 270-4364, 290-5525 PUMP GP-FUEL INJECTION

SMCS-1251, 1290 **i02456364**

NOTE	REF NO	GRAPHIC REF	PART NUMBER	QTY	PART NAME 1 2 3 4 5 6 (PRODUCT LEVEL)	SEE PAGE
M	1	1	**111-3422**	1	NUT (M14X1.5-THD)	
	2	1	**111-3423**	1	WASHER	
	3	1	**152-3968**	1	SEAL-O-RING	
	4	1	**176-6219**	1	SOLENOID (12-VOLT) (FUEL SHUTOFF)	
	5	1	**193-0161**	1	CABLE AS-ADAPTER	

M - METRIC PART

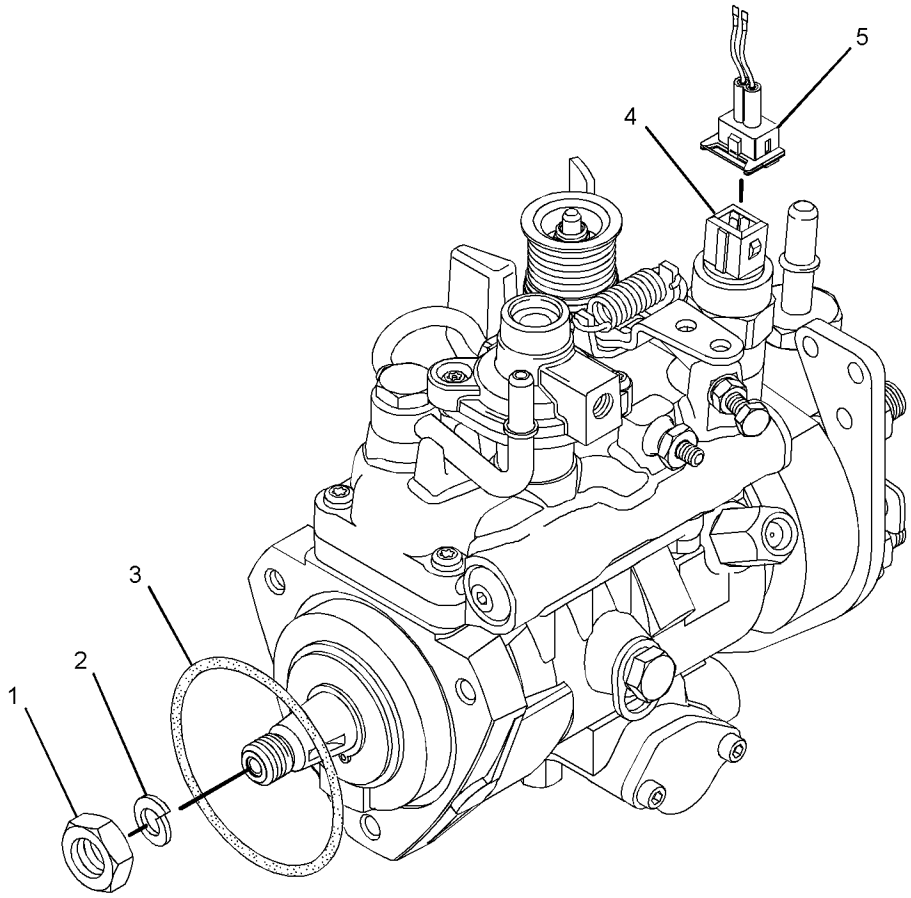

GRAPHIC #1 <END> g01175049

284-4988 PUMP GP-FUEL INJECTION

PART OF 270-8261 PUMP GP-FUEL INJECTION

ALSO AN ATTACHMENT

SMCS-1251, 1290

i07263092

NOTE	REF NO	GRAPHIC REF	PART NUMBER	QTY	PART NAME 1 2 3 4 5 6 (PRODUCT LEVEL)	SEE PAGE
	1	1	**152-3968**	1	SEAL-O-RING	
	2	1	**176-6219**	1	SOLENOID (12-VOLT) (FUEL SHUTOFF)	

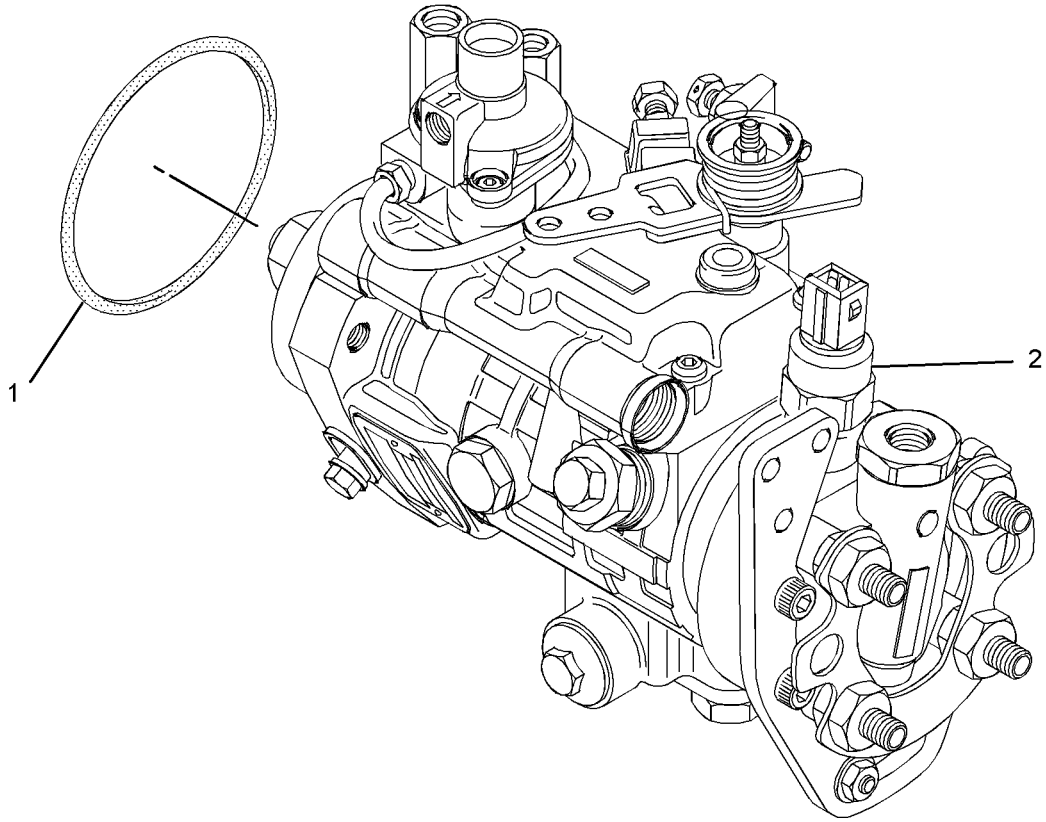

GRAPHIC #1

<END>

g01059219

284-4999 PUMP GP-FUEL INJECTION

FIELD REPLACEMENT ORDER 284-5000—PAGE: 1437
PART OF 233-9526 PUMP GP-FUEL INJECTION
ALSO AN ATTACHMENT

SMCS-1251, 1290

i02436732

NOTE	REF NO	GRAPHIC REF	PART NUMBER	QTY	PART NAME 1 2 3 4 5 6 (PRODUCT LEVEL)	SEE PAGE
	1	1	**152-3968**	1	SEAL-O-RING	
	2	1	**147-2645**	1	SOLENOID-SHUTOFF (24-VOLT) (FUEL SHUTOFF)	

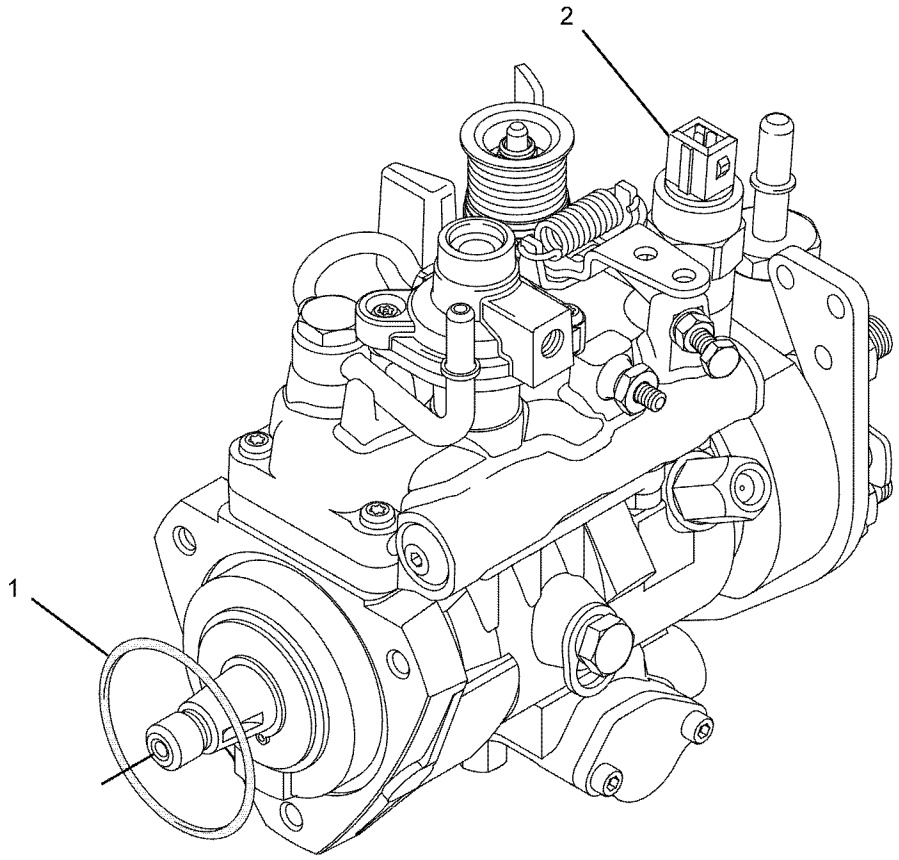

GRAPHIC #1

<END>

g01085467

284-5000 PUMP GP-FUEL INJECTION*R

FIELD REPLACEMENT FOR 284-4999—PAGE: 1436
PART OF 233-9526 PUMP GP-FUEL INJECTION
ALSO AN ATTACHMENT

SMCS-1251, 1290

i06779756

NOTE	PART NUMBER	QTY	PART NAME 1 2 3 4 5 6 (PRODUCT LEVEL)	SEE PAGE
			(NO SERVICED PARTS)	

<END>

285-8528 PUMP GP-FUEL INJECTION

TYPE 1

SMCS-1251, 1290 **i03232720**

NOTE	REF NO	GRAPHIC REF	PART NUMBER	QTY	PART NAME 1 2 3 4 5 6 (PRODUCT LEVEL)	SEE PAGE
M	1	1	**6I-0217**	1	BOLT (M8X1.25X20-MM)	
M	2	1	**6I-0260**	3	BOLT (M8X1.25X25-MM)	
M	3	1	**6I-0291**	1	NUT (M8X1.25-THD)	
M	4	1	**100-4830**	1	BOLT (M10X1.5X20-MM)	
M	5	1	**124-3815**	1	BOLT (M8X1.25X16-MM)	
	6	1	**140-8714**	1	CLIP	
	7	1	**332-7549**	1	SEAL-O-RING	
	8	1	**155-8804**	1	CAP	
	9	1	**240-5571**	1	BRACKET	
	9A	1	**232-3126**	1	CLIP	
	10	1	**232-1115**	2	CLIP-PIPE	
	11	2	**232-1323**	1	PLUG-CUP	
	12	1	**232-1328**	1	CAP (FUEL INJECTOR)	
	13	2	**232-1793**	1	CABLE	
	14	1	**232-1794**	3	HOSE	
	15	1	**232-2720**	1	TUBE AS (CYL NO. 1)	
	16	1	**232-2721**	1	TUBE AS (CYL NO. 2)	
	17	1	**232-2722**	1	TUBE AS (CYL NO. 3)	
	18	1	**232-2723**	1	TUBE AS (CYL NO. 4)	
	19	1	**232-2725**	2	CLIP	
	20	1	**232-2726**	1	CLIP	
	21	1	**232-3149**	3	WASHER (8.35X16.85X1.55-MM THK)	
	22	1	**232-3157**	1	BRACKET	
M	23	1	**232-3274**	4	BOLT (M8X1.25X48.1-MM)	
	24	1	**233-7104**	1	GEAR-PUMP	
	25	2	**235-1790**	1	SWITCH-TEMPERATURE (ENGINE COOLANT)	
	26	1	**238-8671**	4	CLAMP-INJECTOR	
R	27	1	**266-6830**	4	INJECTOR AS-FUEL	
					(EACH INCLUDES)	
	27A	1	**140-8718**	1	WASHER (7.49X15.75X1.68-MM THK)	
	27B	1	**234-0387**	1	NOZZLE	
	27C	1	**275-1038**	1	SEAL-O-RING	
	28	1	**285-8525**	1	PUMP GP-FUEL INJECTION	

M - METRIC PART
R - REMANUFACTURED PART MAY BE AVAILABLE

285-8528 **PUMP GP-FUEL INJECTION (**contd.**)** **i03232720**

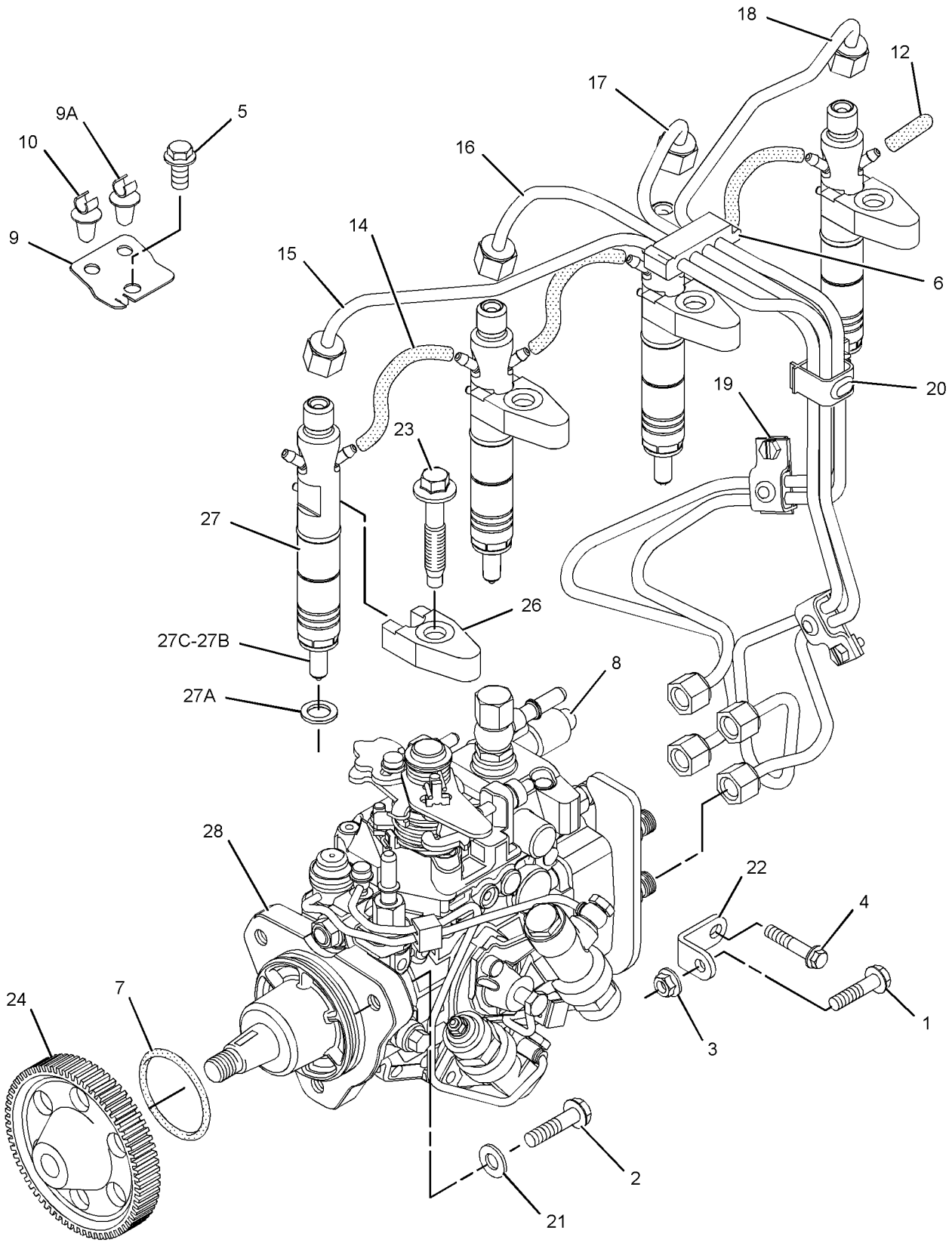

GRAPHIC #1 g01302589

285-8528 **PUMP GP-FUEL INJECTION (**contd.**)** **i03232720**

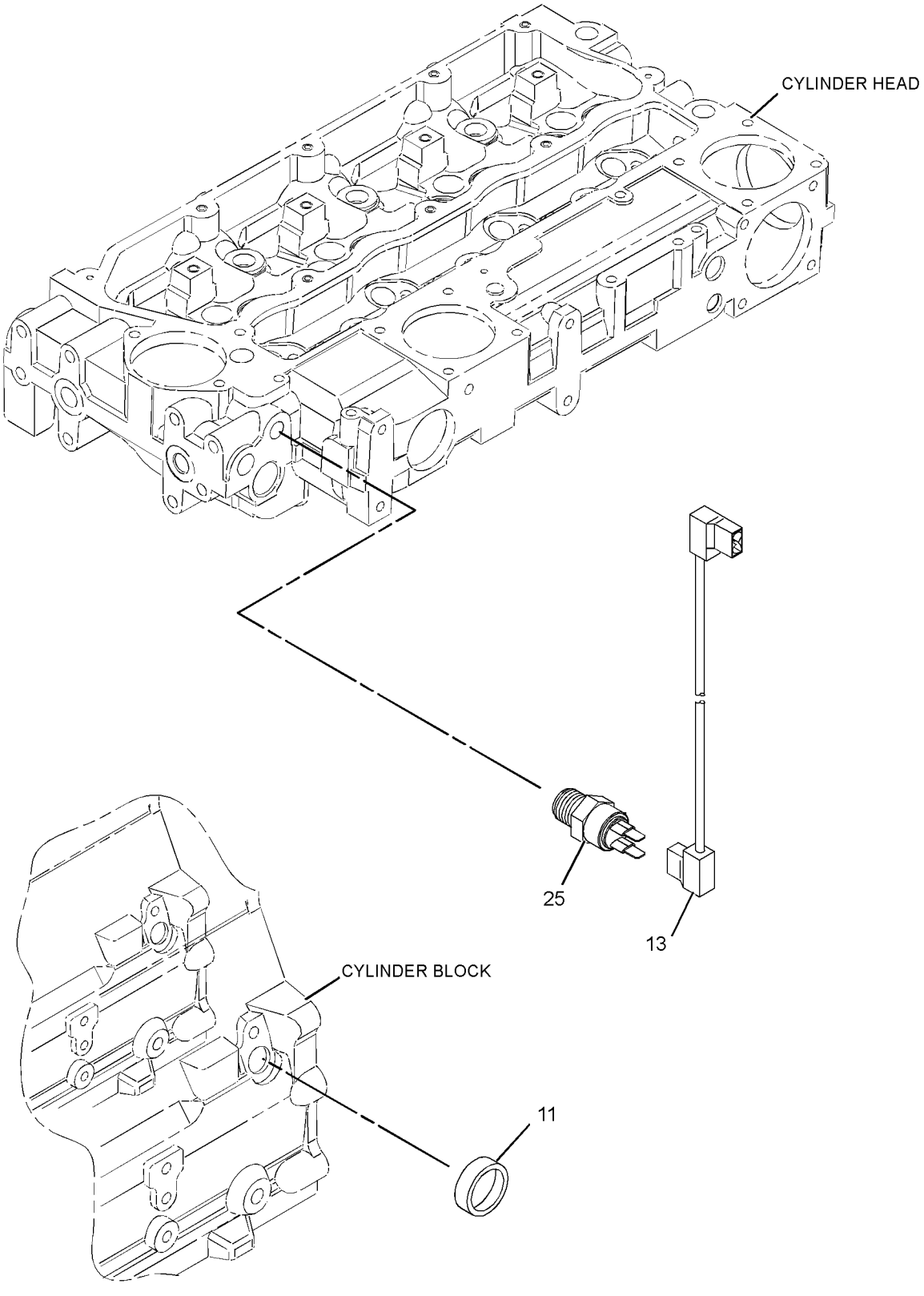

GRAPHIC #2 <END> g01302590

285-8528 PUMP GP-FUEL INJECTION

TYPE 2

SMCS-1251, 1290 **i05195483**

NOTE	REF NO	GRAPHIC REF	PART NUMBER	QTY	PART NAME 1 2 3 4 5 6 (PRODUCT LEVEL)	SEE PAGE
M	1	1	**6I-0217**	1	BOLT (M8X1.25X20-MM)	
M	2	1	**6I-0260**	3	BOLT (M8X1.25X25-MM)	
M	3	1	**6I-0291**	1	NUT (M8X1.25-THD)	
M	4	1	**100-4830**	1	BOLT (M10X1.5X20-MM)	
M	5	1	**124-3815**	1	BOLT (M8X1.25X16-MM)	
	6	1	**140-8714**	1	CLIP	
	7	1	**332-7549**	1	SEAL-O-RING	
	8	1	**155-8804**	1	CAP	
	9	1	**240-5571**	1	BRACKET	
	9A	1	**232-3126**	1	CLIP	
	10	1	**232-1115**	2	CLIP-PIPE	
	12	1	**232-1328**	1	CAP (FUEL INJECTOR)	
	13	2	**232-1793**	1	CABLE	
	14	1	**232-1794**	3	HOSE	
	15	1	**232-2720**	1	TUBE AS (CYL NO. 1)	
	16	1	**232-2721**	1	TUBE AS (CYL NO. 2)	
	17	1	**232-2722**	1	TUBE AS (CYL NO. 3)	
	18	1	**232-2723**	1	TUBE AS (CYL NO. 4)	
	19	1	**232-2725**	2	CLIP	
	20	1	**232-2726**	1	CLIP	
	21	1	**232-3149**	3	WASHER (8.35X16.85X1.55-MM THK)	
	22	1	**232-3157**	1	BRACKET	
M	23	1	**232-3274**	4	BOLT (M8X1.25X48.1-MM)	
	24	1	**233-7104**	1	GEAR-PUMP	
	25	2	**235-1790**	1	SWITCH-TEMPERATURE (ENGINE COOLANT)	
	26	1	**238-8671**	4	CLAMP-INJECTOR	
R	27	1	**266-6830**	4	INJECTOR AS-FUEL	
					(EACH INCLUDES)	
	27A	1	**140-8718**	1	WASHER (7.49X15.75X1.68-MM THK)	
	27B	1	**234-0387**	1	NOZZLE	
	27C	1	**275-1038**	1	SEAL-O-RING	
	28	1	**285-8525**	1	PUMP GP-FUEL INJECTION	

M - METRIC PART
R - REMANUFACTURED PART MAY BE AVAILABLE

285-8528 **PUMP GP-FUEL INJECTION (**contd.**)** **i05195483**

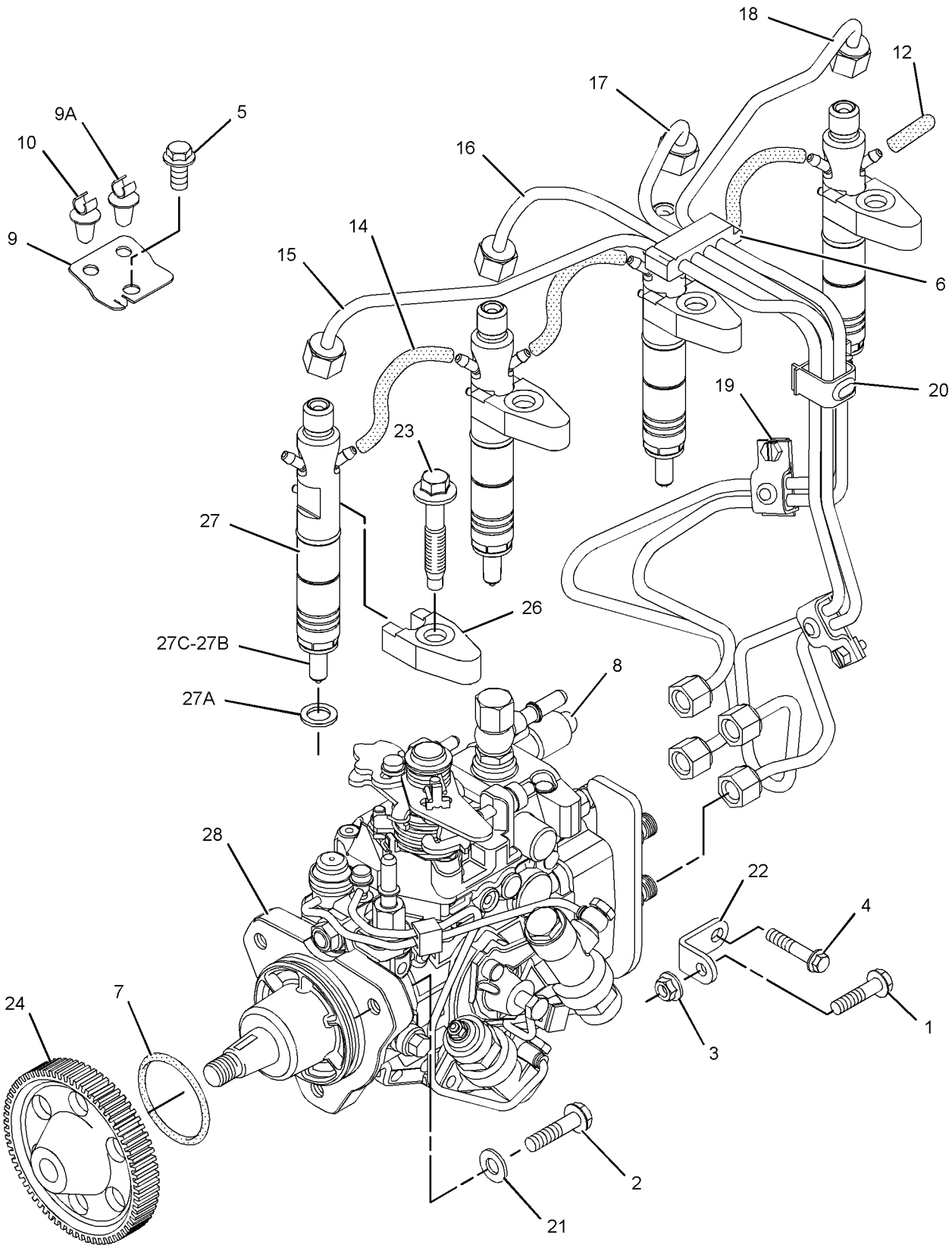

GRAPHIC #1 g01302589

285-8528 **PUMP GP-FUEL INJECTION (**contd.**)** **i05195483**

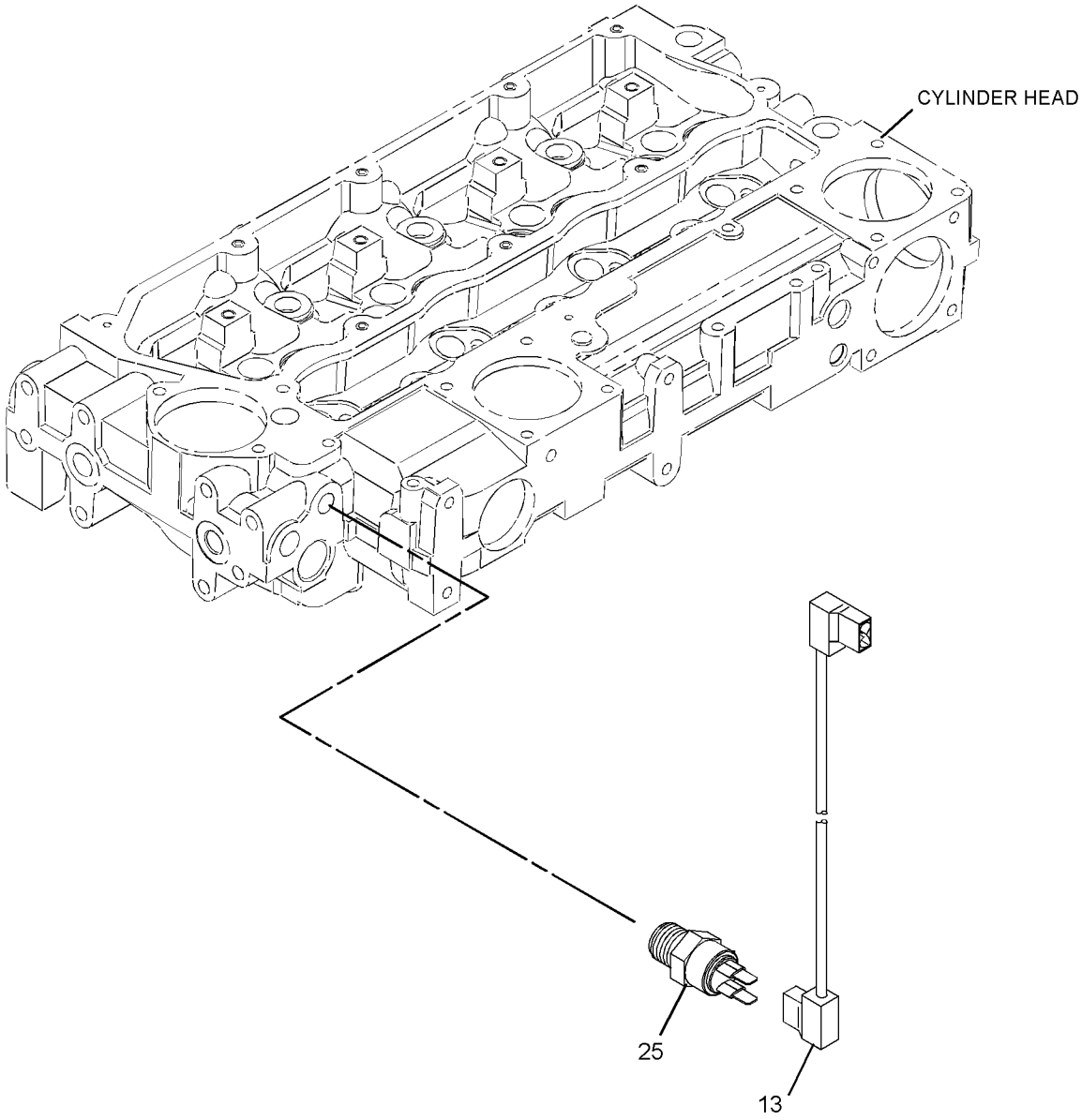

GRAPHIC #2 <END> g03043039

290-2550 PUMP GP-FUEL INJECTION

PART OF 237-7999 PUMP GP-FUEL INJECTION

SMCS-1251, 1290 **i02645882**

NOTE	REF NO	GRAPHIC REF	PART NUMBER	QTY	PART NAME 1 2 3 4 5 6 (PRODUCT LEVEL)	SEE PAGE
	1	1	**152-3968**	1	SEAL-O-RING	
	2	1	**176-6219**	1	SOLENOID (12-VOLT) (FUEL SHUTOFF)	

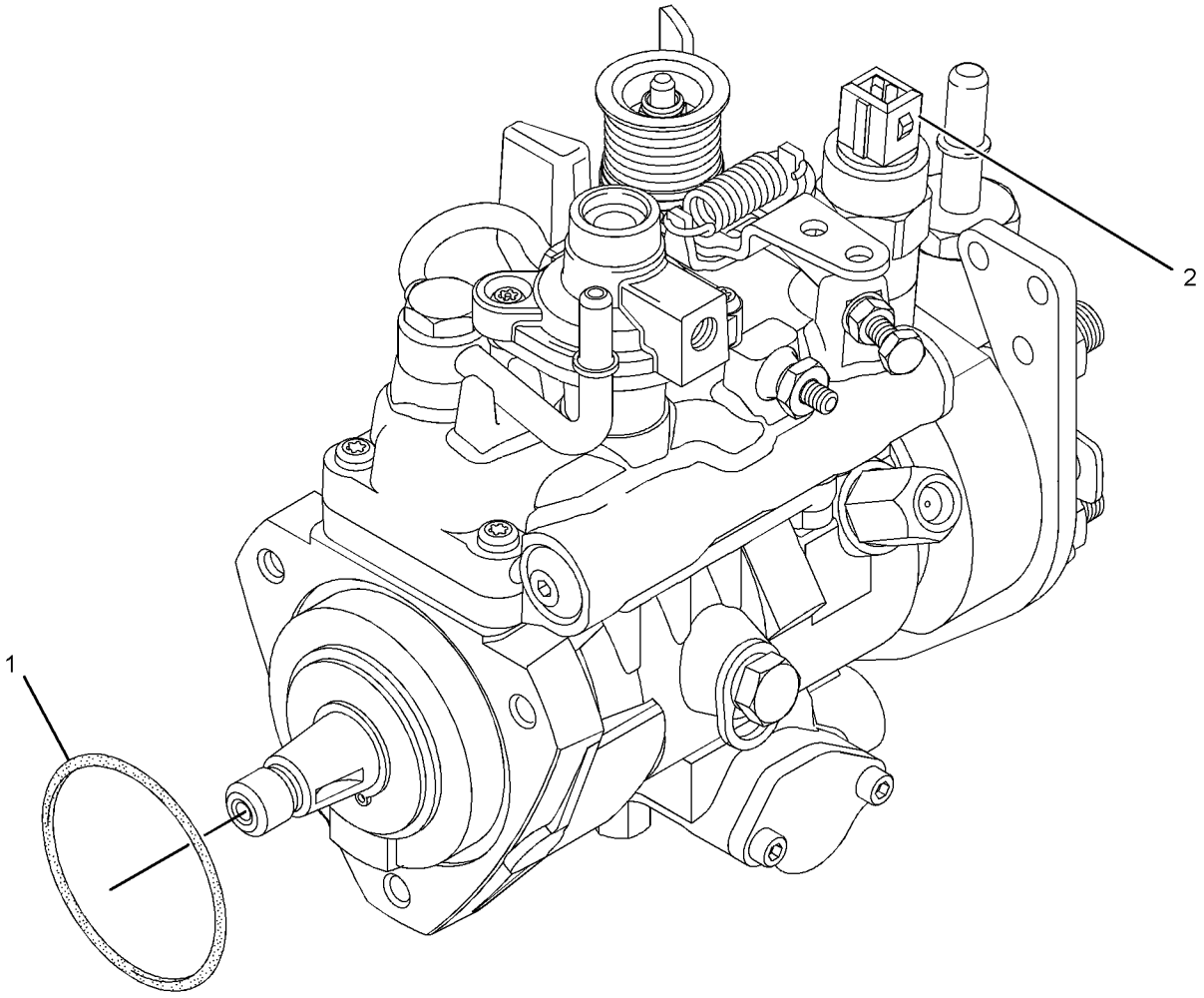

GRAPHIC #1 <END> g01319446

290-5525 PUMP GP-FUEL INJECTION

TYPE 1

SMCS-1251, 1290 **i04889164**

NOTE	REF NO	GRAPHIC REF	PART NUMBER	QTY	PART NAME 1 2 3 4 5 6 (PRODUCT LEVEL)	SEE PAGE
M	1	1	**6I-0217**	1	BOLT (M8X1.25X20-MM)	
M	2	1	**6I-0260**	3	BOLT (M8X1.25X25-MM)	
M	3	1	**6I-0291**	1	NUT (M8X1.25-THD)	
	4	1	**035-8017**	1	UNION	
	5	1	**365-3308**	1	NUT-COMPRESSION (3/8-24-THD)	
	6	1	**067-6265**	1	FITTING-BRASS	
M	7	1	**100-4830**	1	BOLT (M10X1.5X20-MM)	
M	8	1	**124-3815**	1	BOLT (M8X1.25X16-MM)	
	9	1	**140-8714**	1	CLIP	
	10	1	**318-2365**	1	CLIP	
	11	1	**230-8989**	1	GEAR-FUEL PUMP (68-TEETH)	
	12	1	**230-8995**	1	TUBE AS (CYL NO. 1)	
	13	1	**230-8996**	1	TUBE AS (CYL NO. 2)	
	14	1	**230-8997**	1	TUBE AS (CYL NO. 3)	
	15	1	**230-8998**	1	TUBE AS (CYL NO. 4)	
R	16	1	**230-8999**	4	INJECTOR AS-FUEL	
					(EACH INCLUDES)	
	16A	1	**140-8718**	1	WASHER (7.49X15.75X1.68-MM THK)	
	16B	1	**232-2724**	1	NOZZLE	
	16C	1	**275-1038**	1	SEAL-O-RING	
	17	2	**232-1323**	1	PLUG-CUP	
	18	1	**232-1328**	1	CAP	
	19	2	**232-1793**	1	CABLE	
	20	1	**232-1794**	1	HOSE	
	21	1	**232-2725**	2	CLIP	
	22	1	**232-2726**	1	CLIP	
	23	1	**238-8671**	4	CLAMP-INJECTOR	
	25	1	**232-3149**	3	WASHER (8.35X16.85X1.55-MM THK)	
	26	1	**232-3157**	1	BRACKET	
M	27	1	**232-3274**	4	BOLT (M8X1.25X48.1-MM)	
	28	2	**235-1790**	1	SWITCH-TEMPERATURE (ENGINE COOLANT)	
	29	1	**236-2144**	1	TUBE AS	
	29A	1	**067-6999**	1	FERRULE	
	30	1	**240-5571**	1	BRACKET	
Y	31	1	**278-4118**	1	PUMP GP-FUEL INJECTION	1434

M - METRIC PART
R - REMANUFACTURED PART MAY BE AVAILABLE
Y - SEPARATE ILLUSTRATION

290-5525 **PUMP GP-FUEL INJECTION (**contd.**)** **i04889164**

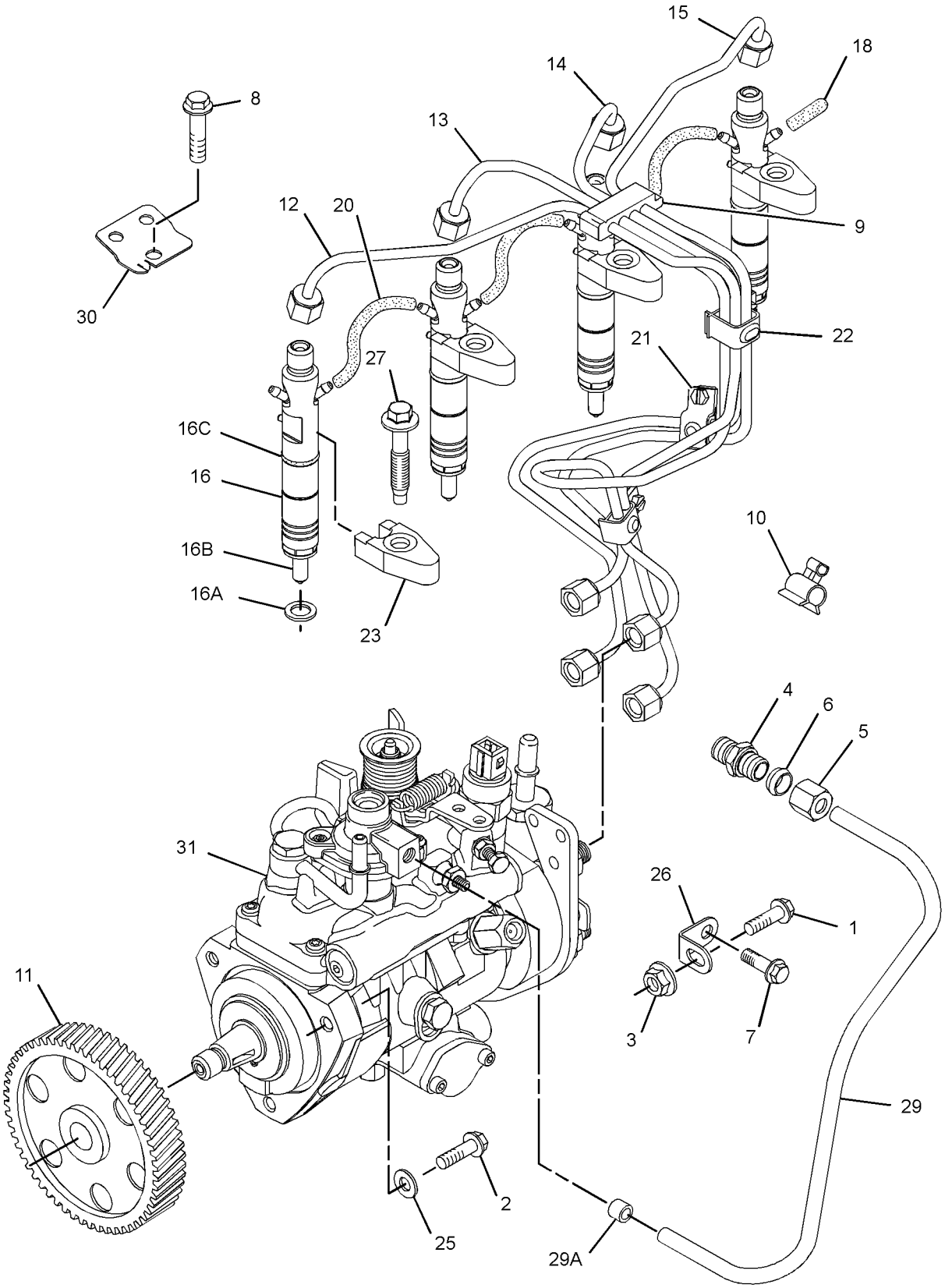

GRAPHIC #1 g01742974

290-5525 **PUMP GP-FUEL INJECTION (**contd.**)** **i04889164**

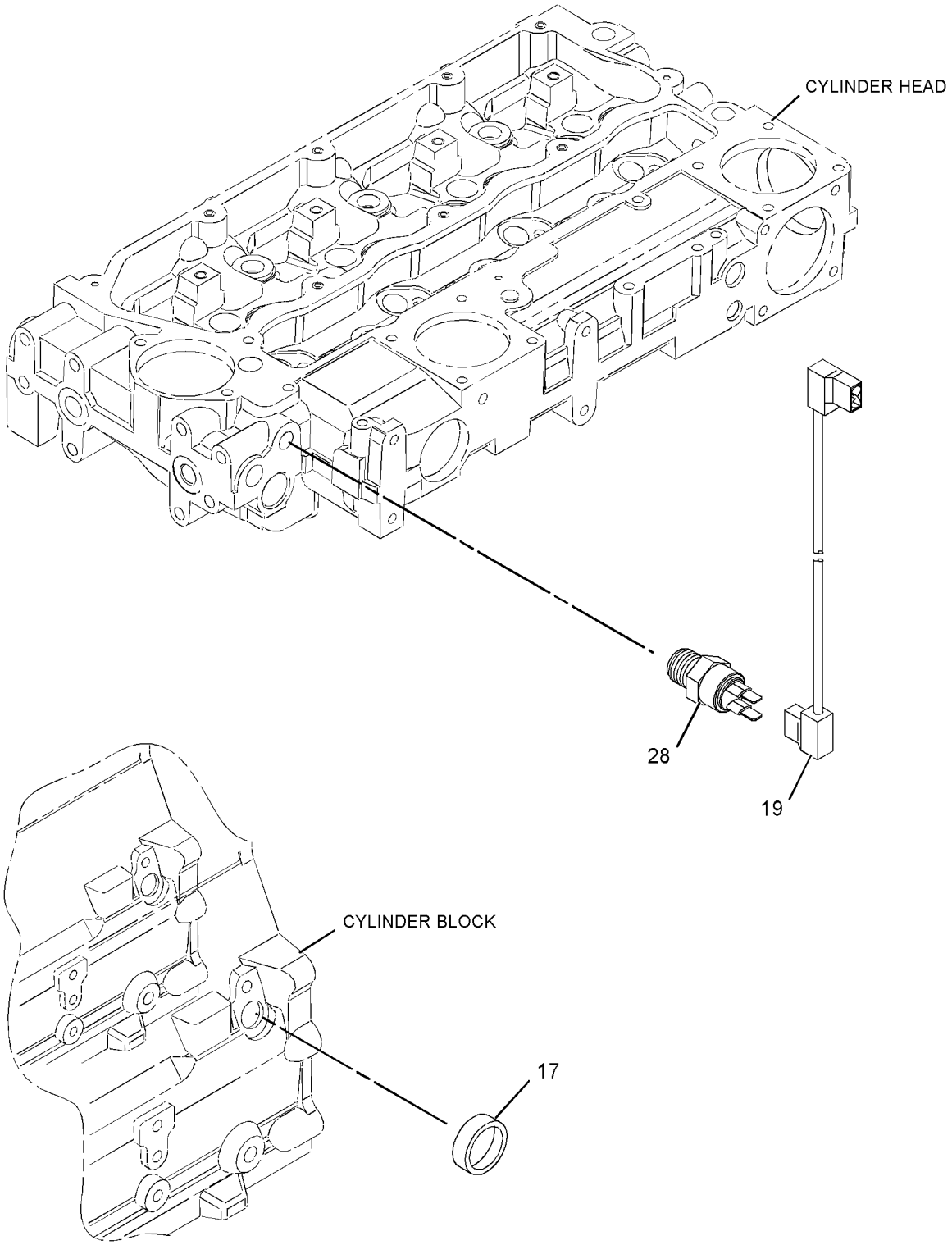

GRAPHIC #2 <END> g01317773

290-5525 PUMP GP-FUEL INJECTION

TYPE 2

SMCS-1251, 1290 **i08268885**

NOTE	REF NO	GRAPHIC REF	PART NUMBER	QTY	PART NAME 1 2 3 4 5 6 (PRODUCT LEVEL)	SEE PAGE
M	1	2	**6I-0217**	1	BOLT (M8X1.25X20-MM)	
M	2	1	**6I-0260**	3	BOLT (M8X1.25X25-MM)	
M	3	2	**178-3336**	1	NUT-HEX FLANGE (M8X1.25-THD)	
	4	2	**035-8017**	1	UNION	
	5	2	**067-6265**	1	FITTING-BRASS	
M	6	2	**100-4830**	1	BOLT (M10X1.5X20-MM)	
M	7	1	**124-3815**	1	BOLT (M8X1.25X16-MM)	
R	8	1	**230-8999**	4	INJECTOR AS-FUEL	
					(EACH INCLUDES)	
	8A	1	**140-8718**	1	WASHER (7.49X15.75X1.68-MM THK)	
	8B	1	**232-2724**	1	NOZZLE	
	8C	1	**275-1038**	1	SEAL-O-RING	
	9	1	**232-1328**	1	CAP (FUEL INJECTOR)	
	10	1	**232-1793**	1	CABLE	
	11	1	**232-1794**	1	HOSE	
	12	1	**232-3149**	3	WASHER (8.35X16.85X1.55-MM THK)	
	13	2	**232-3157**	1	BRACKET	
M	14	1	**232-3274**	4	BOLT (M8X1.25X48.1-MM)	
	15	1	**235-1790**	1	SWITCH-TEMPERATURE (ENGINE COOLANT)	
	16	2	**236-2144**	1	TUBE AS	
	16A	2	**067-6999**	1	FERRULE	
	17	1	**238-8671**	4	CLAMP-INJECTOR	
	18	1	**240-5571**	1	BRACKET	
Y	19	2	*278-4118*	1	PUMP GP-FUEL INJECTION	1434
	20	2	**318-2365**	1	CLIP	
	21	2	**365-3308**	1	NUT-COMPRESSION (3/8-24-THD)	
	22	2	**425-7107**	1	GEAR-FUEL PUMP (68-TEETH)	
Y	23	1	*495-3762*	1	LINES GP-FUEL INJECTION	1173

M - METRIC PART
R - REMANUFACTURED PART MAY BE AVAILABLE
Y - SEPARATE ILLUSTRATION

290-5525 **PUMP GP-FUEL INJECTION (**contd.**)** **i08268885**

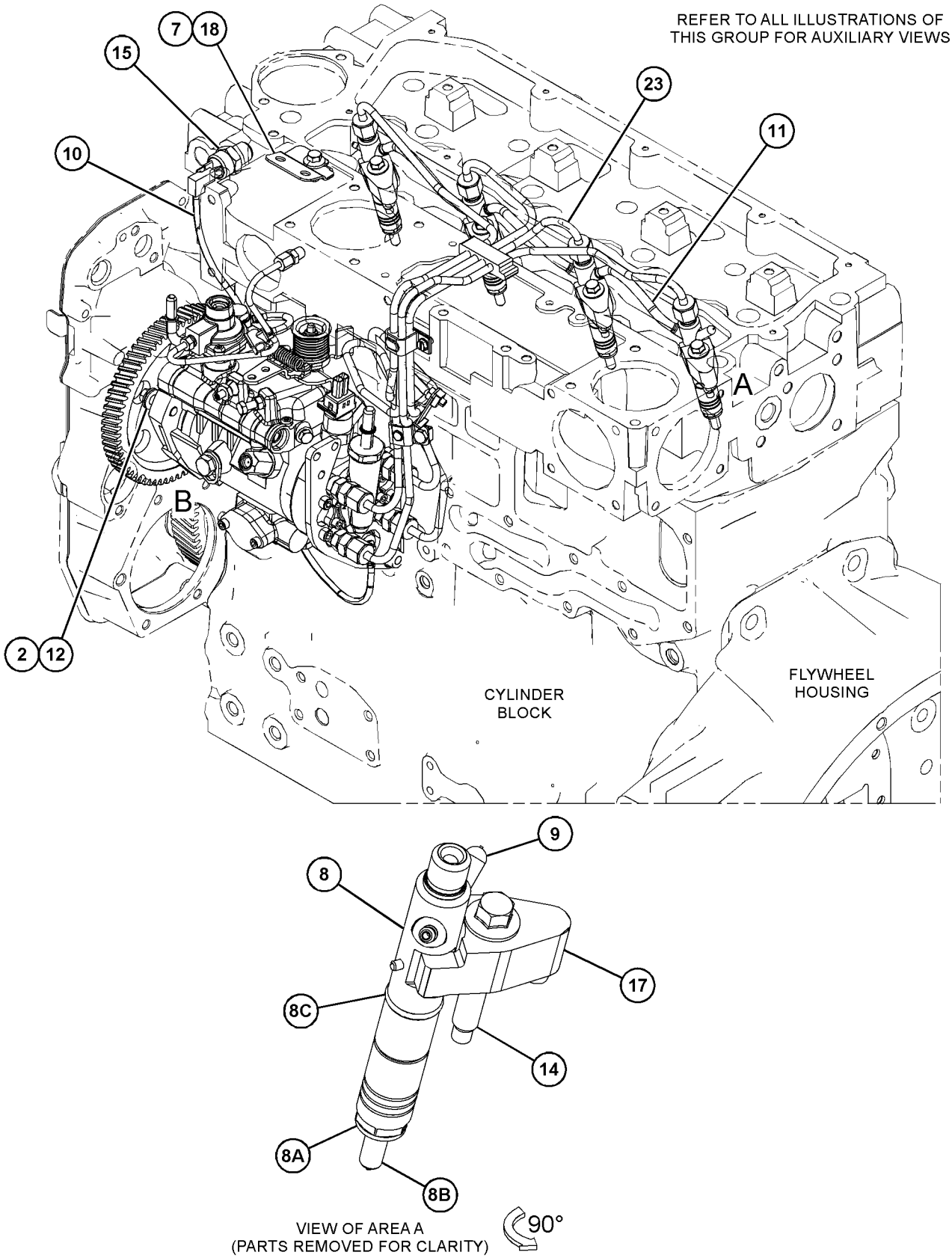

GRAPHIC #1 g06746193

290-5525 **PUMP GP-FUEL INJECTION (**contd.**)** **i08268885**

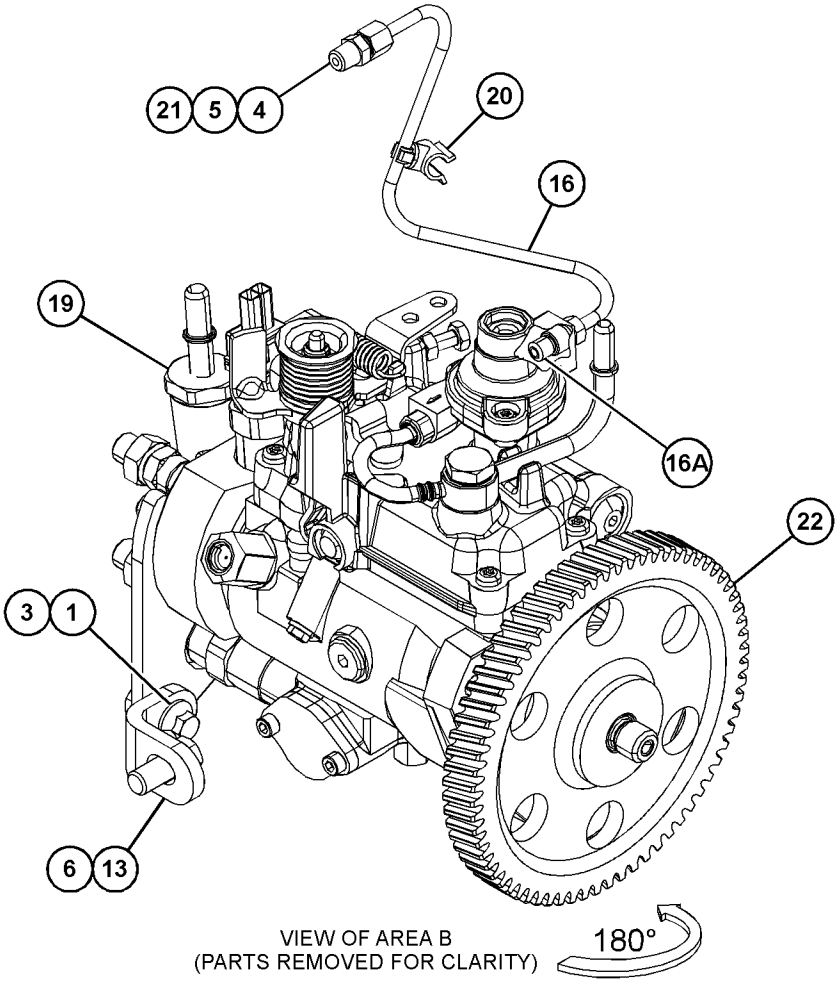

VIEW OF AREA B
(PARTS REMOVED FOR CLARITY)

GRAPHIC #2 <END> g06746194

292-2954 PUMP GP-FUEL INJECTION

TYPE 1

SMCS-1251, 1290 **i04889165**

NOTE	REF NO	GRAPHIC REF	PART NUMBER	QTY	PART NAME 1 2 3 4 5 6 (PRODUCT LEVEL)	SEE PAGE
M	1	1	**6I-0217**	1	BOLT (M8X1.25X20-MM)	
M	2	1	**6I-0260**	3	BOLT (M8X1.25X25-MM)	
M	3	1	**6I-0291**	1	NUT (M8X1.25-THD)	
	4	1	**035-8017**	1	UNION	
	5	1	**365-3308**	1	NUT-COMPRESSION (3/8-24-THD)	
	6	1	**067-6265**	1	FITTING-BRASS	
M	7	1	**100-4830**	1	BOLT (M10X1.5X20-MM)	
M	8	1	**124-3815**	1	BOLT (M8X1.25X16-MM)	
	9	1	**140-8714**	1	CLIP	
	10	1	**318-2365**	1	CLIP	
	11	2	**235-1790**	1	SWITCH-TEMPERATURE (TIMING ADVANCE)	
	12	1	**230-8989**	1	GEAR-FUEL PUMP (68-TEETH)	
	13	1	**230-8995**	1	TUBE AS (CYL NO. 1)	
	14	1	**230-8996**	1	TUBE AS (CYL NO. 2)	
	15	1	**230-8997**	1	TUBE AS (CYL NO. 3)	
	16	1	**230-8998**	1	TUBE AS (CYL NO. 4)	
	17	2	**232-1323**	1	PLUG-CUP	
	18	1	**232-1328**	1	CAP	
	19	2	**232-1793**	1	CABLE	
	20	1	**232-1794**	3	HOSE	
	21	1	**232-2725**	2	CLIP	
	22	1	**232-2726**	1	CLIP	
	24	1	**232-3149**	3	WASHER (8.35X16.85X1.55-MM THK)	
	25	1	**232-3157**	1	BRACKET	
M	26	1	**232-3274**	4	BOLT (M8X1.25X48.1-MM)	
R	27	1	**236-1674**	4	INJECTOR AS-FUEL	
					(EACH INCLUDES)	
	27A	1	**140-8718**	1	WASHER (7.49X15.75X1.68-MM THK)	
	27B	1	**236-1673**	1	NOZZLE	
	27C	1	**275-1038**	1	SEAL-O-RING	
	28	1	**236-2144**	1	TUBE AS	
	28A	1	**067-6999**	1	FERRULE	
	29	1	**238-8671**	4	CLAMP-INJECTOR	
	30	1	**240-5571**	1	BRACKET	
Y	31	1	**292-5821**	1	PUMP GP-FUEL INJECTION	1459

M - METRIC PART
R - REMANUFACTURED PART MAY BE AVAILABLE
Y - SEPARATE ILLUSTRATION

292-2954 **PUMP GP-FUEL INJECTION (**contd.**)** **i04889165**

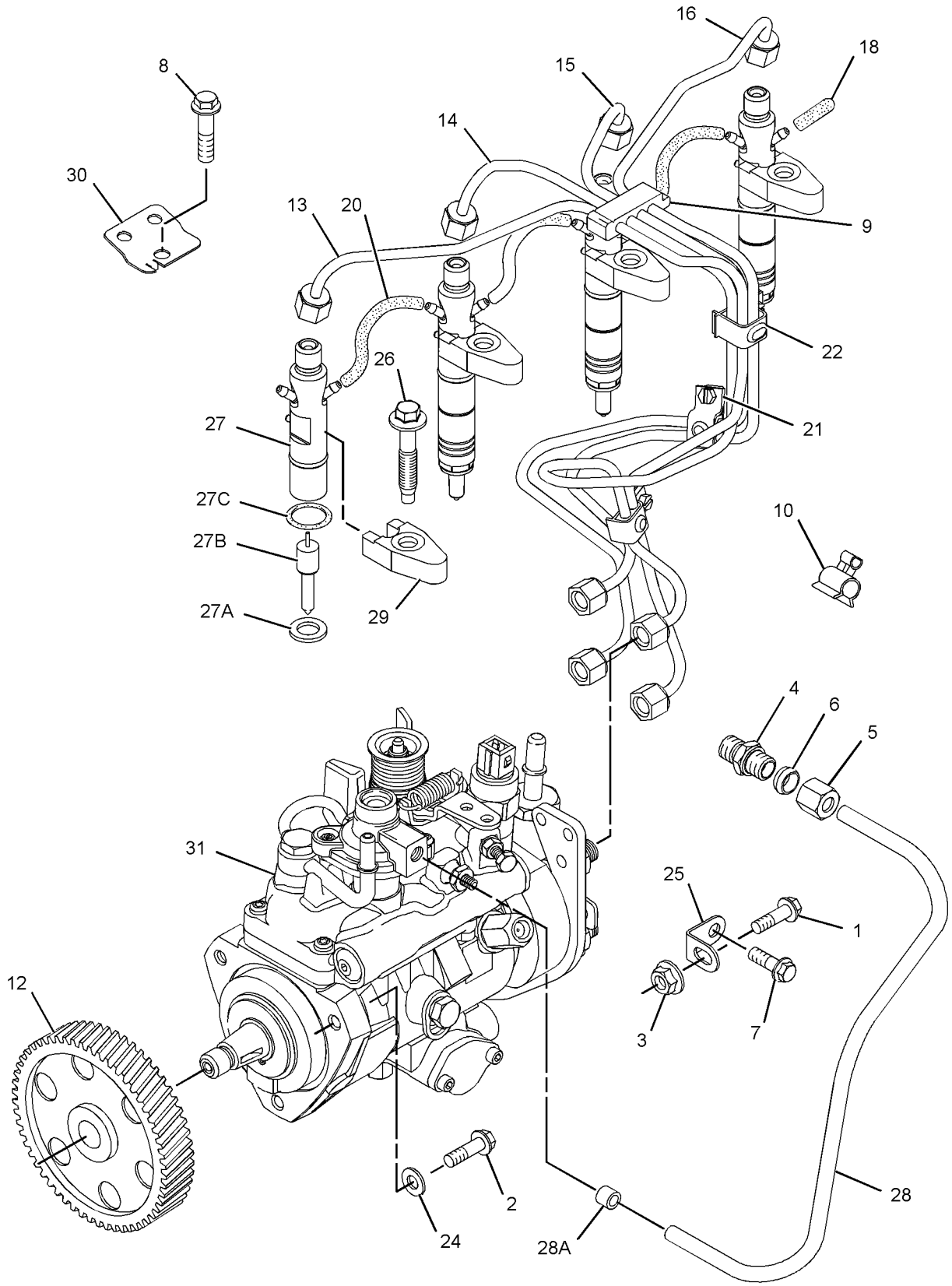

GRAPHIC #1 g01757557

292-2954 **PUMP GP-FUEL INJECTION (**contd.**)** **i04889165**

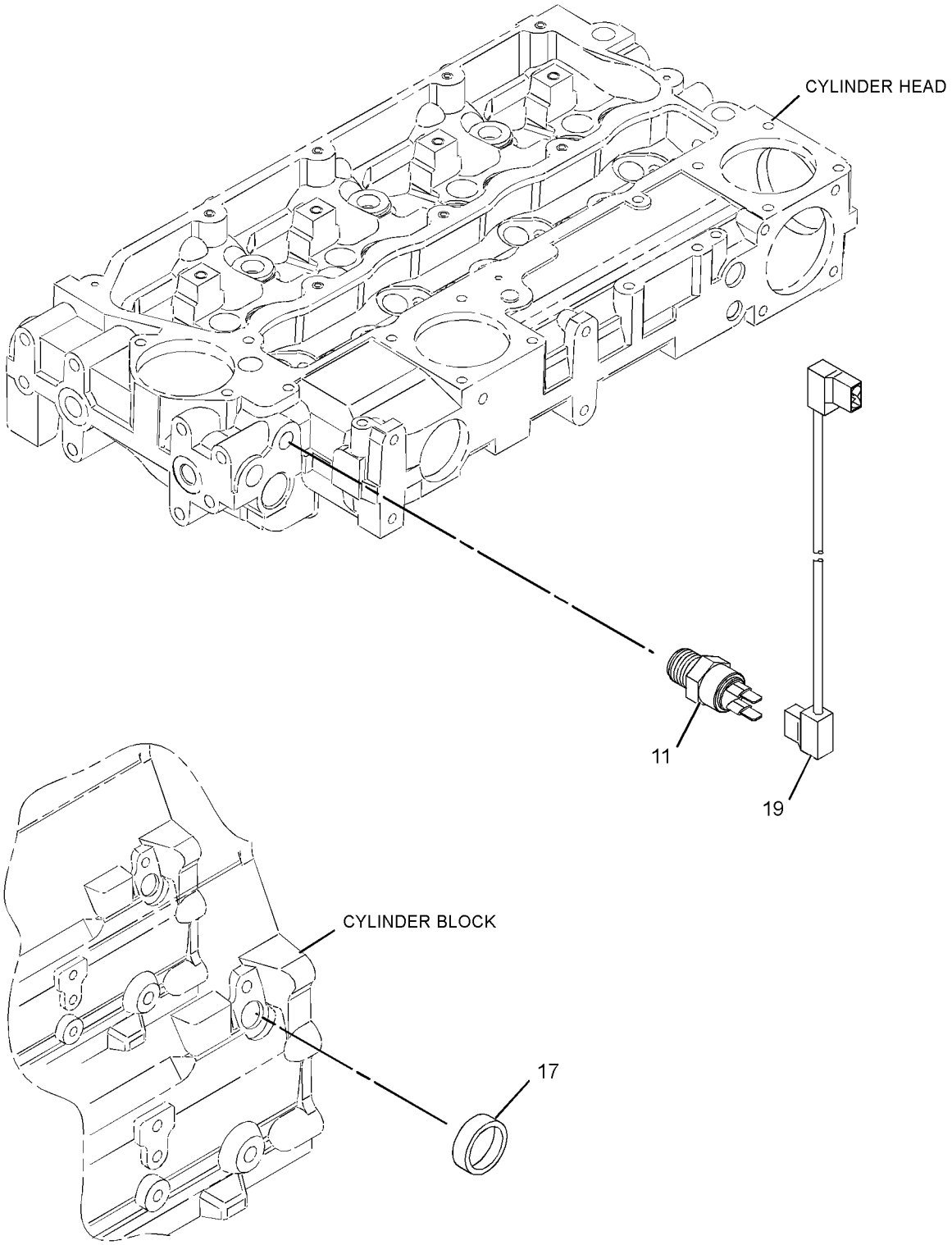

GRAPHIC #2 <END> g01302714

292-2954 PUMP GP-FUEL INJECTION

TYPE 2

SMCS-1251, 1290 **i04891611**

NOTE	REF NO	GRAPHIC REF	PART NUMBER	QTY	PART NAME 1 2 3 4 5 6 (PRODUCT LEVEL)	SEE PAGE
M	1	1	**6I-0217**	1	BOLT (M8X1.25X20-MM)	
M	2	1	**6I-0260**	3	BOLT (M8X1.25X25-MM)	
M	3	1	**6I-0291**	1	NUT (M8X1.25-THD)	
	4	1	**035-8017**	1	UNION	
	5	1	**365-3308**	1	NUT-COMPRESSION (3/8-24-THD)	
	6	1	**067-6265**	1	FITTING-BRASS	
M	7	1	**100-4830**	1	BOLT (M10X1.5X20-MM)	
M	8	1	**124-3815**	1	BOLT (M8X1.25X16-MM)	
	9	1	**140-8714**	1	CLIP	
	10	1	**318-2365**	1	CLIP	
	11	2	**235-1790**	1	SWITCH-TEMPERATURE (TIMING ADVANCE)	
	12	1	**230-8989**	1	GEAR-FUEL PUMP (68-TEETH)	
	13	1	**230-8995**	1	TUBE AS (CYL NO. 1)	
	14	1	**230-8996**	1	TUBE AS (CYL NO. 2)	
	15	1	**230-8997**	1	TUBE AS (CYL NO. 3)	
	16	1	**230-8998**	1	TUBE AS (CYL NO. 4)	
	18	1	**232-1328**	1	CAP	
	19	2	**232-1793**	1	CABLE	
	20	1	**232-1794**	3	HOSE	
	21	1	**232-2725**	2	CLIP	
	22	1	**232-2726**	1	CLIP	
	24	1	**232-3149**	3	WASHER (8.35X16.85X1.55-MM THK)	
	25	1	**232-3157**	1	BRACKET	
M	26	1	**232-3274**	4	BOLT (M8X1.25X48.1-MM)	
R	27	1	**236-1674**	4	INJECTOR AS-FUEL	
					(EACH INCLUDES)	
	27A	1	**140-8718**	1	WASHER (7.49X15.75X1.68-MM THK)	
	27B	1	**236-1673**	1	NOZZLE	
	27C	1	**275-1038**	1	SEAL-O-RING	
	28	1	**236-2144**	1	TUBE AS	
	28A	1	**067-6999**	1	FERRULE	
	29	1	**238-8671**	4	CLAMP-INJECTOR	
	30	1	**240-5571**	1	BRACKET	
Y	31	1	**292-5821**	1	PUMP GP-FUEL INJECTION	1459

M - METRIC PART
R - REMANUFACTURED PART MAY BE AVAILABLE
Y - SEPARATE ILLUSTRATION

292-2954 **PUMP GP-FUEL INJECTION (**contd.**)** **i04891611**

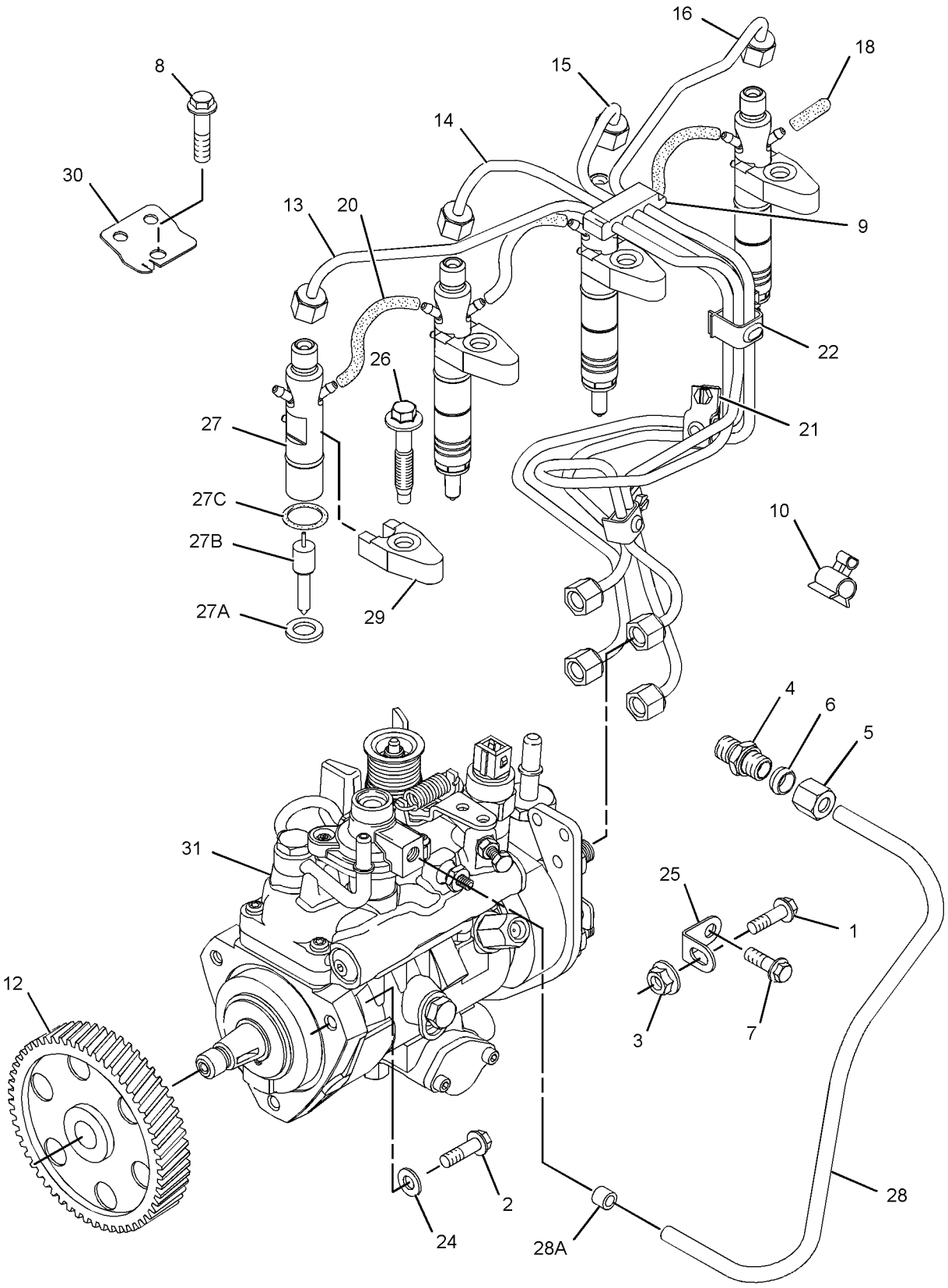

GRAPHIC #1 g01757557

292-2954 **PUMP GP-FUEL INJECTION (**contd.**)** **i04891611**

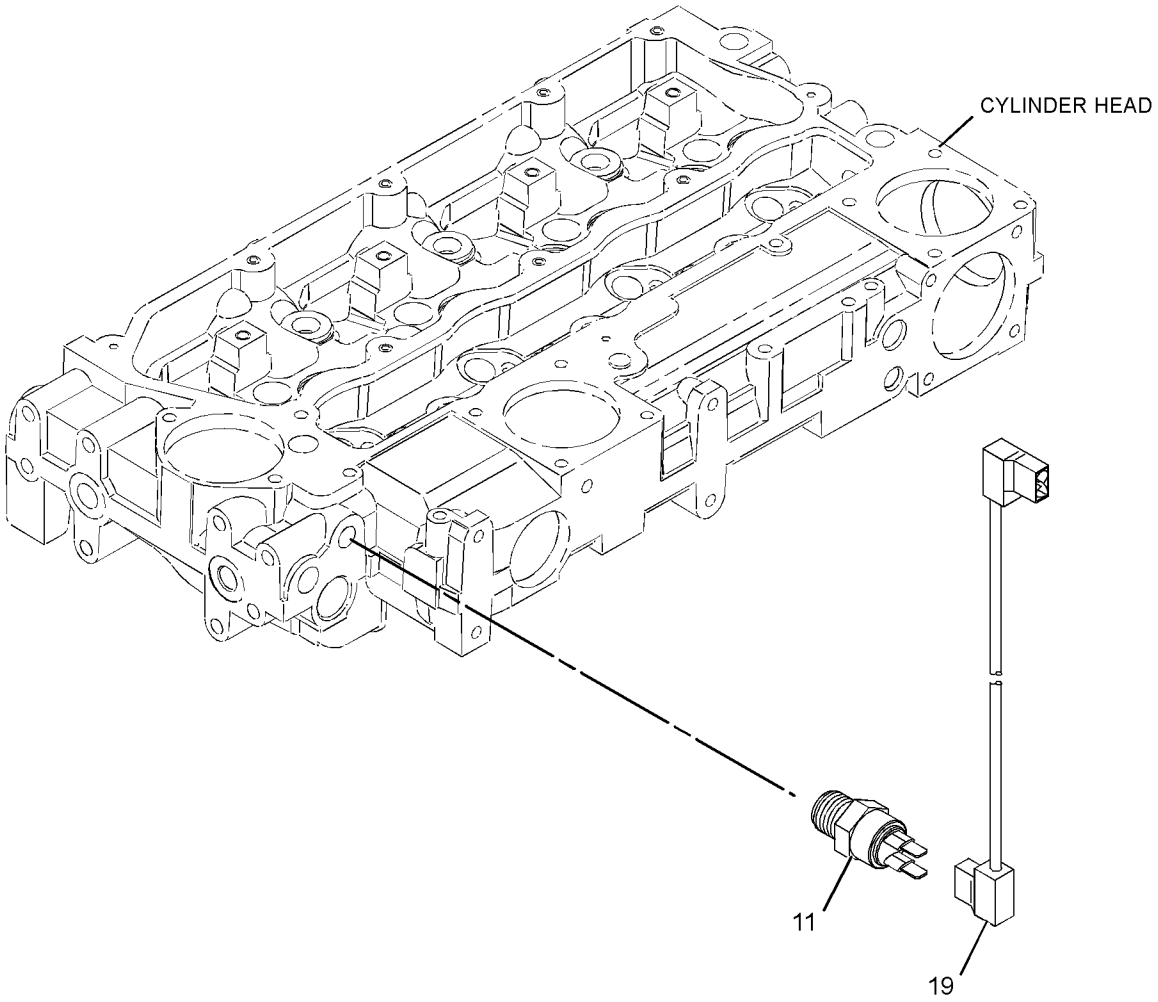

GRAPHIC #2 <END> g03030989

292-3461 PUMP GP-FUEL INJECTION*R

PART OF 269-8487 PUMP GP-FUEL INJECTION

SMCS-1251, 1290 **i02645886**

NOTE	REF NO	GRAPHIC REF	PART NUMBER	QTY	PART NAME 1 2 3 4 5 6 (PRODUCT LEVEL)	SEE PAGE
M	1	1	**111-3422**	1	NUT (M14X1.5-THD)	
	2	1	**111-3423**	1	WASHER	
	3	1	**152-3968**	1	SEAL-O-RING	
	4	1	**176-6219**	1	SOLENOID (12-VOLT) (FUEL SHUTOFF)	
	5	1	**193-0161**	1	CABLE AS-ADAPTER	

M - METRIC PART

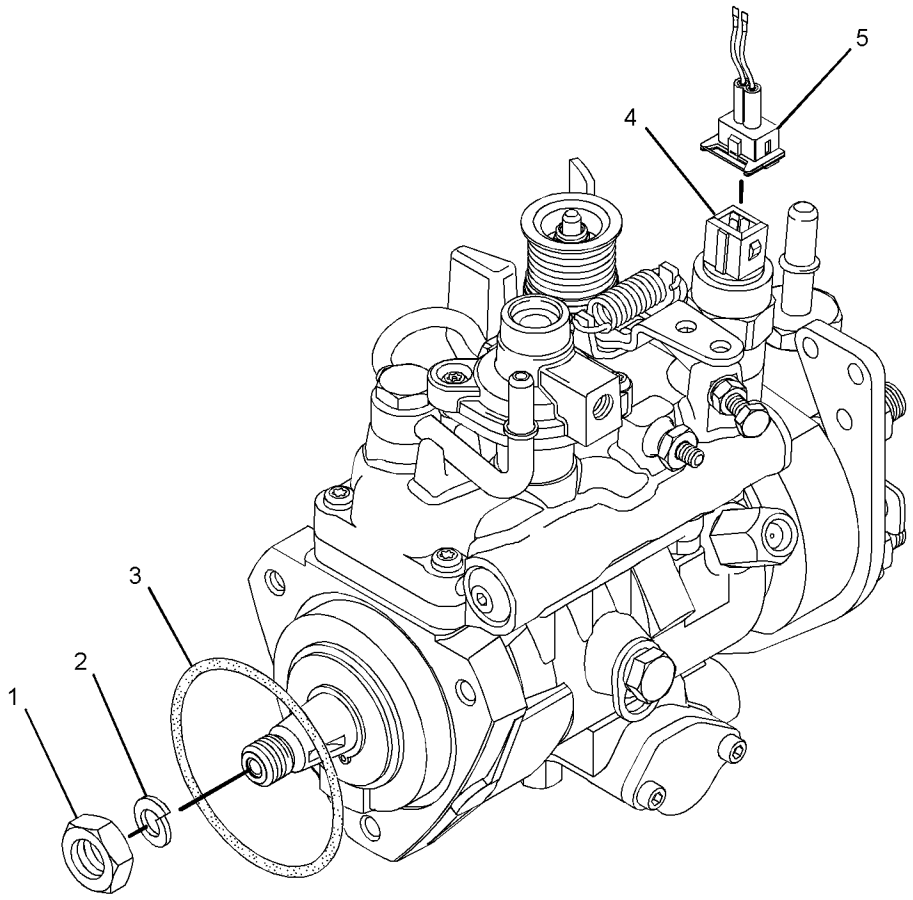

GRAPHIC #1 <END> g01175049

292-4758 PUMP GP-FUEL INJECTION

FIELD REPLACEMENT FOR 248-2368—PAGE: 1331

SMCS-1251, 1290 **i02537975**

NOTE	REF NO	GRAPHIC REF	PART NUMBER	QTY	PART NAME 1 2 3 4 5 6 (PRODUCT LEVEL)	SEE PAGE
M	1	1	**111-3422**	1	NUT (M14X1.5-THD)	
	2	1	**111-3423**	1	WASHER	
	3	1	**147-2645**	1	SOLENOID-SHUTOFF (24-VOLT) (FUEL SHUTOFF)	
	4	1	**152-3968**	1	SEAL-O-RING	

M - METRIC PART

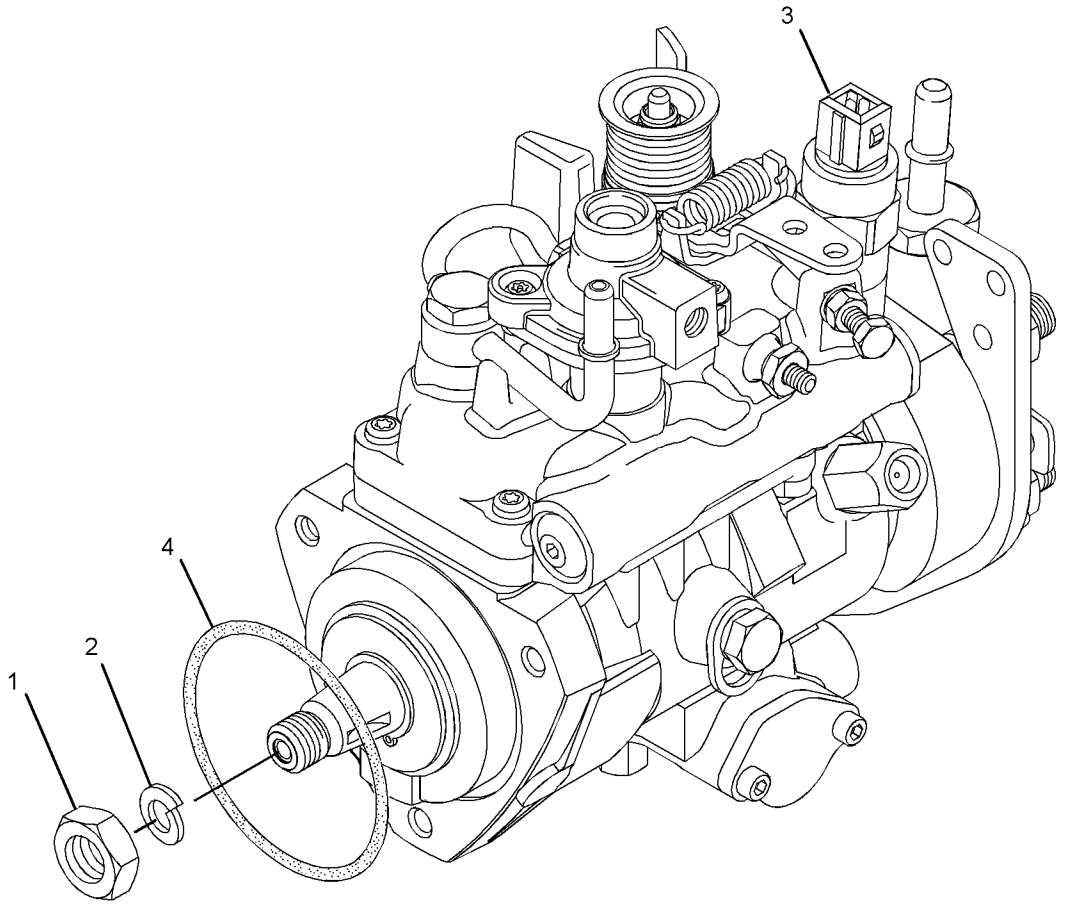

GRAPHIC #1 <END> g01312380

292-5821 PUMP GP-FUEL INJECTION

PART OF 292-2954 PUMP GP-FUEL INJECTION

SMCS-1251, 1290 **i03201061**

NOTE	REF NO	GRAPHIC REF	PART NUMBER	QTY	PART NAME 1 2 3 4 5 6 (PRODUCT LEVEL)	SEE PAGE
M	1	1	**111-3422**	1	NUT (M14X1.5-THD)	
	2	1	**111-3423**	1	WASHER	
	3	1	**152-3968**	1	SEAL-O-RING	
	4	1	**176-6219**	1	SOLENOID (12-VOLT) (FUEL SHUTOFF)	
	5	1	**193-0161**	1	CABLE AS-ADAPTER	

M - METRIC PART

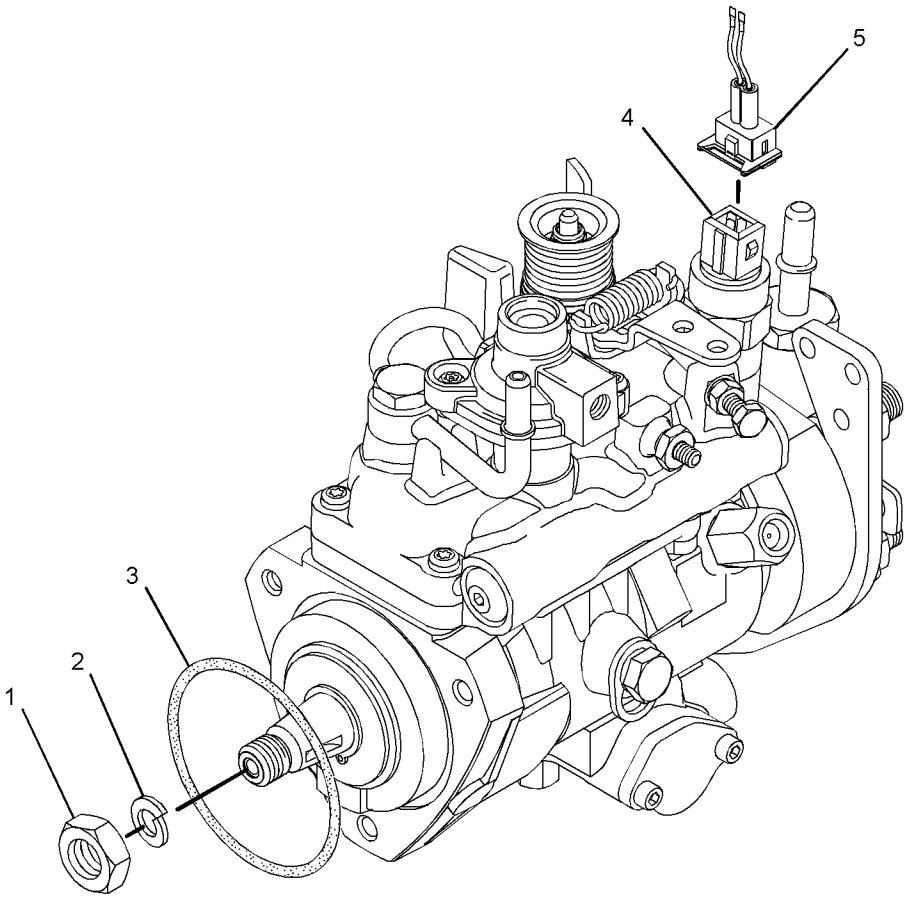

GRAPHIC #1 <END> g01175049

292-5839 PUMP GP-FUEL INJECTION

PART OF 271-8875 PUMP GP-FUEL INJECTION

SMCS-1251, 1290 **i02645888**

NOTE	REF NO	GRAPHIC REF	PART NUMBER	QTY	PART NAME 1 2 3 4 5 6 (PRODUCT LEVEL)	SEE PAGE
M	1	1	**111-3422**	1	NUT (M14X1.5-THD)	
	2	1	**111-3423**	1	WASHER	
	3	1	**176-6219**	1	SOLENOID (12-VOLT) (FUEL SHUTOFF)	
	4	1	**193-0161**	1	CABLE AS-ADAPTER	

M - METRIC PART

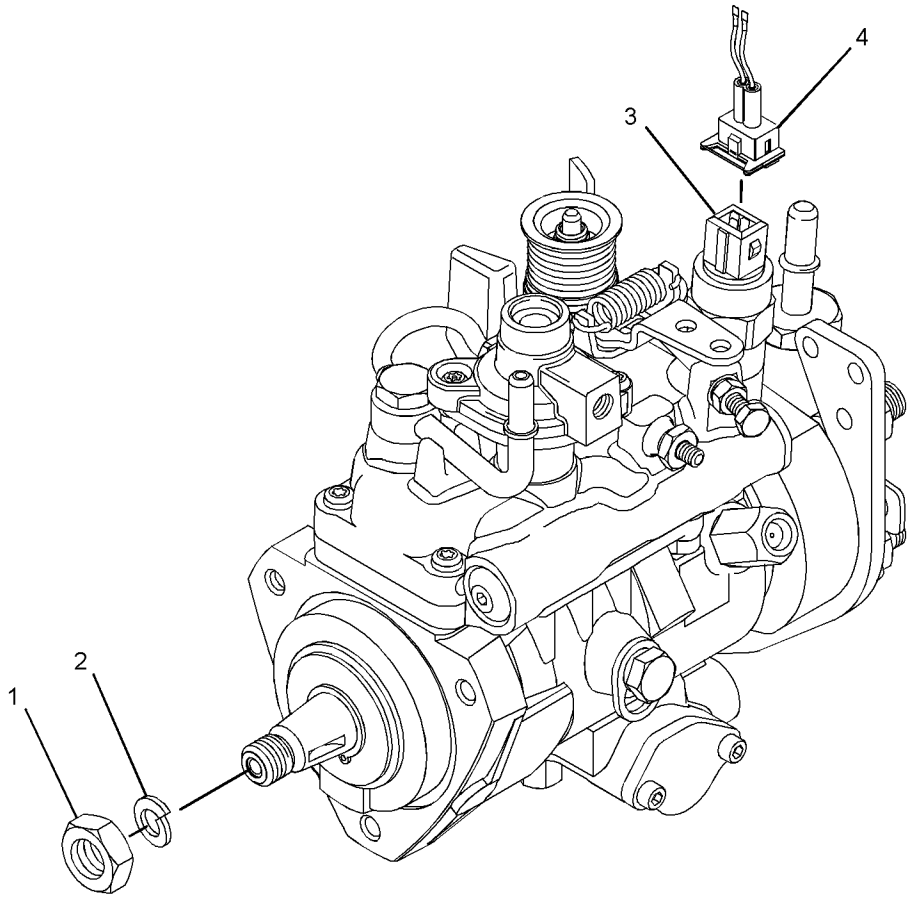

GRAPHIC #1 <END> g01312401

298-7691 PUMP GP-FUEL INJECTION

TYPE 1

SMCS-1251, 1290 **i04889192**

NOTE	REF NO	GRAPHIC REF	PART NUMBER	QTY	PART NAME 1 2 3 4 5 6 (PRODUCT LEVEL)	SEE PAGE
M	1	1	**6I-0217**	1	BOLT (M8X1.25X20-MM)	
M	2	1	**6I-0260**	3	BOLT (M8X1.25X25-MM)	
M	3	1	**6I-0291**	1	NUT (M8X1.25-THD)	
	4	1	**035-8017**	1	UNION	
	5	1	**365-3308**	1	NUT-COMPRESSION (3/8-24-THD)	
	6	1	**067-6265**	1	FITTING-BRASS	
M	7	1	**100-4830**	1	BOLT (M10X1.5X20-MM)	
M	8	1	**124-3815**	1	BOLT (M8X1.25X16-MM)	
	9	1	**140-8714**	1	CLIP	
	10	1	**318-2365**	1	CLIP	
	11	1	**230-8989**	1	GEAR-FUEL PUMP (68-TEETH)	
	12	1	**230-8995**	1	TUBE AS (CYL NO. 1)	
	13	1	**230-8996**	1	TUBE AS (CYL NO. 2)	
	14	1	**230-8997**	1	TUBE AS (CYL NO. 3)	
	15	1	**230-8998**	1	TUBE AS (CYL NO. 4)	
	16	2	**232-1323**	1	PLUG-CUP	
	17	1	**232-1328**	1	CAP	
	18	2	**232-1793**	1	CABLE	
	19	1	**232-1794**	2	HOSE	
	20	1	**232-2725**	2	CLIP	
	21	1	**232-2726**	1	CLIP	
	22	1	**232-3149**	3	WASHER (8.35X16.85X1.55-MM THK)	
	23	1	**232-3157**	1	BRACKET	
M	24	1	**232-3274**	4	BOLT (M8X1.25X48.1-MM)	
	25	2	**235-1790**	1	SWITCH-TEMPERATURE (TIMING ADVANCE)	
R	26	1	**236-1674**	4	INJECTOR AS-FUEL	
					(EACH INCLUDES)	
	26A	1	**140-8718**	1	WASHER (7.49X15.75X1.68-MM THK)	
	26B	1	**275-1038**	1	SEAL-O-RING	
	26C	1	**236-1673**	1	NOZZLE	
	27	1	**236-2144**	1	TUBE AS	
	27A	1	**067-6999**	1	FERRULE	
Y	28	1	*237-8185*	1	PUMP GP-FUEL INJECTION	1295
	29	1	**238-8671**	4	CLAMP-INJECTOR	
	30	1	**240-5571**	1	BRACKET	

M - METRIC PART
R - REMANUFACTURED PART MAY BE AVAILABLE
Y - SEPARATE ILLUSTRATION

298-7691 **PUMP GP-FUEL INJECTION (**contd.**)** **i04889192**

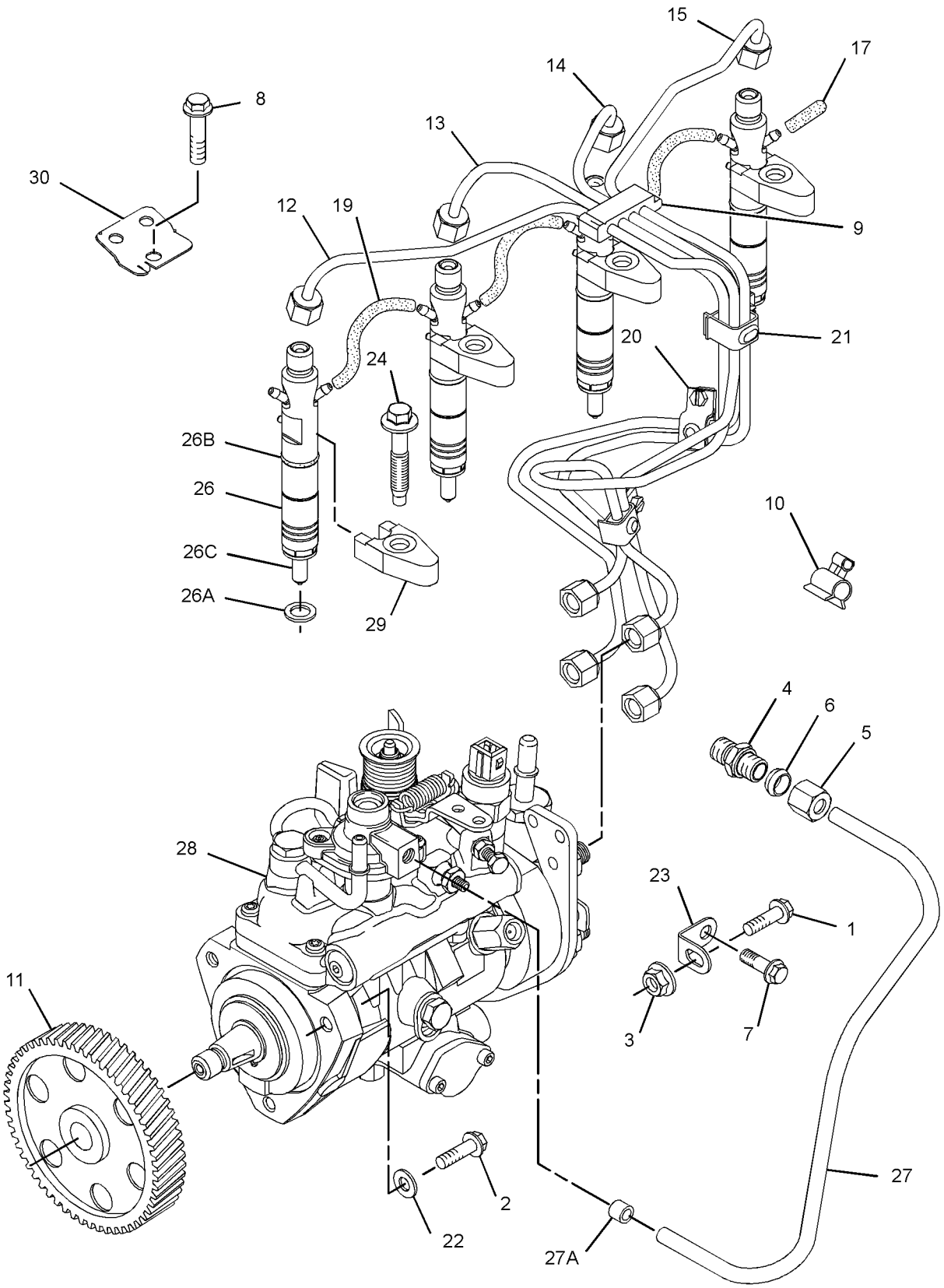

GRAPHIC #1 g01741993

298-7691 **PUMP GP-FUEL INJECTION (**contd.**)** **i04889192**

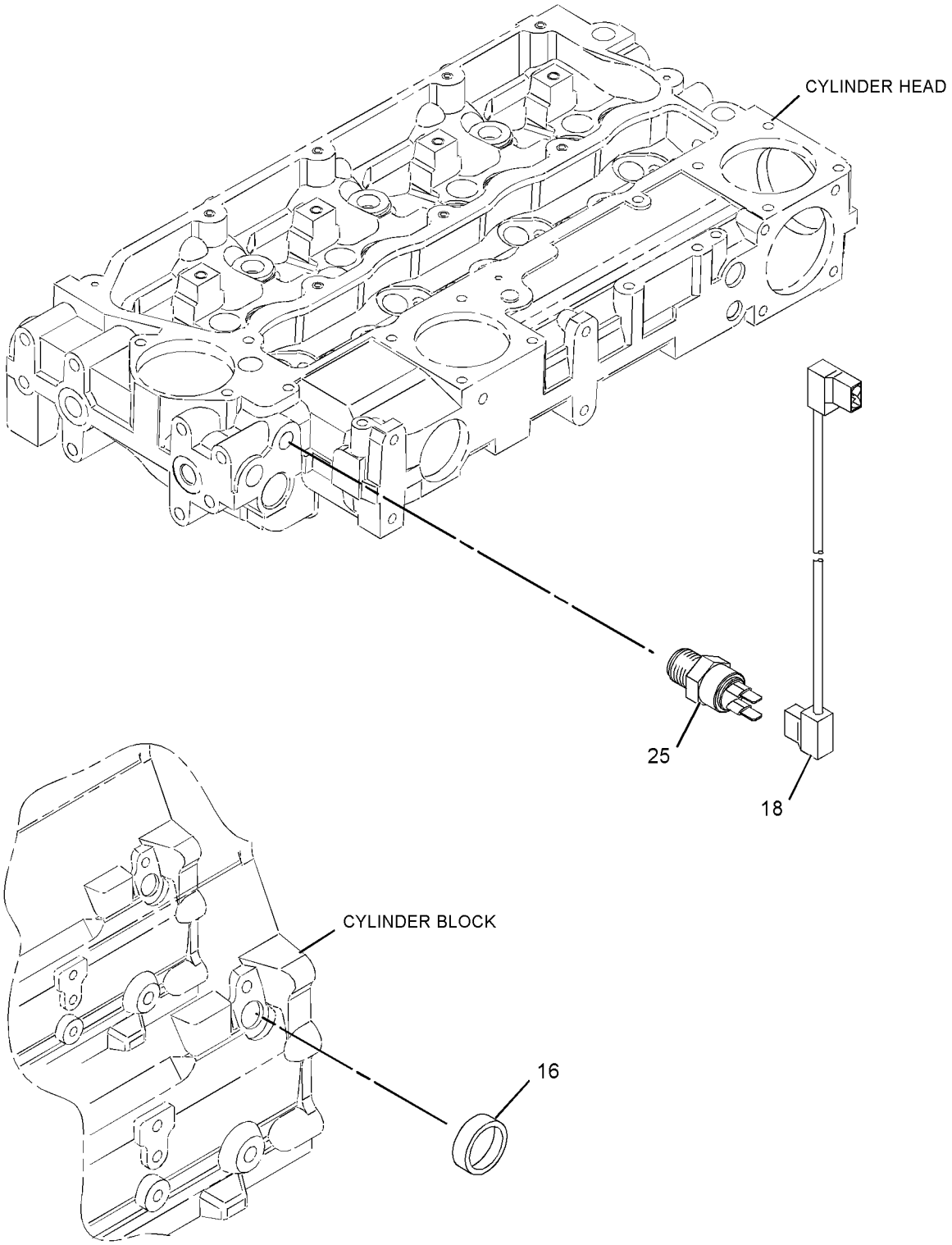

GRAPHIC #2 <END> g01313558

298-7691 PUMP GP-FUEL INJECTION

TYPE 2

SMCS-1251, 1290 **i04895610**

NOTE	REF NO	GRAPHIC REF	PART NUMBER	QTY	PART NAME 1 2 3 4 5 6 (PRODUCT LEVEL)	SEE PAGE
M	1	1	**6I-0217**	1	BOLT (M8X1.25X20-MM)	
M	2	1	**6I-0260**	3	BOLT (M8X1.25X25-MM)	
M	3	1	**6I-0291**	1	NUT (M8X1.25-THD)	
	4	1	**035-8017**	1	UNION	
	5	1	**365-3308**	1	NUT-COMPRESSION (3/8-24-THD)	
	6	1	**067-6265**	1	FITTING-BRASS	
M	7	1	**100-4830**	1	BOLT (M10X1.5X20-MM)	
M	8	1	**124-3815**	1	BOLT (M8X1.25X16-MM)	
	9	1	**140-8714**	1	CLIP	
	10	1	**318-2365**	1	CLIP	
	11	1	**230-8989**	1	GEAR-FUEL PUMP (68-TEETH)	
	12	1	**230-8995**	1	TUBE AS (CYL NO. 1)	
	13	1	**230-8996**	1	TUBE AS (CYL NO. 2)	
	14	1	**230-8997**	1	TUBE AS (CYL NO. 3)	
	15	1	**230-8998**	1	TUBE AS (CYL NO. 4)	
	17	1	**232-1328**	1	CAP	
	18	2	**232-1793**	1	CABLE	
	19	1	**232-1794**	2	HOSE	
	20	1	**232-2725**	2	CLIP	
	21	1	**232-2726**	1	CLIP	
	22	1	**232-3149**	3	WASHER (8.35X16.85X1.55-MM THK)	
	23	1	**232-3157**	1	BRACKET	
M	24	1	**232-3274**	4	BOLT (M8X1.25X48.1-MM)	
	25	2	**235-1790**	1	SWITCH-TEMPERATURE (TIMING ADVANCE)	
R	26	1	**236-1674**	4	INJECTOR AS-FUEL	
					(EACH INCLUDES)	
	26A	1	**140-8718**	1	WASHER (7.49X15.75X1.68-MM THK)	
	26B	1	**275-1038**	1	SEAL-O-RING	
	26C	1	**236-1673**	1	NOZZLE	
	27	1	**236-2144**	1	TUBE AS	
	27A	1	**067-6999**	1	FERRULE	
Y	28	1	*237-8185*	1	PUMP GP-FUEL INJECTION	1295
	29	1	**238-8671**	4	CLAMP-INJECTOR	
	30	1	**240-5571**	1	BRACKET	

M - METRIC PART
R - REMANUFACTURED PART MAY BE AVAILABLE
Y - SEPARATE ILLUSTRATION

298-7691 **PUMP GP-FUEL INJECTION (**contd.**)** **i04895610**

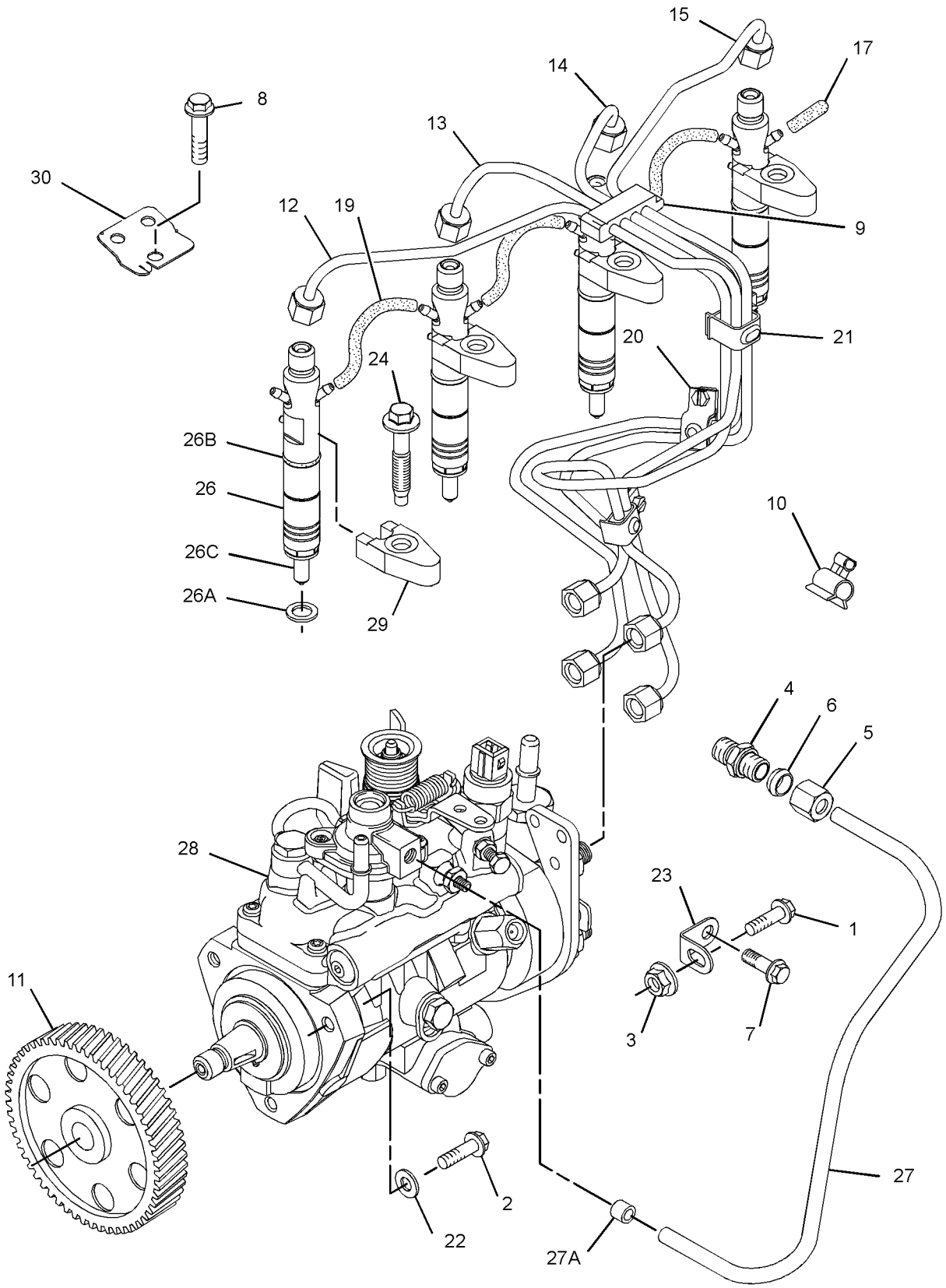

GRAPHIC #1 g01741993

298-7691 **PUMP GP-FUEL INJECTION (**contd.**)** **i04895610**

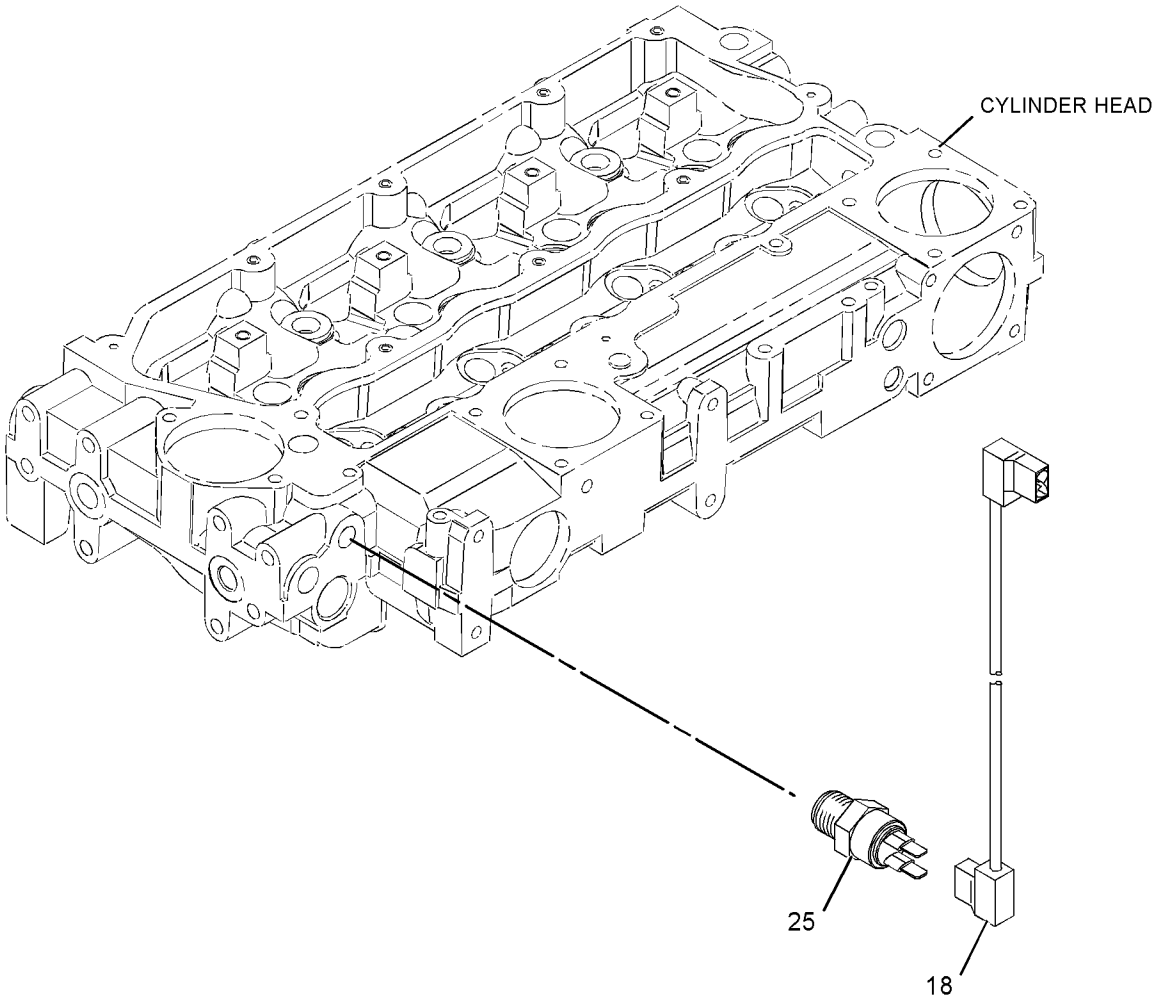

GRAPHIC #2 <END> g03042162

298-7691 PUMP GP-FUEL INJECTION

TYPE 3

SMCS-1251, 1290 **i07373269**

NOTE	REF NO	GRAPHIC REF	PART NUMBER	QTY	PART NAME 1 2 3 4 5 6 (PRODUCT LEVEL)	SEE PAGE
M	1	2	**6I-0217**	1	BOLT (M8X1.25X20-MM)	
M	2	2	**6I-0260**	3	BOLT (M8X1.25X25-MM)	
M	3	2	**178-3336**	1	NUT-HEX FLANGE (M8X1.25-THD)	
	4	2	**035-8017**	1	UNION	
	5	2	**365-3308**	1	NUT-COMPRESSION (3/8-24-THD)	
	6	2	**067-6265**	1	FITTING-BRASS	
M	7	2	**100-4830**	1	BOLT (M10X1.5X20-MM)	
M	8	2	**124-3815**	1	BOLT (M8X1.25X16-MM)	
	9	2	**140-8714**	1	CLIP	
	10	2	**318-2365**	1	CLIP	
	11	2	**425-7107**	1	GEAR-FUEL PUMP (68-TEETH)	
	12	2	**230-8995**	1	TUBE AS (CYL NO. 1)	
	13	2	**230-8996**	1	TUBE AS (CYL NO. 2)	
	14	2	**230-8997**	1	TUBE AS (CYL NO. 3)	
	15	2	**230-8998**	1	TUBE AS (CYL NO. 4)	
	17	2	**232-1328**	1	CAP	
	18	1	**232-1793**	1	CABLE	
	19	2	**232-1794**	2	HOSE	
	20	2	**232-2725**	2	CLIP	
	21	2	**232-2726**	1	CLIP	
	22	2	**232-3149**	3	WASHER (8.35X16.85X1.55-MM THK)	
	23	2	**232-3157**	1	BRACKET	
M	24	2	**232-3274**	4	BOLT (M8X1.25X48.1-MM)	
	25	1	**235-1790**	1	SWITCH-TEMPERATURE (TIMING ADVANCE)	
R	26	2	**236-1674**	4	INJECTOR AS-FUEL	
					(EACH INCLUDES)	
	26A	2	**140-8718**	1	WASHER (7.49X15.75X1.68-MM THK)	
	26B	2	**275-1038**	1	SEAL-O-RING	
	26C	2	**236-1673**	1	NOZZLE	
	27	2	**236-2144**	1	TUBE AS	
C	28	2	**464-0296**	1	PUMP AS-FUEL INJECTION	
M	28A	2	**111-3422**	1	NUT (M14X1.5-THD)	
	28B	2	**147-2645**	1	SOLENOID-SHUTOFF (24-VOLT) (FUEL SHUTOFF)	
	28C	2	**152-3968**	1	SEAL-O-RING	
	29	2	**238-8671**	4	CLAMP-INJECTOR	
	30	2	**240-5571**	1	BRACKET	

C - CHANGE FROM PREVIOUS TYPE
M - METRIC PART
R - REMANUFACTURED PART MAY BE AVAILABLE

298-7691 **PUMP GP-FUEL INJECTION (**contd.**)** **i07373269**

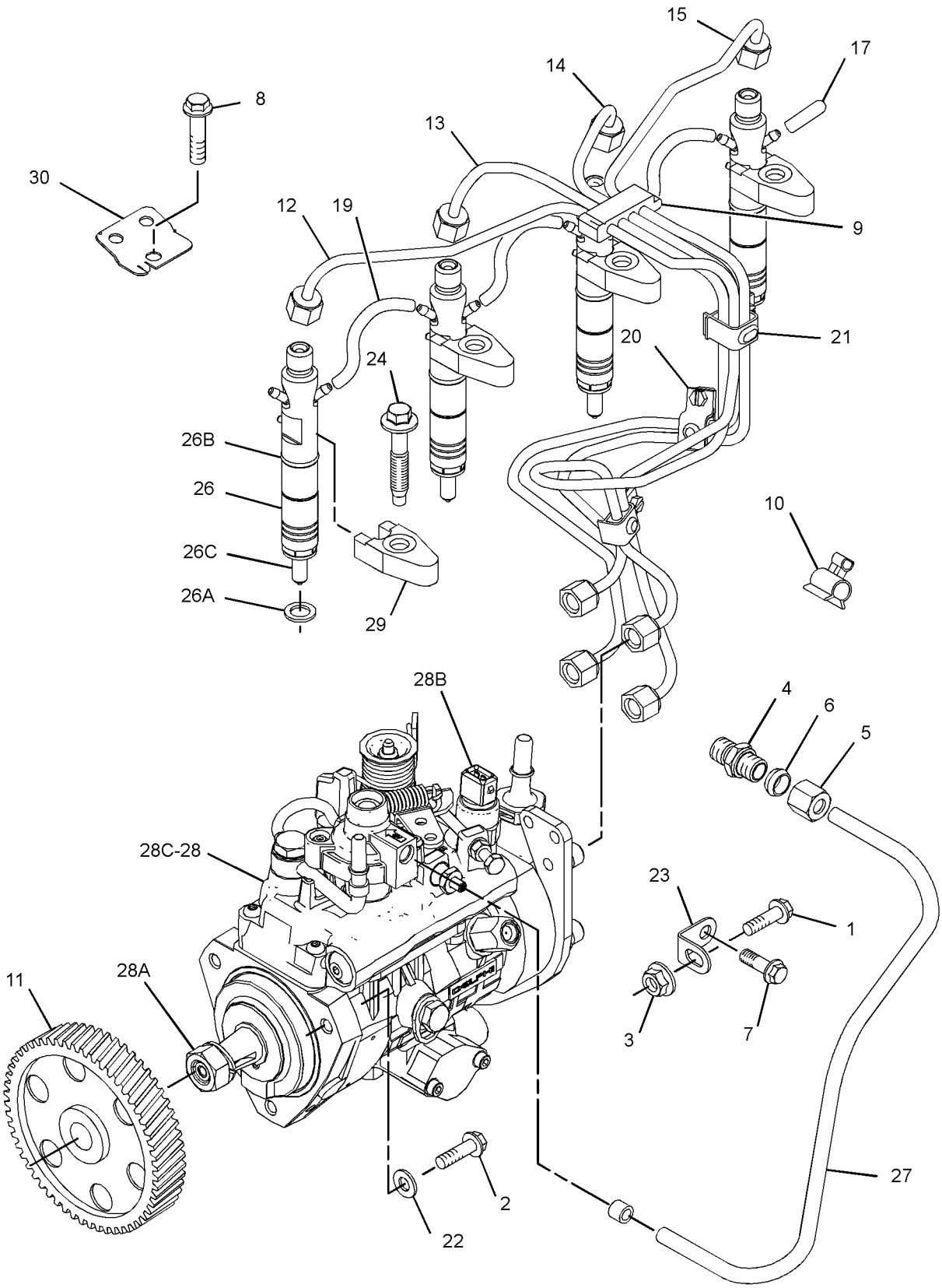

GRAPHIC #1 g06202211

298-7691 **PUMP GP-FUEL INJECTION (**contd.**)** **i07373269**

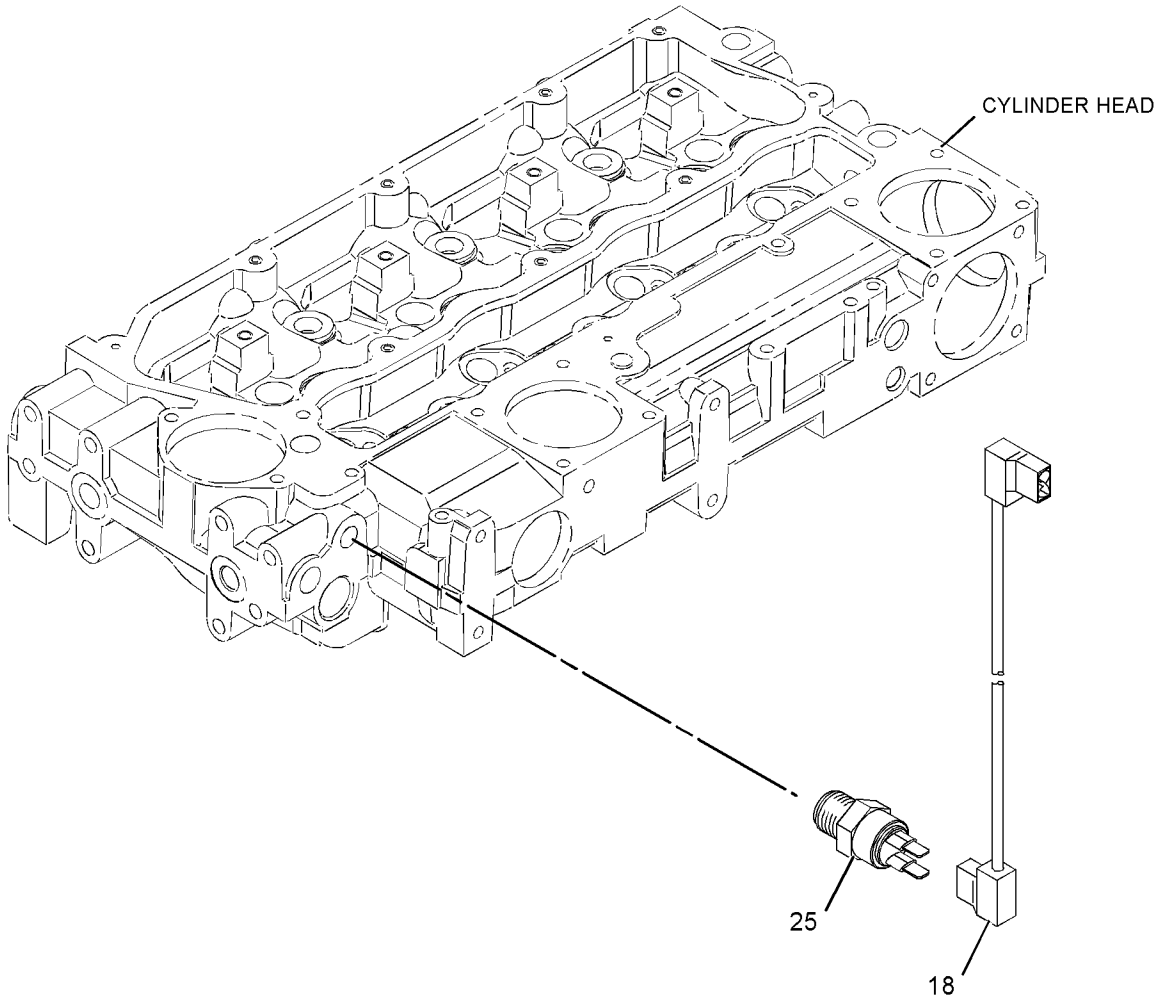

GRAPHIC #2 <END> g03042162

298-7691 PUMP GP-FUEL INJECTION

TYPE 4

SMCS-1251, 1290 **i08248720**

NOTE	REF NO	GRAPHIC REF	PART NUMBER	QTY	PART NAME 1 2 3 4 5 6 (PRODUCT LEVEL)	SEE PAGE
M	1	2	**6I-0217**	1	BOLT (M8X1.25X20-MM)	
M	2	2	**6I-0260**	3	BOLT (M8X1.25X25-MM)	
M	3	2	**178-3336**	1	NUT-HEX FLANGE (M8X1.25-THD)	
	4	2	**035-8017**	1	UNION	
	5	2	**067-6265**	1	FITTING-BRASS	
M	6	2	**100-4830**	1	BOLT (M10X1.5X20-MM)	
M	7	1	**124-3815**	1	BOLT (M8X1.25X16-MM)	
	8	1	**232-1328**	1	CAP	
	9	1	**232-1793**	1	CABLE	
	10	1	**232-1794**	2	HOSE	
	11	2	**232-3149**	3	WASHER (8.35X16.85X1.55-MM THK)	
	12	2	**232-3157**	1	BRACKET	
M	13	1	**232-3274**	4	BOLT (M8X1.25X48.1-MM)	
	14	1	**235-1790**	1	SWITCH-TEMPERATURE (TIMING ADVANCE)	
R	15	1	**236-1674**	4	INJECTOR AS-FUEL	
					(EACH INCLUDES)	
	15A	1	**140-8718**	1	WASHER (7.49X15.75X1.68-MM THK)	
	15B	1	**275-1038**	1	SEAL-O-RING	
	15C	1	**236-1673**	1	NOZZLE	
	16	2	**236-2144**	1	TUBE AS	
	17	1	**238-8671**	4	CLAMP-INJECTOR	
	18	1	**240-5571**	1	BRACKET	
	19	2	**318-2365**	1	CLIP	
	20	2	**365-3308**	1	NUT-COMPRESSION (3/8-24-THD)	
	21	2	**425-7107**	1	GEAR-FUEL PUMP (68-TEETH)	
	22	2	**464-0296**	1	PUMP AS-FUEL INJECTION	
M	22A	2	**111-3422**	1	NUT (M14X1.5-THD)	
	22B	2	**111-3423**	1	WASHER	
	22C	2	**152-3968**	1	SEAL-O-RING	
	22D	2	**147-2645**	1	SOLENOID-SHUTOFF (24-VOLT) (FUEL SHUTOFF)	
CY	23	1	*486-3678*	1	LINES GP-FUEL INJECTION	1172

C - CHANGE FROM PREVIOUS TYPE
M - METRIC PART
R - REMANUFACTURED PART MAY BE AVAILABLE
Y - SEPARATE ILLUSTRATION

298-7691 **PUMP GP-FUEL INJECTION (**contd.**)** **i08248720**

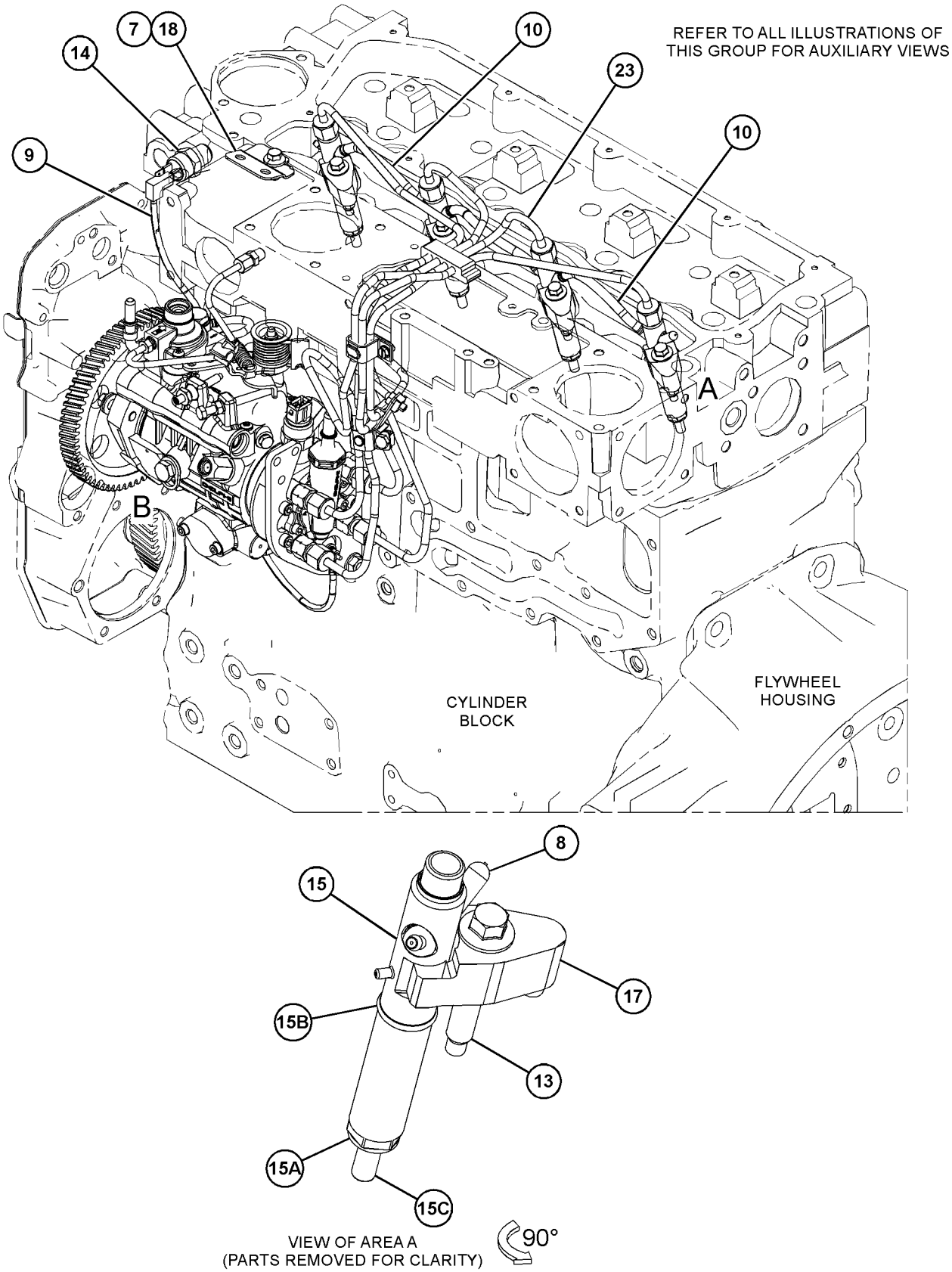

GRAPHIC #1 g06745787

298-7691 **PUMP GP-FUEL INJECTION (**contd.**)** **i08248720**

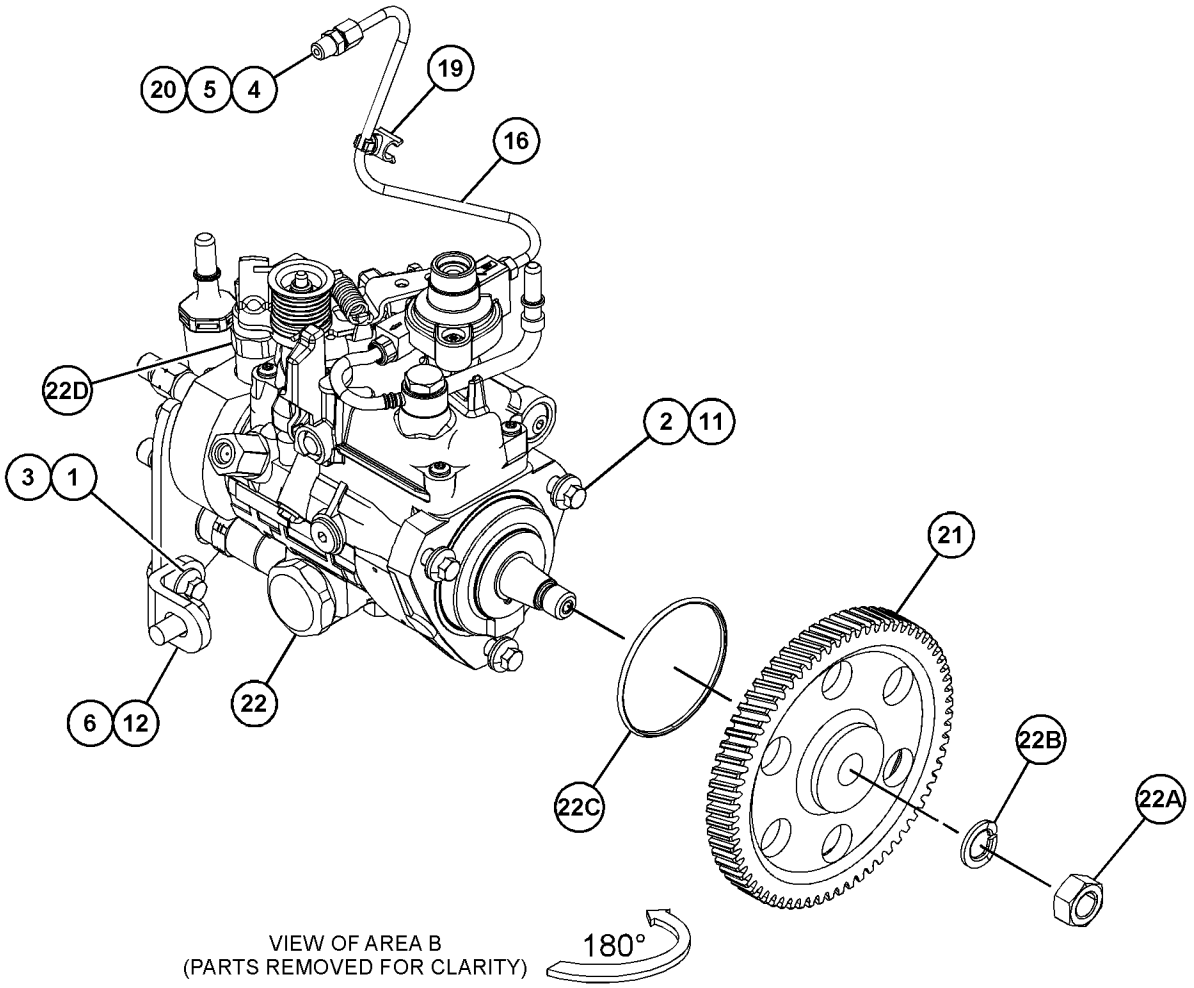

GRAPHIC #2 <END> g06745788

303-2913 PUMP GP-FUEL INJECTION

PART OF 303-2915 PUMP GP-FUEL INJECTION

SMCS-1251, 1290 **i02667313**

NOTE	REF NO	GRAPHIC REF	PART NUMBER	QTY	PART NAME 1 2 3 4 5 6 (PRODUCT LEVEL)	SEE PAGE
M	1	1	**111-3422**	1	NUT (M14X1.5-THD)	
	2	1	**111-3423**	1	WASHER	
	3	1	**152-3968**	1	SEAL-O-RING	
	4	1	**176-6219**	1	SOLENOID (12-VOLT)	

M - METRIC PART

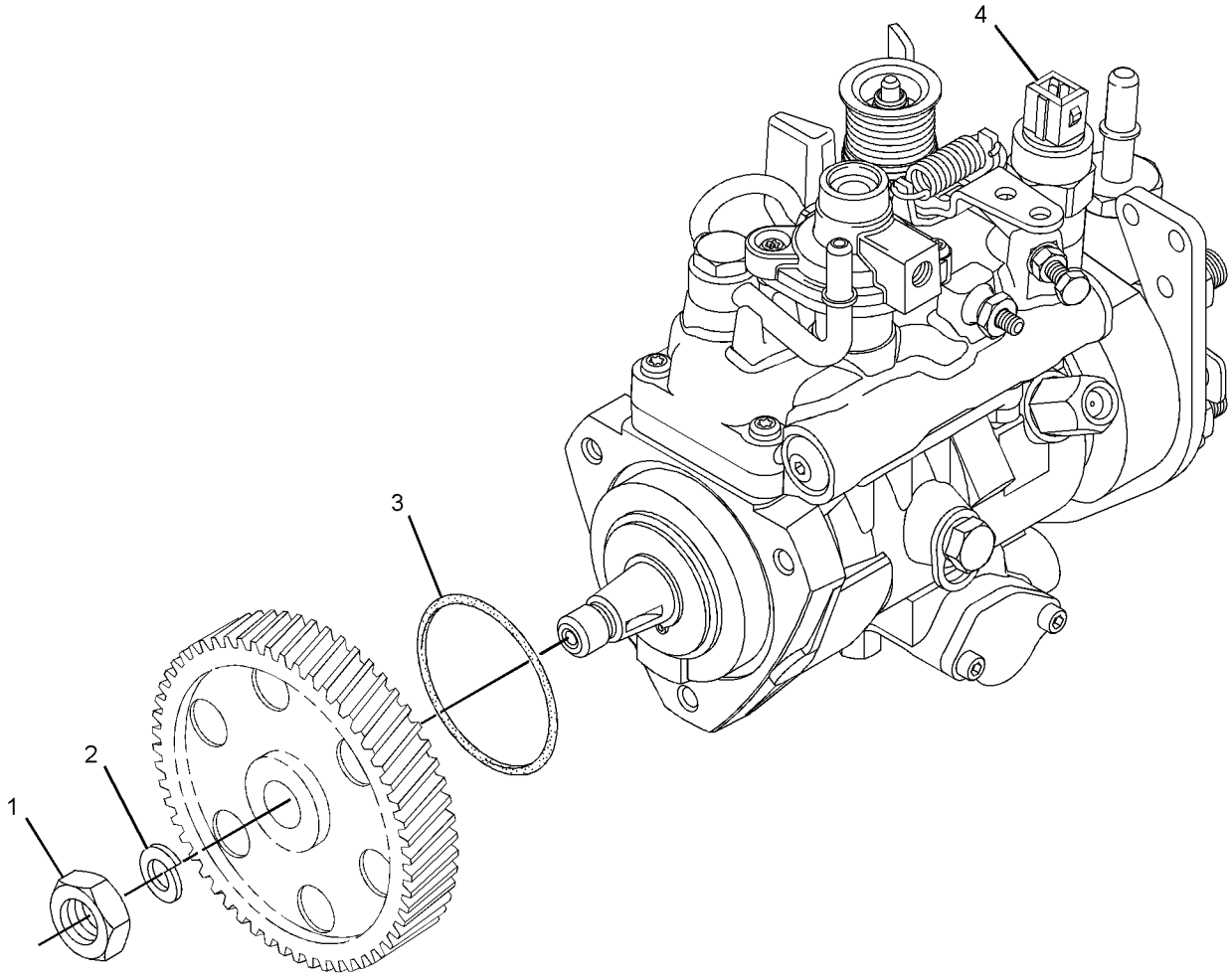

GRAPHIC #1 <END> g01801508

303-2915 PUMP GP-FUEL INJECTION

TYPE 1

SMCS-1251, 1290 **i02854211**

NOTE	REF NO	GRAPHIC REF	PART NUMBER	QTY	PART NAME 1 2 3 4 5 6 (PRODUCT LEVEL)	SEE PAGE
M	1	1	**6I-0217**	1	BOLT (M8X1.25X20-MM)	
M	2	1	**6I-0260**	3	BOLT (M8X1.25X25-MM)	
M	3	1	**6I-0291**	1	NUT (M8X1.25-THD)	
M	4	1	**100-4830**	1	BOLT (M10X1.5X20-MM)	
M	5	1	**124-3815**	1	BOLT (M8X1.25X16-MM)	
	6	1	**140-8714**	1	CLIP	
	7	1	**230-8989**	1	GEAR-FUEL PUMP (68-TEETH)	
	8	1	**230-8995**	1	TUBE AS (CYL NO. 1)	
	9	1	**230-8996**	1	TUBE AS (CYL NO. 2)	
	10	1	**230-8997**	1	TUBE AS (CYL NO. 3)	
	11	1	**230-8998**	1	TUBE AS (CYL NO. 4)	
	12	1	**232-1115**	1	CLIP-PIPE	
	13	2	**232-1323**	1	PLUG-CUP	
	14	1	**232-1328**	1	CAP	
	15	2	**232-1793**	1	CABLE (TIMING ADVANCE SWITCH)	
	16	1	**232-1794**	3	HOSE	
	17	1	**232-2725**	2	CLIP	
	18	1	**232-2726**	1	CLIP	
	19	1	**232-3149**	3	WASHER (8.35X16.85X1.55-MM THK)	
	20	1	**232-3157**	1	BRACKET	
M	21	1	**232-3274**	4	BOLT (M8X1.25X48.1-MM)	
	22	2	**235-1790**	1	SWITCH-TEMPERATURE (ENGINE COOLANT)	
R	23	1	**236-1674**	4	INJECTOR AS-FUEL	
		1	**236-1673**	1	NOZZLE	
		1	**275-1038**	1	SEAL-O-RING	
	23A	1	**140-8718**	1	WASHER (7.49X15.75X1.68-MM THK)	
	24	1	**238-8671**	4	CLAMP-INJECTOR	
	25	1	**303-2913**	1	PUMP GP-FUEL INJECTION	
M	25A	1	**111-3422**	1	NUT (M14X1.5-THD)	
	25B	1	**111-3423**	1	WASHER	
	25C	1	**152-3968**	1	SEAL-O-RING	
	25D	1	**176-6219**	1	SOLENOID (12-VOLT) (FUEL SHUTOFF)	
	26	1	**240-5571**	1	BRACKET	

M - METRIC PART
R - REMANUFACTURED PART MAY BE AVAILABLE

303-2915 **PUMP GP-FUEL INJECTION (**contd.**)** **i02854211**

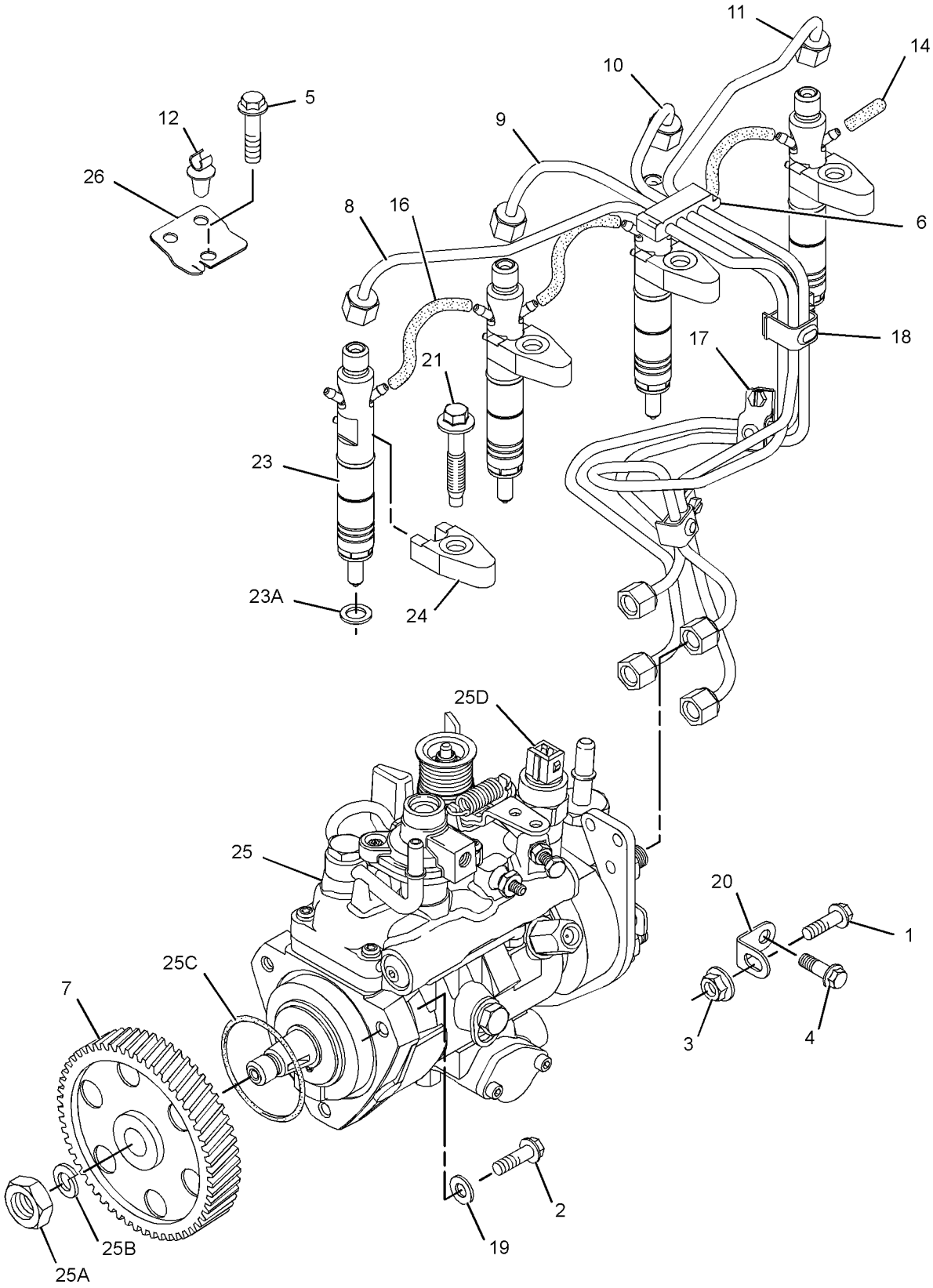

GRAPHIC #1 g01326644

303-2915 **PUMP GP-FUEL INJECTION (**contd.**)** **i02854211**

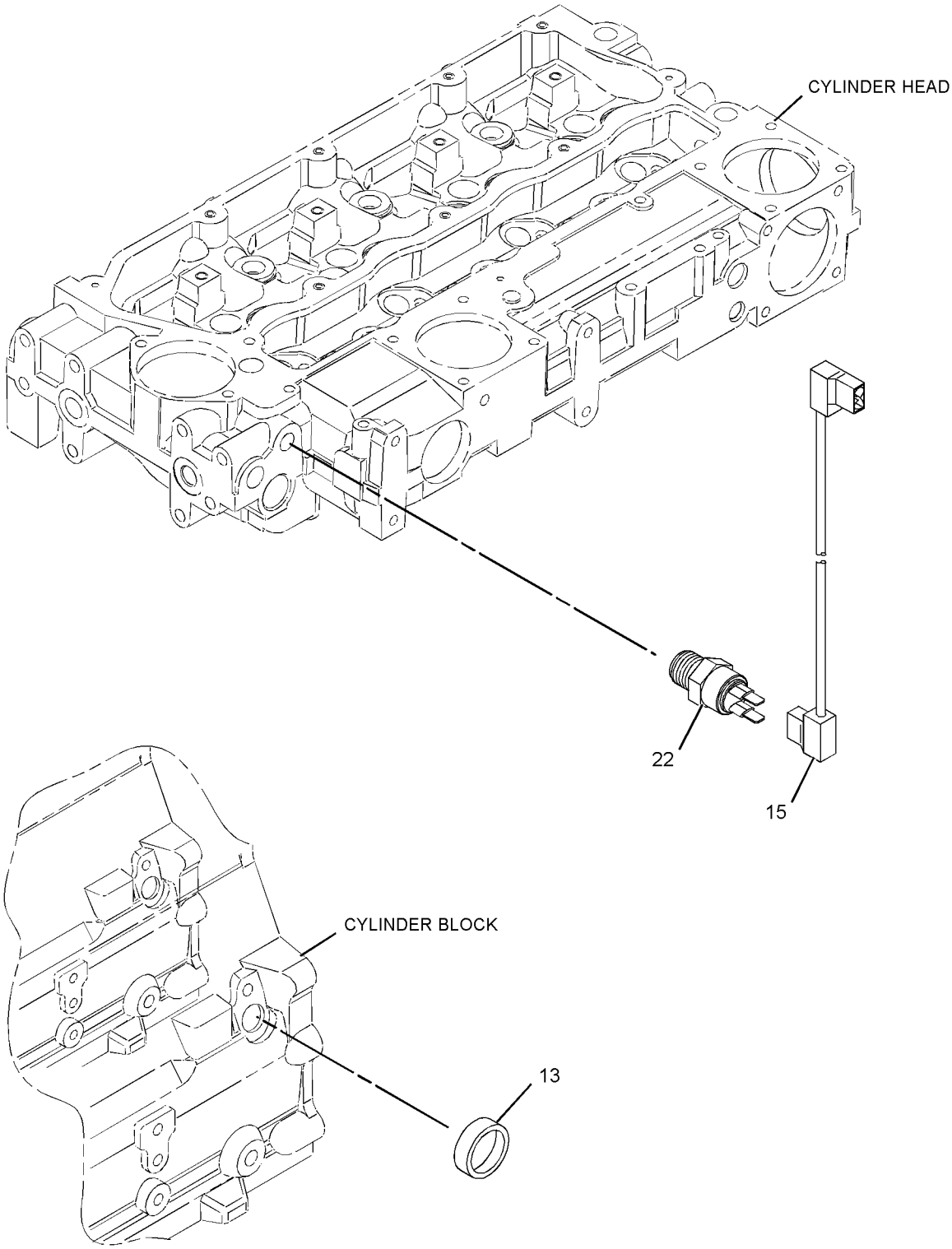

GRAPHIC #2 <END> g01326645

303-2915 PUMP GP-FUEL INJECTION

TYPE 2

SMCS-1251, 1290 **i08271849**

NOTE	REF NO	GRAPHIC REF	PART NUMBER	QTY	PART NAME 1 2 3 4 5 6 (PRODUCT LEVEL)	SEE PAGE
M	1	1	**6I-0217**	1	BOLT (M8X1.25X20-MM)	
M	2	1	**6I-0260**	3	BOLT (M8X1.25X25-MM)	
M	3	1	**178-3336**	1	NUT-HEX FLANGE (M8X1.25-THD)	
M	4	1	**100-4830**	1	BOLT (M10X1.5X20-MM)	
M	5	1	**124-3815**	1	BOLT (M8X1.25X16-MM)	
	6	1	**232-1115**	1	CLIP-PIPE	
	7	1	**232-1328**	1	CAP	
	8	2	**232-1793**	1	CABLE (TIMING ADVANCE SWITCH)	
	9	1	**232-1794**	3	HOSE	
	10	1	**232-3149**	3	WASHER (8.35X16.85X1.55-MM THK)	
	11	1	**232-3157**	1	BRACKET	
M	12	1	**232-3274**	4	BOLT (M8X1.25X48.1-MM)	
	13	2	**235-1790**	1	SWITCH-TEMPERATURE (ENGINE COOLANT)	
R	14	1	**236-1674**	4	INJECTOR AS-FUEL	
					(EACH INCLUDES)	
	14A	1	**140-8718**	1	WASHER (7.49X15.75X1.68-MM THK)	
	14B	1	**236-1673**	1	NOZZLE	
	14C	1	**275-1038**	1	SEAL-O-RING	
	15	1	**238-8671**	4	CLAMP-INJECTOR	
	16	1	**240-5571**	1	BRACKET	
Y	17	1	**303-2913**	1	PUMP GP-FUEL INJECTION	1473
	18	1	**425-7107**	1	GEAR-FUEL PUMP (68-TEETH)	
Y	19	1	*495-3762*	1	LINES GP-FUEL INJECTION	1173

M - METRIC PART
R - REMANUFACTURED PART MAY BE AVAILABLE
Y - SEPARATE ILLUSTRATION

303-2915 **PUMP GP-FUEL INJECTION (**contd.**)** **i08271849**

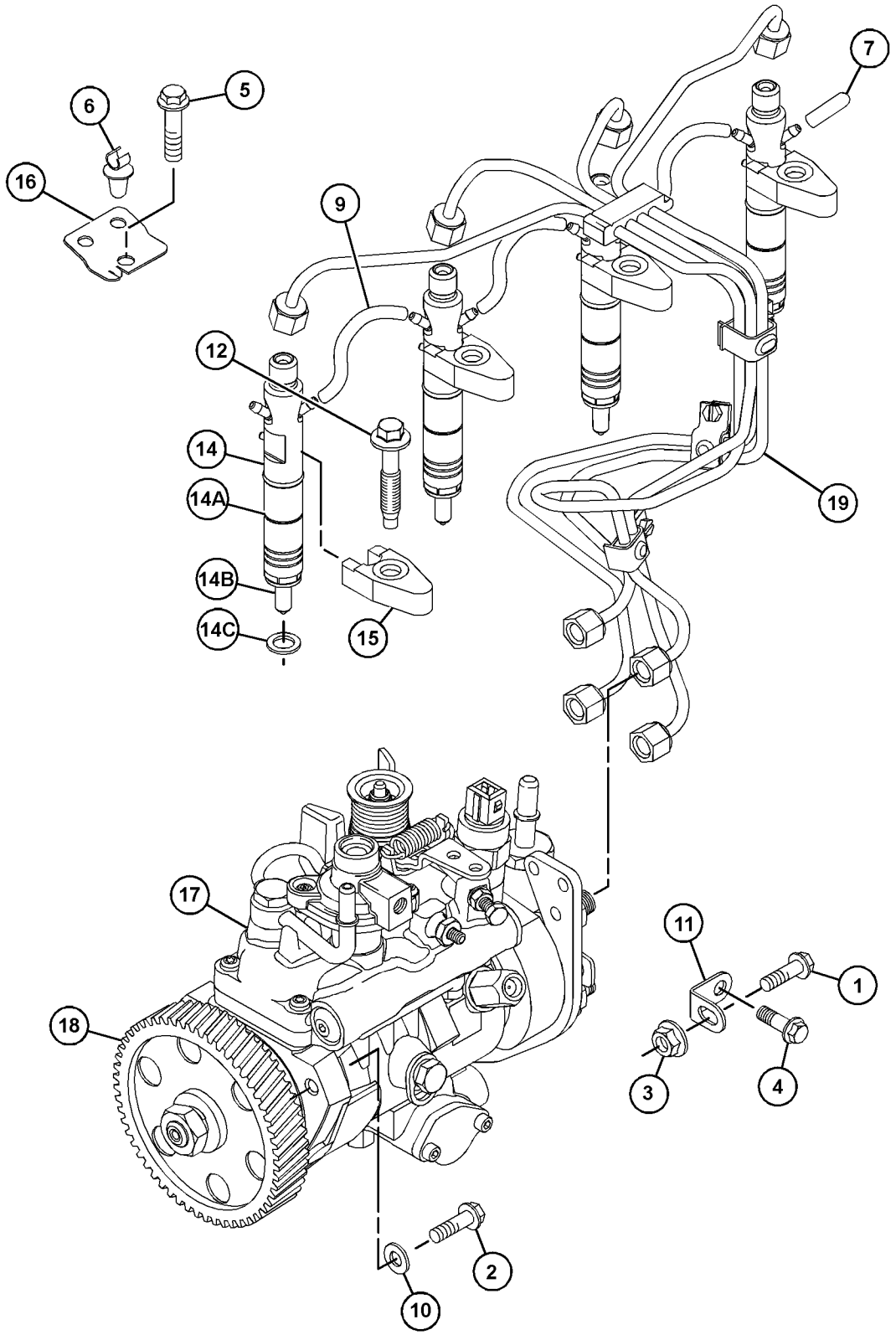

GRAPHIC #1 g06747953

303-2915 **PUMP GP-FUEL INJECTION (**contd.**)** **i08271849**

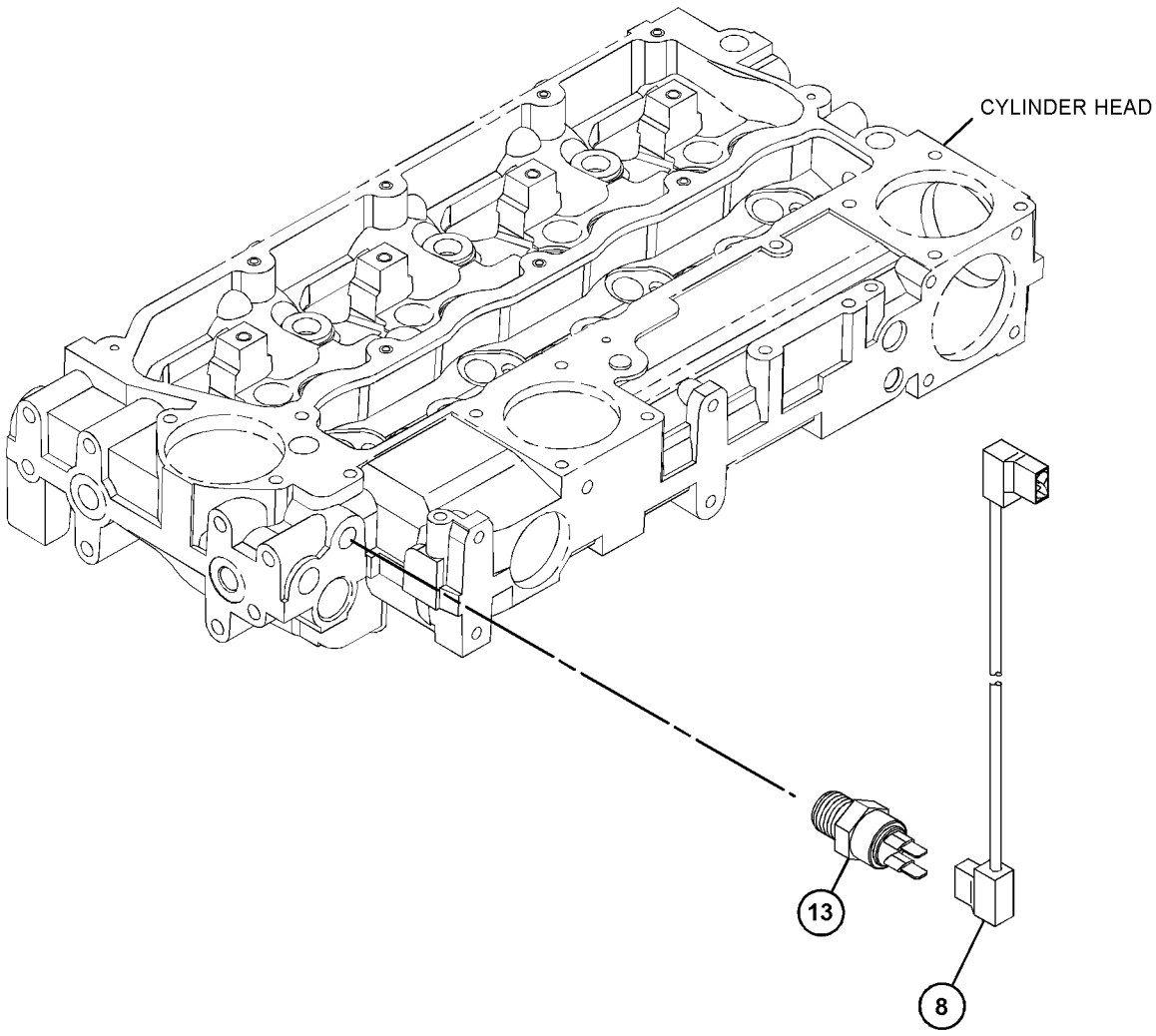

GRAPHIC #2 <END> g06747954

333-8056 PUMP GP-FUEL INJECTION

S/N: 33412707-UP
PART OF 233-9405 PUMP GP-FUEL INJECTION
ALSO AN ATTACHMENT

SMCS-1251, 1290

i03637446

NOTE	REF NO	GRAPHIC REF	PART NUMBER	QTY	PART NAME 1 2 3 4 5 6 (PRODUCT LEVEL)	SEE PAGE
M	1	1	**111-3422**	1	NUT (M14X1.5-THD)	
	2	1	**111-3423**	1	WASHER	
	3	1	**152-3968**	1	SEAL-O-RING	
	4	1	**176-6219**	1	SOLENOID (12-VOLT)	

M - METRIC PART

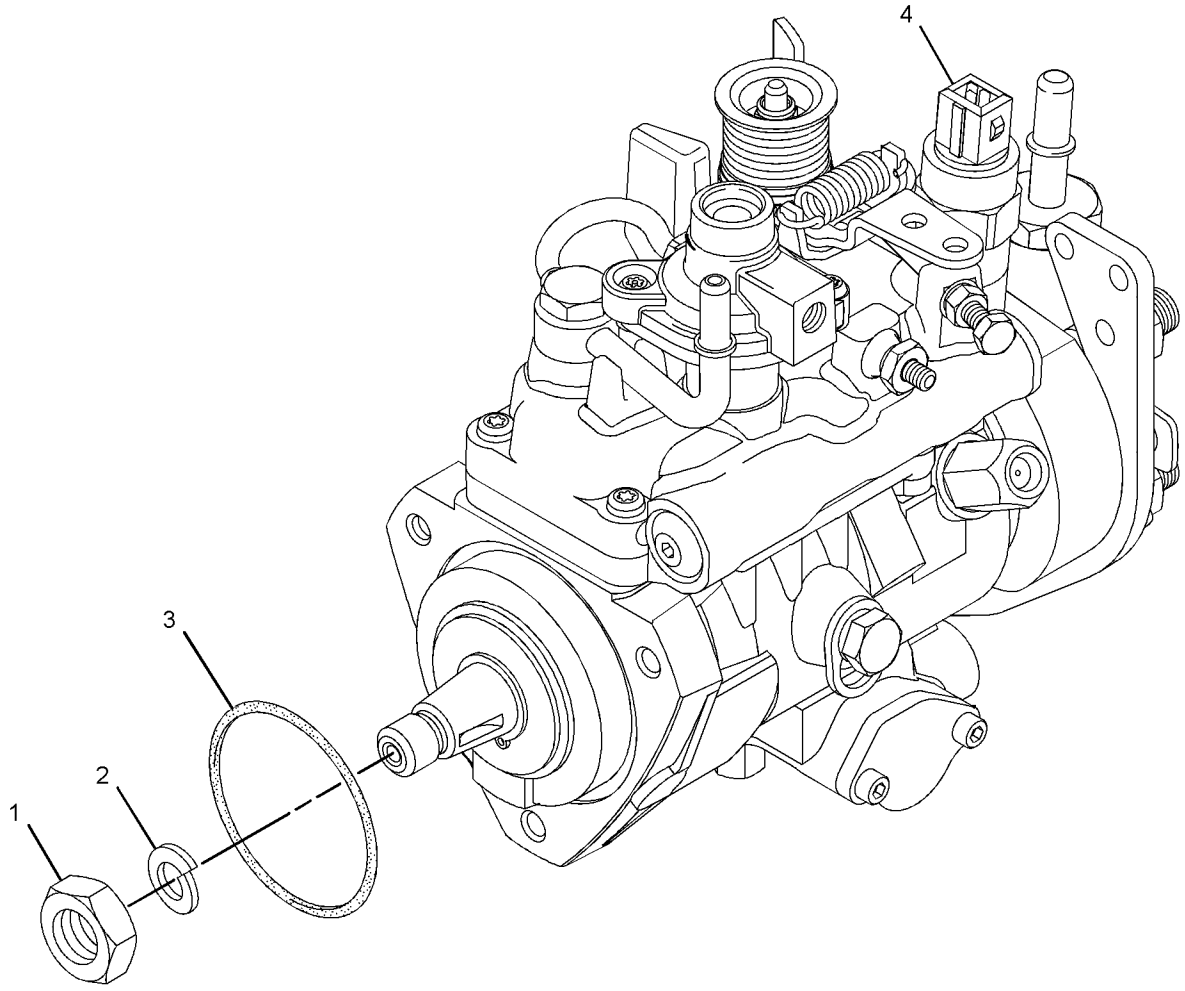

GRAPHIC #1 <END> g01951965

367-2070 PUMP GP-FUEL INJECTION

TYPE 1

SMCS-1251, 1290 **i04636729**

NOTE	REF NO	GRAPHIC REF	PART NUMBER	QTY	PART NAME 1 2 3 4 5 6 (PRODUCT LEVEL)	SEE PAGE
M	1	1	**6I-0260**	3	BOLT (M8X1.25X25-MM)	
M	2	1	**124-3815**	1	BOLT (M8X1.25X16-MM)	
	3	1	**140-8714**	1	CLIP	
	4	2	**169-5326**	1	SWITCH-TEMPERATURE	
	5	1	**230-8989**	1	GEAR-FUEL PUMP (68-TEETH)	
	6	1	**230-8995**	1	TUBE AS (CYL NO. 1)	
	7	1	**230-8996**	1	TUBE AS (CYL NO. 2)	
	8	1	**230-8997**	1	TUBE AS (CYL NO. 3)	
	9	1	**230-8998**	1	TUBE AS (CYL NO. 4)	
	10	2	**232-1323**	1	PLUG-CUP	
	11	1	**232-1328**	1	CAP	
	12	1	**232-1794**	3	HOSE	
	13	1	**232-2725**	2	CLIP	
	14	1	**232-2726**	1	CLIP	
	15	1	**232-3149**	3	WASHER (8.35X16.85X1.55-MM THK)	
M	16	1	**232-3274**	4	BOLT (M8X1.25X48.1-MM)	
	17	1	**238-8671**	4	CLAMP-INJECTOR	
	18	1	**240-5571**	1	BRACKET	
R	19	1	**266-6830**	4	INJECTOR AS-FUEL	
					(EACH INCLUDES)	
	19A	1	**140-8718**	1	WASHER (7.49X15.75X1.68-MM THK)	
	19B	1	**234-0387**	1	NOZZLE	
	19C	1	**275-1038**	1	SEAL-O-RING	
	20	1	**272-2223**	1	ACTUATOR GP-GOVERNOR	
M	20A	1	**241-4291**	4	SCREW (M5X0.8X16-MM)	
	20B	1	**241-4288**	1	SEAL-O-RING	
R	21	1	**367-2069**	1	PUMP-FUEL INJECTION	
M	21A	1	**111-3422**	1	NUT (M14X1.5-THD)	
	21B	1	**111-3423**	1	WASHER	
	21C	1	**152-3968**	1	SEAL-O-RING	
	21D	1	**176-6219**	1	SOLENOID (12-VOLT)	

M - METRIC PART
R - REMANUFACTURED PART MAY BE AVAILABLE

367-2070 **PUMP GP-FUEL INJECTION (**contd.**)** **i04636729**

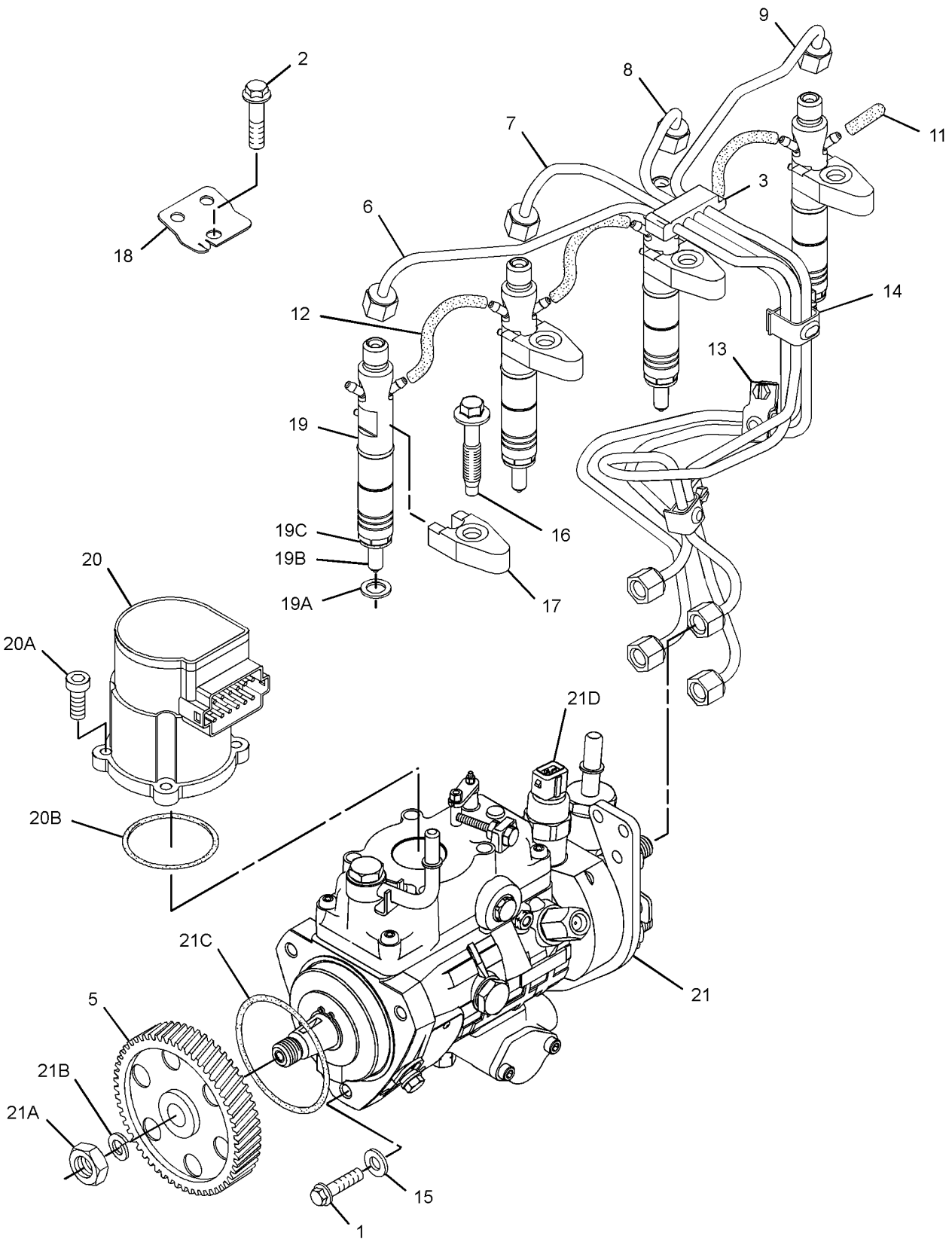

GRAPHIC #1 g02817537

367-2070 **PUMP GP-FUEL INJECTION (**contd.**)** **i04636729**

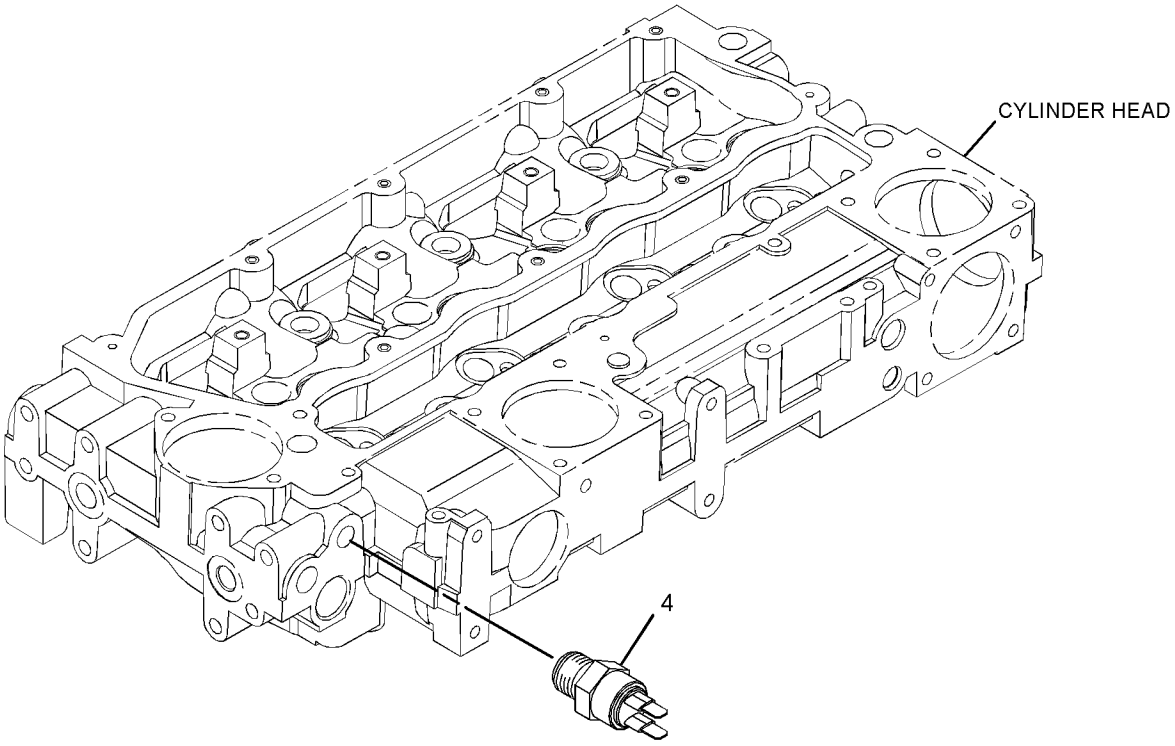

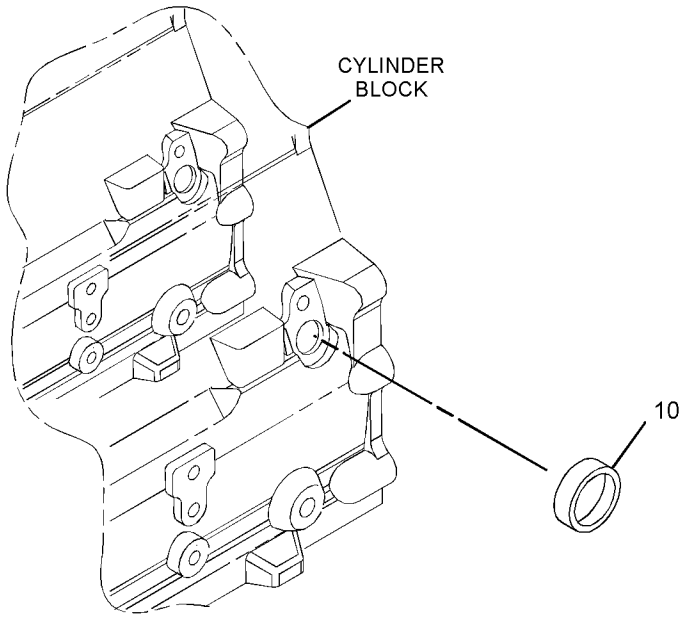

GRAPHIC #2 <END> g02817876

367-2070 PUMP GP-FUEL INJECTION

TYPE 2

SMCS-1251, 1290 **i08257400**

NOTE	REF NO	GRAPHIC REF	PART NUMBER	QTY	PART NAME 1 2 3 4 5 6 (PRODUCT LEVEL)	SEE PAGE
M	1	1	**6I-0260**	3	BOLT (M8X1.25X25-MM)	
M	2	1	**124-3815**	1	BOLT (M8X1.25X16-MM)	
Y	3	1	*495-3762*	1	LINES GP-FUEL INJECTION	1173
	4	2	**169-5326**	1	SWITCH-TEMPERATURE	
	5	1	**425-7107**	1	GEAR-FUEL PUMP (68-TEETH)	
R	6	1	**367-2069**	1	PUMP-FUEL INJECTION	
M	6A	1	**111-3422**	1	NUT (M14X1.5-THD)	
	6B	1	**111-3423**	1	WASHER	
	6C	1	**152-3968**	1	SEAL-O-RING	
	6D	1	**176-6219**	1	SOLENOID (12-VOLT)	
	7	1	**272-2223**	1	ACTUATOR GP-GOVERNOR	
M	7A	1	**260-6686**	4	BOLT-SOCKET HEAD (M5X0.8X16-MM)	
	7B	1	**241-4288**	1	SEAL-O-RING	
R	8	1	**266-6830**	4	INJECTOR AS-FUEL	
					(EACH INCLUDES)	
	8A	1	**140-8718**	1	WASHER (7.49X15.75X1.68-MM THK)	
	8B	1	**234-0387**	1	NOZZLE	
	8C	1	**275-1038**	1	SEAL-O-RING	
	9	1	**240-5571**	1	BRACKET	
	10	1	**238-8671**	4	CLAMP-INJECTOR	
	11	1	**232-1328**	1	CAP	
	12	1	**232-1794**	3	HOSE	
M	13	1	**232-3274**	4	BOLT (M8X1.25X48.1-MM)	
	14	1	**232-3149**	3	WASHER (8.35X16.85X1.55-MM THK)	

M - METRIC PART
R - REMANUFACTURED PART MAY BE AVAILABLE
Y - SEPARATE ILLUSTRATION

367-2070 **PUMP GP-FUEL INJECTION (**contd.**)** **i08257400**

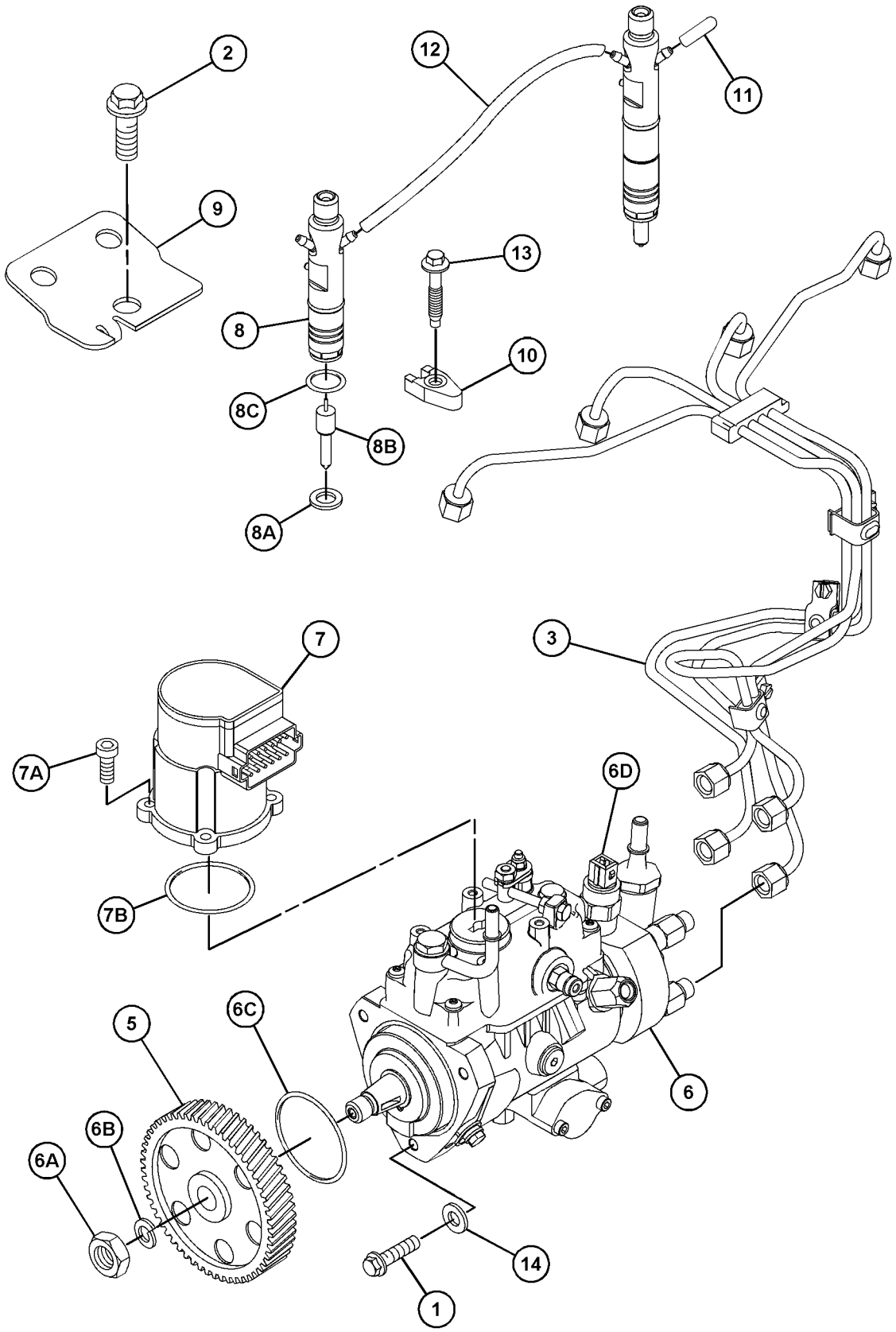

GRAPHIC #1 g06794019

367-2070 **PUMP GP-FUEL INJECTION (**contd.**)** **i08257400**

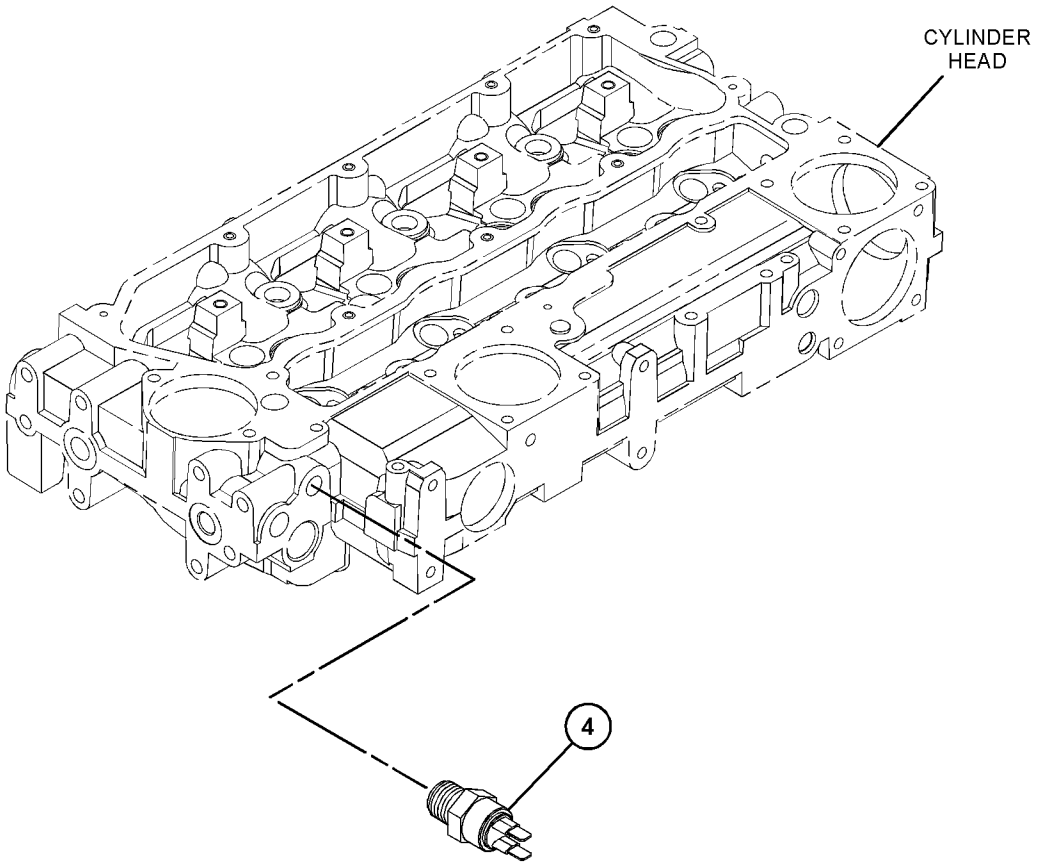

GRAPHIC #2 <END> g06794020

441-4291 PUMP GP-FUEL INJECTION*R

PART OF 441-4311 PUMP GP-FUEL INJECTION

SMCS-1251, 1290 **i05761517**

NOTE	REF NO	GRAPHIC REF	PART NUMBER	QTY	PART NAME 1 2 3 4 5 6 (PRODUCT LEVEL)	SEE PAGE
M	1	1	**111-3422**	1	NUT (M14X1.5-THD)	
	2	1	**111-3423**	1	WASHER	
	3	1	**152-3968**	1	SEAL-O-RING	
	4	1	**176-6219**	1	SOLENOID (12-VOLT) (FUEL SHUTOFF)	

M - METRIC PART

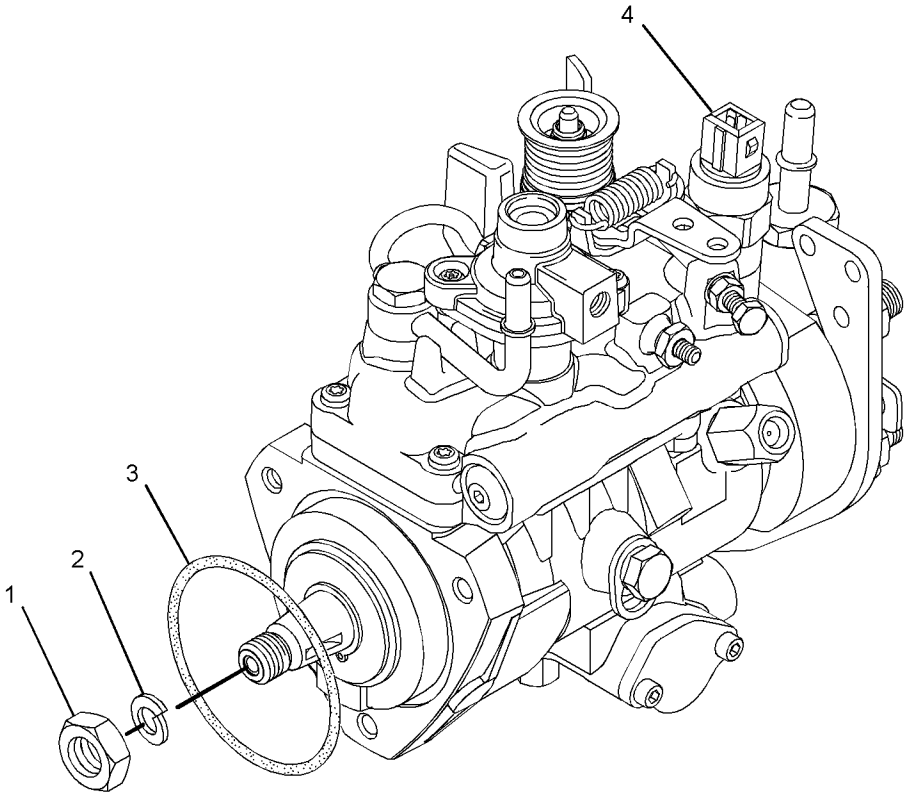

GRAPHIC #1 <END> g01397810

441-4311 PUMP GP-FUEL INJECTION

SMCS-1251, 1290 **i08269297**

NOTE	REF NO	GRAPHIC REF	PART NUMBER	QTY	PART NAME 1 2 3 4 5 6 (PRODUCT LEVEL)	SEE PAGE
M	1	1	**6I-0260**	3	BOLT (M8X1.25X25-MM)	
	2	2	**7M-7410**	1	PLUG-PIPE (3/8-18-THD)	
M	3	2	**124-3815**	1	BOLT (M8X1.25X16-MM)	
Y	4	1	*495-3762*	1	LINES GP-FUEL INJECTION	1173
	5	1	**425-7107**	1	GEAR-FUEL PUMP (68-TEETH)	
YR	6	1	**441-4291**	1	PUMP GP-FUEL INJECTION	1487
	7	2	**292-3462**	1	PLUG-PIPE	
	8	1	**272-2223**	1	ACTUATOR GP-GOVERNOR	
	8A	1	**241-4288**	1	SEAL-O-RING	
M	8B	1	**260-6686**	4	BOLT-SOCKET HEAD (M5X0.8X16-MM)	
	9	2	**240-5571**	1	BRACKET	
R	10	1	**230-8999**	4	INJECTOR AS-FUEL	
					(EACH INCLUDES)	
	10A	1	**140-8718**	1	WASHER (7.49X15.75X1.68-MM THK)	
	10B	1	**275-1038**	1	SEAL-O-RING	
	10C	1	**232-2724**	1	NOZZLE	
	11	2	**232-1323**	1	PLUG-CUP	
	12	1	**232-1328**	1	CAP	
	13	1	**232-1794**	3	HOSE	
	14	1	**238-8671**	4	CLAMP-INJECTOR	
M	15	1	**232-3274**	4	BOLT (M8X1.25X48.1-MM)	
	16	1	**232-3149**	3	WASHER (8.35X16.85X1.55-MM THK)	

M - METRIC PART
R - REMANUFACTURED PART MAY BE AVAILABLE
Y - SEPARATE ILLUSTRATION

441-4311 **PUMP GP-FUEL INJECTION (**contd.**)** **i08269297**

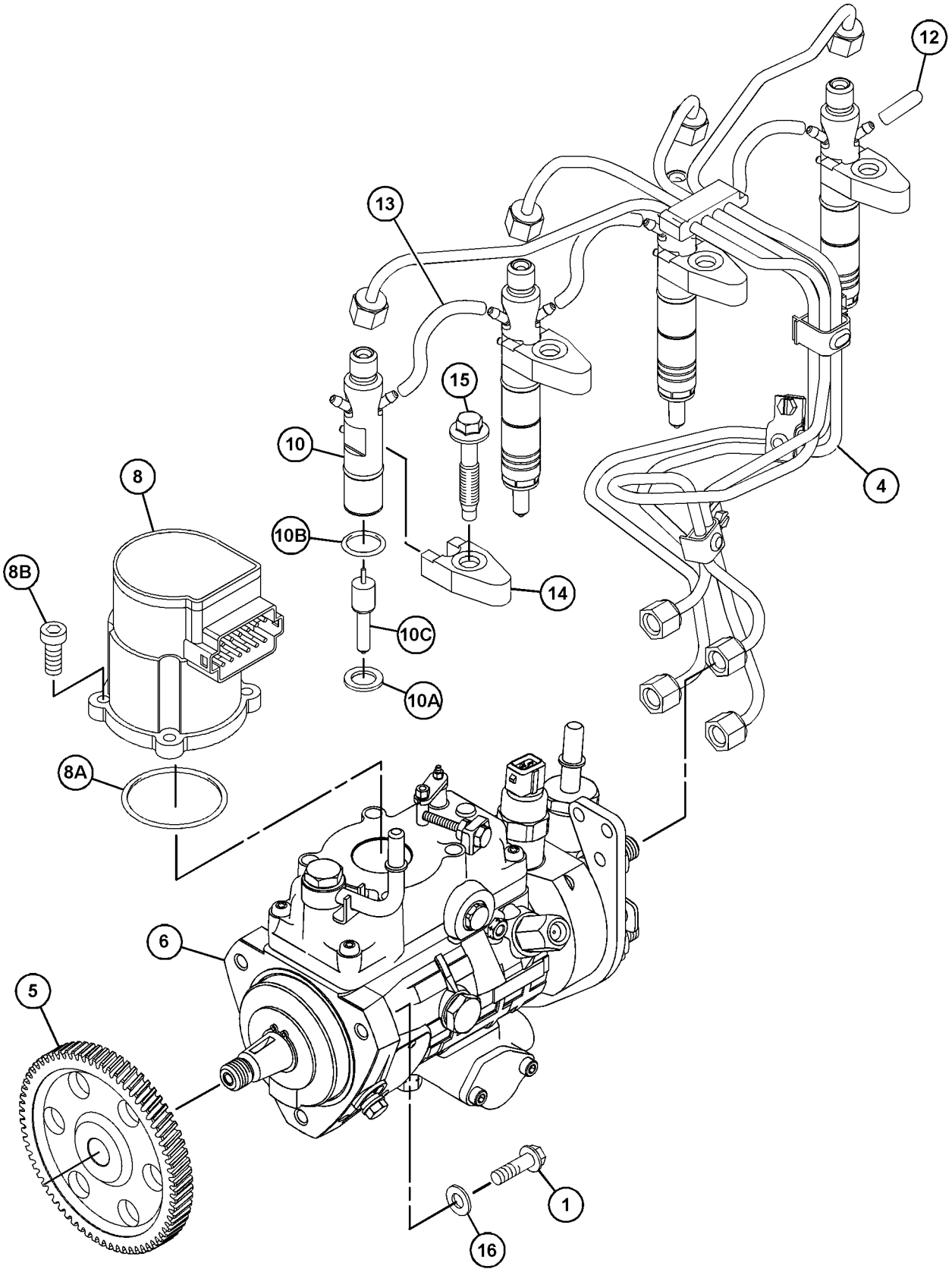

GRAPHIC #1 g06747563

441-4311 **PUMP GP-FUEL INJECTION (**contd.**)** **i08269297**

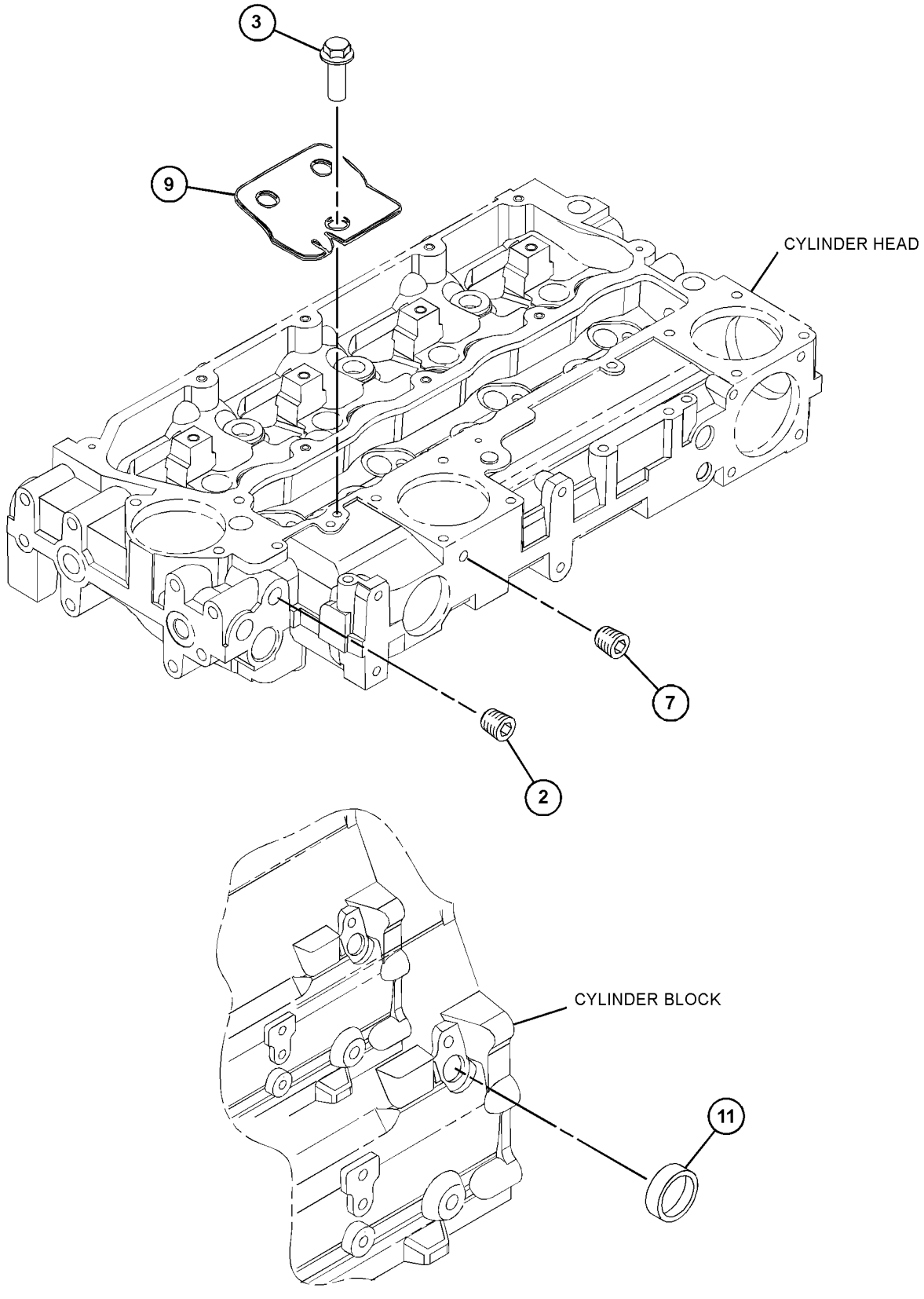

GRAPHIC #2 <END> g06747564

471-1500 PUMP GP-FUEL INJECTION

SMCS-1251, 1290 **i06124360**

NOTE	REF NO	GRAPHIC REF	PART NUMBER	QTY	PART NAME 1 2 3 4 5 6 (PRODUCT LEVEL)	SEE PAGE
M	1	1	**6I-0217**	1	BOLT (M8X1.25X20-MM)	
M	2	1	**6I-0260**	3	BOLT (M8X1.25X25-MM)	
M	3	1	**178-3336**	1	NUT-HEX FLANGE (M8X1.25-THD)	
M	4	1	**100-4830**	1	BOLT (M10X1.5X20-MM)	
M	5	1	**124-3815**	1	BOLT (M8X1.25X16-MM)	
	6	1	**140-8714**	1	CLIP	
	7	1	**155-8804**	1	CAP	
	8	1	**232-1328**	1	CAP	
	9	1	**232-1794**	3	HOSE	
	10	1	**232-2720**	1	TUBE AS (CYL NO. 1)	
	11	1	**232-2721**	1	TUBE AS (CYL NO. 2)	
	12	1	**232-2722**	1	TUBE AS (CYL NO. 3)	
	13	1	**232-2723**	1	TUBE AS (CYL NO. 4)	
	14	1	**232-2725**	2	CLIP	
	15	1	**232-2726**	1	CLIP	
	16	1	**232-3149**	3	WASHER (8.35X16.85X1.55-MM THK)	
	17	1	**232-3157**	1	BRACKET	
M	18	1	**232-3274**	4	BOLT (M8X1.25X48.1-MM)	
	19	1	**233-7104**	1	GEAR-PUMP (FUEL)	
	20	2	**235-1790**	1	SWITCH-TEMPERATURE (ENGINE COOLANT)	
	21	1	**238-8671**	4	CLAMP-INJECTOR	
	22	1	**240-5571**	1	BRACKET	
R	23	1	**266-6830**	4	INJECTOR AS-FUEL	
					(EACH INCLUDES)	
	23A	1	**140-8718**	1	WASHER (7.49X15.75X1.68-MM THK)	
	23B	1	**234-0387**	1	NOZZLE	
	23C	1	**275-1038**	1	SEAL-O-RING	
	24	1	**274-4965**	1	PUMP GP-FUEL INJECTION	
	24A	1	**208-5029**	1	VALVE GP-SOLENOID (12-VOLT) (FUEL SHUTOFF)	
	25	1	**332-7549**	1	SEAL-O-RING	
B	26	2	**232-1323**	1	PLUG-CUP	

B - USE AS REQUIRED
M - METRIC PART
R - REMANUFACTURED PART MAY BE AVAILABLE

471-1500 **PUMP GP-FUEL INJECTION (**contd.**)** **i06124360**

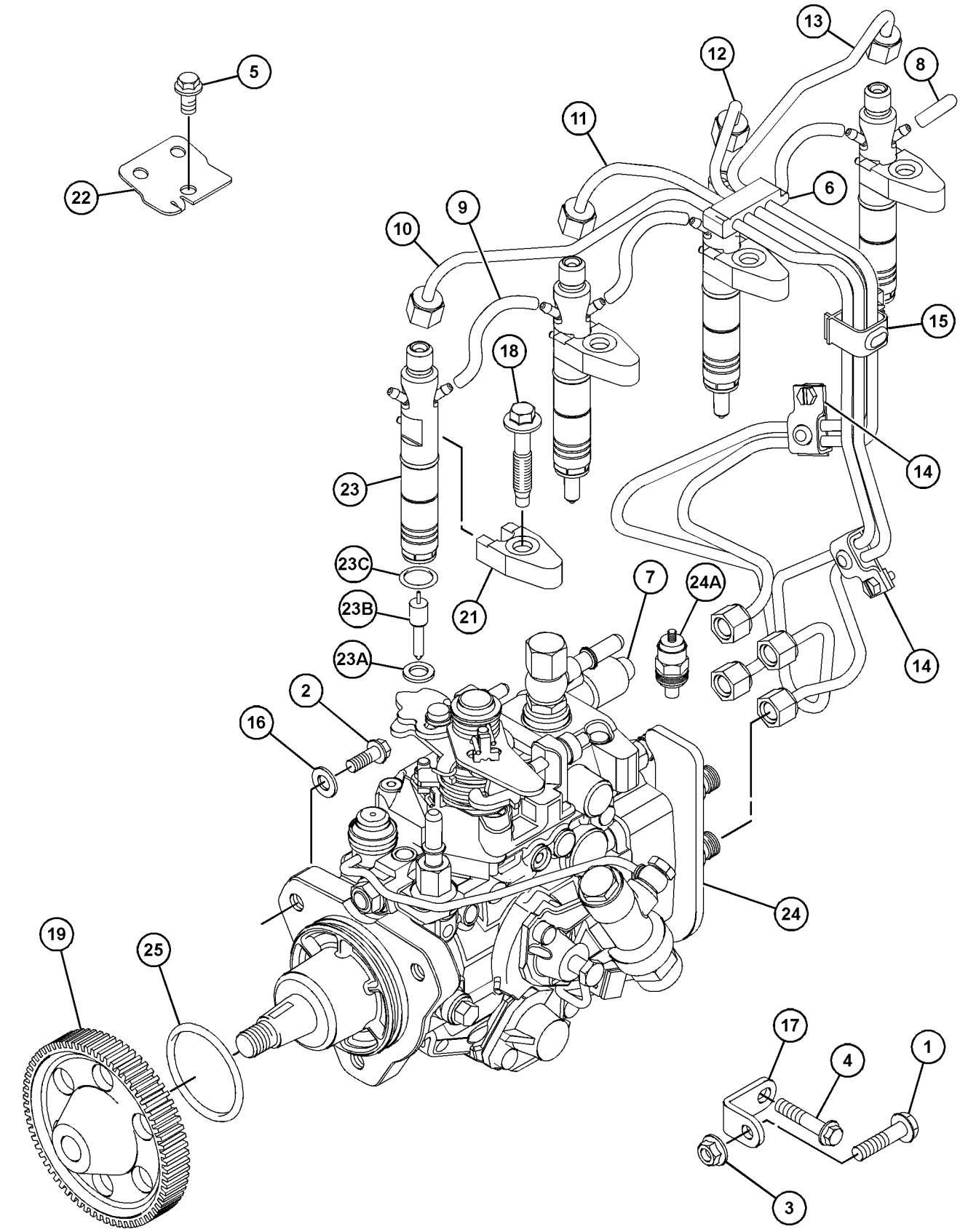

GRAPHIC #1 g06042078

471-1500 **PUMP GP-FUEL INJECTION (**contd.**)** **i06124360**

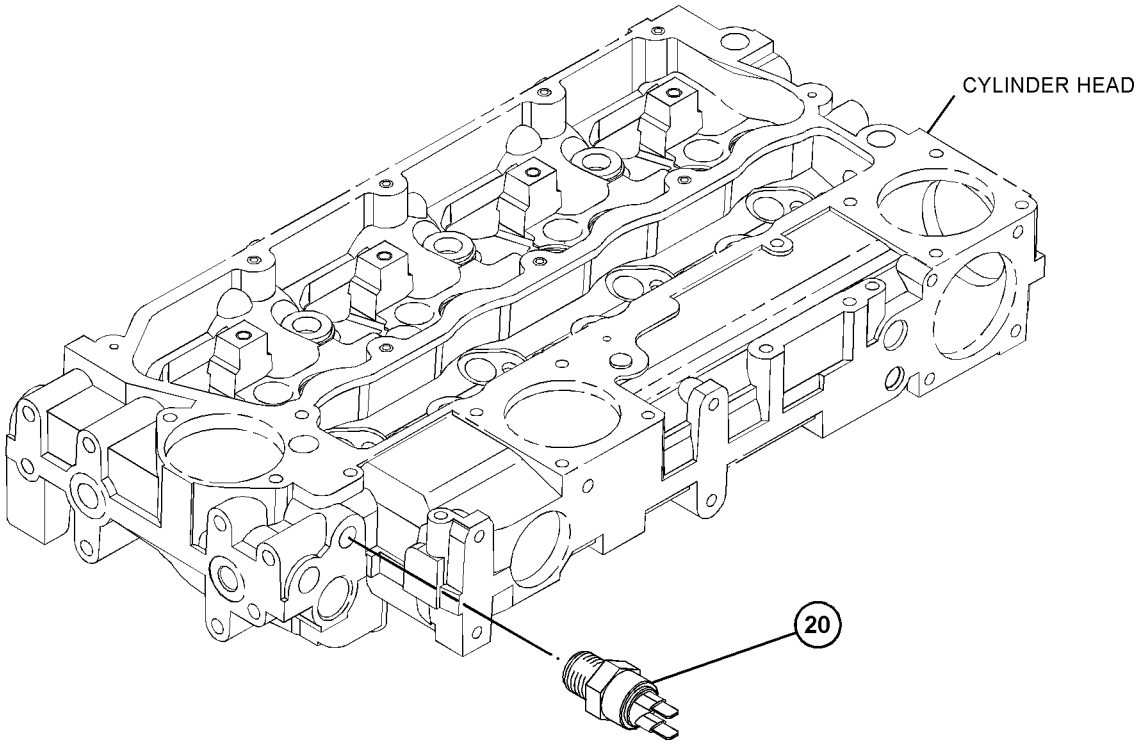

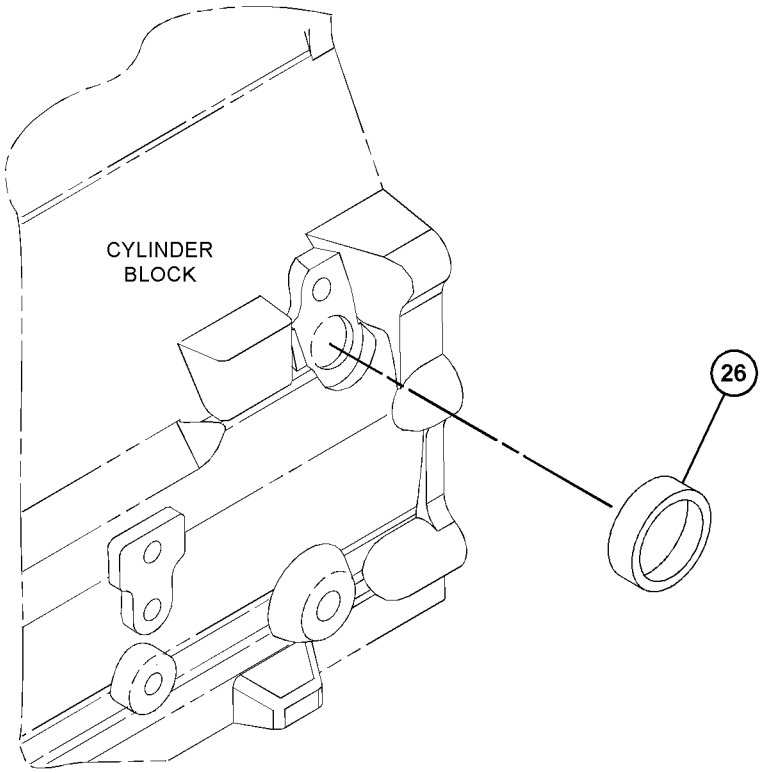

GRAPHIC #2 <END> g06042081

483-2328 PUMP GP-FUEL INJECTION*R

PART OF 233-9526 PUMP GP-FUEL INJECTION
ALSO AN ATTACHMENT

SMCS-1251, 1290 **i07384840**

NOTE	REF NO	GRAPHIC REF	PART NUMBER	QTY	PART NAME 1 2 3 4 5 6 (PRODUCT LEVEL)	SEE PAGE
	1	1	*476-6899*	1	PUMP AS-FUEL INJECTION	
M		1	**111-3422**	1	NUT (M14X1.5-THD)	
		1	**111-3423**	1	WASHER (SPRING)	
		1	**152-3968**	1	SEAL-O-RING	
	2	1	**147-2645**	1	SOLENOID-SHUTOFF (24-VOLT)	

M - METRIC PART

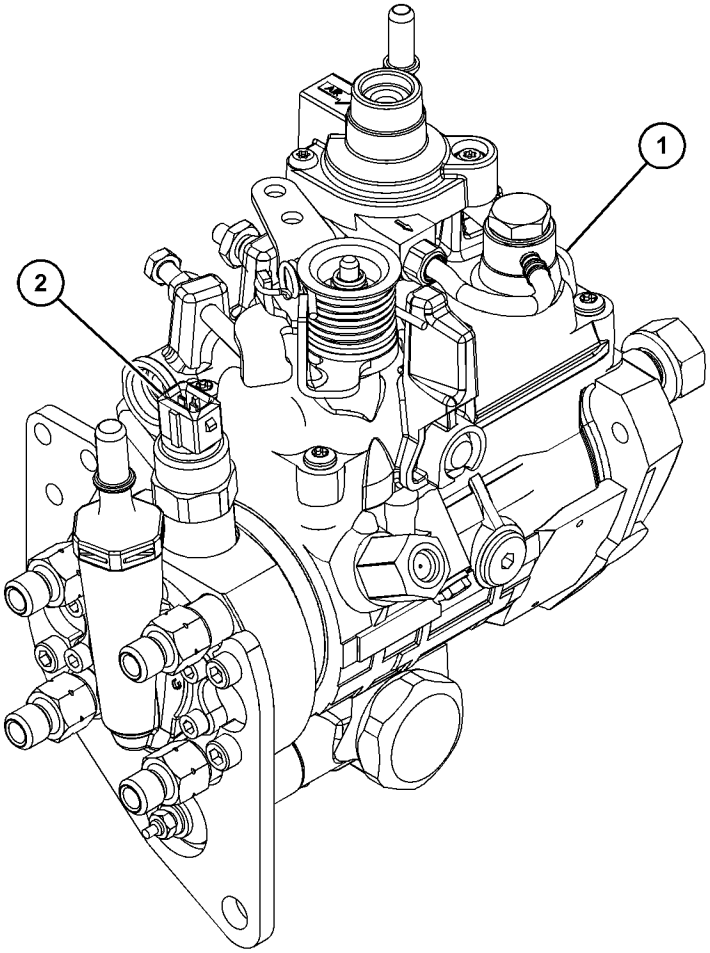

GRAPHIC #1 <END> g06315325

232-9763 PUMP GP-FUEL PRM & PRIM FILTER

S/N: 3341-280
ALSO AN ATTACHMENT

SMCS-1256, 1258, 1260 **i02139051**

NOTE	REF NO	GRAPHIC REF	PART NUMBER	QTY	PART NAME 1 2 3 4 5 6 (PRODUCT LEVEL)	SEE PAGE
M	1	1	**6I-0456**	1	BOLT (M8X1.25X45-MM)	
M	2	1	**120-6872**	3	BOLT (M6X1X40-MM)	
	4	1	**167-7418**	1	SPACER (8.3X18X30-MM THK)	
	5	1	**215-9508**	1	FITTING (QUICK DISCONNECT, FEMALE)	
	6	1	**215-9509**	1	FITTING (QUICK DISCONNECT, MALE)	
	7	1	**232-3126**	1	CLIP	
	8	1	**232-7808**	1	PUMP AS-FUEL TRANSFER	
	8A	1	**1R-1804**	1	FILTER ELEMENT-WTR SEP & FUEL	
	9	1	**232-9758**	3	WASHER (6.51X17.785X1.6-MM THK)	
	10	1	**232-9759**	1	LINE AS-FUEL INJECTION (LOW PRESSURE FEED)	
	11	1	**232-9760**	1	LINE AS-FUEL	
	12	1	**232-9762**	1	BRACKET	

M - METRIC PART

232-9763 **PUMP GP-FUEL PRM & PRIM FILTER (**contd.**)** **i02139051**

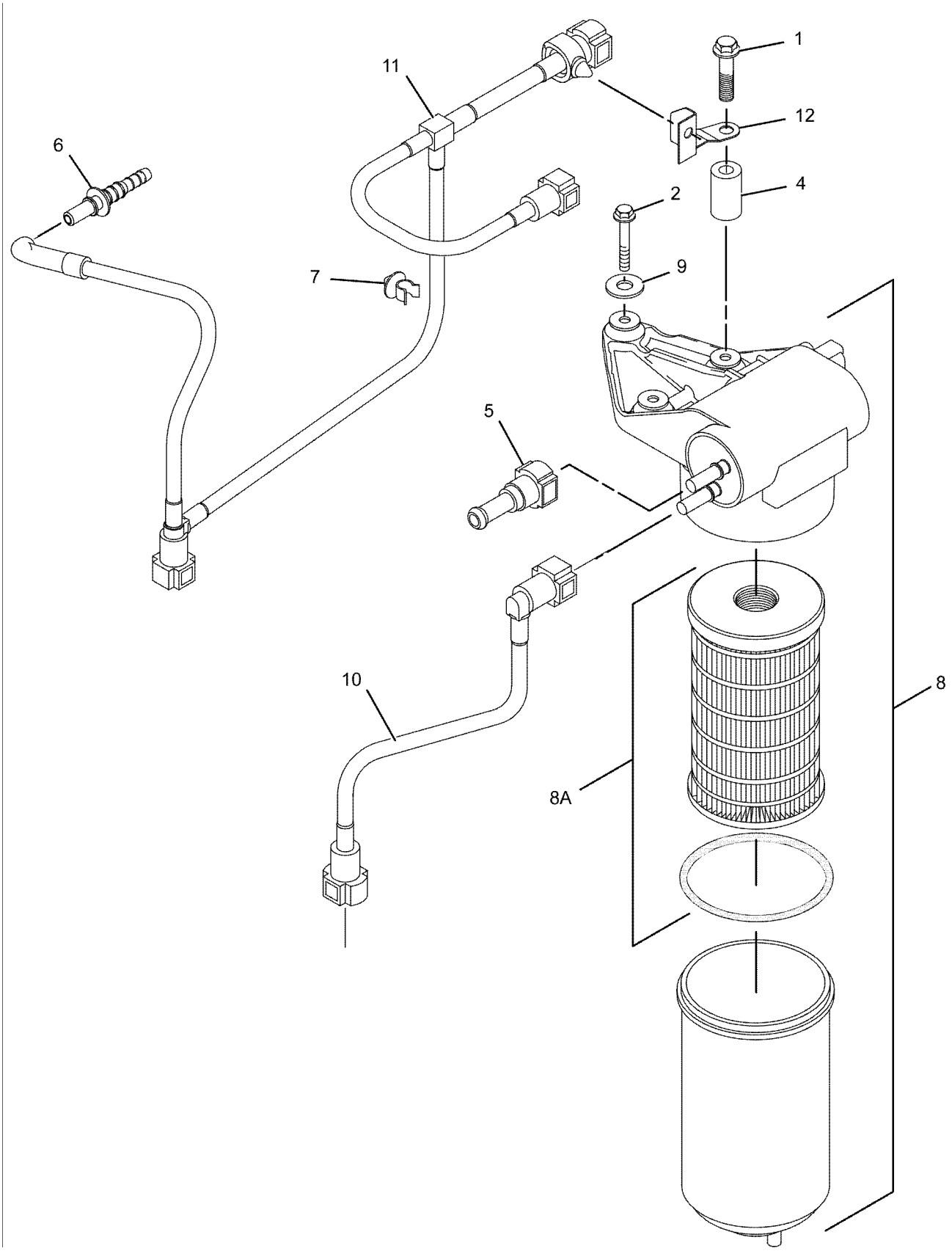

GRAPHIC #1 <END> g01066920

232-9763 PUMP GP-FUEL PRM & PRIM FILTER

S/N: 334281-UP
ALSO AN ATTACHMENT

SMCS-1256, 1258, 1260 **i02139052**

NOTE	REF NO	GRAPHIC REF	PART NUMBER	QTY	PART NAME 1 2 3 4 5 6 (PRODUCT LEVEL)	SEE PAGE
M	1	1	**120-6872**	3	BOLT (M6X1X40-MM)	
	3	1	**215-9508**	1	FITTING (QUICK DISCONNECT, FEMALE)	
	4	1	**215-9509**	1	FITTING (QUICK DISCONNECT, MALE)	
C	5	1	**232-1115**	2	CLIP-PIPE	
	6	1	**232-3126**	1	CLIP	
	7	1	**232-7808**	1	PUMP AS-FUEL TRANSFER	
	7A	1	**1R-1804**	1	FILTER ELEMENT-WTR SEP & FUEL	
	8	1	**232-9758**	3	WASHER (6.51X17.785X1.6-MM THK)	
	9	1	**232-9759**	1	LINE AS-FUEL INJECTION (LOW PRESSURE FEED)	
C	10	1	**237-0284**	1	LINE AS-FUEL (LOW PRESSURE RETURN)	
C	11	1	**237-0285**	1	BRACKET	
C	12	1	**237-0286**	1	PLUG	

C - CHANGE FROM PREVIOUS TYPE
M - METRIC PART

232-9763 **PUMP GP-FUEL PRM & PRIM FILTER** (contd.) **i02139052**

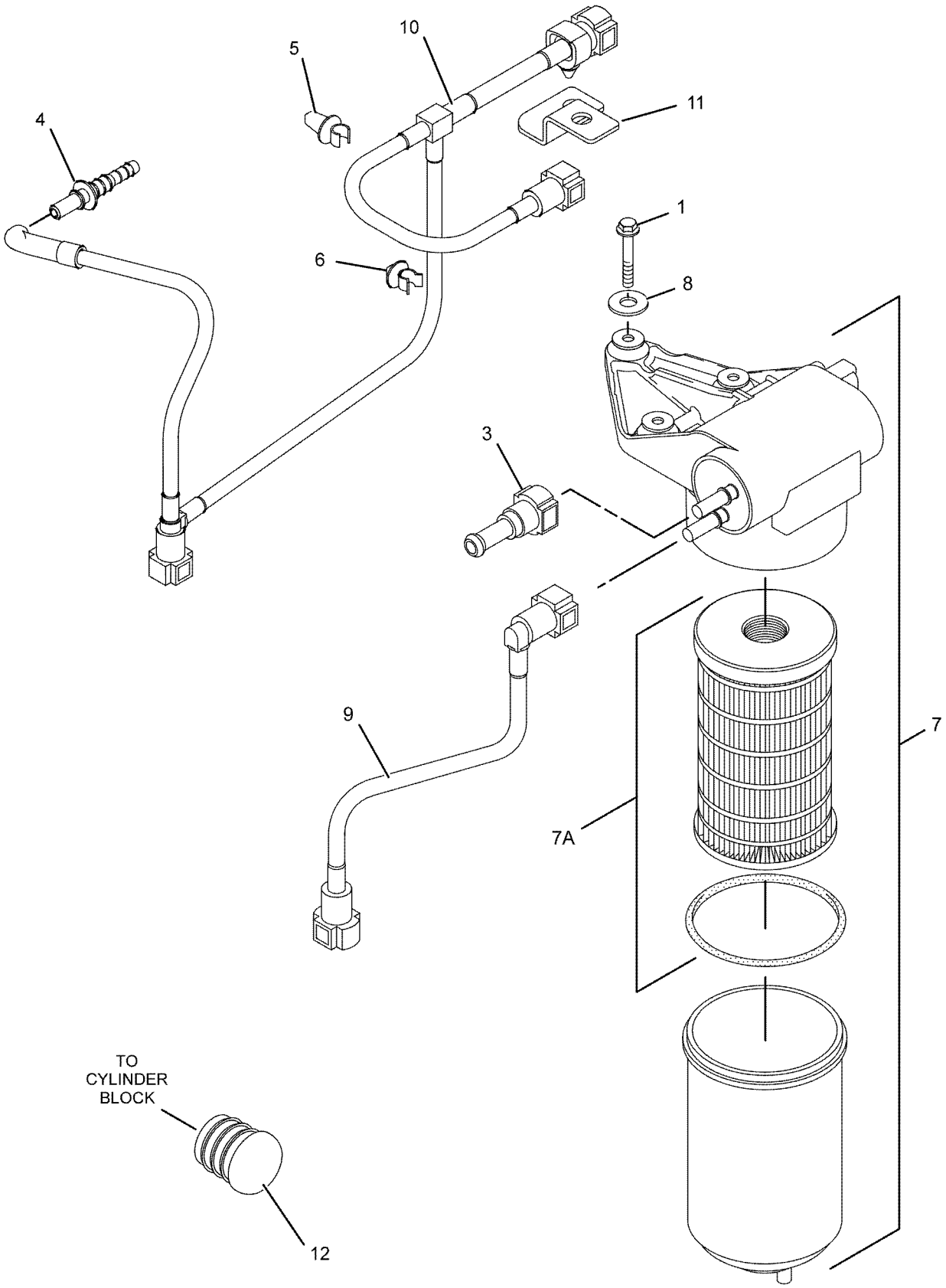

GRAPHIC #1 <END> g01066940

233-7425 PUMP GP-FUEL PRM & PRIM FILTER

S/N: 3341-280

ALSO AN ATTACHMENT

SMCS-1256, 1258, 1260

i02854215

NOTE	REF NO	GRAPHIC REF	PART NUMBER	QTY	PART NAME 1 2 3 4 5 6 (PRODUCT LEVEL)	SEE PAGE
M	1	1	**6I-0456**	1	BOLT (M8X1.25X45-MM)	
M	2	1	**120-6872**	3	BOLT (M6X1X40-MM)	
	3	1	**167-7418**	1	SPACER (8.3X18X30-MM THK)	
	4	1	**215-9508**	1	FITTING (QUICK DISCONNECT, FEMALE)	
	5	1	**215-9509**	1	FITTING (QUICK DISCONNECT, MALE)	
	6	1	**232-3126**	1	CLIP	
	7	1	**232-7808**	1	PUMP AS-FUEL TRANSFER	
	8	1	**1R-1804**	1	FILTER ELEMENT-WTR SEP & FUEL	
	9	1	**232-9758**	3	WASHER (6.51X17.785X1.6-MM THK)	
	10	1	**232-9762**	1	BRACKET	
	11	1	**233-7421**	1	LINE AS-FUEL	
	12	1	**233-7423**	1	LINE AS-FUEL	

M - METRIC PART

233-7425 **PUMP GP-FUEL PRM & PRIM FILTER (**contd.**)** **i02854215**

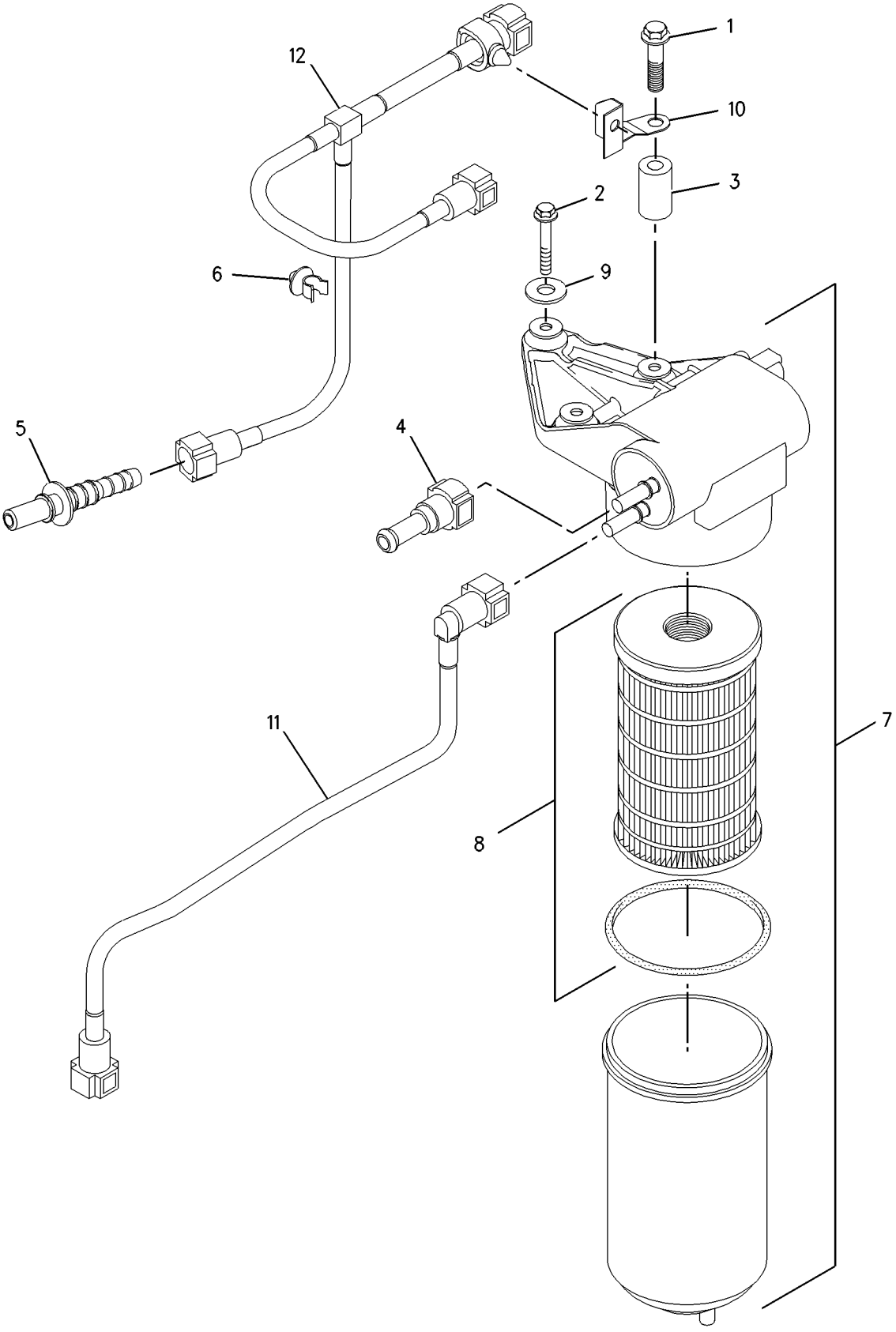

GRAPHIC #1 <END> g00956150

233-7425 PUMP GP-FUEL PRM & PRIM FILTER

S/N: 334281-UP
ALSO AN ATTACHMENT

SMCS-1256, 1258, 1260 **i03494114**

NOTE	REF NO	GRAPHIC REF	PART NUMBER	QTY	PART NAME 1 2 3 4 5 6 (PRODUCT LEVEL)	SEE PAGE
	1	1	**215-9508**	1	FITTING (QUICK DISCONNECT, FEMALE)	
	2	1	**215-9509**	1	FITTING (QUICK DISCONNECT, MALE)	
	3	1	**232-1115**	1	CLIP-PIPE	
	4	1	**233-7421**	1	LINE AS-FUEL	
	5	1	**274-5043**	1	TUBE	
	6	1	**237-0285**	1	BRACKET	
	7	1	**270-6992**	1	PUMP GP-FUEL PRM & PRIM FILTER	
	7A	1	**1R-1804**	1	FILTER ELEMENT-WTR SEP & FUEL	
	7B	1	**207-2757**	1	SEAL (WATER SEPARATOR)	
	7C	1	**221-2014**	1	BOWL AS	
	7D	1	**222-6617**	1	DRAIN AS (FUEL FILTER)	
JM	8	1	**120-6872**	3	BOLT (M6X1X40-MM)	
J	9	1	**232-9758**	3	WASHER (6.51X17.785X1.6-MM THK)	
	10	1	**235-6281**	2	TIE-CABLE	
					AVAILABLE REPAIR KIT(S):	
J			**240-9756**	1	KIT-MOUNTING (FUEL PRIMING PUMP)	

J - KIT MARKED J CONTAINS PARTS MARKED J
M - METRIC PART

233-7425 **PUMP GP-FUEL PRM & PRIM FILTER (**contd.**)** **i03494114**

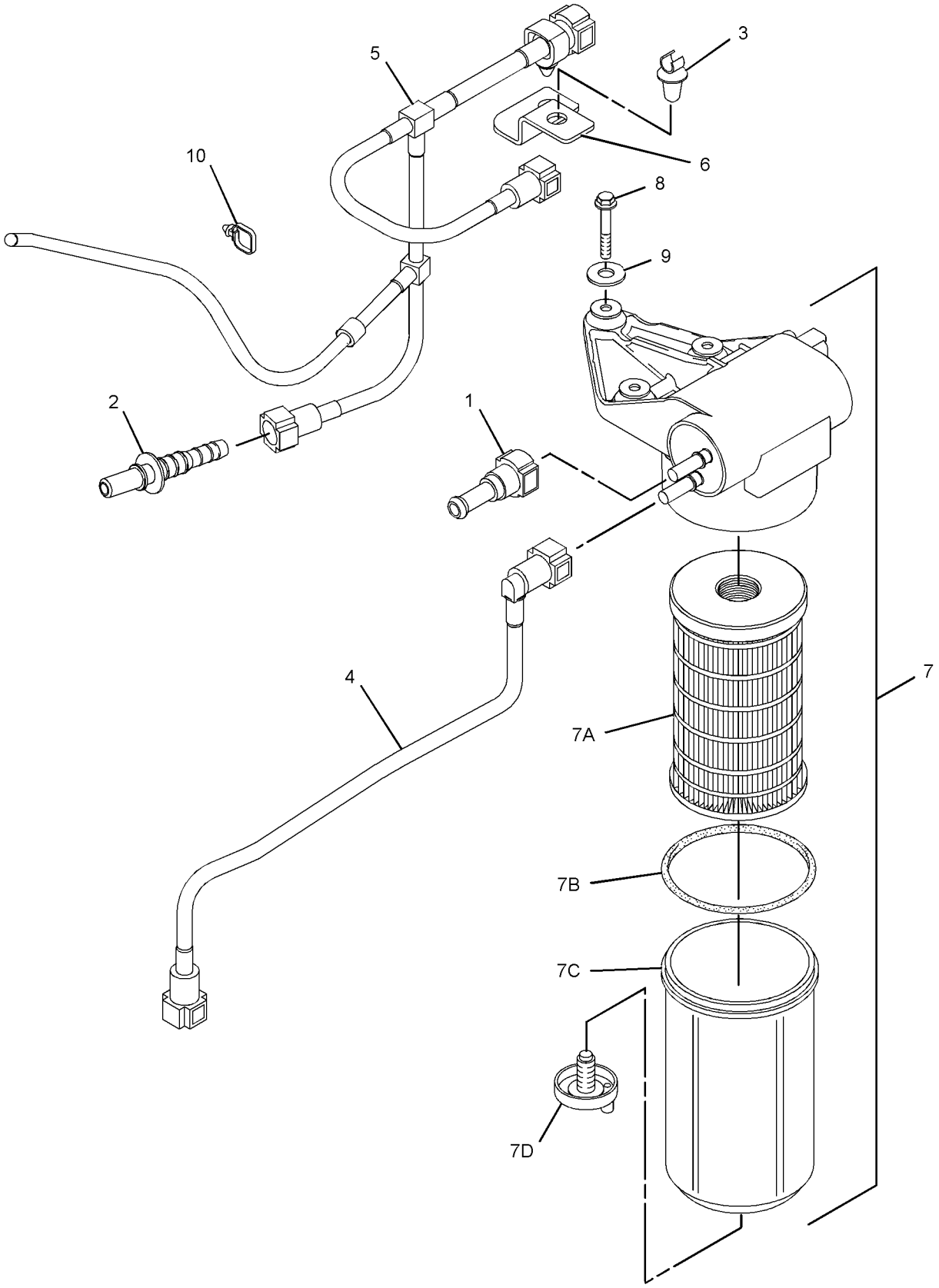

GRAPHIC #1 <END> g01384431

233-7425 PUMP GP-FUEL PRM & PRIM FILTER

ALSO AN ATTACHMENT

SMCS-1256, 1258, 1260 **i06045279**

NOTE	REF NO	GRAPHIC REF	PART NUMBER	QTY	PART NAME 1 2 3 4 5 6 (PRODUCT LEVEL)	SEE PAGE
	1	1	**215-9508**	1	FITTING (QUICK DISCONNECT, FEMALE)	
	2	1	**215-9509**	1	FITTING (QUICK DISCONNECT, MALE)	
C	3	1	**311-6822**	2	CLIP-TUBE	
	4	1	**233-7421**	1	LINE AS-FUEL	
	5	1	**274-5043**	1	TUBE	
	6	1	**237-0285**	1	BRACKET	
	7	1	**235-6281**	2	TIE-CABLE	
JM	8	1	**120-6872**	3	BOLT (M6X1X40-MM)	
J	9	1	**232-9758**	3	WASHER (6.51X17.785X1.6-MM THK)	
					AVAILABLE REPAIR KIT(S):	
Y			**467-7011**	1	KIT-FUEL PRIMING PUMP	1169
					(INCLUDES PUMP GROUP, SPACERS, & ISOLATORS)	
J			**240-9756**	1	KIT-MOUNTING (FUEL PRIMING PUMP)	

C - CHANGE FROM PREVIOUS TYPE
J - KIT MARKED J CONTAINS PARTS MARKED J
M - METRIC PART
Y - SEPARATE ILLUSTRATION

233-7425 **PUMP GP-FUEL PRM & PRIM FILTER (**contd.**)** **i06045279**

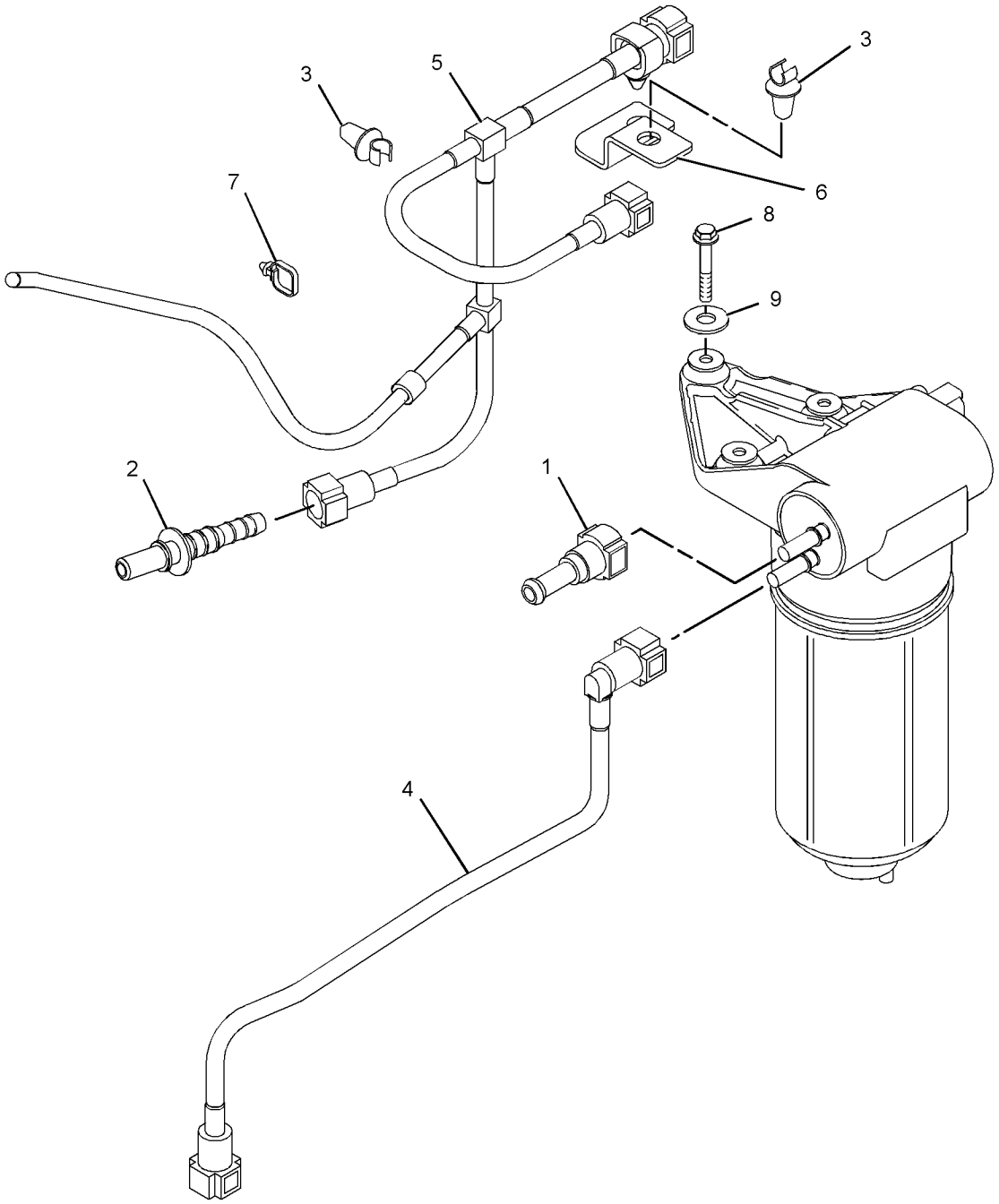

GRAPHIC #1 <END> g02707298

233-9417 PUMP GP-FUEL PRM & PRIM FILTER

ALSO AN ATTACHMENT

SMCS-1256, 1258, 1260 **i03787392**

NOTE	REF NO	GRAPHIC REF	PART NUMBER	QTY	PART NAME 1 2 3 4 5 6 (PRODUCT LEVEL)	SEE PAGE
	1	1	**237-0285**	1	BRACKET	
	2	1	**240-9756**	1	KIT-MOUNTING (FUEL PRIMING PUMP)	
	2A	1	**232-9758**	3	WASHER (6.51X17.785X1.6-MM THK)	
M		1	**120-6872**	3	BOLT (M6X1X40-MM)	
					(KIT ALSO INCLUDES SPACERS & MOUNTS)	
	3	1	**232-1115**	1	CLIP-PIPE	
	4	1	**237-0286**	1	PLUG	
	5	1	**215-9508**	1	FITTING (QUICK DISCONNECT, FEMALE)	
	6	1	**215-9509**	1	FITTING (QUICK DISCONNECT, MALE)	
	7	1	**232-3126**	1	CLIP	
Y	8	1	**270-6992**	1	PUMP GP-FUEL PRM & PRIM FILTER	1515
	9	1	**237-0284**	1	LINE AS-FUEL (LOW PRESSURE RETURN)	
	10	1	**232-9759**	1	LINE AS-FUEL INJECTION (LOW PRESSURE FEED)	

M - METRIC PART
Y - SEPARATE ILLUSTRATION

233-9417 **PUMP GP-FUEL PRM & PRIM FILTER (**contd.**)** **i03787392**

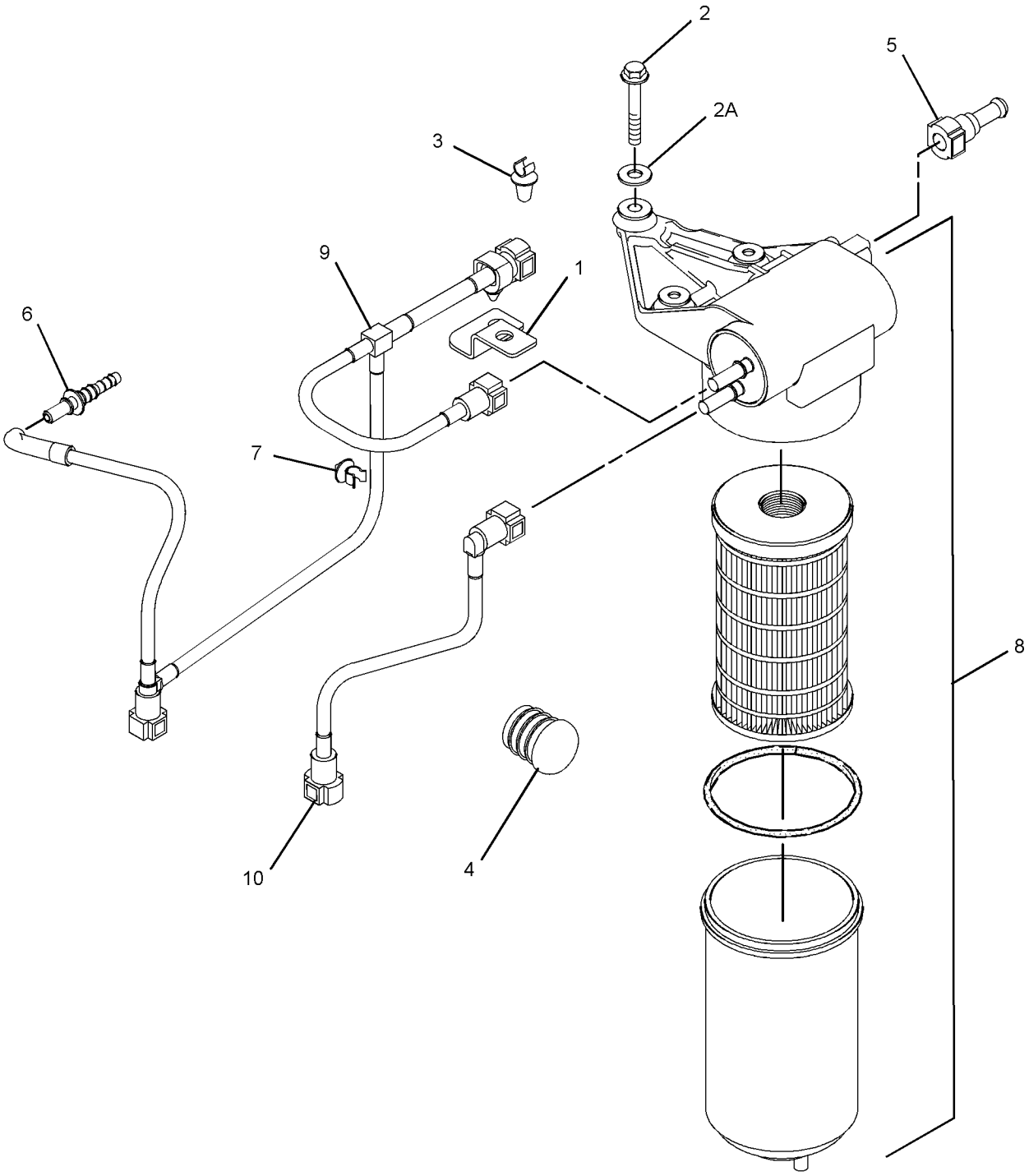

GRAPHIC #1 <END> g02045793

233-9417 PUMP GP-FUEL PRM & PRIM FILTER

ALSO AN ATTACHMENT

SMCS-1256, 1258, 1260 **i06061103**

NOTE	REF NO	GRAPHIC REF	PART NUMBER	QTY	PART NAME 1 2 3 4 5 6 (PRODUCT LEVEL)	SEE PAGE
	1	1	**237-0285**	1	BRACKET	
	2	1	**240-9756**	1	KIT-MOUNTING (FUEL PRIMING PUMP)	
	2A	1	**232-9758**	3	WASHER (6.51X17.785X1.6-MM THK)	
M		1	**120-6872**	3	BOLT (M6X1X40-MM)	
					(KIT ALSO INCLUDES SPACERS & MOUNTS)	
	3	1	**311-6822**	1	CLIP-TUBE	
	4	1	**237-0286**	1	PLUG	
	5	1	**215-9508**	1	FITTING (QUICK DISCONNECT, FEMALE)	
	6	1	**215-9509**	1	FITTING (QUICK DISCONNECT, MALE)	
	7	1	**232-3126**	1	CLIP	
	8	1	**232-9759**	1	LINE AS-FUEL INJECTION (LOW PRESSURE FEED)	
	9	1	**237-0284**	1	LINE AS-FUEL (LOW PRESSURE RETURN)	
					AVAILABLE REPAIR KIT(S):	
Y			**467-7011**	1	KIT-FUEL PRIMING PUMP	1169
					(INCLUDES SPACERS & ISOLATORS)	

M - METRIC PART
Y - SEPARATE ILLUSTRATION

233-9417 **PUMP GP-FUEL PRM & PRIM FILTER (**contd.**)** **i06061103**

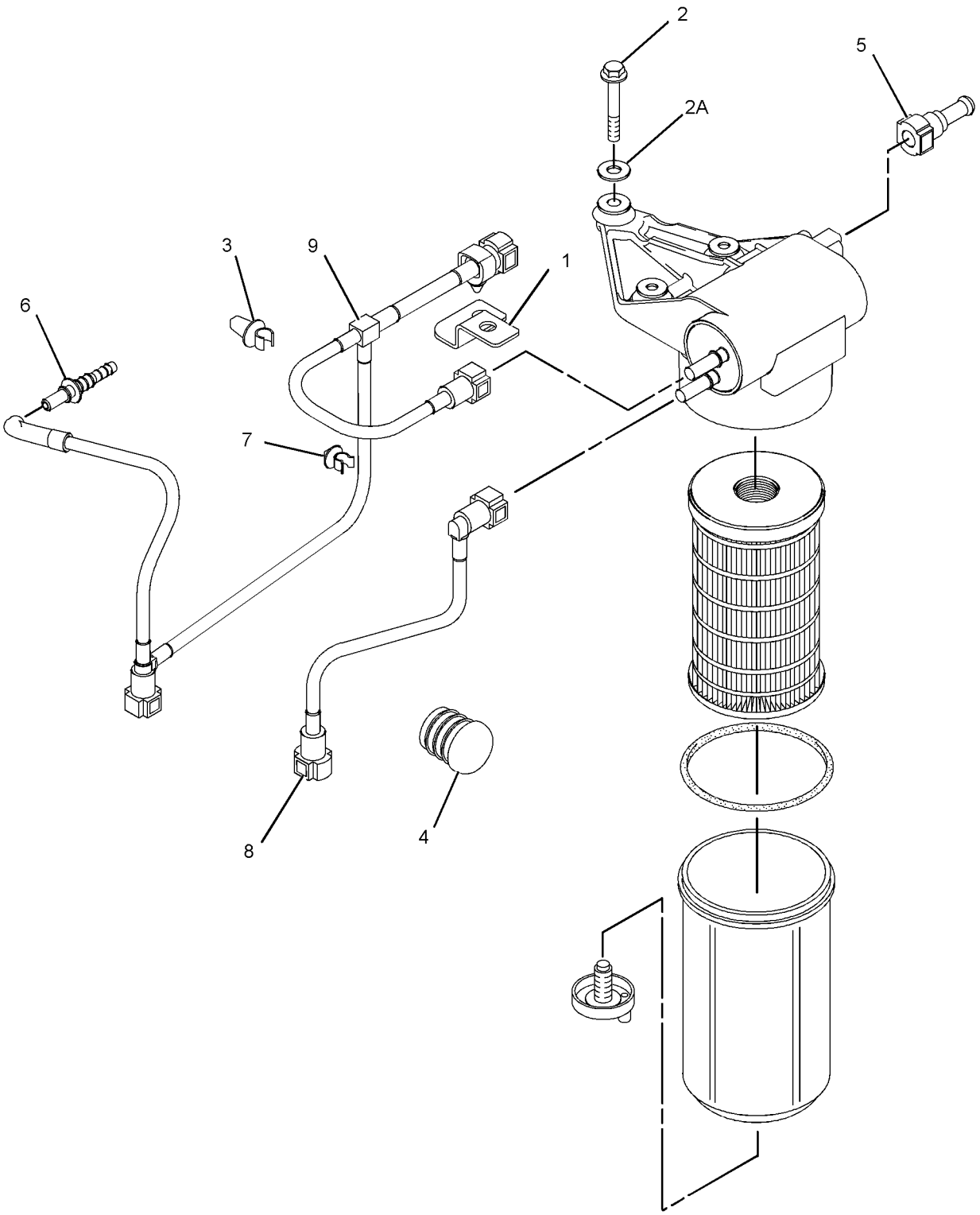

GRAPHIC #1 <END> g02709761

235-3555 PUMP GP-FUEL PRM & PRIM FILTER

S/N: 3341-280

SMCS-1256, 1258, 1260

i01890746

NOTE	REF NO	GRAPHIC REF	PART NUMBER	QTY	PART NAME 1 2 3 4 5 6 (PRODUCT LEVEL)	SEE PAGE
M	1	1	**6I-0456**	1	BOLT (M8X1.25X45-MM)	
M	2	1	**120-6872**	3	BOLT (M6X1X40-MM)	
	3	1	**167-7418**	1	SPACER (8.3X18X30-MM THK)	
	4	1	**215-9508**	1	FITTING (QUICK DISCONNECT, FEMALE)	
	5	1	**215-9509**	1	FITTING (QUICK DISCONNECT, MALE)	
	6	1	**232-3126**	1	CLIP	
	7	1	**232-7808**	1	PUMP AS-FUEL TRANSFER	
	7A	1	**1R-1804**	1	FILTER ELEMENT-WTR SEP & FUEL	
	8	1	**232-9758**	3	WASHER (6.51X17.785X1.6-MM THK)	
	9	1	**232-9762**	1	BRACKET	
	10	1	**233-7421**	1	LINE AS-FUEL	
	11	1	**233-7423**	1	LINE AS-FUEL	

M - METRIC PART

235-3555 **PUMP GP-FUEL PRM & PRIM FILTER (**contd.**)** **i01890746**

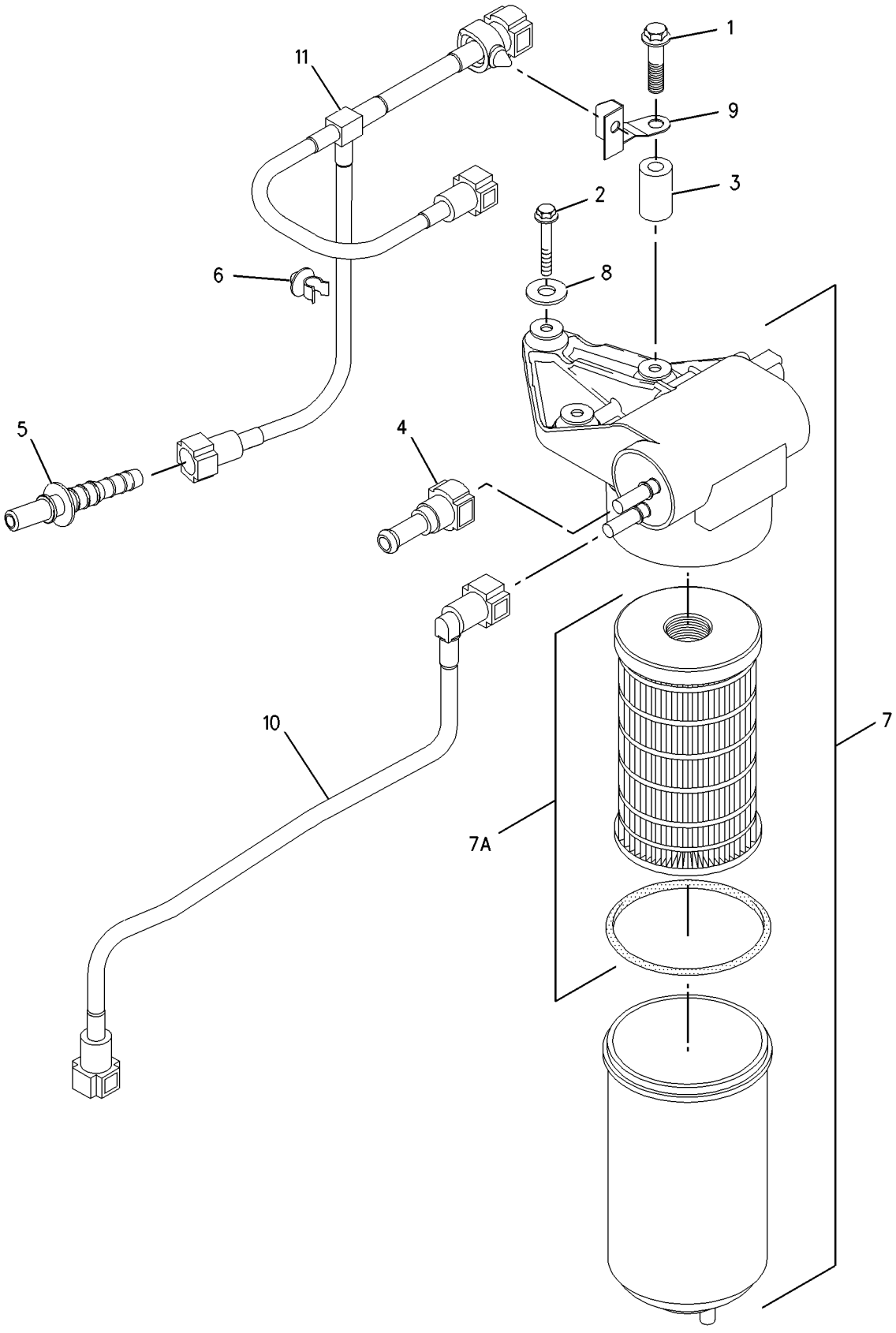

GRAPHIC #1 <END> g00984638

235-3555 PUMP GP-FUEL PRM & PRIM FILTER

S/N: 334281-571

SMCS-1256, 1258, 1260

i01986366

NOTE	REF NO	GRAPHIC REF	PART NUMBER	QTY	PART NAME 1 2 3 4 5 6 (PRODUCT LEVEL)	SEE PAGE
	1	1	**215-9508**	1	FITTING (QUICK DISCONNECT, FEMALE)	
	2	1	**215-9509**	1	FITTING (QUICK DISCONNECT, MALE)	
	3	1	**232-1115**	2	CLIP-PIPE	
	4	1	**233-7421**	1	LINE AS-FUEL	
	5	1	**233-7423**	1	LINE AS-FUEL	
	6	1	**237-0285**	1	BRACKET	
	7	1	**232-7808**	1	PUMP AS-FUEL TRANSFER	
	7A	1	**1R-1804**	1	FILTER ELEMENT-WTR SEP & FUEL	
M	8	1	**120-6872**	3	BOLT (M6X1X40-MM)	
	9	1	**232-9758**	3	WASHER (6.51X17.785X1.6-MM THK)	

M - METRIC PART

235-3555 **PUMP GP-FUEL PRM & PRIM FILTER (**contd.**)** **i01986366**

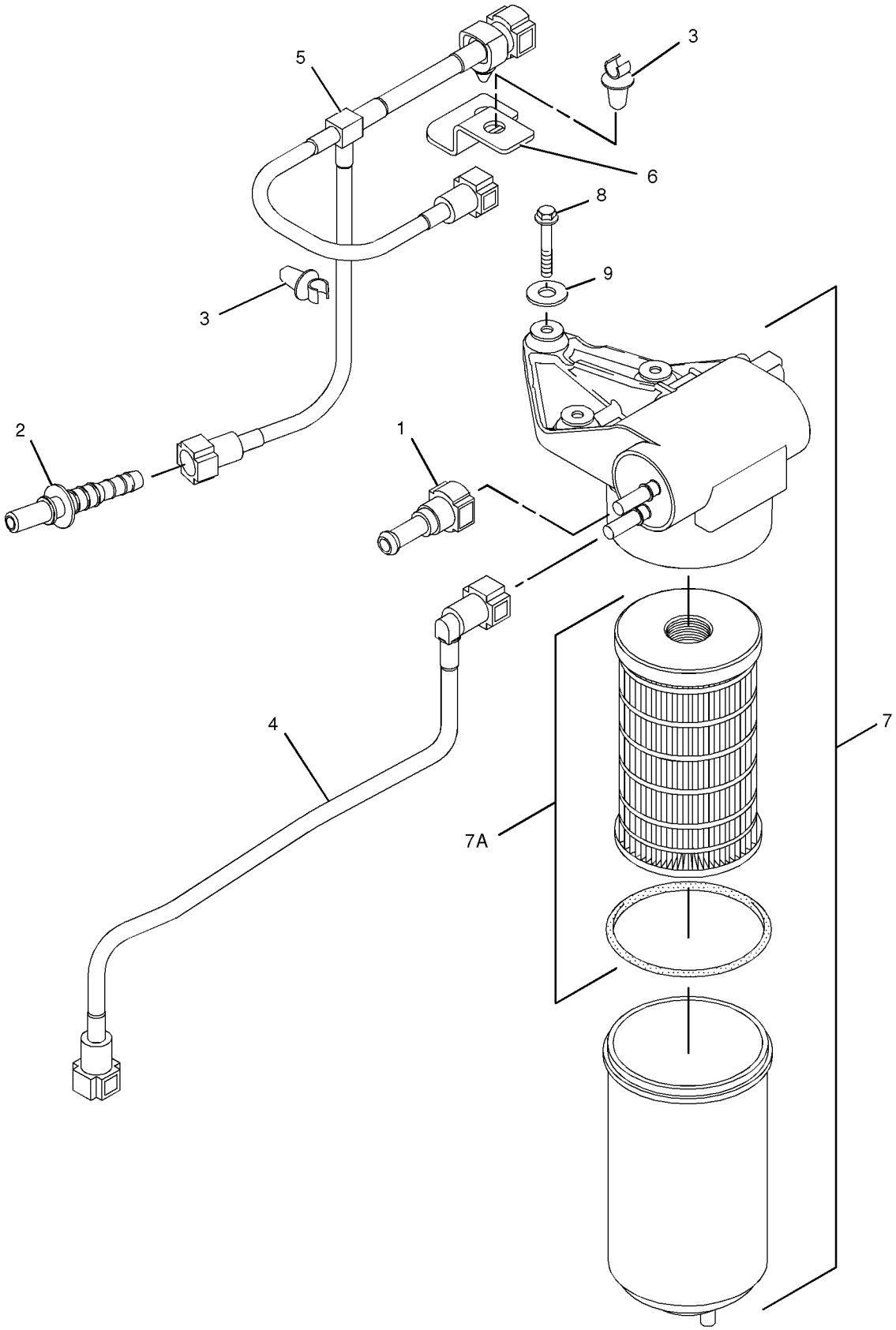

GRAPHIC #1 <END> g01029792

237-0291 PUMP GP-FUEL PRM & PRIM FILTER

S/N: 3341-554

SMCS-1256, 1258, 1260 **i02158494**

NOTE	REF NO	GRAPHIC REF	PART NUMBER	QTY	PART NAME 1 2 3 4 5 6 (PRODUCT LEVEL)	SEE PAGE
M	1	1	**106-8916**	2	BOLT (M6X1X16-MM)	
M	2	1	**120-6872**	3	BOLT (M6X1X40-MM)	
	3	1	**154-8045**	2	NUT	
	4	1	**160-7197**	1	CLIP	
	5	1	**215-9508**	1	FITTING (QUICK DISCONNECT, FEMALE)	
	6	1	**215-9509**	1	FITTING (QUICK DISCONNECT, MALE)	
	7	1	**217-9039**	2	STRAP-CABLE	
	8	1	**226-8773**	1	REGULATOR AS-VOLTAGE (24-VOLT) (FUEL PUMP)	
	9	1	**232-1115**	2	CLIP-PIPE	
	10	1	**232-3126**	1	CLIP	
	11	1	**232-7808**	1	PUMP AS-FUEL TRANSFER	
	11A	1	**1R-1804**	1	FILTER ELEMENT-WTR SEP & FUEL	
	12	1	**232-9758**	3	WASHER (6.51X17.785X1.6-MM THK)	
	13	1	**232-9759**	1	LINE AS-FUEL INJECTION (LOW PRESSURE FEED)	
	14	1	**233-9831**	1	BRACKET	
	15	1	**237-0284**	1	LINE AS-FUEL (LOW PRESSURE RETURN)	
	16	1	**237-0285**	1	BRACKET	
	17	1	**237-0286**	1	PLUG	

M - METRIC PART

237-0291 **PUMP GP-FUEL PRM & PRIM FILTER (**contd.**)** **i02158494**

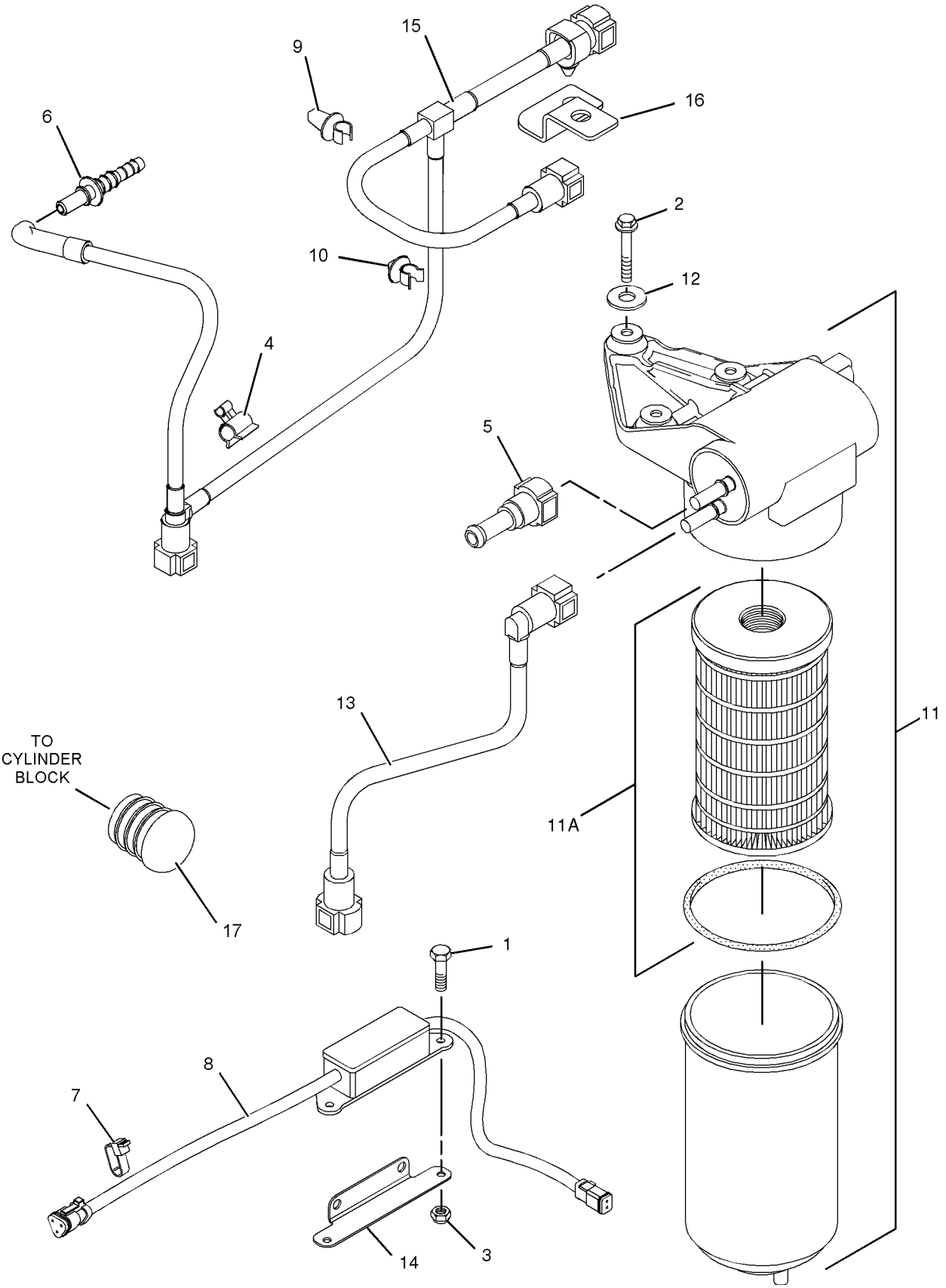

GRAPHIC #1 <END> g01025486

270-6992 PUMP GP-FUEL PRM & PRIM FILTER

PART OF 243-4334 FILTER GP-FUEL, 233-9417 PUMP GP-FUEL PRM & PRIM FILTER
ALSO AN ATTACHMENT

SMCS-1256, 1258, 1260 **i03795009**

NOTE	REF NO	GRAPHIC REF	PART NUMBER	QTY	PART NAME 1 2 3 4 5 6 (PRODUCT LEVEL)	SEE PAGE
	1	1	**1R-1804**	1	FILTER ELEMENT-WTR SEP & FUEL	
	2	1	**207-2757**	1	SEAL (FUEL FILTER)	
	3	1	**221-2014**	1	BOWL AS	
		1	**222-6617**	1	DRAIN AS (FUEL FILTER)	
					PARTS SHOWN IN GRAPHIC(S) WITHOUT A REFERENCE NUMBER ARE NOT SERVICED SEPARATELY	

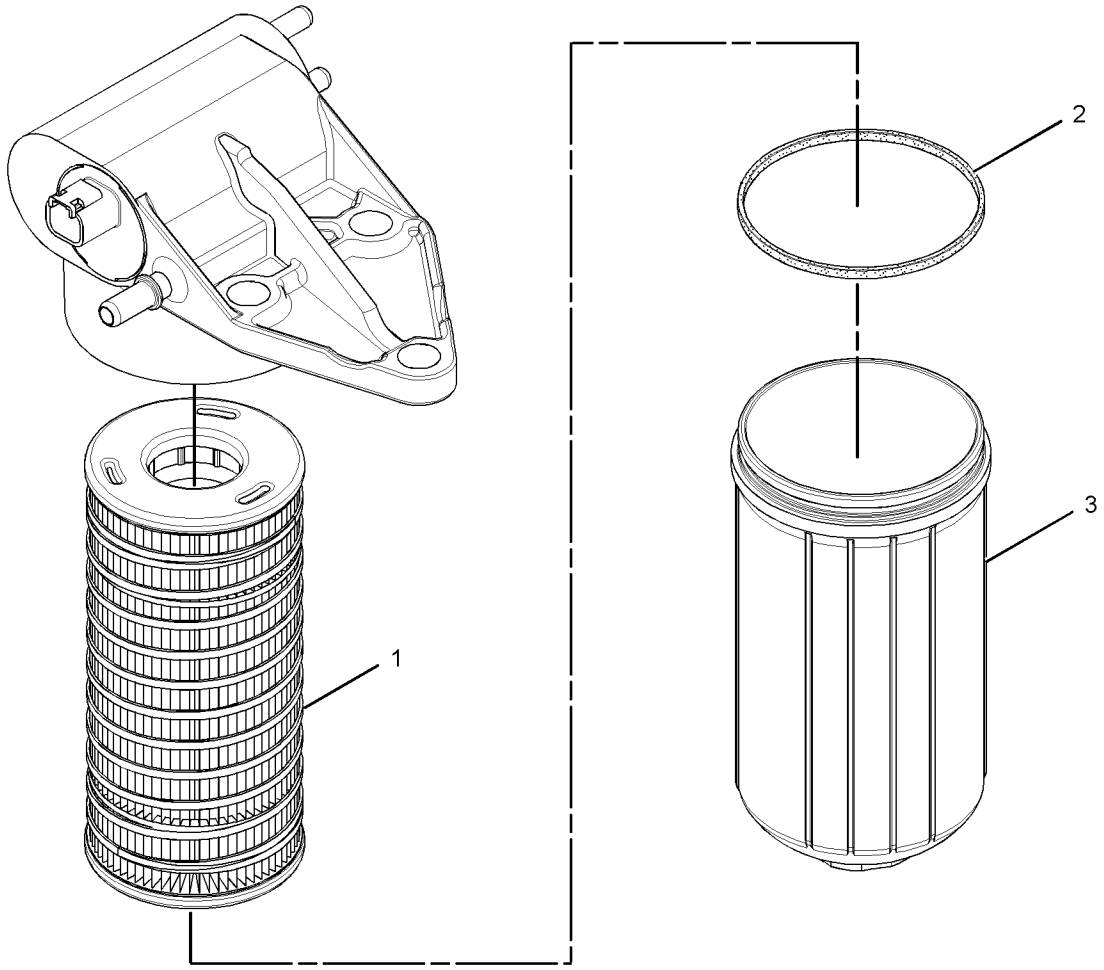

GRAPHIC #1 <END> g02052136

299-9265 PUMP GP-FUEL PRM & PRIM FILTER

PART OF 233-9832 FILTER GP-FUEL, 357-4187 KIT-FUEL PRIMING PUMP, 353-9830 PUMP GP-FUEL PRM & PRIM FILTER
ALSO AN ATTACHMENT

SMCS-1256, 1258, 1260 **i03731089**

NOTE	REF NO	GRAPHIC REF	PART NUMBER	QTY	PART NAME 1 2 3 4 5 6 (PRODUCT LEVEL)	SEE PAGE
	1	1	**207-2757**	1	SEAL (FUEL FILTER)	
	2	1	**221-2014**	1	BOWL AS	
	2A	1	**222-6617**	1	DRAIN AS (FUEL FILTER)	
	3	1	**1R-1804**	1	FILTER ELEMENT-WTR SEP & FUEL	

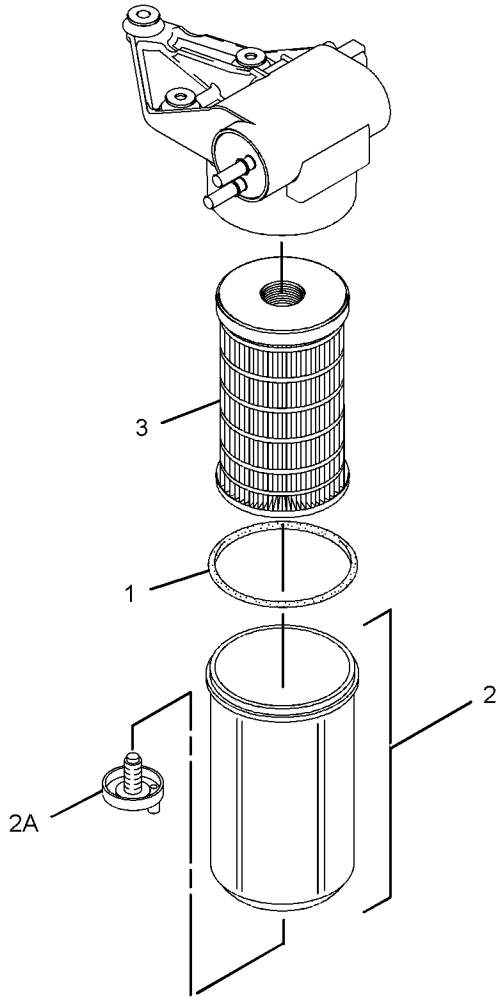

GRAPHIC #1 <END> g01419891

353-9830 PUMP GP-FUEL PRM & PRIM FILTER

S/N: 33416200-UP

SMCS-1256, 1258, 1260 **i05259878**

NOTE	REF NO	GRAPHIC REF	PART NUMBER	QTY	PART NAME 1 2 3 4 5 6 (PRODUCT LEVEL)	SEE PAGE
	1	1	**215-9508**	1	FITTING (QUICK DISCONNECT, FEMALE)	
	2	1	**215-9509**	1	FITTING (QUICK DISCONNECT, MALE)	
	3	1	**232-1115**	1	CLIP-PIPE	
	4	1	**233-7421**	1	LINE AS-FUEL	
	5	1	**235-6281**	1	TIE-CABLE	
	6	1	**237-0285**	1	BRACKET	
	7	1	**240-9756**	1	KIT-MOUNTING (FUEL PRIMING PUMP)	
M	7A	1	**120-6872**	3	BOLT (M6X1X40-MM)	
	7B	1	**232-9758**	3	WASHER (6.51X17.785X1.6-MM THK)	
	8	1	**274-5043**	1	TUBE	
Y	9	1	**299-9265**	1	PUMP GP-FUEL PRM & PRIM FILTER	1516
FY		1	**357-4187**	1	KIT-FUEL PRIMING PUMP	1169

F - NOT SHOWN
M - METRIC PART
Y - SEPARATE ILLUSTRATION

353-9830 **PUMP GP-FUEL PRM & PRIM FILTER (**contd.**)** **i05259878**

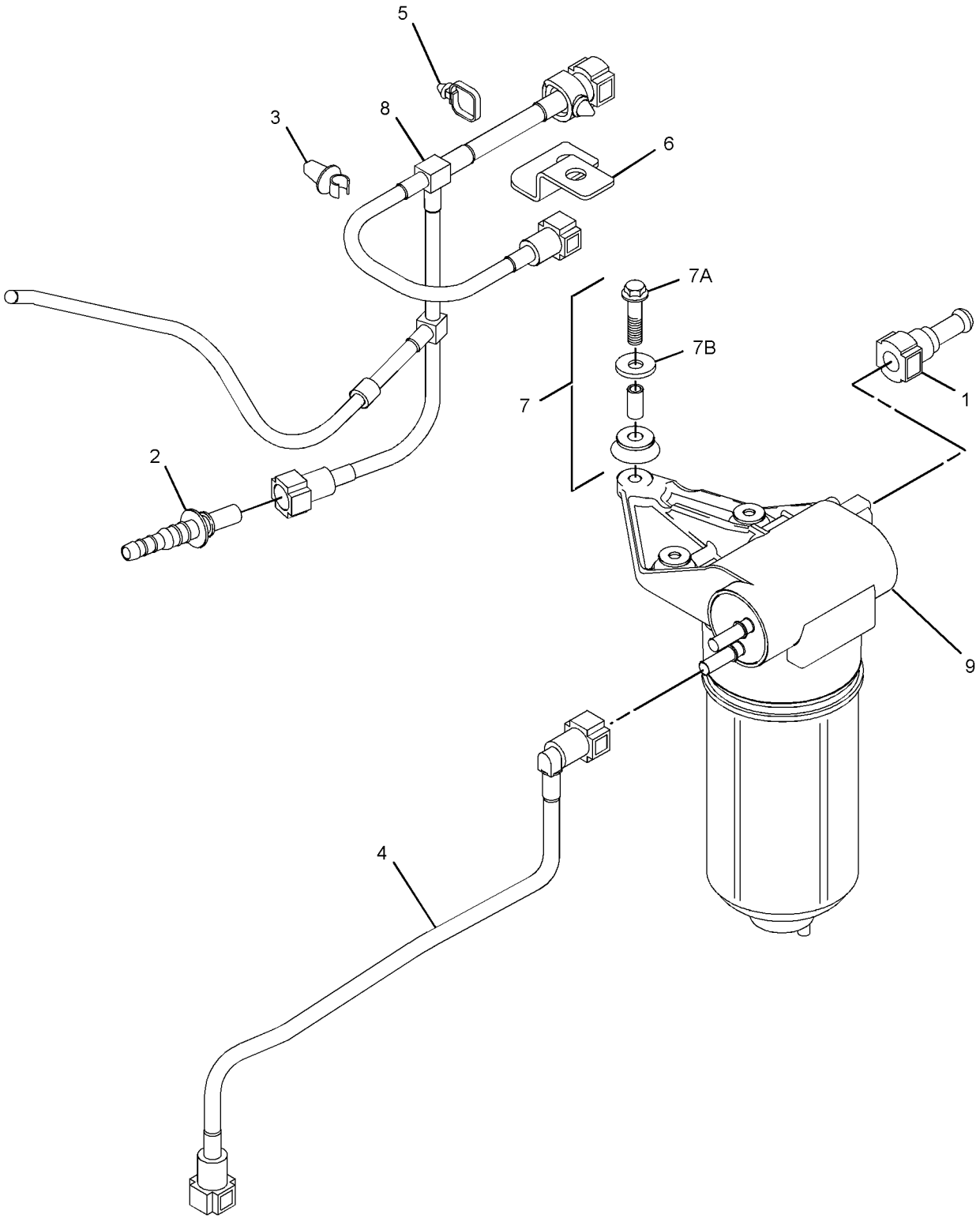

GRAPHIC #1 <END> g02259493

353-9830 PUMP GP-FUEL PRM & PRIM FILTER

SMCS-1256, 1258, 1260 **i06000375**

NOTE	REF NO	GRAPHIC REF	PART NUMBER	QTY	PART NAME 1 2 3 4 5 6 (PRODUCT LEVEL)	SEE PAGE
	1	1	**215-9508**	1	FITTING (QUICK DISCONNECT, FEMALE)	
	2	1	**215-9509**	1	FITTING (QUICK DISCONNECT, MALE)	
	3	1	**232-1115**	1	CLIP-PIPE	
	4	1	**233-7421**	1	LINE AS-FUEL	
	5	1	**235-6281**	1	TIE-CABLE	
	6	1	**237-0285**	1	BRACKET	
	7	1	**240-9756**	1	KIT-MOUNTING (FUEL PRIMING PUMP)	
M	7A	1	**120-6872**	3	BOLT (M6X1X40-MM)	
	7B	1	**232-9758**	3	WASHER (6.51X17.785X1.6-MM THK)	
	8	1	**274-5043**	1	TUBE	
Y	9	1	**299-9265**	1	PUMP GP-FUEL PRM & PRIM FILTER	1516
					AVAILABLE REPAIR KIT(S):	
CY			**467-7011**	1	KIT-FUEL PRIMING PUMP	1169

C - CHANGE FROM PREVIOUS TYPE
M - METRIC PART
Y - SEPARATE ILLUSTRATION

353-9830 **PUMP GP-FUEL PRM & PRIM FILTER (**contd.**)** **i06000375**

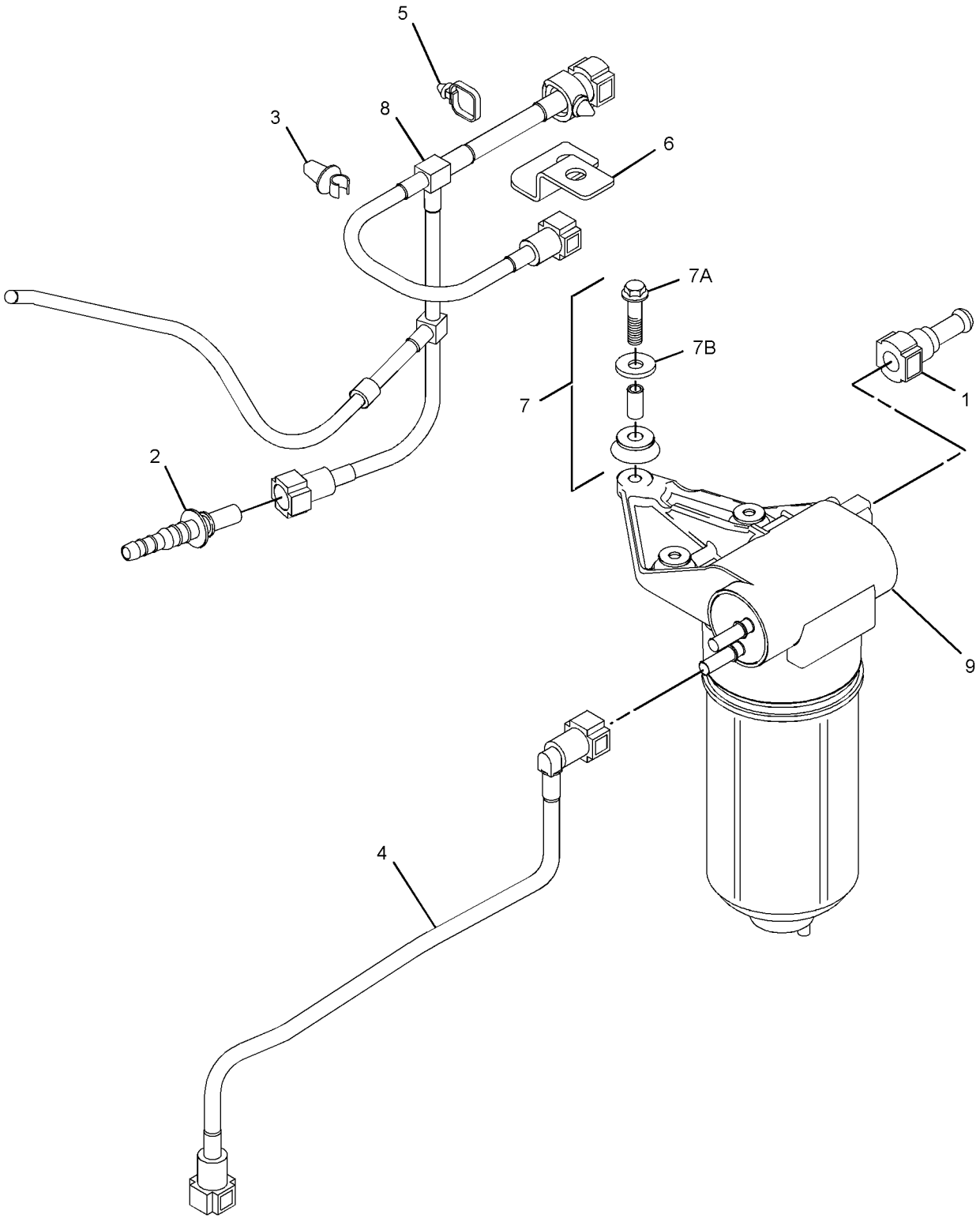

GRAPHIC #1 <END> g02259493

138-3097 SEPARATOR GP-WATER

PART OF 235-0367 SEPARATOR GP-WATER

SMCS-1263 **i03362185**

NOTE	REF NO	GRAPHIC REF	PART NUMBER	QTY	PART NAME 1 2 3 4 5 6 (PRODUCT LEVEL)	SEE PAGE
	1	1	**101-3912**	1	WASHER	
	2	1	**101-3949**	1	SEAL	
	3	1	**101-3953**	1	SEAL	
	4	1	**101-3955**	1	SEAL	
	5	1	**138-3100**	1	ELEMENT-WATER SEPARATOR (PRIMARY)	
	6	1	**101-3739**	1	NUT	
	7	1	**101-3740**	1	CAP	
	8	1	**101-3741**	1	SEAL	
					AVAILABLE REPLACEMENT PART(S):	
			118-5637	1	KIT-BOWL (WATER SEPARATOR)	

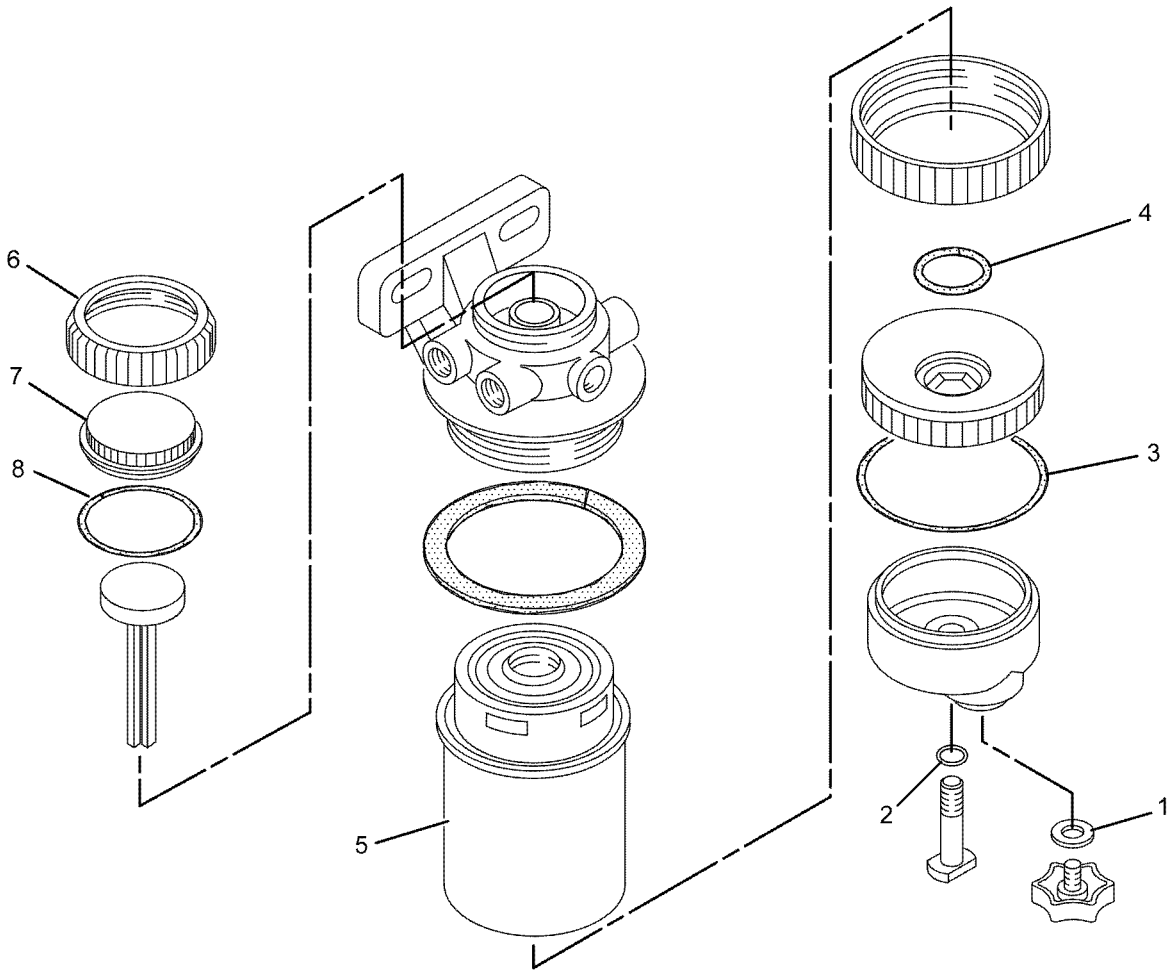

GRAPHIC #1 <END> g01056576

235-0367 SEPARATOR GP-WATER

SMCS-1263 **i01890324**

NOTE	REF NO	GRAPHIC REF	PART NUMBER	QTY	PART NAME 1 2 3 4 5 6 (PRODUCT LEVEL)	SEE PAGE
Y	1	1	**138-3097**	1	SEPARATOR GP-WATER	1521
	2	1	**032-8100**	2	WASHER (0.531X0.718X0.064-IN THK)	
	3	1	**033-7849**	2	PLUG	
	4	1	**067-6268**	2	NUT-FUEL LINE	
	5	1	**224-8978**	2	FITTING-COMPRESSION	

Y - SEPARATE ILLUSTRATION

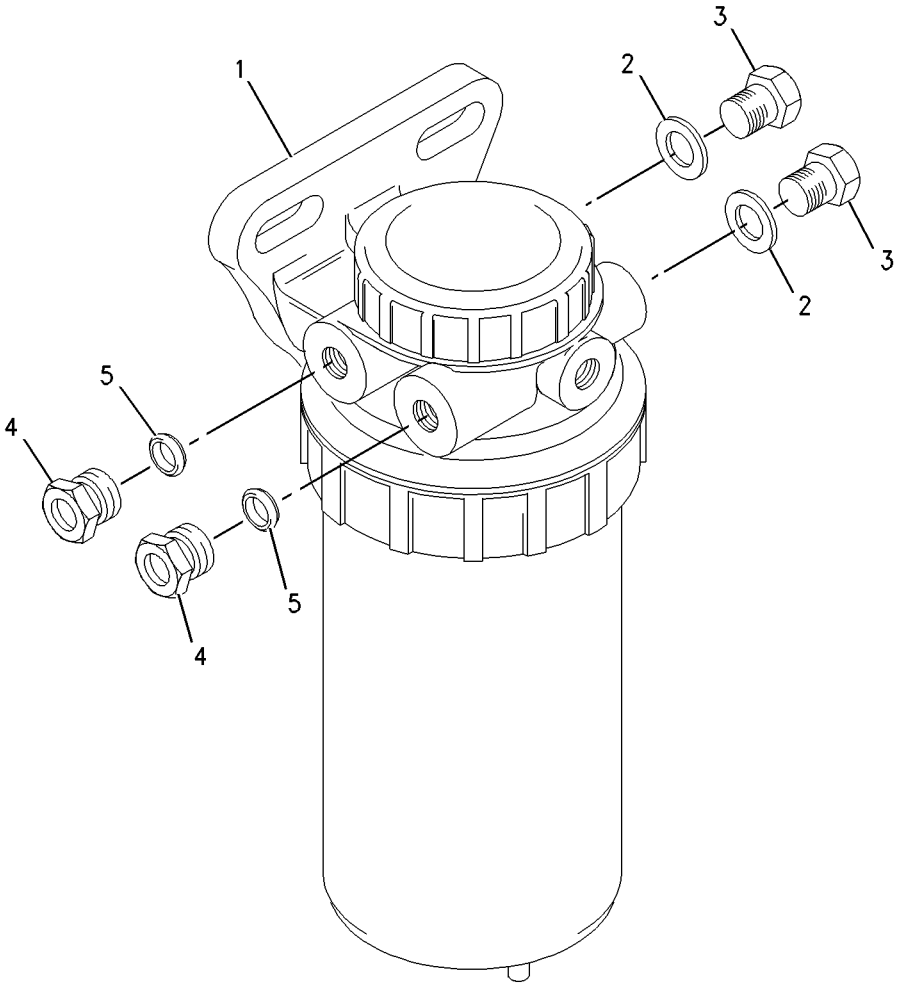

GRAPHIC #1 <END> g00985543

265-5720 SEPARATOR GP-WATER

ALSO AN ATTACHMENT

SMCS-1263 **i05983743**

NOTE	REF NO	GRAPHIC REF	PART NUMBER	QTY	PART NAME 1 2 3 4 5 6 (PRODUCT LEVEL)	SEE PAGE
	1	1	**033-7849**	2	PLUG	
	2	1	**067-6268**	2	NUT-FUEL LINE	
	3	1	**224-8978**	2	FITTING-COMPRESSION	
	4	1	**241-3359**	2	WASHER-SEALING (13.25X18.45X1.6-MM THK)	
	5	1	**441-5107**	1	FILTER GP-FUEL	
	5A	1	**441-5111**	1	FILTER AS-FUEL (FUEL FILTER, WATER SEPARATOR)	
	5B	1	**310-1869**	1	SENSOR-LEVEL (12-VOLT)	

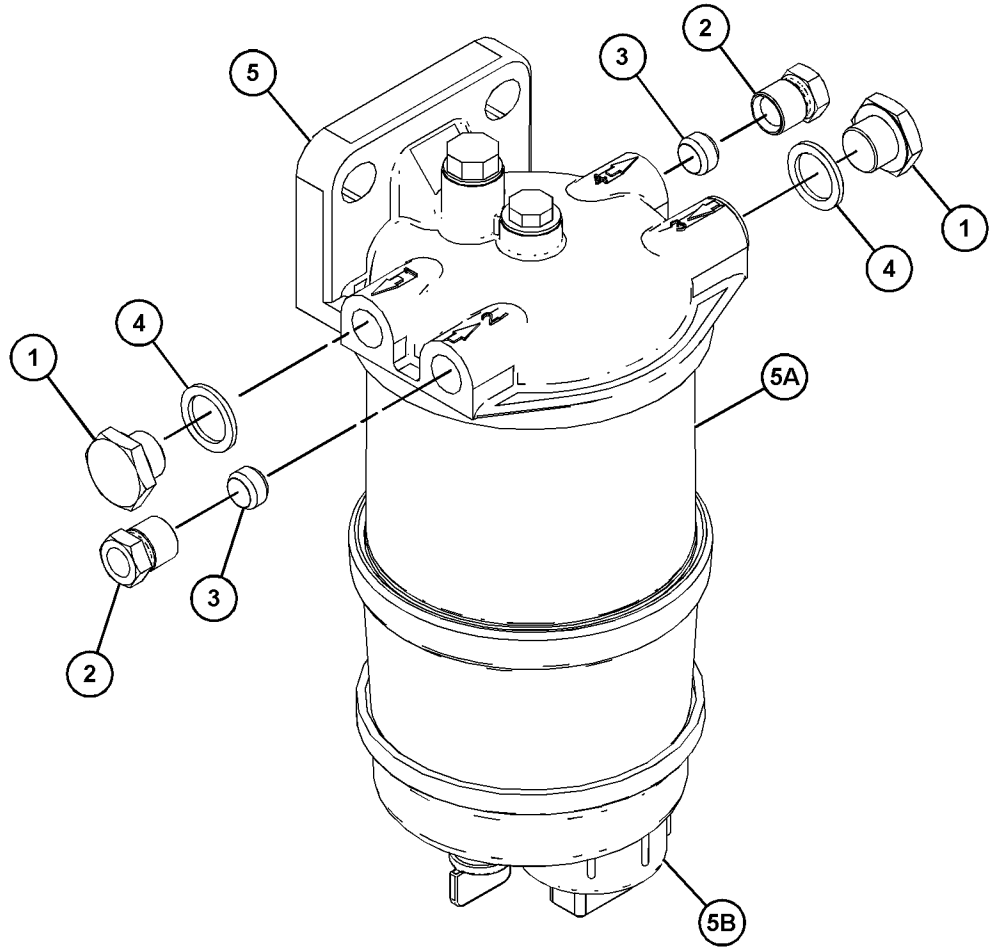

GRAPHIC #1 <END> g03722801

233-9533 ALTERNATOR GP-CHARGING

24-VOLT, 55-AMPERE
ALSO AN ATTACHMENT

SMCS-1405 **i06097231**

NOTE	REF NO	GRAPHIC REF	PART NUMBER	QTY	PART NAME 1 2 3 4 5 6 (PRODUCT LEVEL)	SEE PAGE
	1	1	**6B-0933**	1	SPACER (10.31X19.05X6.35-MM THK)	
M	2	1	**6I-0260**	1	BOLT (M8X1.25X25-MM)	
M	3	1	**6I-0454**	1	BOLT (M10X1.5X70-MM)	
M	4	1	**175-7141**	1	NUT-HEX FLANGE (M10X1.5-THD)	
	5	1	**132-8848**	1	WASHER (8.7X25.4X4.7-MM THK)	
M	6	1	**359-9666**	1	BOLT-FLANGE HEAD (M8X1.25X130-MM)	
M	7	1	**113-6349**	1	NUT (M8X1.25-THD)	
M	8	1	**140-8783**	2	BOLT (M10X1.5X45-MM)	
R	9	1	**424-6821**	1	ALTERNATOR (24-VOLT, 55-AMPERE)	
	10	1	**453-3595**	1	BRACKET	
	11	1	**233-9531**	1	LEVER	
	12	1	**233-9532**	1	PULLEY-ALTERNATOR	

M - METRIC PART
R - REMANUFACTURED PART MAY BE AVAILABLE

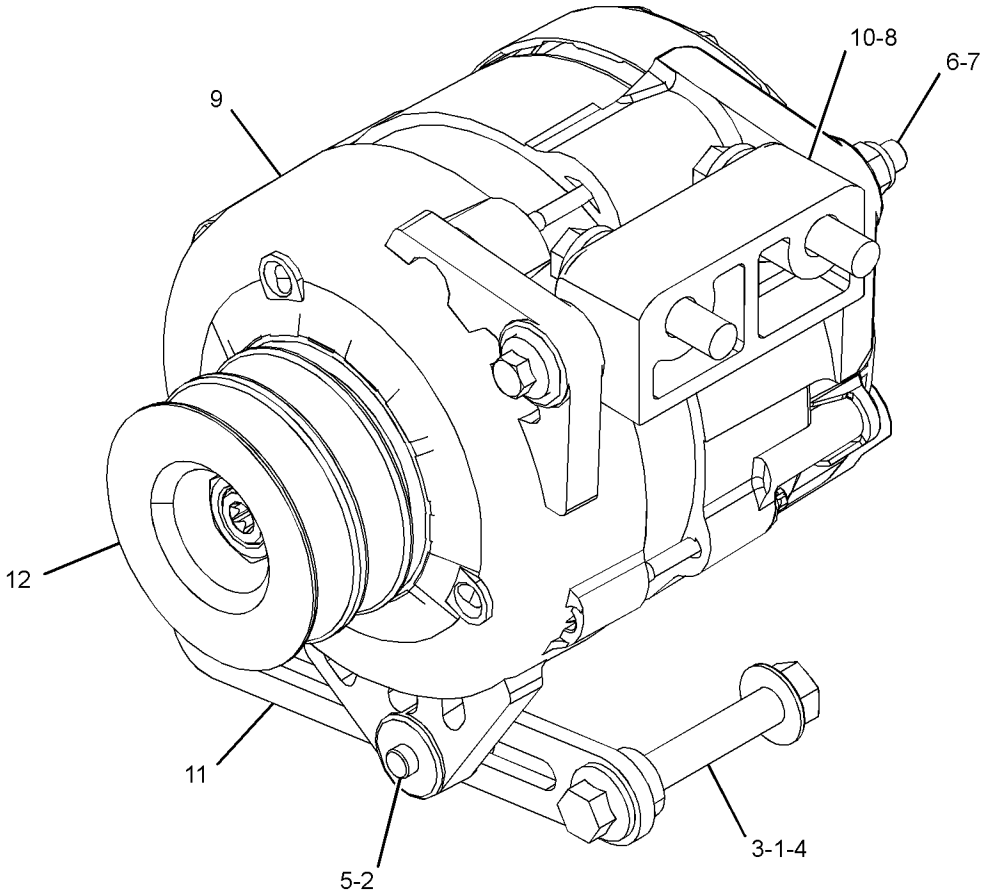

GRAPHIC #1 <END> g03467047

234-3463 ALTERNATOR GP-CHARGING

24-VOLT, 80-AMPERE

SMCS-1405 **i06529720**

NOTE	REF NO	GRAPHIC REF	PART NUMBER	QTY	PART NAME 1 2 3 4 5 6 (PRODUCT LEVEL)	SEE PAGE
	1	1	**6B-0933**	1	SPACER (10.31X19.05X6.35-MM THK)	
M	2	1	**6I-0260**	1	BOLT (M8X1.25X25-MM)	
M	3	1	**6I-0454**	1	BOLT (M10X1.5X70-MM)	
M	4	1	**175-7141**	1	NUT-HEX FLANGE (M10X1.5-THD)	
M	6	1	**359-9666**	1	BOLT-FLANGE HEAD (M8X1.25X130-MM)	
M	7	1	**6V-9189**	1	LOCKNUT (M8X1.25-THD)	
M	8	1	**140-8783**	2	BOLT (M10X1.5X45-MM)	
R	9	1	**399-1485**	1	ALTERNATOR (24-VOLT, 75-AMPERE)	
	10	1	**228-7391**	1	PULLEY-ALTERNATOR	
	11	1	**453-3595**	1	BRACKET	
	12	1	**233-9531**	1	LEVER	
	13	1	**067-6366**	1	WASHER (8.7X19X1.8-MM THK)	

M - METRIC PART
R - REMANUFACTURED PART MAY BE AVAILABLE

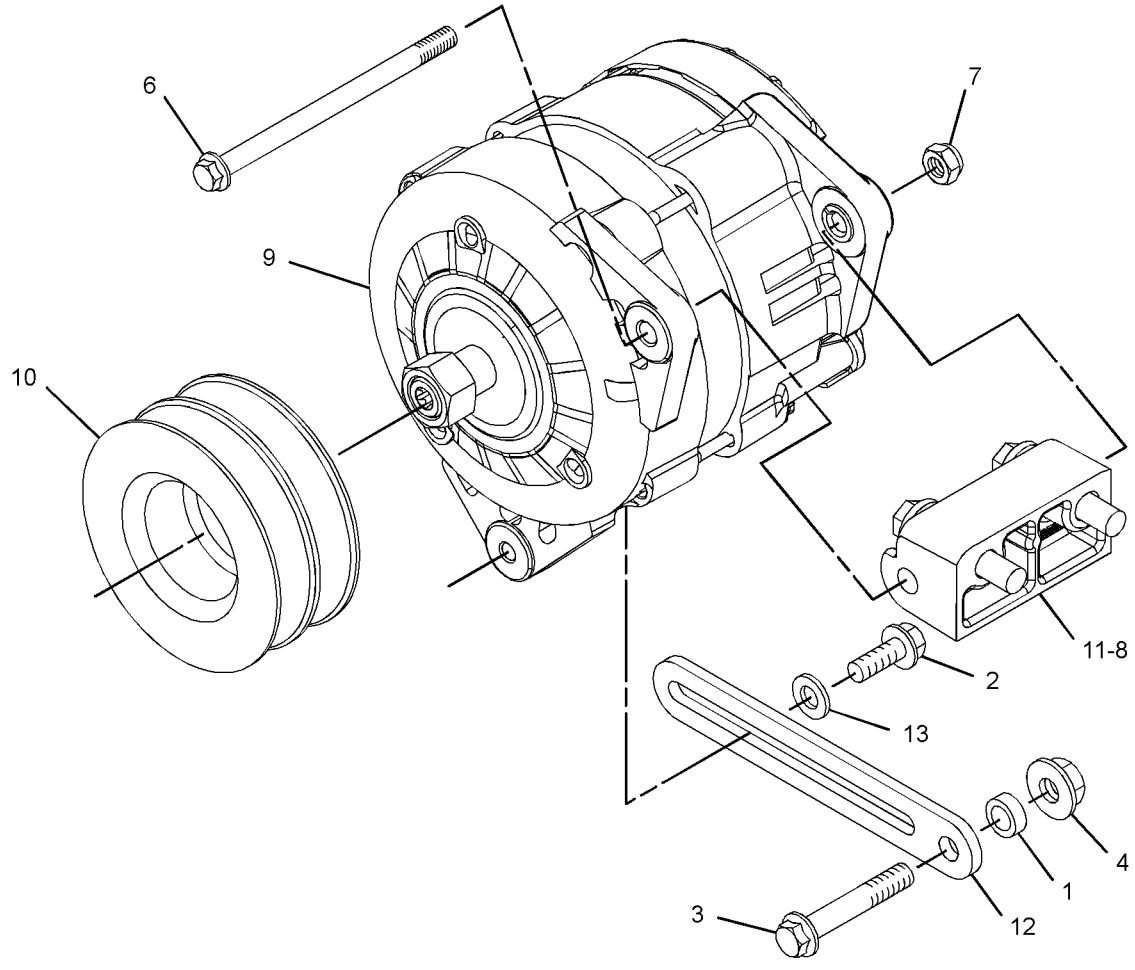

GRAPHIC #1 <END> g06011184

235-0028 ALTERNATOR GP-CHARGING

12-VOLT, 65-AMPERE

SMCS-1405 **i06145396**

NOTE	REF NO	GRAPHIC REF	PART NUMBER	QTY	PART NAME 1 2 3 4 5 6 (PRODUCT LEVEL)	SEE PAGE
	1	1	**6B-0933**	1	SPACER (10.31X19.05X6.35-MM THK)	
M	2	1	**6I-0260**	1	BOLT (M8X1.25X25-MM)	
M	3	1	**6I-0454**	1	BOLT (M10X1.5X70-MM)	
M	4	1	**175-7141**	1	NUT-HEX FLANGE (M10X1.5-THD)	
M	6	1	**100-8451**	1	BOLT (M8X1.25X130-MM)	
M	7	1	**6V-9189**	1	LOCKNUT (M8X1.25-THD)	
M	8	1	**140-8783**	2	BOLT (M10X1.5X45-MM)	
	9	1	**233-9532**	1	PULLEY-ALTERNATOR	
	10	1	**453-3595**	1	BRACKET	
	11	1	**233-9531**	1	LEVER	
	12	1	**339-7767**	1	ALTERNATOR GP-CHARGING (12-VOLT)	
	13	1	**132-8848**	1	WASHER (8.7X25.4X4.7-MM THK)	

M - METRIC PART

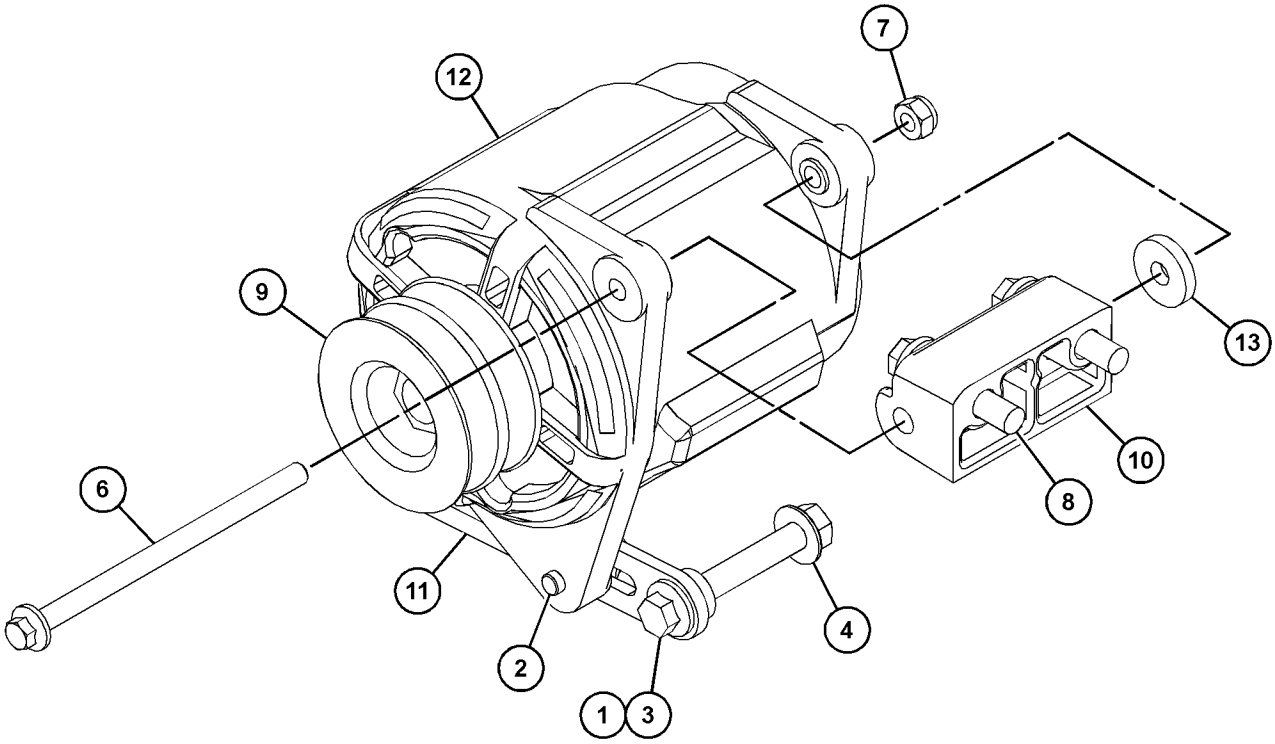

GRAPHIC #1 <END> g03833715

236-8196 ALTERNATOR GP-CHARGING

12-VOLT, 65-AMPERE
ALSO AN ATTACHMENT

SMCS-1405 **i06299016**

NOTE	REF NO	GRAPHIC REF	PART NUMBER	QTY	PART NAME 1 2 3 4 5 6 (PRODUCT LEVEL)	SEE PAGE
	1	1	**6B-0933**	1	SPACER (10.31X19.05X6.35-MM THK)	
M	2	1	**6I-0260**	1	BOLT (M8X1.25X25-MM)	
M	3	1	**6I-0454**	1	BOLT (M10X1.5X70-MM)	
M	4	1	**175-7141**	1	NUT-HEX FLANGE (M10X1.5-THD)	
M	6	1	**100-8451**	1	BOLT (M8X1.25X130-MM)	
M	7	1	**6V-9189**	1	LOCKNUT (M8X1.25-THD)	
M	8	1	**140-8783**	2	BOLT (M10X1.5X45-MM)	
	9	1	**339-7767**	1	ALTERNATOR GP-CHARGING (12-VOLT)	
	10	1	**453-3595**	1	BRACKET	
	11	1	**233-9531**	1	LEVER	
	12	1	**228-7391**	1	PULLEY-ALTERNATOR	
	13	1	**132-8848**	1	WASHER (8.7X25.4X4.7-MM THK)	

M - METRIC PART

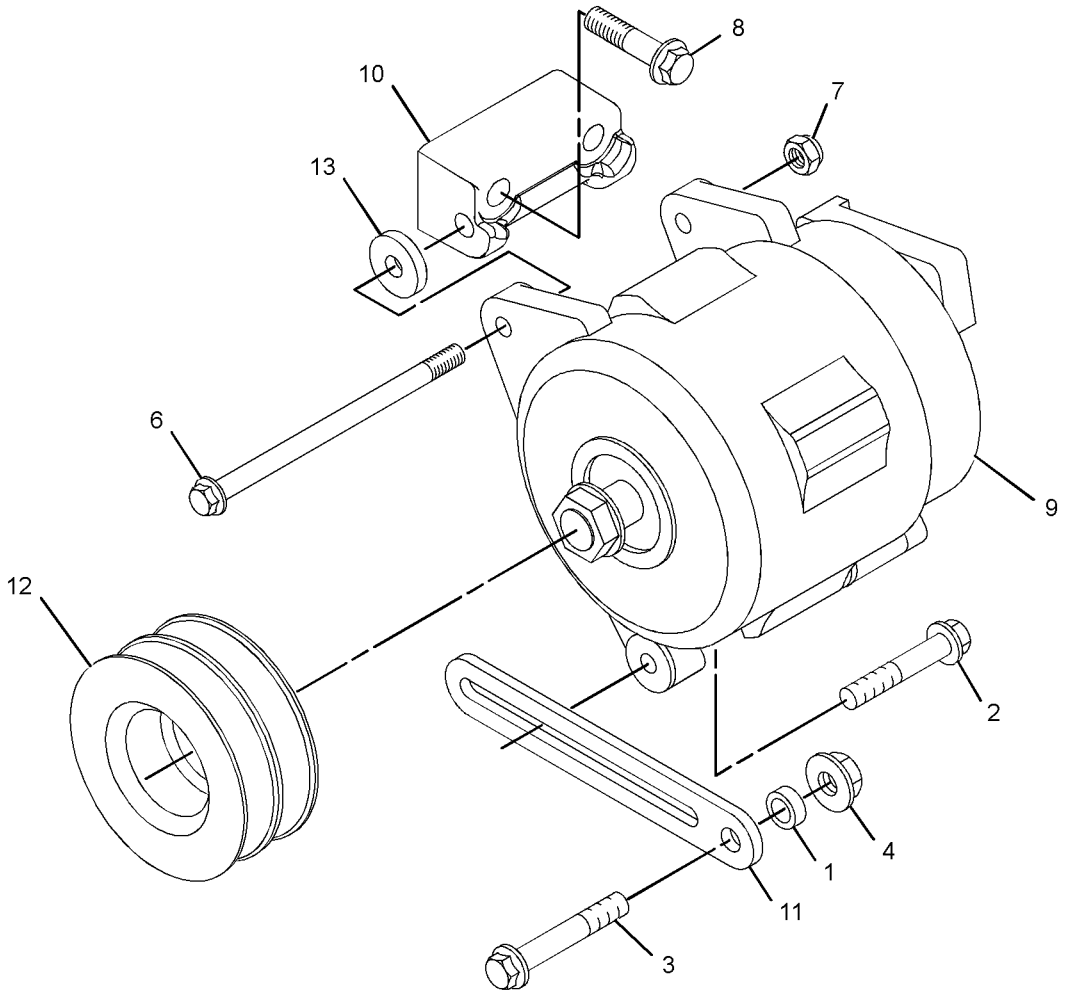

GRAPHIC #1 <END> g06010347

236-9965 ALTERNATOR GP-CHARGING

24-VOLT, 55-AMPERE

SMCS-1405 **i06198223**

NOTE	REF NO	GRAPHIC REF	PART NUMBER	QTY	PART NAME 1 2 3 4 5 6 (PRODUCT LEVEL)	SEE PAGE
	1	1	**6B-0933**	1	SPACER (10.31X19.05X6.35-MM THK)	
M	2	1	**6I-0260**	1	BOLT (M8X1.25X25-MM)	
M	3	1	**6I-0454**	1	BOLT (M10X1.5X70-MM)	
M	4	1	**6I-0594**	1	NUT (M10X1.5-THD)	
M	6	1	**100-8451**	1	BOLT (M8X1.25X130-MM)	
M	7	1	**113-6349**	1	NUT (M8X1.25-THD)	
M	8	1	**140-8783**	2	BOLT (M10X1.5X45-MM)	
R	9	1	**424-6821**	1	ALTERNATOR (24-VOLT, 55-AMPERE)	
	10	1	**228-7391**	1	PULLEY-ALTERNATOR	
	11	1	**453-3595**	1	BRACKET	
	12	1	**233-9531**	1	LEVER	
	13	1	**132-8848**	1	WASHER (8.7X25.4X4.7-MM THK)	

M - METRIC PART
R - REMANUFACTURED PART MAY BE AVAILABLE

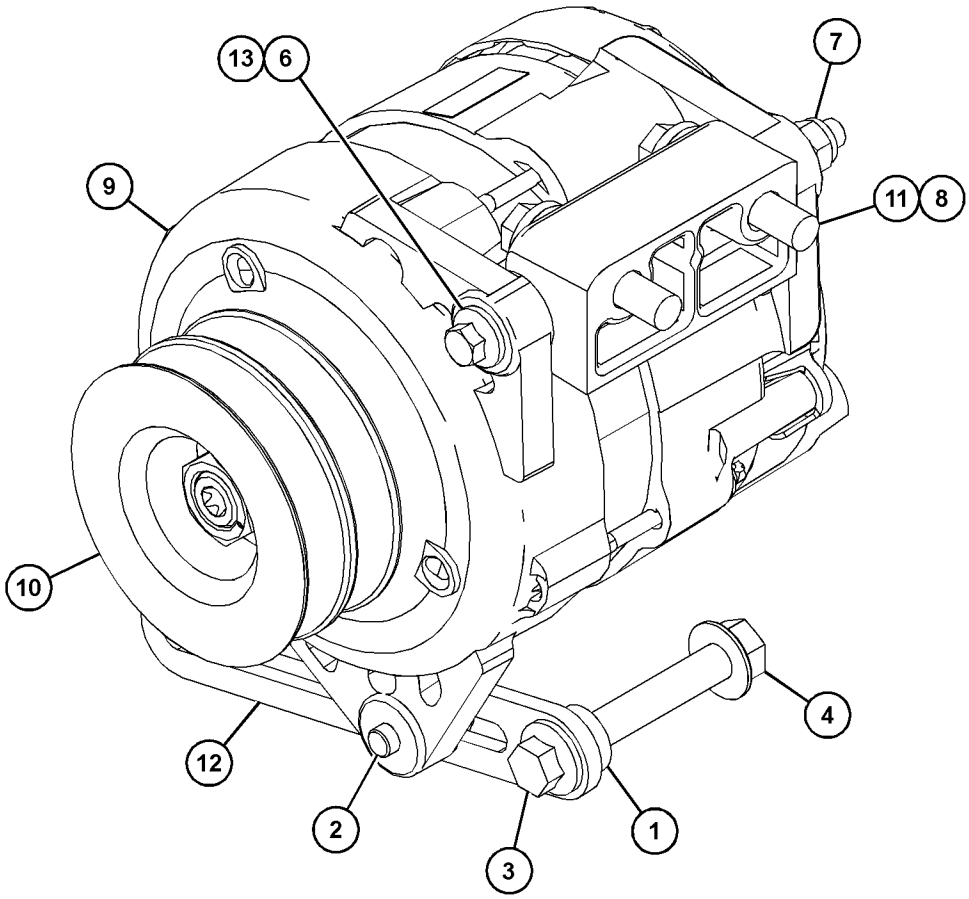

GRAPHIC #1 <END> g03867648

237-0027 ALTERNATOR GP-CHARGING—120-AMPERE, WITH MOUNTING 12-VOLT

SMCS-1405 **i06529725**

NOTE	REF NO	GRAPHIC REF	PART NUMBER	QTY	PART NAME 1 2 3 4 5 6 (PRODUCT LEVEL)	SEE PAGE
	1	1	**6B-0933**	1	SPACER (10.31X19.05X6.35-MM THK)	
M	2	1	**6I-0260**	1	BOLT (M8X1.25X25-MM)	
M	3	1	**6I-0454**	1	BOLT (M10X1.5X70-MM)	
M	4	1	**175-7141**	1	NUT-HEX FLANGE (M10X1.5-THD)	
M	6	1	**359-9666**	1	BOLT-FLANGE HEAD (M8X1.25X130-MM)	
M	7	1	**6V-9189**	1	LOCKNUT (M8X1.25-THD)	
M	8	1	**140-8783**	2	BOLT (M10X1.5X45-MM)	
	9	1	**383-2557**	1	ALTERNATOR (12-VOLT, 120-AMPERE)	
	10	1	**453-3595**	1	BRACKET	
	11	1	**233-9531**	1	LEVER	
	12	1	**233-9532**	1	PULLEY-ALTERNATOR	
	13	1	**067-6366**	2	WASHER (8.7X19X1.8-MM THK)	

M - METRIC PART

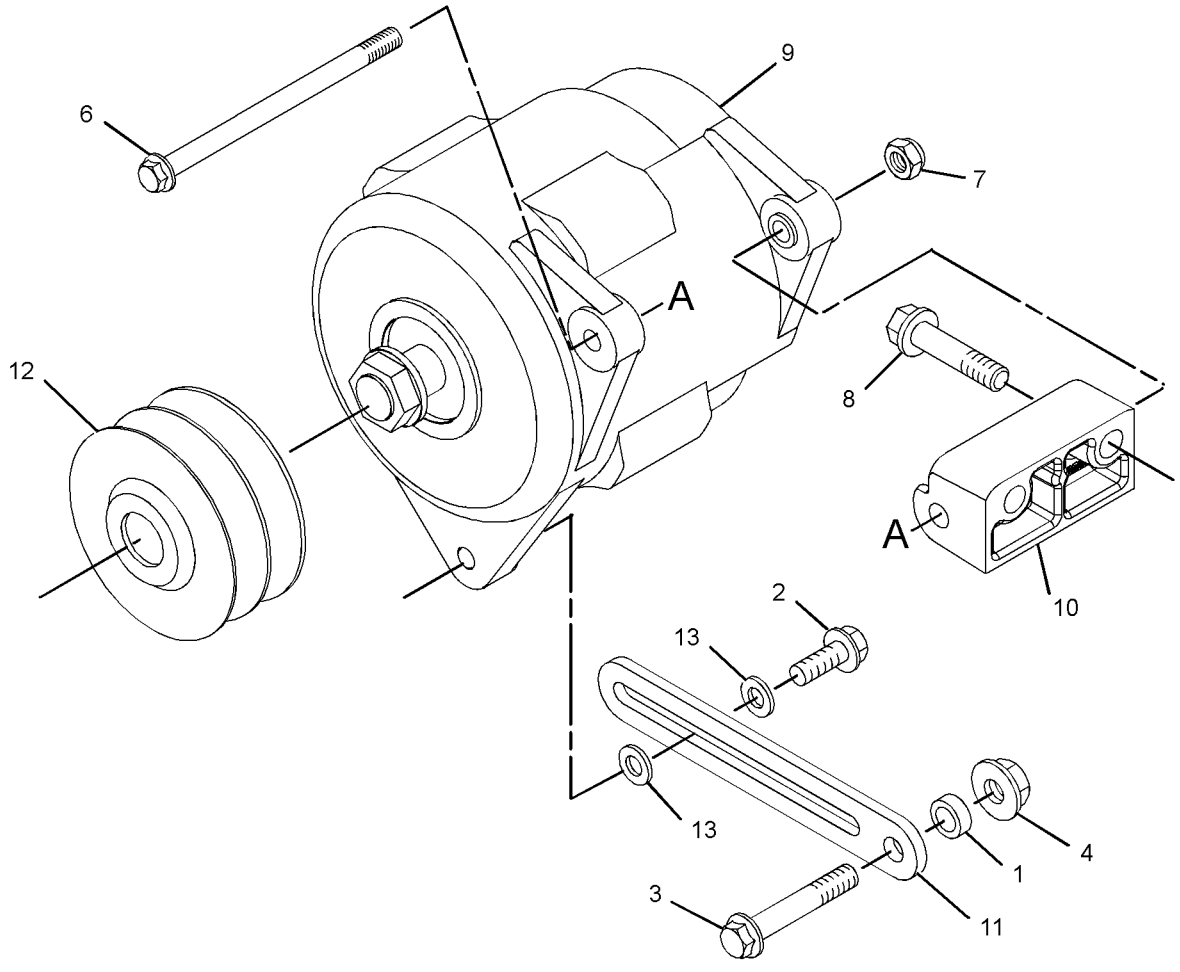

GRAPHIC #1 <END> g06010274

243-4149 ALTERNATOR GP-CHARGING

12-VOLT, 85-AMPERE

SMCS-1405 **i06530158**

NOTE	REF NO	GRAPHIC REF	PART NUMBER	QTY	PART NAME 1 2 3 4 5 6 (PRODUCT LEVEL)	SEE PAGE
	1	1	**6B-0933**	1	SPACER (10.31X19.05X6.35-MM THK)	
M	2	1	**6I-0260**	1	BOLT (M8X1.25X25-MM)	
M	3	1	**6I-0454**	1	BOLT (M10X1.5X70-MM)	
M	4	1	**175-7141**	1	NUT-HEX FLANGE (M10X1.5-THD)	
	6	1	**067-6366**	1	WASHER (8.7X19X1.8-MM THK)	
M	7	1	**359-9666**	1	BOLT-FLANGE HEAD (M8X1.25X130-MM)	
M	8	1	**6V-9189**	1	LOCKNUT (M8X1.25-THD)	
M	9	1	**140-8783**	2	BOLT (M10X1.5X45-MM)	
	10	1	**339-7766**	1	ALTERNATOR GP-CHARGING	
	11	1	**228-7391**	1	PULLEY-ALTERNATOR	
	12	1	**453-3595**	1	BRACKET	
	13	1	**233-9531**	1	LEVER	

M - METRIC PART

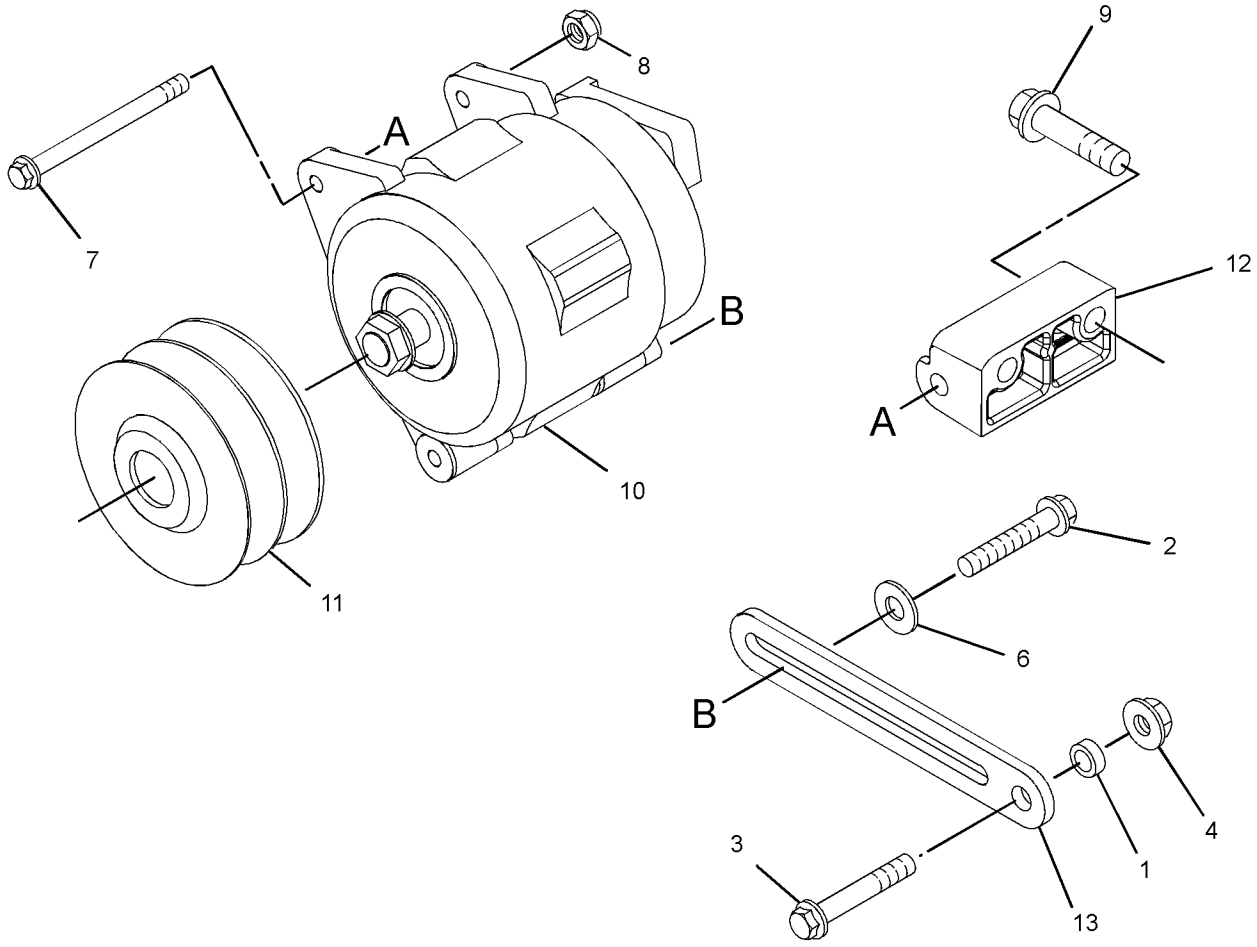

GRAPHIC #1 <END> g06010284

243-4301 ALTERNATOR GP-CHARGING

12-VOLT, 65-AMPERE

SMCS-1405 **i06217921**

NOTE	REF NO	GRAPHIC REF	PART NUMBER	QTY	PART NAME 1 2 3 4 5 6 (PRODUCT LEVEL)	SEE PAGE
	1	1	**6B-0933**	1	SPACER (10.31X19.05X6.35-MM THK)	
M	2	1	**6I-0260**	1	BOLT (M8X1.25X25-MM)	
M	3	1	**6I-0454**	1	BOLT (M10X1.5X70-MM)	
M	4	1	**175-7141**	1	NUT-HEX FLANGE (M10X1.5-THD)	
	5	1	**067-6366**	1	WASHER (8.7X19X1.8-MM THK)	
M	6	1	**100-8451**	1	BOLT (M8X1.25X130-MM)	
M	7	1	**6V-9189**	1	LOCKNUT (M8X1.25-THD)	
M	8	1	**140-8783**	2	BOLT (M10X1.5X45-MM)	
	9	1	**339-7767**	1	ALTERNATOR GP-CHARGING (12-VOLT)	
	10	1	**453-3595**	1	BRACKET	
	11	1	**233-9531**	1	LEVER	
	12	1	**243-4300**	1	PULLEY-ALTERNATOR	
	13	1	**132-8848**	1	WASHER (8.7X25.4X4.7-MM THK)	

M - METRIC PART

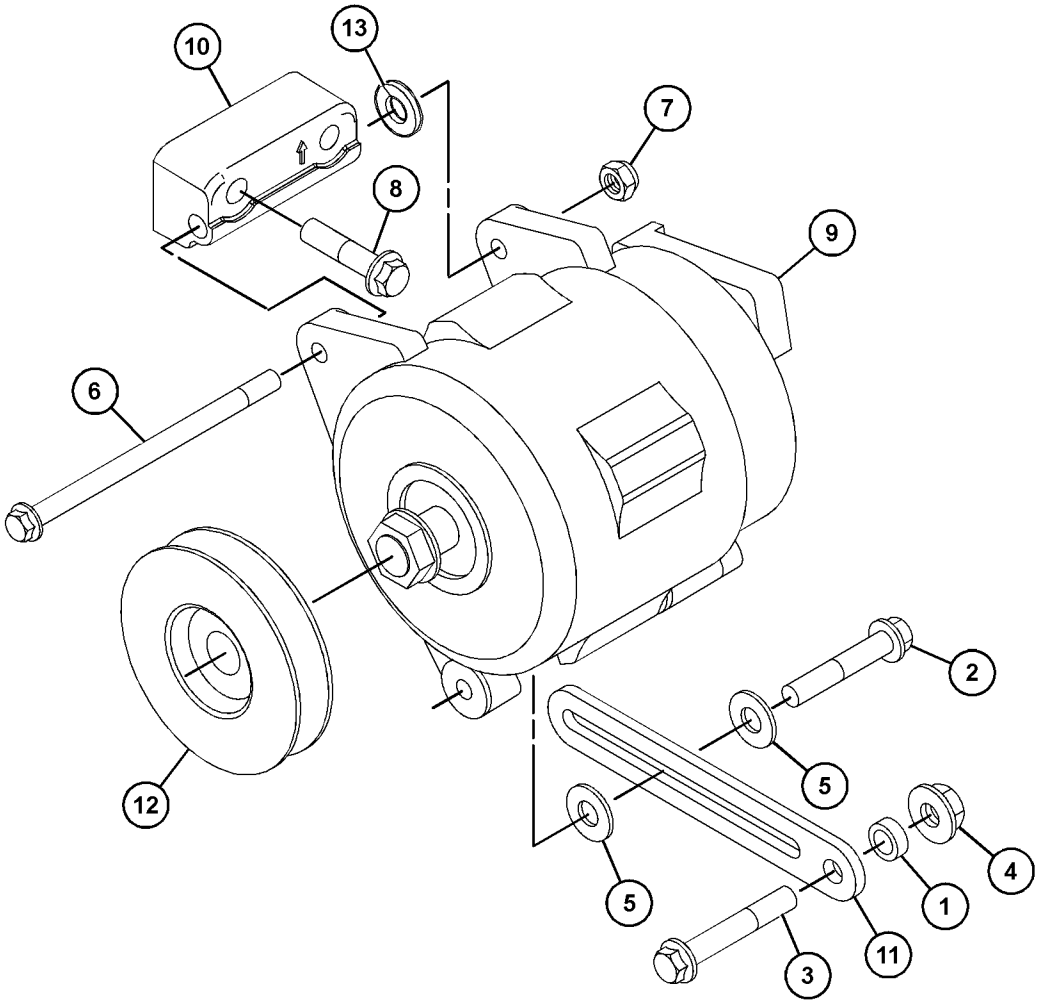

GRAPHIC #1 <END> g03867641

245-4664 ALTERNATOR GP-CHARGING

24-VOLT, 55-AMPERE

SMCS-1405 **i06233724**

NOTE	REF NO	GRAPHIC REF	PART NUMBER	QTY	PART NAME 1 2 3 4 5 6 (PRODUCT LEVEL)	SEE PAGE
	1	1	**6B-0933**	1	SPACER (10.31X19.05X6.35-MM THK)	
M	2	1	**6I-0260**	1	BOLT (M8X1.25X25-MM)	
M	3	1	**6I-0454**	1	BOLT (M10X1.5X70-MM)	
M	4	1	**175-7141**	1	NUT-HEX FLANGE (M10X1.5-THD)	
	6	1	**067-6366**	1	WASHER (8.7X19X1.8-MM THK)	
M	7	1	**359-9666**	1	BOLT-FLANGE HEAD (M8X1.25X130-MM)	
M	8	1	**6V-9189**	1	LOCKNUT (M8X1.25-THD)	
M	9	1	**140-8783**	2	BOLT (M10X1.5X45-MM)	
R	10	1	**424-6821**	1	ALTERNATOR (24-VOLT, 55-AMPERE)	
	11	1	**453-3595**	1	BRACKET	
	12	1	**233-9531**	1	LEVER	
	13	1	**243-4300**	1	PULLEY-ALTERNATOR	
	14	1	**132-8848**	1	WASHER (8.7X25.4X4.7-MM THK)	

M - METRIC PART
R - REMANUFACTURED PART MAY BE AVAILABLE

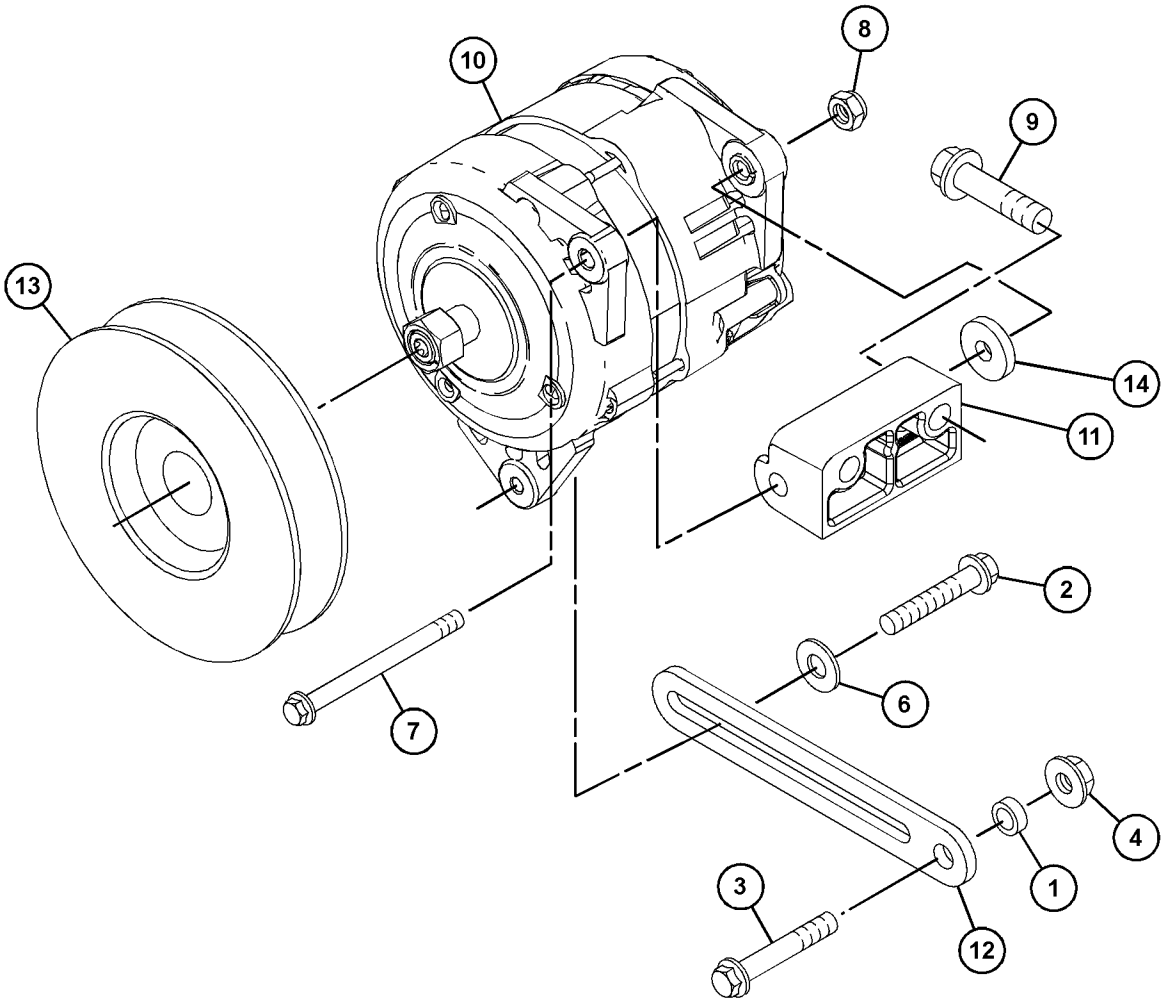

GRAPHIC #1 <END> g06010350

253-6199 ALTERNATOR GP-CHARGING

12-VOLT, 65-AMPERE

SMCS-1405 **i06546475**

NOTE	REF NO	GRAPHIC REF	PART NUMBER	QTY	PART NAME 1 2 3 4 5 6 (PRODUCT LEVEL)	SEE PAGE
	1	1	**6B-0933**	1	SPACER (10.31X19.05X6.35-MM THK)	
M	2	1	**6I-0260**	1	BOLT (M8X1.25X25-MM)	
M	3	1	**6I-0454**	1	BOLT (M10X1.5X70-MM)	
M	4	1	**175-7141**	1	NUT-HEX FLANGE (M10X1.5-THD)	
	6	1	**067-6366**	1	WASHER (8.7X19X1.8-MM THK)	
M	7	1	**359-9666**	1	BOLT-FLANGE HEAD (M8X1.25X130-MM)	
M	8	1	**6V-9189**	1	LOCKNUT (M8X1.25-THD)	
M	9	1	**140-8783**	2	BOLT (M10X1.5X45-MM)	
	10	1	**339-7767**	1	ALTERNATOR GP-CHARGING (12-VOLT)	
	11	1	**453-3595**	1	BRACKET	
	12	1	**233-9531**	1	LEVER	
	13	1	**246-3198**	1	PULLEY-ALTERNATOR	

M - METRIC PART

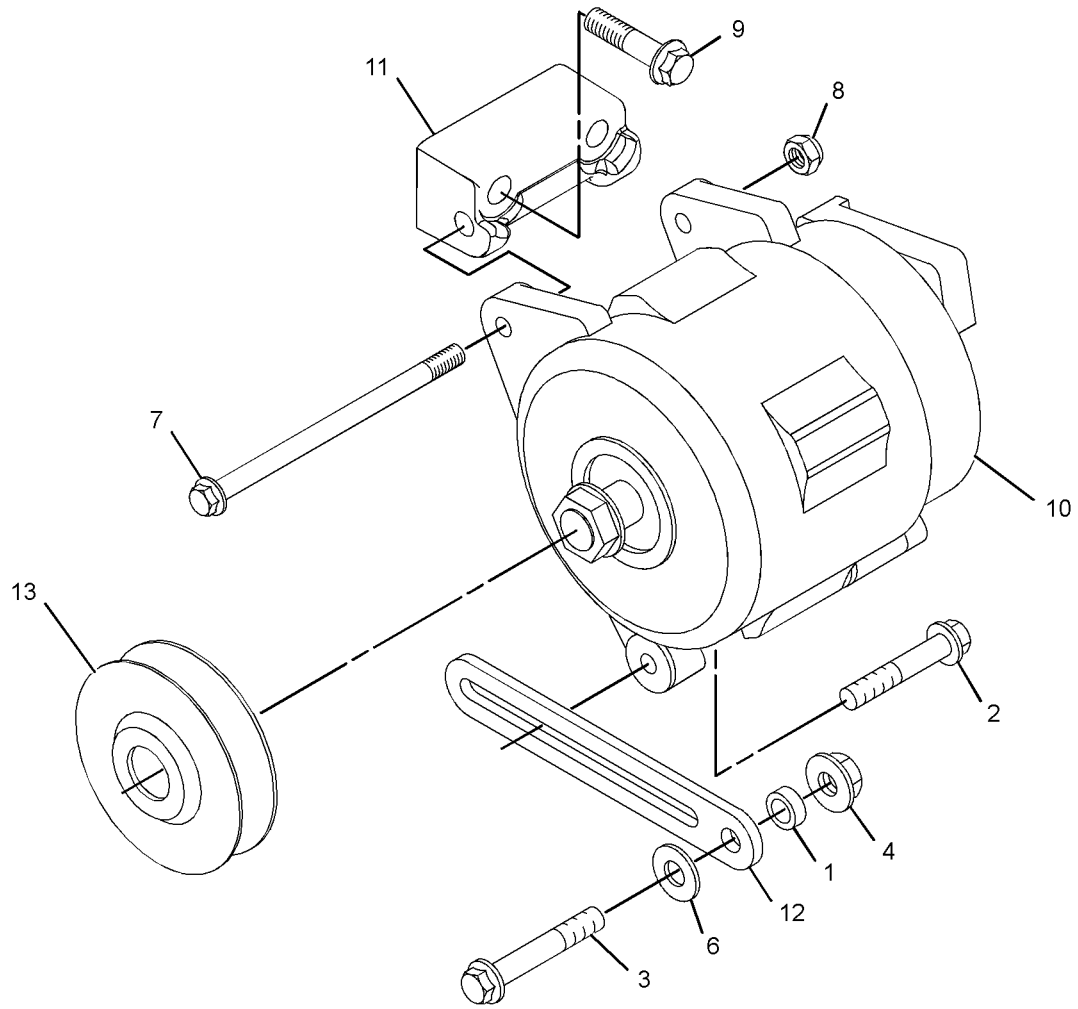

GRAPHIC #1 <END> g06035678

267-9411 ALTERNATOR GP-CHARGING

12-VOLT, 120-AMPERE

SMCS-1405 **i06231124**

NOTE	REF NO	GRAPHIC REF	PART NUMBER	QTY	PART NAME 1 2 3 4 5 6 (PRODUCT LEVEL)	SEE PAGE
	1	1	**6B-0933**	1	SPACER (10.31X19.05X6.35-MM THK)	
M	2	1	**6I-0260**	1	BOLT (M8X1.25X25-MM)	
M	3	1	**6I-0454**	1	BOLT (M10X1.5X70-MM)	
M	4	1	**6I-0594**	1	NUT (M10X1.5-THD)	
	6	1	**067-6366**	1	WASHER (8.7X19X1.8-MM THK)	
M	7	1	**359-9666**	1	BOLT-FLANGE HEAD (M8X1.25X130-MM)	
M	8	1	**113-6349**	1	NUT (M8X1.25-THD)	
M	9	1	**140-8783**	2	BOLT (M10X1.5X45-MM)	
	10	1	**383-2557**	1	ALTERNATOR (12-VOLT, 120-AMPERE)	
	11	1	**228-7391**	1	PULLEY-ALTERNATOR	
	12	1	**453-3595**	1	BRACKET	
	13	1	**233-9531**	1	LEVER	

M - METRIC PART

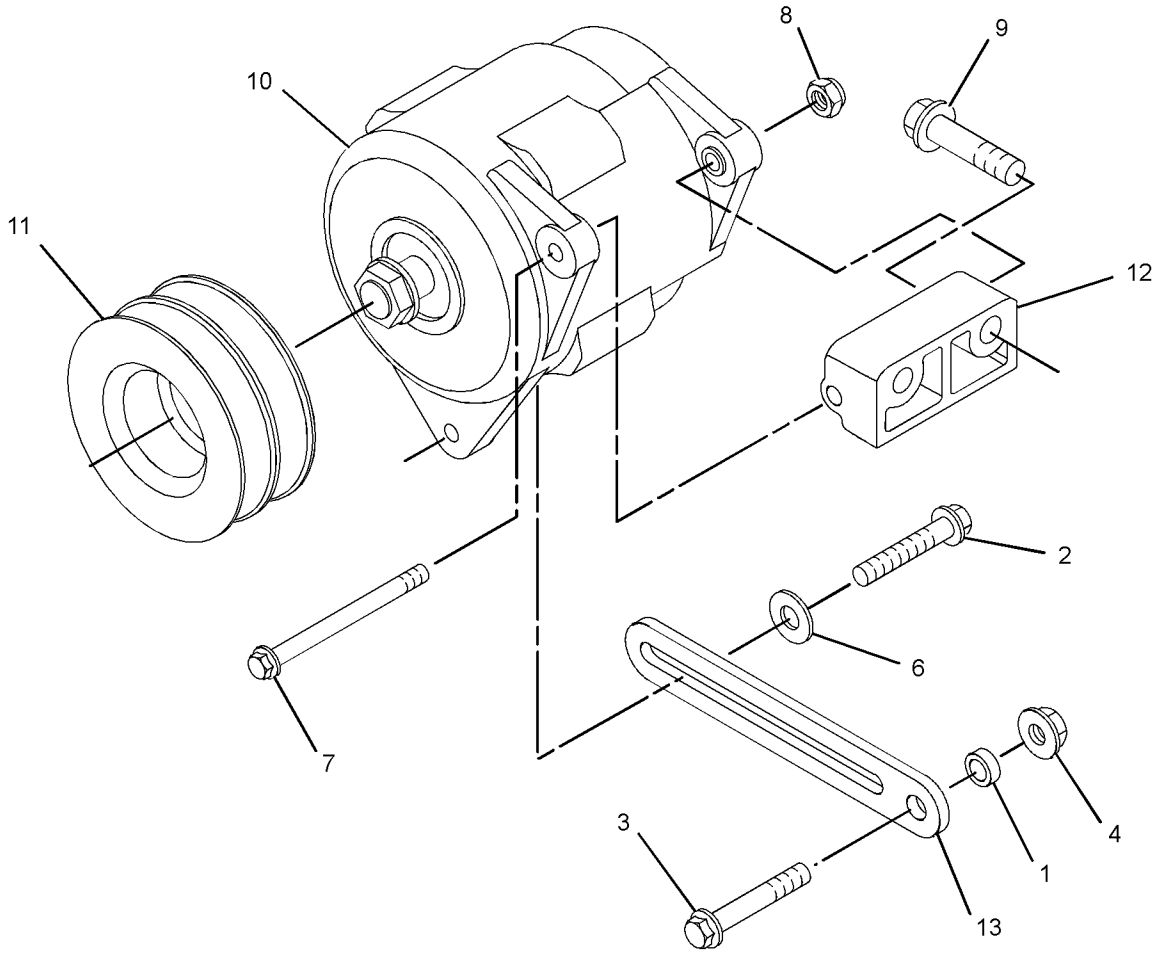

GRAPHIC #1 <END> g01877271

268-1036 ALTERNATOR GP-CHARGING

S/N: 3342066-UP
12-VOLT, 85-AMPERE

SMCS-1405 **i06546479**

NOTE	REF NO	GRAPHIC REF	PART NUMBER	QTY	PART NAME 1 2 3 4 5 6 (PRODUCT LEVEL)	SEE PAGE
	1	1	**6B-0933**	1	SPACER (10.31X19.05X6.35-MM THK)	
M	2	1	**6I-0260**	1	BOLT (M8X1.25X25-MM)	
M	3	1	**6I-0454**	1	BOLT (M10X1.5X70-MM)	
M	4	1	**175-7141**	1	NUT-HEX FLANGE (M10X1.5-THD)	
	6	1	**067-6366**	1	WASHER (8.7X19X1.8-MM THK)	
M	7	1	**359-9666**	1	BOLT-FLANGE HEAD (M8X1.25X130-MM)	
M	8	1	**6V-9189**	1	LOCKNUT (M8X1.25-THD)	
M	9	1	**140-8783**	2	BOLT (M10X1.5X45-MM)	
	10	1	**339-7766**	1	ALTERNATOR GP-CHARGING (12-VOLT, 85-AMPERE)	
	11	1	**453-3595**	1	BRACKET	
	12	1	**233-9531**	1	LEVER	
	13	1	**233-9532**	1	PULLEY-ALTERNATOR	

M - METRIC PART

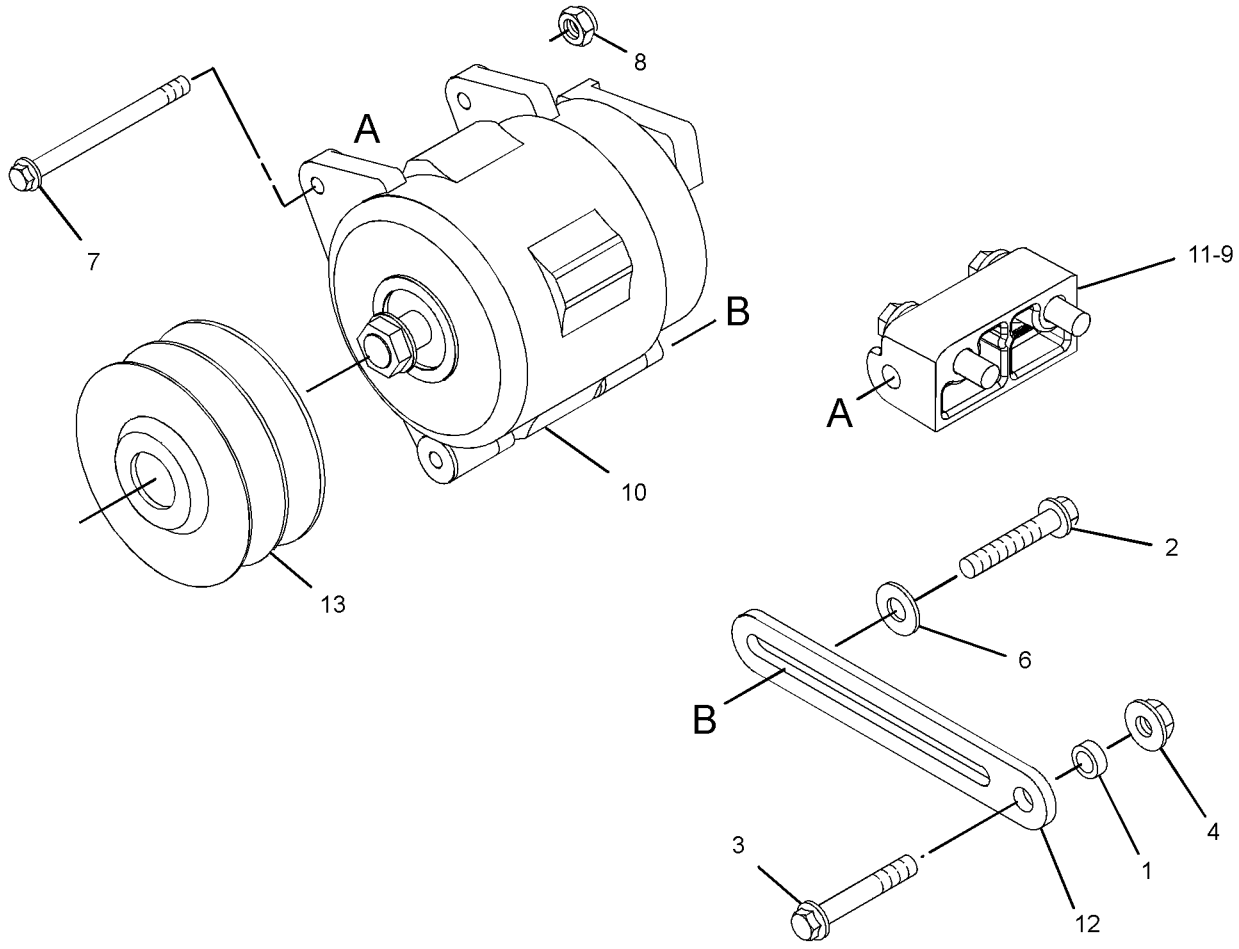

GRAPHIC #1 <END> g06019205

271-7077 ALTERNATOR GP-CHARGING

SMCS-1405 **i06546477**

NOTE	REF NO	GRAPHIC REF	PART NUMBER	QTY	PART NAME 1 2 3 4 5 6 (PRODUCT LEVEL)	SEE PAGE
	1	1	**6B-0933**	1	SPACER (10.31X19.05X6.35-MM THK)	
M	2	1	**6I-0260**	1	BOLT (M8X1.25X25-MM)	
M	3	1	**6I-0454**	1	BOLT (M10X1.5X70-MM)	
M	4	1	**175-7141**	1	NUT-HEX FLANGE (M10X1.5-THD)	
	6	1	**067-6366**	1	WASHER (8.7X19X1.8-MM THK)	
M	7	1	**359-9666**	1	BOLT-FLANGE HEAD (M8X1.25X130-MM)	
M	8	1	**6V-9189**	1	LOCKNUT (M8X1.25-THD)	
M	9	1	**140-8783**	2	BOLT (M10X1.5X45-MM)	
R	10	1	**339-7768**	1	ALTERNATOR GP-CHARGING	
	11	1	**453-3595**	1	BRACKET	
	12	1	**233-9531**	1	LEVER	
	13	1	**233-9532**	1	PULLEY-ALTERNATOR	

M - METRIC PART
R - REMANUFACTURED PART MAY BE AVAILABLE

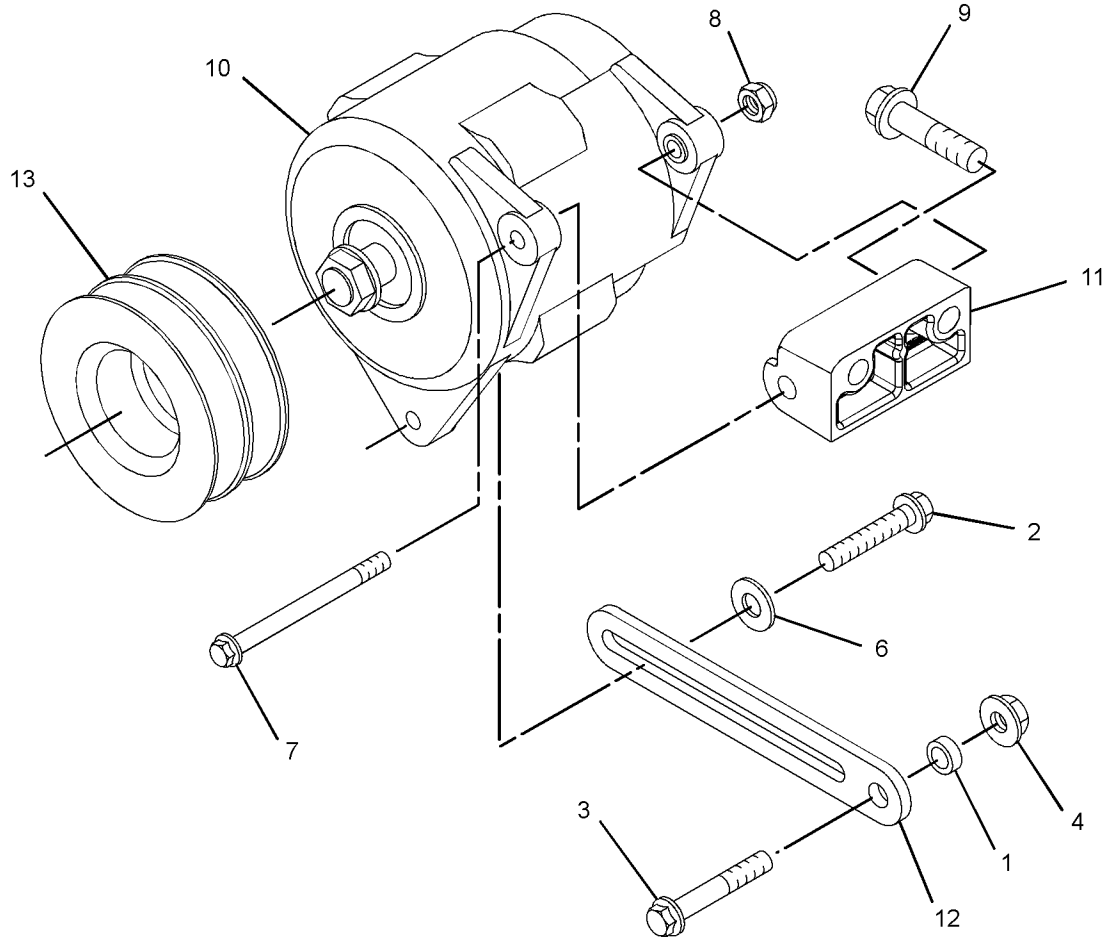

GRAPHIC #1 <END> g06019176

316-5657 ALTERNATOR GP-CHARGING

SMCS-1405 **i06546033**

NOTE	REF NO	GRAPHIC REF	PART NUMBER	QTY	PART NAME 1 2 3 4 5 6 (PRODUCT LEVEL)	SEE PAGE
	1	1	**6B-0933**	1	SPACER (10.31X19.05X6.35-MM THK)	
M	2	1	**6I-0260**	1	BOLT (M8X1.25X25-MM)	
M	3	1	**6I-0454**	1	BOLT (M10X1.5X70-MM)	
M	4	1	**175-7141**	1	NUT-HEX FLANGE (M10X1.5-THD)	
	5	1	**067-6366**	1	WASHER (8.7X19X1.8-MM THK)	
M	6	1	**359-9666**	1	BOLT-FLANGE HEAD (M8X1.25X130-MM)	
M	7	1	**6V-9189**	1	LOCKNUT (M8X1.25-THD)	
M	8	1	**140-8783**	2	BOLT (M10X1.5X45-MM)	
R	9	1	**339-7768**	1	ALTERNATOR GP-CHARGING	
	10	1	**228-7391**	1	PULLEY-ALTERNATOR	
	11	1	**453-3595**	1	BRACKET	
	12	1	**233-9531**	1	LEVER	

M - METRIC PART
R - REMANUFACTURED PART MAY BE AVAILABLE

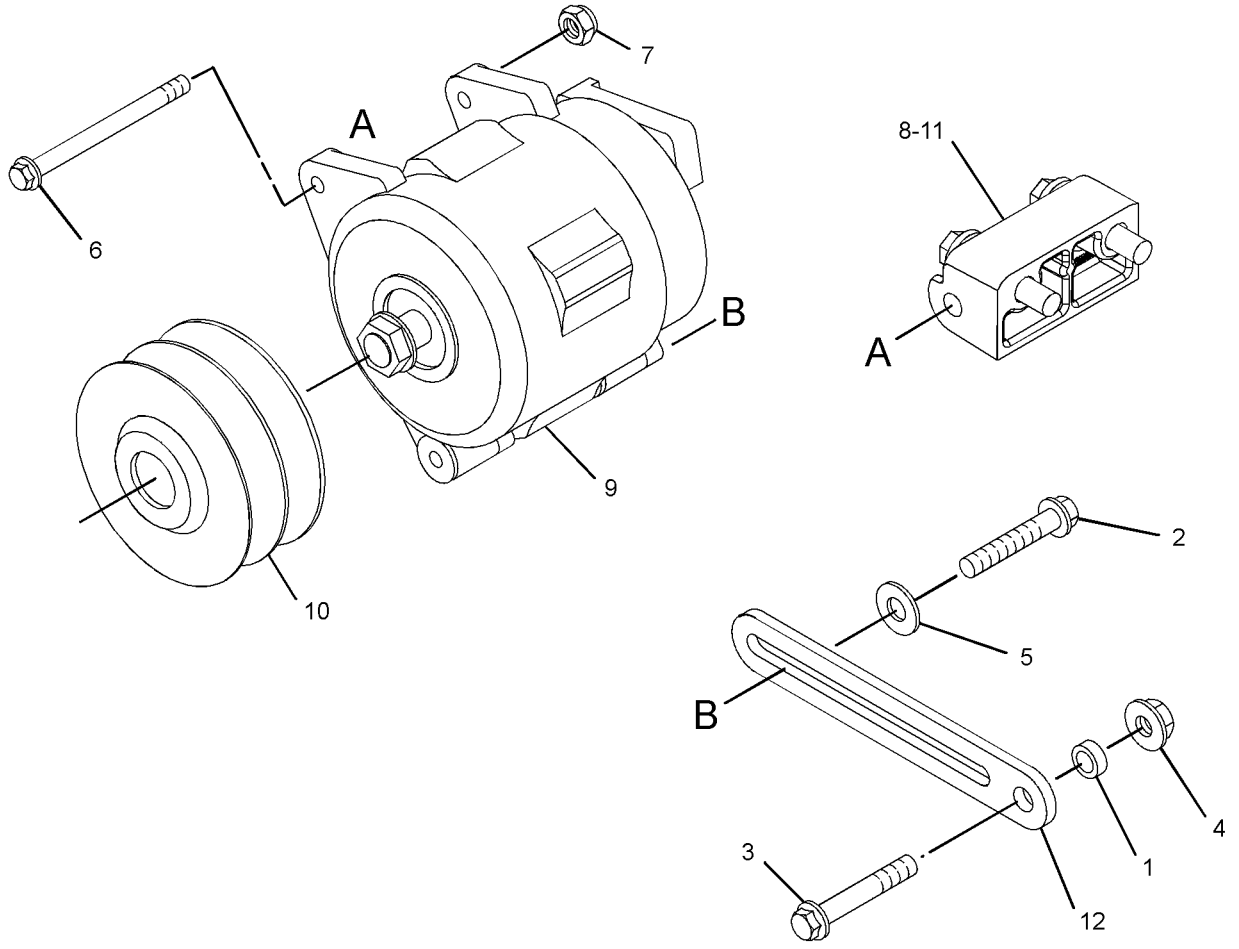

GRAPHIC #1 <END> g06019198

458-7626 ALTERNATOR GP-CHARGING

SMCS-1405 **i09727235**

NOTE	REF NO	GRAPHIC REF	PART NUMBER	QTY	PART NAME 1 2 3 4 5 6 (PRODUCT LEVEL)	SEE PAGE
	1	1	**6B-0933**	1	SPACER (10.31X19.05X6.35-MM THK)	
M	2	1	**6I-0260**	1	BOLT (M8X1.25X25-MM)	
M	3	1	**6I-0454**	1	BOLT (M10X1.5X70-MM)	
M	4	1	**175-7141**	1	NUT-HEX FLANGE (M10X1.5-THD)	
	5	1	**067-6366**	1	WASHER (8.7X19X1.8-MM THK)	
M	6	1	**6V-9189**	1	LOCKNUT (M8X1.25-THD)	
M	7	1	**140-8783**	2	BOLT (M10X1.5X45-MM)	
	8	1	**453-3595**	1	BRACKET	
	9	1	**233-9531**	1	LEVER	
	10	1	**243-4300**	1	PULLEY-ALTERNATOR	
M	11	1	**359-9666**	1	BOLT-FLANGE HEAD (M8X1.25X130-MM)	
	12	1	**609-1948**	1	ALTERNATOR AS (12-VOLT, 65-AMPERE)	
	13	1	**132-8848**	1	WASHER (8.7X25.4X4.7-MM THK)	

M - METRIC PART

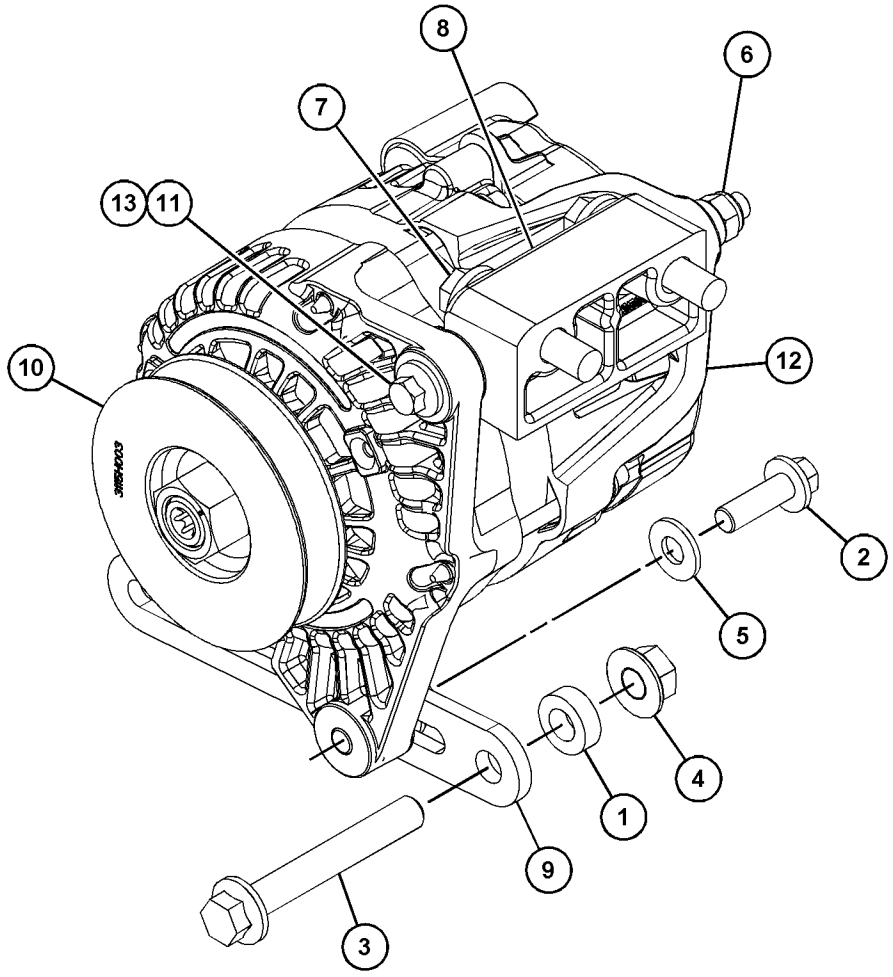

GRAPHIC #1 <END> g07574322

489-1869 ALTERNATOR GP-CHARGING

SMCS-1405 **i06944998**

NOTE	REF NO	GRAPHIC REF	PART NUMBER	QTY	PART NAME 1 2 3 4 5 6 (PRODUCT LEVEL)	SEE PAGE
	1	1	**214-3205**	1	SPACER (10.32X19.05X6.35-MM THK)	
M	2	1	**6I-0260**	1	BOLT (M8X1.25X25-MM)	
M	3	1	**6I-0454**	1	BOLT (M10X1.5X70-MM)	
M	4	1	**175-7141**	1	NUT-HEX FLANGE (M10X1.5-THD)	
	5	1	**067-6366**	1	WASHER (8.7X19X1.8-MM THK)	
M	6	1	**359-9666**	1	BOLT-FLANGE HEAD (M8X1.25X130-MM)	
M	7	1	**6V-9189**	1	LOCKNUT (M8X1.25-THD)	
M	8	1	**140-8783**	2	BOLT (M10X1.5X45-MM)	
	9	1	**371-5649**	1	ALTERNATOR	
	10	1	**228-7391**	1	PULLEY-ALTERNATOR	
	11	1	**453-3595**	1	BRACKET	
	12	1	**233-9531**	1	LEVER	
	13	1	**132-8848**	1	WASHER (8.7X25.4X4.7-MM THK)	

M - METRIC PART

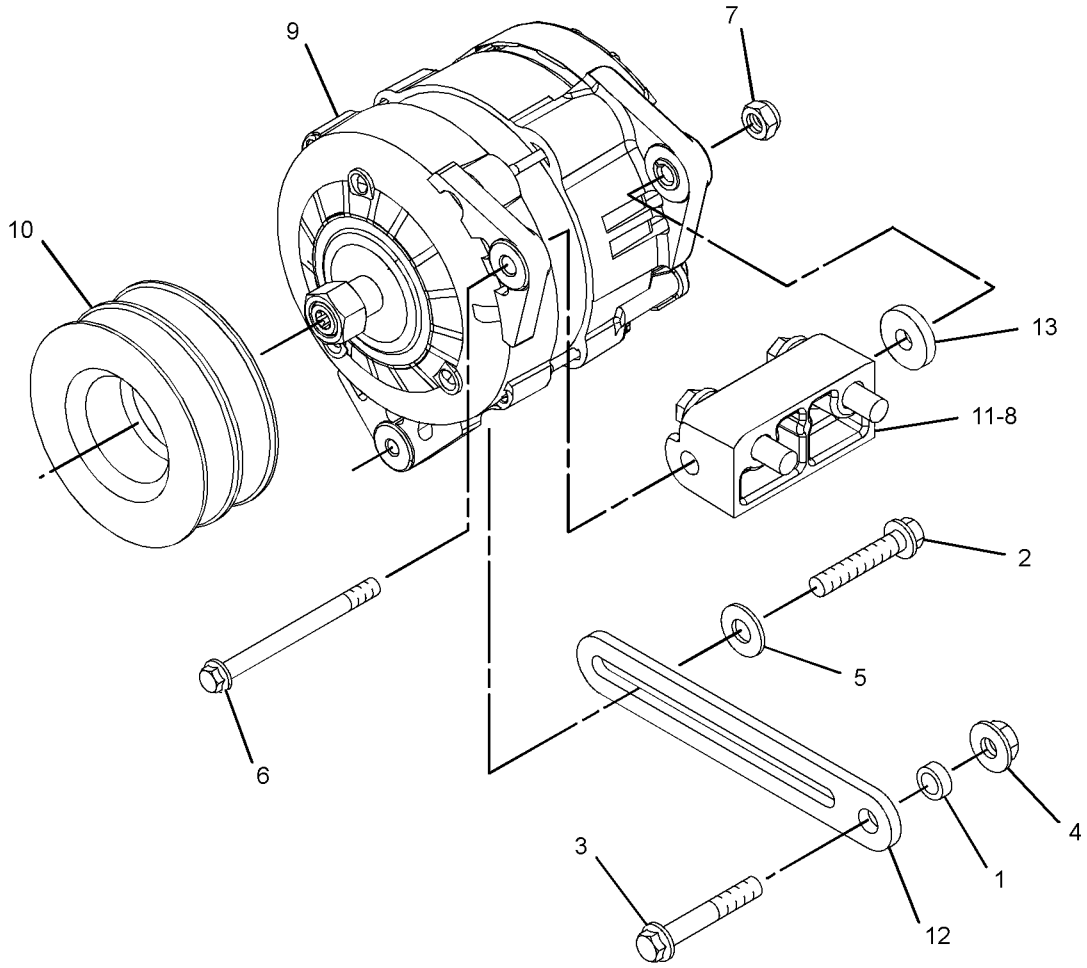

GRAPHIC #1 <END> g06048050

440-2105 CONTROL GP-ELECTRONIC–PL641E CELLULAR*R

PART OF 426-5363 INSTALLATION GP-COMMUNICATION

SMCS-1410, 1917, 1924, 4490 **i07704290**

NOTE	REF NO	GRAPHIC REF	PART NUMBER	QTY	PART NAME 1 2 3 4 5 6 (PRODUCT LEVEL)	SEE PAGE
F			**568-5111**	1	SOFTWARE GP-MONITOR (CELLULAR)	

F - NOT SHOWN

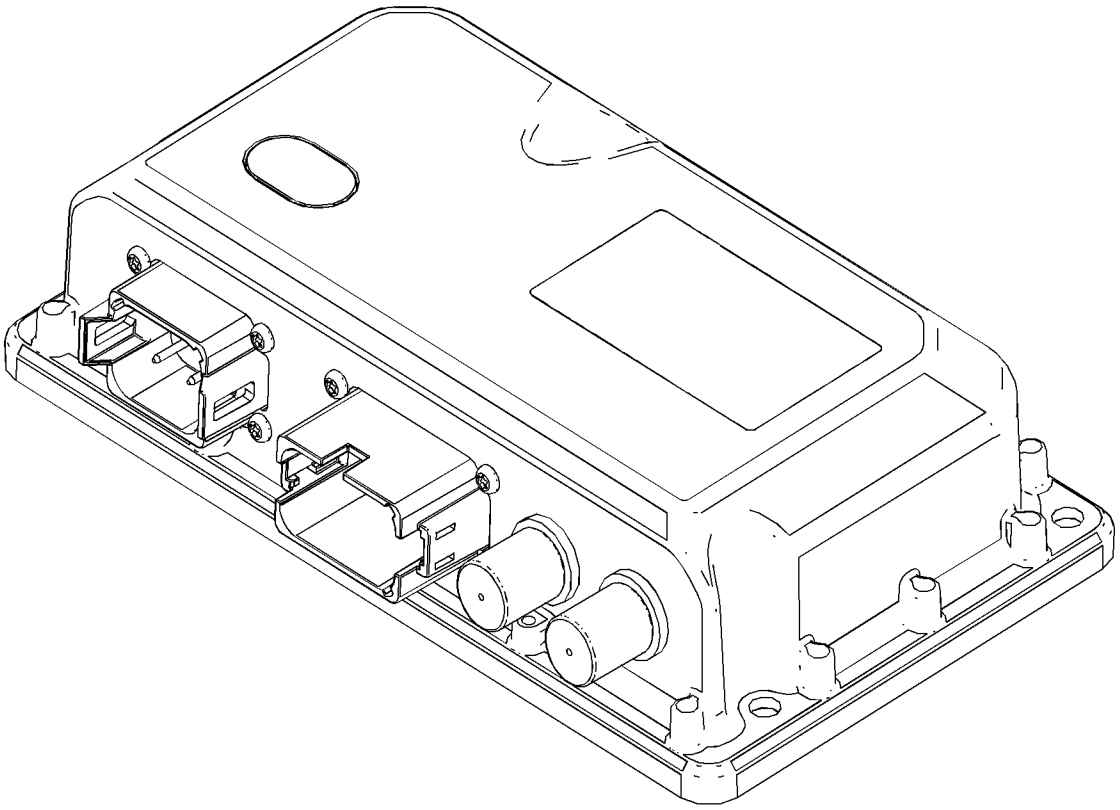

GRAPHIC #1 <END> g06131293

273-3806 CONTROL GP-JACKET WATER HEATER

SMCS-1383 **i02356341**

NOTE	REF NO	GRAPHIC REF	PART NUMBER	QTY	PART NAME 1 2 3 4 5 6 (PRODUCT LEVEL)	SEE PAGE
	1	1	**2B-0858**	1	PLUG-PIPE	
	2	1	**113-4616**	1	CONNECTOR	
	3	1	**134-3856**	1	ELBOW	

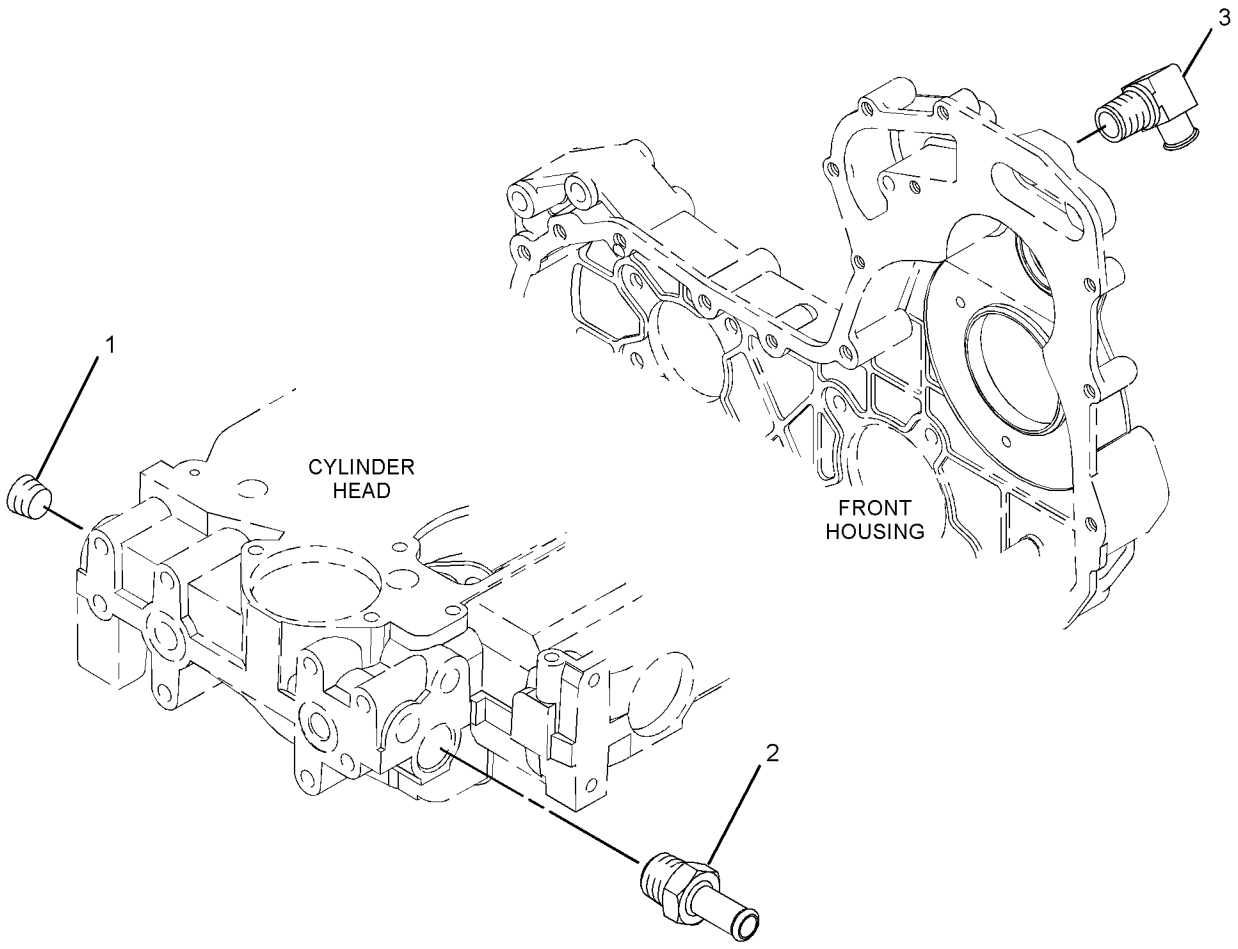

GRAPHIC #1 <END> g01179785

238-4448 CONVERTER GP-ELECTRICAL

SMCS-1421 **i02649379**

NOTE	REF NO	GRAPHIC REF	PART NUMBER	QTY	PART NAME 1 2 3 4 5 6 (PRODUCT LEVEL)	SEE PAGE
	1	1	**147-2642**	1	RESISTOR (TIMING ADVANCE)	
		1	**147-2642**	1	RESISTOR (FUEL SHUTOFF SOLENOID)	
	2	1	**300-5183**	1	RESISTOR AS (24-VOLT) (ELECTRONIC FUEL PUMP MODULE)	

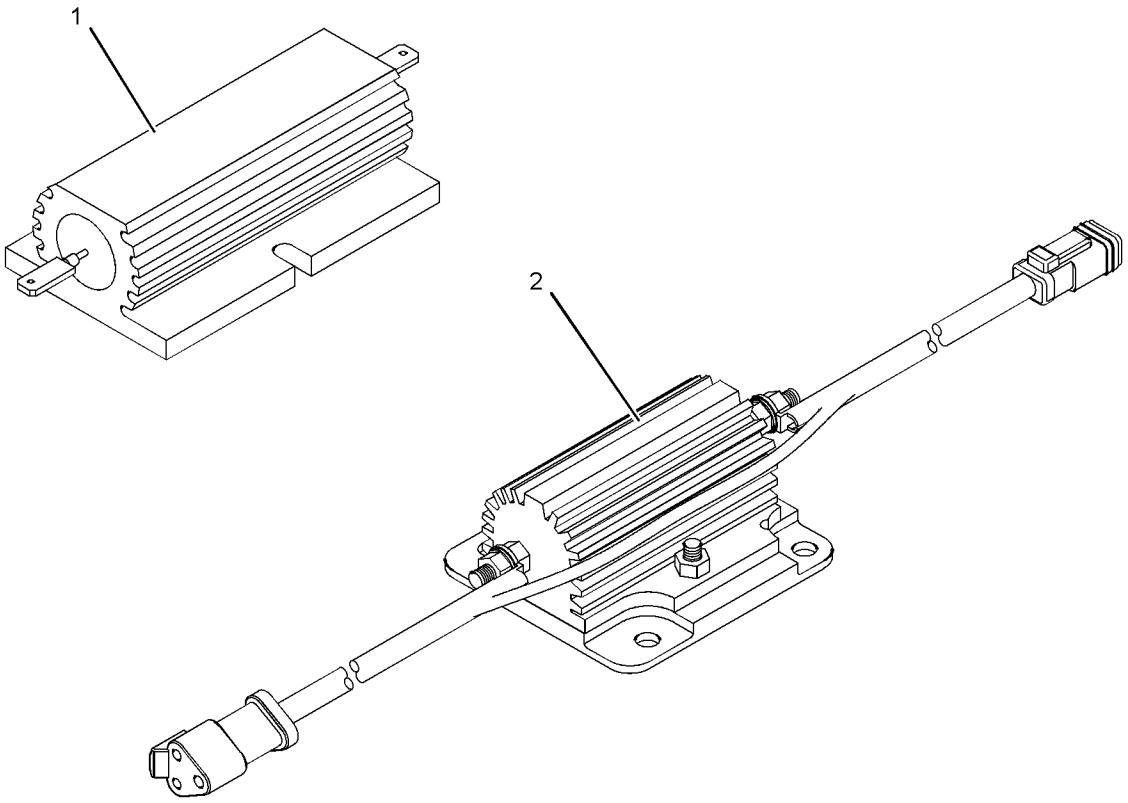

GRAPHIC #1 <END> g01156488

240-5535 CONVERTER GP-ELECTRICAL

SMCS-1421 **i02877891**

NOTE	REF NO	GRAPHIC REF	PART NUMBER	QTY	PART NAME 1 2 3 4 5 6 (PRODUCT LEVEL)	SEE PAGE
	1	1	**300-5183**	1	RESISTOR AS (24-VOLT)	

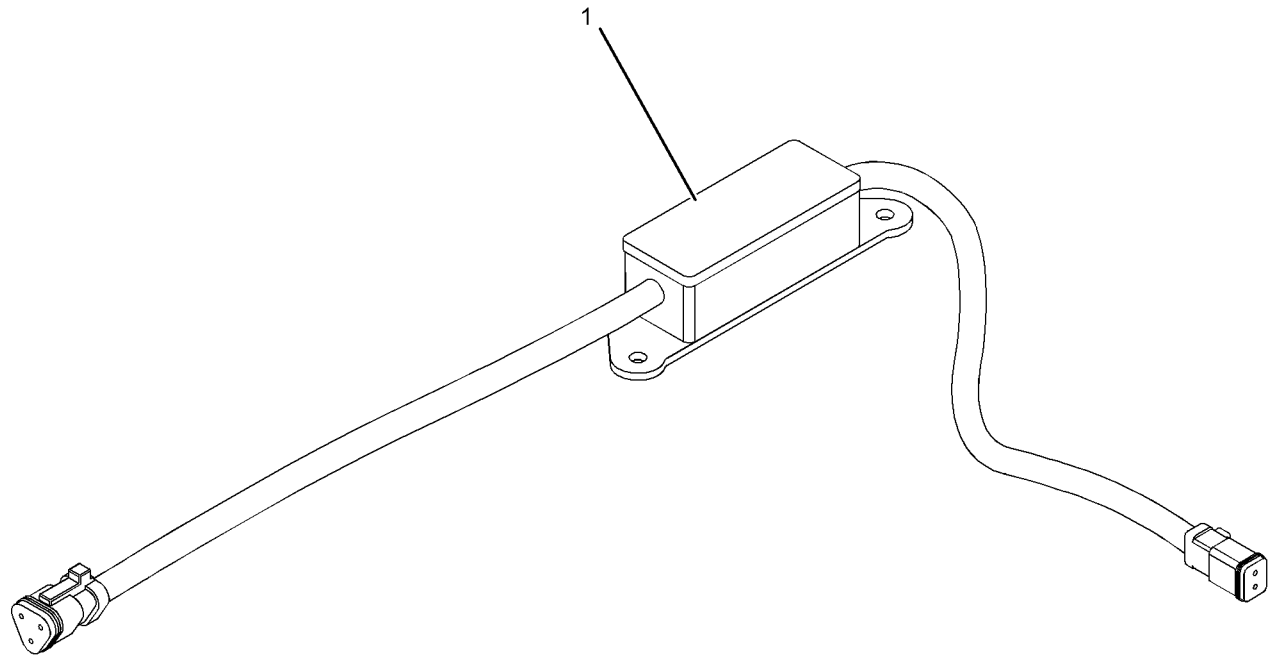

GRAPHIC #1 <END> g01029709

242-6131 CONVERTER GP-ELECTRICAL

SMCS-1421 **i02650856**

NOTE	PART NUMBER	QTY	PART NAME 1 2 3 4 5 6 (PRODUCT LEVEL)	SEE PAGE
	147-2642	1	RESISTOR (FUEL SHUTOFF SOLENOID)	
	147-2642	1	RESISTOR (TIMMING ADVANCE)	
	300-5183	1	RESISTOR AS (24-VOLT) (FUEL PUMP VOLTAGE REGULATOR)	

<END>

298-7692 CONVERTER GP-ELECTRICAL

TYPE 1

SMCS-1421 **i02667360**

NOTE	REF NO	GRAPHIC REF	PART NUMBER	QTY	PART NAME 1 2 3 4 5 6 (PRODUCT LEVEL)	SEE PAGE
	1	1	**300-5183**	1	RESISTOR AS (24-VOLT)	

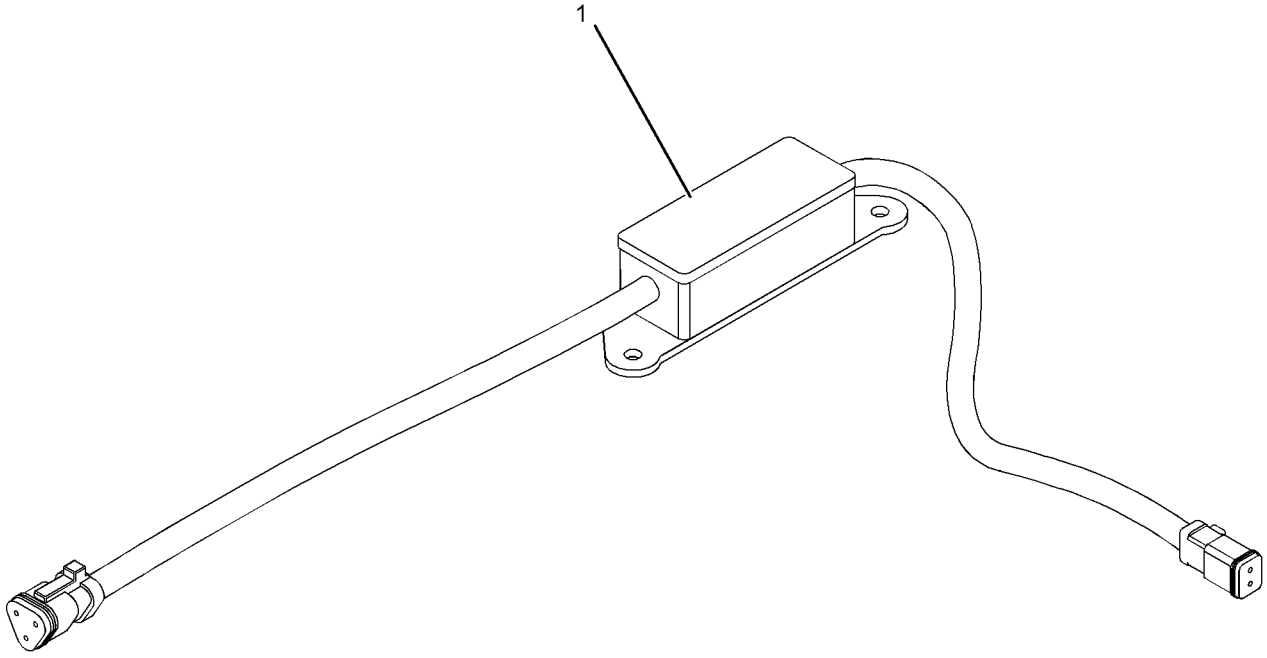

GRAPHIC #1 <END> g01029709

298-7692 CONVERTER GP-ELECTRICAL

TYPE 2

SMCS-1421 **i07047897**

NOTE	REF NO	GRAPHIC REF	PART NUMBER	QTY	PART NAME 1 2 3 4 5 6 (PRODUCT LEVEL)	SEE PAGE
CY	1	1	**431-6132**	1	HARNESS AS-PUMP	1551

C - CHANGE FROM PREVIOUS TYPE
Y - SEPARATE ILLUSTRATION

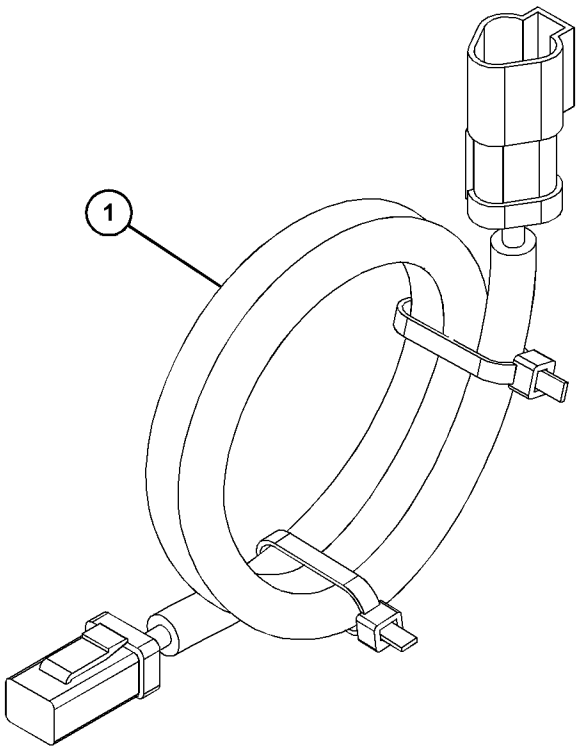

GRAPHIC #1 <END> g06204283

232-6661 GLOW PLUG GP

S/N: 3341-280

ALSO AN ATTACHMENT

SMCS-1412 **i02757556**

NOTE	REF NO	GRAPHIC REF	PART NUMBER	QTY	PART NAME 1 2 3 4 5 6 (PRODUCT LEVEL)	SEE PAGE
	1	1	**232-7399**	1	BUS BAR AS	
	2	1	**232-6662**	4	GLOW PLUG (12-VOLT)	
	3	1	**232-3126**	1	CLIP	

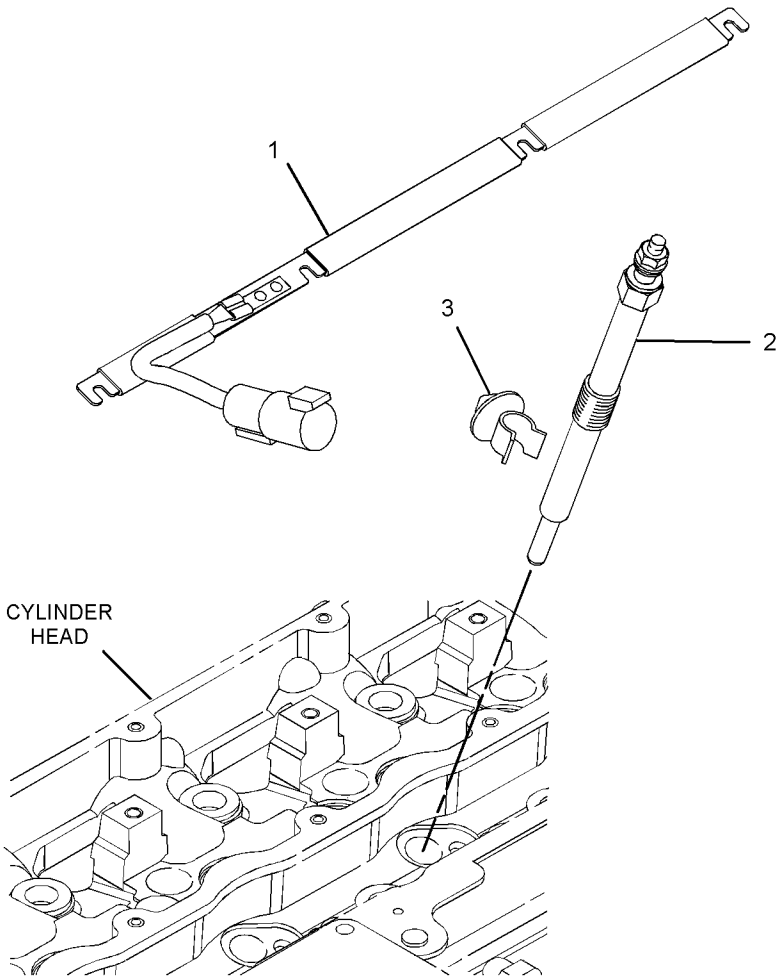

GRAPHIC #1 <END> g01392976

232-6661 GLOW PLUG GP

ALSO AN ATTACHMENT

SMCS-1412 **i06651852**

NOTE	REF NO	GRAPHIC REF	PART NUMBER	QTY	PART NAME 1 2 3 4 5 6 (PRODUCT LEVEL)	SEE PAGE
	1	1	**368-3151**	1	BUS BAR GP	
	2	1	**453-3510**	4	GLOW PLUG (12-VOLT)	
	3	1	**232-3126**	1	CLIP	
	4	1	**067-6366**	2	WASHER (8.7X19X1.8-MM THK)	

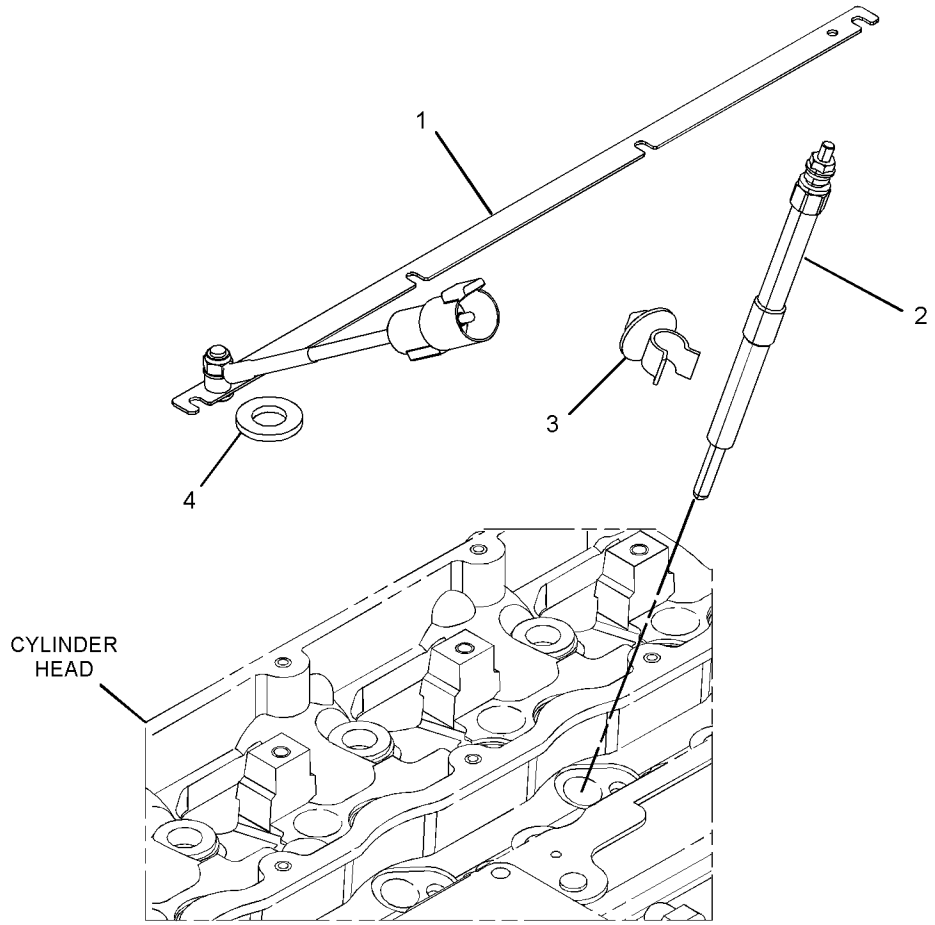

GRAPHIC #1 <END> g06099053

233-9834 GLOW PLUG GP

S/N: 3341-280

ALSO AN ATTACHMENT

SMCS-1412 **i04948459**

NOTE	REF NO	GRAPHIC REF	PART NUMBER	QTY	PART NAME 1 2 3 4 5 6 (PRODUCT LEVEL)	SEE PAGE
	1	1	**368-3151**	1	BUS BAR GP	
	1A	1	**369-2472**	1	SPACER	
	2	1	**226-8770**	4	GLOW PLUG (24-VOLT)	
	3	1	**232-3126**	1	CLIP	

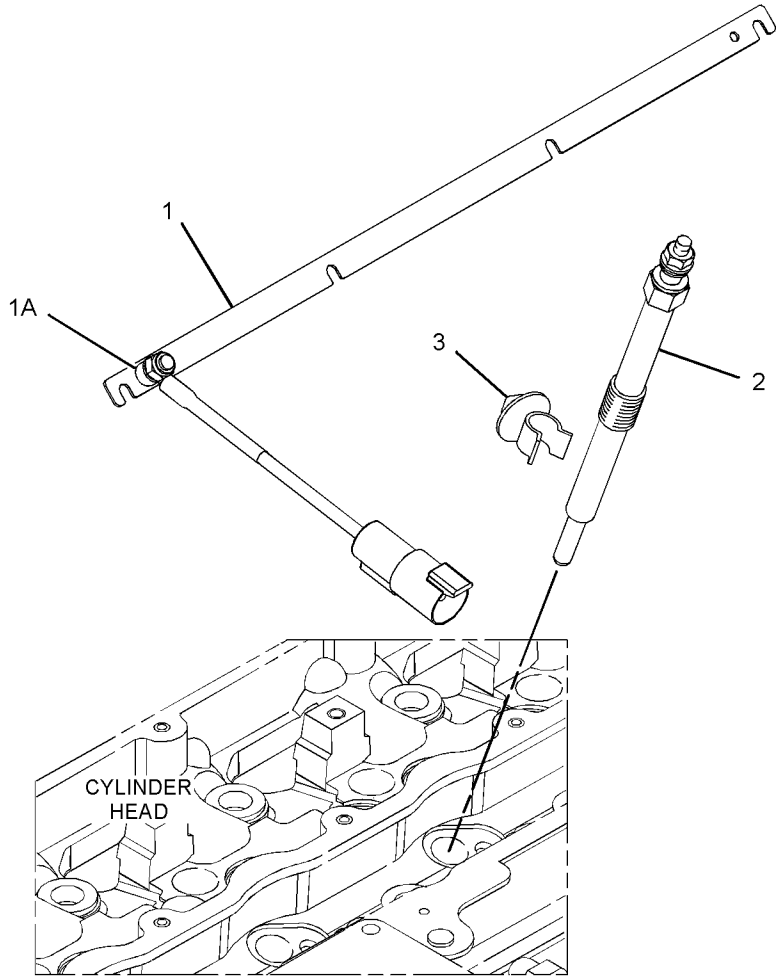

GRAPHIC #1 <END> g03139739

233-9834 GLOW PLUG GP

ALSO AN ATTACHMENT

SMCS-1412 **i06811030**

NOTE	REF NO	GRAPHIC REF	PART NUMBER	QTY	PART NAME 1 2 3 4 5 6 (PRODUCT LEVEL)	SEE PAGE
	1	1	**368-3151**	1	BUS BAR GP	
	2	1	**462-2238**	4	GLOW PLUG (24-VOLT)	
	3	1	**232-3126**	1	CLIP	
	4	1	**067-6366**	2	WASHER (8.7X19X1.8-MM THK)	

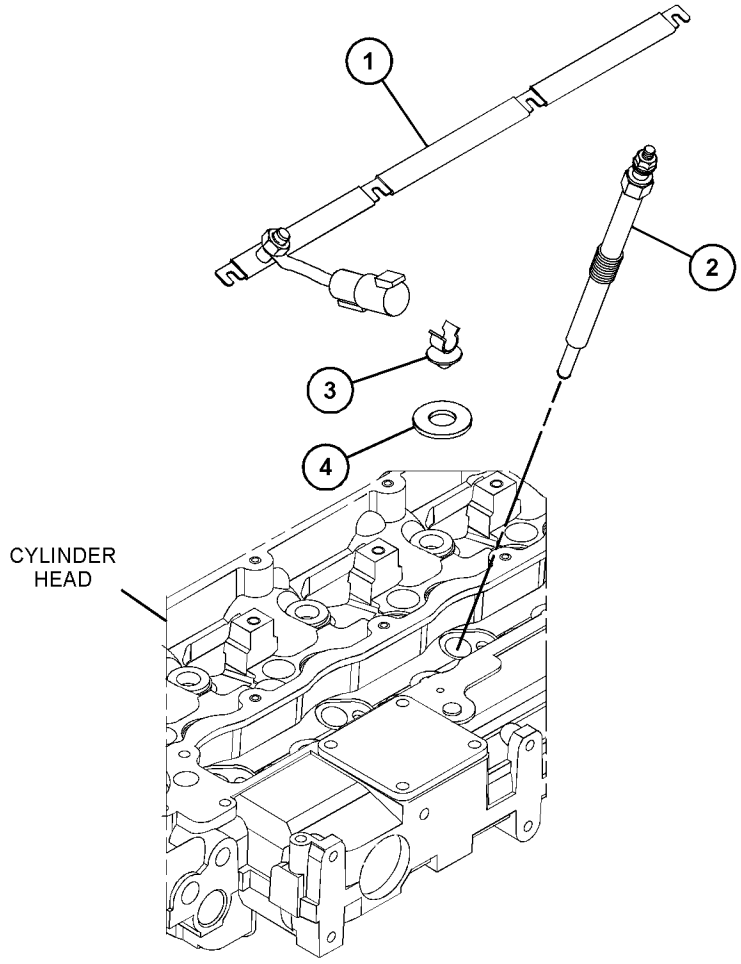

GRAPHIC #1 <END> g06157986

360-4226 HARNESS AS-CONTROL—PRODUCT LINK

PART OF 426-5362 INSTALLATION GP-COMMUNICATION

SMCS-1408 **i06097262**

NOTE	PART NUMBER	QTY	PART NAME 1 2 3 4 5 6 (PRODUCT LEVEL)	SEE PAGE
	340-7298	1	CAP AS-PROTECTION	
	374-7466	1	CAP-SEAL	
	374-7468	1	CAP-SEAL	
	133-0969	1	CONNECTOR-SOCKET (16-GA TO 18-GA)	
	126-1774	1	COVER-CONNECTOR	
	155-2256	2	KIT-CONNECTING PLUG (12-PIN)	
	155-2260	2	KIT-CONNECTING PLUG (3-PIN)	
	155-2274	1	KIT-CONNECTING PLUG (6-PIN)	
			(EACH PLUG KIT INCLUDES PLUS AS, WEDGE, & INTERFACE SEAL)	
	102-8803	1	KIT-RECEPTACLE (3-PIN)	
			(INCLUDES RECEPTACLE AS & WEDGE)	
	8T-8729	6	PIN-CONNECTOR (16-GA TO 20-GA)	
	147-1445	1	PLUG AS-CONNECTOR (70-PIN)	
	159-9322	1	SEAL-O-RING	
	8T-8737	63	PLUG-SEAL	
	133-0970	1	RECEPTACLE AS-CONNECTOR (3-WAY SPLITTER)	
	210-8950	1	RECEPTACLE-CONNECTOR (9-PIN)	
	8T-8730	48	SOCKET-CONNECTOR (16-GA TO 20-GA)	
	7K-1181	2	STRAP-CABLE	
E	**125-7874**		TUBE-HEAT SHRINK (5.72-MM DIA) (15-CM)	
E	**125-7875**		TUBE-HEAT SHRINK (7.44-MM DIA) (10-CM)	

E - ORDER BY THE CENTIMETER

<END>

431-6132 HARNESS AS-PUMP

PART OF 298-7692 CONVERTER GP-ELECTRICAL

SMCS-1408 **i07742404**

NOTE	PART NUMBER	QTY	PART NAME 1 2 3 4 5 6 (PRODUCT LEVEL)	SEE PAGE
E	**289-3195**		CONDUIT (68-CM)	
	180-9339	2	PIN-CONNECTOR (14-GA TO 18-GA)	
	155-2270	1	KIT-CONNECTING PLUG (2-PIN)	
			(INCLUDES PLUG AS, WEDGE, & INTERFACE SEAL)	
	8T-8737	1	PLUG-SEAL	
	102-8803	1	KIT-RECEPTACLE (3-PIN)	
			(INCLUDES RECEPTACLE AS & WEDGE)	
	194-5226	2	TERMINAL AS (16-GA)	
			—OR—	
	194-5227	2	TERMINAL AS (14-GA)	
	217-9039	2	STRAP-CABLE	
	3E-3371	1	WEDGE-RECEPTACLE LOCK (3-PIN)	

E - ORDER BY THE CENTIMETER

<END>

434-2751 HARNESS AS-PUMP

PART OF 467-7011 KIT-FUEL PRIMING PUMP
ALSO AN ATTACHMENT

SMCS-1408 **i05977670**

NOTE	PART NUMBER	QTY	PART NAME 1 2 3 4 5 6 (PRODUCT LEVEL)	SEE PAGE
	102-8802	1	KIT-RECEPTACLE (2-PIN)	
			(INCLUDES RECEPTACLE AS & WEDGE)	
	155-2270	1	KIT-CONNECTING PLUG (2-PIN)	
			(INCLUDES PLUG AS, WEDGE, & INTERFACE SEAL)	
	9X-3401	2	PIN-CONNECTOR (16-GA TO 18-GA)	
			—OR—	
	126-1767	2	PIN-CONNECTOR (14-GA TO 16-GA)	
	194-5226	2	TERMINAL AS (16-GA)	
			—OR—	
	194-5227	2	TERMINAL AS (14-GA)	
			<END>	

423-7018 HARNESS AS-WIRING—PRODUCT LINK RADIO

3-METER EXTENSION
PART OF 426-5363 INSTALLATION GP-COMMUNICATION

SMCS-1408 **i06733922**

NOTE	PART NUMBER	QTY	PART NAME 1 2 3 4 5 6 (PRODUCT LEVEL)	SEE PAGE
	155-2255	1	KIT-CONNECTING PLUG (12-PIN)	
	155-2256	1	KIT-CONNECTING PLUG (12-PIN)	
			(EACH KIT INCLUDES PLUG AS, WEDGE, & INTERFACE SEAL)	
	102-8801	1	KIT-RECEPTACLE (12-PIN)	
	190-7614	1	KIT-RECEPTACLE (12-PIN)	
			(EACH KIT INCLUDES RECEPTACLE AS & WEDGE)	
	8T-8729	8	PIN-CONNECTOR (16-GA TO 20-GA)	
	8T-8737	8	PLUG-SEAL	
	8T-8730	8	SOCKET-CONNECTOR (16-GA TO 20-GA)	
			<END>	

447-5512 HARNESS AS-WIRING—PL461 TO PL462 CONVERSION

PART OF 426-5363 INSTALLATION GP-COMMUNICATION

SMCS-1408 **i05433648**

NOTE	PART NUMBER	QTY	PART NAME 1 2 3 4 5 6 (PRODUCT LEVEL)	SEE PAGE
	8T-8729	8	PIN-CONNECTOR (16-GA TO 20-GA)	
	8T-8730	8	SOCKET-CONNECTOR (16-GA TO 20-GA)	
	8T-8737	8	PLUG-SEAL	
	155-2255	1	KIT-CONNECTING PLUG (12-PIN)	
			(KIT INCLUDES PLUG AS, WEDGE & INTERFACE SEAL)	
	190-7614	1	KIT-RECEPTACLE (12-PIN)	
			(KIT INCLUDES RECEPTACLE AS & WEDGE)	
			<END>	

299-0164 HARNESS GP

SMCS-1408 **i02591888**

NOTE	REF NO	GRAPHIC REF	PART NUMBER	QTY	PART NAME 1 2 3 4 5 6 (PRODUCT LEVEL)	SEE PAGE
	1	1	**299-0160**	1	ADAPTER	

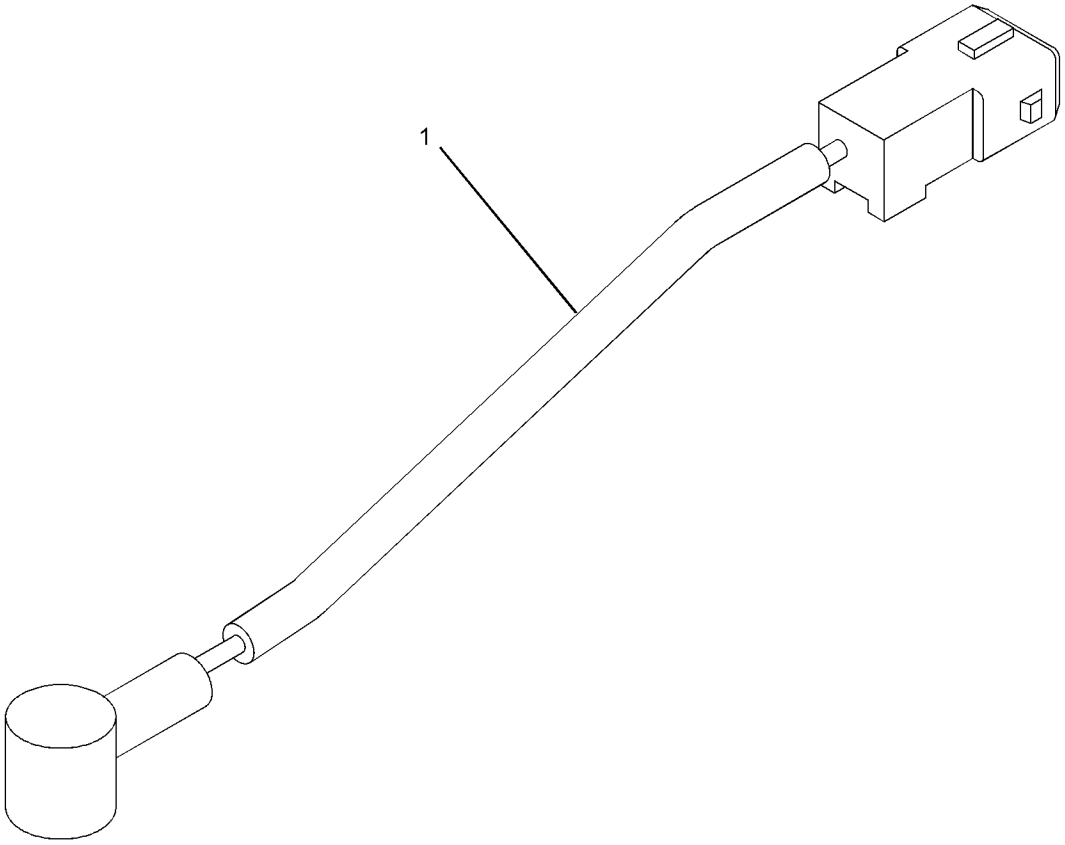

GRAPHIC #1 <END> g01300239

426-5362 INSTALLATION GP-COMMUNICATION—PLE601 NETWORK MANAGER

FIELD INSTALLATION

SMCS-1408, 1901, 1902, 7610, 7620 **i06098882**

NOTE	PART NUMBER	QTY	PART NAME 1 2 3 4 5 6 (PRODUCT LEVEL)	SEE PAGE
Y	**360-4226**	1	HARNESS AS-CONTROL	1551
M	**7X-2534**	4	BOLT (M6X1X50-MM)	
	417-4722	1	CONTROL GP-COMMUNICATION (NETWORK MANAGER)	
	8C-5607	8	MOUNT-ISOLATION	
M	**344-5673**	4	NUT (M6X1-THD)	
	8C-5608	4	SPACER (6.5X9.5X25.4-MM THK)	
	7K-1181	15	STRAP-CABLE	
	9X-6165	4	WASHER (6.5X22X2.5-MM THK)	
	9X-8256	4	WASHER (6.6X12X2-MM THK)	

M - METRIC PART
Y - SEPARATE ILLUSTRATION

<END>

426-5363 INSTALLATION GP-COMMUNICATION—PL641 CELLULAR

FIELD INSTALLATION

SMCS-1408, 1901, 1902, 7610, 7620 **i06632416**

NOTE	PART NUMBER	QTY	PART NAME 1 2 3 4 5 6 (PRODUCT LEVEL)	SEE PAGE
Y	**423-7018**	1	HARNESS AS-WIRING (PRODUCT LINK RADIO)	1552
CYR	**440-2105**	1	CONTROL GP-ELECTRONIC (PL641E CELLULAR)	1540
M	**8T-4971**	4	BOLT (M6X1X30-MM)	
	433-9722	1	FILM-IDENTIFICATION (WIRELESS COM DEVICE, READ OMM)	
	433-9728	1	FILM-WARNING (EXPLOSION, WIRELESS, OMM, U.S.)	
	433-9730	1	FILM-WARNING (EXPLOSION, WIRELESS, OMM, INTL)	
M	**344-5673**	4	NUT (M6X1-THD)	
	9X-8256	8	WASHER (6.6X12X2-MM THK)	

C - CHANGE FROM PREVIOUS TYPE
M - METRIC PART
R - REMANUFACTURED PART MAY BE AVAILABLE
Y - SEPARATE ILLUSTRATION

<END>

236-8758 SENDER GP-TEMPERATURE–ENGINE COOLANT

ALSO AN ATTACHMENT

SMCS-1906 **i02450963**

NOTE	REF NO	GRAPHIC REF	PART NUMBER	QTY	PART NAME 1 2 3 4 5 6 (PRODUCT LEVEL)	SEE PAGE
	1	1	**180-6121**	1	GAUGE GP-COOLANT TEMPERATURE	
	2	1	**199-9751**	1	SEAL-O-RING	
	3	1	**236-8757**	1	SWITCH-WATER TEMPERATURE (ENGINE COOLANT)	

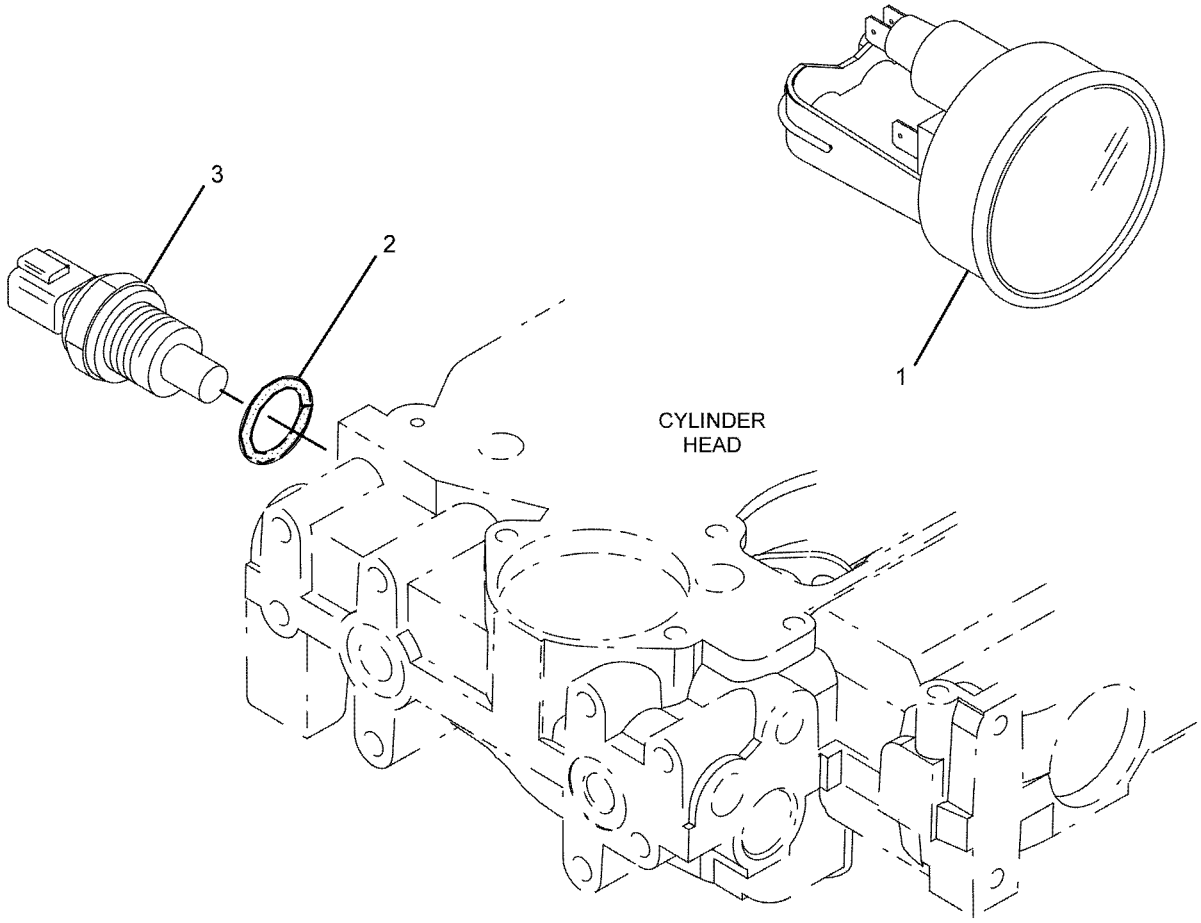

GRAPHIC #1 <END> g01019104

236-9970 SENDER GP-TEMPERATURE—ENGINE COOLANT

SMCS-1906 **i02450964**

NOTE	REF NO	GRAPHIC REF	PART NUMBER	QTY	PART NAME 1 2 3 4 5 6 (PRODUCT LEVEL)	SEE PAGE
	1	1	**186-3615**	1	GAUGE GP-COOLANT TEMPERATURE	
	2	1	**199-9751**	1	SEAL-O-RING	
	3	1	**236-8757**	1	SWITCH-WATER TEMPERATURE (ENGINE COOLANT)	

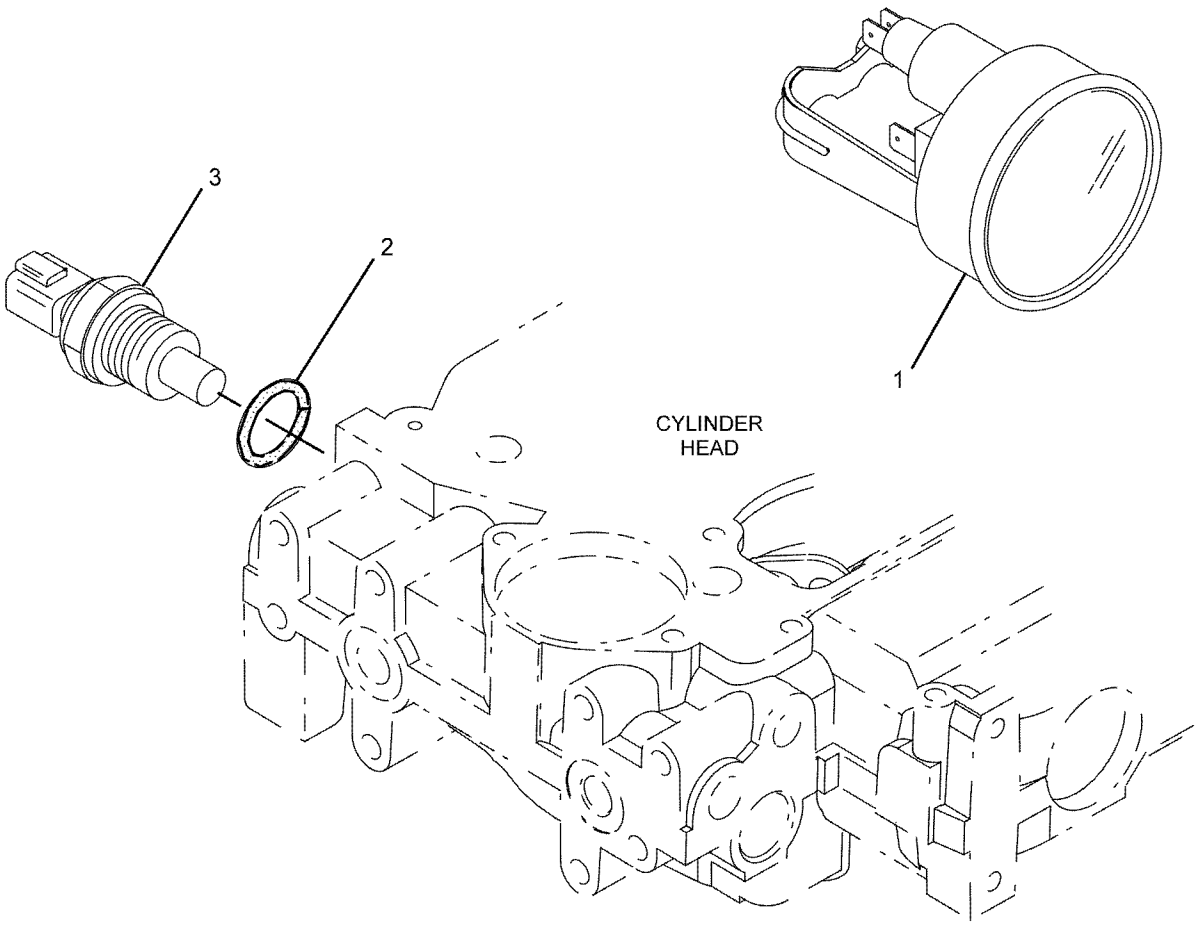

GRAPHIC #1 <END> g01019104

236-8212 STARTING AID GP–IGNITION

SMCS-1090 **i02138967**

NOTE	REF NO	GRAPHIC REF	PART NUMBER	QTY	PART NAME 1 2 3 4 5 6 (PRODUCT LEVEL)	SEE PAGE
	1	1	**101-3987**	1	SWITCH AS (IGNITION)	
	2	1	**101-3989**	1	PLATE	
	3	1	**101-3990**	1	CONNECTOR	
	4	1	**101-3991**	6	CONNECTOR	
	5	1	**101-3992**	1	SLEEVE	
	6	1	**101-3993**	6	SLEEVE	

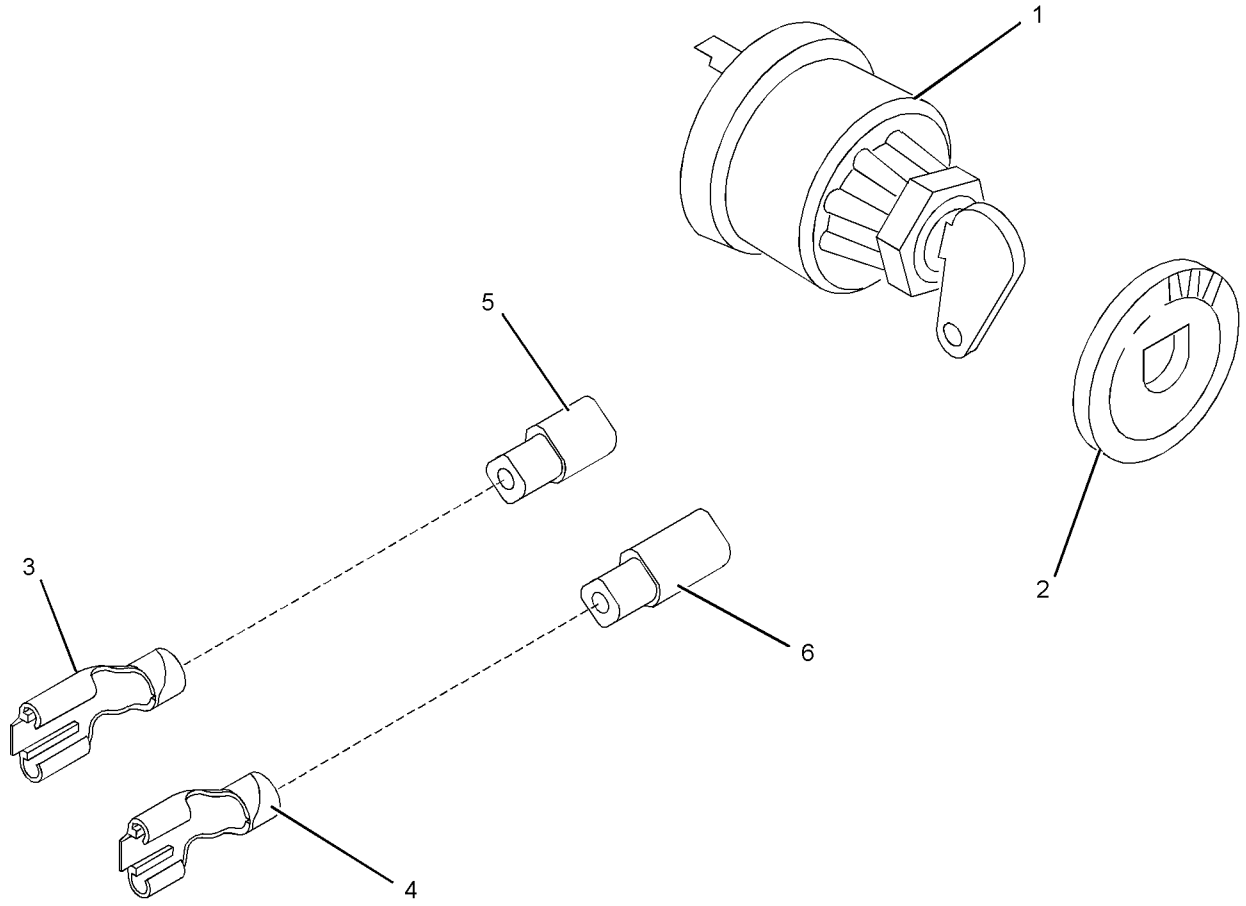

GRAPHIC #1 <END> g01024916

243-2420 STARTING AID GP–IGNITION

SMCS-1090 **i02854230**

NOTE	REF NO	GRAPHIC REF	PART NUMBER	QTY	PART NAME 1 2 3 4 5 6 (PRODUCT LEVEL)	SEE PAGE
	1	1	**7E-5218**	1	PLATE-SWITCH INDEX	
	2	1	**7E-5219**	1	SWITCH AS-KEY	
	2A	1	**128-7723**	1	KEY (START)	
	3	1	**101-3990**	1	CONNECTOR	
	4	1	**101-3991**	6	CONNECTOR	
	5	1	**101-3992**	1	SLEEVE	
	6	1	**101-3993**	6	SLEEVE	

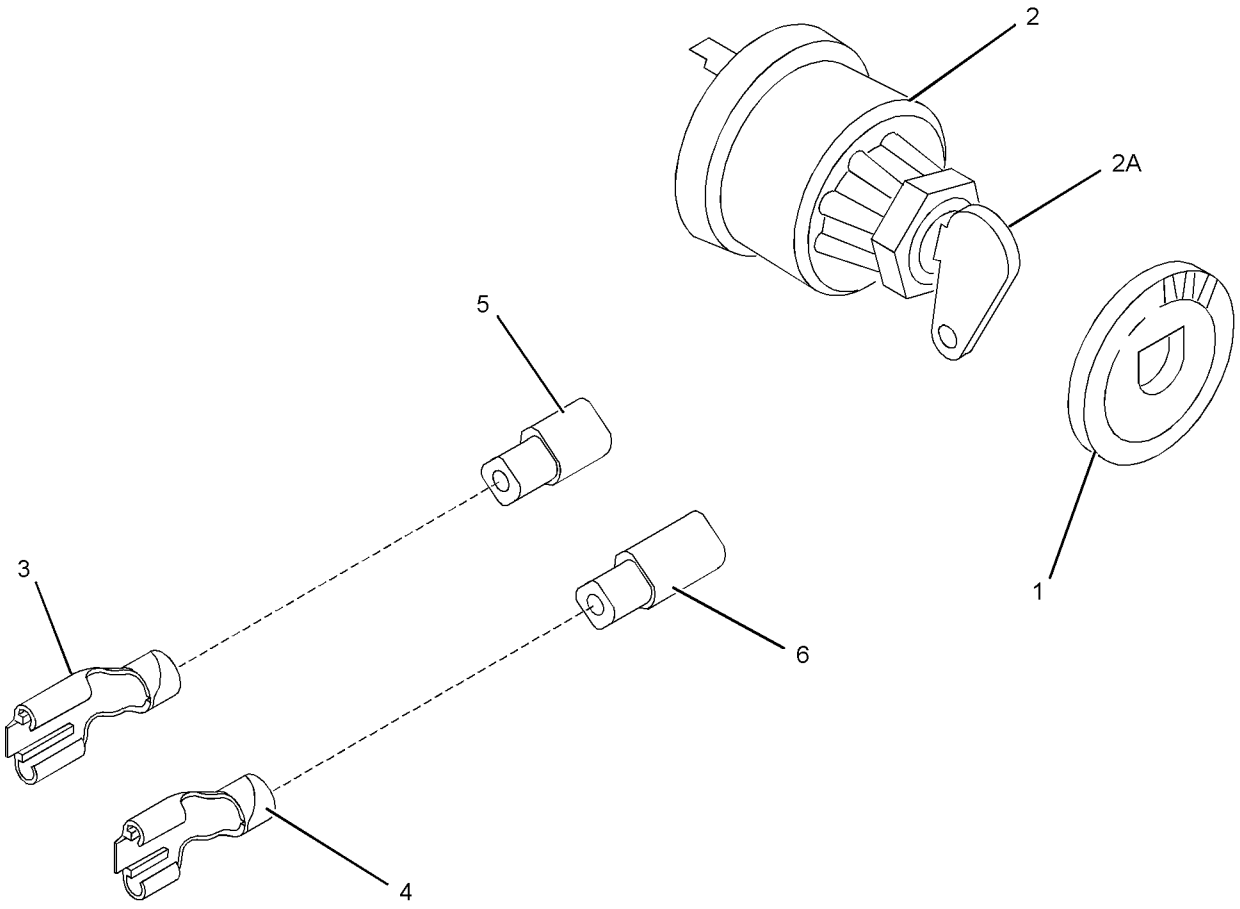

GRAPHIC #1 <END> g01022594

143-0539 STARTING MOTOR GP-ELECTRIC*R

12-VOLT

PART OF 237-0024 STARTING MOTOR GP-ELECTRIC

SMCS-1453 **i06041820**

NOTE	REF NO	GRAPHIC REF	PART NUMBER	QTY	PART NAME 1 2 3 4 5 6 (PRODUCT LEVEL)	SEE PAGE
	1	1	**8C-9778**	1	PLUNGER AS	
	2	1	**8C-9783**	1	GASKET	
	3	1	**2P-8104**	1	BEARING	
	4	1	**7T-6092**	1	HOLDER AS-BRUSH	
M	5	1	**8T-4133**	2	NUT (M10X1.5-THD)	
	6	1	**7T-6088**	1	BEARING AS	
	7	1	**7T-6087**	1	WASHER (15.2X40X0.5-MM THK)	
	8	1	**7T-6093**	1	CLUTCH AS	
	9	1	**8J-4455**	1	BALL	
	10	1	**7T-6090**	1	SPRING	
	11	1	**8T-4121**	2	WASHER-HARD (11X21X2.5-MM THK)	
	12	1	**3E-5153**	1	COVER-STARTING MOTOR	
	13	1	**3E-5154**	1	BUSHING-STARTING MOTOR	
	14	1	**8F-1434**	1	LOCKWASHER	
	15	1	**100-4113**	1	SWITCH AS (STARTING MOTOR)(12-VOLT)	
	16	1	**100-4119**	1	ARMATURE AS	
	17	1	**100-4118**	1	CASE AS-STARTING MOTOR	
	18	1	**100-4115**	1	HOUSING-STARTING MOTOR	
	19	1	**143-1344**	1	FRAME-STARTER	
	20	1	**100-3685**	1	CAP	
					AVAILABLE REPAIR KIT(S):	
			7T-6099	1	KIT-GEAR (STARTING MOTOR)	
					(INCLUDES RETAINER, PINION & ROLLERS)	
			146-6729	1	KIT-HARDWARE (STARTING MOTOR)	
					(INCLUDES BOLTS, SCREWS, SCREW ASSEMBLIES & PLATE)	
			100-4112	1	KIT-CONTACT (STARTING MOTOR)	
					(INCLUDES NUT, WASHERS, SEAL, BUSHINGS, PLATE & BOLT)	

M - METRIC PART

143-0539 **STARTING MOTOR GP-ELECTRIC (**contd.**)** **i06041820**

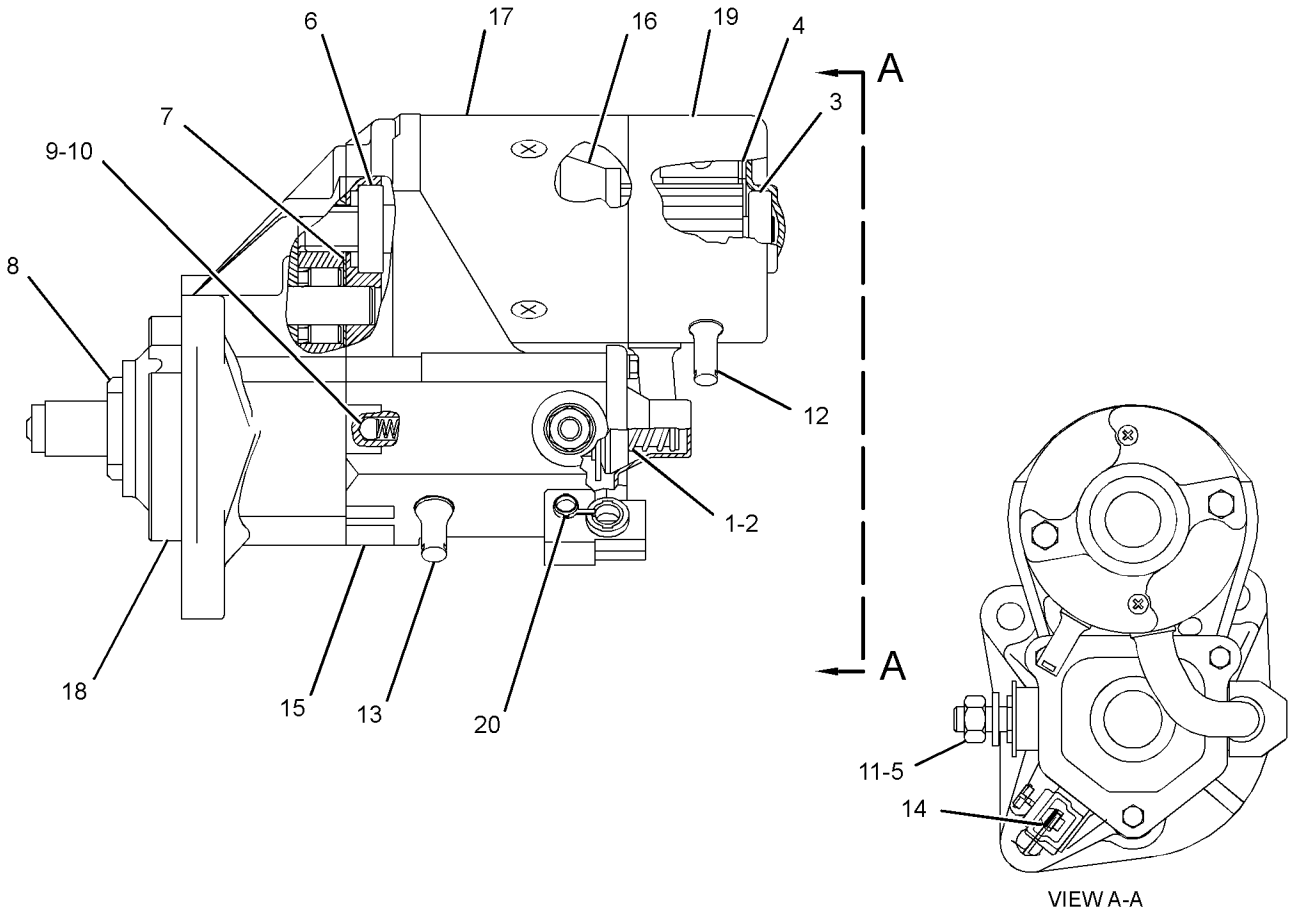

GRAPHIC #1 <END> g03806102

230-7304 STARTING MOTOR GP-ELECTRIC

24-VOLT, 4.5-KW
ALSO AN ATTACHMENT

SMCS-1453 **i02014704**

NOTE	REF NO	GRAPHIC REF	PART NUMBER	QTY	PART NAME 1 2 3 4 5 6 (PRODUCT LEVEL)	SEE PAGE
M	1	1	**6I-0364**	3	STUD (M10X1.5X45-MM)	
M	2	1	**6I-0594**	3	NUT (M10X1.5-THD)	
R	3	1	**225-3150**	1	STARTING MOTOR GP-ELECTRIC	

M - METRIC PART
R - REMANUFACTURED PART MAY BE AVAILABLE

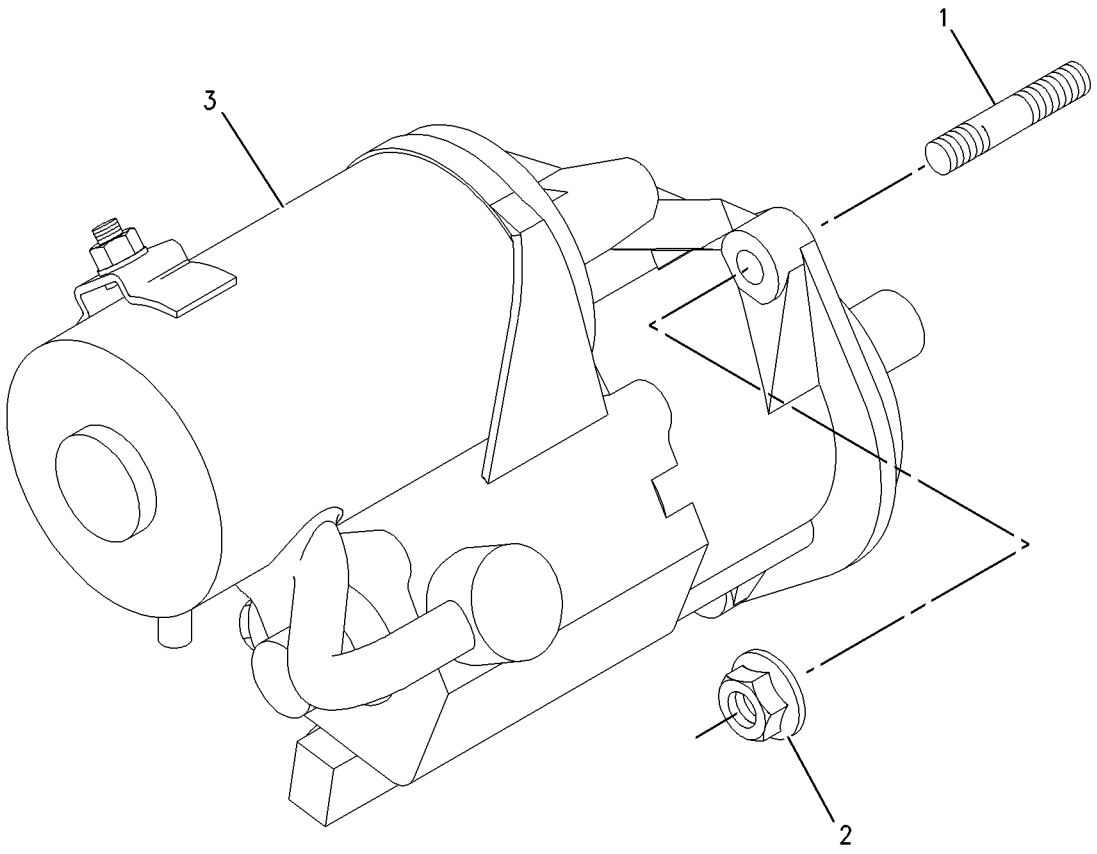

GRAPHIC #1 <END> g00933413

234-9666 STARTING MOTOR GP-ELECTRIC

12-VOLT, 3.2-KW
ALSO AN ATTACHMENT

SMCS-1453 **i04939799**

NOTE	REF NO	GRAPHIC REF	PART NUMBER	QTY	PART NAME 1 2 3 4 5 6 (PRODUCT LEVEL)	SEE PAGE
M	1	1	**6I-0364**	3	STUD (M10X1.5X45-MM)	
M	2	1	**6I-0594**	3	NUT (M10X1.5-THD)	
R	3	1	**364-4130**	1	STARTING MOTOR GP-ELECTRIC	

M - METRIC PART
R - REMANUFACTURED PART MAY BE AVAILABLE

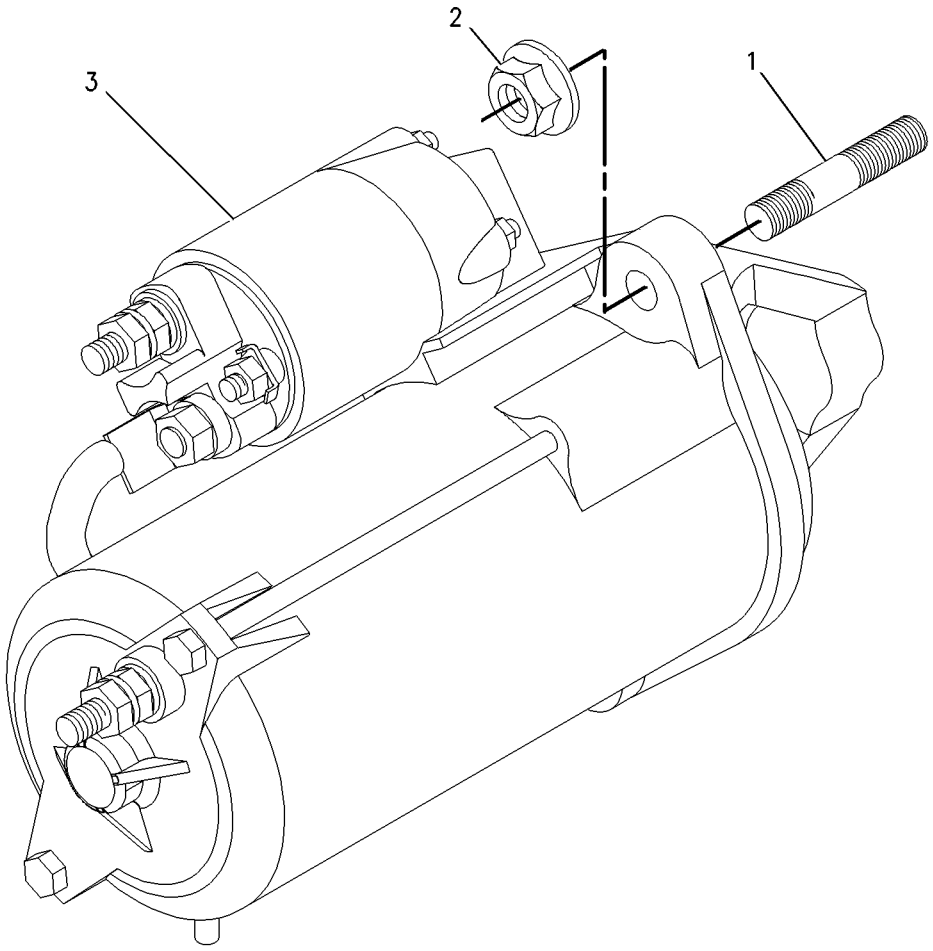

GRAPHIC #1 <END> g00985793

237-0024 STARTING MOTOR GP-ELECTRIC—12-VOLT

SMCS-1453 **i01991979**

NOTE	REF NO	GRAPHIC REF	PART NUMBER	QTY	PART NAME 1 2 3 4 5 6 (PRODUCT LEVEL)	SEE PAGE
M	1	1	**6I-0364**	3	STUD (M10X1.5X45-MM)	
M	2	1	**6I-0594**	3	NUT (M10X1.5-THD)	
YR	3	1	**143-0539**	1	STARTING MOTOR GP-ELECTRIC (12-VOLT)	1559

M - METRIC PART
R - REMANUFACTURED PART MAY BE AVAILABLE
Y - SEPARATE ILLUSTRATION

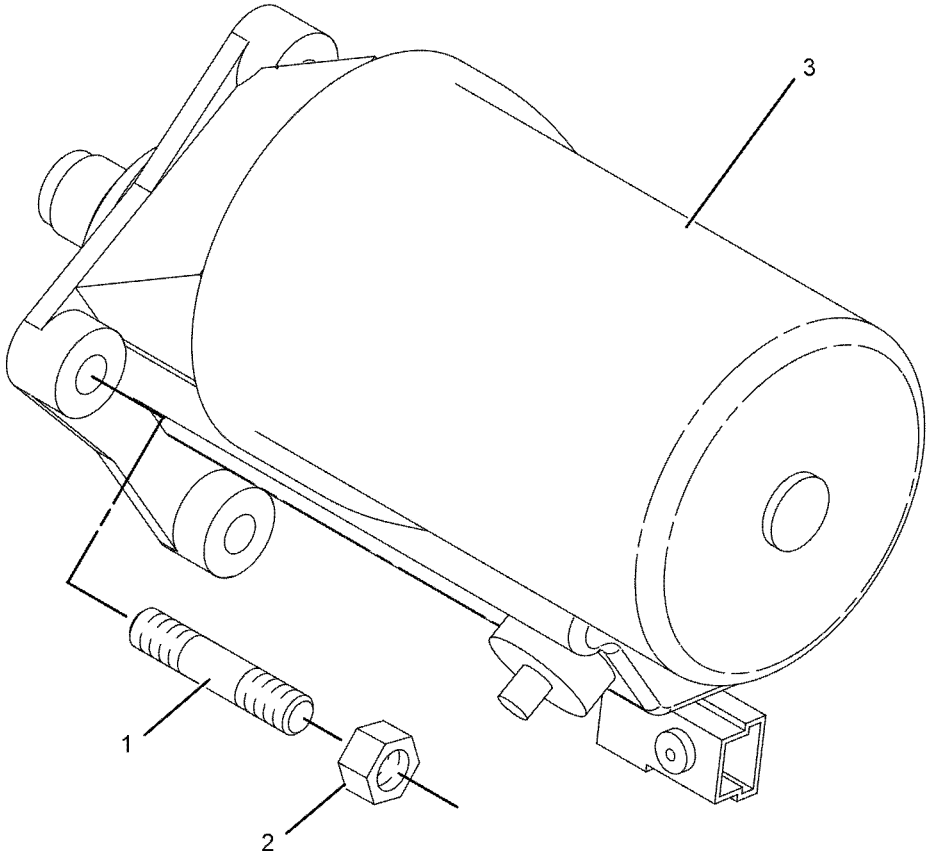

GRAPHIC #1 <END> g01039910

268-3631 STARTING MOTOR GP-ELECTRIC

SMCS-1453 **i03092016**

NOTE	REF NO	GRAPHIC REF	PART NUMBER	QTY	PART NAME 1 2 3 4 5 6 (PRODUCT LEVEL)	SEE PAGE
	1	1	**5M-2894**	3	WASHER-HARD (10.2X18.5X2.5-MM THK)	
	2	1	**1B-4203**	3	NUT-FULL (3/8-24-THD)	
	3	1	**329-0290**	1	STARTING MOTOR GP-ELECTRIC	
	4	1	**268-4218**	3	STUD	

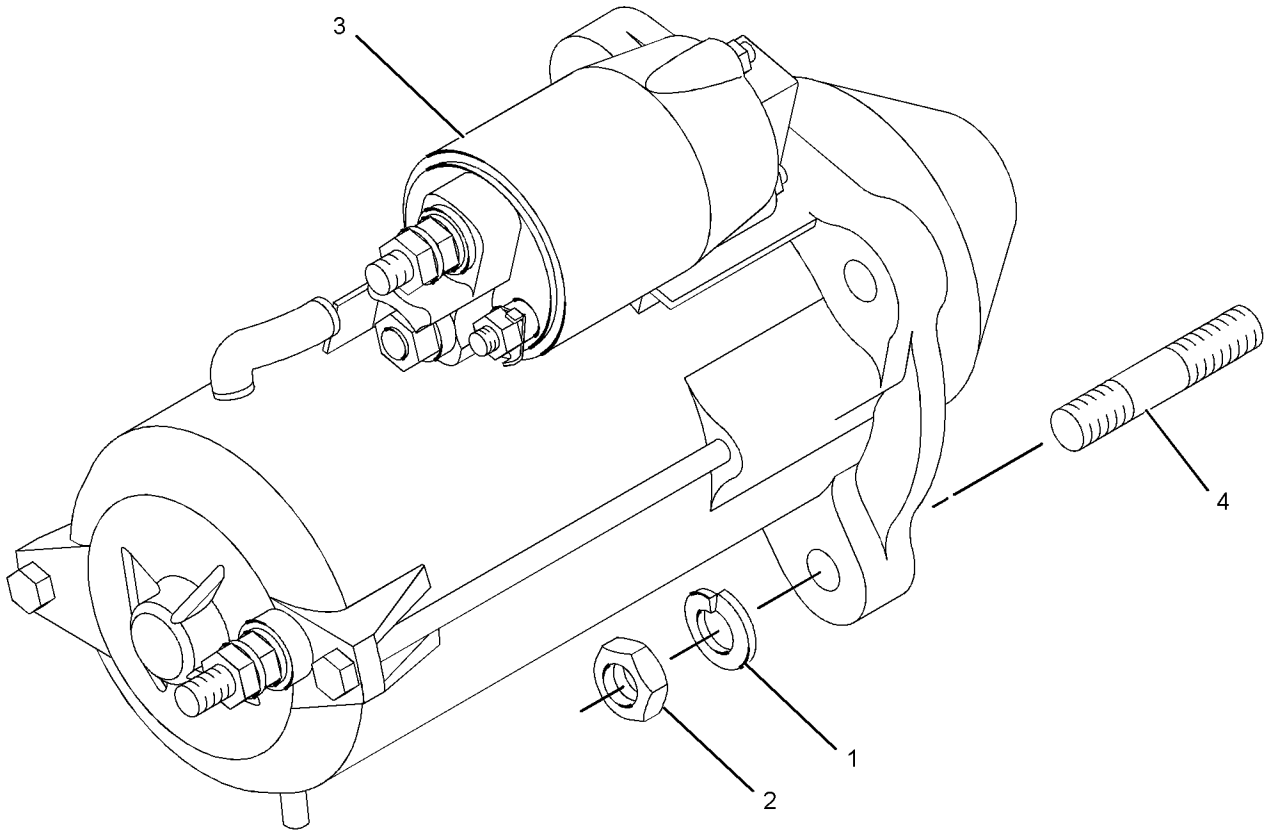

GRAPHIC #1 <END> g01155010

281-4516 STARTING MOTOR GP-ELECTRIC

TYPE 1

SMCS-1453 **i02974912**

NOTE	REF NO	GRAPHIC REF	PART NUMBER	QTY	PART NAME 1 2 3 4 5 6 (PRODUCT LEVEL)	SEE PAGE
M	1	1	**6I-0364**	3	STUD (M10X1.5X45-MM)	
M	2	1	**6I-0594**	3	NUT (M10X1.5-THD)	
	3	1	**225-3149**	1	STARTING MOTOR GP-ELECTRIC	

M - METRIC PART

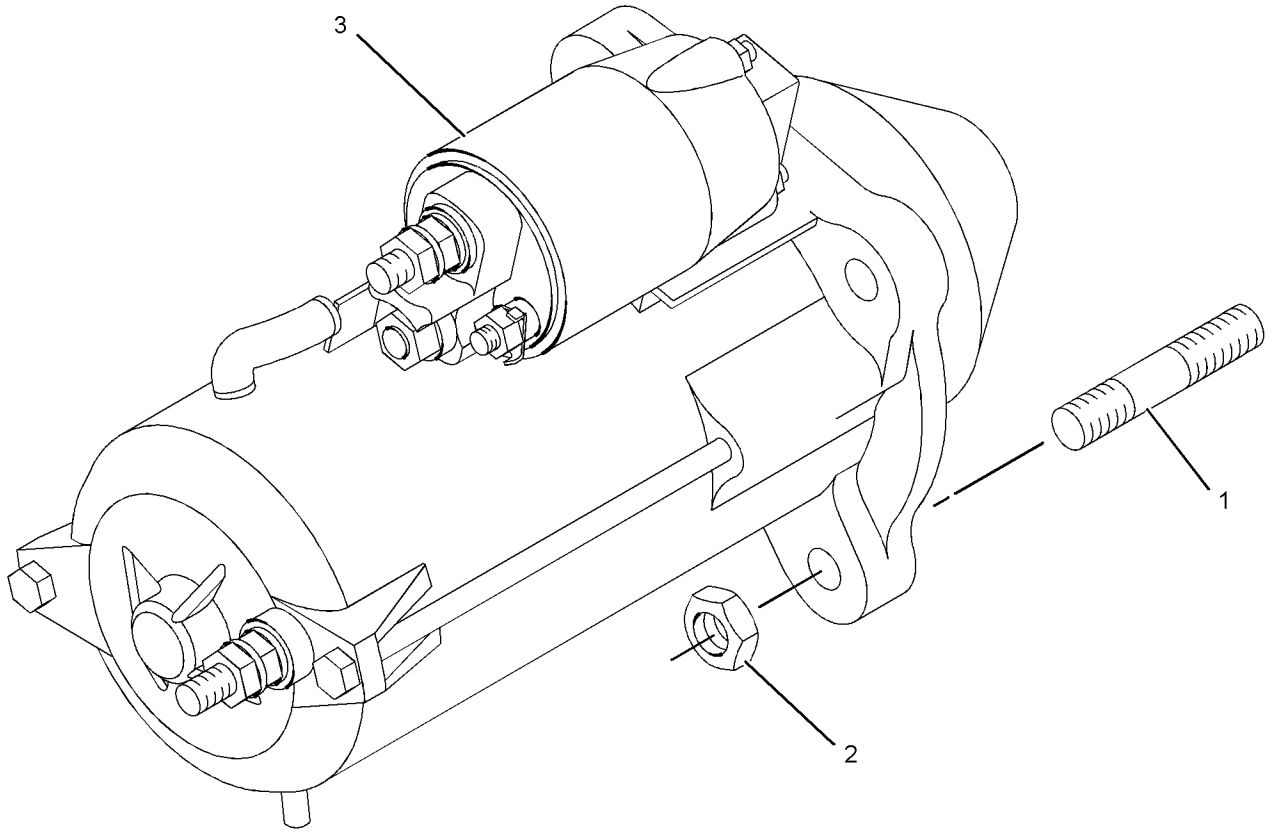

GRAPHIC #1 <END> g01220118

281-4516 STARTING MOTOR GP-ELECTRIC

TYPE 2

SMCS-1453 **i06615534**

NOTE	REF NO	GRAPHIC REF	PART NUMBER	QTY	PART NAME 1 2 3 4 5 6 (PRODUCT LEVEL)	SEE PAGE
M	1	1	**6I-0364**	3	STUD (M10X1.5X45-MM)	
M	2	1	**175-7141**	3	NUT-HEX FLANGE (M10X1.5-THD)	
CR	3	1	**357-5203**	1	STARTING MOTOR GP-ELECTRIC (12-VOLT, 3.2-KW)	

C - CHANGE FROM PREVIOUS TYPE
M - METRIC PART
R - REMANUFACTURED PART MAY BE AVAILABLE

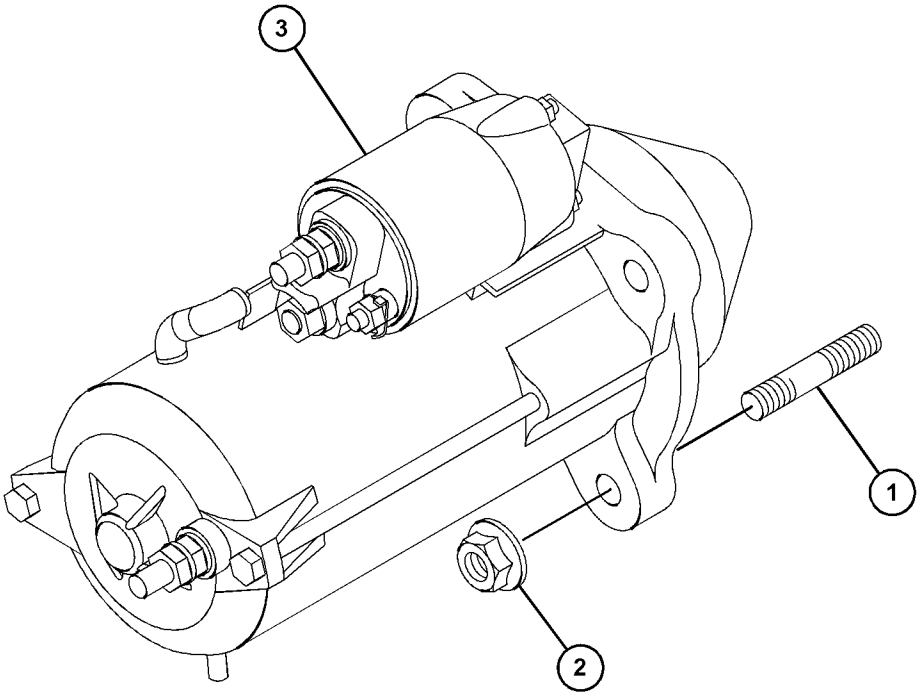

GRAPHIC #1 <END> g06129794

303-2123 STARTING MOTOR GP-ELECTRIC

SMCS-1453 **i03096621**

NOTE	REF NO	GRAPHIC REF	PART NUMBER	QTY	PART NAME 1 2 3 4 5 6 (PRODUCT LEVEL)	SEE PAGE
M	1	1	**6I-0364**	3	STUD (M10X1.5X45-MM)	
M	2	1	**6I-0594**	3	NUT (M10X1.5-THD)	
	3	1	**329-0290**	1	STARTING MOTOR GP-ELECTRIC	

M - METRIC PART

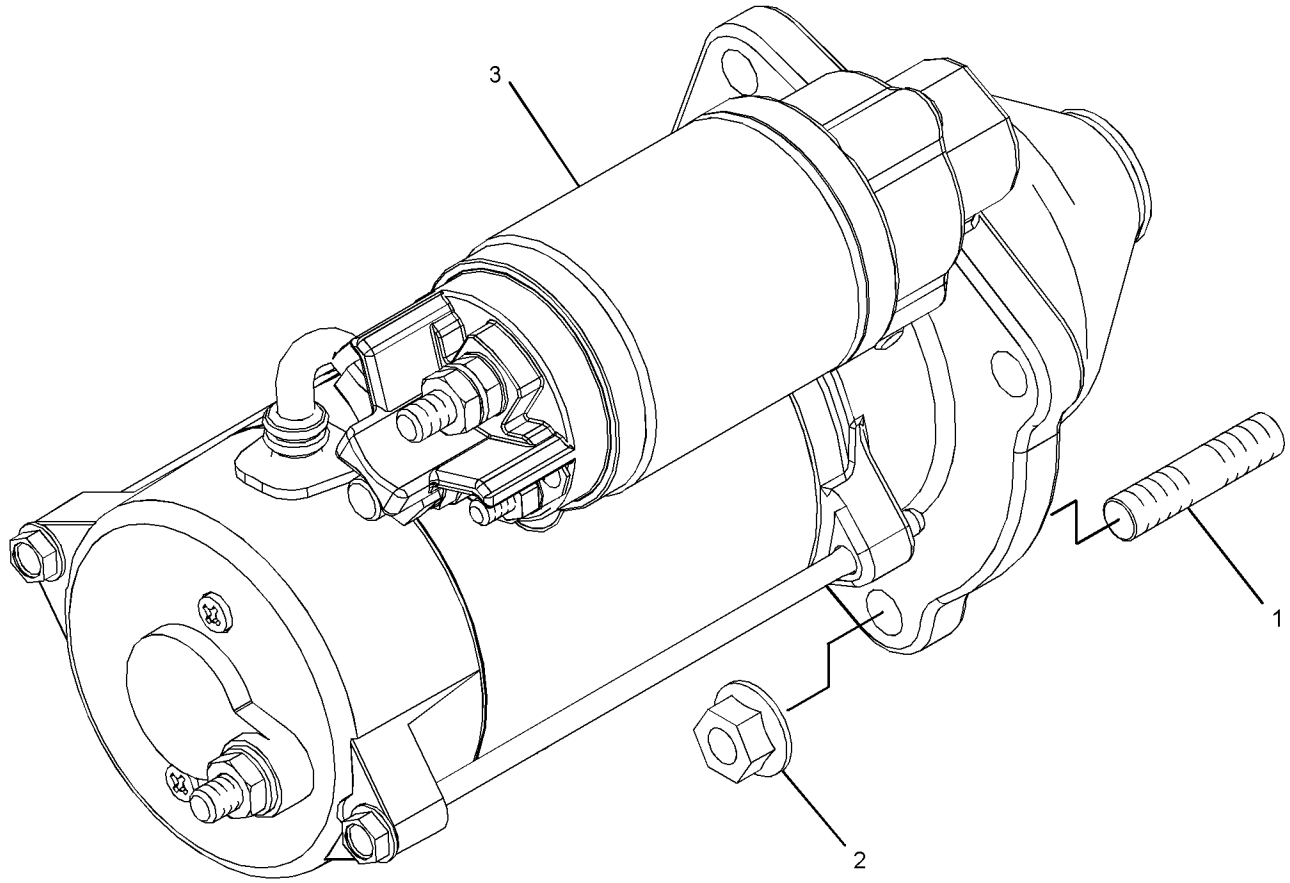

GRAPHIC #1 <END> g01636810

323-6678 STARTING MOTOR GP-ELECTRIC

ALSO AN ATTACHMENT

SMCS-1453 **i08779698**

NOTE	REF NO	GRAPHIC REF	PART NUMBER	QTY	PART NAME 1 2 3 4 5 6 (PRODUCT LEVEL)	SEE PAGE
M	1	1	**6I-4012**	3	STUD (M10X1.5X40-MM)	
M	2	1	**175-7141**	3	NUT-HEX FLANGE (M10X1.5-THD)	
R	3	1	**526-9854**	1	STARTING MOTOR GP-ELECTRIC (12-VOLT, 3.2-KW) (12-VOLT, 3.2-KW)	

M - METRIC PART
R - REMANUFACTURED PART MAY BE AVAILABLE

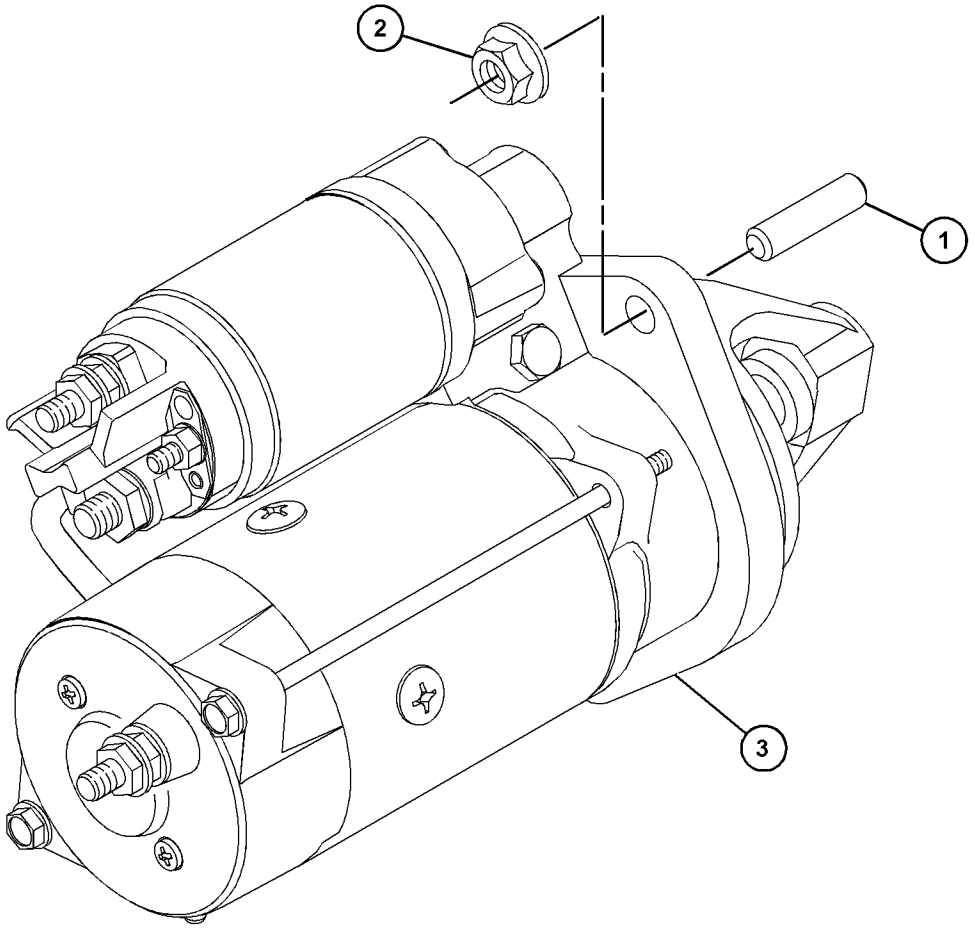

GRAPHIC #1 <END> g06797709

328-6009 STARTING MOTOR GP-ELECTRIC

S/N: 3341-22539
12-VOLT, 3.2-KW

SMCS-1453 **i02985293**

NOTE	REF NO	GRAPHIC REF	PART NUMBER	QTY	PART NAME 1 2 3 4 5 6 (PRODUCT LEVEL)	SEE PAGE
M	1	1	**6I-0364**	3	STUD (M10X1.5X45-MM)	
M	2	1	**6I-0594**	3	NUT (M10X1.5-THD)	
	3	1	**312-7539**	1	STARTING MOTOR GP-ELECTRIC	

M - METRIC PART

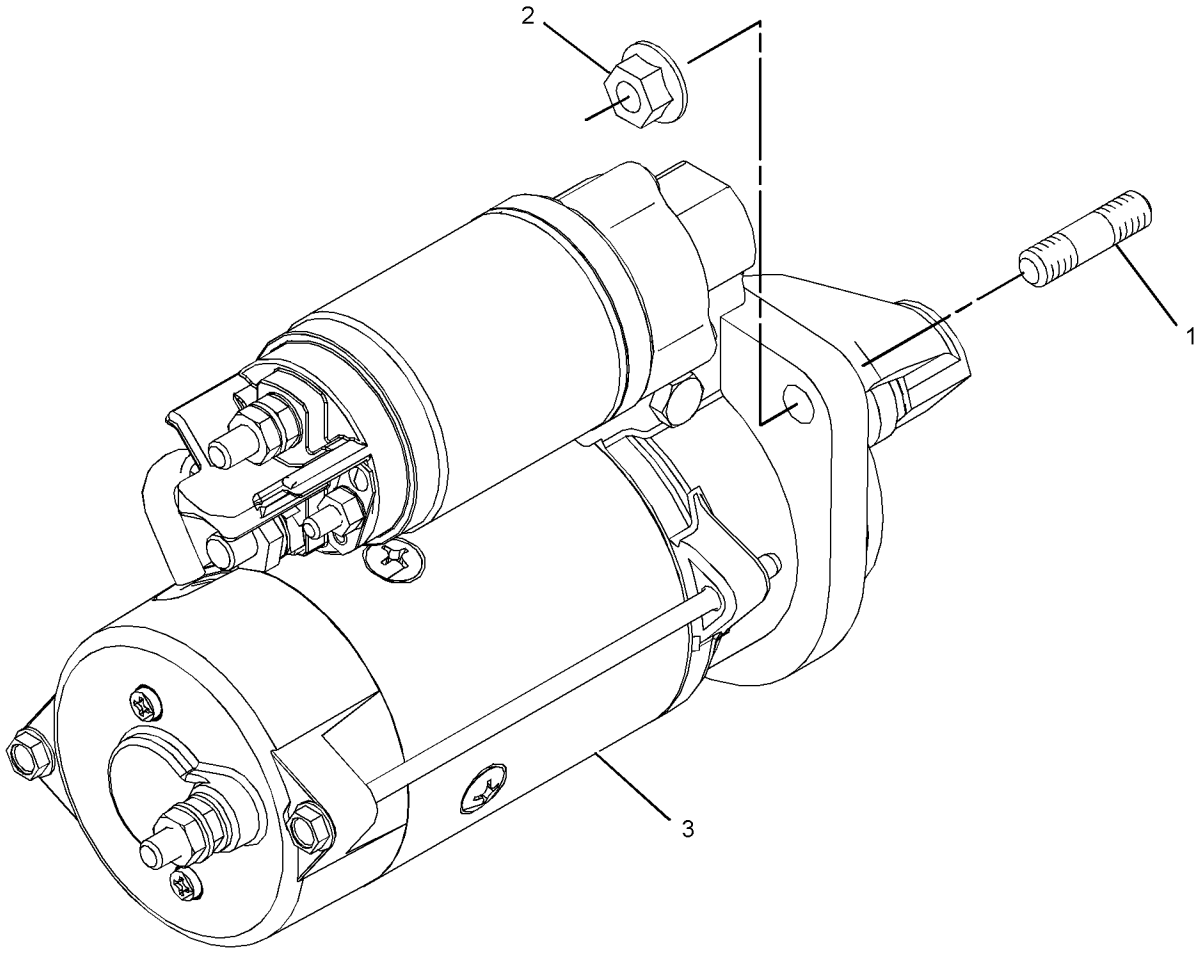

GRAPHIC #1 <END> g01534854

328-6071 STARTING MOTOR GP-ELECTRIC

TYPE 1

SMCS-1453 **i04941600**

NOTE	REF NO	GRAPHIC REF	PART NUMBER	QTY	PART NAME 1 2 3 4 5 6 (PRODUCT LEVEL)	SEE PAGE
	1	1	**1B-4203**	3	NUT-FULL (3/8-24-THD)	
	2	1	**5M-2894**	3	WASHER-HARD (10.2X18.5X2.5-MM THK)	
	3	1	**268-4218**	3	STUD	
R	4	1	**364-4131**	1	STARTING MOTOR GP-ELECTRIC	

R - REMANUFACTURED PART MAY BE AVAILABLE

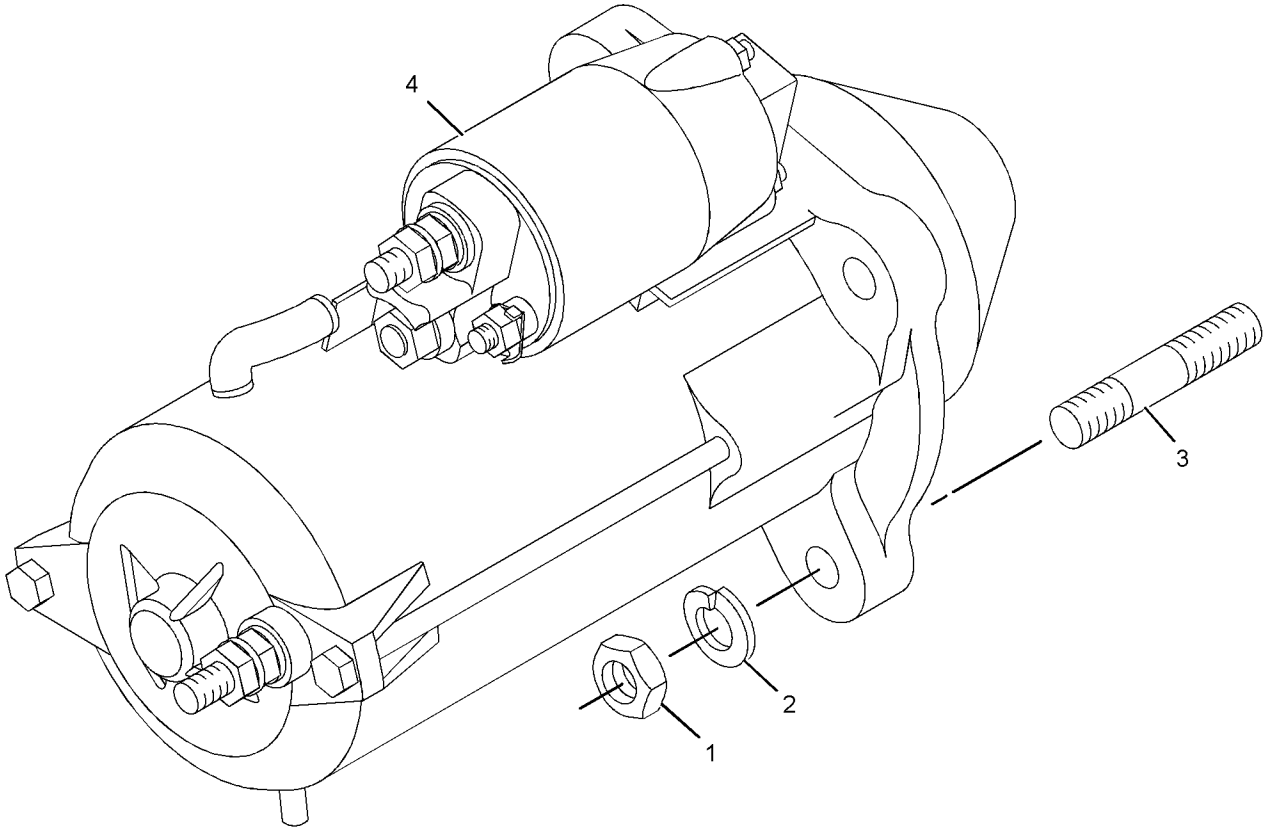

GRAPHIC #1 <END> g01959855

328-6071 STARTING MOTOR GP-ELECTRIC

TYPE 2

SMCS-1453 **i06638378**

NOTE	REF NO	GRAPHIC REF	PART NUMBER	QTY	PART NAME 1 2 3 4 5 6 (PRODUCT LEVEL)	SEE PAGE
	1	1	**1B-4203**	3	NUT-FULL (3/8-24-THD)	
	2	1	**5M-2894**	3	WASHER-HARD (10.2X18.5X2.5-MM THK)	
	3	1	**268-4218**	3	STUD	
CR	4	1	**357-5203**	1	STARTING MOTOR GP-ELECTRIC (12-VOLT, 3.2-KW)	

C - CHANGE FROM PREVIOUS TYPE
R - REMANUFACTURED PART MAY BE AVAILABLE

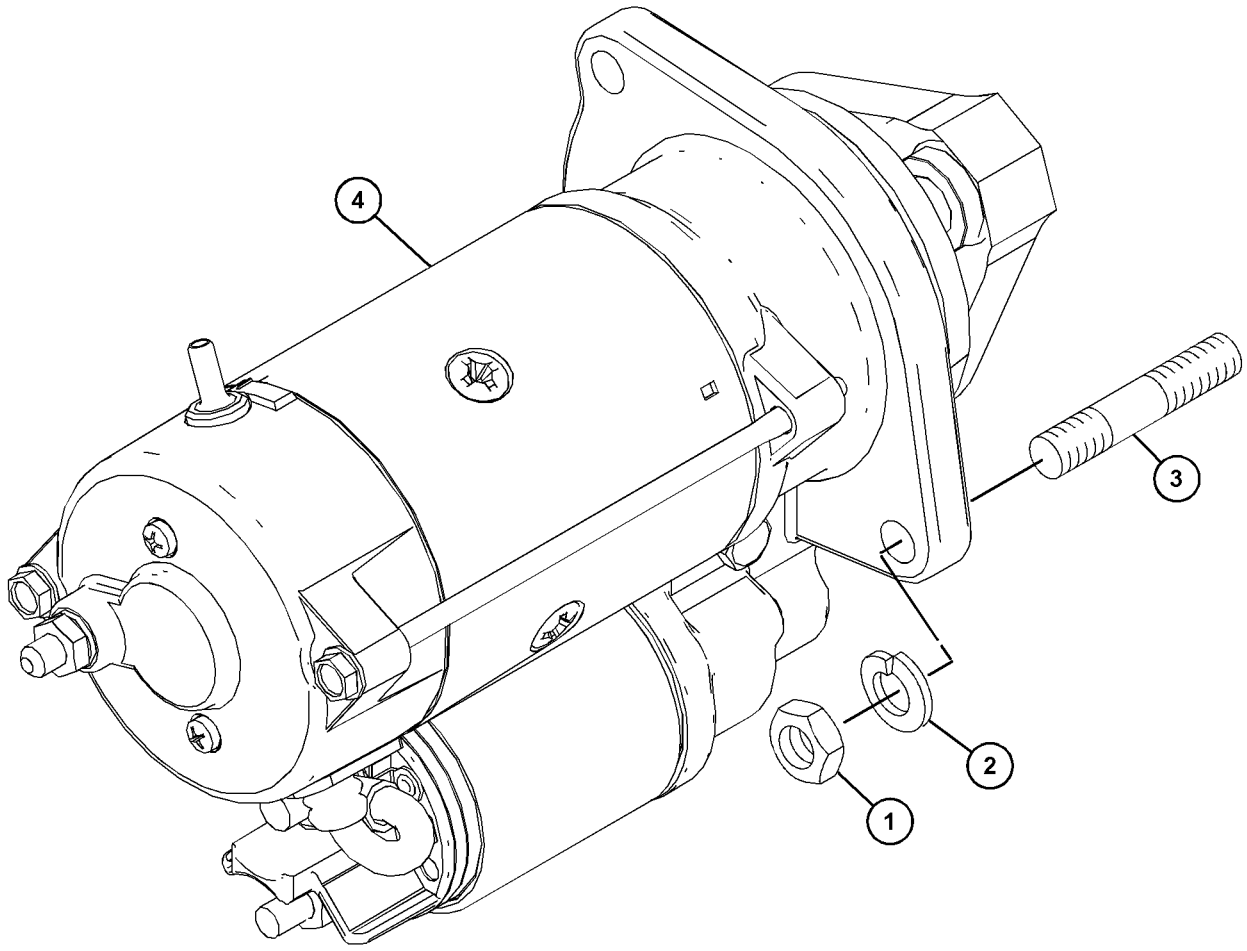

GRAPHIC #1 <END> g06136564

328-6072 STARTING MOTOR GP-ELECTRIC

SMCS-1453 **i07682973**

NOTE	REF NO	GRAPHIC REF	PART NUMBER	QTY	PART NAME 1 2 3 4 5 6 (PRODUCT LEVEL)	SEE PAGE
M	1	1	**6I-4012**	3	STUD (M10X1.5X40-MM)	
M	2	1	**175-7141**	3	NUT-HEX FLANGE (M10X1.5-THD)	
	3	1	**527-8052**	1	STARTING MOTOR-ELECTRIC (12-VOLT, 3200-WATT)	

M - METRIC PART

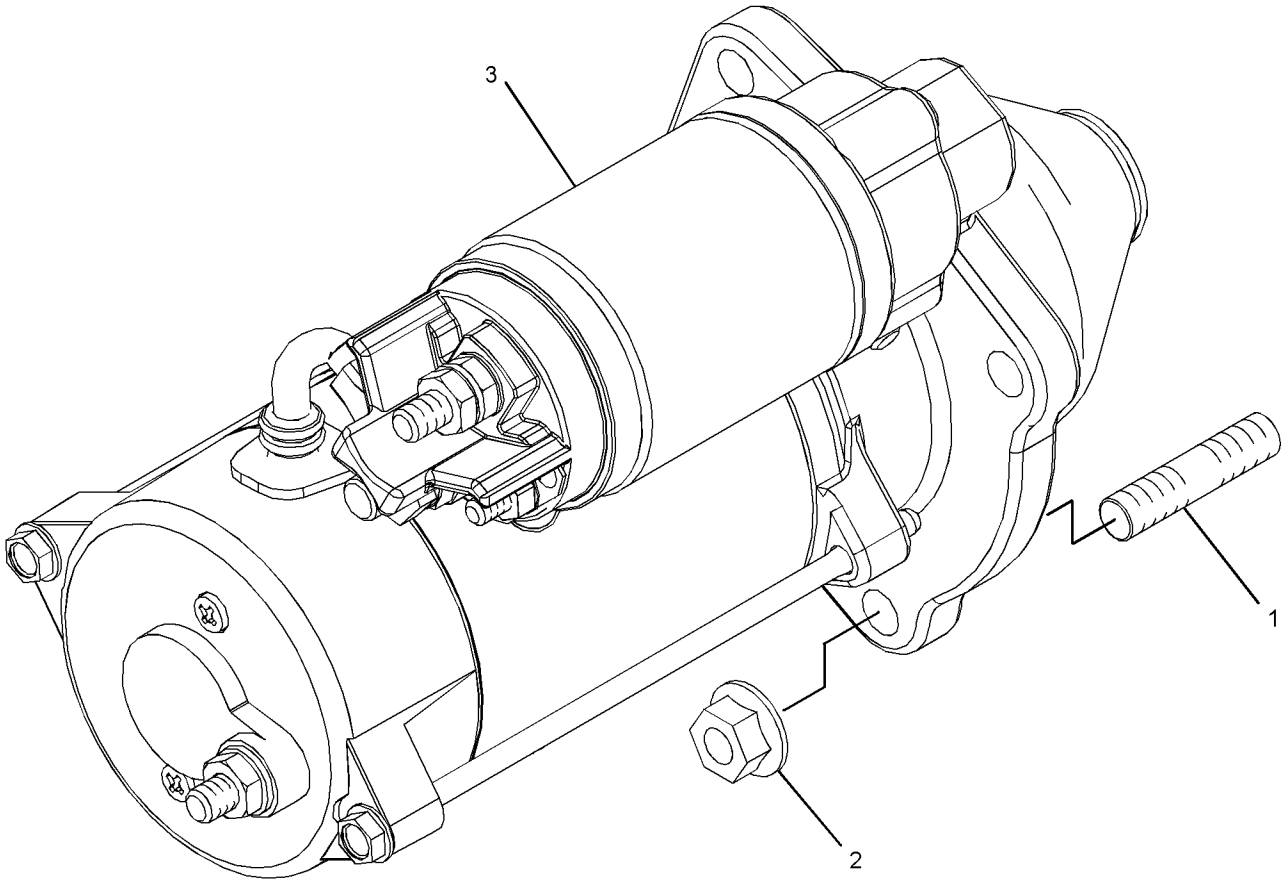

GRAPHIC #1 <END> g01636810

329-1385 STARTING MOTOR GP-ELECTRIC

S/N: 33422540-UP

SMCS-1453 **i06601055**

NOTE	REF NO	GRAPHIC REF	PART NUMBER	QTY	PART NAME 1 2 3 4 5 6 (PRODUCT LEVEL)	SEE PAGE
	1	1	**5M-2894**	3	WASHER-HARD (10.2X18.5X2.5-MM THK)	
	2	1	**6V-8183**	3	NUT-FULL (3/8-24-THD)	
	3	1	**268-4218**	3	STUD	
R	4	1	**357-5203**	1	STARTING MOTOR GP-ELECTRIC (12-VOLT, 3.2-KW) (12-VOLT, 3.2-KW)	

R - REMANUFACTURED PART MAY BE AVAILABLE

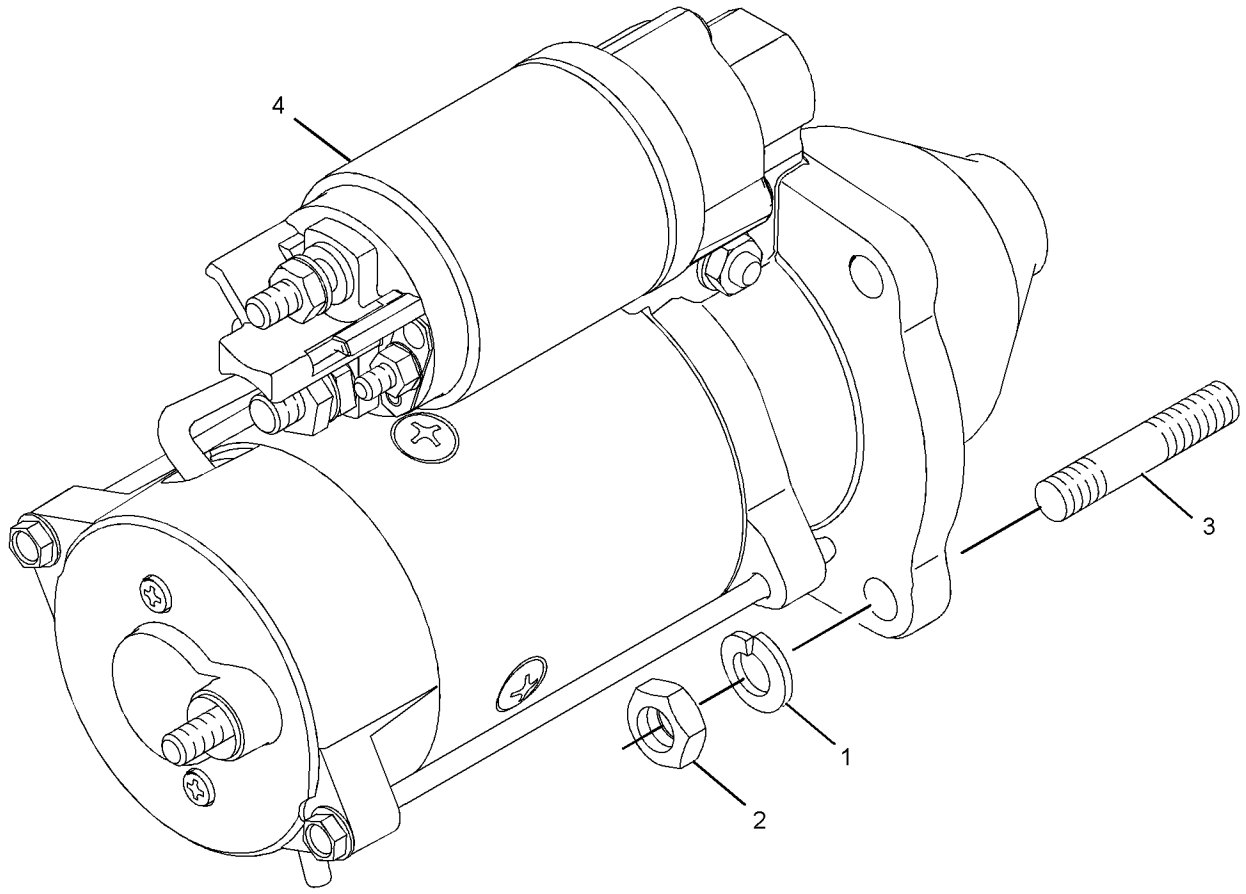

GRAPHIC #1 <END> g01709753

330-8329 STARTING MOTOR GP-ELECTRIC

SMCS-1453 **i06693771**

NOTE	REF NO	GRAPHIC REF	PART NUMBER	QTY	PART NAME 1 2 3 4 5 6 (PRODUCT LEVEL)	SEE PAGE
M	1	1	**6I-4012**	3	STUD (M10X1.5X40-MM)	
M	2	1	**175-7141**	3	NUT-HEX FLANGE (M10X1.5-THD)	
R	3	1	**357-5203**	1	STARTING MOTOR GP-ELECTRIC (12-VOLT, 3.2-KW)	

M - METRIC PART
R - REMANUFACTURED PART MAY BE AVAILABLE

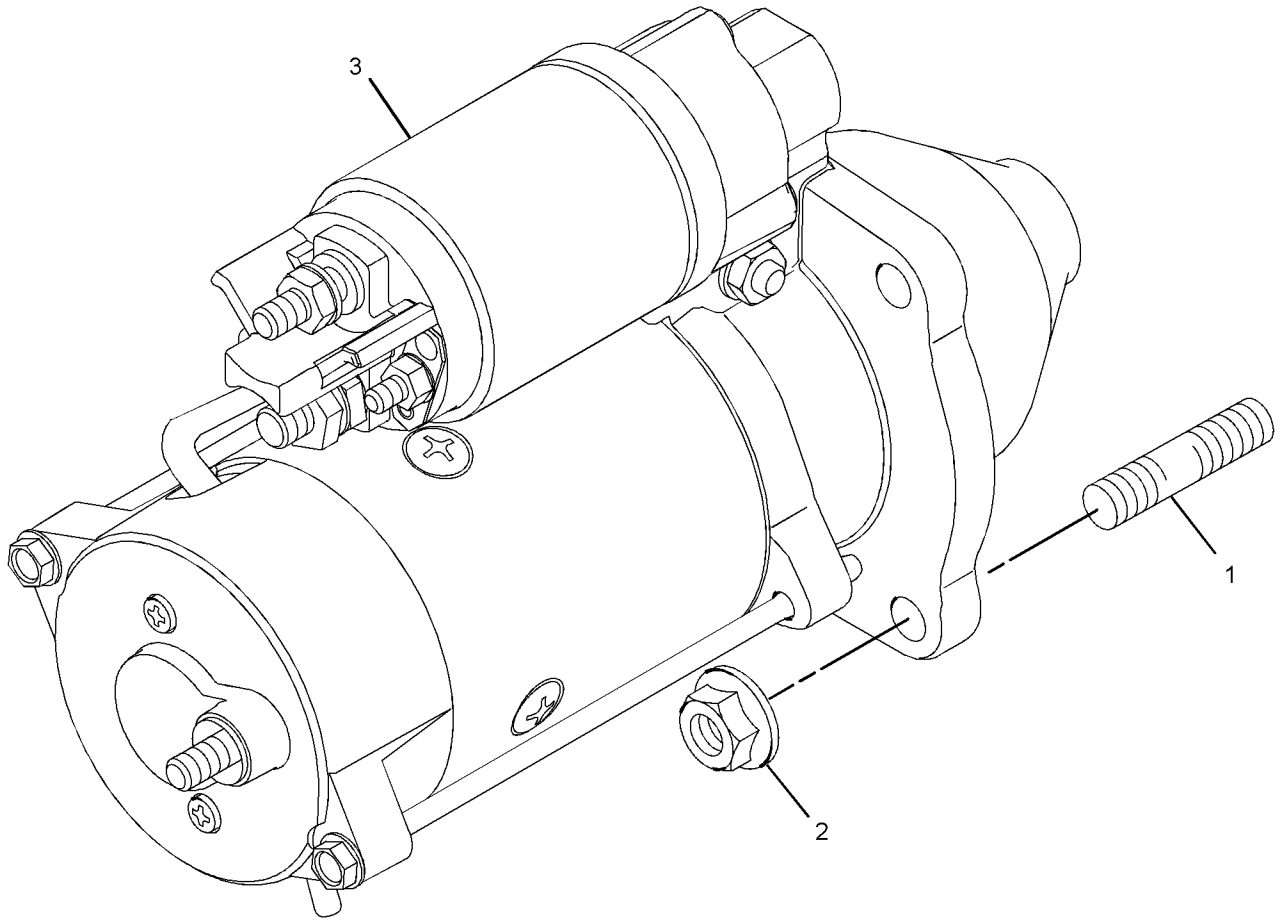

GRAPHIC #1 <END> g06152697

420-3162 STARTING MOTOR GP-ELECTRIC

SMCS-1453 **i08746435**

NOTE	REF NO	GRAPHIC REF	PART NUMBER	QTY	PART NAME 1 2 3 4 5 6 (PRODUCT LEVEL)	SEE PAGE
M	1	1	**6I-4012**	3	STUD (M10X1.5X40-MM)	
M	2	1	**175-7141**	3	NUT-HEX FLANGE (M10X1.5-THD)	
R	3	1	**526-9854**	1	STARTING MOTOR GP-ELECTRIC (12-VOLT, 3.2-KW)	

M - METRIC PART
R - REMANUFACTURED PART MAY BE AVAILABLE

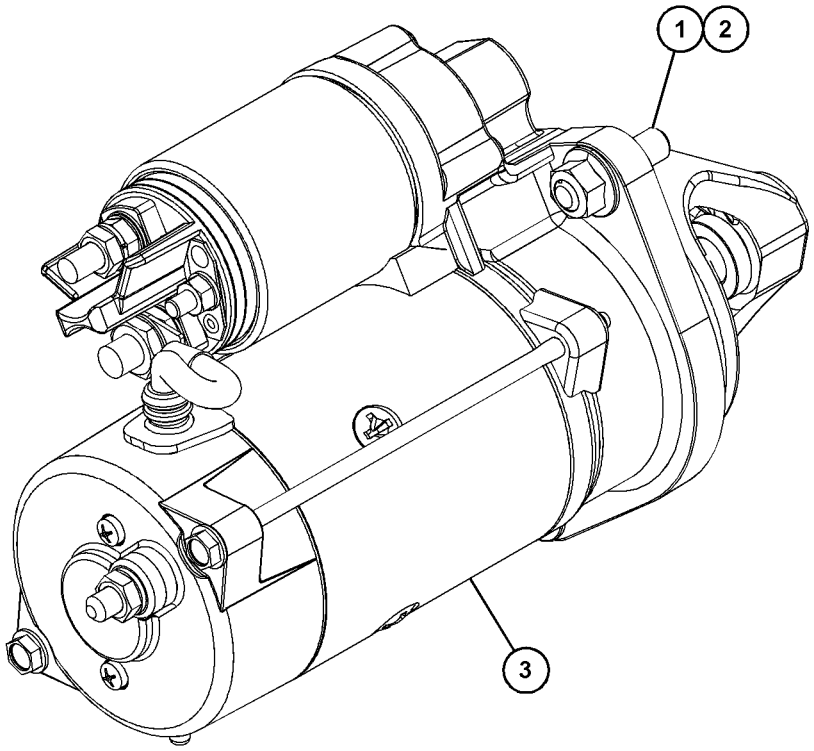

GRAPHIC #1 <END> g06799559

489-1835 STARTING MOTOR GP-ELECTRIC

SMCS-1453 **i07592189**

NOTE	REF NO	GRAPHIC REF	PART NUMBER	QTY	PART NAME 1 2 3 4 5 6 (PRODUCT LEVEL)	SEE PAGE
M	1	1	**6I-0364**	3	STUD (M10X1.5X45-MM)	
M	2	1	**175-7141**	3	NUT-HEX FLANGE (M10X1.5-THD)	
	3	1	**527-8052**	1	STARTING MOTOR-ELECTRIC (12-VOLT, 3200-WATT)	

M - METRIC PART

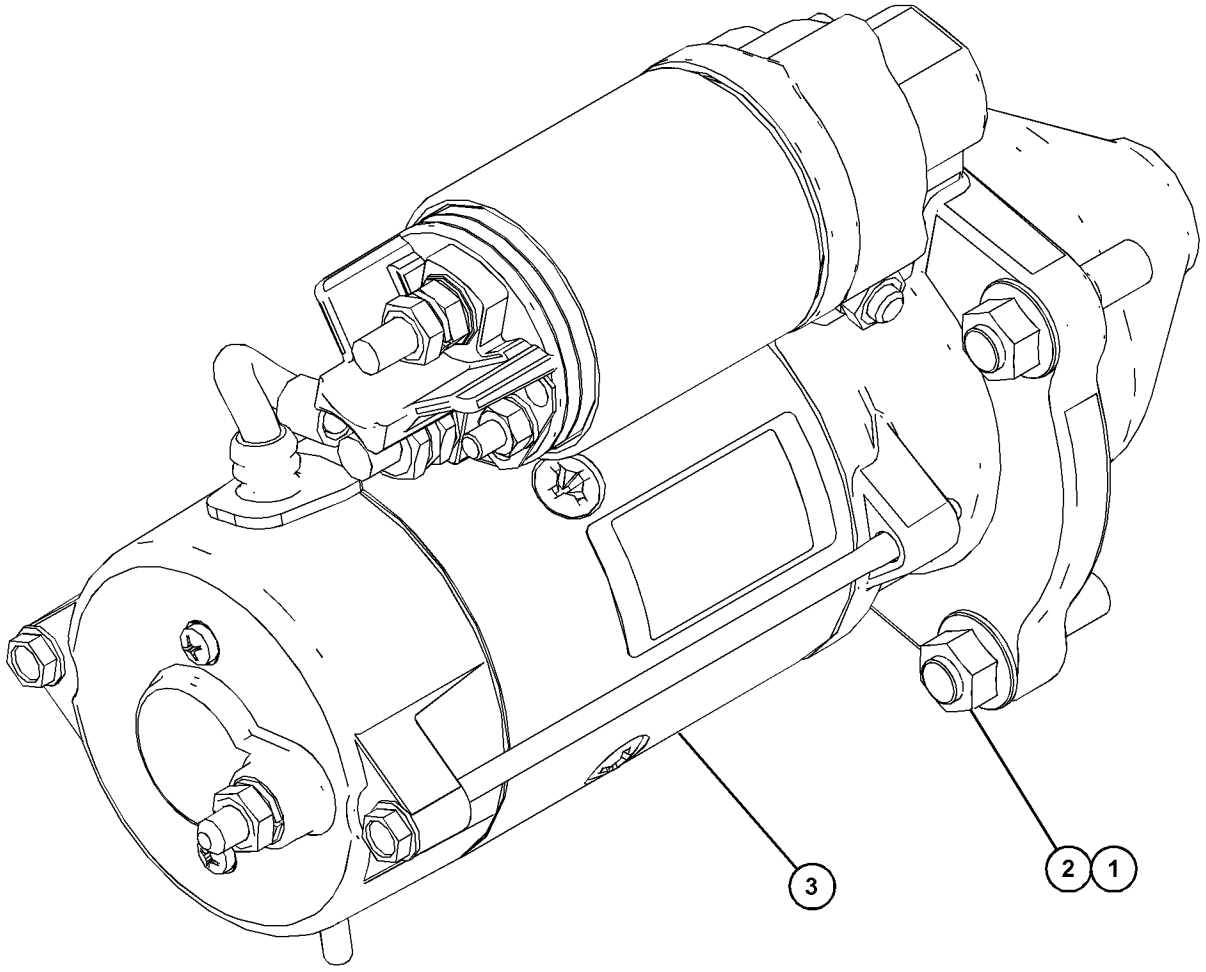

GRAPHIC #1 <END> g06036496

233-9445 SWITCH GP-PRESSURE–ENGINE OIL

ALSO AN ATTACHMENT

SMCS-7400, 7421 **i02436658**

NOTE	REF NO	GRAPHIC REF	PART NUMBER	QTY	PART NAME 1 2 3 4 5 6 (PRODUCT LEVEL)	SEE PAGE
	1	1	**253-7910**	1	SWITCH AS-PRESSURE (ENGINE OIL)	

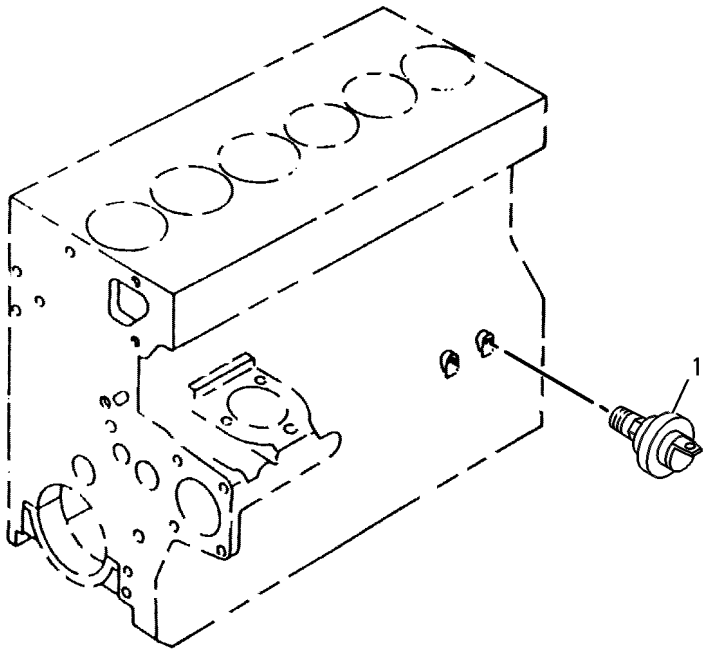

GRAPHIC #1 <END> g00268118

237-4896 SWITCH GP-PRESSURE—ENGINE OIL

SMCS-7400, 7421 **i02437894**

NOTE	REF NO	GRAPHIC REF	PART NUMBER	QTY	PART NAME 1 2 3 4 5 6 (PRODUCT LEVEL)	SEE PAGE
	1	1	**237-4894**	1	SWITCH AS-PRESSURE (ENGINE OIL)	
	2	1	**199-9267**	1	SEAL-O-RING	

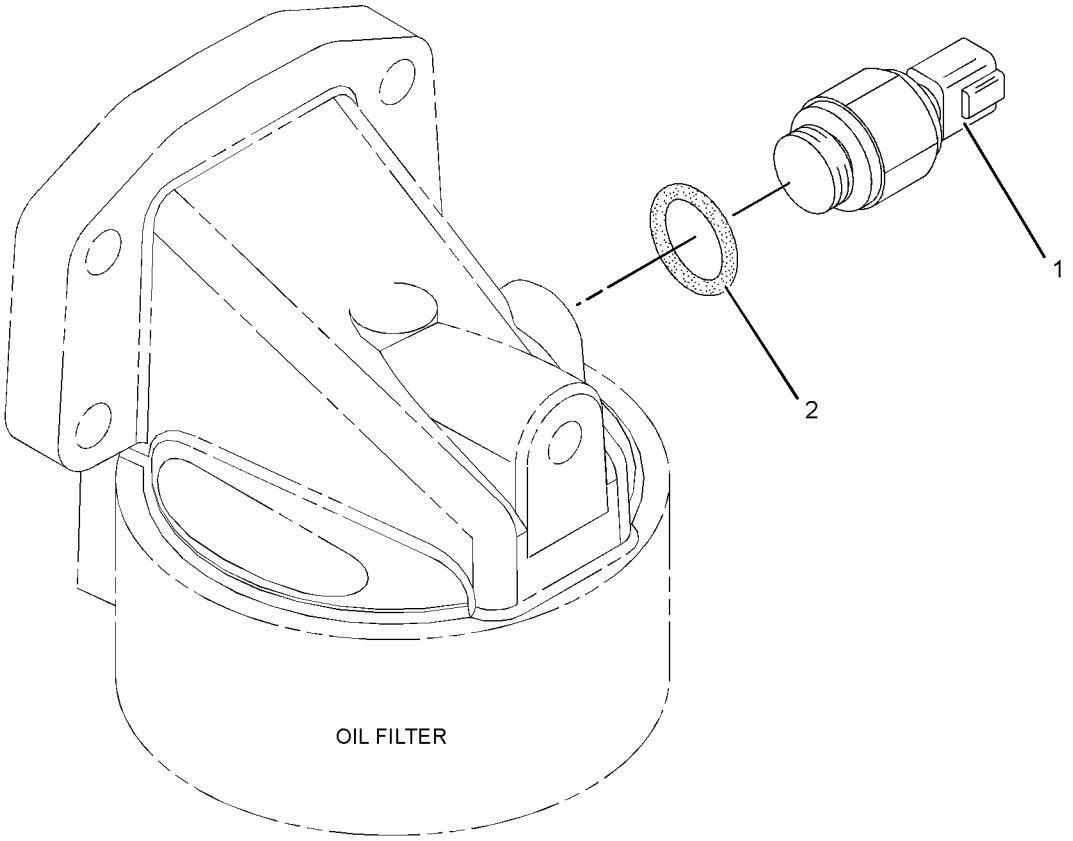

GRAPHIC #1 <END> g01218504

253-0756 SWITCH GP-PRESSURE–ENGINE OIL

ALSO AN ATTACHMENT

SMCS-7400, 7421 **i02362364**

NOTE	REF NO	GRAPHIC REF	PART NUMBER	QTY	PART NAME 1 2 3 4 5 6 (PRODUCT LEVEL)	SEE PAGE
	1	1	**199-9267**	1	SEAL-O-RING	
	2	1	**232-3861**	1	PLUG (BLANKING)	
	3	1	**253-7910**	1	SWITCH AS-PRESSURE (ENGINE OIL)	

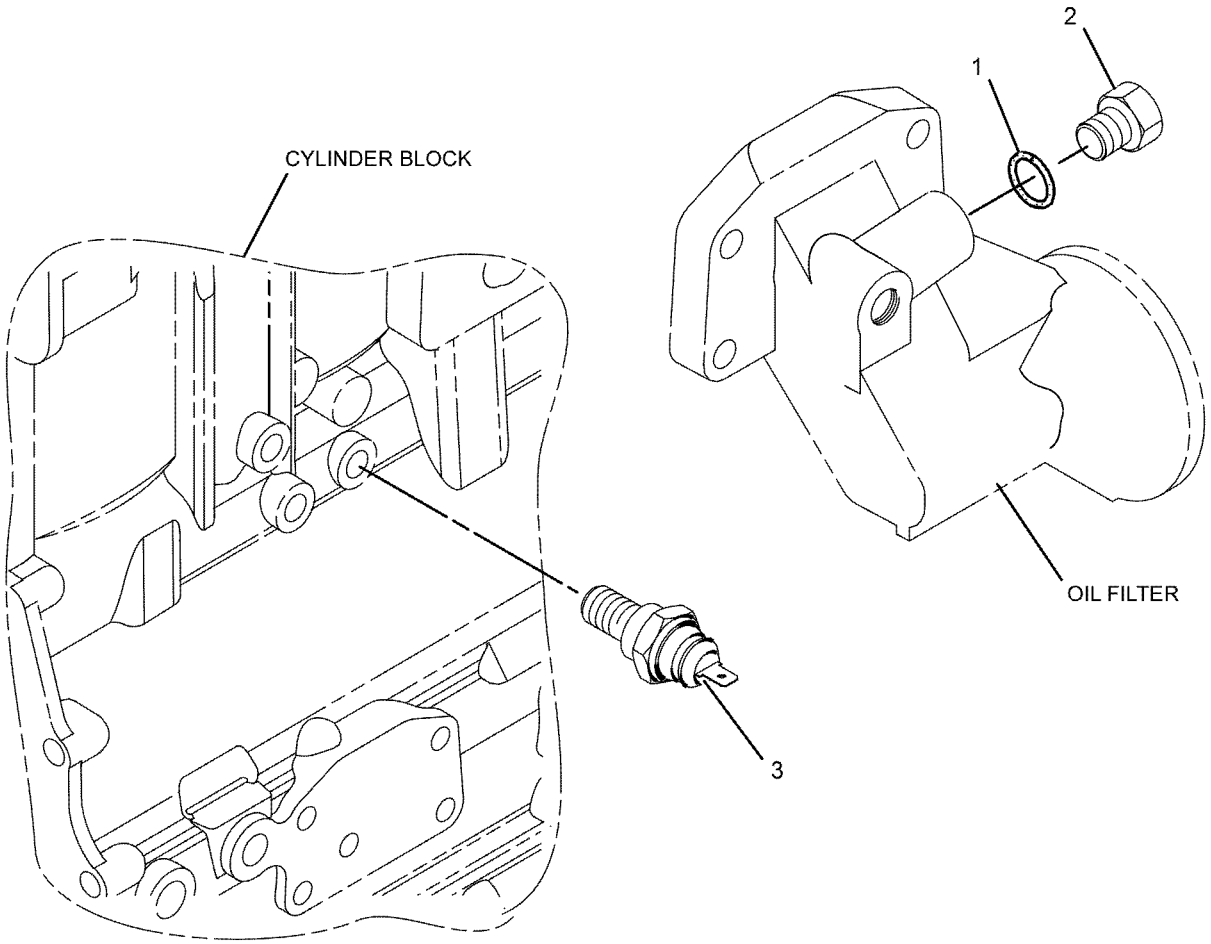

GRAPHIC #1 <END> g01079718

253-8966 SWITCH GP-PRESSURE—ENGINE OIL

ALSO AN ATTACHMENT

SMCS-7400, 7421 **i02252298**

NOTE	REF NO	GRAPHIC REF	PART NUMBER	QTY	PART NAME 1 2 3 4 5 6 (PRODUCT LEVEL)	SEE PAGE
	1	1	**035-8063**	1	PLUG	
	2	1	**199-9267**	2	SEAL-O-RING	
	3	1	**232-3861**	1	PLUG (BLANKING)	
	4	1	**237-4894**	1	SWITCH AS-PRESSURE (ENGINE OIL)	

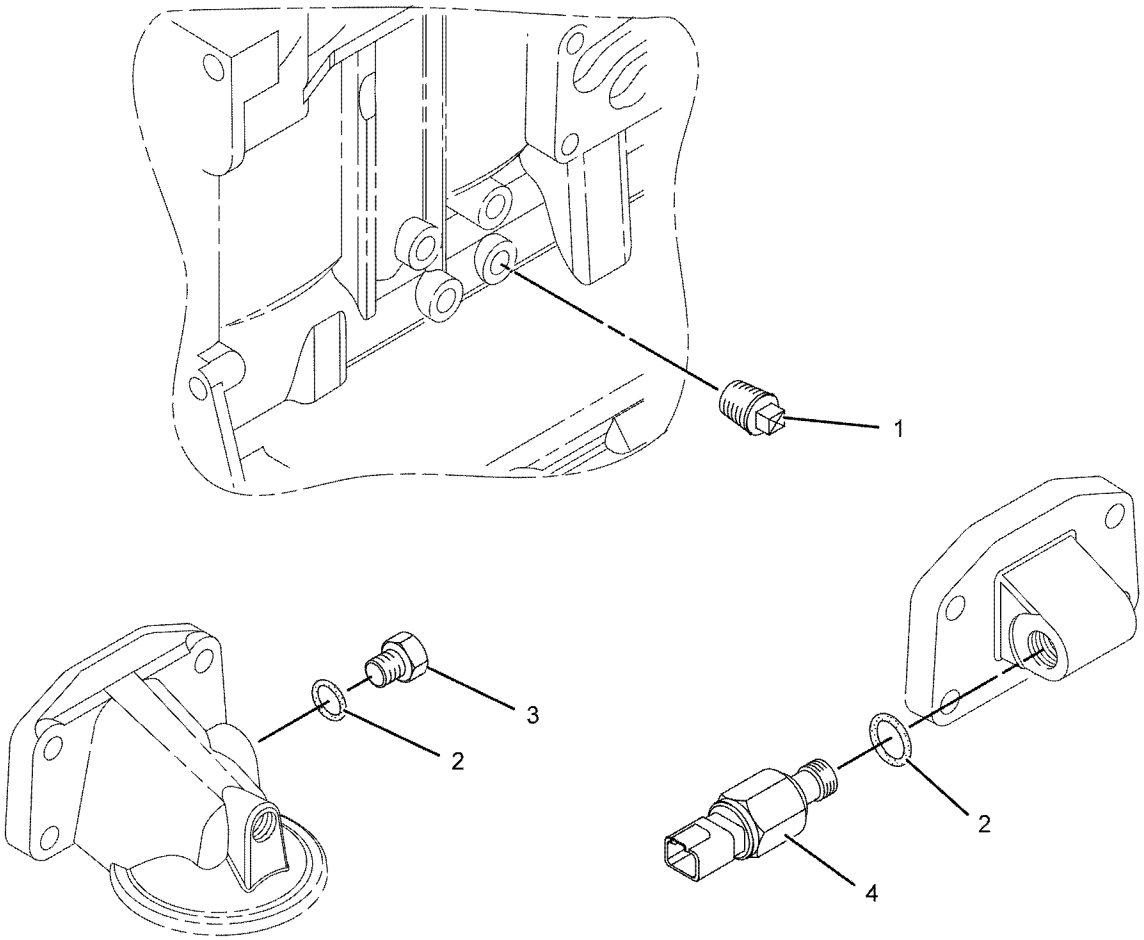

GRAPHIC #1 <END> g01136166

303-2131 SWITCH GP-PRESSURE

SMCS-7400, 7421 **i03365220**

NOTE	REF NO	GRAPHIC REF	PART NUMBER	QTY	PART NAME 1 2 3 4 5 6 (PRODUCT LEVEL)	SEE PAGE
	1	1	**199-9267**	1	SEAL-O-RING	
	2	1	**232-3861**	1	PLUG (BLANKING)	
	3	1	**253-7910**	1	SWITCH AS-PRESSURE (ENGINE OIL)	

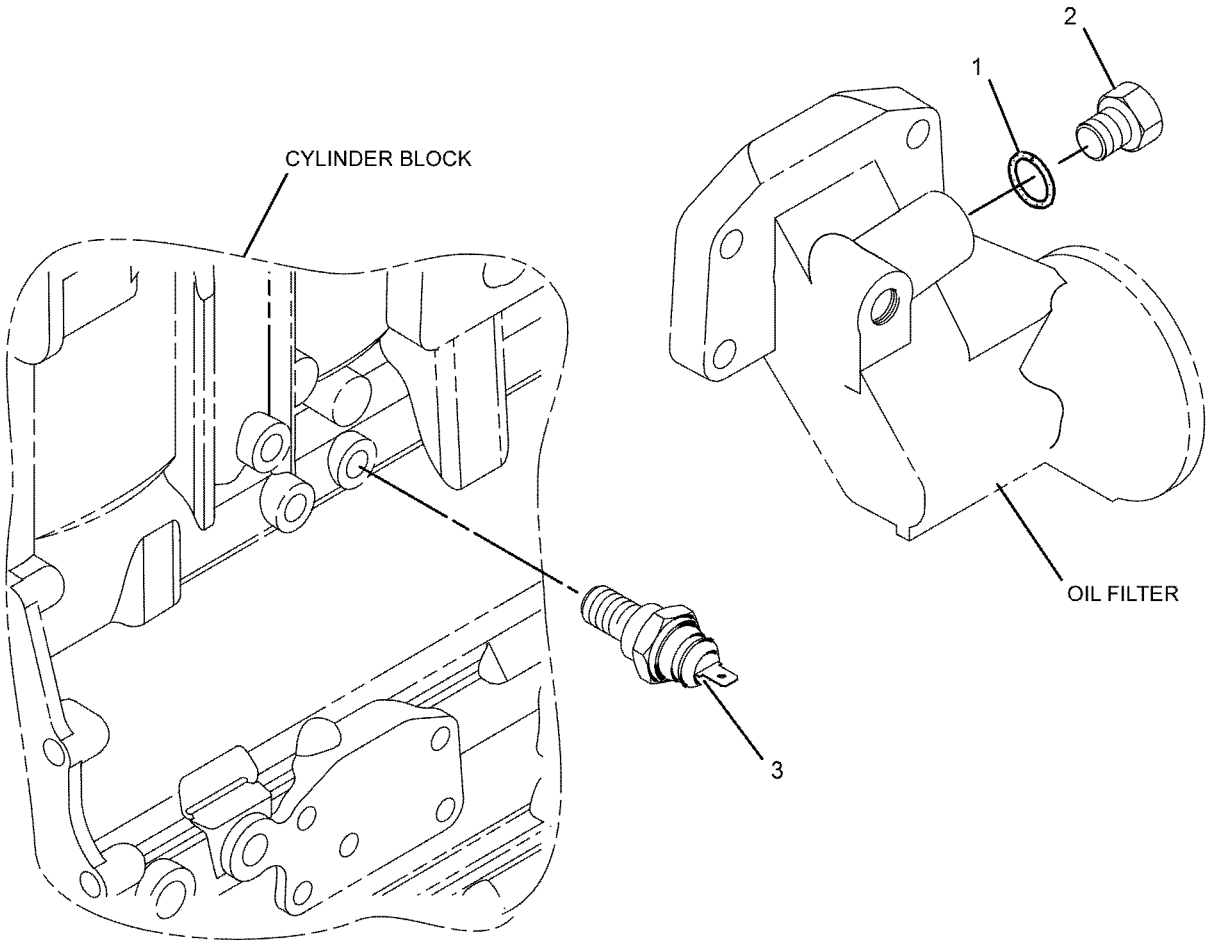

GRAPHIC #1 <END> g01079718

235-8749 SWITCH GP-TEMPERATURE—ENGINE COOLANT

ALSO AN ATTACHMENT

SMCS-7400 **i06137423**

NOTE	REF NO	GRAPHIC REF	PART NUMBER	QTY	PART NAME 1 2 3 4 5 6 (PRODUCT LEVEL)	SEE PAGE
	1	1	**199-9751**	1	SEAL-O-RING	
	2	1	**235-8747**	1	SWITCH-TEMPERATURE (ENGINE COOLANT)	

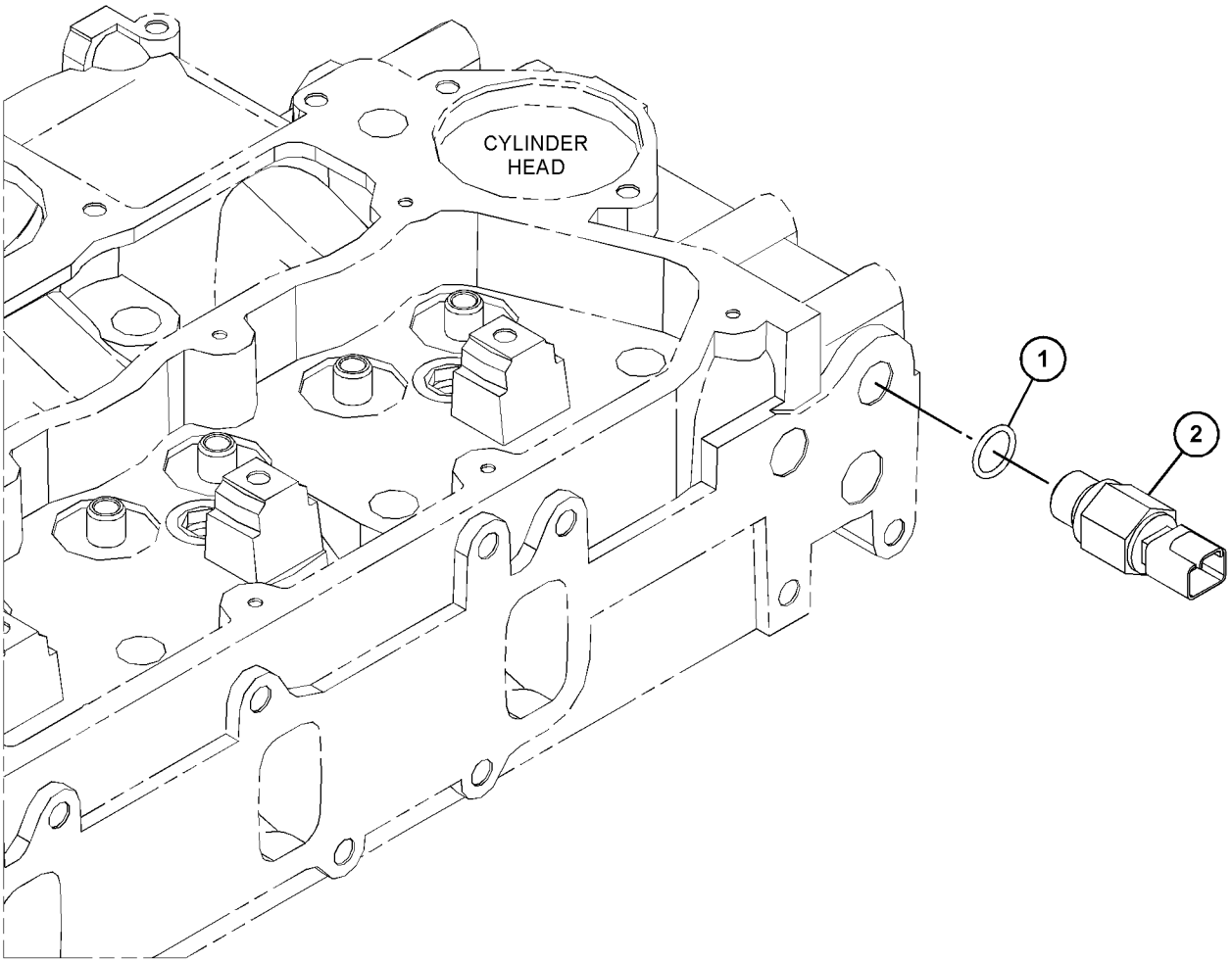

GRAPHIC #1 <END> g03822284

367-0594 SWITCH GP-TEMPERATURE

ALSO AN ATTACHMENT

SMCS-7400 **i07042268**

NOTE	REF NO	GRAPHIC REF	PART NUMBER	QTY	PART NAME 1 2 3 4 5 6 (PRODUCT LEVEL)	SEE PAGE
	1	1	**199-9751**	1	SEAL-O-RING	
	2	1	**367-0593**	1	SWITCH-TEMPERATURE	

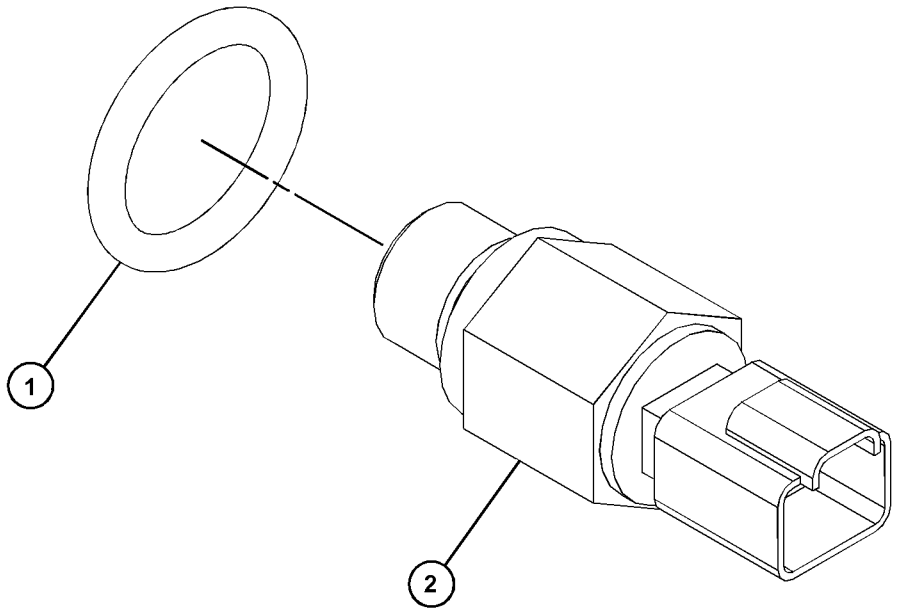

GRAPHIC #1 <END> g06206272

235-0328 MOUNTING GP-MOTOR—STARTING

SMCS-4351, 5082 **i02359203**

NOTE	REF NO	GRAPHIC REF	PART NUMBER	QTY	PART NAME 1 2 3 4 5 6 (PRODUCT LEVEL)	SEE PAGE
M	1	1	**6I-0594**	3	NUT (M10X1.5-THD)	
	2	1	**7W-4540**	1	SPACER	
M	3	1	**128-1599**	3	STUD (M10X1.5X50-MM)	

M - METRIC PART

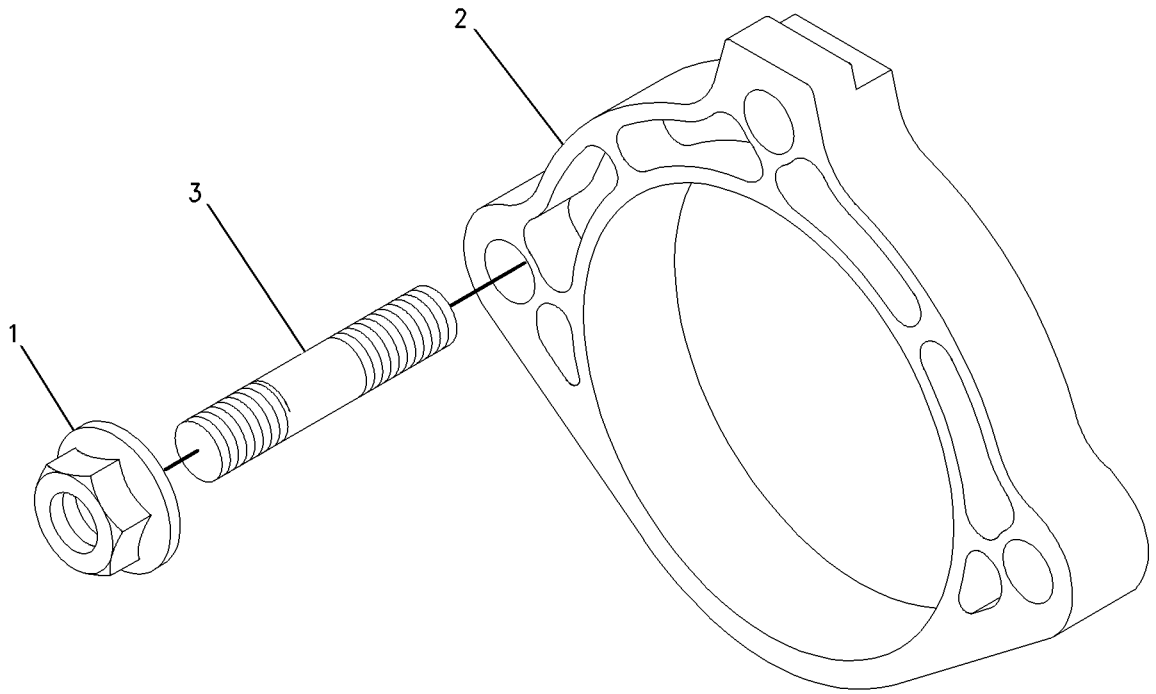

GRAPHIC #1 <END> g00985783

566-2696 DISPLAY GP-MONITOR

8-INCH

AN ATTACHMENT

SMCS-7490 **i08443312**

NOTE	PART NUMBER	QTY	PART NAME 1 2 3 4 5 6 (PRODUCT LEVEL)	SEE PAGE
Y	*581-7710*	1	DISPLAY GP-MONITOR	1587
	604-8309	1	SOFTWARE GP-MONITOR	

Y - SEPARATE ILLUSTRATION

<END>

566-2697 DISPLAY GP-MONITOR

13-INCH

AN ATTACHMENT

SMCS-7490 **i08524415**

NOTE	REF NO	GRAPHIC REF	PART NUMBER	QTY	PART NAME 1 2 3 4 5 6 (PRODUCT LEVEL)	SEE PAGE
Y	1	1	*581-7711*	1	DISPLAY GP-MONITOR	1588
F			**604-8309**	1	SOFTWARE GP-MONITOR	

F - NOT SHOWN
Y - SEPARATE ILLUSTRATION

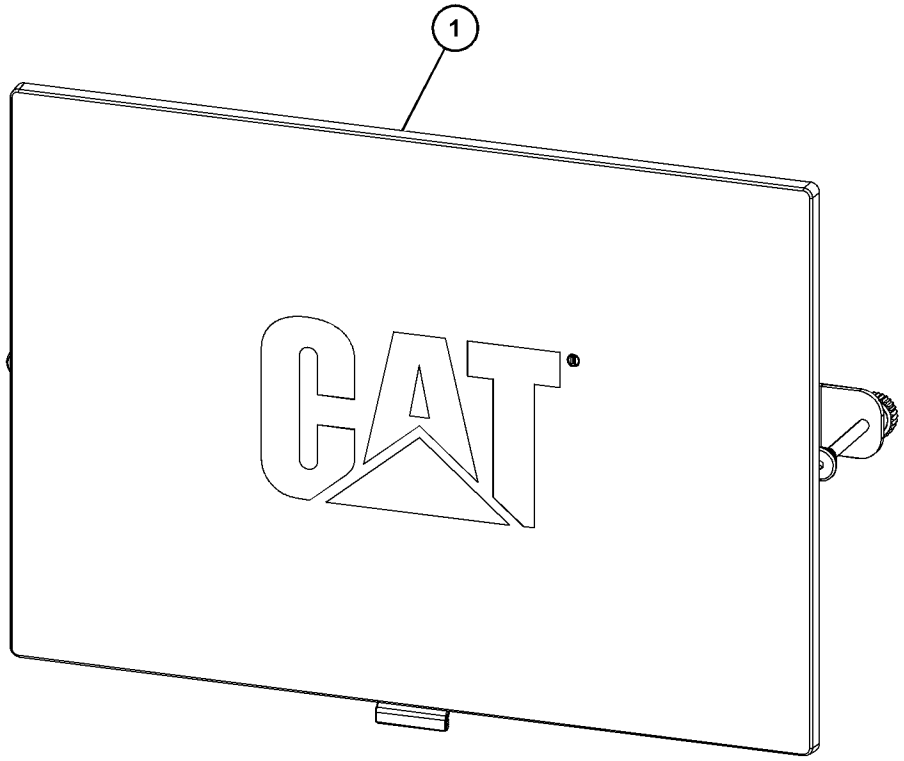

GRAPHIC #1 <END> g06699476

581-7710 DISPLAY GP-MONITOR

8-INCH

PART OF 566-2696 DISPLAY GP-MONITOR

AN ATTACHMENT

SMCS-7490 **i08287988**

NOTE	REF NO	GRAPHIC REF	PART NUMBER	QTY	PART NAME 1 2 3 4 5 6 (PRODUCT LEVEL)	SEE PAGE
F			**458-1027**	1	COVER-PROTECTIVE	
F			**462-1845**	1	CONNECTOR	
F			**463-1730**	1	GASKET	
F			**463-1739**	1	PLUG	
F			**463-1740**	1	BRACKET	
F			**566-2648**	1	DISPLAY	
					AVAILABLE REPAIR KIT(S):	
			458-1025	1	KIT-MOUNTING	
					(INCLUDES PLATES, FLAT WASHERS, SPRING WASHERS, INSERTS, HEAD SCREWS, PAN HEAD SCREWS, WING HEAD SCREWS, ROUND NUTS)	

F - NOT SHOWN

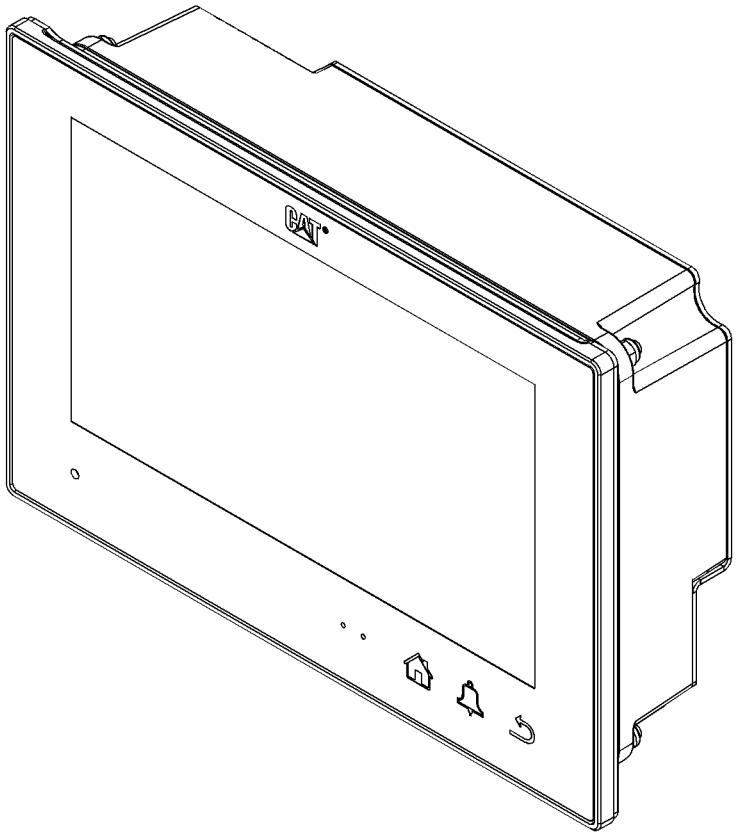

GRAPHIC #1 <END> g06610784

581-7711 DISPLAY GP-MONITOR

13-INCH

PART OF 566-2697 DISPLAY GP-MONITOR

AN ATTACHMENT

SMCS-7490 **i08269305**

NOTE	PART NUMBER	QTY	PART NAME 1 2 3 4 5 6 (PRODUCT LEVEL)	SEE PAGE
	463-1740	1	BRACKET	
	462-1845	1	CONNECTOR	
	458-1033	1	COVER-PROTECTIVE	
	566-2649	1	DISPLAY	
	463-1735	1	GASKET	
	463-1739	1	PLUG	
			AVAILABLE REPAIR KIT(S):	
	458-1031	1	KIT-MOUNTING	
			(INCLUDES HEAD SCREWS, BRACKETS, SPRINGS & FLAT WASHERS)	
			<END>	

386-3814 KIT-GASKET—WATER PUMP

CLASSIC KIT IS SERVICED ONLY AS A COMPLETE PACKAG

FIELD INSTALLATION

SMCS-7555 **i08287713**

NOTE	PART NUMBER	QTY	PART NAME 1 2 3 4 5 6 (PRODUCT LEVEL)	SEE PAGE
			(NO SERVICED PARTS)	
			FOR A LIST OF RELATED PARTS THAT MAY BE REQUIRED FOR THE ENGINE REBUILD TO THE KIT CONSIST, PLEASE VISIT	
			HTTP://DEALER.CAT.COM/RELATED	
			<END>	

PART NUMBER INDEX

Part	Page
0	
0S-1603	590
	591
	592
	593
	594
	596
	597
	598
	600
	603
	604
	605
	607
0S-2353	491
1	
1B-4203	1564
	1570
	1571
1B-8705	195
1B-8736	203
	204
	205
	206
	207
	208
	209
	210
	211
	214
	449
	451
	456
	459
	461
	464
	467
	470
	472
	527
	622
	626
	630
	632
	636
1R-1801	860
1R-1804	1142
	1145
	1147
	1157
	1495
	1497
	1499
	1501
	1509
	1511
	1513
	1515
	1516
2	
2B-0858	528
	538
	613
	679
	701
	816
	824
	872
	873
	874
	1541
2P-8104	1559
2T-2695	318
	414
	426
	428
	447
3	
3E-3371	1551
3E-5153	1559
3E-5154	1559
3J-1907	860
3N-1491	584
3S-8447	581
	585
4	
4B-4278	618
4H-0408	609
	614
4K-7502	595
	599
4N-8771	563
	582
4W-5359	626
	630
5	
5B-9079	838
	839
	840
	842
	843
	844
	846
	847
	849
	851
	853
5C-1809	715
	717
	719
	721
	723
	725
5C-9553	630
	632
	636
5D-1026	196
	233
	247
	249
	251
	253
	255
	256
	258
	260
	262
	264
	274
	276
	278
	280
	298
	300
	302
	304
	306
	308
	310
	312
	314
	316
	318
	320
	322
	324
	326
	328
	330
	332
	334
	336
	338
	340
	342
	344
	354
	356
	358
	360
	362
	364
	366
	368
	370
	372
	374
	376
	378
	380
	382
	384
	386
	388
	390
	392
	394
	410
	412
	414
	420
	422
	424
	426
	428
5L-3308	578
5L-4995	566
5M-2894	1564
	1570
	1571
	1573
5M-8135	567
5P-0597	1004
5P-0598	1004
	1026
	1027
	1029
	1030
	1032
	1126
	1129
	1132
5P-6718	679
	693
	701
	707
	711
	715
	721
	731
	746
	756
5P-8245	590
	591
	592
	593
	594
	595
	596
	597
	598
	599
	600
	601
	602
	603
	604
	605
	607
6	
6B-0933	1524
	1525
	1526
	1527
	1528
	1529
	1530
	1531
	1532
	1533
	1534
	1535
	1536
	1537
	1538
6D-0044	195
6H-3616	613
	652
	653
	654
	655
	657
	658
	659
	662
	663
	666
	667
	668
	669
	670
	671
	672
	673
	825
	826
	828
6H-3957	547
	549
	551
	553
	555

► PRIMARY REFERENCE

PART NUMBER INDEX

Part	Page	Part	Page	Part	Page	Part	Page
	559		1135		1454		444
6I-0217	555		1137		1461		446
	559		1175		1464		447
	622		1178		1467		992
	624		1181		1470		994
	626		1184		1474		1026
	628		1187		1477		1027
	630		1191		1491		1101
	632		1194	6I-0218	911		1104
	634		1197		925		1132
	636		1200		937	6I-0260	196
	638		1204		943		683
	640		1207		949		685
	642		1210		959		687
	644		1213	6I-0233	653		689
	650		1216		659		691
	679		1219		661		693
	681		1222		666		695
	685		1225	6I-0254	195		697
	687		1228		266		699
	693		1231		268		705
	695		1234		270		715
	697		1237		272		717
	699		1240		274		719
	701		1243		276		721
	703		1246		278		723
	715		1249		280		725
	717		1255		282		727
	719		1258		284		729
	721		1261		286		731
	723		1264		288		732
	725		1267		290		734
	731		1270		292		736
	732		1273		294		738
	734		1276		296		740
	736		1279		298		742
	738		1283		300		744
	740		1286		302		746
	742		1289		304		748
	744		1292		306		750
	746		1296		308		752
	748		1298		346		754
	750		1300		348		866
	756		1303		350		867
	758		1306		352		868
	760		1309		354		870
	992		1339		356		871
	994		1342		358		875
	1073		1345		360		876
	1075		1348		362		877
	1077		1351		374		878
	1079		1354		376		880
	1081		1358		378		886
	1083		1361		380		890
	1085		1364		382		894
	1087		1367		384		897
	1089		1370		386		904
	1091		1373		388		906
	1095		1376		390		909
	1097		1379		392		911
	1099		1383		394		913
	1101		1386		395		915
	1104		1389		397		919
	1107		1392		399		923
	1109		1395		401		925
	1111		1421		408		927
	1113		1424		410		929
	1116		1427		412		935
	1119		1430		414		937
	1121		1438		420		939
	1124		1441		422		941
	1126		1445		424		943
	1129		1448		426		945
	1132		1451		428		947

PART NUMBER INDEX

Part	Page	Part	Page	Part	Page	Part	Page
	949		1370		754		1386
	951		1373		756		1389
	953		1376		758		1392
	957		1379		760		1421
	959		1383		762		1424
	961		1386	6I-0291	364		1427
	990		1389		366		1430
	996		1392		368		1438
	1000		1395		370		1441
	1004		1399		372		1445
	1016		1402		557		1451
	1029		1405		650		1454
	1030		1409		679		1461
	1032		1412		701		1464
	1033		1415		707		1474
	1034		1418		709	6I-0292	679
	1047		1421		711		681
	1049		1424		746		701
	1126		1427		996		703
	1129		1430		1004		707
	1175		1438		1016		709
	1178		1441		1026		711
	1181		1445		1027		746
	1184		1448		1101		748
	1187		1451		1175		750
	1191		1454		1178		762
	1194		1461		1181	6I-0293	679
	1197		1464		1184		681
	1200		1467		1191		701
	1204		1470		1194		703
	1207		1474		1197		707
	1210		1477		1200		709
	1213		1481		1204		711
	1216		1484		1207		713
	1219		1488		1210		736
	1222		1491		1213		738
	1225		1524		1216		746
	1228		1525		1219		748
	1231		1526		1222		750
	1234		1527		1225		756
	1237		1528		1231		758
	1240		1529		1234		760
	1243		1530		1237		762
	1246		1531		1243	6I-0363	679
	1249		1532		1246		681
	1255		1533		1255		685
	1258		1534		1258		693
	1261		1535		1264		695
	1264		1536		1267		701
	1267		1537		1270		703
	1270		1538		1276		707
	1273		1539		1279		709
	1276	6I-0289	679		1283		711
	1279		681		1286		715
	1283		683		1289		717
	1286		685		1296		721
	1289		687		1298		723
	1292		693		1303		725
	1296		695		1306		727
	1298		697		1309		731
	1300		699		1339		732
	1303		701		1342		736
	1306		703		1345		740
	1309		705		1348		742
	1339		731		1351		746
	1342		732		1358		748
	1345		734		1361		750
	1348		740		1364		754
	1351		742		1367		756
	1354		744		1370		758
	1358		746		1373	6I-0364	1064
	1361		748		1376		1065
	1364		750		1379		1066
	1367		752		1383		1561

► PRIMARY REFERENCE

PART NUMBER INDEX

Part	Page
	1562
	1563
	1565
	1566
	1567
	1569
	1576
6I-0423	608
	609
	611
	612
	613
	614
	615
	616
	617
	619
	620
	654
	655
	656
	657
	660
	662
	675
6I-0454	199
	200
	201
	630
	632
	634
	642
	1524
	1525
	1526
	1527
	1528
	1529
	1530
	1531
	1532
	1533
	1534
	1535
	1536
	1537
	1538
	1539
6I-0456	320
	322
	324
	326
	328
	330
	332
	334
	336
	338
	340
	342
	344
	434
	436
	438
	440
	442
	900
	918
	922
	972
	1145
	1495
	1499
	1509
6I-0501	589
	830
	831
	832
	833
6I-0502	832
6I-0517	274
	276
	278
6I-0563	1064
	1065
	1066
	1067
	1072
	1073
	1075
	1077
	1079
	1081
	1083
	1085
	1087
	1089
	1091
	1095
	1097
	1099
	1101
	1104
	1107
	1109
	1111
	1113
	1116
	1119
	1121
	1124
	1126
	1129
	1132
	1135
	1137
6I-0572	230
	493
	499
	518
	685
	687
	693
	695
	697
	699
	731
	732
	734
	736
	738
	740
	742
	744
	756
	758
	760
	883
	889
	894
	896
	901
	902
	903
	904
	906
	908
	909
	911
	913
	919
	921
	922
	923
	925
	927
	935
	937
	939
	941
	943
	945
	953
	955
	956
	963
	965
	967
	968
	971
	972
	1026
	1037
	1042
	1046
	1054
	1055
	1056
	1059
	1062
	1063
	1081
	1083
	1085
	1087
	1091
	1095
	1097
	1101
	1109
	1111
	1113
	1116
	1119
	1126
	1129
	1135
6I-0593	555
	559
	612
	620
	1008
	1012
	1075
	1077
	1079
	1081
	1083
	1089
	1095
	1097
	1101
	1104
	1107
	1109
	1111
	1113
	1116
	1119
	1121
	1124
	1126
	1129
	1132
	1137
6I-0594	650
	996
	1004
	1008
	1012
	1016
	1020
	1528
	1534
	1561
	1562
	1563
	1565
	1567
	1569
	1584
6I-0631	608
	611
	615
	616
	617
	620
	693
	695
	697
	727
	729
6I-0645	491
	520
	622
	624
	626
	628
	630
	632
	634
	636
	638
	640
	642
	644
	881
	882
	883
	884
	885
	886
	888
	889
	890
	892
	893
	897
	899
	900
	901
	902
	903
	904
	906
	908
	909
	911
	913
	915
	917
	918
	923
	925
	927
	929

PART NUMBER INDEX

Part	Page
	931
	932
	933
	934
	941
	943
	945
	947
	949
	951
	953
	955
	956
	957
	959
	961
	963
	965
	967
	968
	969
	970
	973
	1037
	1038
	1039
	1040
	1041
	1042
	1043
	1044
	1045
	1046
	1047
	1049
6I-0646	228
	229
	231
	232
	491
	518
	520
	547
	549
	551
	553
	555
	557
	558
	559
6I-0650	622
	624
	628
	640
	644
	1032
6I-0654	555
	559
	616
	1075
	1077
	1079
	1081
	1083
	1089
	1095
	1097
	1101
	1104
	1107
	1109
	1111
	1113
	1116
	1119
	1121
	1124
	1126
	1129
	1132
	1137
6I-0789	626
6I-0840	557
	558
6I-0846	235
	237
	239
	241
	243
	245
	247
	249
	251
	253
	256
	258
	260
	262
	266
	268
	270
	274
	276
	278
	282
	284
	286
	288
	292
	294
	296
	298
	300
	302
	304
	310
	312
	314
	316
	320
	322
	324
	326
	328
	334
	336
	338
	340
	342
	346
	348
	350
	354
	356
	358
	360
	364
	366
	368
	370
	374
	376
	378
	380
	384
	386
	388
	390
	392
	395
	397
	399
	402
	404
	408
	410
	412
	416
	418
	420
	422
	424
	434
	436
	438
	440
	442
	444
6I-0917	320
	322
	324
	326
	328
	330
	332
	346
	348
	350
	352
	420
	422
	424
	426
	428
	434
	436
	438
	440
	442
6I-0918	693
6I-1201	266
	268
	274
	276
	282
	284
	292
	294
	298
	300
	346
	348
	354
	356
	374
	376
	378
	384
	386
	388
	408
	420
6I-1497	679
	681
	683
	685
	687
	689
	691
	693
	695
	697
	699
	701
	703
	705
	707
	709
	711
	713
	715
	717
	719
	721
	723
	725
	727
	729
	731
	732
	734
	740
	742
	744
	746
	748
	750
	752
	756
	758
	760
	762
6I-3981	830
6I-4012	1067
	1072
	1109
	1116
	1121
	1126
	1129
	1132
	1568
	1572
	1574
	1575
6I-4013	1064
	1067
	1116
	1121
	1126
	1129
	1132
6I-4039	1064
	1065
	1066
	1067
	1116
	1121
	1126
	1129
	1132
6I-4045	650
6I-4072	689
	691
	715
	717
	719
	721
	723
	725
	727
	729
	754
6I-4079	679
	681
	683

► PRIMARY REFERENCE

PART NUMBER INDEX

Part	Page
	685
	687
	689
	691
	693
	695
	697
	699
	701
	703
	707
	709
	711
	713
	715
	717
	719
	721
	723
	725
	727
	729
	731
	732
	734
	736
	738
	740
	742
	746
	748
	750
	752
	756
	758
	760
	762
6I-4200	196
	608
	611
	615
	616
	619
6I-4374	266
	268
	270
	272
	274
	276
	278
	280
	282
	284
	286
	288
	290
	292
	294
	296
	298
	300
	302
	304
	306
	308
	320
	322
	324
	326
	328
	330
	332
	334
	336
	338
	340
	342
	344
	346
	348
	350
	352
	354
	356
	358
	360
	362
	374
	376
	378
	380
	382
	384
	386
	388
	390
	392
	394
	395
	397
	399
	401
	408
	410
	412
	414
	420
	422
	424
	426
	428
	434
	436
	438
	440
	442
	444
	446
	447
	875
	876
	877
	878
	880
	886
	890
	894
	897
	904
	906
	909
	911
	913
	915
	919
	923
	925
	927
	929
	935
	937
	939
	941
	943
	945
	947
	949
	951
	953
	957
	959
	961
	990
6I-4709	1053
6I-4793	756
	758
	760
6L-4725	1029
	1030
6V-8183	1573
6V-9189	587
	975
	976
	977
	978
	979
	981
	982
	983
	984
	986
	987
	988
	991
	1525
	1526
	1527
	1529
	1530
	1531
	1532
	1533
	1535
	1536
	1537
	1538
	1539

7

Part	Page
7C-0351	679
	681
	683
	685
	687
	689
	691
	693
	695
	697
	699
	701
	703
	705
	707
	709
	711
	713
	715
	717
	719
	721
	723
	725
	727
	729
	731
	732
	734
	736
	738
	740
	742
	744
	746
	748
	750
	752
	754
	756
	758
	760
	762
7C-1224	685
	693
	695
	731
	732
	736
	740
	742
	744
	756
	758
7C-1281	233
	247
	249
	251
	253
	255
	256
	258
	260
	262
	264
	274
	276
	278
	280
	298
	300
	302
	304
	306
	308
	310
	312
	314
	316
	318
	320
	322
	324
	326
	328
	330
	332
	334
	336
	338
	340
	342
	344
	354
	356
	358
	360
	362
	364
	366
	368
	370
	372
	374

PART NUMBER INDEX

Part	Page
	376
	378
	380
	382
	384
	386
	388
	390
	392
	394
	402
	404
	406
	408
	410
	412
	414
	420
	422
	424
	426
	428
	434
	436
	438
	440
	442
	446
	447
7C-4616	622
	624
	626
	628
	630
	632
	634
	636
	640
	642
	644
7E-5218	1558
7E-5219	1558
7K-1181	1551
	1554
7M-7410	1399
	1402
	1405
	1409
	1412
	1415
	1488
7T-6087	1559
7T-6088	1559
7T-6090	1559
7T-6092	1559
7T-6093	1559
7T-6099	1559
7W-1165	557
	558
7W-1176	609
	612
	614
7W-1218	557
7W-1219	557
7W-2326	861
	862
7W-2562	195
7W-2601	996
	1000
	1004
	1008
	1012
	1016
	1020
7W-4540	1584
7W-4634	589
	830
	831
	832
	833
7W-4642	610
	616
	621
7W-4669	872
7W-6247	606
7X-2534	1554

8

8C-3445	889
8C-5607	1554
8C-5608	1554
8C-9778	1559
8C-9783	1559
8F-1434	1559
8J-4455	1559
8N-7998	198
	200
	201
8T-0269	683
	687
	689
	691
	697
	699
	705
	713
	719
	729
	734
	738
	744
	752
	760
	762
8T-4121	1559
8T-4133	1559
8T-4971	1554
8T-7876	883
	884
	885
	886
	888
	890
	892
	893
	894
	896
	897
	899
	900
	901
	902
	903
	904
	906
	908
	909
	911
	913
	915
	917
	918
	919
	921
	922
	923
	925
	927
	929
	931
	932
	933
	934
	935
	937
	939
	941
	943
	945
	947
	949
	951
	953
	955
	956
	957
	959
	961
	963
	965
	967
	968
	971
	972
8T-8729	1551
	1552
8T-8730	1551
	1552
8T-8737	1551
	1552

9

9F-2247	1264
	1267
	1345
	1348
	1399
	1402
	1405
	1409
	1412
	1415
9L-0895	571
9L-1226	579
9L-6128	574
9M-6738	1028
9M-7959	1031
9S-4190	740
	742
	744
9S-4191	860
9V-3811	593
9X-0506	1175
	1204
	1216
9X-3401	1552
9X-3959	824
9X-6165	1554
9X-8256	1554
9Y-1590	588
9Y-5015	528
	529
	538

0

006-9566	601
	602
032-8100	1522
032-9020	434
	436
	438
	440
	442
	446
	447
032-9090	449
	451
	456
	461
	464
	467
	477
	480
	482
	527
032-9091	449
	451
	456
	461
	464
	467
	477
	480
	482
	527
032-9102	618
	621
033-7630	621
033-7687	590
	591
	592
	593
	594
	595
	596
	597
	598
	599
	600
	601
	602
	603
	604
	605
	607
033-7849	1140
	1141
	1522
	1523
034-1432	1354
	1405
	1415
035-8017	196
	1175
	1178
	1181
	1184
	1187
	1204
	1207
	1210
	1213
	1216
	1219
	1222
	1225
	1228

PART NUMBER INDEX

Part	Page
	1231
	1234
	1237
	1240
	1243
	1246
	1249
	1255
	1258
	1261
	1270
	1273
	1283
	1286
	1289
	1292
	1296
	1298
	1300
	1351
	1354
	1358
	1361
	1364
	1367
	1370
	1373
	1376
	1379
	1383
	1386
	1389
	1392
	1395
	1445
	1448
	1451
	1454
	1461
	1464
	1467
	1470
035-8063	491
	518
	520
	820
	827
	1580
035-8068	493
	520
	526
067-6002	491
	493
	499
	520
	526
067-6006	491
	493
	499
	520
	526
	528
	529
	538
067-6043	491
	493
	499
	520
	526
067-6095	212
	213
	214
	215
	216
	217
	218
	839
	840
	842
	843
	844
	846
	847
	849
	851
067-6135	212
	213
	215
	216
	217
	218
	453
	455
	458
	460
	463
	466
	469
	471
	473
	474
	476
	489
	490
067-6179	622
	624
	626
	628
	630
	632
	634
	636
	638
	640
	642
	644
067-6213	679
	681
	683
	685
	687
	693
	695
	697
	699
	701
	703
	705
	707
	709
	711
	713
	715
	717
	721
	723
	727
	731
	732
	734
	736
	738
	740
	742
	744
	746
	748
	754
	762
067-6265	1175
	1178
	1181
	1184
	1187
	1204
	1207
	1210
	1213
	1216
	1219
	1222
	1225
	1228
	1231
	1234
	1237
	1240
	1243
	1246
	1249
	1255
	1258
	1261
	1270
	1273
	1283
	1286
	1289
	1292
	1296
	1298
	1300
	1351
	1354
	1358
	1361
	1364
	1367
	1370
	1373
	1376
	1379
	1383
	1386
	1389
	1392
	1395
	1445
	1448
	1451
	1454
	1461
	1464
	1467
	1470
067-6268	1140
	1141
	1522
	1523
067-6366	1525
	1529
	1530
	1531
	1532
	1533
	1534
	1535
	1536
	1537
	1538
	1539
	1548
	1550
067-6810	621
067-6823	529
	681
	703
	746
	748
	750
067-6873	449
	451
	456
	461
	464
	467
	477
	478
	480
	482
	527
067-6874	449
	451
	456
	461
	464
	467
	477
	478
	480
	482
	527
067-6897	626
067-6900	626
067-6928	555
	559
067-6999	1175
	1178
	1181
	1184
	1187
	1204
	1207
	1210
	1216
	1219
	1222
	1225
	1231
	1234
	1240
	1243
	1246
	1255
	1258
	1261
	1270
	1273
	1283
	1286
	1296
	1351
	1354
	1358
	1361
	1364
	1367
	1370
	1376
	1379
	1383
	1386
	1389
	1392

PART NUMBER INDEX

Part	Page
	1395
	1445
	1448
	1451
	1454
	1461
	1464
1	
100-3685	1559
100-3751	622
	624
	626
	628
	630
	632
	634
	636
	638
	640
	642
	644
	866
	867
	870
	871
	992
	994
100-4112	1559
100-4113	1559
100-4115	1559
100-4118	1559
100-4119	1559
100-4458	996
	1000
	1004
100-4461	863
	864
	865
	996
	1000
	1004
	1008
	1012
	1016
	1020
100-4830	228
	229
	231
	232
	553
	559
	626
	628
	630
	632
	634
	636
	638
	640
	642
	646
	647
	648
	649
	650
	996
	1000
	1004
	1008
	1012
	1016
	1020
	1027
	1029
	1030
	1033
	1034
	1047
	1049
	1104
	1126
	1129
	1132
	1175
	1178
	1181
	1184
	1187
	1191
	1194
	1197
	1200
	1204
	1207
	1210
	1213
	1216
	1219
	1222
	1225
	1228
	1231
	1234
	1237
	1240
	1243
	1246
	1249
	1255
	1258
	1261
	1264
	1267
	1270
	1273
	1276
	1279
	1283
	1286
	1289
	1292
	1296
	1298
	1300
	1303
	1306
	1309
	1339
	1342
	1345
	1348
	1351
	1354
	1358
	1361
	1364
	1367
	1370
	1373
	1376
	1379
	1383
	1386
	1389
	1392
	1395
	1421
	1424
	1427
	1430
	1438
	1441
	1445
	1448
	1451
	1454
	1461
	1464
	1467
	1470
	1474
	1477
	1491
100-4838	237
	239
	240
	243
	245
	246
	249
	251
	253
	255
	258
	260
	262
	264
	268
	270
	272
	276
	278
	280
	284
	286
	288
	290
	294
	296
	300
	302
	304
	306
	308
	312
	314
	316
	318
	322
	324
	326
	328
	330
	332
	336
	338
	340
	342
	344
	348
	350
	352
	354
	356
	358
	360
	362
	366
	368
	370
	372
	376
	378
	380
	382
	386
	388
	390
	392
	394
	397
	399
	401
	402
	404
	406
	408
	410
	412
	414
	416
	418
	419
	420
	422
	424
	426
	428
	434
	436
	438
	440
	442
	444
	446
	447
100-4841	320
	322
	324
	326
	328
	330
	332
	346
	348
	350
	352
	420
	422
	424
	426
	428
	434
	436
	438
	440
	442
	491
	493
	499
	518
	520
100-8451	1056
	1057
	1059
	1060
	1526
	1527
	1528
	1531
101-3450	408
101-3739	1521

► PRIMARY REFERENCE

PART NUMBER INDEX

Part	Page
101-3740	1521
101-3741	1521
101-3770	984
101-3771	685
	687
	693
	695
	697
	699
	731
	732
	734
	740
	742
	744
101-3805	683
	705
	752
101-3877	364
	366
	368
101-3895	624
	628
	634
	638
	640
	642
	644
	679
	681
	683
	701
	703
	705
	707
	709
	711
	713
	762
	875
	876
	877
	878
	880
	886
	890
	894
	897
	904
	906
	915
	919
	929
	953
	990
101-3912	1521
101-3949	1521
101-3953	1521
101-3955	1521
101-3987	1557
101-3989	1557
101-3990	1557
	1558
101-3991	1557
	1558
101-3992	1557
	1558
101-3993	1557
	1558
101-7185	654
	655
	656
	657
	660
	662
	675
101-7186	654
	655
	656
	657
	660
	662
	675
101-7537	655
	675
	996
	1000
	1004
	1016
101-7538	996
	1000
	1004
	1016
101-7539	1020
101-7540	996
	1000
	1004
	1008
	1012
	1016
	1020
101-7541	996
	1000
	1004
	1008
	1012
	1016
	1020
101-7546	996
	1000
	1004
	1008
	1012
	1016
	1020
101-7547	996
	1000
	1004
	1008
	1012
	1016
	1020
101-7856	1028
	1030
	1031
	1129
101-7860	1104
	1126
	1129
	1132
102-1957	608
	611
	615
	616
	617
	620
102-2073	196
	547
	549
	551
	553
	555
	557
	558
	559
102-2075	547
	549
	551
	553
	555
	559
102-2076	547
	549
	551
	553
	555
	559
102-2078	547
	549
	551
	553
	555
	559
102-2100	1064
	1065
	1066
102-8801	1552
102-8802	1552
102-8803	1551
102-9690	736
	738
	740
	742
	744
103-1067	996
	1008
	1012
	1016
	1020
103-5916	975
	983
	985
	988
	989
103-6710	1008
	1012
	1020
103-6714	1000
	1012
	1020
105-2740	1053
106-7637	978
	979
	982
106-8835	1175
	1178
	1216
	1219
	1222
	1225
	1228
	1231
	1234
	1237
	1240
	1243
	1246
	1249
	1255
	1258
	1261
	1264
	1267
	1270
	1273
	1283
	1286
	1289
	1292
	1296
	1298
	1300
	1306
	1309
	1099
	1101
	1104
	1107
	1109
	1111
	1113
	1116
	1119
	1121
	1124
	1126
	1129
	1132
	1135
	1137
	1143
	1513
106-8954	610
106-9331	580
110-2556	►1023
	►1030
	►1129
110-6326	1023
	1028
110-6331	1023
	1028
110-8760	1243
	1264
	1283
	1345
	1348
	1351
	1399
	1402
	1409
	1412
111-0859	561-586
	1064
111-3297	831
111-3422	1174
	1175
	1178
	1181
	1184
	1187
	1216
	1219
	1222
	1225
	1228
	1231
	1234
	1237
	1240
	1243
	1246
	1249
	1255
	1258
	1261
	1264
	1267
	1270
	1273
	1283
	1286
	1289
	1292
	1296
	1298
	1300
	1306
	1309

► PRIMARY REFERENCE

PART NUMBER INDEX

Part	Page
	1329
	1357
	1382
	1398
	1408
	1433
	1434
	1457
	1458
	1459
	1460
	1467
	1470
	1473
	1474
	1480
	1481
	1484
	1487
	1494
111-3423	1174
	1175
	1178
	1181
	1184
	1187
	1216
	1219
	1222
	1225
	1228
	1231
	1234
	1237
	1240
	1243
	1246
	1249
	1255
	1258
	1261
	1264
	1267
	1270
	1273
	1283
	1286
	1289
	1292
	1296
	1298
	1300
	1306
	1309
	1329
	1357
	1382
	1398
	1408
	1433
	1434
	1457
	1458
	1459
	1460
	1470
	1473
	1474
	1480
	1481
	1484
	1487
	1494
111-8222	219
	220
	228
	229
	230
	231
	232
	1035
	1038
	1039
	1040
	1041
	1043
	1044
	1045
	1047
	1049
	1051
	1052
	1053
	1054
	1055
	1057
	1060
	1062
	1063
113-1504	266
	268
	270
	272
	274
	276
	278
	280
	282
	284
	286
	288
	290
	292
	294
	296
	298
	300
	302
	304
	306
	308
	320
	322
	324
	326
	328
	330
	332
	334
	336
	338
	340
	342
	344
	346
	348
	350
	352
	354
	356
	358
	360
	362
	364
	366
	368
	370
	372
	374
	376
	378
	380
	382
	384
	386
	388
	390
	392
	394
	408
	410
	412
	414
	420
	422
	424
	426
	428
	434
	436
	438
	440
	442
	444
	447
113-1505	320
	322
	324
	334
	336
	338
	434
113-4598	195
113-4604	195
113-4608	196
113-4616	1541
113-6349	588
	677
	980
	985
	989
	1524
	1528
	1534
113-7130	572
	573
113-7543	595
	599
113-8067	557
	558
113-8071	557
113-8075	557
113-8076	196
	557
	558
113-8077	557
113-8129	992
	994
114-2405	594
114-2579	219
	220
	230
	1035
	1037
	1038
	1039
	1040
	1041
	1042
	1046
	1053
	1059
	1521
	884
	601
	602
	693
	695
	697
	727
	729
	1143
	1145
	1147
	1149
	1151
	1153
	1155
	1157
	1159
	1161
	1495
	1497
	1499
	1501
	1503
	1505
	1507
	1509
	1511
	1513
	1517
	1519
121-0883	608
	609
	611
	612
	613
	614
	615
	616
	617
	619
	620
121-4365	568
123-2367	1031
123-2368	1031
123-2934	740

► PRIMARY REFERENCE

PART NUMBER INDEX

Part	Page
124-0506	223
	224
	225
	226
	227
	233
	235
	237
	241
	243
	247
	249
	256
	258
	292
	294
	298
	300
	310
	312
	354
	384
	386
	388
	395
	397
	408
	431
	433
	448
124-3536	527
	764
	766
	768
	770
	772
	774
	776
	778
	780
	782
	784
	786
	788
	790
	792
	794
	796
	798
	800
	802
	804
	806
	808
	810
	812
	814
124-3815	622
	624
	626
	628
	630
	632
	634
	636
	638
	640
	642
	644
	689
	691
	715
	717
	719
	721
	723
	725
	727
	729
	754
	1008
	1012
	1020
	1175
	1178
	1181
	1184
	1187
	1191
	1194
	1197
	1200
	1204
	1207
	1210
	1213
	1216
	1219
	1222
	1225
	1228
	1231
	1234
	1237
	1240
	1243
	1246
	1249
	1255
	1258
	1261
	1264
	1267
	1270
	1273
	1276
	1279
	1283
	1286
	1289
	1292
	1296
	1298
	1300
	1303
	1306
	1309
	1339
	1342
	1345
	1348
	1351
	1354
	1358
	1361
	1364
	1367
	1370
	1373
	1376
	1379
	1383
	1386
	1389
	1392
	1395
	1399
	1402
	1405
	1409
	1412
	1415
	1418
	1421
	1424
	1427
	1430
	1438
	1441
	1445
	1448
	1451
	1454
	1461
	1464
	1467
	1470
	1474
	1477
	1481
	1484
	1488
	1491
124-7702	679
	681
	683
	685
	687
	689
	691
	701
	703
	705
	707
	709
	711
	713
	715
	717
	719
	721
	723
	725
	731
	732
	734
	746
	748
	750
	752
	762
124-7703	685
	687
	731
	732
	734
125-7874	1551
125-7875	1551
126-1767	1552
126-1774	1551
126-3212	547
	549
	551
	553
	555
	559
126-3216	195
126-3219	196
127-6409	650
127-9376	1028
127-9377	1028
127-9674	1031
127-9675	1031
127-9676	1031
128-1599	1584
128-5247	561
128-5250	576
128-7723	1558
130-1161	689
	691
	715
	717
	719
	721
	723
	725
130-3879	561
	564
	565
	566
	571
	574
	576
	578
	586
130-3880	562
	563
	567
	568
	572
	573
	575
	577
	579
	581
	582
	583
130-3881	829
130-9888	266
	268
	270
	272
	274
	276
	278
	280
	282
	284
	286
	288
	290
	292
	294
	296
	298
	300
	302
	304
	306
	308
	320
	322
	324
	326
	328
	330
	332
	334
	336
	338
	340
	342
	344
	346
	348
	350

PART NUMBER INDEX

Part	Page
	352
	354
	356
	358
	360
	362
	364
	366
	368
	370
	372
	374
	376
	378
	380
	382
	384
	386
	388
	390
	392
	394
	408
	410
	412
	414
	420
	422
	424
	426
	428
	434
	436
	438
	440
	442
	444
	446
	447
131-4291	679
	681
	683
	701
	703
	705
	707
	709
	746
	748
	750
	752
	762
131-4292	756
	758
132-8848	1524
	1526
	1527
	1528
	1531
	1532
	1538
	1539
133-0969	1551
133-0970	1551
133-1011	622
	624
	626
	628
	630
	632
	634
	636
	640
	642
	644
133-7668	982
	984
	985
	991
134-3856	1541
134-4139	587
	976
	989
135-5417	588
	975
135-6362	677
	977
	978
	979
	980
	981
	983
	986
	987
	988
136-3608	223
	224
	225
	226
	227
	233
	235
	237
	241
	243
	247
	249
	256
	258
	292
	294
	298
	300
	310
	312
	354
	384
	386
	388
	395
	397
	408
	431
	433
	448
138-2053	851
138-3097	▶1521
	▶1522
138-3100	1521
139-7007	655
	671
	675
140-8714	1172
	1173
	1175
	1178
	1181
	1184
	1191
	1194
	1197
	1200
	1204
	1207
	1210
	1216
	1219
	1222
	1225
	1231
	1234
	1237
	1243
	1246
	1255
	1258
	1264
	1267
	1270
	1276
	1279
	1283
	1286
	1289
	1296
	1298
	1303
	1306
	1309
	1339
	1342
	1345
	1348
	1351
	1358
	1361
	1364
	1367
	1370
	1373
	1376
	1379
	1383
	1386
	1389
	1392
	1399
	1402
	1405
	1409
	1412
	1415
	1418
	1421
	1424
	1427
	1430
	1438
	1441
	1445
	1448
	1451
	1454
	1461
	1464
	1467
	1470
	1474
	1477
	1481
	1484
	1488
140-8718	1175
	1178
	1181
	1184
	1187
	1191
	1194
	1197
	1200
	1204
	1207
	1210
	1213
	1216
	1219

► PRIMARY REFERENCE

PART NUMBER INDEX

Part	Page
	1491
140-8783	1026
	1101
	1524
	1525
	1526
	1527
	1528
	1529
	1530
	1531
	1532
	1533
	1534
	1535
	1536
	1537
	1538
	1539
141-1667	1004
	1026
	1027
	1081
	1083
	1085
	1087
	1091
	1095
	1097
	1109
	1111
	1113
	1116
	1119
	1126
	1129
	1135
143-0539	►1559
	►1563
143-1344	1559
145-2881	655
	663
	665
	671
	675
145-8327	1191
	1194
	1303
146-6729	1559
147-1445	1551
147-1979	528
	529
	538
147-2642	1542
	1544
147-2645	1174
	1253
	1254
	1295
	1300
	1327
	1328
	1329
	1330
	1331
	1332
	1436
	1458
	1467
	1470
	1494
147-5553	1083
	1101
	1109
	1111
	1126
149-4236	1073
	1083
149-5599	593
149-9176	608
	616
	617
150-7732	233
	235
	237
	239
	240
	241
	243
	245
	246
	247
	253
	255
	256
	262
	264
	266
	268
	270
	272
	274
	280
	282
	284
	286
	288
	290
	292
	294
	296
	298
	304
	306
	308
	310
	316
	320
	328
	330
	332
	334
	342
	344
	346
	348
	350
	352
	360
	362
	364
	370
	372
	374
	384
	392
	394
	395
	397
	399
	401
	404
	406
	416
	418
	419
	424
	438
	440
	442
	444
	446
152-3968	1174
	1187
	1203
	1231
	1243
	1246
	1249
	1252
	1253
	1254
	1264
	1267
	1270
	1273
	1282
	1295
	1300
	1312
	1313
	1314
	1321
	1322
	1323
	1324
	1325
	1326
	1327
	1328
	1329
	1330
	1331
	1332
	1333
	1334
	1357
	1382
	1392
	1395
	1398
	1408
	1433
	1434
	1435
	1436
	1444
	1457
	1458
	1459
	1467
	1470
	1473
	1474
	1480
	1481
	1484
	1487
	1494
154-6015	370
	372
154-8045	1143
	1513
155-2255	1552
155-2256	1551
	1552
155-2260	1551
155-2270	1551
	1552
155-2274	1551
155-4828	679
	681
	683
	701
	703
	705
	707
	709
	711
	713
	746
	748
	750
	752
	762
155-8804	1191
	1194
	1197
	1200
	1276
	1279
	1303
	1306
	1309
	1339
	1342
	1421
	1424
	1427
	1430
	1438
	1441
	1491
159-9322	1551
160-7197	1175
	1178
	1204
	1219
	1231
	1243
	1283
	1370
	1373
	1383
	1513
162-1565	233
	247
	249
	251
	253
	255
	256
	258
	260
	262
	264
	280
	298
	300
	302
	304
	306
	308
	310
	312
	314
	316
	318
	320
	322
	324
	326
	328
	330
	332
	334

► PRIMARY REFERENCE

PART NUMBER INDEX

Part	Page
	336
	338
	340
	342
	344
	354
	356
	358
	360
	362
	364
	366
	368
	370
	372
	374
	376
	378
	380
	382
	384
	386
	388
	390
	392
	394
	402
	404
	406
	408
	410
	412
	414
	420
	422
	424
	426
	428
	434
	436
	438
	440
	442
	446
	447
163-3233	618
	621
164-3289	611
164-3300	611
166-6189	616
167-2153	626
	630
167-7418	1145
	1495
	1499
	1509
169-5326	1181
	1184
	1187
	1197
	1200
	1204
	1207
	1210
	1213
	1216
	1219
	1222
	1225
	1228
	1234
	1237
	1240
	1246
	1249
	1345
	1348
	1383
	1481
	1484
172-4323	650
173-7373	756
	758
	760
174-9638	1069
	1070
	1071
	1073
	1075
	1077
	1079
	1081
	1083
	1085
	1087
	1089
	1091
	1095
	1097
	1099
	1101
	1104
	1107
	1109
	1111
	1113
	1116
	1119
	1121
	1126
	1129
	1132
	1135
	1137
175-2584	1028
175-7141	1000
	1524
	1525
	1526
	1527
	1529
	1530
	1531
	1532
	1533
	1535
	1536
	1537
	1538
	1539
	1566
	1568
	1572
	1574
	1575
	1576
176-6219	1187
	1203
	1231
	1246
	1249
	1252
	1254
	1264
	1267
	1270
	1273
	1282
	1312
	1313
	1314
	1321
	1322
	1323
	1324
	1325
	1326
	1333
	1334
	1357
	1382
	1392
	1395
	1398
	1408
	1433
	1434
	1435
	1444
	1457
	1459
	1460
	1473
	1474
	1480
	1481
	1484
	1487
178-3336	558
	681
	683
	703
	705
	713
	748
	750
	752
	762
	1000
	1104
	1132
	1187
	1228
	1240
	1249
	1261
	1273
	1292
	1300
	1354
	1395
	1448
	1467
	1470
	1477
	1491
179-7071	678
180-6121	1555
180-9339	1551
183-1343	652
	653
	656
	657
	659
	661
	663
	665
	666
	667
	668
	669
	670
	671
184-0983	196
185-0882	528
	529
	538
185-0884	491
	493
	499
	520
	526
185-1546	838
	839
	840
	842
	843
	844
	846
	847
	849
	851
	853
185-6627	219
	220
	230
	1035
	1038
	1039
	1040
	1041
	1043
	1044
	1045
	1047
	1049
	1051
	1052
	1054
	1055
	1057
	1060
	1062
	1063
185-9538	976
	977
186-2364	618
	621
186-3594	655
	671
186-3595	655
	675
186-3615	1556
190-7614	1552
193-0161	1243
	1264
	1267
	1357
	1382
	1433
	1434
	1457
	1459
	1460
194-5226	1551
	1552
194-5227	1551
	1552
194-5390	1073
	1075
	1077
	1079
	1081
	1083
	1085

► PRIMARY REFERENCE

PART NUMBER INDEX

Part	Page
	1087
	1089
	1091
	1095
	1097
	1099
	1101
	1104
	1107
	1109
	1111
	1113
	1116
	1119
	1121
	1124
	1126
	1129
	1132
	1135
	1137
195-2132	658
	672
	673
195-2134	658
	672
	673
195-2136	658
	672
	673
195-2221	198
	200
	201
	656
	657
	658
	663
	665
	667
	668
	669
	670
	671
	672
	673
195-6011	756
	758
	760
198-4576	20
	561
198-5823	20
	36
	38
	121
	165
	679
	681
	683
198-8262	196
	553
	559
198-8263	196
	553
	559
198-8645	233
	247
	249
	251
	253
	255
	274
	276
	278
	280
	298
	300
	302
	304
	306
	308
	310
	312
	314
	316
	318
	320
	322
	324
	326
	328
	330
	332
	334
	336
	338
	340
	342
	344
	364
	366
	368
	370
	372
	384
	386
	388
	390
	392
	394
	402
	404
	406
	408
	410
	412
	414
	420
	422
	424
	426
	428
	434
	436
	438
	440
	442
	446
	447
198-9169	256
	258
	260
	262
	264
	354
	356
	358
	360
	362
	374
	376
	378
	380
	382
199-3108	608
	615
	616
	617
199-3109	557
	558
	608
	609
	612
	616
	617
	619
	620
199-9252	1175
	1178
	1181
	1184
	1187
	1191
	1204
	1207
	1210
	1213
	1216
	1219
	1222
	1225
	1228
	1231
	1234
	1237
	1240
	1303
199-9267	827
	883
	884
	885
	894
	896
	947
	949
	951
	953
	955
	956
	963
	965
	973
	1578
	1579
	1580
	1581
199-9751	528
	529
	538
	821
	1175
	1178
	1181
	1184
	1187
	1191
	1204
	1207
	1210
	1213
	1216
	1219
	1222
	1225
	1228
	1231
	1234
	1237
	1240
	1303
	1555
	1556
	1582
	1583

2

Part	Page
201-5509	555
	559
201-5510	555
	559
201-5511	555
	559
203-6797	1399
	1402
	1409
	1412
203-6798	1399
	1402
	1405
	1409
	1412
	1415
	1418
205-7644	1175
	1178
	1181
	1184
	1187
	1231
	1234
	1237
	1240
207-1080	▶6
207-1083	▶7
207-1097	▶8
207-1098	▶9
207-1099	▶10
207-1100	▶11
207-1101	▶12
207-1102	▶13
207-1103	▶14
207-1104	▶15
207-1108	▶16
207-1119	▶17
207-1125	▶18
207-1126	▶19
207-1131	▶20
207-1133	▶21
207-1134	▶22
207-1144	▶23
207-1145	▶24
207-1149	▶25
207-1151	▶27
207-1153	▶28
207-1159	▶29
207-1160	▶30
207-1161	▶31
207-1163	▶32
207-1164	▶33
207-1165	▶34
207-1170	▶35
207-1171	▶36
207-1172	▶38
207-1173	▶39
207-1175	▶40
207-2757	1142
	1157
	1501
	1515
	1516
208-5029	1190
	1276
	1279
	1315

PART NUMBER INDEX

Part	Page
	1316
	1317
	1335
	1336
	1337
	1491
209-5502	228
	231
209-5503	228
	231
209-6825	196
209-6883	196
209-9219	495
	496
	497
	498
	501
	502
	503
	504
	505
	506
	507
	508
	509
	510
	511
	512
	513
	514
	515
	516
	517
	522
	523
	524
	525
	527
210-8950	1551
213-0296	►41
214-3203	196
	228
	229
	231
	232
	491
	518
	520
	547
	549
	551
	553
	555
	557
	558
	559
214-3205	1539
214-3281	689
	691
	715
	717
	719
	727
	729
	754
214-8857	1167
215-9508	1143
	1145
	1147
	1149
	1151
	1153
	1155
	1163
	1165
	1495
	1497
	1499
	1501
	1503
	1505
	1507
	1509
	1511
	1513
	1517
	1519
215-9509	1143
	1145
	1147
	1149
	1151
	1153
	1155
	1163
	1165
	1495
	1497
	1499
	1501
	1503
	1505
	1507
	1509
	1511
	1513
	1517
	1519
215-9512	►1139
215-9513	►1139
215-9515	►1139
216-8314	451
	453
	454
	455
	456
	458
	459
	460
	461
	463
	464
	466
	467
	469
	470
	471
	472
	473
	474
	475
	476
	486
	487
	488
	489
	490
216-8634	622
	626
	630
	632
216-9633	889
217-0099	1132
217-7877	547
217-9039	251
	253
	255
	260
	262
	264
	278
	280
	302
	304
	306
	308
	314
	316
	318
	326
	328
	330
	332
	340
	342
	344
	358
	360
	362
	370
	372
	380
	382
	390
	392
	394
	402
	404
	406
	410
	412
	414
	422
	424
	426
	428
	436
	438
	440
	442
	446
	447
	1143
	1513
	1551
219-4136	721
	723
	725
219-7588	►42
219-7589	►43
219-7590	►44
219-7591	►45
220-8311	679
	681
	701
	703
	746
	748
	750
220-8631	614
220-8632	609
	612
221-1139	364
	366
	368
	370
	372
221-2014	1157
	1501
	1515
	1516
222-2232	►45
222-2362	►46
222-6617	1157
	1501
	1515
	1516
222-8625	547
223-6467	►47
223-6511	►48
223-7570	►49
223-7825	1
	2
	16
	19
	40
	47
	89
	90
	91
	92
	93
	100
	102
	105
	124
	125
	139
	169
	171
	172
	173
	175
	177
	183
	184
	608
224-2162	17
	18
	23
	30
	31
	32
	39
	51
	53
	63
	64
	66
	68
	71
	72
	74
	79
	81
	95
	98
	103
	116
	131
	135
	609
224-2712	320
	322
	324
	334
	336
	338
	434
224-5874	►49
224-5875	►50
224-5877	►50
224-5878	►50
224-5879	►50
224-6635	195
224-8978	1140

► PRIMARY REFERENCE

PART NUMBER INDEX

Part	Page
	1141
	1522
	1523
225-3149	1565
225-3150	1561
225-4312	▶1053
225-4317	1
	2
	6
	8
	9
	10
	11
	12
	13
	14
	15
	16
	17
	18
	19
-160	
	21
	22
	23
	24
	25
	27
	28
	29
	30
	31
	32
	33
	34
	35
	36
	38
	39
	40
	42
	43
	44
	45
	47
	48
	49
	51
	53
	55
	57
	59
	61
	63
	64
	66
	68
	70
	71
	72
	74
	76
	77
	79
	81
	83
	85
	87
	89
	90
	91
	94
	95
	97
	98
	99
	100
	101
	102
	105
	107
	108
	109
	111
	113
	115
	116
	118
	119
	121
	123
	124
	125
	131
	139
	162
	163
	164
	167
	169
	171
	172
	173
	175
	177
	178
	179
	180
	182
	183
	184
	185
	186
	187
	188
	189
	190
	191
	193
	816
225-5436	527
	764
	766
	774
	782
	786
	790
	802
	804
	808
	814
225-5437	527
	764
	766
	774
	782
	786
	790
	802
	804
	808
	814
225-5438	764
	766
	770
	772
	774
	778
	780
	782
	786
	790
	794
	796
	798
	800
	802
	804
	806
	808
	810
	812
	814
225-5439	764
	770
	774
	778
	782
	786
	790
	794
	798
	802
	806
	808
225-5441	764
	770
	774
	778
	782
	786
	790
	794
	798
	802
	806
	808
225-5451	764
	770
	774
	778
	782
	786
	790
	794
	798
	802
	806
	808
225-5453	764
	770
	774
	778
	782
	786
	790
	794
	798
	802
	806
	808
225-5454	764
	770
	774
	778
	782
	786
	790
	794
	798
	802
	806
	808
225-5458	764
	770
	774
	778
	782
	786
	790
	794
	798
	802
	804
	806
	808
225-5459	764
	770
	774
	778
	782
	786
	790
	794
	798
	802
	806
	808
225-5495	528
	529
225-5498	528
	529
	538
225-5499	528
	529
	538
225-5501	531
	532
	533
	534
	535
	536
	537
	539
	540
	541
	542
	543
	544
	545
	546
225-5502	531
	532
	533
	534
	535
	536
	537
	539
	540
	541
	542
	543
	544
	545
	546
225-5625	838
	839
	840
	842
	843
	844
	846
	847
	849
	851

▶ PRIMARY REFERENCE

PART NUMBER INDEX

Part	Page
	853
225-5629	838
	839
	840
	842
	843
	844
	846
	847
	849
	851
	853
225-5634	838
	839
	840
	842
	843
	844
	846
	847
	849
	851
	853
225-5638	838
	839
	840
	842
	843
	844
	846
	847
	849
	851
	853
225-5640	838
	839
	840
	842
	843
	844
	846
	847
	849
	851
	853
225-5959	570
	577
	579
	586
	838
	839
	840
	842
	843
	844
	846
	847
	849
	851
	853
225-5960	838
	839
	840
	842
	843
	844
	846
	847
	849
	851
	853
225-5961	838
	839
	840
	842
	843
	844
	846
	847
	849
	851
	853
225-5962	838
	839
	840
	842
	843
	844
	846
	847
	849
	851
	853
225-5963	►838
	839
	840
	►842
	843
	844
	►846
	►847
	►849
	►851
	►853
	►855
	856
	857
	858
	859
225-5967	203
225-6004	693
	731
225-6005	679
	681
	685
	689
	693
	695
	701
	703
	715
	717
	721
	723
	727
	731
	732
	736
	740
	742
	746
	748
	750
	754
	756
	758
225-6041	685
	687
	693
	695
	697
	699
	731
	732
	734
	740
	742
	744
225-6451	221
	222
	223
	224
	225
	226
	227
	233
	235
	237
	241
	243
	247
	249
	256
	258
	266
	268
	274
	276
	282
	284
	286
	292
	294
	298
	300
	310
	312
	320
	322
	324
	326
	334
	336
	338
	346
	348
	350
	352
	354
	364
	366
	368
	374
	376
	378
	384
	386
	395
	397
	408
	416
	420
	422
	430
	431
	432
	433
	434
	448
225-6455	235
	237
	241
	243
	247
	249
	256
	258
	266
	268
	274
	276
	282
	284
	286
	292
	294
	298
	300
	310
	312
	320
	322
	324
	326
	334
	336
	338
	346
	348
	350
	352
	354
	364
	366
	368
	374
	376
	378
	384
	386
	388
	395
	397
	408
225-6456	225
	226
	233
	235
	237
	241
	243
	247
	249
	256
	266
	268
	274
	276
	282
	284
	286
	292
	294
	298
	300
	310
	312
	320
	322
	324
	326
	334
	336
	338
	346
	348
	350
	352
	354
	364
	366
	368
	374
	376
	378
	384
	386
	388
	395
	397
	408

► PRIMARY REFERENCE

PART NUMBER INDEX

Part	Page
	416
	420
	422
	430
	431
	432
	433
	434
225-6461	225
	226
	233
	235
	237
	241
	243
	247
	249
	256
	258
	266
	268
	274
	276
	282
	284
	286
	292
	294
	298
	300
	310
	312
	320
	322
	324
	326
	334
	336
	338
	346
	348
	350
	352
	354
	364
	366
	368
	374
	376
	378
	384
	386
	388
	395
	397
	408
	416
	420
	422
	430
	431
	432
	433
	434
225-6464	225
	226
	233
	235
	237
	241
	243
	247
	249
	256
	258
	266
	268
	274
	276
	282
	284
	286
	292
	294
	298
	300
	310
	312
	320
	322
	324
	326
	334
	336
	338
	346
	348
	350
	352
	354
	364
	366
	368
	374
	376
	378
	384
	386
	388
	395
	397
	408
	416
	420
	422
	430
	431
	432
	433
	434
225-6477	225
	226
	233
	235
	237
	241
	243
	247
	249
	256
	258
	266
	268
	274
	276
	282
	284
	286
	292
	294
	298
	300
	310
	312
	320
	322
	324
	326
	334
	336
	338
	346
	348
	350
	352
	354
	364
	366
	368
	374
	376
225-6478	221
	222
	223
	224
	225
	226
	227
	233
	235
	237
	241
	243
	247
	249
	256
	258
	266
	268
	274
	276
	282
	284
	286
	292
	294
	298
	300
	310
	312
	320
	322
	324
	326
	334
	336
	338
	346
	348
	350
	352
	354
	364
	366
	368
	374
	376
	378
	384
	386
	388
	395
	397
	408
	416
	420
	422
	430
	431
	432
	433
	434
	448
225-6479	225
	226
	233
	235
	237
	241
	243
	247
	249
	256
	258
	266
	268
	274
	276
	282
	284
	286
	292
	294
	298
	300
	310
	312
	320
	322
	324
	326
	334
	336
	338
	346
	348
	350
	352
	354
	364
	366
	368
	374
	376
	378
	384
	386
	388
	395
	397
	408
	416
	420
	430
	431
	432
	433
	434
225-6481	235
	241
	247

PART NUMBER INDEX

Part	Page
	256
	292
	298
225-6517	233
	235
	241
	247
	256
	266
	274
	282
	292
	298
	310
	320
	334
	346
	364
	374
	384
	395
225-6522	233
	235
	237
	239
	240
	241
	243
	245
	246
	247
	249
	251
	253
	255
	256
	258
	260
	262
	264
	282
	284
	286
	288
	290
	402
	404
	406
	408
	410
	412
	414
	444
225-6527	▶233
225-6817	876
	877
	890
	915
	919
	953
225-6818	875
	876
	877
	886
	890
	894
	897
	904
	906
	915
	919
	929
	953
225-6820	886
	890
	894
	897
	904
	909
	913
	915
	919
	923
	927
	929
	935
	939
	947
	951
	953
	957
	961
225-6906	▶866
225-6907	870
225-6908	870
225-7738	992
	994
225-7739	992
	994
225-7741	992
	994
225-7772	449
	451
	456
	461
	464
	467
	527
225-7781	451
	456
	461
	464
	467
	527
225-7939	860
225-7941	881
	882
	883
	884
	885
	886
	888
	890
	892
	893
	894
	896
	897
	899
	900
	901
	902
	903
	904
	906
	908
	909
	911
	913
	915
	917
	918
	919
	921
	922
	923
	925
	927
	929
	931
	932
	933
	934
	935
	937
	939
	941
	943
	945
	947
	949
	951
	953
	955
	956
	957
	959
	961
	963
	965
	967
	968
	969
	970
	971
	972
225-7942	27
	39
	94
	860
225-7944	493
	499
	518
	881
	882
	883
	884
225-8016	992
225-8019	992
	994
225-8281	626
	630
	636
225-8282	626
	630
	636
225-8287	622
	624
225-8304	▶817
225-8329	863
225-8524	1073
	1075

► PRIMARY REFERENCE

PART NUMBER INDEX

Part	Page
	1077
	1079
	1081
	1083
	1085
	1087
	1089
	1091
	1095
	1097
	1099
	1101
	1104
	1107
	1109
	1111
	1113
	1116
	1119
	1121
	1124
	1126
	1129
	1132
	1135
	1137
225-8525	1073
	1075
	1079
	1081
	1083
	1085
	1087
	1089
	1095
	1097
	1101
	1104
	1109
	1111
	1113
	1116
	1119
	1121
	1124
	1126
	1129
	1132
	1137
225-8526	1073
	1075
	1077
	1079
	1081
	1083
	1085
	1087
	1089
	1091
	1095
	1097
	1099
	1101
	1104
	1107
	1109
	1111
	1113
	1116
	1119
	1121
	1124
	1126
	1129
	1132
	1135
	1137
225-8529	1073
	1075
225-8530	1073
	1099
225-8533	1083
	1101
	1109
	1111
	1126
225-8534	1083
	1101
	1109
	1111
	1126
225-8535	1083
	1109
	1111
225-8536	1069
	1070
	1071
	1073
	1075
	1077
	1079
	1081
	1083
	1085
	1087
	1089
	1091
	1095
	1097
	1099
	1101
	1104
	1107
	1109
	1111
	1113
	1116
	1119
	1121
	1124
	1126
	1129
	1132
	1135
	1137
225-8537	▶1073
225-8848	646
	647
	648
	649
225-8851	▶646
225-8856	651
225-8857	▶651
225-8858	491
	493
	499
	520
	526
	818
225-8859	▶818
226-8763	266
	274
	282
	334
226-8766	626
	628
	630
	632
	634
	636
	638
	640
	642
	644
226-8767	626
	628
	630
	632
	634
	636
	638
	640
	642
	644
226-8770	1549
226-8773	1143
	1513
227-4562	1075
	1077
	1079
	1081
	1083
	1089
	1095
	1097
	1101
	1104
	1107
	1109
	1111
	1113
	1116
	1119
	1121
	1124
	1126
	1129
	1132
	1137
227-4563	1083
	1101
	1109
	1111
228-7089	744
228-7391	1525
	1527
	1528
	1530
	1534
	1537
	1539
230-3478	364
	366
230-5539	▶51
230-5540	▶53
230-7286	1
	89
	90
	91
	125
	173
	175
	177
	590
230-7291	15
	18
	25
	36
	38
	39
	51
	53
	103
	126
	134
	139
	591
230-7300	▶592
230-7304	20
	28
	30
	31
	32
	39
	59
	61
	66
	68
	72
	74
	81
	87
	92
	93
	98
	102
	116
	131
	165
	184
	1561
230-7351	16
	19
	20
	29
	34
	35
	42
	72
	74
	76
	77
	79
	81
	83
	85
	87
	98
	100
	119
	121
	135
	143
	167
	172
	180
	182
	830
230-7352	2
	6
	8
	9
	10
	11
	12
	13
	14
	17
	18
	21
	22
	25
	27
	28
	30
	31

▶ PRIMARY REFERENCE

PART NUMBER INDEX

Part	Page	Part	Page	Part	Page	Part	Page
	33		175		49		187
	36		177		51		188
	38		178		53		189
	39		179		55		190
	40		183		57		191
	42		184		59		192
	43		185		61		193
	44		186		63		194
	45		187		64		992
	47		831		66		994
	48	230-7353	1		68	230-7552	116
	49		7		70		126
	55		15		71		131
	57		23		72		829
	59		24		74	230-7569	7
	61		32		76		8
	63		41		77		9
	64		47		79		10
	66		51		81		11
	68		53		83		12
	71		70		85		13
	89		92		87		14
	90		93		89		25
	91		101		90		31
	94		116		91		39
	95		125		92		101
	97		127		93		118
	99		140		94		163
	102		142		95		167
	103		163		97		185
	105		832		98		819
	107	230-7354	►589		99	230-7578	1
	108	230-7355	1		100		7
	109		2		101		15
	111		6		102		18
	113		7		103		23
	114		8		105		24
	115		9		107		30
	123		10		108		31
	124		11		109		32
	126		12		111		40
	129		13		113		41
	131		14		114		43
	132		15		115		45
	133		16		116		47
	134		17		118		51
	136		18		119		53
	137		19		121		63
	138		20		123		64
	139		21		124		66
	141		22		126		68
	144		23		127		70
	145		24		129		71
	146		25		132		72
	147		27	-160			74
	148		28		162		79
	149		29		163		81
	150		30		164		89
	151		31		165		90
	152		32		167		91
	153		33		169		92
	154		34		171		93
	155		35		172		95
	156		36		173		98
	157		38		175		100
	158		39		177		101
	159		40		178		102
	160		41		179		103
	162		42		180		105
	164		43		182		108
	165		44		183		109
	169		45		184		111
	171		47		185		113
	173		48		186		114

► PRIMARY REFERENCE

PART NUMBER INDEX

Part	Page
	118
	123
	125
	126
	127
	131
	135
	139
	140
	142
	167
	169
	171
	173
	175
	177
	179
	184
	186
	191
	863
230-7581	2
	7
	16
	25
	35
	42
	43
	53
	99
	125
	134
	143
	178
	179
	183
	187
	189
	190
	1037
	1038
230-7886	1255
	1258
	1261
	1364
	1367
230-7924	610
230-7928	▶610
230-8065	561
	562
	563
	564
	565
	566
	567
	568
	569
	571
	572
	573
	574
	575
	576
	578
	580
	581
	582
	583
	584
	585
230-8066	6
	33
	47
	562
230-8082	▶563
230-8083	42
	43
	44
	45
	48
	49
	141
	144
	145
	146
	147
	148
	149
	164
	178
	179
	187
	188
	189
	190
	564
230-8086	20
	51
	53
	99
	109
	111
	113
	114
	127
	136
	137
	138
	191
	194
	867
230-8094	679
	681
	683
	685
	687
	689
	691
	693
	695
	697
	699
	701
	703
	705
	707
	709
	711
	713
	715
	717
	719
	721
	723
	725
	727
	729
	731
	732
	734
	736
	738
	740
	742
	744
	746
	748
	750
	752
	754
	756
	758
	760
	762
230-8144	108
	191
	685
	687
230-8218	715
	717
	721
	723
	727
	754
230-8251	679
	681
	701
	703
	746
	748
	750
230-8253	7
	29
	39
	41
	43
	45
	51
	63
	64
	66
	68
	70
	79
	81
	179
	689
	691
230-8258	693
	695
	697
	727
	729
230-8275	693
	695
	697
	727
	729
230-8276	693
230-8277	693
230-8278	16
	19
	47
	100
	102
	125
	172
	177
	184
	693
	695
	697
230-8989	1175
	1178
	1181
	1184
	1204
	1207
	1210
	1216
	1219
	1222
	1225
	1231
	1234
	1243
	1246
	1255
	1264
	1267
	1270
	1283
	1286
	1296
	1298
	1345
	1348
	1351
	1358
	1361
	1364
	1367
	1370
	1373
	1376
	1379
	1383
	1386
	1389
	1392
	1399
	1409
	1445
	1451
	1454
	1461
	1464
	1474
	1481
230-8995	1173
	1175
	1178
	1181
	1184
	1204
	1207
	1210
	1216
	1219
	1222
	1225
	1231
	1234
	1237
	1243
	1246
	1255
	1258
	1264
	1267
	1270
	1283
	1286
	1289
	1296
	1298
	1345
	1348
	1351
	1358
	1361
	1364
	1367
	1370
	1373
	1376

▶ PRIMARY REFERENCE

PART NUMBER INDEX

Part	Page
	1379
	1383
	1386
	1389
	1392
	1399
	1402
	1405
	1409
	1412
	1418
	1445
	1451
	1454
	1461
	1464
	1467
	1474
	1481
230-8996	1173
	1175
	1178
	1181
	1184
	1204
	1207
	1210
	1216
	1219
	1222
	1225
	1231
	1234
	1237
	1243
	1246
	1255
	1258
	1264
	1267
	1270
	1283
	1286
	1289
	1296
	1298
	1345
	1348
	1351
	1358
	1361
	1364
	1367
	1370
	1373
	1376
	1379
	1383
	1386
	1389
	1392
	1399
	1402
	1405
	1409
	1412
	1418
	1445
	1451
	1454
	1461
	1464
	1467
	1474

Part	Page
	1481
230-8997	1173
	1175
	1178
	1181
	1184
	1204
	1207
	1210
	1216
	1219
	1222
	1225
	1231
	1234
	1237
	1243
	1246
	1255
	1258
	1264
	1267
	1270
	1283
	1286
	1289
	1296
	1298
	1345
	1348
	1351
	1358
	1361
	1364
	1367
	1370
	1373
	1376
	1379
	1383
	1386
	1389
	1392
	1399
	1402
	1405
	1409
	1412
	1418
	1445
	1451
	1454
	1461
	1464
	1467
	1474
	1481
230-8998	1173
	1175
	1178
	1181
	1184
	1204
	1207
	1210
	1216
	1219
	1222
	1225
	1231
	1234
	1237
	1243
	1246

Part	Page
	1255
	1258
	1264
	1267
	1270
	1283
	1286
	1289
	1296
	1298
	1345
	1348
	1351
	1358
	1361
	1364
	1367
	1370
	1373
	1376
	1379
	1383
	1386
	1389
	1392
	1399
	1402
	1405
	1409
	1412
	1418
	1445
	1451
	1454
	1461
	1464
	1467
	1474
	1481
230-8999	1175
	1178
	1181
	1184
	1187
	1216
	1219
	1222
	1225
	1228
	1231
	1234
	1237
	1240
	1283
	1286
	1289
	1292
	1364
	1367
	1370
	1373
	1376
	1379
	1392
	1395
	1399
	1402
	1405
	1409
	1412
	1415
	1445
	1448
	1488

Part	Page
230-9125	235
	241
	266
	282
	292
	346
	395
230-9127	235
	237
	239
	241
	243
	245
	247
	249
	251
	253
	256
	258
	260
	262
	266
	268
	270
	274
	276
	278
	282
	284
	286
	288
	292
	294
	296
	298
	300
	302
	304
	310
	312
	314
	316
	320
	322
	324
	326
	328
	334
	336
	338
	340
	342
	346
	348
	350
	354
	356
	358
	360
	364
	366
	368
	370
	374
	376
	378
	380
	384
	386
	388
	390
	392
	395
	397

► PRIMARY REFERENCE

PART NUMBER INDEX

Part	Page
	399
	402
	404
	408
	410
	412
	416
	418
	420
	422
	424
	434
	436
	438
	444
230-9128	39
	235
	237
	239
	240
230-9139	2
	6
	15
	16
	29
	36
	42
	43
	53
	79
	81
	83
	85
	87
	99
	116
	139
	143
	178
	179
	180
	183
	187
	188
	189
	190
	241
	243
	245
	246
230-9144	247
	256
	274
	298
	310
	320
	334
	364
	374
	384
230-9149	32
	33
	34
	38
	44
	45
	48
	49
	51
	71
	72
	74
	76
	77
	93
	100
	102
	103
	123
	127
	141
	144
	145
	146
	147
	148
	149
	164
	182
	184
	186
	193
	247
	249
	251
	253
	255
230-9150	▶256
	▶258
	▶260
	▶262
	▶264
230-9151	19
	129
	172
	266
	268
	270
	272
230-9152	266
	268
	274
	276
	282
	284
	292
	294
	298
	300
	346
	348
	354
	356
	374
	376
	378
	384
	386
	388
	408
	420
230-9194	549
230-9195	549
230-9196	15
	16
	19
	21
	22
	23
	24
	27
	29
	30
	32
	34
	36
	38
	41
	42
	43
	44
	45
	47
	48
	49
	51
	53
	55
	57
	59
	61
	63
	64
	66
	68
	70
	71
	72
	74
	76
	77
	79
	81
	83
	85
	87
	94
	97
	98
	100
	102
	103
	107
	108
	109
	111
	113
	114
	116
	119
	121
	123
	126
	129
	131
	135
	136
	137
	138
	140
	141
	142
	144
	145
	146
	147
	148
	149
	150
	151
	152
	153
	154
	155
	156
	157
	158
	159
	160
	162
	164
	172
	178
	179
	180
	182
	184
	186
	187
	188
	189
	190
	191
	193
	194
	231
	232
230-9516	1231
230-9523	1231
	1234
230-9527	1175
	1191
	1204
	1216
	1231
	1243
	1264
	1276
	1283
	1345
	1348
	1351
	1399
	1409
230-9699	▶565
230-9719	▶54
231-0033	6
	7
	8
	9
	11
	12
	15
	17
	18
	21
	22
	23
	24
	25
	27
	28
	29
	30
	31
	32
	33
	34
	36
	38
	39
	40
	41
	42
	43
	44
	45
	47
	48
	49
	55
	57
	59
	61
	63
	64

▶ PRIMARY REFERENCE

PART NUMBER INDEX

Part	Page	Part	Page	Part	Page	Part	Page
	66		187	231-0180 . . . . . ▶59			1519
	68		188	231-0181 . . . . . ▶61		232-1117	1175
	70		189	231-0182 . . . . . ▶63			1191
	71		190	231-0183 . . . . . ▶64			1204
	72		192	231-0184 . . . . . ▶66			1216
	74		193	231-0186 . . . . . ▶68			1231
	76		868	231-0286 25			1243
	77	231-0038 1			139		1264
	79		2		1069		1283
	81		10	231-0292 2			1364
	83		13		6		1367
	85		14		7	232-1295	1175
	87		16		12		1178
	89		19		13		1181
	91		35		15		1184
	93		92		16		1187
	94		100		19		1191
	95		102		29		1204
	97		108		35		1207
	98		116		36		1210
	101		124		39		1213
	103		127		42		1216
	105		139		43		1219
	107		172		53		1222
	115		183		79		1225
	118		184		81		1228
	119		870		83		1231
	121		871		85		1234
	123	231-0046 549			87		1237
	125		551		90		1240
	126		553		99		1303
	129		555		116	232-1322	528
	131		817		129		538
	132		819		134		821
	133	231-0047 . . . . . ▶547			143		1175
	134	231-0055 95			172		1178
	135		99		178		1181
	140		115		179		1184
	141		143		180		1187
	142		177		183		1191
	143		549		187		1204
	144	231-0149 8			189		1207
	145		10		190		1210
	146		11		1070		1213
	147		14	231-3015 756			1216
	148		18	231-7013 . . . . . ▶69			1219
	149		34	232-1115 1143			1222
	150		38		1147		1225
	151		51		1149		1228
	152		71		1151		1231
	153		76		1153		1234
	154		77		1165		1237
	155		89		1194		1240
	156		91		1197		1303
	157		100		1200	232-1323	1175
	158		103		1345		1178
	159		118		1348		1181
	160		121		1351		1191
	162		123		1354		1194
	163		126		1364		1197
	164		127		1367		1204
	165		137		1409		1207
	167		138		1412		1210
	169		173		1415		1216
	171		175		1438		1219
	173		177		1441		1222
	175		182		1474		1225
	177		185		1477		1231
	178		186		1497		1234
	179		193		1501		1243
	180		194		1505		1246
	182		1052		1511		1255
	185	231-0178 . . . . . ▶55			1513		1264
	186	231-0179 . . . . . ▶57			1517		1267

▶ PRIMARY REFERENCE

PART NUMBER INDEX

Part	Page	Part	Page	Part	Page	Part	Page
	1270		1345		1286		1273
	1276		1348		1289		1276
	1283		1351		1292		1279
	1286		1354		1296		1283
	1296		1358		1298		1286
	1303		1361		1300		1289
	1306		1364		1303		1292
	1339		1367		1306		1296
	1345		1370		1309		1298
	1348		1373		1339		1300
	1351		1376		1342		1306
	1358		1379		1345		1309
	1364		1383		1348		1339
	1370		1386		1351		1342
	1373		1389		1354		1345
	1376		1392		1358		1348
	1383		1395		1361		1351
	1386		1399		1364		1354
	1392		1402		1367		1358
	1399		1405		1370		1361
	1409		1409		1373		1364
	1421		1412		1376		1367
	1427		1415		1379		1370
	1438		1418		1383		1373
	1445		1421		1386		1376
	1451		1424		1389		1379
	1461		1427		1392		1383
	1474		1430		1395		1386
	1481		1438		1418		1389
	1488		1441		1421		1392
	1491		1445		1424		1395
232-1328	1175		1448		1427		1399
	1178		1451		1430		1402
	1181		1454		1438		1405
	1184		1461		1441		1409
	1187		1464		1445		1412
	1197		1467		1448		1415
	1200		1470		1451		1418
	1204		1474		1454		1421
	1207		1477		1461		1424
	1210		1481		1464		1427
	1213		1484		1467		1430
	1216		1488		1470		1438
	1219		1491		1474		1441
	1222	232-1793	1175		1477		1445
	1225		1178	232-1794	1175		1448
	1228		1181		1178		1451
	1231		1184		1181		1454
	1234		1187		1184		1461
	1237		1197		1187		1464
	1240		1200		1197		1467
	1243		1204		1200		1470
	1246		1207		1204		1474
	1249		1210		1207		1477
	1255		1213		1210		1481
	1258		1216		1213		1484
	1261		1219		1216		1488
	1264		1222		1219		1491
	1267		1225		1222	232-1827	17
	1270		1228		1225		22
	1273		1231		1228		24
	1276		1234		1231		33
	1279		1237		1234		40
	1283		1240		1237		44
	1286		1243		1240		55
	1289		1246		1243		57
	1292		1249		1246		63
	1296		1264		1249		64
	1298		1267		1255		70
	1300		1270		1258		97
	1306		1273		1261		101
	1309		1276		1264		105
	1339		1279		1267		119
	1342		1283		1270		132

PART NUMBER INDEX

Part	Page
	141
	142
	144
	145
	146
	147
	148
	149
	150
	151
	152
	153
	154
	155
	156
	157
	158
	159
	160
	162
	164
	167
	169
	171
	1175
	1178
	1181
	1184
	1187
232-2551	699
	740
232-2565	139
	699
232-2720	1191
	1194
	1197
	1200
	1276
	1279
	1303
	1306
	1309
	1339
	1342
	1421
	1424
	1427
	1430
	1438
	1441
	1491
232-2721	1191
	1194
	1197
	1200
	1276
	1279
	1303
	1306
	1309
	1339
	1342
	1421
	1424
	1427
	1430
	1438
	1441
	1491
232-2722	1191
	1194
	1197
	1200
	1276
	1279
	1303
	1306
	1309
	1339
	1342
	1421
	1424
	1427
	1430
	1438
	1441
	1491
232-2723	1191
	1194
	1197
	1200
	1276
	1279
	1303
	1306
	1309
	1339
	1342
	1421
	1424
	1427
	1430
	1438
	1441
	1491
232-2724	1178
	1181
	1184
	1187
	1222
	1225
	1228
	1234
	1237
	1240
	1289
	1292
	1364
	1367
	1373
	1376
	1379
	1392
	1395
	1402
	1405
	1409
	1412
	1415
	1445
	1448
	1488
232-2725	1172
	1173
	1175
	1178
	1181
	1184
	1191
	1194
	1197
	1200
	1204
	1207
	1210
	1216
	1219
	1222
	1225
	1231
	1234
	1237
	1243
	1246
	1255
	1258
	1264
	1267
	1270
	1276
	1279
	1283
	1286
	1289
	1296
	1298
	1303
	1306
	1309
	1339
	1342
	1345
	1348
	1351
	1358
	1361
	1364
	1367
	1370
	1373
	1376
	1379
	1383
	1386
	1389
	1392
	1399
	1402
	1405
	1409
	1412
	1418
	1421
	1424
	1427
	1430
	1438
	1441
	1445
	1451
	1454
	1461
	1464
	1467
	1474
	1481
	1491
232-2726	1172
	1173
	1175
	1178
	1181
	1184
	1191
	1194
	1197
	1200
	1204
	1207
	1210
	1216
	1219
232-3126	1143
	1145
	1147
	1149
	1151
	1157
	1159
	1161
	1163
	1171
	1178
	1181
	1184
	1187

► PRIMARY REFERENCE

PART NUMBER INDEX

Part	Page	Part	Page	Part	Page	Part	Page
	1207		1399		1348		1225
	1210		1402		1351		1228
	1213		1405		1354		1237
	1286		1409		1358		1240
	1289		1412		1361		1243
	1292		1415		1364		1246
	1345		1418		1367		1249
	1438		1421		1370		1255
	1441		1424		1373		1258
	1495		1427		1376		1261
	1497		1430		1379		1264
	1499		1438		1383		1267
	1505		1441		1386		1270
	1507		1445		1389		1273
	1509		1448		1392		1276
	1513		1451		1395		1279
	1547		1454		1421		1283
	1548		1461		1424		1286
	1549		1464		1427		1289
	1550		1467		1430		1292
232-3149	1191		1470		1438		1296
	1194		1474		1441		1298
	1197		1477		1445		1300
	1200		1481		1448		1303
	1204		1484		1451		1306
	1207		1488		1454		1309
	1210		1491		1461		1339
	1213	232-3157	1175		1464		1342
	1216		1178		1467		1345
	1219		1181		1470		1348
	1222		1184		1474		1351
	1225		1187		1477		1354
	1228		1191		1491		1358
	1243		1194	232-3158	1175		1361
	1246		1197		1191		1364
	1249		1200		1194		1367
	1255		1204		1204		1370
	1258		1207		1216		1373
	1261		1210		1243		1376
	1264		1213		1264		1379
	1267		1216		1267		1383
	1270		1219		1283		1386
	1273		1222	232-3263	1175		1389
	1276		1225		1178		1392
	1279		1228		1181		1395
	1283		1231		1184		1399
	1286		1234		1187		1402
	1289		1237		1191		1405
	1292		1240		1216		1409
	1296		1243		1219		1412
	1298		1246		1222		1415
	1300		1249		1225		1418
	1303		1255		1228		1421
	1306		1258		1234		1424
	1309		1261		1237		1427
	1339		1264		1240		1430
	1342		1267		1364		1438
	1345		1270		1367		1441
	1348		1273	232-3274	1175		1445
	1351		1276		1178		1448
	1354		1279		1181		1451
	1358		1283		1184		1454
	1361		1286		1187		1461
	1364		1289		1191		1464
	1367		1292		1194		1467
	1370		1296		1197		1470
	1373		1298		1200		1474
	1376		1300		1204		1477
	1379		1303		1207		1481
	1383		1306		1210		1484
	1386		1309		1213		1488
	1389		1339		1216		1491
	1392		1342		1219	232-3657	622
	1395		1345		1222		624

PART NUMBER INDEX

Part	Page
232-3666	622
	624
	626
	628
	630
	632
	634
	636
	638
	640
	642
	644
232-3670	7
	8
	9
	10
	11
	12
	13
	14
	25
	31
	39
	101
	118
	163
	167
	185
	622
	624
232-3713	1
	2
	6
	7
	8
	9
	10
	11
	12
	13
	14
	15
	16
	17
	18
	19
	21
	22
	23
	24
	25
	27
	28
	29
	30
	31
	32
	33
	34
	35
	36
	38
	39
	40
	41
	42
	43
	44
	45
	47
	48
	49
	55
	57
	59
	61
	63
	64
	66
	68
	70
	71
	72
	74
	76
	77
	79
	81
	83
	85
	87
	89
	90
	91
	92
	93
	94
	95
	97
	98
	100
	101
	102
	103
	105
	107
	108
	115
	116
	118
	119
	121
	123
	124
	125
	126
	129
	131
	132
	133
	134
	135
	139
-160	
	162
	163
	164
	165
	167
	169
	171
	172
	173
	175
	177
	178
	179
	180
	182
	183
	184
	185
	186
	187
	189
	190
	192
	193
	647
232-3716	27
	820
232-3722	►876
	►884
	►890
	►901
	►915
	►919
	►932
	►953
232-3751	493
	499
	518
	883
	889
	894
	896
	901
	902
	903
	904
	906
	908
	909
	911
	913
	919
	921
	922
	923
	925
	927
	935
	937
	939
	941
	943
	945
	953
	955
	956
	963
	965
	967
	968
	971
	972
232-3861	827
	883
	884
	885
	894
	896
	947
	949
	951
	953
	955
	956
	963
	965
	973
	1579
	1580
	1581
232-4502	►70
232-6177	►883
232-6178	626
232-6179	2
	15
-160	
	16
	19
	20

► PRIMARY REFERENCE

PART NUMBER INDEX

Part	Page
	172
	177
	178
	179
	180
	182
	183
	184
	186
	187
	188
	189
	190
	191
	192
	626
	628
232-6189	1073
	1075
	1079
	1081
	1083
	1089
	1097
	1101
	1109
	1111
	1113
	1119
	1121
	1126
	1132
	1137
232-6194	1083
	1101
	1109
	1111
232-6197	20
	24
	33
	70
	101
	133
	142
	167
	192
	1075
232-6204	2
	6
	7
	8
	9
	10
	11
	12
	13
	14
	15
	16
	17
	18
	20
	23
	24
	27
	33
	35
	36
	38
	41
	42
	43
	44
	45
	47
	48
	49
	70
	92
	94
	99
	101
	102
	107
	108
	109
	111
	113
	116
	123
	126
	127
	133
	134
	136
	137
	138
	139
	140
	141
	142
	144
	145
	146
	147
	148
	149
	163
	164
	165
	167
	178
	179
	183
	184
	185
	186
	187
	188
	189
	190
	191
	192
	194
	821
	822
232-6206	125
	652
232-6661	1
	2
	6
	7
	8
	9
	10
	11
	12
	13
	14
	15
	16
	17
	18
	19
	21
	22
	23
	24
	25
	27
	29
	33
	34
	35
	36
	38
	40
	41
	42
	43
	44
	45
	47
	48
	49
	51
	53
	55
	57
	63
	64
	70
	71
	76
	77
	79
	83
	85
	89
	90
	91
	94
	95
	97
	99
	100
	101
	103
	105
	107
	108
	109
	111
	113
	114
	115
	118
	119
	121
	123
	124
	125
	126
	127
	129
	132
	135
-160	63
	162
	163
	164
	167
	169
	171
	172
	173
	175
	177
	178
	179
	180
	182
	183
	185
	186
	187
	189
	190
	191
	193
	194
	1547
	1548
232-6662	1547
232-7378	1
	2
	6
	7
	8
	9
	10
	11
	12
	13
	14
	15
	16
	17
	18
	19
	20
	21
	22
	23
	24
	25
	28
	29
	30
	31
	32
	33
	34
	35
	36
	38
	40
	41
	42
	43
	44
	45
	47
	48
	49
	51
	53
	55
	57
	59
	61
	63
	64
	66
	68
	70
	71
	72
	74
	76
	77
	79
	81
	83
	85
	87

PART NUMBER INDEX

Part	Page	Part	Page	Part	Page	Part	Page
	89		189		177		502
	90		190		182		503
	91		191		184		504
	92		192		186		505
	93		192		506		
	95		194		451		507
	97		861		453		508
	98	232-7399	1547	232-7440	493		509
	100	232-7400	►449	232-7442	3		510
	101		►451		28		511
	102		►454		31		512
	103		►456		33		513
	105		►459		38		514
	107		►461		72		515
	108		►464		74		516
	115		►467		76		517
	116		►470		92		522
	118		►472		95		523
	119		►475		97		524
	121		►487		98		525
	123		►527		100		527
	125	232-7439	3		101	232-7519	►528
	126		28		102		►529
	127		31		103		►531
	129		33		108		►533
	131		38		109		534
	132		72		111		535
	133		74		113		536
	134		76		118		537
	135		92		119		►541
	136		95		121		►542
	137		97		123		►544
	138		98		124		545
	139		100		126		546
	140		101		127	232-7524	3
	141		102		131		28
	142		103		132		31
	144		108		133		33
	145		109		140		38
	146		111		141		72
	147		113		142		74
	148		118		144		76
	149		119		145		92
	150		121		146		95
	151		123		147		97
	152		124		148		98
	153		126		149		100
	154		127		150		101
	155		131		151		102
	156		132		152		103
	157		133		153		108
	158		140		154		109
	159		141		155		111
	160		142		156		113
	162		144		157		118
	163		145		158		119
	164		146		159		121
	165		147		160		123
	167		148		162		124
	169		149		163		126
	171		150		164		127
	172		151		177		131
	173		152		182		132
	175		153		184		133
	177		154		186		140
	178		155		192		141
	179		156		764		142
	180		157		766		144
	182		158		768		145
	183		159	232-7449	495		146
	184		160		496		147
	186		162		497		148
	187		163		498		149
	188		164		501		150

► PRIMARY REFERENCE

PART NUMBER INDEX

Part	Page
	151
	152
	153
	154
	155
	156
	157
	158
	159
	160
	162
	163
	164
	177
	182
	184
	186
	192
	531
232-7526	3
	28
	31
	33
	38
	72
	74
	76
	92
	95
	97
	98
	100
	101
	102
	103
	108
	109
	111
	113
	118
	119
	121
	123
	124
	126
	127
	131
	132
	133
	140
	141
	142
	144
	145
	146
	147
	148
	149
	150
	151
	152
	153
	154
	155
	156
	157
	158
	159
	160
	162
	163
	164
	177
	182
	184
	186
	192
	839
232-7528	3
	28
	31
	33
	38
	72
	74
	76
	92
	95
	97
	98
	100
	101
	102
	103
	108
	109
	111
	113
	118
	119
	121
	123
	124
	126
	127
	131
	132
	133
	140
	141
	142
	144
	145
	146
	147
	148
	149
	150
	151
	152
	153
	154
	155
	156
	157
	158
	159
	160
	162
	163
	164
	177
	182
	184
	186
	192
	203
232-7596	491
	493
	499
	520
	526
232-7597	491
	493
	499
	520
	526
232-7599	491
	493
	499
	520
	526
232-7600	493
	499
	518
	520
232-7603	493
	499
	518
	520
232-7604	▶493
	▶495
	▶497
	▶505
	▶509
	▶511
	▶513
	▶516
232-7606	3
	28
	31
	33
	38
	72
	74
	76
	92
	95
	97
	98
	100
	101
	102
	103
	108
	109
	111
	113
	118
	119
	121
	123
	124
	126
	127
	131
	132
	133
	140
	141
	142
	144
	145
	146
	147
	148
	149
	150
	151
	152
	153
	154
	155
	156
	157
	158
	159
	160
	162
	163
	164
	177
	182
	184
	186
	192
	495
	496
232-7808	1145
	1495
	1497
	1499
	1509
	1511
	1513
232-9758	1143
	1145
	1147
	1149
	1151
	1153
	1155
	1157
	1159
	1161
	1495
	1497
	1499
	1501
	1503
	1505
	1507
	1509
	1511
	1513
	1517
	1519
232-9759	1143
	1145
	1147
	1149
	1151
	1163
	1165
	1495
	1497
	1505
	1507
	1513
232-9760	1145
	1495
232-9761	▶3
	▶20
	▶22
	23
	24
	▶32
	▶34
	▶41
	▶44
	▶45
	▶47
	48
	49
	▶51
	▶55
	▶57
	▶59
	▶61
	▶63
	▶64
	▶66
	▶68
	▶70
	▶71
	▶77

PART NUMBER INDEX

Part	Page
	►93
232-9762	1145
	1495
	1499
	1509
232-9763	55
	57
	59
	61
	63
	64
	66
	68
	1495
	1497
233-3784	449
	451
	456
	461
	464
	467
	527
233-3785	449
	451
	456
	461
	464
	467
	527
233-3786	449
	451
	456
	461
	464
	467
	477
	527
233-3788	451
	456
	461
	464
	467
	527
233-3789	451
	456
	461
	464
	467
	527
233-3790	451
	456
	461
	464
	467
	527
233-4695	711
	713
233-5180	►1024
	►1026
	►1027
	►1101
	►1104
	►1132
233-5182	1024
	1025
	1035
233-5184	1024
	1025
	1035
233-7007	2
	3
	25
	27
	29
	35
	36
	39
	79
	81
	83
	87
	94
	99
	107
	114
	115
	116
	129
	134
	139
	143
	172
	178
	179
	180
	183
	187
	188
	189
	190
	191
	454
	455
233-7094	►1190
	►1191
	►1194
233-7104	1191
	1194
	1197
	1200
	1276
	1279
	1303
	1306
	1309
	1339
	1342
	1421
	1424
	1427
	1430
	1438
	1441
	1491
233-7214	1191
	1194
233-7222	875
	886
	894
	897
	904
	906
	929
233-7223	886
	894
	897
	904
	929
233-7231	770
	772
	778
	780
	794
	796
	798
	800
	806
233-7232	770
	772
	778
	780
	794
	796
	806
233-7233	2
	3
	25
	27
	29
	35
	36
	39
	79
	81
	83
	87
	94
	99
	107
	114
	115
	116
	129
	134
	139
	143
	172
	178
	179
	180
	183
	187
	188
	189
	190
	191
	770
	772
233-7234	2
	3
	25
	27
	29
	35
	36
	39
	79
	81
	83
	87
	94
	99
	107
	114
	115
	116
	129
	134
	139
	143
	172
	178
	179
	180
	183
	187
	188
	189
	190
	191
	840
233-7236	2
	3
	25
	27
	29
	35
	36
	39
	79

► PRIMARY REFERENCE

PART NUMBER INDEX

Part	Page
	81
	83
	87
	94
	99
	107
	114
	115
	116
	129
	134
	139
	143
	172
	178
	179
	180
	183
	187
	188
	189
	190
	191
	204
233-7421	1153
	1155
	1499
	1501
	1503
	1509
	1511
	1517
	1519
233-7423	1499
	1509
	1511
233-7425	1
	2
	6
	7
	12
	13
	15
	25
	27
	29
	35
	36
	39
	42
	43
	53
	79
	81
	83
	85
	87
	90
	94
	99
	107
	115
	116
	129
	134
	136
	139
	143
	178
	179
	180
	183
	187
	189
	190
	1499
	1501
	1503
233-7432	20
	51
	53
	109
	111
	113
	114
	136
	137
	138
	191
	194
	648
233-7489	1054
	1055
	1062
	1063
233-7490	1056
	1059
233-7491	29
	114
	191
	1054
233-7972	1191
	1194
	1303
233-7974	2
	6
	15
	16
	25
	29
	42
	43
	53
	79
	83
	85
	90
	99
	136
	143
	178
	179
	180
	183
	187
	188
	189
	190
	1191
	1194
	1197
	1200
233-8148	679
	681
	683
	701
	703
	705
233-8150	6
	21
	22
	25
	27
	28
	33
	34
	35
	42
	44
	48
	49
	55
	57
	59
	61
	76
	77
	83
	85
	87
	94
	97
	99
	107
	119
	129
	132
	133
	134
	141
	143
	144
	145
	146
	147
	148
	150
	151
	152
	153
	154
	155
	156
	157
	158
	159
	160
	162
	164
	165
	178
	180
	182
	187
	188
	189
	190
	192
	193
	701
	703
	705
233-9404	▶1203
	▶1204
	▶1207
233-9405	23
	32
	41
	49
	93
	140
	163
	1204
	1207
	1210
	1213
233-9406	▶884
	▶885
233-9408	491
	520
	881
	882
	884
	885
	886
	888
	890
	892
	893
	894
	896
	897
	899
	900
	915
	917
	918
	919
	921
	922
	935
	937
	939
	947
	949
	951
	957
	959
	961
	969
	970
	971
	972
	973
233-9417	8
	9
	10
	11
	14
	17
	18
	20
	21
	22
	23
	24
	28
	30
	31
	32
	33
	34
	38
	40
	41
	44
	45
	48
	49
	51
	55
	57
	59
	61
	63
	64
	66
	68
	70
	71
	72
	74
	76
	77
	89
	91

PART NUMBER INDEX

Part	Page
	92
	93
	95
	97
	98
	101
	103
	105
	108
	118
	119
	121
	123
	124
	126
	127
	132
	133
	135
	137
	138
	140
	141
	142
	144
	145
	146
	147
	148
	149
	150
	151
	152
	153
	154
	155
	156
	157
	158
	159
	160
	162
	163
	164
	165
	167
	169
	171
	173
	175
	182
	186
	192
	193
	194
	1505
	1507
233-9426	7
	35
	42
	43
	44
	45
	47
	48
	49
	108
	141
	144
	145
	146
	147
	148
	149
	164
	167
	178
	187
	188
	189
	190
	191
	823
233-9436	654
	660
	823
	825
	826
	828
233-9445	15
	16
	53
	143
	1577
233-9526	20
	28
	59
	61
	66
	68
	98
	133
	165
	192
	1216
	1219
	1222
	1225
	1228
233-9531	1524
	1525
	1526
	1527
	1528
	1529
	1530
	1531
	1532
	1533
	1534
	1535
	1536
	1537
	1538
	1539
233-9532	1524
	1526
	1529
	1535
	1536
233-9533	32
	92
	93
	116
	1524
233-9534	1077
233-9536	1077
	1107
	1135
233-9537	1077
	1135
233-9539	44
	141
	144
	145
	146
	147
	148
	149
	164
	1077
233-9542	139
	1055
233-9779	1079
233-9780	23
	32
	41
	49
	93
	140
	163
	1079
233-9831	1143
	1513
233-9832	►1143
233-9834	20
	28
	31
	32
	34
	39
	59
	61
	66
	68
	72
	74
	81
	87
	92
	93
	98
	102
	111
	116
	131
	133
	134
	165
	184
	192
	1549
	1550
233-9840	1
	2
	99
	102
	183
	184
	653
234-0189	198
	200
	201
234-0198	198
	200
	201
234-0201	198
	200
	201
234-0204	198
	200
	201
234-0205	198
	200
	201
234-0206	201
234-0212	198
	200
	201
234-0220	198
	200
	201
234-0223	198
	201
234-0251	23
	24
	41
	70
	108
	121
	140
	142
	274
	276
	278
	280
234-0387	1191
	1194
	1197
	1200
	1276
	1279
	1303
	1306
	1309
	1339
	1342
	1421
	1424
	1427
	1430
	1438
	1441
	1481
	1484
	1491
234-0590	198
	200
	201
234-0591	198
	201
234-0613	198
	200
	201
234-0614	198
	200
	201
234-0615	►198
	►199
	►201
234-0616	198
	201
234-0617	6
	8
	9
	10
	11
	12
	13
	14
	20
	21
	22
	25
	28
	33
	34
	35
	38
	42
	44
	48
	49
	55
	57
	61

► PRIMARY REFERENCE

PART NUMBER INDEX

Part	Page
	76
	77
	83
	85
	87
	97
	99
	107
	119
	121
	129
	132
	133
	134
	136
	137
	138
	141
	143
	144
	145
	146
	147
	148
	149
	150
	151
	152
	153
	154
	155
	156
	157
	158
	159
	160
	162
	163
	164
	165
	178
	180
	182
	185
	187
	189
	190
	192
	193
	194
	199
234-0809	▶3
	▶6
	▶7
	▶15
	▶16
	▶19
	▶42
	▶43
	▶53
	▶85
234-1421	42
	125
	139
	1072
234-1546	6
	25
	35
	42
	83
	85
	87
	99
	107
	129
	134
	178
	180
	187
	188
	189
	190
	886
	888
234-2414	45
	47
	48
	108
	124
	1231
	1234
	1237
	1240
234-2418	1107
234-2431	47
	100
	102
	177
	184
	1145
	1147
	1149
	1151
234-2941	124
	889
234-2988	1083
	1085
	1095
	1109
	1111
	1113
	1116
	1126
	1129
234-3024	1119
234-3029	1081
	1083
	1085
	1087
	1095
	1097
	1109
	1111
	1116
	1119
	1126
	1129
234-3030	1081
	1083
	1109
	1111
	1113
	1126
234-3458	941
	943
	945
	947
	949
	951
234-3463	102
	184
	1525
234-3542	20
	51
	53
	116
	118
	127
	828
234-3558	740
	742
	744
234-4215	7
	127
	824
234-9665	24
	41
	70
	140
	142
	611
234-9666	1
	15
	16
	17
	18
	19
	21
	22
	23
	24
	25
	27
	34
	36
	38
	40
	41
	51
	53
	55
	57
	63
	64
	70
	71
	76
	77
	79
	83
	85
	89
	90
	91
	94
	95
	97
	99
	100
	101
	103
	105
	107
	118
	119
	121
	124
	125
	127
	132
	135
	139
	140
	142
	143
	150
	151
	152
	153
	154
	155
	156
	157
	158
	159
	160
	162
	163
	167
	169
	172
	173
	175
	180
	182
	1562
234-9680	23
	24
	32
	41
	51
	53
	70
	92
	93
	101
	116
	140
	142
	163
	566
234-9738	7
	23
	24
	41
	51
	53
	70
	93
	94
	101
	107
	140
	142
	163
	991
235-0028	15
	23
	24
	41
	51
	53
	70
	101
	140
	142
	163
	1526
235-0321	6
	20
	21
	22
	25
	27
	28
	33
	36
	38
	55
	57
	59
	61
	76
	77
	83
	85
	87

▶ PRIMARY REFERENCE

PART NUMBER INDEX

Part	Page
	94
	97
	107
	119
	121
	126
	132
	143
	150
	151
	152
	153
	154
	155
	156
	157
	158
	159
	160
	162
	180
	182
	193
	612
235-0322	6
	20
	21
	22
	27
	28
	31
	33
	43
	55
	57
	59
	61
	63
	64
	66
	68
	71
	72
	74
	76
	77
	79
	81
	83
	85
	87
	94
	95
	98
	107
	118
	132
	143
	150
	151
	152
	153
	154
	155
	156
	157
	158
	159
	160
	162
	179
	180
	182
	193

Part	Page
	593
235-0328	6
	33
	1584
235-0343	6
	33
	108
	677
235-0365	2
	6
	15
	16
	36
	42
	43
	79
	81
	83
	85
	87
	99
	143
	178
	179
	180
	183
	187
	189
	190
	1064
235-0366	6
	21
	22
	27
	32
	33
	55
	57
	59
	61
	63
	64
	66
	68
	1522
235-1039	6
	33
	650
235-1044	2
	6
	20
	28
	33

Part	Page
	35
	127
	139
	183
	551
235-1061	551
	553
	555
	559
235-1063	551
	553
	555
	559
235-1064	630
	632
	636
235-1352	630
	632
	636
235-1358	630
	632
	636
235-1391	630
	632
	636
235-1398	630
	632
	636
235-1418	630
	632
	636
235-1419	6
	28
	33
	34
	90
	136
	137
	138
	630
	632
	634
235-1790	1175
	1178
	1191
	1194
	1231
	1243
	1255
	1258
	1261
	1264
	1267
	1270
	1273
	1283
	1286
	1289
	1292
	1296
	1298
	1300
	1303
	1306
	1309
	1339
	1342
	1351
	1354
	1358
	1361
	1364
	1367
	1370

Part	Page
	1373
	1376
	1379
	1386
	1389
	1392
	1395
	1418
	1421
	1424
	1427
	1430
	1438
	1441
	1445
	1448
	1451
	1454
	1461
	1464
	1467
	1470
	1474
	1477
	1491
235-2375	613
235-2380	167
	613
235-2382	116
	127
	131
	594
235-2385	15
	51
	53
	127
	567
235-2435	736
	738
235-2451	881
	882
	894
	896
	897
	899
	915
	917
	919
	921
	935
	937
	939
	971
	1056
	1057
	1059
	1060
235-2488	1056
	1059
235-2489	12
	13
	15
	136
	1056
	1057
235-2624	23
	24
	41
	43
	70
	140
	142
	179
	825

► PRIMARY REFERENCE

PART NUMBER INDEX

Part	Page
235-3552	7
	34
	102
	115
	184
	595
235-3554	7
	12
	13
	25
	282
	284
	286
	288
	290
235-3555	7
	1509
	1511
235-4105	586
235-5230	20
	21
	22
	28
	33
	34
	38
	44
	48
	49
	55
	57
	59
	61
	76
	77
	97
	119
	121
	132
	133
	141
	144
	145
	146
	147
	148
	149
	150
	151
	152
	153
	154
	155
	156
	157
	158
	159
	160
	162
	164
	165
	182
	192
	890
	892
	893
235-5233	1083
	1109
	1111
235-5234	18
	1081
235-6281	1153
	1155
	1170
	1501
	1503
	1517
	1519
235-8161	35
	90
	292
	294
	296
235-8175	53
	116
	129
	134
	1065
235-8562	15
	53
	894
	896
235-8747	1582
235-8749	19
	25
	29
	30
	32
	34
	39
	40
	53
	72
	74
	76
	79
	81
	83
	87
	89
	91
	93
	100
	103
	105
	118
	119
	121
	124
	143
	169
	171
	172
	173
	175
	177
	180
	1582
236-1238	17
	18
	51
	89
	91
	126
	173
	175
	298
	300
	302
	304
	306
	308
236-1269	51
	1083
	1085
	1087
236-1673	1204
	1207
	1210
	1213
	1243
	1246
	1249
	1255
	1258
	1261
	1264
	1267
	1270
	1273
	1296
	1298
	1300
	1345
	1348
	1351
	1354
	1358
	1361
	1383
	1386
	1389
	1451
	1454
	1461
	1464
	1467
	1470
	1474
	1477
236-1674	1204
	1207
	1210
	1213
	1243
	1246
	1249
	1255
	1258
	1261
	1264
	1267
	1270
	1273
	1296
	1298
	1300
	1345
	1348
	1351
	1354
	1358
	1361
	1383
	1386
	1389
	1451
	1454
	1461
	1464
	1467
	1470
	1474
	1477
236-1812	1243
236-2140	51
	1243
	1246
	1249
236-2144	1175
	1178
	1181
	1184
	1187
	1204
	1207
	1210
	1213
	1216
	1219
	1222
	1225
	1228
	1231
	1234
	1237
	1240
	1243
	1246
	1249
	1270
	1273
	1283
	1286
	1289
	1292
	1296
	1298
	1300
	1351
	1354
	1358
	1361
	1370
	1373
	1376
	1379
	1383
	1386
	1389
	1392
	1395
	1445
	1448
	1451
	1454
	1461
	1464
	1467
	1470
236-4927	1124
236-5707	1175
	1178
	1252
	1370
236-6909	1231
236-6910	1216
	1219
	1253
236-7722	996
	1000
	1004
	1016
236-7734	996
	1000
	1004
	1016
236-7735	996
	1000
	1004
	1016
236-7763	996
	1000
	1004
	1016
236-7764	996

PART NUMBER INDEX

Part	Page
	1000
	1004
	1016
236-7765	996
	1000
	1004
	1016
236-8181	21
	22
	28
	30
	40
	55
	57
	59
	61
	63
	64
	66
	68
	95
	97
	105
	131
	132
	150
	151
	152
	153
	154
	155
	156
	157
	158
	159
	160
	162
	165
	169
	171
	568
236-8184	310
	384
	395
236-8190	20
	21
	22
	28
	30
	47
	55
	57
	59
	61
	63
	64
	66
	68
	95
	97
	98
	131
	132
	133
	150
	151
	152
	153
	154
	155
	156
	157
	158
	159
	160
	162
	164
	165
	192
	310
	312
	314
	316
	318
236-8195	21
	22
	57
	61
	64
	68
	983
236-8196	18
	21
	22
	36
	38
	40
	55
	57
	63
	64
	71
	89
	90
	91
	95
	97
	99
	103
	105
	115
	126
	129
	132
	150
	151
	152
	153
	154
	155
	156
	157
	158
	159
	160
	161
	162
	163
	164
	165
	166
	167
	168
	169
	170
	171
	172
	173
	175
	1527
236-8212	21
	22
	25
	28
	29
	31
	34
	55
	57
	59
	61
	63
	64
	66
	68
	71
	72
	74
	76
	77
	79
	81
	83
	85
	87
	97
	98
	101
	118
	119
	121
	129
	132
	133
	135
	143
	150
	151
	152
	153
	154
	155
	156
	157
	158
	159
	160
	162
	163
	167
	180
	182
	192
	193
	1557
236-8228	►1254
	►1255
	►1258
	►1261
	►1358
	►1361
236-8229	8
	10
	18
	34
	71
	76
	77
	89
	91
	127
	173
	175
	177
	182
	193
	1255
	1258
	1261
236-8238	118
	614
236-8241	10
	13
	14
	569
236-8741	996
	1000
	1004
	1016
236-8742	996
	1000
	1004
	1016
236-8748	1026
	1101
236-8750	1026
	1027
	1101
	1104
	1113
	1126
	1129
	1132
236-8757	1555
	1556
236-8758	1
	21
	22
	55
	57
	63
	64
	71
	77
	85
	95
	97
	115
	125
	129
	132
	135
	150
	151
	152
	153
	154
	155
	156
	157
	158
	159
	160
	162
	1555
236-8760	28
	30
	40
	95
	97
	98
	119
	132
	1089
236-8773	996
	1000
	1004
	1016
236-8774	1004
236-8775	1004
236-8776	996
	1000
	1004
	1016
236-8777	996
	1000
	1004
	1016
236-8780	996
	1000
	1004
	1016
236-8781	996
	1000
	1004
	1016

► PRIMARY REFERENCE

PART NUMBER INDEX

Part	Page
236-8782	996
	1000
	1004
236-8783	1004
236-8784	996
236-8785	21
	22
	28
	30
	40
	55
	57
	59
	61
	63
	64
	66
	68
	97
	105
	119
	132
	135
	150
	151
	152
	153
	154
	155
	156
	157
	158
	159
	160
	162
	165
	169
	171
	996
	1000
236-9152	395
	397
	399
	401
236-9963	30
	63
	98
	167
	979
236-9965	28
	30
	31
	39
	59
	61
	66
	68
	131
	165
	1528
236-9970	28
	31
	59
	61
	66
	68
	98
	131
	1556
236-9971	68
	1004
237-0024	177
	1563
237-0026	320
	346
237-0027	127
	1529
237-0284	1143
	1147
	1149
	1151
	1163
	1165
	1497
	1505
	1507
	1513
237-0285	1143
	1147
	1149
	1151
	1153
	1155
	1163
	1165
	1497
	1501
	1503
	1505
	1507
	1511
	1513
	1517
	1519
237-0286	1143
	1147
	1149
	1151
	1163
	1165
	1497
	1505
	1507
	1513
237-0291	59
	61
	66
	68
	1513
237-0769	320
	322
	324
	326
	328
	330
	332
237-2790	8
	9
	10
	11
	14
	320
	322
	324
	326
	328
	330
	332
237-3794	1091
	1099
237-3921	1091
	1099
237-3922	1091
237-3924	8
	10
	11
	14
	137
	138
	177
	185
	194
	1091
237-4894	1578
	1580
237-4896	25
	29
	30
	34
	40
	89
	91
	103
	115
	118
	126
	131
	132
	167
	1578
237-5213	1264
	1267
237-5214	11
	14
	137
	185
	1264
	1267
	1270
	1273
237-5394	115
	1276
	1279
237-5408	1
	27
	94
	107
	115
	125
	136
	1071
237-5833	▶499
	▶501
	▶503
	▶527
237-5836	3
	137
	138
	185
	501
	502
237-5838	3
	137
	138
	185
	456
	458
237-5840	3
	137
	138
	185
	774
	776
237-5852	3
	137
	138
	185
	533
237-5856	3
	137
	138
	185
	842
237-5858	3
	137
	138
	185
	205
237-5914	707
	709
237-5932	707
	709
	711
237-5933	707
	709
	762
237-5935	10
	11
	13
	14
	707
	709
237-6430	▶3
	▶8
	▶10
	▶11
	▶14
237-6452	12
	13
	136
	897
	899
	900
237-7312	570
	577
	579
237-7313	8
	9
	11
	12
	185
	570
237-7997	▶1282
	▶1283
237-7999	9
	21
	135
	1283
	1286
	1289
	1292
237-8185	▶1295
	▶1296
	▶1298
	▶1461
	▶1464
237-8259	31
	72
	74
	1296
	1298
	1300

▶ PRIMARY REFERENCE

PART NUMBER INDEX

Part . . . . Page

238-2777 . . . . 101, 163, 334, 336, 338, 340, 342, 344
238-2799 . . . . 17, 18, 23, 24, 30, 32, 40, 41, 45, 47, 63, 64, 66, 68, 70, 71, 72, 74, 93, 95, 98, 101, 102, 103, 108, 109, 111, 113, 118, 123, 126, 131, 135, 140, 142, 163, 167, 177, 184, 186, 901, 902, 903
238-3016 . . . . 43, 115, 123, 179, 186, 615
238-4448 . . . . 102, 184, 1542
238-4769 . . . . 19, 25, 39, 90, 172, 1067
238-8288 . . . . 1035, 1037, 1038, 1039, 1040, 1041, 1042, 1043, 1044, 1045, 1046, 1047, 1049, 1051, 1054, 1055, 1057, 1060, 1062, 1063
238-8289 . . . . 1035, 1037, 1038, 1039, 1040, 1041, 1042, 1043, 1044, 1045, 1046, 1047, 1049, 1051
238-8290 . . . . 6, 36, 1039
238-8567 1081
238-8671 . . . . 1178, 1181, 1184, 1187, 1197, 1200, 1207, 1210, 1213, 1219, 1222, 1225, 1228, 1234, 1237, 1240, 1246, 1249, 1255, 1258, 1261, 1270, 1273, 1276, 1279, 1286, 1289, 1292, 1296, 1298, 1300, 1303, 1306, 1309, 1339, 1342, 1345, 1348, 1351, 1354, 1358, 1361, 1364, 1367, 1370, 1373, 1376, 1379, 1383, 1386, 1389, 1392, 1395, 1399, 1402, 1405, 1409, 1412, 1415, 1418, 1421, 1424, 1427, 1430, 1438, 1441, 1445, 1448, 1451, 1454, 1461, 1464, 1467, 1470, 1474, 1477, 1481, 1484, 1488, 1491
238-8864 1147
239-9897 22
240-5535 . . . . 20, 28, 30, 31, 39, 72, 74, 81, 87, 92, 98, 116, 1543
240-5570 . . . . . . ►1302, ►1303
240-5571 . . . . 1178, 1181, 1184, 1187, 1194, 1197, 1200, 1207, 1210, 1213, 1219, 1222, 1225, 1228, 1234, 1237, 1240, 1246, 1249, 1255, 1258, 1261, 1267, 1270, 1273, 1279, 1286, 1289, 1292, 1296, 1298, 1300, 1303, 1306, 1309, 1339, 1342, 1354, 1358, 1361, 1364, 1367, 1370, 1373, 1376, 1379, 1383, 1386, 1389, 1392, 1395, 1402, 1405, 1412, 1415, 1418, 1421, 1424, 1427, 1430, 1438, 1441, 1445, 1448, 1451, 1454, 1461, 1464, 1467, 1470, 1474, 1477, 1481, 1484, 1488, 1491
240-5572 . . . . 39, 81, 87, 134, 1303, 1306, 1309
240-9756 . . . . 1149, 1151, 1153, 1155, 1157, 1159, 1161, 1163, 1165, 1501, 1503, 1505

► PRIMARY REFERENCE

PART NUMBER INDEX

Part	Page
	1507
	1517
	1519
241-1699	31
	34
	38
	100
	126
	127
	1095
	1097
241-3359	1140
	1141
	1523
241-4288	1399
	1402
	1405
	1409
	1412
	1415
	1418
	1481
	1484
	1488
241-4291	1399
	1402
	1405
	1409
	1412
	1481
241-8185	1035
241-8187	▶1025
	▶1116
	▶1121
241-8449	1025
	1035
241-8581	▶70
241-8582	▶71
241-8583	▶72
241-8584	▶74
241-8585	▶76
241-8586	▶77
241-8587	▶78
241-8588	▶78
241-8589	▶79
241-8590	▶80
241-8591	▶80
241-8592	▶81
241-8593	▶83
241-8594	▶85
241-8595	▶86
241-8596	▶87
242-5938	695
	697
	727
	729
242-6131	32
	93
	1544
242-8660	973
243-1799	711
243-1800	711
	713
243-1801	711
	713
243-1882	8
	9
	12
	185
	711
	713
243-1948	4
	136
	503
	504
243-1950	4
	136
	459
	460
243-1951	4
	136
	778
	780
243-1952	4
	136
	534
243-1953	4
	136
	843
243-1954	4
	136
	206
243-2287	▶4
	▶12
243-2411	15
	984
243-2416	15
	16
	19
	47
	100
	101
	163
	172
	826
243-2420	2
	15
	17
	18
	30
	32
	36
	38
	93
	102
	103
	183
	184
	1558
243-2454	15
	101
	163
	616
243-2455	15
	17
	23
	24
	30
	32
	71
	72
	74
	93
	95
	98
	101
	103
	123
	124
	127
	135
	140
	142
	163
	167
	186
	715
	717
	719
243-2483	51
	99
	127
	649
243-2484	649
243-3164	1099
243-3179	4
	40
	105
	169
	171
	173
	175
	505
	506
243-3180	4
	40
	105
	169
	171
	173
	175
	461
	463
243-3181	4
	40
	105
	169
	171
	173
	175
	782
	784
243-3182	4
	40
	105
	169
	171
	173
	175
	535
243-3183	4
	40
	105
	169
	171
	173
	175
	844
243-3184	4
	40
	105
	169
	171
	173
	175
	207
243-3185	▶4
	▶17
	▶18
	▶89
	▶91
243-3196	17
	18
	123
	124
	186
	571
243-3202	18
	31
	721
	723
	725
243-3203	17
	18
	32
	985
243-3253	636
	638
243-3264	636
243-3272	1
	17
	18
	40
	89
	91
	105
	125
	169
	171
	173
	175
	636
	638
243-3274	17
	18
	40
	553
243-3275	17
	18
	107
	655
243-3398	17
	23
	24
	30
	32
	41
	70
	97
	101
	133
	135
	140
	142
	163
	165
	192
	596
243-3806	51
	53
	727
	729
243-4143	9
	1099
243-4149	17
	25
	123
	136
	137
	138
	186
	1530
243-4173	1101
	1104
	1121
	1132
	1137
243-4185	17
	21
	22
	1101
	1104
243-4278	597
243-4279	2
	16
	19

▶ PRIMARY REFERENCE

PART NUMBER INDEX

Part	Page
	100
	172
	183
	597
243-4280	16
	79
	81
	83
	85
	87
	143
	180
	572
243-4288	909
	923
	935
	941
	947
	957
243-4297	16
	19
	99
	100
	126
	139
	172
	587
243-4300	1531
	1532
	1538
243-4301	16
	34
	35
	76
	77
	79
	83
	85
	100
	119
	121
	135
	143
	167
	180
	182
	1531
243-4304	864
243-4305	2
	16
	19
	29
	39
	115
	116
	172
	183
	864
	865
243-4334	16
	19
	125
	172
	1153
	1155
243-4837	4
	507
	508
243-4839	4
	464
	466
243-4842	4
	786
	788
243-4843	4
	536
243-4844	4
	846
243-4845	4
	208
243-4857	▶4
	▶9
244-1649	25
	36
	39
	90
	115
	573
244-1651	1
	2
	116
	183
	731
	732
	734
244-2014	4
	30
	135
	509
	510
244-2081	4
	30
	135
	467
	469
244-2083	4
	30
	135
	790
	792
244-2088	4
	30
	135
	537
244-2093	4
	30
	135
	847
244-2096	4
	30
	135
	209
244-2099	▶4
	▶21
244-3103	▶89
244-3104	▶90
244-3105	▶91
244-6872	881
	882
	894
	896
	897
	899
	900
	915
	917
	918
	919
	921
	922
	935
	937
	939
	971
	972
245-4664	20
	72
	74
	81
	87
	98
	1532
245-4665	20
	114
	872
245-9831	40
	105
	169
	171
	598
246-2983	118
	574
246-3195	833
246-3196	118
	833
246-3198	1533
246-6615	1246
	1249
247-0099	565
247-0144	992
	994
247-1285	▶1312
247-1286	▶1313
247-1287	▶1314
247-4820	1
	125
	511
	512
247-4821	1
	125
	470
	471
247-4831	1
	125
	794
	796
247-4868	532
	538
	539
	540
	543
247-4873	1
	125
	539
247-4876	1
	125
	849
247-4884	1157
	1159
	1161
	1171
247-4885	109
	111
	113
	114
	1171
247-4921	1
	210
247-4923	1
	125
	228
	229
247-4926	126
	129
	136
	137
	138
	194
	873
247-4928	196
	736
	738
	740
	742
	744
247-7797	312
	386
	397
247-7798	322
	348
	420
247-7799	237
	243
	249
	258
	294
	300
	354
	408
247-8225	133
	134
	192
	575
247-8314	663
	665
	671
248-2350	▶1315
248-2351	▶1316
248-2352	▶1317
248-2353	▶1318
248-2354	▶1319
248-2355	▶1320
248-2356	▶1321
248-2357	▶1322
248-2358	▶1323
248-2359	▶1324
248-2360	▶1325
248-2361	▶1326
248-2364	▶1327
248-2365	▶1328
248-2366	▶1329
248-2367	▶1330
248-2368	▶1331
248-2369	▶1332
248-2370	▶1333
248-2371	▶1334
248-2641	1302
	1318
	1319
	1320
	1338
249-0106	45
	48
	92
	1107
249-0974	883
	884
	885
	886
	888
	889
	890
	892
	893
	901
	902
	903
	904
	906
	908
	909
	911
	913
	923
	925
	927

▶ PRIMARY REFERENCE

PART NUMBER INDEX

Part	Page
	929
	931
	932
	933
	934
	953
	955
	956
	957
	959
	961
	963
	965
	967
	968
	969
	970
249-0975	881
	882
	894
	896
	897
	899
	900
	915
	917
	918
	919
	921
	922
	935
	937
	939
	971
	972
249-5230	268
	276
	284
	336
	364
	366
	374
	376
	416
249-7106	1077
	1107
249-9226	1270
	1273
251-4336	622
	626
	628
	640
	644
251-4551	55
	57
	59
	61
	63
	64
	66
	68
	98
	1026
	1027
251-6241	219
	1035
	1044
	1045
	1047
	1049
	1051
	1063
251-6242	31
	72
	74
	102
	131
	219
251-6262	874
251-6697	31
	38
	71
	89
	91
	99
	102
	103
	126
	129
	136
	137
	138
	173
	175
	177
	184
	194
	576
251-6806	89
	91
	1109
251-8261	736
	738
251-8262	736
	738
251-8282	736
	738
251-8283	736
	738
251-8284	40
	89
	90
	91
	105
	169
	171
	173
	175
	736
	738
251-8297	986
	987
251-8298	143
	986
251-8314	667
	669
251-8319	667
	669
251-8335	34
	89
	90
	91
	173
	175
	177
	656
251-8338	742
251-8339	742
	744
251-8371	1008
	1012
	1020
251-8404	1008
251-8410	1008
	1012
	1020
251-8417	1008
251-8418	1008
	1012
251-8419	1008
251-8423	25
	31
	34
	36
	38
	39
	71
	72
	74
	76
	77
	79
	81
	83
	85
	87
	89
	90
	91
	103
	115
	121
	129
	173
	175
	177
	180
	182
	193
	1008
	1012
252-1821	870
252-4441	2
	89
	102
	183
	184
	980
252-4442	980
	981
252-4475	25
	31
	36
	38
	39
	71
	72
	74
	76
	77
	79
	81
	83
	85
	87
	89
	90
	91
	103
	180
	182
	193
	657
252-6291	1032
252-6292	1029
252-6318	491
	520
	881
	882
	884
	885
	886
	888
	890
	892
	893
	897
	899
	900
	915
	917
	918
	947
	949
	951
	957
	959
	961
	969
	970
	973
252-6334	1140
	1168
252-6438	528
	529
	538
252-6456	92
	658
252-7003	108
	577
252-7009	126
	127
	143
	659
252-8737	626
252-8751	►1028
	►1029
	►1126
252-9208	1028
	1031
253-0728	19
	34
	72
	74
	76
	77
	100
	121
	172
	182
	193
	578
253-0756	1
	17
	18
	19
	21
	22
	23
	24
	28
	31
	32
	35
	39
	41
	42
	43
	44
	45
	48
	49
	51
	55
	57
	59
	61
	63
	64

► PRIMARY REFERENCE

PART NUMBER INDEX

Part	Page
	66
	68
	70
	71
	72
	74
	76
	77
	79
	81
	83
	85
	87
	93
	95
	97
	98
	100
	101
	102
	108
	116
	119
	121
	124
	125
	127
	129
	140
	141
	142
	144
	145
	146
	147
	148
	149
	150
	151
	152
	153
	154
	155
	156
	157
	158
	159
	160
	162
	163
	164
	172
	177
	178
	179
	180
	182
	184
	187
	188
	189
	190
	193
	1579
253-0774	103
	121
	131
	1111
	1113
253-0888	71
	77
	1029
	1030
253-2472	7
	43
	79
	81
	114
	179
	904
	906
	908
253-2473	16
	115
	909
	911
	913
253-2474	8
	9
	10
	11
	14
	137
	138
	185
	915
	917
	918
253-2475	51
	92
	127
	919
	921
	922
253-2479	2
	6
	7
	8
	9
	10
	11
	12
	13
	14
	20
	33
	36
	38
	47
	92
	94
	99
	107
	109
	111
	113
	114
	123
	133
	134
	139
	165
	183
	185
	186
	191
	192
	827
253-6184	2
	19
	116
	172
	183
	923
	925
	927
253-6191	27
	588
253-6199	19
	118
	172
	1533
253-6204	1
	19
	27
	94
	107
	172
	1040
253-7910	1577
	1579
	1581
253-8750	5
	513
	514
253-8751	5
	472
	473
253-8755	798
	800
253-8756	5
	798
	800
253-8757	5
	540
253-8763	5
	851
253-8764	5
	211
253-8765	►5
	►90
253-8782	929
	931
	932
	933
	934
253-8786	90
	929
	931
253-8823	90
	555
253-8828	555
	559
253-8958	555
	559
253-8960	555
	559
253-8966	90
	105
	169
	171
	173
	175
	1580
253-9945	1032
	1033
	1034
	1047
	1049
254-0076	►1031
	1032
	1033
	►1047
254-2267	868
254-2268	867
254-2269	866
	871
254-2270	866
	867
	868
	871
254-3309	85
	180
	1032
	1033
	1034
254-3312	79
	83
	85
	115
	180
	1041
254-3775	17
	21
	22
	23
	24
	40
	41
	44
	45
	48
	49
	55
	57
	63
	64
	70
	95
	97
	105
	119
	132
	133
	135
	140
	141
	142
	144
	145
	146
	147
	148
	149
	150
	151
	152
	153
	154
	155
	156
	157
	158
	159
	160
	162
	164
	165
	167
	169
	171
	192
	1042
254-3954	528
	529
	538
254-6819	610
255-3448	1101
255-4922	650
255-4923	650
255-4924	650
256-3651	►557
	►558
256-3660	557
	558
256-4440	9

► PRIMARY REFERENCE

PART NUMBER INDEX

Part	Page
	108
	124
	1059
	1060
256-4441	47
	1043
256-4447	1054
	1055
	1057
	1060
	1062
	1063
256-4720	▶92
257-8358	▶93
257-8359	▶93
257-8360	▶94
257-8362	▶95
257-8364	▶97
257-8369	▶98
257-8370	▶99
257-8374	▶100
257-8375	▶101
257-8376	▶102
257-8380	▶103
257-8381	▶105
258-4946	531
	532
	533
	534
	535
	536
	537
	539
	540
	541
	542
	543
	544
	545
	546
258-7556	92
	93
	132
	133
	134
	165
	192
	196
259-2362	▶106
259-2611	196
259-2612	196
259-2613	196
259-2614	196
259-2623	196
260-3119	93
	599
260-3128	1
	30
	31
	32
	34
	35
	36
	38
	39
	55
	57
	59
	61
	63
	64
	66
	68
	72
	74
	76
	79
	81
	83
	87
	92
	93
	94
	95
	97
	98
	101
	102
	103
	107
	108
	115
	116
	124
	125
	127
	131
	132
	133
	134
	135
	136
	137
	138
	143
	150
	151
	152
	153
	154
	155
	156
	157
	158
	159
	160
	162
	163
	165
	180
	182
	184
	192
	193
	194
	1140
	1141
260-3135	20
	28
	30
	32
	59
	61
	66
	68
	93
	98
	1044
	1045
260-3152	40
	93
	105
	165
	169
	171
	660
260-3214	34
	99
	165
	617
260-3215	25
	31
	34
	38
	39
	71
	74
	77
	81
	85
	87
	90
	91
	103
	119
	121
	129
	180
	182
	987
260-6686	1415
	1418
	1484
	1488
261-0425	727
	729
261-6700	1057
	1060
263-2161	695
	697
263-2162	699
263-5376	1091
	1135
263-9663	▶106
264-0390	200
264-0391	200
264-0392	200
264-0393	200
264-0395	27
	36
	94
	200
	201
265-5289	89
	91
	105
	169
	171
	173
	175
	559
265-5299	89
	91
	105
	169
	171
	173
	175
	932
	933
	934
265-5300	90
	129
	1035
265-5303	89
	91
	173
	175
	1116
265-5720	40
	105
	129
	169
	171
	173
	175
	1523
265-6527	996
	1000
	1016
266-2994	1197
	1200
	1276
	1279
	1339
	1342
	1421
	1424
	1427
	1430
266-3712	1276
	1279
266-3715	1197
	1200
	1335
	1339
	1342
	1421
	1424
266-3716	1197
	1200
	1336
	1421
	1424
266-3718	7
	35
	36
	1197
	1200
	1337
	1421
	1424
266-3719	▶1338
	▶1427
	▶1430
266-6830	1197
	1200
	1276
	1279
	1306
	1309
	1339
	1342
	1418
	1421
	1424
	1427
	1430
	1438
	1441
	1481
	1484
	1491
267-5081	29
	935
	937
	939
267-5101	2
	29
	661
267-5367	39
	114
267-5695	28
	40
	57

PART NUMBER INDEX

Part	Page
	61
	64
	68
	95
	97
	105
	119
	132
	135
	150
	151
	152
	153
	154
	155
	156
	157
	158
	159
	160
	162
	169
	171
	988
267-5696	95
	97
	1046
267-5698	28
	30
	95
	97
	119
	132
	135
	150
	151
	152
	153
	154
	155
	156
	157
	158
	159
	160
	162
	662
267-7065	1170
267-7069	191
	1170
267-8797	39
	941
	943
	945
267-8817	39
	81
	87
	1047
	1049
267-9411	27
	94
	107
	1534
267-9412	27
	94
	107
	579
267-9413	6
	12
	13
	19
	27
	90
	94
	107
	139
	172
	1339
	1342
267-9420	1
	27
	94
	107
	115
	125
	136
	346
	348
	350
	352
267-9422	27
	94
	947
	949
	951
268-0867	34
	111
268-0868	31
	100
	953
	955
	956
268-1036	51
	53
	1535
268-3626	35
	618
268-3627	2
	35
	600
268-3630	600
268-3631	35
	1564
268-3641	35
	580
268-3642	580
	584
	585
268-3643	35
	1066
268-3681	618
268-4218	1564
	1570
	1571
	1573
268-5266	94
	663
268-5339	36
	72
	76
	79
	83
	115
	173
	175
	177
	193
	981
268-5341	1101
268-5354	1030
268-5708	35
	36
	678
268-6486	99
	601
268-9708	36
	957
	959
	961
269-1745	740
	742
	744
269-3086	1085
	1087
	1095
	1104
	1107
	1116
	1124
	1129
269-3101	124
	354
	356
	358
	360
	362
269-8077	33
	101
	163
	1062
269-8487	38
	102
	118
	123
	126
	184
	186
	1345
	1348
	1351
	1354
269-8488	1345
	1357
269-8489	102
	184
	1119
270-0057	▶106
270-0063	▶107
270-0065	▶108
270-0073	▶108
270-3084	103
	1358
	1361
270-4364	92
	1364
	1367
270-4367	92
	740
	742
	744
270-4368	92
	364
	366
	368
	370
	372
270-4374	92
	1063
270-6992	1153
	1157
	1501
	1505
	1515
270-8261	95
	1370
	1373
	1376
	1379
270-8267	95
	165
	1016
270-8890	105
	169
	171
	1121
270-8904	40
	105
	119
	169
	171
	374
	376
	378
	380
	382
271-5062	1025
	1035
271-7077	1
	125
	1536
271-7078	1
	125
	963
	965
271-7079	1
	125
	581
271-7800	116
	982
271-8874	▶1382
	▶1383
271-8875	100
	1383
	1386
	1389
272-0494	3
	6
	15
	16
	17
	18
	19
	20
	21
	22
	23
	24
	25
	27
	28
	29
	30
	32
	33
	34
	35
	36
	38
	39
	40
	41
	42
	43
	44
	45
	47
	48
	49
	53
	55
	58
	60
	62
	63
	65
	66

▶ PRIMARY REFERENCE

PART NUMBER INDEX

Part	Page
	69
	70
	71
	72
	74
	76
	77
	79
	81
	83
	85
	87
	89
	90
	91
	92
	93
	94
	95
	97
	98
	99
	100
	101
	102
	103
	105
	107
	114
	116
	120
	121
	123
	124
	125
	126
	128
	129
	131
	132
	133
	134
	135
	139
-160	
	162
	164
	165
	169
	171
	172
	173
	175
	177
	178
	179
	180
	182
	183
	184
	186
	187
	188
	189
	190
272-1393	30
	1392
	1395
272-2223	1399
	1402
	1405
	1409
	1412
	1415
	1418
	1481
	1484
	1488
272-2224	109
	111
	113
	114
	126
	746
	748
	750
	752
272-2226	746
	748
272-2228	109
	111
	113
	135
	384
	386
	388
	390
	392
	394
272-2229	109
	111
	113
	114
	862
272-2230	109
	111
	113
	220
272-2231	109
	111
	113
	114
	665
272-2232	7
	31
	110
	111
	113
	118
	163
	167
272-2265	875
	876
	877
	878
	880
	906
	911
	925
	937
	941
	943
	945
	949
	959
	990
272-2290	▶1398
	▶1399
	▶1402
	▶1405
272-2291	113
	1399
	1402
	1405
272-2797	▶1408
	▶1409
	▶1412
	▶1415
272-2799	111
	1409
	1412
	1415
272-2837	▶109
272-2839	▶111
272-2841	▶113
273-0869	114
	1418
273-0870	1418
273-0871	114
	191
	395
	397
	399
	401
273-0872	▶114
273-3690	196
	644
273-3691	196
273-3725	▶115
273-3806	92
	132
	133
	134
	165
	192
	1541
273-6234	123
	186
	666
274-1169	▶115
274-1172	▶1
274-1173	▶116
274-4716	474
274-4717	109
	474
274-4718	109
	515
274-4720	109
	814
274-4964	16
	53
	1421
	1424
274-4965	1491
274-5006	116
	1427
	1430
274-5007	1306
	1309
274-5043	1153
	1155
	1501
	1503
	1517
	1519
274-5460	1348
	1433
275-0170	110
	853
275-1038	1178
	1181
	1184
	1187
	1197
	1200
	1204
	1207
	1210
	1213
	1222
	1225
	1228
	1234
	1237
	1240
	1246
	1249
	1255
	1258
	1261
	1270
	1273
	1276
	1279
	1289
	1292
	1300
	1306
	1309
	1339
	1342
	1351
	1354
	1358
	1361
	1364
	1367
	1373
	1376
	1379
	1386
	1389
	1392
	1395
	1402
	1405
	1409
	1412
	1415
	1418
	1421
	1424
	1427
	1430
	1438
	1441
	1445
	1448
	1451
	1454
	1461
	1464
	1467
	1470
	1474
	1477
	1481
	1484
	1488
	1491
275-2452	646
	647
275-9883	681
	683
	685
	687
	689
	691
	695
	697
	699
	703
	705
	709
	713
	717

▶ PRIMARY REFERENCE

PART NUMBER INDEX

Part	Page
	719
	723
	725
	727
	729
	732
	734
	736
	738
	740
	742
	744
	748
	750
	752
	754
	758
	760
	762
275-9891	742
	744
276-5175	740
276-5605	491
	493
	499
	518
	520
276-7476	768
276-7478	768
	776
	784
	788
	792
276-8688	▶117
277-2940	127
	619
277-2942	619
277-2972	1
	118
	125
	127
	131
	989
277-2992	134
	136
	187
	189
	190
277-3012	622
	624
	628
	632
	634
	638
	640
	642
	644
277-5156	3
	6
	7
	8
	9
	10
	11
	12
	13
	14
	15
	16
	17
	18
	19
	20
	21
	23
	24
	25
	27
	28
	29
	30
	31
	32
	33
	34
	35
	36
	38
	39
	40
	41
	42
	43
	44
	45
	47
	48
	49
	52
	53
	55
	58
	60
	62
	63
	65
	66
	69
	70
	71
	72
	74
	76
	77
	79
	81
	83
	85
	87
	89
	90
	91
	92
	93
	94
	95
	97
	98
	99
	100
	101
	102
	103
	105
	107
	110
	111
	113
	114
	116
	118
	120
	121
	123
	124
	125
	126
	128
-160	
	129
	131
	132
	133
	135
	137
	162
	163
	164
	165
	167
	169
	171
	172
	173
	175
	177
	178
	179
	180
	182
	183
	184
	185
	186
	188
278-4118	1364
	1367
	1434
	1445
	1448
280-7187	98
	119
	135
	167
	582
281-4516	115
	123
	129
	1565
	1566
281-8728	1025
283-3327	47
	108
	1124
284-4626	▶118
284-4631	▶119
284-4632	▶121
284-4636	▶123
284-4988	1373
	1435
284-4989	1376
	1379
284-4990	1181
	1184
284-4999	1222
	1436
284-5000	1225
	1437
284-8196	1025
284-8197	1025
285-8525	1438
	1441
285-8528	1
	125
	129
	1438
	1441
286-1603	115
	754
286-1604	115
	129
	667
	668
286-3029	237
	239
	240
	243
	245
	246
	268
	270
	272
	284
	286
	288
	290
	294
	296
	348
	350
	352
	397
	399
	401
	416
	418
	419
	444
286-3030	237
	239
	240
	243
	245
	246
	253
	255
	262
	264
	268
	270
	272
	280
	284
	286
	288
	290
	294
	296
	304
	306
	308
	316
	318
	328
	330
	332
	342
	344
	348
	350
	352
	360
	362
	370
	372
	392
	394
	397
	399
	401
	404
	406
	414
	416
	418
	419

► PRIMARY REFERENCE

PART NUMBER INDEX

Part	Page
	424
	426
	428
	438
	440
	442
	444
	446
	447
286-3592	992
286-4339	1029
	1030
	1033
	1034
	1047
	1049
	1113
	1126
	1129
287-8573	233
	249
	251
	253
	255
	258
	260
	262
	264
	276
	278
	280
	300
	302
	304
	306
	308
	312
	314
	316
	318
	322
	324
	326
	328
	330
	332
	336
	338
	340
	342
	344
	354
	356
	358
	360
	362
	366
	368
	370
	372
	376
	378
	380
	382
	386
	388
	390
	392
	394
	402
	404
	406
	408
	410
	412
	414
	420
	422
	424
	426
	428
	434
	436
	438
	440
	442
	446
	447
287-8597	608
	609
	610
	611
	612
	613
	614
	615
	616
	617
	619
	620
288-0422	622
	624
	628
	632
	634
	636
	638
	640
	642
	644
288-1394	764
	766
	774
	782
	786
	790
	802
	804
	808
	814
288-1395	764
	766
	774
	782
	786
	790
	802
	804
	808
	814
288-1424	109
	541
288-1434	109
	212
288-1532	31
	167
	402
	404
	406
288-5185	▶124
288-5187	▶125
288-9942	770
	772
	778
	780
	794
	796
	806
289-3195	1551
289-3198	116
	1051
290-2045	71
	72
	74
	76
	77
	118
	182
	193
	1126
	1129
290-2488	1027
	1104
	1132
290-2489	55
	57
	59
	61
	63
	64
	66
	68
	150
	151
	152
	153
	154
	155
	156
	157
	158
	159
	160
	162
	165
	1132
290-2494	8
	9
	10
	11
	12
	13
	14
	185
290-2495	52
	136
	137
	138
290-2550	1286
	1289
	1292
	1444
290-2608	1392
	1395
290-4525	1234
	1237
	1240
290-5525	48
	1445
	1448
290-7085	47
	602
291-0353	615
	620
291-6517	634
	642
291-8813	867
291-8845	867
292-2924	603
	604
292-2946	1008
	1012
	1020
292-2949	1008
	1012
	1020
292-2951	1008
	1012
	1020
292-2953	121
	669
	670
292-2954	121
	1451
	1454
292-2955	121
	129
	603
292-3461	1351
	1354
	1457
292-3462	1351
	1354
	1488
292-3516	123
	186
	975
292-3518	123
	186
	1135
292-4758	▶1458
292-5292	▶126
292-5293	▶127
292-5297	▶129
292-5309	▶131
292-5821	1451
	1454
	1459
292-5839	1386
	1389
	1460
292-9008	221
	222
	223
	224
	227
293-1877	▶195
	▶196
293-7193	756
	758
	760
293-7195	118
	408
	410
	412
	414
293-7196	118
	131
	756
	758
	760
293-9307	758
293-9309	736
294-0288	622
	624
294-0298	630
294-7194	▶132
294-8570	119
	124

PART NUMBER INDEX

Part	Page
	604
295-1711	622
295-2159	▶133
295-2162	▶134
295-2176	▶135
296-0884	▶136
296-0885	▶137
296-0886	▶138
296-5614	911
	925
	937
	943
	949
	959
298-3512	123
	186
	605
298-3513	605
298-7691	131
	1461
	1464
	1467
	1470
298-7692	131
	133
	134
	165
	192
	1545
	1546
298-7693	131
	1157
	1159
	1161
298-7821	124
	976
298-7823	124
	671
299-0160	1553
299-0164	129
	1553
299-0165	129
	133
	134
	192
	620
299-2148	125
	213
299-9265	1143
	1169
	1516
	1517
	1519

3

Part	Page
300-5069	▶139
300-5183	1542
	1543
	1544
	1545
302-0581	1075
	1077
	1079
	1081
	1089
	1095
	1097
	1104
	1107
	1113
	1116
	1119
	1121
	1124
	1126
	1129
	1132
	1137
302-4332	195
303-1469	134
	416
	418
	419
303-1470	134
	672
303-2122	136
	137
	138
	194
	606
303-2123	136
	137
	138
	1567
303-2124	762
303-2125	136
	137
	138
	194
	762
303-2128	136
	137
	138
	194
	977
303-2131	135
	136
	137
	138
	194
	1581
303-2168	▶527
303-2205	137
	138
	177
	194
	420
	422
	424
	426
	428
303-2913	▶1473
	▶1474
	▶1477
303-2915	138
	194
	1474
	1477
304-1642	▶140
304-1646	▶141
304-1766	▶142
304-8764	685
	695
	732
305-0482	▶143
305-2584	▶144
305-2588	▶145
305-2592	▶146
305-2596	▶147
305-2598	▶148
305-2600	▶149
306-1682	▶150
306-1687	▶151
306-1688	▶152
306-1689	▶153
306-1690	▶154
306-1691	▶155
306-1692	▶156
306-1697	▶157
306-1698	▶158
306-1700	▶159
306-1701	▶160
306-2337	270
	272
	278
	280
	286
	288
	290
	296
	302
	304
	306
	308
	350
	352
	358
	360
	362
	380
	382
	390
	392
	394
	410
	412
	414
	422
	424
	426
	428
	444
	446
	447
307-0436	▶161
307-2279	▶162
307-2280	▶163
307-2805	1075
	1079
	1081
	1089
	1095
	1097
	1104
	1116
	1119
	1121
	1124
	1126
	1129
	1132
	1137
308-1381	270
	272
	278
	280
	286
	288
	290
	338
	340
	344
	368
	370
	378
	380
	418
	419
	430
	444
308-1393	233
	239
	245
	251
	260
	302
	356
	358
	402
	410
	431
308-1792	324
	326
	332
	350
	352
	422
	428
	432
	434
	436
	442
308-1793	314
	388
	390
	399
	433
	446
308-2863	▶164
308-4162	713
308-5594	▶165
308-5599	▶2
308-5600	▶167
308-5602	▶168
309-9345	133
	192
	673
310-1869	1523
311-4621	996
	1000
	1016
311-6822	1149
	1151
	1155
	1163
	1165
	1503
	1507
311-7449	47
	583
312-7539	1569
314-7349	▶169
314-7350	▶171
315-4691	1030
	1129
316-5634	135
	1137
316-5635	135
	874
316-5655	139
	584
316-5656	139
	971
	972
316-5657	2
	139
	177
	183
	1537
316-5658	139
	675
316-5670	143
	1020

PART NUMBER INDEX

Part	Page
316-5671	143
	973
316-8478	23
	24
	59
	165
	167
	516
	517
316-8479	23
	24
	59
	165
	167
	475
	476
316-8480	23
	24
	59
	165
	167
	802
	804
316-8481	23
	24
	59
	165
	167
	542
316-8482	23
	24
	59
	165
	167
	214
316-8483	23
	24
	59
	165
	167
	855
316-8485	55
	59
	66
	165
	978
316-9044	607
316-9045	167
	607
317-3773	326
	328
	330
	332
	340
	342
	344
	436
	438
	440
	442
317-3776	326
	328
	330
	332
	340
	342
	344
	436
	438
	440
	442
317-9229	996
	1000
	1016
318-2365	1143
	1181
	1184
	1187
	1207
	1210
	1213
	1222
	1225
	1228
	1234
	1237
	1246
	1249
	1255
	1258
	1261
	1270
	1273
	1286
	1289
	1296
	1298
	1300
	1354
	1358
	1361
	1364
	1367
	1376
	1379
	1386
	1389
	1392
	1395
	1445
	1448
	1451
	1454
	1461
	1464
	1467
	1470
319-7259	▶172
319-7260	▶173
320-9211	1008
	1012
	1020
321-2383	270
	272
	278
	280
	286
	288
	290
	296
	302
	304
	306
	308
	350
	352
	358
	360
	362
	380
	382
	390
	392
	394
	410
	412
	414
	422
	424
	426
	428
	444
	446
	447
322-4099	2
	183
	585
322-6826	▶175
322-9615	1091
	1099
322-9616	1091
	1099
322-9663	528
	529
	538
322-9887	713
323-3515	628
	632
	634
	640
	642
	644
323-6678	1
	15
	16
	18
	19
	23
	24
	25
	27
	34
	36
	38
	40
	51
	53
	55
	57
	64
	76
	77
	79
	83
	85
	89
	90
	91
	94
	95
	97
	99
	100
	101
	103
	105
	107
	118
	119
	121
	124
	125
	126
	127
	132
	135
	139
	140
	142
	143
	150
	151
	152
	153
	154
	155
	156
	157
	158
	159
	160
	162
	163
	167
	169
	171
	172
	173
	175
	1568
323-6679	191
	967
	968
323-9312	766
	768
	772
	776
	780
	784
	788
	792
	796
	800
	804
	810
	812
	814
324-0444	622
	624
	628
	640
	644
324-3528	996
	1000
	1008
	1016
324-7132	▶177
324-7839	▶178
324-7840	▶179
325-4340	▶180
325-4341	▶182
325-4893	▶183
325-4894	▶184
326-1010	1033
	1034
	1047
	1049
327-0093	184
	230
327-8268	▶185
328-6009	▶1569
328-6071	35
	183
	1570
	1571
328-6072	136
	137
	138
	1572
328-8203	8
	9
	11
	185
	434
	436
	438

PART NUMBER INDEX

Part	Page
	440
	442
328-8204	8
	9
	11
	185
	1163
	1165
329-0290	1564
	1567
329-1367	2
	621
329-1385	2
	1573
329-6655	528
	529
	538
329-7854	229
	232
329-7856	229
	232
330-3035	▶186
330-5898	881
	882
	969
	970
330-6130	656
	657
	668
	670
330-6131	656
	657
	668
	670
330-8329	43
	123
	129
	179
	186
	1574
330-9698	996
332-7549	1197
	1200
	1276
	1279
	1306
	1309
	1339
	1342
	1421
	1424
	1427
	1430
	1438
	1441
	1491
333-8056	1210
	1213
	1480
334-1996	770
	772
	778
	780
	794
	796
	798
	800
	806
334-1997	770
	772
	778
	780
	794
	796
	798
	800
	806
334-2318	764
	766
	774
	782
	786
	790
	802
	804
	808
	814
334-2319	764
	766
	774
	782
	786
	790
	802
	804
	808
	814
334-2455	798
	800
334-2456	798
	800
334-9334	834
	835
	836
	837
335-7585	681
	683
	687
	689
	691
	697
	699
	703
	705
	713
	717
	719
	723
	725
	727
	729
	734
	738
	744
	748
	750
	752
	754
	760
	762
336-3516	▶491
	▶507
339-7766	1530
	1535
339-7767	1526
	1527
	1531
	1533
339-7768	1536
	1537
340-3610	638
340-7298	1551
341-2238	368
	370
	372
344-3434	638
344-5673	1554
346-0407	624
346-0408	624
	628
	640
	644
346-8219	239
	240
	245
	246
	253
	255
	262
	264
	270
	272
	280
	288
	290
	304
	306
	308
	316
	318
	328
	330
	332
	342
	344
	350
	352
	360
	362
	372
	382
	392
	394
	399
	401
	404
	406
	414
	418
	419
	424
	426
	428
349-2746	221
	222
	223
	224
	225
	226
	227
	233
	350
	352
	430
	431
	432
	433
	448
350-1846	204
	206
	208
	209
	210
	211
	213
	215
350-2374	205
	207
	212
	214
	216
	217
351-4366	▶187
351-4367	▶188
353-2205	449
	480
	482
	484
353-2206	449
	480
	482
	484
353-2207	449
	480
	482
	484
353-2208	449
	480
	482
	484
353-3477	1073
	1075
	1077
	1079
	1081
	1085
	1087
	1089
	1091
	1095
	1097
	1099
	1104
	1107
	1113
	1116
	1119
	1121
	1124
	1129
	1132
	1135
	1137
353-3478	1073
	1075
	1077
	1079
	1081
	1085
	1087
	1089
	1091
	1095
	1097
	1099
	1104
	1107
	1113
	1116
	1119
	1121
	1124
	1129
	1132
	1135
	1137
353-7423	477
	480
353-7424	477
	480
353-7425	477
	480
353-7426	477
	480
353-9815	12

▶ PRIMARY REFERENCE

PART NUMBER INDEX

Part	Page
	444
353-9830	12
	1517
	1519
354-1274	▶877
	▶881
	▶883
	▶885
	▶889
	▶892
	▶902
	▶917
	▶921
	▶933
	▶955
	▶967
	▶969
354-1672	994
355-6224	▶875
	▶888
	▶896
	▶899
	▶906
	▶931
	▶963
	▶971
	▶973
355-8329	913
	927
	939
	945
	951
	961
356-6540	878
	880
	990
356-6541	▶878
	▶881
	▶882
	▶893
	▶903
	▶918
	▶922
	▶934
	▶956
	▶968
	▶970
356-6542	878
	990
357-4187	1149
	1159
	1163
	1169
	1517
357-5203	1566
	1571
	1573
	1574
359-0715	453
	455
	458
	460
	463
	466
	469
	471
	473
	474
	476
	477
	478
	489
	490
359-0719	766
	768
	772
	776
	780
	784
	788
	792
	796
	800
	804
	810
	812
	814
359-0720	766
	768
	772
	776
	780
	784
	788
	792
	796
	800
	804
	810
	812
	814
359-0721	766
	768
	772
	776
	780
	784
	788
	792
	796
	800
	804
	810
	812
	814
359-0722	766
	768
	772
	776
	780
	784
	788
	792
	796
	800
	804
	810
	812
	814
359-0723	766
	768
	772
	776
	780
	784
	788
	792
	796
	800
	804
	810
	812
	814
359-0724	766
	768
	772
	776
	780
	784
	788
	792
	796
	800
	804
	810
	812
	814
359-0730	12
	13
	136
359-0731	1
	2
	6
	7
	15
	16
	19
	25
	27
	29
	35
	36
	42
	43
	53
	79
	81
	83
	85
	87
	94
	99
	107
	115
	116
	125
	129
	134
	139
	143
	172
	178
	179
	180
	183
	187
	188
	189
	190
	191
359-0733	8
	9
	10
	11
	14
	137
	138
	185
	194
359-0734	17
	18
	20
	21
	22
	23
	24
	28
	30
	31
	32
	33
	38
	40
	41
	44
	45
	47
	48
	49
	51
	55
	57
	59
	61
	63
	64
	66
	68
	70
	71
	72
	74
	76
	77
	89
	91
	92
	93
	95
	97
	98
	100
	101
	102
	103
	105
	108
	118
	119
	121
	123
	124
	126
	127
	131
	132
	133
	135
	140
	141
	142
	144
	145
	146
	147
	148
	149
	150
	151
	152
	153
	154
	155
	156
	157
	158
	159
	160
	162
	163
	164
	165
	167
	169
	171
	173

▶ PRIMARY REFERENCE

PART NUMBER INDEX

Part	Page
	175
	177
	182
	184
	186
	192
	193
359-0745	834
359-0746	835
359-0747	836
359-0748	837
359-9431	634
	638
	642
359-9666	707
	709
	762
	1524
	1525
	1529
	1530
	1532
	1533
	1534
	1535
	1536
	1537
	1538
	1539
360-0073	705
	752
360-3986	477
	478
360-4226	▶1551
	▶1554
360-7349	16
	19
	20
	29
	35
	71
	72
	74
	76
	77
	79
	81
	83
	85
	87
	98
	100
	119
	121
	135
	143
	172
	180
	182
	193
	834
360-7350	2
	6
	8
	9
	10
	11
	12
	13
	14
	17
	18
	21
	22
	25
	27
	28
	30
	31
	33
	36
	38
	40
	42
	43
	44
	45
	48
	49
	55
	57
	59
	61
	63
	64
	66
	68
	89
	90
	91
	94
	95
	97
	99
	102
	103
	105
	107
	108
	115
	123
	124
	126
	129
	131
	132
	133
	134
	136
	137
	138
	139
	141
	144
	145
	146
	147
	148
	149
	150
	151
	152
	153
	154
	155
	156
	157
	158
	159
	160
	162
	164
	165
	169
	171
	173
	175
	177
	178
	179
	183
	184
	185
	186
	187
	188
	189
	190
	191
	192
	194
	835
360-7351	1
	7
	15
	23
	24
	32
	41
	47
	51
	53
	70
	92
	93
	101
	116
	125
	127
	140
	142
	163
	836
360-7353	118
	837
361-7519	1075
	1077
	1079
	1081
	1085
	1087
	1089
	1091
	1095
	1097
	1099
	1104
	1107
	1113
	1116
	1119
	1121
	1124
	1129
	1132
	1135
	1137
362-2190	496
	498
	506
	510
	512
	514
	515
	517
	518
	522
	523
	524
363-5760	502
	504
	508
	520
	525
363-7802	7
	586
364-2829	▶480
	▶482
	▶484
	▶486
	▶488
364-4130	1562
364-4131	1570
365-3308	1175
	1178
	1181
	1184
	1187
	1204
	1207
	1210
	1213
	1216
	1219
	1222
	1225
	1228
	1231
	1234
	1237
	1240
	1243
	1246
	1249
	1255
	1258
	1261
	1270
	1273
	1283
	1286
	1289
	1292
	1296
	1298
	1300
	1351
	1354
	1358
	1361
	1364
	1367
	1370
	1373
	1376
	1379
	1383
	1386
	1389
	1392
	1395
	1445
	1448
	1451
	1454
	1461
	1464
	1467
	1470
366-5914	196
366-8853	491
	499
	520
367-0593	1583
367-0594	25
	30

▶ PRIMARY REFERENCE

PART NUMBER INDEX

Part	Page
	34
	39
	40
	72
	74
	76
	79
	81
	83
	87
	89
	90
	91
	103
	119
	121
	143
	169
	171
	173
	175
	177
	180
	182
	193
	1583
367-2069	1481
	1484
367-2070	114
	1481
	1484
367-2084	114
	522
367-2085	114
	486
367-2086	114
	806
367-2087	114
	543
367-2088	114
	856
367-2089	114
	215
367-2220	109
	111
	113
	446
	447
367-2787	109
	111
	113
	523
367-2788	109
	111
	113
	487
	488
367-2789	109
	111
	113
	808
367-2790	109
	111
	113
	544
367-2791	110
	111
	113
	857
367-2792	109
	111
	113
	216
367-4171	996
	1000
	1016
367-5798	1135
367-5799	1081
	1085
	1087
	1095
	1097
	1113
	1116
	1126
	1129
368-3151	1548
	1549
	1550
368-3158	638
368-5398	1000
368-5399	1000
369-2472	1549
369-3705	531
	532
	533
	534
	535
	536
	537
	539
	540
	542
	543
369-7944	592
370-6545	526
371-5649	1539
371-5674	1071
371-5684	1070
371-5700	1091
	1099
371-6059	1073
	1075
	1079
	1081
	1085
	1087
	1089
	1095
	1097
	1104
	1113
	1116
	1119
	1121
	1124
	1126
	1129
	1132
	1137
371-6116	1077
	1107
	1135
371-6658	1069
371-6668	760
373-1622	▶189
373-1623	▶190
373-9785	689
	691
	719
	725
	729
373-9786	750
	752
374-7466	1551
374-7468	1551
375-9272	608
	609
	611
	612
	614
	615
	616
	617
	619
	620
379-6461	663
	665
379-6462	663
	665
380-2065	768
	812
381-9374	1034
	1049
382-8906	1012
383-2557	1529
	1534
386-0189	▶1142
	▶1169
386-3814	▶1589
387-6403	1142
389-7188	810
	812
390-9138	1012
390-9495	1012
392-4902	880
392-4903	▶880
	▶900
	▶908
	▶965
	▶972
393-4006	608
	609
	611
	613
	614
	615
	619
394-9638	738
395-3437	1142
395-3439	1142
398-1564	872
399-1485	1525
	4
416-8777	877
	878
	880
417-4722	1554
418-3216	1030
	1129
420-3162	193
	1575
423-7018	▶1552
	▶1554
424-6821	1524
	1528
	1532
425-7103	624
	628
	634
	640
	642
	644
425-7107	1187
	1213
	1228
	1237
	1240
	1249
	1258
	1261
	1273
	1289
	1292
	1300
	1354
	1395
	1402
	1405
	1412
	1415
	1418
	1448
	1467
	1470
	1477
	1484
	1488
426-5362	▶1554
426-5363	▶1554
430-6490	▶191
431-1704	221
	222
	223
	224
	227
	448
431-6132	1546
	1551
433-0344	683
	705
	752
433-9722	1554
433-9728	1554
433-9730	1554
434-2751	1169
	1552
436-0519	528
	529
	538
437-5064	744
440-2105	▶1540
	▶1554
441-4291	▶1487
	▶1488
441-4311	109
	1488
441-5107	1523
441-5108	1141
	1167
441-5111	1167
	1168
	1523
446-9143	▶221
	▶328
	▶330
	▶424
	▶426
	▶438
	▶440
446-9162	▶222
	▶342
	▶372
	▶382
446-9163	▶223
	▶253
	▶262
	▶304
	▶306
	▶360
	▶404
	▶412

PART NUMBER INDEX

Part	Page
447-5512	▶1552
447-8575	865
449-0818	448
449-1277	316
	392
	448
451-1179	196
451-5317	▶192
453-3510	1548
453-3595	1524
	1525
	1526
	1527
	1528
	1529
	1530
	1531
	1532
	1533
	1534
	1535
	1536
	1537
	1538
	1539
453-9679	587
	976
	989
453-9682	677
	977
	978
	979
	980
	981
	983
	986
	987
	988
453-9700	975
	982
	984
	985
	991
458-1025	1587
458-1027	1587
458-1031	1588
458-1033	1588
458-3400	591
	593
	596
458-3404	590
	598
458-7586	810
	812
458-7626	193
	1538
459-5504	193
	969
	970
459-5647	193
	640
460-0740	193
	524
460-0741	193
	489
460-0742	193
	810
460-0743	193
	545
460-0744	193
	858
460-0745	193
	217
462-1845	1587
	1588
462-2238	1550
463-0651	▶1174
463-1730	1587
463-1735	1588
463-1739	1587
	1588
463-1740	1587
	1588
464-0296	1300
	1467
	1470
464-6253	212
	213
	214
	215
	216
	217
	218
	839
	840
	842
	843
	844
	846
	847
	849
466-4849	768
	812
467-7011	1151
	1155
	1161
	1165
	1169
	1503
	1507
	1519
468-7762	478
468-7769	478
468-7770	478
470-4925	529
	822
470-7995	478
	484
470-8021	478
	484
471-0930	▶193
471-0988	▶194
471-1500	191
	1491
471-2881	713
	762
471-2882	683
	687
	691
	697
	699
	705
	719
	725
	729
	734
	738
	744
	752
	760
474-1553	824
	873
	874
475-2615	760
475-2631	760
476-3073	194
	881
	882
476-6899	1174
	1494
478-6438	194
	525
478-6453	194
	490
478-6458	194
	812
478-6459	194
	546
478-6460	194
	859
478-6461	194
	218
480-4406	687
	697
	699
	734
483-2328	1228
	1494
483-2353	1187
486-3678	▶1172
	▶1470
489-1835	194
	1576
489-1869	194
	1539
489-1970	194
	642
492-3310	1085
	1087
	1091
	1095
	1097
	1116
	1119
	1129
	1135
495-3762	▶1173
	▶1187
	▶1213
	▶1228
	▶1240
	▶1249
	▶1261
	▶1273
	▶1292
	▶1300
	▶1354
	▶1395
	▶1415
	▶1448
	▶1477
	▶1484
	▶1488
499-1558	1172
499-1559	1172
499-1560	1172
499-1561	1172

5

507-5019	1085
	1087
	1095
	1104
	1116
	1124
	1129
507-5021	1107
508-1898	768
	776
	784
	788
	792
508-1902	768
	776
	784
	788
	792
508-1906	768
	776
	784
	788
	792
518-5437	478
	482
	484
518-5440	478
	482
	484
518-5441	478
	482
	484
518-5885	478
	482
	484
518-5891	478
	484
518-5892	478
	484
518-5893	478
	484
520-6710	226
521-8085	▶224
	▶414
521-8086	▶225
	▶240
	▶246
	▶255
	▶264
	▶296
	▶308
	▶362
	▶406
521-8087	▶226
	▶318
	▶394
	▶401
521-8088	▶227
	▶447
522-9019	529
526-9854	1568
	1575
527-8052	1572
	1576
550-2590	134
	644
550-9106	1405
	1415
	1418
558-6969	1087
	1097
	1119
558-6973	1135
558-6980	1091
558-6985	1089
564-8856	518
	526
566-2648	1587
566-2649	1588
566-2696	▶1585
566-2697	▶1586
568-5111	1540
581-7710	1585
	1587

PART NUMBER INDEX

Part	Page	Part	Page	Part	Page	Part	Page
581-7711	1586						
	1588						
6							
604-8309	1585						
	1586						
609-1948	1538						
614-2921	878						
	990						

©2023 Caterpillar
All Rights Reserved

CAT, CATERPILLAR, LET'S DO THE WORK, their respective logos, “Caterpillar Corporate Yellow”, the "Power Edge" and Cat "Modern Hex" trade dress as well as corporate and product identity used herein, are trademarks of Caterpillar and may not be used without permission.