SEBP4124-47 (en-us)
January 2019

Parts Manual

C4.4 Industrial Engine

4441-UP (Engine)

Product and Dealer Information

Note: For product identification plate locations, see the section “Product Identification Information” in the Operation and Maintenance Manual.

Delivery Date: _____

Product Information

Model: _____

Product Identification Number: _____

Engine Serial Number: _____

Transmission Serial Number: _____

Generator Serial Number: _____

Attachment Serial Numbers: _____

Attachment Information: _____

Customer Equipment Number: _____

Dealer Equipment Number: _____

Dealer Information

Name: _____ Branch: _____

Address: _____

_____

_____

	Dealer Contact	Phone Number	Hours
Sales:	_____	_____	_____
Parts:	_____	_____	_____
Service:	_____	_____	_____

MEMORANDA

TABLE OF CONTENTS

NAME	PAGE
GENERAL INFORMATION	A3
REPAIR ALTERNATIVES	A5
SUPPLEMENTAL COOLANT ADDITIVES	A6
MAINTENANCE PARTS	A7
INDEX	A14
ENGINE ARRANGEMENT	1
ENGINE AR	1
ENGINE AR-COMPLETE	19
ENGINE AR-PRIMARY	26
BASIC ENGINE	299
ADAPTER GP-AIR COMPRESSOR	299
ADAPTER GP-AUXILIARY DRIVE	300
ADAPTER GP-PUMP DRIVE	307
AIR COMPRESSOR GP	309
BALANCER GP	317
BELT TENSIONER GP	319
CAMSHAFT GP	320
COVER GP-CYLINDER HEAD	325
COVER GP-ENGINE	332
COVER GP-FRONT HOUSING	334
COVER GP-VALVE MECHANISM	335
CRANKSHAFT GP	378
CYLINDER BLOCK GP	398
CYLINDER BLOCK GP-SHORT	415
CYLINDER HEAD AS	416
CYLINDER HEAD GP	418
DRIVE GP-AUXILIARY	423
DRIVE GP-FAN	425
FLYWHEEL GP	453
GEAR GP-FRONT	475
HOUSING GP-FLYWHEEL	477
HOUSING GP-FRONT	492
LIFTING GP-ENGINE	511
MOUNTING GP-ENGINE	514
MOUNTING GP-FAN DRIVE	532
PAN GP-OIL	533
PISTON & ROD GP	609
PISTON GP	621
PLUG GP-CYLINDER HEAD	629
PLUG GP-ENGINE	631
PULLEY GP	643
PULLEY GP-AUXILIARY DRIVE	647
PULLEY GP-CRANKSHAFT	648
ROCKER ARM GP	657
V-BELT GP	660
VALVE MECHANISM GP	661
LUBRICATION SYSTEM	669
BREATHER GP	669
FILLER GP-ENGINE OIL	670
FILTER GP-ENGINE OIL	678
GAUGE GP-OIL LEVEL (DIPSTICK)	679
PLUG GP-ENGINE OIL MANIFOLD	680
PUMP GP-ENGINE OIL	681
VALVE GP-FLUID SAMPLING	682
COOLING SYSTEM	685
CONNECTION GP-WATER	685
CONNECTOR GP-CAB HEATER LINES	688
COOLER GP-ENGINE OIL	690
COOLER GP-OIL	697
FAN GP	701
FAN GP-SUCTION	712
MOUNTING GP-FAN	713
PUMP GP-WATER	714
RADIATOR AS	728
RADIATOR GP	730
AIR INLET AND EXHAUST SYSTEM	772
AIR CLEANER GP	772
CONNECTION GP-INLET	774
COVER GP-INLET MANIFOLD	780
ELBOW GP-AIR INLET	784
FASTENER GP-TURBOCHARGER	788
MOUNTING GP-EXHAUST	789
PIPE GP-EXHAUST	790
TURBOCHARGER GP	791
FUEL SYSTEM	998
FILTER AS-FUEL	998
FILTER GP-FUEL	999
FILTER GP-PRIMARY FUEL	1009
FILTER GP-WATER SEP & FUEL	1012
INJECTOR GP-FUEL	1018
KIT-FUEL FILTER	1028
LINES GP-FUEL	1030
LINES GP-FUEL FILTER	1050
PUMP & MTG GP-UNIT INJ HYD	1059
PUMP GP-FUEL INJECTION	1067
RAIL GP-FUEL	1552
ELECTRICAL AND STARTING SYSTEM	1556
ALTERNATOR GP-CHARGING	1556
CONTROL GP-ENGINE ELECTRONIC	1584
CONTROL GP-UNPROGRAMMED	1585
GLOW PLUG GP	1586
HARNESS AS-CONTROL	1588
HARNESS AS-WIRING	1588
INSTALLATION GP-COMMUNICATION	1589
STARTING MOTOR GP-ELECTRIC	1590
SWITCH GP-HEAT START	1602
WIRING GP-ENGINE	1604

TABLE OF CONTENTS

NAME	PAGE	NAME	PAGE
SERVICE EQUIPMENT AND SUPPLIES	1619		
CHART-PLATE & FILM	1619		
PARTS GP-MISCELLANEOUS	1620		
PART NUMBER INDEX	B1		

1. ENGINE IDENTIFICATION

Cat engines are identified with Serial Numbers and Arrangement Numbers. In some cases, Modification Numbers are also used. The serial number plate which shows these numbers is mounted on the engine.

Cat dealers need this information to determine which components were included on the engine when it was assembled at the factory. This permits accurate identification of replacement part numbers.

2. ORDERING PARTS

⚠ WARNING

When replacement parts are required for this product Caterpillar recommends using Caterpillar replacement parts or parts with equivalent specifications including, but not limited to, physical dimensions, type, strength and material.

Failure to heed this warning can lead to premature failures, product damage, personal injury or death.

Quality Cat replacement parts are available from Cat dealers throughout the world. Their parts inventories are up to date and include all parts normally required to protect your investment in Cat Engines. Dealers may offer repair kits or remanufactured parts to allow selection of the most effective repair alternative for a particular situation. When ordering parts, your order should specify the quantity, part number, part name, and the serial number/product identification number of the engine for which the parts are needed.

3. PARTS MANUAL ORGANIZATION

Product information in this manual is presented as "information elements" that represent all of the components for the specific model. An Engine Arrangement is an example of an information element. The information elements are organized alphabetically by part name and secondarily by part number within each major section of the manual.

4. TABLE OF CONTENTS

A table of contents (TOC) is found at the beginning of the manual. The TOC lists each section of the manual with a complete list of all information elements organized as they appear in the manual. Page numbers are provided for quick reference to detailed parts identification illustrations and serviceable consist lists.

5. MAINTENANCE PARTS INDEX

The Maintenance Parts Index, located near the beginning of the manual, references most frequently used maintenance part numbers, providing description, quantity, usage and page number. This information is organized alphabetically by part description.

6. INDEX

The index located near the front of the manual is an alphabetical listing of all information elements included in the manual. Page numbers are provided for quick reference to detailed parts identification illustrations and serviceable consist lists.

7. PART NUMBER INDEX

A numerical index listing all part numbers and the corresponding page number(s) appears at the back of the manual.

8. CAPTIONS

Captions located at the beginning each information element identify the part number and part name along with additional descriptive information. S/N information found in each caption should be used to select correct information for a specific engine. Field replacement options, identification of optional attachment components, and where used ("part of") information is also provided.

The first line of a caption is shown in larger type font to indicate the beginning of an information element. Captions for additional pages that may be required to illustrate an information element will be shown in standard type font and will include the term (contd.) .

9. NON-SERVICED PARTS

In some instances it is necessary to display non-serviced parts that are a link to lower level serviceable consist lists. These non-serviced part numbers are shown in italic type indicating that they are not available. All consist lists have not been converted to reflect this enhancement.

10. PARTS LIST REFERENCE NUMBERS

Numbers shown in the Ref No column correspond to numbers used in the associated graphic(s). An alphabetic suffix may be added to a reference number to identify lower level consist items. Numbers shown in the Graphic Ref column refer to the graphic number identifier displayed in the lower left corner of each illustration. The Graphic Ref number may be used in combination with the item Ref No to determine the correct part number. There may be intentional omission of a Ref No in a consist list as information is updated to reflect the latest serviceable part numbers.

11. INDENTED PART NAMES

When a part name is indented in a parts list, it is part of (included in) the group or assembly under which it is indented.

12. ILLUSTRATION REFERENCE LETTERS

When necessary, illustrations contain reference letters (A, B, C etc.) that are intended to track lines and harnesses from one point to another. They are also used to show where to reconnect illustrations that have been separated.

13. ABBREVIATIONS AND SYMBOLS

O.D. – Outside Diameter
I.D. – Inside Diameter
A – Not Part Of This Group
B – Use As Required
C – Change From Previous Type
D – Order By The Meter
E – Order By The Centimeter
F – Not Shown
G – Order By The Inch
I – Refer To Hydraulic Information System
M – Metric Part
R – Remfg Part May Be Available
Y – Separate Illustration
Z – Not Serviced Separately

14. DESCRIPTION OF TYPE CHANGES

Type - A type is defined as any configuration change that requires an additional Information Element for an Arrangement, Group, or Assembly. If serial number breaks for types are not available, a type # (Type 1, Type 2, etc.) will be displayed in the caption. These "type" changes are identified with a "C" note (change from previous type) in the Parts List. Only the "types" that apply to this Parts Manual will be included. Additional types may exist causing "C" notes to appear on an Information Element when no other types are shown.

15. <END>

This symbol indicates the end of an information element.

NOTE:

Continuing improvement and advancement of product design may cause changes to your engine which may not be included in this publication. Whenever a question arises regarding your Cat product or this publication, please consult your Cat dealer for the latest available information.

REMANUFACTURED COMPONENTS

As an option when making repairs consider Cat Remanufactured Components. Components that are available through the Cat Remanufactured Program are identified three ways in the parts book:

- with the letter R in the note field of the parts list
- with an R* at the beginning of the first line of the caption
- with an *R at the end of the first line of the caption

Typical components included in the Remanufacturing Program include:

ALTERNATORS
CONNECTING RODS
CRANKSHAFTS - UNDERSIZE
CRANKSHAFTS - UPGRADE TO NEW
CYLINDER HEADS
ELECTRONIC CONTROL MODULES (ECM)
ELECTRONIC SENSORS
FUEL INJECTORS
FUEL NOZZLES
FUEL PUMPS
GOVERNORS
OIL PUMPS
PISTONS
SHORT BLOCKS
STARTERS
TURBOCHARGERS - COMPLETE
TURBOCHARGER CARTRIDGES
WATER PUMPS

Cat Remanufactured engines for many engine arrangements are also available.

SUPPLEMENTAL COOLANT ADDITIVES

CUSTOMER BENEFITS:

Protects against cavitation, foam, erosion, corrosion, and scale buildup in cooling systems.

- Provides measured coolant conditioner.

DESCRIPTION:

Additives deplete from the coolant with normal operation. For this reason, Supplemental Coolant Additives (SCA) must be added to all heavy duty coolants at regular intervals. In addition, when not using a fully formulated, pre-charged antifreeze, like Cat DEAC, an initial charge of SCA must be added to the cooling system. The amount of SCA added to the system is dependent on the capacity of the system.

The SCA for initial fill is provided as a liquid. SCA's for maintenance intervals are available in liquid form and as a spin-on element. (No Spin-on available for 3600 Family of Engines)

NOTE:

The amount of SCA added at initial fill is not the same as the amount added at maintenance intervals.

The coolant additive elements can be used with any ethylene or propylene glycol type antifreeze which meets ASTM D4985 or ASTM D5345 Specifications.

NOTE:

For use with standard heavy duty coolant only, not for use with Extended Life Coolant.

PARTS NEEDED:

Cooling System Capacity		Liquid SCA at Initial Fill	Liquid SCA at Maintenance*	Spin-on SCA Maintenance Element*
Liters	Gallons			
22-30	(6-8)	3P-2044 (1)	6V-3542 (1)	111-2370 (1)
30-38	(8-10)	3P-2044 (1) 6V-3542 (1)	111-2372 (1)	111-2369 (1)
38-49	(10-13)	3P-2044 (1) 8T-1589 (1)	111-2372 (1)	111-2369 (1)
49-64	(13-17)	3P-2044 (2)	8T-1589 (1)	9N-3368 (1)
64-83	(17-22)	3P-2044 (2) 8T-1589 (1)	111-2372 (1) 6V-3542 (1)	111-2371 (1)
83-114	(22-30)	3P-2044 (3) 8T-1589 (1)	3P-2044 (1)	9N-3718 (1)
114-163	(30-43)	3P-2044 (5)	3P-2044 (1) 6V-3542 (1)	111-2371 (2)
163-242	(43-64)	3P-2044 (8)	3P-2044 (2)	9N-3718 (2)

* Normal maintenance period is 250 hrs. See your Operation and Maintenance Manual for complete coolant maintenance instructions.

( ) Indicates quantity required.

MAINTENANCE PARTS

DESCRIPTION	PART NUMBER	QTY	WHERE USED	PAGE
AIR INLET AND EXHAUST SYSTEM				
FILTER AS-AIR	321-2413	1	TURBOCHARGER GP	960
		1	TURBOCHARGER GP	964
	449-9365	1	AIR CLEANER GP	773
FILTER ELEMENT AS-AIR (PRIMARY)	206-5234	1	AIR CLEANER GP	772
		1	AIR CLEANER GP	773
FILTER ELEMENT AS-AIR (SECONDARY)	206-5235	1	AIR CLEANER GP	772
		1	AIR CLEANER GP	773
FILTER ELEMENT-AIR (PRIMARY)	321-2411	1	TURBOCHARGER GP	960
		1	TURBOCHARGER GP	964
FILTER ELEMENT-AIR (SECONDARY)	321-2412	1	TURBOCHARGER GP	960
		1	TURBOCHARGER GP	964
GASKET-EXHAUST MANIFOLD	298-4570	1	TURBOCHARGER GP	791
		1	TURBOCHARGER GP	794
		1	TURBOCHARGER GP	797
		1	TURBOCHARGER GP	800
		1	TURBOCHARGER GP	803
		1	TURBOCHARGER GP	806
		1	TURBOCHARGER GP	809
		1	TURBOCHARGER GP	812
		1	TURBOCHARGER GP	815
		1	TURBOCHARGER GP	818
		1	TURBOCHARGER GP	821
		1	TURBOCHARGER GP	824
		1	TURBOCHARGER GP	827
		1	TURBOCHARGER GP	830
		1	TURBOCHARGER GP	833
		1	TURBOCHARGER GP	836
		1	TURBOCHARGER GP	839
		1	TURBOCHARGER GP	842
		1	TURBOCHARGER GP	845
		1	TURBOCHARGER GP	848
		1	TURBOCHARGER GP	851
		1	TURBOCHARGER GP	854
		1	TURBOCHARGER GP	857
		1	TURBOCHARGER GP	861
		1	TURBOCHARGER GP	865
		1	TURBOCHARGER GP	869
		1	TURBOCHARGER GP	872
		1	TURBOCHARGER GP	875
		1	TURBOCHARGER GP	878
		1	TURBOCHARGER GP	881
		1	TURBOCHARGER GP	884
		1	TURBOCHARGER GP	887
		1	TURBOCHARGER GP	891
		1	TURBOCHARGER GP	896
		1	TURBOCHARGER GP	899
		1	TURBOCHARGER GP	902

DESCRIPTION	PART NUMBER	QTY	WHERE USED	PAGE
		1	TURBOCHARGER GP	905
		1	TURBOCHARGER GP	908
		1	TURBOCHARGER GP	911
		1	TURBOCHARGER GP	914
		1	TURBOCHARGER GP	917
		1	TURBOCHARGER GP	920
		1	TURBOCHARGER GP	923
		1	TURBOCHARGER GP	926
		1	TURBOCHARGER GP	929
		1	TURBOCHARGER GP	932
		1	TURBOCHARGER GP	935
		1	TURBOCHARGER GP	938
		1	TURBOCHARGER GP	943
		1	TURBOCHARGER GP	948
		1	TURBOCHARGER GP	951
		1	TURBOCHARGER GP	954
		1	TURBOCHARGER GP	957
		1	TURBOCHARGER GP	960
		1	TURBOCHARGER GP	964
		1	TURBOCHARGER GP	968
		1	TURBOCHARGER GP	971
		1	TURBOCHARGER GP	974
		1	TURBOCHARGER GP	977
		1	TURBOCHARGER GP	980
		1	TURBOCHARGER GP	983
		1	TURBOCHARGER GP	986
		1	TURBOCHARGER GP	989
		1	TURBOCHARGER GP	992
		1	TURBOCHARGER GP	995
BASIC ENGINE				
BELT-SERPENTINE	285-2040	1	DRIVE GP-FAN	425
		1	DRIVE GP-FAN	430
	285-9082	1	DRIVE GP-FAN	441
	287-6842	1	DRIVE GP-FAN	445
	289-2358	1	DRIVE GP-FAN	440
		1	DRIVE GP-FAN	447
	289-3260	1	DRIVE GP-FAN	442
	309-6667	1	PULLEY GP	646
BELT-SERPENTINE (FAN DRIVE)	298-5866	1	DRIVE GP-FAN	434
BREATHER (CRANKCASE)	298-4547	1	COVER GP-VALVE MECHANISM	335
		1	COVER GP-VALVE MECHANISM	341
		1	COVER GP-VALVE MECHANISM	347
CAP AS (ENGINE OIL FILLER)	136-3608	1	COVER GP-VALVE MECHANISM	335
		1	COVER GP-VALVE MECHANISM	338
		1	COVER GP-VALVE MECHANISM	341
		1	COVER GP-VALVE MECHANISM	344
		1	COVER GP-VALVE MECHANISM	351
		1	COVER GP-VALVE MECHANISM	354

DESCRIPTION	PART NUMBER	QTY	WHERE USED	PAGE
		1	COVER GP-VALVE MECHANISM	363
		1	COVER GP-VALVE MECHANISM	366
		1	COVER GP-VALVE MECHANISM	369
		1	COVER GP-VALVE MECHANISM	372
		1	COVER GP-VALVE MECHANISM	375
GASKET-VALVE COVER	298-4546	1	COVER GP-CYLINDER HEAD	326
		1	COVER GP-CYLINDER HEAD	329
		1	COVER GP-VALVE MECHANISM	335
		1	COVER GP-VALVE MECHANISM	338
		1	COVER GP-VALVE MECHANISM	341
		1	COVER GP-VALVE MECHANISM	347
		1	COVER GP-VALVE MECHANISM	349
		1	COVER GP-VALVE MECHANISM	351
		1	COVER GP-VALVE MECHANISM	354
		1	COVER GP-VALVE MECHANISM	357
		1	COVER GP-VALVE MECHANISM	363
		1	COVER GP-VALVE MECHANISM	366
		1	COVER GP-VALVE MECHANISM	375
GASKET-VALVE COVER (CYLINDER HEAD)	298-4546	1	COVER GP-VALVE MECHANISM	344
		1	COVER GP-VALVE MECHANISM	360
		1	COVER GP-VALVE MECHANISM	369
		1	COVER GP-VALVE MECHANISM	372
KEY	067-6344	2	ADAPTER GP-AIR COMPRESSOR	299
PLUG-DRAIN (ENGINE OIL)	7C-0351	2	PAN GP-OIL	533
		2	PAN GP-OIL	535
		2	PAN GP-OIL	537
		2	PAN GP-OIL	539
		2	PAN GP-OIL	541
		2	PAN GP-OIL	543
		2	PAN GP-OIL	545
		2	PAN GP-OIL	547
		2	PAN GP-OIL	549
		2	PAN GP-OIL	551
		2	PAN GP-OIL	553
		2	PAN GP-OIL	555
		1	PAN GP-OIL	557
		1	PAN GP-OIL	559
		2	PAN GP-OIL	561
		2	PAN GP-OIL	563
		2	PAN GP-OIL	565
		2	PAN GP-OIL	567
		2	PAN GP-OIL	569
		2	PAN GP-OIL	571
		2	PAN GP-OIL	573
		2	PAN GP-OIL	575
		2	PAN GP-OIL	577
		2	PAN GP-OIL	579
		2	PAN GP-OIL	582
		2	PAN GP-OIL	585

DESCRIPTION	PART NUMBER	QTY	WHERE USED	PAGE
		2	PAN GP-OIL	587
		2	PAN GP-OIL	589
		2	PAN GP-OIL	591
		2	PAN GP-OIL	593
		2	PAN GP-OIL	595
		2	PAN GP-OIL	597
		2	PAN GP-OIL	599
		1	PAN GP-OIL	601
		2	PAN GP-OIL	603
		2	PAN GP-OIL	605
		2	PAN GP-OIL	607
STRAINER	233-8148	1	PAN GP-OIL	543
		1	PAN GP-OIL	599
STRAINER (ENGINE OIL)	233-8148	1	PAN GP-OIL	541
		1	PAN GP-OIL	575
		1	PAN GP-OIL	577
		1	PAN GP-OIL	597
V-BELT (INCLUDES 2-BELTS)	314-2311	1	V-BELT GP	660
V-BELT SET	327-4184	1	DRIVE GP-FAN	443
		1	DRIVE GP-FAN	452
V-BELT SET (INCLUDES 2-BELTS)	128-5247	1	DRIVE GP-FAN	448
		1	DRIVE GP-FAN	449
V-BELT SET (INCLUDES 2-BELTS) (FAN DRIVE)	113-7130	1	DRIVE GP-FAN	437
	128-5247	1	DRIVE GP-FAN	433
	128-5250	1	DRIVE GP-FAN	438
	277-3419	1	DRIVE GP-FAN	451
	3S-8447	1	DRIVE GP-FAN	446
	4N-8771	1	DRIVE GP-FAN	427
		1	DRIVE GP-FAN	432
		1	DRIVE GP-FAN	436
	5L-4995	1	DRIVE GP-FAN	426
COOLING SYSTEM				
CAP-RADIATOR	236-7764	1	RADIATOR AS	728
		1	RADIATOR GP	730
		1	RADIATOR GP	734
		1	RADIATOR GP	738
		1	RADIATOR GP	742
		1	RADIATOR GP	746
		1	RADIATOR GP	750
		1	RADIATOR GP	754
		1	RADIATOR GP	758
		1	RADIATOR GP	762
CONNECTION AS (INCLUDES TEMPERATURE REGULATOR)	367-1817	1	CONNECTION GP-WATER	685
GASKET-WATER REGULATOR (TEMPERATURE)	281-8744	1	CONNECTION GP-WATER	685
		1	CONNECTION GP-WATER	686
		1	CONNECTION GP-WATER	687

DESCRIPTION	PART NUMBER	QTY	WHERE USED	PAGE
HOSE-RADIATOR	236-7722	1	RADIATOR GP	766
		1	RADIATOR GP	769
	236-7734	1	RADIATOR GP	730
		1	RADIATOR GP	734
		1	RADIATOR GP	738
		1	RADIATOR GP	742
		1	RADIATOR GP	746
		1	RADIATOR GP	750
		1	RADIATOR GP	754
		1	RADIATOR GP	758
		1	RADIATOR GP	762
		1	RADIATOR GP	766
		1	RADIATOR GP	769
	236-7735	2	RADIATOR GP	730
		2	RADIATOR GP	734
		2	RADIATOR GP	738
		2	RADIATOR GP	742
		2	RADIATOR GP	746
		2	RADIATOR GP	750
		2	RADIATOR GP	754
		2	RADIATOR GP	758
		2	RADIATOR GP	762
		2	RADIATOR GP	766
		2	RADIATOR GP	769
	236-8781	1	RADIATOR GP	766
		1	RADIATOR GP	769
HOSE-RADIATOR (LOWER)	236-8781	1	RADIATOR GP	730
		1	RADIATOR GP	734
		1	RADIATOR GP	738
		1	RADIATOR GP	742
		1	RADIATOR GP	746
		1	RADIATOR GP	750
		1	RADIATOR GP	754
		1	RADIATOR GP	758
		1	RADIATOR GP	762
HOSE-RADIATOR (UPPER)	236-7722	1	RADIATOR GP	730
		1	RADIATOR GP	734
		1	RADIATOR GP	738
		1	RADIATOR GP	742
		1	RADIATOR GP	746
		1	RADIATOR GP	750
		1	RADIATOR GP	754
		1	RADIATOR GP	758
		1	RADIATOR GP	762
PLUG-DRAIN	236-7765	1	RADIATOR AS	728
PLUG-DRAIN (RADIATOR)	236-7765	1	RADIATOR GP	730
		1	RADIATOR GP	734
		1	RADIATOR GP	738
		1	RADIATOR GP	742

MAINTENANCE PARTS

DESCRIPTION	PART NUMBER	QTY	WHERE USED	PAGE
		1	RADIATOR GP	746
		1	RADIATOR GP	750
		1	RADIATOR GP	754
		1	RADIATOR GP	758
		1	RADIATOR GP	762
REGULATOR AS-WATER TEMPERATURE (INCLUDES CONNECTOR) (WATER TEMPERATURE)	417-7782	1	CONNECTION GP-WATER	687
ELECTRICAL AND STARTING SYSTEM				
GLOW PLUG (12-VOLT)	452-3112	4	GLOW PLUG GP	1586
GLOW PLUG (24-VOLT)	462-2235	4	GLOW PLUG GP	1587
KEY (START)	128-7723	1	SWITCH GP-HEAT START	1602
ENGINE ARRANGEMENT				
V-BELT GP	314-2310	1	ENGINE AR-PRIMARY	70
		1	ENGINE AR-PRIMARY	214
		1	ENGINE AR-PRIMARY	262
FUEL SYSTEM				
FILTER AS-FUEL	298-4603	1	FILTER GP-FUEL	1003
	311-1110	1	FILTER GP-FUEL	1006
	311-2376	1	FILTER GP-FUEL	1003
		1	FILTER GP-FUEL	1003
		1	FILTER GP-FUEL	1006
		1	FILTER GP-PRIMARY FUEL	1010
	343-7104	1	FILTER GP-FUEL	1007
FILTER AS-FUEL (IN-LINE)	371-4587	1	KIT-FUEL FILTER	1029
FILTER AS-FUEL (PRIMARY)	298-4603	1	FILTER GP-PRIMARY FUEL	1009
FILTER AS-FUEL (SECONDARY)	311-2376	1	FILTER GP-FUEL	1001
	343-7104	1	FILTER GP-FUEL	1002
		1	FILTER GP-PRIMARY FUEL	1011
FILTER AS-FUEL (ULTRA HIGH EFFICIENCY)	346-0523	1	FILTER GP-FUEL	1007
		1	KIT-FUEL FILTER	1028
	368-5934	1	FILTER GP-FUEL	1008
FILTER AS-FUEL (ULTRA HIGH EFFICIENCY) (ULTRA HIGH EFFICIENCY)	368-5935	1	FILTER GP-FUEL	1005
FILTER AS-WATER SEP & FUEL	308-7298	1	FILTER GP-WATER SEP & FUEL	1012
		1	FILTER GP-WATER SEP & FUEL	1015
FILTER ELEMENT-FUEL (ULTRA HIGH EFFICIENCY)	299-8229	1	FILTER AS-FUEL	998
		1	FILTER GP-FUEL	1001
		1	FILTER GP-FUEL	1002
		1	FILTER GP-FUEL	1004
		1	FILTER GP-FUEL	1005
		1	FILTER GP-FUEL	1006
			FILTER GP-FUEL	1007

DESCRIPTION	PART NUMBER	QTY	WHERE USED	PAGE
		1	FILTER GP-FUEL	1007
		1	FILTER GP-FUEL	1008
		1	FILTER GP-PRIMARY FUEL	1010
		1	FILTER GP-PRIMARY FUEL	1011
		1	KIT-FUEL FILTER	1028
		1	KIT-FUEL FILTER	1029
	355-6862	1	FILTER GP-FUEL	1004
FILTER ELEMENT-FUEL (ULTRA HIGH EFFICIENCY) (SECONDARY)	355-6862	1	FILTER GP-FUEL	1005
FILTER-FUEL (ULTRA HIGH EFFICIENCY)	289-0600	1	FILTER GP-FUEL	1000
		1	FILTER GP-PRIMARY FUEL	1009
LUBRICATION SYSTEM				
CAP AS-OIL FILLER (ENGINE)	130-9888	1	FILLER GP-ENGINE OIL	670
		1	FILLER GP-ENGINE OIL	672
		1	FILLER GP-ENGINE OIL	673
		1	FILLER GP-ENGINE OIL	676
		1	FILLER GP-ENGINE OIL	677
FILTER AS-ENGINE OIL	7W-2326	1	FILTER GP-ENGINE OIL	678
FILTER-FUMES DISPOSAL	273-5711	1	BREATHER GP	669

INDEX

NAME PAGE

A

ADAPTER GP-AIR COMPRESSOR 299
ADAPTER GP-AUXILIARY DRIVE. 300
301
303
305
306
ADAPTER GP-PUMP DRIVE 307
AIR CLEANER GP 772
773
AIR COMPRESSOR GP 309
311
313
315
ALTERNATOR GP-CHARGING 1556
1558
1559
1560
1561
1563
1565
1567
1569
1571
1573
1574
1575
1576
1577
1578
1580
1581
1582
1583
ALTERNATOR GP-CHARGING (12-VOLT, 85-AMPERE) 1556

B

BALANCER GP 317
BASE GP-BREATHER (CRANKCASE). 326
329
363
366
BASE GP-VALVE COVER & INJ HARN. 326
329
335
338
341
344
347
349
351
354
357
360
363
366
369
372
375
BELT TENSIONER GP. 319
BELT-SERPENTINE. 425
430
440
441
442
445
447
646
BELT-SERPENTINE (FAN DRIVE) 434
BREATHER (CRANKCASE) 335
341
347
BREATHER GP–CRANKCASE 669
BRIDGE GP-VALVE 658
661
663
665
667

C

CAMSHAFT GP 320
321
322
323
324
CAP AS (ENGINE OIL FILLER) 335
338
341
344
351
354
363
366
369
372
375
CAP AS-OIL FILLER (ENGINE). 670
672
673
676
677

INDEX

NAME	PAGE
CAP-RADIATOR	728 730 734 738 742 746 750 754 758 762
CHART-PLATE & FILM	1619
CONNECTION AS (INCLUDES TEMPERATURE REGULATOR)	685
CONNECTION GP-INLET–AIR	774 776 778
CONNECTION GP-WATER	685 686 687
CONNECTOR GP-CAB HEATER LINES	688 689
CONTROL GP-ENGINE ELECTRONIC	1584
CONTROL GP-UNPROGRAMMED (ENGINE)	1584
CONTROL GP-UNPROGRAMMED–PL641E CELLULAR	1585
COOLER GP-ENGINE OIL	690 692 693 695 696
COOLER GP-OIL–ENGINE	697 698 700
COVER GP	303
COVER GP-CYLINDER HEAD	325 326 329
COVER GP-ENGINE	332 333
COVER GP-FRONT HOUSING–POWER TAKE-OFF	334
COVER GP-INLET MANIFOLD	780 782
COVER GP-VALVE MECHANISM	326 329 335 338 341 344 347 349 351 354 357 360 363 366 369 372 375
CRANKSHAFT GP	378 379 380 381 382 383 384 385 386 387 388 390 391 392 394 396
CYLINDER BLOCK GP	398 399 400 401 402 403 404 405 406 407 408 410 412 414
CYLINDER BLOCK GP-SHORT	415
CYLINDER HEAD AS	416
CYLINDER HEAD GP	418 419 420 421 422

D

DRIVE GP-AUXILIARY	423 424
DRIVE GP-FAN	425-452

E

ELBOW GP-AIR INLET	784 786

INDEX

NAME	PAGE
ELECTRONICS GP-ENGINE RATINGS	2
	5
	9
	12
	15
	18
	20
	22
	24
	40
	43
	44
	46
	56
	59
	68
	73
	82
	85
	90
	96
	98
	100
	104
	107
	111
	112
	116
	133
	139
	154
	159
	166
	168
	195
	196
	202
	207
	210
	215
	220
	221
	222
	230
	243
	248
	249
	253
	255
	256
	257
	268
	269
	270
	272
	275
	281
	282
	283
	284
	292
	295
	297
ENGINE AR	1
	2
	3
	5
	7
	8
	9
	10
	11
	12
	13
	14
	15
	16
	17
	18
ENGINE AR-COMPLETE	19
	20
	21
	22
	23
	24
	25

INDEX

NAME	PAGE
ENGINE AR-PRIMARY	26
	27
	29
	31
	33
	35
	36
	38
	40
	42
	44
	46
	47
	48
	49
	51
	52
	54
	55
	57
	58
	59
	61
	63
	64
	66
	68
	69
	70
	72
	74
	76
	77
	78
	80
	81
	83
	84
	85
	87
	88
	89
	90
	91
	93
	94
	96
	98
	100
	101
	102
	103
	104
	105
	106
	107
	109
	110
	111
	112
	114
	116
	117
	118
	119
	121
	122
	123
	125
	126
	128
	129
	131
	132
	133
	134
	135
	136
	137
	139
	141
	142
	143
	144
	145
	146
	147
	148
	149
	150
	151
	153
	155
-193	
	195
-298	

F

FAN GP	701
	702
	703
	704
	705
	706
	707
	708
	709
	710
	711
FAN GP-SUCTION	712
FASTENER GP-TURBOCHARGER	788
FILLER GP-ENGINE OIL	670
	671
	672
	673
	674
	675
	676
	677

INDEX

NAME	PAGE
FILM-IDENTIFICATION (WIRELESS COM DEVICE, READ OMM)	1589
FILM-WARNING (EXPLOSION, WIRELESS, OMM, INTL)	1589
FILM-WARNING (EXPLOSION, WIRELESS, OMM, U.S.)	1589
FILTER AS-AIR	773 960 964
FILTER AS-ENGINE OIL	678
FILTER AS-FUEL	998 1003 1006 1007 1010
FILTER AS-FUEL (IN-LINE)	1029
FILTER AS-FUEL (PRIMARY)	1009
FILTER AS-FUEL (SECONDARY)	1001 1002 1011
FILTER AS-FUEL (ULTRA HIGH EFFICIENCY)	1007 1008 1028
FILTER AS-FUEL (ULTRA HIGH EFFICIENCY) (ULTRA HIGH EFFICIENCY)	1005
FILTER AS-WATER SEP & FUEL	1012 1015
FILTER ELEMENT AS-AIR (PRIMARY)	772 773
FILTER ELEMENT AS-AIR (SECONDARY)	772 773
FILTER ELEMENT-AIR (PRIMARY)	960 964
FILTER ELEMENT-AIR (SECONDARY)	960 964
FILTER ELEMENT-FUEL (ULTRA HIGH EFFICIENCY)	998 1001 1002 1004 1005 1006 1007 1008 1010 1011 1028 1029
FILTER ELEMENT-FUEL (ULTRA HIGH EFFICIENCY) (SECONDARY)	1005
FILTER GP-ENGINE OIL	678
FILTER GP-FUEL	999 1000 1001 1002 1003 1004 1005 1006 1007 1008
FILTER GP-PRIMARY FUEL	1009 1010 1011
FILTER GP-WATER SEP & FUEL	1012 1013 1014 1015 1016 1017
FILTER-FUEL (ULTRA HIGH EFFICIENCY)	1000 1009
FILTER-FUMES DISPOSAL	669
FLYWHEEL GP	453 454 455 456 457 458 459 460 461 462 463 465 466 467 468 469 470 471 472 473 474

NAME PAGE

G

GASKET-EXHAUST MANIFOLD. 791
794
797
800
803
806
809
812
815
818
821
824
827
830
833
836
839
842
845
848
851
854
857
861
865
869
872
875
878
881
884
887
891
896
899
902
905
908
911
914
917
920
923
926
929
932
935
938
943
948
951
954
957
960
964
968
971
974
977

NAME PAGE

980
983
986
989
992
995
GASKET-VALVE COVER. 326
329
335
338
341
347
349
351
354
357
363
366
375
GASKET-VALVE COVER (CYLINDER HEAD). . . 344
360
369
372
GASKET-WATER REGULATOR (TEMPERATURE). 685
686
687
GAUGE AS-OIL LEVEL (DIPSTICK). 543
599
GAUGE AS-OIL LEVEL (DIPSTICK) (ENGINE) 533
535
537
539
541
549
551
553
555
557
559
561
563
565
567
569
575
577
585
587
593
595
597
601
679
GAUGE GP-OIL LEVEL (DIPSTICK) (ENGINE) 591
GAUGE GP-OIL LEVEL (DIPSTICK)–ENGINE. . . 679
GAUGE-OIL LEVEL (DIPSTICK) 603
605

INDEX

NAME PAGE

GAUGE-OIL LEVEL (DIPSTICK) (ENGINE) 571
573
579
582
589
607
GEAR GP-FRONT 475
GLOW PLUG (12-VOLT) 1586
GLOW PLUG (24-VOLT) 1587
GLOW PLUG GP 1586
1587

H

HARNESS AS-CONTROL 1589
HARNESS AS-CONTROL–PRODUCT LINK 1588
HARNESS AS-ENGINE 1604
1606
1607
1609
1611
1615
1617
HARNESS AS-ENGINE (FUEL INJECTION) 326
329
335
338
341
344
347
349
351
354
357
360
363
366
369
372
375
HARNESS AS-WIRING–PL461 TO PL462 CONVERSION 1589
HARNESS AS-WIRING–PRODUCT LINK RADIO 1588
HOSE-RADIATOR 730
734
738
742
746
750
754
758
762
766
769

NAME PAGE

HOSE-RADIATOR (LOWER) 730
734
738
742
746
750
754
758
762
HOSE-RADIATOR (UPPER) 730
734
738
742
746
750
754
758
762
HOUSING GP-FLYWHEEL 477
478
479
481
483
484
485
486
487
488
489
490
491
HOUSING GP-FRONT 492
495
497
499
501
503
506
509

I

INDICATOR-AIR FILTER CHANGE 772
773
960
964
INJECTOR GP-FUEL 1018
1019
1020
1021
1022
1023
1024
1025
1026
1027
INSTALLATION GP-COMMUNICATION–PL641 CELLULAR 1589
INSTALLATION GP-COMMUNICATION–PLE601 NETWORK MANAGER 1589

NAME PAGE

K

KEY 299
KEY (START) 1602
KIT-FUEL FILTER 1028
1029

NAME PAGE

KIT-SENSOR (AIR PRESSURE) 1069
1074
1079
1084
1114
1119
1124
1129
1134
1139
1144
1149
1179
1184
1189
1194
1224
1229
1234
1239
1244
1248
1253
1258
1263
1268
1273
1303
1308
1313
1318
1323
1328
1333
1338
1343
1373
1378
1383
1388
1393
1398
1403
1408
1413
1418
1423
1428
1433
1438
1443
1448
1453
1458
1463
1468
1473
1478
1483
1488
1493

INDEX

NAME	PAGE
	1498
	1503
	1508
	1513
	1518
	1525
	1530
	1535
KIT-SENSOR (AIR TEMPERATURE)	1069
	1074
	1079
	1084
	1089
	1094
	1099
	1104
	1109
	1114
	1119
	1124
	1129
	1154
	1159
	1164
	1169
	1174
	1179
	1184
	1189
	1194
	1199
	1204
	1209
	1214
	1219
	1224
	1229
	1234
	1239
	1244
	1248
	1253
	1258
	1278
	1283
	1288
	1293
	1298
	1348
	1353
	1358
	1363
	1368
	1423
	1428
	1433
	1438
	1443
	1448
	1453
	1458
	1463
	1468
KIT-SENSOR (ATMOSPHERIC PRESSURE) . . .	1278
	1283
	1288
	1293
	1298

INDEX

NAME	PAGE	NAME	PAGE
KIT-SENSOR (COOLANT TEMPERATURE). . . .	1069	KIT-SENSOR (ENGINE OIL PRESSURE).	1069
	1074		1074
	1079		1079
	1084		1084
	1119		1089
	1124		1094
	1129		1099
	1134		1104
	1139		1109
	1144		1114
	1149		1119
	1244		1124
	1248		1129
	1253		1134
	1258		1139
	1263		1144
	1268		1149
	1273		1154
	1303		1159
	1308		1164
	1313		1169
	1318		1174
	1323		1179
	1328		1184
	1333		1189
	1338		1194
	1343		1199
	1373		1204
	1378		1209
	1383		1214
	1388		1219
	1393		1224
	1398		1229
	1403		1234
	1408		1239
	1413		1244
	1418		1248
	1423		1253
	1428		1258
	1433		1263
	1438		1268
	1443		1273
	1448		1278
	1453		1283
	1458		1288
	1463		1293
	1468		1298
	1473		1303
	1478		1308
	1483		1313
	1488		1318
	1493		1323
	1498		1328
	1525		1333
	1530		1338
	1535		1343
			1348
			1353
			1358
			1363
			1368

INDEX

NAME	PAGE	NAME	PAGE
	1373	KIT-SENSOR (ENGINE SPEED)	1069
	1378		1074
	1383		1079
	1388		1084
	1393		1094
	1398		1099
	1403		1104
	1408		1109
	1413		1119
	1418		1124
	1423		1129
	1428		1134
	1433		1139
	1438		1144
	1443		1149
	1448		1159
	1453		1164
	1458		1169
	1463		1174
	1468		1184
	1473		1189
	1478		1194
	1483		1199
	1488		1204
	1493		1209
	1498		1214
	1503		1219
	1508		1224
	1513		1229
	1518		1234
	1525		1239
	1530		1244
	1535		1248
			1253
			1258
			1268
			1273
			1283
			1288
			1293
			1298
			1303
			1308
			1313
			1318
			1328
			1333
			1338
			1343
			1353
			1358
			1363
			1368
			1374
			1378
			1383
			1388
			1393
			1399
			1404
			1408

INDEX

NAME	PAGE
	1413
	1418
	1423
	1428
	1433
	1438
	1443
	1448
	1453
	1458
	1463
	1468
	1473
	1478
	1483
	1488
	1493
	1498
	1503
	1508
	1513
	1518
	1525
	1530
	1535
KIT-SENSOR (INTAKE AIR TEMPERATURE)	1134
	1139
	1144
	1149
	1303
	1308
	1313
	1318
	1323
	1328
	1333
	1338
	1343
	1473
	1478
	1483
	1488
	1493
	1498
	1503
	1508
	1513
	1518

NAME	PAGE
KIT-SENSOR (WATER PRESSURE)	1089
	1094
	1099
	1104
	1109
	1154
	1159
	1164
	1169
	1174
	1199
	1204
	1209
	1214
	1219
	1348
	1353
	1358
	1363
	1368
KIT-SENSOR (WATER TEMPERATURE)	1089
	1094
	1099
	1104
	1109
	1114
	1154
	1159
	1164
	1169
	1174
	1179
	1184
	1189
	1194
	1199
	1204
	1209
	1214
	1219
	1224
	1229
	1234
	1239
	1278
	1283
	1288
	1293
	1298
	1348
	1353
	1358
	1363
	1368
KIT-TEMPERATURE SENSOR (AIR)	1394
	1414
	1419
	1535

INDEX

NAME PAGE

L

LIFTING GP-ENGINE 511
512
513
LINES GP-FUEL. 1030
1033
1036
1039
1040
1041
1044
1047
LINES GP-FUEL FILTER. 1050
1053
1056

M

MOUNTING GP-ENGINE 514
515
517
518
519
520
521
522
523
524
525
526
528
529
530
531
MOUNTING GP-EXHAUST 789
MOUNTING GP-FAN. 713
MOUNTING GP-FAN DRIVE. 532

NAME PAGE

P

PAN GP-OIL 545
547
549
551
561
563
565
567
571
573
575
577
579
582
589
591
593
595
597
599
601
607
PAN GP-OIL–ENGINE. 533
535
537
539
541
543
553
555
557
559
569
585
587
603
605
PARTS GP-MISCELLANEOUS 1620
PIPE GP-EXHAUST. 790
PISTON & ROD GP 609
611
613
615
617
619
PISTON GP 621
623
625
627
PLUG GP-CYLINDER HEAD 629
630

INDEX

NAME	PAGE
PLUG GP-ENGINE	631
	632
	633
	634
	635
	636
	637
	638
	639
	640
	642
PLUG GP-ENGINE OIL MANIFOLD	680
PLUG-DRAIN	728
PLUG-DRAIN (ENGINE OIL)	533
	535
	537
	539
	541
	543
	545
	547
	549
	551
	553
	555
	557
	559
	561
	563
	565
	567
	569
	571
	573
	575
	577
	579
	582
	585
	587
	589
	591
	593
	595
	597
	599
	601
	603
	605
	607
PLUG-DRAIN (RADIATOR)	730
	734
	738
	742
	746
	750
	754
	758
	762
PULLEY GP	646
PULLEY GP-AUXILIARY DRIVE	647
PULLEY GP-CRANKSHAFT	648
	649
	650
	651
	652
	653
	654
	655
	656
PULLEY GP–CRANKSHAFT	643
	644
	645
PUMP & MTG GP-UNIT INJ HYD	1059
	1061
	1062
	1063
	1065
PUMP GP-ENGINE OIL	681

INDEX

NAME	PAGE
PUMP GP-FUEL INJECTION	1067
	1068
	1069
	1074
	1079
	1084
	1089
	1094
	1099
	1104
	1109
	1114
	1119
	1124
	1129
	1134
	1139
	1144
	1149
	1154
	1159
	1164
	1169
	1174
	1179
	1184
	1189
	1194
	1199
	1204
	1209
	1214
	1219
	1224
	1229
	1234
	1239
	1244
	1248
	1253
	1258
	1263
	1268
	1273
	1278
	1283
	1288
	1293
	1298
	1303
	1308
	1313
	1318
	1323
	1328
	1333
	1338
	1343
	1348
	1353
	1358
	1363
	1368
	1373
	1378
	1383
	1388
	1393
	1398
	1403
	1408
	1413
	1418
	1423
	1428
	1433
	1438
	1443
	1448
	1453
	1458
	1463
	1468
	1473
	1478
	1483
	1488
	1493
	1498
	1503
	1508
	1513
	1518
	1523
	1525
	1530
	1535
	1540
	1541
	1544
	1547
	1550
PUMP GP-FUEL TRANSFER	1059
	1061
	1062
	1063
	1065
	1067
PUMP GP-WATER	714
	716
	718
	720
	722
	724
	726

R

RADIATOR AS	728

INDEX

NAME	PAGE
RADIATOR GP	730
	734
	738
	742
	746
	750
	754
	758
	762
	766
	769
RAIL GP-FUEL	1084
	1109
	1149
	1174
	1199
	1219
	1239
	1258
	1298
	1318
	1343
	1368
	1393
	1418
	1438
	1453
	1483
	1498
	1508
	1535
	1547
	1552
	1553
	1554
	1555
REGULATOR AS-WATER TEMPERATURE (INCLUDES CONNECTOR) (WATER TEMPERATURE)	687
ROCKER ARM GP	657
	658

S

NAME	PAGE
SENSOR AS-LIQUID LEVEL (FUEL, WATER SEPARATOR)	1015
SENSOR AS-PRESSURE	1443
	1448
	1453
SENSOR AS-PRESSURE (FUEL RAIL PRESSURE)	1069
	1074
	1079
	1084
	1089
	1094
	1099
	1104
	1109
	1119
	1124
	1129
	1134
	1139
	1144
	1149
	1159
	1164
	1169
	1174
	1184
	1189
	1194
	1199
	1204
	1209
	1214
	1219
	1224
	1229
	1234
	1239
	1244
	1248
	1253
	1258
	1268
	1273
	1283
	1288
	1293
	1298
	1303
	1308
	1313
	1318
	1328
	1333
	1338
	1343
	1353
	1358
	1363
	1368

INDEX

NAME	PAGE
SENSOR AS-PRESSURE (FUEL RAIL)	1423
	1428
	1433
	1438
	1458
	1463
	1468
	1488
	1493
	1498
	1525
	1530
	1535
SENSOR AS-PRESSURE (FUEL)	1374
	1378
	1383
	1389
	1394
	1399
	1404
	1409
	1414
	1419
	1473
	1478
	1483
	1503
	1508
	1513
	1518
SENSOR GP-SPEED	1069
	1079
	1084
	1099
	1104
	1109
	1124
	1129
	1134
	1144
	1149
	1169
	1174
	1194
	1199
	1214
	1219
	1234
	1239
	1253
	1258
	1293
	1298
	1303
	1313
	1318
	1328
	1338
	1343
	1353
	1388
	1393
	1413
	1418
	1423
	1433
	1438
	1448
	1453
	1463
	1468
	1478
	1483
	1493
	1498
	1508
	1518
	1530
	1535
	1550
SENSOR GP-SPEED (ENGINE)	1363
	1368
SENSOR GP-SPEED (FUEL PUMP)	1062
	1065
SENSOR GP-SPEED (INJECTION PUMP)	1059
	1061
	1063
	1068
	1540

INDEX

NAME	PAGE
SENSOR GP-SPEED (SECONDARY, TIMING)	1067
	1523
SENSOR-PRESSURE (FUEL)	1012
SENSOR-TEMPERATURE (AIR)	1268
	1273
	1374
	1379
	1384
	1389
	1399
	1404
	1409
	1525
	1530
SOFTWARE GP-MONITOR (CELLULAR)	1585
SOLENOID	986
	989
SOLENOID (BOOST)	791
	794
	797
	812
	815
	818
	869
	872
SOLENOID (WASTEGATE)	821
	824
	827
	830
	833
	842
	845
	875
	878
	881
	884
	887
	891
	896
	899
	902
	905
	914
	917
	920
	923
	926
	929
	938
	943
	948
	951
	954
	957
	960
	964
	968
	971
	974
	977
SOLENOID AS (FUEL SHUTOFF)	1068
SOLENOID AS (WASTEGATE)	800
	803
	806
	809
	836
	839
	848
	851
	854
	857
	861
	865
	908
	911
	932
	935
	992
	995
SOLENOID AS (WASTEGATE) (AIR FUEL RATIO CONTROL)	980
	983
STARTING MOTOR GP-ELECTRIC	1590
	1591
	1592
	1594
	1595
	1596
	1597
	1598
	1599
	1600
	1601
STARTING MOTOR GP-ELECTRIC–12-VOLT	1593
STRAINER	543
	599
STRAINER (ENGINE OIL)	541
	575
	577
	597
SWITCH AS (IGNITION)	1603
SWITCH GP-HEAT START	1602
	1603

INDEX

NAME PAGE

T

TURBOCHARGER GP 791
794
797
800
803
806
809
812
815
818
821
824
827
830
833
836
839
842
845
848
851
854
857
861
865
869
872
875
878
881
884
887
891
896
899
902
905
908
911
914
917
920
923
926
929
932
935
938
943
948
951
954
957
960
964
968
971
974
977

NAME PAGE

980
983
986
989
992
995

V

V-BELT (INCLUDES 2-BELTS). 660
V-BELT GP 70
214
262
660
V-BELT SET 443
452
V-BELT SET (INCLUDES 2-BELTS). 448
449
V-BELT SET (INCLUDES 2-BELTS) (FAN DRIVE) 426
427
432
433
436
437
438
446
451

INDEX

NAME	PAGE
VALVE AS-RELIEF	1074
	1079
	1084
	1099
	1104
	1109
	1119
	1124
	1129
	1139
	1144
	1149
	1164
	1169
	1174
	1189
	1194
	1199
	1209
	1214
	1219
	1229
	1234
	1239
	1288
	1293
	1298
	1308
	1313
	1318
	1333
	1338
	1343
	1358
	1363
	1368
	1383
	1388
	1393
	1408
	1413
	1418
	1423
	1428
	1433
	1438
	1443
	1448
	1453
	1458
	1463
	1468
	1473
	1478
	1483
	1488
	1493
	1498
	1508
	1513
	1518
	1525
	1530
	1535
	1541
	1544
	1547
VALVE AS-RELIEF (ENGINE OIL PRESSURE)	317
VALVE AS-RELIEF (FUEL RAIL)	1248
	1253
	1258
	1553
	1554
	1555
VALVE GP-FLUID SAMPLING–ENGINE OIL	682
	683
	684
VALVE GP-SOLENOID (FUEL SHUTOFF)	1068
VALVE MECHANISM GP	661
	663
	665
	667

W

WIRING GP-ENGINE	1604
	1606
	1607
	1609
	1611
	1613
	1615
	1617

MEMORANDA

ENGINE ARRANGEMENT

307-0428 ENGINE AR

85.5 BRAKE KW (114 BHP) AT 2200 RPM

SMCS-1000 **i03993353**

NOTE	PART NUMBER	QTY	PART NAME 1 2 3 4 5 6 (PRODUCT LEVEL)	SEE PAGE
Y	*301-8245*	1	BALANCER GP	317
Y	*308-4152*	1	CAMSHAFT GP	323
Y	*298-5116*	1	CONNECTION GP-INLET	774
Y	*301-8243*	1	CONNECTION GP-WATER	687
Y	*304-6436*	1	CONTROL GP-ENGINE ELECTRONIC	1584
Y	*308-4159*	1	COOLER GP-OIL	700
Y	*303-5772*	1	COVER GP-VALVE MECHANISM	347
Y	*308-4146*	1	CRANKSHAFT GP	384
Y	*308-4145*	1	CYLINDER BLOCK GP	404
Y	*308-4150*	1	CYLINDER HEAD GP	421
Y	*308-4156*	1	DRIVE GP-FAN	431
Y	*308-4158*	1	FILLER GP-ENGINE OIL	673
Y	*316-1100*	1	FILTER GP-FUEL	1004
Y	*298-5125*	1	GLOW PLUG GP	1586
Y	*304-8760*	1	HOUSING GP-FRONT	495
Y	*299-5033*	1	LIFTING GP-ENGINE	512
Y	*316-1179*	1	LINES GP-FUEL	1033
Y	*308-4157*	1	PAN GP-OIL	561
Y	*308-4149*	1	PISTON & ROD GP	617
Y	*298-5129*	1	PLUG GP-CYLINDER HEAD	629
Y	*298-5131*	1	PLUG GP-ENGINE (THREADED)	632
Y	*304-8761*	1	PLUG GP-ENGINE	636
Y	*298-5128*	1	PLUG GP-ENGINE OIL MANIFOLD	680
Y	*308-4160*	1	PULLEY GP-CRANKSHAFT	649
			S/N: 4441-7401	
Y	*360-7343*	1	PULLEY GP-CRANKSHAFT	652
			S/N: 4447402-UP	
Y	*317-7967*	1	PUMP GP-FUEL INJECTION	1443
Y	*298-5105*	1	PUMP GP-WATER	714
Y	*303-5776*	1	TURBOCHARGER GP	821
			—OR—	
Y	*329-9129*	1	TURBOCHARGER GP	948
Y	*308-4151*	1	VALVE MECHANISM GP	665
Y	*316-1102*	1	WIRING GP-ENGINE	1613
	359-0738	1	CYLINDER BLOCK GP-SHORT	
	317-7971	1	ELECTRONICS GP-ENGINE RATINGS	

Y - SEPARATE ILLUSTRATION

<END>

ENGINE ARRANGEMENT

307-0430 ENGINE AR

75 BRAKE KW (100 BHP) AT 2200 RPM

SMCS-1000 **i03993356**

NOTE	PART NUMBER	QTY	PART NAME 1 2 3 4 5 6 (PRODUCT LEVEL)	SEE PAGE
Y	*301-8245*	1	BALANCER GP	317
Y	*308-4152*	1	CAMSHAFT GP	323
Y	*298-5116*	1	CONNECTION GP-INLET	774
Y	*301-8243*	1	CONNECTION GP-WATER	687
Y	*304-6436*	1	CONTROL GP-ENGINE ELECTRONIC	1584
Y	*308-4159*	1	COOLER GP-OIL	700
Y	*303-5772*	1	COVER GP-VALVE MECHANISM	347
Y	*308-4146*	1	CRANKSHAFT GP	384
Y	*308-4145*	1	CYLINDER BLOCK GP	404
Y	*308-4150*	1	CYLINDER HEAD GP	421
Y	*308-4156*	1	DRIVE GP-FAN	431
Y	*308-4158*	1	FILLER GP-ENGINE OIL	673
Y	*316-1100*	1	FILTER GP-FUEL	1004
Y	*298-5125*	1	GLOW PLUG GP	1586
Y	*304-8760*	1	HOUSING GP-FRONT	495
Y	*299-5033*	1	LIFTING GP-ENGINE	512
Y	*316-1179*	1	LINES GP-FUEL	1033
Y	*308-4157*	1	PAN GP-OIL	561
Y	*308-4149*	1	PISTON & ROD GP	617
Y	*298-5129*	1	PLUG GP-CYLINDER HEAD	629
Y	*298-5131*	1	PLUG GP-ENGINE	632
Y	*304-8761*	1	PLUG GP-ENGINE	636
Y	*298-5128*	1	PLUG GP-ENGINE OIL MANIFOLD	680
Y	*308-4160*	1	PULLEY GP-CRANKSHAFT	649
			S/N: 4441-7401	
Y	*360-7343*	1	PULLEY GP-CRANKSHAFT	652
			S/N: 4447402-UP	
Y	*316-1109*	1	PUMP GP-FUEL INJECTION	1423
Y	*298-5105*	1	PUMP GP-WATER	714
Y	*303-5776*	1	TURBOCHARGER GP	821
			—OR—	
Y	*329-9129*	1	TURBOCHARGER GP	948
Y	*308-4151*	1	VALVE MECHANISM GP	665
Y	*316-1102*	1	WIRING GP-ENGINE	1613
	359-0738	1	CYLINDER BLOCK GP-SHORT	
	316-1199	1	ELECTRONICS GP-ENGINE RATINGS	

Y - SEPARATE ILLUSTRATION

<END>

318-7147 ENGINE AR*R

97 BRAKE KW (129 BHP) AT 2200 RPM

FIELD REPLACEMENT ORDER 540-1156—PAGE: 298

SMCS-1000 **i06917768**

NOTE	PART NUMBER	QTY	PART NAME 1 2 3 4 5 6 (PRODUCT LEVEL)	SEE PAGE
Y	*304-0728*	1	ADAPTER GP-AUXILIARY DRIVE	301
Y	*311-7455*	1	ALTERNATOR GP-CHARGING	1577
Y	*298-5892*	1	CAMSHAFT GP	321
Y	*301-8248*	1	CONNECTION GP-INLET	776
Y	*301-8243*	1	CONNECTION GP-WATER	687
Y	*304-6436*	1	CONTROL GP-ENGINE ELECTRONIC	1584
Y	*298-5099*	1	COOLER GP-ENGINE OIL	690
Y	*304-5574*	1	COVER GP-VALVE MECHANISM	351
Y	*298-5888*	1	CRANKSHAFT GP	380
Y	*298-5887*	1	CYLINDER BLOCK GP	400
Y	*298-5890*	1	CYLINDER HEAD GP	419
Y	*311-4644*	1	DRIVE GP-FAN	433
			S/N: 4441-9221	
Y	*316-7959*	1	DRIVE GP-FAN	436
			S/N: 4449222-UP	
Y	*311-4640*	1	FAN GP	704
Y	*299-5071*	1	FILLER GP-ENGINE OIL	670
Y	*298-5100*	1	FILTER GP-ENGINE OIL	678
Y	*303-5780*	1	FILTER GP-FUEL	999
Y	*322-3755*	1	FILTER GP-FUEL	1005
Y	*299-5063*	1	FLYWHEEL GP	454
Y	*298-5125*	1	GLOW PLUG GP	1586
Y	*299-5057*	1	HOUSING GP-FLYWHEEL	478
Y	*304-0727*	1	HOUSING GP-FRONT	492
Y	*299-5033*	1	LIFTING GP-ENGINE	512
Y	*322-3754*	1	LINES GP-FUEL	1036
Y	*307-2851*	1	MOUNTING GP-ENGINE	520
			—OR—	
Y	*323-6804*	1	MOUNTING GP-ENGINE	529
Y	*305-2578*	1	PAN GP-OIL	557
			S/N: 4441-10751	
Y	*377-8331*	1	PAN GP-OIL	603
			S/N: 44410752-UP	
Y	*304-8762*	1	PIPE GP-EXHAUST	790
Y	*298-5889*	1	PISTON GP	621
Y	*298-5129*	1	PLUG GP-CYLINDER HEAD	629
Y	*298-5131*	1	PLUG GP-ENGINE	632
Y	*298-5128*	1	PLUG GP-ENGINE OIL MANIFOLD	680
Y	*308-4160*	1	PULLEY GP-CRANKSHAFT	649
			S/N: 4441-7401	
Y	*360-7343*	1	PULLEY GP-CRANKSHAFT	652
			S/N: 4447402-UP	
Y	*298-5112*	1	PUMP GP-ENGINE OIL	681
Y	*322-3753*	1	PUMP GP-FUEL INJECTION	1503
Y	*340-4692*	1	PUMP GP-WATER	722
Y	*311-4636*	1	RADIATOR GP	730
			S/N: 4441-12946	
Y	*381-0115*	1	RADIATOR GP	769

318-7147 **ENGINE AR (**contd.**)** **i06917768**

NOTE	PART NUMBER	QTY	PART NAME 1 2 3 4 5 6 (PRODUCT LEVEL)	SEE PAGE
			S/N: 44412947-UP	
Y	*325-5612*	1	STARTING MOTOR GP-ELECTRIC	1597
			S/N: 4441-28174	
Y	*328-0666*	1	STARTING MOTOR GP-ELECTRIC	1599
			S/N: 44428175-UP	
Y	*311-7456*	1	TURBOCHARGER GP	887
			S/N: 4441-7122	
Y	*365-1581*	1	TURBOCHARGER GP	986
			S/N: 4447123-UP	
Y	*298-5891*	1	VALVE MECHANISM GP	661
Y	*316-1102*	1	WIRING GP-ENGINE	1613
R	**359-0737**	1	CYLINDER BLOCK GP-SHORT	
	305-8458	1	ELECTRONICS GP-ENGINE RATINGS	

R - REMANUFACTURED PART MAY BE AVAILABLE
Y - SEPARATE ILLUSTRATION

<END>

318-7148 ENGINE AR*R

95 BRAKE KW (127 BHP) AT 2200 RPM

SMCS-1000 **i03990129**

NOTE	PART NUMBER	QTY	PART NAME 1 2 3 4 5 6 (PRODUCT LEVEL)	SEE PAGE
Y	*323-8845*	1	AIR COMPRESSOR GP	309
Y	*322-3055*	1	ALTERNATOR GP-CHARGING	1580
Y	*301-8245*	1	BALANCER GP	317
Y	*298-5892*	1	CAMSHAFT GP	321
Y	*301-8248*	1	CONNECTION GP-INLET	776
Y	*301-8243*	1	CONNECTION GP-WATER	687
Y	*304-6436*	1	CONTROL GP-ENGINE ELECTRONIC	1584
Y	*301-8241*	1	COOLER GP-OIL	697
Y	*301-8240*	1	COVER GP-VALVE MECHANISM	341
			—OR—	
Y	*329-3543*	1	COVER GP-VALVE MECHANISM	375
Y	*298-5888*	1	CRANKSHAFT GP	380
Y	*298-5887*	1	CYLINDER BLOCK GP	400
Y	*298-5890*	1	CYLINDER HEAD GP	419
Y	*311-4644*	1	DRIVE GP-FAN	433
Y	*314-5003*	1	FAN GP	707
Y	*298-5100*	1	FILTER GP-ENGINE OIL	678
Y	*333-5523*	1	FILTER GP-FUEL	1008
Y	*301-8251*	1	FILTER GP-WATER SEP & FUEL	1013
Y	*301-8237*	1	FLYWHEEL GP	455
Y	*299-5075*	1	GLOW PLUG GP	1587
Y	*301-8236*	1	HOUSING GP-FLYWHEEL	479
Y	*323-8844*	1	HOUSING GP-FRONT	506
Y	*299-5033*	1	LIFTING GP-ENGINE	512
Y	*333-5521*	1	LINES GP-FUEL	1047
Y	*311-4641*	1	MOUNTING GP-ENGINE	521
Y	*323-8843*	1	PAN GP-OIL	575
Y	*304-8762*	1	PIPE GP-EXHAUST	790
Y	*298-5889*	1	PISTON GP	621
Y	*298-5129*	1	PLUG GP-CYLINDER HEAD	629
Y	*298-5098*	1	PLUG GP-ENGINE	631
Y	*304-3663*	1	PLUG GP-ENGINE	634
Y	*298-5128*	1	PLUG GP-ENGINE OIL MANIFOLD	680
Y	*308-4160*	1	PULLEY GP-CRANKSHAFT	649
			S/N: 4441-7401	
Y	*360-7343*	1	PULLEY GP-CRANKSHAFT	652
			S/N: 4447402-UP	
Y	*305-6701*	1	PUMP GP-FUEL INJECTION	1303
Y	*340-4692*	1	PUMP GP-WATER	722
Y	*311-4636*	1	RADIATOR GP	730
Y	*299-5067*	1	STARTING MOTOR GP-ELECTRIC	1591
Y	*307-2850*	1	TURBOCHARGER GP	857
Y	*298-5891*	1	VALVE MECHANISM GP	661
Y	*335-6238*	1	WIRING GP-ENGINE	1615
R	**359-0737**	1	CYLINDER BLOCK GP-SHORT	
	305-8454	1	ELECTRONICS GP-ENGINE RATINGS	

318-7148 **ENGINE AR (**contd.**)** **i03990129**

NOTE	PART NUMBER	QTY	PART NAME 1 2 3 4 5 6 (PRODUCT LEVEL)	SEE PAGE

R - REMANUFACTURED PART MAY BE AVAILABLE
Y - SEPARATE ILLUSTRATION

<END>

318-7156 ENGINE AR

82 BRAKE KW (110 BHP) AT 2200 RPM

SMCS-1000 **i03990186**

NOTE	PART NUMBER	QTY	PART NAME 1 2 3 4 5 6 (PRODUCT LEVEL)	SEE PAGE
Y	*311-4639*	1	ALTERNATOR GP-CHARGING	1575
Y	*298-5892*	1	CAMSHAFT GP	321
Y	*301-8248*	1	CONNECTION GP-INLET	776
Y	*301-8243*	1	CONNECTION GP-WATER	687
Y	*304-6436*	1	CONTROL GP-ENGINE ELECTRONIC	1584
Y	*298-5099*	1	COOLER GP-ENGINE OIL	690
Y	*301-8240*	1	COVER GP-VALVE MECHANISM	341
Y	*298-5111*	1	COVER GP-ENGINE	332
Y	*298-5888*	1	CRANKSHAFT GP	380
Y	*298-5887*	1	CYLINDER BLOCK GP	400
Y	*298-5890*	1	CYLINDER HEAD GP	419
Y	*316-7959*	1	DRIVE GP-FAN	436
Y	*314-5003*	1	FAN GP	707
Y	*298-5100*	1	FILTER GP-ENGINE OIL	678
Y	*311-2271*	1	LINES GP-FUEL FILTER	1050
Y	*298-5123*	1	FILTER GP-PRIMARY FUEL	1009
Y	*301-8251*	1	FILTER GP-WATER SEP & FUEL	1013
Y	*301-8237*	1	FLYWHEEL GP	455
Y	*298-5110*	1	GEAR GP-FRONT	475
Y	*299-5075*	1	GLOW PLUG GP	1587
Y	*298-5130*	1	WIRING GP-ENGINE	1604
Y	*303-4618*	1	HOUSING GP-FLYWHEEL	481
Y	*299-5033*	1	LIFTING GP-ENGINE	512
Y	*311-4641*	1	MOUNTING GP-ENGINE	521
Y	*298-5096*	1	PAN GP-OIL	533
Y	*304-8762*	1	PIPE GP-EXHAUST	790
Y	*298-5889*	1	PISTON GP	621
Y	*298-5129*	1	PLUG GP-CYLINDER HEAD	629
Y	*298-5098*	1	PLUG GP-ENGINE	631
Y	*298-5131*	1	PLUG GP-ENGINE	632
Y	*298-5128*	1	PLUG GP-ENGINE OIL MANIFOLD	680
Y	*308-4160*	1	PULLEY GP-CRANKSHAFT	649
			S/N: 4441-7401	
Y	*360-7343*	1	PULLEY GP-CRANKSHAFT	652
			S/N: 4447402-UP	
Y	*298-5112*	1	PUMP GP-ENGINE OIL	681
Y	*307-2847*	1	PUMP GP-FUEL INJECTION	1323
Y	*298-5105*	1	PUMP GP-WATER	714
Y	*312-1672*	1	RADIATOR GP	738
Y	*299-5067*	1	STARTING MOTOR GP-ELECTRIC	1591
Y	*307-2850*	1	TURBOCHARGER GP	857
Y	*298-5891*	1	VALVE MECHANISM GP	661
R	**359-0737**	1	CYLINDER BLOCK GP-SHORT	
	307-2848	1	ELECTRONICS GP-ENGINE RATINGS	

R - REMANUFACTURED PART MAY BE AVAILABLE
Y - SEPARATE ILLUSTRATION

<END>

ENGINE ARRANGEMENT

318-7157 ENGINE AR*R

95 BRAKE KW (127 BHP) AT 2200 RPM

SMCS-1000 **i04453151**

NOTE	PART NUMBER	QTY	PART NAME 1 2 3 4 5 6 (PRODUCT LEVEL)	SEE PAGE
Y	*304-0728*	1	ADAPTER GP-AUXILIARY DRIVE	301
Y	*322-4890*	1	ALTERNATOR GP-CHARGING	1581
Y	*301-8245*	1	BALANCER GP	317
			S/N: 4441-9723	
Y	*298-5112*	1	PUMP GP-ENGINE OIL	681
			S/N: 4449724-UP	
Y	*298-5892*	1	CAMSHAFT GP	321
Y	*301-8243*	1	CONNECTION GP-WATER	687
Y	*304-6436*	1	CONTROL GP-ENGINE ELECTRONIC	1584
Y	*301-8241*	1	COOLER GP-OIL	697
			S/N: 4441-9723	
Y	*298-5099*	1	COOLER GP-ENGINE OIL	690
			S/N: 4449724-UP	
Y	*301-8240*	1	COVER GP-VALVE MECHANISM	341
Y	*298-5888*	1	CRANKSHAFT GP	380
Y	*298-5887*	1	CYLINDER BLOCK GP	400
Y	*298-5890*	1	CYLINDER HEAD GP	419
Y	*311-4644*	1	DRIVE GP-FAN	433
Y	*311-4640*	1	FAN GP	704
Y	*298-5100*	1	FILTER GP-ENGINE OIL	678
Y	*298-5123*	1	FILTER GP-PRIMARY FUEL	1009
Y	*301-8251*	1	FILTER GP-WATER SEP & FUEL	1013
Y	*301-8237*	1	FLYWHEEL GP	455
Y	*298-5125*	1	GLOW PLUG GP	1586
Y	*301-8236*	1	HOUSING GP-FLYWHEEL	479
			S/N: 4441-9723	
Y	*303-4618*	1	HOUSING GP-FLYWHEEL	481
			S/N: 4449724-UP	
Y	*304-0727*	1	HOUSING GP-FRONT	492
Y	*299-5033*	1	LIFTING GP-ENGINE	512
Y	*311-2271*	1	LINES GP-FUEL FILTER	1050
Y	*311-4641*	1	MOUNTING GP-ENGINE	521
Y	*301-8239*	1	PAN GP-OIL	541
			S/N: 4441-9723	
Y	*304-3656*	1	PAN GP-OIL	549
			S/N: 4449724-UP	
Y	*304-8762*	1	PIPE GP-EXHAUST	790
Y	*298-5889*	1	PISTON GP	621
Y	*298-5129*	1	PLUG GP-CYLINDER HEAD	629
Y	*298-5098*	1	PLUG GP-ENGINE	631
Y	*298-5131*	1	PLUG GP-ENGINE	632
Y	*298-5128*	1	PLUG GP-ENGINE OIL MANIFOLD	680
Y	*308-4160*	1	PULLEY GP-CRANKSHAFT	649
			S/N: 4441-7401	
Y	*360-7343*	1	PULLEY GP-CRANKSHAFT	652
			S/N: 4447402-UP	
Y	*305-6701*	1	PUMP GP-FUEL INJECTION	1303
Y	*340-4692*	1	PUMP GP-WATER	722
Y	*311-4636*	1	RADIATOR GP	730

318-7157 **ENGINE AR (**contd.**)** **i04453151**

NOTE	PART NUMBER	QTY	PART NAME 1 2 3 4 5 6 (PRODUCT LEVEL)	SEE PAGE
Y	*303-4619*	1	STARTING MOTOR GP-ELECTRIC	1592
			—OR—	
Y	*325-5612*	1	STARTING MOTOR GP-ELECTRIC	1597
Y	*311-7456*	1	TURBOCHARGER GP	887
Y	*298-5891*	1	VALVE MECHANISM GP	661
Y	*298-5130*	1	WIRING GP-ENGINE	1604
R	**359-0737**	1	CYLINDER BLOCK GP-SHORT	
	305-8454	1	ELECTRONICS GP-ENGINE RATINGS	

R - REMANUFACTURED PART MAY BE AVAILABLE
Y - SEPARATE ILLUSTRATION

<END>

318-7165 ENGINE AR

107 BRAKE KW (144 BHP) AT 2200 RPM

SMCS-1000 **i02898469**

NOTE	PART NUMBER	QTY	PART NAME 1 2 3 4 5 6 (PRODUCT LEVEL)	SEE PAGE
			(NO SERVICED PARTS)	

<END>

ENGINE ARRANGEMENT

321-3049 ENGINE AR

106 BRAKE KW (142 BHP) AT 2200 RPM

SMCS-1000 **i03990263**

NOTE	PART NUMBER	QTY	PART NAME 1 2 3 4 5 6 (PRODUCT LEVEL)	SEE PAGE
Y	*304-0728*	1	ADAPTER GP-AUXILIARY DRIVE	301
Y	*322-3055*	1	ALTERNATOR GP-CHARGING	1580
Y	*298-5090*	1	CAMSHAFT GP	320
Y	*301-8248*	1	CONNECTION GP-INLET	776
Y	*301-8243*	1	CONNECTION GP-WATER	687
Y	*304-6436*	1	CONTROL GP-ENGINE ELECTRONIC	1584
Y	*298-5099*	1	COOLER GP-ENGINE OIL	690
Y	*304-8758*	1	COVER GP-VALVE MECHANISM	357
Y	*298-5086*	1	CRANKSHAFT GP	378
Y	*298-5085*	1	CYLINDER BLOCK GP	398
Y	*298-5088*	1	CYLINDER HEAD GP	418
Y	*316-7959*	1	DRIVE GP-FAN	436
Y	*314-5003*	1	FAN GP	707
Y	*298-5100*	1	FILTER GP-ENGINE OIL	678
Y	*303-5780*	1	FILTER GP-FUEL	999
Y	*298-5123*	1	FILTER GP-PRIMARY FUEL	1009
Y	*301-8237*	1	FLYWHEEL GP	455
Y	*299-5075*	1	GLOW PLUG GP	1587
Y	*298-5130*	1	WIRING GP-ENGINE	1604
Y	*303-4618*	1	HOUSING GP-FLYWHEEL	481
Y	*304-0727*	1	HOUSING GP-FRONT	492
Y	*299-5033*	1	LIFTING GP-ENGINE	512
Y	*311-2271*	1	LINES GP-FUEL FILTER	1050
Y	*311-4641*	1	MOUNTING GP-ENGINE	521
Y	*323-9283*	1	PAN GP-OIL	579
Y	*304-8762*	1	PIPE GP-EXHAUST	790
Y	*298-5087*	1	PISTON & ROD GP	609
Y	*298-5129*	1	PLUG GP-CYLINDER HEAD	629
Y	*298-5131*	1	PLUG GP-ENGINE	632
Y	*308-4160*	1	PULLEY GP-CRANKSHAFT	649
			S/N: 4441-7401	
Y	*360-7343*	1	PULLEY GP-CRANKSHAFT	652
			S/N: 4447402-UP	
Y	*298-5112*	1	PUMP GP-ENGINE OIL	681
Y	*304-6570*	1	PUMP GP-FUEL INJECTION	1179
Y	*340-4692*	1	PUMP GP-WATER	722
Y	*311-4636*	1	RADIATOR GP	730
Y	*298-5089*	1	ROCKER ARM GP	658
Y	*299-5067*	1	STARTING MOTOR GP-ELECTRIC	1591
Y	*312-2579*	1	SWITCH GP-HEAT START	1603
Y	*307-2850*	1	TURBOCHARGER GP	857
Y	*303-5779*	1	VALVE GP-FLUID SAMPLING	682
R	**359-0739**	1	CYLINDER BLOCK GP-SHORT	
	305-8457	1	ELECTRONICS GP-ENGINE RATINGS	

R - REMANUFACTURED PART MAY BE AVAILABLE
Y - SEPARATE ILLUSTRATION

<END>

324-7126 ENGINE AR

106 BRAKE KW (142 BHP) AT 2200 RPM

SMCS-1000 **i03956613**

NOTE	PART NUMBER	QTY	PART NAME 1 2 3 4 5 6 (PRODUCT LEVEL)	SEE PAGE
Y	*304-0728*	1	ADAPTER GP-AUXILIARY DRIVE	301
Y	*301-8244*	1	ALTERNATOR GP-CHARGING	1559
Y	*298-5090*	1	CAMSHAFT GP	320
Y	*298-5116*	1	CONNECTION GP-INLET	774
Y	*298-5107*	1	CONNECTION GP-WATER	685
Y	*304-6436*	1	CONTROL GP-ENGINE ELECTRONIC	1584
Y	*306-2319*	1	COOLER GP-ENGINE OIL	693
Y	*304-5574*	1	COVER GP-VALVE MECHANISM	351
Y	*298-5086*	1	CRANKSHAFT GP	378
Y	*298-5085*	1	CYLINDER BLOCK GP	398
Y	*298-5088*	1	CYLINDER HEAD GP	418
Y	*301-8238*	1	DRIVE GP-FAN	427
Y	*307-2849*	1	FAN GP	702
Y	*298-5100*	1	FILTER GP-ENGINE OIL	678
Y	*303-5780*	1	FILTER GP-FUEL	999
Y	*322-8426*	1	FILTER GP-FUEL	1006
Y	*305-2577*	1	FLYWHEEL GP	460
Y	*299-5075*	1	GLOW PLUG GP	1587
Y	*322-2434*	1	HOUSING GP-FLYWHEEL	490
Y	*304-0727*	1	HOUSING GP-FRONT	492
Y	*298-5127*	1	LIFTING GP-ENGINE	511
Y	*322-8425*	1	LINES GP-FUEL	1041
Y	*326-4549*	1	MOUNTING GP-ENGINE	531
Y	*304-3656*	1	PAN GP-OIL	549
Y	*304-8762*	1	PIPE GP-EXHAUST	790
Y	*298-5087*	1	PISTON & ROD GP	609
Y	*298-5129*	1	PLUG GP-CYLINDER HEAD	629
Y	*298-5098*	1	PLUG GP-ENGINE	631
Y	*298-5131*	1	PLUG GP-ENGINE	632
Y	*301-8242*	1	PULLEY GP	644
			S/N: 4441-7401	
Y	*360-7342*	1	PULLEY GP-CRANKSHAFT	651
			S/N: 4447402-UP	
Y	*298-5112*	1	PUMP GP-ENGINE OIL	681
Y	*304-6570*	1	PUMP GP-FUEL INJECTION	1179
Y	*340-4692*	1	PUMP GP-WATER	722
Y	*298-5089*	1	ROCKER ARM GP	658
Y	*299-5067*	1	STARTING MOTOR GP-ELECTRIC	1591
Y	*328-5896*	1	TURBOCHARGER GP	932
Y	*328-5897*	1	VALVE GP-FLUID SAMPLING	684
Y	*298-5130*	1	WIRING GP-ENGINE	1604
R	**359-0739**	1	CYLINDER BLOCK GP-SHORT	
	305-8457	1	ELECTRONICS GP-ENGINE RATINGS	

R - REMANUFACTURED PART MAY BE AVAILABLE
Y - SEPARATE ILLUSTRATION

<END>

ENGINE ARRANGEMENT

324-7127 ENGINE AR

75 BRAKE KW (100 BHP) AT 2200 RPM

SMCS-1000 **i05353299**

NOTE	PART NUMBER	QTY	PART NAME 1 2 3 4 5 6 (PRODUCT LEVEL)	SEE PAGE
Y	*311-7455*	1	ALTERNATOR GP-CHARGING	1577
Y	*304-3648*	1	CAMSHAFT GP	322
Y	*301-8243*	1	CONNECTION GP-WATER	687
Y	*304-6436*	1	CONTROL GP-ENGINE ELECTRONIC	1584
Y	*306-2319*	1	COOLER GP-ENGINE OIL	693
Y	*298-5111*	1	COVER GP-ENGINE	332
Y	*305-0640*	1	COVER GP-INLET MANIFOLD	780
Y	*301-8240*	1	COVER GP-VALVE MECHANISM	341
Y	*304-3642*	1	CRANKSHAFT GP	382
Y	*304-3641*	1	CYLINDER BLOCK GP	402
Y	*304-3645*	1	CYLINDER HEAD GP	420
Y	*311-4644*	1	DRIVE GP-FAN	433
Y	*326-4488*	1	FAN GP	711
Y	*298-5100*	1	FILTER GP-ENGINE OIL	678
Y	*305-0642*	1	FILTER GP-FUEL	1000
Y	*301-8251*	1	FILTER GP-WATER SEP & FUEL	1013
Y	*299-5063*	1	FLYWHEEL GP	454
Y	*298-5110*	1	GEAR GP-FRONT	475
Y	*298-5125*	1	GLOW PLUG GP	1586
Y	*299-5057*	1	HOUSING GP-FLYWHEEL	478
Y	*299-5033*	1	LIFTING GP-ENGINE	512
Y	*311-2271*	1	LINES GP-FUEL FILTER	1050
Y	*326-4549*	1	MOUNTING GP-ENGINE	531
Y	*324-6508*	1	PAN GP-OIL	585
Y	*304-8762*	1	PIPE GP-EXHAUST	790
Y	*304-3643*	1	PISTON & ROD GP	613
Y	*298-5129*	1	PLUG GP-CYLINDER HEAD	629
Y	*298-5098*	1	PLUG GP-ENGINE	631
Y	*298-5131*	1	PLUG GP-ENGINE	632
Y	*306-2328*	1	PLUG GP-ENGINE	637
Y	*308-4160*	1	PULLEY GP-CRANKSHAFT	649
			S/N: 4441-7401	
Y	*360-7343*	1	PULLEY GP-CRANKSHAFT	652
			S/N: 4447402-UP	
Y	*298-5112*	1	PUMP GP-ENGINE OIL	681
Y	*313-4350*	1	PUMP GP-FUEL INJECTION	1398
Y	*298-5105*	1	PUMP GP-WATER	714
Y	*325-5612*	1	STARTING MOTOR GP-ELECTRIC	1597
Y	*328-7279*	1	TURBOCHARGER GP	938
Y	*304-3647*	1	VALVE MECHANISM GP	663
Y	*298-5130*	1	WIRING GP-ENGINE	1604
R	**359-0737**	1	CYLINDER BLOCK GP-SHORT	
	305-8460	1	ELECTRONICS GP-ENGINE RATINGS	

R - REMANUFACTURED PART MAY BE AVAILABLE
Y - SEPARATE ILLUSTRATION

<END>

324-7128 ENGINE AR

106 BRAKE KW (142 BHP) AT 2200 RPM

SMCS-1000 **i03696098**

NOTE	PART NUMBER	QTY	PART NAME 1 2 3 4 5 6 (PRODUCT LEVEL)	SEE PAGE
			(NO SERVICED PARTS)	
			<END>	

392-8742 ENGINE AR

97 BRAKE KW (129 BHP) AT 2200 RPM

SMCS-1000 **i05412966**

NOTE	PART NUMBER	QTY	PART NAME 1 2 3 4 5 6 (PRODUCT LEVEL)	SEE PAGE
Y	*304-0728*	1	ADAPTER GP-AUXILIARY DRIVE	301
Y	*311-7455*	1	ALTERNATOR GP-CHARGING	1577
Y	*298-5892*	1	CAMSHAFT GP	321
Y	*301-8248*	1	CONNECTION GP-INLET	776
Y	*301-8243*	1	CONNECTION GP-WATER	687
Y	*304-6436*	1	CONTROL GP-ENGINE ELECTRONIC	1584
Y	*298-5099*	1	COOLER GP-ENGINE OIL	690
Y	*304-5574*	1	COVER GP-VALVE MECHANISM	351
Y	*298-5888*	1	CRANKSHAFT GP	380
Y	*298-5887*	1	CYLINDER BLOCK GP	400
YR	**359-0737**	1	CYLINDER BLOCK GP-SHORT	415
Y	*298-5890*	1	CYLINDER HEAD GP	419
Y	*311-4644*	1	DRIVE GP-FAN	433
Y	*311-4640*	1	FAN GP	704
Y	*298-5100*	1	FILTER GP-ENGINE OIL	678
Y	*303-5780*	1	FILTER GP-FUEL	999
Y	*322-8426*	1	FILTER GP-FUEL	1006
Y	*299-5063*	1	FLYWHEEL GP	454
Y	*298-5125*	1	GLOW PLUG GP	1586
Y	*299-5057*	1	HOUSING GP-FLYWHEEL	478
Y	*304-0727*	1	HOUSING GP-FRONT	492
Y	*299-5033*	1	LIFTING GP-ENGINE	512
Y	*322-8425*	1	LINES GP-FUEL	1041
Y	*323-6804*	1	MOUNTING GP-ENGINE	529
Y	*377-8331*	1	PAN GP-OIL	603
Y	*304-8762*	1	PIPE GP-EXHAUST	790
Y	*298-5889*	1	PISTON GP	621
Y	*298-5129*	1	PLUG GP-CYLINDER HEAD	629
Y	*298-5098*	1	PLUG GP-ENGINE	631
Y	*298-5131*	1	PLUG GP-ENGINE	632
Y	*298-5128*	1	PLUG GP-ENGINE OIL MANIFOLD	680
Y	*360-7343*	1	PULLEY GP-CRANKSHAFT	652
Y	*298-5112*	1	PUMP GP-ENGINE OIL	681
Y	*303-4615*	1	PUMP GP-FUEL INJECTION	1134
Y	*340-4692*	1	PUMP GP-WATER	722
Y	*311-4636*	1	RADIATOR GP	730
Y	*325-5612*	1	STARTING MOTOR GP-ELECTRIC	1597
Y	*333-8976*	1	TURBOCHARGER GP	960
Y	*298-5891*	1	VALVE MECHANISM GP	661
Y	*298-5130*	1	WIRING GP-ENGINE	1604
	305-8458	1	ELECTRONICS GP-ENGINE RATINGS	

R - REMANUFACTURED PART MAY BE AVAILABLE
Y - SEPARATE ILLUSTRATION

<END>

393-2053 ENGINE AR

95 BRAKE KW (127 BHP) AT 2200 RPM

SMCS-1000 **i06809762**

NOTE	PART NUMBER	QTY	PART NAME 1 2 3 4 5 6 (PRODUCT LEVEL)	SEE PAGE
Y	*375-5262*	1	AIR COMPRESSOR GP	315
Y	*311-7455*	1	ALTERNATOR GP-CHARGING	1577
Y	*301-8245*	1	BALANCER GP	317
Y	*298-5892*	1	CAMSHAFT GP	321
Y	*301-8248*	1	CONNECTION GP-INLET	776
Y	*301-8243*	1	CONNECTION GP-WATER	687
Y	*323-8846*	1	CONNECTOR GP-CAB HEATER LINES	689
Y	*304-6436*	1	CONTROL GP-ENGINE ELECTRONIC	1584
Y	*301-8241*	1	COOLER GP-OIL	697
Y	*301-8240*	1	COVER GP-VALVE MECHANISM	341
Y	*298-5888*	1	CRANKSHAFT GP	380
Y	*298-5887*	1	CYLINDER BLOCK GP	400
Y	*298-5890*	1	CYLINDER HEAD GP	419
Y	*316-7959*	1	DRIVE GP-FAN	436
Y	*314-5003*	1	FAN GP	707
Y	*298-5100*	1	FILTER GP-ENGINE OIL	678
Y	*298-5123*	1	FILTER GP-PRIMARY FUEL	1009
Y	*301-8251*	1	FILTER GP-WATER SEP & FUEL	1013
Y	*301-8237*	1	FLYWHEEL GP	455
Y	*298-5125*	1	GLOW PLUG GP	1586
Y	*301-8236*	1	HOUSING GP-FLYWHEEL	479
Y	*352-6361*	1	HOUSING GP-FRONT	509
Y	*299-5033*	1	LIFTING GP-ENGINE	512
Y	*311-2271*	1	LINES GP-FUEL FILTER	1050
Y	*311-4641*	1	MOUNTING GP-ENGINE	521
Y	*323-8843*	1	PAN GP-OIL	575
Y	*304-8762*	1	PIPE GP-EXHAUST	790
Y	*298-5889*	1	PISTON GP	621
Y	*298-5129*	1	PLUG GP-CYLINDER HEAD	629
Y	*298-5098*	1	PLUG GP-ENGINE	631
Y	*298-5128*	1	PLUG GP-ENGINE OIL MANIFOLD	680
Y	*360-7343*	1	PULLEY GP-CRANKSHAFT	652
Y	*305-6701*	1	PUMP GP-FUEL INJECTION	1303
Y	*298-5105*	1	PUMP GP-WATER	714
Y	*312-1672*	1	RADIATOR GP	738
Y	*325-5612*	1	STARTING MOTOR GP-ELECTRIC	1597
Y	*311-7456*	1	TURBOCHARGER GP	887
Y	*298-5891*	1	VALVE MECHANISM GP	661
Y	*352-6443*	1	WIRING GP-ENGINE	1617
R	**359-0737**	1	CYLINDER BLOCK GP-SHORT	
	305-8454	1	ELECTRONICS GP-ENGINE RATINGS	

R - REMANUFACTURED PART MAY BE AVAILABLE
Y - SEPARATE ILLUSTRATION

<END>

393-2054 ENGINE AR

93 BRAKE KW (125 BHP) AT 2200 RPM

SMCS-1000 **i06809872**

NOTE	PART NUMBER	QTY	PART NAME 1 2 3 4 5 6 (PRODUCT LEVEL)	SEE PAGE
Y	*298-5892*	1	CAMSHAFT GP	321
Y	*299-5078*	1	CONNECTION GP-WATER	686
Y	*304-6436*	1	CONTROL GP-ENGINE ELECTRONIC	1584
Y	*298-5099*	1	COOLER GP-ENGINE OIL	690
Y	*298-5111*	1	COVER GP-ENGINE	332
Y	*304-8758*	1	COVER GP-VALVE MECHANISM	357
Y	*298-5888*	1	CRANKSHAFT GP	380
Y	*298-5887*	1	CYLINDER BLOCK GP	400
Y	*298-5890*	1	CYLINDER HEAD GP	419
Y	*316-6873*	1	DRIVE GP-FAN	435
Y	*318-0775*	1	FILLER GP-ENGINE OIL	676
Y	*298-5100*	1	FILTER GP-ENGINE OIL	678
Y	*298-5123*	1	FILTER GP-PRIMARY FUEL	1009
Y	*301-8251*	1	FILTER GP-WATER SEP & FUEL	1013
Y	*298-5110*	1	GEAR GP-FRONT	475
Y	*298-5125*	1	GLOW PLUG GP	1586
Y	*299-5033*	1	LIFTING GP-ENGINE	512
Y	*311-2271*	1	LINES GP-FUEL FILTER	1050
Y	*304-0730*	1	MOUNTING GP-ENGINE	518
Y	*312-2577*	1	MOUNTING GP-FAN DRIVE	532
Y	*304-8757*	1	PAN GP-OIL	553
Y	*304-8762*	1	PIPE GP-EXHAUST	790
Y	*298-5889*	1	PISTON GP	621
Y	*298-5129*	1	PLUG GP-CYLINDER HEAD	629
Y	*298-5131*	1	PLUG GP-ENGINE	632
Y	*298-5128*	1	PLUG GP-ENGINE OIL MANIFOLD	680
Y	*360-7343*	1	PULLEY GP-CRANKSHAFT	652
Y	*298-5112*	1	PUMP GP-ENGINE OIL	681
Y	*304-8755*	1	PUMP GP-FUEL INJECTION	1244
Y	*298-5105*	1	PUMP GP-WATER	714
Y	*308-4277*	1	TURBOCHARGER GP	881
Y	*298-5891*	1	VALVE MECHANISM GP	661
Y	*298-5130*	1	WIRING GP-ENGINE	1604
R	**359-0737**	1	CYLINDER BLOCK GP-SHORT	
	305-8456	1	ELECTRONICS GP-ENGINE RATINGS	

R - REMANUFACTURED PART MAY BE AVAILABLE
Y - SEPARATE ILLUSTRATION

<END>

393-2055 ENGINE AR

93 BRAKE KW (125 BHP) AT 2200 RPM

SMCS-1000 **i06809760**

NOTE	PART NUMBER	QTY	PART NAME 1 2 3 4 5 6 (PRODUCT LEVEL)	SEE PAGE
Y	*298-5892*	1	CAMSHAFT GP	321
Y	*299-5078*	1	CONNECTION GP-WATER	686
Y	*304-6436*	1	CONTROL GP-ENGINE ELECTRONIC	1584
Y	*298-5099*	1	COOLER GP-ENGINE OIL	690
Y	*298-5111*	1	COVER GP-ENGINE	332
Y	*304-8758*	1	COVER GP-VALVE MECHANISM	357
Y	*298-5888*	1	CRANKSHAFT GP	380
Y	*298-5887*	1	CYLINDER BLOCK GP	400
Y	*298-5890*	1	CYLINDER HEAD GP	419
Y	*316-6873*	1	DRIVE GP-FAN	435
Y	*318-0775*	1	FILLER GP-ENGINE OIL	676
Y	*298-5100*	1	FILTER GP-ENGINE OIL	678
Y	*298-5123*	1	FILTER GP-PRIMARY FUEL	1009
Y	*301-8251*	1	FILTER GP-WATER SEP & FUEL	1013
Y	*316-6872*	1	FLYWHEEL GP	463
Y	*298-5110*	1	GEAR GP-FRONT	475
Y	*298-5125*	1	GLOW PLUG GP	1586
Y	*298-5092*	1	HOUSING GP-FLYWHEEL	477
Y	*299-5033*	1	LIFTING GP-ENGINE	512
Y	*311-2271*	1	LINES GP-FUEL FILTER	1050
Y	*312-2577*	1	MOUNTING GP-FAN DRIVE	532
Y	*304-8757*	1	PAN GP-OIL	553
Y	*304-8762*	1	PIPE GP-EXHAUST	790
Y	*298-5889*	1	PISTON GP	621
Y	*298-5129*	1	PLUG GP-CYLINDER HEAD	629
Y	*298-5131*	1	PLUG GP-ENGINE	632
Y	*311-5793*	1	PLUG GP-ENGINE	638
Y	*298-5128*	1	PLUG GP-ENGINE OIL MANIFOLD	680
Y	*360-7343*	1	PULLEY GP-CRANKSHAFT	652
Y	*298-5112*	1	PUMP GP-ENGINE OIL	681
Y	*304-8755*	1	PUMP GP-FUEL INJECTION	1244
Y	*298-5105*	1	PUMP GP-WATER	714
Y	*308-4277*	1	TURBOCHARGER GP	881
Y	*298-5891*	1	VALVE MECHANISM GP	661
Y	*298-5130*	1	WIRING GP-ENGINE	1604
R	**359-0737**	1	CYLINDER BLOCK GP-SHORT	
	305-8456	1	ELECTRONICS GP-ENGINE RATINGS	

R - REMANUFACTURED PART MAY BE AVAILABLE
Y - SEPARATE ILLUSTRATION

<END>

ENGINE ARRANGEMENT

435-1699 ENGINE AR*R

95 BRAKE KW (127 BHP) AT 2200 RPM

SMCS-1000 **i07668240**

NOTE	PART NUMBER	QTY	PART NAME 1 2 3 4 5 6 (PRODUCT LEVEL)	SEE PAGE
Y	*311-7455*	1	ALTERNATOR GP-CHARGING	1577
Y	*301-8245*	1	BALANCER GP	317
Y	*298-5892*	1	CAMSHAFT GP	321
Y	*301-8248*	1	CONNECTION GP-INLET	776
Y	*301-8243*	1	CONNECTION GP-WATER	687
Y	*304-6436*	1	CONTROL GP-ENGINE ELECTRONIC	1584
Y	*301-8241*	1	COOLER GP-OIL	697
Y	*298-5111*	1	COVER GP-ENGINE	332
Y	*301-8240*	1	COVER GP-VALVE MECHANISM	341
Y	*298-5888*	1	CRANKSHAFT GP	380
Y	*298-5887*	1	CYLINDER BLOCK GP	400
Y	*298-5890*	1	CYLINDER HEAD GP	419
Y	*311-4644*	1	DRIVE GP-FAN	433
Y	*311-4640*	1	FAN GP	704
Y	*298-5100*	1	FILTER GP-ENGINE OIL	678
Y	*298-5123*	1	FILTER GP-PRIMARY FUEL	1009
Y	*301-8251*	1	FILTER GP-WATER SEP & FUEL	1013
Y	*301-8237*	1	FLYWHEEL GP	455
Y	*298-5110*	1	GEAR GP-FRONT	475
Y	*298-5125*	1	GLOW PLUG GP	1586
Y	*301-8236*	1	HOUSING GP-FLYWHEEL	479
Y	*299-5033*	1	LIFTING GP-ENGINE	512
Y	*311-2271*	1	LINES GP-FUEL FILTER	1050
Y	*311-4641*	1	MOUNTING GP-ENGINE	521
Y	*301-8239*	1	PAN GP-OIL	541
Y	*304-8762*	1	PIPE GP-EXHAUST	790
Y	*298-5889*	1	PISTON GP	621
Y	*298-5129*	1	PLUG GP-CYLINDER HEAD	629
Y	*298-5131*	1	PLUG GP-ENGINE	632
Y	*298-5098*	1	PLUG GP-ENGINE	631
Y	*298-5128*	1	PLUG GP-ENGINE OIL MANIFOLD	680
Y	*360-7343*	1	PULLEY GP-CRANKSHAFT	652
Y	*305-6701*	1	PUMP GP-FUEL INJECTION	1303
Y	*298-5105*	1	PUMP GP-WATER	714
Y	*312-1672*	1	RADIATOR GP	738
Y	*325-5612*	1	STARTING MOTOR GP-ELECTRIC	1597
Y	*311-7456*	1	TURBOCHARGER GP	887
Y	*298-5891*	1	VALVE MECHANISM GP	661
Y	*298-5130*	1	WIRING GP-ENGINE	1604
	305-8454		ELECTRONICS GP-ENGINE RATINGS	

Y - SEPARATE ILLUSTRATION

<END>

362-9374 ENGINE AR-COMPLETE

97 BRAKE KW (129 BHP) AT 2200 RPM

SMCS-1000 **i04446431**

NOTE	PART NUMBER	QTY	PART NAME 1 2 3 4 5 6 (PRODUCT LEVEL)	SEE PAGE
Y	*322-3055*	1	ALTERNATOR GP-CHARGING	1580
Y	*298-5892*	1	CAMSHAFT GP	321
Y	*301-8248*	1	CONNECTION GP-INLET	776
Y	*301-8243*	1	CONNECTION GP-WATER	687
Y	*304-6436*	1	CONTROL GP-ENGINE ELECTRONIC	1584
Y	*298-5099*	1	COOLER GP-ENGINE OIL	690
Y	*298-5111*	1	COVER GP-ENGINE	332
Y	*301-8240*	1	COVER GP-VALVE MECHANISM	341
Y	*298-5888*	1	CRANKSHAFT GP	380
Y	*298-5887*	1	CYLINDER BLOCK GP	400
Y	*298-5890*	1	CYLINDER HEAD GP	419
Y	*311-4644*	1	DRIVE GP-FAN	433
Y	*326-4488*	1	FAN GP	711
Y	*318-0775*	1	FILLER GP-ENGINE OIL	676
Y	*298-5100*	1	FILTER GP-ENGINE OIL	678
Y	*298-5123*	1	FILTER GP-PRIMARY FUEL	1009
Y	*301-8251*	1	FILTER GP-WATER SEP & FUEL	1013
Y	*301-8237*	1	FLYWHEEL GP	455
Y	*298-5110*	1	GEAR GP-FRONT	475
Y	*299-5075*	1	GLOW PLUG GP	1587
Y	*299-5057*	1	HOUSING GP-FLYWHEEL	478
Y	*299-5033*	1	LIFTING GP-ENGINE	512
Y	*311-2271*	1	LINES GP-FUEL FILTER	1050
Y	*311-8537*	1	MOUNTING GP-ENGINE	522
Y	*298-5096*	1	PAN GP-OIL	533
Y	*304-8762*	1	PIPE GP-EXHAUST	790
Y	*298-5889*	1	PISTON GP	621
Y	*298-5129*	1	PLUG GP-CYLINDER HEAD	629
Y	*304-3663*	1	PLUG GP-ENGINE	634
Y	*298-5128*	1	PLUG GP-ENGINE OIL MANIFOLD	680
Y	*360-7343*	1	PULLEY GP-CRANKSHAFT	652
Y	*298-5112*	1	PUMP GP-ENGINE OIL	681
Y	*303-4615*	1	PUMP GP-FUEL INJECTION	1134
Y	*298-5105*	1	PUMP GP-WATER	714
Y	*299-5067*	1	STARTING MOTOR GP-ELECTRIC	1591
Y	*307-2850*	1	TURBOCHARGER GP	857
Y	*298-5891*	1	VALVE MECHANISM GP	661
Y	*298-5130*	1	WIRING GP-ENGINE	1604
R	**359-0737**	1	CYLINDER BLOCK GP-SHORT	
	305-8458	1	ELECTRONICS GP-ENGINE RATINGS	

R - REMANUFACTURED PART MAY BE AVAILABLE
Y - SEPARATE ILLUSTRATION

<END>

362-9382 ENGINE AR-COMPLETE

95 BRAKE KW (127 BHP) AT 2200 RPM

SMCS-1000 **i06830544**

NOTE	PART NUMBER	QTY	PART NAME 1 2 3 4 5 6 (PRODUCT LEVEL)	SEE PAGE
Y	*304-0728*	1	ADAPTER GP-AUXILIARY DRIVE	301
Y	*301-8244*	1	ALTERNATOR GP-CHARGING	1559
Y	*301-8245*	1	BALANCER GP	317
Y	*298-5892*	1	CAMSHAFT GP	321
Y	*301-8248*	1	CONNECTION GP-INLET	776
Y	*301-8243*	1	CONNECTION GP-WATER	687
Y	*304-6436*	1	CONTROL GP-ENGINE ELECTRONIC	1584
Y	*301-8241*	1	COOLER GP-OIL	697
Y	*301-8240*	1	COVER GP-VALVE MECHANISM	341
Y	*298-5888*	1	CRANKSHAFT GP	380
Y	*298-5887*	1	CYLINDER BLOCK GP	400
Y	*298-5890*	1	CYLINDER HEAD GP	419
Y	*383-1389*	1	DRIVE GP-FAN	448
Y	*315-3413*	1	FAN GP	708
Y	*298-5100*	1	FILTER GP-ENGINE OIL	678
Y	*298-5123*	1	FILTER GP-PRIMARY FUEL	1009
Y	*301-8251*	1	FILTER GP-WATER SEP & FUEL	1013
Y	*306-2314*	1	FLYWHEEL GP	461
Y	*299-5075*	1	GLOW PLUG GP	1587
Y	*301-8236*	1	HOUSING GP-FLYWHEEL	479
Y	*304-0727*	1	HOUSING GP-FRONT	492
Y	*299-5033*	1	LIFTING GP-ENGINE	512
Y	*311-2271*	1	LINES GP-FUEL FILTER	1050
Y	*322-2403*	1	MOUNTING GP-ENGINE	528
Y	*323-8843*	1	PAN GP-OIL	575
Y	*304-8762*	1	PIPE GP-EXHAUST	790
Y	*298-5889*	1	PISTON GP	621
Y	*298-5129*	1	PLUG GP-CYLINDER HEAD	629
Y	*298-5098*	1	PLUG GP-ENGINE	631
Y	*298-5131*	1	PLUG GP-ENGINE	632
Y	*298-5128*	1	PLUG GP-ENGINE OIL MANIFOLD	680
Y	*360-7342*	1	PULLEY GP-CRANKSHAFT	651
Y	*305-6701*	1	PUMP GP-FUEL INJECTION	1303
Y	*340-4692*	1	PUMP GP-WATER	722
Y	*299-5067*	1	STARTING MOTOR GP-ELECTRIC	1591
Y	*383-1390*	1	TURBOCHARGER GP	992
Y	*298-5891*	1	VALVE MECHANISM GP	661
Y	*298-5130*	1	WIRING GP-ENGINE	1604
R	**359-0737**	1	CYLINDER BLOCK GP-SHORT	
	305-8454	1	ELECTRONICS GP-ENGINE RATINGS	

R - REMANUFACTURED PART MAY BE AVAILABLE
Y - SEPARATE ILLUSTRATION

<END>

362-9383 ENGINE AR-COMPLETE

106.2 BRAKE KW (142.4 BHP) AT 2200-RPM

SMCS-1000 **i06628043**

NOTE	PART NUMBER	QTY	PART NAME 1 2 3 4 5 6 (PRODUCT LEVEL)	SEE PAGE
Y	*303-5774*	1	ALTERNATOR GP-CHARGING	1561
Y	*298-5090*	1	CAMSHAFT GP	320
Y	*298-5116*	1	CONNECTION GP-INLET	774
Y	*298-5107*	1	CONNECTION GP-WATER	685
Y	*304-6436*	1	CONTROL GP-ENGINE ELECTRONIC	1584
Y	*305-2579*	1	COOLER GP-OIL	698
Y	*298-5111*	1	COVER GP-ENGINE	332
Y	*303-5772*	1	COVER GP-VALVE MECHANISM	347
Y	*298-5086*	1	CRANKSHAFT GP	378
Y	*298-5085*	1	CYLINDER BLOCK GP	398
Y	*298-5088*	1	CYLINDER HEAD GP	418
Y	*311-8533*	1	DRIVE GP-FAN	434
Y	*318-0775*	1	FILLER GP-ENGINE OIL	676
Y	*298-5100*	1	FILTER GP-ENGINE OIL	678
Y	*298-5123*	1	FILTER GP-PRIMARY FUEL	1009
Y	*301-8251*	1	FILTER GP-WATER SEP & FUEL	1013
Y	*351-9871*	1	FLYWHEEL GP	471
Y	*298-5110*	1	GEAR GP-FRONT	475
Y	*298-5125*	1	GLOW PLUG GP	1586
Y	*299-5057*	1	HOUSING GP-FLYWHEEL	478
Y	*298-5127*	1	LIFTING GP-ENGINE	511
Y	*314-9819*	1	LINES GP-FUEL FILTER	1056
Y	*304-8763*	1	MOUNTING GP-ENGINE	519
Y	*299-5082*	1	MOUNTING GP-FAN	713
Y	*304-8757*	1	PAN GP-OIL	553
Y	*298-5087*	1	PISTON & ROD GP	609
Y	*298-5129*	1	PLUG GP-CYLINDER HEAD	629
Y	*298-5131*	1	PLUG GP-ENGINE	632
Y	*298-5128*	1	PLUG GP-ENGINE OIL MANIFOLD	680
Y	*360-7346*	1	PULLEY GP-CRANKSHAFT	655
Y	*298-5112*	1	PUMP GP-ENGINE OIL	681
Y	*304-6570*	1	PUMP GP-FUEL INJECTION	1179
Y	*298-5105*	1	PUMP GP-WATER	714
Y	*298-5089*	1	ROCKER ARM GP	658
Y	*325-5612*	1	STARTING MOTOR GP-ELECTRIC	1597
Y	*303-5776*	1	TURBOCHARGER GP	821
Y	*298-5130*	1	WIRING GP-ENGINE	1604
R	**359-0739**	1	CYLINDER BLOCK GP-SHORT	
	305-8457	1	ELECTRONICS GP-ENGINE RATINGS	

R - REMANUFACTURED PART MAY BE AVAILABLE
Y - SEPARATE ILLUSTRATION

<END>

362-9388 ENGINE AR-COMPLETE

75 BRAKE KW (100 BHP) AT 2200 RPM

SMCS-1000 **i06832082**

NOTE	PART NUMBER	QTY	PART NAME 1 2 3 4 5 6 (PRODUCT LEVEL)	SEE PAGE
Y	*308-3351*	1	ALTERNATOR GP-CHARGING	1573
Y	*304-3648*	1	CAMSHAFT GP	322
Y	*301-8243*	1	CONNECTION GP-WATER	687
Y	*304-6436*	1	CONTROL GP-ENGINE ELECTRONIC	1584
Y	*298-5099*	1	COOLER GP-ENGINE OIL	690
Y	*304-3658*	1	COVER GP-CYLINDER HEAD	325
Y	*303-5772*	1	COVER GP-VALVE MECHANISM	347
Y	*304-3642*	1	CRANKSHAFT GP	382
Y	*304-3641*	1	CYLINDER BLOCK GP	402
Y	*304-3645*	1	CYLINDER HEAD GP	420
Y	*325-5613*	1	DRIVE GP-FAN	442
Y	*307-2849*	1	FAN GP	702
Y	*317-6399*	1	FASTENER GP-TURBOCHARGER	788
Y	*308-4158*	1	FILLER GP-ENGINE OIL	673
Y	*298-5100*	1	FILTER GP-ENGINE OIL	678
Y	*305-0642*	1	FILTER GP-FUEL	1000
Y	*301-8251*	1	FILTER GP-WATER SEP & FUEL	1013
Y	*323-9150*	1	FLYWHEEL GP	467
Y	*298-5125*	1	GLOW PLUG GP	1586
Y	*321-5596*	1	HOUSING GP-FLYWHEEL	489
Y	*304-8760*	1	HOUSING GP-FRONT	495
Y	*326-0478*	1	LIFTING GP-ENGINE	513
Y	*311-2271*	1	LINES GP-FUEL FILTER	1050
Y	*298-5771*	1	MOUNTING GP-ENGINE	514
Y	*344-8201*	1	PAN GP-OIL	589
Y	*304-3643*	1	PISTON & ROD GP	613
Y	*298-5129*	1	PLUG GP-CYLINDER HEAD	629
Y	*298-5131*	1	PLUG GP-ENGINE	632
Y	*304-8761*	1	PLUG GP-ENGINE	636
Y	*298-5128*	1	PLUG GP-ENGINE OIL MANIFOLD	680
Y	*360-7346*	1	PULLEY GP-CRANKSHAFT	655
Y	*360-7355*	1	PULLEY GP-CRANKSHAFT	656
Y	*298-5112*	1	PUMP GP-ENGINE OIL	681
Y	*313-4350*	1	PUMP GP-FUEL INJECTION	1398
Y	*298-5105*	1	PUMP GP-WATER	714
Y	*327-8999*	1	STARTING MOTOR GP-ELECTRIC	1598
			—OR—	
Y	*399-1113*	1	STARTING MOTOR GP-ELECTRIC	1601
Y	*308-3350*	1	TURBOCHARGER GP	875
Y	*304-3647*	1	VALVE MECHANISM GP	663
Y	*298-5130*	1	WIRING GP-ENGINE	1604
	305-8460	1	ELECTRONICS GP-ENGINE RATINGS	
R	**359-0737**	1	CYLINDER BLOCK GP-SHORT	

R - REMANUFACTURED PART MAY BE AVAILABLE
Y - SEPARATE ILLUSTRATION

<END>

381-7585 ENGINE AR-COMPLETE

97 BRAKE KW (129 BHP) AT 2200 RPM

SMCS-1000 **i04637529**

NOTE	PART NUMBER	QTY	PART NAME 1 2 3 4 5 6 (PRODUCT LEVEL)	SEE PAGE
Y	*304-0728*	1	ADAPTER GP-AUXILIARY DRIVE	301
Y	*311-7455*	1	ALTERNATOR GP-CHARGING	1577
Y	*298-5892*	1	CAMSHAFT GP	321
Y	*301-8248*	1	CONNECTION GP-INLET	776
Y	*301-8243*	1	CONNECTION GP-WATER	687
Y	*304-6436*	1	CONTROL GP-ENGINE ELECTRONIC	1584
Y	*298-5099*	1	COOLER GP-ENGINE OIL	690
Y	*304-5574*	1	COVER GP-VALVE MECHANISM	351
Y	*298-5888*	1	CRANKSHAFT GP	380
Y	*298-5887*	1	CYLINDER BLOCK GP	400
Y	*298-5890*	1	CYLINDER HEAD GP	419
Y	*388-2420*	1	DRIVE GP-FAN	449
Y	*311-4640*	1	FAN GP	704
Y	*298-5100*	1	FILTER GP-ENGINE OIL	678
Y	*303-5780*	1	FILTER GP-FUEL	999
Y	*322-8426*	1	FILTER GP-FUEL	1006
Y	*299-5063*	1	FLYWHEEL GP	454
Y	*298-5125*	1	GLOW PLUG GP	1586
Y	*299-5057*	1	HOUSING GP-FLYWHEEL	478
Y	*304-0727*	1	HOUSING GP-FRONT	492
Y	*299-5033*	1	LIFTING GP-ENGINE	512
Y	*322-8425*	1	LINES GP-FUEL	1041
Y	*323-6804*	1	MOUNTING GP-ENGINE	529
Y	*377-8331*	1	PAN GP-OIL	603
Y	*304-8762*	1	PIPE GP-EXHAUST	790
Y	*298-5889*	1	PISTON GP	621
Y	*298-5129*	1	PLUG GP-CYLINDER HEAD	629
Y	*298-5098*	1	PLUG GP-ENGINE	631
Y	*298-5131*	1	PLUG GP-ENGINE	632
Y	*298-5128*	1	PLUG GP-ENGINE OIL MANIFOLD	680
Y	*360-7343*	1	PULLEY GP-CRANKSHAFT	652
Y	*298-5112*	1	PUMP GP-ENGINE OIL	681
Y	*303-4615*	1	PUMP GP-FUEL INJECTION	1134
Y	*340-4692*	1	PUMP GP-WATER	722
Y	*311-4636*	1	RADIATOR GP	730
Y	*325-5612*	1	STARTING MOTOR GP-ELECTRIC	1597
Y	*333-8976*	1	TURBOCHARGER GP	960
Y	*298-5891*	1	VALVE MECHANISM GP	661
Y	*298-5130*	1	WIRING GP-ENGINE	1604
R	**359-0737**	1	CYLINDER BLOCK GP-SHORT	
	305-8458	1	ELECTRONICS GP-ENGINE RATINGS	

R - REMANUFACTURED PART MAY BE AVAILABLE
Y - SEPARATE ILLUSTRATION

<END>

389-1320 ENGINE AR-COMPLETE

95 BRAKE KW (127 BHP) AT 2200 RPM

SMCS-1000 **i06830593**

NOTE	PART NUMBER	QTY	PART NAME 1 2 3 4 5 6 (PRODUCT LEVEL)	SEE PAGE
Y	*311-7455*	1	ALTERNATOR GP-CHARGING	1577
Y	*301-8245*	1	BALANCER GP	317
Y	*298-5892*	1	CAMSHAFT GP	321
Y	*301-8248*	1	CONNECTION GP-INLET	776
Y	*301-8243*	1	CONNECTION GP-WATER	687
Y	*304-6436*	1	CONTROL GP-ENGINE ELECTRONIC	1584
Y	*301-8241*	1	COOLER GP-OIL	697
Y	*298-5111*	1	COVER GP-ENGINE	332
Y	*301-8240*	1	COVER GP-VALVE MECHANISM	341
Y	*298-5888*	1	CRANKSHAFT GP	380
Y	*298-5887*	1	CYLINDER BLOCK GP	400
Y	*298-5890*	1	CYLINDER HEAD GP	419
Y	*316-7959*	1	DRIVE GP-FAN	436
Y	*314-5003*	1	FAN GP	707
Y	*298-5100*	1	FILTER GP-ENGINE OIL	678
Y	*298-5123*	1	FILTER GP-PRIMARY FUEL	1009
Y	*301-8251*	1	FILTER GP-WATER SEP & FUEL	1013
Y	*301-8237*	1	FLYWHEEL GP	455
Y	*298-5110*	1	GEAR GP-FRONT	475
Y	*298-5125*	1	GLOW PLUG GP	1586
Y	*301-8236*	1	HOUSING GP-FLYWHEEL	479
Y	*299-5033*	1	LIFTING GP-ENGINE	512
Y	*311-2271*	1	LINES GP-FUEL FILTER	1050
Y	*311-4641*	1	MOUNTING GP-ENGINE	521
Y	*301-8239*	1	PAN GP-OIL	541
Y	*304-8762*	1	PIPE GP-EXHAUST	790
Y	*298-5889*	1	PISTON GP	621
Y	*298-5129*	1	PLUG GP-CYLINDER HEAD	629
Y	*298-5098*	1	PLUG GP-ENGINE	631
Y	*298-5131*	1	PLUG GP-ENGINE	632
Y	*298-5128*	1	PLUG GP-ENGINE OIL MANIFOLD	680
Y	*360-7343*	1	PULLEY GP-CRANKSHAFT	652
Y	*305-6701*	1	PUMP GP-FUEL INJECTION	1303
Y	*298-5105*	1	PUMP GP-WATER	714
Y	*312-1672*	1	RADIATOR GP	738
Y	*325-5612*	1	STARTING MOTOR GP-ELECTRIC	1597
Y	*311-7456*	1	TURBOCHARGER GP	887
Y	*298-5891*	1	VALVE MECHANISM GP	661
Y	*298-5130*	1	WIRING GP-ENGINE	1604
R	**359-0737**	1	CYLINDER BLOCK GP-SHORT	
	305-8454	1	ELECTRONICS GP-ENGINE RATINGS	

R - REMANUFACTURED PART MAY BE AVAILABLE
Y - SEPARATE ILLUSTRATION

<END>

435-1692 ENGINE AR-COMPLETE*R

102 BRAKE KW (137 BHP) AT 2000 RPM

FIELD REPLACEMENT FOR 292-5307—PAGE: 29

SMCS-1000 **i06830537**

NOTE	PART NUMBER	QTY	PART NAME 1 2 3 4 5 6 (PRODUCT LEVEL)	SEE PAGE
Y	*308-3351*	1	ALTERNATOR GP-CHARGING	1573
Y	*298-5892*	1	CAMSHAFT GP	321
Y	*298-5116*	1	CONNECTION GP-INLET	774
Y	*298-5107*	1	CONNECTION GP-WATER	685
Y	*304-6436*	1	CONTROL GP-ENGINE ELECTRONIC	1584
Y	*298-5099*	1	COOLER GP-ENGINE OIL	690
Y	*298-5111*	1	COVER GP-ENGINE	332
Y	*298-5097*	1	COVER GP-VALVE MECHANISM	335
Y	*298-5888*	1	CRANKSHAFT GP	380
Y	*298-5887*	1	CYLINDER BLOCK GP	400
Y	*298-5890*	1	CYLINDER HEAD GP	419
Y	*298-5095*	1	DRIVE GP-FAN	425
Y	*298-5108*	1	FAN GP	701
Y	*298-5100*	1	FILTER GP-ENGINE OIL	678
Y	*298-5123*	1	FILTER GP-PRIMARY FUEL	1009
Y	*298-5093*	1	FLYWHEEL GP	453
Y	*298-5110*	1	GEAR GP-FRONT	475
Y	*298-5125*	1	GLOW PLUG GP	1586
Y	*321-5596*	1	HOUSING GP-FLYWHEEL	489
Y	*298-5127*	1	LIFTING GP-ENGINE	511
Y	*311-2271*	1	LINES GP-FUEL FILTER	1050
Y	*298-5771*	1	MOUNTING GP-ENGINE	514
Y	*344-8201*	1	PAN GP-OIL	589
Y	*298-5889*	1	PISTON GP	621
Y	*298-5129*	1	PLUG GP-CYLINDER HEAD	629
Y	*298-5098*	1	PLUG GP-ENGINE	631
Y	*298-5131*	1	PLUG GP-ENGINE	632
Y	*298-5128*	1	PLUG GP-ENGINE OIL MANIFOLD	680
Y	*360-7346*	1	PULLEY GP-CRANKSHAFT	655
Y	*360-7355*	1	PULLEY GP-CRANKSHAFT	656
Y	*298-5112*	1	PUMP GP-ENGINE OIL	681
Y	*320-2398*	1	PUMP GP-FUEL INJECTION	1488
Y	*298-5105*	1	PUMP GP-WATER	714
Y	*327-8999*	1	STARTING MOTOR GP-ELECTRIC	1598
Y	*325-1069*	1	TURBOCHARGER GP	920
Y	*298-5891*	1	VALVE MECHANISM GP	661
Y	*298-5130*	1	WIRING GP-ENGINE	1604
R	**359-0737**	1	CYLINDER BLOCK GP-SHORT	
	320-2401	1	ELECTRONICS GP-ENGINE RATINGS	

R - REMANUFACTURED PART MAY BE AVAILABLE
Y - SEPARATE ILLUSTRATION

<END>

275-9173 ENGINE AR-PRIMARY

75 BRAKE KW (100 BHP) AT 2200 RPM

SMCS-1000 **i02603166**

NOTE	PART NUMBER	QTY	PART NAME 1 2 3 4 5 6 (PRODUCT LEVEL)	SEE PAGE
			(NO SERVICED PARTS)	

<END>

275-9174 ENGINE AR-PRIMARY

69 BRAKE KW (92 BHP) AT 2200 RPM

SMCS-1000 **i02603172**

NOTE	PART NUMBER	QTY	PART NAME 1 2 3 4 5 6 (PRODUCT LEVEL)	SEE PAGE
			(NO SERVICED PARTS)	

<END>

292-5304 ENGINE AR-PRIMARY*R

105 BRAKE KW (141 BHP) AT 2400 RPM

FIELD REPLACEMENT ORDER 435-1685—PAGE: 263

SMCS-1000 **i07506790**

NOTE	PART NUMBER	QTY	PART NAME 1 2 3 4 5 6 (PRODUCT LEVEL)	SEE PAGE
Y	*298-5109*	1	ALTERNATOR GP-CHARGING	1556
			S/N: 4441-657	
Y	*308-3351*	1	ALTERNATOR GP-CHARGING	1573
			S/N: 444658-UP	
Y	*298-5090*	1	CAMSHAFT GP	320
Y	*298-5107*	1	CONNECTION GP-WATER	685
Y	*304-6436*	1	CONTROL GP-ENGINE ELECTRONIC	1584
Y	*298-5099*	1	COOLER GP-ENGINE OIL	690
Y	*298-5111*	1	COVER GP-ENGINE	332
Y	*298-5097*	1	COVER GP-VALVE MECHANISM	335
Y	*298-5086*	1	CRANKSHAFT GP	378
Y	*298-5085*	1	CYLINDER BLOCK GP	398
Y	*298-5088*	1	CYLINDER HEAD GP	418
Y	*298-5095*	1	DRIVE GP-FAN	425
Y	*298-5108*	1	FAN GP	701
Y	*298-5100*	1	FILTER GP-ENGINE OIL	678
Y	*298-5123*	1	FILTER GP-PRIMARY FUEL	1009
Y	*298-5093*	1	FLYWHEEL GP	453
Y	*298-5110*	1	GEAR GP-FRONT	475
Y	*298-5125*	1	GLOW PLUG GP	1586
Y	*298-5130*	1	WIRING GP-ENGINE	1604
Y	*298-5092*	1	HOUSING GP-FLYWHEEL	477
			—OR—	
Y	*321-5596*	1	HOUSING GP-FLYWHEEL	489
Y	*298-5127*	1	LIFTING GP-ENGINE	511
Y	*298-5120*	1	LINES GP-FUEL	1030
			S/N: 4441-321	
Y	*311-2271*	1	LINES GP-FUEL FILTER	1050
			S/N: 444322-UP	
Y	*298-5116*	1	CONNECTION GP-INLET	774
Y	*298-5771*	1	MOUNTING GP-ENGINE	514
Y	*298-5096*	1	PAN GP-OIL	533
			—OR—	
Y	*344-8201*	1	PAN GP-OIL	589
Y	*298-5087*	1	PISTON & ROD GP	609
Y	*298-5129*	1	PLUG GP-CYLINDER HEAD	629
Y	*298-5098*	1	PLUG GP-ENGINE	631
Y	*298-5131*	1	PLUG GP-ENGINE (THREADED)	632
Y	*298-5128*	1	PLUG GP-ENGINE OIL MANIFOLD	680
Y	*298-5102*	1	PULLEY GP-AUXILIARY DRIVE	647
			S/N: 4441-7401	
Y	*360-7355*	1	PULLEY GP-CRANKSHAFT	656
			S/N: 4447402-UP	
Y	*298-5101*	1	PULLEY GP-CRANKSHAFT	648
			S/N: 4441-7401	
Y	*360-7346*	1	PULLEY GP-CRANKSHAFT	655
			S/N: 4447402-UP	
Y	*298-5112*	1	PUMP GP-ENGINE OIL	681

292-5304 **ENGINE AR-PRIMARY (**contd.**)** **i07506790**

NOTE	PART NUMBER	QTY	PART NAME 1 2 3 4 5 6 (PRODUCT LEVEL)	SEE PAGE
Y	*298-5091*	1	PUMP GP-FUEL INJECTION	1069
			S/N: 4441-1359	
Y	*320-2397*	1	PUMP GP-FUEL INJECTION	1473
			S/N: 4441360-UP	
Y	*298-5105*	1	PUMP GP-WATER	714
Y	*298-5089*	1	ROCKER ARM GP	658
Y	*298-5094*	1	STARTING MOTOR GP-ELECTRIC	1590
			—OR—	
Y	*327-8999*	1	STARTING MOTOR GP-ELECTRIC	1598
Y	*298-5113*	1	TURBOCHARGER GP	791
			S/N: 4441-2312	
Y	*325-1069*	1	TURBOCHARGER GP	920
			S/N: 4442313-UP	
R	**359-0739**	1	CYLINDER BLOCK GP-SHORT	

R - REMANUFACTURED PART MAY BE AVAILABLE
Y - SEPARATE ILLUSTRATION

<END>

292-5307 ENGINE AR-PRIMARY*R

94 BRAKE KW (126 BHP) AT 2400 RPM

FIELD REPLACEMENT ORDER 435-1692—PAGE: 25, 540-0570—PAGE: 296

SMCS-1000 **i07311446**

NOTE	PART NUMBER	QTY	PART NAME 1 2 3 4 5 6 (PRODUCT LEVEL)	SEE PAGE
Y	*298-5109*	1	ALTERNATOR GP-CHARGING	1556
			S/N: 4441-657	
Y	*308-3351*	1	ALTERNATOR GP-CHARGING	1573
			S/N: 444658-UP	
Y	*298-5892*	1	CAMSHAFT GP	321
Y	*298-5116*	1	CONNECTION GP-INLET	774
Y	*298-5107*	1	CONNECTION GP-WATER	685
Y	*304-6436*	1	CONTROL GP-ENGINE ELECTRONIC	1584
Y	*298-5099*	1	COOLER GP-ENGINE OIL	690
Y	*298-5111*	1	COVER GP-ENGINE	332
Y	*298-5097*	1	COVER GP-VALVE MECHANISM	335
Y	*298-5888*	1	CRANKSHAFT GP	380
Y	*298-5887*	1	CYLINDER BLOCK GP	400
Y	*298-5890*	1	CYLINDER HEAD GP	419
Y	*298-5095*	1	DRIVE GP-FAN	425
Y	*298-5108*	1	FAN GP	701
Y	*298-5100*	1	FILTER GP-ENGINE OIL	678
Y	*298-5123*	1	FILTER GP-PRIMARY FUEL	1009
Y	*298-5093*	1	FLYWHEEL GP	453
Y	*298-5110*	1	GEAR GP-FRONT	475
Y	*298-5125*	1	GLOW PLUG GP	1586
Y	*298-5092*	1	HOUSING GP-FLYWHEEL	477
			S/N: 4441-1618	
Y	*321-5596*	1	HOUSING GP-FLYWHEEL	489
			S/N: 4441619-UP	
Y	*298-5127*	1	LIFTING GP-ENGINE	511
Y	*298-5120*	1	LINES GP-FUEL	1030
			S/N: 4441-321	
Y	*311-2271*	1	LINES GP-FUEL FILTER	1050
			S/N: 444322-UP	
Y	*298-5771*	1	MOUNTING GP-ENGINE	514
Y	*298-5096*	1	PAN GP-OIL	533
			—OR—	
Y	*344-8201*	1	PAN GP-OIL	589
Y	*298-5889*	1	PISTON GP	621
Y	*298-5129*	1	PLUG GP-CYLINDER HEAD	629
Y	*298-5098*	1	PLUG GP-ENGINE	631
Y	*298-5131*	1	PLUG GP-ENGINE (THREADED)	632
Y	*298-5128*	1	PLUG GP-ENGINE OIL MANIFOLD	680
Y	*298-5102*	1	PULLEY GP-AUXILIARY DRIVE	647
			S/N: 4441-7401	
Y	*360-7355*	1	PULLEY GP-CRANKSHAFT	656
			S/N: 4447402-UP	
Y	*298-5101*	1	PULLEY GP-CRANKSHAFT	648
			S/N: 4441-7401	
Y	*360-7346*	1	PULLEY GP-CRANKSHAFT	655
			S/N: 4447402-UP	
Y	*298-5112*	1	PUMP GP-ENGINE OIL	681

292-5307 **ENGINE AR-PRIMARY (**contd.**)** **i07311446**

NOTE	PART NUMBER	QTY	PART NAME 1 2 3 4 5 6 (PRODUCT LEVEL)	SEE PAGE
Y	*298-5893*	1	PUMP GP-FUEL INJECTION	1089
			S/N: 4441-1359	
Y	*320-2398*	1	PUMP GP-FUEL INJECTION	1488
			S/N: 4441360-UP	
Y	*298-5105*	1	PUMP GP-WATER	714
Y	*298-5094*	1	STARTING MOTOR GP-ELECTRIC	1590
			S/N: 4441-2312	
Y	*327-8999*	1	STARTING MOTOR GP-ELECTRIC	1598
			S/N: 4442313-UP	
Y	*298-5113*	1	TURBOCHARGER GP	791
			S/N: 4441-2312	
Y	*325-1069*	1	TURBOCHARGER GP	920
			S/N: 4442313-UP	
Y	*298-5891*	1	VALVE MECHANISM GP	661
Y	*298-5130*	1	WIRING GP-ENGINE	1604
R	**359-0737**	1	CYLINDER BLOCK GP-SHORT	
	320-2401	1	ELECTRONICS GP-ENGINE RATINGS	

R - REMANUFACTURED PART MAY BE AVAILABLE
Y - SEPARATE ILLUSTRATION

<END>

292-5308 ENGINE AR-PRIMARY

105 BRAKE KW (141 BHP) AT 2400 RPM

SMCS-1000 **i03935432**

NOTE	PART NUMBER	QTY	PART NAME 1 2 3 4 5 6 (PRODUCT LEVEL)	SEE PAGE
Y	*303-8449*	1	ALTERNATOR GP-CHARGING	1563
Y	*298-5090*	1	CAMSHAFT GP	320
Y	*298-5116*	1	CONNECTION GP-INLET	774
Y	*301-8243*	1	CONNECTION GP-WATER	687
Y	*304-6436*	1	CONTROL GP-ENGINE ELECTRONIC	1584
Y	*298-5099*	1	COOLER GP-ENGINE OIL	690
Y	*298-5111*	1	COVER GP-ENGINE	332
Y	*298-5097*	1	COVER GP-VALVE MECHANISM	335
Y	*298-5086*	1	CRANKSHAFT GP	378
Y	*298-5085*	1	CYLINDER BLOCK GP	398
Y	*298-5088*	1	CYLINDER HEAD GP	418
Y	*298-5095*	1	DRIVE GP-FAN	425
Y	*298-5108*	1	FAN GP	701
Y	*298-5100*	1	FILTER GP-ENGINE OIL	678
Y	*298-5123*	1	FILTER GP-PRIMARY FUEL	1009
Y	*298-5093*	1	FLYWHEEL GP	453
Y	*298-5110*	1	GEAR GP-FRONT	475
Y	*298-5125*	1	GLOW PLUG GP	1586
Y	*298-5092*	1	HOUSING GP-FLYWHEEL	477
Y	*299-5033*	1	LIFTING GP-ENGINE	512
Y	*298-5120*	1	LINES GP-FUEL	1030
			S/N: 4441-321	
Y	*311-2271*	1	LINES GP-FUEL FILTER	1050
			S/N: 444322-UP	
Y	*298-5771*	1	MOUNTING GP-ENGINE	514
Y	*298-5096*	1	PAN GP-OIL	533
Y	*298-5087*	1	PISTON & ROD GP	609
Y	*298-5098*	1	PLUG GP-ENGINE	631
Y	*298-5129*	1	PLUG GP-CYLINDER HEAD	629
Y	*298-5131*	1	PLUG GP-ENGINE	632
Y	*298-5128*	1	PLUG GP-ENGINE OIL MANIFOLD	680
Y	*298-5102*	1	PULLEY GP-AUXILIARY DRIVE	647
			S/N: 4441-7401	
Y	*360-7355*	1	PULLEY GP-CRANKSHAFT	656
			S/N: 4447402-UP	
Y	*298-5101*	1	PULLEY GP-CRANKSHAFT	648
			S/N: 4441-7401	
Y	*360-7346*	1	PULLEY GP-CRANKSHAFT	655
			S/N: 4447402-UP	
Y	*298-5112*	1	PUMP GP-ENGINE OIL	681
Y	*298-5091*	1	PUMP GP-FUEL INJECTION	1069
Y	*298-5105*	1	PUMP GP-WATER	714
Y	*298-5089*	1	ROCKER ARM GP	658
Y	*298-5094*	1	STARTING MOTOR GP-ELECTRIC	1590
			—OR—	
Y	*327-8999*	1	STARTING MOTOR GP-ELECTRIC	1598
Y	*298-5113*	1	TURBOCHARGER GP	791
Y	*298-5130*	1	WIRING GP-ENGINE	1604

292-5308 **ENGINE AR-PRIMARY (**contd.**)** **i03935432**

NOTE	PART NUMBER	QTY	PART NAME 1 2 3 4 5 6 (PRODUCT LEVEL)	SEE PAGE
R	**359-0739**	1	CYLINDER BLOCK GP-SHORT	
	298-5076	1	SOFTWARE GP-ENG RATINGS ELEK	

R - REMANUFACTURED PART MAY BE AVAILABLE
Y - SEPARATE ILLUSTRATION

<END>

292-5310 ENGINE AR-PRIMARY

75 BRAKE KW (100 BHP) AT 2200 RPM

SMCS-1000 **i04289869**

NOTE	PART NUMBER	QTY	PART NAME 1 2 3 4 5 6 (PRODUCT LEVEL)	SEE PAGE
Y	*303-4621*	1	ALTERNATOR GP-CHARGING	1560
Y	*304-3648*	1	CAMSHAFT GP	322
Y	*301-8243*	1	CONNECTION GP-WATER	687
Y	*304-6436*	1	CONTROL GP-ENGINE ELECTRONIC	1584
Y	*301-8241*	1	COOLER GP-OIL	697
Y	*301-8240*	1	COVER GP-VALVE MECHANISM	341
Y	*298-5111*	1	COVER GP-ENGINE	332
Y	*305-0640*	1	COVER GP-INLET MANIFOLD	780
Y	*304-3642*	1	CRANKSHAFT GP	382
Y	*304-3641*	1	CYLINDER BLOCK GP	402
Y	*304-3645*	1	CYLINDER HEAD GP	420
Y	*301-8238*	1	DRIVE GP-FAN	427
Y	*299-5082*	1	MOUNTING GP-FAN	713
Y	*298-5100*	1	FILTER GP-ENGINE OIL	678
Y	*305-0642*	1	FILTER GP-FUEL	1000
Y	*301-8251*	1	FILTER GP-WATER SEP & FUEL	1013
Y	*301-8237*	1	FLYWHEEL GP	455
Y	*298-5110*	1	GEAR GP-FRONT	475
Y	*298-5125*	1	GLOW PLUG GP	1586
Y	*298-5130*	1	WIRING GP-ENGINE	1604
Y	*301-8236*	1	HOUSING GP-FLYWHEEL	479
Y	*301-8245*	1	BALANCER GP	317
Y	*299-5033*	1	LIFTING GP-ENGINE	512
Y	*298-5120*	1	LINES GP-FUEL	1030
			S/N: 4441-321	
Y	*311-2271*	1	LINES GP-FUEL FILTER	1050
			S/N: 444322-UP	
Y	*301-8250*	1	PLUG GP-ENGINE	633
Y	*301-8239*	1	PAN GP-OIL	541
Y	*304-3643*	1	PISTON & ROD GP	613
Y	*298-5098*	1	PLUG GP-ENGINE	631
Y	*298-5129*	1	PLUG GP-CYLINDER HEAD	629
Y	*298-5131*	1	PLUG GP-ENGINE	632
Y	*298-5128*	1	PLUG GP-ENGINE OIL MANIFOLD	680
Y	*301-8242*	1	PULLEY GP	644
			S/N: 4441-7401	
Y	*360-7342*	1	PULLEY GP-CRANKSHAFT	651
			S/N: 4447402-UP	
Y	*305-0634*	1	PUMP GP-FUEL INJECTION	1263
			S/N: 4441-321	
Y	*313-3514*	1	PUMP GP-FUEL INJECTION	1373
			S/N: 444322-UP	
Y	*298-5105*	1	PUMP GP-WATER	714
Y	*303-4619*	1	STARTING MOTOR GP-ELECTRIC	1592
			—OR—	
Y	*325-5612*	1	STARTING MOTOR GP-ELECTRIC	1597
Y	*305-0637*	1	TURBOCHARGER GP	830
Y	*304-3647*	1	VALVE MECHANISM GP	663

292-5310 **ENGINE AR-PRIMARY (**contd.**)** **i04289869**

NOTE	PART NUMBER	QTY	PART NAME 1 2 3 4 5 6 (PRODUCT LEVEL)	SEE PAGE
R	**359-0737**	1	CYLINDER BLOCK GP-SHORT	
	305-8453	1	ELECTRONICS GP-ENGINE RATINGS	

R - REMANUFACTURED PART MAY BE AVAILABLE
Y - SEPARATE ILLUSTRATION

<END>

292-5311 ENGINE AR-PRIMARY

104 BRAKE KW (139 BHP) AT 2200 RPM

SMCS-1000 **i03935709**

NOTE	PART NUMBER	QTY	PART NAME 1 2 3 4 5 6 (PRODUCT LEVEL)	SEE PAGE
Y	*303-4621*	1	ALTERNATOR GP-CHARGING	1560
Y	*298-5090*	1	CAMSHAFT GP	320
Y	*301-8248*	1	CONNECTION GP-INLET	776
Y	*301-8243*	1	CONNECTION GP-WATER	687
Y	*304-6436*	1	CONTROL GP-ENGINE ELECTRONIC	1584
Y	*301-8241*	1	COOLER GP-OIL	697
Y	*301-8240*	1	COVER GP-VALVE MECHANISM	341
Y	*298-5111*	1	COVER GP-ENGINE	332
Y	*298-5086*	1	CRANKSHAFT GP	378
Y	*298-5085*	1	CYLINDER BLOCK GP	398
Y	*298-5088*	1	CYLINDER HEAD GP	418
Y	*301-8238*	1	DRIVE GP-FAN	427
Y	*298-5100*	1	FILTER GP-ENGINE OIL	678
Y	*298-5123*	1	FILTER GP-PRIMARY FUEL	1009
Y	*301-8251*	1	FILTER GP-WATER SEP & FUEL	1013
Y	*301-8237*	1	FLYWHEEL GP	455
Y	*298-5110*	1	GEAR GP-FRONT	475
Y	*298-5125*	1	GLOW PLUG GP	1586
Y	*301-8236*	1	HOUSING GP-FLYWHEEL	479
Y	*301-8245*	1	BALANCER GP	317
Y	*299-5033*	1	LIFTING GP-ENGINE	512
Y	*298-5120*	1	LINES GP-FUEL	1030
			S/N: 4441-321	
Y	*311-2271*	1	LINES GP-FUEL FILTER	1050
			S/N: 444322-UP	
Y	*301-8250*	1	PLUG GP-ENGINE	633
Y	*299-5082*	1	MOUNTING GP-FAN	713
Y	*301-8239*	1	PAN GP-OIL	541
Y	*298-5087*	1	PISTON & ROD GP	609
Y	*298-5131*	1	PLUG GP-ENGINE	632
Y	*298-5098*	1	PLUG GP-ENGINE	631
Y	*298-5129*	1	PLUG GP-CYLINDER HEAD	629
Y	*298-5128*	1	PLUG GP-ENGINE OIL MANIFOLD	680
Y	*301-8242*	1	PULLEY GP	644
			S/N: 4441-7401	
Y	*360-7342*	1	PULLEY GP-CRANKSHAFT	651
			S/N: 4447402-UP	
Y	*301-8235*	1	PUMP GP-FUEL INJECTION	1114
Y	*298-5105*	1	PUMP GP-WATER	714
Y	*298-5089*	1	ROCKER ARM GP	658
Y	*303-4619*	1	STARTING MOTOR GP-ELECTRIC	1592
			—OR—	
Y	*325-5612*	1	STARTING MOTOR GP-ELECTRIC	1597
Y	*303-4622*	1	TURBOCHARGER GP	812
Y	*298-5130*	1	WIRING GP-ENGINE	1604
	298-4523	1	CYLINDER BLOCK GP-SHORT	

Y - SEPARATE ILLUSTRATION

<END>

294-7184 ENGINE AR-PRIMARY

75 BRAKE KW (100 BHP) AT 2200 RPM

SMCS-1000 **i04289870**

NOTE	PART NUMBER	QTY	PART NAME 1 2 3 4 5 6 (PRODUCT LEVEL)	SEE PAGE
Y	*301-8244*	1	ALTERNATOR GP-CHARGING	1559
Y	*301-8245*	1	BALANCER GP	317
Y	*304-3648*	1	CAMSHAFT GP	322
Y	*301-8243*	1	CONNECTION GP-WATER	687
Y	*304-6436*	1	CONTROL GP-ENGINE ELECTRONIC	1584
Y	*301-8241*	1	COOLER GP-OIL	697
Y	*301-8240*	1	COVER GP-VALVE MECHANISM	341
Y	*298-5111*	1	COVER GP-ENGINE	332
Y	*305-0640*	1	COVER GP-INLET MANIFOLD	780
Y	*304-3642*	1	CRANKSHAFT GP	382
Y	*304-3641*	1	CYLINDER BLOCK GP	402
Y	*304-3645*	1	CYLINDER HEAD GP	420
Y	*301-8238*	1	DRIVE GP-FAN	427
Y	*298-5100*	1	FILTER GP-ENGINE OIL	678
Y	*305-0642*	1	FILTER GP-FUEL	1000
Y	*301-8251*	1	FILTER GP-WATER SEP & FUEL	1013
Y	*301-8237*	1	FLYWHEEL GP	455
Y	*298-5110*	1	GEAR GP-FRONT	475
Y	*299-5075*	1	GLOW PLUG GP	1587
Y	*301-8236*	1	HOUSING GP-FLYWHEEL	479
Y	*299-5033*	1	LIFTING GP-ENGINE	512
Y	*298-5120*	1	LINES GP-FUEL	1030
			S/N: 4441-321	
Y	*311-2271*	1	LINES GP-FUEL FILTER	1050
			S/N: 444322-UP	
Y	*299-5082*	1	MOUNTING GP-FAN	713
Y	*301-8250*	1	PLUG GP-ENGINE	633
Y	*301-8239*	1	PAN GP-OIL	541
Y	*304-3643*	1	PISTON & ROD GP	613
Y	*298-5098*	1	PLUG GP-ENGINE	631
Y	*298-5129*	1	PLUG GP-CYLINDER HEAD	629
Y	*298-5131*	1	PLUG GP-ENGINE	632
Y	*298-5128*	1	PLUG GP-ENGINE OIL MANIFOLD	680
Y	*301-8242*	1	PULLEY GP	644
			S/N: 4441-7401	
Y	*360-7342*	1	PULLEY GP-CRANKSHAFT	651
			S/N: 4447402-UP	
Y	*305-0634*	1	PUMP GP-FUEL INJECTION	1263
			S/N: 4441-321	
Y	*313-3514*	1	PUMP GP-FUEL INJECTION	1373
			S/N: 444322-UP	
Y	*298-5105*	1	PUMP GP-WATER	714
Y	*299-5067*	1	STARTING MOTOR GP-ELECTRIC	1591
Y	*305-1948*	1	TURBOCHARGER GP	836
Y	*304-3647*	1	VALVE MECHANISM GP	663
Y	*298-5130*	1	WIRING GP-ENGINE	1604
R	**359-0737**	1	CYLINDER BLOCK GP-SHORT	
	305-8453	1	ELECTRONICS GP-ENGINE RATINGS	

294-7184 **ENGINE AR-PRIMARY (**contd.**)** **i04289870**

NOTE	PART NUMBER	QTY	PART NAME 1 2 3 4 5 6 (PRODUCT LEVEL)	SEE PAGE

R - REMANUFACTURED PART MAY BE AVAILABLE
Y - SEPARATE ILLUSTRATION

<END>

294-7185 ENGINE AR-PRIMARY

107 BRAKE KW (144 BHP) AT 2200 RPM

SMCS-1000 **i04173015**

NOTE	PART NUMBER	QTY	PART NAME 1 2 3 4 5 6 (PRODUCT LEVEL)	SEE PAGE
Y	*303-4621*	1	ALTERNATOR GP-CHARGING	1560
Y	*298-5090*	1	CAMSHAFT GP	320
Y	*301-8248*	1	CONNECTION GP-INLET	776
Y	*301-8243*	1	CONNECTION GP-WATER	687
Y	*304-6436*	1	CONTROL GP-ENGINE ELECTRONIC	1584
Y	*298-5099*	1	COOLER GP-ENGINE OIL	690
Y	*301-8240*	1	COVER GP-VALVE MECHANISM	341
Y	*298-5111*	1	COVER GP-ENGINE	332
Y	*298-5086*	1	CRANKSHAFT GP	378
Y	*298-5085*	1	CYLINDER BLOCK GP	398
Y	*298-5088*	1	CYLINDER HEAD GP	418
Y	*301-8238*	1	DRIVE GP-FAN	427
Y	*298-5100*	1	FILTER GP-ENGINE OIL	678
Y	*298-5123*	1	FILTER GP-PRIMARY FUEL	1009
Y	*301-8251*	1	FILTER GP-WATER SEP & FUEL	1013
Y	*301-8237*	1	FLYWHEEL GP	455
Y	*298-5110*	1	GEAR GP-FRONT	475
Y	*298-5125*	1	GLOW PLUG GP	1586
Y	*303-4618*	1	HOUSING GP-FLYWHEEL	481
Y	*299-5033*	1	LIFTING GP-ENGINE	512
Y	*298-5120*	1	LINES GP-FUEL	1030
			S/N: 4441-321	
Y	*311-2271*	1	LINES GP-FUEL FILTER	1050
			S/N: 444322-UP	
Y	*299-5082*	1	MOUNTING GP-FAN	713
Y	*301-8250*	1	PLUG GP-ENGINE	633
Y	*298-5096*	1	PAN GP-OIL	533
Y	*298-5087*	1	PISTON & ROD GP	609
Y	*298-5098*	1	PLUG GP-ENGINE	631
Y	*298-5129*	1	PLUG GP-CYLINDER HEAD	629
Y	*298-5131*	1	PLUG GP-ENGINE	632
Y	*298-5128*	1	PLUG GP-ENGINE OIL MANIFOLD	680
Y	*301-8242*	1	PULLEY GP	644
			S/N: 4441-7401	
Y	*360-7342*	1	PULLEY GP-CRANKSHAFT	651
			S/N: 4447402-UP	
Y	*298-5112*	1	PUMP GP-ENGINE OIL	681
Y	*304-6570*	1	PUMP GP-FUEL INJECTION	1179
Y	*298-5105*	1	PUMP GP-WATER	714
Y	*298-5089*	1	ROCKER ARM GP	658
Y	*303-4619*	1	STARTING MOTOR GP-ELECTRIC	1592
			—OR—	
Y	*325-5612*	1	STARTING MOTOR GP-ELECTRIC	1597
Y	*303-4622*	1	TURBOCHARGER GP	812
Y	*298-5130*	1	WIRING GP-ENGINE	1604
R	**359-0739**	1	CYLINDER BLOCK GP-SHORT	
	305-8457	1	ELECTRONICS GP-ENGINE RATINGS	

294-7185 **ENGINE AR-PRIMARY (**contd.**)** **i04173015**

NOTE	PART NUMBER	QTY	PART NAME 1 2 3 4 5 6 (PRODUCT LEVEL)	SEE PAGE

R - REMANUFACTURED PART MAY BE AVAILABLE
Y - SEPARATE ILLUSTRATION

<END>

294-7187 ENGINE AR-PRIMARY

95 BRAKE KW (127 BHP) AT 2200 RPM

SMCS-1000 **i04293942**

NOTE	PART NUMBER	QTY	PART NAME 1 2 3 4 5 6 (PRODUCT LEVEL)	SEE PAGE
Y	*303-4621*	1	ALTERNATOR GP-CHARGING	1560
Y	*301-8245*	1	BALANCER GP	317
Y	*298-5892*	1	CAMSHAFT GP	321
Y	*301-8248*	1	CONNECTION GP-INLET	776
Y	*301-8243*	1	CONNECTION GP-WATER	687
Y	*304-6436*	1	CONTROL GP-ENGINE ELECTRONIC	1584
Y	*301-8241*	1	COOLER GP-OIL	697
Y	*301-8240*	1	COVER GP-VALVE MECHANISM	341
Y	*298-5111*	1	COVER GP-ENGINE	332
Y	*298-5888*	1	CRANKSHAFT GP	380
Y	*298-5887*	1	CYLINDER BLOCK GP	400
Y	*298-5890*	1	CYLINDER HEAD GP	419
Y	*301-8238*	1	DRIVE GP-FAN	427
Y	*298-5100*	1	FILTER GP-ENGINE OIL	678
Y	*298-5123*	1	FILTER GP-PRIMARY FUEL	1009
Y	*301-8251*	1	FILTER GP-WATER SEP & FUEL	1013
Y	*301-8237*	1	FLYWHEEL GP	455
Y	*298-5110*	1	GEAR GP-FRONT	475
Y	*298-5125*	1	GLOW PLUG GP	1586
Y	*301-8236*	1	HOUSING GP-FLYWHEEL	479
Y	*299-5033*	1	LIFTING GP-ENGINE	512
Y	*298-5120*	1	LINES GP-FUEL	1030
			S/N: 4441-321	
Y	*311-2271*	1	LINES GP-FUEL FILTER	1050
			S/N: 444322-UP	
Y	*299-5082*	1	MOUNTING GP-FAN	713
Y	*301-8250*	1	PLUG GP-ENGINE	633
Y	*301-8239*	1	PAN GP-OIL	541
Y	*298-5889*	1	PISTON GP	621
Y	*298-5098*	1	PLUG GP-ENGINE	631
Y	*298-5129*	1	PLUG GP-CYLINDER HEAD	629
Y	*298-5131*	1	PLUG GP-ENGINE	632
Y	*298-5128*	1	PLUG GP-ENGINE OIL MANIFOLD	680
Y	*301-8242*	1	PULLEY GP	644
			S/N: 4441-7401	
Y	*360-7342*	1	PULLEY GP-CRANKSHAFT	651
			S/N: 4447402-UP	
Y	*305-6701*	1	PUMP GP-FUEL INJECTION	1303
Y	*298-5105*	1	PUMP GP-WATER	714
Y	*303-4619*	1	STARTING MOTOR GP-ELECTRIC	1592
			—OR—	
Y	*325-5612*	1	STARTING MOTOR GP-ELECTRIC	1597
Y	*303-4622*	1	TURBOCHARGER GP	812
Y	*298-5130*	1	WIRING GP-ENGINE	1604
R	**359-0737**	1	CYLINDER BLOCK GP-SHORT	
	305-8454	1	ELECTRONICS GP-ENGINE RATINGS	

294-7187 **ENGINE AR-PRIMARY (**contd.**)** **i04293942**

NOTE	PART NUMBER	QTY	PART NAME 1 2 3 4 5 6 (PRODUCT LEVEL)	SEE PAGE

R - REMANUFACTURED PART MAY BE AVAILABLE
Y - SEPARATE ILLUSTRATION

<END>

294-7188 ENGINE AR-PRIMARY

75 BRAKE KW (100 BHP) AT 2200 RPM

SMCS-1000 **i04293943**

NOTE	PART NUMBER	QTY	PART NAME 1 2 3 4 5 6 (PRODUCT LEVEL)	SEE PAGE
Y	*303-4621*	1	ALTERNATOR GP-CHARGING	1560
Y	*304-3648*	1	CAMSHAFT GP	322
Y	*301-8243*	1	CONNECTION GP-WATER	687
Y	*304-6436*	1	CONTROL GP-ENGINE ELECTRONIC	1584
Y	*298-5099*	1	COOLER GP-ENGINE OIL	690
Y	*301-8240*	1	COVER GP-VALVE MECHANISM	341
Y	*298-5111*	1	COVER GP-ENGINE	332
Y	*305-0640*	1	COVER GP-INLET MANIFOLD	780
Y	*304-3642*	1	CRANKSHAFT GP	382
Y	*304-3641*	1	CYLINDER BLOCK GP	402
Y	*304-3645*	1	CYLINDER HEAD GP	420
Y	*301-8238*	1	DRIVE GP-FAN	427
Y	*298-5100*	1	FILTER GP-ENGINE OIL	678
Y	*305-0642*	1	FILTER GP-FUEL	1000
Y	*301-8251*	1	FILTER GP-WATER SEP & FUEL	1013
Y	*301-8237*	1	FLYWHEEL GP	455
Y	*298-5110*	1	GEAR GP-FRONT	475
Y	*298-5125*	1	GLOW PLUG GP	1586
Y	*303-4618*	1	HOUSING GP-FLYWHEEL	481
Y	*299-5033*	1	LIFTING GP-ENGINE	512
Y	*298-5120*	1	LINES GP-FUEL	1030
			S/N: 4441-321	
Y	*311-2271*	1	LINES GP-FUEL FILTER	1050
			S/N: 444322-UP	
Y	*299-5082*	1	MOUNTING GP-FAN	713
Y	*301-8250*	1	PLUG GP-ENGINE	633
Y	*298-5096*	1	PAN GP-OIL	533
Y	*304-3643*	1	PISTON & ROD GP	613
Y	*298-5098*	1	PLUG GP-ENGINE	631
Y	*298-5129*	1	PLUG GP-CYLINDER HEAD	629
Y	*298-5131*	1	PLUG GP-ENGINE	632
Y	*298-5128*	1	PLUG GP-ENGINE OIL MANIFOLD	680
Y	*301-8242*	1	PULLEY GP	644
			S/N: 4441-7401	
Y	*360-7342*	1	PULLEY GP-CRANKSHAFT	651
			S/N: 4447402-UP	
Y	*298-5112*	1	PUMP GP-ENGINE OIL	681
Y	*305-1955*	1	PUMP GP-FUEL INJECTION	1268
			S/N: 4441-321	
Y	*313-4350*	1	PUMP GP-FUEL INJECTION	1398
			S/N: 444322-UP	
Y	*298-5105*	1	PUMP GP-WATER	714
Y	*303-4619*	1	STARTING MOTOR GP-ELECTRIC	1592
			—OR—	
Y	*325-5612*	1	STARTING MOTOR GP-ELECTRIC	1597
Y	*305-0637*	1	TURBOCHARGER GP	830
Y	*304-3647*	1	VALVE MECHANISM GP	663
Y	*298-5130*	1	WIRING GP-ENGINE	1604

294-7188 **ENGINE AR-PRIMARY (**contd.**)** **i04293943**

NOTE	PART NUMBER	QTY	PART NAME 1 2 3 4 5 6 (PRODUCT LEVEL)	SEE PAGE
R	**359-0737**	1	CYLINDER BLOCK GP-SHORT	
	305-8460	1	ELECTRONICS GP-ENGINE RATINGS	

R - REMANUFACTURED PART MAY BE AVAILABLE
Y - SEPARATE ILLUSTRATION

<END>

294-7189 ENGINE AR-PRIMARY

75 BRAKE KW (100 BHP) AT 2200 RPM

SMCS-1000 **i06830549**

NOTE	PART NUMBER	QTY	PART NAME 1 2 3 4 5 6 (PRODUCT LEVEL)	SEE PAGE
Y	*301-8244*	1	ALTERNATOR GP-CHARGING	1559
Y	*304-3648*	1	CAMSHAFT GP	322
Y	*301-8243*	1	CONNECTION GP-WATER	687
Y	*304-6436*	1	CONTROL GP-ENGINE ELECTRONIC	1584
Y	*298-5099*	1	COOLER GP-ENGINE OIL	690
Y	*301-8240*	1	COVER GP-VALVE MECHANISM	341
Y	*298-5111*	1	COVER GP-ENGINE	332
Y	*305-0640*	1	COVER GP-INLET MANIFOLD	780
Y	*304-3642*	1	CRANKSHAFT GP	382
Y	*304-3641*	1	CYLINDER BLOCK GP	402
Y	*304-3645*	1	CYLINDER HEAD GP	420
Y	*301-8238*	1	DRIVE GP-FAN	427
Y	*298-5100*	1	FILTER GP-ENGINE OIL	678
Y	*305-0642*	1	FILTER GP-FUEL	1000
Y	*301-8251*	1	FILTER GP-WATER SEP & FUEL	1013
Y	*301-8237*	1	FLYWHEEL GP	455
Y	*298-5110*	1	GEAR GP-FRONT	475
Y	*299-5075*	1	GLOW PLUG GP	1587
Y	*303-4618*	1	HOUSING GP-FLYWHEEL	481
Y	*299-5033*	1	LIFTING GP-ENGINE	512
Y	*298-5120*	1	LINES GP-FUEL	1030
			S/N: 4441-321	
Y	*311-2271*	1	LINES GP-FUEL FILTER	1050
			S/N: 444322-UP	
Y	*299-5082*	1	MOUNTING GP-FAN	713
Y	*301-8250*	1	PLUG GP-ENGINE	633
Y	*298-5096*	1	PAN GP-OIL	533
Y	*304-3643*	1	PISTON & ROD GP	613
Y	*298-5098*	1	PLUG GP-ENGINE	631
Y	*298-5129*	1	PLUG GP-CYLINDER HEAD	629
Y	*298-5131*	1	PLUG GP-ENGINE	632
Y	*298-5128*	1	PLUG GP-ENGINE OIL MANIFOLD	680
Y	*301-8242*	1	PULLEY GP	644
			S/N: 4441-7401	
Y	*360-7342*	1	PULLEY GP-CRANKSHAFT	651
			S/N: 4447402-UP	
Y	*298-5112*	1	PUMP GP-ENGINE OIL	681
Y	*305-1955*	1	PUMP GP-FUEL INJECTION	1268
			S/N: 4441-321	
Y	*313-4350*	1	PUMP GP-FUEL INJECTION	1398
			S/N: 444322-UP	
Y	*298-5105*	1	PUMP GP-WATER	714
Y	*299-5067*	1	STARTING MOTOR GP-ELECTRIC	1591
Y	*305-1948*	1	TURBOCHARGER GP	836
Y	*304-3647*	1	VALVE MECHANISM GP	663
Y	*298-5130*	1	WIRING GP-ENGINE	1604
R	**359-0737**	1	CYLINDER BLOCK GP-SHORT	
	305-8460	1	ELECTRONICS GP-ENGINE RATINGS	

294-7189 **ENGINE AR-PRIMARY (**contd.**)** **i06830549**

NOTE	PART NUMBER	QTY	PART NAME 1 2 3 4 5 6 (PRODUCT LEVEL)	SEE PAGE

R - REMANUFACTURED PART MAY BE AVAILABLE
Y - SEPARATE ILLUSTRATION

<END>

294-7190 ENGINE AR-PRIMARY

95 BRAKE KW (127 BHP) AT 2200 RPM

SMCS-1000 **i04380456**

NOTE	PART NUMBER	QTY	PART NAME 1 2 3 4 5 6 (PRODUCT LEVEL)	SEE PAGE
Y	*301-8244*	1	ALTERNATOR GP-CHARGING	1559
Y	*298-5892*	1	CAMSHAFT GP	321
Y	*301-8248*	1	CONNECTION GP-INLET	776
Y	*301-8243*	1	CONNECTION GP-WATER	687
Y	*304-6436*	1	CONTROL GP-ENGINE ELECTRONIC	1584
Y	*301-8241*	1	COOLER GP-OIL	697
Y	*301-8240*	1	COVER GP-VALVE MECHANISM	341
Y	*298-5111*	1	COVER GP-ENGINE	332
Y	*298-5888*	1	CRANKSHAFT GP	380
Y	*298-5887*	1	CYLINDER BLOCK GP	400
Y	*298-5890*	1	CYLINDER HEAD GP	419
Y	*301-8238*	1	DRIVE GP-FAN	427
Y	*298-5100*	1	FILTER GP-ENGINE OIL	678
Y	*298-5123*	1	FILTER GP-PRIMARY FUEL	1009
Y	*301-8251*	1	FILTER GP-WATER SEP & FUEL	1013
Y	*301-8237*	1	FLYWHEEL GP	455
Y	*298-5110*	1	GEAR GP-FRONT	475
Y	*299-5075*	1	GLOW PLUG GP	1587
Y	*301-8236*	1	HOUSING GP-FLYWHEEL	479
Y	*301-8245*	1	BALANCER GP	317
Y	*299-5033*	1	LIFTING GP-ENGINE	512
Y	*298-5120*	1	LINES GP-FUEL	1030
			S/N: 4441-321	
Y	*311-2271*	1	LINES GP-FUEL FILTER	1050
			S/N: 444322-UP	
Y	*299-5082*	1	MOUNTING GP-FAN	713
Y	*301-8250*	1	PLUG GP-ENGINE	633
Y	*301-8239*	1	PAN GP-OIL	541
Y	*298-5889*	1	PISTON GP	621
Y	*298-5098*	1	PLUG GP-ENGINE	631
Y	*298-5129*	1	PLUG GP-CYLINDER HEAD	629
Y	*298-5131*	1	PLUG GP-ENGINE	632
Y	*298-5128*	1	PLUG GP-ENGINE OIL MANIFOLD	680
Y	*301-8242*	1	PULLEY GP	644
			S/N: 4441-7401	
Y	*360-7342*	1	PULLEY GP-CRANKSHAFT	651
			S/N: 4447402-UP	
Y	*305-6701*	1	PUMP GP-FUEL INJECTION	1303
Y	*298-5105*	1	PUMP GP-WATER	714
Y	*299-5067*	1	STARTING MOTOR GP-ELECTRIC	1591
Y	*301-8246*	1	TURBOCHARGER GP	806
Y	*298-5891*	1	VALVE MECHANISM GP	661
Y	*298-5130*	1	WIRING GP-ENGINE	1604
R	**359-0737**	1	CYLINDER BLOCK GP-SHORT	
	305-8454	1	ELECTRONICS GP-ENGINE RATINGS	

R - REMANUFACTURED PART MAY BE AVAILABLE
Y - SEPARATE ILLUSTRATION

<END>

294-7191 ENGINE AR-PRIMARY

104 BRAKE KW (139 BHP) AT 2200 RPM

SMCS-1000 **i04173050**

NOTE	PART NUMBER	QTY	PART NAME 1 2 3 4 5 6 (PRODUCT LEVEL)	SEE PAGE
Y	*301-8244*	1	ALTERNATOR GP-CHARGING	1559
Y	*301-8245*	1	BALANCER GP	317
Y	*298-5090*	1	CAMSHAFT GP	320
Y	*301-8248*	1	CONNECTION GP-INLET	776
Y	*301-8243*	1	CONNECTION GP-WATER	687
Y	*304-6436*	1	CONTROL GP-ENGINE ELECTRONIC	1584
Y	*301-8241*	1	COOLER GP-OIL	697
Y	*301-8240*	1	COVER GP-VALVE MECHANISM	341
Y	*298-5111*	1	COVER GP-ENGINE	332
Y	*298-5086*	1	CRANKSHAFT GP	378
Y	*298-5085*	1	CYLINDER BLOCK GP	398
Y	*298-5088*	1	CYLINDER HEAD GP	418
Y	*301-8238*	1	DRIVE GP-FAN	427
Y	*298-5100*	1	FILTER GP-ENGINE OIL	678
Y	*298-5123*	1	FILTER GP-PRIMARY FUEL	1009
Y	*301-8251*	1	FILTER GP-WATER SEP & FUEL	1013
Y	*301-8237*	1	FLYWHEEL GP	455
Y	*298-5110*	1	GEAR GP-FRONT	475
Y	*299-5075*	1	GLOW PLUG GP	1587
Y	*301-8236*	1	HOUSING GP-FLYWHEEL	479
Y	*299-5033*	1	LIFTING GP-ENGINE	512
Y	*298-5120*	1	LINES GP-FUEL	1030
			S/N: 4441-321	
Y	*311-2271*	1	LINES GP-FUEL FILTER	1050
			S/N: 444322-UP	
Y	*301-8250*	1	PLUG GP-ENGINE	633
Y	*301-8239*	1	PAN GP-OIL	541
Y	*298-5087*	1	PISTON & ROD GP	609
Y	*298-5098*	1	PLUG GP-ENGINE	631
Y	*298-5129*	1	PLUG GP-CYLINDER HEAD	629
Y	*298-5131*	1	PLUG GP-ENGINE	632
Y	*298-5128*	1	PLUG GP-ENGINE OIL MANIFOLD	680
Y	*301-8242*	1	PULLEY GP	644
			S/N: 4441-7401	
Y	*360-7342*	1	PULLEY GP-CRANKSHAFT	651
			S/N: 4447402-UP	
Y	*301-8235*	1	PUMP GP-FUEL INJECTION	1114
Y	*298-5105*	1	PUMP GP-WATER	714
Y	*298-5089*	1	ROCKER ARM GP	658
Y	*301-8246*	1	TURBOCHARGER GP	806
Y	*298-5130*	1	WIRING GP-ENGINE	1604
R	**359-0739**	1	CYLINDER BLOCK GP-SHORT	
	301-8234	1	ELECTRONICS GP-ENGINE RATINGS	

R - REMANUFACTURED PART MAY BE AVAILABLE
Y - SEPARATE ILLUSTRATION

<END>

294-7192 ENGINE AR-PRIMARY

104 BRAKE KW (139 BHP) AT 2200 RPM

SMCS-1000 **i04173051**

NOTE	PART NUMBER	QTY	PART NAME 1 2 3 4 5 6 (PRODUCT LEVEL)	SEE PAGE
Y	*301-8244*	1	ALTERNATOR GP-CHARGING	1559
Y	*298-5090*	1	CAMSHAFT GP	320
Y	*301-8248*	1	CONNECTION GP-INLET	776
Y	*301-8243*	1	CONNECTION GP-WATER	687
Y	*304-6436*	1	CONTROL GP-ENGINE ELECTRONIC	1584
Y	*298-5099*	1	COOLER GP-ENGINE OIL	690
Y	*301-8240*	1	COVER GP-VALVE MECHANISM	341
Y	*298-5111*	1	COVER GP-ENGINE	332
Y	*298-5086*	1	CRANKSHAFT GP	378
Y	*298-5085*	1	CYLINDER BLOCK GP	398
Y	*298-5088*	1	CYLINDER HEAD GP	418
Y	*301-8238*	1	DRIVE GP-FAN	427
Y	*298-5100*	1	FILTER GP-ENGINE OIL	678
Y	*298-5123*	1	FILTER GP-PRIMARY FUEL	1009
Y	*301-8251*	1	FILTER GP-WATER SEP & FUEL	1013
Y	*301-8237*	1	FLYWHEEL GP	455
Y	*298-5110*	1	GEAR GP-FRONT	475
Y	*299-5075*	1	GLOW PLUG GP	1587
Y	*303-4618*	1	HOUSING GP-FLYWHEEL	481
Y	*299-5033*	1	LIFTING GP-ENGINE	512
Y	*298-5120*	1	LINES GP-FUEL	1030
			S/N: 4441-321	
Y	*311-2271*	1	LINES GP-FUEL FILTER	1050
			S/N: 444322-UP	
Y	*299-5082*	1	MOUNTING GP-FAN	713
Y	*301-8250*	1	PLUG GP-ENGINE	633
Y	*298-5096*	1	PAN GP-OIL	533
Y	*298-5087*	1	PISTON & ROD GP	609
Y	*298-5098*	1	PLUG GP-ENGINE	631
Y	*298-5129*	1	PLUG GP-CYLINDER HEAD	629
Y	*298-5131*	1	PLUG GP-ENGINE	632
Y	*298-5128*	1	PLUG GP-ENGINE OIL MANIFOLD	680
Y	*301-8242*	1	PULLEY GP	644
			S/N: 4441-7401	
Y	*360-7342*	1	PULLEY GP-CRANKSHAFT	651
			S/N: 4447402-UP	
Y	*298-5112*	1	PUMP GP-ENGINE OIL	681
Y	*304-6570*	1	PUMP GP-FUEL INJECTION	1179
Y	*298-5105*	1	PUMP GP-WATER	714
Y	*298-5089*	1	ROCKER ARM GP	658
Y	*299-5067*	1	STARTING MOTOR GP-ELECTRIC	1591
Y	*301-8246*	1	TURBOCHARGER GP	806
Y	*298-5130*	1	WIRING GP-ENGINE	1604
R	**359-0739**	1	CYLINDER BLOCK GP-SHORT	
	305-8457	1	ELECTRONICS GP-ENGINE RATINGS	

R - REMANUFACTURED PART MAY BE AVAILABLE
Y - SEPARATE ILLUSTRATION

<END>

294-7193 ENGINE AR-PRIMARY

97 BRAKE KW (129 BHP) AT 2200 RPM

SMCS-1000 **i04380457**

NOTE	PART NUMBER	QTY	PART NAME 1 2 3 4 5 6 (PRODUCT LEVEL)	SEE PAGE
Y	*303-4621*	1	ALTERNATOR GP-CHARGING	1560
Y	*298-5892*	1	CAMSHAFT GP	321
Y	*301-8248*	1	CONNECTION GP-INLET	776
Y	*301-8243*	1	CONNECTION GP-WATER	687
Y	*304-6436*	1	CONTROL GP-ENGINE ELECTRONIC	1584
Y	*298-5099*	1	COOLER GP-ENGINE OIL	690
Y	*301-8240*	1	COVER GP-VALVE MECHANISM	341
Y	*298-5111*	1	COVER GP-ENGINE	332
Y	*298-5888*	1	CRANKSHAFT GP	380
Y	*298-5887*	1	CYLINDER BLOCK GP	400
Y	*298-5890*	1	CYLINDER HEAD GP	419
Y	*301-8238*	1	DRIVE GP-FAN	427
Y	*298-5100*	1	FILTER GP-ENGINE OIL	678
Y	*298-5123*	1	FILTER GP-PRIMARY FUEL	1009
Y	*301-8251*	1	FILTER GP-WATER SEP & FUEL	1013
Y	*301-8237*	1	FLYWHEEL GP	455
Y	*298-5110*	1	GEAR GP-FRONT	475
Y	*298-5125*	1	GLOW PLUG GP	1586
Y	*303-4618*	1	HOUSING GP-FLYWHEEL	481
Y	*299-5033*	1	LIFTING GP-ENGINE	512
Y	*298-5120*	1	LINES GP-FUEL	1030
			S/N: 4441-321	
Y	*311-2271*	1	LINES GP-FUEL FILTER	1050
			S/N: 444322-UP	
Y	*299-5082*	1	MOUNTING GP-FAN	713
Y	*301-8250*	1	PLUG GP-ENGINE	633
Y	*298-5096*	1	PAN GP-OIL	533
Y	*298-5889*	1	PISTON GP	621
Y	*298-5098*	1	PLUG GP-ENGINE	631
Y	*298-5129*	1	PLUG GP-CYLINDER HEAD	629
Y	*298-5131*	1	PLUG GP-ENGINE	632
Y	*298-5128*	1	PLUG GP-ENGINE OIL MANIFOLD	680
Y	*301-8242*	1	PULLEY GP	644
			S/N: 4441-7401	
Y	*360-7342*	1	PULLEY GP-CRANKSHAFT	651
			S/N: 4447402-UP	
Y	*298-5112*	1	PUMP GP-ENGINE OIL	681
Y	*303-4615*	1	PUMP GP-FUEL INJECTION	1134
Y	*298-5105*	1	PUMP GP-WATER	714
Y	*303-4619*	1	STARTING MOTOR GP-ELECTRIC	1592
			—OR—	
Y	*325-5612*	1	STARTING MOTOR GP-ELECTRIC	1597
Y	*303-4622*	1	TURBOCHARGER GP	812
Y	*298-5891*	1	VALVE MECHANISM GP	661
Y	*298-5130*	1	WIRING GP-ENGINE	1604
R	**359-0737**	1	CYLINDER BLOCK GP-SHORT	
	305-8458	1	ELECTRONICS GP-ENGINE RATINGS	

294-7193 **ENGINE AR-PRIMARY (**contd.**)** **i04380457**

NOTE	PART NUMBER	QTY	PART NAME 1 2 3 4 5 6 (PRODUCT LEVEL)	SEE PAGE
R - REMANUFACTURED PART MAY BE AVAILABLE Y - SEPARATE ILLUSTRATION				

<END>

294-7195 ENGINE AR-PRIMARY*R

97 BRAKE KW (129 BHP) AT 2200 RPM

SMCS-1000 **i04380458**

NOTE	PART NUMBER	QTY	PART NAME 1 2 3 4 5 6 (PRODUCT LEVEL)	SEE PAGE
Y	*301-8244*	1	ALTERNATOR GP-CHARGING	1559
Y	*298-5892*	1	CAMSHAFT GP	321
Y	*301-8248*	1	CONNECTION GP-INLET	776
Y	*301-8243*	1	CONNECTION GP-WATER	687
Y	*304-6436*	1	CONTROL GP-ENGINE ELECTRONIC	1584
Y	*298-5099*	1	COOLER GP-ENGINE OIL	690
Y	*301-8240*	1	COVER GP-VALVE MECHANISM	341
Y	*298-5111*	1	COVER GP-ENGINE	332
Y	*298-5888*	1	CRANKSHAFT GP	380
Y	*298-5887*	1	CYLINDER BLOCK GP	400
Y	*298-5890*	1	CYLINDER HEAD GP	419
Y	*301-8238*	1	DRIVE GP-FAN	427
Y	*298-5100*	1	FILTER GP-ENGINE OIL	678
Y	*298-5123*	1	FILTER GP-PRIMARY FUEL	1009
Y	*301-8251*	1	FILTER GP-WATER SEP & FUEL	1013
Y	*301-8237*	1	FLYWHEEL GP	455
Y	*298-5110*	1	GEAR GP-FRONT	475
Y	*299-5075*	1	GLOW PLUG GP	1587
Y	*303-4618*	1	HOUSING GP-FLYWHEEL	481
Y	*299-5033*	1	LIFTING GP-ENGINE	512
Y	*298-5120*	1	LINES GP-FUEL	1030
			S/N: 4441-321	
Y	*311-2271*	1	LINES GP-FUEL FILTER	1050
			S/N: 444322-UP	
Y	*299-5082*	1	MOUNTING GP-FAN	713
Y	*301-8250*	1	PLUG GP-ENGINE	633
Y	*298-5096*	1	PAN GP-OIL	533
Y	*298-5889*	1	PISTON GP	621
Y	*298-5098*	1	PLUG GP-ENGINE	631
Y	*298-5129*	1	PLUG GP-CYLINDER HEAD	629
Y	*298-5131*	1	PLUG GP-ENGINE	632
Y	*298-5128*	1	PLUG GP-ENGINE OIL MANIFOLD	680
Y	*301-8242*	1	PULLEY GP	644
			S/N: 4441-7401	
Y	*360-7342*	1	PULLEY GP-CRANKSHAFT	651
			S/N: 4447402-UP	
Y	*298-5112*	1	PUMP GP-ENGINE OIL	681
Y	*303-4615*	1	PUMP GP-FUEL INJECTION	1134
Y	*298-5105*	1	PUMP GP-WATER	714
Y	*299-5067*	1	STARTING MOTOR GP-ELECTRIC	1591
Y	*301-8246*	1	TURBOCHARGER GP	806
Y	*298-5891*	1	VALVE MECHANISM GP	661
Y	*298-5130*	1	WIRING GP-ENGINE	1604
R	**359-0737**	1	CYLINDER BLOCK GP-SHORT	
	305-8458	1	ELECTRONICS GP-ENGINE RATINGS	

R - REMANUFACTURED PART MAY BE AVAILABLE
Y - SEPARATE ILLUSTRATION

<END>

294-7198 ENGINE AR-PRIMARY

104 BRAKE KW (139 BHP) AT 2200 RPM

SMCS-1000 **i04173053**

NOTE	PART NUMBER	QTY	PART NAME 1 2 3 4 5 6 (PRODUCT LEVEL)	SEE PAGE
Y	*304-0728*	1	ADAPTER GP-AUXILIARY DRIVE	301
Y	*303-4621*	1	ALTERNATOR GP-CHARGING	1560
Y	*301-8245*	1	BALANCER GP	317
Y	*298-5090*	1	CAMSHAFT GP	320
Y	*301-8248*	1	CONNECTION GP-INLET	776
Y	*301-8243*	1	CONNECTION GP-WATER	687
Y	*304-6436*	1	CONTROL GP-ENGINE ELECTRONIC	1584
Y	*301-8241*	1	COOLER GP-OIL	697
Y	*301-8240*	1	COVER GP-VALVE MECHANISM	341
Y	*298-5086*	1	CRANKSHAFT GP	378
Y	*298-5085*	1	CYLINDER BLOCK GP	398
Y	*298-5088*	1	CYLINDER HEAD GP	418
Y	*301-8238*	1	DRIVE GP-FAN	427
Y	*298-5100*	1	FILTER GP-ENGINE OIL	678
Y	*298-5123*	1	FILTER GP-PRIMARY FUEL	1009
Y	*301-8251*	1	FILTER GP-WATER SEP & FUEL	1013
Y	*301-8237*	1	FLYWHEEL GP	455
Y	*298-5125*	1	GLOW PLUG GP	1586
Y	*301-8236*	1	HOUSING GP-FLYWHEEL	479
Y	*304-0727*	1	HOUSING GP-FRONT	492
Y	*299-5033*	1	LIFTING GP-ENGINE	512
Y	*298-5120*	1	LINES GP-FUEL	1030
			S/N: 4441-321	
Y	*311-2271*	1	LINES GP-FUEL FILTER	1050
			S/N: 444322-UP	
Y	*299-5082*	1	MOUNTING GP-FAN	713
Y	*301-8250*	1	PLUG GP-ENGINE	633
Y	*301-8239*	1	PAN GP-OIL	541
Y	*298-5087*	1	PISTON & ROD GP	609
Y	*298-5098*	1	PLUG GP-ENGINE	631
Y	*298-5129*	1	PLUG GP-CYLINDER HEAD	629
Y	*298-5131*	1	PLUG GP-ENGINE	632
Y	*298-5128*	1	PLUG GP-ENGINE OIL MANIFOLD	680
Y	*301-8242*	1	PULLEY GP (CRANKSHAFT)	644
			S/N: 4441-7401	
Y	*360-7342*	1	PULLEY GP-CRANKSHAFT	651
			S/N: 4447402-UP	
Y	*301-8235*	1	PUMP GP-FUEL INJECTION	1114
Y	*340-4692*	1	PUMP GP-WATER	722
Y	*298-5089*	1	ROCKER ARM GP	658
Y	*303-4619*	1	STARTING MOTOR GP-ELECTRIC	1592
			—OR—	
Y	*325-5612*	1	STARTING MOTOR GP-ELECTRIC	1597
Y	*303-4622*	1	TURBOCHARGER GP	812
Y	*298-5130*	1	WIRING GP-ENGINE	1604
R	**359-0739**	1	CYLINDER BLOCK GP-SHORT	
	301-8234	1	ELECTRONICS GP-ENGINE RATINGS	

294-7198 **ENGINE AR-PRIMARY (**contd.**)** **i04173053**

NOTE	PART NUMBER	QTY	PART NAME 1 2 3 4 5 6 (PRODUCT LEVEL)	SEE PAGE

R - REMANUFACTURED PART MAY BE AVAILABLE
Y - SEPARATE ILLUSTRATION

<END>

294-7200 ENGINE AR-PRIMARY*R

92 BRAKE KW (123 BHP) AT 2400 RPM

SMCS-1000 **i04380459**

NOTE	PART NUMBER	QTY	PART NAME 1 2 3 4 5 6 (PRODUCT LEVEL)	SEE PAGE
Y	*301-8245*	1	BALANCER GP	317
Y	*298-5892*	1	CAMSHAFT GP	321
Y	*301-8248*	1	CONNECTION GP-INLET	776
Y	*301-8243*	1	CONNECTION GP-WATER	687
Y	*304-6436*	1	CONTROL GP-ENGINE ELECTRONIC	1584
Y	*301-8241*	1	COOLER GP-OIL	697
Y	*298-5111*	1	COVER GP-ENGINE	332
Y	*298-5097*	1	COVER GP-VALVE MECHANISM	335
Y	*298-5888*	1	CRANKSHAFT GP	380
Y	*298-5887*	1	CYLINDER BLOCK GP	400
Y	*298-5890*	1	CYLINDER HEAD GP	419
Y	*330-3666*	1	DRIVE GP-FAN	444
Y	*303-5773*	1	FILLER GP-ENGINE OIL	671
			S/N: 4441-1441	
Y	*318-0775*	1	FILLER GP-ENGINE OIL	676
			S/N: 4441442-UP	
Y	*298-5100*	1	FILTER GP-ENGINE OIL	678
Y	*311-2271*	1	LINES GP-FUEL FILTER	1050
Y	*298-5123*	1	FILTER GP-PRIMARY FUEL	1009
Y	*301-8251*	1	FILTER GP-WATER SEP & FUEL	1013
Y	*298-5110*	1	GEAR GP-FRONT	475
Y	*298-5125*	1	GLOW PLUG GP	1586
Y	*298-5130*	1	WIRING GP-ENGINE	1604
Y	*299-5033*	1	LIFTING GP-ENGINE	512
Y	*304-0730*	1	MOUNTING GP-ENGINE	518
Y	*299-5082*	1	MOUNTING GP-FAN	713
Y	*301-8239*	1	PAN GP-OIL	541
Y	*298-5889*	1	PISTON GP	621
Y	*298-5129*	1	PLUG GP-CYLINDER HEAD	629
Y	*298-5131*	1	PLUG GP-ENGINE	632
Y	*298-5128*	1	PLUG GP-ENGINE OIL MANIFOLD	680
Y	*298-5101*	1	PULLEY GP-CRANKSHAFT	648
			S/N: 4441-7401	
Y	*360-7346*	1	PULLEY GP-CRANKSHAFT	655
			S/N: 4447402-UP	
Y	*304-7189*	1	PUMP GP-FUEL INJECTION	1204
Y	*298-5105*	1	PUMP GP-WATER	714
Y	*304-0729*	1	TURBOCHARGER GP	824
Y	*298-5891*	1	VALVE MECHANISM GP	661
R	**359-0737**	1	CYLINDER BLOCK GP-SHORT	
	305-8461	1	ELECTRONICS GP-ENGINE RATINGS	

R - REMANUFACTURED PART MAY BE AVAILABLE
Y - SEPARATE ILLUSTRATION

<END>

294-7203 ENGINE AR-PRIMARY

75 BRAKE KW (100 BHP) AT 2200 RPM

SMCS-1000 **i04380460**

NOTE	PART NUMBER	QTY	PART NAME 1 2 3 4 5 6 (PRODUCT LEVEL)	SEE PAGE
Y	*304-0728*	1	ADAPTER GP-AUXILIARY DRIVE	301
Y	*303-4621*	1	ALTERNATOR GP-CHARGING	1560
Y	*304-3648*	1	CAMSHAFT GP	322
Y	*301-8243*	1	CONNECTION GP-WATER	687
Y	*304-6436*	1	CONTROL GP-ENGINE ELECTRONIC	1584
Y	*298-5099*	1	COOLER GP-ENGINE OIL	690
Y	*301-8240*	1	COVER GP-VALVE MECHANISM	341
Y	*305-0640*	1	COVER GP-INLET MANIFOLD	780
Y	*304-3642*	1	CRANKSHAFT GP	382
Y	*304-3641*	1	CYLINDER BLOCK GP	402
Y	*304-3645*	1	CYLINDER HEAD GP	420
Y	*301-8238*	1	DRIVE GP-FAN	427
Y	*298-5100*	1	FILTER GP-ENGINE OIL	678
Y	*305-0642*	1	FILTER GP-FUEL	1000
Y	*301-8251*	1	FILTER GP-WATER SEP & FUEL	1013
Y	*301-8237*	1	FLYWHEEL GP	455
Y	*298-5125*	1	GLOW PLUG GP	1586
Y	*303-4618*	1	HOUSING GP-FLYWHEEL	481
Y	*304-0727*	1	HOUSING GP-FRONT	492
Y	*299-5033*	1	LIFTING GP-ENGINE	512
Y	*298-5120*	1	LINES GP-FUEL	1030
			S/N: 4441-321	
Y	*311-2271*	1	LINES GP-FUEL FILTER	1050
			S/N: 444322-UP	
Y	*299-5082*	1	MOUNTING GP-FAN	713
Y	*301-8250*	1	PLUG GP-ENGINE	633
Y	*298-5096*	1	PAN GP-OIL	533
Y	*304-3643*	1	PISTON & ROD GP	613
Y	*298-5098*	1	PLUG GP-ENGINE	631
Y	*298-5129*	1	PLUG GP-CYLINDER HEAD	629
Y	*298-5131*	1	PLUG GP-ENGINE	632
Y	*298-5128*	1	PLUG GP-ENGINE OIL MANIFOLD	680
Y	*301-8242*	1	PULLEY GP (CRANKSHAFT)	644
			S/N: 4441-7401	
Y	*360-7342*	1	PULLEY GP-CRANKSHAFT	651
			S/N: 4447402-UP	
Y	*298-5112*	1	PUMP GP-ENGINE OIL	681
Y	*305-1955*	1	PUMP GP-FUEL INJECTION	1268
			S/N: 4441-321	
Y	*313-4350*	1	PUMP GP-FUEL INJECTION	1398
			S/N: 444322-UP	
Y	*340-4692*	1	PUMP GP-WATER	722
Y	*303-4619*	1	STARTING MOTOR GP-ELECTRIC	1592
			—OR—	
Y	*325-5612*	1	STARTING MOTOR GP-ELECTRIC	1597
Y	*305-0637*	1	TURBOCHARGER GP	830
Y	*304-3647*	1	VALVE MECHANISM GP	663
Y	*298-5130*	1	WIRING GP-ENGINE	1604

294-7203 **ENGINE AR-PRIMARY (**contd.**)** **i04380460**

NOTE	PART NUMBER	QTY	PART NAME 1 2 3 4 5 6 (PRODUCT LEVEL)	SEE PAGE
R	**359-0737**	1	CYLINDER BLOCK GP-SHORT	
	305-8460	1	ELECTRONICS GP-ENGINE RATINGS	

R - REMANUFACTURED PART MAY BE AVAILABLE
Y - SEPARATE ILLUSTRATION

<END>

295-2157 ENGINE AR-PRIMARY*R

85 BRAKE KW (114 BHP) AT 2200 RPM

SMCS-1000 **i04380461**

NOTE	PART NUMBER	QTY	PART NAME 1 2 3 4 5 6 (PRODUCT LEVEL)	SEE PAGE
Y	*301-8245*	1	BALANCER GP	317
Y	*298-5892*	1	CAMSHAFT GP	321
Y	*301-8248*	1	CONNECTION GP-INLET	776
Y	*301-8243*	1	CONNECTION GP-WATER	687
Y	*301-8241*	1	COOLER GP-OIL	697
Y	*298-5111*	1	COVER GP-ENGINE	332
Y	*298-5097*	1	COVER GP-VALVE MECHANISM	335
Y	*298-5888*	1	CRANKSHAFT GP	380
Y	*298-5887*	1	CYLINDER BLOCK GP	400
Y	*298-5890*	1	CYLINDER HEAD GP	419
Y	*330-3666*	1	DRIVE GP-FAN	444
Y	*303-5773*	1	FILLER GP-ENGINE OIL	671
			S/N: 4441-1441	
Y	*318-0775*	1	FILLER GP-ENGINE OIL	676
			S/N: 4441442-UP	
Y	*298-5100*	1	FILTER GP-ENGINE OIL	678
Y	*311-2271*	1	LINES GP-FUEL FILTER	1050
Y	*298-5123*	1	FILTER GP-PRIMARY FUEL	1009
Y	*301-8251*	1	FILTER GP-WATER SEP & FUEL	1013
Y	*298-5110*	1	GEAR GP-FRONT	475
Y	*298-5125*	1	GLOW PLUG GP	1586
Y	*299-5033*	1	LIFTING GP-ENGINE	512
Y	*304-0730*	1	MOUNTING GP-ENGINE	518
Y	*299-5082*	1	MOUNTING GP-FAN	713
Y	*301-8239*	1	PAN GP-OIL	541
Y	*298-5889*	1	PISTON GP	621
Y	*298-5129*	1	PLUG GP-CYLINDER HEAD (TEMPERATURE)	629
Y	*298-5131*	1	PLUG GP-ENGINE	632
Y	*298-5128*	1	PLUG GP-ENGINE OIL MANIFOLD	680
Y	*298-5101*	1	PULLEY GP-CRANKSHAFT	648
			S/N: 4441-7401	
Y	*360-7346*	1	PULLEY GP-CRANKSHAFT	655
			S/N: 4447402-UP	
Y	*304-0725*	1	PUMP GP-FUEL INJECTION	1154
Y	*298-5105*	1	PUMP GP-WATER	714
Y	*304-0729*	1	TURBOCHARGER GP	824
Y	*298-5891*	1	VALVE MECHANISM GP	661
Y	*298-5130*	1	WIRING GP-ENGINE	1604
R	**359-0737**	1	CYLINDER BLOCK GP-SHORT	
	305-8463	1	ELECTRONICS GP-ENGINE RATINGS	

R - REMANUFACTURED PART MAY BE AVAILABLE
Y - SEPARATE ILLUSTRATION

<END>

295-2163 ENGINE AR-PRIMARY*R

104 BRAKE KW (139 BHP) AT 2400 RPM

SMCS-1000 **i04173054**

NOTE	PART NUMBER	QTY	PART NAME 1 2 3 4 5 6 (PRODUCT LEVEL)	SEE PAGE
Y	*301-8245*	1	BALANCER GP	317
Y	*298-5090*	1	CAMSHAFT GP	320
Y	*301-8248*	1	CONNECTION GP-INLET	776
Y	*301-8243*	1	CONNECTION GP-WATER	687
Y	*304-6436*	1	CONTROL GP-ENGINE ELECTRONIC	1584
Y	*301-8241*	1	COOLER GP-OIL	697
Y	*298-5111*	1	COVER GP-ENGINE	332
Y	*298-5097*	1	COVER GP-VALVE MECHANISM	335
Y	*298-5086*	1	CRANKSHAFT GP	378
Y	*298-5085*	1	CYLINDER BLOCK GP	398
Y	*298-5088*	1	CYLINDER HEAD GP	418
Y	*330-3666*	1	DRIVE GP-FAN	444
Y	*303-5773*	1	FILLER GP-ENGINE OIL	671
			S/N: 4441-1441	
Y	*318-0775*	1	FILLER GP-ENGINE OIL	676
			S/N: 4441442-UP	
Y	*298-5100*	1	FILTER GP-ENGINE OIL	678
Y	*311-2271*	1	LINES GP-FUEL FILTER	1050
Y	*298-5123*	1	FILTER GP-PRIMARY FUEL	1009
Y	*301-8251*	1	FILTER GP-WATER SEP & FUEL	1013
Y	*298-5110*	1	GEAR GP-FRONT	475
Y	*298-5125*	1	GLOW PLUG GP	1586
Y	*298-5130*	1	WIRING GP-ENGINE	1604
Y	*299-5033*	1	LIFTING GP-ENGINE	512
Y	*304-0730*	1	MOUNTING GP-ENGINE	518
Y	*299-5082*	1	MOUNTING GP-FAN	713
Y	*301-8239*	1	PAN GP-OIL	541
Y	*298-5087*	1	PISTON & ROD GP	609
Y	*298-5129*	1	PLUG GP-CYLINDER HEAD	629
Y	*298-5131*	1	PLUG GP-ENGINE	632
Y	*298-5128*	1	PLUG GP-ENGINE OIL MANIFOLD	680
Y	*298-5101*	1	PULLEY GP-CRANKSHAFT	648
			S/N: 4441-7401	
Y	*360-7346*	1	PULLEY GP-CRANKSHAFT	655
			S/N: 4447402-UP	
Y	*304-7192*	1	PUMP GP-FUEL INJECTION	1224
Y	*298-5105*	1	PUMP GP-WATER	714
Y	*298-5089*	1	ROCKER ARM GP	658
Y	*304-0729*	1	TURBOCHARGER GP	824
R	**359-0739**	1	CYLINDER BLOCK GP-SHORT	
	305-8462	1	ELECTRONICS GP-ENGINE RATINGS	

R - REMANUFACTURED PART MAY BE AVAILABLE
Y - SEPARATE ILLUSTRATION

<END>

295-2167 ENGINE AR-PRIMARY

95 BRAKE KW (127 BHP) AT 2200 RPM

SMCS-1000 **i04935169**

NOTE	PART NUMBER	QTY	PART NAME 1 2 3 4 5 6 (PRODUCT LEVEL)	SEE PAGE
Y	*304-0728*	1	ADAPTER GP-AUXILIARY DRIVE	301
Y	*303-4621*	1	ALTERNATOR GP-CHARGING	1560
Y	*301-8245*	1	BALANCER GP	317
Y	*298-5892*	1	CAMSHAFT GP	321
Y	*301-8248*	1	CONNECTION GP-INLET	776
Y	*301-8243*	1	CONNECTION GP-WATER	687
Y	*304-6436*	1	CONTROL GP-ENGINE ELECTRONIC	1584
Y	*301-8241*	1	COOLER GP-OIL	697
Y	*301-8240*	1	COVER GP-VALVE MECHANISM	341
Y	*298-5888*	1	CRANKSHAFT GP	380
Y	*298-5887*	1	CYLINDER BLOCK GP	400
Y	*298-5890*	1	CYLINDER HEAD GP	419
Y	*301-8238*	1	DRIVE GP-FAN	427
Y	*298-5100*	1	FILTER GP-ENGINE OIL	678
Y	*298-5123*	1	FILTER GP-PRIMARY FUEL	1009
Y	*301-8251*	1	FILTER GP-WATER SEP & FUEL	1013
Y	*301-8237*	1	FLYWHEEL GP	455
Y	*298-5125*	1	GLOW PLUG GP	1586
Y	*301-8236*	1	HOUSING GP-FLYWHEEL	479
Y	*304-0727*	1	HOUSING GP-FRONT	492
Y	*299-5033*	1	LIFTING GP-ENGINE	512
Y	*298-5120*	1	LINES GP-FUEL	1030
			S/N: 4441-321	
Y	*311-2271*	1	LINES GP-FUEL FILTER	1050
			S/N: 444322-UP	
Y	*299-5082*	1	MOUNTING GP-FAN	713
Y	*301-8250*	1	PLUG GP-ENGINE	633
Y	*301-8239*	1	PAN GP-OIL	541
Y	*298-5889*	1	PISTON GP	621
Y	*298-5098*	1	PLUG GP-ENGINE	631
Y	*298-5129*	1	PLUG GP-CYLINDER HEAD	629
Y	*298-5131*	1	PLUG GP-ENGINE	632
Y	*298-5128*	1	PLUG GP-ENGINE OIL MANIFOLD	680
Y	*301-8242*	1	PULLEY GP (CRANKSHAFT)	644
			S/N: 4441-7401	
Y	*360-7342*	1	PULLEY GP-CRANKSHAFT	651
			S/N: 4447402-UP	
Y	*305-6701*	1	PUMP GP-FUEL INJECTION	1303
Y	*340-4692*	1	PUMP GP-WATER	722
Y	*303-4619*	1	STARTING MOTOR GP-ELECTRIC	1592
			—OR—	
Y	*325-5612*	1	STARTING MOTOR GP-ELECTRIC	1597
Y	*303-4622*	1	TURBOCHARGER GP	812
Y	*298-5891*	1	VALVE MECHANISM GP	661
Y	*298-5130*	1	WIRING GP-ENGINE	1604
R	**359-0737**	1	CYLINDER BLOCK GP-SHORT	
	305-8454	1	ELECTRONICS GP-ENGINE RATINGS	

295-2167 **ENGINE AR-PRIMARY (**contd.**)** **i04935169**

NOTE	PART NUMBER	QTY	PART NAME 1 2 3 4 5 6 (PRODUCT LEVEL)	SEE PAGE

R - REMANUFACTURED PART MAY BE AVAILABLE
Y - SEPARATE ILLUSTRATION

<END>

295-2169 ENGINE AR-PRIMARY

75 BRAKE KW (100 BHP) AT 2200 RPM

SMCS-1000 **i04380948**

NOTE	PART NUMBER	QTY	PART NAME 1 2 3 4 5 6 (PRODUCT LEVEL)	SEE PAGE
Y	*304-0728*	1	ADAPTER GP-AUXILIARY DRIVE	301
Y	*303-4621*	1	ALTERNATOR GP-CHARGING	1560
Y	*301-8243*	1	CONNECTION GP-WATER	687
Y	*304-6436*	2	CONTROL GP-ENGINE ELECTRONIC	1584
Y	*301-8241*	1	COOLER GP-OIL	697
Y	*301-8240*	1	COVER GP-VALVE MECHANISM	341
Y	*305-0640*	1	COVER GP-INLET MANIFOLD	780
Y	*304-3642*	1	CRANKSHAFT GP	382
Y	*304-3641*	1	CYLINDER BLOCK GP	402
Y	*304-3645*	1	CYLINDER HEAD GP	420
Y	*301-8238*	1	DRIVE GP-FAN	427
Y	*299-5082*	1	MOUNTING GP-FAN	713
Y	*298-5100*	1	FILTER GP-ENGINE OIL	678
Y	*305-0642*	1	FILTER GP-FUEL	1000
Y	*301-8251*	1	FILTER GP-WATER SEP & FUEL	1013
Y	*301-8237*	1	FLYWHEEL GP	455
Y	*298-5125*	1	GLOW PLUG GP	1586
Y	*298-5130*	1	WIRING GP-ENGINE	1604
Y	*301-8236*	1	HOUSING GP-FLYWHEEL	479
Y	*304-0727*	1	HOUSING GP-FRONT	492
Y	*301-8245*	1	BALANCER GP	317
Y	*299-5033*	1	LIFTING GP-ENGINE	512
Y	*298-5120*	1	LINES GP-FUEL	1030
			S/N: 4441-321	
Y	*311-2271*	1	LINES GP-FUEL FILTER	1050
			S/N: 444322-UP	
Y	*301-8250*	1	PLUG GP-ENGINE	633
Y	*301-8239*	1	PAN GP-OIL	541
Y	*304-3643*	1	PISTON & ROD GP	613
Y	*298-5098*	1	PLUG GP-ENGINE	631
Y	*298-5129*	1	PLUG GP-CYLINDER HEAD	629
Y	*298-5131*	1	PLUG GP-ENGINE	632
Y	*298-5128*	1	PLUG GP-ENGINE OIL MANIFOLD	680
Y	*301-8242*	1	PULLEY GP (CRANKSHAFT)	644
			S/N: 4441-7401	
Y	*360-7342*	1	PULLEY GP-CRANKSHAFT	651
			S/N: 4447402-UP	
Y	*305-0634*	1	PUMP GP-FUEL INJECTION	1263
			S/N: 4441-321	
Y	*313-3514*	1	PUMP GP-FUEL INJECTION	1373
			S/N: 444322-UP	
Y	*340-4692*	1	PUMP GP-WATER	722
Y	*303-4619*	1	STARTING MOTOR GP-ELECTRIC	1592
			—OR—	
Y	*325-5612*	1	STARTING MOTOR GP-ELECTRIC	1597
Y	*305-0637*	1	TURBOCHARGER GP	830
Y	*304-3647*	1	VALVE MECHANISM GP	663

295-2169 **ENGINE AR-PRIMARY (**contd.**)** **i04380948**

NOTE	PART NUMBER	QTY	PART NAME 1 2 3 4 5 6 (PRODUCT LEVEL)	SEE PAGE
R	**359-0737**	1	CYLINDER BLOCK GP-SHORT	
	305-8453	1	ELECTRONICS GP-ENGINE RATINGS	

R - REMANUFACTURED PART MAY BE AVAILABLE
Y - SEPARATE ILLUSTRATION

<END>

295-2170 ENGINE AR-PRIMARY

104 BRAKE KW (139 BHP) AT 2200 RPM

SMCS-1000 **i04173055**

NOTE	PART NUMBER	QTY	PART NAME 1 2 3 4 5 6 (PRODUCT LEVEL)	SEE PAGE
Y	*304-0728*	1	ADAPTER GP-AUXILIARY DRIVE	301
Y	*301-8244*	1	ALTERNATOR GP-CHARGING	1559
Y	*298-5090*	1	CAMSHAFT GP	320
Y	*301-8248*	1	CONNECTION GP-INLET	776
Y	*301-8243*	1	CONNECTION GP-WATER	687
Y	*304-6436*	1	CONTROL GP-ENGINE ELECTRONIC	1584
Y	*301-8241*	1	COOLER GP-OIL	697
Y	*301-8240*	1	COVER GP-VALVE MECHANISM	341
Y	*298-5086*	1	CRANKSHAFT GP	378
Y	*298-5085*	1	CYLINDER BLOCK GP	398
Y	*298-5088*	1	CYLINDER HEAD GP	418
Y	*301-8238*	1	DRIVE GP-FAN	427
Y	*299-5082*	1	MOUNTING GP-FAN	713
Y	*298-5100*	1	FILTER GP-ENGINE OIL	678
Y	*298-5123*	1	FILTER GP-PRIMARY FUEL	1009
Y	*301-8251*	1	FILTER GP-WATER SEP & FUEL	1013
Y	*301-8237*	1	FLYWHEEL GP	455
Y	*299-5075*	1	GLOW PLUG GP	1587
Y	*298-5130*	1	WIRING GP-ENGINE	1604
Y	*301-8236*	1	HOUSING GP-FLYWHEEL	479
Y	*304-0727*	1	HOUSING GP-FRONT	492
Y	*301-8245*	1	BALANCER GP	317
Y	*299-5033*	1	LIFTING GP-ENGINE	512
Y	*298-5120*	1	LINES GP-FUEL	1030
			S/N: 4441-321	
Y	*311-2271*	1	LINES GP-FUEL FILTER	1050
			S/N: 444322-UP	
Y	*301-8250*	1	PLUG GP-ENGINE	633
Y	*301-8239*	1	PAN GP-OIL	541
Y	*298-5087*	1	PISTON & ROD GP	609
Y	*298-5098*	1	PLUG GP-ENGINE	631
Y	*298-5129*	1	PLUG GP-CYLINDER HEAD	629
Y	*298-5131*	1	PLUG GP-ENGINE	632
Y	*298-5128*	1	PLUG GP-ENGINE OIL MANIFOLD	680
Y	*301-8242*	1	PULLEY GP	644
			S/N: 4441-7401	
Y	*360-7342*	1	PULLEY GP-CRANKSHAFT	651
			S/N: 4447402-UP	
Y	*301-8235*	1	PUMP GP-FUEL INJECTION	1114
Y	*340-4692*	1	PUMP GP-WATER	722
Y	*298-5089*	1	ROCKER ARM GP	658
Y	*299-5067*	1	STARTING MOTOR GP-ELECTRIC	1591
Y	*301-8246*	1	TURBOCHARGER GP	806
R	**359-0739**	1	CYLINDER BLOCK GP-SHORT	
	301-8234	1	ELECTRONICS GP-ENGINE RATINGS	

R - REMANUFACTURED PART MAY BE AVAILABLE
Y - SEPARATE ILLUSTRATION

<END>

295-2171 ENGINE AR-PRIMARY

75 BRAKE KW (100 BHP) AT 2200 RPM

SMCS-1000 **i04380949**

NOTE	PART NUMBER	QTY	PART NAME 1 2 3 4 5 6 (PRODUCT LEVEL)	SEE PAGE
Y	*304-0728*	1	ADAPTER GP-AUXILIARY DRIVE	301
Y	*301-8244*	1	ALTERNATOR GP-CHARGING	1559
Y	*304-3648*	1	CAMSHAFT GP	322
Y	*301-8243*	1	CONNECTION GP-WATER	687
Y	*304-6436*	1	CONTROL GP-ENGINE ELECTRONIC	1584
Y	*301-8241*	1	COOLER GP-OIL	697
Y	*301-8240*	1	COVER GP-VALVE MECHANISM	341
Y	*305-0640*	1	COVER GP-INLET MANIFOLD	780
Y	*304-3642*	1	CRANKSHAFT GP	382
Y	*304-3641*	1	CYLINDER BLOCK GP	402
Y	*304-3645*	1	CYLINDER HEAD GP	420
Y	*301-8238*	1	DRIVE GP-FAN	427
Y	*299-5082*	1	MOUNTING GP-FAN	713
Y	*298-5100*	1	FILTER GP-ENGINE OIL	678
Y	*305-0642*	1	FILTER GP-FUEL	1000
Y	*301-8251*	1	FILTER GP-WATER SEP & FUEL	1013
Y	*301-8237*	1	FLYWHEEL GP	455
Y	*299-5075*	1	GLOW PLUG GP	1587
Y	*298-5130*	1	WIRING GP-ENGINE	1604
Y	*301-8236*	1	HOUSING GP-FLYWHEEL	479
Y	*304-0727*	1	HOUSING GP-FRONT	492
Y	*301-8245*	1	BALANCER GP	317
Y	*299-5033*	1	LIFTING GP-ENGINE	512
Y	*298-5120*	1	LINES GP-FUEL	1030
			S/N: 4441-321	
Y	*311-2271*	1	LINES GP-FUEL FILTER	1050
			S/N: 444322-UP	
Y	*301-8250*	1	PLUG GP-ENGINE	633
Y	*301-8239*	1	PAN GP-OIL	541
Y	*304-3643*	1	PISTON & ROD GP	613
Y	*298-5098*	1	PLUG GP-ENGINE	631
Y	*298-5129*	1	PLUG GP-CYLINDER HEAD	629
Y	*298-5131*	1	PLUG GP-ENGINE	632
Y	*298-5128*	1	PLUG GP-ENGINE OIL MANIFOLD	680
Y	*301-8242*	1	PULLEY GP	644
			S/N: 4441-7401	
Y	*360-7342*	1	PULLEY GP-CRANKSHAFT	651
			S/N: 4447402-UP	
Y	*305-0634*	1	PUMP GP-FUEL INJECTION	1263
			S/N: 4441-321	
Y	*313-3514*	1	PUMP GP-FUEL INJECTION	1373
			S/N: 444322-UP	
Y	*340-4692*	1	PUMP GP-WATER	722
Y	*299-5067*	1	STARTING MOTOR GP-ELECTRIC	1591
Y	*305-1948*	1	TURBOCHARGER GP	836
Y	*304-3647*	1	VALVE MECHANISM GP	663
R	**359-0737**	1	CYLINDER BLOCK GP-SHORT	
	305-8453	1	ELECTRONICS GP-ENGINE RATINGS	

295-2171 **ENGINE AR-PRIMARY (**contd.**)** **i04380949**

NOTE	PART NUMBER	QTY	PART NAME 1 2 3 4 5 6 (PRODUCT LEVEL)	SEE PAGE

R - REMANUFACTURED PART MAY BE AVAILABLE
Y - SEPARATE ILLUSTRATION

<END>

300-5067 ENGINE AR-PRIMARY

93 BRAKE KW (125 BHP) AT 2200 RPM

SMCS-1000 **i04380950**

NOTE	PART NUMBER	QTY	PART NAME 1 2 3 4 5 6 (PRODUCT LEVEL)	SEE PAGE
Y	*301-8245*	1	BALANCER GP	317
Y	*298-5892*	1	CAMSHAFT GP	321
Y	*301-8243*	1	CONNECTION GP-WATER	687
Y	*304-6436*	1	CONTROL GP-ENGINE ELECTRONIC	1584
Y	*301-8241*	1	COOLER GP-OIL	697
Y	*304-8758*	1	COVER GP-VALVE MECHANISM	357
Y	*298-5888*	1	CRANKSHAFT GP	380
Y	*298-5887*	1	CYLINDER BLOCK GP	400
Y	*298-5890*	1	CYLINDER HEAD GP	419
Y	*323-9874*	1	DRIVE GP-FAN	440
			S/N: 4441487-UP	
Y	*303-5777*	1	ELBOW GP-AIR INLET	786
Y	*307-2849*	1	FAN GP	702
			S/N: 4441487-UP	
Y	*314-6667*	1	FILLER GP-ENGINE OIL	675
			S/N: 4441-1441	
Y	*308-4158*	1	FILLER GP-ENGINE OIL	673
			S/N: 4441442-UP	
Y	*298-5100*	1	FILTER GP-ENGINE OIL	678
Y	*311-2271*	1	LINES GP-FUEL FILTER	1050
Y	*298-5123*	1	FILTER GP-PRIMARY FUEL	1009
Y	*301-8251*	1	FILTER GP-WATER SEP & FUEL	1013
Y	*304-8756*	1	FLYWHEEL GP	458
Y	*298-5125*	1	GLOW PLUG GP	1586
Y	*308-4272*	1	HOUSING GP-FLYWHEEL	487
Y	*304-8760*	1	HOUSING GP-FRONT	495
Y	*298-5127*	1	LIFTING GP-ENGINE	511
Y	*304-8763*	1	MOUNTING GP-ENGINE	519
Y	*301-8239*	1	PAN GP-OIL	541
Y	*304-8762*	1	PIPE GP-EXHAUST	790
Y	*298-5889*	1	PISTON GP	621
Y	*298-5129*	1	PLUG GP-CYLINDER HEAD	629
Y	*304-3663*	1	PLUG GP-ENGINE	634
Y	*304-8761*	1	PLUG GP-ENGINE	636
Y	*298-5128*	1	PLUG GP-ENGINE OIL MANIFOLD	680
Y	*298-5102*	1	PULLEY GP-AUXILIARY DRIVE	647
			S/N: 4441-7401	
Y	*360-7355*	1	PULLEY GP-CRANKSHAFT	656
			S/N: 4447402-UP	
Y	*298-5101*	1	PULLEY GP-CRANKSHAFT	648
			S/N: 4441-7401	
Y	*360-7346*	1	PULLEY GP-CRANKSHAFT	655
			S/N: 4447402-UP	
Y	*308-4153*	1	PUMP GP-FUEL INJECTION	1348
Y	*298-5105*	1	PUMP GP-WATER	714
Y	*325-5612*	1	STARTING MOTOR GP-ELECTRIC	1597
Y	*304-0729*	1	TURBOCHARGER GP	824
Y	*298-5891*	1	VALVE MECHANISM GP	661
Y	*298-5130*	1	WIRING GP-ENGINE	1604

300-5067 **ENGINE AR-PRIMARY (**contd.**)** **i04380950**

NOTE	PART NUMBER	QTY	PART NAME 1 2 3 4 5 6 (PRODUCT LEVEL)	SEE PAGE
R	**359-0737**	1	CYLINDER BLOCK GP-SHORT	
	308-4154	1	ELECTRONICS GP-ENGINE RATINGS	

R - REMANUFACTURED PART MAY BE AVAILABLE
Y - SEPARATE ILLUSTRATION

<END>

300-5078 ENGINE AR-PRIMARY

95 BRAKE KW (127 BHP) AT 2200 RPM

SMCS-1000 **i04380952**

NOTE	PART NUMBER	QTY	PART NAME 1 2 3 4 5 6 (PRODUCT LEVEL)	SEE PAGE
Y	*304-0728*	1	ADAPTER GP-AUXILIARY DRIVE	301
Y	*301-8244*	1	ALTERNATOR GP-CHARGING	1559
Y	*301-8245*	1	BALANCER GP	317
Y	*298-5892*	1	CAMSHAFT GP	321
Y	*301-8248*	1	CONNECTION GP-INLET	776
Y	*301-8243*	1	CONNECTION GP-WATER	687
Y	*304-6436*	1	CONTROL GP-ENGINE ELECTRONIC	1584
Y	*301-8241*	1	COOLER GP-OIL	697
Y	*301-8240*	1	COVER GP-VALVE MECHANISM	341
Y	*298-5888*	1	CRANKSHAFT GP	380
Y	*298-5887*	1	CYLINDER BLOCK GP	400
Y	*298-5890*	1	CYLINDER HEAD GP	419
Y	*301-8238*	1	DRIVE GP-FAN	427
Y	*298-5100*	1	FILTER GP-ENGINE OIL	678
Y	*298-5123*	1	FILTER GP-PRIMARY FUEL	1009
Y	*301-8251*	1	FILTER GP-WATER SEP & FUEL	1013
Y	*301-8237*	1	FLYWHEEL GP	455
Y	*299-5075*	1	GLOW PLUG GP	1587
Y	*301-8236*	1	HOUSING GP-FLYWHEEL	479
Y	*304-0727*	1	HOUSING GP-FRONT	492
Y	*299-5033*	1	LIFTING GP-ENGINE	512
Y	*298-5120*	1	LINES GP-FUEL	1030
			S/N: 4441-321	
Y	*311-2271*	1	LINES GP-FUEL FILTER	1050
			S/N: 444322-UP	
Y	*299-5082*	1	MOUNTING GP-FAN	713
Y	*301-8239*	1	PAN GP-OIL	541
Y	*298-5889*	1	PISTON GP	621
Y	*298-5098*	1	PLUG GP-ENGINE	631
Y	*301-8250*	1	PLUG GP-ENGINE	633
Y	*298-5129*	1	PLUG GP-CYLINDER HEAD	629
Y	*298-5131*	1	PLUG GP-ENGINE	632
Y	*298-5128*	1	PLUG GP-ENGINE OIL MANIFOLD	680
Y	*301-8242*	1	PULLEY GP	644
			S/N: 4441-7401	
Y	*360-7342*	1	PULLEY GP-CRANKSHAFT	651
			S/N: 4447402-UP	
Y	*305-6701*	1	PUMP GP-FUEL INJECTION	1303
Y	*340-4692*	1	PUMP GP-WATER	722
Y	*299-5067*	1	STARTING MOTOR GP-ELECTRIC	1591
Y	*301-8246*	1	TURBOCHARGER GP	806
Y	*298-5891*	1	VALVE MECHANISM GP	661
Y	*298-5130*	1	WIRING GP-ENGINE	1604
R	**359-0737**	1	CYLINDER BLOCK GP-SHORT	
	305-8454	1	ELECTRONICS GP-ENGINE RATINGS	

R - REMANUFACTURED PART MAY BE AVAILABLE
Y - SEPARATE ILLUSTRATION

<END>

300-5079 ENGINE AR-PRIMARY

93 BRAKE KW (120 BHP) AT 2800 RPM

SMCS-1000 **i04005573**

NOTE	PART NUMBER	QTY	PART NAME 1 2 3 4 5 6 (PRODUCT LEVEL)	SEE PAGE
Y	*301-8245*	1	BALANCER GP	317
Y	*308-4152*	1	CAMSHAFT GP	323
Y	*298-5116*	1	CONNECTION GP-INLET	774
Y	*301-8243*	1	CONNECTION GP-WATER	687
Y	*304-6436*	1	CONTROL GP-ENGINE ELECTRONIC	1584
Y	*308-4159*	1	COOLER GP-OIL	700
Y	*303-5772*	1	COVER GP-VALVE MECHANISM	347
Y	*308-4146*	1	CRANKSHAFT GP	384
Y	*308-4145*	1	CYLINDER BLOCK GP	404
Y	*308-4150*	1	CYLINDER HEAD GP	421
Y	*308-4156*	1	DRIVE GP-FAN	431
Y	*308-4158*	1	FILLER GP-ENGINE OIL	673
Y	*316-1100*	1	FILTER GP-FUEL	1004
Y	*298-5125*	1	GLOW PLUG GP	1586
Y	*304-8760*	1	HOUSING GP-FRONT	495
Y	*299-5033*	1	LIFTING GP-ENGINE	512
Y	*316-1179*	1	LINES GP-FUEL	1033
Y	*308-4157*	1	PAN GP-OIL	561
Y	*308-4149*	1	PISTON & ROD GP	617
Y	*298-5129*	1	PLUG GP-CYLINDER HEAD (TEMPERATURE)	629
Y	*298-5131*	1	PLUG GP-ENGINE	632
Y	*304-8761*	1	PLUG GP-ENGINE	636
Y	*298-5128*	1	PLUG GP-ENGINE OIL MANIFOLD	680
Y	*308-4160*	1	PULLEY GP-CRANKSHAFT	649
			S/N: 4441-7401	
Y	*360-7343*	1	PULLEY GP-CRANKSHAFT	652
			S/N: 4447402-UP	
Y	*317-7968*	1	PUMP GP-FUEL INJECTION	1458
Y	*298-5105*	1	PUMP GP-WATER	714
Y	*303-5776*	1	TURBOCHARGER GP	821
			—OR—	
Y	*329-9129*	1	TURBOCHARGER GP	948
Y	*308-4151*	1	VALVE MECHANISM GP	665
Y	*316-1102*	1	WIRING GP-ENGINE	1613
	359-0738	1	CYLINDER BLOCK GP-SHORT	
	317-7969	1	SOFTWARE GP-ENG RATINGS ELEK	

Y - SEPARATE ILLUSTRATION

<END>

300-5080 ENGINE AR-PRIMARY*R

97 BRAKE KW (130 BHP) AT 2200 RPM

SMCS-1000 **i04380953**

NOTE	PART NUMBER	QTY	PART NAME 1 2 3 4 5 6 (PRODUCT LEVEL)	SEE PAGE
Y	*303-5775*	1	ADAPTER GP-AUXILIARY DRIVE	300
Y	*308-0304*	1	ALTERNATOR GP-CHARGING	1571
Y	*314-2310*	1	V-BELT GP	660
Y	*298-5892*	1	CAMSHAFT GP	321
Y	*299-5078*	1	CONNECTION GP-WATER	686
Y	*304-6436*	1	CONTROL GP-ENGINE ELECTRONIC	1584
Y	*305-2579*	1	COOLER GP-OIL	698
Y	*301-8240*	1	COVER GP-VALVE MECHANISM	341
Y	*298-5888*	1	CRANKSHAFT GP	380
Y	*298-5887*	1	CYLINDER BLOCK GP	400
Y	*298-5890*	1	CYLINDER HEAD GP	419
Y	*303-5777*	1	ELBOW GP-AIR INLET	786
Y	*299-5071*	1	FILLER GP-ENGINE OIL	670
			S/N: 4441-415	
Y	*318-0775*	1	FILLER GP-ENGINE OIL	676
			S/N: 4441442-2472	
Y	*298-5098*	1	PLUG GP-ENGINE	631
			S/N: 444416-1441, 2473-UP	
Y	*298-5100*	1	FILTER GP-ENGINE OIL	678
Y	*314-2286*	1	FILTER GP-FUEL	1003
			S/N: 4441-415	
Y	*298-5123*	1	FILTER GP-PRIMARY FUEL	1009
			S/N: 444416-UP	
Y	*301-8251*	1	FILTER GP-WATER SEP & FUEL	1013
Y	*305-2577*	1	FLYWHEEL GP	460
Y	*298-5110*	1	GEAR GP-FRONT	475
Y	*298-5125*	1	GLOW PLUG GP	1586
Y	*308-0302*	1	HOUSING GP-FLYWHEEL	486
Y	*299-5033*	1	LIFTING GP-ENGINE	512
Y	*298-5120*	1	LINES GP-FUEL	1030
			S/N: 4441-415	
Y	*311-2271*	1	LINES GP-FUEL FILTER	1050
			S/N: 444416-UP	
Y	*305-2168*	1	MOUNTING GP-EXHAUST	789
Y	*301-8250*	1	PLUG GP-ENGINE	633
Y	*298-5096*	1	PAN GP-OIL	533
Y	*298-5889*	1	PISTON GP	621
Y	*298-5129*	1	PLUG GP-CYLINDER HEAD	629
Y	*304-3663*	1	PLUG GP-ENGINE	634
Y	*298-5128*	1	PLUG GP-ENGINE OIL MANIFOLD	680
Y	*299-5030*	1	PULLEY GP	643
			S/N: 4441-7401	
Y	*360-7344*	1	PULLEY GP-CRANKSHAFT	653
			S/N: 4447402-UP	
Y	*298-5112*	1	PUMP GP-ENGINE OIL	681
Y	*303-4615*	1	PUMP GP-FUEL INJECTION	1134
Y	*298-5105*	1	PUMP GP-WATER	714
Y	*325-5612*	1	STARTING MOTOR GP-ELECTRIC	1597
Y	*308-0305*	1	TURBOCHARGER GP	869

300-5080 **ENGINE AR-PRIMARY (**contd.**)** **i04380953**

NOTE	PART NUMBER	QTY	PART NAME 1 2 3 4 5 6 (PRODUCT LEVEL)	SEE PAGE
Y	*298-5891*	1	VALVE MECHANISM GP	661
Y	*298-5130*	1	WIRING GP-ENGINE	1604
R	**359-0737**	1	CYLINDER BLOCK GP-SHORT	
	305-8458	1	ELECTRONICS GP-ENGINE RATINGS	

R - REMANUFACTURED PART MAY BE AVAILABLE
Y - SEPARATE ILLUSTRATION

<END>

302-8563 ENGINE AR-PRIMARY

75 BRAKE KW (100 BHP) AT 2200 RPM

SMCS-1000 **i07622781**

NOTE	PART NUMBER	QTY	PART NAME 1 2 3 4 5 6 (PRODUCT LEVEL)	SEE PAGE
Y	*304-3648*	1	CAMSHAFT GP	322
Y	*298-5107*	1	CONNECTION GP-WATER	685
Y	*304-6436*	1	CONTROL GP-ENGINE ELECTRONIC	1584
Y	*298-5099*	1	COOLER GP-ENGINE OIL	690
Y	*301-8240*	1	COVER GP-VALVE MECHANISM	341
Y	*305-2169*	1	COVER GP-INLET MANIFOLD	782
Y	*304-3642*	1	CRANKSHAFT GP	382
Y	*304-3641*	1	CYLINDER BLOCK GP	402
Y	*304-3645*	1	CYLINDER HEAD GP	420
Y	*317-6399*	1	FASTENER GP-TURBOCHARGER	788
Y	*304-8759*	1	FILLER GP-ENGINE OIL	672
			S/N: 4441-1441	
Y	*319-4957*	1	FILLER GP-ENGINE OIL	677
			S/N: 4441442-UP	
Y	*298-5100*	1	FILTER GP-ENGINE OIL	678
Y	*314-2301*	1	FILTER GP-FUEL	1003
			S/N: 4441-1441	
Y	*305-0642*	1	FILTER GP-FUEL	1000
			S/N: 4441442-UP	
Y	*303-5780*	1	FILTER GP-FUEL	999
Y	*305-2166*	1	FLYWHEEL GP	459
Y	*298-5125*	1	GLOW PLUG GP	1586
Y	*298-5130*	1	WIRING GP-ENGINE	1604
Y	*304-5571*	1	HOUSING GP-FLYWHEEL	484
Y	*304-8760*	1	HOUSING GP-FRONT	495
Y	*298-5127*	1	LIFTING GP-ENGINE	511
Y	*298-5120*	1	LINES GP-FUEL	1030
			S/N: 4441-1441	
Y	*311-2271*	1	LINES GP-FUEL FILTER	1050
			S/N: 4441442-UP	
Y	*304-0730*	1	MOUNTING GP-ENGINE	518
Y	*298-5096*	1	PAN GP-OIL	533
Y	*304-3643*	1	PISTON & ROD GP	613
Y	*298-5129*	1	PLUG GP-CYLINDER HEAD	629
Y	*298-5131*	1	PLUG GP-ENGINE	632
Y	*304-8761*	1	PLUG GP-ENGINE	636
Y	*298-5128*	1	PLUG GP-ENGINE OIL MANIFOLD	680
Y	*304-5575*	1	PULLEY GP	645
			S/N: 4441-7401	
Y	*360-7341*	1	PULLEY GP-CRANKSHAFT	650
			S/N: 4447402-UP	
Y	*298-5112*	1	PUMP GP-ENGINE OIL	681
Y	*305-1955*	1	PUMP GP-FUEL INJECTION	1268
			S/N: 4441-1441	
Y	*313-4350*	1	PUMP GP-FUEL INJECTION	1398
			S/N: 4441442-UP	
Y	*298-5105*	1	PUMP GP-WATER	714
Y	*305-2167*	1	TURBOCHARGER GP	842
Y	*304-3647*	1	VALVE MECHANISM GP	663

302-8563 **ENGINE AR-PRIMARY (**contd.**)** **i07622781**

NOTE	PART NUMBER	QTY	PART NAME 1 2 3 4 5 6 (PRODUCT LEVEL)	SEE PAGE
R	**359-0737**	1	CYLINDER BLOCK GP-SHORT	
	305-8460	1	ELECTRONICS GP-ENGINE RATINGS	

R - REMANUFACTURED PART MAY BE AVAILABLE
Y - SEPARATE ILLUSTRATION

<END>

302-8564 ENGINE AR-PRIMARY

82 BRAKE KW (110 BHP) AT 2200 RPM

SMCS-1000 **i04380955**

NOTE	PART NUMBER	QTY	PART NAME 1 2 3 4 5 6 (PRODUCT LEVEL)	SEE PAGE
Y	*299-5112*	1	ALTERNATOR GP-CHARGING	1558
Y	*298-5892*	1	CAMSHAFT GP	321
Y	*301-8248*	1	CONNECTION GP-INLET	776
Y	*301-8243*	1	CONNECTION GP-WATER	687
Y	*304-6436*	1	CONTROL GP-ENGINE ELECTRONIC	1584
Y	*298-5099*	1	COOLER GP-ENGINE OIL	690
Y	*301-8240*	1	COVER GP-VALVE MECHANISM	341
Y	*298-5111*	1	COVER GP-ENGINE	332
Y	*298-5888*	1	CRANKSHAFT GP	380
Y	*298-5887*	1	CYLINDER BLOCK GP	400
Y	*298-5890*	1	CYLINDER HEAD GP	419
Y	*299-5069*	1	DRIVE GP-FAN	426
Y	*307-2849*	1	FAN GP	702
Y	*298-5100*	1	FILTER GP-ENGINE OIL	678
Y	*298-5123*	1	FILTER GP-PRIMARY FUEL	1009
Y	*303-5780*	1	FILTER GP-FUEL	999
Y	*304-8756*	1	FLYWHEEL GP	458
Y	*298-5110*	1	GEAR GP-FRONT	475
Y	*299-5075*	1	GLOW PLUG GP	1587
Y	*298-5130*	1	WIRING GP-ENGINE	1604
Y	*299-5057*	1	HOUSING GP-FLYWHEEL	478
Y	*299-5033*	1	LIFTING GP-ENGINE	512
Y	*298-5120*	1	LINES GP-FUEL	1030
			S/N: 4441-321	
Y	*311-2271*	1	LINES GP-FUEL FILTER	1050
			S/N: 444322-UP	
Y	*323-6804*	1	MOUNTING GP-ENGINE	529
Y	*298-5096*	1	PAN GP-OIL	533
Y	*304-8762*	1	PIPE GP-EXHAUST	790
Y	*298-5889*	1	PISTON GP	621
Y	*298-5098*	1	PLUG GP-ENGINE	631
Y	*298-5129*	1	PLUG GP-CYLINDER HEAD (TEMPERATURE)	629
Y	*298-5131*	1	PLUG GP-ENGINE	632
Y	*298-5128*	1	PLUG GP-ENGINE OIL MANIFOLD	680
Y	*299-5030*	1	PULLEY GP	643
			S/N: 4441-7401	
Y	*360-7344*	1	PULLEY GP-CRANKSHAFT	653
			S/N: 4447402-UP	
Y	*298-5112*	1	PUMP GP-ENGINE OIL	681
Y	*307-2847*	1	PUMP GP-FUEL INJECTION	1323
Y	*298-5105*	1	PUMP GP-WATER	714
Y	*299-5067*	1	STARTING MOTOR GP-ELECTRIC	1591
Y	*307-2861*	1	SWITCH GP-HEAT START	1602
Y	*307-2850*	1	TURBOCHARGER GP	857
Y	*298-5891*	1	VALVE MECHANISM GP	661
R	**359-0737**	1	CYLINDER BLOCK GP-SHORT	
	307-2848	1	ELECTRONICS GP-ENGINE RATINGS	

302-8564 **ENGINE AR-PRIMARY (**contd.**)** **i04380955**

NOTE	PART NUMBER	QTY	PART NAME 1 2 3 4 5 6 (PRODUCT LEVEL)	SEE PAGE

R - REMANUFACTURED PART MAY BE AVAILABLE
Y - SEPARATE ILLUSTRATION

<END>

302-8565 ENGINE AR-PRIMARY

97 BRAKE KW (129 BHP) AT 2200 RPM

SMCS-1000 **i04380956**

NOTE	PART NUMBER	QTY	PART NAME 1 2 3 4 5 6 (PRODUCT LEVEL)	SEE PAGE
Y	*322-4982*	1	BELT TENSIONER GP	319
Y	*298-5892*	1	CAMSHAFT GP	321
Y	*298-5116*	1	CONNECTION GP-INLET	774
Y	*299-5078*	1	CONNECTION GP-WATER	686
Y	*304-6436*	1	CONTROL GP-ENGINE ELECTRONIC	1584
Y	*298-5099*	1	COOLER GP-ENGINE OIL	690
Y	*304-8758*	1	COVER GP-VALVE MECHANISM	357
Y	*298-5111*	1	COVER GP-ENGINE	332
Y	*298-5888*	1	CRANKSHAFT GP	380
Y	*298-5887*	1	CYLINDER BLOCK GP	400
Y	*298-5890*	1	CYLINDER HEAD GP	419
Y	*306-8855*	1	DRIVE GP-AUXILIARY	424
			S/N: 4441-7401	
Y	*322-4983*	1	DRIVE GP-FAN	439
Y	*307-2849*	1	FAN GP	702
Y	*318-0775*	1	FILLER GP-ENGINE OIL	676
Y	*298-5100*	1	FILTER GP-ENGINE OIL	678
Y	*311-2271*	1	LINES GP-FUEL FILTER	1050
Y	*298-5123*	1	FILTER GP-PRIMARY FUEL	1009
Y	*301-8251*	1	FILTER GP-WATER SEP & FUEL	1013
Y	*306-2314*	1	FLYWHEEL GP	461
Y	*298-5110*	1	GEAR GP-FRONT	475
Y	*299-5075*	1	GLOW PLUG GP	1587
Y	*303-4618*	1	HOUSING GP-FLYWHEEL	481
Y	*299-5033*	1	LIFTING GP-ENGINE	512
Y	*301-8250*	1	PLUG GP-ENGINE	633
Y	*304-8757*	1	PAN GP-OIL	553
Y	*298-5889*	1	PISTON GP	621
Y	*298-5129*	1	PLUG GP-CYLINDER HEAD	629
Y	*298-5131*	1	PLUG GP-ENGINE	632
Y	*360-7345*	1	PULLEY GP-CRANKSHAFT	654
			S/N: 4447402-UP	
Y	*298-5112*	1	PUMP GP-ENGINE OIL	681
Y	*303-4615*	1	PUMP GP-FUEL INJECTION	1134
Y	*298-5105*	1	PUMP GP-WATER	714
Y	*299-5067*	1	STARTING MOTOR GP-ELECTRIC	1591
Y	*303-5779*	1	VALVE GP-FLUID SAMPLING	682
Y	*305-2581*	1	TURBOCHARGER GP	848
Y	*298-5891*	1	VALVE MECHANISM GP	661
Y	*298-5130*	1	WIRING GP-ENGINE	1604
R	**359-0737**	1	CYLINDER BLOCK GP-SHORT	
	305-8458	1	ELECTRONICS GP-ENGINE RATINGS	

R - REMANUFACTURED PART MAY BE AVAILABLE
Y - SEPARATE ILLUSTRATION

<END>

302-8568 ENGINE AR-PRIMARY

87 BRAKE KW (116 BHP) AT 2200 RPM

SMCS-1000 **i04380957**

NOTE	PART NUMBER	QTY	PART NAME 1 2 3 4 5 6 (PRODUCT LEVEL)	SEE PAGE
Y	*305-2580*	1	ALTERNATOR GP-CHARGING	1565
Y	*298-5892*	1	CAMSHAFT GP	321
Y	*301-8248*	1	CONNECTION GP-INLET	776
Y	*299-5078*	1	CONNECTION GP-WATER	686
Y	*304-6436*	1	CONTROL GP-ENGINE ELECTRONIC	1584
Y	*305-2579*	1	COOLER GP-OIL	698
Y	*301-8240*	1	COVER GP-VALVE MECHANISM	341
Y	*298-5111*	1	COVER GP-ENGINE	332
Y	*298-5888*	1	CRANKSHAFT GP	380
Y	*298-5887*	1	CYLINDER BLOCK GP	400
Y	*298-5890*	1	CYLINDER HEAD GP	419
Y	*299-5069*	1	DRIVE GP-FAN	426
Y	*299-5082*	1	MOUNTING GP-FAN	713
Y	*298-5100*	1	FILTER GP-ENGINE OIL	678
Y	*298-5123*	1	FILTER GP-PRIMARY FUEL	1009
Y	*305-2577*	1	FLYWHEEL GP	460
Y	*298-5110*	1	GEAR GP-FRONT	475
Y	*299-5075*	1	GLOW PLUG GP	1587
Y	*305-2576*	1	HOUSING GP-FLYWHEEL	485
Y	*299-5033*	1	LIFTING GP-ENGINE	512
Y	*298-5120*	1	LINES GP-FUEL	1030
			S/N: 4441-321	
Y	*311-2271*	1	LINES GP-FUEL FILTER	1050
			S/N: 444322-UP	
Y	*304-0730*	1	MOUNTING GP-ENGINE	518
Y	*305-2578*	1	PAN GP-OIL	557
Y	*298-5889*	1	PISTON GP	621
Y	*298-5098*	1	PLUG GP-ENGINE	631
Y	*298-5129*	1	PLUG GP-CYLINDER HEAD	629
Y	*304-3663*	1	PLUG GP-ENGINE	634
Y	*298-5128*	1	PLUG GP-ENGINE OIL MANIFOLD	680
Y	*299-5030*	1	PULLEY GP	643
			S/N: 4441-7401	
Y	*360-7344*	1	PULLEY GP-CRANKSHAFT	653
			S/N: 4447402-UP	
Y	*298-5112*	1	PUMP GP-ENGINE OIL	681
Y	*303-5780*	1	FILTER GP-FUEL	999
Y	*305-2575*	1	PUMP GP-FUEL INJECTION	1278
Y	*298-5105*	1	PUMP GP-WATER	714
Y	*299-5067*	1	STARTING MOTOR GP-ELECTRIC	1591
Y	*305-2581*	1	TURBOCHARGER GP	848
Y	*298-5891*	1	VALVE MECHANISM GP	661
Y	*299-5092*	1	WIRING GP-ENGINE	1606
R	**359-0737**	1	CYLINDER BLOCK GP-SHORT	
	305-8459	1	ELECTRONICS GP-ENGINE RATINGS	

R - REMANUFACTURED PART MAY BE AVAILABLE
Y - SEPARATE ILLUSTRATION

<END>

302-8573 ENGINE AR-PRIMARY

92 BRAKE KW (129 BHP) AT 2400 RPM

SMCS-1000 **i04380958**

NOTE	PART NUMBER	QTY	PART NAME 1 2 3 4 5 6 (PRODUCT LEVEL)	SEE PAGE
Y	*308-4274*	1	ALTERNATOR GP-CHARGING	1574
Y	*301-8245*	1	BALANCER GP	317
Y	*298-5892*	1	CAMSHAFT GP	321
Y	*301-8248*	1	CONNECTION GP-INLET	776
Y	*301-8243*	1	CONNECTION GP-WATER	687
Y	*304-6436*	1	CONTROL GP-ENGINE ELECTRONIC	1584
Y	*301-8241*	1	COOLER GP-OIL (ENGINE)	697
Y	*304-5574*	1	COVER GP-VALVE MECHANISM	351
Y	*298-5888*	1	CRANKSHAFT GP	380
Y	*298-5887*	1	CYLINDER BLOCK GP	400
Y	*298-5890*	1	CYLINDER HEAD GP	419
Y	*308-4275*	1	ADAPTER GP-AUXILIARY DRIVE	306
Y	*308-4273*	1	DRIVE GP-FAN	432
Y	*307-2849*	1	FAN GP	702
Y	*298-5100*	1	FILTER GP-ENGINE OIL	678
Y	*298-5123*	1	FILTER GP-PRIMARY FUEL	1009
Y	*301-8251*	1	FILTER GP-WATER SEP & FUEL	1013
Y	*320-2347*	1	FLYWHEEL GP	466
Y	*298-5110*	1	GEAR GP-FRONT	475
Y	*298-5125*	1	GLOW PLUG GP	1586
Y	*298-5130*	1	WIRING GP-ENGINE	1604
Y	*308-4272*	1	HOUSING GP-FLYWHEEL	487
Y	*299-5033*	1	LIFTING GP-ENGINE	512
Y	*298-5120*	1	LINES GP-FUEL	1030
			S/N: 4441-321	
Y	*311-2271*	1	LINES GP-FUEL FILTER	1050
			S/N: 444322-UP	
Y	*304-8763*	1	MOUNTING GP-ENGINE	519
Y	*301-8239*	1	PAN GP-OIL	541
Y	*298-5889*	1	PISTON GP	621
Y	*298-5129*	1	PLUG GP-CYLINDER HEAD	629
Y	*298-5098*	1	PLUG GP-ENGINE	631
Y	*298-5131*	1	PLUG GP-ENGINE	632
Y	*298-5128*	1	PLUG GP-ENGINE OIL MANIFOLD	680
Y	*299-5030*	1	PULLEY GP	643
			S/N: 4441-7401	
Y	*360-7344*	1	PULLEY GP-CRANKSHAFT	653
			S/N: 4447402-UP	
Y	*304-7189*	1	PUMP GP-FUEL INJECTION	1204
Y	*298-5105*	1	PUMP GP-WATER	714
Y	*303-4619*	1	STARTING MOTOR GP-ELECTRIC	1592
			—OR—	
Y	*325-5612*	1	STARTING MOTOR GP-ELECTRIC	1597
Y	*307-2861*	1	SWITCH GP-HEAT START	1602
Y	*308-4277*	1	TURBOCHARGER GP	881
Y	*298-5891*	1	VALVE MECHANISM GP	661
R	**359-0737**	1	CYLINDER BLOCK GP-SHORT	
	305-8461	1	ELECTRONICS GP-ENGINE RATINGS	

302-8573 **ENGINE AR-PRIMARY (**contd.**)** **i04380958**

NOTE	PART NUMBER	QTY	PART NAME 1 2 3 4 5 6 (PRODUCT LEVEL)	SEE PAGE

R - REMANUFACTURED PART MAY BE AVAILABLE
Y - SEPARATE ILLUSTRATION

<END>

302-8575 ENGINE AR-PRIMARY

107 BRAKE KW (144 BHP) AT 2200 RPM

SMCS-1000 **i03993343**

NOTE	PART NUMBER	QTY	PART NAME 1 2 3 4 5 6 (PRODUCT LEVEL)	SEE PAGE
Y	*308-4275*	1	ADAPTER GP-AUXILIARY DRIVE	306
Y	*311-4639*	1	ALTERNATOR GP-CHARGING	1575
Y	*298-5090*	1	CAMSHAFT GP	320
Y	*298-5116*	1	CONNECTION GP-INLET	774
Y	*301-8243*	1	CONNECTION GP-WATER	687
Y	*304-6436*	1	CONTROL GP-ENGINE ELECTRONIC	1584
Y	*298-5099*	1	COOLER GP-ENGINE OIL	690
Y	*304-8758*	1	COVER GP-VALVE MECHANISM	357
Y	*298-5086*	1	CRANKSHAFT GP	378
Y	*298-5085*	1	CYLINDER BLOCK GP	398
Y	*298-5088*	1	CYLINDER HEAD GP	418
Y	*318-3621*	1	DRIVE GP-FAN	437
Y	*307-2849*	1	FAN GP	702
Y	*318-0775*	1	FILLER GP-ENGINE OIL	676
Y	*298-5100*	1	FILTER GP-ENGINE OIL	678
Y	*303-5780*	1	FILTER GP-FUEL	999
Y	*298-5123*	1	FILTER GP-PRIMARY FUEL	1009
Y	*306-2314*	1	FLYWHEEL GP	461
Y	*298-5110*	1	GEAR GP-FRONT	475
Y	*299-5075*	1	GLOW PLUG GP	1587
Y	*303-4618*	1	HOUSING GP-FLYWHEEL	481
Y	*299-5033*	1	LIFTING GP-ENGINE	512
Y	*311-2271*	1	LINES GP-FUEL FILTER	1050
Y	*318-3623*	1	MOUNTING GP-ENGINE	526
Y	*323-9283*	1	PAN GP-OIL	579
			S/N: 4441-1751	
Y	*298-5096*	1	PAN GP-OIL	533
			S/N: 4441752-UP	
Y	*298-5087*	1	PISTON & ROD GP	609
Y	*298-5129*	1	PLUG GP-CYLINDER HEAD	629
Y	*298-5131*	1	PLUG GP-ENGINE	632
Y	*298-5128*	1	PLUG GP-ENGINE OIL MANIFOLD	680
Y	*308-4160*	1	PULLEY GP-CRANKSHAFT	649
			S/N: 4441-7401	
Y	*360-7343*	1	PULLEY GP-CRANKSHAFT	652
			S/N: 4447402-UP	
Y	*298-5112*	1	PUMP GP-ENGINE OIL	681
Y	*304-6570*	1	PUMP GP-FUEL INJECTION	1179
Y	*298-5105*	1	PUMP GP-WATER	714
Y	*298-5089*	1	ROCKER ARM GP	658
Y	*299-5067*	1	STARTING MOTOR GP-ELECTRIC	1591
Y	*307-2850*	1	TURBOCHARGER GP	857
Y	*298-5130*	1	WIRING GP-ENGINE	1604
R	**359-0739**	1	CYLINDER BLOCK GP-SHORT	
	305-8457	1	ELECTRONICS GP-ENGINE RATINGS	

R - REMANUFACTURED PART MAY BE AVAILABLE
Y - SEPARATE ILLUSTRATION

<END>

302-8577 ENGINE AR-PRIMARY

75 BRAKE KW (100 BHP) AT 2200 RPM

SMCS-1000 **i04380959**

NOTE	PART NUMBER	QTY	PART NAME 1 2 3 4 5 6 (PRODUCT LEVEL)	SEE PAGE
Y	*308-3351*	1	ALTERNATOR GP-CHARGING	1573
Y	*304-3648*	1	CAMSHAFT GP	322
Y	*301-8243*	1	CONNECTION GP-WATER	687
Y	*304-6436*	1	CONTROL GP-ENGINE ELECTRONIC	1584
Y	*298-5099*	1	COOLER GP-ENGINE OIL	690
Y	*304-3658*	1	COVER GP-CYLINDER HEAD	325
Y	*298-5111*	1	COVER GP-ENGINE	332
Y	*303-5772*	1	COVER GP-VALVE MECHANISM	347
Y	*304-3642*	1	CRANKSHAFT GP	382
Y	*304-3641*	1	CYLINDER BLOCK GP	402
Y	*304-3645*	1	CYLINDER HEAD GP	420
Y	*306-8855*	1	DRIVE GP-AUXILIARY	424
			S/N: 4441-7401	
Y	*360-7345*	1	PULLEY GP-CRANKSHAFT	654
			S/N: 4447402-UP	
Y	*308-3349*	1	DRIVE GP-FAN	430
Y	*299-5071*	1	FILLER GP-ENGINE OIL	670
			S/N: 4441-1441	
Y	*318-0775*	1	FILLER GP-ENGINE OIL	676
			S/N: 4441442-UP	
Y	*298-5100*	1	FILTER GP-ENGINE OIL	678
Y	*303-5780*	1	FILTER GP-FUEL	999
Y	*314-2301*	1	FILTER GP-FUEL	1003
			S/N: 4441-1441	
Y	*305-0642*	1	FILTER GP-FUEL	1000
			S/N: 4441442-UP	
Y	*305-2166*	1	FLYWHEEL GP	459
Y	*298-5110*	1	GEAR GP-FRONT	475
Y	*298-5125*	1	GLOW PLUG GP	1586
Y	*303-5767*	1	HOUSING GP-FLYWHEEL	483
Y	*298-5127*	1	LIFTING GP-ENGINE	511
Y	*298-5120*	1	LINES GP-FUEL	1030
			S/N: 4441-1441	
Y	*311-2271*	1	LINES GP-FUEL FILTER	1050
			S/N: 4441442-UP	
Y	*299-5082*	1	MOUNTING GP-FAN	713
Y	*304-8757*	1	PAN GP-OIL	553
Y	*304-3643*	1	PISTON & ROD GP	613
Y	*298-5129*	1	PLUG GP-CYLINDER HEAD	629
Y	*298-5131*	1	PLUG GP-ENGINE	632
Y	*301-8250*	1	PLUG GP-ENGINE	633
Y	*298-5128*	1	PLUG GP-ENGINE OIL MANIFOLD	680
Y	*298-5112*	1	PUMP GP-ENGINE OIL	681
Y	*305-1955*	1	PUMP GP-FUEL INJECTION	1268
			S/N: 4441-1441	
Y	*313-4350*	1	PUMP GP-FUEL INJECTION	1398
			S/N: 4441442-UP	
Y	*298-5105*	1	PUMP GP-WATER	714
Y	*303-4619*	1	STARTING MOTOR GP-ELECTRIC	1592

302-8577 **ENGINE AR-PRIMARY (**contd.**)** **i04380959**

NOTE	PART NUMBER	QTY	PART NAME 1 2 3 4 5 6 (PRODUCT LEVEL)	SEE PAGE
			—OR—	
Y	*325-5612*	1	STARTING MOTOR GP-ELECTRIC	1597
Y	*308-3350*	1	TURBOCHARGER GP	875
Y	*304-3647*	1	VALVE MECHANISM GP	663
Y	*298-5130*	1	WIRING GP-ENGINE	1604
R	**359-0737**	1	CYLINDER BLOCK GP-SHORT	
	305-8460	1	ELECTRONICS GP-ENGINE RATINGS	

R - REMANUFACTURED PART MAY BE AVAILABLE
Y - SEPARATE ILLUSTRATION

<END>

302-8579 ENGINE AR-PRIMARY

107 BRAKE KW (143 BHP) AT 2200 RPM

SMCS-1000 **i03943590**

NOTE	PART NUMBER	QTY	PART NAME 1 2 3 4 5 6 (PRODUCT LEVEL)	SEE PAGE
Y	*304-0728*	1	ADAPTER GP-AUXILIARY DRIVE	301
Y	*303-4621*	1	ALTERNATOR GP-CHARGING	1560
Y	*298-5090*	1	CAMSHAFT GP	320
Y	*301-8248*	1	CONNECTION GP-INLET	776
Y	*301-8243*	1	CONNECTION GP-WATER	687
Y	*304-6436*	1	CONTROL GP-ENGINE ELECTRONIC	1584
Y	*298-5099*	1	COOLER GP-ENGINE OIL	690
Y	*301-8240*	1	COVER GP-VALVE MECHANISM	341
Y	*298-5086*	1	CRANKSHAFT GP	378
Y	*298-5085*	1	CYLINDER BLOCK GP	398
Y	*298-5088*	1	CYLINDER HEAD GP	418
Y	*301-8238*	1	DRIVE GP-FAN	427
Y	*298-5100*	1	FILTER GP-ENGINE OIL	678
Y	*311-2271*	1	LINES GP-FUEL FILTER	1050
Y	*298-5123*	1	FILTER GP-PRIMARY FUEL	1009
Y	*301-8251*	1	FILTER GP-WATER SEP & FUEL	1013
Y	*301-8237*	1	FLYWHEEL GP	455
Y	*298-5125*	1	GLOW PLUG GP	1586
Y	*303-4618*	1	HOUSING GP-FLYWHEEL	481
Y	*304-0727*	1	HOUSING GP-FRONT	492
Y	*299-5033*	1	LIFTING GP-ENGINE	512
Y	*299-5082*	1	MOUNTING GP-FAN	713
Y	*298-5096*	1	PAN GP-OIL	533
Y	*298-5087*	1	PISTON & ROD GP	609
Y	*298-5129*	1	PLUG GP-CYLINDER HEAD	629
Y	*298-5098*	1	PLUG GP-ENGINE	631
Y	*301-8250*	1	PLUG GP-ENGINE	633
Y	*298-5131*	1	PLUG GP-ENGINE	632
Y	*298-5128*	1	PLUG GP-ENGINE OIL MANIFOLD	680
Y	*301-8242*	1	PULLEY GP	644
			S/N: 4441-7401	
Y	*360-7342*	1	PULLEY GP-CRANKSHAFT	651
			S/N: 4447402-UP	
Y	*298-5112*	1	PUMP GP-ENGINE OIL	681
Y	*304-6570*	1	PUMP GP-FUEL INJECTION	1179
Y	*340-4692*	1	PUMP GP-WATER	722
Y	*298-5089*	1	ROCKER ARM GP	658
Y	*303-4619*	1	STARTING MOTOR GP-ELECTRIC	1592
			—OR—	
Y	*325-5612*	1	STARTING MOTOR GP-ELECTRIC	1597
Y	*303-4622*	1	TURBOCHARGER GP	812
Y	*298-5130*	1	WIRING GP-ENGINE	1604
R	**359-0739**	1	CYLINDER BLOCK GP-SHORT	
	305-8457	1	ELECTRONICS GP-ENGINE RATINGS	

R - REMANUFACTURED PART MAY BE AVAILABLE
Y - SEPARATE ILLUSTRATION

<END>

302-8580 ENGINE AR-PRIMARY

97 BRAKE KW (129 BHP) AT 2200 RPM

SMCS-1000 **i04380982**

NOTE	PART NUMBER	QTY	PART NAME 1 2 3 4 5 6 (PRODUCT LEVEL)	SEE PAGE
Y	*304-0728*	1	ADAPTER GP-AUXILIARY DRIVE	301
Y	*303-4621*	1	ALTERNATOR GP-CHARGING	1560
Y	*298-5892*	1	CAMSHAFT GP	321
Y	*301-8248*	1	CONNECTION GP-INLET	776
Y	*301-8243*	1	CONNECTION GP-WATER	687
Y	*304-6436*	1	CONTROL GP-ENGINE ELECTRONIC	1584
Y	*298-5099*	1	COOLER GP-ENGINE OIL	690
Y	*301-8240*	1	COVER GP-VALVE MECHANISM	341
Y	*298-5888*	1	CRANKSHAFT GP	380
Y	*298-5887*	1	CYLINDER BLOCK GP	400
Y	*298-5890*	1	CYLINDER HEAD GP	419
Y	*301-8238*	1	DRIVE GP-FAN	427
Y	*298-5100*	1	FILTER GP-ENGINE OIL	678
Y	*311-2271*	1	LINES GP-FUEL FILTER	1050
Y	*298-5123*	1	FILTER GP-PRIMARY FUEL	1009
Y	*301-8251*	1	FILTER GP-WATER SEP & FUEL	1013
Y	*301-8237*	1	FLYWHEEL GP	455
Y	*298-5125*	1	GLOW PLUG GP	1586
Y	*303-4618*	1	HOUSING GP-FLYWHEEL	481
Y	*304-0727*	1	HOUSING GP-FRONT	492
Y	*299-5033*	1	LIFTING GP-ENGINE	512
Y	*299-5082*	1	MOUNTING GP-FAN	713
Y	*298-5096*	1	PAN GP-OIL	533
Y	*298-5889*	1	PISTON GP	621
Y	*298-5129*	1	PLUG GP-CYLINDER HEAD	629
Y	*298-5098*	1	PLUG GP-ENGINE	631
Y	*301-8250*	1	PLUG GP-ENGINE	633
Y	*298-5131*	1	PLUG GP-ENGINE	632
Y	*298-5128*	1	PLUG GP-ENGINE OIL MANIFOLD	680
Y	*301-8242*	1	PULLEY GP	644
			S/N: 4441-7401	
Y	*360-7342*	1	PULLEY GP-CRANKSHAFT	651
			S/N: 4447402-UP	
Y	*298-5112*	1	PUMP GP-ENGINE OIL	681
Y	*303-4615*	1	PUMP GP-FUEL INJECTION	1134
Y	*340-4692*	1	PUMP GP-WATER	722
Y	*303-4619*	1	STARTING MOTOR GP-ELECTRIC	1592
			—OR—	
Y	*325-5612*	1	STARTING MOTOR GP-ELECTRIC	1597
Y	*303-4622*	1	TURBOCHARGER GP	812
Y	*298-5891*	1	VALVE MECHANISM GP	661
Y	*298-5130*	1	WIRING GP-ENGINE	1604
R	**359-0737**	1	CYLINDER BLOCK GP-SHORT	
	305-8458	1	ELECTRONICS GP-ENGINE RATINGS	

R - REMANUFACTURED PART MAY BE AVAILABLE
Y - SEPARATE ILLUSTRATION

<END>

302-8581 ENGINE AR-PRIMARY

75 BRAKE KW (100 BHP) AT 2200 RPM

SMCS-1000 **i04380983**

NOTE	PART NUMBER	QTY	PART NAME 1 2 3 4 5 6 (PRODUCT LEVEL)	SEE PAGE
Y	*303-5774*	1	ALTERNATOR GP-CHARGING	1561
Y	*304-3648*	1	CAMSHAFT GP	322
Y	*301-8243*	1	CONNECTION GP-WATER	687
Y	*304-6436*	1	CONTROL GP-ENGINE ELECTRONIC	1584
Y	*298-5099*	1	COOLER GP-ENGINE OIL	690
Y	*305-0640*	1	COVER GP-INLET MANIFOLD	780
Y	*303-5772*	1	COVER GP-VALVE MECHANISM	347
Y	*304-3642*	1	CRANKSHAFT GP	382
Y	*304-3641*	1	CYLINDER BLOCK GP	402
Y	*304-3645*	1	CYLINDER HEAD GP	420
Y	*306-8855*	1	DRIVE GP-AUXILIARY	424
			S/N: 4441-7401	
Y	*360-7345*	1	PULLEY GP-CRANKSHAFT	654
			S/N: 4447402-UP	
Y	*303-5770*	1	DRIVE GP-FAN	428
Y	*309-7555*	1	FILLER GP-ENGINE OIL	674
Y	*303-5780*	1	FILTER GP-FUEL (FUEL PRESSURE)	999
Y	*305-0642*	1	FILTER GP-FUEL	1000
Y	*305-2166*	1	FLYWHEEL GP	459
Y	*298-5125*	1	GLOW PLUG GP	1586
Y	*303-5767*	1	HOUSING GP-FLYWHEEL	483
Y	*304-8760*	1	HOUSING GP-FRONT	495
Y	*298-5127*	1	LIFTING GP-ENGINE	511
Y	*298-5120*	1	LINES GP-FUEL	1030
			S/N: 4441-321	
Y	*311-2271*	1	LINES GP-FUEL FILTER	1050
			S/N: 444322-UP	
Y	*303-5778*	1	MOUNTING GP-ENGINE	517
Y	*303-5771*	1	PAN GP-OIL	545
Y	*304-3643*	1	PISTON & ROD GP	613
Y	*298-5129*	1	PLUG GP-CYLINDER HEAD (TEMPERATURE)	629
Y	*298-5131*	1	PLUG GP-ENGINE	632
Y	*304-8761*	1	PLUG GP-ENGINE	636
Y	*298-5128*	1	PLUG GP-ENGINE OIL MANIFOLD	680
Y	*298-5112*	1	PUMP GP-ENGINE OIL	681
Y	*305-1955*	1	PUMP GP-FUEL INJECTION	1268
			S/N: 4441-321	
Y	*313-4350*	1	PUMP GP-FUEL INJECTION	1398
			S/N: 444322-UP	
Y	*298-5105*	1	PUMP GP-WATER	714
Y	*303-5769*	1	STARTING MOTOR GP-ELECTRIC (12-VOLT)	1593
Y	*318-0333*	1	TURBOCHARGER GP	902
Y	*304-3647*	1	VALVE MECHANISM GP	663
Y	*304-5577*	1	WIRING GP-ENGINE	1609
R	**359-0737**	1	CYLINDER BLOCK GP-SHORT	
	305-8460	1	ELECTRONICS GP-ENGINE RATINGS	

302-8581 **ENGINE AR-PRIMARY (**contd.**)** **i04380983**

NOTE	PART NUMBER	QTY	PART NAME 1 2 3 4 5 6 (PRODUCT LEVEL)	SEE PAGE

R - REMANUFACTURED PART MAY BE AVAILABLE
Y - SEPARATE ILLUSTRATION

<END>

302-8582 ENGINE AR-PRIMARY

107 BRAKE KW (143 BHP) AT 2200 RPM

SMCS-1000 **i04173057**

NOTE	PART NUMBER	QTY	PART NAME 1 2 3 4 5 6 (PRODUCT LEVEL)	SEE PAGE
Y	*304-0728*	1	ADAPTER GP-AUXILIARY DRIVE	301
Y	*301-8244*	1	ALTERNATOR GP-CHARGING	1559
Y	*298-5090*	1	CAMSHAFT GP	320
Y	*301-8248*	1	CONNECTION GP-INLET	776
Y	*301-8243*	1	CONNECTION GP-WATER	687
Y	*298-5099*	1	COOLER GP-ENGINE OIL	690
Y	*301-8240*	1	COVER GP-VALVE MECHANISM	341
Y	*298-5086*	1	CRANKSHAFT GP	378
Y	*298-5085*	1	CYLINDER BLOCK GP	398
Y	*298-5088*	1	CYLINDER HEAD GP	418
Y	*301-8238*	1	DRIVE GP-FAN	427
Y	*298-5100*	1	FILTER GP-ENGINE OIL	678
Y	*298-5123*	1	FILTER GP-PRIMARY FUEL	1009
Y	*301-8251*	1	FILTER GP-WATER SEP & FUEL	1013
Y	*301-8237*	1	FLYWHEEL GP	455
Y	*299-5075*	1	GLOW PLUG GP	1587
Y	*303-4618*	1	HOUSING GP-FLYWHEEL	481
Y	*304-0727*	1	HOUSING GP-FRONT	492
Y	*299-5033*	1	LIFTING GP-ENGINE	512
Y	*311-2271*	1	LINES GP-FUEL FILTER	1050
Y	*299-5082*	1	MOUNTING GP-FAN	713
Y	*298-5096*	1	PAN GP-OIL	533
Y	*298-5087*	1	PISTON & ROD GP	609
Y	*298-5129*	1	PLUG GP-CYLINDER HEAD	629
Y	*298-5098*	1	PLUG GP-ENGINE	631
Y	*298-5131*	1	PLUG GP-ENGINE	632
Y	*301-8250*	1	PLUG GP-ENGINE	633
Y	*298-5128*	1	PLUG GP-ENGINE OIL MANIFOLD	680
Y	*301-8242*	1	PULLEY GP	644
			S/N: 4441-7401	
Y	*360-7342*	2	PULLEY GP-CRANKSHAFT	651
			S/N: 4447402-UP	
Y	*298-5112*	1	PUMP GP-ENGINE OIL	681
Y	*304-6570*	1	PUMP GP-FUEL INJECTION	1179
Y	*340-4692*	1	PUMP GP-WATER	722
Y	*298-5089*	1	ROCKER ARM GP	658
Y	*299-5067*	1	STARTING MOTOR GP-ELECTRIC	1591
Y	*301-8246*	1	TURBOCHARGER GP	806
Y	*298-5130*	1	WIRING GP-ENGINE	1604
R	**359-0739**	1	CYLINDER BLOCK GP-SHORT	
	305-8457	1	ELECTRONICS GP-ENGINE RATINGS	

R - REMANUFACTURED PART MAY BE AVAILABLE
Y - SEPARATE ILLUSTRATION

<END>

303-3120 ENGINE AR-PRIMARY

82 BRAKE KW (110 BHP) AT 2200 RPM

SMCS-1000 **i03725247**

NOTE	PART NUMBER	QTY	PART NAME 1 2 3 4 5 6 (PRODUCT LEVEL)	SEE PAGE
			(NO SERVICED PARTS)	

<END>

305-0471 ENGINE AR-PRIMARY

97 BRAKE KW (129 BHP) AT 2200 RPM

SMCS-1000 **i04380984**

NOTE	PART NUMBER	QTY	PART NAME 1 2 3 4 5 6 (PRODUCT LEVEL)	SEE PAGE
Y	*304-0728*	1	ADAPTER GP-AUXILIARY DRIVE	301
Y	*301-8244*	1	ALTERNATOR GP-CHARGING	1559
Y	*298-5892*	1	CAMSHAFT GP	321
Y	*301-8248*	1	CONNECTION GP-INLET	776
Y	*301-8243*	1	CONNECTION GP-WATER	687
Y	*304-6436*	1	CONTROL GP-ENGINE ELECTRONIC	1584
Y	*298-5099*	1	COOLER GP-ENGINE OIL	690
Y	*301-8240*	1	COVER GP-VALVE MECHANISM	341
Y	*298-5888*	1	CRANKSHAFT GP	380
Y	*298-5887*	1	CYLINDER BLOCK GP	400
Y	*298-5890*	1	CYLINDER HEAD GP	419
Y	*301-8238*	1	DRIVE GP-FAN	427
Y	*298-5100*	1	FILTER GP-ENGINE OIL	678
Y	*298-5123*	1	FILTER GP-PRIMARY FUEL	1009
Y	*301-8251*	1	FILTER GP-WATER SEP & FUEL	1013
Y	*301-8237*	1	FLYWHEEL GP	455
Y	*299-5075*	1	GLOW PLUG GP	1587
Y	*303-4618*	1	HOUSING GP-FLYWHEEL	481
Y	*304-0727*	1	HOUSING GP-FRONT	492
Y	*299-5033*	1	LIFTING GP-ENGINE	512
Y	*311-2271*	1	LINES GP-FUEL FILTER	1050
Y	*299-5082*	1	MOUNTING GP-FAN	713
Y	*298-5096*	1	PAN GP-OIL	533
Y	*298-5889*	1	PISTON GP	621
Y	*298-5129*	1	PLUG GP-CYLINDER HEAD	629
Y	*298-5098*	1	PLUG GP-ENGINE	631
Y	*301-8250*	1	PLUG GP-ENGINE	633
Y	*298-5131*	1	PLUG GP-ENGINE	632
Y	*298-5128*	1	PLUG GP-ENGINE OIL MANIFOLD	680
Y	*301-8242*	1	PULLEY GP	644
			S/N: 4441-7401	
Y	*360-7342*	1	PULLEY GP-CRANKSHAFT	651
			S/N: 4447402-UP	
Y	*298-5112*	1	PUMP GP-ENGINE OIL	681
Y	*303-4615*	1	PUMP GP-FUEL INJECTION	1134
Y	*340-4692*	1	PUMP GP-WATER	722
Y	*299-5067*	1	STARTING MOTOR GP-ELECTRIC	1591
Y	*301-8246*	1	TURBOCHARGER GP	806
Y	*298-5891*	1	VALVE MECHANISM GP	661
Y	*298-5130*	1	WIRING GP-ENGINE	1604
R	**359-0737**	1	CYLINDER BLOCK GP-SHORT	
	305-8458	1	ELECTRONICS GP-ENGINE RATINGS	

R - REMANUFACTURED PART MAY BE AVAILABLE
Y - SEPARATE ILLUSTRATION

<END>

305-0472 ENGINE AR-PRIMARY

75 BRAKE KW (100 BHP) AT 2200 RPM

SMCS-1000 **i04249490**

NOTE	PART NUMBER	QTY	PART NAME 1 2 3 4 5 6 (PRODUCT LEVEL)	SEE PAGE
Y	*304-0728*	1	ADAPTER GP-AUXILIARY DRIVE	301
Y	*301-8244*	1	ALTERNATOR GP-CHARGING	1559
Y	*304-3648*	1	CAMSHAFT GP	322
Y	*301-8243*	1	CONNECTION GP-WATER	687
Y	*304-6436*	1	CONTROL GP-ENGINE ELECTRONIC	1584
Y	*298-5099*	1	COOLER GP-ENGINE OIL	690
Y	*305-0640*	1	COVER GP-INLET MANIFOLD	780
Y	*301-8240*	1	COVER GP-VALVE MECHANISM	341
Y	*304-3642*	1	CRANKSHAFT GP	382
Y	*304-3641*	1	CYLINDER BLOCK GP	402
Y	*304-3645*	1	CYLINDER HEAD GP	420
Y	*301-8238*	1	DRIVE GP-FAN	427
Y	*298-5100*	1	FILTER GP-ENGINE OIL	678
Y	*305-0642*	1	FILTER GP-FUEL	1000
Y	*301-8251*	1	FILTER GP-WATER SEP & FUEL	1013
Y	*301-8237*	1	FLYWHEEL GP	455
Y	*299-5075*	1	GLOW PLUG GP	1587
Y	*303-4618*	1	HOUSING GP-FLYWHEEL	481
Y	*304-0727*	1	HOUSING GP-FRONT	492
Y	*299-5033*	1	LIFTING GP-ENGINE	512
Y	*311-2271*	1	LINES GP-FUEL FILTER	1050
Y	*299-5082*	1	MOUNTING GP-FAN	713
Y	*298-5096*	1	PAN GP-OIL	533
Y	*304-3643*	1	PISTON & ROD GP	613
Y	*298-5129*	1	PLUG GP-CYLINDER HEAD	629
Y	*298-5098*	1	PLUG GP-ENGINE	631
Y	*298-5131*	1	PLUG GP-ENGINE	632
Y	*301-8250*	1	PLUG GP-ENGINE	633
Y	*298-5128*	1	PLUG GP-ENGINE OIL MANIFOLD	680
Y	*301-8242*	1	PULLEY GP	644
			S/N: 4441-7401	
Y	*360-7342*	1	PULLEY GP-CRANKSHAFT	651
			S/N: 4447402-UP	
Y	*298-5112*	1	PUMP GP-ENGINE OIL	681
Y	*313-4350*	1	PUMP GP-FUEL INJECTION	1398
Y	*340-4692*	1	PUMP GP-WATER	722
Y	*299-5067*	1	STARTING MOTOR GP-ELECTRIC	1591
Y	*305-1948*	1	TURBOCHARGER GP	836
Y	*304-3647*	1	VALVE MECHANISM GP	663
Y	*298-5130*	1	WIRING GP-ENGINE	1604
R	**359-0737**	1	CYLINDER BLOCK GP-SHORT	
	305-8460	1	ELECTRONICS GP-ENGINE RATINGS	

R - REMANUFACTURED PART MAY BE AVAILABLE
Y - SEPARATE ILLUSTRATION

<END>

305-0484 ENGINE AR-PRIMARY*R

97 BRAKE KW (129 BHP) AT 2200 RPM

SMCS-1000 **i04249491**

NOTE	PART NUMBER	QTY	PART NAME 1 2 3 4 5 6 (PRODUCT LEVEL)	SEE PAGE
Y	*308-4275*	1	ADAPTER GP-AUXILIARY DRIVE	306
Y	*303-8449*	1	ALTERNATOR GP-CHARGING	1563
Y	*298-5892*	1	CAMSHAFT GP	321
Y	*301-8248*	1	CONNECTION GP-INLET	776
Y	*301-8243*	1	CONNECTION GP-WATER	687
Y	*304-6436*	1	CONTROL GP-ENGINE ELECTRONIC	1584
Y	*298-5099*	1	COOLER GP-ENGINE OIL	690
Y	*298-5097*	1	COVER GP-VALVE MECHANISM	335
Y	*298-5888*	1	CRANKSHAFT GP	380
Y	*298-5887*	1	CYLINDER BLOCK GP	400
Y	*298-5890*	1	CYLINDER HEAD GP	419
Y	*306-2321*	1	DRIVE GP-AUXILIARY	423
Y	*325-5613*	1	DRIVE GP-FAN	442
Y	*311-8536*	1	FAN GP	705
Y	*298-5100*	1	FILTER GP-ENGINE OIL	678
Y	*303-5780*	1	FILTER GP-FUEL	999
Y	*311-2271*	1	LINES GP-FUEL FILTER	1050
Y	*298-5123*	1	FILTER GP-PRIMARY FUEL	1009
Y	*304-8756*	1	FLYWHEEL GP	458
Y	*298-5110*	1	GEAR GP-FRONT	475
Y	*298-5125*	1	GLOW PLUG GP	1586
Y	*308-4272*	1	HOUSING GP-FLYWHEEL	487
Y	*299-5033*	1	LIFTING GP-ENGINE	512
Y	*311-8537*	1	MOUNTING GP-ENGINE	522
Y	*311-8534*	1	PAN GP-OIL	563
Y	*304-8762*	1	PIPE GP-EXHAUST	790
Y	*298-5889*	1	PISTON GP	621
Y	*298-5129*	1	PLUG GP-CYLINDER HEAD	629
Y	*304-3663*	1	PLUG GP-ENGINE	634
Y	*298-5128*	1	PLUG GP-ENGINE OIL MANIFOLD	680
Y	*298-5101*	1	PULLEY GP-CRANKSHAFT	648
			S/N: 4441-7401	
Y	*360-7346*	1	PULLEY GP-CRANKSHAFT	655
			S/N: 4447402-UP	
Y	*298-5112*	1	PUMP GP-ENGINE OIL	681
Y	*303-4615*	1	PUMP GP-FUEL INJECTION	1134
Y	*298-5105*	1	PUMP GP-WATER	714
Y	*303-4619*	1	STARTING MOTOR GP-ELECTRIC	1592
			—OR—	
Y	*325-5612*	1	STARTING MOTOR GP-ELECTRIC	1597
Y	*307-2861*	1	SWITCH GP-HEAT START	1602
Y	*312-5964*	1	TURBOCHARGER GP	896
Y	*298-5891*	1	VALVE MECHANISM GP	661
Y	*298-5130*	1	WIRING GP-ENGINE	1604
R	**359-0737**	1	CYLINDER BLOCK GP-SHORT	
	305-8458	1	ELECTRONICS GP-ENGINE RATINGS	

305-0484 **ENGINE AR-PRIMARY (**contd.**)** **i04249491**

NOTE	PART NUMBER	QTY	PART NAME 1 2 3 4 5 6 (PRODUCT LEVEL)	SEE PAGE

R - REMANUFACTURED PART MAY BE AVAILABLE
Y - SEPARATE ILLUSTRATION

<END>

305-0485 ENGINE AR-PRIMARY*R

97 BRAKE KW (129 BHP) AT 2200 RPM

SMCS-1000 **i03993344**

NOTE	PART NUMBER	QTY	PART NAME 1 2 3 4 5 6 (PRODUCT LEVEL)	SEE PAGE
Y	*311-7455*	1	ALTERNATOR GP-CHARGING	1577
Y	*298-5892*	1	CAMSHAFT GP	321
Y	*301-8248*	1	CONNECTION GP-INLET	776
Y	*301-8243*	1	CONNECTION GP-WATER	687
Y	*304-6436*	1	CONTROL GP-ENGINE ELECTRONIC	1584
Y	*298-5099*	1	COOLER GP-ENGINE OIL	690
Y	*298-5111*	1	COVER GP-ENGINE	332
Y	*301-8240*	1	COVER GP-VALVE MECHANISM	341
Y	*298-5888*	1	CRANKSHAFT GP	380
Y	*298-5887*	1	CYLINDER BLOCK GP	400
Y	*298-5890*	1	CYLINDER HEAD GP	419
Y	*311-4644*	1	DRIVE GP-FAN	433
Y	*311-4640*	1	FAN GP	704
Y	*298-5100*	1	FILTER GP-ENGINE OIL	678
Y	*298-5123*	1	FILTER GP-PRIMARY FUEL	1009
Y	*301-8251*	1	FILTER GP-WATER SEP & FUEL	1013
Y	*301-8237*	1	FLYWHEEL GP	455
Y	*298-5110*	1	GEAR GP-FRONT	475
Y	*298-5125*	1	GLOW PLUG GP	1586
Y	*303-4618*	1	HOUSING GP-FLYWHEEL	481
Y	*299-5033*	1	LIFTING GP-ENGINE	512
Y	*311-2271*	1	LINES GP-FUEL FILTER	1050
Y	*311-4641*	1	MOUNTING GP-ENGINE	521
Y	*298-5096*	1	PAN GP-OIL	533
Y	*304-8762*	1	PIPE GP-EXHAUST	790
Y	*298-5889*	1	PISTON GP	621
Y	*298-5129*	1	PLUG GP-CYLINDER HEAD	629
Y	*298-5098*	1	PLUG GP-ENGINE	631
Y	*298-5131*	1	PLUG GP-ENGINE	632
Y	*298-5128*	1	PLUG GP-ENGINE OIL MANIFOLD	680
Y	*308-4160*	1	PULLEY GP-CRANKSHAFT	649
			S/N: 4441-7401	
Y	*360-7343*	1	PULLEY GP-CRANKSHAFT	652
			S/N: 4447402-UP	
Y	*298-5112*	1	PUMP GP-ENGINE OIL	681
Y	*303-4615*	1	PUMP GP-FUEL INJECTION	1134
Y	*298-5105*	1	PUMP GP-WATER	714
Y	*312-1672*	1	RADIATOR GP	738
Y	*325-5612*	1	STARTING MOTOR GP-ELECTRIC	1597
Y	*311-7456*	1	TURBOCHARGER GP	887
Y	*298-5891*	1	VALVE MECHANISM GP	661
Y	*298-5130*	1	WIRING GP-ENGINE	1604
R	**359-0737**	1	CYLINDER BLOCK GP-SHORT	
	305-8458	1	ELECTRONICS GP-ENGINE RATINGS	

R - REMANUFACTURED PART MAY BE AVAILABLE
Y - SEPARATE ILLUSTRATION

<END>

305-0486 ENGINE AR-PRIMARY*R

97 BRAKE KW (129 BHP) AT 2200 RPM

SMCS-1000 **i03993345**

NOTE	PART NUMBER	QTY	PART NAME 1 2 3 4 5 6 (PRODUCT LEVEL)	SEE PAGE
Y	*304-0728*	1	ADAPTER GP-AUXILIARY DRIVE	301
Y	*311-7455*	1	ALTERNATOR GP-CHARGING	1577
Y	*298-5892*	1	CAMSHAFT GP	321
Y	*301-8248*	1	CONNECTION GP-INLET	776
Y	*301-8243*	1	CONNECTION GP-WATER	687
Y	*304-6436*	1	CONTROL GP-ENGINE ELECTRONIC	1584
Y	*298-5099*	1	COOLER GP-ENGINE OIL	690
Y	*301-8240*	1	COVER GP-VALVE MECHANISM	341
Y	*298-5888*	1	CRANKSHAFT GP	380
Y	*298-5887*	1	CYLINDER BLOCK GP	400
Y	*298-5890*	1	CYLINDER HEAD GP	419
Y	*311-4644*	1	DRIVE GP-FAN	433
Y	*311-4640*	1	FAN GP	704
Y	*298-5100*	1	FILTER GP-ENGINE OIL	678
Y	*298-5123*	1	FILTER GP-PRIMARY FUEL	1009
Y	*301-8251*	1	FILTER GP-WATER SEP & FUEL	1013
Y	*301-8237*	1	FLYWHEEL GP	455
Y	*298-5125*	1	GLOW PLUG GP	1586
Y	*303-4618*	1	HOUSING GP-FLYWHEEL	481
Y	*304-0727*	1	HOUSING GP-FRONT	492
Y	*299-5033*	1	LIFTING GP-ENGINE	512
Y	*311-2271*	1	LINES GP-FUEL FILTER	1050
Y	*311-4641*	1	MOUNTING GP-ENGINE	521
Y	*298-5096*	1	PAN GP-OIL	533
Y	*304-8762*	1	PIPE GP-EXHAUST	790
Y	*298-5889*	1	PISTON GP	621
Y	*298-5129*	1	PLUG GP-CYLINDER HEAD	629
Y	*298-5098*	1	PLUG GP-ENGINE	631
Y	*298-5131*	1	PLUG GP-ENGINE	632
Y	*298-5128*	1	PLUG GP-ENGINE OIL MANIFOLD	680
Y	*308-4160*	1	PULLEY GP-CRANKSHAFT	649
			S/N: 4441-7401	
Y	*360-7343*	1	PULLEY GP-CRANKSHAFT	652
			S/N: 4447402-UP	
Y	*298-5112*	1	PUMP GP-ENGINE OIL	681
Y	*303-4615*	1	PUMP GP-FUEL INJECTION	1134
Y	*340-4692*	1	PUMP GP-WATER	722
Y	*311-4636*	1	RADIATOR GP	730
Y	*303-4619*	1	STARTING MOTOR GP-ELECTRIC	1592
			—OR—	
Y	*325-5612*	1	STARTING MOTOR GP-ELECTRIC	1597
Y	*311-7456*	1	TURBOCHARGER GP	887
Y	*298-5891*	1	VALVE MECHANISM GP	661
Y	*298-5130*	1	WIRING GP-ENGINE	1604
R	**359-0737**	1	CYLINDER BLOCK GP-SHORT	
	305-8458	1	ELECTRONICS GP-ENGINE RATINGS	

305-0486 **ENGINE AR-PRIMARY (**contd.**)** **i03993345**

NOTE	PART NUMBER	QTY	PART NAME 1 2 3 4 5 6 (PRODUCT LEVEL)	SEE PAGE

R - REMANUFACTURED PART MAY BE AVAILABLE
Y - SEPARATE ILLUSTRATION

<END>

305-0488 ENGINE AR-PRIMARY*R

95 BRAKE KW (127 BHP) AT 2200 RPM

SMCS-1000 **i03993346**

NOTE	PART NUMBER	QTY	PART NAME 1 2 3 4 5 6 (PRODUCT LEVEL)	SEE PAGE
Y	*304-0728*	1	ADAPTER GP-AUXILIARY DRIVE	301
Y	*311-7455*	1	ALTERNATOR GP-CHARGING	1577
Y	*301-8245*	1	BALANCER GP	317
Y	*298-5892*	1	CAMSHAFT GP	321
Y	*301-8248*	1	CONNECTION GP-INLET	776
Y	*301-8243*	1	CONNECTION GP-WATER	687
Y	*304-6436*	1	CONTROL GP-ENGINE ELECTRONIC	1584
Y	*301-8241*	1	COOLER GP-OIL	697
Y	*301-8240*	1	COVER GP-VALVE MECHANISM	341
Y	*298-5888*	1	CRANKSHAFT GP	380
Y	*298-5887*	1	CYLINDER BLOCK GP	400
Y	*298-5890*	1	CYLINDER HEAD GP	419
Y	*311-4644*	1	DRIVE GP-FAN	433
Y	*311-4640*	1	FAN GP	704
Y	*298-5100*	1	FILTER GP-ENGINE OIL	678
Y	*311-2271*	1	LINES GP-FUEL FILTER	1050
Y	*298-5123*	1	FILTER GP-PRIMARY FUEL	1009
Y	*301-8251*	1	FILTER GP-WATER SEP & FUEL	1013
Y	*301-8237*	1	FLYWHEEL GP	455
Y	*298-5125*	1	GLOW PLUG GP	1586
Y	*301-8236*	1	HOUSING GP-FLYWHEEL	479
Y	*304-0727*	1	HOUSING GP-FRONT	492
Y	*299-5033*	1	LIFTING GP-ENGINE	512
Y	*311-4641*	1	MOUNTING GP-ENGINE	521
Y	*301-8239*	1	PAN GP-OIL	541
Y	*304-8762*	1	PIPE GP-EXHAUST	790
Y	*298-5889*	1	PISTON GP	621
Y	*298-5129*	1	PLUG GP-CYLINDER HEAD	629
Y	*298-5098*	1	PLUG GP-ENGINE	631
Y	*298-5131*	1	PLUG GP-ENGINE	632
Y	*298-5128*	1	PLUG GP-ENGINE OIL MANIFOLD	680
Y	*308-4160*	1	PULLEY GP-CRANKSHAFT	649
			S/N: 4441-7401	
Y	*360-7343*	1	PULLEY GP-CRANKSHAFT	652
			S/N: 4447402-UP	
Y	*305-6701*	1	PUMP GP-FUEL INJECTION	1303
Y	*340-4692*	1	PUMP GP-WATER	722
Y	*311-4636*	1	RADIATOR GP	730
Y	*303-4619*	1	STARTING MOTOR GP-ELECTRIC	1592
			—OR—	
Y	*325-5612*	1	STARTING MOTOR GP-ELECTRIC	1597
Y	*311-7456*	1	TURBOCHARGER GP	887
Y	*298-5891*	1	VALVE MECHANISM GP	661
Y	*298-5130*	1	WIRING GP-ENGINE	1604
R	**359-0737**	1	CYLINDER BLOCK GP-SHORT	
	305-8454	1	ELECTRONICS GP-ENGINE RATINGS	

305-0488 **ENGINE AR-PRIMARY (**contd.**)** **i03993346**

NOTE	PART NUMBER	QTY	PART NAME 1 2 3 4 5 6 (PRODUCT LEVEL)	SEE PAGE

R - REMANUFACTURED PART MAY BE AVAILABLE
Y - SEPARATE ILLUSTRATION

<END>

305-0489 ENGINE AR-PRIMARY*R

95 BRAKE KW (127 BHP) AT 2200 RPM

SMCS-1000 **i04249492**

NOTE	PART NUMBER	QTY	PART NAME 1 2 3 4 5 6 (PRODUCT LEVEL)	SEE PAGE
Y	*311-7455*	1	ALTERNATOR GP-CHARGING	1577
Y	*301-8245*	1	BALANCER GP	317
Y	*298-5892*	1	CAMSHAFT GP	321
Y	*301-8248*	1	CONNECTION GP-INLET	776
Y	*301-8243*	1	CONNECTION GP-WATER	687
Y	*304-6436*	1	CONTROL GP-ENGINE ELECTRONIC	1584
Y	*301-8241*	1	COOLER GP-OIL	697
Y	*301-8240*	1	COVER GP-VALVE MECHANISM	341
Y	*298-5111*	1	COVER GP-ENGINE	332
Y	*298-5888*	1	CRANKSHAFT GP	380
Y	*298-5887*	1	CYLINDER BLOCK GP	400
Y	*298-5890*	1	CYLINDER HEAD GP	419
Y	*311-4644*	1	DRIVE GP-FAN	433
Y	*311-4640*	1	FAN GP	704
Y	*298-5100*	1	FILTER GP-ENGINE OIL	678
Y	*311-2271*	1	LINES GP-FUEL FILTER	1050
Y	*298-5123*	1	FILTER GP-PRIMARY FUEL	1009
Y	*301-8251*	1	FILTER GP-WATER SEP & FUEL	1013
Y	*301-8237*	1	FLYWHEEL GP	455
Y	*298-5110*	1	GEAR GP-FRONT	475
Y	*298-5125*	1	GLOW PLUG GP	1586
Y	*301-8236*	1	HOUSING GP-FLYWHEEL	479
Y	*299-5033*	1	LIFTING GP-ENGINE	512
Y	*311-4641*	1	MOUNTING GP-ENGINE	521
Y	*301-8239*	1	PAN GP-OIL	541
Y	*304-8762*	1	PIPE GP-EXHAUST	790
Y	*298-5889*	1	PISTON GP	621
Y	*298-5129*	1	PLUG GP-CYLINDER HEAD	629
Y	*298-5098*	1	PLUG GP-ENGINE	631
Y	*298-5131*	1	PLUG GP-ENGINE	632
Y	*298-5128*	1	PLUG GP-ENGINE OIL MANIFOLD	680
Y	*308-4160*	1	PULLEY GP-CRANKSHAFT	649
			S/N: 4441-7401	
Y	*360-7343*	1	PULLEY GP-CRANKSHAFT	652
			S/N: 4447402-UP	
Y	*305-6701*	1	PUMP GP-FUEL INJECTION	1303
Y	*298-5105*	1	PUMP GP-WATER	714
Y	*312-1672*	1	RADIATOR GP	738
Y	*303-4619*	1	STARTING MOTOR GP-ELECTRIC	1592
			—OR—	
Y	*325-5612*	1	STARTING MOTOR GP-ELECTRIC	1597
Y	*311-7456*	1	TURBOCHARGER GP	887
Y	*298-5891*	1	VALVE MECHANISM GP	661
Y	*298-5130*	1	WIRING GP-ENGINE	1604
R	**359-0737**	1	CYLINDER BLOCK GP-SHORT	
	305-8454	1	ELECTRONICS GP-ENGINE RATINGS	

305-0489 **ENGINE AR-PRIMARY (**contd.**)** **i04249492**

NOTE	PART NUMBER	QTY	PART NAME 1 2 3 4 5 6 (PRODUCT LEVEL)	SEE PAGE

R - REMANUFACTURED PART MAY BE AVAILABLE
Y - SEPARATE ILLUSTRATION

<END>

305-0490 ENGINE AR-PRIMARY*R

95 BRAKE KW (127 BHP) AT 2200 RPM

SMCS-1000 **i03993348**

NOTE	PART NUMBER	QTY	PART NAME 1 2 3 4 5 6 (PRODUCT LEVEL)	SEE PAGE
Y	*311-4639*	1	ALTERNATOR GP-CHARGING	1575
Y	*301-8245*	1	BALANCER GP	317
Y	*298-5892*	1	CAMSHAFT GP	321
Y	*301-8248*	1	CONNECTION GP-INLET	776
Y	*301-8243*	1	CONNECTION GP-WATER	687
Y	*304-6436*	1	CONTROL GP-ENGINE ELECTRONIC	1584
Y	*301-8241*	1	COOLER GP-OIL	697
Y	*301-8240*	1	COVER GP-VALVE MECHANISM	341
Y	*298-5111*	1	COVER GP-ENGINE	332
Y	*298-5888*	1	CRANKSHAFT GP	380
Y	*298-5887*	1	CYLINDER BLOCK GP	400
Y	*298-5890*	1	CYLINDER HEAD GP	419
Y	*311-4644*	1	DRIVE GP-FAN	433
Y	*311-4640*	1	FAN GP	704
Y	*298-5100*	1	FILTER GP-ENGINE OIL	678
Y	*311-2271*	1	LINES GP-FUEL FILTER	1050
Y	*298-5123*	1	FILTER GP-PRIMARY FUEL	1009
Y	*301-8251*	1	FILTER GP-WATER SEP & FUEL	1013
Y	*301-8237*	1	FLYWHEEL GP	455
Y	*298-5110*	1	GEAR GP-FRONT	475
Y	*299-5075*	1	GLOW PLUG GP	1587
Y	*301-8236*	1	HOUSING GP-FLYWHEEL	479
Y	*299-5033*	1	LIFTING GP-ENGINE	512
Y	*311-4641*	1	MOUNTING GP-ENGINE	521
Y	*301-8239*	1	PAN GP-OIL	541
Y	*304-8762*	1	PIPE GP-EXHAUST	790
Y	*298-5889*	1	PISTON GP	621
Y	*298-5129*	1	PLUG GP-CYLINDER HEAD	629
Y	*298-5098*	1	PLUG GP-ENGINE	631
Y	*298-5131*	1	PLUG GP-ENGINE	632
Y	*298-5128*	1	PLUG GP-ENGINE OIL MANIFOLD	680
Y	*308-4160*	1	PULLEY GP-CRANKSHAFT	649
			S/N: 4441-7401	
Y	*360-7343*	1	PULLEY GP-CRANKSHAFT	652
			S/N: 4447402-UP	
Y	*305-6701*	1	PUMP GP-FUEL INJECTION	1303
Y	*298-5105*	1	PUMP GP-WATER	714
Y	*312-1672*	1	RADIATOR GP	738
Y	*299-5067*	1	STARTING MOTOR GP-ELECTRIC	1591
Y	*307-2850*	1	TURBOCHARGER GP	857
Y	*298-5891*	1	VALVE MECHANISM GP	661
Y	*298-5130*	1	WIRING GP-ENGINE	1604
	305-8454	1	ELECTRONICS GP-ENGINE RATINGS	

Y - SEPARATE ILLUSTRATION

<END>

306-8901 ENGINE AR-PRIMARY

58 BRAKE KW (77 BHP) AT 2200 RPM

SMCS-1000 **i02883420**

NOTE	PART NUMBER	QTY	PART NAME 1 2 3 4 5 6 (PRODUCT LEVEL)	SEE PAGE
			(NO SERVICED PARTS)	

<END>

307-0425 ENGINE AR-PRIMARY

97 BRAKE KW (129 BHP) AT 2200 RPM

SMCS-1000 **i03993349**

NOTE	PART NUMBER	QTY	PART NAME 1 2 3 4 5 6 (PRODUCT LEVEL)	SEE PAGE
Y	*311-4639*	1	ALTERNATOR GP-CHARGING	1575
Y	*298-5892*	1	CAMSHAFT GP	321
Y	*301-8248*	1	CONNECTION GP-INLET	776
Y	*301-8243*	1	CONNECTION GP-WATER	687
Y	*304-6436*	1	CONTROL GP-ENGINE ELECTRONIC	1584
Y	*298-5099*	1	COOLER GP-ENGINE OIL	690
Y	*301-8240*	1	COVER GP-VALVE MECHANISM	341
Y	*298-5111*	1	COVER GP-ENGINE	332
Y	*298-5888*	1	CRANKSHAFT GP	380
Y	*298-5887*	1	CYLINDER BLOCK GP	400
Y	*298-5890*	1	CYLINDER HEAD GP	419
Y	*311-4644*	1	DRIVE GP-FAN	433
Y	*311-4640*	1	FAN GP	704
Y	*298-5100*	1	FILTER GP-ENGINE OIL	678
Y	*311-2271*	1	LINES GP-FUEL FILTER	1050
Y	*298-5123*	1	FILTER GP-PRIMARY FUEL	1009
Y	*301-8251*	1	FILTER GP-WATER SEP & FUEL	1013
Y	*301-8237*	1	FLYWHEEL GP	455
Y	*298-5110*	1	GEAR GP-FRONT	475
Y	*299-5075*	1	GLOW PLUG GP	1587
Y	*303-4618*	1	HOUSING GP-FLYWHEEL	481
Y	*299-5033*	1	LIFTING GP-ENGINE	512
Y	*301-8250*	1	PLUG GP-ENGINE	633
Y	*298-5096*	1	PAN GP-OIL	533
Y	*304-8762*	1	PIPE GP-EXHAUST	790
Y	*298-5889*	1	PISTON GP	621
Y	*298-5129*	1	PLUG GP-CYLINDER HEAD	629
Y	*298-5098*	1	PLUG GP-ENGINE	631
Y	*298-5131*	1	PLUG GP-ENGINE	632
Y	*298-5128*	1	PLUG GP-ENGINE OIL MANIFOLD	680
Y	*308-4160*	1	PULLEY GP-CRANKSHAFT	649
			S/N: 4441-7401	
Y	*360-7343*	1	PULLEY GP-CRANKSHAFT	652
			S/N: 4447402-UP	
Y	*298-5112*	1	PUMP GP-ENGINE OIL	681
Y	*303-4615*	1	PUMP GP-FUEL INJECTION	1134
Y	*298-5105*	1	PUMP GP-WATER	714
Y	*312-1672*	1	RADIATOR GP	738
Y	*299-5067*	1	STARTING MOTOR GP-ELECTRIC	1591
Y	*307-2850*	1	TURBOCHARGER GP	857
Y	*298-5891*	1	VALVE MECHANISM GP	661
Y	*298-5130*	1	WIRING GP-ENGINE	1604
R	**359-0737**	1	CYLINDER BLOCK GP-SHORT	
	305-8458	1	ELECTRONICS GP-ENGINE RATINGS	

R - REMANUFACTURED PART MAY BE AVAILABLE
Y - SEPARATE ILLUSTRATION

<END>

307-0426 ENGINE AR-PRIMARY

97 BRAKE KW (129 BHP) AT 2200 RPM

SMCS-1000 **i03993351**

NOTE	PART NUMBER	QTY	PART NAME 1 2 3 4 5 6 (PRODUCT LEVEL)	SEE PAGE
Y	*304-0728*	1	ADAPTER GP-AUXILIARY DRIVE	301
Y	*311-4639*	1	ALTERNATOR GP-CHARGING	1575
Y	*298-5892*	1	CAMSHAFT GP	321
Y	*301-8248*	1	CONNECTION GP-INLET	776
Y	*301-8243*	1	CONNECTION GP-WATER	687
Y	*304-6436*	1	CONTROL GP-ENGINE ELECTRONIC	1584
Y	*298-5099*	1	COOLER GP-ENGINE OIL	690
Y	*301-8240*	1	COVER GP-VALVE MECHANISM	341
Y	*298-5888*	1	CRANKSHAFT GP	380
Y	*298-5887*	1	CYLINDER BLOCK GP	400
Y	*298-5890*	1	CYLINDER HEAD GP	419
Y	*311-4644*	1	DRIVE GP-FAN	433
Y	*311-4640*	1	FAN GP	704
Y	*298-5100*	1	FILTER GP-ENGINE OIL	678
Y	*298-5123*	1	FILTER GP-PRIMARY FUEL	1009
Y	*301-8251*	1	FILTER GP-WATER SEP & FUEL	1013
Y	*301-8237*	1	FLYWHEEL GP	455
Y	*299-5075*	1	GLOW PLUG GP	1587
Y	*303-4618*	1	HOUSING GP-FLYWHEEL	481
Y	*304-0727*	1	HOUSING GP-FRONT	492
Y	*299-5033*	1	LIFTING GP-ENGINE	512
Y	*311-2271*	1	LINES GP-FUEL FILTER	1050
Y	*311-4641*	1	MOUNTING GP-ENGINE	521
Y	*298-5096*	1	PAN GP-OIL	533
Y	*304-8762*	1	PIPE GP-EXHAUST	790
Y	*298-5889*	1	PISTON GP	621
Y	*298-5129*	1	PLUG GP-CYLINDER HEAD	629
Y	*298-5098*	1	PLUG GP-ENGINE	631
Y	*298-5131*	1	PLUG GP-ENGINE	632
Y	*298-5128*	1	PLUG GP-ENGINE OIL MANIFOLD	680
Y	*308-4160*	1	PULLEY GP-CRANKSHAFT	649
			S/N: 4441-7401	
Y	*360-7343*	1	PULLEY GP-CRANKSHAFT	652
			S/N: 4447402-UP	
Y	*298-5112*	1	PUMP GP-ENGINE OIL	681
Y	*303-4615*	1	PUMP GP-FUEL INJECTION	1134
Y	*340-4692*	1	PUMP GP-WATER	722
Y	*311-4636*	1	RADIATOR GP	730
Y	*299-5067*	1	STARTING MOTOR GP-ELECTRIC	1591
Y	*307-2850*	1	TURBOCHARGER GP	857
Y	*298-5891*	1	VALVE MECHANISM GP	661
Y	*298-5130*	1	WIRING GP-ENGINE	1604
R	**359-0737**	1	CYLINDER BLOCK GP-SHORT	
	305-8458	1	ELECTRONICS GP-ENGINE RATINGS	

R - REMANUFACTURED PART MAY BE AVAILABLE
Y - SEPARATE ILLUSTRATION

<END>

307-0427 ENGINE AR-PRIMARY

95 BRAKE KW (127 BHP) AT 2200 RPM

SMCS-1000 **i03993352**

NOTE	PART NUMBER	QTY	PART NAME 1 2 3 4 5 6 (PRODUCT LEVEL)	SEE PAGE
Y	*304-0728*	1	ADAPTER GP-AUXILIARY DRIVE	301
Y	*311-4639*	1	ALTERNATOR GP-CHARGING	1575
Y	*301-8245*	1	BALANCER GP	317
Y	*298-5892*	1	CAMSHAFT GP	321
Y	*301-8243*	1	CONNECTION GP-WATER	687
Y	*304-6436*	1	CONTROL GP-ENGINE ELECTRONIC	1584
Y	*301-8241*	1	COOLER GP-OIL	697
Y	*301-8240*	1	COVER GP-VALVE MECHANISM	341
Y	*298-5888*	1	CRANKSHAFT GP	380
Y	*298-5887*	1	CYLINDER BLOCK GP	400
Y	*298-5890*	1	CYLINDER HEAD GP	419
Y	*311-4644*	1	DRIVE GP-FAN	433
Y	*311-4640*	1	FAN GP	704
Y	*298-5100*	1	FILTER GP-ENGINE OIL	678
Y	*298-5123*	1	FILTER GP-PRIMARY FUEL	1009
Y	*301-8251*	1	FILTER GP-WATER SEP & FUEL	1013
Y	*301-8237*	1	FLYWHEEL GP	455
Y	*299-5075*	1	GLOW PLUG GP	1587
Y	*301-8236*	1	HOUSING GP-FLYWHEEL	479
Y	*304-0727*	1	HOUSING GP-FRONT	492
Y	*299-5033*	1	LIFTING GP-ENGINE	512
Y	*311-2271*	1	LINES GP-FUEL FILTER	1050
Y	*311-4641*	1	MOUNTING GP-ENGINE	521
Y	*301-8239*	1	PAN GP-OIL	541
Y	*304-8762*	1	PIPE GP-EXHAUST	790
Y	*298-5889*	1	PISTON GP	621
Y	*298-5129*	1	PLUG GP-CYLINDER HEAD	629
Y	*298-5098*	1	PLUG GP-ENGINE	631
Y	*298-5131*	1	PLUG GP-ENGINE	632
Y	*298-5128*	1	PLUG GP-ENGINE OIL MANIFOLD	680
Y	*308-4160*	1	PULLEY GP-CRANKSHAFT	649
			S/N: 4441-7401	
Y	*360-7343*	1	PULLEY GP-CRANKSHAFT	652
			S/N: 4447402-UP	
Y	*305-6701*	1	PUMP GP-FUEL INJECTION	1303
Y	*340-4692*	1	PUMP GP-WATER	722
Y	*311-4636*	1	RADIATOR GP	730
Y	*299-5067*	1	STARTING MOTOR GP-ELECTRIC	1591
Y	*307-2850*	1	TURBOCHARGER GP	857
Y	*298-5891*	1	VALVE MECHANISM GP	661
Y	*298-5130*	1	WIRING GP-ENGINE	1604
R	**359-0737**	1	CYLINDER BLOCK GP-SHORT	
	305-8454	1	ELECTRONICS GP-ENGINE RATINGS	

R - REMANUFACTURED PART MAY BE AVAILABLE
Y - SEPARATE ILLUSTRATION

<END>

307-0433 ENGINE AR-PRIMARY*R

97 BRAKE KW (129 BHP) AT 2200 RPM

SMCS-1000 **i04249493**

NOTE	PART NUMBER	QTY	PART NAME 1 2 3 4 5 6 (PRODUCT LEVEL)	SEE PAGE
Y	*311-5794*	1	ALTERNATOR GP-CHARGING	1576
Y	*298-5892*	1	CAMSHAFT GP	321
Y	*301-8248*	1	CONNECTION GP-INLET	776
Y	*301-8243*	1	CONNECTION GP-WATER	687
Y	*304-6436*	1	CONTROL GP-ENGINE ELECTRONIC	1584
Y	*298-5099*	1	COOLER GP-ENGINE OIL	690
Y	*304-5574*	1	COVER GP-VALVE MECHANISM	351
Y	*298-5111*	1	COVER GP-ENGINE	332
Y	*298-5888*	1	CRANKSHAFT GP	380
Y	*298-5887*	1	CYLINDER BLOCK GP	400
Y	*298-5890*	1	CYLINDER HEAD GP	419
Y	*299-5069*	1	DRIVE GP-FAN	426
Y	*307-2849*	1	FAN GP	702
Y	*298-5100*	1	FILTER GP-ENGINE OIL	678
Y	*311-2271*	1	LINES GP-FUEL FILTER	1050
Y	*298-5123*	1	FILTER GP-PRIMARY FUEL	1009
Y	*301-8251*	1	FILTER GP-WATER SEP & FUEL	1013
Y	*311-5795*	1	FLYWHEEL GP	462
Y	*298-5110*	1	GEAR GP-FRONT	475
Y	*298-5125*	1	GLOW PLUG GP	1586
Y	*311-5796*	1	HOUSING GP-FLYWHEEL	488
Y	*299-5033*	1	LIFTING GP-ENGINE	512
Y	*298-5096*	1	PAN GP-OIL	533
Y	*298-5889*	1	PISTON GP	621
Y	*298-5129*	1	PLUG GP-CYLINDER HEAD	629
Y	*298-5098*	1	PLUG GP-ENGINE	631
Y	*298-5131*	1	PLUG GP-ENGINE	632
Y	*311-5793*	1	PLUG GP-ENGINE	638
Y	*299-5030*	1	PULLEY GP	643
			S/N: 4441-7401	
Y	*360-7344*	1	PULLEY GP-CRANKSHAFT	653
			S/N: 4447402-UP	
Y	*298-5112*	1	PUMP GP-ENGINE OIL	681
Y	*303-4615*	1	PUMP GP-FUEL INJECTION	1134
Y	*298-5105*	1	PUMP GP-WATER	714
Y	*328-0666*	1	STARTING MOTOR GP-ELECTRIC	1599
Y	*303-5779*	1	VALVE GP-FLUID SAMPLING	682
Y	*308-0305*	1	TURBOCHARGER GP	869
Y	*298-5891*	1	VALVE MECHANISM GP	661
Y	*298-5130*	1	WIRING GP-ENGINE	1604
R	**359-0737**	1	CYLINDER BLOCK GP-SHORT	
	305-8458	1	ELECTRONICS GP-ENGINE RATINGS	

R - REMANUFACTURED PART MAY BE AVAILABLE
Y - SEPARATE ILLUSTRATION

<END>

307-0438 ENGINE AR-PRIMARY*R

87 BRAKE KW (117 BHP) AT 2200 RPM

SMCS-1000 **i04249510**

NOTE	PART NUMBER	QTY	PART NAME 1 2 3 4 5 6 (PRODUCT LEVEL)	SEE PAGE
Y	*311-5794*	1	ALTERNATOR GP-CHARGING	1576
Y	*298-5892*	1	CAMSHAFT GP	321
Y	*301-8248*	1	CONNECTION GP-INLET	776
Y	*301-8243*	1	CONNECTION GP-WATER	687
Y	*304-6436*	1	CONTROL GP-ENGINE ELECTRONIC	1584
Y	*298-5099*	1	COOLER GP-ENGINE OIL	690
Y	*298-5111*	1	COVER GP-ENGINE	332
Y	*304-5574*	1	COVER GP-VALVE MECHANISM	351
Y	*298-5888*	1	CRANKSHAFT GP	380
Y	*298-5887*	1	CYLINDER BLOCK GP	400
Y	*298-5890*	1	CYLINDER HEAD GP	419
Y	*299-5069*	1	DRIVE GP-FAN	426
Y	*307-2849*	1	FAN GP	702
Y	*298-5100*	1	FILTER GP-ENGINE OIL	678
Y	*298-5123*	1	FILTER GP-PRIMARY FUEL	1009
Y	*301-8251*	1	FILTER GP-WATER SEP & FUEL	1013
Y	*311-5795*	1	FLYWHEEL GP	462
Y	*298-5110*	1	GEAR GP-FRONT	475
Y	*298-5125*	1	GLOW PLUG GP	1586
Y	*311-5796*	1	HOUSING GP-FLYWHEEL	488
Y	*299-5033*	1	LIFTING GP-ENGINE	512
Y	*311-2271*	1	LINES GP-FUEL FILTER	1050
Y	*298-5096*	1	PAN GP-OIL	533
Y	*298-5889*	1	PISTON GP	621
Y	*298-5129*	1	PLUG GP-CYLINDER HEAD	629
Y	*298-5098*	1	PLUG GP-ENGINE	631
Y	*298-5131*	1	PLUG GP-ENGINE	632
Y	*311-5793*	1	PLUG GP-ENGINE	638
Y	*299-5030*	1	PULLEY GP	643
			S/N: 4441-7401	
Y	*360-7344*	1	PULLEY GP-CRANKSHAFT	653
			S/N: 4447402-UP	
Y	*298-5112*	1	PUMP GP-ENGINE OIL	681
Y	*305-2575*	1	PUMP GP-FUEL INJECTION	1278
Y	*298-5105*	1	PUMP GP-WATER	714
Y	*328-0666*	1	STARTING MOTOR GP-ELECTRIC	1599
Y	*303-5779*	1	VALVE GP-FLUID SAMPLING	682
Y	*308-0305*	1	TURBOCHARGER GP	869
Y	*298-5891*	1	VALVE MECHANISM GP	661
Y	*298-5130*	1	WIRING GP-ENGINE	1604
R	**359-0737**	1	CYLINDER BLOCK GP-SHORT	
	305-8459	1	ELECTRONICS GP-ENGINE RATINGS	

R - REMANUFACTURED PART MAY BE AVAILABLE
Y - SEPARATE ILLUSTRATION

<END>

308-5585 ENGINE AR-PRIMARY*R

95 BRAKE KW (127 BHP) AT 2200 RPM

FIELD REPLACEMENT ORDER 437-5409—PAGE: 269, 540-1155—PAGE: 297

SMCS-1000 **i04006451**

NOTE	PART NUMBER	QTY	PART NAME 1 2 3 4 5 6 (PRODUCT LEVEL)	SEE PAGE
Y	*311-7455*	1	ALTERNATOR GP-CHARGING	1577
Y	*301-8245*	1	BALANCER GP	317
Y	*298-5892*	1	CAMSHAFT GP	321
Y	*301-8248*	1	CONNECTION GP-INLET	776
Y	*301-8243*	1	CONNECTION GP-WATER	687
Y	*304-6436*	1	CONTROL GP-ENGINE ELECTRONIC	1584
Y	*301-8241*	1	COOLER GP-OIL	697
Y	*301-8240*	1	COVER GP-VALVE MECHANISM	341
Y	*298-5111*	1	COVER GP-ENGINE	332
Y	*298-5888*	1	CRANKSHAFT GP	380
Y	*298-5887*	1	CYLINDER BLOCK GP	400
Y	*298-5890*	1	CYLINDER HEAD GP	419
Y	*311-4644*	1	DRIVE GP-FAN	433
Y	*314-5003*	1	FAN GP	707
Y	*298-5100*	1	FILTER GP-ENGINE OIL	678
Y	*311-2271*	1	LINES GP-FUEL FILTER	1050
Y	*298-5123*	1	FILTER GP-PRIMARY FUEL	1009
Y	*301-8251*	1	FILTER GP-WATER SEP & FUEL	1013
Y	*301-8237*	1	FLYWHEEL GP	455
Y	*298-5110*	1	GEAR GP-FRONT	475
Y	*298-5125*	1	GLOW PLUG GP	1586
Y	*298-5130*	1	WIRING GP-ENGINE	1604
Y	*301-8236*	1	HOUSING GP-FLYWHEEL	479
Y	*299-5033*	1	LIFTING GP-ENGINE	512
Y	*311-4641*	1	MOUNTING GP-ENGINE	521
Y	*301-8239*	1	PAN GP-OIL	541
Y	*304-8762*	1	PIPE GP-EXHAUST	790
Y	*298-5889*	1	PISTON GP	621
Y	*298-5129*	1	PLUG GP-CYLINDER HEAD	629
Y	*298-5098*	1	PLUG GP-ENGINE	631
Y	*298-5131*	1	PLUG GP-ENGINE	632
Y	*298-5128*	1	PLUG GP-ENGINE OIL MANIFOLD	680
Y	*308-4160*	1	PULLEY GP-CRANKSHAFT	649
			S/N: 4441-7401	
Y	*360-7343*	1	PULLEY GP-CRANKSHAFT	652
			S/N: 4447402-UP	
Y	*305-6701*	1	PUMP GP-FUEL INJECTION	1303
Y	*298-5105*	1	PUMP GP-WATER	714
Y	*312-1672*	1	RADIATOR GP	738
Y	*303-4619*	1	STARTING MOTOR GP-ELECTRIC	1592
			—OR—	
Y	*325-5612*	1	STARTING MOTOR GP-ELECTRIC	1597
Y	*311-7456*	1	TURBOCHARGER GP	887
Y	*298-5891*	1	VALVE MECHANISM GP	661
R	**359-0737**	1	CYLINDER BLOCK GP-SHORT	
	305-8454	1	ELECTRONICS GP-ENGINE RATINGS	

308-5585 **ENGINE AR-PRIMARY (**contd.**)** **i04006451**

NOTE	PART NUMBER	QTY	PART NAME 1 2 3 4 5 6 (PRODUCT LEVEL)	SEE PAGE

R - REMANUFACTURED PART MAY BE AVAILABLE
Y - SEPARATE ILLUSTRATION

<END>

308-5586 ENGINE AR-PRIMARY

97 BRAKE KW (129 BHP) AT 2200 RPM

SMCS-1000 **i04249511**

NOTE	PART NUMBER	QTY	PART NAME 1 2 3 4 5 6 (PRODUCT LEVEL)	SEE PAGE
Y	*311-4639*	1	ALTERNATOR GP-CHARGING	1575
Y	*298-5892*	1	CAMSHAFT GP	321
Y	*301-8243*	1	CONNECTION GP-WATER	687
Y	*304-6436*	1	CONTROL GP-ENGINE ELECTRONIC	1584
Y	*298-5099*	1	COOLER GP-ENGINE OIL	690
Y	*298-5111*	1	COVER GP-ENGINE	332
Y	*301-8240*	1	COVER GP-VALVE MECHANISM	341
Y	*298-5888*	1	CRANKSHAFT GP	380
Y	*298-5887*	1	CYLINDER BLOCK GP	400
Y	*298-5890*	1	CYLINDER HEAD GP	419
Y	*311-4644*	1	DRIVE GP-FAN	433
Y	*314-5003*	1	FAN GP	707
Y	*298-5100*	1	FILTER GP-ENGINE OIL	678
Y	*298-5123*	1	FILTER GP-PRIMARY FUEL	1009
Y	*301-8251*	1	FILTER GP-WATER SEP & FUEL	1013
Y	*301-8237*	1	FLYWHEEL GP	455
Y	*298-5110*	1	GEAR GP-FRONT	475
Y	*299-5075*	1	GLOW PLUG GP	1587
Y	*303-4618*	1	HOUSING GP-FLYWHEEL	481
Y	*299-5033*	1	LIFTING GP-ENGINE	512
Y	*311-2271*	1	LINES GP-FUEL FILTER	1050
Y	*311-4641*	1	MOUNTING GP-ENGINE	521
Y	*298-5096*	1	PAN GP-OIL (ENGINE)	533
Y	*304-8762*	1	PIPE GP-EXHAUST	790
Y	*298-5889*	1	PISTON GP	621
Y	*298-5129*	1	PLUG GP-CYLINDER HEAD	629
Y	*298-5098*	1	PLUG GP-ENGINE	631
Y	*298-5131*	1	PLUG GP-ENGINE	632
Y	*298-5128*	1	PLUG GP-ENGINE OIL MANIFOLD	680
Y	*308-4160*	1	PULLEY GP-CRANKSHAFT	649
			S/N: 4441-7401	
Y	*360-7343*	1	PULLEY GP-CRANKSHAFT	652
			S/N: 4447402-UP	
Y	*298-5112*	1	PUMP GP-ENGINE OIL	681
Y	*303-4615*	1	PUMP GP-FUEL INJECTION	1134
Y	*298-5105*	1	PUMP GP-WATER	714
Y	*312-1672*	1	RADIATOR GP	738
Y	*299-5067*	1	STARTING MOTOR GP-ELECTRIC	1591
Y	*307-2850*	1	TURBOCHARGER GP	857
Y	*298-5891*	1	VALVE MECHANISM GP	661
Y	*298-5130*	1	WIRING GP-ENGINE	1604
R	**359-0737**	1	CYLINDER BLOCK GP-SHORT	
	305-8458	1	ELECTRONICS GP-ENGINE RATINGS	

R - REMANUFACTURED PART MAY BE AVAILABLE
Y - SEPARATE ILLUSTRATION

<END>

308-5587 ENGINE AR-PRIMARY*R

97 BRAKE KW (129 BHP) AT 2200 RPM

SMCS-1000 **i06809795**

NOTE	PART NUMBER	QTY	PART NAME 1 2 3 4 5 6 (PRODUCT LEVEL)	SEE PAGE
Y	*311-7455*	1	ALTERNATOR GP-CHARGING	1577
Y	*298-5892*	1	CAMSHAFT GP	321
Y	*301-8243*	1	CONNECTION GP-WATER	687
Y	*304-6436*	1	CONTROL GP-ENGINE ELECTRONIC	1584
Y	*298-5099*	1	COOLER GP-ENGINE OIL	690
Y	*301-8240*	1	COVER GP-VALVE MECHANISM	341
Y	*298-5111*	1	COVER GP-ENGINE	332
Y	*298-5888*	1	CRANKSHAFT GP	380
Y	*298-5887*	1	CYLINDER BLOCK GP	400
Y	*298-5890*	1	CYLINDER HEAD GP	419
Y	*311-4644*	1	DRIVE GP-FAN	433
Y	*314-5003*	1	FAN GP	707
Y	*298-5100*	1	FILTER GP-ENGINE OIL	678
Y	*311-2271*	1	LINES GP-FUEL FILTER	1050
Y	*298-5123*	1	FILTER GP-PRIMARY FUEL	1009
Y	*301-8251*	1	FILTER GP-WATER SEP & FUEL	1013
Y	*301-8237*	1	FLYWHEEL GP	455
Y	*298-5110*	1	GEAR GP-FRONT	475
Y	*298-5125*	1	GLOW PLUG GP	1586
Y	*303-4618*	1	HOUSING GP-FLYWHEEL	481
Y	*299-5033*	1	LIFTING GP-ENGINE	512
Y	*311-4641*	1	MOUNTING GP-ENGINE	521
Y	*298-5096*	1	PAN GP-OIL (ENGINE)	533
Y	*304-8762*	1	PIPE GP-EXHAUST	790
Y	*298-5889*	1	PISTON GP	621
Y	*298-5129*	1	PLUG GP-CYLINDER HEAD	629
Y	*298-5098*	1	PLUG GP-ENGINE	631
Y	*298-5131*	1	PLUG GP-ENGINE	632
Y	*298-5128*	1	PLUG GP-ENGINE OIL MANIFOLD	680
Y	*308-4160*	1	PULLEY GP-CRANKSHAFT	649
			S/N: 4441-7401	
Y	*360-7343*	1	PULLEY GP-CRANKSHAFT	652
			S/N: 4447402-UP	
Y	*298-5112*	1	PUMP GP-ENGINE OIL	681
Y	*303-4615*	1	PUMP GP-FUEL INJECTION	1134
Y	*298-5105*	1	PUMP GP-WATER	714
Y	*312-1672*	1	RADIATOR GP	738
Y	*303-4619*	1	STARTING MOTOR GP-ELECTRIC	1592
			—OR—	
Y	*325-5612*	1	STARTING MOTOR GP-ELECTRIC	1597
Y	*311-7456*	1	TURBOCHARGER GP	887
Y	*298-5891*	1	VALVE MECHANISM GP	661
Y	*298-5130*	1	WIRING GP-ENGINE	1604
R	**359-0737**	1	CYLINDER BLOCK GP-SHORT	
	305-8458	1	ELECTRONICS GP-ENGINE RATINGS	

R - REMANUFACTURED PART MAY BE AVAILABLE
Y - SEPARATE ILLUSTRATION

<END>

308-5588 ENGINE AR-PRIMARY*R

95 BRAKE KW (127 BHP) AT 2200 RPM

SMCS-1000 **i04249616**

NOTE	PART NUMBER	QTY	PART NAME 1 2 3 4 5 6 (PRODUCT LEVEL)	SEE PAGE
Y	*311-4639*	1	ALTERNATOR GP-CHARGING	1575
Y	*301-8245*	1	BALANCER GP	317
Y	*298-5892*	1	CAMSHAFT GP	321
Y	*301-8248*	1	CONNECTION GP-INLET	776
Y	*301-8243*	1	CONNECTION GP-WATER	687
Y	*304-6436*	1	CONTROL GP-ENGINE ELECTRONIC	1584
Y	*301-8241*	1	COOLER GP-OIL	697
Y	*298-5111*	1	COVER GP-ENGINE	332
Y	*301-8240*	1	COVER GP-VALVE MECHANISM	341
Y	*298-5888*	1	CRANKSHAFT GP	380
Y	*298-5887*	1	CYLINDER BLOCK GP	400
Y	*298-5890*	1	CYLINDER HEAD GP	419
Y	*311-4644*	1	DRIVE GP-FAN	433
Y	*314-5003*	1	FAN GP	707
Y	*298-5100*	1	FILTER GP-ENGINE OIL	678
Y	*298-5123*	1	FILTER GP-PRIMARY FUEL	1009
Y	*301-8251*	1	FILTER GP-WATER SEP & FUEL	1013
Y	*301-8237*	1	FLYWHEEL GP	455
Y	*298-5110*	1	GEAR GP-FRONT	475
Y	*299-5075*	1	GLOW PLUG GP	1587
Y	*301-8236*	1	HOUSING GP-FLYWHEEL	479
Y	*299-5033*	1	LIFTING GP-ENGINE	512
Y	*311-2271*	1	LINES GP-FUEL FILTER	1050
Y	*311-4641*	1	MOUNTING GP-ENGINE	521
Y	*301-8239*	1	PAN GP-OIL	541
Y	*304-8762*	1	PIPE GP-EXHAUST	790
Y	*298-5889*	1	PISTON GP	621
Y	*298-5129*	1	PLUG GP-CYLINDER HEAD	629
Y	*298-5098*	1	PLUG GP-ENGINE	631
Y	*298-5131*	1	PLUG GP-ENGINE	632
Y	*298-5128*	1	PLUG GP-ENGINE OIL MANIFOLD	680
Y	*308-4160*	1	PULLEY GP-CRANKSHAFT	649
			S/N: 4441-7401	
Y	*360-7343*	1	PULLEY GP-CRANKSHAFT	652
			S/N: 4447402-UP	
Y	*305-6701*	1	PUMP GP-FUEL INJECTION	1303
Y	*298-5105*	1	PUMP GP-WATER	714
Y	*312-1672*	1	RADIATOR GP	738
Y	*299-5067*	1	STARTING MOTOR GP-ELECTRIC	1591
Y	*307-2850*	1	TURBOCHARGER GP	857
Y	*298-5891*	1	VALVE MECHANISM GP	661
Y	*298-5130*	1	WIRING GP-ENGINE	1604
R	**359-0737**	1	CYLINDER BLOCK GP-SHORT	
	305-8454	1	ELECTRONICS GP-ENGINE RATINGS	

R - REMANUFACTURED PART MAY BE AVAILABLE
Y - SEPARATE ILLUSTRATION

<END>

308-5589 ENGINE AR-PRIMARY*R

96 BRAKE KW (128 BHP) AT 2200 RPM

SMCS-1000 **i04347890**

NOTE	PART NUMBER	QTY	PART NAME 1 2 3 4 5 6 (PRODUCT LEVEL)	SEE PAGE
Y	*304-0728*	1	ADAPTER GP-AUXILIARY DRIVE	301
Y	*311-7455*	1	ALTERNATOR GP-CHARGING	1577
Y	*301-8245*	1	BALANCER GP	317
Y	*298-5892*	1	CAMSHAFT GP	321
Y	*301-8248*	1	CONNECTION GP-INLET	776
Y	*301-8243*	1	CONNECTION GP-WATER	687
Y	*304-6436*	1	CONTROL GP-ENGINE ELECTRONIC	1584
Y	*301-8241*	1	COOLER GP-OIL	697
Y	*301-8240*	1	COVER GP-VALVE MECHANISM	341
Y	*298-5888*	1	CRANKSHAFT GP	380
Y	*298-5887*	1	CYLINDER BLOCK GP	400
Y	*298-5890*	1	CYLINDER HEAD GP	419
Y	*311-4644*	1	DRIVE GP-FAN	433
Y	*314-5003*	1	FAN GP	707
Y	*298-5100*	1	FILTER GP-ENGINE OIL	678
Y	*311-2271*	1	LINES GP-FUEL FILTER	1050
Y	*298-5123*	1	FILTER GP-PRIMARY FUEL	1009
Y	*301-8251*	1	FILTER GP-WATER SEP & FUEL	1013
Y	*301-8237*	1	FLYWHEEL GP	455
Y	*298-5125*	1	GLOW PLUG GP	1586
Y	*301-8236*	1	HOUSING GP-FLYWHEEL	479
Y	*304-0727*	1	HOUSING GP-FRONT	492
Y	*299-5033*	1	LIFTING GP-ENGINE	512
Y	*311-4641*	1	MOUNTING GP-ENGINE	521
Y	*301-8239*	1	PAN GP-OIL	541
Y	*304-8762*	1	PIPE GP-EXHAUST	790
Y	*298-5889*	1	PISTON GP	621
Y	*298-5129*	1	PLUG GP-CYLINDER HEAD	629
Y	*298-5098*	1	PLUG GP-ENGINE	631
Y	*298-5131*	1	PLUG GP-ENGINE (THREADED)	632
Y	*298-5128*	1	PLUG GP-ENGINE OIL MANIFOLD	680
Y	*308-4160*	1	PULLEY GP-CRANKSHAFT	649
			S/N: 4441-7401	
Y	*360-7343*	1	PULLEY GP-CRANKSHAFT	652
			S/N: 4447402-UP	
Y	*305-6701*	1	PUMP GP-FUEL INJECTION	1303
Y	*340-4692*	1	PUMP GP-WATER	722
Y	*311-4636*	1	RADIATOR GP	730
Y	*303-4619*	1	STARTING MOTOR GP-ELECTRIC	1592
			—OR—	
Y	*325-5612*	1	STARTING MOTOR GP-ELECTRIC	1597
Y	*311-7456*	1	TURBOCHARGER GP	887
Y	*298-5891*	1	VALVE MECHANISM GP	661
Y	*298-5130*	1	WIRING GP-ENGINE	1604
R	**359-0737**	1	CYLINDER BLOCK GP-SHORT	
	305-8454	1	ELECTRONICS GP-ENGINE RATINGS	

308-5589 **ENGINE AR-PRIMARY (**contd.**)** **i04347890**

NOTE	PART NUMBER	QTY	PART NAME 1 2 3 4 5 6 (PRODUCT LEVEL)	SEE PAGE

R - REMANUFACTURED PART MAY BE AVAILABLE
Y - SEPARATE ILLUSTRATION

<END>

308-5590 ENGINE AR-PRIMARY

97 BRAKE KW (129 BHP) AT 2200 RPM

SMCS-1000 **i06809798**

NOTE	PART NUMBER	QTY	PART NAME 1 2 3 4 5 6 (PRODUCT LEVEL)	SEE PAGE
Y	*304-0728*	1	ADAPTER GP-AUXILIARY DRIVE	301
Y	*311-7455*	1	ALTERNATOR GP-CHARGING	1577
Y	*298-5892*	1	CAMSHAFT GP	321
Y	*301-8248*	1	CONNECTION GP-INLET	776
Y	*301-8243*	1	CONNECTION GP-WATER	687
Y	*304-6436*	1	CONTROL GP-ENGINE ELECTRONIC	1584
Y	*298-5099*	1	COOLER GP-ENGINE OIL	690
Y	*301-8240*	1	COVER GP-VALVE MECHANISM	341
Y	*298-5888*	1	CRANKSHAFT GP	380
Y	*298-5887*	1	CYLINDER BLOCK GP	400
Y	*298-5890*	1	CYLINDER HEAD GP	419
Y	*311-4644*	1	DRIVE GP-FAN	433
Y	*314-5003*	1	FAN GP	707
Y	*298-5100*	1	FILTER GP-ENGINE OIL	678
Y	*298-5123*	1	FILTER GP-PRIMARY FUEL	1009
Y	*301-8251*	1	FILTER GP-WATER SEP & FUEL	1013
Y	*301-8237*	1	FLYWHEEL GP	455
Y	*298-5125*	1	GLOW PLUG GP	1586
Y	*303-4618*	1	HOUSING GP-FLYWHEEL	481
Y	*304-0727*	1	HOUSING GP-FRONT	492
Y	*299-5033*	1	LIFTING GP-ENGINE	512
Y	*311-2271*	1	LINES GP-FUEL FILTER	1050
Y	*311-4641*	1	MOUNTING GP-ENGINE	521
Y	*298-5096*	1	PAN GP-OIL	533
Y	*304-8762*	1	PIPE GP-EXHAUST	790
Y	*298-5889*	1	PISTON GP	621
Y	*298-5129*	1	PLUG GP-CYLINDER HEAD	629
Y	*298-5098*	1	PLUG GP-ENGINE	631
Y	*298-5131*	1	PLUG GP-ENGINE (THREADED)	632
Y	*298-5128*	1	PLUG GP-ENGINE OIL MANIFOLD	680
Y	*308-4160*	1	PULLEY GP-CRANKSHAFT	649
			S/N: 4441-7401	
Y	*360-7343*	1	PULLEY GP-CRANKSHAFT	652
			S/N: 4447402-UP	
Y	*298-5112*	1	PUMP GP-ENGINE OIL	681
Y	*303-4615*	1	PUMP GP-FUEL INJECTION	1134
Y	*340-4692*	1	PUMP GP-WATER	722
Y	*311-4636*	1	RADIATOR GP	730
Y	*303-4619*	1	STARTING MOTOR GP-ELECTRIC	1592
			—OR—	
Y	*325-5612*	1	STARTING MOTOR GP-ELECTRIC	1597
Y	*311-7456*	1	TURBOCHARGER GP	887
Y	*298-5891*	1	VALVE MECHANISM GP	661
Y	*298-5130*	1	WIRING GP-ENGINE	1604
R	**359-0737**	1	CYLINDER BLOCK GP-SHORT	
	305-8458	1	ELECTRONICS GP-ENGINE RATINGS	

308-5590 **ENGINE AR-PRIMARY (**contd.**)** **i06809798**

NOTE	PART NUMBER	QTY	PART NAME 1 2 3 4 5 6 (PRODUCT LEVEL)	SEE PAGE

R - REMANUFACTURED PART MAY BE AVAILABLE
Y - SEPARATE ILLUSTRATION

<END>

308-5591 ENGINE AR-PRIMARY*R

95 BRAKE KW (127 BHP) AT 2200 RPM

SMCS-1000 **i06809793**

NOTE	PART NUMBER	QTY	PART NAME 1 2 3 4 5 6 (PRODUCT LEVEL)	SEE PAGE
Y	*304-0728*	1	ADAPTER GP-AUXILIARY DRIVE	301
Y	*311-4639*	1	ALTERNATOR GP-CHARGING	1575
Y	*301-8245*	1	BALANCER GP	317
Y	*298-5892*	1	CAMSHAFT GP	321
Y	*301-8243*	1	CONNECTION GP-WATER	687
Y	*304-6436*	1	CONTROL GP-ENGINE ELECTRONIC	1584
Y	*301-8241*	1	COOLER GP-OIL	697
Y	*301-8240*	1	COVER GP-VALVE MECHANISM	341
Y	*298-5888*	1	CRANKSHAFT GP	380
Y	*298-5887*	1	CYLINDER BLOCK GP	400
Y	*298-5890*	1	CYLINDER HEAD GP	419
Y	*311-4644*	1	DRIVE GP-FAN	433
Y	*314-5003*	1	FAN GP	707
Y	*298-5100*	1	FILTER GP-ENGINE OIL	678
Y	*298-5123*	1	FILTER GP-PRIMARY FUEL	1009
Y	*301-8251*	1	FILTER GP-WATER SEP & FUEL	1013
Y	*301-8237*	1	FLYWHEEL GP	455
Y	*299-5075*	1	GLOW PLUG GP	1587
Y	*301-8236*	1	HOUSING GP-FLYWHEEL	479
Y	*304-0727*	1	HOUSING GP-FRONT	492
Y	*299-5033*	1	LIFTING GP-ENGINE	512
Y	*311-2271*	1	LINES GP-FUEL FILTER	1050
Y	*311-4641*	1	MOUNTING GP-ENGINE	521
Y	*301-8239*	1	PAN GP-OIL	541
Y	*304-8762*	1	PIPE GP-EXHAUST	790
Y	*298-5889*	1	PISTON GP	621
Y	*298-5129*	1	PLUG GP-CYLINDER HEAD	629
Y	*298-5098*	1	PLUG GP-ENGINE	631
Y	*298-5131*	1	PLUG GP-ENGINE (THREADED)	632
Y	*298-5128*	1	PLUG GP-ENGINE OIL MANIFOLD	680
Y	*308-4160*	1	PULLEY GP-CRANKSHAFT	649
			S/N: 4441-7401	
Y	*360-7343*	1	PULLEY GP-CRANKSHAFT	652
			S/N: 4441-7402	
Y	*305-6701*	1	PUMP GP-FUEL INJECTION	1303
Y	*340-4692*	1	PUMP GP-WATER	722
Y	*311-4636*	1	RADIATOR GP	730
Y	*299-5067*	1	STARTING MOTOR GP-ELECTRIC	1591
Y	*307-2850*	1	TURBOCHARGER GP	857
Y	*298-5891*	1	VALVE MECHANISM GP	661
Y	*298-5130*	1	WIRING GP-ENGINE	1604
R	**359-0737**	1	CYLINDER BLOCK GP-SHORT	
	305-8454	1	ELECTRONICS GP-ENGINE RATINGS	

R - REMANUFACTURED PART MAY BE AVAILABLE
Y - SEPARATE ILLUSTRATION

<END>

308-5592 ENGINE AR-PRIMARY

97 BRAKE KW (129 BHP) AT 2200 RPM

SMCS-1000 **i04347929**

NOTE	PART NUMBER	QTY	PART NAME 1 2 3 4 5 6 (PRODUCT LEVEL)	SEE PAGE
Y	*304-0728*	1	ADAPTER GP-AUXILIARY DRIVE	301
Y	*311-4639*	1	ALTERNATOR GP-CHARGING	1575
Y	*298-5892*	1	CAMSHAFT GP	321
Y	*301-8248*	1	CONNECTION GP-INLET	776
Y	*301-8243*	1	CONNECTION GP-WATER	687
Y	*304-6436*	1	CONTROL GP-ENGINE ELECTRONIC	1584
Y	*298-5099*	1	COOLER GP-ENGINE OIL	690
Y	*301-8240*	1	COVER GP-VALVE MECHANISM	341
Y	*298-5888*	1	CRANKSHAFT GP	380
Y	*298-5887*	1	CYLINDER BLOCK GP	400
Y	*298-5890*	1	CYLINDER HEAD GP	419
Y	*311-4644*	1	DRIVE GP-FAN	433
Y	*314-5003*	1	FAN GP	707
Y	*298-5100*	1	FILTER GP-ENGINE OIL	678
Y	*298-5123*	1	FILTER GP-PRIMARY FUEL	1009
Y	*301-8251*	1	FILTER GP-WATER SEP & FUEL	1013
Y	*301-8237*	1	FLYWHEEL GP	455
Y	*299-5075*	1	GLOW PLUG GP	1587
Y	*303-4618*	1	HOUSING GP-FLYWHEEL	481
Y	*304-0727*	1	HOUSING GP-FRONT	492
Y	*299-5033*	1	LIFTING GP-ENGINE	512
Y	*311-2271*	1	LINES GP-FUEL FILTER	1050
Y	*311-4641*	1	MOUNTING GP-ENGINE	521
Y	*298-5096*	1	PAN GP-OIL	533
Y	*304-8762*	1	PIPE GP-EXHAUST	790
Y	*298-5889*	1	PISTON GP	621
Y	*298-5129*	1	PLUG GP-CYLINDER HEAD	629
Y	*298-5098*	1	PLUG GP-ENGINE	631
Y	*298-5131*	1	PLUG GP-ENGINE (THREADED)	632
Y	*298-5128*	1	PLUG GP-ENGINE OIL MANIFOLD	680
Y	*308-4160*	1	PULLEY GP-CRANKSHAFT	649
			S/N: 4441-7401	
Y	*360-7343*	1	PULLEY GP-CRANKSHAFT	652
			S/N: 4447402-UP	
Y	*298-5112*	1	PUMP GP-ENGINE OIL	681
Y	*303-4615*	1	PUMP GP-FUEL INJECTION	1134
Y	*340-4692*	1	PUMP GP-WATER	722
Y	*311-4636*	1	RADIATOR GP	730
Y	*299-5067*	1	STARTING MOTOR GP-ELECTRIC	1591
Y	*307-2850*	1	TURBOCHARGER GP	857
Y	*298-5891*	1	VALVE MECHANISM GP	661
Y	*298-5130*	1	WIRING GP-ENGINE	1604
R	**359-0737**	1	CYLINDER BLOCK GP-SHORT	
	305-8458	1	ELECTRONICS GP-ENGINE RATINGS	

R - REMANUFACTURED PART MAY BE AVAILABLE
Y - SEPARATE ILLUSTRATION

<END>

308-5593 ENGINE AR-PRIMARY*R

97 BRAKE KW (125 BHP) AT 2200 RPM

SMCS-1000 **i04348911**

NOTE	PART NUMBER	QTY	PART NAME 1 2 3 4 5 6 (PRODUCT LEVEL)	SEE PAGE
Y	*298-5892*	1	CAMSHAFT GP	321
Y	*298-5116*	1	CONNECTION GP-INLET	774
Y	*299-5078*	1	CONNECTION GP-WATER	686
Y	*304-6436*	1	CONTROL GP-ENGINE ELECTRONIC	1584
Y	*298-5099*	1	COOLER GP-ENGINE OIL	690
Y	*304-8758*	1	COVER GP-VALVE MECHANISM	357
Y	*298-5111*	1	COVER GP-ENGINE	332
Y	*298-5888*	1	CRANKSHAFT GP	380
Y	*298-5887*	1	CYLINDER BLOCK GP	400
Y	*298-5890*	1	CYLINDER HEAD GP	419
Y	*316-6873*	1	DRIVE GP-FAN	435
Y	*318-0775*	1	FILLER GP-ENGINE OIL	676
Y	*298-5100*	1	FILTER GP-ENGINE OIL	678
Y	*311-2271*	1	LINES GP-FUEL FILTER	1050
Y	*298-5123*	1	FILTER GP-PRIMARY FUEL	1009
Y	*301-8251*	1	FILTER GP-WATER SEP & FUEL	1013
Y	*298-5110*	1	GEAR GP-FRONT	475
Y	*298-5125*	1	GLOW PLUG GP	1586
Y	*299-5033*	1	LIFTING GP-ENGINE	512
Y	*304-0730*	1	MOUNTING GP-ENGINE	518
Y	*312-2577*	1	MOUNTING GP-FAN DRIVE	532
Y	*304-8757*	1	PAN GP-OIL	553
Y	*304-8762*	1	PIPE GP-EXHAUST	790
Y	*298-5889*	1	PISTON GP	621
Y	*298-5129*	1	PLUG GP-CYLINDER HEAD	629
Y	*298-5131*	1	PLUG GP-ENGINE	632
Y	*298-5128*	1	PLUG GP-ENGINE OIL MANIFOLD	680
Y	*308-4160*	1	PULLEY GP-CRANKSHAFT	649
			S/N: 4441-7401	
Y	*360-7343*	1	PULLEY GP-CRANKSHAFT	652
			S/N: 4447402-UP	
Y	*298-5112*	1	PUMP GP-ENGINE OIL	681
Y	*304-8755*	1	PUMP GP-FUEL INJECTION	1244
Y	*298-5105*	1	PUMP GP-WATER	714
Y	*308-4277*	1	TURBOCHARGER GP	881
Y	*298-5891*	1	VALVE MECHANISM GP	661
Y	*298-5130*	1	WIRING GP-ENGINE	1604
R	**359-0737**	1	CYLINDER BLOCK GP-SHORT	
	305-8456	1	ELECTRONICS GP-ENGINE RATINGS	

R - REMANUFACTURED PART MAY BE AVAILABLE
Y - SEPARATE ILLUSTRATION

<END>

308-5601 ENGINE AR-PRIMARY

97 BRAKE KW (129 BHP) AT 2200 RPM

SMCS-1000 **i04348913**

NOTE	PART NUMBER	QTY	PART NAME 1 2 3 4 5 6 (PRODUCT LEVEL)	SEE PAGE
Y	*303-4621*	1	ALTERNATOR GP-CHARGING	1560
Y	*298-5892*	1	CAMSHAFT GP	321
Y	*301-8248*	1	CONNECTION GP-INLET	776
Y	*301-8243*	1	CONNECTION GP-WATER	687
Y	*304-6436*	1	CONTROL GP-ENGINE ELECTRONIC	1584
Y	*298-5099*	1	COOLER GP-ENGINE OIL	690
Y	*301-8240*	1	COVER GP-VALVE MECHANISM	341
Y	*298-5888*	1	CRANKSHAFT GP	380
Y	*298-5887*	1	CYLINDER BLOCK GP	400
Y	*298-5890*	1	CYLINDER HEAD GP	419
Y	*311-4644*	1	DRIVE GP-FAN	433
Y	*312-2577*	1	MOUNTING GP-FAN DRIVE	532
Y	*298-5100*	1	FILTER GP-ENGINE OIL	678
Y	*311-2271*	1	LINES GP-FUEL FILTER	1050
Y	*298-5123*	1	FILTER GP-PRIMARY FUEL	1009
Y	*301-8251*	1	FILTER GP-WATER SEP & FUEL	1013
Y	*306-2314*	1	FLYWHEEL GP	461
Y	*298-5125*	1	GLOW PLUG GP	1586
Y	*298-5130*	1	WIRING GP-ENGINE	1604
Y	*303-4618*	1	HOUSING GP-FLYWHEEL	481
Y	*304-8760*	1	HOUSING GP-FRONT	495
Y	*299-5033*	1	LIFTING GP-ENGINE	512
Y	*301-8250*	1	PLUG GP-ENGINE	633
Y	*298-5096*	1	PAN GP-OIL	533
Y	*304-8762*	1	PIPE GP-EXHAUST	790
Y	*298-5889*	1	PISTON GP	621
Y	*298-5129*	1	PLUG GP-CYLINDER HEAD	629
Y	*312-2578*	1	PLUG GP-ENGINE	639
Y	*298-5131*	1	PLUG GP-ENGINE (THREADED)	632
Y	*304-8761*	1	PLUG GP-ENGINE	636
Y	*298-5128*	1	PLUG GP-ENGINE OIL MANIFOLD	680
Y	*301-8242*	1	PULLEY GP	644
			S/N: 4441-7401	
Y	*360-7342*	1	PULLEY GP-CRANKSHAFT	651
			S/N: 4447402-UP	
Y	*298-5112*	1	PUMP GP-ENGINE OIL	681
Y	*303-4615*	1	PUMP GP-FUEL INJECTION	1134
Y	*298-5105*	1	PUMP GP-WATER	714
Y	*303-4619*	1	STARTING MOTOR GP-ELECTRIC	1592
			—OR—	
Y	*325-5612*	1	STARTING MOTOR GP-ELECTRIC	1597
Y	*312-2579*	1	SWITCH GP-HEAT START	1603
Y	*308-0305*	1	TURBOCHARGER GP	869
Y	*298-5891*	1	VALVE MECHANISM GP	661
R	**359-0737**	1	CYLINDER BLOCK GP-SHORT	
	305-8458	1	ELECTRONICS GP-ENGINE RATINGS	

308-5601 **ENGINE AR-PRIMARY (**contd.**)** **i04348913**

NOTE	PART NUMBER	QTY	PART NAME 1 2 3 4 5 6 (PRODUCT LEVEL)	SEE PAGE

R - REMANUFACTURED PART MAY BE AVAILABLE
Y - SEPARATE ILLUSTRATION

<END>

308-5603 ENGINE AR-PRIMARY*R

93 BRAKE KW (125 BHP) AT 2200 RPM

SMCS-1000 **i07622785**

NOTE	PART NUMBER	QTY	PART NAME 1 2 3 4 5 6 (PRODUCT LEVEL)	SEE PAGE
Y	*308-0304*	1	ALTERNATOR GP-CHARGING	1571
Y	*298-5892*	1	CAMSHAFT GP	321
Y	*301-8243*	1	CONNECTION GP-WATER	687
Y	*304-6436*	1	CONTROL GP-ENGINE ELECTRONIC	1584
Y	*298-5099*	1	COOLER GP-ENGINE OIL	690
Y	*298-5111*	1	COVER GP-ENGINE	332
Y	*304-5574*	1	COVER GP-VALVE MECHANISM	351
Y	*298-5888*	1	CRANKSHAFT GP	380
Y	*298-5887*	1	CYLINDER BLOCK GP	400
Y	*298-5890*	1	CYLINDER HEAD GP	419
Y	*327-4182*	1	DRIVE GP-FAN	443
			S/N: 4441-18904	
Y	*437-2695*	1	DRIVE GP-FAN	452
			S/N: 44418905-UP	
Y	*299-5167*	1	ELBOW GP-AIR INLET	784
Y	*315-3413*	1	FAN GP	708
Y	*317-6399*	1	FASTENER GP-TURBOCHARGER	788
Y	*298-5123*	1	FILTER GP-PRIMARY FUEL	1009
Y	*301-8251*	1	FILTER GP-WATER SEP & FUEL	1013
Y	*303-5768*	1	FLYWHEEL GP	456
Y	*298-5110*	1	GEAR GP-FRONT	475
Y	*298-5125*	1	GLOW PLUG GP	1586
Y	*304-5571*	1	HOUSING GP-FLYWHEEL	484
Y	*299-5033*	1	LIFTING GP-ENGINE	512
Y	*311-2271*	1	LINES GP-FUEL FILTER	1050
Y	*314-5375*	1	MOUNTING GP-ENGINE	524
Y	*299-5175*	1	PAN GP-OIL	537
Y	*298-5889*	1	PISTON GP	621
Y	*298-5129*	1	PLUG GP-CYLINDER HEAD	629
Y	*298-5098*	1	PLUG GP-ENGINE	631
Y	*298-5131*	1	PLUG GP-ENGINE (THREADED)	632
Y	*298-5128*	1	PLUG GP-ENGINE OIL MANIFOLD	680
Y	*308-4160*	1	PULLEY GP-CRANKSHAFT	649
			S/N: 4441-7401	
Y	*360-7343*	1	PULLEY GP-CRANKSHAFT	652
			S/N: 4447402-UP	
Y	*298-5112*	1	PUMP GP-ENGINE OIL	681
Y	*304-8755*	1	PUMP GP-FUEL INJECTION	1244
Y	*298-5105*	1	PUMP GP-WATER	714
Y	*303-4622*	1	TURBOCHARGER GP	812
Y	*298-5891*	1	VALVE MECHANISM GP	661
Y	*304-5577*	1	WIRING GP-ENGINE	1609
YR	**359-0737**	1	CYLINDER BLOCK GP-SHORT	415
	305-8456	1	ELECTRONICS GP-ENGINE RATINGS	

R - REMANUFACTURED PART MAY BE AVAILABLE
Y - SEPARATE ILLUSTRATION

<END>

310-6934 ENGINE AR-PRIMARY*R

93 BRAKE KW (125 BHP) AT 2200 RPM

SMCS-1000 **i04381019**

NOTE	PART NUMBER	QTY	PART NAME 1 2 3 4 5 6 (PRODUCT LEVEL)	SEE PAGE
Y	*298-5892*	1	CAMSHAFT GP	321
Y	*299-5078*	1	CONNECTION GP-WATER	686
Y	*304-6436*	1	CONTROL GP-ENGINE ELECTRONIC	1584
Y	*298-5099*	1	COOLER GP-ENGINE OIL	690
Y	*304-8758*	1	COVER GP-VALVE MECHANISM	357
Y	*298-5111*	1	COVER GP-ENGINE	332
Y	*298-5888*	1	CRANKSHAFT GP	380
Y	*298-5887*	1	CYLINDER BLOCK GP	400
Y	*298-5890*	1	CYLINDER HEAD GP	419
Y	*318-0775*	1	FILLER GP-ENGINE OIL	676
Y	*298-5100*	1	FILTER GP-ENGINE OIL	678
Y	*311-2271*	1	LINES GP-FUEL FILTER	1050
Y	*298-5123*	1	FILTER GP-PRIMARY FUEL	1009
Y	*301-8251*	1	FILTER GP-WATER SEP & FUEL	1013
Y	*298-5110*	1	GEAR GP-FRONT	475
Y	*298-5125*	1	GLOW PLUG GP	1586
Y	*312-2577*	1	MOUNTING GP-FAN DRIVE	532
Y	*304-8757*	1	PAN GP-OIL	553
Y	*304-8762*	1	PIPE GP-EXHAUST	790
Y	*298-5889*	1	PISTON GP	621
Y	*298-5129*	1	PLUG GP-CYLINDER HEAD	629
Y	*298-5131*	1	PLUG GP-ENGINE	632
Y	*311-5793*	1	PLUG GP-ENGINE	638
Y	*298-5128*	1	PLUG GP-ENGINE OIL MANIFOLD	680
Y	*308-4160*	1	PULLEY GP-CRANKSHAFT	649
			S/N: 4441-7401	
Y	*360-7343*	1	PULLEY GP-CRANKSHAFT	652
			S/N: 4447402-UP	
Y	*298-5112*	1	PUMP GP-ENGINE OIL	681
Y	*304-8755*	1	PUMP GP-FUEL INJECTION	1244
Y	*298-5105*	1	PUMP GP-WATER	714
Y	*308-4277*	1	TURBOCHARGER GP	881
Y	*298-5891*	1	VALVE MECHANISM GP	661
Y	*298-5130*	1	WIRING GP-ENGINE	1604
R	**359-0737**	1	CYLINDER BLOCK GP-SHORT	
	305-8456	1	ELECTRONICS GP-ENGINE RATINGS	

R - REMANUFACTURED PART MAY BE AVAILABLE
Y - SEPARATE ILLUSTRATION

<END>

313-1212 ENGINE AR-PRIMARY*R

97 BRAKE KW (129 BHP) AT 2200 RPM

SMCS-1000 **i04381162**

NOTE	PART NUMBER	QTY	PART NAME 1 2 3 4 5 6 (PRODUCT LEVEL)	SEE PAGE
Y	*315-3414*	1	ALTERNATOR GP-CHARGING	1578
Y	*298-5892*	1	CAMSHAFT GP	321
Y	*301-8243*	1	CONNECTION GP-WATER	687
Y	*304-6436*	1	CONTROL GP-ENGINE ELECTRONIC	1584
Y	*298-5099*	1	COOLER GP-ENGINE OIL	690
Y	*304-5574*	1	COVER GP-VALVE MECHANISM	351
Y	*298-5888*	1	CRANKSHAFT GP	380
Y	*298-5887*	1	CYLINDER BLOCK GP	400
Y	*298-5890*	1	CYLINDER HEAD GP	419
Y	*311-4644*	1	DRIVE GP-FAN	433
Y	*314-5003*	1	FAN GP	707
Y	*308-4158*	1	FILLER GP-ENGINE OIL	673
Y	*298-5100*	1	FILTER GP-ENGINE OIL	678
Y	*303-5780*	1	FILTER GP-FUEL	999
Y	*311-2271*	1	LINES GP-FUEL FILTER	1050
Y	*298-5123*	1	FILTER GP-PRIMARY FUEL	1009
Y	*301-8237*	1	FLYWHEEL GP	455
Y	*298-5125*	1	GLOW PLUG GP	1586
Y	*303-4618*	1	HOUSING GP-FLYWHEEL	481
Y	*304-8760*	1	HOUSING GP-FRONT	495
Y	*299-5033*	1	LIFTING GP-ENGINE	512
Y	*311-4641*	1	MOUNTING GP-ENGINE	521
Y	*304-3656*	1	PAN GP-OIL	549
Y	*304-8762*	1	PIPE GP-EXHAUST	790
Y	*298-5889*	1	PISTON GP	621
Y	*298-5129*	1	PLUG GP-CYLINDER HEAD	629
Y	*298-5131*	1	PLUG GP-ENGINE	632
Y	*304-8761*	1	PLUG GP-ENGINE	636
Y	*308-4160*	1	PULLEY GP-CRANKSHAFT	649
			S/N: 4441-7401	
Y	*360-7343*	1	PULLEY GP-CRANKSHAFT	652
			S/N: 4447402-UP	
Y	*298-5112*	1	PUMP GP-ENGINE OIL	681
Y	*303-4615*	1	PUMP GP-FUEL INJECTION	1134
Y	*298-5105*	1	PUMP GP-WATER	714
Y	*312-1672*	1	RADIATOR GP	738
Y	*303-4619*	1	STARTING MOTOR GP-ELECTRIC	1592
			—OR—	
Y	*325-5612*	1	STARTING MOTOR GP-ELECTRIC	1597
Y	*312-2579*	1	SWITCH GP-HEAT START	1603
Y	*318-3637*	1	VALVE GP-FLUID SAMPLING (ENGINE OIL)	683
Y	*311-7456*	1	TURBOCHARGER GP	887
Y	*298-5891*	1	VALVE MECHANISM GP	661
Y	*298-5130*	1	WIRING GP-ENGINE	1604
R	**359-0737**	1	CYLINDER BLOCK GP-SHORT	
	305-8458	1	ELECTRONICS GP-ENGINE RATINGS	

313-1212 **ENGINE AR-PRIMARY (**contd.**)** **i04381162**

NOTE	PART NUMBER	QTY	PART NAME 1 2 3 4 5 6 (PRODUCT LEVEL)	SEE PAGE

R - REMANUFACTURED PART MAY BE AVAILABLE
Y - SEPARATE ILLUSTRATION

<END>

313-1225 ENGINE AR-PRIMARY

107 BRAKE KW (144 BHP) AT 2200 RPM

SMCS-1000 **i03989613**

NOTE	PART NUMBER	QTY	PART NAME 1 2 3 4 5 6 (PRODUCT LEVEL)	SEE PAGE
Y	*308-4275*	1	ADAPTER GP-AUXILIARY DRIVE	306
Y	*311-4639*	1	ALTERNATOR GP-CHARGING	1575
Y	*298-5090*	1	CAMSHAFT GP	320
Y	*301-8248*	1	CONNECTION GP-INLET	776
Y	*301-8243*	1	CONNECTION GP-WATER	687
Y	*304-6436*	1	CONTROL GP-ENGINE ELECTRONIC	1584
Y	*298-5099*	1	COOLER GP-ENGINE OIL	690
Y	*301-8240*	1	COVER GP-VALVE MECHANISM	341
Y	*298-5086*	1	CRANKSHAFT GP	378
Y	*298-5085*	1	CYLINDER BLOCK GP	398
Y	*298-5088*	1	CYLINDER HEAD GP	418
Y	*311-4644*	1	DRIVE GP-FAN	433
Y	*311-8536*	1	FAN GP	705
Y	*298-5100*	1	FILTER GP-ENGINE OIL	678
Y	*298-5123*	1	FILTER GP-PRIMARY FUEL	1009
Y	*301-8251*	1	FILTER GP-WATER SEP & FUEL	1013
Y	*306-2314*	1	FLYWHEEL GP	461
Y	*298-5110*	1	GEAR GP-FRONT	475
Y	*299-5075*	1	GLOW PLUG GP	1587
Y	*303-4618*	1	HOUSING GP-FLYWHEEL	481
Y	*299-5033*	1	LIFTING GP-ENGINE	512
Y	*311-2271*	1	LINES GP-FUEL FILTER	1050
Y	*301-8250*	1	PLUG GP-ENGINE	633
Y	*298-5096*	1	PAN GP-OIL	533
Y	*298-5087*	1	PISTON & ROD GP	609
Y	*298-5129*	1	PLUG GP-CYLINDER HEAD	629
Y	*298-5098*	1	PLUG GP-ENGINE	631
Y	*298-5131*	1	PLUG GP-ENGINE	632
Y	*298-5128*	1	PLUG GP-ENGINE OIL MANIFOLD	680
Y	*308-4160*	1	PULLEY GP-CRANKSHAFT	649
			S/N: 4441-7401	
Y	*360-7343*	1	PULLEY GP-CRANKSHAFT	652
			S/N: 4447402-UP	
Y	*298-5112*	1	PUMP GP-ENGINE OIL	681
Y	*304-6570*	1	PUMP GP-FUEL INJECTION	1179
Y	*298-5105*	1	PUMP GP-WATER	714
Y	*298-5089*	1	ROCKER ARM GP	658
Y	*299-5067*	1	STARTING MOTOR GP-ELECTRIC	1591
Y	*307-2850*	1	TURBOCHARGER GP	857
Y	*298-5130*	1	WIRING GP-ENGINE	1604
R	**359-0739**	1	CYLINDER BLOCK GP-SHORT	
	305-8457	1	ELECTRONICS GP-ENGINE RATINGS	

R - REMANUFACTURED PART MAY BE AVAILABLE
Y - SEPARATE ILLUSTRATION

<END>

313-1226 ENGINE AR-PRIMARY*R

97 BRAKE KW (129 BHP) AT 2200 RPM

SMCS-1000 **i04363346**

NOTE	PART NUMBER	QTY	PART NAME 1 2 3 4 5 6 (PRODUCT LEVEL)	SEE PAGE
Y	*304-0728*	1	ADAPTER GP-AUXILIARY DRIVE	301
Y	*311-7455*	1	ALTERNATOR GP-CHARGING	1577
Y	*298-5892*	1	CAMSHAFT GP	321
Y	*301-8248*	1	CONNECTION GP-INLET	776
Y	*301-8243*	1	CONNECTION GP-WATER	687
Y	*304-6436*	1	CONTROL GP-ENGINE ELECTRONIC	1584
Y	*298-5099*	1	COOLER GP-ENGINE OIL	690
Y	*304-5574*	1	COVER GP-VALVE MECHANISM	351
Y	*298-5888*	1	CRANKSHAFT GP	380
Y	*298-5887*	1	CYLINDER BLOCK GP	400
Y	*298-5890*	1	CYLINDER HEAD GP	419
Y	*311-4644*	1	DRIVE GP-FAN	433
Y	*311-4640*	1	FAN GP	704
Y	*298-5100*	1	FILTER GP-ENGINE OIL	678
Y	*303-5780*	1	FILTER GP-FUEL	999
Y	*298-5123*	1	FILTER GP-PRIMARY FUEL	1009
			S/N: 4441-4096	
Y	*322-8426*	1	FILTER GP-FUEL	1006
			S/N: 4444097-UP	
Y	*299-5063*	1	FLYWHEEL GP	454
Y	*298-5125*	1	GLOW PLUG GP	1586
Y	*299-5057*	1	HOUSING GP-FLYWHEEL	478
Y	*304-0727*	1	HOUSING GP-FRONT	492
Y	*299-5033*	1	LIFTING GP-ENGINE	512
Y	*311-2271*	1	LINES GP-FUEL FILTER	1050
			S/N: 4441-4096	
Y	*322-8425*	1	LINES GP-FUEL	1041
			S/N: 4444097-UP	
Y	*307-2851*	1	MOUNTING GP-ENGINE	520
			S/N: 4441-2872	
Y	*323-6804*	1	MOUNTING GP-ENGINE	529
			S/N: 4442873-UP	
Y	*305-2578*	1	PAN GP-OIL	557
			S/N: 4441-10879	
Y	*377-8331*	1	PAN GP-OIL	603
			S/N: 44410880-UP	
Y	*304-8762*	1	PIPE GP-EXHAUST	790
Y	*298-5889*	1	PISTON GP	621
Y	*298-5129*	1	PLUG GP-CYLINDER HEAD	629
Y	*298-5098*	1	PLUG GP-ENGINE	631
Y	*298-5131*	1	PLUG GP-ENGINE	632
Y	*298-5128*	1	PLUG GP-ENGINE OIL MANIFOLD	680
Y	*308-4160*	1	PULLEY GP-CRANKSHAFT	649
			S/N: 4441-7695	
Y	*360-7343*	1	PULLEY GP-CRANKSHAFT	652
			S/N: 4447696-UP	
Y	*298-5112*	1	PUMP GP-ENGINE OIL	681
Y	*303-4615*	1	PUMP GP-FUEL INJECTION	1134
Y	*298-5105*	1	PUMP GP-WATER	714

313-1226 **ENGINE AR-PRIMARY (**contd.**)** **i04363346**

NOTE	PART NUMBER	QTY	PART NAME 1 2 3 4 5 6 (PRODUCT LEVEL)	SEE PAGE
			S/N: 4441-5535	
Y	*340-4692*	1	PUMP GP-WATER	722
			S/N: 4445536-UP	
Y	*311-4636*	1	RADIATOR GP	730
Y	*303-4619*	1	STARTING MOTOR GP-ELECTRIC	1592
			S/N: 4441-2872	
Y	*325-5612*	1	STARTING MOTOR GP-ELECTRIC	1597
			S/N: 4442873-UP	
Y	*311-7456*	1	TURBOCHARGER GP	887
			S/N: 4441-4096	
Y	*333-8976*	1	TURBOCHARGER GP	960
			S/N: 4444097-UP	
Y	*298-5891*	1	VALVE MECHANISM GP	661
Y	*298-5130*	1	WIRING GP-ENGINE	1604
R	**359-0737**	1	CYLINDER BLOCK GP-SHORT	
	305-8458	1	ELECTRONICS GP-ENGINE RATINGS	

R - REMANUFACTURED PART MAY BE AVAILABLE
Y - SEPARATE ILLUSTRATION

<END>

315-8093 ENGINE AR-PRIMARY

75 BRAKE KW (100 BHP) AT 2200 RPM

SMCS-1000 **i04451611**

NOTE	PART NUMBER	QTY	PART NAME 1 2 3 4 5 6 (PRODUCT LEVEL)	SEE PAGE
Y	*322-4890*	1	ALTERNATOR GP-CHARGING	1581
Y	*301-8245*	1	BALANCER GP	317
Y	*322-4886*	1	CAMSHAFT GP	324
Y	*298-5107*	1	CONNECTION GP-WATER	685
Y	*304-6436*	1	CONTROL GP-ENGINE ELECTRONIC	1584
Y	*308-4159*	1	COOLER GP-OIL	700
Y	*304-3658*	1	COVER GP-CYLINDER HEAD	325
Y	*298-5111*	1	COVER GP-ENGINE	332
Y	*303-5772*	1	COVER GP-VALVE MECHANISM	347
Y	*322-4882*	1	CRANKSHAFT GP	386
Y	*322-4881*	1	CYLINDER BLOCK GP	406
Y	*322-4884*	1	CYLINDER HEAD GP	422
Y	*318-3621*	1	DRIVE GP-FAN	437
Y	*322-4889*	1	FAN GP	710
Y	*298-5100*	1	FILTER GP-ENGINE OIL	678
Y	*305-0642*	1	FILTER GP-FUEL	1000
Y	*311-2271*	1	LINES GP-FUEL FILTER	1050
Y	*301-8251*	1	FILTER GP-WATER SEP & FUEL	1013
Y	*298-5125*	1	GLOW PLUG GP	1586
Y	*298-5130*	1	WIRING GP-ENGINE	1604
Y	*319-1582*	1	HOUSING GP-FRONT	499
Y	*298-5127*	1	LIFTING GP-ENGINE	511
Y	*322-4888*	1	PAN GP-OIL	569
Y	*322-4883*	1	PISTON GP	625
Y	*298-5129*	1	PLUG GP-CYLINDER HEAD	629
Y	*304-3663*	1	PLUG GP-ENGINE	634
Y	*298-5128*	1	PLUG GP-ENGINE OIL MANIFOLD	680
Y	*308-4160*	1	PULLEY GP-CRANKSHAFT	649
			S/N: 4441-7401	
Y	*360-7343*	1	PULLEY GP-CRANKSHAFT	652
			S/N: 4447402-UP	
Y	*313-3514*	1	PUMP GP-FUEL INJECTION	1373
Y	*298-5105*	1	PUMP GP-WATER	714
Y	*322-4887*	1	STARTING MOTOR GP-ELECTRIC	1596
			—OR—	
Y	*328-5921*	1	STARTING MOTOR GP-ELECTRIC	1600
Y	*308-3350*	1	TURBOCHARGER GP	875
Y	*322-4885*	1	VALVE MECHANISM GP	667
	359-0738	1	CYLINDER BLOCK GP-SHORT	
	305-8453	1	ELECTRONICS GP-ENGINE RATINGS	

Y - SEPARATE ILLUSTRATION

<END>

315-8094 ENGINE AR-PRIMARY

107 BRAKE KW (144 BHP) AT 2200 RPM

SMCS-1000 **i04453112**

NOTE	PART NUMBER	QTY	PART NAME 1 2 3 4 5 6 (PRODUCT LEVEL)	SEE PAGE
Y	*308-4275*	1	ADAPTER GP-AUXILIARY DRIVE	306
Y	*308-3351*	1	ALTERNATOR GP-CHARGING	1573
Y	*298-5090*	1	CAMSHAFT GP	320
Y	*298-5116*	1	CONNECTION GP-INLET	774
Y	*299-5078*	1	CONNECTION GP-WATER	686
Y	*304-6436*	1	CONTROL GP-ENGINE ELECTRONIC	1584
Y	*305-2579*	1	COOLER GP-OIL	698
Y	*301-8240*	1	COVER GP-VALVE MECHANISM	341
Y	*298-5086*	1	CRANKSHAFT GP	378
Y	*298-5085*	1	CYLINDER BLOCK GP	398
Y	*298-5088*	1	CYLINDER HEAD GP	418
Y	*311-8533*	1	DRIVE GP-FAN	434
Y	*307-2849*	1	FAN GP	702
Y	*317-6399*	1	FASTENER GP-TURBOCHARGER	788
Y	*298-5100*	1	FILTER GP-ENGINE OIL	678
Y	*298-5123*	1	FILTER GP-PRIMARY FUEL	1009
Y	*301-8251*	1	FILTER GP-WATER SEP & FUEL	1013
Y	*301-8237*	1	FLYWHEEL GP	455
Y	*298-5125*	1	GLOW PLUG GP	1586
Y	*301-8236*	1	HOUSING GP-FLYWHEEL	479
Y	*319-1582*	1	HOUSING GP-FRONT	499
Y	*299-5033*	1	LIFTING GP-ENGINE	512
Y	*311-2271*	1	LINES GP-FUEL FILTER	1050
Y	*301-8250*	1	PLUG GP-ENGINE	633
Y	*311-8534*	1	PAN GP-OIL	563
			S/N: 4441-9592	
Y	*304-3656*	1	PAN GP-OIL	549
			S/N: 4449593-UP	
Y	*298-5087*	1	PISTON & ROD GP	609
Y	*298-5129*	1	PLUG GP-CYLINDER HEAD	629
Y	*298-5098*	1	PLUG GP-ENGINE	631
Y	*304-3663*	1	PLUG GP-ENGINE	634
Y	*298-5128*	1	PLUG GP-ENGINE OIL MANIFOLD	680
Y	*298-5102*	1	PULLEY GP-AUXILIARY DRIVE	647
			S/N: 4441-7401	
Y	*360-7355*	1	PULLEY GP-CRANKSHAFT	656
			S/N: 4447402-UP	
Y	*298-5101*	1	PULLEY GP-CRANKSHAFT	648
			S/N: 4441-7401	
Y	*360-7346*	1	PULLEY GP-CRANKSHAFT	655
			S/N: 4447402-UP	
Y	*298-5112*	1	PUMP GP-ENGINE OIL	681
Y	*304-6570*	1	PUMP GP-FUEL INJECTION	1179
Y	*298-5105*	1	PUMP GP-WATER	714
Y	*298-5089*	1	ROCKER ARM GP	658
Y	*325-5612*	1	STARTING MOTOR GP-ELECTRIC	1597
Y	*298-5113*	1	TURBOCHARGER GP	791
Y	*298-5130*	1	WIRING GP-ENGINE	1604

315-8094 **ENGINE AR-PRIMARY (**contd.**)** **i04453112**

NOTE	PART NUMBER	QTY	PART NAME 1 2 3 4 5 6 (PRODUCT LEVEL)	SEE PAGE
R	**359-0739**	1	CYLINDER BLOCK GP-SHORT	
	305-8457	1	ELECTRONICS GP-ENGINE RATINGS	

R - REMANUFACTURED PART MAY BE AVAILABLE
Y - SEPARATE ILLUSTRATION

<END>

315-8097 ENGINE AR-PRIMARY*R

94 BRAKE KW (126 BHP) AT 2400 RPM

SMCS-1000 **i04381163**

NOTE	PART NUMBER	QTY	PART NAME 1 2 3 4 5 6 (PRODUCT LEVEL)	SEE PAGE
Y	*311-5794*	1	ALTERNATOR GP-CHARGING	1576
Y	*298-5892*	1	CAMSHAFT GP	321
Y	*308-0307*	1	CONNECTION GP-INLET	778
Y	*301-8243*	1	CONNECTION GP-WATER	687
Y	*304-6436*	1	CONTROL GP-ENGINE ELECTRONIC	1584
Y	*298-5099*	1	COOLER GP-ENGINE OIL	690
Y	*304-8758*	1	COVER GP-VALVE MECHANISM	357
Y	*298-5888*	1	CRANKSHAFT GP	380
Y	*298-5887*	1	CYLINDER BLOCK GP	400
Y	*298-5890*	1	CYLINDER HEAD GP	419
Y	*299-5069*	1	DRIVE GP-FAN	426
Y	*307-2849*	1	FAN GP	702
Y	*308-4158*	1	FILLER GP-ENGINE OIL	673
Y	*298-5100*	1	FILTER GP-ENGINE OIL	678
Y	*311-2271*	1	LINES GP-FUEL FILTER	1050
Y	*298-5123*	1	FILTER GP-PRIMARY FUEL	1009
Y	*301-8251*	1	FILTER GP-WATER SEP & FUEL	1013
Y	*306-2314*	1	FLYWHEEL GP	461
Y	*298-5125*	1	GLOW PLUG GP	1586
Y	*322-2434*	1	HOUSING GP-FLYWHEEL	490
Y	*304-8760*	1	HOUSING GP-FRONT	495
Y	*299-5033*	1	LIFTING GP-ENGINE	512
Y	*304-8763*	1	MOUNTING GP-ENGINE	519
Y	*298-5096*	1	PAN GP-OIL	533
Y	*298-5889*	1	PISTON GP	621
Y	*298-5129*	1	PLUG GP-CYLINDER HEAD	629
Y	*298-5131*	1	PLUG GP-ENGINE	632
Y	*304-8761*	1	PLUG GP-ENGINE	636
Y	*298-5128*	1	PLUG GP-ENGINE OIL MANIFOLD	680
Y	*299-5030*	1	PULLEY GP	643
			S/N: 4441-7401	
Y	*360-7344*	1	PULLEY GP-CRANKSHAFT	653
			S/N: 4447402-UP	
Y	*298-5112*	1	PUMP GP-ENGINE OIL	681
Y	*298-5893*	1	PUMP GP-FUEL INJECTION	1089
Y	*298-5105*	1	PUMP GP-WATER	714
Y	*304-3655*	1	STARTING MOTOR GP-ELECTRIC	1594
Y	*312-2579*	1	SWITCH GP-HEAT START	1603
Y	*308-0305*	1	TURBOCHARGER GP	869
Y	*298-5891*	1	VALVE MECHANISM GP	661
Y	*298-5130*	1	WIRING GP-ENGINE	1604
R	**359-0737**	1	CYLINDER BLOCK GP-SHORT	
	298-5883	1	SOFTWARE GP-ENG RATINGS ELEK	

R - REMANUFACTURED PART MAY BE AVAILABLE
Y - SEPARATE ILLUSTRATION

<END>

ENGINE ARRANGEMENT

315-8099 ENGINE AR-PRIMARY*R

104 BRAKE KW (139 BHP) AT 2200 RPM

FIELD REPLACEMENT ORDER 435-1701—PAGE: 265

SMCS-1000 **i03989615**

NOTE	PART NUMBER	QTY	PART NAME 1 2 3 4 5 6 (PRODUCT LEVEL)	SEE PAGE
Y	*311-7455*	1	ALTERNATOR GP-CHARGING	1577
Y	*301-8245*	1	BALANCER GP	317
Y	*298-5090*	1	CAMSHAFT GP	320
Y	*301-8243*	1	CONNECTION GP-WATER	687
Y	*304-6436*	1	CONTROL GP-ENGINE ELECTRONIC	1584
Y	*301-8241*	1	COOLER GP-OIL (ENGINE)	697
Y	*301-8240*	1	COVER GP-VALVE MECHANISM	341
Y	*298-5111*	1	COVER GP-ENGINE	332
Y	*298-5086*	1	CRANKSHAFT GP	378
Y	*298-5085*	1	CYLINDER BLOCK GP	398
Y	*298-5088*	1	CYLINDER HEAD GP	418
Y	*316-7959*	1	DRIVE GP-FAN	436
Y	*314-5003*	1	FAN GP	707
Y	*298-5100*	1	FILTER GP-ENGINE OIL	678
Y	*311-2271*	1	LINES GP-FUEL FILTER	1050
Y	*298-5123*	1	FILTER GP-PRIMARY FUEL	1009
Y	*301-8251*	1	FILTER GP-WATER SEP & FUEL	1013
Y	*301-8237*	1	FLYWHEEL GP	455
Y	*298-5110*	1	GEAR GP-FRONT	475
Y	*298-5125*	1	GLOW PLUG GP	1586
Y	*298-5130*	1	WIRING GP-ENGINE	1604
Y	*301-8236*	1	HOUSING GP-FLYWHEEL	479
Y	*299-5033*	1	LIFTING GP-ENGINE	512
Y	*311-4641*	1	MOUNTING GP-ENGINE	521
Y	*301-8239*	1	PAN GP-OIL	541
Y	*304-8762*	1	PIPE GP-EXHAUST	790
Y	*298-5087*	1	PISTON & ROD GP	609
Y	*298-5129*	1	PLUG GP-CYLINDER HEAD	629
Y	*298-5098*	1	PLUG GP-ENGINE	631
Y	*298-5131*	1	PLUG GP-ENGINE	632
Y	*298-5128*	1	PLUG GP-ENGINE OIL MANIFOLD	680
Y	*308-4160*	1	PULLEY GP-CRANKSHAFT	649
			S/N: 4441-7401	
Y	*360-7343*	1	PULLEY GP-CRANKSHAFT	652
			S/N: 4447402-UP	
Y	*301-8235*	1	PUMP GP-FUEL INJECTION	1114
Y	*298-5105*	1	PUMP GP-WATER	714
Y	*312-1672*	1	RADIATOR GP	738
Y	*298-5089*	1	ROCKER ARM GP	658
Y	*303-4619*	1	STARTING MOTOR GP-ELECTRIC	1592
			—OR—	
Y	*325-5612*	1	STARTING MOTOR GP-ELECTRIC	1597
Y	*311-7456*	1	TURBOCHARGER GP	887
R	**359-0739**	1	CYLINDER BLOCK GP-SHORT	
	301-8234	1	ELECTRONICS GP-ENGINE RATINGS	

R - REMANUFACTURED PART MAY BE AVAILABLE
Y - SEPARATE ILLUSTRATION

<END>

315-8103 ENGINE AR-PRIMARY

75 BRAKE KW (100 BHP) AT 2200 RPM

SMCS-1000 **i06101666**

NOTE	PART NUMBER	QTY	PART NAME 1 2 3 4 5 6 (PRODUCT LEVEL)	SEE PAGE
Y	*308-4275*	1	ADAPTER GP-AUXILIARY DRIVE	306
Y	*299-5112*	1	ALTERNATOR GP-CHARGING	1558
Y	*306-2318*	1	BREATHER GP	669
Y	*304-3648*	1	CAMSHAFT GP	322
Y	*299-5078*	1	CONNECTION GP-WATER	686
Y	*304-6436*	1	CONTROL GP-ENGINE ELECTRONIC	1584
Y	*305-2579*	1	COOLER GP-OIL (ENGINE)	698
Y	*305-0640*	1	COVER GP-INLET MANIFOLD	780
Y	*322-2605*	1	COVER GP-VALVE MECHANISM	363
Y	*304-3642*	1	CRANKSHAFT GP	382
Y	*304-3641*	1	CYLINDER BLOCK GP	402
Y	*304-3645*	1	CYLINDER HEAD GP	420
Y	*299-5069*	1	DRIVE GP-FAN	426
Y	*322-2607*	1	FAN GP	709
Y	*298-5100*	1	FILTER GP-ENGINE OIL	678
Y	*305-0642*	1	FILTER GP-FUEL	1000
Y	*322-2606*	1	FILTER GP-WATER SEP & FUEL	1016
Y	*304-3654*	1	FLYWHEEL GP	457
Y	*298-5110*	1	GEAR GP-FRONT	475
Y	*299-5075*	1	GLOW PLUG GP	1587
Y	*298-5130*	1	WIRING GP-ENGINE	1604
Y	*303-4618*	1	HOUSING GP-FLYWHEEL	481
Y	*299-5033*	1	LIFTING GP-ENGINE	512
Y	*311-2271*	1	LINES GP-FUEL FILTER	1050
Y	*304-8757*	1	PAN GP-OIL	553
Y	*304-8762*	1	PIPE GP-EXHAUST	790
Y	*304-3643*	1	PISTON & ROD GP	613
Y	*298-5129*	1	PLUG GP-CYLINDER HEAD	629
Y	*298-5131*	1	PLUG GP-ENGINE	632
Y	*301-8250*	1	PLUG GP-ENGINE	633
Y	*298-5128*	1	PLUG GP-ENGINE OIL MANIFOLD	680
Y	*299-5030*	1	PULLEY GP	643
			S/N: 4441-7401	
Y	*360-7344*	1	PULLEY GP-CRANKSHAFT	653
			S/N: 4447402-UP	
Y	*298-5112*	1	PUMP GP-ENGINE OIL	681
Y	*313-4350*	1	PUMP GP-FUEL INJECTION	1398
Y	*298-5105*	1	PUMP GP-WATER	714
Y	*299-5067*	1	STARTING MOTOR GP-ELECTRIC	1591
Y	*322-2604*	1	TURBOCHARGER GP	908
Y	*304-3647*	1	VALVE MECHANISM GP	663
R	**359-0737**	1	CYLINDER BLOCK GP-SHORT	
	305-8460	1	ELECTRONICS GP-ENGINE RATINGS	

R - REMANUFACTURED PART MAY BE AVAILABLE
Y - SEPARATE ILLUSTRATION

<END>

315-8104 ENGINE AR-PRIMARY

104 BRAKE KW (139 BHP) AT 2200 RPM

SMCS-1000 **i03989616**

NOTE	PART NUMBER	QTY	PART NAME 1 2 3 4 5 6 (PRODUCT LEVEL)	SEE PAGE
Y	*322-3055*	1	ALTERNATOR GP-CHARGING	1580
Y	*301-8245*	1	BALANCER GP	317
Y	*298-5090*	1	CAMSHAFT GP	320
Y	*301-8248*	1	CONNECTION GP-INLET	776
Y	*301-8243*	1	CONNECTION GP-WATER	687
Y	*304-6436*	1	CONTROL GP-ENGINE ELECTRONIC	1584
Y	*301-8241*	1	COOLER GP-OIL (ENGINE)	697
Y	*301-8240*	1	COVER GP-VALVE MECHANISM	341
Y	*298-5086*	1	CRANKSHAFT GP	378
Y	*298-5085*	1	CYLINDER BLOCK GP	398
Y	*298-5088*	1	CYLINDER HEAD GP	418
Y	*316-7959*	1	DRIVE GP-FAN	436
Y	*314-5003*	1	FAN GP	707
Y	*298-5100*	1	FILTER GP-ENGINE OIL	678
Y	*298-5123*	1	FILTER GP-PRIMARY FUEL	1009
Y	*301-8251*	1	FILTER GP-WATER SEP & FUEL	1013
Y	*301-8237*	1	FLYWHEEL GP	455
Y	*299-5075*	1	GLOW PLUG GP	1587
Y	*298-5130*	1	WIRING GP-ENGINE	1604
Y	*301-8236*	1	HOUSING GP-FLYWHEEL	479
Y	*322-3056*	1	HOUSING GP-FRONT	503
Y	*299-5033*	1	LIFTING GP-ENGINE	512
Y	*311-2271*	1	LINES GP-FUEL FILTER	1050
Y	*311-4641*	1	MOUNTING GP-ENGINE	521
Y	*301-8239*	1	PAN GP-OIL	541
Y	*304-8762*	1	PIPE GP-EXHAUST	790
Y	*298-5087*	1	PISTON & ROD GP	609
Y	*322-3059*	1	COVER GP-FRONT HOUSING (POWER TAKE-OFF)	334
Y	*298-5129*	1	PLUG GP-CYLINDER HEAD	629
Y	*298-5098*	1	PLUG GP-ENGINE	631
Y	*298-5131*	1	PLUG GP-ENGINE	632
Y	*298-5128*	1	PLUG GP-ENGINE OIL MANIFOLD	680
Y	*308-4160*	1	PULLEY GP-CRANKSHAFT	649
			S/N: 4441-7401	
Y	*360-7343*	1	PULLEY GP-CRANKSHAFT	652
			S/N: 4447402-UP	
Y	*301-8235*	1	PUMP GP-FUEL INJECTION	1114
Y	*298-5105*	1	PUMP GP-WATER	714
Y	*314-5004*	1	RADIATOR GP	750
Y	*298-5089*	1	ROCKER ARM GP	658
Y	*299-5067*	1	STARTING MOTOR GP-ELECTRIC	1591
Y	*307-2861*	1	SWITCH GP-HEAT START	1602
Y	*307-2850*	1	TURBOCHARGER GP	857
R	**359-0739**	1	CYLINDER BLOCK GP-SHORT	
	301-8234	1	ELECTRONICS GP-ENGINE RATINGS	

R - REMANUFACTURED PART MAY BE AVAILABLE
Y - SEPARATE ILLUSTRATION

<END>

315-8105 ENGINE AR-PRIMARY*R

107 BRAKE KW (144 BHP) AT 2200 RPM

SMCS-1000 **i03989619**

NOTE	PART NUMBER	QTY	PART NAME 1 2 3 4 5 6 (PRODUCT LEVEL)	SEE PAGE
Y	*311-4639*	1	ALTERNATOR GP-CHARGING	1575
Y	*298-5090*	1	CAMSHAFT GP	320
Y	*301-8248*	1	CONNECTION GP-INLET	776
Y	*301-8243*	1	CONNECTION GP-WATER	687
Y	*304-6436*	1	CONTROL GP-ENGINE ELECTRONIC	1584
Y	*298-5099*	1	COOLER GP-ENGINE OIL	690
Y	*301-8240*	1	COVER GP-VALVE MECHANISM	341
Y	*298-5111*	1	COVER GP-ENGINE	332
Y	*298-5086*	1	CRANKSHAFT GP	378
Y	*298-5085*	1	CYLINDER BLOCK GP	398
Y	*298-5088*	1	CYLINDER HEAD GP	418
Y	*316-7959*	1	DRIVE GP-FAN	436
Y	*314-5003*	1	FAN GP	707
Y	*298-5100*	1	FILTER GP-ENGINE OIL	678
Y	*311-2271*	1	LINES GP-FUEL FILTER	1050
Y	*298-5123*	1	FILTER GP-PRIMARY FUEL	1009
Y	*301-8251*	1	FILTER GP-WATER SEP & FUEL	1013
Y	*301-8237*	1	FLYWHEEL GP	455
Y	*298-5110*	1	GEAR GP-FRONT	475
Y	*299-5075*	1	GLOW PLUG GP	1587
Y	*298-5130*	1	WIRING GP-ENGINE	1604
Y	*303-4618*	1	HOUSING GP-FLYWHEEL	481
Y	*299-5033*	1	LIFTING GP-ENGINE	512
Y	*311-4641*	1	MOUNTING GP-ENGINE	521
Y	*298-5096*	1	PAN GP-OIL	533
Y	*304-8762*	1	PIPE GP-EXHAUST	790
Y	*298-5087*	1	PISTON & ROD GP	609
Y	*298-5129*	1	PLUG GP-CYLINDER HEAD	629
Y	*298-5098*	1	PLUG GP-ENGINE	631
Y	*298-5131*	1	PLUG GP-ENGINE	632
Y	*298-5128*	1	PLUG GP-ENGINE OIL MANIFOLD	680
Y	*308-4160*	1	PULLEY GP-CRANKSHAFT	649
			S/N: 4441-7401	
Y	*360-7343*	1	PULLEY GP-CRANKSHAFT	652
			S/N: 4447402-UP	
Y	*298-5112*	1	PUMP GP-ENGINE OIL	681
Y	*304-6570*	1	PUMP GP-FUEL INJECTION	1179
Y	*298-5105*	1	PUMP GP-WATER	714
Y	*312-1672*	1	RADIATOR GP	738
Y	*298-5089*	1	ROCKER ARM GP	658
Y	*299-5067*	1	STARTING MOTOR GP-ELECTRIC	1591
Y	*307-2850*	1	TURBOCHARGER GP	857
R	**359-0739**	1	CYLINDER BLOCK GP-SHORT	
	305-8457	1	ELECTRONICS GP-ENGINE RATINGS	

R - REMANUFACTURED PART MAY BE AVAILABLE
Y - SEPARATE ILLUSTRATION

<END>

315-8106 ENGINE AR-PRIMARY

107 BRAKE KW (144 BHP) AT 2200 RPM

SMCS-1000 **i03989617**

NOTE	PART NUMBER	QTY	PART NAME 1 2 3 4 5 6 (PRODUCT LEVEL)	SEE PAGE
Y	*304-0728*	1	ADAPTER GP-AUXILIARY DRIVE	301
Y	*311-4639*	1	ALTERNATOR GP-CHARGING	1575
Y	*298-5090*	1	CAMSHAFT GP	320
Y	*301-8248*	1	CONNECTION GP-INLET	776
Y	*301-8243*	1	CONNECTION GP-WATER	687
Y	*304-6436*	1	CONTROL GP-ENGINE ELECTRONIC	1584
Y	*298-5099*	1	COOLER GP-ENGINE OIL	690
Y	*301-8240*	1	COVER GP-VALVE MECHANISM	341
Y	*298-5086*	1	CRANKSHAFT GP	378
Y	*298-5085*	1	CYLINDER BLOCK GP	398
Y	*298-5088*	1	CYLINDER HEAD GP	418
Y	*316-7959*	1	DRIVE GP-FAN	436
Y	*314-5003*	1	FAN GP	707
Y	*298-5100*	1	FILTER GP-ENGINE OIL	678
Y	*298-5123*	1	FILTER GP-PRIMARY FUEL	1009
Y	*301-8251*	1	FILTER GP-WATER SEP & FUEL	1013
Y	*301-8237*	1	FLYWHEEL GP	455
Y	*299-5075*	1	GLOW PLUG GP	1587
Y	*298-5130*	1	WIRING GP-ENGINE	1604
Y	*303-4618*	1	HOUSING GP-FLYWHEEL	481
Y	*304-0727*	1	HOUSING GP-FRONT	492
Y	*299-5033*	1	LIFTING GP-ENGINE	512
Y	*311-2271*	1	LINES GP-FUEL FILTER	1050
Y	*311-4641*	1	MOUNTING GP-ENGINE	521
Y	*298-5096*	1	PAN GP-OIL	533
Y	*304-8762*	1	PIPE GP-EXHAUST	790
Y	*298-5087*	1	PISTON & ROD GP	609
Y	*298-5129*	1	PLUG GP-CYLINDER HEAD	629
Y	*298-5098*	1	PLUG GP-ENGINE	631
Y	*298-5131*	1	PLUG GP-ENGINE	632
Y	*298-5128*	1	PLUG GP-ENGINE OIL MANIFOLD	680
Y	*308-4160*	1	PULLEY GP-CRANKSHAFT	649
			S/N: 4441-7401	
Y	*360-7343*	1	PULLEY GP-CRANKSHAFT	652
			S/N: 4447402-UP	
Y	*298-5112*	1	PUMP GP-ENGINE OIL	681
Y	*304-6570*	1	PUMP GP-FUEL INJECTION	1179
Y	*340-4692*	1	PUMP GP-WATER	722
Y	*311-4636*	1	RADIATOR GP	730
Y	*298-5089*	1	ROCKER ARM GP	658
Y	*299-5067*	1	STARTING MOTOR GP-ELECTRIC	1591
Y	*307-2850*	1	TURBOCHARGER GP	857
R	**359-0739**	1	CYLINDER BLOCK GP-SHORT	
	305-8457	1	ELECTRONICS GP-ENGINE RATINGS	

R - REMANUFACTURED PART MAY BE AVAILABLE
Y - SEPARATE ILLUSTRATION

<END>

315-8107 ENGINE AR-PRIMARY

104 BRAKE KW (139 BHP) AT 2200 RPM

SMCS-1000 **i03989620**

NOTE	PART NUMBER	QTY	PART NAME 1 2 3 4 5 6 (PRODUCT LEVEL)	SEE PAGE
Y	*304-0728*	1	ADAPTER GP-AUXILIARY DRIVE	301
Y	*311-7455*	1	ALTERNATOR GP-CHARGING	1577
Y	*301-8245*	1	BALANCER GP	317
Y	*298-5090*	1	CAMSHAFT GP	320
Y	*301-8248*	1	CONNECTION GP-INLET	776
Y	*301-8243*	1	CONNECTION GP-WATER	687
Y	*304-6436*	1	CONTROL GP-ENGINE ELECTRONIC	1584
Y	*301-8241*	1	COOLER GP-OIL (ENGINE)	697
Y	*301-8240*	1	COVER GP-VALVE MECHANISM	341
Y	*298-5086*	1	CRANKSHAFT GP	378
Y	*298-5085*	1	CYLINDER BLOCK GP	398
Y	*298-5088*	1	CYLINDER HEAD GP	418
Y	*316-7959*	1	DRIVE GP-FAN	436
Y	*314-5003*	1	FAN GP	707
Y	*298-5100*	1	FILTER GP-ENGINE OIL	678
Y	*311-2271*	1	LINES GP-FUEL FILTER	1050
Y	*298-5123*	1	FILTER GP-PRIMARY FUEL	1009
Y	*301-8251*	1	FILTER GP-WATER SEP & FUEL	1013
Y	*301-8237*	1	FLYWHEEL GP	455
Y	*298-5125*	1	GLOW PLUG GP	1586
Y	*298-5130*	1	WIRING GP-ENGINE	1604
Y	*301-8236*	1	HOUSING GP-FLYWHEEL	479
Y	*304-0727*	1	HOUSING GP-FRONT	492
Y	*299-5033*	1	LIFTING GP-ENGINE	512
Y	*311-4641*	1	MOUNTING GP-ENGINE	521
Y	*301-8239*	1	PAN GP-OIL	541
Y	*304-8762*	1	PIPE GP-EXHAUST	790
Y	*298-5087*	1	PISTON & ROD GP	609
Y	*298-5129*	1	PLUG GP-CYLINDER HEAD	629
Y	*298-5098*	1	PLUG GP-ENGINE	631
Y	*298-5131*	1	PLUG GP-ENGINE	632
Y	*298-5128*	1	PLUG GP-ENGINE OIL MANIFOLD	680
Y	*308-4160*	1	PULLEY GP-CRANKSHAFT	649
			S/N: 4441-7401	
Y	*360-7343*	1	PULLEY GP-CRANKSHAFT	652
			S/N: 4447402-UP	
Y	*301-8235*	1	PUMP GP-FUEL INJECTION	1114
Y	*340-4692*	1	PUMP GP-WATER	722
Y	*311-4636*	1	RADIATOR GP	730
Y	*298-5089*	1	ROCKER ARM GP	658
Y	*303-4619*	1	STARTING MOTOR GP-ELECTRIC	1592
			—OR—	
Y	*325-5612*	1	STARTING MOTOR GP-ELECTRIC	1597
Y	*311-7456*	1	TURBOCHARGER GP	887
R	**359-0739**	1	CYLINDER BLOCK GP-SHORT	
	301-8234	1	ELECTRONICS GP-ENGINE RATINGS	

315-8107 **ENGINE AR-PRIMARY (**contd.**)** **i03989620**

NOTE	PART NUMBER	QTY	PART NAME 1 2 3 4 5 6 (PRODUCT LEVEL)	SEE PAGE

R - REMANUFACTURED PART MAY BE AVAILABLE
Y - SEPARATE ILLUSTRATION

<END>

315-8108 ENGINE AR-PRIMARY

95 BRAKE KW (127 BHP) AT 2200 RPM

SMCS-1000 **i04381166**

NOTE	PART NUMBER	QTY	PART NAME 1 2 3 4 5 6 (PRODUCT LEVEL)	SEE PAGE
Y	*311-7455*	1	ALTERNATOR GP-CHARGING	1577
Y	*301-8245*	1	BALANCER GP	317
Y	*306-2318*	1	BREATHER GP	669
Y	*298-5892*	1	CAMSHAFT GP	321
Y	*301-8248*	1	CONNECTION GP-INLET	776
Y	*301-8243*	1	CONNECTION GP-WATER	687
Y	*304-6436*	1	CONTROL GP-ENGINE ELECTRONIC	1584
Y	*301-8241*	1	COOLER GP-OIL (ENGINE)	697
Y	*322-4951*	1	COVER GP-VALVE MECHANISM	366
Y	*298-5888*	1	CRANKSHAFT GP	380
Y	*298-5887*	1	CYLINDER BLOCK GP	400
Y	*298-5890*	1	CYLINDER HEAD GP	419
Y	*311-4644*	1	DRIVE GP-FAN	433
Y	*314-5003*	1	FAN GP	707
Y	*298-5100*	1	FILTER GP-ENGINE OIL	678
Y	*311-2271*	1	LINES GP-FUEL FILTER	1050
Y	*298-5123*	1	FILTER GP-PRIMARY FUEL	1009
Y	*306-2314*	1	FLYWHEEL GP	461
Y	*298-5125*	1	GLOW PLUG GP	1586
Y	*298-5130*	1	WIRING GP-ENGINE	1604
Y	*301-8236*	1	HOUSING GP-FLYWHEEL	479
Y	*304-8760*	1	HOUSING GP-FRONT	495
Y	*299-5033*	1	LIFTING GP-ENGINE	512
Y	*322-4952*	1	LINES GP-FUEL	1039
Y	*301-8239*	1	PAN GP-OIL	541
Y	*304-8762*	1	PIPE GP-EXHAUST	790
Y	*298-5889*	1	PISTON GP	621
Y	*298-5129*	1	PLUG GP-CYLINDER HEAD	629
Y	*298-5131*	1	PLUG GP-ENGINE	632
Y	*304-8761*	1	PLUG GP-ENGINE	636
Y	*312-2578*	1	PLUG GP-ENGINE	639
Y	*308-4160*	1	PULLEY GP-CRANKSHAFT	649
			S/N: 4441-7401	
Y	*360-7343*	1	PULLEY GP-CRANKSHAFT	652
			S/N: 4447402-UP	
Y	*305-6701*	1	PUMP GP-FUEL INJECTION	1303
Y	*298-5105*	1	PUMP GP-WATER	714
Y	*312-1672*	1	RADIATOR GP	738
Y	*303-4619*	1	STARTING MOTOR GP-ELECTRIC	1592
			—OR—	
Y	*325-5612*	1	STARTING MOTOR GP-ELECTRIC	1597
Y	*318-3637*	1	VALVE GP-FLUID SAMPLING	683
Y	*311-7456*	1	TURBOCHARGER GP	887
Y	*298-5891*	1	VALVE MECHANISM GP	661
R	**359-0737**	1	CYLINDER BLOCK GP-SHORT	
	305-8454	1	ELECTRONICS GP-ENGINE RATINGS	

315-8108 **ENGINE AR-PRIMARY (**contd.**)** **i04381166**

NOTE	PART NUMBER	QTY	PART NAME 1 2 3 4 5 6 (PRODUCT LEVEL)	SEE PAGE
R - REMANUFACTURED PART MAY BE AVAILABLE Y - SEPARATE ILLUSTRATION				

<END>

318-7150 ENGINE AR-PRIMARY

104 BRAKE KW (139 BHP) AT 2200 RPM

SMCS-1000 **i03990120**

NOTE	PART NUMBER	QTY	PART NAME 1 2 3 4 5 6 (PRODUCT LEVEL)	SEE PAGE
Y	*311-7455*	1	ALTERNATOR GP-CHARGING	1577
Y	*301-8245*	1	BALANCER GP	317
Y	*298-5090*	1	CAMSHAFT GP	320
Y	*301-8243*	1	CONNECTION GP-WATER	687
Y	*304-6436*	1	CONTROL GP-ENGINE ELECTRONIC	1584
Y	*301-8241*	1	COOLER GP-OIL (ENGINE)	697
Y	*301-8240*	1	COVER GP-VALVE MECHANISM	341
Y	*298-5086*	1	CRANKSHAFT GP	378
Y	*298-5085*	1	CYLINDER BLOCK GP	398
Y	*298-5088*	1	CYLINDER HEAD GP	418
Y	*311-4644*	1	DRIVE GP-FAN	433
Y	*314-5003*	1	FAN GP	707
Y	*298-5100*	1	FILTER GP-ENGINE OIL	678
Y	*311-2271*	1	LINES GP-FUEL FILTER	1050
Y	*298-5123*	1	FILTER GP-PRIMARY FUEL	1009
Y	*301-8251*	1	FILTER GP-WATER SEP & FUEL	1013
Y	*301-8237*	1	FLYWHEEL GP	455
Y	*298-5125*	1	GLOW PLUG GP	1586
Y	*298-5130*	1	WIRING GP-ENGINE	1604
Y	*301-8236*	1	HOUSING GP-FLYWHEEL	479
Y	*322-3056*	1	HOUSING GP-FRONT	503
Y	*299-5033*	1	LIFTING GP-ENGINE	512
Y	*311-4641*	1	MOUNTING GP-ENGINE	521
Y	*301-8239*	1	PAN GP-OIL	541
Y	*304-8762*	1	PIPE GP-EXHAUST	790
Y	*298-5087*	1	PISTON & ROD GP	609
Y	*322-3059*	1	COVER GP-FRONT HOUSING (POWER TAKE-OFF)	334
Y	*298-5129*	1	PLUG GP-CYLINDER HEAD	629
Y	*298-5098*	1	PLUG GP-ENGINE	631
Y	*298-5131*	1	PLUG GP-ENGINE	632
Y	*298-5128*	1	PLUG GP-ENGINE OIL MANIFOLD	680
Y	*308-4160*	1	PULLEY GP-CRANKSHAFT	649
			S/N: 4441-7401	
Y	*360-7343*	1	PULLEY GP-CRANKSHAFT	652
			S/N: 4447402-UP	
Y	*301-8235*	1	PUMP GP-FUEL INJECTION	1114
Y	*298-5105*	1	PUMP GP-WATER	714
Y	*314-5004*	1	RADIATOR GP	750
Y	*298-5089*	1	ROCKER ARM GP	658
Y	*303-4619*	1	STARTING MOTOR GP-ELECTRIC	1592
			—OR—	
Y	*325-5612*	1	STARTING MOTOR GP-ELECTRIC	1597
Y	*311-7456*	1	TURBOCHARGER GP	887
R	**359-0739**	1	CYLINDER BLOCK GP-SHORT	
	301-8234	1	ELECTRONICS GP-ENGINE RATINGS	

R - REMANUFACTURED PART MAY BE AVAILABLE
Y - SEPARATE ILLUSTRATION

<END>

318-7151 ENGINE AR-PRIMARY

104 BRAKE KE (139 BHP) AT 2200 RPM

SMCS-1000 **i03990143**

NOTE	PART NUMBER	QTY	PART NAME 1 2 3 4 5 6 (PRODUCT LEVEL)	SEE PAGE
Y	*311-4639*	1	ALTERNATOR GP-CHARGING	1575
Y	*301-8245*	1	BALANCER GP	317
Y	*298-5090*	1	CAMSHAFT GP	320
Y	*301-8243*	1	CONNECTION GP-WATER	687
Y	*304-6436*	1	CONTROL GP-ENGINE ELECTRONIC	1584
Y	*301-8241*	1	COOLER GP-OIL (ENGINE)	697
Y	*301-8240*	1	COVER GP-VALVE MECHANISM	341
Y	*298-5086*	1	CRANKSHAFT GP	378
Y	*298-5085*	1	CYLINDER BLOCK GP	398
Y	*298-5088*	1	CYLINDER HEAD GP	418
Y	*311-4644*	1	DRIVE GP-FAN	433
Y	*314-5003*	1	FAN GP	707
Y	*298-5100*	1	FILTER GP-ENGINE OIL	678
Y	*298-5123*	1	FILTER GP-PRIMARY FUEL	1009
Y	*301-8251*	1	FILTER GP-WATER SEP & FUEL	1013
Y	*301-8237*	1	FLYWHEEL GP	455
Y	*299-5075*	1	GLOW PLUG GP	1587
Y	*298-5130*	1	WIRING GP-ENGINE	1604
Y	*301-8236*	1	HOUSING GP-FLYWHEEL	479
Y	*322-3056*	1	HOUSING GP-FRONT	503
Y	*299-5033*	1	LIFTING GP-ENGINE	512
Y	*311-2271*	1	LINES GP-FUEL FILTER	1050
Y	*311-4641*	1	MOUNTING GP-ENGINE	521
Y	*301-8239*	1	PAN GP-OIL	541
Y	*304-8762*	1	PIPE GP-EXHAUST	790
Y	*298-5087*	1	PISTON & ROD GP	609
Y	*322-3059*	1	COVER GP-FRONT HOUSING (POWER TAKE-OFF)	334
Y	*298-5129*	1	PLUG GP-CYLINDER HEAD	629
Y	*298-5098*	1	PLUG GP-ENGINE	631
Y	*298-5131*	1	PLUG GP-ENGINE	632
Y	*298-5128*	1	PLUG GP-ENGINE OIL MANIFOLD	680
Y	*308-4160*	1	PULLEY GP-CRANKSHAFT	649
			S/N: 4441-7401	
Y	*360-7343*	1	PULLEY GP-CRANKSHAFT	652
			S/N: 4441-7402	
Y	*301-8235*	1	PUMP GP-FUEL INJECTION	1114
Y	*298-5105*	1	PUMP GP-WATER	714
Y	*314-5004*	1	RADIATOR GP	750
Y	*298-5089*	1	ROCKER ARM GP	658
Y	*299-5067*	1	STARTING MOTOR GP-ELECTRIC	1591
Y	*307-2850*	1	TURBOCHARGER GP	857
R	**359-0739**	1	CYLINDER BLOCK GP-SHORT	
	301-8234	1	ELECTRONICS GP-ENGINE RATINGS	

R - REMANUFACTURED PART MAY BE AVAILABLE
Y - SEPARATE ILLUSTRATION

<END>

318-7152 ENGINE AR-PRIMARY

104 BRAKE KW (139 BHP) AT 2200 RPM

SMCS-1000 **i04401272**

NOTE	PART NUMBER	QTY	PART NAME 1 2 3 4 5 6 (PRODUCT LEVEL)	SEE PAGE
Y	*304-0728*	1	ADAPTER GP-AUXILIARY DRIVE	301
Y	*311-7455*	1	ALTERNATOR GP-CHARGING	1577
Y	*301-8245*	1	BALANCER GP	317
Y	*298-5090*	1	CAMSHAFT GP	320
Y	*301-8243*	1	CONNECTION GP-WATER	687
Y	*304-6436*	1	CONTROL GP-ENGINE ELECTRONIC	1584
Y	*301-8241*	1	COOLER GP-OIL	697
Y	*301-8240*	1	COVER GP-VALVE MECHANISM	341
Y	*298-5086*	1	CRANKSHAFT GP	378
Y	*298-5085*	1	CYLINDER BLOCK GP	398
Y	*298-5088*	1	CYLINDER HEAD GP	418
Y	*311-4644*	1	DRIVE GP-FAN	433
Y	*314-5003*	1	FAN GP	707
Y	*298-5100*	1	FILTER GP-ENGINE OIL	678
Y	*298-5123*	1	FILTER GP-PRIMARY FUEL	1009
Y	*301-8251*	1	FILTER GP-WATER SEP & FUEL	1013
Y	*301-8237*	1	FLYWHEEL GP	455
Y	*298-5125*	1	GLOW PLUG GP	1586
Y	*301-8236*	1	HOUSING GP-FLYWHEEL	479
Y	*304-0727*	1	HOUSING GP-FRONT	492
Y	*299-5033*	1	LIFTING GP-ENGINE	512
Y	*311-2271*	1	LINES GP-FUEL FILTER	1050
Y	*311-4641*	1	MOUNTING GP-ENGINE	521
Y	*301-8239*	1	PAN GP-OIL	541
Y	*304-8762*	1	PIPE GP-EXHAUST	790
Y	*298-5087*	1	PISTON & ROD GP	609
Y	*298-5129*	1	PLUG GP-CYLINDER HEAD	629
Y	*298-5098*	1	PLUG GP-ENGINE	631
Y	*298-5131*	1	PLUG GP-ENGINE	632
Y	*298-5128*	1	PLUG GP-ENGINE OIL MANIFOLD	680
Y	*308-4160*	1	PULLEY GP-CRANKSHAFT	649
Y	*360-7343*	1	PULLEY GP-CRANKSHAFT	652
Y	*301-8235*	1	PUMP GP-FUEL INJECTION	1114
Y	*340-4692*	1	PUMP GP-WATER	722
Y	*311-4636*	1	RADIATOR GP	730
Y	*298-5089*	1	ROCKER ARM GP	658
Y	*325-5612*	1	STARTING MOTOR GP-ELECTRIC	1597
Y	*311-7456*	1	TURBOCHARGER GP	887
Y	*298-5130*	1	WIRING GP-ENGINE	1604
R	**359-0739**	1	CYLINDER BLOCK GP-SHORT	
	301-8234	1	ELECTRONICS GP-ENGINE RATINGS	

R - REMANUFACTURED PART MAY BE AVAILABLE
Y - SEPARATE ILLUSTRATION

<END>

318-7153 ENGINE AR-PRIMARY

104 BRAKE KW (139 BHP) AT 2200 RPM

SMCS-1000 **i02898462**

NOTE	PART NUMBER	QTY	PART NAME 1 2 3 4 5 6 (PRODUCT LEVEL)	SEE PAGE
			(NO SERVICED PARTS)	

<END>

318-7154 ENGINE AR-PRIMARY

104 BRAKE KW (139 BHP) AT 2200 RPM

SMCS-1000 **i03990154**

NOTE	PART NUMBER	QTY	PART NAME 1 2 3 4 5 6 (PRODUCT LEVEL)	SEE PAGE
Y	*323-8845*	1	AIR COMPRESSOR GP	309
Y	*311-7455*	1	ALTERNATOR GP-CHARGING	1577
Y	*301-8245*	1	BALANCER GP	317
Y	*298-5090*	1	CAMSHAFT GP	320
Y	*301-8248*	1	CONNECTION GP-INLET	776
Y	*301-8243*	1	CONNECTION GP-WATER	687
Y	*304-6436*	1	CONTROL GP-ENGINE ELECTRONIC	1584
Y	*301-8241*	1	COOLER GP-OIL	697
Y	*329-3543*	1	COVER GP-VALVE MECHANISM	375
Y	*298-5086*	1	CRANKSHAFT GP	378
Y	*298-5085*	1	CYLINDER BLOCK GP	398
Y	*298-5088*	1	CYLINDER HEAD GP	418
Y	*311-4644*	1	DRIVE GP-FAN	433
Y	*314-5003*	1	FAN GP	707
Y	*298-5100*	1	FILTER GP-ENGINE OIL	678
Y	*333-5523*	1	FILTER GP-FUEL	1008
Y	*301-8251*	1	FILTER GP-WATER SEP & FUEL	1013
Y	*301-8237*	1	FLYWHEEL GP	455
Y	*298-5125*	1	GLOW PLUG GP	1586
Y	*301-8236*	1	HOUSING GP-FLYWHEEL	479
Y	*323-8844*	1	HOUSING GP-FRONT	506
Y	*299-5033*	1	LIFTING GP-ENGINE	512
Y	*333-5521*	1	LINES GP-FUEL	1047
Y	*311-4641*	1	MOUNTING GP-ENGINE	521
Y	*323-8843*	1	PAN GP-OIL	575
Y	*304-8762*	1	PIPE GP-EXHAUST	790
Y	*298-5087*	1	PISTON & ROD GP	609
Y	*298-5129*	1	PLUG GP-CYLINDER HEAD	629
Y	*304-3663*	1	PLUG GP-ENGINE	634
Y	*298-5098*	1	PLUG GP-ENGINE	631
Y	*298-5128*	1	PLUG GP-ENGINE OIL MANIFOLD	680
Y	*308-4160*	1	PULLEY GP-CRANKSHAFT	649
			S/N: 4441-7401	
Y	*360-7343*	1	PULLEY GP-CRANKSHAFT	652
			S/N: 4447402-UP	
Y	*301-8235*	1	PUMP GP-FUEL INJECTION	1114
Y	*340-4692*	1	PUMP GP-WATER	722
Y	*311-4636*	1	RADIATOR GP	730
Y	*298-5089*	1	ROCKER ARM GP	658
Y	*325-5612*	1	STARTING MOTOR GP-ELECTRIC	1597
Y	*311-7456*	1	TURBOCHARGER GP	887
Y	*335-6238*	1	WIRING GP-ENGINE	1615
R	**359-0739**	1	CYLINDER BLOCK GP-SHORT	
	301-8234	1	ELECTRONICS GP-ENGINE RATINGS	

R - REMANUFACTURED PART MAY BE AVAILABLE
Y - SEPARATE ILLUSTRATION

<END>

318-7155 ENGINE AR-PRIMARY

104 BRAKE KW (139 BHP) AT 2200 RPM

SMCS-1000 **i02898465**

NOTE	PART NUMBER	QTY	PART NAME 1 2 3 4 5 6 (PRODUCT LEVEL)	SEE PAGE
			(NO SERVICED PARTS)	

<END>

318-7160 ENGINE AR-PRIMARY

97 BRAKE KW (129 BHP) AT 2200 RPM

SMCS-1000 **i03990209**

NOTE	PART NUMBER	QTY	PART NAME 1 2 3 4 5 6 (PRODUCT LEVEL)	SEE PAGE
Y	*322-3055*	1	ALTERNATOR GP-CHARGING	1580
Y	*298-5892*	1	CAMSHAFT GP	321
Y	*299-5078*	1	CONNECTION GP-WATER	686
Y	*304-6436*	1	CONTROL GP-ENGINE ELECTRONIC	1584
Y	*298-5099*	1	COOLER GP-ENGINE OIL	690
Y	*298-5111*	1	COVER GP-ENGINE	332
Y	*298-5097*	1	COVER GP-VALVE MECHANISM	335
Y	*298-5888*	1	CRANKSHAFT GP	380
Y	*298-5887*	1	CYLINDER BLOCK GP	400
Y	*298-5890*	1	CYLINDER HEAD GP	419
Y	*306-2321*	1	DRIVE GP-AUXILIARY	423
Y	*311-4644*	1	DRIVE GP-FAN	433
Y	*298-5108*	1	FAN GP	701
Y	*317-6399*	1	FASTENER GP-TURBOCHARGER	788
Y	*298-5100*	1	FILTER GP-ENGINE OIL	678
Y	*322-8426*	1	FILTER GP-FUEL	1006
Y	*301-8251*	1	FILTER GP-WATER SEP & FUEL	1013
Y	*304-8756*	1	FLYWHEEL GP	458
Y	*298-5110*	1	GEAR GP-FRONT	475
Y	*299-5075*	1	GLOW PLUG GP	1587
Y	*298-5130*	1	WIRING GP-ENGINE	1604
Y	*299-5057*	1	HOUSING GP-FLYWHEEL	478
Y	*299-5033*	1	LIFTING GP-ENGINE	512
Y	*322-8425*	1	LINES GP-FUEL	1041
Y	*308-0307*	1	CONNECTION GP-INLET	778
Y	*304-8763*	1	MOUNTING GP-ENGINE	519
Y	*322-8424*	1	PAN GP-OIL	571
Y	*298-5889*	1	PISTON GP	621
Y	*298-5129*	1	PLUG GP-CYLINDER HEAD	629
Y	*298-5098*	1	PLUG GP-ENGINE	631
Y	*304-3663*	1	PLUG GP-ENGINE	634
Y	*298-5128*	1	PLUG GP-ENGINE OIL MANIFOLD	680
Y	*308-4160*	1	PULLEY GP-CRANKSHAFT	649
			S/N: 4441-7401	
Y	*360-7343*	1	PULLEY GP-CRANKSHAFT	652
			S/N: 4447402-UP	
Y	*298-5112*	1	PUMP GP-ENGINE OIL	681
Y	*303-4615*	1	PUMP GP-FUEL INJECTION	1134
Y	*298-5105*	1	PUMP GP-WATER	714
Y	*299-5067*	1	STARTING MOTOR GP-ELECTRIC	1591
Y	*305-2581*	1	TURBOCHARGER GP	848
Y	*298-5891*	1	VALVE MECHANISM GP	661
R	**359-0737**	1	CYLINDER BLOCK GP-SHORT	
	305-8458	1	ELECTRONICS GP-ENGINE RATINGS	

R - REMANUFACTURED PART MAY BE AVAILABLE
Y - SEPARATE ILLUSTRATION

<END>

318-7161 ENGINE AR-PRIMARY

95 BRAKE KW (127 BHP) AT 2200 RPM

SMCS-1000 **i02898468**

NOTE	PART NUMBER	QTY	PART NAME 1 2 3 4 5 6 (PRODUCT LEVEL)	SEE PAGE
			(NO SERVICED PARTS)	

<END>

321-3038 ENGINE AR-PRIMARY

130 BRAKE KW (139 BHP) AT 2200 RPM

SMCS-1000 **i03943536**

NOTE	PART NUMBER	QTY	PART NAME 1 2 3 4 5 6 (PRODUCT LEVEL)	SEE PAGE
Y	*308-3351*	1	ALTERNATOR GP-CHARGING	1573
Y	*301-8245*	1	BALANCER GP	317
Y	*298-5090*	1	CAMSHAFT GP	320
Y	*301-8248*	1	CONNECTION GP-INLET	776
Y	*299-5078*	1	CONNECTION GP-WATER	686
Y	*323-6240*	1	CONNECTOR GP-CAB HEATER LINES	688
Y	*304-6436*	1	CONTROL GP-ENGINE ELECTRONIC	1584
Y	*301-8241*	1	COOLER GP-OIL (ENGINE)	697
Y	*298-5111*	1	COVER GP-ENGINE	332
Y	*323-6222*	1	COVER GP-VALVE MECHANISM	369
Y	*298-5086*	1	CRANKSHAFT GP	378
Y	*298-5085*	1	CYLINDER BLOCK GP	398
Y	*298-5088*	1	CYLINDER HEAD GP	418
Y	*298-5095*	1	DRIVE GP-FAN	425
Y	*303-5773*	1	FILLER GP-ENGINE OIL	671
Y	*298-5100*	1	FILTER GP-ENGINE OIL	678
Y	*298-5123*	1	FILTER GP-PRIMARY FUEL	1009
Y	*301-8237*	1	FLYWHEEL GP	455
Y	*298-5110*	1	GEAR GP-FRONT	475
Y	*298-5125*	1	GLOW PLUG GP	1586
Y	*301-8236*	1	HOUSING GP-FLYWHEEL	479
Y	*299-5033*	1	LIFTING GP-ENGINE	512
Y	*311-2271*	1	LINES GP-FUEL FILTER	1050
Y	*299-5082*	1	MOUNTING GP-FAN	713
Y	*301-8239*	1	PAN GP-OIL	541
Y	*298-5087*	1	PISTON & ROD GP	609
Y	*298-5129*	1	PLUG GP-CYLINDER HEAD	629
Y	*301-8250*	1	PLUG GP-ENGINE	633
Y	*298-5128*	1	PLUG GP-ENGINE OIL MANIFOLD	680
Y	*298-5102*	1	PULLEY GP-AUXILIARY DRIVE	647
			S/N: 4441-7401	
Y	*360-7355*	1	PULLEY GP-CRANKSHAFT	656
			S/N: 4447402-UP	
Y	*298-5101*	1	PULLEY GP-CRANKSHAFT	648
			S/N: 4441-7401	
Y	*360-7346*	1	PULLEY GP-CRANKSHAFT	655
			S/N: 4447402-UP	
Y	*301-8235*	1	PUMP GP-FUEL INJECTION	1114
Y	*298-5105*	1	PUMP GP-WATER	714
Y	*298-5089*	1	ROCKER ARM GP	658
Y	*303-4619*	1	STARTING MOTOR GP-ELECTRIC	1592
			—OR—	
Y	*325-5612*	1	STARTING MOTOR GP-ELECTRIC	1597
Y	*298-5113*	1	TURBOCHARGER GP	791
Y	*298-5130*	1	WIRING GP-ENGINE	1604
R	**359-0739**	1	CYLINDER BLOCK GP-SHORT	
	301-8234	1	ELECTRONICS GP-ENGINE RATINGS	

321-3038 **ENGINE AR-PRIMARY (**contd.**)** **i03943536**

NOTE	PART NUMBER	QTY	PART NAME 1 2 3 4 5 6 (PRODUCT LEVEL)	SEE PAGE
R - REMANUFACTURED PART MAY BE AVAILABLE Y - SEPARATE ILLUSTRATION				

<END>

321-3043 ENGINE AR-PRIMARY

94 BRAKE KW (126 BHP) AT 2400

SMCS-1000 **i03696086**

NOTE	PART NUMBER	QTY	PART NAME 1 2 3 4 5 6 (PRODUCT LEVEL)	SEE PAGE
			(NO SERVICED PARTS)	

<END>

321-3044 ENGINE AR-PRIMARY*R

87 BRAKE KW (117 BHP) AT 2200 RPM

SMCS-1000 **i04935192**

NOTE	PART NUMBER	QTY	PART NAME 1 2 3 4 5 6 (PRODUCT LEVEL)	SEE PAGE
Y	*304-0728*	1	ADAPTER GP-AUXILIARY DRIVE	301
Y	*303-8449*	1	ALTERNATOR GP-CHARGING	1563
Y	*298-5892*	1	CAMSHAFT GP	321
Y	*301-8248*	1	CONNECTION GP-INLET	776
Y	*301-8243*	1	CONNECTION GP-WATER	687
Y	*304-6436*	1	CONTROL GP-ENGINE ELECTRONIC	1584
Y	*298-5099*	1	COOLER GP-ENGINE OIL	690
Y	*298-5097*	1	COVER GP-VALVE MECHANISM	335
Y	*298-5888*	1	CRANKSHAFT GP	380
Y	*298-5887*	1	CYLINDER BLOCK GP	400
Y	*298-5890*	1	CYLINDER HEAD GP	419
Y	*306-2321*	1	DRIVE GP-AUXILIARY	423
Y	*325-5613*	1	DRIVE GP-FAN	442
Y	*311-8536*	1	FAN GP	705
Y	*298-5100*	1	FILTER GP-ENGINE OIL	678
Y	*303-5780*	1	FILTER GP-FUEL	999
Y	*298-5123*	1	FILTER GP-PRIMARY FUEL	1009
Y	*304-8756*	1	FLYWHEEL GP	458
Y	*298-5125*	1	GLOW PLUG GP	1586
Y	*308-4272*	1	HOUSING GP-FLYWHEEL	487
Y	*304-0727*	1	HOUSING GP-FRONT	492
Y	*299-5033*	1	LIFTING GP-ENGINE	512
Y	*311-2271*	1	LINES GP-FUEL FILTER	1050
Y	*325-5614*	1	MOUNTING GP-ENGINE	530
Y	*311-8534*	1	PAN GP-OIL	563
Y	*304-8762*	1	PIPE GP-EXHAUST	790
Y	*298-5889*	1	PISTON GP	621
Y	*298-5129*	1	PLUG GP-CYLINDER HEAD	629
Y	*298-5098*	1	PLUG GP-ENGINE	631
Y	*304-3663*	1	PLUG GP-ENGINE	634
Y	*298-5128*	1	PLUG GP-ENGINE OIL MANIFOLD	680
Y	*298-5102*	1	PULLEY GP-AUXILIARY DRIVE	647
			S/N: 4441-7401	
Y	*360-7355*	1	PULLEY GP-CRANKSHAFT	656
			S/N: 4447402-UP	
Y	*298-5101*	1	PULLEY GP-CRANKSHAFT	648
			S/N: 4441-7401	
Y	*360-7346*	1	PULLEY GP-CRANKSHAFT	655
			S/N: 4447402-UP	
Y	*298-5112*	1	PUMP GP-ENGINE OIL	681
Y	*305-2575*	1	PUMP GP-FUEL INJECTION	1278
Y	*340-4692*	1	PUMP GP-WATER	722
Y	*325-5612*	1	STARTING MOTOR GP-ELECTRIC	1597
Y	*307-2861*	1	SWITCH GP-HEAT START	1602
Y	*312-5964*	1	TURBOCHARGER GP	896
Y	*298-5891*	1	VALVE MECHANISM GP	661
Y	*298-5130*	1	WIRING GP-ENGINE	1604

321-3044 **ENGINE AR-PRIMARY (**contd.**)** **i04935192**

NOTE	PART NUMBER	QTY	PART NAME 1 2 3 4 5 6 (PRODUCT LEVEL)	SEE PAGE
R	**359-0737**	1	CYLINDER BLOCK GP-SHORT	
	305-8459	1	ELECTRONICS GP-ENGINE RATINGS	

R - REMANUFACTURED PART MAY BE AVAILABLE
Y - SEPARATE ILLUSTRATION

<END>

321-3045 ENGINE AR-PRIMARY

75 BRAKE KW (100 BHP) AT 2200 RPM

SMCS-1000 **i04381168**

NOTE	PART NUMBER	QTY	PART NAME 1 2 3 4 5 6 (PRODUCT LEVEL)	SEE PAGE
Y	*308-4275*	1	ADAPTER GP-AUXILIARY DRIVE	306
Y	*303-8449*	1	ALTERNATOR GP-CHARGING	1563
Y	*304-3648*	1	CAMSHAFT GP	322
Y	*301-8243*	1	CONNECTION GP-WATER	687
Y	*304-6436*	1	CONTROL GP-ENGINE ELECTRONIC	1584
Y	*298-5099*	1	COOLER GP-ENGINE OIL	690
Y	*305-0640*	1	COVER GP-INLET MANIFOLD	780
Y	*298-5097*	1	COVER GP-VALVE MECHANISM	335
Y	*304-3642*	1	CRANKSHAFT GP	382
Y	*304-3641*	1	CYLINDER BLOCK GP	402
Y	*304-3645*	1	CYLINDER HEAD GP	420
Y	*306-2321*	1	DRIVE GP-AUXILIARY	423
Y	*325-0577*	1	DRIVE GP-FAN	441
Y	*315-3413*	1	FAN GP	708
Y	*298-5100*	1	FILTER GP-ENGINE OIL	678
Y	*305-0642*	1	FILTER GP-FUEL	1000
Y	*301-8251*	1	FILTER GP-WATER SEP & FUEL	1013
Y	*304-3654*	1	FLYWHEEL GP	457
Y	*298-5125*	1	GLOW PLUG GP	1586
Y	*303-4618*	1	HOUSING GP-FLYWHEEL	481
Y	*319-1582*	1	HOUSING GP-FRONT	499
Y	*299-5033*	1	LIFTING GP-ENGINE	512
Y	*311-2271*	1	LINES GP-FUEL FILTER	1050
Y	*316-6924*	1	MOUNTING GP-ENGINE	525
Y	*298-5096*	1	PAN GP-OIL	533
Y	*304-8762*	1	PIPE GP-EXHAUST	790
Y	*304-3643*	1	PISTON & ROD GP	613
Y	*298-5129*	1	PLUG GP-CYLINDER HEAD	629
Y	*298-5098*	1	PLUG GP-ENGINE	631
Y	*304-3663*	1	PLUG GP-ENGINE	634
Y	*298-5128*	1	PLUG GP-ENGINE OIL MANIFOLD	680
Y	*298-5102*	1	PULLEY GP-AUXILIARY DRIVE	647
			S/N: 4441-7401	
Y	*360-7355*	1	PULLEY GP-CRANKSHAFT	656
			S/N: 4447402-UP	
Y	*298-5101*	1	PULLEY GP-CRANKSHAFT	648
			S/N: 4441-7401	
Y	*360-7346*	1	PULLEY GP-CRANKSHAFT	655
			S/N: 4447402-UP	
Y	*298-5112*	1	PUMP GP-ENGINE OIL	681
Y	*313-4350*	1	PUMP GP-FUEL INJECTION	1398
Y	*298-5105*	1	PUMP GP-WATER	714
Y	*303-4619*	1	STARTING MOTOR GP-ELECTRIC	1592
			—OR—	
Y	*325-5612*	1	STARTING MOTOR GP-ELECTRIC	1597
Y	*325-0585*	1	TURBOCHARGER GP	914
Y	*304-3647*	1	VALVE MECHANISM GP	663
Y	*298-5130*	1	WIRING GP-ENGINE	1604

321-3045 **ENGINE AR-PRIMARY (**contd.**)** **i04381168**

NOTE	PART NUMBER	QTY	PART NAME 1 2 3 4 5 6 (PRODUCT LEVEL)	SEE PAGE
R	**359-0737**	1	CYLINDER BLOCK GP-SHORT	
	305-8460	1	ELECTRONICS GP-ENGINE RATINGS	

R - REMANUFACTURED PART MAY BE AVAILABLE
Y - SEPARATE ILLUSTRATION

<END>

321-3047 ENGINE AR-PRIMARY*R

104 BRAKE KW (139 BHP) AT 2200 RPM

SMCS-1000 **i03990252**

NOTE	PART NUMBER	QTY	PART NAME 1 2 3 4 5 6 (PRODUCT LEVEL)	SEE PAGE
Y	*311-7455*	1	ALTERNATOR GP-CHARGING	1577
Y	*301-8245*	1	BALANCER GP	317
Y	*298-5090*	1	CAMSHAFT GP	320
Y	*301-8248*	1	CONNECTION GP-INLET	776
Y	*301-8243*	1	CONNECTION GP-WATER	687
Y	*304-6436*	1	CONTROL GP-ENGINE ELECTRONIC	1584
Y	*301-8241*	1	COOLER GP-OIL (ENGINE)	697
Y	*298-5111*	1	COVER GP-ENGINE	332
Y	*301-8240*	1	COVER GP-VALVE MECHANISM	341
Y	*298-5086*	1	CRANKSHAFT GP	378
Y	*298-5085*	1	CYLINDER BLOCK GP	398
Y	*298-5088*	1	CYLINDER HEAD GP	418
Y	*311-4644*	1	DRIVE GP-FAN	433
Y	*314-5003*	1	FAN GP	707
Y	*298-5100*	1	FILTER GP-ENGINE OIL	678
Y	*298-5123*	1	FILTER GP-PRIMARY FUEL	1009
Y	*301-8251*	1	FILTER GP-WATER SEP & FUEL	1013
Y	*301-8237*	1	FLYWHEEL GP	455
Y	*298-5110*	1	GEAR GP-FRONT	475
Y	*298-5125*	1	GLOW PLUG GP	1586
Y	*298-5130*	1	WIRING GP-ENGINE	1604
Y	*301-8236*	1	HOUSING GP-FLYWHEEL	479
Y	*299-5033*	1	LIFTING GP-ENGINE	512
Y	*311-2271*	1	LINES GP-FUEL FILTER	1050
Y	*311-4641*	1	MOUNTING GP-ENGINE	521
Y	*301-8239*	1	PAN GP-OIL	541
Y	*304-8762*	1	PIPE GP-EXHAUST	790
Y	*298-5087*	1	PISTON & ROD GP	609
Y	*298-5129*	1	PLUG GP-CYLINDER HEAD	629
Y	*298-5098*	1	PLUG GP-ENGINE	631
Y	*298-5131*	1	PLUG GP-ENGINE	632
Y	*298-5128*	1	PLUG GP-ENGINE OIL MANIFOLD	680
Y	*308-4160*	1	PULLEY GP-CRANKSHAFT	649
			S/N: 4441-7401	
Y	*360-7343*	1	PULLEY GP-CRANKSHAFT	652
			S/N: 4447402-UP	
Y	*301-8235*	1	PUMP GP-FUEL INJECTION	1114
Y	*298-5105*	1	PUMP GP-WATER	714
Y	*312-1672*	1	RADIATOR GP	738
Y	*298-5089*	1	ROCKER ARM GP	658
Y	*325-5612*	1	STARTING MOTOR GP-ELECTRIC	1597
Y	*311-7456*	1	TURBOCHARGER GP	887
R	**359-0739**	1	CYLINDER BLOCK GP-SHORT	
	301-8234	1	ELECTRONICS GP-ENGINE RATINGS	

R - REMANUFACTURED PART MAY BE AVAILABLE
Y - SEPARATE ILLUSTRATION

<END>

321-3048 ENGINE AR-PRIMARY

104 BRAKE KW (139 BHP) AT 2200 RPM

SMCS-1000 **i04315219**

NOTE	PART NUMBER	QTY	PART NAME 1 2 3 4 5 6 (PRODUCT LEVEL)	SEE PAGE
Y	*311-4639*	1	ALTERNATOR GP-CHARGING	1575
Y	*301-8245*	1	BALANCER GP	317
Y	*298-5090*	1	CAMSHAFT GP	320
Y	*301-8248*	1	CONNECTION GP-INLET	776
Y	*301-8243*	1	CONNECTION GP-WATER	687
Y	*304-6436*	1	CONTROL GP-ENGINE ELECTRONIC	1584
Y	*301-8241*	1	COOLER GP-OIL	697
Y	*298-5111*	1	COVER GP-ENGINE	332
Y	*301-8240*	1	COVER GP-VALVE MECHANISM	341
Y	*298-5086*	1	CRANKSHAFT GP	378
Y	*298-5085*	1	CYLINDER BLOCK GP	398
Y	*298-5088*	1	CYLINDER HEAD GP	418
Y	*311-4644*	1	DRIVE GP-FAN	433
Y	*314-5003*	1	FAN GP	707
Y	*298-5100*	1	FILTER GP-ENGINE OIL	678
Y	*298-5123*	1	FILTER GP-PRIMARY FUEL	1009
Y	*301-8251*	1	FILTER GP-WATER SEP & FUEL	1013
Y	*301-8237*	1	FLYWHEEL GP	455
Y	*298-5110*	1	GEAR GP-FRONT	475
Y	*299-5075*	1	GLOW PLUG GP	1587
Y	*301-8236*	1	HOUSING GP-FLYWHEEL	479
Y	*299-5033*	1	LIFTING GP-ENGINE	512
Y	*311-2271*	1	LINES GP-FUEL FILTER	1050
Y	*311-4641*	1	MOUNTING GP-ENGINE	521
Y	*301-8239*	1	PAN GP-OIL	541
Y	*304-8762*	1	PIPE GP-EXHAUST	790
Y	*298-5087*	1	PISTON & ROD GP	609
Y	*298-5129*	1	PLUG GP-CYLINDER HEAD	629
Y	*298-5131*	1	PLUG GP-ENGINE (THREADED)	632
Y	*298-5098*	1	PLUG GP-ENGINE	631
Y	*298-5128*	1	PLUG GP-ENGINE OIL MANIFOLD	680
Y	*360-7343*	1	PULLEY GP-CRANKSHAFT	652
Y	*301-8235*	1	PUMP GP-FUEL INJECTION	1114
Y	*298-5105*	1	PUMP GP-WATER	714
Y	*312-1672*	1	RADIATOR GP	738
Y	*298-5089*	1	ROCKER ARM GP	658
Y	*299-5067*	1	STARTING MOTOR GP-ELECTRIC	1591
Y	*307-2850*	1	TURBOCHARGER GP	857
Y	*298-5130*	1	WIRING GP-ENGINE	1604
R	**359-0739**	1	CYLINDER BLOCK GP-SHORT	
	301-8234	1	ELECTRONICS GP-ENGINE RATINGS	

R - REMANUFACTURED PART MAY BE AVAILABLE
Y - SEPARATE ILLUSTRATION

<END>

321-3051 ENGINE AR-PRIMARY

106 BRAKE KW (142 BHP) AT 2200 RPM

SMCS-1000 **i03696095**

NOTE	PART NUMBER	QTY	PART NAME 1 2 3 4 5 6 (PRODUCT LEVEL)	SEE PAGE
			(NO SERVICED PARTS)	

<END>

321-3056 ENGINE AR-PRIMARY*R

106 BRAKE KW (142 BHP) AT 2200 RPM

SMCS-1000 **i03990397**

NOTE	PART NUMBER	QTY	PART NAME 1 2 3 4 5 6 (PRODUCT LEVEL)	SEE PAGE
Y	*308-4275*	1	ADAPTER GP-AUXILIARY DRIVE	306
Y	*311-4639*	1	ALTERNATOR GP-CHARGING	1575
Y	*298-5090*	1	CAMSHAFT GP	320
Y	*301-8248*	1	CONNECTION GP-INLET	776
Y	*301-8243*	1	CONNECTION GP-WATER	687
Y	*304-6436*	1	CONTROL GP-ENGINE ELECTRONIC	1584
Y	*298-5099*	1	COOLER GP-ENGINE OIL	690
Y	*301-8240*	1	COVER GP-VALVE MECHANISM	341
Y	*298-5086*	1	CRANKSHAFT GP	378
Y	*298-5085*	1	CYLINDER BLOCK GP	398
Y	*298-5088*	1	CYLINDER HEAD GP	418
Y	*311-4644*	1	DRIVE GP-FAN	433
Y	*311-4640*	1	FAN GP	704
Y	*298-5100*	1	FILTER GP-ENGINE OIL	678
Y	*303-5780*	1	FILTER GP-FUEL	999
Y	*298-5123*	1	FILTER GP-PRIMARY FUEL	1009
Y	*306-2314*	1	FLYWHEEL GP	461
Y	*298-5110*	1	GEAR GP-FRONT	475
Y	*299-5075*	1	GLOW PLUG GP	1587
Y	*298-5130*	1	WIRING GP-ENGINE	1604
Y	*303-4618*	1	HOUSING GP-FLYWHEEL	481
Y	*299-5033*	1	LIFTING GP-ENGINE	512
Y	*311-2271*	1	LINES GP-FUEL FILTER	1050
Y	*311-4641*	1	MOUNTING GP-ENGINE	521
Y	*298-5096*	1	PAN GP-OIL	533
Y	*304-8762*	1	PIPE GP-EXHAUST	790
Y	*298-5087*	1	PISTON & ROD GP	609
Y	*298-5129*	1	PLUG GP-CYLINDER HEAD	629
Y	*298-5131*	1	PLUG GP-ENGINE	632
Y	*298-5128*	1	PLUG GP-ENGINE OIL MANIFOLD	680
Y	*308-4160*	1	PULLEY GP-CRANKSHAFT	649
			S/N: 4441-7401	
Y	*360-7343*	1	PULLEY GP-CRANKSHAFT	652
			S/N: 4447402-UP	
Y	*298-5112*	1	PUMP GP-ENGINE OIL	681
Y	*304-6570*	1	PUMP GP-FUEL INJECTION	1179
Y	*298-5105*	1	PUMP GP-WATER	714
Y	*312-1672*	1	RADIATOR GP	738
Y	*298-5089*	1	ROCKER ARM GP	658
Y	*299-5067*	1	STARTING MOTOR GP-ELECTRIC	1591
Y	*307-2861*	1	SWITCH GP-HEAT START	1602
Y	*307-2850*	1	TURBOCHARGER GP	857
R	**359-0739**	1	CYLINDER BLOCK GP-SHORT	
	305-8457	1	ELECTRONICS GP-ENGINE RATINGS	

R - REMANUFACTURED PART MAY BE AVAILABLE
Y - SEPARATE ILLUSTRATION

<END>

324-7124 ENGINE AR-PRIMARY

75 BRAKE KW (100 BHP) AT 2200 RPM

SMCS-1000 **i05226060**

NOTE	PART NUMBER	QTY	PART NAME 1 2 3 4 5 6 (PRODUCT LEVEL)	SEE PAGE
Y	*311-7455*	1	ALTERNATOR GP-CHARGING	1577
Y	*304-3648*	1	CAMSHAFT GP	322
Y	*301-8243*	1	CONNECTION GP-WATER	687
Y	*304-6436*	1	CONTROL GP-ENGINE ELECTRONIC	1584
Y	*298-5099*	1	COOLER GP-ENGINE OIL	690
Y	*304-3658*	1	COVER GP-CYLINDER HEAD	325
Y	*298-5111*	1	COVER GP-ENGINE	332
Y	*301-8240*	1	COVER GP-VALVE MECHANISM	341
Y	*304-3642*	1	CRANKSHAFT GP	382
Y	*304-3641*	1	CYLINDER BLOCK GP	402
Y	*304-3645*	1	CYLINDER HEAD GP	420
Y	*311-4644*	1	DRIVE GP-FAN	433
Y	*326-4488*	1	FAN GP	711
Y	*298-5100*	1	FILTER GP-ENGINE OIL	678
Y	*305-0642*	1	FILTER GP-FUEL	1000
Y	*301-8251*	1	FILTER GP-WATER SEP & FUEL	1013
Y	*299-5063*	1	FLYWHEEL GP	454
Y	*298-5110*	1	GEAR GP-FRONT	475
Y	*298-5125*	1	GLOW PLUG GP	1586
Y	*299-5057*	1	HOUSING GP-FLYWHEEL	478
Y	*299-5033*	1	LIFTING GP-ENGINE	512
Y	*311-2271*	1	LINES GP-FUEL FILTER	1050
Y	*326-4549*	1	MOUNTING GP-ENGINE	531
Y	*298-5096*	1	PAN GP-OIL	533
Y	*304-8762*	1	PIPE GP-EXHAUST	790
Y	*304-3643*	1	PISTON & ROD GP	613
Y	*298-5129*	1	PLUG GP-CYLINDER HEAD	629
Y	*298-5098*	1	PLUG GP-ENGINE	631
Y	*298-5131*	1	PLUG GP-ENGINE	632
Y	*298-5128*	1	PLUG GP-ENGINE OIL MANIFOLD	680
Y	*308-4160*	1	PULLEY GP-CRANKSHAFT	649
			S/N: 4441-7401	
Y	*360-7343*	1	PULLEY GP-CRANKSHAFT	652
			S/N: 4447402-UP	
Y	*298-5112*	1	PUMP GP-ENGINE OIL	681
Y	*313-4350*	1	PUMP GP-FUEL INJECTION	1398
Y	*298-5105*	1	PUMP GP-WATER	714
Y	*325-5612*	1	STARTING MOTOR GP-ELECTRIC	1597
Y	*326-4510*	1	TURBOCHARGER GP	926
Y	*304-3647*	1	VALVE MECHANISM GP	663
Y	*298-5130*	1	WIRING GP-ENGINE	1604
R	**359-0737**	1	CYLINDER BLOCK GP-SHORT	
	305-8460	1	ELECTRONICS GP-ENGINE RATINGS	

R - REMANUFACTURED PART MAY BE AVAILABLE
Y - SEPARATE ILLUSTRATION

<END>

324-7125 ENGINE AR-PRIMARY

106 BRAKE KW (106 BHP) AT 2200 RPM

SMCS-1000 **i03696097**

NOTE	PART NUMBER	QTY	PART NAME 1 2 3 4 5 6 (PRODUCT LEVEL)	SEE PAGE
			(NO SERVICED PARTS)	

<END>

324-7129 ENGINE AR-PRIMARY

106 BRAKE KW (142 BHP) AT 2200 RPM

SMCS-1000 **i03941910**

NOTE	PART NUMBER	QTY	PART NAME 1 2 3 4 5 6 (PRODUCT LEVEL)	SEE PAGE
Y	*304-0728*	1	ADAPTER GP-AUXILIARY DRIVE	301
Y	*330-7211*	1	ALTERNATOR GP-CHARGING	1583
Y	*298-5090*	1	CAMSHAFT GP	320
Y	*301-8248*	1	CONNECTION GP-INLET	776
Y	*301-8243*	1	CONNECTION GP-WATER	687
Y	*304-6436*	1	CONTROL GP-ENGINE ELECTRONIC	1584
Y	*298-5099*	1	COOLER GP-ENGINE OIL	690
Y	*298-5097*	1	COVER GP-VALVE MECHANISM	335
Y	*298-5086*	1	CRANKSHAFT GP	378
Y	*298-5085*	1	CYLINDER BLOCK GP	398
Y	*298-5088*	1	CYLINDER HEAD GP	418
Y	*301-8238*	1	DRIVE GP-FAN	427
Y	*298-5100*	1	FILTER GP-ENGINE OIL	678
Y	*298-5123*	1	FILTER GP-PRIMARY FUEL	1009
Y	*301-8251*	1	FILTER GP-WATER SEP & FUEL	1013
Y	*306-2314*	1	FLYWHEEL GP	461
Y	*298-5125*	1	GLOW PLUG GP	1586
Y	*298-5130*	1	WIRING GP-ENGINE	1604
Y	*303-4618*	1	HOUSING GP-FLYWHEEL	481
Y	*304-0727*	1	HOUSING GP-FRONT	492
Y	*299-5033*	1	LIFTING GP-ENGINE	512
Y	*311-2271*	1	LINES GP-FUEL FILTER	1050
Y	*301-8250*	1	PLUG GP-ENGINE	633
Y	*299-5082*	1	MOUNTING GP-FAN	713
Y	*298-5096*	1	PAN GP-OIL	533
Y	*304-8762*	1	PIPE GP-EXHAUST	790
Y	*298-5087*	1	PISTON & ROD GP	609
Y	*298-5129*	1	PLUG GP-CYLINDER HEAD	629
Y	*298-5098*	1	PLUG GP-ENGINE	631
Y	*298-5131*	1	PLUG GP-ENGINE	632
Y	*298-5128*	1	PLUG GP-ENGINE OIL MANIFOLD	680
Y	*301-8242*	1	PULLEY GP	644
			S/N: 4441-7401	
Y	*360-7342*	1	PULLEY GP-CRANKSHAFT	651
			S/N: 4447402-UP	
Y	*298-5112*	1	PUMP GP-ENGINE OIL	681
Y	*304-6570*	1	PUMP GP-FUEL INJECTION	1179
Y	*340-4692*	1	PUMP GP-WATER	722
Y	*298-5089*	1	ROCKER ARM GP	658
Y	*325-5612*	1	STARTING MOTOR GP-ELECTRIC	1597
Y	*311-7456*	1	TURBOCHARGER GP	887
R	**359-0739**	1	CYLINDER BLOCK GP-SHORT	
	305-8457	1	ELECTRONICS GP-ENGINE RATINGS	

R - REMANUFACTURED PART MAY BE AVAILABLE
Y - SEPARATE ILLUSTRATION

<END>

324-7131 ENGINE AR-PRIMARY

75 BRAKE KW (100 BHP) AT 2200 RPM

SMCS-1000 **i04381169**

NOTE	PART NUMBER	QTY	PART NAME 1 2 3 4 5 6 (PRODUCT LEVEL)	SEE PAGE
Y	*303-8449*	1	ALTERNATOR GP-CHARGING	1563
Y	*301-8245*	1	BALANCER GP	317
Y	*304-3648*	1	CAMSHAFT GP	322
Y	*301-8243*	1	CONNECTION GP-WATER	687
Y	*304-6436*	1	CONTROL GP-ENGINE ELECTRONIC	1584
Y	*301-8241*	1	COOLER GP-OIL	697
Y	*298-5111*	1	COVER GP-ENGINE	332
Y	*305-0640*	1	COVER GP-INLET MANIFOLD	780
Y	*298-5097*	1	COVER GP-VALVE MECHANISM	335
Y	*304-3642*	1	CRANKSHAFT GP	382
Y	*304-3641*	1	CYLINDER BLOCK GP	402
Y	*304-3645*	1	CYLINDER HEAD GP	420
Y	*325-0577*	1	DRIVE GP-FAN	441
Y	*308-0303*	1	FAN GP	703
Y	*317-6399*	1	FASTENER GP-TURBOCHARGER	788
Y	*298-5100*	1	FILTER GP-ENGINE OIL	678
Y	*305-0642*	1	FILTER GP-FUEL	1000
Y	*301-8251*	1	FILTER GP-WATER SEP & FUEL	1013
Y	*301-8237*	1	FLYWHEEL GP	455
Y	*298-5110*	1	GEAR GP-FRONT	475
Y	*298-5125*	1	GLOW PLUG GP	1586
Y	*301-8236*	1	HOUSING GP-FLYWHEEL	479
Y	*299-5033*	1	LIFTING GP-ENGINE	512
Y	*311-2271*	1	LINES GP-FUEL FILTER	1050
Y	*318-3623*	1	MOUNTING GP-ENGINE	526
Y	*301-8239*	1	PAN GP-OIL	541
Y	*304-3643*	1	PISTON & ROD GP	613
Y	*298-5129*	1	PLUG GP-CYLINDER HEAD	629
Y	*298-5098*	1	PLUG GP-ENGINE	631
Y	*331-8683*	1	PLUG GP-ENGINE	640
Y	*298-5101*	1	PULLEY GP-CRANKSHAFT	648
			S/N: 4441-7401	
Y	*360-7346*	1	PULLEY GP-CRANKSHAFT	655
			S/N: 4447402-UP	
Y	*313-3514*	1	PUMP GP-FUEL INJECTION	1373
Y	*298-5105*	1	PUMP GP-WATER	714
Y	*325-5612*	1	STARTING MOTOR GP-ELECTRIC	1597
Y	*331-8682*	1	TURBOCHARGER GP	954
Y	*303-5779*	1	VALVE GP-FLUID SAMPLING	682
Y	*304-3647*	1	VALVE MECHANISM GP	663
Y	*298-5130*	1	WIRING GP-ENGINE	1604
R	**359-0737**	1	CYLINDER BLOCK GP-SHORT	
	305-8453	1	ELECTRONICS GP-ENGINE RATINGS	

R - REMANUFACTURED PART MAY BE AVAILABLE
Y - SEPARATE ILLUSTRATION

<END>

324-7139 ENGINE AR-PRIMARY

SMCS-1000 **i03696099**

NOTE	PART NUMBER	QTY	PART NAME 1 2 3 4 5 6 (PRODUCT LEVEL)	SEE PAGE
			(NO SERVICED PARTS)	
			<END>	

324-7143 ENGINE AR-PRIMARY

SMCS-1000 **i03696100**

NOTE	PART NUMBER	QTY	PART NAME 1 2 3 4 5 6 (PRODUCT LEVEL)	SEE PAGE
			(NO SERVICED PARTS)	
			<END>	

329-3149 ENGINE AR-PRIMARY

106 BRAKE KW (142 BHP) AT 2200 RPM

SMCS-1000 **i03990402**

NOTE	PART NUMBER	QTY	PART NAME 1 2 3 4 5 6 (PRODUCT LEVEL)	SEE PAGE
Y	*308-4275*	1	ADAPTER GP-AUXILIARY DRIVE	306
Y	*322-4890*	1	ALTERNATOR GP-CHARGING	1581
Y	*298-5090*	1	CAMSHAFT GP	320
Y	*301-8248*	1	CONNECTION GP-INLET	776
Y	*301-8243*	1	CONNECTION GP-WATER	687
Y	*304-6436*	1	CONTROL GP-ENGINE ELECTRONIC	1584
Y	*298-5099*	1	COOLER GP-ENGINE OIL	690
Y	*301-8240*	1	COVER GP-VALVE MECHANISM	341
Y	*298-5086*	1	CRANKSHAFT GP	378
Y	*298-5085*	1	CYLINDER BLOCK GP	398
Y	*298-5088*	1	CYLINDER HEAD GP	418
Y	*311-4644*	1	DRIVE GP-FAN	433
Y	*311-4640*	1	FAN GP	704
Y	*298-5100*	1	FILTER GP-ENGINE OIL	678
Y	*303-5780*	1	FILTER GP-FUEL	999
Y	*298-5123*	1	FILTER GP-PRIMARY FUEL	1009
Y	*306-2314*	1	FLYWHEEL GP	461
Y	*298-5110*	1	GEAR GP-FRONT	475
Y	*298-5125*	1	GLOW PLUG GP	1586
Y	*303-4618*	1	HOUSING GP-FLYWHEEL	481
Y	*299-5033*	1	LIFTING GP-ENGINE	512
Y	*311-2271*	1	LINES GP-FUEL FILTER	1050
Y	*311-4641*	1	MOUNTING GP-ENGINE	521
Y	*298-5096*	1	PAN GP-OIL	533
Y	*304-8762*	1	PIPE GP-EXHAUST	790
Y	*298-5087*	1	PISTON & ROD GP	609
Y	*298-5129*	1	PLUG GP-CYLINDER HEAD	629
Y	*298-5131*	1	PLUG GP-ENGINE	632
Y	*298-5128*	1	PLUG GP-ENGINE OIL MANIFOLD	680
Y	*308-4160*	1	PULLEY GP-CRANKSHAFT	649
			S/N: 4441-7401	
Y	*360-7343*	1	PULLEY GP-CRANKSHAFT	652
			S/N: 4447402-UP	
Y	*298-5112*	1	PUMP GP-ENGINE OIL	681
Y	*304-6570*	1	PUMP GP-FUEL INJECTION	1179
Y	*298-5105*	1	PUMP GP-WATER	714
Y	*312-1672*	1	RADIATOR GP	738
Y	*298-5089*	1	ROCKER ARM GP	658
Y	*325-5612*	1	STARTING MOTOR GP-ELECTRIC	1597
Y	*307-2861*	1	SWITCH GP-HEAT START	1602
Y	*311-7456*	1	TURBOCHARGER GP	887
Y	*298-5130*	1	WIRING GP-ENGINE	1604
R	**359-0739**	1	CYLINDER BLOCK GP-SHORT	
	305-8457	1	ELECTRONICS GP-ENGINE RATINGS	

R - REMANUFACTURED PART MAY BE AVAILABLE
Y - SEPARATE ILLUSTRATION

<END>

329-3160 ENGINE AR-PRIMARY

106 BRAKE KW (142 BHP) AT 2200 RPM

SMCS-1000 **i03696101**

NOTE	PART NUMBER	QTY	PART NAME 1 2 3 4 5 6 (PRODUCT LEVEL)	SEE PAGE
			(NO SERVICED PARTS)	

<END>

329-3165 ENGINE AR-PRIMARY

95 BRAKE KW (127 BHP) AT 2200 RPM

SMCS-1000 **i03990403**

NOTE	PART NUMBER	QTY	PART NAME 1 2 3 4 5 6 (PRODUCT LEVEL)	SEE PAGE
Y	*311-7455*	1	ALTERNATOR GP-CHARGING	1577
Y	*301-8245*	1	BALANCER GP	317
Y	*298-5892*	1	CAMSHAFT GP	321
Y	*301-8248*	1	CONNECTION GP-INLET	776
Y	*301-8243*	1	CONNECTION GP-WATER	687
Y	*304-6436*	1	CONTROL GP-ENGINE ELECTRONIC	1584
Y	*301-8241*	1	COOLER GP-OIL	697
Y	*298-5097*	1	COVER GP-VALVE MECHANISM	335
Y	*298-5888*	1	CRANKSHAFT GP	380
Y	*298-5887*	1	CYLINDER BLOCK GP	400
Y	*298-5890*	1	CYLINDER HEAD GP	419
Y	*316-7959*	1	DRIVE GP-FAN	436
Y	*314-5003*	1	FAN GP	707
Y	*298-5100*	1	FILTER GP-ENGINE OIL	678
Y	*298-5123*	1	FILTER GP-PRIMARY FUEL	1009
Y	*301-8251*	1	FILTER GP-WATER SEP & FUEL	1013
Y	*320-2347*	1	FLYWHEEL GP	466
Y	*298-5125*	1	GLOW PLUG GP	1586
Y	*308-4272*	1	HOUSING GP-FLYWHEEL	487
Y	*304-8760*	1	HOUSING GP-FRONT	495
Y	*299-5033*	1	LIFTING GP-ENGINE	512
Y	*311-2271*	1	LINES GP-FUEL FILTER	1050
Y	*323-6804*	1	MOUNTING GP-ENGINE	529
Y	*301-8239*	1	PAN GP-OIL	541
Y	*304-8762*	1	PIPE GP-EXHAUST	790
Y	*298-5889*	1	PISTON GP	621
Y	*298-5129*	1	PLUG GP-CYLINDER HEAD	629
Y	*298-5131*	1	PLUG GP-ENGINE (THREADED)	632
Y	*304-8761*	1	PLUG GP-ENGINE	636
Y	*312-2578*	1	PLUG GP-ENGINE	639
Y	*308-4160*	1	PULLEY GP-CRANKSHAFT	649
			S/N: 4441-7401	
Y	*360-7343*	1	PULLEY GP-CRANKSHAFT	652
			S/N: 4447402-UP	
Y	*305-6701*	1	PUMP GP-FUEL INJECTION	1303
Y	*298-5105*	1	PUMP GP-WATER	714
Y	*312-1672*	1	RADIATOR GP	738
Y	*325-5612*	1	STARTING MOTOR GP-ELECTRIC	1597
Y	*312-2579*	1	SWITCH GP-HEAT START	1603
Y	*311-7456*	1	TURBOCHARGER GP	887
Y	*303-5779*	1	VALVE GP-FLUID SAMPLING	682
Y	*298-5891*	1	VALVE MECHANISM GP	661
Y	*298-5130*	1	WIRING GP-ENGINE	1604
R	**359-0737**	1	CYLINDER BLOCK GP-SHORT	
	305-8454	1	ELECTRONICS GP-ENGINE RATINGS	

R - REMANUFACTURED PART MAY BE AVAILABLE
Y - SEPARATE ILLUSTRATION

<END>

329-3166 ENGINE AR-PRIMARY

75 BRAKE KW (100 BHP) AT 2200 RPM

SMCS-1000 **i03696103**

NOTE	PART NUMBER	QTY	PART NAME 1 2 3 4 5 6 (PRODUCT LEVEL)	SEE PAGE
			(NO SERVICED PARTS)	

<END>

329-3167 ENGINE AR-PRIMARY

95 BRAKE KW (127 BHP) AT 2200 RPM

SMCS-1000 **i03990404**

NOTE	PART NUMBER	QTY	PART NAME 1 2 3 4 5 6 (PRODUCT LEVEL)	SEE PAGE
Y	*323-8845*	1	AIR COMPRESSOR GP	309
Y	*311-7455*	1	ALTERNATOR GP-CHARGING	1577
Y	*301-8245*	1	BALANCER GP	317
Y	*298-5892*	1	CAMSHAFT GP	321
Y	*301-8248*	1	CONNECTION GP-INLET	776
Y	*301-8243*	1	CONNECTION GP-WATER	687
Y	*304-6436*	1	CONTROL GP-ENGINE ELECTRONIC	1584
Y	*301-8241*	1	COOLER GP-OIL	697
Y	*329-3543*	1	COVER GP-VALVE MECHANISM	375
Y	*298-5888*	1	CRANKSHAFT GP	380
Y	*298-5887*	1	CYLINDER BLOCK GP	400
Y	*298-5890*	1	CYLINDER HEAD GP	419
Y	*316-7959*	1	DRIVE GP-FAN	436
Y	*314-5003*	1	FAN GP	707
Y	*298-5100*	1	FILTER GP-ENGINE OIL	678
Y	*333-5523*	1	FILTER GP-FUEL	1008
Y	*301-8251*	1	FILTER GP-WATER SEP & FUEL	1013
Y	*301-8237*	1	FLYWHEEL GP	455
Y	*298-5125*	1	GLOW PLUG GP	1586
Y	*301-8236*	1	HOUSING GP-FLYWHEEL	479
Y	*323-8844*	1	HOUSING GP-FRONT	506
Y	*299-5033*	1	LIFTING GP-ENGINE	512
Y	*333-5521*	1	LINES GP-FUEL	1047
Y	*311-4641*	1	MOUNTING GP-ENGINE	521
Y	*323-8843*	1	PAN GP-OIL	575
Y	*304-8762*	1	PIPE GP-EXHAUST	790
Y	*298-5889*	1	PISTON GP	621
Y	*298-5129*	1	PLUG GP-CYLINDER HEAD	629
Y	*298-5098*	1	PLUG GP-ENGINE	631
Y	*304-3663*	1	PLUG GP-ENGINE	634
Y	*298-5128*	1	PLUG GP-ENGINE OIL MANIFOLD	680
Y	*308-4160*	1	PULLEY GP-CRANKSHAFT	649
			S/N: 4441-7401	
Y	*360-7343*	1	PULLEY GP-CRANKSHAFT	652
			S/N: 4447402-UP	
Y	*305-6701*	1	PUMP GP-FUEL INJECTION	1303
Y	*298-5105*	1	PUMP GP-WATER	714
Y	*311-4636*	1	RADIATOR GP	730
Y	*325-5612*	1	STARTING MOTOR GP-ELECTRIC	1597
Y	*311-7456*	1	TURBOCHARGER GP	887
Y	*298-5891*	1	VALVE MECHANISM GP	661
Y	*335-6238*	1	WIRING GP-ENGINE	1615
R	**359-0737**	1	CYLINDER BLOCK GP-SHORT	
	305-8454	1	ELECTRONICS GP-ENGINE RATINGS	

R - REMANUFACTURED PART MAY BE AVAILABLE
Y - SEPARATE ILLUSTRATION

<END>

335-1530 ENGINE AR-PRIMARY*R

75 BRAKE KW (100 BHP) AT 2400 RPM

SMCS-1000 **i04453232**

NOTE	PART NUMBER	QTY	PART NAME 1 2 3 4 5 6 (PRODUCT LEVEL)	SEE PAGE
Y	*308-3351*	1	ALTERNATOR GP-CHARGING	1573
Y	*304-3648*	1	CAMSHAFT GP	322
Y	*301-8243*	1	CONNECTION GP-WATER	687
Y	*304-6436*	1	CONTROL GP-ENGINE ELECTRONIC	1584
Y	*298-5099*	1	COOLER GP-ENGINE OIL	690
Y	*298-5111*	1	COVER GP-ENGINE	332
Y	*305-2169*	1	COVER GP-INLET MANIFOLD	782
Y	*298-5097*	1	COVER GP-VALVE MECHANISM	335
Y	*304-3642*	1	CRANKSHAFT GP	382
Y	*304-3641*	1	CYLINDER BLOCK GP	402
Y	*304-3645*	1	CYLINDER HEAD GP	420
Y	*298-5095*	1	DRIVE GP-FAN	425
Y	*326-4488*	1	FAN GP	711
Y	*298-5100*	1	FILTER GP-ENGINE OIL	678
Y	*305-0642*	1	FILTER GP-FUEL	1000
Y	*301-8251*	1	FILTER GP-WATER SEP & FUEL	1013
Y	*339-1787*	1	FLYWHEEL GP	469
Y	*298-5110*	1	GEAR GP-FRONT	475
Y	*298-5125*	1	GLOW PLUG GP	1586
Y	*321-5596*	1	HOUSING GP-FLYWHEEL	489
Y	*326-0478*	1	LIFTING GP-ENGINE	513
Y	*311-2271*	1	LINES GP-FUEL FILTER	1050
Y	*298-5771*	1	MOUNTING GP-ENGINE	514
Y	*344-8201*	1	PAN GP-OIL	589
Y	*304-3643*	1	PISTON & ROD GP	613
Y	*298-5129*	1	PLUG GP-CYLINDER HEAD	629
Y	*298-5098*	1	PLUG GP-ENGINE	631
Y	*298-5131*	1	PLUG GP-ENGINE	632
Y	*298-5128*	1	PLUG GP-ENGINE OIL MANIFOLD	680
Y	*298-5101*	1	PULLEY GP-CRANKSHAFT	648
			S/N: 4441-7401	
Y	*360-7346*	1	PULLEY GP-CRANKSHAFT	655
			S/N: 4447402-UP	
Y	*298-5112*	1	PUMP GP-ENGINE OIL	681
Y	*339-1745*	1	PUMP GP-FUEL INJECTION	1525
Y	*298-5105*	1	PUMP GP-WATER	714
Y	*327-8999*	1	STARTING MOTOR GP-ELECTRIC	1598
Y	*339-1795*	1	TURBOCHARGER GP	968
			S/N: 4441-11071	
Y	*325-0585*	1	TURBOCHARGER GP	914
			S/N: 44411072-UP	
Y	*304-3647*	1	VALVE MECHANISM GP	663
Y	*298-5130*	1	WIRING GP-ENGINE	1604
R	**359-0737**	1	CYLINDER BLOCK GP-SHORT	
	339-1786	1	ELECTRONICS GP-ENGINE RATINGS	

R - REMANUFACTURED PART MAY BE AVAILABLE
Y - SEPARATE ILLUSTRATION

<END>

340-5314 ENGINE AR-PRIMARY*R

96.5 BRAKE KW (129.4 BHP) AT 2200 RPM

SMCS-1000 **i06809796**

NOTE	PART NUMBER	QTY	PART NAME 1 2 3 4 5 6 (PRODUCT LEVEL)	SEE PAGE
Y	*311-4639*	1	ALTERNATOR GP-CHARGING	1575
Y	*298-5892*	1	CAMSHAFT GP	321
Y	*301-8248*	1	CONNECTION GP-INLET	776
Y	*301-8243*	1	CONNECTION GP-WATER	687
Y	*304-6436*	1	CONTROL GP-ENGINE ELECTRONIC	1584
Y	*298-5099*	1	COOLER GP-ENGINE OIL	690
Y	*298-5111*	1	COVER GP-ENGINE	332
Y	*301-8240*	1	COVER GP-VALVE MECHANISM	341
Y	*298-5888*	1	CRANKSHAFT GP	380
Y	*298-5887*	1	CYLINDER BLOCK GP	400
Y	*298-5890*	1	CYLINDER HEAD GP	419
Y	*311-4644*	1	DRIVE GP-FAN	433
Y	*326-4488*	1	FAN GP	711
Y	*298-5100*	1	FILTER GP-ENGINE OIL	678
Y	*298-5123*	1	FILTER GP-PRIMARY FUEL	1009
Y	*301-8251*	1	FILTER GP-WATER SEP & FUEL	1013
Y	*301-8237*	1	FLYWHEEL GP	455
Y	*298-5110*	1	GEAR GP-FRONT	475
Y	*299-5075*	1	GLOW PLUG GP	1587
Y	*298-5130*	1	WIRING GP-ENGINE	1604
Y	*299-5057*	1	HOUSING GP-FLYWHEEL	478
Y	*299-5033*	1	LIFTING GP-ENGINE	512
Y	*311-2271*	1	LINES GP-FUEL FILTER	1050
Y	*311-8537*	1	MOUNTING GP-ENGINE	522
Y	*298-5096*	1	PAN GP-OIL	533
Y	*304-8762*	1	PIPE GP-EXHAUST	790
Y	*298-5889*	1	PISTON GP	621
Y	*298-5129*	1	PLUG GP-CYLINDER HEAD	629
Y	*298-5098*	1	PLUG GP-ENGINE	631
Y	*298-5131*	1	PLUG GP-ENGINE	632
Y	*298-5128*	1	PLUG GP-ENGINE OIL MANIFOLD	680
Y	*308-4160*	1	PULLEY GP-CRANKSHAFT	649
			S/N: 4441-7401	
Y	*360-7343*	1	PULLEY GP-CRANKSHAFT	652
			S/N: 4447402-UP	
Y	*298-5112*	1	PUMP GP-ENGINE OIL	681
Y	*303-4615*	1	PUMP GP-FUEL INJECTION	1134
Y	*298-5105*	1	PUMP GP-WATER	714
Y	*299-5067*	1	STARTING MOTOR GP-ELECTRIC	1591
Y	*307-2850*	1	TURBOCHARGER GP	857
Y	*298-5891*	1	VALVE MECHANISM GP	661
R	**359-0737**	1	CYLINDER BLOCK GP-SHORT	
	305-8458	1	ELECTRONICS GP-ENGINE RATINGS	

R - REMANUFACTURED PART MAY BE AVAILABLE
Y - SEPARATE ILLUSTRATION

<END>

340-5315 ENGINE AR-PRIMARY*R

105 BRAKE KW (141 BHP) AT 2400 RPM

SMCS-1000 **i03990406**

NOTE	PART NUMBER	QTY	PART NAME 1 2 3 4 5 6 (PRODUCT LEVEL)	SEE PAGE
Y	*322-3055*	1	ALTERNATOR GP-CHARGING	1580
Y	*298-5090*	1	CAMSHAFT GP	320
Y	*308-0307*	1	CONNECTION GP-INLET	778
Y	*301-8243*	1	CONNECTION GP-WATER	687
Y	*304-6436*	1	CONTROL GP-ENGINE ELECTRONIC	1584
Y	*306-2319*	1	COOLER GP-ENGINE OIL	693
Y	*298-5111*	1	COVER GP-ENGINE	332
Y	*303-5772*	1	COVER GP-VALVE MECHANISM	347
Y	*298-5086*	1	CRANKSHAFT GP	378
Y	*298-5085*	1	CYLINDER BLOCK GP	398
Y	*298-5088*	1	CYLINDER HEAD GP	418
Y	*342-8096*	1	DRIVE GP-FAN	446
Y	*307-2849*	1	FAN GP	702
Y	*317-6399*	1	FASTENER GP-TURBOCHARGER	788
Y	*303-5773*	1	FILLER GP-ENGINE OIL	671
Y	*298-5100*	1	FILTER GP-ENGINE OIL	678
Y	*303-5780*	1	FILTER GP-FUEL	999
Y	*298-5123*	1	FILTER GP-PRIMARY FUEL	1009
Y	*304-8756*	1	FLYWHEEL GP	458
Y	*298-5110*	1	GEAR GP-FRONT	475
Y	*299-5075*	1	GLOW PLUG GP	1587
Y	*299-5057*	1	HOUSING GP-FLYWHEEL	478
Y	*299-5033*	1	LIFTING GP-ENGINE	512
Y	*311-2271*	1	LINES GP-FUEL FILTER	1050
Y	*299-5125*	1	MOUNTING GP-ENGINE	515
Y	*298-5096*	1	PAN GP-OIL	533
Y	*298-5087*	1	PISTON & ROD GP	609
Y	*298-5129*	1	PLUG GP-CYLINDER HEAD	629
Y	*306-2328*	1	PLUG GP-ENGINE	637
Y	*331-8683*	1	PLUG GP-ENGINE	640
Y	*308-4160*	1	PULLEY GP-CRANKSHAFT	649
			S/N: 4441-7401	
Y	*360-7343*	1	PULLEY GP-CRANKSHAFT	652
			S/N: 4447402-UP	
Y	*298-5112*	1	PUMP GP-ENGINE OIL	681
Y	*298-5091*	1	PUMP GP-FUEL INJECTION	1069
Y	*298-5105*	1	PUMP GP-WATER	714
Y	*298-5089*	1	ROCKER ARM GP	658
Y	*299-5067*	1	STARTING MOTOR GP-ELECTRIC	1591
Y	*342-8097*	1	TURBOCHARGER GP	974
Y	*298-5130*	1	WIRING GP-ENGINE	1604
R	**359-0739**	1	CYLINDER BLOCK GP-SHORT	
	298-5076	1	SOFTWARE GP-ENG RATINGS ELEK	

R - REMANUFACTURED PART MAY BE AVAILABLE
Y - SEPARATE ILLUSTRATION

<END>

340-5316 ENGINE AR-PRIMARY

105 BRAKE KW (141 BHP) AT 2400 RPM

SMCS-1000 **i04451572**

NOTE	PART NUMBER	QTY	PART NAME 1 2 3 4 5 6 (PRODUCT LEVEL)	SEE PAGE
Y	*306-2320*	1	ALTERNATOR GP-CHARGING	1567
Y	*298-5090*	1	CAMSHAFT GP	320
Y	*308-0307*	1	CONNECTION GP-INLET	778
Y	*299-5078*	1	CONNECTION GP-WATER	686
Y	*304-6436*	1	CONTROL GP-ENGINE ELECTRONIC	1584
Y	*298-5099*	1	COOLER GP-ENGINE OIL	690
Y	*298-5111*	1	COVER GP-ENGINE	332
Y	*304-8758*	1	COVER GP-VALVE MECHANISM	357
Y	*298-5086*	1	CRANKSHAFT GP	378
Y	*298-5085*	1	CYLINDER BLOCK GP	398
Y	*298-5088*	1	CYLINDER HEAD GP	418
Y	*306-2321*	1	DRIVE GP-AUXILIARY	423
Y	*323-9874*	1	DRIVE GP-FAN	440
Y	*303-5773*	1	FILLER GP-ENGINE OIL	671
Y	*298-5100*	1	FILTER GP-ENGINE OIL	678
Y	*303-5780*	1	FILTER GP-FUEL	999
Y	*298-5123*	1	FILTER GP-PRIMARY FUEL	1009
Y	*342-8117*	1	FLYWHEEL GP	470
Y	*299-5075*	1	GLOW PLUG GP	1587
Y	*303-4618*	1	HOUSING GP-FLYWHEEL	481
Y	*319-1582*	1	HOUSING GP-FRONT	499
Y	*299-5033*	1	LIFTING GP-ENGINE	512
Y	*314-9819*	1	LINES GP-FUEL FILTER	1056
Y	*322-2403*	1	MOUNTING GP-ENGINE	528
Y	*299-5082*	1	MOUNTING GP-FAN	713
Y	*304-3656*	1	PAN GP-OIL	549
Y	*342-8118*	1	PARTS GP-MISCELLANEOUS	1620
Y	*304-8762*	1	PIPE GP-EXHAUST	790
Y	*298-5087*	1	PISTON & ROD GP	609
Y	*298-5129*	1	PLUG GP-CYLINDER HEAD	629
Y	*298-5102*	1	PULLEY GP-AUXILIARY DRIVE	647
			S/N: 4441-7401	
Y	*360-7355*	1	PULLEY GP-CRANKSHAFT	656
			S/N: 4447402-UP	
Y	*298-5101*	1	PULLEY GP-CRANKSHAFT	648
			S/N: 4441-7401	
Y	*360-7346*	1	PULLEY GP-CRANKSHAFT	655
			S/N: 4447402-UP	
Y	*298-5112*	1	PUMP GP-ENGINE OIL	681
Y	*298-5091*	1	PUMP GP-FUEL INJECTION	1069
Y	*298-5105*	1	PUMP GP-WATER	714
Y	*298-5089*	1	ROCKER ARM GP	658
Y	*299-5067*	1	STARTING MOTOR GP-ELECTRIC	1591
Y	*312-2579*	1	SWITCH GP-HEAT START	1603
Y	*307-2850*	1	TURBOCHARGER GP	857
Y	*303-5779*	1	VALVE GP-FLUID SAMPLING	682
Y	*299-5092*	1	WIRING GP-ENGINE	1606

340-5316 **ENGINE AR-PRIMARY (**contd.**)** **i04451572**

NOTE	PART NUMBER	QTY	PART NAME 1 2 3 4 5 6 (PRODUCT LEVEL)	SEE PAGE
R	**359-0739**	1	CYLINDER BLOCK GP-SHORT	
	298-5076	1	SOFTWARE GP-ENG RATINGS ELEK	

R - REMANUFACTURED PART MAY BE AVAILABLE
Y - SEPARATE ILLUSTRATION

<END>

340-5323 ENGINE AR-PRIMARY

106.2 BRAKE KW (142.4 BHP) AT 2200 RPM

SMCS-1000 **i03687980**

NOTE	PART NUMBER	QTY	PART NAME 1 2 3 4 5 6 (PRODUCT LEVEL)	SEE PAGE
			(NO SERVICED PARTS)	

<END>

340-5324 ENGINE AR-PRIMARY

106.2 BRAKE KW (142.2 BHP) AT 2200 RPM

SMCS-1000 **i03687981**

NOTE	PART NUMBER	QTY	PART NAME 1 2 3 4 5 6 (PRODUCT LEVEL)	SEE PAGE
			(NO SERVICED PARTS)	

<END>

340-5331 ENGINE AR-PRIMARY*R

92.8 BRAKE KW (124.4 BHP) AT 2200 RPM

SMCS-1000 **i03990405**

NOTE	PART NUMBER	QTY	PART NAME 1 2 3 4 5 6 (PRODUCT LEVEL)	SEE PAGE
Y	*352-6382*	1	AIR COMPRESSOR GP	313
Y	*322-3055*	1	ALTERNATOR GP-CHARGING	1580
Y	*301-8245*	1	BALANCER GP	317
Y	*298-5892*	1	CAMSHAFT GP	321
Y	*308-0307*	1	CONNECTION GP-INLET	778
Y	*301-8243*	1	CONNECTION GP-WATER	687
Y	*323-8846*	1	CONNECTOR GP-CAB HEATER LINES	689
Y	*304-6436*	1	CONTROL GP-ENGINE ELECTRONIC	1584
Y	*301-8241*	1	COOLER GP-OIL	697
Y	*301-8240*	1	COVER GP-VALVE MECHANISM	341
Y	*298-5888*	1	CRANKSHAFT GP	380
Y	*298-5887*	1	CYLINDER BLOCK GP	400
Y	*298-5890*	1	CYLINDER HEAD GP	419
Y	*342-8096*	1	DRIVE GP-FAN	446
Y	*298-5100*	1	FILTER GP-ENGINE OIL	678
Y	*298-5123*	1	FILTER GP-PRIMARY FUEL	1009
Y	*301-8251*	1	FILTER GP-WATER SEP & FUEL	1013
Y	*353-7364*	1	FLYWHEEL GP	472
Y	*299-5075*	1	GLOW PLUG GP	1587
Y	*308-4272*	1	HOUSING GP-FLYWHEEL	487
Y	*352-6361*	1	HOUSING GP-FRONT	509
Y	*299-5033*	1	LIFTING GP-ENGINE	512
Y	*311-2271*	1	LINES GP-FUEL FILTER	1050
Y	*311-8537*	1	MOUNTING GP-ENGINE	522
Y	*299-5082*	1	MOUNTING GP-FAN	713
Y	*353-7377*	1	PAN GP-OIL	597
Y	*304-8762*	1	PIPE GP-EXHAUST	790
Y	*298-5889*	1	PISTON GP	621
Y	*298-5129*	1	PLUG GP-CYLINDER HEAD	629
Y	*298-5098*	1	PLUG GP-ENGINE	631
Y	*298-5128*	1	PLUG GP-ENGINE OIL MANIFOLD	680
Y	*308-4160*	1	PULLEY GP-CRANKSHAFT	649
			S/N: 4441-7401	
Y	*360-7343*	1	PULLEY GP-CRANKSHAFT	652
			S/N: 4447402-UP	
Y	*353-7341*	1	PUMP GP-FUEL INJECTION	1541
Y	*298-5105*	1	PUMP GP-WATER	714
Y	*299-5067*	1	STARTING MOTOR GP-ELECTRIC	1591
Y	*353-7405*	1	TURBOCHARGER GP	980
Y	*298-5891*	1	VALVE MECHANISM GP	661
Y	*352-6443*	1	WIRING GP-ENGINE	1617
R	**359-0737**	1	CYLINDER BLOCK GP-SHORT	
	353-7340	1	ELECTRONICS AR	

R - REMANUFACTURED PART MAY BE AVAILABLE
Y - SEPARATE ILLUSTRATION

<END>

344-4809 ENGINE AR-PRIMARY

103.5 BRAKE KW (138.7 BHP) AT 2400 RPM

SMCS-1000 **i03687984**

NOTE	PART NUMBER	QTY	PART NAME 1 2 3 4 5 6 (PRODUCT LEVEL)	SEE PAGE
			(NO SERVICED PARTS)	
			<END>	

344-4810 ENGINE AR-PRIMARY

92 BRAKE KW (123.3 BHP) AT 2400 RPM

SMCS-1000 **i03687985**

NOTE	PART NUMBER	QTY	PART NAME 1 2 3 4 5 6 (PRODUCT LEVEL)	SEE PAGE
			(NO SERVICED PARTS)	
			<END>	

344-4811 ENGINE AR-PRIMARY

85 BRAKE KW (113.9 BHP) AT 2200 RPM

SMCS-1000 **i03687986**

NOTE	PART NUMBER	QTY	PART NAME 1 2 3 4 5 6 (PRODUCT LEVEL)	SEE PAGE
			(NO SERVICED PARTS)	
			<END>	

344-4821 ENGINE AR-PRIMARY*R

94 KW (126 BHP) AT 2400 RPM

SMCS-1000 **i04453414**

NOTE	PART NUMBER	QTY	PART NAME 1 2 3 4 5 6 (PRODUCT LEVEL)	SEE PAGE
Y	*308-3351*	1	ALTERNATOR GP-CHARGING	1573
Y	*298-5892*	1	CAMSHAFT GP	321
Y	*298-5116*	1	CONNECTION GP-INLET	774
Y	*301-8243*	1	CONNECTION GP-WATER	687
Y	*304-6436*	1	CONTROL GP-ENGINE ELECTRONIC	1584
Y	*298-5099*	1	COOLER GP-ENGINE OIL	690
Y	*298-5111*	1	COVER GP-ENGINE	332
Y	*298-5097*	1	COVER GP-VALVE MECHANISM	335
Y	*298-5888*	1	CRANKSHAFT GP	380
Y	*298-5887*	1	CYLINDER BLOCK GP	400
Y	*298-5890*	1	CYLINDER HEAD GP	419
Y	*298-5095*	1	DRIVE GP-FAN	425
Y	*326-4488*	1	FAN GP	711
Y	*298-5100*	1	FILTER GP-ENGINE OIL	678
Y	*298-5123*	1	FILTER GP-PRIMARY FUEL	1009
Y	*301-8251*	1	FILTER GP-WATER SEP & FUEL	1013
Y	*298-5093*	1	FLYWHEEL GP	453
Y	*298-5110*	1	GEAR GP-FRONT	475
Y	*298-5125*	1	GLOW PLUG GP	1586
Y	*321-5596*	1	HOUSING GP-FLYWHEEL	489
Y	*326-0478*	1	LIFTING GP-ENGINE	513
Y	*311-2271*	1	LINES GP-FUEL FILTER	1050
Y	*298-5771*	1	MOUNTING GP-ENGINE	514
Y	*344-8201*	1	PAN GP-OIL	589
Y	*298-5889*	1	PISTON GP	621
Y	*298-5129*	1	PLUG GP-CYLINDER HEAD	629
Y	*298-5098*	1	PLUG GP-ENGINE	631
Y	*298-5131*	1	PLUG GP-ENGINE (THREADED)	632
Y	*298-5128*	1	PLUG GP-ENGINE OIL MANIFOLD	680
Y	*360-7346*	1	PULLEY GP-CRANKSHAFT	655
Y	*298-5112*	1	PUMP GP-ENGINE OIL	681
Y	*320-2398*	1	PUMP GP-FUEL INJECTION	1488
Y	*298-5105*	1	PUMP GP-WATER	714
Y	*327-8999*	1	STARTING MOTOR GP-ELECTRIC	1598
Y	*308-0305*	1	TURBOCHARGER GP	869
Y	*298-5891*	1	VALVE MECHANISM GP	661
Y	*298-5130*	1	WIRING GP-ENGINE	1604
R	**359-0737**	1	CYLINDER BLOCK GP-SHORT	
	320-2401	1	ELECTRONICS GP-ENGINE RATINGS	

R - REMANUFACTURED PART MAY BE AVAILABLE
Y - SEPARATE ILLUSTRATION

<END>

344-4824 ENGINE AR-PRIMARY

105 BRAKE KW (140.8 BHP) AT 2400 RPM

SMCS-1000 **i04173058**

NOTE	PART NUMBER	QTY	PART NAME 1 2 3 4 5 6 (PRODUCT LEVEL)	SEE PAGE
Y	*308-3351*	1	ALTERNATOR GP-CHARGING	1573
Y	*298-5090*	1	CAMSHAFT GP	320
Y	*298-5116*	1	CONNECTION GP-INLET	774
Y	*301-8243*	1	CONNECTION GP-WATER	687
Y	*304-6436*	1	CONTROL GP-ENGINE ELECTRONIC	1584
Y	*298-5099*	1	COOLER GP-ENGINE OIL	690
Y	*298-5111*	1	COVER GP-ENGINE	332
Y	*298-5097*	1	COVER GP-VALVE MECHANISM	335
Y	*298-5086*	1	CRANKSHAFT GP	378
Y	*298-5085*	1	CYLINDER BLOCK GP	398
Y	*298-5088*	1	CYLINDER HEAD GP	418
Y	*298-5095*	1	DRIVE GP-FAN	425
Y	*326-4488*	1	FAN GP	711
Y	*298-5100*	1	FILTER GP-ENGINE OIL	678
Y	*298-5123*	1	FILTER GP-PRIMARY FUEL	1009
Y	*301-8251*	1	FILTER GP-WATER SEP & FUEL	1013
Y	*351-9871*	1	FLYWHEEL GP	471
Y	*298-5110*	1	GEAR GP-FRONT	475
Y	*298-5125*	1	GLOW PLUG GP	1586
Y	*298-5130*	1	WIRING GP-ENGINE	1604
Y	*321-5596*	1	HOUSING GP-FLYWHEEL	489
Y	*326-0478*	1	LIFTING GP-ENGINE	513
Y	*311-2271*	1	LINES GP-FUEL FILTER	1050
Y	*298-5771*	1	MOUNTING GP-ENGINE	514
Y	*344-8201*	1	PAN GP-OIL	589
Y	*298-5087*	1	PISTON & ROD GP	609
Y	*298-5129*	1	PLUG GP-CYLINDER HEAD	629
Y	*298-5098*	1	PLUG GP-ENGINE	631
Y	*298-5131*	1	PLUG GP-ENGINE	632
Y	*298-5128*	1	PLUG GP-ENGINE OIL MANIFOLD	680
Y	*298-5101*	1	PULLEY GP-CRANKSHAFT	648
			S/N: 4441-7401	
Y	*360-7346*	1	PULLEY GP-CRANKSHAFT	655
			S/N: 4447402-UP	
Y	*298-5112*	1	PUMP GP-ENGINE OIL	681
Y	*320-2397*	1	PUMP GP-FUEL INJECTION	1473
Y	*298-5105*	1	PUMP GP-WATER	714
Y	*298-5089*	1	ROCKER ARM GP	658
Y	*327-8999*	1	STARTING MOTOR GP-ELECTRIC	1598
Y	*308-0305*	1	TURBOCHARGER GP	869
R	**359-0739**	1	CYLINDER BLOCK GP-SHORT	
	320-2399	1	ELECTRONICS GP-ENGINE RATINGS	

R - REMANUFACTURED PART MAY BE AVAILABLE
Y - SEPARATE ILLUSTRATION

<END>

344-4825 ENGINE AR-PRIMARY*R

105 KW (141 BHP) AT 2400 RPM

SMCS-1000 **i04453611**

NOTE	PART NUMBER	QTY	PART NAME 1 2 3 4 5 6 (PRODUCT LEVEL)	SEE PAGE
Y	*308-3351*	1	ALTERNATOR GP-CHARGING	1573
Y	*298-5090*	1	CAMSHAFT GP	320
Y	*298-5116*	1	CONNECTION GP-INLET	774
Y	*301-8243*	1	CONNECTION GP-WATER	687
Y	*304-6436*	1	CONTROL GP-ENGINE ELECTRONIC	1584
Y	*298-5099*	1	COOLER GP-ENGINE OIL	690
Y	*298-5111*	1	COVER GP-ENGINE	332
Y	*298-5097*	1	COVER GP-VALVE MECHANISM	335
Y	*298-5086*	1	CRANKSHAFT GP	378
Y	*298-5085*	1	CYLINDER BLOCK GP	398
Y	*298-5088*	1	CYLINDER HEAD GP	418
Y	*298-5095*	1	DRIVE GP-FAN	425
Y	*326-4488*	1	FAN GP	711
Y	*298-5100*	1	FILTER GP-ENGINE OIL	678
Y	*298-5123*	1	FILTER GP-PRIMARY FUEL	1009
Y	*301-8251*	1	FILTER GP-WATER SEP & FUEL	1013
Y	*298-5093*	1	FLYWHEEL GP	453
Y	*298-5110*	1	GEAR GP-FRONT	475
Y	*298-5125*	1	GLOW PLUG GP	1586
Y	*321-5596*	1	HOUSING GP-FLYWHEEL	489
Y	*326-0478*	1	LIFTING GP-ENGINE	513
Y	*311-2271*	1	LINES GP-FUEL FILTER	1050
Y	*298-5771*	1	MOUNTING GP-ENGINE	514
Y	*344-8201*	1	PAN GP-OIL	589
Y	*298-5087*	1	PISTON & ROD GP	609
Y	*298-5129*	1	PLUG GP-CYLINDER HEAD	629
Y	*298-5098*	1	PLUG GP-ENGINE	631
Y	*298-5131*	1	PLUG GP-ENGINE (THREADED)	632
Y	*298-5128*	1	PLUG GP-ENGINE OIL MANIFOLD	680
Y	*360-7346*	1	PULLEY GP-CRANKSHAFT	655
Y	*298-5112*	1	PUMP GP-ENGINE OIL	681
Y	*320-2397*	1	PUMP GP-FUEL INJECTION	1473
Y	*298-5105*	1	PUMP GP-WATER	714
Y	*298-5089*	1	ROCKER ARM GP	658
Y	*327-8999*	1	STARTING MOTOR GP-ELECTRIC	1598
Y	*308-0305*	1	TURBOCHARGER GP	869
Y	*298-5130*	1	WIRING GP-ENGINE	1604
R	**359-0739**	1	CYLINDER BLOCK GP-SHORT	
	320-2399	1	ELECTRONICS GP-ENGINE RATINGS	

R - REMANUFACTURED PART MAY BE AVAILABLE
Y - SEPARATE ILLUSTRATION

<END>

348-8478 ENGINE AR-PRIMARY

74.5 BRAKE KW (99.9 BHP) AT 2400 RPM

SMCS-1000 **i06830539**

NOTE	PART NUMBER	QTY	PART NAME 1 2 3 4 5 6 (PRODUCT LEVEL)	SEE PAGE
			(NO SERVICED PARTS)	
			<END>	

348-8480 ENGINE AR-PRIMARY

106.2 BRAKE KW (142.4 BHP) AT 2200 RPM

SMCS-1000 **i04173059**

NOTE	PART NUMBER	QTY	PART NAME 1 2 3 4 5 6 (PRODUCT LEVEL)	SEE PAGE
Y	*304-0728*	1	ADAPTER GP-AUXILIARY DRIVE	301
Y	*311-4639*	1	ALTERNATOR GP-CHARGING	1575
Y	*298-5090*	1	CAMSHAFT GP	320
Y	*298-5116*	1	CONNECTION GP-INLET	774
Y	*299-5078*	1	CONNECTION GP-WATER	686
Y	*304-6436*	1	CONTROL GP-ENGINE ELECTRONIC	1584
Y	*306-2319*	1	COOLER GP-ENGINE OIL	693
Y	*298-5097*	1	COVER GP-VALVE MECHANISM	335
Y	*298-5086*	1	CRANKSHAFT GP	378
Y	*298-5085*	1	CYLINDER BLOCK GP	398
Y	*298-5088*	1	CYLINDER HEAD GP	418
Y	*320-9223*	1	DRIVE GP-FAN	438
Y	*311-8536*	1	FAN GP	705
Y	*298-5100*	1	FILTER GP-ENGINE OIL	678
Y	*303-5780*	1	FILTER GP-FUEL	999
Y	*322-8426*	1	FILTER GP-FUEL	1006
Y	*306-2314*	1	FLYWHEEL GP	461
Y	*299-5075*	1	GLOW PLUG GP	1587
Y	*322-2434*	1	HOUSING GP-FLYWHEEL	490
Y	*304-0727*	1	HOUSING GP-FRONT	492
Y	*299-5033*	1	LIFTING GP-ENGINE	512
Y	*322-8425*	1	LINES GP-FUEL	1041
Y	*304-8763*	1	MOUNTING GP-ENGINE	519
Y	*304-3656*	1	PAN GP-OIL	549
Y	*304-8762*	1	PIPE GP-EXHAUST	790
Y	*298-5087*	1	PISTON & ROD GP	609
Y	*298-5129*	1	PLUG GP-CYLINDER HEAD	629
Y	*298-5098*	1	PLUG GP-ENGINE	631
Y	*298-5131*	1	PLUG GP-ENGINE	632
Y	*308-4160*	1	PULLEY GP-CRANKSHAFT	649
			S/N: 4441-7401	
Y	*360-7343*	1	PULLEY GP-CRANKSHAFT	652
			S/N: 4447402-UP	
Y	*298-5112*	1	PUMP GP-ENGINE OIL	681
Y	*304-6570*	1	PUMP GP-FUEL INJECTION	1179
Y	*340-4692*	1	PUMP GP-WATER	722
Y	*298-5089*	1	ROCKER ARM GP	658
Y	*299-5067*	1	STARTING MOTOR GP-ELECTRIC	1591
Y	*328-5896*	1	TURBOCHARGER GP	932
Y	*328-5897*	1	VALVE GP-FLUID SAMPLING	684
Y	*298-5130*	1	WIRING GP-ENGINE	1604
R	**359-0739**	1	CYLINDER BLOCK GP-SHORT	
	305-8457	1	ELECTRONICS GP-ENGINE RATINGS	

R - REMANUFACTURED PART MAY BE AVAILABLE
Y - SEPARATE ILLUSTRATION

<END>

348-8481 ENGINE AR-PRIMARY

106.2 BRAKE KW (142.4 BHP) AT 2200 RPM

SMCS-1000 **i03696923**

NOTE	PART NUMBER	QTY	PART NAME 1 2 3 4 5 6 (PRODUCT LEVEL)	SEE PAGE
			(NO SERVICED PARTS)	

<END>

348-8482 ENGINE AR-PRIMARY*R

106.2 BRAKE KW (142.4 BHP) AT 2200 RPM

SMCS-1000 **i04173061**

NOTE	PART NUMBER	QTY	PART NAME 1 2 3 4 5 6 (PRODUCT LEVEL)	SEE PAGE
Y	*311-4639*	1	ALTERNATOR GP-CHARGING	1575
Y	*298-5090*	1	CAMSHAFT GP	320
Y	*298-5116*	1	CONNECTION GP-INLET	774
Y	*299-5078*	1	CONNECTION GP-WATER	686
Y	*304-6436*	1	CONTROL GP-ENGINE ELECTRONIC	1584
Y	*306-2319*	1	COOLER GP-ENGINE OIL	693
Y	*298-5111*	1	COVER GP-ENGINE	332
Y	*298-5097*	1	COVER GP-VALVE MECHANISM	335
Y	*298-5086*	1	CRANKSHAFT GP	378
Y	*298-5085*	1	CYLINDER BLOCK GP	398
Y	*298-5088*	1	CYLINDER HEAD GP	418
Y	*320-9223*	1	DRIVE GP-FAN	438
Y	*311-8536*	1	FAN GP	705
Y	*298-5100*	1	FILTER GP-ENGINE OIL	678
Y	*303-5780*	1	FILTER GP-FUEL	999
Y	*322-8426*	1	FILTER GP-FUEL	1006
Y	*306-2314*	1	FLYWHEEL GP	461
Y	*298-5110*	1	GEAR GP-FRONT	475
Y	*299-5075*	1	GLOW PLUG GP	1587
Y	*322-2434*	1	HOUSING GP-FLYWHEEL	490
Y	*299-5033*	1	LIFTING GP-ENGINE	512
Y	*322-8425*	1	LINES GP-FUEL	1041
Y	*304-8763*	1	MOUNTING GP-ENGINE	519
Y	*304-3656*	1	PAN GP-OIL	549
Y	*304-8762*	1	PIPE GP-EXHAUST	790
Y	*298-5087*	1	PISTON & ROD GP	609
Y	*298-5129*	1	PLUG GP-CYLINDER HEAD	629
Y	*298-5098*	1	PLUG GP-ENGINE	631
Y	*298-5131*	1	PLUG GP-ENGINE	632
Y	*308-4160*	1	PULLEY GP-CRANKSHAFT	649
			S/N: 4441-7401	
Y	*360-7343*	1	PULLEY GP-CRANKSHAFT	652
			S/N: 4447402-UP	
Y	*298-5112*	1	PUMP GP-ENGINE OIL	681
Y	*304-6570*	1	PUMP GP-FUEL INJECTION	1179
Y	*298-5105*	1	PUMP GP-WATER	714
Y	*298-5089*	1	ROCKER ARM GP	658
Y	*299-5067*	1	STARTING MOTOR GP-ELECTRIC	1591
Y	*328-5896*	1	TURBOCHARGER GP	932
Y	*298-5130*	1	WIRING GP-ENGINE	1604
Y	*328-5897*	1	VALVE GP-FLUID SAMPLING	684
R	**359-0739**	1	CYLINDER BLOCK GP-SHORT	
	305-8457	1	ELECTRONICS GP-ENGINE RATINGS	

R - REMANUFACTURED PART MAY BE AVAILABLE
Y - SEPARATE ILLUSTRATION

<END>

348-8483 ENGINE AR-PRIMARY

106.2 BRAKE KW (142.4 BHP) AT 2200 RPM

SMCS-1000 **i04182910**

NOTE	PART NUMBER	QTY	PART NAME 1 2 3 4 5 6 (PRODUCT LEVEL)	SEE PAGE
Y	*352-6382*	1	AIR COMPRESSOR GP	313
Y	*303-5774*	1	ALTERNATOR GP-CHARGING	1561
Y	*298-5090*	1	CAMSHAFT GP	320
Y	*298-5116*	1	CONNECTION GP-INLET	774
Y	*301-8243*	1	CONNECTION GP-WATER	687
Y	*323-8846*	1	CONNECTOR GP-CAB HEATER LINES	689
Y	*304-6436*	1	CONTROL GP-ENGINE ELECTRONIC	1584
Y	*298-5099*	1	COOLER GP-ENGINE OIL	690
Y	*298-5097*	1	COVER GP-VALVE MECHANISM	335
Y	*298-5086*	1	CRANKSHAFT GP	378
Y	*298-5085*	1	CYLINDER BLOCK GP	398
Y	*298-5088*	1	CYLINDER HEAD GP	418
Y	*306-8855*	1	DRIVE GP-AUXILIARY	424
			S/N: 4441-7401	
Y	*339-8100*	1	DRIVE GP-FAN	445
Y	*298-5100*	1	FILTER GP-ENGINE OIL	678
Y	*298-5123*	1	FILTER GP-PRIMARY FUEL	1009
Y	*301-8251*	1	FILTER GP-WATER SEP & FUEL	1013
Y	*306-2314*	1	FLYWHEEL GP	461
Y	*298-5125*	1	GLOW PLUG GP	1586
Y	*303-4618*	1	HOUSING GP-FLYWHEEL	481
Y	*352-6361*	1	HOUSING GP-FRONT	509
Y	*299-5033*	1	LIFTING GP-ENGINE	512
Y	*311-2271*	1	LINES GP-FUEL FILTER	1050
Y	*299-5082*	1	MOUNTING GP-FAN	713
Y	*352-6355*	1	PAN GP-OIL	593
Y	*304-8762*	1	PIPE GP-EXHAUST	790
Y	*298-5087*	1	PISTON & ROD GP	609
Y	*298-5129*	1	PLUG GP-CYLINDER HEAD	629
Y	*301-8250*	1	PLUG GP-ENGINE	633
Y	*360-7345*	1	PULLEY GP-CRANKSHAFT	654
			S/N: 4447402-UP	
Y	*298-5112*	1	PUMP GP-ENGINE OIL	681
Y	*304-6570*	1	PUMP GP-FUEL INJECTION	1179
Y	*298-5105*	1	PUMP GP-WATER	714
Y	*298-5089*	1	ROCKER ARM GP	658
Y	*328-0666*	1	STARTING MOTOR GP-ELECTRIC	1599
Y	*312-5964*	1	TURBOCHARGER GP	896
Y	*303-5779*	1	VALVE GP-FLUID SAMPLING	682
Y	*352-6443*	1	WIRING GP-ENGINE	1617
R	**359-0739**	1	CYLINDER BLOCK GP-SHORT	
	305-8457	1	ELECTRONICS GP-ENGINE RATINGS	

R - REMANUFACTURED PART MAY BE AVAILABLE
Y - SEPARATE ILLUSTRATION

<END>

348-8492 ENGINE AR-PRIMARY

104 BRAKE KW (139 BHP) AT 2200 RPM

SMCS-1000 **i03725528**

NOTE	PART NUMBER	QTY	PART NAME 1 2 3 4 5 6 (PRODUCT LEVEL)	SEE PAGE
			(NO SERVICED PARTS)	

<END>

348-8494 ENGINE AR-PRIMARY

96.5 BRAKE KW (129.4 BHP) AT 2200 RPM

SMCS-1000 **i04381172**

NOTE	PART NUMBER	QTY	PART NAME 1 2 3 4 5 6 (PRODUCT LEVEL)	SEE PAGE
Y	*352-6382*	1	AIR COMPRESSOR GP	313
Y	*306-2320*	1	ALTERNATOR GP-CHARGING	1567
Y	*298-5892*	1	CAMSHAFT GP	321
Y	*301-8248*	1	CONNECTION GP-INLET	776
Y	*301-8243*	1	CONNECTION GP-WATER	687
Y	*323-8846*	1	CONNECTOR GP-CAB HEATER LINES	689
Y	*304-6436*	1	CONTROL GP-ENGINE ELECTRONIC	1584
Y	*298-5099*	1	COOLER GP-ENGINE OIL	690
Y	*301-8240*	1	COVER GP-VALVE MECHANISM	341
Y	*298-5888*	1	CRANKSHAFT GP	380
Y	*298-5887*	1	CYLINDER BLOCK GP	400
Y	*298-5890*	1	CYLINDER HEAD GP	419
Y	*303-5770*	1	DRIVE GP-FAN	428
Y	*298-5100*	1	FILTER GP-ENGINE OIL	678
Y	*303-5780*	1	FILTER GP-FUEL	999
Y	*298-5123*	1	FILTER GP-PRIMARY FUEL	1009
Y	*303-5768*	1	FLYWHEEL GP	456
Y	*299-5075*	1	GLOW PLUG GP	1587
Y	*303-5767*	1	HOUSING GP-FLYWHEEL	483
Y	*352-6361*	1	HOUSING GP-FRONT	509
Y	*299-5033*	1	LIFTING GP-ENGINE	512
Y	*311-2271*	1	LINES GP-FUEL FILTER	1050
Y	*316-6924*	1	MOUNTING GP-ENGINE	525
Y	*303-5771*	1	PAN GP-OIL	545
Y	*298-5889*	1	PISTON GP	621
Y	*298-5129*	1	PLUG GP-CYLINDER HEAD	629
Y	*298-5098*	1	PLUG GP-ENGINE	631
Y	*298-5128*	1	PLUG GP-ENGINE OIL MANIFOLD	680
Y	*298-5101*	1	PULLEY GP-CRANKSHAFT	648
			S/N: 4441-7401	
Y	*360-7346*	1	PULLEY GP-CRANKSHAFT	655
			S/N: 4447402-UP	
Y	*298-5112*	1	PUMP GP-ENGINE OIL	681
Y	*303-4615*	1	PUMP GP-FUEL INJECTION	1134
Y	*298-5105*	1	PUMP GP-WATER	714
Y	*299-5067*	1	STARTING MOTOR GP-ELECTRIC	1591
Y	*299-5043*	1	TURBOCHARGER GP	800
Y	*298-5891*	1	VALVE MECHANISM GP	661
Y	*352-6443*	1	WIRING GP-ENGINE	1617
R	**359-0737**	1	CYLINDER BLOCK GP-SHORT	
	305-8458	1	ELECTRONICS GP-ENGINE RATINGS	

R - REMANUFACTURED PART MAY BE AVAILABLE
Y - SEPARATE ILLUSTRATION

<END>

348-8495 ENGINE AR-PRIMARY

92.8 BRAKE KW (124.4 BHP) AT 2200 RPM

SMCS-1000 **i06014911**

NOTE	PART NUMBER	QTY	PART NAME 1 2 3 4 5 6 (PRODUCT LEVEL)	SEE PAGE
Y	*315-3414*	1	ALTERNATOR GP-CHARGING	1578
Y	*301-8245*	1	BALANCER GP	317
Y	*308-4152*	1	CAMSHAFT GP	323
Y	*301-8243*	1	CONNECTION GP-WATER	687
Y	*304-6436*	1	CONTROL GP-ENGINE ELECTRONIC	1584
Y	*301-8241*	1	COOLER GP-OIL	697
Y	*298-5111*	1	COVER GP-ENGINE	332
Y	*304-8758*	1	COVER GP-VALVE MECHANISM	357
Y	*308-4146*	1	CRANKSHAFT GP	384
Y	*308-4145*	1	CYLINDER BLOCK GP	404
Y	*308-4150*	1	CYLINDER HEAD GP	421
Y	*320-9223*	1	DRIVE GP-FAN	438
Y	*303-5777*	1	ELBOW GP-AIR INLET	786
Y	*362-2833*	1	FAN GP-SUCTION	712
Y	*317-6399*	1	FASTENER GP-TURBOCHARGER	788
Y	*318-0775*	1	FILLER GP-ENGINE OIL	676
Y	*298-5100*	1	FILTER GP-ENGINE OIL	678
Y	*303-5780*	1	FILTER GP-FUEL	999
Y	*298-5123*	1	FILTER GP-PRIMARY FUEL	1009
Y	*358-8821*	1	FLYWHEEL GP	473
Y	*298-5110*	1	GEAR GP-FRONT	475
Y	*298-5125*	1	GLOW PLUG GP	1586
Y	*298-5127*	1	LIFTING GP-ENGINE	511
Y	*311-2271*	1	LINES GP-FUEL FILTER	1050
Y	*362-2831*	1	PAN GP-OIL	601
Y	*308-4149*	1	PISTON & ROD GP	617
Y	*298-5129*	1	PLUG GP-CYLINDER HEAD	629
Y	*304-3663*	1	PLUG GP-ENGINE	634
Y	*298-5128*	1	PLUG GP-ENGINE OIL MANIFOLD	680
Y	*360-7343*	1	PULLEY GP-CRANKSHAFT	652
Y	*353-7341*	1	PUMP GP-FUEL INJECTION	1541
Y	*298-5105*	1	PUMP GP-WATER	714
Y	*328-5921*	1	STARTING MOTOR GP-ELECTRIC	1600
Y	*298-5113*	1	TURBOCHARGER GP	791
Y	*308-4151*	1	VALVE MECHANISM GP	665
Y	*298-5130*	1	WIRING GP-ENGINE	1604
	359-0738	1	CYLINDER BLOCK GP-SHORT	
	353-7340	1	ELECTRONICS AR	

Y - SEPARATE ILLUSTRATION

<END>

348-8497 ENGINE AR-PRIMARY

105 BRAKE KW (141 BHP) AT 2400 RPM

SMCS-1000 **i06830542**

NOTE	PART NUMBER	QTY	PART NAME 1 2 3 4 5 6 (PRODUCT LEVEL)	SEE PAGE
			(NO SERVICED PARTS)	

<END>

353-6814 ENGINE AR-PRIMARY

75 BRAKE KW (100 BHP) AT 2200 RPM

SMCS-1000 **i04014911**

NOTE	PART NUMBER	QTY	PART NAME 1 2 3 4 5 6 (PRODUCT LEVEL)	SEE PAGE
Y	*311-4639*	1	ALTERNATOR GP-CHARGING	1575
Y	*301-8245*	1	BALANCER GP	317
Y	*298-5892*	1	CAMSHAFT GP	321
Y	*301-8248*	1	CONNECTION GP-INLET	776
Y	*301-8243*	1	CONNECTION GP-WATER	687
Y	*304-6436*	1	CONTROL GP-ENGINE ELECTRONIC	1584
Y	*301-8241*	1	COOLER GP-OIL	697
Y	*298-5111*	1	COVER GP-ENGINE	332
Y	*301-8240*	1	COVER GP-VALVE MECHANISM	341
Y	*298-5888*	1	CRANKSHAFT GP	380
Y	*298-5887*	1	CYLINDER BLOCK GP	400
Y	*298-5890*	1	CYLINDER HEAD GP	419
Y	*311-4644*	1	DRIVE GP-FAN	433
Y	*326-4488*	1	FAN GP	711
Y	*298-5100*	1	FILTER GP-ENGINE OIL	678
Y	*298-5123*	1	FILTER GP-PRIMARY FUEL	1009
Y	*301-8251*	1	FILTER GP-WATER SEP & FUEL	1013
Y	*301-8237*	1	FLYWHEEL GP	455
Y	*298-5110*	1	GEAR GP-FRONT	475
Y	*299-5075*	1	GLOW PLUG GP	1587
Y	*308-4272*	1	HOUSING GP-FLYWHEEL	487
Y	*299-5033*	1	LIFTING GP-ENGINE	512
Y	*311-2271*	1	LINES GP-FUEL FILTER	1050
Y	*311-8537*	1	MOUNTING GP-ENGINE	522
Y	*301-8239*	1	PAN GP-OIL	541
Y	*304-8762*	1	PIPE GP-EXHAUST	790
Y	*298-5889*	1	PISTON GP	621
Y	*298-5129*	1	PLUG GP-CYLINDER HEAD	629
Y	*298-5098*	1	PLUG GP-ENGINE	631
Y	*298-5131*	1	PLUG GP-ENGINE (THREADED)	632
Y	*298-5128*	1	PLUG GP-ENGINE OIL MANIFOLD	680
Y	*360-7343*	1	PULLEY GP-CRANKSHAFT	652
Y	*353-7341*	1	PUMP GP-FUEL INJECTION	1541
Y	*298-5105*	1	PUMP GP-WATER	714
Y	*299-5067*	1	STARTING MOTOR GP-ELECTRIC	1591
Y	*307-2850*	1	TURBOCHARGER GP	857
Y	*298-5891*	1	VALVE MECHANISM GP	661
Y	*298-5130*	1	WIRING GP-ENGINE	1604
R	**359-0737**	1	CYLINDER BLOCK GP-SHORT	
	353-7340	1	ELECTRONICS AR	

R - REMANUFACTURED PART MAY BE AVAILABLE
Y - SEPARATE ILLUSTRATION

<END>

353-6816 ENGINE AR-PRIMARY

SMCS-1000 **i04033129**

NOTE	PART NUMBER	QTY	PART NAME 1 2 3 4 5 6 (PRODUCT LEVEL)	SEE PAGE
Y	*322-3055*	1	ALTERNATOR GP-CHARGING	1580
Y	*298-5892*	1	CAMSHAFT GP	321
Y	*298-5116*	1	CONNECTION GP-INLET	774
Y	*301-8243*	1	CONNECTION GP-WATER	687
Y	*304-6436*	1	CONTROL GP-ENGINE ELECTRONIC	1584
Y	*306-2319*	1	COOLER GP-ENGINE OIL	693
Y	*298-5111*	1	COVER GP-ENGINE	332
Y	*304-5574*	1	COVER GP-VALVE MECHANISM	351
Y	*298-5888*	1	CRANKSHAFT GP	380
Y	*298-5887*	1	CYLINDER BLOCK GP	400
Y	*298-5890*	1	CYLINDER HEAD GP	419
Y	*318-3621*	1	DRIVE GP-FAN	437
Y	*307-2849*	1	FAN GP	702
Y	*303-5773*	1	FILLER GP-ENGINE OIL	671
Y	*298-5100*	1	FILTER GP-ENGINE OIL	678
Y	*303-5780*	1	FILTER GP-FUEL	999
Y	*322-8426*	1	FILTER GP-FUEL	1006
Y	*301-8237*	1	FLYWHEEL GP	455
Y	*298-5110*	1	GEAR GP-FRONT	475
Y	*299-5075*	1	GLOW PLUG GP	1587
Y	*303-4618*	1	HOUSING GP-FLYWHEEL	481
Y	*299-5033*	1	LIFTING GP-ENGINE	512
Y	*322-8425*	1	LINES GP-FUEL	1041
Y	*318-3623*	1	MOUNTING GP-ENGINE	526
Y	*324-6508*	1	PAN GP-OIL	585
Y	*304-8762*	1	PIPE GP-EXHAUST	790
Y	*298-5889*	1	PISTON GP	621
Y	*298-5129*	1	PLUG GP-CYLINDER HEAD	629
Y	*298-5131*	1	PLUG GP-ENGINE	632
Y	*360-7343*	1	PULLEY GP-CRANKSHAFT	652
Y	*298-5112*	1	PUMP GP-ENGINE OIL	681
Y	*298-5893*	1	PUMP GP-FUEL INJECTION	1089
Y	*298-5105*	1	PUMP GP-WATER	714
Y	*299-5067*	1	STARTING MOTOR GP-ELECTRIC	1591
Y	*307-2850*	1	TURBOCHARGER GP	857
Y	*328-5897*	1	VALVE GP-FLUID SAMPLING	684
Y	*298-5891*	1	VALVE MECHANISM GP	661
Y	*298-5130*	1	WIRING GP-ENGINE	1604
R	**359-0737**	1	CYLINDER BLOCK GP-SHORT	

R - REMANUFACTURED PART MAY BE AVAILABLE
Y - SEPARATE ILLUSTRATION

<END>

353-6828 ENGINE AR-PRIMARY*R

93 BRAKE KW (124 BHP) AT 2200 RPM

SMCS-1000 **i04446433**

NOTE	PART NUMBER	QTY	PART NAME 1 2 3 4 5 6 (PRODUCT LEVEL)	SEE PAGE
Y	*352-6382*	1	AIR COMPRESSOR GP	313
Y	*322-3055*	1	ALTERNATOR GP-CHARGING	1580
Y	*301-8245*	1	BALANCER GP	317
Y	*298-5892*	1	CAMSHAFT GP	321
Y	*301-8243*	1	CONNECTION GP-WATER	687
Y	*323-8846*	1	CONNECTOR GP-CAB HEATER LINES	689
Y	*304-6436*	1	CONTROL GP-ENGINE ELECTRONIC	1584
Y	*301-8241*	1	COOLER GP-OIL	697
Y	*304-5574*	1	COVER GP-VALVE MECHANISM	351
Y	*298-5888*	1	CRANKSHAFT GP	380
Y	*298-5887*	1	CYLINDER BLOCK GP	400
Y	*298-5890*	1	CYLINDER HEAD GP	419
Y	*342-8096*	1	DRIVE GP-FAN	446
Y	*298-5100*	1	FILTER GP-ENGINE OIL	678
Y	*298-5123*	1	FILTER GP-PRIMARY FUEL	1009
Y	*301-8251*	1	FILTER GP-WATER SEP & FUEL	1013
Y	*353-7364*	1	FLYWHEEL GP	472
Y	*299-5075*	1	GLOW PLUG GP	1587
Y	*308-4272*	1	HOUSING GP-FLYWHEEL	487
Y	*352-6361*	1	HOUSING GP-FRONT	509
Y	*299-5033*	1	LIFTING GP-ENGINE	512
Y	*311-2271*	1	LINES GP-FUEL FILTER	1050
Y	*311-8537*	1	MOUNTING GP-ENGINE	522
Y	*299-5082*	1	MOUNTING GP-FAN	713
Y	*353-7377*	1	PAN GP-OIL	597
Y	*304-8762*	1	PIPE GP-EXHAUST	790
Y	*298-5889*	1	PISTON GP	621
Y	*298-5129*	1	PLUG GP-CYLINDER HEAD	629
Y	*298-5098*	1	PLUG GP-ENGINE	631
Y	*298-5128*	1	PLUG GP-ENGINE OIL MANIFOLD	680
Y	*360-7343*	1	PULLEY GP-CRANKSHAFT	652
Y	*353-7341*	1	PUMP GP-FUEL INJECTION	1541
Y	*298-5105*	1	PUMP GP-WATER	714
Y	*299-5067*	1	STARTING MOTOR GP-ELECTRIC	1591
Y	*353-7405*	1	TURBOCHARGER GP	980
Y	*298-5891*	1	VALVE MECHANISM GP	661
Y	*352-6443*	1	WIRING GP-ENGINE	1617
R	**359-0737**	1	CYLINDER BLOCK GP-SHORT	
	353-7340	1	ELECTRONICS AR	

R - REMANUFACTURED PART MAY BE AVAILABLE
Y - SEPARATE ILLUSTRATION

<END>

356-7044 ENGINE AR-PRIMARY

SMCS-1000 **i04035728**

NOTE	PART NUMBER	QTY	PART NAME 1 2 3 4 5 6 (PRODUCT LEVEL)	SEE PAGE
Y	*303-5775*	1	ADAPTER GP-AUXILIARY DRIVE	300
Y	*322-3055*	1	ALTERNATOR GP-CHARGING	1580
Y	*301-8245*	1	BALANCER GP	317
Y	*298-5892*	1	CAMSHAFT GP	321
Y	*301-8248*	1	CONNECTION GP-INLET	776
Y	*301-8243*	1	CONNECTION GP-WATER	687
Y	*304-6436*	1	CONTROL GP-ENGINE ELECTRONIC	1584
Y	*301-8241*	1	COOLER GP-OIL	697
Y	*298-5097*	1	COVER GP-VALVE MECHANISM	335
Y	*298-5888*	1	CRANKSHAFT GP	380
Y	*298-5887*	1	CYLINDER BLOCK GP	400
Y	*298-5890*	1	CYLINDER HEAD GP	419
Y	*320-9223*	1	DRIVE GP-FAN	438
Y	*318-0775*	1	FILLER GP-ENGINE OIL	676
Y	*298-5100*	1	FILTER GP-ENGINE OIL	678
Y	*298-5123*	1	FILTER GP-PRIMARY FUEL	1009
Y	*301-8251*	1	FILTER GP-WATER SEP & FUEL	1013
Y	*306-2314*	1	FLYWHEEL GP	461
Y	*298-5110*	1	GEAR GP-FRONT	475
Y	*299-5075*	1	GLOW PLUG GP	1587
Y	*301-8236*	1	HOUSING GP-FLYWHEEL	479
Y	*299-5033*	1	LIFTING GP-ENGINE	512
Y	*311-2271*	1	LINES GP-FUEL FILTER	1050
Y	*312-6022*	1	MOUNTING GP-ENGINE	523
Y	*299-5082*	1	MOUNTING GP-FAN	713
Y	*301-8239*	1	PAN GP-OIL	541
Y	*304-8762*	1	PIPE GP-EXHAUST	790
Y	*298-5889*	1	PISTON GP	621
Y	*298-5129*	1	PLUG GP-CYLINDER HEAD	629
Y	*298-5131*	1	PLUG GP-ENGINE	632
Y	*298-5128*	1	PLUG GP-ENGINE OIL MANIFOLD	680
Y	*360-7343*	1	PULLEY GP-CRANKSHAFT	652
Y	*304-7189*	1	PUMP GP-FUEL INJECTION	1204
Y	*298-5105*	1	PUMP GP-WATER	714
Y	*299-5067*	1	STARTING MOTOR GP-ELECTRIC	1591
Y	*299-5043*	1	TURBOCHARGER GP	800
Y	*298-5891*	1	VALVE MECHANISM GP	661
Y	*298-5130*	1	WIRING GP-ENGINE	1604
R	**359-0737**	1	CYLINDER BLOCK GP-SHORT	
	305-8461	1	ELECTRONICS GP-ENGINE RATINGS	

R - REMANUFACTURED PART MAY BE AVAILABLE
Y - SEPARATE ILLUSTRATION

<END>

356-7051 ENGINE AR-PRIMARY

104 KW (139 BHP) AT 2400 RPM

SMCS-1000 **i04322060**

NOTE	PART NUMBER	QTY	PART NAME 1 2 3 4 5 6 (PRODUCT LEVEL)	SEE PAGE
Y	*306-2323*	1	ADAPTER GP-AUXILIARY DRIVE	305
Y	*322-3055*	1	ALTERNATOR GP-CHARGING	1580
Y	*301-8245*	1	BALANCER GP	317
Y	*298-5090*	1	CAMSHAFT GP	320
Y	*301-8248*	1	CONNECTION GP-INLET	776
Y	*301-8243*	1	CONNECTION GP-WATER	687
Y	*304-6436*	1	CONTROL GP-ENGINE ELECTRONIC	1584
Y	*301-8241*	1	COOLER GP-OIL	697
Y	*298-5097*	1	COVER GP-VALVE MECHANISM	335
Y	*298-5086*	1	CRANKSHAFT GP	378
Y	*298-5085*	1	CYLINDER BLOCK GP	398
Y	*298-5088*	1	CYLINDER HEAD GP	418
Y	*320-9223*	1	DRIVE GP-FAN	438
Y	*318-0775*	1	FILLER GP-ENGINE OIL	676
Y	*298-5100*	1	FILTER GP-ENGINE OIL	678
Y	*298-5123*	1	FILTER GP-PRIMARY FUEL	1009
Y	*301-8251*	1	FILTER GP-WATER SEP & FUEL	1013
Y	*306-2314*	1	FLYWHEEL GP	461
Y	*298-5110*	1	GEAR GP-FRONT	475
Y	*299-5075*	1	GLOW PLUG GP	1587
Y	*301-8236*	1	HOUSING GP-FLYWHEEL	479
Y	*299-5033*	1	LIFTING GP-ENGINE	512
Y	*311-2271*	1	LINES GP-FUEL FILTER	1050
Y	*312-6022*	1	MOUNTING GP-ENGINE	523
Y	*299-5082*	1	MOUNTING GP-FAN	713
Y	*353-7377*	1	PAN GP-OIL	597
Y	*298-5087*	1	PISTON & ROD GP	609
Y	*298-5129*	1	PLUG GP-CYLINDER HEAD	629
Y	*298-5131*	1	PLUG GP-ENGINE	632
Y	*298-5128*	1	PLUG GP-ENGINE OIL MANIFOLD	680
Y	*360-7343*	1	PULLEY GP-CRANKSHAFT	652
Y	*304-7192*	1	PUMP GP-FUEL INJECTION	1224
Y	*298-5105*	1	PUMP GP-WATER	714
Y	*298-5089*	1	ROCKER ARM GP	658
Y	*299-5067*	1	STARTING MOTOR GP-ELECTRIC	1591
Y	*307-2861*	1	SWITCH GP-HEAT START	1602
Y	*299-5043*	1	TURBOCHARGER GP	800
Y	*298-5130*	1	WIRING GP-ENGINE	1604
R	**359-0739**	1	CYLINDER BLOCK GP-SHORT	
	305-8462	1	ELECTRONICS GP-ENGINE RATINGS	

R - REMANUFACTURED PART MAY BE AVAILABLE
Y - SEPARATE ILLUSTRATION

<END>

356-7053 ENGINE AR-PRIMARY

106 KW (142 BHP) AT 2200 RPM

SMCS-1000 **i04574656**

NOTE	PART NUMBER	QTY	PART NAME 1 2 3 4 5 6 (PRODUCT LEVEL)	SEE PAGE
Y	*304-0728*	1	ADAPTER GP-AUXILIARY DRIVE	301
			S/N: 4441-9093, 12234-UP	
Y	*308-4275*	1	ADAPTER GP-AUXILIARY DRIVE	306
			S/N: 4449094-12233	
Y	*311-7455*	1	ALTERNATOR GP-CHARGING	1577
Y	*298-5090*	1	CAMSHAFT GP	320
Y	*301-8248*	1	CONNECTION GP-INLET	776
Y	*301-8243*	1	CONNECTION GP-WATER	687
Y	*304-6436*	1	CONTROL GP-ENGINE ELECTRONIC	1584
Y	*298-5099*	1	COOLER GP-ENGINE OIL	690
Y	*301-8240*	1	COVER GP-VALVE MECHANISM	341
Y	*298-5086*	1	CRANKSHAFT GP	378
Y	*298-5085*	1	CYLINDER BLOCK GP	398
Y	*298-5088*	1	CYLINDER HEAD GP	418
Y	*316-7959*	1	DRIVE GP-FAN	436
Y	*314-5003*	1	FAN GP	707
Y	*298-5100*	1	FILTER GP-ENGINE OIL	678
Y	*298-5123*	1	FILTER GP-PRIMARY FUEL	1009
Y	*301-8251*	1	FILTER GP-WATER SEP & FUEL	1013
Y	*301-8237*	1	FLYWHEEL GP	455
Y	*298-5125*	1	GLOW PLUG GP	1586
Y	*303-4618*	1	HOUSING GP-FLYWHEEL	481
Y	*304-0727*	1	HOUSING GP-FRONT	492
			S/N: 4441-9093, 12234-UP	
Y	*298-5110*	1	GEAR GP-FRONT	475
			S/N: 4449094-12233	
Y	*299-5033*	1	LIFTING GP-ENGINE	512
Y	*311-2271*	1	LINES GP-FUEL FILTER	1050
Y	*311-4641*	1	MOUNTING GP-ENGINE	521
Y	*298-5096*	1	PAN GP-OIL	533
Y	*304-8762*	1	PIPE GP-EXHAUST	790
Y	*298-5087*	1	PISTON & ROD GP	609
Y	*298-5129*	1	PLUG GP-CYLINDER HEAD	629
Y	*298-5098*	1	PLUG GP-ENGINE	631
Y	*298-5131*	1	PLUG GP-ENGINE	632
Y	*298-5128*	1	PLUG GP-ENGINE OIL MANIFOLD	680
Y	*360-7343*	1	PULLEY GP-CRANKSHAFT	652
Y	*298-5112*	1	PUMP GP-ENGINE OIL	681
Y	*304-6570*	1	PUMP GP-FUEL INJECTION	1179
Y	*340-4692*	1	PUMP GP-WATER	722
			S/N: 4441-9093	
Y	*298-5105*	1	PUMP GP-WATER	714
			S/N: 4449094-UP	
Y	*311-4636*	1	RADIATOR GP	730
Y	*298-5089*	1	ROCKER ARM GP	658
Y	*328-0666*	1	STARTING MOTOR GP-ELECTRIC	1599
Y	*311-7456*	1	TURBOCHARGER GP	887
Y	*298-5130*	1	WIRING GP-ENGINE	1604

356-7053 **ENGINE AR-PRIMARY (**contd.**)** **i04574656**

NOTE	PART NUMBER	QTY	PART NAME 1 2 3 4 5 6 (PRODUCT LEVEL)	SEE PAGE
R	**359-0739**	1	CYLINDER BLOCK GP-SHORT	
	305-8457	1	ELECTRONICS GP-ENGINE RATINGS	

R - REMANUFACTURED PART MAY BE AVAILABLE
Y - SEPARATE ILLUSTRATION

<END>

362-9375 ENGINE AR-PRIMARY

95 KW (127 BHP) AT 2200 RPM

SMCS-1000 **i04451373**

NOTE	PART NUMBER	QTY	PART NAME 1 2 3 4 5 6 (PRODUCT LEVEL)	SEE PAGE
Y	*308-3351*	1	ALTERNATOR GP-CHARGING	1573
Y	*301-8245*	1	BALANCER GP	317
Y	*298-5892*	1	CAMSHAFT GP	321
Y	*298-5116*	1	CONNECTION GP-INLET	774
Y	*301-8243*	1	CONNECTION GP-WATER	687
Y	*304-6436*	1	CONTROL GP-ENGINE ELECTRONIC	1584
Y	*301-8241*	1	COOLER GP-OIL	697
Y	*298-5111*	1	COVER GP-ENGINE	332
Y	*301-8240*	1	COVER GP-VALVE MECHANISM	341
Y	*298-5888*	1	CRANKSHAFT GP	380
Y	*298-5887*	1	CYLINDER BLOCK GP	400
Y	*298-5890*	1	CYLINDER HEAD GP	419
Y	*378-3549*	1	DRIVE GP-FAN	447
Y	*298-5100*	1	FILTER GP-ENGINE OIL	678
Y	*298-5123*	1	FILTER GP-PRIMARY FUEL	1009
Y	*301-8237*	1	FLYWHEEL GP	455
Y	*298-5110*	1	GEAR GP-FRONT	475
Y	*298-5125*	1	GLOW PLUG GP	1586
Y	*301-8236*	1	HOUSING GP-FLYWHEEL	479
Y	*299-5033*	1	LIFTING GP-ENGINE	512
Y	*311-2271*	1	LINES GP-FUEL FILTER	1050
Y	*299-5082*	1	MOUNTING GP-FAN	713
Y	*301-8239*	1	PAN GP-OIL	541
Y	*304-8762*	1	PIPE GP-EXHAUST	790
Y	*298-5889*	1	PISTON GP	621
Y	*298-5129*	1	PLUG GP-CYLINDER HEAD	629
Y	*298-5098*	1	PLUG GP-ENGINE	631
Y	*298-5131*	1	PLUG GP-ENGINE (THREADED)	632
Y	*301-8250*	1	PLUG GP-ENGINE	633
Y	*298-5128*	1	PLUG GP-ENGINE OIL MANIFOLD	680
Y	*360-7346*	1	PULLEY GP-CRANKSHAFT	655
Y	*305-6701*	1	PUMP GP-FUEL INJECTION	1303
Y	*298-5105*	1	PUMP GP-WATER	714
Y	*325-5612*	1	STARTING MOTOR GP-ELECTRIC	1597
Y	*311-7456*	1	TURBOCHARGER GP	887
Y	*298-5891*	1	VALVE MECHANISM GP	661
Y	*298-5130*	1	WIRING GP-ENGINE	1604
R	**359-0737**	1	CYLINDER BLOCK GP-SHORT	
	305-8454	1	ELECTRONICS GP-ENGINE RATINGS	

R - REMANUFACTURED PART MAY BE AVAILABLE
Y - SEPARATE ILLUSTRATION

<END>

362-9376 ENGINE AR-PRIMARY

95 KW (127 BHP) AT 2200 RPM

SMCS-1000 **i04451392**

NOTE	PART NUMBER	QTY	PART NAME 1 2 3 4 5 6 (PRODUCT LEVEL)	SEE PAGE
Y	*375-5262*	1	AIR COMPRESSOR GP	315
Y	*311-7455*	1	ALTERNATOR GP-CHARGING	1577
Y	*301-8245*	1	BALANCER GP	317
Y	*298-5892*	1	CAMSHAFT GP	321
Y	*301-8248*	1	CONNECTION GP-INLET	776
Y	*301-8243*	1	CONNECTION GP-WATER	687
Y	*323-8846*	1	CONNECTOR GP-CAB HEATER LINES	689
Y	*304-6436*	1	CONTROL GP-ENGINE ELECTRONIC	1584
Y	*301-8241*	1	COOLER GP-OIL	697
Y	*301-8240*	1	COVER GP-VALVE MECHANISM	341
Y	*298-5888*	1	CRANKSHAFT GP	380
Y	*298-5887*	1	CYLINDER BLOCK GP	400
Y	*298-5890*	1	CYLINDER HEAD GP	419
Y	*316-7959*	1	DRIVE GP-FAN	436
Y	*314-5003*	1	FAN GP	707
Y	*298-5100*	1	FILTER GP-ENGINE OIL	678
Y	*298-5123*	1	FILTER GP-PRIMARY FUEL	1009
Y	*301-8251*	1	FILTER GP-WATER SEP & FUEL	1013
Y	*301-8237*	1	FLYWHEEL GP	455
Y	*298-5125*	1	GLOW PLUG GP	1586
Y	*301-8236*	1	HOUSING GP-FLYWHEEL	479
Y	*352-6361*	1	HOUSING GP-FRONT	509
Y	*299-5033*	1	LIFTING GP-ENGINE	512
Y	*311-2271*	1	LINES GP-FUEL FILTER	1050
Y	*311-4641*	1	MOUNTING GP-ENGINE	521
Y	*323-8843*	1	PAN GP-OIL	575
Y	*304-8762*	1	PIPE GP-EXHAUST	790
Y	*298-5889*	1	PISTON GP	621
Y	*298-5129*	1	PLUG GP-CYLINDER HEAD	629
Y	*298-5098*	1	PLUG GP-ENGINE	631
Y	*298-5128*	1	PLUG GP-ENGINE OIL MANIFOLD	680
Y	*360-7343*	1	PULLEY GP-CRANKSHAFT	652
Y	*305-6701*	1	PUMP GP-FUEL INJECTION	1303
Y	*298-5105*	1	PUMP GP-WATER	714
Y	*312-1672*	1	RADIATOR GP	738
Y	*325-5612*	1	STARTING MOTOR GP-ELECTRIC	1597
Y	*311-7456*	1	TURBOCHARGER GP	887
Y	*298-5891*	1	VALVE MECHANISM GP	661
Y	*352-6443*	1	WIRING GP-ENGINE	1617
R	**359-0737**	1	CYLINDER BLOCK GP-SHORT	
	305-8454	1	ELECTRONICS GP-ENGINE RATINGS	

R - REMANUFACTURED PART MAY BE AVAILABLE
Y - SEPARATE ILLUSTRATION

<END>

362-9386 ENGINE AR-PRIMARY

106 BRAKE KW (142 BHP) AT 2200 RPM

SMCS-1000 **i06691798**

NOTE	PART NUMBER	QTY	PART NAME 1 2 3 4 5 6 (PRODUCT LEVEL)	SEE PAGE
Y	*308-3351*	1	ALTERNATOR GP-CHARGING	1573
Y	*298-5090*	1	CAMSHAFT GP	320
Y	*298-5116*	1	CONNECTION GP-INLET	774
Y	*301-8243*	1	CONNECTION GP-WATER	687
Y	*304-6436*	1	CONTROL GP-ENGINE ELECTRONIC	1584
Y	*298-5099*	1	COOLER GP-ENGINE OIL	690
Y	*303-5772*	1	COVER GP-VALVE MECHANISM	347
Y	*298-5086*	1	CRANKSHAFT GP	378
Y	*298-5085*	1	CYLINDER BLOCK GP	398
Y	*298-5088*	1	CYLINDER HEAD GP	418
Y	*325-5613*	1	DRIVE GP-FAN	442
Y	*307-2849*	1	FAN GP	702
Y	*317-6399*	1	FASTENER GP-TURBOCHARGER	788
Y	*308-4158*	1	FILLER GP-ENGINE OIL	673
Y	*298-5100*	1	FILTER GP-ENGINE OIL	678
Y	*298-5123*	1	FILTER GP-PRIMARY FUEL	1009
Y	*301-8251*	1	FILTER GP-WATER SEP & FUEL	1013
Y	*351-9871*	1	FLYWHEEL GP	471
Y	*298-5125*	1	GLOW PLUG GP	1586
Y	*321-5596*	1	HOUSING GP-FLYWHEEL	489
Y	*304-8760*	1	HOUSING GP-FRONT	495
Y	*326-0478*	1	LIFTING GP-ENGINE	513
Y	*311-2271*	1	LINES GP-FUEL FILTER	1050
Y	*298-5771*	1	MOUNTING GP-ENGINE	514
Y	*344-8201*	1	PAN GP-OIL	589
			—OR—	
Y	*298-5096*	1	PAN GP-OIL	533
Y	*298-5087*	1	PISTON & ROD GP	609
Y	*298-5129*	1	PLUG GP-CYLINDER HEAD	629
Y	*298-5131*	1	PLUG GP-ENGINE	632
Y	*304-8761*	1	PLUG GP-ENGINE	636
Y	*298-5128*	1	PLUG GP-ENGINE OIL MANIFOLD	680
Y	*360-7346*	1	PULLEY GP-CRANKSHAFT	655
Y	**360-7355**	1	PULLEY GP-CRANKSHAFT	656
Y	*298-5112*	1	PUMP GP-ENGINE OIL	681
Y	*304-6570*	1	PUMP GP-FUEL INJECTION	1179
Y	*298-5105*	1	PUMP GP-WATER	714
Y	*298-5089*	1	ROCKER ARM GP	658
Y	*327-8999*	1	STARTING MOTOR GP-ELECTRIC	1598
			—OR—	
Y	*399-1113*	1	STARTING MOTOR GP-ELECTRIC	1601
Y	*303-5776*	1	TURBOCHARGER GP	821
Y	*298-5130*	1	WIRING GP-ENGINE	1604
	305-8457	1	ELECTRONICS GP-ENGINE RATINGS	

Y - SEPARATE ILLUSTRATION

<END>

362-9387 ENGINE AR-PRIMARY

82 BRAKE KW (110 BHP) AT 2200 RPM

SMCS-1000 **i06245041**

NOTE	PART NUMBER	QTY	PART NAME 1 2 3 4 5 6 (PRODUCT LEVEL)	SEE PAGE
Y	*308-3351*	1	ALTERNATOR GP-CHARGING	1573
Y	*298-5892*	1	CAMSHAFT GP	321
Y	*298-5116*	1	CONNECTION GP-INLET	774
Y	*301-8243*	1	CONNECTION GP-WATER	687
Y	*304-6436*	1	CONTROL GP-ENGINE ELECTRONIC	1584
Y	*298-5099*	1	COOLER GP-ENGINE OIL	690
Y	*303-5772*	1	COVER GP-VALVE MECHANISM	347
Y	*298-5888*	1	CRANKSHAFT GP	380
Y	*298-5887*	1	CYLINDER BLOCK GP	400
Y	*298-5890*	1	CYLINDER HEAD GP	419
Y	*325-5613*	1	DRIVE GP-FAN	442
Y	*307-2849*	1	FAN GP	702
Y	*317-6399*	1	FASTENER GP-TURBOCHARGER	788
Y	*308-4158*	1	FILLER GP-ENGINE OIL	673
Y	*298-5100*	1	FILTER GP-ENGINE OIL	678
Y	*298-5123*	1	FILTER GP-PRIMARY FUEL	1009
Y	*301-8251*	1	FILTER GP-WATER SEP & FUEL	1013
Y	*351-9871*	1	FLYWHEEL GP	471
Y	*298-5125*	1	GLOW PLUG GP	1586
Y	*321-5596*	1	HOUSING GP-FLYWHEEL	489
Y	*304-8760*	1	HOUSING GP-FRONT	495
Y	*326-0478*	1	LIFTING GP-ENGINE	513
Y	*311-2271*	1	LINES GP-FUEL FILTER	1050
Y	*298-5771*	1	MOUNTING GP-ENGINE	514
Y	*344-8201*	1	PAN GP-OIL	589
			—OR—	
Y	*298-5096*	1	PAN GP-OIL	533
Y	*298-5889*	1	PISTON GP	621
Y	*298-5129*	1	PLUG GP-CYLINDER HEAD	629
Y	*298-5131*	1	PLUG GP-ENGINE	632
Y	*304-8761*	1	PLUG GP-ENGINE	636
Y	*298-5128*	1	PLUG GP-ENGINE OIL MANIFOLD	680
Y	*360-7346*	1	PULLEY GP-CRANKSHAFT	655
Y	*360-7355*	1	PULLEY GP-CRANKSHAFT	656
Y	*298-5112*	1	PUMP GP-ENGINE OIL	681
Y	*307-2847*	1	PUMP GP-FUEL INJECTION	1323
Y	*298-5105*	1	PUMP GP-WATER	714
Y	*327-8999*	1	STARTING MOTOR GP-ELECTRIC	1598
			S/N: 4441-21542	
Y	*399-1113*	1	STARTING MOTOR GP-ELECTRIC	1601
			S/N: 44421543-UP	
Y	*303-5776*	1	TURBOCHARGER GP	821
Y	*298-5891*	1	VALVE MECHANISM GP	661
Y	*298-5130*	1	WIRING GP-ENGINE	1604
R	**359-0737**	1	CYLINDER BLOCK GP-SHORT	
	307-2848	1	ELECTRONICS GP-ENGINE RATINGS	

362-9387 **ENGINE AR-PRIMARY (**contd.**)** **i06245041**

NOTE	PART NUMBER	QTY	PART NAME 1 2 3 4 5 6 (PRODUCT LEVEL)	SEE PAGE
R - REMANUFACTURED PART MAY BE AVAILABLE Y - SEPARATE ILLUSTRATION				

<END>

382-0821 ENGINE AR-PRIMARY

97 BRAKE KW (129 BHP) AT 2200 RPM

SMCS-1000 **i05014019**

NOTE	PART NUMBER	QTY	PART NAME 1 2 3 4 5 6 (PRODUCT LEVEL)	SEE PAGE
Y	*311-4639*	1	ALTERNATOR GP-CHARGING	1575
Y	*298-5892*	1	CAMSHAFT GP	321
Y	*301-8243*	1	CONNECTION GP-WATER	687
Y	*304-6436*	1	CONTROL GP-ENGINE ELECTRONIC	1584
Y	*298-5099*	1	COOLER GP-ENGINE OIL	690
Y	*298-5111*	1	COVER GP-ENGINE	332
Y	*301-8240*	1	COVER GP-VALVE MECHANISM	341
Y	*298-5888*	1	CRANKSHAFT GP	380
Y	*298-5887*	1	CYLINDER BLOCK GP	400
Y	*298-5890*	1	CYLINDER HEAD GP	419
Y	*311-4644*	1	DRIVE GP-FAN	433
Y	*326-4488*	1	FAN GP	711
Y	*298-5100*	1	FILTER GP-ENGINE OIL	678
Y	*298-5123*	1	FILTER GP-PRIMARY FUEL	1009
Y	*301-8251*	1	FILTER GP-WATER SEP & FUEL	1013
Y	*301-8237*	1	FLYWHEEL GP	455
Y	*298-5110*	1	GEAR GP-FRONT	475
Y	*299-5075*	1	GLOW PLUG GP	1587
Y	*299-5057*	1	HOUSING GP-FLYWHEEL	478
Y	*299-5033*	1	LIFTING GP-ENGINE	512
Y	*311-2271*	1	LINES GP-FUEL FILTER	1050
Y	*311-8537*	1	MOUNTING GP-ENGINE	522
Y	*298-5096*	1	PAN GP-OIL	533
Y	*304-8762*	1	PIPE GP-EXHAUST	790
Y	*298-5889*	1	PISTON GP	621
Y	*298-5129*	1	PLUG GP-CYLINDER HEAD	629
Y	*298-5098*	1	PLUG GP-ENGINE	631
Y	*298-5131*	1	PLUG GP-ENGINE	632
Y	*298-5128*	1	PLUG GP-ENGINE OIL MANIFOLD	680
Y	*360-7343*	1	PULLEY GP-CRANKSHAFT	652
Y	*298-5112*	1	PUMP GP-ENGINE OIL	681
Y	*303-4615*	1	PUMP GP-FUEL INJECTION	1134
Y	*298-5105*	1	PUMP GP-WATER	714
Y	*299-5067*	1	STARTING MOTOR GP-ELECTRIC	1591
Y	*307-2850*	1	TURBOCHARGER GP	857
Y	*298-5891*	1	VALVE MECHANISM GP	661
Y	*298-5130*	1	WIRING GP-ENGINE	1604
R	**359-0737**	1	CYLINDER BLOCK GP-SHORT	
	305-8458	1	ELECTRONICS GP-ENGINE RATINGS	

R - REMANUFACTURED PART MAY BE AVAILABLE
Y - SEPARATE ILLUSTRATION

<END>

382-0822 ENGINE AR-PRIMARY

97 BRAKE KW 9129 GHP) AT 2200 RPM

SMCS-1000 **i05014335**

NOTE	PART NUMBER	QTY	PART NAME 1 2 3 4 5 6 (PRODUCT LEVEL)	SEE PAGE
Y	*311-4639*	1	ALTERNATOR GP-CHARGING	1575
Y	*298-5892*	1	CAMSHAFT GP	321
Y	*301-8243*	1	CONNECTION GP-WATER	687
Y	*304-6436*	1	CONTROL GP-ENGINE ELECTRONIC	1584
Y	*298-5099*	1	COOLER GP-ENGINE OIL	690
Y	*298-5111*	1	COVER GP-ENGINE	332
Y	*301-8240*	1	COVER GP-VALVE MECHANISM	341
Y	*298-5888*	1	CRANKSHAFT GP	380
Y	*298-5887*	1	CYLINDER BLOCK GP	400
Y	*298-5890*	1	CYLINDER HEAD GP	419
Y	*311-4644*	1	DRIVE GP-FAN	433
Y	*326-4488*	1	FAN GP	711
Y	*298-5100*	1	FILTER GP-ENGINE OIL	678
Y	*298-5123*	1	FILTER GP-PRIMARY FUEL	1009
Y	*301-8251*	1	FILTER GP-WATER SEP & FUEL	1013
Y	*301-8237*	1	FLYWHEEL GP	455
Y	*298-5110*	1	GEAR GP-FRONT	475
Y	*299-5075*	1	GLOW PLUG GP	1587
Y	*299-5057*	1	HOUSING GP-FLYWHEEL	478
Y	*299-5033*	1	LIFTING GP-ENGINE	512
Y	*311-2271*	1	LINES GP-FUEL FILTER	1050
Y	*311-8537*	1	MOUNTING GP-ENGINE	522
Y	*298-5096*	1	PAN GP-OIL	533
Y	*304-8762*	1	PIPE GP-EXHAUST	790
Y	*298-5889*	1	PISTON GP	621
Y	*298-5129*	1	PLUG GP-CYLINDER HEAD	629
Y	*298-5098*	1	PLUG GP-ENGINE	631
Y	*298-5131*	1	PLUG GP-ENGINE	632
Y	*298-5128*	1	PLUG GP-ENGINE OIL MANIFOLD	680
Y	*360-7343*	1	PULLEY GP-CRANKSHAFT	652
Y	*298-5112*	1	PUMP GP-ENGINE OIL	681
Y	*303-4615*	1	PUMP GP-FUEL INJECTION	1134
Y	*298-5105*	1	PUMP GP-WATER	714
Y	*299-5067*	1	STARTING MOTOR GP-ELECTRIC	1591
Y	*307-2850*	1	TURBOCHARGER GP	857
Y	*298-5891*	1	VALVE MECHANISM GP	661
Y	*298-5130*	1	WIRING GP-ENGINE	1604
R	**359-0737**	1	CYLINDER BLOCK GP-SHORT	
	305-8458	1	ELECTRONICS GP-ENGINE RATINGS	

R - REMANUFACTURED PART MAY BE AVAILABLE
Y - SEPARATE ILLUSTRATION

<END>

384-6663 ENGINE AR-PRIMARY

93 BRAKE KW (125 BHP) AT 2200 RPM

SMCS-1000 **i06656341**

NOTE	PART NUMBER	QTY	PART NAME 1 2 3 4 5 6 (PRODUCT LEVEL)	SEE PAGE
Y	*330-4296*	1	ALTERNATOR GP-CHARGING	1582
Y	*303-5775*	1	ADAPTER GP-AUXILIARY DRIVE	300
Y	*298-5892*	1	CAMSHAFT GP	321
Y	*298-5107*	1	CONNECTION GP-WATER	685
Y	*304-6436*	1	CONTROL GP-ENGINE ELECTRONIC	1584
Y	*298-5099*	1	COOLER GP-ENGINE OIL	690
Y	*304-5574*	1	COVER GP-VALVE MECHANISM	351
Y	*298-5888*	1	CRANKSHAFT GP	380
Y	*298-5887*	1	CYLINDER BLOCK GP	400
Y	*298-5890*	1	CYLINDER HEAD GP	419
Y	*416-4358*	1	DRIVE GP-FAN	451
Y	*299-5167*	1	ELBOW GP-AIR INLET	784
Y	*317-6399*	1	FASTENER GP-TURBOCHARGER	788
Y	*298-5100*	1	FILTER GP-ENGINE OIL	678
Y	*298-5123*	1	FILTER GP-PRIMARY FUEL	1009
Y	*301-8251*	1	FILTER GP-WATER SEP & FUEL	1013
Y	*351-9871*	1	FLYWHEEL GP	471
Y	*298-5110*	1	GEAR GP-FRONT	475
Y	*298-5125*	1	GLOW PLUG GP	1586
Y	*321-5596*	1	HOUSING GP-FLYWHEEL	489
Y	*298-5127*	1	LIFTING GP-ENGINE	511
Y	*311-2271*	1	LINES GP-FUEL FILTER	1050
Y	*298-5771*	1	MOUNTING GP-ENGINE	514
Y	*299-5175*	1	PAN GP-OIL	537
			—OR—	
Y	*399-1114*	1	PAN GP-OIL	607
Y	*298-5889*	1	PISTON GP	621
Y	*298-5129*	1	PLUG GP-CYLINDER HEAD	629
Y	*298-5098*	1	PLUG GP-ENGINE	631
Y	*298-5131*	1	PLUG GP-ENGINE	632
Y	*298-5128*	1	PLUG GP-ENGINE OIL MANIFOLD	680
Y	*360-7343*	1	PULLEY GP-CRANKSHAFT	652
Y	*298-5112*	1	PUMP GP-ENGINE OIL	681
Y	*304-8755*	1	PUMP GP-FUEL INJECTION	1244
Y	*298-5105*	1	PUMP GP-WATER	714
Y	*399-1113*	1	STARTING MOTOR GP-ELECTRIC	1601
Y	*303-4622*	1	TURBOCHARGER GP	812
Y	*298-5891*	1	VALVE MECHANISM GP	661
Y	*298-5130*	1	WIRING GP-ENGINE	1604
R	**359-0737**	1	CYLINDER BLOCK GP-SHORT	
	305-8456	1	ELECTRONICS GP-ENGINE RATINGS	

R - REMANUFACTURED PART MAY BE AVAILABLE
Y - SEPARATE ILLUSTRATION

<END>

384-6665 ENGINE AR-PRIMARY

SMCS-1000 **i05428610**

NOTE	PART NUMBER	QTY	PART NAME 1 2 3 4 5 6 (PRODUCT LEVEL)	SEE PAGE
Y	*304-3648*	1	CAMSHAFT GP	322
Y	*298-5107*	1	CONNECTION GP-WATER	685
Y	*304-6436*	1	CONTROL GP-ENGINE ELECTRONIC	1584
Y	*298-5099*	1	COOLER GP-ENGINE OIL	690
Y	*305-2169*	1	COVER GP-INLET MANIFOLD	782
Y	*298-5097*	1	COVER GP-VALVE MECHANISM	335
Y	*304-3642*	1	CRANKSHAFT GP	382
Y	*304-3641*	1	CYLINDER BLOCK GP	402
Y	*304-3645*	1	CYLINDER HEAD GP	420
Y	*397-3885*	1	DRIVE GP-FAN	450
Y	*298-5100*	1	FILTER GP-ENGINE OIL	678
Y	*305-0642*	1	FILTER GP-FUEL	1000
Y	*301-8251*	1	FILTER GP-WATER SEP & FUEL	1013
Y	*397-3888*	1	FLYWHEEL GP	474
Y	*298-5125*	1	GLOW PLUG GP	1586
Y	*397-3886*	1	HOUSING GP-FLYWHEEL	491
Y	*304-8760*	1	HOUSING GP-FRONT	495
Y	*298-5127*	1	LIFTING GP-ENGINE	511
Y	*314-9819*	1	LINES GP-FUEL FILTER	1056
Y	*299-5082*	1	MOUNTING GP-FAN	713
Y	*322-8424*	1	PAN GP-OIL	571
Y	*304-8762*	1	PIPE GP-EXHAUST	790
Y	*304-3643*	1	PISTON & ROD GP	613
Y	*397-3889*	1	PLUG GP-ENGINE	642
Y	*298-5129*	1	PLUG GP-CYLINDER HEAD	629
Y	*298-5131*	1	PLUG GP-ENGINE	632
Y	*304-8761*	1	PLUG GP-ENGINE	636
Y	*312-2578*	1	PLUG GP-ENGINE	639
Y	*298-5128*	1	PLUG GP-ENGINE OIL MANIFOLD	680
Y	*360-7342*	1	PULLEY GP-CRANKSHAFT	651
Y	*298-5112*	1	PUMP GP-ENGINE OIL	681
Y	*313-4350*	1	PUMP GP-FUEL INJECTION	1398
Y	*298-5105*	1	PUMP GP-WATER	714
Y	*339-1795*	1	TURBOCHARGER GP	968
Y	*304-3647*	1	VALVE MECHANISM GP	663
Y	*298-5130*	1	WIRING GP-ENGINE	1604
R	**359-0737**	1	CYLINDER BLOCK GP-SHORT	
	305-8460	1	ELECTRONICS GP-ENGINE RATINGS	

R - REMANUFACTURED PART MAY BE AVAILABLE
Y - SEPARATE ILLUSTRATION

<END>

384-6670 ENGINE AR-PRIMARY

94 BRAKE KW (126 BHP) AT 2400 RPM

SMCS-1000 **i06617559**

NOTE	PART NUMBER	QTY	PART NAME 1 2 3 4 5 6 (PRODUCT LEVEL)	SEE PAGE
Y	*308-4275*	1	ADAPTER GP-AUXILIARY DRIVE	306
Y	*311-4639*	1	ALTERNATOR GP-CHARGING	1575
Y	*298-5892*	1	CAMSHAFT GP	321
Y	*301-8248*	1	CONNECTION GP-INLET	776
Y	*301-8243*	1	CONNECTION GP-WATER	687
Y	*304-6436*	1	CONTROL GP-ENGINE ELECTRONIC	1584
Y	*298-5099*	1	COOLER GP-ENGINE OIL	690
Y	*298-5097*	1	COVER GP-VALVE MECHANISM	335
Y	*298-5888*	1	CRANKSHAFT GP	380
Y	*298-5887*	1	CYLINDER BLOCK GP	400
YR	*359-0737*	1	CYLINDER BLOCK GP-SHORT	415
Y	*298-5890*	1	CYLINDER HEAD GP	419
Y	*311-4644*	1	DRIVE GP-FAN	433
Y	*311-4640*	1	FAN GP	704
Y	*298-5100*	1	FILTER GP-ENGINE OIL	678
Y	*303-5780*	1	FILTER GP-FUEL	999
Y	*298-5123*	1	FILTER GP-PRIMARY FUEL	1009
Y	*301-8237*	1	FLYWHEEL GP	455
Y	*298-5110*	1	GEAR GP-FRONT	475
Y	*299-5075*	1	GLOW PLUG GP	1587
Y	*303-4618*	1	HOUSING GP-FLYWHEEL	481
Y	*299-5033*	1	LIFTING GP-ENGINE	512
Y	*311-2271*	1	LINES GP-FUEL FILTER	1050
Y	*311-4641*	1	MOUNTING GP-ENGINE	521
Y	*298-5096*	1	PAN GP-OIL	533
Y	*304-8762*	1	PIPE GP-EXHAUST	790
Y	*298-5889*	1	PISTON GP	621
Y	*298-5129*	1	PLUG GP-CYLINDER HEAD	629
Y	*298-5098*	1	PLUG GP-ENGINE	631
Y	*298-5131*	1	PLUG GP-ENGINE (THREADED)	632
Y	*360-7343*	1	PULLEY GP-CRANKSHAFT	652
Y	*298-5112*	1	PUMP GP-ENGINE OIL	681
Y	*298-5893*	1	PUMP GP-FUEL INJECTION	1089
Y	*298-5105*	1	PUMP GP-WATER	714
Y	*312-1672*	1	RADIATOR GP	738
Y	*299-5067*	1	STARTING MOTOR GP-ELECTRIC	1591
Y	*307-2850*	1	TURBOCHARGER GP	857
Y	*318-3637*	1	VALVE GP-FLUID SAMPLING	683
Y	*298-5891*	1	VALVE MECHANISM GP	661
Y	*298-5130*	1	WIRING GP-ENGINE	1604
	298-5883	1	SOFTWARE GP-ENG RATINGS ELEK	

R - REMANUFACTURED PART MAY BE AVAILABLE
Y - SEPARATE ILLUSTRATION

<END>

386-1197 ENGINE AR-PRIMARY

75 BRAKE KW (100 BHP) AT 2400 RPM

SMCS-1000 **i04892141**

NOTE	PART NUMBER	QTY	PART NAME 1 2 3 4 5 6 (PRODUCT LEVEL)	SEE PAGE
Y	*308-3351*	1	ALTERNATOR GP-CHARGING	1573
Y	*304-3648*	1	CAMSHAFT GP	322
Y	*301-8243*	1	CONNECTION GP-WATER	687
Y	*304-6436*	1	CONTROL GP-ENGINE ELECTRONIC	1584
Y	*298-5099*	1	COOLER GP-ENGINE OIL	690
Y	*298-5111*	1	COVER GP-ENGINE	332
Y	*305-0640*	1	COVER GP-INLET MANIFOLD	780
Y	*298-5097*	1	COVER GP-VALVE MECHANISM	335
Y	*304-3642*	1	CRANKSHAFT GP	382
Y	*304-3641*	1	CYLINDER BLOCK GP	402
Y	*304-3645*	1	CYLINDER HEAD GP	420
Y	*298-5095*	1	DRIVE GP-FAN	425
Y	*326-4488*	1	FAN GP	711
Y	*298-5100*	1	FILTER GP-ENGINE OIL	678
Y	*305-0642*	1	FILTER GP-FUEL	1000
Y	*301-8251*	1	FILTER GP-WATER SEP & FUEL	1013
Y	*339-1787*	1	FLYWHEEL GP	469
Y	*298-5110*	1	GEAR GP-FRONT	475
Y	*298-5125*	1	GLOW PLUG GP	1586
Y	*321-5596*	1	HOUSING GP-FLYWHEEL	489
Y	*326-0478*	1	LIFTING GP-ENGINE	513
Y	*311-2271*	1	LINES GP-FUEL FILTER	1050
Y	*298-5771*	1	MOUNTING GP-ENGINE	514
Y	*344-8201*	1	PAN GP-OIL	589
Y	*304-3643*	1	PISTON & ROD GP	613
Y	*298-5129*	1	PLUG GP-CYLINDER HEAD	629
Y	*298-5098*	1	PLUG GP-ENGINE	631
Y	*298-5131*	1	PLUG GP-ENGINE	632
Y	*298-5128*	1	PLUG GP-ENGINE OIL MANIFOLD	680
Y	*360-7346*	1	PULLEY GP-CRANKSHAFT	655
Y	*298-5112*	1	PUMP GP-ENGINE OIL	681
Y	*339-1745*	1	PUMP GP-FUEL INJECTION	1525
Y	*298-5105*	1	PUMP GP-WATER	714
Y	*327-8999*	1	STARTING MOTOR GP-ELECTRIC	1598
Y	*325-0585*	1	TURBOCHARGER GP	914
Y	*304-3647*	1	VALVE MECHANISM GP	663
Y	*298-5130*	1	WIRING GP-ENGINE	1604
R	**359-0737**	1	CYLINDER BLOCK GP-SHORT	
	339-1786	1	ELECTRONICS GP-ENGINE RATINGS	

R - REMANUFACTURED PART MAY BE AVAILABLE
Y - SEPARATE ILLUSTRATION

<END>

386-1198 ENGINE AR-PRIMARY

94 BRAKE KW (126 BHP) AT 2400 RPM

SMCS-1000 **i06830559**

NOTE	PART NUMBER	QTY	PART NAME 1 2 3 4 5 6 (PRODUCT LEVEL)	SEE PAGE
Y	*308-3351*	1	ALTERNATOR GP-CHARGING	1573
Y	*298-5892*	1	CAMSHAFT GP	321
Y	*298-5116*	1	CONNECTION GP-INLET	774
Y	*301-8243*	1	CONNECTION GP-WATER	687
Y	*304-6436*	1	CONTROL GP-ENGINE ELECTRONIC	1584
Y	*298-5099*	1	COOLER GP-ENGINE OIL	690
Y	*298-5111*	1	COVER GP-ENGINE	332
Y	*298-5097*	1	COVER GP-VALVE MECHANISM	335
Y	*298-5888*	1	CRANKSHAFT GP	380
Y	*298-5887*	1	CYLINDER BLOCK GP	400
Y	*298-5890*	1	CYLINDER HEAD GP	419
Y	*298-5095*	1	DRIVE GP-FAN	425
Y	*326-4488*	1	FAN GP	711
Y	*298-5100*	1	FILTER GP-ENGINE OIL	678
Y	*298-5123*	1	FILTER GP-PRIMARY FUEL	1009
Y	*301-8251*	1	FILTER GP-WATER SEP & FUEL	1013
Y	*298-5093*	1	FLYWHEEL GP	453
Y	*298-5110*	1	GEAR GP-FRONT	475
Y	*298-5125*	1	GLOW PLUG GP	1586
Y	*321-5596*	1	HOUSING GP-FLYWHEEL	489
Y	*326-0478*	1	LIFTING GP-ENGINE	513
Y	*311-2271*	1	LINES GP-FUEL FILTER	1050
Y	*298-5771*	1	MOUNTING GP-ENGINE	514
Y	*344-8201*	1	PAN GP-OIL	589
Y	*298-5889*	1	PISTON GP	621
Y	*298-5129*	1	PLUG GP-CYLINDER HEAD	629
Y	*298-5098*	1	PLUG GP-ENGINE	631
Y	*298-5131*	1	PLUG GP-ENGINE	632
Y	*298-5128*	1	PLUG GP-ENGINE OIL MANIFOLD	680
Y	*360-7346*	1	PULLEY GP-CRANKSHAFT	655
Y	*298-5112*	1	PUMP GP-ENGINE OIL	681
Y	*320-2398*	1	PUMP GP-FUEL INJECTION	1488
Y	*298-5105*	1	PUMP GP-WATER	714
Y	*327-8999*	1	STARTING MOTOR GP-ELECTRIC	1598
Y	*308-0305*	1	TURBOCHARGER GP	869
Y	*298-5891*	1	VALVE MECHANISM GP	661
Y	*298-5130*	1	WIRING GP-ENGINE	1604
R	**359-0737**	1	CYLINDER BLOCK GP-SHORT	
	320-2401	1	ELECTRONICS GP-ENGINE RATINGS	

R - REMANUFACTURED PART MAY BE AVAILABLE
Y - SEPARATE ILLUSTRATION

<END>

386-1199 ENGINE AR-PRIMARY

105 BRAKE KW (141 BHP) AT 2400 RPM

SMCS-1000 **i06830568**

NOTE	PART NUMBER	QTY	PART NAME 1 2 3 4 5 6 (PRODUCT LEVEL)	SEE PAGE
Y	*308-3351*	1	ALTERNATOR GP-CHARGING	1573
Y	*298-5090*	1	CAMSHAFT GP	320
Y	*298-5116*	1	CONNECTION GP-INLET	774
Y	*301-8243*	1	CONNECTION GP-WATER	687
Y	*304-6436*	1	CONTROL GP-ENGINE ELECTRONIC	1584
Y	*298-5099*	1	COOLER GP-ENGINE OIL	690
Y	*298-5111*	1	COVER GP-ENGINE	332
Y	*298-5097*	1	COVER GP-VALVE MECHANISM	335
Y	*298-5086*	1	CRANKSHAFT GP	378
Y	*298-5085*	1	CYLINDER BLOCK GP	398
Y	*298-5088*	1	CYLINDER HEAD GP	418
Y	*298-5095*	1	DRIVE GP-FAN	425
Y	*326-4488*	1	FAN GP	711
Y	*298-5100*	1	FILTER GP-ENGINE OIL	678
Y	*298-5123*	1	FILTER GP-PRIMARY FUEL	1009
Y	*301-8251*	1	FILTER GP-WATER SEP & FUEL	1013
Y	*298-5093*	1	FLYWHEEL GP	453
Y	*298-5110*	1	GEAR GP-FRONT	475
Y	*298-5125*	1	GLOW PLUG GP	1586
Y	*321-5596*	1	HOUSING GP-FLYWHEEL	489
Y	*326-0478*	1	LIFTING GP-ENGINE	513
Y	*311-2271*	1	LINES GP-FUEL FILTER	1050
Y	*298-5771*	1	MOUNTING GP-ENGINE	514
Y	*344-8201*	1	PAN GP-OIL	589
Y	*298-5087*	1	PISTON & ROD GP	609
Y	*298-5129*	1	PLUG GP-CYLINDER HEAD	629
Y	*298-5098*	1	PLUG GP-ENGINE	631
Y	*298-5131*	1	PLUG GP-ENGINE	632
Y	*298-5128*	1	PLUG GP-ENGINE OIL MANIFOLD	680
Y	*360-7346*	1	PULLEY GP-CRANKSHAFT	655
Y	*298-5112*	1	PUMP GP-ENGINE OIL	681
Y	*320-2397*	1	PUMP GP-FUEL INJECTION	1473
Y	*298-5105*	1	PUMP GP-WATER	714
Y	*298-5089*	1	ROCKER ARM GP	658
Y	*327-8999*	1	STARTING MOTOR GP-ELECTRIC	1598
Y	*308-0305*	1	TURBOCHARGER GP	869
Y	*298-5130*	1	WIRING GP-ENGINE	1604
R	**359-0739**	1	CYLINDER BLOCK GP-SHORT	
	320-2399	1	ELECTRONICS GP-ENGINE RATINGS	

R - REMANUFACTURED PART MAY BE AVAILABLE
Y - SEPARATE ILLUSTRATION

<END>

386-1203 ENGINE AR-PRIMARY

95 BRAKE KW (127 BHPO AT 2200 RPM

SMCS-1000 **i06830570**

NOTE	PART NUMBER	QTY	PART NAME 1 2 3 4 5 6 (PRODUCT LEVEL)	SEE PAGE
Y	*308-4275*	1	ADAPTER GP-AUXILIARY DRIVE	306
Y	*308-3351*	1	ALTERNATOR GP-CHARGING	1573
Y	*301-8245*	1	BALANCER GP	317
Y	*298-5892*	1	CAMSHAFT GP	321
Y	*301-8243*	1	CONNECTION GP-WATER	687
Y	*304-6436*	1	CONTROL GP-ENGINE ELECTRONIC	1584
Y	*301-8241*	1	COOLER GP-OIL	697
Y	*301-8240*	1	COVER GP-VALVE MECHANISM	341
Y	*298-5888*	1	CRANKSHAFT GP	380
Y	*298-5887*	1	CYLINDER BLOCK GP	400
Y	*298-5890*	1	CYLINDER HEAD GP	419
Y	*378-3549*	1	DRIVE GP-FAN	447
Y	*318-0775*	1	FILLER GP-ENGINE OIL	676
Y	*298-5100*	1	FILTER GP-ENGINE OIL	678
Y	*298-5123*	1	FILTER GP-PRIMARY FUEL	1009
Y	*301-8251*	1	FILTER GP-WATER SEP & FUEL	1013
Y	*301-8237*	1	FLYWHEEL GP	455
Y	*298-5110*	1	GEAR GP-FRONT	475
Y	*301-8236*	1	HOUSING GP-FLYWHEEL	479
Y	*299-5033*	1	LIFTING GP-ENGINE	512
Y	*311-2271*	1	LINES GP-FUEL FILTER	1050
Y	*299-5082*	1	MOUNTING GP-FAN	713
Y	*301-8239*	1	PAN GP-OIL	541
Y	*304-8762*	1	PIPE GP-EXHAUST	790
Y	*298-5889*	1	PISTON GP	621
Y	*298-5129*	1	PLUG GP-CYLINDER HEAD	629
Y	*298-5131*	1	PLUG GP-ENGINE	632
Y	*301-8250*	1	PLUG GP-ENGINE	633
Y	*298-5128*	2	PLUG GP-ENGINE OIL MANIFOLD	680
Y	*360-7346*	1	PULLEY GP-CRANKSHAFT	655
Y	*305-6701*	1	PUMP GP-FUEL INJECTION	1303
Y	*298-5105*	1	PUMP GP-WATER	714
Y	*325-5612*	1	STARTING MOTOR GP-ELECTRIC	1597
Y	*308-4277*	1	TURBOCHARGER GP	881
Y	*298-5891*	1	VALVE MECHANISM GP	661
Y	*298-5130*	1	WIRING GP-ENGINE	1604
R	**359-0737**	1	CYLINDER BLOCK GP-SHORT	
	305-8454	1	ELECTRONICS GP-ENGINE RATINGS	

R - REMANUFACTURED PART MAY BE AVAILABLE
Y - SEPARATE ILLUSTRATION

<END>

386-1205 ENGINE AR-PRIMARY

85 BRAKE KW (114 BHP) AT 2200 RPM

SMCS-1000 **i06830575**

NOTE	PART NUMBER	QTY	PART NAME 1 2 3 4 5 6 (PRODUCT LEVEL)	SEE PAGE
Y	*301-8245*	1	BALANCER GP	317
Y	*298-5892*	1	CAMSHAFT GP	321
Y	*298-5116*	1	CONNECTION GP-INLET	774
Y	*301-8243*	1	CONNECTION GP-WATER	687
Y	*304-6436*	1	CONTROL GP-ENGINE ELECTRONIC	1584
Y	*308-4159*	1	COOLER GP-OIL	700
Y	*303-5772*	1	COVER GP-VALVE MECHANISM	347
Y	*298-5888*	1	CRANKSHAFT GP	380
Y	*298-5887*	1	CYLINDER BLOCK GP	400
Y	*298-5890*	1	CYLINDER HEAD GP	419
Y	*308-4156*	1	DRIVE GP-FAN	431
Y	*308-4158*	1	FILLER GP-ENGINE OIL	673
Y	*316-1100*	1	FILTER GP-FUEL	1004
Y	*298-5125*	1	GLOW PLUG GP	1586
Y	*304-8760*	1	HOUSING GP-FRONT	495
Y	*299-5033*	1	LIFTING GP-ENGINE	512
Y	*316-1179*	1	LINES GP-FUEL	1033
Y	*308-4157*	1	PAN GP-OIL	561
Y	*298-5889*	1	PISTON GP	621
Y	*298-5129*	1	PLUG GP-CYLINDER HEAD	629
Y	*298-5131*	1	PLUG GP-ENGINE	632
Y	*304-8761*	1	PLUG GP-ENGINE	636
Y	*298-5128*	1	PLUG GP-ENGINE OIL MANIFOLD	680
Y	*360-7343*	1	PULLEY GP-CRANKSHAFT	652
Y	*317-7967*	1	PUMP GP-FUEL INJECTION	1443
Y	*298-5105*	1	PUMP GP-WATER	714
Y	*329-9129*	1	TURBOCHARGER GP	948
Y	*298-5891*	1	VALVE MECHANISM GP	661
Y	*316-1102*	1	WIRING GP-ENGINE	1613
R	**359-0737**	1	CYLINDER BLOCK GP-SHORT	
	317-7971	1	ELECTRONICS GP-ENGINE RATINGS	

R - REMANUFACTURED PART MAY BE AVAILABLE
Y - SEPARATE ILLUSTRATION

<END>

386-1206 ENGINE AR-PRIMARY

75 BRAKE KW (100 BHP) AT 2200 RPM

SMCS-1000 **i06830576**

NOTE	PART NUMBER	QTY	PART NAME 1 2 3 4 5 6 (PRODUCT LEVEL)	SEE PAGE
Y	*301-8245*	1	BALANCER GP	317
Y	*298-5090*	1	CAMSHAFT GP	320
Y	*301-8248*	1	CONNECTION GP-INLET	776
Y	*301-8243*	1	CONNECTION GP-WATER	687
Y	*304-6436*	1	CONTROL GP-ENGINE ELECTRONIC	1584
Y	*301-8241*	1	COOLER GP-OIL	697
Y	*298-5111*	1	COVER GP-ENGINE	332
Y	*298-5097*	1	COVER GP-VALVE MECHANISM	335
Y	*298-5086*	1	CRANKSHAFT GP	378
Y	*298-5085*	1	CYLINDER BLOCK GP	398
Y	*298-5088*	1	CYLINDER HEAD GP	418
Y	*330-3666*	1	DRIVE GP-FAN	444
Y	*318-0775*	1	FILLER GP-ENGINE OIL	676
Y	*298-5100*	1	FILTER GP-ENGINE OIL	678
Y	*298-5123*	1	FILTER GP-PRIMARY FUEL	1009
Y	*301-8251*	1	FILTER GP-WATER SEP & FUEL	1013
Y	*298-5110*	1	GEAR GP-FRONT	475
Y	*298-5125*	1	GLOW PLUG GP	1586
Y	*299-5033*	1	LIFTING GP-ENGINE	512
Y	*311-2271*	1	LINES GP-FUEL FILTER	1050
Y	*304-0730*	1	MOUNTING GP-ENGINE	518
Y	*299-5082*	1	MOUNTING GP-FAN	713
Y	*301-8239*	1	PAN GP-OIL	541
Y	*298-5087*	1	PISTON & ROD GP	609
Y	*298-5129*	1	PLUG GP-CYLINDER HEAD	629
Y	*298-5131*	1	PLUG GP-ENGINE	632
Y	*298-5128*	1	PLUG GP-ENGINE OIL MANIFOLD	680
Y	*360-7346*	1	PULLEY GP-CRANKSHAFT	655
Y	*304-7192*	1	PUMP GP-FUEL INJECTION	1224
Y	*298-5105*	1	PUMP GP-WATER	714
Y	*304-0729*	1	TURBOCHARGER GP	824
Y	*298-5130*	1	WIRING GP-ENGINE	1604
R	**359-0739**	1	CYLINDER BLOCK GP-SHORT	
	305-8462	1	ELECTRONICS GP-ENGINE RATINGS	

R - REMANUFACTURED PART MAY BE AVAILABLE
Y - SEPARATE ILLUSTRATION

<END>

386-1207 ENGINE AR-PRIMARY

75 BRAKE KW (100 BHP) AT 2200 RPM

AN ATTACHMENT

SMCS-1000 **i05014418**

NOTE	PART NUMBER	QTY	PART NAME 1 2 3 4 5 6 (PRODUCT LEVEL)	SEE PAGE
Y	*301-8245*	1	BALANCER GP	317
Y	*308-4152*	1	CAMSHAFT GP	323
Y	*298-5116*	1	CONNECTION GP-INLET	774
Y	*301-8243*	1	CONNECTION GP-WATER	687
Y	*304-6436*	1	CONTROL GP-ENGINE ELECTRONIC	1584
Y	*308-4159*	1	COOLER GP-OIL	700
Y	*303-5772*	1	COVER GP-VALVE MECHANISM	347
Y	*308-4146*	1	CRANKSHAFT GP	384
Y	*308-4145*	1	CYLINDER BLOCK GP	404
Y	*308-4150*	1	CYLINDER HEAD GP	421
Y	*308-4156*	1	DRIVE GP-FAN	431
Y	*308-4158*	1	FILLER GP-ENGINE OIL	673
Y	*316-1100*	1	FILTER GP-FUEL	1004
Y	*298-5125*	1	GLOW PLUG GP	1586
Y	*304-8760*	1	HOUSING GP-FRONT	495
Y	*299-5033*	1	LIFTING GP-ENGINE	512
Y	*316-1179*	1	LINES GP-FUEL	1033
Y	*308-4157*	1	PAN GP-OIL	561
Y	*308-4149*	1	PISTON & ROD GP	617
Y	*298-5129*	1	PLUG GP-CYLINDER HEAD	629
Y	*298-5131*	1	PLUG GP-ENGINE	632
Y	*304-8761*	1	PLUG GP-ENGINE	636
Y	*298-5128*	1	PLUG GP-ENGINE OIL MANIFOLD	680
Y	*360-7343*	1	PULLEY GP-CRANKSHAFT	652
Y	*316-1109*	1	PUMP GP-FUEL INJECTION	1423
Y	*298-5105*	1	PUMP GP-WATER	714
Y	*329-9129*	1	TURBOCHARGER GP	948
Y	*308-4151*	1	VALVE MECHANISM GP	665
Y	*316-1102*	1	WIRING GP-ENGINE	1613
	359-0738	1	CYLINDER BLOCK GP-SHORT	
	316-1199	1	ELECTRONICS GP-ENGINE RATINGS	

Y - SEPARATE ILLUSTRATION

<END>

386-1208 ENGINE AR-PRIMARY

86 BRAKE KW (115 BHP) AT 2200 RPM

SMCS-1000 **i05014422**

NOTE	PART NUMBER	QTY	PART NAME 1 2 3 4 5 6 (PRODUCT LEVEL)	SEE PAGE
Y	*301-8245*	1	BALANCER GP	317
Y	*308-4152*	1	CAMSHAFT GP	323
Y	*298-5116*	1	CONNECTION GP-INLET	774
Y	*301-8243*	1	CONNECTION GP-WATER	687
Y	*304-6436*	1	CONTROL GP-ENGINE ELECTRONIC	1584
Y	*308-4159*	1	COOLER GP-OIL	700
Y	*303-5772*	1	COVER GP-VALVE MECHANISM	347
Y	*308-4146*	1	CRANKSHAFT GP	384
Y	*308-4145*	1	CYLINDER BLOCK GP	404
Y	*308-4150*	1	CYLINDER HEAD GP	421
Y	*308-4156*	1	DRIVE GP-FAN	431
Y	*308-4158*	1	FILLER GP-ENGINE OIL	673
Y	*316-1100*	1	FILTER GP-FUEL	1004
Y	*298-5125*	1	GLOW PLUG GP	1586
Y	*304-8760*	1	HOUSING GP-FRONT	495
Y	*299-5033*	1	LIFTING GP-ENGINE	512
Y	*316-1179*	1	LINES GP-FUEL	1033
Y	*308-4157*	1	PAN GP-OIL	561
Y	*308-4149*	1	PISTON & ROD GP	617
Y	*298-5129*	1	PLUG GP-CYLINDER HEAD	629
Y	*298-5131*	1	PLUG GP-ENGINE	632
Y	*304-8761*	1	PLUG GP-ENGINE	636
Y	*298-5128*	1	PLUG GP-ENGINE OIL MANIFOLD	680
Y	*360-7343*	1	PULLEY GP-CRANKSHAFT	652
Y	*317-7967*	1	PUMP GP-FUEL INJECTION	1443
Y	*298-5105*	1	PUMP GP-WATER	714
Y	*329-9129*	1	TURBOCHARGER GP	948
Y	*308-4151*	1	VALVE MECHANISM GP	665
Y	*316-1102*	1	WIRING GP-ENGINE	1613
	359-0738	1	CYLINDER BLOCK GP-SHORT	
	317-7971	1	ELECTRONICS GP-ENGINE RATINGS	

Y - SEPARATE ILLUSTRATION

<END>

386-1209 ENGINE AR-PRIMARY

86 BRAKE KW (115 BHP) AT 2200 RPM

SMCS-1000 **i06830579**

NOTE	PART NUMBER	QTY	PART NAME 1 2 3 4 5 6 (PRODUCT LEVEL)	SEE PAGE
Y	*301-8245*	1	BALANCER GP	317
Y	*308-4152*	1	CAMSHAFT GP	323
Y	*298-5116*	1	CONNECTION GP-INLET	774
Y	*301-8243*	1	CONNECTION GP-WATER	687
Y	*304-6436*	1	CONTROL GP-ENGINE ELECTRONIC	1584
Y	*308-4159*	1	COOLER GP-OIL	700
Y	*303-5772*	1	COVER GP-VALVE MECHANISM	347
Y	*308-4146*	1	CRANKSHAFT GP	384
Y	*308-4145*	1	CYLINDER BLOCK GP	404
Y	*308-4150*	1	CYLINDER HEAD GP	421
Y	*308-4156*	1	DRIVE GP-FAN	431
Y	*308-4158*	1	FILLER GP-ENGINE OIL	673
Y	*316-1100*	1	FILTER GP-FUEL	1004
Y	*298-5125*	1	GLOW PLUG GP	1586
Y	*304-8760*	1	HOUSING GP-FRONT	495
Y	*299-5033*	1	LIFTING GP-ENGINE	512
Y	*316-1179*	1	LINES GP-FUEL	1033
Y	*308-4157*	1	PAN GP-OIL	561
Y	*308-4149*	1	PISTON & ROD GP	617
Y	*298-5129*	1	PLUG GP-CYLINDER HEAD	629
Y	*298-5131*	1	PLUG GP-ENGINE	632
Y	*304-8761*	1	PLUG GP-ENGINE	636
Y	*298-5128*	1	PLUG GP-ENGINE OIL MANIFOLD	680
Y	*360-7343*	1	PULLEY GP-CRANKSHAFT	652
Y	*317-7968*	1	PUMP GP-FUEL INJECTION	1458
Y	*298-5105*	1	PUMP GP-WATER	714
Y	*329-9129*	1	TURBOCHARGER GP	948
Y	*308-4151*	1	VALVE MECHANISM GP	665
Y	*316-1102*	1	WIRING GP-ENGINE	1613
	359-0738	1	CYLINDER BLOCK GP-SHORT	
	317-7969	1	SOFTWARE GP-ENG RATINGS ELEK	

Y - SEPARATE ILLUSTRATION

<END>

387-1619 ENGINE AR-PRIMARY

85 BRAKE KW (114 BHP) AT 2200 RPM

SMCS-1000 **i06830585**

NOTE	PART NUMBER	QTY	PART NAME 1 2 3 4 5 6 (PRODUCT LEVEL)	SEE PAGE
Y	*301-8245*	1	BALANCER GP	317
Y	*298-5892*	1	CAMSHAFT GP	321
Y	*301-8248*	1	CONNECTION GP-INLET	776
Y	*301-8243*	1	CONNECTION GP-WATER	687
Y	*304-6436*	1	CONTROL GP-ENGINE ELECTRONIC	1584
Y	*301-8241*	1	COOLER GP-OIL	697
Y	*298-5111*	1	COVER GP-ENGINE	332
Y	*298-5097*	1	COVER GP-VALVE MECHANISM	335
Y	*298-5888*	1	CRANKSHAFT GP	380
Y	*298-5887*	1	CYLINDER BLOCK GP	400
Y	*298-5890*	1	CYLINDER HEAD GP	419
Y	*330-3666*	1	DRIVE GP-FAN	444
Y	*318-0775*	1	FILLER GP-ENGINE OIL	676
Y	*298-5100*	1	FILTER GP-ENGINE OIL	678
Y	*298-5123*	1	FILTER GP-PRIMARY FUEL	1009
Y	*301-8251*	1	FILTER GP-WATER SEP & FUEL	1013
Y	*298-5110*	1	GEAR GP-FRONT	475
Y	*298-5125*	1	GLOW PLUG GP	1586
Y	*299-5033*	1	LIFTING GP-ENGINE	512
Y	*311-2271*	1	LINES GP-FUEL FILTER	1050
Y	*304-0730*	1	MOUNTING GP-ENGINE	518
Y	*299-5082*	1	MOUNTING GP-FAN	713
Y	*301-8239*	1	PAN GP-OIL	541
Y	*298-5889*	1	PISTON GP	621
Y	*298-5129*	1	PLUG GP-CYLINDER HEAD	629
Y	*298-5131*	1	PLUG GP-ENGINE	632
Y	*298-5128*	1	PLUG GP-ENGINE OIL MANIFOLD	680
Y	*360-7346*	1	PULLEY GP-CRANKSHAFT	655
Y	*304-0725*	1	PUMP GP-FUEL INJECTION	1154
Y	*298-5105*	1	PUMP GP-WATER	714
Y	*304-0729*	1	TURBOCHARGER GP	824
Y	*298-5891*	1	VALVE MECHANISM GP	661
Y	*298-5130*	1	WIRING GP-ENGINE	1604
R	**359-0737**	1	CYLINDER BLOCK GP-SHORT	
	305-8463	1	ELECTRONICS GP-ENGINE RATINGS	

R - REMANUFACTURED PART MAY BE AVAILABLE
Y - SEPARATE ILLUSTRATION

<END>

387-8156 ENGINE AR-PRIMARY

97 BRAKE KW (129 BHP) AT 2200 RPM

SMCS-1000 **i06657107**

NOTE	PART NUMBER	QTY	PART NAME 1 2 3 4 5 6 (PRODUCT LEVEL)	SEE PAGE
Y	*303-5775*	1	ADAPTER GP-AUXILIARY DRIVE	300
Y	*308-0304*	1	ALTERNATOR GP-CHARGING	1571
Y	*298-5892*	1	CAMSHAFT GP	321
Y	*299-5078*	1	CONNECTION GP-WATER	686
Y	*304-6436*	1	CONTROL GP-ENGINE ELECTRONIC	1584
Y	*305-2579*	1	COOLER GP-OIL	698
Y	*301-8240*	1	COVER GP-VALVE MECHANISM	341
Y	*298-5888*	1	CRANKSHAFT GP	380
Y	*298-5887*	1	CYLINDER BLOCK GP	400
Y	*298-5890*	1	CYLINDER HEAD GP	419
Y	*303-5777*	1	ELBOW GP-AIR INLET	786
Y	*298-5100*	1	FILTER GP-ENGINE OIL	678
Y	*298-5123*	1	FILTER GP-PRIMARY FUEL	1009
Y	*301-8251*	1	FILTER GP-WATER SEP & FUEL	1013
Y	*305-2577*	1	FLYWHEEL GP	460
Y	*298-5110*	1	GEAR GP-FRONT	475
Y	*298-5125*	1	GLOW PLUG GP	1586
Y	*308-0302*	1	HOUSING GP-FLYWHEEL	486
Y	*299-5033*	1	LIFTING GP-ENGINE	512
Y	*311-2271*	1	LINES GP-FUEL FILTER	1050
Y	*305-2168*	1	MOUNTING GP-EXHAUST	789
Y	*298-5096*	1	PAN GP-OIL	533
Y	*298-5889*	1	PISTON GP	621
Y	*298-5129*	1	PLUG GP-CYLINDER HEAD	629
Y	*298-5098*	1	PLUG GP-ENGINE	631
Y	*301-8250*	1	PLUG GP-ENGINE	633
Y	*304-3663*	1	PLUG GP-ENGINE	634
Y	*298-5128*	1	PLUG GP-ENGINE OIL MANIFOLD	680
Y	*360-7344*	1	PULLEY GP-CRANKSHAFT	653
Y	*298-5112*	1	PUMP GP-ENGINE OIL	681
Y	*303-4615*	1	PUMP GP-FUEL INJECTION	1134
Y	*298-5105*	1	PUMP GP-WATER	714
Y	*325-5612*	1	STARTING MOTOR GP-ELECTRIC	1597
Y	*308-0305*	1	TURBOCHARGER GP	869
Y	*314-2310*	1	V-BELT GP	660
Y	*298-5891*	1	VALVE MECHANISM GP	661
Y	*298-5130*	1	WIRING GP-ENGINE	1604
R	**359-0737**	1	CYLINDER BLOCK GP-SHORT	
	305-8458	1	ELECTRONICS GP-ENGINE RATINGS	

R - REMANUFACTURED PART MAY BE AVAILABLE
Y - SEPARATE ILLUSTRATION

<END>

388-1875 ENGINE AR-PRIMARY

95 BRAKE KW (127 BHP) AT 2200 RPM

SMCS-1000 **i06830588**

NOTE	PART NUMBER	QTY	PART NAME 1 2 3 4 5 6 (PRODUCT LEVEL)	SEE PAGE
Y	*311-7455*	1	ALTERNATOR GP-CHARGING	1577
Y	*301-8245*	1	BALANCER GP	317
Y	*298-5892*	1	CAMSHAFT GP	321
Y	*301-8243*	1	CONNECTION GP-WATER	687
Y	*304-6436*	1	CONTROL GP-ENGINE ELECTRONIC	1584
Y	*301-8241*	1	COOLER GP-OIL	697
Y	*298-5111*	1	COVER GP-ENGINE	332
Y	*301-8240*	1	COVER GP-VALVE MECHANISM	341
Y	*298-5888*	1	CRANKSHAFT GP	380
Y	*298-5887*	1	CYLINDER BLOCK GP	400
Y	*298-5890*	1	CYLINDER HEAD GP	419
Y	*316-7959*	1	DRIVE GP-FAN	436
Y	*314-5003*	1	FAN GP	707
Y	*298-5100*	1	FILTER GP-ENGINE OIL	678
Y	*298-5123*	1	FILTER GP-PRIMARY FUEL	1009
Y	*301-8251*	1	FILTER GP-WATER SEP & FUEL	1013
Y	*301-8237*	1	FLYWHEEL GP	455
Y	*298-5110*	1	GEAR GP-FRONT	475
Y	*298-5125*	1	GLOW PLUG GP	1586
Y	*301-8236*	1	HOUSING GP-FLYWHEEL	479
Y	*299-5033*	1	LIFTING GP-ENGINE	512
Y	*311-2271*	1	LINES GP-FUEL FILTER	1050
Y	*311-4641*	1	MOUNTING GP-ENGINE	521
Y	*301-8239*	1	PAN GP-OIL	541
Y	*304-8762*	1	PIPE GP-EXHAUST	790
Y	*298-5889*	1	PISTON GP	621
Y	*298-5129*	1	PLUG GP-CYLINDER HEAD	629
Y	*298-5098*	1	PLUG GP-ENGINE	631
Y	*298-5131*	1	PLUG GP-ENGINE	632
Y	*298-5128*	1	PLUG GP-ENGINE OIL MANIFOLD	680
Y	*360-7343*	1	PULLEY GP-CRANKSHAFT	652
Y	*305-6701*	1	PUMP GP-FUEL INJECTION	1303
Y	*298-5105*	1	PUMP GP-WATER	714
Y	*312-1672*	1	RADIATOR GP	738
Y	*325-5612*	1	STARTING MOTOR GP-ELECTRIC	1597
Y	*311-7456*	1	TURBOCHARGER GP	887
Y	*298-5891*	1	VALVE MECHANISM GP	661
Y	*298-5130*	1	WIRING GP-ENGINE	1604
R	**359-0737**	1	CYLINDER BLOCK GP-SHORT	
	305-8454	1	ELECTRONICS GP-ENGINE RATINGS	

R - REMANUFACTURED PART MAY BE AVAILABLE
Y - SEPARATE ILLUSTRATION

<END>

388-1879 ENGINE AR-PRIMARY

104 BRAKE KW (139 BHP) AT 2200 RPM

SMCS-1000 **i06656600**

NOTE	PART NUMBER	QTY	PART NAME 1 2 3 4 5 6 (PRODUCT LEVEL)	SEE PAGE
Y	*308-3351*	1	ALTERNATOR GP-CHARGING	1573
Y	*301-8245*	1	BALANCER GP	317
Y	*298-5090*	1	CAMSHAFT GP	320
Y	*301-8248*	1	CONNECTION GP-INLET	776
Y	*299-5078*	1	CONNECTION GP-WATER	686
Y	*323-6240*	1	CONNECTOR GP-CAB HEATER LINES	688
Y	*304-6436*	1	CONTROL GP-ENGINE ELECTRONIC	1584
Y	*301-8241*	1	COOLER GP-OIL	697
Y	*298-5111*	1	COVER GP-ENGINE	332
Y	*323-6222*	1	COVER GP-VALVE MECHANISM	369
Y	*298-5086*	1	CRANKSHAFT GP	378
Y	*298-5085*	1	CYLINDER BLOCK GP	398
Y	*298-5088*	1	CYLINDER HEAD GP	418
Y	*298-5095*	1	DRIVE GP-FAN	425
Y	*303-5773*	1	FILLER GP-ENGINE OIL	671
Y	*298-5100*	1	FILTER GP-ENGINE OIL	678
Y	*298-5123*	1	FILTER GP-PRIMARY FUEL	1009
Y	*301-8237*	1	FLYWHEEL GP	455
Y	*298-5110*	1	GEAR GP-FRONT	475
Y	*298-5125*	1	GLOW PLUG GP	1586
Y	*301-8236*	1	HOUSING GP-FLYWHEEL	479
Y	*299-5033*	1	LIFTING GP-ENGINE	512
Y	*311-2271*	1	LINES GP-FUEL FILTER	1050
Y	*299-5082*	1	MOUNTING GP-FAN	713
Y	*301-8239*	1	PAN GP-OIL	541
Y	*298-5087*	1	PISTON & ROD GP	609
Y	*298-5129*	1	PLUG GP-CYLINDER HEAD	629
Y	*301-8250*	1	PLUG GP-ENGINE	633
Y	*298-5128*	1	PLUG GP-ENGINE OIL MANIFOLD	680
Y	*360-7346*	1	PULLEY GP-CRANKSHAFT	655
Y	*360-7355*	1	PULLEY GP-CRANKSHAFT	656
Y	*301-8235*	1	PUMP GP-FUEL INJECTION	1114
Y	*298-5105*	1	PUMP GP-WATER	714
Y	*298-5089*	1	ROCKER ARM GP	658
Y	*325-5612*	1	STARTING MOTOR GP-ELECTRIC	1597
Y	*298-5113*	1	TURBOCHARGER GP	791
Y	*298-5130*	1	WIRING GP-ENGINE	1604
R	**359-0739**	1	CYLINDER BLOCK GP-SHORT	
	301-8234	1	ELECTRONICS GP-ENGINE RATINGS	

R - REMANUFACTURED PART MAY BE AVAILABLE
Y - SEPARATE ILLUSTRATION

<END>

388-1880 ENGINE AR-PRIMARY

93 BRAKE KW (125 BHP) AT 2200 RPM

SMCS-1000 **i06830591**

NOTE	PART NUMBER	QTY	PART NAME 1 2 3 4 5 6 (PRODUCT LEVEL)	SEE PAGE
Y	*308-0304*	1	ALTERNATOR GP-CHARGING	1571
Y	*298-5892*	1	CAMSHAFT GP	321
Y	*301-8243*	1	CONNECTION GP-WATER	687
Y	*304-6436*	1	CONTROL GP-ENGINE ELECTRONIC	1584
Y	*298-5099*	1	COOLER GP-ENGINE OIL	690
Y	*298-5111*	1	COVER GP-ENGINE	332
Y	*304-5574*	1	COVER GP-VALVE MECHANISM	351
Y	*298-5888*	1	CRANKSHAFT GP	380
Y	*298-5887*	1	CYLINDER BLOCK GP	400
Y	*298-5890*	1	CYLINDER HEAD GP	419
Y	*327-4182*	1	DRIVE GP-FAN	443
			S/N: 4441-19522	
Y	*437-2695*	1	DRIVE GP-FAN	452
			S/N: 44419523-UP	
Y	*299-5167*	1	ELBOW GP-AIR INLET	784
Y	*315-3413*	1	FAN GP	708
Y	*317-6399*	1	FASTENER GP-TURBOCHARGER	788
Y	*298-5123*	1	FILTER GP-PRIMARY FUEL	1009
Y	*301-8251*	1	FILTER GP-WATER SEP & FUEL	1013
Y	*303-5768*	1	FLYWHEEL GP	456
Y	*298-5110*	1	GEAR GP-FRONT	475
Y	*298-5125*	1	GLOW PLUG GP	1586
Y	*304-5571*	1	HOUSING GP-FLYWHEEL	484
Y	*299-5033*	1	LIFTING GP-ENGINE	512
Y	*311-2271*	1	LINES GP-FUEL FILTER	1050
Y	*314-5375*	1	MOUNTING GP-ENGINE	524
Y	*299-5175*	1	PAN GP-OIL	537
Y	*298-5889*	1	PISTON GP	621
Y	*298-5129*	1	PLUG GP-CYLINDER HEAD	629
Y	*298-5098*	1	PLUG GP-ENGINE	631
Y	*298-5131*	1	PLUG GP-ENGINE	632
Y	*298-5128*	1	PLUG GP-ENGINE OIL MANIFOLD	680
Y	*360-7343*	1	PULLEY GP-CRANKSHAFT	652
Y	*298-5112*	1	PUMP GP-ENGINE OIL	681
Y	*304-8755*	1	PUMP GP-FUEL INJECTION	1244
Y	*298-5105*	1	PUMP GP-WATER	714
Y	*303-4622*	1	TURBOCHARGER GP	812
Y	*298-5891*	1	VALVE MECHANISM GP	661
Y	*304-5577*	1	WIRING GP-ENGINE	1609
R	**359-0737**	1	CYLINDER BLOCK GP-SHORT	
	305-8456	1	ELECTRONICS GP-ENGINE RATINGS	

R - REMANUFACTURED PART MAY BE AVAILABLE
Y - SEPARATE ILLUSTRATION

<END>

389-1312 ENGINE AR-PRIMARY

93 BRAKE KE (125 BHP) AT 2200 RPM

SMCS-1000 **i05317194**

NOTE	PART NUMBER	QTY	PART NAME 1 2 3 4 5 6 (PRODUCT LEVEL)	SEE PAGE
Y	*308-0304*	1	ALTERNATOR GP-CHARGING	1571
Y	*298-5892*	1	CAMSHAFT GP	321
Y	*301-8243*	1	CONNECTION GP-WATER	687
Y	*304-6436*	1	CONTROL GP-ENGINE ELECTRONIC	1584
Y	*298-5099*	1	COOLER GP-ENGINE OIL	690
Y	*298-5111*	1	COVER GP-ENGINE	332
Y	*304-5574*	1	COVER GP-VALVE MECHANISM	351
Y	*298-5888*	1	CRANKSHAFT GP	380
Y	*298-5887*	1	CYLINDER BLOCK GP	400
Y	*298-5890*	1	CYLINDER HEAD GP	419
Y	*327-4182*	1	DRIVE GP-FAN	443
			S/N: 4441-18915	
Y	*437-2695*	1	DRIVE GP-FAN	452
			S/N: 44418916-UP	
Y	*299-5167*	1	ELBOW GP-AIR INLET	784
Y	*315-3413*	1	FAN GP	708
Y	*317-6399*	1	FASTENER GP-TURBOCHARGER	788
Y	*298-5123*	1	FILTER GP-PRIMARY FUEL	1009
Y	*301-8251*	1	FILTER GP-WATER SEP & FUEL	1013
Y	*303-5768*	1	FLYWHEEL GP	456
Y	*298-5110*	1	GEAR GP-FRONT	475
Y	*298-5125*	1	GLOW PLUG GP	1586
Y	*304-5571*	1	HOUSING GP-FLYWHEEL	484
Y	*299-5033*	1	LIFTING GP-ENGINE	512
Y	*311-2271*	1	LINES GP-FUEL FILTER	1050
Y	*314-5375*	1	MOUNTING GP-ENGINE	524
Y	*299-5175*	1	PAN GP-OIL	537
Y	*298-5889*	1	PISTON GP	621
Y	*298-5129*	1	PLUG GP-CYLINDER HEAD	629
Y	*298-5098*	1	PLUG GP-ENGINE	631
Y	*298-5131*	1	PLUG GP-ENGINE (THREADED)	632
Y	*298-5128*	1	PLUG GP-ENGINE OIL MANIFOLD	680
Y	*360-7343*	1	PULLEY GP-CRANKSHAFT	652
Y	*298-5112*	1	PUMP GP-ENGINE OIL	681
Y	*304-8755*	1	PUMP GP-FUEL INJECTION	1244
Y	*298-5105*	1	PUMP GP-WATER	714
Y	*303-4622*	1	TURBOCHARGER GP	812
Y	*298-5891*	1	VALVE MECHANISM GP	661
Y	*304-5577*	1	WIRING GP-ENGINE	1609
R	**359-0737**	1	CYLINDER BLOCK GP-SHORT	
	305-8456	1	ELECTRONICS GP-ENGINE RATINGS	

R - REMANUFACTURED PART MAY BE AVAILABLE
Y - SEPARATE ILLUSTRATION

<END>

389-9222 ENGINE AR-PRIMARY

107 BRAKE KW (144 BHP) AT 2200 RPM

SMCS-1000 **i06658014**

NOTE	PART NUMBER	QTY	PART NAME 1 2 3 4 5 6 (PRODUCT LEVEL)	SEE PAGE
Y	*308-4275*	1	ADAPTER GP-AUXILIARY DRIVE	306
Y	*311-4639*	1	ALTERNATOR GP-CHARGING	1575
Y	*298-5090*	1	CAMSHAFT GP	320
Y	*301-8248*	1	CONNECTION GP-INLET	776
Y	*301-8243*	1	CONNECTION GP-WATER	687
Y	*304-6436*	1	CONTROL GP-ENGINE ELECTRONIC	1584
Y	*298-5099*	1	COOLER GP-ENGINE OIL	690
Y	*301-8240*	1	COVER GP-VALVE MECHANISM	341
Y	*298-5086*	1	CRANKSHAFT GP	378
Y	*298-5085*	1	CYLINDER BLOCK GP	398
Y	*298-5088*	1	CYLINDER HEAD GP	418
Y	*311-4644*	1	DRIVE GP-FAN	433
Y	*311-8536*	1	FAN GP	705
Y	*298-5100*	1	FILTER GP-ENGINE OIL	678
Y	*298-5123*	1	FILTER GP-PRIMARY FUEL	1009
Y	*301-8251*	1	FILTER GP-WATER SEP & FUEL	1013
Y	*306-2314*	1	FLYWHEEL GP	461
Y	*298-5110*	1	GEAR GP-FRONT	475
Y	*299-5075*	1	GLOW PLUG GP	1587
Y	*303-4618*	1	HOUSING GP-FLYWHEEL	481
Y	*299-5033*	1	LIFTING GP-ENGINE	512
Y	*311-2271*	1	LINES GP-FUEL FILTER	1050
Y	*298-5096*	1	PAN GP-OIL	533
Y	*298-5087*	1	PISTON & ROD GP	609
Y	*298-5129*	1	PLUG GP-CYLINDER HEAD	629
Y	*298-5098*	1	PLUG GP-ENGINE	631
Y	*298-5131*	1	PLUG GP-ENGINE	632
Y	*301-8250*	1	PLUG GP-ENGINE	633
Y	*298-5128*	1	PLUG GP-ENGINE OIL MANIFOLD	680
Y	*360-7343*	1	PULLEY GP-CRANKSHAFT	652
Y	*298-5112*	1	PUMP GP-ENGINE OIL	681
Y	*304-6570*	1	PUMP GP-FUEL INJECTION	1179
Y	*298-5105*	1	PUMP GP-WATER	714
Y	*298-5089*	1	ROCKER ARM GP	658
Y	*299-5067*	1	STARTING MOTOR GP-ELECTRIC	1591
Y	*307-2850*	1	TURBOCHARGER GP	857
Y	*298-5130*	1	WIRING GP-ENGINE	1604
R	**359-0739**	1	CYLINDER BLOCK GP-SHORT	
	305-8457	1	ELECTRONICS GP-ENGINE RATINGS	

R - REMANUFACTURED PART MAY BE AVAILABLE
Y - SEPARATE ILLUSTRATION

<END>

389-9225 ENGINE AR-PRIMARY

95 BRAKE KW (127 BHP) AT 2200 RPM

SMCS-1000 **i06830594**

NOTE	PART NUMBER	QTY	PART NAME 1 2 3 4 5 6 (PRODUCT LEVEL)	SEE PAGE
Y	*311-7455*	1	ALTERNATOR GP-CHARGING	1577
Y	*301-8245*	1	BALANCER GP	317
Y	*298-5892*	1	CAMSHAFT GP	321
Y	*301-8248*	1	CONNECTION GP-INLET	776
Y	*301-8243*	1	CONNECTION GP-WATER	687
Y	*304-6436*	1	CONTROL GP-ENGINE ELECTRONIC	1584
Y	*301-8241*	1	COOLER GP-OIL	697
Y	*298-5111*	1	COVER GP-ENGINE	332
Y	*301-8240*	1	COVER GP-VALVE MECHANISM	341
Y	*298-5888*	1	CRANKSHAFT GP	380
Y	*298-5887*	1	CYLINDER BLOCK GP	400
Y	*298-5890*	1	CYLINDER HEAD GP	419
Y	*316-7959*	1	DRIVE GP-FAN	436
Y	*314-5003*	1	FAN GP	707
Y	*298-5100*	1	FILTER GP-ENGINE OIL	678
Y	*298-5123*	1	FILTER GP-PRIMARY FUEL	1009
Y	*301-8251*	1	FILTER GP-WATER SEP & FUEL	1013
Y	*301-8237*	1	FLYWHEEL GP	455
Y	*298-5110*	1	GEAR GP-FRONT	475
Y	*298-5125*	1	GLOW PLUG GP	1586
Y	*301-8236*	1	HOUSING GP-FLYWHEEL	479
Y	*299-5033*	1	LIFTING GP-ENGINE	512
Y	*311-2271*	1	LINES GP-FUEL FILTER	1050
Y	*311-4641*	1	MOUNTING GP-ENGINE	521
Y	*301-8239*	1	PAN GP-OIL	541
Y	*304-8762*	1	PIPE GP-EXHAUST	790
Y	*298-5889*	1	PISTON GP	621
Y	*298-5129*	1	PLUG GP-CYLINDER HEAD	629
Y	*298-5098*	1	PLUG GP-ENGINE	631
Y	*298-5131*	1	PLUG GP-ENGINE	632
Y	*298-5128*	1	PLUG GP-ENGINE OIL MANIFOLD	680
Y	*360-7343*	1	PULLEY GP-CRANKSHAFT	652
Y	*305-6701*	1	PUMP GP-FUEL INJECTION	1303
Y	*298-5105*	1	PUMP GP-WATER	714
Y	*312-1672*	1	RADIATOR GP	738
Y	*325-5612*	1	STARTING MOTOR GP-ELECTRIC	1597
Y	*311-7456*	1	TURBOCHARGER GP	887
Y	*298-5891*	1	VALVE MECHANISM GP	661
Y	*298-5130*	1	WIRING GP-ENGINE	1604
R	**359-0737**	1	CYLINDER BLOCK GP-SHORT	
	305-8454	1	ELECTRONICS GP-ENGINE RATINGS	

R - REMANUFACTURED PART MAY BE AVAILABLE
Y - SEPARATE ILLUSTRATION

<END>

389-9235 ENGINE AR-PRIMARY

95 BRAKE KW (127 BHP) AT 2200 RPM

SMCS-1000 **i06830595**

NOTE	PART NUMBER	QTY	PART NAME 1 2 3 4 5 6 (PRODUCT LEVEL)	SEE PAGE
Y	*304-0728*	1	ADAPTER GP-AUXILIARY DRIVE	301
Y	*322-4890*	1	ALTERNATOR GP-CHARGING	1581
Y	*298-5892*	1	CAMSHAFT GP	321
Y	*301-8248*	1	CONNECTION GP-INLET	776
Y	*301-8243*	1	CONNECTION GP-WATER	687
Y	*304-6436*	1	CONTROL GP-ENGINE ELECTRONIC	1584
Y	*298-5099*	1	COOLER GP-ENGINE OIL	690
Y	*301-8240*	1	COVER GP-VALVE MECHANISM	341
Y	*298-5888*	1	CRANKSHAFT GP	380
Y	*298-5887*	1	CYLINDER BLOCK GP	400
Y	*298-5890*	1	CYLINDER HEAD GP	419
Y	*311-4644*	1	DRIVE GP-FAN	433
Y	*311-4640*	1	FAN GP	704
Y	*298-5100*	1	FILTER GP-ENGINE OIL	678
Y	*298-5123*	1	FILTER GP-PRIMARY FUEL	1009
Y	*301-8251*	1	FILTER GP-WATER SEP & FUEL	1013
Y	*301-8237*	1	FLYWHEEL GP	455
Y	*298-5125*	1	GLOW PLUG GP	1586
Y	*303-4618*	1	HOUSING GP-FLYWHEEL	481
Y	*304-0727*	1	HOUSING GP-FRONT	492
Y	*299-5033*	1	LIFTING GP-ENGINE	512
Y	*311-2271*	1	LINES GP-FUEL FILTER	1050
Y	*311-4641*	1	MOUNTING GP-ENGINE	521
Y	*304-3656*	1	PAN GP-OIL	549
Y	*304-8762*	1	PIPE GP-EXHAUST	790
Y	*298-5889*	1	PISTON GP	621
Y	*298-5129*	1	PLUG GP-CYLINDER HEAD	629
Y	*298-5098*	1	PLUG GP-ENGINE	631
Y	*298-5131*	1	PLUG GP-ENGINE	632
Y	*298-5128*	1	PLUG GP-ENGINE OIL MANIFOLD	680
Y	*360-7343*	1	PULLEY GP-CRANKSHAFT	652
Y	*298-5112*	1	PUMP GP-ENGINE OIL	681
Y	*305-6701*	1	PUMP GP-FUEL INJECTION	1303
Y	*340-4692*	1	PUMP GP-WATER	722
Y	*311-4636*	1	RADIATOR GP	730
Y	*325-5612*	1	STARTING MOTOR GP-ELECTRIC	1597
Y	*311-7456*	1	TURBOCHARGER GP	887
Y	*298-5891*	1	VALVE MECHANISM GP	661
Y	*298-5130*	1	WIRING GP-ENGINE	1604
R	**359-0737**	1	CYLINDER BLOCK GP-SHORT	
	305-8454	1	ELECTRONICS GP-ENGINE RATINGS	

R - REMANUFACTURED PART MAY BE AVAILABLE
Y - SEPARATE ILLUSTRATION

<END>

389-9236 ENGINE AR-PRIMARY

95 BRAKE KW (127 BHP) AT 2200 RPM

SMCS-1000 **i06830596**

NOTE	PART NUMBER	QTY	PART NAME 1 2 3 4 5 6 (PRODUCT LEVEL)	SEE PAGE
Y	*323-8845*	1	AIR COMPRESSOR GP	309
Y	*322-3055*	1	ALTERNATOR GP-CHARGING	1580
Y	*301-8245*	1	BALANCER GP	317
Y	*298-5892*	1	CAMSHAFT GP	321
Y	*301-8248*	1	CONNECTION GP-INLET	776
Y	*301-8243*	1	CONNECTION GP-WATER	687
Y	*304-6436*	1	CONTROL GP-ENGINE ELECTRONIC	1584
Y	*301-8241*	1	COOLER GP-OIL	697
Y	*329-3543*	1	COVER GP-VALVE MECHANISM	375
Y	*298-5888*	1	CRANKSHAFT GP	380
Y	*298-5887*	1	CYLINDER BLOCK GP	400
Y	*298-5890*	1	CYLINDER HEAD GP	419
Y	*311-4644*	1	DRIVE GP-FAN	433
Y	*314-5003*	1	FAN GP	707
Y	*298-5100*	1	FILTER GP-ENGINE OIL	678
Y	*333-5523*	1	FILTER GP-FUEL	1008
Y	*301-8251*	1	FILTER GP-WATER SEP & FUEL	1013
Y	*301-8237*	1	FLYWHEEL GP	455
Y	*299-5075*	1	GLOW PLUG GP	1587
Y	*301-8236*	1	HOUSING GP-FLYWHEEL	479
Y	*323-8844*	1	HOUSING GP-FRONT	506
Y	*299-5033*	1	LIFTING GP-ENGINE	512
Y	*333-5521*	1	LINES GP-FUEL	1047
Y	*311-4641*	1	MOUNTING GP-ENGINE	521
Y	*323-8843*	1	PAN GP-OIL	575
Y	*304-8762*	1	PIPE GP-EXHAUST	790
Y	*298-5889*	1	PISTON GP	621
Y	*298-5129*	1	PLUG GP-CYLINDER HEAD	629
Y	*298-5098*	1	PLUG GP-ENGINE	631
Y	*304-3663*	1	PLUG GP-ENGINE	634
Y	*298-5128*	1	PLUG GP-ENGINE OIL MANIFOLD	680
Y	*360-7343*	1	PULLEY GP-CRANKSHAFT	652
Y	*305-6701*	1	PUMP GP-FUEL INJECTION	1303
Y	*340-4692*	1	PUMP GP-WATER	722
Y	*311-4636*	1	RADIATOR GP	730
Y	*299-5067*	1	STARTING MOTOR GP-ELECTRIC	1591
Y	*307-2850*	1	TURBOCHARGER GP	857
Y	*298-5891*	1	VALVE MECHANISM GP	661
Y	*335-6238*	1	WIRING GP-ENGINE	1615
R	**359-0737**	1	CYLINDER BLOCK GP-SHORT	
	305-8454	1	ELECTRONICS GP-ENGINE RATINGS	

R - REMANUFACTURED PART MAY BE AVAILABLE
Y - SEPARATE ILLUSTRATION

<END>

389-9237 ENGINE AR-PRIMARY

97 BRAKE KW (129 BHP) AT 2200 RPM

SMCS-1000 **i06830598**

NOTE	PART NUMBER	QTY	PART NAME 1 2 3 4 5 6 (PRODUCT LEVEL)	SEE PAGE
Y	*304-0728*	1	ADAPTER GP-AUXILIARY DRIVE	301
Y	*311-7455*	1	ALTERNATOR GP-CHARGING	1577
Y	*298-5892*	1	CAMSHAFT GP	321
Y	*301-8248*	1	CONNECTION GP-INLET	776
Y	*301-8243*	1	CONNECTION GP-WATER	687
Y	*304-6436*	1	CONTROL GP-ENGINE ELECTRONIC	1584
Y	*298-5099*	1	COOLER GP-ENGINE OIL	690
Y	*304-5574*	1	COVER GP-VALVE MECHANISM	351
Y	*298-5888*	1	CRANKSHAFT GP	380
Y	*298-5887*	1	CYLINDER BLOCK GP	400
YR	**359-0737**	1	CYLINDER BLOCK GP-SHORT	415
Y	*298-5890*	1	CYLINDER HEAD GP	419
Y	*311-4644*	1	DRIVE GP-FAN	433
Y	*311-4640*	1	FAN GP	704
Y	*298-5100*	1	FILTER GP-ENGINE OIL	678
Y	*303-5780*	1	FILTER GP-FUEL (FUEL PRESSURE)	999
Y	*322-8426*	1	FILTER GP-FUEL	1006
Y	*299-5063*	1	FLYWHEEL GP	454
Y	*298-5125*	1	GLOW PLUG GP	1586
Y	*299-5057*	1	HOUSING GP-FLYWHEEL	478
Y	*304-0727*	1	HOUSING GP-FRONT	492
Y	*299-5033*	1	LIFTING GP-ENGINE	512
Y	*322-8425*	1	LINES GP-FUEL	1041
Y	*323-6804*	1	MOUNTING GP-ENGINE	529
Y	*377-8331*	1	PAN GP-OIL	603
Y	*304-8762*	1	PIPE GP-EXHAUST	790
Y	*298-5889*	1	PISTON GP	621
Y	*298-5129*	1	PLUG GP-CYLINDER HEAD	629
Y	*298-5098*	1	PLUG GP-ENGINE	631
Y	*298-5131*	1	PLUG GP-ENGINE	632
Y	*298-5128*	1	PLUG GP-ENGINE OIL MANIFOLD	680
Y	*360-7343*	1	PULLEY GP-CRANKSHAFT	652
Y	*298-5112*	1	PUMP GP-ENGINE OIL	681
Y	*303-4615*	1	PUMP GP-FUEL INJECTION	1134
Y	*340-4692*	1	PUMP GP-WATER	722
Y	*311-4636*	1	RADIATOR GP	730
Y	*325-5612*	1	STARTING MOTOR GP-ELECTRIC	1597
Y	*333-8976*	1	TURBOCHARGER GP	960
Y	*298-5891*	1	VALVE MECHANISM GP	661
Y	*298-5130*	1	WIRING GP-ENGINE	1604
	305-8458	1	ELECTRONICS GP-ENGINE RATINGS	

R - REMANUFACTURED PART MAY BE AVAILABLE
Y - SEPARATE ILLUSTRATION

<END>

389-9240 ENGINE AR-PRIMARY

97 BRAKE KW (129 BHP) AT 2200 RPM

SMCS-1000 **i06831029**

NOTE	PART NUMBER	QTY	PART NAME 1 2 3 4 5 6 (PRODUCT LEVEL)	SEE PAGE
Y	*311-5794*	1	ALTERNATOR GP-CHARGING	1576
Y	*298-5892*	1	CAMSHAFT GP	321
Y	*301-8248*	1	CONNECTION GP-INLET	776
Y	*301-8243*	1	CONNECTION GP-WATER	687
Y	*304-6436*	1	CONTROL GP-ENGINE ELECTRONIC	1584
Y	*298-5099*	1	COOLER GP-ENGINE OIL	690
Y	*298-5111*	1	COVER GP-ENGINE	332
Y	*304-5574*	1	COVER GP-VALVE MECHANISM	351
Y	*298-5888*	1	CRANKSHAFT GP	380
Y	*298-5887*	1	CYLINDER BLOCK GP	400
Y	*298-5890*	1	CYLINDER HEAD GP	419
Y	*299-5069*	1	DRIVE GP-FAN	426
Y	*307-2849*	1	FAN GP	702
Y	*298-5100*	1	FILTER GP-ENGINE OIL	678
Y	*298-5123*	1	FILTER GP-PRIMARY FUEL	1009
Y	*301-8251*	1	FILTER GP-WATER SEP & FUEL	1013
Y	*311-5795*	1	FLYWHEEL GP	462
Y	*298-5110*	1	GEAR GP-FRONT	475
Y	*298-5125*	1	GLOW PLUG GP	1586
Y	*311-5796*	1	HOUSING GP-FLYWHEEL	488
Y	*299-5033*	1	LIFTING GP-ENGINE	512
Y	*311-2271*	1	LINES GP-FUEL FILTER	1050
Y	*298-5096*	1	PAN GP-OIL	533
Y	*298-5889*	1	PISTON GP	621
Y	*298-5129*	1	PLUG GP-CYLINDER HEAD	629
Y	*298-5098*	1	PLUG GP-ENGINE	631
Y	*298-5131*	1	PLUG GP-ENGINE	632
Y	*311-5793*	1	PLUG GP-ENGINE	638
Y	*360-7344*	1	PULLEY GP-CRANKSHAFT	653
Y	*298-5112*	1	PUMP GP-ENGINE OIL	681
Y	*303-4615*	1	PUMP GP-FUEL INJECTION	1134
Y	*298-5105*	1	PUMP GP-WATER	714
Y	*328-0666*	1	STARTING MOTOR GP-ELECTRIC	1599
Y	*308-0305*	1	TURBOCHARGER GP	869
Y	*303-5779*	1	VALVE GP-FLUID SAMPLING	682
Y	*298-5891*	1	VALVE MECHANISM GP	661
Y	*298-5130*	1	WIRING GP-ENGINE	1604
R	**359-0737**	1	CYLINDER BLOCK GP-SHORT	
	305-8458	1	ELECTRONICS GP-ENGINE RATINGS	

R - REMANUFACTURED PART MAY BE AVAILABLE
Y - SEPARATE ILLUSTRATION

<END>

389-9241 ENGINE AR-PRIMARY

87 BRAKE KW (117 BHP) AT 2200 RPM

SMCS-1000 **i06151692**

NOTE	PART NUMBER	QTY	PART NAME 1 2 3 4 5 6 (PRODUCT LEVEL)	SEE PAGE
Y	*311-5794*	1	ALTERNATOR GP-CHARGING	1576
Y	*298-5892*	1	CAMSHAFT GP	321
Y	*301-8248*	1	CONNECTION GP-INLET	776
Y	*301-8243*	1	CONNECTION GP-WATER	687
Y	*304-6436*	1	CONTROL GP-ENGINE ELECTRONIC	1584
Y	*298-5099*	1	COOLER GP-ENGINE OIL	690
Y	*298-5111*	1	COVER GP-ENGINE	332
Y	*304-5574*	1	COVER GP-VALVE MECHANISM	351
Y	*298-5888*	1	CRANKSHAFT GP	380
Y	*298-5887*	1	CYLINDER BLOCK GP	400
Y	*298-5890*	1	CYLINDER HEAD GP	419
Y	*299-5069*	1	DRIVE GP-FAN	426
Y	*307-2849*	1	FAN GP	702
Y	*298-5100*	1	FILTER GP-ENGINE OIL	678
Y	*298-5123*	1	FILTER GP-PRIMARY FUEL	1009
Y	*301-8251*	1	FILTER GP-WATER SEP & FUEL	1013
Y	*311-5795*	1	FLYWHEEL GP	462
Y	*298-5110*	1	GEAR GP-FRONT	475
Y	*298-5125*	1	GLOW PLUG GP	1586
Y	*311-5796*	1	HOUSING GP-FLYWHEEL	488
Y	*299-5033*	1	LIFTING GP-ENGINE	512
Y	*311-2271*	1	LINES GP-FUEL FILTER	1050
Y	*298-5096*	1	PAN GP-OIL	533
Y	*298-5889*	1	PISTON GP	621
Y	*298-5129*	1	PLUG GP-CYLINDER HEAD	629
Y	*298-5098*	1	PLUG GP-ENGINE	631
Y	*298-5131*	1	PLUG GP-ENGINE (THREADED)	632
Y	*311-5793*	1	PLUG GP-ENGINE	638
Y	*360-7344*	1	PULLEY GP-CRANKSHAFT	653
Y	*298-5112*	1	PUMP GP-ENGINE OIL	681
Y	*305-2575*	1	PUMP GP-FUEL INJECTION	1278
Y	*298-5105*	1	PUMP GP-WATER	714
Y	*328-0666*	1	STARTING MOTOR GP-ELECTRIC	1599
Y	*308-0305*	1	TURBOCHARGER GP	869
Y	*303-5779*	1	VALVE GP-FLUID SAMPLING	682
Y	*298-5891*	1	VALVE MECHANISM GP	661
Y	*298-5130*	1	WIRING GP-ENGINE	1604
R	**359-0739**	1	CYLINDER BLOCK GP-SHORT	
	305-8459	1	ELECTRONICS GP-ENGINE RATINGS	

R - REMANUFACTURED PART MAY BE AVAILABLE
Y - SEPARATE ILLUSTRATION

<END>

390-5142 ENGINE AR-PRIMARY

94 BRAKE KW (126 BHP) AT 2400 RPM

SMCS-1000 **i06691572**

NOTE	PART NUMBER	QTY	PART NAME 1 2 3 4 5 6 (PRODUCT LEVEL)	SEE PAGE
Y	*311-5794*	1	ALTERNATOR GP-CHARGING	1576
Y	*298-5892*	1	CAMSHAFT GP	321
Y	*308-0307*	1	CONNECTION GP-INLET	778
Y	*301-8243*	1	CONNECTION GP-WATER	687
Y	*304-6436*	1	CONTROL GP-ENGINE ELECTRONIC	1584
Y	*298-5099*	1	COOLER GP-ENGINE OIL	690
Y	*304-8758*	1	COVER GP-VALVE MECHANISM	357
Y	*298-5888*	1	CRANKSHAFT GP	380
Y	*298-5887*	1	CYLINDER BLOCK GP	400
Y	*298-5890*	1	CYLINDER HEAD GP	419
Y	*299-5069*	1	DRIVE GP-FAN	426
Y	*307-2849*	1	FAN GP	702
Y	*308-4158*	1	FILLER GP-ENGINE OIL	673
Y	*298-5100*	1	FILTER GP-ENGINE OIL	678
Y	*298-5123*	1	FILTER GP-PRIMARY FUEL	1009
Y	*301-8251*	1	FILTER GP-WATER SEP & FUEL	1013
Y	*306-2314*	1	FLYWHEEL GP	461
Y	*298-5125*	1	GLOW PLUG GP	1586
Y	*322-2434*	1	HOUSING GP-FLYWHEEL	490
Y	*304-8760*	1	HOUSING GP-FRONT	495
Y	*299-5033*	1	LIFTING GP-ENGINE	512
Y	*311-2271*	1	LINES GP-FUEL FILTER	1050
Y	*304-8763*	1	MOUNTING GP-ENGINE	519
Y	*298-5096*	1	PAN GP-OIL	533
Y	*298-5889*	1	PISTON GP	621
Y	*298-5129*	1	PLUG GP-CYLINDER HEAD	629
Y	*298-5131*	1	PLUG GP-ENGINE	632
Y	*304-8761*	1	PLUG GP-ENGINE	636
Y	*298-5128*	1	PLUG GP-ENGINE OIL MANIFOLD	680
Y	*360-7344*	1	PULLEY GP-CRANKSHAFT	653
Y	*298-5112*	1	PUMP GP-ENGINE OIL	681
Y	*298-5893*	1	PUMP GP-FUEL INJECTION	1089
Y	*298-5105*	1	PUMP GP-WATER	714
Y	*304-3655*	1	STARTING MOTOR GP-ELECTRIC	1594
Y	*312-2579*	1	SWITCH GP-HEAT START	1603
Y	*308-0305*	1	TURBOCHARGER GP	869
Y	*298-5891*	1	VALVE MECHANISM GP	661
Y	*298-5130*	1	WIRING GP-ENGINE	1604
R	**359-0737**	1	CYLINDER BLOCK GP-SHORT	
	298-5883	1	SOFTWARE GP-ENG RATINGS ELEK	

R - REMANUFACTURED PART MAY BE AVAILABLE
Y - SEPARATE ILLUSTRATION

<END>

390-5143 ENGINE AR-PRIMARY

106 BRAKE KW (142 BHP) AT 2200 RPM

SMCS-1000 **i06831031**

NOTE	PART NUMBER	QTY	PART NAME 1 2 3 4 5 6 (PRODUCT LEVEL)	SEE PAGE
Y	*304-0728*	1	ADAPTER GP-AUXILIARY DRIVE	301
Y	*330-7211*	1	ALTERNATOR GP-CHARGING	1583
Y	*298-5090*	1	CAMSHAFT GP	320
Y	*301-8248*	1	CONNECTION GP-INLET	776
Y	*301-8243*	1	CONNECTION GP-WATER	687
Y	*304-6436*	1	CONTROL GP-ENGINE ELECTRONIC	1584
Y	*298-5099*	1	COOLER GP-ENGINE OIL	690
Y	*298-5097*	1	COVER GP-VALVE MECHANISM	335
Y	*298-5086*	1	CRANKSHAFT GP	378
Y	*298-5085*	1	CYLINDER BLOCK GP	398
Y	*298-5088*	1	CYLINDER HEAD GP	418
Y	*301-8238*	1	DRIVE GP-FAN	427
Y	*298-5100*	1	FILTER GP-ENGINE OIL	678
Y	*298-5123*	1	FILTER GP-PRIMARY FUEL	1009
Y	*301-8251*	1	FILTER GP-WATER SEP & FUEL	1013
Y	*306-2314*	1	FLYWHEEL GP	461
Y	*298-5125*	1	GLOW PLUG GP	1586
Y	*303-4618*	1	HOUSING GP-FLYWHEEL	481
Y	*304-0727*	1	HOUSING GP-FRONT	492
Y	*299-5033*	1	LIFTING GP-ENGINE	512
Y	*311-2271*	1	LINES GP-FUEL FILTER	1050
Y	*299-5082*	1	MOUNTING GP-FAN	713
Y	*298-5096*	1	PAN GP-OIL	533
Y	*304-8762*	1	PIPE GP-EXHAUST	790
Y	*298-5087*	1	PISTON & ROD GP	609
Y	*298-5129*	1	PLUG GP-CYLINDER HEAD	629
Y	*298-5098*	1	PLUG GP-ENGINE	631
Y	*298-5131*	1	PLUG GP-ENGINE	632
Y	*301-8250*	1	PLUG GP-ENGINE	633
Y	*298-5128*	1	PLUG GP-ENGINE OIL MANIFOLD	680
Y	*360-7342*	1	PULLEY GP-CRANKSHAFT	651
Y	*298-5112*	1	PUMP GP-ENGINE OIL	681
Y	*304-6570*	1	PUMP GP-FUEL INJECTION	1179
Y	*340-4692*	1	PUMP GP-WATER	722
Y	*298-5089*	1	ROCKER ARM GP	658
Y	*325-5612*	1	STARTING MOTOR GP-ELECTRIC	1597
Y	*311-7456*	1	TURBOCHARGER GP	887
Y	*298-5130*	1	WIRING GP-ENGINE	1604
R	**359-0739**	1	CYLINDER BLOCK GP-SHORT	
	305-8457	1	ELECTRONICS GP-ENGINE RATINGS	

R - REMANUFACTURED PART MAY BE AVAILABLE
Y - SEPARATE ILLUSTRATION

<END>

390-5144 ENGINE AR-PRIMARY

107 BRAKE KW (144 BHP) AT 2200 RPM

SMCS-1000 **i06831034**

NOTE	PART NUMBER	QTY	PART NAME 1 2 3 4 5 6 (PRODUCT LEVEL)	SEE PAGE
Y	*308-4275*	1	ADAPTER GP-AUXILIARY DRIVE	306
Y	*308-3351*	1	ALTERNATOR GP-CHARGING	1573
Y	*298-5090*	1	CAMSHAFT GP	320
Y	*298-5116*	1	CONNECTION GP-INLET	774
Y	*299-5078*	1	CONNECTION GP-WATER	686
Y	*304-6436*	1	CONTROL GP-ENGINE ELECTRONIC	1584
Y	*305-2579*	1	COOLER GP-OIL	698
Y	*301-8240*	1	COVER GP-VALVE MECHANISM	341
Y	*298-5086*	1	CRANKSHAFT GP	378
Y	*298-5085*	1	CYLINDER BLOCK GP	398
Y	*298-5088*	1	CYLINDER HEAD GP	418
Y	*311-8533*	1	DRIVE GP-FAN	434
Y	*307-2849*	1	FAN GP	702
Y	*317-6399*	1	FASTENER GP-TURBOCHARGER	788
Y	*298-5100*	1	FILTER GP-ENGINE OIL	678
Y	*298-5123*	1	FILTER GP-PRIMARY FUEL	1009
Y	*301-8251*	1	FILTER GP-WATER SEP & FUEL	1013
Y	*301-8237*	1	FLYWHEEL GP	455
Y	*298-5125*	1	GLOW PLUG GP	1586
Y	*303-4618*	1	HOUSING GP-FLYWHEEL	481
Y	*319-1582*	1	HOUSING GP-FRONT	499
Y	*299-5033*	1	LIFTING GP-ENGINE	512
Y	*311-2271*	1	LINES GP-FUEL FILTER	1050
Y	*304-3656*	1	PAN GP-OIL	549
Y	*298-5087*	1	PISTON & ROD GP	609
Y	*298-5129*	1	PLUG GP-CYLINDER HEAD	629
Y	*298-5098*	1	PLUG GP-ENGINE	631
Y	*301-8250*	1	PLUG GP-ENGINE	633
Y	*304-3663*	1	PLUG GP-ENGINE	634
Y	*298-5128*	1	PLUG GP-ENGINE OIL MANIFOLD	680
Y	*360-7346*	1	PULLEY GP-CRANKSHAFT	655
Y	*360-7355*	1	PULLEY GP-CRANKSHAFT	656
Y	*298-5112*	1	PUMP GP-ENGINE OIL	681
Y	*304-6570*	1	PUMP GP-FUEL INJECTION	1179
Y	*298-5105*	1	PUMP GP-WATER	714
Y	*298-5089*	1	ROCKER ARM GP	658
Y	*325-5612*	1	STARTING MOTOR GP-ELECTRIC	1597
Y	*298-5113*	1	TURBOCHARGER GP	791
Y	*298-5130*	1	WIRING GP-ENGINE	1604
R	**359-0739**	1	CYLINDER BLOCK GP-SHORT	
	305-8457	1	ELECTRONICS GP-ENGINE RATINGS	

R - REMANUFACTURED PART MAY BE AVAILABLE
Y - SEPARATE ILLUSTRATION

<END>

390-5148 ENGINE AR-PRIMARY

106 BRAKE KW (142 BHP) AT 2200 RPM

SMCS-1000 **i06683817**

NOTE	PART NUMBER	QTY	PART NAME 1 2 3 4 5 6 (PRODUCT LEVEL)	SEE PAGE
Y	*303-5774*	1	ALTERNATOR GP-CHARGING	1561
Y	*298-5090*	1	CAMSHAFT GP	320
Y	*298-5116*	1	CONNECTION GP-INLET	774
Y	*298-5107*	1	CONNECTION GP-WATER	685
Y	*304-6436*	1	CONTROL GP-ENGINE ELECTRONIC	1584
Y	*305-2579*	1	COOLER GP-OIL	698
Y	*298-5111*	1	COVER GP-ENGINE	332
Y	*303-5772*	1	COVER GP-VALVE MECHANISM	347
Y	*298-5086*	1	CRANKSHAFT GP	378
Y	*298-5085*	1	CYLINDER BLOCK GP	398
Y	*298-5088*	1	CYLINDER HEAD GP	418
Y	*311-8533*	1	DRIVE GP-FAN	434
Y	*318-0775*	1	FILLER GP-ENGINE OIL	676
Y	*298-5100*	1	FILTER GP-ENGINE OIL	678
Y	*298-5123*	1	FILTER GP-PRIMARY FUEL	1009
Y	*301-8251*	1	FILTER GP-WATER SEP & FUEL	1013
Y	*351-9871*	1	FLYWHEEL GP	471
Y	*298-5110*	1	GEAR GP-FRONT	475
Y	*298-5125*	1	GLOW PLUG GP	1586
Y	*299-5057*	1	HOUSING GP-FLYWHEEL	478
Y	*298-5127*	1	LIFTING GP-ENGINE	511
Y	*314-9819*	1	LINES GP-FUEL FILTER	1056
Y	*304-8763*	1	MOUNTING GP-ENGINE	519
Y	*299-5082*	1	MOUNTING GP-FAN	713
Y	*304-8757*	1	PAN GP-OIL	553
Y	*298-5087*	1	PISTON & ROD GP	609
Y	*298-5129*	1	PLUG GP-CYLINDER HEAD	629
Y	*298-5131*	1	PLUG GP-ENGINE	632
Y	*298-5128*	1	PLUG GP-ENGINE OIL MANIFOLD	680
Y	*360-7346*	1	PULLEY GP-CRANKSHAFT	655
Y	*298-5112*	1	PUMP GP-ENGINE OIL	681
Y	*304-6570*	1	PUMP GP-FUEL INJECTION	1179
Y	*298-5105*	1	PUMP GP-WATER	714
Y	*298-5089*	1	ROCKER ARM GP	658
Y	*325-5612*	1	STARTING MOTOR GP-ELECTRIC	1597
Y	*303-5776*	1	TURBOCHARGER GP	821
Y	*298-5130*	1	WIRING GP-ENGINE	1604
R	**359-0739**	1	CYLINDER BLOCK GP-SHORT	
	305-8457	1	ELECTRONICS GP-ENGINE RATINGS	

R - REMANUFACTURED PART MAY BE AVAILABLE
Y - SEPARATE ILLUSTRATION

<END>

391-4903 ENGINE AR-PRIMARY

75 KW (100 BHP) AT 2200 RPM

SMCS-1000 **i06831107**

NOTE	PART NUMBER	QTY	PART NAME 1 2 3 4 5 6 (PRODUCT LEVEL)	SEE PAGE
Y	*304-3648*	1	CAMSHAFT GP	322
Y	*298-5107*	1	CONNECTION GP-WATER	685
Y	*304-6436*	1	CONTROL GP-ENGINE ELECTRONIC	1584
Y	*298-5099*	1	COOLER GP-ENGINE OIL	690
Y	*305-2169*	1	COVER GP-INLET MANIFOLD	782
Y	*298-5097*	1	COVER GP-VALVE MECHANISM	335
Y	*304-3642*	1	CRANKSHAFT GP	382
Y	*304-3641*	1	CYLINDER BLOCK GP	402
Y	*304-3645*	1	CYLINDER HEAD GP	420
Y	*397-3885*	1	DRIVE GP-FAN	450
Y	*298-5100*	1	FILTER GP-ENGINE OIL	678
Y	*305-0642*	1	FILTER GP-FUEL	1000
Y	*301-8251*	1	FILTER GP-WATER SEP & FUEL	1013
Y	*397-3888*	1	FLYWHEEL GP	474
Y	*298-5125*	1	GLOW PLUG GP	1586
Y	*397-3886*	1	HOUSING GP-FLYWHEEL	491
Y	*304-8760*	1	HOUSING GP-FRONT	495
Y	*298-5127*	1	LIFTING GP-ENGINE	511
Y	*314-9819*	1	LINES GP-FUEL FILTER	1056
Y	*299-5082*	1	MOUNTING GP-FAN	713
Y	*322-8424*	1	PAN GP-OIL	571
Y	*304-8762*	1	PIPE GP-EXHAUST	790
Y	*304-3643*	1	PISTON & ROD GP	613
Y	*397-3889*	1	PLUG GP-ENGINE	642
Y	*298-5129*	1	PLUG GP-CYLINDER HEAD	629
Y	*298-5131*	1	PLUG GP-ENGINE	632
Y	*304-8761*	1	PLUG GP-ENGINE	636
Y	*312-2578*	1	PLUG GP-ENGINE	639
Y	*298-5128*	1	PLUG GP-ENGINE OIL MANIFOLD	680
Y	*360-7342*	1	PULLEY GP-CRANKSHAFT	651
Y	*298-5112*	1	PUMP GP-ENGINE OIL	681
Y	*313-4350*	1	PUMP GP-FUEL INJECTION	1398
Y	*298-5105*	1	PUMP GP-WATER	714
Y	*339-1795*	1	TURBOCHARGER GP	968
			—OR—	
Y	*325-0585*	1	TURBOCHARGER GP	914
Y	*304-3647*	1	VALVE MECHANISM GP	663
Y	*298-5130*	1	WIRING GP-ENGINE	1604
R	**359-0737**	1	CYLINDER BLOCK GP-SHORT	
	305-8460	1	ELECTRONICS GP-ENGINE RATINGS	

R - REMANUFACTURED PART MAY BE AVAILABLE
Y - SEPARATE ILLUSTRATION

<END>

391-4908 ENGINE AR-PRIMARY

82 BRAKE KW 9110 BHP) AT 2200 RPM

SMCS-1000 **i05412973**

NOTE	PART NUMBER	QTY	PART NAME 1 2 3 4 5 6 (PRODUCT LEVEL)	SEE PAGE
Y	*311-4639*	1	ALTERNATOR GP-CHARGING	1575
Y	*298-5892*	1	CAMSHAFT GP	321
Y	*301-8248*	1	CONNECTION GP-INLET	776
Y	*301-8243*	1	CONNECTION GP-WATER	687
Y	*304-6436*	1	CONTROL GP-ENGINE ELECTRONIC	1584
Y	*298-5099*	1	COOLER GP-ENGINE OIL	690
Y	*298-5111*	1	COVER GP-ENGINE	332
Y	*301-8240*	1	COVER GP-VALVE MECHANISM	341
Y	*298-5888*	1	CRANKSHAFT GP	380
Y	*298-5887*	1	CYLINDER BLOCK GP	400
YR	**359-0737**	1	CYLINDER BLOCK GP-SHORT	415
Y	*298-5890*	1	CYLINDER HEAD GP	419
Y	*316-7959*	1	DRIVE GP-FAN	436
Y	*314-5003*	1	FAN GP	707
Y	*298-5100*	1	FILTER GP-ENGINE OIL	678
Y	*298-5123*	1	FILTER GP-PRIMARY FUEL	1009
Y	*301-8251*	1	FILTER GP-WATER SEP & FUEL	1013
Y	*301-8237*	1	FLYWHEEL GP	455
Y	*298-5110*	1	GEAR GP-FRONT	475
Y	*299-5075*	1	GLOW PLUG GP	1587
Y	*303-4618*	1	HOUSING GP-FLYWHEEL	481
Y	*299-5033*	1	LIFTING GP-ENGINE	512
Y	*311-2271*	1	LINES GP-FUEL FILTER	1050
Y	*311-4641*	1	MOUNTING GP-ENGINE	521
Y	*298-5096*	1	PAN GP-OIL	533
Y	*304-8762*	1	PIPE GP-EXHAUST	790
Y	*298-5889*	1	PISTON GP	621
Y	*298-5129*	1	PLUG GP-CYLINDER HEAD	629
Y	*298-5098*	1	PLUG GP-ENGINE	631
Y	*298-5131*	1	PLUG GP-ENGINE	632
Y	*298-5128*	1	PLUG GP-ENGINE OIL MANIFOLD	680
Y	*360-7343*	1	PULLEY GP-CRANKSHAFT	652
Y	*298-5112*	1	PUMP GP-ENGINE OIL	681
Y	*307-2847*	1	PUMP GP-FUEL INJECTION	1323
Y	*298-5105*	1	PUMP GP-WATER	714
Y	*312-1672*	1	RADIATOR GP	738
Y	*299-5067*	1	STARTING MOTOR GP-ELECTRIC	1591
Y	*307-2850*	1	TURBOCHARGER GP	857
Y	*298-5891*	1	VALVE MECHANISM GP	661
Y	*298-5130*	1	WIRING GP-ENGINE	1604
	307-2848	1	ELECTRONICS GP-ENGINE RATINGS	

R - REMANUFACTURED PART MAY BE AVAILABLE
Y - SEPARATE ILLUSTRATION

<END>

391-4910 ENGINE AR-PRIMARY

107 BRAKE KW (144 BHP) AT 2200 RPM

SMCS-1000 **i06657811**

NOTE	PART NUMBER	QTY	PART NAME 1 2 3 4 5 6 (PRODUCT LEVEL)	SEE PAGE
Y	*311-4639*	1	ALTERNATOR GP-CHARGING	1575
Y	*298-5090*	1	CAMSHAFT GP	320
Y	*301-8248*	1	CONNECTION GP-INLET	776
Y	*301-8243*	1	CONNECTION GP-WATER	687
Y	*304-6436*	1	CONTROL GP-ENGINE ELECTRONIC	1584
Y	*298-5099*	1	COOLER GP-ENGINE OIL	690
Y	*298-5111*	1	COVER GP-ENGINE	332
Y	*301-8240*	1	COVER GP-VALVE MECHANISM	341
Y	*298-5086*	1	CRANKSHAFT GP	378
Y	*298-5085*	1	CYLINDER BLOCK GP	398
Y	*298-5088*	1	CYLINDER HEAD GP	418
Y	*316-7959*	1	DRIVE GP-FAN	436
Y	*314-5003*	1	FAN GP	707
Y	*298-5100*	1	FILTER GP-ENGINE OIL	678
Y	*298-5123*	1	FILTER GP-PRIMARY FUEL	1009
Y	*301-8251*	1	FILTER GP-WATER SEP & FUEL	1013
Y	*301-8237*	1	FLYWHEEL GP	455
Y	*298-5110*	1	GEAR GP-FRONT	475
Y	*299-5075*	1	GLOW PLUG GP	1587
Y	*303-4618*	1	HOUSING GP-FLYWHEEL	481
Y	*299-5033*	1	LIFTING GP-ENGINE	512
Y	*311-2271*	1	LINES GP-FUEL FILTER	1050
Y	*311-4641*	1	MOUNTING GP-ENGINE	521
Y	*298-5096*	1	PAN GP-OIL	533
Y	*304-8762*	1	PIPE GP-EXHAUST	790
Y	*298-5087*	1	PISTON & ROD GP	609
Y	*298-5129*	1	PLUG GP-CYLINDER HEAD	629
Y	*298-5098*	1	PLUG GP-ENGINE	631
Y	*298-5131*	1	PLUG GP-ENGINE	632
Y	*298-5128*	1	PLUG GP-ENGINE OIL MANIFOLD	680
Y	*360-7343*	1	PULLEY GP-CRANKSHAFT	652
Y	*298-5112*	1	PUMP GP-ENGINE OIL	681
Y	*304-6570*	1	PUMP GP-FUEL INJECTION	1179
Y	*298-5105*	1	PUMP GP-WATER	714
Y	*312-1672*	1	RADIATOR GP	738
Y	*298-5089*	1	ROCKER ARM GP	658
Y	*299-5067*	1	STARTING MOTOR GP-ELECTRIC	1591
Y	*307-2850*	1	TURBOCHARGER GP	857
Y	*298-5130*	1	WIRING GP-ENGINE	1604
R	**359-0739**	1	CYLINDER BLOCK GP-SHORT	
	305-8457	1	ELECTRONICS GP-ENGINE RATINGS	

R - REMANUFACTURED PART MAY BE AVAILABLE
Y - SEPARATE ILLUSTRATION

<END>

391-4912 ENGINE AR-PRIMARY

104 BRAKE KW (139 BHP) AT 2200 RPM

SMCS-1000 **i05016872**

NOTE	PART NUMBER	QTY	PART NAME 1 2 3 4 5 6 (PRODUCT LEVEL)	SEE PAGE
Y	*311-7455*	1	ALTERNATOR GP-CHARGING	1577
Y	*301-8245*	1	BALANCER GP	317
Y	*298-5090*	1	CAMSHAFT GP	320
Y	*301-8248*	1	CONNECTION GP-INLET	776
Y	*301-8243*	1	CONNECTION GP-WATER	687
Y	*304-6436*	1	CONTROL GP-ENGINE ELECTRONIC	1584
Y	*301-8241*	1	COOLER GP-OIL	697
Y	*298-5111*	1	COVER GP-ENGINE	332
Y	*301-8240*	1	COVER GP-VALVE MECHANISM	341
Y	*298-5086*	1	CRANKSHAFT GP	378
Y	*298-5085*	1	CYLINDER BLOCK GP	398
Y	*298-5088*	1	CYLINDER HEAD GP	418
Y	*316-7959*	1	DRIVE GP-FAN	436
Y	*314-5003*	1	FAN GP	707
Y	*298-5100*	1	FILTER GP-ENGINE OIL	678
Y	*298-5123*	1	FILTER GP-PRIMARY FUEL	1009
Y	*301-8251*	1	FILTER GP-WATER SEP & FUEL	1013
Y	*301-8237*	1	FLYWHEEL GP	455
Y	*298-5110*	1	GEAR GP-FRONT	475
Y	*298-5125*	1	GLOW PLUG GP	1586
Y	*301-8236*	1	HOUSING GP-FLYWHEEL	479
Y	*299-5033*	1	LIFTING GP-ENGINE	512
Y	*311-2271*	1	LINES GP-FUEL FILTER	1050
Y	*311-4641*	1	MOUNTING GP-ENGINE	521
Y	*301-8239*	1	PAN GP-OIL	541
Y	*304-8762*	1	PIPE GP-EXHAUST	790
Y	*298-5087*	1	PISTON & ROD GP	609
Y	*298-5129*	1	PLUG GP-CYLINDER HEAD	629
Y	*298-5098*	1	PLUG GP-ENGINE	631
Y	*298-5131*	1	PLUG GP-ENGINE	632
Y	*298-5128*	1	PLUG GP-ENGINE OIL MANIFOLD	680
Y	*360-7343*	1	PULLEY GP-CRANKSHAFT	652
Y	*301-8235*	1	PUMP GP-FUEL INJECTION	1114
Y	*298-5105*	1	PUMP GP-WATER	714
Y	*312-1672*	1	RADIATOR GP	738
Y	*298-5089*	1	ROCKER ARM GP	658
Y	*325-5612*	1	STARTING MOTOR GP-ELECTRIC	1597
Y	*311-7456*	1	TURBOCHARGER GP	887
Y	*298-5130*	1	WIRING GP-ENGINE	1604
R	**359-0739**	1	CYLINDER BLOCK GP-SHORT	
	301-8234	1	ELECTRONICS GP-ENGINE RATINGS	

R - REMANUFACTURED PART MAY BE AVAILABLE
Y - SEPARATE ILLUSTRATION

<END>

391-8751 ENGINE AR-PRIMARY

139 BHP (104 KW) AT 2400 RPM

SMCS-1000 **i06831111**

NOTE	PART NUMBER	QTY	PART NAME 1 2 3 4 5 6 (PRODUCT LEVEL)	SEE PAGE
Y	*301-8245*	1	BALANCER GP	317
Y	*298-5090*	1	CAMSHAFT GP	320
Y	*301-8248*	1	CONNECTION GP-INLET	776
Y	*301-8243*	1	CONNECTION GP-WATER	687
Y	*304-6436*	1	CONTROL GP-ENGINE ELECTRONIC	1584
Y	*301-8241*	1	COOLER GP-OIL	697
Y	*298-5111*	1	COVER GP-ENGINE	332
Y	*298-5097*	1	COVER GP-VALVE MECHANISM	335
Y	*298-5086*	1	CRANKSHAFT GP	378
Y	*298-5085*	1	CYLINDER BLOCK GP	398
Y	*298-5088*	1	CYLINDER HEAD GP	418
Y	*330-3666*	1	DRIVE GP-FAN	444
Y	*318-0775*	1	FILLER GP-ENGINE OIL	676
Y	*298-5100*	1	FILTER GP-ENGINE OIL	678
Y	*298-5123*	1	FILTER GP-PRIMARY FUEL	1009
Y	*301-8251*	1	FILTER GP-WATER SEP & FUEL	1013
Y	*298-5110*	1	GEAR GP-FRONT	475
Y	*298-5125*	1	GLOW PLUG GP	1586
Y	*299-5033*	1	LIFTING GP-ENGINE	512
Y	*311-2271*	1	LINES GP-FUEL FILTER	1050
Y	*304-0730*	1	MOUNTING GP-ENGINE	518
Y	*299-5082*	1	MOUNTING GP-FAN	713
Y	*301-8239*	1	PAN GP-OIL	541
Y	*298-5087*	1	PISTON & ROD GP	609
Y	*298-5129*	1	PLUG GP-CYLINDER HEAD	629
Y	*298-5131*	1	PLUG GP-ENGINE	632
Y	*298-5128*	1	PLUG GP-ENGINE OIL MANIFOLD	680
Y	*360-7346*	1	PULLEY GP-CRANKSHAFT	655
Y	*304-7192*	1	PUMP GP-FUEL INJECTION	1224
Y	*298-5105*	1	PUMP GP-WATER	714
Y	*298-5089*	1	ROCKER ARM GP	658
Y	*304-0729*	1	TURBOCHARGER GP	824
Y	*298-5130*	1	WIRING GP-ENGINE	1604
R	**359-0739**	1	CYLINDER BLOCK GP-SHORT	
	305-8462	1	ELECTRONICS GP-ENGINE RATINGS	

R - REMANUFACTURED PART MAY BE AVAILABLE
Y - SEPARATE ILLUSTRATION

<END>

391-8752 ENGINE AR-PRIMARY

107 BRAKE KW (144 BHP) AT 2200 RPM

SMCS-1000 **i06831118**

NOTE	PART NUMBER	QTY	PART NAME 1 2 3 4 5 6 (PRODUCT LEVEL)	SEE PAGE
Y	*308-4275*	1	ADAPTER GP-AUXILIARY DRIVE	306
Y	*311-4639*	1	ALTERNATOR GP-CHARGING	1575
Y	*298-5090*	1	CAMSHAFT GP	320
Y	*301-8248*	1	CONNECTION GP-INLET	776
Y	*301-8243*	1	CONNECTION GP-WATER	687
Y	*304-6436*	1	CONTROL GP-ENGINE ELECTRONIC	1584
Y	*298-5099*	1	COOLER GP-ENGINE OIL	690
Y	*301-8240*	1	COVER GP-VALVE MECHANISM	341
Y	*298-5086*	1	CRANKSHAFT GP	378
Y	*298-5085*	1	CYLINDER BLOCK GP	398
Y	*298-5088*	1	CYLINDER HEAD GP	418
Y	*311-4644*	1	DRIVE GP-FAN	433
Y	*311-8536*	1	FAN GP	705
Y	*298-5100*	1	FILTER GP-ENGINE OIL	678
Y	*298-5123*	1	FILTER GP-PRIMARY FUEL	1009
Y	*301-8251*	1	FILTER GP-WATER SEP & FUEL	1013
Y	*306-2314*	1	FLYWHEEL GP	461
Y	*298-5110*	1	GEAR GP-FRONT	475
Y	*299-5075*	1	GLOW PLUG GP	1587
Y	*303-4618*	1	HOUSING GP-FLYWHEEL	481
Y	*299-5033*	1	LIFTING GP-ENGINE	512
Y	*311-2271*	1	LINES GP-FUEL FILTER	1050
Y	*298-5096*	1	PAN GP-OIL	533
Y	*298-5087*	1	PISTON & ROD GP	609
Y	*298-5129*	1	PLUG GP-CYLINDER HEAD	629
Y	*298-5098*	1	PLUG GP-ENGINE	631
Y	*298-5131*	1	PLUG GP-ENGINE (THREADED)	632
Y	*301-8250*	1	PLUG GP-ENGINE	633
Y	*298-5128*	1	PLUG GP-ENGINE OIL MANIFOLD	680
Y	*360-7343*	1	PULLEY GP-CRANKSHAFT	652
Y	*298-5112*	1	PUMP GP-ENGINE OIL	681
Y	*304-6570*	1	PUMP GP-FUEL INJECTION	1179
Y	*298-5105*	1	PUMP GP-WATER	714
Y	*298-5089*	1	ROCKER ARM GP	658
Y	*299-5067*	1	STARTING MOTOR GP-ELECTRIC	1591
Y	*307-2850*	1	TURBOCHARGER GP	857
Y	*298-5130*	1	WIRING GP-ENGINE	1604
R	**359-0739**	1	CYLINDER BLOCK GP-SHORT	
	305-8457	1	ELECTRONICS GP-ENGINE RATINGS	

R - REMANUFACTURED PART MAY BE AVAILABLE
Y - SEPARATE ILLUSTRATION

<END>

391-8755 ENGINE AR-PRIMARY

129 BHP (97 KW) AT 2200 RPM

SMCS-1000 **i06657686**

NOTE	PART NUMBER	QTY	PART NAME 1 2 3 4 5 6 (PRODUCT LEVEL)	SEE PAGE
Y	*304-0728*	1	ADAPTER GP-AUXILIARY DRIVE	301
Y	*311-7455*	1	ALTERNATOR GP-CHARGING	1577
Y	*298-5892*	1	CAMSHAFT GP	321
Y	*301-8243*	1	CONNECTION GP-WATER	687
Y	*304-6436*	1	CONTROL GP-ENGINE ELECTRONIC	1584
Y	*298-5099*	1	COOLER GP-ENGINE OIL	690
Y	*304-5574*	1	COVER GP-VALVE MECHANISM	351
Y	*298-5888*	1	CRANKSHAFT GP	380
Y	*298-5887*	1	CYLINDER BLOCK GP	400
Y	*298-5890*	1	CYLINDER HEAD GP	419
Y	*316-7959*	1	DRIVE GP-FAN	436
Y	*311-4640*	1	FAN GP	704
Y	*299-5071*	1	FILLER GP-ENGINE OIL	670
Y	*298-5100*	1	FILTER GP-ENGINE OIL	678
Y	*303-5780*	1	FILTER GP-FUEL	999
Y	*322-3755*	1	FILTER GP-FUEL	1005
Y	*299-5063*	1	FLYWHEEL GP	454
Y	*298-5125*	1	GLOW PLUG GP	1586
Y	*299-5057*	1	HOUSING GP-FLYWHEEL	478
Y	*304-0727*	1	HOUSING GP-FRONT	492
Y	*299-5033*	1	LIFTING GP-ENGINE	512
Y	*322-3754*	1	LINES GP-FUEL	1036
Y	*323-6804*	1	MOUNTING GP-ENGINE	529
Y	*377-8331*	1	PAN GP-OIL	603
Y	*304-8762*	1	PIPE GP-EXHAUST	790
Y	*298-5889*	1	PISTON GP	621
Y	*298-5129*	1	PLUG GP-CYLINDER HEAD	629
Y	*298-5131*	1	PLUG GP-ENGINE	632
Y	*298-5128*	1	PLUG GP-ENGINE OIL MANIFOLD	680
Y	*360-7343*	1	PULLEY GP-CRANKSHAFT	652
Y	*298-5112*	1	PUMP GP-ENGINE OIL	681
Y	*322-3753*	1	PUMP GP-FUEL INJECTION	1503
Y	*340-4692*	1	PUMP GP-WATER	722
Y	*381-0115*	1	RADIATOR GP	769
Y	*325-5612*	1	STARTING MOTOR GP-ELECTRIC	1597
Y	*365-1581*	1	TURBOCHARGER GP	986
Y	*298-5891*	1	VALVE MECHANISM GP	661
Y	*316-1102*	1	WIRING GP-ENGINE	1613
R	**359-0737**	1	CYLINDER BLOCK GP-SHORT	
	305-8458	1	ELECTRONICS GP-ENGINE RATINGS	

R - REMANUFACTURED PART MAY BE AVAILABLE
Y - SEPARATE ILLUSTRATION

<END>

391-8758 ENGINE AR-PRIMARY

97 BRAKE KW (129 BHPO AT 2200 RPM

SMCS-1000 **i06831119**

NOTE	PART NUMBER	QTY	PART NAME 1 2 3 4 5 6 (PRODUCT LEVEL)	SEE PAGE
Y	*304-0728*	1	ADAPTER GP-AUXILIARY DRIVE	301
Y	*311-7455*	1	ALTERNATOR GP-CHARGING	1577
Y	*298-5892*	1	CAMSHAFT GP	321
Y	*301-8248*	1	CONNECTION GP-INLET	776
Y	*301-8243*	1	CONNECTION GP-WATER	687
Y	*304-6436*	1	CONTROL GP-ENGINE ELECTRONIC	1584
Y	*298-5099*	1	COOLER GP-ENGINE OIL	690
Y	*304-5574*	1	COVER GP-VALVE MECHANISM	351
Y	*298-5888*	1	CRANKSHAFT GP	380
Y	*298-5887*	1	CYLINDER BLOCK GP	400
Y	*298-5890*	1	CYLINDER HEAD GP	419
Y	*316-7959*	1	DRIVE GP-FAN	436
Y	*311-4640*	1	FAN GP	704
Y	*299-5071*	1	FILLER GP-ENGINE OIL	670
Y	*298-5100*	1	FILTER GP-ENGINE OIL	678
Y	*303-5780*	1	FILTER GP-FUEL	999
Y	*322-3755*	1	FILTER GP-FUEL	1005
Y	*299-5063*	1	FLYWHEEL GP	454
Y	*298-5125*	1	GLOW PLUG GP	1586
Y	*299-5057*	1	HOUSING GP-FLYWHEEL	478
Y	*304-0727*	1	HOUSING GP-FRONT	492
Y	*299-5033*	1	LIFTING GP-ENGINE	512
Y	*322-3754*	1	LINES GP-FUEL	1036
Y	*323-6804*	1	MOUNTING GP-ENGINE	529
Y	*377-8331*	1	PAN GP-OIL	603
Y	*304-8762*	1	PIPE GP-EXHAUST	790
Y	*298-5889*	1	PISTON GP	621
Y	*298-5129*	1	PLUG GP-CYLINDER HEAD	629
Y	*298-5131*	1	PLUG GP-ENGINE	632
Y	*298-5128*	1	PLUG GP-ENGINE OIL MANIFOLD	680
Y	*360-7343*	1	PULLEY GP-CRANKSHAFT	652
Y	*298-5112*	1	PUMP GP-ENGINE OIL	681
Y	*322-3753*	1	PUMP GP-FUEL INJECTION	1503
Y	*340-4692*	1	PUMP GP-WATER	722
Y	*381-0115*	1	RADIATOR GP	769
Y	*325-5612*	1	STARTING MOTOR GP-ELECTRIC	1597
Y	*365-1581*	1	TURBOCHARGER GP	986
Y	*298-5891*	1	VALVE MECHANISM GP	661
Y	*316-1102*	1	WIRING GP-ENGINE	1613
R	**359-0737**	1	CYLINDER BLOCK GP-SHORT	
	305-8458	1	ELECTRONICS GP-ENGINE RATINGS	

R - REMANUFACTURED PART MAY BE AVAILABLE
Y - SEPARATE ILLUSTRATION

<END>

392-0442 ENGINE AR-PRIMARY

97 BRAKE KW (129 BHP) AT 2200 RPM

SMCS-1000 **i06657568**

NOTE	PART NUMBER	QTY	PART NAME 1 2 3 4 5 6 (PRODUCT LEVEL)	SEE PAGE
Y	*304-0728*	1	ADAPTER GP-AUXILIARY DRIVE	301
Y	*311-7455*	1	ALTERNATOR GP-CHARGING	1577
Y	*298-5892*	1	CAMSHAFT GP	321
Y	*301-8243*	1	CONNECTION GP-WATER	687
Y	*304-6436*	1	CONTROL GP-ENGINE ELECTRONIC	1584
Y	*298-5099*	1	COOLER GP-ENGINE OIL	690
Y	*304-5574*	1	COVER GP-VALVE MECHANISM	351
Y	*298-5888*	1	CRANKSHAFT GP	380
Y	*298-5887*	1	CYLINDER BLOCK GP	400
Y	*298-5890*	1	CYLINDER HEAD GP	419
Y	*311-4644*	1	DRIVE GP-FAN	433
			—OR—	
Y	*316-7959*	1	DRIVE GP-FAN	436
Y	*311-4640*	1	FAN GP	704
Y	*298-5100*	1	FILTER GP-ENGINE OIL	678
Y	*303-5780*	1	FILTER GP-FUEL	999
Y	*322-8426*	1	FILTER GP-FUEL	1006
Y	*299-5063*	1	FLYWHEEL GP	454
Y	*298-5125*	1	GLOW PLUG GP	1586
Y	*299-5057*	1	HOUSING GP-FLYWHEEL	478
Y	*304-0727*	1	HOUSING GP-FRONT	492
Y	*299-5033*	1	LIFTING GP-ENGINE	512
Y	*322-8425*	1	LINES GP-FUEL	1041
Y	*323-6804*	1	MOUNTING GP-ENGINE	529
Y	*377-8331*	1	PAN GP-OIL	603
Y	*304-8762*	1	PIPE GP-EXHAUST	790
Y	*298-5889*	1	PISTON GP	621
Y	*298-5129*	1	PLUG GP-CYLINDER HEAD	629
Y	*298-5098*	1	PLUG GP-ENGINE	631
Y	*298-5131*	1	PLUG GP-ENGINE	632
Y	*298-5128*	1	PLUG GP-ENGINE OIL MANIFOLD	680
Y	*360-7343*	1	PULLEY GP-CRANKSHAFT	652
Y	*298-5112*	1	PUMP GP-ENGINE OIL	681
Y	*303-4615*	1	PUMP GP-FUEL INJECTION	1134
Y	*340-4692*	1	PUMP GP-WATER	722
Y	*311-4636*	1	RADIATOR GP	730
			—OR—	
Y	*381-0115*	1	RADIATOR GP	769
Y	*325-5612*	1	STARTING MOTOR GP-ELECTRIC	1597
Y	*333-8976*	1	TURBOCHARGER GP	960
Y	*298-5891*	1	VALVE MECHANISM GP	661
Y	*298-5130*	1	WIRING GP-ENGINE	1604
R	**359-0737**	1	CYLINDER BLOCK GP-SHORT	
	305-8458	1	ELECTRONICS GP-ENGINE RATINGS	

R - REMANUFACTURED PART MAY BE AVAILABLE
Y - SEPARATE ILLUSTRATION

<END>

392-0445 ENGINE AR-PRIMARY

97 BRAKE KW (129 BHP) AT 2200 RPM

SMCS-1000 **i06657531**

NOTE	PART NUMBER	QTY	PART NAME 1 2 3 4 5 6 (PRODUCT LEVEL)	SEE PAGE
Y	*304-0728*	1	ADAPTER GP-AUXILIARY DRIVE	301
Y	*311-7455*	1	ALTERNATOR GP-CHARGING	1577
Y	*298-5892*	1	CAMSHAFT GP	321
Y	*301-8243*	1	CONNECTION GP-WATER	687
Y	*304-6436*	1	CONTROL GP-ENGINE ELECTRONIC	1584
Y	*298-5099*	1	COOLER GP-ENGINE OIL	690
Y	*304-5574*	1	COVER GP-VALVE MECHANISM	351
Y	*298-5888*	1	CRANKSHAFT GP	380
Y	*298-5887*	1	CYLINDER BLOCK GP	400
Y	*298-5890*	1	CYLINDER HEAD GP	419
Y	*311-4644*	1	DRIVE GP-FAN	433
Y	*311-4640*	1	FAN GP	704
Y	*298-5100*	1	FILTER GP-ENGINE OIL	678
Y	*303-5780*	1	FILTER GP-FUEL (FUEL PRESSURE)	999
Y	*322-8426*	1	FILTER GP-FUEL	1006
Y	*299-5063*	1	FLYWHEEL GP	454
Y	*298-5125*	1	GLOW PLUG GP	1586
Y	*299-5057*	1	HOUSING GP-FLYWHEEL	478
Y	*304-0727*	1	HOUSING GP-FRONT	492
Y	*299-5033*	1	LIFTING GP-ENGINE	512
Y	*322-8425*	1	LINES GP-FUEL	1041
Y	*323-6804*	1	MOUNTING GP-ENGINE	529
Y	*377-8331*	1	PAN GP-OIL	603
Y	*304-8762*	1	PIPE GP-EXHAUST	790
Y	*298-5889*	1	PISTON GP	621
Y	*298-5129*	1	PLUG GP-CYLINDER HEAD	629
Y	*298-5098*	1	PLUG GP-ENGINE	631
Y	*298-5131*	1	PLUG GP-ENGINE (THREADED)	632
Y	*298-5128*	1	PLUG GP-ENGINE OIL MANIFOLD	680
Y	*360-7343*	1	PULLEY GP-CRANKSHAFT	652
Y	*298-5112*	1	PUMP GP-ENGINE OIL	681
Y	*303-4615*	1	PUMP GP-FUEL INJECTION	1134
Y	*340-4692*	1	PUMP GP-WATER	722
Y	*311-4636*	1	RADIATOR GP	730
Y	*325-5612*	1	STARTING MOTOR GP-ELECTRIC	1597
Y	*333-8976*	1	TURBOCHARGER GP	960
Y	*298-5891*	1	VALVE MECHANISM GP	661
Y	*298-5130*	1	WIRING GP-ENGINE	1604
R	**359-0737**	1	CYLINDER BLOCK GP-SHORT	
	305-8458	1	ELECTRONICS GP-ENGINE RATINGS	

R - REMANUFACTURED PART MAY BE AVAILABLE
Y - SEPARATE ILLUSTRATION

<END>

392-0447 ENGINE AR-PRIMARY

97 BRAKE KW (129 BHP) AT 2200 RPM

SMCS-1000 **i06831125**

NOTE	PART NUMBER	QTY	PART NAME 1 2 3 4 5 6 (PRODUCT LEVEL)	SEE PAGE
Y	*304-0728*	1	ADAPTER GP-AUXILIARY DRIVE	301
Y	*311-7455*	1	ALTERNATOR GP-CHARGING	1577
Y	*298-5892*	1	CAMSHAFT GP	321
Y	*301-8248*	1	CONNECTION GP-INLET	776
Y	*301-8243*	1	CONNECTION GP-WATER	687
Y	*304-6436*	1	CONTROL GP-ENGINE ELECTRONIC	1584
Y	*298-5099*	1	COOLER GP-ENGINE OIL	690
Y	*304-5574*	1	COVER GP-VALVE MECHANISM	351
Y	*298-5888*	1	CRANKSHAFT GP	380
Y	*298-5887*	1	CYLINDER BLOCK GP	400
Y	*298-5890*	1	CYLINDER HEAD GP	419
Y	*311-4644*	1	DRIVE GP-FAN	433
Y	*311-4640*	1	FAN GP	704
Y	*298-5100*	1	FILTER GP-ENGINE OIL	678
Y	*303-5780*	1	FILTER GP-FUEL	999
Y	*322-8426*	1	FILTER GP-FUEL	1006
Y	*299-5063*	1	FLYWHEEL GP	454
Y	*298-5125*	1	GLOW PLUG GP	1586
Y	*299-5057*	1	HOUSING GP-FLYWHEEL	478
Y	*304-0727*	1	HOUSING GP-FRONT	492
Y	*299-5033*	1	LIFTING GP-ENGINE	512
Y	*322-8425*	1	LINES GP-FUEL	1041
Y	*323-6804*	1	MOUNTING GP-ENGINE	529
Y	*377-8331*	1	PAN GP-OIL	603
Y	*304-8762*	1	PIPE GP-EXHAUST	790
Y	*298-5889*	1	PISTON GP	621
Y	*298-5129*	1	PLUG GP-CYLINDER HEAD	629
Y	*298-5098*	1	PLUG GP-ENGINE	631
Y	*298-5131*	1	PLUG GP-ENGINE (THREADED)	632
Y	*298-5128*	1	PLUG GP-ENGINE OIL MANIFOLD	680
Y	*360-7343*	1	PULLEY GP-CRANKSHAFT	652
Y	*298-5112*	1	PUMP GP-ENGINE OIL	681
Y	*303-4615*	1	PUMP GP-FUEL INJECTION	1134
Y	*340-4692*	1	PUMP GP-WATER	722
Y	*311-4636*	1	RADIATOR GP	730
Y	*325-5612*	1	STARTING MOTOR GP-ELECTRIC	1597
Y	*333-8976*	1	TURBOCHARGER GP	960
Y	*298-5891*	1	VALVE MECHANISM GP	661
Y	*298-5130*	1	WIRING GP-ENGINE	1604
R	**359-0737**	1	CYLINDER BLOCK GP-SHORT	
	305-8458	1	ELECTRONICS GP-ENGINE RATINGS	

R - REMANUFACTURED PART MAY BE AVAILABLE
Y - SEPARATE ILLUSTRATION

<END>

392-0448 ENGINE AR-PRIMARY

97 BRAKE KW (129 BHP) AT 2200 RPM

SMCS-1000 **i06809763**

NOTE	PART NUMBER	QTY	PART NAME 1 2 3 4 5 6 (PRODUCT LEVEL)	SEE PAGE
Y	*304-0728*	1	ADAPTER GP-AUXILIARY DRIVE	301
Y	*311-7455*	1	ALTERNATOR GP-CHARGING	1577
Y	*298-5892*	1	CAMSHAFT GP	321
Y	*301-8248*	1	CONNECTION GP-INLET	776
Y	*301-8243*	1	CONNECTION GP-WATER	687
Y	*304-6436*	1	CONTROL GP-ENGINE ELECTRONIC	1584
Y	*298-5099*	1	COOLER GP-ENGINE OIL	690
Y	*304-5574*	1	COVER GP-VALVE MECHANISM	351
Y	*298-5888*	1	CRANKSHAFT GP	380
Y	*298-5887*	1	CYLINDER BLOCK GP	400
YR	**359-0737**	1	CYLINDER BLOCK GP-SHORT	415
Y	*298-5890*	1	CYLINDER HEAD GP	419
Y	*311-4644*	1	DRIVE GP-FAN	433
Y	*311-4640*	1	FAN GP	704
Y	*298-5100*	1	FILTER GP-ENGINE OIL	678
Y	*303-5780*	1	FILTER GP-FUEL	999
Y	*322-8426*	1	FILTER GP-FUEL	1006
Y	*299-5063*	1	FLYWHEEL GP	454
Y	*298-5125*	1	GLOW PLUG GP	1586
Y	*299-5057*	1	HOUSING GP-FLYWHEEL	478
Y	*304-0727*	1	HOUSING GP-FRONT	492
Y	*299-5033*	1	LIFTING GP-ENGINE	512
Y	*322-8425*	1	LINES GP-FUEL	1041
Y	*323-6804*	1	MOUNTING GP-ENGINE	529
Y	*377-8331*	1	PAN GP-OIL	603
Y	*304-8762*	1	PIPE GP-EXHAUST	790
Y	*298-5889*	1	PISTON GP	621
Y	*298-5129*	1	PLUG GP-CYLINDER HEAD	629
Y	*298-5098*	1	PLUG GP-ENGINE	631
Y	*298-5131*	1	PLUG GP-ENGINE	632
Y	*298-5128*	1	PLUG GP-ENGINE OIL MANIFOLD	680
Y	*360-7343*	1	PULLEY GP-CRANKSHAFT	652
Y	*298-5112*	1	PUMP GP-ENGINE OIL	681
Y	*303-4615*	1	PUMP GP-FUEL INJECTION	1134
Y	*340-4692*	1	PUMP GP-WATER	722
Y	*311-4636*	1	RADIATOR GP	730
Y	*325-5612*	1	STARTING MOTOR GP-ELECTRIC	1597
Y	*333-8976*	1	TURBOCHARGER GP	960
Y	*298-5891*	1	VALVE MECHANISM GP	661
Y	*298-5130*	1	WIRING GP-ENGINE	1604
	305-8458	1	ELECTRONICS GP-ENGINE RATINGS	

R - REMANUFACTURED PART MAY BE AVAILABLE
Y - SEPARATE ILLUSTRATION

<END>

392-5649 ENGINE AR-PRIMARY

129 BHP (97 KW) AT 2200 RPM

SMCS-1000 **i06831128**

NOTE	PART NUMBER	QTY	PART NAME 1 2 3 4 5 6 (PRODUCT LEVEL)	SEE PAGE
Y	*304-0728*	1	ADAPTER GP-AUXILIARY DRIVE	301
Y	*311-7455*	1	ALTERNATOR GP-CHARGING	1577
Y	*298-5892*	1	CAMSHAFT GP	321
Y	*301-8248*	1	CONNECTION GP-INLET	776
Y	*301-8243*	1	CONNECTION GP-WATER	687
Y	*304-6436*	1	CONTROL GP-ENGINE ELECTRONIC	1584
Y	*298-5099*	1	COOLER GP-ENGINE OIL	690
Y	*304-5574*	1	COVER GP-VALVE MECHANISM	351
Y	*298-5888*	1	CRANKSHAFT GP	380
Y	*298-5887*	1	CYLINDER BLOCK GP	400
Y	*298-5890*	1	CYLINDER HEAD GP	419
Y	*311-4644*	1	DRIVE GP-FAN	433
			—OR—	
Y	*316-7959*	1	DRIVE GP-FAN	436
Y	*311-4640*	1	FAN GP	704
Y	*298-5100*	1	FILTER GP-ENGINE OIL	678
Y	*303-5780*	1	FILTER GP-FUEL	999
Y	*322-8426*	1	FILTER GP-FUEL	1006
Y	*299-5063*	1	FLYWHEEL GP	454
Y	*298-5125*	1	GLOW PLUG GP	1586
Y	*299-5057*	1	HOUSING GP-FLYWHEEL	478
Y	*304-0727*	1	HOUSING GP-FRONT	492
Y	*299-5033*	1	LIFTING GP-ENGINE	512
Y	*322-8425*	1	LINES GP-FUEL	1041
Y	*323-6804*	1	MOUNTING GP-ENGINE	529
Y	*377-8331*	1	PAN GP-OIL	603
Y	*304-8762*	1	PIPE GP-EXHAUST	790
Y	*298-5889*	1	PISTON GP	621
Y	*298-5129*	1	PLUG GP-CYLINDER HEAD	629
Y	*298-5098*	1	PLUG GP-ENGINE	631
Y	*298-5131*	1	PLUG GP-ENGINE	632
Y	*298-5128*	1	PLUG GP-ENGINE OIL MANIFOLD	680
Y	*360-7343*	1	PULLEY GP-CRANKSHAFT	652
Y	*298-5112*	1	PUMP GP-ENGINE OIL	681
Y	*303-4615*	1	PUMP GP-FUEL INJECTION	1134
Y	*340-4692*	1	PUMP GP-WATER	722
Y	*311-4636*	1	RADIATOR GP	730
			—OR—	
Y	*381-0115*	1	RADIATOR GP	769
Y	*325-5612*	1	STARTING MOTOR GP-ELECTRIC	1597
Y	*333-8976*	1	TURBOCHARGER GP	960
Y	*298-5891*	1	VALVE MECHANISM GP	661
Y	*298-5130*	1	WIRING GP-ENGINE	1604
	305-8458	1	ELECTRONICS GP-ENGINE RATINGS	

Y - SEPARATE ILLUSTRATION

<END>

392-5651 ENGINE AR-PRIMARY

95 BRAKE KW (127 BHP) AT 2200 RPM

SMCS-1000 **i05412977**

NOTE	PART NUMBER	QTY	PART NAME 1 2 3 4 5 6 (PRODUCT LEVEL)	SEE PAGE
Y	*311-7455*	1	ALTERNATOR GP-CHARGING	1577
Y	*301-8245*	1	BALANCER GP	317
Y	*298-5892*	1	CAMSHAFT GP	321
Y	*301-8248*	1	CONNECTION GP-INLET	776
Y	*301-8243*	1	CONNECTION GP-WATER	687
Y	*304-6436*	1	CONTROL GP-ENGINE ELECTRONIC	1584
Y	*301-8241*	1	COOLER GP-OIL	697
Y	*298-5111*	1	COVER GP-ENGINE	332
Y	*301-8240*	1	COVER GP-VALVE MECHANISM	341
Y	*298-5888*	1	CRANKSHAFT GP	380
Y	*298-5887*	1	CYLINDER BLOCK GP	400
YR	**359-0737**	1	CYLINDER BLOCK GP-SHORT	415
Y	*298-5890*	1	CYLINDER HEAD GP	419
Y	*316-7959*	1	DRIVE GP-FAN	436
Y	*314-5003*	1	FAN GP	707
Y	*298-5100*	1	FILTER GP-ENGINE OIL	678
Y	*298-5123*	1	FILTER GP-PRIMARY FUEL	1009
Y	*301-8251*	1	FILTER GP-WATER SEP & FUEL	1013
Y	*301-8237*	1	FLYWHEEL GP	455
Y	*298-5110*	1	GEAR GP-FRONT	475
Y	*298-5125*	1	GLOW PLUG GP	1586
Y	*301-8236*	1	HOUSING GP-FLYWHEEL	479
Y	*299-5033*	1	LIFTING GP-ENGINE	512
Y	*311-2271*	1	LINES GP-FUEL FILTER	1050
Y	*311-4641*	1	MOUNTING GP-ENGINE	521
Y	*301-8239*	1	PAN GP-OIL	541
Y	*304-8762*	1	PIPE GP-EXHAUST	790
Y	*298-5889*	1	PISTON GP	621
Y	*298-5129*	1	PLUG GP-CYLINDER HEAD	629
Y	*298-5131*	1	PLUG GP-ENGINE	632
Y	*298-5128*	1	PLUG GP-ENGINE OIL MANIFOLD	680
Y	*360-7343*	1	PULLEY GP-CRANKSHAFT	652
Y	*305-6701*	1	PUMP GP-FUEL INJECTION	1303
Y	*298-5105*	1	PUMP GP-WATER	714
Y	*312-1672*	1	RADIATOR GP	738
Y	*325-5612*	1	STARTING MOTOR GP-ELECTRIC	1597
Y	*311-7456*	1	TURBOCHARGER GP	887
Y	*298-5891*	1	VALVE MECHANISM GP	661
Y	*298-5130*	1	WIRING GP-ENGINE	1604
	305-8454	1	ELECTRONICS GP-ENGINE RATINGS	

R - REMANUFACTURED PART MAY BE AVAILABLE
Y - SEPARATE ILLUSTRATION

<END>

392-5652 ENGINE AR-PRIMARY

104 BRAKE KW 9139 BHP) AT 2200 RPM

SMCS-1000 **i06831132**

NOTE	PART NUMBER	QTY	PART NAME 1 2 3 4 5 6 (PRODUCT LEVEL)	SEE PAGE
Y	*311-7455*	1	ALTERNATOR GP-CHARGING	1577
Y	*301-8245*	1	BALANCER GP	317
Y	*298-5090*	1	CAMSHAFT GP	320
Y	*301-8248*	1	CONNECTION GP-INLET	776
Y	*301-8243*	1	CONNECTION GP-WATER	687
Y	*304-6436*	1	CONTROL GP-ENGINE ELECTRONIC	1584
Y	*301-8241*	1	COOLER GP-OIL	697
Y	*298-5111*	1	COVER GP-ENGINE	332
Y	*301-8240*	1	COVER GP-VALVE MECHANISM	341
Y	*298-5086*	1	CRANKSHAFT GP	378
Y	*298-5085*	1	CYLINDER BLOCK GP	398
Y	*298-5088*	1	CYLINDER HEAD GP	418
Y	*316-7959*	1	DRIVE GP-FAN	436
Y	*314-5003*	1	FAN GP	707
Y	*298-5100*	1	FILTER GP-ENGINE OIL	678
Y	*298-5123*	1	FILTER GP-PRIMARY FUEL	1009
Y	*301-8251*	1	FILTER GP-WATER SEP & FUEL	1013
Y	*301-8237*	1	FLYWHEEL GP	455
Y	*298-5110*	1	GEAR GP-FRONT	475
Y	*298-5125*	1	GLOW PLUG GP	1586
Y	*301-8236*	1	HOUSING GP-FLYWHEEL	479
Y	*299-5033*	1	LIFTING GP-ENGINE	512
Y	*311-2271*	1	LINES GP-FUEL FILTER	1050
Y	*311-4641*	1	MOUNTING GP-ENGINE	521
Y	*301-8239*	1	PAN GP-OIL	541
Y	*304-8762*	1	PIPE GP-EXHAUST	790
Y	*298-5087*	1	PISTON & ROD GP	609
Y	*298-5129*	1	PLUG GP-CYLINDER HEAD	629
Y	*298-5131*	1	PLUG GP-ENGINE	632
Y	*298-5128*	1	PLUG GP-ENGINE OIL MANIFOLD	680
Y	*360-7343*	1	PULLEY GP-CRANKSHAFT	652
Y	*301-8235*	1	PUMP GP-FUEL INJECTION	1114
Y	*298-5105*	1	PUMP GP-WATER	714
Y	*312-1672*	1	RADIATOR GP	738
Y	*298-5089*	1	ROCKER ARM GP	658
Y	*325-5612*	1	STARTING MOTOR GP-ELECTRIC	1597
Y	*311-7456*	1	TURBOCHARGER GP	887
Y	*298-5130*	1	WIRING GP-ENGINE	1604
R	**359-0739**	1	CYLINDER BLOCK GP-SHORT	
	301-8234	1	ELECTRONICS GP-ENGINE RATINGS	

R - REMANUFACTURED PART MAY BE AVAILABLE
Y - SEPARATE ILLUSTRATION

<END>

392-5653 ENGINE AR-PRIMARY

104 BRAKE KW (139 BHP) AT 2200 RPM

SMCS-1000 **i05959187**

NOTE	PART NUMBER	QTY	PART NAME 1 2 3 4 5 6 (PRODUCT LEVEL)	SEE PAGE
Y	*323-8845*	1	AIR COMPRESSOR GP	309
Y	*311-7455*	1	ALTERNATOR GP-CHARGING	1577
Y	*301-8245*	1	BALANCER GP	317
Y	*298-5090*	1	CAMSHAFT GP	320
Y	*301-8248*	1	CONNECTION GP-INLET	776
Y	*301-8243*	1	CONNECTION GP-WATER	687
Y	*304-6436*	1	CONTROL GP-ENGINE ELECTRONIC	1584
Y	*301-8241*	1	COOLER GP-OIL	697
Y	*329-3543*	1	COVER GP-VALVE MECHANISM	375
Y	*298-5086*	1	CRANKSHAFT GP	378
Y	*298-5085*	1	CYLINDER BLOCK GP	398
Y	*298-5088*	1	CYLINDER HEAD GP	418
Y	*311-4644*	1	DRIVE GP-FAN	433
Y	*314-5003*	1	FAN GP	707
Y	*298-5100*	1	FILTER GP-ENGINE OIL	678
Y	*333-5523*	1	FILTER GP-FUEL	1008
Y	*301-8251*	1	FILTER GP-WATER SEP & FUEL	1013
Y	*301-8237*	1	FLYWHEEL GP	455
Y	*298-5125*	1	GLOW PLUG GP	1586
Y	*301-8236*	1	HOUSING GP-FLYWHEEL	479
Y	*323-8844*	1	HOUSING GP-FRONT	506
Y	*299-5033*	1	LIFTING GP-ENGINE	512
Y	*333-5521*	1	LINES GP-FUEL	1047
Y	*311-4641*	1	MOUNTING GP-ENGINE	521
Y	*323-8843*	1	PAN GP-OIL	575
Y	*304-8762*	1	PIPE GP-EXHAUST	790
Y	*298-5087*	1	PISTON & ROD GP	609
Y	*298-5129*	1	PLUG GP-CYLINDER HEAD	629
Y	*298-5098*	1	PLUG GP-ENGINE	631
Y	*304-3663*	1	PLUG GP-ENGINE	634
Y	*298-5128*	1	PLUG GP-ENGINE OIL MANIFOLD	680
Y	*360-7343*	1	PULLEY GP-CRANKSHAFT	652
Y	*301-8235*	1	PUMP GP-FUEL INJECTION	1114
Y	*340-4692*	1	PUMP GP-WATER	722
Y	*311-4636*	1	RADIATOR GP	730
Y	*298-5089*	1	ROCKER ARM GP	658
Y	*325-5612*	1	STARTING MOTOR GP-ELECTRIC	1597
Y	*311-7456*	1	TURBOCHARGER GP	887
Y	*335-6238*	1	WIRING GP-ENGINE	1615
R	**359-0739**	1	CYLINDER BLOCK GP-SHORT	
	301-8234	1	ELECTRONICS GP-ENGINE RATINGS	

R - REMANUFACTURED PART MAY BE AVAILABLE
Y - SEPARATE ILLUSTRATION

<END>

393-2041 ENGINE AR-PRIMARY

114 BHP (85 KW) AT 2200 RPM

SMCS-1000 **i06151703**

NOTE	PART NUMBER	QTY	PART NAME 1 2 3 4 5 6 (PRODUCT LEVEL)	SEE PAGE
Y	*301-8245*	1	BALANCER GP	317
Y	*298-5892*	1	CAMSHAFT GP	321
Y	*301-8248*	1	CONNECTION GP-INLET	776
Y	*301-8243*	1	CONNECTION GP-WATER	687
Y	*304-6436*	1	CONTROL GP-ENGINE ELECTRONIC	1584
Y	*301-8241*	1	COOLER GP-OIL	697
Y	*298-5111*	1	COVER GP-ENGINE	332
Y	*298-5097*	1	COVER GP-VALVE MECHANISM	335
Y	*298-5888*	1	CRANKSHAFT GP	380
Y	*298-5887*	1	CYLINDER BLOCK GP	400
Y	*298-5890*	1	CYLINDER HEAD GP	419
Y	*330-3666*	1	DRIVE GP-FAN	444
Y	*318-0775*	1	FILLER GP-ENGINE OIL	676
Y	*298-5100*	1	FILTER GP-ENGINE OIL	678
Y	*298-5123*	1	FILTER GP-PRIMARY FUEL	1009
Y	*301-8251*	1	FILTER GP-WATER SEP & FUEL	1013
Y	*298-5110*	1	GEAR GP-FRONT	475
Y	*298-5125*	1	GLOW PLUG GP	1586
Y	*299-5033*	1	LIFTING GP-ENGINE	512
Y	*311-2271*	1	LINES GP-FUEL FILTER	1050
Y	*304-0730*	1	MOUNTING GP-ENGINE	518
Y	*299-5082*	1	MOUNTING GP-FAN	713
Y	*301-8239*	1	PAN GP-OIL	541
Y	*298-5889*	1	PISTON GP	621
Y	*298-5129*	1	PLUG GP-CYLINDER HEAD	629
Y	*298-5131*	1	PLUG GP-ENGINE	632
Y	*298-5128*	1	PLUG GP-ENGINE OIL MANIFOLD	680
Y	*360-7346*	1	PULLEY GP-CRANKSHAFT	655
Y	*304-0725*	1	PUMP GP-FUEL INJECTION	1154
Y	*298-5105*	1	PUMP GP-WATER	714
Y	*304-0729*	1	TURBOCHARGER GP	824
Y	*298-5891*	1	VALVE MECHANISM GP	661
Y	*298-5130*	1	WIRING GP-ENGINE	1604
R	**359-0737**	1	CYLINDER BLOCK GP-SHORT	
	305-8463	1	ELECTRONICS GP-ENGINE RATINGS	

R - REMANUFACTURED PART MAY BE AVAILABLE
Y - SEPARATE ILLUSTRATION

<END>

393-2042 ENGINE AR-PRIMARY

104 BRAKE KW (139 BHP) AT 2400 RPM

SMCS-1000 **i06151714**

NOTE	PART NUMBER	QTY	PART NAME 1 2 3 4 5 6 (PRODUCT LEVEL)	SEE PAGE
Y	*301-8245*	1	BALANCER GP	317
Y	*298-5090*	1	CAMSHAFT GP	320
Y	*301-8248*	1	CONNECTION GP-INLET	776
Y	*301-8243*	1	CONNECTION GP-WATER	687
Y	*304-6436*	1	CONTROL GP-ENGINE ELECTRONIC	1584
Y	*301-8241*	1	COOLER GP-OIL	697
Y	*298-5111*	1	COVER GP-ENGINE	332
Y	*298-5097*	1	COVER GP-VALVE MECHANISM	335
Y	*298-5086*	1	CRANKSHAFT GP	378
Y	*298-5085*	1	CYLINDER BLOCK GP	398
Y	*298-5088*	1	CYLINDER HEAD GP	418
Y	*330-3666*	1	DRIVE GP-FAN	444
Y	*318-0775*	1	FILLER GP-ENGINE OIL	676
Y	*298-5100*	1	FILTER GP-ENGINE OIL	678
Y	*298-5123*	1	FILTER GP-PRIMARY FUEL	1009
Y	*301-8251*	1	FILTER GP-WATER SEP & FUEL	1013
Y	*298-5110*	1	GEAR GP-FRONT	475
Y	*298-5125*	1	GLOW PLUG GP	1586
Y	*299-5033*	1	LIFTING GP-ENGINE	512
Y	*311-2271*	1	LINES GP-FUEL FILTER	1050
Y	*304-0730*	1	MOUNTING GP-ENGINE	518
Y	*299-5082*	1	MOUNTING GP-FAN	713
Y	*301-8239*	1	PAN GP-OIL	541
Y	*298-5087*	1	PISTON & ROD GP	609
Y	*298-5129*	1	PLUG GP-CYLINDER HEAD	629
Y	*298-5131*	1	PLUG GP-ENGINE	632
Y	*298-5128*	1	PLUG GP-ENGINE OIL MANIFOLD	680
Y	*360-7346*	1	PULLEY GP-CRANKSHAFT	655
Y	*304-7192*	1	PUMP GP-FUEL INJECTION	1224
Y	*298-5105*	1	PUMP GP-WATER	714
Y	*298-5089*	1	ROCKER ARM GP	658
Y	*304-0729*	1	TURBOCHARGER GP	824
Y	*298-5130*	1	WIRING GP-ENGINE	1604
R	**359-0739**	1	CYLINDER BLOCK GP-SHORT	
	305-8462	1	ELECTRONICS GP-ENGINE RATINGS	

R - REMANUFACTURED PART MAY BE AVAILABLE
Y - SEPARATE ILLUSTRATION

<END>

395-0733 ENGINE AR-PRIMARY

95 BRAKE KW (127 BHP) AT 2200 RPM

SMCS-1000 **i06830526**

NOTE	PART NUMBER	QTY	PART NAME 1 2 3 4 5 6 (PRODUCT LEVEL)	SEE PAGE
Y	*311-7455*	1	ALTERNATOR GP-CHARGING	1577
Y	*301-8245*	1	BALANCER GP	317
Y	*298-5892*	1	CAMSHAFT GP	321
Y	*301-8248*	1	CONNECTION GP-INLET	776
Y	*301-8243*	1	CONNECTION GP-WATER	687
Y	*304-6436*	1	CONTROL GP-ENGINE ELECTRONIC	1584
Y	*301-8241*	1	COOLER GP-OIL	697
Y	*298-5111*	1	COVER GP-ENGINE	332
Y	*301-8240*	1	COVER GP-VALVE MECHANISM	341
Y	*298-5888*	1	CRANKSHAFT GP	380
Y	*298-5887*	1	CYLINDER BLOCK GP	400
Y	*298-5890*	1	CYLINDER HEAD GP	419
Y	*311-4644*	1	DRIVE GP-FAN	433
Y	*311-4640*	1	FAN GP	704
Y	*298-5100*	1	FILTER GP-ENGINE OIL	678
Y	*298-5123*	1	FILTER GP-PRIMARY FUEL	1009
Y	*301-8251*	1	FILTER GP-WATER SEP & FUEL	1013
Y	*301-8237*	1	FLYWHEEL GP	455
Y	*298-5110*	1	GEAR GP-FRONT	475
Y	*298-5125*	1	GLOW PLUG GP	1586
Y	*301-8236*	1	HOUSING GP-FLYWHEEL	479
Y	*299-5033*	1	LIFTING GP-ENGINE	512
Y	*311-2271*	1	LINES GP-FUEL FILTER	1050
Y	*311-4641*	1	MOUNTING GP-ENGINE	521
Y	*301-8239*	1	PAN GP-OIL	541
Y	*304-8762*	1	PIPE GP-EXHAUST	790
Y	*298-5889*	1	PISTON GP	621
Y	*298-5129*	1	PLUG GP-CYLINDER HEAD	629
Y	*298-5098*	1	PLUG GP-ENGINE	631
Y	*298-5131*	1	PLUG GP-ENGINE	632
Y	*298-5128*	1	PLUG GP-ENGINE OIL MANIFOLD	680
Y	*360-7343*	1	PULLEY GP-CRANKSHAFT	652
Y	*305-6701*	1	PUMP GP-FUEL INJECTION	1303
Y	*298-5105*	1	PUMP GP-WATER	714
Y	*312-1672*	1	RADIATOR GP	738
Y	*325-5612*	1	STARTING MOTOR GP-ELECTRIC	1597
Y	*311-7456*	1	TURBOCHARGER GP	887
Y	*298-5891*	1	VALVE MECHANISM GP	661
Y	*298-5130*	1	WIRING GP-ENGINE	1604
R	**359-0737**	1	CYLINDER BLOCK GP-SHORT	
	305-8454	1	ELECTRONICS GP-ENGINE RATINGS	

R - REMANUFACTURED PART MAY BE AVAILABLE
Y - SEPARATE ILLUSTRATION

<END>

395-0736 ENGINE AR-PRIMARY*R

95 BRAKE KW (127 BHP) AT 2200 RPM

FIELD REPLACEMENT ORDER 522-8303—PAGE: 295

SMCS-1000 **i06809761**

NOTE	PART NUMBER	QTY	PART NAME 1 2 3 4 5 6 (PRODUCT LEVEL)	SEE PAGE
Y	*304-0728*	1	ADAPTER GP-AUXILIARY DRIVE	301
Y	*311-4639*	1	ALTERNATOR GP-CHARGING	1575
Y	*301-8245*	1	BALANCER GP	317
Y	*298-5892*	1	CAMSHAFT GP	321
Y	*301-8248*	1	CONNECTION GP-INLET	776
Y	*301-8243*	1	CONNECTION GP-WATER	687
Y	*304-6436*	1	CONTROL GP-ENGINE ELECTRONIC	1584
Y	*301-8241*	1	COOLER GP-OIL	697
Y	*301-8240*	1	COVER GP-VALVE MECHANISM	341
Y	*298-5888*	1	CRANKSHAFT GP	380
Y	*298-5887*	1	CYLINDER BLOCK GP	400
Y	*298-5890*	1	CYLINDER HEAD GP	419
Y	*311-4644*	1	DRIVE GP-FAN	433
Y	*311-4640*	1	FAN GP	704
Y	*298-5100*	1	FILTER GP-ENGINE OIL	678
Y	*298-5123*	1	FILTER GP-PRIMARY FUEL	1009
Y	*301-8251*	1	FILTER GP-WATER SEP & FUEL	1013
Y	*301-8237*	1	FLYWHEEL GP	455
Y	*299-5075*	1	GLOW PLUG GP	1587
Y	*301-8236*	1	HOUSING GP-FLYWHEEL	479
Y	*304-0727*	1	HOUSING GP-FRONT	492
Y	*299-5033*	1	LIFTING GP-ENGINE	512
Y	*311-2271*	1	LINES GP-FUEL FILTER	1050
Y	*311-4641*	1	MOUNTING GP-ENGINE	521
Y	*301-8239*	1	PAN GP-OIL	541
Y	*304-8762*	1	PIPE GP-EXHAUST	790
Y	*298-5889*	1	PISTON GP	621
Y	*298-5129*	1	PLUG GP-CYLINDER HEAD	629
Y	*298-5098*	1	PLUG GP-ENGINE	631
Y	*298-5131*	1	PLUG GP-ENGINE	632
Y	*298-5128*	1	PLUG GP-ENGINE OIL MANIFOLD	680
Y	*360-7343*	1	PULLEY GP-CRANKSHAFT	652
Y	*305-6701*	1	PUMP GP-FUEL INJECTION	1303
Y	*340-4692*	1	PUMP GP-WATER	722
Y	*311-4636*	1	RADIATOR GP	730
Y	*299-5067*	1	STARTING MOTOR GP-ELECTRIC	1591
Y	*307-2850*	1	TURBOCHARGER GP	857
Y	*298-5891*	1	VALVE MECHANISM GP	661
Y	*298-5130*	1	WIRING GP-ENGINE	1604
R	**359-0737**	1	CYLINDER BLOCK GP-SHORT	
	305-8454	1	ELECTRONICS GP-ENGINE RATINGS	

R - REMANUFACTURED PART MAY BE AVAILABLE
Y - SEPARATE ILLUSTRATION

<END>

397-1544 ENGINE AR-PRIMARY

92 BRAKE KW (123 BHP) AT 2400 RPM

SMCS-1000 **i06830528**

NOTE	PART NUMBER	QTY	PART NAME 1 2 3 4 5 6 (PRODUCT LEVEL)	SEE PAGE
Y	*301-8245*	1	BALANCER GP	317
Y	*298-5892*	1	CAMSHAFT GP	321
Y	*301-8248*	1	CONNECTION GP-INLET	776
Y	*301-8243*	1	CONNECTION GP-WATER	687
Y	*304-6436*	1	CONTROL GP-ENGINE ELECTRONIC	1584
Y	*301-8241*	1	COOLER GP-OIL	697
Y	*298-5111*	1	COVER GP-ENGINE	332
Y	*298-5097*	1	COVER GP-VALVE MECHANISM	335
Y	*298-5888*	1	CRANKSHAFT GP	380
Y	*298-5887*	1	CYLINDER BLOCK GP	400
Y	*298-5890*	1	CYLINDER HEAD GP	419
Y	*330-3666*	1	DRIVE GP-FAN	444
Y	*318-0775*	1	FILLER GP-ENGINE OIL	676
Y	*298-5100*	1	FILTER GP-ENGINE OIL	678
Y	*298-5123*	1	FILTER GP-PRIMARY FUEL	1009
Y	*301-8251*	1	FILTER GP-WATER SEP & FUEL	1013
Y	*298-5110*	1	GEAR GP-FRONT	475
Y	*298-5125*	1	GLOW PLUG GP	1586
Y	*299-5033*	1	LIFTING GP-ENGINE	512
Y	*311-2271*	1	LINES GP-FUEL FILTER	1050
Y	*304-0730*	1	MOUNTING GP-ENGINE	518
Y	*299-5082*	1	MOUNTING GP-FAN	713
Y	*301-8239*	1	PAN GP-OIL	541
Y	*298-5889*	1	PISTON GP	621
Y	*298-5129*	1	PLUG GP-CYLINDER HEAD	629
Y	*298-5131*	1	PLUG GP-ENGINE	632
Y	*298-5128*	1	PLUG GP-ENGINE OIL MANIFOLD	680
Y	*360-7346*	1	PULLEY GP-CRANKSHAFT	655
Y	*304-7189*	1	PUMP GP-FUEL INJECTION	1204
Y	*298-5105*	1	PUMP GP-WATER	714
Y	*304-0729*	1	TURBOCHARGER GP	824
Y	*298-5891*	1	VALVE MECHANISM GP	661
Y	*298-5130*	1	WIRING GP-ENGINE	1604
R	**359-0737**	1	CYLINDER BLOCK GP-SHORT	
	305-8461	1	ELECTRONICS GP-ENGINE RATINGS	

R - REMANUFACTURED PART MAY BE AVAILABLE
Y - SEPARATE ILLUSTRATION

<END>

398-1566 ENGINE AR-PRIMARY

106 BRAKE KW (142 BHP) AT 2200 RPM

SMCS-1000 **i05615366**

NOTE	PART NUMBER	QTY	PART NAME 1 2 3 4 5 6 (PRODUCT LEVEL)	SEE PAGE
Y	*303-5774*	1	ALTERNATOR GP-CHARGING	1561
Y	*298-5090*	1	CAMSHAFT GP	320
Y	*298-5116*	1	CONNECTION GP-INLET	774
Y	*298-5107*	1	CONNECTION GP-WATER	685
Y	*304-6436*	1	CONTROL GP-ENGINE ELECTRONIC	1584
Y	*305-2579*	1	COOLER GP-OIL	698
Y	*298-5111*	1	COVER GP-ENGINE	332
Y	*303-5772*	1	COVER GP-VALVE MECHANISM	347
Y	*298-5086*	1	CRANKSHAFT GP	378
Y	*298-5085*	1	CYLINDER BLOCK GP	398
Y	*298-5088*	1	CYLINDER HEAD GP	418
Y	*311-8533*	1	DRIVE GP-FAN	434
Y	*318-0775*	1	FILLER GP-ENGINE OIL	676
Y	*298-5100*	1	FILTER GP-ENGINE OIL	678
Y	*298-5123*	1	FILTER GP-PRIMARY FUEL	1009
Y	*301-8251*	1	FILTER GP-WATER SEP & FUEL	1013
Y	*351-9871*	1	FLYWHEEL GP	471
Y	*298-5110*	1	GEAR GP-FRONT	475
Y	*298-5125*	1	GLOW PLUG GP	1586
Y	*299-5057*	1	HOUSING GP-FLYWHEEL	478
Y	*298-5127*	1	LIFTING GP-ENGINE	511
Y	*314-9819*	1	LINES GP-FUEL FILTER	1056
Y	*304-8763*	1	MOUNTING GP-ENGINE	519
Y	*299-5082*	1	MOUNTING GP-FAN	713
Y	*304-8757*	1	PAN GP-OIL	553
Y	*298-5087*	1	PISTON & ROD GP	609
Y	*298-5129*	1	PLUG GP-CYLINDER HEAD	629
Y	*298-5131*	1	PLUG GP-ENGINE	632
Y	*298-5128*	1	PLUG GP-ENGINE OIL MANIFOLD	680
Y	*360-7346*	1	PULLEY GP-CRANKSHAFT	655
Y	*298-5112*	1	PUMP GP-ENGINE OIL	681
Y	*304-6570*	1	PUMP GP-FUEL INJECTION	1179
Y	*298-5105*	1	PUMP GP-WATER	714
Y	*298-5089*	1	ROCKER ARM GP	658
Y	*325-5612*	1	STARTING MOTOR GP-ELECTRIC	1597
Y	*303-5776*	1	TURBOCHARGER GP	821
Y	*298-5130*	1	WIRING GP-ENGINE	1604
R	**359-0739**	1	CYLINDER BLOCK GP-SHORT	
	305-8457	1	ELECTRONICS GP-ENGINE RATINGS	

R - REMANUFACTURED PART MAY BE AVAILABLE
Y - SEPARATE ILLUSTRATION

<END>

398-1571 ENGINE AR-PRIMARY

92 BRAKE KW (123 BHP) AT 2400 RPM

SMCS-1000 **i05685049**

NOTE	PART NUMBER	QTY	PART NAME 1 2 3 4 5 6 (PRODUCT LEVEL)	SEE PAGE
Y	*303-5775*	1	ADAPTER GP-AUXILIARY DRIVE	300
Y	*322-3055*	1	ALTERNATOR GP-CHARGING	1580
Y	*301-8245*	1	BALANCER GP	317
Y	*298-5892*	1	CAMSHAFT GP	321
Y	*301-8248*	1	CONNECTION GP-INLET	776
Y	*301-8243*	1	CONNECTION GP-WATER	687
Y	*304-6436*	1	CONTROL GP-ENGINE ELECTRONIC	1584
Y	*301-8241*	1	COOLER GP-OIL	697
Y	*298-5097*	1	COVER GP-VALVE MECHANISM	335
Y	*298-5888*	1	CRANKSHAFT GP	380
Y	*298-5887*	1	CYLINDER BLOCK GP	400
Y	*298-5890*	1	CYLINDER HEAD GP	419
Y	*320-9223*	1	DRIVE GP-FAN	438
Y	*318-0775*	1	FILLER GP-ENGINE OIL	676
Y	*298-5100*	1	FILTER GP-ENGINE OIL	678
Y	*298-5123*	1	FILTER GP-PRIMARY FUEL	1009
Y	*301-8251*	1	FILTER GP-WATER SEP & FUEL	1013
Y	*306-2314*	1	FLYWHEEL GP	461
Y	*298-5110*	1	GEAR GP-FRONT	475
Y	*299-5075*	1	GLOW PLUG GP	1587
Y	*301-8236*	1	HOUSING GP-FLYWHEEL	479
Y	*299-5033*	1	LIFTING GP-ENGINE	512
Y	*311-2271*	1	LINES GP-FUEL FILTER	1050
Y	*312-6022*	1	MOUNTING GP-ENGINE	523
Y	*299-5082*	1	MOUNTING GP-FAN	713
Y	*301-8239*	1	PAN GP-OIL	541
Y	*304-8762*	1	PIPE GP-EXHAUST	790
Y	*298-5889*	1	PISTON GP	621
Y	*298-5129*	1	PLUG GP-CYLINDER HEAD	629
Y	*298-5131*	1	PLUG GP-ENGINE	632
Y	*298-5128*	1	PLUG GP-ENGINE OIL MANIFOLD	680
Y	*360-7343*	1	PULLEY GP-CRANKSHAFT	652
Y	*304-7189*	1	PUMP GP-FUEL INJECTION	1204
Y	*298-5105*	1	PUMP GP-WATER	714
Y	*299-5067*	1	STARTING MOTOR GP-ELECTRIC	1591
Y	*299-5043*	1	TURBOCHARGER GP	800
Y	*298-5891*	1	VALVE MECHANISM GP	661
Y	*298-5130*	1	WIRING GP-ENGINE	1604
R	**359-0737**	1	CYLINDER BLOCK GP-SHORT	
	305-8461	1	ELECTRONICS GP-ENGINE RATINGS	

R - REMANUFACTURED PART MAY BE AVAILABLE
Y - SEPARATE ILLUSTRATION

<END>

398-1577 ENGINE AR-PRIMARY

95 BRAKE KW (127 BHP) AT 2200 RPM

SMCS-1000 **i05429061**

NOTE	PART NUMBER	QTY	PART NAME 1 2 3 4 5 6 (PRODUCT LEVEL)	SEE PAGE
Y	*308-4275*	1	ADAPTER GP-AUXILIARY DRIVE	306
Y	*308-3351*	1	ALTERNATOR GP-CHARGING	1573
Y	*301-8245*	1	BALANCER GP	317
Y	*298-5892*	1	CAMSHAFT GP	321
Y	*298-5116*	1	CONNECTION GP-INLET	774
Y	*301-8243*	1	CONNECTION GP-WATER	687
Y	*304-6436*	1	CONTROL GP-ENGINE ELECTRONIC	1584
Y	*301-8241*	1	COOLER GP-OIL	697
Y	*301-8240*	1	COVER GP-VALVE MECHANISM	341
Y	*298-5888*	1	CRANKSHAFT GP	380
Y	*298-5887*	1	CYLINDER BLOCK GP	400
Y	*298-5890*	1	CYLINDER HEAD GP	419
Y	*325-0577*	1	DRIVE GP-FAN	441
Y	*318-0775*	1	FILLER GP-ENGINE OIL	676
Y	*298-5100*	1	FILTER GP-ENGINE OIL	678
Y	*298-5123*	1	FILTER GP-PRIMARY FUEL	1009
Y	*301-8251*	1	FILTER GP-WATER SEP & FUEL	1013
Y	*301-8237*	1	FLYWHEEL GP	455
Y	*298-5110*	1	GEAR GP-FRONT	475
Y	*298-5125*	1	GLOW PLUG GP	1586
Y	*301-8236*	1	HOUSING GP-FLYWHEEL	479
Y	*299-5033*	1	LIFTING GP-ENGINE	512
Y	*311-2271*	1	LINES GP-FUEL FILTER	1050
Y	*299-5082*	1	MOUNTING GP-FAN	713
Y	*353-7377*	1	PAN GP-OIL	597
Y	*304-8762*	1	PIPE GP-EXHAUST	790
Y	*298-5889*	1	PISTON GP	621
Y	*298-5129*	1	PLUG GP-CYLINDER HEAD	629
Y	*298-5131*	1	PLUG GP-ENGINE	632
Y	*301-8250*	1	PLUG GP-ENGINE	633
Y	*298-5128*	1	PLUG GP-ENGINE OIL MANIFOLD	680
Y	*360-7346*	1	PULLEY GP-CRANKSHAFT	655
Y	*305-6701*	1	PUMP GP-FUEL INJECTION	1303
Y	*298-5105*	1	PUMP GP-WATER	714
Y	*325-5612*	1	STARTING MOTOR GP-ELECTRIC	1597
Y	*312-5964*	1	TURBOCHARGER GP	896
Y	*298-5891*	1	VALVE MECHANISM GP	661
Y	*298-5130*	1	WIRING GP-ENGINE	1604
R	**359-0737**	1	CYLINDER BLOCK GP-SHORT	
	305-8454	1	ELECTRONICS GP-ENGINE RATINGS	

R - REMANUFACTURED PART MAY BE AVAILABLE
Y - SEPARATE ILLUSTRATION

<END>

398-1582 ENGINE AR-PRIMARY

97 BRAKE KW (129 BHP) AT 2200 RPM

SMCS-1000 **i05429064**

NOTE	PART NUMBER	QTY	PART NAME 1 2 3 4 5 6 (PRODUCT LEVEL)	SEE PAGE
Y	*298-5109*	1	ALTERNATOR GP-CHARGING	1556
Y	*306-2318*	1	BREATHER GP	669
Y	*298-5892*	1	CAMSHAFT GP	321
Y	*298-5116*	1	CONNECTION GP-INLET	774
Y	*298-5107*	1	CONNECTION GP-WATER	685
Y	*304-6436*	1	CONTROL GP-ENGINE ELECTRONIC	1584
Y	*305-2579*	1	COOLER GP-OIL	698
Y	*306-2316*	1	COVER GP-CYLINDER HEAD	326
Y	*298-5888*	1	CRANKSHAFT GP	380
Y	*298-5887*	1	CYLINDER BLOCK GP	400
Y	*298-5890*	1	CYLINDER HEAD GP	419
Y	*325-0577*	1	DRIVE GP-FAN	441
Y	*308-4158*	1	FILLER GP-ENGINE OIL	673
Y	*298-5100*	1	FILTER GP-ENGINE OIL	678
Y	*298-5123*	1	FILTER GP-PRIMARY FUEL	1009
Y	*306-2314*	1	FLYWHEEL GP	461
Y	*298-5125*	1	GLOW PLUG GP	1586
Y	*303-4618*	1	HOUSING GP-FLYWHEEL	481
Y	*304-8760*	1	HOUSING GP-FRONT	495
Y	*298-5127*	1	LIFTING GP-ENGINE	511
Y	*322-4952*	1	LINES GP-FUEL	1039
Y	*311-2271*	1	LINES GP-FUEL FILTER	1050
Y	*316-6924*	1	MOUNTING GP-ENGINE	525
Y	*305-2168*	1	MOUNTING GP-EXHAUST	789
Y	*299-5082*	1	MOUNTING GP-FAN	713
Y	*298-5096*	1	PAN GP-OIL	533
Y	*298-5889*	1	PISTON GP	621
Y	*298-5129*	1	PLUG GP-CYLINDER HEAD	629
Y	*298-5131*	1	PLUG GP-ENGINE	632
Y	*304-8761*	1	PLUG GP-ENGINE	636
Y	*298-5128*	1	PLUG GP-ENGINE OIL MANIFOLD	680
Y	*360-7346*	1	PULLEY GP-CRANKSHAFT	655
Y	*298-5112*	1	PUMP GP-ENGINE OIL	681
Y	*303-4615*	1	PUMP GP-FUEL INJECTION	1134
Y	*298-5105*	1	PUMP GP-WATER	714
Y	*328-0666*	1	STARTING MOTOR GP-ELECTRIC	1599
Y	*308-4277*	1	TURBOCHARGER GP	881
Y	*298-5891*	1	VALVE MECHANISM GP	661
Y	*298-5130*	1	WIRING GP-ENGINE	1604
R	**359-0737**	1	CYLINDER BLOCK GP-SHORT	
	305-8458	1	ELECTRONICS GP-ENGINE RATINGS	

R - REMANUFACTURED PART MAY BE AVAILABLE
Y - SEPARATE ILLUSTRATION

<END>

417-2318 ENGINE AR-PRIMARY

95 BRAKE KW (127 BHP) 2200 RPM

SMCS-1000 **i07668716**

NOTE	PART NUMBER	QTY	PART NAME 1 2 3 4 5 6 (PRODUCT LEVEL)	SEE PAGE
Y	*304-0728*	1	ADAPTER GP-AUXILIARY DRIVE	301
Y	*311-7455*	1	ALTERNATOR GP-CHARGING	1577
Y	*301-8245*	1	BALANCER GP	317
Y	*298-5892*	1	CAMSHAFT GP	321
Y	*301-8248*	1	CONNECTION GP-INLET	776
Y	*301-8243*	1	CONNECTION GP-WATER	687
Y	*304-6436*	1	CONTROL GP-ENGINE ELECTRONIC	1584
Y	*301-8241*	1	COOLER GP-OIL	697
Y	*301-8240*	1	COVER GP-VALVE MECHANISM	341
Y	*298-5888*	1	CRANKSHAFT GP	380
Y	*298-5887*	1	CYLINDER BLOCK GP	400
YR	**359-0737**	1	CYLINDER BLOCK GP-SHORT	415
Y	*298-5890*	1	CYLINDER HEAD GP	419
Y	*316-7959*	1	DRIVE GP-FAN	436
Y	*314-5003*	1	FAN GP	707
Y	*298-5100*	1	FILTER GP-ENGINE OIL	678
Y	*298-5123*	1	FILTER GP-PRIMARY FUEL	1009
Y	*301-8251*	1	FILTER GP-WATER SEP & FUEL	1013
Y	*301-8237*	1	FLYWHEEL GP	455
Y	*298-5125*	1	GLOW PLUG GP	1586
Y	*301-8236*	1	HOUSING GP-FLYWHEEL	479
Y	*304-0727*	1	HOUSING GP-FRONT	492
Y	*299-5033*	1	LIFTING GP-ENGINE	512
Y	*311-2271*	1	LINES GP-FUEL FILTER	1050
Y	*311-4641*	1	MOUNTING GP-ENGINE	521
Y	*301-8239*	1	PAN GP-OIL	541
Y	*304-8762*	1	PIPE GP-EXHAUST	790
Y	*298-5889*	1	PISTON GP	621
Y	*298-5129*	1	PLUG GP-CYLINDER HEAD	629
Y	*298-5098*	1	PLUG GP-ENGINE	631
Y	*298-5131*	1	PLUG GP-ENGINE	632
Y	*298-5128*	1	PLUG GP-ENGINE OIL MANIFOLD	680
Y	*360-7343*	1	PULLEY GP-CRANKSHAFT	652
Y	*305-6701*	1	PUMP GP-FUEL INJECTION	1303
Y	*340-4692*	1	PUMP GP-WATER	722
Y	*311-4636*	1	RADIATOR GP	730
Y	*325-5612*	1	STARTING MOTOR GP-ELECTRIC	1597
Y	*311-7456*	1	TURBOCHARGER GP	887
Y	*298-5891*	1	VALVE MECHANISM GP	661
Y	*298-5130*	1	WIRING GP-ENGINE	1604
	305-8454	1	ELECTRONICS GP-ENGINE RATINGS	

R - REMANUFACTURED PART MAY BE AVAILABLE
Y - SEPARATE ILLUSTRATION

<END>

417-2319 ENGINE AR-PRIMARY

95 BRAKE KW (127 BHP) AT 2200 RPM

SMCS-1000 **i06830532**

NOTE	PART NUMBER	QTY	PART NAME 1 2 3 4 5 6 (PRODUCT LEVEL)	SEE PAGE
Y	*304-0728*	1	ADAPTER GP-AUXILIARY DRIVE	301
Y	*311-7455*	1	ALTERNATOR GP-CHARGING	1577
Y	*301-8245*	1	BALANCER GP	317
Y	*298-5892*	1	CAMSHAFT GP	321
Y	*301-8248*	1	CONNECTION GP-INLET	776
Y	*301-8243*	1	CONNECTION GP-WATER	687
Y	*304-6436*	1	CONTROL GP-ENGINE ELECTRONIC	1584
Y	*301-8241*	1	COOLER GP-OIL	697
Y	*301-8240*	1	COVER GP-VALVE MECHANISM	341
Y	*298-5888*	1	CRANKSHAFT GP	380
Y	*298-5887*	1	CYLINDER BLOCK GP	400
Y	*298-5890*	1	CYLINDER HEAD GP	419
Y	*311-4644*	1	DRIVE GP-FAN	433
Y	*311-4640*	1	FAN GP	704
Y	*298-5100*	1	FILTER GP-ENGINE OIL	678
Y	*298-5123*	1	FILTER GP-PRIMARY FUEL	1009
Y	*301-8251*	1	FILTER GP-WATER SEP & FUEL	1013
Y	*301-8237*	1	FLYWHEEL GP	455
Y	*298-5125*	1	GLOW PLUG GP	1586
Y	*301-8236*	1	HOUSING GP-FLYWHEEL	479
Y	*304-0727*	1	HOUSING GP-FRONT	492
Y	*299-5033*	1	LIFTING GP-ENGINE	512
Y	*311-2271*	1	LINES GP-FUEL FILTER	1050
Y	*311-4641*	1	MOUNTING GP-ENGINE	521
Y	*301-8239*	1	PAN GP-OIL	541
Y	*304-8762*	1	PIPE GP-EXHAUST	790
Y	*298-5889*	1	PISTON GP	621
Y	*298-5129*	1	PLUG GP-CYLINDER HEAD	629
Y	*298-5098*	1	PLUG GP-ENGINE	631
Y	*298-5131*	1	PLUG GP-ENGINE	632
Y	*298-5128*	1	PLUG GP-ENGINE OIL MANIFOLD	680
Y	*360-7343*	1	PULLEY GP-CRANKSHAFT	652
Y	*305-6701*	1	PUMP GP-FUEL INJECTION	1303
Y	*340-4692*	1	PUMP GP-WATER	722
Y	*311-4636*	1	RADIATOR GP	730
Y	*325-5612*	1	STARTING MOTOR GP-ELECTRIC	1597
Y	*311-7456*	1	TURBOCHARGER GP	887
Y	*298-5891*	1	VALVE MECHANISM GP	661
Y	*298-5130*	1	WIRING GP-ENGINE	1604
R	**359-0737**	1	CYLINDER BLOCK GP-SHORT	
	305-8454	1	ELECTRONICS GP-ENGINE RATINGS	

R - REMANUFACTURED PART MAY BE AVAILABLE
Y - SEPARATE ILLUSTRATION

<END>

420-4748 ENGINE AR-PRIMARY

95 BRAKE KW (127 BHP) AT 2200 RPM

SMCS-1000 **i06830535**

NOTE	PART NUMBER	QTY	PART NAME 1 2 3 4 5 6 (PRODUCT LEVEL)	SEE PAGE
Y	*308-4275*	1	ADAPTER GP-AUXILIARY DRIVE	306
Y	*308-3351*	1	ALTERNATOR GP-CHARGING	1573
Y	*301-8245*	1	BALANCER GP	317
Y	*298-5892*	1	CAMSHAFT GP	321
Y	*298-5116*	1	CONNECTION GP-INLET	774
Y	*301-8243*	1	CONNECTION GP-WATER	687
Y	*304-6436*	1	CONTROL GP-ENGINE ELECTRONIC	1584
Y	*301-8241*	1	COOLER GP-OIL	697
Y	*301-8240*	1	COVER GP-VALVE MECHANISM	341
Y	*298-5888*	1	CRANKSHAFT GP	380
Y	*298-5887*	1	CYLINDER BLOCK GP	400
Y	*298-5890*	1	CYLINDER HEAD GP	419
Y	*325-0577*	1	DRIVE GP-FAN	441
Y	*318-0775*	1	FILLER GP-ENGINE OIL	676
Y	*298-5100*	1	FILTER GP-ENGINE OIL	678
Y	*298-5123*	1	FILTER GP-PRIMARY FUEL	1009
Y	*301-8251*	1	FILTER GP-WATER SEP & FUEL	1013
Y	*301-8237*	1	FLYWHEEL GP	455
Y	*298-5110*	1	GEAR GP-FRONT	475
Y	*298-5125*	1	GLOW PLUG GP	1586
Y	*301-8236*	1	HOUSING GP-FLYWHEEL	479
Y	*299-5033*	1	LIFTING GP-ENGINE	512
Y	*311-2271*	1	LINES GP-FUEL FILTER	1050
Y	*299-5082*	1	MOUNTING GP-FAN	713
Y	*353-7377*	1	PAN GP-OIL	597
Y	*304-8762*	1	PIPE GP-EXHAUST	790
Y	*298-5889*	1	PISTON GP	621
Y	*298-5129*	1	PLUG GP-CYLINDER HEAD	629
Y	*298-5131*	1	PLUG GP-ENGINE	632
Y	*301-8250*	1	PLUG GP-ENGINE	633
Y	*298-5128*	1	PLUG GP-ENGINE OIL MANIFOLD	680
Y	*360-7346*	1	PULLEY GP-CRANKSHAFT	655
Y	*305-6701*	1	PUMP GP-FUEL INJECTION	1303
Y	*298-5105*	1	PUMP GP-WATER	714
Y	*325-5612*	1	STARTING MOTOR GP-ELECTRIC	1597
Y	*312-5964*	1	TURBOCHARGER GP	896
Y	*298-5891*	1	VALVE MECHANISM GP	661
Y	*298-5130*	1	WIRING GP-ENGINE	1604
R	**359-0737**	1	CYLINDER BLOCK GP-SHORT	
	305-8454	1	ELECTRONICS GP-ENGINE RATINGS	

R - REMANUFACTURED PART MAY BE AVAILABLE
Y - SEPARATE ILLUSTRATION

<END>

423-8915 ENGINE AR-PRIMARY

97 BRAKE KW (129 BHP) AT 2200 RPM

SMCS-1000 **i05431816**

NOTE	PART NUMBER	QTY	PART NAME 1 2 3 4 5 6 (PRODUCT LEVEL)	SEE PAGE
Y	*304-0728*	1	ADAPTER GP-AUXILIARY DRIVE	301
Y	*311-7455*	1	ALTERNATOR GP-CHARGING	1577
Y	*298-5892*	1	CAMSHAFT GP	321
Y	*301-8248*	1	CONNECTION GP-INLET	776
Y	*301-8243*	1	CONNECTION GP-WATER	687
Y	*304-6436*	1	CONTROL GP-ENGINE ELECTRONIC	1584
Y	*298-5099*	1	COOLER GP-ENGINE OIL	690
Y	*304-5574*	1	COVER GP-VALVE MECHANISM	351
Y	*298-5888*	1	CRANKSHAFT GP	380
Y	*298-5887*	1	CYLINDER BLOCK GP	400
Y	*298-5890*	1	CYLINDER HEAD GP	419
Y	*311-4644*	1	DRIVE GP-FAN	433
Y	*311-4640*	1	FAN GP	704
Y	*298-5100*	1	FILTER GP-ENGINE OIL	678
Y	*303-5780*	1	FILTER GP-FUEL	999
Y	*322-8426*	1	FILTER GP-FUEL	1006
Y	*299-5063*	1	FLYWHEEL GP	454
Y	*298-5125*	1	GLOW PLUG GP	1586
Y	*299-5057*	1	HOUSING GP-FLYWHEEL	478
Y	*304-0727*	1	HOUSING GP-FRONT	492
Y	*299-5033*	1	LIFTING GP-ENGINE	512
Y	*322-8425*	1	LINES GP-FUEL	1041
Y	*323-6804*	1	MOUNTING GP-ENGINE	529
Y	*377-8331*	1	PAN GP-OIL	603
Y	*304-8762*	1	PIPE GP-EXHAUST	790
Y	*298-5889*	1	PISTON GP	621
Y	*298-5129*	1	PLUG GP-CYLINDER HEAD	629
Y	*298-5098*	1	PLUG GP-ENGINE	631
Y	*298-5131*	1	PLUG GP-ENGINE	632
Y	*298-5128*	1	PLUG GP-ENGINE OIL MANIFOLD	680
Y	*360-7343*	1	PULLEY GP-CRANKSHAFT	652
Y	*298-5112*	1	PUMP GP-ENGINE OIL	681
Y	*303-4615*	1	PUMP GP-FUEL INJECTION	1134
Y	*340-4692*	1	PUMP GP-WATER	722
Y	*311-4636*	1	RADIATOR GP	730
Y	*325-5612*	1	STARTING MOTOR GP-ELECTRIC	1597
Y	*333-8976*	1	TURBOCHARGER GP	960
Y	*298-5891*	1	VALVE MECHANISM GP	661
Y	*298-5130*	1	WIRING GP-ENGINE	1604
R	**359-0737**	1	CYLINDER BLOCK GP-SHORT	
	305-8458	1	ELECTRONICS GP-ENGINE RATINGS	

R - REMANUFACTURED PART MAY BE AVAILABLE
Y - SEPARATE ILLUSTRATION

<END>

423-8918 ENGINE AR-PRIMARY

104 BRAKE KW (139 BHP) AT 2200 RPM

SMCS-1000 **i06809933**

NOTE	PART NUMBER	QTY	PART NAME 1 2 3 4 5 6 (PRODUCT LEVEL)	SEE PAGE
Y	*311-7455*	1	ALTERNATOR GP-CHARGING	1577
Y	*301-8245*	1	BALANCER GP	317
Y	*298-5090*	1	CAMSHAFT GP	320
Y	*301-8248*	1	CONNECTION GP-INLET	776
Y	*301-8243*	1	CONNECTION GP-WATER	687
Y	*304-6436*	1	CONTROL GP-ENGINE ELECTRONIC	1584
Y	*301-8241*	1	COOLER GP-OIL	697
Y	*298-5111*	1	COVER GP-ENGINE	332
Y	*301-8240*	1	COVER GP-VALVE MECHANISM	341
Y	*298-5086*	1	CRANKSHAFT GP	378
Y	*298-5085*	1	CYLINDER BLOCK GP	398
Y	*298-5088*	1	CYLINDER HEAD GP	418
Y	*316-7959*	1	DRIVE GP-FAN	436
Y	*314-5003*	1	FAN GP	707
Y	*298-5100*	1	FILTER GP-ENGINE OIL	678
Y	*298-5123*	1	FILTER GP-PRIMARY FUEL	1009
Y	*301-8251*	1	FILTER GP-WATER SEP & FUEL	1013
Y	*301-8237*	1	FLYWHEEL GP	455
Y	*298-5110*	1	GEAR GP-FRONT	475
Y	*298-5125*	1	GLOW PLUG GP	1586
Y	*301-8236*	1	HOUSING GP-FLYWHEEL	479
Y	*299-5033*	1	LIFTING GP-ENGINE	512
Y	*311-2271*	1	LINES GP-FUEL FILTER	1050
Y	*311-4641*	1	MOUNTING GP-ENGINE	521
Y	*301-8239*	1	PAN GP-OIL	541
Y	*304-8762*	1	PIPE GP-EXHAUST	790
Y	*298-5087*	1	PISTON & ROD GP	609
Y	*298-5129*	1	PLUG GP-CYLINDER HEAD	629
Y	*298-5098*	1	PLUG GP-ENGINE	631
Y	*298-5131*	1	PLUG GP-ENGINE	632
Y	*298-5128*	1	PLUG GP-ENGINE OIL MANIFOLD	680
Y	*360-7343*	1	PULLEY GP-CRANKSHAFT	652
Y	*301-8235*	1	PUMP GP-FUEL INJECTION	1114
Y	*298-5105*	1	PUMP GP-WATER	714
Y	*312-1672*	1	RADIATOR GP	738
Y	*298-5089*	1	ROCKER ARM GP	658
Y	*325-5612*	1	STARTING MOTOR GP-ELECTRIC	1597
Y	*311-7456*	1	TURBOCHARGER GP	887
Y	*298-5130*	1	WIRING GP-ENGINE	1604
R	**359-0739**	1	CYLINDER BLOCK GP-SHORT	
	301-8234	1	ELECTRONICS GP-ENGINE RATINGS	

R - REMANUFACTURED PART MAY BE AVAILABLE
Y - SEPARATE ILLUSTRATION

<END>

423-8920 ENGINE AR-PRIMARY

97 BRAKE KW (129 BHP) AT 2200

SMCS-1000 **i06809788**

NOTE	PART NUMBER	QTY	PART NAME 1 2 3 4 5 6 (PRODUCT LEVEL)	SEE PAGE
Y	*304-0728*	1	ADAPTER GP-AUXILIARY DRIVE	301
Y	*311-7455*	1	ALTERNATOR GP-CHARGING	1577
Y	*298-5892*	1	CAMSHAFT GP	321
Y	*301-8248*	1	CONNECTION GP-INLET	776
Y	*301-8243*	1	CONNECTION GP-WATER	687
Y	*304-6436*	1	CONTROL GP-ENGINE ELECTRONIC	1584
Y	*298-5099*	1	COOLER GP-ENGINE OIL	690
Y	*304-5574*	1	COVER GP-VALVE MECHANISM	351
Y	*298-5888*	1	CRANKSHAFT GP	380
Y	*298-5887*	1	CYLINDER BLOCK GP	400
Y	*298-5890*	1	CYLINDER HEAD GP	419
Y	*311-4644*	1	DRIVE GP-FAN	433
Y	*311-4640*	1	FAN GP	704
Y	*298-5100*	1	FILTER GP-ENGINE OIL	678
Y	*303-5780*	1	FILTER GP-FUEL	999
Y	*322-8426*	1	FILTER GP-FUEL	1006
Y	*299-5063*	1	FLYWHEEL GP	454
Y	*298-5125*	1	GLOW PLUG GP	1586
Y	*299-5057*	1	HOUSING GP-FLYWHEEL	478
Y	*304-0727*	1	HOUSING GP-FRONT	492
Y	*299-5033*	1	LIFTING GP-ENGINE	512
Y	*322-8425*	1	LINES GP-FUEL	1041
Y	*323-6804*	1	MOUNTING GP-ENGINE	529
Y	*377-8331*	1	PAN GP-OIL	603
Y	*304-8762*	1	PIPE GP-EXHAUST	790
Y	*298-5889*	1	PISTON GP	621
Y	*298-5129*	1	PLUG GP-CYLINDER HEAD	629
Y	*298-5098*	1	PLUG GP-ENGINE	631
Y	*298-5131*	1	PLUG GP-ENGINE	632
Y	*298-5128*	1	PLUG GP-ENGINE OIL MANIFOLD	680
Y	*360-7343*	1	PULLEY GP-CRANKSHAFT	652
Y	*298-5112*	1	PUMP GP-ENGINE OIL	681
Y	*303-4615*	1	PUMP GP-FUEL INJECTION	1134
Y	*340-4692*	1	PUMP GP-WATER	722
Y	*311-4636*	1	RADIATOR GP	730
Y	*325-5612*	1	STARTING MOTOR GP-ELECTRIC	1597
Y	*333-8976*	1	TURBOCHARGER GP	960
Y	*298-5891*	1	VALVE MECHANISM GP	661
Y	*298-5130*	1	WIRING GP-ENGINE	1604
R	**359-0737**	1	CYLINDER BLOCK GP-SHORT	
	305-8458	1	ELECTRONICS GP-ENGINE RATINGS	

R - REMANUFACTURED PART MAY BE AVAILABLE
Y - SEPARATE ILLUSTRATION

<END>

423-8921 ENGINE AR-PRIMARY

104 BRAKE KW (139 BHP) AT 2200 RPM

SMCS-1000 **i05431847**

NOTE	PART NUMBER	QTY	PART NAME 1 2 3 4 5 6 (PRODUCT LEVEL)	SEE PAGE
Y	*304-0728*	1	ADAPTER GP-AUXILIARY DRIVE	301
Y	*311-7455*	1	ALTERNATOR GP-CHARGING	1577
Y	*301-8245*	1	BALANCER GP	317
Y	*298-5090*	1	CAMSHAFT GP	320
Y	*301-8248*	1	CONNECTION GP-INLET	776
Y	*301-8243*	1	CONNECTION GP-WATER	687
Y	*304-6436*	1	CONTROL GP-ENGINE ELECTRONIC	1584
Y	*301-8241*	1	COOLER GP-OIL	697
Y	*301-8240*	1	COVER GP-VALVE MECHANISM	341
Y	*298-5086*	1	CRANKSHAFT GP	378
Y	*298-5085*	1	CYLINDER BLOCK GP	398
Y	*298-5088*	1	CYLINDER HEAD GP	418
Y	*316-7959*	1	DRIVE GP-FAN	436
Y	*314-5003*	1	FAN GP	707
Y	*298-5100*	1	FILTER GP-ENGINE OIL	678
Y	*298-5123*	1	FILTER GP-PRIMARY FUEL	1009
Y	*301-8251*	1	FILTER GP-WATER SEP & FUEL	1013
Y	*301-8237*	1	FLYWHEEL GP	455
Y	*298-5125*	1	GLOW PLUG GP	1586
Y	*301-8236*	1	HOUSING GP-FLYWHEEL	479
Y	*304-0727*	1	HOUSING GP-FRONT	492
Y	*299-5033*	1	LIFTING GP-ENGINE	512
Y	*311-2271*	1	LINES GP-FUEL FILTER	1050
Y	*311-4641*	1	MOUNTING GP-ENGINE	521
Y	*301-8239*	1	PAN GP-OIL	541
Y	*304-8762*	1	PIPE GP-EXHAUST	790
Y	*298-5087*	1	PISTON & ROD GP	609
Y	*298-5129*	1	PLUG GP-CYLINDER HEAD	629
Y	*298-5098*	1	PLUG GP-ENGINE	631
Y	*298-5131*	1	PLUG GP-ENGINE	632
Y	*298-5128*	1	PLUG GP-ENGINE OIL MANIFOLD	680
Y	*360-7343*	1	PULLEY GP-CRANKSHAFT	652
Y	*301-8235*	1	PUMP GP-FUEL INJECTION	1114
Y	*340-4692*	1	PUMP GP-WATER	722
Y	*311-4636*	1	RADIATOR GP	730
Y	*298-5089*	1	ROCKER ARM GP	658
Y	*325-5612*	1	STARTING MOTOR GP-ELECTRIC	1597
Y	*311-7456*	1	TURBOCHARGER GP	887
Y	*298-5130*	1	WIRING GP-ENGINE	1604
R	**359-0739**	1	CYLINDER BLOCK GP-SHORT	
	301-8234	1	ELECTRONICS GP-ENGINE RATINGS	

R - REMANUFACTURED PART MAY BE AVAILABLE
Y - SEPARATE ILLUSTRATION

<END>

434-6861 ENGINE AR-PRIMARY

97 BRAKE KW (129 BHP) AT 2200 RPM

SMCS-1000 **i06809938**

NOTE	PART NUMBER	QTY	PART NAME 1 2 3 4 5 6 (PRODUCT LEVEL)	SEE PAGE
Y	*303-5775*	1	ADAPTER GP-AUXILIARY DRIVE	300
Y	*308-0304*	1	ALTERNATOR GP-CHARGING	1571
Y	*298-5892*	1	CAMSHAFT GP	321
Y	*299-5078*	1	CONNECTION GP-WATER	686
Y	*304-6436*	1	CONTROL GP-ENGINE ELECTRONIC	1584
Y	*305-2579*	1	COOLER GP-OIL	698
Y	*301-8240*	1	COVER GP-VALVE MECHANISM	341
Y	*298-5888*	1	CRANKSHAFT GP	380
Y	*298-5887*	1	CYLINDER BLOCK GP	400
Y	*298-5890*	1	CYLINDER HEAD GP	419
Y	*303-5777*	1	ELBOW GP-AIR INLET	786
Y	*298-5100*	1	FILTER GP-ENGINE OIL	678
Y	*298-5123*	1	FILTER GP-PRIMARY FUEL	1009
Y	*301-8251*	1	FILTER GP-WATER SEP & FUEL	1013
Y	*305-2577*	1	FLYWHEEL GP	460
Y	*298-5110*	1	GEAR GP-FRONT	475
Y	*298-5125*	1	GLOW PLUG GP	1586
Y	*308-0302*	1	HOUSING GP-FLYWHEEL	486
Y	*299-5033*	1	LIFTING GP-ENGINE	512
Y	*311-2271*	1	LINES GP-FUEL FILTER	1050
Y	*305-2168*	1	MOUNTING GP-EXHAUST	789
Y	*298-5096*	1	PAN GP-OIL	533
Y	*298-5889*	1	PISTON GP	621
Y	*298-5129*	1	PLUG GP-CYLINDER HEAD	629
Y	*298-5098*	1	PLUG GP-ENGINE	631
Y	*301-8250*	1	PLUG GP-ENGINE	633
Y	*304-3663*	1	PLUG GP-ENGINE	634
Y	*298-5128*	1	PLUG GP-ENGINE OIL MANIFOLD	680
Y	*360-7344*	1	PULLEY GP-CRANKSHAFT	653
Y	*298-5112*	1	PUMP GP-ENGINE OIL	681
Y	*303-4615*	1	PUMP GP-FUEL INJECTION	1134
Y	*298-5105*	1	PUMP GP-WATER	714
Y	*325-5612*	1	STARTING MOTOR GP-ELECTRIC	1597
Y	*308-0305*	1	TURBOCHARGER GP	869
Y	*314-2310*	1	V-BELT GP	660
Y	*298-5891*	1	VALVE MECHANISM GP	661
Y	*298-5130*	1	WIRING GP-ENGINE	1604
R	**359-0737**	1	CYLINDER BLOCK GP-SHORT	
	305-8458	1	ELECTRONICS GP-ENGINE RATINGS	

R - REMANUFACTURED PART MAY BE AVAILABLE
Y - SEPARATE ILLUSTRATION

<END>

435-1685 ENGINE AR-PRIMARY*R

FIELD INSTALLATION

SMCS-1000 **i05793292**

NOTE	PART NUMBER	QTY	PART NAME 1 2 3 4 5 6 (PRODUCT LEVEL)	SEE PAGE
Y	*308-3351*	1	ALTERNATOR GP-CHARGING	1573
Y	*298-5090*	1	CAMSHAFT GP	320
Y	*298-5116*	1	CONNECTION GP-INLET	774
Y	*298-5107*	1	CONNECTION GP-WATER	685
Y	*304-6436*	1	CONTROL GP-ENGINE ELECTRONIC	1584
Y	*298-5099*	1	COOLER GP-ENGINE OIL	690
Y	*298-5111*	1	COVER GP-ENGINE	332
Y	*298-5097*	1	COVER GP-VALVE MECHANISM	335
Y	*298-5086*	1	CRANKSHAFT GP	378
Y	*298-5085*	1	CYLINDER BLOCK GP	398
Y	*298-5088*	1	CYLINDER HEAD GP	418
Y	*298-5095*	1	DRIVE GP-FAN	425
Y	*298-5108*	1	FAN GP	701
Y	*298-5100*	1	FILTER GP-ENGINE OIL	678
Y	*298-5123*	1	FILTER GP-PRIMARY FUEL	1009
Y	*298-5093*	1	FLYWHEEL GP	453
Y	*298-5110*	1	GEAR GP-FRONT	475
Y	*298-5125*	1	GLOW PLUG GP	1586
Y	*321-5596*	1	HOUSING GP-FLYWHEEL	489
Y	*298-5127*	1	LIFTING GP-ENGINE	511
Y	*311-2271*	1	LINES GP-FUEL FILTER	1050
Y	*298-5771*	1	MOUNTING GP-ENGINE	514
Y	*344-8201*	1	PAN GP-OIL	589
Y	*298-5087*	1	PISTON & ROD GP	609
Y	*298-5129*	1	PLUG GP-CYLINDER HEAD	629
Y	*298-5098*	1	PLUG GP-ENGINE	631
Y	*298-5131*	1	PLUG GP-ENGINE	632
Y	*298-5128*	1	PLUG GP-ENGINE OIL MANIFOLD	680
Y	*360-7346*	1	PULLEY GP-CRANKSHAFT	655
Y	*360-7355*	1	PULLEY GP-CRANKSHAFT	656
Y	*298-5112*	1	PUMP GP-ENGINE OIL	681
Y	*320-2397*	1	PUMP GP-FUEL INJECTION	1473
Y	*298-5105*	1	PUMP GP-WATER	714
Y	*298-5089*	1	ROCKER ARM GP	658
Y	*327-8999*	1	STARTING MOTOR GP-ELECTRIC	1598
Y	*325-1069*	1	TURBOCHARGER GP	920
Y	*298-5130*	1	WIRING GP-ENGINE	1604
R	**359-0739**	1	CYLINDER BLOCK GP-SHORT	
	320-2399	1	ELECTRONICS GP-ENGINE RATINGS	

R - REMANUFACTURED PART MAY BE AVAILABLE
Y - SEPARATE ILLUSTRATION

<END>

435-1687 ENGINE AR-PRIMARY*R

97 BRAKE KW (129 BHP) AT 2200 RPM

SMCS-1000 **i07037797**

NOTE	PART NUMBER	QTY	PART NAME 1 2 3 4 5 6 (PRODUCT LEVEL)	SEE PAGE
Y	*304-0728*	1	ADAPTER GP-AUXILIARY DRIVE	301
Y	*311-7455*	1	ALTERNATOR GP-CHARGING	1577
Y	*298-5892*	1	CAMSHAFT GP	321
Y	*301-8248*	1	CONNECTION GP-INLET	776
Y	*301-8243*	1	CONNECTION GP-WATER	687
Y	*304-6436*	1	CONTROL GP-ENGINE ELECTRONIC	1584
Y	*298-5099*	1	COOLER GP-ENGINE OIL	690
Y	*304-5574*	1	COVER GP-VALVE MECHANISM	351
Y	*298-5888*	1	CRANKSHAFT GP	380
Y	*298-5887*	1	CYLINDER BLOCK GP	400
Y	*298-5890*	1	CYLINDER HEAD GP	419
Y	*316-7959*	1	DRIVE GP-FAN	436
Y	*311-4640*	1	FAN GP	704
Y	*299-5071*	1	FILLER GP-ENGINE OIL	670
Y	*298-5100*	1	FILTER GP-ENGINE OIL	678
Y	*303-5780*	1	FILTER GP-FUEL	999
Y	*322-3755*	1	FILTER GP-FUEL	1005
Y	*299-5063*	1	FLYWHEEL GP	454
Y	*298-5125*	1	GLOW PLUG GP	1586
Y	*299-5057*	1	HOUSING GP-FLYWHEEL	478
Y	*304-0727*	1	HOUSING GP-FRONT	492
Y	*299-5033*	1	LIFTING GP-ENGINE	512
Y	*322-3754*	1	LINES GP-FUEL	1036
Y	*323-6804*	1	MOUNTING GP-ENGINE	529
Y	*377-8331*	1	PAN GP-OIL	603
Y	*304-8762*	1	PIPE GP-EXHAUST	790
Y	*298-5889*	1	PISTON GP	621
Y	*298-5129*	1	PLUG GP-CYLINDER HEAD	629
Y	*298-5131*	1	PLUG GP-ENGINE	632
Y	*298-5128*	1	PLUG GP-ENGINE OIL MANIFOLD	680
Y	*360-7343*	1	PULLEY GP-CRANKSHAFT	652
Y	*298-5112*	1	PUMP GP-ENGINE OIL	681
Y	*322-3753*	1	PUMP GP-FUEL INJECTION	1503
Y	*340-4692*	1	PUMP GP-WATER	722
Y	*381-0115*	1	RADIATOR GP	769
Y	*325-5612*	1	STARTING MOTOR GP-ELECTRIC	1597
Y	*365-1581*	1	TURBOCHARGER GP	986
Y	*298-5891*	1	VALVE MECHANISM GP	661
Y	*316-1102*	1	WIRING GP-ENGINE	1613
R	**359-0737**	1	CYLINDER BLOCK GP-SHORT	
	305-8458	1	ELECTRONICS GP-ENGINE RATINGS	

R - REMANUFACTURED PART MAY BE AVAILABLE
Y - SEPARATE ILLUSTRATION

<END>

435-1701 ENGINE AR-PRIMARY*R

104 BRAKE KW (139 BHP) AT 2200 RPM

FIELD REPLACEMENT FOR 315-8099—PAGE: 132

SMCS-1000 **i05376271**

NOTE	PART NUMBER	QTY	PART NAME 1 2 3 4 5 6 (PRODUCT LEVEL)	SEE PAGE
			(NO SERVICED PARTS)	

<END>

435-3728 ENGINE AR-PRIMARY

106 BRAKE KW (142 BHP) AT 2200 RPM

SMCS-1000 **i06809780**

NOTE	PART NUMBER	QTY	PART NAME 1 2 3 4 5 6 (PRODUCT LEVEL)	SEE PAGE
Y	*308-4275*	1	ADAPTER GP-AUXILIARY DRIVE	306
Y	*311-4639*	1	ALTERNATOR GP-CHARGING	1575
Y	*298-5090*	1	CAMSHAFT GP	320
Y	*301-8248*	1	CONNECTION GP-INLET	776
Y	*301-8243*	1	CONNECTION GP-WATER	687
Y	*304-6436*	1	CONTROL GP-ENGINE ELECTRONIC	1584
Y	*298-5099*	1	COOLER GP-ENGINE OIL	690
Y	*311-8535*	1	COVER GP-ENGINE	333
Y	*301-8240*	1	COVER GP-VALVE MECHANISM	341
Y	*298-5086*	1	CRANKSHAFT GP	378
Y	*298-5085*	1	CYLINDER BLOCK GP	398
Y	*298-5088*	1	CYLINDER HEAD GP	418
Y	*311-4644*	1	DRIVE GP-FAN	433
Y	*311-4640*	1	FAN GP	704
Y	*298-5100*	1	FILTER GP-ENGINE OIL	678
Y	*303-5780*	1	FILTER GP-FUEL	999
Y	*298-5123*	1	FILTER GP-PRIMARY FUEL	1009
Y	*306-2314*	1	FLYWHEEL GP	461
Y	*298-5110*	1	GEAR GP-FRONT	475
Y	*299-5075*	1	GLOW PLUG GP	1587
Y	*303-4618*	1	HOUSING GP-FLYWHEEL	481
Y	*299-5033*	1	LIFTING GP-ENGINE	512
Y	*311-2271*	1	LINES GP-FUEL FILTER	1050
Y	*311-4641*	1	MOUNTING GP-ENGINE	521
Y	*298-5096*	1	PAN GP-OIL	533
Y	*304-8762*	1	PIPE GP-EXHAUST	790
Y	*298-5087*	1	PISTON & ROD GP	609
Y	*298-5129*	1	PLUG GP-CYLINDER HEAD	629
Y	*298-5131*	1	PLUG GP-ENGINE	632
Y	*298-5128*	1	PLUG GP-ENGINE OIL MANIFOLD	680
Y	*360-7343*	1	PULLEY GP-CRANKSHAFT	652
Y	*298-5112*	1	PUMP GP-ENGINE OIL	681
Y	*304-6570*	1	PUMP GP-FUEL INJECTION	1179
Y	*298-5105*	1	PUMP GP-WATER	714
Y	*312-1672*	1	RADIATOR GP	738
Y	*298-5089*	1	ROCKER ARM GP	658
Y	*299-5067*	1	STARTING MOTOR GP-ELECTRIC	1591
Y	*307-2861*	1	SWITCH GP-HEAT START	1602
Y	*307-2850*	1	TURBOCHARGER GP	857
Y	*298-5130*	1	WIRING GP-ENGINE	1604
R	**359-0739**	1	CYLINDER BLOCK GP-SHORT	
	305-8457	1	ELECTRONICS GP-ENGINE RATINGS	

R - REMANUFACTURED PART MAY BE AVAILABLE
Y - SEPARATE ILLUSTRATION

<END>

435-3730 ENGINE AR-PRIMARY

97 BRAKE KW (129 BHP) AT 2200 RPM

SMCS-1000 **i05433137**

NOTE	PART NUMBER	QTY	PART NAME 1 2 3 4 5 6 (PRODUCT LEVEL)	SEE PAGE
Y	*298-5109*	1	ALTERNATOR GP-CHARGING	1556
Y	*306-2318*	1	BREATHER GP	669
Y	*298-5892*	1	CAMSHAFT GP	321
Y	*298-5116*	1	CONNECTION GP-INLET	774
Y	*298-5107*	1	CONNECTION GP-WATER	685
Y	*304-6436*	1	CONTROL GP-ENGINE ELECTRONIC	1584
Y	*305-2579*	1	COOLER GP-OIL	698
Y	*306-2316*	1	COVER GP-CYLINDER HEAD	326
Y	*298-5888*	1	CRANKSHAFT GP	380
Y	*298-5887*	1	CYLINDER BLOCK GP	400
Y	*298-5890*	1	CYLINDER HEAD GP	419
Y	*325-0577*	1	DRIVE GP-FAN	441
Y	*308-4158*	1	FILLER GP-ENGINE OIL	673
Y	*298-5100*	1	FILTER GP-ENGINE OIL	678
Y	*298-5123*	1	FILTER GP-PRIMARY FUEL	1009
Y	*306-2314*	1	FLYWHEEL GP	461
Y	*298-5125*	1	GLOW PLUG GP	1586
Y	*303-4618*	1	HOUSING GP-FLYWHEEL	481
Y	*304-8760*	1	HOUSING GP-FRONT	495
Y	*298-5127*	1	LIFTING GP-ENGINE	511
Y	*322-4952*	1	LINES GP-FUEL	1039
Y	*311-2271*	1	LINES GP-FUEL FILTER	1050
Y	*316-6924*	1	MOUNTING GP-ENGINE	525
Y	*305-2168*	1	MOUNTING GP-EXHAUST	789
Y	*299-5082*	1	MOUNTING GP-FAN	713
Y	*298-5096*	1	PAN GP-OIL	533
Y	*298-5889*	1	PISTON GP	621
Y	*298-5129*	1	PLUG GP-CYLINDER HEAD	629
Y	*298-5131*	1	PLUG GP-ENGINE	632
Y	*304-8761*	1	PLUG GP-ENGINE	636
Y	*298-5128*	1	PLUG GP-ENGINE OIL MANIFOLD	680
Y	*360-7346*	1	PULLEY GP-CRANKSHAFT	655
Y	*298-5112*	1	PUMP GP-ENGINE OIL	681
Y	*303-4615*	1	PUMP GP-FUEL INJECTION	1134
Y	*298-5105*	1	PUMP GP-WATER	714
Y	*328-0666*	1	STARTING MOTOR GP-ELECTRIC	1599
Y	*308-4277*	1	TURBOCHARGER GP	881
Y	*298-5891*	1	VALVE MECHANISM GP	661
Y	*298-5130*	1	WIRING GP-ENGINE	1604
R	**359-0737**	1	CYLINDER BLOCK GP-SHORT	
	305-8458	1	ELECTRONICS GP-ENGINE RATINGS	

R - REMANUFACTURED PART MAY BE AVAILABLE
Y - SEPARATE ILLUSTRATION

<END>

437-1249 ENGINE AR-PRIMARY

95 BRAKE KW (127 BHP) AT 2200 RPM

SMCS-1000 **i05366021**

NOTE	PART NUMBER	QTY	PART NAME 1 2 3 4 5 6 (PRODUCT LEVEL)	SEE PAGE
Y	*323-8845*	1	AIR COMPRESSOR GP	309
Y	*322-3055*	1	ALTERNATOR GP-CHARGING	1580
Y	*301-8245*	1	BALANCER GP	317
Y	*298-5892*	1	CAMSHAFT GP	321
Y	*301-8248*	1	CONNECTION GP-INLET	776
Y	*301-8243*	1	CONNECTION GP-WATER	687
Y	*304-6436*	1	CONTROL GP-ENGINE ELECTRONIC	1584
Y	*301-8241*	1	COOLER GP-OIL	697
Y	*329-3543*	1	COVER GP-VALVE MECHANISM	375
Y	*298-5888*	1	CRANKSHAFT GP	380
Y	*298-5887*	1	CYLINDER BLOCK GP	400
Y	*298-5890*	1	CYLINDER HEAD GP	419
Y	*311-4644*	1	DRIVE GP-FAN	433
Y	*314-5003*	1	FAN GP	707
Y	*298-5100*	1	FILTER GP-ENGINE OIL	678
Y	*333-5523*	1	FILTER GP-FUEL	1008
Y	*301-8251*	1	FILTER GP-WATER SEP & FUEL	1013
Y	*301-8237*	1	FLYWHEEL GP	455
Y	*299-5075*	1	GLOW PLUG GP	1587
Y	*301-8236*	1	HOUSING GP-FLYWHEEL	479
Y	*323-8844*	1	HOUSING GP-FRONT	506
Y	*299-5033*	1	LIFTING GP-ENGINE	512
Y	*333-5521*	1	LINES GP-FUEL	1047
Y	*311-4641*	1	MOUNTING GP-ENGINE	521
Y	*323-8843*	1	PAN GP-OIL	575
Y	*304-8762*	1	PIPE GP-EXHAUST	790
Y	*298-5889*	1	PISTON GP	621
Y	*298-5129*	1	PLUG GP-CYLINDER HEAD	629
Y	*298-5098*	1	PLUG GP-ENGINE	631
Y	*304-3663*	1	PLUG GP-ENGINE	634
Y	*298-5128*	1	PLUG GP-ENGINE OIL MANIFOLD	680
Y	*360-7343*	1	PULLEY GP-CRANKSHAFT	652
Y	*305-6701*	1	PUMP GP-FUEL INJECTION	1303
Y	*340-4692*	1	PUMP GP-WATER	722
Y	*311-4636*	1	RADIATOR GP	730
Y	*299-5067*	1	STARTING MOTOR GP-ELECTRIC	1591
Y	*307-2850*	1	TURBOCHARGER GP	857
Y	*298-5891*	1	VALVE MECHANISM GP	661
Y	*335-6238*	1	WIRING GP-ENGINE	1615
R	**359-0737**	1	CYLINDER BLOCK GP-SHORT	
	305-8454	1	ELECTRONICS GP-ENGINE RATINGS	

R - REMANUFACTURED PART MAY BE AVAILABLE
Y - SEPARATE ILLUSTRATION

<END>

437-5409 ENGINE AR-PRIMARY*R

95 BRAKE (127 BHP) AT 2200 RPM

FIELD REPLACEMENT FOR 308-5585—PAGE: 107

SMCS-1000 **i06809766**

NOTE	PART NUMBER	QTY	PART NAME 1 2 3 4 5 6 (PRODUCT LEVEL)	SEE PAGE
Y	*311-7455*	1	ALTERNATOR GP-CHARGING	1577
Y	*301-8245*	1	BALANCER GP	317
Y	*298-5892*	1	CAMSHAFT GP	321
Y	*301-8248*	1	CONNECTION GP-INLET	776
Y	*301-8243*	1	CONNECTION GP-WATER	687
Y	*304-6436*	1	CONTROL GP-ENGINE ELECTRONIC	1584
Y	*301-8241*	1	COOLER GP-OIL	697
Y	*298-5111*	1	COVER GP-ENGINE	332
Y	*301-8240*	1	COVER GP-VALVE MECHANISM	341
Y	*298-5888*	1	CRANKSHAFT GP	380
Y	*298-5887*	1	CYLINDER BLOCK GP	400
Y	*298-5890*	1	CYLINDER HEAD GP	419
Y	*316-7959*	1	DRIVE GP-FAN	436
Y	*314-5003*	1	FAN GP	707
Y	*298-5100*	1	FILTER GP-ENGINE OIL	678
Y	*298-5123*	1	FILTER GP-PRIMARY FUEL	1009
Y	*301-8251*	1	FILTER GP-WATER SEP & FUEL	1013
Y	*301-8237*	1	FLYWHEEL GP	455
Y	*298-5110*	1	GEAR GP-FRONT	475
Y	*298-5125*	1	GLOW PLUG GP	1586
Y	*301-8236*	1	HOUSING GP-FLYWHEEL	479
Y	*299-5033*	1	LIFTING GP-ENGINE	512
Y	*311-2271*	1	LINES GP-FUEL FILTER	1050
Y	*311-4641*	1	MOUNTING GP-ENGINE	521
Y	*301-8239*	1	PAN GP-OIL	541
Y	*304-8762*	1	PIPE GP-EXHAUST	790
Y	*298-5889*	1	PISTON GP	621
Y	*298-5129*	1	PLUG GP-CYLINDER HEAD	629
Y	*298-5098*	1	PLUG GP-ENGINE	631
Y	*298-5131*	1	PLUG GP-ENGINE	632
Y	*298-5128*	1	PLUG GP-ENGINE OIL MANIFOLD	680
Y	*360-7343*	1	PULLEY GP-CRANKSHAFT	652
Y	*305-6701*	1	PUMP GP-FUEL INJECTION	1303
Y	*298-5105*	1	PUMP GP-WATER	714
Y	*312-1672*	1	RADIATOR GP	738
Y	*325-5612*	1	STARTING MOTOR GP-ELECTRIC	1597
Y	*311-7456*	1	TURBOCHARGER GP	887
Y	*298-5891*	1	VALVE MECHANISM GP	661
Y	*298-5130*	1	WIRING GP-ENGINE	1604
R	**359-0737**	1	CYLINDER BLOCK GP-SHORT	
	305-8454	1	ELECTRONICS GP-ENGINE RATINGS	

R - REMANUFACTURED PART MAY BE AVAILABLE
Y - SEPARATE ILLUSTRATION

<END>

437-5411 ENGINE AR-PRIMARY

95 BRAKE KW (127 BHP) AT 2200 RPM

SMCS-1000 **i05433190**

NOTE	PART NUMBER	QTY	PART NAME 1 2 3 4 5 6 (PRODUCT LEVEL)	SEE PAGE
Y	*304-0728*	1	ADAPTER GP-AUXILIARY DRIVE	301
Y	*322-4890*	1	ALTERNATOR GP-CHARGING	1581
Y	*298-5892*	1	CAMSHAFT GP	321
Y	*301-8248*	1	CONNECTION GP-INLET	776
Y	*301-8243*	1	CONNECTION GP-WATER	687
Y	*304-6436*	1	CONTROL GP-ENGINE ELECTRONIC	1584
Y	*298-5099*	1	COOLER GP-ENGINE OIL	690
Y	*301-8240*	1	COVER GP-VALVE MECHANISM	341
Y	*298-5888*	1	CRANKSHAFT GP	380
Y	*298-5887*	1	CYLINDER BLOCK GP	400
Y	*298-5890*	1	CYLINDER HEAD GP	419
Y	*311-4644*	1	DRIVE GP-FAN	433
Y	*311-4640*	1	FAN GP	704
Y	*298-5100*	1	FILTER GP-ENGINE OIL	678
Y	*298-5123*	1	FILTER GP-PRIMARY FUEL	1009
Y	*301-8251*	1	FILTER GP-WATER SEP & FUEL	1013
Y	*301-8237*	1	FLYWHEEL GP	455
Y	*298-5125*	1	GLOW PLUG GP	1586
Y	*303-4618*	1	HOUSING GP-FLYWHEEL	481
Y	*304-0727*	1	HOUSING GP-FRONT	492
Y	*299-5033*	1	LIFTING GP-ENGINE	512
Y	*311-2271*	1	LINES GP-FUEL FILTER	1050
Y	*311-4641*	1	MOUNTING GP-ENGINE	521
Y	*304-3656*	1	PAN GP-OIL	549
Y	*304-8762*	1	PIPE GP-EXHAUST	790
Y	*298-5889*	1	PISTON GP	621
Y	*298-5129*	1	PLUG GP-CYLINDER HEAD	629
Y	*298-5098*	1	PLUG GP-ENGINE	631
Y	*298-5131*	1	PLUG GP-ENGINE	632
Y	*298-5128*	1	PLUG GP-ENGINE OIL MANIFOLD	680
Y	*360-7343*	1	PULLEY GP-CRANKSHAFT	652
Y	*298-5112*	1	PUMP GP-ENGINE OIL	681
Y	*305-6701*	1	PUMP GP-FUEL INJECTION	1303
Y	*340-4692*	1	PUMP GP-WATER	722
Y	*311-4636*	1	RADIATOR GP	730
Y	*325-5612*	1	STARTING MOTOR GP-ELECTRIC	1597
Y	*311-7456*	1	TURBOCHARGER GP	887
Y	*298-5891*	1	VALVE MECHANISM GP	661
Y	*298-5130*	1	WIRING GP-ENGINE	1604
R	**359-0737**	1	CYLINDER BLOCK GP-SHORT	
	305-8454	1	ELECTRONICS GP-ENGINE RATINGS	

R - REMANUFACTURED PART MAY BE AVAILABLE
Y - SEPARATE ILLUSTRATION

<END>

437-5417 ENGINE AR-PRIMARY

97 BRAKE KW (129 BHP) AT 2200 RPM

SMCS-1000 **i05685051**

NOTE	PART NUMBER	QTY	PART NAME 1 2 3 4 5 6 (PRODUCT LEVEL)	SEE PAGE
Y	*315-3414*	1	ALTERNATOR GP-CHARGING	1578
Y	*298-5892*	1	CAMSHAFT GP	321
Y	*301-8248*	1	CONNECTION GP-INLET	776
Y	*301-8243*	1	CONNECTION GP-WATER	687
Y	*304-6436*	1	CONTROL GP-ENGINE ELECTRONIC	1584
Y	*298-5099*	1	COOLER GP-ENGINE OIL	690
Y	*304-5574*	1	COVER GP-VALVE MECHANISM	351
Y	*298-5888*	1	CRANKSHAFT GP	380
Y	*298-5887*	1	CYLINDER BLOCK GP	400
YR	**359-0737**	1	CYLINDER BLOCK GP-SHORT	415
Y	*298-5890*	1	CYLINDER HEAD GP	419
Y	*311-4644*	1	DRIVE GP-FAN	433
Y	*314-5003*	1	FAN GP	707
Y	*308-4158*	1	FILLER GP-ENGINE OIL	673
Y	*298-5100*	1	FILTER GP-ENGINE OIL	678
Y	*303-5780*	1	FILTER GP-FUEL	999
Y	*298-5123*	1	FILTER GP-PRIMARY FUEL	1009
Y	*301-8237*	1	FLYWHEEL GP	455
Y	*298-5125*	1	GLOW PLUG GP	1586
Y	*303-4618*	1	HOUSING GP-FLYWHEEL	481
Y	*304-8760*	1	HOUSING GP-FRONT	495
Y	*299-5033*	1	LIFTING GP-ENGINE	512
Y	*311-2271*	1	LINES GP-FUEL FILTER	1050
Y	*311-4641*	1	MOUNTING GP-ENGINE	521
Y	*304-3656*	1	PAN GP-OIL	549
Y	*304-8762*	1	PIPE GP-EXHAUST	790
Y	*298-5889*	1	PISTON GP	621
Y	*298-5129*	1	PLUG GP-CYLINDER HEAD	629
Y	*298-5131*	1	PLUG GP-ENGINE	632
Y	*304-8761*	1	PLUG GP-ENGINE	636
Y	*360-7343*	1	PULLEY GP-CRANKSHAFT	652
Y	*298-5112*	1	PUMP GP-ENGINE OIL	681
Y	*303-4615*	1	PUMP GP-FUEL INJECTION	1134
Y	*298-5105*	1	PUMP GP-WATER	714
Y	*312-1672*	1	RADIATOR GP	738
Y	*325-5612*	1	STARTING MOTOR GP-ELECTRIC	1597
Y	*312-2579*	1	SWITCH GP-HEAT START	1603
Y	*311-7456*	1	TURBOCHARGER GP	887
Y	*318-3637*	1	VALVE GP-FLUID SAMPLING	683
Y	*298-5891*	1	VALVE MECHANISM GP	661
Y	*298-5130*	1	WIRING GP-ENGINE	1604
	305-8458	1	ELECTRONICS GP-ENGINE RATINGS	

R - REMANUFACTURED PART MAY BE AVAILABLE
Y - SEPARATE ILLUSTRATION

<END>

437-5419 ENGINE AR-PRIMARY

95 BRAKE KW (127 BHP) AT 220 RPM

SMCS-1000 **i05685069**

NOTE	PART NUMBER	QTY	PART NAME 1 2 3 4 5 6 (PRODUCT LEVEL)	SEE PAGE
Y	*311-7455*	1	ALTERNATOR GP-CHARGING	1577
Y	*301-8245*	1	BALANCER GP	317
Y	*298-5892*	1	CAMSHAFT GP	321
Y	*301-8248*	1	CONNECTION GP-INLET	776
Y	*301-8243*	1	CONNECTION GP-WATER	687
Y	*304-6436*	1	CONTROL GP-ENGINE ELECTRONIC	1584
Y	*301-8241*	1	COOLER GP-OIL	697
Y	*298-5111*	1	COVER GP-ENGINE	332
Y	*301-8240*	1	COVER GP-VALVE MECHANISM	341
Y	*298-5888*	1	CRANKSHAFT GP	380
Y	*298-5887*	1	CYLINDER BLOCK GP	400
Y	*298-5890*	1	CYLINDER HEAD GP	419
Y	*316-7959*	1	DRIVE GP-FAN	436
Y	*314-5003*	1	FAN GP	707
Y	*298-5100*	1	FILTER GP-ENGINE OIL	678
Y	*298-5123*	1	FILTER GP-PRIMARY FUEL	1009
Y	*301-8251*	1	FILTER GP-WATER SEP & FUEL	1013
Y	*301-8237*	1	FLYWHEEL GP	455
Y	*298-5110*	1	GEAR GP-FRONT	475
Y	*298-5125*	1	GLOW PLUG GP	1586
Y	*301-8236*	1	HOUSING GP-FLYWHEEL	479
Y	*299-5033*	1	LIFTING GP-ENGINE	512
Y	*311-2271*	1	LINES GP-FUEL FILTER	1050
Y	*311-4641*	1	MOUNTING GP-ENGINE	521
Y	*301-8239*	1	PAN GP-OIL	541
Y	*304-8762*	1	PIPE GP-EXHAUST	790
Y	*298-5889*	1	PISTON GP	621
Y	*298-5129*	1	PLUG GP-CYLINDER HEAD	629
Y	*298-5098*	1	PLUG GP-ENGINE	631
Y	*298-5131*	1	PLUG GP-ENGINE	632
Y	*298-5128*	1	PLUG GP-ENGINE OIL MANIFOLD	680
Y	*360-7343*	1	PULLEY GP-CRANKSHAFT	652
Y	*305-6701*	1	PUMP GP-FUEL INJECTION	1303
Y	*298-5105*	1	PUMP GP-WATER	714
Y	*312-1672*	1	RADIATOR GP	738
Y	*325-5612*	1	STARTING MOTOR GP-ELECTRIC	1597
Y	*311-7456*	1	TURBOCHARGER GP	887
Y	*298-5891*	1	VALVE MECHANISM GP	661
Y	*298-5130*	1	WIRING GP-ENGINE	1604
R	**359-0737**	1	CYLINDER BLOCK GP-SHORT	
	305-8454	1	ELECTRONICS GP-ENGINE RATINGS	

R - REMANUFACTURED PART MAY BE AVAILABLE
Y - SEPARATE ILLUSTRATION

<END>

438-0894 ENGINE AR-PRIMARY

106 BRAKE KW (142 BHP) AT 2200 RPM

SMCS-1000 **i05849414**

NOTE	PART NUMBER	QTY	PART NAME 1 2 3 4 5 6 (PRODUCT LEVEL)	SEE PAGE
Y	*308-4275*	1	ADAPTER GP-AUXILIARY DRIVE	306
Y	*303-5774*	1	ALTERNATOR GP-CHARGING	1561
Y	*298-5090*	1	CAMSHAFT GP	320
Y	*298-5116*	1	CONNECTION GP-INLET	774
Y	*299-5078*	1	CONNECTION GP-WATER	686
Y	*304-6436*	1	CONTROL GP-ENGINE ELECTRONIC	1584
Y	*305-2579*	1	COOLER GP-OIL	698
Y	*301-8240*	1	COVER GP-VALVE MECHANISM	341
Y	*298-5086*	1	CRANKSHAFT GP	378
Y	*298-5085*	1	CYLINDER BLOCK GP	398
Y	*298-5088*	1	CYLINDER HEAD GP	418
Y	*307-2849*	1	FAN GP	702
Y	*317-6399*	1	FASTENER GP-TURBOCHARGER	788
Y	*318-0775*	1	FILLER GP-ENGINE OIL	676
Y	*298-5100*	1	FILTER GP-ENGINE OIL	678
Y	*298-5123*	1	FILTER GP-PRIMARY FUEL	1009
Y	*301-8251*	1	FILTER GP-WATER SEP & FUEL	1013
Y	*301-8237*	1	FLYWHEEL GP	455
Y	*298-5125*	1	GLOW PLUG GP	1586
Y	*303-4618*	1	HOUSING GP-FLYWHEEL	481
Y	*319-1582*	1	HOUSING GP-FRONT	499
Y	*299-5033*	1	LIFTING GP-ENGINE	512
Y	*311-2271*	1	LINES GP-FUEL FILTER	1050
Y	*304-8757*	1	PAN GP-OIL	553
Y	*298-5087*	1	PISTON & ROD GP	609
Y	*298-5129*	1	PLUG GP-CYLINDER HEAD	629
Y	*301-8250*	1	PLUG GP-ENGINE	633
Y	*304-3663*	1	PLUG GP-ENGINE	634
Y	*298-5128*	1	PLUG GP-ENGINE OIL MANIFOLD	680
Y	*455-0744*	1	PULLEY GP	646
Y	*360-7345*	1	PULLEY GP-CRANKSHAFT	654
Y	*298-5112*	1	PUMP GP-ENGINE OIL	681
Y	*304-6570*	1	PUMP GP-FUEL INJECTION	1179
Y	*298-5105*	1	PUMP GP-WATER	714
Y	*298-5089*	1	ROCKER ARM GP	658
Y	*304-3655*	1	STARTING MOTOR GP-ELECTRIC	1594
Y	*298-5113*	1	TURBOCHARGER GP	791
Y	*298-5130*	1	WIRING GP-ENGINE	1604
R	**359-0739**	1	CYLINDER BLOCK GP-SHORT	
	305-8457	1	ELECTRONICS GP-ENGINE RATINGS	

R - REMANUFACTURED PART MAY BE AVAILABLE
Y - SEPARATE ILLUSTRATION

<END>

438-0898 ENGINE AR-PRIMARY

97 BRAKE KW (129 BHP) AT 2200 RPM

SMCS-1000 **i06830548**

NOTE	PART NUMBER	QTY	PART NAME 1 2 3 4 5 6 (PRODUCT LEVEL)	SEE PAGE
Y	*311-7455*	1	ALTERNATOR GP-CHARGING	1577
Y	*298-5892*	1	CAMSHAFT GP	321
Y	*301-8248*	1	CONNECTION GP-INLET	776
Y	*301-8243*	1	CONNECTION GP-WATER	687
Y	*304-6436*	1	CONTROL GP-ENGINE ELECTRONIC	1584
Y	*298-5099*	1	COOLER GP-ENGINE OIL	690
Y	*298-5111*	1	COVER GP-ENGINE	332
Y	*301-8240*	1	COVER GP-VALVE MECHANISM	341
Y	*298-5888*	1	CRANKSHAFT GP	380
Y	*298-5887*	1	CYLINDER BLOCK GP	400
Y	*298-5890*	1	CYLINDER HEAD GP	419
Y	*316-7959*	1	DRIVE GP-FAN	436
Y	*314-5003*	1	FAN GP	707
Y	*298-5100*	1	FILTER GP-ENGINE OIL	678
Y	*298-5123*	1	FILTER GP-PRIMARY FUEL	1009
Y	*301-8251*	1	FILTER GP-WATER SEP & FUEL	1013
Y	*301-8237*	1	FLYWHEEL GP	455
Y	*298-5110*	1	GEAR GP-FRONT	475
Y	*298-5125*	1	GLOW PLUG GP	1586
Y	*303-4618*	1	HOUSING GP-FLYWHEEL	481
Y	*299-5033*	1	LIFTING GP-ENGINE	512
Y	*311-2271*	1	LINES GP-FUEL FILTER	1050
Y	*311-4641*	1	MOUNTING GP-ENGINE	521
Y	*298-5096*	1	PAN GP-OIL	533
Y	*304-8762*	1	PIPE GP-EXHAUST	790
Y	*298-5889*	1	PISTON GP	621
Y	*298-5129*	1	PLUG GP-CYLINDER HEAD	629
Y	*298-5098*	1	PLUG GP-ENGINE	631
Y	*298-5131*	1	PLUG GP-ENGINE	632
Y	*298-5128*	1	PLUG GP-ENGINE OIL MANIFOLD	680
Y	*360-7343*	1	PULLEY GP-CRANKSHAFT	652
Y	*298-5112*	1	PUMP GP-ENGINE OIL	681
Y	*303-4615*	1	PUMP GP-FUEL INJECTION	1134
Y	*298-5105*	1	PUMP GP-WATER	714
Y	*312-1672*	1	RADIATOR GP	738
Y	*325-5612*	1	STARTING MOTOR GP-ELECTRIC	1597
Y	*311-7456*	1	TURBOCHARGER GP	887
Y	*298-5891*	1	VALVE MECHANISM GP	661
Y	*298-5130*	1	WIRING GP-ENGINE	1604
R	**359-0737**	1	CYLINDER BLOCK GP-SHORT	
	305-8458	1	ELECTRONICS GP-ENGINE RATINGS	

R - REMANUFACTURED PART MAY BE AVAILABLE
Y - SEPARATE ILLUSTRATION

<END>

439-3389 ENGINE AR-PRIMARY

76 BRAKE KW (100 BHP) AT 2200 RPM

SMCS-1000 **i05849417**

NOTE	PART NUMBER	QTY	PART NAME 1 2 3 4 5 6 (PRODUCT LEVEL)	SEE PAGE
Y	*454-6621*	1	ADAPTER GP-PUMP DRIVE	307
Y	*306-8856*	1	ALTERNATOR GP-CHARGING	1569
Y	*304-3648*	1	CAMSHAFT GP	322
Y	*301-8243*	1	CONNECTION GP-WATER	687
Y	*304-6436*	1	CONTROL GP-ENGINE ELECTRONIC	1584
Y	*298-5099*	1	COOLER GP-ENGINE OIL	690
Y	*304-3658*	1	COVER GP-CYLINDER HEAD	325
Y	*304-8758*	1	COVER GP-VALVE MECHANISM	357
Y	*304-3642*	1	CRANKSHAFT GP	382
Y	*304-3641*	1	CYLINDER BLOCK GP	402
Y	*304-3645*	1	CYLINDER HEAD GP	420
Y	*325-0577*	1	DRIVE GP-FAN	441
Y	*311-8536*	1	FAN GP	705
Y	*318-0775*	1	FILLER GP-ENGINE OIL	676
Y	*298-5100*	1	FILTER GP-ENGINE OIL	678
Y	*303-5780*	1	FILTER GP-FUEL	999
Y	*322-8426*	1	FILTER GP-FUEL	1006
Y	*304-3654*	1	FLYWHEEL GP	457
Y	*299-5075*	1	GLOW PLUG GP	1587
Y	*299-5057*	1	HOUSING GP-FLYWHEEL	478
Y	*322-3056*	1	HOUSING GP-FRONT	503
Y	*299-5033*	1	LIFTING GP-ENGINE	512
Y	*322-8425*	1	LINES GP-FUEL	1041
Y	*304-8763*	1	MOUNTING GP-ENGINE	519
Y	*305-2578*	1	PAN GP-OIL	557
Y	*304-8762*	1	PIPE GP-EXHAUST	790
Y	*304-3643*	1	PISTON & ROD GP	613
Y	*298-5129*	1	PLUG GP-CYLINDER HEAD	629
Y	*298-5131*	1	PLUG GP-ENGINE	632
Y	*360-7346*	1	PULLEY GP-CRANKSHAFT	655
Y	*298-5112*	1	PUMP GP-ENGINE OIL	681
Y	*313-4350*	1	PUMP GP-FUEL INJECTION	1398
Y	*298-5105*	1	PUMP GP-WATER	714
Y	*299-5067*	1	STARTING MOTOR GP-ELECTRIC	1591
Y	*454-6650*	1	TURBOCHARGER GP	995
Y	*303-5779*	1	VALVE GP-FLUID SAMPLING	682
Y	*304-3647*	1	VALVE MECHANISM GP	663
Y	*298-5130*	1	WIRING GP-ENGINE	1604
R	**359-0737**	1	CYLINDER BLOCK GP-SHORT	
	305-8460	1	ELECTRONICS GP-ENGINE RATINGS	

R - REMANUFACTURED PART MAY BE AVAILABLE
Y - SEPARATE ILLUSTRATION

<END>

439-3392 ENGINE AR-PRIMARY

104 BRAKE KW (139 BHP) AT 2200 RPM

SMCS-1000 **i05626889**

NOTE	PART NUMBER	QTY	PART NAME 1 2 3 4 5 6 (PRODUCT LEVEL)	SEE PAGE
Y	*303-5775*	1	ADAPTER GP-AUXILIARY DRIVE	300
Y	*322-3055*	1	ALTERNATOR GP-CHARGING	1580
Y	*301-8245*	1	BALANCER GP	317
Y	*298-5090*	1	CAMSHAFT GP	320
Y	*301-8248*	1	CONNECTION GP-INLET	776
Y	*301-8243*	1	CONNECTION GP-WATER	687
Y	*304-6436*	1	CONTROL GP-ENGINE ELECTRONIC	1584
Y	*301-8241*	1	COOLER GP-OIL	697
Y	*298-5097*	1	COVER GP-VALVE MECHANISM	335
Y	*298-5086*	1	CRANKSHAFT GP	378
Y	*298-5085*	1	CYLINDER BLOCK GP	398
Y	*298-5088*	1	CYLINDER HEAD GP	418
Y	*320-9223*	1	DRIVE GP-FAN	438
Y	*318-0775*	1	FILLER GP-ENGINE OIL	676
Y	*298-5100*	1	FILTER GP-ENGINE OIL	678
Y	*298-5123*	1	FILTER GP-PRIMARY FUEL	1009
Y	*301-8251*	1	FILTER GP-WATER SEP & FUEL	1013
Y	*306-2314*	1	FLYWHEEL GP	461
Y	*298-5110*	1	GEAR GP-FRONT	475
Y	*299-5075*	1	GLOW PLUG GP	1587
Y	*301-8236*	1	HOUSING GP-FLYWHEEL	479
Y	*299-5033*	1	LIFTING GP-ENGINE	512
Y	*311-2271*	1	LINES GP-FUEL FILTER	1050
Y	*312-6022*	1	MOUNTING GP-ENGINE	523
Y	*299-5082*	1	MOUNTING GP-FAN	713
Y	*301-8239*	1	PAN GP-OIL	541
Y	*304-8762*	1	PIPE GP-EXHAUST	790
Y	*298-5087*	1	PISTON & ROD GP	609
Y	*298-5129*	1	PLUG GP-CYLINDER HEAD	629
Y	*298-5131*	1	PLUG GP-ENGINE	632
Y	*298-5128*	1	PLUG GP-ENGINE OIL MANIFOLD	680
Y	*360-7343*	1	PULLEY GP-CRANKSHAFT	652
Y	*301-8235*	1	PUMP GP-FUEL INJECTION	1114
Y	*298-5105*	1	PUMP GP-WATER	714
Y	*298-5089*	1	ROCKER ARM GP	658
Y	*299-5067*	1	STARTING MOTOR GP-ELECTRIC	1591
Y	*299-5043*	1	TURBOCHARGER GP	800
Y	*298-5130*	1	WIRING GP-ENGINE	1604
R	**359-0739**	1	CYLINDER BLOCK GP-SHORT	
	301-8234	1	ELECTRONICS GP-ENGINE RATINGS	

R - REMANUFACTURED PART MAY BE AVAILABLE
Y - SEPARATE ILLUSTRATION

<END>

439-3395 ENGINE AR-PRIMARY

97 BRAKE KW (129 BHP) AT 2200 RPM

SMCS-1000 **i06809785**

NOTE	PART NUMBER	QTY	PART NAME 1 2 3 4 5 6 (PRODUCT LEVEL)	SEE PAGE
Y	*304-0728*	1	ADAPTER GP-AUXILIARY DRIVE	301
Y	*311-7455*	1	ALTERNATOR GP-CHARGING	1577
Y	*298-5892*	1	CAMSHAFT GP	321
Y	*301-8248*	1	CONNECTION GP-INLET	776
Y	*301-8243*	1	CONNECTION GP-WATER	687
Y	*304-6436*	1	CONTROL GP-ENGINE ELECTRONIC	1584
Y	*298-5099*	1	COOLER GP-ENGINE OIL	690
Y	*304-5574*	1	COVER GP-VALVE MECHANISM	351
Y	*298-5888*	1	CRANKSHAFT GP	380
Y	*298-5887*	1	CYLINDER BLOCK GP	400
Y	*298-5890*	1	CYLINDER HEAD GP	419
Y	*316-7959*	1	DRIVE GP-FAN	436
Y	*311-4640*	1	FAN GP	704
Y	*298-5100*	1	FILTER GP-ENGINE OIL	678
Y	*303-5780*	1	FILTER GP-FUEL	999
Y	*322-8426*	1	FILTER GP-FUEL	1006
Y	*299-5063*	1	FLYWHEEL GP	454
Y	*298-5125*	1	GLOW PLUG GP	1586
Y	*299-5057*	1	HOUSING GP-FLYWHEEL	478
Y	*304-0727*	1	HOUSING GP-FRONT	492
Y	*299-5033*	1	LIFTING GP-ENGINE	512
Y	*322-8425*	1	LINES GP-FUEL	1041
Y	*323-6804*	1	MOUNTING GP-ENGINE	529
Y	*377-8331*	1	PAN GP-OIL	603
Y	*304-8762*	1	PIPE GP-EXHAUST	790
Y	*298-5889*	1	PISTON GP	621
Y	*298-5129*	1	PLUG GP-CYLINDER HEAD	629
Y	*298-5098*	1	PLUG GP-ENGINE	631
Y	*298-5131*	1	PLUG GP-ENGINE	632
Y	*298-5128*	1	PLUG GP-ENGINE OIL MANIFOLD	680
Y	*360-7343*	1	PULLEY GP-CRANKSHAFT	652
Y	*298-5112*	1	PUMP GP-ENGINE OIL	681
Y	*303-4615*	1	PUMP GP-FUEL INJECTION	1134
Y	*340-4692*	1	PUMP GP-WATER	722
Y	*381-0115*	1	RADIATOR GP	769
Y	*325-5612*	1	STARTING MOTOR GP-ELECTRIC	1597
Y	*333-8976*	1	TURBOCHARGER GP	960
Y	*298-5891*	1	VALVE MECHANISM GP	661
Y	*298-5130*	1	WIRING GP-ENGINE	1604
R	**359-0737**	1	CYLINDER BLOCK GP-SHORT	
	305-8458	1	ELECTRONICS GP-ENGINE RATINGS	

R - REMANUFACTURED PART MAY BE AVAILABLE
Y - SEPARATE ILLUSTRATION

<END>

441-5485 ENGINE AR-PRIMARY

107 BRAKE KW (144 BHP) AT 2200 RPM

SMCS-1000 **i05624594**

NOTE	PART NUMBER	QTY	PART NAME 1 2 3 4 5 6 (PRODUCT LEVEL)	SEE PAGE
Y	*304-0728*	1	ADAPTER GP-AUXILIARY DRIVE	301
Y	*311-4639*	1	ALTERNATOR GP-CHARGING	1575
Y	*298-5090*	1	CAMSHAFT GP	320
Y	*301-8248*	1	CONNECTION GP-INLET	776
Y	*301-8243*	1	CONNECTION GP-WATER	687
Y	*304-6436*	1	CONTROL GP-ENGINE ELECTRONIC	1584
Y	*298-5099*	1	COOLER GP-ENGINE OIL	690
Y	*301-8240*	1	COVER GP-VALVE MECHANISM	341
Y	*298-5086*	1	CRANKSHAFT GP	378
Y	*298-5085*	1	CYLINDER BLOCK GP	398
Y	*298-5088*	1	CYLINDER HEAD GP	418
Y	*316-7959*	1	DRIVE GP-FAN	436
Y	*314-5003*	1	FAN GP	707
Y	*298-5100*	1	FILTER GP-ENGINE OIL	678
Y	*298-5123*	1	FILTER GP-PRIMARY FUEL	1009
Y	*301-8251*	1	FILTER GP-WATER SEP & FUEL	1013
Y	*301-8237*	1	FLYWHEEL GP	455
Y	*299-5075*	1	GLOW PLUG GP	1587
Y	*303-4618*	1	HOUSING GP-FLYWHEEL	481
Y	*304-0727*	1	HOUSING GP-FRONT	492
Y	*299-5033*	1	LIFTING GP-ENGINE	512
Y	*311-2271*	1	LINES GP-FUEL FILTER	1050
Y	*311-4641*	1	MOUNTING GP-ENGINE	521
Y	*298-5096*	1	PAN GP-OIL	533
Y	*304-8762*	1	PIPE GP-EXHAUST	790
Y	*298-5087*	1	PISTON & ROD GP	609
Y	*298-5129*	1	PLUG GP-CYLINDER HEAD	629
Y	*298-5098*	1	PLUG GP-ENGINE	631
Y	*298-5131*	1	PLUG GP-ENGINE	632
Y	*298-5128*	1	PLUG GP-ENGINE OIL MANIFOLD	680
Y	*360-7343*	1	PULLEY GP-CRANKSHAFT	652
Y	*298-5112*	1	PUMP GP-ENGINE OIL	681
Y	*304-6570*	1	PUMP GP-FUEL INJECTION	1179
Y	*340-4692*	1	PUMP GP-WATER	722
Y	*311-4636*	1	RADIATOR GP	730
Y	*298-5089*	1	ROCKER ARM GP	658
Y	*299-5067*	1	STARTING MOTOR GP-ELECTRIC	1591
Y	*307-2850*	1	TURBOCHARGER GP	857
Y	*298-5130*	1	WIRING GP-ENGINE	1604
R	**359-0739**	1	CYLINDER BLOCK GP-SHORT	
	305-8457	1	ELECTRONICS GP-ENGINE RATINGS	

R - REMANUFACTURED PART MAY BE AVAILABLE
Y - SEPARATE ILLUSTRATION

<END>

441-5487 ENGINE AR-PRIMARY

104 BRAKE KW (139 BHP) 2200 RPM

SMCS-1000 **i05626854**

NOTE	PART NUMBER	QTY	PART NAME 1 2 3 4 5 6 (PRODUCT LEVEL)	SEE PAGE
Y	*311-7455*	1	ALTERNATOR GP-CHARGING	1577
Y	*301-8245*	1	BALANCER GP	317
Y	*298-5090*	1	CAMSHAFT GP	320
Y	*301-8248*	1	CONNECTION GP-INLET	776
Y	*301-8243*	1	CONNECTION GP-WATER	687
Y	*304-6436*	1	CONTROL GP-ENGINE ELECTRONIC	1584
Y	*301-8241*	1	COOLER GP-OIL	697
Y	*298-5111*	1	COVER GP-ENGINE	332
Y	*301-8240*	1	COVER GP-VALVE MECHANISM	341
Y	*298-5086*	1	CRANKSHAFT GP	378
Y	*298-5085*	1	CYLINDER BLOCK GP	398
Y	*298-5088*	1	CYLINDER HEAD GP	418
Y	*316-7959*	1	DRIVE GP-FAN	436
Y	*314-5003*	1	FAN GP	707
Y	*298-5100*	1	FILTER GP-ENGINE OIL	678
Y	*298-5123*	1	FILTER GP-PRIMARY FUEL	1009
Y	*301-8251*	1	FILTER GP-WATER SEP & FUEL	1013
Y	*301-8237*	1	FLYWHEEL GP	455
Y	*298-5110*	1	GEAR GP-FRONT	475
Y	*298-5125*	1	GLOW PLUG GP	1586
Y	*301-8236*	1	HOUSING GP-FLYWHEEL	479
Y	*299-5033*	1	LIFTING GP-ENGINE	512
Y	*311-2271*	1	LINES GP-FUEL FILTER	1050
Y	*311-4641*	1	MOUNTING GP-ENGINE	521
Y	*301-8239*	1	PAN GP-OIL	541
Y	*304-8762*	1	PIPE GP-EXHAUST	790
Y	*298-5087*	1	PISTON & ROD GP	609
Y	*298-5129*	1	PLUG GP-CYLINDER HEAD	629
Y	*298-5098*	1	PLUG GP-ENGINE	631
Y	*298-5131*	1	PLUG GP-ENGINE	632
Y	*298-5128*	1	PLUG GP-ENGINE OIL MANIFOLD	680
Y	*360-7343*	1	PULLEY GP-CRANKSHAFT	652
Y	*301-8235*	1	PUMP GP-FUEL INJECTION	1114
Y	*298-5105*	1	PUMP GP-WATER	714
Y	*312-1672*	1	RADIATOR GP	738
Y	*298-5089*	1	ROCKER ARM GP	658
Y	*325-5612*	1	STARTING MOTOR GP-ELECTRIC	1597
Y	*311-7456*	1	TURBOCHARGER GP	887
Y	*298-5130*	1	WIRING GP-ENGINE	1604
R	**359-0739**	1	CYLINDER BLOCK GP-SHORT	
	301-8234	1	ELECTRONICS GP-ENGINE RATINGS	

R - REMANUFACTURED PART MAY BE AVAILABLE
Y - SEPARATE ILLUSTRATION

<END>

445-2420 ENGINE AR-PRIMARY

107 BRAKE KW (144 BHP) AT 2200 RPM

SMCS-1000 **i05626150**

NOTE	PART NUMBER	QTY	PART NAME 1 2 3 4 5 6 (PRODUCT LEVEL)	SEE PAGE
Y	*311-4639*	1	ALTERNATOR GP-CHARGING	1575
Y	*298-5090*	1	CAMSHAFT GP	320
Y	*301-8248*	1	CONNECTION GP-INLET	776
Y	*301-8243*	1	CONNECTION GP-WATER	687
Y	*304-6436*	1	CONTROL GP-ENGINE ELECTRONIC	1584
Y	*298-5099*	1	COOLER GP-ENGINE OIL	690
Y	*298-5111*	1	COVER GP-ENGINE	332
Y	*301-8240*	1	COVER GP-VALVE MECHANISM	341
Y	*298-5086*	1	CRANKSHAFT GP	378
Y	*298-5085*	1	CYLINDER BLOCK GP	398
Y	*298-5088*	1	CYLINDER HEAD GP	418
Y	*316-7959*	1	DRIVE GP-FAN	436
Y	*314-5003*	1	FAN GP	707
Y	*298-5100*	1	FILTER GP-ENGINE OIL	678
Y	*298-5123*	1	FILTER GP-PRIMARY FUEL	1009
Y	*301-8251*	1	FILTER GP-WATER SEP & FUEL	1013
Y	*301-8237*	1	FLYWHEEL GP	455
Y	*298-5110*	1	GEAR GP-FRONT	475
Y	*299-5075*	1	GLOW PLUG GP	1587
Y	*303-4618*	1	HOUSING GP-FLYWHEEL	481
Y	*299-5033*	1	LIFTING GP-ENGINE	512
Y	*311-2271*	1	LINES GP-FUEL FILTER	1050
Y	*311-4641*	1	MOUNTING GP-ENGINE	521
Y	*298-5096*	1	PAN GP-OIL	533
Y	*304-8762*	1	PIPE GP-EXHAUST	790
Y	*298-5087*	1	PISTON & ROD GP	609
Y	*298-5129*	1	PLUG GP-CYLINDER HEAD	629
Y	*298-5098*	1	PLUG GP-ENGINE	631
Y	*298-5131*	1	PLUG GP-ENGINE	632
Y	*298-5128*	1	PLUG GP-ENGINE OIL MANIFOLD	680
Y	*360-7343*	1	PULLEY GP-CRANKSHAFT	652
Y	*298-5112*	1	PUMP GP-ENGINE OIL	681
Y	*304-6570*	1	PUMP GP-FUEL INJECTION	1179
Y	*298-5105*	1	PUMP GP-WATER	714
Y	*312-1672*	1	RADIATOR GP	738
Y	*298-5089*	1	ROCKER ARM GP	658
Y	*299-5067*	1	STARTING MOTOR GP-ELECTRIC	1591
Y	*307-2850*	1	TURBOCHARGER GP	857
Y	*298-5130*	1	WIRING GP-ENGINE	1604
R	**359-0739**	1	CYLINDER BLOCK GP-SHORT	
	305-8457	1	ELECTRONICS GP-ENGINE RATINGS	

R - REMANUFACTURED PART MAY BE AVAILABLE
Y - SEPARATE ILLUSTRATION

<END>

447-2007 ENGINE AR-PRIMARY

75 BRAKE KW (100 BHP) AT 2200 RPM

SMCS-1000 **i06809937**

NOTE	PART NUMBER	QTY	PART NAME 1 2 3 4 5 6 (PRODUCT LEVEL)	SEE PAGE
Y	*303-5775*	1	ADAPTER GP-AUXILIARY DRIVE	300
Y	*308-0304*	1	ALTERNATOR GP-CHARGING	1571
Y	*304-3648*	1	CAMSHAFT GP	322
Y	*298-5107*	1	CONNECTION GP-WATER	685
Y	*304-6436*	1	CONTROL GP-ENGINE ELECTRONIC	1584
Y	*305-2579*	1	COOLER GP-OIL	698
Y	*304-3658*	1	COVER GP-CYLINDER HEAD	325
Y	*301-8240*	1	COVER GP-VALVE MECHANISM	341
Y	*304-3642*	1	CRANKSHAFT GP	382
Y	*304-3641*	1	CYLINDER BLOCK GP	402
Y	*304-3645*	1	CYLINDER HEAD GP	420
Y	*299-5069*	1	DRIVE GP-FAN	426
Y	*308-0303*	1	FAN GP	703
Y	*318-0775*	1	FILLER GP-ENGINE OIL	676
Y	*298-5100*	1	FILTER GP-ENGINE OIL	678
Y	*305-0642*	1	FILTER GP-FUEL	1000
Y	*301-8251*	1	FILTER GP-WATER SEP & FUEL	1013
Y	*317-6139*	1	FLYWHEEL GP	465
Y	*298-5110*	1	GEAR GP-FRONT	475
Y	*298-5125*	1	GLOW PLUG GP	1586
Y	*308-0302*	1	HOUSING GP-FLYWHEEL	486
Y	*298-5127*	1	LIFTING GP-ENGINE	511
Y	*311-2271*	1	LINES GP-FUEL FILTER	1050
Y	*305-2168*	1	MOUNTING GP-EXHAUST	789
Y	*298-5096*	1	PAN GP-OIL	533
Y	*304-3643*	1	PISTON & ROD GP	613
Y	*298-5129*	1	PLUG GP-CYLINDER HEAD	629
Y	*301-8250*	1	PLUG GP-ENGINE	633
Y	*304-3663*	1	PLUG GP-ENGINE	634
Y	*298-5128*	1	PLUG GP-ENGINE OIL MANIFOLD	680
Y	*360-7344*	1	PULLEY GP-CRANKSHAFT	653
Y	*298-5112*	1	PUMP GP-ENGINE OIL	681
Y	*313-4350*	1	PUMP GP-FUEL INJECTION	1398
Y	*298-5105*	1	PUMP GP-WATER	714
Y	*325-5612*	1	STARTING MOTOR GP-ELECTRIC	1597
Y	*326-4510*	1	TURBOCHARGER GP	926
Y	*304-3647*	1	VALVE MECHANISM GP	663
Y	*298-5130*	1	WIRING GP-ENGINE	1604
R	**359-0737**	1	CYLINDER BLOCK GP-SHORT	
	305-8460	1	ELECTRONICS GP-ENGINE RATINGS	

R - REMANUFACTURED PART MAY BE AVAILABLE
Y - SEPARATE ILLUSTRATION

<END>

448-0292 ENGINE AR-PRIMARY

SMCS-1000 **i06809940**

NOTE	PART NUMBER	QTY	PART NAME 1 2 3 4 5 6 (PRODUCT LEVEL)	SEE PAGE
Y	*304-0728*	1	ADAPTER GP-AUXILIARY DRIVE	301
Y	*311-7455*	1	ALTERNATOR GP-CHARGING	1577
Y	*301-8245*	1	BALANCER GP	317
Y	*298-5892*	1	CAMSHAFT GP	321
Y	*301-8248*	1	CONNECTION GP-INLET	776
Y	*301-8243*	1	CONNECTION GP-WATER	687
Y	*304-6436*	1	CONTROL GP-ENGINE ELECTRONIC	1584
Y	*301-8241*	1	COOLER GP-OIL	697
Y	*301-8240*	1	COVER GP-VALVE MECHANISM	341
Y	*298-5888*	1	CRANKSHAFT GP	380
Y	*298-5887*	1	CYLINDER BLOCK GP	400
Y	*298-5890*	1	CYLINDER HEAD GP	419
Y	*311-4644*	1	DRIVE GP-FAN	433
Y	*311-4640*	1	FAN GP	704
Y	*298-5100*	1	FILTER GP-ENGINE OIL	678
Y	*298-5123*	1	FILTER GP-PRIMARY FUEL	1009
Y	*301-8251*	1	FILTER GP-WATER SEP & FUEL	1013
Y	*301-8237*	1	FLYWHEEL GP	455
Y	*298-5125*	1	GLOW PLUG GP	1586
Y	*301-8236*	1	HOUSING GP-FLYWHEEL	479
Y	*304-0727*	1	HOUSING GP-FRONT	492
Y	*299-5033*	1	LIFTING GP-ENGINE	512
Y	*311-2271*	1	LINES GP-FUEL FILTER	1050
Y	*311-4641*	1	MOUNTING GP-ENGINE	521
Y	*301-8239*	1	PAN GP-OIL	541
Y	*304-8762*	1	PIPE GP-EXHAUST	790
Y	*298-5889*	1	PISTON GP	621
Y	*298-5129*	1	PLUG GP-CYLINDER HEAD	629
Y	*298-5098*	1	PLUG GP-ENGINE	631
Y	*298-5131*	1	PLUG GP-ENGINE	632
Y	*298-5128*	1	PLUG GP-ENGINE OIL MANIFOLD	680
Y	*360-7343*	1	PULLEY GP-CRANKSHAFT	652
Y	*305-6701*	1	PUMP GP-FUEL INJECTION	1303
Y	*340-4692*	1	PUMP GP-WATER	722
Y	*311-4636*	1	RADIATOR GP	730
Y	*325-5612*	1	STARTING MOTOR GP-ELECTRIC	1597
Y	*311-7456*	1	TURBOCHARGER GP	887
Y	*298-5891*	1	VALVE MECHANISM GP	661
Y	*298-5130*	1	WIRING GP-ENGINE	1604
R	**359-0737**	1	CYLINDER BLOCK GP-SHORT	
	305-8454	1	ELECTRONICS GP-ENGINE RATINGS	

R - REMANUFACTURED PART MAY BE AVAILABLE
Y - SEPARATE ILLUSTRATION

<END>

449-8021 ENGINE AR-PRIMARY

75 BRAKE KW (100 BHP) AT 2200 RPM

SMCS-1000 **i05856496**

NOTE	PART NUMBER	QTY	PART NAME 1 2 3 4 5 6 (PRODUCT LEVEL)	SEE PAGE
Y	*454-6621*	1	ADAPTER GP-PUMP DRIVE	307
Y	*306-8856*	1	ALTERNATOR GP-CHARGING	1569
Y	*304-3648*	1	CAMSHAFT GP	322
Y	*301-8243*	1	CONNECTION GP-WATER	687
Y	*304-6436*	1	CONTROL GP-ENGINE ELECTRONIC	1584
Y	*298-5099*	1	COOLER GP-ENGINE OIL	690
Y	*304-3658*	1	COVER GP-CYLINDER HEAD	325
Y	*304-8758*	1	COVER GP-VALVE MECHANISM	357
Y	*304-3642*	1	CRANKSHAFT GP	382
Y	*304-3641*	1	CYLINDER BLOCK GP	402
Y	*304-3645*	1	CYLINDER HEAD GP	420
Y	*325-0577*	1	DRIVE GP-FAN	441
Y	*311-8536*	1	FAN GP	705
Y	*318-0775*	1	FILLER GP-ENGINE OIL	676
Y	*298-5100*	1	FILTER GP-ENGINE OIL	678
Y	*303-5780*	1	FILTER GP-FUEL	999
Y	*322-8426*	1	FILTER GP-FUEL	1006
Y	*304-3654*	1	FLYWHEEL GP	457
Y	*299-5075*	1	GLOW PLUG GP	1587
Y	*299-5057*	1	HOUSING GP-FLYWHEEL	478
Y	*322-3056*	1	HOUSING GP-FRONT	503
Y	*299-5033*	1	LIFTING GP-ENGINE	512
Y	*322-8425*	1	LINES GP-FUEL	1041
Y	*304-8763*	1	MOUNTING GP-ENGINE	519
Y	*305-2578*	1	PAN GP-OIL	557
Y	*304-8762*	1	PIPE GP-EXHAUST	790
Y	*304-3643*	1	PISTON & ROD GP	613
Y	*298-5129*	1	PLUG GP-CYLINDER HEAD	629
Y	*298-5131*	1	PLUG GP-ENGINE	632
Y	*360-7346*	1	PULLEY GP-CRANKSHAFT	655
Y	*298-5112*	1	PUMP GP-ENGINE OIL	681
Y	*313-4350*	1	PUMP GP-FUEL INJECTION	1398
Y	*298-5105*	1	PUMP GP-WATER	714
Y	*299-5067*	1	STARTING MOTOR GP-ELECTRIC	1591
Y	*454-6650*	1	TURBOCHARGER GP	995
Y	*303-5779*	1	VALVE GP-FLUID SAMPLING	682
Y	*304-3647*	1	VALVE MECHANISM GP	663
Y	*298-5130*	1	WIRING GP-ENGINE	1604
	305-8460	1	ELECTRONICS GP-ENGINE RATINGS	
			AVAILABLE REPLACEMENT PART(S):	
YR	*359-0737*	1	CYLINDER BLOCK GP-SHORT	415

R - REMANUFACTURED PART MAY BE AVAILABLE
Y - SEPARATE ILLUSTRATION

<END>

449-8025 ENGINE AR-PRIMARY

75 BRAKE KW (100 BHPO AT 2200 RPM

SMCS-1000 **i06809782**

NOTE	PART NUMBER	QTY	PART NAME 1 2 3 4 5 6 (PRODUCT LEVEL)	SEE PAGE
Y	*454-6621*	1	ADAPTER GP-PUMP DRIVE	307
Y	*306-8856*	1	ALTERNATOR GP-CHARGING	1569
Y	*304-3648*	1	CAMSHAFT GP	322
Y	*301-8243*	1	CONNECTION GP-WATER	687
Y	*304-6436*	1	CONTROL GP-ENGINE ELECTRONIC	1584
Y	*298-5099*	1	COOLER GP-ENGINE OIL	690
Y	*304-3658*	1	COVER GP-CYLINDER HEAD	325
Y	*304-8758*	1	COVER GP-VALVE MECHANISM	357
Y	*304-3642*	1	CRANKSHAFT GP	382
Y	*304-3641*	1	CYLINDER BLOCK GP	402
Y	*304-3645*	1	CYLINDER HEAD GP	420
Y	*325-0577*	1	DRIVE GP-FAN	441
Y	*311-8536*	1	FAN GP	705
Y	*318-0775*	1	FILLER GP-ENGINE OIL	676
Y	*298-5100*	1	FILTER GP-ENGINE OIL	678
Y	*303-5780*	1	FILTER GP-FUEL	999
Y	*322-8426*	1	FILTER GP-FUEL	1006
Y	*304-3654*	1	FLYWHEEL GP	457
Y	*299-5075*	1	GLOW PLUG GP	1587
Y	*299-5057*	1	HOUSING GP-FLYWHEEL	478
Y	*322-3056*	1	HOUSING GP-FRONT	503
Y	*299-5033*	1	LIFTING GP-ENGINE	512
Y	*322-8425*	1	LINES GP-FUEL	1041
Y	*304-8763*	1	MOUNTING GP-ENGINE	519
Y	*305-2578*	1	PAN GP-OIL	557
Y	*304-8762*	1	PIPE GP-EXHAUST	790
Y	*304-3643*	1	PISTON & ROD GP	613
Y	*298-5129*	1	PLUG GP-CYLINDER HEAD	629
Y	*298-5131*	1	PLUG GP-ENGINE	632
Y	*360-7346*	1	PULLEY GP-CRANKSHAFT	655
Y	*298-5112*	1	PUMP GP-ENGINE OIL	681
Y	*313-4350*	1	PUMP GP-FUEL INJECTION	1398
Y	*298-5105*	1	PUMP GP-WATER	714
Y	*299-5067*	1	STARTING MOTOR GP-ELECTRIC	1591
Y	*454-6650*	1	TURBOCHARGER GP	995
Y	*303-5779*	1	VALVE GP-FLUID SAMPLING	682
Y	*304-3647*	1	VALVE MECHANISM GP	663
Y	*298-5130*	1	WIRING GP-ENGINE	1604
	305-8460	1	ELECTRONICS GP-ENGINE RATINGS	
			AVAILABLE REPLACEMENT PART(S):	
YR	*359-0737*	1	CYLINDER BLOCK GP-SHORT	415

R - REMANUFACTURED PART MAY BE AVAILABLE
Y - SEPARATE ILLUSTRATION

<END>

449-8033 ENGINE AR-PRIMARY

97 BRAKE KW (129 BHP) AT 2200 RPM

SMCS-1000 **i05681109**

NOTE	PART NUMBER	QTY	PART NAME 1 2 3 4 5 6 (PRODUCT LEVEL)	SEE PAGE
Y	*304-0728*	1	ADAPTER GP-AUXILIARY DRIVE	301
Y	*311-4639*	1	ALTERNATOR GP-CHARGING	1575
Y	*298-5892*	1	CAMSHAFT GP	321
Y	*301-8248*	1	CONNECTION GP-INLET	776
Y	*301-8243*	1	CONNECTION GP-WATER	687
Y	*304-6436*	1	CONTROL GP-ENGINE ELECTRONIC	1584
Y	*298-5099*	1	COOLER GP-ENGINE OIL	690
Y	*301-8240*	1	COVER GP-VALVE MECHANISM	341
Y	*298-5888*	1	CRANKSHAFT GP	380
Y	*298-5887*	1	CYLINDER BLOCK GP	400
Y	*298-5890*	1	CYLINDER HEAD GP	419
Y	*316-7959*	1	DRIVE GP-FAN	436
Y	*314-5003*	1	FAN GP	707
Y	*298-5100*	1	FILTER GP-ENGINE OIL	678
Y	*298-5123*	1	FILTER GP-PRIMARY FUEL	1009
Y	*301-8251*	1	FILTER GP-WATER SEP & FUEL	1013
Y	*301-8237*	1	FLYWHEEL GP	455
Y	*299-5075*	1	GLOW PLUG GP	1587
Y	*303-4618*	1	HOUSING GP-FLYWHEEL	481
Y	*304-0727*	1	HOUSING GP-FRONT	492
Y	*299-5033*	1	LIFTING GP-ENGINE	512
Y	*311-2271*	1	LINES GP-FUEL FILTER	1050
Y	*311-4641*	1	MOUNTING GP-ENGINE	521
Y	*298-5096*	1	PAN GP-OIL	533
Y	*304-8762*	1	PIPE GP-EXHAUST	790
Y	*298-5889*	1	PISTON GP	621
Y	*298-5129*	1	PLUG GP-CYLINDER HEAD	629
Y	*298-5098*	1	PLUG GP-ENGINE	631
Y	*298-5131*	1	PLUG GP-ENGINE	632
Y	*298-5128*	1	PLUG GP-ENGINE OIL MANIFOLD	680
Y	*360-7343*	1	PULLEY GP-CRANKSHAFT	652
Y	*298-5112*	1	PUMP GP-ENGINE OIL	681
Y	*303-4615*	1	PUMP GP-FUEL INJECTION	1134
Y	*340-4692*	1	PUMP GP-WATER	722
Y	*311-4636*	1	RADIATOR GP	730
Y	*299-5067*	1	STARTING MOTOR GP-ELECTRIC	1591
Y	*307-2850*	1	TURBOCHARGER GP	857
Y	*298-5891*	1	VALVE MECHANISM GP	661
Y	*298-5130*	1	WIRING GP-ENGINE	1604
R	**359-0737**	1	CYLINDER BLOCK GP-SHORT	
	305-8458	1	ELECTRONICS GP-ENGINE RATINGS	

R - REMANUFACTURED PART MAY BE AVAILABLE
Y - SEPARATE ILLUSTRATION

<END>

450-4924 ENGINE AR-PRIMARY

97 BRAKE KW (129 BHP) AT 2200 RPM

SMCS-1000 **i05958160**

NOTE	PART NUMBER	QTY	PART NAME 1 2 3 4 5 6 (PRODUCT LEVEL)	SEE PAGE
Y	*304-0728*	1	ADAPTER GP-AUXILIARY DRIVE	301
Y	*311-7455*	1	ALTERNATOR GP-CHARGING	1577
Y	*298-5892*	1	CAMSHAFT GP	321
Y	*301-8248*	1	CONNECTION GP-INLET	776
Y	*301-8243*	1	CONNECTION GP-WATER	687
Y	*304-6436*	1	CONTROL GP-ENGINE ELECTRONIC	1584
Y	*298-5099*	1	COOLER GP-ENGINE OIL	690
Y	*304-5574*	1	COVER GP-VALVE MECHANISM	351
Y	*298-5888*	1	CRANKSHAFT GP	380
Y	*298-5887*	1	CYLINDER BLOCK GP	400
Y	*298-5890*	1	CYLINDER HEAD GP	419
Y	*316-7959*	1	DRIVE GP-FAN	436
Y	*311-4640*	1	FAN GP	704
Y	*298-5100*	1	FILTER GP-ENGINE OIL	678
Y	*303-5780*	1	FILTER GP-FUEL	999
Y	*322-8426*	1	FILTER GP-FUEL	1006
Y	*299-5063*	1	FLYWHEEL GP	454
Y	*298-5125*	1	GLOW PLUG GP	1586
Y	*299-5057*	1	HOUSING GP-FLYWHEEL	478
Y	*304-0727*	1	HOUSING GP-FRONT	492
Y	*299-5033*	1	LIFTING GP-ENGINE	512
Y	*322-8425*	1	LINES GP-FUEL	1041
Y	*323-6804*	1	MOUNTING GP-ENGINE	529
Y	*377-8331*	1	PAN GP-OIL	603
Y	*304-8762*	1	PIPE GP-EXHAUST	790
Y	*298-5889*	1	PISTON GP	621
Y	*298-5129*	1	PLUG GP-CYLINDER HEAD	629
Y	*298-5098*	1	PLUG GP-ENGINE	631
Y	*298-5131*	1	PLUG GP-ENGINE	632
Y	*298-5128*	1	PLUG GP-ENGINE OIL MANIFOLD	680
Y	*360-7343*	1	PULLEY GP-CRANKSHAFT	652
Y	*298-5112*	1	PUMP GP-ENGINE OIL	681
Y	*303-4615*	1	PUMP GP-FUEL INJECTION	1134
Y	*340-4692*	1	PUMP GP-WATER	722
Y	*381-0115*	1	RADIATOR GP	769
Y	*325-5612*	1	STARTING MOTOR GP-ELECTRIC	1597
Y	*333-8976*	1	TURBOCHARGER GP	960
Y	*298-5891*	1	VALVE MECHANISM GP	661
Y	*298-5130*	1	WIRING GP-ENGINE	1604
R	**359-0737**	1	CYLINDER BLOCK GP-SHORT	
	305-8458	1	ELECTRONICS GP-ENGINE RATINGS	

R - REMANUFACTURED PART MAY BE AVAILABLE
Y - SEPARATE ILLUSTRATION

<END>

453-1368 ENGINE AR-PRIMARY

82 BRAKE KW (110 BHP) AT 2200 RPM

SMCS-1000 **i06003260**

NOTE	PART NUMBER	QTY	PART NAME 1 2 3 4 5 6 (PRODUCT LEVEL)	SEE PAGE
Y	*311-4639*	1	ALTERNATOR GP-CHARGING	1575
Y	*298-5892*	1	CAMSHAFT GP	321
Y	*301-8248*	1	CONNECTION GP-INLET	776
Y	*301-8243*	1	CONNECTION GP-WATER	687
Y	*304-6436*	1	CONTROL GP-ENGINE ELECTRONIC	1584
Y	*298-5099*	1	COOLER GP-ENGINE OIL	690
Y	*298-5111*	1	COVER GP-ENGINE	332
Y	*301-8240*	1	COVER GP-VALVE MECHANISM	341
Y	*298-5888*	1	CRANKSHAFT GP	380
Y	*298-5887*	1	CYLINDER BLOCK GP	400
Y	*298-5890*	1	CYLINDER HEAD GP	419
Y	*316-7959*	1	DRIVE GP-FAN	436
Y	*314-5003*	1	FAN GP	707
Y	*298-5100*	1	FILTER GP-ENGINE OIL	678
Y	*298-5123*	1	FILTER GP-PRIMARY FUEL	1009
Y	*301-8251*	1	FILTER GP-WATER SEP & FUEL	1013
Y	*301-8237*	1	FLYWHEEL GP	455
Y	*298-5110*	1	GEAR GP-FRONT	475
Y	*299-5075*	1	GLOW PLUG GP	1587
Y	*303-4618*	1	HOUSING GP-FLYWHEEL	481
Y	*299-5033*	1	LIFTING GP-ENGINE	512
Y	*311-2271*	1	LINES GP-FUEL FILTER	1050
Y	*311-4641*	1	MOUNTING GP-ENGINE	521
Y	*298-5096*	1	PAN GP-OIL	533
Y	*304-8762*	1	PIPE GP-EXHAUST	790
Y	*298-5889*	1	PISTON GP	621
Y	*298-5129*	1	PLUG GP-CYLINDER HEAD	629
Y	*298-5098*	1	PLUG GP-ENGINE	631
Y	*298-5131*	1	PLUG GP-ENGINE	632
Y	*298-5128*	1	PLUG GP-ENGINE OIL MANIFOLD	680
Y	*360-7343*	1	PULLEY GP-CRANKSHAFT	652
Y	*298-5112*	1	PUMP GP-ENGINE OIL	681
Y	*307-2847*	1	PUMP GP-FUEL INJECTION	1323
Y	*298-5105*	1	PUMP GP-WATER	714
Y	*312-1672*	1	RADIATOR GP	738
Y	*299-5067*	1	STARTING MOTOR GP-ELECTRIC	1591
Y	*307-2850*	1	TURBOCHARGER GP	857
Y	*298-5891*	1	VALVE MECHANISM GP	661
Y	*298-5130*	1	WIRING GP-ENGINE	1604
R	**359-0737**	1	CYLINDER BLOCK GP-SHORT	
	307-2848	1	ELECTRONICS GP-ENGINE RATINGS	

R - REMANUFACTURED PART MAY BE AVAILABLE
Y - SEPARATE ILLUSTRATION

<END>

454-3554 ENGINE AR-PRIMARY

97 BRAKE KW (129 BHP) AT 2200 RPM

SMCS-1000 **i06809791**

NOTE	PART NUMBER	QTY	PART NAME 1 2 3 4 5 6 (PRODUCT LEVEL)	SEE PAGE
Y	*304-0728*	1	ADAPTER GP-AUXILIARY DRIVE	301
Y	*311-7455*	1	ALTERNATOR GP-CHARGING	1577
Y	*298-5892*	1	CAMSHAFT GP	321
Y	*301-8248*	1	CONNECTION GP-INLET	776
Y	*301-8243*	1	CONNECTION GP-WATER	687
Y	*304-6436*	1	CONTROL GP-ENGINE ELECTRONIC	1584
Y	*298-5099*	1	COOLER GP-ENGINE OIL	690
Y	*304-5574*	1	COVER GP-VALVE MECHANISM	351
Y	*298-5888*	1	CRANKSHAFT GP	380
Y	*298-5887*	1	CYLINDER BLOCK GP	400
Y	*298-5890*	1	CYLINDER HEAD GP	419
Y	*311-4644*	1	DRIVE GP-FAN	433
Y	*311-4640*	1	FAN GP	704
Y	*298-5100*	1	FILTER GP-ENGINE OIL	678
Y	*303-5780*	1	FILTER GP-FUEL	999
Y	*322-8426*	1	FILTER GP-FUEL	1006
Y	*299-5063*	1	FLYWHEEL GP	454
Y	*298-5125*	1	GLOW PLUG GP	1586
Y	*299-5057*	1	HOUSING GP-FLYWHEEL	478
Y	*304-0727*	1	HOUSING GP-FRONT	492
Y	*299-5033*	1	LIFTING GP-ENGINE	512
Y	*322-8425*	1	LINES GP-FUEL	1041
Y	*323-6804*	1	MOUNTING GP-ENGINE	529
Y	*377-8331*	1	PAN GP-OIL	603
Y	*304-8762*	1	PIPE GP-EXHAUST	790
Y	*298-5889*	1	PISTON GP	621
Y	*298-5129*	1	PLUG GP-CYLINDER HEAD	629
Y	*298-5098*	1	PLUG GP-ENGINE	631
Y	*298-5131*	1	PLUG GP-ENGINE	632
Y	*298-5128*	1	PLUG GP-ENGINE OIL MANIFOLD	680
Y	*360-7343*	1	PULLEY GP-CRANKSHAFT	652
Y	*298-5112*	1	PUMP GP-ENGINE OIL	681
Y	*303-4615*	1	PUMP GP-FUEL INJECTION	1134
Y	*340-4692*	1	PUMP GP-WATER	722
Y	*311-4636*	1	RADIATOR GP	730
Y	*325-5612*	1	STARTING MOTOR GP-ELECTRIC	1597
Y	*333-8976*	1	TURBOCHARGER GP	960
Y	*298-5891*	1	VALVE MECHANISM GP	661
Y	*298-5130*	1	WIRING GP-ENGINE	1604
R	**359-0737**	1	CYLINDER BLOCK GP-SHORT	
	305-8458	1	ELECTRONICS GP-ENGINE RATINGS	

R - REMANUFACTURED PART MAY BE AVAILABLE
Y - SEPARATE ILLUSTRATION

<END>

454-5790 ENGINE AR-PRIMARY

104 BRAKE KW (139 BHP) AT 2200 RPM

SMCS-1000 **i05958140**

NOTE	PART NUMBER	QTY	PART NAME 1 2 3 4 5 6 (PRODUCT LEVEL)	SEE PAGE
Y	*304-0728*	1	ADAPTER GP-AUXILIARY DRIVE	301
Y	*311-7455*	1	ALTERNATOR GP-CHARGING	1577
Y	*301-8245*	1	BALANCER GP	317
Y	*298-5090*	1	CAMSHAFT GP	320
Y	*301-8248*	1	CONNECTION GP-INLET	776
Y	*301-8243*	1	CONNECTION GP-WATER	687
Y	*304-6436*	1	CONTROL GP-ENGINE ELECTRONIC	1584
Y	*301-8241*	1	COOLER GP-OIL	697
Y	*301-8240*	1	COVER GP-VALVE MECHANISM	341
Y	*298-5086*	1	CRANKSHAFT GP	378
Y	*298-5085*	1	CYLINDER BLOCK GP	398
Y	*298-5088*	1	CYLINDER HEAD GP	418
Y	*316-7959*	1	DRIVE GP-FAN	436
Y	*314-5003*	1	FAN GP	707
Y	*298-5100*	1	FILTER GP-ENGINE OIL	678
Y	*298-5123*	1	FILTER GP-PRIMARY FUEL	1009
Y	*301-8251*	1	FILTER GP-WATER SEP & FUEL	1013
Y	*301-8237*	1	FLYWHEEL GP	455
Y	*298-5125*	1	GLOW PLUG GP	1586
Y	*301-8236*	1	HOUSING GP-FLYWHEEL	479
Y	*304-0727*	1	HOUSING GP-FRONT	492
Y	*299-5033*	1	LIFTING GP-ENGINE	512
Y	*311-2271*	1	LINES GP-FUEL FILTER	1050
Y	*311-4641*	1	MOUNTING GP-ENGINE	521
Y	*301-8239*	1	PAN GP-OIL	541
Y	*304-8762*	1	PIPE GP-EXHAUST	790
Y	*298-5087*	1	PISTON & ROD GP	609
Y	*298-5129*	1	PLUG GP-CYLINDER HEAD	629
Y	*298-5098*	1	PLUG GP-ENGINE	631
Y	*298-5131*	1	PLUG GP-ENGINE	632
Y	*298-5128*	1	PLUG GP-ENGINE OIL MANIFOLD	680
Y	*360-7343*	1	PULLEY GP-CRANKSHAFT	652
Y	*301-8235*	1	PUMP GP-FUEL INJECTION	1114
Y	*340-4692*	1	PUMP GP-WATER	722
Y	*311-4636*	1	RADIATOR GP	730
Y	*298-5089*	1	ROCKER ARM GP	658
Y	*325-5612*	1	STARTING MOTOR GP-ELECTRIC	1597
Y	*311-7456*	1	TURBOCHARGER GP	887
Y	*298-5130*	1	WIRING GP-ENGINE	1604
R	**359-0739**	1	CYLINDER BLOCK GP-SHORT	
	301-8234	1	ELECTRONICS GP-ENGINE RATINGS	

R - REMANUFACTURED PART MAY BE AVAILABLE
Y - SEPARATE ILLUSTRATION

<END>

461-5528 ENGINE AR-PRIMARY

106 BRAKE KW (142 BHP) AT 2200 RPM

SMCS-1000 **i05988531**

NOTE	PART NUMBER	QTY	PART NAME 1 2 3 4 5 6 (PRODUCT LEVEL)	SEE PAGE
Y	*304-0728*	1	ADAPTER GP-AUXILIARY DRIVE	301
Y	*311-4639*	1	ALTERNATOR GP-CHARGING	1575
Y	*298-5090*	1	CAMSHAFT GP	320
Y	*301-8248*	1	CONNECTION GP-INLET	776
Y	*301-8243*	1	CONNECTION GP-WATER	687
Y	*304-6436*	1	CONTROL GP-ENGINE ELECTRONIC	1584
Y	*298-5099*	1	COOLER GP-ENGINE OIL	690
Y	*301-8240*	1	COVER GP-VALVE MECHANISM	341
Y	*298-5086*	1	CRANKSHAFT GP	378
Y	*298-5085*	1	CYLINDER BLOCK GP	398
Y	*298-5088*	1	CYLINDER HEAD GP	418
Y	*316-7959*	1	DRIVE GP-FAN	436
Y	*314-5003*	1	FAN GP	707
Y	*298-5100*	1	FILTER GP-ENGINE OIL	678
Y	*298-5123*	1	FILTER GP-PRIMARY FUEL	1009
Y	*301-8251*	1	FILTER GP-WATER SEP & FUEL	1013
Y	*301-8237*	1	FLYWHEEL GP	455
Y	*299-5075*	1	GLOW PLUG GP	1587
Y	*303-4618*	1	HOUSING GP-FLYWHEEL	481
Y	*304-0727*	1	HOUSING GP-FRONT	492
Y	*299-5033*	1	LIFTING GP-ENGINE	512
Y	*311-2271*	1	LINES GP-FUEL FILTER	1050
Y	*311-4641*	1	MOUNTING GP-ENGINE	521
Y	*298-5096*	1	PAN GP-OIL	533
Y	*304-8762*	1	PIPE GP-EXHAUST	790
Y	*298-5087*	1	PISTON & ROD GP	609
Y	*298-5129*	1	PLUG GP-CYLINDER HEAD	629
Y	*298-5098*	1	PLUG GP-ENGINE	631
Y	*298-5131*	1	PLUG GP-ENGINE	632
Y	*298-5128*	1	PLUG GP-ENGINE OIL MANIFOLD	680
Y	*360-7343*	1	PULLEY GP-CRANKSHAFT	652
Y	*298-5112*	1	PUMP GP-ENGINE OIL	681
Y	*304-6570*	1	PUMP GP-FUEL INJECTION	1179
Y	*340-4692*	1	PUMP GP-WATER	722
Y	*311-4636*	1	RADIATOR GP	730
Y	*298-5089*	1	ROCKER ARM GP	658
Y	*299-5067*	1	STARTING MOTOR GP-ELECTRIC	1591
Y	*307-2850*	1	TURBOCHARGER GP	857
Y	*298-5130*	1	WIRING GP-ENGINE	1604
R	**359-0739**	1	CYLINDER BLOCK GP-SHORT	
	305-8457	1	ELECTRONICS GP-ENGINE RATINGS	

R - REMANUFACTURED PART MAY BE AVAILABLE
Y - SEPARATE ILLUSTRATION

<END>

461-5534 ENGINE AR-PRIMARY

107 BRAKE KW (144 BHP) AT 2200 RPM

SMCS-1000 **i05988611**

NOTE	PART NUMBER	QTY	PART NAME 1 2 3 4 5 6 (PRODUCT LEVEL)	SEE PAGE
Y	*304-0728*	1	ADAPTER GP-AUXILIARY DRIVE	301
Y	*311-4639*	1	ALTERNATOR GP-CHARGING	1575
Y	*298-5090*	1	CAMSHAFT GP	320
Y	*301-8248*	1	CONNECTION GP-INLET	776
Y	*301-8243*	1	CONNECTION GP-WATER	687
Y	*304-6436*	1	CONTROL GP-ENGINE ELECTRONIC	1584
Y	*298-5099*	1	COOLER GP-ENGINE OIL	690
Y	*301-8240*	1	COVER GP-VALVE MECHANISM	341
Y	*298-5086*	1	CRANKSHAFT GP	378
Y	*298-5085*	1	CYLINDER BLOCK GP	398
Y	*298-5088*	1	CYLINDER HEAD GP	418
Y	*316-7959*	1	DRIVE GP-FAN	436
Y	*314-5003*	1	FAN GP	707
Y	*298-5100*	1	FILTER GP-ENGINE OIL	678
Y	*298-5123*	1	FILTER GP-PRIMARY FUEL	1009
Y	*301-8251*	1	FILTER GP-WATER SEP & FUEL	1013
Y	*301-8237*	1	FLYWHEEL GP	455
Y	*299-5075*	1	GLOW PLUG GP	1587
Y	*303-4618*	1	HOUSING GP-FLYWHEEL	481
Y	*304-0727*	1	HOUSING GP-FRONT	492
Y	*299-5033*	1	LIFTING GP-ENGINE	512
Y	*311-2271*	1	LINES GP-FUEL FILTER	1050
Y	*311-4641*	1	MOUNTING GP-ENGINE	521
Y	*298-5096*	1	PAN GP-OIL	533
Y	*304-8762*	1	PIPE GP-EXHAUST	790
Y	*298-5087*	1	PISTON & ROD GP	609
Y	*298-5129*	1	PLUG GP-CYLINDER HEAD	629
Y	*298-5098*	1	PLUG GP-ENGINE	631
Y	*298-5131*	1	PLUG GP-ENGINE	632
Y	*298-5128*	1	PLUG GP-ENGINE OIL MANIFOLD	680
Y	*360-7343*	1	PULLEY GP-CRANKSHAFT	652
Y	*298-5112*	1	PUMP GP-ENGINE OIL	681
Y	*304-6570*	1	PUMP GP-FUEL INJECTION	1179
Y	*340-4692*	1	PUMP GP-WATER	722
Y	*311-4636*	1	RADIATOR GP	730
Y	*298-5089*	1	ROCKER ARM GP	658
Y	*299-5067*	1	STARTING MOTOR GP-ELECTRIC	1591
Y	*307-2850*	1	TURBOCHARGER GP	857
Y	*298-5130*	1	WIRING GP-ENGINE	1604
R	**359-0739**	1	CYLINDER BLOCK GP-SHORT	
	305-8457	1	ELECTRONICS GP-ENGINE RATINGS	

R - REMANUFACTURED PART MAY BE AVAILABLE
Y - SEPARATE ILLUSTRATION

<END>

462-8161 ENGINE AR-PRIMARY

95 BRAKE KW (127 BHP) AT 2200 RPM

SMCS-1000 **i05988604**

NOTE	PART NUMBER	QTY	PART NAME 1 2 3 4 5 6 (PRODUCT LEVEL)	SEE PAGE
Y	*311-4639*	1	ALTERNATOR GP-CHARGING	1575
Y	*301-8245*	1	BALANCER GP	317
Y	*298-5892*	1	CAMSHAFT GP	321
Y	*301-8248*	1	CONNECTION GP-INLET	776
Y	*301-8243*	1	CONNECTION GP-WATER	687
Y	*304-6436*	1	CONTROL GP-ENGINE ELECTRONIC	1584
Y	*301-8241*	1	COOLER GP-OIL	697
Y	*298-5111*	1	COVER GP-ENGINE	332
Y	*301-8240*	1	COVER GP-VALVE MECHANISM	341
Y	*298-5888*	1	CRANKSHAFT GP	380
Y	*298-5887*	1	CYLINDER BLOCK GP	400
Y	*298-5890*	1	CYLINDER HEAD GP	419
Y	*311-4644*	1	DRIVE GP-FAN	433
Y	*311-4640*	1	FAN GP	704
Y	*298-5100*	1	FILTER GP-ENGINE OIL	678
Y	*298-5123*	1	FILTER GP-PRIMARY FUEL	1009
Y	*301-8251*	1	FILTER GP-WATER SEP & FUEL	1013
Y	*301-8237*	1	FLYWHEEL GP	455
Y	*298-5110*	1	GEAR GP-FRONT	475
Y	*299-5075*	1	GLOW PLUG GP	1587
Y	*301-8236*	1	HOUSING GP-FLYWHEEL	479
Y	*299-5033*	1	LIFTING GP-ENGINE	512
Y	*311-2271*	1	LINES GP-FUEL FILTER	1050
Y	*311-4641*	1	MOUNTING GP-ENGINE	521
Y	*301-8239*	1	PAN GP-OIL	541
Y	*304-8762*	1	PIPE GP-EXHAUST	790
Y	*298-5889*	1	PISTON GP	621
Y	*298-5129*	1	PLUG GP-CYLINDER HEAD	629
Y	*298-5098*	1	PLUG GP-ENGINE	631
Y	*298-5131*	1	PLUG GP-ENGINE	632
Y	*298-5128*	1	PLUG GP-ENGINE OIL MANIFOLD	680
Y	*360-7343*	1	PULLEY GP-CRANKSHAFT	652
Y	*305-6701*	1	PUMP GP-FUEL INJECTION	1303
Y	*298-5105*	1	PUMP GP-WATER	714
Y	*312-1672*	1	RADIATOR GP	738
Y	*299-5067*	1	STARTING MOTOR GP-ELECTRIC	1591
Y	*307-2850*	1	TURBOCHARGER GP	857
Y	*298-5891*	1	VALVE MECHANISM GP	661
Y	*298-5130*	1	WIRING GP-ENGINE	1604
R	**359-0737**	1	CYLINDER BLOCK GP-SHORT	
	305-8454	1	ELECTRONICS GP-ENGINE RATINGS	

R - REMANUFACTURED PART MAY BE AVAILABLE
Y - SEPARATE ILLUSTRATION

<END>

465-5183 ENGINE AR-PRIMARY

SMCS-1000 **i06284970**

NOTE	PART NUMBER	QTY	PART NAME 1 2 3 4 5 6 (PRODUCT LEVEL)	SEE PAGE
Y	*304-0728*	1	ADAPTER GP-AUXILIARY DRIVE	301
Y	*311-7455*	1	ALTERNATOR GP-CHARGING	1577
Y	*298-5892*	1	CAMSHAFT GP	321
Y	*301-8248*	1	CONNECTION GP-INLET	776
Y	*301-8243*	1	CONNECTION GP-WATER	687
Y	*304-6436*	1	CONTROL GP-ENGINE ELECTRONIC	1584
Y	*298-5099*	1	COOLER GP-ENGINE OIL	690
Y	*304-5574*	1	COVER GP-VALVE MECHANISM	351
Y	*298-5888*	1	CRANKSHAFT GP	380
Y	*298-5887*	1	CYLINDER BLOCK GP	400
Y	*298-5890*	1	CYLINDER HEAD GP	419
Y	*316-7959*	1	DRIVE GP-FAN	436
Y	*311-4640*	1	FAN GP	704
Y	*298-5100*	1	FILTER GP-ENGINE OIL	678
Y	*303-5780*	1	FILTER GP-FUEL	999
Y	*322-8426*	1	FILTER GP-FUEL	1006
Y	*299-5063*	1	FLYWHEEL GP	454
Y	*298-5125*	1	GLOW PLUG GP	1586
Y	*299-5057*	1	HOUSING GP-FLYWHEEL	478
Y	*304-0727*	1	HOUSING GP-FRONT	492
Y	*299-5033*	1	LIFTING GP-ENGINE	512
Y	*322-8425*	1	LINES GP-FUEL	1041
Y	*323-6804*	1	MOUNTING GP-ENGINE	529
Y	*377-8331*	1	PAN GP-OIL	603
Y	*304-8762*	1	PIPE GP-EXHAUST	790
Y	*298-5889*	1	PISTON GP	621
Y	*298-5129*	1	PLUG GP-CYLINDER HEAD	629
Y	*298-5098*	1	PLUG GP-ENGINE	631
Y	*298-5131*	1	PLUG GP-ENGINE	632
Y	*298-5128*	1	PLUG GP-ENGINE OIL MANIFOLD	680
Y	*360-7343*	1	PULLEY GP-CRANKSHAFT	652
Y	*298-5112*	1	PUMP GP-ENGINE OIL	681
Y	*303-4615*	1	PUMP GP-FUEL INJECTION	1134
Y	*340-4692*	1	PUMP GP-WATER	722
Y	*381-0115*	1	RADIATOR GP	769
Y	*325-5612*	1	STARTING MOTOR GP-ELECTRIC	1597
Y	*333-8976*	1	TURBOCHARGER GP	960
Y	*298-5891*	1	VALVE MECHANISM GP	661
Y	*298-5130*	1	WIRING GP-ENGINE	1604
R	**359-0737**	1	CYLINDER BLOCK GP-SHORT	
	305-8458	1	ELECTRONICS GP-ENGINE RATINGS	

R - REMANUFACTURED PART MAY BE AVAILABLE
Y - SEPARATE ILLUSTRATION

<END>

467-8982 ENGINE AR-PRIMARY

SMCS-1000 **i06809790**

NOTE	PART NUMBER	QTY	PART NAME 1 2 3 4 5 6 (PRODUCT LEVEL)	SEE PAGE
Y	*304-0728*	1	ADAPTER GP-AUXILIARY DRIVE	301
Y	*311-7455*	1	ALTERNATOR GP-CHARGING	1577
Y	*298-5892*	1	CAMSHAFT GP	321
Y	*301-8248*	1	CONNECTION GP-INLET	776
Y	*301-8243*	1	CONNECTION GP-WATER	687
Y	*304-6436*	1	CONTROL GP-ENGINE ELECTRONIC	1584
Y	*298-5099*	1	COOLER GP-ENGINE OIL	690
Y	*304-5574*	1	COVER GP-VALVE MECHANISM	351
Y	*298-5888*	1	CRANKSHAFT GP	380
Y	*298-5887*	1	CYLINDER BLOCK GP	400
Y	*298-5890*	1	CYLINDER HEAD GP	419
Y	*311-4644*	1	DRIVE GP-FAN	433
Y	*311-4640*	1	FAN GP	704
Y	*298-5100*	1	FILTER GP-ENGINE OIL	678
Y	*303-5780*	1	FILTER GP-FUEL	999
Y	*322-8426*	1	FILTER GP-FUEL	1006
Y	*299-5063*	1	FLYWHEEL GP	454
Y	*298-5125*	1	GLOW PLUG GP	1586
Y	*299-5057*	1	HOUSING GP-FLYWHEEL	478
Y	*304-0727*	1	HOUSING GP-FRONT	492
Y	*299-5033*	1	LIFTING GP-ENGINE	512
Y	*322-8425*	1	LINES GP-FUEL	1041
Y	*323-6804*	1	MOUNTING GP-ENGINE	529
Y	*377-8331*	1	PAN GP-OIL	603
Y	*304-8762*	1	PIPE GP-EXHAUST	790
Y	*298-5889*	1	PISTON GP	621
Y	*298-5129*	1	PLUG GP-CYLINDER HEAD	629
Y	*298-5098*	1	PLUG GP-ENGINE	631
Y	*298-5131*	1	PLUG GP-ENGINE	632
Y	*298-5128*	1	PLUG GP-ENGINE OIL MANIFOLD	680
Y	*360-7343*	1	PULLEY GP-CRANKSHAFT	652
Y	*298-5112*	1	PUMP GP-ENGINE OIL	681
Y	*303-4615*	1	PUMP GP-FUEL INJECTION	1134
Y	*340-4692*	1	PUMP GP-WATER	722
Y	*311-4636*	1	RADIATOR GP	730
Y	*325-5612*	1	STARTING MOTOR GP-ELECTRIC	1597
Y	*333-8976*	1	TURBOCHARGER GP	960
Y	*298-5891*	1	VALVE MECHANISM GP	661
Y	*298-5130*	1	WIRING GP-ENGINE	1604
R	**359-0737**	1	CYLINDER BLOCK GP-SHORT	
	305-8458	1	ELECTRONICS GP-ENGINE RATINGS	

R - REMANUFACTURED PART MAY BE AVAILABLE
Y - SEPARATE ILLUSTRATION

<END>

522-8303 ENGINE AR-PRIMARY

95 BRAKE KW (127.3 BHP) AT 2200-RPM
FIELD REPLACEMENT FOR 395-0736

SMCS-1000 **i06928275**

NOTE	PART NUMBER	QTY	PART NAME 1 2 3 4 5 6 (PRODUCT LEVEL)	SEE PAGE
Y	*304-0728*	1	ADAPTER GP-AUXILIARY DRIVE	301
Y	*311-4639*	1	ALTERNATOR GP-CHARGING	1575
Y	*301-8245*	1	BALANCER GP	317
Y	*298-5892*	1	CAMSHAFT GP	321
Y	*301-8248*	1	CONNECTION GP-INLET	776
Y	*301-8243*	1	CONNECTION GP-WATER	687
Y	*304-6436*	1	CONTROL GP-ENGINE ELECTRONIC	1584
Y	*301-8241*	1	COOLER GP-OIL	697
Y	*301-8240*	1	COVER GP-VALVE MECHANISM	341
Y	*298-5888*	1	CRANKSHAFT GP	380
Y	*298-5887*	1	CYLINDER BLOCK GP	400
Y	*298-5890*	1	CYLINDER HEAD GP	419
Y	*311-4644*	1	DRIVE GP-FAN	433
Y	*311-4640*	1	FAN GP	704
Y	*298-5100*	1	FILTER GP-ENGINE OIL	678
Y	*298-5123*	1	FILTER GP-PRIMARY FUEL	1009
Y	*301-8251*	1	FILTER GP-WATER SEP & FUEL	1013
Y	*301-8237*	1	FLYWHEEL GP	455
Y	*299-5075*	1	GLOW PLUG GP	1587
Y	*301-8236*	1	HOUSING GP-FLYWHEEL	479
Y	*304-0727*	1	HOUSING GP-FRONT	492
Y	*299-5033*	1	LIFTING GP-ENGINE	512
Y	*311-2271*	1	LINES GP-FUEL FILTER	1050
Y	*311-4641*	1	MOUNTING GP-ENGINE	521
Y	*301-8239*	1	PAN GP-OIL	541
Y	*304-8762*	1	PIPE GP-EXHAUST	790
Y	*298-5889*	1	PISTON GP	621
Y	*298-5129*	1	PLUG GP-CYLINDER HEAD	629
Y	*298-5098*	1	PLUG GP-ENGINE	631
Y	*298-5131*	1	PLUG GP-ENGINE (THREADED)	632
Y	*298-5128*	1	PLUG GP-ENGINE OIL MANIFOLD	680
Y	*360-7343*	1	PULLEY GP-CRANKSHAFT	652
Y	*305-6701*	1	PUMP GP-FUEL INJECTION	1303
Y	*340-4692*	1	PUMP GP-WATER	722
Y	*311-4636*	1	RADIATOR GP	730
Y	*299-5067*	1	STARTING MOTOR GP-ELECTRIC	1591
Y	*307-2850*	1	TURBOCHARGER GP	857
Y	*298-5891*	1	VALVE MECHANISM GP	661
Y	*298-5130*	1	WIRING GP-ENGINE	1604
R	**359-0737**	1	CYLINDER BLOCK GP-SHORT	
	305-8454	1	ELECTRONICS GP-ENGINE RATINGS	

R - REMANUFACTURED PART MAY BE AVAILABLE
Y - SEPARATE ILLUSTRATION

<END>

540-0570 ENGINE AR-PRIMARY

94 BRAKE KW (126 BHP) AT 2400 RPM
FIELD REPLACEMENT FOR 292-5307—PAGE: 29

SMCS-1000 **i07311437**

NOTE	PART NUMBER	QTY	PART NAME 1 2 3 4 5 6 (PRODUCT LEVEL)	SEE PAGE
Y	*308-3351*	1	ALTERNATOR GP-CHARGING	1573
Y	*298-5892*	1	CAMSHAFT GP	321
Y	*298-5116*	1	CONNECTION GP-INLET	774
Y	*298-5107*	1	CONNECTION GP-WATER	685
Y	*304-6436*	1	CONTROL GP-ENGINE ELECTRONIC	1584
Y	*298-5099*	1	COOLER GP-ENGINE OIL	690
Y	*298-5111*	1	COVER GP-ENGINE	332
Y	*298-5097*	1	COVER GP-VALVE MECHANISM	335
Y	*298-5888*	1	CRANKSHAFT GP	380
Y	*298-5887*	1	CYLINDER BLOCK GP	400
Y	*298-5890*	1	CYLINDER HEAD GP	419
Y	*298-5095*	1	DRIVE GP-FAN	425
Y	*298-5108*	1	FAN GP	701
Y	*298-5100*	1	FILTER GP-ENGINE OIL	678
Y	*298-5123*	1	FILTER GP-PRIMARY FUEL	1009
Y	*298-5093*	1	FLYWHEEL GP	453
Y	*298-5110*	1	GEAR GP-FRONT	475
Y	*298-5125*	1	GLOW PLUG GP	1586
Y	*321-5596*	1	HOUSING GP-FLYWHEEL	489
Y	*298-5127*	1	LIFTING GP-ENGINE	511
Y	*311-2271*	1	LINES GP-FUEL FILTER	1050
Y	*298-5771*	1	MOUNTING GP-ENGINE	514
Y	*344-8201*	1	PAN GP-OIL	589
Y	*298-5889*	1	PISTON GP	621
Y	*298-5129*	1	PLUG GP-CYLINDER HEAD	629
Y	*298-5098*	1	PLUG GP-ENGINE	631
Y	*298-5131*	1	PLUG GP-ENGINE	632
Y	*298-5128*	1	PLUG GP-ENGINE OIL MANIFOLD	680
Y	*360-7346*	1	PULLEY GP-CRANKSHAFT	655
Y	*360-7355*	1	PULLEY GP-CRANKSHAFT	656
Y	*298-5112*	1	PUMP GP-ENGINE OIL	681
Y	*320-2398*	1	PUMP GP-FUEL INJECTION	1488
Y	*298-5105*	1	PUMP GP-WATER	714
Y	*327-8999*	1	STARTING MOTOR GP-ELECTRIC	1598
Y	*325-1069*	1	TURBOCHARGER GP	920
Y	*298-5891*	1	VALVE MECHANISM GP	661
Y	*298-5130*	1	WIRING GP-ENGINE	1604
R	**359-0737**	1	CYLINDER BLOCK GP-SHORT	
	320-2401	1	ELECTRONICS GP-ENGINE RATINGS	

R - REMANUFACTURED PART MAY BE AVAILABLE
Y - SEPARATE ILLUSTRATION

<END>

540-1155 ENGINE AR-PRIMARY*R

FIELD REPLACEMENT FOR 308-5585—PAGE: 107

SMCS-1000 **i07158376**

NOTE	PART NUMBER	QTY	PART NAME 1 2 3 4 5 6 (PRODUCT LEVEL)	SEE PAGE
Y	*311-7455*	1	ALTERNATOR GP-CHARGING	1577
Y	*301-8245*	1	BALANCER GP	317
Y	*298-5892*	1	CAMSHAFT GP	321
Y	*301-8248*	1	CONNECTION GP-INLET	776
Y	*301-8243*	1	CONNECTION GP-WATER	687
Y	*304-6436*	1	CONTROL GP-ENGINE ELECTRONIC	1584
Y	*301-8241*	1	COOLER GP-OIL	697
Y	*298-5111*	1	COVER GP-ENGINE	332
Y	*301-8240*	1	COVER GP-VALVE MECHANISM	341
Y	*298-5888*	1	CRANKSHAFT GP	380
Y	*298-5887*	1	CYLINDER BLOCK GP	400
YR	**359-0737**	1	CYLINDER BLOCK GP-SHORT	415
Y	*298-5890*	1	CYLINDER HEAD GP	419
Y	*316-7959*	1	DRIVE GP-FAN	436
Y	*314-5003*	1	FAN GP	707
Y	*298-5100*	1	FILTER GP-ENGINE OIL	678
Y	*298-5123*	1	FILTER GP-PRIMARY FUEL	1009
Y	*301-8251*	1	FILTER GP-WATER SEP & FUEL	1013
Y	*301-8237*	1	FLYWHEEL GP	455
Y	*298-5110*	1	GEAR GP-FRONT	475
Y	*298-5125*	1	GLOW PLUG GP	1586
Y	*301-8236*	1	HOUSING GP-FLYWHEEL	479
Y	*299-5033*	1	LIFTING GP-ENGINE	512
Y	*311-2271*	1	LINES GP-FUEL FILTER	1050
Y	*311-4641*	1	MOUNTING GP-ENGINE	521
Y	*301-8239*	1	PAN GP-OIL	541
Y	*304-8762*	1	PIPE GP-EXHAUST	790
Y	*298-5889*	1	PISTON GP	621
Y	*298-5129*	1	PLUG GP-CYLINDER HEAD	629
Y	*298-5098*	1	PLUG GP-ENGINE	631
Y	*298-5131*	1	PLUG GP-ENGINE	632
Y	*298-5128*	1	PLUG GP-ENGINE OIL MANIFOLD	680
Y	*360-7343*	1	PULLEY GP-CRANKSHAFT	652
Y	*305-6701*	1	PUMP GP-FUEL INJECTION	1303
Y	*298-5105*	1	PUMP GP-WATER	714
Y	*312-1672*	1	RADIATOR GP	738
Y	*325-5612*	1	STARTING MOTOR GP-ELECTRIC	1597
Y	*311-7456*	1	TURBOCHARGER GP	887
Y	*298-5891*	1	VALVE MECHANISM GP	661
Y	*298-5130*	1	WIRING GP-ENGINE	1604
	305-8454	1	ELECTRONICS GP-ENGINE RATINGS	

R - REMANUFACTURED PART MAY BE AVAILABLE
Y - SEPARATE ILLUSTRATION

<END>

540-1156 ENGINE AR-PRIMARY*R

FIELD REPLACEMENT FOR 318-7147—PAGE: 3

SMCS-1000 **i07158366**

NOTE	PART NUMBER	QTY	PART NAME 1 2 3 4 5 6 (PRODUCT LEVEL)	SEE PAGE
Y	*304-0728*	1	ADAPTER GP-AUXILIARY DRIVE	301
Y	*311-7455*	1	ALTERNATOR GP-CHARGING	1577
Y	*298-5892*	1	CAMSHAFT GP	321
Y	*301-8248*	1	CONNECTION GP-INLET	776
Y	*301-8243*	1	CONNECTION GP-WATER	687
Y	*304-6436*	1	CONTROL GP-ENGINE ELECTRONIC	1584
Y	*298-5099*	1	COOLER GP-ENGINE OIL	690
Y	*304-5574*	1	COVER GP-VALVE MECHANISM	351
Y	*298-5888*	1	CRANKSHAFT GP	380
Y	*298-5887*	1	CYLINDER BLOCK GP	400
YR	**359-0737**	1	CYLINDER BLOCK GP-SHORT	415
Y	*298-5890*	1	CYLINDER HEAD GP	419
Y	*316-7959*	1	DRIVE GP-FAN	436
Y	*311-4640*	1	FAN GP	704
Y	*299-5071*	1	FILLER GP-ENGINE OIL	670
Y	*298-5100*	1	FILTER GP-ENGINE OIL	678
Y	*303-5780*	1	FILTER GP-FUEL	999
Y	*322-3755*	1	FILTER GP-FUEL	1005
Y	*299-5063*	1	FLYWHEEL GP	454
Y	*298-5125*	1	GLOW PLUG GP	1586
Y	*299-5057*	1	HOUSING GP-FLYWHEEL	478
Y	*304-0727*	1	HOUSING GP-FRONT	492
Y	*299-5033*	1	LIFTING GP-ENGINE	512
Y	*322-3754*	1	LINES GP-FUEL	1036
Y	*323-6804*	1	MOUNTING GP-ENGINE	529
Y	*377-8331*	1	PAN GP-OIL	603
Y	*304-8762*	1	PIPE GP-EXHAUST	790
Y	*298-5889*	1	PISTON GP	621
Y	*298-5129*	1	PLUG GP-CYLINDER HEAD	629
Y	*298-5131*	1	PLUG GP-ENGINE	632
Y	*298-5128*	1	PLUG GP-ENGINE OIL MANIFOLD	680
Y	*360-7343*	1	PULLEY GP-CRANKSHAFT	652
Y	*298-5112*	1	PUMP GP-ENGINE OIL	681
Y	*322-3753*	1	PUMP GP-FUEL INJECTION	1503
Y	*340-4692*	1	PUMP GP-WATER	722
Y	*381-0115*	1	RADIATOR GP	769
Y	*325-5612*	1	STARTING MOTOR GP-ELECTRIC	1597
Y	*365-1581*	1	TURBOCHARGER GP	986
Y	*298-5891*	1	VALVE MECHANISM GP	661
Y	*316-1102*	1	WIRING GP-ENGINE	1613
	305-8458	1	ELECTRONICS GP-ENGINE RATINGS	

R - REMANUFACTURED PART MAY BE AVAILABLE
Y - SEPARATE ILLUSTRATION

<END>

293-1877 ADAPTER GP-AIR COMPRESSOR

PART OF 352-6382, 375-5262 AIR COMPRESSOR GP

SMCS-1803 **i07378148**

NOTE	REF NO	GRAPHIC REF	PART NUMBER	QTY	PART NAME 1 2 3 4 5 6 (PRODUCT LEVEL)	SEE PAGE
M	1	1	**6I-0254**	4	BOLT (M8X1.25X30-MM)	
	2	1	**7W-2562**	1	RING-SNAP	
	3	1	**6D-0044**	2	DOWEL	
	4	1	**067-6344**	2	KEY	
	5	1	**113-4598**	2	NUT	
	6	1	**113-4604**	1	GASKET	
	7	1	**126-3216**	2	STUD	
	8	1	**224-6635**	1	BUSHING	
	9	1	**302-4332**	1	HOUSING	
					PARTS SHOWN IN GRAPHIC(S) WITHOUT A REFERENCE NUMBER ARE NOT SERVICED SEPARATELY	

M - METRIC PART

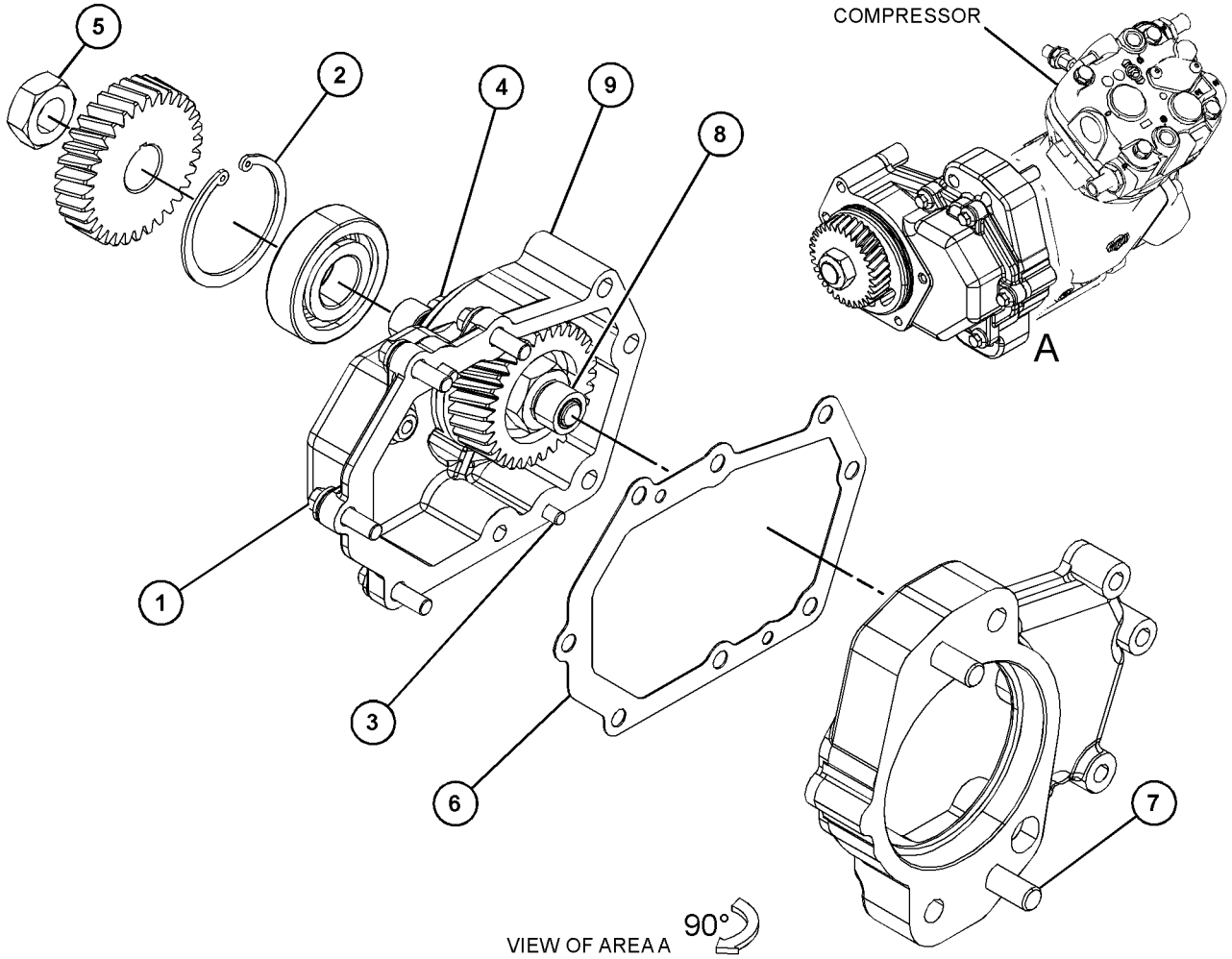

GRAPHIC #1

<END>

g06194937

303-5775 ADAPTER GP-AUXILIARY DRIVE

SMCS-1165, 1207 **i06056533**

NOTE	REF NO	GRAPHIC REF	PART NUMBER	QTY	PART NAME 1 2 3 4 5 6 (PRODUCT LEVEL)	SEE PAGE
	1	1	**235-1063**	1	ADAPTER AS	
	1A	1	**6H-3957**	1	BALL BEARING	
	1B	1	**102-2075**	1	BEARING	
	1C	1	**102-2076**	1	CLIP	
	1D	1	**235-1061**	1	GEAR (33-TEETH) (13-TEETH ID)	
	2	1	**102-2073**	1	SEAL-O-RING	
M	3	1	**102-2078**	1	BOLT (M10X1.5X25-MM)	
M	5	1	**126-3212**	5	BOLT (M8X1.25X25-MM)	
M	6	1	**6I-0646**	1	BOLT (M10X1.5X14-MM)	
	7	1	**214-3203**	1	WASHER (SEALING)	

M - METRIC PART

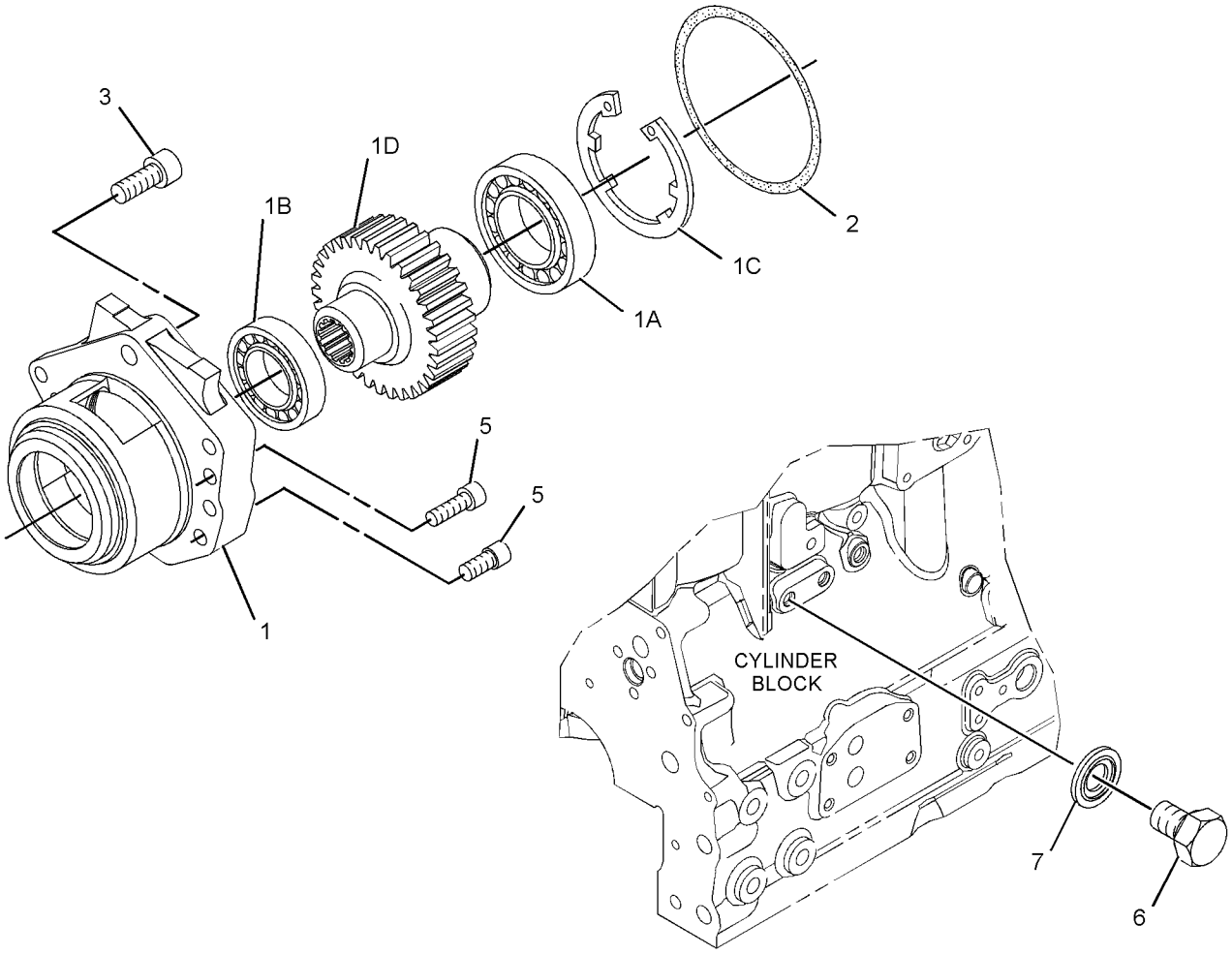

GRAPHIC #1 <END> g01447103

304-0728 ADAPTER GP-AUXILIARY DRIVE

PART OF 435-1687 ENGINE AR-PRIMARY

TYPE 1

SMCS-1165, 1207 **i02736290**

NOTE	REF NO	GRAPHIC REF	PART NUMBER	QTY	PART NAME 1 2 3 4 5 6 (PRODUCT LEVEL)	SEE PAGE
M	1	1	**102-9941**	2	BOLT (M12X1.75X25-MM)	
	2	1	**214-3203**	1	WASHER (SEALING)	
	3	1	**291-6526**	1	BEARING-NEEDLE	
	4	1	**291-6528**	1	CLIP	
	5	1	**291-6529**	1	CLIP	
	6	1	**291-6530**	1	PLATE	
	7	1	**291-6531**	1	GASKET	
	8	1	**293-9737**	1	GEAR (34-TEETH)	
	9	1	**302-6780**	1	BALL BEARING	
M	10	1	**6I-0646**	1	BOLT (M10X1.5X14-MM)	

M - METRIC PART

304-0728 **ADAPTER GP-AUXILIARY DRIVE (**contd.**)** **i02736290**

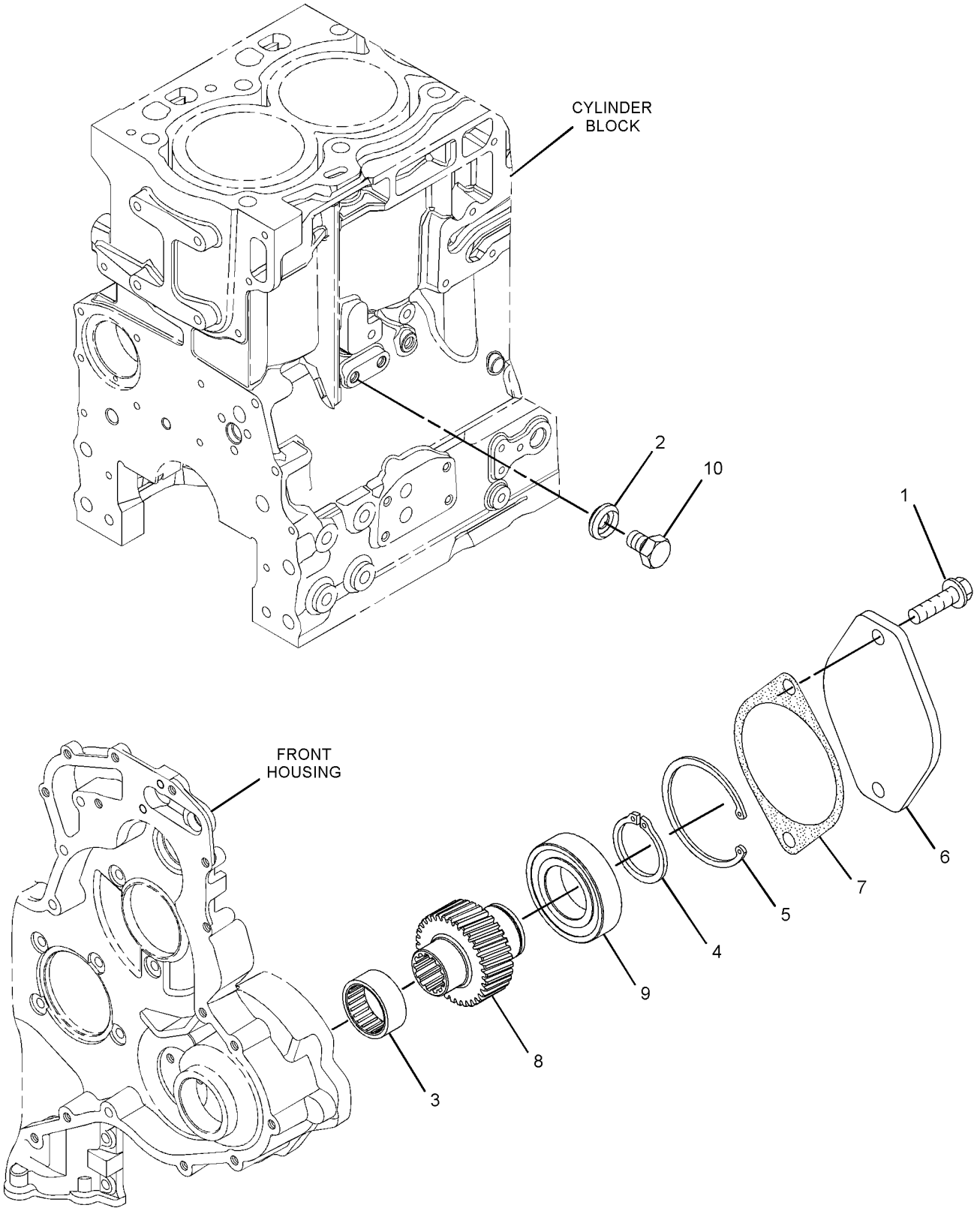

GRAPHIC #1 <END> g01373667

304-0728 ADAPTER GP-AUXILIARY DRIVE

PART OF 435-1687, 522-8303, 540-1156 ENGINE AR-PRIMARY

TYPE 2

SMCS-1165, 1207

i05660574

NOTE	REF NO	GRAPHIC REF	PART NUMBER	QTY	PART NAME 1 2 3 4 5 6 (PRODUCT LEVEL)	SEE PAGE
M	1	1	**102-9941**	2	BOLT (M12X1.75X25-MM)	
	2	1	**214-3203**	1	WASHER (SEALING)	
	3	1	**291-6526**	1	BEARING-NEEDLE	
	4	1	**291-6528**	1	CLIP	
	5	1	**291-6529**	1	CLIP	
C	6	1	**369-6810**	1	COVER GP	
M	7	1	**6I-0646**	1	BOLT (M10X1.5X14-MM)	
	8	1	**293-9737**	1	GEAR (34-TEETH)	
	9	1	**302-6780**	1	BALL BEARING	

C - CHANGE FROM PREVIOUS TYPE
M - METRIC PART

304-0728 **ADAPTER GP-AUXILIARY DRIVE (**contd.**)** **i05660574**

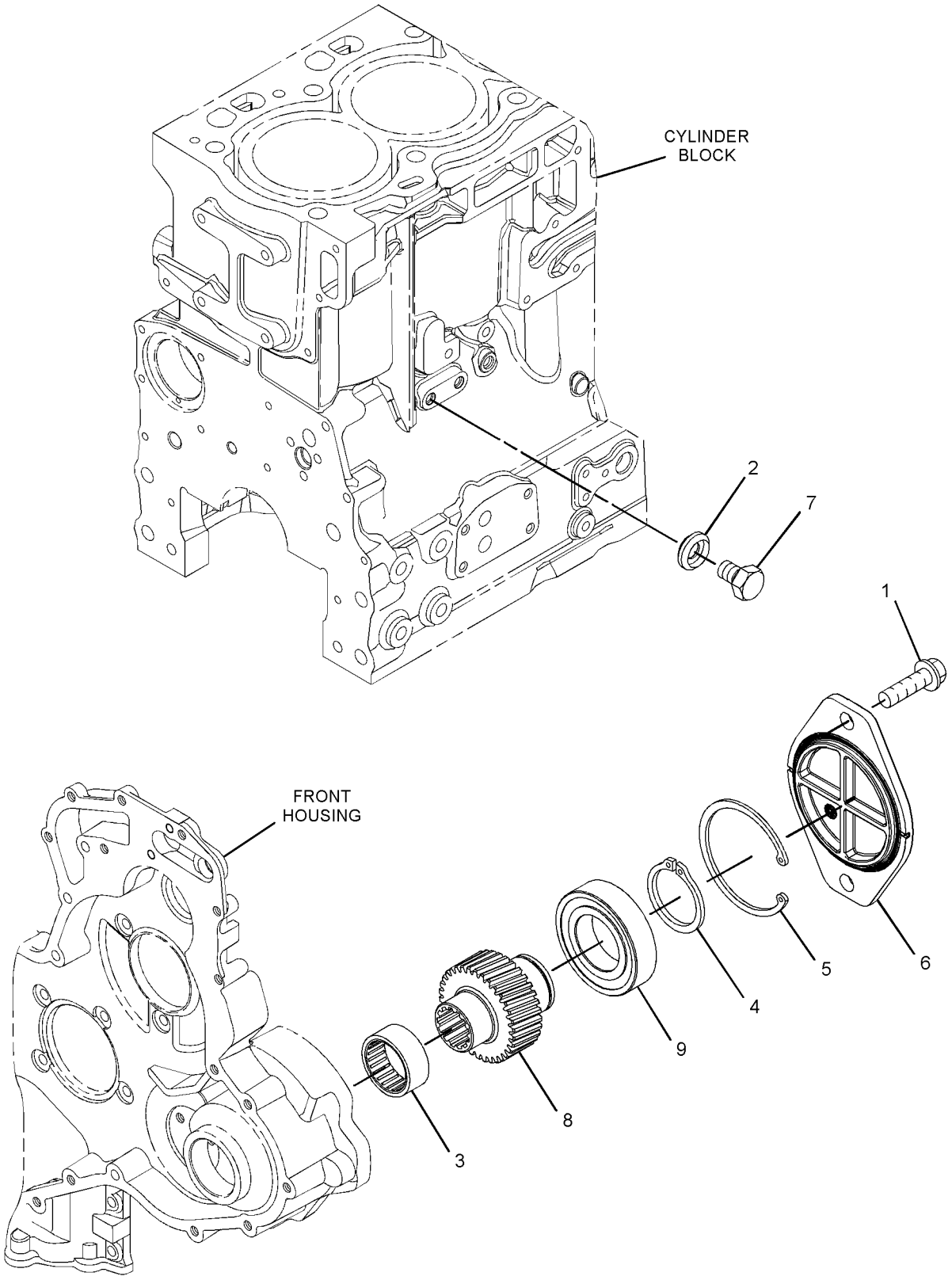

GRAPHIC #1 <END> g03673650

306-2323 ADAPTER GP-AUXILIARY DRIVE

SMCS-1165, 1207 **i06056532**

NOTE	REF NO	GRAPHIC REF	PART NUMBER	QTY	PART NAME 1 2 3 4 5 6 (PRODUCT LEVEL)	SEE PAGE
M	1	1	**6I-0646**	1	BOLT (M10X1.5X14-MM)	
	2	1	**102-2073**	1	SEAL-O-RING	
M	3	1	**102-2078**	1	BOLT (M10X1.5X25-MM)	
M	5	1	**126-3212**	5	BOLT (M8X1.25X25-MM)	
	6	1	**214-3203**	1	WASHER (SEALING)	
	7	1	**222-8625**	1	ADAPTER AS	
	7A	1	**6H-3957**	1	BALL BEARING	
	7B	1	**102-2076**	1	CLIP	
	7C	1	**217-7877**	1	GEAR (33-TEETH) (11-TEETH ID)	
	7D	1	**102-2075**	1	BEARING	

M - METRIC PART

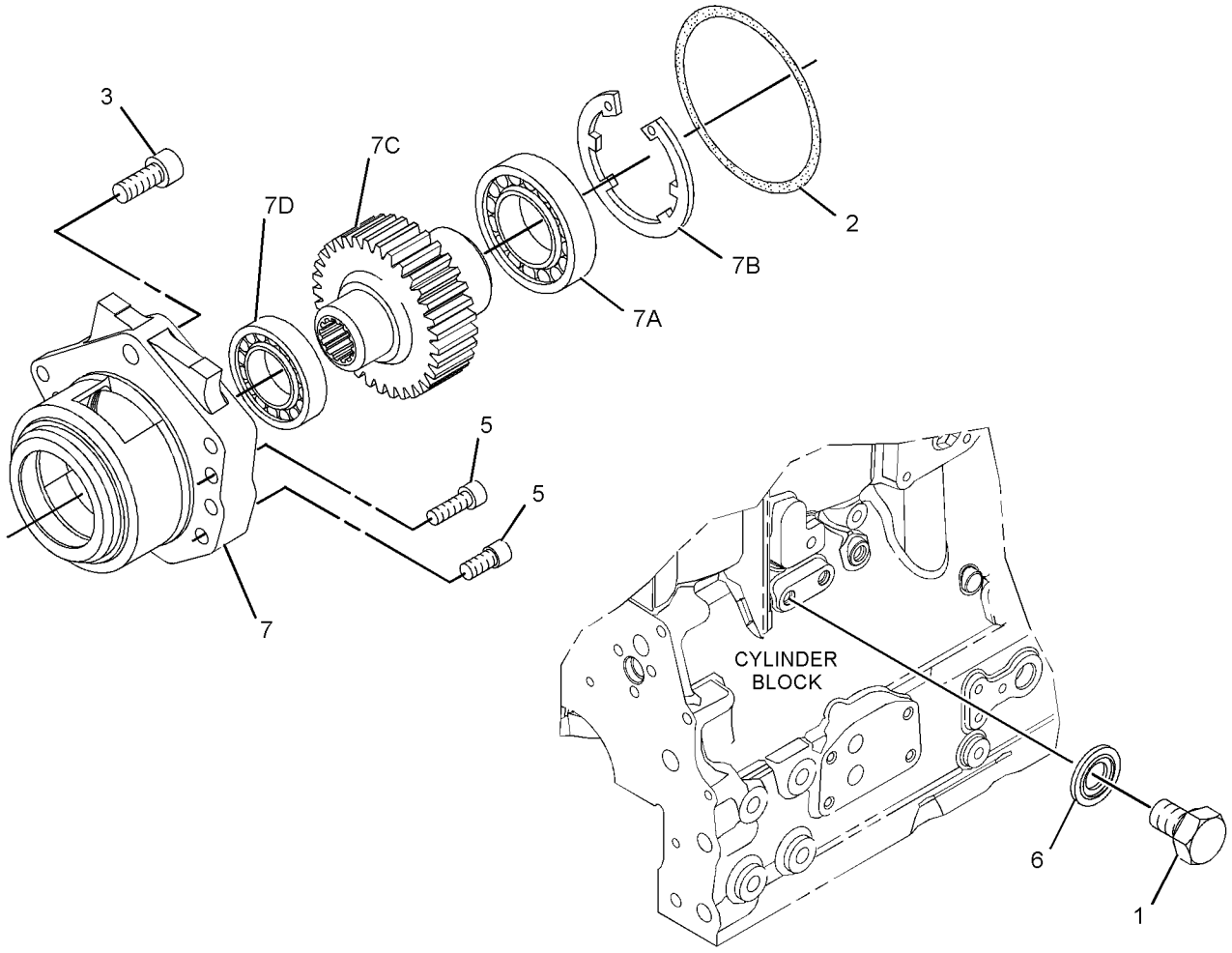

GRAPHIC #1 <END> g01456977

308-4275 ADAPTER GP-AUXILIARY DRIVE

SMCS-1165, 1207 **i06056531**

NOTE	REF NO	GRAPHIC REF	PART NUMBER	QTY	PART NAME 1 2 3 4 5 6 (PRODUCT LEVEL)	SEE PAGE
	1	1	**102-2073**	1	SEAL-O-RING	
M	2	1	**102-2078**	1	BOLT (M10X1.5X25-MM)	
M	4	1	**126-3212**	5	BOLT (M8X1.25X25-MM)	
	5	1	**230-9195**	1	ADAPTER AS	
	5A	1	**6H-3957**	1	BALL BEARING	
	5B	1	**102-2075**	1	BEARING	
	5C	1	**102-2076**	1	CLIP	
	5D	1	**230-9194**	1	GEAR (33-TEETH) (9-TEETH ID)	

M - METRIC PART

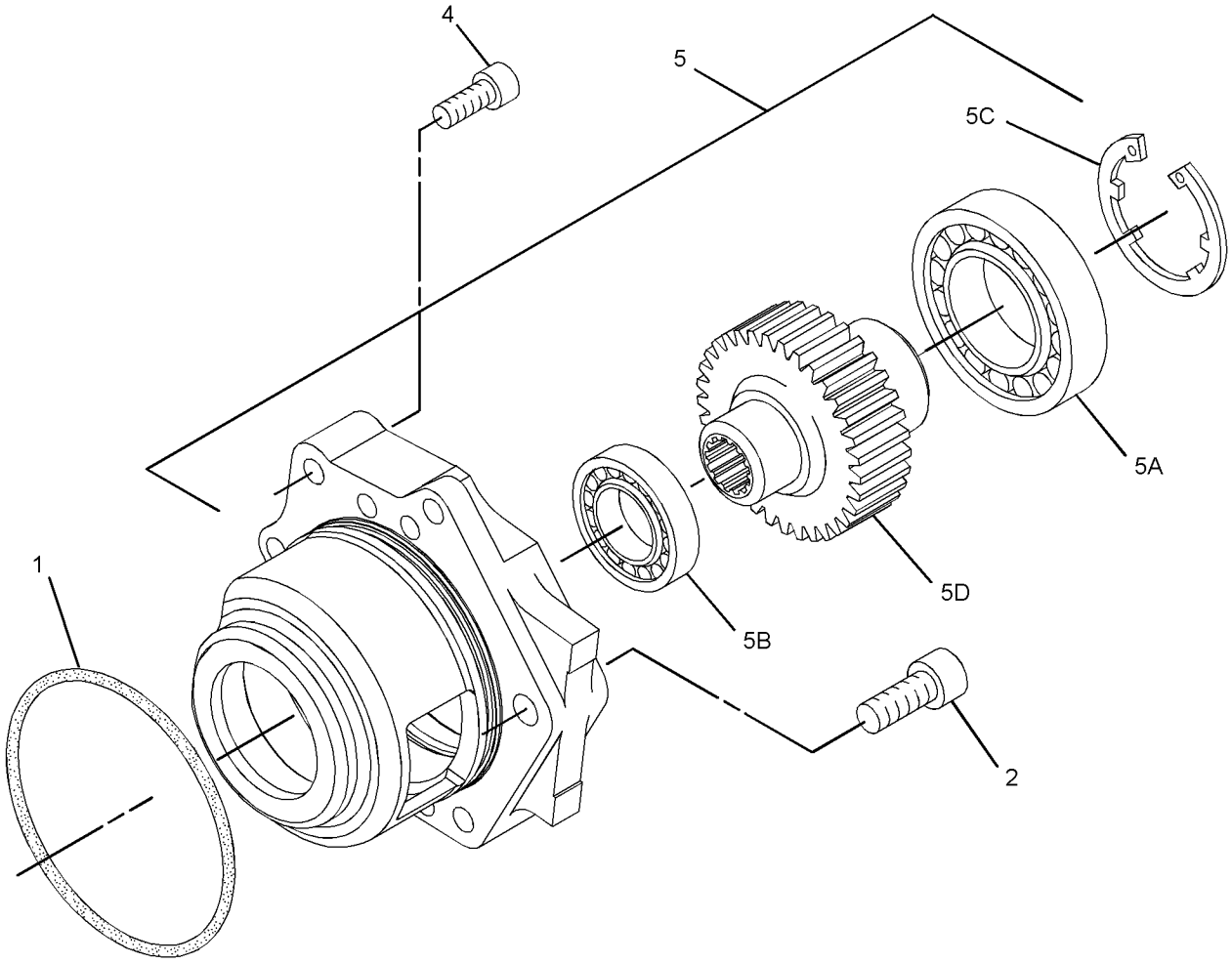

GRAPHIC #1 <END> g01441890

454-6621 ADAPTER GP-PUMP DRIVE

SMCS-1313, 3108 **i06056534**

NOTE	REF NO	GRAPHIC REF	PART NUMBER	QTY	PART NAME 1 2 3 4 5 6 (PRODUCT LEVEL)	SEE PAGE
M	1	1	**6I-0646**	1	BOLT (M10X1.5X14-MM)	
M	2	1	**100-4830**	2	BOLT (M10X1.5X20-MM)	
	3	1	**102-2073**	1	SEAL-O-RING	
M	4	1	**102-2078**	1	BOLT (M10X1.5X25-MM)	
M	5	1	**126-3212**	5	BOLT (M8X1.25X25-MM)	
	6	1	**198-8262**	1	COVER AS	
	6A	1	**198-8263**	1	SEAL-O-RING	
	7	1	**214-3203**	1	WASHER (SEALING)	
	8	1	**235-1063**	1	ADAPTER AS	
	8A	1	**6H-3957**	1	BALL BEARING	
	8B	1	**102-2075**	1	BEARING	
	8C	1	**102-2076**	1	CLIP	
	8D	1	**235-1061**	1	GEAR (33-TEETH) (13-TEETH ID)	

M - METRIC PART

454-6621 **ADAPTER GP-PUMP DRIVE (**contd.**)** **i06056534**

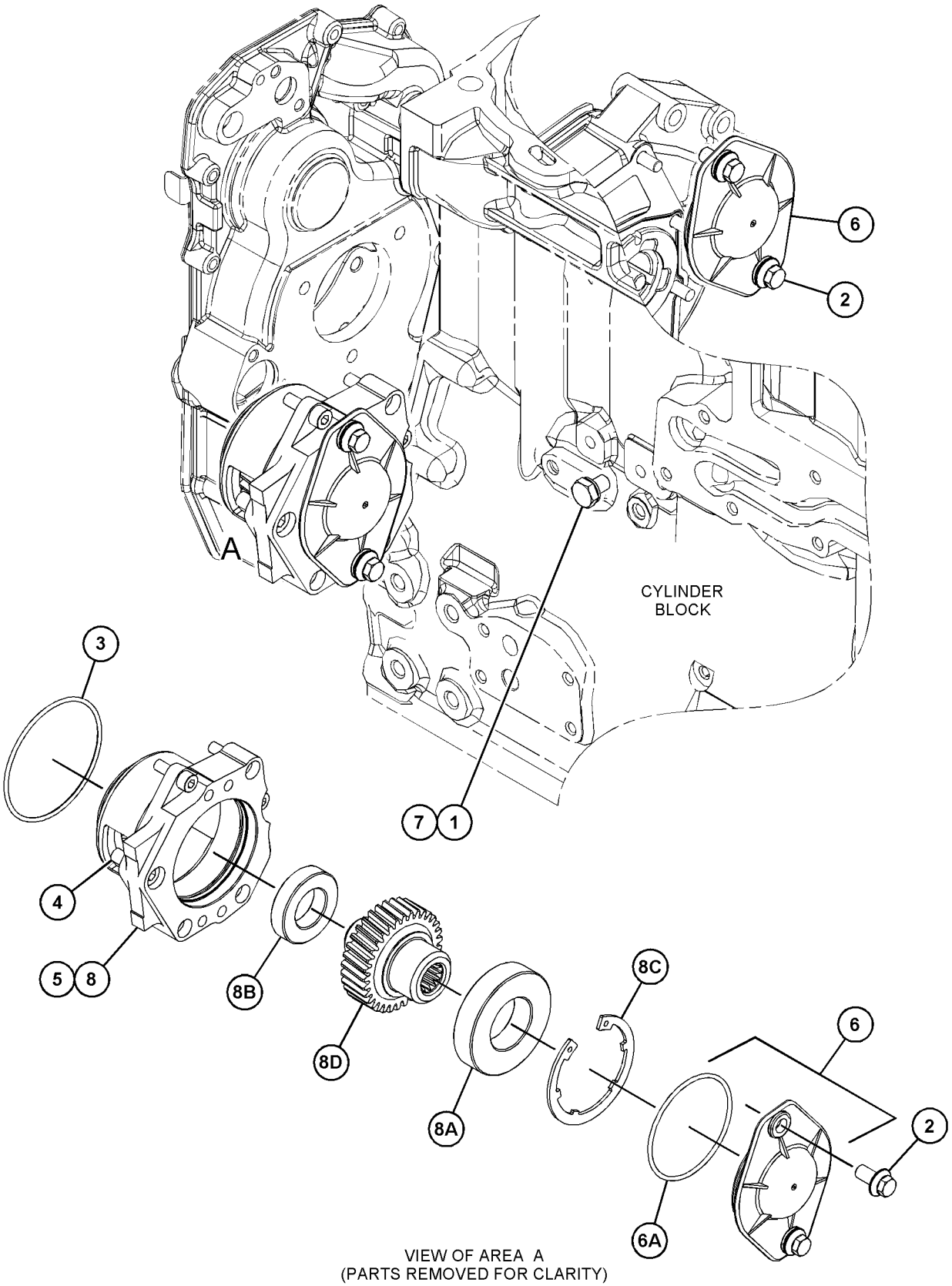

VIEW OF AREA A
(PARTS REMOVED FOR CLARITY)

GRAPHIC #1 <END> g03702810

323-8845 AIR COMPRESSOR GP

S/N: 4441-4221

SMCS-1803 **i06244687**

NOTE	REF NO	GRAPHIC REF	PART NUMBER	QTY	PART NAME 1 2 3 4 5 6 (PRODUCT LEVEL)	SEE PAGE
M	1	1	**6I-0654**	6	BOLT (M10X1.5X25-MM)	
	3	1	**113-4608**	1	ADAPTER	
	4	1	**198-8262**	1	COVER AS	
	4A	1	**198-8263**	1	SEAL-O-RING	
	5	1	**214-3203**	1	WASHER (SEALING)	
	6	1	**225-8524**	1	BOLT-SPECIAL	
	7	1	**246-4361**	2	WASHER (10.5X14X1.5-MM THK)	
	8	1	**375-9813**	1	HOSE	
	9	1	**381-5651**	4	CLIP	
	10	1	**293-4776**	2	WASHER	
	11	1	**294-9392**	2	ADAPTER	
	12	1	**294-9393**	1	HOSE-WATER	
	13	1	**451-5480**	1	COMPRESSOR	
	14	1	**320-8383**	1	GEAR	
	15	1	**320-8384**	1	NUT	
	16	1	**320-8385**	1	WASHER (19X34X3-MM THK)	
	17	1	**126-3219**	1	SEAL-O-RING	
	18	1	**323-8761**	1	BRACKET	
	19	1	**323-8762**	1	TUBE-OIL	
	19A	1	**067-6264**	1	FITTING-FLARED	
	19B	1	**067-6265**	1	FITTING-BRASS	
	20	1	**317-6232**	2	STUD	
M	21	1	**195-2221**	2	NUT (M12X1.75-THD)	
	22	1	**294-9396**	1	CLIP	
M	23	1	**6I-0260**	2	BOLT (M8X1.25X25-MM)	

M - METRIC PART

323-8845 **AIR COMPRESSOR GP (**contd.**)** **i06244687**

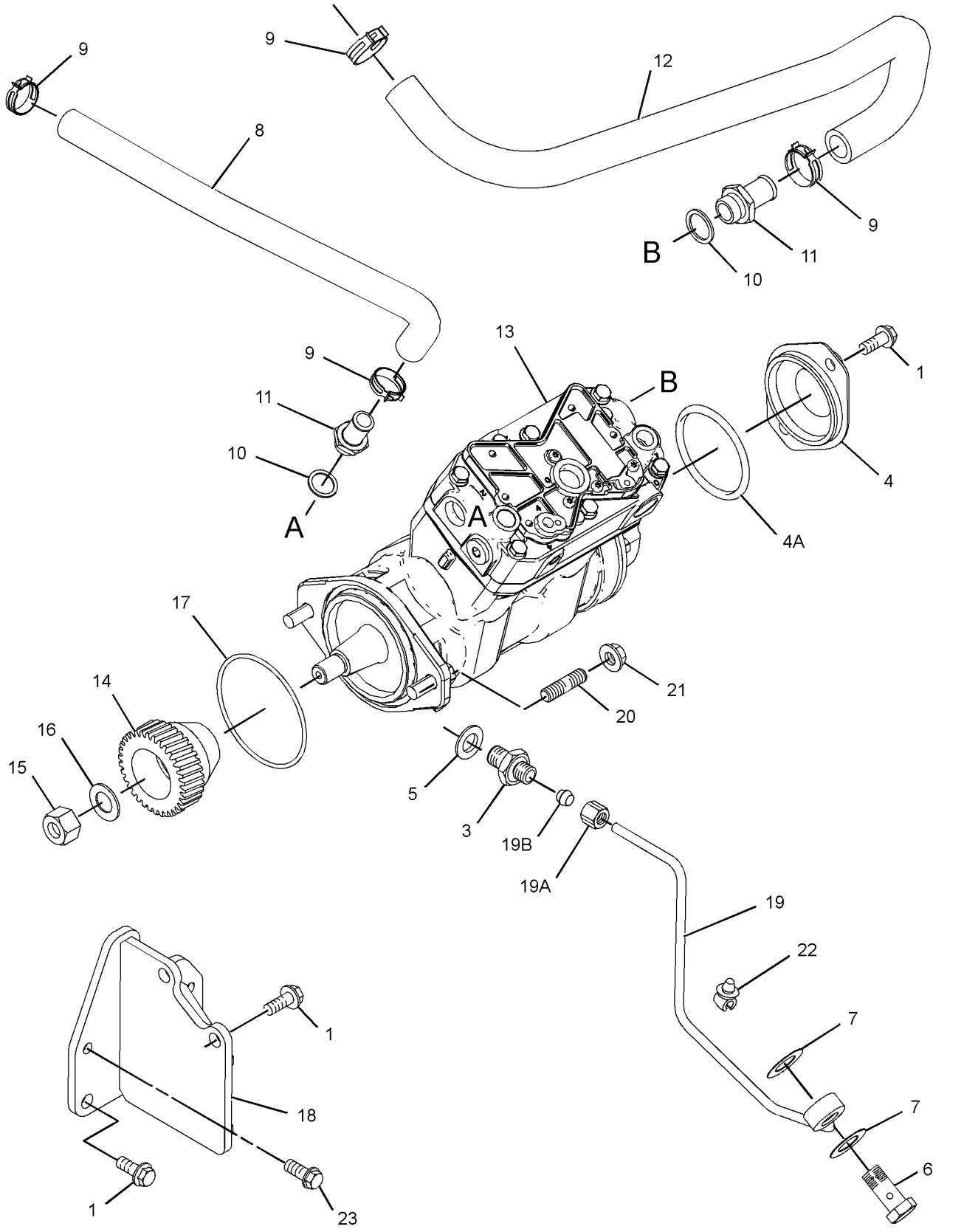

GRAPHIC #1 <END> g06136600

323-8845 AIR COMPRESSOR GP

S/N: 4444222-UP

SMCS-1803 **i07568670**

NOTE	REF NO	GRAPHIC REF	PART NUMBER	QTY	PART NAME 1 2 3 4 5 6 (PRODUCT LEVEL)	SEE PAGE
M	1	1	**6I-0654**	6	BOLT (M10X1.5X25-MM)	
	3	1	**113-4608**	1	ADAPTER	
	4	1	**198-8262**	1	COVER AS	
	4A	1	**198-8263**	1	SEAL-O-RING	
	5	1	**214-3203**	1	WASHER (SEALING)	
	6	1	**225-8524**	1	BOLT-SPECIAL	
	7	1	**246-4361**	2	WASHER (10.5X14X1.5-MM THK)	
	8	1	**375-9813**	1	HOSE (COOLANT)	
	9	1	**381-5651**	4	CLIP	
	10	1	**293-4776**	2	WASHER	
	11	1	**294-9392**	2	ADAPTER	
	12	1	**375-9812**	1	HOSE (COOLANT)	
	13	1	**451-5480**	1	COMPRESSOR	
	14	1	**320-8383**	1	GEAR (34-TEETH)	
	15	1	**320-8384**	1	NUT	
	16	1	**320-8385**	1	WASHER (19X34X3-MM THK)	
	17	1	**126-3219**	1	SEAL-O-RING	
	18	1	**323-8761**	1	BRACKET	
	19	1	**323-8762**	1	TUBE-OIL	
	19A	1	**365-3308**	1	NUT-COMPRESSION	
	19B	1	**067-6265**	1	FITTING-BRASS	
	20	1	**317-6232**	2	STUD	
M	21	1	**195-2221**	2	NUT (M12X1.75-THD)	
M	23	1	**6I-0260**	2	BOLT (M8X1.25X25-MM)	

M - METRIC PART

323-8845 **AIR COMPRESSOR GP (**contd.**)** **i07568670**

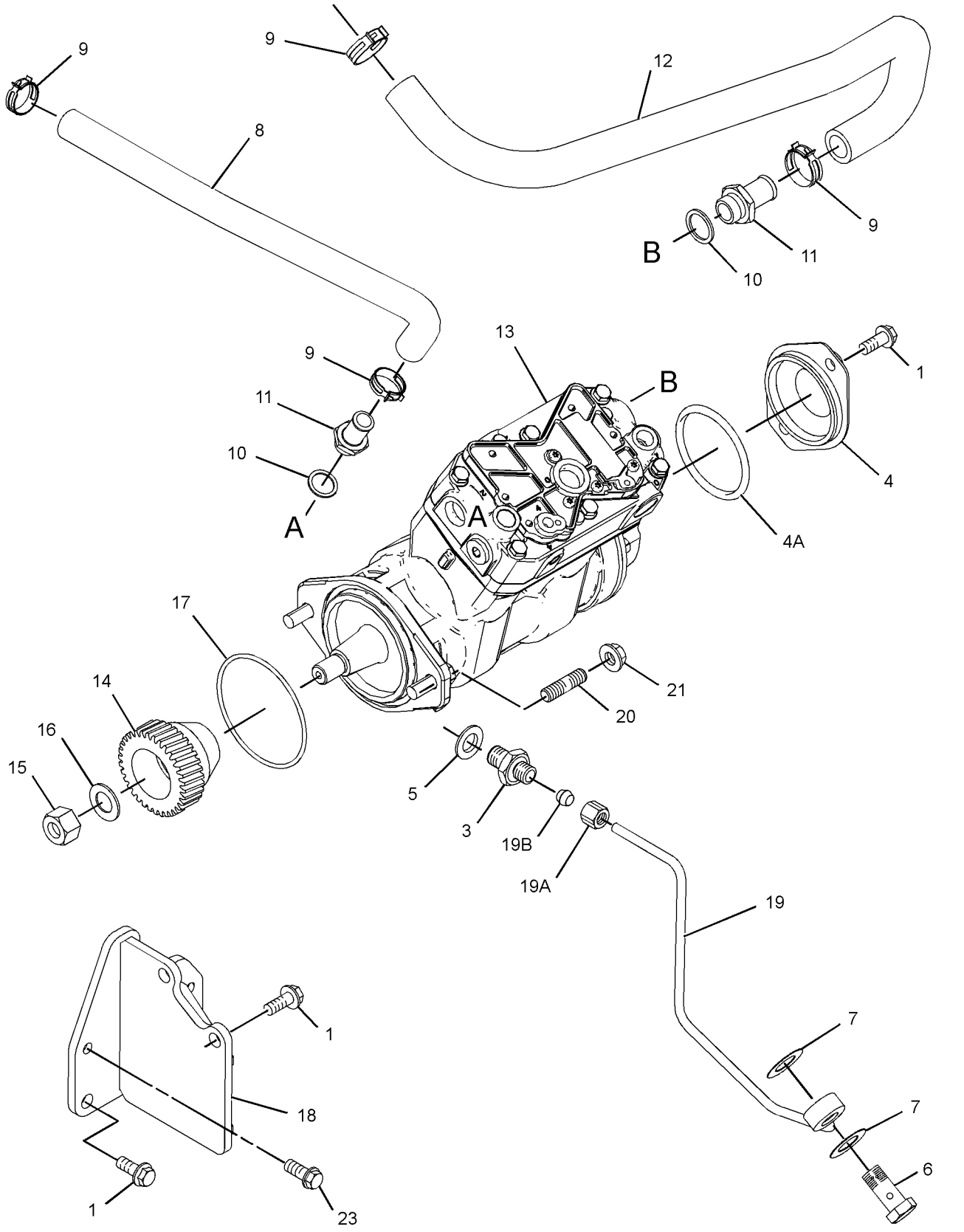

GRAPHIC #1 <END> g06361813

352-6382 AIR COMPRESSOR GP

SMCS-1803 **i07378195**

NOTE	REF NO	GRAPHIC REF	PART NUMBER	QTY	PART NAME 1 2 3 4 5 6 (PRODUCT LEVEL)	SEE PAGE
	1	1	**5D-1026**	4	CLAMP-BAND	
M	2	1	**184-0983**	2	NUT-HEX FLANGE (M12X1.75-THD)	
M	3	1	**6I-0260**	4	BOLT (M8X1.25X25-MM)	
	4	1	**035-8017**	1	UNION	
	5	1	**102-2073**	1	SEAL-O-RING	
	6	1	**113-4608**	1	ADAPTER	
	7	1	**113-8076**	1	PIN	
	8	1	**126-3219**	1	SEAL-O-RING	
	9	1	**198-8262**	1	COVER AS	
	9A	1	**198-8263**	1	SEAL-O-RING	
	10	1	**209-6825**	2	ADAPTER	
	11	1	**214-3203**	1	WASHER (SEALING)	
	12	1	**451-1179**	1	COMPRESSOR	
	13	1	**247-4928**	2	WASHER (16.5X20.5X1.6-MM THK)	
	14	1	**259-2611**	1	HOSE	
	15	1	**259-2612**	1	HOSE	
	16	1	**259-2614**	1	BRACKET	
	17	1	**259-2623**	1	GEAR (34-TEETH)	
	18	1	**273-3690**	1	BOLT	
M	19	1	**273-3691**	4	BOLT (M8X1.25X80-MM)	
M	20	1	**293-1875**	2	BOLT (M10X1.5X16-MM)	
Y	21	1	**293-1877**	1	ADAPTER GP-AIR COMPRESSOR	299
	22	1	**352-6375**	1	PIPE AS-OIL	
	23	1	**366-5914**	1	PISTON AS	
					AVAILABLE REPAIR KIT(S):	
			209-6881	1	KIT-SEAL (COMPRESSOR)	
			209-6883	1	KIT-REPAIR (AIR COMPRESSOR VALVE)	

M - METRIC PART
Y - SEPARATE ILLUSTRATION

352-6382 **AIR COMPRESSOR GP (**contd.**)** **i07378195**

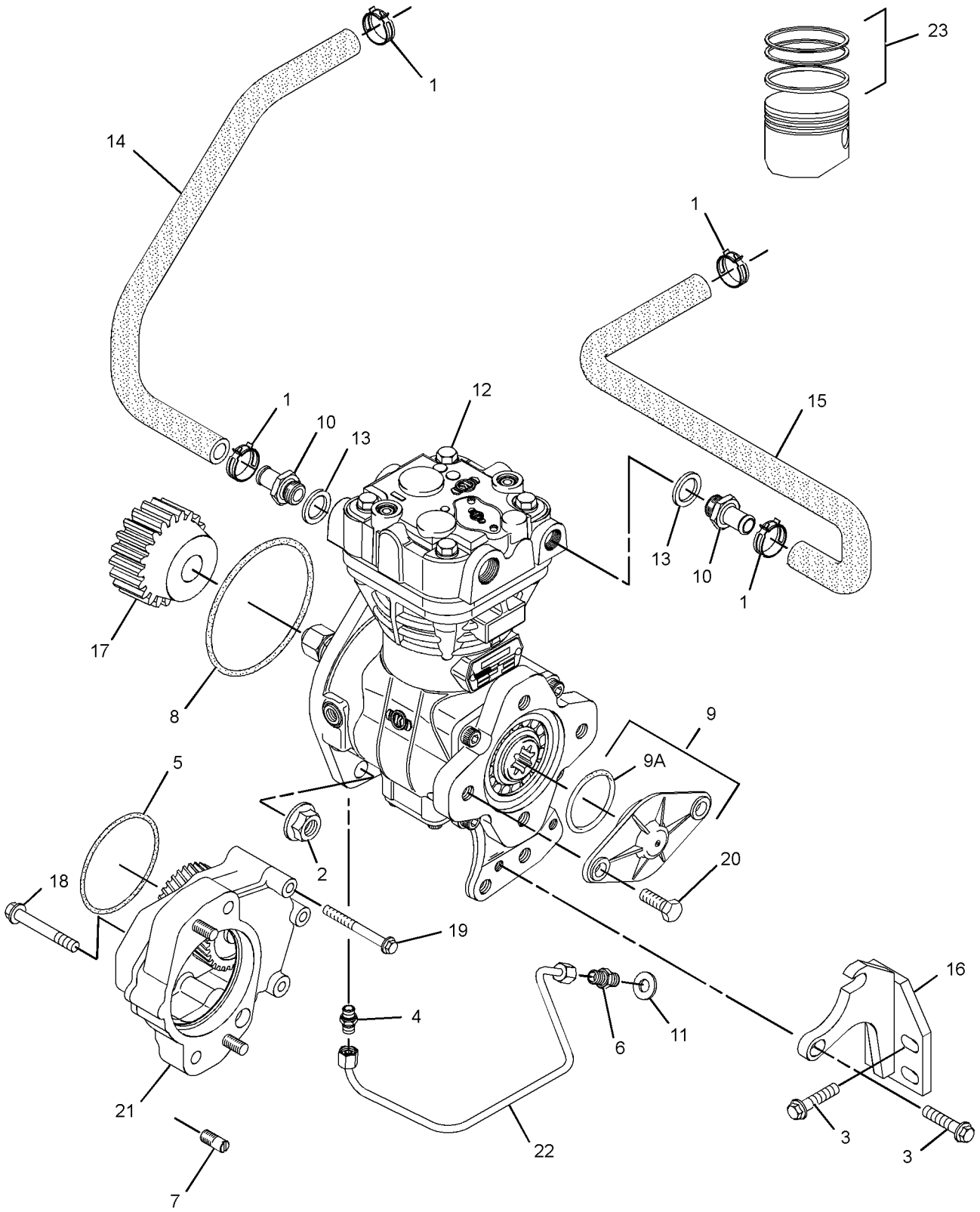

GRAPHIC #1 <END> g03336468

375-5262 AIR COMPRESSOR GP

SMCS-1803 **i07378194**

NOTE	REF NO	GRAPHIC REF	PART NUMBER	QTY	PART NAME 1 2 3 4 5 6 (PRODUCT LEVEL)	SEE PAGE
	1	1	**5D-1026**	4	CLAMP-BAND	
M	2	1	**6I-0233**	2	NUT (M12X1.75-THD)	
M	3	1	**6I-0260**	4	BOLT (M8X1.25X25-MM)	
	4	1	**035-8017**	1	UNION	
	5	1	**102-2073**	1	SEAL-O-RING	
	6	1	**113-4608**	1	ADAPTER	
	7	1	**113-8076**	1	PIN	
	8	1	**126-3219**	1	SEAL-O-RING	
	9	1	**198-8262**	1	COVER AS	
	9A	1	**198-8263**	1	SEAL-O-RING	
	10	1	**209-6825**	2	ADAPTER	
	11	1	**214-3203**	1	WASHER (SEALING)	
	12	1	**451-1179**	1	COMPRESSOR	
	13	1	**247-4928**	2	WASHER (16.5X20.5X1.6-MM THK)	
	14	1	**259-2611**	1	HOSE	
	15	1	**259-2612**	1	HOSE	
	16	1	**259-2614**	1	BRACKET	
	17	1	**259-2623**	1	GEAR (34-TEETH)	
	18	1	**273-3690**	1	BOLT	
M	19	1	**273-3691**	4	BOLT (M8X1.25X80-MM)	
M	20	1	**293-1875**	2	BOLT (M10X1.5X16-MM)	
Y	21	1	**293-1877**	1	ADAPTER GP-AIR COMPRESSOR	299
	22	1	**352-6375**	1	PIPE AS-OIL	

M - METRIC PART
Y - SEPARATE ILLUSTRATION

375-5262 **AIR COMPRESSOR GP (**contd.**)** **i07378194**

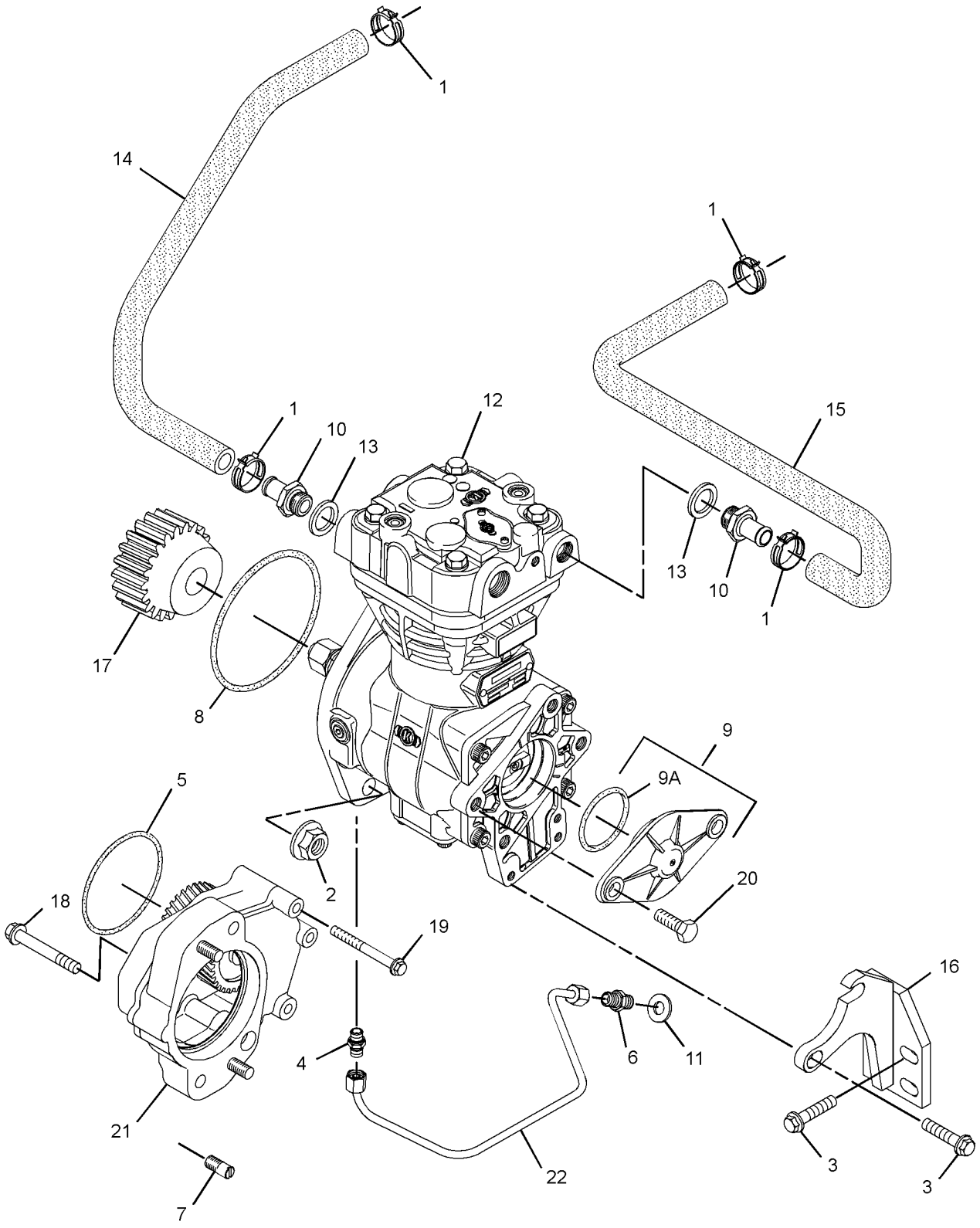

GRAPHIC #1 <END> g02645537

301-8245 BALANCER GP

PART OF 435-1699 ENGINE AR, 437-5409, 522-8303, 540-1155 ENGINE AR-PRIMARY
ALSO AN ATTACHMENT

SMCS-1220 **i02664792**

NOTE	REF NO	GRAPHIC REF	PART NUMBER	QTY	PART NAME 1 2 3 4 5 6 (PRODUCT LEVEL)	SEE PAGE
M	1	1	**6I-0454**	6	BOLT (M10X1.5X70-MM)	
	2	1	**234-0615**	1	BALANCER AS	
	3	1	**8N-7998**	1	DOWEL	
M	4	1	**195-2221**	1	NUT (M12X1.75-THD)	
	5	1	**234-0189**	1	BOLT	
	6	1	**234-0198**	1	SHAFT-GEAR	
	7	1	**234-0201**	1	WASHER-THRUST	
	8	1	**234-0204**	1	GEAR-BALANCER (17-TEETH)	
	9	1	**234-0205**	1	GEAR AS (44-TEETH)	
	11	1	**234-0212**	5	BOLT	
	12	1	**234-0220**	1	COVER	
	13	1	**234-0223**	1	ROTOR AS	
	14	1	**234-0614**	1	DOWEL	
	15	1	**234-0616**	1	VALVE AS-RELIEF (ENGINE OIL PRESSURE)	
	16	1	**234-0590**	1	PLUNGER	
	17	1	**234-0591**	1	SPRING	
	18	1	**234-0613**	1	PLUG-RETAINER	

M - METRIC PART

301-8245 **BALANCER GP** (contd.) **i02664792**

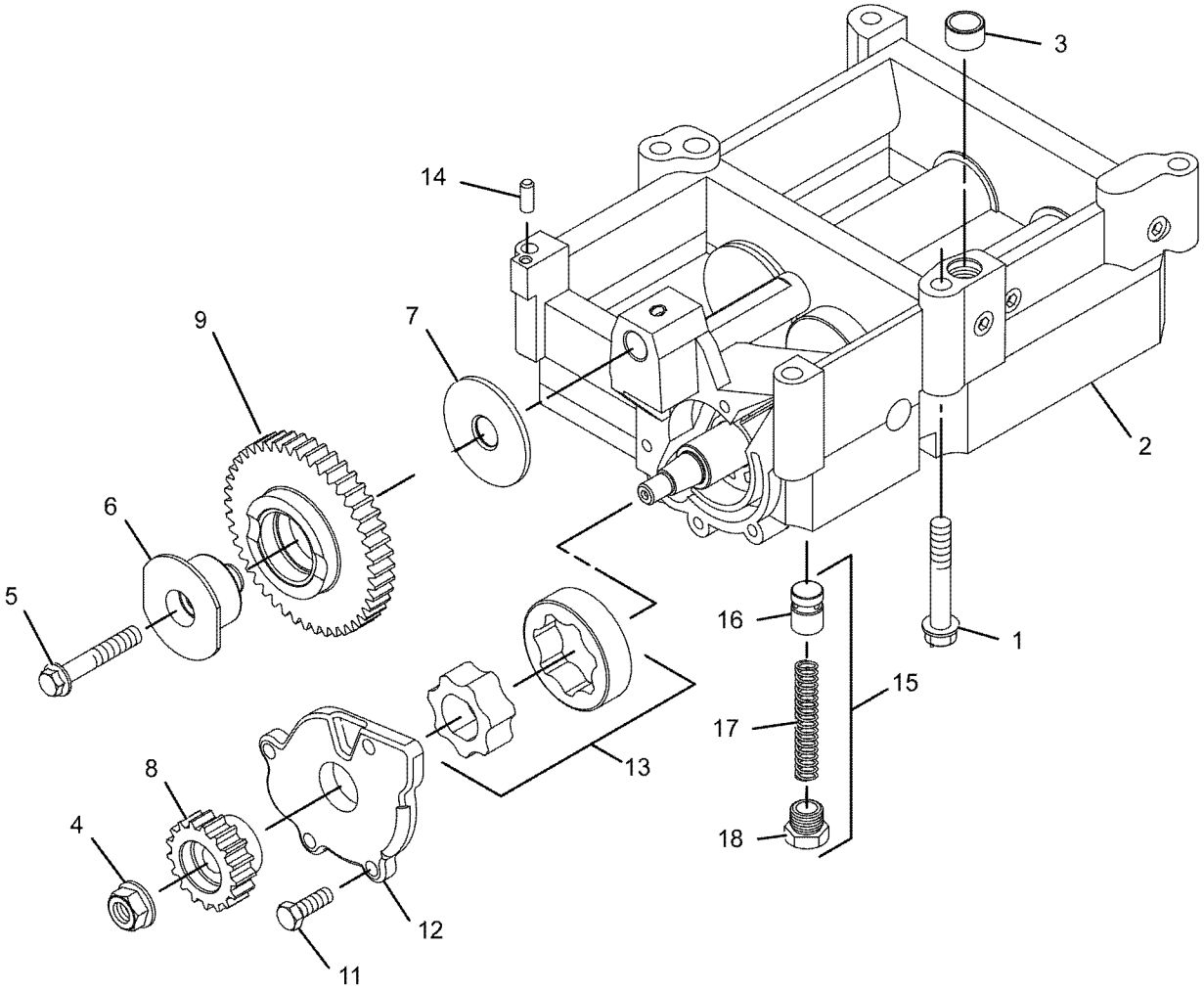

GRAPHIC #1 <END> g01065190

322-4982 BELT TENSIONER GP

SMCS-1358 **i05050671**

NOTE	REF NO	GRAPHIC REF	PART NUMBER	QTY	PART NAME 1 2 3 4 5 6 (PRODUCT LEVEL)	SEE PAGE
	1	1	**377-9082**	1	BELT TENSIONER	

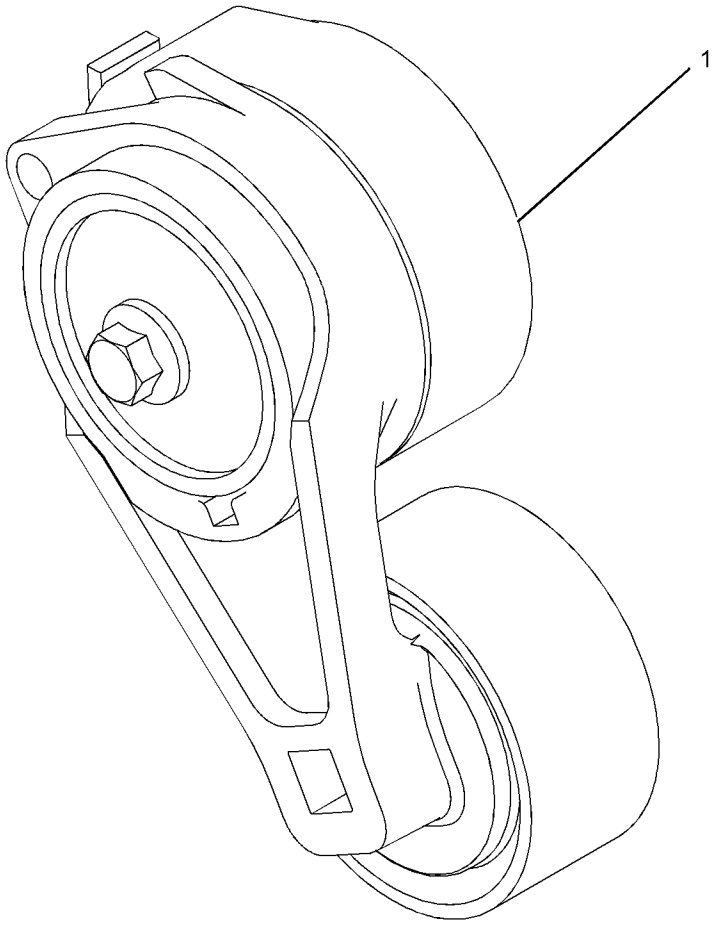

GRAPHIC #1 <END> g01438375

298-5090 CAMSHAFT GP

PART OF 435-1685 ENGINE AR-PRIMARY

SMCS-1210 **i05781435**

NOTE	REF NO	GRAPHIC REF	PART NUMBER	QTY	PART NAME 1 2 3 4 5 6 (PRODUCT LEVEL)	SEE PAGE
	1	1	**315-3384**	8	TAPPET	
	2	1	**319-8426**	8	PUSHROD	
	3	1	**394-1399**	1	CAMSHAFT AS	
	3A	1	**067-6135**	1	KEY-WOODRUFF	

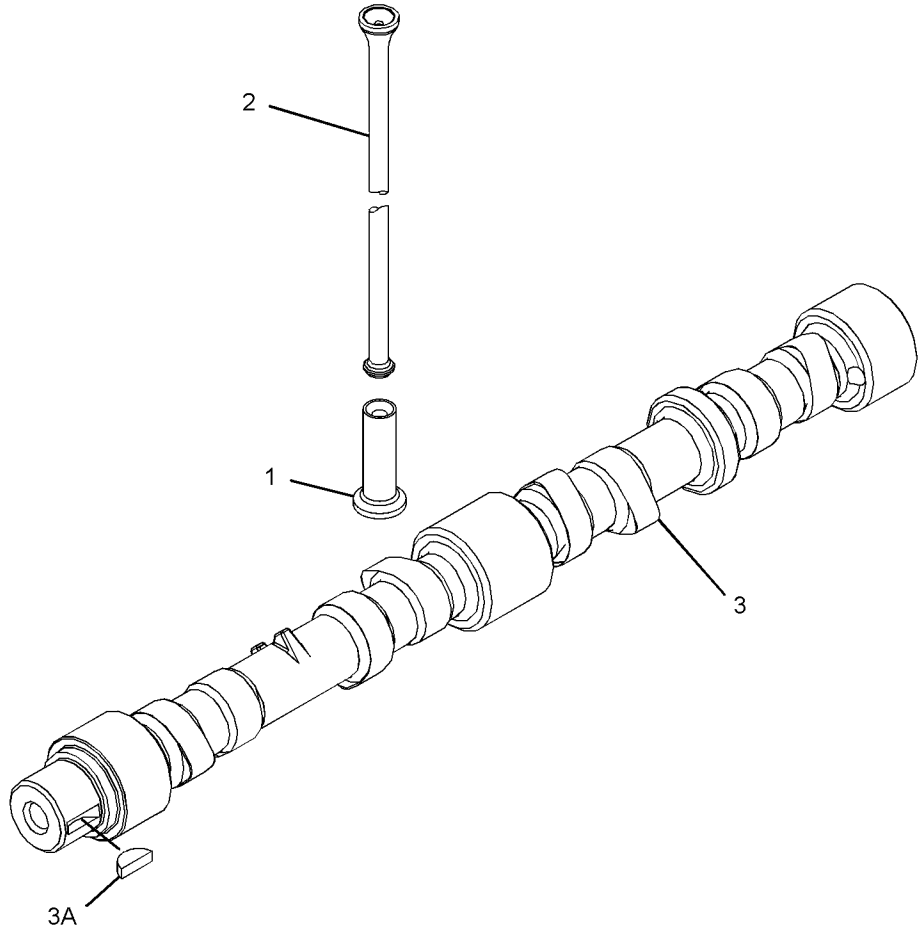

GRAPHIC #1 <END> g02995659

298-5892 CAMSHAFT GP

PART OF 435-1699 ENGINE AR, 435-1692 ENGINE AR-COMPLETE, 435-1687, 437-5409, 522-8303, 540-0570, 540-1155, 540-1156 ENGINE AR-PRIMARY

SMCS-1210 **i06273533**

NOTE	REF NO	GRAPHIC REF	PART NUMBER	QTY	PART NAME 1 2 3 4 5 6 (PRODUCT LEVEL)	SEE PAGE
	1	1	**315-3384**	8	TAPPET	
	2	1	**319-8426**	8	PUSHROD	
	3	1	**394-1399**	1	CAMSHAFT AS	
	3A	1	**067-6135**	1	KEY-WOODRUFF	

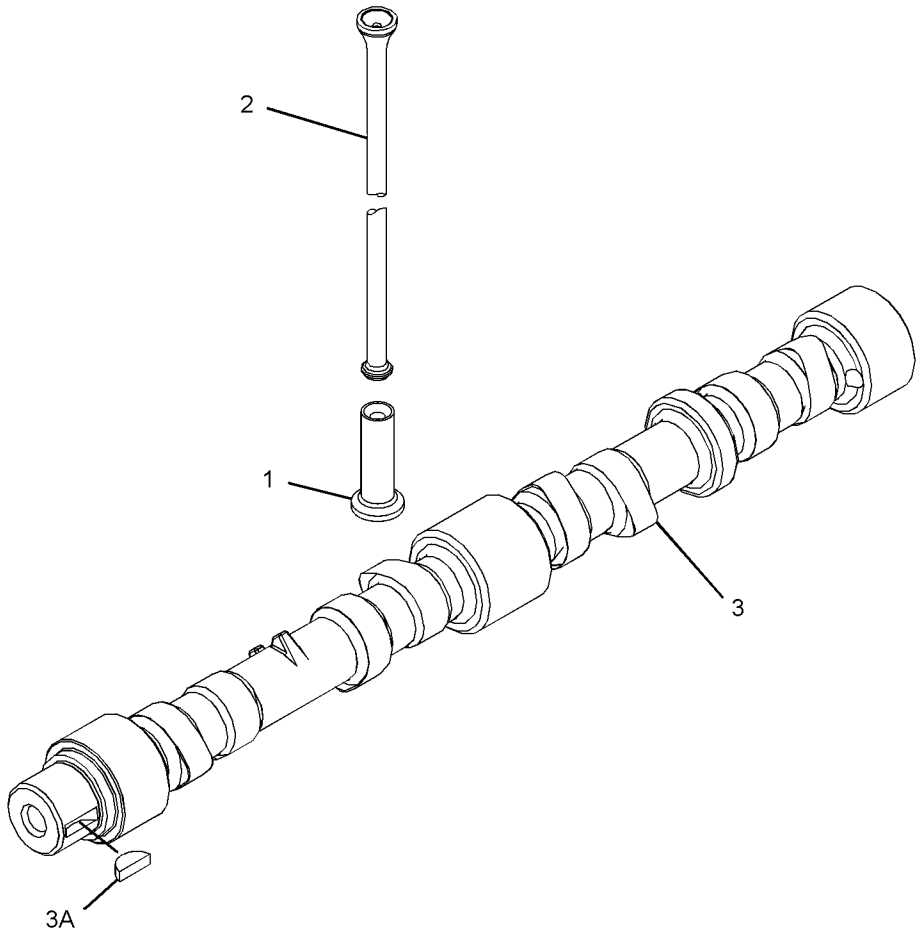

GRAPHIC #1 <END> g02995659

304-3648 CAMSHAFT GP

SMCS-1210 **i05812734**

NOTE	REF NO	GRAPHIC REF	PART NUMBER	QTY	PART NAME 1 2 3 4 5 6 (PRODUCT LEVEL)	SEE PAGE
	1	1	**315-3384**	8	TAPPET	
	2	1	**278-5126**	8	PUSHROD	
	3	1	**394-1399**	1	CAMSHAFT AS	
	3A	1	**067-6135**	1	KEY-WOODRUFF (WOODRUFF)	

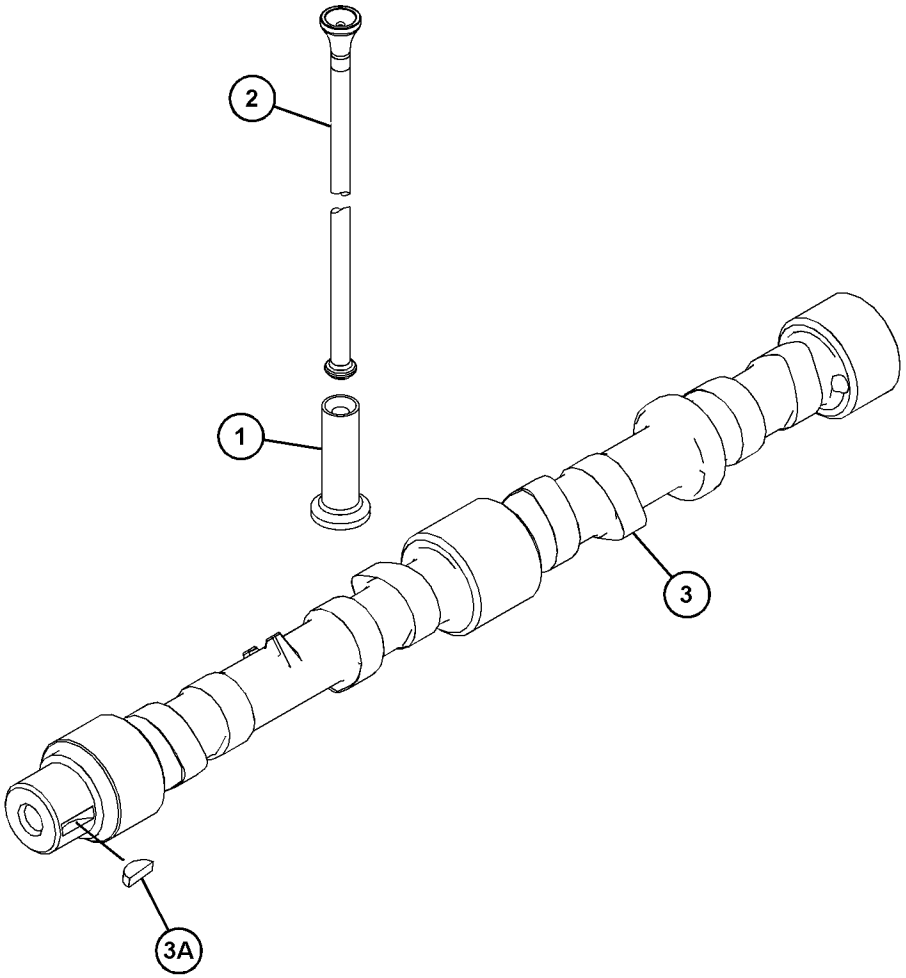

GRAPHIC #1 <END> g03688950

308-4152 CAMSHAFT GP

ALSO AN ATTACHMENT

SMCS-1210 **i05792713**

NOTE	REF NO	GRAPHIC REF	PART NUMBER	QTY	PART NAME 1 2 3 4 5 6 (PRODUCT LEVEL)	SEE PAGE
	1	1	**315-3384**	8	TAPPET	
	2	1	**319-8426**	8	PUSHROD	
	3	1	**394-1399**	1	CAMSHAFT AS	
	3A	1	**067-6135**	1	KEY-WOODRUFF	

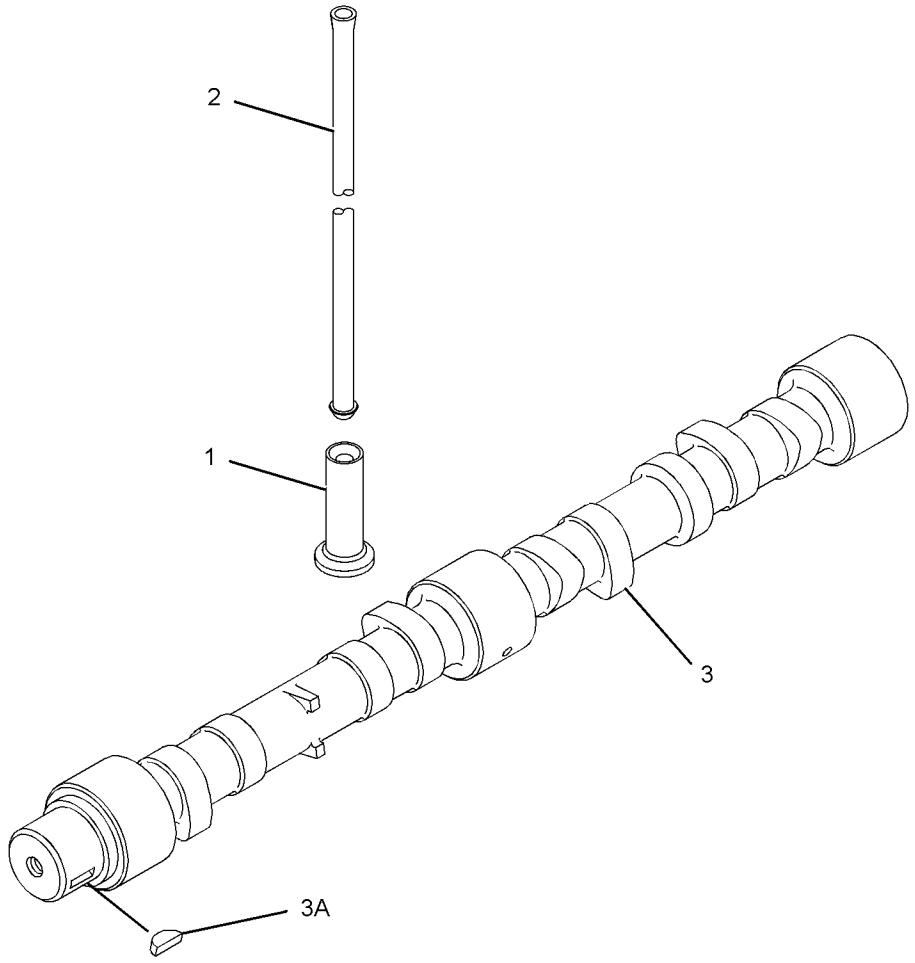

GRAPHIC #1 <END> g01304671

322-4886 CAMSHAFT GP

SMCS-1210 **i05792716**

NOTE	REF NO	GRAPHIC REF	PART NUMBER	QTY	PART NAME 1 2 3 4 5 6 (PRODUCT LEVEL)	SEE PAGE
	1	1	**319-8426**	8	PUSHROD	
	2	1	**306-2330**	1	CAMSHAFT AS	
	2A	1	**067-6135**	1	KEY-WOODRUFF	
	3	1	**315-3384**	8	TAPPET	

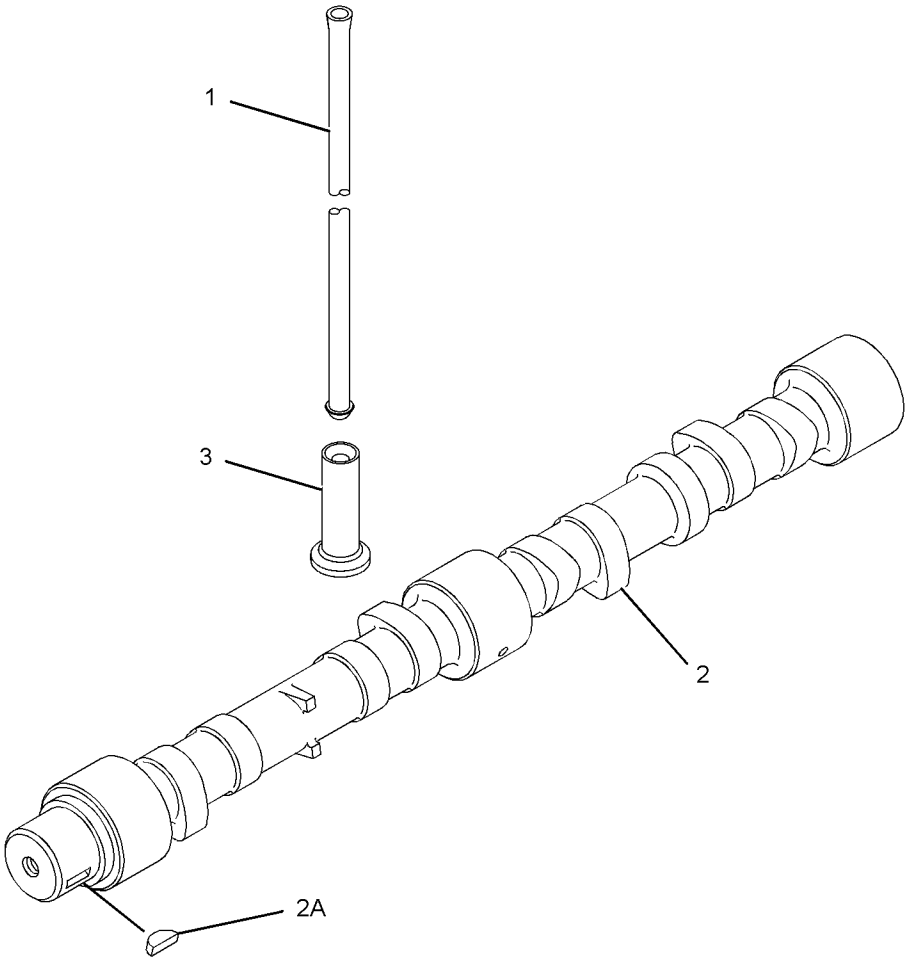

GRAPHIC #1 <END> g01438114

304-3658 COVER GP-CYLINDER HEAD

SMCS-1100 **i03859380**

NOTE	REF NO	GRAPHIC REF	PART NUMBER	QTY	PART NAME 1 2 3 4 5 6 (PRODUCT LEVEL)	SEE PAGE
M	1	1	**124-3815**	4	BOLT (M8X1.25X16-MM)	
M	2	1	**111-8222**	4	BOLT (M8X16-MM)	
	3	1	**114-2579**	2	GASKET	
	4	1	**185-6627**	2	PLATE	

M - METRIC PART

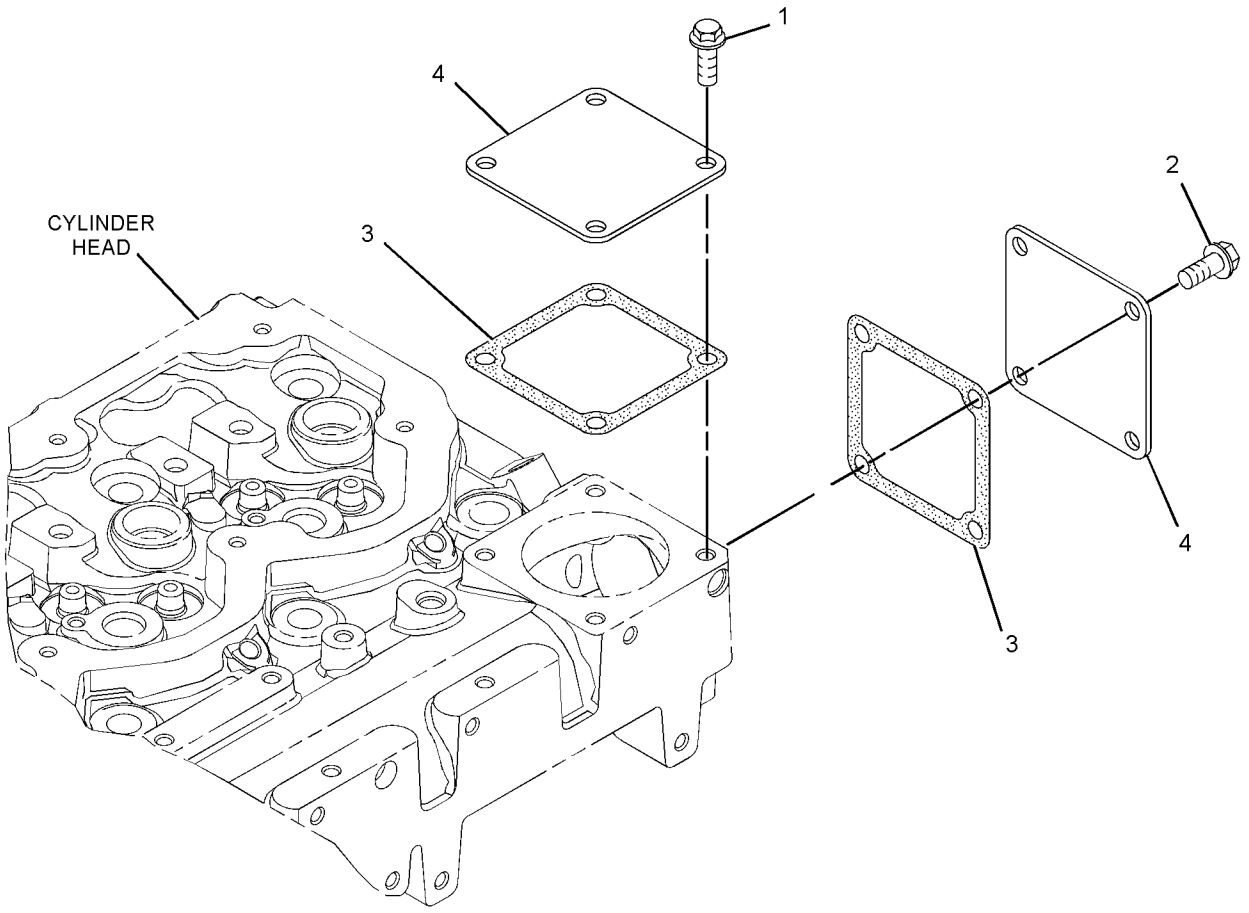

GRAPHIC #1 <END> g02122260

306-2316 COVER GP-CYLINDER HEAD

TYPE 1

SMCS-1100 **i07193372**

NOTE	REF NO	GRAPHIC REF	PART NUMBER	QTY	PART NAME 1 2 3 4 5 6 (PRODUCT LEVEL)	SEE PAGE
	1	2	**339-8775**	1	BRACKET	
M	2	2	**6I-0217**	4	BOLT (M8X1.25X20-MM)	
	3	2	**7C-1281**	1	BRACKET	
	4	2	**032-9020**	3	CLIP	
	5	1	**277-5031**	7	BOLT-SPECIAL	
	6	1	**517-8243**	4	SLEEVE-INJECTOR	
	7	2	**420-0609**	1	HOSE-BREATHER	
	8	2	**280-2023**	1	HOSE	
	9	1	**298-4550**	4	BOLT-SPECIAL	
	10	1	**298-4551**	1	BASE GP-VALVE COVER & INJ HARN	
	10A	1	**277-5064**	2	SEAL-O-RING	
	10B	1	**277-5065**	2	CLIP	
	10C	1	**285-1973**	2	HARNESS AS-ENGINE (FUEL INJECTION)	
		1	**113-4630**	1	RECEPTACLE AS-CONNECTOR (4-PIN)	
		1	**9X-3401**	4	PIN-CONNECTOR (16-GA TO 18-GA)	
					—OR—	
		1	**126-1767**	4	PIN-CONNECTOR (14-GA TO 16-GA)	
		1	**3E-3377**	1	WEDGE-RECEPTACLE LOCK (4-PIN)	
		1	**316-9351**	1	MOUNTING-CABLE TIE	
	10D	1	**298-4552**	1	GASKET	
	11	1	**304-8766**	1	COVER GP-VALVE MECHANISM	
	11A	1	**318-1726**	4	BOLT	
	11B	1	**298-4546**	1	GASKET-VALVE COVER	
	11D	1	**298-4548**	1	SEPARATOR-OIL	
	11E	1	**298-4549**	1	SEAL-O-RING	
	12	2	**306-2333**	1	BASE GP-BREATHER (CRANKCASE)	
F			**5D-1026**	1	CLAMP-BAND	

F - NOT SHOWN
M - METRIC PART

306-2316 **COVER GP-CYLINDER HEAD (**contd.**)** **i07193372**

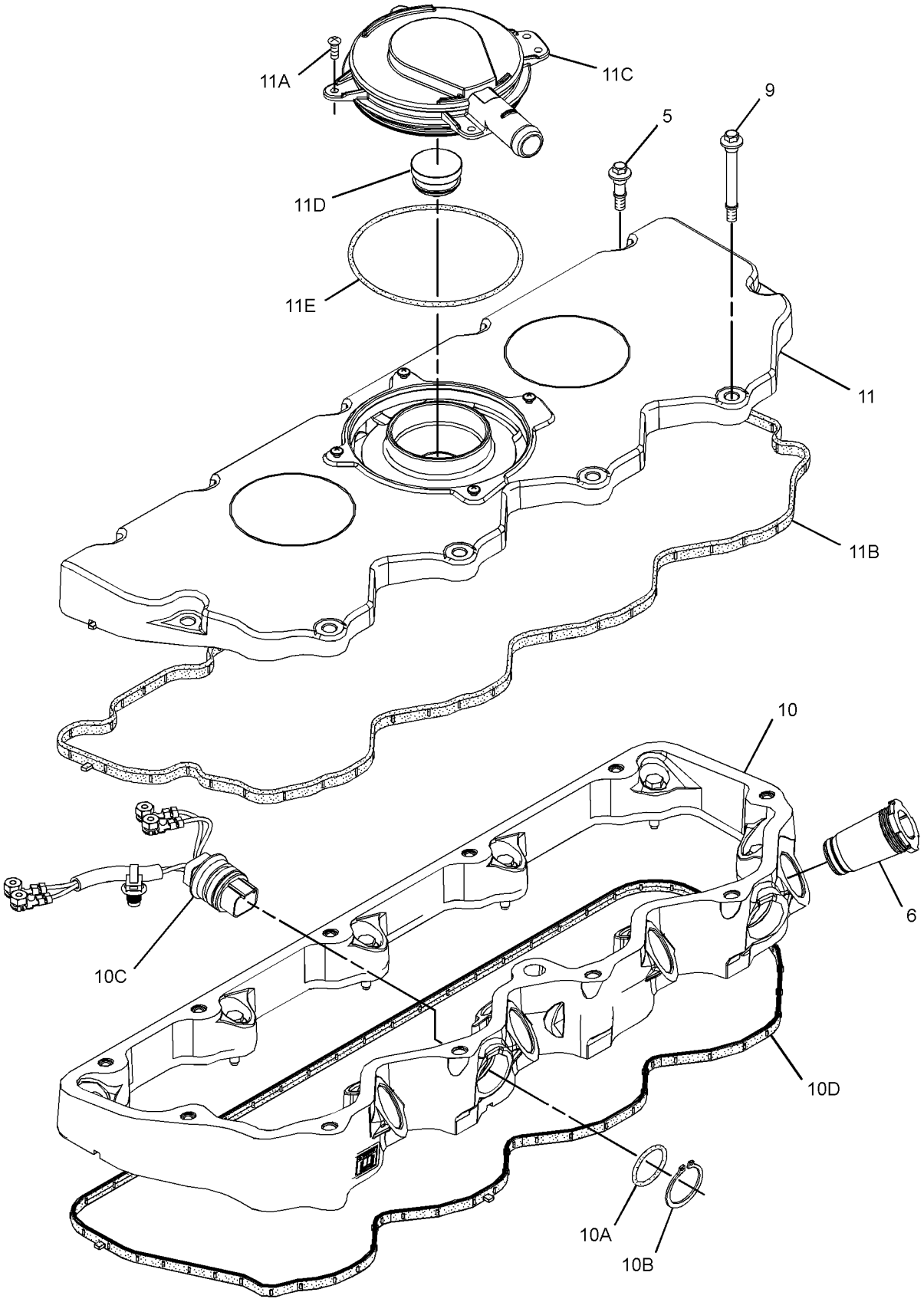

GRAPHIC #1 g01344724

306-2316 **COVER GP-CYLINDER HEAD (**contd.**)** **i07193372**

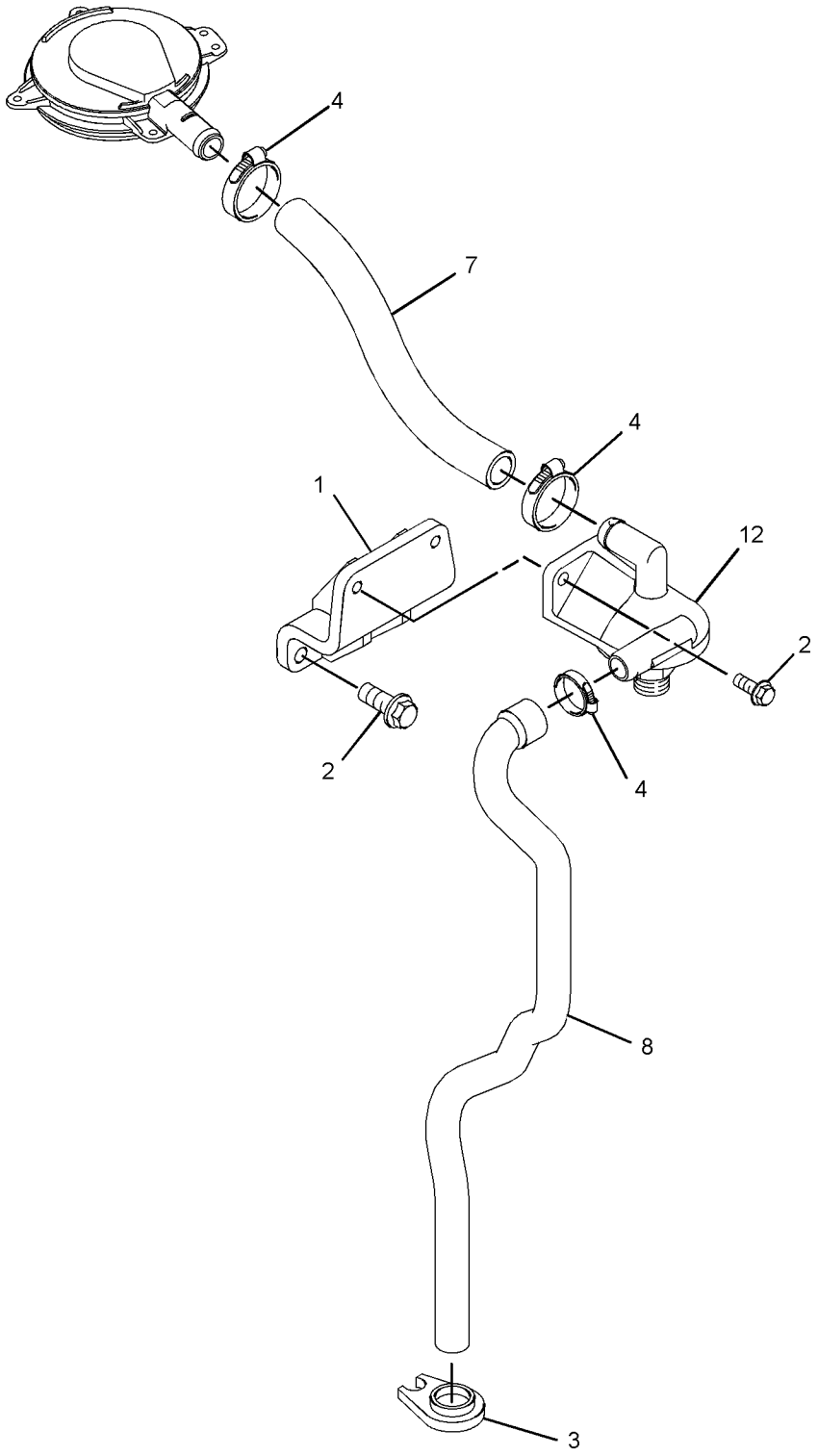

GRAPHIC #2 <END> g06217404

306-2316 COVER GP-CYLINDER HEAD

TYPE 2

SMCS-1100 **i07187586**

NOTE	REF NO	GRAPHIC REF	PART NUMBER	QTY	PART NAME 1 2 3 4 5 6 (PRODUCT LEVEL)	SEE PAGE
	1	2	**339-8775**	1	BRACKET	
M	2	2	**6I-0217**	4	BOLT (M8X1.25X20-MM)	
	3	2	**7C-1281**	1	BRACKET	
	4	2	**032-9020**	3	CLIP	
	5	1	**277-5031**	7	BOLT-SPECIAL	
	6	1	**517-8243**	4	SLEEVE-INJECTOR	
	7	2	**420-0609**	1	HOSE-BREATHER	
	8	2	**280-2023**	1	HOSE	
	9	1	**298-4550**	4	BOLT-SPECIAL	
	10	1	**298-4551**	1	BASE GP-VALVE COVER & INJ HARN	
	10A	1	**277-5064**	2	SEAL-O-RING	
	10B	1	**277-5065**	2	CLIP	
	10C	1	**285-1973**	2	HARNESS AS-ENGINE (FUEL INJECTION)	
		1	**113-4630**	1	RECEPTACLE AS-CONNECTOR (4-PIN)	
		1	**9X-3401**	4	PIN-CONNECTOR (16-GA TO 18-GA)	
					—OR—	
		1	**126-1767**	4	PIN-CONNECTOR (14-GA TO 16-GA)	
		1	**3E-3377**	1	WEDGE-RECEPTACLE LOCK (4-PIN)	
		1	**316-9351**	1	MOUNTING-CABLE TIE	
	10D	1	**298-4552**	1	GASKET	
	11	1	**304-8766**	1	COVER GP-VALVE MECHANISM	
	11A	1	**318-1726**	4	BOLT	
	11B	1	**298-4546**	1	GASKET-VALVE COVER	
	11D	1	**298-4548**	1	SEPARATOR-OIL	
	11E	1	**298-4549**	1	SEAL-O-RING	
	12	2	**306-2333**	1	BASE GP-BREATHER (CRANKCASE)	

M - METRIC PART

306-2316 **COVER GP-CYLINDER HEAD (**contd.**)** **i07187586**

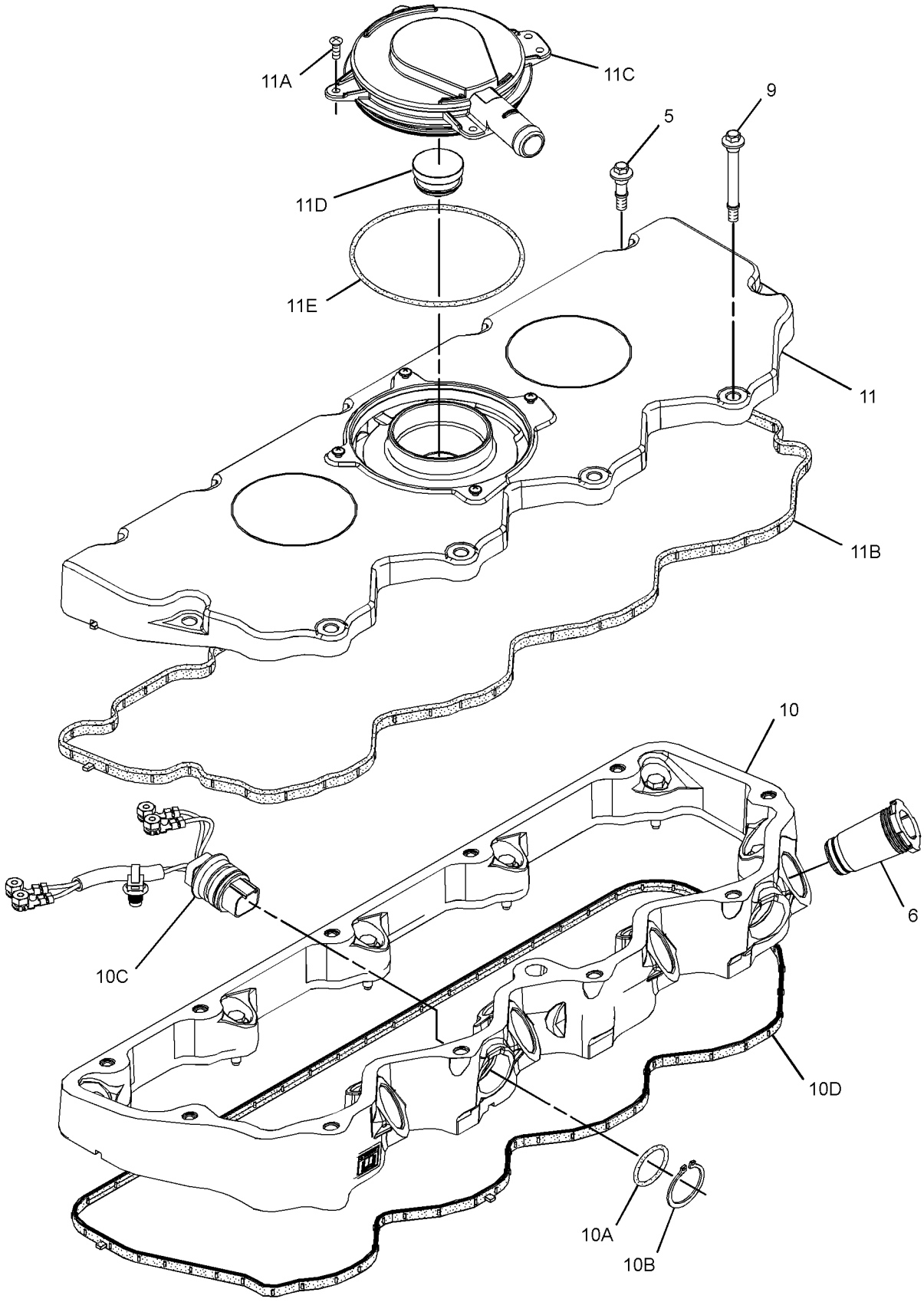

GRAPHIC #1 g01344724

306-2316 **COVER GP-CYLINDER HEAD (**contd.**)** **i07187586**

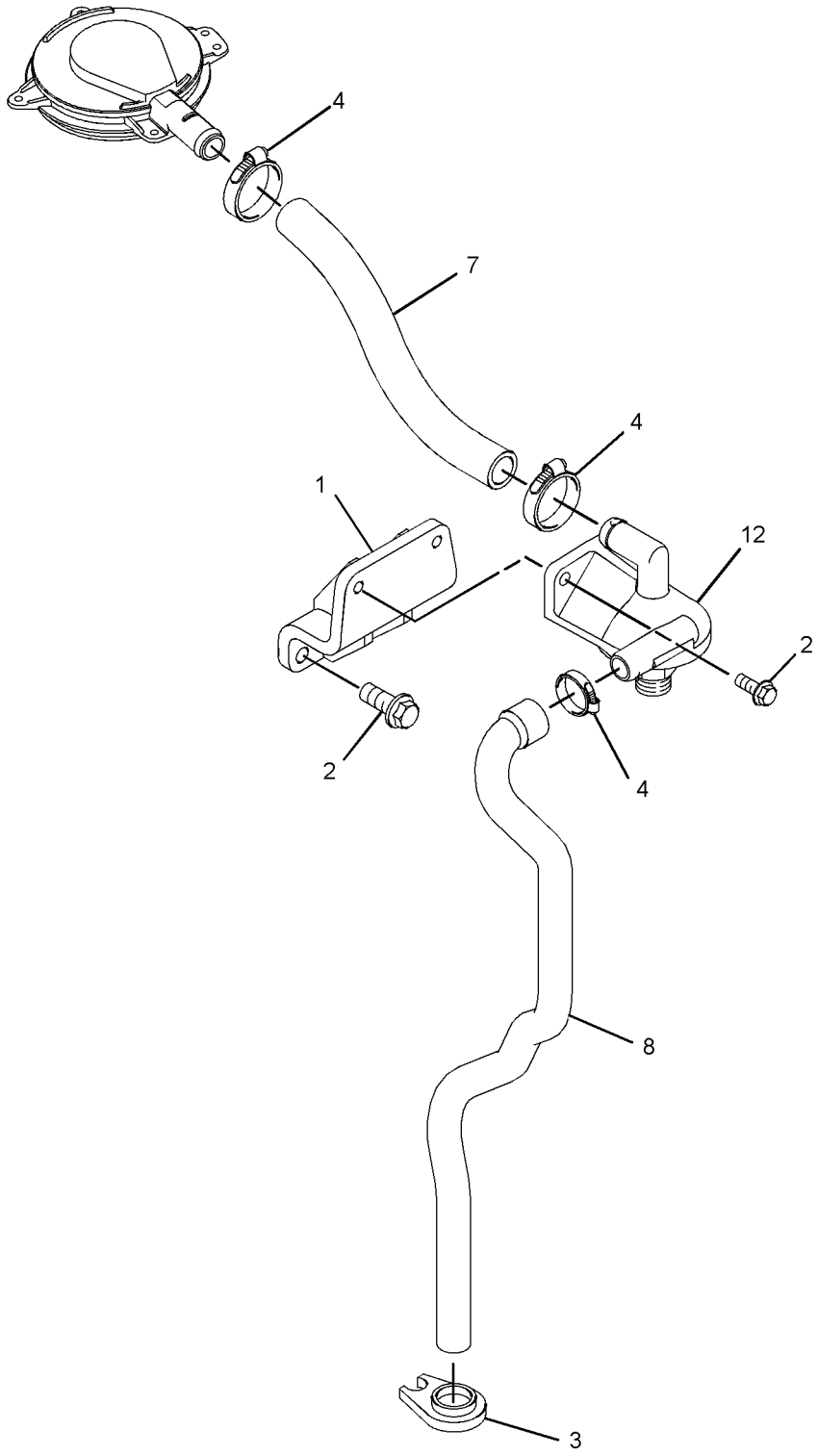

GRAPHIC #2 <END> g06217404

298-5111 COVER GP-ENGINE

PART OF 435-1699 ENGINE AR, 435-1692 ENGINE AR-COMPLETE, 435-1685, 437-5409, 540-0570, 540-1155 ENGINE AR-PRIMARY

SMCS-795C **i03334769**

NOTE	REF NO	GRAPHIC REF	PART NUMBER	QTY	PART NAME 1 2 3 4 5 6 (PRODUCT LEVEL)	SEE PAGE
M	1	1	**6I-0646**	1	BOLT (M10X1.5X14-MM)	
M	2	1	**100-4830**	1	BOLT (M10X1.5X20-MM)	
M	3	1	**111-8222**	5	BOLT (M8X16-MM)	
	4	1	**329-7854**	1	PLATE AS	
	4A	1	**329-7856**	1	SEAL-O-RING	
	5	1	**214-3203**	1	WASHER (SEALING)	

M - METRIC PART

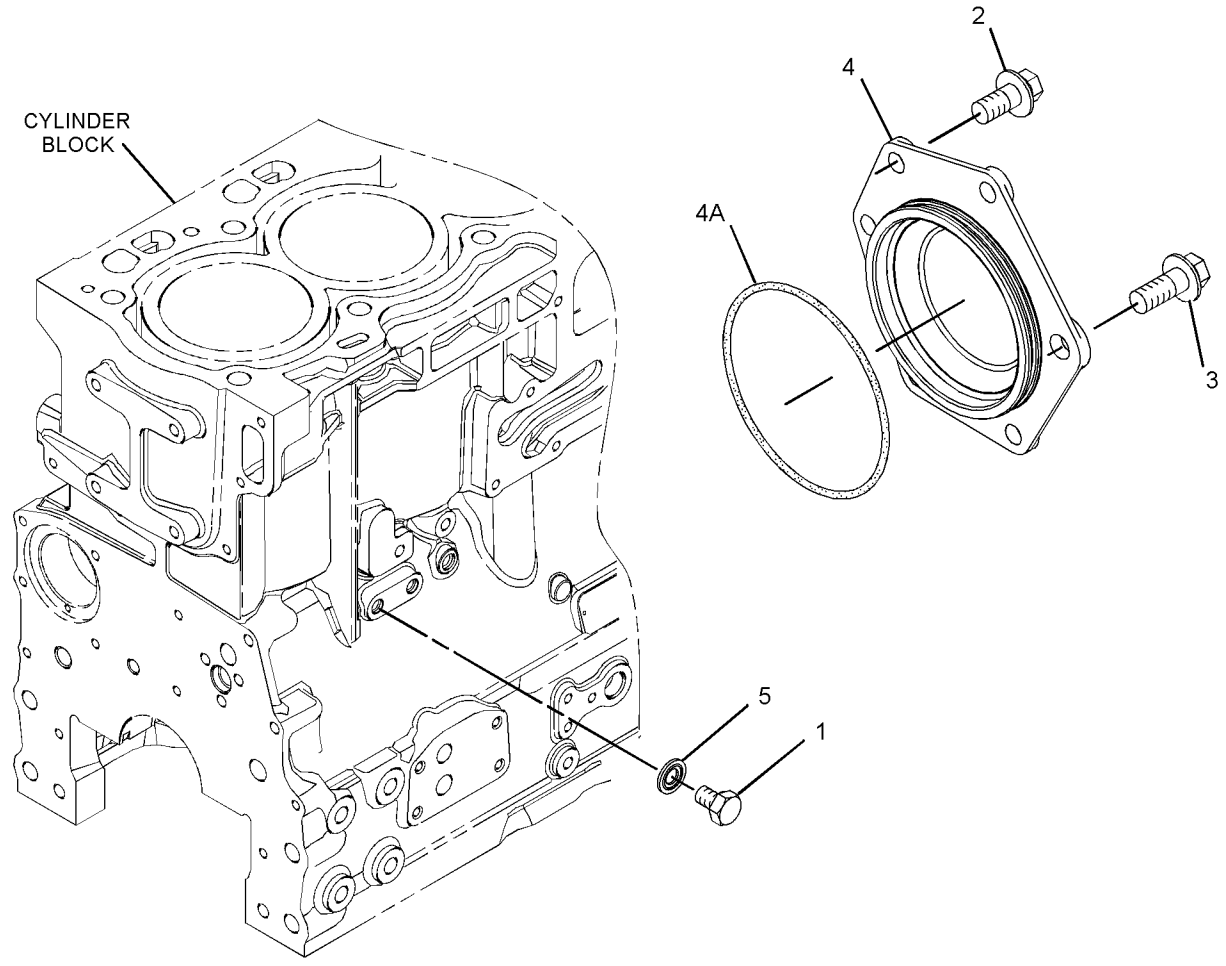

GRAPHIC #1 <END> g01304566

311-8535 COVER GP-ENGINE

SMCS-795C **i02810909**

NOTE	REF NO	GRAPHIC REF	PART NUMBER	QTY	PART NAME 1 2 3 4 5 6 (PRODUCT LEVEL)	SEE PAGE
	1	1	**311-8546**	1	COVER AS	
	2	1	**6I-1201**	1	SEAL-O-RING	
M	3	1	**6I-0260**	2	BOLT (M8X1.25X25-MM)	

M - METRIC PART

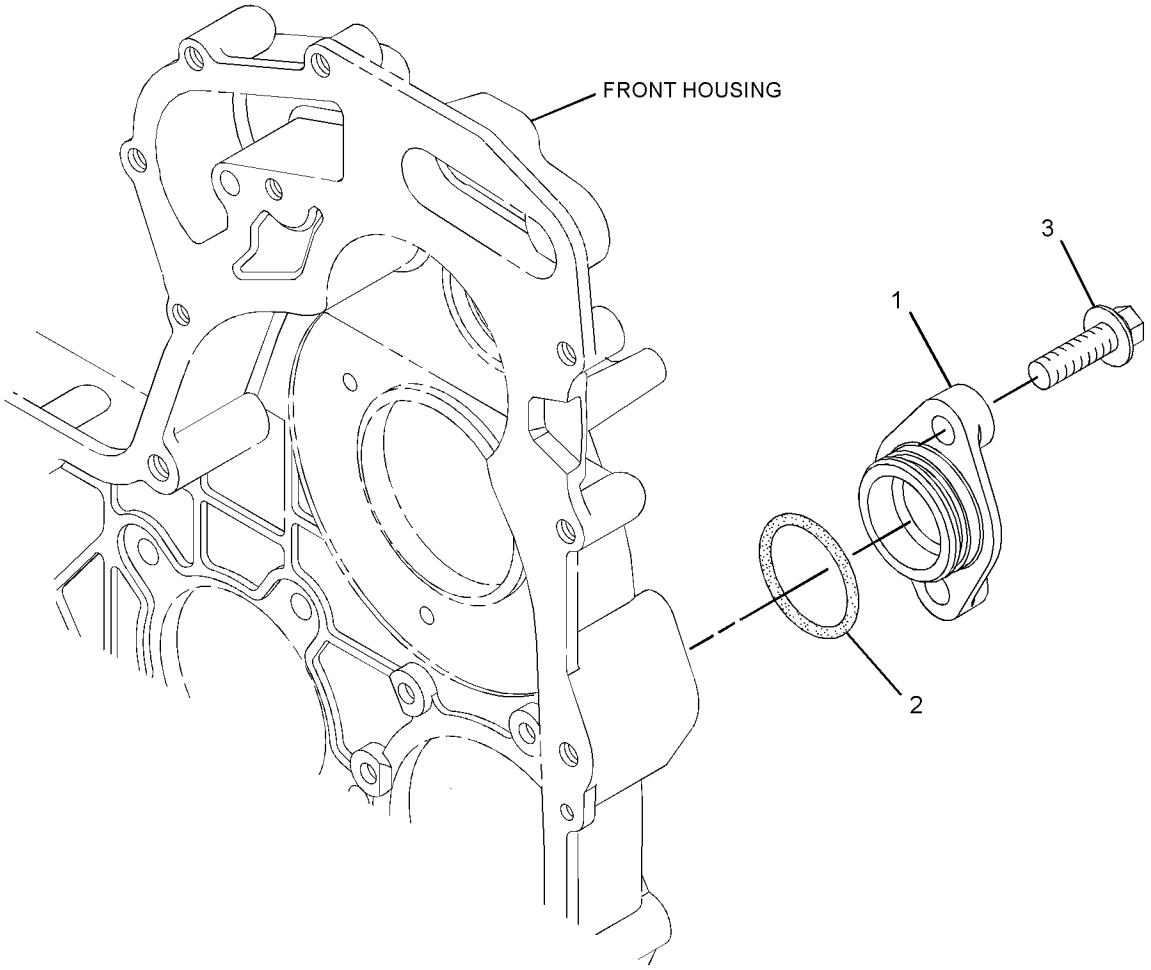

GRAPHIC #1 <END> g01430082

322-3059 COVER GP-FRONT HOUSING—POWER TAKE-OFF

SMCS-1151, 1166 **i03274795**

NOTE	REF NO	GRAPHIC REF	PART NUMBER	QTY	PART NAME 1 2 3 4 5 6 (PRODUCT LEVEL)	SEE PAGE
M	1	1	**6I-0646**	1	BOLT (M10X1.5X14-MM)	
M	2	1	**100-4830**	3	BOLT (M10X1.5X20-MM)	
M	3	1	**111-8222**	5	BOLT (M8X16-MM)	
	4	1	**198-8262**	1	COVER AS	
	4A	1	**198-8263**	1	SEAL-O-RING	
	5	1	**329-7854**	1	PLATE AS	
	5A	1	**329-7856**	1	SEAL-O-RING	
	6	1	**214-3203**	1	WASHER (SEALING)	

M - METRIC PART

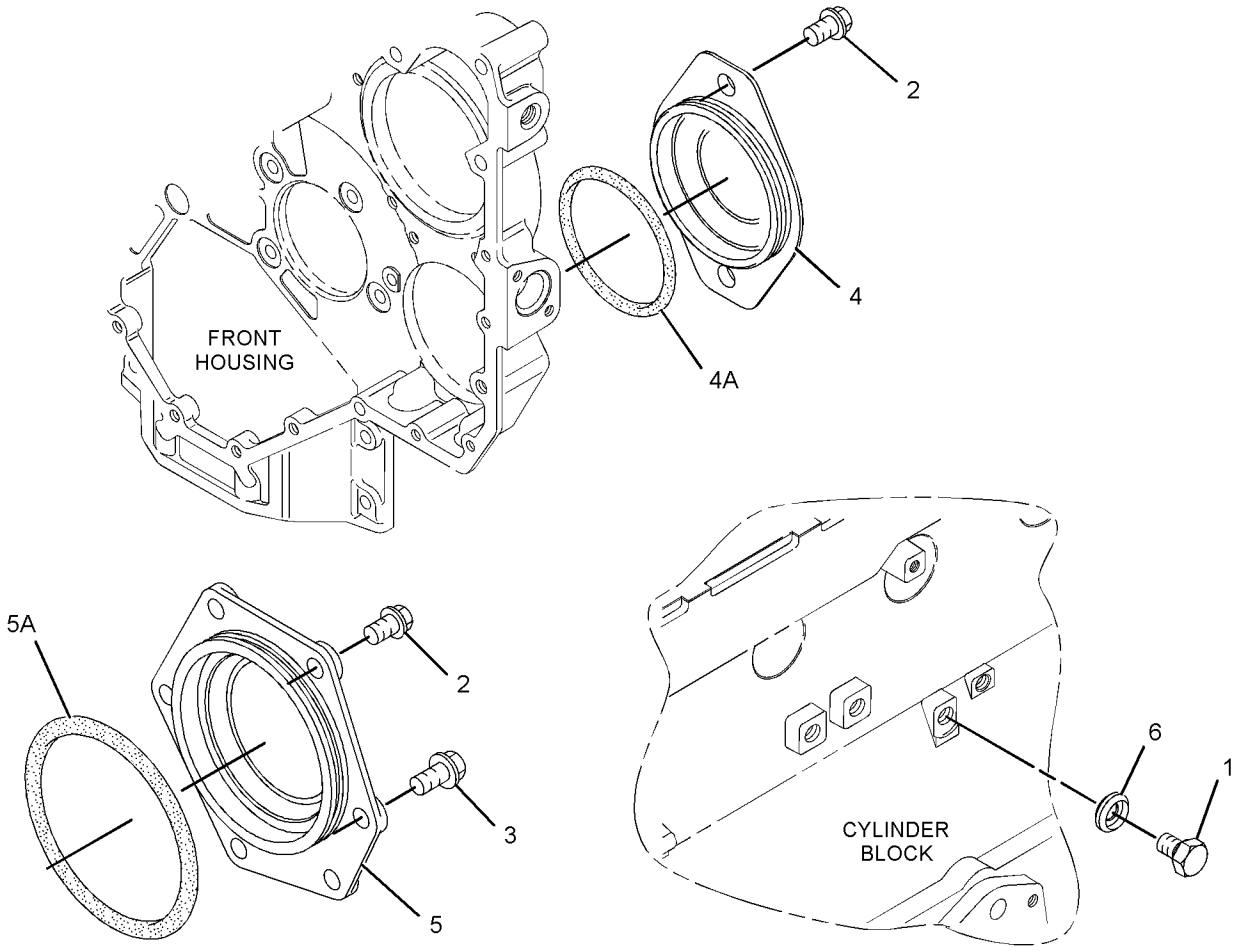

GRAPHIC #1 <END> g01270747

298-5097 COVER GP-VALVE MECHANISM

S/N: 4441-839

PART OF 435-1692 ENGINE AR-COMPLETE, 435-1685 ENGINE AR-PRIMARY

SMCS-1107 **i03626473**

NOTE	REF NO	GRAPHIC REF	PART NUMBER	QTY	PART NAME 1 2 3 4 5 6 (PRODUCT LEVEL)	SEE PAGE
	1	1	**298-4545**	1	COVER GP-VALVE MECHANISM	
	2	1	**298-4551**	1	BASE GP-VALVE COVER & INJ HARN	
	3	1	**298-4546**	1	GASKET-VALVE COVER	
	4	1	**298-4547**	1	BREATHER (CRANKCASE)	
	5	1	**295-1042**	4	SCREW-TAPPING	
	6	1	**298-4548**	1	SEPARATOR-OIL	
	7	1	**298-4549**	1	SEAL-O-RING	
	8	1	**136-3608**	1	CAP AS (ENGINE OIL FILLER)	
	8A	1	**124-0506**	1	SEAL	
	9	1	**298-4552**	1	GASKET (VALVE MECHANISM BASE)	
	10	1	**285-1973**	2	HARNESS AS-ENGINE (FUEL INJECTION)	
					(EACH HARNESS AS INCLUDES)	
		1	**3E-3377**	1	WEDGE-RECEPTACLE LOCK (4-PIN)	
		1	**113-4630**	1	RECEPTACLE AS-CONNECTOR (4-PIN)	
		1	**180-9339**	4	PIN-CONNECTOR (14-GA TO 18-GA)	
		1	**316-9351**	1	MOUNTING-CABLE TIE	
	11	1	**277-5031**	7	BOLT-SPECIAL	
	12	1	**298-4550**	4	BOLT-SPECIAL	
	13	1	**277-5064**	2	SEAL-O-RING	
	14	1	**277-5065**	2	CLIP	
	15	1	**277-5067**	4	SLEEVE	
	16	2	**198-8645**	1	HOSE (CRANKCASE BREATHER)	
	17	2	**162-1565**	1	SPRING (CRANKCASE BREATHER HOSE)	
	18	2	**5D-1026**	1	CLAMP-BAND	
	19	2	**7C-1281**	1	BRACKET	
	20	2	**277-5094**	1	COVER AS	
	20A	2	**277-5096**	1	SEAL-O-RING	
M	21	2	**6I-0217**	1	BOLT (M8X1.25X20-MM)	

M - METRIC PART

298-5097 **COVER GP-VALVE MECHANISM (**contd.**)** **i03626473**

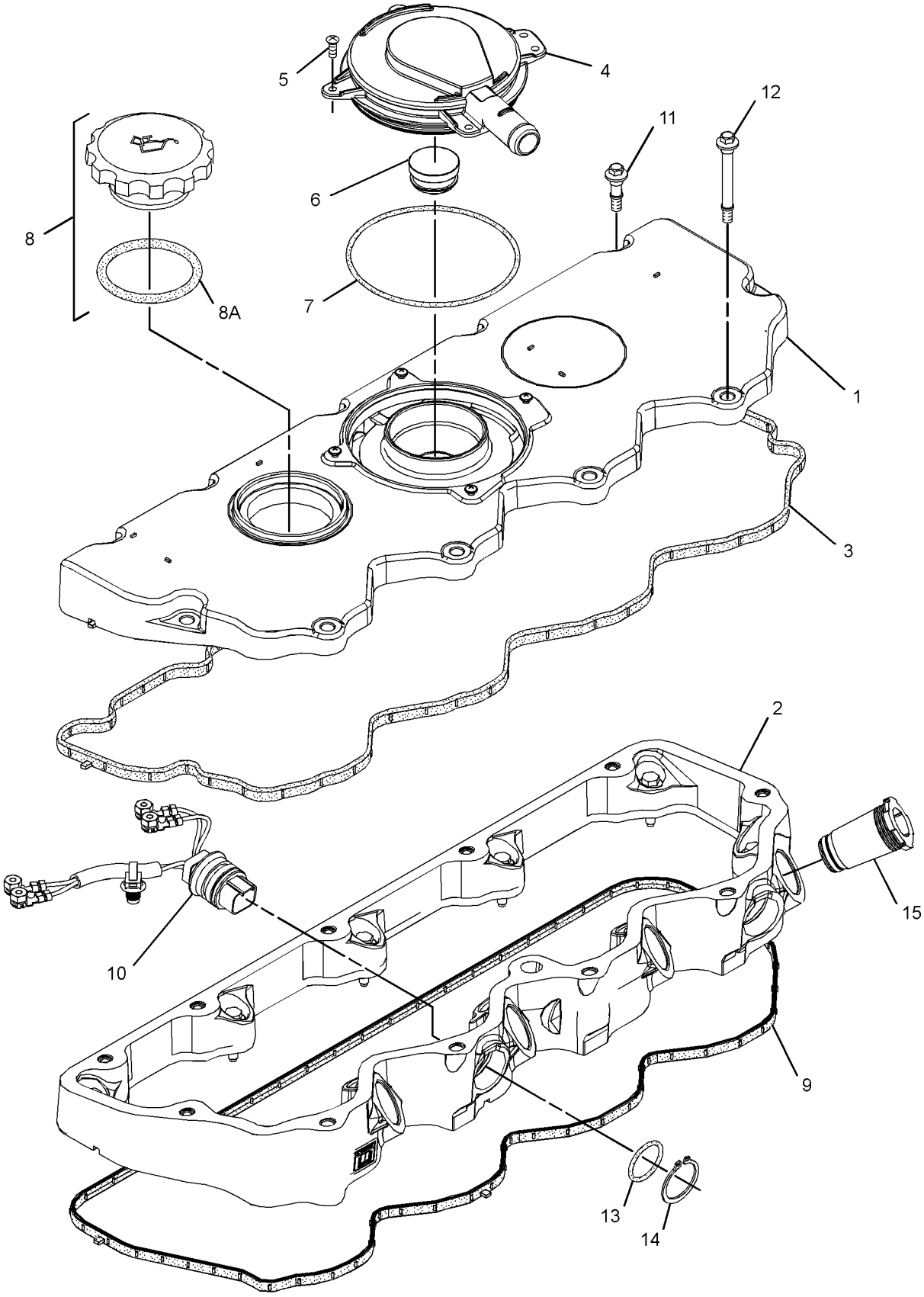

GRAPHIC #1 g01308138

298-5097 **COVER GP-VALVE MECHANISM (**contd.**)** **i03626473**

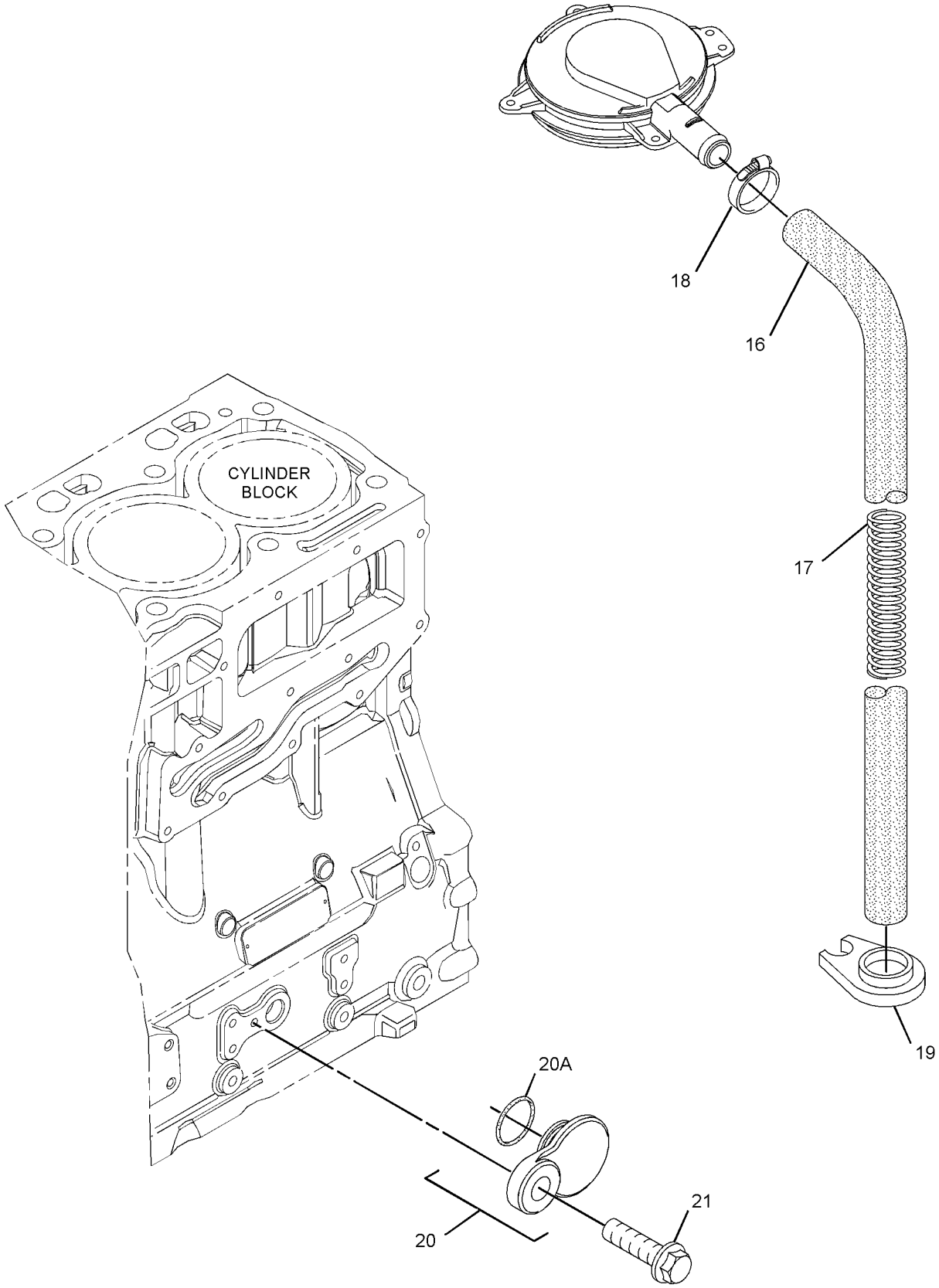

GRAPHIC #2 <END> g01308140

298-5097 COVER GP-VALVE MECHANISM

PART OF 435-1692 ENGINE AR-COMPLETE, 435-1685, 540-0570 ENGINE AR-PRIMARY

SMCS-1107 **i06901825**

NOTE	REF NO	GRAPHIC REF	PART NUMBER	QTY	PART NAME 1 2 3 4 5 6 (PRODUCT LEVEL)	SEE PAGE
	1	2	**5D-1026**	1	CLAMP-BAND	
	2	2	**7C-1281**	1	BRACKET	
	3	2	**032-9020**	1	CLIP	
	4	2	**162-1565**	1	SPRING (CRANKCASE BREATHER HOSE)	
	5	2	**198-8645**	1	HOSE (CRANKCASE BREATHER)	
	6	2	**217-9039**	1	STRAP-CABLE	
	7	1	**277-5031**	7	BOLT-SPECIAL	
	8	2	**517-8243**	4	SLEEVE-INJECTOR	
	9	1	**298-4545**	1	COVER GP-VALVE MECHANISM	
	9A	1	**298-4548**	1	SEPARATOR-OIL	
	9B	1	**136-3608**	1	CAP AS (ENGINE OIL FILLER)	
	9C	1	**124-0506**	1	SEAL	
	9D	1	**298-4546**	1	GASKET-VALVE COVER	
	10	1	**298-4550**	4	BOLT-SPECIAL	
	11	2	**298-4551**	1	BASE GP-VALVE COVER & INJ HARN	
	11A	2	**277-5064**	2	SEAL-O-RING	
	11B	2	**277-5065**	2	CLIP	
	11C	2	**298-4552**	1	GASKET	
	11D	2	**285-1973**	2	HARNESS AS-ENGINE (FUEL INJECTION)	
					(EACH INCLUDES)	
		2	**316-9351**	1	MOUNTING-CABLE TIE	
		2	**9X-3401**	4	PIN-CONNECTOR (16-GA TO 18-GA)	
					—OR—	
		2	**126-1767**	4	PIN-CONNECTOR (14-GA TO 16-GA)	
		2	**113-4630**	1	RECEPTACLE AS-CONNECTOR (4-PIN)	
		2	**3E-3377**	1	WEDGE-RECEPTACLE LOCK (4-PIN)	

298-5097 **COVER GP-VALVE MECHANISM (**contd.**)** **i06901825**

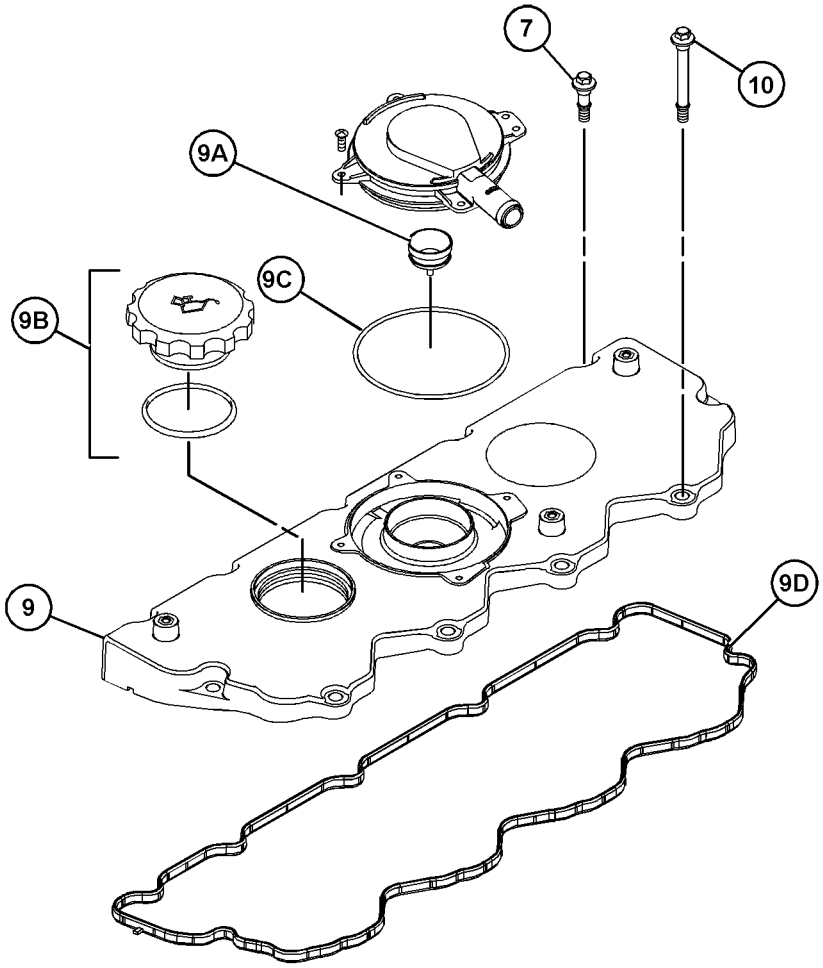

GRAPHIC #1 g06161918

298-5097 **COVER GP-VALVE MECHANISM (**contd.**)** **i06901825**

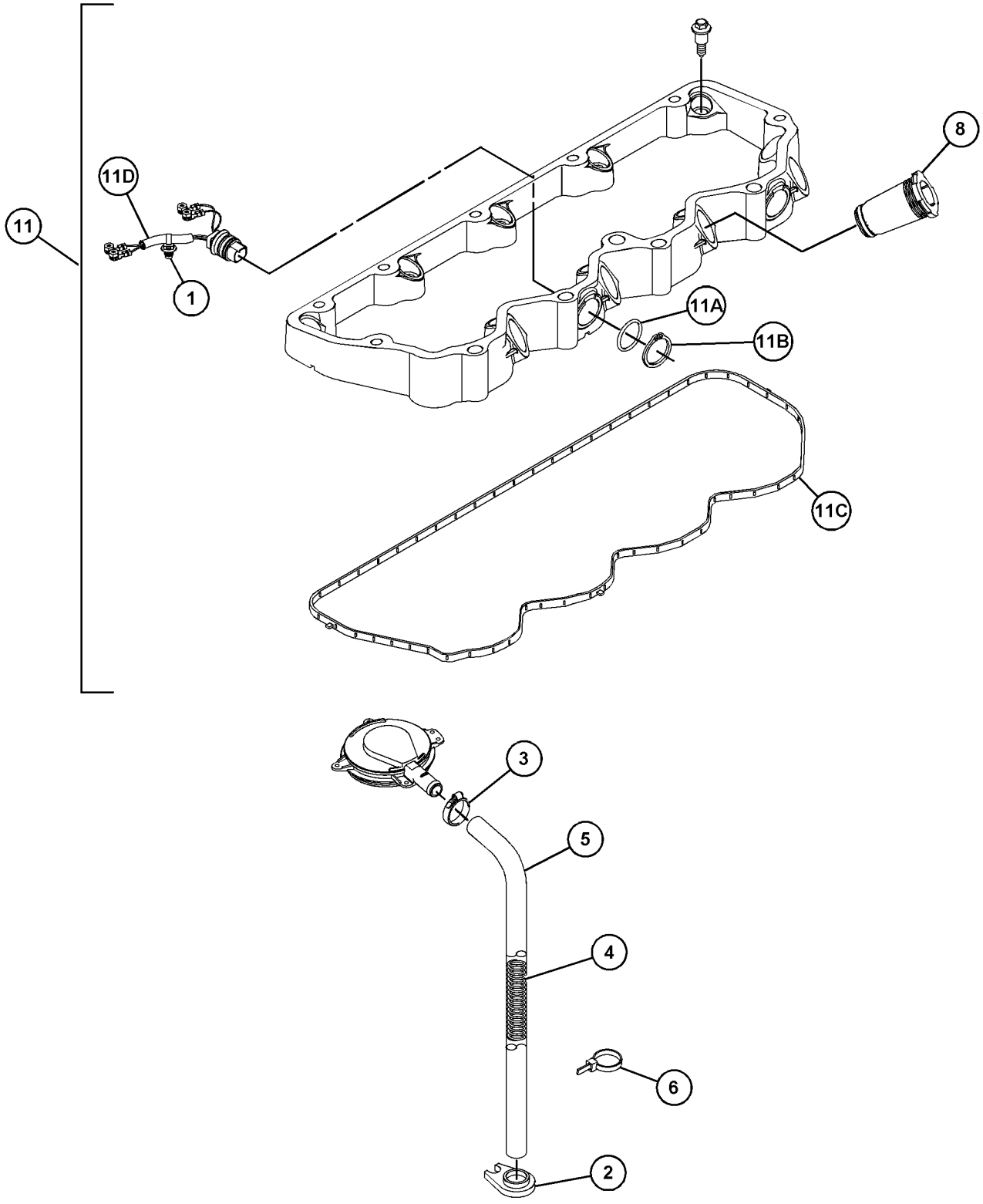

GRAPHIC #2 <END> g06161919

301-8240 COVER GP-VALVE MECHANISM

S/N: 4441-839

PART OF 437-5409 ENGINE AR-PRIMARY

SMCS-1107 **i03729660**

NOTE	REF NO	GRAPHIC REF	PART NUMBER	QTY	PART NAME 1 2 3 4 5 6 (PRODUCT LEVEL)	SEE PAGE
	1	1	**301-8253**	1	COVER GP-VALVE MECHANISM	
	1A	1	**298-4546**	1	GASKET-VALVE COVER	
	1B	1	**298-4547**	1	BREATHER (CRANKCASE)	
	1C	1	**295-1042**	4	SCREW-TAPPING	
	1D	1	**298-4548**	1	SEPARATOR-OIL	
	1E	1	**298-4549**	1	SEAL-O-RING	
	1F	1	**136-3608**	1	CAP AS (ENGINE OIL FILLER)	
	1G	1	**124-0506**	1	SEAL	
	2	1	**277-5031**	7	BOLT-SPECIAL	
	3	1	**298-4550**	4	BOLT-SPECIAL	
	4	1	**298-4551**	1	BASE GP-VALVE COVER & INJ HARN	
	4A	1	**298-4552**	1	GASKET (VALVE MECHANISM BASE)	
	4B	1	**285-1973**	2	HARNESS AS-ENGINE (FUEL INJECTION)	
	4C	1	**277-5064**	2	SEAL-O-RING	
	4D	1	**277-5065**	2	CLIP	
	5	1	**277-5067**	4	SLEEVE	
	6	2	**198-8645**	1	HOSE (CRANKCASE BREATHER)	
	7	2	**162-1565**	1	SPRING (CRANKCASE BREATHER HOSE)	
	8	2	**5D-1026**	1	CLAMP-BAND	
	9	2	**7C-1281**	1	BRACKET	
	10	2	**277-5094**	1	COVER AS	
	10A	2	**277-5096**	1	SEAL-O-RING	
M	11	2	**6I-0217**	1	BOLT (M8X1.25X20-MM)	

M - METRIC PART

301-8240 **COVER GP-VALVE MECHANISM (**contd.**)** **i03729660**

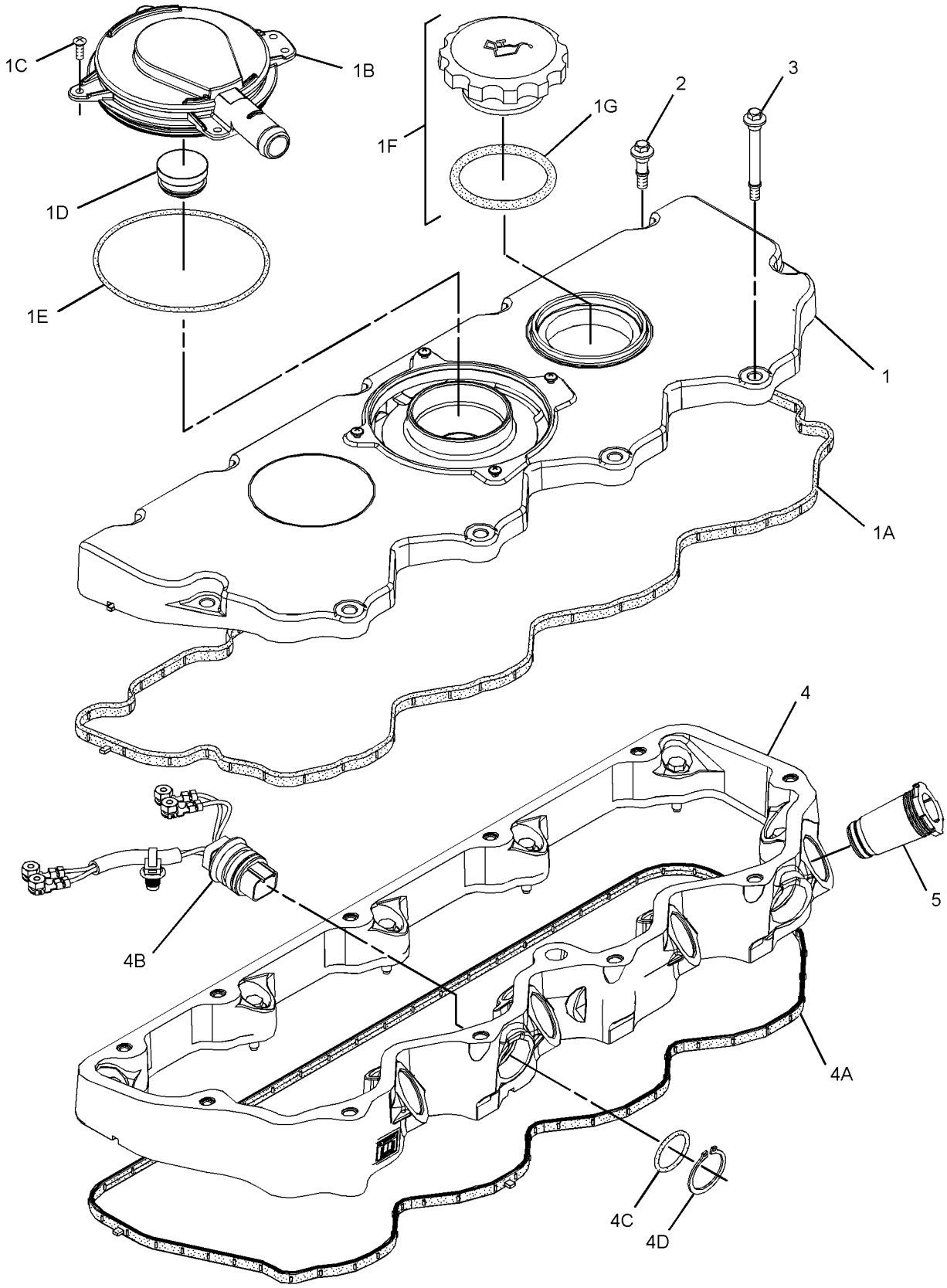

GRAPHIC #1 g01367893

301-8240 **COVER GP-VALVE MECHANISM (**contd.**)** **i03729660**

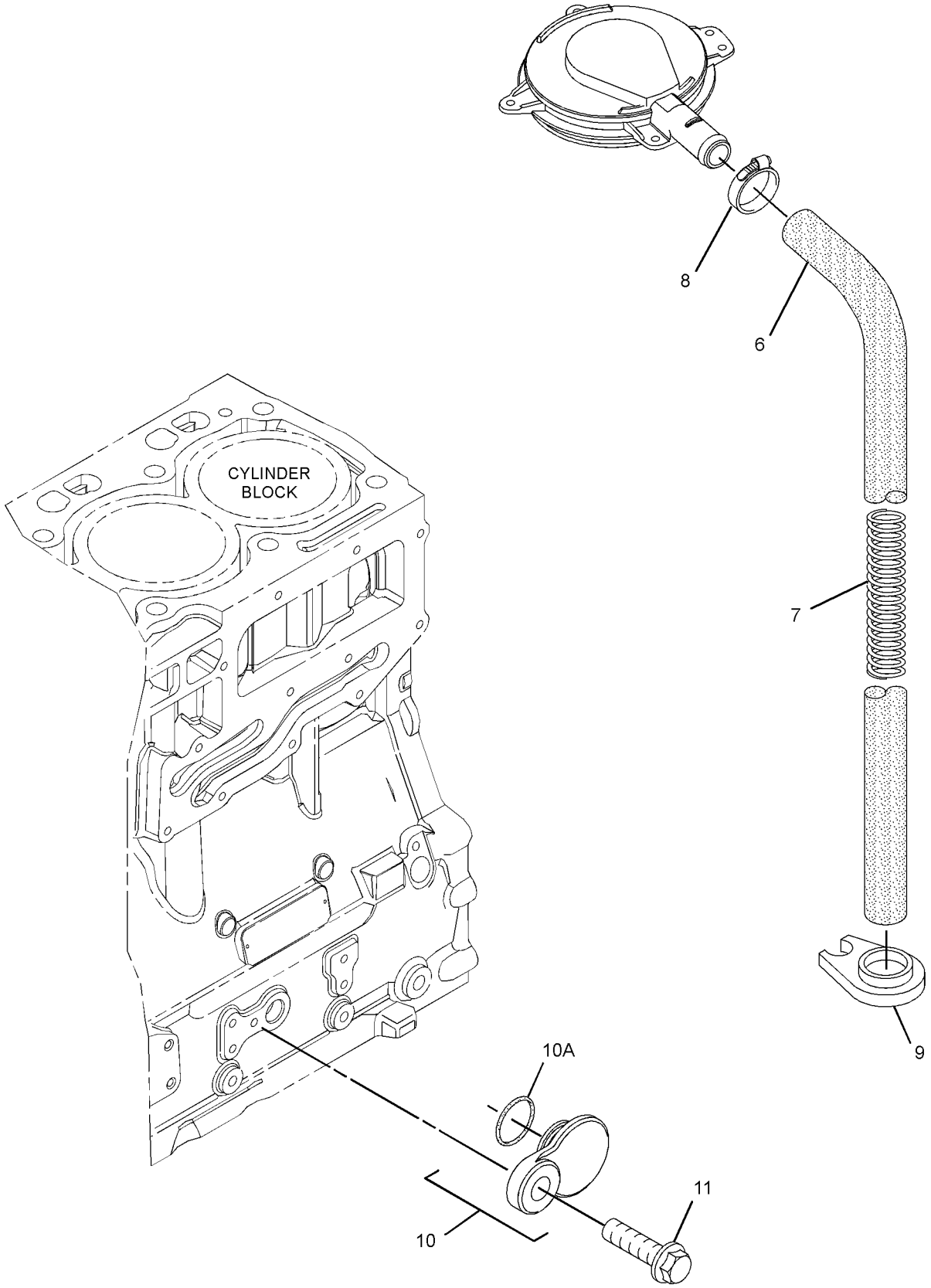

GRAPHIC #2 <END> g01367895

301-8240 COVER GP-VALVE MECHANISM

PART OF 435-1699 ENGINE AR, 437-5409, 522-8303, 540-1155 ENGINE AR-PRIMARY

SMCS-1107 **i06859449**

NOTE	REF NO	GRAPHIC REF	PART NUMBER	QTY	PART NAME 1 2 3 4 5 6 (PRODUCT LEVEL)	SEE PAGE
	1	1	**301-8253**	1	COVER GP-VALVE MECHANISM	
	1A	1	**298-4546**	1	GASKET-VALVE COVER (CYLINDER HEAD)	
	1B	2	**298-4548**	1	SEPARATOR-OIL	
	1C	1	**136-3608**	1	CAP AS (ENGINE OIL FILLER)	
	1D	2	**124-0506**	1	SEAL	
	2	1	**277-5031**	7	BOLT-SPECIAL	
	3	1	**298-4550**	4	BOLT-SPECIAL	
	4	1	**298-4551**	1	BASE GP-VALVE COVER & INJ HARN	
	4A	1	**298-4552**	1	GASKET (VALVE MECHANISM BASE)	
	4B	1	**285-1973**	2	HARNESS AS-ENGINE (FUEL INJECTION)	
					(EACH INCLUDES)	
		1	**316-9351**	1	MOUNTING-CABLE TIE	
		1	**3E-3377**	1	WEDGE-RECEPTACLE LOCK (4-PIN)	
		1	**9X-3401**	4	PIN-CONNECTOR (16-GA TO 18-GA)	
					—OR—	
		1	**126-1767**	4	PIN-CONNECTOR (14-GA TO 16-GA)	
		1	**113-4630**	1	RECEPTACLE AS-CONNECTOR (4-PIN)	
	4C	1	**277-5064**	2	SEAL-O-RING	
	4D	1	**277-5065**	2	CLIP	
	5	1	**517-8243**	4	SLEEVE-INJECTOR	
	6	2	**198-8645**	1	HOSE (CRANKCASE BREATHER)	
	7	2	**162-1565**	1	SPRING (CRANKCASE BREATHER HOSE)	
	8	1	**5D-1026**	1	CLAMP-BAND	
	9	2	**7C-1281**	1	BRACKET	
	10	2	**217-9039**	1	STRAP-CABLE	
	11	2	**032-9020**	1	CLIP	

301-8240 **COVER GP-VALVE MECHANISM (**contd.**)** **i06859449**

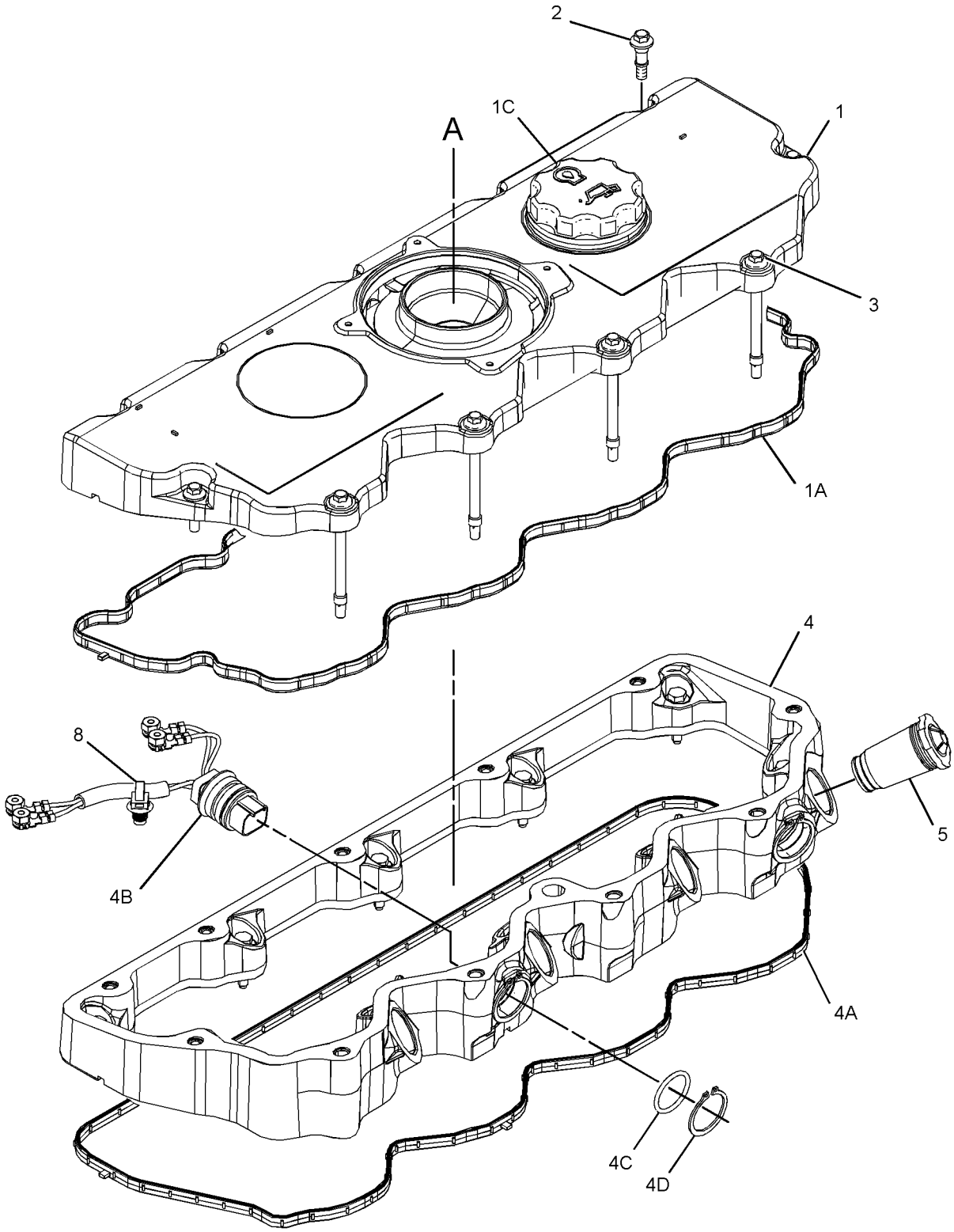

GRAPHIC #1 g06150747

301-8240 **COVER GP-VALVE MECHANISM (**contd.**)** **i06859449**

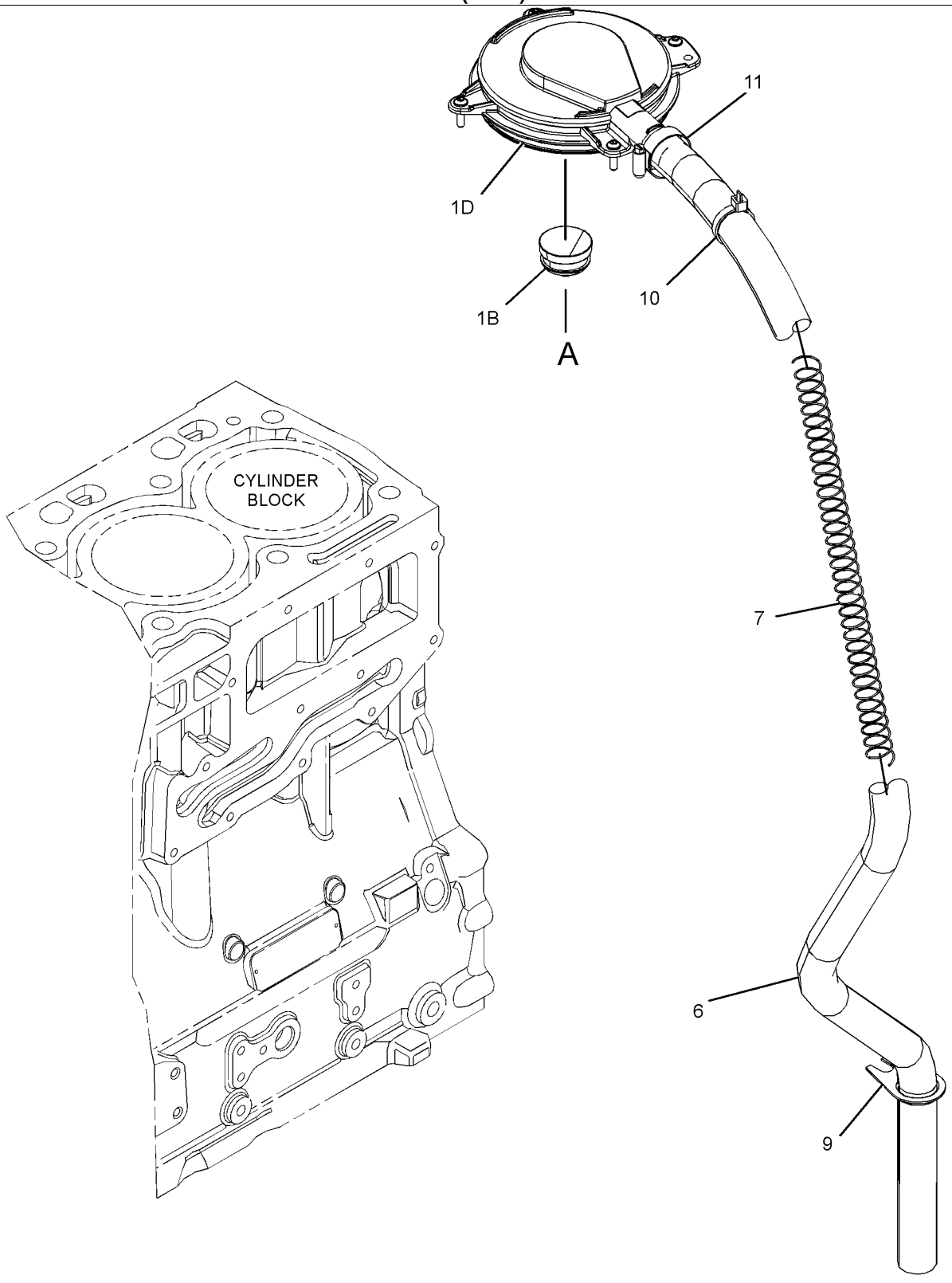

GRAPHIC #2 <END> g06126401

303-5772 COVER GP-VALVE MECHANISM

S/N: 4441-839

SMCS-1107 **i03312360**

NOTE	REF NO	GRAPHIC REF	PART NUMBER	QTY	PART NAME 1 2 3 4 5 6 (PRODUCT LEVEL)	SEE PAGE
M	1	1	**6I-0572**	1	BOLT (M8X1.25X20-MM)	
	2	1	**7C-1281**	1	BRACKET	
M	3	1	**100-4841**	3	BOLT (M6X1X10-MM)	
	4	1	**5D-1026**	1	CLAMP-BAND	
	5	1	**162-1565**	1	SPRING (CRANKCASE BREATHER HOSE)	
	6	1	**198-8645**	1	HOSE (CRANKCASE BREATHER)	
	7	1	**277-5031**	7	BOLT-SPECIAL	
	8	1	**277-5067**	4	SLEEVE	
	9	1	**277-5094**	1	COVER AS	
	9A	1	**277-5096**	1	SEAL-O-RING	
	10	1	**298-4550**	4	BOLT-SPECIAL	
	11	1	**298-4551**	1	BASE GP-VALVE COVER & INJ HARN	
	11A	1	**277-5064**	2	SEAL-O-RING	
	11B	1	**277-5065**	2	CLIP	
	11C	1	**285-1973**	2	HARNESS AS-ENGINE (FUEL INJECTION)	
	11D	1	**298-4552**	1	GASKET (VALVE MECHANISM BASE)	
	12	1	**303-5781**	1	COVER GP-VALVE MECHANISM	
	12A	1	**295-1042**	4	SCREW-TAPPING	
	12B	1	**298-4546**	1	GASKET-VALVE COVER	
	12C	1	**298-4547**	1	BREATHER (CRANKCASE)	
	12D	1	**298-4548**	1	SEPARATOR-OIL	
	12E	1	**298-4549**	1	SEAL-O-RING	
	13	1	**303-5782**	1	SHIELD-HEAT	

M - METRIC PART

303-5772 **COVER GP-VALVE MECHANISM (**contd.**)** **i03312360**

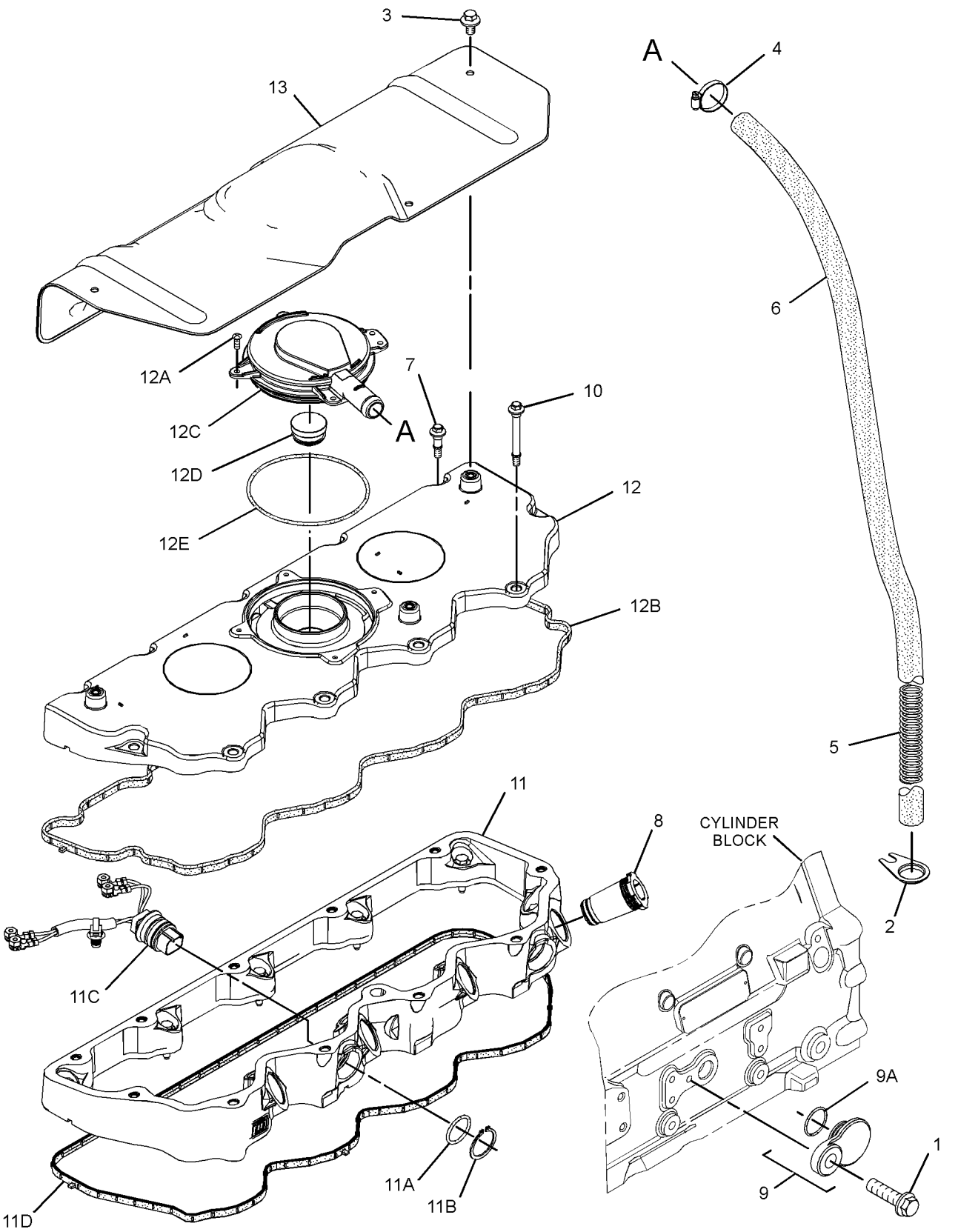

GRAPHIC #1 <END> g01341851

303-5772 COVER GP-VALVE MECHANISM

ALSO AN ATTACHMENT

SMCS-1107 **i06859455**

NOTE	REF NO	GRAPHIC REF	PART NUMBER	QTY	PART NAME 1 2 3 4 5 6 (PRODUCT LEVEL)	SEE PAGE
	1	1	**7C-1281**	1	BRACKET	
CM	3	1	**6I-0846**	3	BOLT (M6X1X14-MM)	
	5	1	**162-1565**	1	SPRING (CRANKCASE BREATHER HOSE)	
	6	1	**198-8645**	1	HOSE (CRANKCASE BREATHER)	
	7	1	**277-5031**	7	BOLT-SPECIAL	
	8	1	**517-8243**	4	SLEEVE-INJECTOR	
	10	1	**298-4550**	4	BOLT-SPECIAL	
	11	1	**298-4551**	1	BASE GP-VALVE COVER & INJ HARN	
	11A	1	**277-5064**	2	SEAL-O-RING	
	11B	1	**277-5065**	2	CLIP	
	11C	1	**285-1973**	2	HARNESS AS-ENGINE (FUEL INJECTION)	
					(EACH INCLUDES)	
		1	**316-9351**	1	MOUNTING-CABLE TIE	
		1	**3E-3377**	1	WEDGE-RECEPTACLE LOCK (4-PIN)	
		1	**9X-3401**	4	PIN-CONNECTOR (16-GA TO 18-GA)	
					—OR—	
		1	**126-1767**	4	PIN-CONNECTOR (14-GA TO 16-GA)	
		1	**113-4630**	1	RECEPTACLE AS-CONNECTOR (4-PIN)	
	11D	1	**298-4552**	1	GASKET (VALVE MECHANISM BASE)	
	12	1	**303-5781**	1	COVER GP-VALVE MECHANISM	
	12A	1	**298-4546**	1	GASKET-VALVE COVER	
	12B	1	**298-4548**	1	SEPARATOR-OIL	
C	13	1	**320-2360**	1	SHIELD-HEAT	
C	14	1	**320-2362**	1	WASHER	
C	15	1	**320-2361**	2	WASHER	
	16	1	**217-9039**	1	STRAP-CABLE	
	17	1	**032-9020**	1	CLIP	
F		1	**5D-1026**	1	CLAMP-BAND	

C - CHANGE FROM PREVIOUS TYPE
F - NOT SHOWN
M - METRIC PART

303-5772 **COVER GP-VALVE MECHANISM (**contd.**)** **i06859455**

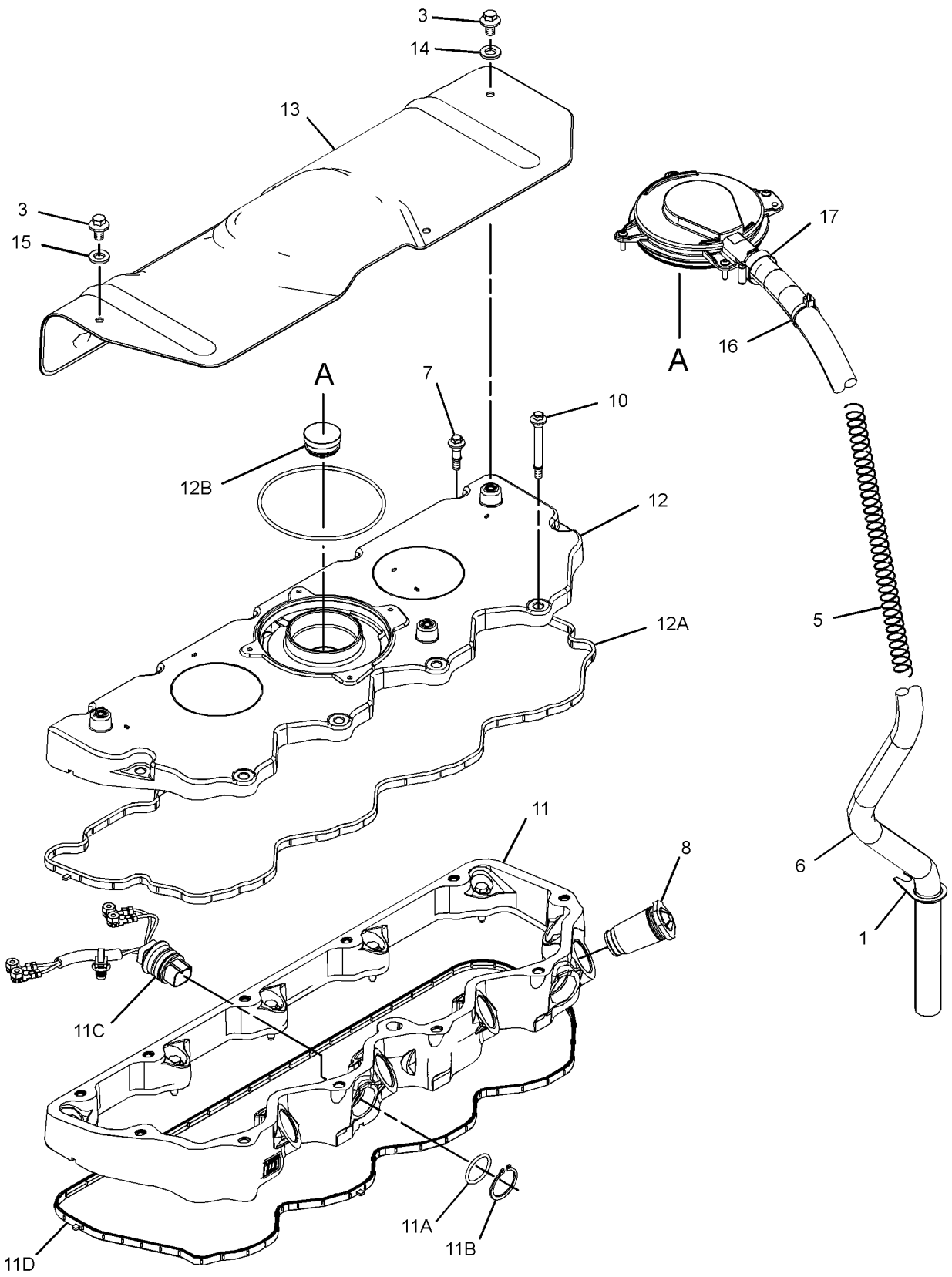

GRAPHIC #1 <END> g06198992

304-5574 COVER GP-VALVE MECHANISM

S/N: 4441-839

SMCS-1107 **i06898706**

NOTE	REF NO	GRAPHIC REF	PART NUMBER	QTY	PART NAME 1 2 3 4 5 6 (PRODUCT LEVEL)	SEE PAGE
	1	1	**301-8253**	1	COVER GP-VALVE MECHANISM	
	1A	1	**298-4546**	1	GASKET-VALVE COVER	
	1B	1	**136-3608**	1	CAP AS (ENGINE OIL FILLER)	
	1C	1	**124-0506**	1	SEAL	
		1	**298-4548**	1	SEPARATOR-OIL	
	2	1	**277-5031**	7	BOLT-SPECIAL	
	3	1	**298-4550**	4	BOLT-SPECIAL	
	4	1	**298-4551**	1	BASE GP-VALVE COVER & INJ HARN	
	4A	1	**298-4552**	1	GASKET (VALVE MECHANISM BASE)	
	4B	1	**285-1973**	2	HARNESS AS-ENGINE (FUEL INJECTION)	
					(EACH INCLUDES)	
		1	**3E-3377**	1	WEDGE-RECEPTACLE LOCK (4-PIN)	
		1	**113-4630**	1	RECEPTACLE AS-CONNECTOR (4-PIN)	
		1	**9X-3401**	4	PIN-CONNECTOR (16-GA TO 18-GA)	
					—OR—	
		1	**126-1767**	4	PIN-CONNECTOR (14-GA TO 16-GA)	
		1	**316-9351**	1	MOUNTING-CABLE TIE	
	4C	1	**277-5064**	2	SEAL-O-RING	
	4D	1	**277-5065**	2	CLIP	
	5	1	**277-5067**	4	SLEEVE	
	6	2	**198-9169**	1	HOSE	
	7	2	**162-1565**	1	SPRING (CRANKCASE BREATHER HOSE)	
	8	2	**5D-1026**	1	CLAMP-BAND	
	9	2	**7C-1281**	1	BRACKET	
	10	2	**277-5094**	1	COVER AS	
	10A	2	**277-5096**	1	SEAL-O-RING	
M	11	2	**6I-0217**	1	BOLT (M8X1.25X20-MM)	

M - METRIC PART

304-5574 **COVER GP-VALVE MECHANISM (**contd.**)** **i06898706**

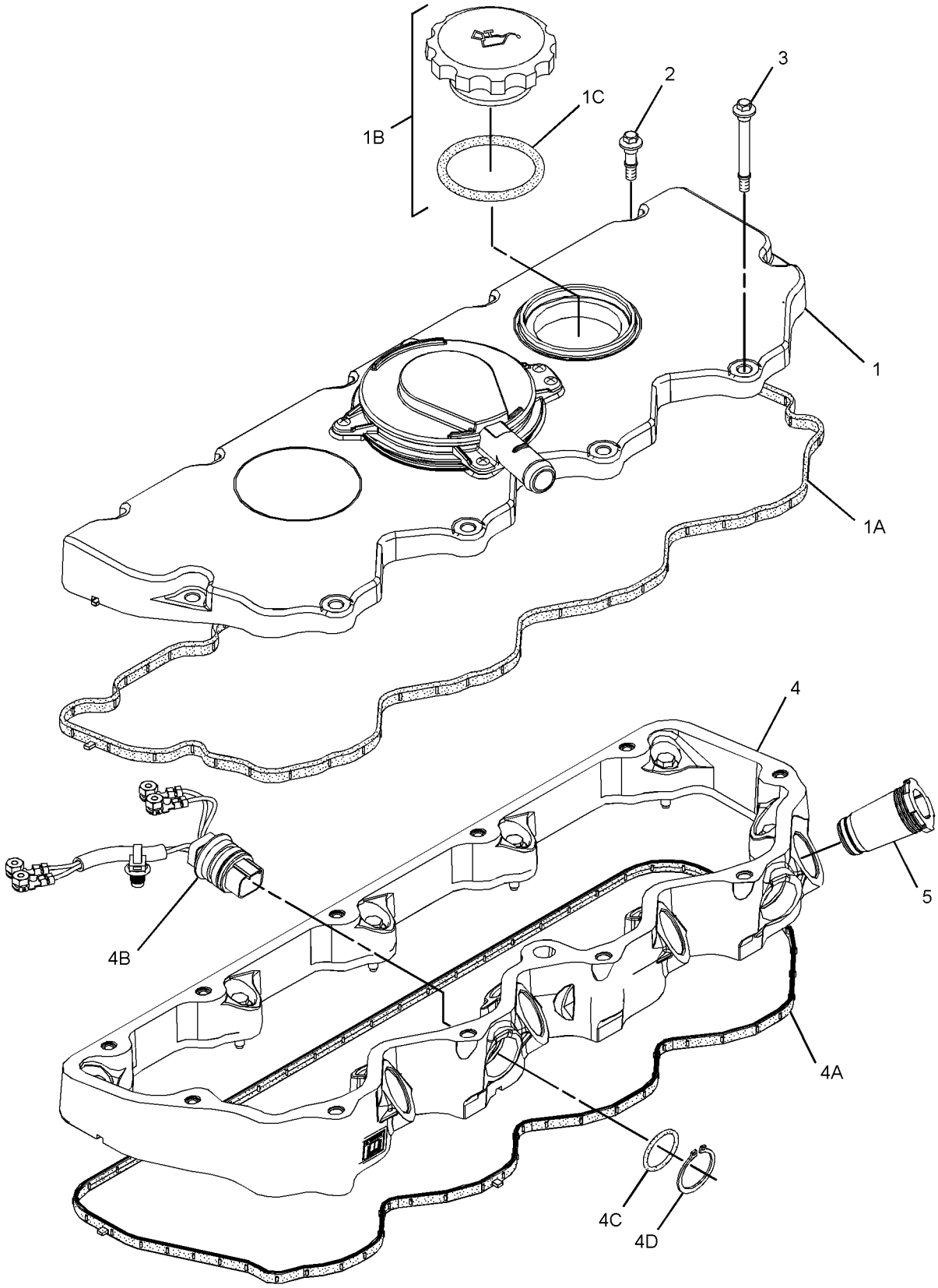

GRAPHIC #1 g01710995

304-5574 **COVER GP-VALVE MECHANISM (**contd.**)** **i06898706**

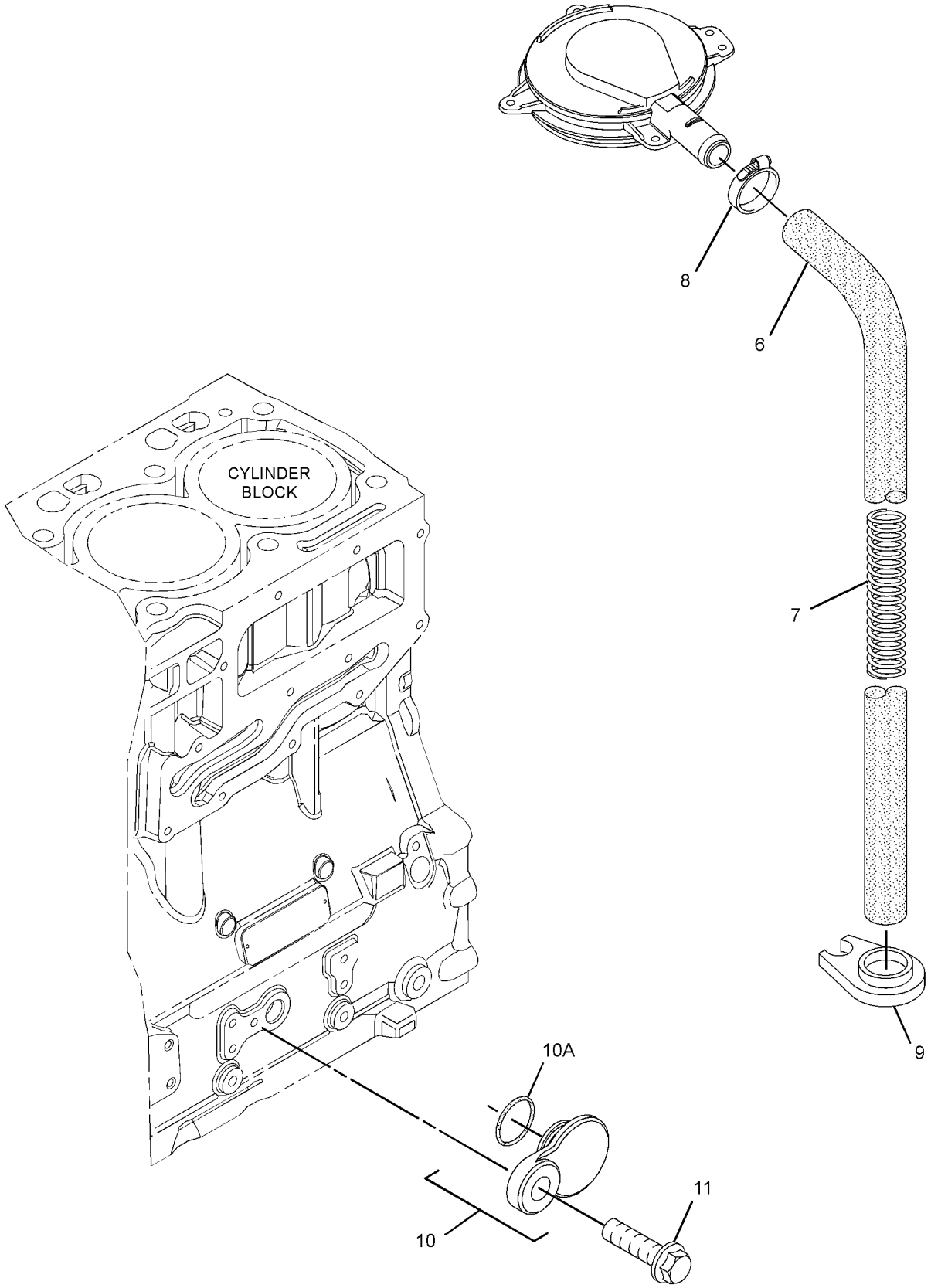

GRAPHIC #2 <END> g01367895

304-5574 COVER GP-VALVE MECHANISM

PART OF 435-1687, 540-1156 ENGINE AR-PRIMARY

SMCS-1107 **i06898670**

NOTE	REF NO	GRAPHIC REF	PART NUMBER	QTY	PART NAME 1 2 3 4 5 6 (PRODUCT LEVEL)	SEE PAGE
	1	1	**301-8253**	1	COVER GP-VALVE MECHANISM	
	1A	1	**298-4546**	1	GASKET-VALVE COVER	
	1B	1	**136-3608**	1	CAP AS (ENGINE OIL FILLER)	
		1	**124-0506**	1	SEAL	
		1	**298-4548**	1	SEPARATOR-OIL	
	2	1	**277-5031**	7	BOLT-SPECIAL	
	3	1	**298-4550**	4	BOLT-SPECIAL	
	4	1	**298-4551**	1	BASE GP-VALVE COVER & INJ HARN	
	4A	1	**298-4552**	1	GASKET	
	4B	1	**285-1973**	2	HARNESS AS-ENGINE (FUEL INJECTION)	
					(EACH INCLUDES)	
		1	**316-9351**	1	MOUNTING-CABLE TIE	
		1	**113-4630**	1	RECEPTACLE AS-CONNECTOR (4-PIN)	
		1	**9X-3401**	4	PIN-CONNECTOR (16-GA TO 18-GA)	
					—OR—	
		1	**126-1767**	4	PIN-CONNECTOR (14-GA TO 16-GA)	
	4C	1	**277-5064**	2	SEAL-O-RING	
	4D	1	**277-5065**	2	CLIP	
	5	1	**517-8243**	4	SLEEVE-INJECTOR	
	6	2	**198-9169**	1	HOSE	
	7	2	**162-1565**	1	SPRING (CRANKCASE BREATHER HOSE)	
	8	2	**032-9020**	1	CLIP	
	9	2	**7C-1281**	1	BRACKET	
	10	2	**217-9039**	1	STRAP-CABLE	

304-5574 **COVER GP-VALVE MECHANISM (**contd.**)** **i06898670**

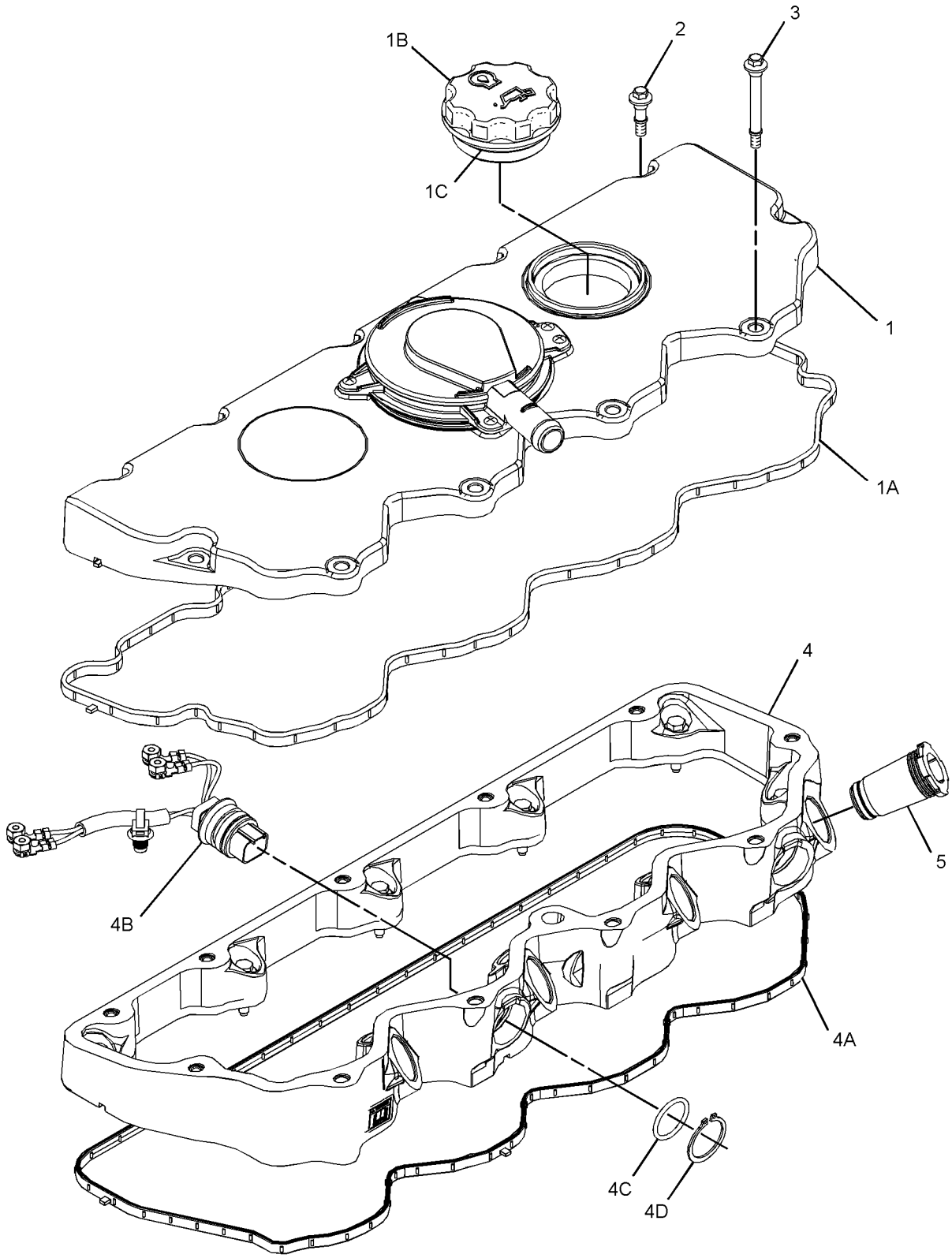

GRAPHIC #1 g06158375

304-5574 **COVER GP-VALVE MECHANISM (**contd.**)** **i06898670**

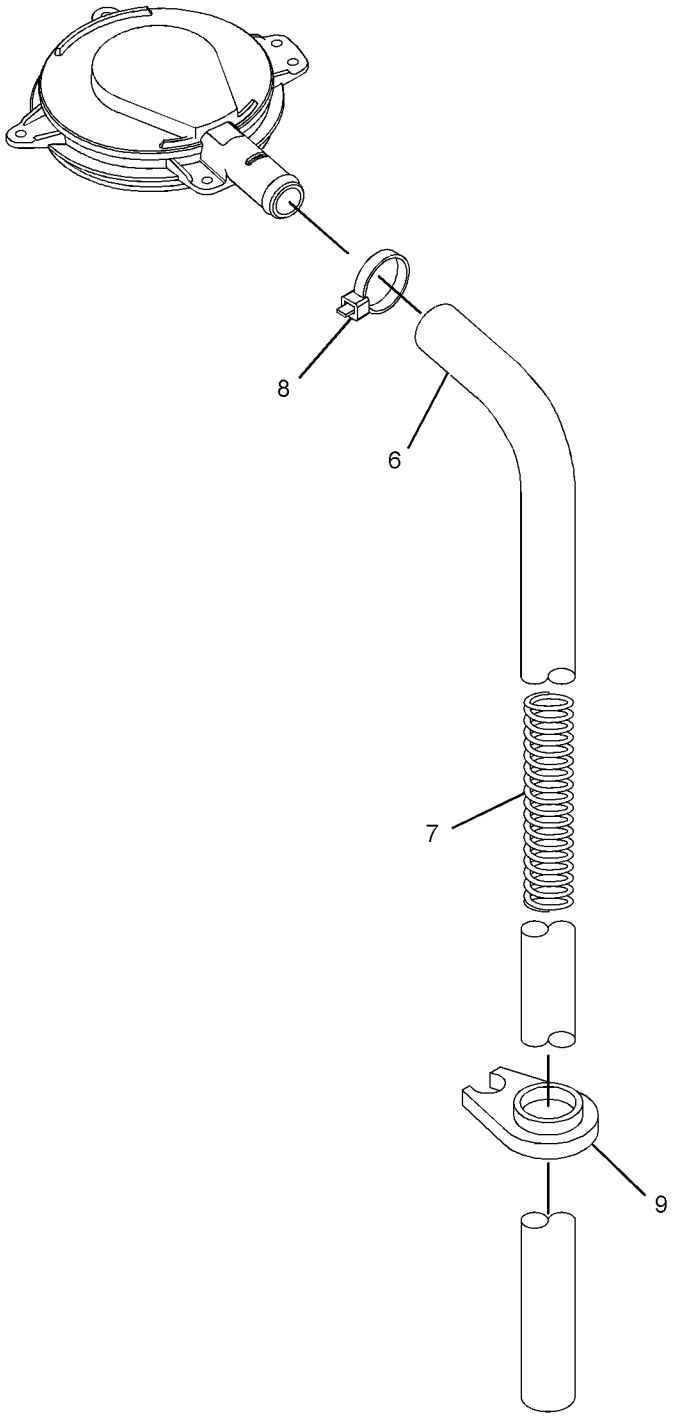

GRAPHIC #2 <END> g06158376

304-8758 COVER GP-VALVE MECHANISM

S/N: 4441-839

SMCS-1107 **i03333122**

NOTE	REF NO	GRAPHIC REF	PART NUMBER	QTY	PART NAME 1 2 3 4 5 6 (PRODUCT LEVEL)	SEE PAGE
	1	1	**304-8766**	1	COVER GP-VALVE MECHANISM	
	1A	1	**298-4546**	1	GASKET-VALVE COVER	
	2	1	**277-5031**	7	BOLT-SPECIAL	
	3	1	**298-4550**	4	BOLT-SPECIAL	
	4	1	**298-4551**	1	BASE GP-VALVE COVER & INJ HARN	
	4A	1	**298-4552**	1	GASKET	
	4B	1	**285-1973**	2	HARNESS AS-ENGINE (FUEL INJECTION)	
	4C	1	**277-5064**	2	SEAL-O-RING	
	4D	1	**277-5065**	2	CLIP	
	5	1	**277-5067**	4	SLEEVE	
	6	2	**198-8645**	1	HOSE (CRANKCASE BREATHER)	
	7	2	**162-1565**	1	SPRING (CRANKCASE BREATHER HOSE)	
	8	2	**5D-1026**	1	CLAMP-BAND	
	9	2	**7C-1281**	1	BRACKET	
	10	2	**277-5094**	1	COVER AS	
	10A	2	**277-5096**	1	SEAL-O-RING	
M	11	2	**6I-0217**	1	BOLT (M8X1.25X20-MM)	

M - METRIC PART

304-8758 **COVER GP-VALVE MECHANISM (**contd.**)** **i03333122**

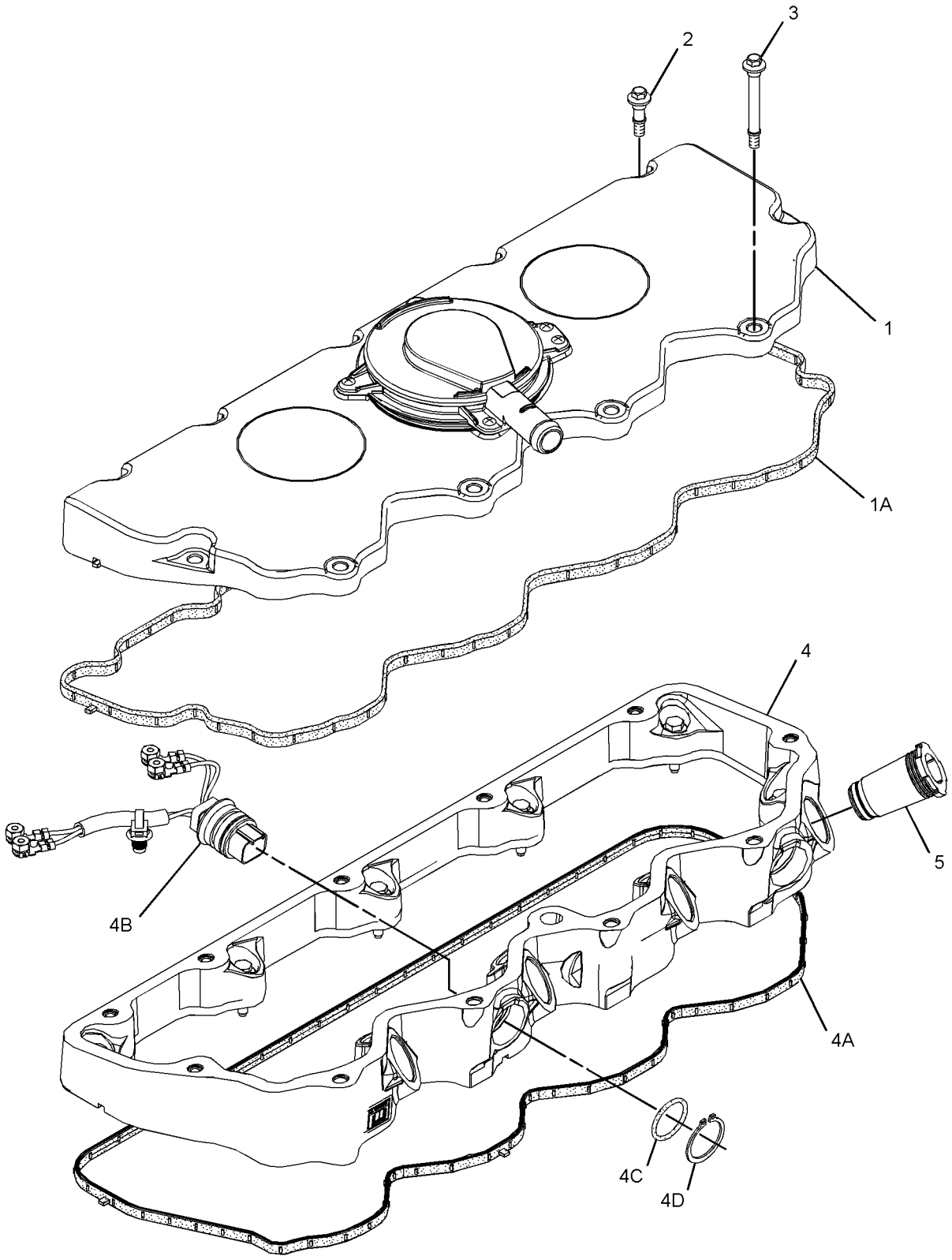

GRAPHIC #1 g01710962

304-8758 **COVER GP-VALVE MECHANISM (**contd.**)** **i03333122**

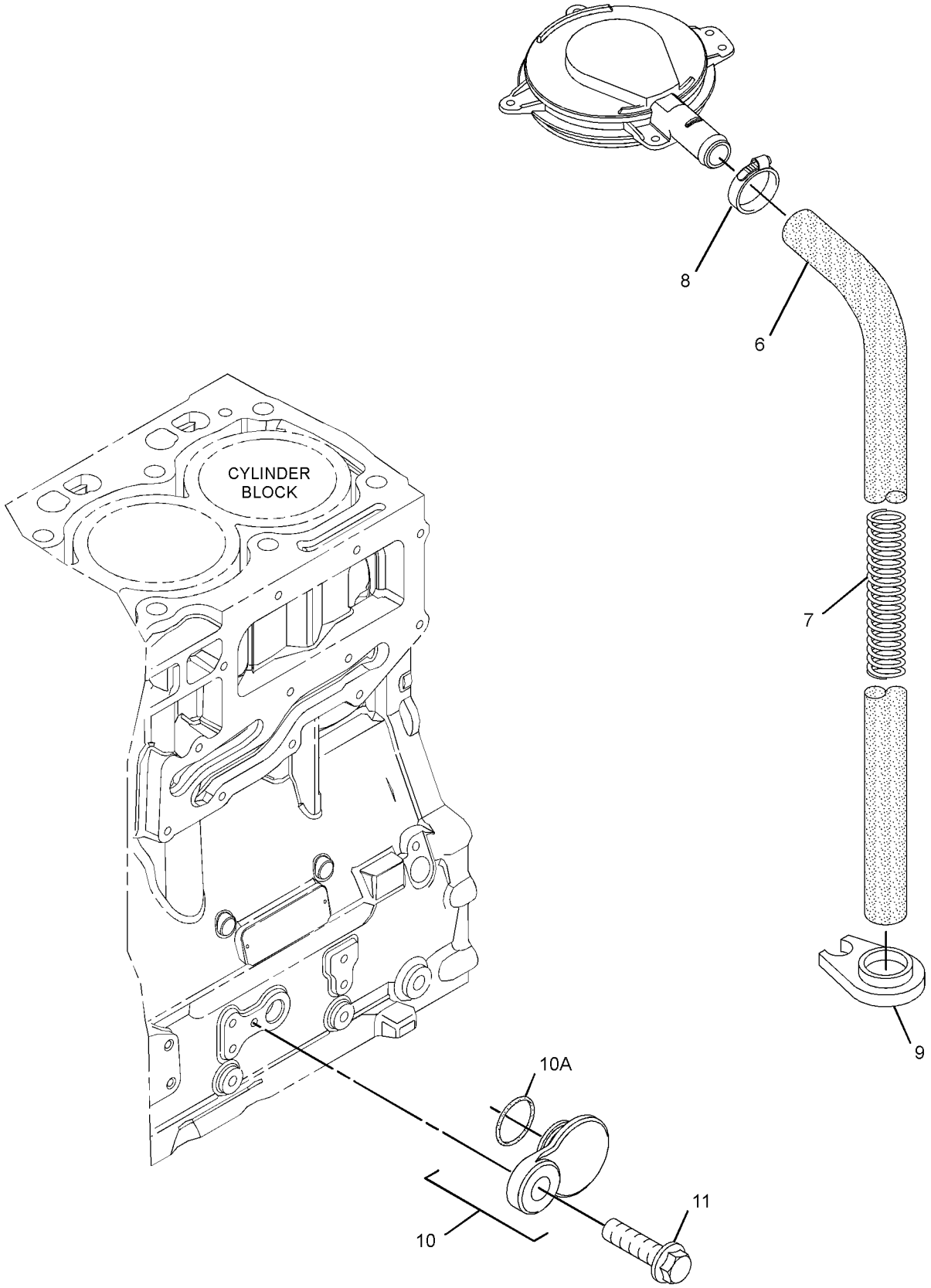

GRAPHIC #2 <END> g01352539

304-8758 COVER GP-VALVE MECHANISM

SMCS-1107 **i06859445**

NOTE	REF NO	GRAPHIC REF	PART NUMBER	QTY	PART NAME 1 2 3 4 5 6 (PRODUCT LEVEL)	SEE PAGE
	1	1	**304-8766**	1	COVER GP-VALVE MECHANISM	
	1A	1	**298-4546**	1	GASKET-VALVE COVER (CYLINDER HEAD)	
	2	1	**277-5031**	7	BOLT-SPECIAL	
	3	1	**298-4550**	4	BOLT-SPECIAL	
	4	1	**298-4551**	1	BASE GP-VALVE COVER & INJ HARN	
	4A	1	**298-4552**	1	GASKET	
	4B	1	**285-1973**	2	HARNESS AS-ENGINE (FUEL INJECTION)	
					(EACH INCLUDES)	
		1	**316-9351**	1	MOUNTING-CABLE TIE	
		1	**9X-3401**	4	PIN-CONNECTOR (16-GA TO 18-GA)	
					—OR—	
		1	**126-1767**	4	PIN-CONNECTOR (14-GA TO 16-GA)	
		1	**3E-3377**	1	WEDGE-RECEPTACLE LOCK (4-PIN)	
		1	**113-4630**	1	RECEPTACLE AS-CONNECTOR (4-PIN)	
	4C	1	**277-5064**	2	SEAL-O-RING	
	4D	1	**277-5065**	2	CLIP	
	5	1	**517-8243**	4	SLEEVE-INJECTOR	
	6	2	**198-8645**	1	HOSE (CRANKCASE BREATHER)	
	7	2	**162-1565**	1	SPRING (CRANKCASE BREATHER HOSE)	
	8	2	**032-9020**	1	CLIP	
	9	2	**7C-1281**	1	BRACKET	
	10	2	**217-9039**	1	STRAP-CABLE	
F		2	**5D-1026**	1	CLAMP-BAND	

F - NOT SHOWN

304-8758 **COVER GP-VALVE MECHANISM (**contd.**)** **i06859445**

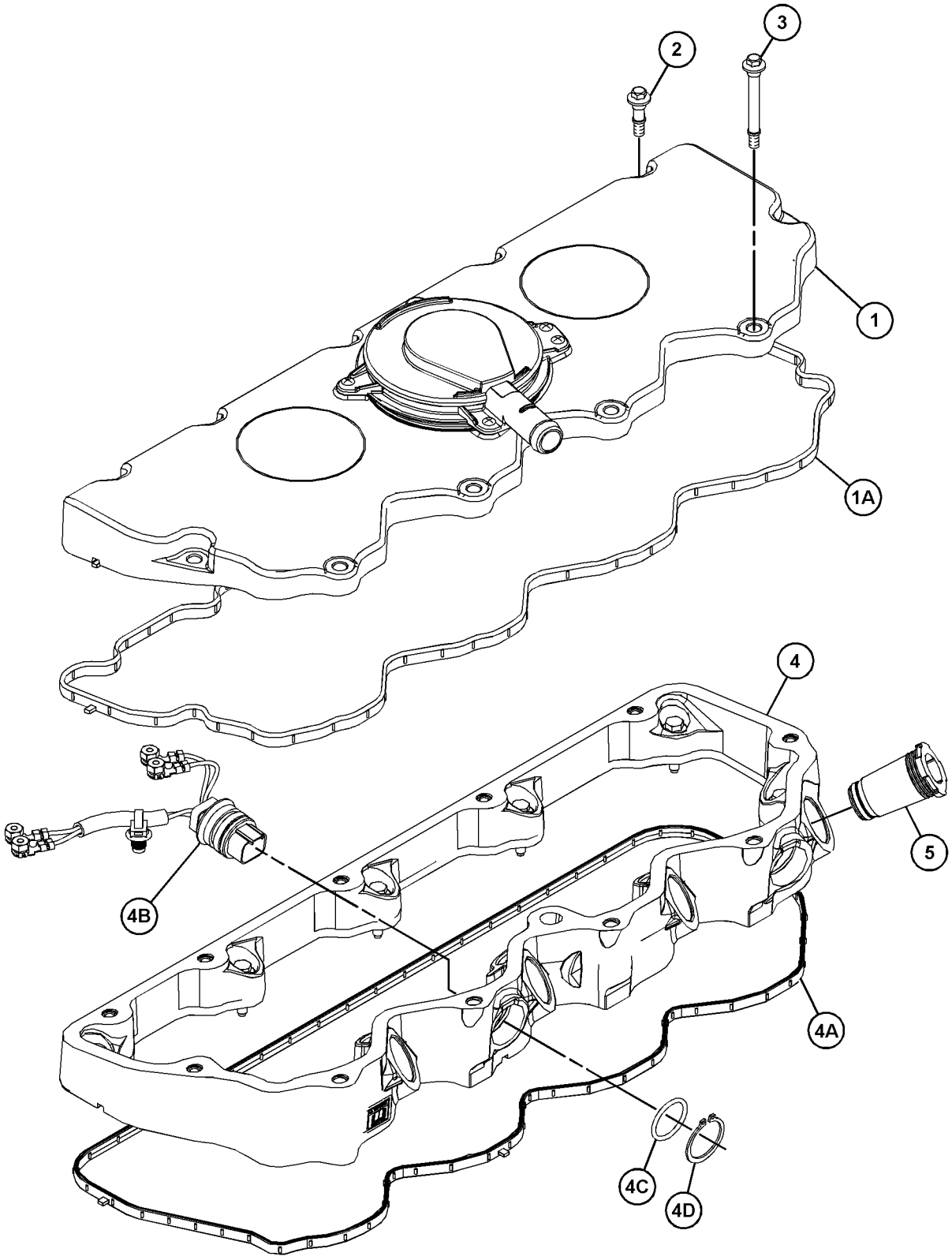

GRAPHIC #1 g06198715

304-8758 **COVER GP-VALVE MECHANISM (**contd.**)** **i06859445**

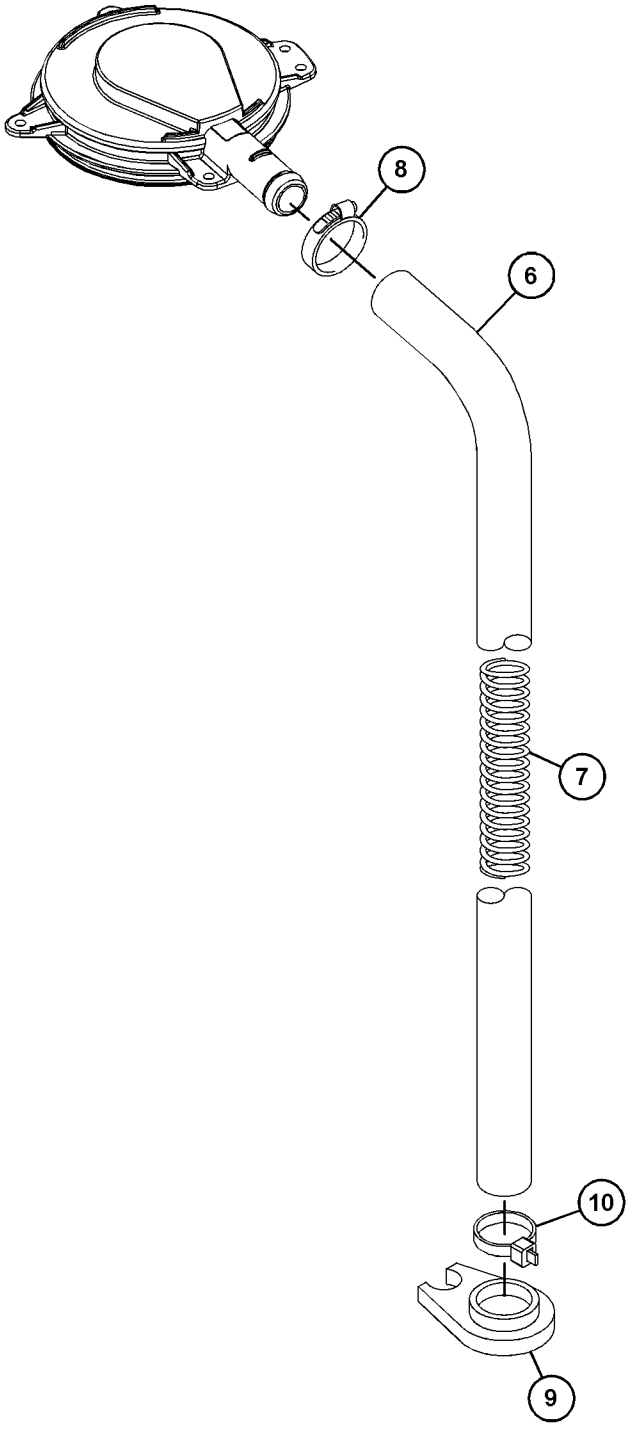

GRAPHIC #2 <END> g06198716

322-2605 COVER GP-VALVE MECHANISM

SMCS-1107 **i06883347**

NOTE	REF NO	GRAPHIC REF	PART NUMBER	QTY	PART NAME 1 2 3 4 5 6 (PRODUCT LEVEL)	SEE PAGE
	1	2	**2S-3440**	2	CLAMP-HOSE	
M	2	2	**6I-0217**	4	BOLT (M8X1.25X20-MM)	
	3	2	**7C-1281**	1	BRACKET	
	4	2	**032-9020**	1	CLIP	
	5	1	**277-5031**	7	BOLT-SPECIAL	
	6	1	**277-5067**	4	SLEEVE	
	7	2	**280-2023**	1	HOSE	
	8	1	**298-4550**	4	BOLT-SPECIAL	
	9	1	**298-4551**	1	BASE GP-VALVE COVER & INJ HARN	
	9A	1	**277-5064**	2	SEAL-O-RING	
	9B	1	**277-5065**	2	CLIP	
	9C	1	**285-1973**	2	HARNESS AS-ENGINE (FUEL INJECTION)	
					(EACH INCLUDES)	
		1	**3E-3377**	1	WEDGE-RECEPTACLE LOCK (4-PIN)	
		1	**113-4630**	1	RECEPTACLE AS-CONNECTOR (4-PIN)	
		1	**9X-3401**	4	PIN-CONNECTOR (16-GA TO 18-GA)	
					—OR—	
		1	**126-1767**	4	PIN-CONNECTOR (14-GA TO 16-GA)	
		1	**316-9351**	1	MOUNTING-CABLE TIE	
	9D	1	**298-4552**	1	GASKET (VALVE MECHANISM BASE)	
	10	1	**301-8253**	1	COVER GP-VALVE MECHANISM	
	10A	1	**136-3608**	1	CAP AS (ENGINE OIL FILLER)	
	10B	1	**124-0506**	1	SEAL	
	10C	1	**298-4546**	1	GASKET-VALVE COVER	
	10D	1	**298-4548**	1	SEPARATOR-OIL	
	11	2	**306-2333**	1	BASE GP-BREATHER (CRANKCASE)	
	12	2	**420-0609**	1	HOSE-BREATHER	
	13	2	**339-8775**	1	BRACKET	

M - METRIC PART

322-2605 **COVER GP-VALVE MECHANISM (**contd.**)** **i06883347**

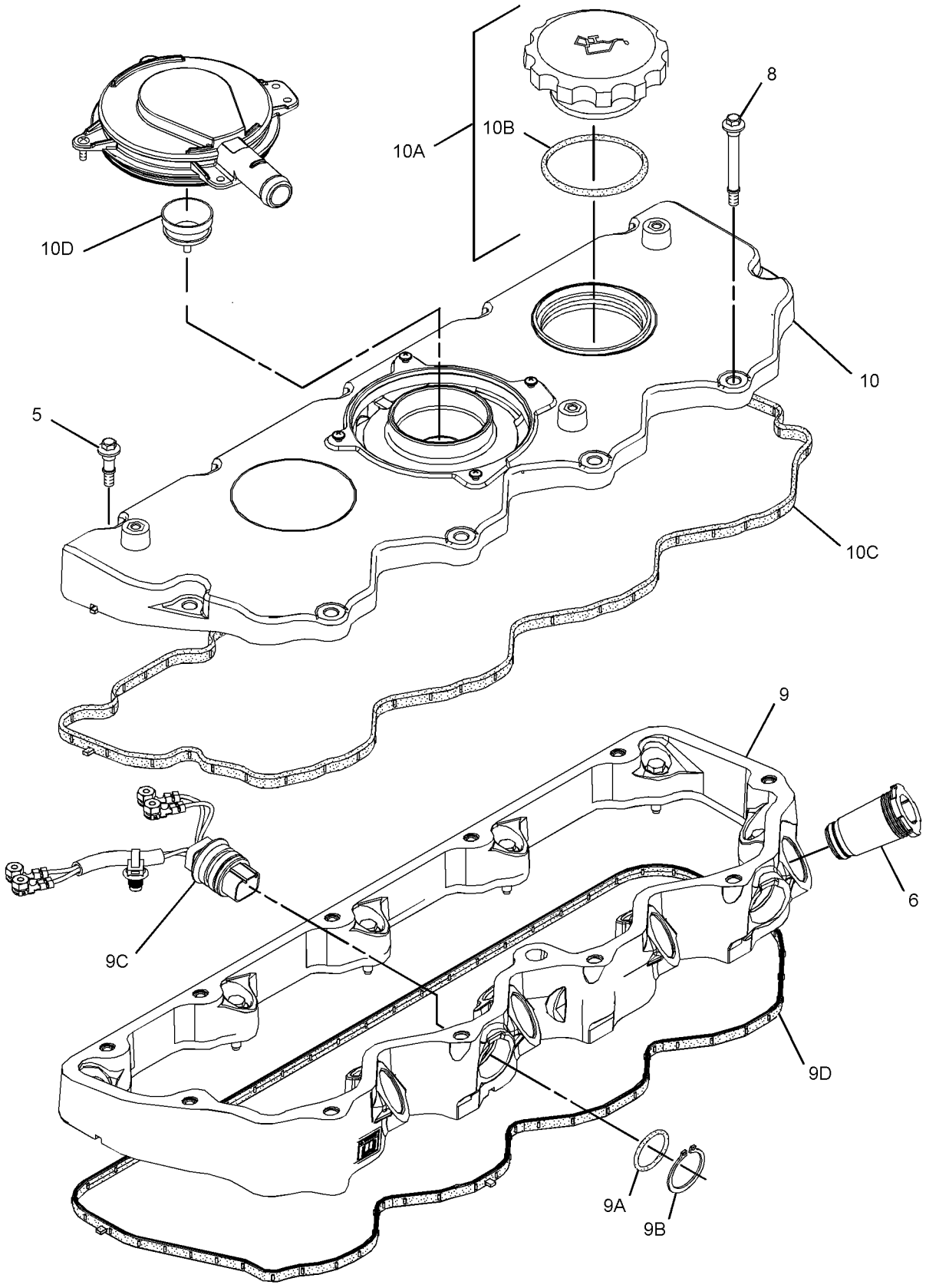

GRAPHIC #1 g01992455

322-2605 **COVER GP-VALVE MECHANISM (**contd.**)** **i06883347**

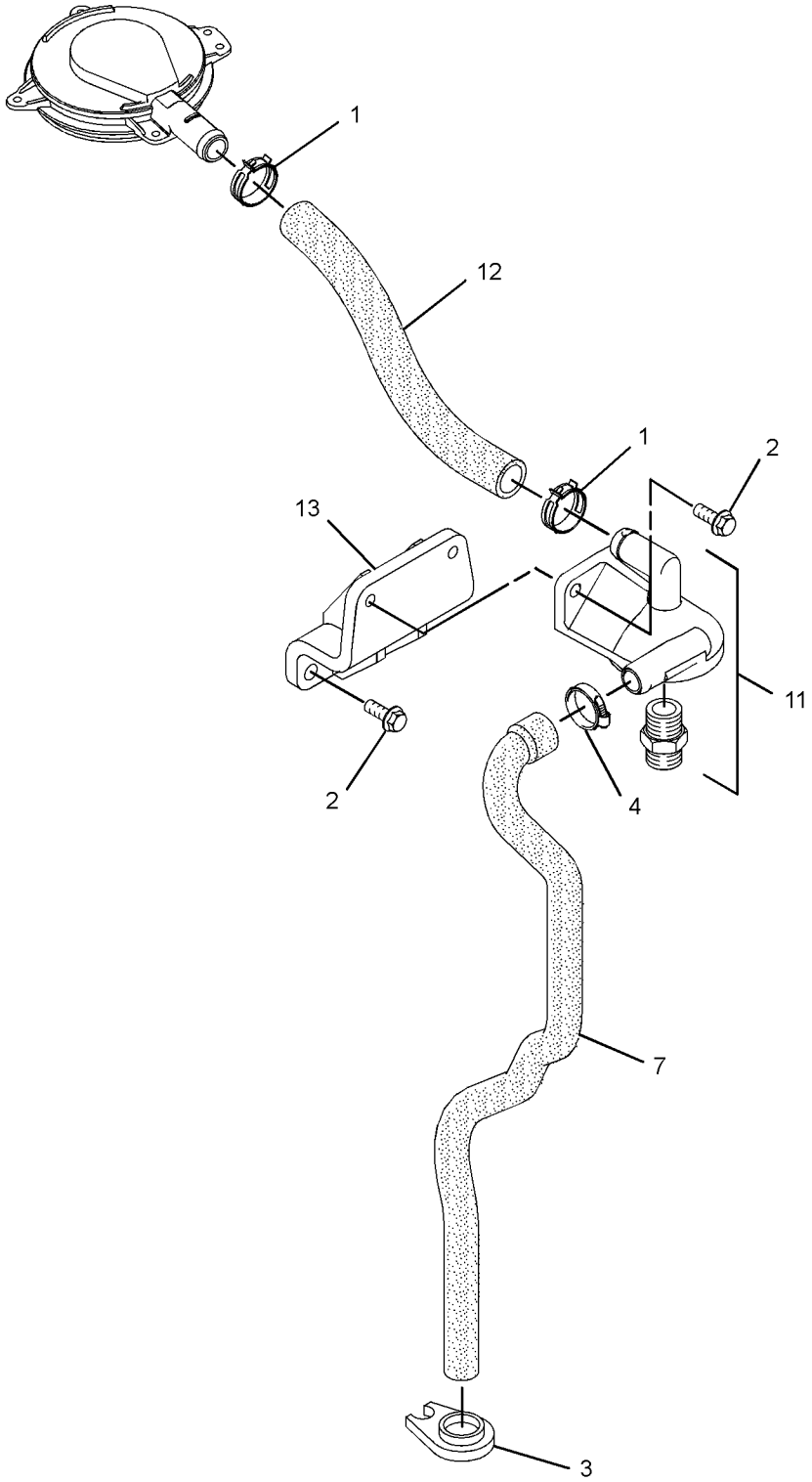

GRAPHIC #2 <END> g01992456

322-4951 COVER GP-VALVE MECHANISM

SMCS-1107 **i06883343**

NOTE	REF NO	GRAPHIC REF	PART NUMBER	QTY	PART NAME 1 2 3 4 5 6 (PRODUCT LEVEL)	SEE PAGE
	1	1	**339-8775**	1	BRACKET	
M	2	1	**6I-0217**	5	BOLT (M8X1.25X20-MM)	
	3	1	**7C-1281**	1	BRACKET	
	4	1	**032-9020**	3	CLIP	
	5	2	**277-5031**	7	BOLT-SPECIAL	
	6	1,2	**277-5067**	4	SLEEVE	
	7	1	**331-8052**	1	PLATE AS	
	7A	1	**331-8053**	1	SEAL-O-RING	
	8	1	**280-2023**	1	HOSE	
	9	2	**298-4545**	1	COVER GP-VALVE MECHANISM	
	9A	2	**136-3608**	1	CAP AS (ENGINE OIL FILLER)	
	9B	2	**124-0506**	1	SEAL	
	9C	2	**298-4546**	1	GASKET-VALVE COVER	
	9D	2	**298-4548**	1	SEPARATOR-OIL	
	10	2	**298-4550**	4	BOLT-SPECIAL	
	11	2	**298-4551**	1	BASE GP-VALVE COVER & INJ HARN	
	11A	2	**277-5064**	2	SEAL-O-RING	
	11B	2	**277-5065**	2	CLIP	
	11C	2	**285-1973**	2	HARNESS AS-ENGINE (FUEL INJECTION)	
					(EACH INCLUDES)	
		2	**3E-3377**	1	WEDGE-RECEPTACLE LOCK (4-PIN)	
		2	**113-4630**	1	RECEPTACLE AS-CONNECTOR (4-PIN)	
		2	**9X-3401**	4	PIN-CONNECTOR (16-GA TO 18-GA)	
					—OR—	
		2	**126-1767**	1	PIN-CONNECTOR (14-GA TO 16-GA)	
		2	**316-9351**	1	MOUNTING-CABLE TIE	
	11D	2	**298-4552**	1	GASKET (VALVE MECHANISM BASE)	
	12	1	**306-2333**	1	BASE GP-BREATHER (CRANKCASE)	
	13	1	**420-0609**	1	HOSE-BREATHER	

M - METRIC PART

322-4951 **COVER GP-VALVE MECHANISM (**contd.**)** **i06883343**

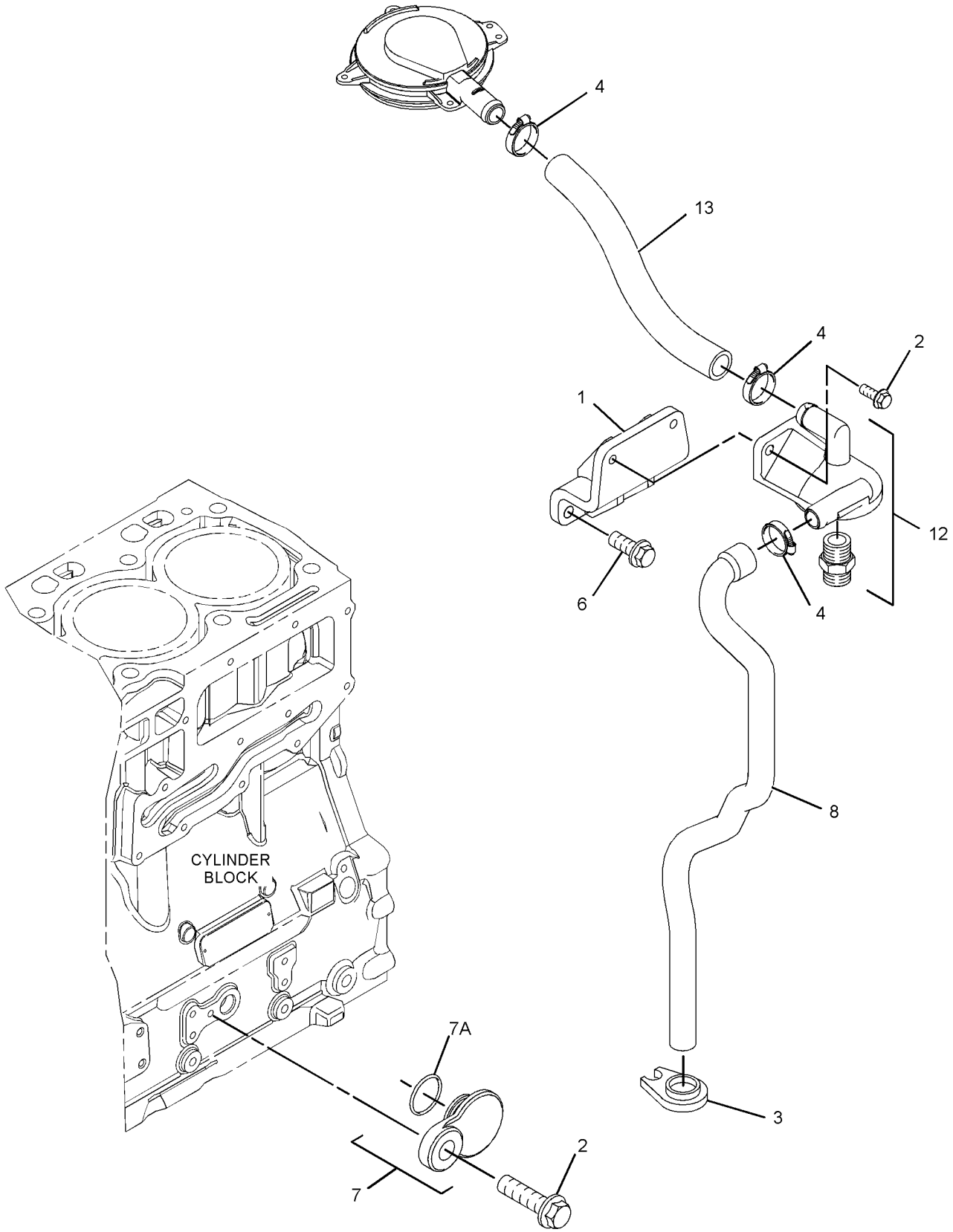

GRAPHIC #1 g06203375

322-4951 **COVER GP-VALVE MECHANISM (**contd.**)** **i06883343**

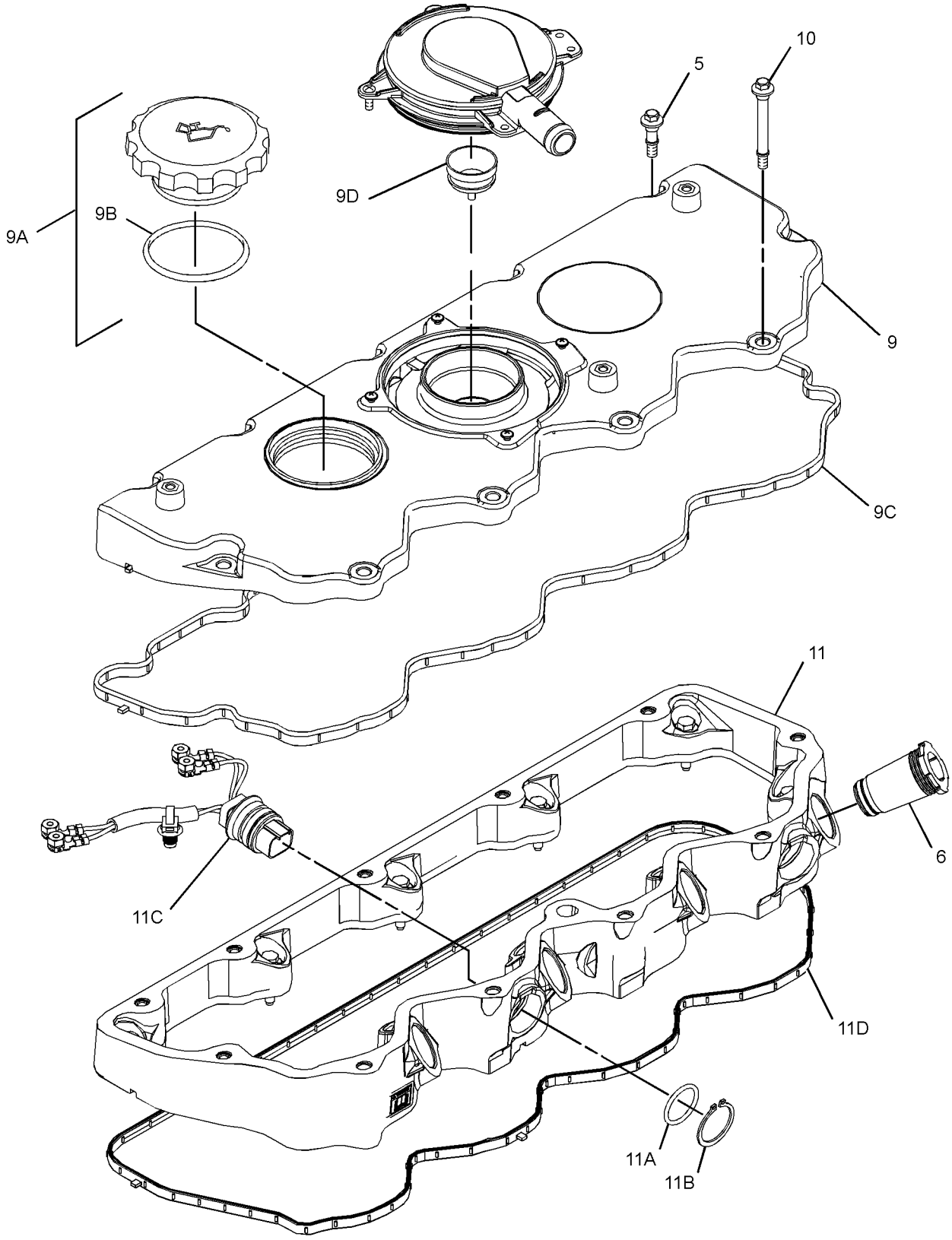

GRAPHIC #2 <END> g06203371

323-6222 COVER GP-VALVE MECHANISM

TYPE 1

SMCS-1107 **i04041832**

NOTE	REF NO	GRAPHIC REF	PART NUMBER	QTY	PART NAME 1 2 3 4 5 6 (PRODUCT LEVEL)	SEE PAGE
M	1	2	**6I-0217**	1	BOLT (M8X1.25X20-MM)	
	2	2	**7C-1281**	1	BRACKET	
	3	2	**162-1565**	1	SPRING (CRANKCASE BREATHER HOSE)	
	4	2	**198-9169**	1	HOSE	
	5	2	**5D-1026**	1	CLAMP-BAND	
	6	1	**277-5031**	7	BOLT-SPECIAL	
	7	1	**277-5067**	4	SLEEVE	
	8	2	**277-5094**	1	COVER AS	
	8A	2	**277-5096**	1	SEAL-O-RING	
	9	1	**298-4545**	1	COVER GP-VALVE MECHANISM	
	9A	1	**136-3608**	1	CAP AS (ENGINE OIL FILLER)	
	9B	1	**124-0506**	1	SEAL	
	9C	1	**298-4548**	1	SEPARATOR-OIL	
	9D	1	**298-4546**	1	GASKET-VALVE COVER (CYLINDER HEAD)	
	10	1	**298-4550**	4	BOLT-SPECIAL	
	11	1	**298-4551**	1	BASE GP-VALVE COVER & INJ HARN	
	11A	1	**277-5064**	2	SEAL-O-RING	
	11B	1	**277-5065**	2	CLIP	
	11C	1	**285-1973**	2	HARNESS AS-ENGINE (FUEL INJECTION)	
	11D	1	**298-4552**	1	GASKET (VALVE MECHANISM BASE)	

M - METRIC PART

323-6222 **COVER GP-VALVE MECHANISM (**contd.**)** **i04041832**

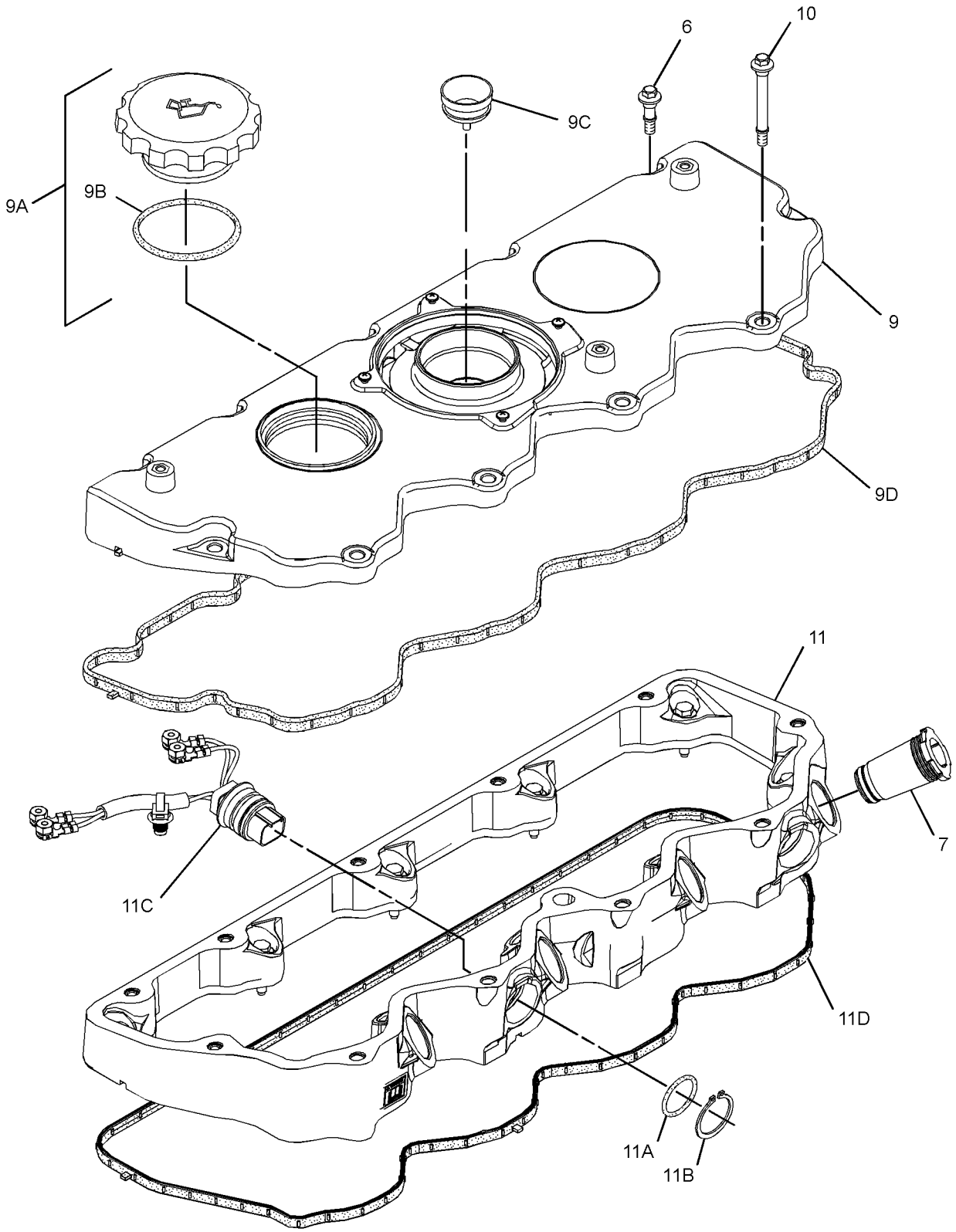

GRAPHIC #1 g02251636

323-6222 **COVER GP-VALVE MECHANISM (**contd.**)** **i04041832**

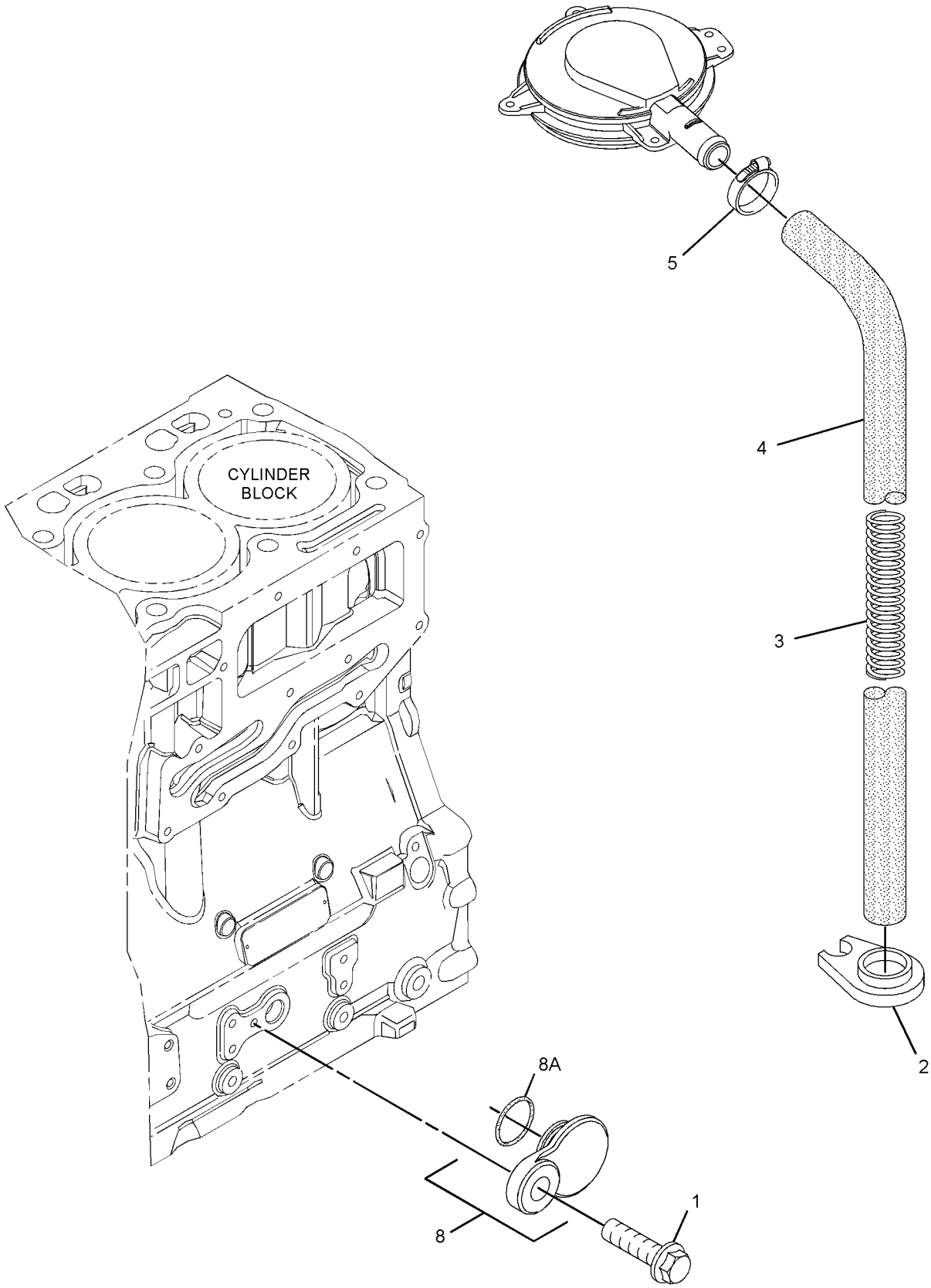

GRAPHIC #2 <END> g01524693

323-6222 COVER GP-VALVE MECHANISM

TYPE 2

SMCS-1107 **i06859468**

NOTE	REF NO	GRAPHIC REF	PART NUMBER	QTY	PART NAME 1 2 3 4 5 6 (PRODUCT LEVEL)	SEE PAGE
	1	2	**217-9039**	1	STRAP-CABLE	
	2	2	**7C-1281**	1	BRACKET	
	3	2	**162-1565**	1	SPRING (CRANKCASE BREATHER HOSE)	
	4	2	**198-9169**	1	HOSE	
	5	2	**032-9020**	1	CLIP	
	6	1	**277-5031**	7	BOLT-SPECIAL	
	7	1	**517-8243**	4	SLEEVE-INJECTOR	
	8	1	**298-4551**	1	BASE GP-VALVE COVER & INJ HARN	
	8A	1	**277-5064**	2	SEAL-O-RING	
	8B	1	**277-5065**	2	CLIP	
	8C	1	**285-1973**	2	HARNESS AS-ENGINE (FUEL INJECTION)	
					(EACH INCLUDES)	
		1	**3E-3377**	1	WEDGE-RECEPTACLE LOCK (4-PIN)	
		1	**9X-3401**	4	PIN-CONNECTOR (16-GA TO 18-GA)	
					—OR—	
		1	**126-1767**	4	PIN-CONNECTOR (14-GA TO 16-GA)	
		1	**113-4630**	1	RECEPTACLE AS-CONNECTOR (4-PIN)	
		1	**316-9351**	1	MOUNTING-CABLE TIE	
	8D	1	**298-4552**	1	GASKET (VALVE MECHANISM BASE)	
	9	1	**298-4545**	1	COVER GP-VALVE MECHANISM	
	9A	1	**136-3608**	1	CAP AS (ENGINE OIL FILLER)	
	9B	1	**124-0506**	1	SEAL	
	9C	1	**298-4548**	1	SEPARATOR-OIL	
	9D	1	**298-4546**	1	GASKET-VALVE COVER (CYLINDER HEAD)	
	10	1	**298-4550**	4	BOLT-SPECIAL	

323-6222 **COVER GP-VALVE MECHANISM (**contd.**)** **i06859468**

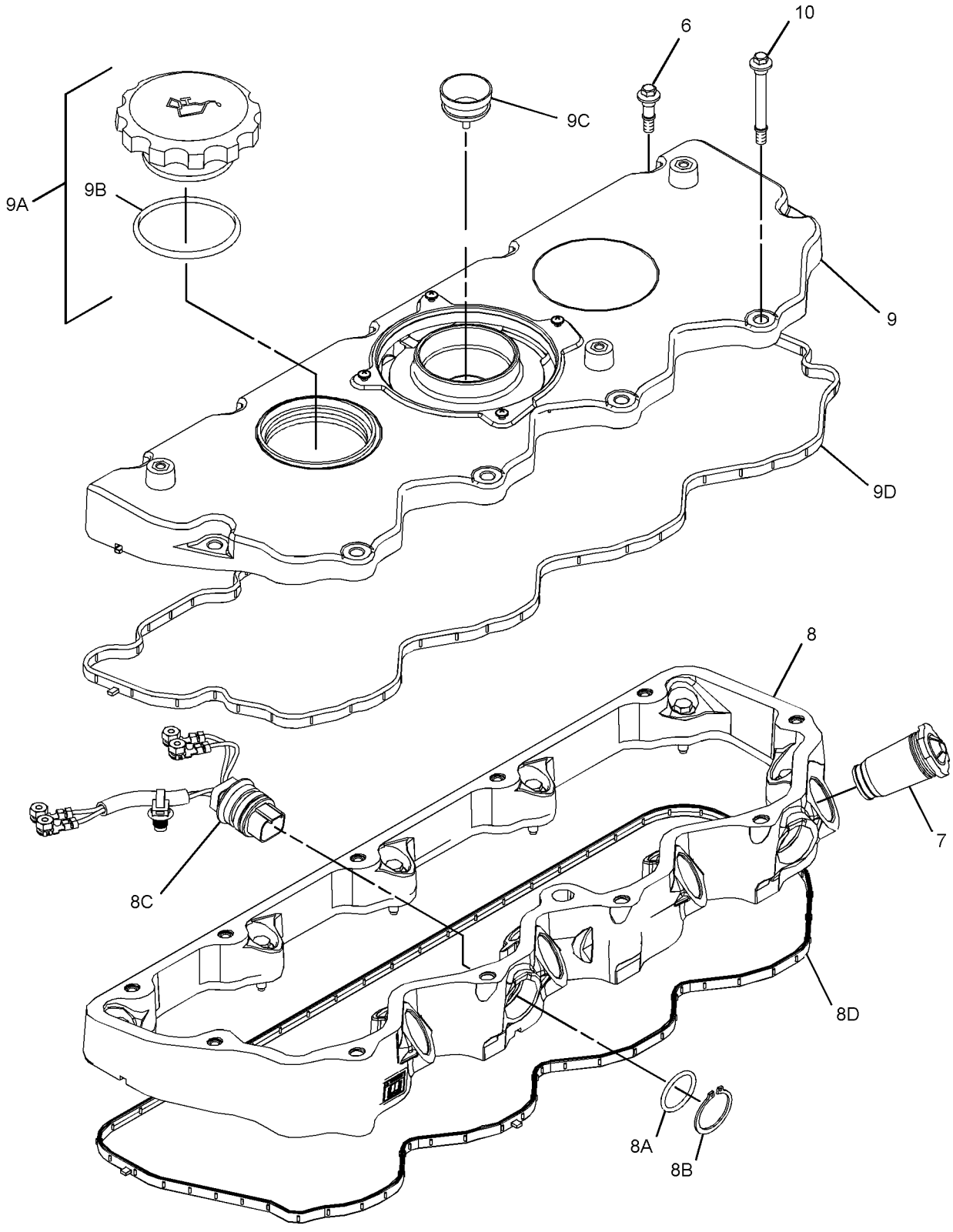

GRAPHIC #1 g06150756

323-6222 **COVER GP-VALVE MECHANISM (**contd.**)** **i06859468**

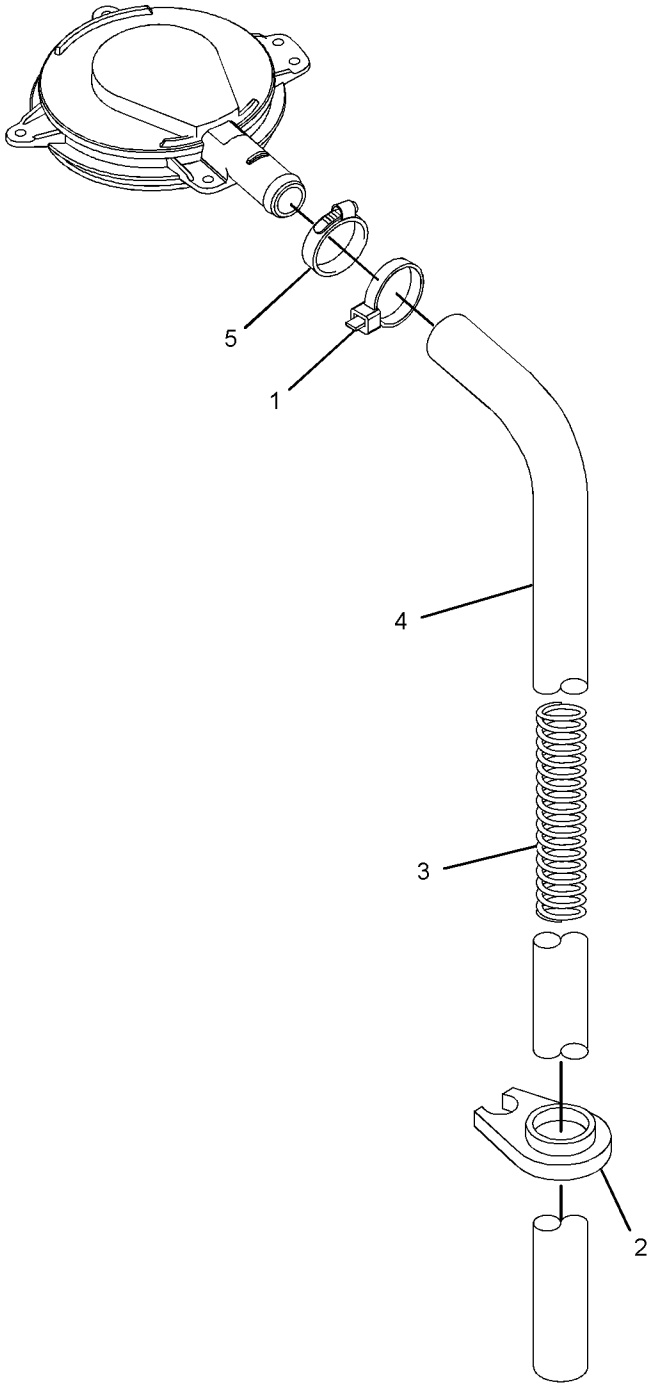

GRAPHIC #2 <END> g06114396

329-3543 COVER GP-VALVE MECHANISM

SMCS-1107 **i06859462**

NOTE	REF NO	GRAPHIC REF	PART NUMBER	QTY	PART NAME 1 2 3 4 5 6 (PRODUCT LEVEL)	SEE PAGE
	1	2	**7C-1281**	1	BRACKET	
	2	2	**032-9020**	1	CLIP	
	3	2	**162-1565**	1	SPRING (CRANKCASE BREATHER HOSE)	
	4	1	**277-5031**	7	BOLT-SPECIAL	
	5	1	**517-8243**	4	SLEEVE-INJECTOR	
	6	1	**298-4550**	4	BOLT-SPECIAL	
	7	1	**298-4551**	1	BASE GP-VALVE COVER & INJ HARN	
	7A	1	**277-5064**	2	SEAL-O-RING	
	7B	1	**277-5065**	2	CLIP	
	7C	1	**285-1973**	2	HARNESS AS-ENGINE (FUEL INJECTION)	
					(EACH INCLUDES)	
		1	**316-9351**	1	MOUNTING-CABLE TIE	
		1	**113-4630**	1	RECEPTACLE AS-CONNECTOR (4-PIN)	
		1	**9X-3401**	4	PIN-CONNECTOR (16-GA TO 18-GA)	
					—OR—	
		1	**126-1767**	4	PIN-CONNECTOR (14-GA TO 16-GA)	
		1	**3E-3377**	1	WEDGE-RECEPTACLE LOCK (4-PIN)	
	7D	1	**298-4552**	1	GASKET	
	8	1	**301-8253**	1	COVER GP-VALVE MECHANISM	
	8A	1	**136-3608**	1	CAP AS (ENGINE OIL FILLER)	
	8B	1	**124-0506**	1	SEAL	
	8C	1	**298-4546**	1	GASKET-VALVE COVER	
	8D	1	**298-4548**	1	SEPARATOR-OIL	
	9	2	**320-9921**	1	HOSE	
	10	2	**217-9039**	1	STRAP-CABLE	

329-3543 **COVER GP-VALVE MECHANISM (**contd.**)** **i06859462**

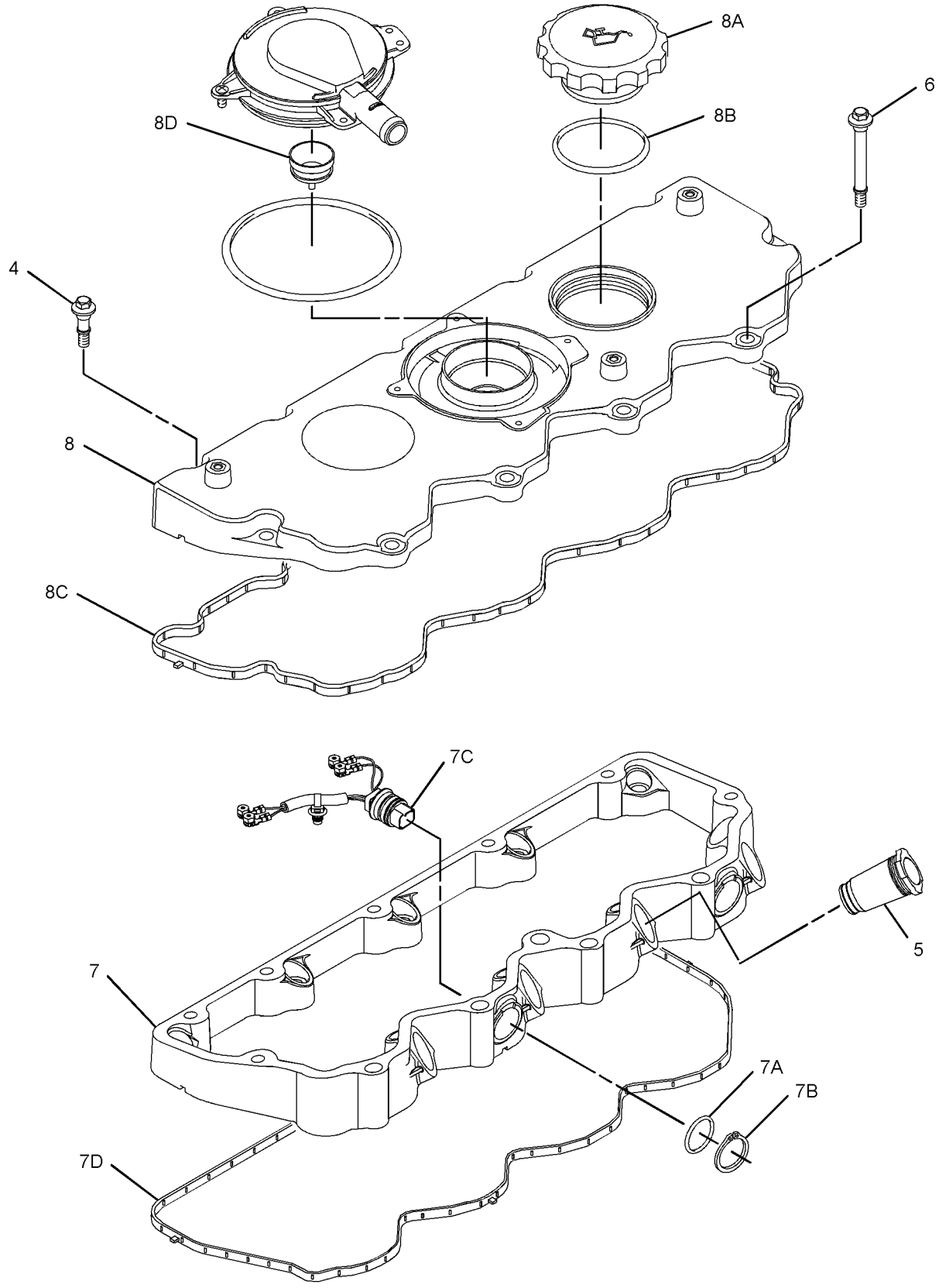

GRAPHIC #1 g06198996

329-3543 **COVER GP-VALVE MECHANISM (**contd.**)** **i06859462**

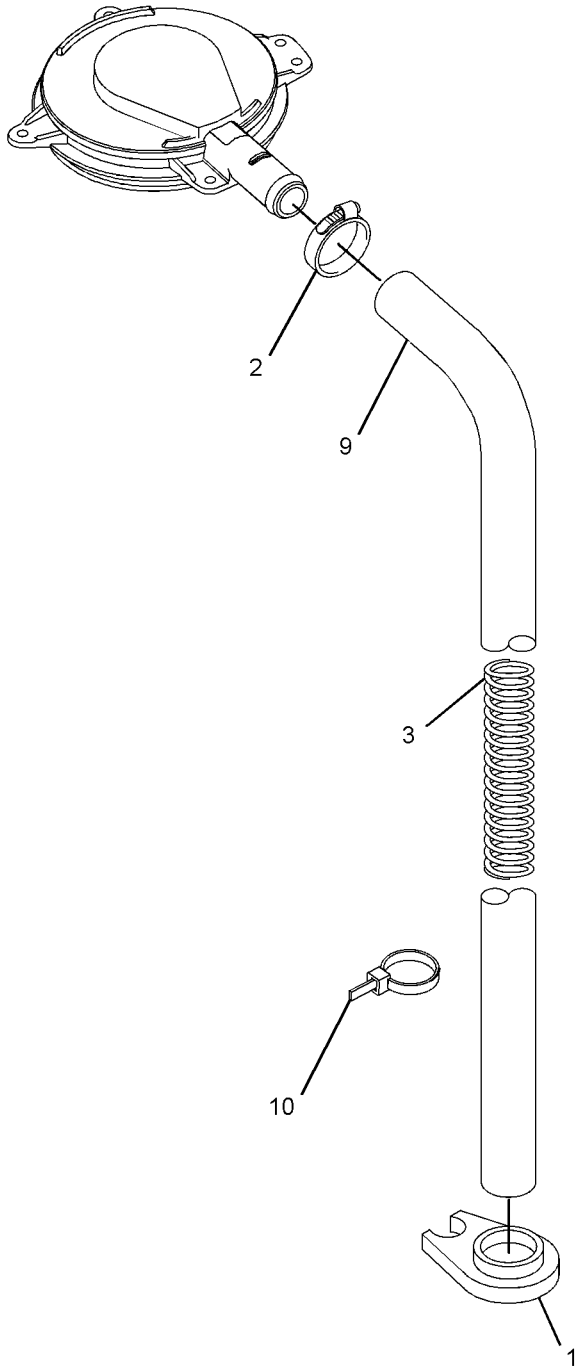

GRAPHIC #2 <END> g06198997

298-5086 CRANKSHAFT GP

S/N: 4441-7401

PART OF 435-1685 ENGINE AR-PRIMARY

SMCS-1202 **i04855413**

NOTE	REF NO	GRAPHIC REF	PART NUMBER	QTY	PART NAME 1 2 3 4 5 6 (PRODUCT LEVEL)	SEE PAGE
Y	1	1	**330-1736**	1	CRANKSHAFT GP	388
M	2	1	**276-7394**	3	SCREW (M6X1XX12-MM)	
	3	1	**341-4028**	1	RING-TIMING	

M - METRIC PART
Y - SEPARATE ILLUSTRATION

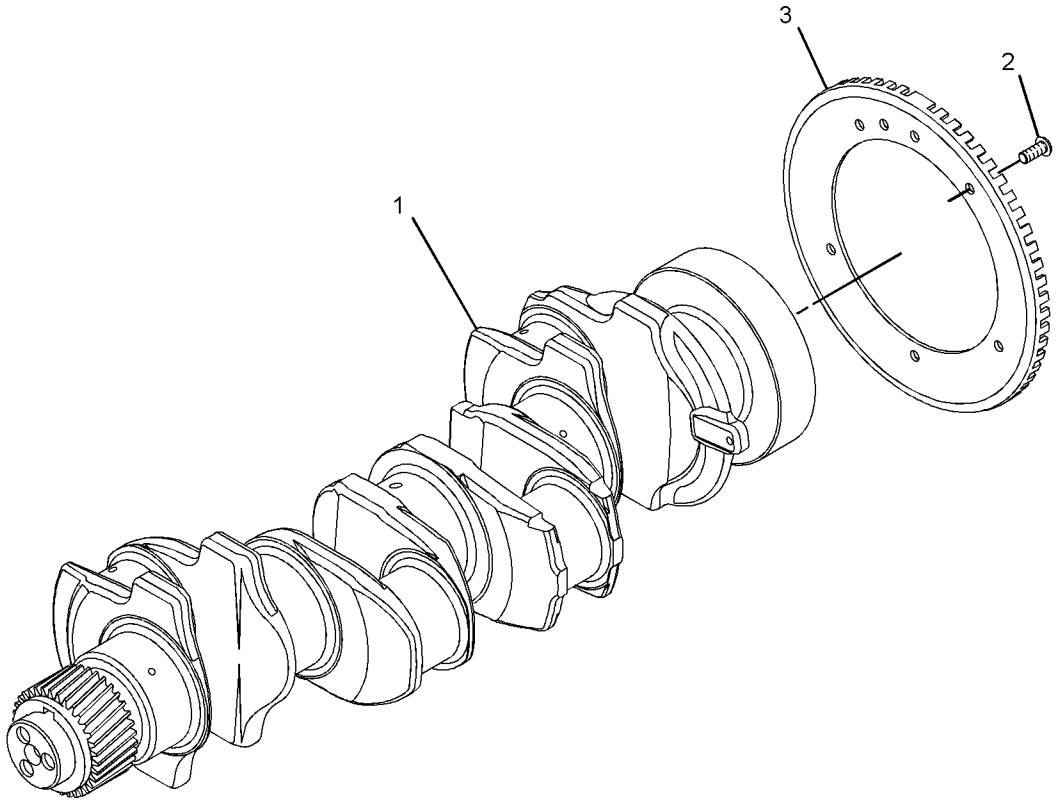

GRAPHIC #1 <END> g02985538

298-5086 CRANKSHAFT GP

PART OF 435-1685 ENGINE AR-PRIMARY

SMCS-1202 **i05192022**

NOTE	REF NO	GRAPHIC REF	PART NUMBER	QTY	PART NAME 1 2 3 4 5 6 (PRODUCT LEVEL)	SEE PAGE
CY	1	1	**359-0716**	1	CRANKSHAFT GP	390
M	2	1	**276-7394**	3	SCREW (M6X1XX12-MM)	
	3	1	**341-4028**	1	RING-TIMING	
C	4	1	**339-8780**	1	DOWEL	
C	5	1	**216-8314**	1	GEAR-CRANKSHAFT (34-TEETH)	
C	6	1	**067-6135**	1	KEY-WOODRUFF	

C - CHANGE FROM PREVIOUS TYPE
M - METRIC PART
Y - SEPARATE ILLUSTRATION

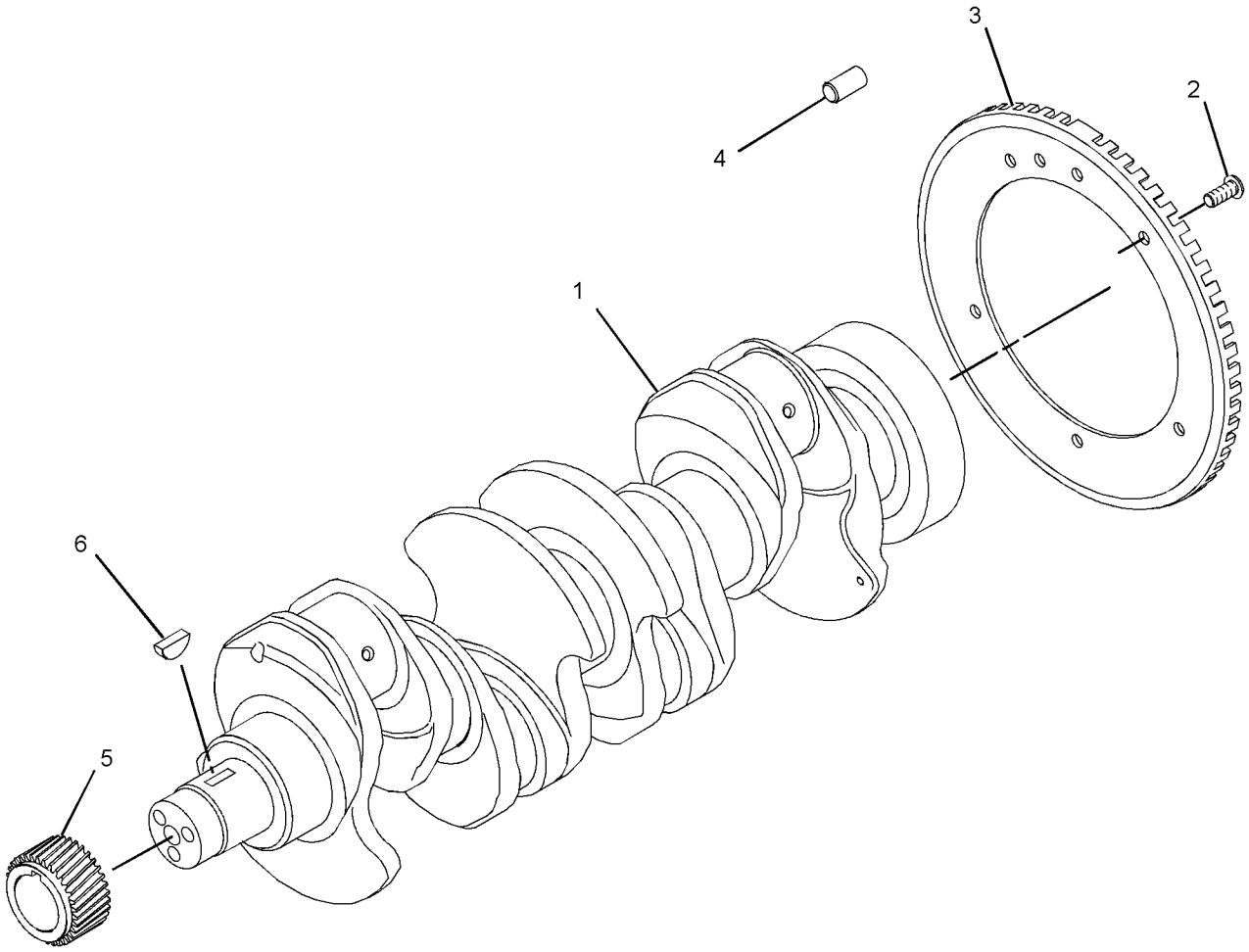

GRAPHIC #1 <END> g02189439

298-5888 CRANKSHAFT GP

S/N: 4441-7401

PART OF 435-1692 ENGINE AR-COMPLETE, 435-1687, 437-5409 ENGINE AR-PRIMARY

SMCS-1202 **i03541382**

NOTE	REF NO	GRAPHIC REF	PART NUMBER	QTY	PART NAME 1 2 3 4 5 6 (PRODUCT LEVEL)	SEE PAGE
Y	1	1	**330-1736**	1	CRANKSHAFT GP	388
M	2	1	**276-7394**	3	SCREW (M6X1XX12-MM)	
	3	1	**341-4028**	1	RING-TIMING	

M - METRIC PART
Y - SEPARATE ILLUSTRATION

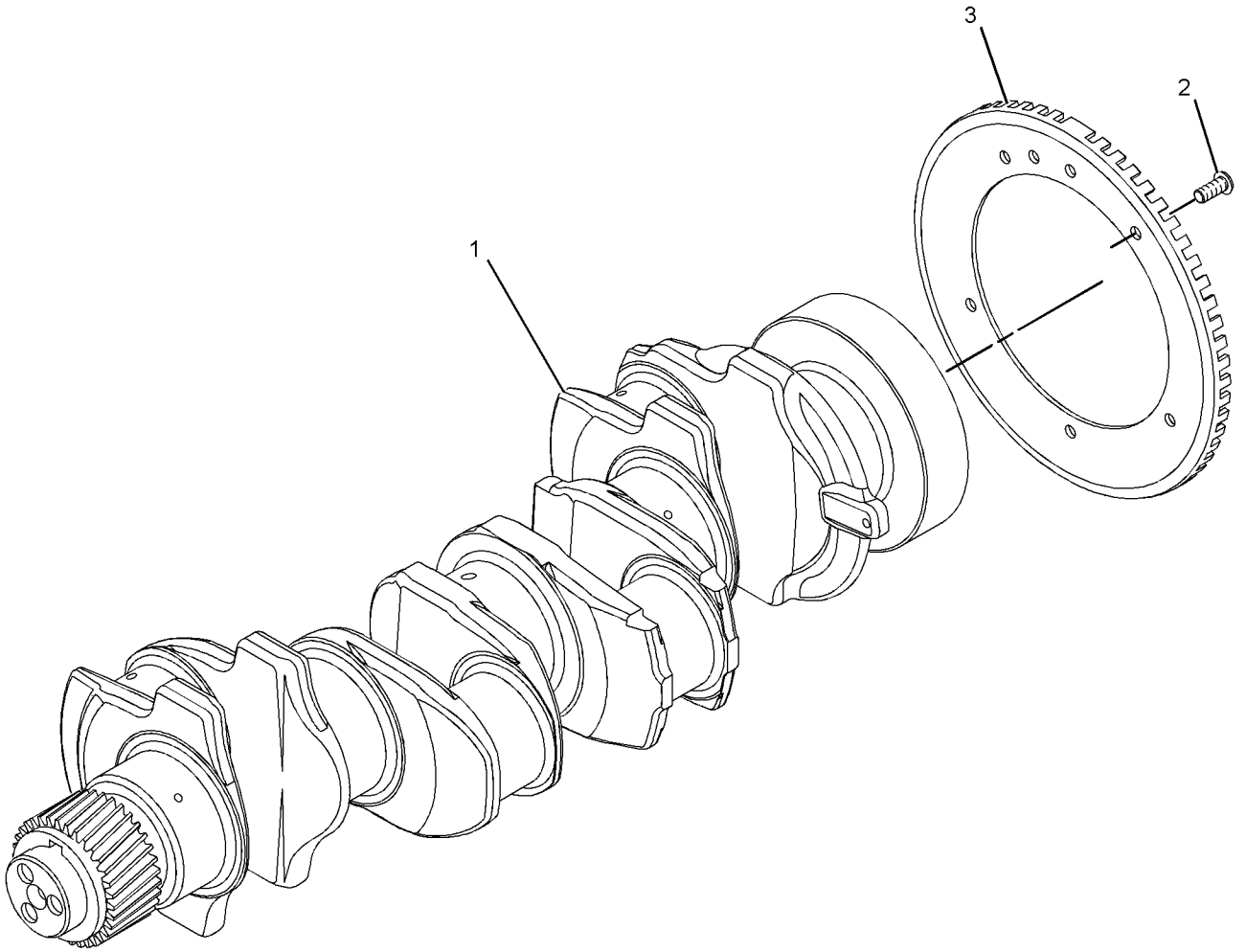

GRAPHIC #1 <END> g01763713

298-5888 CRANKSHAFT GP

PART OF 435-1699 ENGINE AR, 435-1692 ENGINE AR-COMPLETE, 435-1687, 437-5409, 522-8303, 540-0570, 540-1155, 540-1156 ENGINE AR-PRIMARY

SMCS-1202 **i04929963**

NOTE	REF NO	GRAPHIC REF	PART NUMBER	QTY	PART NAME 1 2 3 4 5 6 (PRODUCT LEVEL)	SEE PAGE
CY	1	1	**359-0716**	1	CRANKSHAFT GP	390
M	2	1	**276-7394**	3	SCREW (M6X1XX12-MM)	
	3	1	**341-4028**	1	RING-TIMING	
C	4	1	**339-8780**	1	DOWEL	
C	5	1	**216-8314**	1	GEAR-CRANKSHAFT (34-TEETH)	
C	6	1	**067-6135**	1	KEY-WOODRUFF (CRANKSHAFT)	

C - CHANGE FROM PREVIOUS TYPE
M - METRIC PART
Y - SEPARATE ILLUSTRATION

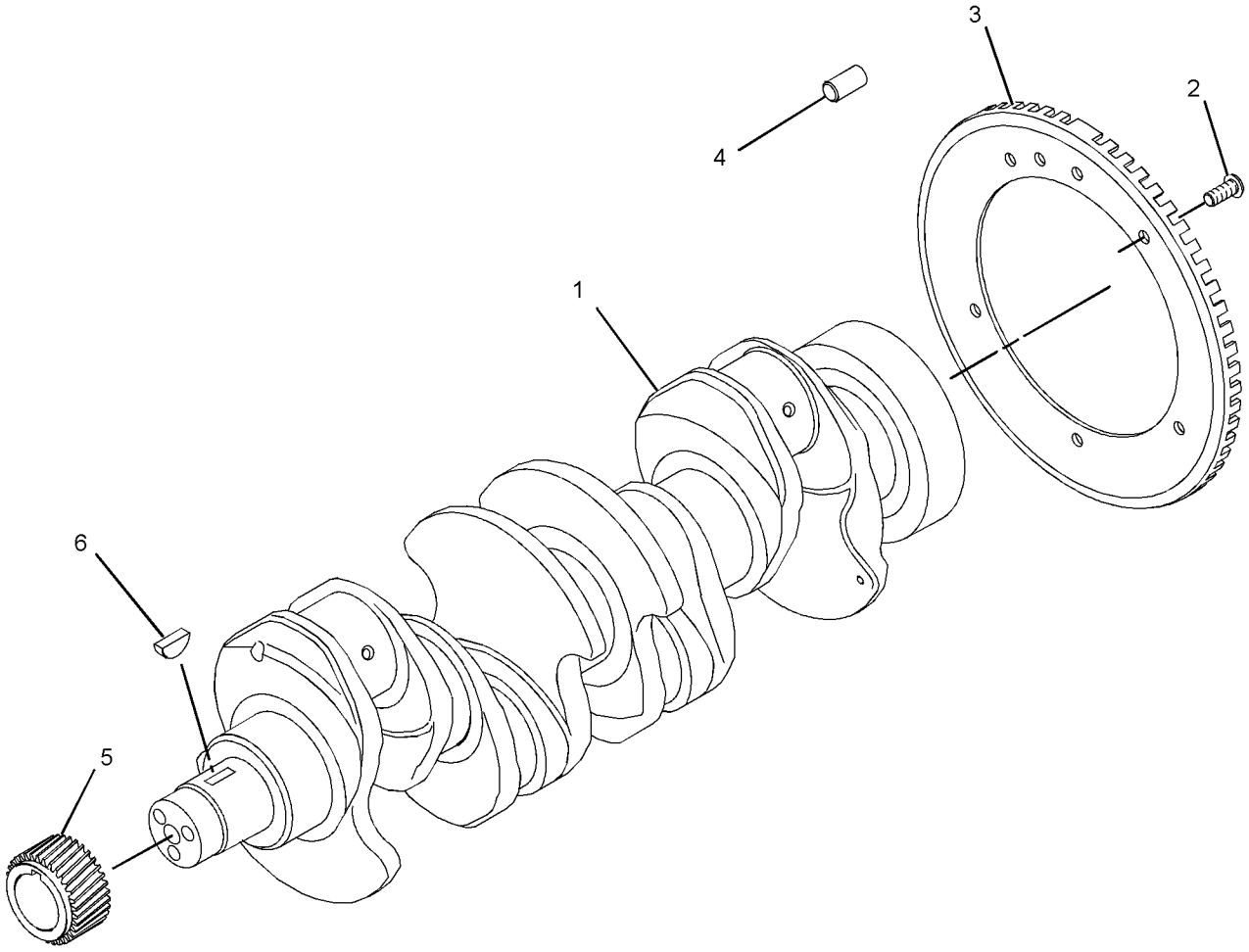

GRAPHIC #1 <END> g02189439

304-3642 CRANKSHAFT GP

S/N: 4441-7401

SMCS-1202 **i03399180**

NOTE	REF NO	GRAPHIC REF	PART NUMBER	QTY	PART NAME 1 2 3 4 5 6 (PRODUCT LEVEL)	SEE PAGE
Y	1	1	**330-1736**	1	CRANKSHAFT GP	388
M	2	1	**276-7394**	3	SCREW (M6X1XX12-MM)	
	3	1	**341-4028**	1	RING-TIMING	

M - METRIC PART
Y - SEPARATE ILLUSTRATION

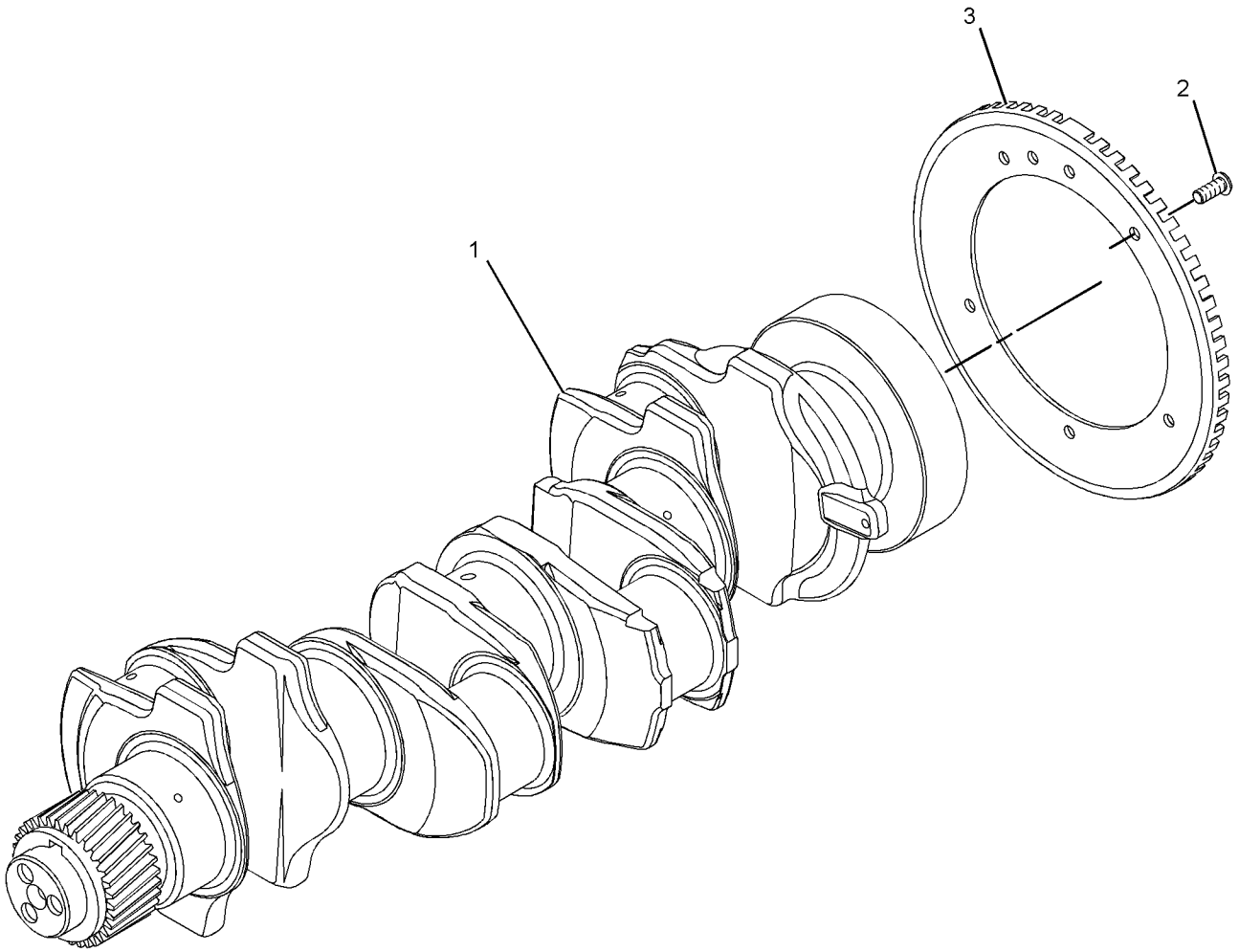

GRAPHIC #1 <END> g01763713

304-3642 CRANKSHAFT GP

SMCS-1202 **i04897361**

NOTE	REF NO	GRAPHIC REF	PART NUMBER	QTY	PART NAME 1 2 3 4 5 6 (PRODUCT LEVEL)	SEE PAGE
CY	1	1	**359-0716**	1	CRANKSHAFT GP	390
M	2	1	**276-7394**	3	SCREW (M6X1XX12-MM)	
	3	1	**341-4028**	1	RING-TIMING	
C	4	1	**339-8780**	1	DOWEL	
C	5	1	**216-8314**	1	GEAR-CRANKSHAFT (34-TEETH)	
C	6	1	**067-6135**	1	KEY-WOODRUFF	

C - CHANGE FROM PREVIOUS TYPE
M - METRIC PART
Y - SEPARATE ILLUSTRATION

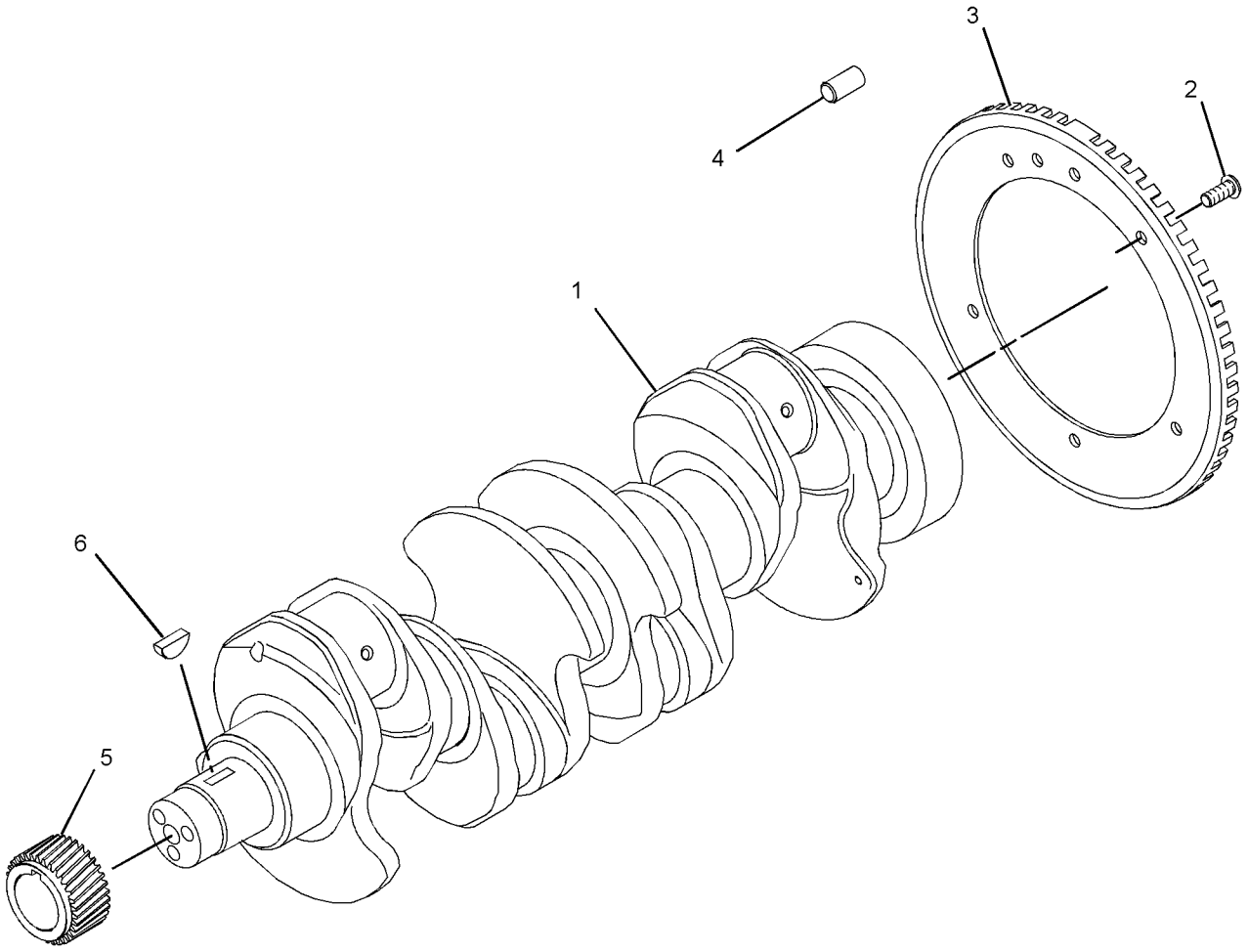

GRAPHIC #1 <END> g02189439

308-4146 CRANKSHAFT GP

S/N: 4441-7401

SMCS-1202 **i03541440**

NOTE	REF NO	GRAPHIC REF	PART NUMBER	QTY	PART NAME 1 2 3 4 5 6 (PRODUCT LEVEL)	SEE PAGE
M	1	1	**276-7394**	3	SCREW (M6X1XX12-MM)	
	2	1	**341-4028**	1	RING-TIMING	
Y	3	1	**330-1736**	1	CRANKSHAFT GP	388

M - METRIC PART
Y - SEPARATE ILLUSTRATION

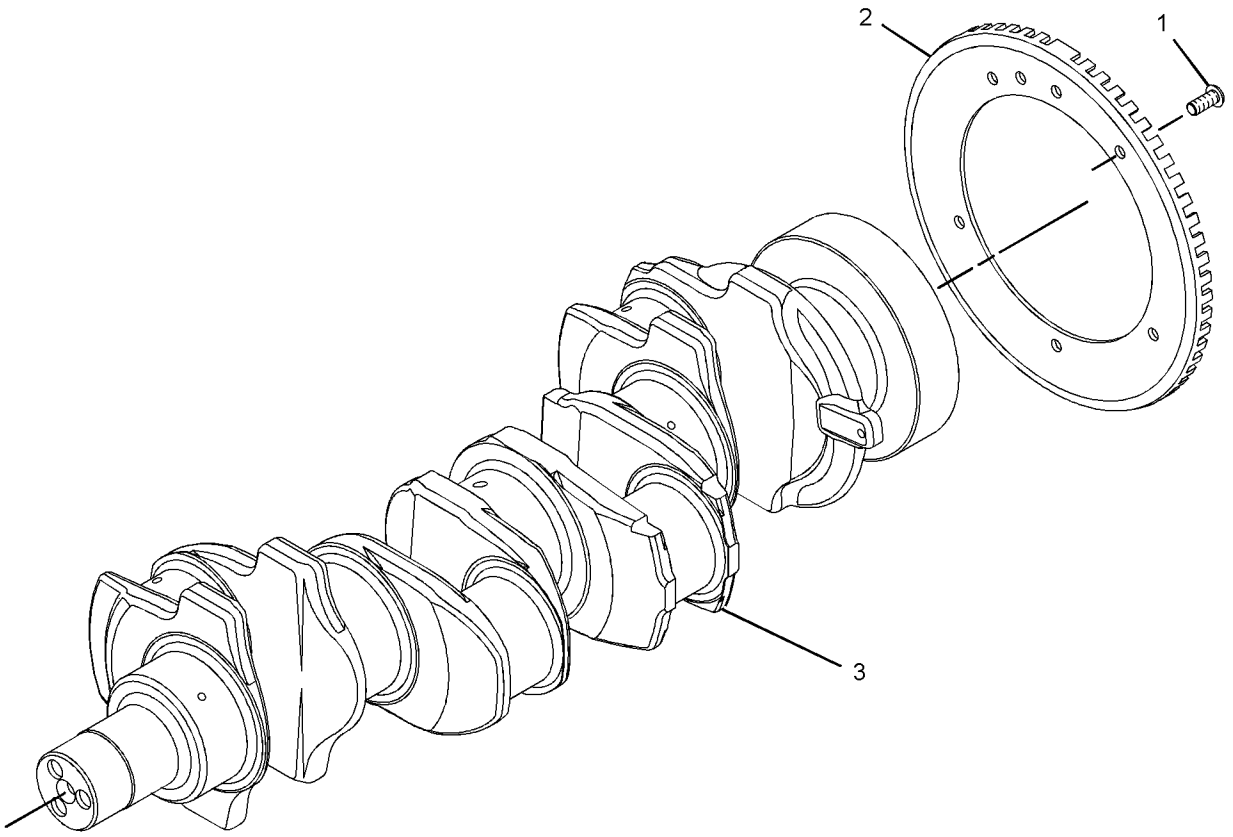

GRAPHIC #1 <END> g01896952

308-4146 CRANKSHAFT GP

ALSO AN ATTACHMENT

SMCS-1202 **i05261282**

NOTE	REF NO	GRAPHIC REF	PART NUMBER	QTY	PART NAME 1 2 3 4 5 6 (PRODUCT LEVEL)	SEE PAGE
CY	1	1	**359-0716**	1	CRANKSHAFT GP	390
M	2	1	**276-7394**	3	SCREW (M6X1XX12-MM)	
	3	1	**341-4028**	1	RING-TIMING	
C	4	1	**339-8780**	1	DOWEL	
C	5	1	**216-8314**	1	GEAR-CRANKSHAFT (34-TEETH)	
C	6	1	**067-6135**	1	KEY-WOODRUFF	

C - CHANGE FROM PREVIOUS TYPE
M - METRIC PART
Y - SEPARATE ILLUSTRATION

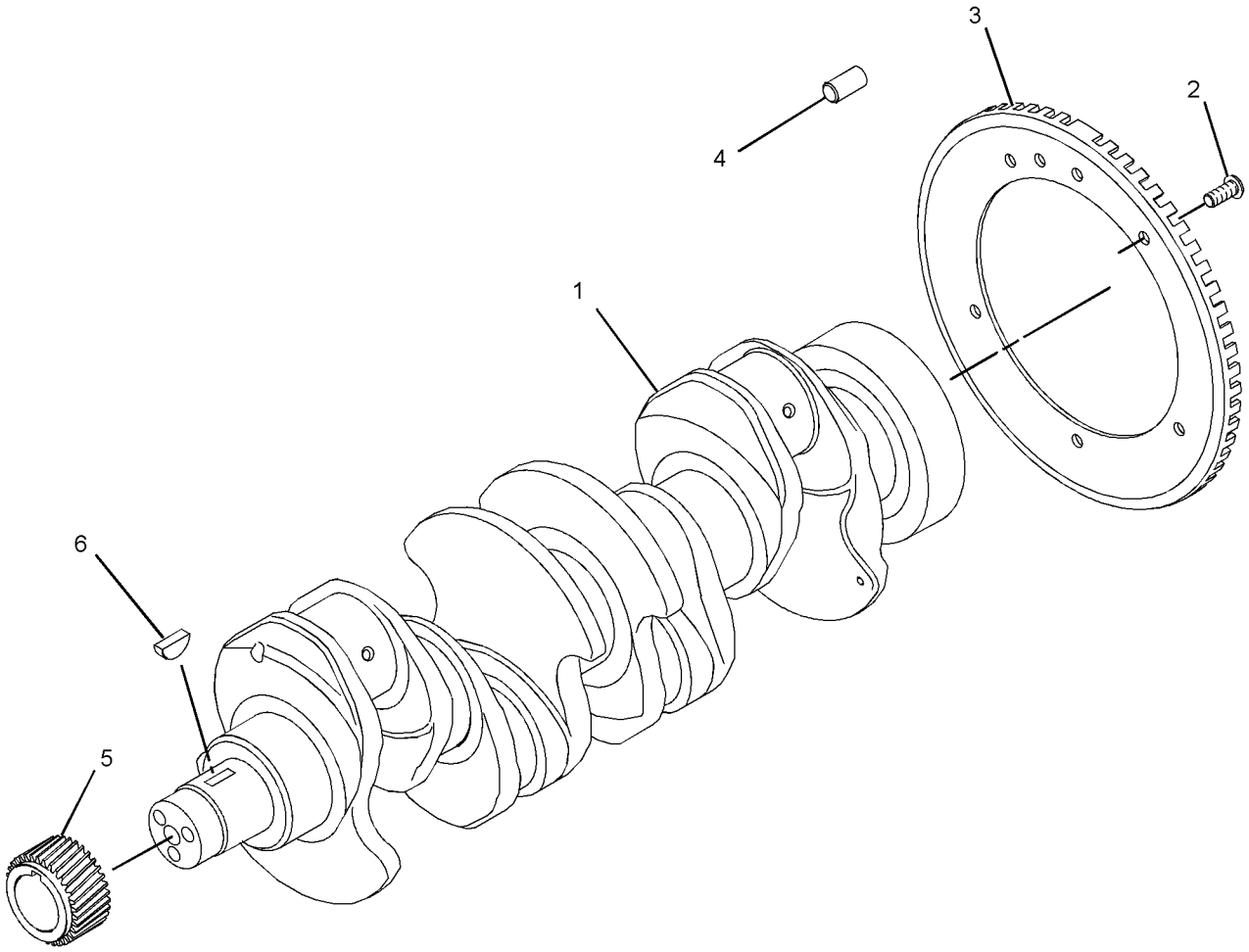

GRAPHIC #1 <END> g02189439

322-4882 CRANKSHAFT GP

S/N: 4441-7401

SMCS-1202 **i03541582**

NOTE	REF NO	GRAPHIC REF	PART NUMBER	QTY	PART NAME 1 2 3 4 5 6 (PRODUCT LEVEL)	SEE PAGE
Y	1	1	**330-1736**	1	CRANKSHAFT GP	388
M	2	1	**276-7394**	3	SCREW (M6X1XX12-MM)	
C	3	1	**341-4028**	1	RING-TIMING (CRANK SHAFT)	

C - CHANGE FROM PREVIOUS TYPE
M - METRIC PART
Y - SEPARATE ILLUSTRATION

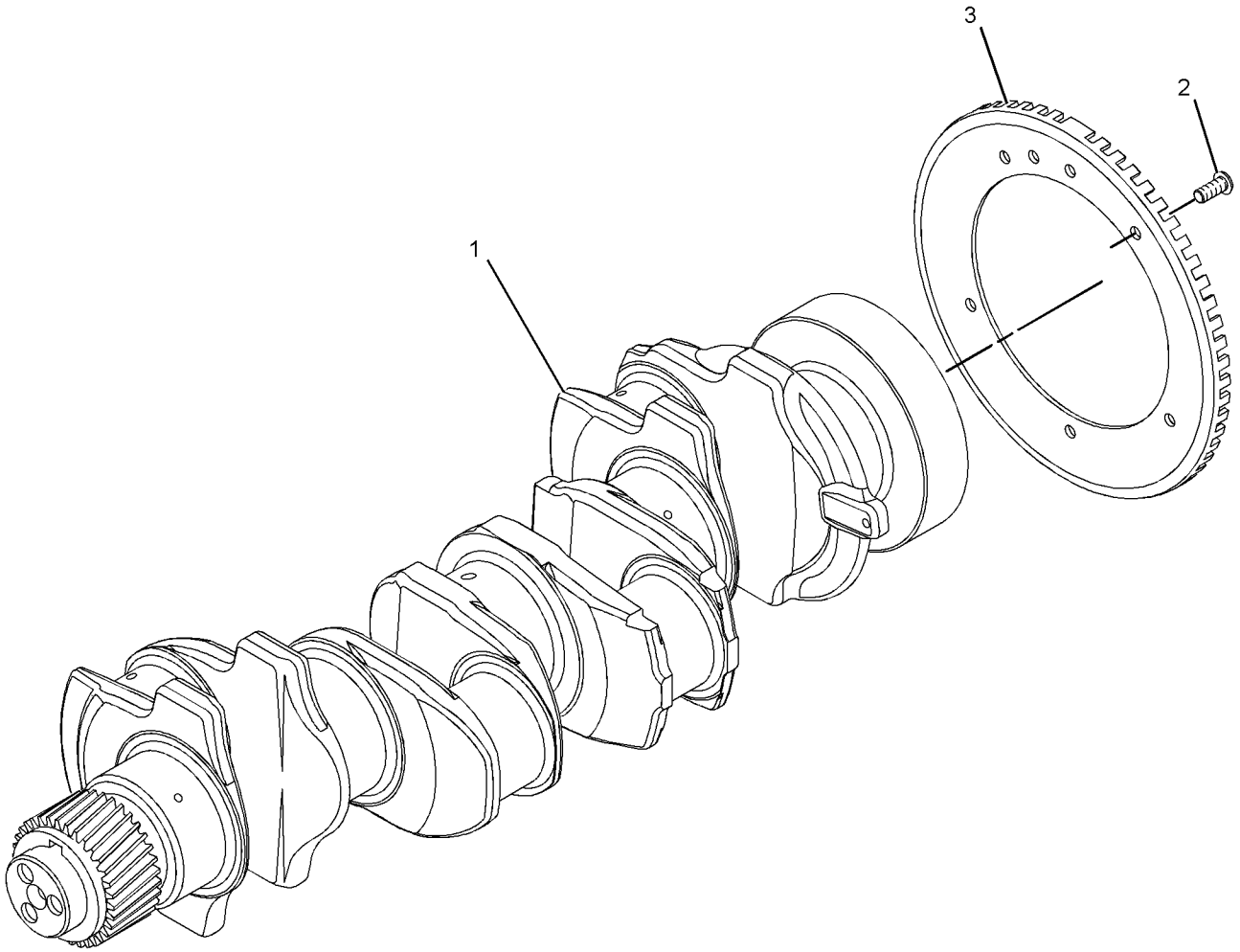

GRAPHIC #1 <END> g01763713

322-4882 CRANKSHAFT GP

S/N: 4447402-UP

SMCS-1202 **i05022112**

NOTE	REF NO	GRAPHIC REF	PART NUMBER	QTY	PART NAME 1 2 3 4 5 6 (PRODUCT LEVEL)	SEE PAGE
CY	1	1	**359-0716**	1	CRANKSHAFT GP	390
M	2	1	**276-7394**	3	SCREW (M6X1XX12-MM)	
	3	1	**341-4028**	1	RING-TIMING (CRANKSHAFT)	
C	4	1	**339-8780**	1	DOWEL	
C	5	1	**216-8314**	1	GEAR-CRANKSHAFT (34-TEETH)	
C	6	1	**067-6135**	1	KEY-WOODRUFF (CRANKSHAFT)	

C - CHANGE FROM PREVIOUS TYPE
M - METRIC PART
Y - SEPARATE ILLUSTRATION

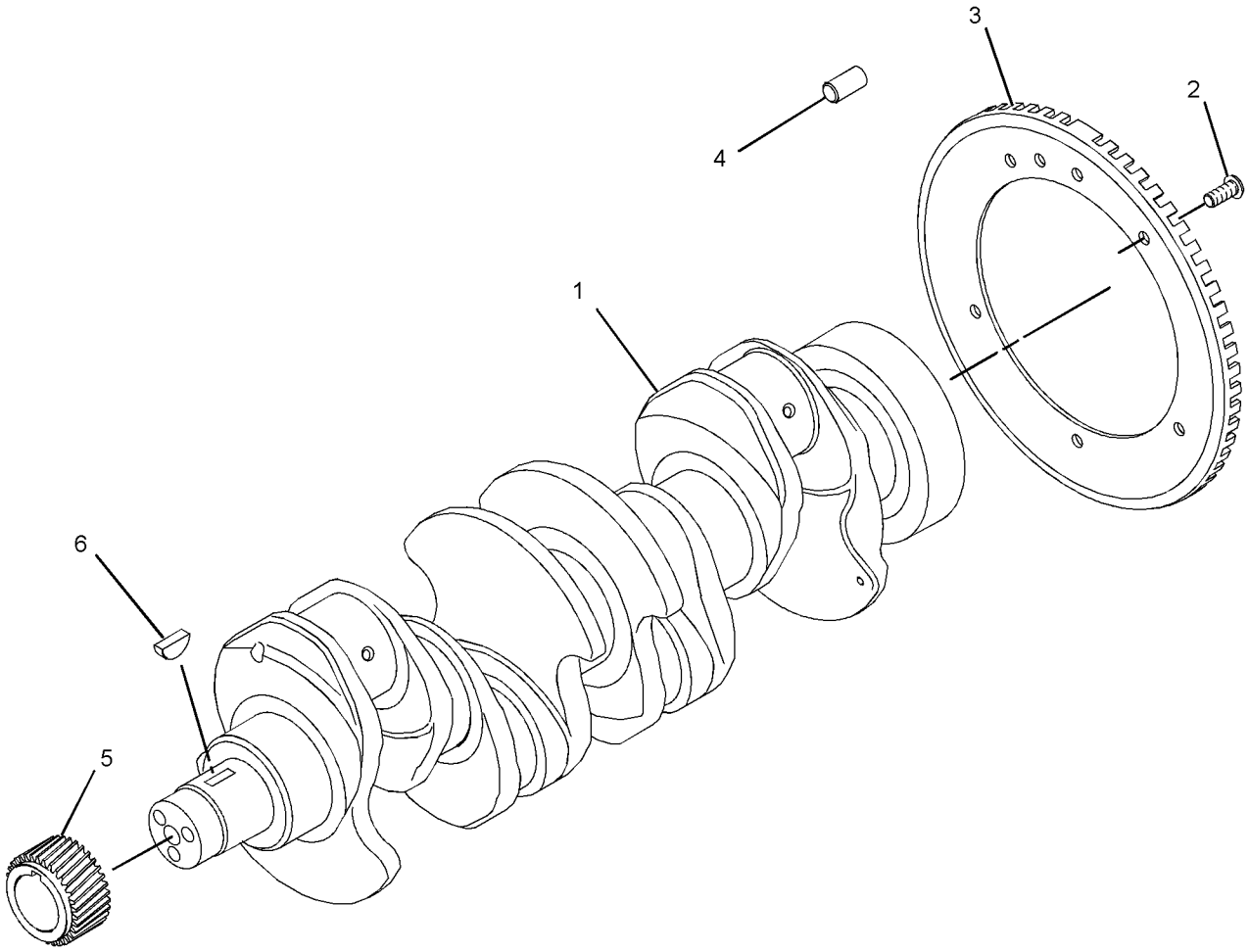

GRAPHIC #1 <END> g02189439

330-1736 CRANKSHAFT GP

S/N: 4441-7401
WITH SPLINE
FIELD REPLACEMENT ORDER 364-2829—PAGE: 392
PART OF 298-5086, 298-5888, 304-3642, 308-4146, 322-4882 CRANKSHAFT GP

SMCS-1202 **i03419135**

NOTE	REF NO	GRAPHIC REF	PART NUMBER	QTY	PART NAME 1 2 3 4 5 6 (PRODUCT LEVEL)	SEE PAGE
	1	1	**1B-8736**	1	KEY-WOODRUFF	
	2	1	**032-9090**	2	WASHER-THRUST (STANDARD-UPPER)	
AB		1	**067-6873**		WASHER-THRUST (0.18-MM OS)	
	3	1	**032-9091**	2	WASHER-THRUST (STANDARD-LOWER)	
AB		1	**067-6874**		WASHER-THRUST (0.18-MM OS)	
	4	1	**216-8314**	1	GEAR-CRANKSHAFT (34-TEETH)	
	5	1	**225-7772**	1	BEARING SET-MAIN (STANDARD)	
AB		1	**233-3784**		KIT-CRANKSHAFT BEARING (0.25-MM US)	
AB		1	**233-3785**		KIT-CRANKSHAFT BEARING (0.50-MM US)	
AB		1	**233-3786**		KIT-CRANKSHAFT BEARING (0.75-MM US)	
	6	1	**339-8780**	1	DOWEL	
	7	1	**298-4524**	1	KIT-BEARING	

A - NOT PART OF THIS GROUP
B - USE AS REQUIRED

330-1736 **CRANKSHAFT GP (**contd.**)** **i03419135**

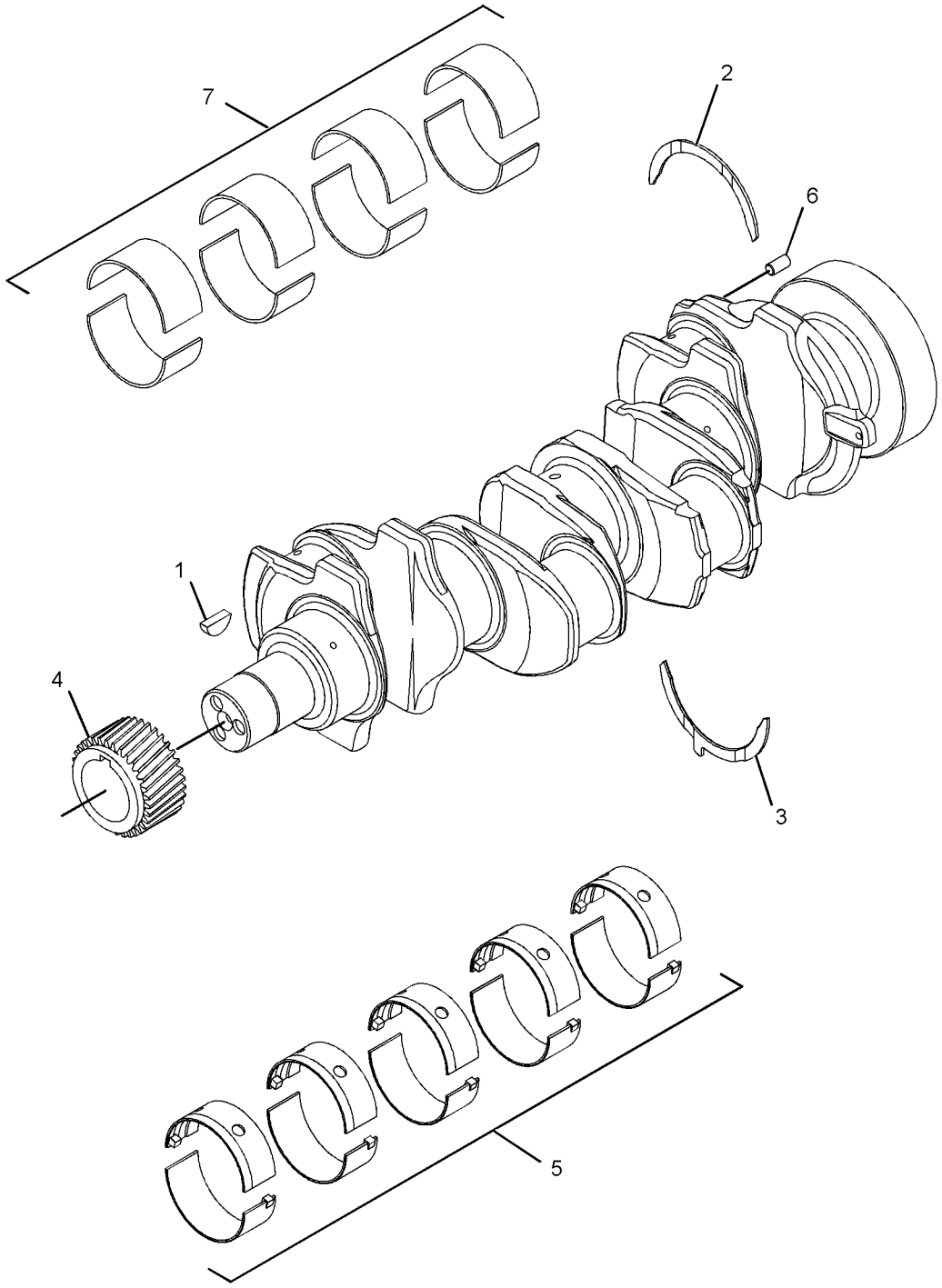

GRAPHIC #1 <END> g01541418

359-0716 CRANKSHAFT GP

S/N: 4447402-UP
W/O SPLINE
PART OF 298-5086, 298-5888, 304-3642, 308-4146, 322-4882 CRANKSHAFT GP, 359-0737 CYLINDER BLOCK GP-SHORT
ALSO AN ATTACHMENT
TYPE 1

SMCS-1202 **i07153329**

NOTE	REF NO	GRAPHIC REF	PART NUMBER	QTY	PART NAME 1 2 3 4 5 6 (PRODUCT LEVEL)	SEE PAGE
	1	1	**032-9090**	2	WASHER-THRUST (STANDARD-UPPER)	
AB		1	**067-6873**		WASHER-THRUST (0.18-MM OS)	
	2	1	**032-9091**	2	WASHER-THRUST (STANDARD-LOWER)	
AB		1	**067-6874**		WASHER-THRUST (0.18-MM OS)	
	3	1	**353-7423**	1	KIT-BEARING (MAIN)	
AB		1	**353-7424**		KIT-BEARING (0.25-MM US)	
AB		1	**353-7425**		KIT-BEARING (0.50-MM US)	
AB		1	**353-7426**		KIT-BEARING (0.75-MM US)	
	4	1	**360-3986**	1	KIT-BEARING (CONNECTING ROD) (STANDARD)	
AB		1	**468-7762**		KIT-BEARING (0.254-MM US)	
AB		1	**468-7769**		KIT-BEARING (0.508-MM US)	
AB		1	**468-7770**		KIT-BEARING (0.762-MM US)	

A - NOT PART OF THIS GROUP
B - USE AS REQUIRED

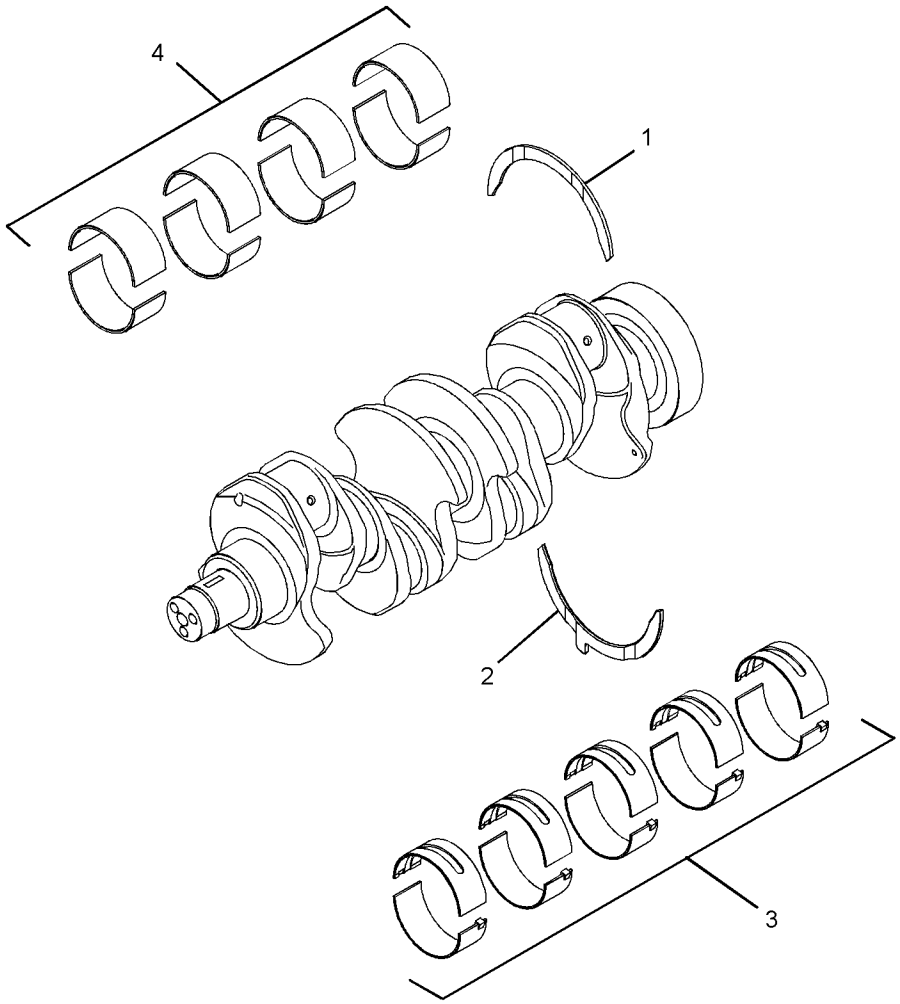

GRAPHIC #1 <END> g03331776

359-0716 CRANKSHAFT GP

S/N: 4447402-UP
W/O SPLINE
PART OF 298-5086, 298-5888, 304-3642, 308-4146, 322-4882 CRANKSHAFT GP, 359-0737 CYLINDER BLOCK GP-SHORT
ALSO AN ATTACHMENT
TYPE 2

SMCS-1202 **i07474280**

NOTE	REF NO	GRAPHIC REF	PART NUMBER	QTY	PART NAME 1 2 3 4 5 6 (PRODUCT LEVEL)	SEE PAGE
	1	1	**470-7995**	2	PLATE-THRUST (STANDARD) (UPPER)	
AB		1	**067-6873**		WASHER-THRUST (0.18-MM OS)	
	2	1	**470-8021**	2	PLATE-THRUST (STANDARD) (LOWER)	
AB		1	**067-6874**		WASHER-THRUST (0.18-MM OS)	
C	3	1	**518-5437**	1	KIT-BEARING (STANDARD)	
ABC		1	**518-5440**		KIT-BEARING (0.254-MM US)	
ABC		1	**518-5441**		KIT-BEARING (0.508-MM US)	
ABC		1	**518-5885**		KIT-BEARING (0.762-MM US)	
	4	1	**360-3986**	1	KIT-BEARING (CONNECTING ROD)	
AB		1	**468-7762**		KIT-BEARING (0.254-MM US)	
AB		1	**468-7769**		KIT-BEARING (0.508-MM US)	
AB		1	**468-7770**		KIT-BEARING (0.762-MM US)	

A - NOT PART OF THIS GROUP
B - USE AS REQUIRED
C - CHANGE FROM PREVIOUS TYPE

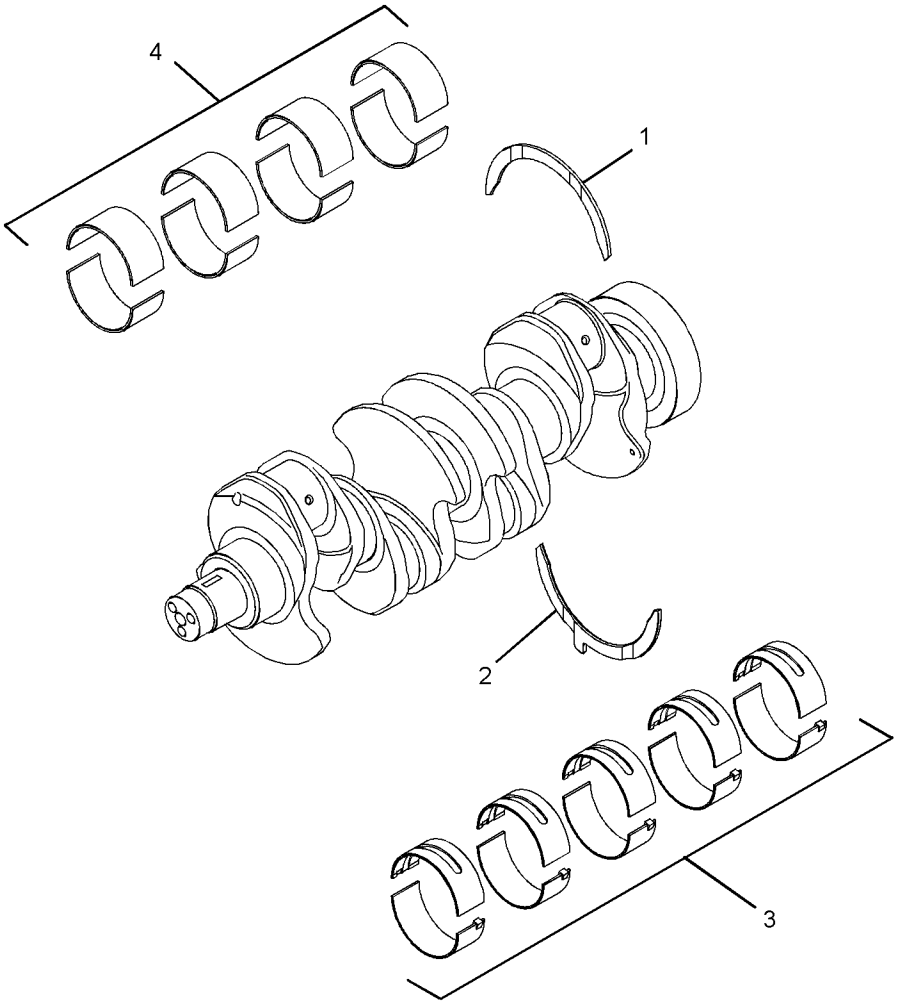

GRAPHIC #1 <END> g03331776

364-2829 CRANKSHAFT GP

WITH SPLINE

FIELD REPLACEMENT FOR 330-1736—PAGE: 388

TYPE 1

SMCS-1202 **i07340992**

NOTE	REF NO	GRAPHIC REF	PART NUMBER	QTY	PART NAME 1 2 3 4 5 6 (PRODUCT LEVEL)	SEE PAGE
B	1	1	**032-9090**	2	WASHER-THRUST (STANDARD-UPPER)	
AB		1	**067-6873**		WASHER-THRUST (0.18-MM OS)	
B	2	1	**032-9091**	2	WASHER-THRUST (STANDARD-LOWER)	
AB		1	**067-6874**		WASHER-THRUST (0.18-MM OS)	
B	3	1	**353-2205**	1	KIT-ROD BEARING	
AB		1	**353-2206**		KIT-ROD BEARING (0.25-MM US)	
AB		1	**353-2207**		KIT-ROD BEARING (0.50-MM US)	
AB		1	**353-2208**		KIT-ROD BEARING (0.75-MM US)	
B	4	1	**353-7423**	1	KIT-BEARING (MAIN)	
AB		1	**353-7424**		KIT-BEARING (0.25-MM US)	
AB		1	**353-7425**		KIT-BEARING (0.50-MM US)	
AB		1	**353-7426**		KIT-BEARING (0.75-MM US)	

A - NOT PART OF THIS GROUP
B - USE AS REQUIRED

364-2829 **CRANKSHAFT GP (**contd.**)** **i07340992**

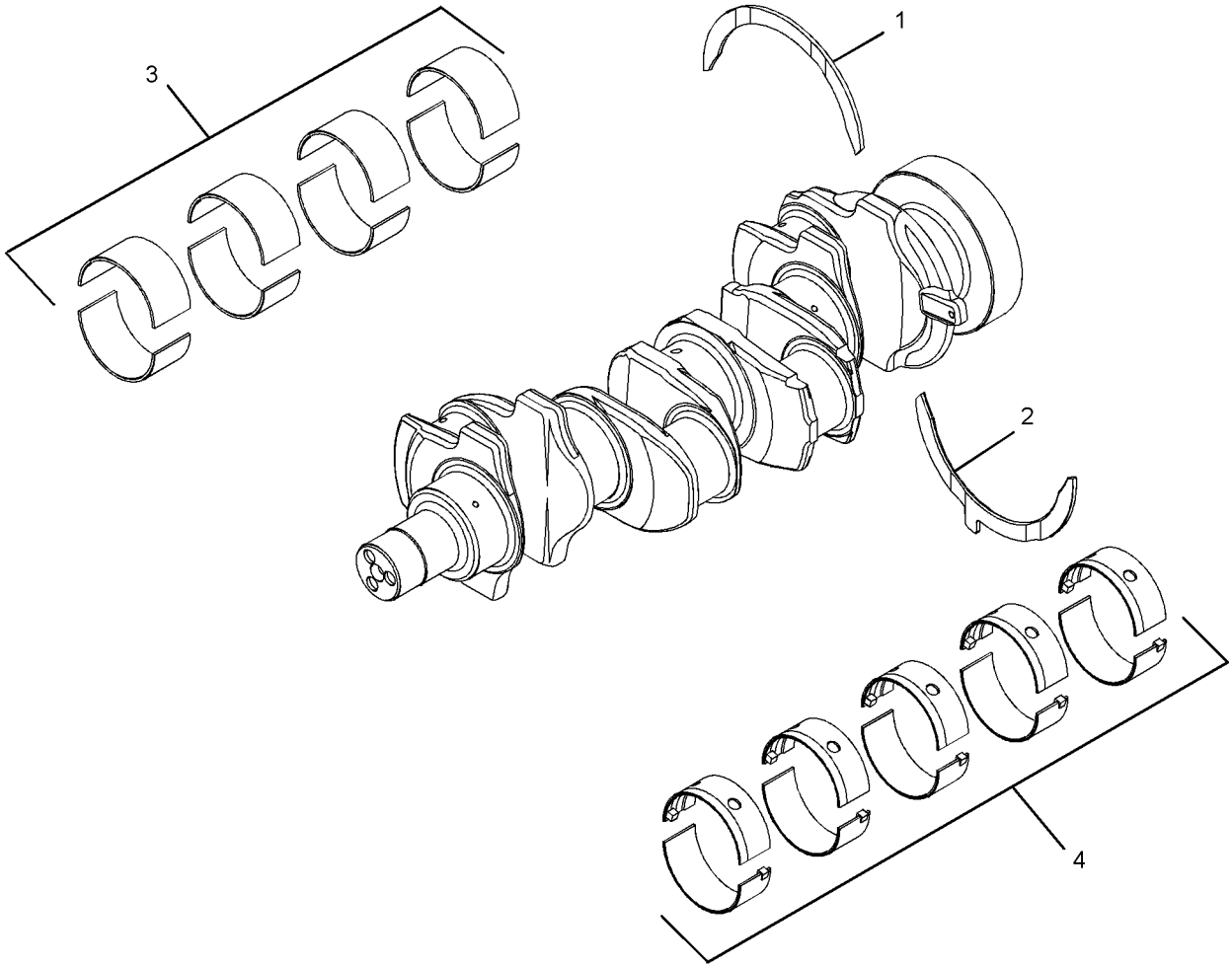

GRAPHIC #1 <END> g06288688

364-2829 CRANKSHAFT GP

WITH SPLINE

FIELD REPLACEMENT FOR 330-1736—PAGE: 388

TYPE 2

SMCS-1202 **i07340995**

NOTE	REF NO	GRAPHIC REF	PART NUMBER	QTY	PART NAME 1 2 3 4 5 6 (PRODUCT LEVEL)	SEE PAGE
B	1	1	**032-9090**	2	WASHER-THRUST (STANDARD-UPPER)	
AB		1	**067-6873**		WASHER-THRUST (0.18-MM OS)	
B	2	1	**032-9091**	2	WASHER-THRUST (STANDARD-LOWER)	
AB		1	**067-6874**		WASHER-THRUST (0.18-MM OS)	
B	3	1	**353-2205**	1	KIT-ROD BEARING (STANDARD)	
AB		1	**353-2206**		KIT-ROD BEARING (0.25-MM US)	
AB		1	**353-2207**		KIT-ROD BEARING (0.50-MM US)	
AB		1	**353-2208**		KIT-ROD BEARING (0.75-MM US)	
BC	4	1	**518-5437**	1	KIT-BEARING (STANDARD)	
ABC		1	**518-5440**		KIT-BEARING (0.254-MM US) (0.254-MM US)	
ABC		1	**518-5441**		KIT-BEARING (0.508-MM US) (0.50-MM US)	
ABC		1	**518-5885**		KIT-BEARING (0.762-MM US) (0.75-MM US)	

A - NOT PART OF THIS GROUP
B - USE AS REQUIRED
C - CHANGE FROM PREVIOUS TYPE

364-2829 **CRANKSHAFT GP (**contd.**)** **i07340995**

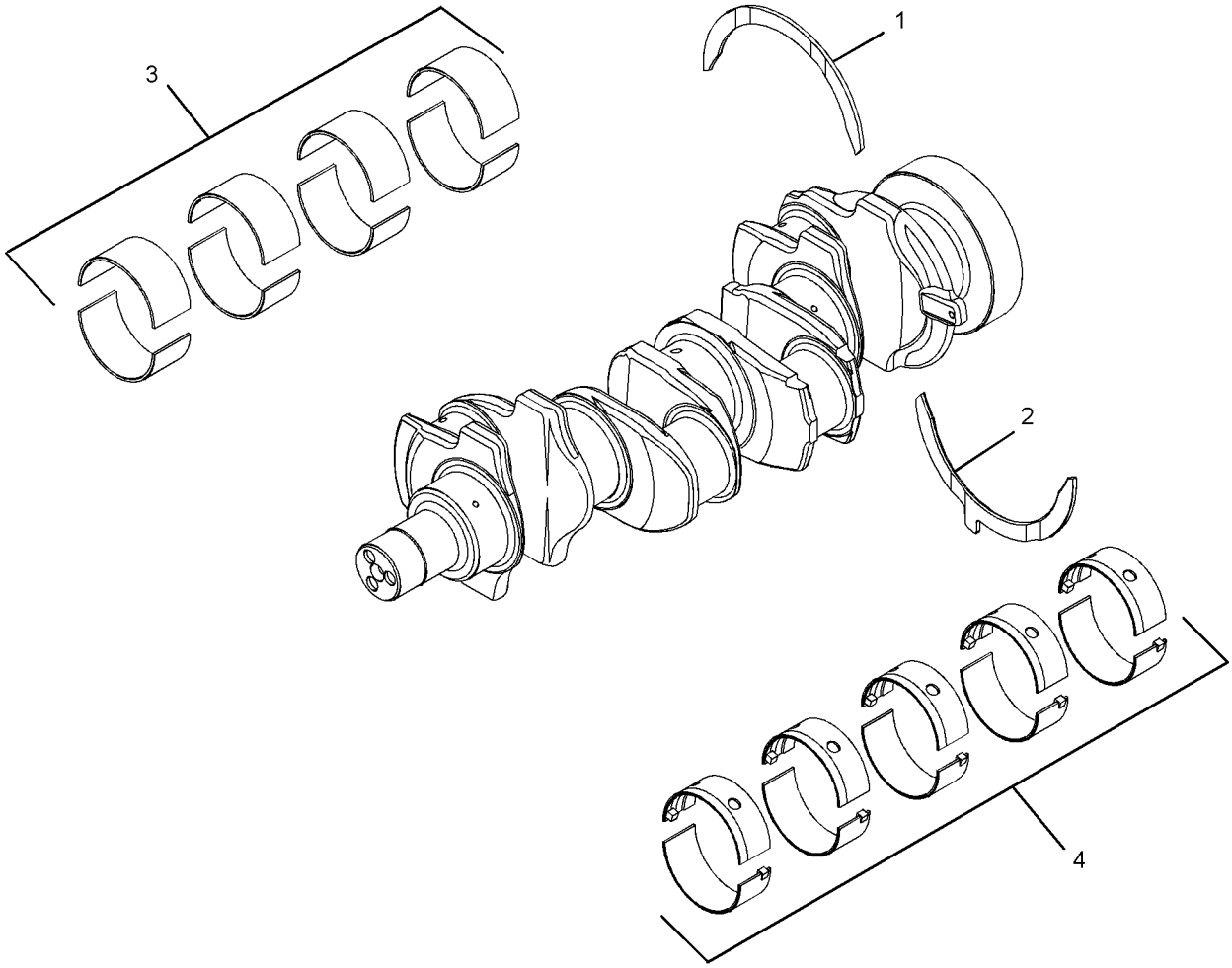

GRAPHIC #1 <END> g06288689

364-2829 CRANKSHAFT GP

WITH SPLINE

FIELD REPLACEMENT FOR 330-1736—PAGE: 388

TYPE 3

SMCS-1202 **i07340716**

NOTE	REF NO	GRAPHIC REF	PART NUMBER	QTY	PART NAME 1 2 3 4 5 6 (PRODUCT LEVEL)	SEE PAGE
BC	1	1	*470-7995*	2	PLATE-THRUST (STANDARD) (UPPER)	
BC		1	**518-5891**	2	KIT-WASHER (STANDARD)	
ABC		1	**518-5892**		KIT-WASHER (0.191-MM US)	
ABC		1	**518-5893**		KIT-WASHER (STANDARD, 0.191-MM US)	
BC	2	1	*470-8021*	2	PLATE-THRUST (STANDARD) (LOWER)	
BC		1	**518-5891**	2	KIT-WASHER (STANDARD)	
ABC		1	**518-5892**		KIT-WASHER (0.191-MM US)	
ABC		1	**518-5893**		KIT-WASHER (STANDARD, 0.191-MM US)	
B	3	1	**353-2205**	1	KIT-ROD BEARING (STANDARD)	
AB		1	**353-2206**		KIT-ROD BEARING (0.25-MM US)	
AB		1	**353-2207**		KIT-ROD BEARING (0.50-MM US)	
AB		1	**353-2208**		KIT-ROD BEARING (0.75-MM US)	
B	4	1	**518-5437**	1	KIT-BEARING (STANDARD)	
AB		1	**518-5440**		KIT-BEARING (0.254-MM US) (0.254-MM US)	
AB		1	**518-5441**		KIT-BEARING (0.508-MM US) (0.50-MM US)	
AB		1	**518-5885**		KIT-BEARING (0.762-MM US) (0.75-MM US)	

A - NOT PART OF THIS GROUP
B - USE AS REQUIRED
C - CHANGE FROM PREVIOUS TYPE

364-2829 **CRANKSHAFT GP (**contd.**)** **i07340716**

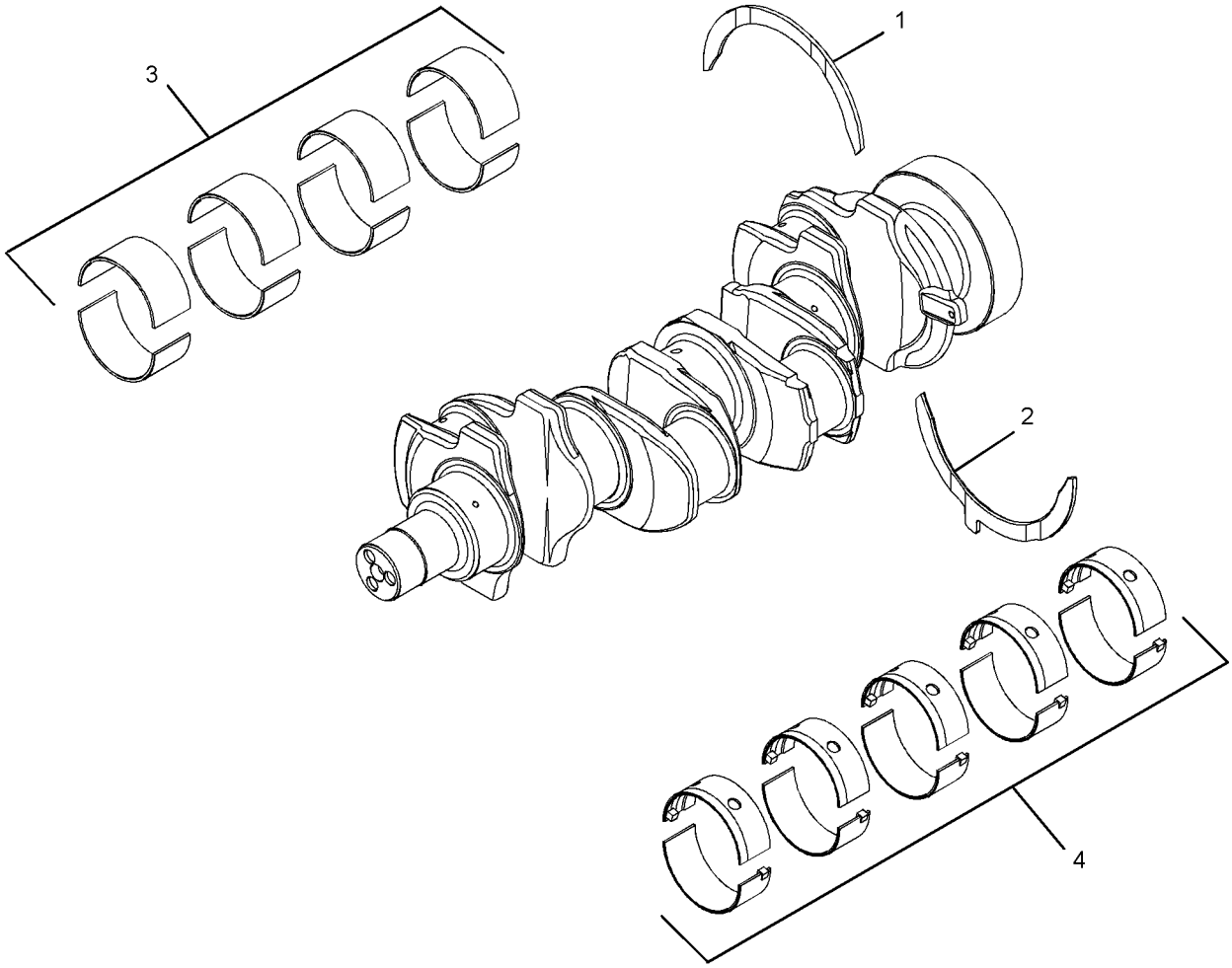

GRAPHIC #1 <END> g06288685

298-5085 CYLINDER BLOCK GP

S/N: 4441-7418

PART OF 435-1685 ENGINE AR-PRIMARY

SMCS-1201 **i03360104**

NOTE	REF NO	GRAPHIC REF	PART NUMBER	QTY	PART NAME 1 2 3 4 5 6 (PRODUCT LEVEL)	SEE PAGE
M	1	1	**209-9219**	10	BOLT (M8X1.25X16-MM)	
	2	1	**232-7449**	1	HOUSING AS	
Y	3	1	**330-4789**	1	CYLINDER BLOCK GP	408

M - METRIC PART
Y - SEPARATE ILLUSTRATION

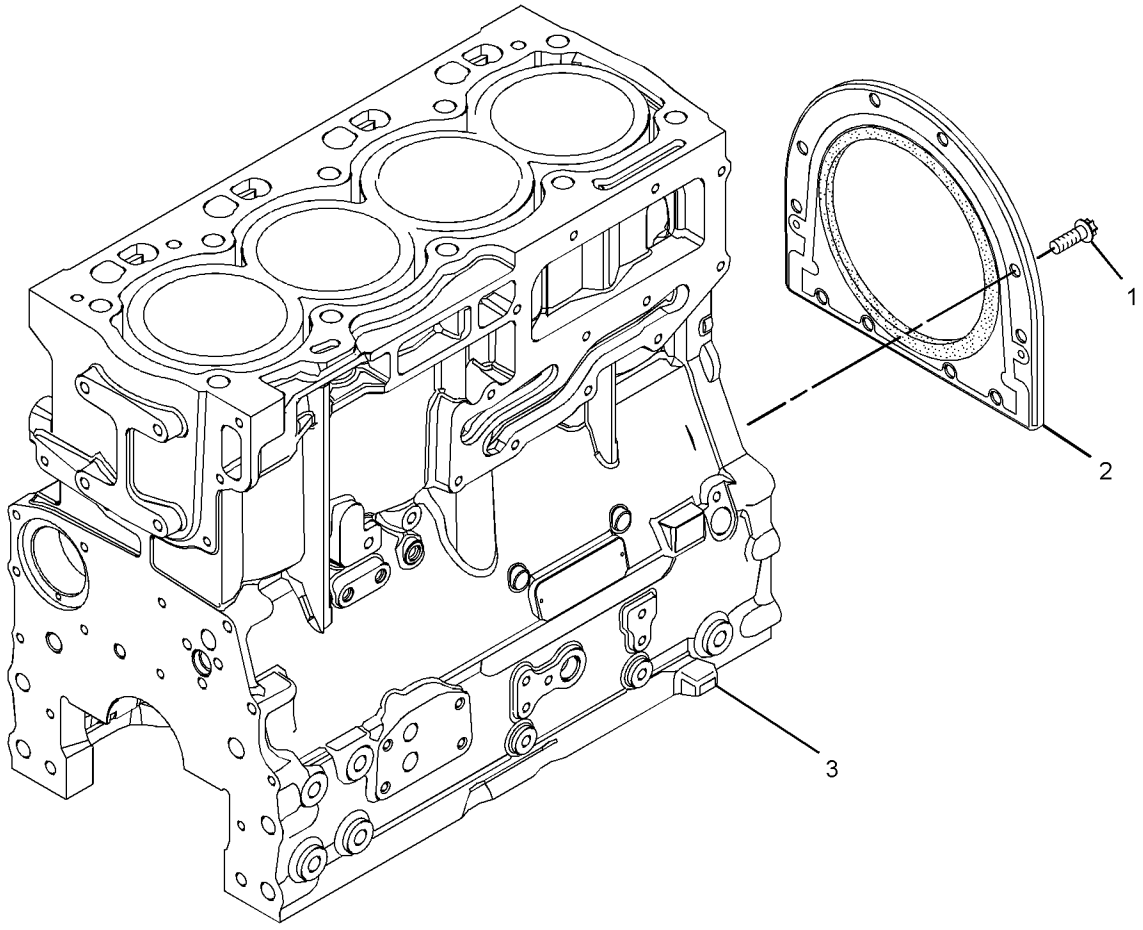

GRAPHIC #1 <END> g01586214

298-5085 CYLINDER BLOCK GP

PART OF 435-1685 ENGINE AR-PRIMARY

SMCS-1201 **i04253469**

NOTE	REF NO	GRAPHIC REF	PART NUMBER	QTY	PART NAME 1 2 3 4 5 6 (PRODUCT LEVEL)	SEE PAGE
M	1	1	**209-9219**	10	BOLT (M8X1.25X16-MM)	
	2	1	**232-7449**	1	HOUSING AS	
CY	3	1	**363-3907**	1	CYLINDER BLOCK GP	412

C - CHANGE FROM PREVIOUS TYPE
M - METRIC PART
Y - SEPARATE ILLUSTRATION

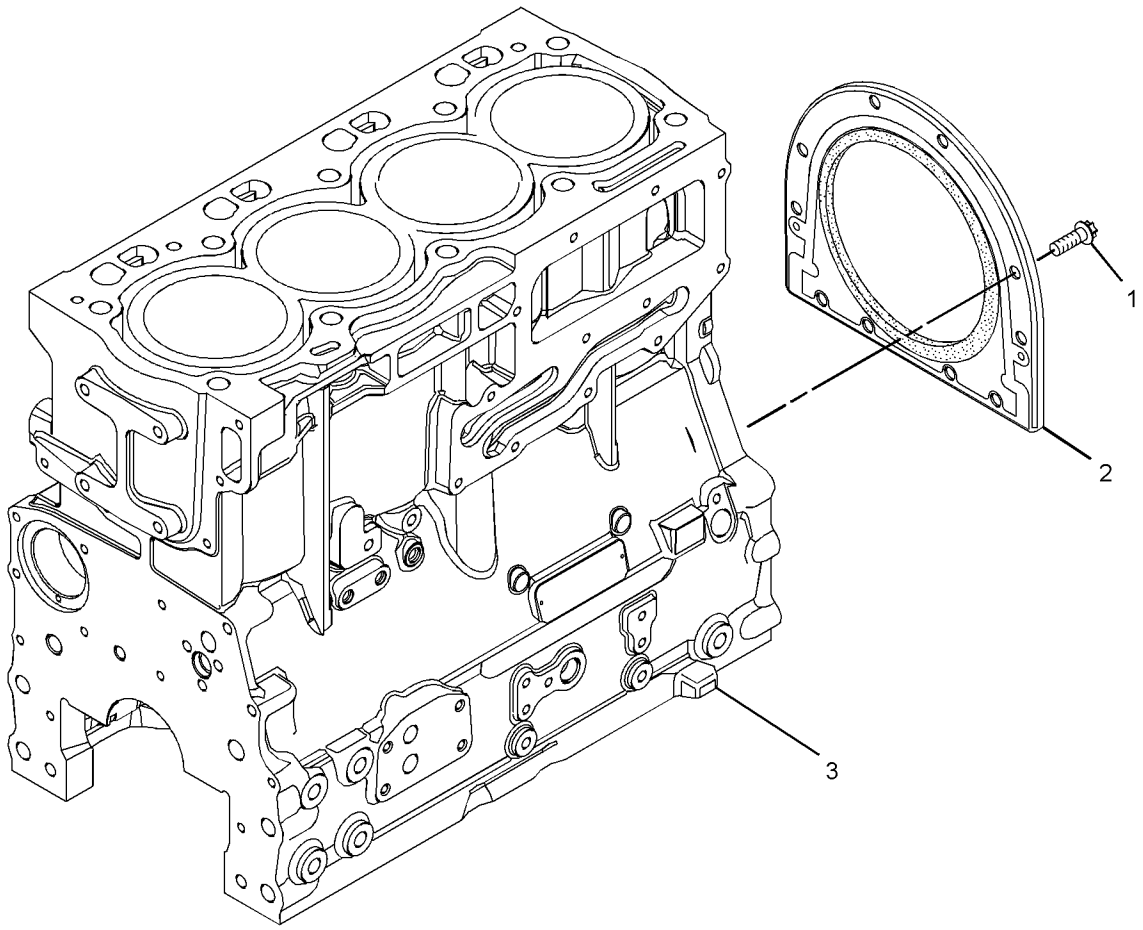

GRAPHIC #1 <END> g01586214

298-5887 CYLINDER BLOCK GP

PART OF 435-1692 ENGINE AR-COMPLETE, 435-1687, 437-5409 ENGINE AR-PRIMARY
TYPE 1

SMCS-1201 **i03190629**

NOTE	REF NO	GRAPHIC REF	PART NUMBER	QTY	PART NAME 1 2 3 4 5 6 (PRODUCT LEVEL)	SEE PAGE
M	1	1	**209-9219**	10	BOLT (M8X1.25X16-MM)	
	2	1	**232-7449**	1	HOUSING AS	
Y	3	1	**330-4789**	1	CYLINDER BLOCK GP	408

M - METRIC PART
Y - SEPARATE ILLUSTRATION

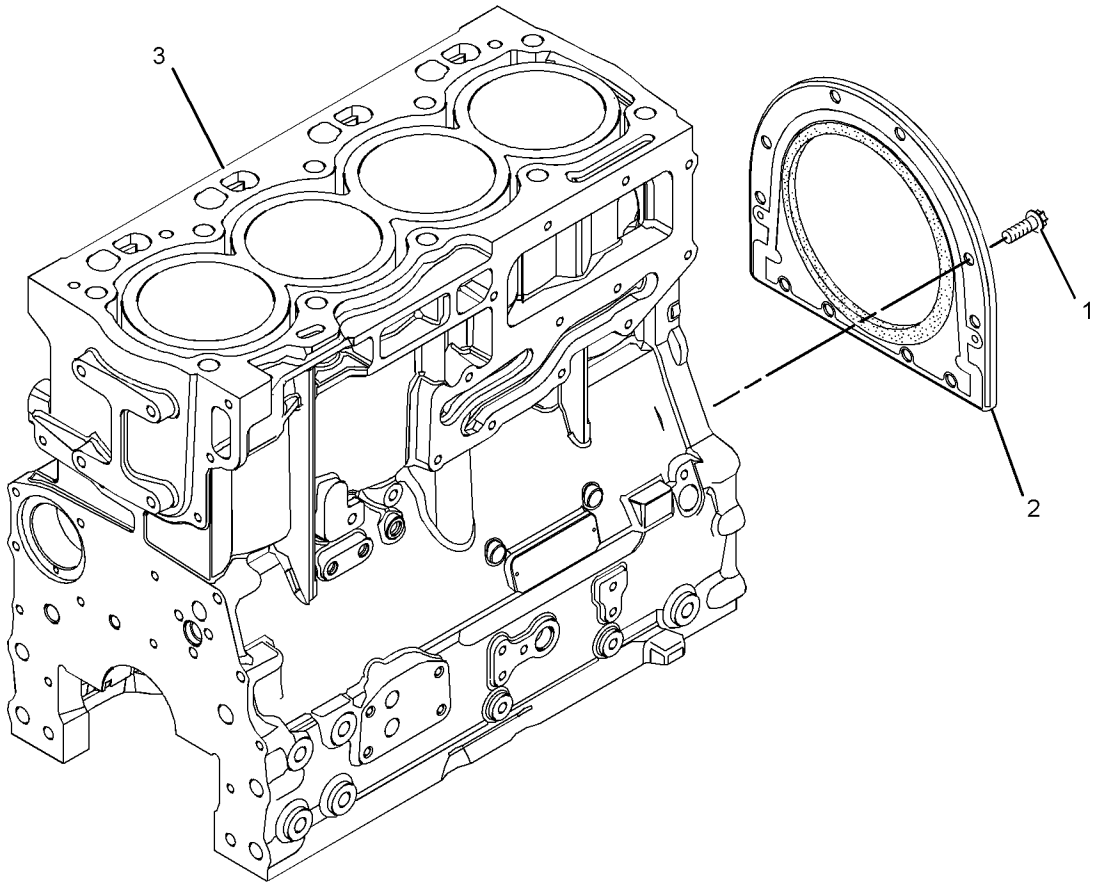

GRAPHIC #1 <END> g01630054

298-5887 CYLINDER BLOCK GP

PART OF 435-1699 ENGINE AR, 435-1692 ENGINE AR-COMPLETE, 435-1687, 437-5409, 522-8303, 540-0570, 540-1155, 540-1156 ENGINE AR-PRIMARY
TYPE 2

SMCS-1201 **i04439615**

NOTE	REF NO	GRAPHIC REF	PART NUMBER	QTY	PART NAME 1 2 3 4 5 6 (PRODUCT LEVEL)	SEE PAGE
M	1	1	**209-9219**	10	BOLT (M8X1.25X16-MM)	
	2	1	**232-7449**	1	HOUSING AS	
CY	3	1	**363-3907**	1	CYLINDER BLOCK GP	412

C - CHANGE FROM PREVIOUS TYPE
M - METRIC PART
Y - SEPARATE ILLUSTRATION

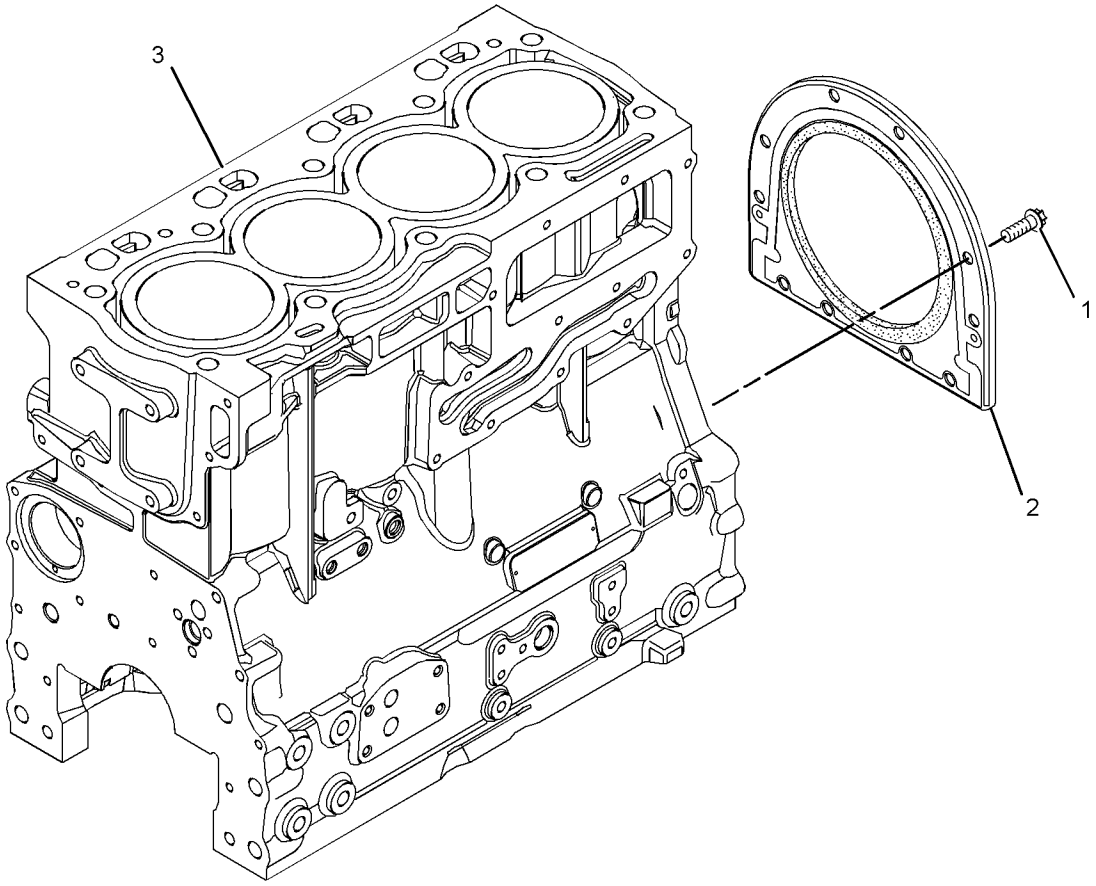

GRAPHIC #1 <END> g01630054

304-3641 CYLINDER BLOCK GP

TYPE 1

SMCS-1201 **i03190979**

NOTE	REF NO	GRAPHIC REF	PART NUMBER	QTY	PART NAME 1 2 3 4 5 6 (PRODUCT LEVEL)	SEE PAGE
M	1	1	**209-9219**	10	BOLT (M8X1.25X16-MM)	
	2	1	**232-7449**	1	HOUSING AS	
Y	3	1	**330-4789**	1	CYLINDER BLOCK GP	408

M - METRIC PART
Y - SEPARATE ILLUSTRATION

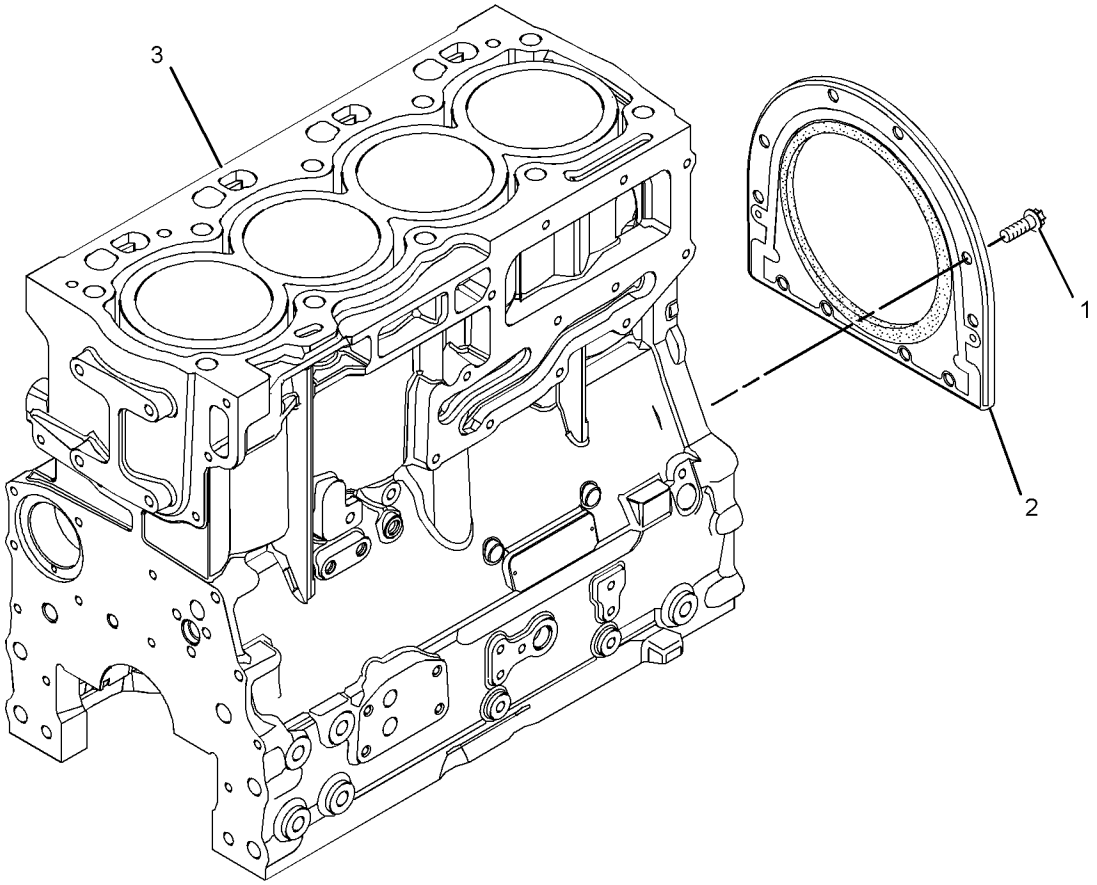

GRAPHIC #1 <END> g01630054

304-3641 CYLINDER BLOCK GP

TYPE 2

SMCS-1201 **i04823189**

NOTE	REF NO	GRAPHIC REF	PART NUMBER	QTY	PART NAME 1 2 3 4 5 6 (PRODUCT LEVEL)	SEE PAGE
M	1	1	**209-9219**	10	BOLT (M8X1.25X16-MM)	
	2	1	**232-7449**	1	HOUSING AS	
CY	3	1	**363-3907**	1	CYLINDER BLOCK GP	412

C - CHANGE FROM PREVIOUS TYPE
M - METRIC PART
Y - SEPARATE ILLUSTRATION

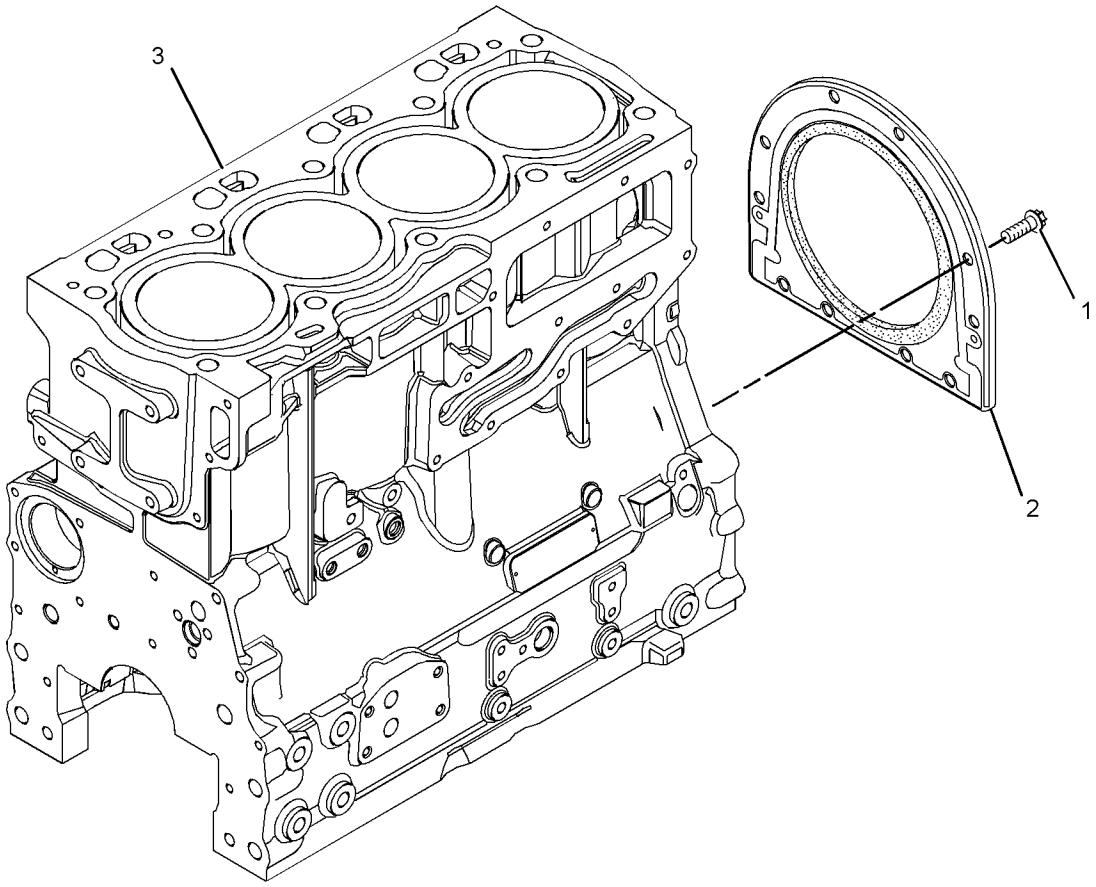

GRAPHIC #1 <END> g01630054

308-4145 CYLINDER BLOCK GP

SMCS-1201 **i03193323**

NOTE	REF NO	GRAPHIC REF	PART NUMBER	QTY	PART NAME 1 2 3 4 5 6 (PRODUCT LEVEL)	SEE PAGE
M	1	1	**209-9219**	10	BOLT (M8X1.25X16-MM)	
	2	1	**232-7449**	1	HOUSING AS	
Y	3	1	**330-4790**	1	CYLINDER BLOCK GP	410

M - METRIC PART
Y - SEPARATE ILLUSTRATION

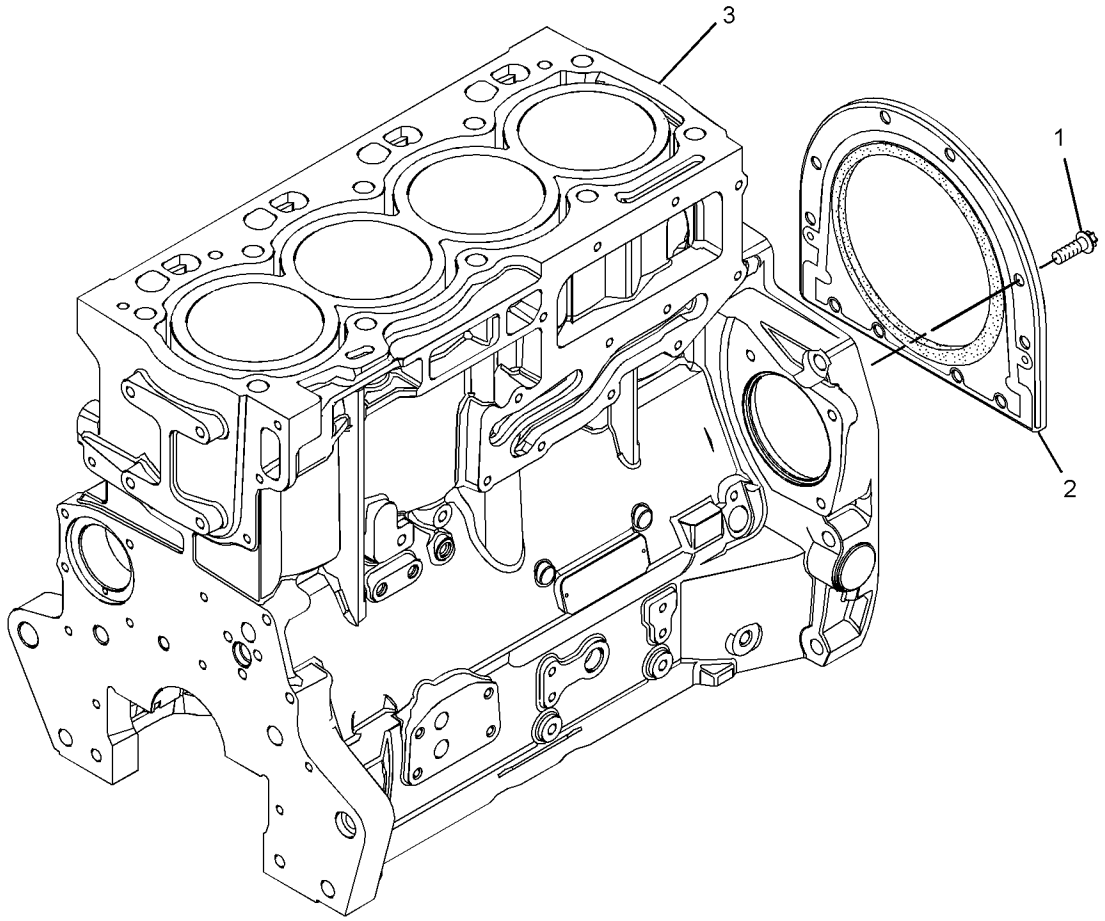

GRAPHIC #1 <END> g01672614

308-4145 CYLINDER BLOCK GP

ALSO AN ATTACHMENT

SMCS-1201 **i05424039**

NOTE	REF NO	GRAPHIC REF	PART NUMBER	QTY	PART NAME 1 2 3 4 5 6 (PRODUCT LEVEL)	SEE PAGE
M	1	1	**209-9219**	10	BOLT (M8X1.25X16-MM)	
	2	1	**232-7449**	1	HOUSING AS	
CY	3	1	**366-5613**	1	CYLINDER BLOCK GP	414

C - CHANGE FROM PREVIOUS TYPE
M - METRIC PART
Y - SEPARATE ILLUSTRATION

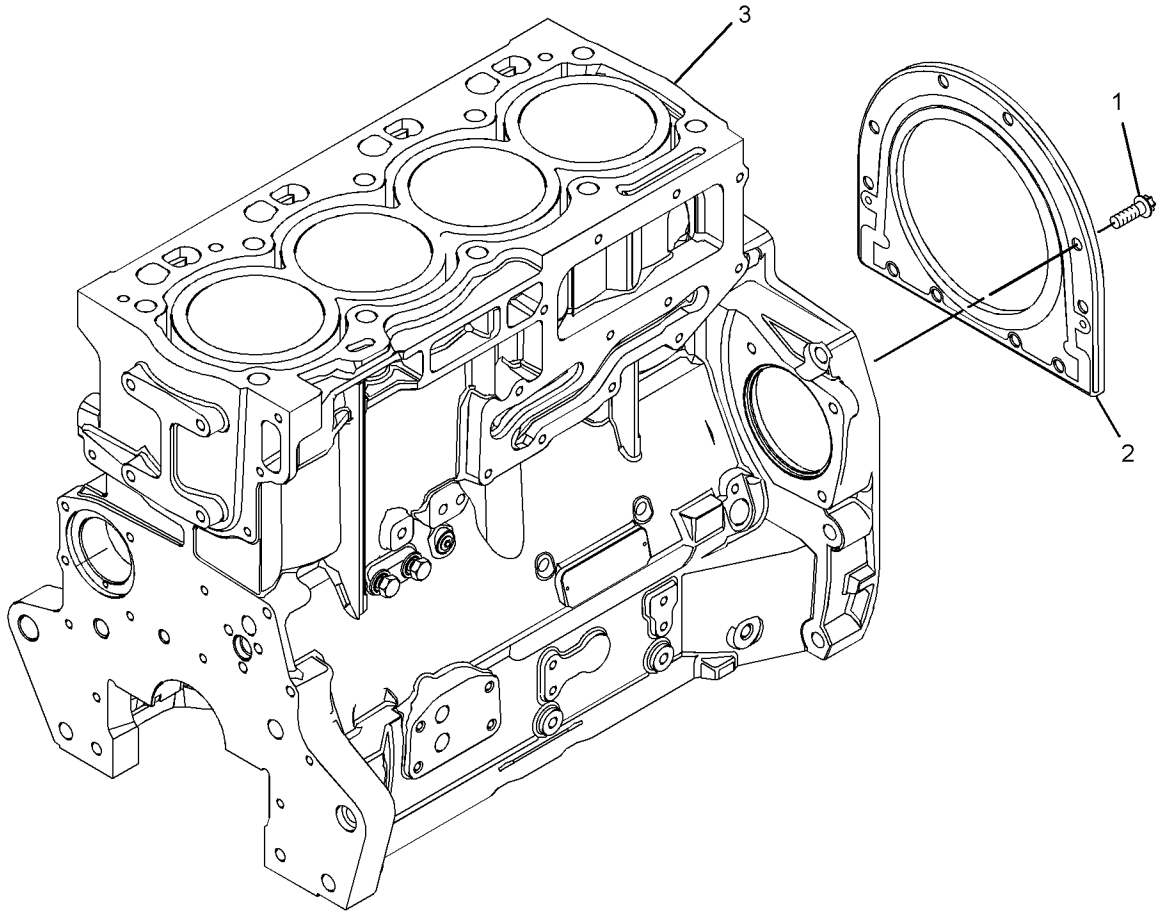

GRAPHIC #1 <END> g03666243

322-4881 CYLINDER BLOCK GP

TYPE 1

SMCS-1201 **i03193324**

NOTE	REF NO	GRAPHIC REF	PART NUMBER	QTY	PART NAME 1 2 3 4 5 6 (PRODUCT LEVEL)	SEE PAGE
M	1	1	**209-9219**	10	BOLT (M8X1.25X16-MM)	
	2	1	**232-7449**	1	HOUSING AS	
Y	3	1	**330-4790**	1	CYLINDER BLOCK GP	410

M - METRIC PART
Y - SEPARATE ILLUSTRATION

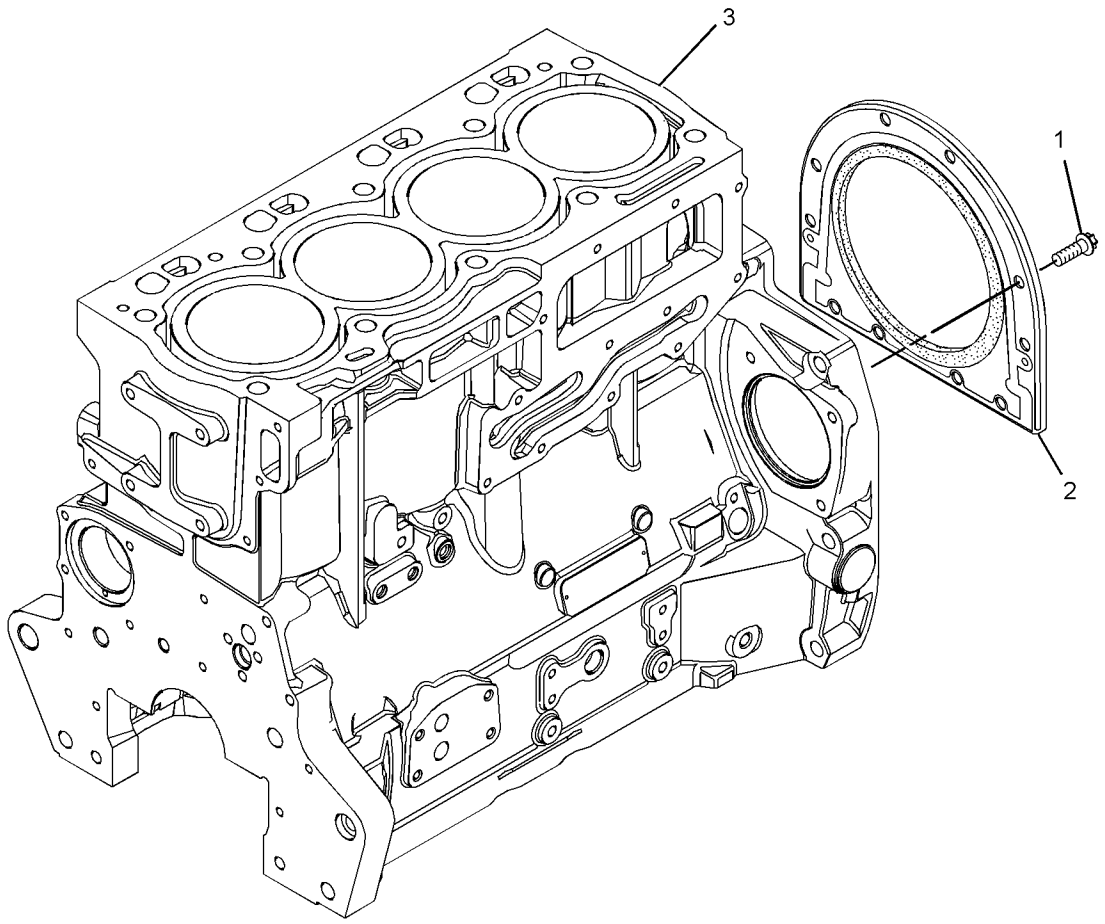

GRAPHIC #1 <END> g01672614

322-4881 CYLINDER BLOCK GP

TYPE 2

SMCS-1201 **i05424042**

NOTE	REF NO	GRAPHIC REF	PART NUMBER	QTY	PART NAME 1 2 3 4 5 6 (PRODUCT LEVEL)	SEE PAGE
M	1	1	**209-9219**	10	BOLT (M8X1.25X16-MM)	
	2	1	**232-7449**	1	HOUSING AS	
CY	3	1	**366-5613**	1	CYLINDER BLOCK GP	414

C - CHANGE FROM PREVIOUS TYPE
M - METRIC PART
Y - SEPARATE ILLUSTRATION

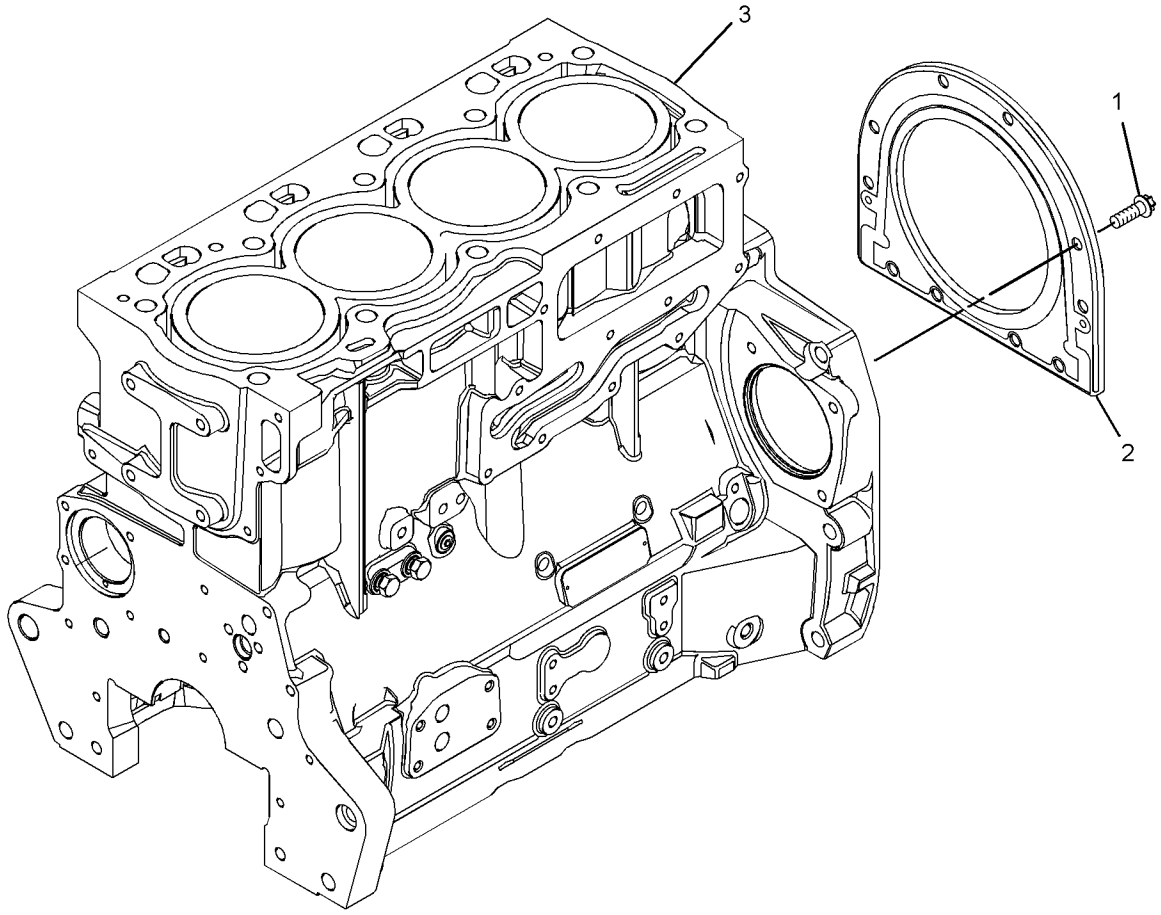

GRAPHIC #1 <END> g03666243

330-4789 CYLINDER BLOCK GP

PART OF 298-5085, 298-5887, 304-3641 CYLINDER BLOCK GP

SMCS-1201 **i03192960**

NOTE	REF NO	GRAPHIC REF	PART NUMBER	QTY	PART NAME 1 2 3 4 5 6 (PRODUCT LEVEL)	SEE PAGE
M	1	1	**6I-0645**	4	BOLT (M8X1.25X25-MM)	
M	2	1	**6I-0646**	1	BOLT (M10X1.5X14-MM)	
	3	1	**035-8063**	1	PLUG	
	4	1	**035-8068**	10	BOLT (5/8-18X3.75-IN)	
	5	1	**067-6002**	10	DOWEL	
	6	1	**067-6006**	1	PLUG	
	7	1	**067-6043**	1	PLUG-SIDE	
M	8	1	**100-4841**	4	BOLT (M6X1X10-MM)	
	9	1	**185-0884**	2	DOWEL	
	10	1	**214-3203**	1	WASHER (SEALING)	
	11	1	**225-8858**	1	PLUG	
	12	1	**232-7440**	1	BEARING	
	13	1	**232-7596**	1	PLUG	
	14	1	**232-7597**	2	PLUG	
	15	1	**232-7599**	1	PLUG	
	16	1	**233-9408**	1	GASKET	
	17	1	**252-6318**	1	PLATE	
	18	1	**276-5605**	4	JET AS-PISTON COOLING	

M - METRIC PART

330-4789 **CYLINDER BLOCK GP (**contd.**)** **i03192960**

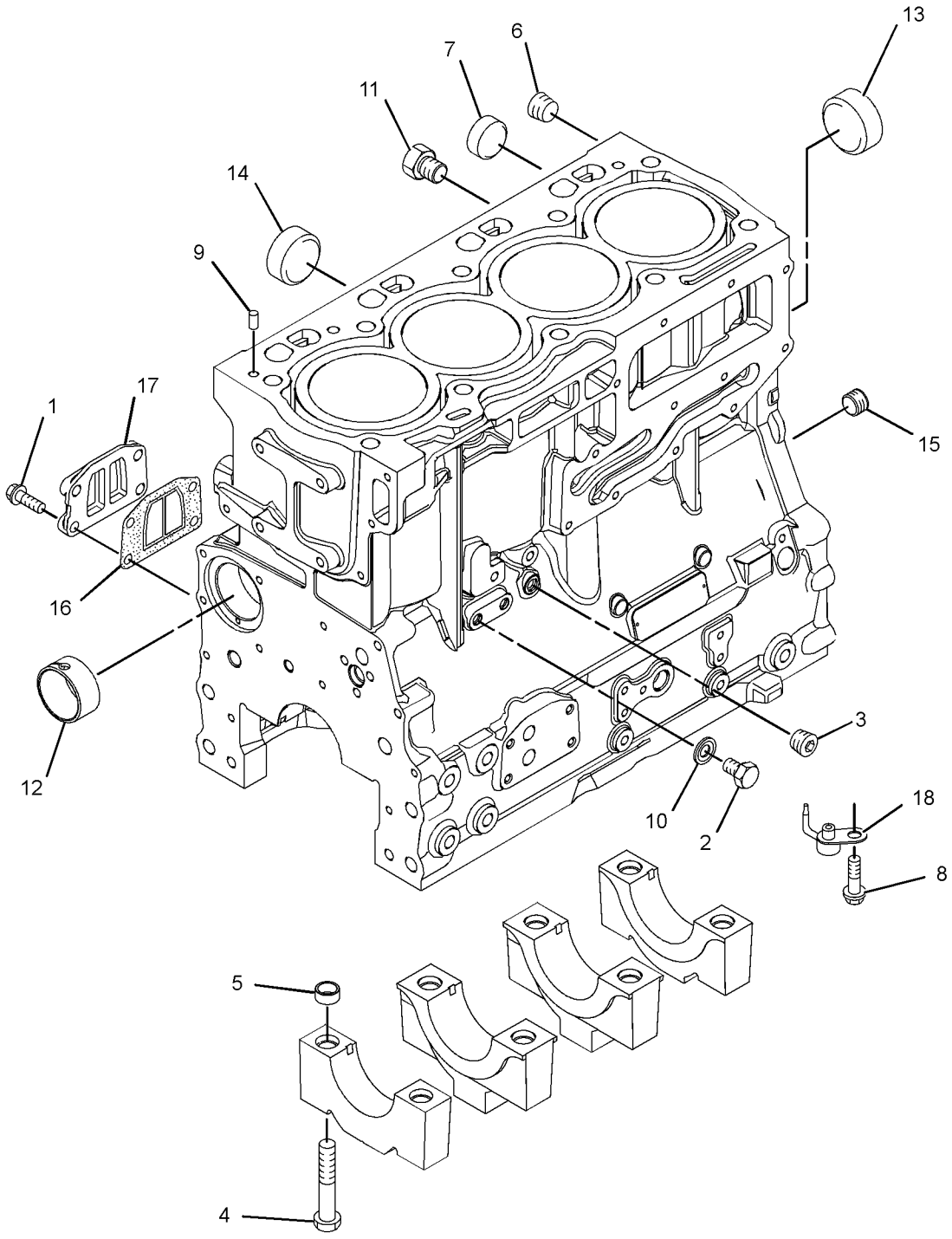

GRAPHIC #1 <END> g01586142

330-4790 CYLINDER BLOCK GP

PART OF 308-4145, 322-4881 CYLINDER BLOCK GP

SMCS-1201 **i03193325**

NOTE	REF NO	GRAPHIC REF	PART NUMBER	QTY	PART NAME 1 2 3 4 5 6 (PRODUCT LEVEL)	SEE PAGE
M	1	1	**6I-0645**	4	BOLT (M8X1.25X25-MM)	
M	2	1	**6I-0646**	1	BOLT (M10X1.5X14-MM)	
	3	1	**035-8063**	1	PLUG	
	4	1	**035-8068**	10	BOLT (5/8-18X3.75-IN)	
	5	1	**067-6002**	10	DOWEL	
	6	1	**067-6006**	1	PLUG	
	7	1	**067-6043**	1	PLUG-SIDE	
M	8	1	**100-4841**	4	BOLT (M6X1X10-MM)	
	9	1	**185-0884**	2	DOWEL	
	10	1	**214-3203**	1	WASHER (SEALING)	
	11	1	**225-8858**	1	PLUG	
	12	1	**232-7440**	1	BEARING	
	13	1	**232-7596**	1	PLUG	
	14	1	**232-7597**	2	PLUG	
	15	1	**232-7599**	1	PLUG	
	16	1	**233-9408**	1	GASKET	
	17	1	**252-6318**	1	PLATE	
	18	1	**276-5605**	4	JET AS-PISTON COOLING	

M - METRIC PART

330-4790 **CYLINDER BLOCK GP (**contd.**)** **i03193325**

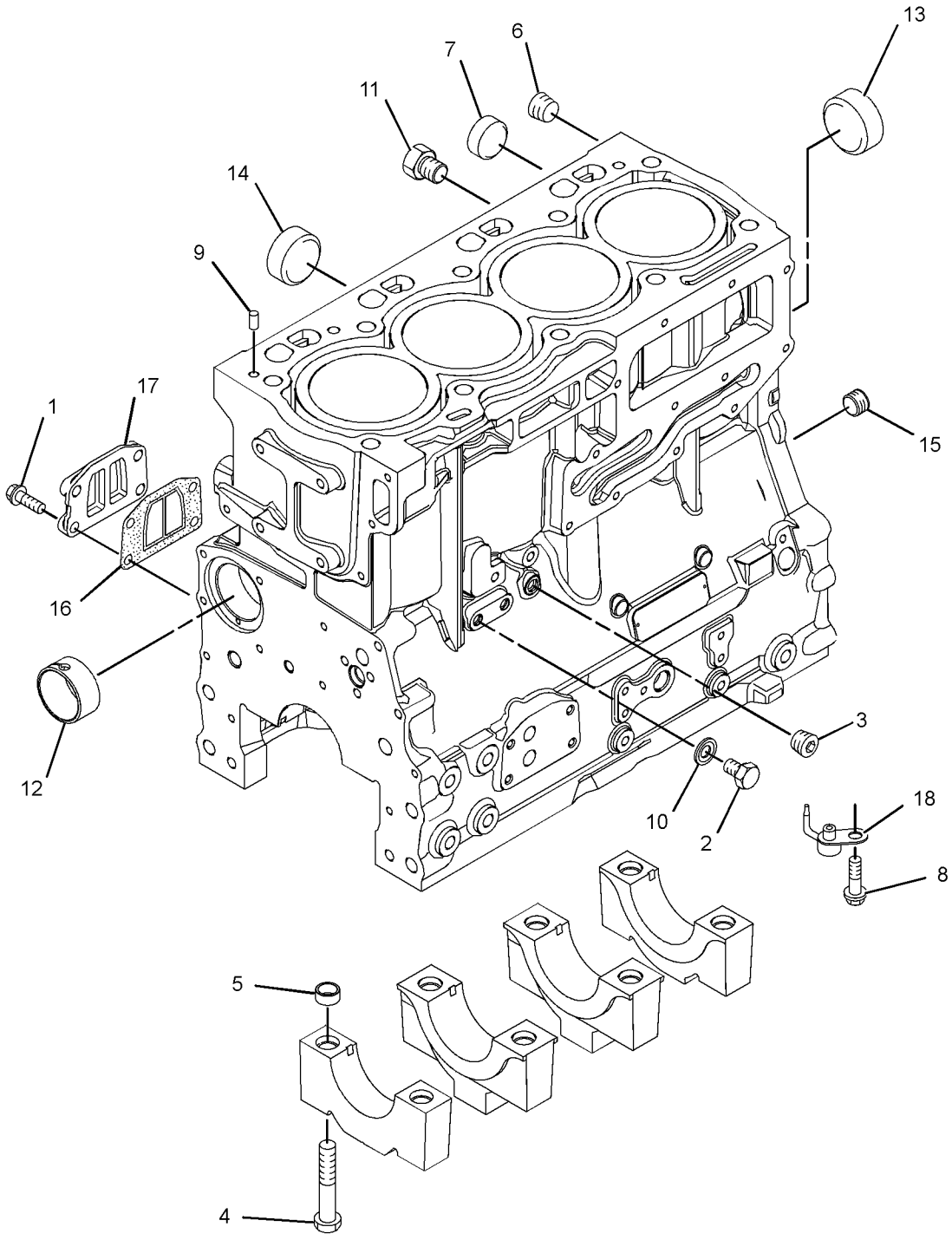

GRAPHIC #1 <END> g01586142

363-3907 CYLINDER BLOCK GP

PART OF 298-5085, 298-5887, 304-3641 CYLINDER BLOCK GP, 359-0737 CYLINDER BLOCK GP-SHORT

SMCS-1201 **i06186824**

NOTE	REF NO	GRAPHIC REF	PART NUMBER	QTY	PART NAME 1 2 3 4 5 6 (PRODUCT LEVEL)	SEE PAGE
M	1	1	**6I-0645**	4	BOLT (M8X1.25X25-MM)	
M	2	1	**6I-0646**	1	BOLT (M10X1.5X14-MM)	
	3	1	**035-8063**	1	PLUG	
M	4	1	**100-4841**	4	BOLT (M6X1X10-MM)	
	5	1	**214-3203**	1	WASHER (SEALING)	
	6	1	**233-9408**	1	GASKET	
	7	1	**252-6318**	1	PLATE	
	8	1	**276-5605**	4	JET AS-PISTON COOLING	
	10	1	**346-0007**	1	WASHER	
	11	1	**363-3908**	1	BOLT-SPECIAL	
	12	1	**067-6002**	10	DOWEL	
	13	1	**0S-2353**	10	BOLT (5/8-18X3.75-IN)	
	14	1	**366-8853**	1	BEARING	
	15	1	**232-7597**	2	PLUG	
	16	1	**232-7596**	1	PLUG	
	17	1	**067-6043**	1	PLUG-SIDE	
	18	1	**225-8858**	1	PLUG	
	19	1	**232-7599**	1	PLUG	
	20	1	**185-0884**	2	DOWEL	

M - METRIC PART

363-3907 **CYLINDER BLOCK GP (**contd.**)** **i06186824**

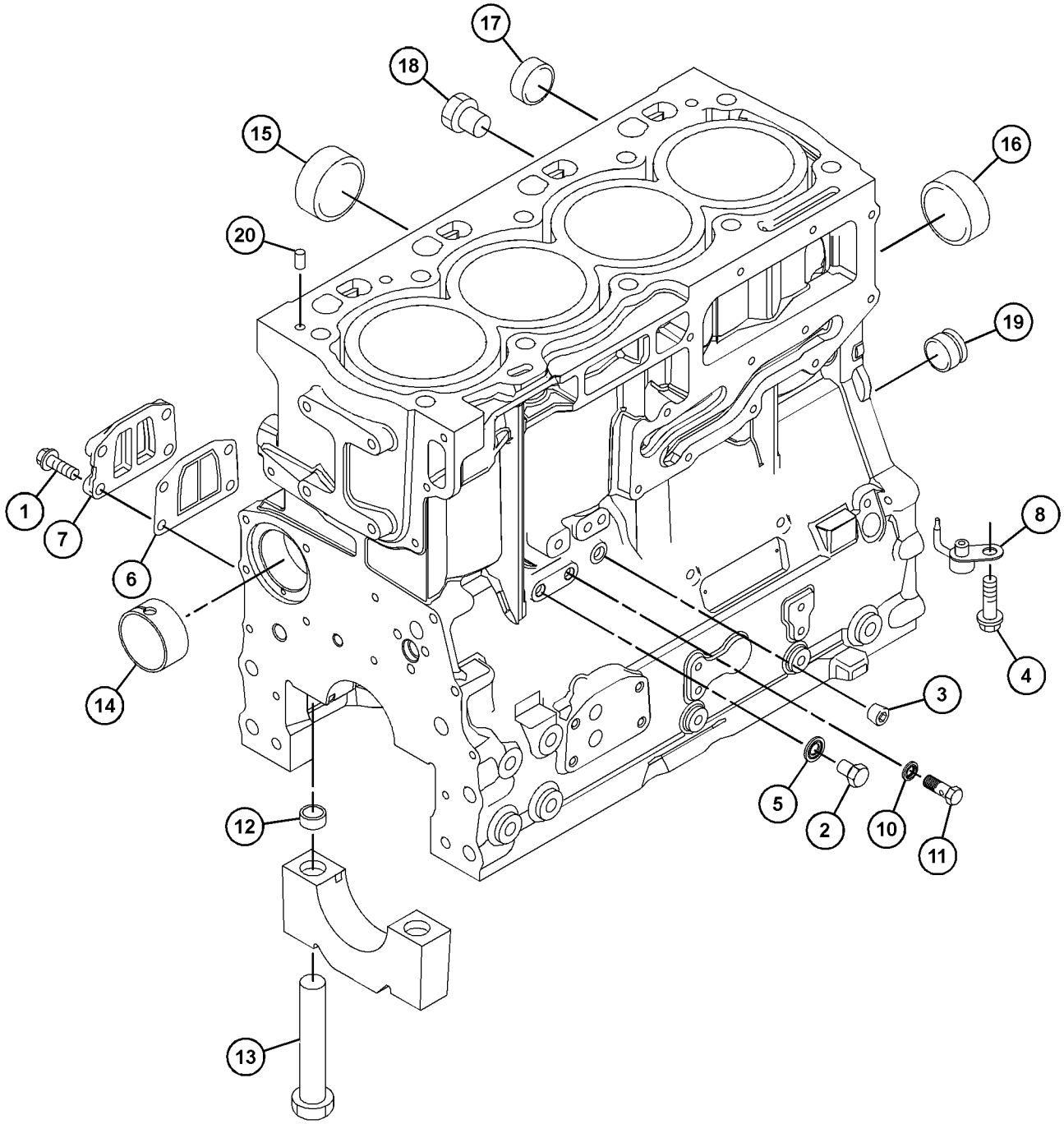

GRAPHIC #1 <END> g03841734

366-5613 CYLINDER BLOCK GP

PART OF 308-4145, 322-4881 CYLINDER BLOCK GP
ALSO AN ATTACHMENT

SMCS-1201 **i05090250**

NOTE	REF NO	GRAPHIC REF	PART NUMBER	QTY	PART NAME 1 2 3 4 5 6 (PRODUCT LEVEL)	SEE PAGE
M	1	1	**6I-0645**	4	BOLT (M8X1.25X25-MM)	
M	2	1	**6I-0646**	1	BOLT (M10X1.5X14-MM)	
	3	1	**035-8063**	1	PLUG	
M	4	1	**100-4841**	4	BOLT (M6X1X10-MM)	
	5	1	**214-3203**	1	WASHER (SEALING)	
	6	1	**233-9408**	1	GASKET	
	7	1	**252-6318**	1	PLATE	
	8	1	**276-5605**	4	JET AS-PISTON COOLING	
	10	1	**346-0007**	2	WASHER	
	11	1	**363-3908**	1	BOLT-SPECIAL	

M - METRIC PART

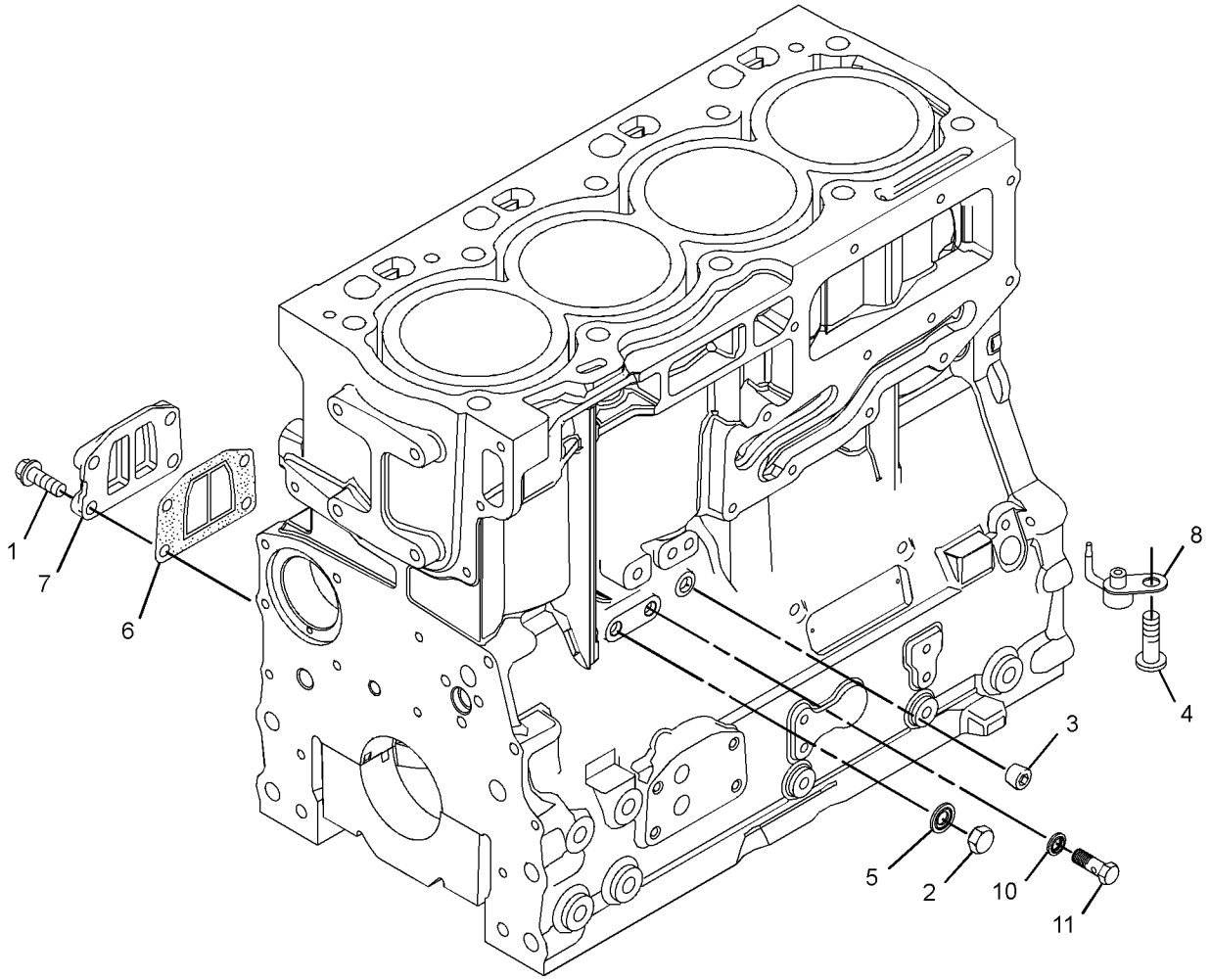

GRAPHIC #1 <END> g02442721

359-0737 CYLINDER BLOCK GP-SHORT*R

PART OF 540-1155, 540-1156 ENGINE AR-PRIMARY

SMCS-1200 **i04929999**

NOTE	PART NUMBER	QTY	PART NAME 1 2 3 4 5 6 (PRODUCT LEVEL)	SEE PAGE
Y	**359-0716**	1	CRANKSHAFT GP	390
Y	**363-3907**	1	CYLINDER BLOCK GP	412
	232-7449	1	HOUSING AS	
	310-9269	1	PISTON AS	
	124-3536	2	RING-RETAINING	
	276-7476	1	KIT-PISTON RING	
			(INCLUDES PISTON RINGS)	
	359-0719	4	ROD AS-CONNECTING (LENGTH R)	
	359-0720	4	ROD AS-CONNECTING (LENGTH O)	
	359-0721	4	ROD AS-CONNECTING (LENGTH W)	
	359-0722	4	ROD AS-CONNECTING (LENGTH G)	
	359-0723	4	ROD AS-CONNECTING (LENGTH P)	
	359-0724	4	ROD AS-CONNECTING (LENGTH B)	
			(EACH ROD AS INCLUDES)	
	225-5438	1	BUSHING	
M	**323-9312**	2	BOLT (M10X1X50-MM)	
M	**6I-0363**	2	BOLT (M6X1X20-MM)	
M	**6I-0646**	1	BOLT (M10X1.5X14-MM)	
M	**209-9219**	10	BOLT (M8X1.25X16-MM)	
M	**276-7394**	3	SCREW (M6X1XX12-MM)	
	230-8094	1	BRIDGE	
	035-8063	1	PLUG	
	341-4028	1	RING-TIMING	
	214-3203	1	WASHER (SEALING)	

M - METRIC PART
Y - SEPARATE ILLUSTRATION

<END>

298-4526 CYLINDER HEAD AS

PART OF 298-5088, 298-5890, 304-3645, 308-4150, 322-4884 CYLINDER HEAD GP
ALSO AN ATTACHMENT

SMCS-1100, 1101 **i06238693**

NOTE	REF NO	GRAPHIC REF	PART NUMBER	QTY	PART NAME 1 2 3 4 5 6 (PRODUCT LEVEL)	SEE PAGE
	1	1	**2B-0858**	2	PLUG-PIPE	
	2	1	**199-9751**	1	SEAL-O-RING	
	3	1	**232-1322**	1	PLUG	
	4	1	**276-8116**	4	PLUG-CORE	
	5	1	**276-8117**	9	PLUG-CORE	
	6	1	**309-6678**	8	VALVE-INLET	
	7	1	**276-8123**	32	COTTER-CAP	
	8	1	**339-9637**	8	VALVE-EXHAUST	
	9	1	**299-5511**	16	SEAL-VALVE STEM	
	10	1	**276-8133**	16	CAP-VALVE	
	11	1	**295-6661**	1	PLUG	
	12	1	**298-4527**	1	PLUG-CORE	
	13	1	**298-4528**	1	PLUG-CORE	
	14	1	**436-0524**	16	SPRING-VALVE	
	15	1	**377-0399**	8	INSERT-VALVE SEAT	
	16	1	**377-0400**	8	INSERT-VALVE SEAT	
	17	1	**380-2073**	16	GUIDE-VALVE	

298-4526 **CYLINDER HEAD AS (**contd.**)** **i06238693**

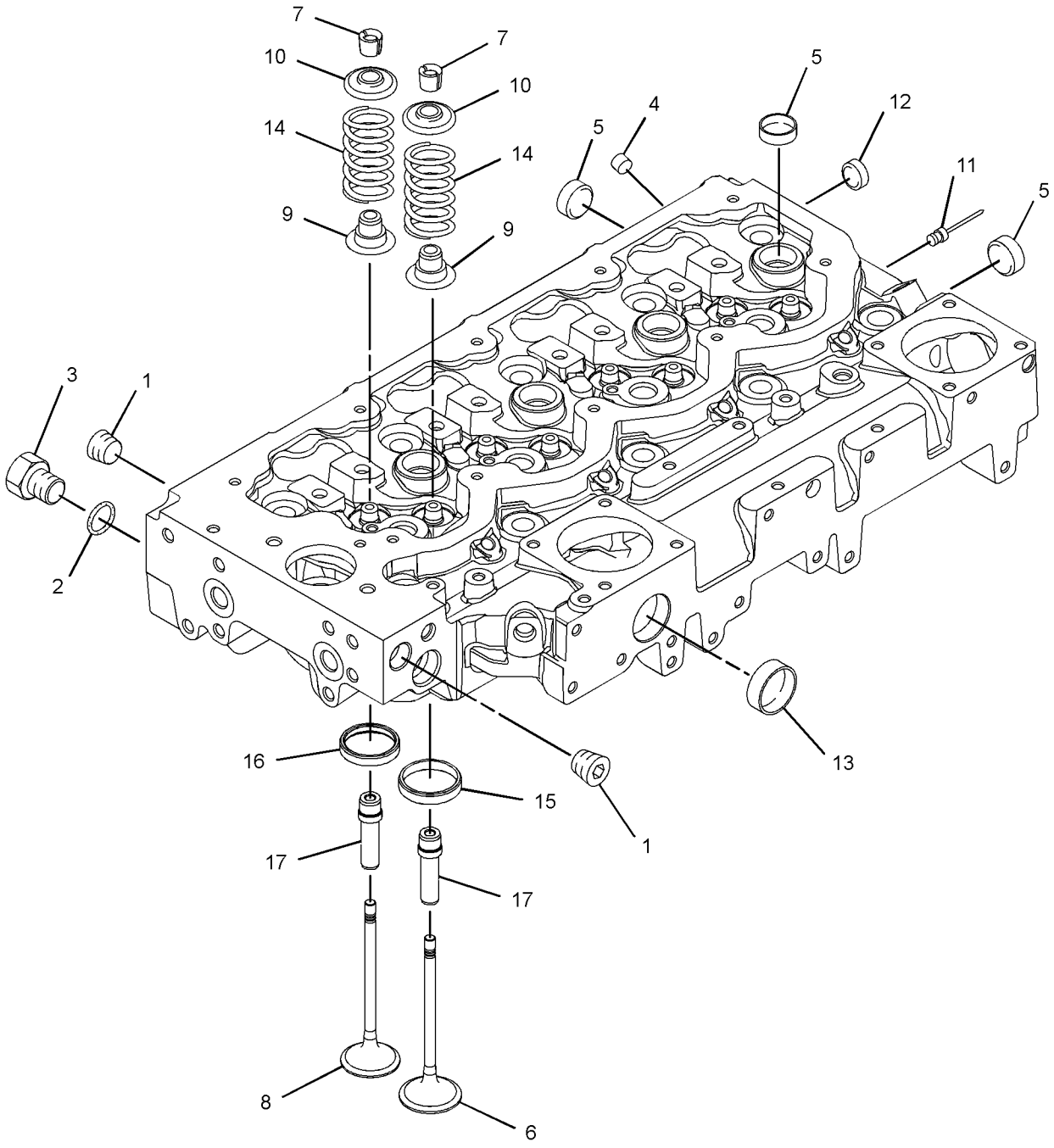

GRAPHIC #1 <END> g03388575

298-5088 CYLINDER HEAD GP

PART OF 435-1685 ENGINE AR-PRIMARY

SMCS-1100 **i02846820**

NOTE	REF NO	GRAPHIC REF	PART NUMBER	QTY	PART NAME 1 2 3 4 5 6 (PRODUCT LEVEL)	SEE PAGE
	1	1	**225-5501**	10	BOLT (M15X1.5X137-MM)	
Y	2	1	**298-4526**	1	CYLINDER HEAD AS	416
	3	1	**310-8520**	1	GASKET-CYLINDER HEAD	

Y - SEPARATE ILLUSTRATION

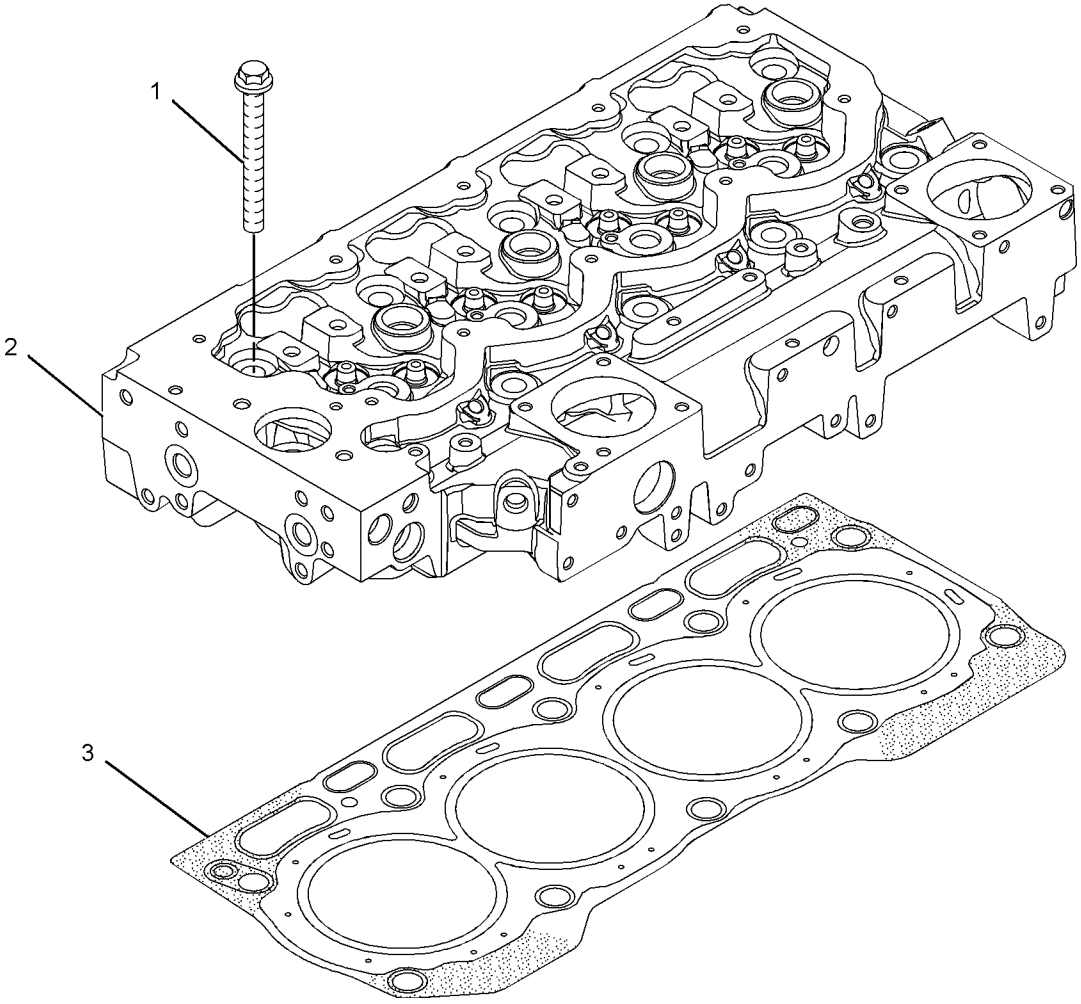

GRAPHIC #1 <END> g01307654

298-5890 CYLINDER HEAD GP

PART OF 435-1699 ENGINE AR, 435-1692 ENGINE AR-COMPLETE, 435-1687, 437-5409, 522-8303, 540-0570, 540-1155, 540-1156 ENGINE AR-PRIMARY

SMCS-1100 **i03190843**

NOTE	REF NO	GRAPHIC REF	PART NUMBER	QTY	PART NAME 1 2 3 4 5 6 (PRODUCT LEVEL)	SEE PAGE
	1	1	**225-5501**	10	BOLT (M15X1.5X137-MM)	
Y	2	1	**298-4526**	1	CYLINDER HEAD AS	416
	3	1	**310-8520**	1	GASKET-CYLINDER HEAD	

Y - SEPARATE ILLUSTRATION

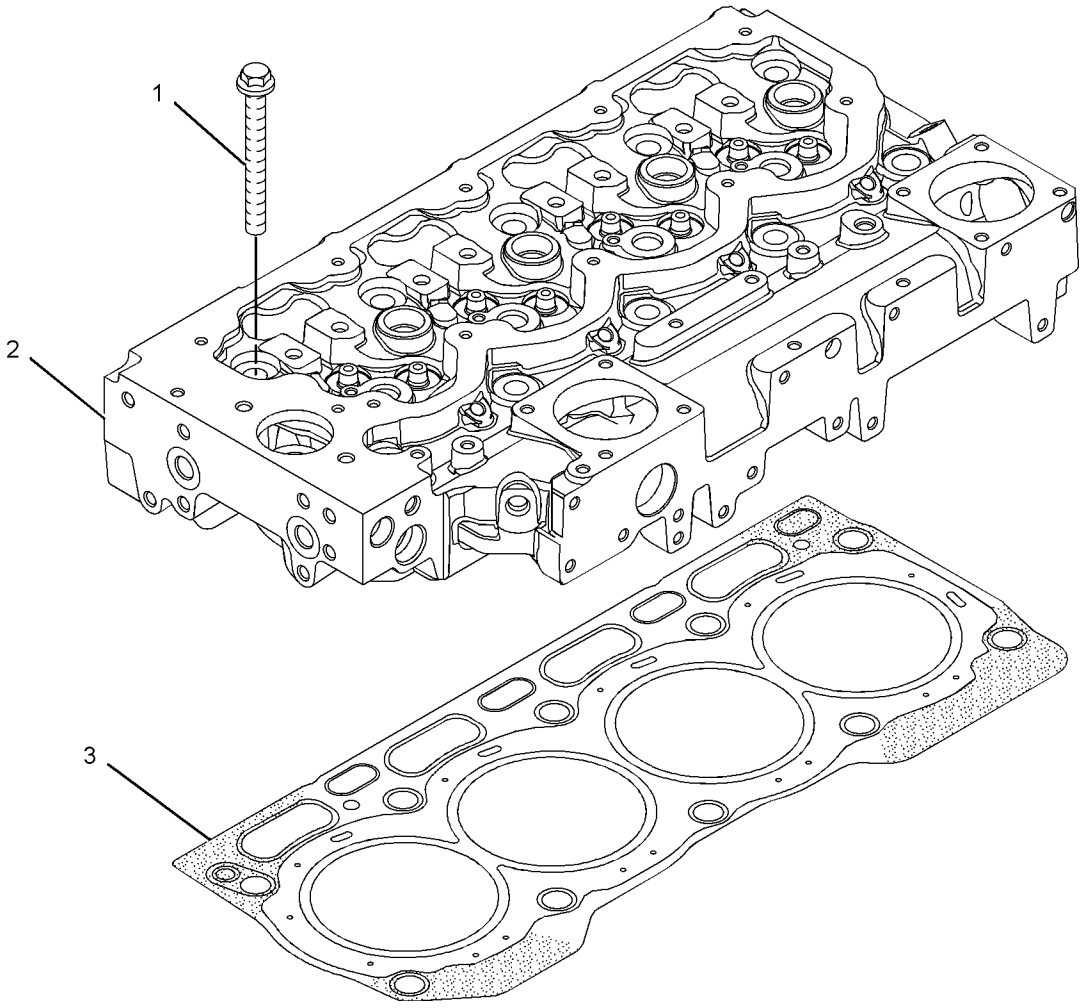

GRAPHIC #1 <END> g01307654

304-3645 CYLINDER HEAD GP

SMCS-1100 **i02845314**

NOTE	REF NO	GRAPHIC REF	PART NUMBER	QTY	PART NAME 1 2 3 4 5 6 (PRODUCT LEVEL)	SEE PAGE
	1	1	**225-5501**	10	BOLT (M15X1.5X137-MM)	
Y	2	1	**298-4526**	1	CYLINDER HEAD AS	416
	3	1	**310-8520**	1	GASKET-CYLINDER HEAD	

Y - SEPARATE ILLUSTRATION

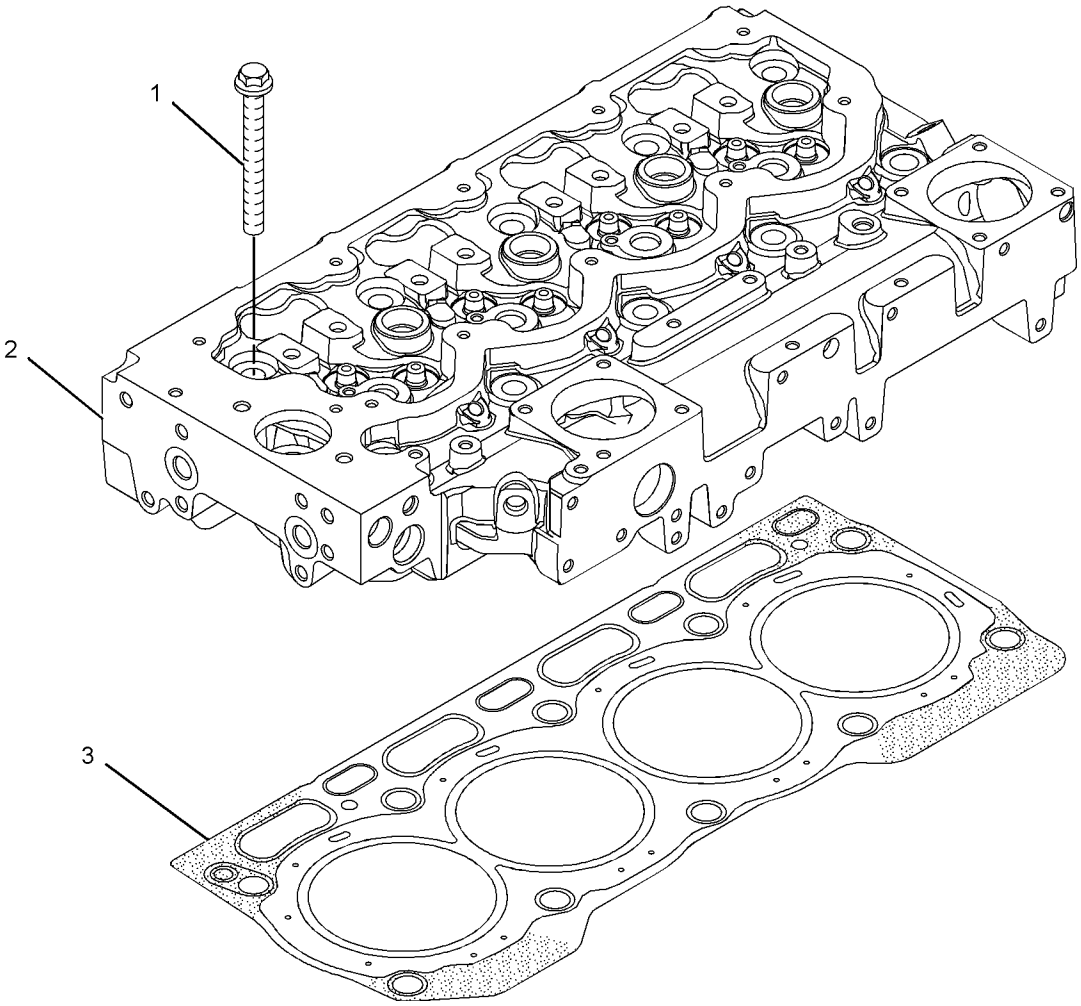

GRAPHIC #1 <END> g01307654

308-4150 CYLINDER HEAD GP

ALSO AN ATTACHMENT

SMCS-1100 **i02811395**

NOTE	REF NO	GRAPHIC REF	PART NUMBER	QTY	PART NAME 1 2 3 4 5 6 (PRODUCT LEVEL)	SEE PAGE
	1	1	**225-5501**	10	BOLT (M15X1.5X137-MM)	
Y	2	1	**298-4526**	1	CYLINDER HEAD AS	416
	3	1	**310-8520**	1	GASKET-CYLINDER HEAD	

Y - SEPARATE ILLUSTRATION

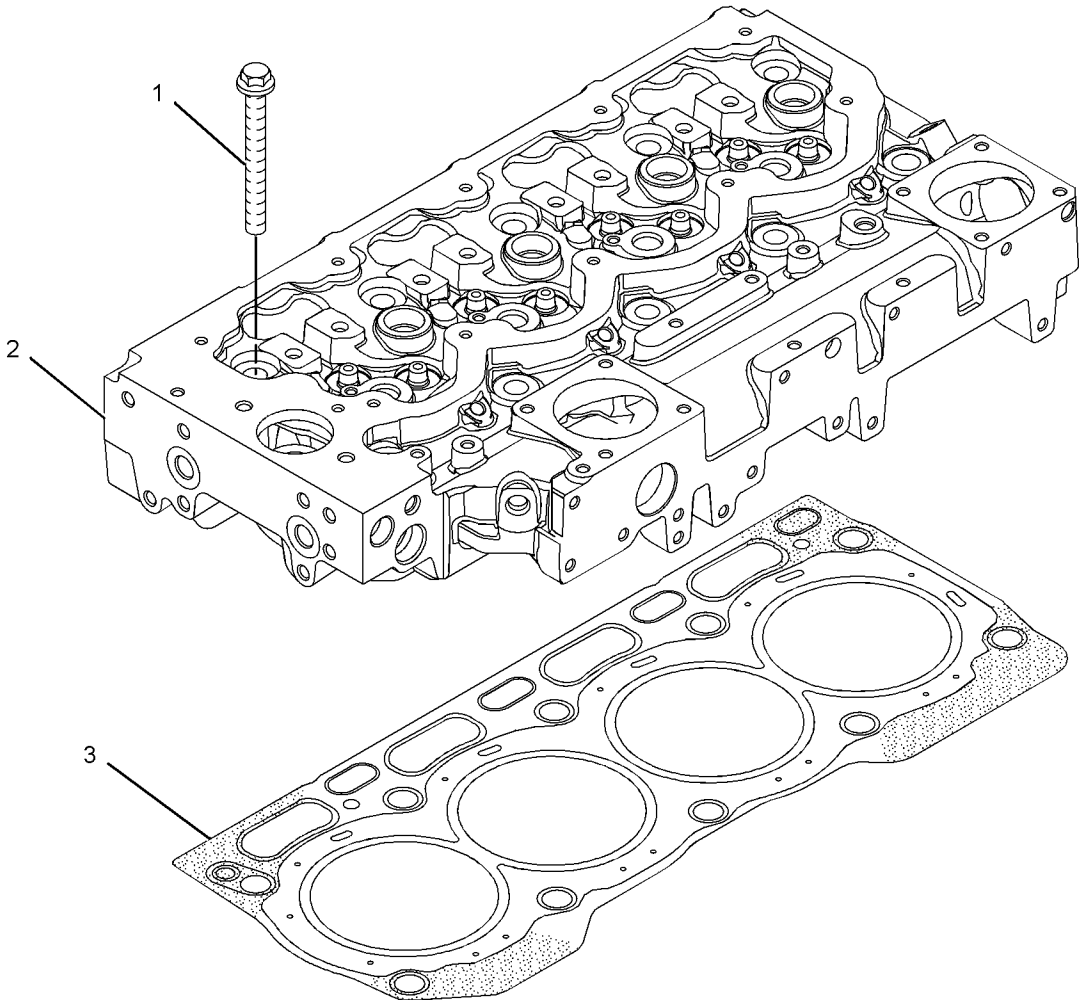

GRAPHIC #1 <END> g01307654

322-4884 CYLINDER HEAD GP

SMCS-1100 **i02892116**

NOTE	REF NO	GRAPHIC REF	PART NUMBER	QTY	PART NAME 1 2 3 4 5 6 (PRODUCT LEVEL)	SEE PAGE
	1	1	**225-5501**	10	BOLT (M15X1.5X137-MM)	
Y	2	1	**298-4526**	1	CYLINDER HEAD AS	416
	3	1	**310-8520**	1	GASKET-CYLINDER HEAD	

Y - SEPARATE ILLUSTRATION

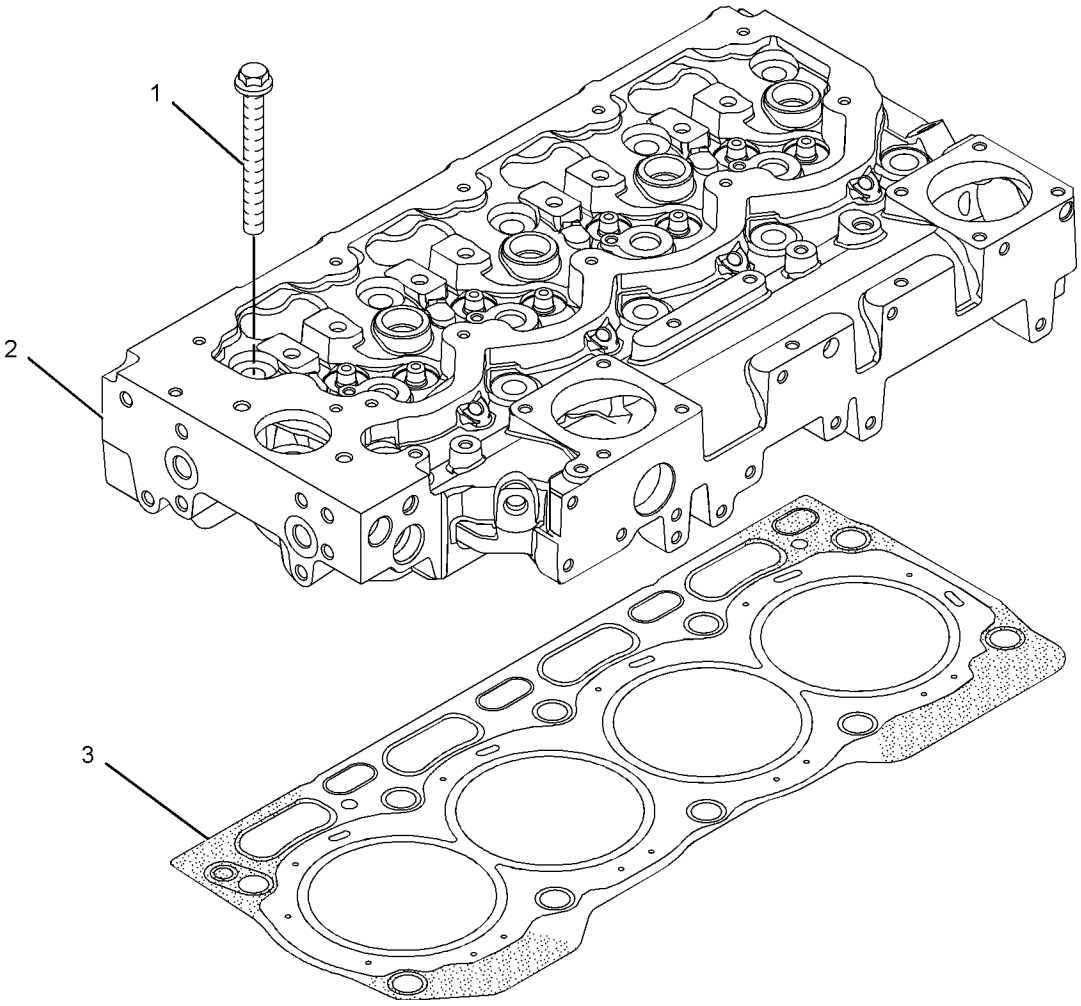

GRAPHIC #1 <END> g01307654

306-2321 DRIVE GP-AUXILIARY

SMCS-1207 **i02900056**

NOTE	REF NO	GRAPHIC REF	PART NUMBER	QTY	PART NAME 1 2 3 4 5 6 (PRODUCT LEVEL)	SEE PAGE
	1	1	**130-3881**	1	PULLEY-FAN	

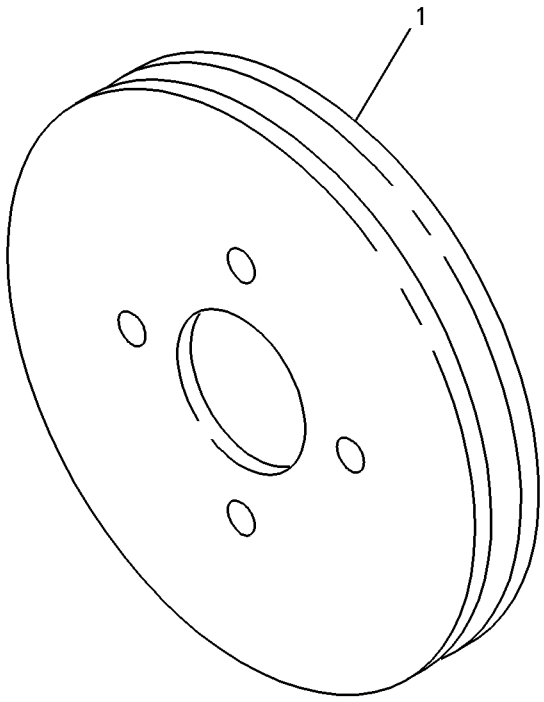

GRAPHIC #1 <END> g00734082

306-8855 DRIVE GP-AUXILIARY

S/N: 4441-7401

SMCS-1207 **i02724410**

NOTE	REF NO	GRAPHIC REF	PART NUMBER	QTY	PART NAME 1 2 3 4 5 6 (PRODUCT LEVEL)	SEE PAGE
	1	1	**286-7848**	1	PULLEY (8-GROOVE)	
	2	1	**306-8857**	1	HUB	
M	3	1	**102-9941**	3	BOLT (M12X1.75X25-MM)	
	4	1	**6I-0501**	1	BLOCK	
	5	1	**7W-4634**	3	BOLT (7/16-20X1.5-IN)	

M - METRIC PART

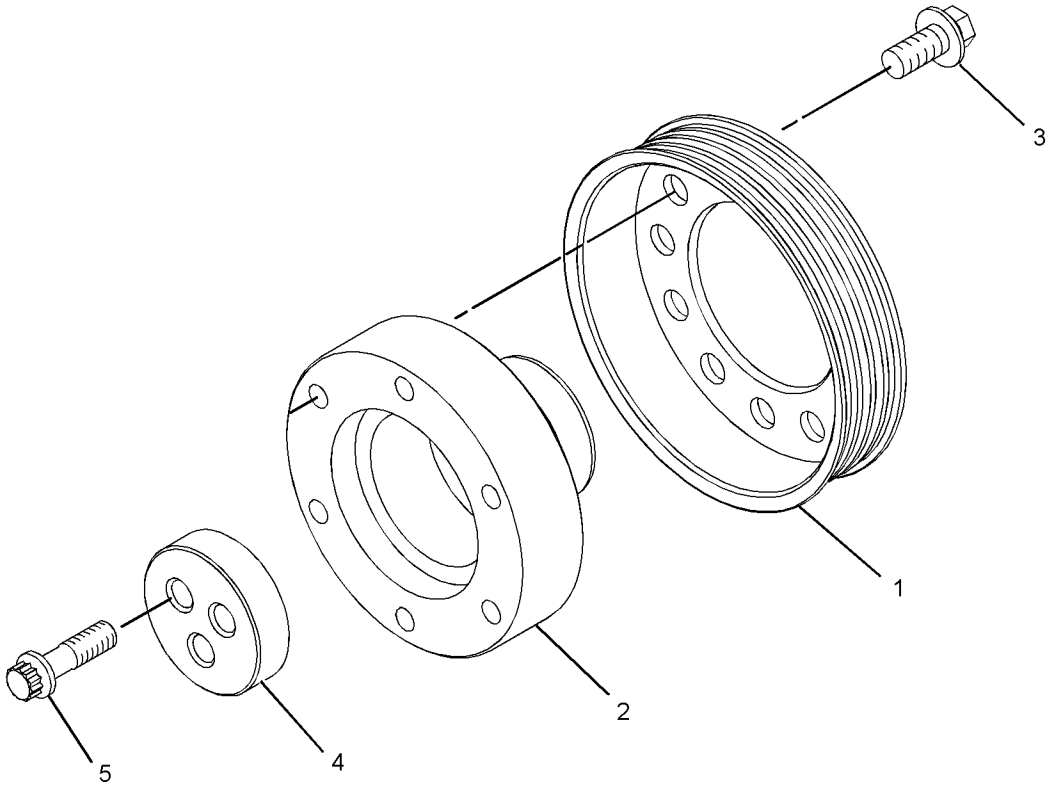

GRAPHIC #1 <END> g01377208

298-5095 DRIVE GP-FAN

PART OF 435-1692 ENGINE AR-COMPLETE, 435-1685, 540-0570 ENGINE AR-PRIMARY

SMCS-1359 **i02709180**

NOTE	REF NO	GRAPHIC REF	PART NUMBER	QTY	PART NAME 1 2 3 4 5 6 (PRODUCT LEVEL)	SEE PAGE
M	1	1	**111-0859**	4	BOLT (M10X1.5X35-MM)	
	2	1	**289-8336**	1	HOUSING AS	
	3	1	**283-4148**	1	PULLEY (8-GROOVE)	
	4	1	**285-2040**	1	BELT-SERPENTINE	

M - METRIC PART

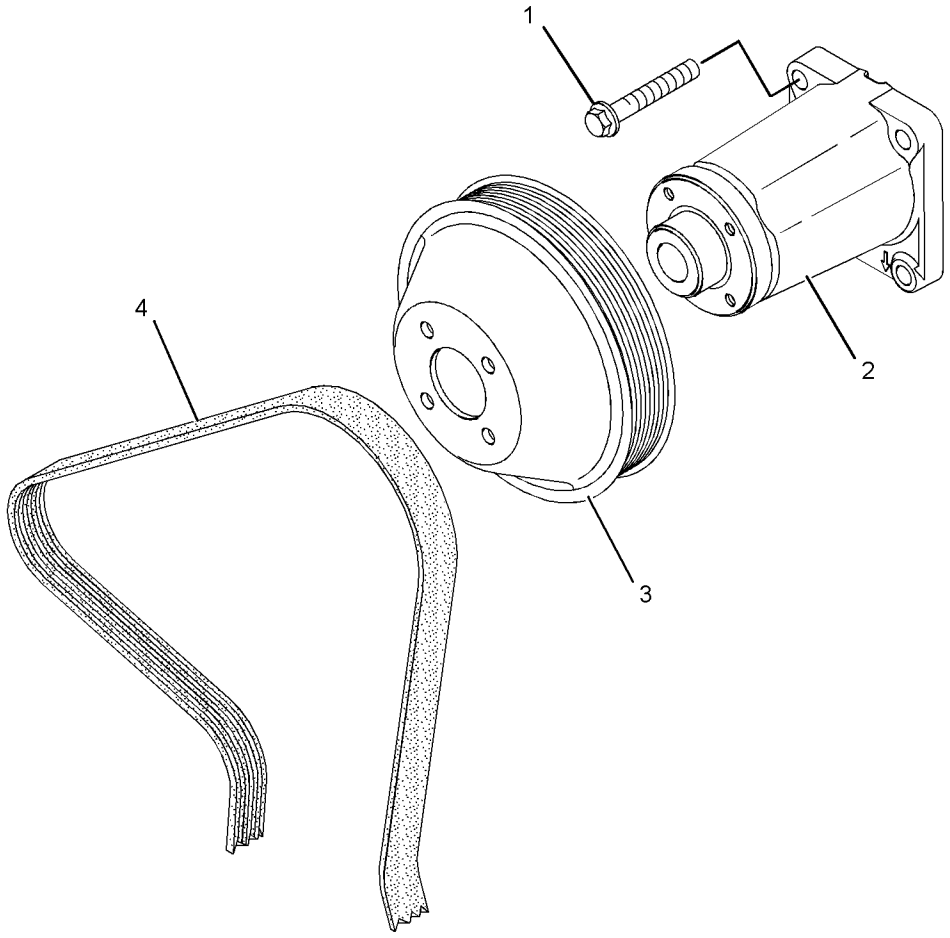

GRAPHIC #1 <END> g01235346

299-5069 DRIVE GP-FAN

SMCS-1359 **i02902271**

NOTE	REF NO	GRAPHIC REF	PART NUMBER	QTY	PART NAME 1 2 3 4 5 6 (PRODUCT LEVEL)	SEE PAGE
M	1	1	**111-0859**	4	BOLT (M10X1.5X35-MM)	
	2	1	**5L-4995**	1	V-BELT SET (INCLUDES 2-BELTS) (FAN DRIVE)	
	3	1	**130-3879**	1	PULLEY-FAN DRIVE	
	4	1	**230-8065**	1	HOUSING AS	

M - METRIC PART

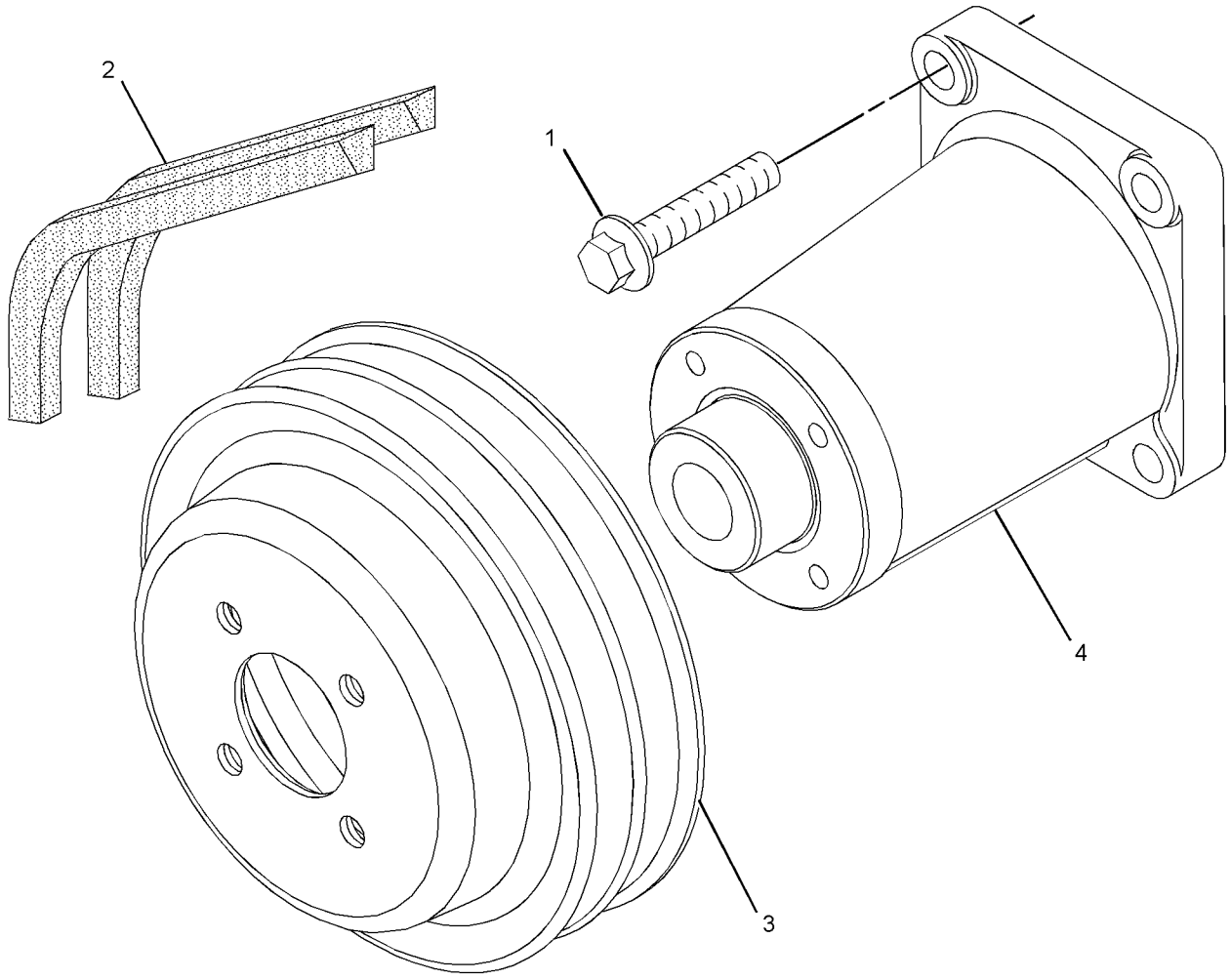

GRAPHIC #1 <END> g01367719

301-8238 DRIVE GP-FAN

SMCS-1359 **i03729667**

NOTE	REF NO	GRAPHIC REF	PART NUMBER	QTY	PART NAME 1 2 3 4 5 6 (PRODUCT LEVEL)	SEE PAGE
M	1	1	**111-0859**	4	BOLT (M10X1.5X35-MM)	
	2	1	**4N-8771**	1	V-BELT SET (INCLUDES 2-BELTS) (FAN DRIVE)	
	3	1	**130-3880**	1	PULLEY-FAN DRIVE	
	4	1	**230-8065**	1	HOUSING AS	

M - METRIC PART

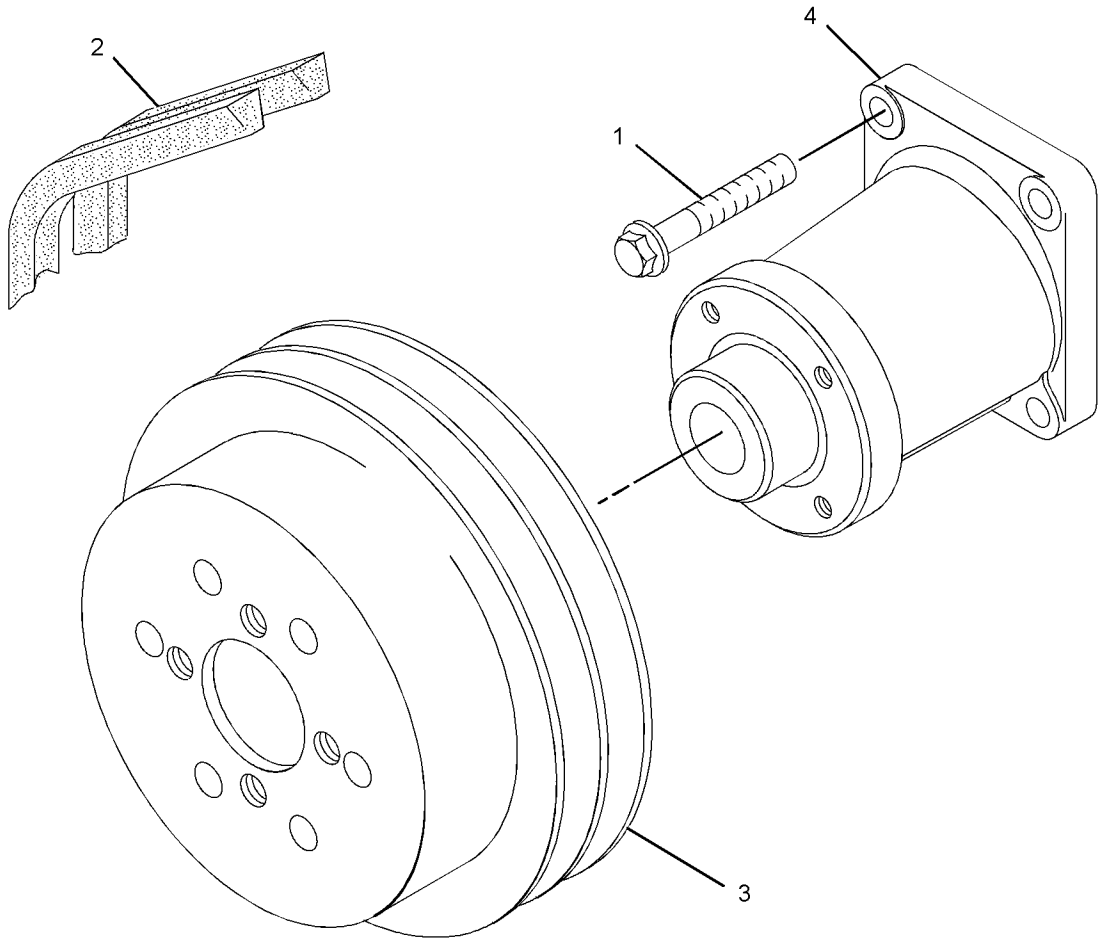

GRAPHIC #1 <END> g01371099

303-5770 DRIVE GP-FAN

SMCS-1359 **i02974925**

NOTE	REF NO	GRAPHIC REF	PART NUMBER	QTY	PART NAME 1 2 3 4 5 6 (PRODUCT LEVEL)	SEE PAGE
	1	1	**326-1880**	1	HOUSING-FAN DRIVE	
	2	1	**251-2437**	1	PLATE	
M	3	1	**111-0859**	8	BOLT (M10X1.5X35-MM)	

M - METRIC PART

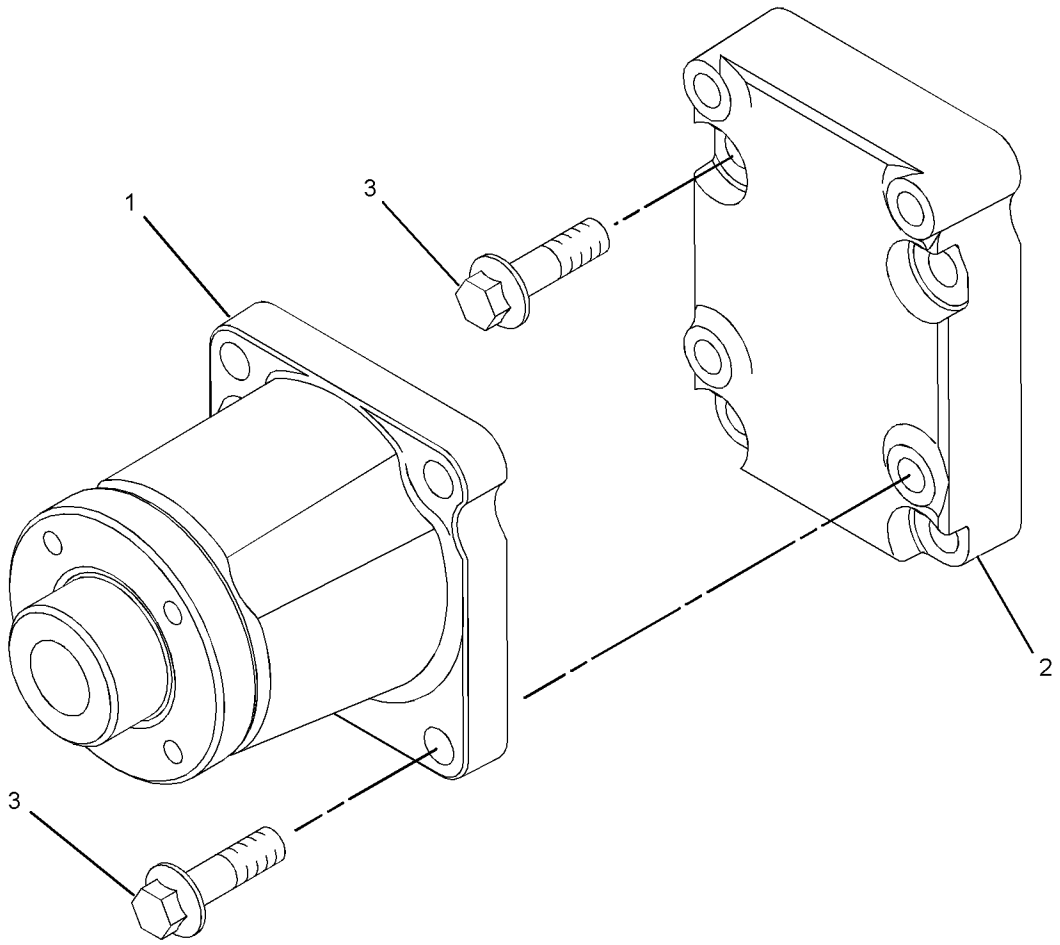

GRAPHIC #1 <END> g01340877

304-0726 DRIVE GP-FAN

SMCS-1359 **i02638422**

NOTE	REF NO	GRAPHIC REF	PART NUMBER	QTY	PART NAME 1 2 3 4 5 6 (PRODUCT LEVEL)	SEE PAGE
	1	1	**289-8336**	1	HOUSING AS	
M	2	1	**111-0859**	4	BOLT (M10X1.5X35-MM)	
	3	1	**283-4148**	1	PULLEY (8-GROOVE)	

M - METRIC PART

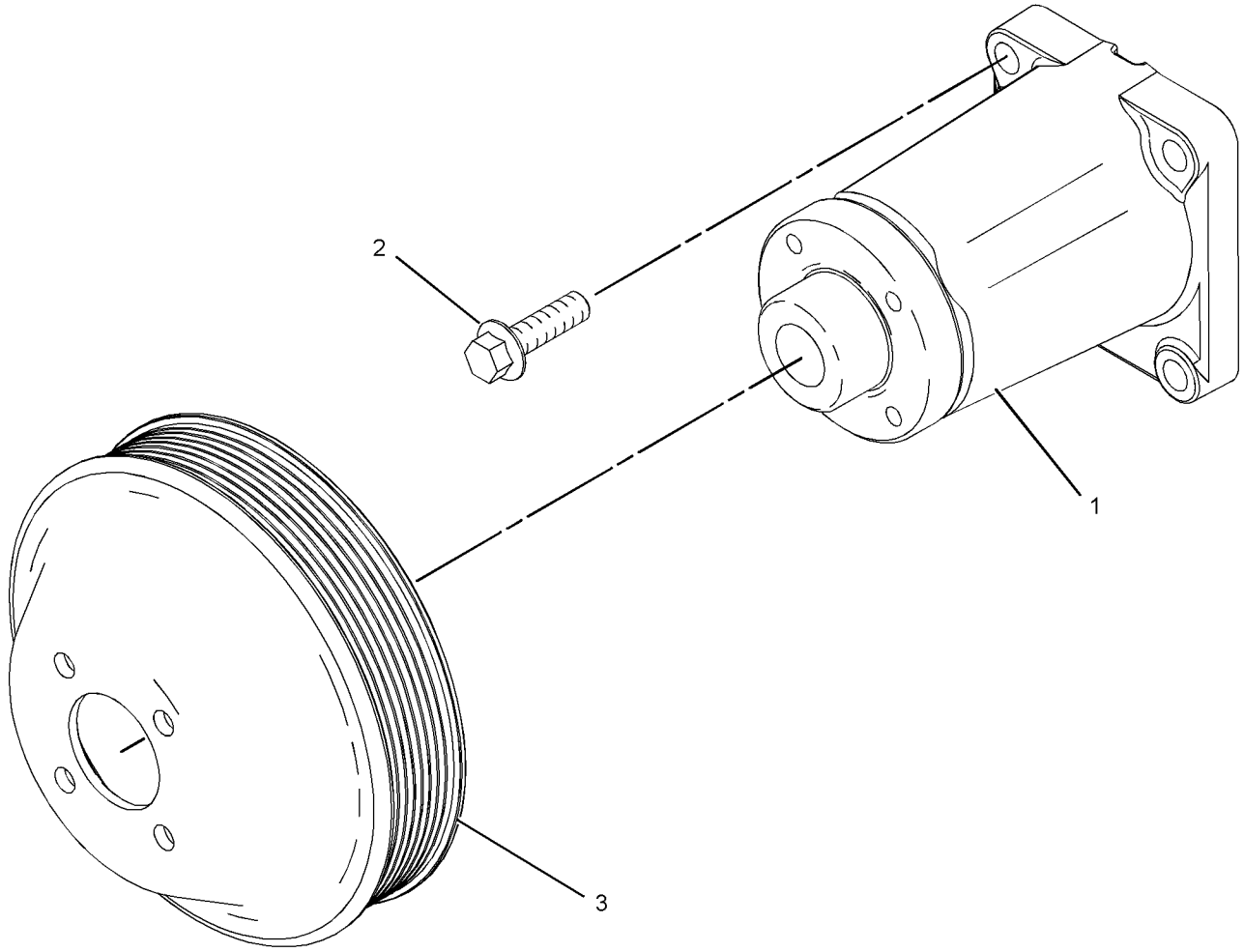

GRAPHIC #1 <END> g01209225

308-3349 DRIVE GP-FAN

SMCS-1359 **i02755655**

NOTE	REF NO	GRAPHIC REF	PART NUMBER	QTY	PART NAME 1 2 3 4 5 6 (PRODUCT LEVEL)	SEE PAGE
M	1	1	**111-0859**	4	BOLT (M10X1.5X35-MM)	
	2	1	**289-8336**	1	HOUSING AS	
	3	1	**283-4148**	1	PULLEY (8-GROOVE)	
	4	1	**285-2040**	1	BELT-SERPENTINE	

M - METRIC PART

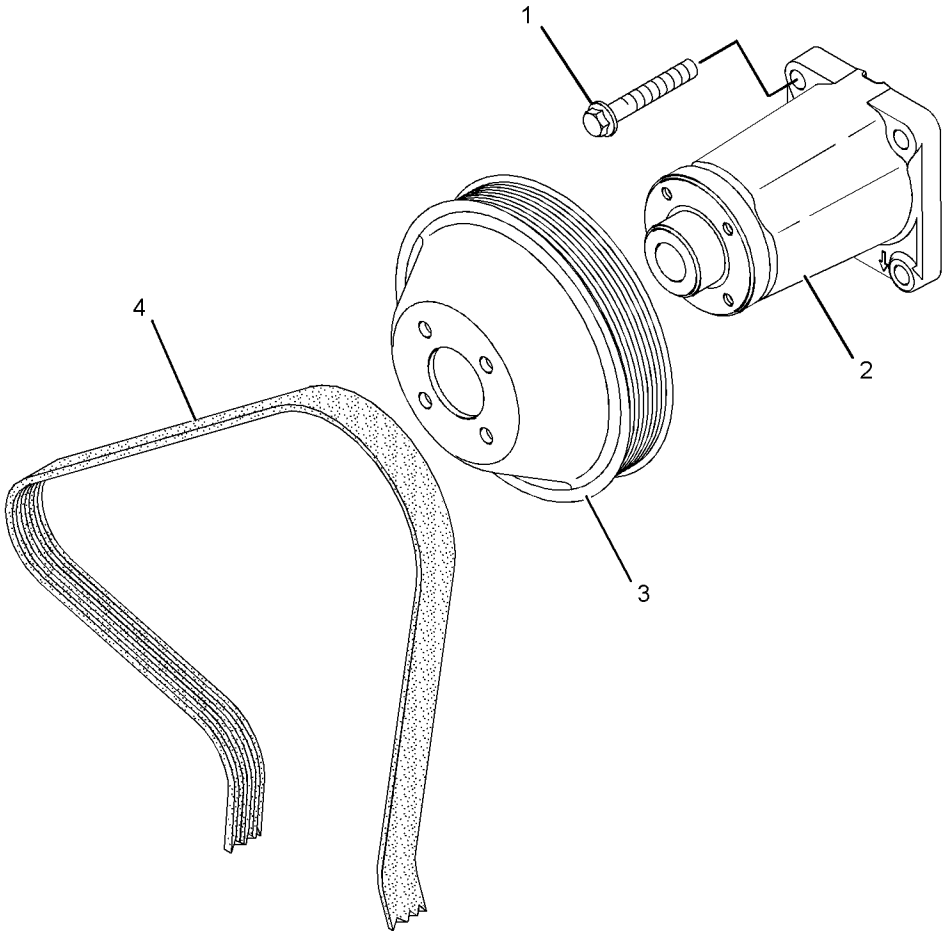

GRAPHIC #1 <END> g01235346

308-4156 DRIVE GP-FAN

ALSO AN ATTACHMENT

SMCS-1359 **i02945278**

NOTE	REF NO	GRAPHIC REF	PART NUMBER	QTY	PART NAME 1 2 3 4 5 6 (PRODUCT LEVEL)	SEE PAGE
	1	1	**326-1878**	1	HOUSING-FAN DRIVE	
M	2	1	**111-0859**	4	BOLT (M10X1.5X35-MM)	

M - METRIC PART

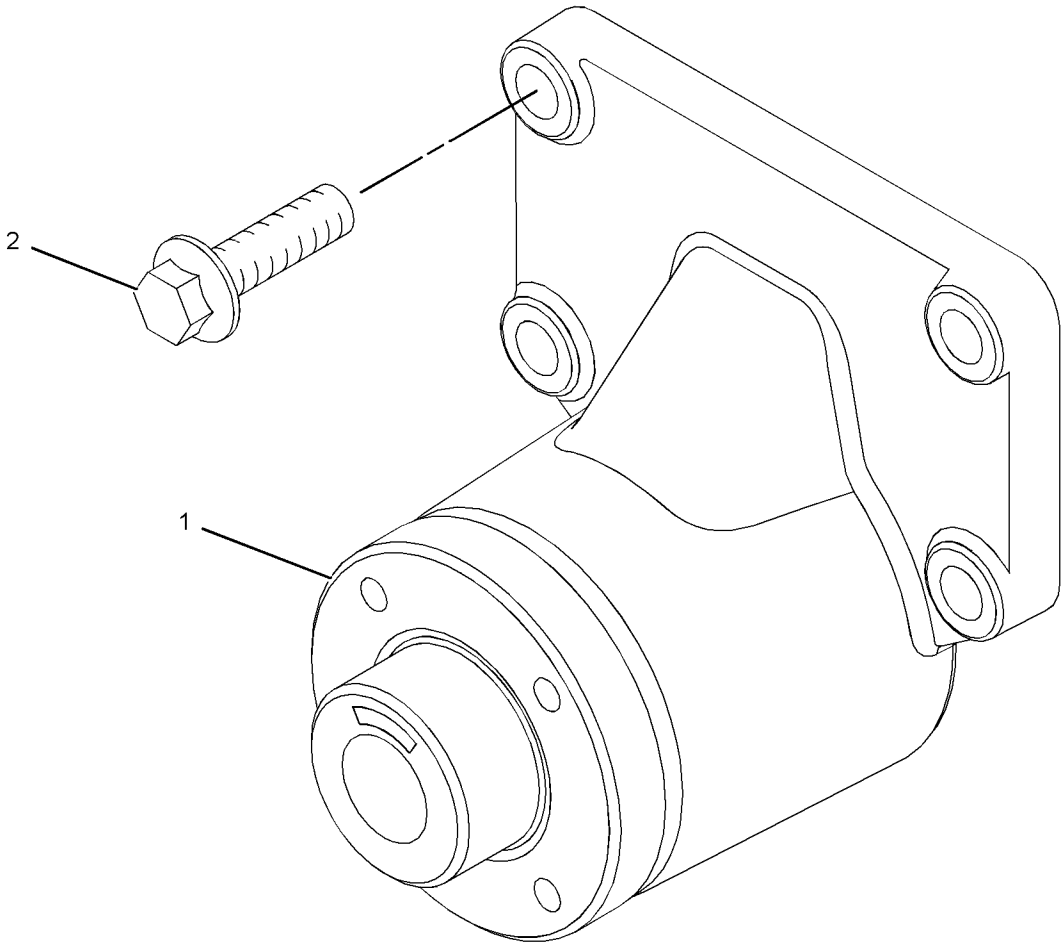

GRAPHIC #1 <END> g01375112

308-4273 DRIVE GP-FAN

SMCS-1359 **i02902272**

NOTE	REF NO	GRAPHIC REF	PART NUMBER	QTY	PART NAME 1 2 3 4 5 6 (PRODUCT LEVEL)	SEE PAGE
	1	1	**230-8065**	1	HOUSING AS	
M	2	1	**111-0859**	4	BOLT (M10X1.5X35-MM)	
	3	1	**130-3880**	1	PULLEY-FAN DRIVE	
	4	1	**4N-8771**	1	V-BELT SET (INCLUDES 2-BELTS) (FAN DRIVE)	

M - METRIC PART

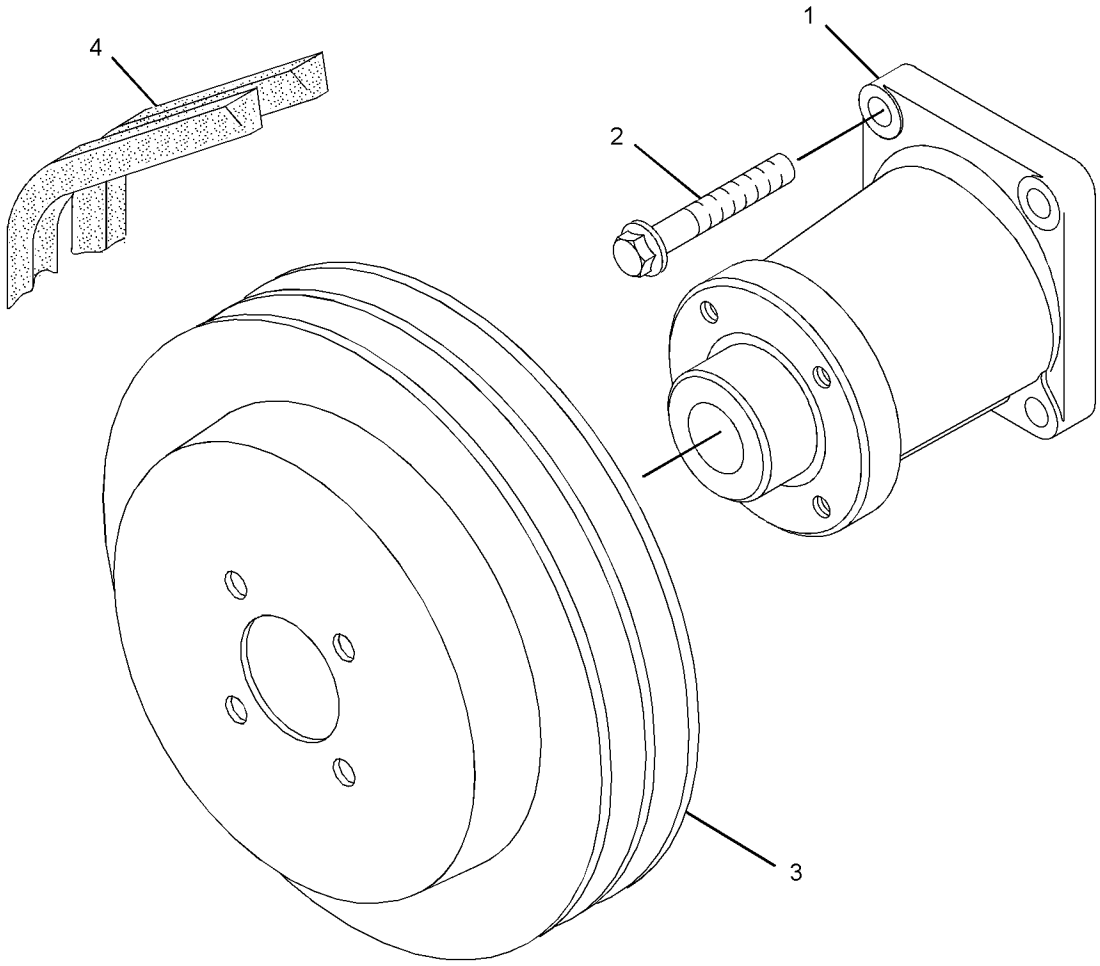

GRAPHIC #1 <END> g01377656

311-4644 DRIVE GP-FAN

PART OF 435-1699 ENGINE AR, 522-8303 ENGINE AR-PRIMARY

SMCS-1359 **i02761062**

NOTE	REF NO	GRAPHIC REF	PART NUMBER	QTY	PART NAME 1 2 3 4 5 6 (PRODUCT LEVEL)	SEE PAGE
M	1	1	**111-0859**	4	BOLT (M10X1.5X35-MM)	
	2	1	**128-5247**	1	V-BELT SET (INCLUDES 2-BELTS) (FAN DRIVE)	
	3	1	**130-3879**	1	PULLEY-FAN DRIVE	
	4	1	**230-8065**	1	HOUSING AS	

M - METRIC PART

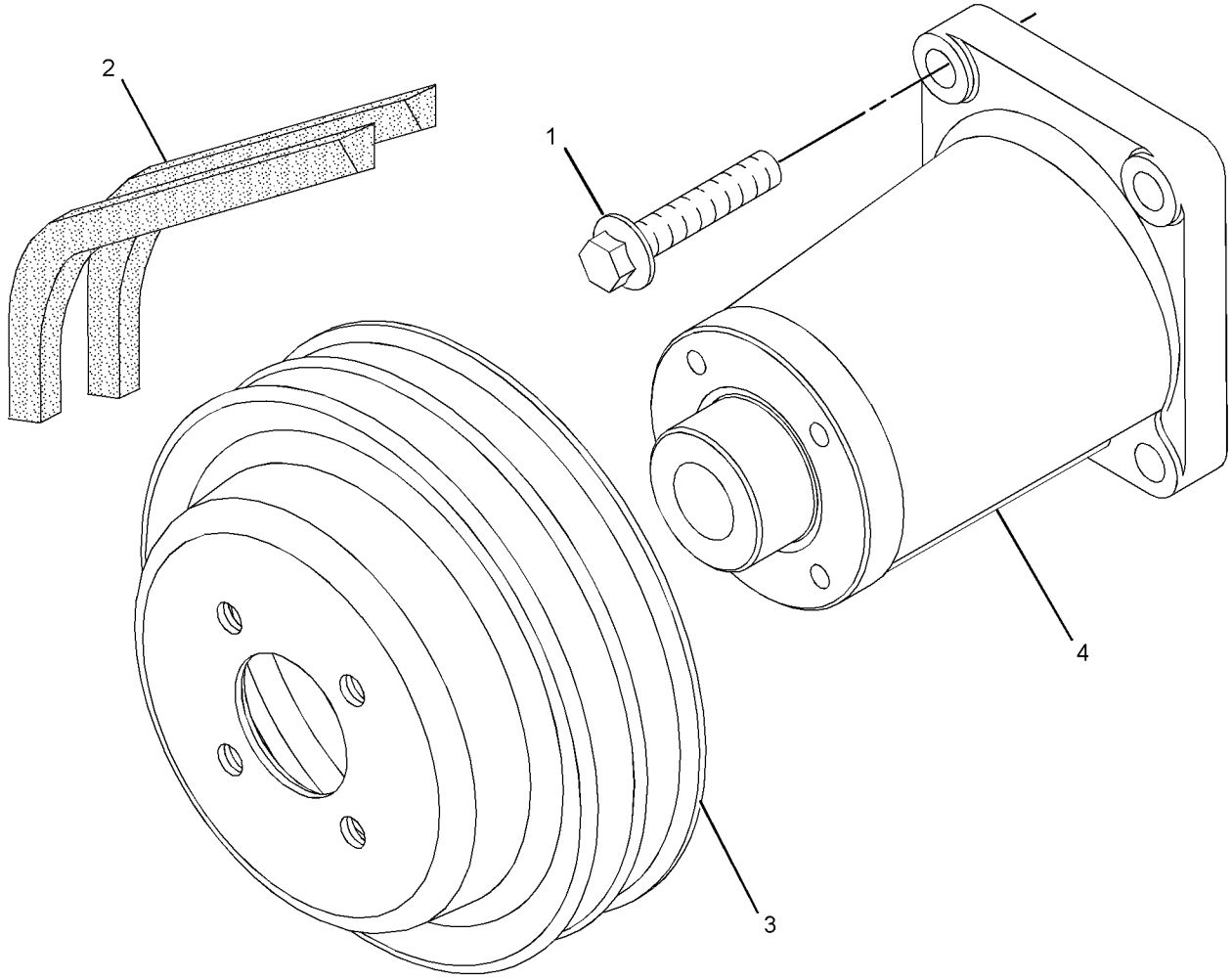

GRAPHIC #1 <END> g01367719

311-8533 DRIVE GP-FAN

SMCS-1359 **i03730325**

NOTE	REF NO	GRAPHIC REF	PART NUMBER	QTY	PART NAME 1 2 3 4 5 6 (PRODUCT LEVEL)	SEE PAGE
	1	1	**326-1876**	1	HOUSING-FAN DRIVE	
M	2	1	**111-0859**	5	BOLT (M10X1.5X35-MM)	
	3	1	**284-1026**	1	PULLEY (8-GROOVE)	
	4	1	**298-5866**	1	BELT-SERPENTINE (FAN DRIVE)	
	6	1	**261-0428**	1	PULLEY AS-IDLER	
M	7	1	**307-2242**	1	BOLT (M10X1.5X45-MM)	
	8	1	**288-2354**	1	BRACKET	
M	9	1	**6I-0650**	1	BOLT (M10X1.5X65-MM)	

M - METRIC PART

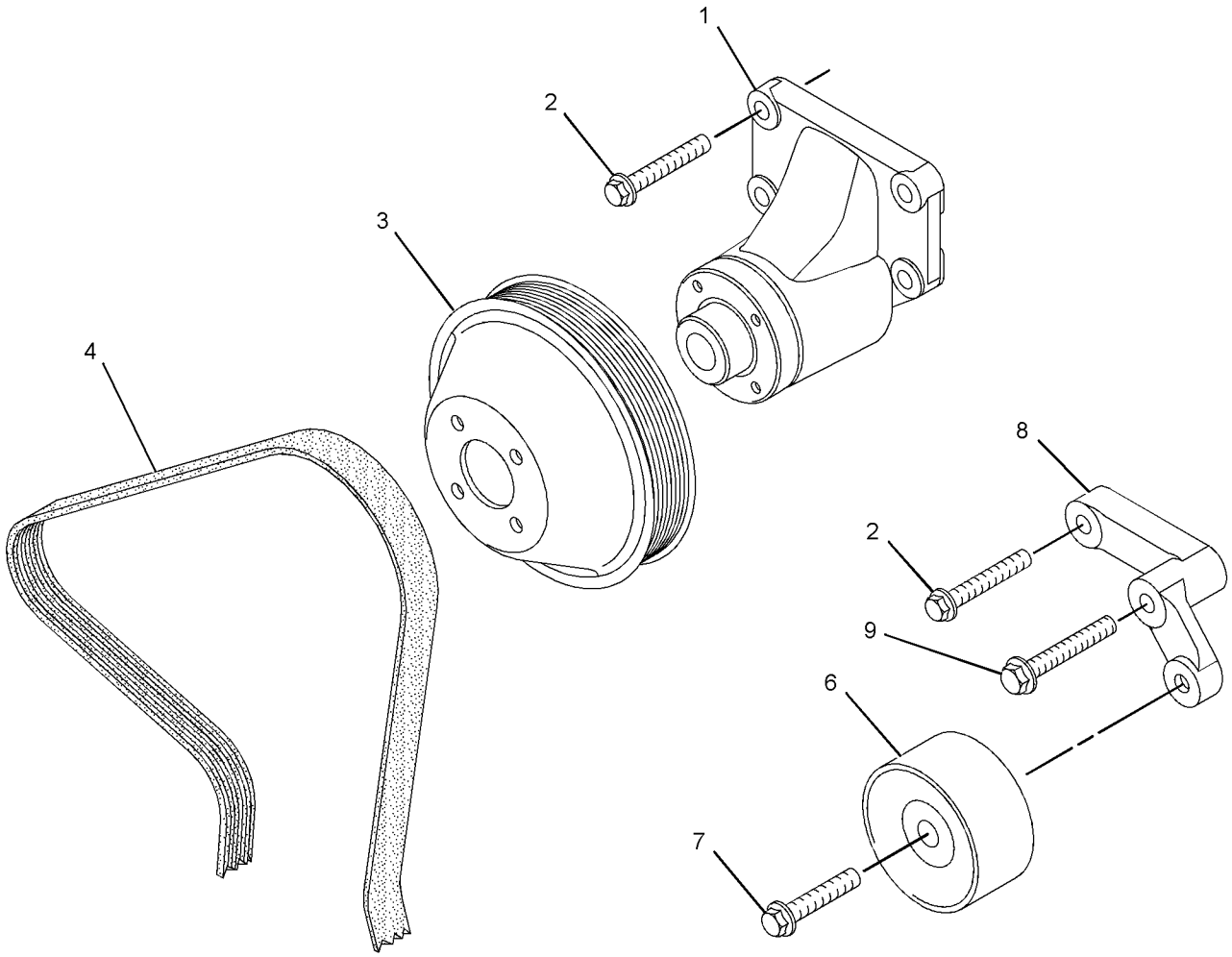

GRAPHIC #1 <END> g01430444

316-6873 DRIVE GP-FAN

SMCS-1359 **i02945281**

NOTE	REF NO	GRAPHIC REF	PART NUMBER	QTY	PART NAME 1 2 3 4 5 6 (PRODUCT LEVEL)	SEE PAGE
M	1	1	**111-0859**	4	BOLT (M10X1.5X35-MM)	
	2	1	**130-3880**	1	PULLEY-FAN DRIVE	
	3	1	**326-1878**	1	HOUSING-FAN DRIVE	

M - METRIC PART

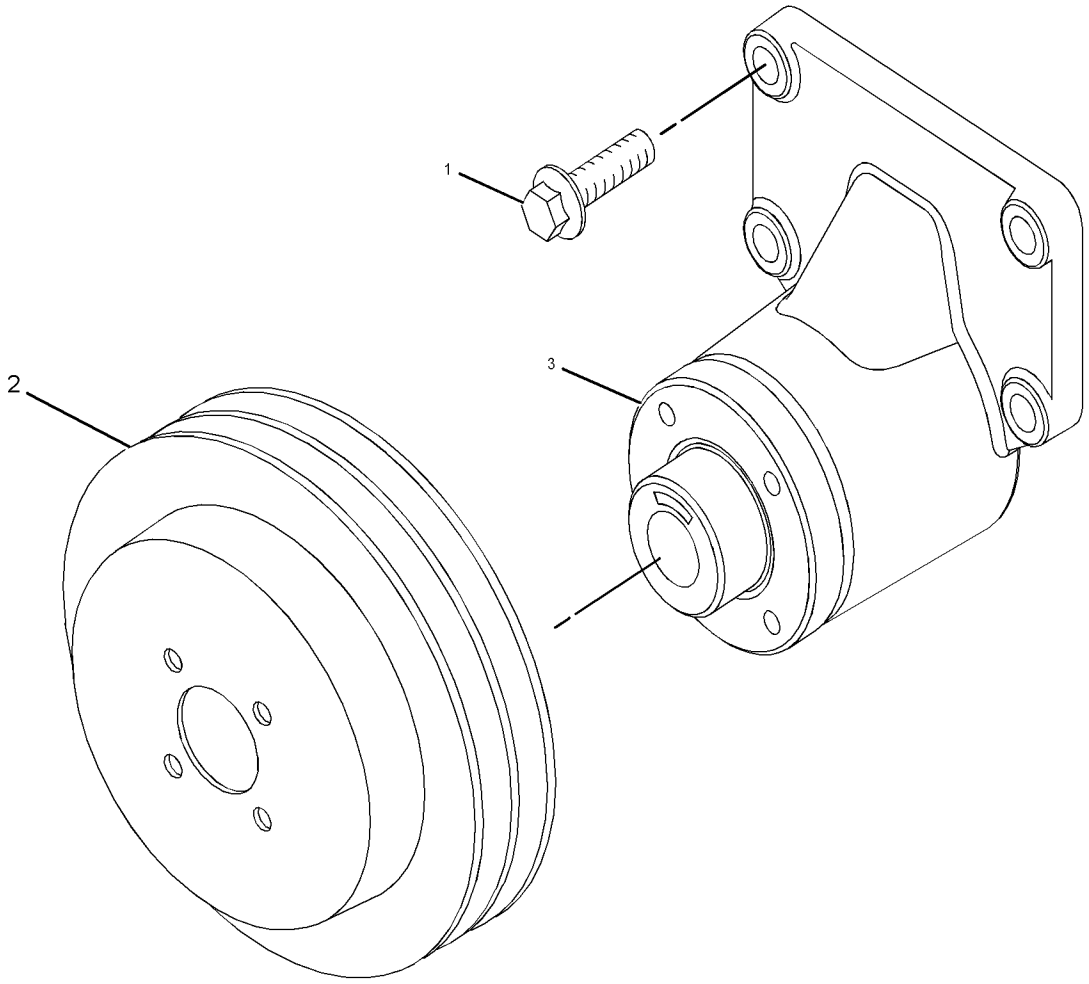

GRAPHIC #1 <END> g01398397

316-7959 DRIVE GP-FAN

PART OF 435-1687, 437-5409, 540-1155, 540-1156 ENGINE AR-PRIMARY

SMCS-1359 **i02892220**

NOTE	REF NO	GRAPHIC REF	PART NUMBER	QTY	PART NAME 1 2 3 4 5 6 (PRODUCT LEVEL)	SEE PAGE
	1	1	**230-8065**	1	HOUSING AS	
M	2	1	**111-0859**	4	BOLT (M10X1.5X35-MM)	
	3	1	**130-3880**	1	PULLEY-FAN DRIVE	
	4	1	**4N-8771**	1	V-BELT SET (INCLUDES 2-BELTS) (FAN DRIVE)	

M - METRIC PART

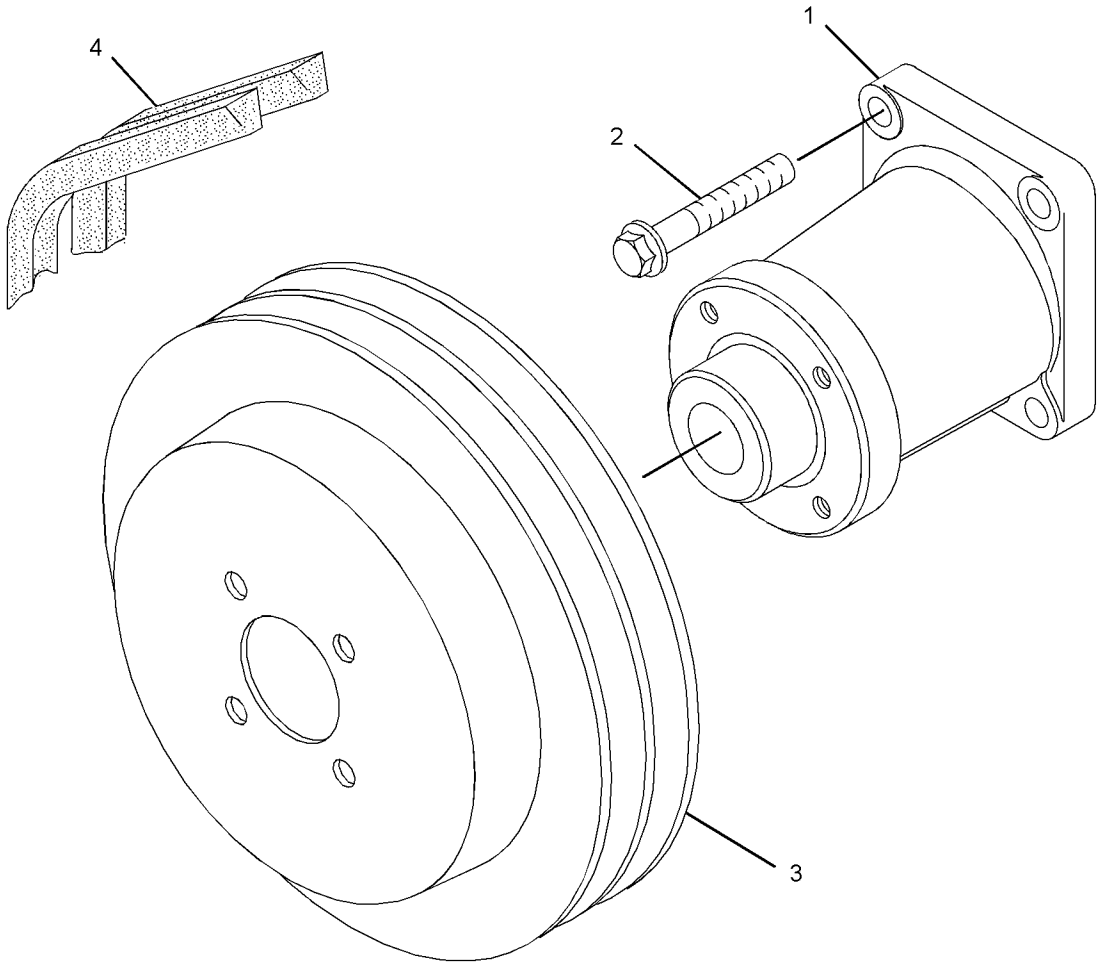

GRAPHIC #1 <END> g01377656

318-3621 DRIVE GP-FAN

SMCS-1359 **i03312430**

NOTE	REF NO	GRAPHIC REF	PART NUMBER	QTY	PART NAME 1 2 3 4 5 6 (PRODUCT LEVEL)	SEE PAGE
M	1	1	**111-0859**	4	BOLT (M10X1.5X35-MM)	
	2	1	**113-7130**	1	V-BELT SET (INCLUDES 2-BELTS) (FAN DRIVE)	
	3	1	**130-3880**	1	PULLEY-FAN DRIVE	
	4	1	**230-8065**	1	HOUSING AS	

M - METRIC PART

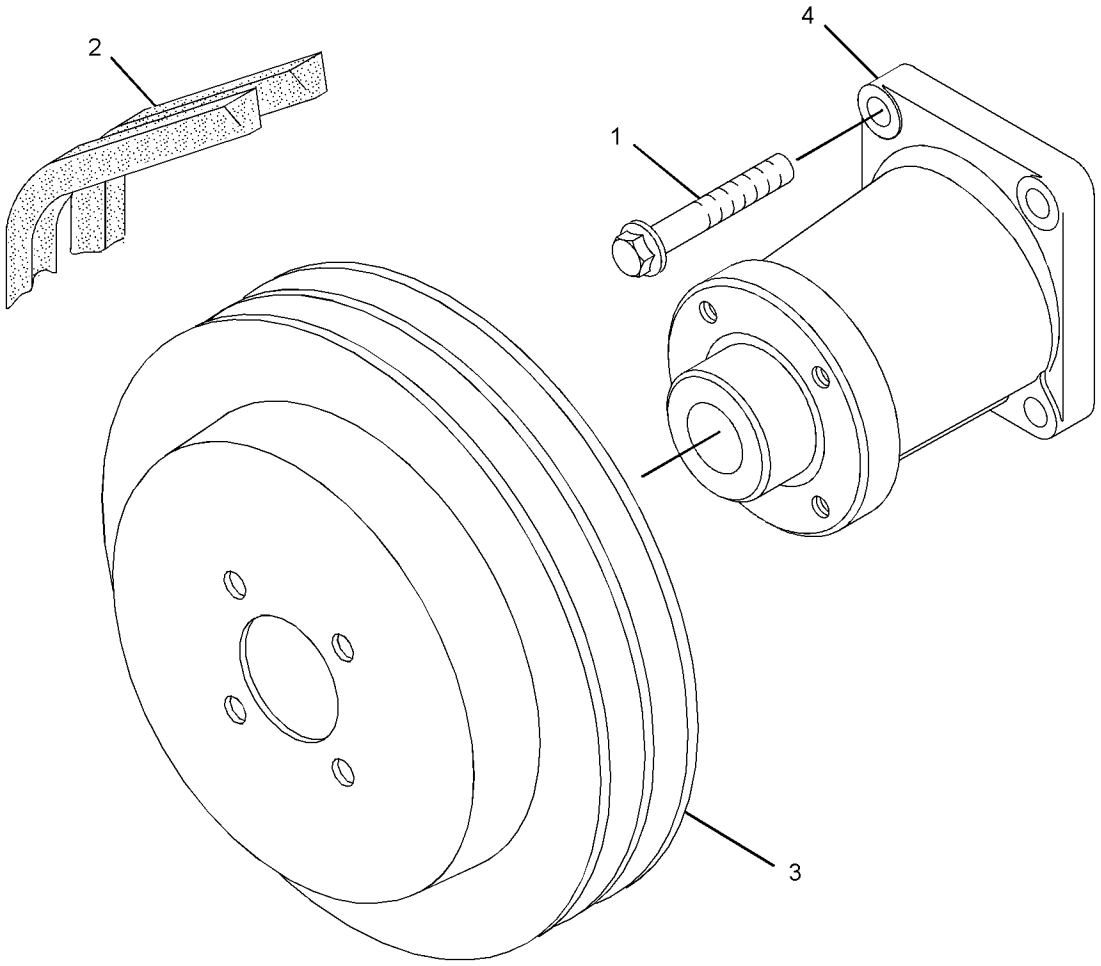

GRAPHIC #1 <END> g01438419

320-9223 DRIVE GP-FAN

SMCS-1359 **i03694712**

NOTE	REF NO	GRAPHIC REF	PART NUMBER	QTY	PART NAME 1 2 3 4 5 6 (PRODUCT LEVEL)	SEE PAGE
M	1	1	**111-0859**	4	BOLT (M10X1.5X35-MM)	
	2	1	**130-3879**	1	PULLEY-FAN DRIVE	
	3	1	**230-8065**	1	HOUSING AS	
	4	1	**128-5250**	1	V-BELT SET (INCLUDES 2-BELTS) (FAN DRIVE)	

M - METRIC PART

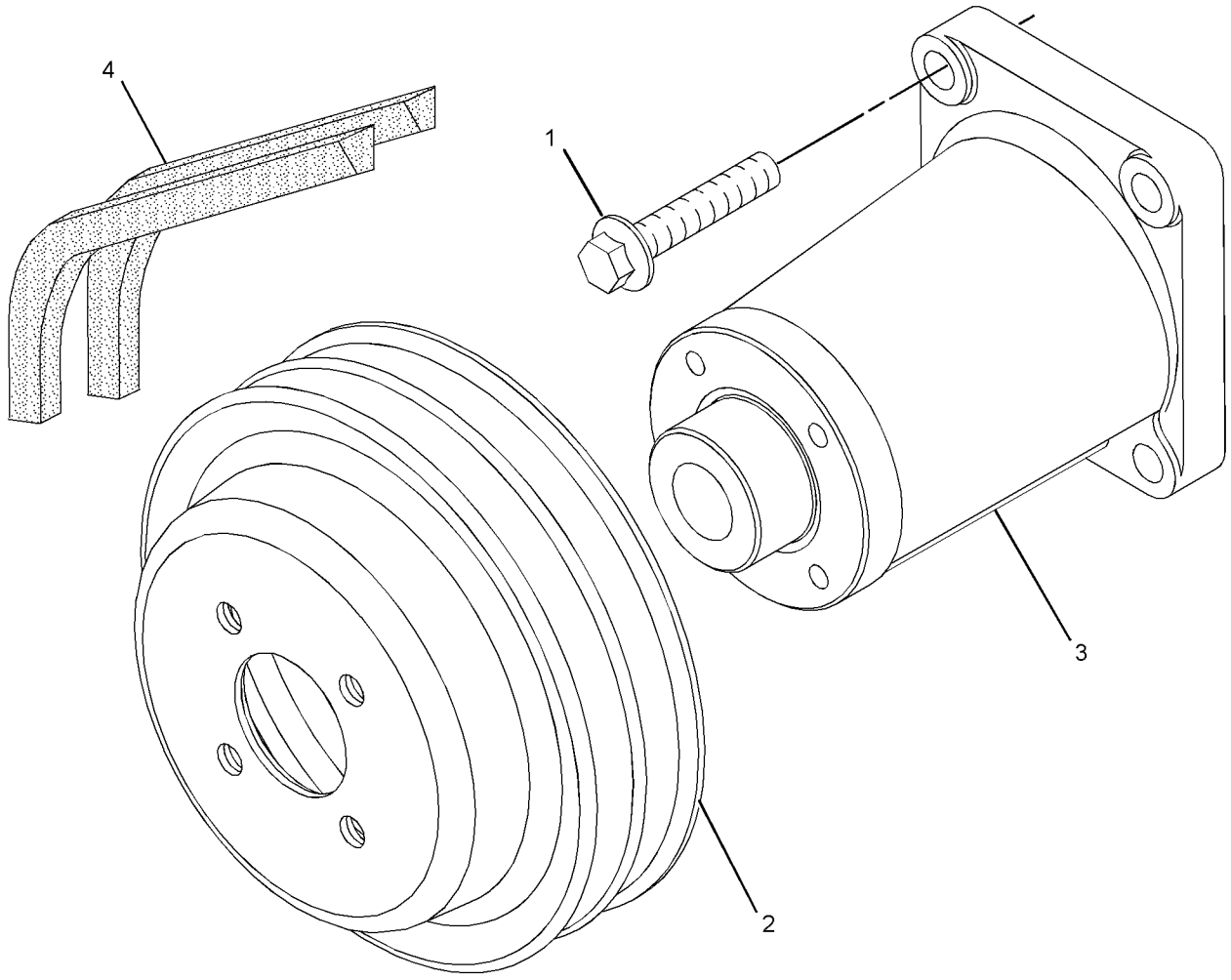

GRAPHIC #1 <END> g01531554

322-4983 DRIVE GP-FAN

SMCS-1359 **i02945282**

NOTE	REF NO	GRAPHIC REF	PART NUMBER	QTY	PART NAME 1 2 3 4 5 6 (PRODUCT LEVEL)	SEE PAGE
M	1	1	**6I-0650**	1	BOLT (M10X1.5X65-MM)	
M	2	1	**111-0859**	5	BOLT (M10X1.5X35-MM)	
	3	1	**261-0428**	1	PULLEY AS-IDLER	
M	3A	1	**307-2242**	1	BOLT (M10X1.5X45-MM)	
	4	1	**283-4148**	1	PULLEY (8-GROOVE)	
	5	1	**288-2354**	1	BRACKET	
	6	1	**326-1876**	1	HOUSING-FAN DRIVE	

M - METRIC PART

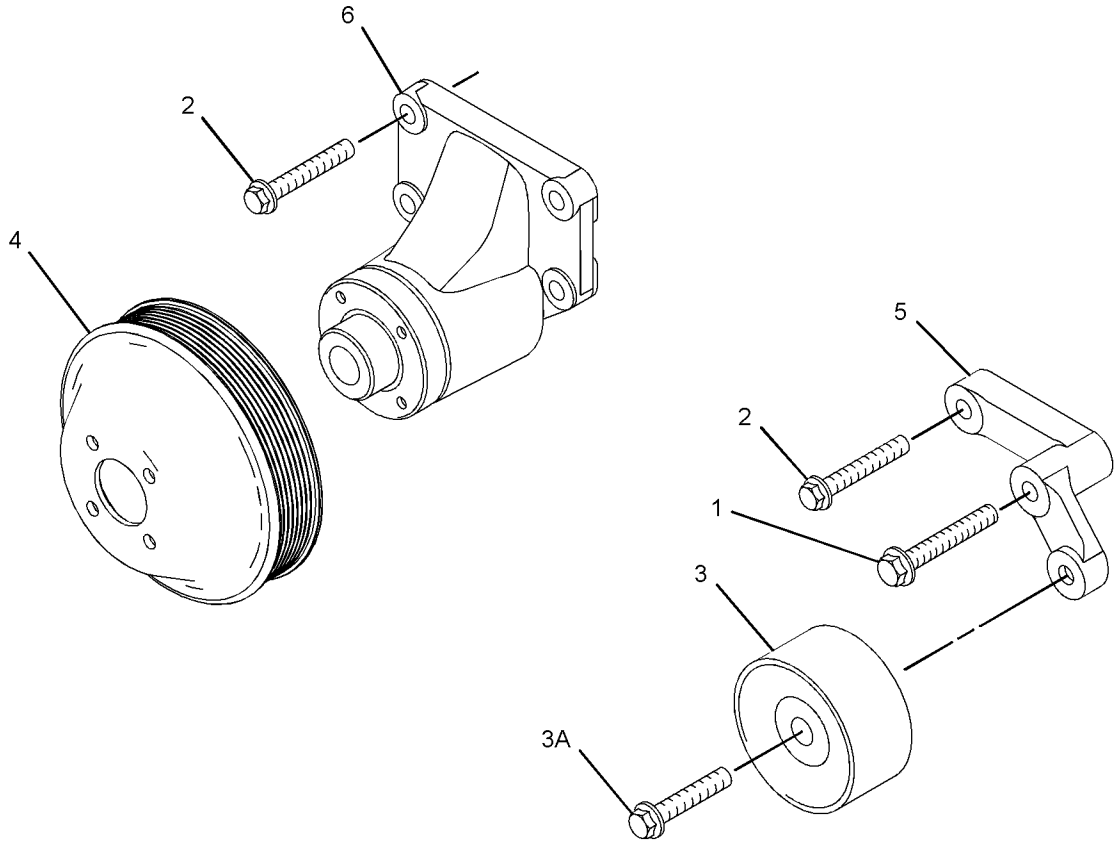

GRAPHIC #1 <END> g01438057

323-9874 DRIVE GP-FAN

SMCS-1359 **i03303708**

NOTE	REF NO	GRAPHIC REF	PART NUMBER	QTY	PART NAME 1 2 3 4 5 6 (PRODUCT LEVEL)	SEE PAGE
M	1	1	**6I-0650**	1	BOLT (M10X1.5X65-MM)	
M	2	1	**111-0859**	5	BOLT (M10X1.5X35-MM)	
	3	1	**261-0428**	1	PULLEY AS-IDLER	
M	3A	1	**307-2242**	1	BOLT (M10X1.5X45-MM)	
	4	1	**261-4320**	1	PULLEY (8-GROOVE)	
	5	1	**288-2354**	1	BRACKET	
	6	1	**289-2358**	1	BELT-SERPENTINE	
	7	1	**326-1876**	1	HOUSING-FAN DRIVE	

M - METRIC PART

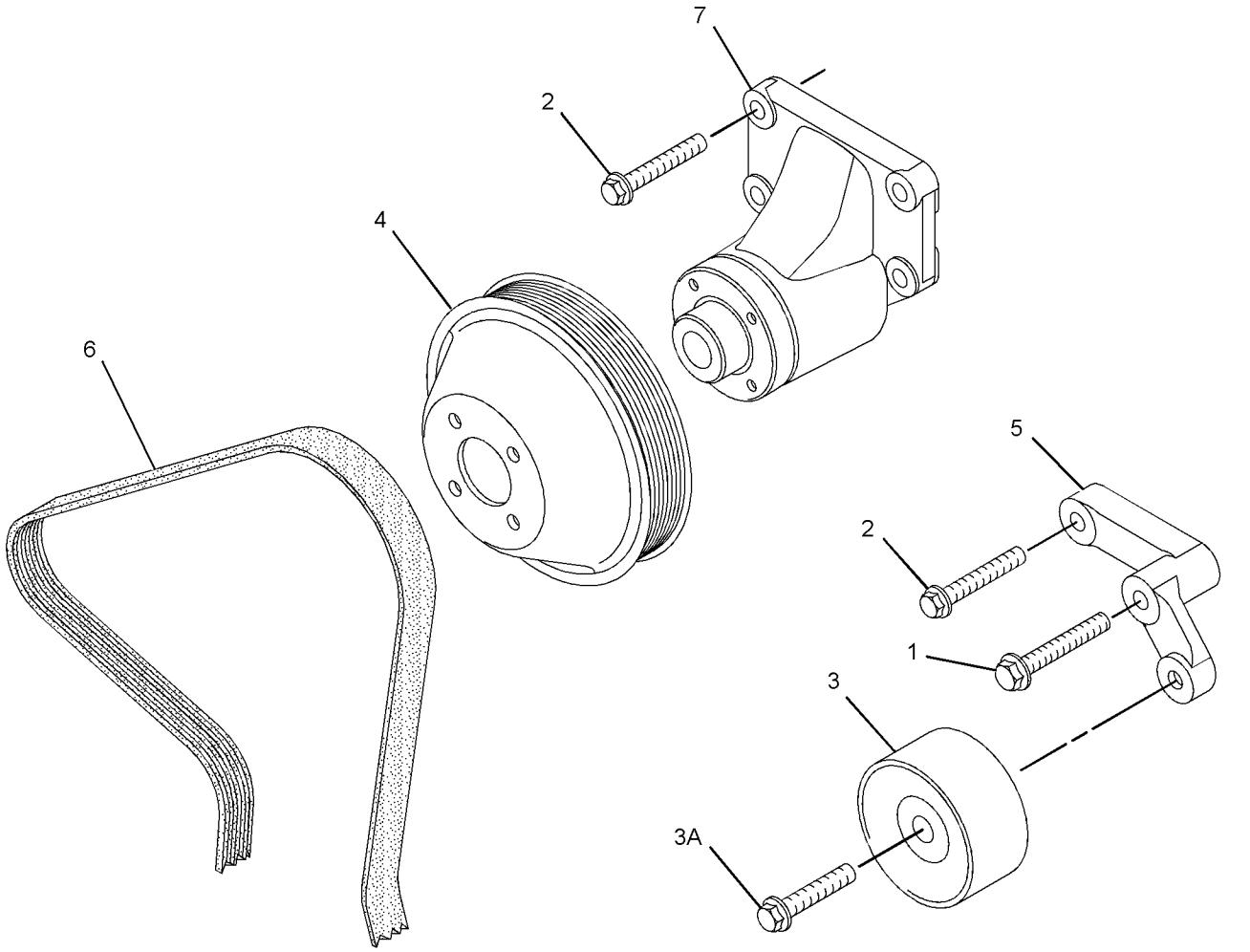

GRAPHIC #1 <END> g01672453

325-0577 DRIVE GP-FAN

SMCS-1359 **i02938987**

NOTE	REF NO	GRAPHIC REF	PART NUMBER	QTY	PART NAME 1 2 3 4 5 6 (PRODUCT LEVEL)	SEE PAGE
M	1	1	**111-0859**	4	BOLT (M10X1.5X35-MM)	
	2	1	**289-8336**	1	HOUSING AS	
	3	1	**283-4148**	1	PULLEY (8-GROOVE)	
	4	1	**285-9082**	1	BELT-SERPENTINE	

M - METRIC PART

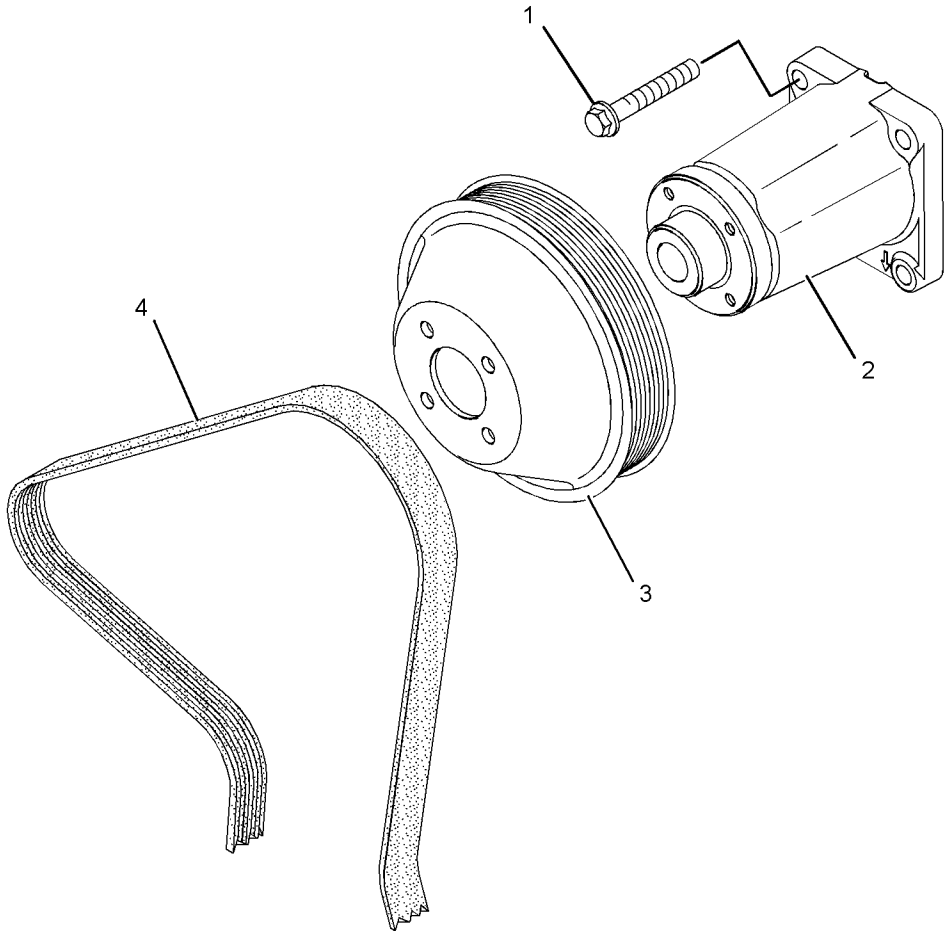

GRAPHIC #1 <END> g01235346

325-5613 DRIVE GP-FAN

SMCS-1359 **i02938966**

NOTE	REF NO	GRAPHIC REF	PART NUMBER	QTY	PART NAME 1 2 3 4 5 6 (PRODUCT LEVEL)	SEE PAGE
M	1	1	**111-0859**	4	BOLT (M10X1.5X35-MM)	
	2	1	**289-8336**	1	HOUSING AS	
	3	1	**284-1026**	1	PULLEY (8-GROOVE)	
	4	1	**289-3260**	1	BELT-SERPENTINE	

M - METRIC PART

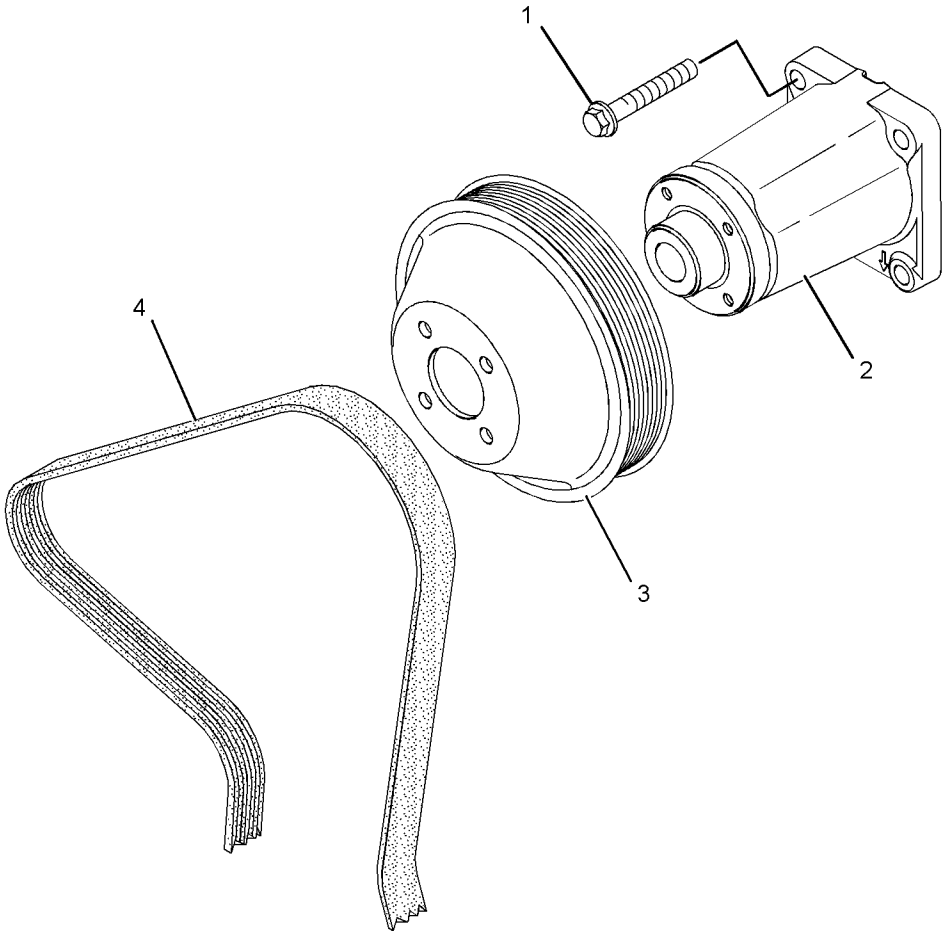

GRAPHIC #1 <END> g01235346

327-4182 DRIVE GP-FAN

S/N: 4441-19522

SMCS-1359 **i03312440**

NOTE	REF NO	GRAPHIC REF	PART NUMBER	QTY	PART NAME 1 2 3 4 5 6 (PRODUCT LEVEL)	SEE PAGE
M	1	1	**111-0859**	4	BOLT (M10X1.5X35-MM)	
	2	1	**130-3880**	1	PULLEY-FAN DRIVE	
	3	1	**326-1878**	1	HOUSING-FAN DRIVE	
	4	1	**327-4184**	1	V-BELT SET	

M - METRIC PART

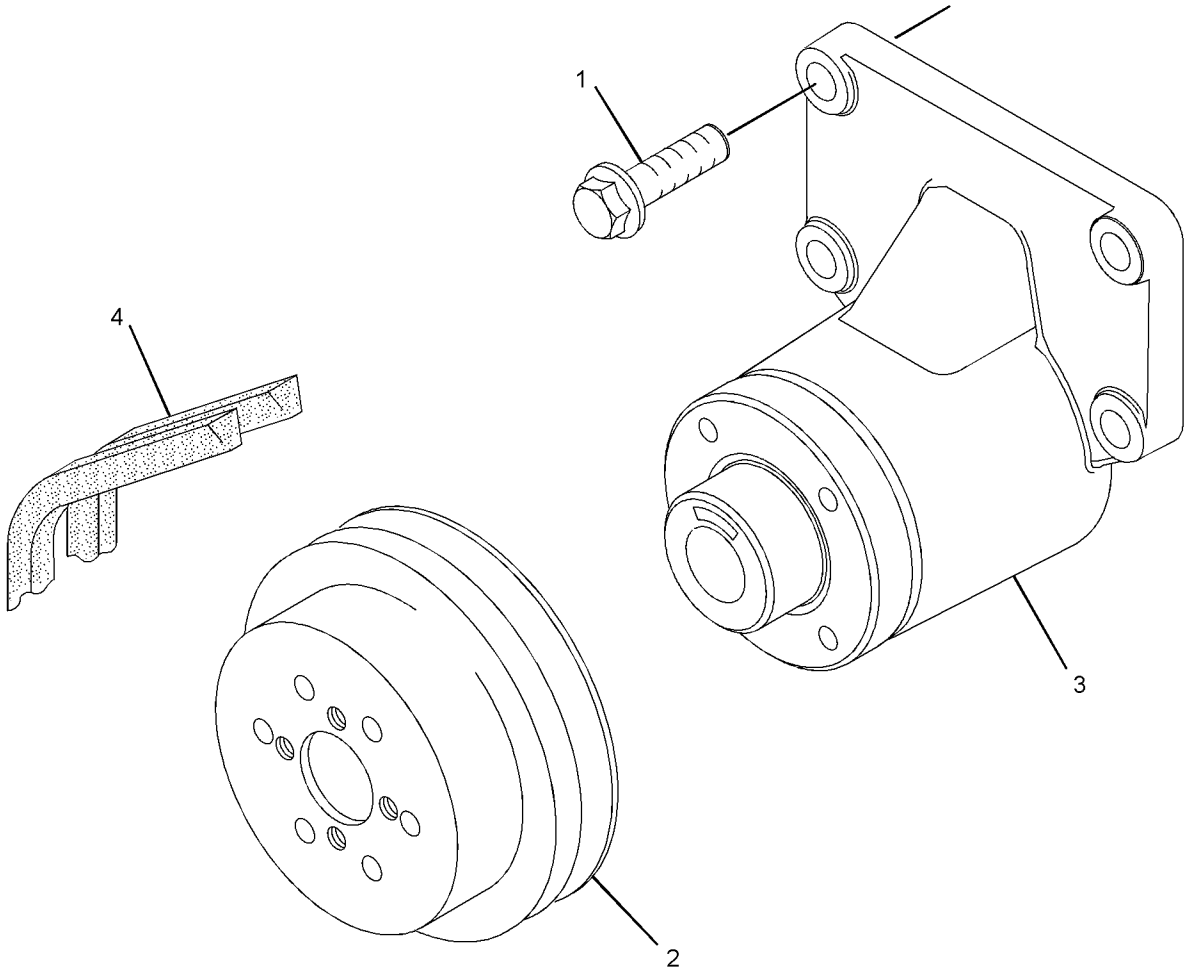

GRAPHIC #1 <END> g01635314

330-3666 DRIVE GP-FAN

SMCS-1359 **i03165480**

NOTE	REF NO	GRAPHIC REF	PART NUMBER	QTY	PART NAME 1 2 3 4 5 6 (PRODUCT LEVEL)	SEE PAGE
M	1	1	**111-0859**	4	BOLT (M10X1.5X35-MM)	
	2	1	**284-1026**	1	PULLEY (8-GROOVE)	
	3	1	**289-8336**	1	HOUSING AS	

M - METRIC PART

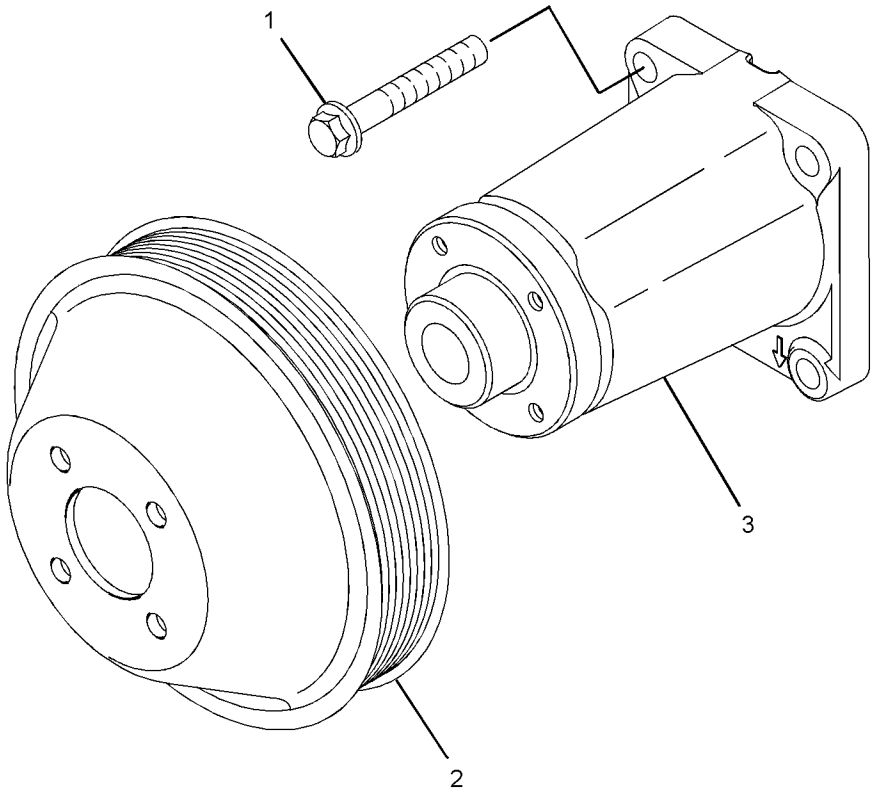

GRAPHIC #1 <END> g01671473

339-8100 DRIVE GP-FAN

SMCS-1359 **i03834651**

NOTE	REF NO	GRAPHIC REF	PART NUMBER	QTY	PART NAME 1 2 3 4 5 6 (PRODUCT LEVEL)	SEE PAGE
M	1	1	**111-0859**	4	BOLT (M10X1.5X35-MM)	
	2	1	**289-8336**	1	HOUSING AS	
	3	1	**284-1026**	1	PULLEY (8-GROOVE)	
	4	1	**287-6842**	1	BELT-SERPENTINE	

M - METRIC PART

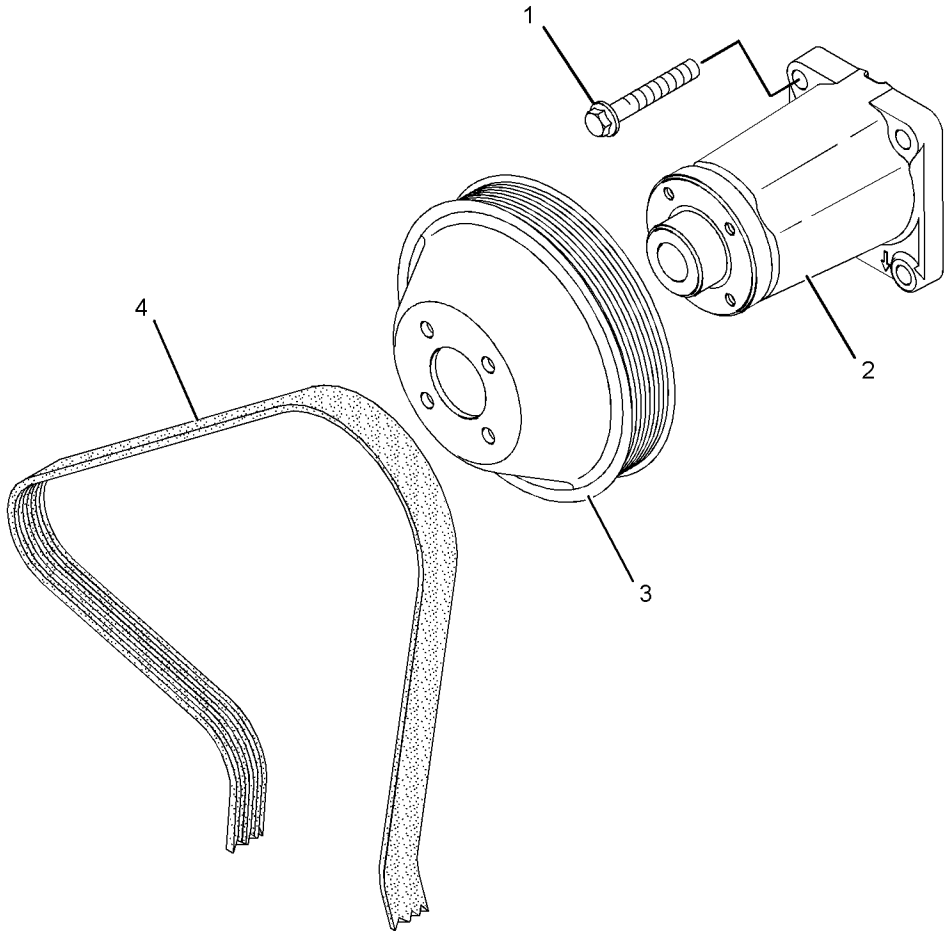

GRAPHIC #1 <END> g01235346

342-8096 DRIVE GP-FAN

SMCS-1359 **i03729842**

NOTE	REF NO	GRAPHIC REF	PART NUMBER	QTY	PART NAME 1 2 3 4 5 6 (PRODUCT LEVEL)	SEE PAGE
M	1	1	**111-0859**	4	BOLT (M10X1.5X35-MM)	
	2	1	**230-8065**	1	HOUSING AS	
	3	1	**268-3642**	1	PULLEY-FAN DRIVE	
	4	1	**3S-8447**	1	V-BELT SET (INCLUDES 2-BELTS) (FAN DRIVE)	

M - METRIC PART

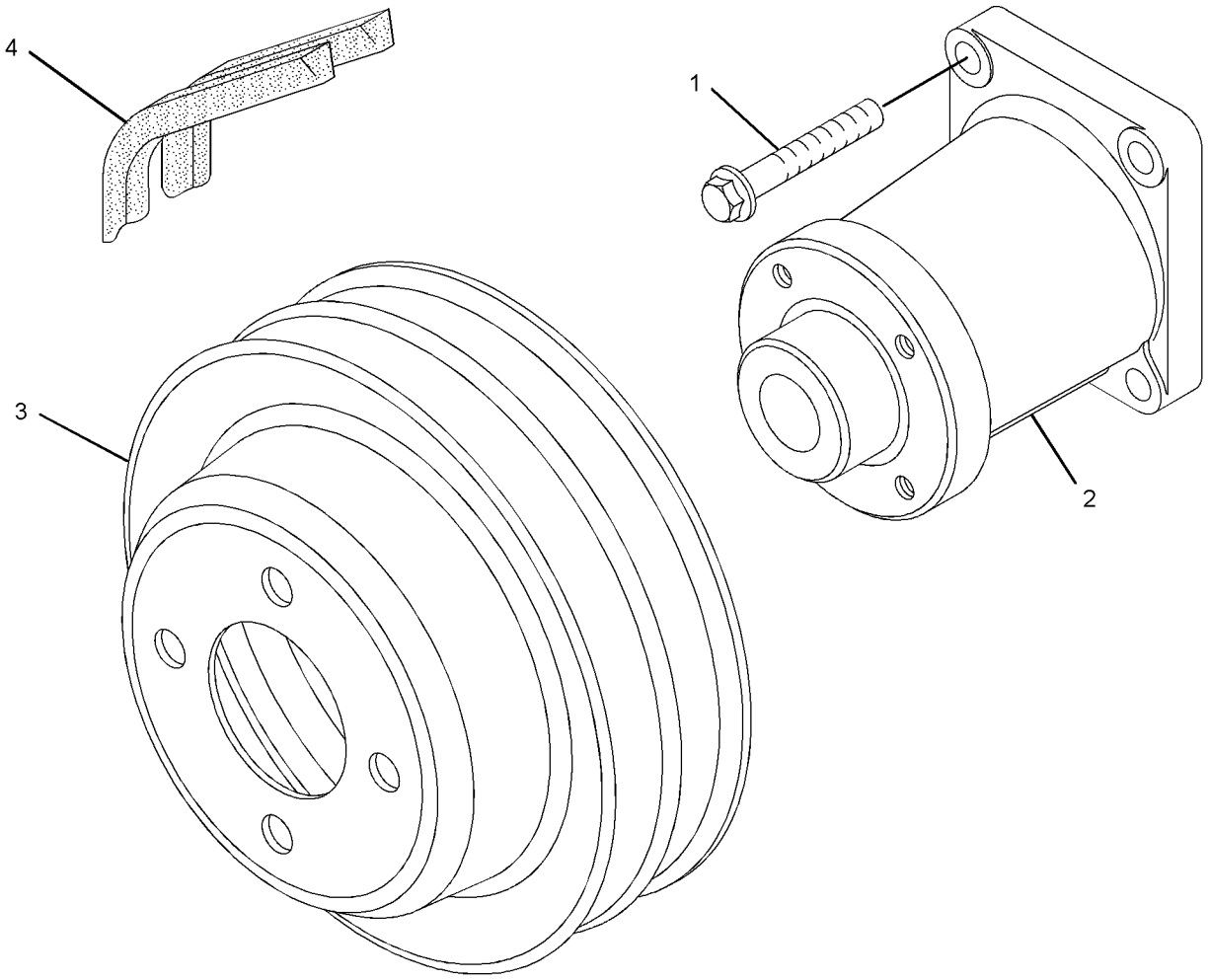

GRAPHIC #1 <END> g01629113

378-3549 DRIVE GP-FAN

SMCS-1359 **i04451411**

NOTE	REF NO	GRAPHIC REF	PART NUMBER	QTY	PART NAME 1 2 3 4 5 6 (PRODUCT LEVEL)	SEE PAGE
M	1	1	**6I-0650**	1	BOLT (M10X1.5X65-MM)	
M	2	1	**111-0859**	5	BOLT (M10X1.5X35-MM)	
	3	1	**261-0428**	1	PULLEY AS-IDLER	
M	3A	1	**307-2242**	1	BOLT (M10X1.5X45-MM)	
	4	1	**284-1026**	1	PULLEY (8-GROOVE)	
	5	1	**288-2354**	1	BRACKET	
	6	1	**289-2358**	1	BELT-SERPENTINE	
	7	1	**326-1877**	1	HOUSING-FAN DRIVE	

M - METRIC PART

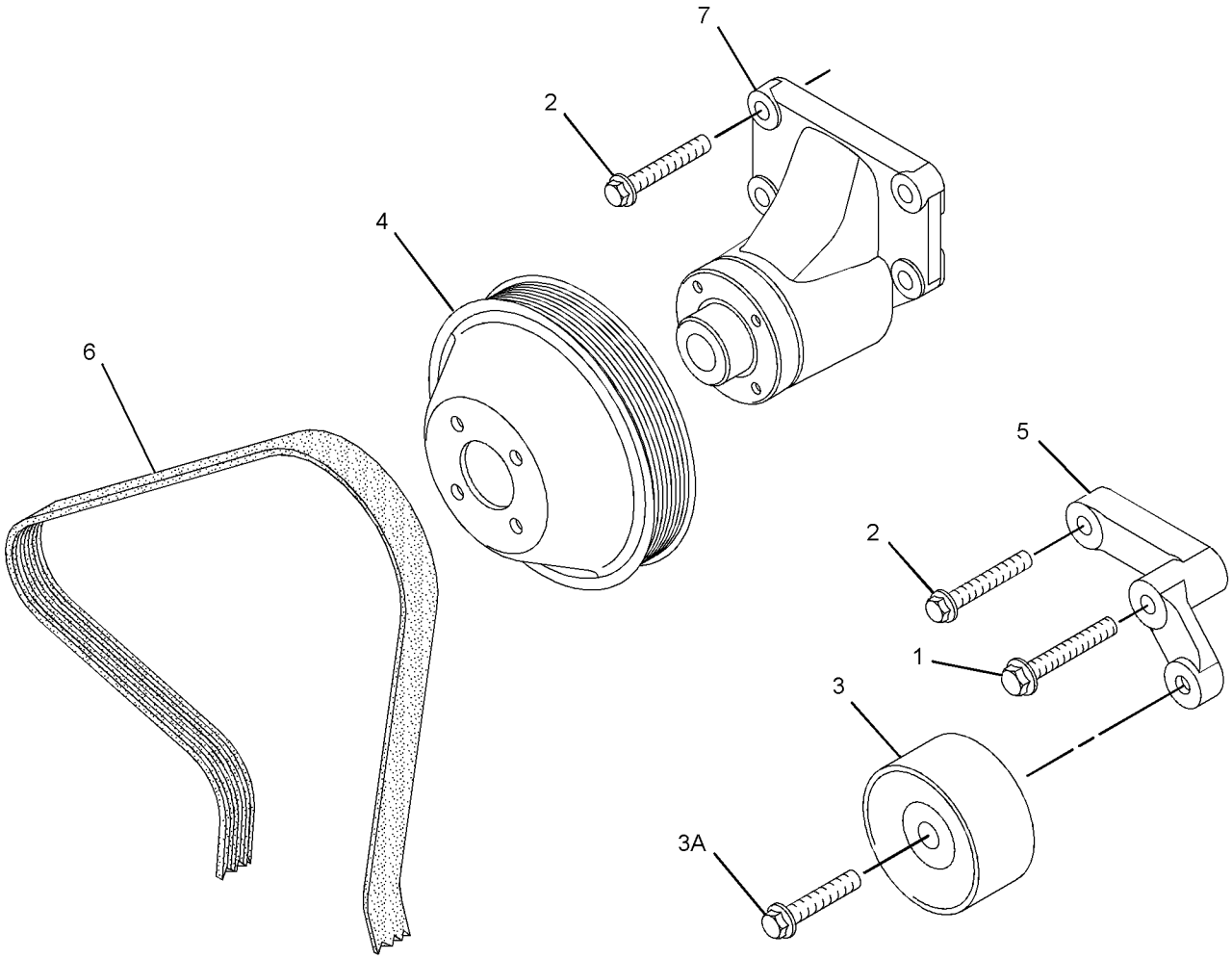

GRAPHIC #1 <END> g01672453

383-1389 DRIVE GP-FAN

SMCS-1359 **i04891516**

NOTE	REF NO	GRAPHIC REF	PART NUMBER	QTY	PART NAME 1 2 3 4 5 6 (PRODUCT LEVEL)	SEE PAGE
M	1	1	**111-0859**	4	BOLT (M10X1.5X35-MM)	
	2	1	**128-5247**	1	V-BELT SET (INCLUDES 2-BELTS)	
	3	1	**130-3879**	1	PULLEY-FAN DRIVE	
	4	1	**230-8065**	1	HOUSING AS	

M - METRIC PART

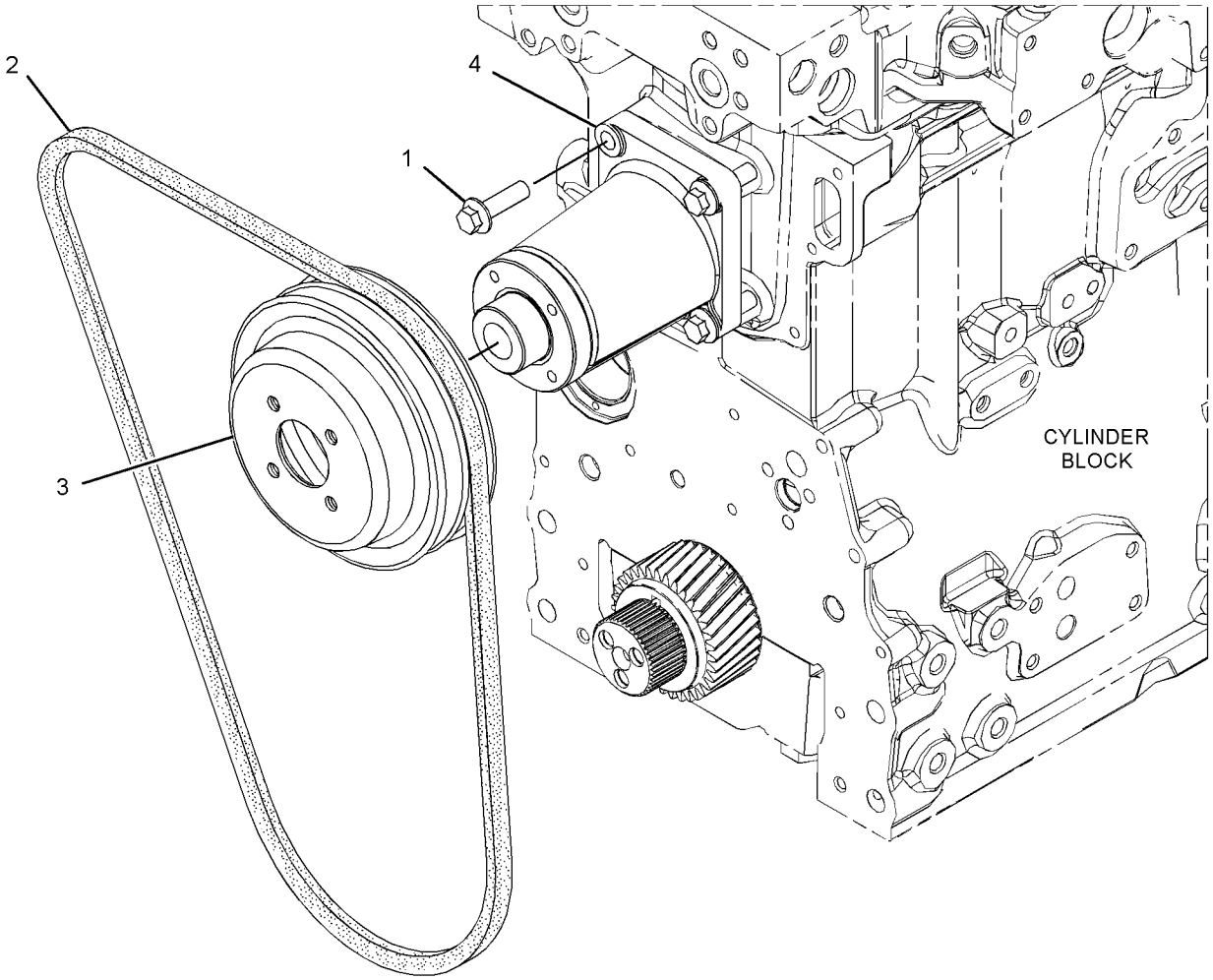

GRAPHIC #1 <END> g03030202

388-2420 DRIVE GP-FAN

SMCS-1359 **i04637549**

NOTE	REF NO	GRAPHIC REF	PART NUMBER	QTY	PART NAME 1 2 3 4 5 6 (PRODUCT LEVEL)	SEE PAGE
M	1	1	**111-0859**	4	BOLT (M10X1.5X35-MM)	
	2	1	**128-5247**	1	V-BELT SET (INCLUDES 2-BELTS)	
	3	1	**130-3879**	1	PULLEY-FAN DRIVE	
	4	1	**230-8065**	1	HOUSING AS	

M - METRIC PART

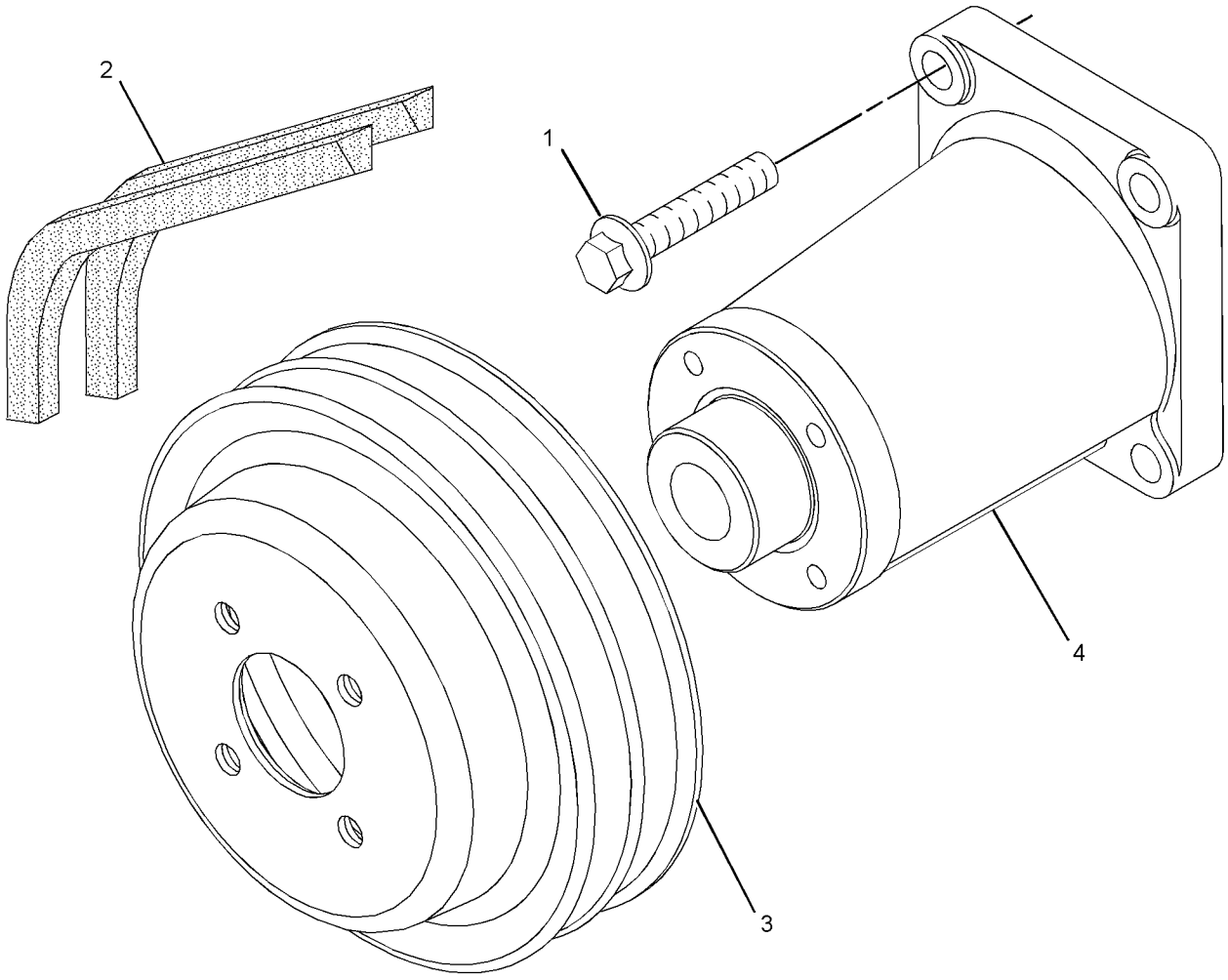

GRAPHIC #1 <END> g01367719

397-3885 DRIVE GP-FAN

SMCS-1359 **i04897756**

NOTE	REF NO	GRAPHIC REF	PART NUMBER	QTY	PART NAME 1 2 3 4 5 6 (PRODUCT LEVEL)	SEE PAGE
M	1	1	**111-0859**	4	BOLT (M10X1.5X35-MM)	
	2	1	**268-3642**	1	PULLEY-FAN DRIVE	
	3	1	**230-8065**	1	HOUSING AS	

M - METRIC PART

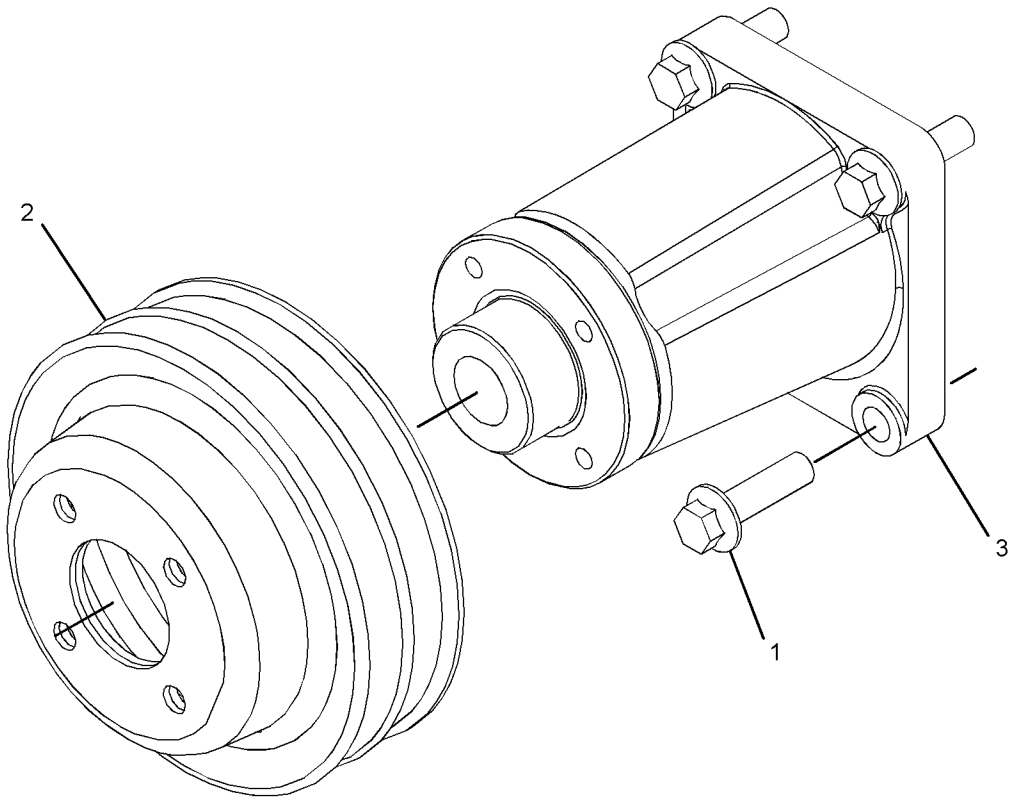

GRAPHIC #1 <END> g03077118

416-4358 DRIVE GP-FAN

SMCS-1359 **i05475310**

NOTE	REF NO	GRAPHIC REF	PART NUMBER	QTY	PART NAME 1 2 3 4 5 6 (PRODUCT LEVEL)	SEE PAGE
	1	1	**277-3419**	1	V-BELT SET (INCLUDES 2-BELTS) (FAN DRIVE)	

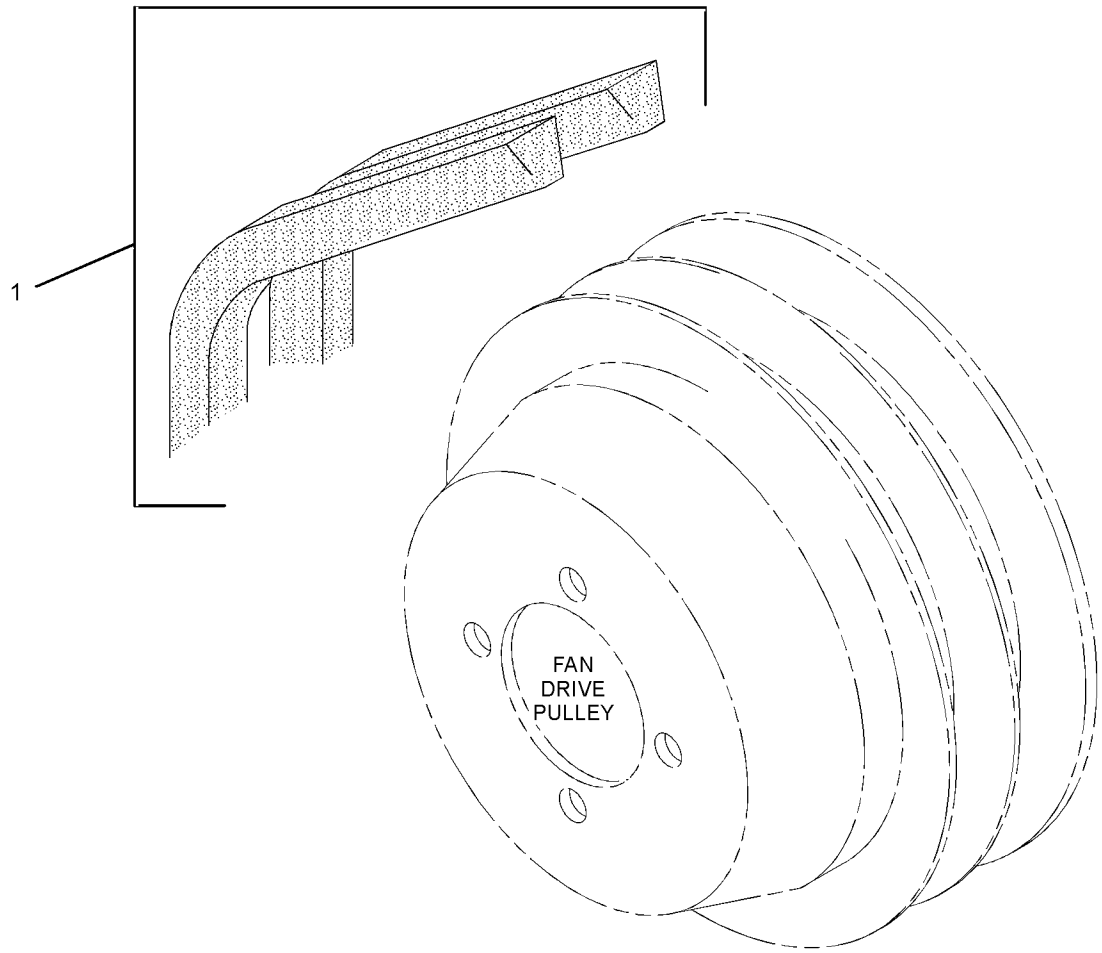

GRAPHIC #1 <END> g01750113

437-2695 DRIVE GP-FAN

S/N: 44418905-UP

SMCS-1359 **i07405087**

NOTE	REF NO	GRAPHIC REF	PART NUMBER	QTY	PART NAME 1 2 3 4 5 6 (PRODUCT LEVEL)	SEE PAGE
M	1	1	**111-0859**	4	BOLT (M10X1.5X35-MM)	
	2	1	**130-3880**	1	PULLEY-FAN DRIVE	
	3	1	**417-0487**	1	BRACKET AS	
	3A	1	**225-5959**	1	CLIP	
	4	1	**327-4184**	1	V-BELT SET	

M - METRIC PART

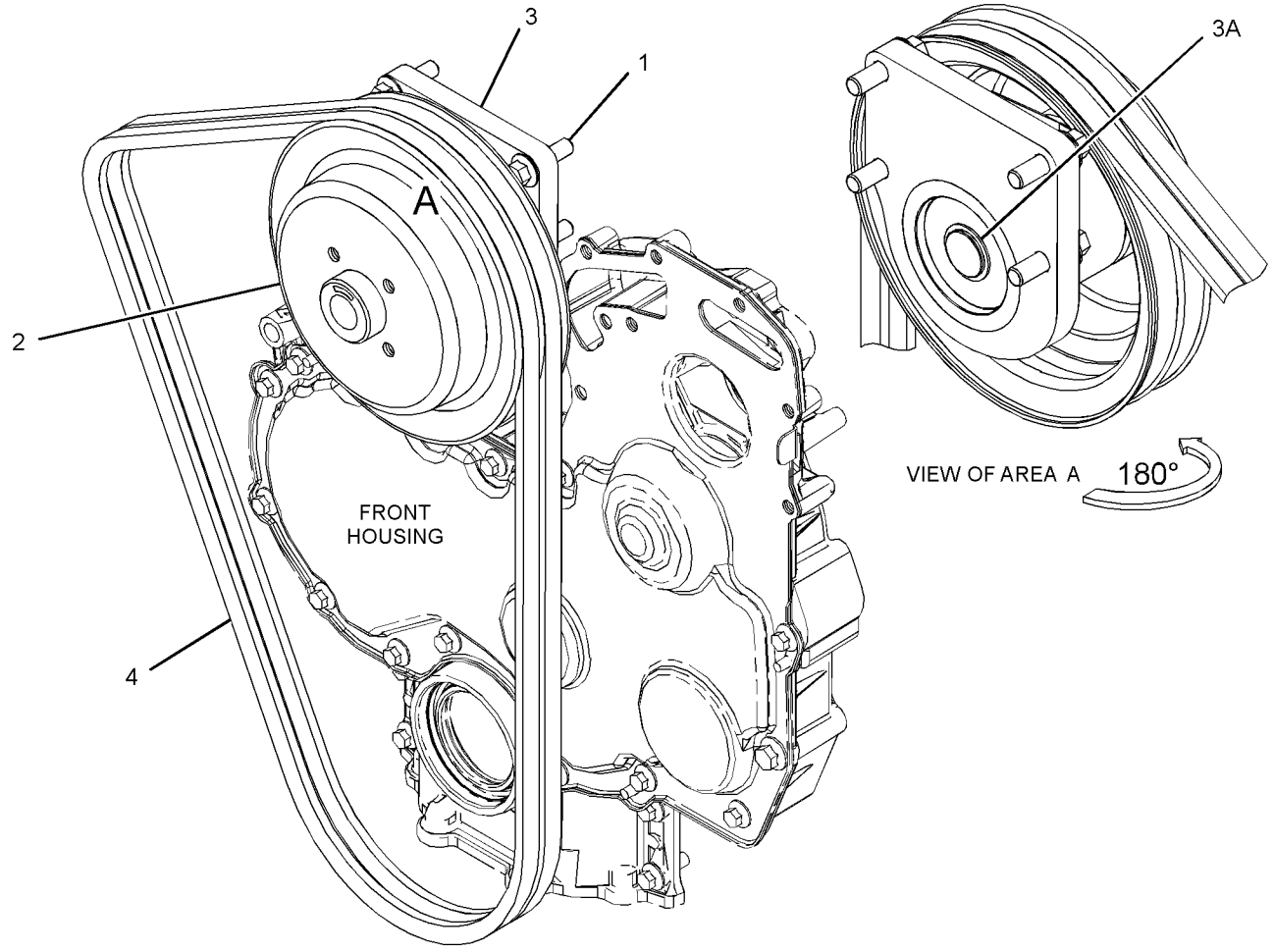

GRAPHIC #1 <END> g03374467

298-5093 FLYWHEEL GP

PART OF 435-1692 ENGINE AR-COMPLETE, 435-1685, 540-0570 ENGINE AR-PRIMARY

SMCS-1156 **i02604329**

NOTE	REF NO	GRAPHIC REF	PART NUMBER	QTY	PART NAME 1 2 3 4 5 6 (PRODUCT LEVEL)	SEE PAGE
	1	1	**0S-1603**	10	BOLT (1/2-20X1.5-IN)	
	2	1	**5P-8245**	10	WASHER-HARD (13.5X25.5X3-MM THK)	
	3	1	**298-3513**	1	FLYWHEEL AS	
	3A	1	**033-7687**	1	RING-STARTING MOTOR (126-TEETH)	

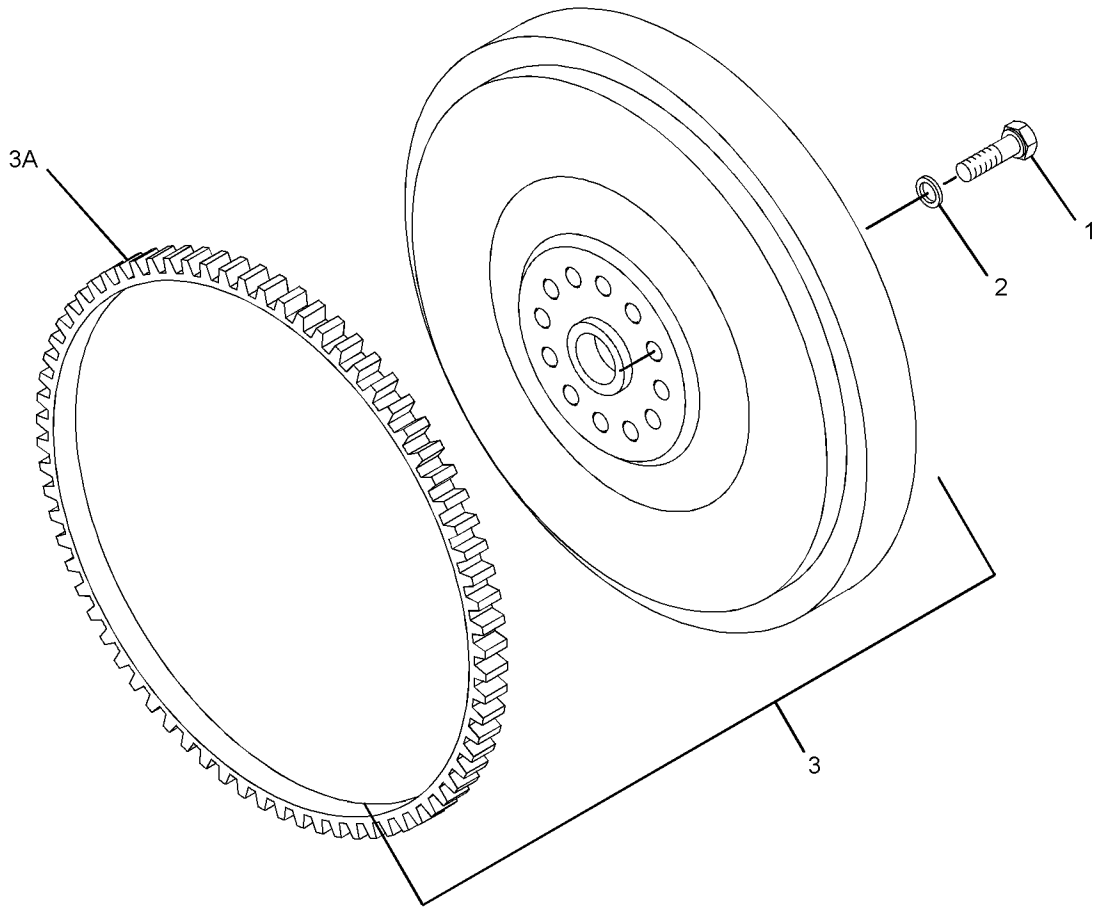

GRAPHIC #1 <END> g01304696

299-5063 FLYWHEEL GP

PART OF 435-1687, 540-1156 ENGINE AR-PRIMARY

SMCS-1156 **i06997651**

NOTE	REF NO	GRAPHIC REF	PART NUMBER	QTY	PART NAME 1 2 3 4 5 6 (PRODUCT LEVEL)	SEE PAGE
	1	1	**0S-1603**	10	BOLT (1/2-20X1.5-IN)	
	2	1	**145-4911**	10	WASHER	
	3	1	**458-3404**	1	FLYWHEEL AS	
	3A	1	**033-7687**	1	RING-STARTING MOTOR (126-TEETH)	

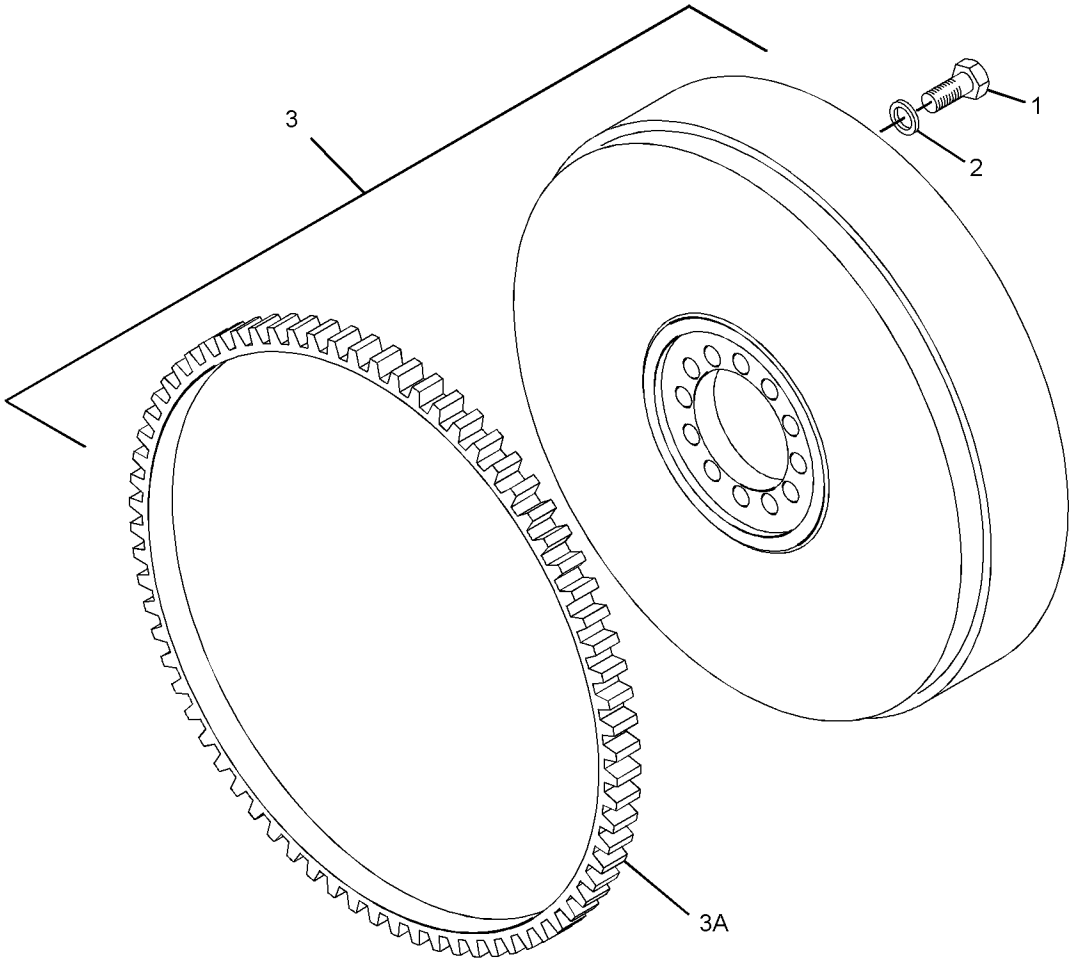

GRAPHIC #1 <END> g01413444

301-8237 FLYWHEEL GP

PART OF 435-1699 ENGINE AR, 437-5409, 522-8303, 540-1155 ENGINE AR-PRIMARY

SMCS-1156 **i06731866**

NOTE	REF NO	GRAPHIC REF	PART NUMBER	QTY	PART NAME 1 2 3 4 5 6 (PRODUCT LEVEL)	SEE PAGE
	1	1	**458-3400**	1	FLYWHEEL AS	
	1A	1	**033-7687**	1	RING-STARTING MOTOR (126-TEETH)	
	2	1	**9V-3811**	4	BOLT-12 POINT HEAD (1/2-20X2.25-IN)	
	3	1	**0S-1603**	6	BOLT (1/2-20X1.5-IN)	
	4	1	**145-4911**	6	WASHER	
	5	1	**149-5599**	1	HOUSING	

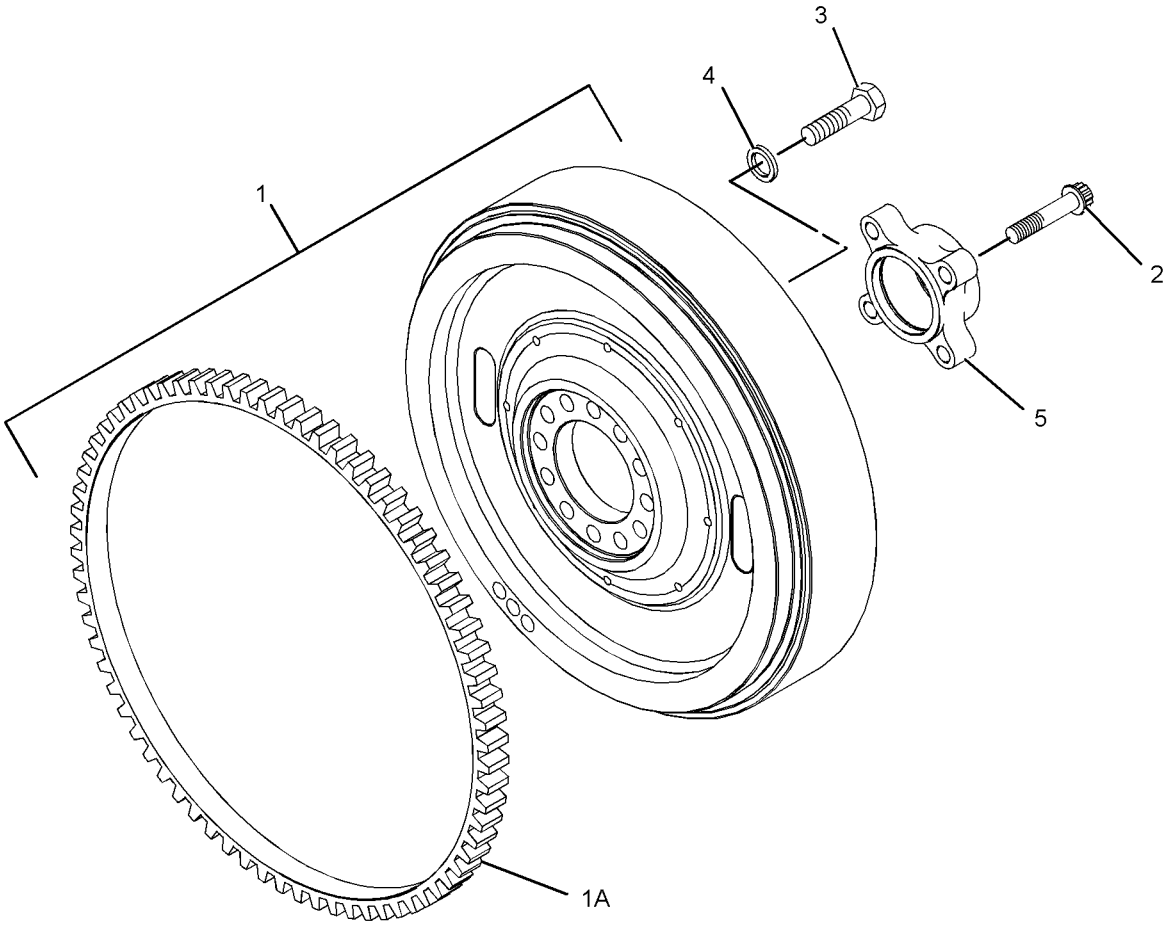

GRAPHIC #1 <END> g06169626

303-5768 FLYWHEEL GP

SMCS-1156 **i05196707**

NOTE	REF NO	GRAPHIC REF	PART NUMBER	QTY	PART NAME 1 2 3 4 5 6 (PRODUCT LEVEL)	SEE PAGE
	1	1	**369-7944**	1	FLYWHEEL AS	
	1A	1	**033-7687**	1	RING-STARTING MOTOR (126-TEETH)	
	2	1	**0S-1603**	10	BOLT (1/2-20X1.5-IN)	
	3	1	**5P-8245**	10	WASHER-HARD (13.5X25.5X3-MM THK)	

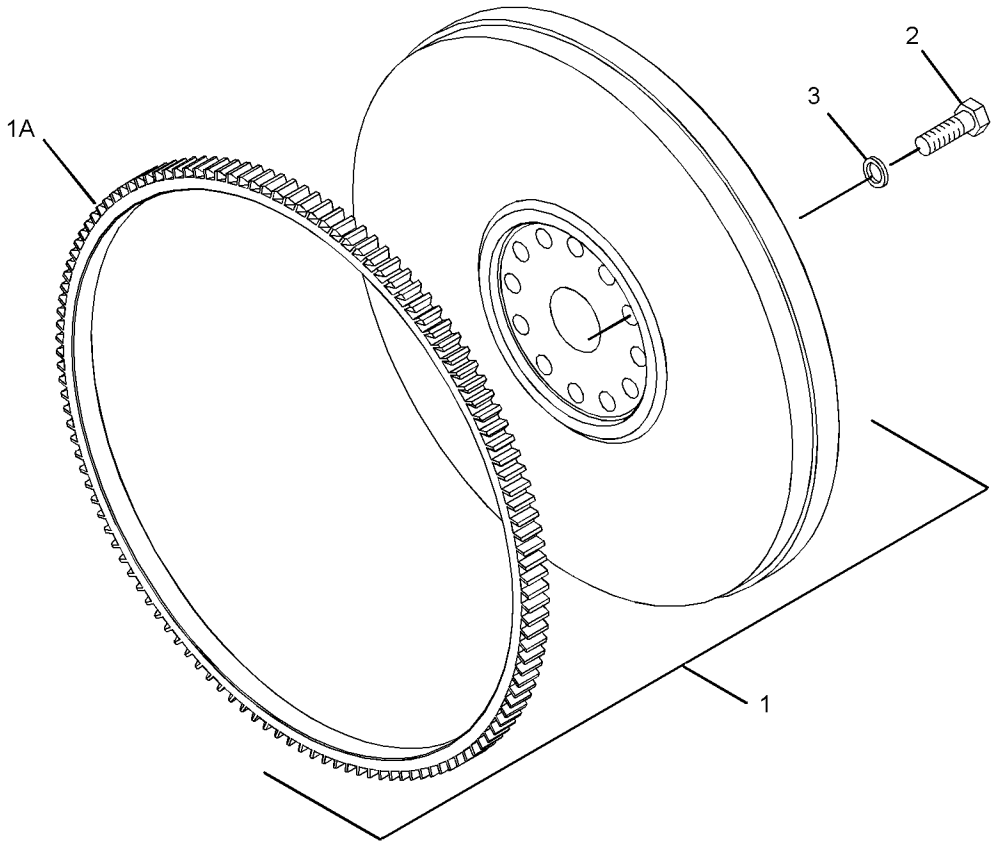

GRAPHIC #1 <END> g01372699

304-3654 FLYWHEEL GP

SMCS-1156 **i06901671**

NOTE	REF NO	GRAPHIC REF	PART NUMBER	QTY	PART NAME 1 2 3 4 5 6 (PRODUCT LEVEL)	SEE PAGE
	1	1	**458-3400**	1	FLYWHEEL AS	
	1A	1	**033-7687**	1	RING-STARTING MOTOR (126-TEETH)	
	2	1	**0S-1603**	6	BOLT (1/2-20X1.5-IN)	
	3	1	**145-4911**	6	WASHER	

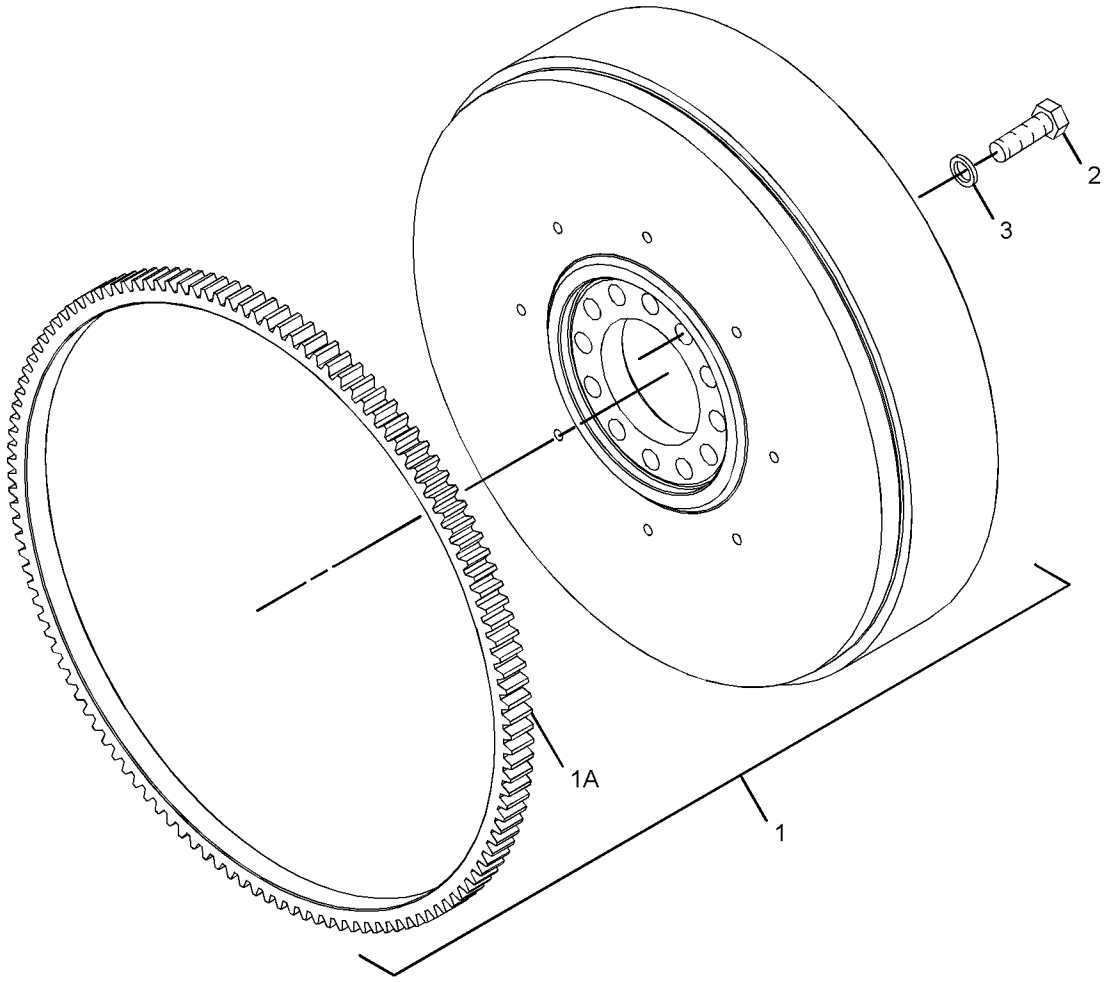

GRAPHIC #1 <END> g01280683

304-8756 FLYWHEEL GP

SMCS-1156 **i03883881**

NOTE	REF NO	GRAPHIC REF	PART NUMBER	QTY	PART NAME 1 2 3 4 5 6 (PRODUCT LEVEL)	SEE PAGE
	1	1	**113-7543**	1	FLYWHEEL AS	
	1A	1	**033-7687**	1	RING-STARTING MOTOR (126-TEETH)	
	2	1	**4K-7502**	10	BOLT (1/2-20X1.375-IN)	
	3	1	**145-4911**	10	WASHER	

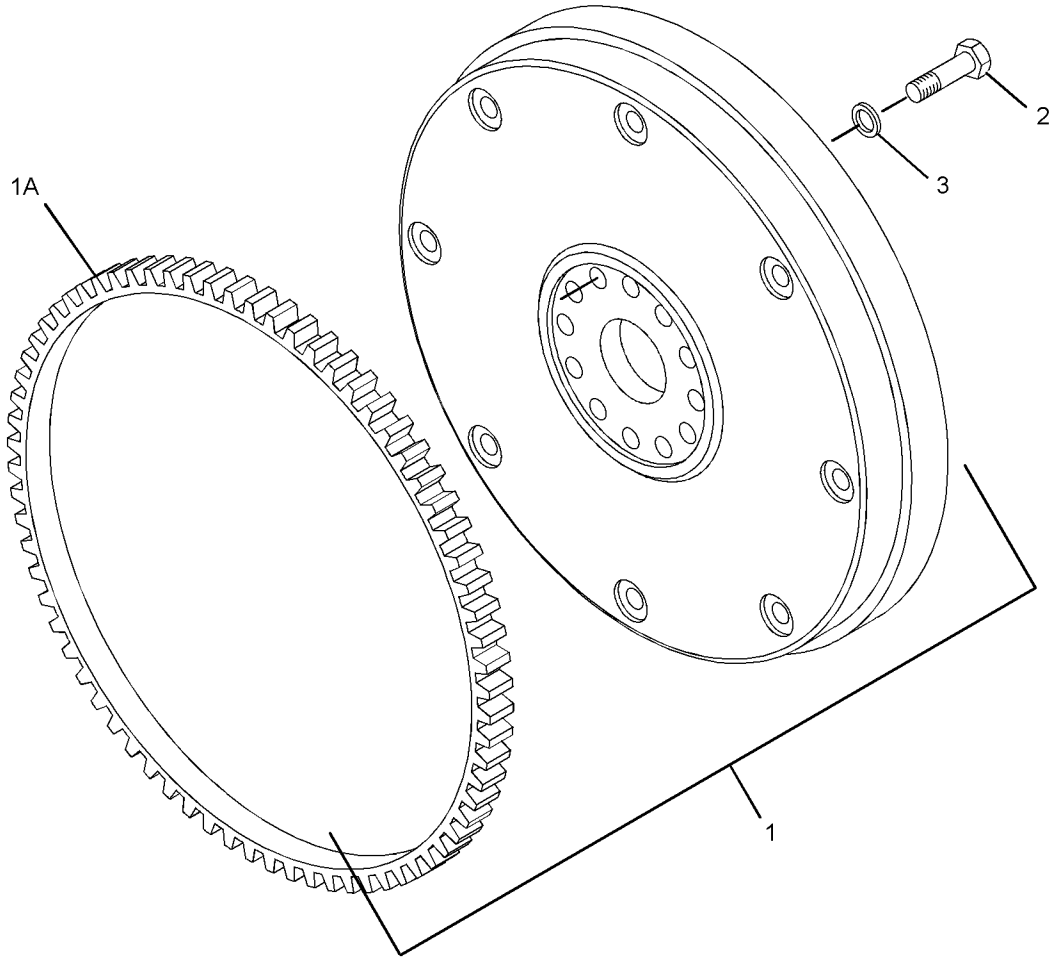

GRAPHIC #1 <END> g01370267

305-2166 FLYWHEEL GP

SMCS-1156 **i05196717**

NOTE	REF NO	GRAPHIC REF	PART NUMBER	QTY	PART NAME 1 2 3 4 5 6 (PRODUCT LEVEL)	SEE PAGE
	1	1	**369-7944**	1	FLYWHEEL AS	
	1A	1	**033-7687**	1	RING-STARTING MOTOR (126-TEETH)	
	2	1	**0S-1603**	6	BOLT (1/2-20X1.5-IN)	
	3	1	**5P-8245**	6	WASHER-HARD (13.5X25.5X3-MM THK)	

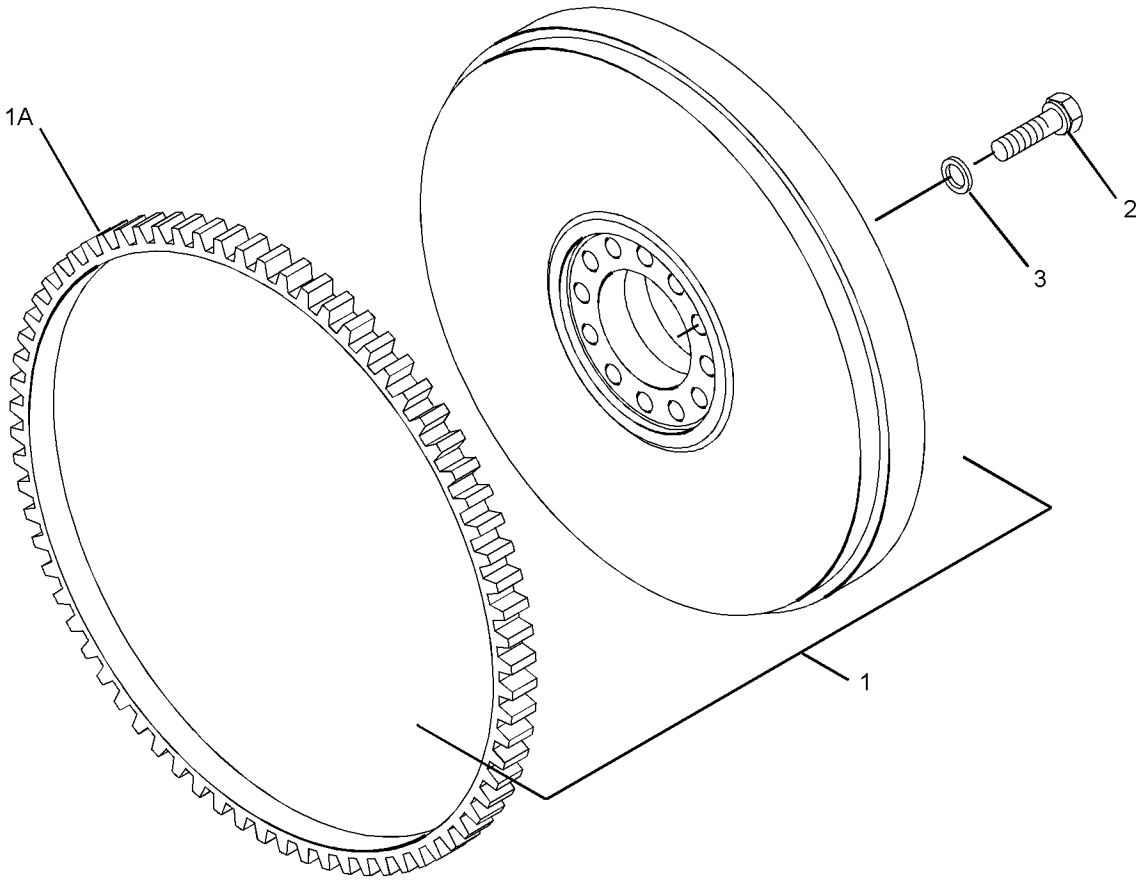

GRAPHIC #1 <END> g01232733

305-2577 FLYWHEEL GP

SMCS-1156 **i02654259**

NOTE	REF NO	GRAPHIC REF	PART NUMBER	QTY	PART NAME 1 2 3 4 5 6 (PRODUCT LEVEL)	SEE PAGE
	1	1	**114-2405**	1	FLYWHEEL AS	
	1A	1	**033-7687**	1	RING-STARTING MOTOR (126-TEETH)	
	2	1	**0S-1603**	10	BOLT (1/2-20X1.5-IN)	
	3	1	**5P-8245**	10	WASHER-HARD (13.5X25.5X3-MM THK)	

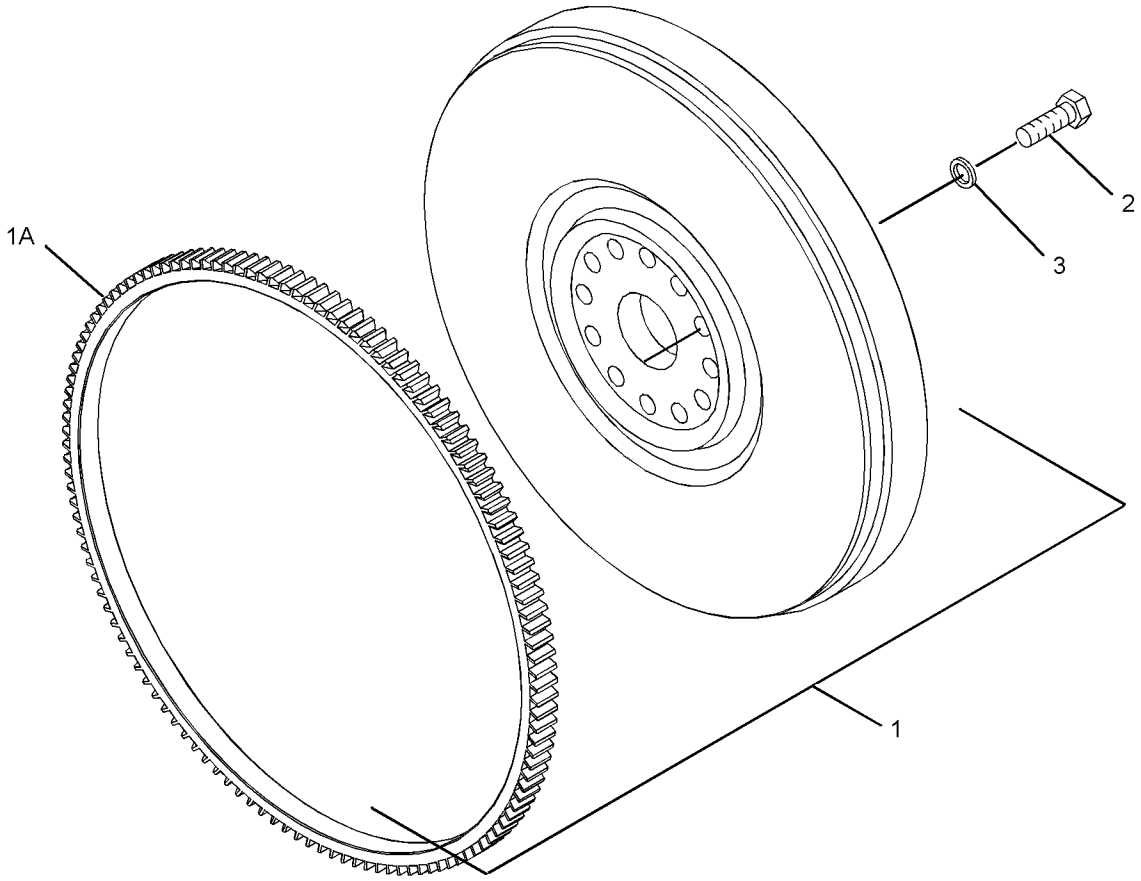

GRAPHIC #1 <END> g01371247

306-2314 FLYWHEEL GP

SMCS-1156 **i06901672**

NOTE	REF NO	GRAPHIC REF	PART NUMBER	QTY	PART NAME 1 2 3 4 5 6 (PRODUCT LEVEL)	SEE PAGE
	1	1	**458-3400**	1	FLYWHEEL AS	
	1A	1	**033-7687**	1	RING-STARTING MOTOR (126-TEETH)	
	2	1	**0S-1603**	10	BOLT (1/2-20X1.5-IN)	
	3	1	**145-4911**	10	WASHER	

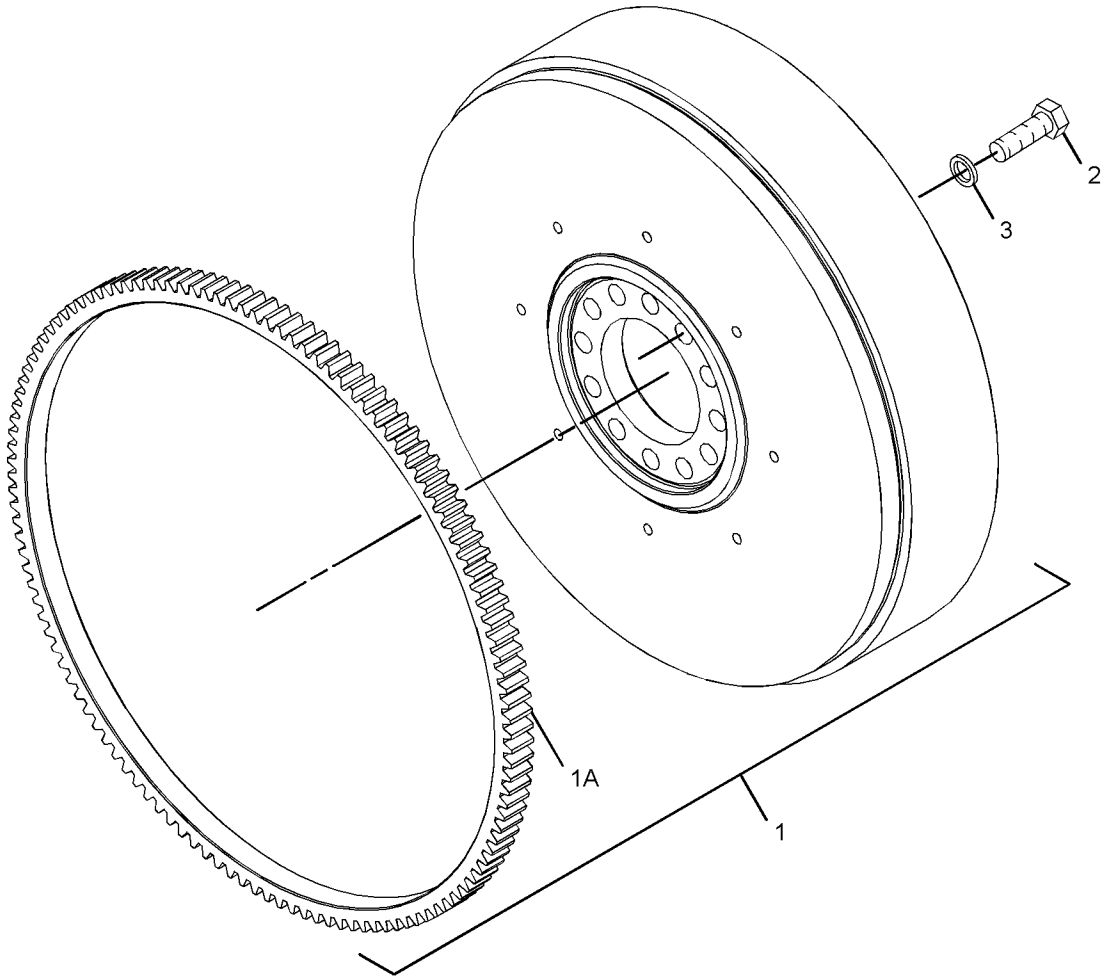

GRAPHIC #1 <END> g01280683

311-5795 FLYWHEEL GP

SMCS-1156 **i06901675**

NOTE	REF NO	GRAPHIC REF	PART NUMBER	QTY	PART NAME 1 2 3 4 5 6 (PRODUCT LEVEL)	SEE PAGE
	1	1	**0S-1603**	10	BOLT (1/2-20X1.5-IN)	
	2	1	**145-4911**	10	WASHER	
	3	1	**458-3406**	1	FLYWHEEL AS	
	3A	1	**033-7687**	1	RING-STARTING MOTOR (126-TEETH)	

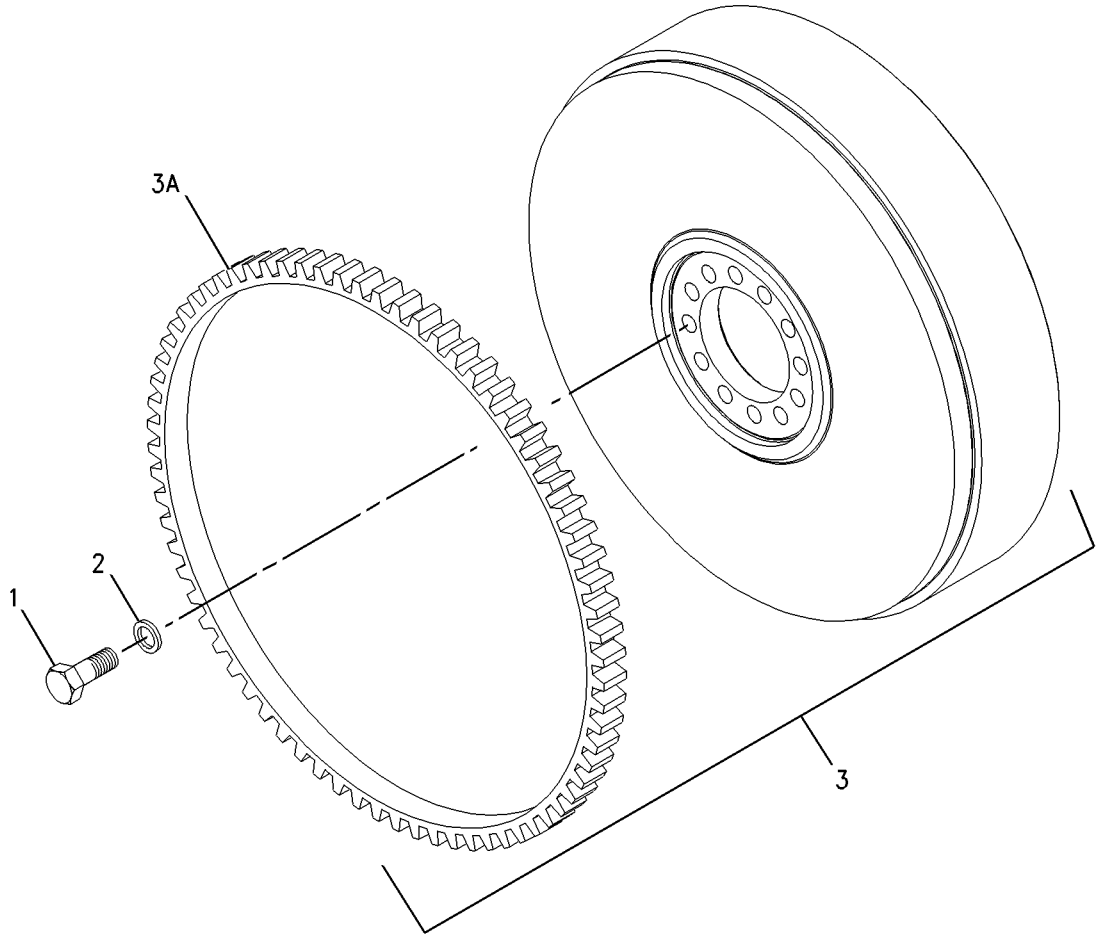

GRAPHIC #1 <END> g00933389

316-6872 FLYWHEEL GP

SMCS-1156 **i06852918**

NOTE	REF NO	GRAPHIC REF	PART NUMBER	QTY	PART NAME 1 2 3 4 5 6 (PRODUCT LEVEL)	SEE PAGE
	1	1	**113-7547**	1	FLYWHEEL AS	
	1A	1	**033-7687**	1	RING-STARTING MOTOR (126-TEETH)	
	2	1	**113-7548**	1	PLATE	
	3	1	**113-7549**	1	PLATE	
	4	1	**113-7550**	10	BOLT (1/2-20X2.87-IN)	
	5	1	**145-4911**	10	WASHER	

316-6872 **FLYWHEEL GP** (contd.) **i06852918**

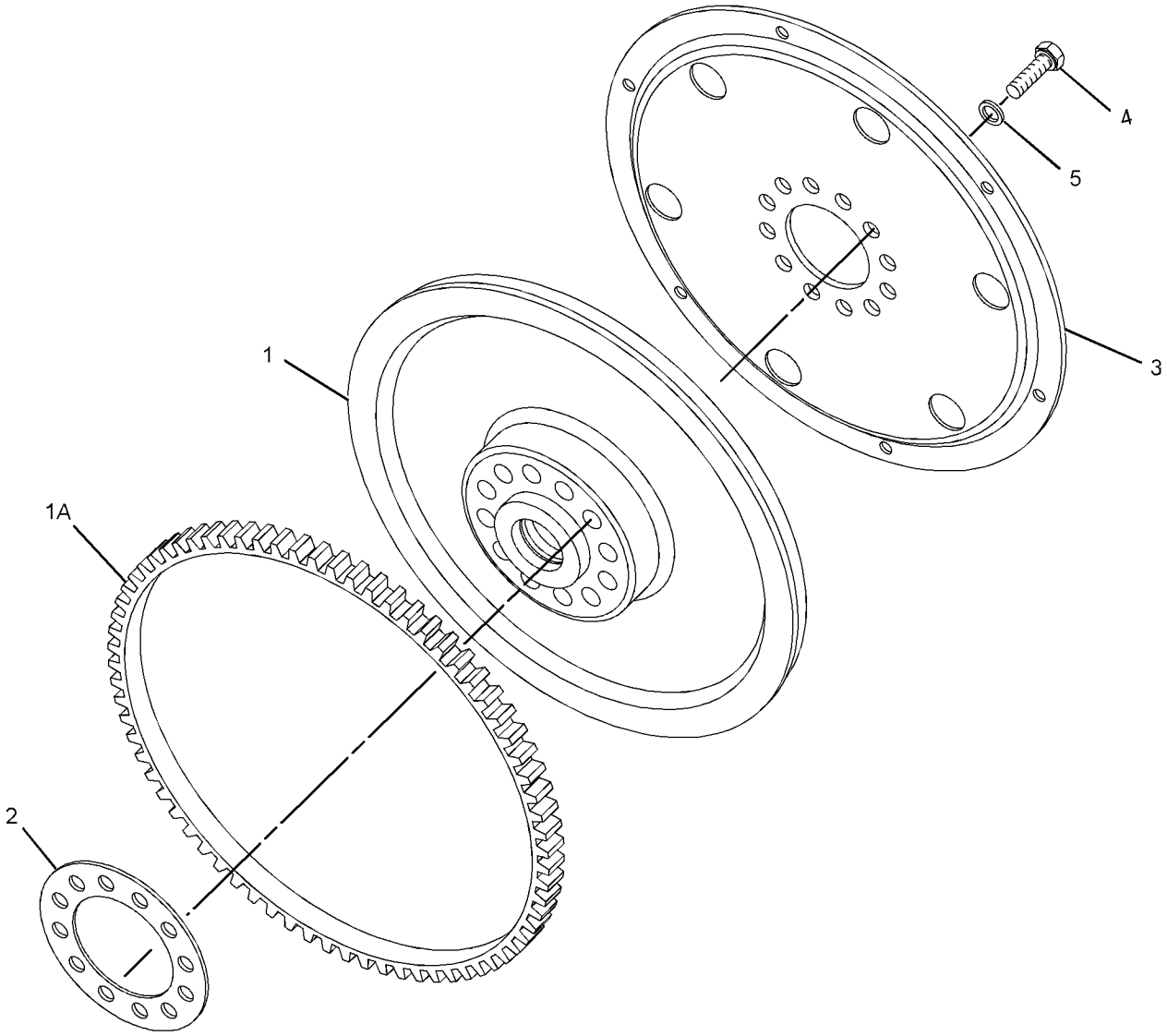

GRAPHIC #1 <END> g01398373

317-6139 FLYWHEEL GP

SMCS-1156 **i06003258**

NOTE	REF NO	GRAPHIC REF	PART NUMBER	QTY	PART NAME 1 2 3 4 5 6 (PRODUCT LEVEL)	SEE PAGE
	1	1	**0S-1603**	6	BOLT (1/2-20X1.5-IN)	
	2	1	**5P-8245**	6	WASHER-HARD (13.5X25.5X3-MM THK)	
	3	1	**114-2405**	1	FLYWHEEL AS	
	3A	1	**033-7687**	1	RING-STARTING MOTOR (126-TEETH)	

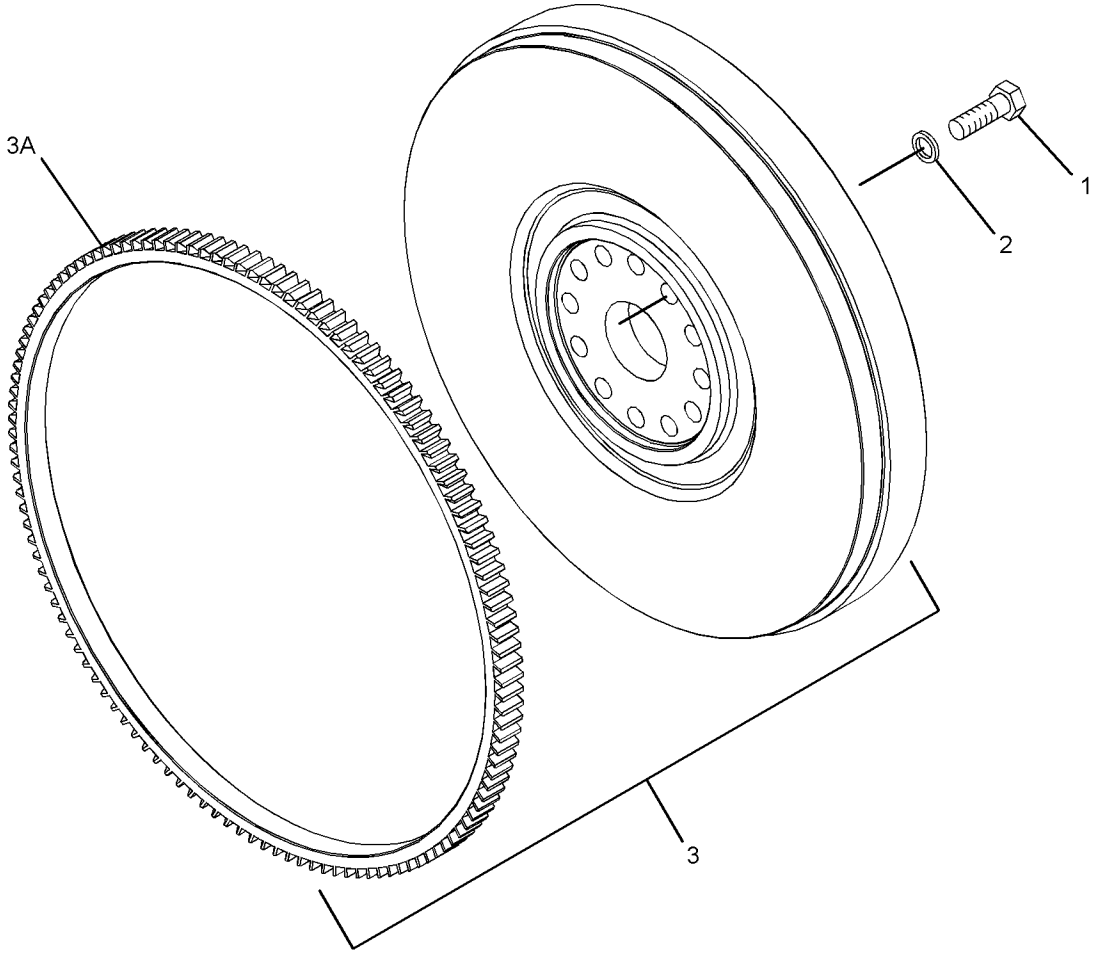

GRAPHIC #1 <END> g01516141

320-2347 FLYWHEEL GP

SMCS-1156 **i02860000**

NOTE	REF NO	GRAPHIC REF	PART NUMBER	QTY	PART NAME 1 2 3 4 5 6 (PRODUCT LEVEL)	SEE PAGE
	1	1	**006-9566**	10	BOLT (1/2-20X1.437-IN)	
	2	1	**5P-8245**	10	WASHER-HARD (13.5X25.5X3-MM THK)	
	3	1	**119-4034**	1	FLYWHEEL AS	
	3A	1	**033-7687**	1	RING-STARTING MOTOR (126-TEETH)	

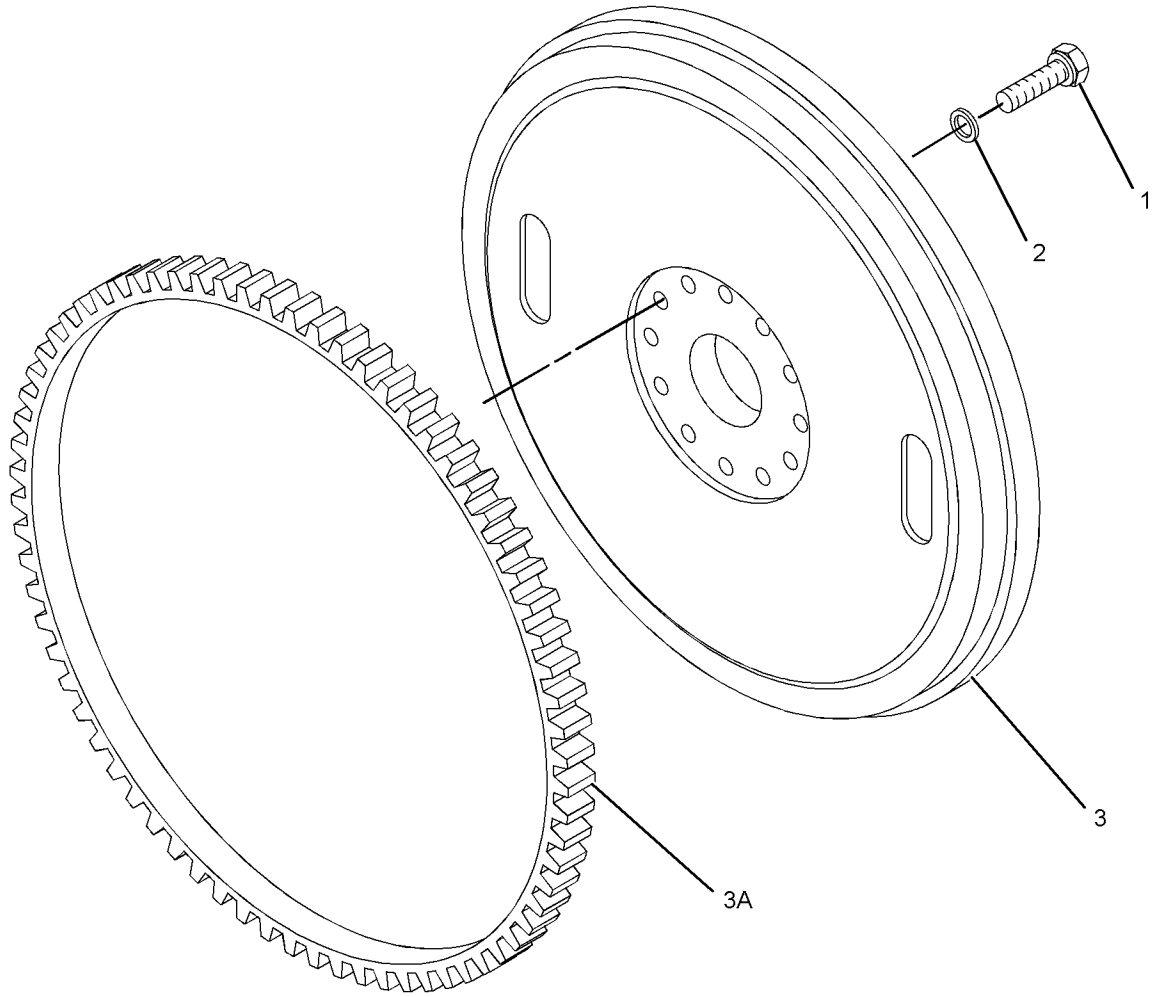

GRAPHIC #1 <END> g01321558

323-9150 FLYWHEEL GP

SMCS-1156 **i05007209**

NOTE	REF NO	GRAPHIC REF	PART NUMBER	QTY	PART NAME 1 2 3 4 5 6 (PRODUCT LEVEL)	SEE PAGE
	1	1	**0S-1603**	6	BOLT (1/2-20X1.5-IN)	
	2	1	**5P-8245**	6	WASHER-HARD (13.5X25.5X3-MM THK)	
	3	1	**243-4278**	1	FLYWHEEL AS	
	3A	1	**033-7687**	1	RING-STARTING MOTOR (126-TEETH)	

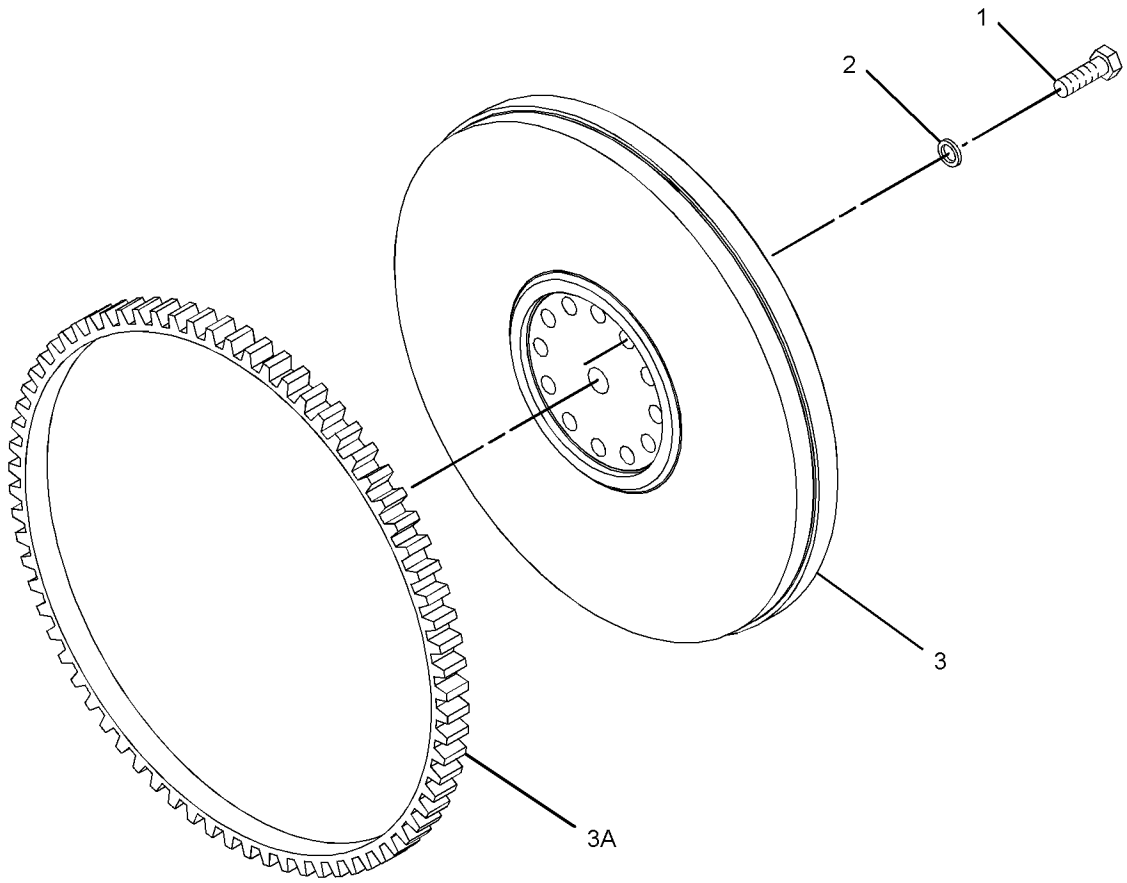

GRAPHIC #1 <END> g01623466

324-6531 FLYWHEEL GP

SMCS-1156 **i06997637**

NOTE	REF NO	GRAPHIC REF	PART NUMBER	QTY	PART NAME 1 2 3 4 5 6 (PRODUCT LEVEL)	SEE PAGE
	1	1	**0S-1603**	10	BOLT (1/2-20X1.5-IN)	
	2	1	**145-4911**	4	WASHER	
	3	1	**458-3404**	1	FLYWHEEL AS	
	3A	1	**033-7687**	1	RING-STARTING MOTOR (126-TEETH)	
F			**5P-8245**	6	WASHER-HARD (13.5X25.5X3-MM THK)	

F - NOT SHOWN

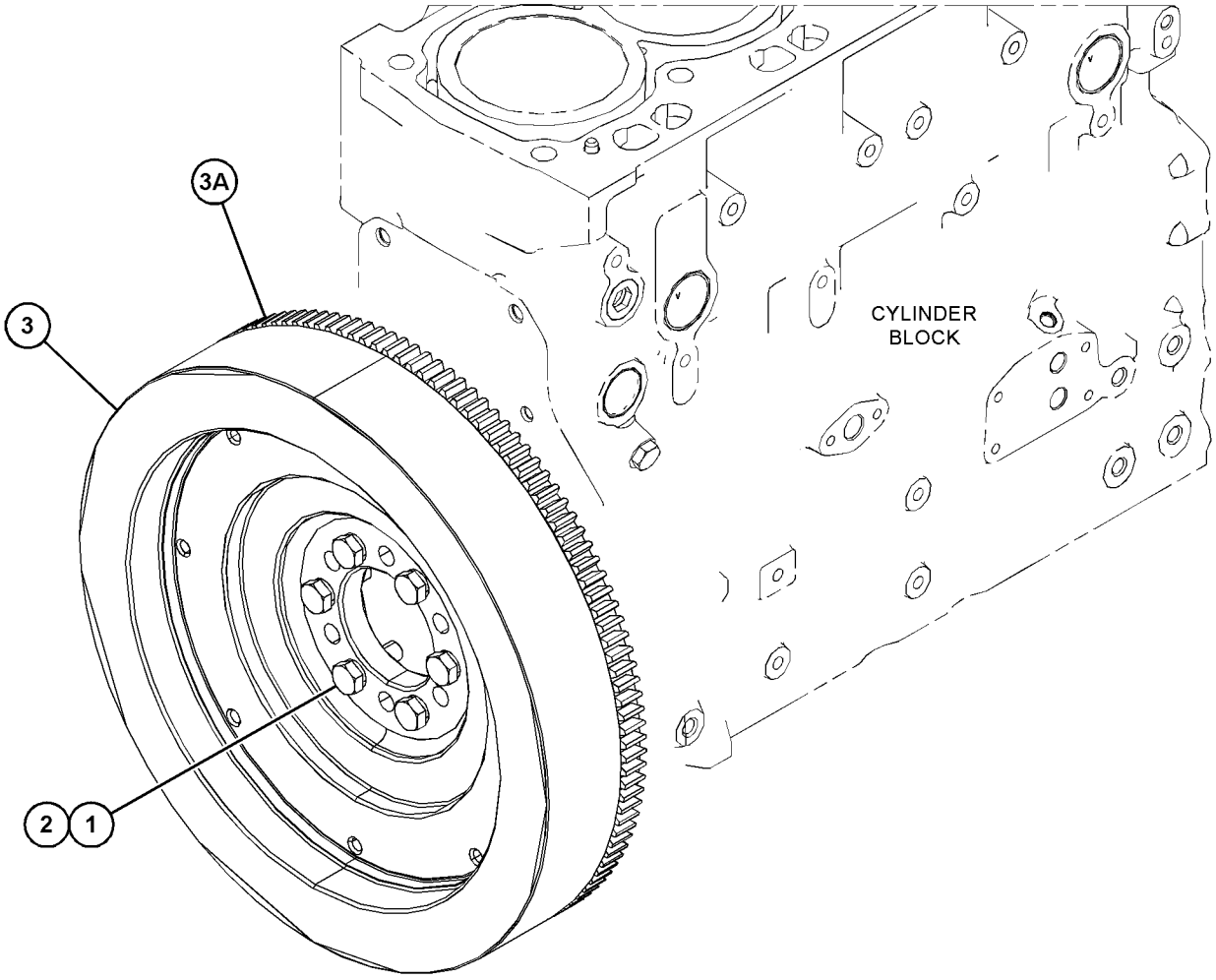

GRAPHIC #1 <END> g06216291

339-1787 FLYWHEEL GP

SMCS-1156 **i03533325**

NOTE	REF NO	GRAPHIC REF	PART NUMBER	QTY	PART NAME 1 2 3 4 5 6 (PRODUCT LEVEL)	SEE PAGE
	1	1	**0S-1603**	6	BOLT (1/2-20X1.5-IN)	
	2	1	**5P-8245**	6	WASHER-HARD (13.5X25.5X3-MM THK)	
	3	1	**298-3513**	1	FLYWHEEL AS	
	3A	1	**033-7687**	1	RING-STARTING MOTOR (126-TEETH)	

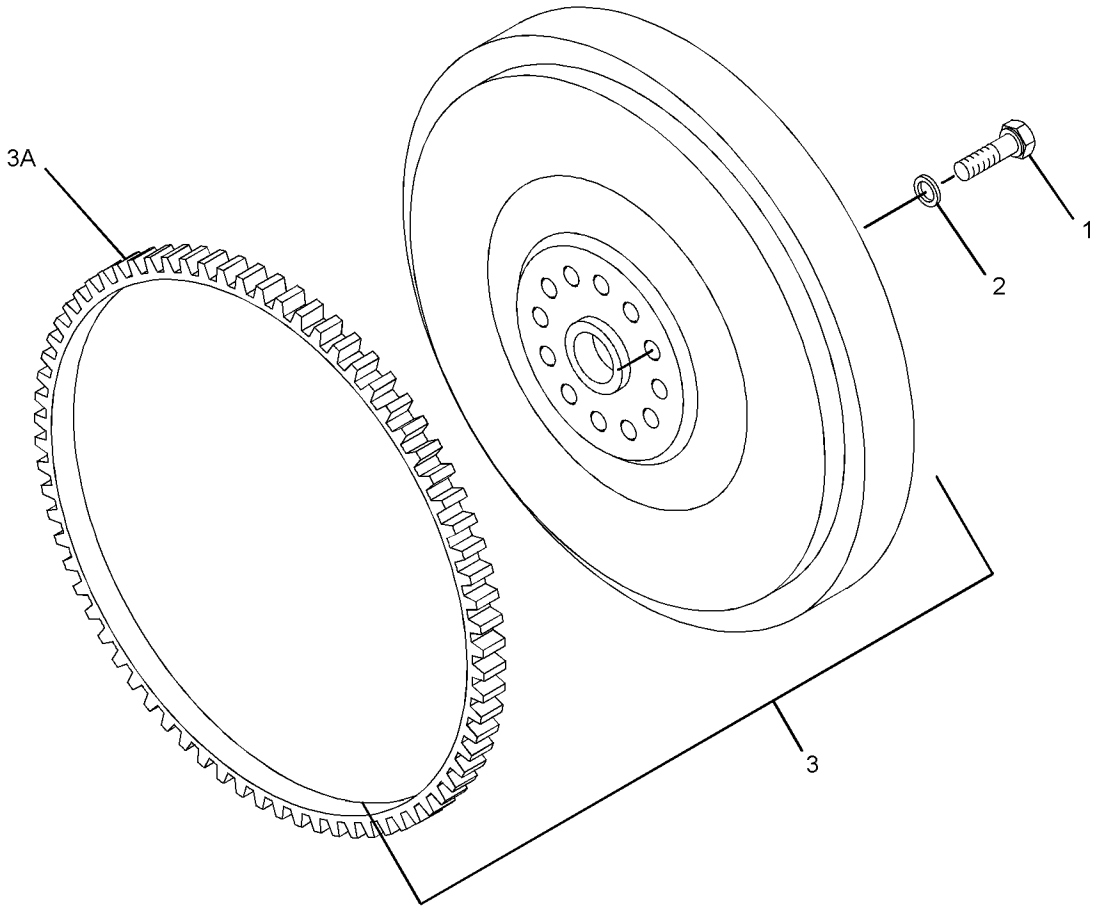

GRAPHIC #1 <END> g01304696

342-8117 FLYWHEEL GP

SMCS-1156 **i03427232**

NOTE	REF NO	GRAPHIC REF	PART NUMBER	QTY	PART NAME 1 2 3 4 5 6 (PRODUCT LEVEL)	SEE PAGE
	1	1	**268-3630**	1	FLYWHEEL AS	
	1A	1	**033-7687**	1	RING-STARTING MOTOR (126-TEETH)	
	2	1	**0S-1603**	10	BOLT (1/2-20X1.5-IN)	
	3	1	**5P-8245**	10	WASHER-HARD (13.5X25.5X3-MM THK)	

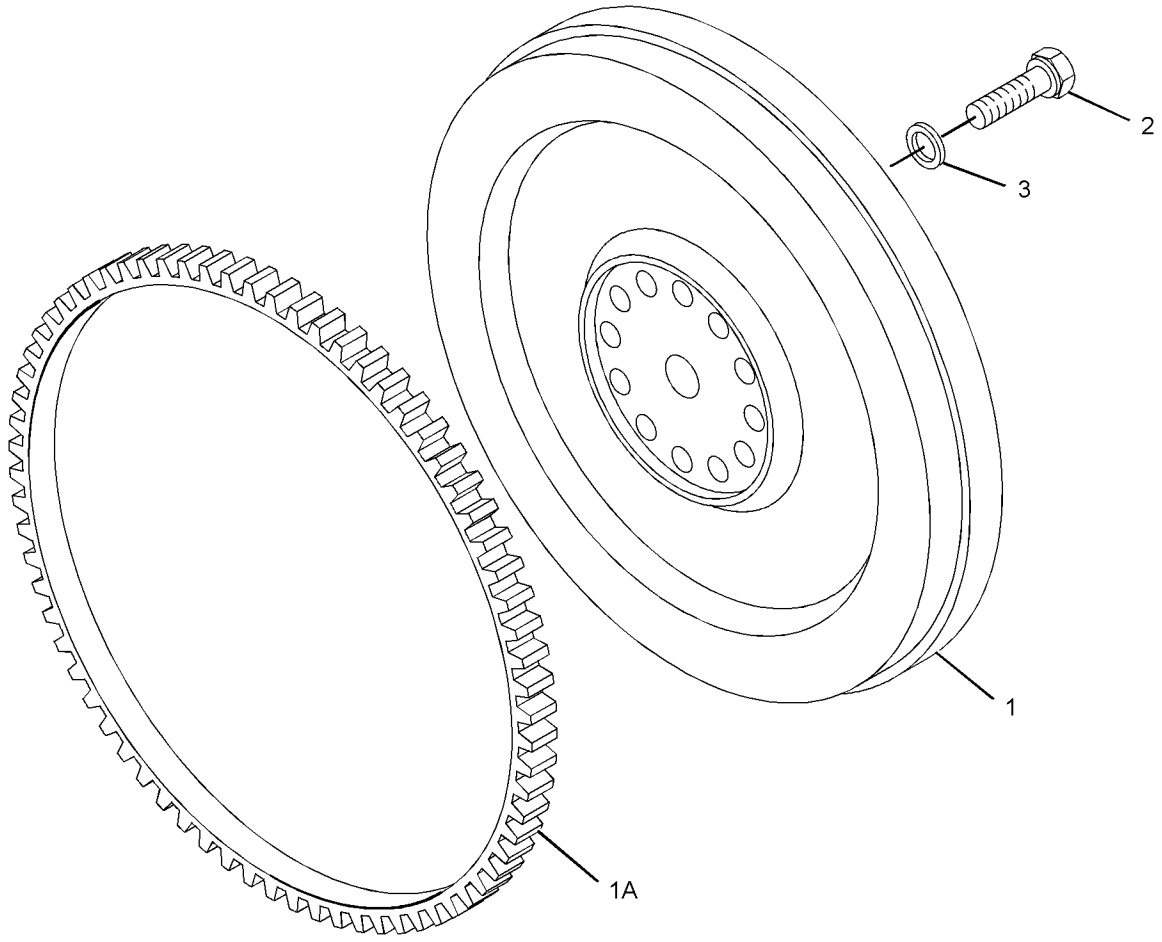

GRAPHIC #1 <END> g01981433

351-9871 FLYWHEEL GP

SMCS-1156 **i03696814**

NOTE	REF NO	GRAPHIC REF	PART NUMBER	QTY	PART NAME 1 2 3 4 5 6 (PRODUCT LEVEL)	SEE PAGE
	1	1	**0S-1603**	10	BOLT (1/2-20X1.5-IN)	
	2	1	**5P-8245**	10	WASHER-HARD (13.5X25.5X3-MM THK)	
	3	1	**243-4278**	1	FLYWHEEL AS	
	3A	1	**033-7687**	1	RING-STARTING MOTOR (126-TEETH)	

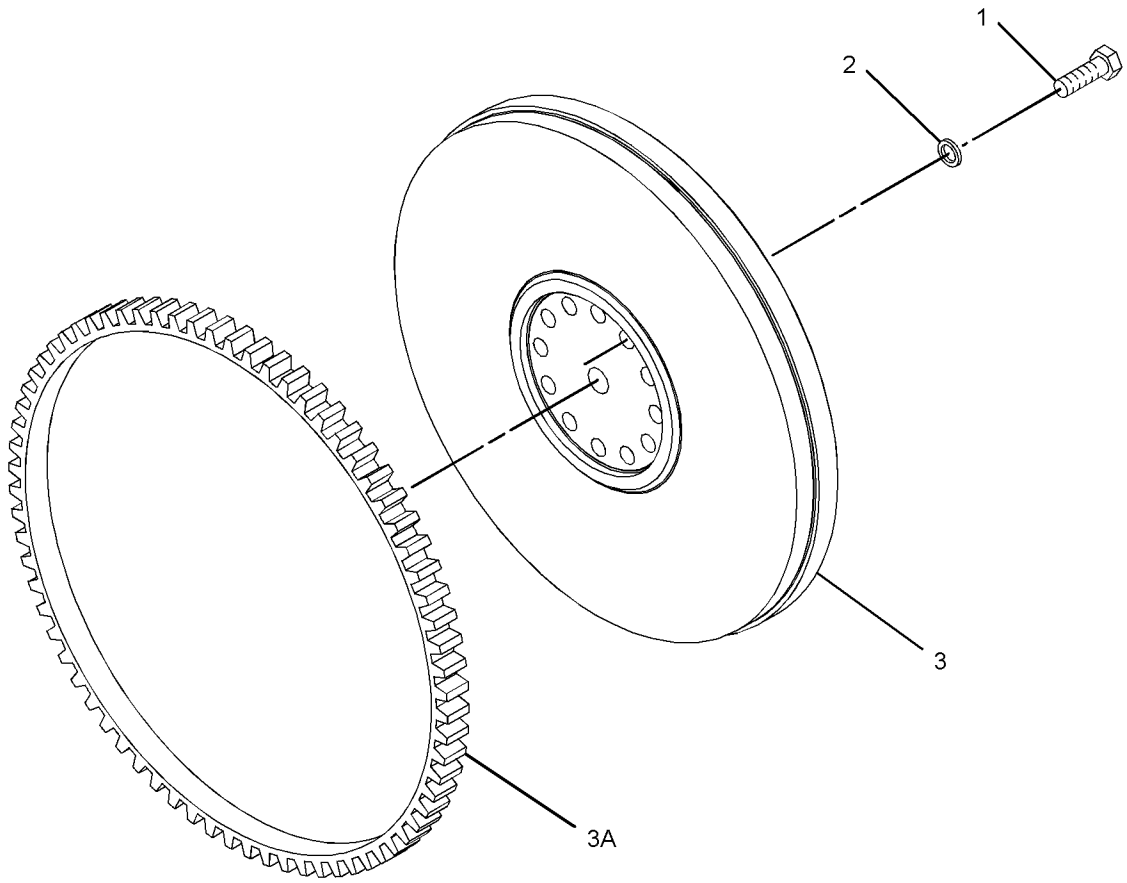

GRAPHIC #1 <END> g01623466

353-7364 FLYWHEEL GP

SMCS-1156 **i03918234**

NOTE	REF NO	GRAPHIC REF	PART NUMBER	QTY	PART NAME 1 2 3 4 5 6 (PRODUCT LEVEL)	SEE PAGE
	1	1	**067-6119**	10	BOLT	
	2	1	**145-4911**	10	WASHER	
	3	1	**339-5864**	1	FLYWHEEL AS	
	3A	1	**033-7687**	1	RING-STARTING MOTOR (126-TEETH)	

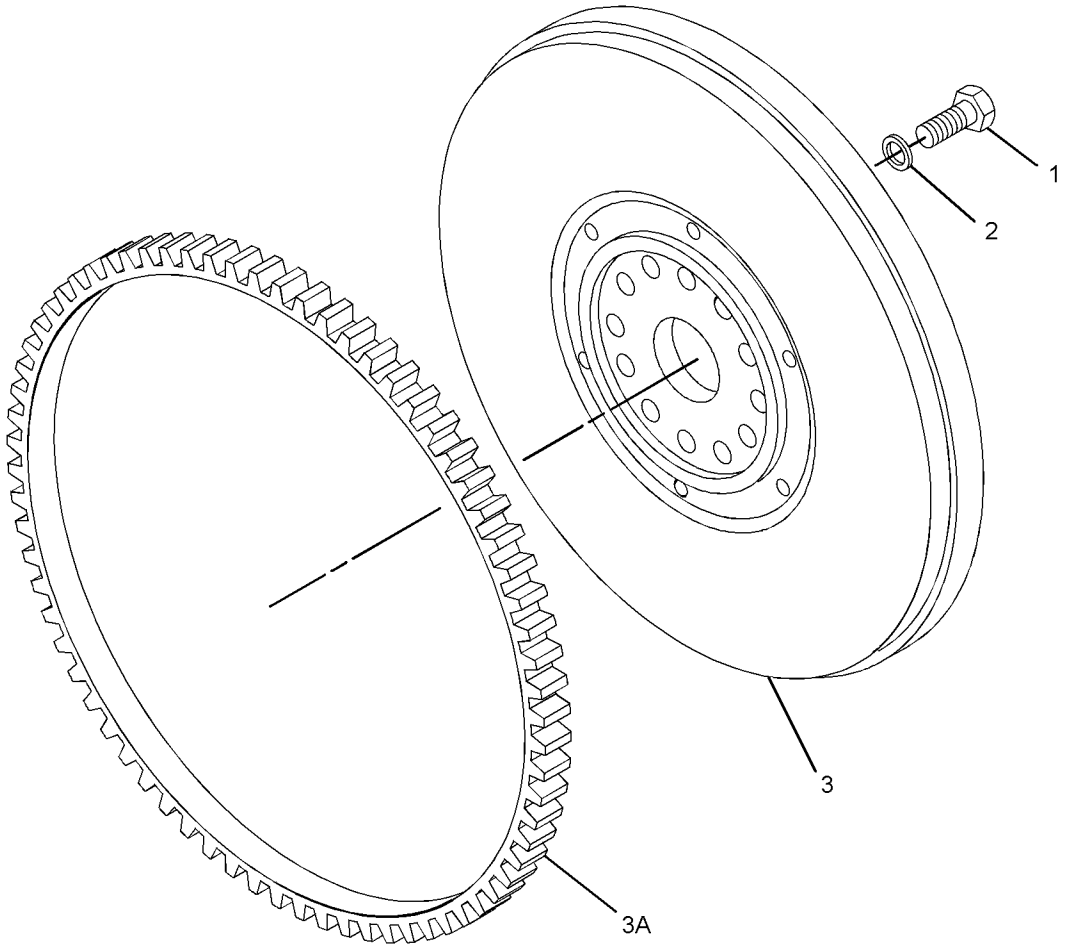

GRAPHIC #1 <END> g02087706

358-8821 FLYWHEEL GP

SMCS-1156 **i03931298**

NOTE	REF NO	GRAPHIC REF	PART NUMBER	QTY	PART NAME 1 2 3 4 5 6 (PRODUCT LEVEL)	SEE PAGE
	1	1	**0S-1603**	10	BOLT (1/2-20X1.5-IN)	
	2	1	**145-4911**	10	WASHER	
	3	1	**339-5862**	1	FLYWHEEL AS	

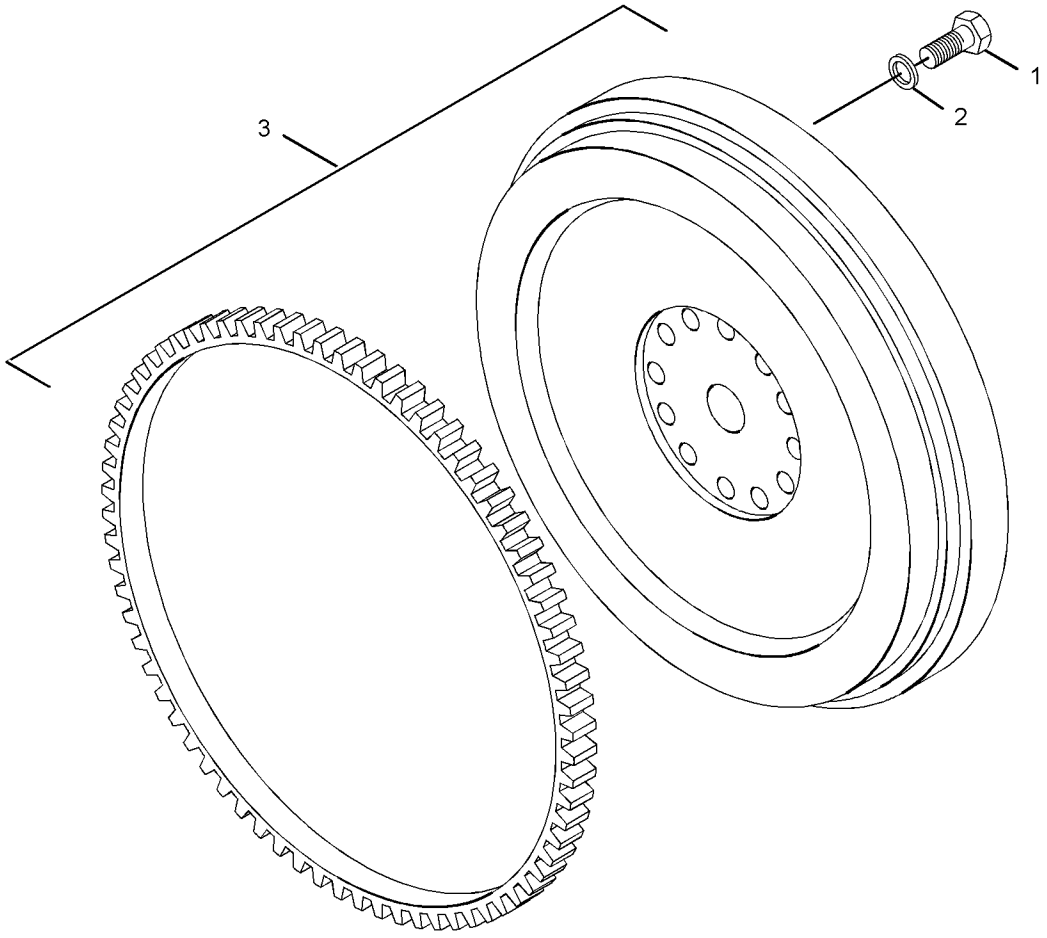

GRAPHIC #1 <END> g02155493

397-3888 FLYWHEEL GP

SMCS-1156 **i04897757**

NOTE	REF NO	GRAPHIC REF	PART NUMBER	QTY	PART NAME 1 2 3 4 5 6 (PRODUCT LEVEL)	SEE PAGE
	1	1	**0S-1603**	6	BOLT (1/2-20X1.5-IN)	
	2	1	**145-4911**	6	WASHER	
	3	1	**397-3891**	1	FLYWHEEL AS	

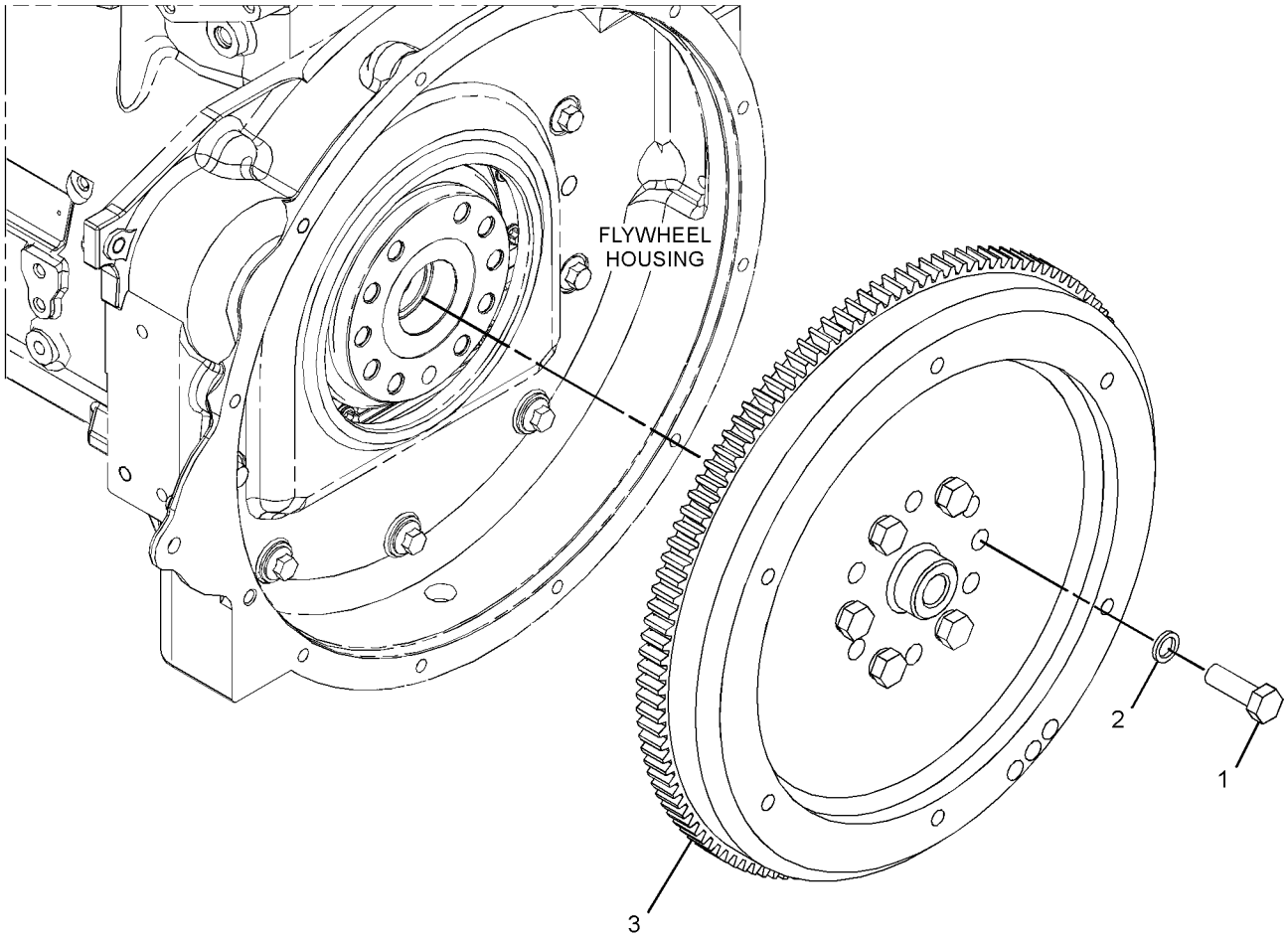

GRAPHIC #1 <END> g03078899

298-5110 GEAR GP-FRONT

PART OF 435-1699 ENGINE AR, 435-1692 ENGINE AR-COMPLETE, 435-1685, 437-5409, 540-0570, 540-1155 ENGINE AR-PRIMARY

SMCS-1151, 1162, 1206 **i06546480**

NOTE	REF NO	GRAPHIC REF	PART NUMBER	QTY	PART NAME 1 2 3 4 5 6 (PRODUCT LEVEL)	SEE PAGE
M	1	1	**6I-0217**	6	BOLT (M8X1.25X20-MM)	
M	2	1	**6I-0645**	4	BOLT (M8X1.25X25-MM)	
M	3	1	**6I-0650**	3	BOLT (M10X1.5X65-MM)	
M	4	1	**7C-4616**	1	BOLT (M12X1.75X45-MM)	
	5	1	**067-6179**	1	DOWEL	
M	6	1	**100-3751**	5	BOLT (M8X1.25X65-MM)	
M	7	1	**100-4830**	1	BOLT (M10X1.5X20-MM)	
M	8	1	**101-3895**	2	BOLT (M8X1.25X35-MM)	
M	9	1	**124-3815**	9	BOLT (M8X1.25X16-MM)	
	10	1	**133-1011**	1	WASHER	
	11	1	**425-7103**	1	GEAR (68-TEETH)	
	12	1	**226-8767**	1	COVER AS-FRONT	
	12A	1	**226-8766**	1	GASKET-COVER	
	13	1	**232-3666**	1	WASHER-THRUST	
	14	1	**251-4336**	1	GEAR AS-IDLER (73-TEETH)	
	15	1	**277-3012**	1	GASKET-COVER (HOUSING)	
	16	1	**324-0444**	1	HUB-IDLER GEAR	
	17	1	**288-0422**	1	SEAL-CRANKSHAFT	
	18	1	**323-3515**	1	HOUSING-FRONT	
	19	1	**346-0408**	1	PLATE	
ABF		1	**225-6522**	1	PLUG-CUP	
					(ALSO ORDER IF ONLY ORDERING HOUSING-FRONT)	

A - NOT PART OF THIS GROUP
B - USE AS REQUIRED
F - NOT SHOWN
M - METRIC PART

298-5110 **GEAR GP-FRONT (**contd.**)** **i06546480**

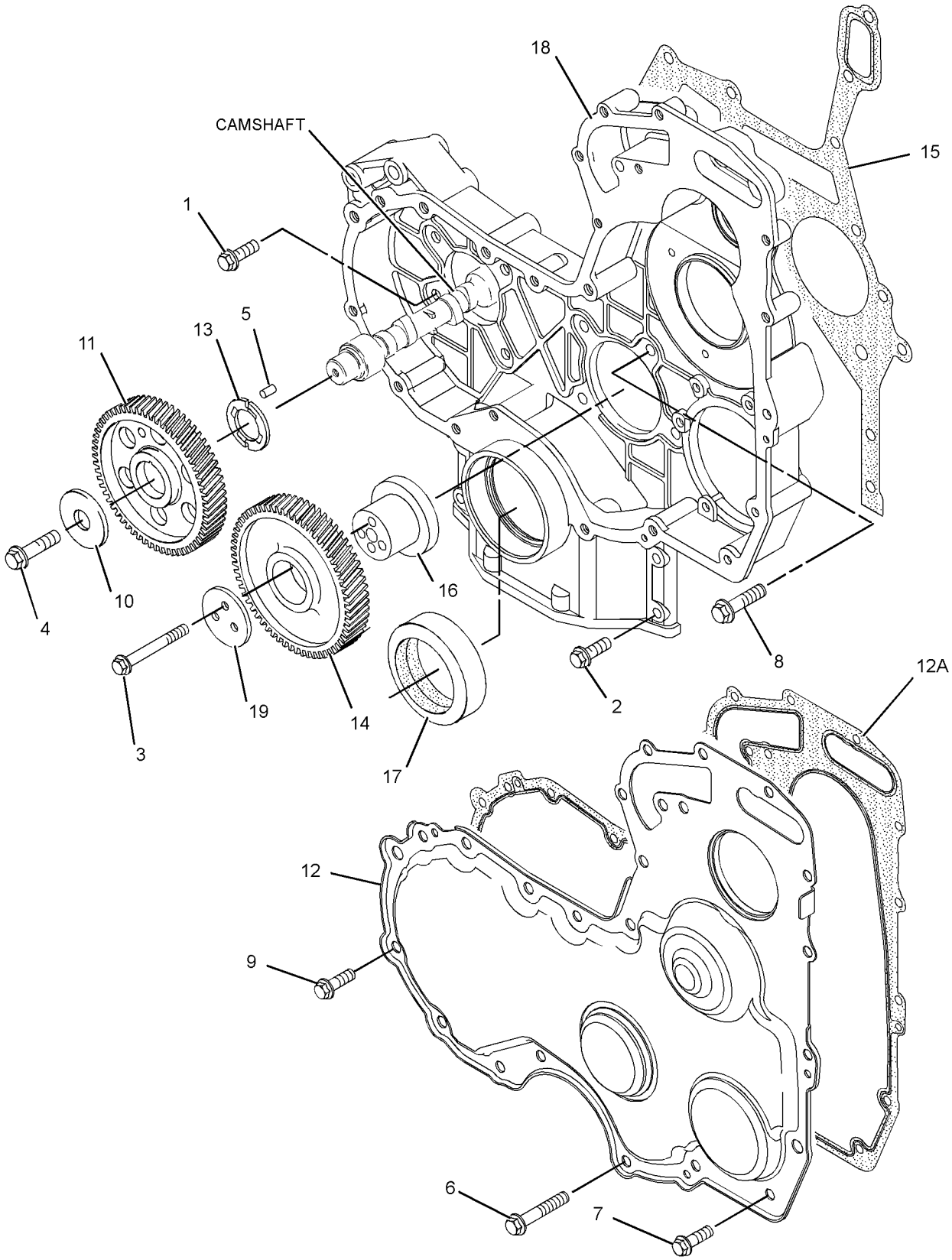

GRAPHIC #1 <END> g01304618

298-5092 HOUSING GP-FLYWHEEL

SMCS-1157 **i06991561**

NOTE	REF NO	GRAPHIC REF	PART NUMBER	QTY	PART NAME 1 2 3 4 5 6 (PRODUCT LEVEL)	SEE PAGE
M	1	1	**6I-0423**	2	BOLT (M12X1.75X30-MM)	
M	2	1	**6I-0631**	2	BOLT (M6X1X12-MM)	
	3	1	**375-9272**	1	PLUG	
M	4	1	**6I-4200**	3	BOLT (M10X1.5X16-MM)	
	5	1	**393-4006**	1	GASKET	
	6	1	**287-8597**	1	DOWEL	
	7	1	**102-1957**	1	PLATE	
M	8	1	**121-0883**	6	BOLT (M10X1.5X30-MM)	
	9	1	**324-2981**	1	HOUSING-FLYWHEEL	
	10	1	**199-3109**	1	PLUG	

M - METRIC PART

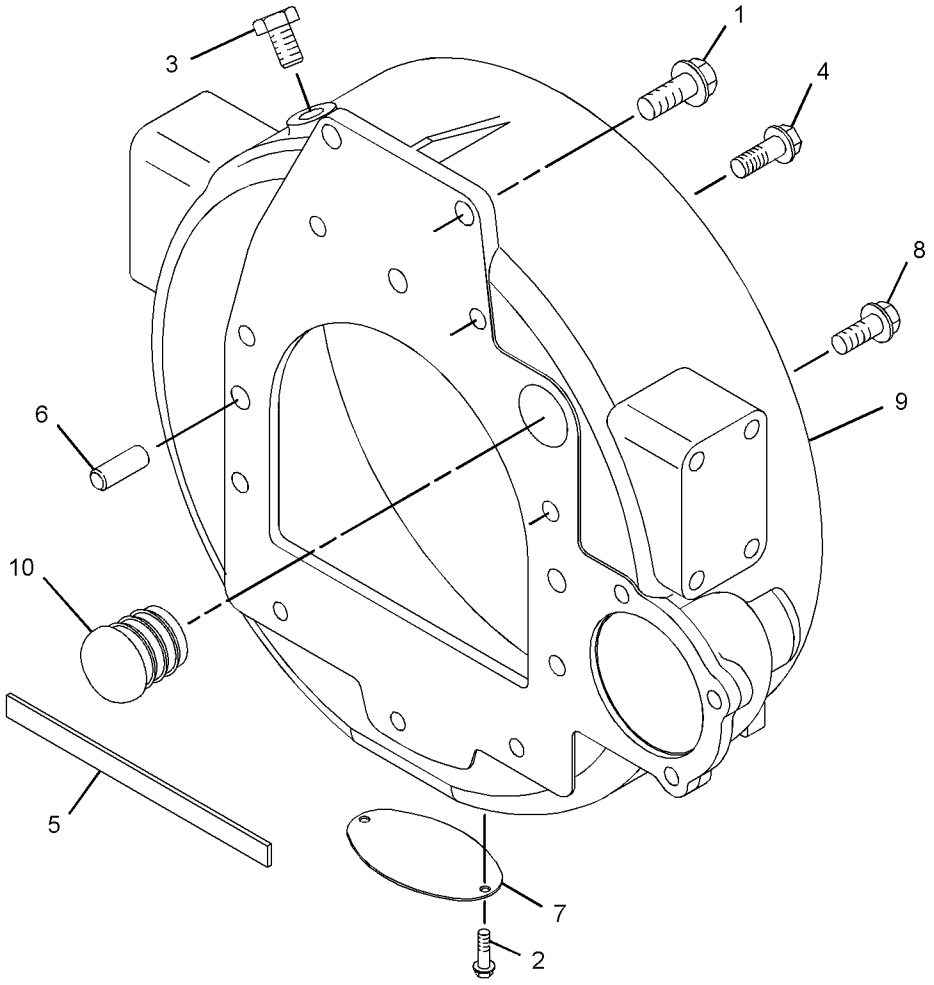

GRAPHIC #1 <END> g01672857

299-5057 HOUSING GP-FLYWHEEL

PART OF 435-1687, 540-1156 ENGINE AR-PRIMARY

SMCS-1157 **i06991565**

NOTE	REF NO	GRAPHIC REF	PART NUMBER	QTY	PART NAME 1 2 3 4 5 6 (PRODUCT LEVEL)	SEE PAGE
	1	1	**149-9176**	1	HOUSING-FLYWHEEL	
	2	1	**102-1957**	1	PLATE	
M	3	1	**6I-0631**	2	BOLT (M6X1X12-MM)	
	4	1	**287-8597**	2	DOWEL	
	5	1	**375-9272**	1	PLUG	
	6	1	**199-3109**	1	PLUG	
	7	1	**199-3108**	1	PLUG	
M	8	1	**6I-0423**	2	BOLT (M12X1.75X30-MM)	
M	9	1	**121-0883**	6	BOLT (M10X1.5X30-MM)	
M	10	1	**6I-4200**	3	BOLT (M10X1.5X16-MM)	
	11	1	**393-4006**	1	GASKET	

M - METRIC PART

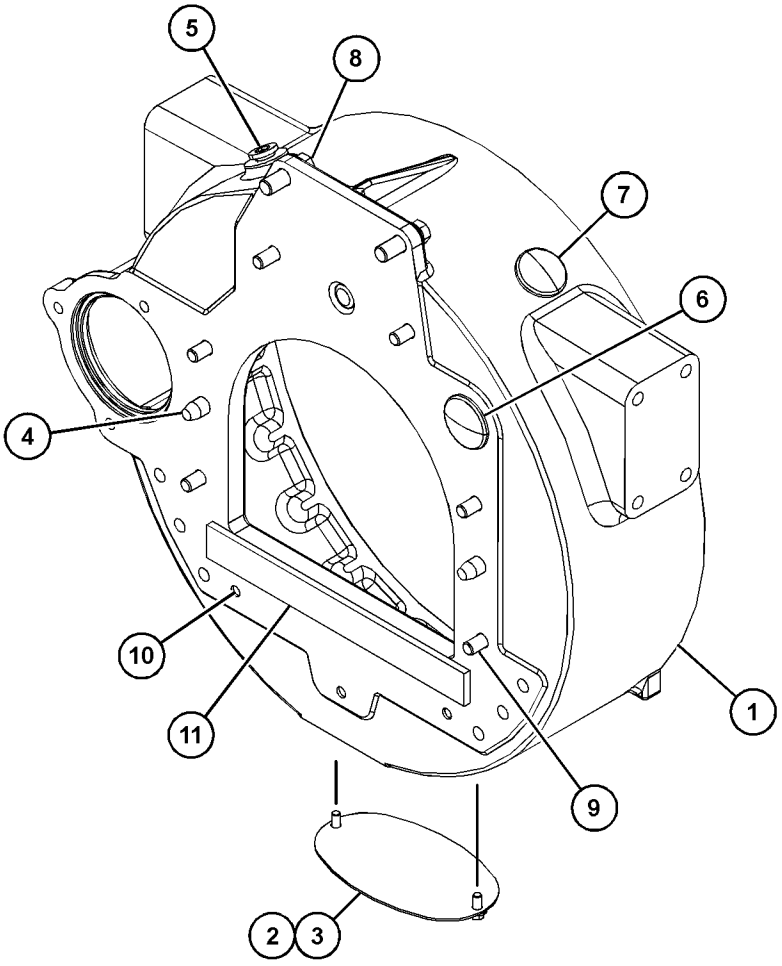

GRAPHIC #1 <END> g06206657

301-8236 HOUSING GP-FLYWHEEL

PART OF 435-1699 ENGINE AR, 437-5409, 522-8303, 540-1155 ENGINE AR-PRIMARY

SMCS-1157 **i05166979**

NOTE	REF NO	GRAPHIC REF	PART NUMBER	QTY	PART NAME 1 2 3 4 5 6 (PRODUCT LEVEL)	SEE PAGE
M	1	1	**6I-0423**	2	BOLT (M12X1.75X30-MM)	
M	2	1	**6I-0593**	3	BOLT (M10X1.5X30-MM)	
	3	1	**375-9272**	2	PLUG	
	4	1	**7W-1176**	1	PLATE-COVER	
M	5	1	**114-4363**	2	BOLT (M8X1.25X12-MM)	
M	6	1	**121-0883**	6	BOLT (M10X1.5X30-MM)	
	7	1	**199-3109**	1	PLUG	
	8	1	**220-8632**	1	HOUSING-FLYWHEEL	
	9	1	**287-8597**	2	DOWEL	

M - METRIC PART

301-8236 **HOUSING GP-FLYWHEEL (**contd.**)** **i05166979**

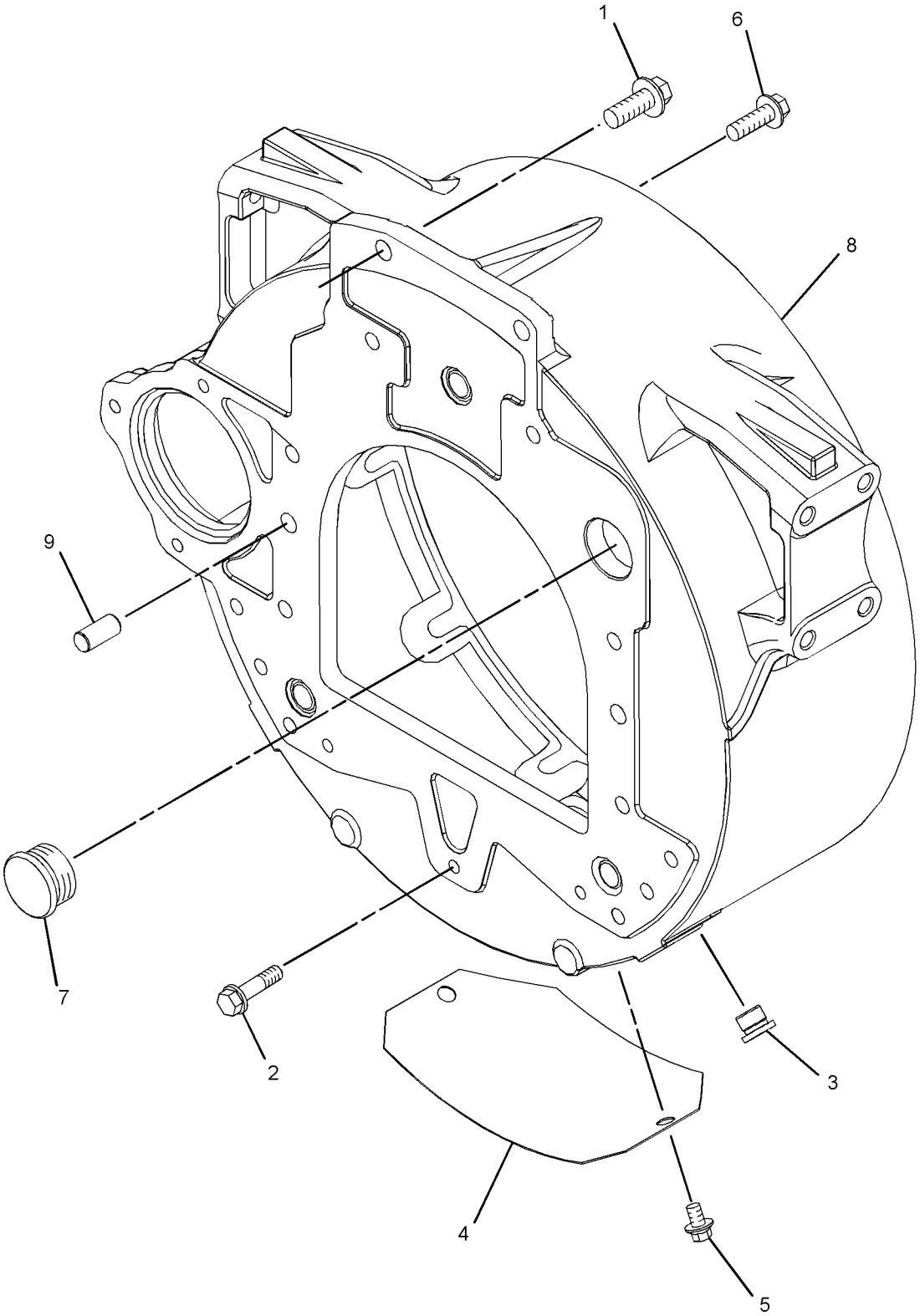

GRAPHIC #1 <END> g03322955

303-4618 HOUSING GP-FLYWHEEL

SMCS-1157 **i06991553**

NOTE	REF NO	GRAPHIC REF	PART NUMBER	QTY	PART NAME 1 2 3 4 5 6 (PRODUCT LEVEL)	SEE PAGE
M	1	1	**6I-0423**	2	BOLT (M12X1.75X30-MM)	
	2	1	**375-9272**	2	PLUG	
	3	1	**7W-1176**	1	PLATE-COVER	
	4	1	**393-4006**	1	GASKET	
	5	1	**4H-0408**	3	PLUG-PROTECTION (10-MM)	
M	6	1	**114-4363**	2	BOLT (M8X1.25X12-MM)	
M	7	1	**121-0883**	6	BOLT (M10X1.5X30-MM)	
	8	1	**199-3109**	1	PLUG	
	9	1	**220-8632**	1	HOUSING-FLYWHEEL	
	10	1	**287-8597**	2	DOWEL	

M - METRIC PART

303-4618 **HOUSING GP-FLYWHEEL (**contd.**)** **i06991553**

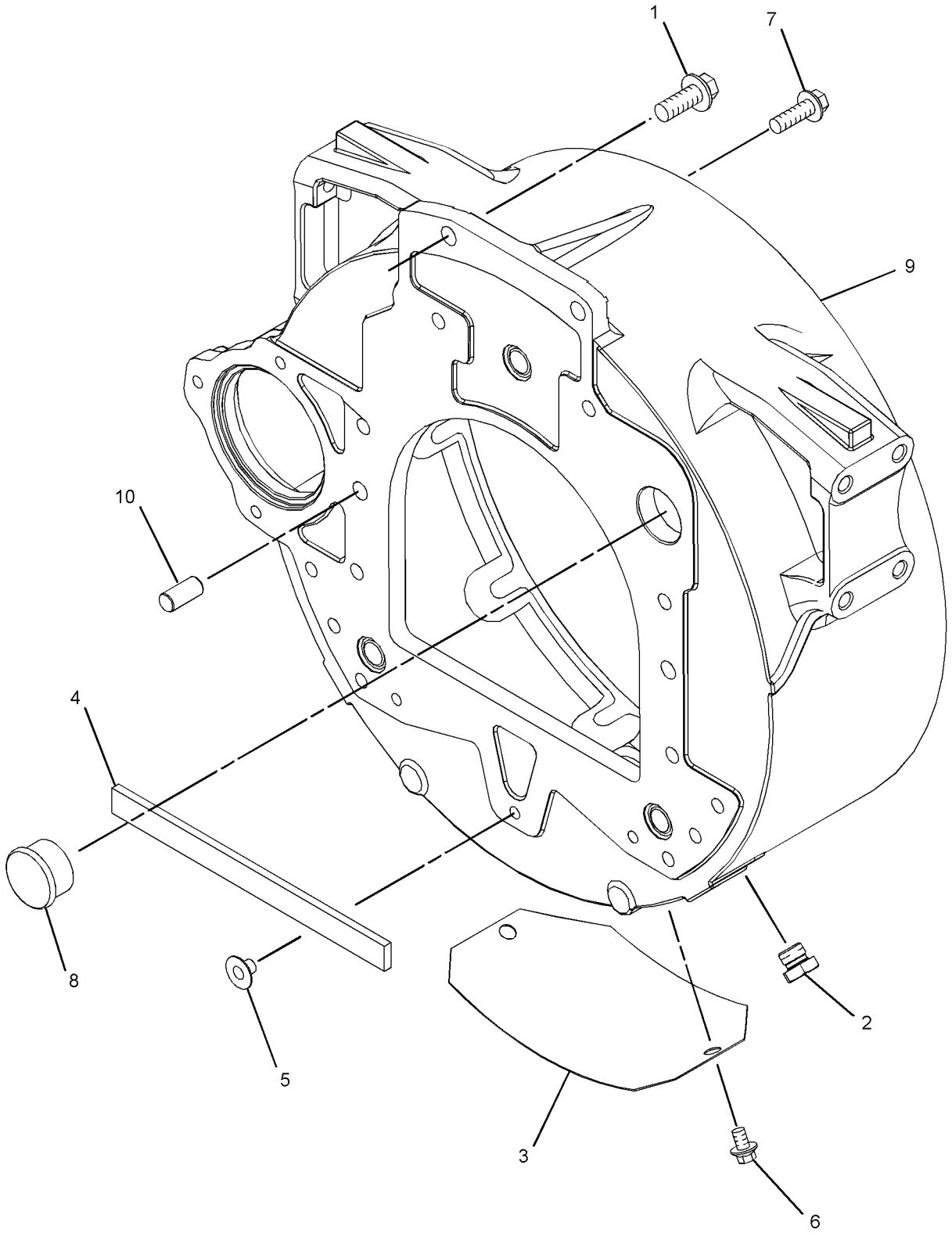

GRAPHIC #1 <END> g01368852

303-5767 HOUSING GP-FLYWHEEL

SMCS-1157 **i07479936**

NOTE	REF NO	GRAPHIC REF	PART NUMBER	QTY	PART NAME 1 2 3 4 5 6 (PRODUCT LEVEL)	SEE PAGE
M	1	1	**6I-0423**	2	BOLT (M12X1.75X30-MM)	
	2	1	**375-9272**	2	PLUG	
	3	1	**7W-1176**	1	PLATE-COVER	
	4	1	**393-4006**	1	GASKET	
	5	1	**287-8597**	2	DOWEL	
M	6	1	**114-4363**	2	BOLT (M8X1.25X12-MM)	
	7	1	**4H-0408**	3	PLUG-PROTECTION (10-MM)	
M	8	1	**121-0883**	6	BOLT (M10X1.5X30-MM)	
	9	1	**220-8631**	1	HOUSING-FLYWHEEL	

M - METRIC PART

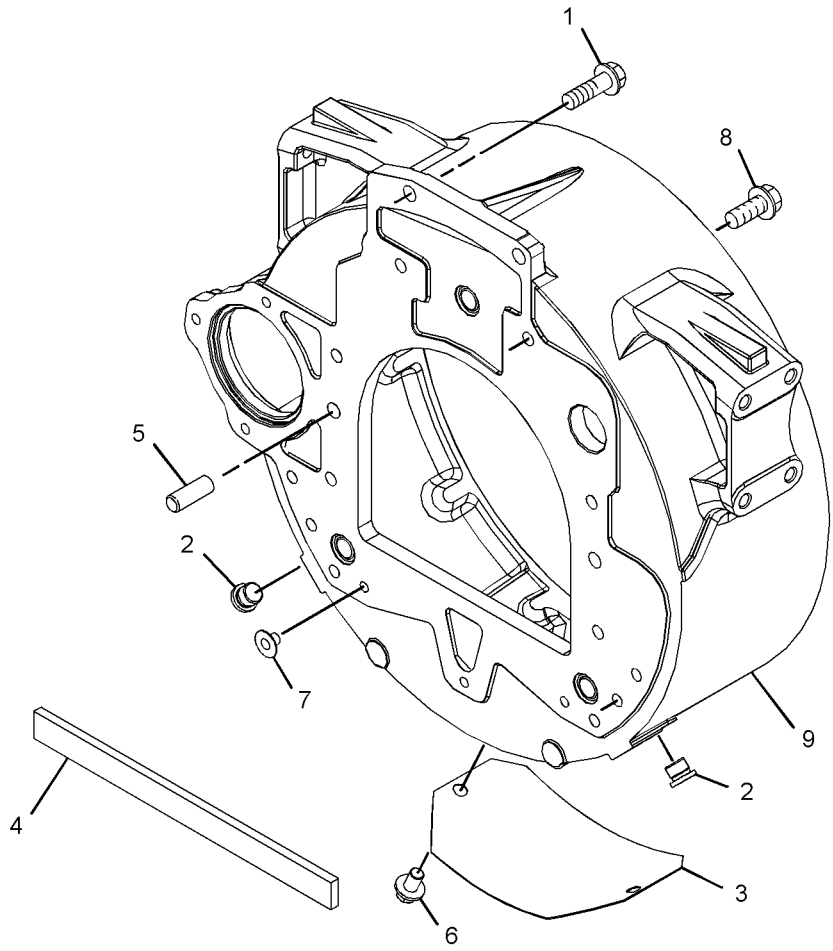

GRAPHIC #1 <END> g06362120

304-5571 HOUSING GP-FLYWHEEL

SMCS-1157 **i02685880**

NOTE	REF NO	GRAPHIC REF	PART NUMBER	QTY	PART NAME 1 2 3 4 5 6 (PRODUCT LEVEL)	SEE PAGE
	1	1	**7W-4642**	1	SHIELD-DUST	
M	2	1	**106-8954**	2	BOLT (M12X1.75X35-MM)	
M	3	1	**230-7924**	6	BOLT (M10X1.5X35-MM)	
	4	1	**254-6819**	1	PLATE-ADAPTER	
	5	1	**287-8597**	2	DOWEL	

M - METRIC PART

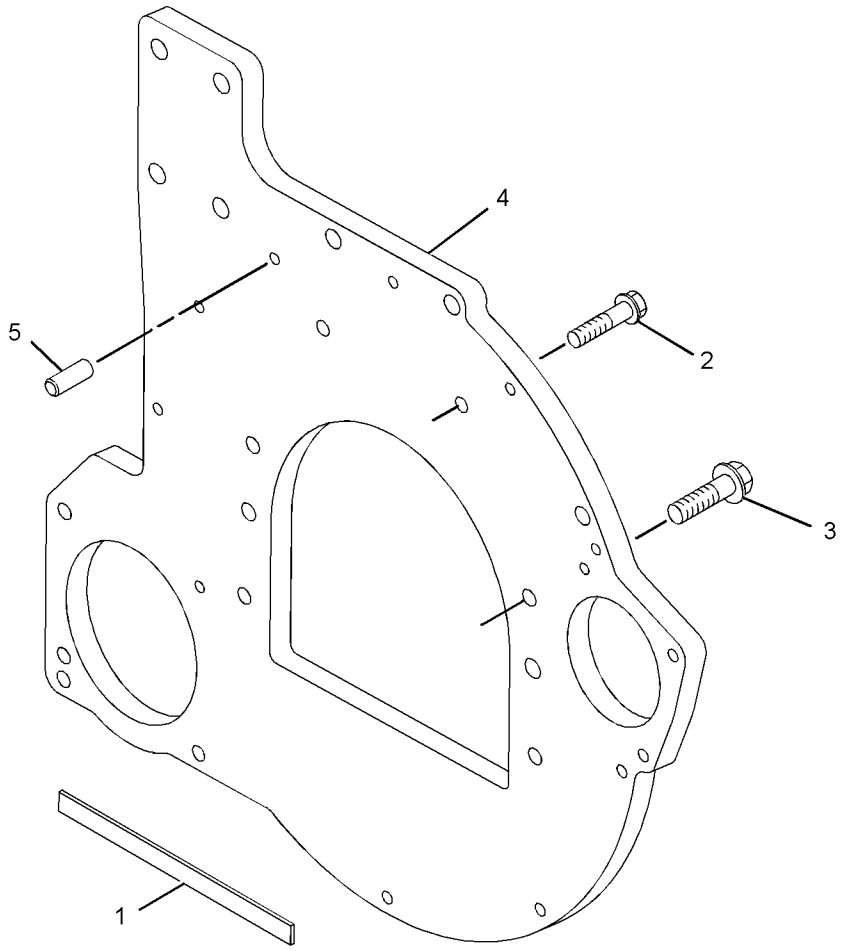

GRAPHIC #1 <END> g01371916

305-2576 HOUSING GP-FLYWHEEL

SMCS-1157 **i06991580**

NOTE	REF NO	GRAPHIC REF	PART NUMBER	QTY	PART NAME 1 2 3 4 5 6 (PRODUCT LEVEL)	SEE PAGE
	1	1	**235-2375**	1	HOUSING-FLYWHEEL	
	2	1	**6H-3616**	4	PLUG-PROTECTION	
	3	1	**2B-0858**	1	PLUG-PIPE	
M	4	1	**121-0883**	6	BOLT (M10X1.5X30-MM)	
M	5	1	**6I-0423**	2	BOLT (M12X1.75X30-MM)	
	6	1	**287-8597**	2	DOWEL	
	7	1	**393-4006**	1	GASKET	
	8	1	**141-2652**	1	PLUG	

M - METRIC PART

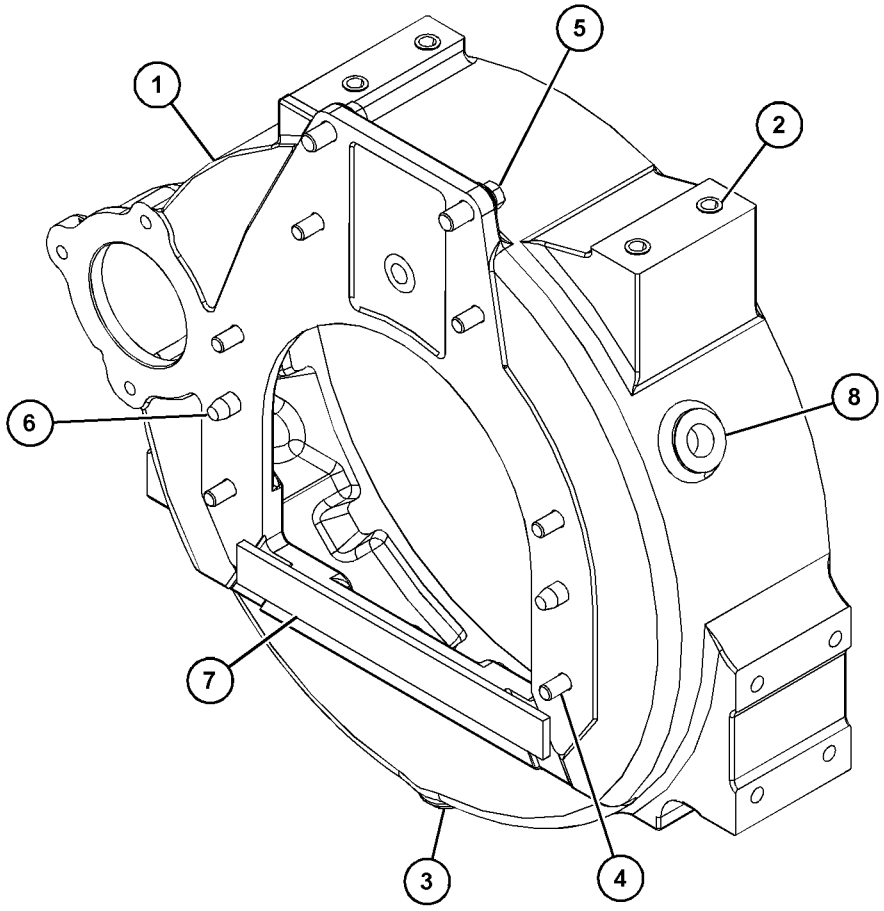

GRAPHIC #1 <END> g06206650

308-0302 HOUSING GP-FLYWHEEL

SMCS-1157 **i07474032**

NOTE	REF NO	GRAPHIC REF	PART NUMBER	QTY	PART NAME 1 2 3 4 5 6 (PRODUCT LEVEL)	SEE PAGE
	1	1	**277-2942**	1	HOUSING-FLYWHEEL	
M	2	1	**6I-0423**	2	BOLT (M12X1.75X30-MM)	
	3	1	**375-9272**	1	PLUG	
	4	1	**287-8597**	2	DOWEL	
M	5	1	**121-0883**	6	BOLT (M10X1.5X30-MM)	
	6	1	**199-3109**	1	PLUG	
M	7	1	**6I-4200**	3	BOLT (M10X1.5X16-MM)	
	8	1	**393-4006**	1	GASKET	

M - METRIC PART

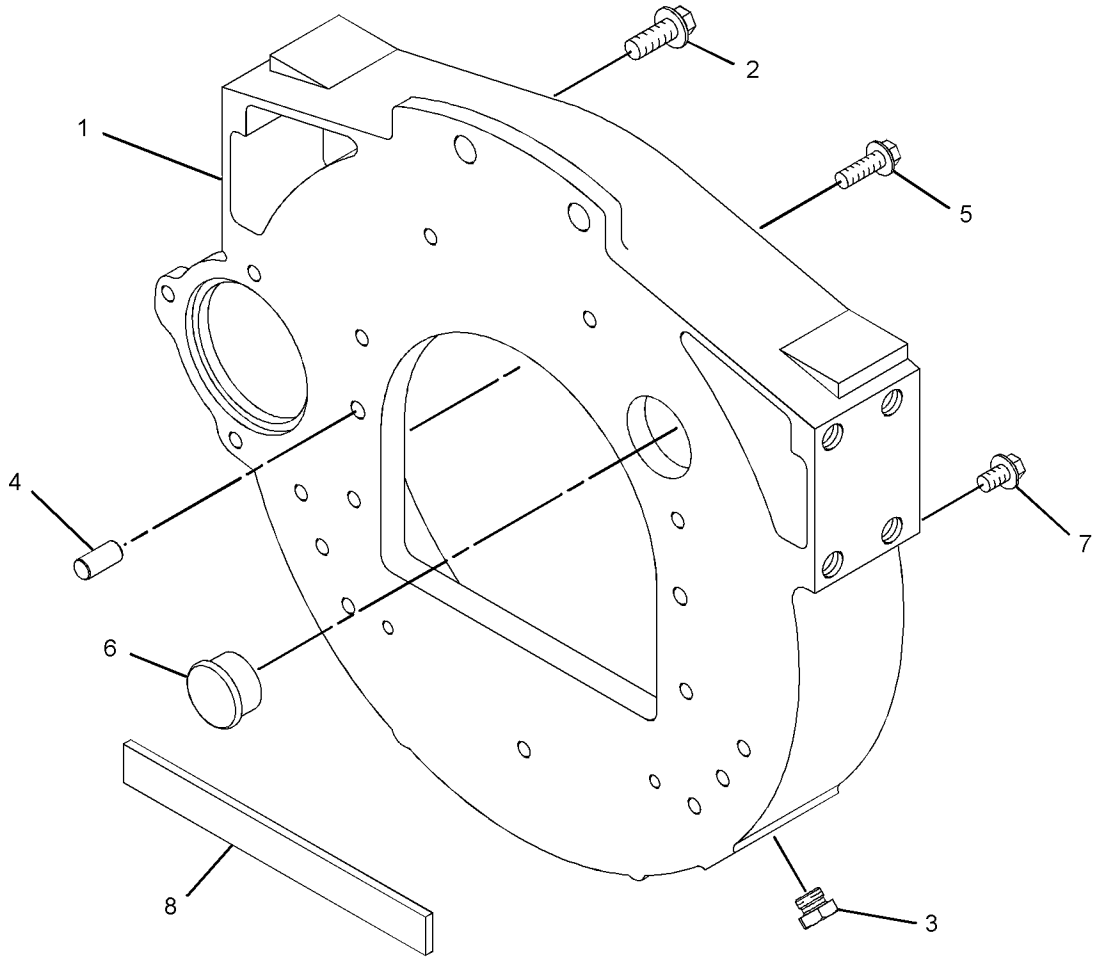

GRAPHIC #1 <END> g06378244

308-4272 HOUSING GP-FLYWHEEL

SMCS-1157 **i05185983**

NOTE	REF NO	GRAPHIC REF	PART NUMBER	QTY	PART NAME 1 2 3 4 5 6 (PRODUCT LEVEL)	SEE PAGE
M	1	1	**6I-0423**	2	BOLT (M12X1.75X30-MM)	
M	2	1	**6I-0593**	3	BOLT (M10X1.5X30-MM)	
M	3	1	**6I-0631**	2	BOLT (M6X1X12-MM)	
	4	1	**375-9272**	1	PLUG	
	5	1	**102-1957**	1	PLATE	
M	6	1	**121-0883**	6	BOLT (M10X1.5X30-MM)	
	7	1	**149-9176**	1	HOUSING-FLYWHEEL	
	8	1	**199-3108**	1	PLUG	
	9	1	**199-3109**	1	PLUG	
	10	1	**287-8597**	2	DOWEL	

M - METRIC PART

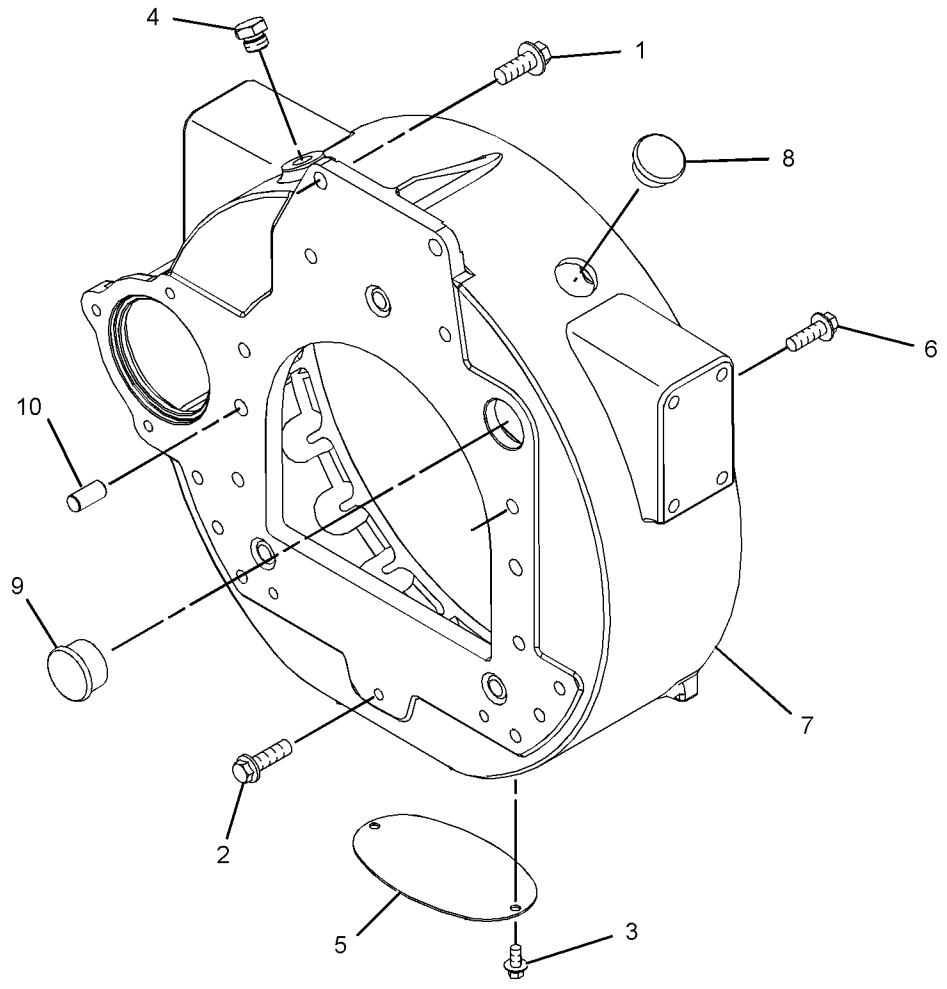

GRAPHIC #1 <END> g01377587

311-5796 HOUSING GP-FLYWHEEL

SMCS-1157 **i07491323**

NOTE	REF NO	GRAPHIC REF	PART NUMBER	QTY	PART NAME 1 2 3 4 5 6 (PRODUCT LEVEL)	SEE PAGE
M	1	1	**6I-0423**	2	BOLT (M12X1.75X30-MM)	
M	2	1	**6I-0631**	2	BOLT (M6X1X12-MM)	
	3	1	**375-9272**	1	PLUG	
M	4	1	**6I-4200**	6	BOLT (M10X1.5X16-MM)	
	5	1	**393-4006**	1	GASKET	
	6	1	**287-8597**	2	DOWEL	
	7	1	**102-1957**	1	PLATE	
M	8	1	**121-0883**	6	BOLT (M10X1.5X30-MM)	
	9	1	**164-3289**	1	HOUSING-FLYWHEEL	
	10	1	**164-3300**	1	PLATE	

M - METRIC PART

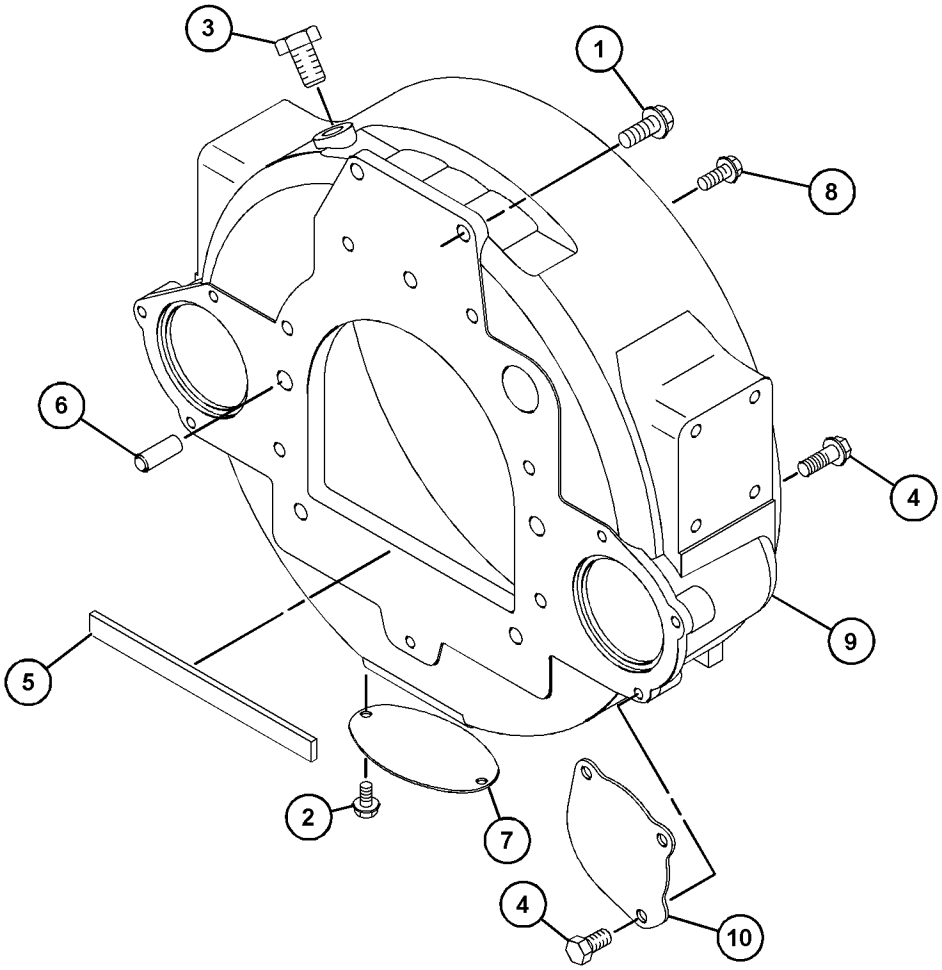

GRAPHIC #1 <END> g06338021

321-5596 HOUSING GP-FLYWHEEL

PART OF 435-1692 ENGINE AR-COMPLETE, 435-1685, 540-0570 ENGINE AR-PRIMARY

SMCS-1157 **i05185986**

NOTE	REF NO	GRAPHIC REF	PART NUMBER	QTY	PART NAME 1 2 3 4 5 6 (PRODUCT LEVEL)	SEE PAGE
M	1	1	**6I-0423**	2	BOLT (M12X1.75X30-MM)	
M	2	1	**6I-0631**	2	BOLT (M6X1X12-MM)	
	3	1	**375-9272**	1	PLUG	
M	4	1	**6I-4200**	3	BOLT (M10X1.5X16-MM)	
	5	1	**7W-4642**	1	SHIELD-DUST	
M	6	1	**121-0883**	6	BOLT (M10X1.5X30-MM)	
	7	1	**287-8597**	2	DOWEL	
	8	1	**321-5594**	1	HOUSING-FLYWHEEL	
	9	1	**321-5595**	1	PLATE	

M - METRIC PART

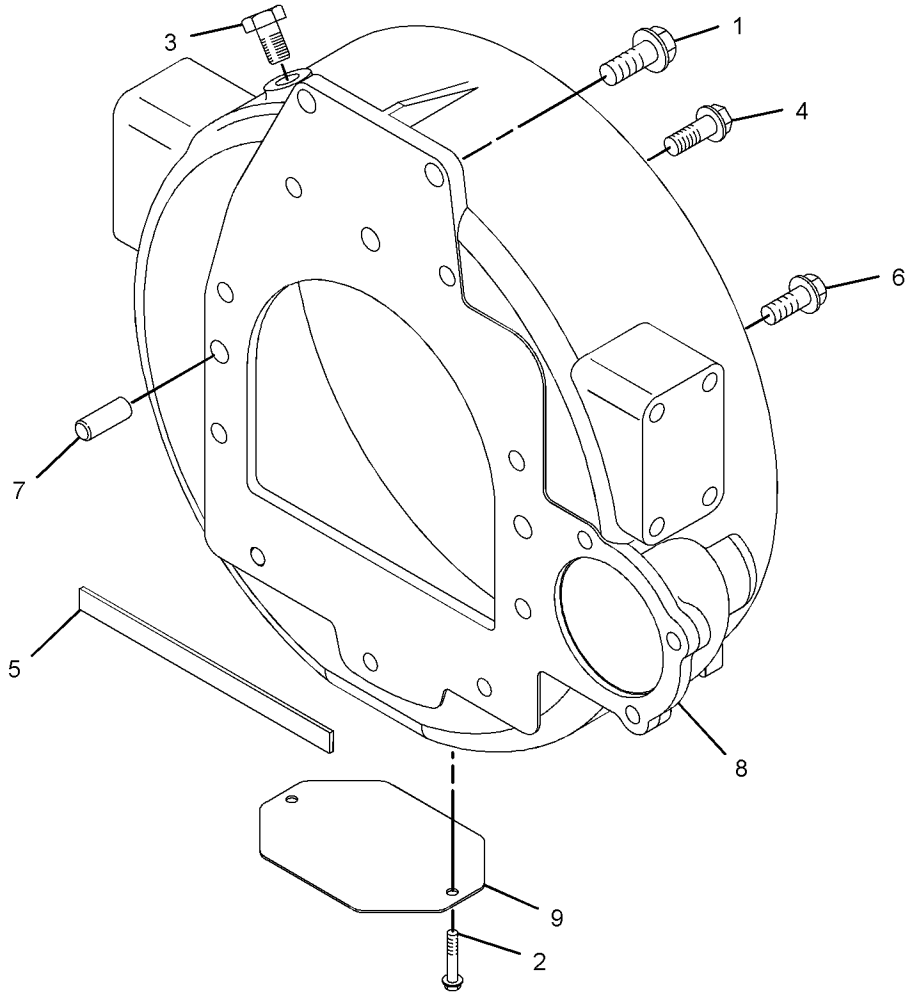

GRAPHIC #1 <END> g01672953

322-2434 HOUSING GP-FLYWHEEL

SMCS-1157 **i07426267**

NOTE	REF NO	GRAPHIC REF	PART NUMBER	QTY	PART NAME 1 2 3 4 5 6 (PRODUCT LEVEL)	SEE PAGE
M	1	1	**6I-0423**	2	BOLT (M12X1.75X30-MM)	
M	2	1	**6I-0631**	2	BOLT (M6X1X12-MM)	
M	3	1	**6I-0654**	12	BOLT (M10X1.5X25-MM)	
	4	1	**375-9272**	1	PLUG	
M	5	1	**6I-4200**	3	BOLT (M10X1.5X16-MM)	
	6	1	**393-4006**	1	GASKET	
	7	1	**102-1957**	1	PLATE	
M	8	1	**121-0883**	6	BOLT (M10X1.5X30-MM)	
	9	1	**149-9176**	1	HOUSING-FLYWHEEL	
	10	1	**166-6189**	1	PLATE	
	11	1	**199-3108**	1	PLUG	
	12	1	**199-3109**	1	PLUG	
	13	1	**287-8597**	2	DOWEL	

M - METRIC PART

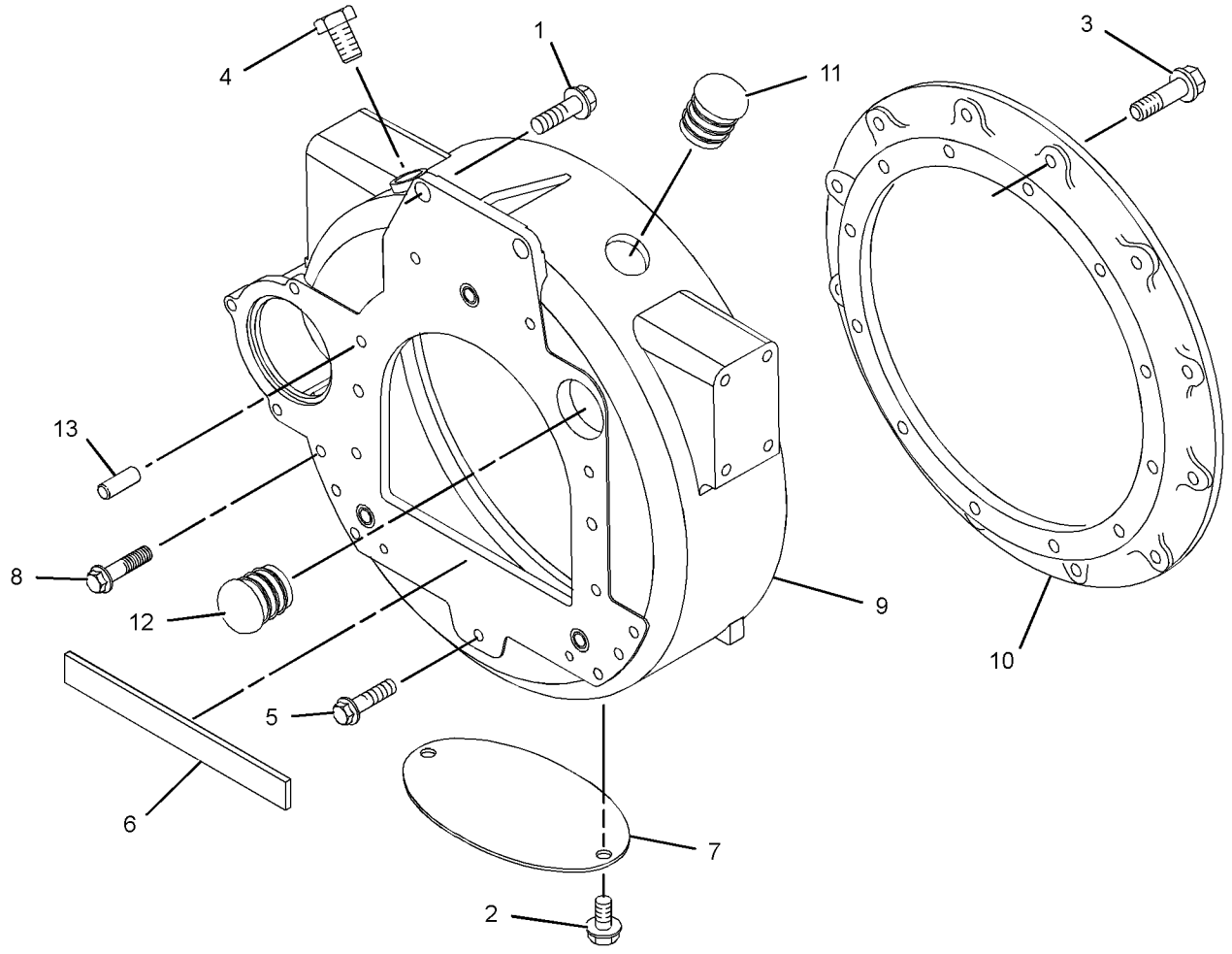

GRAPHIC #1 <END> g06321812

397-3886 HOUSING GP-FLYWHEEL

SMCS-1157 **i07499131**

NOTE	REF NO	GRAPHIC REF	PART NUMBER	QTY	PART NAME 1 2 3 4 5 6 (PRODUCT LEVEL)	SEE PAGE
	1	1	**2B-0858**	1	PLUG-PIPE	
M	2	1	**6I-4200**	3	BOLT (M10X1.5X16-MM)	
	3	1	**393-4006**	1	GASKET	
	4	1	**067-6006**	1	PLUG	
	5	1	**186-2362**	1	HOUSING-FLYWHEEL	
	6	1	**186-2364**	6	BOLT	
	7	1	**287-8597**	2	DOWEL	

M - METRIC PART

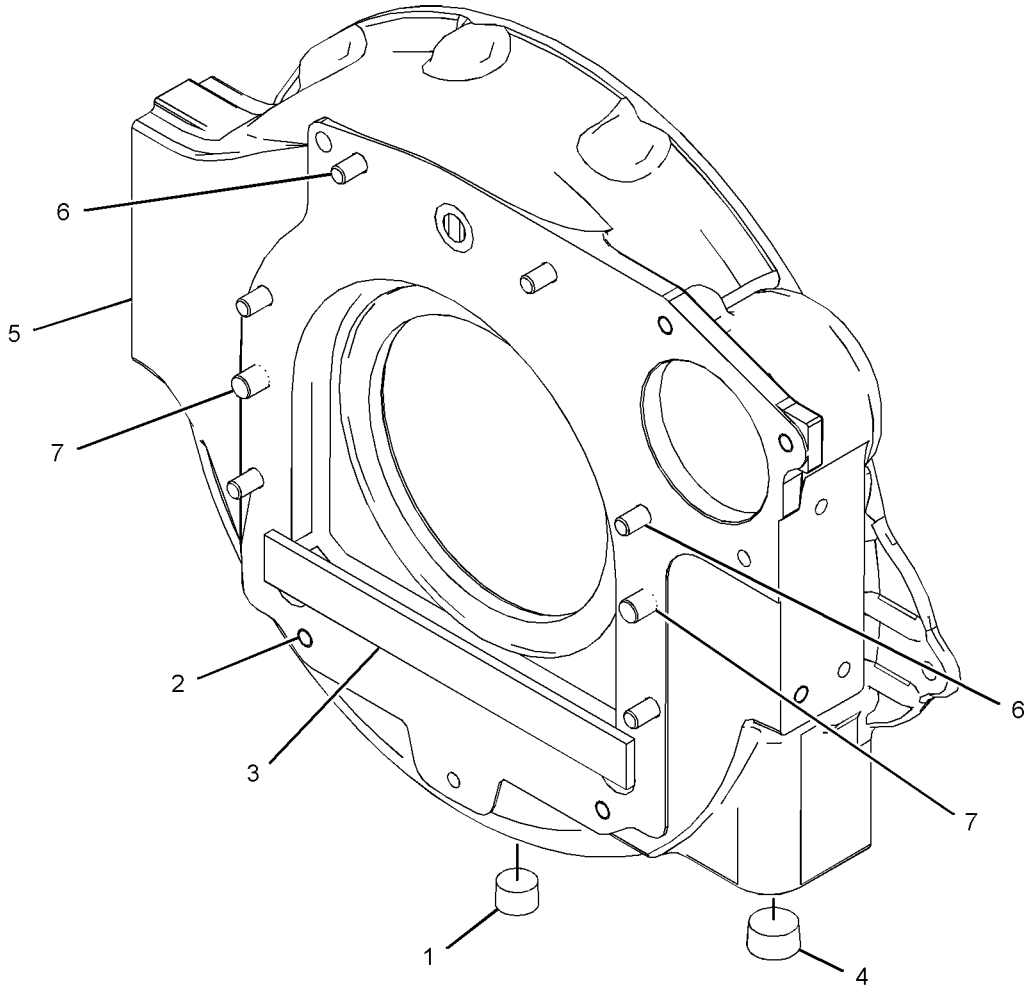

GRAPHIC #1 <END> g06358644

304-0727 HOUSING GP-FRONT

PART OF 435-1687, 522-8303, 540-1156 ENGINE AR-PRIMARY

SMCS-1151, 1162, 1206 **i06707802**

NOTE	REF NO	GRAPHIC REF	PART NUMBER	QTY	PART NAME 1 2 3 4 5 6 (PRODUCT LEVEL)	SEE PAGE
M	1	1	**6I-0217**	6	BOLT (M8X1.25X20-MM)	
M	2	1	**6I-0645**	4	BOLT (M8X1.25X25-MM)	
M	3	1	**101-3895**	2	BOLT (M8X1.25X35-MM)	
	4	1	**277-3012**	1	GASKET-COVER	
	5	1	**304-0721**	1	HOUSING	
M	6	1	**6I-0254**	3	BOLT (M8X1.25X30-MM)	
M	7	1	**6I-0260**	9	BOLT (M8X1.25X25-MM)	
M	8	2	**6I-0454**	6	BOLT (M10X1.5X70-MM)	
M	9	2	**7C-4616**	1	BOLT (M12X1.75X45-MM)	
	10	2	**067-6179**	1	DOWEL	
M	11	1	**100-3751**	5	BOLT (M8X1.25X65-MM)	
	12	2	**133-1011**	1	WASHER	
	13	2	**425-7103**	1	GEAR (68-TEETH)	
	14	2	**232-3666**	1	WASHER-THRUST	
	15	1	**288-0422**	1	SEAL-CRANKSHAFT	
	16	2	**381-9252**	1	GEAR-IDLER (73-TEETH)	
	17	2	**291-6517**	1	PLATE	
	18	2	**418-7684**	1	GEAR-IDLER (44-TEETH)	
	19	2	**291-6521**	1	TUBE	
	20	2	**291-6522**	2	CLIP	
	21	1	**291-6523**	1	COVER-FRONT	
	22	1	**291-6524**	1	GASKET	

M - METRIC PART

304-0727 **HOUSING GP-FRONT (**contd.**)** **i06707802**

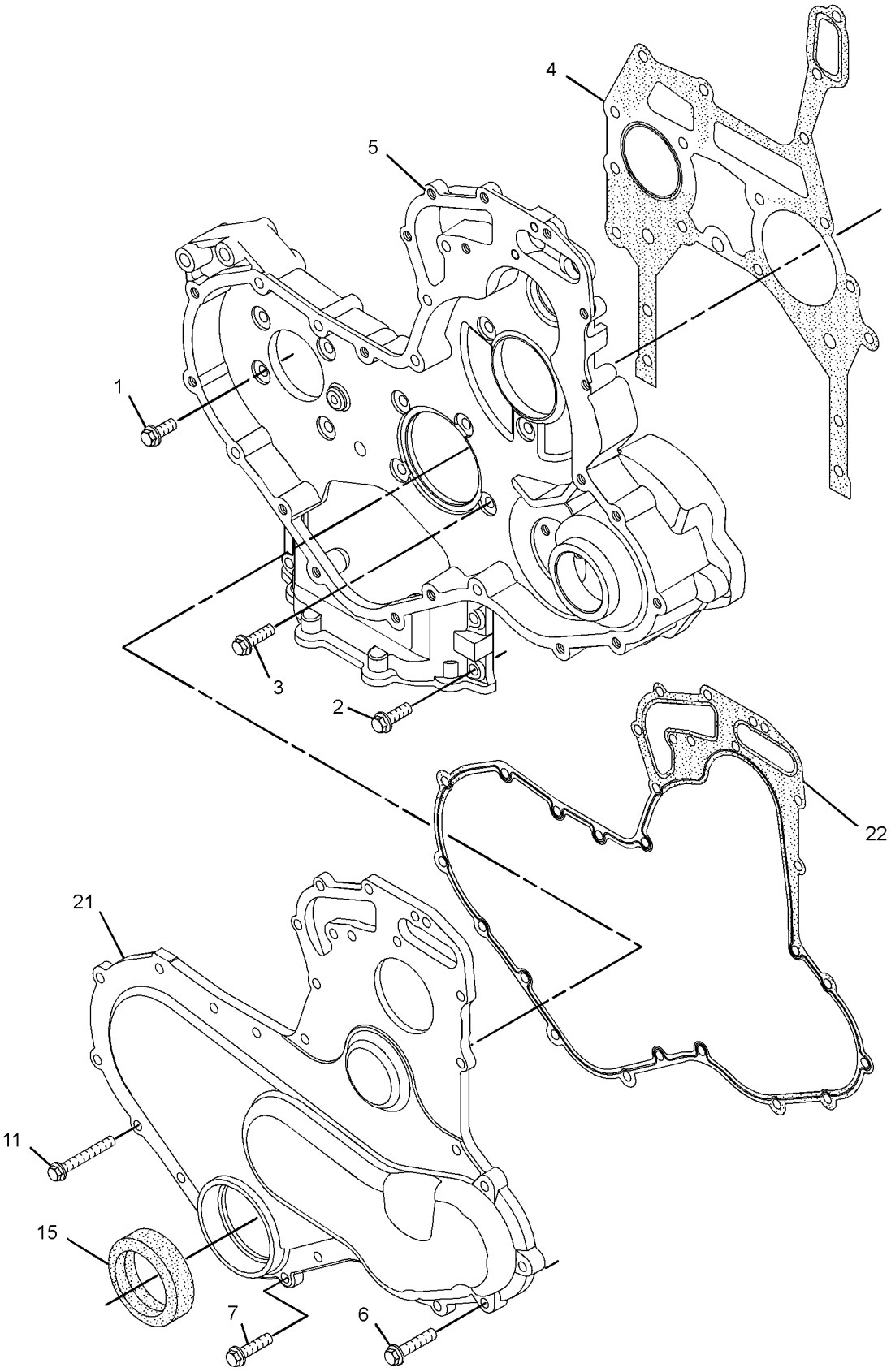

GRAPHIC #1 g01422550

304-0727 **HOUSING GP-FRONT (**contd.**)** **i06707802**

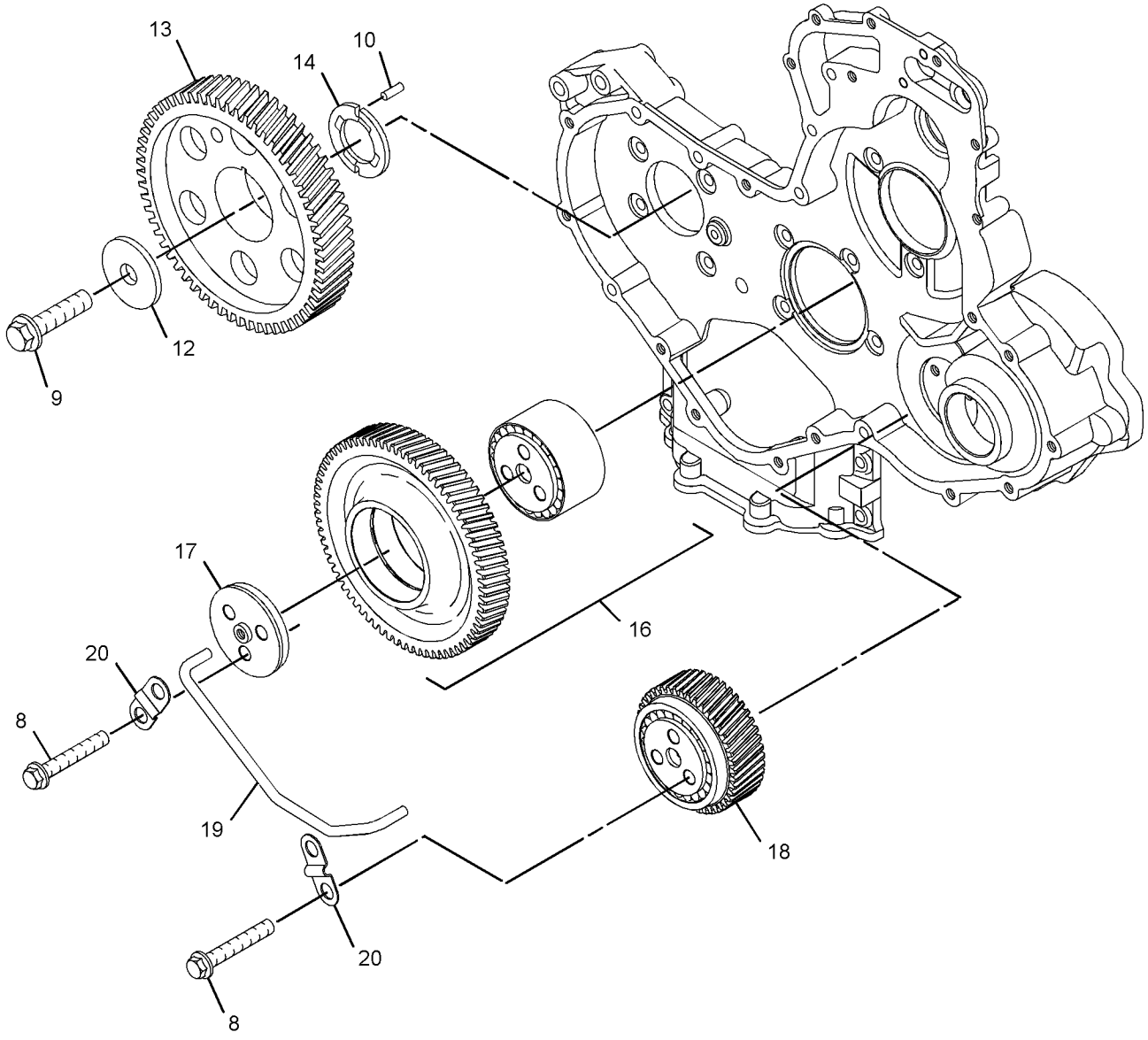

GRAPHIC #2 <END> g03559817

304-8760 HOUSING GP-FRONT

S/N: 4441-6043

SMCS-1151, 1162, 1206 **i02939546**

NOTE	REF NO	GRAPHIC REF	PART NUMBER	QTY	PART NAME 1 2 3 4 5 6 (PRODUCT LEVEL)	SEE PAGE
	1	1	**294-0288**	1	HOUSING-FRONT	
	2	1	**277-3012**	1	GASKET-COVER	
	3	1	**288-0422**	1	SEAL-CRANKSHAFT (FRONT)	
M	4	1	**6I-0217**	6	BOLT (M8X1.25X20-MM)	
M	5	1	**101-3895**	2	BOLT (M8X1.25X35-MM)	
M	6	1	**6I-0645**	4	BOLT (M8X1.25X25-MM)	
	7	1	**251-4336**	1	GEAR AS-IDLER (73-TEETH)	
	8	1	**324-0444**	1	HUB-IDLER GEAR	
	9	1	**295-1711**	1	PLATE-RETAINING	
M	10	1	**6I-0650**	3	BOLT (M10X1.5X65-MM)	
	11	1	**216-8634**	1	GEAR-CAMSHAFT (68-TEETH)	
	12	1	**133-1011**	1	WASHER	
	13	1	**067-6179**	1	DOWEL	
	14	1	**232-3666**	1	WASHER-THRUST	
M	15	1	**7C-4616**	1	BOLT (M12X1.75X45-MM)	
	16	1	**232-3657**	1	COVER AS-FRONT	
	16A	1	**225-8287**	1	GASKET	
M	17	1	**124-3815**	10	BOLT (M8X1.25X16-MM)	
M	18	1	**100-3751**	5	BOLT (M8X1.25X65-MM)	

M - METRIC PART

304-8760 **HOUSING GP-FRONT (**contd.**)** **i02939546**

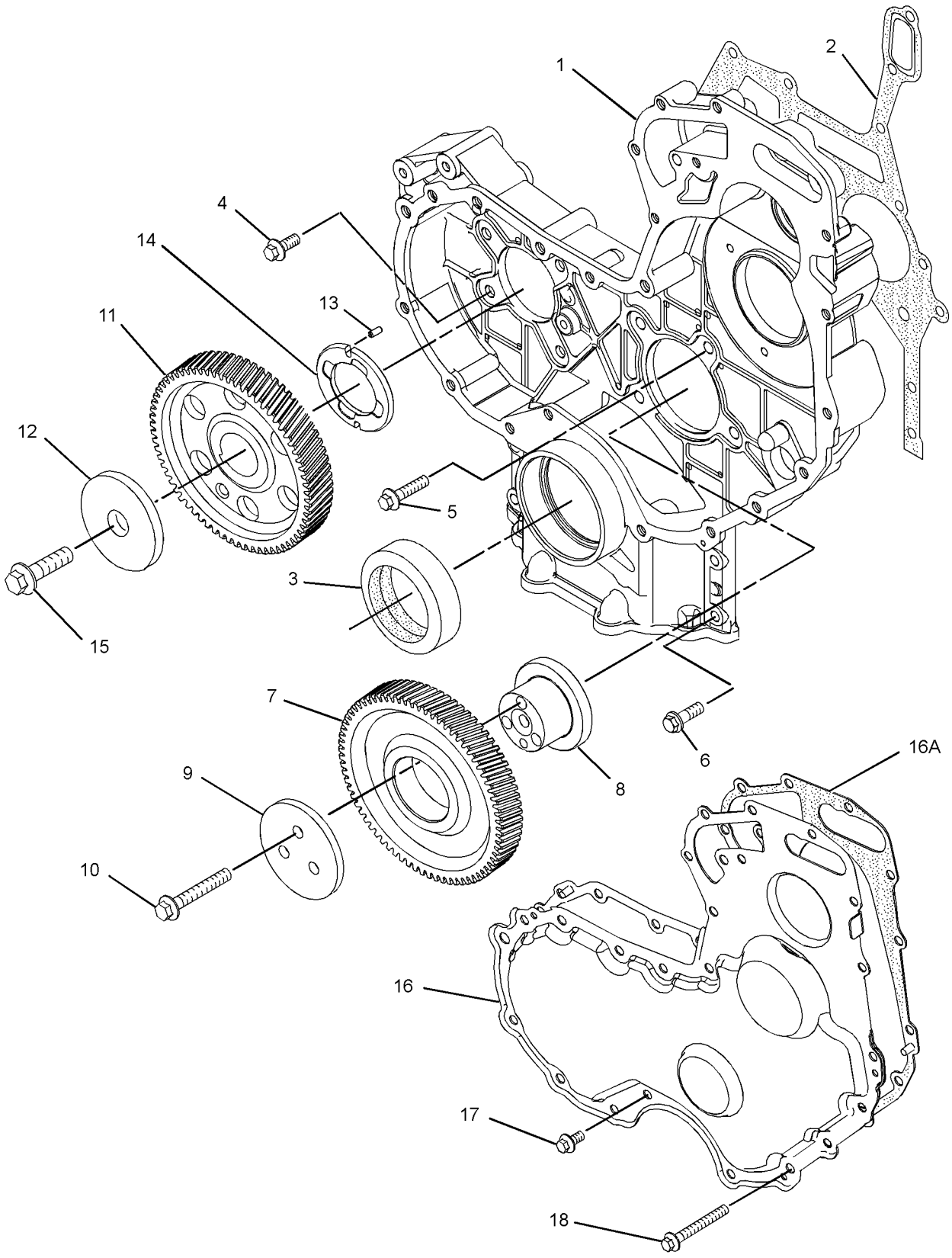

GRAPHIC #1 <END> g01370860

304-8760 HOUSING GP-FRONT

ALSO AN ATTACHMENT

SMCS-1151, 1162, 1206 **i06579097**

NOTE	REF NO	GRAPHIC REF	PART NUMBER	QTY	PART NAME 1 2 3 4 5 6 (PRODUCT LEVEL)	SEE PAGE
	1	1	**294-0288**	1	HOUSING-FRONT	
	2	1	**277-3012**	1	GASKET-COVER	
	3	1	**288-0422**	1	SEAL-CRANKSHAFT (FRONT)	
M	4	1	**6I-0217**	6	BOLT (M8X1.25X20-MM)	
M	5	1	**101-3895**	2	BOLT (M8X1.25X35-MM)	
M	6	1	**6I-0645**	4	BOLT (M8X1.25X25-MM)	
CJ	7	1	**346-0407**	1	GEAR-IDLER (73-TEETH)	
	8	1	**324-0444**	1	HUB-IDLER GEAR	
C	9	1	**346-0408**	1	PLATE	
M	10	1	**6I-0650**	3	BOLT (M10X1.5X65-MM)	
	11	1	**425-7103**	1	GEAR (68-TEETH)	
	12	1	**133-1011**	1	WASHER	
	13	1	**067-6179**	1	DOWEL	
	14	1	**232-3666**	1	WASHER-THRUST	
M	15	1	**7C-4616**	1	BOLT (M12X1.75X45-MM)	
	16	1	**232-3657**	1	COVER AS-FRONT	
	16A	1	**225-8287**	1	GASKET	
M	17	1	**124-3815**	10	BOLT (M8X1.25X16-MM)	
M	18	1	**100-3751**	5	BOLT (M8X1.25X65-MM)	

C - CHANGE FROM PREVIOUS TYPE
J - CAN ONLY BE USED IN CONJUNCTION WITH 346-0408 & 324-0444
M - METRIC PART

304-8760 **HOUSING GP-FRONT (**contd.**)** **i06579097**

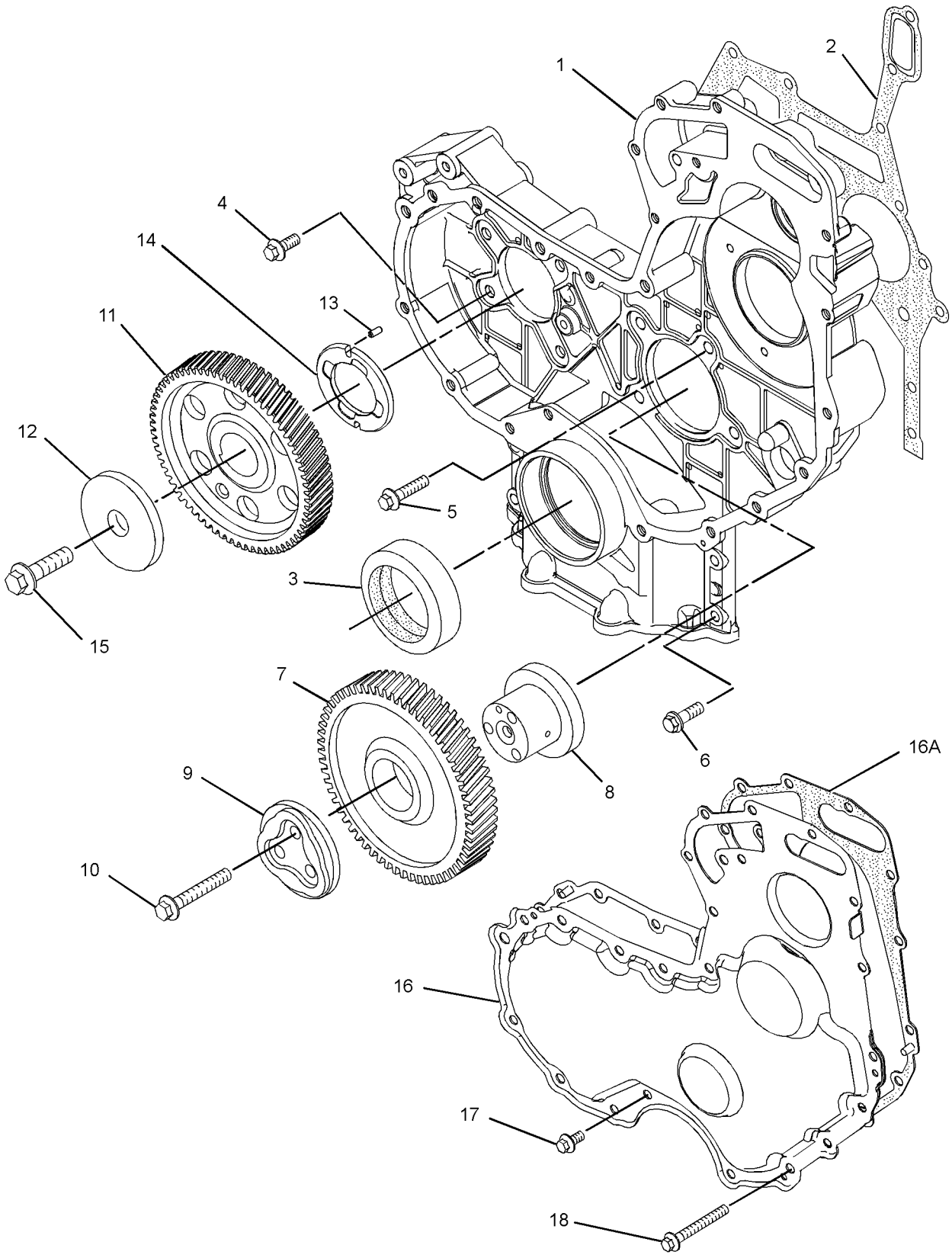

GRAPHIC #1 <END> g01900827

319-1582 HOUSING GP-FRONT

TYPE 1

SMCS-1151, 1162, 1206 **i02910322**

NOTE	REF NO	GRAPHIC REF	PART NUMBER	QTY	PART NAME 1 2 3 4 5 6 (PRODUCT LEVEL)	SEE PAGE
M	1	1	**6I-0217**	6	BOLT (M8X1.25X20-MM)	
M	2	1	**6I-0645**	7	BOLT (M8X1.25X25-MM)	
M	3	1	**7C-4616**	1	BOLT (M12X1.75X45-MM)	
	4	1	**067-6179**	1	DOWEL	
M	5	1	**100-3751**	5	BOLT (M8X1.25X65-MM)	
M	6	1	**100-4830**	1	BOLT (M10X1.5X20-MM)	
M	7	1	**101-3895**	2	BOLT (M8X1.25X35-MM)	
M	8	1	**124-3815**	9	BOLT (M8X1.25X16-MM)	
	9	1	**133-1011**	1	WASHER	
	10	1	**216-8634**	1	GEAR-CAMSHAFT (68-TEETH)	
	11	1	**226-8767**	1	COVER AS-FRONT	
	11A	1	**226-8766**	1	GASKET-COVER	
	12	1	**232-3666**	1	WASHER-THRUST	
	13	1	**235-1418**	1	GEAR AS-IDLER (73-TEETH)	
M	13A	1	**5C-9553**	1	BOLT (M6X1X16-MM)	
	13B	1	**235-1064**	1	PLATE-RETAINING	
	13C	1	**235-1352**	2	CLIP	
	13D	1	**235-1358**	1	BEARING	
	13E	1	**235-1391**	1	HUB-IDLER GEAR	
	13F	1	**235-1398**	2	WASHER-THRUST	
	14	1	**277-3012**	1	GASKET-COVER	
	15	1	**288-0422**	1	SEAL-CRANKSHAFT	
	16	1	**323-3515**	1	HOUSING-FRONT	

M - METRIC PART

319-1582 **HOUSING GP-FRONT (**contd.**)** **i02910322**

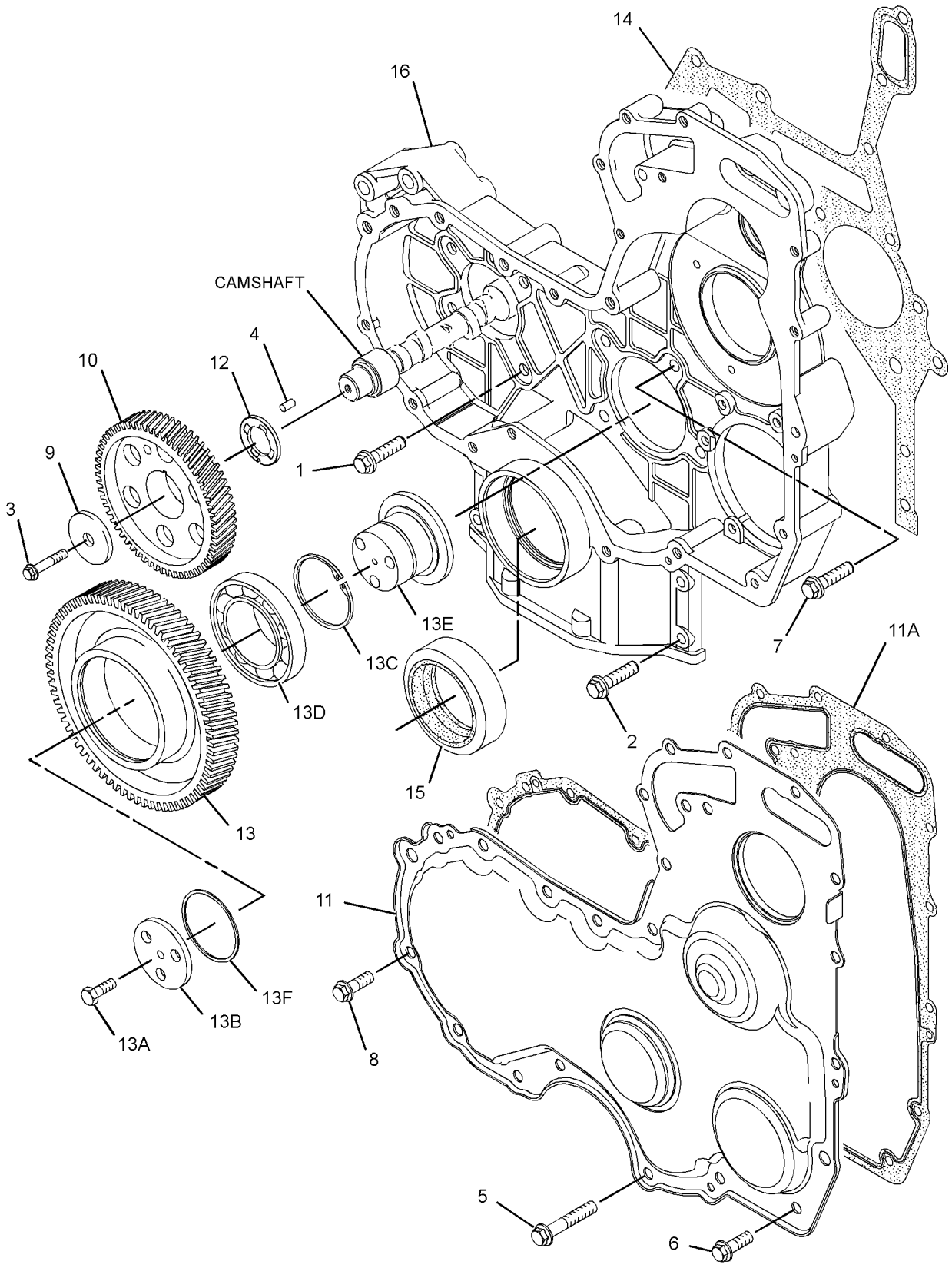

GRAPHIC #1 <END> g01431239

319-1582 HOUSING GP-FRONT

TYPE 2

SMCS-1151, 1162, 1206 **i06648203**

NOTE	REF NO	GRAPHIC REF	PART NUMBER	QTY	PART NAME 1 2 3 4 5 6 (PRODUCT LEVEL)	SEE PAGE
M	1	1	**6I-0217**	6	BOLT (M8X1.25X20-MM)	
CM	2	1	**6I-0645**	4	BOLT (M8X1.25X25-MM)	
M	3	1	**7C-4616**	1	BOLT (M12X1.75X45-MM)	
	4	1	**067-6179**	1	DOWEL	
M	5	1	**100-3751**	5	BOLT (M8X1.25X65-MM)	
M	6	1	**100-4830**	1	BOLT (M10X1.5X20-MM)	
M	7	1	**101-3895**	2	BOLT (M8X1.25X35-MM)	
M	8	1	**124-3815**	9	BOLT (M8X1.25X16-MM)	
	9	1	**133-1011**	1	WASHER	
	10	1	**425-7103**	1	GEAR (68-TEETH)	
	11	1	**226-8767**	1	COVER AS-FRONT	
	11A	1	**226-8766**	1	GASKET-COVER	
	12	1	**232-3666**	1	WASHER-THRUST	
C	13	1	**359-9431**	1	GEAR-IDLER (73-TEETH)	
	14	1	**277-3012**	1	GASKET-COVER	
	15	1	**288-0422**	1	SEAL-CRANKSHAFT	
	16	1	**323-3515**	1	HOUSING-FRONT	
C	17	1	**291-6517**	1	PLATE	
CM	18	1	**6I-0454**	3	BOLT (M10X1.5X70-MM)	

C - CHANGE FROM PREVIOUS TYPE
M - METRIC PART

319-1582 **HOUSING GP-FRONT (**contd.**)** **i06648203**

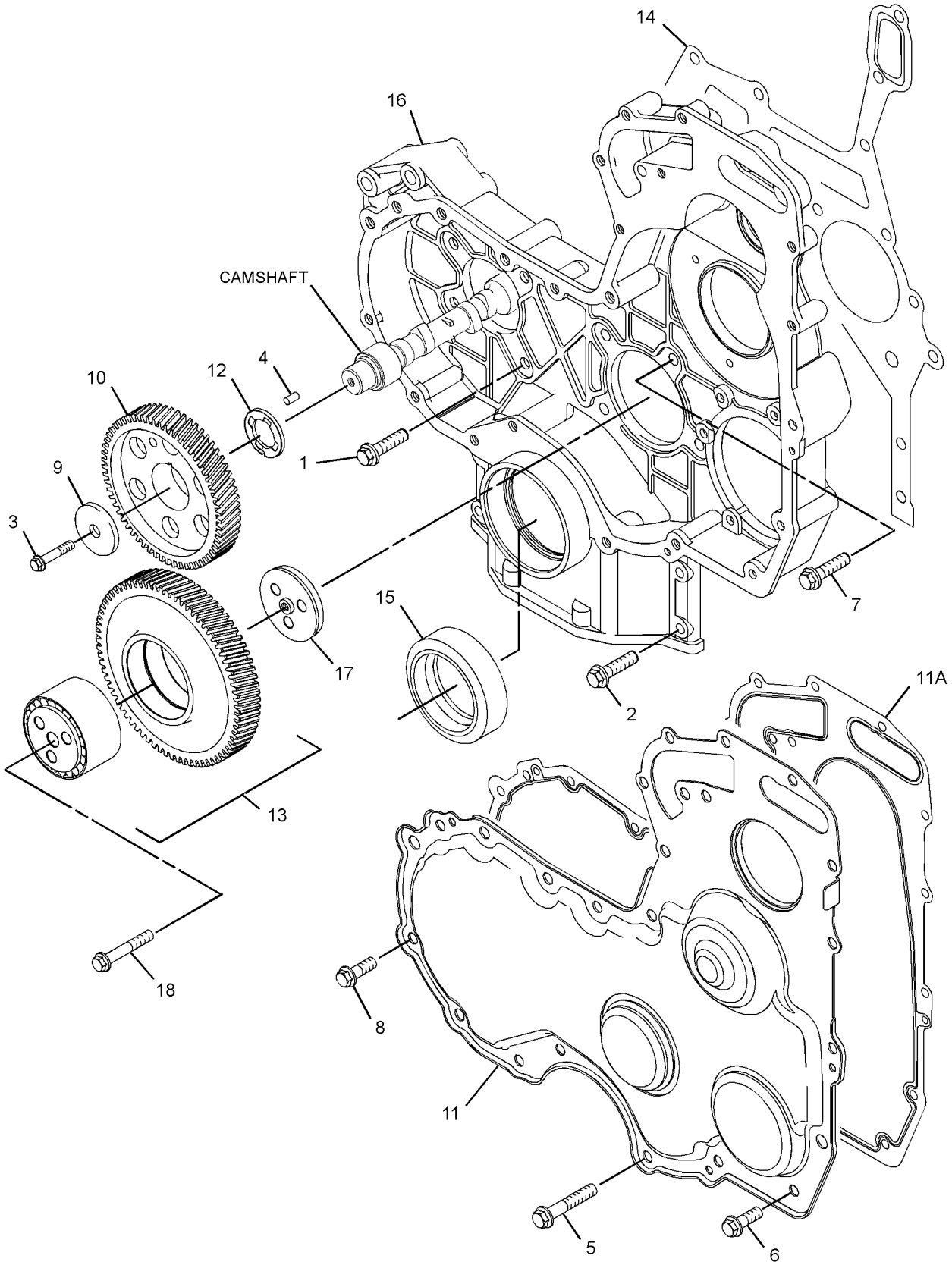

GRAPHIC #1 <END> g03771102

322-3056 HOUSING GP-FRONT

SMCS-1151, 1162, 1206 **i06944127**

NOTE	REF NO	GRAPHIC REF	PART NUMBER	QTY	PART NAME 1 2 3 4 5 6 (PRODUCT LEVEL)	SEE PAGE
M	1	2	**6I-0217**	6	BOLT (M8X1.25X20-MM)	
M	2	2	**6I-0454**	3	BOLT (M10X1.5X70-MM)	
M	3	2	**6I-0645**	4	BOLT (M8X1.25X25-MM)	
	4	2	**344-3434**	1	BOLT	
	5	2	**067-6179**	1	DOWEL	
M	6	1	**100-3751**	5	BOLT (M8X1.25X65-MM)	
M	7	1	**100-4830**	1	BOLT (M10X1.5X20-MM)	
M	8	2	**101-3895**	2	BOLT (M8X1.25X35-MM)	
M	9	1	**124-3815**	9	BOLT (M8X1.25X16-MM)	
	10	2	**368-3158**	1	WASHER	
	11	1	**226-8767**	1	COVER AS-FRONT	
	11A	1	**226-8766**	1	GASKET-COVER	
	12	2	**232-3666**	1	WASHER-THRUST	
	13	2	**243-3253**	1	HOUSING-FRONT	
	14	2	**340-3610**	1	GEAR-CAMSHAFT (68-TEETH)	
	15	2	**277-3012**	1	GASKET-COVER	
	16	2	**288-0422**	1	SEAL-CRANKSHAFT	
	17	2	**291-6517**	1	PLATE	
	18	2	**359-9431**	1	GEAR-IDLER (73-TEETH)	

M - METRIC PART

322-3056 **HOUSING GP-FRONT (**contd.**)** **i06944127**

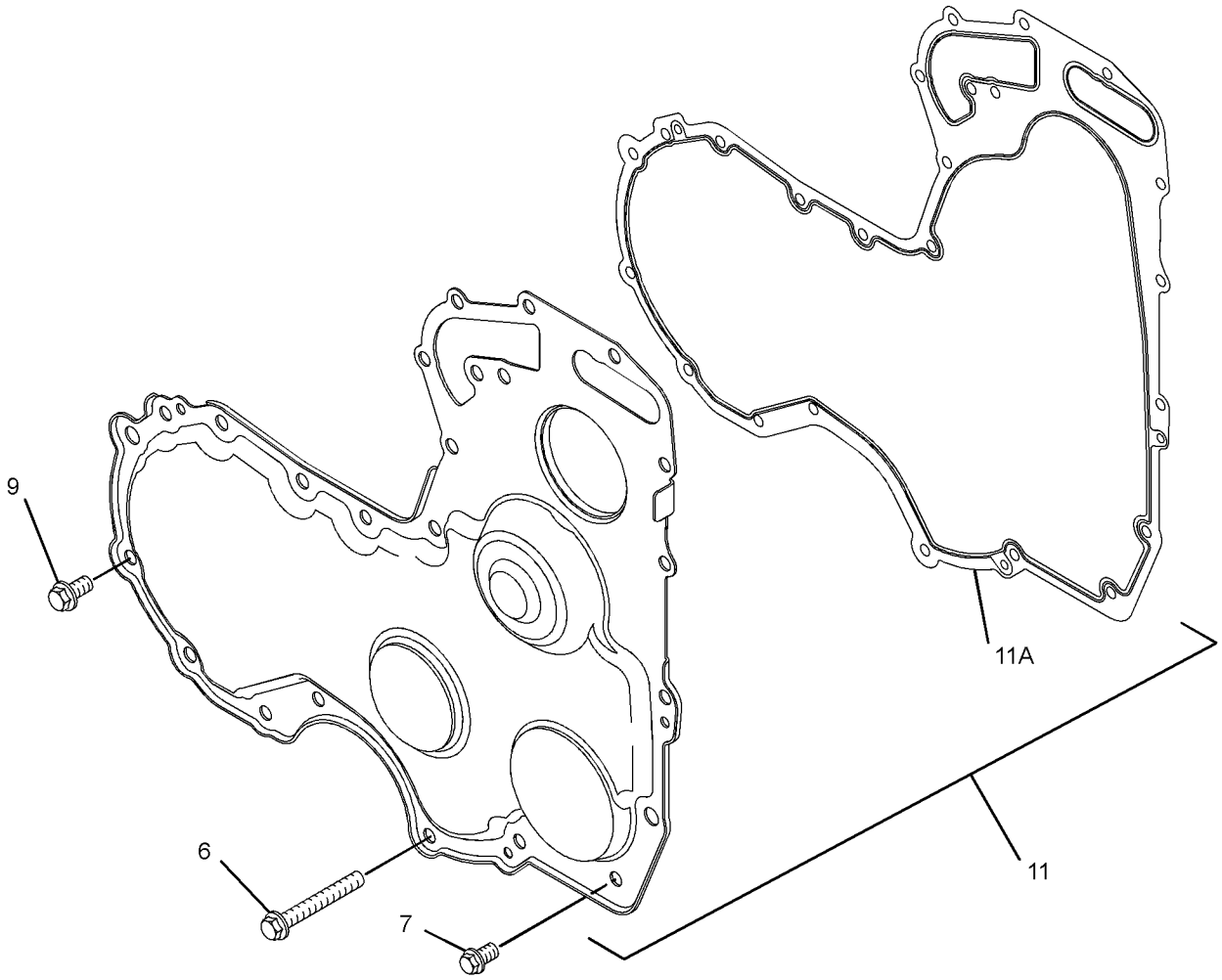

GRAPHIC #1 g06204831

322-3056 **HOUSING GP-FRONT (**contd.**)** **i06944127**

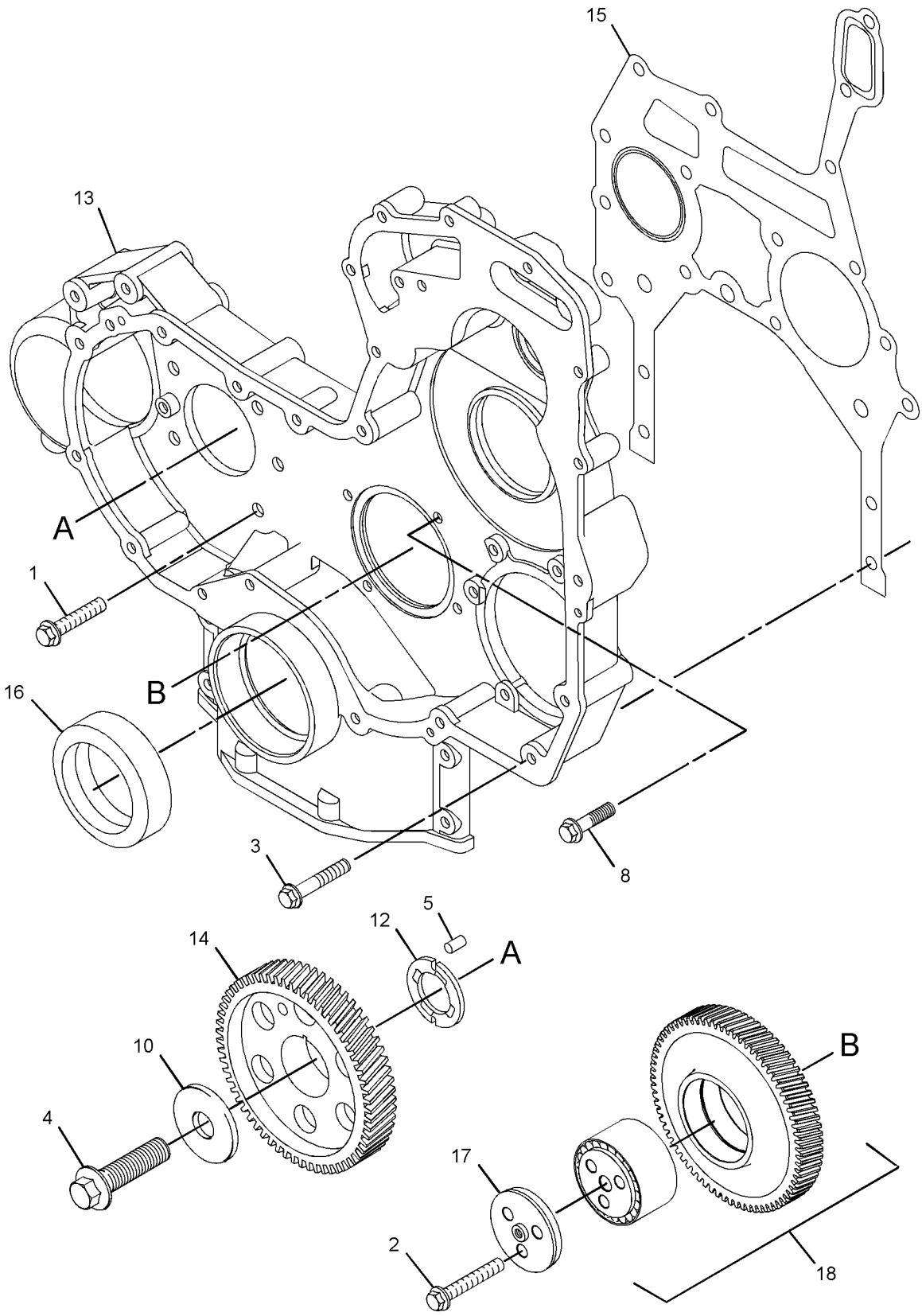

GRAPHIC #2 <END> g06204832

323-8844 HOUSING GP-FRONT

SMCS-1151, 1162, 1206 **i06582069**

NOTE	REF NO	GRAPHIC REF	PART NUMBER	QTY	PART NAME 1 2 3 4 5 6 (PRODUCT LEVEL)	SEE PAGE
M	1	1	**6I-0217**	6	BOLT (M8X1.25X20-MM)	
M	2	1	**6I-0254**	3	BOLT (M8X1.25X30-MM)	
M	3	1	**6I-0260**	9	BOLT (M8X1.25X25-MM)	
M	4	2	**6I-0454**	6	BOLT (M10X1.5X70-MM)	
M	5	1	**6I-0645**	4	BOLT (M8X1.25X25-MM)	
M	6	2	**7C-4616**	1	BOLT (M12X1.75X45-MM)	
	7	2	**067-6179**	1	DOWEL	
M	8	1	**100-3751**	5	BOLT (M8X1.25X65-MM)	
M	9	1	**101-3895**	2	BOLT (M8X1.25X35-MM)	
	10	2	**133-1011**	1	WASHER	
	11	2	**425-7103**	1	GEAR (68-TEETH)	
	12	2	**232-3666**	1	WASHER-THRUST	
	13	1	**277-3012**	1	GASKET-COVER (HOUSING)	
	14	1	**288-0422**	1	SEAL-CRANKSHAFT	
	15	1	**304-0721**	1	HOUSING	
	16	2	**381-9252**	1	GEAR-IDLER (73-TEETH)	
	17	2	**291-6517**	1	PLATE	
	18	2	**291-6519**	1	GEAR-IDLER (44-TEETH)	
	19	2	**291-6521**	1	TUBE	
	20	2	**291-6522**	2	CLIP	
	21	1	**291-6523**	1	COVER-FRONT	
	22	1	**291-6524**	1	GASKET	

M - METRIC PART

323-8844 **HOUSING GP-FRONT (**contd.**)** **i06582069**

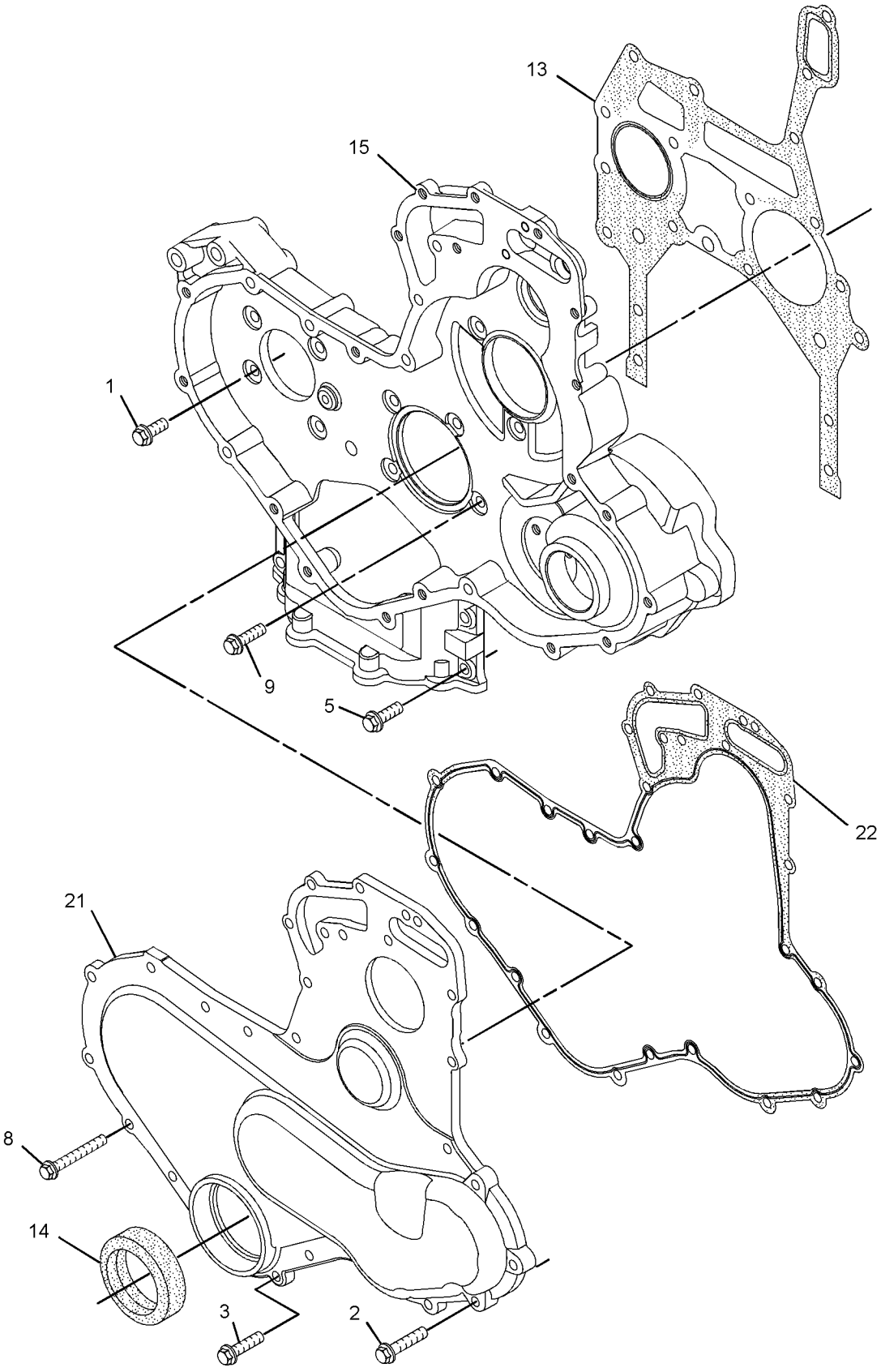

GRAPHIC #1 g01445371

323-8844 **HOUSING GP-FRONT (**contd.**)** **i06582069**

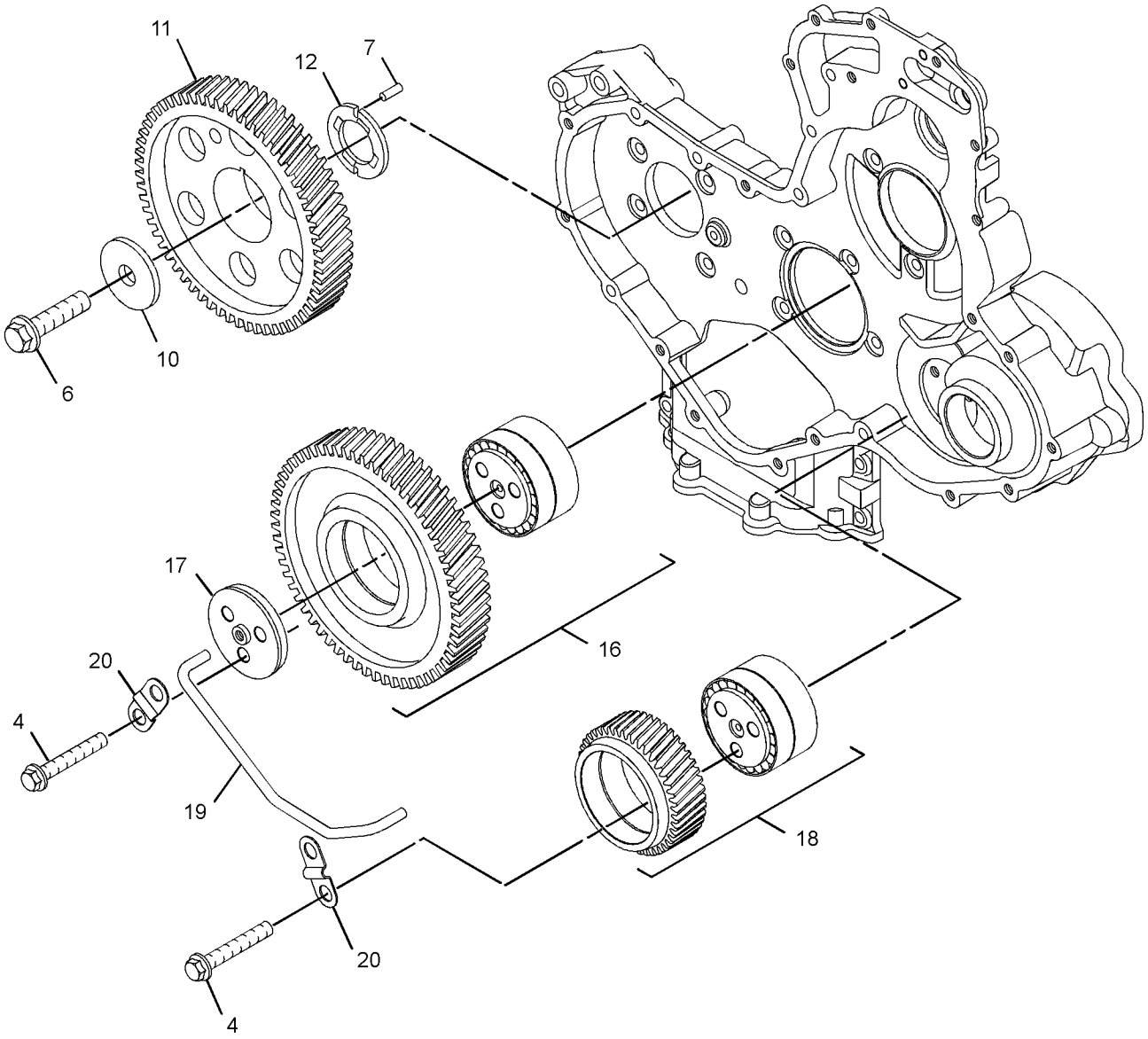

GRAPHIC #2 <END> g01445372

352-6361 HOUSING GP-FRONT

SMCS-1151, 1162, 1206 **i06758552**

NOTE	REF NO	GRAPHIC REF	PART NUMBER	QTY	PART NAME 1 2 3 4 5 6 (PRODUCT LEVEL)	SEE PAGE
	1	1	**346-0408**	1	PLATE	
M	2	1	**6I-0217**	6	BOLT (M8X1.25X20-MM)	
M	3	1	**6I-0645**	4	BOLT (M8X1.25X25-MM)	
M	4	1	**6I-0650**	3	BOLT (M10X1.5X65-MM)	
M	5	1	**7C-4616**	1	BOLT (M12X1.75X45-MM)	
	6	1	**067-6179**	1	DOWEL	
M	7	1	**100-3751**	5	BOLT (M8X1.25X65-MM)	
M	8	1	**101-3895**	2	BOLT (M8X1.25X35-MM)	
M	9	1	**124-3815**	9	BOLT (M8X1.25X16-MM)	
	10	1	**133-1011**	1	WASHER	
	11	1	**425-7103**	1	GEAR (68-TEETH)	
	12	1	**226-8767**	1	COVER AS-FRONT	
	12A	1	**226-8766**	1	GASKET-COVER	
	13	1	**232-3666**	1	WASHER-THRUST	
	14	1	**251-4336**	1	GEAR AS-IDLER (73-TEETH)	
	15	1	**277-3012**	1	GASKET-COVER	
	16	1	**324-0444**	1	HUB-IDLER GEAR	
	17	1	**288-0422**	1	SEAL-CRANKSHAFT	
	18	1	**323-3515**	1	HOUSING-FRONT	

M - METRIC PART

352-6361 **HOUSING GP-FRONT (**contd.**)** **i06758552**

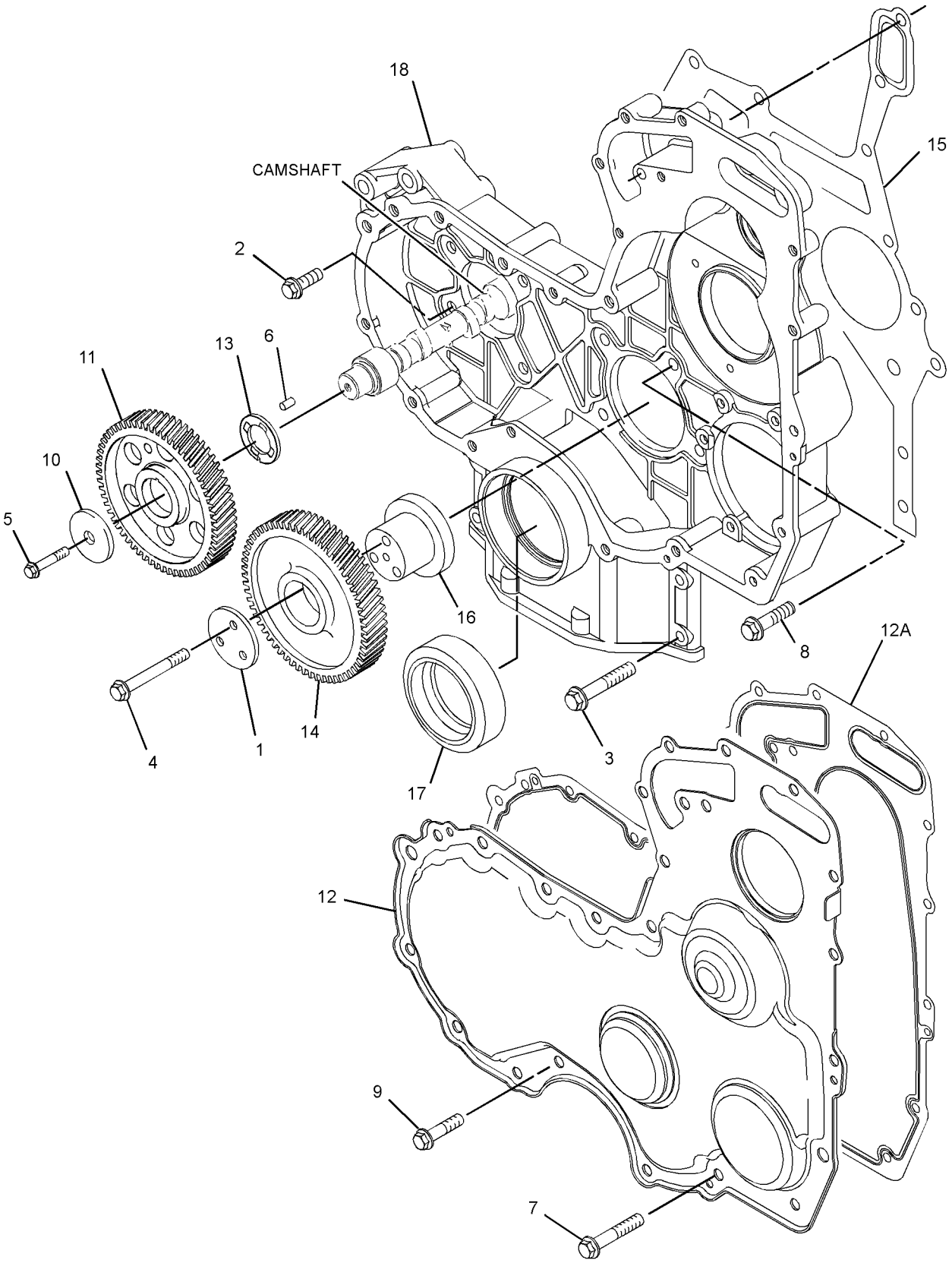

GRAPHIC #1 <END> g06146173

298-5127 LIFTING GP-ENGINE

PART OF 435-1692 ENGINE AR-COMPLETE, 435-1685, 540-0570 ENGINE AR-PRIMARY

SMCS-1122 **i02604370**

NOTE	REF NO	GRAPHIC REF	PART NUMBER	QTY	PART NAME 1 2 3 4 5 6 (PRODUCT LEVEL)	SEE PAGE
	1	1	**279-9651**	1	PLATE-LIFTING	
M	2	1	**6I-0654**	4	BOLT (M10X1.5X25-MM)	
	3	1	**298-4604**	1	PLATE-LIFTING	

M - METRIC PART

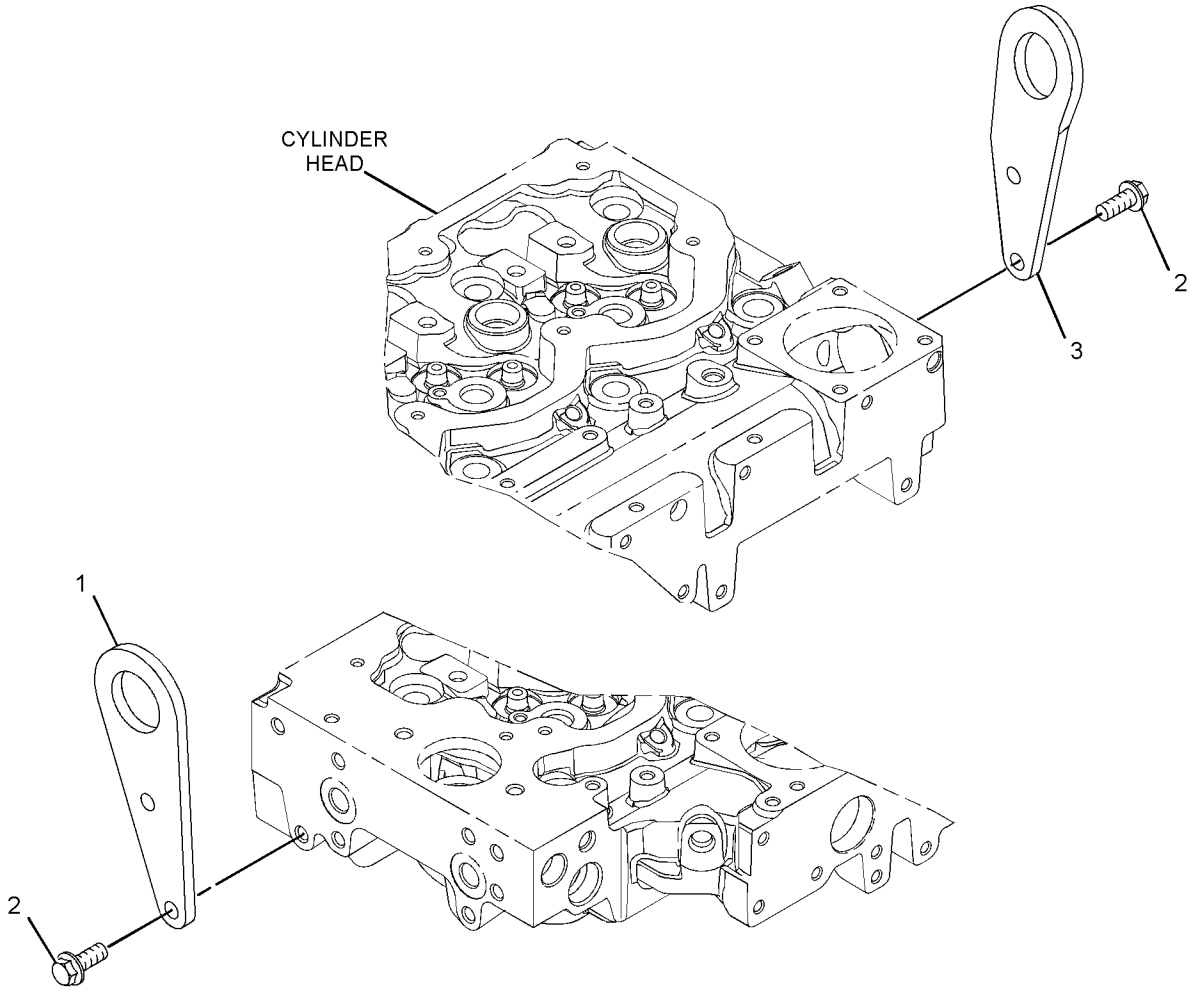

GRAPHIC #1 <END> g01305506

299-5033 LIFTING GP-ENGINE

PART OF 435-1699 ENGINE AR, 435-1687, 437-5409, 522-8303, 540-1155, 540-1156 ENGINE AR-PRIMARY
ALSO AN ATTACHMENT

SMCS-1122 **i02654270**

NOTE	REF NO	GRAPHIC REF	PART NUMBER	QTY	PART NAME 1 2 3 4 5 6 (PRODUCT LEVEL)	SEE PAGE
M	1	1	**6I-0654**	4	BOLT (M10X1.5X25-MM)	
	2	1	**299-5024**	1	BRACKET	
	3	1	**299-5026**	1	BRACKET	

M - METRIC PART

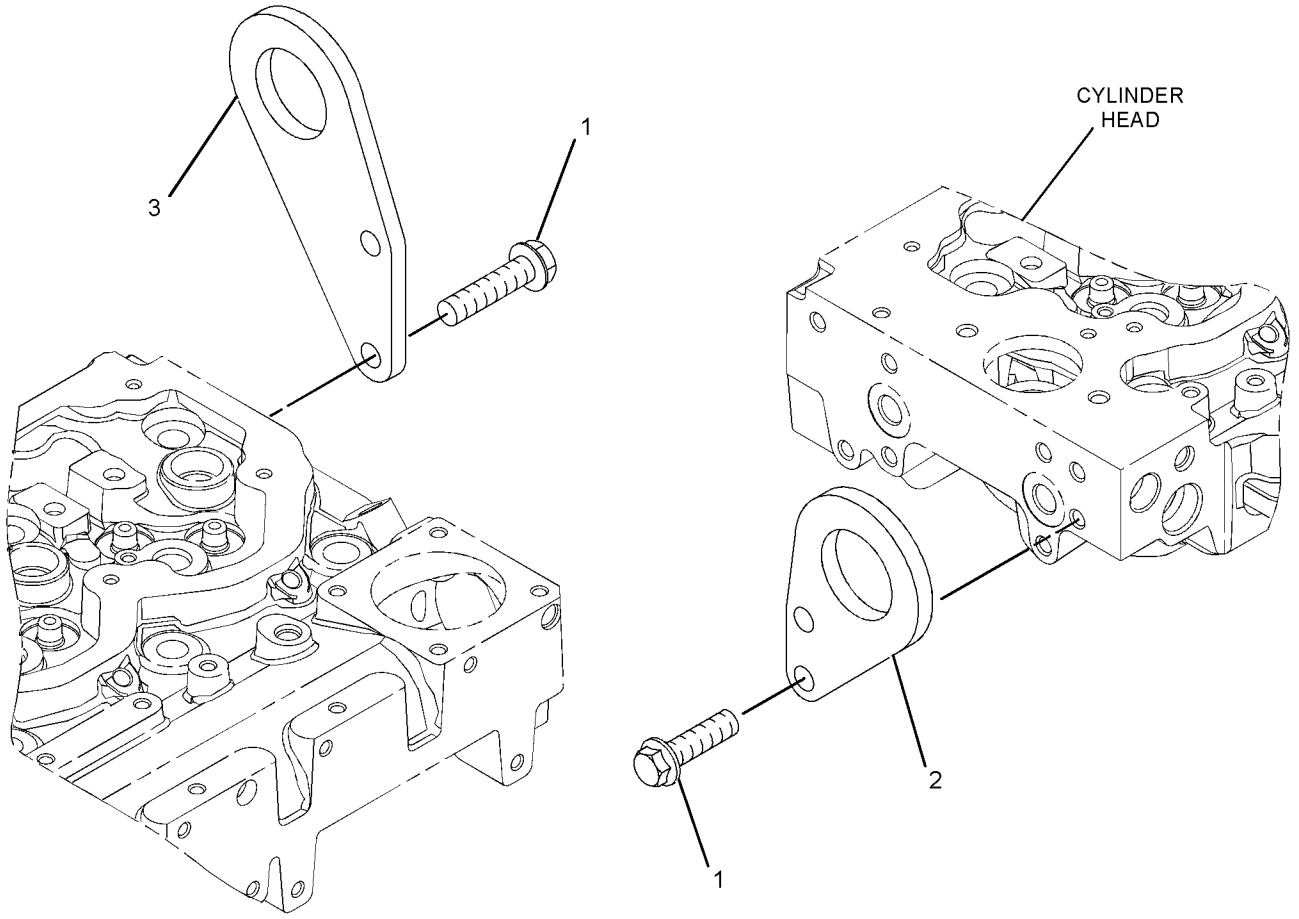

GRAPHIC #1 <END> g01369012

326-0478 LIFTING GP-ENGINE

SMCS-1122 **i05916324**

NOTE	REF NO	GRAPHIC REF	PART NUMBER	QTY	PART NAME 1 2 3 4 5 6 (PRODUCT LEVEL)	SEE PAGE
M	1	1	**6I-0654**	2	BOLT (M10X1.5X25-MM)	
M	2	1	**123-2899**	3	BOLT (M10X1.5X40-MM)	
	3	1	**279-9651**	1	PLATE-LIFTING	
	4	1	**389-8101**	1	BRACKET	
	5	1	**389-8097**	1	SPACER	

M - METRIC PART

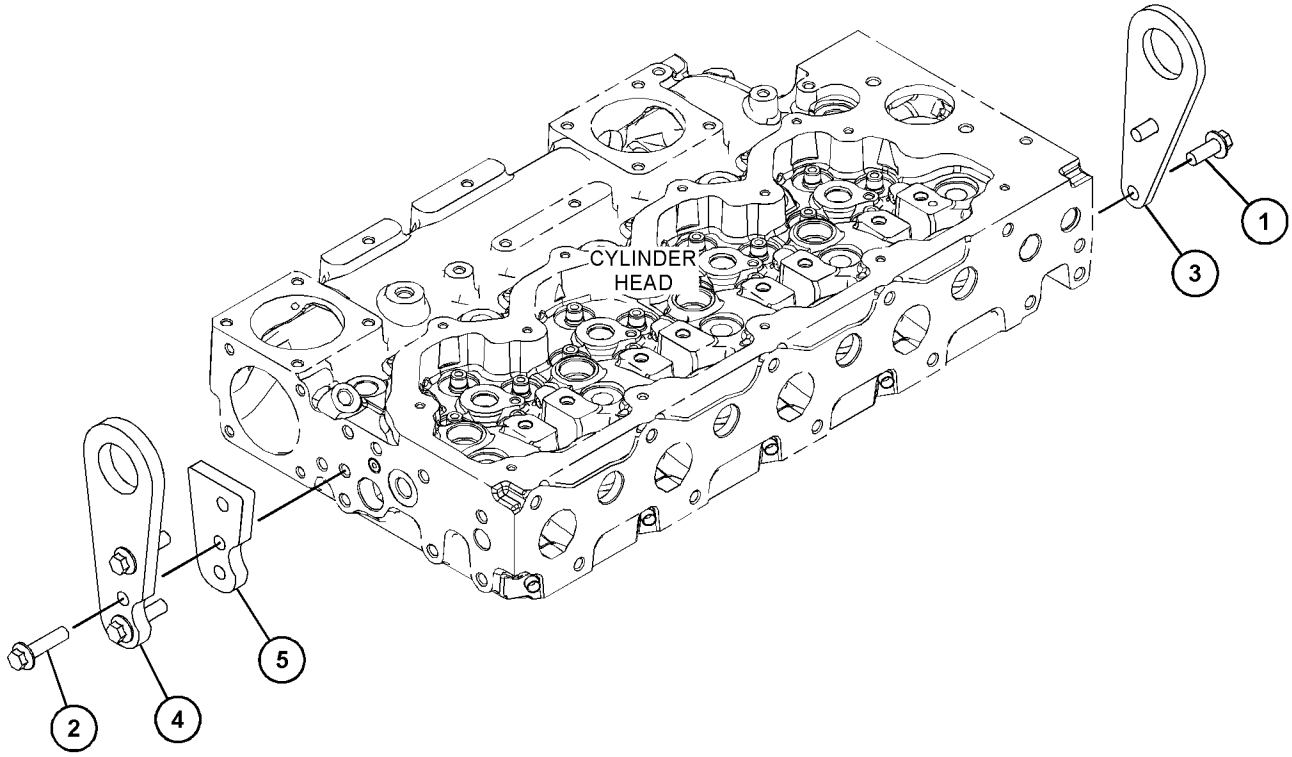

GRAPHIC #1 <END> g03728689

298-5771 MOUNTING GP-ENGINE

PART OF 435-1692 ENGINE AR-COMPLETE, 435-1685, 540-0570 ENGINE AR-PRIMARY

SMCS-1152, 1153, 1154

i02604321

NOTE	REF NO	GRAPHIC REF	PART NUMBER	QTY	PART NAME 1 2 3 4 5 6 (PRODUCT LEVEL)	SEE PAGE
	1	1	**6H-3616**	4	PLUG-PROTECTION	
	2	1	**183-1343**	8	STUD	
M	3	1	**195-2221**	8	NUT (M12X1.75-THD)	

M - METRIC PART

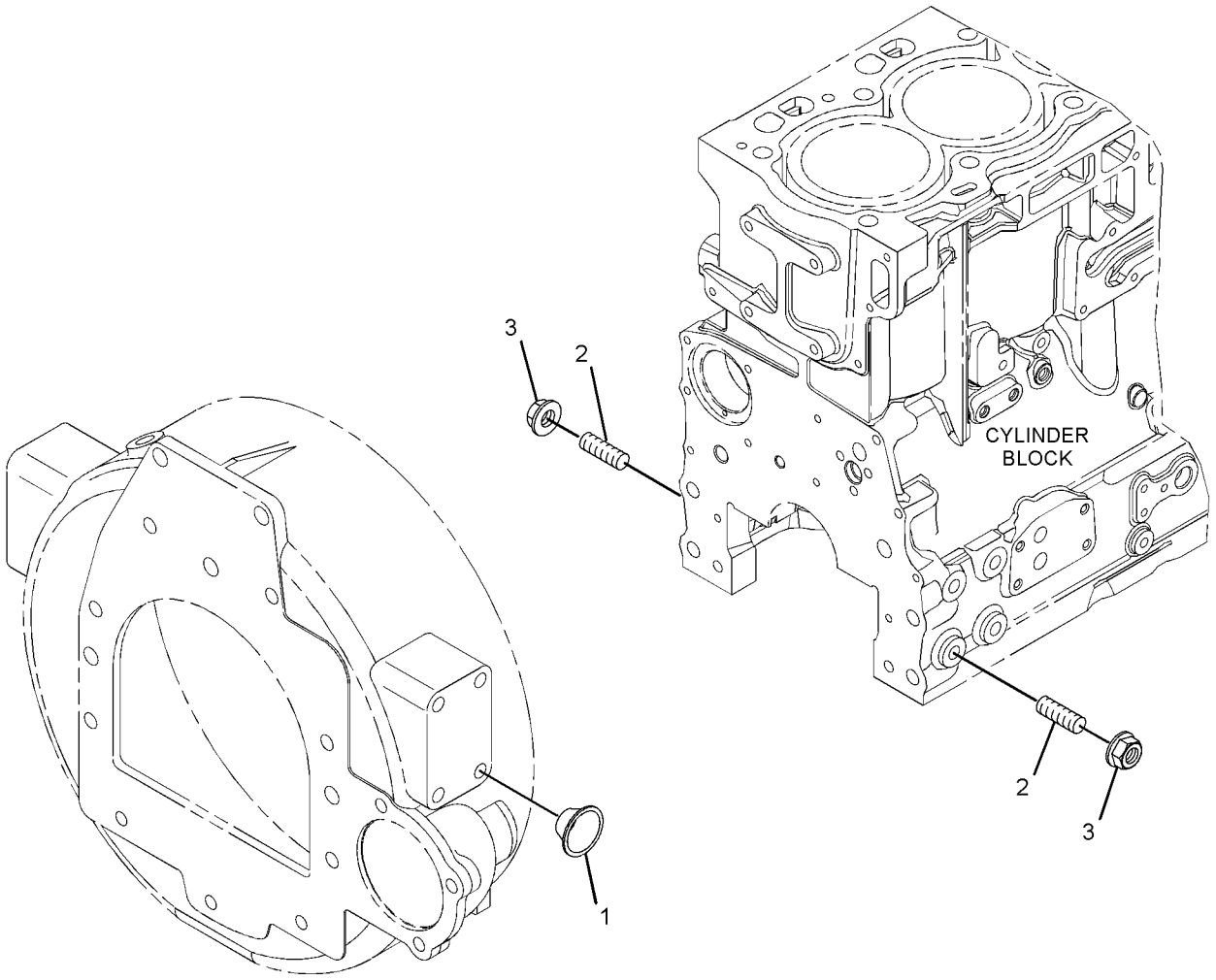

GRAPHIC #1 <END> g01306067

299-5125 MOUNTING GP-ENGINE

SMCS-1152, 1153, 1154 **i02738318**

NOTE	REF NO	GRAPHIC REF	PART NUMBER	QTY	PART NAME 1 2 3 4 5 6 (PRODUCT LEVEL)	SEE PAGE
	1	1	**195-2132**	1	SUPPORT-FRONT (LH)	
	2	1	**195-2136**	8	STUD	
M	3	1	**195-2221**	8	NUT (M12X1.75-THD)	
	4	1	**195-2134**	1	SUPPORT-FRONT (RH)	
	5	1	**6H-3616**	6	PLUG-PROTECTION	

M - METRIC PART

299-5125 **MOUNTING GP-ENGINE (**contd.**)** **i02738318**

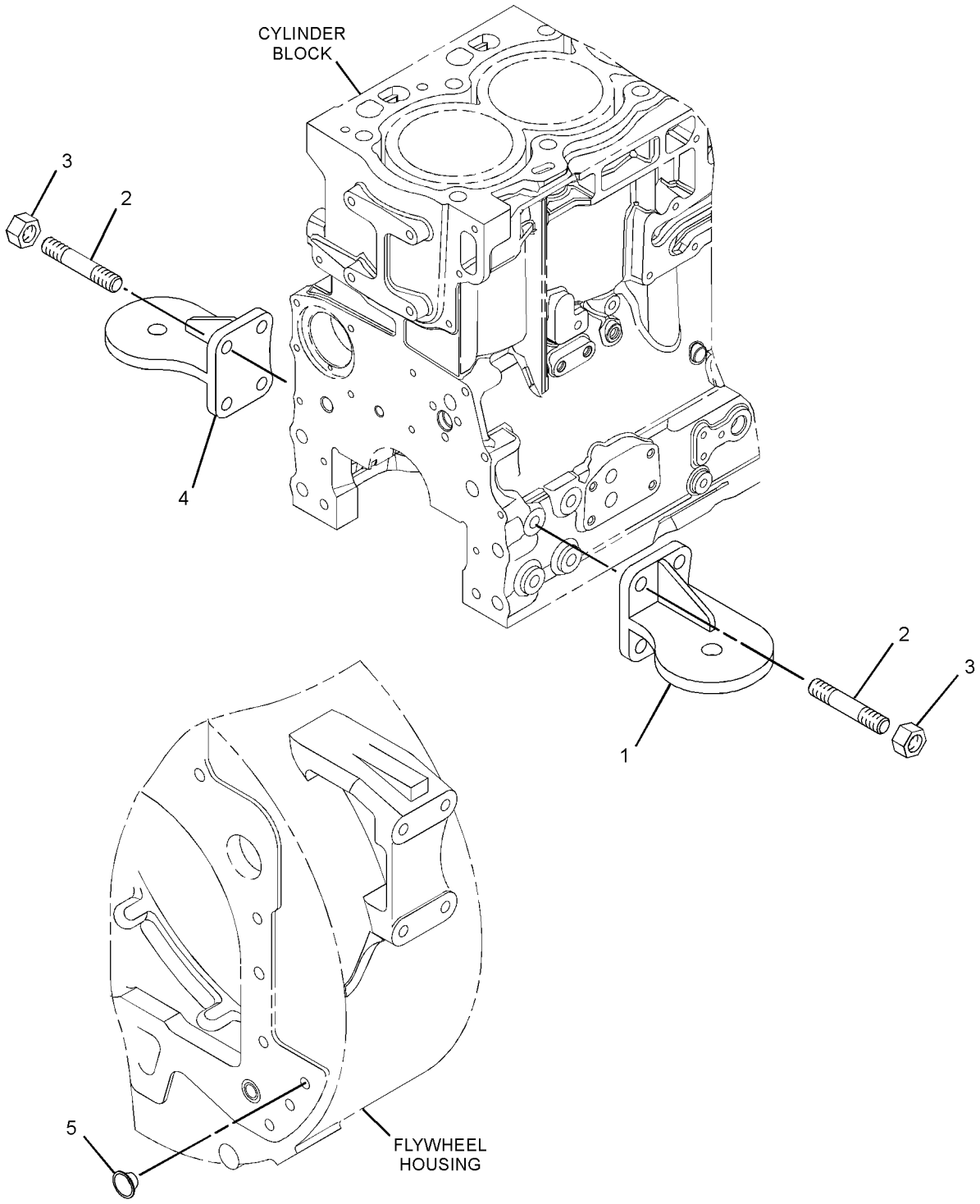

GRAPHIC #1 <END> g01385735

303-5778 MOUNTING GP-ENGINE

SMCS-1152, 1153, 1154 **i06926184**

NOTE	REF NO	GRAPHIC REF	PART NUMBER	QTY	PART NAME 1 2 3 4 5 6 (PRODUCT LEVEL)	SEE PAGE
	1	1	**6H-3616**	3	PLUG-PROTECTION	
	2	1	**398-8353**	6	PLUG	
	3	1	**195-2132**	1	SUPPORT-FRONT	
	4	1	**195-2134**	1	SUPPORT-FRONT	
	5	1	**195-2136**	8	STUD	
M	6	1	**195-2221**	8	NUT (M12X1.75-THD)	

M - METRIC PART

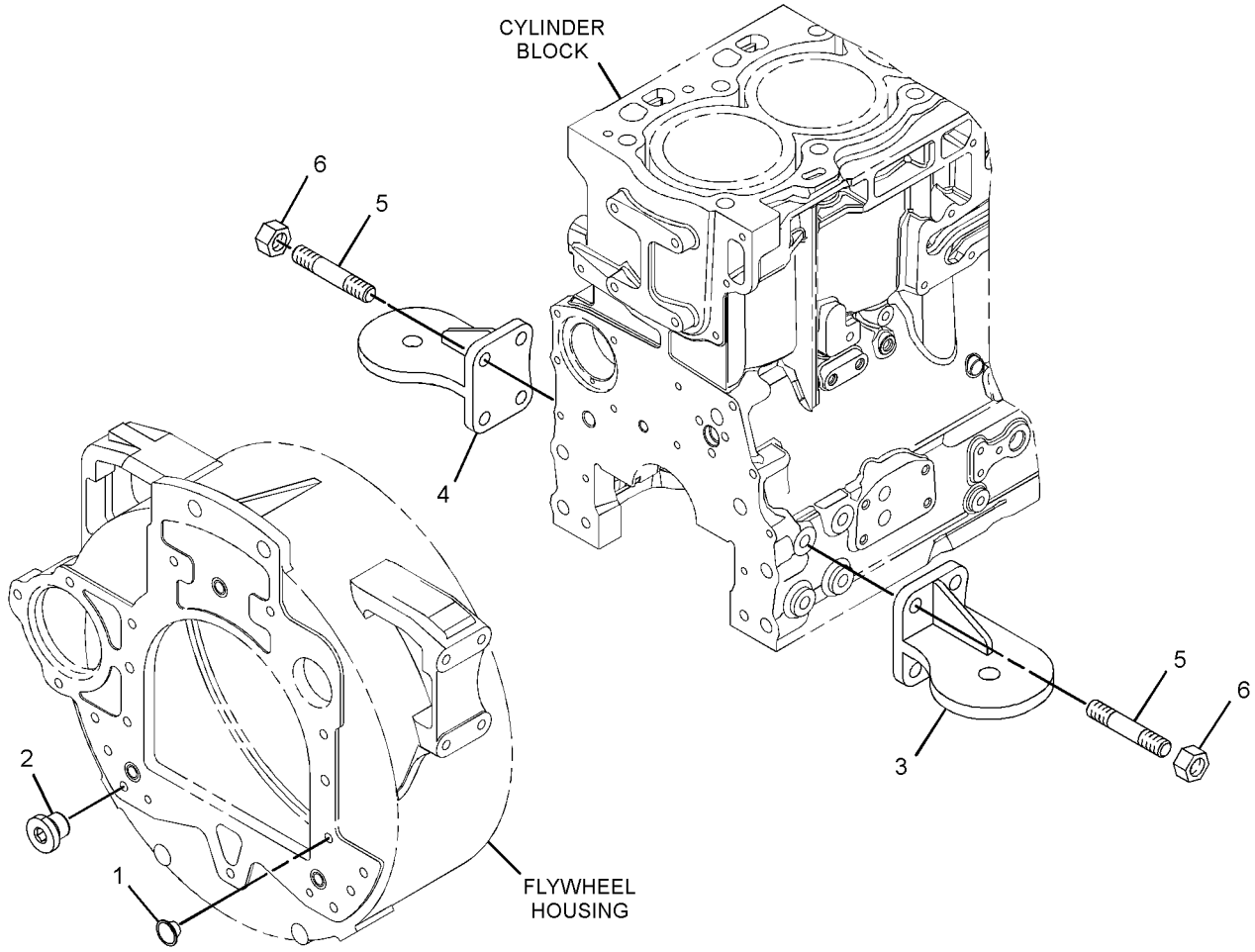

GRAPHIC #1 <END> g06201487

304-0730 MOUNTING GP-ENGINE

SMCS-1152, 1153, 1154 **i02638404**

NOTE	REF NO	GRAPHIC REF	PART NUMBER	QTY	PART NAME 1 2 3 4 5 6 (PRODUCT LEVEL)	SEE PAGE
	1	1	**233-9436**	4	PLUG	

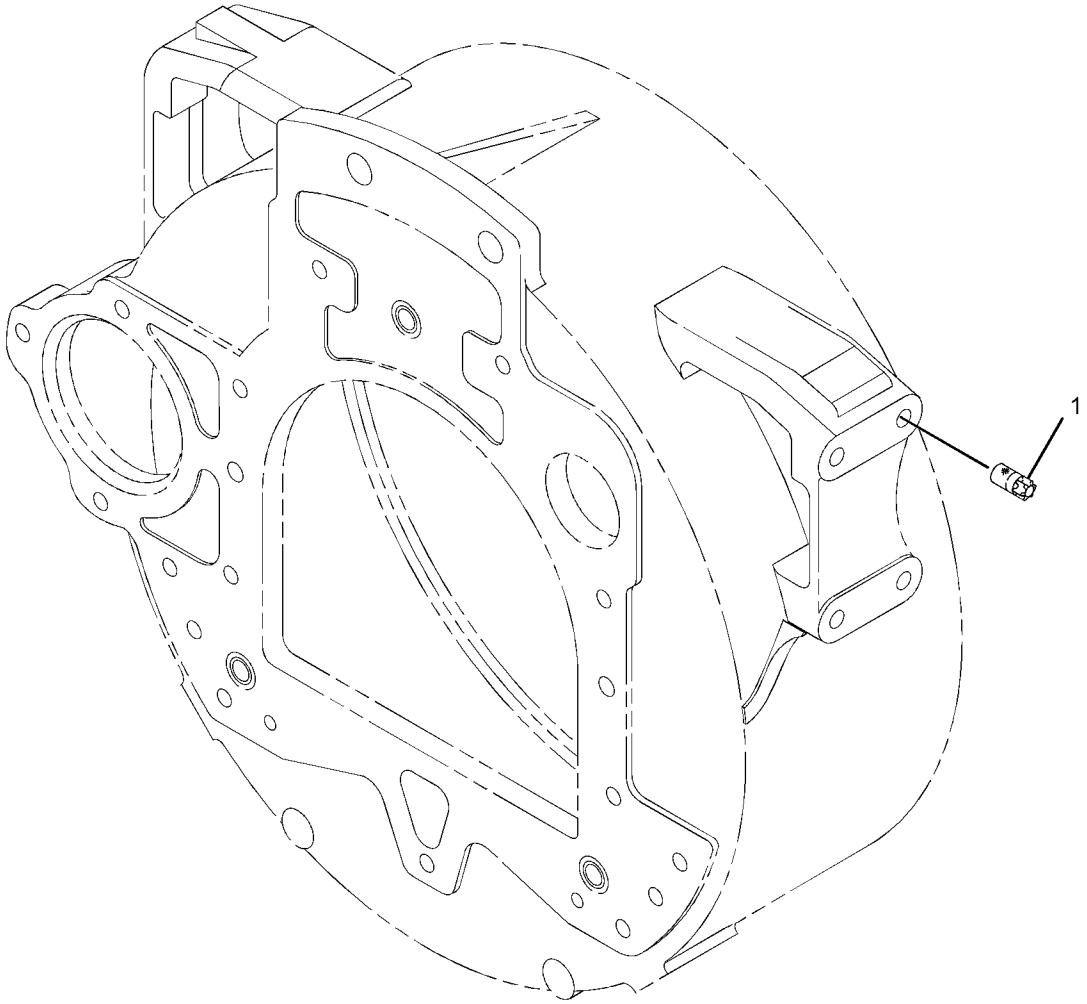

GRAPHIC #1 <END> g01326622

304-8763 MOUNTING GP-ENGINE

SMCS-1152, 1153, 1154 **i02678602**

NOTE	REF NO	GRAPHIC REF	PART NUMBER	QTY	PART NAME 1 2 3 4 5 6 (PRODUCT LEVEL)	SEE PAGE
	1	1	**6H-3616**	6	PLUG-PROTECTION	
	2	1	**233-9436**	4	PLUG	

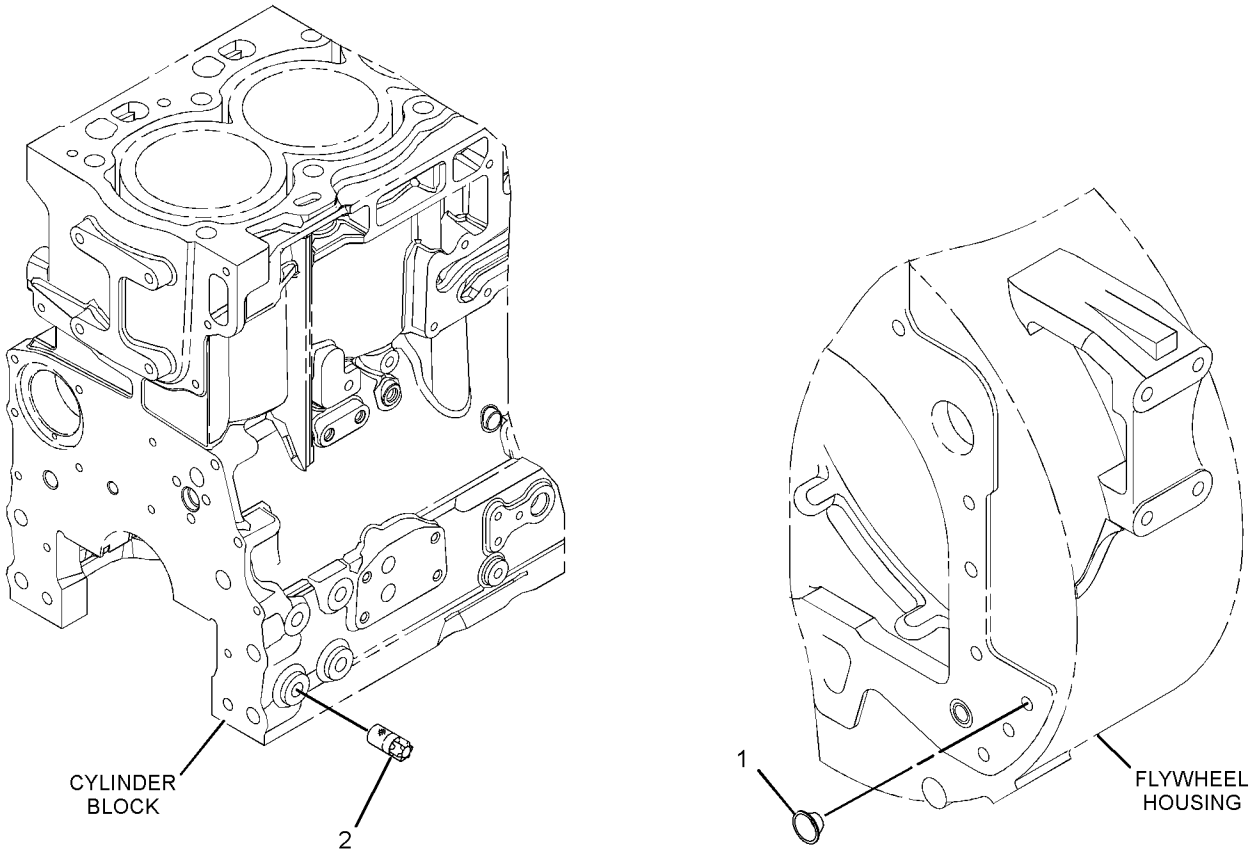

GRAPHIC #1 <END> g01370821

307-2851 MOUNTING GP-ENGINE

SMCS-1152, 1153, 1154 **i02713410**

NOTE	REF NO	GRAPHIC REF	PART NUMBER	QTY	PART NAME 1 2 3 4 5 6 (PRODUCT LEVEL)	SEE PAGE
M	1	1	**6I-0423**	6	BOLT (M12X1.75X30-MM)	
	2	1	**101-7185**	1	BRACKET	
	3	1	**101-7186**	1	BRACKET	
	4	1	**233-9436**	4	PLUG	

M - METRIC PART

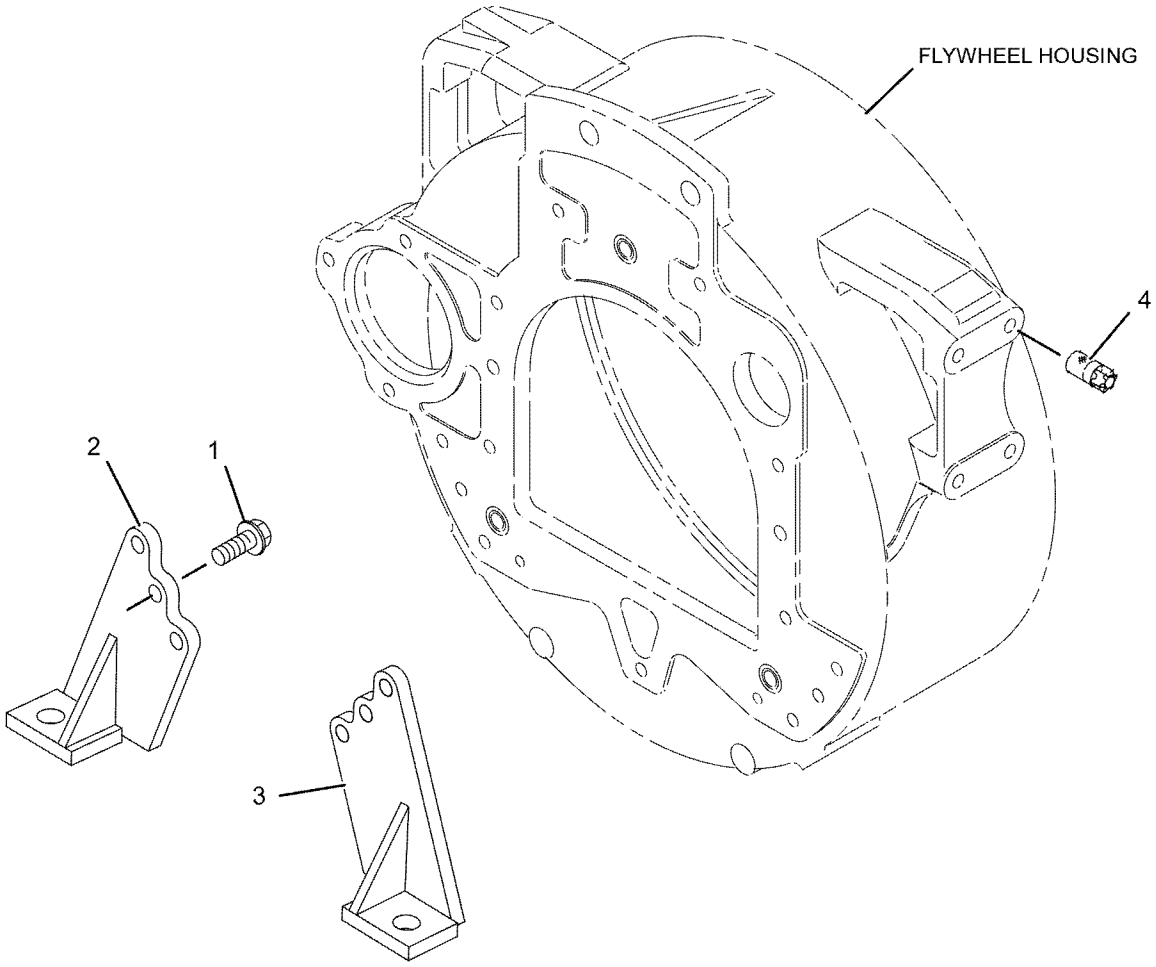

GRAPHIC #1 <END> g01120042

311-4641 MOUNTING GP-ENGINE

PART OF 435-1699 ENGINE AR, 437-5409, 522-8303, 540-1155 ENGINE AR-PRIMARY

SMCS-1152, 1153, 1154

i02820542

NOTE	REF NO	GRAPHIC REF	PART NUMBER	QTY	PART NAME 1 2 3 4 5 6 (PRODUCT LEVEL)	SEE PAGE
	1	1	**6H-3616**	4	PLUG-PROTECTION	
M	2	1	**6I-0423**	6	BOLT (M12X1.75X30-MM)	
	3	1	**101-7185**	1	BRACKET	
	4	1	**101-7186**	1	BRACKET	

M - METRIC PART

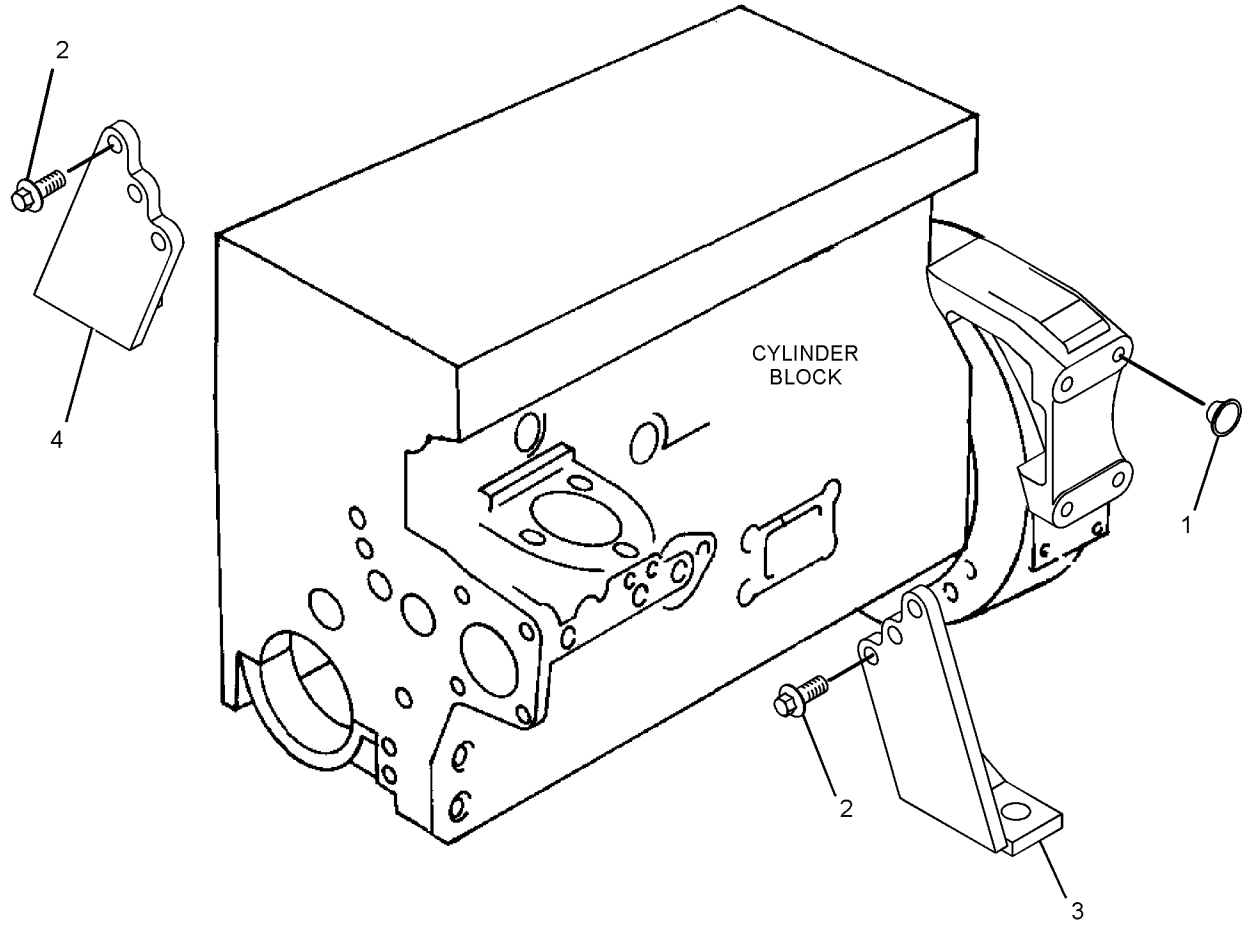

GRAPHIC #1 <END> g01407801

311-8537 MOUNTING GP-ENGINE

SMCS-1152, 1153, 1154 **i02810918**

NOTE	REF NO	GRAPHIC REF	PART NUMBER	QTY	PART NAME 1 2 3 4 5 6 (PRODUCT LEVEL)	SEE PAGE
	1	1	**6H-3616**	6	PLUG-PROTECTION	
	2	1	**183-1343**	8	STUD	
M	3	1	**195-2221**	8	NUT (M12X1.75-THD)	

M - METRIC PART

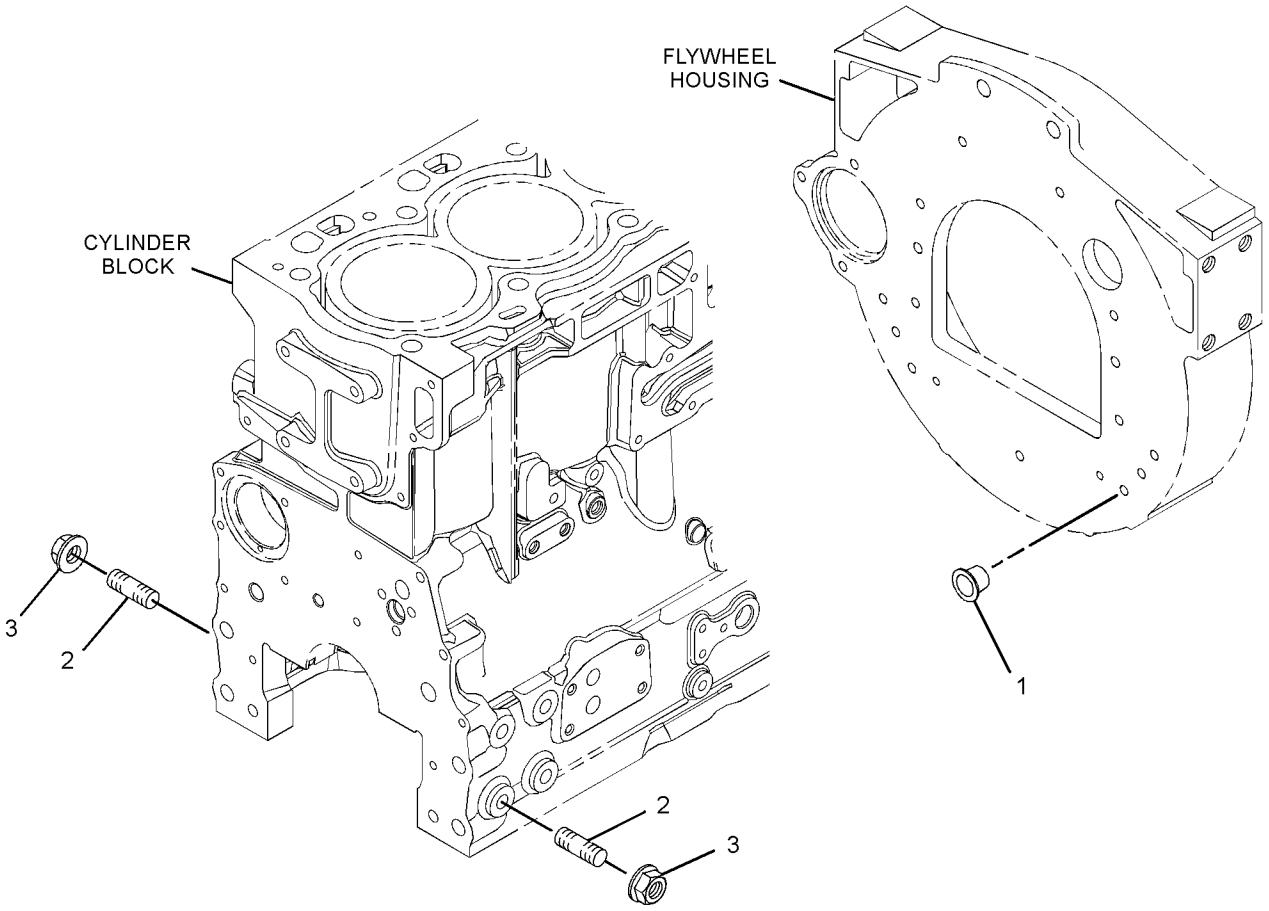

GRAPHIC #1 <END> g01430983

312-6022 MOUNTING GP-ENGINE

SMCS-1152, 1153, 1154 **i04035950**

NOTE	REF NO	GRAPHIC REF	PART NUMBER	QTY	PART NAME 1 2 3 4 5 6 (PRODUCT LEVEL)	SEE PAGE
	1	1	**6H-3616**	10	PLUG-PROTECTION	
	2	1	**139-7007**	1	BRACKET	
	3	1	**145-2881**	1	SPACER	
	4	1	**183-1343**	4	STUD	
	5	1	**186-3594**	1	BRACKET	
M	6	1	**195-2221**	8	NUT (M12X1.75-THD)	
M	7	1	**247-8314**	4	STUD (M12X1.75X73-MM)	

M - METRIC PART

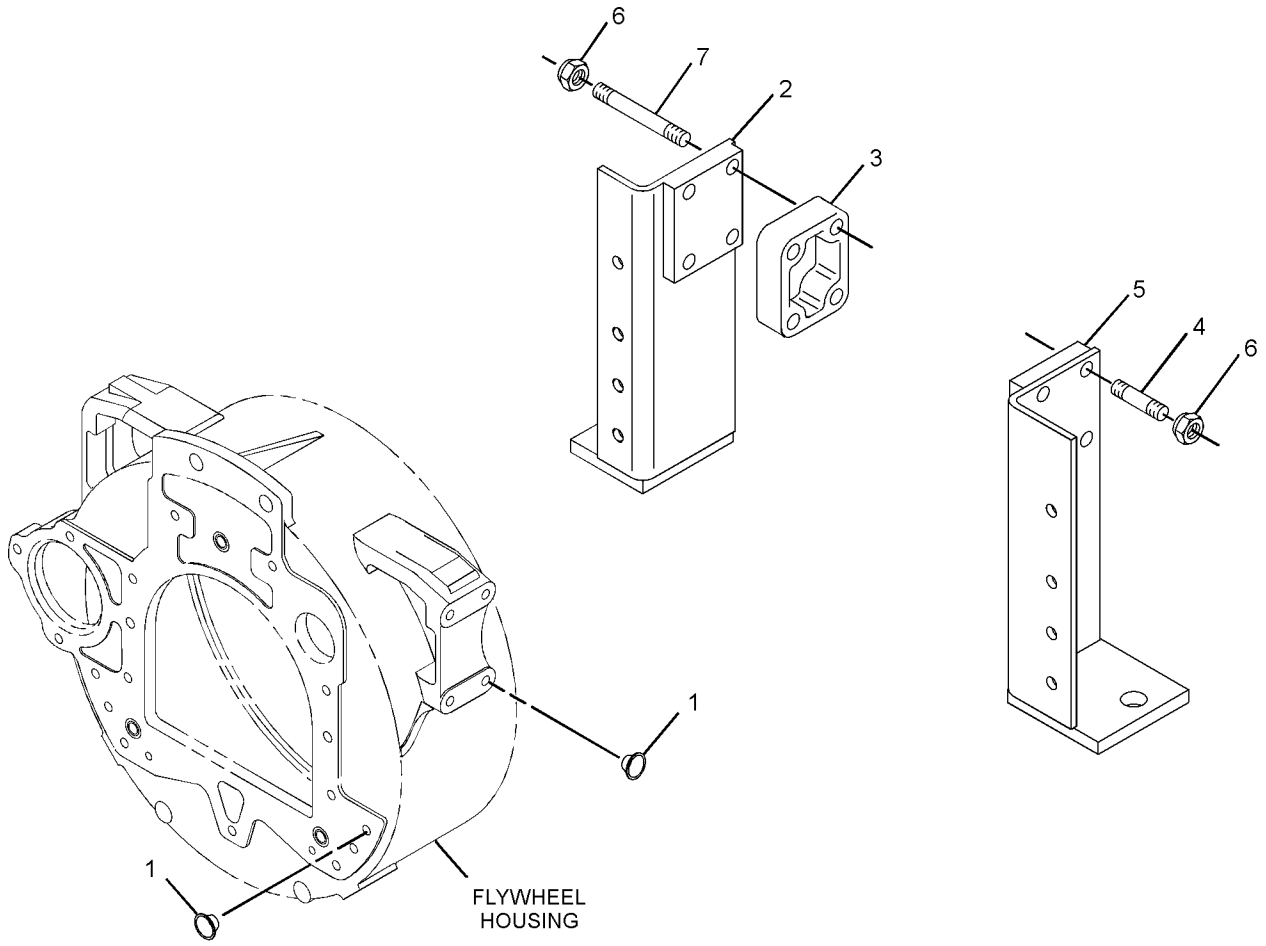

GRAPHIC #1 <END> g01391439

314-5375 MOUNTING GP-ENGINE

SMCS-1152, 1153, 1154 **i02896347**

NOTE	REF NO	GRAPHIC REF	PART NUMBER	QTY	PART NAME 1 2 3 4 5 6 (PRODUCT LEVEL)	SEE PAGE
	1	1	**183-1343**	8	STUD	
M	2	1	**195-2221**	8	NUT (M12X1.75-THD)	

M - METRIC PART

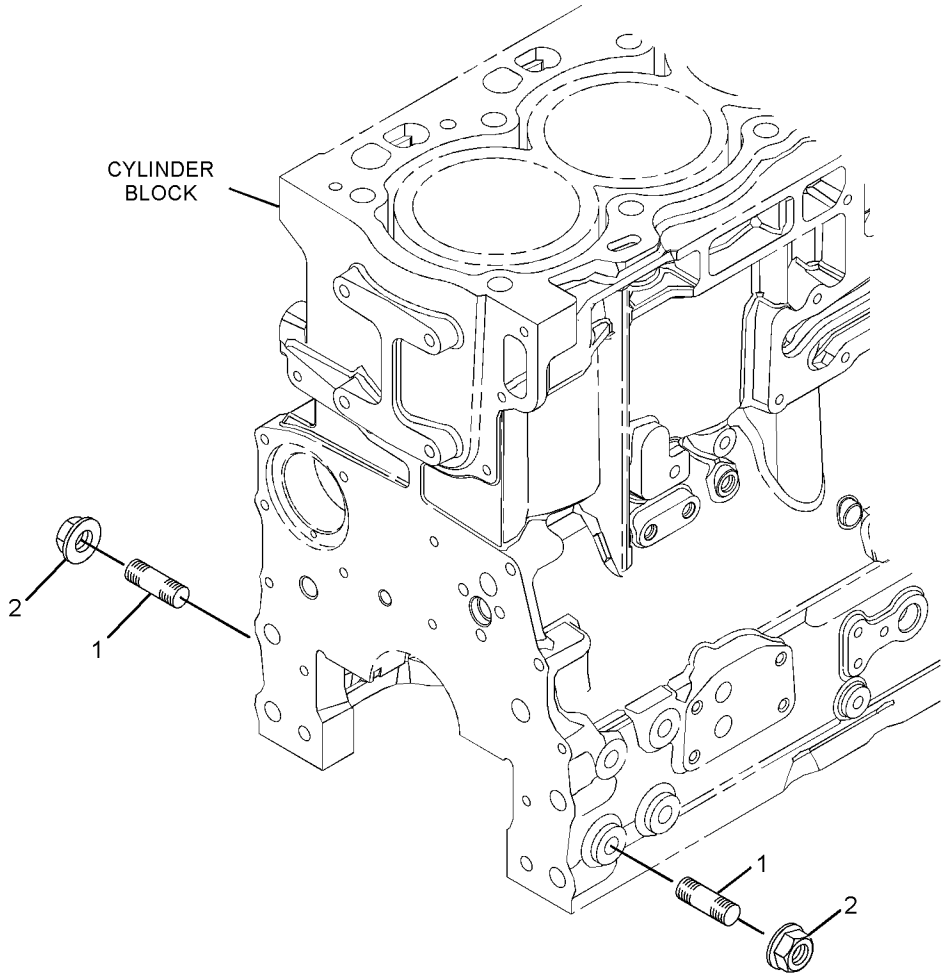

GRAPHIC #1 <END> g01398370

316-6924 MOUNTING GP-ENGINE

SMCS-1152, 1153, 1154 **i02938991**

NOTE	REF NO	GRAPHIC REF	PART NUMBER	QTY	PART NAME 1 2 3 4 5 6 (PRODUCT LEVEL)	SEE PAGE
	1	1	**6H-3616**	10	PLUG-PROTECTION	
	2	1	**183-1343**	8	STUD	
M	3	1	**195-2221**	8	NUT (M12X1.75-THD)	

M - METRIC PART

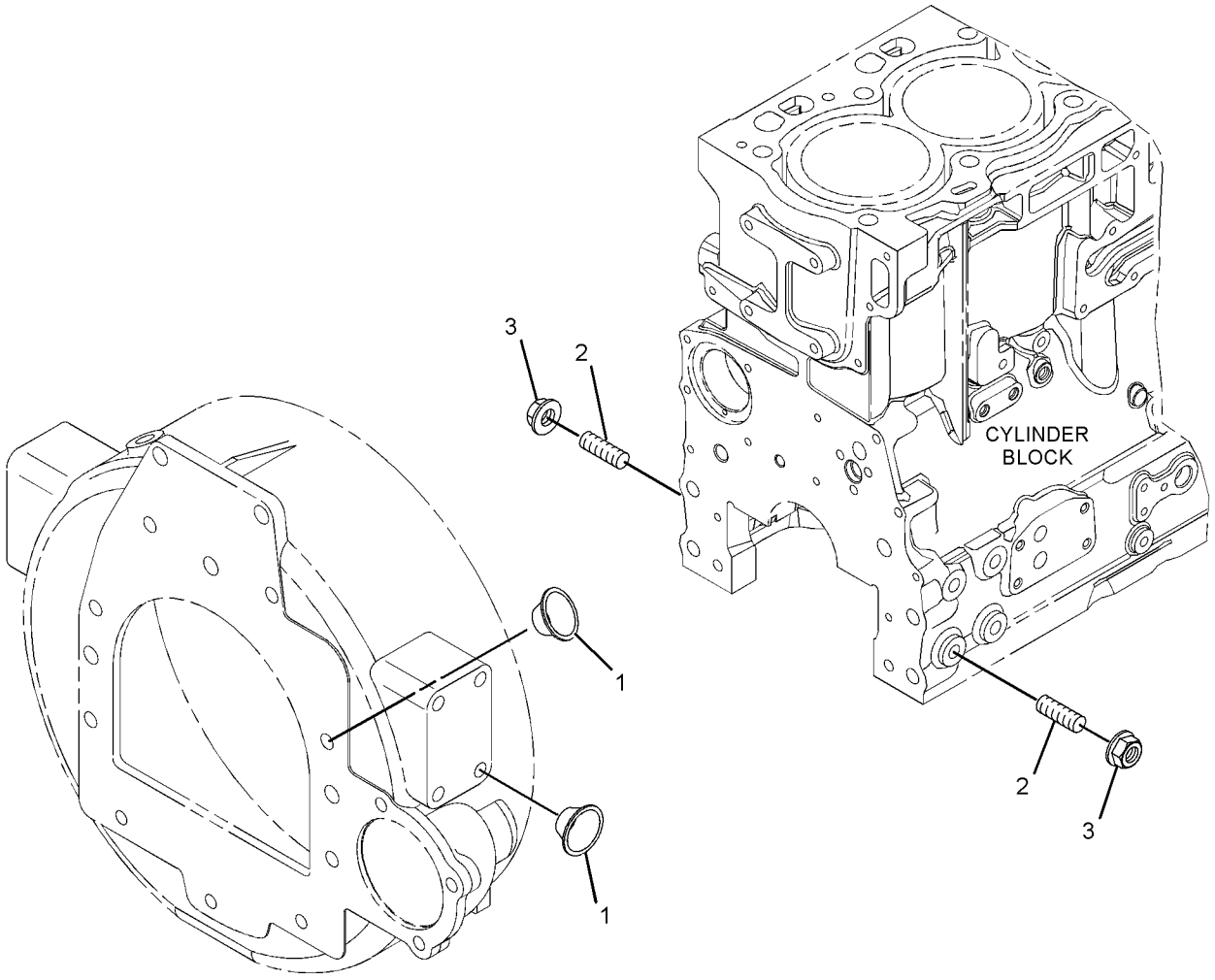

GRAPHIC #1 <END> g01400189

318-3623 MOUNTING GP-ENGINE

SMCS-1152, 1153, 1154 **i02852386**

NOTE	REF NO	GRAPHIC REF	PART NUMBER	QTY	PART NAME 1 2 3 4 5 6 (PRODUCT LEVEL)	SEE PAGE
	1	1	**6H-3616**	4	PLUG-PROTECTION	
M	2	1	**6I-0423**	6	BOLT (M12X1.75X30-MM)	
	3	1	**101-7185**	1	BRACKET	
	4	1	**101-7186**	1	BRACKET	
	5	1	**233-9436**	4	PLUG	

M - METRIC PART

318-3623 **MOUNTING GP-ENGINE (**contd.**)** **i02852386**

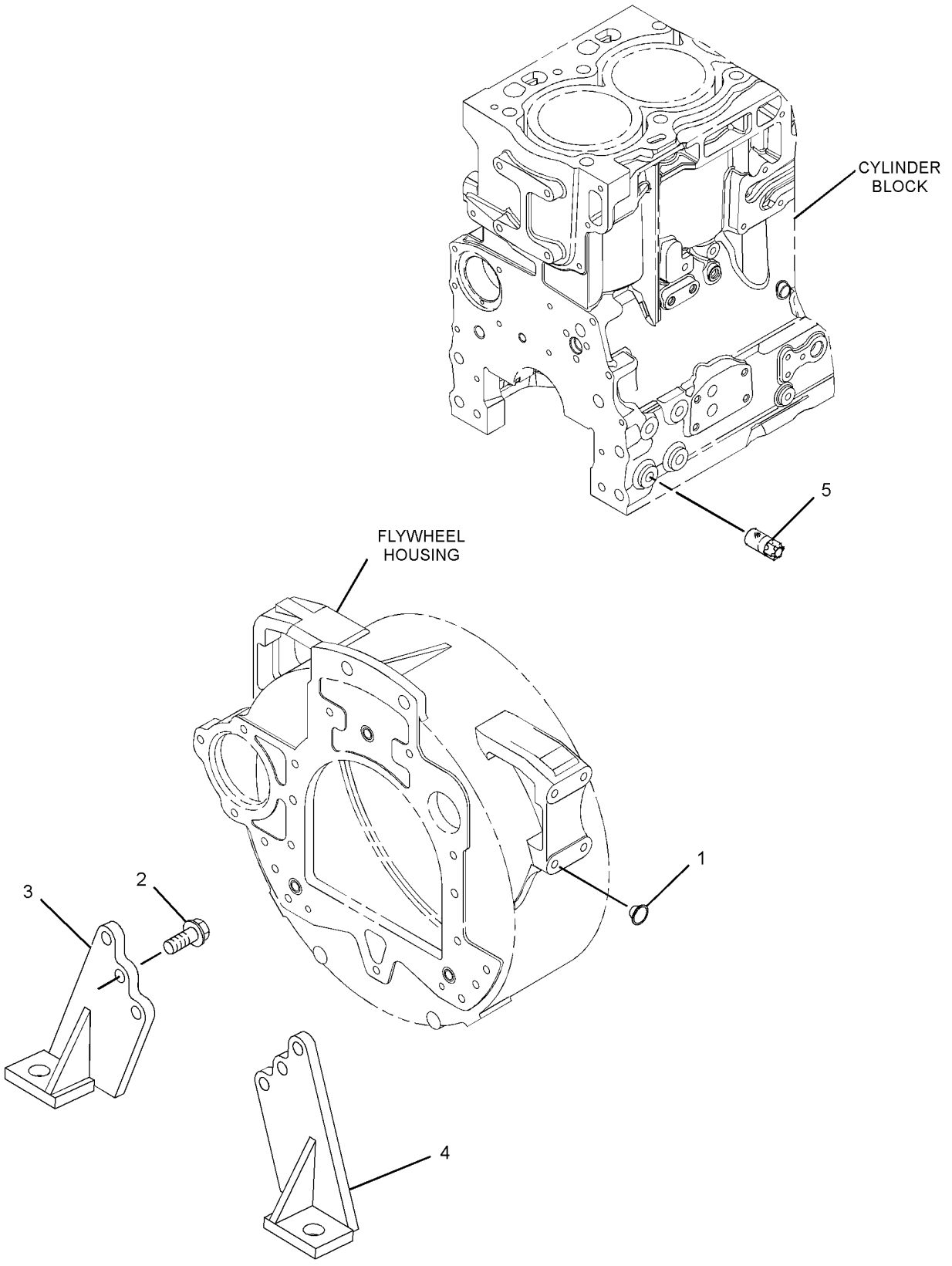

GRAPHIC #1 <END> g01438495

322-2403 MOUNTING GP-ENGINE

SMCS-1152, 1153, 1154 **i03427233**

NOTE	REF NO	GRAPHIC REF	PART NUMBER	QTY	PART NAME 1 2 3 4 5 6 (PRODUCT LEVEL)	SEE PAGE
	1	1	**6H-3616**	4	PLUG-PROTECTION	
M	2	1	**6I-0423**	6	BOLT (M12X1.75X30-MM)	
	3	1	**101-7185**	1	BRACKET	
	4	1	**101-7186**	1	BRACKET	
	5	1	**183-1343**	8	STUD	
M	6	1	**195-2221**	8	NUT (M12X1.75-THD)	
	7	1	**330-6130**	1	BRACKET-MOUNTING (LH)	
	8	1	**330-6131**	1	BRACKET-MOUNTING (RH)	

M - METRIC PART

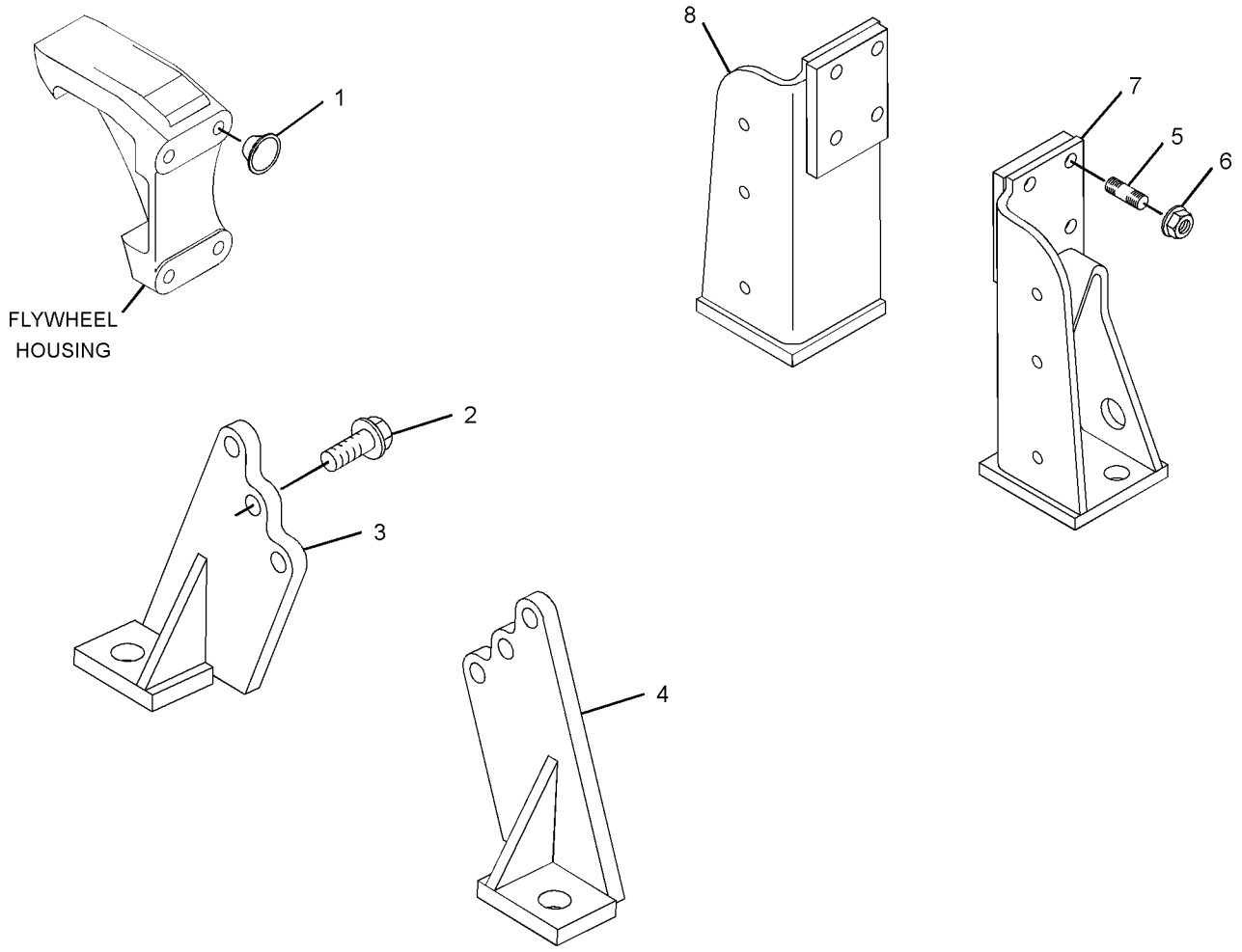

GRAPHIC #1 <END> g01701818

323-6804 MOUNTING GP-ENGINE

PART OF 435-1687, 540-1156 ENGINE AR-PRIMARY

SMCS-1152, 1153, 1154 **i02978328**

NOTE	REF NO	GRAPHIC REF	PART NUMBER	QTY	PART NAME 1 2 3 4 5 6 (PRODUCT LEVEL)	SEE PAGE
M	1	1	**6I-0423**	6	BOLT (M12X1.75X30-MM)	
	2	1	**101-7185**	1	BRACKET	
	3	1	**101-7186**	1	BRACKET	

M - METRIC PART

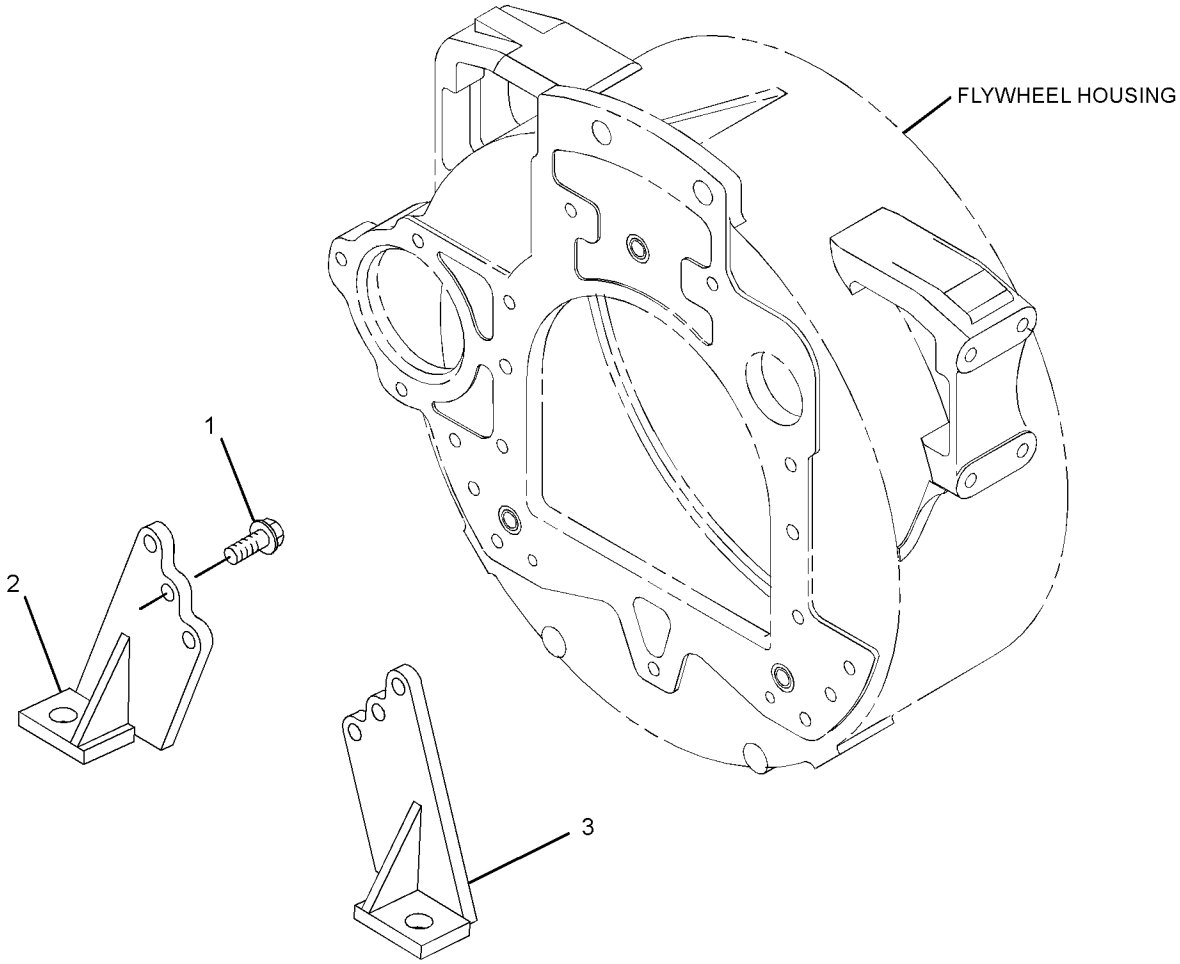

GRAPHIC #1 <END> g01671773

325-5614 MOUNTING GP-ENGINE

SMCS-1152, 1153, 1154 **i02938965**

NOTE	REF NO	GRAPHIC REF	PART NUMBER	QTY	PART NAME 1 2 3 4 5 6 (PRODUCT LEVEL)	SEE PAGE
	1	1	**6H-3616**	6	PLUG-PROTECTION	
	2	1	**183-1343**	4	STUD	

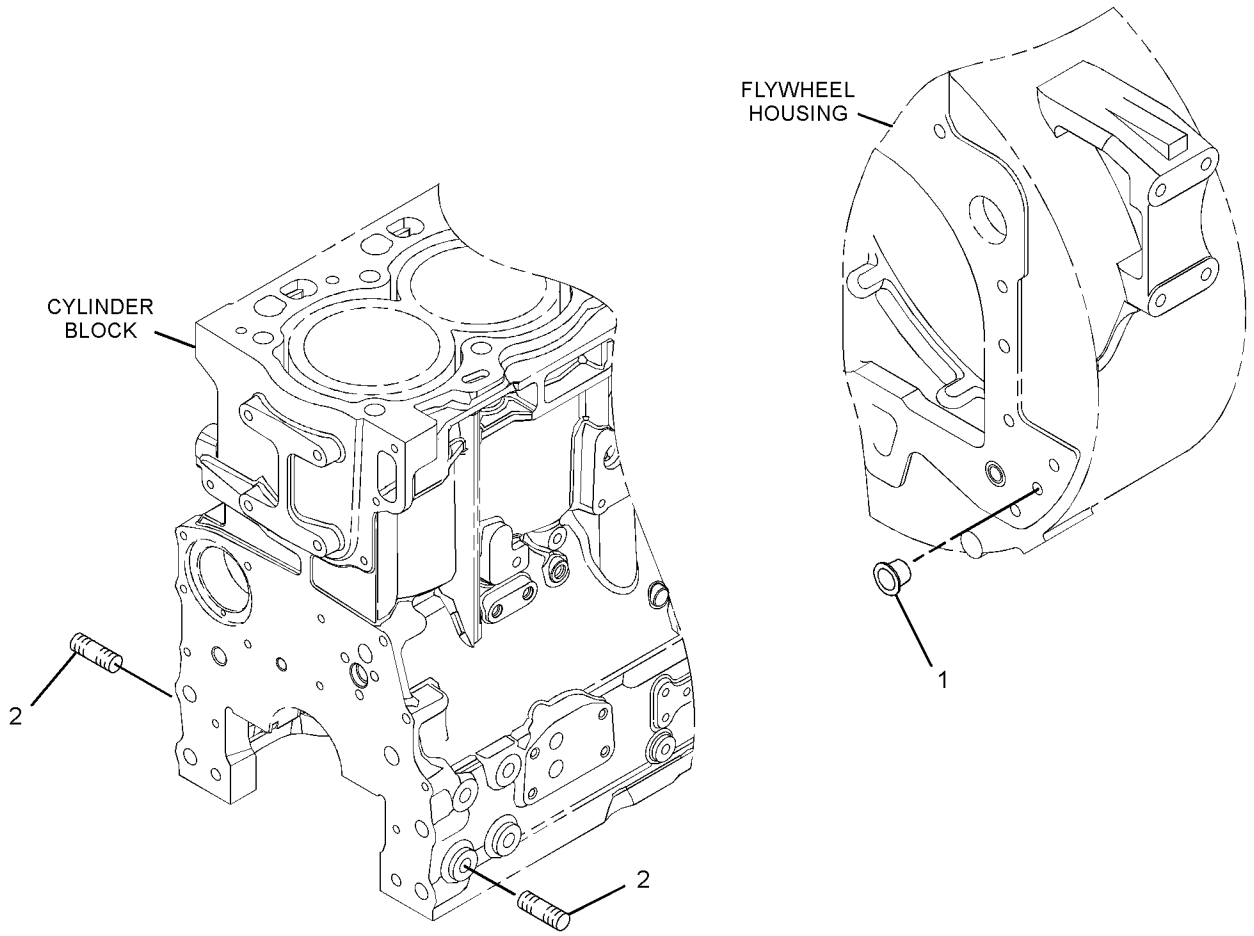

GRAPHIC #1 <END> g01673595

326-4549 MOUNTING GP-ENGINE

SMCS-1152, 1153, 1154 **i03312485**

NOTE	REF NO	GRAPHIC REF	PART NUMBER	QTY	PART NAME 1 2 3 4 5 6 (PRODUCT LEVEL)	SEE PAGE
M	1	1	**6I-0423**	6	BOLT (M12X1.75X30-MM)	
	2	1	**101-7185**	1	BRACKET (LH)	
	3	1	**101-7186**	1	BRACKET (RH)	
	4	1	**183-1343**	8	STUD	
M	5	1	**195-2221**	8	NUT (M12X1.75-THD)	
	6	1	**330-6130**	1	BRACKET-MOUNTING (LH)	
	7	1	**330-6131**	1	BRACKET-MOUNTING (RH)	

M - METRIC PART

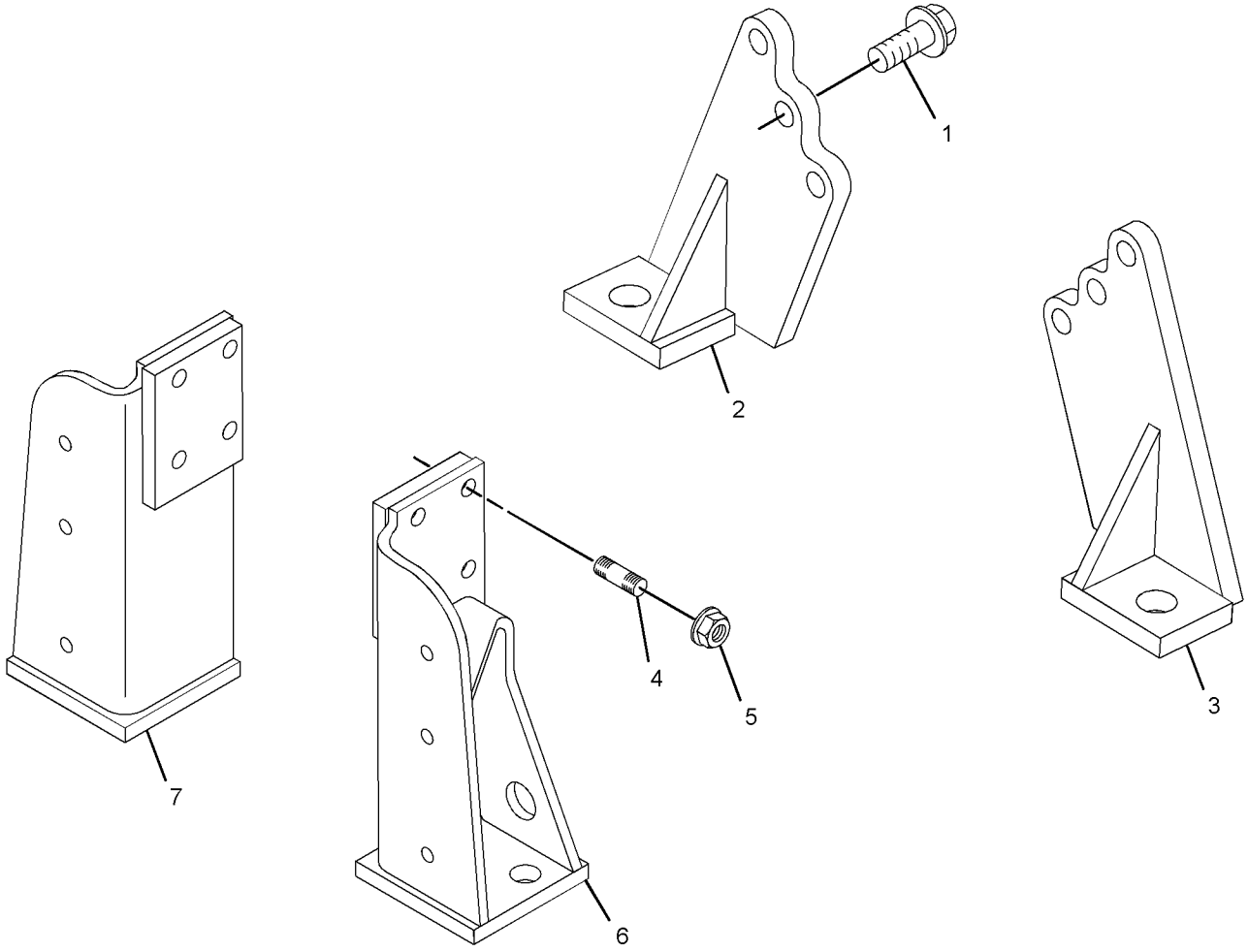

GRAPHIC #1 <END> g01674533

312-2577 MOUNTING GP-FAN DRIVE

SMCS-1359 **i06097136**

NOTE	REF NO	GRAPHIC REF	PART NUMBER	QTY	PART NAME 1 2 3 4 5 6 (PRODUCT LEVEL)	SEE PAGE
M	1	1	**113-6349**	4	NUT (M8X1.25-THD)	
	2	1	**135-6362**	4	STUD	
	3	1	**453-9682**	1	EXTENSION-FAN	

M - METRIC PART

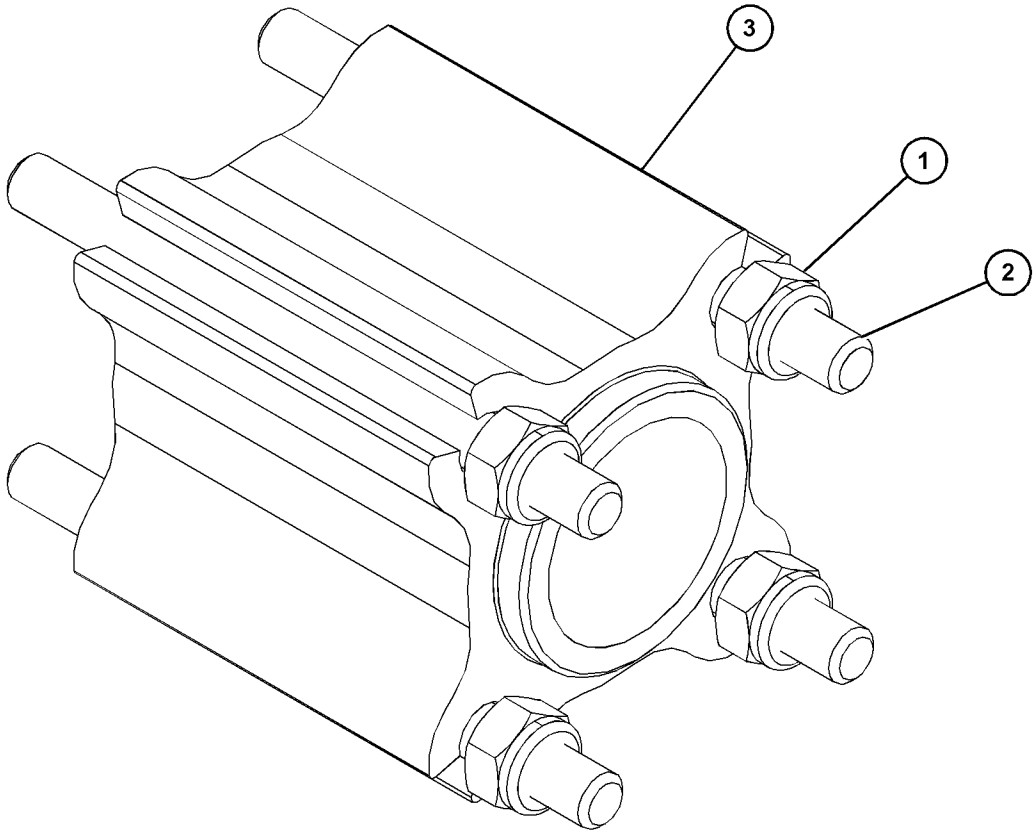

GRAPHIC #1 <END> g03809229

298-5096 PAN GP-OIL—ENGINE

TYPE 1

SMCS-1302 **i06857363**

NOTE	REF NO	GRAPHIC REF	PART NUMBER	QTY	PART NAME 1 2 3 4 5 6 (PRODUCT LEVEL)	SEE PAGE
	1	1	**5C-1809**	1	SPACER (8X19X6.5-MM)	
M	2	1	**6I-0217**	1	BOLT (M8X1.25X20-MM)	
M	3	1	**6I-0260**	2	BOLT (M8X1.25X25-MM)	
M	4	1	**8T-0269**	2	BOLT-SOCKET HEAD (M6X1X20-MM)	
	5	1	**6I-1497**	1	SEAL	
M	6	1	**6I-4072**	2	BOLT (M8X1.25X14-MM)	
	7	1	**7C-0351**	2	PLUG-DRAIN (ENGINE OIL)	
	8	1	**067-6213**	1	GASKET	
M	9	1	**124-3815**	17	BOLT (M8X1.25X16-MM)	
	10	1	**124-7702**	1	TUBE AS	
	10A	1	**6I-4079**	1	NUT	
	11	1	**130-1161**	1	GAUGE AS-OIL LEVEL (DIPSTICK) (ENGINE)	
	12	1	**214-3281**	1	PAN-OIL	
	13	1	**225-6005**	1	GASKET	
	14	1	**230-8094**	1	BRIDGE	
	15	1	**230-8218**	1	TUBE-SUCTION	
	16	1	**335-7585**	2	SEAL	
F			**275-9883**	2	SEAL	

F - NOT SHOWN
M - METRIC PART

298-5096 **PAN GP-OIL (**contd.**)** **i06857363**

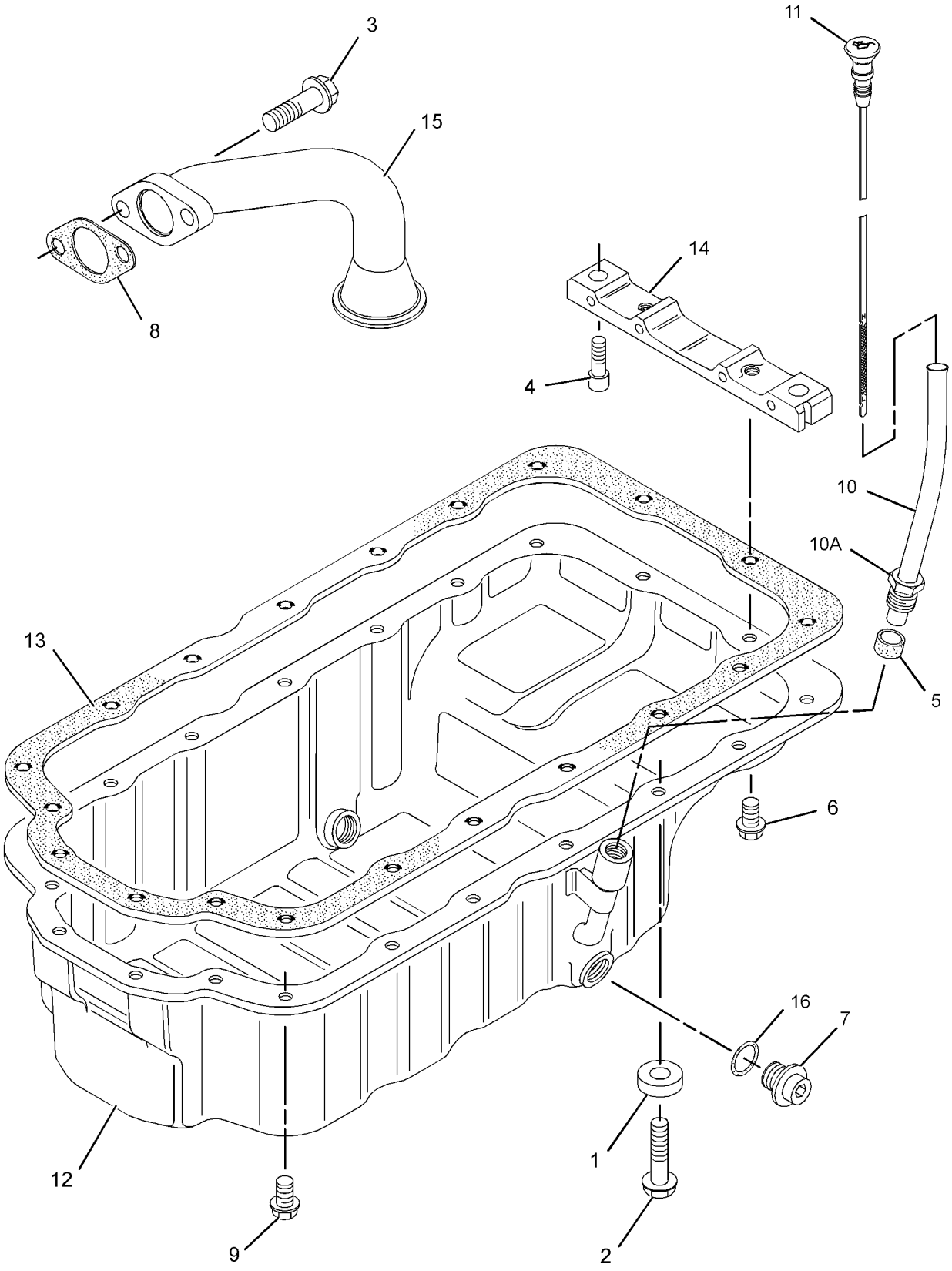

GRAPHIC #1 <END> g01304644

298-5096 PAN GP-OIL—ENGINE

TYPE 2

SMCS-1302 **i06857404**

NOTE	REF NO	GRAPHIC REF	PART NUMBER	QTY	PART NAME 1 2 3 4 5 6 (PRODUCT LEVEL)	SEE PAGE
	1	1	**5C-1809**	1	SPACER (8X19X6.5-MM)	
M	2	1	**6I-0217**	1	BOLT (M8X1.25X20-MM)	
M	3	1	**6I-0260**	2	BOLT (M8X1.25X25-MM)	
M	4	1	**8T-0269**	2	BOLT-SOCKET HEAD (M6X1X20-MM)	
	5	1	**6I-1497**	1	SEAL	
M	6	1	**6I-4072**	2	BOLT (M8X1.25X14-MM)	
	7	1	**7C-0351**	2	PLUG-DRAIN (ENGINE OIL)	
	8	1	**335-7585**	2	SEAL	
M	9	1	**124-3815**	17	BOLT (M8X1.25X16-MM)	
	10	1	**124-7702**	1	TUBE AS	
	10A	1	**6I-4079**	1	NUT	
	11	1	**130-1161**	1	GAUGE AS-OIL LEVEL (DIPSTICK) (ENGINE)	
	12	1	**214-3281**	1	PAN-OIL	
	13	1	**471-2882**	1	GASKET	
	14	1	**230-8094**	1	BRIDGE	
C	15	1	**373-9785**	1	PIPE	
F			**275-9883**	2	SEAL	

C - CHANGE FROM PREVIOUS TYPE
F - NOT SHOWN
M - METRIC PART

298-5096 **PAN GP-OIL (**contd.**)** **i06857404**

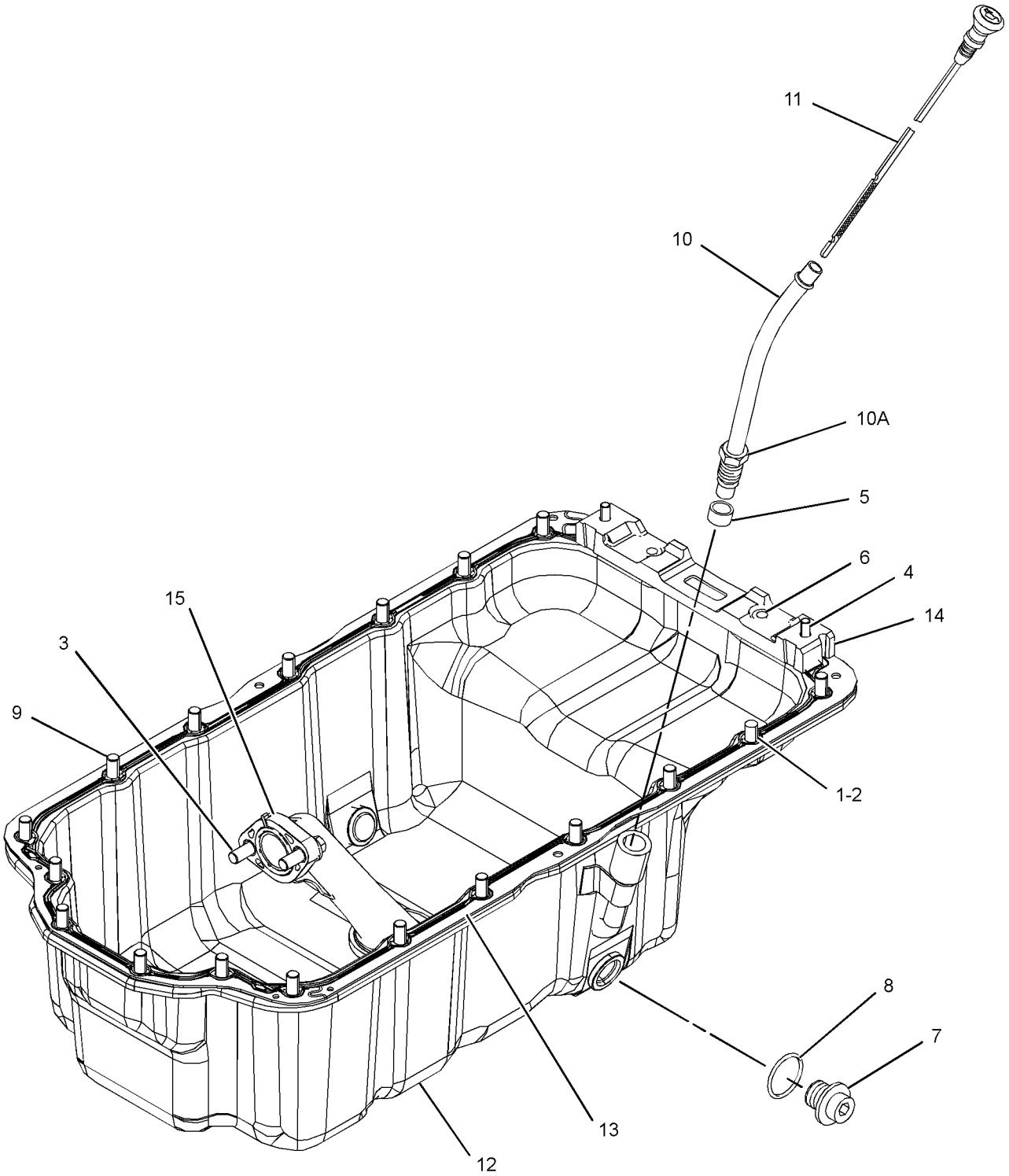

GRAPHIC #1 <END> g06142382

299-5175 PAN GP-OIL—ENGINE

TYPE 1

SMCS-1302 **i03848392**

NOTE	REF NO	GRAPHIC REF	PART NUMBER	QTY	PART NAME 1 2 3 4 5 6 (PRODUCT LEVEL)	SEE PAGE
	1	1	**304-8764**	1	PAN AS-OIL (ENGINE)	
	1A	1	**7C-1224**	2	INSERT	
	2	1	**232-2551**	1	TUBE AS	
	2A	1	**6I-4079**	1	NUT	
M	3	1	**6I-0260**	2	BOLT (M8X1.25X25-MM)	
	4	1	**225-6005**	1	GASKET	
	5	1	**230-8094**	1	BRIDGE	
M	6	1	**6I-0363**	2	BOLT (M6X1X20-MM)	
	7	1	**7C-0351**	2	PLUG-DRAIN (ENGINE OIL)	
	8	1	**275-9883**	2	SEAL	
	9	1	**6I-0289**	1	PLUG	
M	10	1	**6I-0572**	2	BOLT (M8X1.25X20-MM)	
M	11	1	**101-3771**	4	BOLT (M8X1.25X85-MM)	
M	12	1	**6I-0217**	14	BOLT (M8X1.25X20-MM)	
	13	1	**6I-1497**	1	SEAL	
	14	1	**263-2162**	1	GAUGE AS-OIL LEVEL (DIPSTICK) (ENGINE)	
	15	1	**225-6041**	1	TUBE	
	16	1	**067-6213**	1	GASKET	

M - METRIC PART

299-5175 **PAN GP-OIL (**contd.**)** **i03848392**

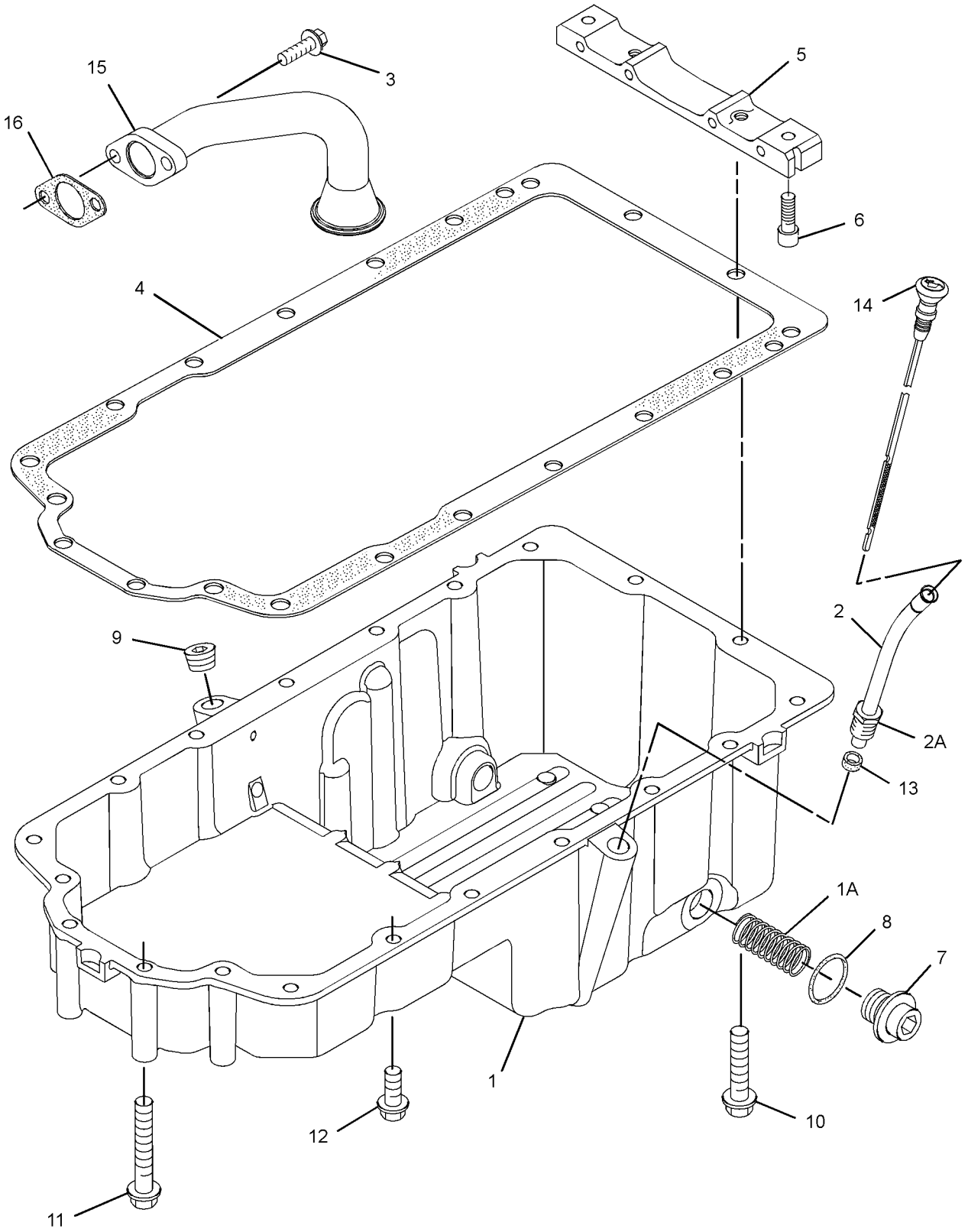

GRAPHIC #1 <END> g02153735

299-5175 PAN GP-OIL—ENGINE

TYPE 2

SMCS-1302 **i07349212**

NOTE	REF NO	GRAPHIC REF	PART NUMBER	QTY	PART NAME 1 2 3 4 5 6 (PRODUCT LEVEL)	SEE PAGE
	1	1	**480-4406**	1	PAN	
	2	1	**232-2551**	1	TUBE AS	
	2A	1	**6I-4079**	1	NUT	
M	3	1	**6I-0260**	2	BOLT (M8X1.25X25-MM)	
	4	1	**471-2882**	1	GASKET	
	5	1	**230-8094**	1	BRIDGE	
M	6	1	**8T-0269**	2	BOLT-SOCKET HEAD (M6X1X20-MM)	
	7	1	**7C-0351**	2	PLUG-DRAIN (ENGINE OIL)	
	8	1	**335-7585**	2	SEAL	
	9	1	**6I-0289**	1	PLUG	
M	10	1	**6I-0572**	4	BOLT (M8X1.25X20-MM)	
M	11	1	**101-3771**	4	BOLT (M8X1.25X85-MM)	
M	12	1	**6I-0217**	12	BOLT (M8X1.25X20-MM)	
	13	1	**6I-1497**	1	SEAL	
	14	1	**263-2162**	1	GAUGE AS-OIL LEVEL (DIPSTICK) (ENGINE)	
	15	1	**225-6041**	1	TUBE	
	16	1	**067-6213**	1	GASKET	
F		1	**275-9883**	2	SEAL	

F - NOT SHOWN
M - METRIC PART

299-5175 **PAN GP-OIL (**contd.**)** **i07349212**

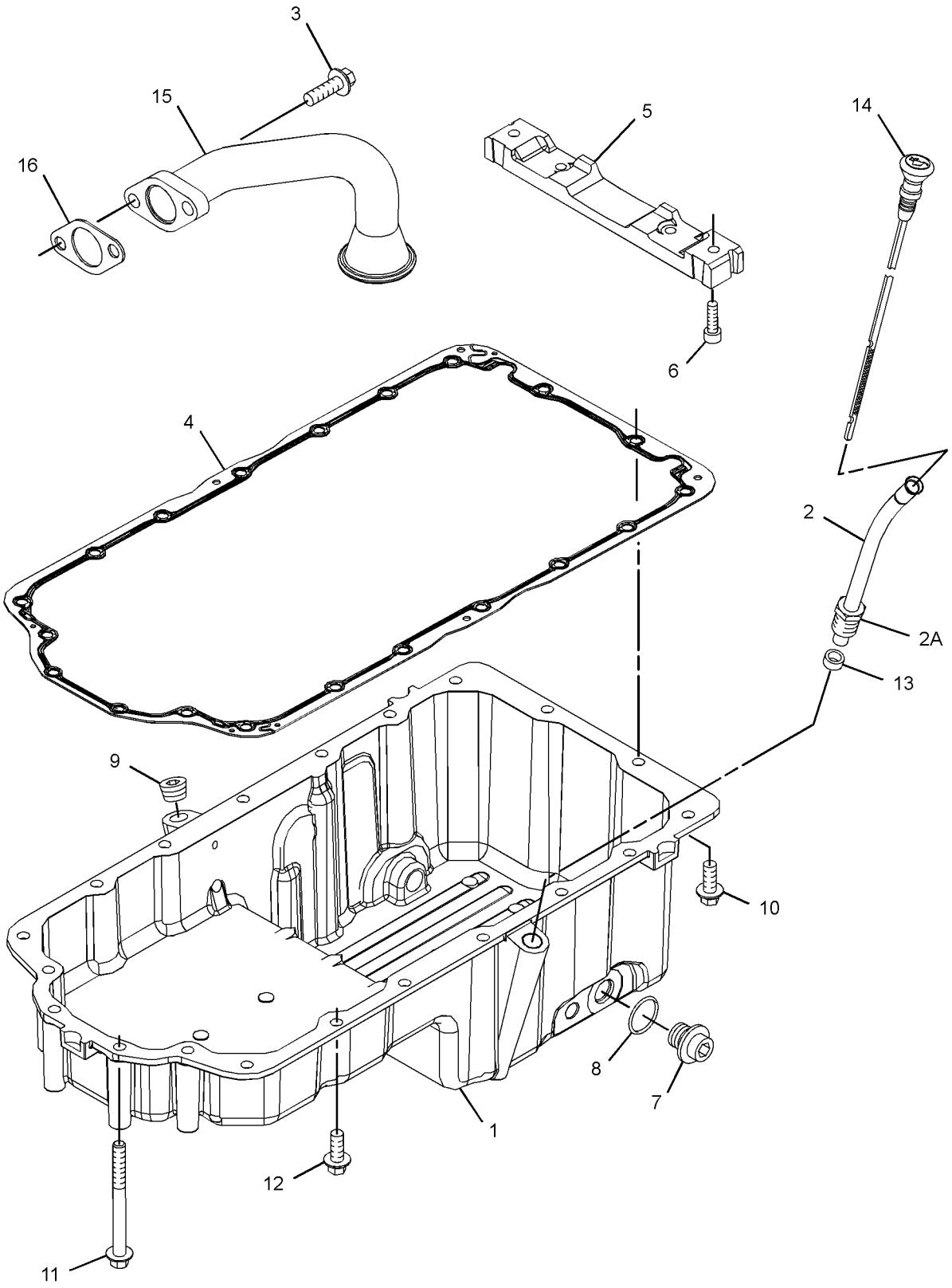

GRAPHIC #1 <END> g06196647

301-8239 PAN GP-OIL—ENGINE

S/N: 4441-25486

PART OF 435-1699 ENGINE AR, 437-5409, 522-8303, 540-1155 ENGINE AR-PRIMARY

SMCS-1302 **i06679969**

NOTE	REF NO	GRAPHIC REF	PART NUMBER	QTY	PART NAME 1 2 3 4 5 6 (PRODUCT LEVEL)	SEE PAGE
	1	1	**067-6823**	2	PLUG	
M	2	1	**6I-0217**	7	BOLT (M8X1.25X20-MM)	
	3	1	**6I-0289**	1	PLUG	
M	4	1	**178-3336**	2	NUT-HEX FLANGE (M8X1.25-THD)	
M	5	1	**6I-0292**	2	BOLT (M8X1.25X140-MM)	
M	6	1	**6I-0293**	4	BOLT (M8X1.25X80-MM)	
M	7	1	**6I-0363**	2	BOLT (M6X1X20-MM)	
	8	1	**6I-1497**	1	SEAL	
	9	1	**7C-0351**	2	PLUG-DRAIN (ENGINE OIL)	
	10	1	**067-6213**	1	GASKET	
M	11	1	**101-3895**	2	BOLT (M8X1.25X35-MM)	
	12	1	**124-7702**	1	TUBE AS	
	12A	1	**6I-4079**	1	NUT	
	13	1	**131-4291**	1	GAUGE AS-OIL LEVEL (DIPSTICK) (ENGINE)	
	14	1	**155-4828**	2	STUD	
M	15	1	**220-8311**	4	BOLT (M8X1.25X115-MM)	
	16	1	**225-6005**	1	GASKET	
	17	1	**230-8094**	1	BRIDGE	
	18	1	**230-8251**	1	PAN-OIL	
	19	1	**233-8148**	1	STRAINER (ENGINE OIL)	
	20	1	**335-7585**	2	SEAL	
M	21	1	**6I-0254**	1	BOLT (M8X1.25X30-MM)	
	22	1	**5C-1809**	1	SPACER (8X19X6.5-MM)	
F			**275-9883**	2	SEAL	

F - NOT SHOWN
M - METRIC PART

301-8239 **PAN GP-OIL (**contd.**)** **i06679969**

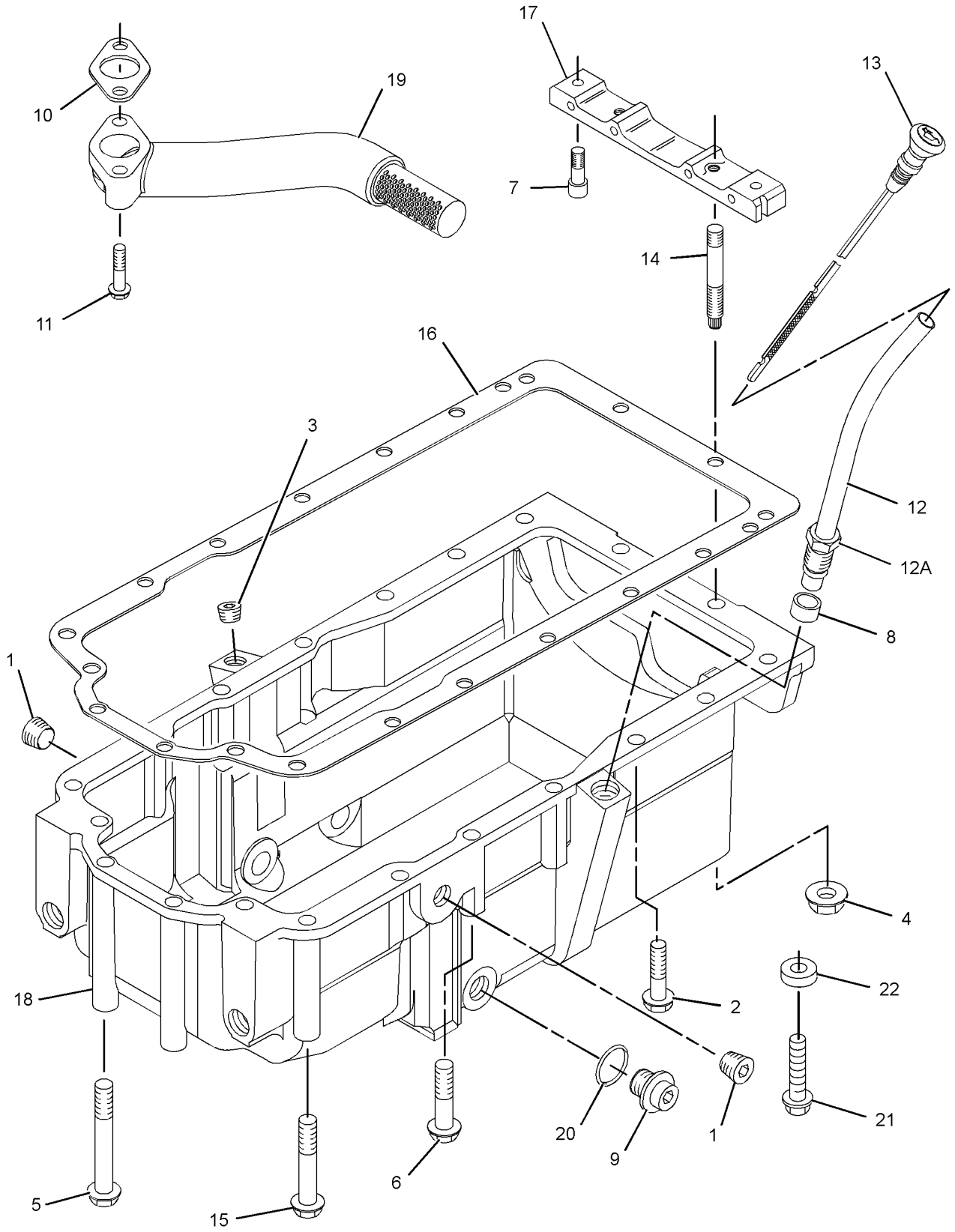

GRAPHIC #1 <END> g03883697

301-8239 PAN GP-OIL—ENGINE

S/N: 44425487-UP

PART OF 437-5409, 522-8303, 540-1155 ENGINE AR-PRIMARY

SMCS-1302 **i06850942**

NOTE	REF NO	GRAPHIC REF	PART NUMBER	QTY	PART NAME 1 2 3 4 5 6 (PRODUCT LEVEL)	SEE PAGE
CM	1	1	**6I-0260**	2	BOLT (M8X1.25X25-MM)	
	2	1	**6I-0289**	1	PLUG	
M	3	1	**178-3336**	2	NUT-HEX FLANGE (M8X1.25-THD)	
M	4	1	**8T-0269**	2	BOLT-SOCKET HEAD (M6X1X20-MM)	
	5	1	**6I-1497**	1	SEAL	
	6	1	**7C-0351**	2	PLUG-DRAIN (ENGINE OIL)	
	7	1	**067-6213**	1	GASKET	
CM	8	1	**101-3805**	16	BOLT (M8X1.25X90-MM)	
M	9	1	**101-3895**	2	BOLT (M8X1.25X35-MM)	
	10	1	**124-7702**	1	TUBE AS	
	10A	1	**6I-4079**	1	NUT	
	11	1	**131-4291**	1	GAUGE AS-OIL LEVEL (DIPSTICK)	
	12	1	**155-4828**	2	STUD	
	13	1	**471-2882**	1	GASKET	
	14	1	**230-8094**	1	BRIDGE	
	15	1	**233-8148**	1	STRAINER	
	16	1	**335-7585**	2	SEAL	
C	17	1	**433-0344**	1	PAN AS-OIL	
F		1	**275-9883**	2	SEAL	

C - CHANGE FROM PREVIOUS TYPE
F - NOT SHOWN
M - METRIC PART

301-8239 **PAN GP-OIL (**contd.**)** **i06850942**

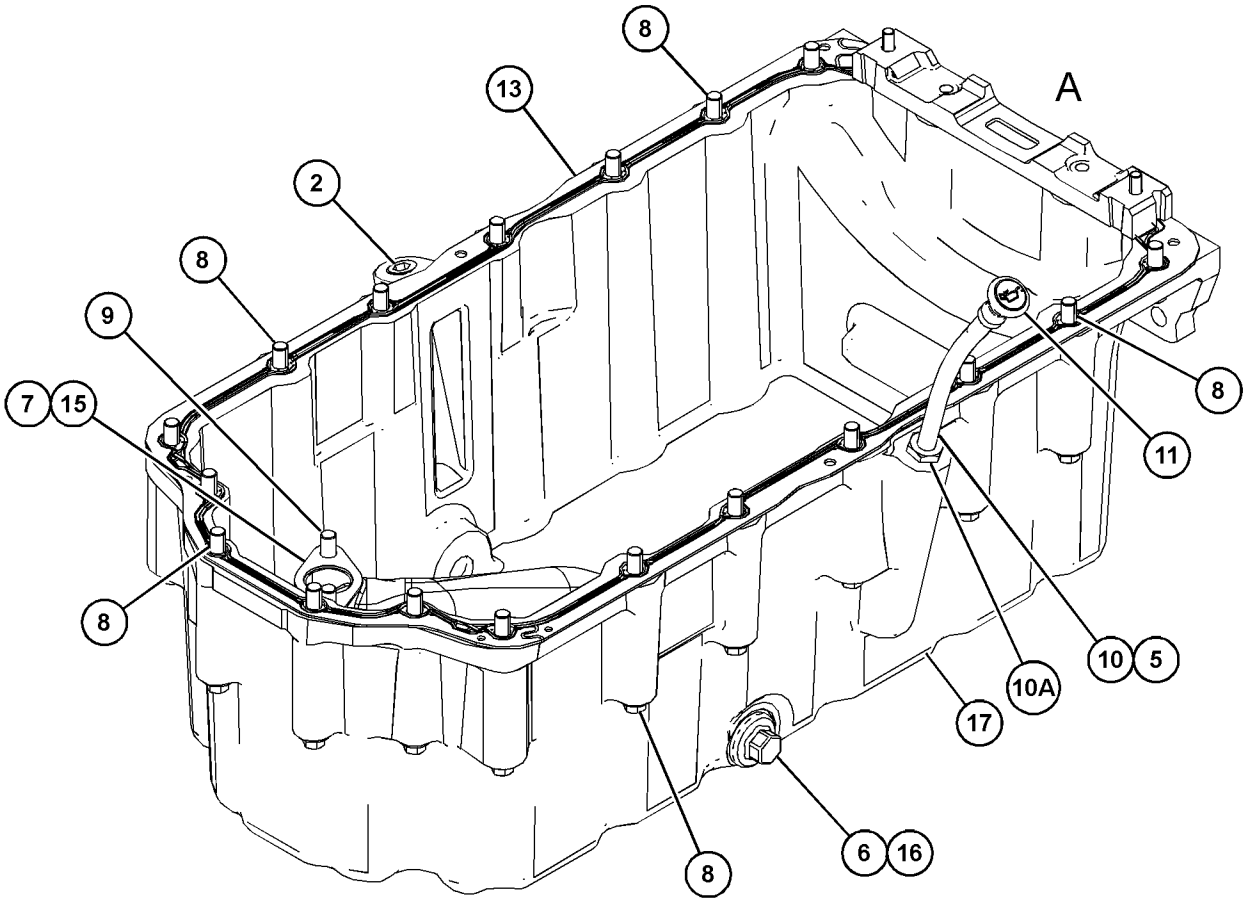

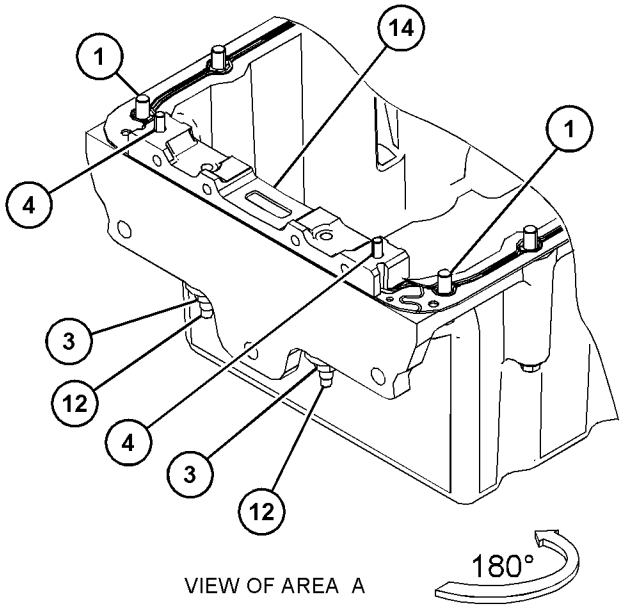

VIEW OF AREA A

GRAPHIC #1 <END> g06196718

303-5771 PAN GP-OIL

TYPE 1

SMCS-1302 **i03903437**

NOTE	REF NO	GRAPHIC REF	PART NUMBER	QTY	PART NAME 1 2 3 4 5 6 (PRODUCT LEVEL)	SEE PAGE
M	1	1	**6I-0217**	14	BOLT (M8X1.25X20-MM)	
M	2	1	**6I-0260**	2	BOLT (M8X1.25X25-MM)	
J	3	1	**6I-0289**	2	PLUG	
M	4	1	**6I-0363**	2	BOLT (M6X1X20-MM)	
M	5	1	**6I-0572**	2	BOLT (M8X1.25X20-MM)	
	6	1	**7C-0351**	2	PLUG-DRAIN (ENGINE OIL)	
	7	1	**067-6213**	1	GASKET	
M	8	1	**101-3771**	4	BOLT (M8X1.25X85-MM)	
	9	1	**304-8764**	1	PAN AS-OIL (ENGINE)	
	9A	1	**7C-1224**	2	INSERT	
	10	1	**225-6005**	1	GASKET	
	11	1	**225-6041**	1	TUBE	
	12	1	**230-8094**	1	BRIDGE	
	13	1	**275-9883**	2	SEAL	

J - USED TO PLUG OPTIONAL DIPSTICK LOCATION
M - METRIC PART

303-5771 **PAN GP-OIL (**contd.**)** **i03903437**

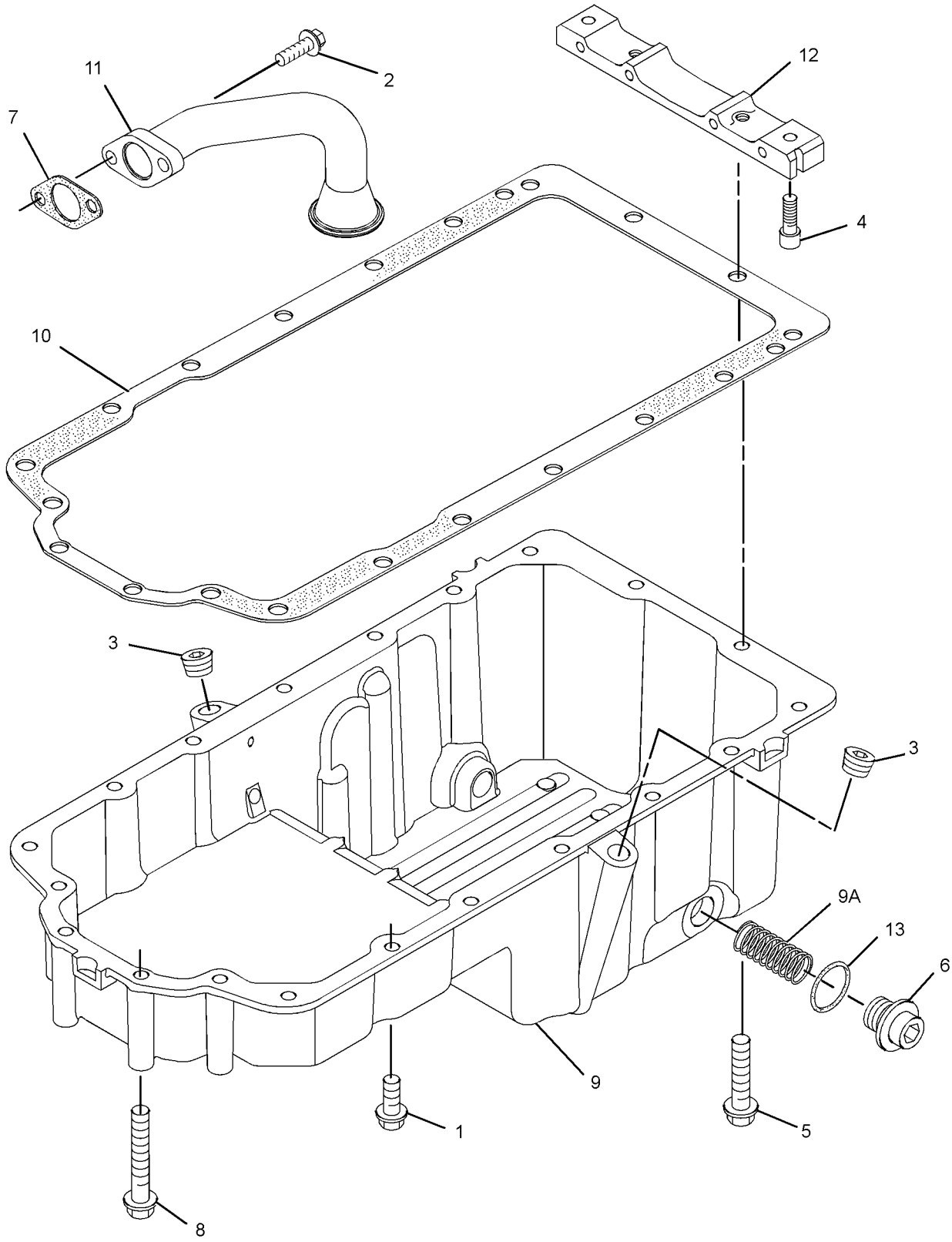

GRAPHIC #1 <END> g02153747

303-5771 PAN GP-OIL

TYPE 2

SMCS-1302 **i07475510**

NOTE	REF NO	GRAPHIC REF	PART NUMBER	QTY	PART NAME 1 2 3 4 5 6 (PRODUCT LEVEL)	SEE PAGE
M	1	1	**6I-0217**	12	BOLT (M8X1.25X20-MM)	
M	2	1	**6I-0260**	2	BOLT (M8X1.25X25-MM)	
J	3	1	**6I-0289**	2	PLUG	
M	4	1	**8T-0269**	2	BOLT-SOCKET HEAD (M6X1X20-MM)	
M	5	1	**6I-0572**	4	BOLT (M8X1.25X20-MM)	
	6	1	**7C-0351**	2	PLUG-DRAIN (ENGINE OIL)	
	7	1	**067-6213**	1	GASKET	
M	8	1	**101-3771**	4	BOLT (M8X1.25X85-MM)	
C	9	1	**480-4406**	1	PAN (OIL)	
	10	1	**471-2882**	1	GASKET	
	11	1	**225-6041**	1	TUBE	
	12	1	**230-8094**	1	BRIDGE	
	13	1	**335-7585**	2	SEAL	
F			**275-9883**	2	SEAL	

C - CHANGE FROM PREVIOUS TYPE
F - NOT SHOWN
J - USED TO PLUG OPTIONAL DIPSTICK LOCATION
M - METRIC PART

303-5771 **PAN GP-OIL (**contd.**)** **i07475510**

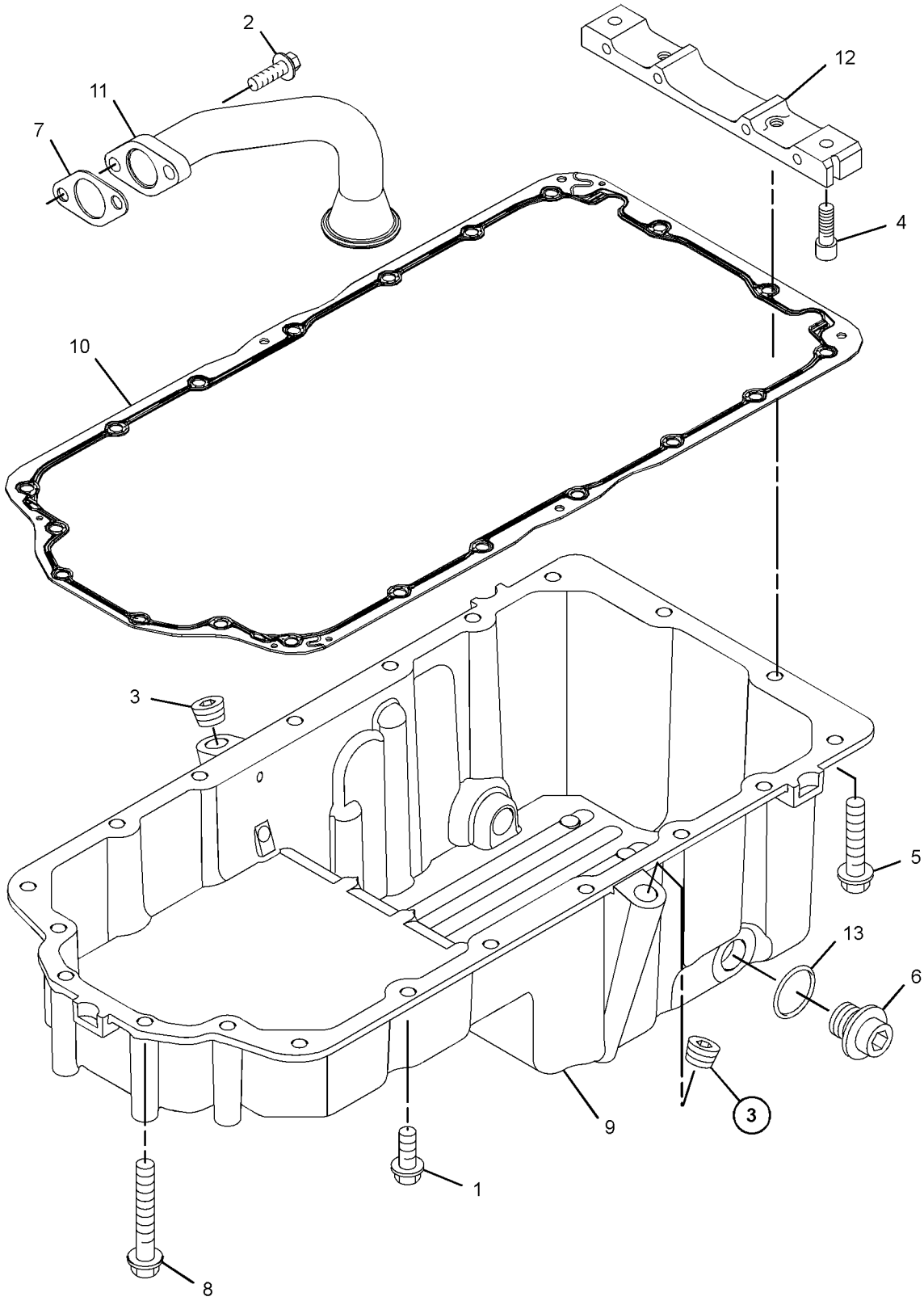

GRAPHIC #1 <END> g06369001

304-3656 PAN GP-OIL

TYPE 1

SMCS-1302 **i02776129**

NOTE	REF NO	GRAPHIC REF	PART NUMBER	QTY	PART NAME 1 2 3 4 5 6 (PRODUCT LEVEL)	SEE PAGE
	1	1	**304-3698**	1	TUBE-OIL SUCTION	
	2	1	**067-6213**	1	GASKET	
M	3	1	**6I-0260**	2	BOLT (M8X1.25X25-MM)	
	4	1	**304-3692**	1	TUBE AS-OIL GAUGE	
	4A	1	**187-0555**	1	CLIP	
	5	1	**304-3693**	1	GAUGE AS-OIL LEVEL (DIPSTICK) (ENGINE)	
	6	1	**6I-1497**	1	SEAL	
	7	1	**304-3695**	1	BRACKET	
M	8	1	**6I-0846**	1	BOLT (M6X1X14-MM)	
M	9	1	**124-3815**	1	BOLT (M8X1.25X16-MM)	
	10	1	**306-5911**	1	PAN GP-OIL	
	10A	1	**7C-1224**	2	INSERT	
	11	1	**225-6005**	1	GASKET	
	12	1	**230-8094**	1	BRIDGE	
M	13	1	**6I-0363**	2	BOLT (M6X1X20-MM)	
	14	1	**185-7149**	4	BOLT	
	15	1	**7C-0351**	2	PLUG-DRAIN (ENGINE OIL)	
	16	1	**275-9883**	2	SEAL	
M	17	1	**6I-0292**	12	BOLT (M8X1.25X140-MM)	
M	18	1	**152-6730**	4	BOLT (M8X1.25X120-MM)	

M - METRIC PART

304-3656 **PAN GP-OIL (**contd.**)** **i02776129**

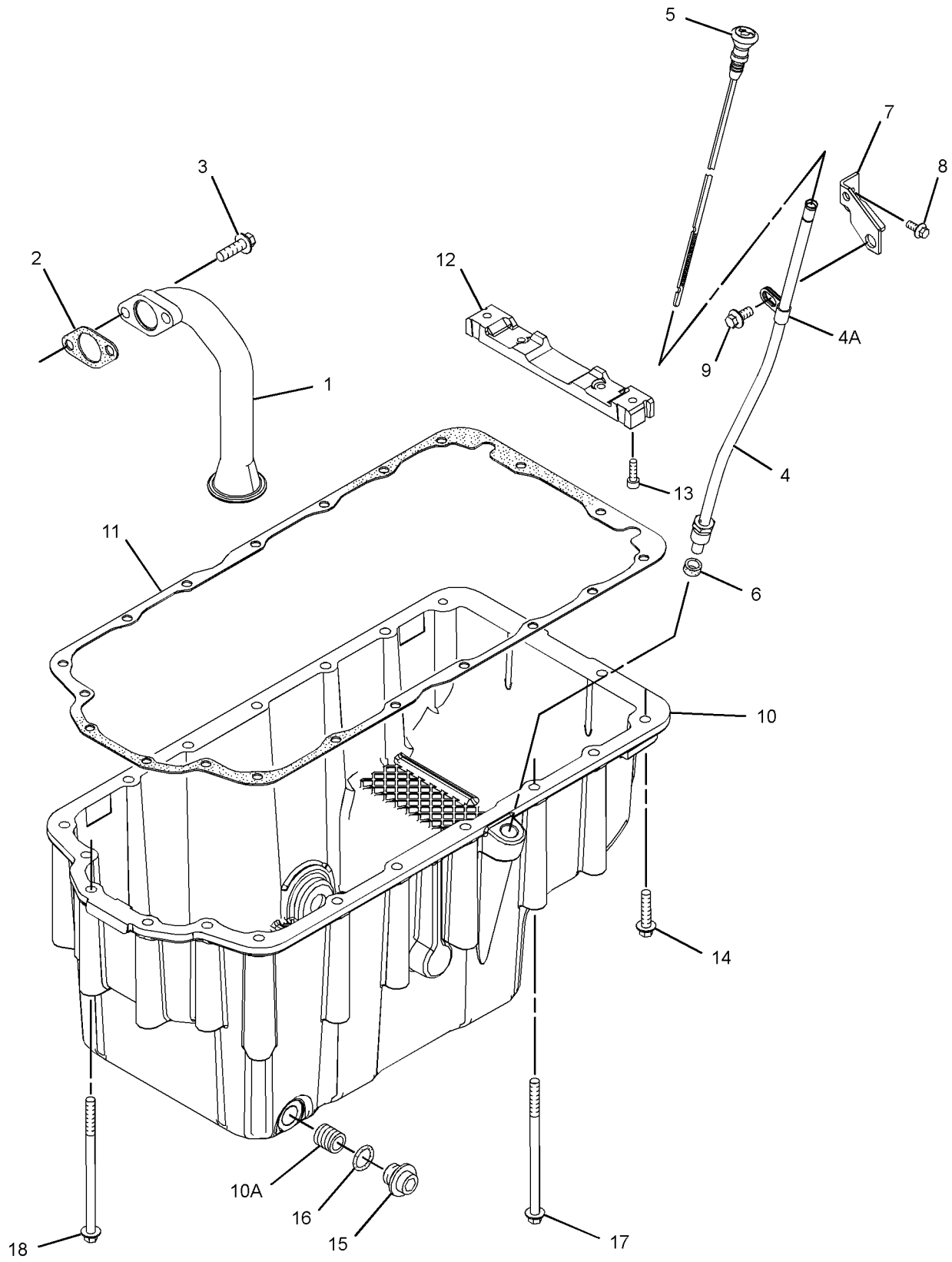

GRAPHIC #1 <END> g01351082

304-3656 PAN GP-OIL

TYPE 2

SMCS-1302 **i06976284**

NOTE	REF NO	GRAPHIC REF	PART NUMBER	QTY	PART NAME 1 2 3 4 5 6 (PRODUCT LEVEL)	SEE PAGE
	1	1	**304-3698**	1	TUBE-OIL SUCTION	
	2	1	**067-6213**	1	GASKET	
M	3	1	**6I-0260**	2	BOLT (M8X1.25X25-MM)	
	4	1	**304-3692**	1	TUBE AS-OIL GAUGE	
	4A	1	**187-0555**	1	CLIP	
	5	1	**304-3693**	1	GAUGE AS-OIL LEVEL (DIPSTICK) (ENGINE)	
	6	1	**6I-1497**	1	SEAL	
	7	1	**304-3695**	1	BRACKET	
M	8	1	**6I-0846**	1	BOLT (M6X1X14-MM)	
M	9	1	**124-3815**	1	BOLT (M8X1.25X16-MM)	
C	10	1	**479-1570**	1	PAN-OIL	
	11	1	**225-6005**	1	GASKET	
	12	1	**230-8094**	1	BRIDGE	
M	13	1	**6I-0363**	2	BOLT (M6X1X20-MM)	
	14	1	**185-7149**	4	BOLT	
	15	1	**7C-0351**	2	PLUG-DRAIN (ENGINE OIL)	
	16	1	**335-7585**	2	SEAL	
M	17	1	**6I-0292**	12	BOLT (M8X1.25X140-MM)	
M	18	1	**152-6730**	4	BOLT (M8X1.25X120-MM)	
	19	1	**6I-0289**	1	PLUG	
F			**275-9883**	2	SEAL	

C - CHANGE FROM PREVIOUS TYPE
F - NOT SHOWN
M - METRIC PART

304-3656 **PAN GP-OIL (**contd.**)** **i06976284**

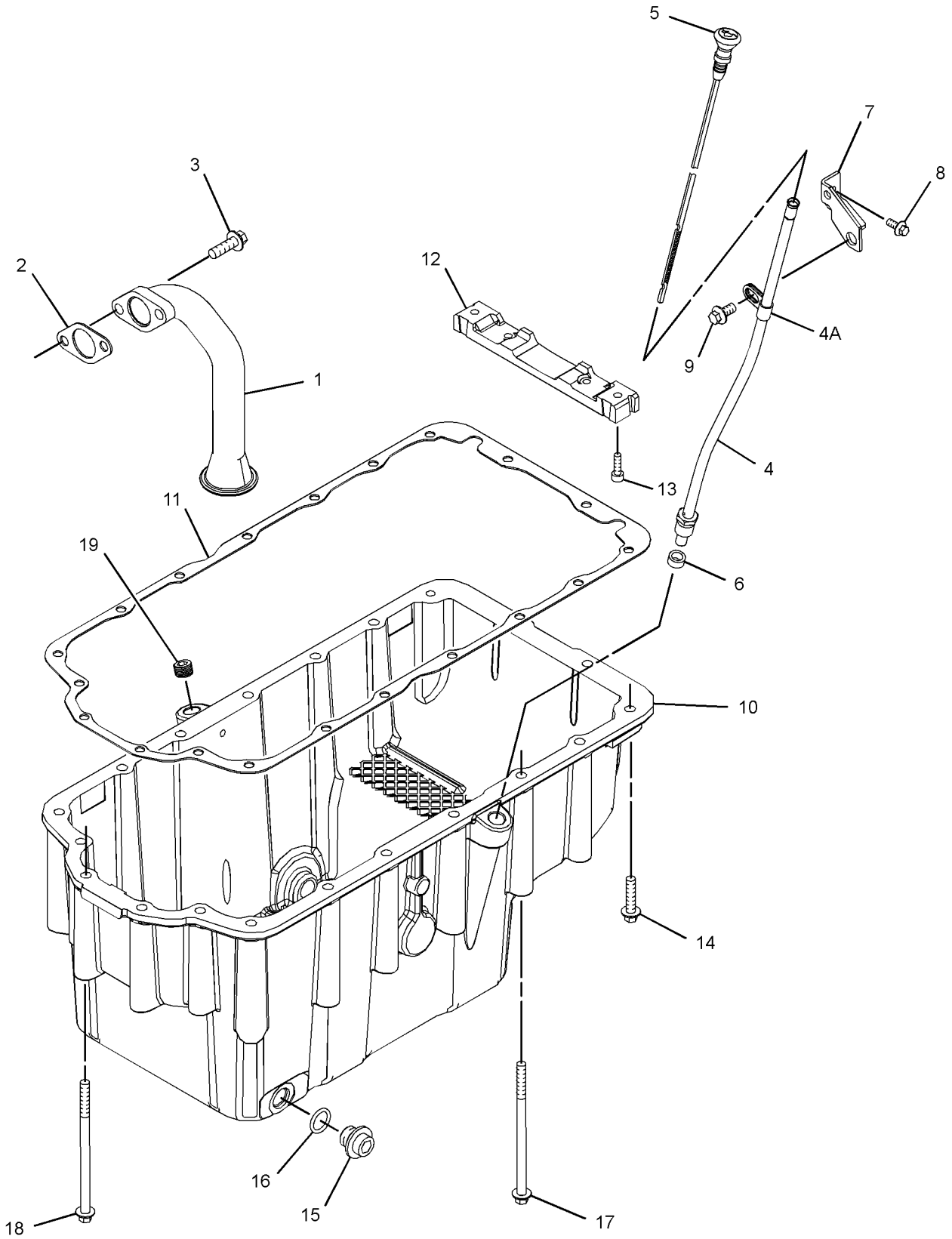

GRAPHIC #1 <END> g06201677

304-8757 PAN GP-OIL–ENGINE

TYPE 1

SMCS-1302 **i02678601**

NOTE	REF NO	GRAPHIC REF	PART NUMBER	QTY	PART NAME 1 2 3 4 5 6 (PRODUCT LEVEL)	SEE PAGE
	1	1	**304-8764**	1	PAN AS-OIL (ENGINE)	
	1A	1	**7C-1224**	1	INSERT	
	2	1	**7C-0351**	2	PLUG-DRAIN (ENGINE OIL)	
	3	1	**275-9883**	2	SEAL	
	4	1	**225-6005**	1	GASKET	
	5	1	**6I-0289**	1	PLUG	
M	6	1	**101-3771**	4	BOLT (M8X1.25X85-MM)	
M	7	1	**6I-0217**	14	BOLT (M8X1.25X20-MM)	
M	8	1	**6I-0572**	2	BOLT (M8X1.25X20-MM)	
	9	1	**230-8094**	1	BRIDGE	
M	10	1	**6I-0363**	2	BOLT (M6X1X20-MM)	
	11	1	**225-6041**	1	TUBE	
	12	1	**067-6213**	1	GASKET	
M	13	1	**6I-0260**	2	BOLT (M8X1.25X25-MM)	
	14	1	**124-7702**	1	TUBE AS	
	14A	1	**6I-4079**	1	NUT	
	15	1	**6I-1497**	1	SEAL	
	16	1	**124-7703**	1	GAUGE AS-OIL LEVEL (DIPSTICK) (ENGINE)	

M - METRIC PART

304-8757 **PAN GP-OIL (**contd.**)** **i02678601**

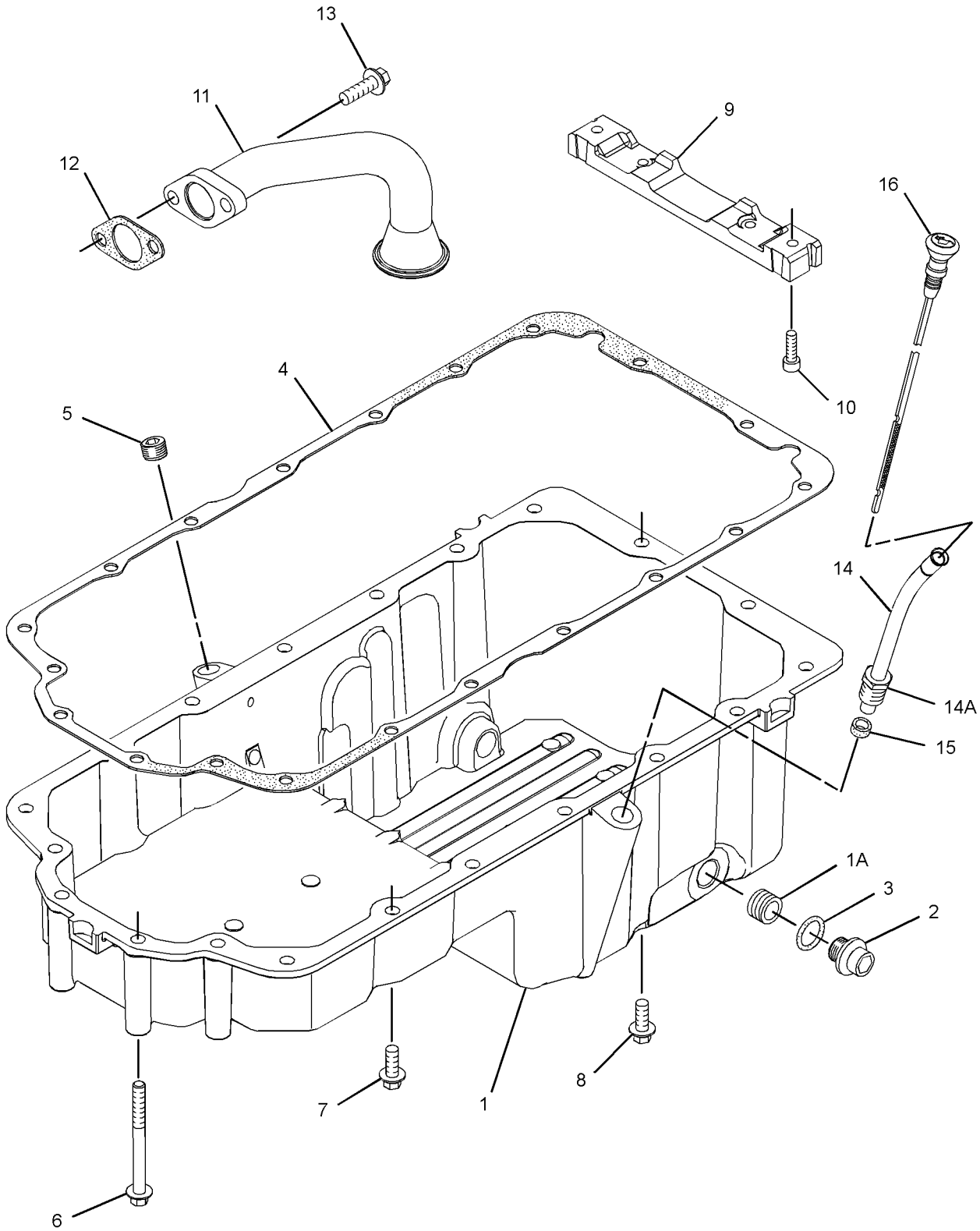

GRAPHIC #1 <END> g01352851

304-8757 PAN GP-OIL—ENGINE

TYPE 2

SMCS-1302 **i07376610**

NOTE	REF NO	GRAPHIC REF	PART NUMBER	QTY	PART NAME 1 2 3 4 5 6 (PRODUCT LEVEL)	SEE PAGE
C	1	1	**480-4406**	1	PAN	
	2	1	**7C-0351**	2	PLUG-DRAIN (ENGINE OIL)	
	3	1	**335-7585**	2	SEAL	
	4	1	**471-2882**	1	GASKET	
	5	1	**6I-0289**	1	PLUG	
M	6	1	**101-3771**	4	BOLT (M8X1.25X85-MM)	
M	7	1	**6I-0217**	12	BOLT (M8X1.25X20-MM)	
M	8	1	**6I-0572**	4	BOLT (M8X1.25X20-MM)	
	9	1	**230-8094**	1	BRIDGE	
M	10	1	**8T-0269**	2	BOLT-SOCKET HEAD (M6X1X20-MM)	
	11	1	**225-6041**	1	TUBE	
	12	1	**067-6213**	1	GASKET	
M	13	1	**6I-0260**	2	BOLT (M8X1.25X25-MM)	
	14	1	**124-7702**	1	TUBE AS	
	14A	1	**6I-4079**	1	NUT	
	15	1	**6I-1497**	1	SEAL	
	16	1	**124-7703**	1	GAUGE AS-OIL LEVEL (DIPSTICK) (ENGINE)	
F		1	**275-9883**	2	SEAL	

C - CHANGE FROM PREVIOUS TYPE
F - NOT SHOWN
M - METRIC PART

304-8757 **PAN GP-OIL (**contd.**)** **i07376610**

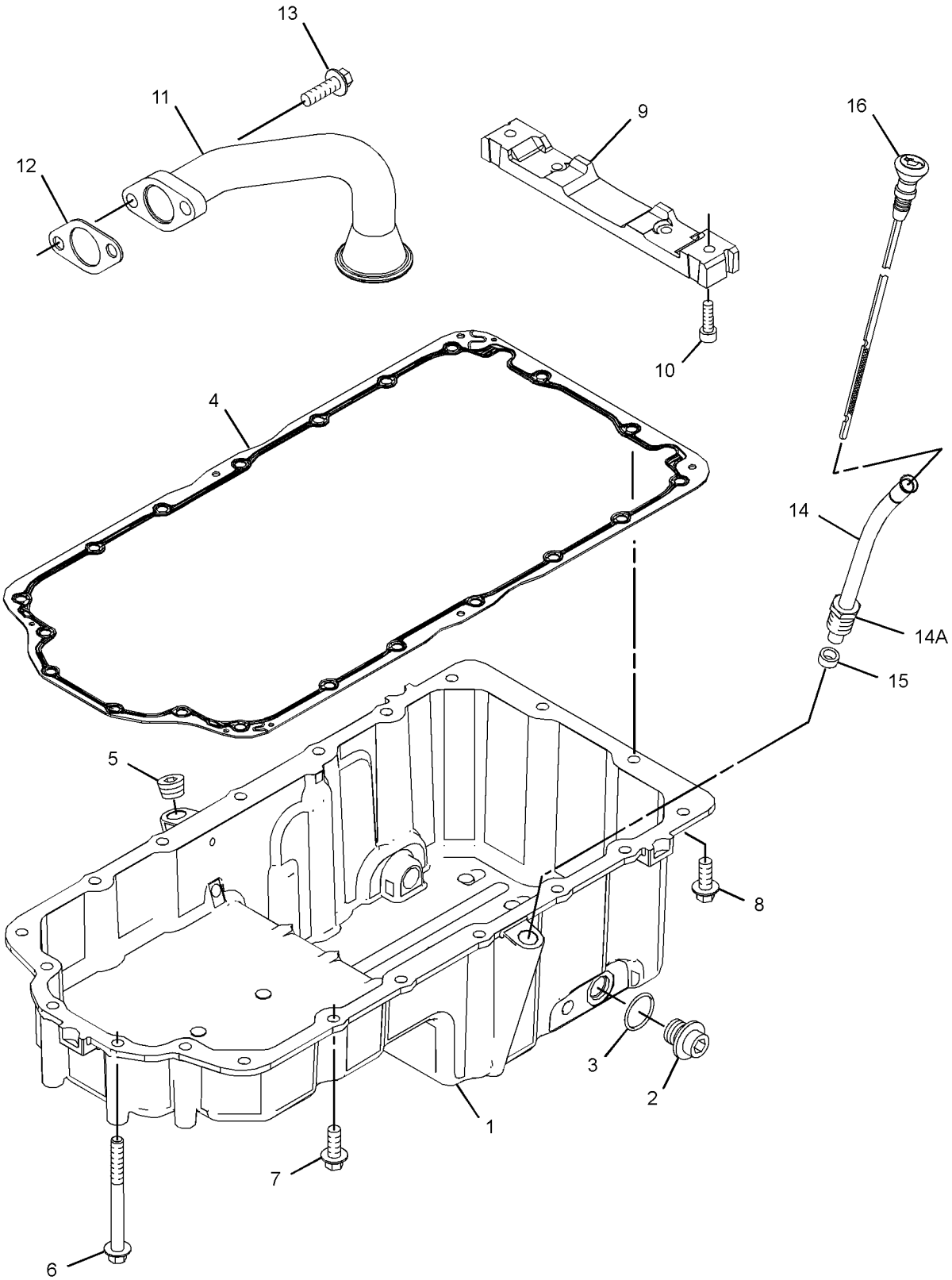

GRAPHIC #1 <END> g06293845

305-2578 PAN GP-OIL—ENGINE

TYPE 1

SMCS-1302 **i02654269**

NOTE	REF NO	GRAPHIC REF	PART NUMBER	QTY	PART NAME 1 2 3 4 5 6 (PRODUCT LEVEL)	SEE PAGE
M	1	1	**6I-0217**	11	BOLT (M8X1.25X20-MM)	
M	2	1	**6I-0260**	3	BOLT (M8X1.25X25-MM)	
M	3	1	**6I-0293**	6	BOLT (M8X1.25X80-MM)	
M	4	1	**6I-0363**	2	BOLT (M6X1X20-MM)	
M	5	1	**6I-0572**	2	BOLT (M8X1.25X20-MM)	
	6	1	**6I-1497**	1	SEAL	
	7	1	**7C-0351**	1	PLUG-DRAIN (ENGINE OIL)	
	8	1	**067-6213**	1	GASKET	
	9	1	**102-9690**	1	PLUG	
	10	1	**225-6005**	1	GASKET	
	11	1	**230-8094**	1	BRIDGE	
	12	1	**235-2435**	1	TUBE-SUCTION	
	13	1	**247-4928**	1	WASHER (16.5X20.5X1.6-MM THK)	
	14	1	**251-8261**	1	PLUG	
	15	1	**251-8262**	1	WASHER	
	16	1	**251-8282**	1	TUBE AS	
	16A	1	**6I-4079**	1	NUT	
	17	1	**251-8283**	1	GAUGE AS-OIL LEVEL (DIPSTICK) (ENGINE)	
	18	1	**275-9883**	1	SEAL	
	19	1	**293-9309**	1	PAN GP-OIL	
	19A	1	**7C-1224**	1	INSERT	

M - METRIC PART

305-2578 **PAN GP-OIL (**contd.**)** **i02654269**

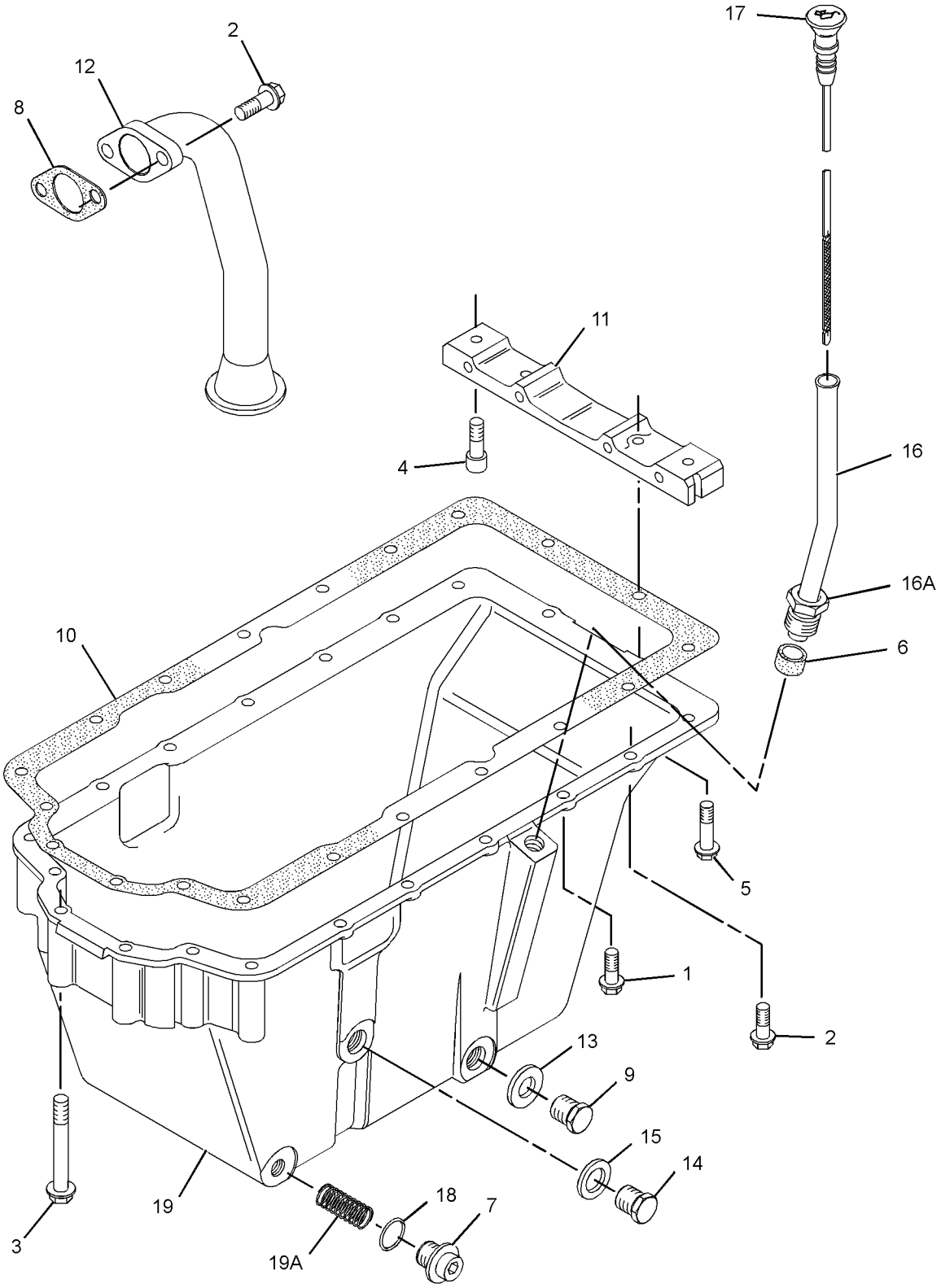

GRAPHIC #1 <END> g01373592

305-2578 PAN GP-OIL—ENGINE

TYPE 2

SMCS-1302 **i06850945**

NOTE	REF NO	GRAPHIC REF	PART NUMBER	QTY	PART NAME 1 2 3 4 5 6 (PRODUCT LEVEL)	SEE PAGE
M	1	1	**6I-0217**	11	BOLT (M8X1.25X20-MM)	
M	2	1	**6I-0260**	3	BOLT (M8X1.25X25-MM)	
M	3	1	**6I-0293**	6	BOLT (M8X1.25X80-MM)	
M	4	1	**8T-0269**	2	BOLT-SOCKET HEAD (M6X1X20-MM)	
M	5	1	**6I-0572**	2	BOLT (M8X1.25X20-MM)	
	6	1	**6I-1497**	1	SEAL	
	7	1	**7C-0351**	1	PLUG-DRAIN (ENGINE OIL)	
	8	1	**067-6213**	1	GASKET	
	9	1	**102-9690**	1	PLUG	
	10	1	**471-2882**	1	GASKET	
	11	1	**230-8094**	1	BRIDGE	
	12	1	**235-2435**	1	TUBE-SUCTION	
	13	1	**247-4928**	1	WASHER (16.5X20.5X1.6-MM THK)	
	14	1	**251-8261**	1	PLUG	
	15	1	**251-8262**	1	WASHER	
	16	1	**251-8282**	1	TUBE AS	
	16A	1	**6I-4079**	1	NUT	
	17	1	**251-8283**	1	GAUGE AS-OIL LEVEL (DIPSTICK) (ENGINE)	
	18	1	**335-7585**	1	SEAL	
C	19	1	**394-9638**	1	PAN-OIL	
CF		1	**275-9883**	2	SEAL	

C - CHANGE FROM PREVIOUS TYPE
F - NOT SHOWN
M - METRIC PART

305-2578 **PAN GP-OIL (**contd.**)** **i06850945**

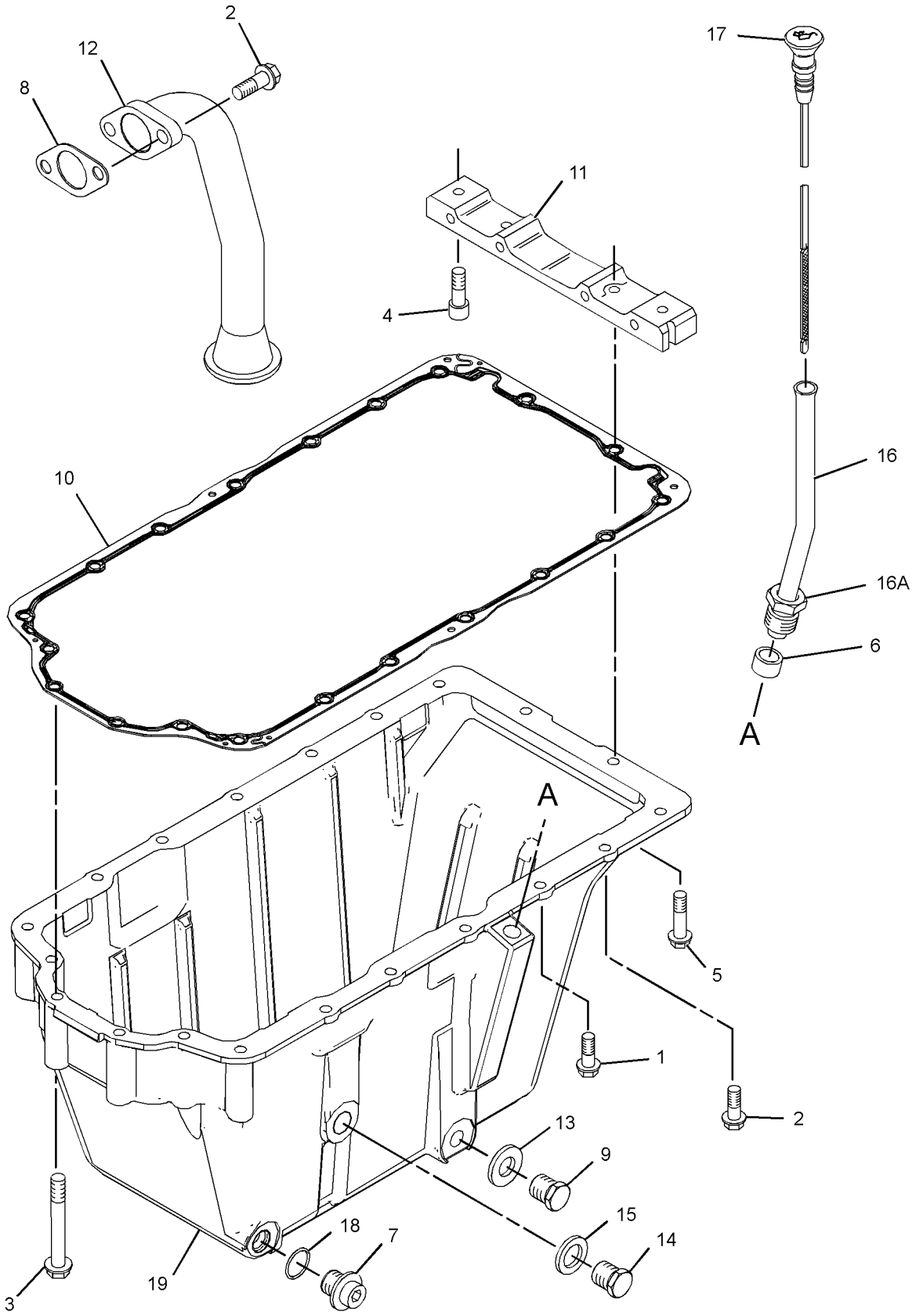

GRAPHIC #1 <END> g06196475

308-4157 PAN GP-OIL

ALSO AN ATTACHMENT

SMCS-1302 **i07035498**

NOTE	REF NO	GRAPHIC REF	PART NUMBER	QTY	PART NAME 1 2 3 4 5 6 (PRODUCT LEVEL)	SEE PAGE
	1	1	**308-4162**	1	PAN-OIL	
	2	1	**471-2881**	1	GASKET-SUMP	
	3	1	**230-8094**	1	BRIDGE	
M	4	1	**6I-0363**	2	BOLT (M6X1X20-MM)	
	5	1	**155-4828**	2	STUD	
M	6	1	**6I-0291**	2	NUT (M8X1.25-THD)	
	7	1	**7C-0351**	2	PLUG-DRAIN (ENGINE OIL)	
	8	1	**335-7585**	2	SEAL	
M	9	1	**6I-0292**	2	BOLT (M8X1.25X140-MM)	
M	10	1	**6I-0293**	12	BOLT (M8X1.25X80-MM)	
	11	1	**233-4695**	2	BOLT-FLANGE HEAD	
	12	1	**308-4163**	2	BOLT	
	13	1	**232-2551**	1	TUBE AS	
	13A	1	**6I-4079**	1	NUT	
	14	1	**6I-1497**	1	SEAL	
	15	1	**308-4164**	1	GAUGE AS-OIL LEVEL (DIPSTICK) (ENGINE)	
	16	1	**243-1800**	1	TUBE-OIL SUCTION	
	17	1	**067-6213**	1	GASKET	
M	18	1	**101-3895**	2	BOLT (M8X1.25X35-MM)	
F			**275-9883**	2	SEAL	

F - NOT SHOWN
M - METRIC PART

308-4157 **PAN GP-OIL (**contd.**)** **i07035498**

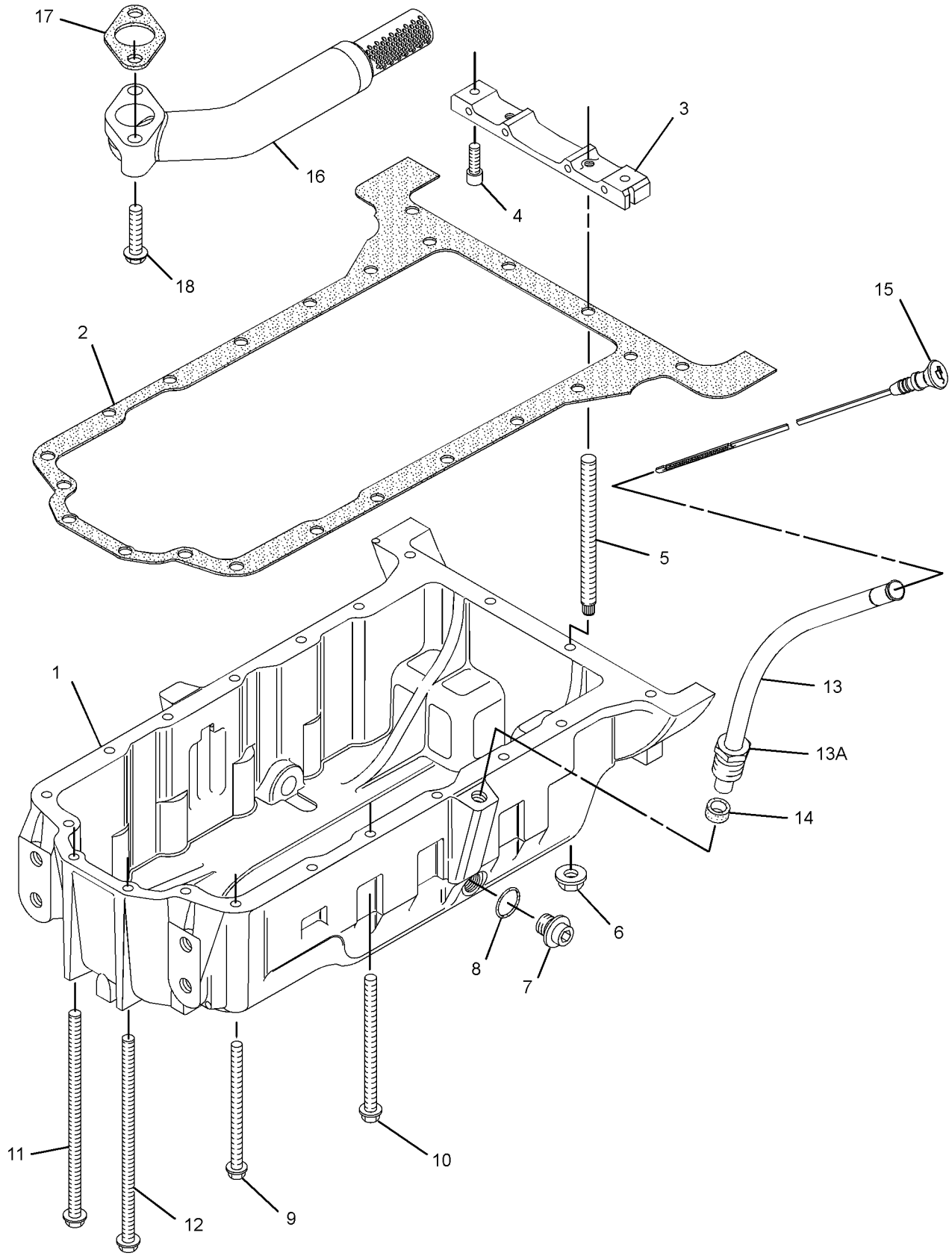

GRAPHIC #1 <END> g01379117

311-8534 PAN GP-OIL

TYPE 1

SMCS-1302 **i06015921**

NOTE	REF NO	GRAPHIC REF	PART NUMBER	QTY	PART NAME 1 2 3 4 5 6 (PRODUCT LEVEL)	SEE PAGE
	1	1	**2B-0858**	2	PLUG-PIPE	
	2	1	**335-7585**	2	SEAL	
M	3	1	**6I-0217**	8	BOLT (M8X1.25X20-MM)	
	4	1	**6I-0289**	1	PLUG	
M	5	1	**178-3336**	2	NUT-HEX FLANGE (M8X1.25-THD)	
M	6	1	**6I-0292**	2	BOLT (M8X1.25X140-MM)	
M	7	1	**6I-0293**	4	BOLT (M8X1.25X80-MM)	
M	8	1	**6I-0363**	2	BOLT (M6X1X20-MM)	
	9	1	**6I-1497**	1	SEAL	
	10	1	**7C-0351**	2	PLUG-DRAIN (ENGINE OIL)	
	11	1	**067-6213**	1	GASKET	
M	12	1	**6I-0260**	2	BOLT (M8X1.25X25-MM)	
	13	1	**124-7702**	1	TUBE AS	
	14	1	**6I-4079**	1	NUT	
	15	1	**131-4291**	1	GAUGE AS-OIL LEVEL (DIPSTICK) (ENGINE)	
	16	1	**155-4828**	2	STUD	
M	17	1	**220-8311**	4	BOLT (M8X1.25X115-MM)	
	18	1	**225-6005**	1	GASKET	
	19	1	**230-8094**	1	BRIDGE	
	20	1	**230-8251**	1	PAN-OIL	
	21	1	**272-2226**	1	TUBE-OIL SUCTION	
F			**275-9883**	2	SEAL	

F - NOT SHOWN
M - METRIC PART

311-8534 **PAN GP-OIL (**contd.**)** **i06015921**

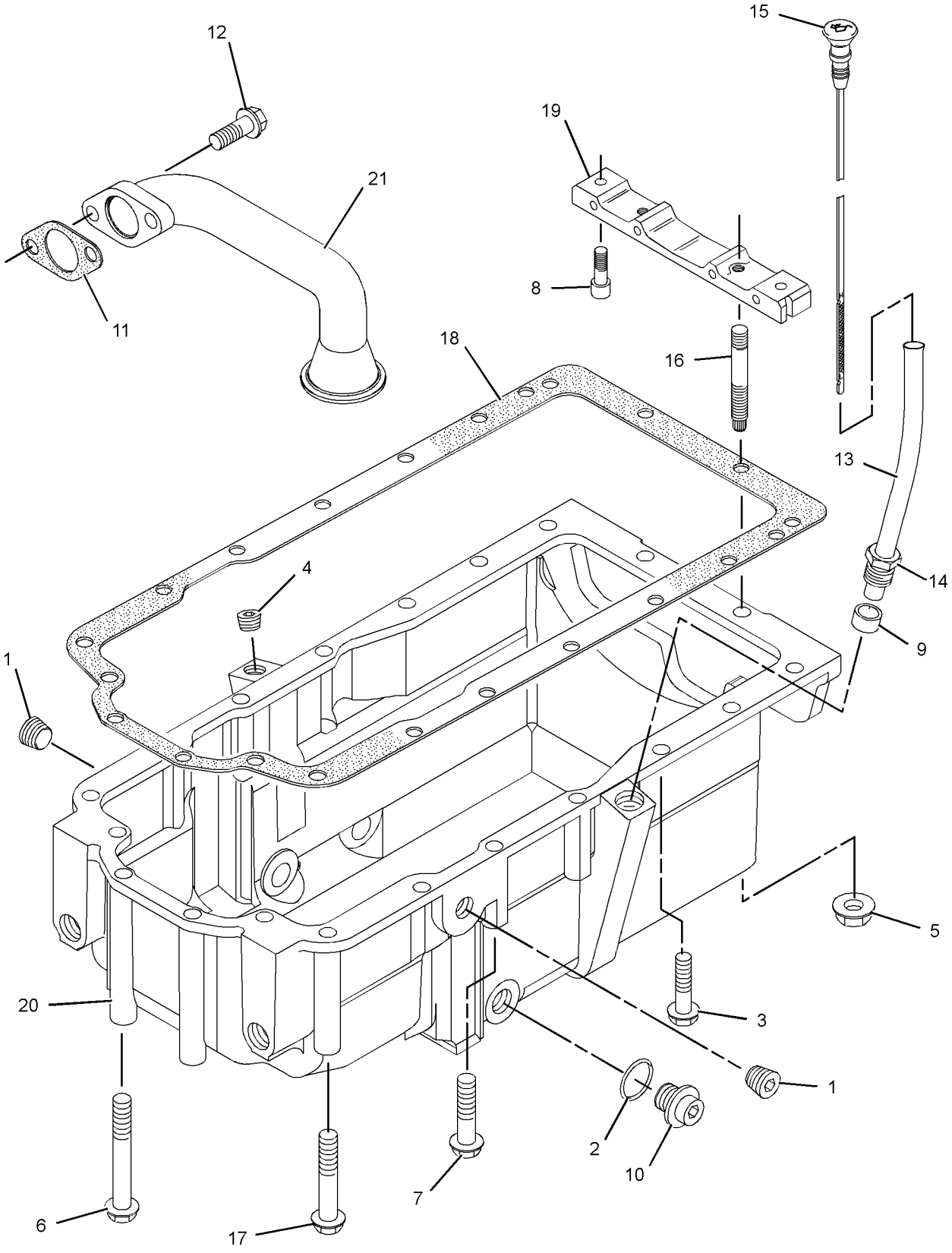

GRAPHIC #1 <END> g01157582

311-8534 PAN GP-OIL

TYPE 2

SMCS-1302 **i06704094**

NOTE	REF NO	GRAPHIC REF	PART NUMBER	QTY	PART NAME 1 2 3 4 5 6 (PRODUCT LEVEL)	SEE PAGE
	1	1	**067-6823**	2	PLUG	
	2	1	**335-7585**	2	SEAL	
M	3	1	**6I-0217**	7	BOLT (M8X1.25X20-MM)	
	4	1	**6I-0289**	1	PLUG	
M	5	1	**178-3336**	2	NUT-HEX FLANGE (M8X1.25-THD)	
M	6	1	**6I-0292**	2	BOLT (M8X1.25X140-MM)	
M	7	1	**6I-0293**	4	BOLT (M8X1.25X80-MM)	
M	8	1	**8T-0269**	2	BOLT-SOCKET HEAD (M6X1X20-MM)	
	9	1	**6I-1497**	1	SEAL	
	10	1	**7C-0351**	2	PLUG-DRAIN (ENGINE OIL)	
C	11	1	**373-9786**	1	PIPE	
M	12	1	**6I-0260**	2	BOLT (M8X1.25X25-MM)	
	13	1	**124-7702**	1	TUBE AS	
	14	1	**6I-4079**	1	NUT	
	15	1	**131-4291**	1	GAUGE AS-OIL LEVEL (DIPSTICK) (ENGINE)	
	16	1	**155-4828**	2	STUD	
M	17	1	**220-8311**	4	BOLT (M8X1.25X115-MM)	
	18	1	**225-6005**	1	GASKET	
	19	1	**230-8094**	1	BRIDGE	
	20	1	**230-8251**	1	PAN-OIL	
M	21	1	**6I-0254**	1	BOLT (M8X1.25X30-MM)	
	22	1	**5C-1809**	1	SPACER (8X19X6.5-MM)	
F			**275-9883**	2	SEAL	

C - CHANGE FROM PREVIOUS TYPE
F - NOT SHOWN
M - METRIC PART

311-8534 **PAN GP-OIL (**contd.**)** **i06704094**

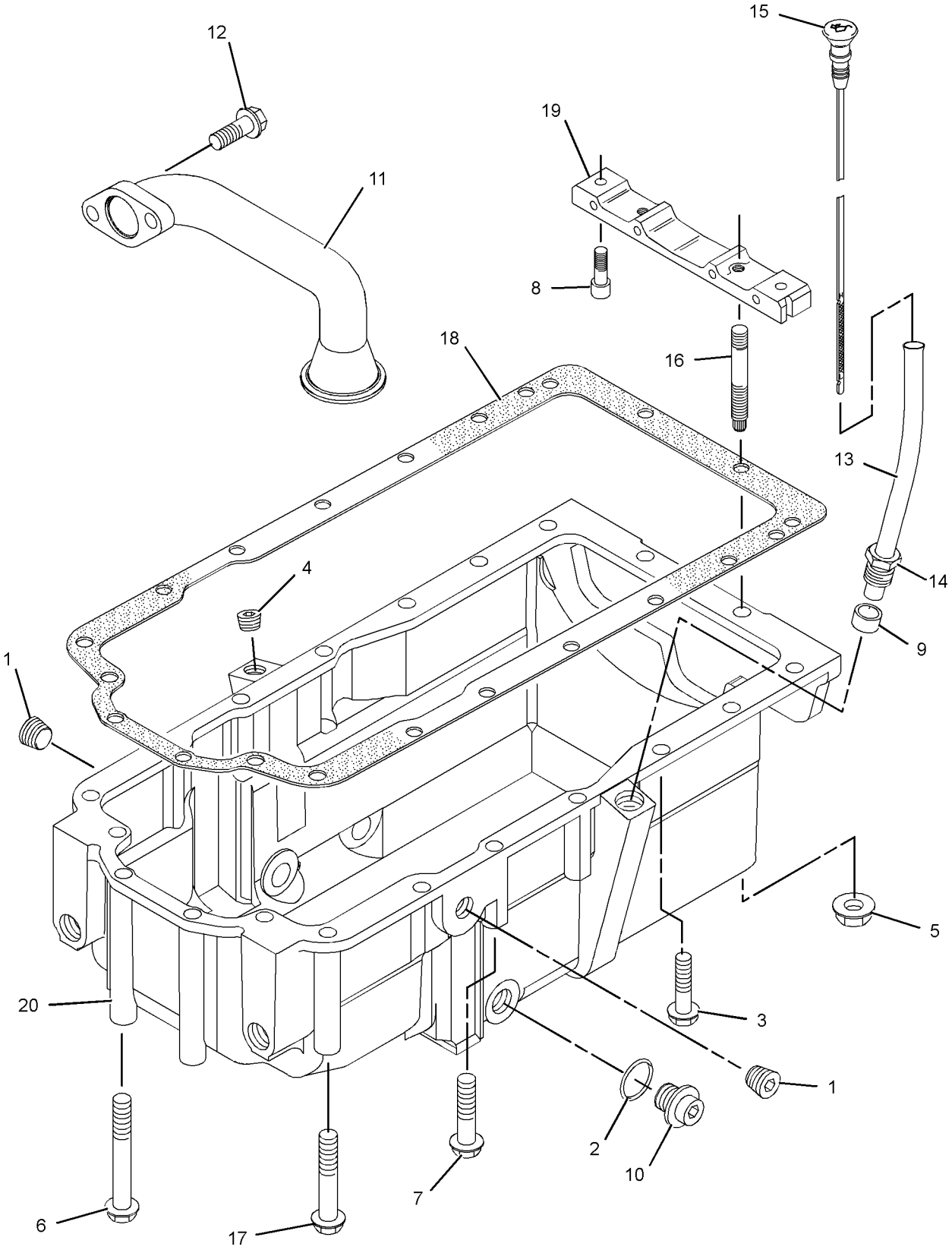

GRAPHIC #1 <END> g03825794

311-8534 PAN GP-OIL

TYPE 3

SMCS-1302 **i06850957**

NOTE	REF NO	GRAPHIC REF	PART NUMBER	QTY	PART NAME 1 2 3 4 5 6 (PRODUCT LEVEL)	SEE PAGE
C	1	1	**433-0344**	1	PAN AS-OIL	
		1	**360-0073**	1	PAN	
	2	1	**335-7585**	2	SEAL	
CM	3	1	**101-3805**	16	BOLT (M8X1.25X90-MM)	
	4	1	**6I-0289**	1	PLUG	
M	5	1	**178-3336**	2	NUT-HEX FLANGE (M8X1.25-THD)	
	6	1	**230-8094**	1	BRIDGE	
	7	1	**471-2882**	1	GASKET	
M	8	1	**8T-0269**	2	BOLT-SOCKET HEAD (M6X1X20-MM)	
	9	1	**6I-1497**	1	SEAL	
	10	1	**7C-0351**	2	PLUG-DRAIN (ENGINE OIL)	
	11	1	**373-9786**	1	PIPE	
CM	12	1	**6I-0260**	4	BOLT (M8X1.25X25-MM)	
	13	1	**124-7702**	1	TUBE AS	
	13A	1	**6I-4079**	1	NUT	
	14	1	**155-4828**	2	STUD	
	15	1	**131-4291**	1	GAUGE AS-OIL LEVEL (DIPSTICK) (ENGINE)	
F			**275-9883**	2	SEAL	

C - CHANGE FROM PREVIOUS TYPE
F - NOT SHOWN
M - METRIC PART

311-8534 **PAN GP-OIL (**contd.**)** **i06850957**

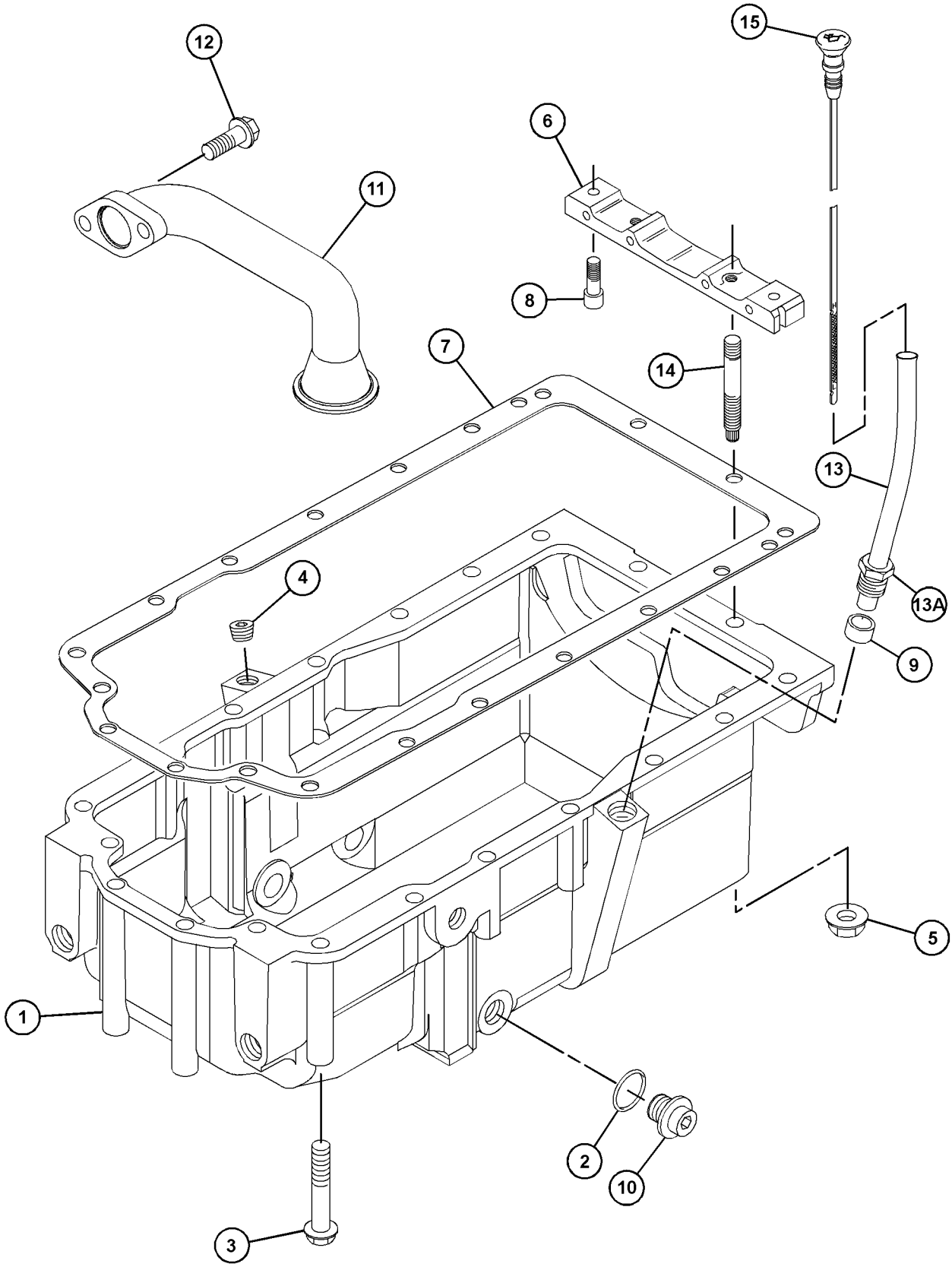

GRAPHIC #1 <END> g06126411

322-4888 PAN GP-OIL—ENGINE

SMCS-1302 **i06850937**

NOTE	REF NO	GRAPHIC REF	PART NUMBER	QTY	PART NAME 1 2 3 4 5 6 (PRODUCT LEVEL)	SEE PAGE
	1	1	**6I-0289**	1	PLUG	
M	2	1	**178-3336**	2	NUT-HEX FLANGE (M8X1.25-THD)	
M	3	1	**6I-0292**	5	BOLT (M8X1.25X140-MM)	
M	4	1	**6I-0293**	12	BOLT (M8X1.25X80-MM)	
M	5	1	**8T-0269**	2	BOLT-SOCKET HEAD (M6X1X20-MM)	
	6	1	**6I-1497**	1	SEAL	
	7	1	**7C-0351**	2	PLUG-DRAIN (ENGINE OIL)	
	8	1	**067-6213**	1	GASKET	
M	9	1	**359-9666**	1	BOLT-FLANGE HEAD (M8X1.25X130-MM)	
M	10	1	**101-3895**	2	BOLT (M8X1.25X35-MM)	
	11	1	**124-7702**	1	TUBE AS	
	11A	1	**6I-4079**	1	NUT	
	12	1	**131-4291**	1	GAUGE AS-OIL LEVEL (DIPSTICK) (ENGINE)	
	13	1	**155-4828**	2	STUD	
	14	1	**230-8094**	1	BRIDGE	
	15	1	**471-2881**	1	GASKET-SUMP	
	16	1	**237-5933**	1	TUBE-OIL SUCTION	
	17	1	**335-7585**	2	SEAL	
	18	1	**303-2124**	1	PAN-OIL	
F		1	**275-9883**	2	SEAL	

F - NOT SHOWN
M - METRIC PART

322-4888 **PAN GP-OIL (**contd.**)** **i06850937**

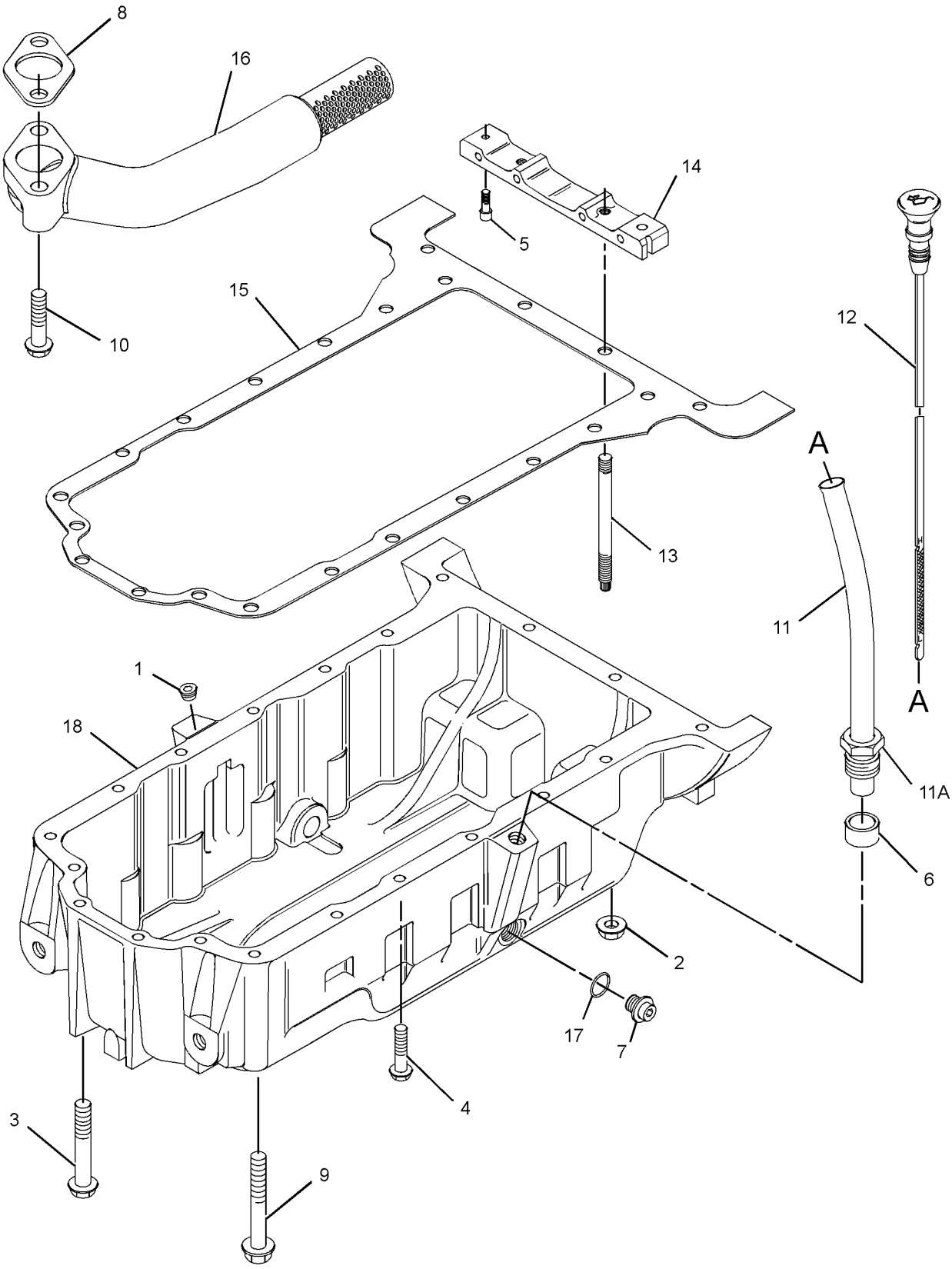

GRAPHIC #1 <END> g06151108

322-8424 PAN GP-OIL

TYPE 1

SMCS-1302 **i02900467**

NOTE	REF NO	GRAPHIC REF	PART NUMBER	QTY	PART NAME 1 2 3 4 5 6 (PRODUCT LEVEL)	SEE PAGE
M	1	1	**6I-0217**	14	BOLT (M8X1.25X20-MM)	
M	2	1	**6I-0260**	2	BOLT (M8X1.25X25-MM)	
	3	1	**6I-0289**	1	PLUG	
M	4	1	**6I-0363**	2	BOLT (M6X1X20-MM)	
M	5	1	**6I-0572**	2	BOLT (M8X1.25X20-MM)	
M	6	1	**6I-0846**	1	BOLT (M6X1X14-MM)	
	7	1	**6I-1497**	1	SEAL	
	8	1	**7C-0351**	2	PLUG-DRAIN (ENGINE OIL)	
	9	1	**067-6213**	1	GASKET	
M	10	1	**101-3771**	4	BOLT (M8X1.25X85-MM)	
M	11	1	**124-3815**	1	BOLT (M8X1.25X16-MM)	
	12	1	**225-6005**	1	GASKET	
	13	1	**225-6041**	1	TUBE	
	14	1	**230-8094**	1	BRIDGE	
	15	1	**275-9883**	2	SEAL	
	16	1	**304-3695**	1	BRACKET	
	17	1	**304-8764**	1	PAN AS-OIL (ENGINE)	
	17A	1	**7C-1224**	2	INSERT	
	18	1	**322-8417**	1	TUBE	
	18A	1	**187-0555**	1	CLIP	
	19	1	**322-8418**	1	GAUGE-OIL LEVEL (DIPSTICK) (ENGINE)	

M - METRIC PART

322-8424 **PAN GP-OIL (**contd.**)** **i02900467**

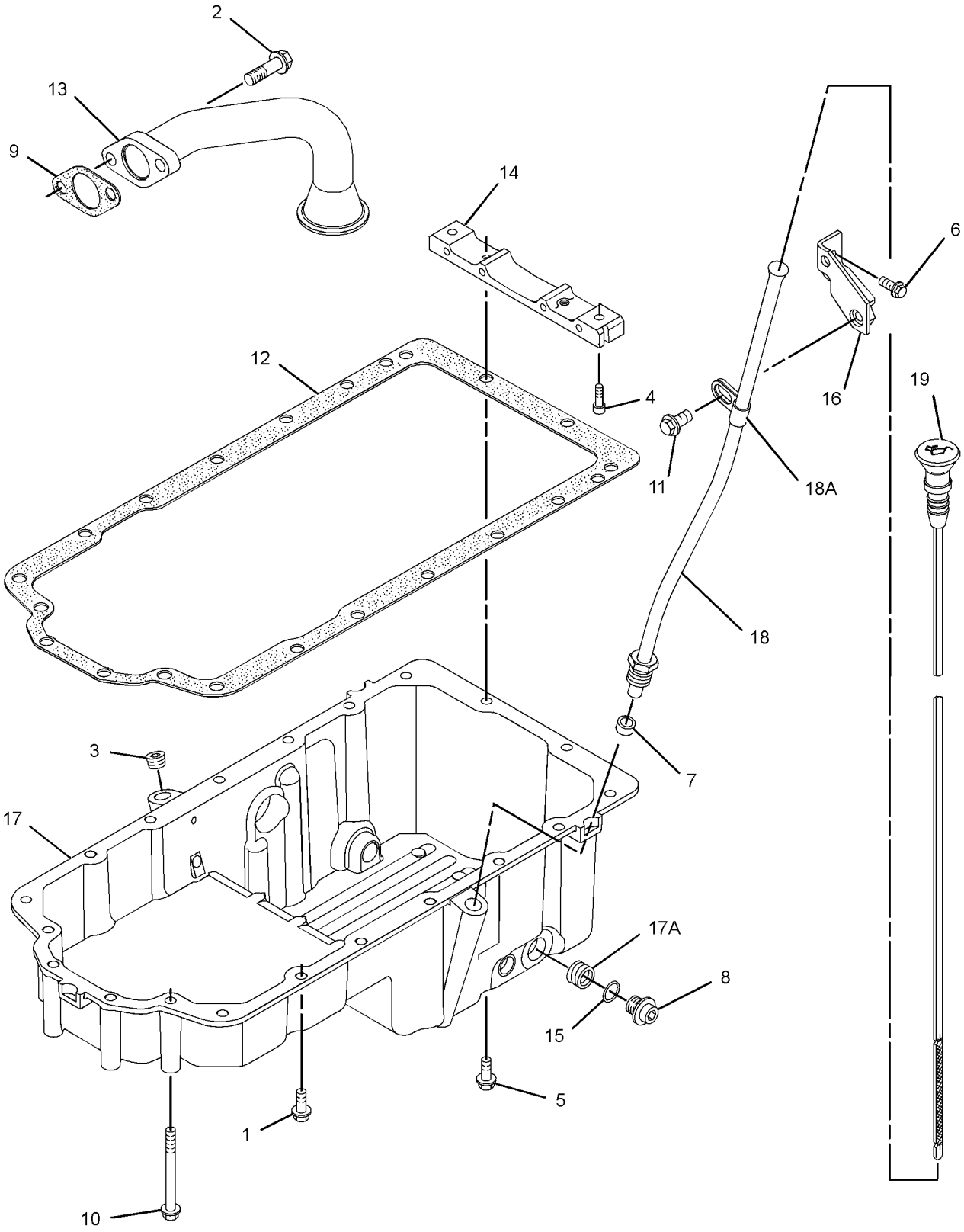

GRAPHIC #1 <END> g01446772

322-8424 PAN GP-OIL

TYPE 2

SMCS-1302 **i06850938**

NOTE	REF NO	GRAPHIC REF	PART NUMBER	QTY	PART NAME 1 2 3 4 5 6 (PRODUCT LEVEL)	SEE PAGE
M	1	1	**6I-0217**	12	BOLT (M8X1.25X20-MM)	
M	2	1	**6I-0260**	2	BOLT (M8X1.25X25-MM)	
	3	1	**6I-0289**	1	PLUG	
M	4	1	**8T-0269**	2	BOLT-SOCKET HEAD (M6X1X20-MM)	
M	5	1	**6I-0572**	4	BOLT (M8X1.25X20-MM)	
M	6	1	**6I-0846**	1	BOLT (M6X1X14-MM)	
	7	1	**6I-1497**	1	SEAL	
	8	1	**7C-0351**	2	PLUG-DRAIN (ENGINE OIL)	
	9	1	**067-6213**	1	GASKET	
M	10	1	**101-3771**	4	BOLT (M8X1.25X85-MM)	
M	11	1	**124-3815**	1	BOLT (M8X1.25X16-MM)	
	12	1	**471-2882**	1	GASKET	
	13	1	**225-6041**	1	TUBE	
	14	1	**230-8094**	1	BRIDGE	
	15	1	**335-7585**	2	SEAL	
	16	1	**304-3695**	1	BRACKET	
	17	1	**353-5219**	1	PAN-OIL	
	18	1	**322-8417**	1	TUBE	
	18A	1	**187-0555**	1	CLIP	
	19	1	**322-8418**	1	GAUGE-OIL LEVEL (DIPSTICK) (ENGINE)	
F		1	**275-9883**	2	SEAL	

F - NOT SHOWN
M - METRIC PART

322-8424 **PAN GP-OIL (**contd.**)** **i06850938**

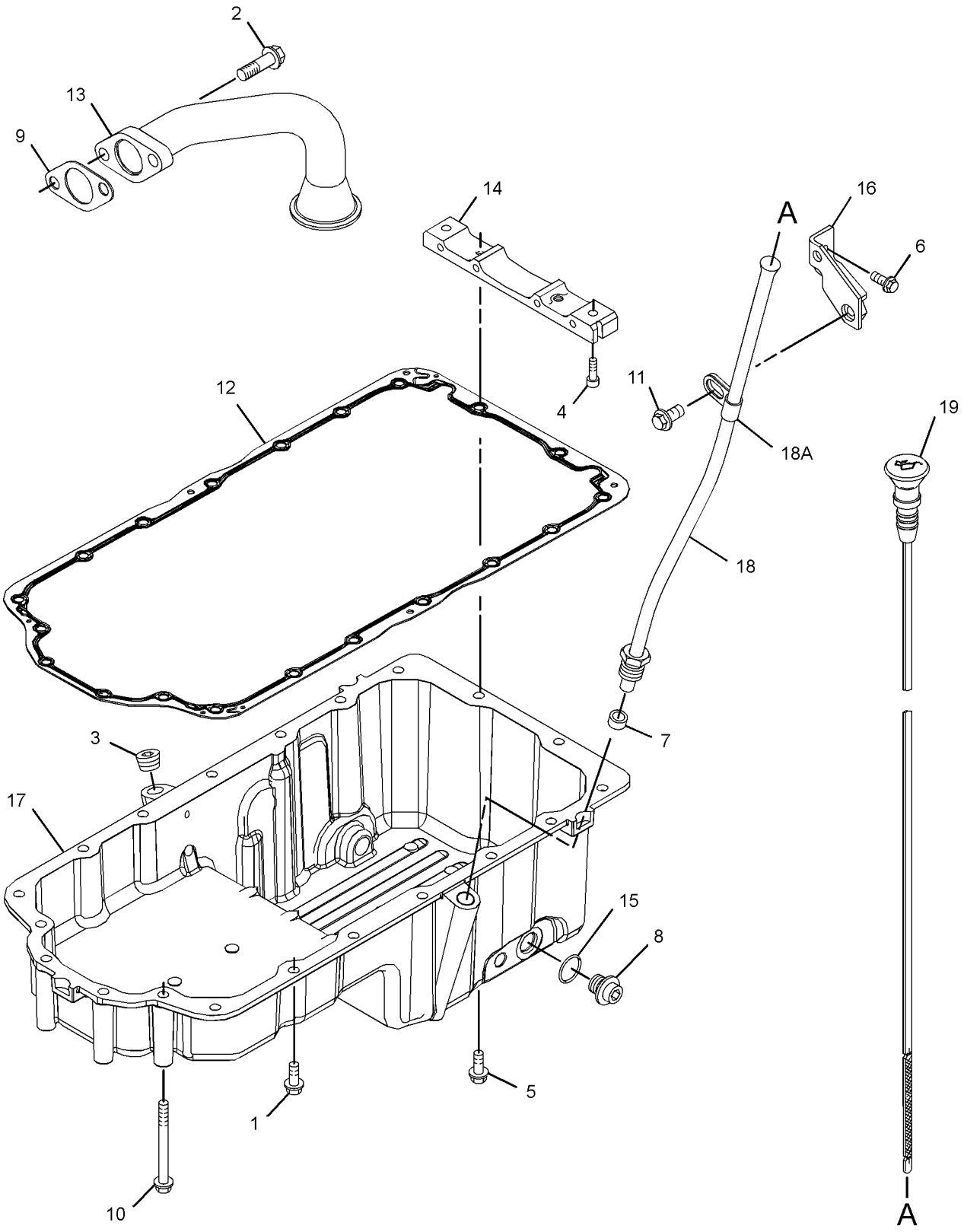

GRAPHIC #1 <END> g06196399

323-8843 PAN GP-OIL

S/N: 4441-25830

SMCS-1302 **i06680498**

NOTE	REF NO	GRAPHIC REF	PART NUMBER	QTY	PART NAME 1 2 3 4 5 6 (PRODUCT LEVEL)	SEE PAGE
	1	1	**067-6823**	2	PLUG	
M	2	1	**6I-0217**	7	BOLT (M8X1.25X20-MM)	
	3	1	**6I-0289**	1	PLUG	
M	4	1	**178-3336**	2	NUT-HEX FLANGE (M8X1.25-THD)	
M	5	1	**6I-0292**	2	BOLT (M8X1.25X140-MM)	
M	6	1	**6I-0293**	4	BOLT (M8X1.25X80-MM)	
M	7	1	**6I-0363**	2	BOLT (M6X1X20-MM)	
	8	1	**6I-1497**	1	SEAL	
	9	1	**7C-0351**	2	PLUG-DRAIN (ENGINE OIL)	
	10	1	**067-6213**	1	GASKET	
M	11	1	**101-3895**	2	BOLT (M8X1.25X35-MM)	
	12	1	**124-7702**	1	TUBE AS	
	12A	1	**6I-4079**		NUT	
	13	1	**131-4291**	1	GAUGE AS-OIL LEVEL (DIPSTICK) (ENGINE)	
	14	1	**155-4828**	2	STUD	
M	15	1	**220-8311**	4	BOLT (M8X1.25X115-MM)	
	16	1	**225-6005**	1	GASKET	
	17	1	**230-8094**	1	BRIDGE	
	18	1	**230-8251**	1	PAN-OIL	
	19	1	**233-8148**	1	STRAINER (ENGINE OIL)	
	20	1	**335-7585**	2	SEAL	
M	21	1	**6I-0254**	1	BOLT (M8X1.25X30-MM)	
	22	1	**5C-1809**	1	SPACER (8X19X6.5-MM)	
F		1	**275-9883**	2	SEAL	

F - NOT SHOWN
M - METRIC PART

323-8843 **PAN GP-OIL (**contd.**)** **i06680498**

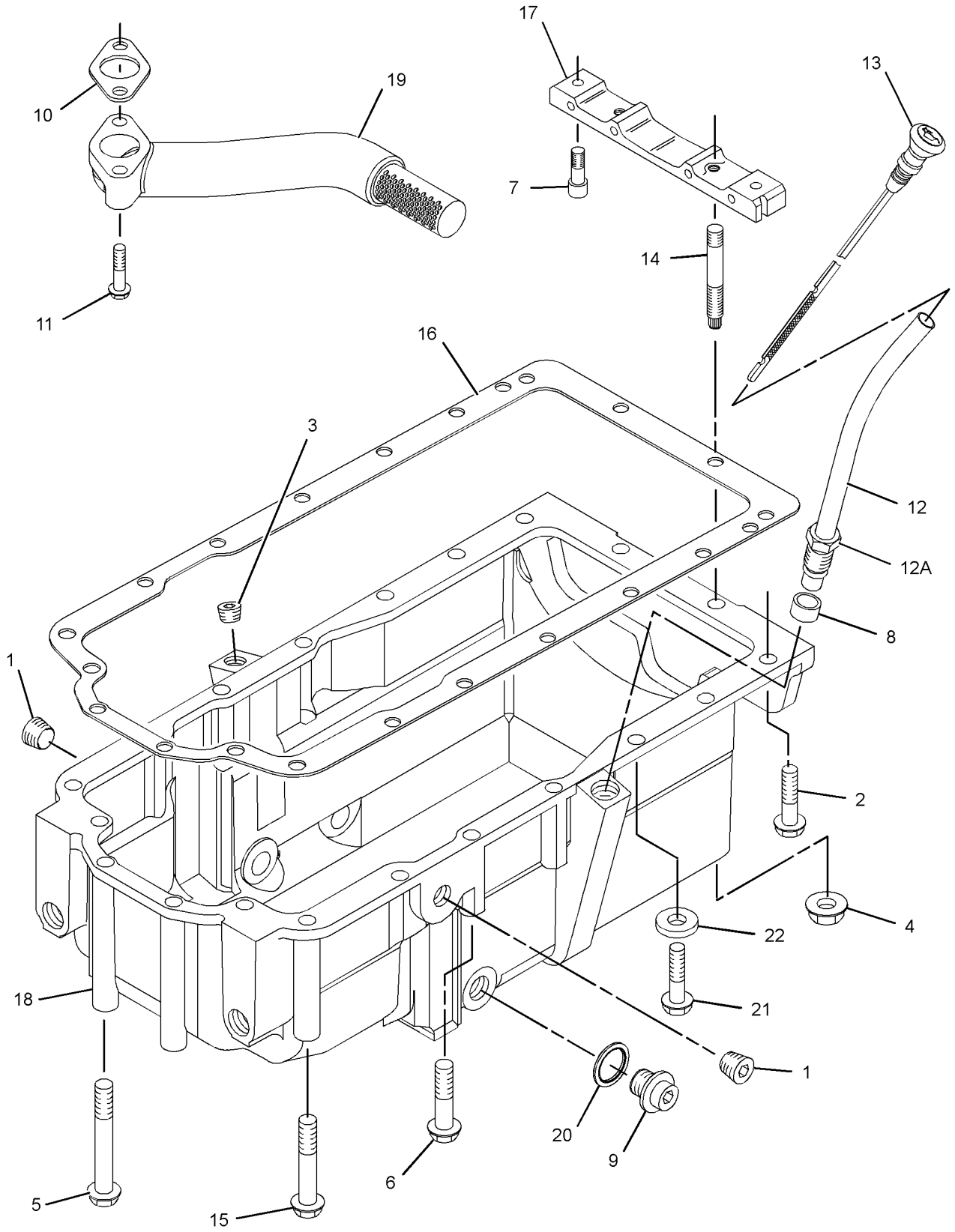

GRAPHIC #1 <END> g06014702

323-8843 PAN GP-OIL

S/N: 44425831-UP

SMCS-1302 **i06850960**

NOTE	REF NO	GRAPHIC REF	PART NUMBER	QTY	PART NAME 1 2 3 4 5 6 (PRODUCT LEVEL)	SEE PAGE
CM	1	1	**101-3805**	16	BOLT (M8X1.25X90-MM)	
	3	1	**6I-0289**	1	PLUG	
M	4	1	**178-3336**	2	NUT-HEX FLANGE (M8X1.25-THD)	
M	7	1	**8T-0269**	2	BOLT-SOCKET HEAD (M6X1X20-MM)	
	8	1	**6I-1497**	1	SEAL	
	9	1	**7C-0351**	2	PLUG-DRAIN (ENGINE OIL)	
	10	1	**067-6213**	1	GASKET	
M	11	1	**101-3895**	2	BOLT (M8X1.25X35-MM)	
	12	1	**124-7702**	1	TUBE AS	
	12A	1	**6I-4079**		NUT	
	13	1	**131-4291**	1	GAUGE AS-OIL LEVEL (DIPSTICK) (ENGINE)	
	14	1	**155-4828**	2	STUD	
	16	1	**471-2882**	1	GASKET	
	17	1	**230-8094**	1	BRIDGE	
C	18	1	**433-0344**	1	PAN AS-OIL	
	18A	1	**360-0073**	1	PAN	
	19	1	**233-8148**	1	STRAINER (ENGINE OIL)	
	20	1	**335-7585**	2	SEAL	
CM	23	1	**6I-0260**	2	BOLT (M8X1.25X25-MM)	
F			**275-9883**	2	SEAL	

C - CHANGE FROM PREVIOUS TYPE
F - NOT SHOWN
M - METRIC PART

323-8843 **PAN GP-OIL (**contd.**)** **i06850960**

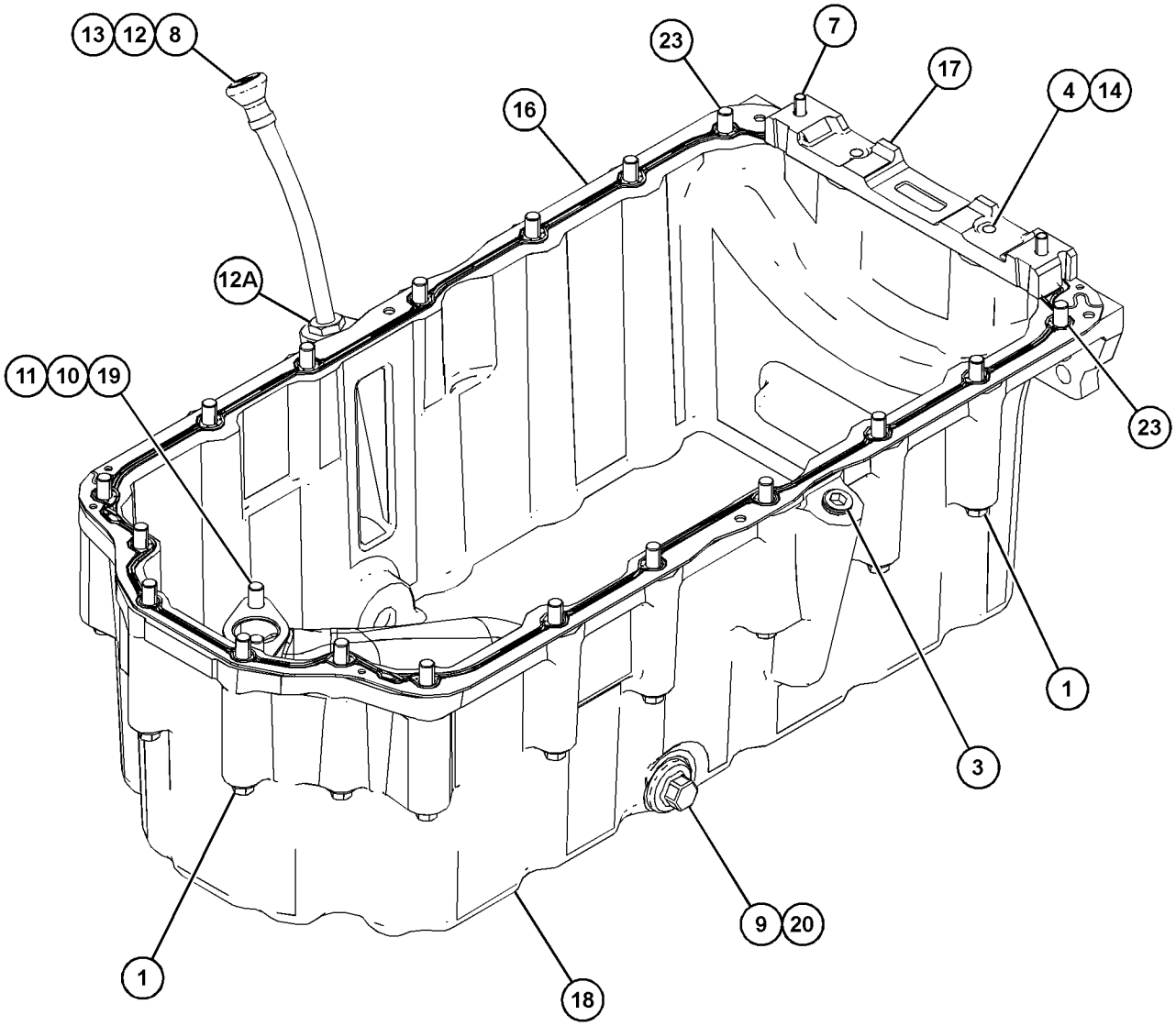

GRAPHIC #1 <END> g06142175

323-9283 PAN GP-OIL

TYPE 1

SMCS-1302 **i06061554**

NOTE	REF NO	GRAPHIC REF	PART NUMBER	QTY	PART NAME 1 2 3 4 5 6 (PRODUCT LEVEL)	SEE PAGE
	1	1	**5C-1809**	1	SPACER (8X19X6.5-MM)	
M	2	1	**6I-0217**	1	BOLT (M8X1.25X20-MM)	
M	3	1	**6I-0260**	2	BOLT (M8X1.25X25-MM)	
M	4	1	**6I-0363**	2	BOLT (M6X1X20-MM)	
M	5	2	**6I-0846**	1	BOLT (M6X1X14-MM)	
	6	2	**6I-1497**	1	SEAL	
M	7	1	**6I-4072**	2	BOLT (M8X1.25X14-MM)	
	8	1	**7C-0351**	2	PLUG-DRAIN (ENGINE OIL)	
	9	1	**067-6213**	1	GASKET	
M	10	1,2	**124-3815**	18	BOLT (M8X1.25X16-MM)	
	11	1	**214-3281**	1	PAN-OIL	
	12	1	**225-6005**	1	GASKET	
	13	1	**230-8094**	1	BRIDGE	
	14	1	**230-8218**	1	TUBE-SUCTION	
	15	1	**335-7585**	2	SEAL	
	16	2	**304-3695**	1	BRACKET	
	17	2	**322-8417**	1	TUBE	
	17A	2	**187-0555**	1	CLIP	
	18	2	**323-9282**	1	GAUGE-OIL LEVEL (DIPSTICK) (ENGINE)	
F			**275-9883**	2	SEAL	

F - NOT SHOWN
M - METRIC PART

323-9283 **PAN GP-OIL (**contd.**)** **i06061554**

REFER TO ALL ILLUSTRATIONS OF THIS GROUP FOR AUXILIARY VIEWS

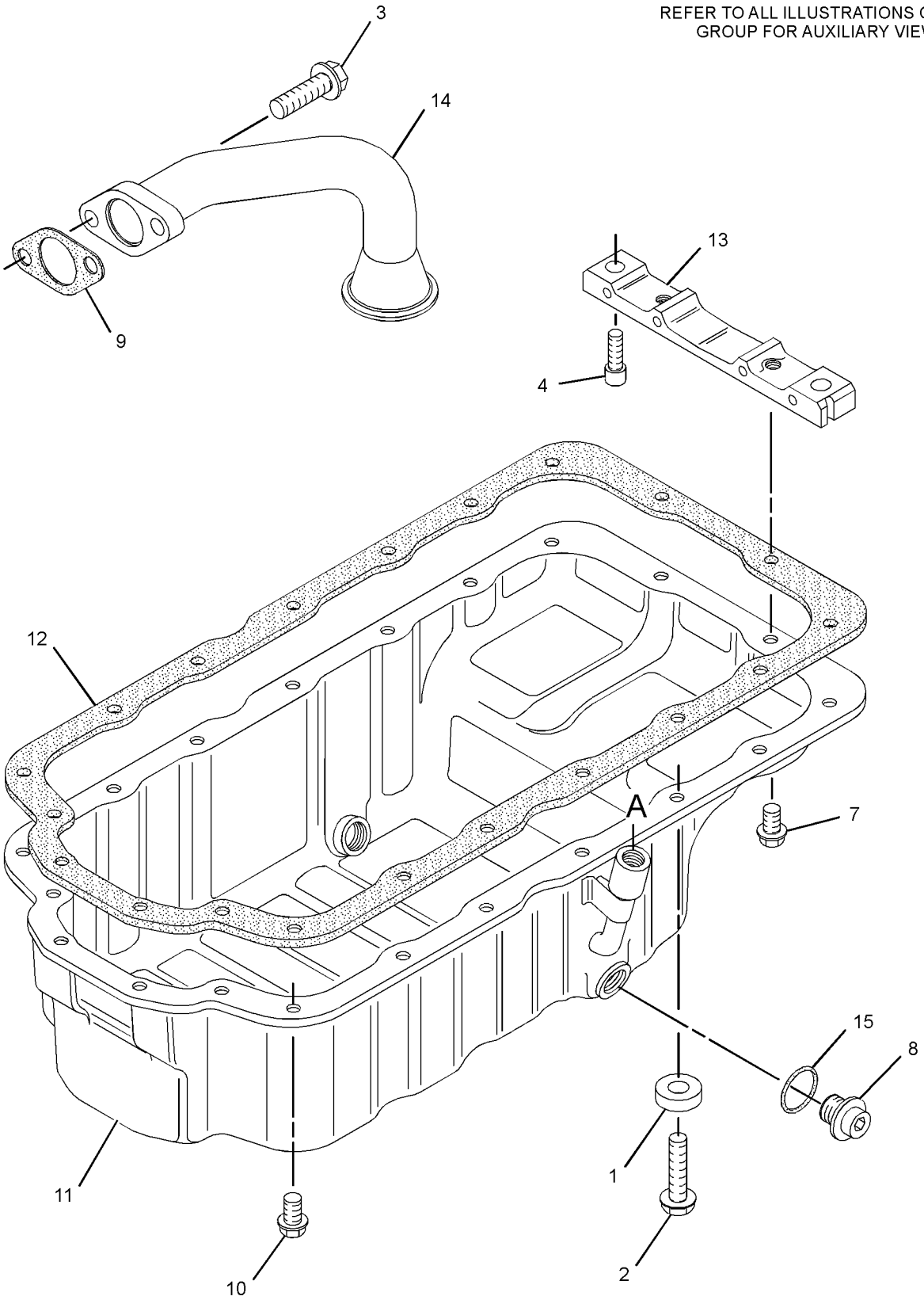

GRAPHIC #1 g01447139

323-9283 **PAN GP-OIL (**contd.**)** **i06061554**

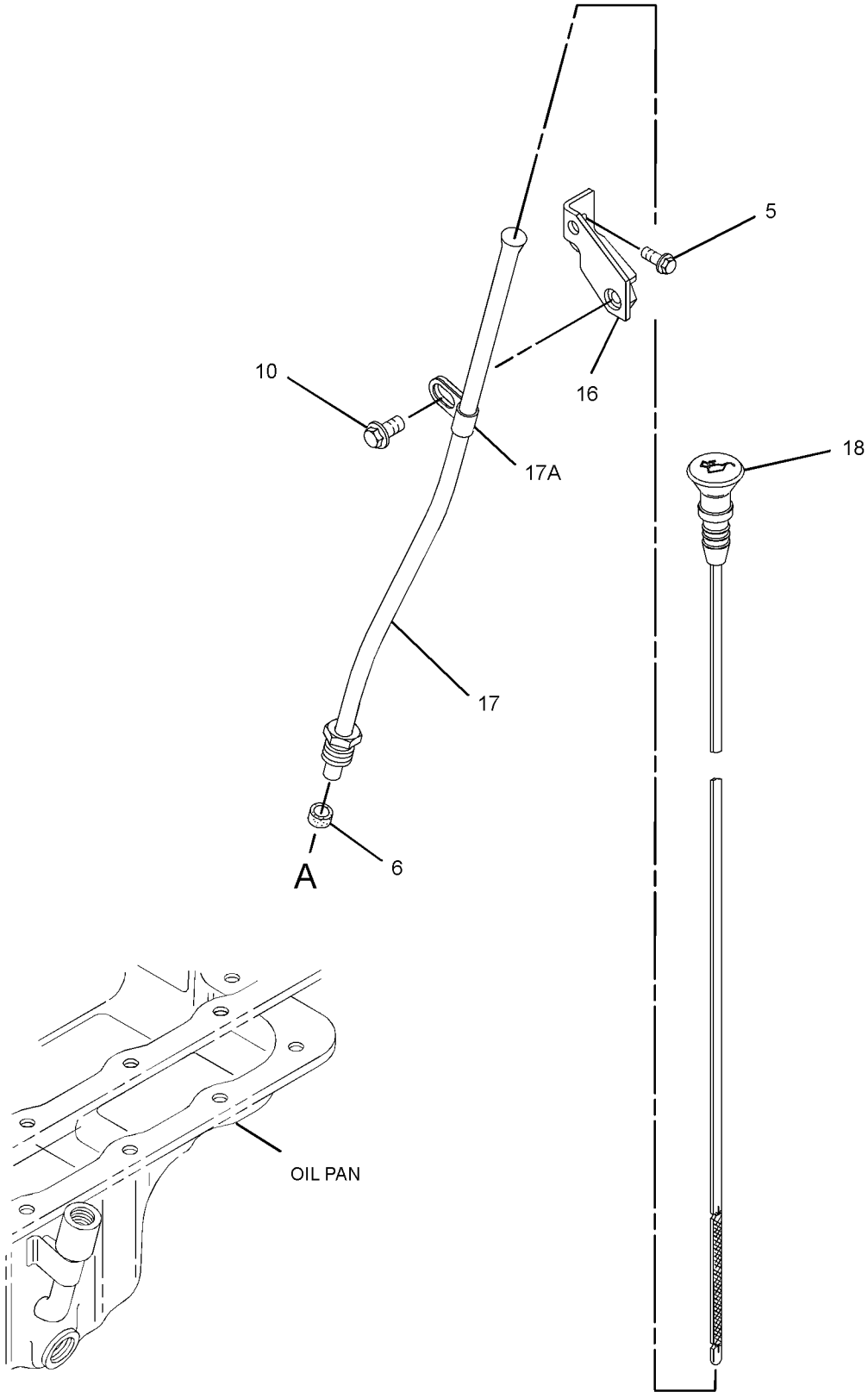

GRAPHIC #2 <END> g01447142

323-9283 PAN GP-OIL

TYPE 2

SMCS-1302 **i06850952**

NOTE	REF NO	GRAPHIC REF	PART NUMBER	QTY	PART NAME 1 2 3 4 5 6 (PRODUCT LEVEL)	SEE PAGE
	1	1	**5C-1809**	1	SPACER (8X19X6.5-MM)	
M	2	1	**6I-0217**	1	BOLT (M8X1.25X20-MM)	
M	3	1	**6I-0260**	2	BOLT (M8X1.25X25-MM)	
M	4	1	**8T-0269**	2	BOLT-SOCKET HEAD (M6X1X20-MM)	
M	5	2	**6I-0846**	1	BOLT (M6X1X14-MM)	
	6	2	**6I-1497**	1	SEAL	
M	7	1	**6I-4072**	2	BOLT (M8X1.25X14-MM)	
	8	1	**7C-0351**	2	PLUG-DRAIN (ENGINE OIL)	
M	10	1,2	**124-3815**	18	BOLT (M8X1.25X16-MM)	
	11	1	**214-3281**	1	PAN-OIL	
	12	1	**471-2882**	1	GASKET	
	13	1	**230-8094**	1	BRIDGE	
C	14	1	**373-9785**	1	PIPE	
	15	1	**335-7585**	2	SEAL	
	16	2	**304-3695**	1	BRACKET	
	17	2	**322-8417**	1	TUBE	
	17A	2	**187-0555**	1	CLIP	
	18	2	**323-9282**	1	GAUGE-OIL LEVEL (DIPSTICK) (ENGINE)	
F		2	**275-9883**	2	SEAL	

C - CHANGE FROM PREVIOUS TYPE
F - NOT SHOWN
M - METRIC PART

323-9283 **PAN GP-OIL (**contd.**)** **i06850952**

REFER TO ALL ILLUSTRATIONS OF THIS GROUP FOR AUXILIARY VIEWS

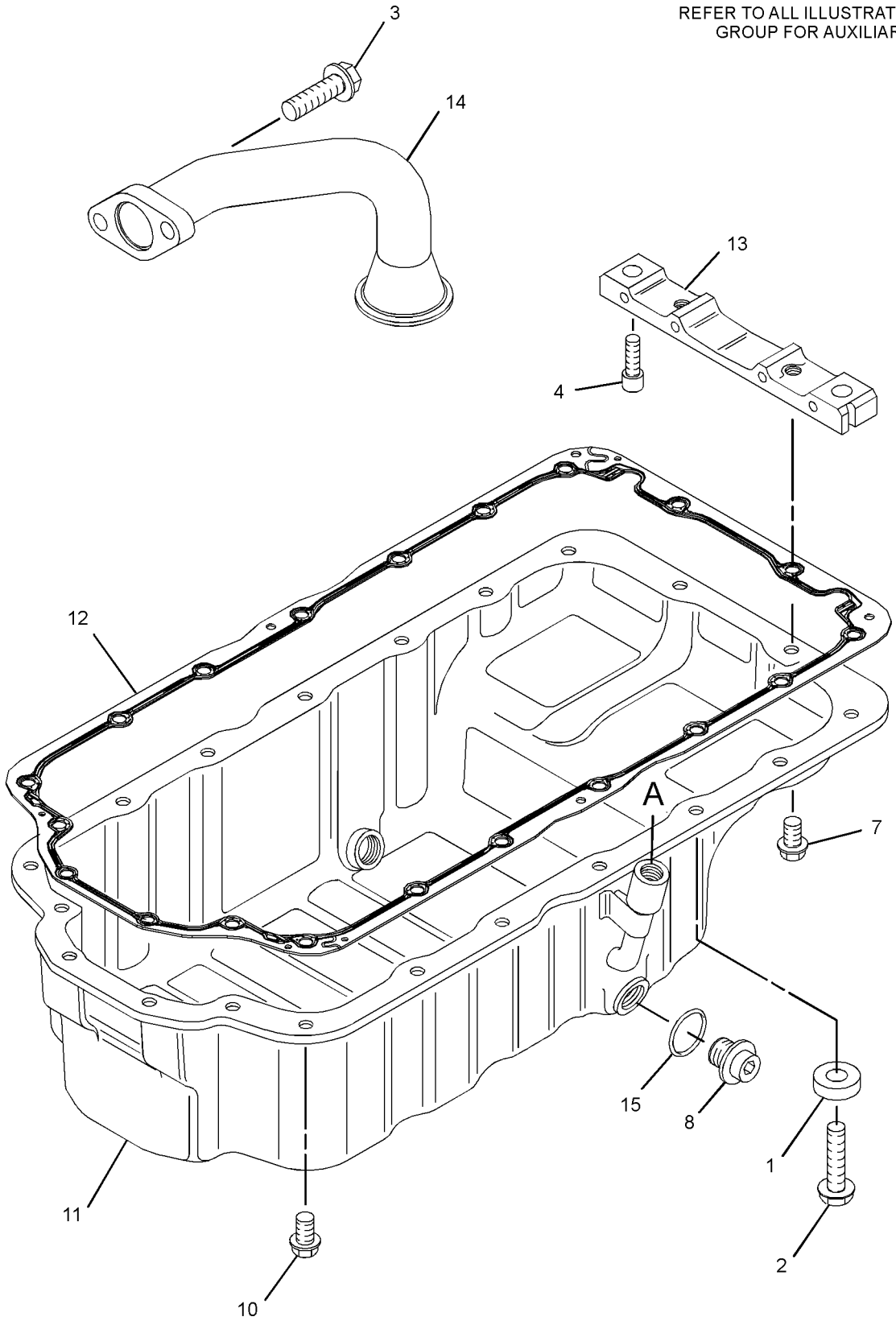

GRAPHIC #1 g06196502

323-9283 **PAN GP-OIL (**contd.**)** **i06850952**

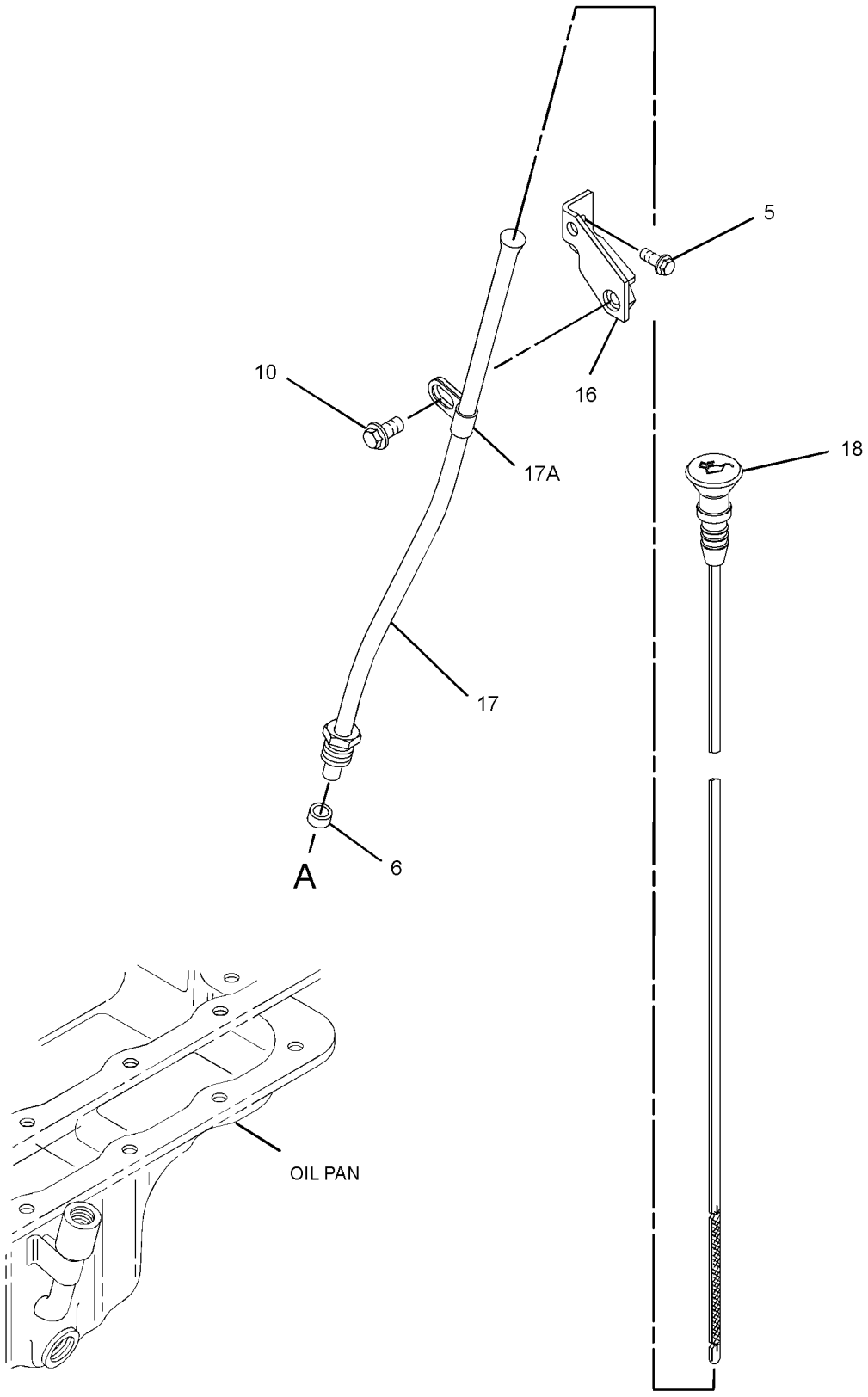

GRAPHIC #2 <END> g06196518

324-6508 PAN GP-OIL—ENGINE

TYPE 1

SMCS-1302 **i06015056**

NOTE	REF NO	GRAPHIC REF	PART NUMBER	QTY	PART NAME 1 2 3 4 5 6 (PRODUCT LEVEL)	SEE PAGE
	1	1	**5C-1809**	1	SPACER (8X19X6.5-MM)	
M	2	1	**6I-0217**	1	BOLT (M8X1.25X20-MM)	
M	3	1	**6I-0260**	2	BOLT (M8X1.25X25-MM)	
M	4	1	**6I-0363**	2	BOLT (M6X1X20-MM)	
	5	1	**6I-1497**	1	SEAL	
M	6	1	**6I-4072**	2	BOLT (M8X1.25X14-MM)	
	7	1	**7C-0351**	2	PLUG-DRAIN (ENGINE OIL)	
	8	1	**067-6213**	1	GASKET	
M	9	1	**124-3815**	17	BOLT (M8X1.25X16-MM)	
	10	1	**124-7702**	1	TUBE AS	
	10A	1	**6I-4079**	1	NUT	
	11	1	**130-1161**	1	GAUGE AS-OIL LEVEL (DIPSTICK) (ENGINE)	
	12	1	**219-4136**	1	PAN-OIL	
	13	1	**225-6005**	1	GASKET	
	14	1	**230-8094**	1	BRIDGE	
	15	1	**230-8218**	1	TUBE-SUCTION	
	16	1	**335-7585**	2	SEAL	
F			**275-9883**	2	SEAL	

F - NOT SHOWN
M - METRIC PART

324-6508 **PAN GP-OIL (**contd.**)** **i06015056**

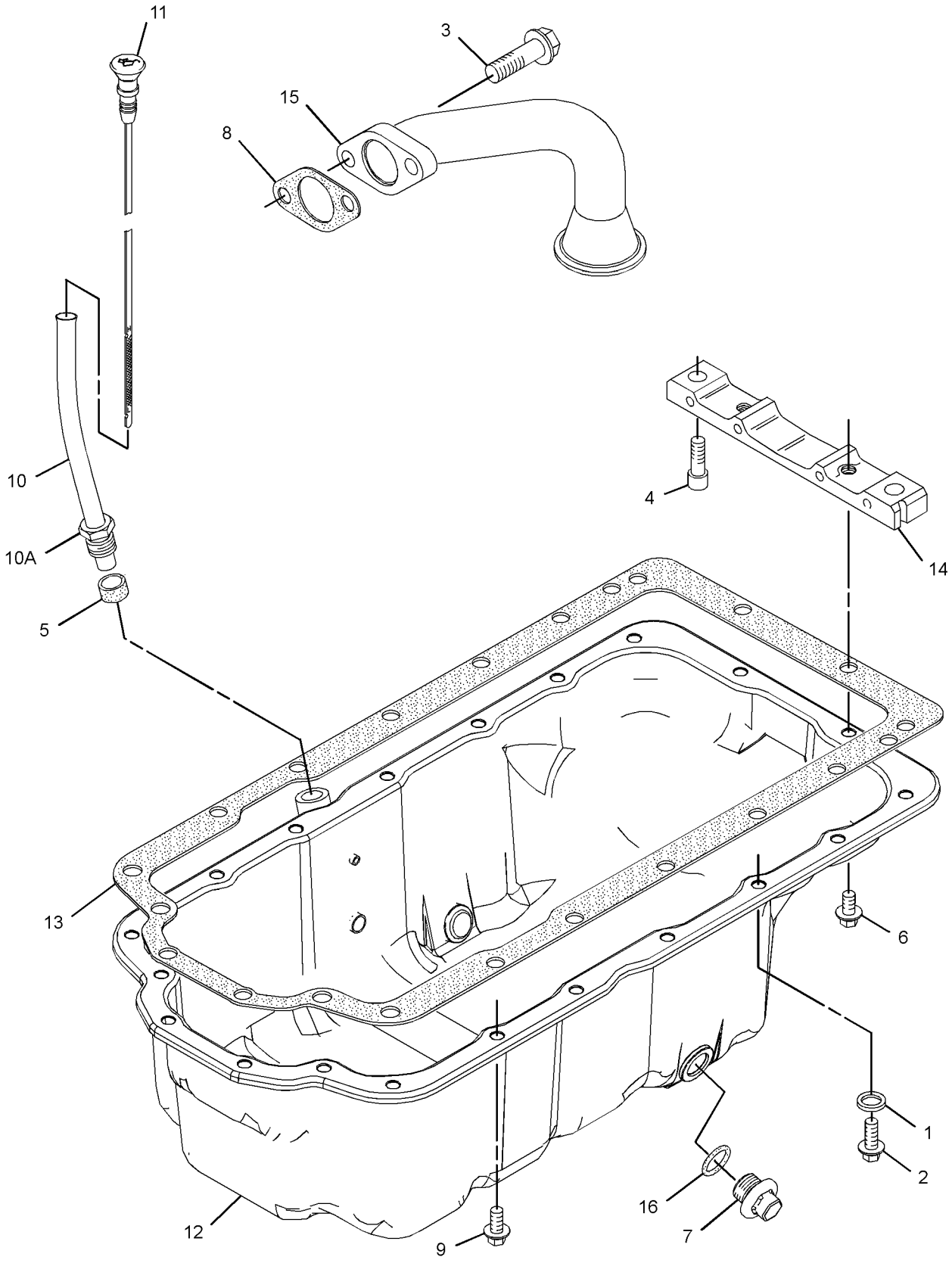

GRAPHIC #1 <END> g01670916

324-6508 PAN GP-OIL—ENGINE

TYPE 2

SMCS-1302 **i06850935**

NOTE	REF NO	GRAPHIC REF	PART NUMBER	QTY	PART NAME 1 2 3 4 5 6 (PRODUCT LEVEL)	SEE PAGE
	1	1	**5C-1809**	1	SPACER (8X19X6.5-MM)	
M	2	1	**6I-0217**	1	BOLT (M8X1.25X20-MM)	
M	3	1	**6I-0260**	2	BOLT (M8X1.25X25-MM)	
M	4	1	**8T-0269**	2	BOLT-SOCKET HEAD (M6X1X20-MM)	
	5	1	**6I-1497**	1	SEAL	
M	6	1	**6I-4072**	2	BOLT (M8X1.25X14-MM)	
	7	1	**7C-0351**	2	PLUG-DRAIN (ENGINE OIL)	
M	9	1	**124-3815**	17	BOLT (M8X1.25X16-MM)	
	10	1	**124-7702**	1	TUBE AS	
	10A	1	**6I-4079**	1	NUT	
	11	1	**130-1161**	1	GAUGE AS-OIL LEVEL (DIPSTICK) (ENGINE)	
	12	1	**219-4136**	1	PAN-OIL	
	13	1	**471-2882**	1	GASKET	
	14	1	**230-8094**	1	BRIDGE	
C	15	1	**373-9785**	1	PIPE	
	16	1	**335-7585**	2	SEAL	
F			**275-9883**	2	SEAL	

C - CHANGE FROM PREVIOUS TYPE
F - NOT SHOWN
M - METRIC PART

324-6508 **PAN GP-OIL (**contd.**)** **i06850935**

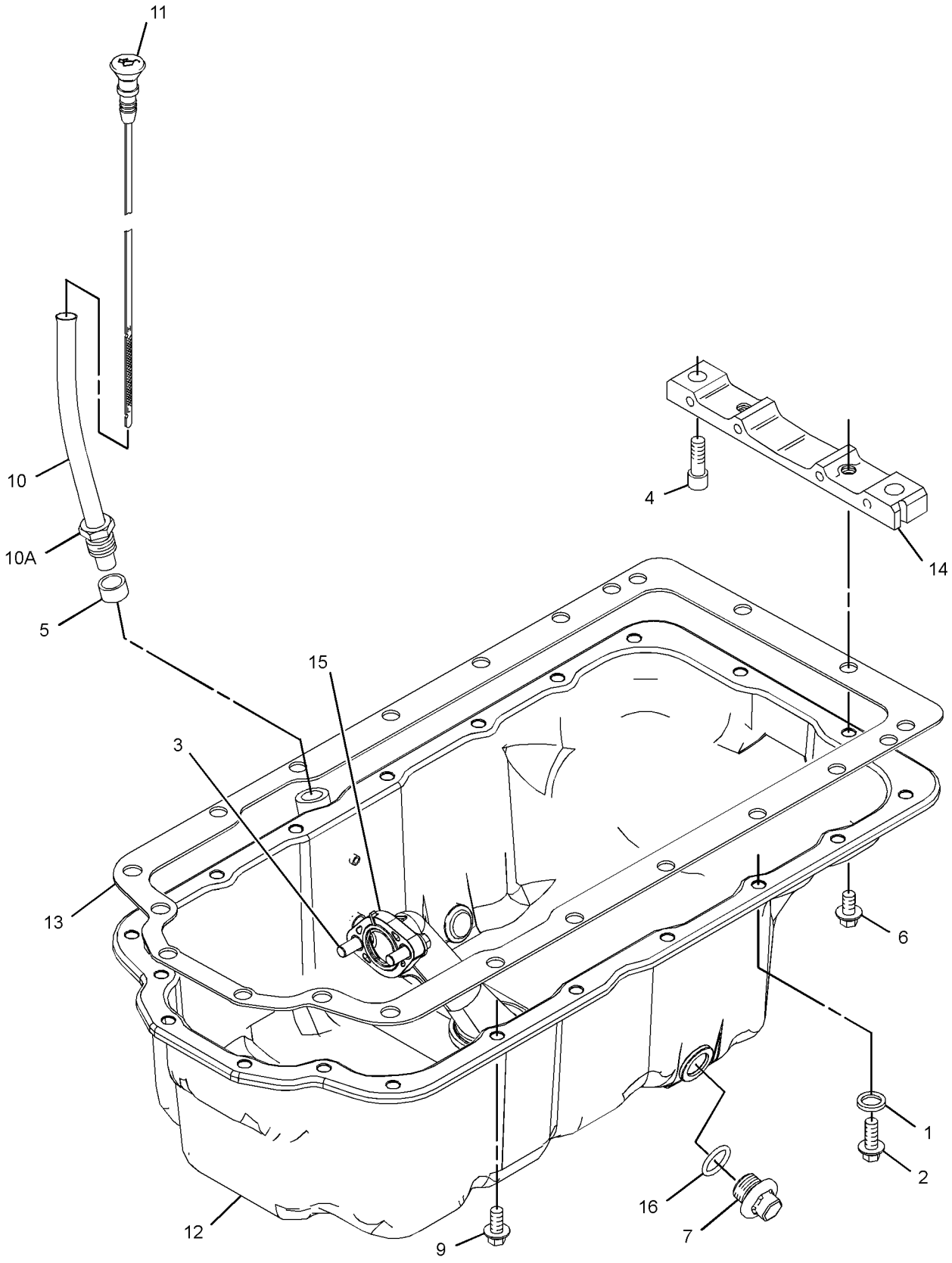

GRAPHIC #1 <END> g03883833

344-8201 PAN GP-OIL

PART OF 435-1692 ENGINE AR-COMPLETE, 435-1685 ENGINE AR-PRIMARY
TYPE 1

SMCS-1302 **i06244703**

NOTE	REF NO	GRAPHIC REF	PART NUMBER	QTY	PART NAME 1 2 3 4 5 6 (PRODUCT LEVEL)	SEE PAGE
	1	1	**5C-1809**	1	SPACER (8X19X6.5-MM)	
M	2	1	**6I-0217**	1	BOLT (M8X1.25X20-MM)	
M	3	1	**6I-0260**	2	BOLT (M8X1.25X25-MM)	
M	4	1	**6I-0363**	2	BOLT (M6X1X20-MM)	
	5	1	**6I-1497**	1	SEAL	
M	6	1	**6I-4072**	2	BOLT (M8X1.25X14-MM)	
	7	1	**7C-0351**	2	PLUG-DRAIN (ENGINE OIL)	
	8	1	**335-2214**	1	TUBE AS	
	8A	1	**6I-4079**	1	NUT	
M	9	1	**124-3815**	17	BOLT (M8X1.25X16-MM)	
	10	1	**214-3281**	1	PAN-OIL	
	11	1	**225-6005**	1	GASKET	
	12	1	**230-8094**	1	BRIDGE	
	13	1	**373-9785**	1	PIPE	
	14	1	**335-7585**	2	SEAL	
	15	1	**335-2204**	1	GAUGE-OIL LEVEL (DIPSTICK) (ENGINE)	
F			**275-9883**	2	SEAL	

F - NOT SHOWN
M - METRIC PART

344-8201 **PAN GP-OIL (**contd.**)** **i06244703**

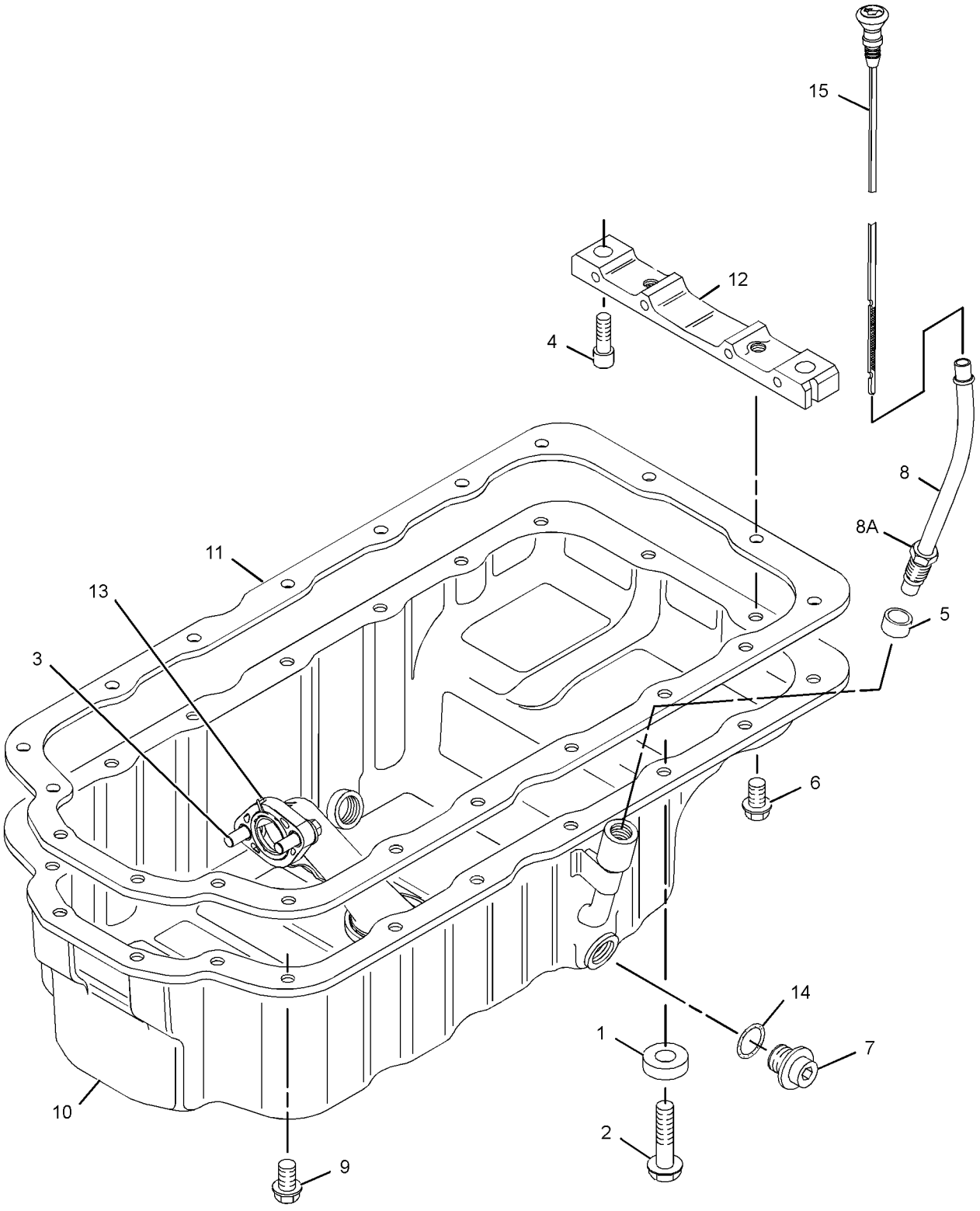

GRAPHIC #1 <END> g03873114

344-8201 PAN GP-OIL

PART OF 435-1692 ENGINE AR-COMPLETE, 540-0570 ENGINE AR-PRIMARY
TYPE 2

SMCS-1302 **i06245035**

NOTE	REF NO	GRAPHIC REF	PART NUMBER	QTY	PART NAME 1 2 3 4 5 6 (PRODUCT LEVEL)	SEE PAGE
	1	1	**5C-1809**	1	SPACER (8X19X6.5-MM)	
M	2	1	**6I-0217**	1	BOLT (M8X1.25X20-MM)	
M	3	1	**6I-0260**	2	BOLT (M8X1.25X25-MM)	
M	4	1	**6I-0363**	2	BOLT (M6X1X20-MM)	
	5	1	**6I-1497**	1	SEAL	
M	6	1	**6I-4072**	2	BOLT (M8X1.25X14-MM)	
	7	1	**7C-0351**	2	PLUG-DRAIN (ENGINE OIL)	
CY	8	1	**351-2098**	1	GAUGE GP-OIL LEVEL (DIPSTICK) (ENGINE)	679
M	9	1	**124-3815**	17	BOLT (M8X1.25X16-MM)	
	10	1	**214-3281**	1	PAN-OIL	
	11	1	**225-6005**	1	GASKET	
	12	1	**230-8094**	1	BRIDGE	
	13	1	**373-9785**	1	PIPE	
	14	1	**335-7585**	2	SEAL	
F			**275-9883**	2	SEAL	

C - CHANGE FROM PREVIOUS TYPE
F - NOT SHOWN
M - METRIC PART
Y - SEPARATE ILLUSTRATION

344-8201 **PAN GP-OIL (**contd.**)** **i06245035**

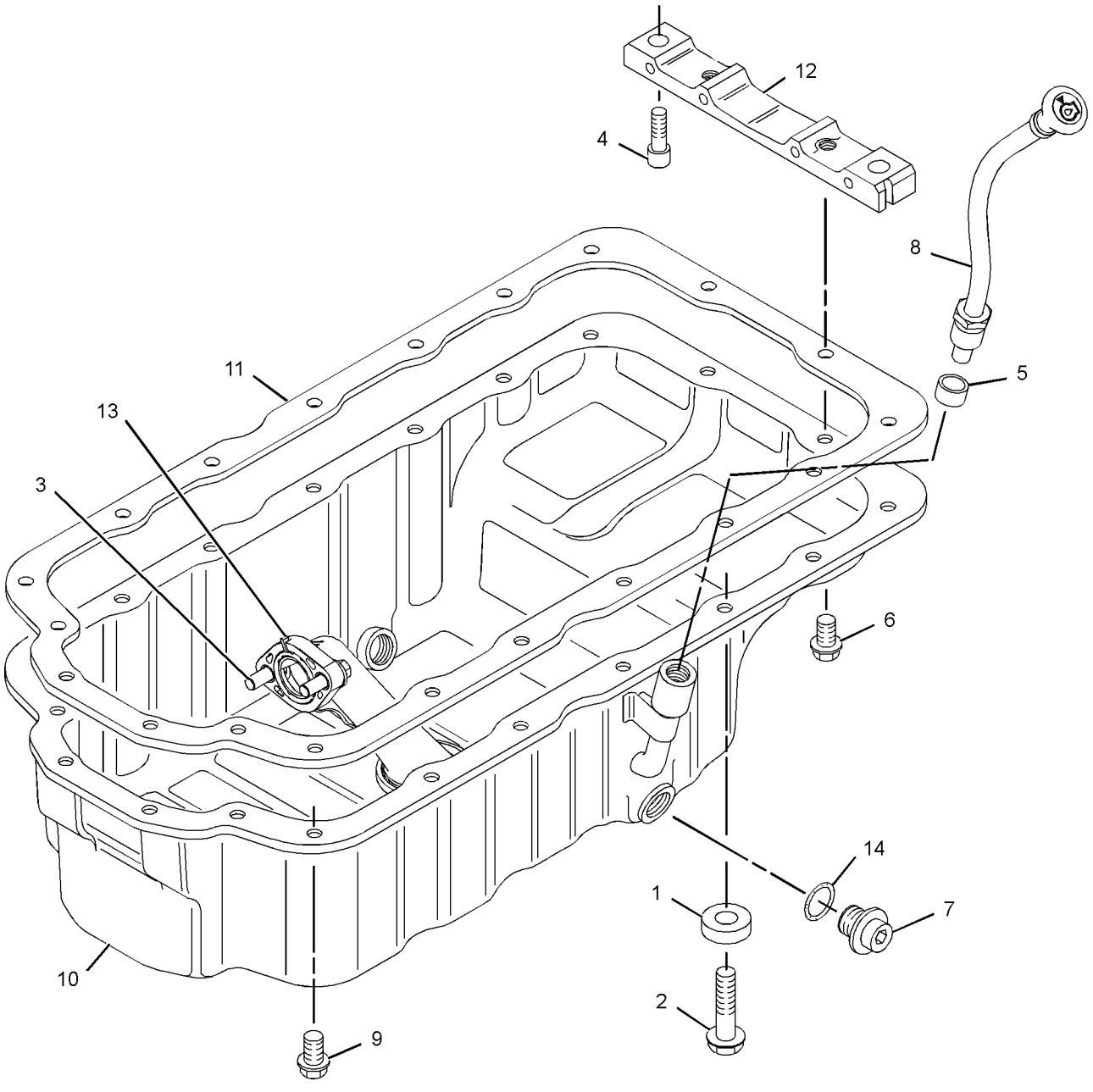

GRAPHIC #1 <END> g03877343

352-6355 PAN GP-OIL

TYPE 1

SMCS-1302 **i03834649**

NOTE	REF NO	GRAPHIC REF	PART NUMBER	QTY	PART NAME 1 2 3 4 5 6 (PRODUCT LEVEL)	SEE PAGE
	1	1	**304-8764**	1	PAN AS-OIL (ENGINE)	
	1A	1	**7C-1224**	2	INSERT	
	2	1	**7C-0351**	2	PLUG-DRAIN (ENGINE OIL)	
	3	1	**275-9883**	2	SEAL	
	4	1	**225-6005**	1	GASKET	
	5	1	**6I-0289**	1	PLUG	
M	6	1	**101-3771**	4	BOLT (M8X1.25X85-MM)	
M	7	1	**6I-0217**	14	BOLT (M8X1.25X20-MM)	
M	8	1	**6I-0572**	2	BOLT (M8X1.25X20-MM)	
	9	1	**230-8094**	1	BRIDGE	
M	10	1	**6I-0363**	2	BOLT (M6X1X20-MM)	
	11	1	**225-6041**	1	TUBE	
	12	1	**067-6213**	1	GASKET	
M	13	1	**6I-0260**	2	BOLT (M8X1.25X25-MM)	
	14	1	**124-7702**	1	TUBE AS	
	14A	1	**6I-4079**	1	NUT	
	15	1	**6I-1497**	1	SEAL	
	16	1	**124-7703**	1	GAUGE AS-OIL LEVEL (DIPSTICK) (ENGINE)	

M - METRIC PART

352-6355 **PAN GP-OIL (**contd.**)** **i03834649**

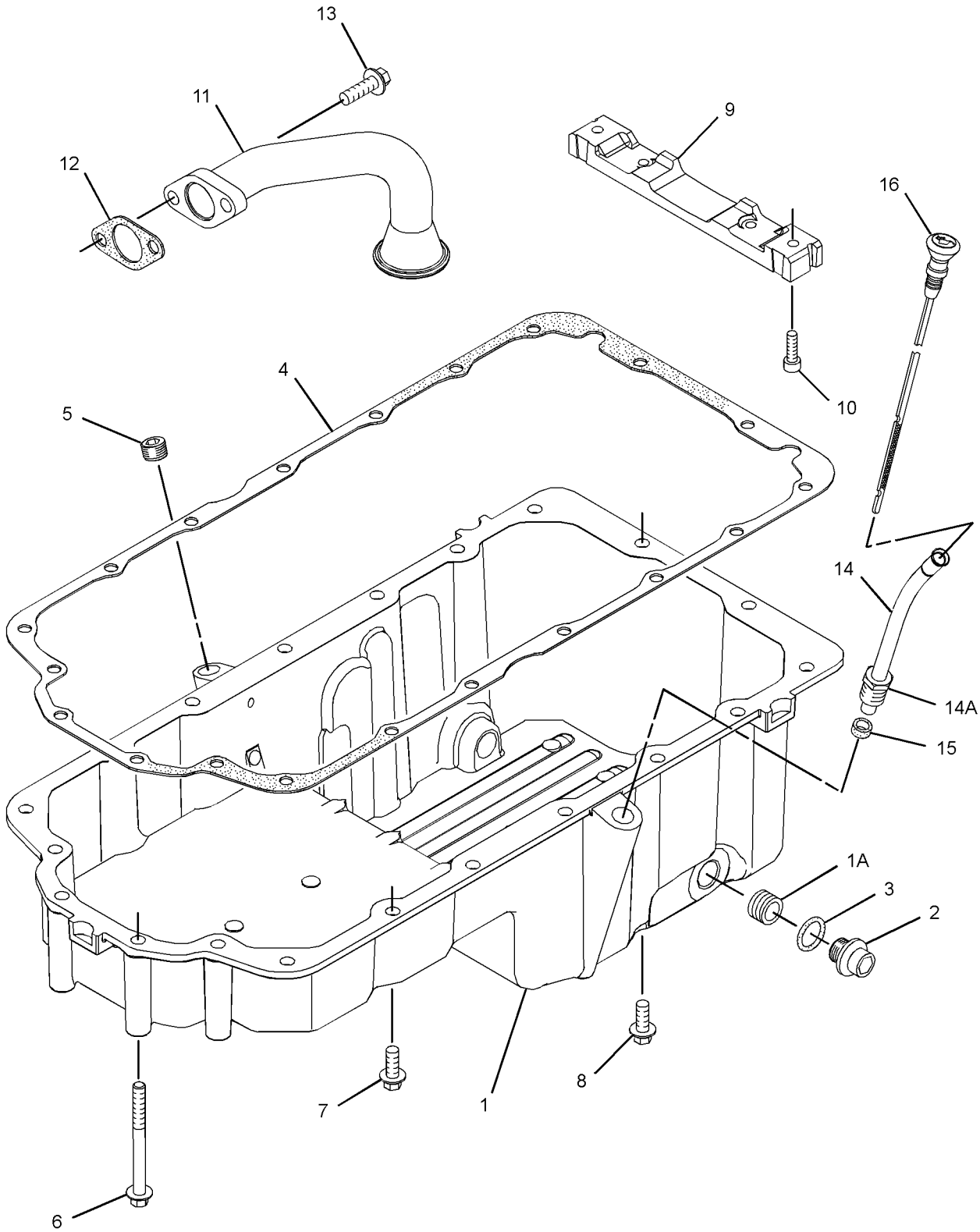

GRAPHIC #1 <END> g01352851

352-6355 PAN GP-OIL

TYPE 2

SMCS-1302 **i06850989**

NOTE	REF NO	GRAPHIC REF	PART NUMBER	QTY	PART NAME 1 2 3 4 5 6 (PRODUCT LEVEL)	SEE PAGE
C	1	1	**353-5219**	1	PAN-OIL	
	2	1	**7C-0351**	2	PLUG-DRAIN (ENGINE OIL)	
	3	1	**335-7585**	2	SEAL	
	4	1	**471-2882**	1	GASKET	
	5	1	**6I-0289**	1	PLUG	
M	6	1	**101-3771**	4	BOLT (M8X1.25X85-MM)	
M	7	1	**6I-0217**	12	BOLT (M8X1.25X20-MM)	
M	8	1	**6I-0572**	4	BOLT (M8X1.25X20-MM)	
	9	1	**230-8094**	1	BRIDGE	
M	10	1	**8T-0269**	2	BOLT-SOCKET HEAD (M6X1X20-MM)	
	11	1	**225-6041**	1	TUBE	
	12	1	**067-6213**	1	GASKET	
M	13	1	**6I-0260**	2	BOLT (M8X1.25X25-MM)	
	14	1	**124-7702**	1	TUBE AS	
	14A	1	**6I-4079**	1	NUT	
	15	1	**6I-1497**	1	SEAL	
	16	1	**124-7703**	1	GAUGE AS-OIL LEVEL (DIPSTICK) (ENGINE)	
F		1	**275-9883**	2	SEAL	

C - CHANGE FROM PREVIOUS TYPE
F - NOT SHOWN
M - METRIC PART

352-6355 **PAN GP-OIL (**contd.**)** **i06850989**

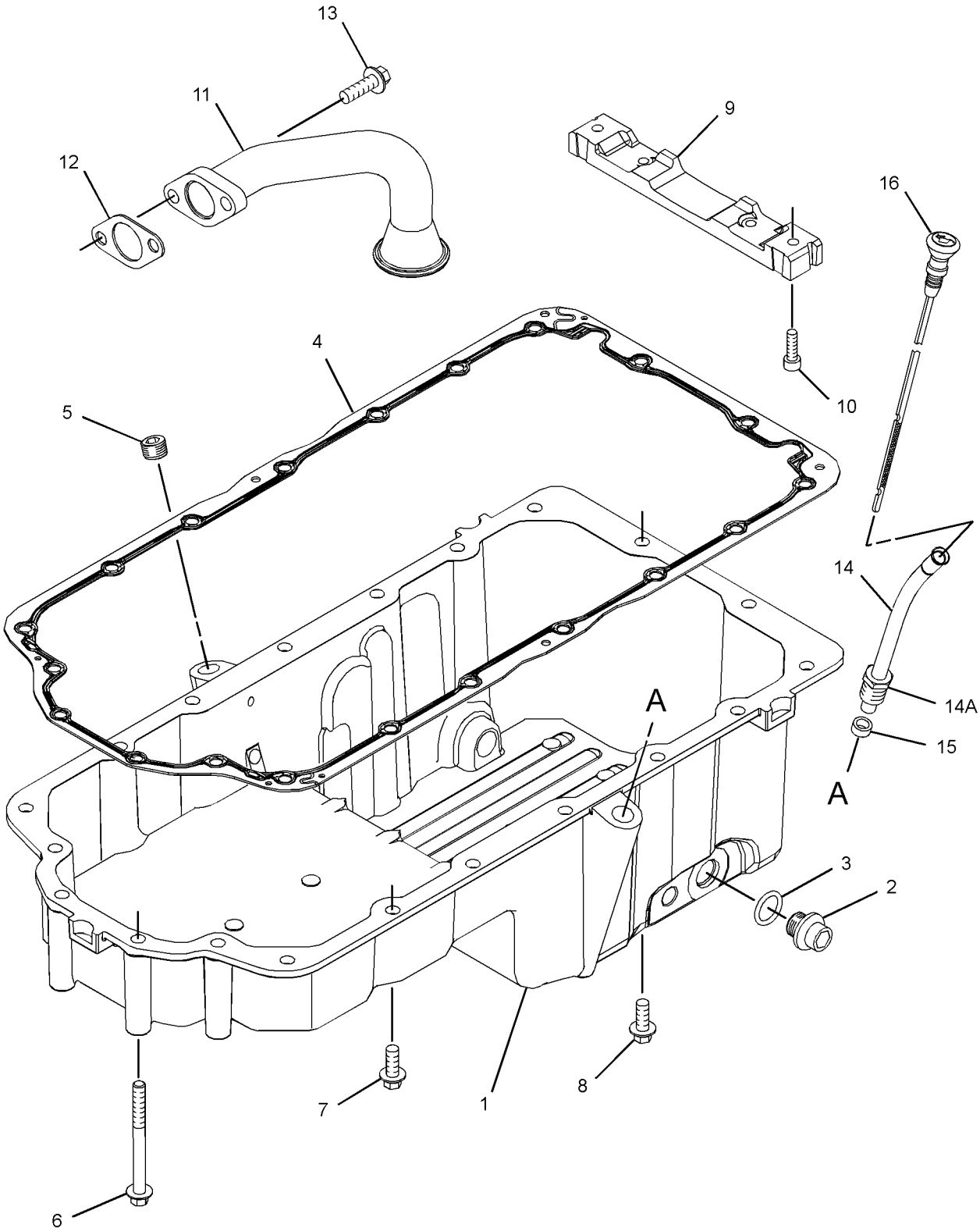

GRAPHIC #1 <END> g06196710

353-7377 PAN GP-OIL

S/N: 4441-26051

SMCS-1302 **i06680581**

NOTE	REF NO	GRAPHIC REF	PART NUMBER	QTY	PART NAME 1 2 3 4 5 6 (PRODUCT LEVEL)	SEE PAGE
	1	1	**067-6823**	2	PLUG	
M	2	1	**6I-0217**	7	BOLT (M8X1.25X20-MM)	
	3	1	**6I-0289**	1	PLUG	
M	4	1	**6I-0291**	2	NUT (M8X1.25-THD)	
M	5	1	**6I-0292**	2	BOLT (M8X1.25X140-MM)	
M	6	1	**6I-0293**	4	BOLT (M8X1.25X80-MM)	
M	7	1	**6I-0363**	2	BOLT (M6X1X20-MM)	
	8	1	**6I-1497**	1	SEAL	
	9	1	**7C-0351**	2	PLUG-DRAIN (ENGINE OIL)	
	10	1	**067-6213**	1	GASKET	
M	11	1	**101-3895**	2	BOLT (M8X1.25X35-MM)	
	12	1	**251-8282**	1	TUBE AS	
	12A	1	**6I-4079**	1	NUT	
	13	1	**353-7368**	1	GAUGE AS-OIL LEVEL (DIPSTICK) (ENGINE)	
	14	1	**155-4828**	2	STUD	
M	15	1	**220-8311**	4	BOLT (M8X1.25X115-MM)	
	16	1	**225-6005**	1	GASKET	
	17	1	**230-8094**	1	BRIDGE	
	18	1	**230-8251**	1	PAN-OIL	
	19	1	**233-8148**	1	STRAINER (ENGINE OIL)	
	20	1	**335-7585**	2	SEAL	
	21	1	**5C-1809**	1	SPACER (8X19X6.5-MM)	
M	22	1	**6I-0254**	1	BOLT (M8X1.25X30-MM)	
F			**275-9883**	2	SEAL	

F - NOT SHOWN
M - METRIC PART

353-7377 **PAN GP-OIL (**contd.**)** **i06680581**

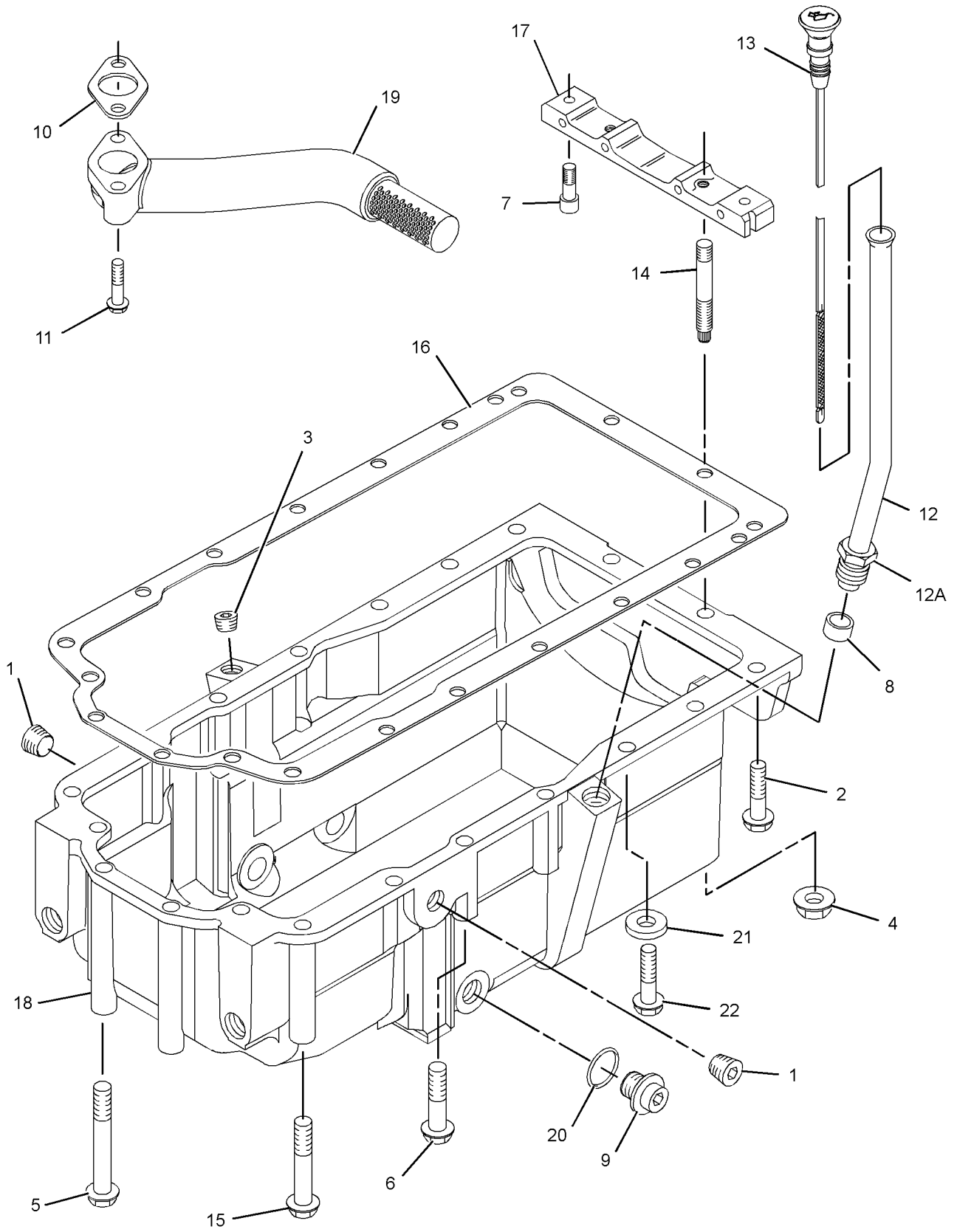

GRAPHIC #1 <END> g03874762

353-7377 PAN GP-OIL

S/N: 44426052-UP

SMCS-1302 **i06680611**

NOTE	REF NO	GRAPHIC REF	PART NUMBER	QTY	PART NAME 1 2 3 4 5 6 (PRODUCT LEVEL)	SEE PAGE
CM	1	1	**6I-0260**	2	BOLT (M8X1.25X25-MM)	
	2	1	**6I-0289**	1	PLUG	
M	3	1	**6I-0291**	2	NUT (M8X1.25-THD)	
M	4	1	**6I-0363**	2	BOLT (M6X1X20-MM)	
	5	1	**6I-1497**	1	SEAL	
	6	1	**7C-0351**	2	PLUG-DRAIN (ENGINE OIL)	
	7	1	**067-6213**	1	GASKET	
CM	8	1	**101-3805**	16	BOLT (M8X1.25X90-MM)	
M	9	1	**101-3895**	2	BOLT (M8X1.25X35-MM)	
	10	1	**155-4828**	2	STUD	
	11	1	**225-6005**	1	GASKET	
	12	1	**230-8094**	1	BRIDGE	
	13	1	**233-8148**	1	STRAINER	
	14	1	**251-8282**	1	TUBE AS	
	15	1	**335-7585**	2	SEAL	
	16	1	**353-7368**	1	GAUGE AS-OIL LEVEL (DIPSTICK)	
C	17	1	**433-0344**	1	PAN AS-OIL	
		1	**360-0073**	1	PAN	
F		1	**275-9883**	2	SEAL	

C - CHANGE FROM PREVIOUS TYPE
F - NOT SHOWN
M - METRIC PART

353-7377 **PAN GP-OIL (**contd.**)** **i06680611**

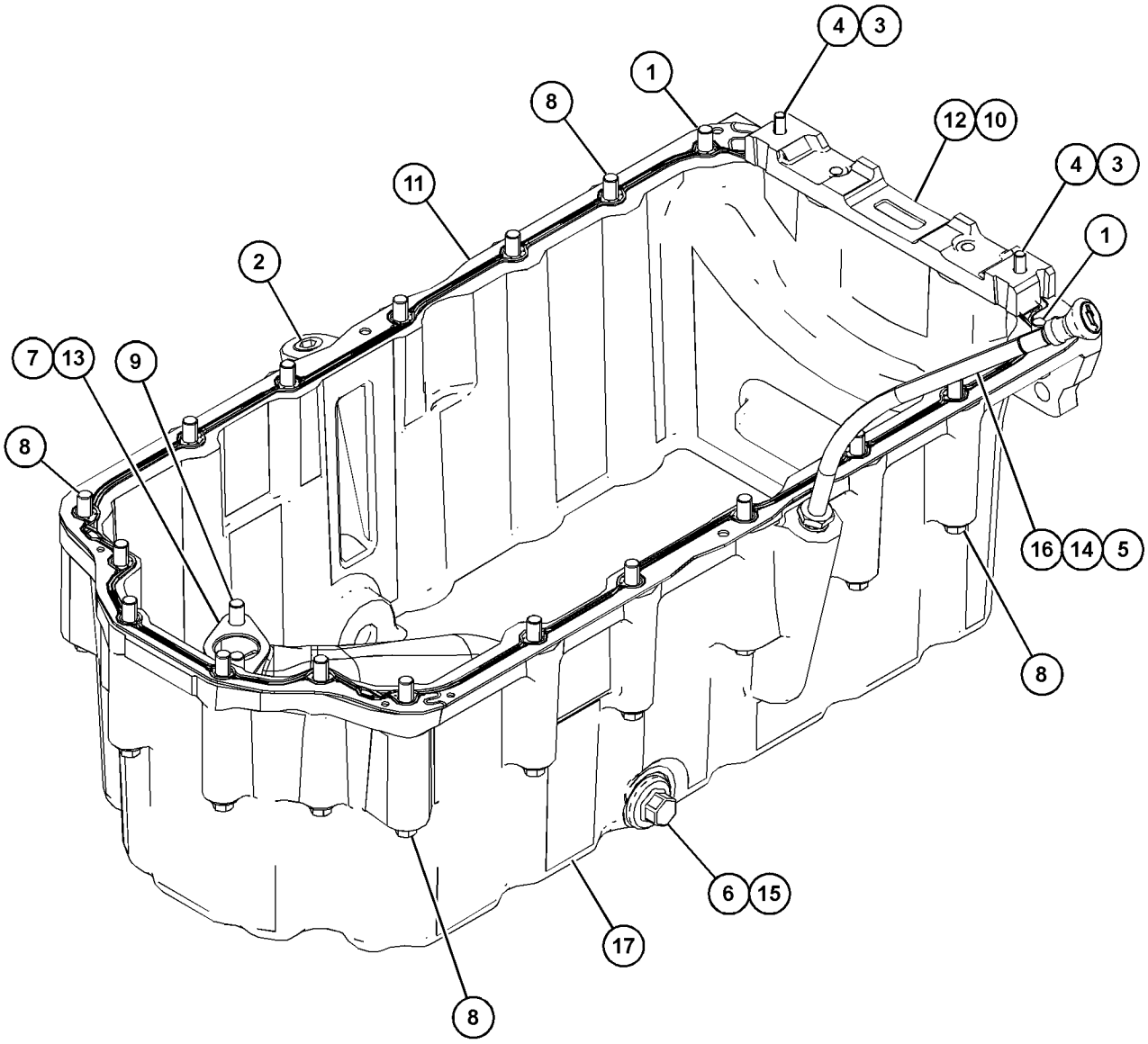

GRAPHIC #1 <END> g06110323

362-2831 PAN GP-OIL

SMCS-1302 **i06015184**

NOTE	REF NO	GRAPHIC REF	PART NUMBER	QTY	PART NAME 1 2 3 4 5 6 (PRODUCT LEVEL)	SEE PAGE
M	1	1	**6I-0292**	5	BOLT (M8X1.25X140-MM)	
M	2	1	**6I-0293**	12	BOLT (M8X1.25X80-MM)	
M	3	1	**6I-0363**	2	BOLT (M6X1X20-MM)	
M	4	1	**101-3895**	2	BOLT (M8X1.25X35-MM)	
M	5	1	**359-9666**	1	BOLT-FLANGE HEAD (M8X1.25X130-MM)	
	6	1	**230-8094**	1	BRIDGE	
	7	1	**067-6213**	1	GASKET	
	8	1	**237-5932**	1	GASKET	
	9	1	**131-3777**	1	GAUGE AS-OIL LEVEL (DIPSTICK) (ENGINE)	
M	10	1	**6I-0291**	2	NUT (M8X1.25-THD)	
	11	1	**362-2817**	1	PAN-OIL	
	12	1	**362-2818**	1	PIPE-SUCTION	
	13	1	**7C-0351**	1	PLUG-DRAIN (ENGINE OIL)	
	14	1	**6I-1497**	1	SEAL	
	15	1	**335-7585**	1	SEAL	
	16	1	**155-4828**	2	STUD	
	17	1	**124-7702**	1	TUBE AS	
	17A	1	**6I-4079**	1	NUT	
F			**275-9883**	1	SEAL	

F - NOT SHOWN
M - METRIC PART

362-2831 **PAN GP-OIL (**contd.**)** **i06015184**

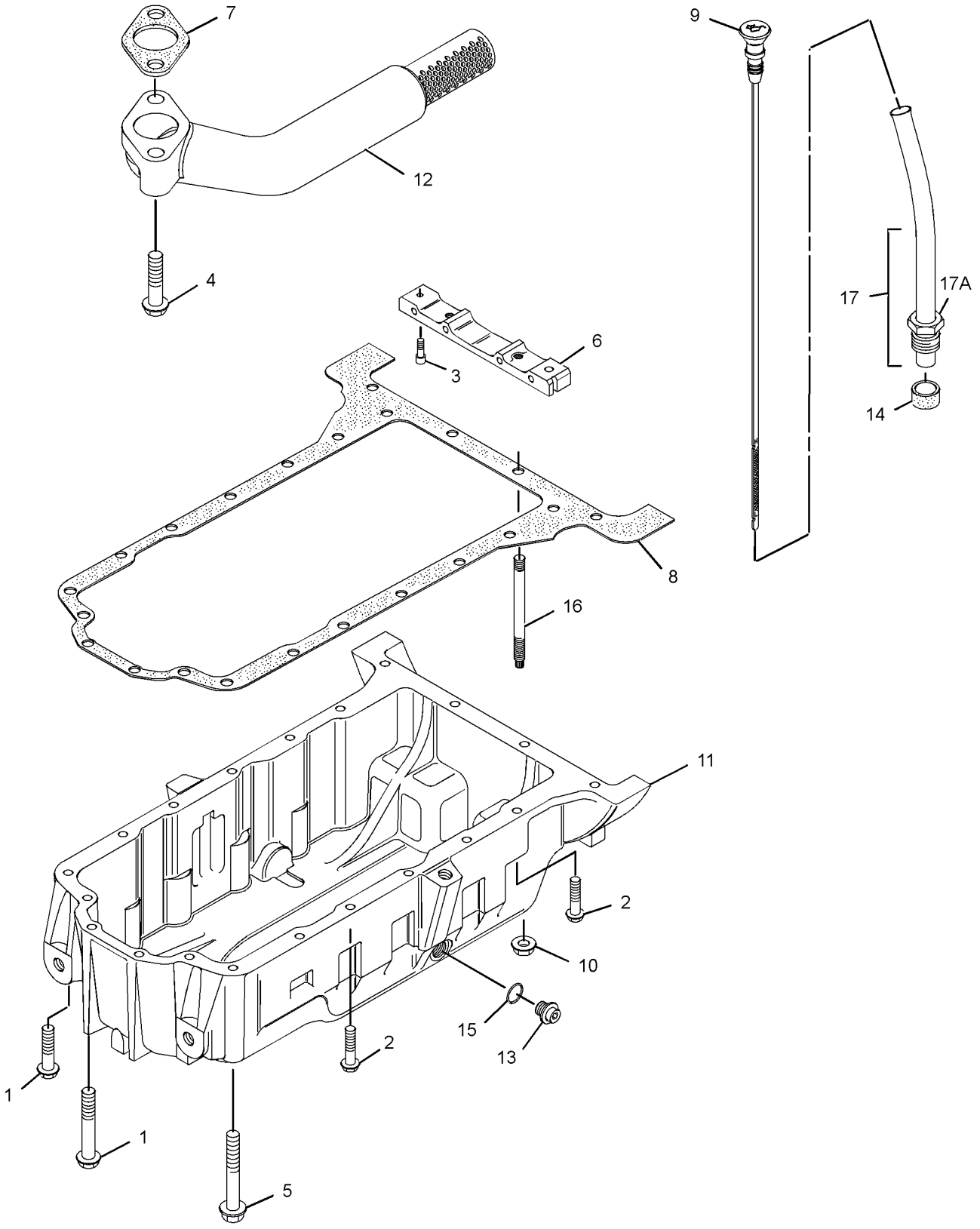

GRAPHIC #1 <END> g02150802

377-8331 PAN GP-OIL—ENGINE

PART OF 435-1687 ENGINE AR-PRIMARY

TYPE 1

SMCS-1302 **i05457010**

NOTE	REF NO	GRAPHIC REF	PART NUMBER	QTY	PART NAME 1 2 3 4 5 6 (PRODUCT LEVEL)	SEE PAGE
M	1	1	**6I-0292**	12	BOLT (M8X1.25X140-MM)	
M	2	1	**6I-0260**	2	BOLT (M8X1.25X25-MM)	
	3	1	**185-7149**	4	BOLT	
M	4	1	**6I-0363**	2	BOLT (M6X1X20-MM)	
	5	1	**377-8327**	1	GAUGE-OIL LEVEL (DIPSTICK)	
	6	1	**6I-1497**	1	SEAL	
	7	1	**7C-0351**	2	PLUG-DRAIN (ENGINE OIL)	
	8	1	**067-6213**	1	GASKET	
	9	1	**377-8326**	1	TUBE AS-OIL GAUGE	
	9A	1	**6I-4079**	1	NUT	
	10	1	**225-6005**	1	GASKET	
	11	1	**230-8094**	1	BRIDGE	
	12	1	**304-3698**	1	TUBE-OIL SUCTION	
	13	1	**306-5911**	1	PAN GP-OIL	
	13A	1	**7C-1224**	2	INSERT	
	14	1	**335-7585**	2	SEAL	
M	15	1	**152-6730**	4	BOLT (M8X1.25X120-MM)	

M - METRIC PART

377-8331 **PAN GP-OIL (**contd.**)** **i05457010**

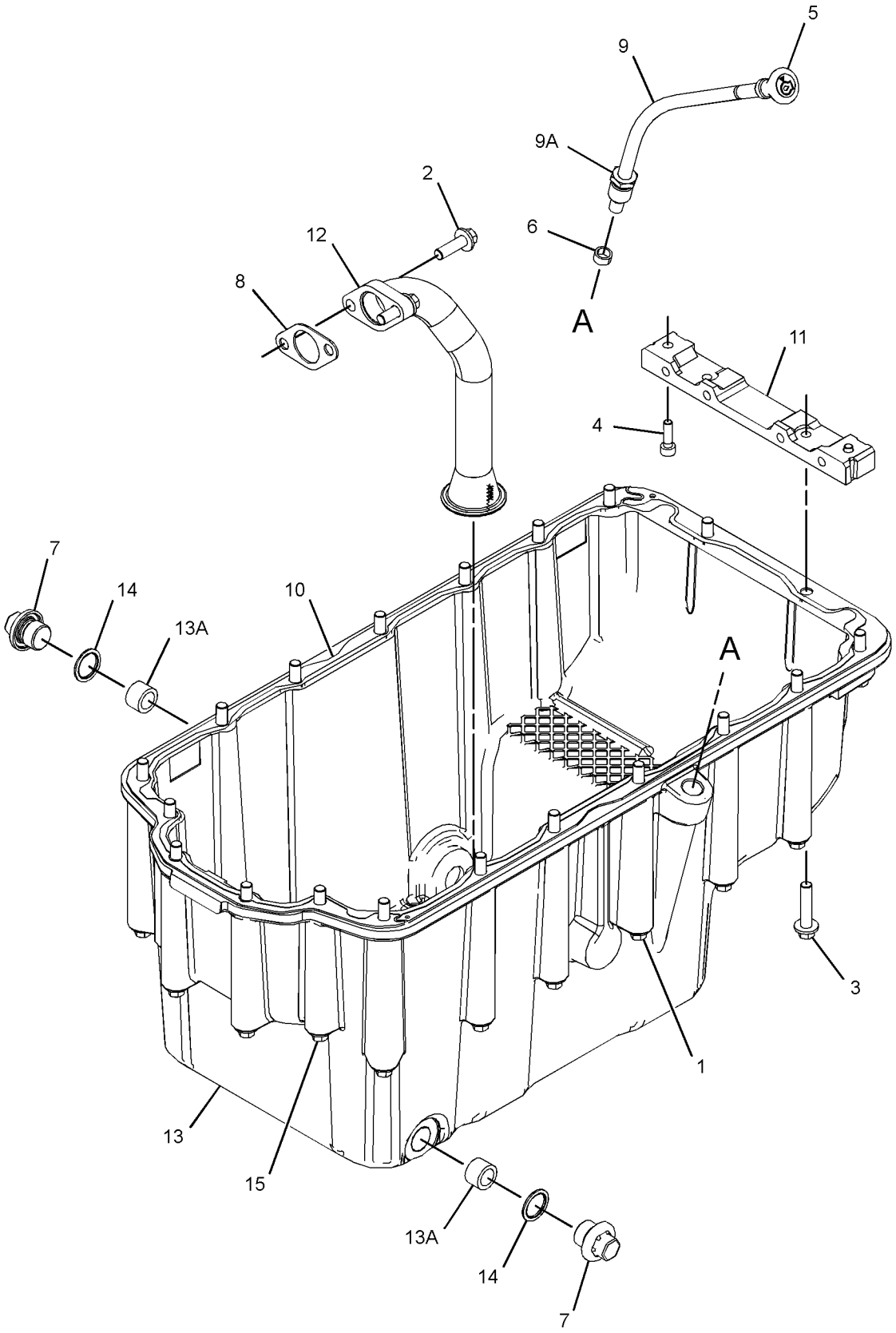

GRAPHIC #1 <END> g03448597

377-8331 PAN GP-OIL—ENGINE

PART OF 435-1687, 540-1156 ENGINE AR-PRIMARY

TYPE 2

SMCS-1302 **i07045814**

NOTE	REF NO	GRAPHIC REF	PART NUMBER	QTY	PART NAME 1 2 3 4 5 6 (PRODUCT LEVEL)	SEE PAGE
M	1	1	**6I-0292**	12	BOLT (M8X1.25X140-MM)	
M	2	1	**6I-0260**	2	BOLT (M8X1.25X25-MM)	
	3	1	**185-7149**	4	BOLT	
M	4	1	**6I-0363**	2	BOLT (M6X1X20-MM)	
	5	1	**377-8327**	1	GAUGE-OIL LEVEL (DIPSTICK)	
	6	1	**6I-1497**	1	SEAL	
	7	1	**7C-0351**	2	PLUG-DRAIN (ENGINE OIL)	
	8	1	**067-6213**	1	GASKET	
	9	1	**377-8326**	1	TUBE AS-OIL GAUGE	
	9A	1	**6I-4079**	1	NUT	
	10	1	**471-2882**	1	GASKET	
	11	1	**230-8094**	1	BRIDGE	
	12	1	**304-3698**	1	TUBE-OIL SUCTION	
C	13	1	**479-1570**	1	PAN-OIL	
	14	1	**335-7585**	2	SEAL	
M	15	1	**152-6730**	4	BOLT (M8X1.25X120-MM)	
	16	1	**6I-0289**	1	PLUG	
F			**275-9883**	2	SEAL	

C - CHANGE FROM PREVIOUS TYPE
F - NOT SHOWN
M - METRIC PART

377-8331 **PAN GP-OIL (**contd.**)** **i07045814**

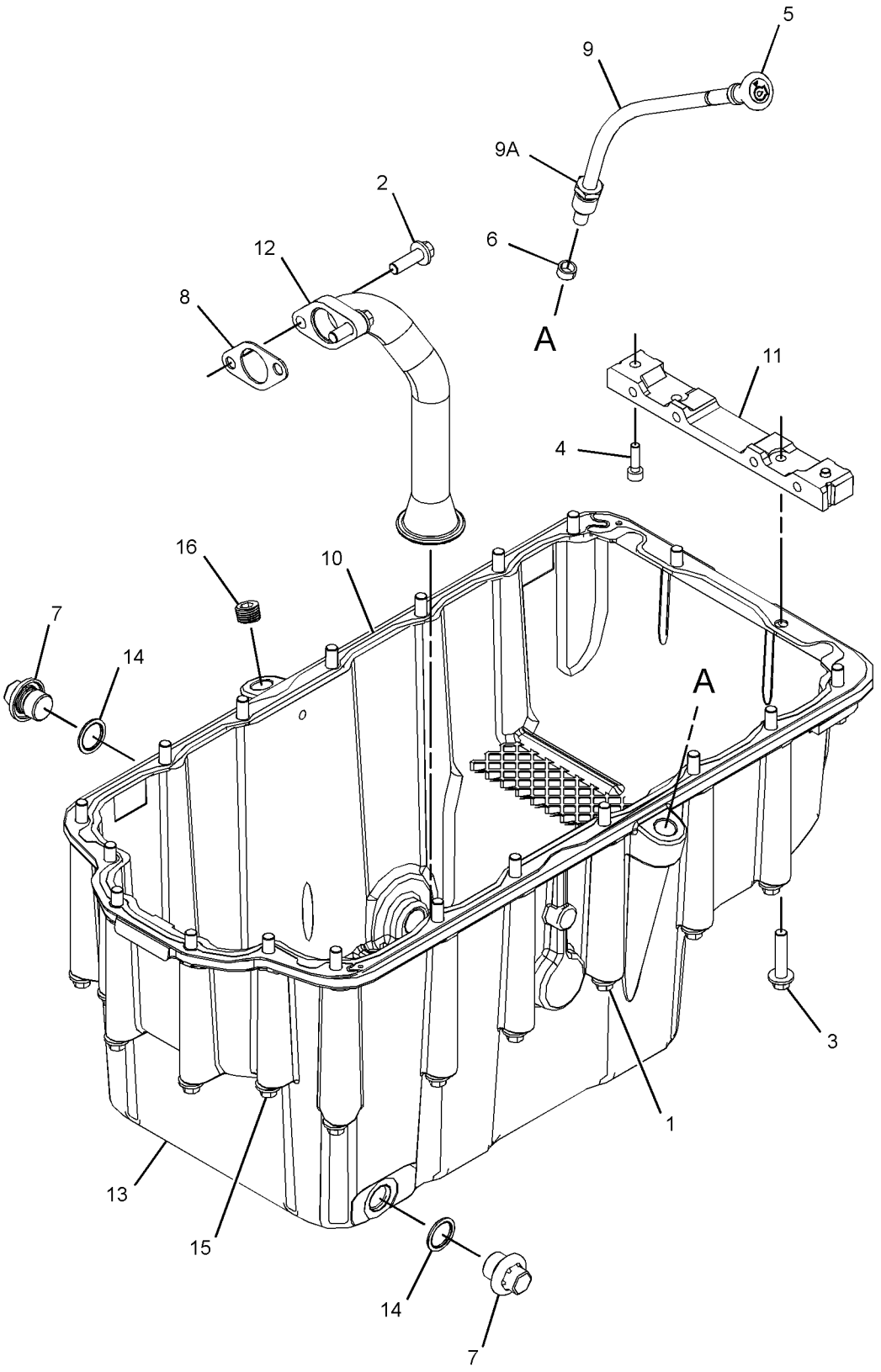

GRAPHIC #1 <END> g03505861

399-1114 PAN GP-OIL

SMCS-1302 **i07186790**

NOTE	REF NO	GRAPHIC REF	PART NUMBER	QTY	PART NAME 1 2 3 4 5 6 (PRODUCT LEVEL)	SEE PAGE
M	1	1	**6I-0217**	12	BOLT (M8X1.25X20-MM)	
M	2	1	**6I-0260**	2	BOLT (M8X1.25X25-MM)	
	3	1	**6I-0289**	1	PLUG	
M	4	1	**8T-0269**	2	BOLT-SOCKET HEAD (M6X1X20-MM)	
M	5	1	**6I-0572**	4	BOLT (M8X1.25X20-MM)	
	6	1	**6I-1497**	1	SEAL	
	7	1	**067-6213**	1	GASKET	
M	8	1	**101-3771**	4	BOLT (M8X1.25X85-MM)	
	9	1	**243-1801**	1	GAUGE-OIL LEVEL (DIPSTICK) (ENGINE)	
	10	1	**471-2882**	1	GASKET	
	11	1	**225-6041**	1	TUBE	
	12	1	**230-8094**	1	BRIDGE	
	13	1	**335-7585**	2	SEAL	
	14	1	**335-2214**	1	TUBE AS	
	14A	1	**6I-4079**	1	NUT	
	15	1	**353-5219**	1	PAN-OIL	
	16	1	**360-3693**	1	PLUG (3/4-16-THD)	
	17	1	**7C-0351**	2	PLUG-DRAIN (ENGINE OIL)	
F		1	**275-9883**	2	SEAL	

F - NOT SHOWN
M - METRIC PART

399-1114 **PAN GP-OIL (**contd.**)** **i07186790**

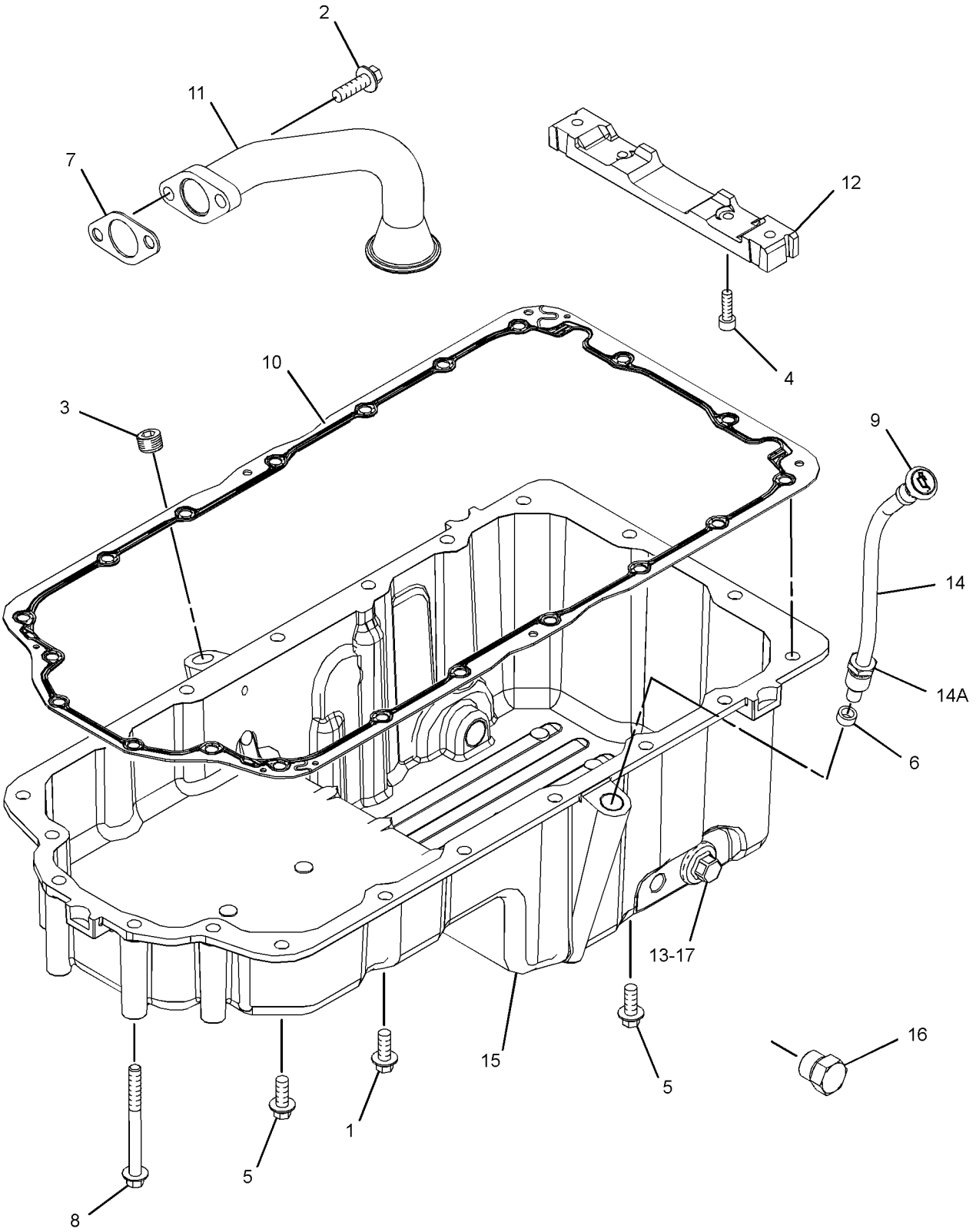

GRAPHIC #1 <END> g06255671

298-5087 PISTON & ROD GP

S/N: 4441-7401

PART OF 435-1685 ENGINE AR-PRIMARY

SMCS-1225 **i05332853**

NOTE	REF NO	GRAPHIC REF	PART NUMBER	QTY	PART NAME 1 2 3 4 5 6 (PRODUCT LEVEL)	SEE PAGE
BJ	1	1	**225-5441**	4	ROD AS-CONNECTING (GRADE L)	
					—OR—	
BJ		1	**225-5451**	4	ROD AS-CONNECTING (GRADE K)	
					—OR—	
BJ		1	**225-5453**	4	ROD AS-CONNECTING (GRADE J)	
					—OR—	
BJ		1	**225-5454**	4	ROD AS-CONNECTING (GRADE H)	
					—OR—	
BJ		1	**225-5458**	4	ROD AS-CONNECTING (GRADE G)	
					—OR—	
BJ		1	**225-5459**	4	ROD AS-CONNECTING (GRADE F)	
					(EACH INCLUDES)	
	2	1	**225-5438**	1	BUSHING	
	3	1	**225-5439**	2	BOLT-SPECIAL	
	4	1	**310-9905**	4	PISTON AS	
					(EACH INCLUDES)	
	4A	1	**124-3536**	2	RING-RETAINING	
	4B	1	**276-7476**	1	KIT-PISTON RING	
AB		1	**380-2065**		KIT-PISTON RING (0.5-MM OS)	
					(INCLUDES 3 PISTON RINGS)	
AB		1	**396-4516**		KIT-PISTON & RING (0.5-MM OS)	
					(INCLUDES PISTON & RETAINING RING)	

A - NOT PART OF THIS GROUP
B - USE AS REQUIRED
J - ENSURE THAT CORRECT ROD LENGTH IS FITTED

298-5087 **PISTON & ROD GP (**contd.**)** **i05332853**

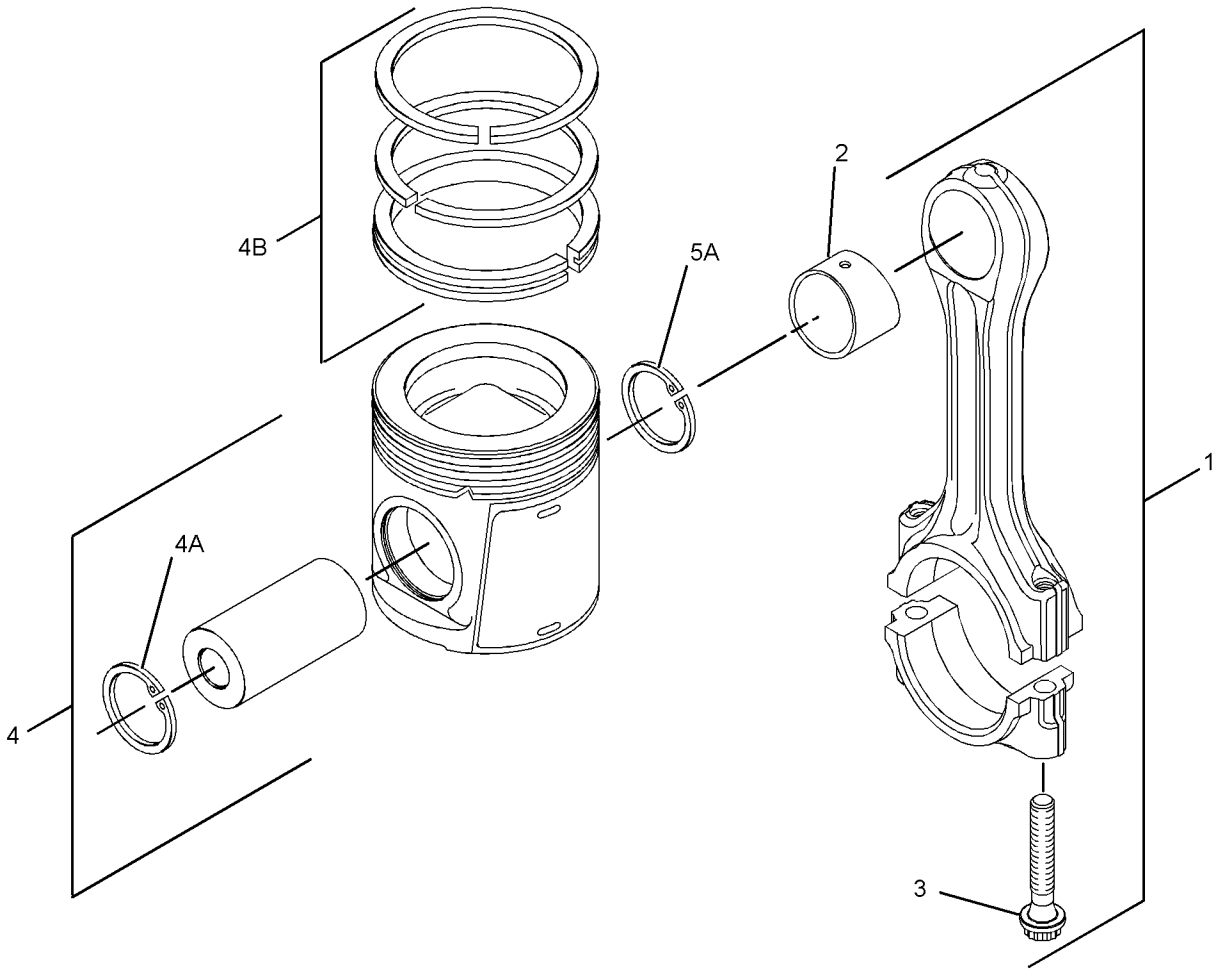

GRAPHIC #1 <END> g01420646

298-5087 PISTON & ROD GP

SMCS-1225 **i05332756**

NOTE	REF NO	GRAPHIC REF	PART NUMBER	QTY	PART NAME 1 2 3 4 5 6 (PRODUCT LEVEL)	SEE PAGE
BCJ	1	1	**359-0724**	4	ROD AS-CONNECTING (LENGTH B)	
					—OR—	
BCJ		1	**359-0723**	4	ROD AS-CONNECTING (LENGTH P)	
					—OR—	
BCJ		1	**359-0722**	4	ROD AS-CONNECTING (LENGTH G)	
					—OR—	
BCJ		1	**359-0721**	4	ROD AS-CONNECTING (LENGTH W)	
					—OR—	
BCJ		1	**359-0720**	4	ROD AS-CONNECTING (LENGTH O)	
					—OR—	
BCJ		1	**359-0719**	4	ROD AS-CONNECTING (LENGTH R)	
					(EACH ROD AS INCLUDES)	
	1A	1	**225-5438**	1	BUSHING	
M	1B	1	**323-9312**	2	BOLT (M10X1X50-MM)	
	2	1	**310-9905**	4	PISTON AS	
					(EACH INCLUDES)	
	2A	1	**124-3536**	2	RING-RETAINING	
	2B	1	**276-7476**	1	KIT-PISTON RING	
AB		1	**380-2065**		KIT-PISTON RING (0.5-MM OS)	
					(INCLUDES 3 PISTON RINGS)	
AB		1	**396-4516**		KIT-PISTON & RING (0.5-MM OS)	
					(INCLUDES PISTON & RETAINING RING)	

A - NOT PART OF THIS GROUP
B - USE AS REQUIRED
C - CHANGE FROM PREVIOUS TYPE
J - ENSURE THAT CORRECT ROD LENGTH IS FITTED
M - METRIC PART

298-5087 **PISTON & ROD GP (**contd.**)** **i05332756**

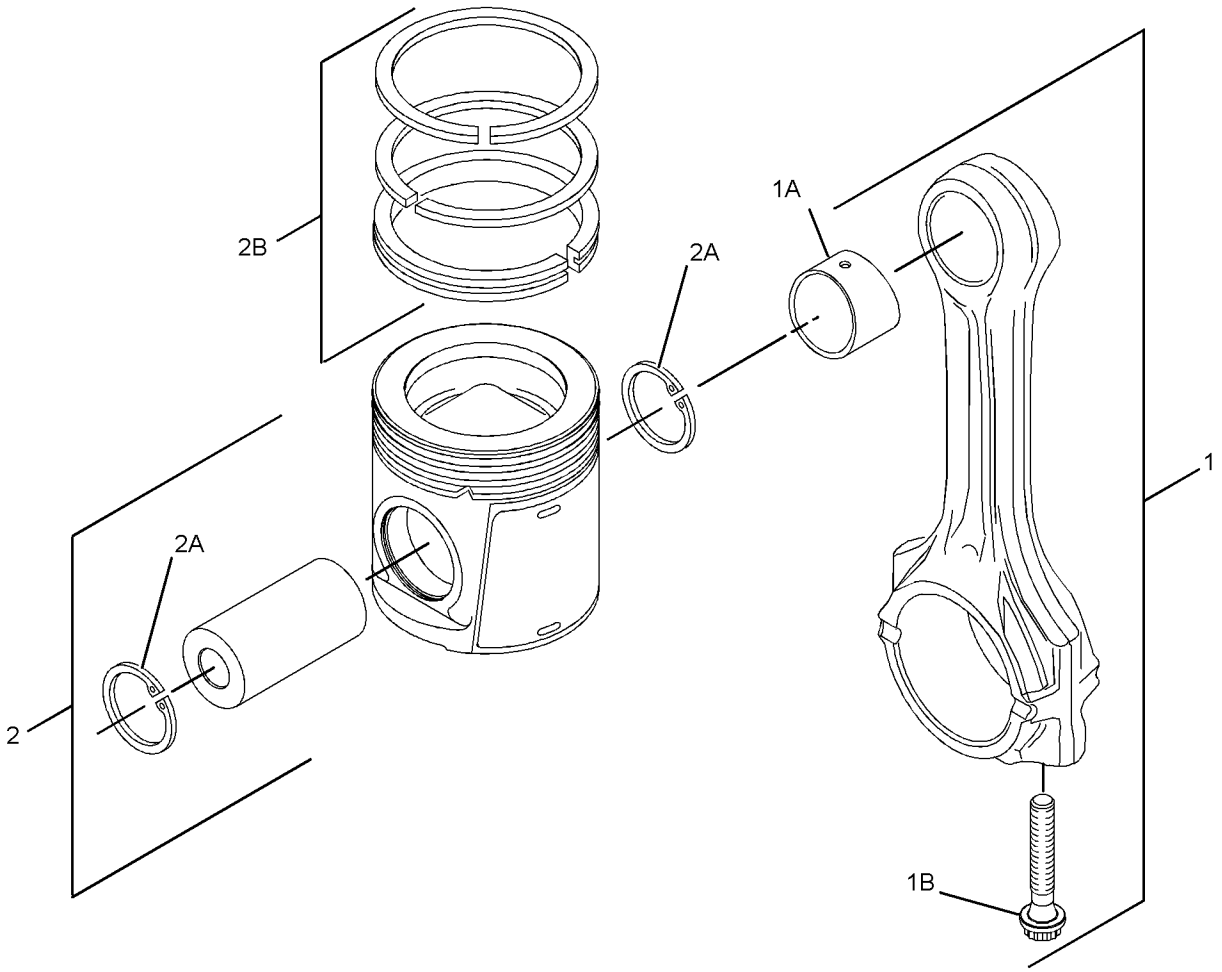

GRAPHIC #1 <END> g02195993

304-3643 PISTON & ROD GP

S/N: 4441-7401

SMCS-1225 **i07039439**

NOTE	REF NO	GRAPHIC REF	PART NUMBER	QTY	PART NAME 1 2 3 4 5 6 (PRODUCT LEVEL)	SEE PAGE
BJ	1	1	**225-5441**	4	ROD AS-CONNECTING (GRADE L)	
					—OR—	
BJ		1	**225-5451**	4	ROD AS-CONNECTING (GRADE K)	
					—OR—	
BJ		1	**225-5453**	4	ROD AS-CONNECTING (GRADE J)	
					—OR—	
BJ		1	**225-5454**	4	ROD AS-CONNECTING (GRADE H)	
					—OR—	
BJ		1	**225-5458**	4	ROD AS-CONNECTING (GRADE G)	
					—OR—	
BJ		1	**225-5459**	4	ROD AS-CONNECTING (GRADE F)	
					(EACH INCLUDES)	
	1A	1	**276-7478**	1	BUSHING	
	1B	1	**225-5439**	2	BOLT-SPECIAL	
	2	1	**310-9269**	4	PISTON AS	
					(EACH INCLUDES)	
	2A	1	**124-3536**	2	RING-RETAINING	
	2B	1	**276-7476**	1	KIT-PISTON RING	
					AVAILABLE REPLACEMENT PART(S):	
AB			**380-2065**		KIT-PISTON RING (0.5-MM OS)	
					(INCLUDES RINGS)	
AB			**466-4849**		KIT-PISTON RING (1-MM OS)	
					(INCLUDES RINGS)	
AB			**396-4482**		KIT-PISTON & RING (0.5-MM OS)	
					(INCLUDES RINGS)	

A - NOT PART OF THIS GROUP
B - USE AS REQUIRED
J - ENSURE THAT CORRECT ROD LENGTH IS FITTED

304-3643 **PISTON & ROD GP (**contd.**)** **i07039439**

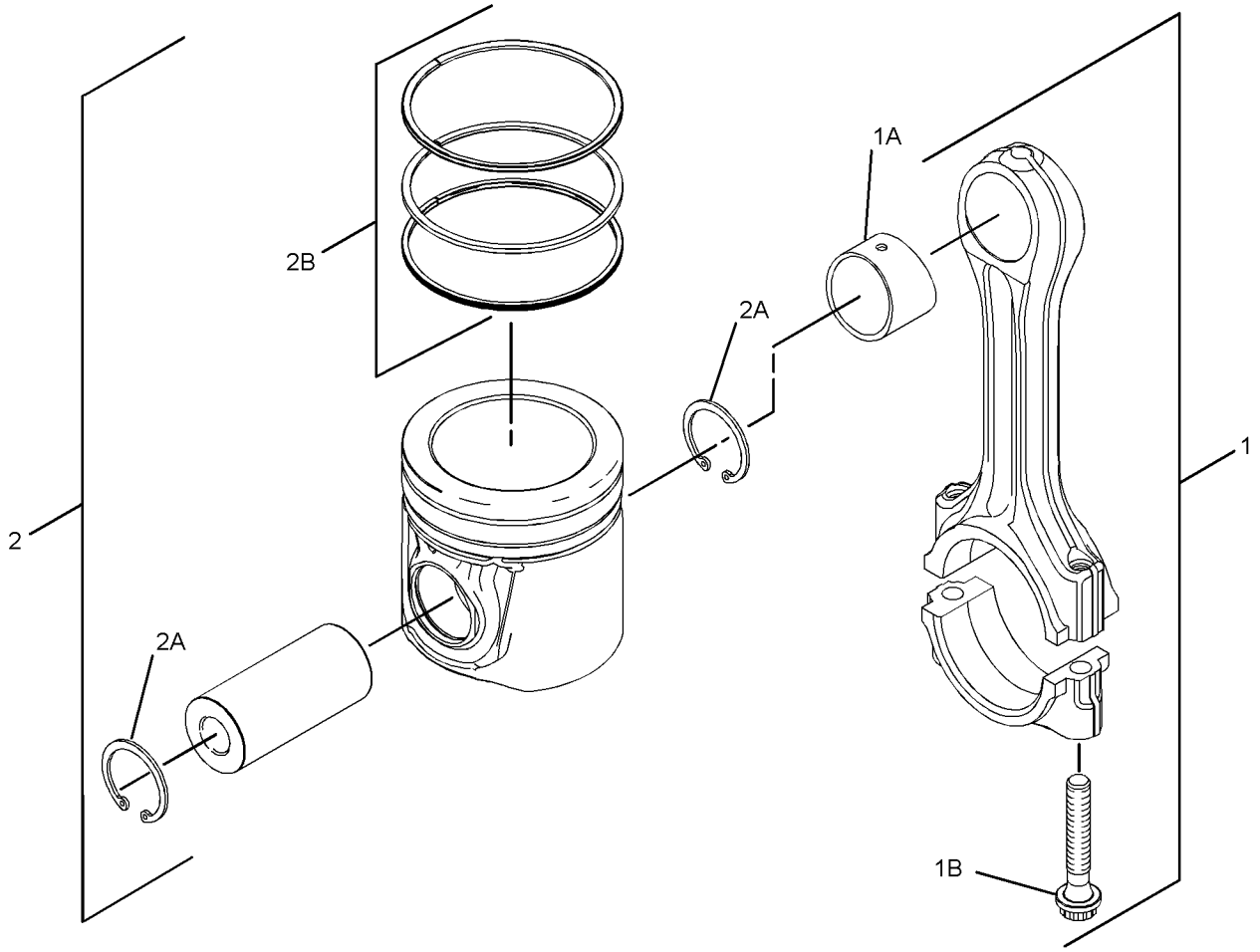

GRAPHIC #1 <END> g01369796

304-3643 PISTON & ROD GP

SMCS-1225 **i07048691**

NOTE	REF NO	GRAPHIC REF	PART NUMBER	QTY	PART NAME 1 2 3 4 5 6 (PRODUCT LEVEL)	SEE PAGE
BCJ	1	1	**359-0724**	4	ROD AS-CONNECTING (LENGTH B)	
					—OR—	
BCJ		1	**359-0723**	4	ROD AS-CONNECTING (LENGTH P)	
					—OR—	
BCJ		1	**359-0722**	4	ROD AS-CONNECTING (LENGTH G)	
					—OR—	
BCJ		1	**359-0721**	4	ROD AS-CONNECTING (LENGTH W)	
					—OR—	
BCJ		1	**359-0720**	4	ROD AS-CONNECTING (LENGTH O)	
					—OR—	
BCJ		1	**359-0719**	4	ROD AS-CONNECTING (LENGTH R)	
					(EACH INCLUDES)	
	1A	1	**276-7478**	1	BUSHING	
M	1B	1	**323-9312**	2	BOLT (M10X1X50-MM)	
	2	1	**310-9269**	4	PISTON AS	
					(EACH INCLUDES)	
	2A	1	**124-3536**	2	RING-RETAINING	
	2B	1	**276-7476**	1	KIT-PISTON RING	
F			**225-5439**	2	BOLT-SPECIAL	
					AVAILABLE REPLACEMENT PART(S):	
AB			**380-2065**		KIT-PISTON RING (0.5-MM OS)	
					(INCLUDES RINGS)	
AB			**396-4482**		KIT-PISTON & RING (0.5-MM OS)	
					(INCLUDES RINGS)	
AB			**466-4849**		KIT-PISTON RING (1-MM OS)	
					(INCLUDES RINGS)	

A - NOT PART OF THIS GROUP
B - USE AS REQUIRED
C - CHANGE FROM PREVIOUS TYPE
F - NOT SHOWN
J - ENSURE THAT CORRECT ROD LENGTH IS FITTED
M - METRIC PART

304-3643 **PISTON & ROD GP (**contd.**)** **i07048691**

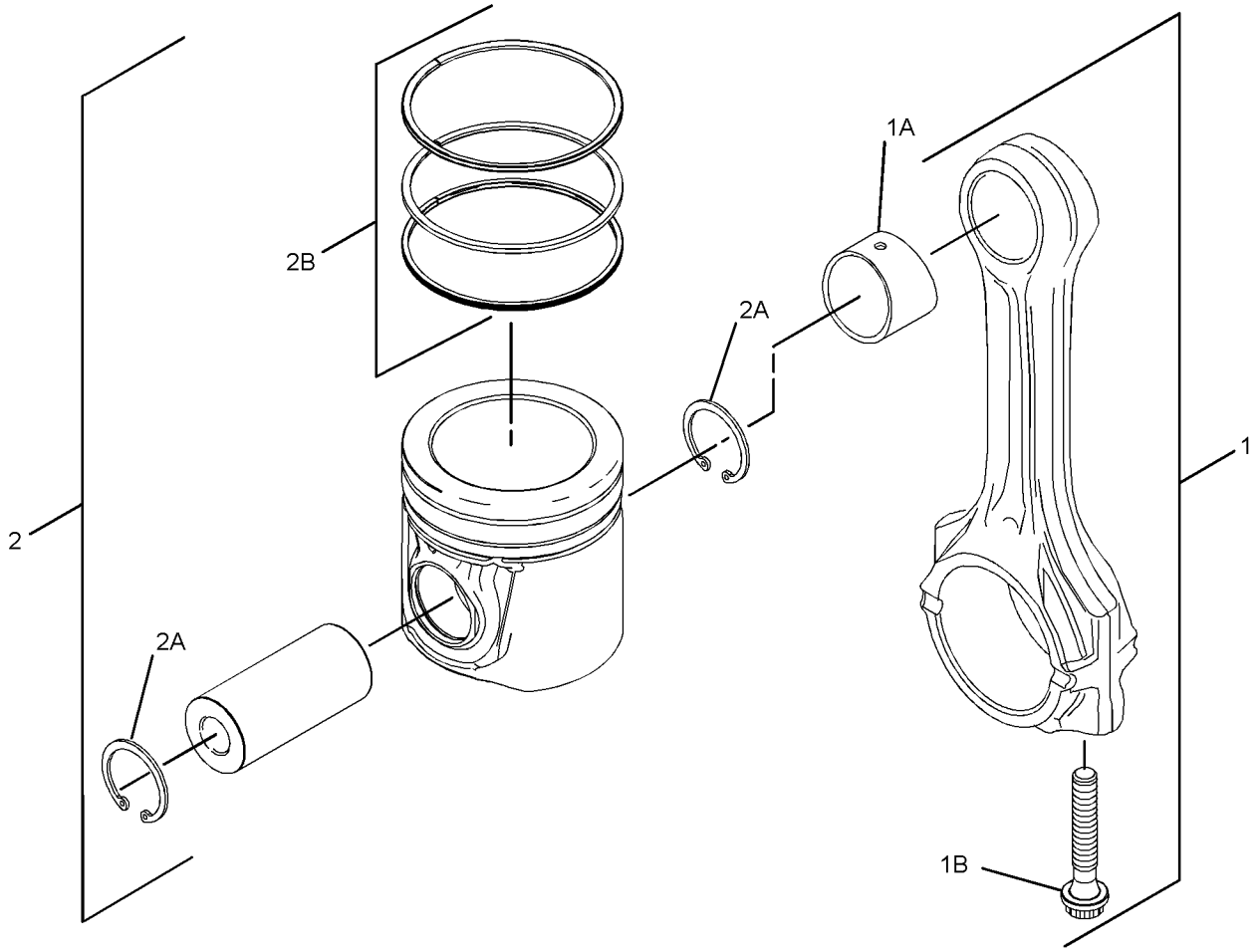

GRAPHIC #1 <END> g02241673

308-4149 PISTON & ROD GP

S/N: 4441-7401

SMCS-1225 **i05332251**

NOTE	REF NO	GRAPHIC REF	PART NUMBER	QTY	PART NAME 1 2 3 4 5 6 (PRODUCT LEVEL)	SEE PAGE
BJ	1	1	**225-5441**	4	ROD AS-CONNECTING (GRADE L)	
					—OR—	
BJ		1	**225-5451**	4	ROD AS-CONNECTING (GRADE K)	
					—OR—	
BJ		1	**225-5453**	4	ROD AS-CONNECTING (GRADE J)	
					—OR—	
BJ		1	**225-5454**	4	ROD AS-CONNECTING (GRADE H)	
					—OR—	
BJ		1	**225-5458**	4	ROD AS-CONNECTING (GRADE G)	
					—OR—	
BJ		1	**225-5459**	4	ROD AS-CONNECTING (GRADE F)	
					(EACH ROD AS INCLUDES)	
	2	1	**225-5438**	1	BUSHING	
	3	1	**225-5439**	2	BOLT-SPECIAL	
	4	1	**310-9269**	4	PISTON AS	
					(EACH INCLUDES)	
	4A	1	**124-3536**	2	RING-RETAINING	
	5	1	**276-7476**	1	KIT-PISTON RING	
AB		1	**380-2065**		KIT-PISTON RING (0.5-MM OS)	
					(INCLUDES 3 PISTON RINGS)	
AB		1	**396-4482**		KIT-PISTON & RING (0.5-MM OS)	
					(INCLUDES PISTON & RETAINING RING)	

A - NOT PART OF THIS GROUP
B - USE AS REQUIRED
J - ENSURE THAT CORRECT ROD LENGTH IS FITTED

308-4149 **PISTON & ROD GP (**contd.**)** **i05332251**

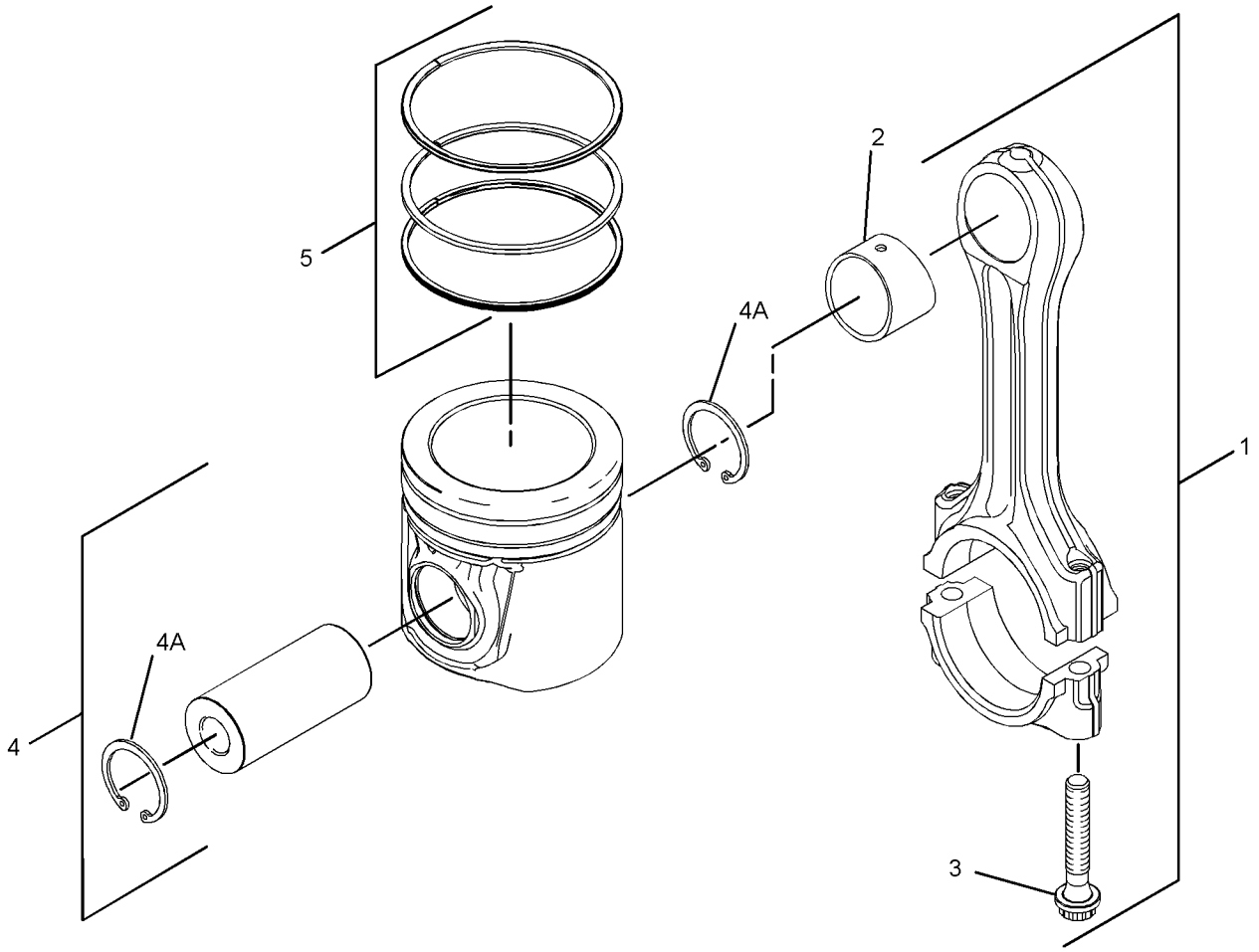

GRAPHIC #1 <END> g01305078

308-4149 PISTON & ROD GP

ALSO AN ATTACHMENT

SMCS-1225 **i07059319**

NOTE	REF NO	GRAPHIC REF	PART NUMBER	QTY	PART NAME 1 2 3 4 5 6 (PRODUCT LEVEL)	SEE PAGE
BCJ	1	1	**359-0719**	4	ROD AS-CONNECTING (LENGTH R)	
					—OR—	
BCJ		1	**359-0723**	4	ROD AS-CONNECTING (LENGTH P)	
					—OR—	
BCJ		1	**359-0722**	4	ROD AS-CONNECTING (LENGTH G)	
					—OR—	
BCJ		1	**359-0721**	4	ROD AS-CONNECTING (LENGTH W)	
					—OR—	
BCJ		1	**359-0720**	4	ROD AS-CONNECTING (LENGTH O)	
					—OR—	
BCJ		1	**359-0724**	4	ROD AS-CONNECTING (LENGTH B)	
					(EACH ROD AS INCLUDES)	
	1A	1	**276-7478**	1	BUSHING	
M	1B	1	**323-9312**	2	BOLT (M10X1X50-MM)	
N	2	1	**310-9269**	4	PISTON AS	
					(EACH INCLUDES)	
	2A	1	**124-3536**	2	RING-RETAINING	
					AVAILABLE REPAIR KIT(S):	
N			**276-7476**	4	KIT-PISTON RING	
					(INCLUDES RINGS)	
AB			**380-2065**		KIT-PISTON RING (0.5-MM OS)	
					(INCLUDES RINGS)	
AB			**396-4482**		KIT-PISTON & RING (0.5-MM OS)	
					(INCLUDES RINGS)	
AB			**466-4849**		KIT-PISTON RING (1-MM OS)	
					(INCLUDES RINGS)	

A - NOT PART OF THIS GROUP
B - USE AS REQUIRED
C - CHANGE FROM PREVIOUS TYPE
J - ENSURE THAT CORRECT ROD LENGTH IS FITTED
M - METRIC PART
N - KIT MARKED N SERVICES PART(S) MARKED N

308-4149 **PISTON & ROD GP** (contd.) **i07059319**

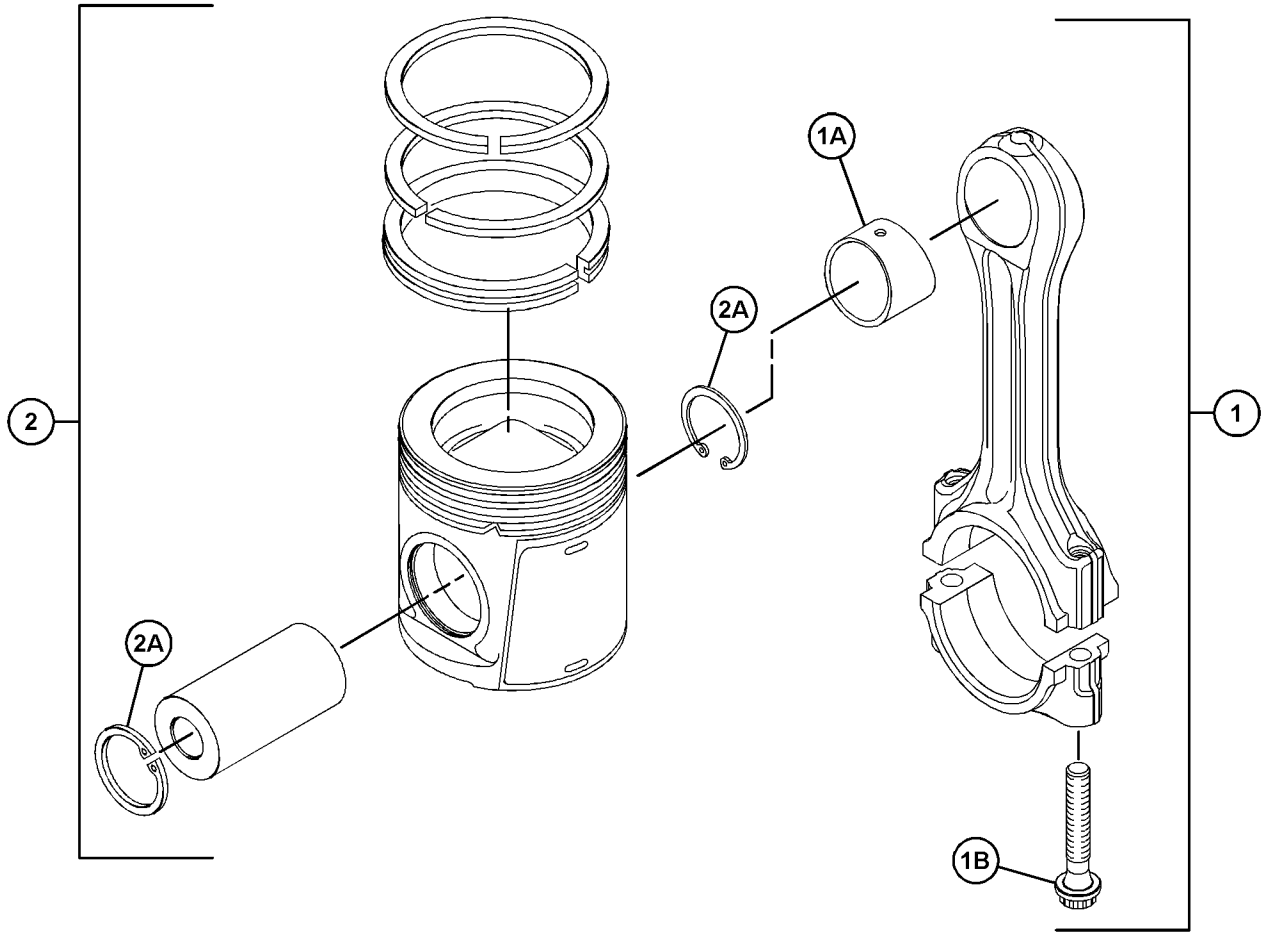

GRAPHIC #1 <END> g06220906

298-5889 PISTON GP

S/N: 4441-7401

PART OF 435-1692 ENGINE AR-COMPLETE, 435-1687, 437-5409 ENGINE AR-PRIMARY

SMCS-1214 **i05332240**

NOTE	REF NO	GRAPHIC REF	PART NUMBER	QTY	PART NAME 1 2 3 4 5 6 (PRODUCT LEVEL)	SEE PAGE
BJ	1	1	**225-5441**	4	ROD AS-CONNECTING (GRADE L)	
					—OR—	
BJ		1	**225-5451**	4	ROD AS-CONNECTING (GRADE K)	
					—OR—	
BJ		1	**225-5453**	4	ROD AS-CONNECTING (GRADE J)	
					—OR—	
BJ		1	**225-5454**	4	ROD AS-CONNECTING (GRADE H)	
					—OR—	
BJ		1	**225-5458**	4	ROD AS-CONNECTING (GRADE G)	
					—OR—	
BJ		1	**225-5459**	4	ROD AS-CONNECTING (GRADE F)	
					(EACH ROD ASSEMBLY INCLUDES)	
	1A	1	**225-5438**	1	BUSHING	
	1B	1	**225-5439**	2	BOLT-SPECIAL	
	2	1	**310-9269**	4	PISTON AS	
					(EACH INCLUDES)	
	2A	1	**124-3536**	2	RING-RETAINING	
	2B	1	**276-7476**	1	KIT-PISTON RING	
AB		1	**380-2065**		KIT-PISTON RING (0.5-MM OS)	
					(INCLUDES 3 PISTON RINGS)	
AB		1	**396-4482**		KIT-PISTON & RING (0.5-MM OS)	
					(INCLUDES PISTON & RETAINING RING)	

A - NOT PART OF THIS GROUP
B - USE AS REQUIRED
J - ENSURE THAT CORRECT ROD LENGTH IS FITTED

298-5889 **PISTON GP (**contd.**)** **i05332240**

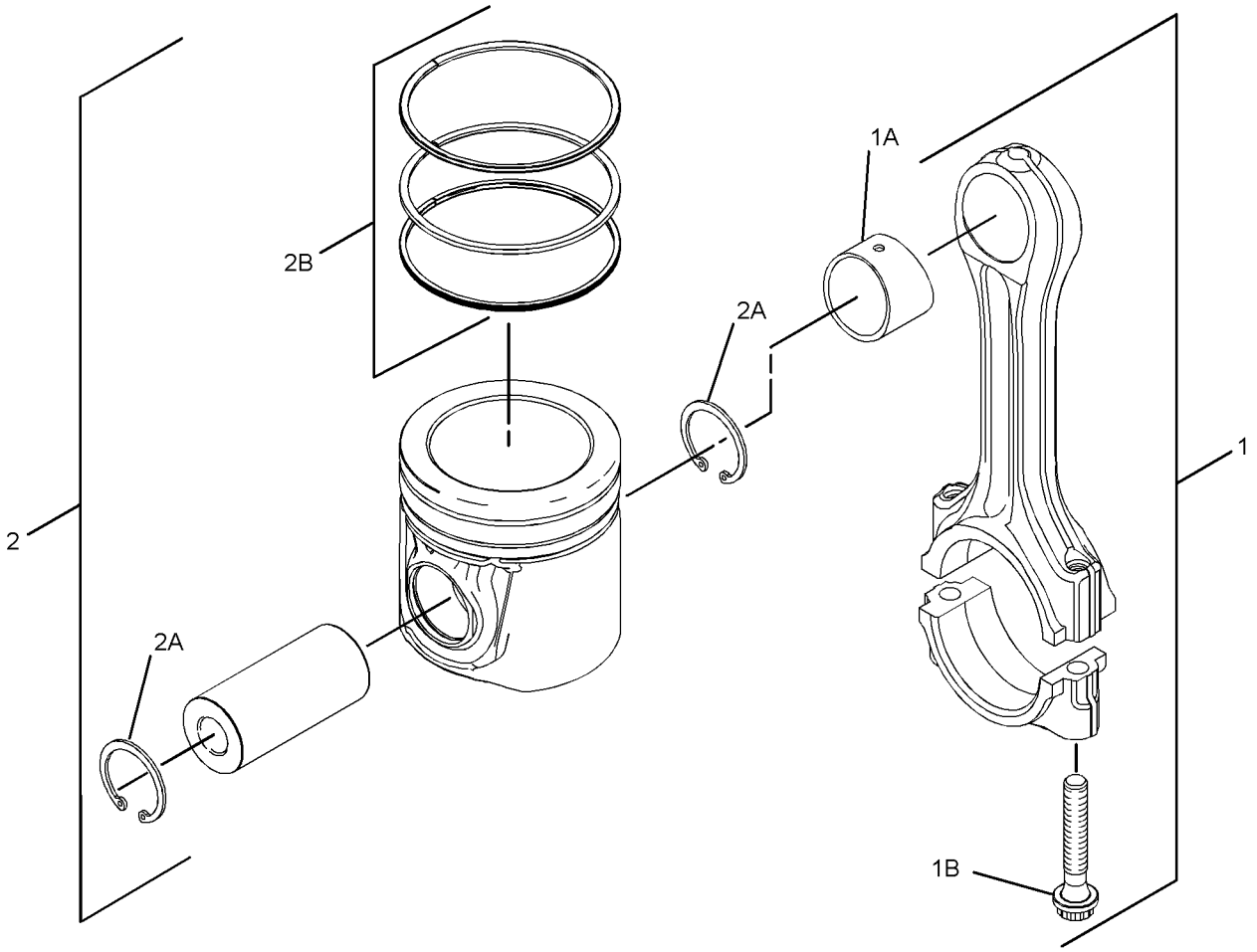

GRAPHIC #1 <END> g01369796

298-5889 PISTON GP

PART OF 435-1699 ENGINE AR, 435-1692 ENGINE AR-COMPLETE, 435-1687, 437-5409, 522-8303, 540-0570, 540-1155, 540-1156 ENGINE AR-PRIMARY

SMCS-1214 **i05332238**

NOTE	REF NO	GRAPHIC REF	PART NUMBER	QTY	PART NAME 1 2 3 4 5 6 (PRODUCT LEVEL)	SEE PAGE
BCJ	1	1	**359-0724**	4	ROD AS-CONNECTING (LENGTH B)	
					—OR—	
BCJ		1	**359-0723**	4	ROD AS-CONNECTING (LENGTH P)	
					—OR—	
BCJ		1	**359-0722**	4	ROD AS-CONNECTING (LENGTH G)	
					—OR—	
BCJ		1	**359-0721**	4	ROD AS-CONNECTING (LENGTH W)	
					—OR—	
BCJ		1	**359-0720**	4	ROD AS-CONNECTING (LENGTH O)	
					—OR—	
BCJ		1	**359-0719**	4	ROD AS-CONNECTING (LENGTH R)	
					(EACH ROD ASSEMBLY INCLUDES)	
	1A	1	**225-5438**	1	BUSHING	
M	1B	1	**323-9312**	2	BOLT (M10X1X50-MM)	
	2	1	**310-9269**	4	PISTON AS	
					(EACH INCLUDES)	
	2A	1	**124-3536**	2	RING-RETAINING	
	2B	1	**276-7476**	1	KIT-PISTON RING	
AB		1	**380-2065**		KIT-PISTON RING (0.5-MM OS)	
					(INCLUDES 3 PISTON RINGS)	
AB		1	**396-4482**		KIT-PISTON & RING (0.5-MM OS)	
					(INCLUDES PISTON & RETAINING RING)	

A - NOT PART OF THIS GROUP
B - USE AS REQUIRED
C - CHANGE FROM PREVIOUS TYPE
J - ENSURE THAT CORRECT ROD LENGTH IS FITTED
M - METRIC PART

298-5889 **PISTON GP (**contd.**)** **i05332238**

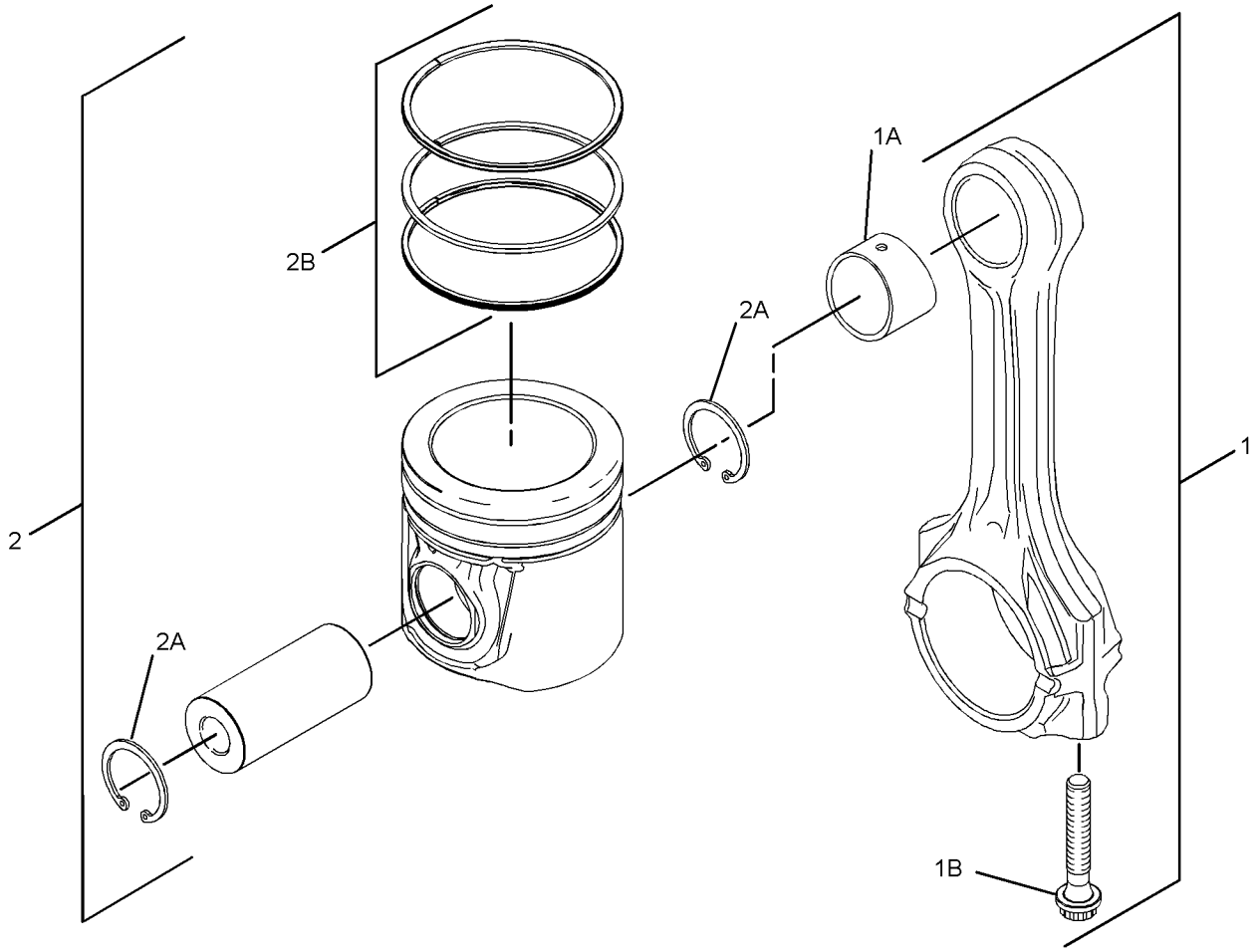

GRAPHIC #1 <END> g02198076

322-4883 PISTON GP

S/N: 4441-7401

SMCS-1214 **i05332259**

NOTE	REF NO	GRAPHIC REF	PART NUMBER	QTY	PART NAME 1 2 3 4 5 6 (PRODUCT LEVEL)	SEE PAGE
BJ	1	1	**225-5441**	4	ROD AS-CONNECTING (GRADE L)	
					—OR—	
BJ		1	**225-5451**	4	ROD AS-CONNECTING (GRADE K)	
					—OR—	
BJ		1	**225-5453**	4	ROD AS-CONNECTING (GRADE J)	
					—OR—	
BJ		1	**225-5454**	4	ROD AS-CONNECTING (GRADE H)	
					—OR—	
BJ		1	**225-5458**	4	ROD AS-CONNECTING (GRADE G)	
					—OR—	
BJ		1	**225-5459**	4	ROD AS-CONNECTING (GRADE F)	
					(EACH ROD AS INCLUDES)	
	1A	1	**225-5438**	1	BUSHING	
	1B	1	**225-5439**	2	BOLT-SPECIAL	
	2	1	**310-9269**	4	PISTON AS	
					(EACH INCLUDES)	
	2A	1	**124-3536**	2	RING-RETAINING	
	2B	1	**276-7476**	1	KIT-PISTON RING	
AB		1	**380-2065**		KIT-PISTON RING (0.5-MM OS)	
					(INCLUDES 3 PISTON RINGS)	
AB		1	**396-4482**		KIT-PISTON & RING (0.5-MM OS)	
					(INCLUDES PISTON & RETAINING RING)	

A - NOT PART OF THIS GROUP
B - USE AS REQUIRED
J - ENSURE THAT CORRECT ROD LENGTH IS FITTED

322-4883 **PISTON GP (**contd.**)** **i05332259**

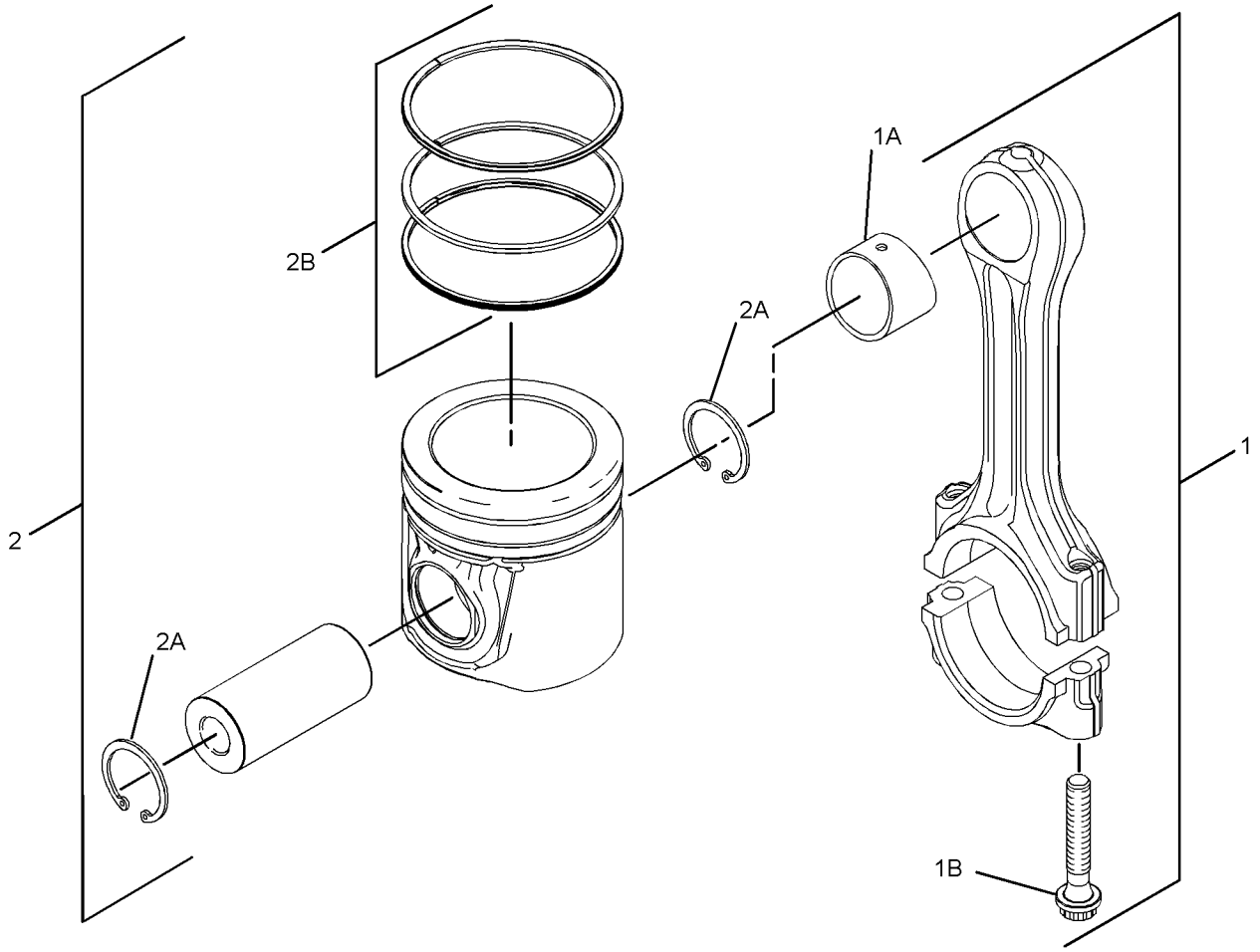

GRAPHIC #1 <END> g01369796

322-4883 PISTON GP

S/N: 4447402-UP

SMCS-1214 **i05331992**

NOTE	REF NO	GRAPHIC REF	PART NUMBER	QTY	PART NAME 1 2 3 4 5 6 (PRODUCT LEVEL)	SEE PAGE
BCJ	1	1	**359-0724**	4	ROD AS-CONNECTING (LENGTH B)	
					—OR—	
BCJ		1	**359-0723**	4	ROD AS-CONNECTING (LENGTH P)	
					—OR—	
BCJ		1	**359-0722**	4	ROD AS-CONNECTING (LENGTH G)	
					—OR—	
BCJ		1	**359-0721**	4	ROD AS-CONNECTING (LENGTH W)	
					—OR—	
BCJ		1	**359-0720**	4	ROD AS-CONNECTING (LENGTH O)	
					—OR—	
BCJ		1	**359-0719**	4	ROD AS-CONNECTING (LENGTH R)	
					(EACH ROD AS INCLUDES)	
	1A	1	**225-5438**	1	BUSHING	
M	1B	1	**323-9312**	2	BOLT (M10X1X50-MM)	
	2	1	**310-9269**	4	PISTON AS	
					(EACH INCLUDES)	
	2A	1	**124-3536**	2	RING-RETAINING	
	2B	1	**276-7476**	1	KIT-PISTON RING	
AB		1	**380-2065**		KIT-PISTON RING (0.5-MM OS)	
					(INCLUDES 3 PISTON RINGS)	
AB		1	**396-4482**		KIT-PISTON & RING (0.5-MM OS)	
					(INCLUDES PISTON & RETAINING RING)	

A - NOT PART OF THIS GROUP
B - USE AS REQUIRED
C - CHANGE FROM PREVIOUS TYPE
J - ENSURE THAT CORRECT ROD LENGTH IS FITTED
M - METRIC PART

322-4883 **PISTON GP (**contd.**)** **i05331992**

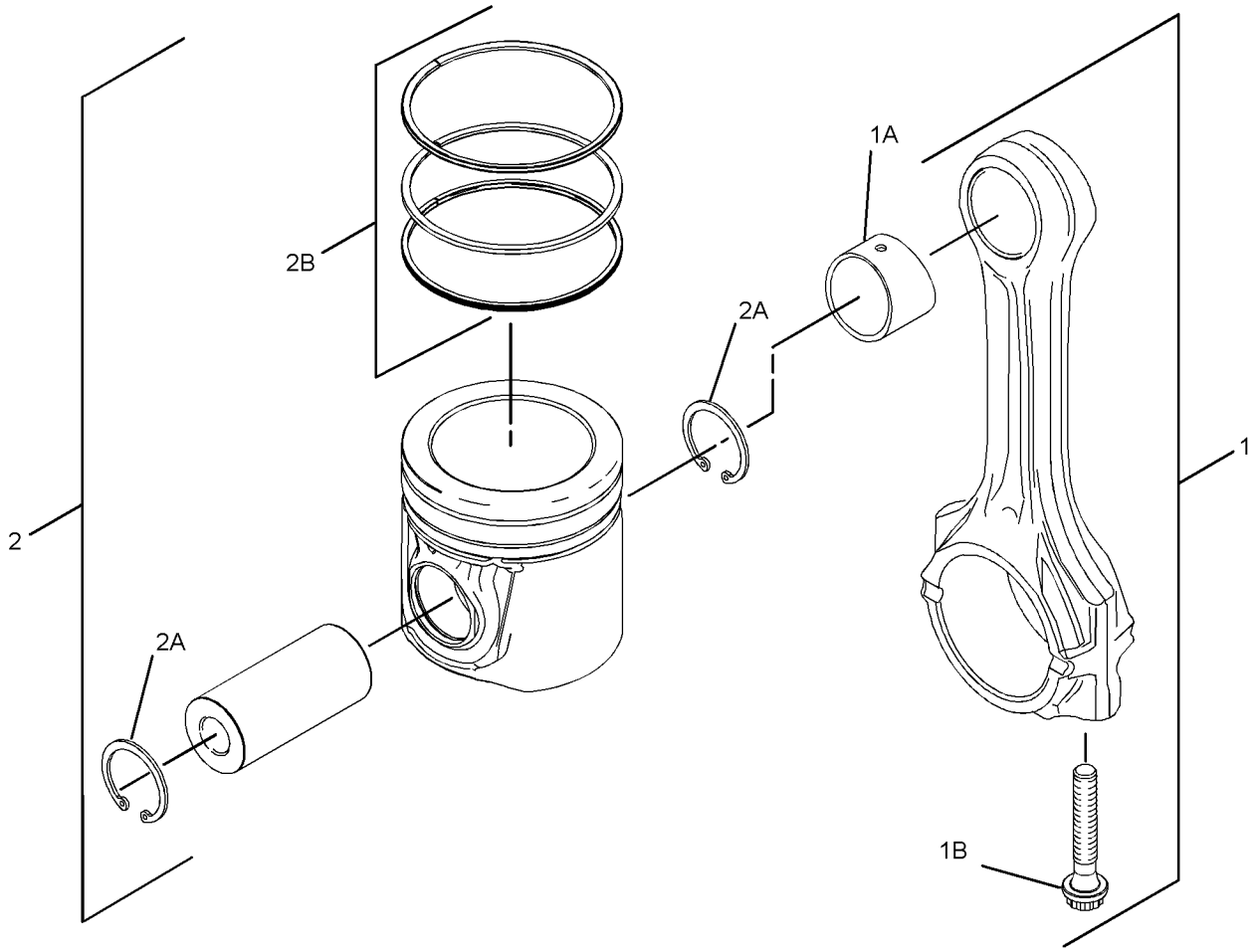

GRAPHIC #1 <END> g02287334

298-5129 PLUG GP-CYLINDER HEAD

PART OF 435-1699 ENGINE AR, 435-1692 ENGINE AR-COMPLETE, 435-1685, 435-1687, 437-5409, 522-8303, 540-0570 ENGINE AR-PRIMARY
ALSO AN ATTACHMENT
TYPE 1

SMCS-1100 **i02604328**

NOTE	REF NO	GRAPHIC REF	PART NUMBER	QTY	PART NAME 1 2 3 4 5 6 (PRODUCT LEVEL)	SEE PAGE
	1	1	**232-1322**	1	PLUG	
	2	1	**199-9751**	1	SEAL-O-RING	

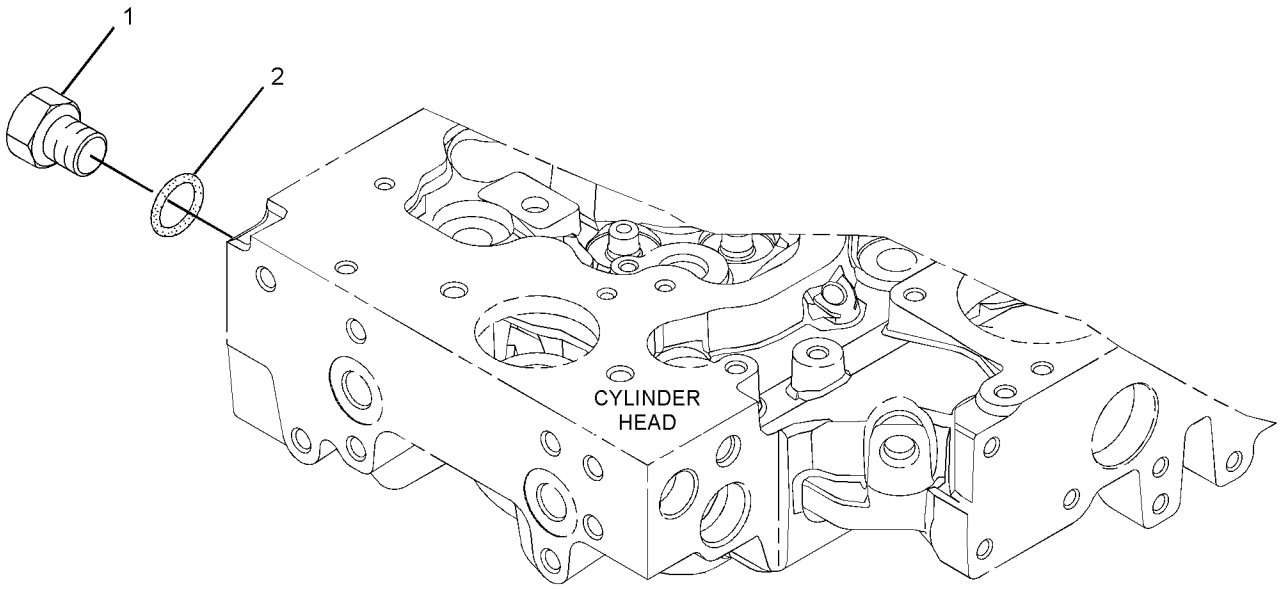

GRAPHIC #1 <END> g01305536

298-5129 PLUG GP-CYLINDER HEAD

PART OF 435-1699 ENGINE AR, 540-0570, 540-1155, 540-1156 ENGINE AR-PRIMARY
ALSO AN ATTACHMENT
TYPE 2

SMCS-1100 **i07037979**

NOTE	REF NO	GRAPHIC REF	PART NUMBER	QTY	PART NAME 1 2 3 4 5 6 (PRODUCT LEVEL)	SEE PAGE
C	1	1	**470-4925**	1	PLUG	

C - CHANGE FROM PREVIOUS TYPE

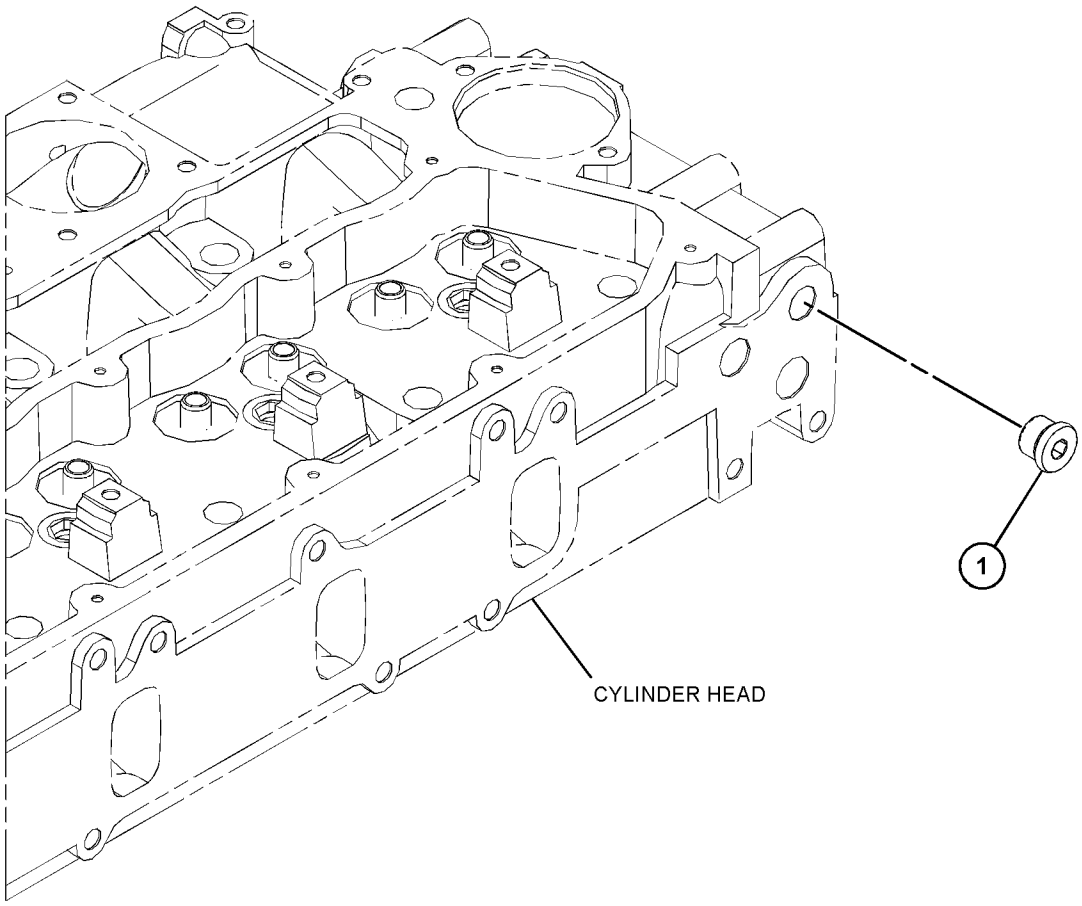

GRAPHIC #1 <END> g06211531

298-5098 PLUG GP-ENGINE

PART OF 435-1699 ENGINE AR, 435-1692 ENGINE AR-COMPLETE, 435-1685, 437-5409, 522-8303, 540-0570, 540-1155 ENGINE AR-PRIMARY

SMCS-1100, 1201

i02604367

NOTE	REF NO	GRAPHIC REF	PART NUMBER	QTY	PART NAME 1 2 3 4 5 6 (PRODUCT LEVEL)	SEE PAGE
	1	1	**225-6522**	1	PLUG-CUP	

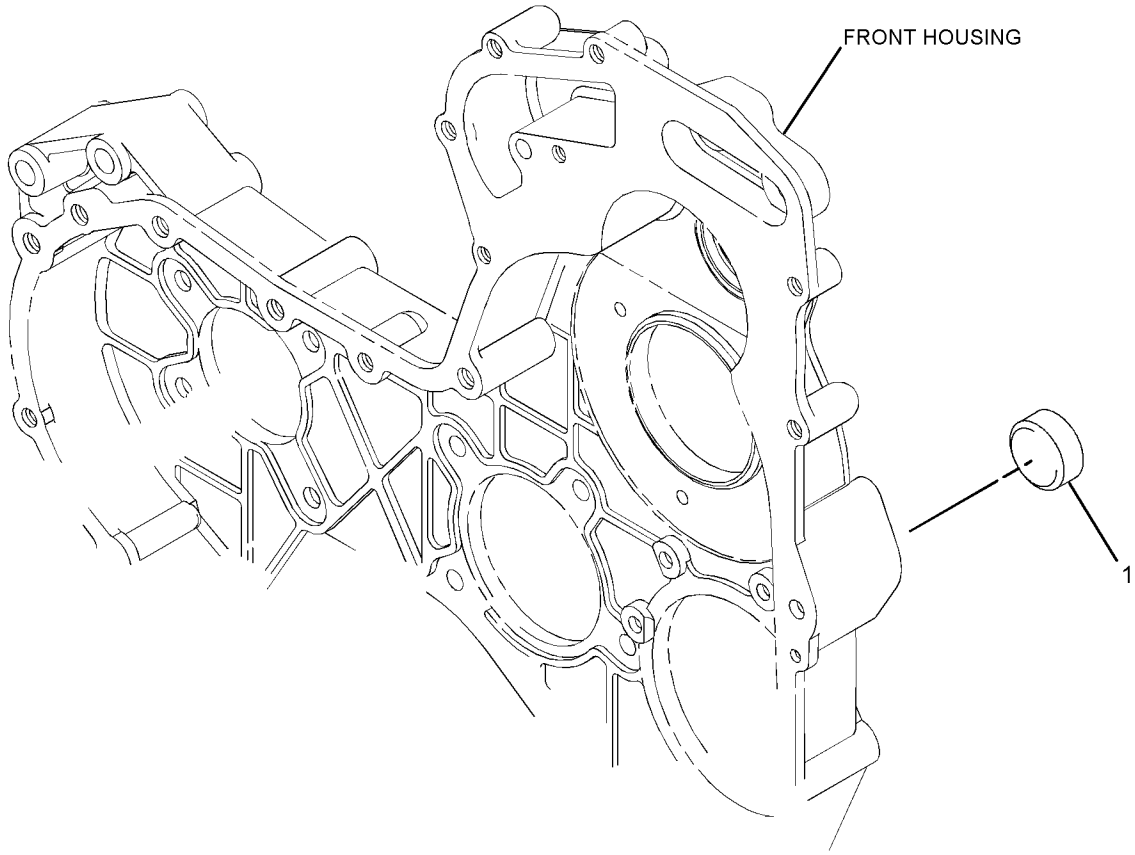

GRAPHIC #1 <END> g01304747

298-5131 PLUG GP-ENGINE

PART OF 435-1699 ENGINE AR, 435-1692 ENGINE AR-COMPLETE, 435-1685, 435-1687, 437-5409, 522-8303, 540-0570, 540-1155, 540-1156 ENGINE AR-PRIMARY
ALSO AN ATTACHMENT

SMCS-1100, 1201

i02604369

NOTE	REF NO	GRAPHIC REF	PART NUMBER	QTY	PART NAME 1 2 3 4 5 6 (PRODUCT LEVEL)	SEE PAGE
	1	1	**2B-0858**	3	PLUG-PIPE	

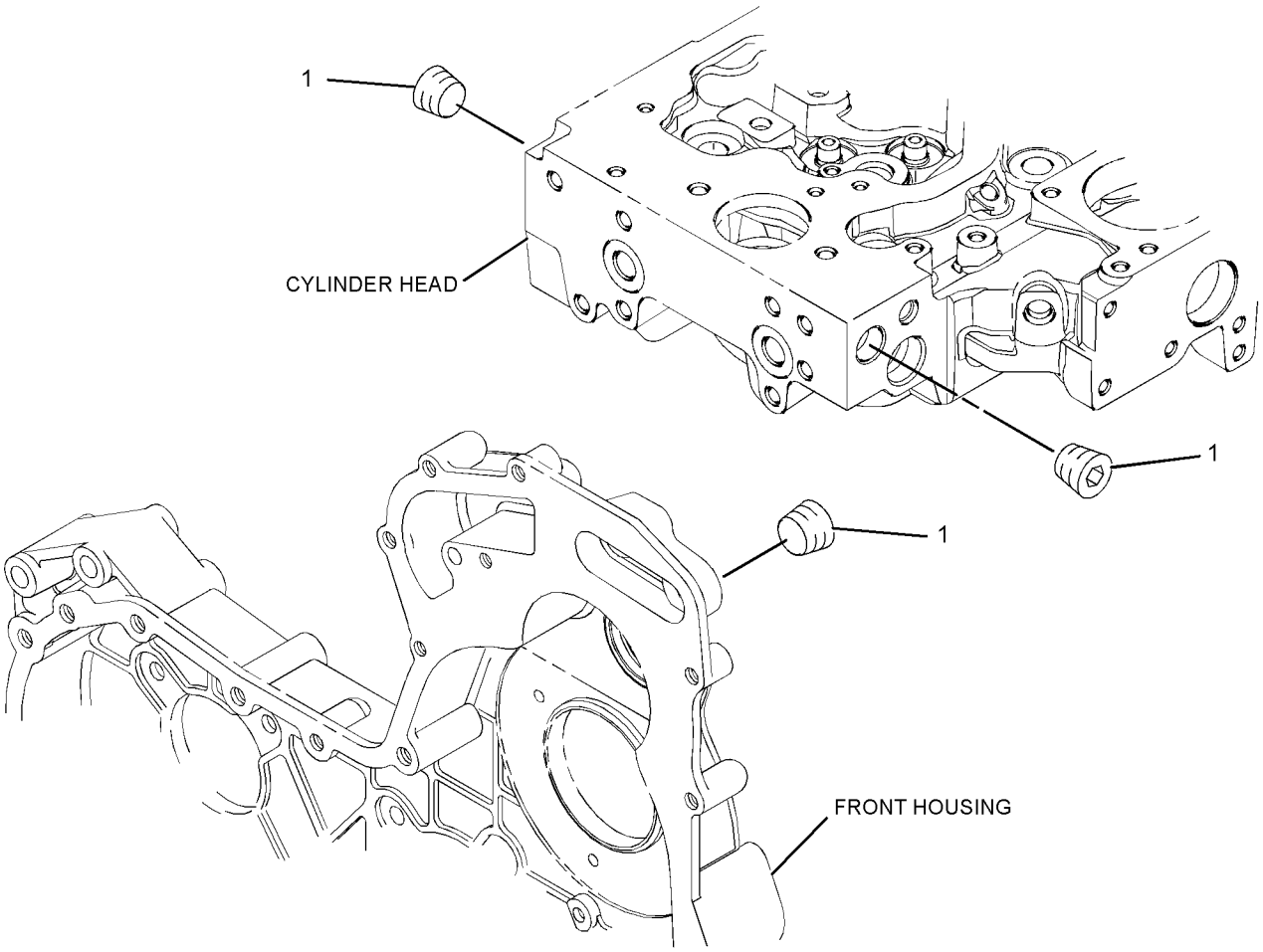

GRAPHIC #1 <END> g01305448

301-8250 PLUG GP-ENGINE

SMCS-1100, 1201 **i02635819**

NOTE	REF NO	GRAPHIC REF	PART NUMBER	QTY	PART NAME 1 2 3 4 5 6 (PRODUCT LEVEL)	SEE PAGE
	1	1	**6H-3616**	10	PLUG-PROTECTION	
	2	1	**233-9436**	4	PLUG	

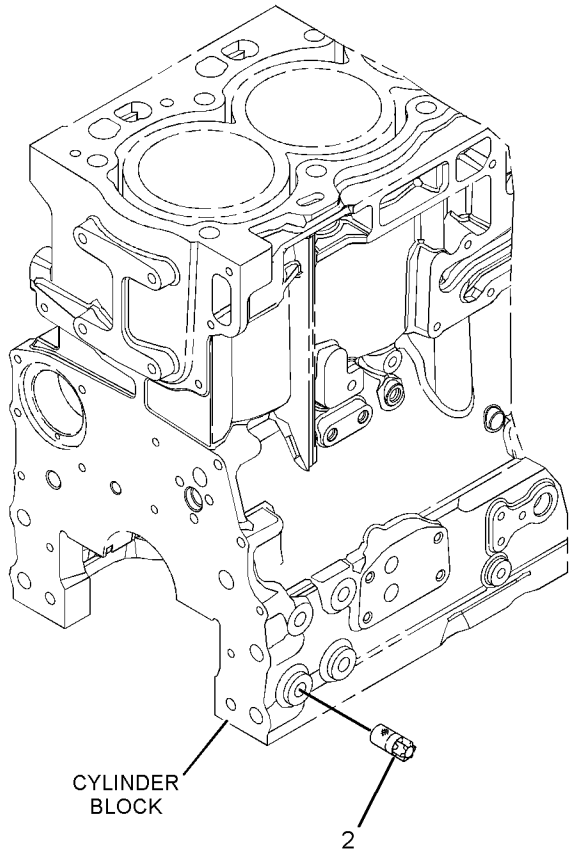

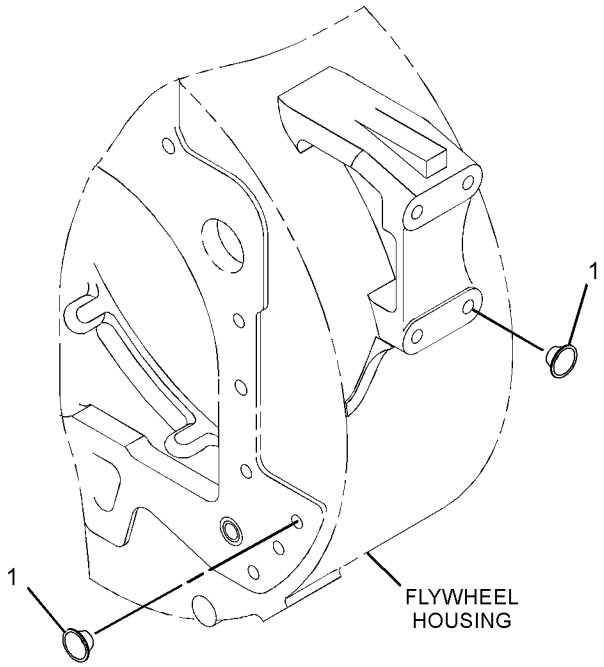

GRAPHIC #1 <END> g01371177

304-3663 PLUG GP-ENGINE

TYPE 1

SMCS-1100, 1201 **i02654272**

NOTE	REF NO	GRAPHIC REF	PART NUMBER	QTY	PART NAME 1 2 3 4 5 6 (PRODUCT LEVEL)	SEE PAGE
	1	1	**2B-0858**	1	PLUG-PIPE	
	2	1	**7W-4669**	1	ADAPTER	
	3	1	**134-3856**	1	ELBOW	

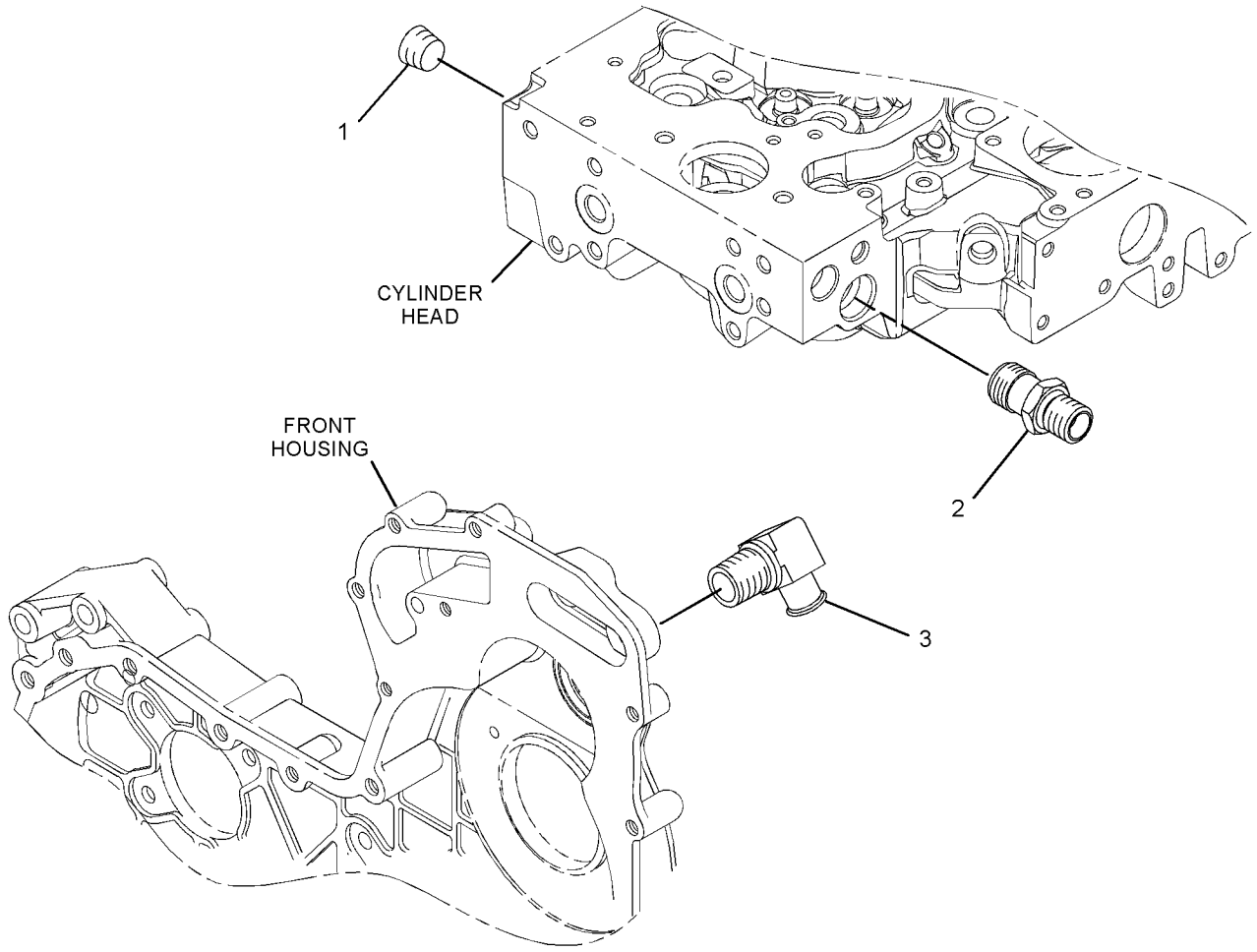

GRAPHIC #1 <END> g01346476

304-3663 PLUG GP-ENGINE

TYPE 2

SMCS-1100, 1201 **i07043530**

NOTE	REF NO	GRAPHIC REF	PART NUMBER	QTY	PART NAME 1 2 3 4 5 6 (PRODUCT LEVEL)	SEE PAGE
	1	1	**2B-0858**	1	PLUG-PIPE	
C	2	1	**474-1553**	1	ADAPTER	
	3	1	**134-3856**	1	ELBOW	

C - CHANGE FROM PREVIOUS TYPE

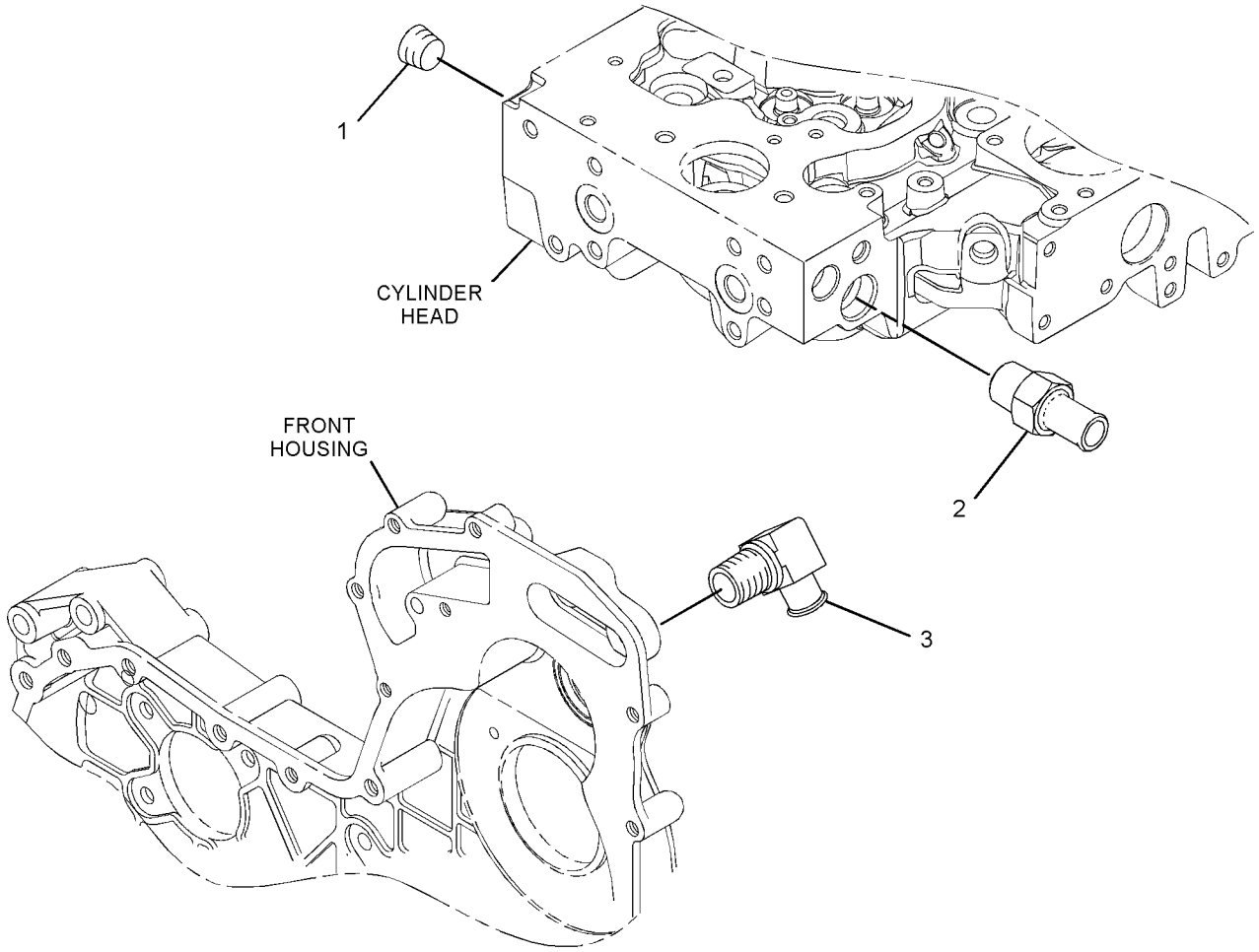

GRAPHIC #1 <END> g06200275

304-8761 PLUG GP-ENGINE

ALSO AN ATTACHMENT

SMCS-1100, 1201 **i02677730**

NOTE	REF NO	GRAPHIC REF	PART NUMBER	QTY	PART NAME 1 2 3 4 5 6 (PRODUCT LEVEL)	SEE PAGE
M	1	1	**6I-0646**	1	BOLT (M10X1.5X14-MM)	
	2	1	**214-3203**	1	WASHER (SEALING)	

M - METRIC PART

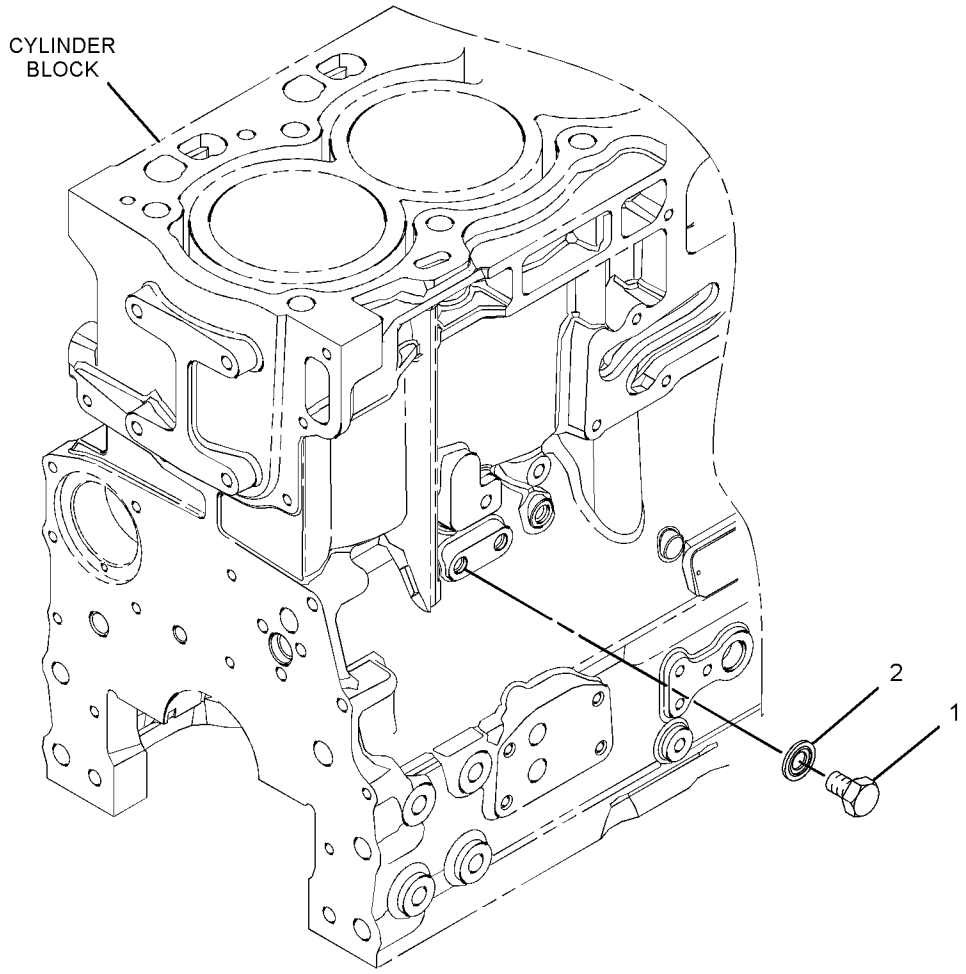

GRAPHIC #1 <END> g01373022

306-2328 PLUG GP-ENGINE

SMCS-1100, 1201 **i03078103**

NOTE	REF NO	GRAPHIC REF	PART NUMBER	QTY	PART NAME 1 2 3 4 5 6 (PRODUCT LEVEL)	SEE PAGE
	1	1	**8T-7876**	1	SEAL-O-RING	
	2	1	**035-8063**	1	PLUG	
	3	1	**199-9267**	1	SEAL-O-RING	
	4	1	**225-7941**	1	PLUG	
	5	1	**232-3861**	1	PLUG (BLANKING)	

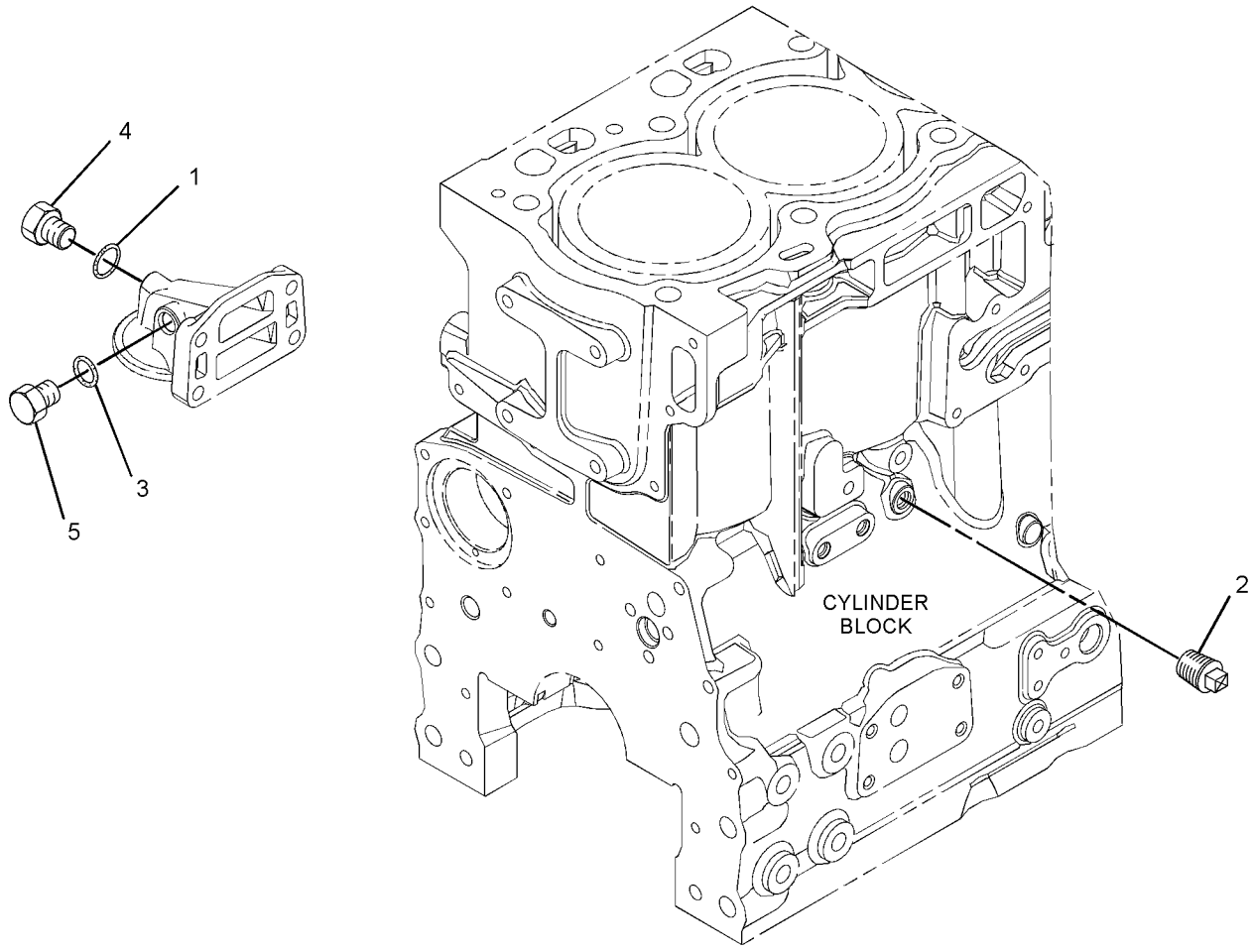

GRAPHIC #1 <END> g01341941

311-5793 PLUG GP-ENGINE

SMCS-1100, 1201 **i02783439**

NOTE	REF NO	GRAPHIC REF	PART NUMBER	QTY	PART NAME 1 2 3 4 5 6 (PRODUCT LEVEL)	SEE PAGE
	1	1	**6H-3616**	4	PLUG-PROTECTION	
	2	1	**233-9436**	4	PLUG	

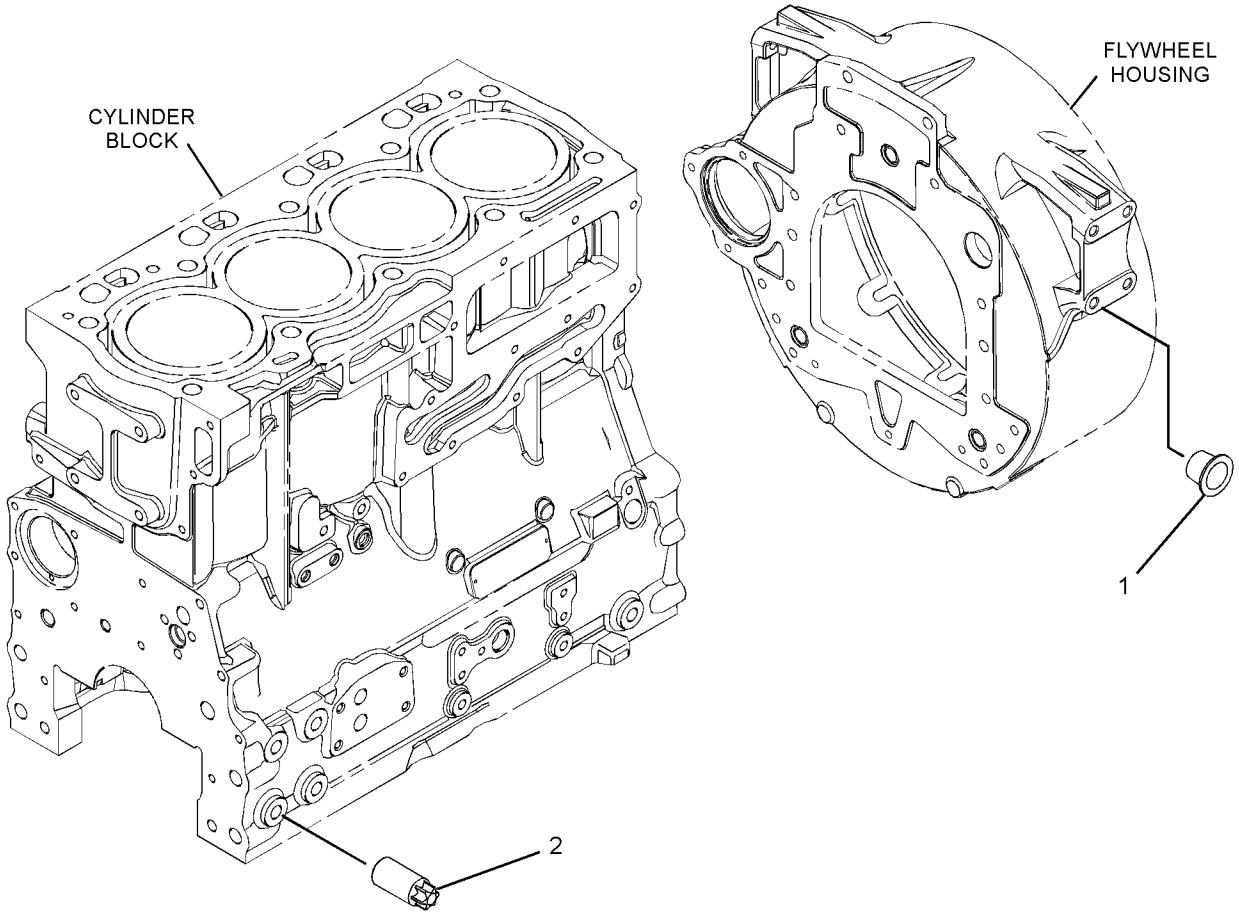

GRAPHIC #1 <END> g01430886

312-2578 PLUG GP-ENGINE

SMCS-1100, 1201 **i02810582**

NOTE	REF NO	GRAPHIC REF	PART NUMBER	QTY	PART NAME 1 2 3 4 5 6 (PRODUCT LEVEL)	SEE PAGE
	1	1	**225-6522**	1	PLUG-CUP	
	2	1	**225-6524**	1	PLUG-CUP	

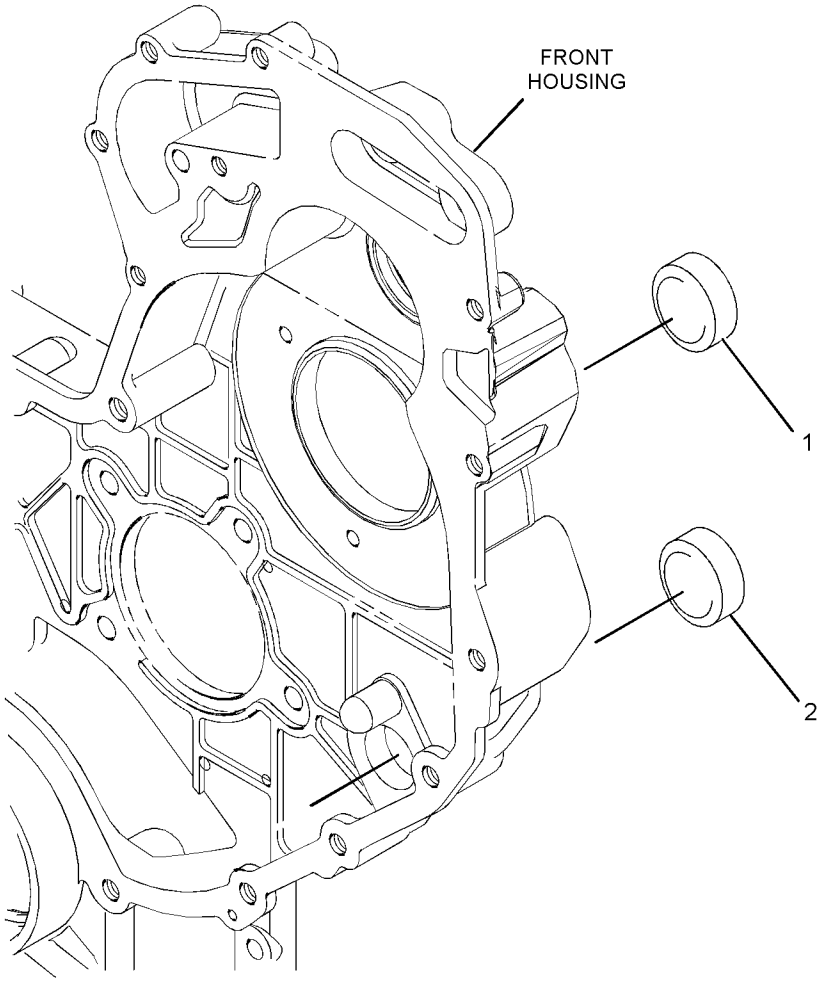

GRAPHIC #1 <END> g01430695

331-8683 PLUG GP-ENGINE

SMCS-1100, 1201

i03182237

NOTE	REF NO	GRAPHIC REF	PART NUMBER	QTY	PART NAME 1 2 3 4 5 6 (PRODUCT LEVEL)	SEE PAGE
	1	1	**2B-0858**	4	PLUG-PIPE	
	2	1	**331-8708**	1	CONNECTOR	

331-8683 **PLUG GP-ENGINE (**contd.**)** **i03182237**

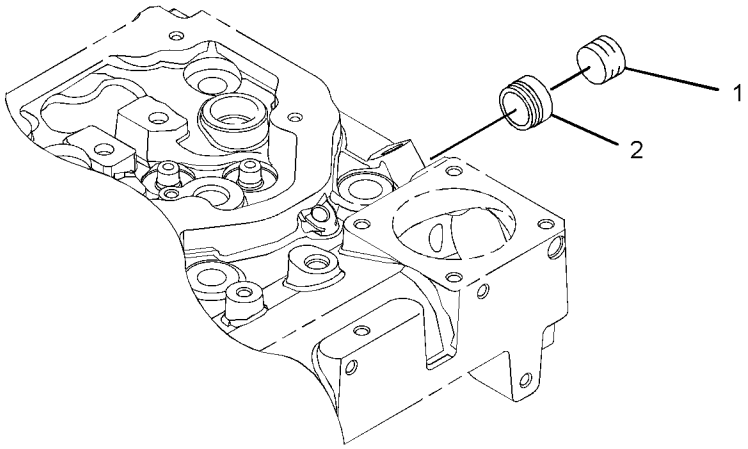

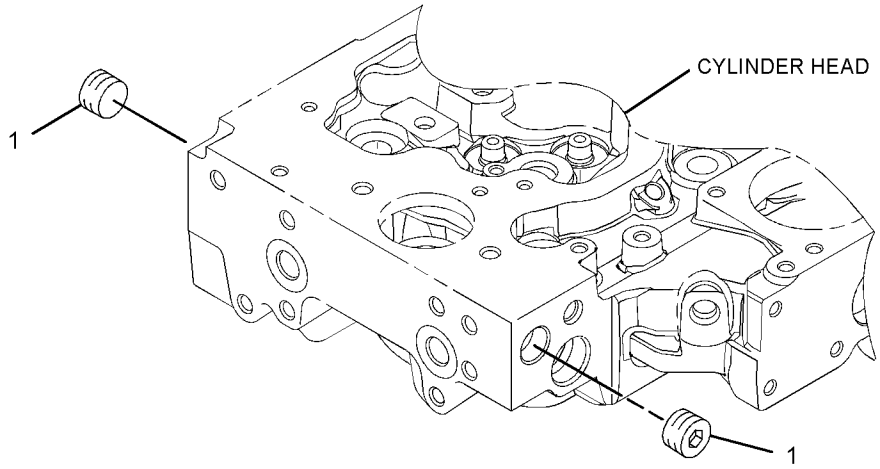

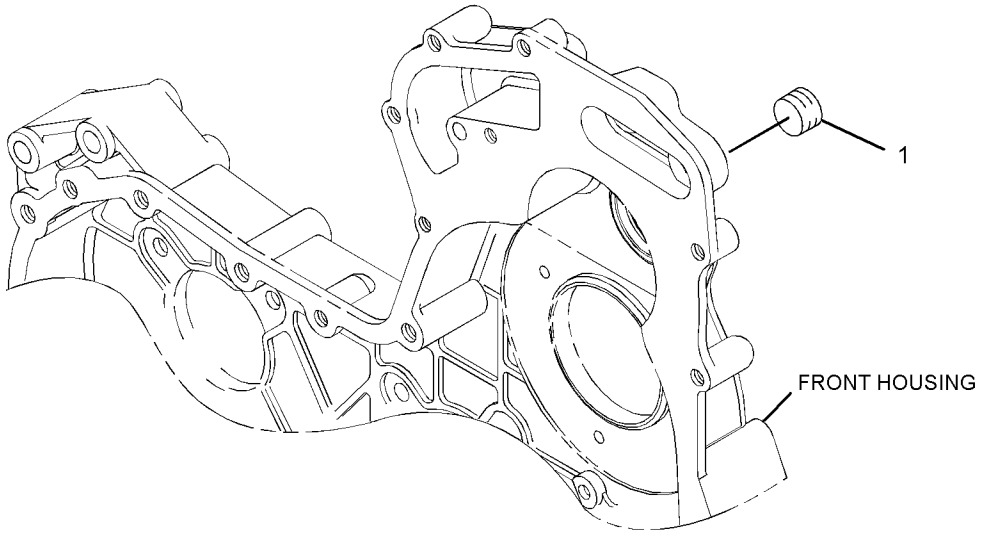

GRAPHIC #1 <END> g01637455

397-3889 PLUG GP-ENGINE

SMCS-1100, 1201 **i05769126**

NOTE	REF NO	GRAPHIC REF	PART NUMBER	QTY	PART NAME 1 2 3 4 5 6 (PRODUCT LEVEL)	SEE PAGE
	1	1	**067-6809**	6	BOLT	
	2	1	**214-3203**	6	WASHER (SEALING)	
	3	1	**233-9436**	4	PLUG	

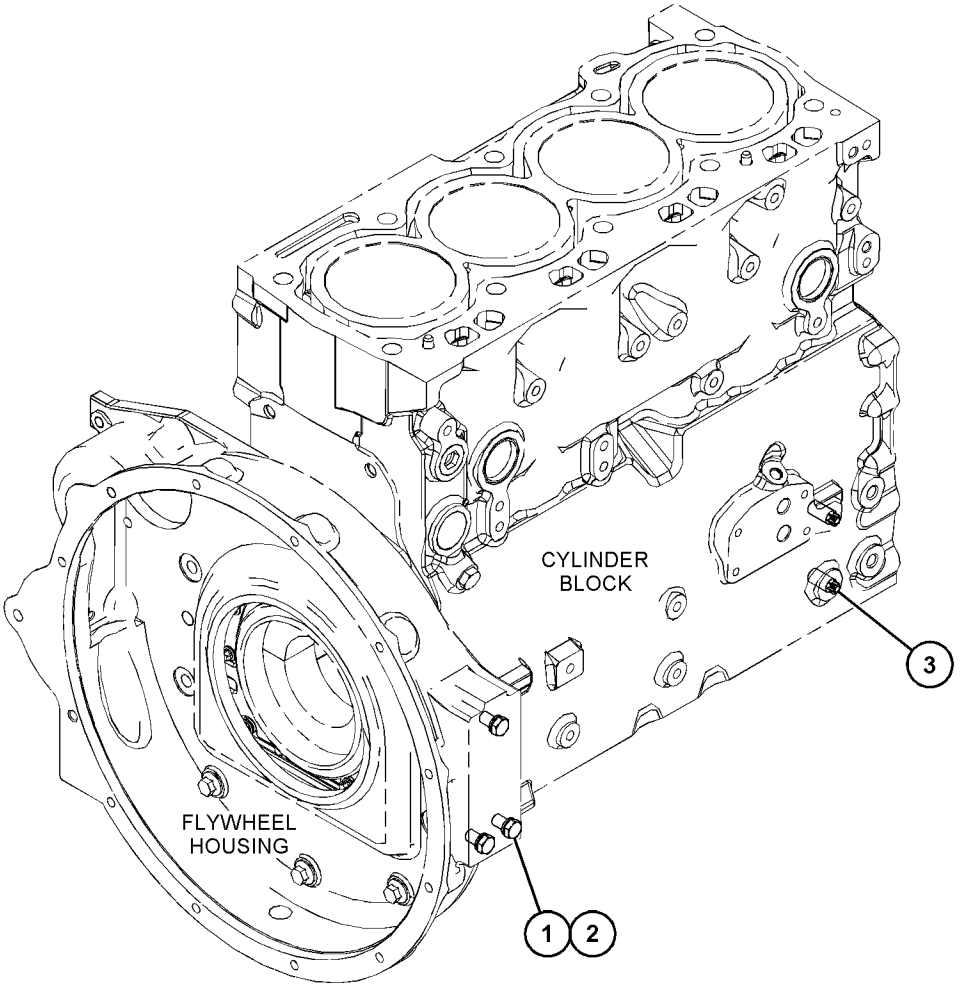

GRAPHIC #1 <END> g03661871

299-5030 PULLEY GP–CRANKSHAFT

SMCS-1205, 1359, 1384, 1425 **i02944299**

NOTE	REF NO	GRAPHIC REF	PART NUMBER	QTY	PART NAME 1 2 3 4 5 6 (PRODUCT LEVEL)	SEE PAGE
	1	1	**6I-0501**	1	BLOCK	
	2	1	**6I-0502**	1	PULLEY	
	3	1	**7W-4634**	3	BOLT (7/16-20X1.5-IN)	

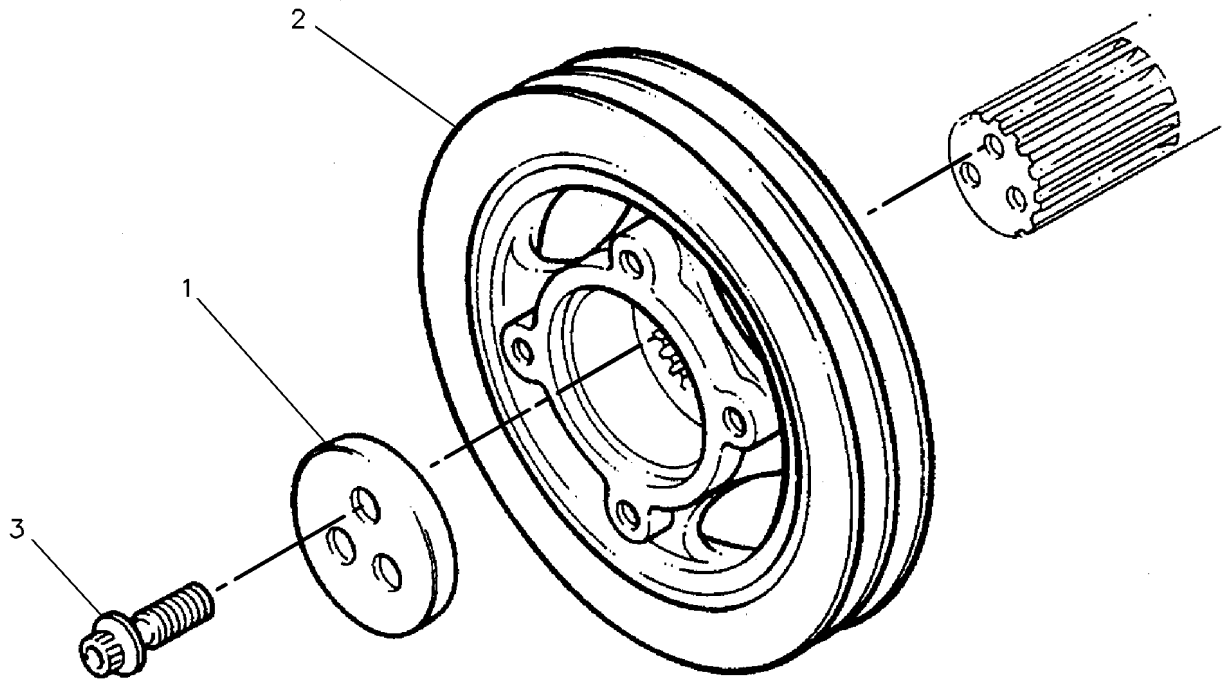

GRAPHIC #1 <END> g00130941

301-8242 PULLEY GP–CRANKSHAFT

S/N: 4441-7401

SMCS-1205, 1359, 1384, 1425 **i02635882**

NOTE	REF NO	GRAPHIC REF	PART NUMBER	QTY	PART NAME 1 2 3 4 5 6 (PRODUCT LEVEL)	SEE PAGE
	1	1	**6I-0501**	1	BLOCK	
	2	1	**7W-4634**	3	BOLT (7/16-20X1.5-IN)	
	3	1	**6I-3981**	1	PULLEY	

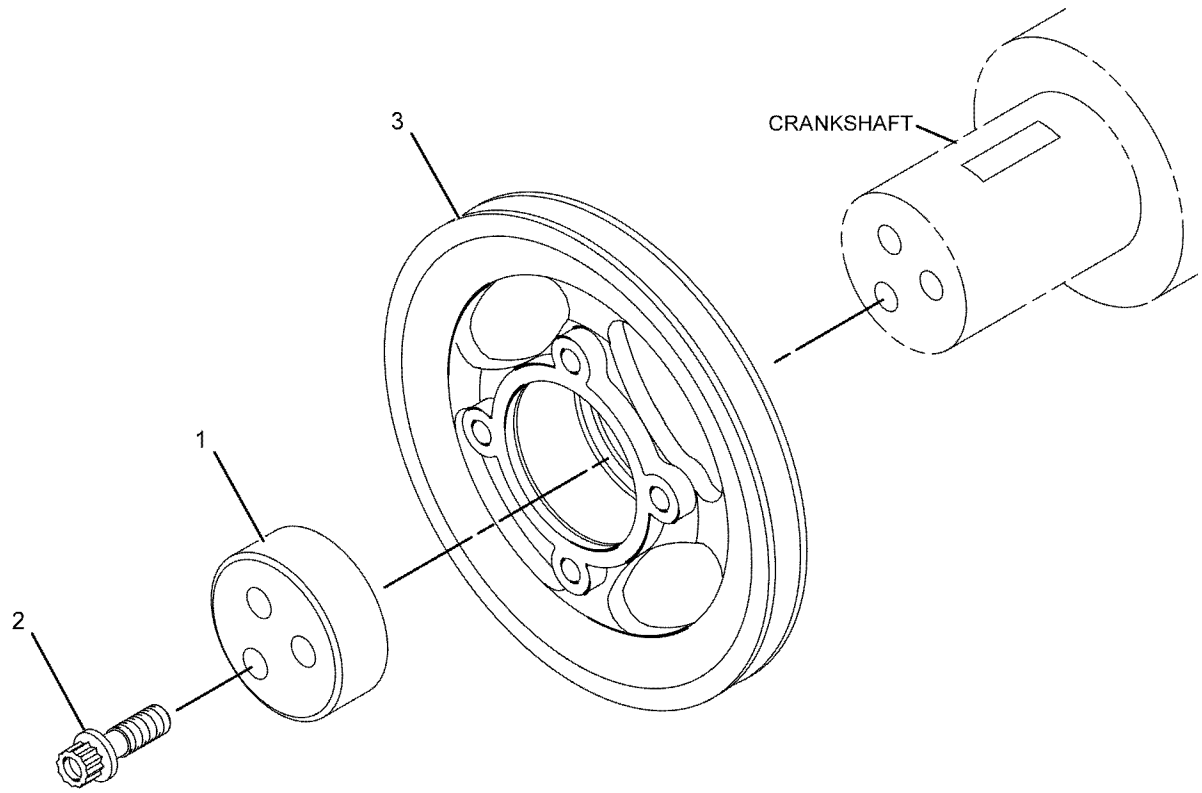

GRAPHIC #1 <END> g01080419

304-5575 PULLEY GP–CRANKSHAFT

S/N: 4441-7401

SMCS-1205, 1359, 1384, 1425 **i02685876**

NOTE	REF NO	GRAPHIC REF	PART NUMBER	QTY	PART NAME 1 2 3 4 5 6 (PRODUCT LEVEL)	SEE PAGE
	1	1	**220-2745**	1	PULLEY	
	2	1	**6I-0501**	1	BLOCK	
	3	1	**7W-4634**	3	BOLT (7/16-20X1.5-IN)	

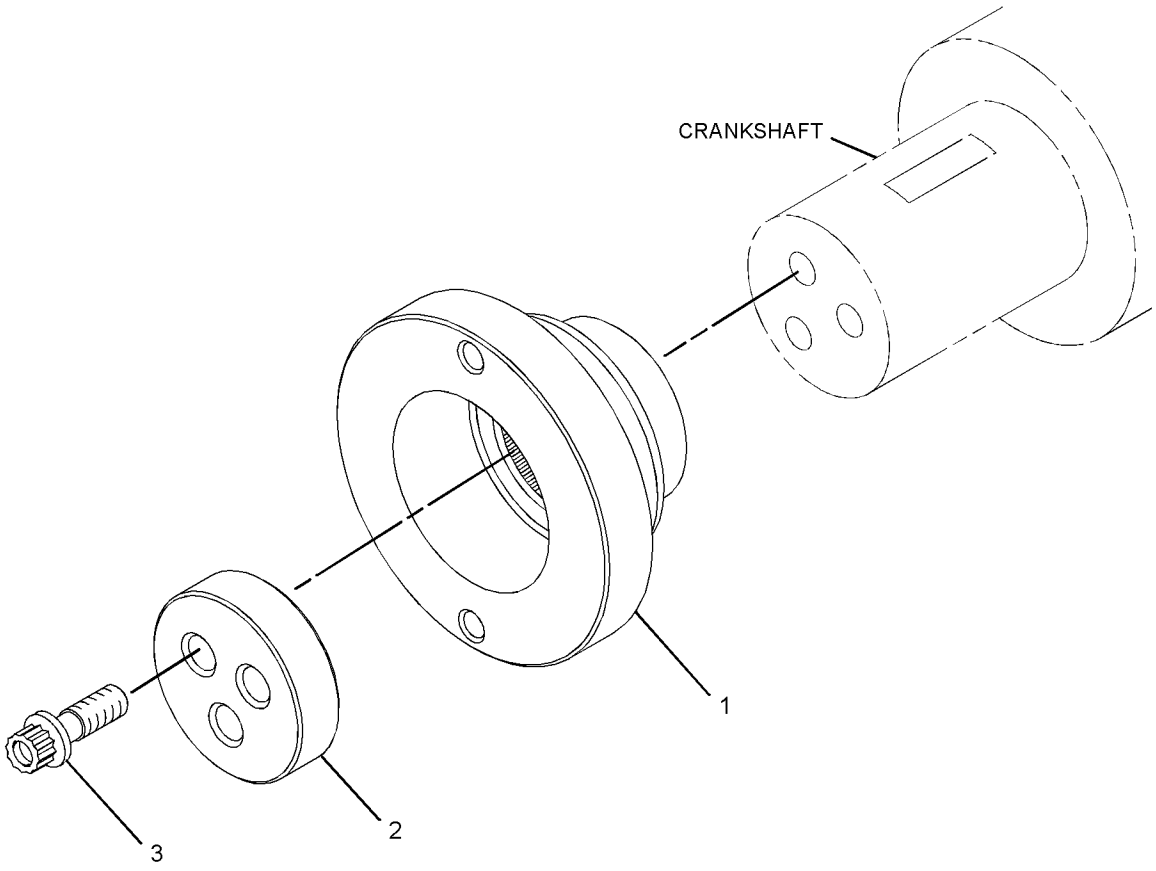

GRAPHIC #1 <END> g01372821

455-0744 PULLEY GP

SMCS-1205, 1359, 1384, 1425 **i05856276**

NOTE	REF NO	GRAPHIC REF	PART NUMBER	QTY	PART NAME 1 2 3 4 5 6 (PRODUCT LEVEL)	SEE PAGE
M	1	1	**6I-0650**	1	BOLT (M10X1.5X65-MM)	
M	2	1	**111-0859**	5	BOLT (M10X1.5X35-MM)	
	3	1	**261-0428**	1	PULLEY AS-IDLER	
M	3A	1	**307-2242**	1	BOLT (M10X1.5X45-MM)	
	4	1	**283-4148**	1	PULLEY (8-GROOVE)	
	5	1	**288-2354**	1	BRACKET	
	6	1	**309-6667**	1	BELT-SERPENTINE	
	7	1	**326-1876**	1	HOUSING-FAN DRIVE	

M - METRIC PART

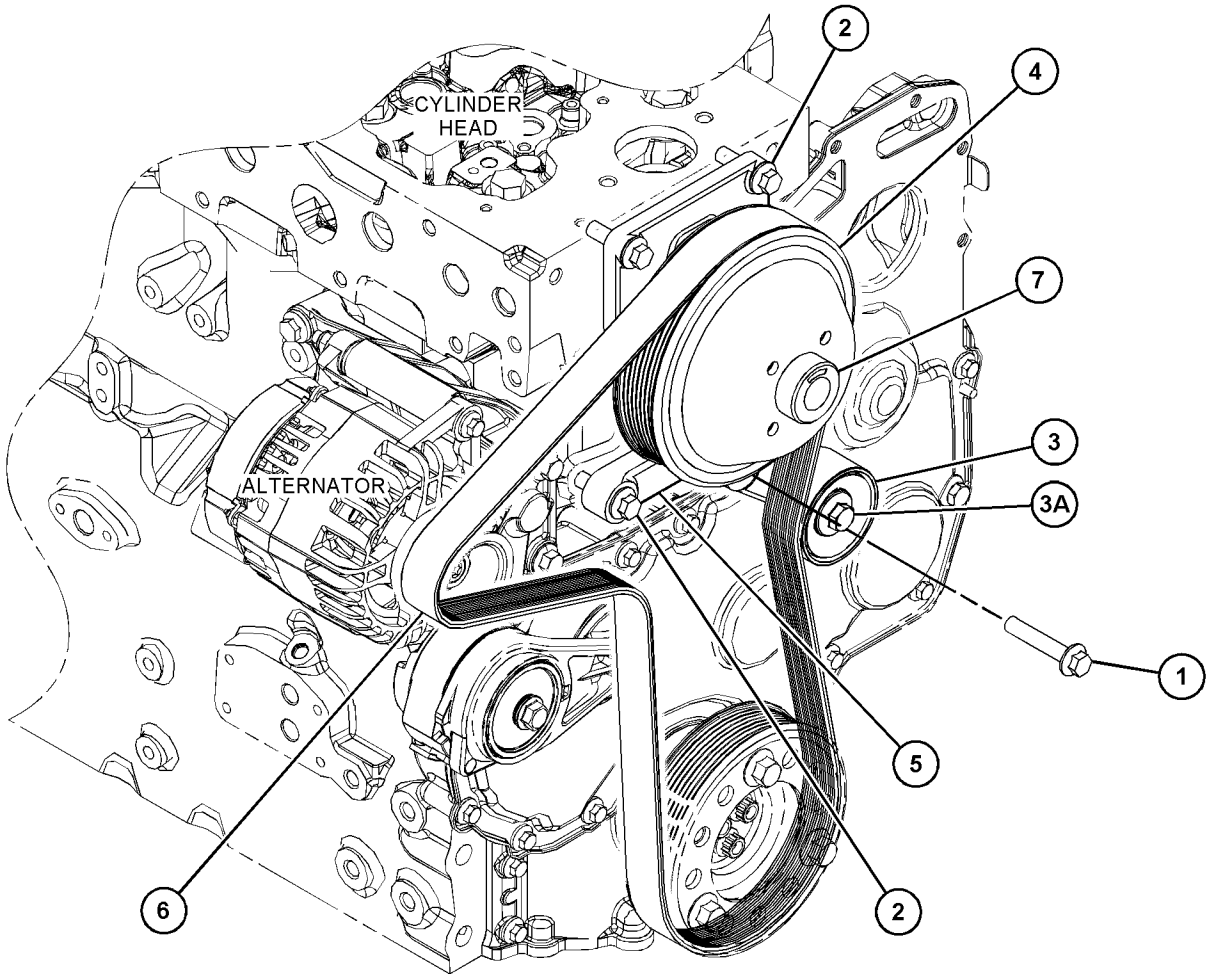

GRAPHIC #1 <END> g03701533

298-5102 PULLEY GP-AUXILIARY DRIVE

S/N: 4441-7401

SMCS-1205, 1207 **i02604383**

NOTE	REF NO	GRAPHIC REF	PART NUMBER	QTY	PART NAME 1 2 3 4 5 6 (PRODUCT LEVEL)	SEE PAGE
	1	1	**283-4674**	1	PULLEY-AUXILIARY DRIVE	
M	2	1	**7C-4616**	3	BOLT (M12X1.75X45-MM)	

M - METRIC PART

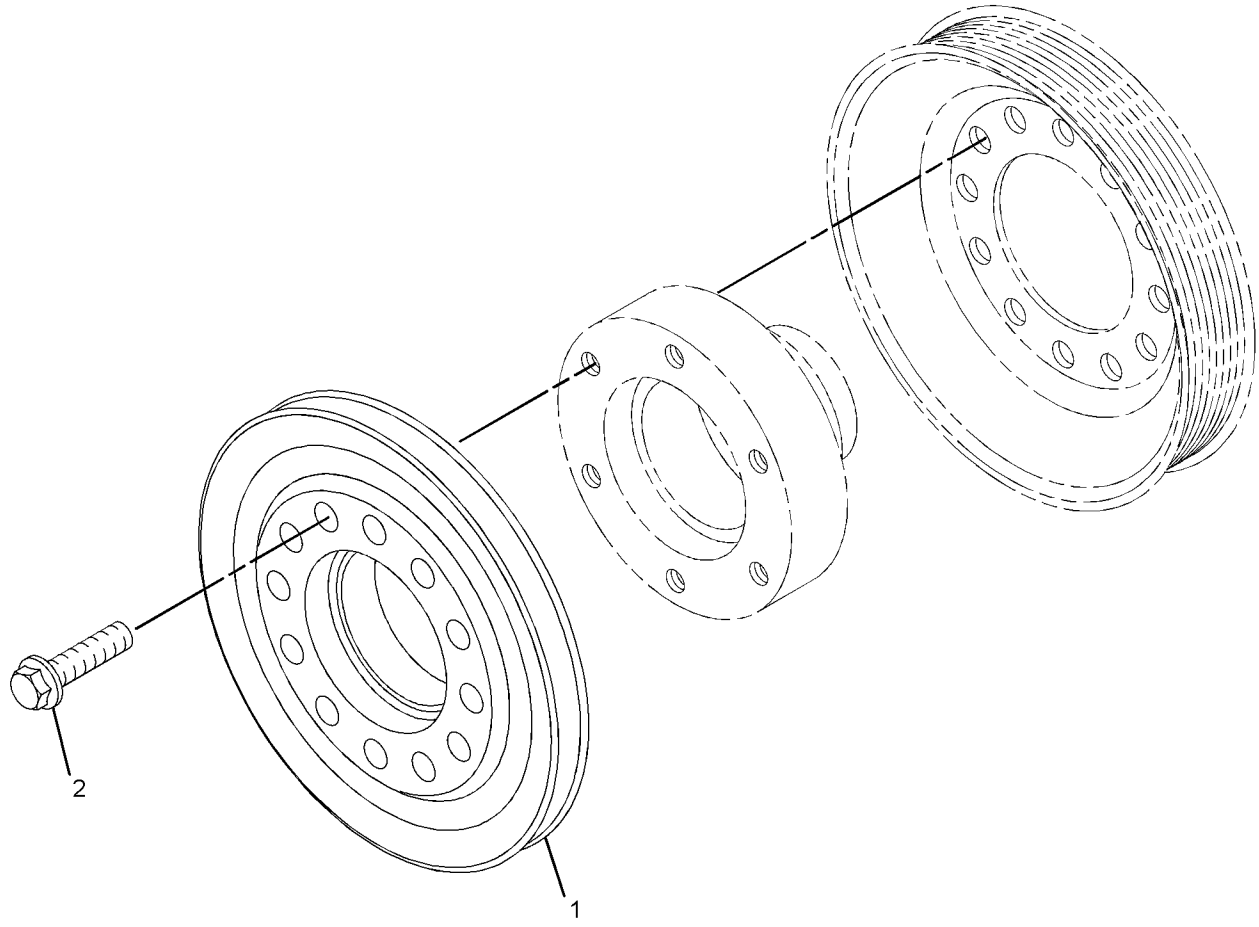

GRAPHIC #1 <END> g01306063

298-5101 PULLEY GP-CRANKSHAFT

S/N: 4441-7401

SMCS-1205 **i02846822**

NOTE	REF NO	GRAPHIC REF	PART NUMBER	QTY	PART NAME 1 2 3 4 5 6 (PRODUCT LEVEL)	SEE PAGE
	1	1	**274-1931**	1	PULLEY (8-GROOVE)	
	2	1	**306-8857**	1	HUB	
M	3	1	**102-9941**	3	BOLT (M12X1.75X25-MM)	
	4	1	**6I-0501**	1	BLOCK	
	5	1	**7W-4634**	3	BOLT (7/16-20X1.5-IN)	

M - METRIC PART

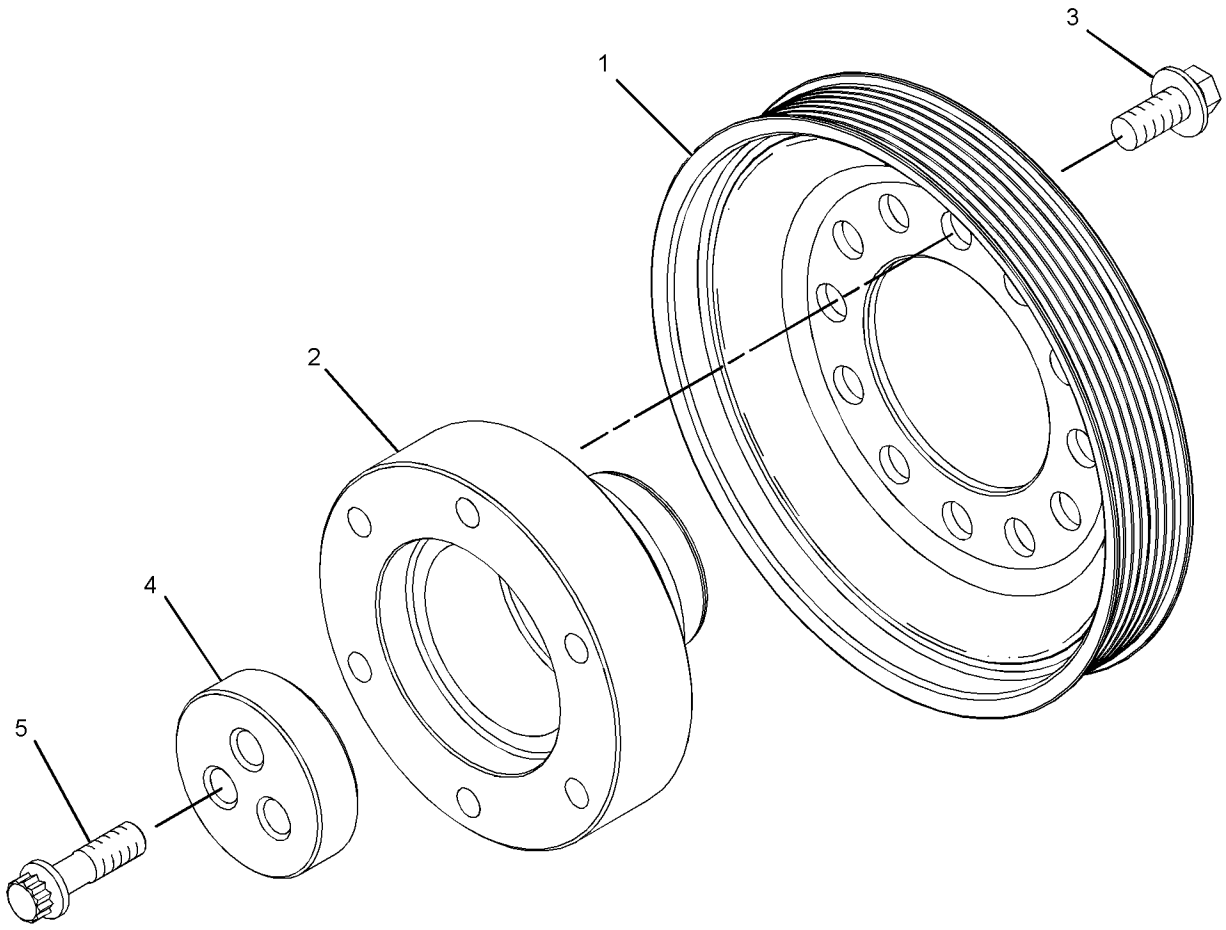

GRAPHIC #1 <END> g01304395

308-4160 PULLEY GP-CRANKSHAFT

SMCS-1205 **i02736228**

NOTE	REF NO	GRAPHIC REF	PART NUMBER	QTY	PART NAME 1 2 3 4 5 6 (PRODUCT LEVEL)	SEE PAGE
	1	1	**6I-0501**	1	BLOCK	
	2	1	**111-3297**	1	PULLEY	
	3	1	**7W-4634**	3	BOLT (7/16-20X1.5-IN)	

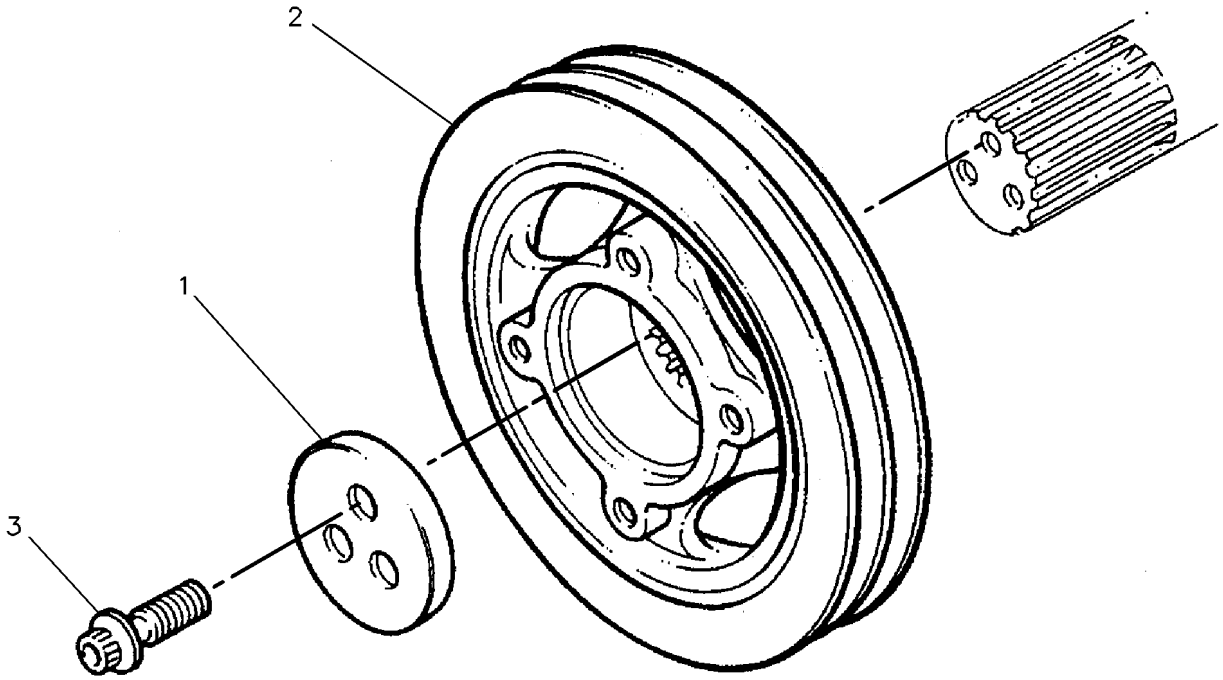

GRAPHIC #1 <END> g00130941

360-7341 PULLEY GP-CRANKSHAFT

S/N: 4447402-UP

SMCS-1205 **i03905199**

NOTE	REF NO	GRAPHIC REF	PART NUMBER	QTY	PART NAME 1 2 3 4 5 6 (PRODUCT LEVEL)	SEE PAGE
	1	1	**334-9334**	3	BOLT	
	2	1	**359-0749**	1	PULLEY-CRANKSHAFT	

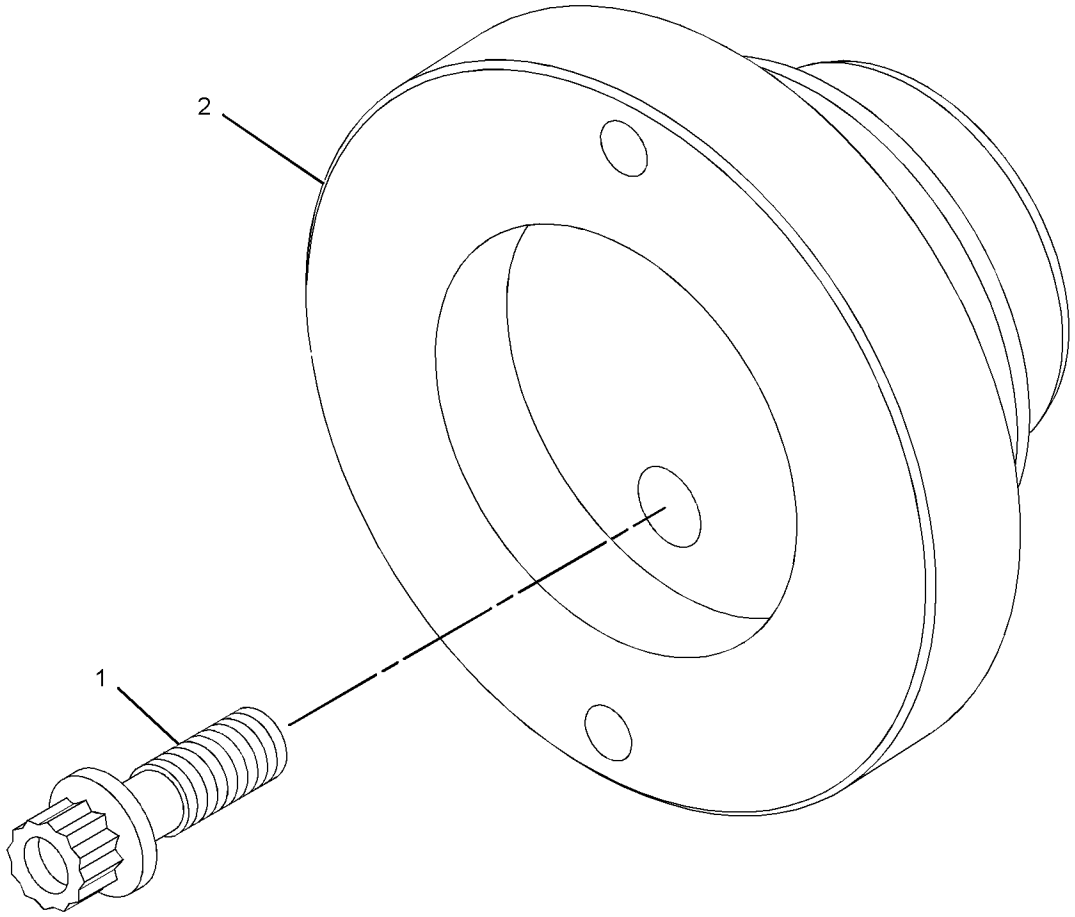

GRAPHIC #1 <END> g02154876

360-7342 PULLEY GP-CRANKSHAFT

SMCS-1205 **i03902970**

NOTE	REF NO	GRAPHIC REF	PART NUMBER	QTY	PART NAME 1 2 3 4 5 6 (PRODUCT LEVEL)	SEE PAGE
	1	1	**334-9334**	3	BOLT	
	2	1	**359-0745**	1	PULLEY-CRANKSHAFT	

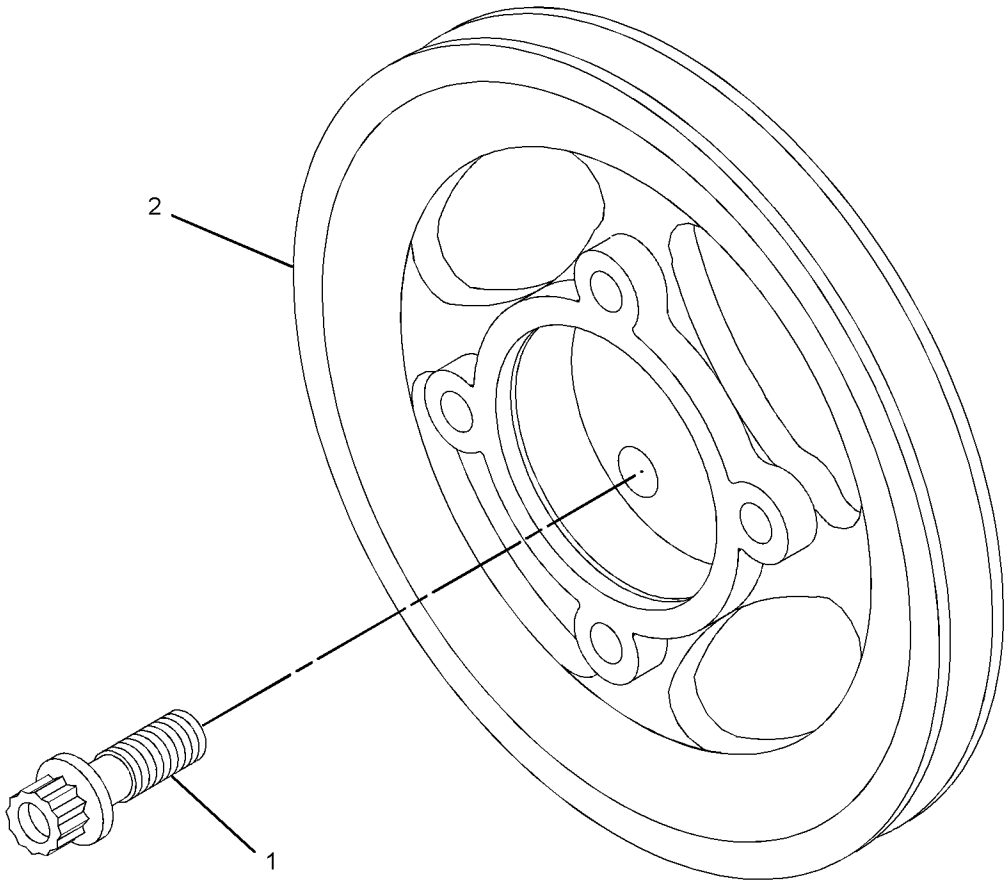

GRAPHIC #1 <END> g02154849

360-7343 PULLEY GP-CRANKSHAFT

PART OF 435-1699 ENGINE AR, 435-1687, 437-5409, 522-8303, 540-1155, 540-1156 ENGINE AR-PRIMARY
ALSO AN ATTACHMENT

SMCS-1205 **i03905841**

NOTE	REF NO	GRAPHIC REF	PART NUMBER	QTY	PART NAME 1 2 3 4 5 6 (PRODUCT LEVEL)	SEE PAGE
	1	1	**334-9334**	3	BOLT	
	2	1	**359-0746**	1	PULLEY-CRANKSHAFT	

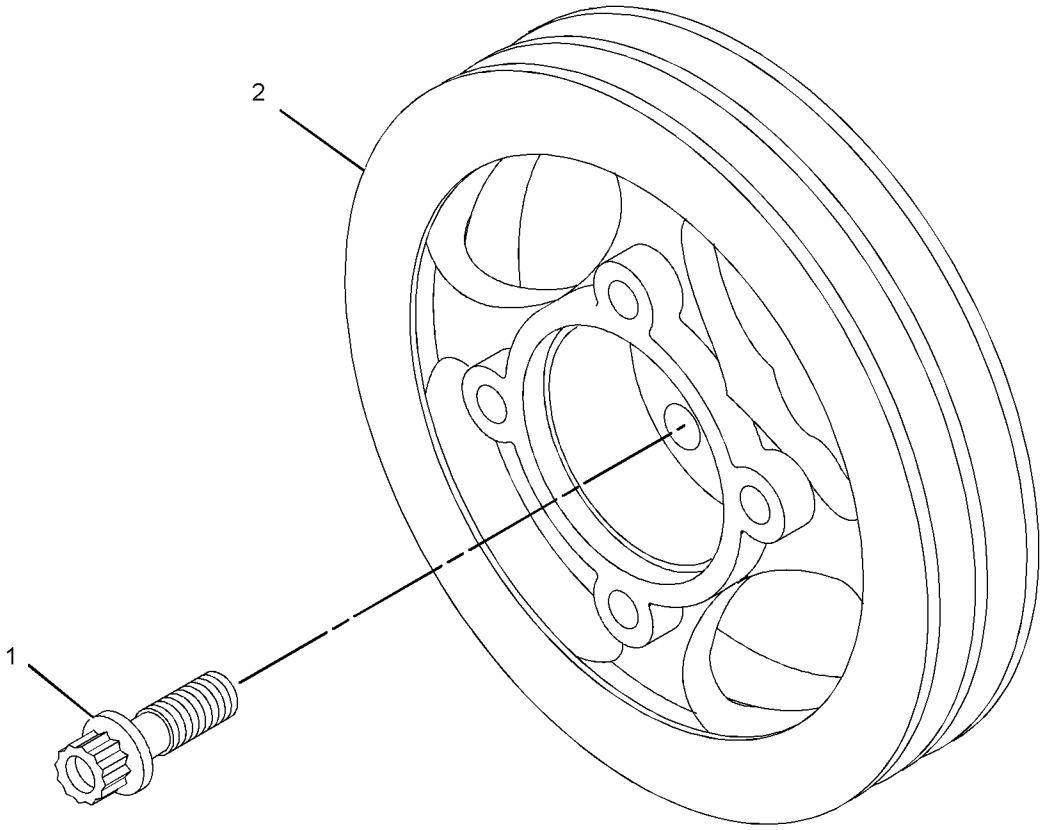

GRAPHIC #1 <END> g02154420

360-7344 PULLEY GP-CRANKSHAFT

SMCS-1205 **i03905205**

NOTE	REF NO	GRAPHIC REF	PART NUMBER	QTY	PART NAME 1 2 3 4 5 6 (PRODUCT LEVEL)	SEE PAGE
	1	1	**334-9334**	3	BOLT	
	2	1	**359-0747**	1	PULLEY-CRANKSHAFT	

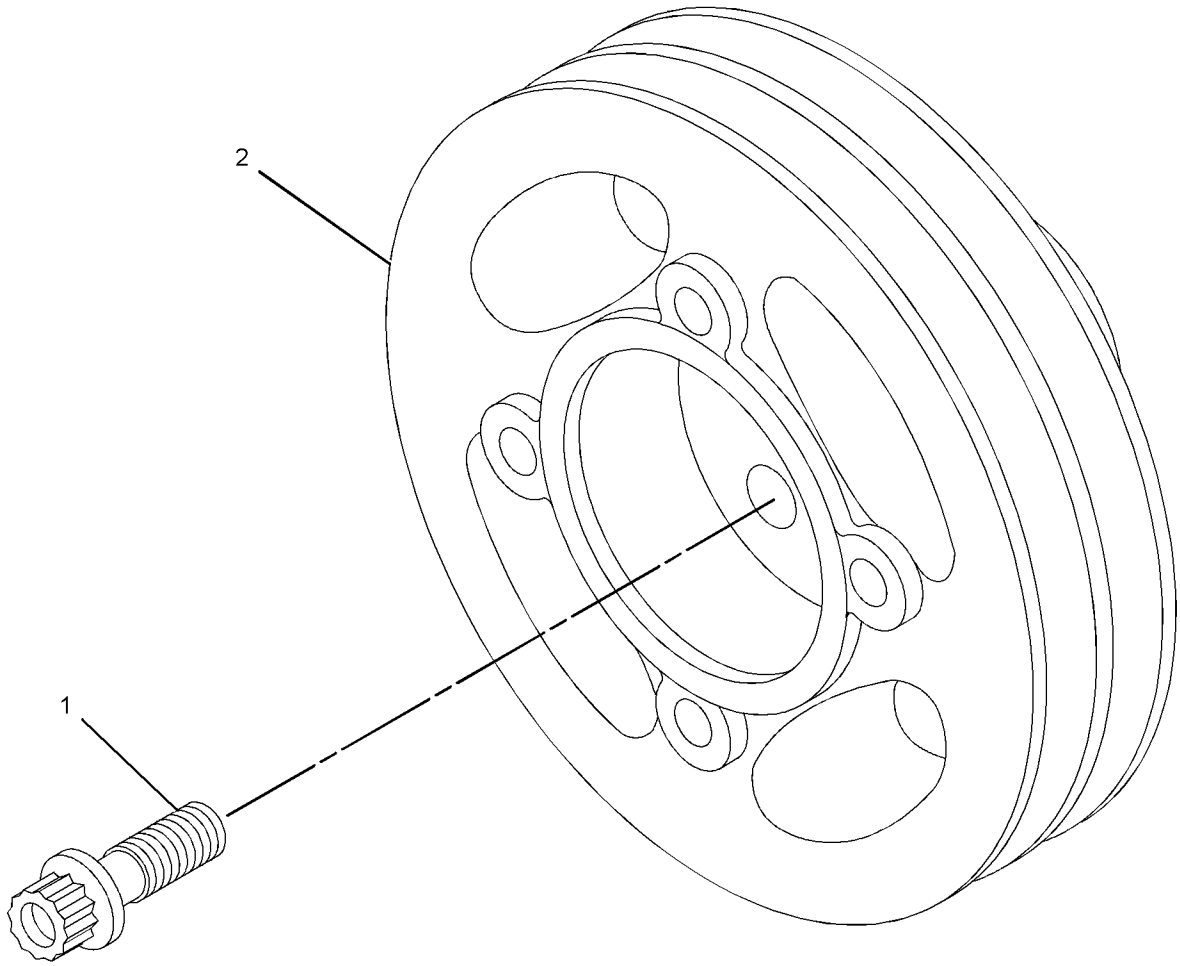

GRAPHIC #1 <END> g02154837

360-7345 PULLEY GP-CRANKSHAFT

SMCS-1205 **i03900157**

NOTE	REF NO	GRAPHIC REF	PART NUMBER	QTY	PART NAME 1 2 3 4 5 6 (PRODUCT LEVEL)	SEE PAGE
M	1	1	**102-9941**	3	BOLT (M12X1.75X25-MM)	
	2	1	**286-7848**	1	PULLEY (8-GROOVE)	
	3	1	**334-9334**	3	BOLT	
	4	1	**359-0750**	1	PULLEY-CRANKSHAFT	

M - METRIC PART

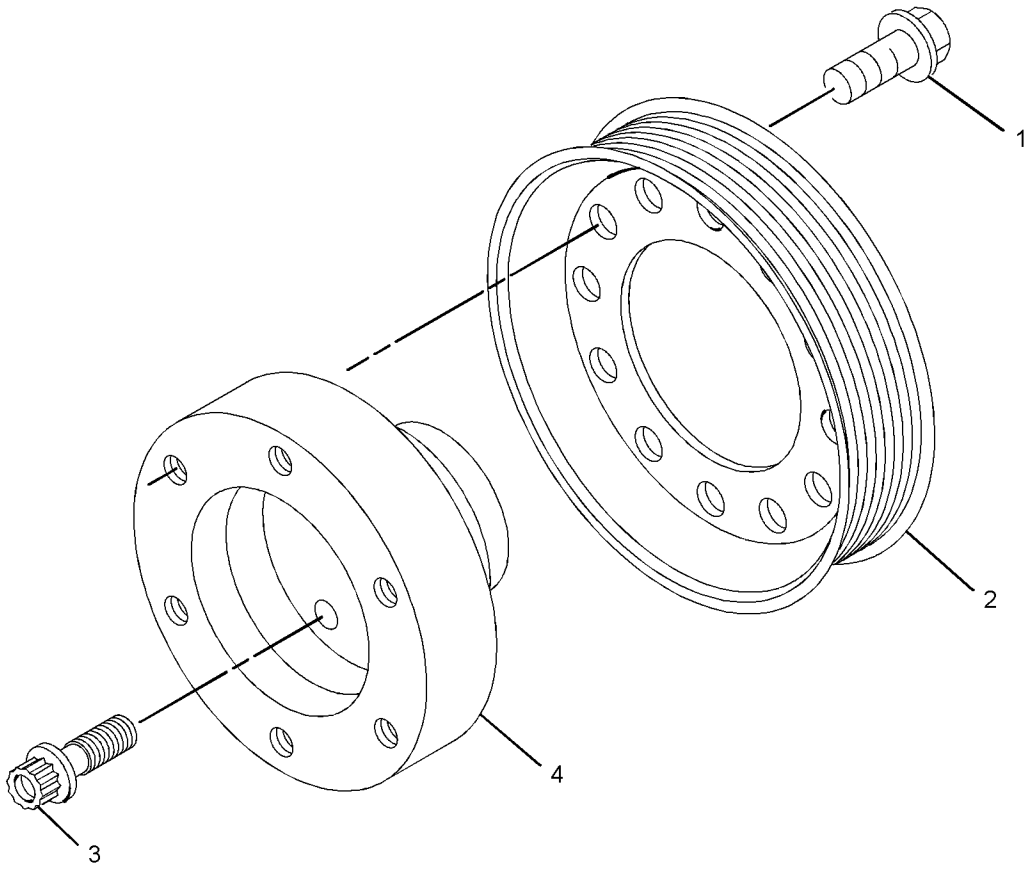

GRAPHIC #1 <END> g02156463

360-7346 PULLEY GP-CRANKSHAFT

PART OF 435-1692 ENGINE AR-COMPLETE, 435-1685, 540-0570 ENGINE AR-PRIMARY

SMCS-1205 **i03902969**

NOTE	REF NO	GRAPHIC REF	PART NUMBER	QTY	PART NAME 1 2 3 4 5 6 (PRODUCT LEVEL)	SEE PAGE
M	1	1	**102-9941**	3	BOLT (M12X1.75X25-MM)	
	2	1	**274-1931**	1	PULLEY (8-GROOVE)	
	3	1	**334-9334**	3	BOLT	
	4	1	**359-0750**	1	PULLEY-CRANKSHAFT	

M - METRIC PART

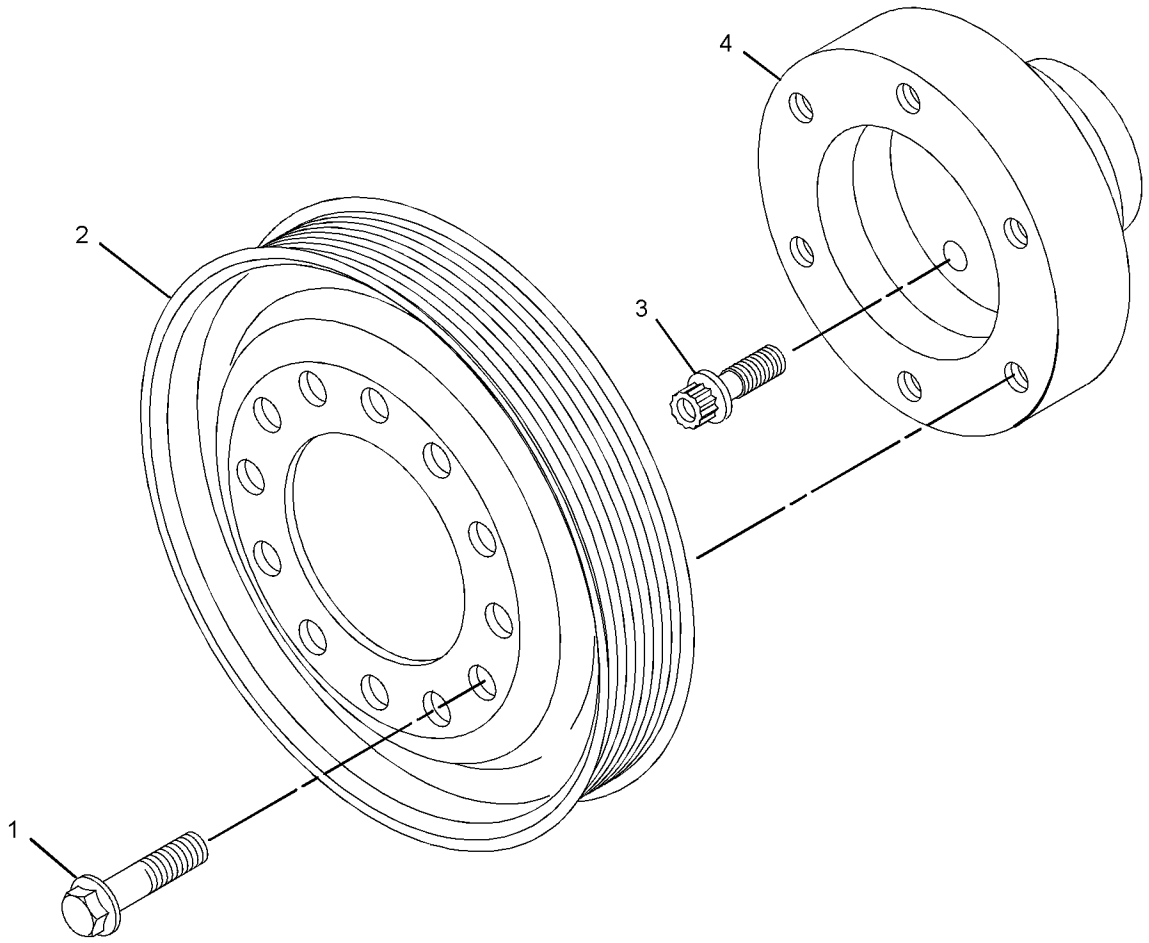

GRAPHIC #1 <END> g02158336

360-7355 PULLEY GP-CRANKSHAFT

PART OF 435-1692 ENGINE AR-COMPLETE, 435-1685, 540-0570 ENGINE AR-PRIMARY

SMCS-1205 **i03900159**

NOTE	REF NO	GRAPHIC REF	PART NUMBER	QTY	PART NAME 1 2 3 4 5 6 (PRODUCT LEVEL)	SEE PAGE
M	1	1	**7C-4616**	3	BOLT (M12X1.75X45-MM)	
	2	1	**283-4674**	1	PULLEY-AUXILIARY DRIVE	

M - METRIC PART

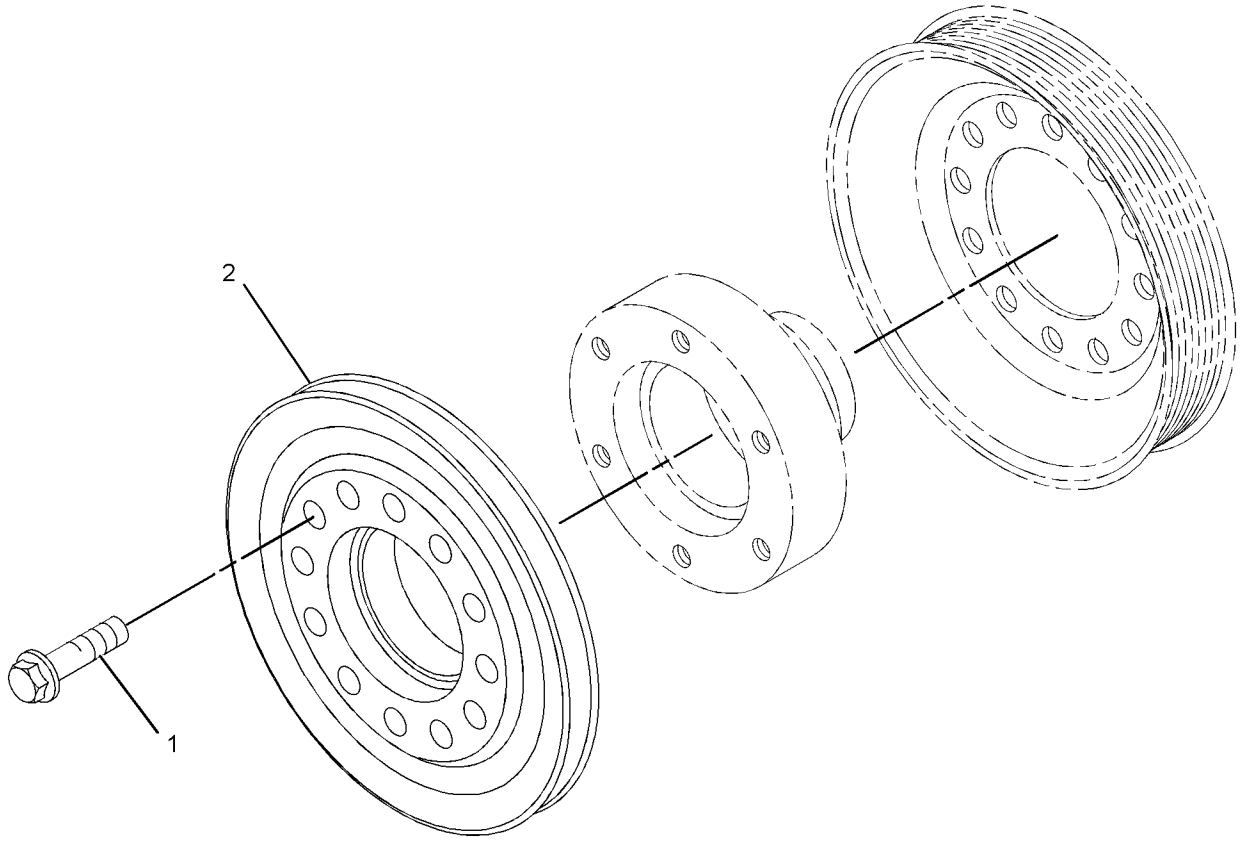

GRAPHIC #1 <END> g02155449

298-4533 ROCKER ARM GP

PART OF 298-5089 ROCKER ARM GP, 298-5891, 304-3647, 308-4151, 322-4885 VALVE MECHANISM GP
ALSO AN ATTACHMENT

SMCS-1123 **i06273531**

NOTE	REF NO	GRAPHIC REF	PART NUMBER	QTY	PART NAME 1 2 3 4 5 6 (PRODUCT LEVEL)	SEE PAGE
	1	1	**276-9200**	2	PLUG-SHAFT END	
	2	1	**276-9201**	1	CLIP	
	3	1	**276-9206**	3	SPRING-SHAFT	
	4	1	**276-9207**	1	SPRING-SHAFT	
	5	1	**278-5111**	4	ROCKER ARM AS	
					(EACH INCLUDES)	
	5A	1	**276-9230**	1	NUT	
	5B	1	**278-5113**	1	SCREW-ADJUSTING (TORX)	
	6	1	**278-5112**	4	ROCKER ARM AS	
					(EACH INCLUDES)	
	6A	1	**276-9230**	1	NUT	
	6B	1	**278-5113**	1	SCREW-ADJUSTING (TORX)	
	7	1	**280-1912**	4	BRACKET	
	8	1	**280-1913**	4	RETAINER	
	9	1	**280-1914**	8	BOLT (M8X1.25X55-MM)	

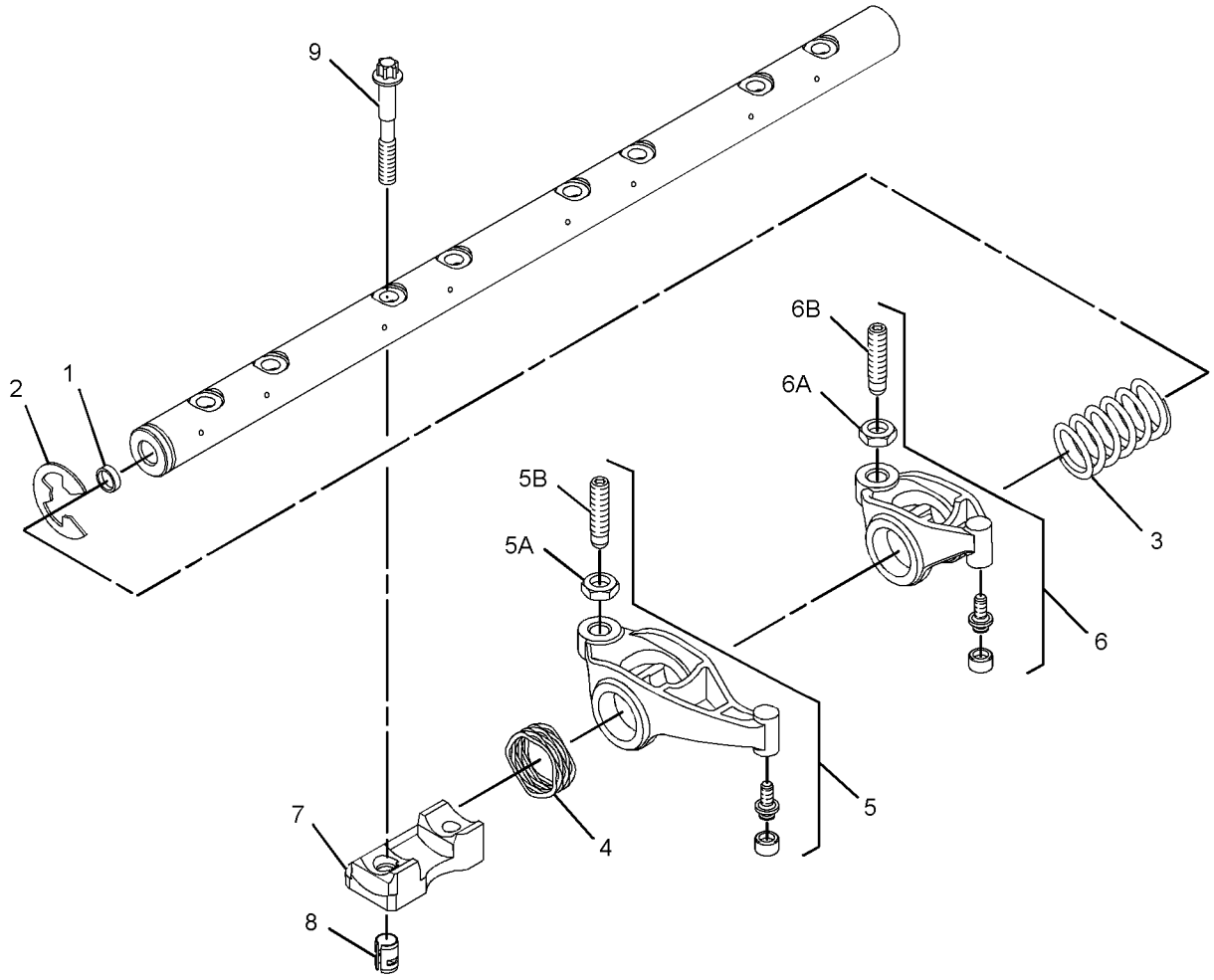

GRAPHIC #1 <END> g01532745

298-5089 ROCKER ARM GP

PART OF 435-1685 ENGINE AR-PRIMARY

SMCS-1123 **i04523148**

NOTE	REF NO	GRAPHIC REF	PART NUMBER	QTY	PART NAME 1 2 3 4 5 6 (PRODUCT LEVEL)	SEE PAGE
	1	1	**346-4709**	8	BRIDGE GP-VALVE	
Y	2	1	**298-4533**	1	ROCKER ARM GP	657

Y - SEPARATE ILLUSTRATION

298-5089 **ROCKER ARM GP (**contd.**)** **i04523148**

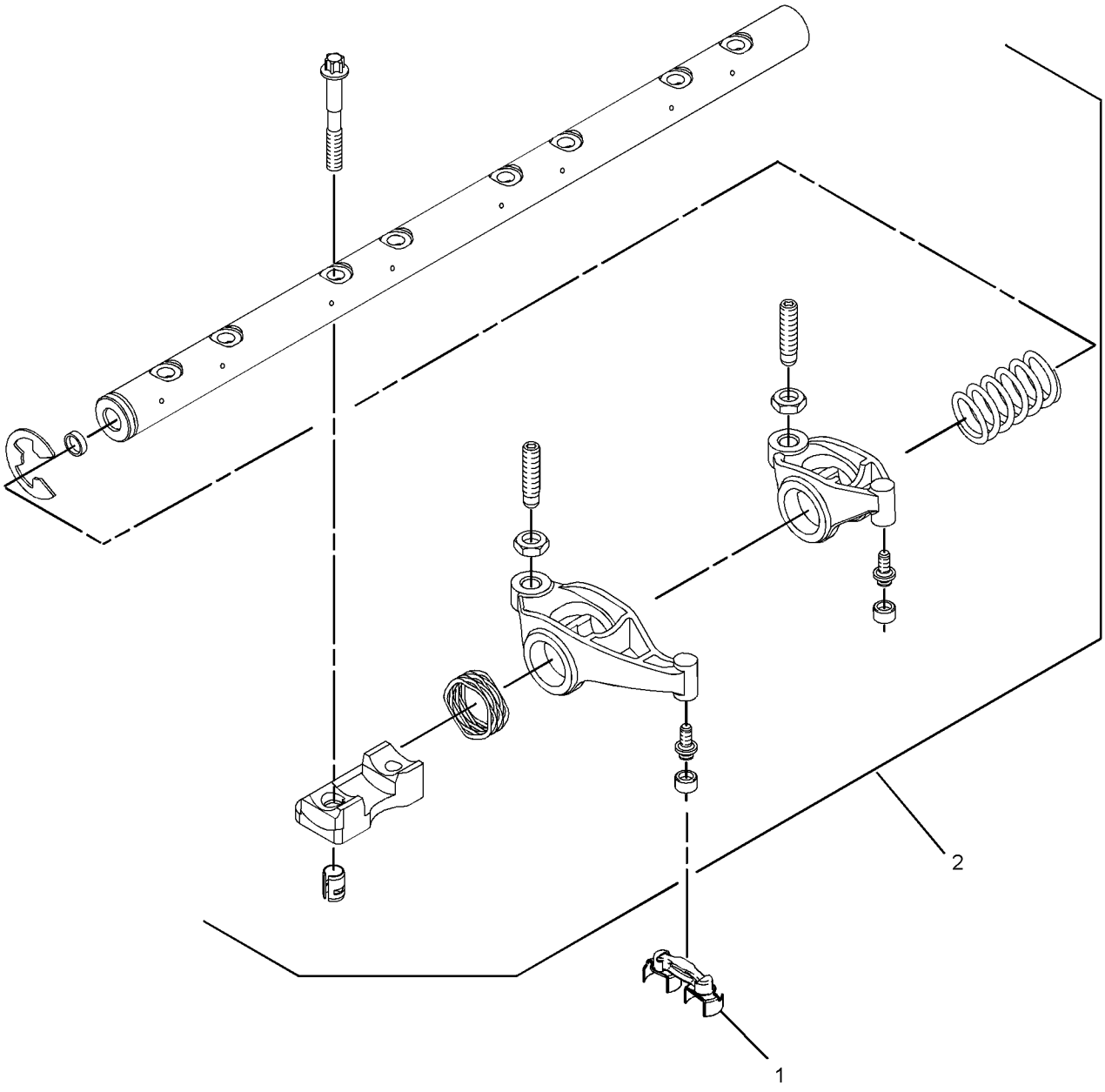

GRAPHIC #1 <END> g01932396

314-2310 V-BELT GP

SMCS-1357 **i02896269**

NOTE	REF NO	GRAPHIC REF	PART NUMBER	QTY	PART NAME 1 2 3 4 5 6 (PRODUCT LEVEL)	SEE PAGE
	1	1	**314-2311**	1	V-BELT (INCLUDES 2-BELTS)	

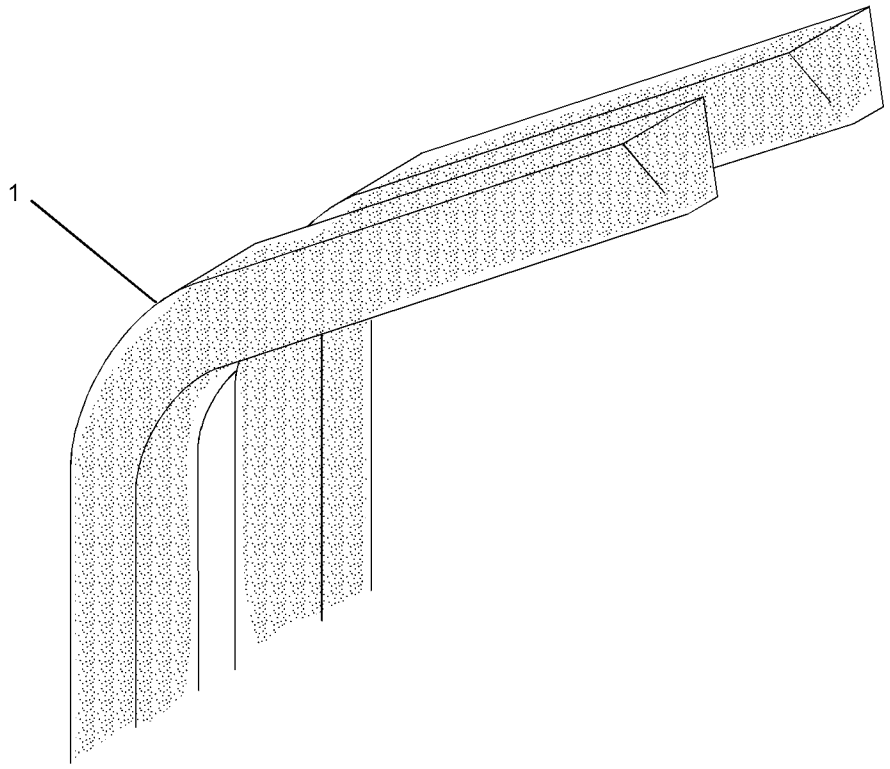

GRAPHIC #1 <END> g01392591

298-5891 VALVE MECHANISM GP

PART OF 435-1699 ENGINE AR, 435-1692 ENGINE AR-COMPLETE, 435-1687, 437-5409, 522-8303, 540-0570, 540-1155, 540-1156 ENGINE AR-PRIMARY

SMCS-1102, 1121, 1123, 1209 **i04522857**

NOTE	REF NO	GRAPHIC REF	PART NUMBER	QTY	PART NAME 1 2 3 4 5 6 (PRODUCT LEVEL)	SEE PAGE
	1	1	**346-4709**	8	BRIDGE GP-VALVE	
Y	2	1	**298-4533**	1	ROCKER ARM GP	657

Y - SEPARATE ILLUSTRATION

298-5891 **VALVE MECHANISM GP (**contd.**)** **i04522857**

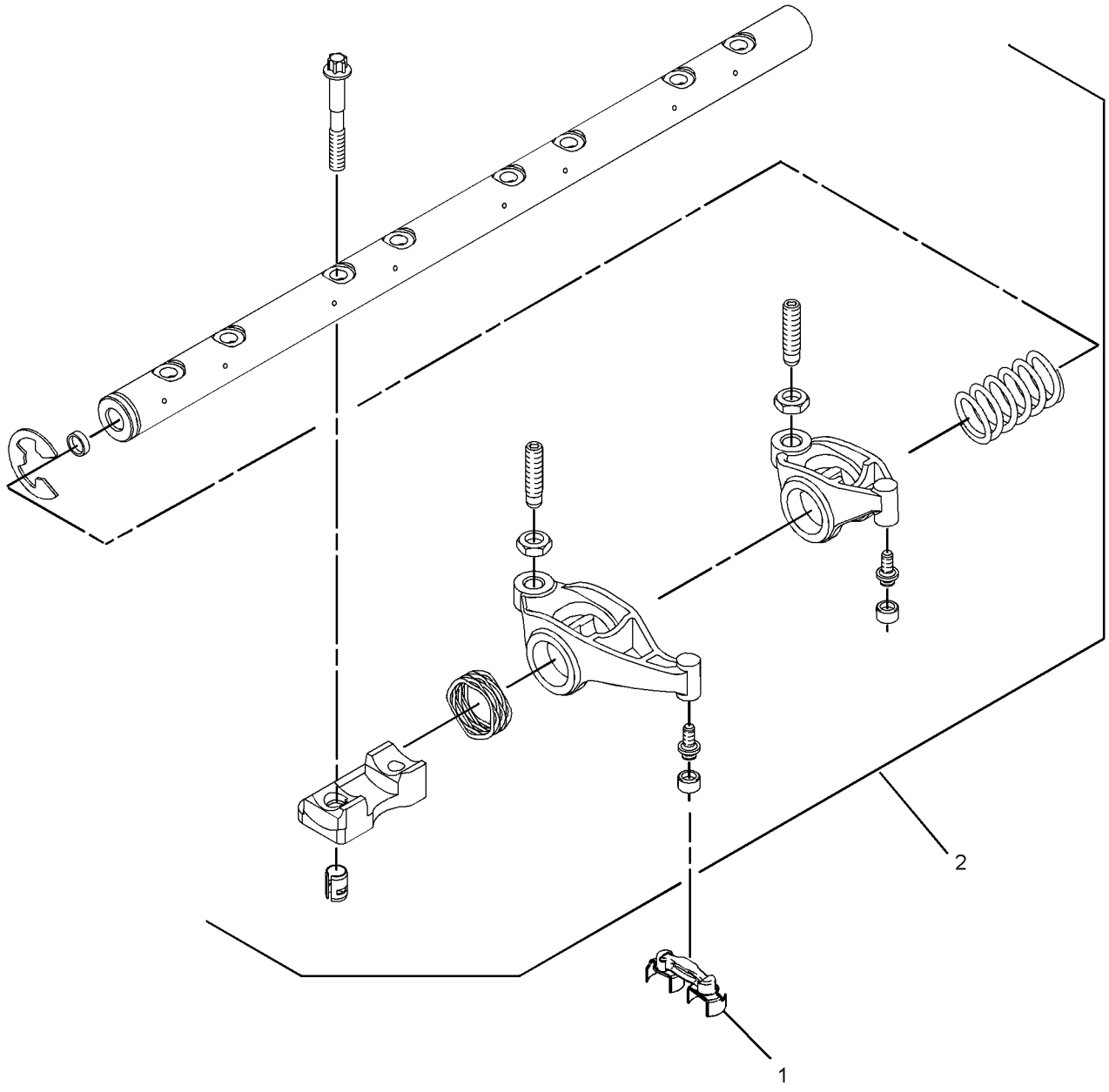

GRAPHIC #1 <END> g01932396

304-3647 VALVE MECHANISM GP

SMCS-1102, 1121, 1123, 1209 **i04523151**

NOTE	REF NO	GRAPHIC REF	PART NUMBER	QTY	PART NAME 1 2 3 4 5 6 (PRODUCT LEVEL)	SEE PAGE
	1	1	**346-4709**	8	BRIDGE GP-VALVE	
Y	2	1	**298-4533**	1	ROCKER ARM GP	657

Y - SEPARATE ILLUSTRATION

304-3647 **VALVE MECHANISM GP (**contd.**)** **i04523151**

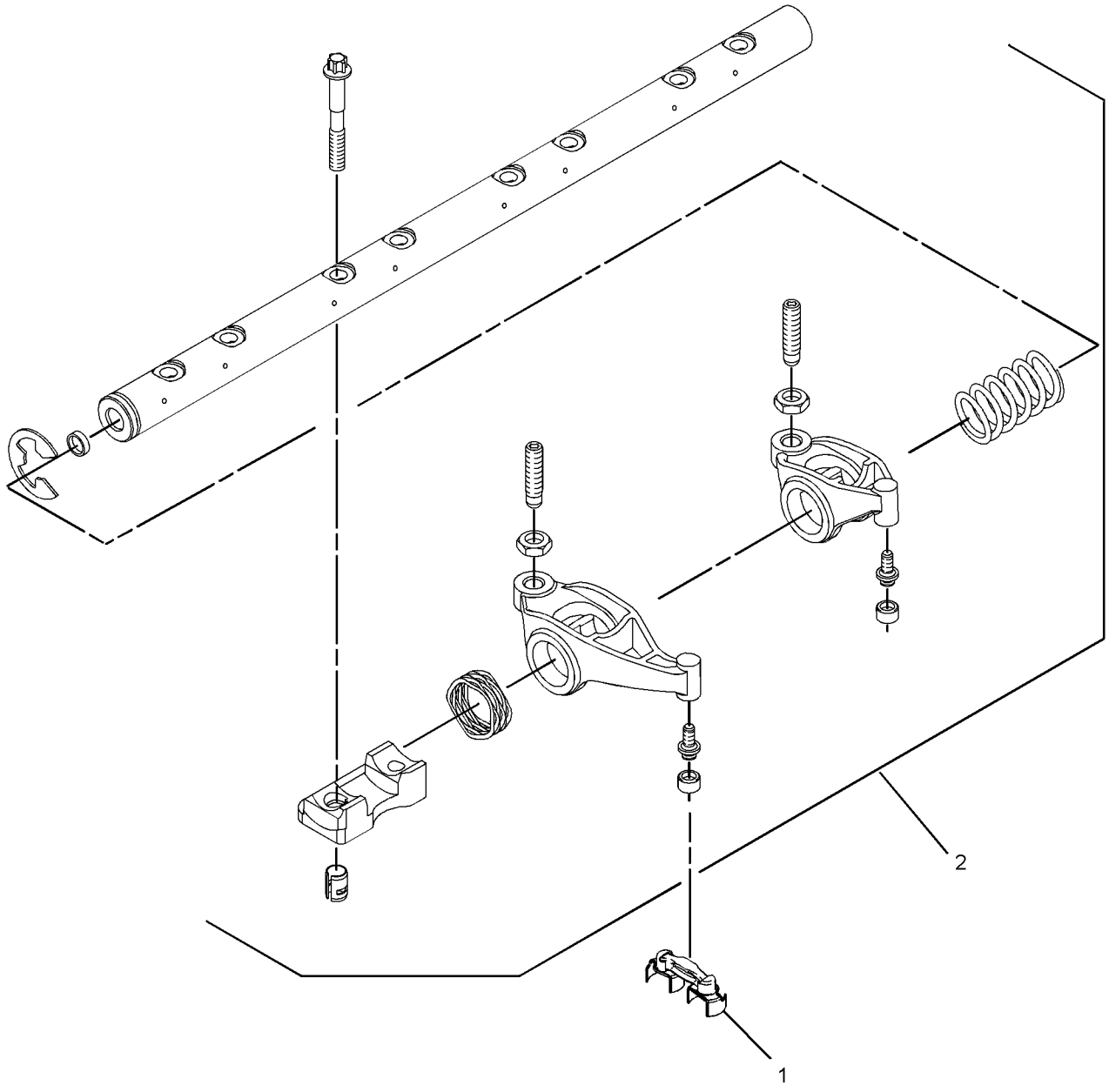

GRAPHIC #1 <END> g01932396

308-4151 VALVE MECHANISM GP

ALSO AN ATTACHMENT

SMCS-1102, 1121, 1123, 1209 **i05296604**

NOTE	REF NO	GRAPHIC REF	PART NUMBER	QTY	PART NAME 1 2 3 4 5 6 (PRODUCT LEVEL)	SEE PAGE
	1	1	**346-4709**	8	BRIDGE GP-VALVE	
Y	2	1	**298-4533**	1	ROCKER ARM GP	657

Y - SEPARATE ILLUSTRATION

308-4151 **VALVE MECHANISM GP (**contd.**)** **i05296604**

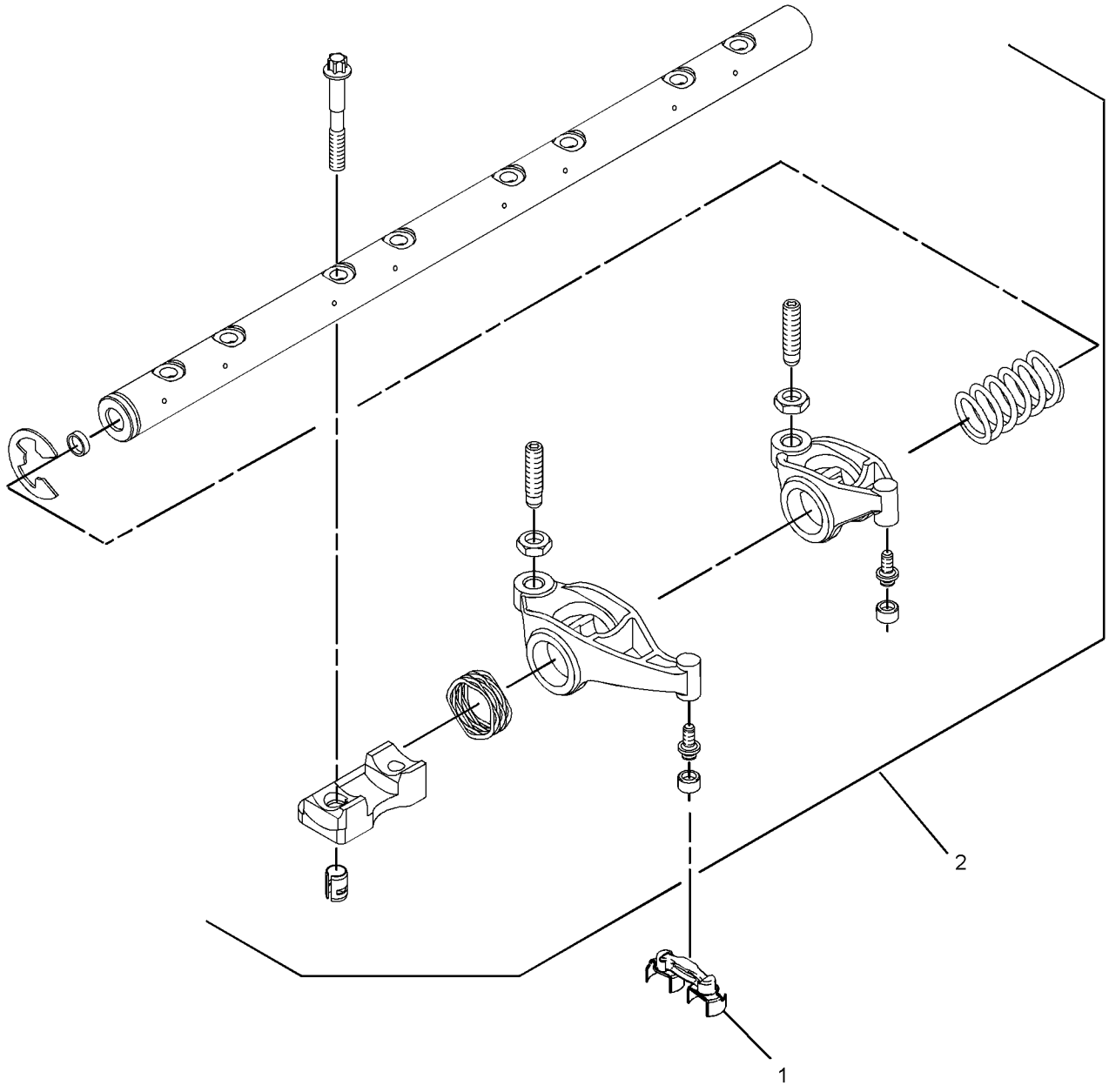

GRAPHIC #1 <END> g01932396

322-4885 VALVE MECHANISM GP

SMCS-1102, 1121, 1123, 1209 **i05328634**

NOTE	REF NO	GRAPHIC REF	PART NUMBER	QTY	PART NAME 1 2 3 4 5 6 (PRODUCT LEVEL)	SEE PAGE
	1	1	**346-4709**	8	BRIDGE GP-VALVE	
Y	2	1	**298-4533**	1	ROCKER ARM GP	657

Y - SEPARATE ILLUSTRATION

322-4885 **VALVE MECHANISM GP (**contd.**)** **i05328634**

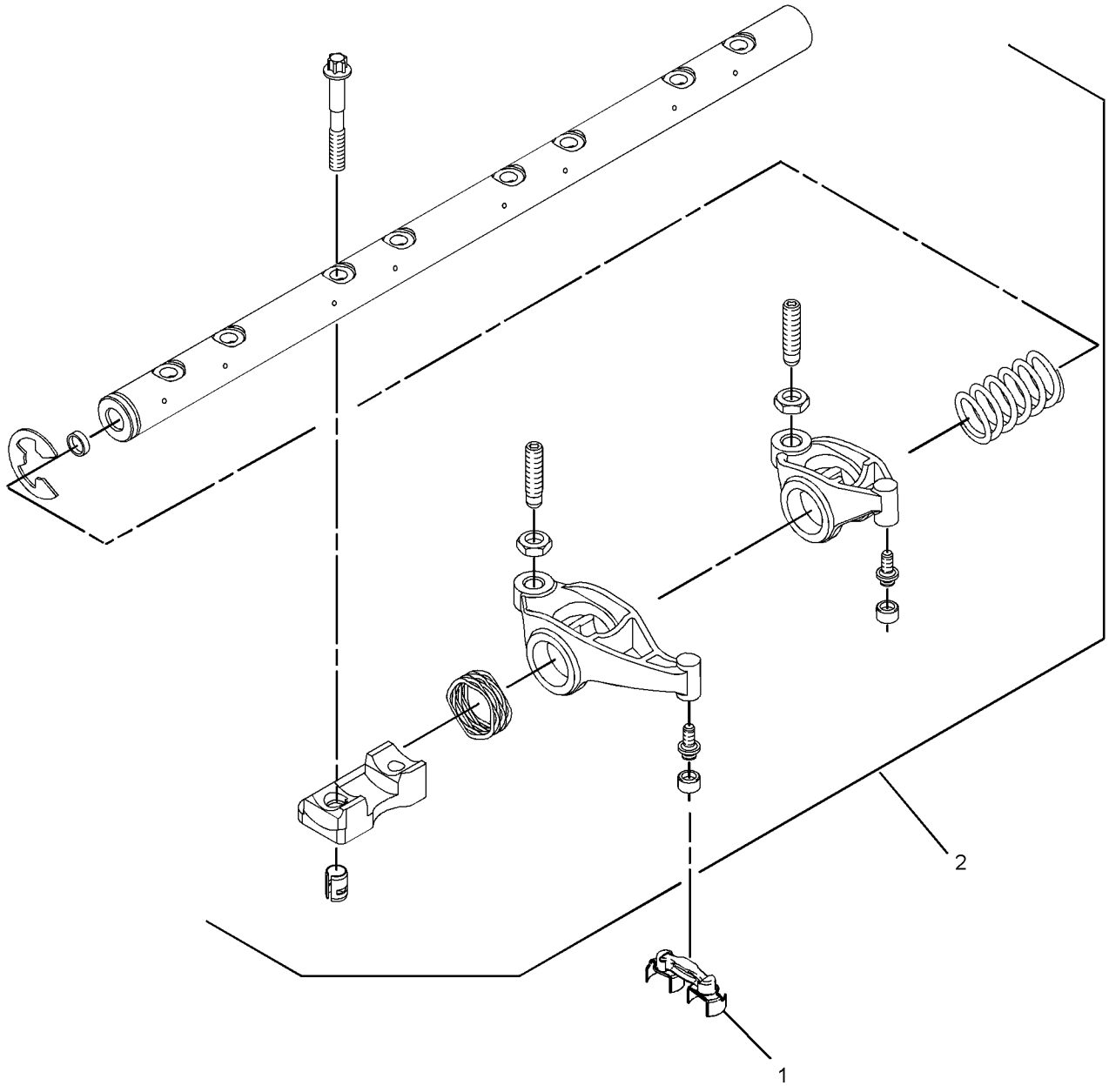

GRAPHIC #1 <END> g01932396

306-2318 BREATHER GP–CRANKCASE

SMCS-1317 **i02892283**

NOTE	REF NO	GRAPHIC REF	PART NUMBER	QTY	PART NAME 1 2 3 4 5 6 (PRODUCT LEVEL)	SEE PAGE
	1	1	**273-5711**	1	FILTER-FUMES DISPOSAL	

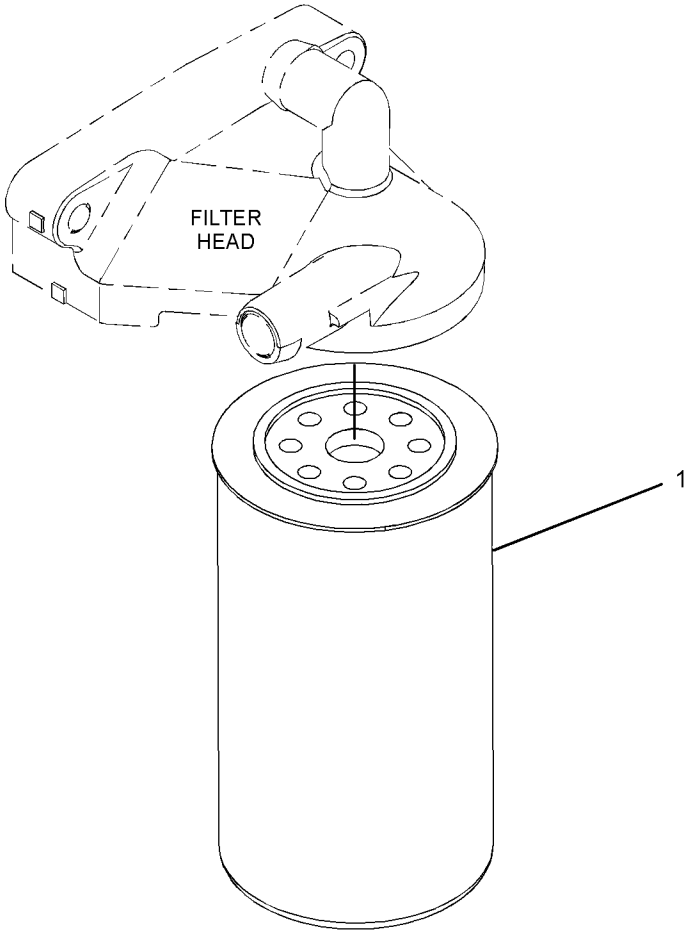

GRAPHIC #1 <END> g01290203

299-5071 FILLER GP-ENGINE OIL

PART OF 435-1687, 540-1156 ENGINE AR-PRIMARY

SMCS-1316 **i02897866**

NOTE	REF NO	GRAPHIC REF	PART NUMBER	QTY	PART NAME 1 2 3 4 5 6 (PRODUCT LEVEL)	SEE PAGE
	1	1	**321-2383**	1	FILLER AS	
	1A	1	**306-2337**	1	SEAL-O-RING	
	1B	1	**130-9888**	1	CAP AS-OIL FILLER (ENGINE)	
	1C	1	**113-1504**	1	SEAL-O-RING	
M	2	1	**6I-4374**	1	BOLT (M8X1.25X60-MM)	
M	3	1	**6I-0254**	1	BOLT (M8X1.25X30-MM)	

M - METRIC PART

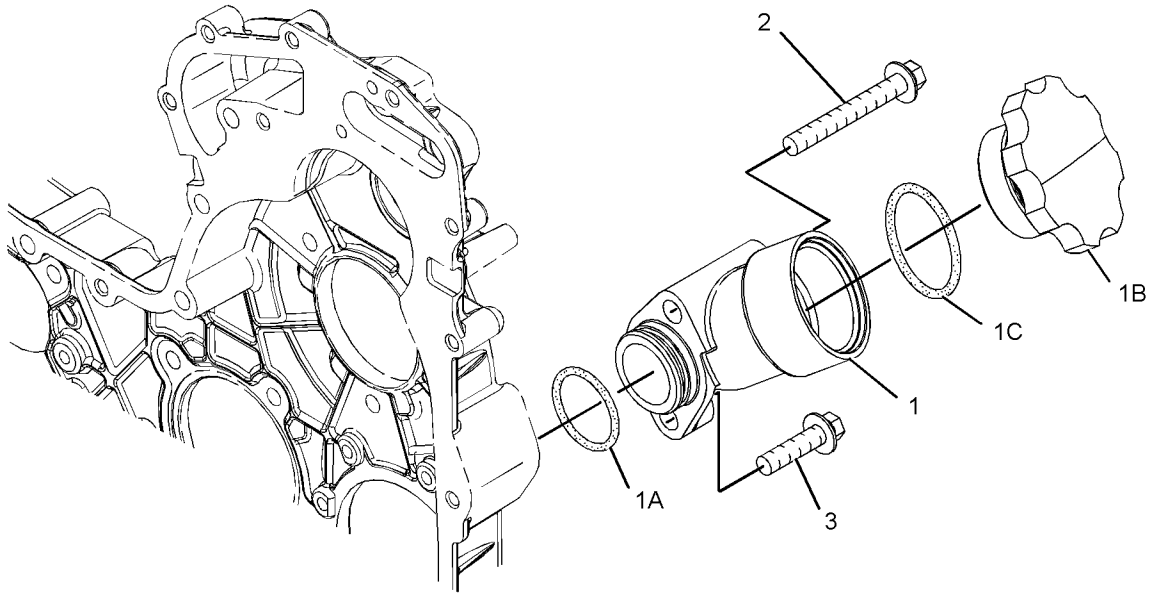

GRAPHIC #1 <END> g01333629

303-5773 FILLER GP-ENGINE OIL

SMCS-1316 **i03107142**

NOTE	REF NO	GRAPHIC REF	PART NUMBER	QTY	PART NAME 1 2 3 4 5 6 (PRODUCT LEVEL)	SEE PAGE
M	1	1	**6I-0260**	2	BOLT (M8X1.25X25-MM)	
	2	1	**326-7861**	1	FILLER AS-OIL	
	2A	1	**306-2337**	1	SEAL-O-RING	

M - METRIC PART

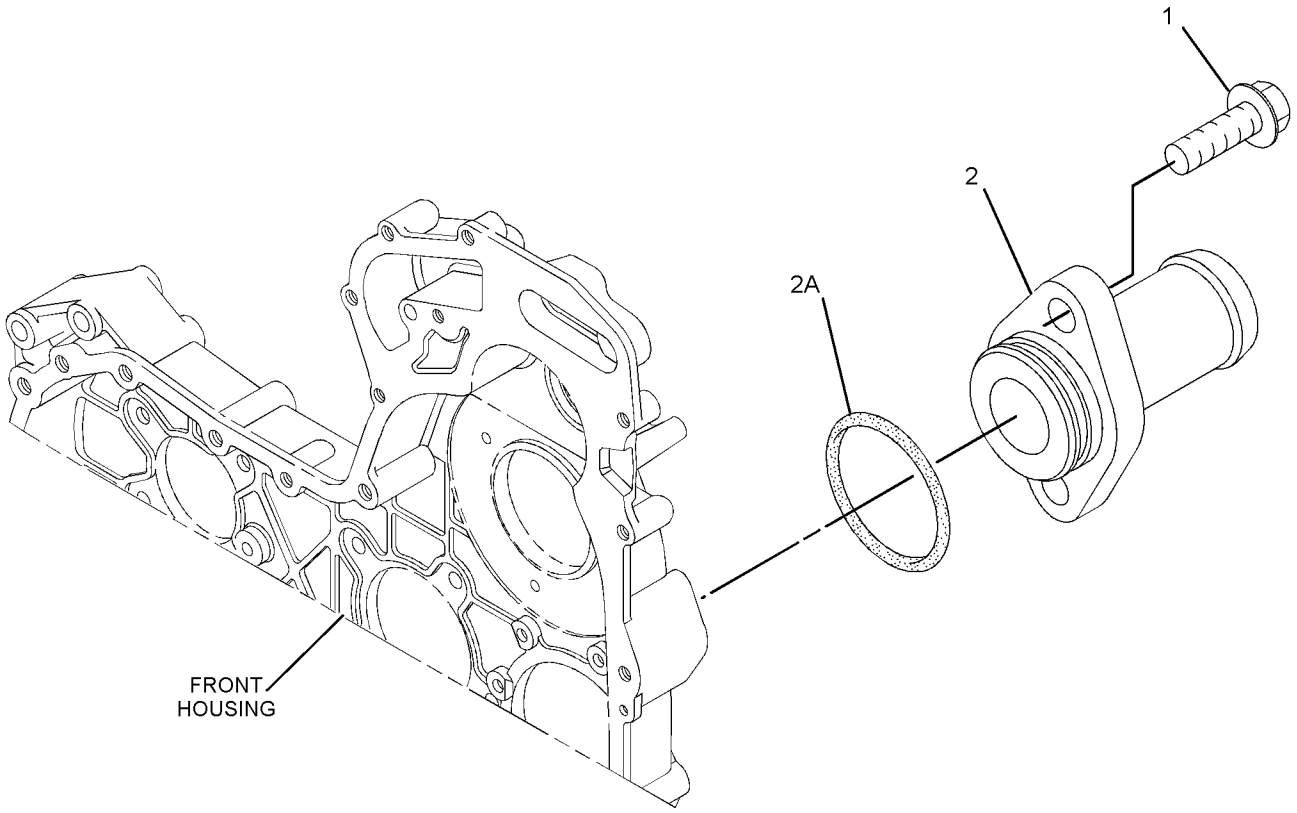

GRAPHIC #1 <END> g01674613

304-8759 FILLER GP-ENGINE OIL

S/N: 4441-1441

SMCS-1316 **i06601070**

NOTE	REF NO	GRAPHIC REF	PART NUMBER	QTY	PART NAME 1 2 3 4 5 6 (PRODUCT LEVEL)	SEE PAGE
M	1	1	**6I-0254**	1	BOLT (M8X1.25X30-MM)	
M	2	1	**6I-4374**	1	BOLT (M8X1.25X60-MM)	
	3	1	**225-6524**	1	PLUG-CUP	
	4	1	**321-2383**	1	FILLER AS	
	4A	1	**306-2337**	1	SEAL-O-RING	
	4B	1	**130-9888**	1	CAP AS-OIL FILLER (ENGINE)	
	4C	1	**113-1504**	1	SEAL-O-RING	

M - METRIC PART

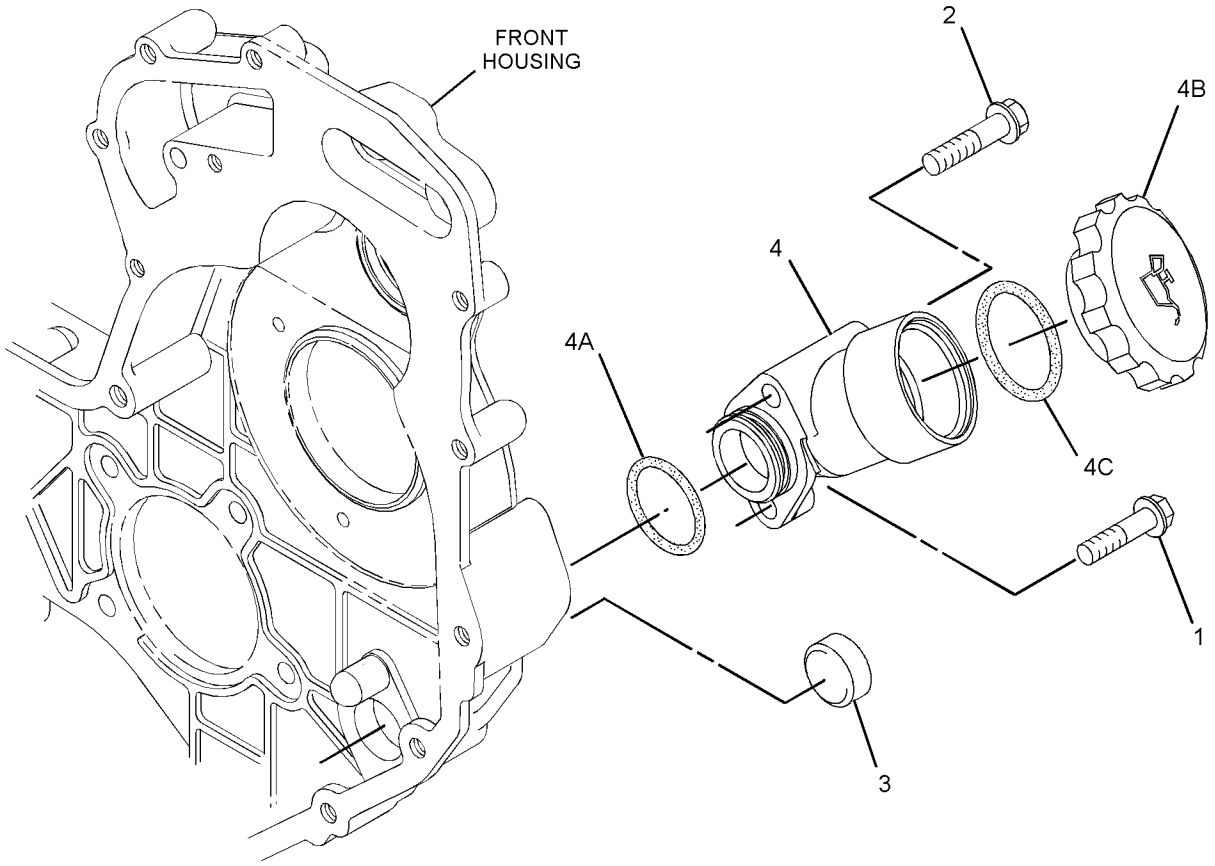

GRAPHIC #1 <END> g01351550

308-4158 FILLER GP-ENGINE OIL

ALSO AN ATTACHMENT

SMCS-1316 **i02853660**

NOTE	REF NO	GRAPHIC REF	PART NUMBER	QTY	PART NAME 1 2 3 4 5 6 (PRODUCT LEVEL)	SEE PAGE
M	1	1	**6I-0456**	1	BOLT (M8X1.25X45-MM)	
M	2	1	**6I-4374**	1	BOLT (M8X1.25X60-MM)	
	3	1	**317-3773**	1	FILLER GP-ENGINE OIL	
	3A	1	**317-3776**	1	SEAL-O-RING	
	3B	1	**130-9888**	1	CAP AS-OIL FILLER (ENGINE)	
	3C	1	**113-1504**	1	SEAL-O-RING	
	4	1	**225-6522**	1	PLUG-CUP	

M - METRIC PART

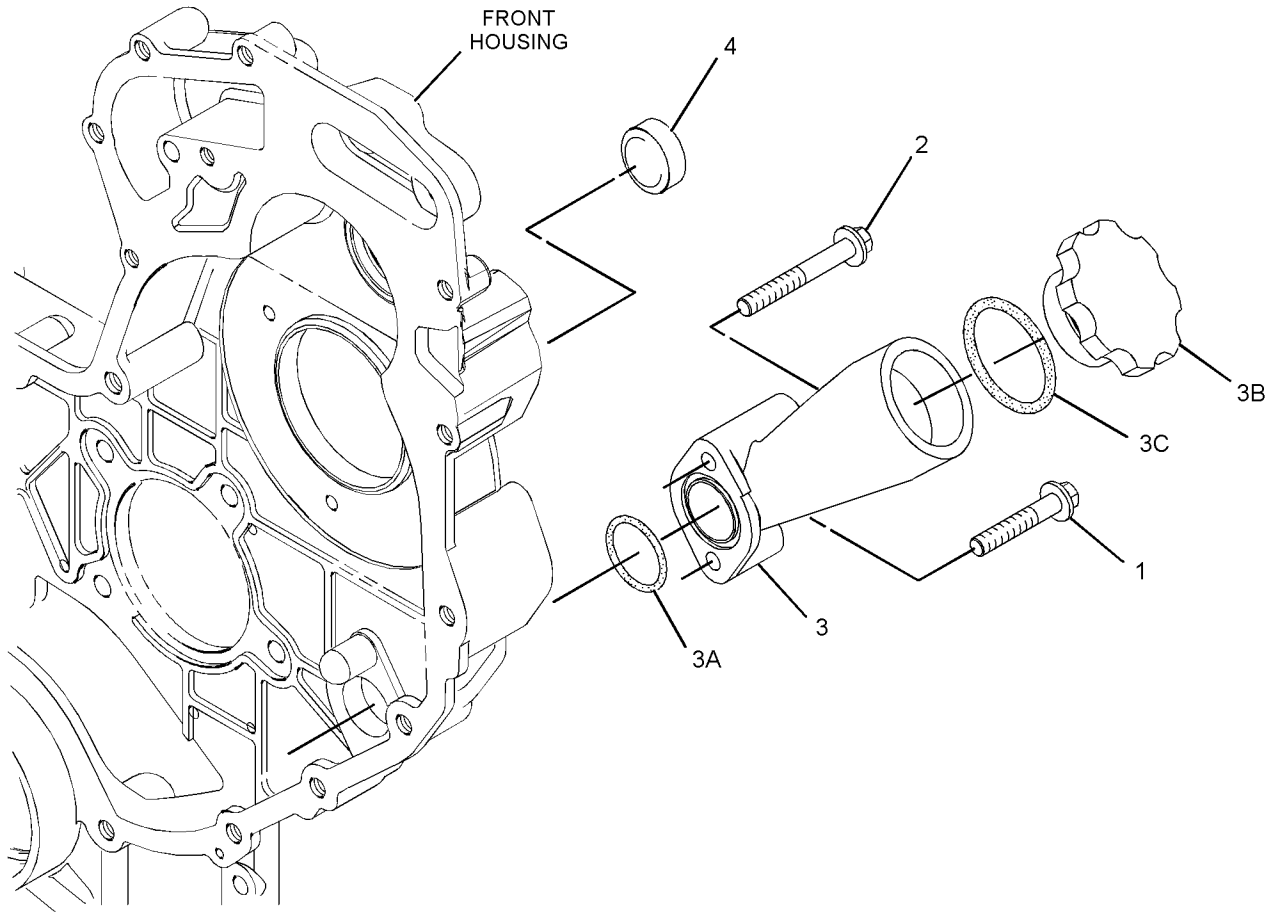

GRAPHIC #1 <END> g01375304

309-7555 FILLER GP-ENGINE OIL

SMCS-1316 **i02853662**

NOTE	REF NO	GRAPHIC REF	PART NUMBER	QTY	PART NAME 1 2 3 4 5 6 (PRODUCT LEVEL)	SEE PAGE
M	1	1	**6I-0260**	2	BOLT (M8X1.25X25-MM)	
	2	1	**225-6522**	1	PLUG-CUP	
	3	1	**317-3769**	1	FILLER GP-ENGINE OIL	
	3A	1	**317-3778**	1	SEAL-O-RING	

M - METRIC PART

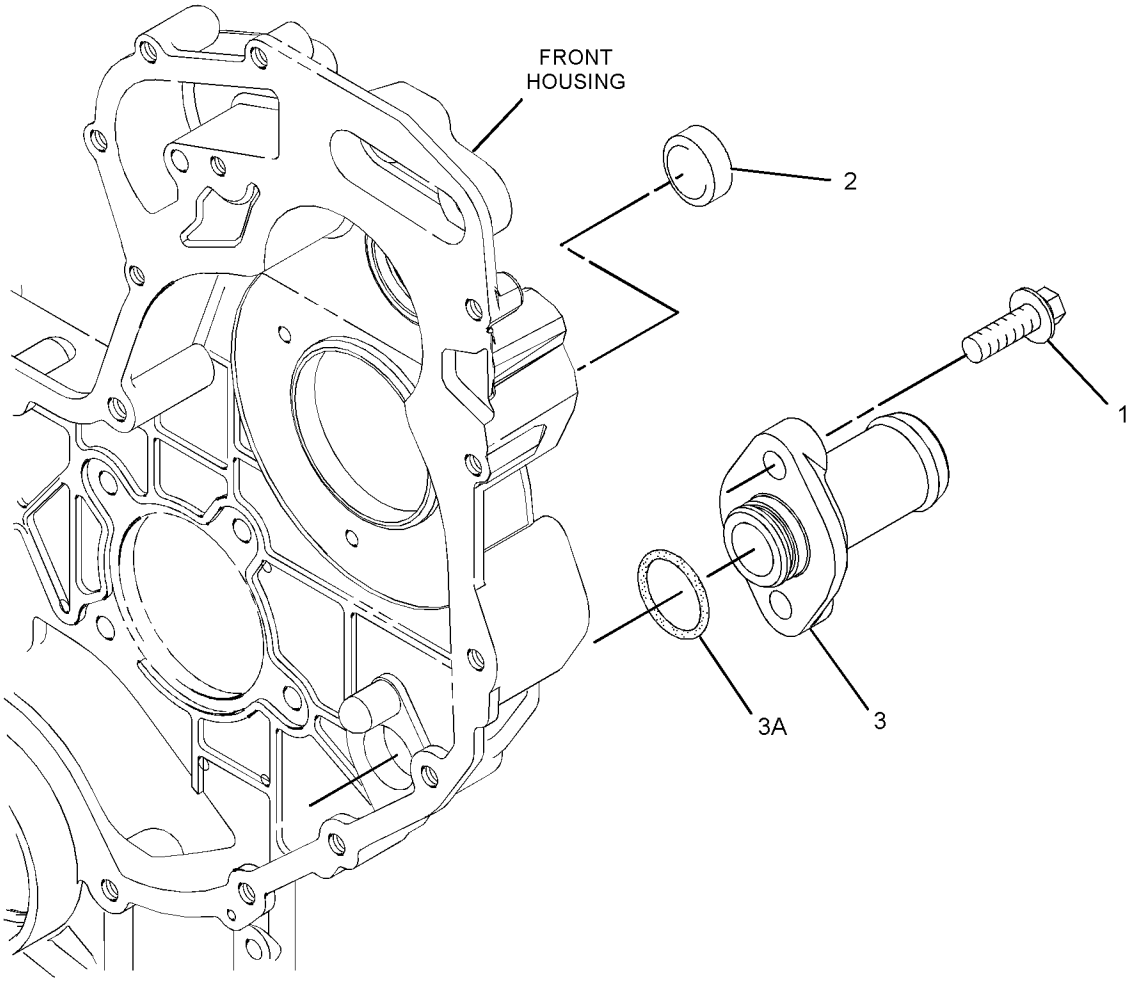

GRAPHIC #1 <END> g01378834

314-6667 FILLER GP-ENGINE OIL

S/N: 4441-1441

SMCS-1316 **i02775354**

NOTE	REF NO	GRAPHIC REF	PART NUMBER	QTY	PART NAME 1 2 3 4 5 6 (PRODUCT LEVEL)	SEE PAGE
M	1	1	**6I-0260**	2	BOLT (M8X1.25X25-MM)	
	2	1	**225-6524**	1	PLUG-CUP	
	3	1	**303-5784**	1	TUBE AS-OIL FILLER	
	3A	1	**6I-1201**	1	SEAL-O-RING	

M - METRIC PART

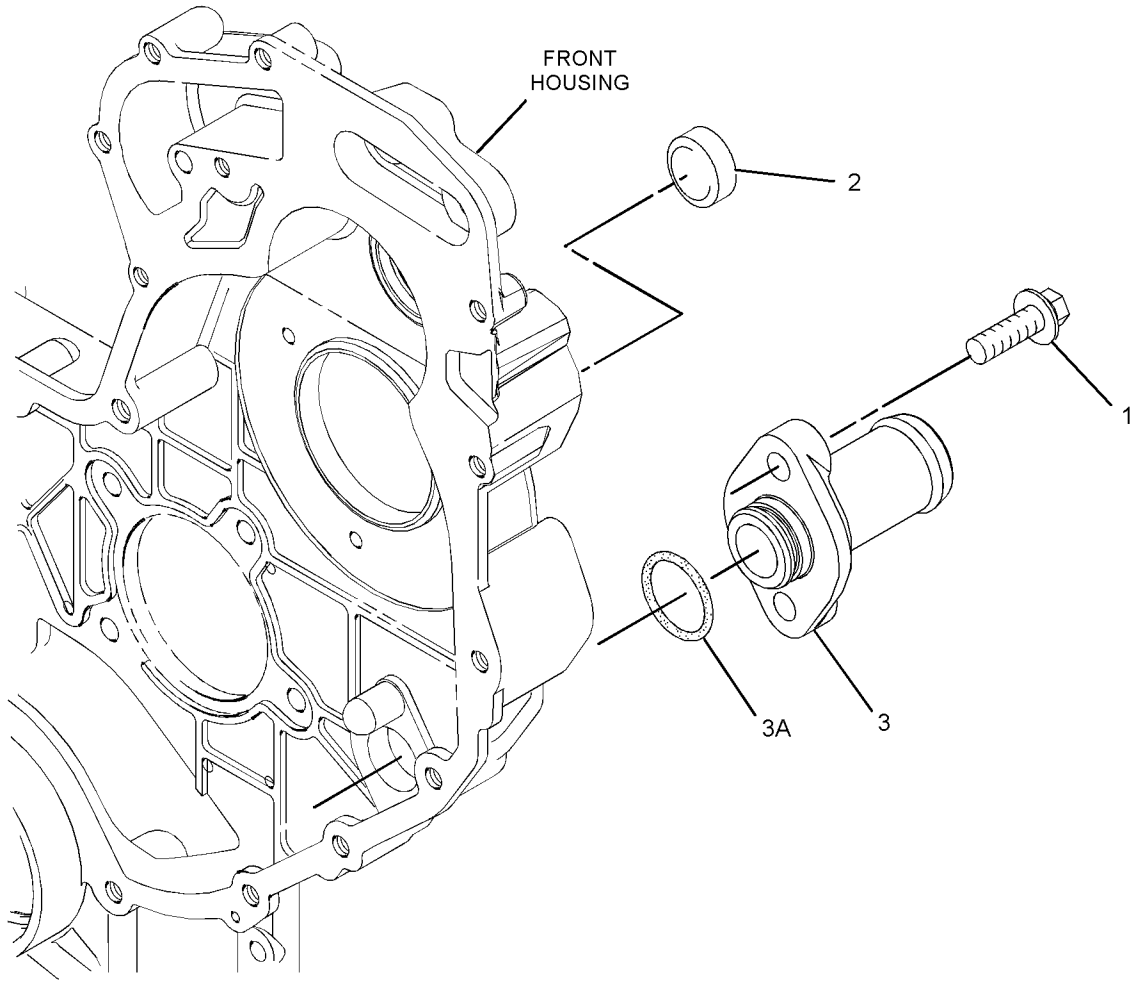

GRAPHIC #1 <END> g01378834

318-0775 FILLER GP-ENGINE OIL

SMCS-1316 **i02846953**

NOTE	REF NO	GRAPHIC REF	PART NUMBER	QTY	PART NAME 1 2 3 4 5 6 (PRODUCT LEVEL)	SEE PAGE
M	1	1	**6I-0254**	1	BOLT (M8X1.25X30-MM)	
M	2	1	**6I-4374**	1	BOLT (M8X1.25X60-MM)	
	3	1	**318-0774**	1	FILLER GP-ENGINE OIL	
	3A	1	**130-9888**	1	CAP AS-OIL FILLER (ENGINE)	
	3B	1	**113-1504**	1	SEAL-O-RING	
	3C	1	**306-2337**	1	SEAL-O-RING	

M - METRIC PART

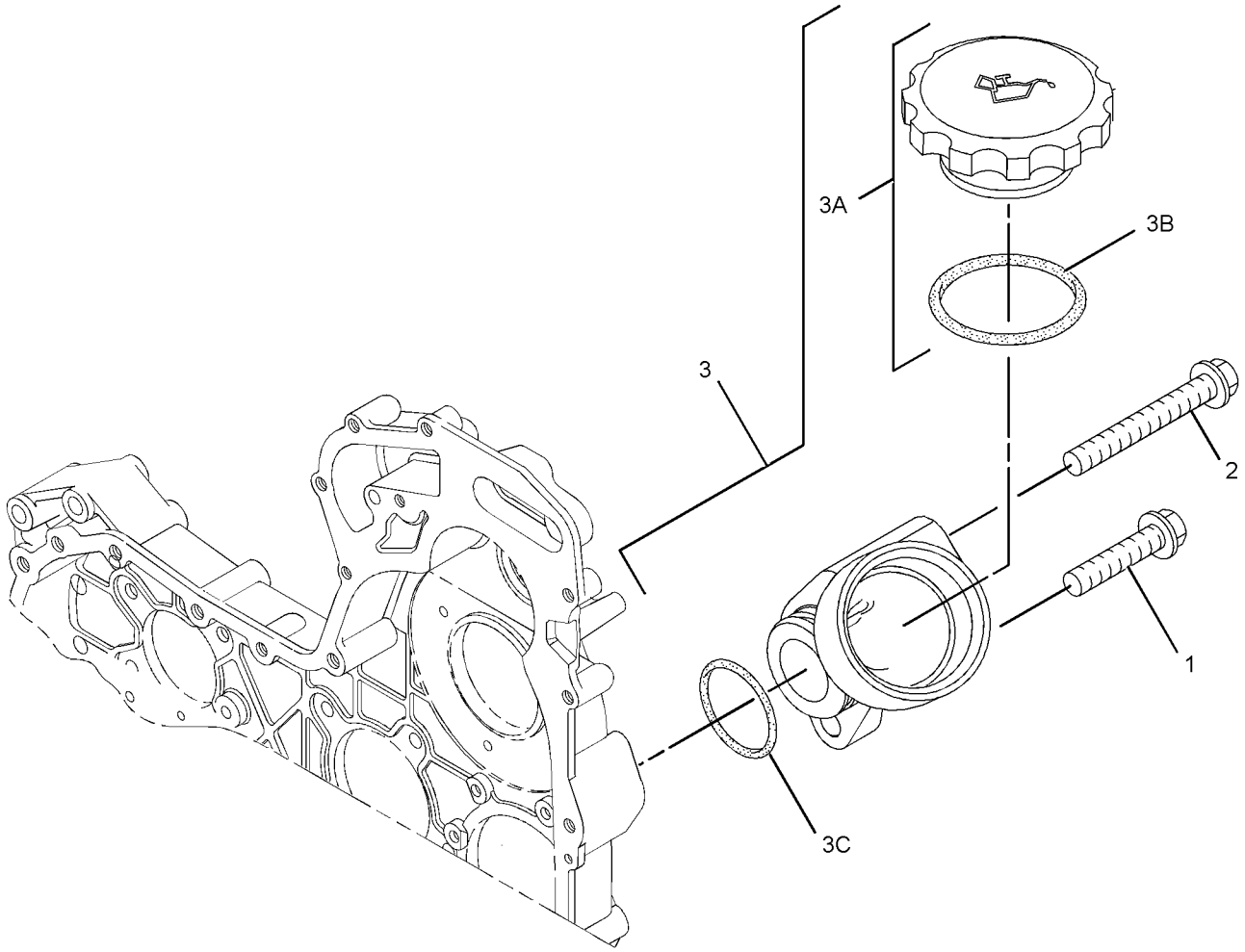

GRAPHIC #1 <END> g01423399

319-4957 FILLER GP-ENGINE OIL

S/N: 4441442-UP

SMCS-1316 **i02860352**

NOTE	REF NO	GRAPHIC REF	PART NUMBER	QTY	PART NAME 1 2 3 4 5 6 (PRODUCT LEVEL)	SEE PAGE
M	1	1	**6I-0254**	1	BOLT (M8X1.25X30-MM)	
M	2	1	**6I-4374**	1	BOLT (M8X1.25X60-MM)	
	3	1	**225-6524**	1	PLUG-CUP	
	4	1	**318-0774**	1	FILLER GP-ENGINE OIL	
	4A	1	**130-9888**	1	CAP AS-OIL FILLER (ENGINE)	
	4B	1	**113-1504**	1	SEAL-O-RING	
	4C	1	**306-2337**	1	SEAL-O-RING	

M - METRIC PART

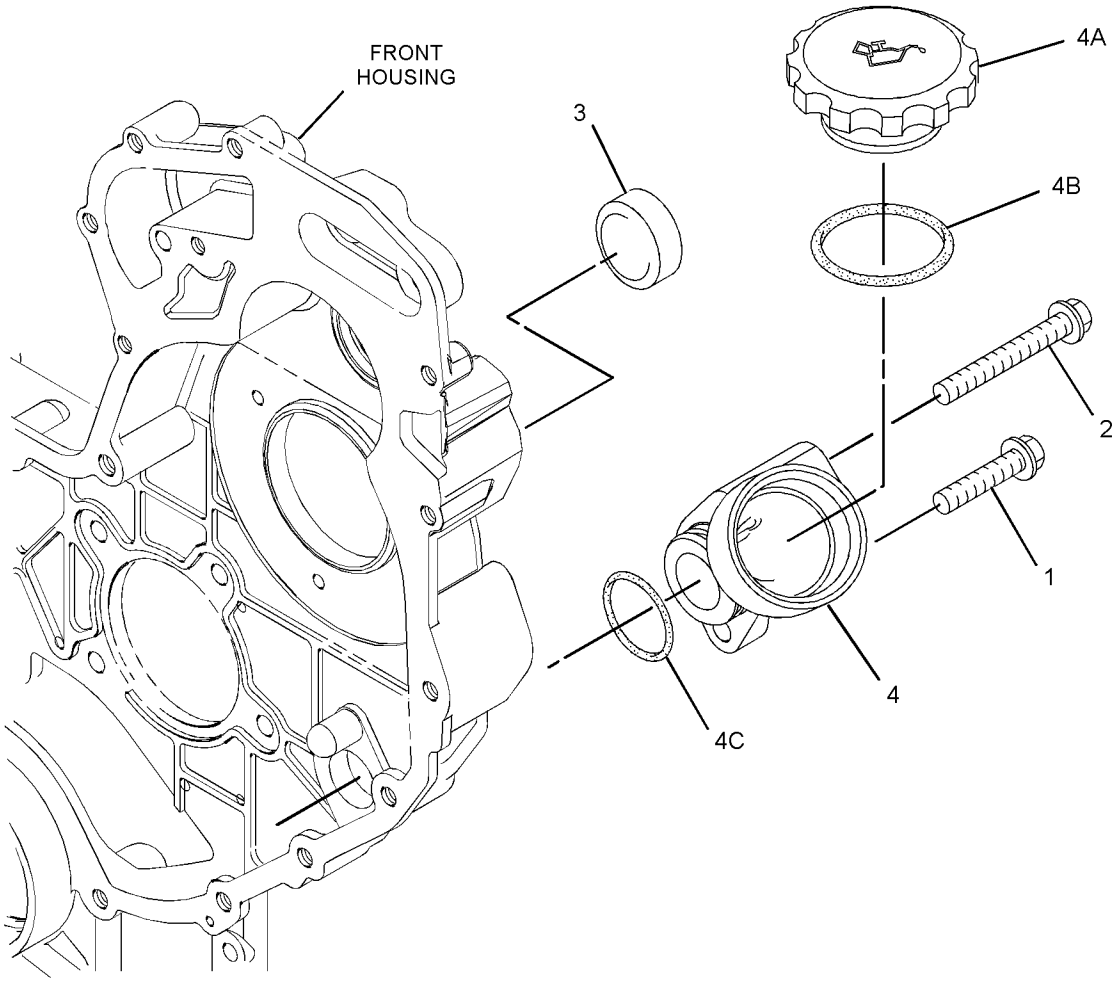

GRAPHIC #1 <END> g01431381

298-5100 FILTER GP-ENGINE OIL

PART OF 435-1699 ENGINE AR, 435-1692 ENGINE AR-COMPLETE, 435-1685, 435-1687, 437-5409, 522-8303, 540-0570, 540-1155, 540-1156 ENGINE AR-PRIMARY

SMCS-1306, 1308

i02604360

NOTE	REF NO	GRAPHIC REF	PART NUMBER	QTY	PART NAME 1 2 3 4 5 6 (PRODUCT LEVEL)	SEE PAGE
	1	1	**7W-2326**	1	FILTER AS-ENGINE OIL	

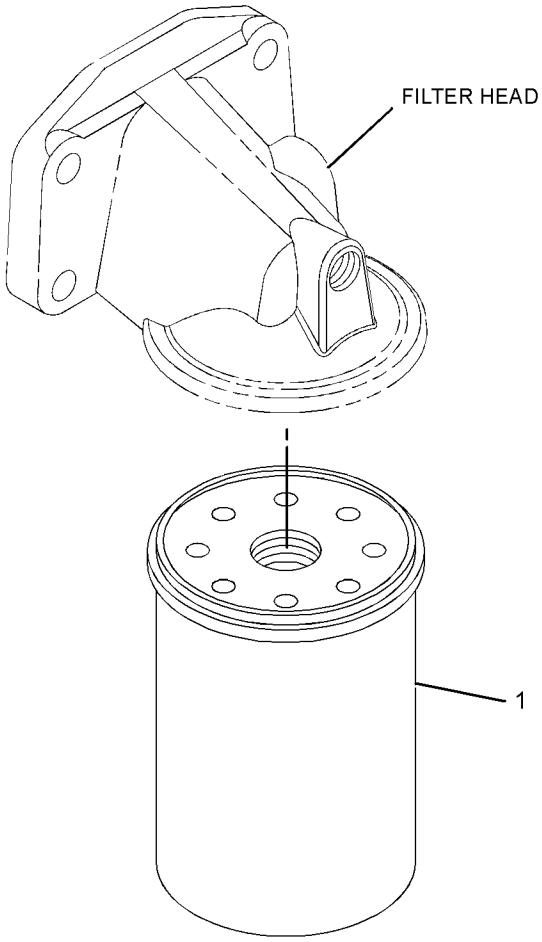

GRAPHIC #1 <END> g01304792

351-2098 GAUGE GP-OIL LEVEL (DIPSTICK)—ENGINE

PART OF 344-8201 PAN GP-OIL

SMCS-1326 **i06265838**

NOTE	REF NO	GRAPHIC REF	PART NUMBER	QTY	PART NAME 1 2 3 4 5 6 (PRODUCT LEVEL)	SEE PAGE
	1	1	*350-5725*	1	TUBE AS-OIL GAUGE	
		1	**228-7089**	1	SEAL-O-RING	
	2	1	*351-2097*	1	GAUGE AS-OIL LEVEL (DIPSTICK) (ENGINE)	
		1	**275-9891**	2	SEAL-O-RING	

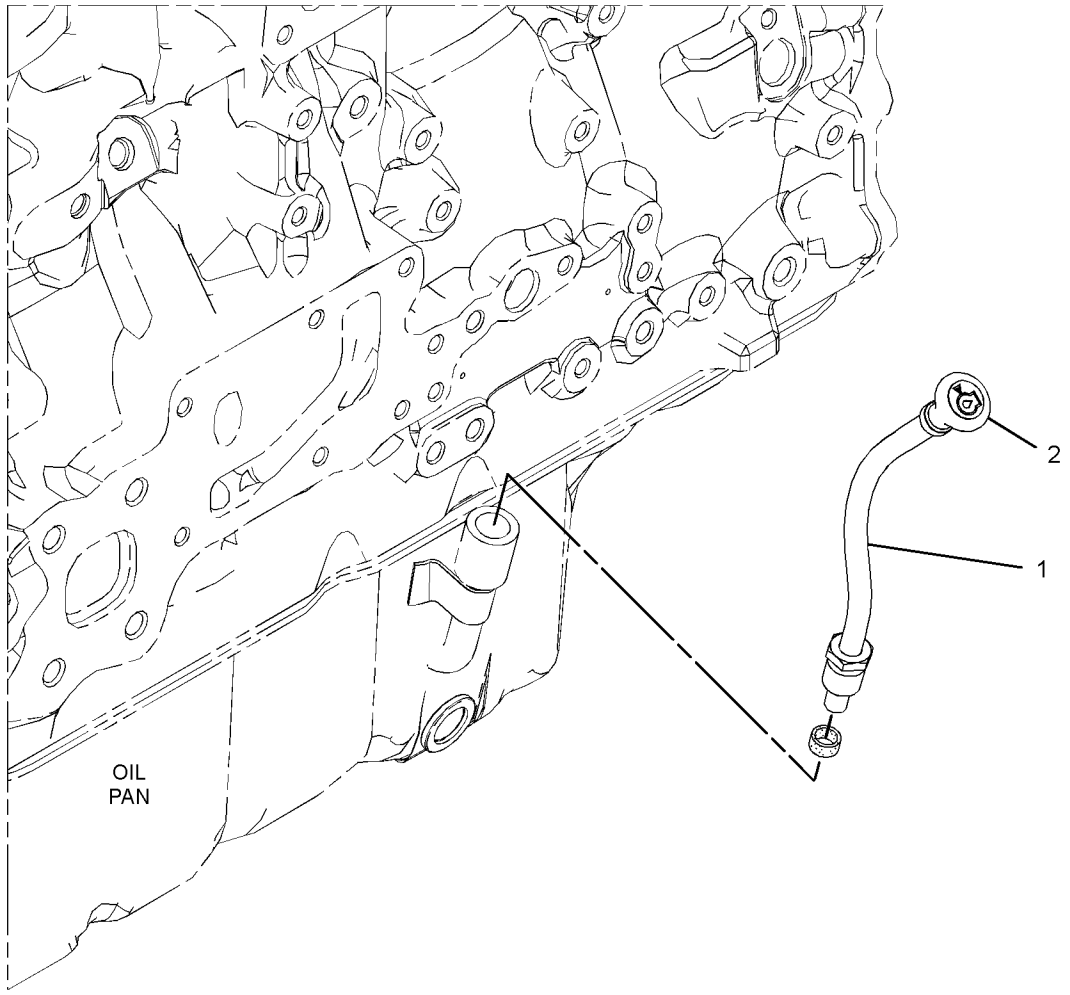

GRAPHIC #1 <END> g02858900

298-5128 PLUG GP-ENGINE OIL MANIFOLD

PART OF 435-1699 ENGINE AR, 435-1692 ENGINE AR-COMPLETE, 435-1685, 435-1687, 437-5409, 522-8303, 540-0570, 540-1155, 540-1156 ENGINE AR-PRIMARY
ALSO AN ATTACHMENT

SMCS-1201, 1307

i02604335

NOTE	REF NO	GRAPHIC REF	PART NUMBER	QTY	PART NAME 1 2 3 4 5 6 (PRODUCT LEVEL)	SEE PAGE
	1	1	**225-7941**	1	PLUG	
	2	1	**8T-7876**	1	SEAL-O-RING	
	3	1	**035-8063**	1	PLUG	

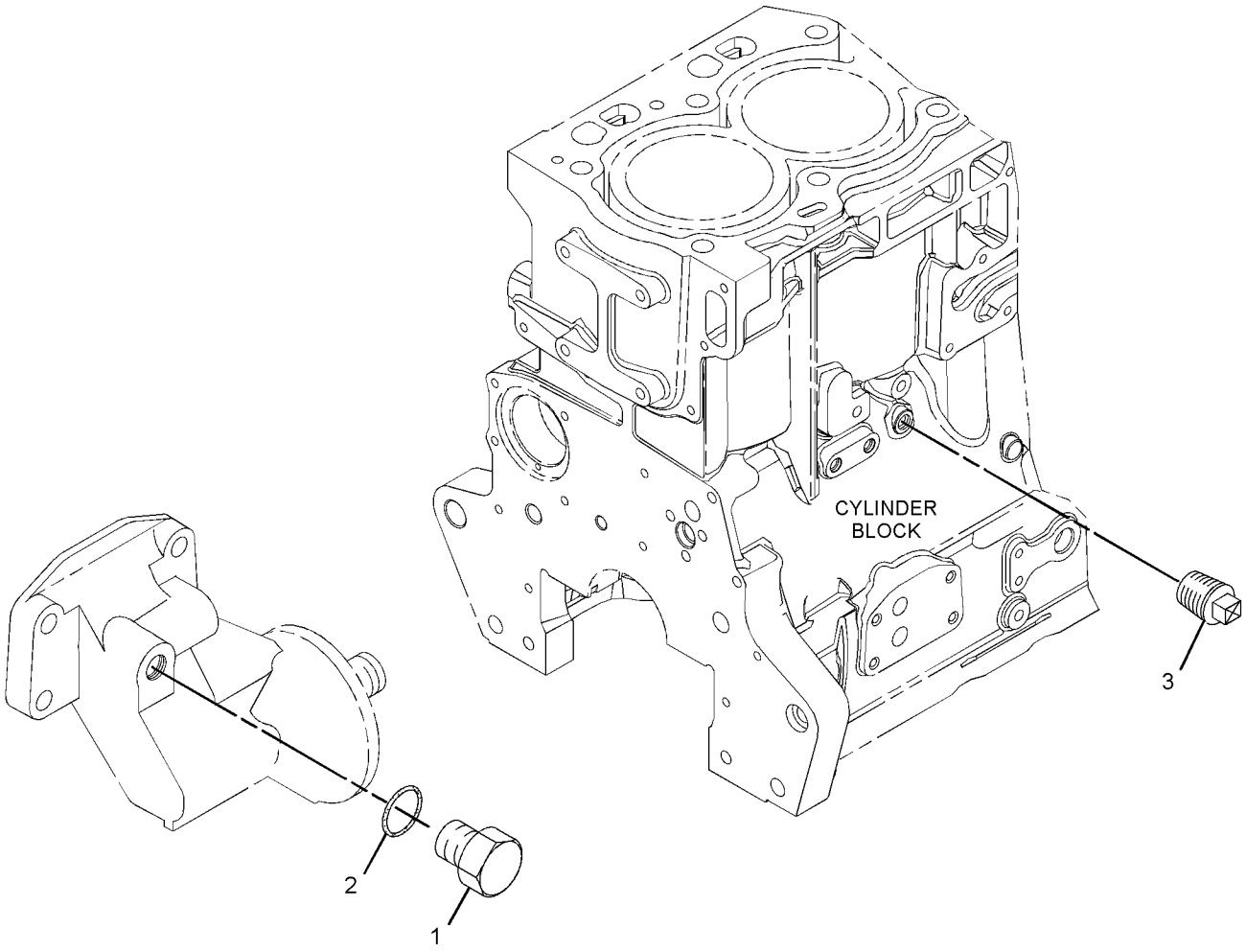

GRAPHIC #1 <END> g01305502

298-5112 PUMP GP-ENGINE OIL

PART OF 435-1692 ENGINE AR-COMPLETE, 435-1685, 435-1687, 540-0570, 540-1156 ENGINE AR-PRIMARY

SMCS-1304, 1315

i06151700

NOTE	REF NO	GRAPHIC REF	PART NUMBER	QTY	PART NAME 1 2 3 4 5 6 (PRODUCT LEVEL)	SEE PAGE
	1	1	**447-8572**	1	PUMP AS-OIL	
M	2	1	**100-4461**	5	BOLT (M10X1.5X50-MM)	

M - METRIC PART

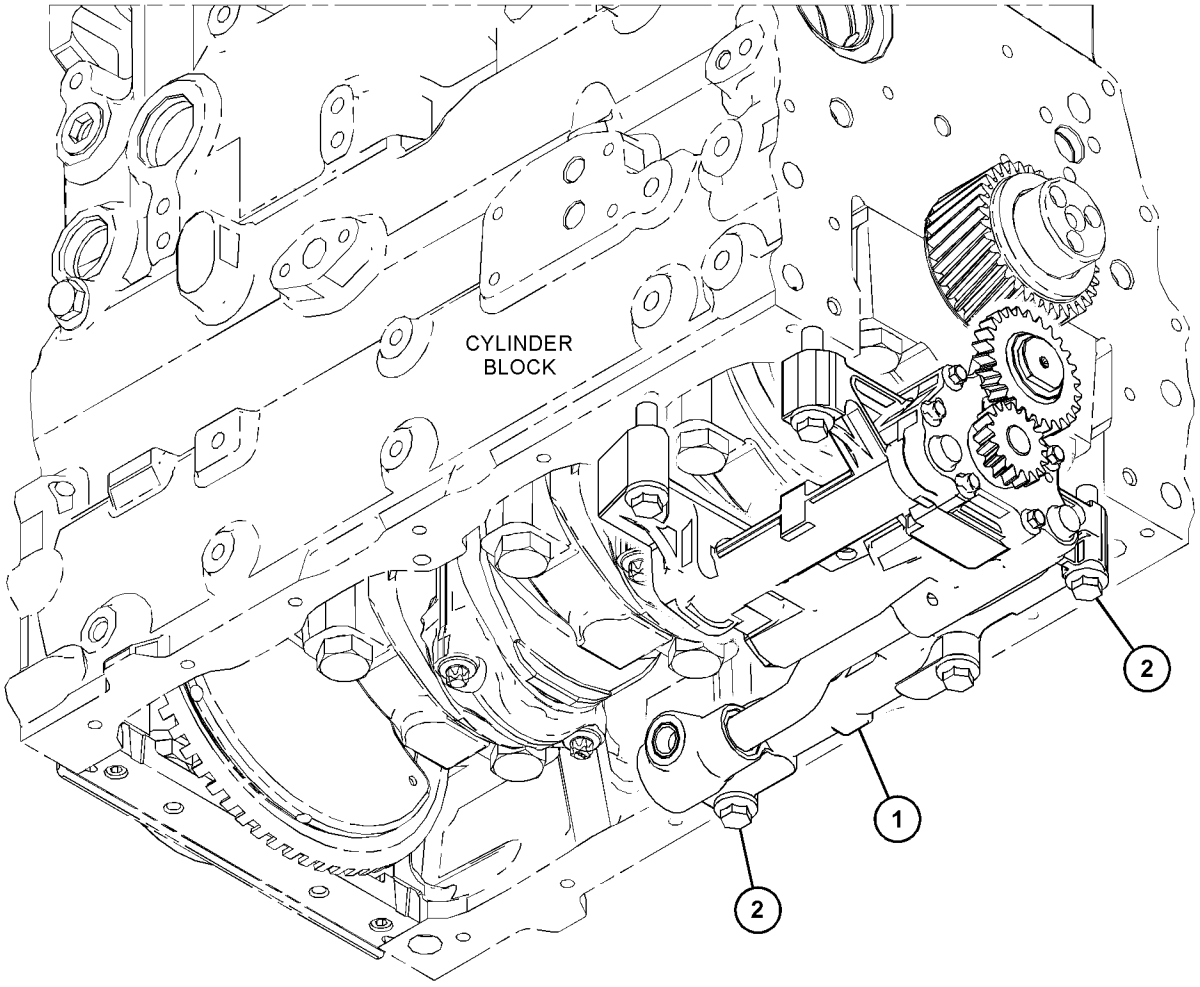

GRAPHIC #1 <END> g03832336

303-5779 VALVE GP-FLUID SAMPLING–ENGINE OIL

SMCS-7542 **i02801736**

NOTE	REF NO	GRAPHIC REF	PART NUMBER	QTY	PART NAME 1 2 3 4 5 6 (PRODUCT LEVEL)	SEE PAGE
	1	1	**216-9633**	1	VALVE AS-FLUID SAMPLING	
	2	1	**8C-3445**	1	CAP-DUST	
	3	1	**035-8063**	1	PLUG	

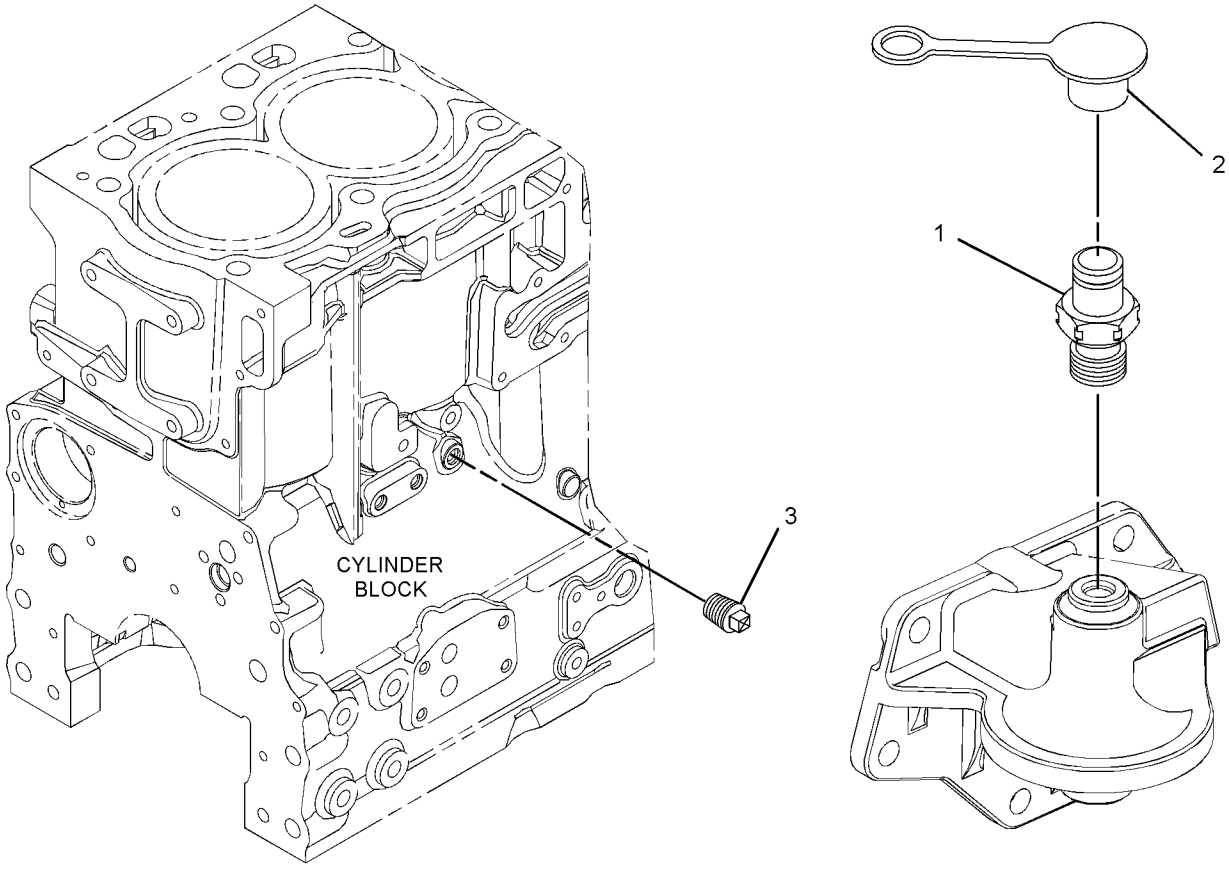

GRAPHIC #1 <END> g01341254

318-3637 VALVE GP-FLUID SAMPLING–ENGINE OIL

SMCS-7542 **i02852388**

NOTE	REF NO	GRAPHIC REF	PART NUMBER	QTY	PART NAME 1 2 3 4 5 6 (PRODUCT LEVEL)	SEE PAGE
	1	1	**8T-7876**	1	SEAL-O-RING	
	2	1	**159-8336**	1	VALVE-SAMPLING	
	3	1	**225-7941**	1	PLUG	
	4	1	**272-6504**	1	CAP-VALVE	

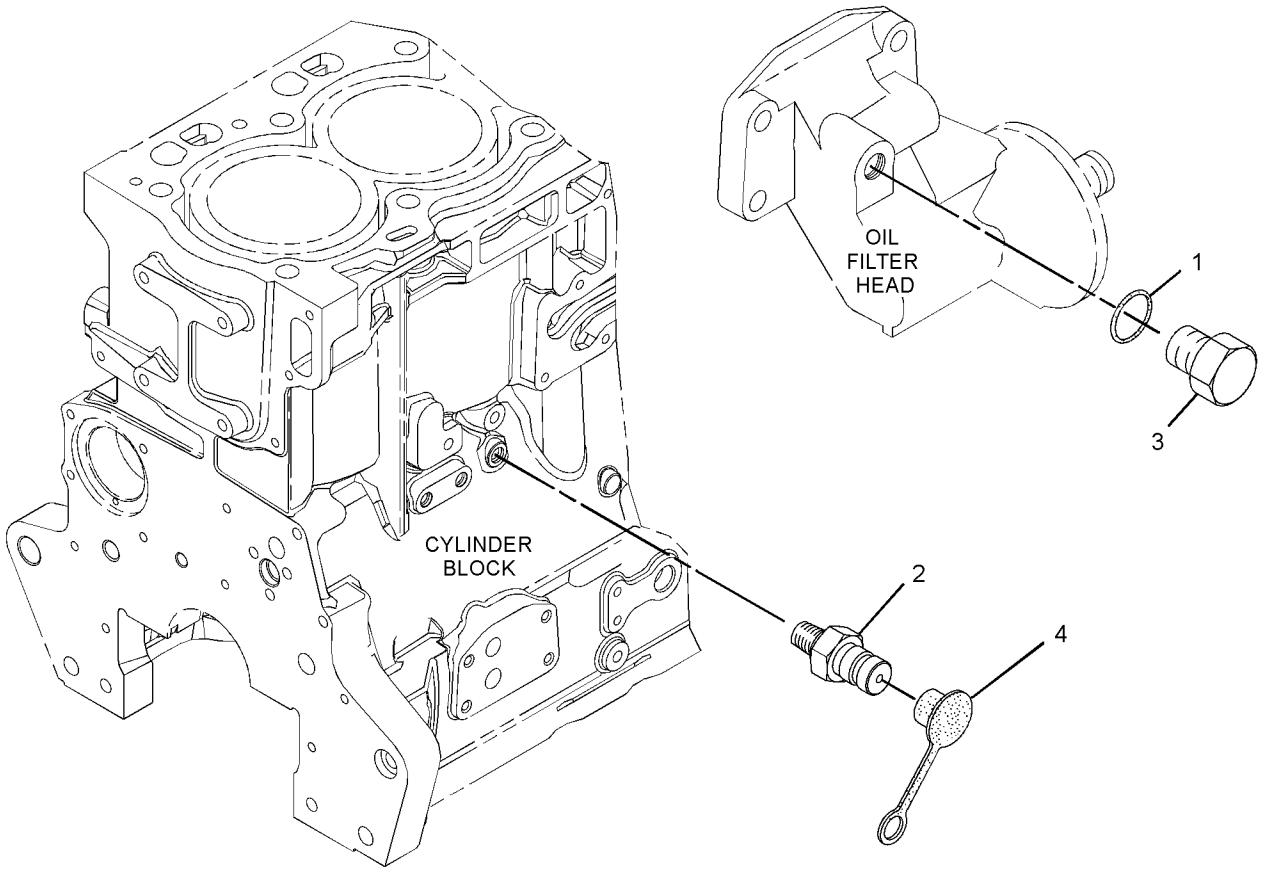

GRAPHIC #1 <END> g01438078

328-5897 VALVE GP-FLUID SAMPLING–ENGINE OIL

SMCS-7542 **i03098405**

NOTE	REF NO	GRAPHIC REF	PART NUMBER	QTY	PART NAME 1 2 3 4 5 6 (PRODUCT LEVEL)	SEE PAGE
	1	1	**035-8063**	1	PLUG	
	2	1	**199-9267**	1	SEAL-O-RING	
	3	1	**216-9633**	1	VALVE AS-FLUID SAMPLING	
	4	1	**232-3861**	1	PLUG (BLANKING)	
	5	1	**272-6504**	1	CAP-VALVE	

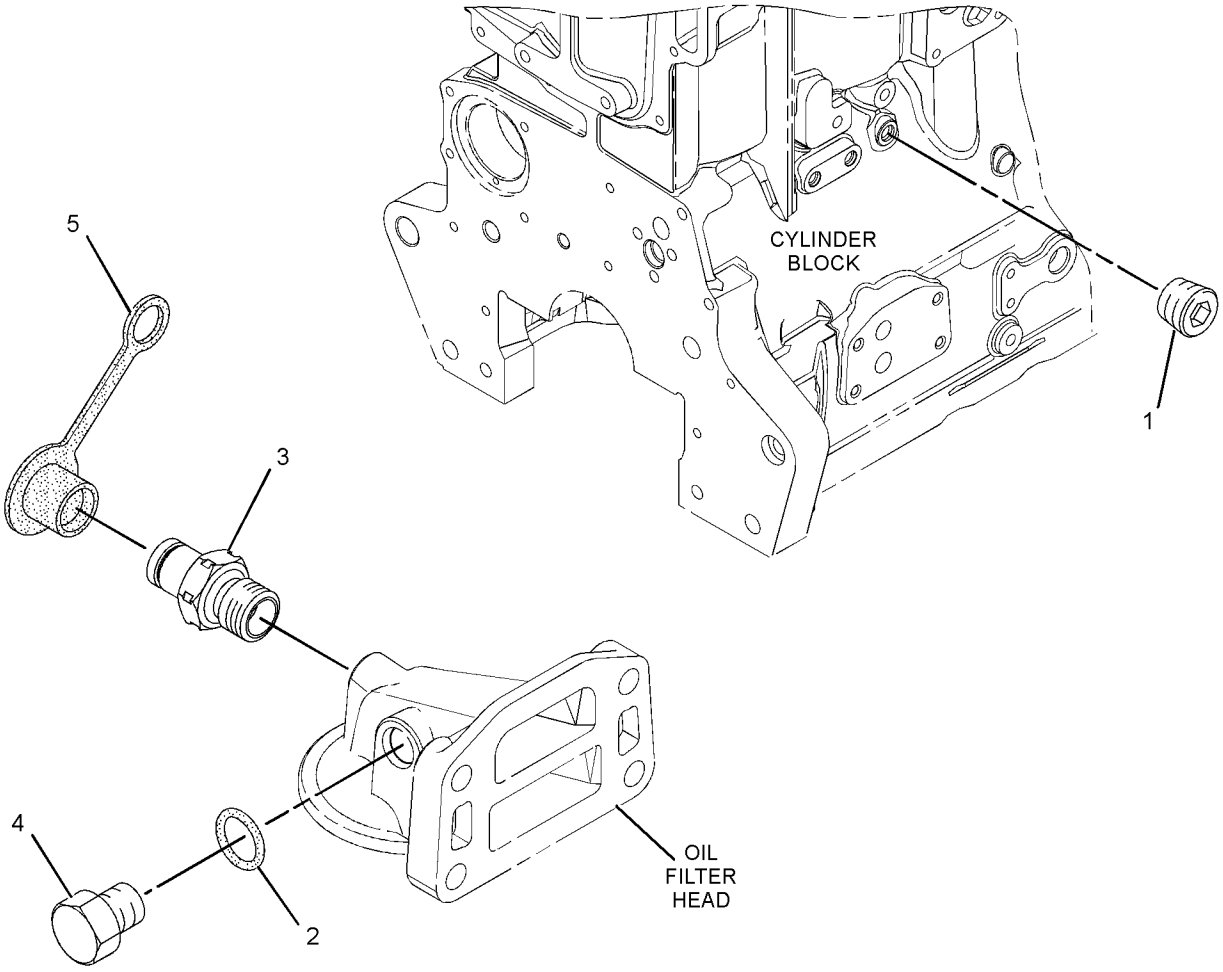

GRAPHIC #1 <END> g01673158

298-5107 CONNECTION GP-WATER

PART OF 435-1692 ENGINE AR-COMPLETE, 435-1685, 540-0570 ENGINE AR-PRIMARY

SMCS-1380 **i04897359**

NOTE	REF NO	GRAPHIC REF	PART NUMBER	QTY	PART NAME 1 2 3 4 5 6 (PRODUCT LEVEL)	SEE PAGE
M	1	1	**103-5687**	1	BOLT (M10X1.5X85-MM)	
M	2	1	**123-2899**	1	BOLT (M10X1.5X40-MM)	
	3	1	**281-8744**	1	GASKET-WATER REGULATOR (TEMPERATURE)	
	4	1	**367-1817**	1	CONNECTION AS (INCLUDES TEMPERATURE REGULATOR)	

M - METRIC PART

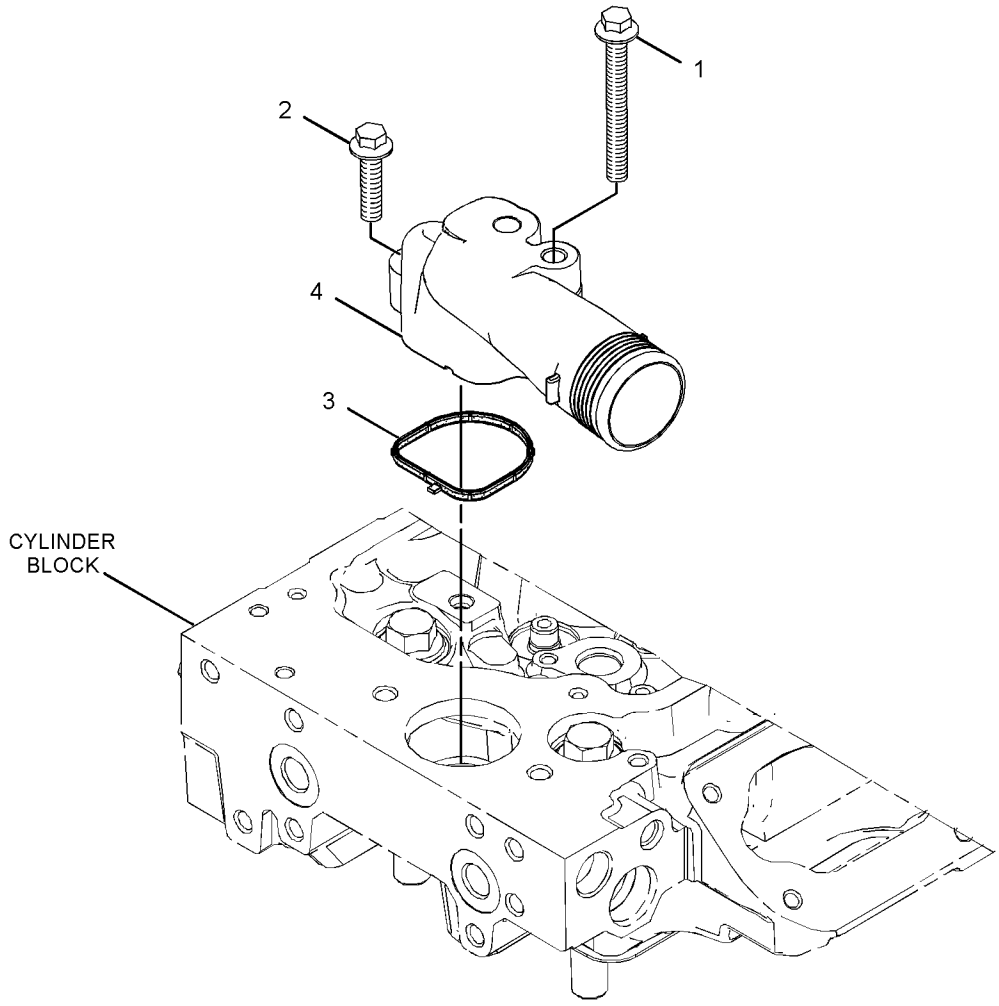

GRAPHIC #1 <END> g03066980

299-5078 CONNECTION GP-WATER

SMCS-1380 **i05210154**

NOTE	REF NO	GRAPHIC REF	PART NUMBER	QTY	PART NAME 1 2 3 4 5 6 (PRODUCT LEVEL)	SEE PAGE
M	1	1	**103-5687**	1	BOLT (M10X1.5X85-MM)	
M	2	1	**123-2899**	1	BOLT (M10X1.5X40-MM)	
	3	1	**281-8744**	1	GASKET-WATER REGULATOR (TEMPERATURE)	
	4	1	**357-8714**	1	CONNECTION AS	

M - METRIC PART

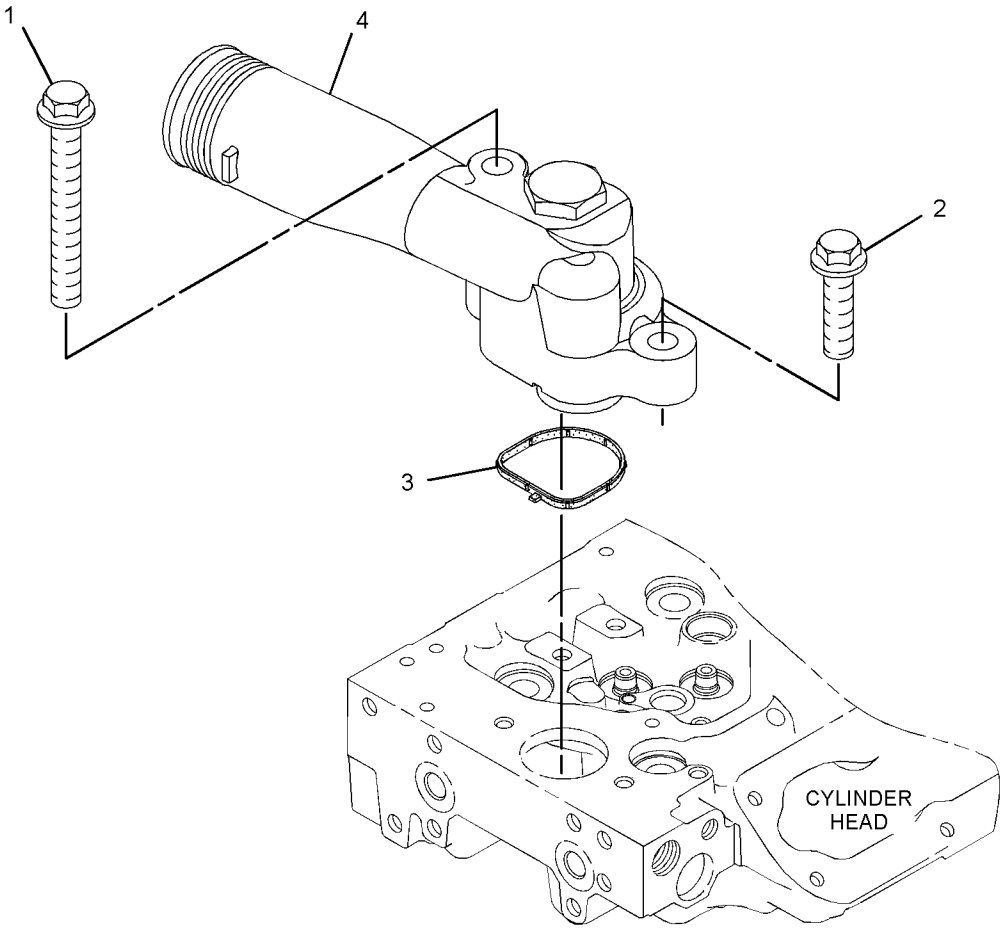

GRAPHIC #1 <END> g03340090

301-8243 CONNECTION GP-WATER

PART OF 435-1699 ENGINE AR, 435-1687, 437-5409, 522-8303, 540-1155, 540-1156 ENGINE AR-PRIMARY
ALSO AN ATTACHMENT

SMCS-1380 **i05512313**

NOTE	REF NO	GRAPHIC REF	PART NUMBER	QTY	PART NAME 1 2 3 4 5 6 (PRODUCT LEVEL)	SEE PAGE
M	1	1	**123-2899**	2	BOLT (M10X1.5X40-MM)	
	2	1	**417-7782**	1	REGULATOR AS-WATER TEMPERATURE (INCLUDES CONNECTOR) (WATER TEMPERATURE)	
	3	1	**281-8744**	1	GASKET-WATER REGULATOR (TEMPERATURE)	

M - METRIC PART

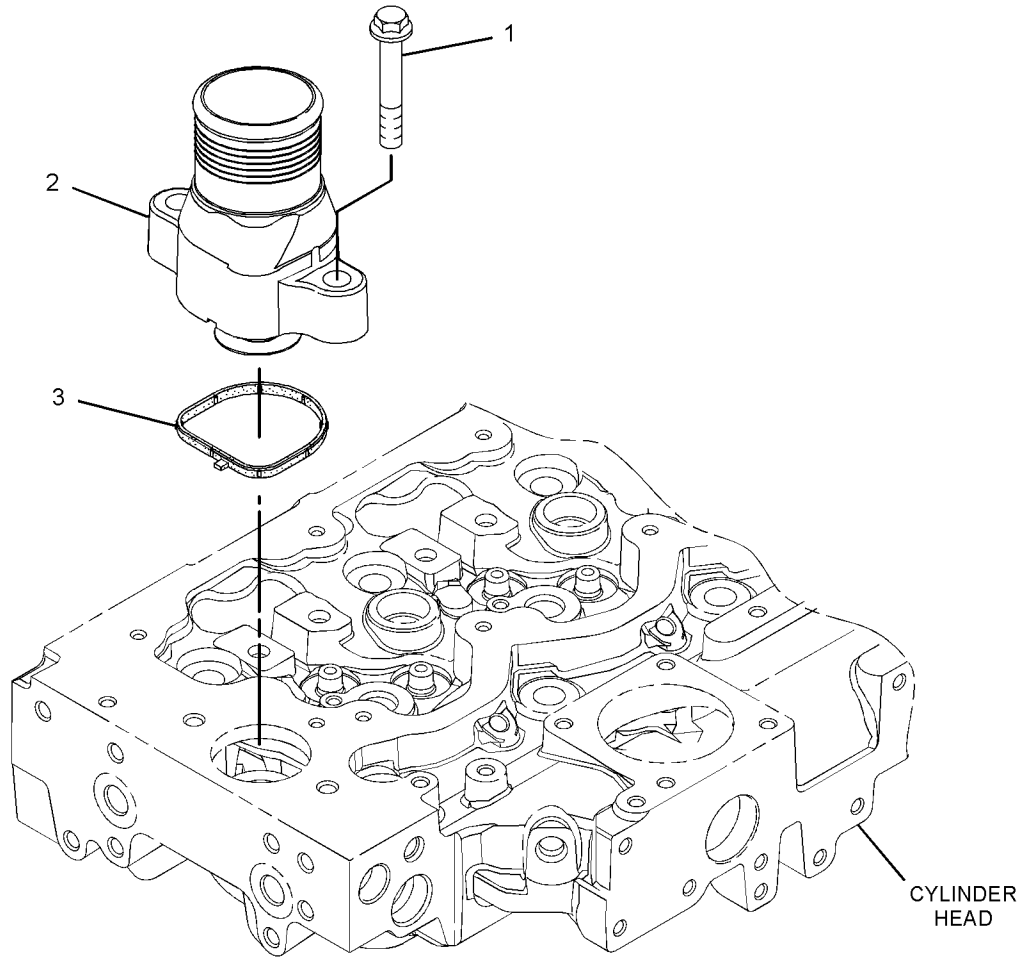

GRAPHIC #1 <END> g01371208

323-6240 CONNECTOR GP-CAB HEATER LINES

SMCS-1380 **i02940699**

NOTE	REF NO	GRAPHIC REF	PART NUMBER	QTY	PART NAME 1 2 3 4 5 6 (PRODUCT LEVEL)	SEE PAGE
	1	1	**2B-0858**	2	PLUG-PIPE	
	2	1	**134-3856**	1	ELBOW	
	3	1	**323-6241**	1	ADAPTER-HOSE	

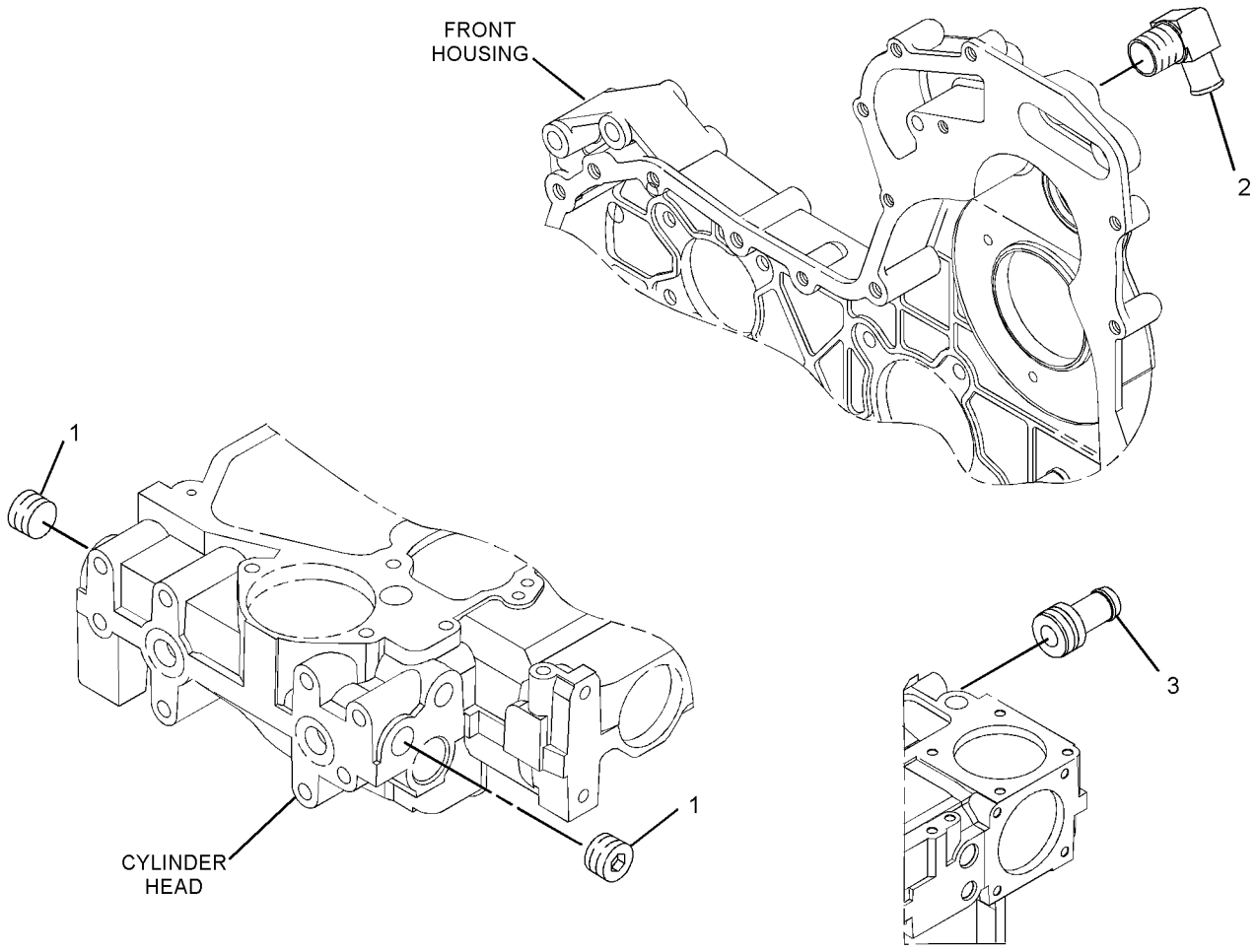

GRAPHIC #1 <END> g01628328

323-8846 CONNECTOR GP-CAB HEATER LINES

SMCS-1380 **i02900486**

NOTE	REF NO	GRAPHIC REF	PART NUMBER	QTY	PART NAME 1 2 3 4 5 6 (PRODUCT LEVEL)	SEE PAGE
	1	1	**2B-0858**	1	PLUG-PIPE	
	2	1	**113-4616**	1	CONNECTOR	
	3	1	**293-1881**	1	ELBOW	

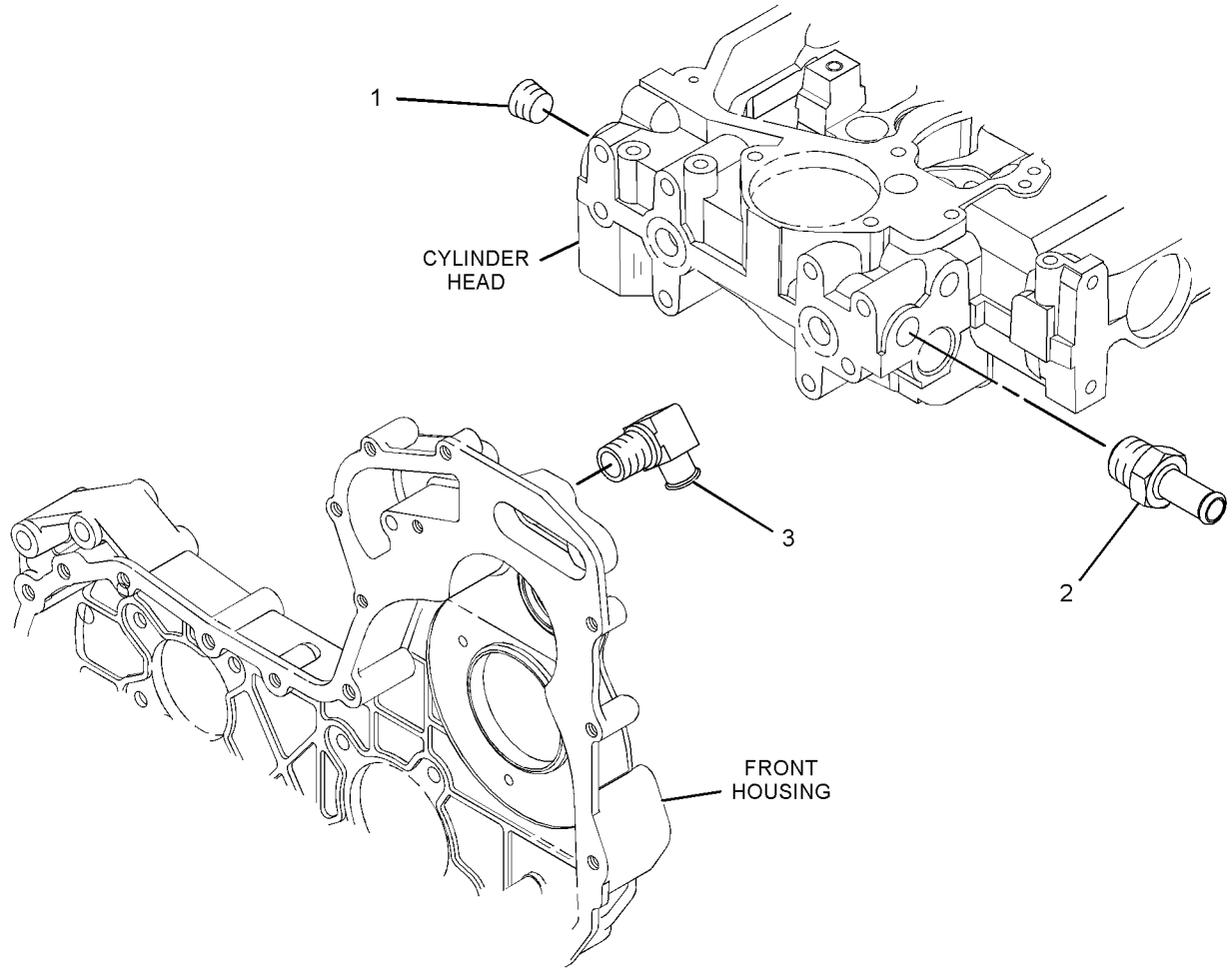

GRAPHIC #1 <END> g01445498

298-5099 COOLER GP-ENGINE OIL

PART OF 435-1692 ENGINE AR-COMPLETE, 435-1685, 435-1687 ENGINE AR-PRIMARY
TYPE 1

SMCS-1378 **i02604345**

NOTE	REF NO	GRAPHIC REF	PART NUMBER	QTY	PART NAME 1 2 3 4 5 6 (PRODUCT LEVEL)	SEE PAGE
M	1	1	**6I-0572**	4	BOLT (M8X1.25X20-MM)	
M	2	1	**6I-0645**	4	BOLT (M8X1.25X25-MM)	
	3	1	**225-7944**	2	GASKET	
	4	1	**232-3751**	1	PLATE	
	5	1	**249-0974**	1	HEAD AS-OIL FILTER	
	6	1	**298-4553**	1	COOLER AS-OIL (ENGINE)	
	6A	1	**298-4558**	1	COOLER-OIL (ENGINE)	
	6B	1	**298-4559**	1	GASKET	
	6C	1	**298-4560**	2	GASKET	
M	6D	1	**6I-1090**	5	BOLT (M8X1.25X40-MM)	
M	6E	1	**101-3771**	2	BOLT (M8X1.25X85-MM)	
M	6F	1	**6I-0217**	1	BOLT (M8X1.25X20-MM)	
M	6G	1	**6I-0260**	8	BOLT (M8X1.25X25-MM)	

M - METRIC PART

298-5099 **COOLER GP-ENGINE OIL (**contd.**)** **i02604345**

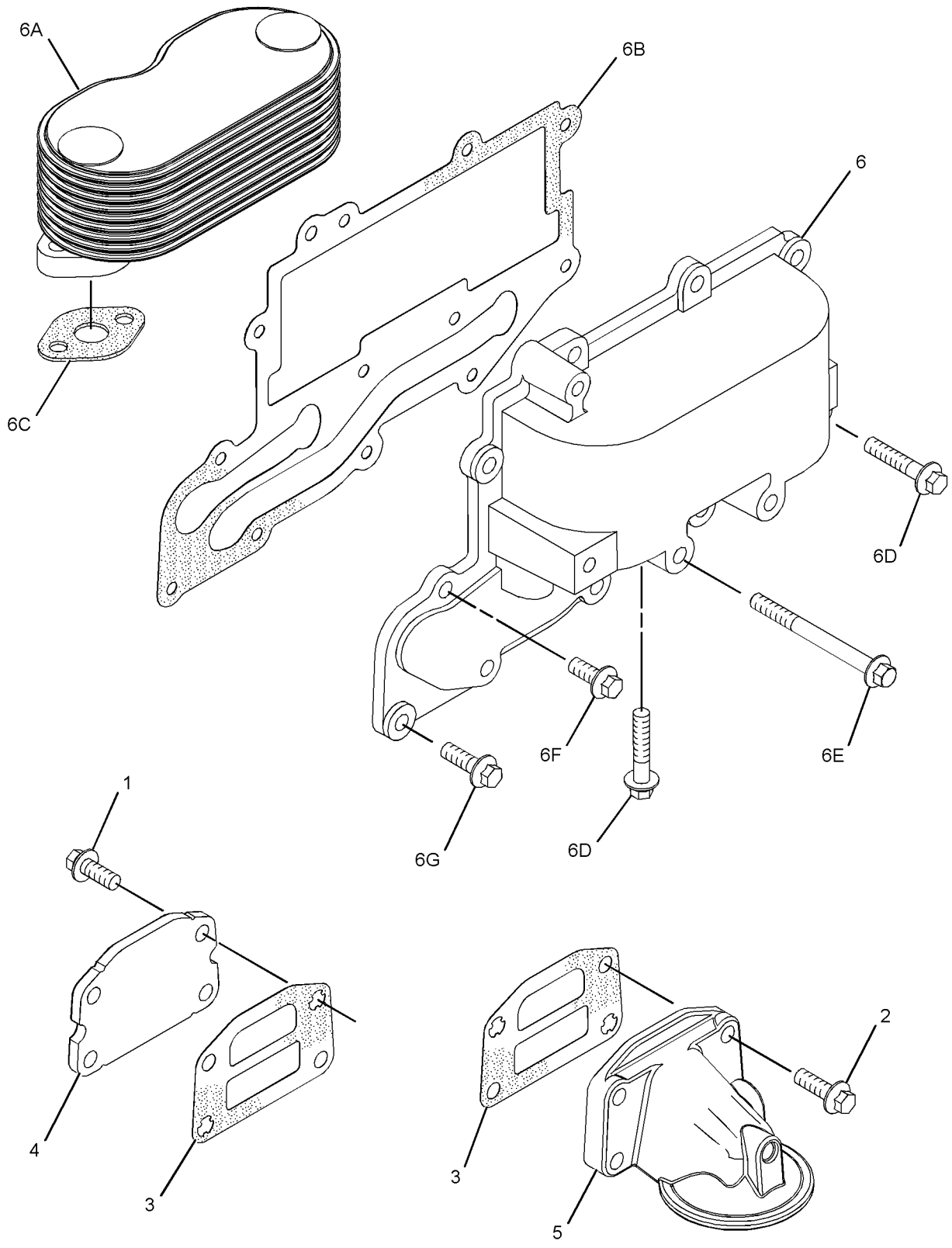

GRAPHIC #1 <END> g01304480

298-5099 COOLER GP-ENGINE OIL

PART OF 435-1692 ENGINE AR-COMPLETE, 435-1685, 435-1687, 540-0570, 540-1156 ENGINE AR-PRIMARY
TYPE 2

SMCS-1378 **i03868169**

NOTE	REF NO	GRAPHIC REF	PART NUMBER	QTY	PART NAME 1 2 3 4 5 6 (PRODUCT LEVEL)	SEE PAGE
M	1	1	**6I-0572**	4	BOLT (M8X1.25X20-MM)	
M	2	1	**6I-0645**	4	BOLT (M8X1.25X25-MM)	
	3	1	**225-7944**	2	GASKET	
	4	1	**232-3751**	1	PLATE	
	5	1	**249-0974**	1	HEAD AS-OIL FILTER	
CY	6	1	**353-7717**	1	COOLER GP-ENGINE OIL	696

C - CHANGE FROM PREVIOUS TYPE
M - METRIC PART
Y - SEPARATE ILLUSTRATION

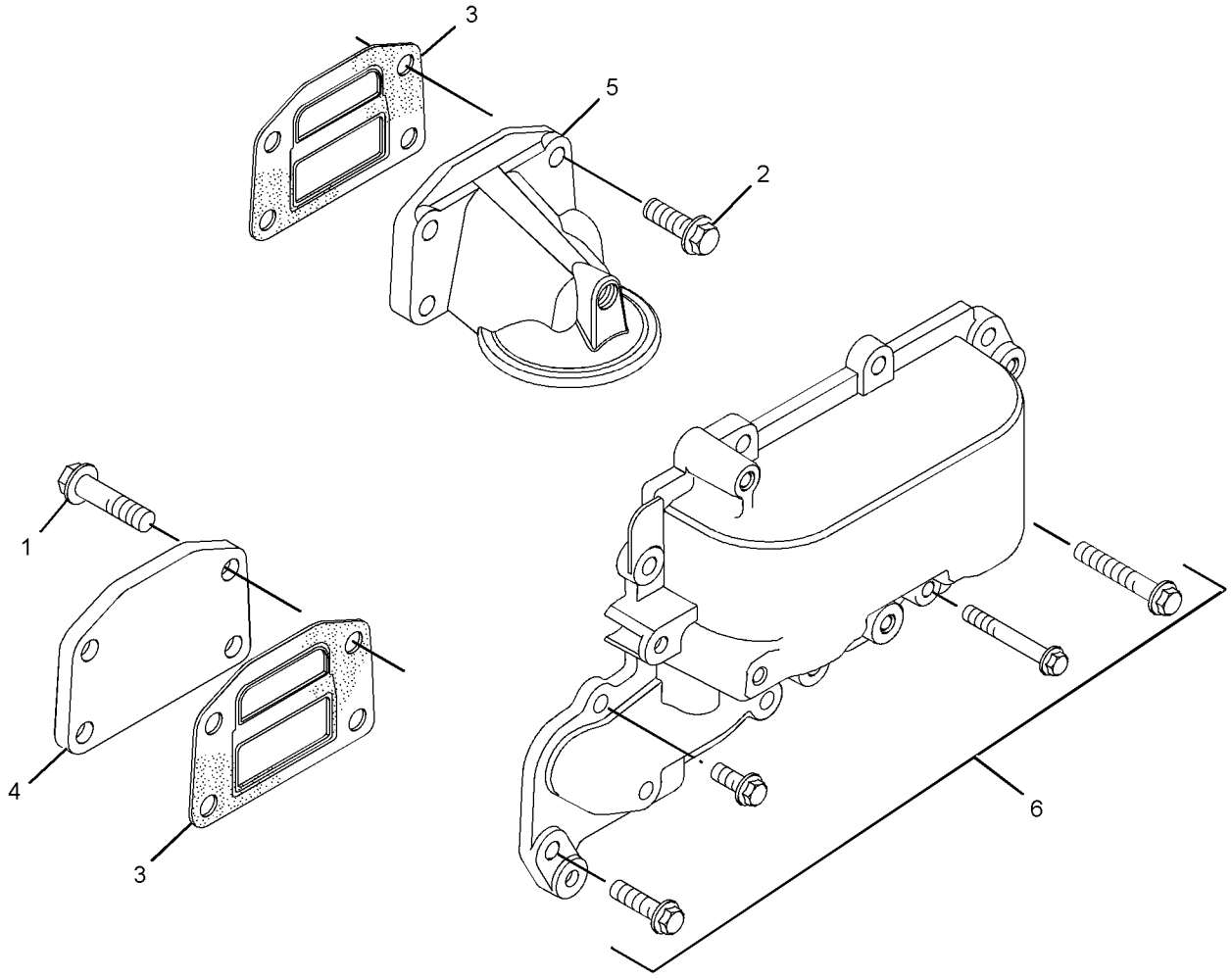

GRAPHIC #1 <END> g02124518

306-2319 COOLER GP-ENGINE OIL

TYPE 1

SMCS-1378 **i03314263**

NOTE	REF NO	GRAPHIC REF	PART NUMBER	QTY	PART NAME 1 2 3 4 5 6 (PRODUCT LEVEL)	SEE PAGE
M	1	1	**6I-0645**	8	BOLT (M8X1.25X25-MM)	
	2	1	**225-7944**	2	GASKET	
	3	1	**234-3459**	1	PLATE	
	4	1	**249-0974**	1	HEAD AS-OIL FILTER	
	5	1	**298-4553**	1	COOLER AS-OIL (ENGINE)	
M	5A	1	**6I-0217**	1	BOLT (M8X1.25X20-MM)	
M	5B	1	**6I-0260**	8	BOLT (M8X1.25X25-MM)	
M	5C	1	**6I-1090**	5	BOLT (M8X1.25X40-MM)	
M	5D	1	**101-3771**	2	BOLT (M8X1.25X85-MM)	
	5E	1	**298-4558**	1	COOLER-OIL (ENGINE)	
	5F	1	**298-4559**	1	GASKET	
	5G	1	**298-4560**	2	GASKET	

M - METRIC PART

306-2319 **COOLER GP-ENGINE OIL (**contd.**)** **i03314263**

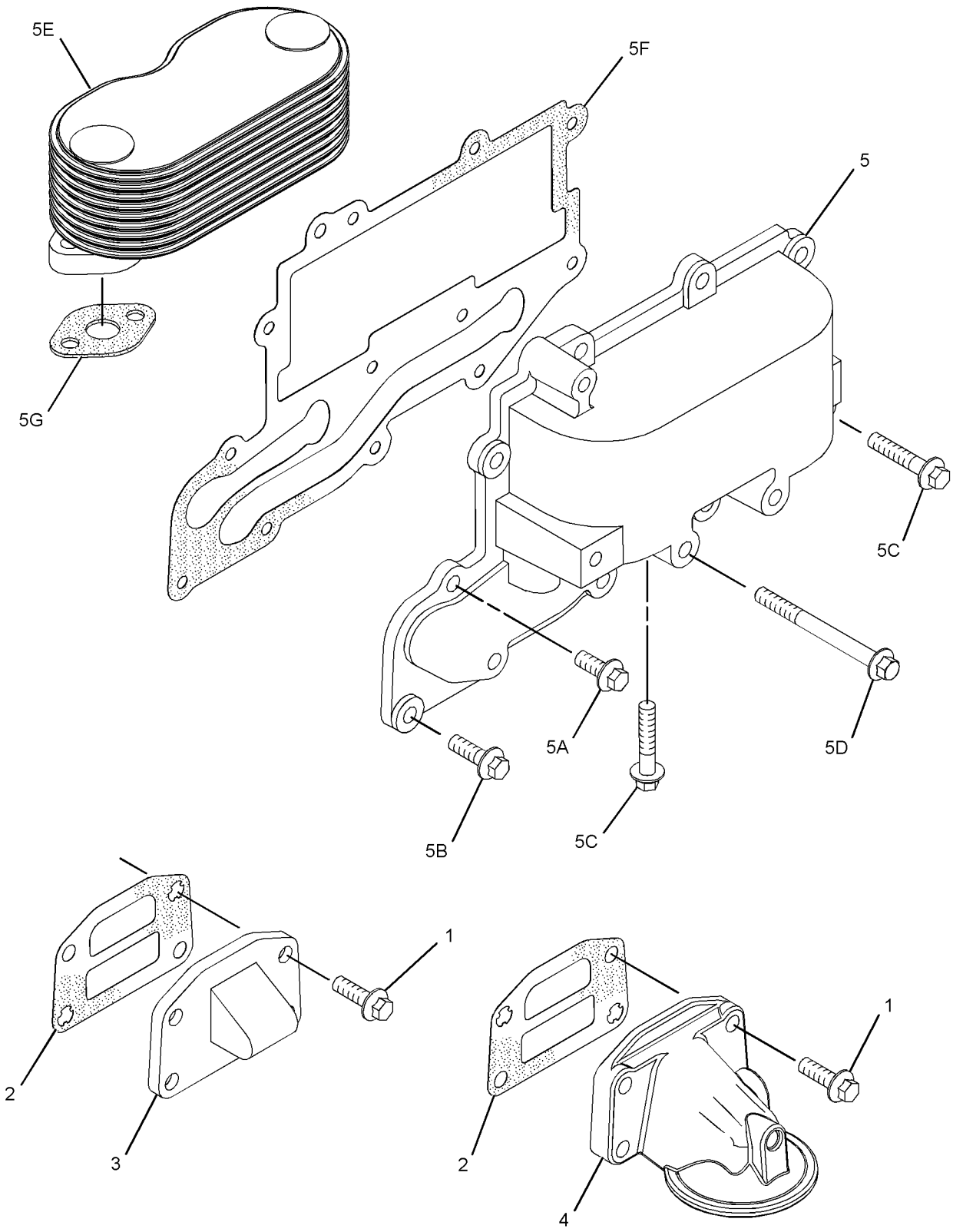

GRAPHIC #1 <END> g01341084

306-2319 COOLER GP-ENGINE OIL

TYPE 2

SMCS-1378 **i03890818**

NOTE	REF NO	GRAPHIC REF	PART NUMBER	QTY	PART NAME 1 2 3 4 5 6 (PRODUCT LEVEL)	SEE PAGE
M	1	1	**6I-0645**	8	BOLT (M8X1.25X25-MM)	
	2	1	**225-7944**	2	GASKET	
	3	1	**234-3459**	1	PLATE	
	4	1	**249-0974**	1	HEAD AS-OIL FILTER	
CY	5	1	**353-7717**	1	COOLER GP-ENGINE OIL	696

C - CHANGE FROM PREVIOUS TYPE
M - METRIC PART
Y - SEPARATE ILLUSTRATION

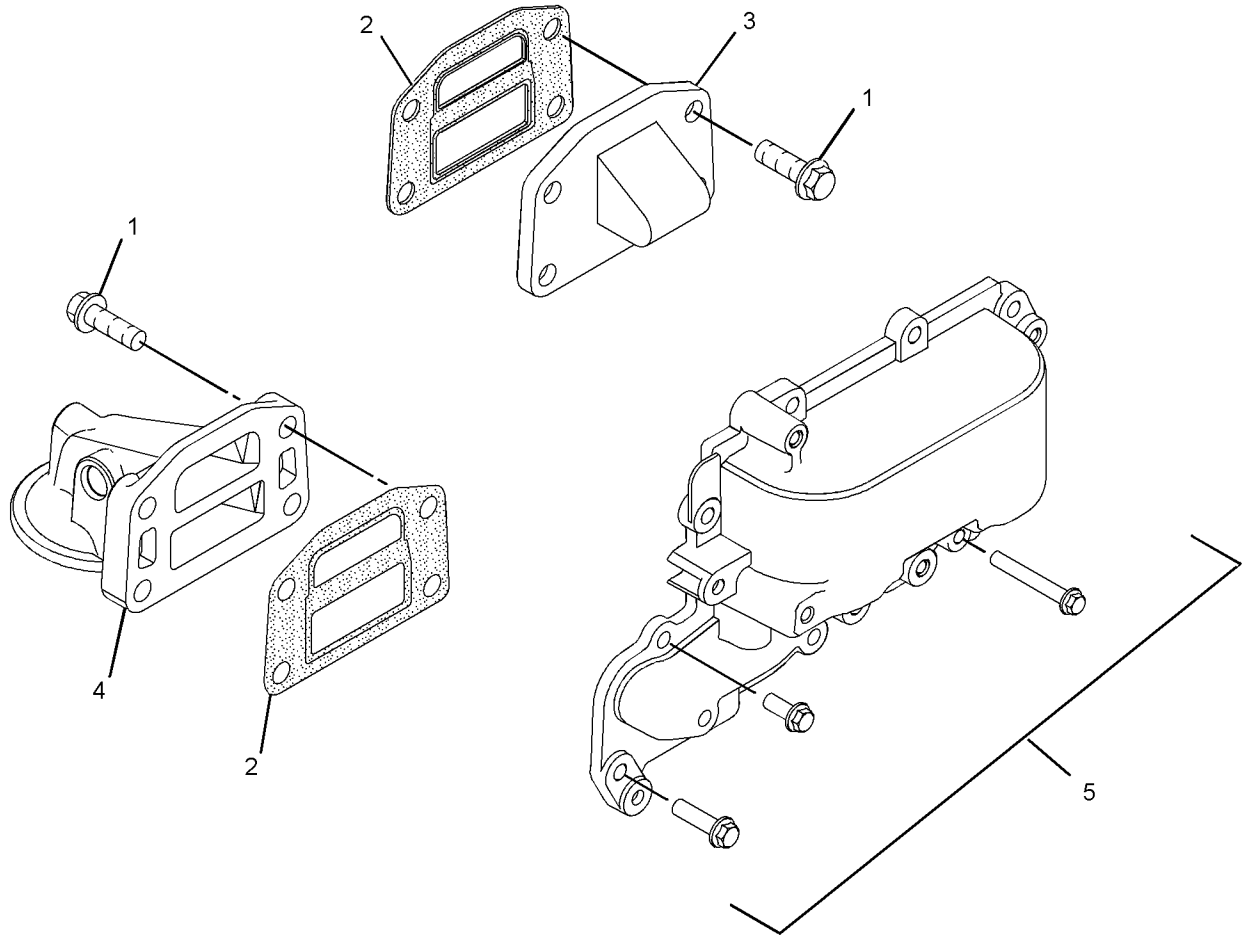

GRAPHIC #1 <END> g02147898

353-7717 COOLER GP-ENGINE OIL

PART OF 298-5099, 306-2319 COOLER GP-ENGINE OIL, 301-8241, 305-2579, 308-4159 COOLER GP-OIL

ALSO AN ATTACHMENT

SMCS-1378 **i04003850**

NOTE	REF NO	GRAPHIC REF	PART NUMBER	QTY	PART NAME 1 2 3 4 5 6 (PRODUCT LEVEL)	SEE PAGE
M	1	1	**6I-0217**	2	BOLT (M8X1.25X20-MM)	
M	2	1	**6I-0260**	7	BOLT (M8X1.25X25-MM)	
M	3	1	**6I-1090**	1	BOLT (M8X1.25X40-MM)	
M	4	1	**100-3751**	2	BOLT (M8X1.25X65-MM)	
	5	1	**298-4558**	1	COOLER-OIL	
	6	1	**353-7715**	1	GASKET	
	7	1	**298-4560**	2	GASKET	

M - METRIC PART

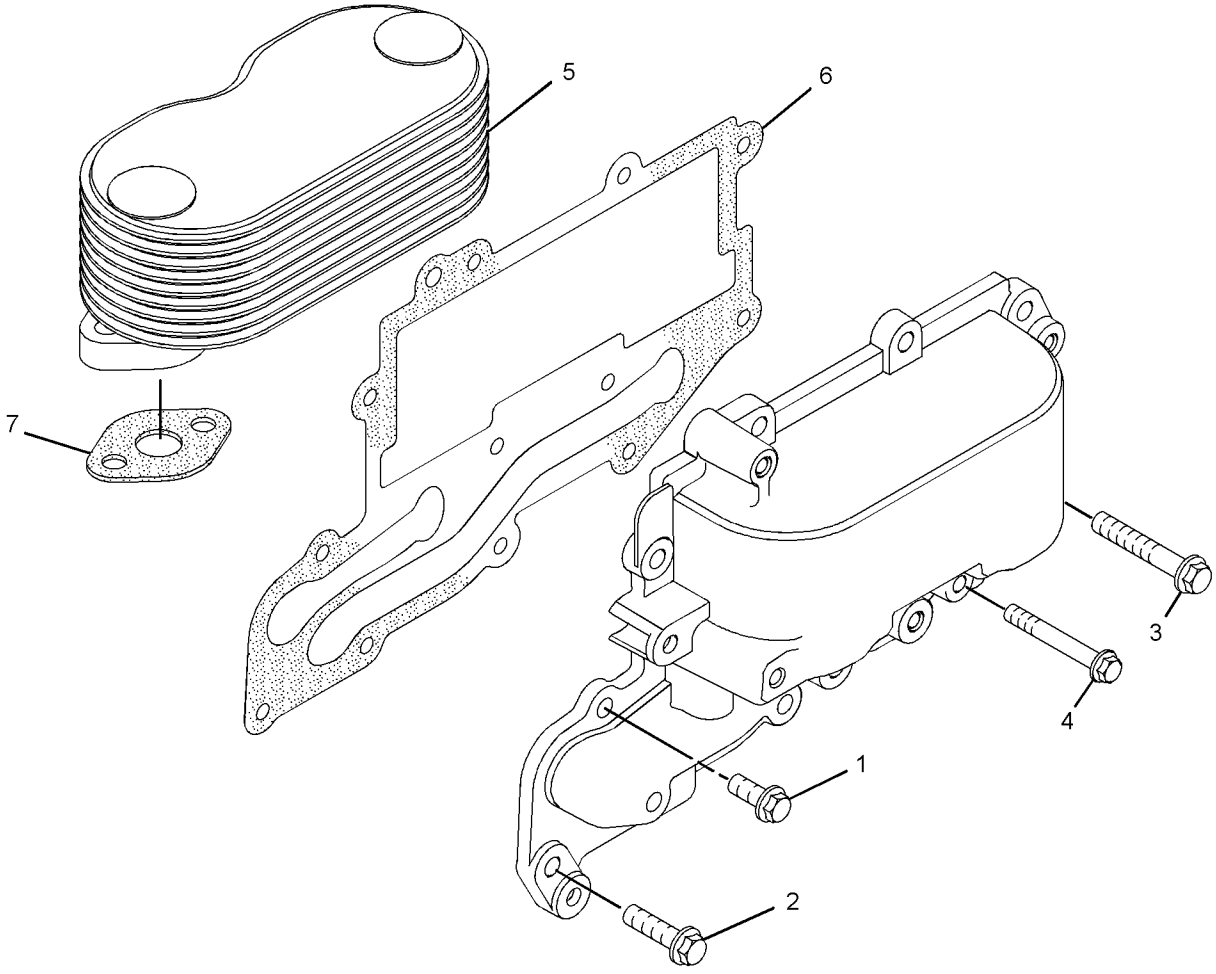

GRAPHIC #1 <END> g02196064

301-8241 COOLER GP-OIL–ENGINE

PART OF 435-1699 ENGINE AR, 437-5409, 522-8303, 540-1155 ENGINE AR-PRIMARY

SMCS-1374 **i03890814**

NOTE	REF NO	GRAPHIC REF	PART NUMBER	QTY	PART NAME 1 2 3 4 5 6 (PRODUCT LEVEL)	SEE PAGE
Y	1	1	**353-7717**	1	COOLER GP-ENGINE OIL (ENGINE)	696
	2	1	**249-0974**	1	HEAD AS-OIL FILTER	
	3	1	**225-7944**	1	GASKET (ENGINE OIL FILTER BASE)	
M	4	1	**6I-0645**	8	BOLT (M8X1.25X25-MM)	
	5	1	**252-6318**	1	PLATE	
	6	1	**233-9408**	1	GASKET	

M - METRIC PART
Y - SEPARATE ILLUSTRATION

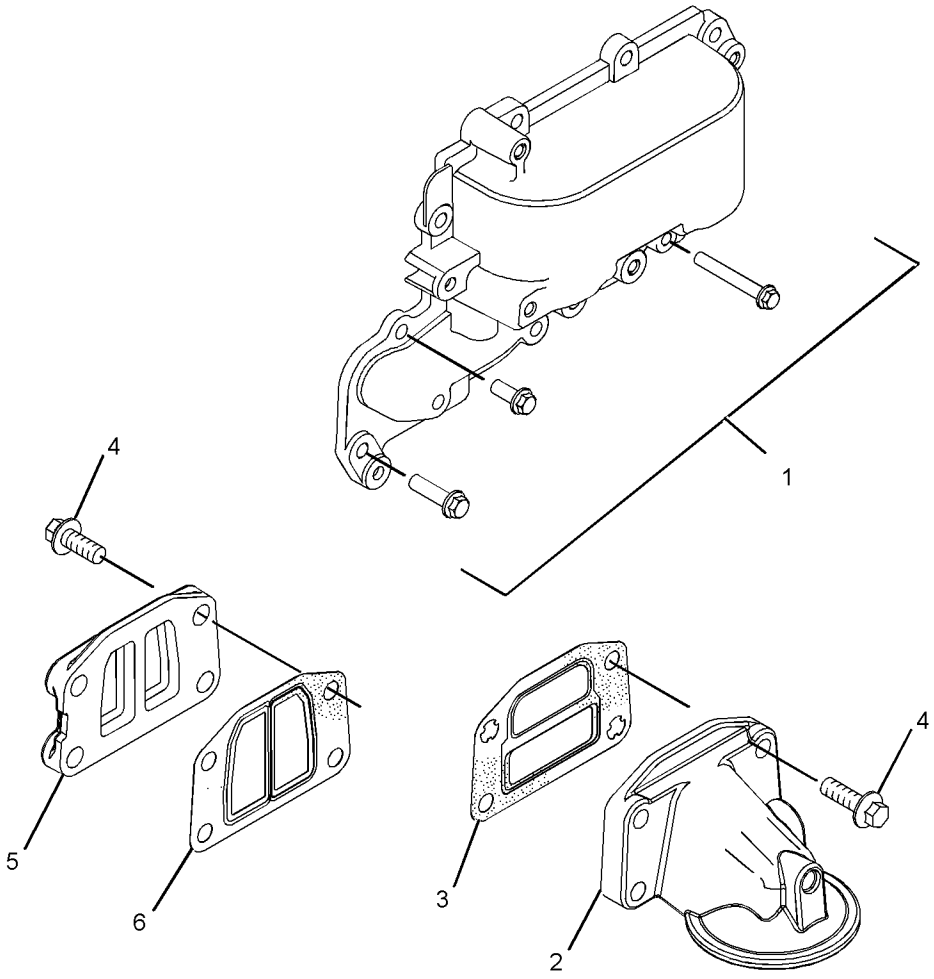

GRAPHIC #1 <END> g02147895

305-2579 COOLER GP-OIL—ENGINE

SMCS-1374 **i03890816**

NOTE	REF NO	GRAPHIC REF	PART NUMBER	QTY	PART NAME 1 2 3 4 5 6 (PRODUCT LEVEL)	SEE PAGE
M	1	1	**6I-0572**	4	BOLT (M8X1.25X20-MM)	
	2	1	**225-7944**	2	GASKET	
	3	1	**232-3751**	1	PLATE	
	4	1	**233-9408**	1	GASKET	
M	5	1	**235-2451**	4	BOLT (M8X1.25X45-MM)	
	6	1	**244-6872**	1	ADAPTER-FILTER	
	7	1	**249-0975**	1	HEAD AS-OIL FILTER	
Y	8	1	**353-7717**	1	COOLER GP-ENGINE OIL	696

M - METRIC PART
Y - SEPARATE ILLUSTRATION

305-2579 **COOLER GP-OIL (**contd.**)** **i03890816**

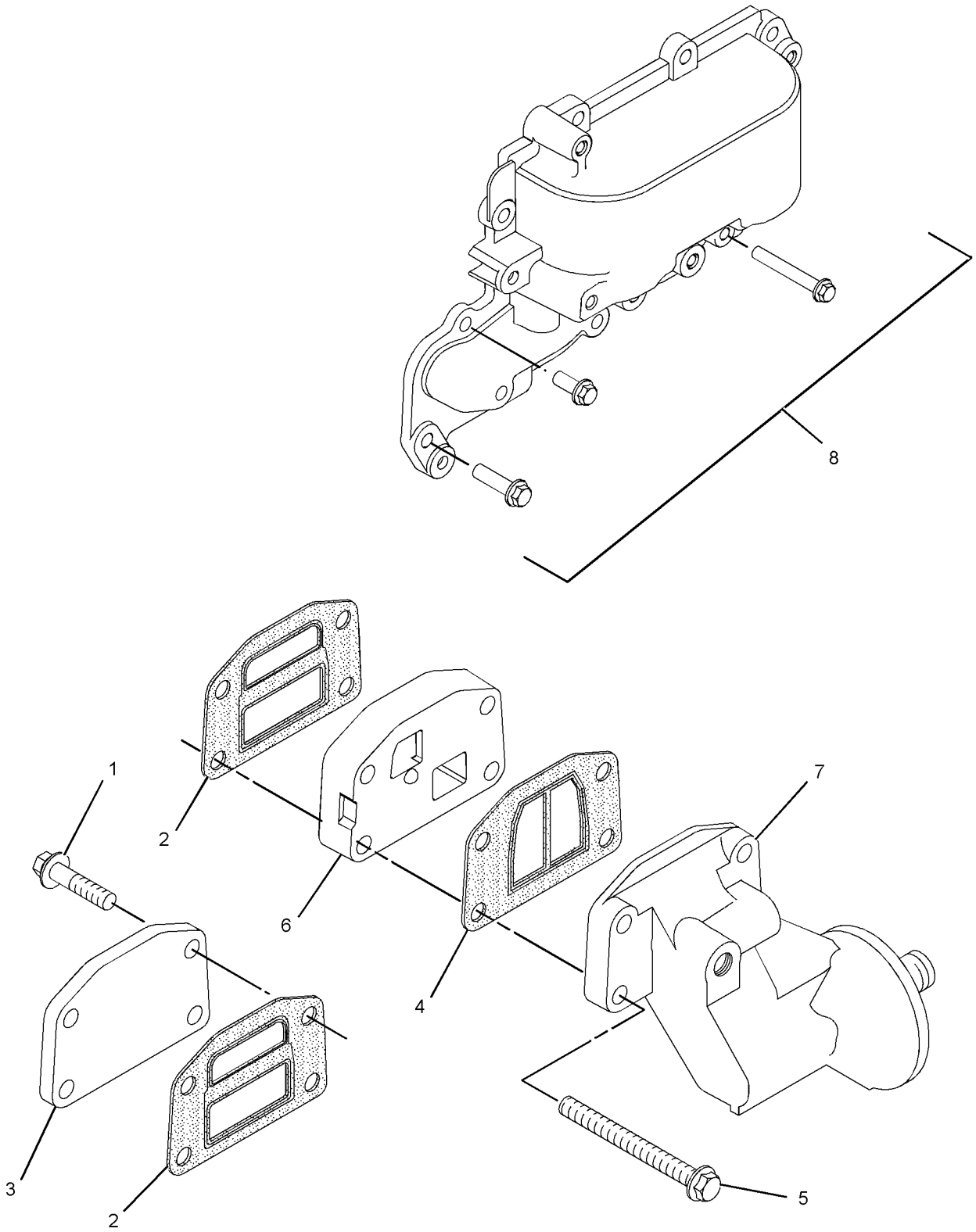

GRAPHIC #1 <END> g02147743

308-4159 COOLER GP-OIL–ENGINE

ALSO AN ATTACHMENT

SMCS-1374 **i03890822**

NOTE	REF NO	GRAPHIC REF	PART NUMBER	QTY	PART NAME 1 2 3 4 5 6 (PRODUCT LEVEL)	SEE PAGE
Y	1	1	**353-7717**	1	COOLER GP-ENGINE OIL (ENGINE)	696
	2	1	**249-0975**	1	HEAD AS-OIL FILTER	
	3	1	**233-9408**	2	GASKET	
	4	1	**244-6872**	1	ADAPTER-FILTER	
	5	1	**225-7944**	1	GASKET	
M	6	1	**235-2451**	4	BOLT (M8X1.25X45-MM)	
	7	1	**252-6318**	1	PLATE	
M	8	1	**6I-0645**	4	BOLT (M8X1.25X25-MM)	

M - METRIC PART
Y - SEPARATE ILLUSTRATION

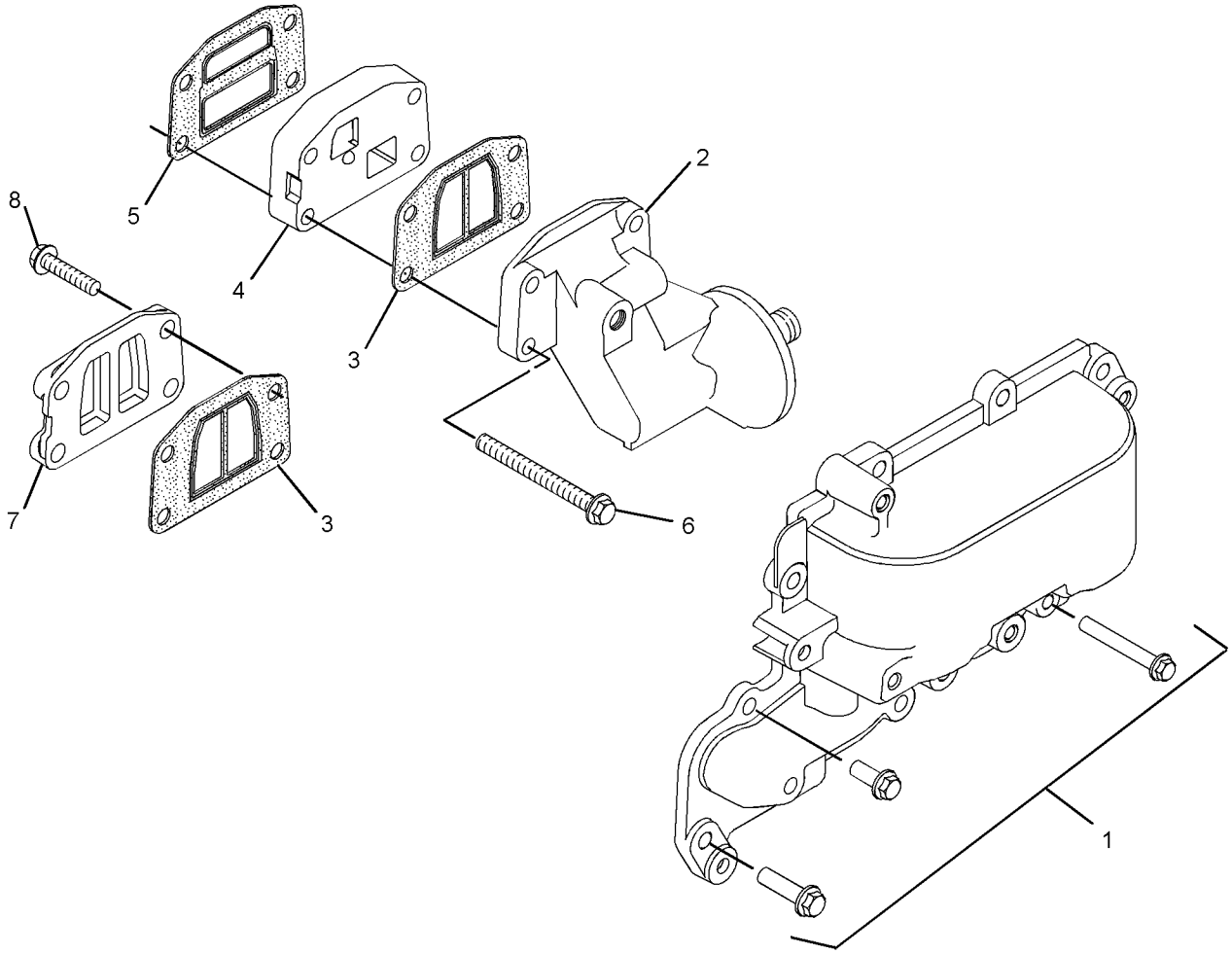

GRAPHIC #1 <END> g02147833

298-5108 FAN GP

PART OF 435-1692 ENGINE AR-COMPLETE, 435-1685, 540-0570 ENGINE AR-PRIMARY

SMCS-1356 **i06233759**

NOTE	REF NO	GRAPHIC REF	PART NUMBER	QTY	PART NAME 1 2 3 4 5 6 (PRODUCT LEVEL)	SEE PAGE
M	1	1	**6V-9189**	4	LOCKNUT (M8X1.25-THD)	
	2	1	**114-2474**	1	FAN	
	3	1	**133-7668**	4	STUD	
	4	1	**453-9700**	1	EXTENSION (FAN PULLEY)	

M - METRIC PART

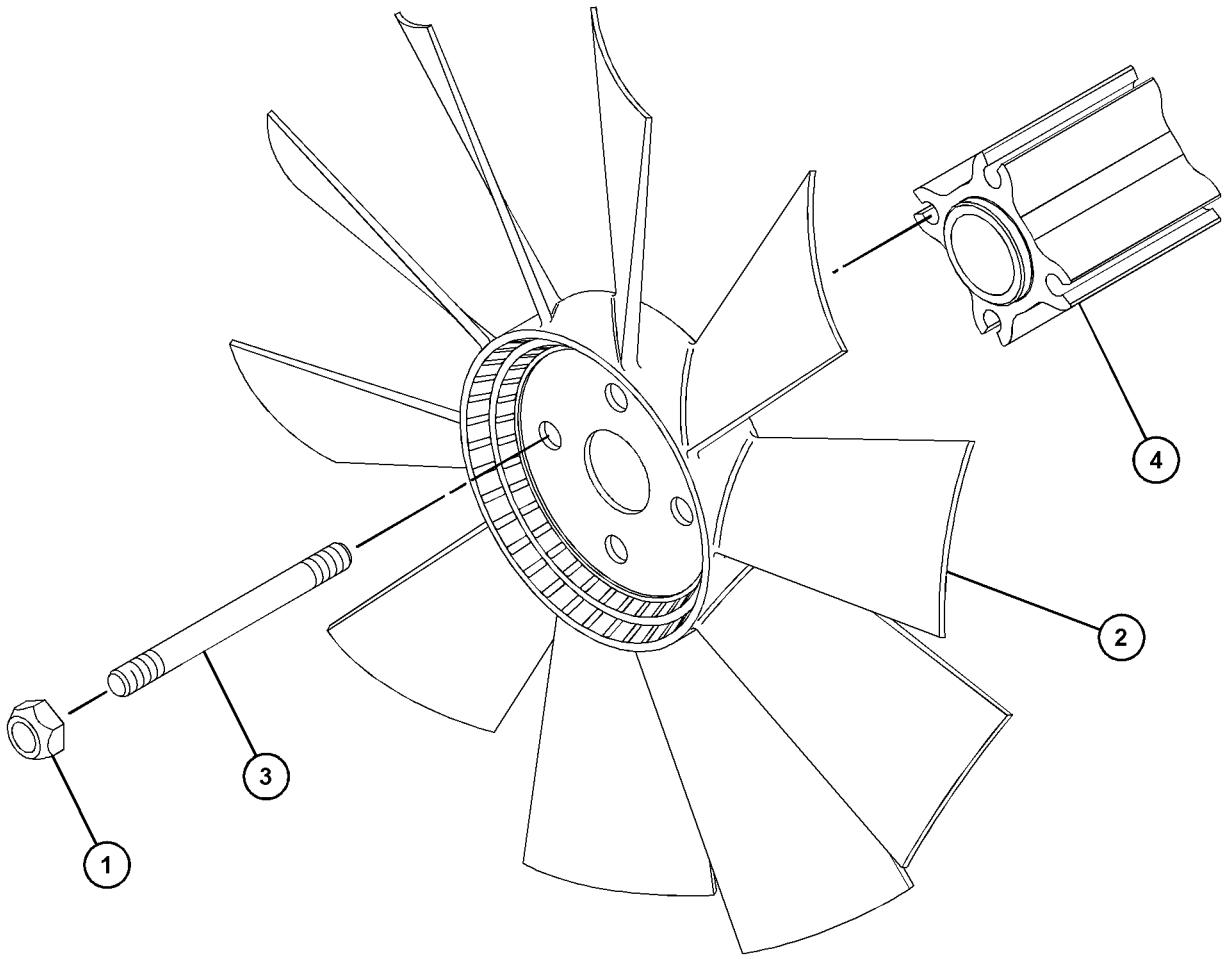

GRAPHIC #1 <END> g06011903

307-2849 FAN GP

SMCS-1356 **i06091173**

NOTE	REF NO	GRAPHIC REF	PART NUMBER	QTY	PART NAME 1 2 3 4 5 6 (PRODUCT LEVEL)	SEE PAGE
	1	1	**453-9700**	1	EXTENSION (FAN PULLEY)	
	2	1	**133-7668**	4	STUD	
M	3	1	**113-6349**	4	NUT (M8X1.25-THD)	

M - METRIC PART

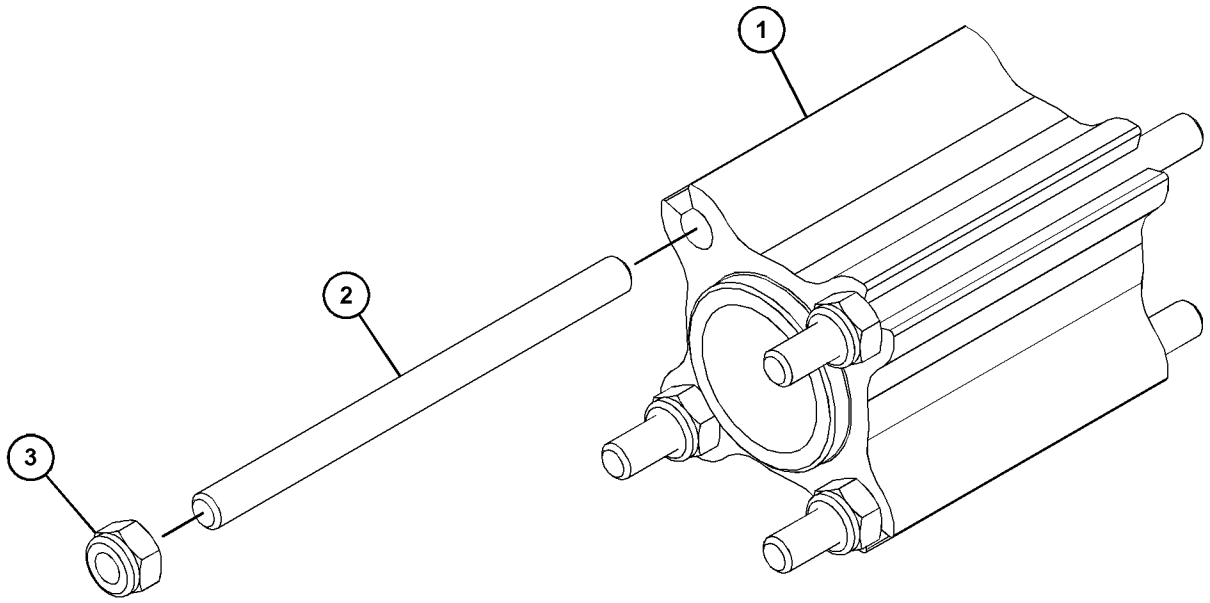

GRAPHIC #1 <END> g03808369

308-0303 FAN GP

SMCS-1356 **i06238491**

NOTE	REF NO	GRAPHIC REF	PART NUMBER	QTY	PART NAME 1 2 3 4 5 6 (PRODUCT LEVEL)	SEE PAGE
M	1	1	**6V-9189**	4	LOCKNUT (M8X1.25-THD)	
	2	1	**103-5916**	1	FAN (10-BLADE)	
	3	1	**134-4139**	4	STUD	
	4	1	**453-9679**	1	EXTENSION	

M - METRIC PART

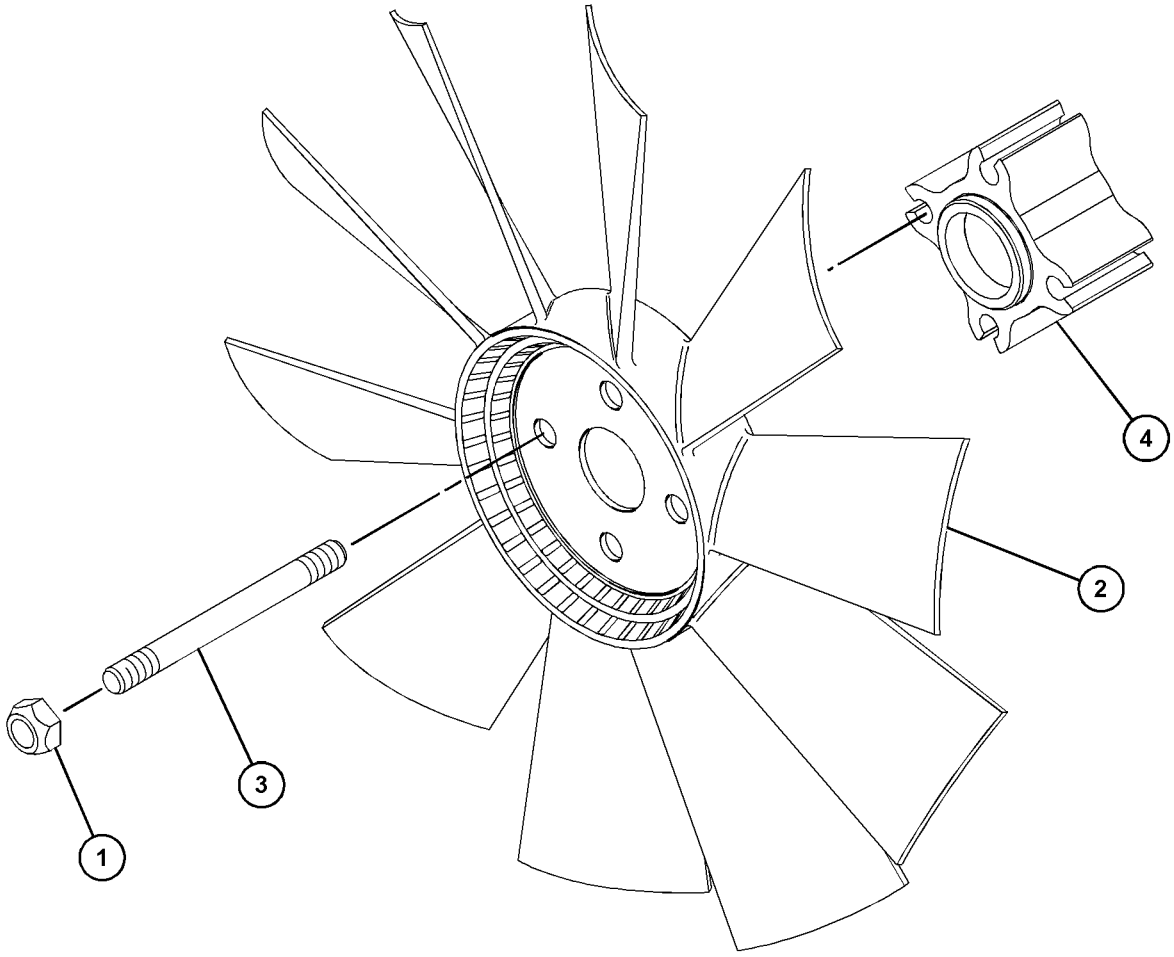

GRAPHIC #1 <END> g06012376

311-4640 FAN GP

PART OF 435-1699 ENGINE AR, 435-1687, 522-8303, 540-1156 ENGINE AR-PRIMARY

SMCS-1356 **i07082024**

NOTE	REF NO	GRAPHIC REF	PART NUMBER	QTY	PART NAME 1 2 3 4 5 6 (PRODUCT LEVEL)	SEE PAGE
	1	1	**111-5767**	1	FAN (7-BLADE)	
	2	1	**453-9682**	1	EXTENSION-FAN	
	3	1	**135-6362**	4	STUD	
M	4	1	**6V-9189**	4	LOCKNUT (M8X1.25-THD)	

M - METRIC PART

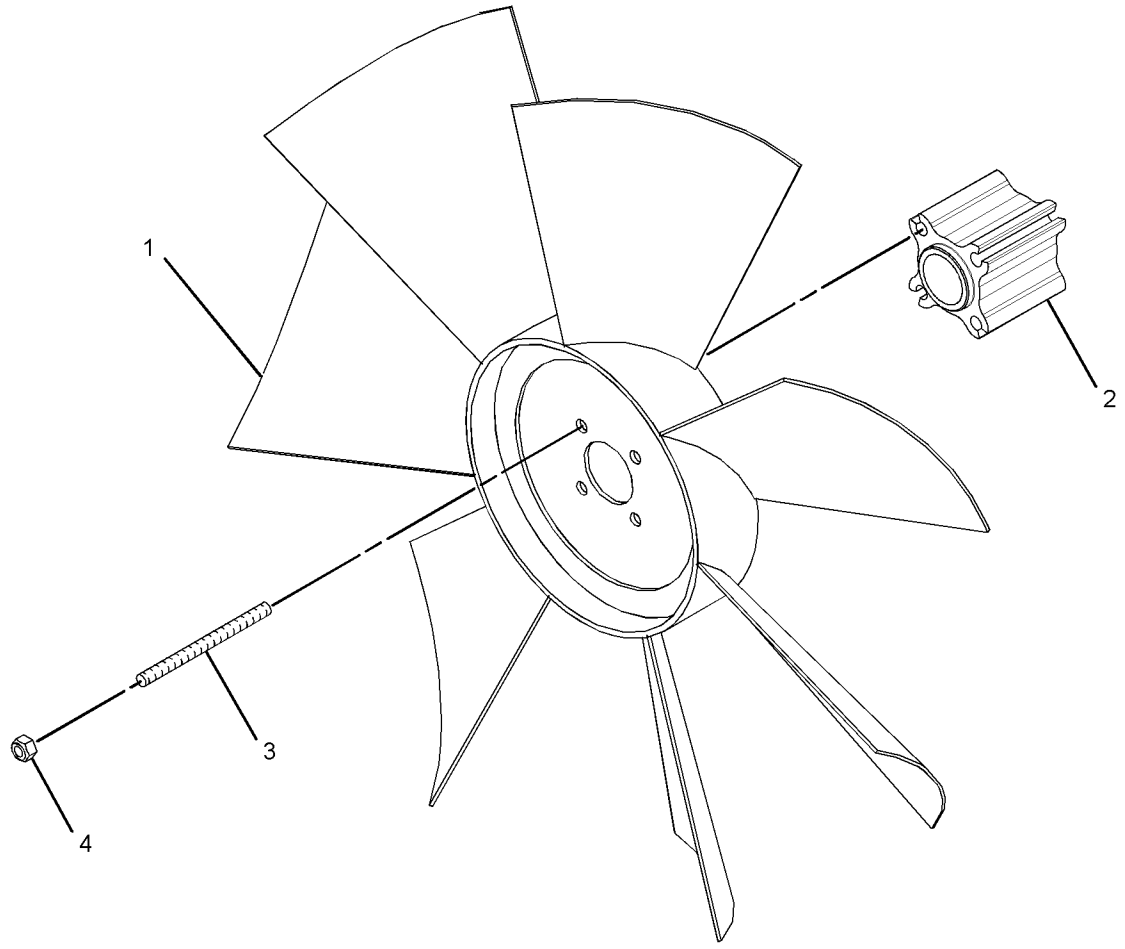

GRAPHIC #1 <END> g06220315

311-8536 FAN GP

TYPE 1

SMCS-1356 **i02810917**

NOTE	REF NO	GRAPHIC REF	PART NUMBER	QTY	PART NAME 1 2 3 4 5 6 (PRODUCT LEVEL)	SEE PAGE
	1	1	**9Y-1590**	1	EXTENSION-FAN	
	2	1	**135-5417**	4	STUD	
M	3	1	**113-6349**	4	NUT (M8X1.25-THD)	

M - METRIC PART

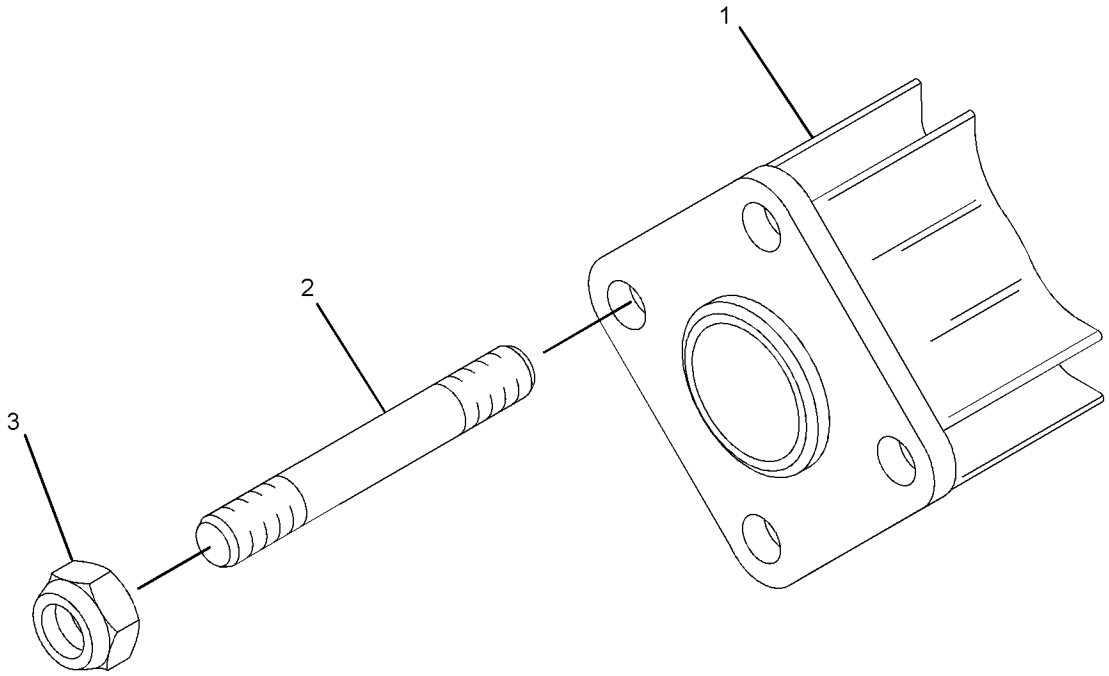

GRAPHIC #1 <END> g01430480

311-8536 FAN GP

TYPE 2

SMCS-1356 **i06210319**

NOTE	REF NO	GRAPHIC REF	PART NUMBER	QTY	PART NAME 1 2 3 4 5 6 (PRODUCT LEVEL)	SEE PAGE
C	1	1	**453-9681**	1	EXTENSION	
	2	1	**135-5417**	4	STUD	
M	3	1	**6V-9189**	4	LOCKNUT (M8X1.25-THD)	

C - CHANGE FROM PREVIOUS TYPE
M - METRIC PART

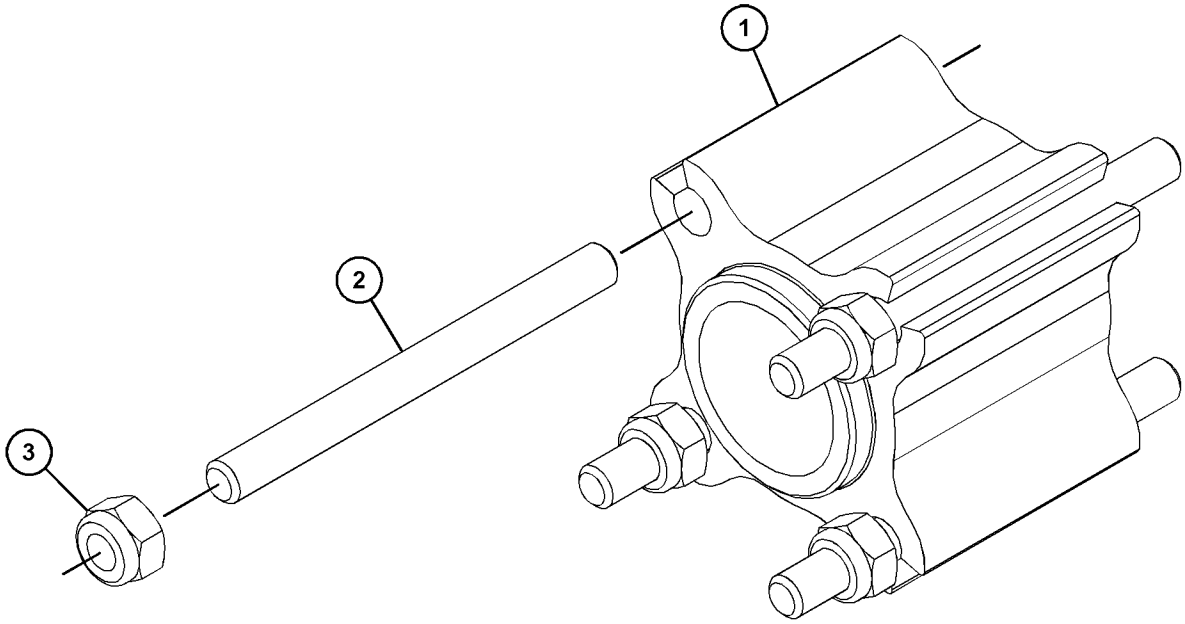

GRAPHIC #1 <END> g03873290

314-5003 FAN GP

PART OF 437-5409, 540-1155 ENGINE AR-PRIMARY

SMCS-1356 **i07076825**

NOTE	REF NO	GRAPHIC REF	PART NUMBER	QTY	PART NAME 1 2 3 4 5 6 (PRODUCT LEVEL)	SEE PAGE
M	1	1	**6V-9189**	4	LOCKNUT (M8X1.25-THD)	
	2	1	**135-6362**	4	STUD	
	3	1	**453-9682**	1	EXTENSION-FAN	
	4	1	**114-2474**	1	FAN (10-BLADE)	

M - METRIC PART

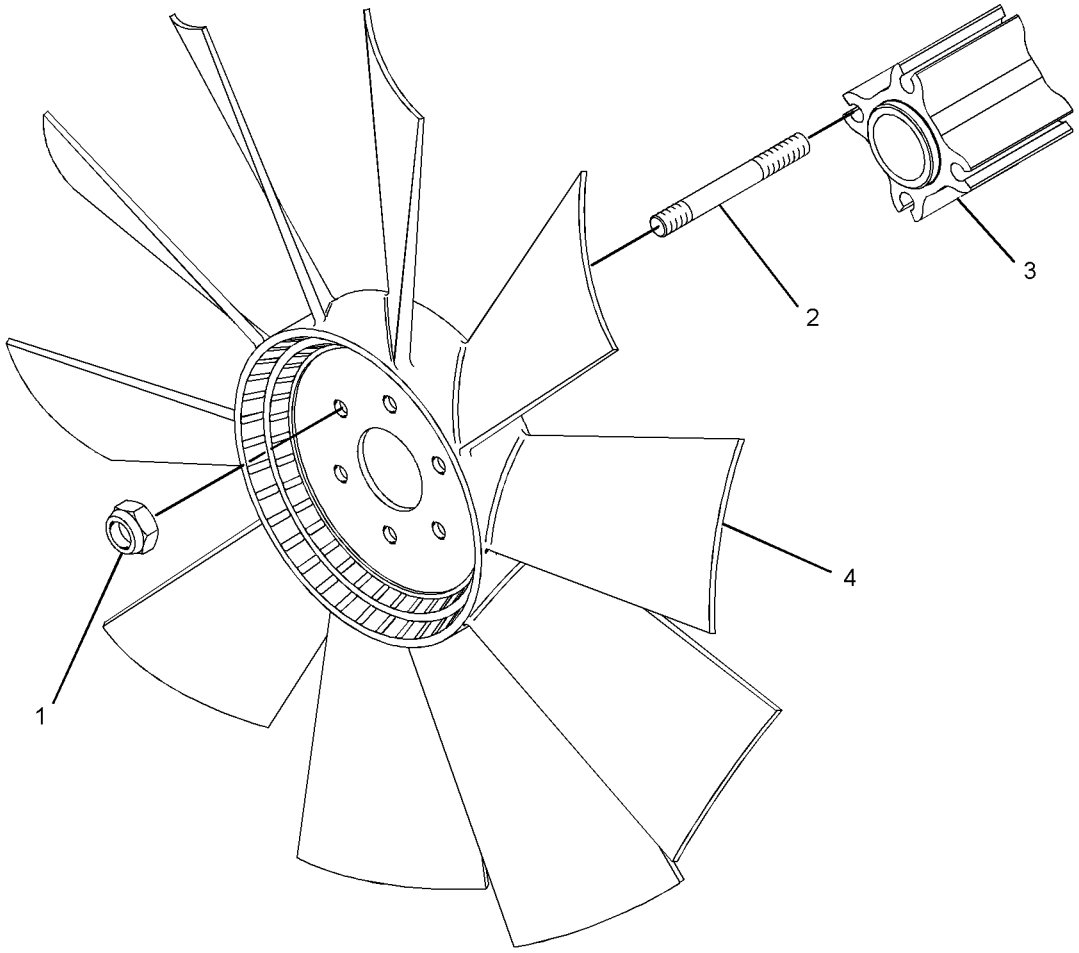

GRAPHIC #1 <END> g06218794

315-3413 FAN GP

SMCS-1356 **i06238419**

NOTE	REF NO	GRAPHIC REF	PART NUMBER	QTY	PART NAME 1 2 3 4 5 6 (PRODUCT LEVEL)	SEE PAGE
M	1	1	**6V-9189**	4	LOCKNUT (M8X1.25-THD)	
	2	1	**453-9679**	1	EXTENSION	
	3	1	**134-4139**	4	STUD	

M - METRIC PART

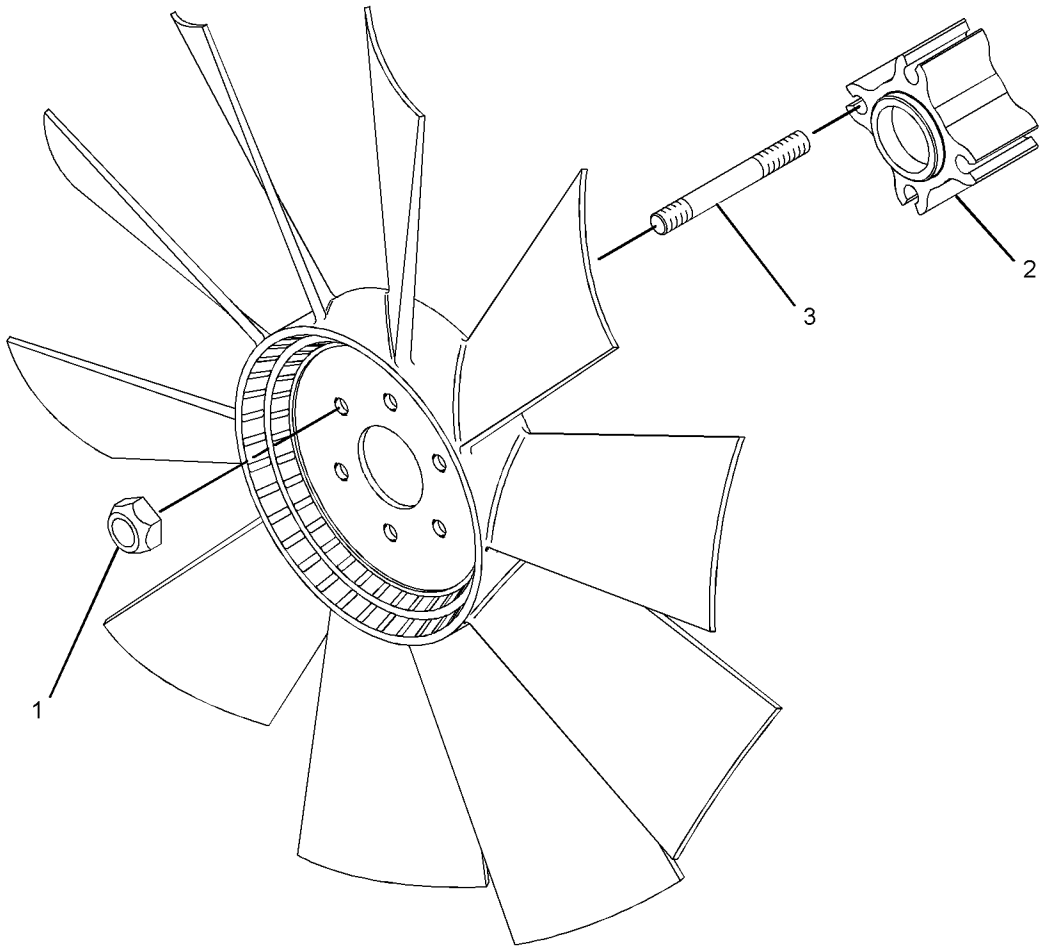

GRAPHIC #1 <END> g06012371

322-2607 FAN GP

SMCS-1356 **i06240040**

NOTE	REF NO	GRAPHIC REF	PART NUMBER	QTY	PART NAME 1 2 3 4 5 6 (PRODUCT LEVEL)	SEE PAGE
	1	1	**103-5916**	1	FAN (10-BLADE)	
M	2	1	**113-6349**	4	NUT (M8X1.25-THD)	
	3	1	**133-7668**	4	STUD	
	4	1	**453-9700**	1	EXTENSION (FAN PULLEY)	

M - METRIC PART

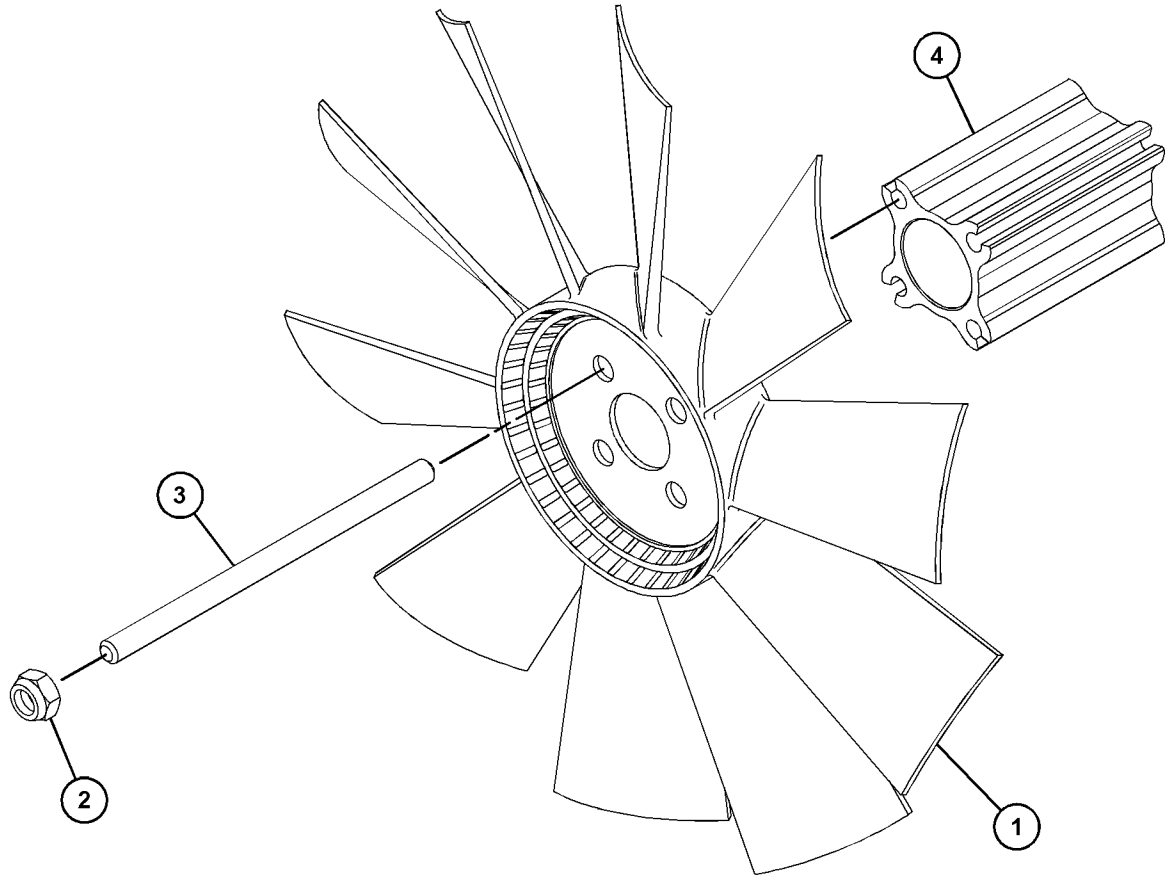

GRAPHIC #1 <END> g03876433

322-4889 FAN GP

SMCS-1356 **i06233749**

NOTE	REF NO	GRAPHIC REF	PART NUMBER	QTY	PART NAME 1 2 3 4 5 6 (PRODUCT LEVEL)	SEE PAGE
M	1	1	**6V-9189**	4	LOCKNUT (M8X1.25-THD)	
	2	1	**135-6362**	4	STUD	
	3	1	**453-9682**	1	EXTENSION-FAN	
	4	1	**185-9538**	1	FAN (10-BLADE)	

M - METRIC PART

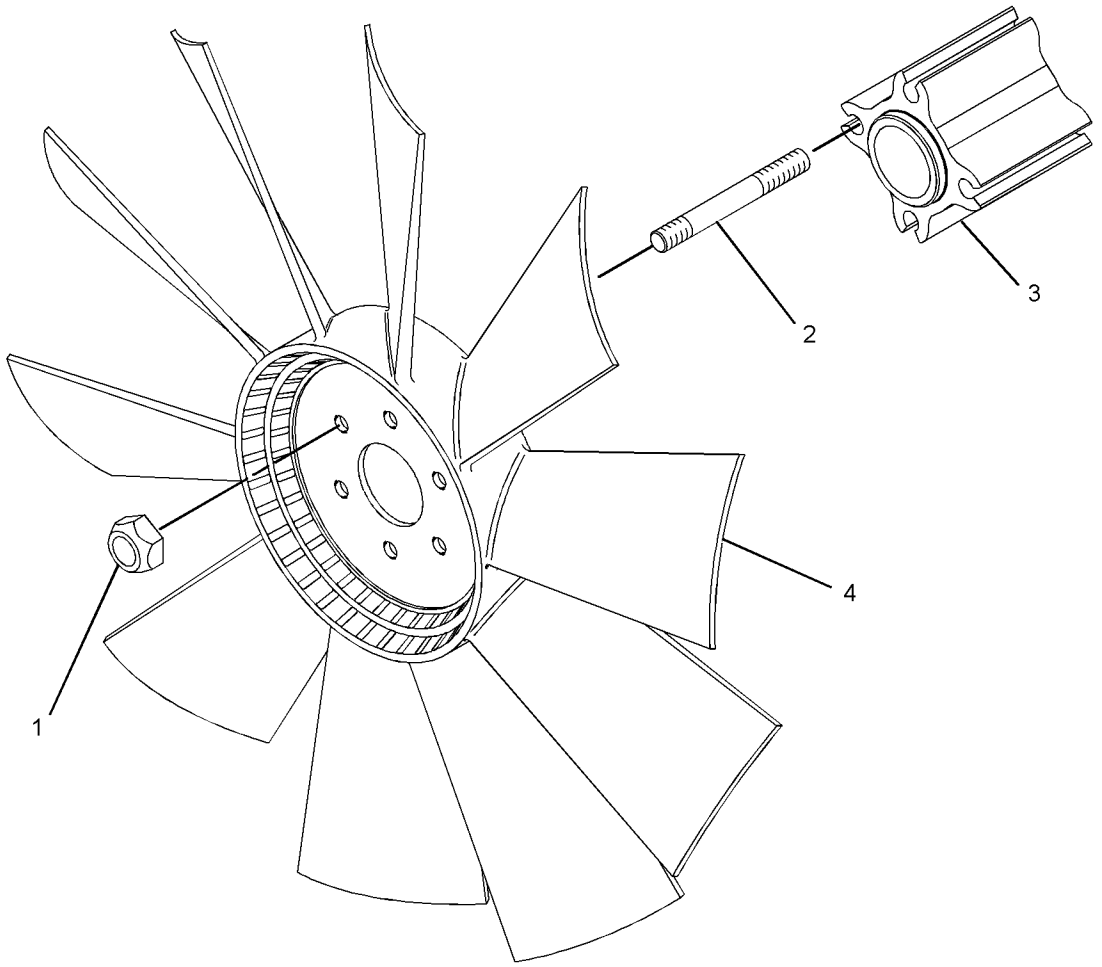

GRAPHIC #1 <END> g06012354

326-4488 FAN GP

SMCS-1356 **i07233079**

NOTE	REF NO	GRAPHIC REF	PART NUMBER	QTY	PART NAME 1 2 3 4 5 6 (PRODUCT LEVEL)	SEE PAGE
M	1	1	**113-6349**	4	NUT (M8X1.25-THD)	
	2	1	**114-2474**	1	FAN	
	3	1	**135-6362**	4	STUD	
	4	1	**453-9682**	1	EXTENSION-FAN	

M - METRIC PART

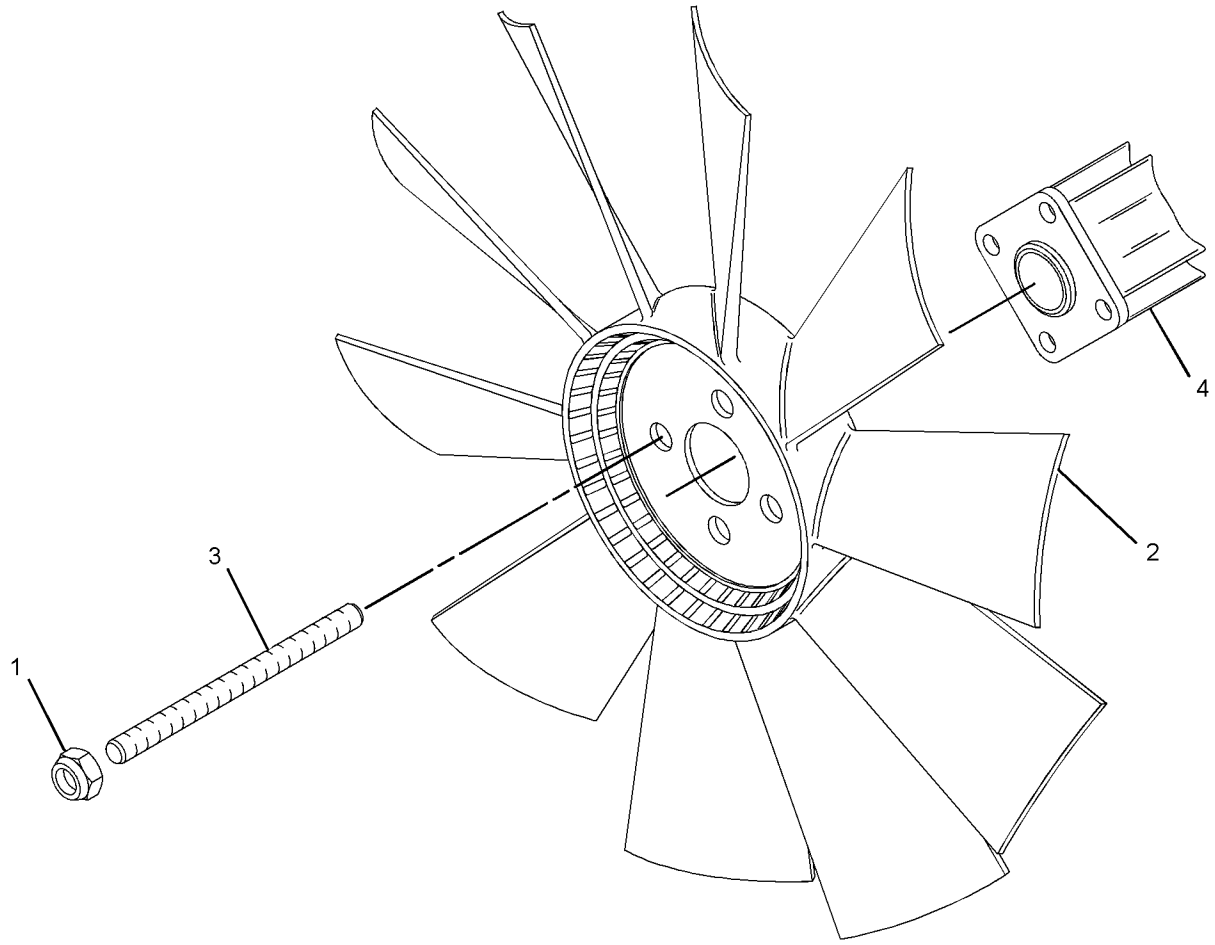

GRAPHIC #1 <END> g01673198

362-2833 FAN GP-SUCTION

SMCS-1356 **i03911070**

NOTE	REF NO	GRAPHIC REF	PART NUMBER	QTY	PART NAME 1 2 3 4 5 6 (PRODUCT LEVEL)	SEE PAGE
	1	1	**135-6363**	1	EXTENSION-FAN	
	2	1	**103-5916**	1	FAN (10-BLADE)	
M	3	1	**113-6349**	4	NUT (M8X1.25-THD)	
	4	1	**135-6362**	4	STUD	

M - METRIC PART

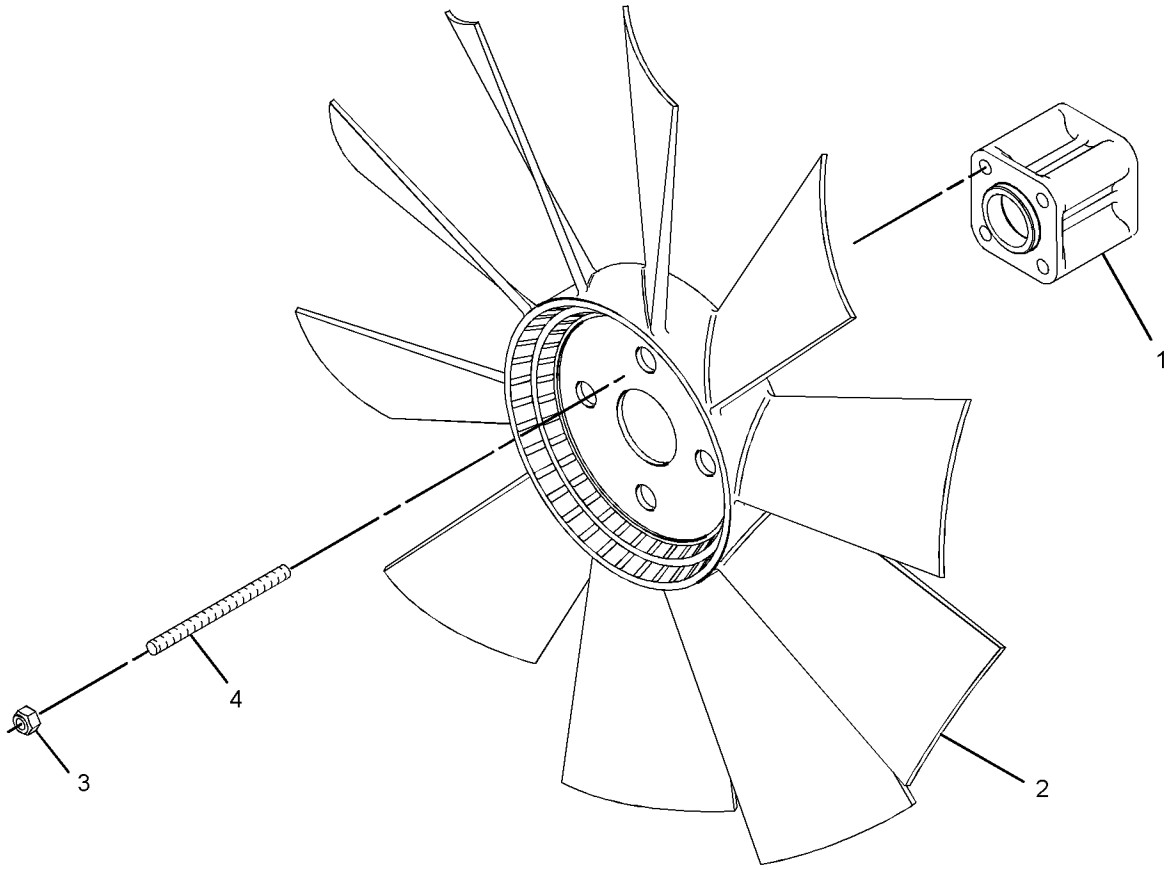

GRAPHIC #1 <END> g02150017

299-5082 MOUNTING GP-FAN

SMCS-1356 **i02654278**

NOTE	REF NO	GRAPHIC REF	PART NUMBER	QTY	PART NAME 1 2 3 4 5 6 (PRODUCT LEVEL)	SEE PAGE
	1	1	**179-7071**	4	BOLT (M8X1.25X20-MM)	

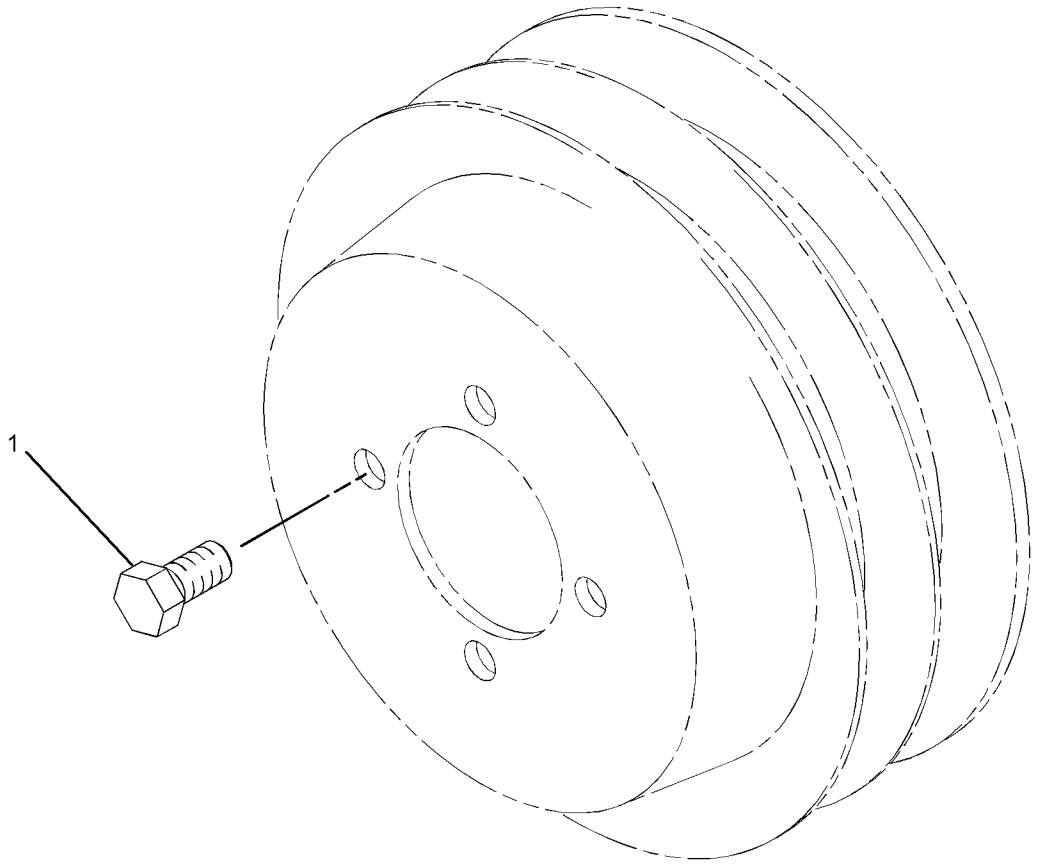

GRAPHIC #1 <END> g01340803

298-5105 PUMP GP-WATER

PART OF 435-1692 ENGINE AR-COMPLETE, 435-1685, 437-5409 ENGINE AR-PRIMARY

SMCS-1361 **i02685560**

NOTE	REF NO	GRAPHIC REF	PART NUMBER	QTY	PART NAME 1 2 3 4 5 6 (PRODUCT LEVEL)	SEE PAGE
M	1	1	**6I-0217**	2	BOLT (M8X1.25X20-MM)	
M	2	1	**6I-0254**	2	BOLT (M8X1.25X30-MM)	
M	3	1	**113-8129**	7	BOLT (M8X1.25X75-MM)	
	4	1	**307-9843**	1	PUMP GP-WATER	
	4A	1	**278-3242**	2	BOLT-FLANGE HEAD (M8X1.25X18-MM)	
	4B	1	**287-7430**	1	GASKET-COVER	
	4C	1	**225-8019**	1	GASKET	
	5	1	**277-2925**	1	CONNECTION AS	
	5A	1	**225-7738**	1	SEAL-O-RING	
	5B	1	**277-2923**	1	GASKET	

M - METRIC PART

298-5105 **PUMP GP-WATER (**contd.**)** **i02685560**

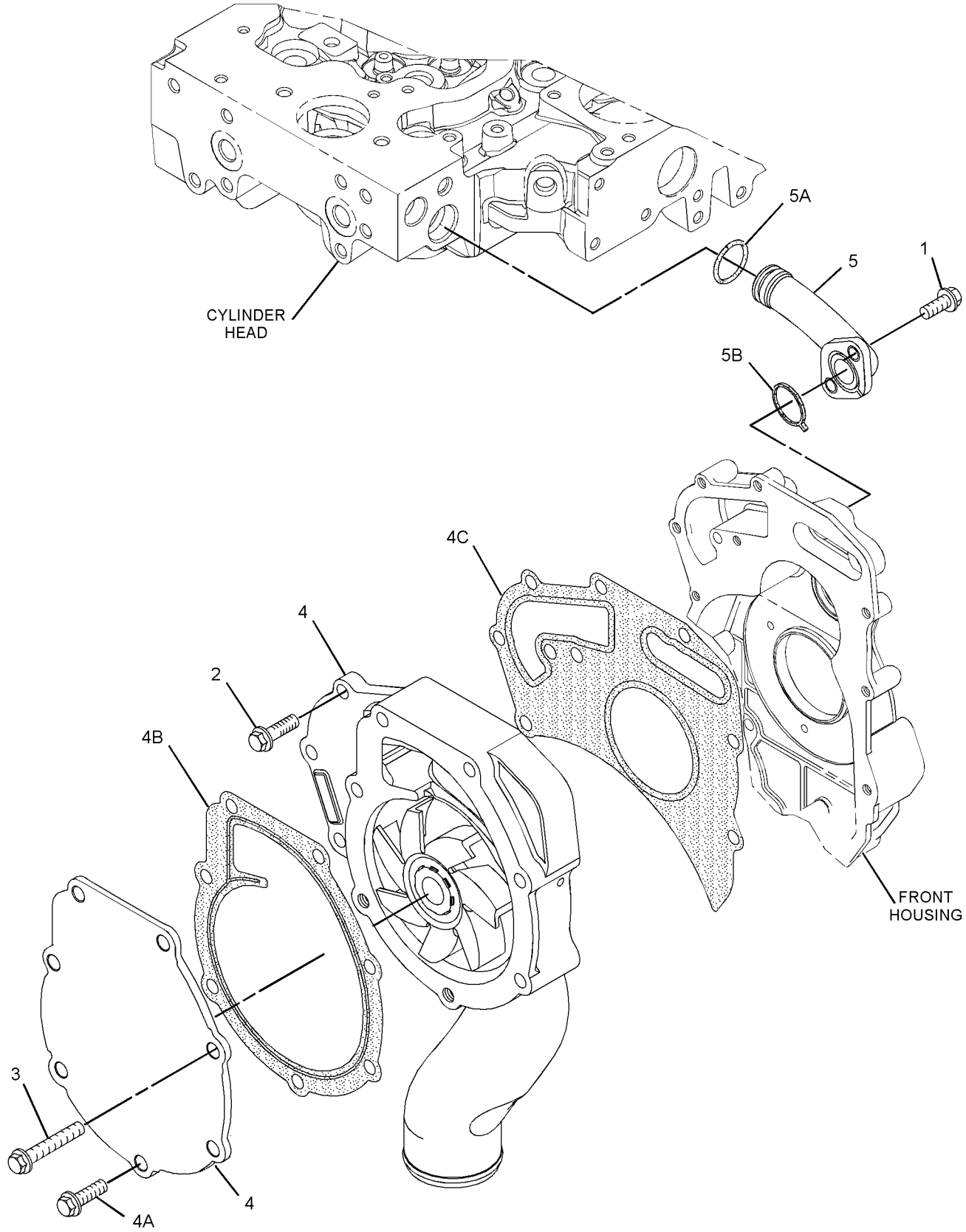

GRAPHIC #1 <END> g01305584

298-5105 PUMP GP-WATER

PART OF 435-1692 ENGINE AR-COMPLETE, 435-1685, 437-5409 ENGINE AR-PRIMARY
ALSO AN ATTACHMENT
TYPE 1

SMCS-1361 **i05391378**

NOTE	REF NO	GRAPHIC REF	PART NUMBER	QTY	PART NAME 1 2 3 4 5 6 (PRODUCT LEVEL)	SEE PAGE
C	1	1	**322-9662**	1	PUMP GP-WATER	
	1A	1	**225-8019**	1	GASKET	
M	2	1	**6I-0254**	2	BOLT (M8X1.25X30-MM)	
M	3	1	**113-8129**	7	BOLT (M8X1.25X75-MM)	
	4	1	**277-2925**	1	CONNECTION AS	
	4A	1	**225-7738**	1	SEAL-O-RING	
	4B	1	**277-2923**	1	GASKET	
M	5	1	**6I-0217**	2	BOLT (M8X1.25X20-MM)	

C - CHANGE FROM PREVIOUS TYPE
M - METRIC PART

298-5105 **PUMP GP-WATER (**contd.**)** **i05391378**

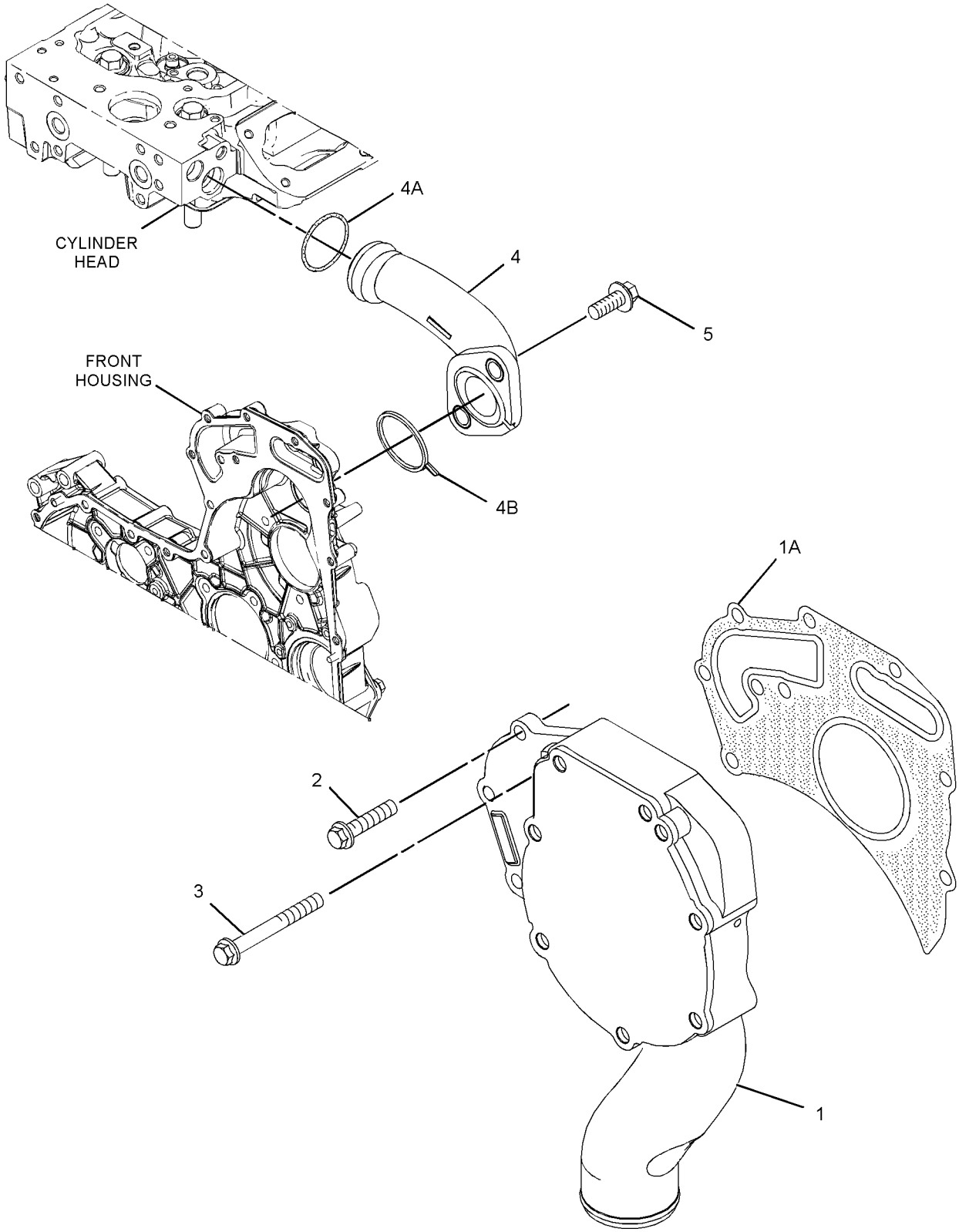

GRAPHIC #1 <END> g03405500

298-5105 PUMP GP-WATER

PART OF 435-1699 ENGINE AR, 435-1692 ENGINE AR-COMPLETE, 435-1685, 437-5409, 540-0570 ENGINE AR-PRIMARY
ALSO AN ATTACHMENT
TYPE 2

SMCS-1361 **i05391429**

NOTE	REF NO	GRAPHIC REF	PART NUMBER	QTY	PART NAME 1 2 3 4 5 6 (PRODUCT LEVEL)	SEE PAGE
C	1	1	**354-4754**	1	PUMP GP-WATER	
	1A	1	**225-8019**	1	GASKET	
M	2	1	**6I-0254**	2	BOLT (M8X1.25X30-MM)	
M	3	1	**113-8129**	2	BOLT (M8X1.25X75-MM)	
	4	1	**277-2925**	1	CONNECTION AS	
	4A	1	**225-7738**	1	SEAL-O-RING	
	4B	1	**277-2923**	1	GASKET	
M	5	1	**6I-0217**	2	BOLT (M8X1.25X20-MM)	
M	6	1	**6I-0839**	5	BOLT (M8X1.25X70-MM)	

C - CHANGE FROM PREVIOUS TYPE
M - METRIC PART

298-5105 **PUMP GP-WATER (**contd.**)** **i05391429**

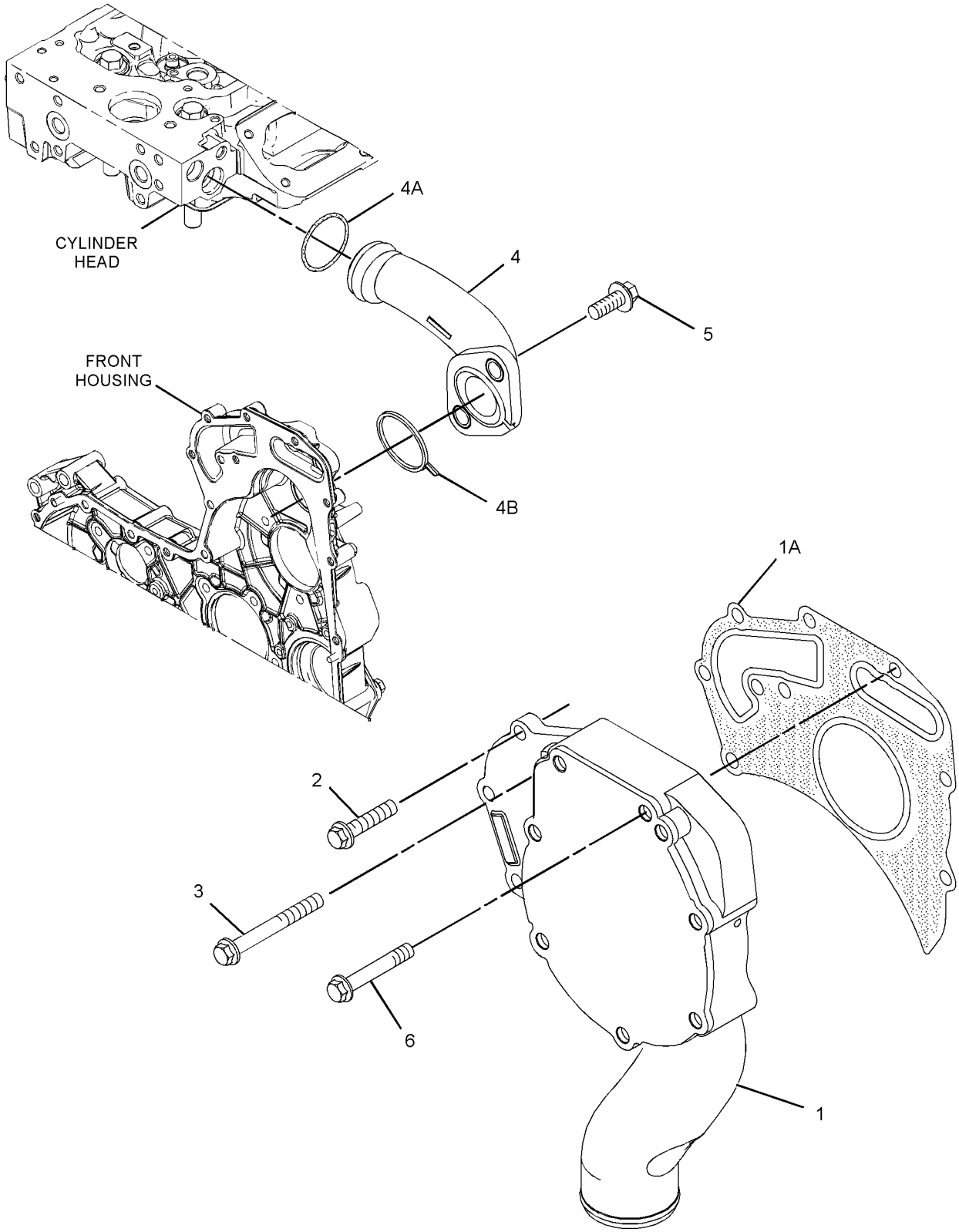

GRAPHIC #1 <END> g02177184

298-5105 PUMP GP-WATER

PART OF 435-1699 ENGINE AR, 435-1692 ENGINE AR-COMPLETE, 437-5409, 540-0570, 540-1155 ENGINE AR-PRIMARY
ALSO AN ATTACHMENT
TYPE 3

SMCS-1361 **i06921915**

NOTE	REF NO	GRAPHIC REF	PART NUMBER	QTY	PART NAME 1 2 3 4 5 6 (PRODUCT LEVEL)	SEE PAGE
CJ	1	1	*485-4894*	1	PUMP GP-WATER	
	1A	1	**278-3242**	3	BOLT-FLANGE HEAD (M8X1.25X18-MM)	
	1B	1	**374-4419**	1	GASKET	
M	2	1	**6I-0254**	2	BOLT (M8X1.25X30-MM)	
M	3	1	**113-8129**	2	BOLT (M8X1.25X75-MM)	
	4	1	**277-2925**	1	CONNECTION AS	
	4A	1	**225-7738**	1	SEAL-O-RING	
	4B	1	**277-2923**	1	GASKET	
M	5	1	**6I-0217**	2	BOLT (M8X1.25X20-MM)	
M	6	1	**6I-0839**	5	BOLT (M8X1.25X70-MM)	
					AVAILABLE REPLACEMENT PART(S):	
J			**485-4895**	1	PUMP GP-WATER	

C - CHANGE FROM PREVIOUS TYPE
J - KIT MARKED J SERVICES PART(S) MARKED J
M - METRIC PART

298-5105 **PUMP GP-WATER (**contd.**)** **i06921915**

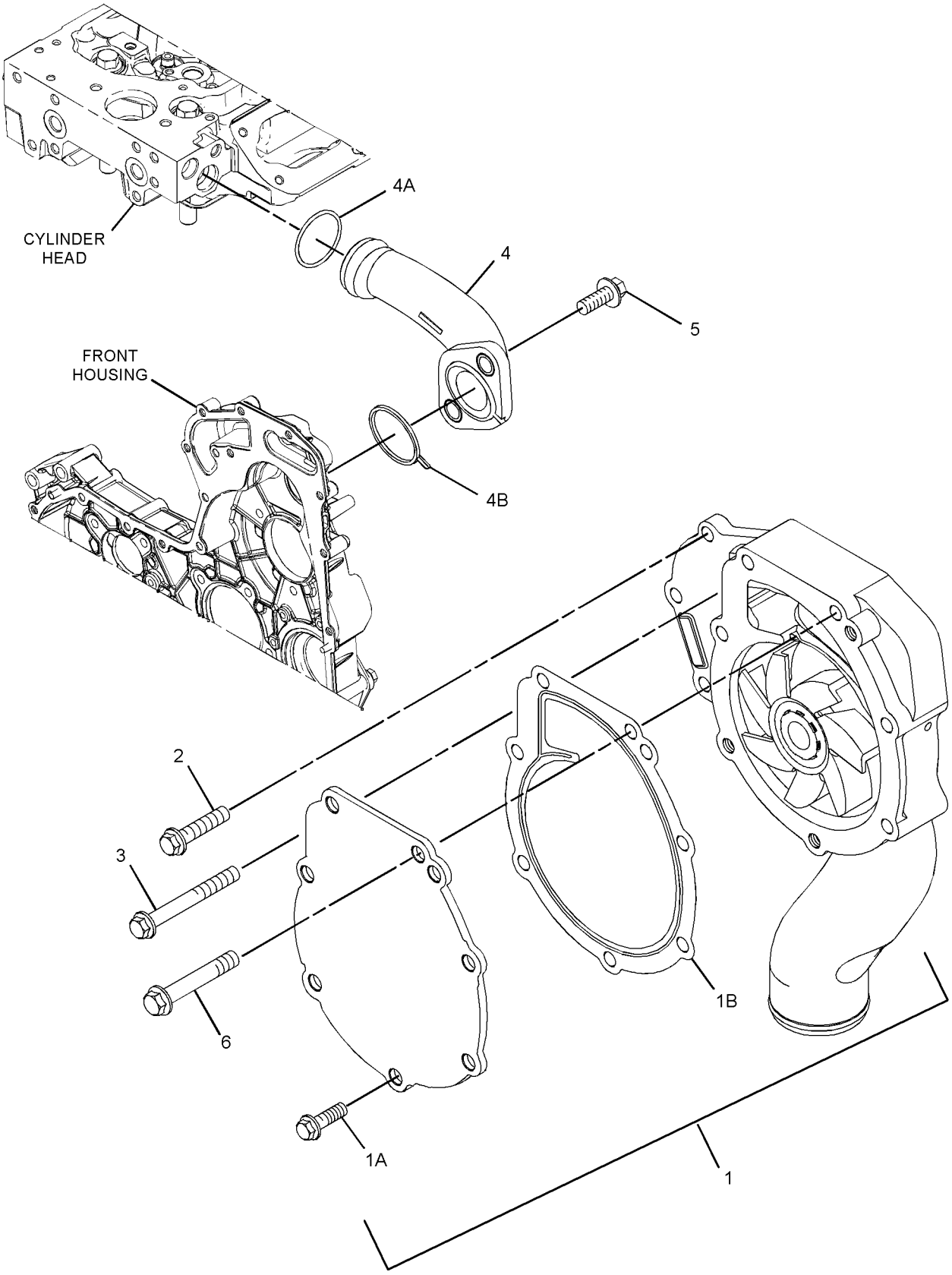

GRAPHIC #1 <END> g06210921

340-4692 PUMP GP-WATER

PART OF 435-1687 ENGINE AR-PRIMARY

TYPE 1

SMCS-1361 **i03347849**

NOTE	REF NO	GRAPHIC REF	PART NUMBER	QTY	PART NAME 1 2 3 4 5 6 (PRODUCT LEVEL)	SEE PAGE
M	1	1	**6I-0217**	2	BOLT (M8X1.25X20-MM)	
M	2	1	**101-3895**	2	BOLT (M8X1.25X35-MM)	
M	3	1	**113-8129**	7	BOLT (M8X1.25X75-MM)	
	4	1	**322-9662**	1	PUMP GP-WATER	
	4A	1	**225-8019**	1	GASKET	
	5	1	**277-2925**	1	CONNECTION AS	
	5A	1	**225-7738**	1	SEAL-O-RING	
	5B	1	**277-2923**	1	GASKET	

M - METRIC PART

340-4692 **PUMP GP-WATER (**contd.**)** **i03347849**

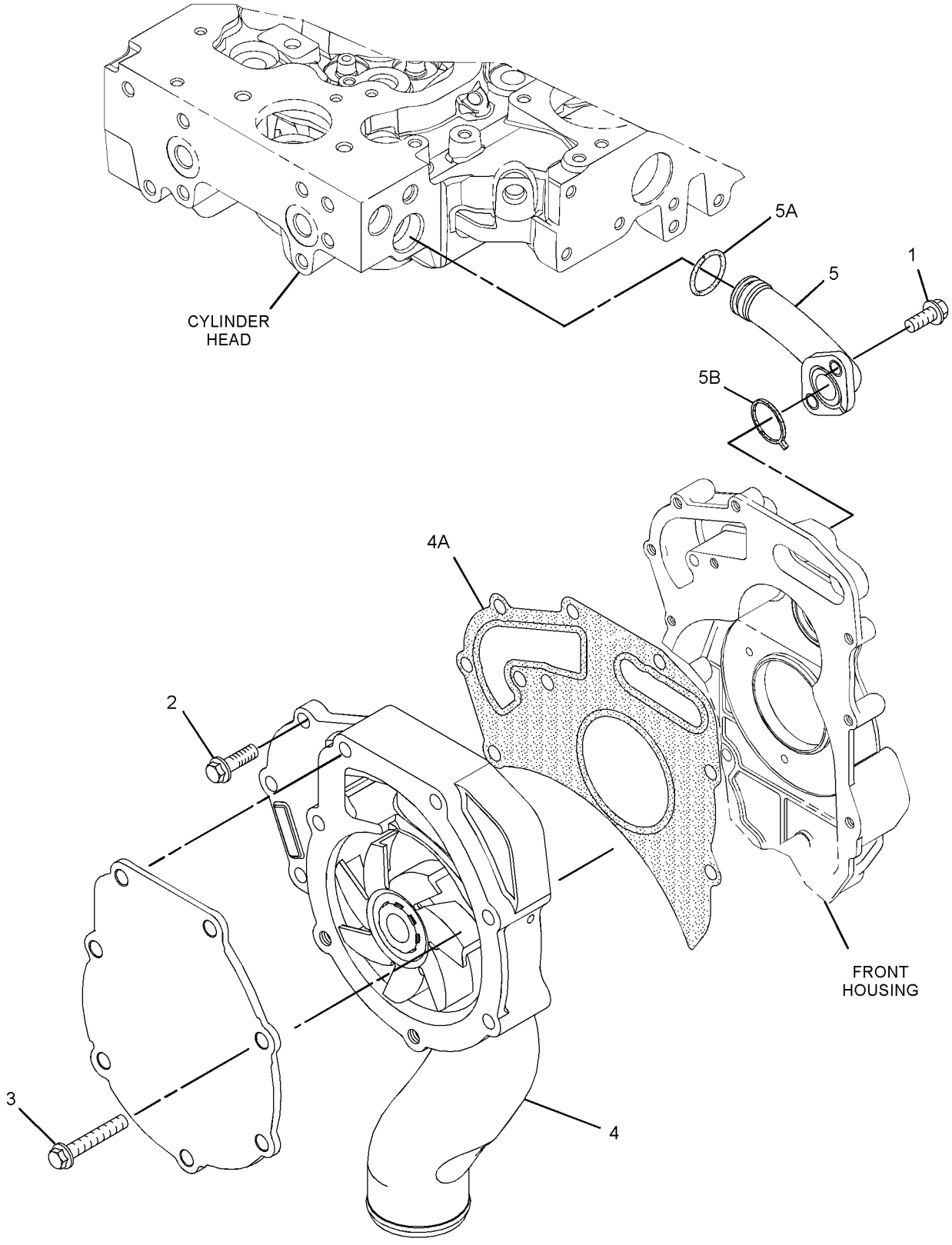

GRAPHIC #1 <END> g01521947

340-4692 PUMP GP-WATER

PART OF 435-1687 ENGINE AR-PRIMARY

TYPE 2

SMCS-1361 **i04888201**

NOTE	REF NO	GRAPHIC REF	PART NUMBER	QTY	PART NAME 1 2 3 4 5 6 (PRODUCT LEVEL)	SEE PAGE
M	1	1	**6I-0217**	2	BOLT (M8X1.25X20-MM)	
CM	2	1	**101-3895**	2	BOLT (M8X1.25X35-MM)	
CM	3	1	**113-8129**	2	BOLT (M8X1.25X75-MM)	
C	4	1	**354-4754**	1	PUMP GP-WATER	
	4A	1	**225-8019**	1	GASKET	
	5	1	**277-2925**	1	CONNECTION AS	
	5A	1	**225-7738**	1	SEAL-O-RING	
	5B	1	**277-2923**	1	GASKET	
CM	6	1	**6I-0839**	5	BOLT (M8X1.25X70-MM)	

C - CHANGE FROM PREVIOUS TYPE
M - METRIC PART

340-4692 **PUMP GP-WATER (**contd.**)** **i04888201**

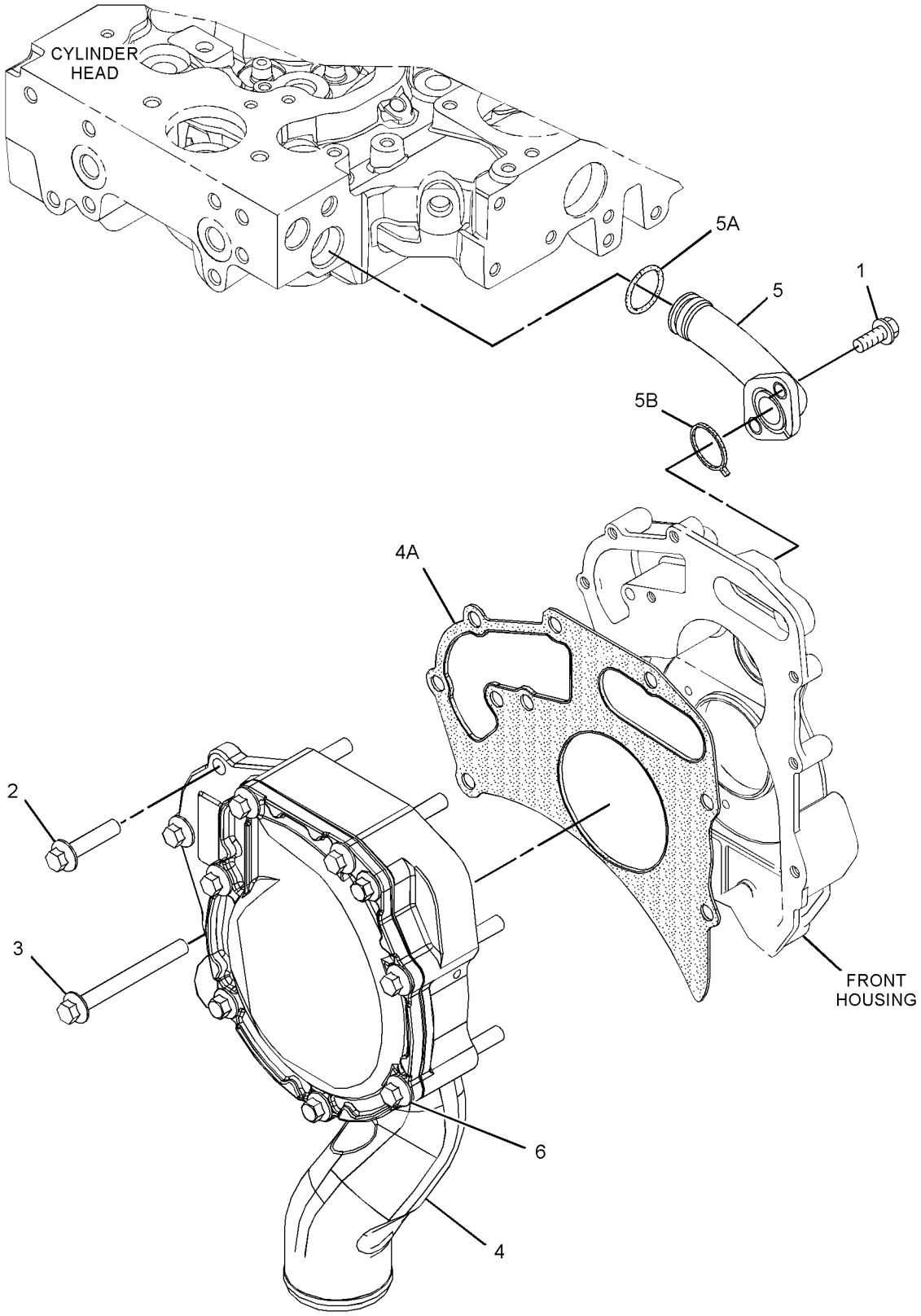

GRAPHIC #1 <END> g03004756

340-4692 PUMP GP-WATER

PART OF 435-1687, 522-8303, 540-1156 ENGINE AR-PRIMARY
TYPE 3

SMCS-1361 **i06916056**

NOTE	REF NO	GRAPHIC REF	PART NUMBER	QTY	PART NAME 1 2 3 4 5 6 (PRODUCT LEVEL)	SEE PAGE
M	1	1	**6I-0217**	2	BOLT (M8X1.25X20-MM)	
M	2	1	**101-3895**	2	BOLT (M8X1.25X35-MM)	
M	3	1	**113-8129**	2	BOLT (M8X1.25X75-MM)	
CJ	4	1	*485-4894*	1	PUMP GP-WATER	
	4A	1	**374-4419**	1	GASKET	
	4B	1	**278-3242**	3	BOLT-FLANGE HEAD (M8X1.25X18-MM)	
	5	1	**277-2925**	1	CONNECTION AS	
	5A	1	**225-7738**	1	SEAL-O-RING	
	5B	1	**277-2923**	1	GASKET	
M	6	1	**6I-0839**	5	BOLT (M8X1.25X70-MM)	
BFJ			**485-4895**	1	PUMP GP-WATER	
					(INCLUDES PUMP GP, BOLTS, & GASKET)	

B - USE AS REQUIRED
C - CHANGE FROM PREVIOUS TYPE
F - NOT SHOWN
J - PARTS MARKED J SERVICE PARTS MARKED J
M - METRIC PART

340-4692 **PUMP GP-WATER (**contd.**)** **i06916056**

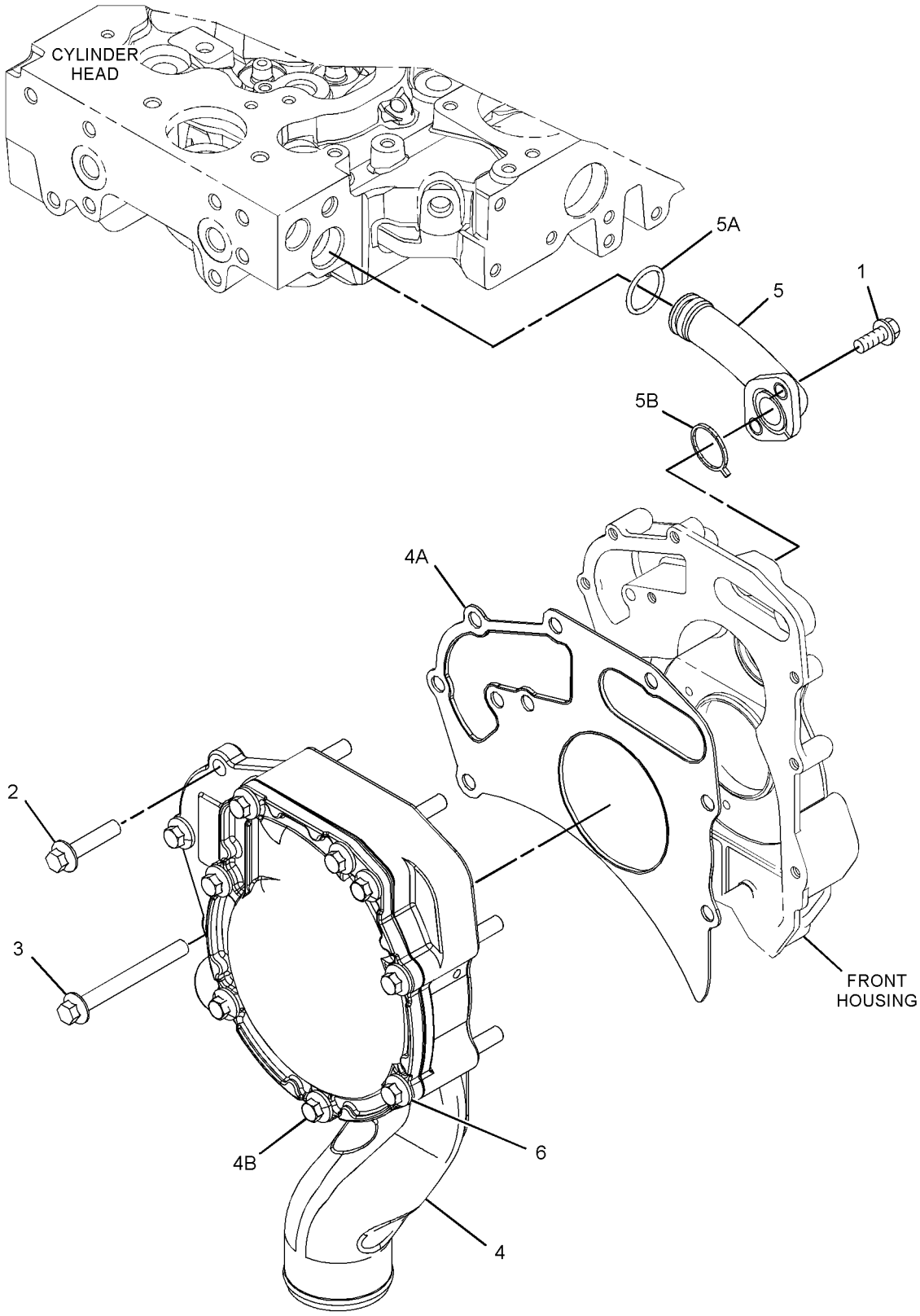

GRAPHIC #1 <END> g06206375

372-8150 RADIATOR AS

WITH SAND BLAST GRIT

PART OF 381-0115 RADIATOR GP

SMCS-1353 **i05063117**

NOTE	REF NO	GRAPHIC REF	PART NUMBER	QTY	PART NAME 1 2 3 4 5 6 (PRODUCT LEVEL)	SEE PAGE
M	1	1	**111-8222**	4	BOLT (M8X16-MM)	
M	2	1	**114-4363**	12	BOLT (M8X1.25X12-MM)	
	3	1	**236-7760**	1	GUARD-RADIATOR	
	4	1	**236-7763**	1	BRACKET-MOUNTING	
	5	1	**236-7764**	1	CAP-RADIATOR	
	6	1	**236-7765**	1	PLUG-DRAIN	
	7	1	**372-4241**	1	SCREEN	

M - METRIC PART

372-8150 **RADIATOR AS (**contd.**)** **i05063117**

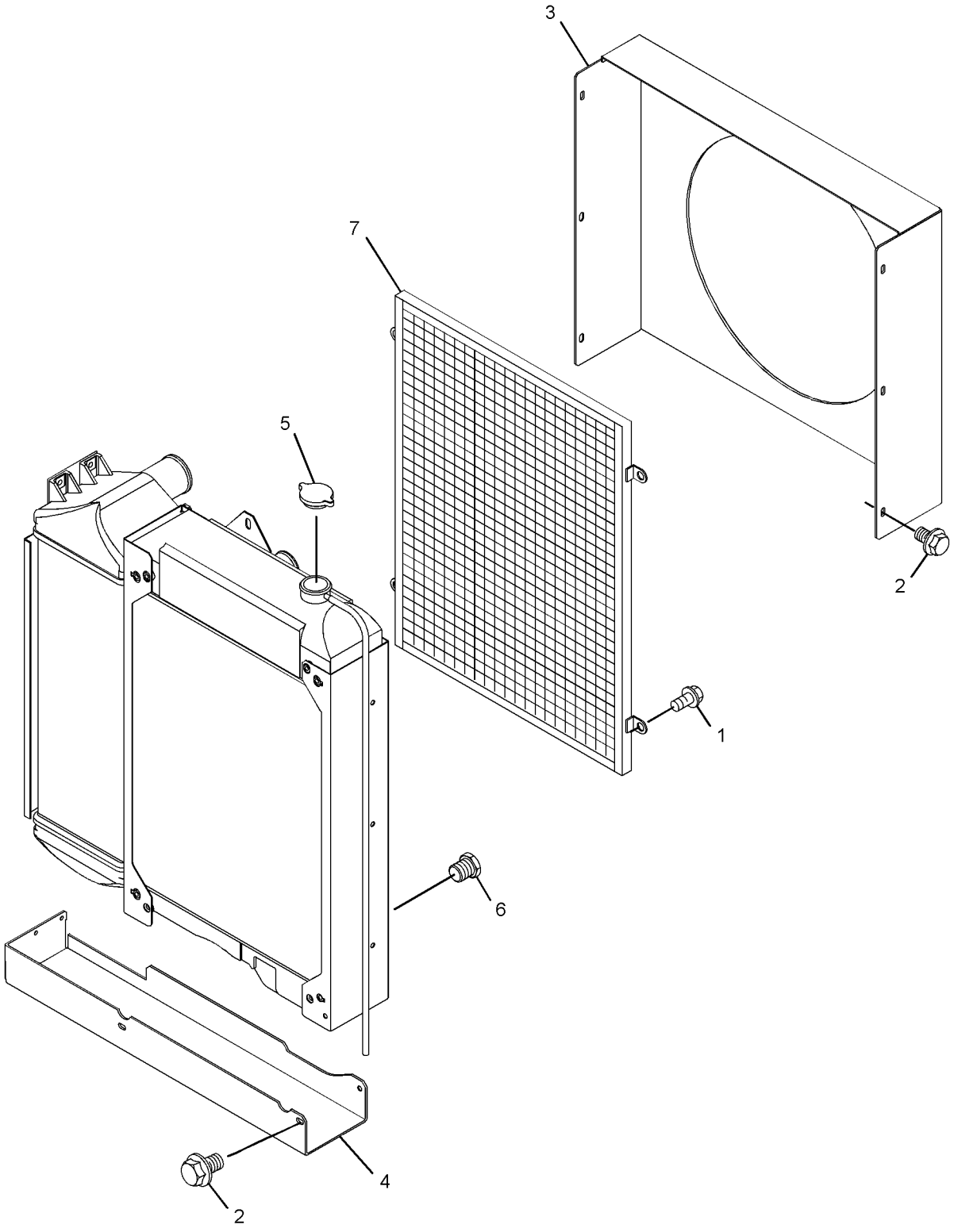

GRAPHIC #1 <END> g03236257

311-4636 RADIATOR GP

SMCS-1353 **i05374001**

NOTE	REF NO	GRAPHIC REF	PART NUMBER	QTY	PART NAME 1 2 3 4 5 6 (PRODUCT LEVEL)	SEE PAGE
	1	1	**324-3528**	3	CLAMP-HOSE	
	2	1	**317-9229**	4	CLAMP-HOSE	
M	3	2	**6I-0260**	1	BOLT (M8X1.25X25-MM)	
M	4	2	**6I-0291**	1	NUT (M8X1.25-THD)	
M	5	2	**6I-0594**	2	NUT (M10X1.5-THD)	
	6	2	**7W-2601**	2	SPACER (10.3X19X3.2-MM THK)	
M	7	2	**100-4458**	2	BOLT (M8X1.25X14-MM)	
M	8	2	**100-4461**	2	BOLT (M10X1.5X50-MM)	
M	9	2	**100-4830**	2	BOLT (M10X1.5X20-MM)	
M	10	2	**101-7537**	8	BOLT (M12X1.75X35-MM)	
	11	2	**101-7538**	2	MOUNT	
	12	2	**101-7540**	2	WASHER (11.9X38.2X1.6-MM THK)	
M	13	2	**101-7541**	4	SCREW-FLAT HEAD (M8X1.25X25-MM)	
	14	2	**101-7546**	1	MOUNT	
	15	1	**103-6714**	3	CLIP	
	16	1	**236-7722**	1	HOSE-RADIATOR (UPPER)	
	17	1	**236-7734**	1	HOSE-RADIATOR	
	18	1	**236-7735**	2	HOSE-RADIATOR	
	19	3	**236-7766**	1	RADIATOR AS	
M	19A	3	**114-4363**	12	BOLT (M8X1.25X12-MM)	
	19B	3	**236-7760**	1	GUARD-RADIATOR	
	19C	3	**236-7763**	1	BRACKET-MOUNTING	
	19D	3	**236-7764**	1	CAP-RADIATOR	
	19E	3	**236-7765**	1	PLUG-DRAIN (RADIATOR)	
	20	2	**236-8773**	1	BRACKET-MOUNTING	
	21	1	**236-8777**	1	HOSE-AIR INLET	
	22	1	**236-8780**	1	TUBE	
	23	2	**368-5398**	1	GUARD AS-FAN	
M	23A	2	**6I-0254**	2	BOLT (M8X1.25X30-MM)	
	23B	2	**362-8050**	2	NUT	
	24	2	**368-5399**	1	GUARD-FAN	
	25	3	**334-7488**	1	COVER AS	
	25A	3	**295-0440**	4	CAP	
	26	3	**303-2160**	4	STUD	
	27	2	**311-4621**	1	BRACKET	
	28	2	**367-4171**	1	BRACKET	
	29	1	**311-4624**	1	TUBE-AIR	
	30	1	**236-8781**	1	HOSE-RADIATOR (LOWER)	
	31	2	**311-4627**	1	GUARD-RADIATOR	
	33	1	**265-6527**	2	CLIP	

M - METRIC PART

311-4636 **RADIATOR GP (**contd.**)** **i05374001**

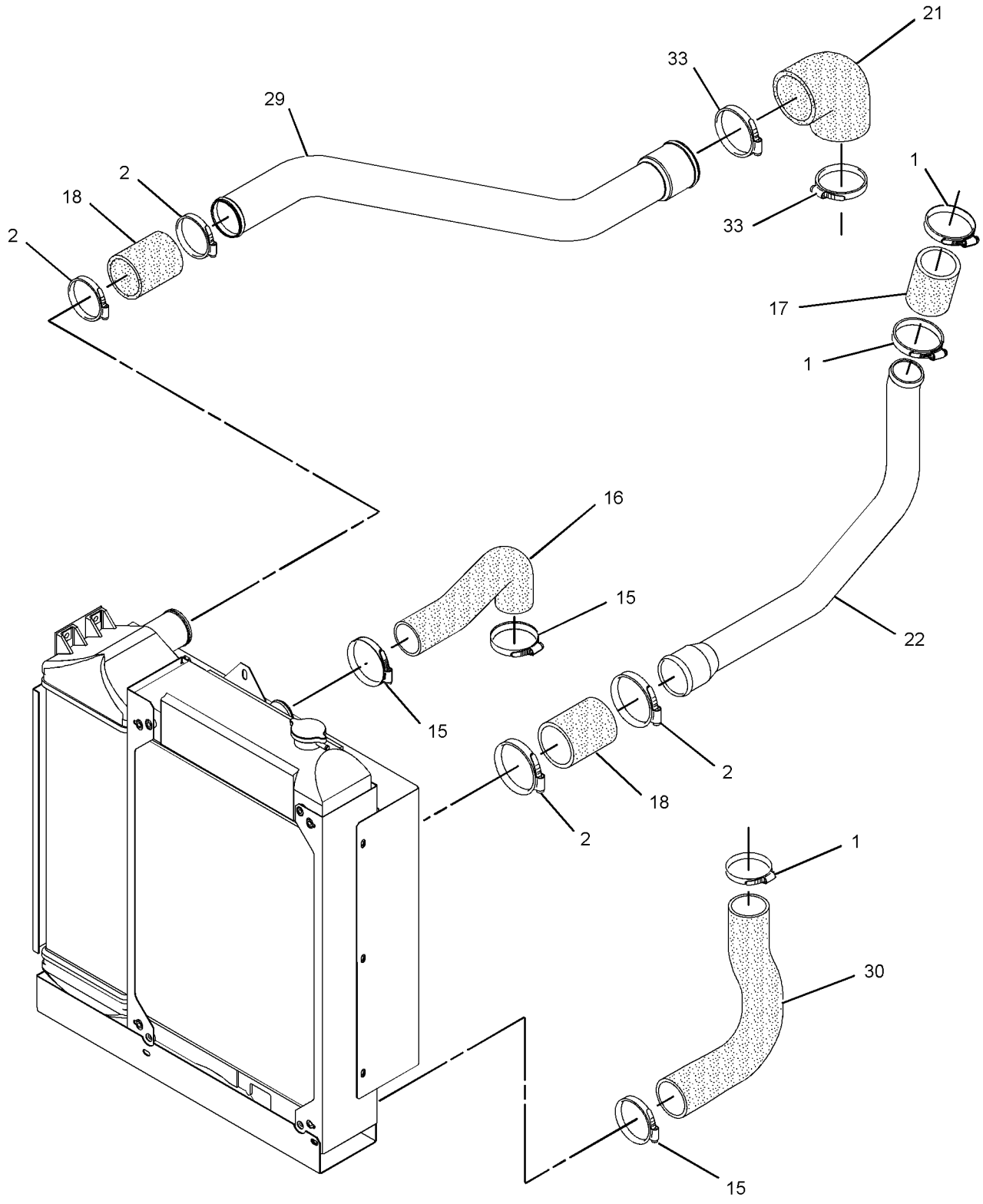

GRAPHIC #1 g01536734

311-4636 **RADIATOR GP** (contd.) **i05374001**

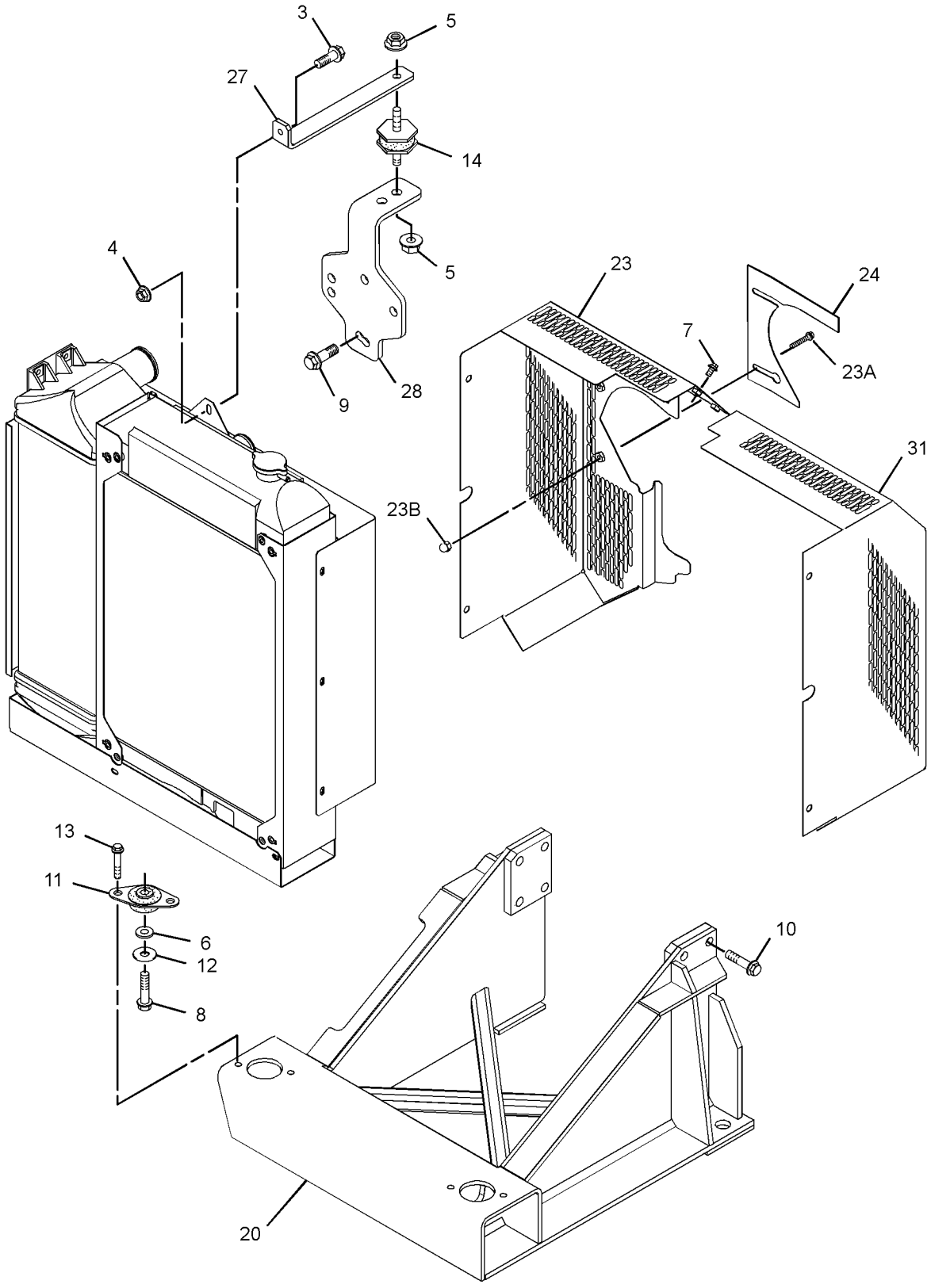

GRAPHIC #2 g03343185

311-4636 **RADIATOR GP (**contd.**)** **i05374001**

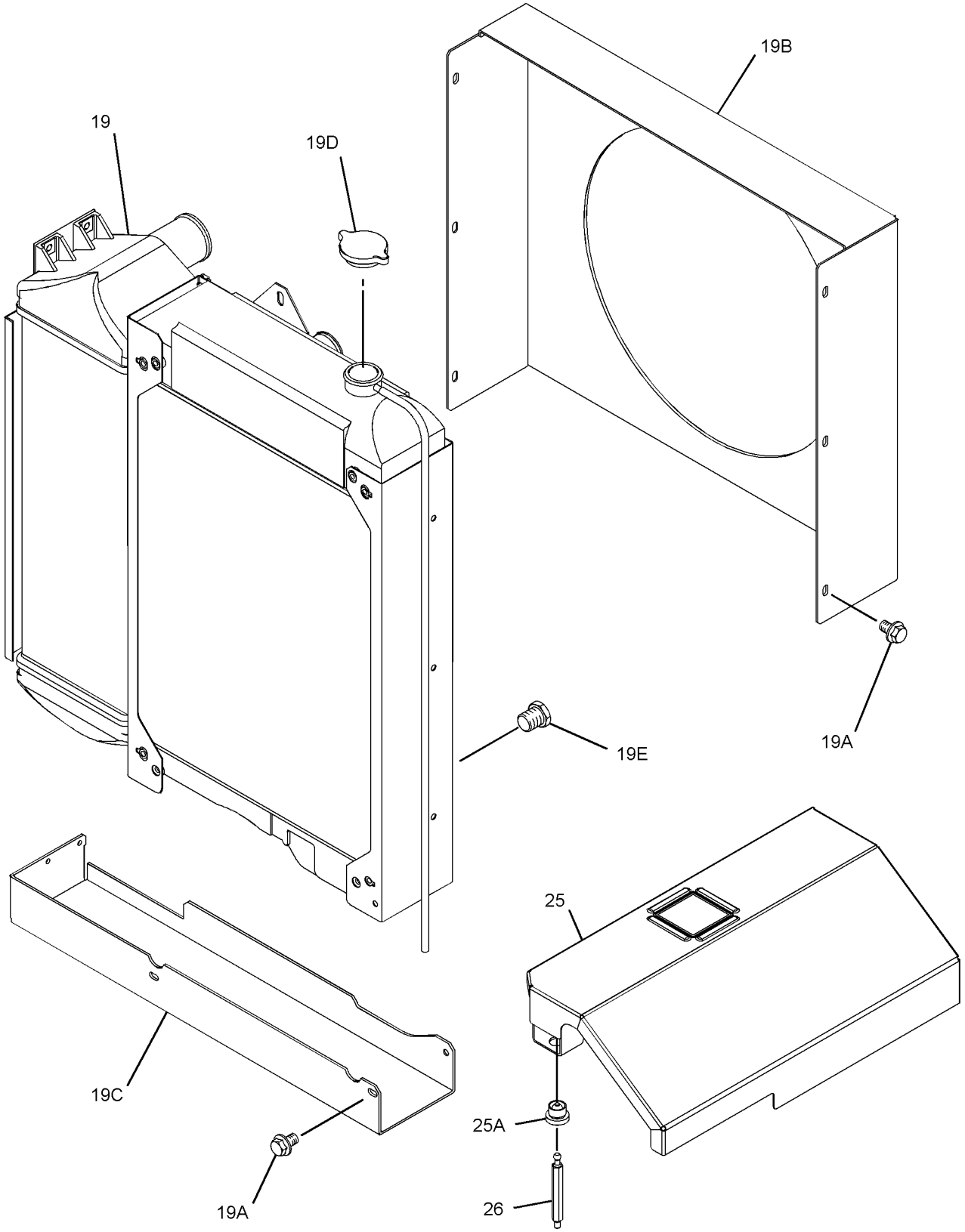

GRAPHIC #3 <END> g03343186

311-4636 RADIATOR GP

PART OF 522-8303 ENGINE AR-PRIMARY

SMCS-1353 **i05902448**

NOTE	REF NO	GRAPHIC REF	PART NUMBER	QTY	PART NAME 1 2 3 4 5 6 (PRODUCT LEVEL)	SEE PAGE
	1	1	**324-3528**	3	CLAMP-HOSE	
	2	1	**317-9229**	4	CLAMP-HOSE	
M	3	2	**6I-0260**	1	BOLT (M8X1.25X25-MM)	
M	4	2	**6I-0291**	1	NUT (M8X1.25-THD)	
M	5	2	**6I-0594**	2	NUT (M10X1.5-THD)	
	6	2	**7W-2601**	2	SPACER (10.3X19X3.2-MM THK)	
M	7	2	**100-4458**	2	BOLT (M8X1.25X14-MM)	
M	8	2	**100-4461**	2	BOLT (M10X1.5X50-MM)	
M	9	2	**100-4830**	2	BOLT (M10X1.5X20-MM)	
M	10	2	**101-7537**	8	BOLT (M12X1.75X35-MM)	
	11	2	**101-7538**	2	MOUNT	
	12	2	**101-7540**	2	WASHER (11.9X38.2X1.6-MM THK)	
M	13	2	**101-7541**	4	SCREW-FLAT HEAD (M8X1.25X25-MM)	
	14	2	**101-7546**	1	MOUNT	
	15	1	**103-6714**	3	CLIP	
	16	1	**236-7722**	1	HOSE-RADIATOR (UPPER)	
	17	1	**236-7734**	1	HOSE-RADIATOR	
	18	1	**236-7735**	2	HOSE-RADIATOR	
	19	3	**236-7766**	1	RADIATOR AS	
M	19A	3	**114-4363**	12	BOLT (M8X1.25X12-MM)	
	19B	3	**236-7760**	1	GUARD-RADIATOR	
	19C	3	**236-7763**	1	BRACKET-MOUNTING	
	19D	3	**236-7764**	1	CAP-RADIATOR	
	19E	3	**236-7765**	1	PLUG-DRAIN (RADIATOR)	
	20	2	**236-8773**	1	BRACKET-MOUNTING	
	21	1	**236-8777**	1	HOSE-AIR INLET	
	22	1	**236-8780**	1	TUBE	
	23	2	**368-5398**	1	GUARD AS-FAN	
M	23A	2	**6I-0254**	2	BOLT (M8X1.25X30-MM)	
	23B	2	**362-8050**	2	NUT	
	24	2	**368-5399**	1	GUARD-FAN	
	27	2	**311-4621**	1	BRACKET	
	28	2	**367-4171**	1	BRACKET	
	29	1	**311-4624**	1	TUBE-AIR	
	30	1	**236-8781**	1	HOSE-RADIATOR (LOWER)	
	31	2	**311-4627**	1	GUARD-RADIATOR	
	33	1	**265-6527**	2	CLIP	

M - METRIC PART

311-4636 **RADIATOR GP (**contd.**)** **i05902448**

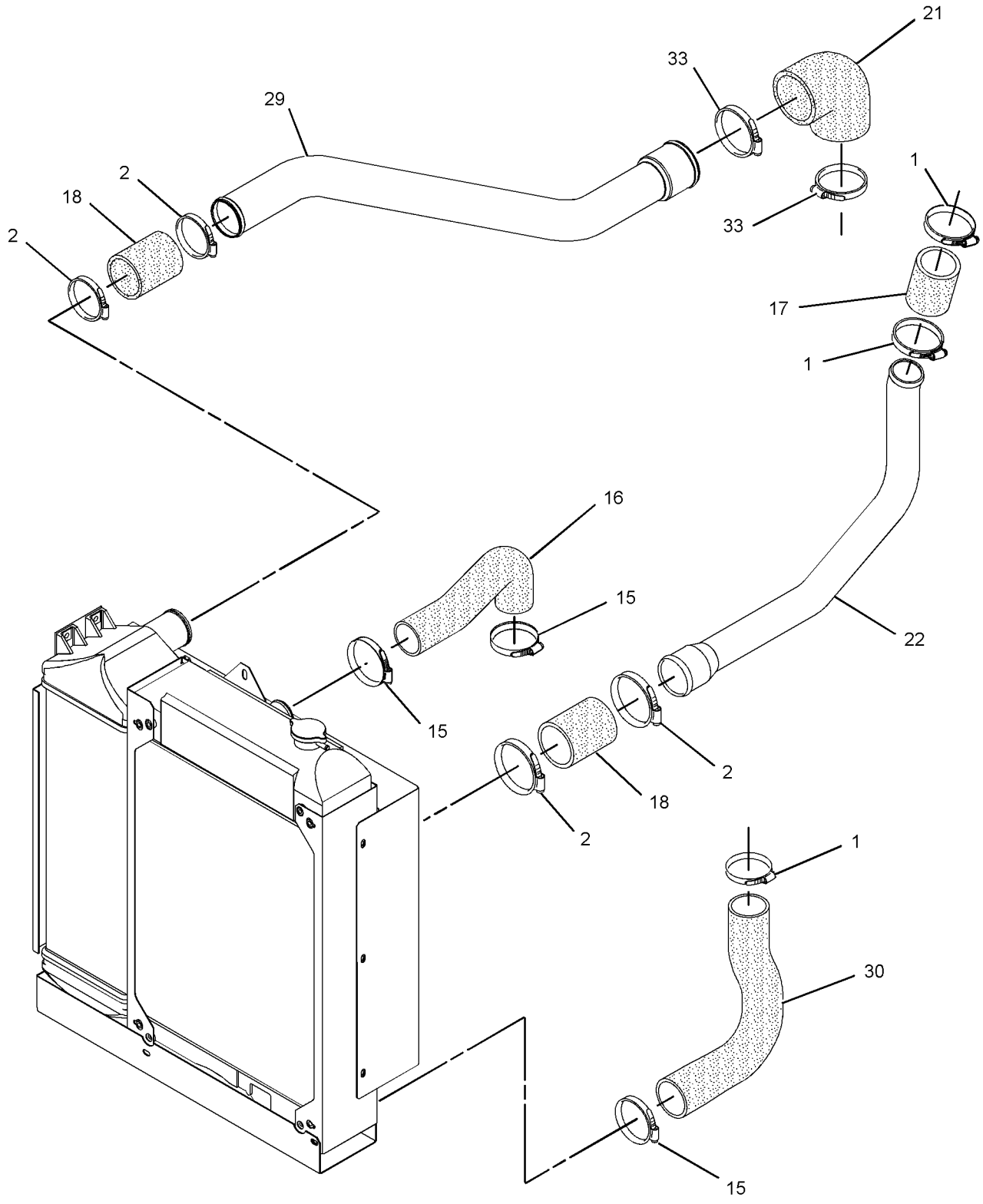

GRAPHIC #1 g01536734

311-4636 **RADIATOR GP** (contd.) **i05902448**

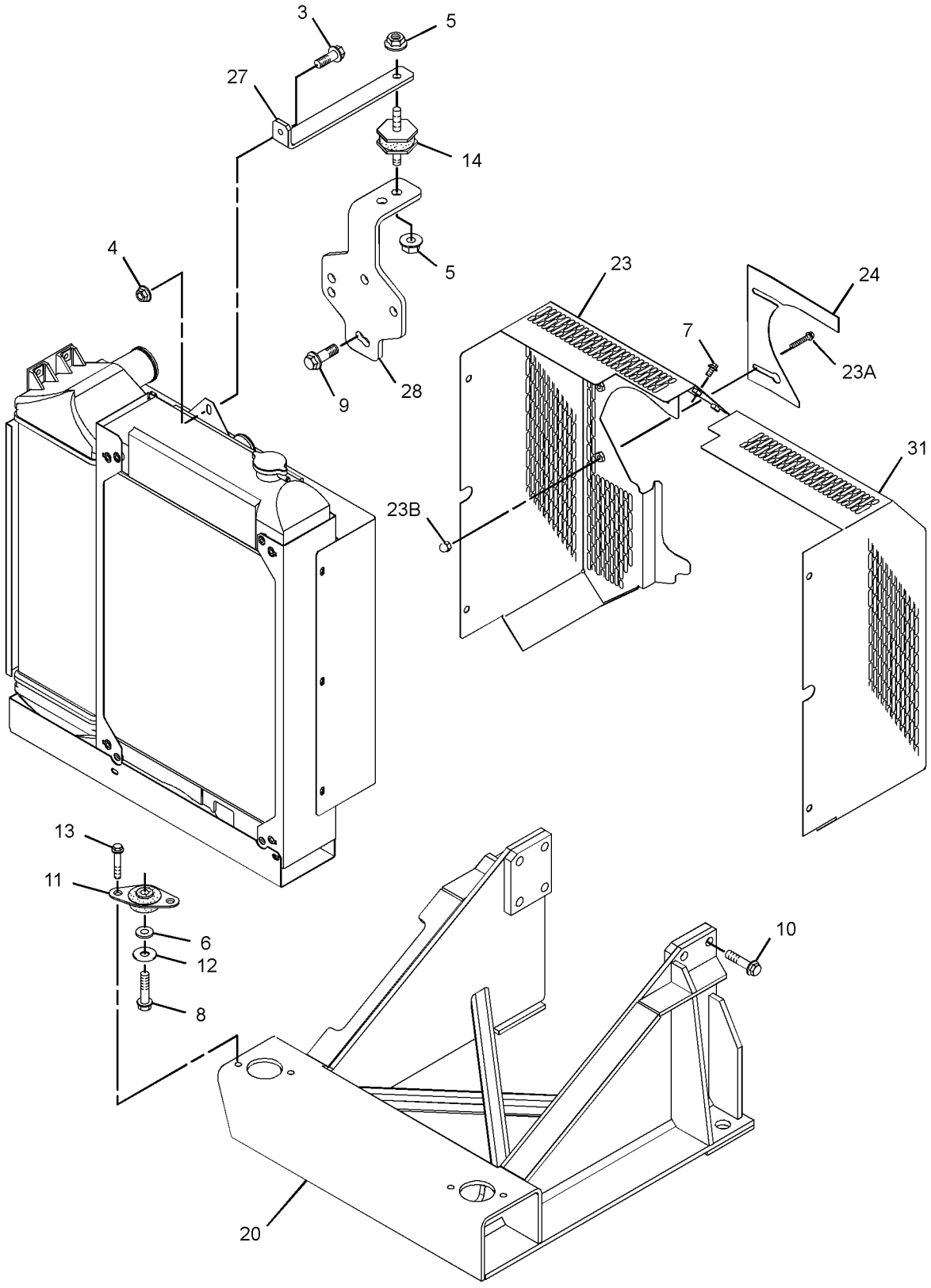

GRAPHIC #2 g03343185

311-4636 **RADIATOR GP (**contd.**)** **i05902448**

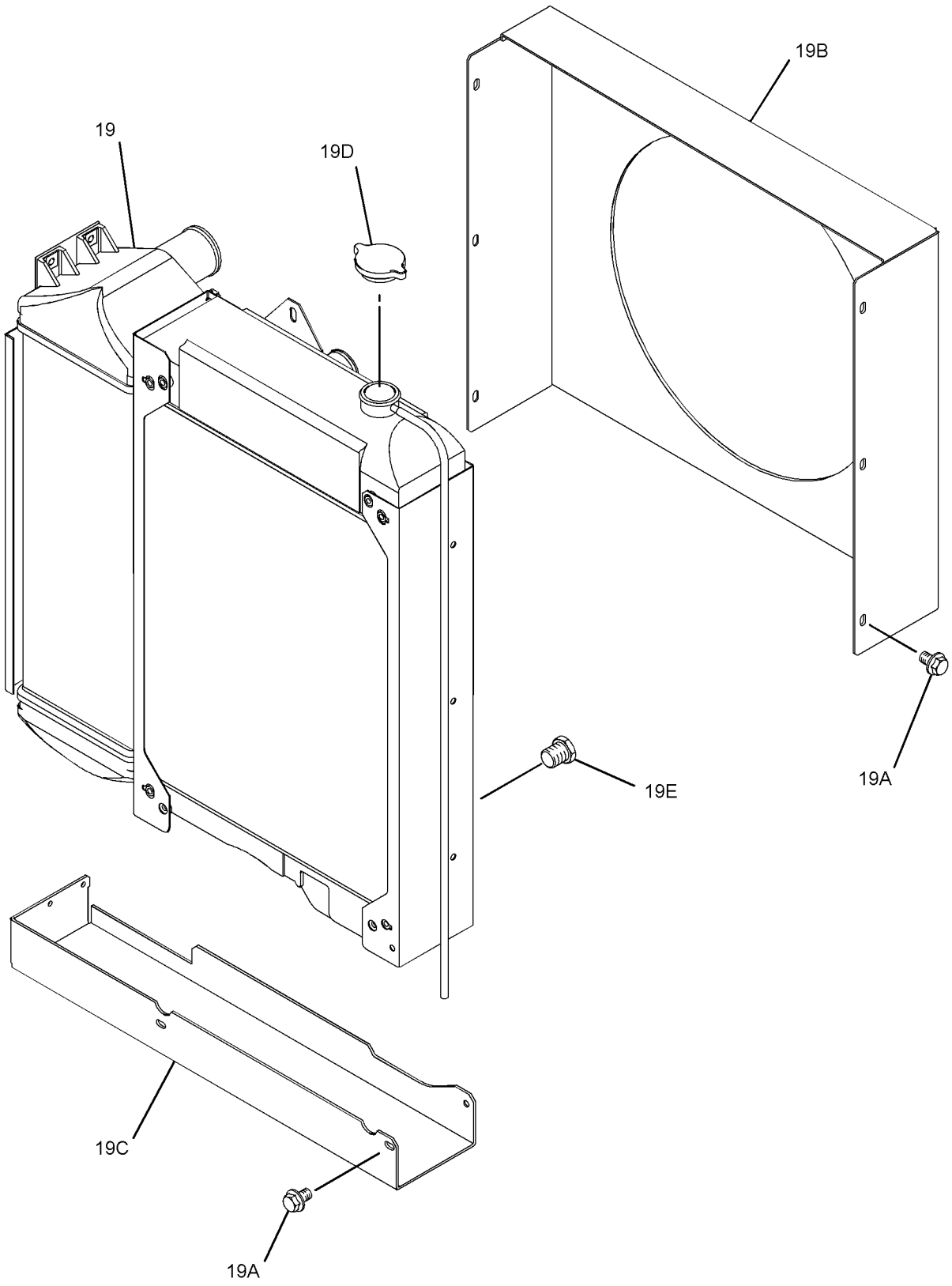

GRAPHIC #3 <END> g03821350

312-1672 RADIATOR GP

PART OF 437-5409 ENGINE AR-PRIMARY

TYPE 1

SMCS-1353 **i03730002**

NOTE	REF NO	GRAPHIC REF	PART NUMBER	QTY	PART NAME 1 2 3 4 5 6 (PRODUCT LEVEL)	SEE PAGE
	1	2	**5P-0597**	3	CLAMP-HOSE	
	2	2	**5P-0598**	6	CLAMP-HOSE	
M	3	1	**6I-0260**	1	BOLT (M8X1.25X25-MM)	
M	4	1	**6I-0291**	1	NUT (M8X1.25-THD)	
M	5	1	**6I-0594**	2	NUT (M10X1.5-THD)	
	6	1	**7W-2601**	2	SPACER (10.3X19X3.2-MM THK)	
M	7	1	**100-4458**	4	BOLT (M8X1.25X14-MM)	
M	8	1	**100-4461**	2	BOLT (M10X1.5X50-MM)	
M	9	1	**100-4830**	2	BOLT (M10X1.5X20-MM)	
M	10	1	**101-7537**	8	BOLT (M12X1.75X35-MM)	
	11	1	**101-7538**	2	MOUNT	
	12	1	**101-7540**	2	WASHER (11.9X38.2X1.6-MM THK)	
M	13	1	**101-7541**	4	SCREW-FLAT HEAD (M8X1.25X25-MM)	
	14	1	**101-7546**	1	MOUNT	
	15	2	**103-6714**	3	CLIP	
	16	2	**236-7722**	1	HOSE-RADIATOR (UPPER)	
	17	2	**236-7734**	1	HOSE-RADIATOR	
	18	2	**236-7735**	2	HOSE-RADIATOR	
	19	3	**236-7766**	1	RADIATOR AS	
M	19A	3	**114-4363**	12	BOLT (M8X1.25X12-MM)	
	19B	3	**236-7760**	1	GUARD-RADIATOR	
	19C	3	**236-7763**	1	BRACKET-MOUNTING	
	19D	3	**236-7764**	1	CAP-RADIATOR	
	19E	3	**236-7765**	1	PLUG-DRAIN (RADIATOR)	
	20	1	**236-8773**	1	BRACKET-MOUNTING	
	21	2	**236-8777**	1	HOSE-AIR INLET	
	22	2	**236-8780**	1	TUBE	
	23	2	**236-8781**	1	HOSE-RADIATOR (LOWER)	
	24	1	**236-8782**	1	GUARD (RADIATOR)	
	25	1	**326-0497**	1	GUARD-RADIATOR	
	26	1	**236-8784**	1	GUARD-FAN	
	27	3	**299-1601**	1	COVER	
	28	3	**303-2160**	3	STUD	
	29	1	**311-4621**	1	BRACKET	
	30	1	**311-4623**	1	BRACKET	
	31	2	**311-4624**	1	TUBE-AIR	
	32	3	**311-4631**	1	STUD	

M - METRIC PART

312-1672 **RADIATOR GP (**contd.**)** **i03730002**

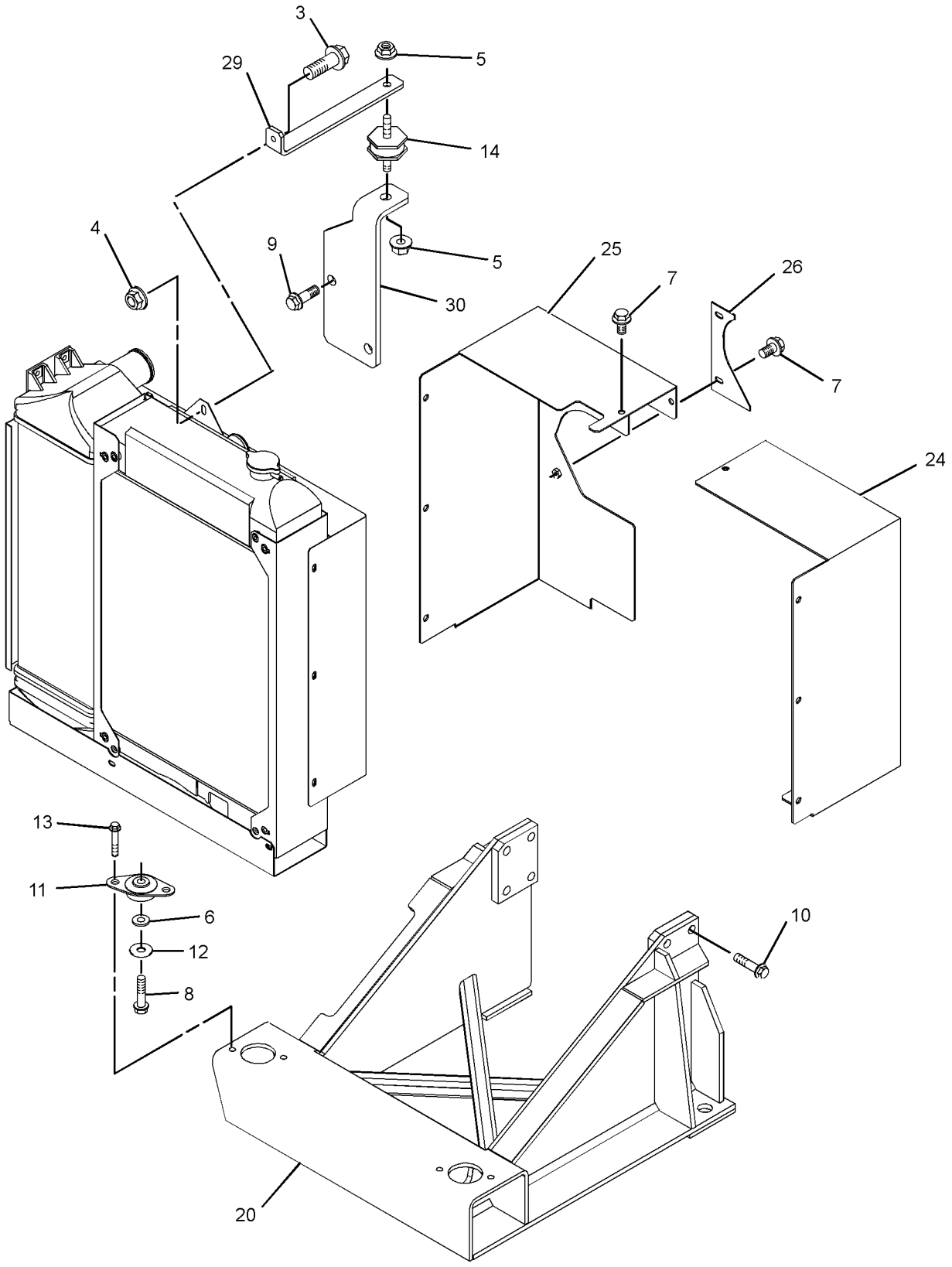

GRAPHIC #1 g01438014

312-1672 **RADIATOR GP (**contd.**)** **i03730002**

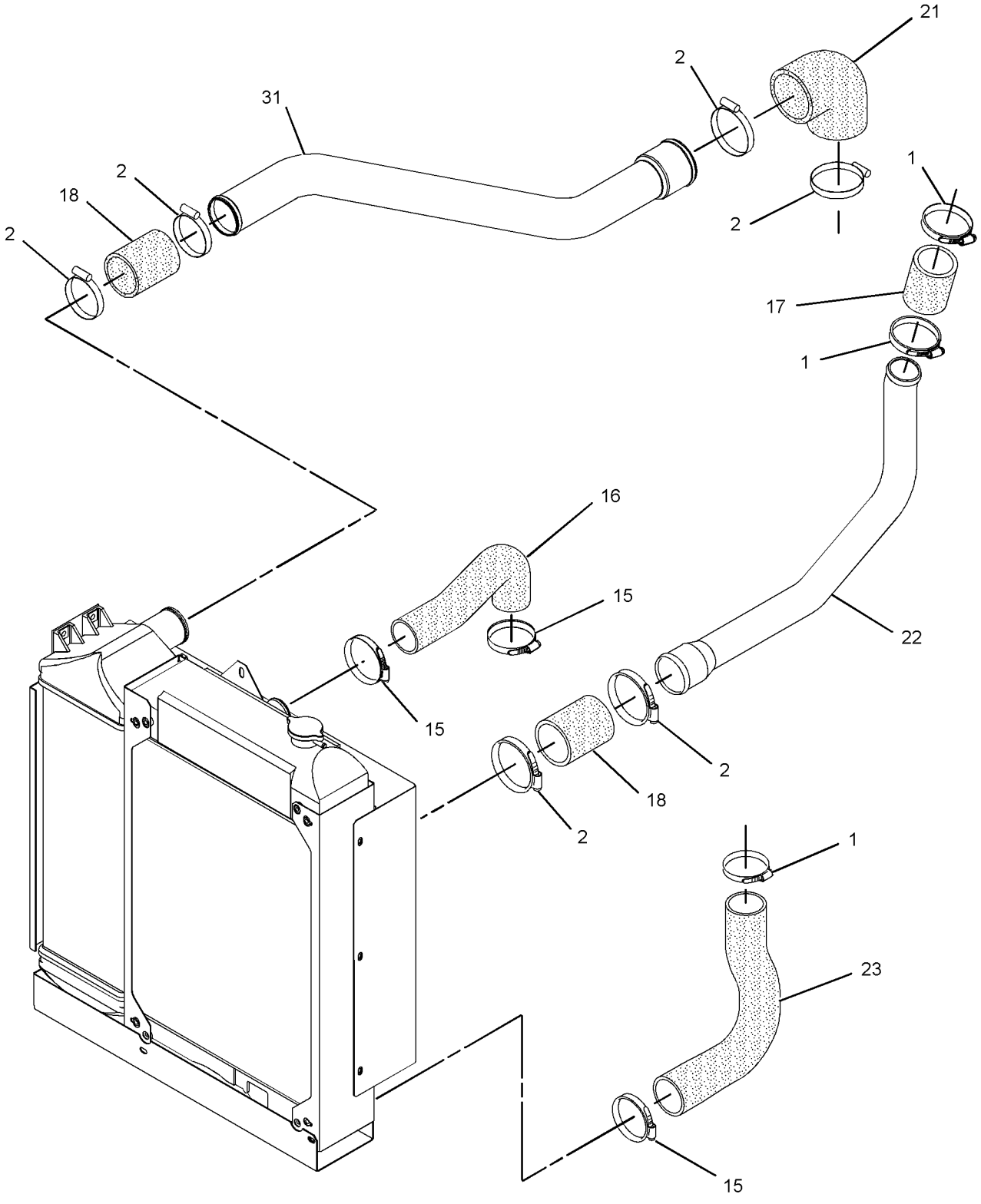

GRAPHIC #2 g01438015

312-1672 **RADIATOR GP (**contd.**)** **i03730002**

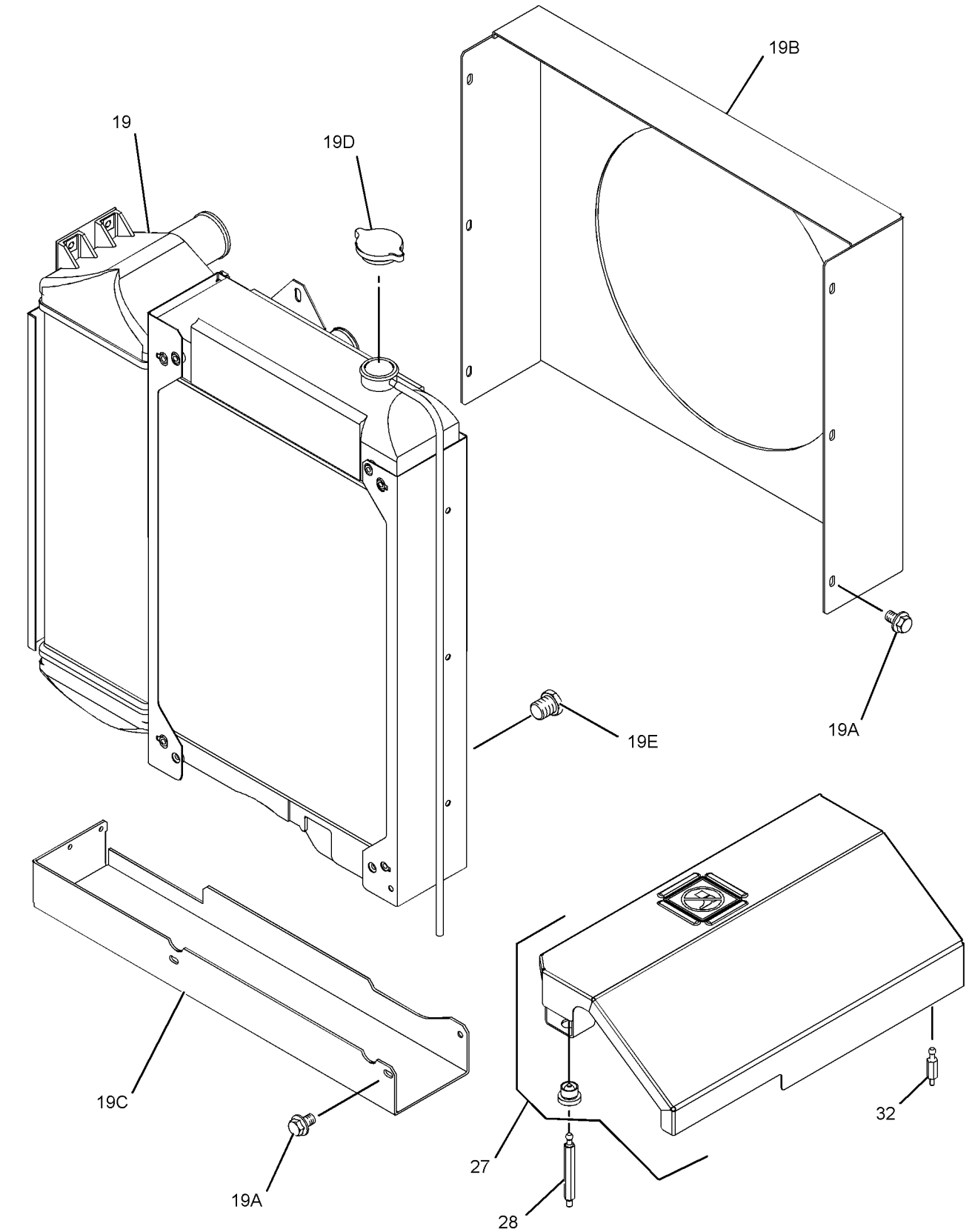

GRAPHIC #3 <END> g01438016

312-1672 RADIATOR GP

S/N: 4441-7614

PART OF 435-1699 ENGINE AR

SMCS-1353 **i04085270**

NOTE	REF NO	GRAPHIC REF	PART NUMBER	QTY	PART NAME 1 2 3 4 5 6 (PRODUCT LEVEL)	SEE PAGE
	1	2	**5P-0597**	3	CLAMP-HOSE	
	2	2	**5P-0598**	6	CLAMP-HOSE	
M	3	1	**6I-0260**	1	BOLT (M8X1.25X25-MM)	
M	4	1	**6I-0291**	1	NUT (M8X1.25-THD)	
M	5	1	**6I-0594**	2	NUT (M10X1.5-THD)	
	6	1	**7W-2601**	2	SPACER (10.3X19X3.2-MM THK)	
M	7	1	**100-4458**	4	BOLT (M8X1.25X14-MM)	
M	8	1	**100-4461**	2	BOLT (M10X1.5X50-MM)	
M	9	1	**100-4830**	2	BOLT (M10X1.5X20-MM)	
M	10	1	**101-7537**	8	BOLT (M12X1.75X35-MM)	
	11	1	**101-7538**	2	MOUNT	
	12	1	**101-7540**	2	WASHER (11.9X38.2X1.6-MM THK)	
M	13	1	**101-7541**	4	SCREW-FLAT HEAD (M8X1.25X25-MM)	
	14	1	**101-7546**	1	MOUNT	
	15	2	**103-6714**	3	CLIP	
	16	2	**236-7722**	1	HOSE-RADIATOR (UPPER)	
	17	2	**236-7734**	1	HOSE-RADIATOR	
	18	2	**236-7735**	2	HOSE-RADIATOR	
	19	3	**236-7766**	1	RADIATOR AS	
M	19A	3	**114-4363**	12	BOLT (M8X1.25X12-MM)	
	19B	3	**236-7760**	1	GUARD-RADIATOR	
	19C	3	**236-7763**	1	BRACKET-MOUNTING	
	19D	3	**236-7764**	1	CAP-RADIATOR	
	19E	3	**236-7765**	1	PLUG-DRAIN (RADIATOR)	
	20	1	**236-8773**	1	BRACKET-MOUNTING	
	21	2	**236-8777**	1	HOSE-AIR INLET	
	22	2	**236-8780**	1	TUBE	
	23	2	**236-8781**	1	HOSE-RADIATOR (LOWER)	
	24	1	**236-8782**	1	GUARD (RADIATOR)	
C	25	1	**330-9698**	1	GUARD-RADIATOR	
	26	1	**236-8784**	1	GUARD-FAN	
	27	3	**334-7488**	1	COVER AS	
	28	3	**303-2160**	3	STUD	
	29	1	**311-4621**	1	BRACKET	
	30	1	**367-4171**	1	BRACKET	
	31	2	**311-4624**	1	TUBE-AIR	
	32	3	**311-4631**	1	STUD	

C - CHANGE FROM PREVIOUS TYPE
M - METRIC PART

312-1672 **RADIATOR GP (**contd.**)** **i04085270**

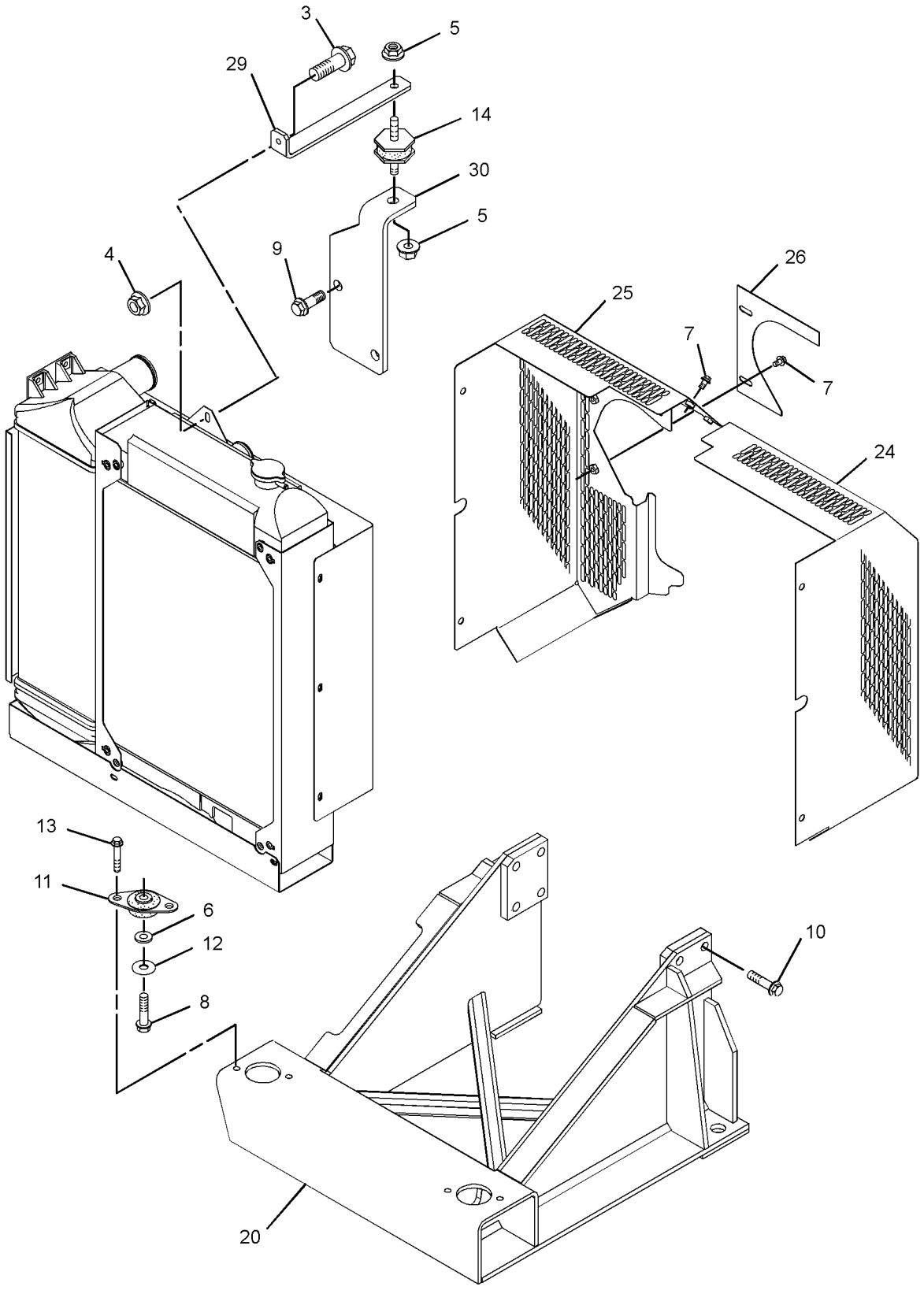

GRAPHIC #1 g01674754

312-1672 **RADIATOR GP (**contd.**)** **i04085270**

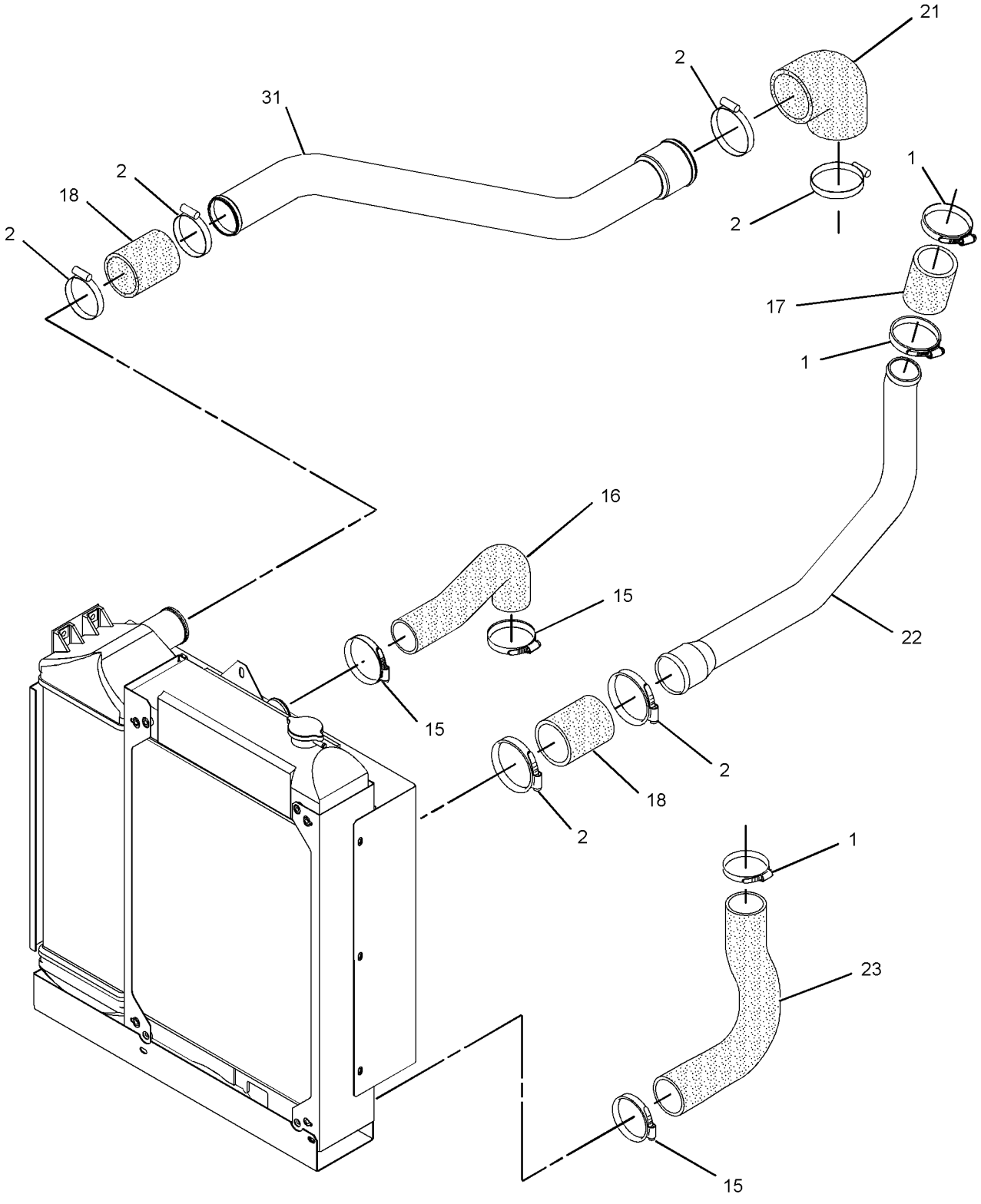

GRAPHIC #2 g01438015

312-1672 **RADIATOR GP (**contd.**)** **i04085270**

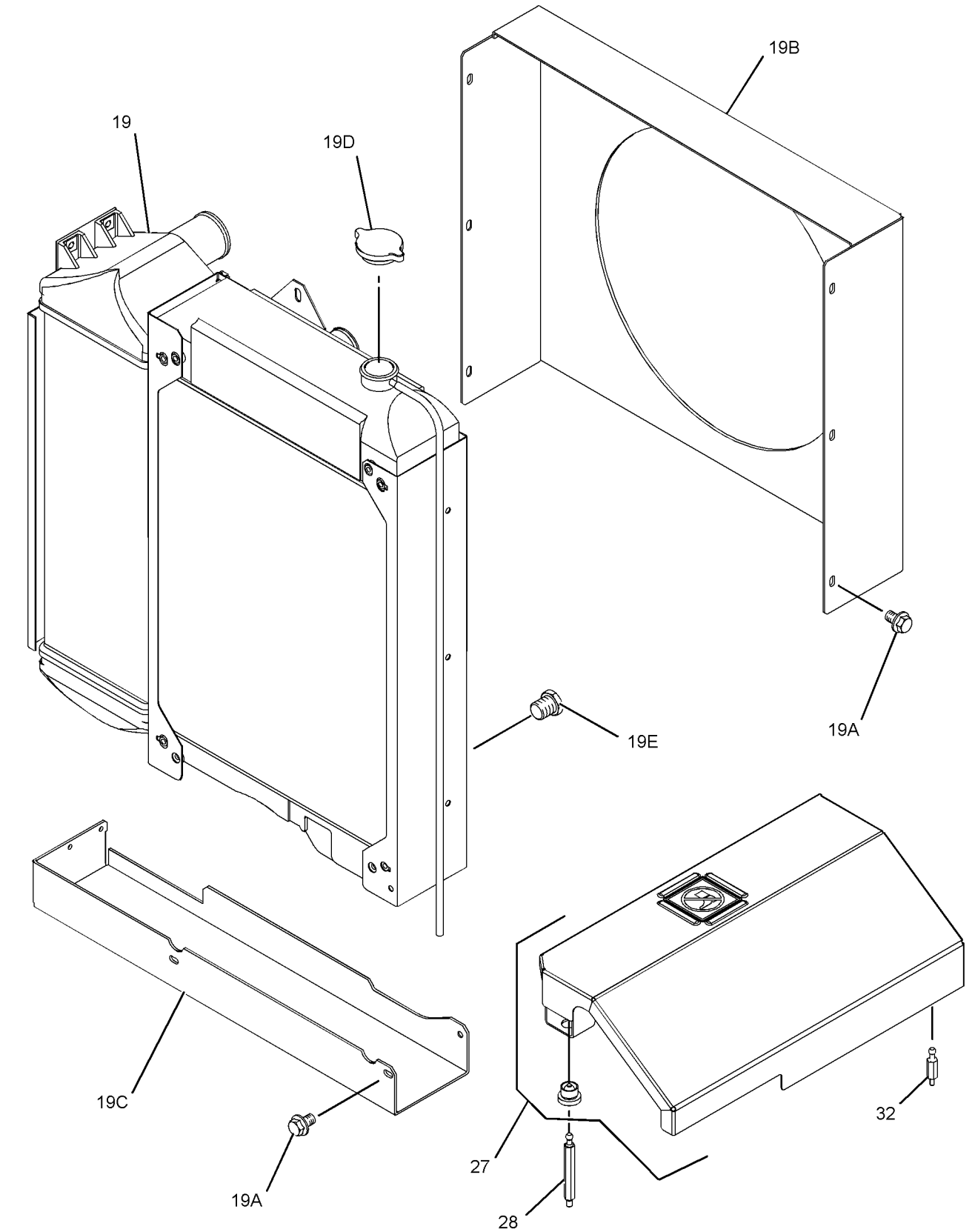

GRAPHIC #3 <END> g01438016

312-1672 RADIATOR GP

PART OF 435-1699 ENGINE AR, 540-1155 ENGINE AR-PRIMARY

TYPE 2

SMCS-1353 **i05825911**

NOTE	REF NO	GRAPHIC REF	PART NUMBER	QTY	PART NAME 1 2 3 4 5 6 (PRODUCT LEVEL)	SEE PAGE
	1	2	**5P-0597**	3	CLAMP-HOSE	
	2	2	**5P-0598**	6	CLAMP-HOSE	
M	3	1	**6I-0260**	1	BOLT (M8X1.25X25-MM)	
M	4	1	**6I-0291**	1	NUT (M8X1.25-THD)	
M	5	1	**6I-0594**	2	NUT (M10X1.5-THD)	
	6	1	**7W-2601**	2	SPACER (10.3X19X3.2-MM THK)	
CM	7	1	**100-4458**	2	BOLT (M8X1.25X14-MM)	
M	8	1	**100-4461**	2	BOLT (M10X1.5X50-MM)	
M	9	1	**100-4830**	2	BOLT (M10X1.5X20-MM)	
M	10	1	**101-7537**	8	BOLT (M12X1.75X35-MM)	
	11	1	**101-7538**	2	MOUNT	
	12	1	**101-7540**	2	WASHER (11.9X38.2X1.6-MM THK)	
M	13	1	**101-7541**	4	SCREW-FLAT HEAD (M8X1.25X25-MM)	
	14	1	**101-7546**	1	MOUNT	
	15	2	**103-6714**	3	CLIP	
	16	2	**236-7722**	1	HOSE-RADIATOR (UPPER)	
	17	2	**236-7734**	1	HOSE-RADIATOR	
	18	2	**236-7735**	2	HOSE-RADIATOR	
	19	3	**236-7766**	1	RADIATOR AS	
M	19A	3	**114-4363**	12	BOLT (M8X1.25X12-MM)	
	19B	3	**236-7760**	1	GUARD-RADIATOR	
	19C	3	**236-7763**	1	BRACKET-MOUNTING	
	19D	3	**236-7764**	1	CAP-RADIATOR	
	19E	3	**236-7765**	1	PLUG-DRAIN (RADIATOR)	
	20	1	**236-8773**	1	BRACKET-MOUNTING	
	21	2	**236-8777**	1	HOSE-AIR INLET	
	22	2	**236-8780**	1	TUBE	
	23	2	**236-8781**	1	HOSE-RADIATOR (LOWER)	
	24	1	**236-8782**	1	GUARD (RADIATOR)	
C	25	1	**368-5398**	1	GUARD AS-FAN	
C	26	1	**368-5399**	1	GUARD-FAN	
	27	3	**334-7488**	1	COVER AS	
	28	3	**303-2160**	4	STUD	
	29	1	**311-4621**	1	BRACKET	
	30	1	**367-4171**	1	BRACKET	
	31	2	**311-4624**	1	TUBE-AIR	

C - CHANGE FROM PREVIOUS TYPE
M - METRIC PART

312-1672 **RADIATOR GP (**contd.**)** **i05825911**

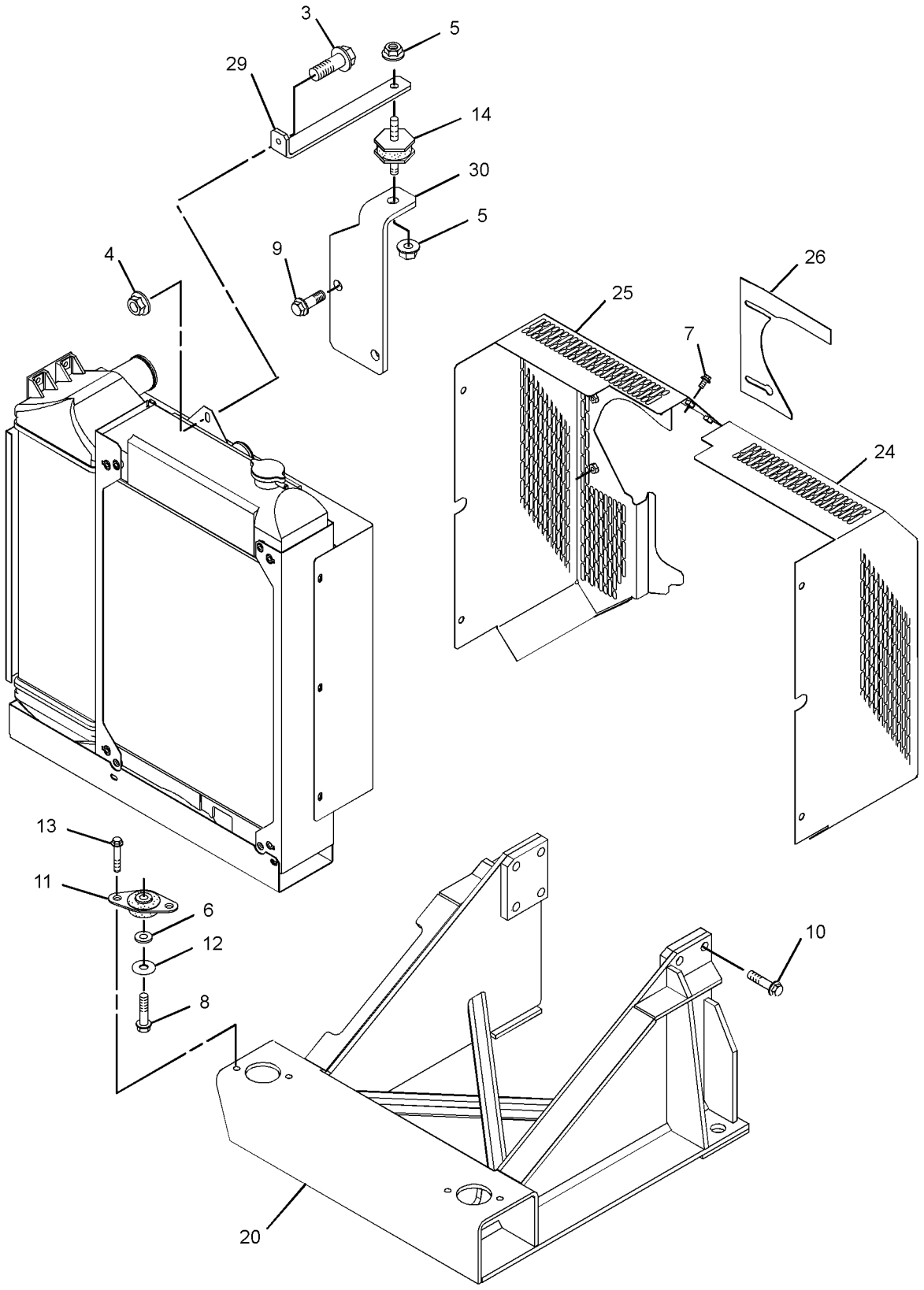

GRAPHIC #1 g03817122

312-1672 **RADIATOR GP (**contd.**)** **i05825911**

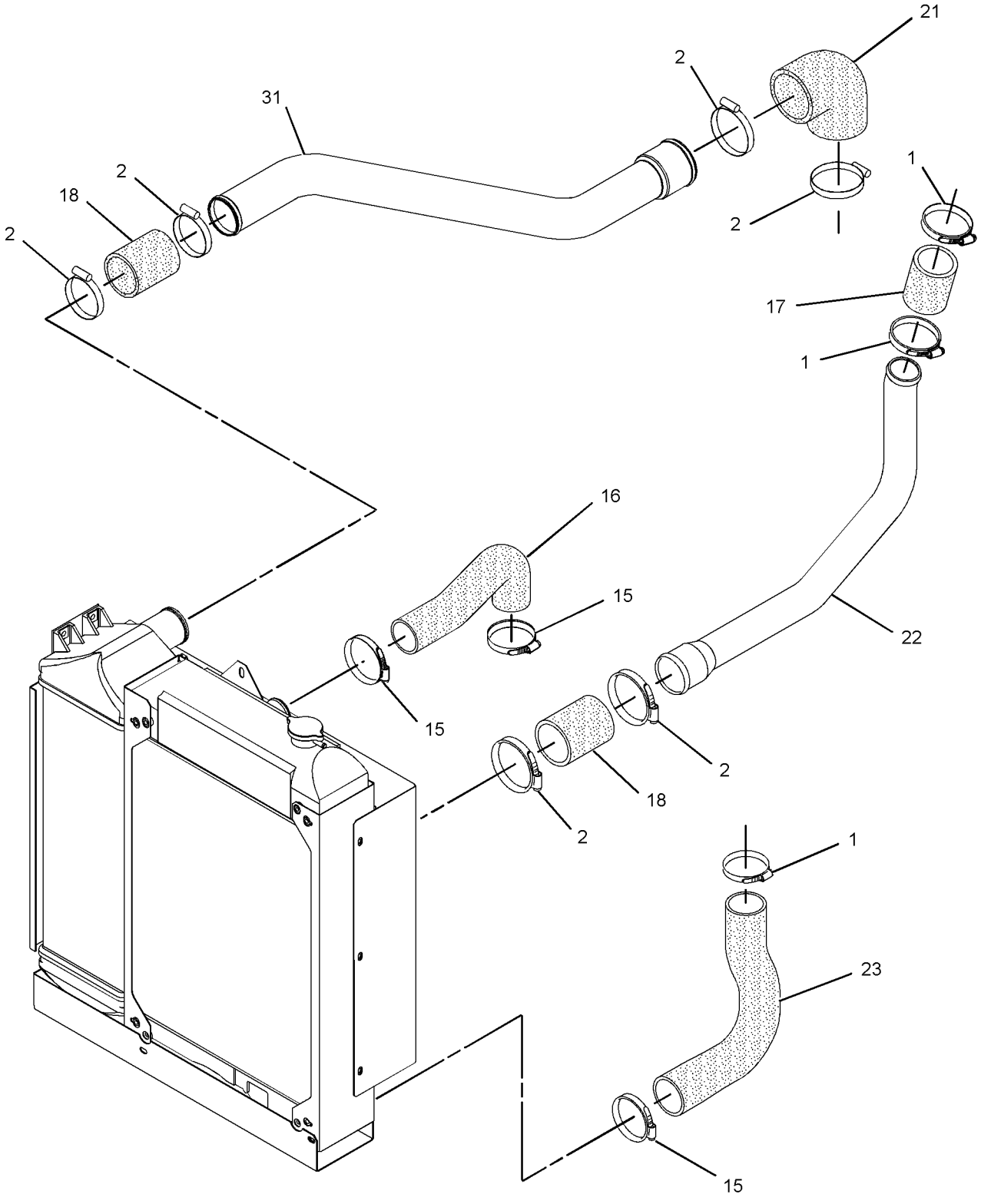

GRAPHIC #2 g01438015

312-1672 **RADIATOR GP (**contd.**)** **i05825911**

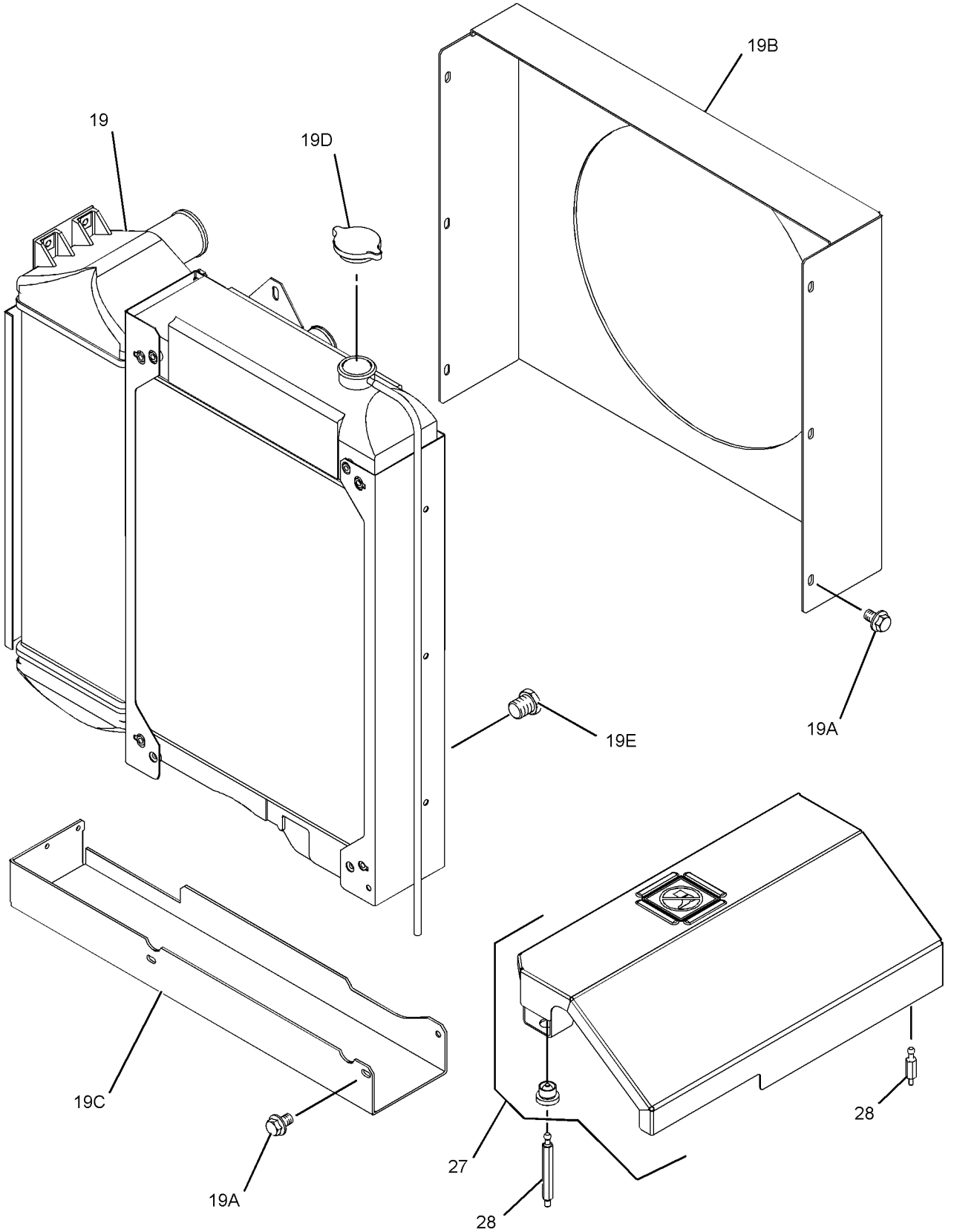

GRAPHIC #3 <END> g03817123

314-5004 RADIATOR GP

SMCS-1353 **i03730020**

NOTE	REF NO	GRAPHIC REF	PART NUMBER	QTY	PART NAME 1 2 3 4 5 6 (PRODUCT LEVEL)	SEE PAGE
	1	2	**5P-0597**	3	CLAMP-HOSE	
	2	2	**5P-0598**	6	CLAMP-HOSE	
M	3	1	**6I-0260**	1	BOLT (M8X1.25X25-MM)	
M	4	1	**6I-0291**	1	NUT (M8X1.25-THD)	
M	5	1	**6I-0594**	2	NUT (M10X1.5-THD)	
	6	1	**7W-2601**	2	SPACER (10.3X19X3.2-MM THK)	
M	7	1	**100-4458**	4	BOLT (M8X1.25X14-MM)	
M	8	1	**100-4461**	2	BOLT (M10X1.5X50-MM)	
M	9	1	**100-4830**	2	BOLT (M10X1.5X20-MM)	
M	10	1	**101-7537**	8	BOLT (M12X1.75X35-MM)	
	11	1	**101-7538**	2	MOUNT	
	12	1	**101-7540**	2	WASHER (11.9X38.2X1.6-MM THK)	
M	13	1	**101-7541**	4	SCREW-FLAT HEAD (M8X1.25X25-MM)	
	14	1	**101-7546**	1	MOUNT	
	15	2	**103-6714**	3	CLIP	
	16	2	**236-7722**	1	HOSE-RADIATOR (UPPER)	
	17	2	**236-7734**	1	HOSE-RADIATOR	
	18	2	**236-7735**	2	HOSE-RADIATOR	
	19	3	**236-7766**	1	RADIATOR AS	
M	19A	3	**114-4363**	12	BOLT (M8X1.25X12-MM)	
	19B	3	**236-7760**	1	GUARD-RADIATOR	
	19C	3	**236-7763**	1	BRACKET-MOUNTING	
	19D	3	**236-7764**	1	CAP-RADIATOR	
	19E	3	**236-7765**	1	PLUG-DRAIN (RADIATOR)	
	20	1	**236-8773**	1	BRACKET-MOUNTING	
	21	2	**236-8777**	1	HOSE-AIR INLET	
	22	2	**236-8780**	1	TUBE	
	23	2	**236-8781**	1	HOSE-RADIATOR (LOWER)	
	24	1	**236-8782**	1	GUARD (RADIATOR)	
C	25	1	**326-0497**	1	GUARD-RADIATOR	
	26	1	**236-8784**	1	GUARD-FAN	
	27	3	**299-1601**	1	COVER	
	28	3	**303-2160**	3	STUD	
	29	1	**311-4621**	1	BRACKET	
	30	1	**311-4623**	1	BRACKET	
	31	2	**311-4624**	1	TUBE-AIR	
	32	3	**311-4631**	1	STUD	

C - CHANGE FROM PREVIOUS TYPE
M - METRIC PART

314-5004 **RADIATOR GP (**contd.**)** **i03730020**

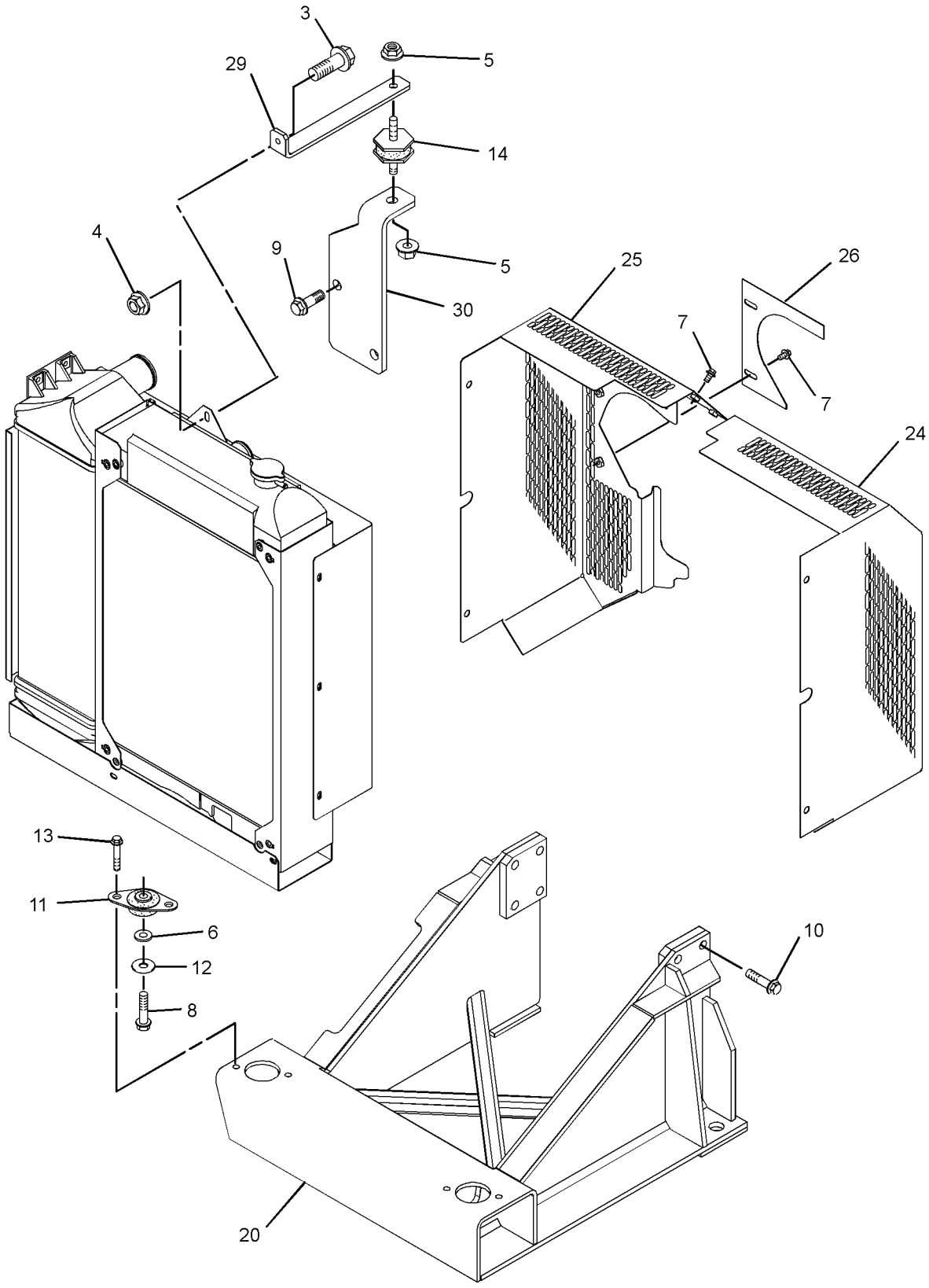

GRAPHIC #1 g01618178

314-5004 **RADIATOR GP (**contd.**)** **i03730020**

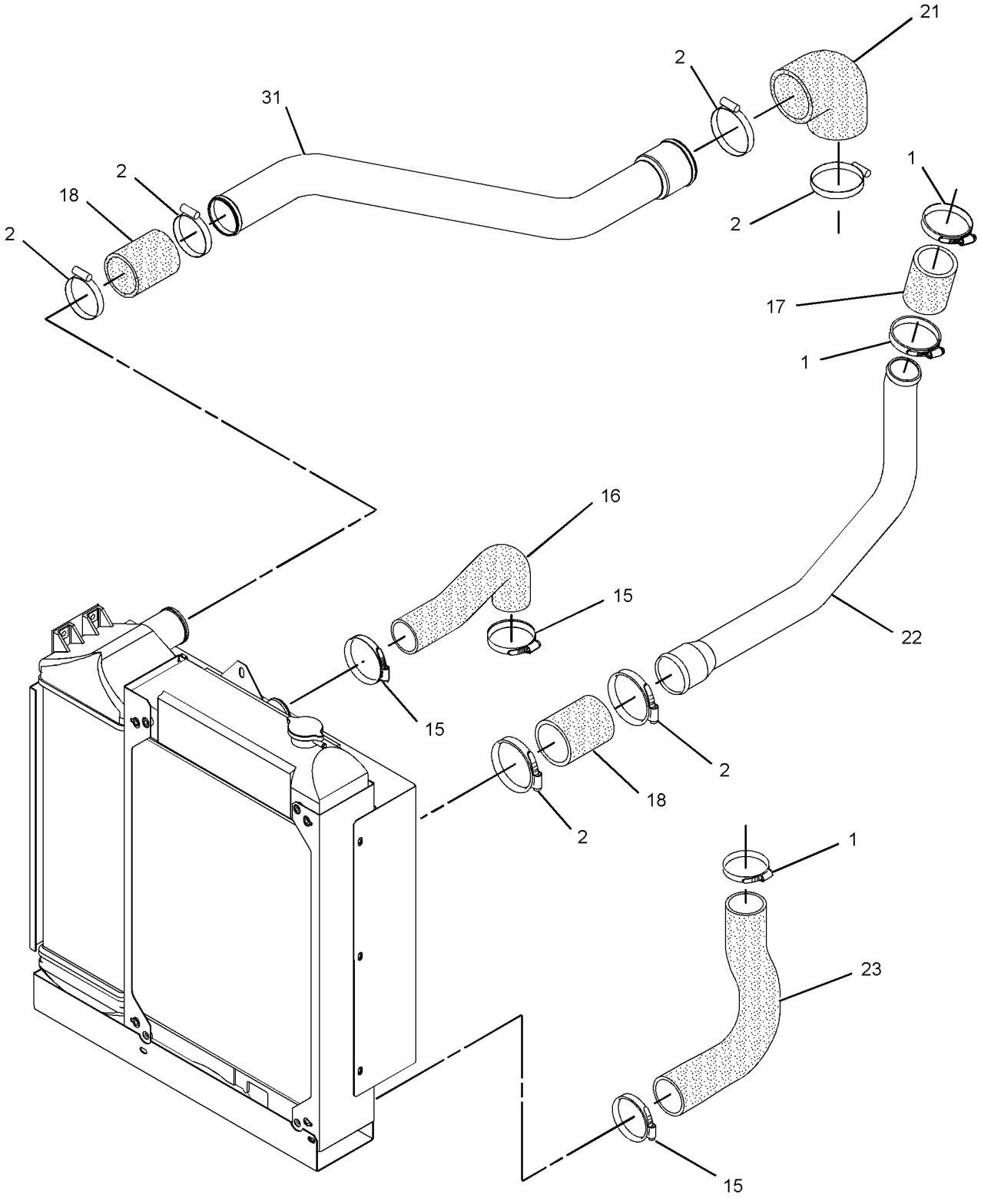

GRAPHIC #2 g01437380

314-5004 **RADIATOR GP (**contd.**)** **i03730020**

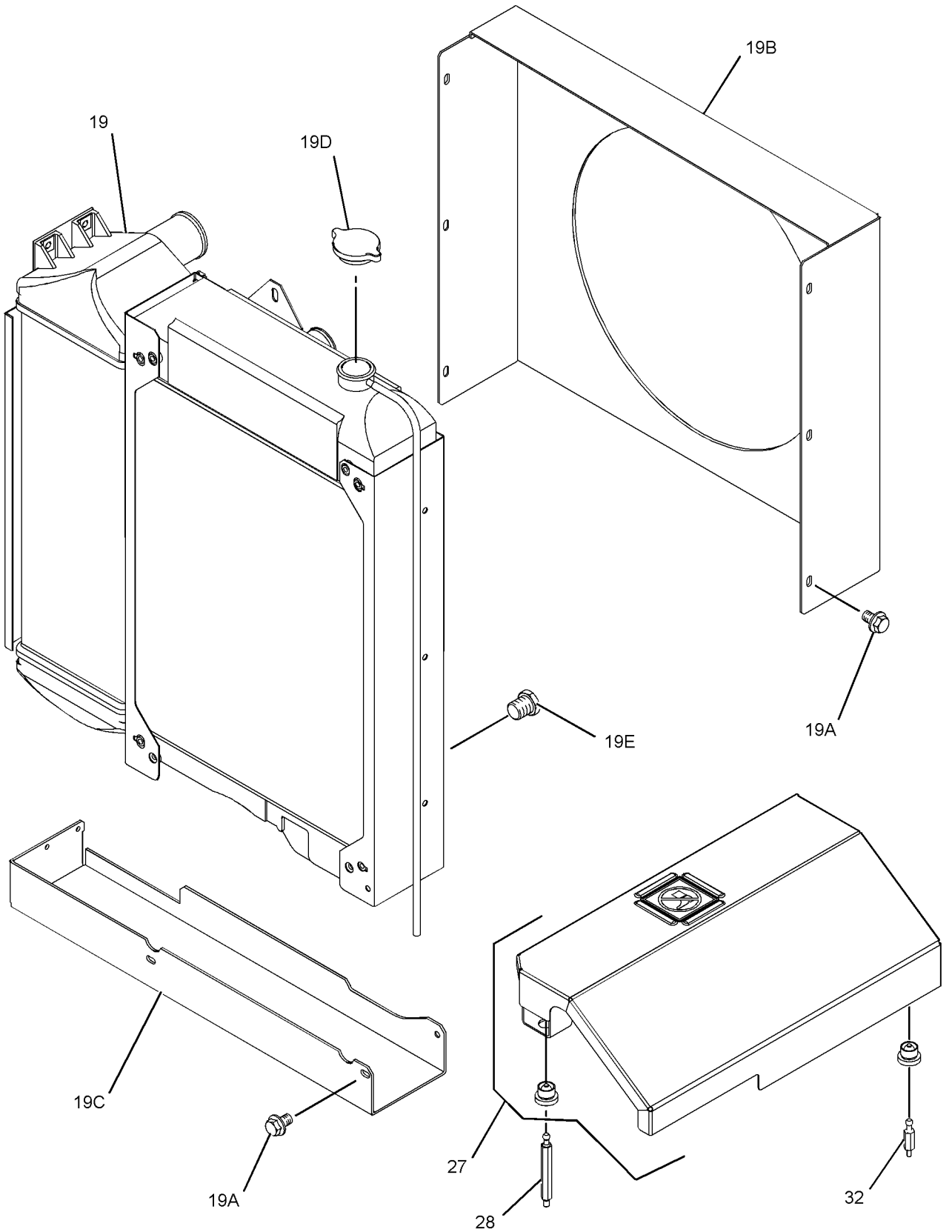

GRAPHIC #3 <END> g01437381

314-5004 RADIATOR GP

S/N: 4441-5919

SMCS-1353 **i05300538**

NOTE	REF NO	GRAPHIC REF	PART NUMBER	QTY	PART NAME 1 2 3 4 5 6 (PRODUCT LEVEL)	SEE PAGE
	1	2	**5P-0597**	3	CLAMP-HOSE	
	2	2	**5P-0598**	6	CLAMP-HOSE	
M	3	1	**6I-0260**	1	BOLT (M8X1.25X25-MM)	
M	4	1	**6I-0291**	1	NUT (M8X1.25-THD)	
M	5	1	**6I-0594**	2	NUT (M10X1.5-THD)	
	6	1	**7W-2601**	2	SPACER (10.3X19X3.2-MM THK)	
M	7	1	**100-4458**	4	BOLT (M8X1.25X14-MM)	
M	8	1	**100-4461**	2	BOLT (M10X1.5X50-MM)	
M	9	1	**100-4830**	2	BOLT (M10X1.5X20-MM)	
M	10	1	**101-7537**	8	BOLT (M12X1.75X35-MM)	
	11	1	**101-7538**	2	MOUNT	
	12	1	**101-7540**	2	WASHER (11.9X38.2X1.6-MM THK)	
M	13	1	**101-7541**	4	SCREW-FLAT HEAD (M8X1.25X25-MM)	
	14	1	**101-7546**	1	MOUNT	
	15	2	**103-6714**	3	CLIP	
	16	2	**236-7722**	1	HOSE-RADIATOR (UPPER)	
	17	2	**236-7734**	1	HOSE-RADIATOR	
	18	2	**236-7735**	2	HOSE-RADIATOR	
	19	3	**236-7766**	1	RADIATOR AS	
M	19A	3	**114-4363**	12	BOLT (M8X1.25X12-MM)	
	19B	3	**236-7760**	1	GUARD-RADIATOR	
	19C	3	**236-7763**	1	BRACKET-MOUNTING	
	19D	3	**236-7764**	1	CAP-RADIATOR	
	19E	3	**236-7765**	1	PLUG-DRAIN (RADIATOR)	
	20	1	**236-8773**	1	BRACKET-MOUNTING	
	21	2	**236-8777**	1	HOSE-AIR INLET	
	22	2	**236-8780**	1	TUBE	
	23	2	**236-8781**	1	HOSE-RADIATOR (LOWER)	
	24	1	**236-8782**	1	GUARD (RADIATOR) (LH)	
C	25	1	**330-9698**	1	GUARD-RADIATOR (RH)	
	26	1	**236-8784**	1	GUARD-FAN	
	27	3	**334-7488**	1	COVER AS	
	27A	3	**295-0440**	4	CAP	
	28	3	**303-2160**	3	STUD	
	29	1	**311-4621**	1	BRACKET	
	30	1	**367-4171**	1	BRACKET	
	31	2	**311-4624**	1	TUBE-AIR	
	32	3	**311-4631**	1	STUD	

C - CHANGE FROM PREVIOUS TYPE
M - METRIC PART

314-5004 **RADIATOR GP (**contd.**)** **i05300538**

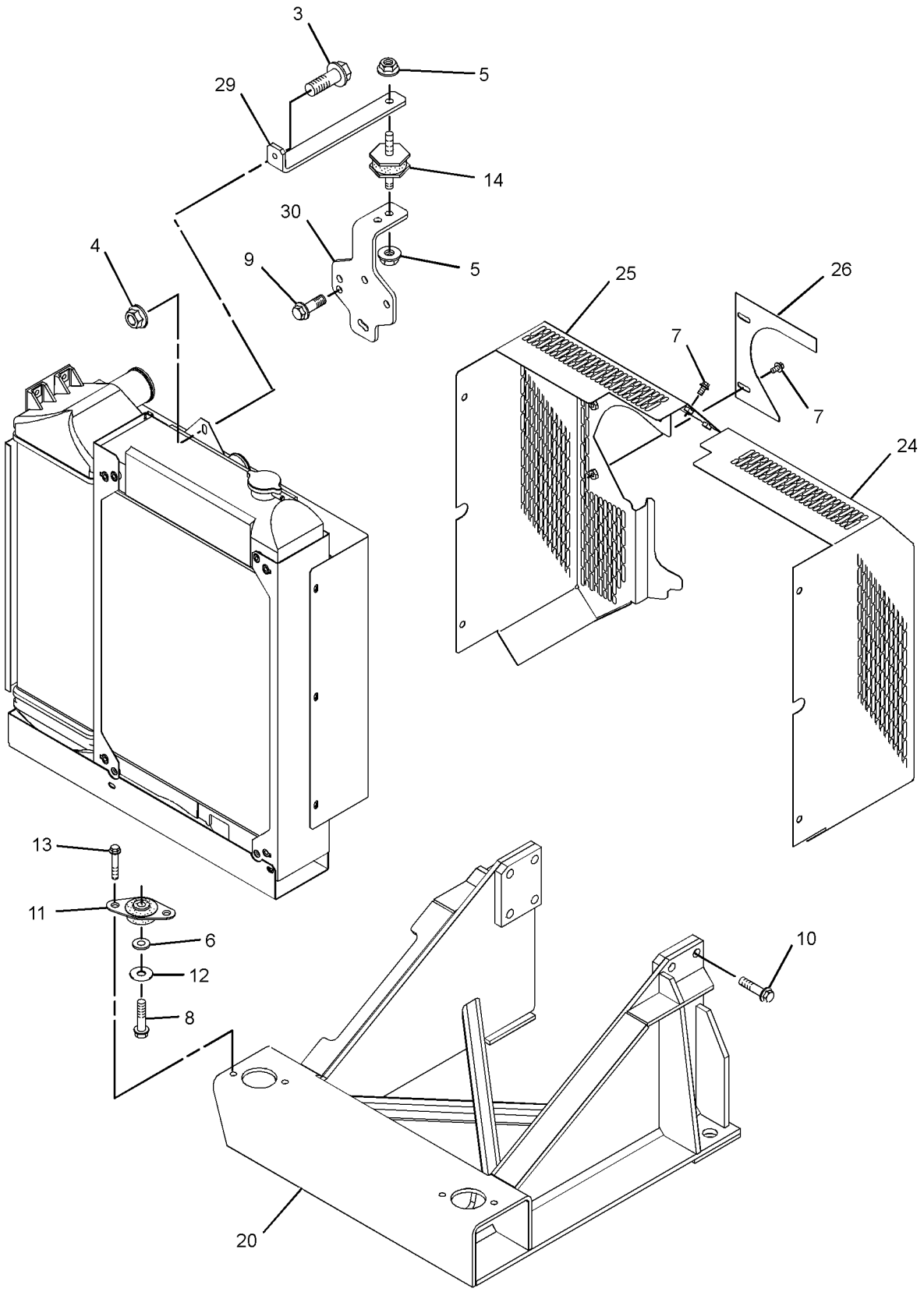

GRAPHIC #1 g03372939

314-5004 **RADIATOR GP (**contd.**)** **i05300538**

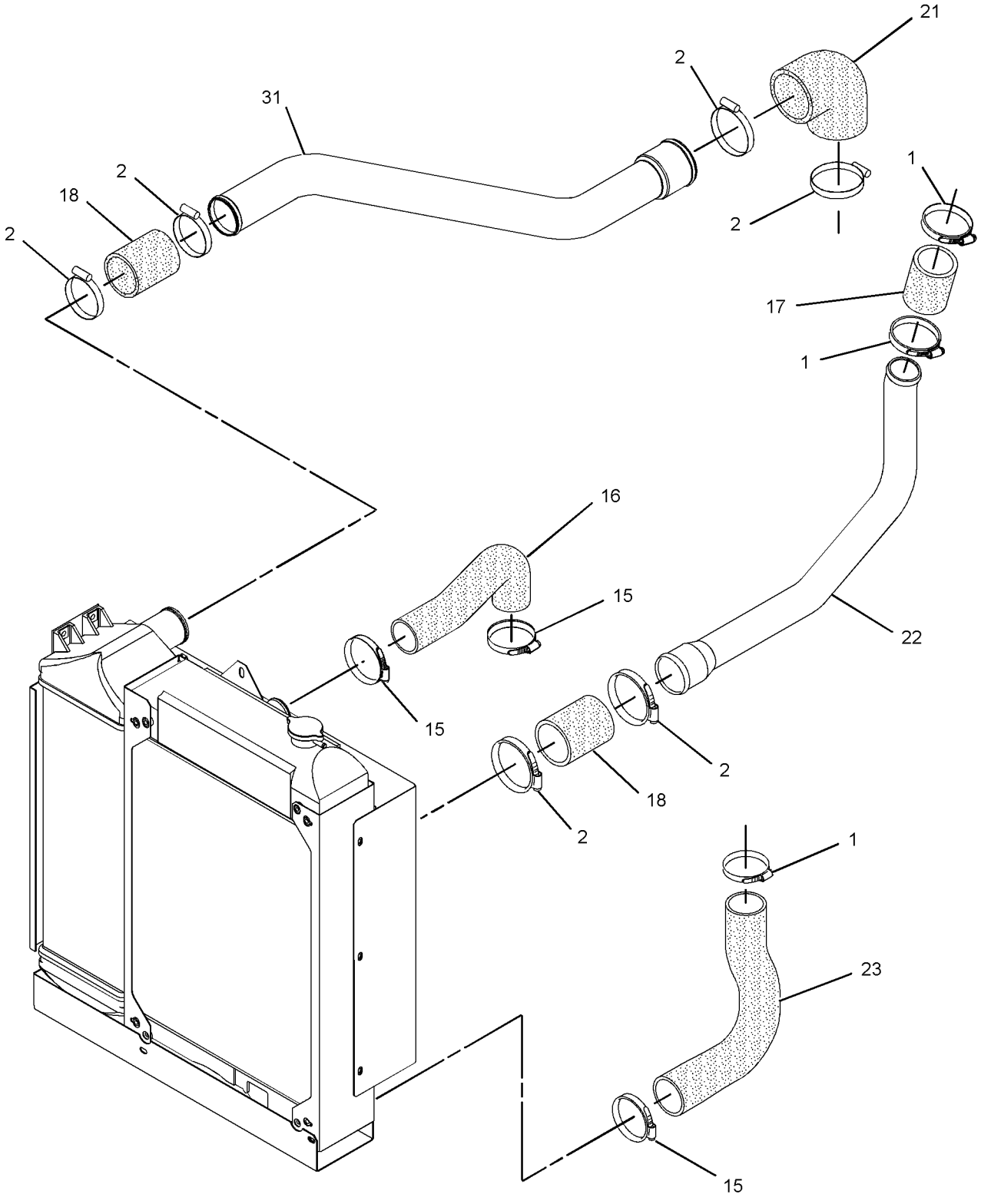

GRAPHIC #2 g01437380

314-5004 **RADIATOR GP (**contd.**)** **i05300538**

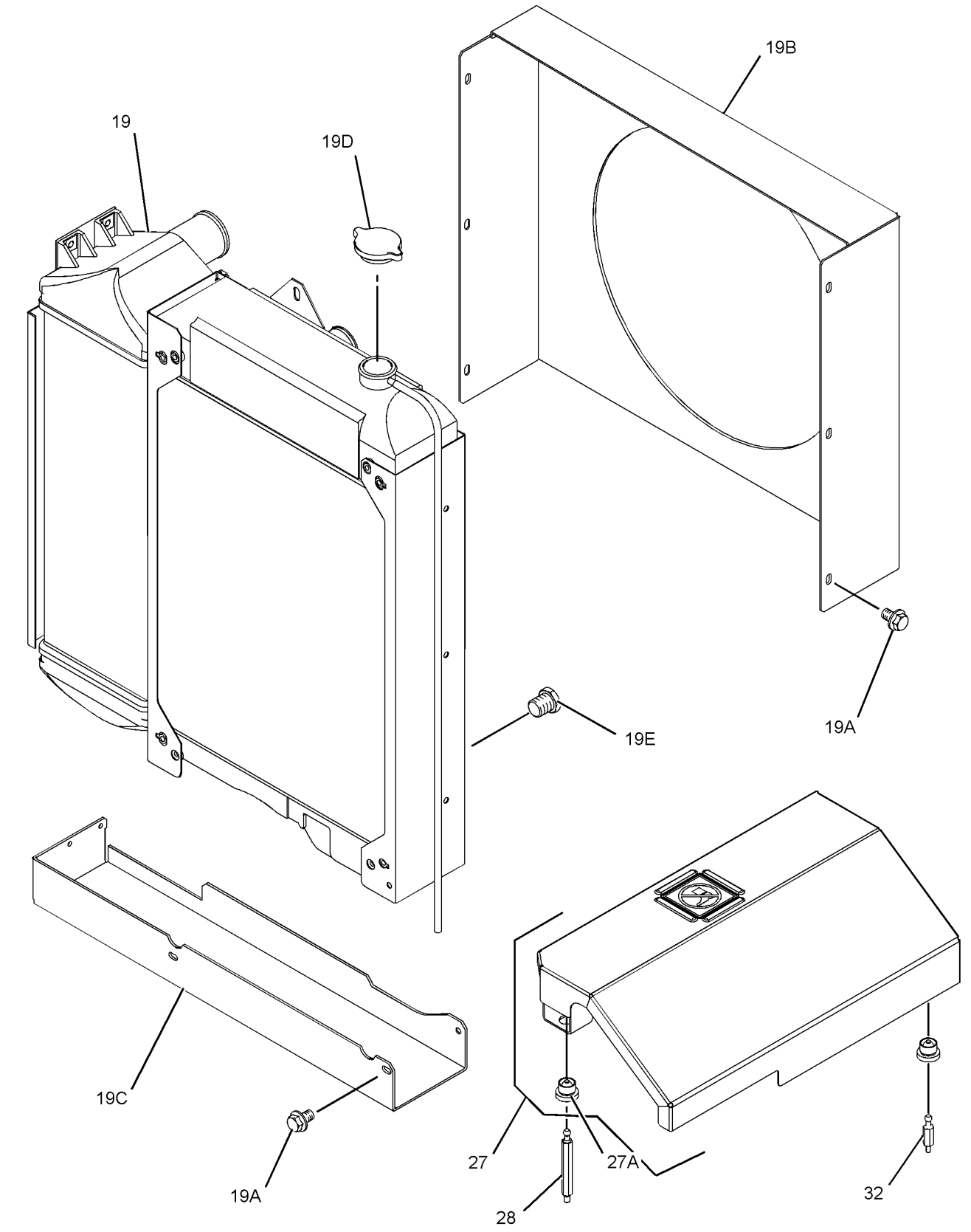

GRAPHIC #3 <END> g01920627

314-5004 RADIATOR GP

S/N: 4445920-UP

TYPE 1

SMCS-1353 **i05560370**

NOTE	REF NO	GRAPHIC REF	PART NUMBER	QTY	PART NAME 1 2 3 4 5 6 (PRODUCT LEVEL)	SEE PAGE
	1	2	**5P-0597**	3	CLAMP-HOSE	
	2	2	**5P-0598**	6	CLAMP-HOSE	
M	3	1	**6I-0260**	1	BOLT (M8X1.25X25-MM)	
M	4	1	**6I-0291**	1	NUT (M8X1.25-THD)	
M	5	1	**6I-0594**	2	NUT (M10X1.5-THD)	
	6	1	**7W-2601**	2	SPACER (10.3X19X3.2-MM THK)	
M	7	1	**100-4458**	2	BOLT (M8X1.25X14-MM)	
M	8	1	**100-4461**	2	BOLT (M10X1.5X50-MM)	
M	9	1	**100-4830**	2	BOLT (M10X1.5X20-MM)	
M	10	1	**101-7537**	8	BOLT (M12X1.75X35-MM)	
	11	1	**101-7538**	2	MOUNT	
	12	1	**101-7540**	2	WASHER (11.9X38.2X1.6-MM THK)	
M	13	1	**101-7541**	4	SCREW-FLAT HEAD (M8X1.25X25-MM)	
	14	1	**101-7546**	1	MOUNT	
	15	2	**103-6714**	3	CLIP	
	16	2	**236-7722**	1	HOSE-RADIATOR (UPPER)	
	17	2	**236-7734**	1	HOSE-RADIATOR	
	18	2	**236-7735**	2	HOSE-RADIATOR	
	19	3	**236-7766**	1	RADIATOR AS	
M	19A	3	**114-4363**	12	BOLT (M8X1.25X12-MM)	
	19B	3	**236-7760**	1	GUARD-RADIATOR	
	19C	3	**236-7763**	1	BRACKET-MOUNTING	
	19D	3	**236-7764**	1	CAP-RADIATOR	
	19E	3	**236-7765**	1	PLUG-DRAIN (RADIATOR)	
	20	1	**236-8773**	1	BRACKET-MOUNTING	
	21	2	**236-8777**	1	HOSE-AIR INLET	
	22	2	**236-8780**	1	TUBE	
	23	2	**236-8781**	1	HOSE-RADIATOR (LOWER)	
	24	1	**236-8782**	1	GUARD (RADIATOR) (LH)	
C	25	1	**368-5398**	1	GUARD AS-FAN (RH)	
	26	1	**368-5399**	1	GUARD-FAN	
	27	3	**334-7488**	1	COVER AS	
	27A	3	**295-0440**	4	CAP	
	28	3	**303-2160**	4	STUD	
	29	1	**311-4621**	1	BRACKET	
	30	1	**367-4171**	1	BRACKET	
	31	2	**311-4624**	1	TUBE-AIR	

C - CHANGE FROM PREVIOUS TYPE
M - METRIC PART

314-5004 **RADIATOR GP (**contd.**)** **i05560370**

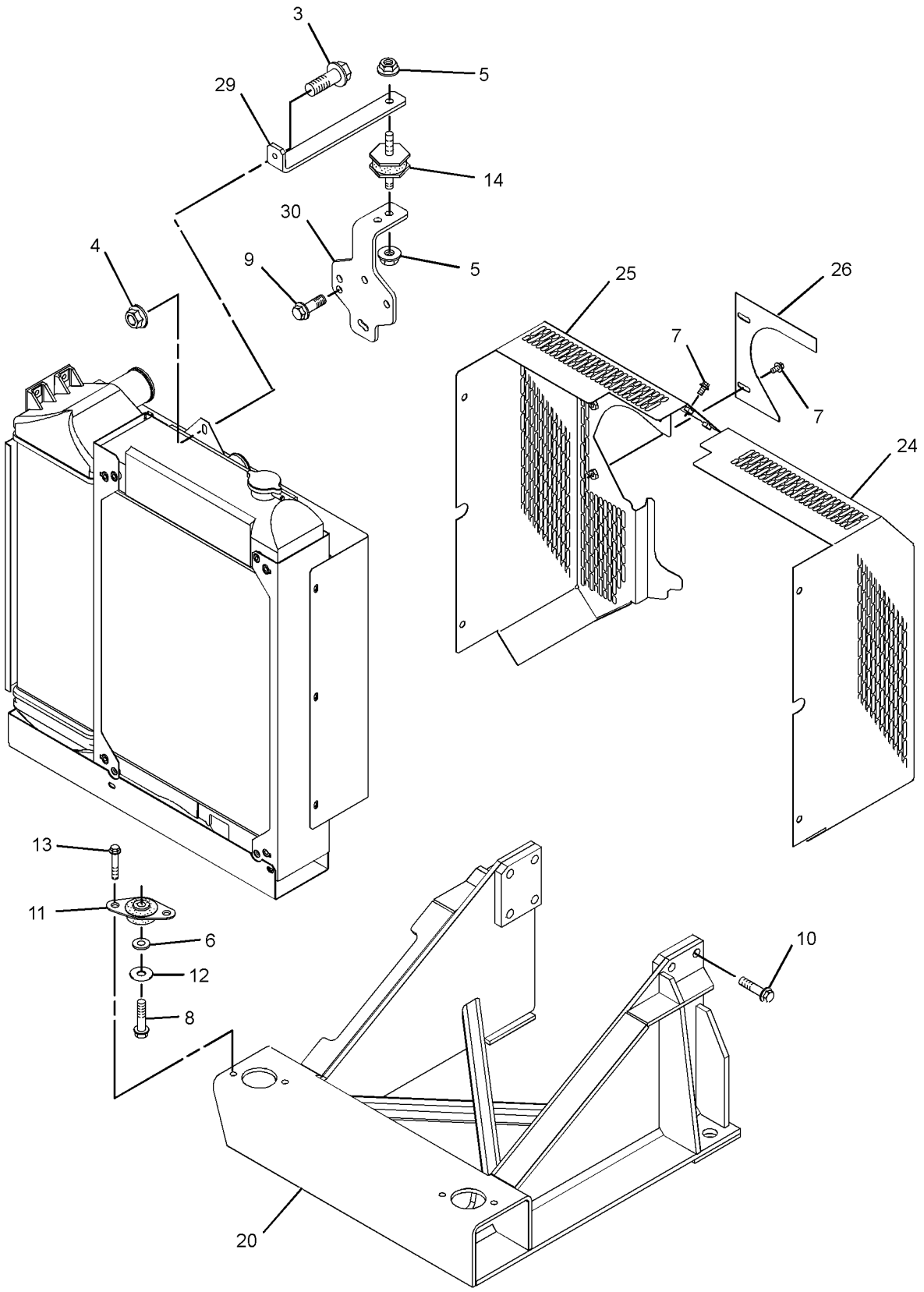

GRAPHIC #1 g03372939

314-5004 **RADIATOR GP** (contd.) **i05560370**

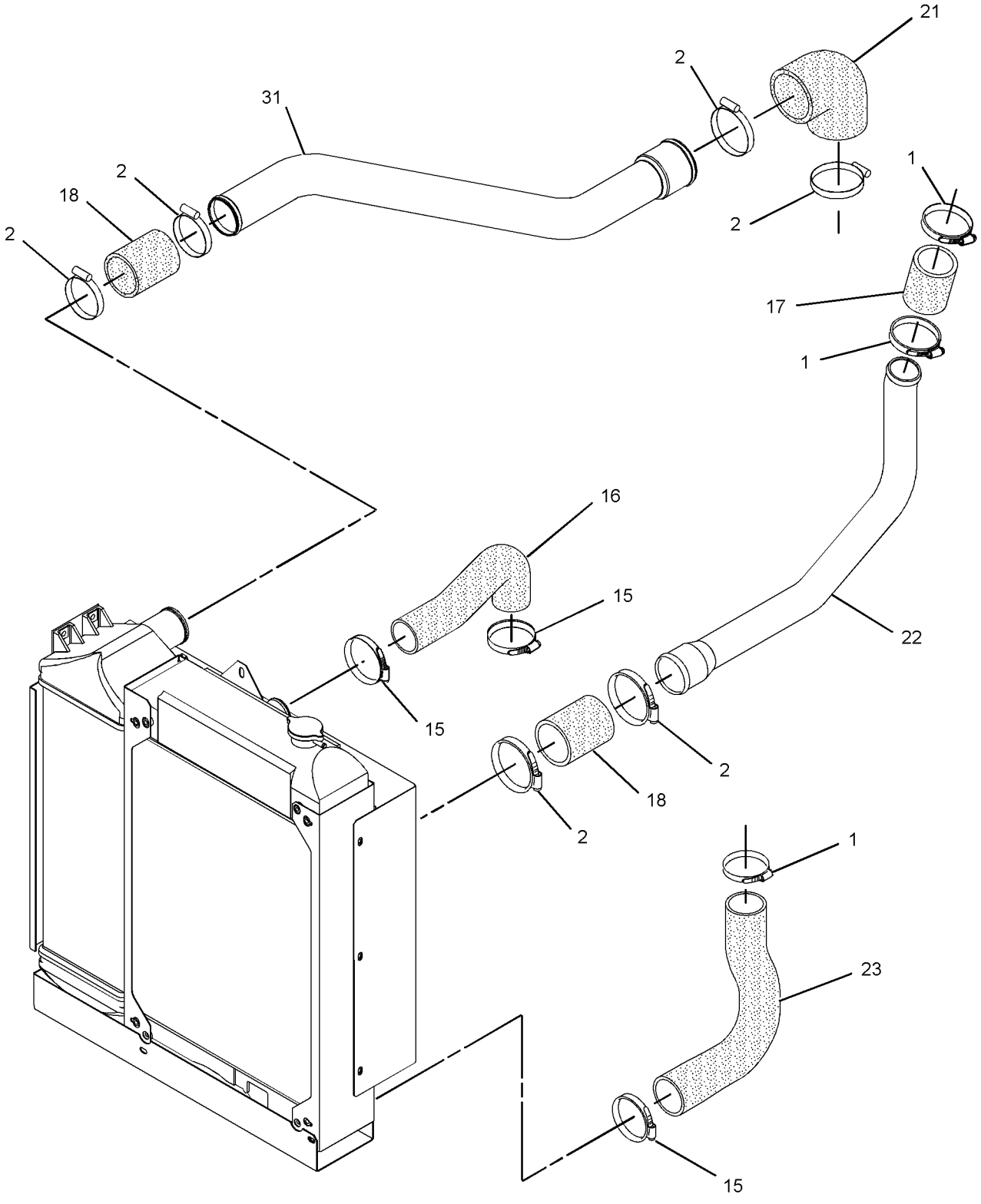

GRAPHIC #2 g01437380

314-5004 **RADIATOR GP (**contd.**)** **i05560370**

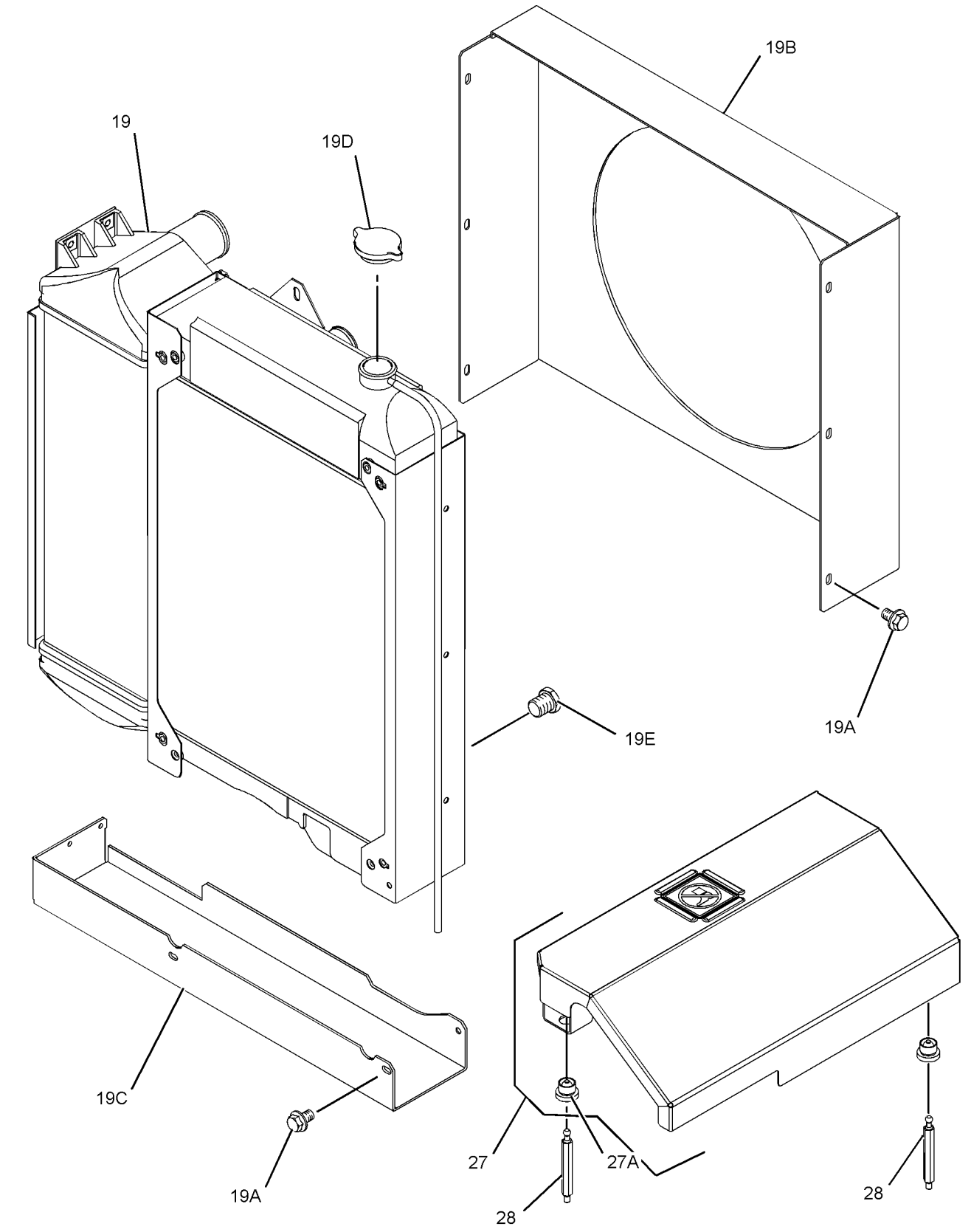

GRAPHIC #3 <END> g03522457

314-5004 RADIATOR GP

S/N: 4445920-UP

TYPE 2

SMCS-1353 **i05902477**

NOTE	REF NO	GRAPHIC REF	PART NUMBER	QTY	PART NAME 1 2 3 4 5 6 (PRODUCT LEVEL)	SEE PAGE
	1	2	**5P-0597**	3	CLAMP-HOSE	
	2	2	**5P-0598**	6	CLAMP-HOSE	
M	3	1	**6I-0260**	1	BOLT (M8X1.25X25-MM)	
M	4	1	**6I-0291**	1	NUT (M8X1.25-THD)	
M	5	1	**6I-0594**	2	NUT (M10X1.5-THD)	
	6	1	**7W-2601**	2	SPACER (10.3X19X3.2-MM THK)	
M	7	1	**100-4458**	2	BOLT (M8X1.25X14-MM)	
M	8	1	**100-4461**	2	BOLT (M10X1.5X50-MM)	
M	9	1	**100-4830**	2	BOLT (M10X1.5X20-MM)	
M	10	1	**101-7537**	8	BOLT (M12X1.75X35-MM)	
	11	1	**101-7538**	2	MOUNT	
	12	1	**101-7540**	2	WASHER (11.9X38.2X1.6-MM THK)	
M	13	1	**101-7541**	4	SCREW-FLAT HEAD (M8X1.25X25-MM)	
	14	1	**101-7546**	1	MOUNT	
	15	2	**103-6714**	3	CLIP	
	16	2	**236-7722**	1	HOSE-RADIATOR (UPPER)	
	17	2	**236-7734**	1	HOSE-RADIATOR	
	18	2	**236-7735**	2	HOSE-RADIATOR	
	19	3	**236-7766**	1	RADIATOR AS	
M	19A	3	**114-4363**	12	BOLT (M8X1.25X12-MM)	
	19B	3	**236-7760**	1	GUARD-RADIATOR	
	19C	3	**236-7763**	1	BRACKET-MOUNTING	
	19D	3	**236-7764**	1	CAP-RADIATOR	
	19E	3	**236-7765**	1	PLUG-DRAIN (RADIATOR)	
	20	1	**236-8773**	1	BRACKET-MOUNTING	
	21	2	**236-8777**	1	HOSE-AIR INLET	
	22	2	**236-8780**	1	TUBE	
	23	2	**236-8781**	1	HOSE-RADIATOR (LOWER)	
	24	1	**236-8782**	1	GUARD (RADIATOR) (LH)	
C	25	1	**368-5398**	1	GUARD AS-FAN (RH)	
	26	1	**368-5399**	1	GUARD-FAN	
	27	3	**334-7488**	1	COVER AS	
	27A	3	**295-0440**	4	CAP	
	28	3	**303-2160**	4	STUD	
	29	1	**311-4621**	1	BRACKET	
	30	1	**367-4171**	1	BRACKET	
	31	2	**311-4624**	1	TUBE-AIR	

C - CHANGE FROM PREVIOUS TYPE
M - METRIC PART

314-5004 **RADIATOR GP (**contd.**)** **i05902477**

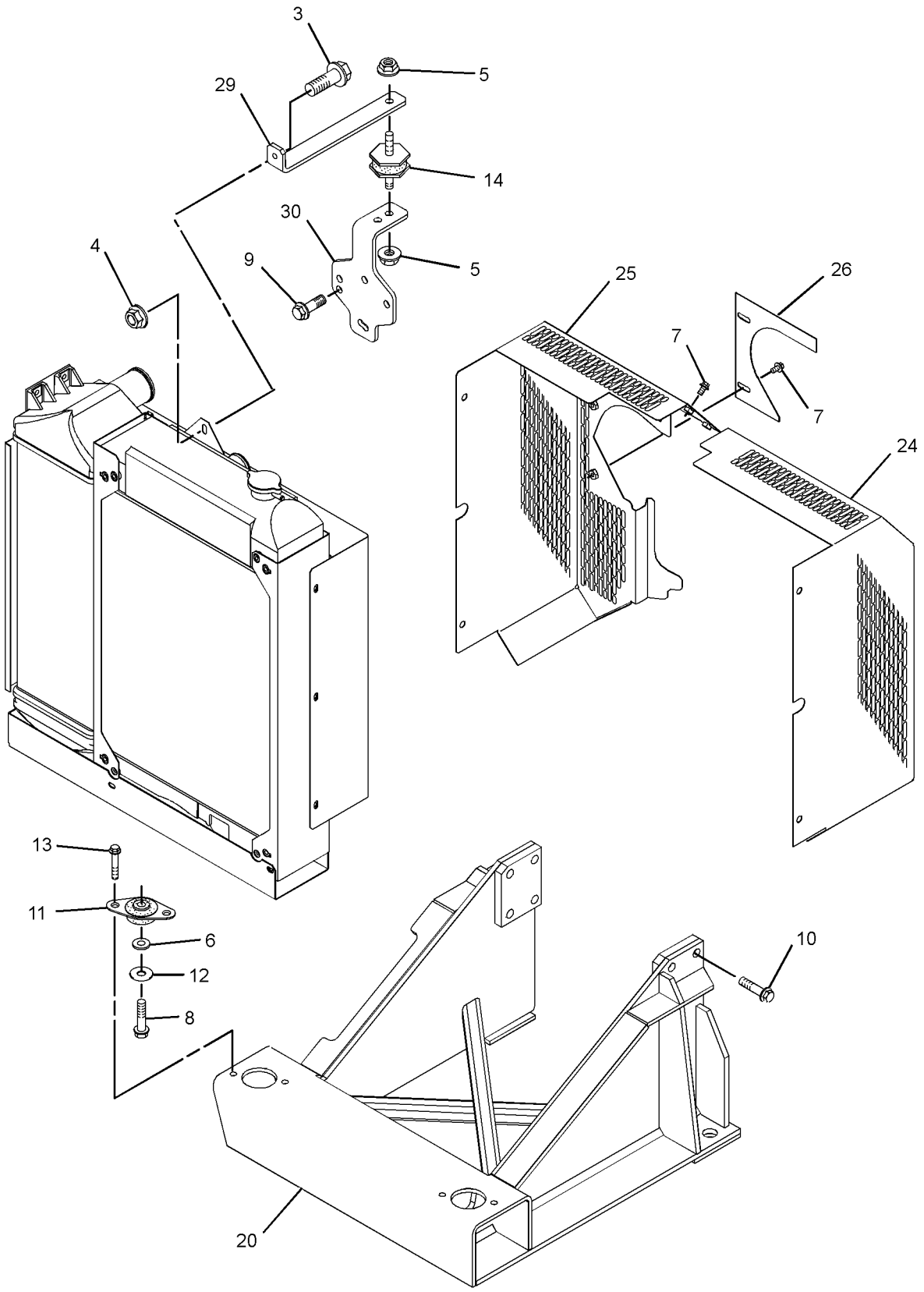

GRAPHIC #1 g03372939

314-5004 **RADIATOR GP (**contd.**)** **i05902477**

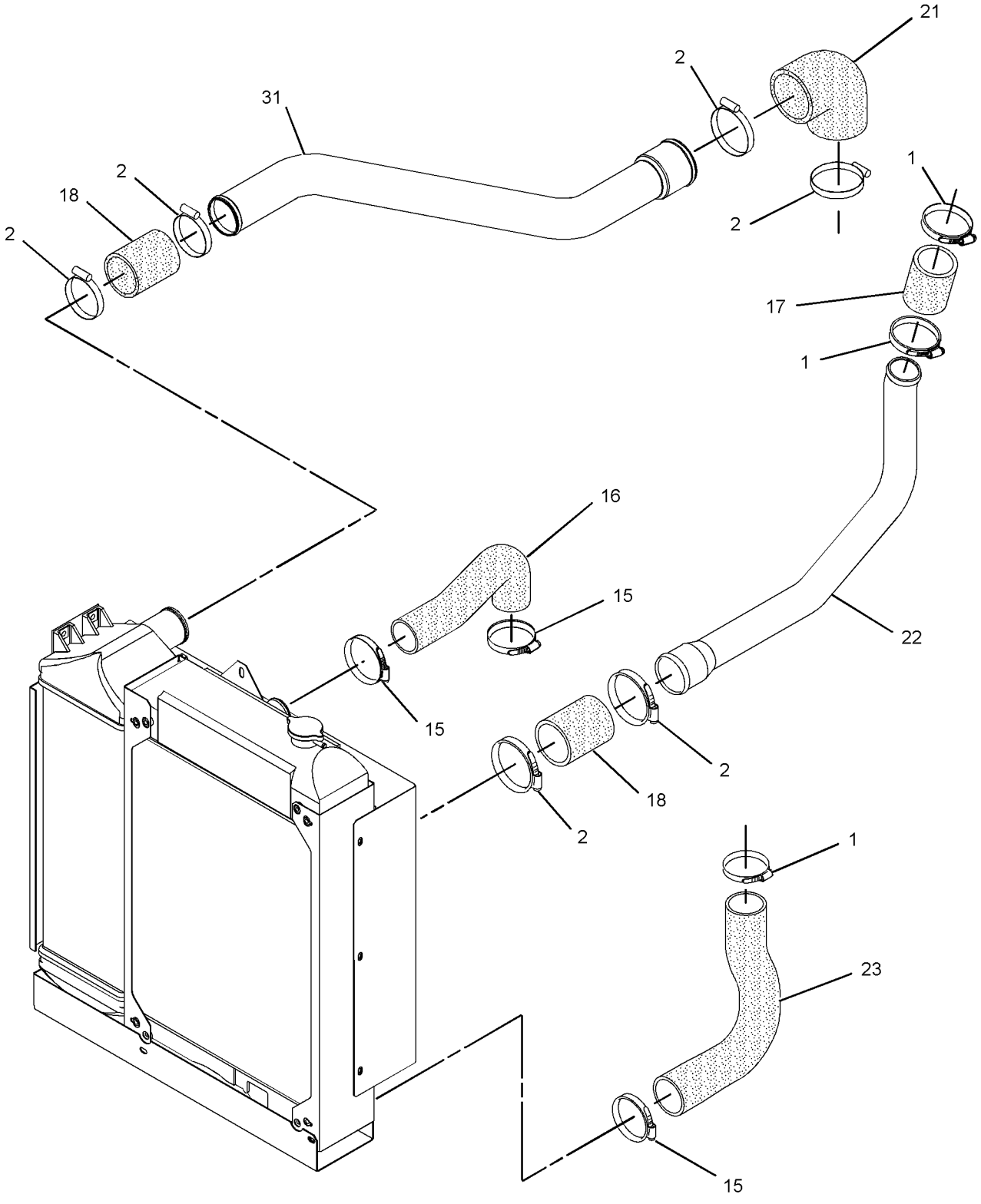

GRAPHIC #2 g01437380

314-5004 **RADIATOR GP (**contd.**)** **i05902477**

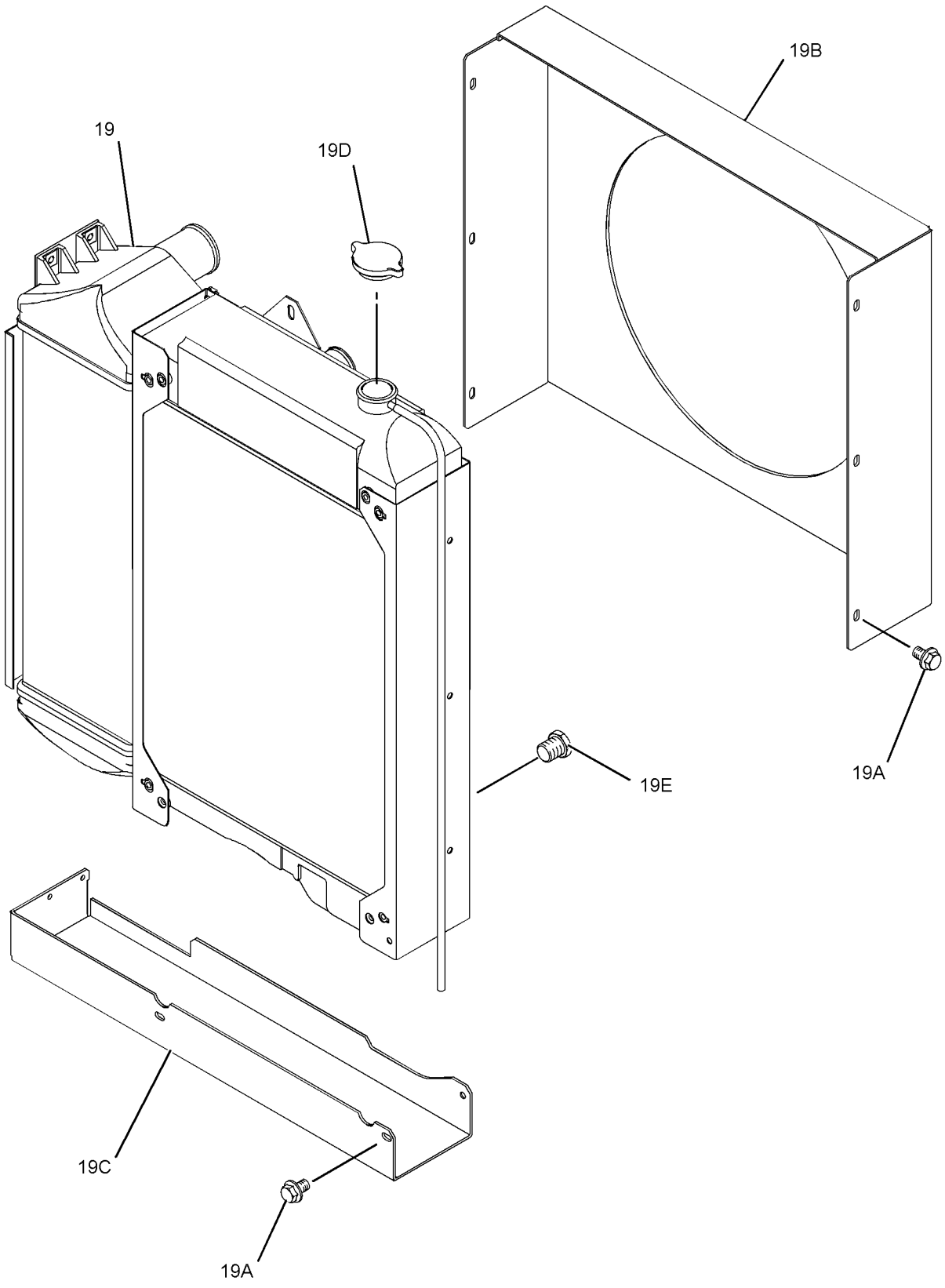

GRAPHIC #3 <END> g03811787

381-0115 RADIATOR GP

PART OF 435-1687, 540-1156 ENGINE AR-PRIMARY
TYPE 2

SMCS-1353 **i05915615**

NOTE	REF NO	GRAPHIC REF	PART NUMBER	QTY	PART NAME 1 2 3 4 5 6 (PRODUCT LEVEL)	SEE PAGE
	1	2	**317-9229**	4	CLAMP-HOSE	
	2	2	**324-3528**	3	CLAMP-HOSE	
M	3	1	**6I-0260**	1	BOLT (M8X1.25X25-MM)	
M	4	1	**178-3336**	1	NUT-HEX FLANGE (M8X1.25-THD)	
M	5	1	**175-7141**	2	NUT-HEX FLANGE (M10X1.5-THD)	
	6	1	**7W-2601**	2	SPACER (10.3X19X3.2-MM THK)	
M	7	1	**100-4458**	2	BOLT (M8X1.25X14-MM)	
M	8	1	**100-4461**	2	BOLT (M10X1.5X50-MM)	
M	9	1	**100-4830**	2	BOLT (M10X1.5X20-MM)	
M	10	1	**101-7537**	8	BOLT (M12X1.75X35-MM)	
	11	1	**101-7538**	2	MOUNT	
	12	1	**101-7540**	2	WASHER (11.9X38.2X1.6-MM THK)	
M	13	1	**101-7541**	4	SCREW-FLAT HEAD (M8X1.25X25-MM)	
	14	1	**101-7546**	1	MOUNT	
	15	2	**103-6714**	3	CLIP	
	16	2	**236-7722**	1	HOSE-RADIATOR	
	17	2	**236-7734**	1	HOSE-RADIATOR	
	18	2	**236-7735**	2	HOSE-RADIATOR	
Y	19	1	**372-8150**	1	RADIATOR AS	728
	20	1	**236-8773**	1	BRACKET-MOUNTING	
	21	2	**311-4624**	1	TUBE-AIR	
	22	2	**236-8777**	1	HOSE-AIR INLET	
	23	2	**236-8780**	1	TUBE	
	24	2	**236-8781**	1	HOSE-RADIATOR	
	25	1	**311-4627**	1	GUARD-RADIATOR	
	26	1	**368-5398**	1	GUARD AS-FAN	
L	27	1	**368-5399**	1	GUARD-FAN	
	28	1	**311-4621**	1	BRACKET	
	29	1	**367-4171**	1	BRACKET	
	30	2	**265-6527**	2	CLIP	

L - USED ONLY WITH 368-5398
M - METRIC PART
Y - SEPARATE ILLUSTRATION

381-0115 **RADIATOR GP (**contd.**)** **i05915615**

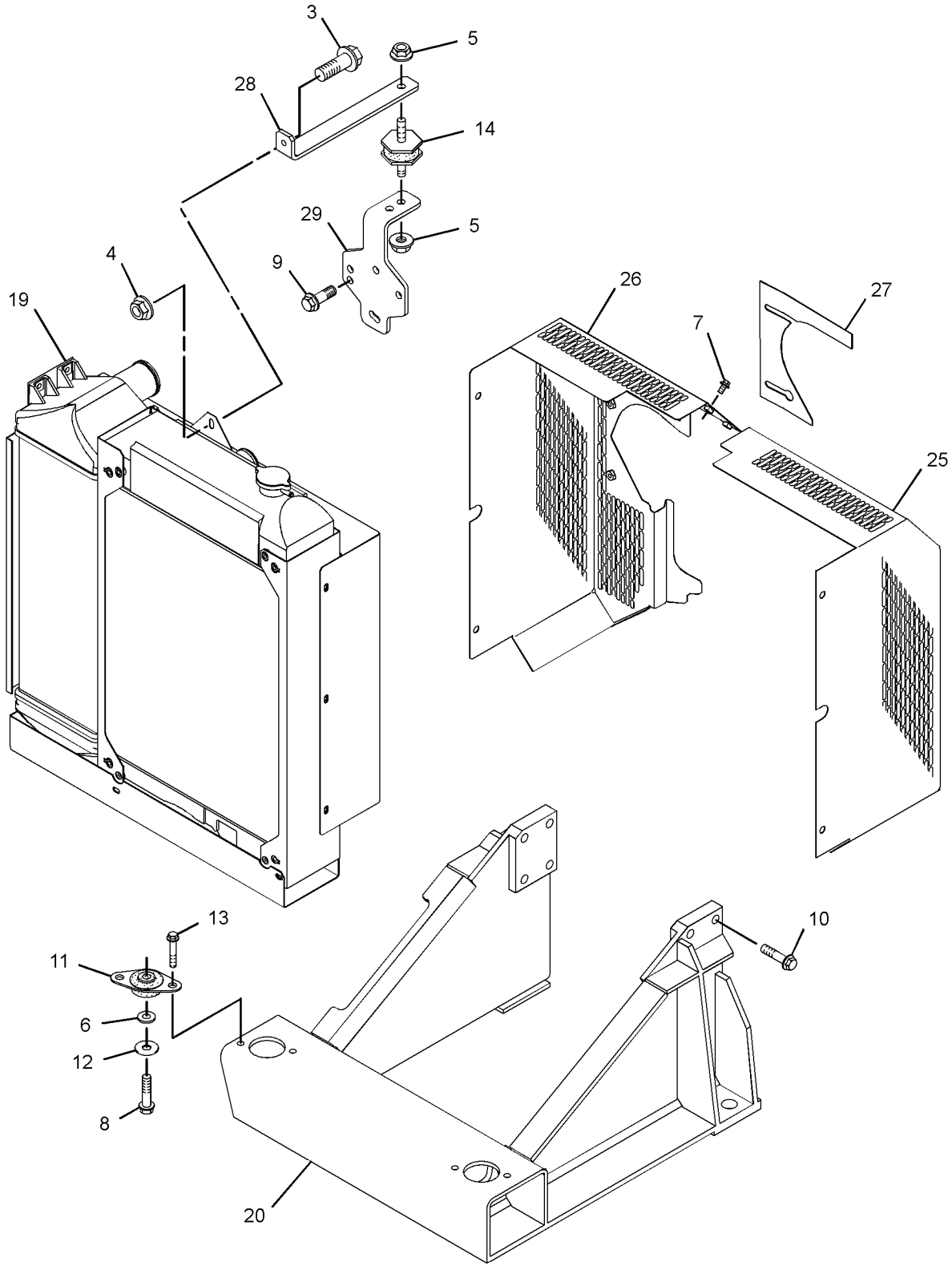

GRAPHIC #1 g03823095

381-0115 **RADIATOR GP** (contd.) **i05915615**

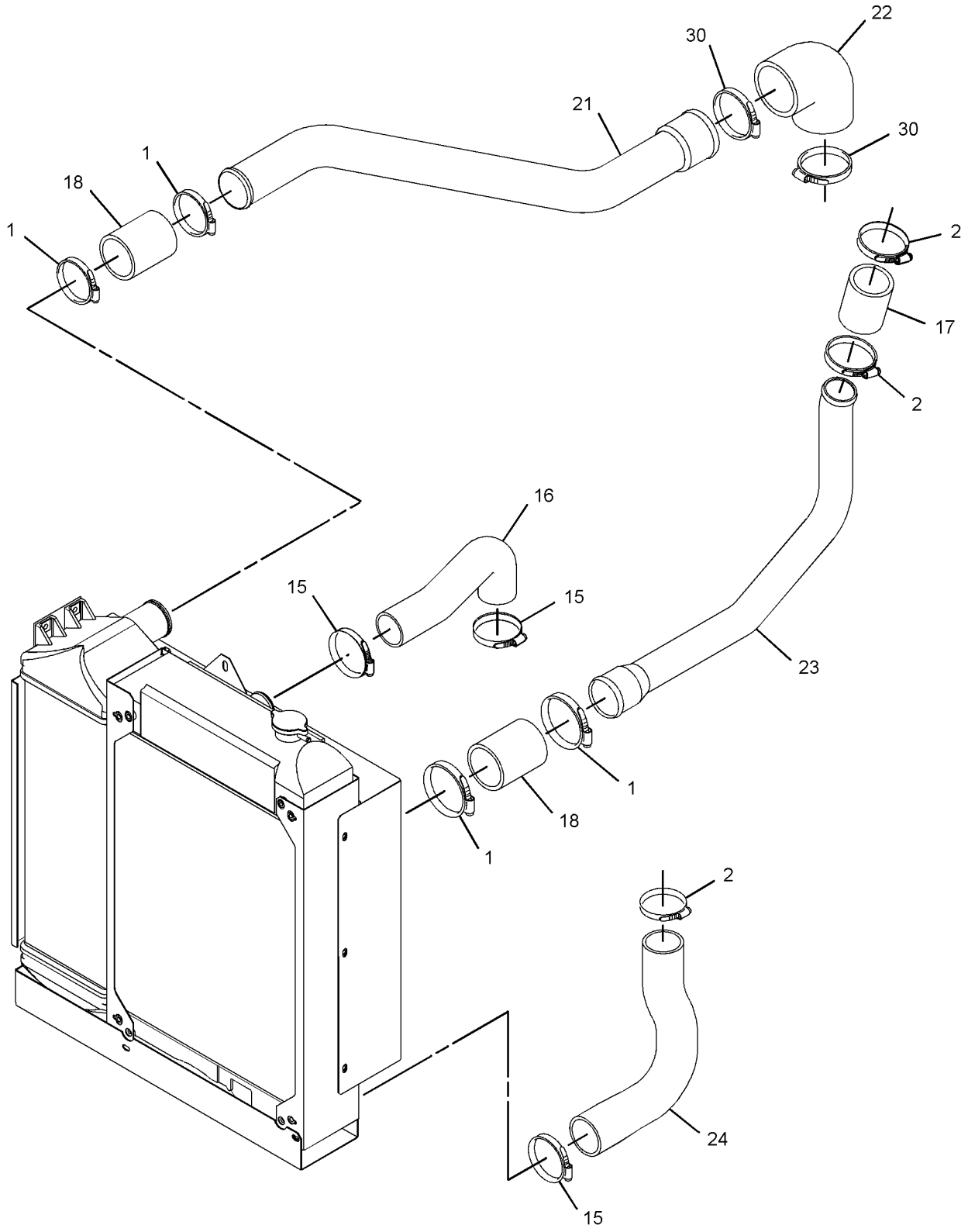

GRAPHIC #2 <END> g03823097

381-0115 RADIATOR GP

PART OF 435-1687 ENGINE AR-PRIMARY

TYPE 1

SMCS-1353 **i05374390**

NOTE	REF NO	GRAPHIC REF	PART NUMBER	QTY	PART NAME 1 2 3 4 5 6 (PRODUCT LEVEL)	SEE PAGE
	1	2	**317-9229**	4	CLAMP-HOSE	
	2	2	**324-3528**	3	CLAMP-HOSE	
M	3	1	**6I-0260**	1	BOLT (M8X1.25X25-MM)	
M	4	1	**6I-0291**	1	NUT (M8X1.25-THD)	
M	5	1	**6I-0594**	2	NUT (M10X1.5-THD)	
	6	1	**7W-2601**	2	SPACER (10.3X19X3.2-MM THK)	
M	7	1	**100-4458**	2	BOLT (M8X1.25X14-MM)	
M	8	1	**100-4461**	2	BOLT (M10X1.5X50-MM)	
M	9	1	**100-4830**	2	BOLT (M10X1.5X20-MM)	
M	10	1	**101-7537**	8	BOLT (M12X1.75X35-MM)	
	11	1	**101-7538**	2	MOUNT	
	12	1	**101-7540**	2	WASHER (11.9X38.2X1.6-MM THK)	
M	13	1	**101-7541**	4	SCREW-FLAT HEAD (M8X1.25X25-MM)	
	14	1	**101-7546**	1	MOUNT	
	15	2	**103-6714**	3	CLIP	
	16	2	**236-7722**	1	HOSE-RADIATOR	
	17	2	**236-7734**	1	HOSE-RADIATOR	
	18	2	**236-7735**	2	HOSE-RADIATOR	
Y	19	1	**372-8150**	1	RADIATOR AS	728
	20	1	**236-8773**	1	BRACKET-MOUNTING	
	21	2	**311-4624**	1	TUBE-AIR	
	22	2	**236-8777**	1	HOSE-AIR INLET	
	23	2	**236-8780**	1	TUBE	
	24	2	**236-8781**	1	HOSE-RADIATOR	
	25	1	**311-4627**	1	GUARD-RADIATOR	
	26	1	**368-5398**	1	GUARD AS-FAN	
	27	1	**368-5399**	1	GUARD-FAN	
	28	1	**311-4621**	1	BRACKET	
	29	1	**367-4171**	1	BRACKET	
	30	1	**334-7488**	1	COVER AS	
	30A	1	**295-0440**	4	CAP	
	31	1	**303-2160**	4	STUD	
	32	2	**265-6527**	2	CLIP	

M - METRIC PART
Y - SEPARATE ILLUSTRATION

381-0115 **RADIATOR GP** (contd.) **i05374390**

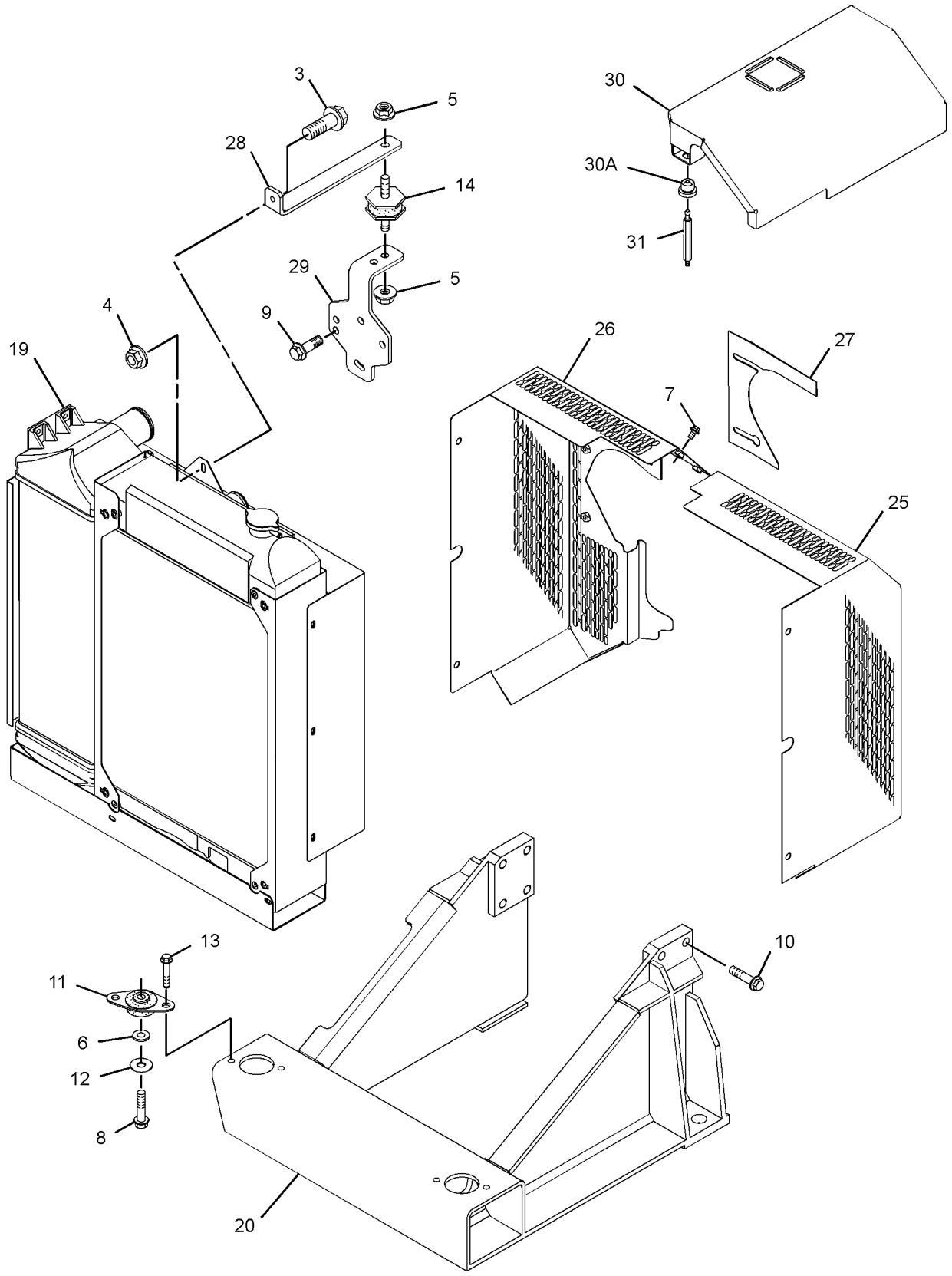

GRAPHIC #1 g03236239

381-0115 **RADIATOR GP (**contd.**)** **i05374390**

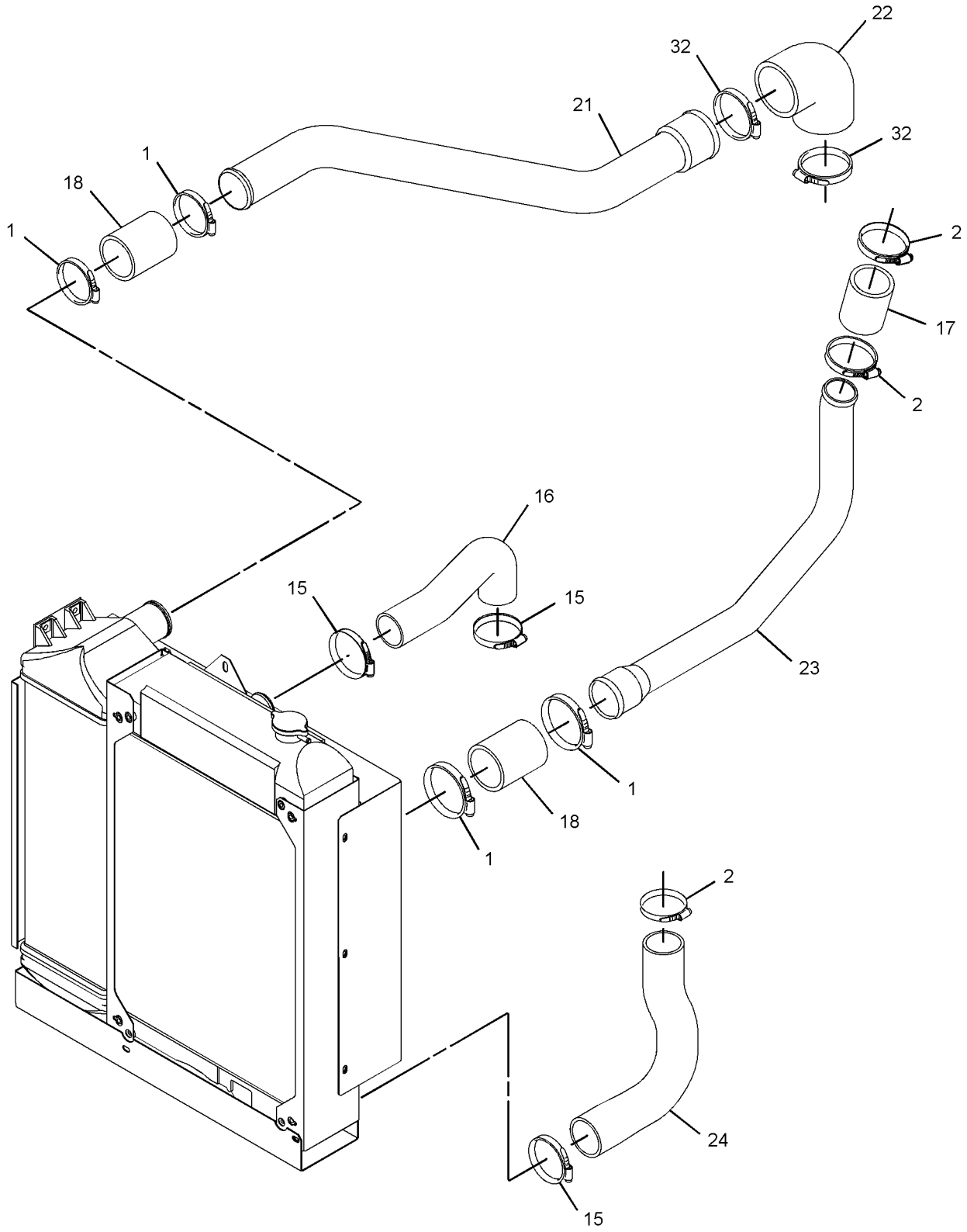

GRAPHIC #2 <END> g03219036

307-2807 AIR CLEANER GP

PART OF 307-2850, 311-7456, 328-7279 TURBOCHARGER GP

SMCS-1051, 1054

i07310579

NOTE	REF NO	GRAPHIC REF	PART NUMBER	QTY	PART NAME 1 2 3 4 5 6 (PRODUCT LEVEL)	SEE PAGE
	1	1	**104-2083**	1	CAP (AIR CLEANER)	
	2	1	**133-7403**	1	VALVE-DUST	
	3	1	**206-5234**	1	FILTER ELEMENT AS-AIR (PRIMARY)	
	4	1	**206-5235**	1	FILTER ELEMENT AS-AIR (SECONDARY)	
	5	1	**206-5237**	1	COVER AS	
		1	**487-5635**	1	LATCH	
	6	1	**143-8170**	1	INDICATOR-AIR FILTER CHANGE	
	7	1	**307-2808**	1	BRACKET	

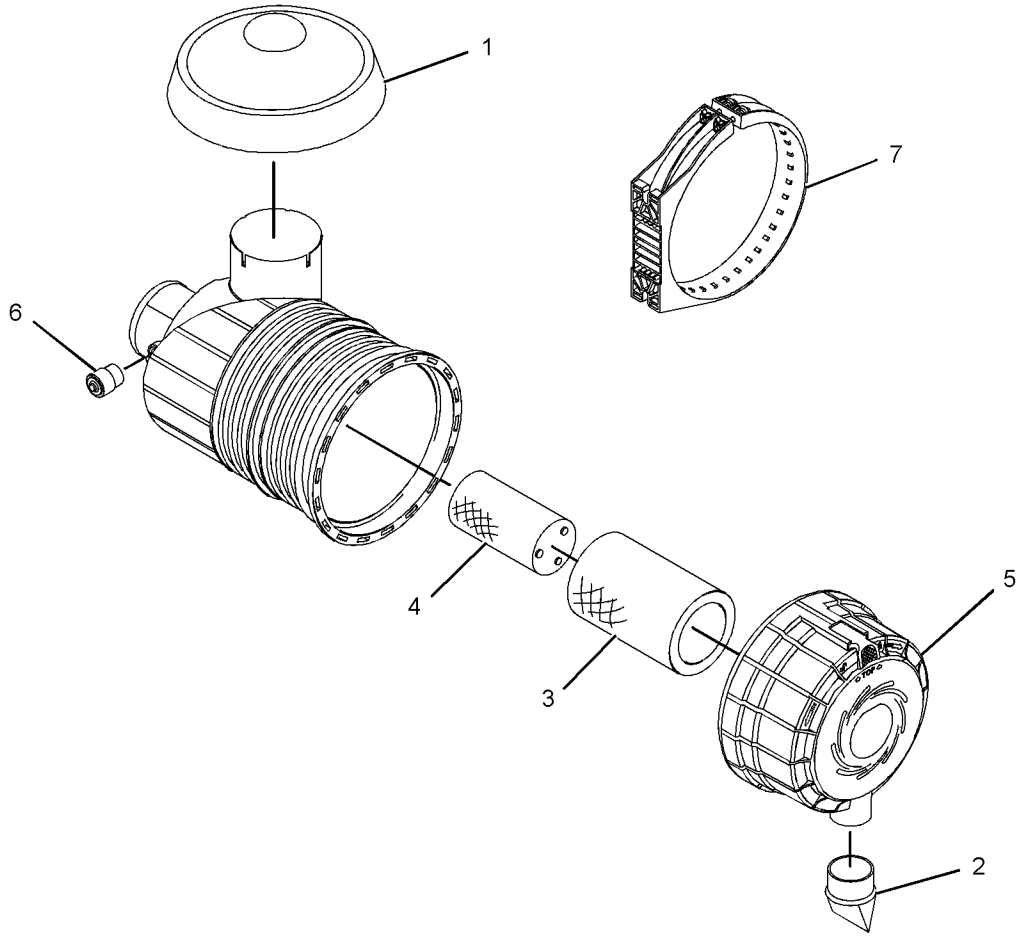

GRAPHIC #1 <END> g01430410

449-7366 AIR CLEANER GP

PART OF 307-2850, 311-7456 TURBOCHARGER GP

SMCS-1051, 1054 **i06580346**

NOTE	REF NO	GRAPHIC REF	PART NUMBER	QTY	PART NAME 1 2 3 4 5 6 (PRODUCT LEVEL)	SEE PAGE
	1	1	**104-2083**	1	CAP (AIR CLEANER)	
	2	1	**307-2808**	1	BRACKET	
	3	1	**6V-0447**	1	CLAMP-HOSE	
	4	1	**449-9365**	1	FILTER AS-AIR	
		1	**133-7403**	1	VALVE-DUST	
		1	**206-5234**	1	FILTER ELEMENT AS-AIR (PRIMARY)	
		1	**206-5235**	1	FILTER ELEMENT AS-AIR (SECONDARY)	
		1	**451-9226**	1	COVER-AIR CLEANER	
	5	1	**315-4691**	1	INDICATOR-AIR FILTER CHANGE	

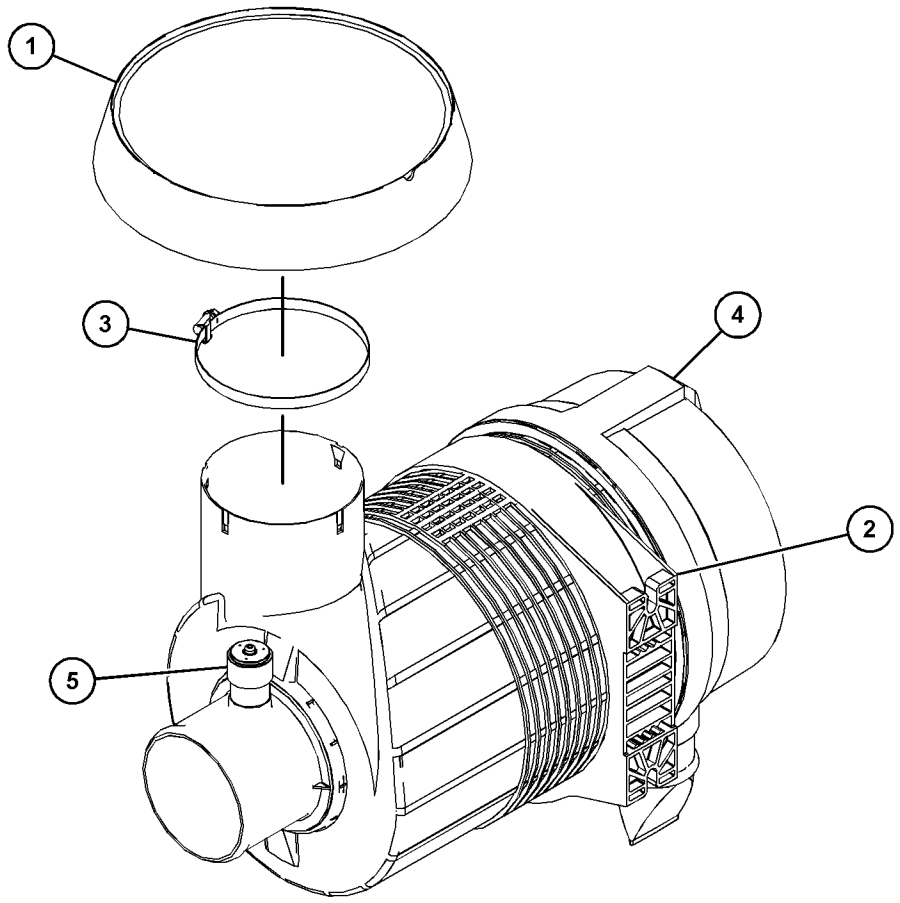

GRAPHIC #1 <END> g03832671

298-5116 CONNECTION GP-INLET–AIR

PART OF 435-1692 ENGINE AR-COMPLETE, 435-1685, 540-0570 ENGINE AR-PRIMARY
ALSO AN ATTACHMENT

SMCS-1087 **i03859378**

NOTE	REF NO	GRAPHIC REF	PART NUMBER	QTY	PART NAME 1 2 3 4 5 6 (PRODUCT LEVEL)	SEE PAGE
M	1	1	**124-3815**	4	BOLT (M8X1.25X16-MM)	
M	2	1	**6I-0260**	4	BOLT (M8X1.25X25-MM)	
M	3	1	**111-8222**	4	BOLT (M8X16-MM)	
	4	1	**114-2579**	2	GASKET	
	5	1	**185-6627**	2	PLATE	
	6	1	**238-8289**	1	PIPE AS	
	6A	1	**238-8288**	1	GASKET-INLET	

M - METRIC PART

298-5116 **CONNECTION GP-INLET (**contd.**)** **i03859378**

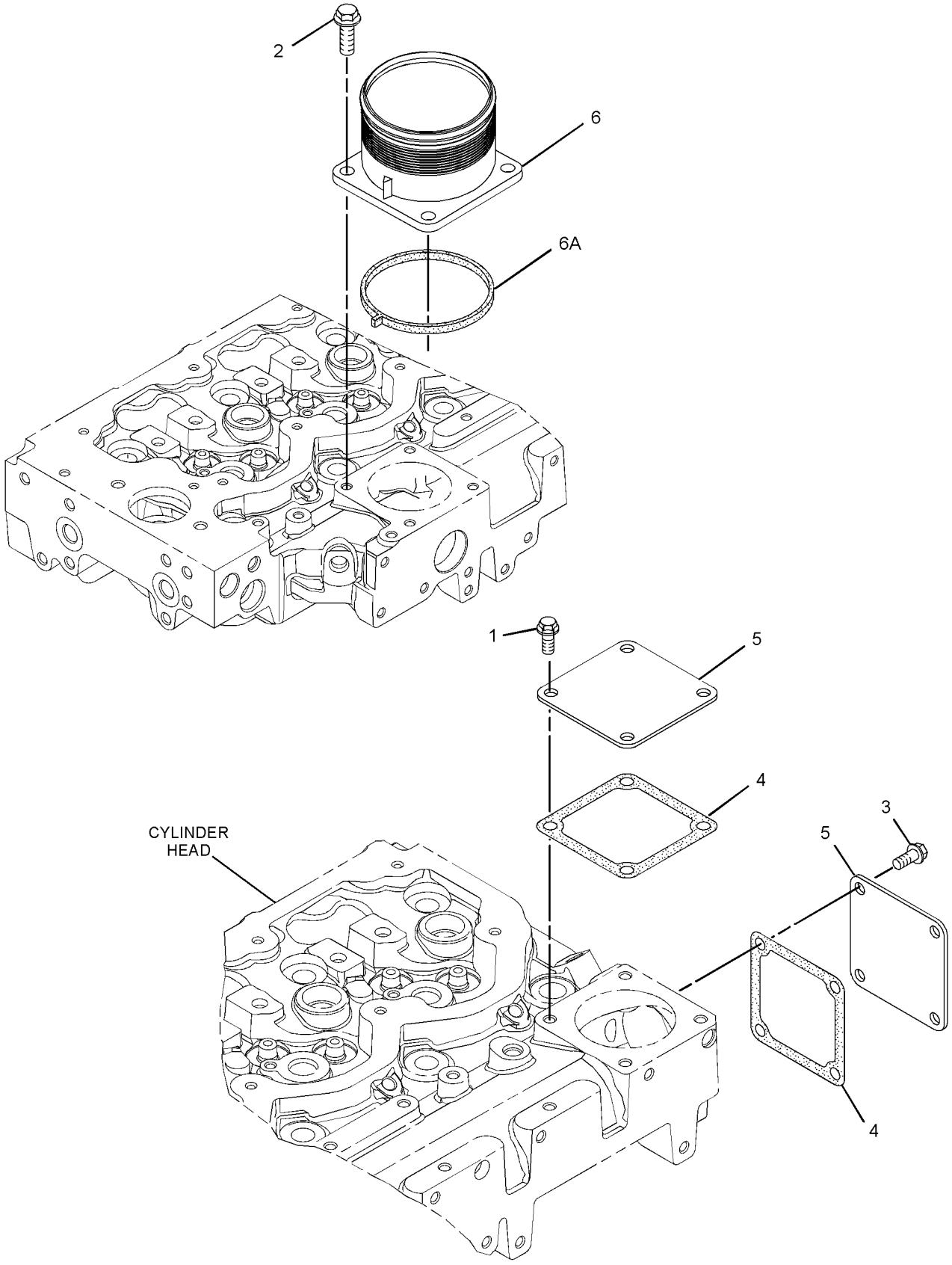

GRAPHIC #1 <END> g02145436

301-8248 CONNECTION GP-INLET–AIR

PART OF 435-1699 ENGINE AR, 435-1687, 437-5409, 522-8303, 540-1155, 540-1156 ENGINE AR-PRIMARY

SMCS-1087 **i02654280**

NOTE	REF NO	GRAPHIC REF	PART NUMBER	QTY	PART NAME 1 2 3 4 5 6 (PRODUCT LEVEL)	SEE PAGE
M	1	1	**6I-0260**	4	BOLT (M8X1.25X25-MM)	
M	2	1	**111-8222**	4	BOLT (M8X16-MM)	
	3	1	**114-2579**	2	GASKET	
M	4	1	**124-3815**	4	BOLT (M8X1.25X16-MM)	
	5	1	**185-6627**	2	PLATE	
	6	1	**238-8289**	1	PIPE AS	
	6A	1	**238-8288**	1	GASKET-INLET	

M - METRIC PART

301-8248 **CONNECTION GP-INLET (**contd.**)** **i02654280**

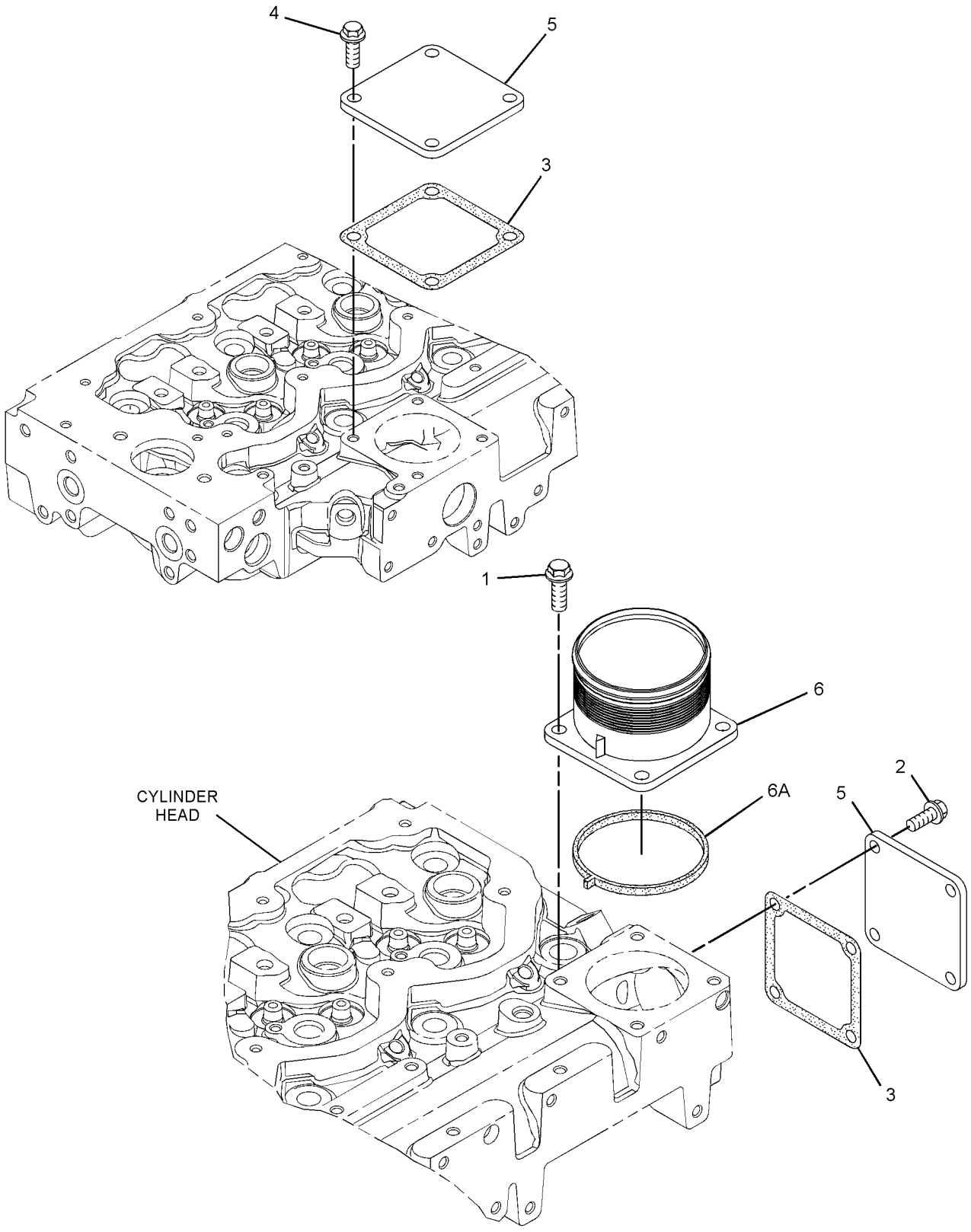

GRAPHIC #1 <END> g01368632

308-0307 CONNECTION GP-INLET–AIR

SMCS-1087 **i02689483**

NOTE	REF NO	GRAPHIC REF	PART NUMBER	QTY	PART NAME 1 2 3 4 5 6 (PRODUCT LEVEL)	SEE PAGE
M	1	1	**6I-0217**	2	BOLT (M8X1.25X20-MM)	
M	2	1	**220-8311**	2	BOLT (M8X1.25X115-MM)	
M	3	1	**111-8222**	4	BOLT (M8X16-MM)	
	4	1	**114-2579**	2	GASKET	
M	5	1	**124-3815**	4	BOLT (M8X1.25X16-MM)	
	6	1	**185-6627**	2	PLATE	
	7	1	**256-4447**	1	ELBOW AS-AIR INLET	
	7A	1	**238-8288**	1	GASKET-INLET	

M - METRIC PART

308-0307 **CONNECTION GP-INLET (**contd.**)** **i02689483**

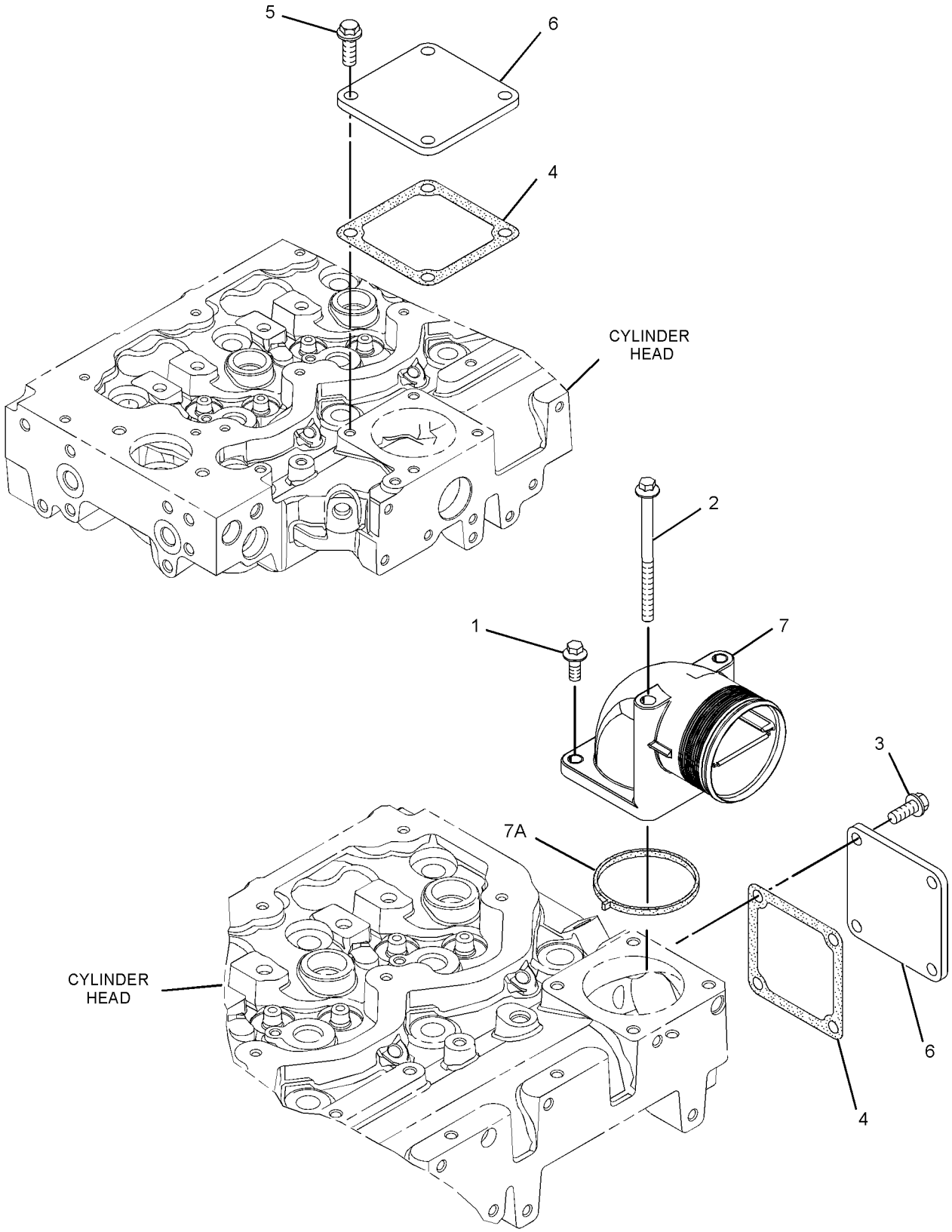

GRAPHIC #1 <END> g01373167

305-0640 COVER GP-INLET MANIFOLD

SMCS-1058 **i02678607**

NOTE	REF NO	GRAPHIC REF	PART NUMBER	QTY	PART NAME 1 2 3 4 5 6 (PRODUCT LEVEL)	SEE PAGE
	1	1	**185-6627**	2	PLATE	
	2	1	**114-2579**	2	GASKET	
M	3	1	**124-3815**	4	BOLT (M8X1.25X16-MM)	
M	4	1	**111-8222**	4	BOLT (M8X16-MM)	

M - METRIC PART

305-0640 **COVER GP-INLET MANIFOLD (**contd.**)** **i02678607**

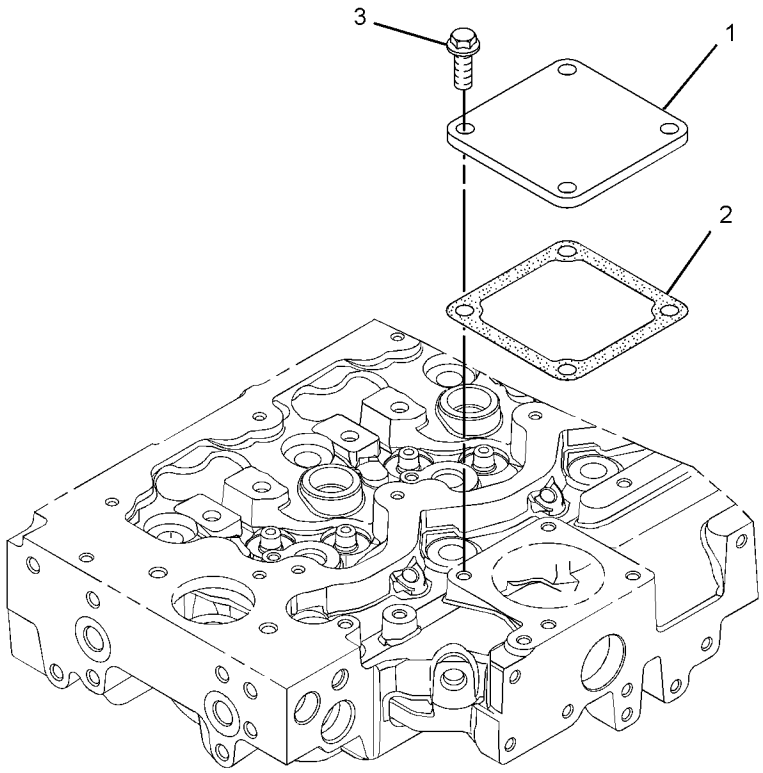

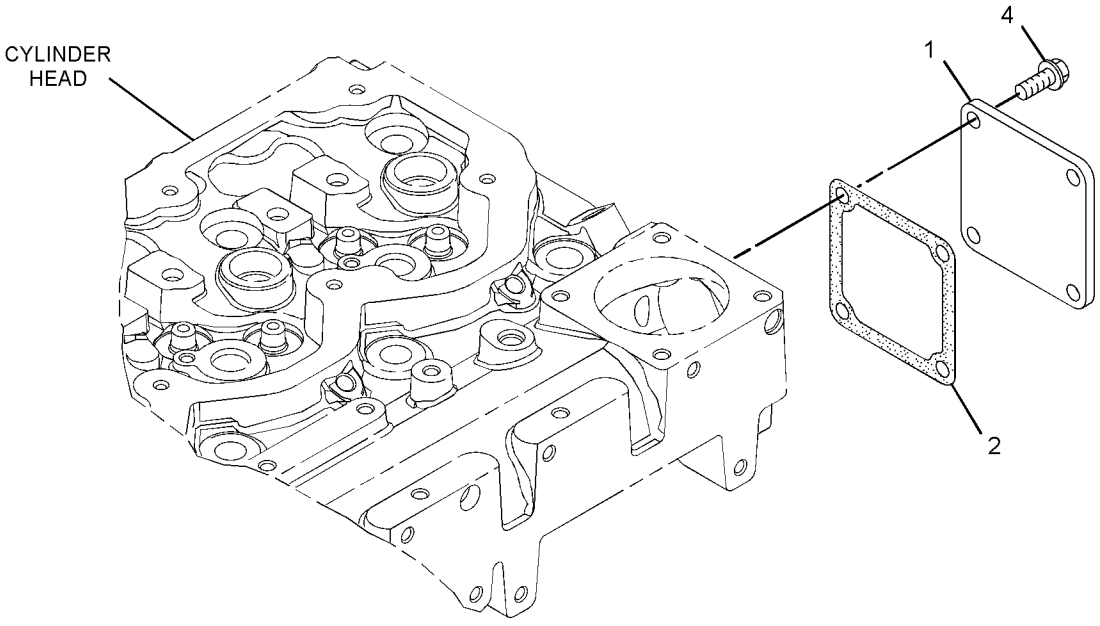

GRAPHIC #1 <END> g01373097

305-2169 COVER GP-INLET MANIFOLD

SMCS-1058 **i02686254**

NOTE	REF NO	GRAPHIC REF	PART NUMBER	QTY	PART NAME 1 2 3 4 5 6 (PRODUCT LEVEL)	SEE PAGE
	1	1	**114-2579**	2	GASKET	
M	2	1	**124-3815**	8	BOLT (M8X1.25X16-MM)	
	3	1	**185-6627**	2	PLATE	

M - METRIC PART

305-2169 **COVER GP-INLET MANIFOLD (**contd.**)** **i02686254**

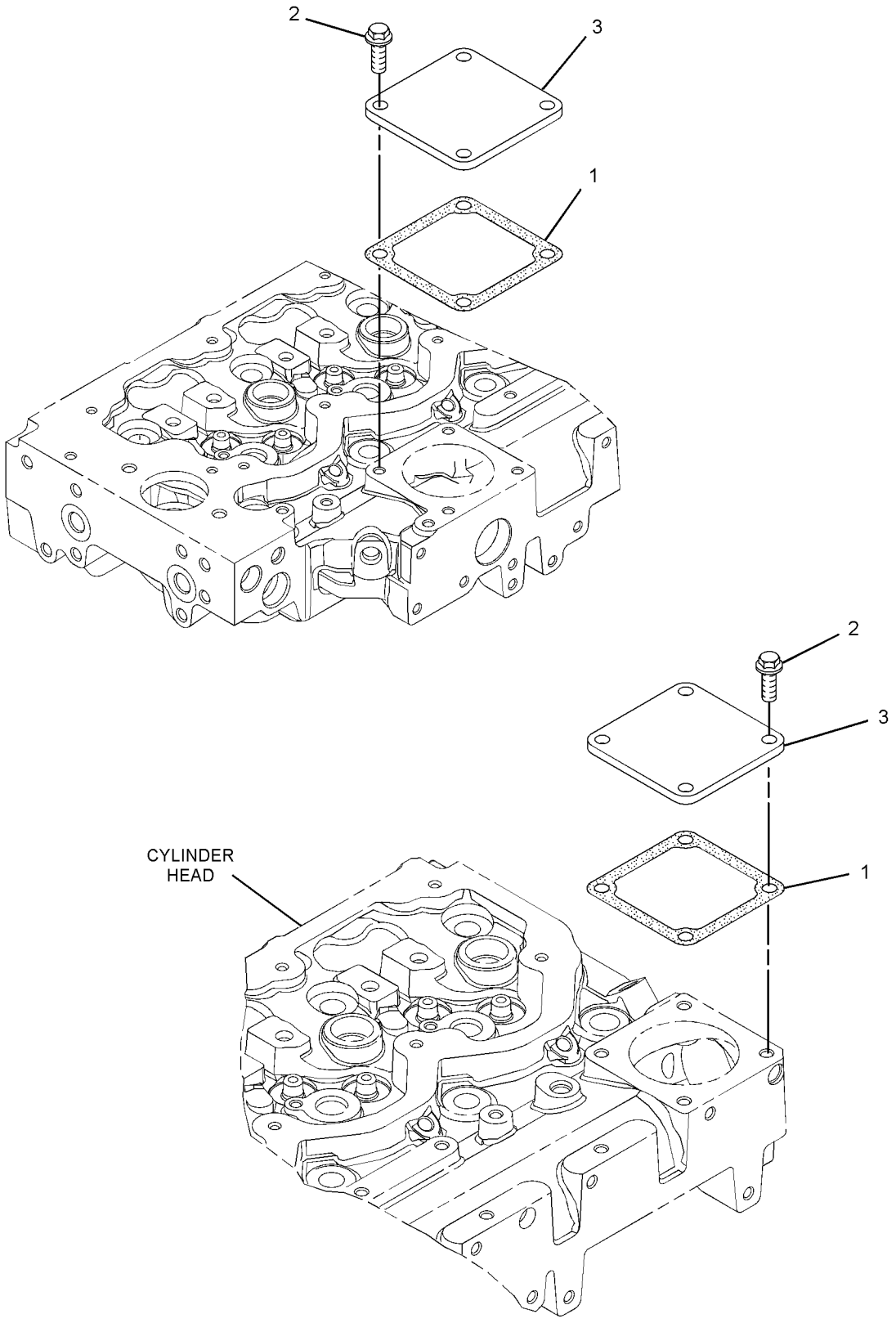

GRAPHIC #1 <END> g01373135

299-5167 ELBOW GP-AIR INLET

SMCS-1087 **i03705422**

NOTE	REF NO	GRAPHIC REF	PART NUMBER	QTY	PART NAME 1 2 3 4 5 6 (PRODUCT LEVEL)	SEE PAGE
	1	1	**256-4447**	1	ELBOW AS-AIR INLET	
	1A	1	**238-8288**	1	GASKET-INLET	
	2	1	**114-2579**	2	GASKET	
M	3	1	**124-3815**	8	BOLT (M8X1.25X16-MM)	
M	4	1	**6I-0572**	2	BOLT (M8X1.25X20-MM)	
	5	1	**233-7489**	2	BOLT (M8X1.25-THD)	
	6	1	**185-6627**	2	PLATE	

M - METRIC PART

299-5167 **ELBOW GP-AIR INLET (**contd.**)** **i03705422**

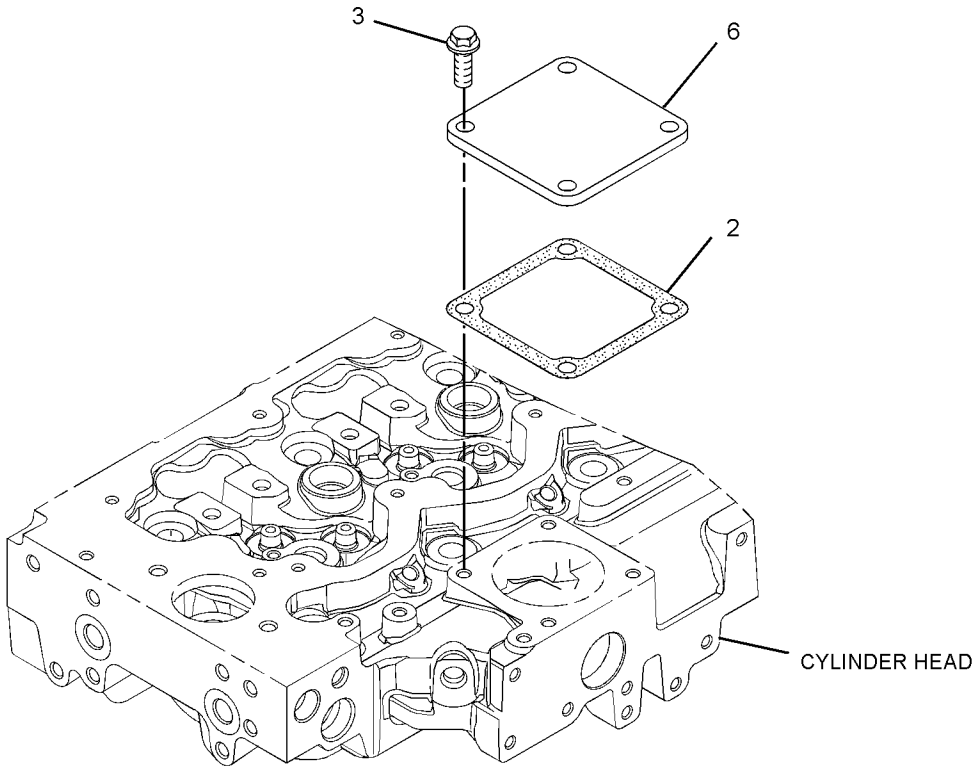

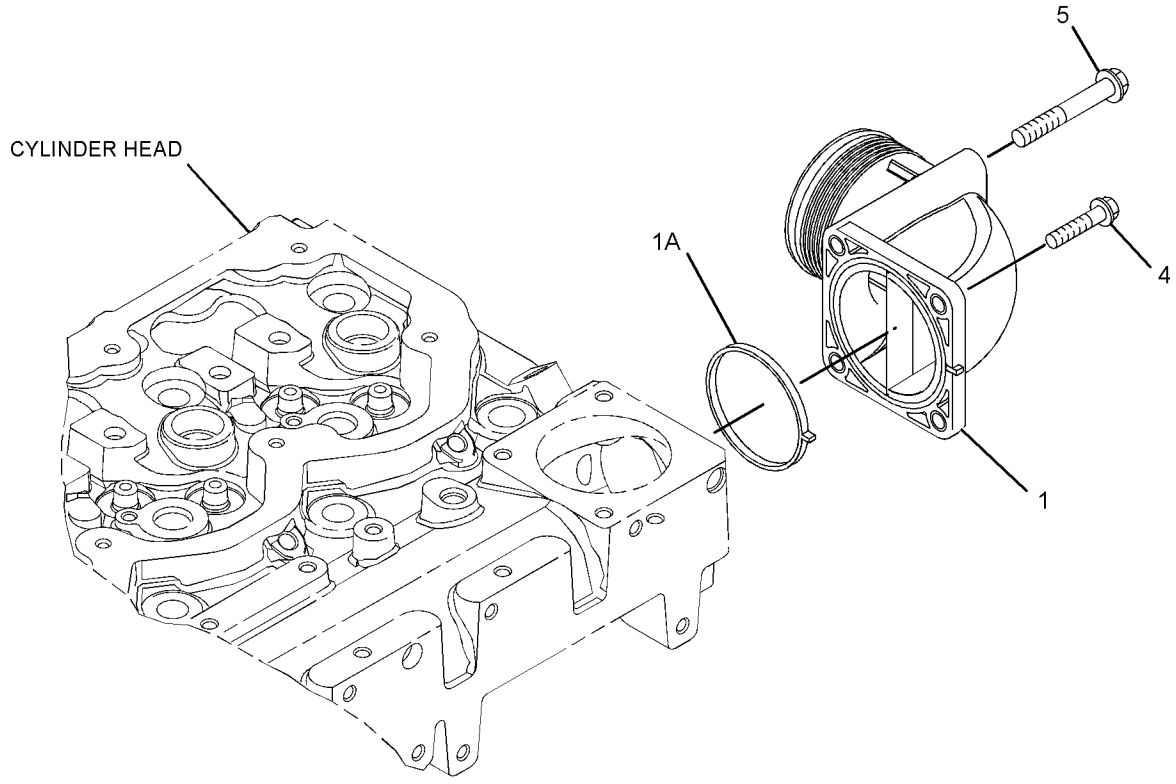

GRAPHIC #1 <END> g01372202

303-5777 ELBOW GP-AIR INLET

SMCS-1087 **i03823209**

NOTE	REF NO	GRAPHIC REF	PART NUMBER	QTY	PART NAME 1 2 3 4 5 6 (PRODUCT LEVEL)	SEE PAGE
	1	1	**256-4447**	1	ELBOW AS-AIR INLET	
	1A	1	**238-8288**	1	GASKET-INLET	
	2	1	**114-2579**	2	GASKET	
M	3	1	**111-8222**	4	BOLT (M8X16-MM)	
M	4	1	**220-8311**	2	BOLT (M8X1.25X115-MM)	
M	5	1	**6I-0217**	2	BOLT (M8X1.25X20-MM)	
	6	1	**185-8627**	2	PLATE-WARNING-ROPS/FOPS (FINNISH)	
M	7	1	**124-3815**	4	BOLT (M8X1.25X16-MM)	

M - METRIC PART

303-5777 **ELBOW GP-AIR INLET (**contd.**)** **i03823209**

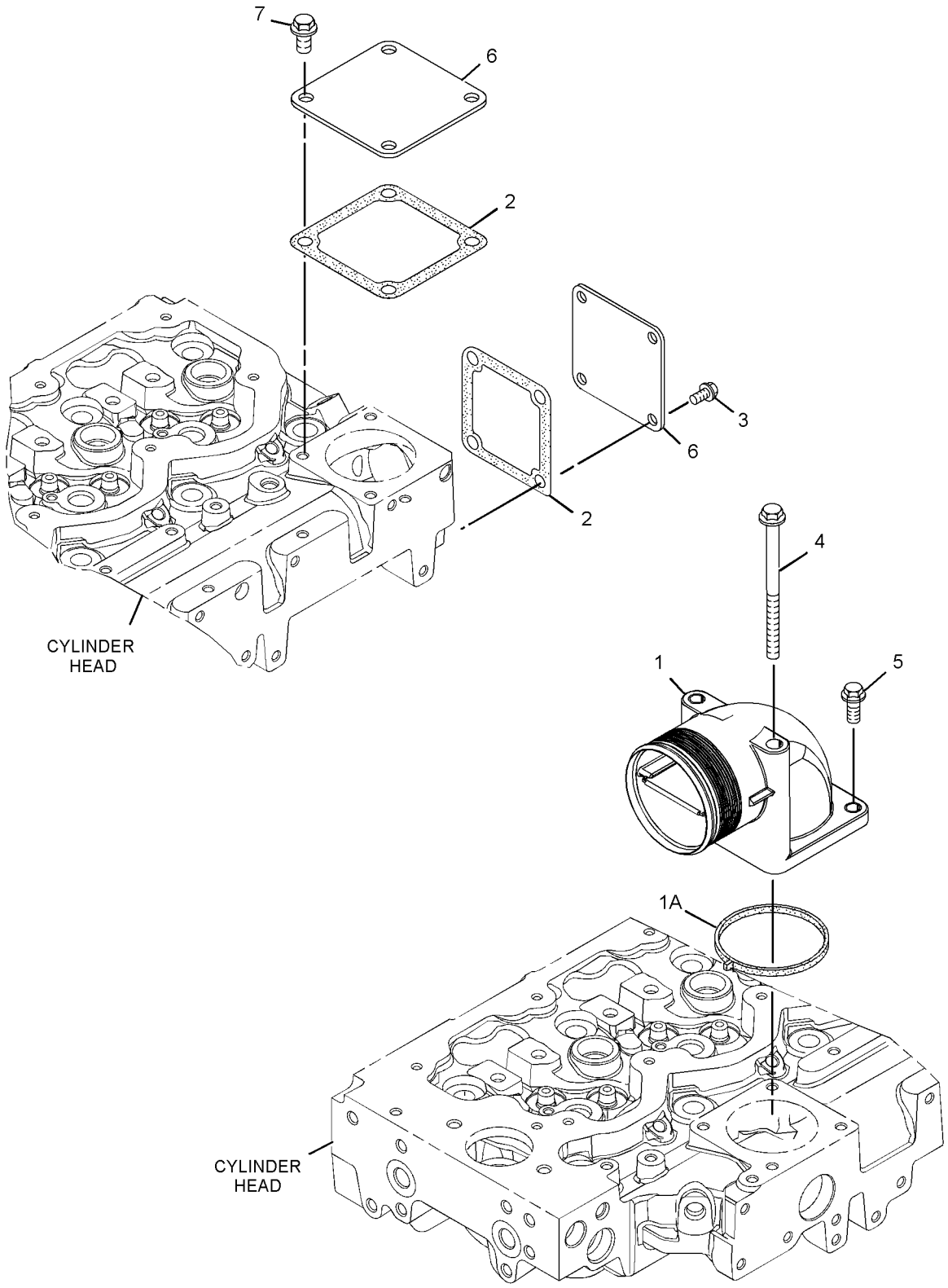

GRAPHIC #1 <END> g02091235

317-6399 FASTENER GP-TURBOCHARGER

SMCS-1052 **i05985427**

NOTE	REF NO	GRAPHIC REF	PART NUMBER	QTY	PART NAME 1 2 3 4 5 6 (PRODUCT LEVEL)	SEE PAGE
	1	1	**361-7519**	3	ROD-THREADED	
M	2	1	**6I-0563**	3	NUT (M10X1.5-THD)	

M - METRIC PART

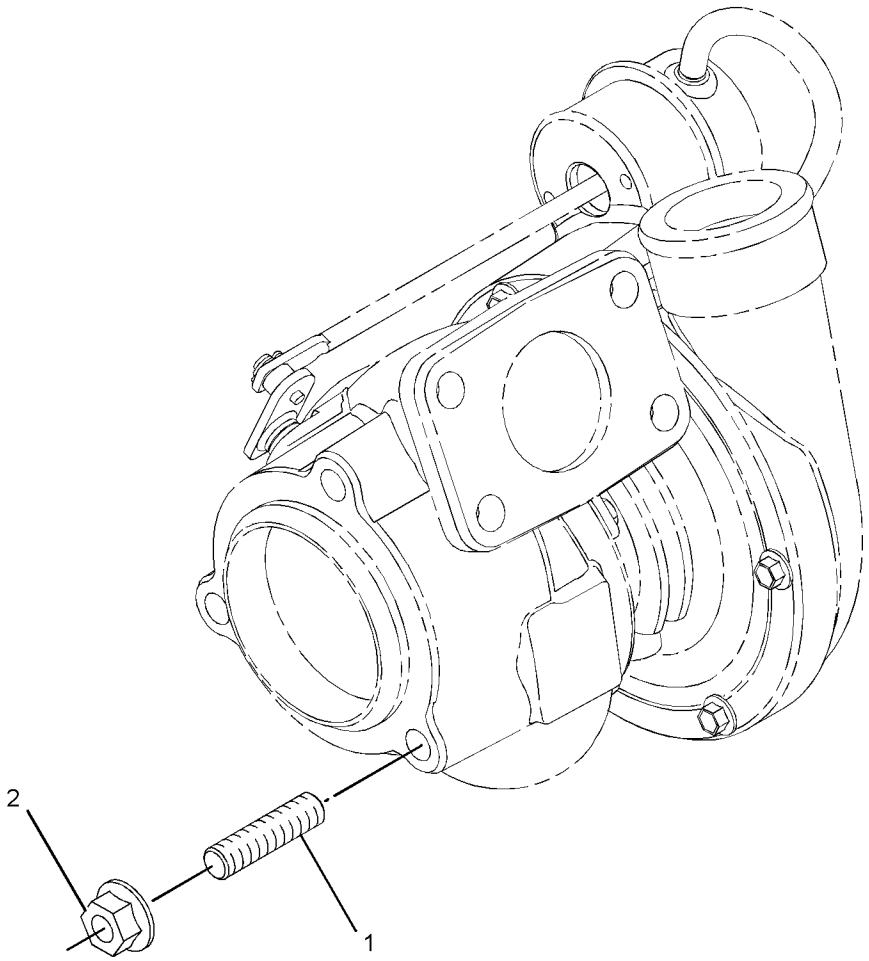

GRAPHIC #1 <END> g01421636

305-2168 MOUNTING GP-EXHAUST

SMCS-1061 **i02686290**

NOTE	REF NO	GRAPHIC REF	PART NUMBER	QTY	PART NAME 1 2 3 4 5 6 (PRODUCT LEVEL)	SEE PAGE
M	1	1	**6I-0563**	3	NUT (M10X1.5-THD)	
M	2	1	**6I-4012**	3	STUD	

M - METRIC PART

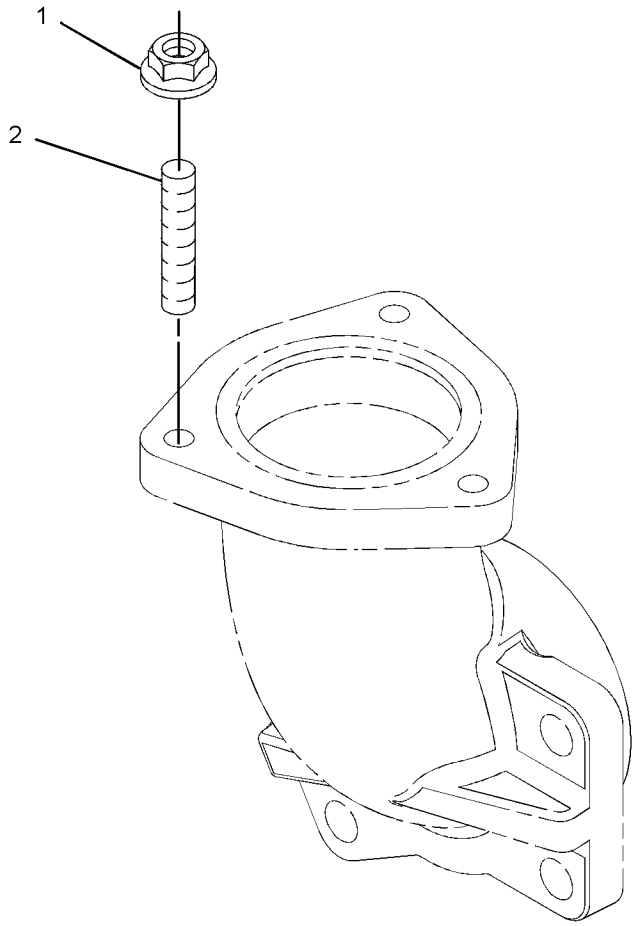

GRAPHIC #1 <END> g01341924

304-8762 PIPE GP-EXHAUST

PART OF 435-1699 ENGINE AR, 435-1687, 437-5409, 522-8303, 540-1155, 540-1156 ENGINE AR-PRIMARY

SMCS-1061 **i02678596**

NOTE	REF NO	GRAPHIC REF	PART NUMBER	QTY	PART NAME 1 2 3 4 5 6 (PRODUCT LEVEL)	SEE PAGE
	1	1	**6I-4013**	1	FLANGE	
	2	1	**6I-4039**	1	GASKET (EXHAUST)	
M	3	1	**6I-4012**	3	STUD	
M	4	1	**6I-0563**	3	NUT (M10X1.5-THD)	

M - METRIC PART

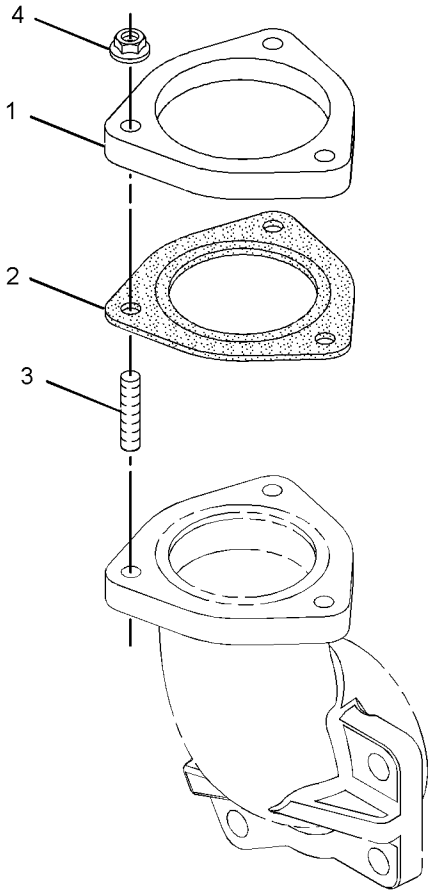

GRAPHIC #1 <END> g01373067

298-5113 TURBOCHARGER GP

S/N: 4441-421

SMCS-1052, 1053 **i02859786**

NOTE	REF NO	GRAPHIC REF	PART NUMBER	QTY	PART NAME 1 2 3 4 5 6 (PRODUCT LEVEL)	SEE PAGE
M	1	1	**6I-0217**	2	BOLT (M8X1.25X20-MM)	
M	2	2	**6I-4200**	3	BOLT (M10X1.5X16-MM)	
	3	2	**6I-0817**	1	ADAPTER	
	4	2	**9Y-9381**	1	WASHER-HARD	
M	5	2	**100-4830**	1	BOLT (M10X1.5X20-MM)	
M	6	1	**106-8916**	2	BOLT (M6X16-MM)	
	7	2	**127-8165**	1	SPACER	
	8	2	**298-4576**	1	CLIP	
	9	1	**225-8533**	1	GASKET	
	10	1	**225-8534**	1	GASKET	
	11	1	**238-8292**	1	BOLT-FLANGE HEAD	
M	13	1	**278-0361**	7	BOLT (M10X1.5X45-MM)	
	14	2	**294-7375**	1	SOLENOID (BOOST)	
R	15	1	**316-0477**	1	TURBOCHARGER	
	16	1	**298-4566**	1	TUBE AS	
	16A	1	**225-8524**	2	BOLT-SPECIAL	
	16B	1	**225-8526**	4	WASHER (10.4X13.75X1.37-MM THK)	
	17	1	**298-4568**	1	TUBE AS	
	18	1	**298-4569**	1	MANIFOLD-EXHAUST	
	19	1	**298-4570**	1	GASKET-EXHAUST MANIFOLD	
	20	2	**303-5792**	1	BRACKET	
	22	2	**303-5791**	1	TUBE AS	
	22A	2	**4B-8774**	1	NUT-FLARED	
	22B	2	**032-8047**	2	FERRULE	
	22C	2	**035-8014**	1	NUT	
	23	2	**305-2582**	1	TUBE AS	
	23A	2	**032-8047**	1	FERRULE	
	23B	2	**032-8191**	1	NUT	
	23C	2	**298-4576**	1	CLIP	
	23D	2	**300-6520**	1	HOSE AS	
	23E	2	**107-2348**	2	CLIP	
	24	1	**194-5390**	1	GASKET-MANIFOLD	
M	25	1	**147-5553**	4	STUD (M10X1.5X40-MM)	
M	26	1	**6I-0563**	4	NUT (M10X1.5-THD)	
	27	2	**303-2116**	9	CLIP	

M - METRIC PART
R - REMANUFACTURED PART MAY BE AVAILABLE

298-5113 **TURBOCHARGER GP (**contd.**)** **i02859786**

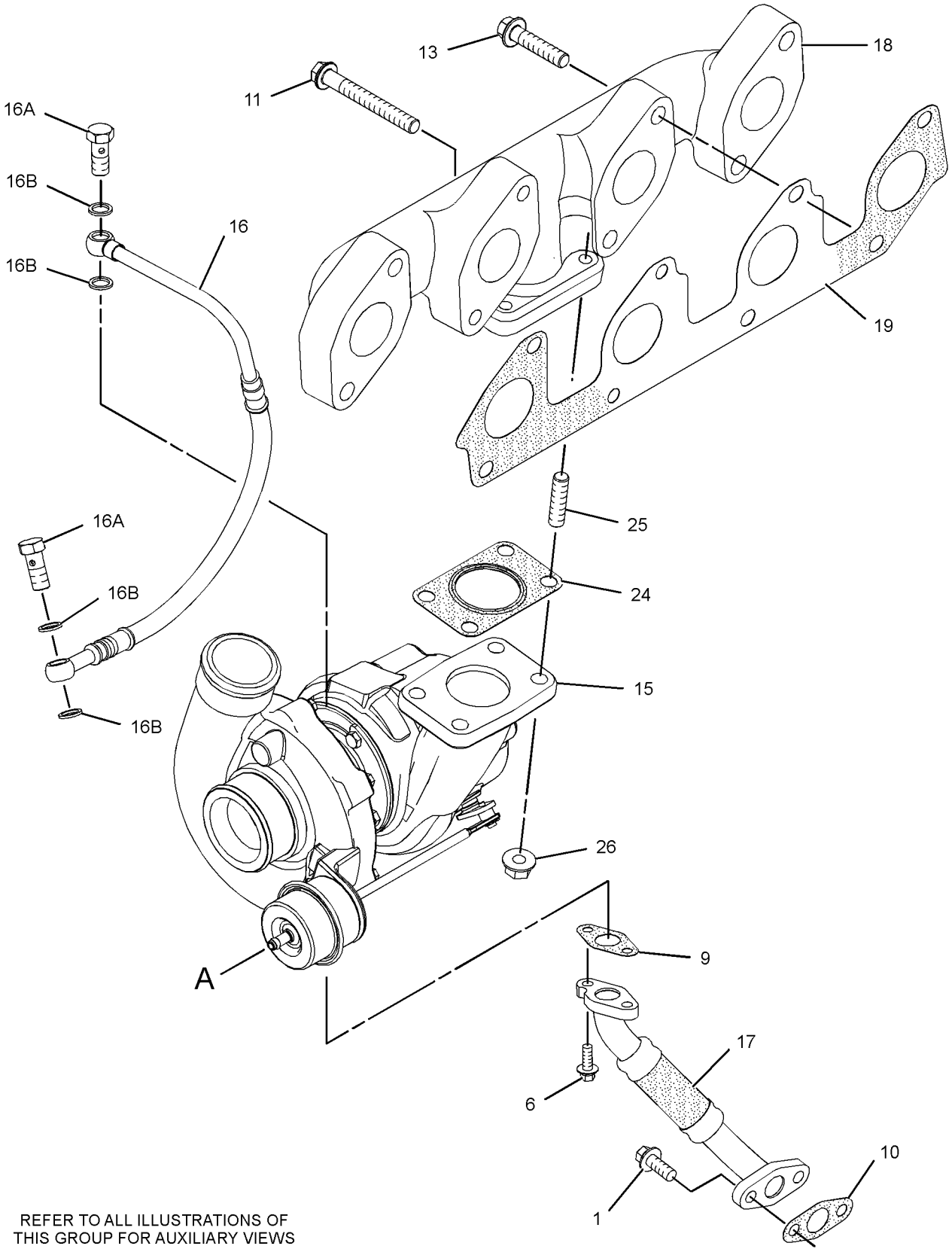

REFER TO ALL ILLUSTRATIONS OF
THIS GROUP FOR AUXILIARY VIEWS

GRAPHIC #1 g01437352

298-5113 **TURBOCHARGER GP (**contd.**)** **i02859786**

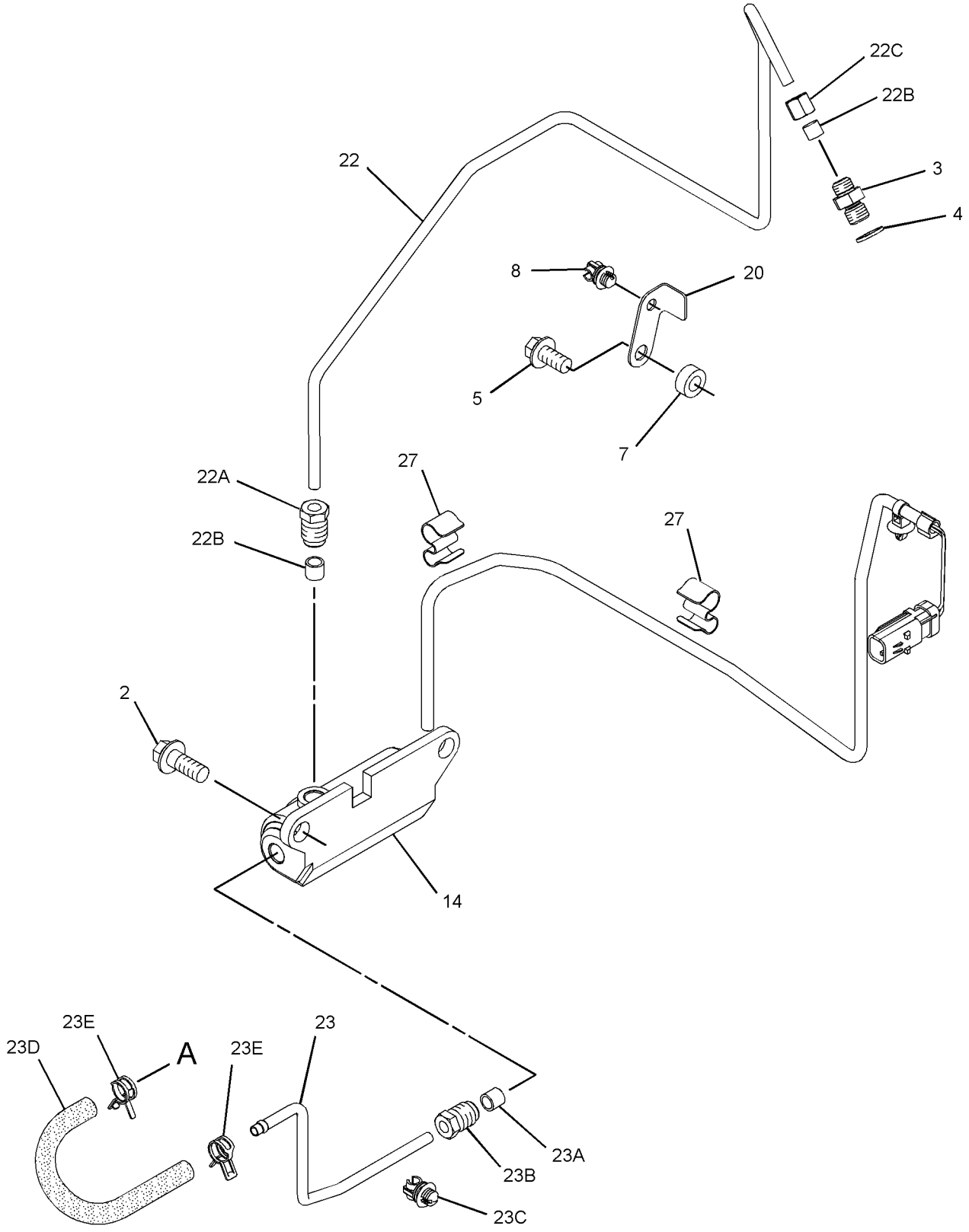

GRAPHIC #2 <END> g01437353

298-5113 TURBOCHARGER GP

TYPE 1

SMCS-1052, 1053 **i02966005**

NOTE	REF NO	GRAPHIC REF	PART NUMBER	QTY	PART NAME 1 2 3 4 5 6 (PRODUCT LEVEL)	SEE PAGE
M	1	1	**6I-0217**	2	BOLT (M8X1.25X20-MM)	
CM	2	2	**6I-0654**	2	BOLT (M10X1.5X25-MM)	
	3	2	**6I-0817**	1	ADAPTER	
	4	2	**9Y-9381**	1	WASHER-HARD	
M	5	2	**100-4830**	1	BOLT (M10X1.5X20-MM)	
M	6	1	**106-8916**	2	BOLT (M6X16-MM)	
	7	2	**127-8165**	1	SPACER	
	8	2	**298-4576**	1	CLIP	
	9	1	**225-8533**	1	GASKET	
	10	1	**225-8534**	1	GASKET	
	11	1	**238-8292**	1	BOLT-FLANGE HEAD	
C	12	2	**298-4573**	2	BOLT	
M	13	1	**278-0361**	7	BOLT (M10X1.5X45-MM)	
	14	2	**294-7375**	1	SOLENOID (BOOST)	
R	15	1	**316-0477**	1	TURBOCHARGER	
	16	1	**298-4566**	1	TUBE AS	
	16A	1	**225-8524**	2	BOLT-SPECIAL	
	16B	1	**225-8526**	4	WASHER (10.4X13.75X1.37-MM THK)	
	17	1	**298-4568**	1	TUBE AS	
	18	1	**298-4569**	1	MANIFOLD-EXHAUST	
	19	1	**298-4570**	1	GASKET-EXHAUST MANIFOLD	
	20	2	**303-5792**	1	BRACKET	
C	21	2	**310-7533**	1	BRACKET	
C	22	2	**324-6530**	1	TUBE AS-TURBOCHARGER	
	22A	2	**4B-8774**	1	NUT-FLARED	
	22B	2	**032-8047**	2	FERRULE	
	22C	2	**035-8014**	1	NUT	
C	23	2	**310-7536**	1	TUBE AS	
	23A	2	**032-8047**	1	FERRULE	
	23B	2	**4B-8774**	1	NUT-FLARED	
	23C	2	**298-4576**	1	CLIP	
	23D	2	**300-6520**	1	HOSE AS	
	23E	2	**107-2348**	2	CLIP	
	24	1	**194-5390**	1	GASKET-MANIFOLD	
M	25	1	**147-5553**	4	STUD (M10X1.5X40-MM)	
M	26	1	**6I-0563**	4	NUT (M10X1.5-THD)	
	27	2	**303-2116**	10	CLIP	

C - CHANGE FROM PREVIOUS TYPE
M - METRIC PART
R - REMANUFACTURED PART MAY BE AVAILABLE

298-5113 **TURBOCHARGER GP (**contd.**)** **i02966005**

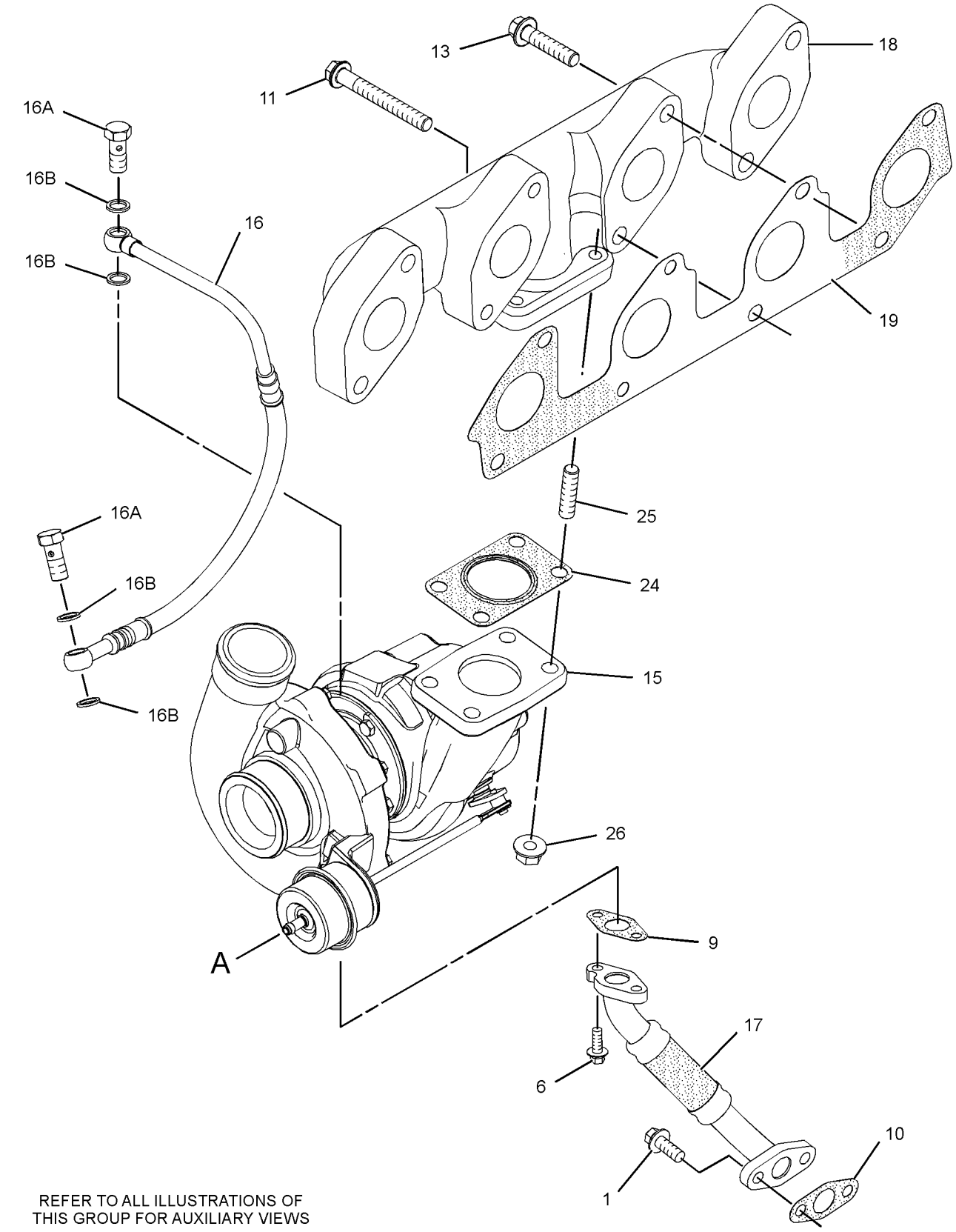

REFER TO ALL ILLUSTRATIONS OF
THIS GROUP FOR AUXILIARY VIEWS

GRAPHIC #1

g01672753

298-5113 **TURBOCHARGER GP (**contd.**)** **i02966005**

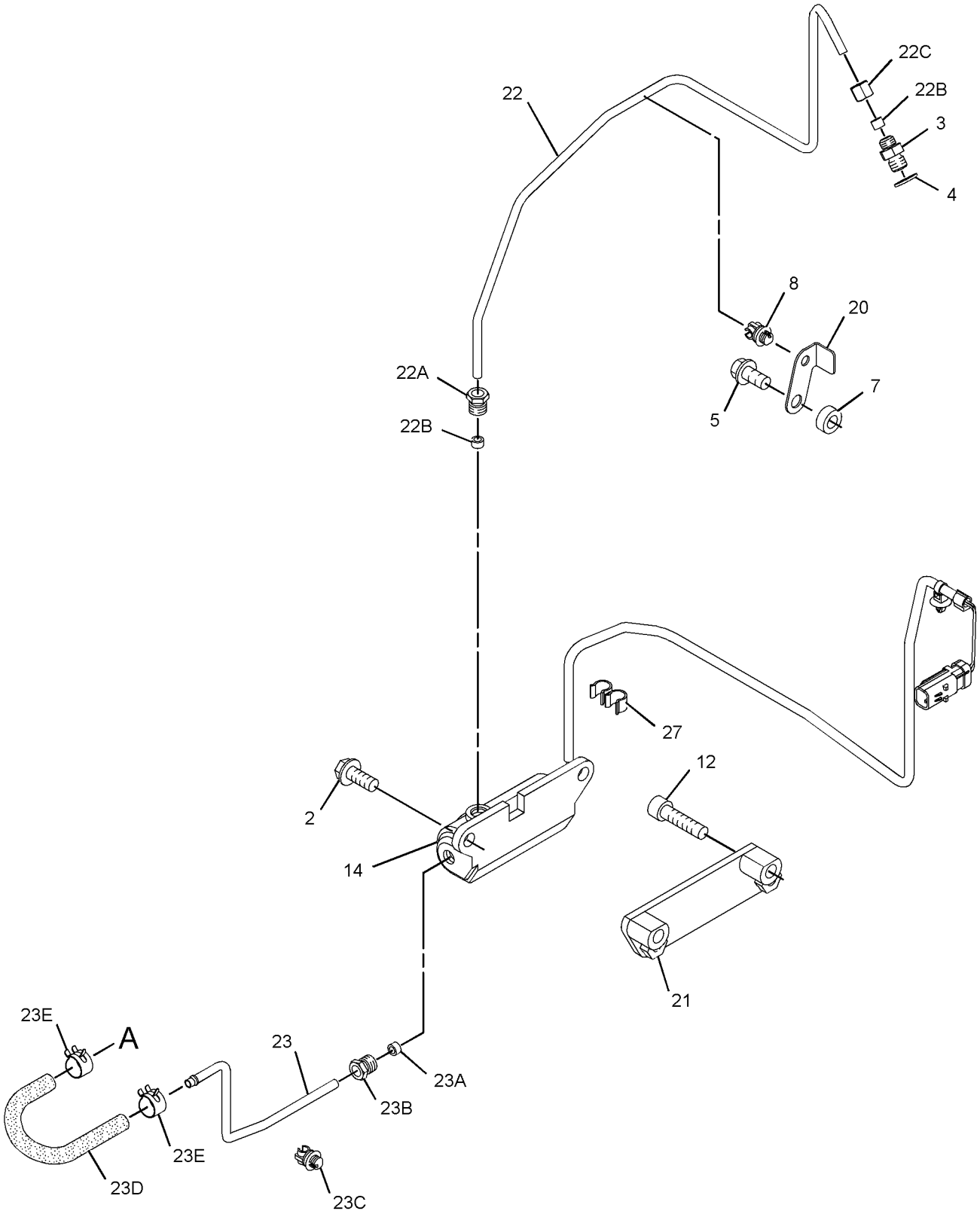

GRAPHIC #2 <END> g01672754

298-5113 TURBOCHARGER GP

TYPE 2

SMCS-1052, 1053 **i07030379**

NOTE	REF NO	GRAPHIC REF	PART NUMBER	QTY	PART NAME 1 2 3 4 5 6 (PRODUCT LEVEL)	SEE PAGE
M	1	1	**6I-0217**	2	BOLT (M8X1.25X20-MM)	
M	2	2	**6I-0654**	2	BOLT (M10X1.5X25-MM)	
	3	2	**6I-0817**	1	ADAPTER	
	4	2	**9Y-9381**	1	WASHER-HARD	
CM	5	2	**6I-4200**	1	BOLT (M10X1.5X16-MM)	
M	6	1	**106-8916**	2	BOLT (M6X16-MM)	
	8	2	**298-4576**	1	CLIP	
	9	1	**353-3477**	1	GASKET-TURBOCHARGER	
	10	1	**353-3478**	1	GASKET-TURBOCHARGER	
	11	1	**238-8292**	1	BOLT-FLANGE HEAD	
M	12	2	**8T-9515**	2	BOLT-SOCKET HEAD (M10X1.5X40-MM)	
M	13	1	**278-0361**	7	BOLT (M10X1.5X45-MM)	
	14	2	**294-7375**	1	SOLENOID (BOOST)	
R	15	1	**316-0477**	1	TURBOCHARGER	
	16	1	**298-4566**	1	TUBE AS	
	16A	1	**225-8524**	2	BOLT-SPECIAL	
	16B	1	**225-8526**	4	WASHER (10.4X13.75X1.37-MM THK)	
	17	1	**507-5015**	1	LINE AS	
	17A	1	**269-3086**	2	CLAMP-BAND	
	18	1	**298-4569**	1	MANIFOLD-EXHAUST	
	19	1	**298-4570**	1	GASKET-EXHAUST MANIFOLD	
C	20	2	**377-6869**	1	BRACKET	
	21	2	**310-7533**	1	BRACKET	
	22	2	**324-6530**	1	TUBE AS-TURBOCHARGER	
	23	2	**310-7536**	1	TUBE AS	
	23A	2	**298-4576**	1	CLIP	
	23B	2	**300-6520**	1	HOSE AS	
	23C	2	**107-2348**	2	CLIP	
	24	1	**194-5390**	1	GASKET-MANIFOLD	
	25	1	**361-7519**	4	ROD-THREADED	
M	26	1	**6I-0563**	4	NUT (M10X1.5-THD)	
	27	2	**303-2116**	10	CLIP	

C - CHANGE FROM PREVIOUS TYPE
M - METRIC PART
R - REMANUFACTURED PART MAY BE AVAILABLE

298-5113 **TURBOCHARGER GP (**contd.**)** **i07030379**

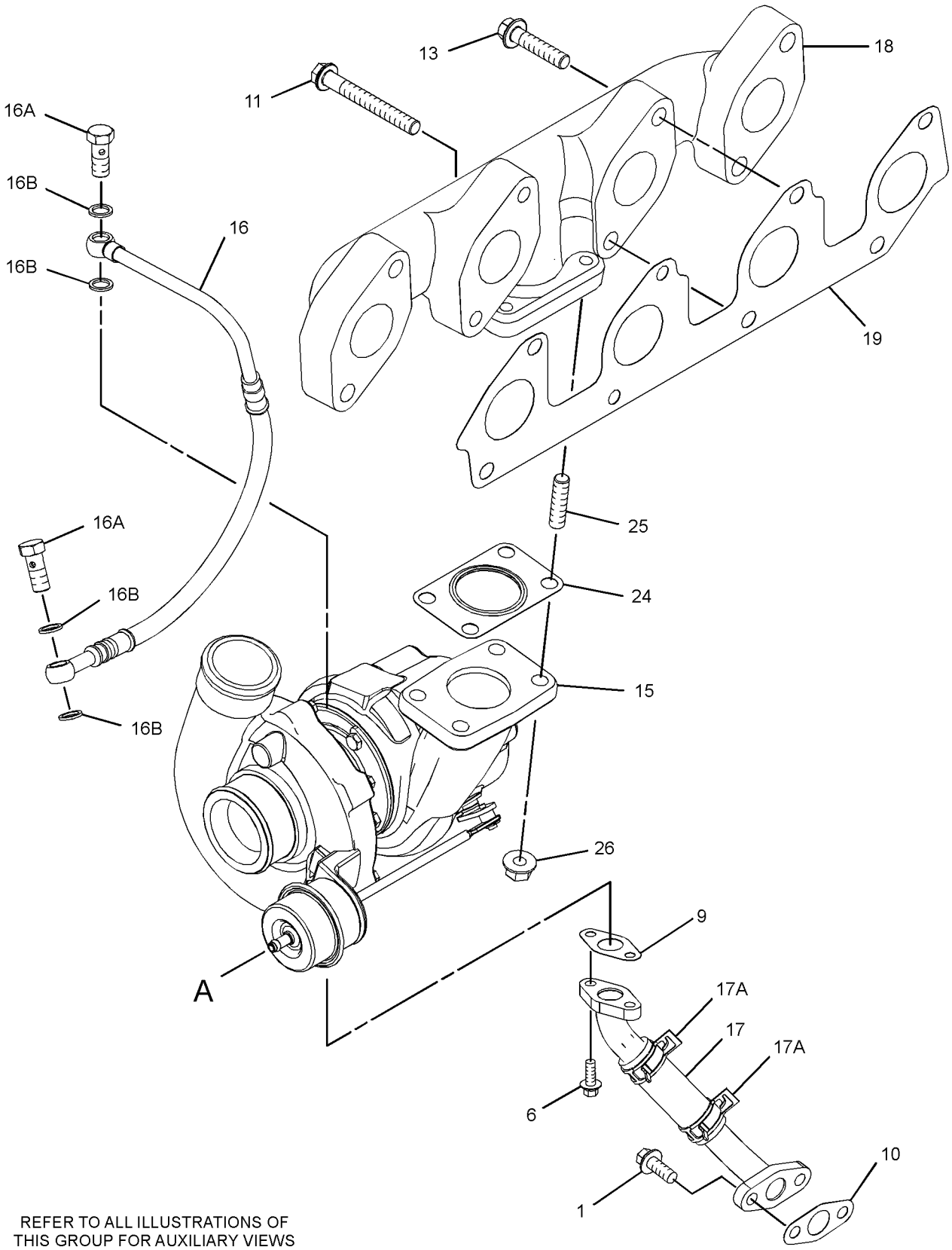

REFER TO ALL ILLUSTRATIONS OF
THIS GROUP FOR AUXILIARY VIEWS

GRAPHIC #1 g06211582

298-5113 **TURBOCHARGER GP (**contd.**)** **i07030379**

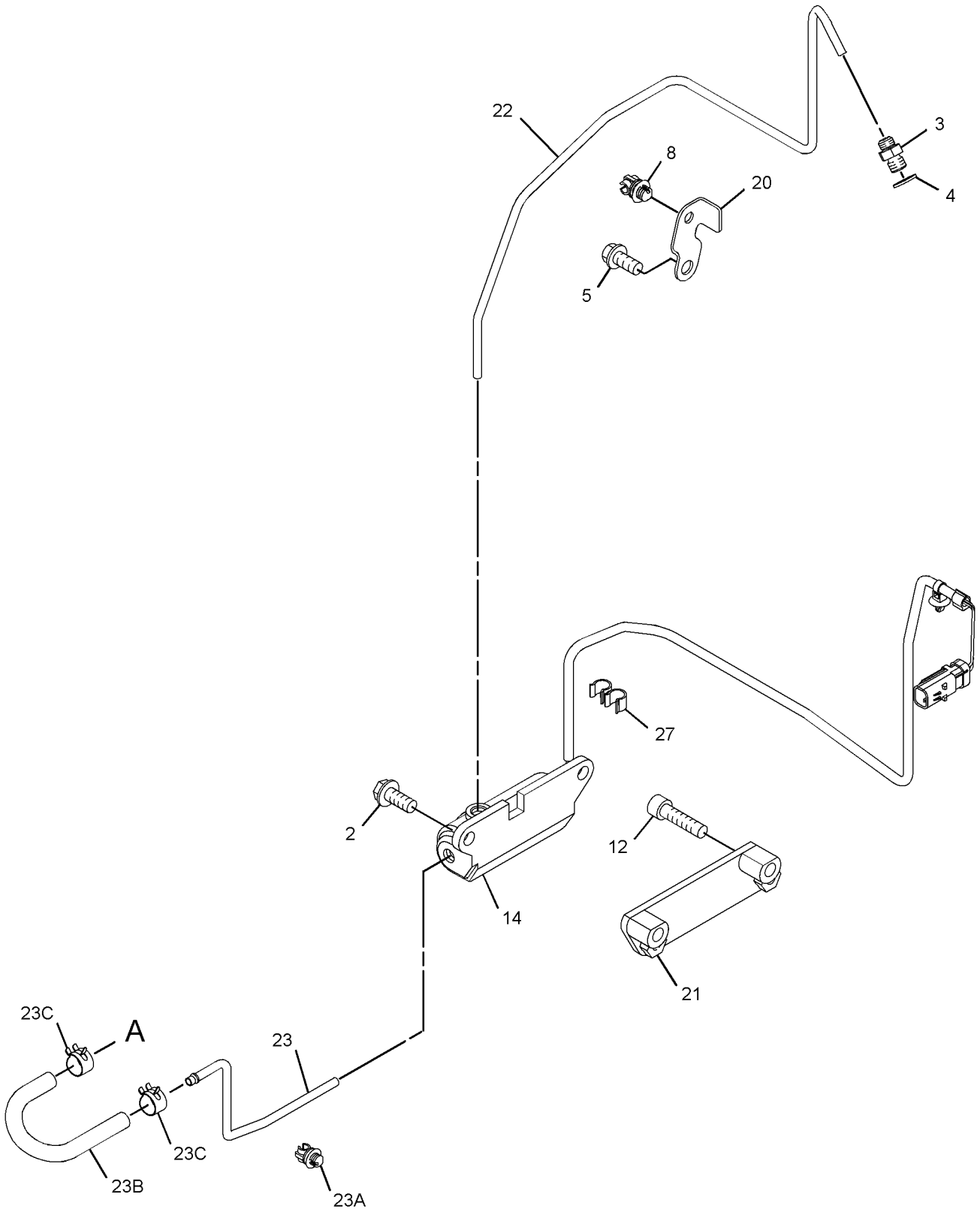

GRAPHIC #2 <END> g06211583

299-5043 TURBOCHARGER GP

TYPE 1

SMCS-1052, 1053 **i04367070**

NOTE	REF NO	GRAPHIC REF	PART NUMBER	QTY	PART NAME 1 2 3 4 5 6 (PRODUCT LEVEL)	SEE PAGE
M	1	1	**6I-0217**	2	BOLT (M8X1.25X20-MM)	
M	2	1	**6I-0563**	7	NUT (M10X1.5-THD)	
M	3	1	**6I-0593**	2	BOLT (M10X1.5X30-MM)	
M	4	1,2	**6I-0654**	5	BOLT (M10X1.5X25-MM)	
	5	2	**6I-0817**	1	ADAPTER	
	6	2	**9Y-9381**	1	WASHER-HARD	
M	7	2	**100-4830**	1	BOLT (M10X1.5X20-MM)	
M	8	1	**106-8916**	2	BOLT (M6X16-MM)	
	9	2	**127-8165**	1	SPACER	
M	10	1	**147-5553**	7	STUD (M10X1.5X40-MM)	
	11	1	**225-8530**	1	GASKET	
	12	1	**225-8533**	1	GASKET	
	13	1	**225-8534**	1	GASKET	
	14	1	**302-0581**	1	ADAPTER-EXHAUST	
	15	1	**238-8292**	1	BOLT-FLANGE HEAD	
	16	2	**278-0310**	1	SOLENOID AS (WASTEGATE)	
	17	1	**194-5390**	1	GASKET-MANIFOLD	
M	18	1	**278-0361**	7	BOLT (M10X1.5X45-MM)	
	19	1	**298-4566**	1	TUBE AS	
	19A	1	**225-8524**	2	BOLT-SPECIAL	
	19B	1	**225-8526**	4	WASHER (10.4X13.75X1.37-MM THK)	
	20	1	**298-4568**	1	TUBE AS	
	21	1	**298-4569**	1	MANIFOLD-EXHAUST	
	22	1	**298-4570**	1	GASKET-EXHAUST MANIFOLD	
	23	2	**310-7533**	1	BRACKET	
	24	2	**298-4573**	2	BOLT	
	25	2	**310-7536**	1	TUBE AS	
	25A	2	**4B-8774**	1	NUT-FLARED	
	25B	2	**032-8047**	2	FERRULE	
	25C	2	**298-4576**	1	CLIP	
	25D	2	**300-6520**	1	HOSE AS	
	25E	2	**107-2348**	2	CLIP	
	26	2	**324-6530**	1	TUBE AS-TURBOCHARGER	
	26A	2	**4B-8774**	1	NUT-FLARED	
	26B	2	**032-8047**	2	FERRULE	
	26C	2	**035-8014**	1	NUT	
	27	1	**316-0510**	1	TURBOCHARGER	
	28	1	**314-3723**	1	BRACKET	
	29	2	**303-2116**	6	CLIP	
	30	2	**303-5792**	1	BRACKET	
	31	2	**298-4576**	1	CLIP	
	32	1	**227-4562**	1	ELBOW-EXHAUST	

M - METRIC PART

299-5043 **TURBOCHARGER GP (**contd.**)** **i04367070**

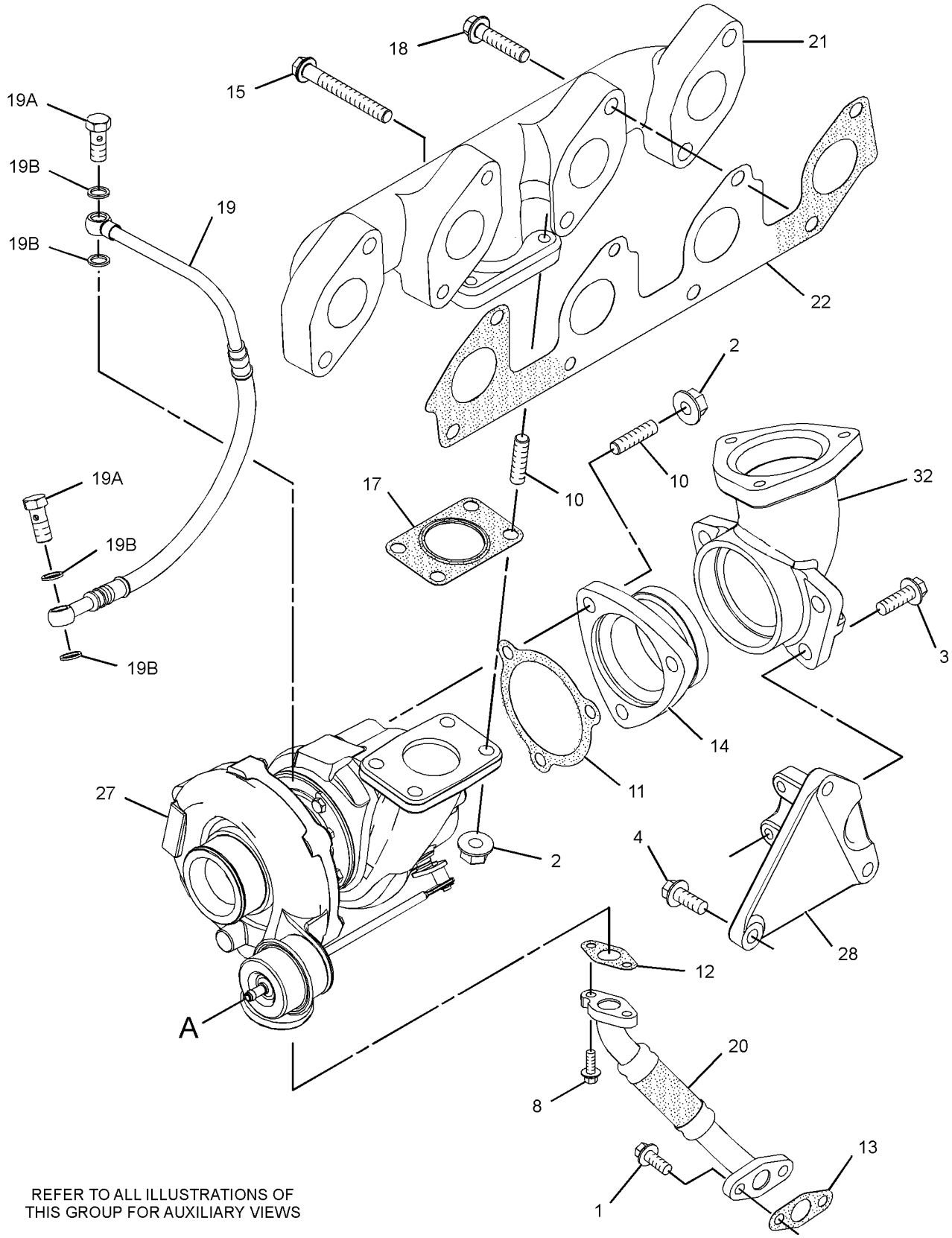

REFER TO ALL ILLUSTRATIONS OF
THIS GROUP FOR AUXILIARY VIEWS

GRAPHIC #1 g01443807

299-5043 **TURBOCHARGER GP (**contd.**)** **i04367070**

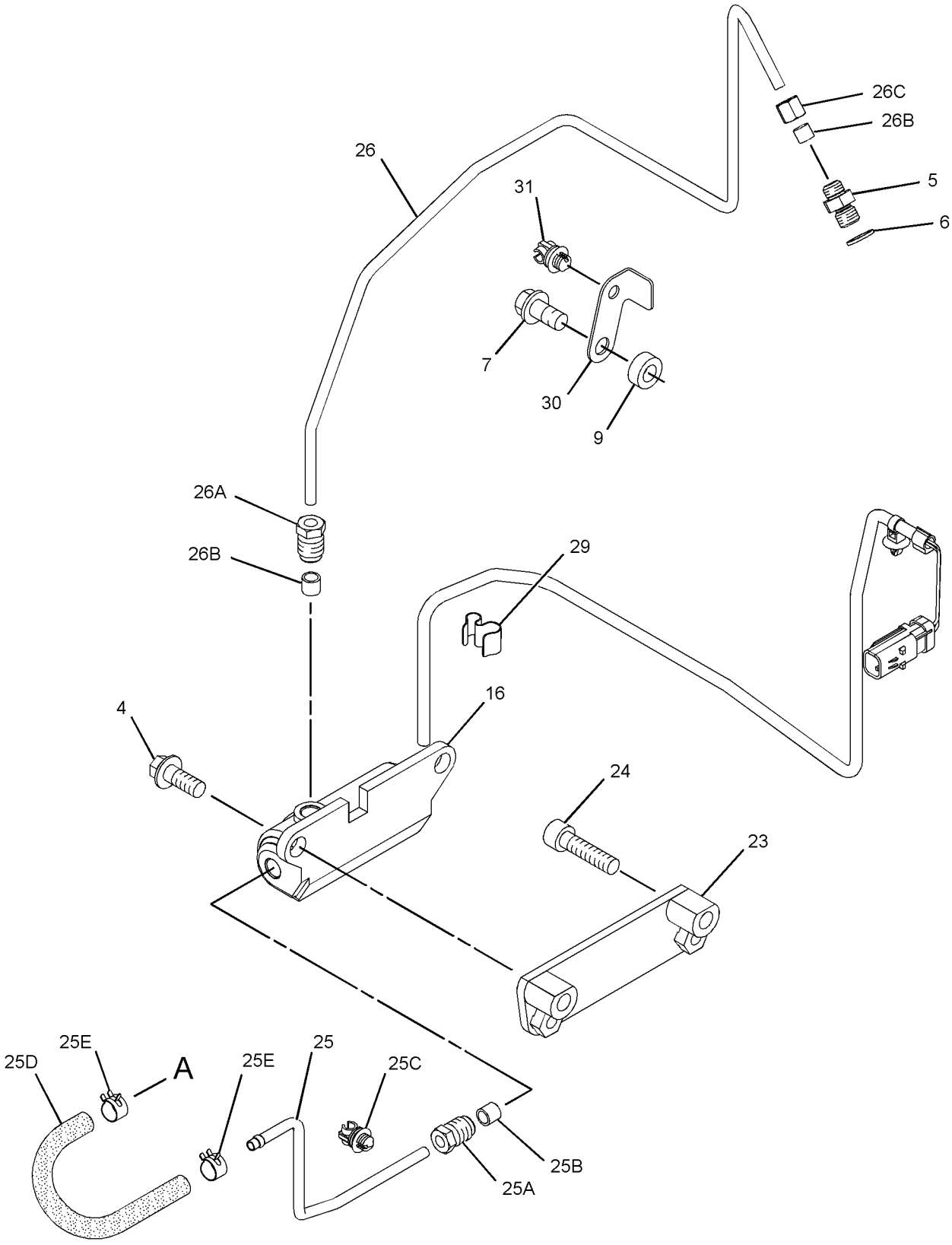

GRAPHIC #2 <END> g01530819

299-5043 TURBOCHARGER GP

TYPE 2

SMCS-1052, 1053 **i07030376**

NOTE	REF NO	GRAPHIC REF	PART NUMBER	QTY	PART NAME 1 2 3 4 5 6 (PRODUCT LEVEL)	SEE PAGE
M	1	1	**6I-0217**	2	BOLT (M8X1.25X20-MM)	
M	2	1	**6I-0563**	7	NUT (M10X1.5-THD)	
M	3	1	**6I-0593**	2	BOLT (M10X1.5X30-MM)	
M	4	1,2	**6I-0654**	5	BOLT (M10X1.5X25-MM)	
	5	2	**6I-0817**	1	ADAPTER	
	6	2	**9Y-9381**	1	WASHER-HARD	
CM	7	2	**6I-4200**	1	BOLT (M10X1.5X16-MM)	
M	8	1	**106-8916**	2	BOLT (M6X16-MM)	
	10	1	**361-7519**	7	ROD-THREADED	
	11	1	**225-8530**	1	GASKET	
	12	1	**353-3477**	1	GASKET-TURBOCHARGER	
	13	1	**353-3478**	1	GASKET-TURBOCHARGER	
	14	1	**302-0581**	1	ADAPTER-EXHAUST	
	15	1	**238-8292**	1	BOLT-FLANGE HEAD	
	16	2	**278-0310**	1	SOLENOID AS (WASTEGATE)	
	17	1	**194-5390**	1	GASKET-MANIFOLD	
M	18	1	**278-0361**	7	BOLT (M10X1.5X45-MM)	
	19	1	**298-4566**	1	TUBE AS	
	19A	1	**225-8524**	2	BOLT-SPECIAL	
	19B	1	**225-8526**	4	WASHER (10.4X13.75X1.37-MM THK)	
	20	1	**507-5015**	1	LINE AS	
	20A	1	**269-3086**	2	CLAMP-BAND	
	21	1	**298-4569**	1	MANIFOLD-EXHAUST	
	22	1	**298-4570**	1	GASKET-EXHAUST MANIFOLD	
	23	2	**310-7533**	1	BRACKET	
M	24	2	**8T-9515**	2	BOLT-SOCKET HEAD (M10X1.5X40-MM)	
	25	2	**310-7536**	1	TUBE AS	
	26	2	**324-6530**	1	TUBE AS-TURBOCHARGER	
	27	1	**316-0510**	1	TURBOCHARGER	
	28	1	**314-3723**	1	BRACKET	
	29	2	**303-2116**	6	CLIP	
C	30	2	**377-6869**	1	BRACKET	
	31	2	**298-4576**	1	CLIP	
	32	1	**227-4562**	1	ELBOW-EXHAUST	

C - CHANGE FROM PREVIOUS TYPE
M - METRIC PART

299-5043 **TURBOCHARGER GP (**contd.**)** **i07030376**

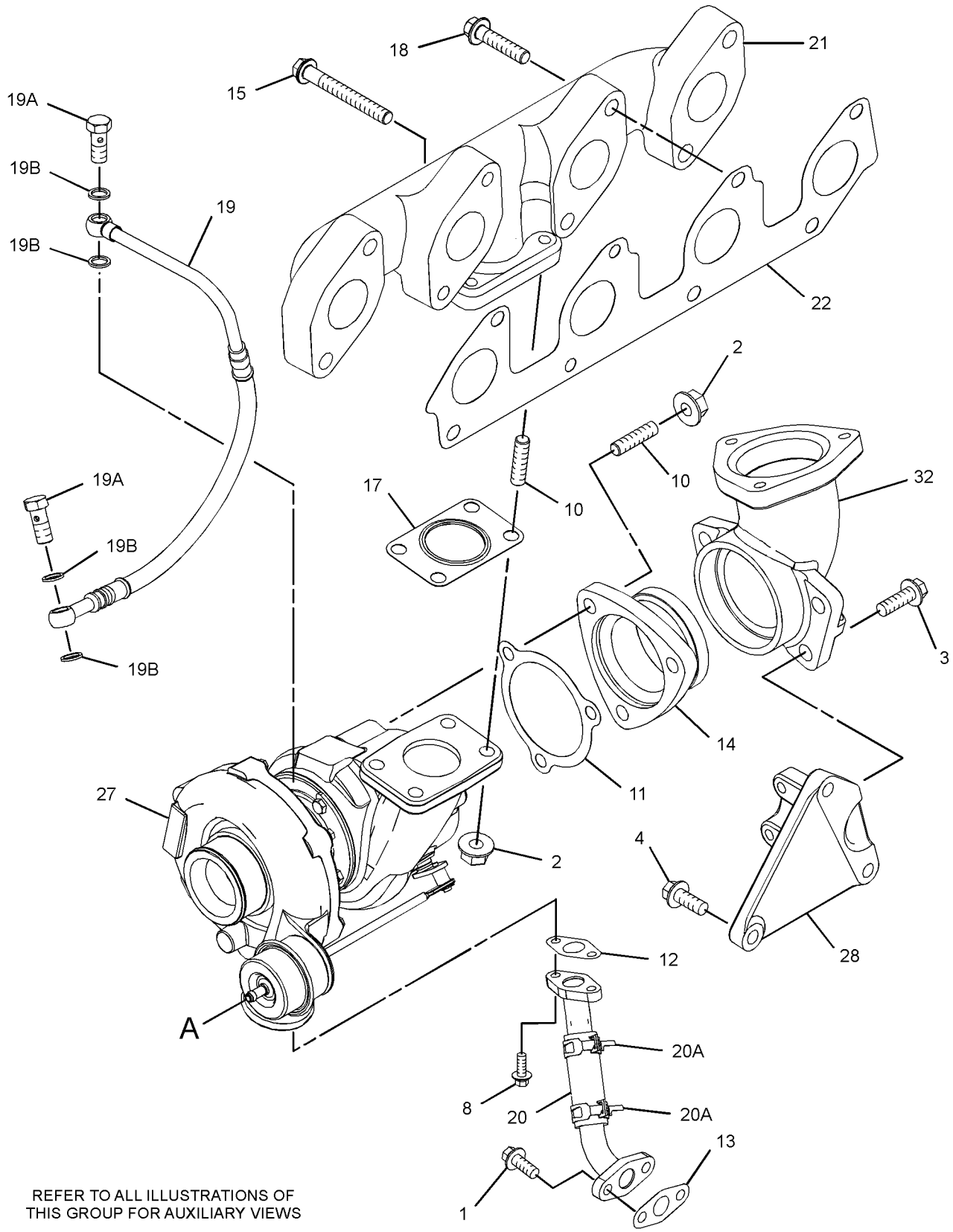

REFER TO ALL ILLUSTRATIONS OF
THIS GROUP FOR AUXILIARY VIEWS

GRAPHIC #1 g06208904

299-5043 **TURBOCHARGER GP (**contd.**)** **i07030376**

REFER TO ALL ILLUSTRATIONS OF
THIS GROUP FOR AUXILIARY VIEWS

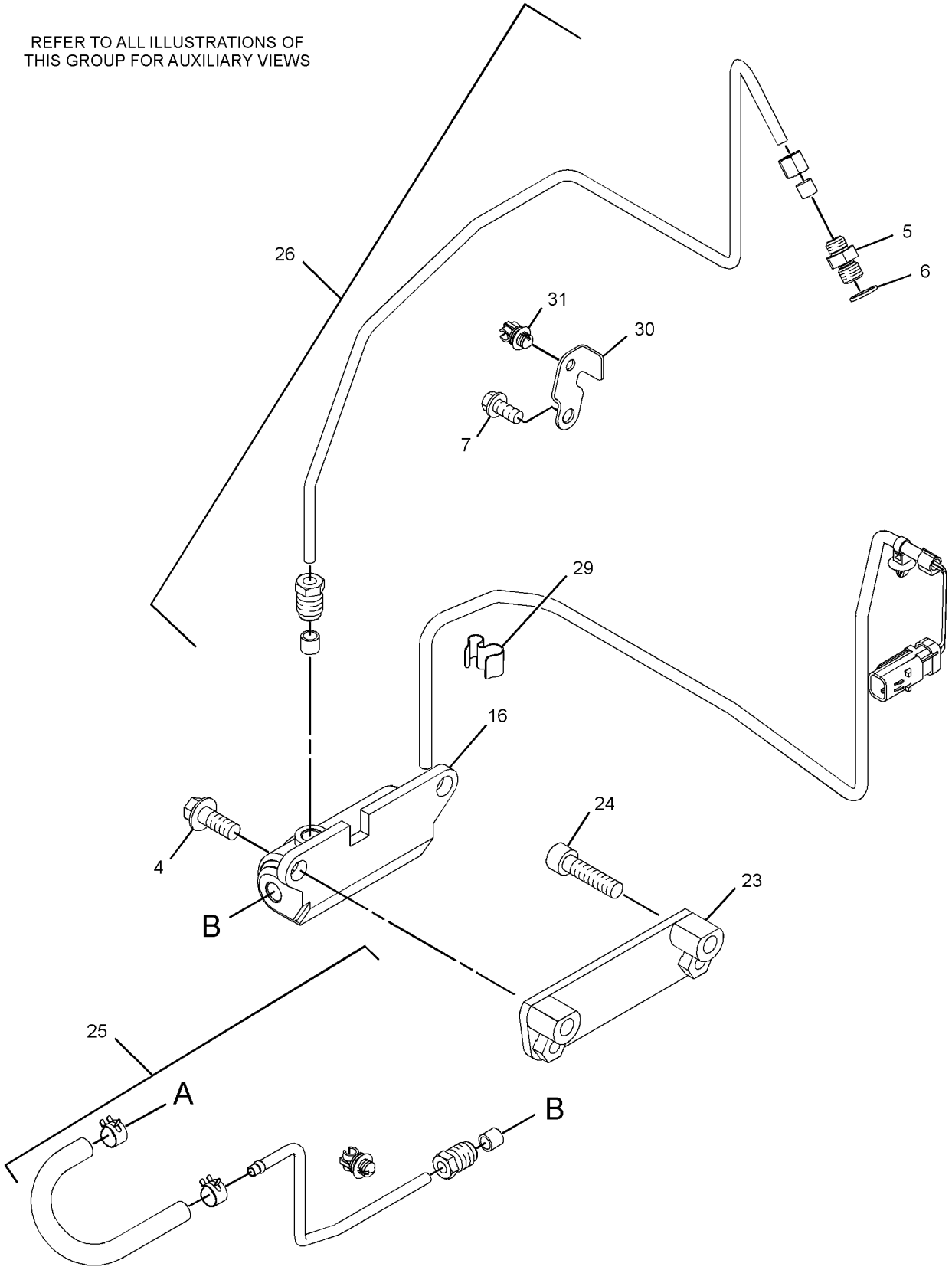

GRAPHIC #2 <END> g06208905

301-8246 TURBOCHARGER GP

TYPE 1

SMCS-1052, 1053 **i05171197**

NOTE	REF NO	GRAPHIC REF	PART NUMBER	QTY	PART NAME 1 2 3 4 5 6 (PRODUCT LEVEL)	SEE PAGE
	1	1	**316-0525**	1	TURBOCHARGER GP	
	2	1	**301-8255**	1	TUBE AS	
	2A	1	**225-8524**	2	BOLT-SPECIAL	
	2B	1	**225-8526**	4	WASHER (10.4X13.75X1.37-MM THK)	
	3	1	**232-6189**	1	TUBE AS	
	4	1	**353-3477**	1	GASKET-TURBOCHARGER	
	5	1	**353-3478**	1	GASKET-TURBOCHARGER	
M	6	1	**106-8916**	2	BOLT (M6X16-MM)	
M	7	1	**6I-0217**	2	BOLT (M8X1.25X20-MM)	
	8	1	**301-8256**	1	MANIFOLD-EXHAUST	
	9	1	**298-4570**	1	GASKET-EXHAUST MANIFOLD	
M	10	1	**278-0361**	8	BOLT (M10X1.5X45-MM)	
	11	2	**278-0310**	1	SOLENOID AS (WASTEGATE)	
M	12	2	**6I-4200**	2	BOLT (M10X1.5X16-MM)	
	13	2	**303-2116**	8	CLIP	
	14	2	**326-4508**	1	TUBE AS	
	14A	2	**035-8014**	1	NUT	
	14B	2	**032-8047**	2	FERRULE	
	14C	2	**032-8191**	1	NUT	
	15	2	**6I-0817**	1	ADAPTER	
	16	2	**9Y-9381**	1	WASHER-HARD	
	17	2	**311-7458**	1	TUBE AS	
	17A	2	**032-8191**	1	NUT	
	17B	2	**032-8047**	1	FERRULE	
	17C	2	**300-6520**	1	HOSE AS	
	17D	2	**107-2348**	2	CLIP	
	17E	2	**298-4576**	2	CLIP	
	18	1	**194-5390**	1	GASKET-MANIFOLD	
M	19	1	**6I-0563**	4	NUT (M10X1.5-THD)	
M	20	1	**147-5553**	4	STUD (M10X1.5X40-MM)	
	21	2	**303-5792**	1	BRACKET	
	22	2	**298-4576**	1	CLIP	
	23	2	**127-8165**	1	SPACER	
M	24	2	**100-4830**	1	BOLT (M10X1.5X20-MM)	

M - METRIC PART

301-8246 **TURBOCHARGER GP (**contd.**)** **i05171197**

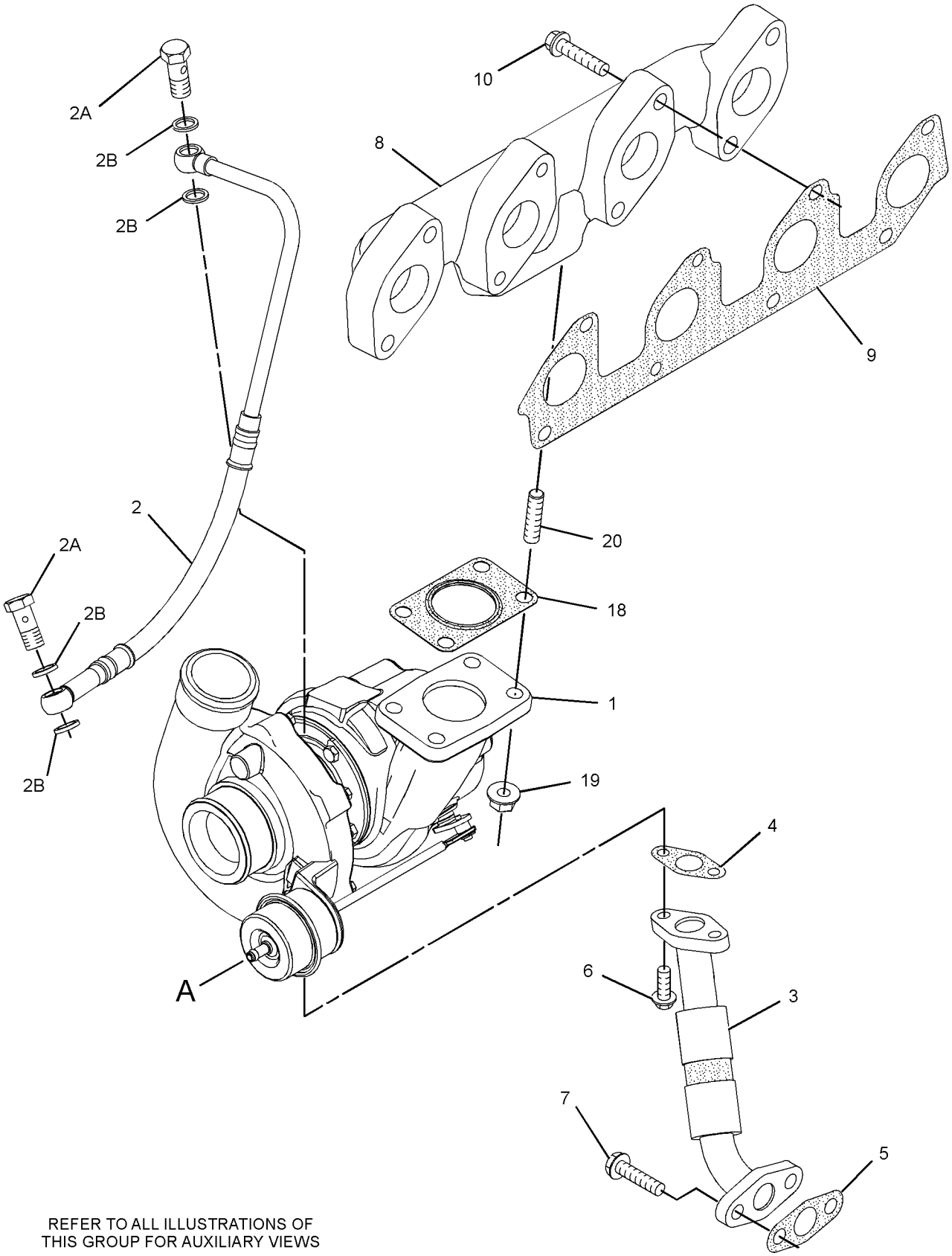

REFER TO ALL ILLUSTRATIONS OF
THIS GROUP FOR AUXILIARY VIEWS

GRAPHIC #1

g01433176

301-8246 **TURBOCHARGER GP (**contd.**)** **i05171197**

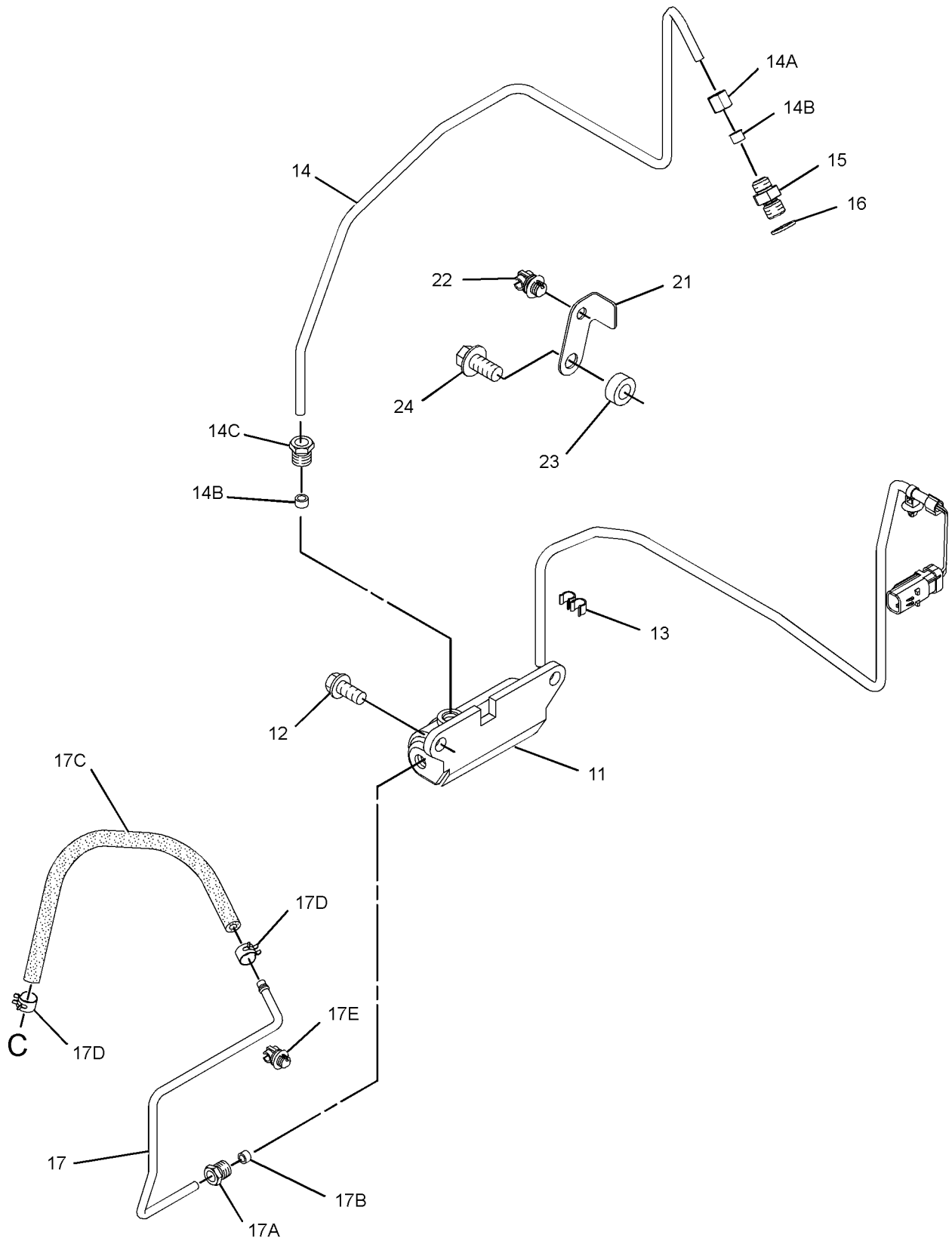

GRAPHIC #2 <END> g01678074

301-8246 TURBOCHARGER GP

TYPE 2

SMCS-1052, 1053 **i07040477**

NOTE	REF NO	GRAPHIC REF	PART NUMBER	QTY	PART NAME 1 2 3 4 5 6 (PRODUCT LEVEL)	SEE PAGE
	1	1	**316-0525**	1	TURBOCHARGER GP	
	2	1	**301-8255**	1	TUBE AS	
	2A	1	**225-8524**	2	BOLT-SPECIAL	
	2B	1	**225-8526**	4	WASHER (10.4X13.75X1.37-MM THK)	
	3	1	**507-5019**	1	LINE AS-OIL	
	3A	1	**269-3086**	2	CLAMP-BAND	
	4	1	**353-3477**	1	GASKET-TURBOCHARGER	
	5	1	**353-3478**	1	GASKET-TURBOCHARGER	
M	6	1	**106-8916**	2	BOLT (M6X16-MM)	
M	7	1	**6I-0217**	2	BOLT (M8X1.25X20-MM)	
	8	1	**301-8256**	1	MANIFOLD-EXHAUST	
	9	1	**298-4570**	1	GASKET-EXHAUST MANIFOLD	
M	10	1	**278-0361**	8	BOLT (M10X1.5X45-MM)	
	11	2	**278-0310**	1	SOLENOID AS (WASTEGATE)	
CM	12	2	**6I-4200**	3	BOLT (M10X1.5X16-MM)	
	13	2	**303-2116**	5	CLIP	
	14	2	**326-4508**	1	TUBE AS	
	15	2	**6I-0817**	1	ADAPTER	
	16	2	**9Y-9381**	1	WASHER-HARD	
	17	2	**311-7458**	1	TUBE AS	
	17A	2	**300-6520**	2	HOSE AS	
	17B	2	**107-2348**	2	CLIP	
	17C	2	**298-4576**	2	CLIP	
	18	1	**194-5390**	1	GASKET-MANIFOLD	
M	19	1	**6I-0563**	4	NUT (M10X1.5-THD)	
	20	1	**361-7519**	4	ROD-THREADED	
C	21	2	**377-6869**	1	BRACKET	
	22	2	**298-4576**	1	CLIP	

C - CHANGE FROM PREVIOUS TYPE
M - METRIC PART

301-8246 **TURBOCHARGER GP** (contd.) **i07040477**

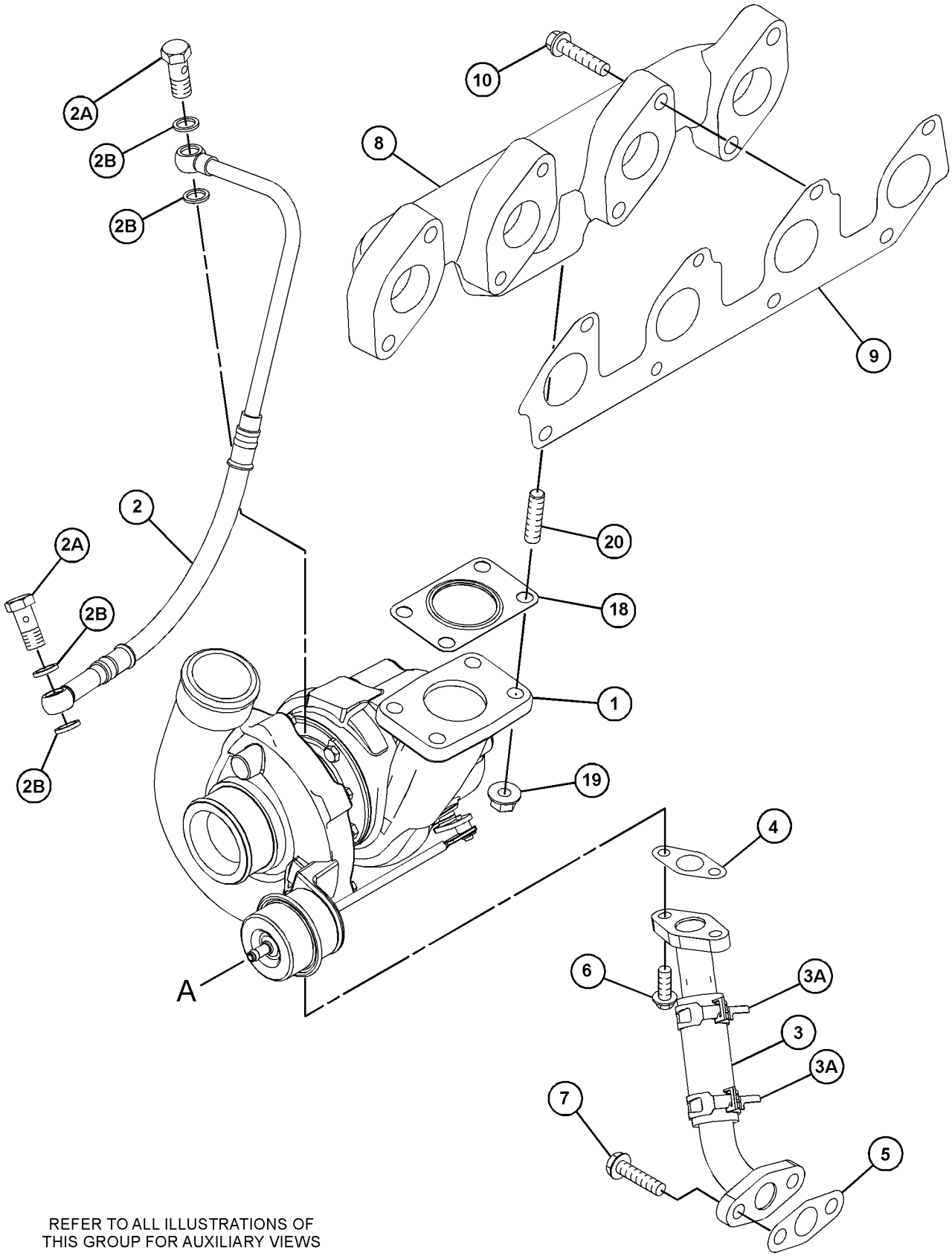

REFER TO ALL ILLUSTRATIONS OF
THIS GROUP FOR AUXILIARY VIEWS

GRAPHIC #1 g06212729

301-8246 **TURBOCHARGER GP (**contd.**)** **i07040477**

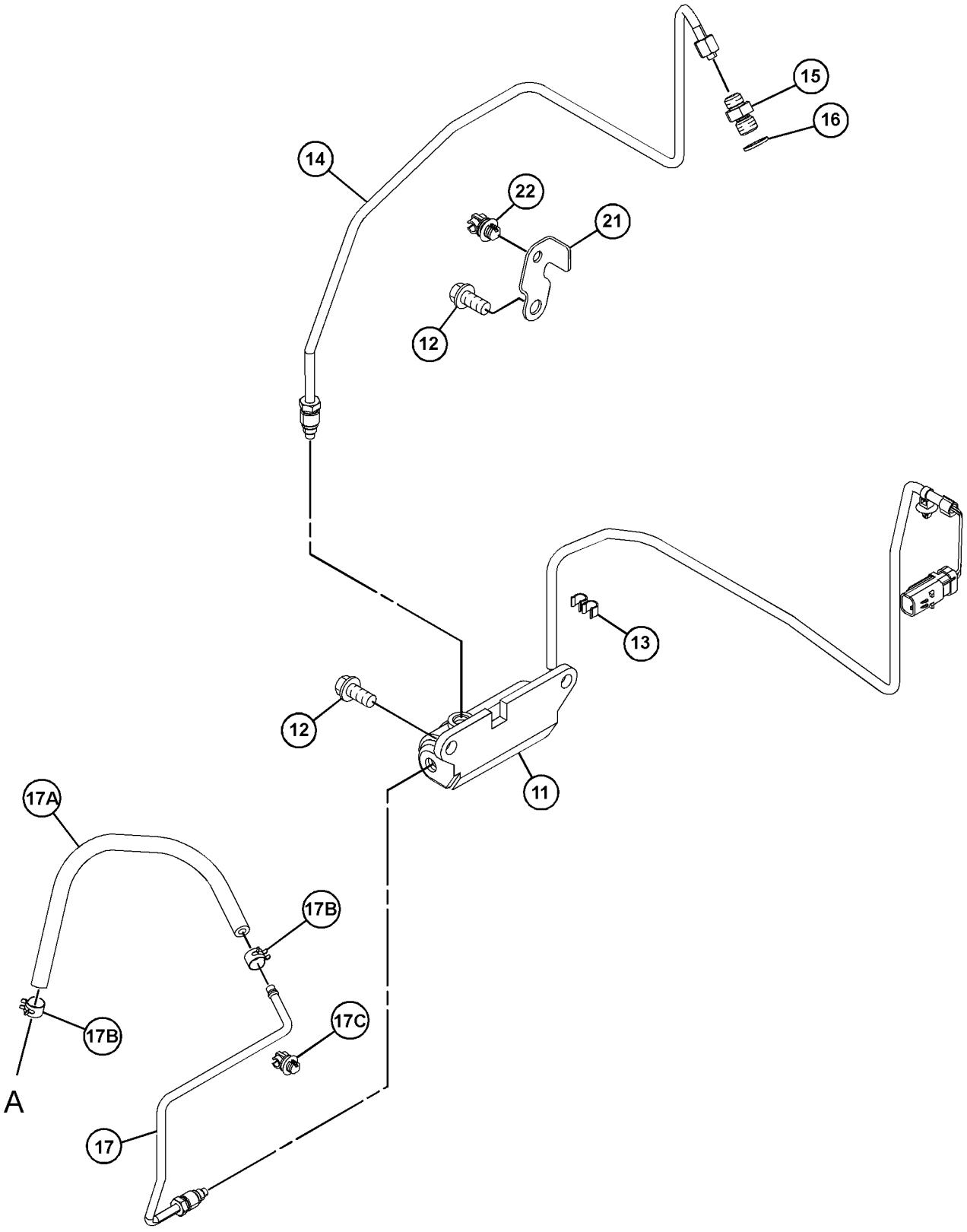

GRAPHIC #2 <END> g06204266

303-4622 TURBOCHARGER GP

TYPE 1

SMCS-1052, 1053 **i02637644**

NOTE	REF NO	GRAPHIC REF	PART NUMBER	QTY	PART NAME 1 2 3 4 5 6 (PRODUCT LEVEL)	SEE PAGE
M	1	1	**6I-0217**	2	BOLT (M8X1.25X20-MM)	
	2	2	**6I-0817**	1	ADAPTER	
M	3	2	**6I-4200**	2	BOLT (M10X1.5X16-MM)	
	4	2	**9Y-9381**	1	WASHER-HARD	
M	5	1	**106-8916**	2	BOLT (M6X16-MM)	
	6	1	**225-8533**	1	GASKET	
	7	1	**225-8534**	1	GASKET	
	8	1	**232-6189**	1	TUBE AS	
M	9	1	**278-0361**	8	BOLT (M10X1.5X45-MM)	
	10	2	**294-7375**	1	SOLENOID (BOOST)	
	11	1	**298-4570**	1	GASKET-EXHAUST MANIFOLD	
	12	1	**301-8254**	1	TURBOCHARGER GP	
M	12A	1	**6I-0563**	4	NUT (M10X1.5-THD)	
M	12B	1	**147-5553**	4	STUD (M10X1.5X40-MM)	
	12C	1	**194-5390**	1	GASKET-MANIFOLD	
	13	1	**301-8255**	1	TUBE AS	
	13A	1	**225-8524**	2	BOLT-SPECIAL	
	13B	1	**225-8526**	4	WASHER (10.4X13.75X1.37-MM THK)	
	14	1	**301-8256**	1	MANIFOLD-EXHAUST	
	15	2	**301-8257**	1	TUBE AS	
	15A	2	**032-8047**	2	FERRULE	
	15B	2	**032-8191**	1	NUT	
	15C	2	**035-8014**	1	NUT	
	15D	2	**298-4576**	2	CLIP	
	16	2	**301-8258**	1	TUBE AS	
	16A	2	**032-8047**	1	FERRULE	
	16B	2	**032-8191**	1	NUT	
	16C	2	**298-4576**	2	CLIP	
	16D	2	**300-6520**	1	HOSE AS	
	16E	2	**107-2348**	2	CLIP	
	17	2	**303-2116**	3	CLIP	

M - METRIC PART

303-4622 **TURBOCHARGER GP (**contd.**)** **i02637644**

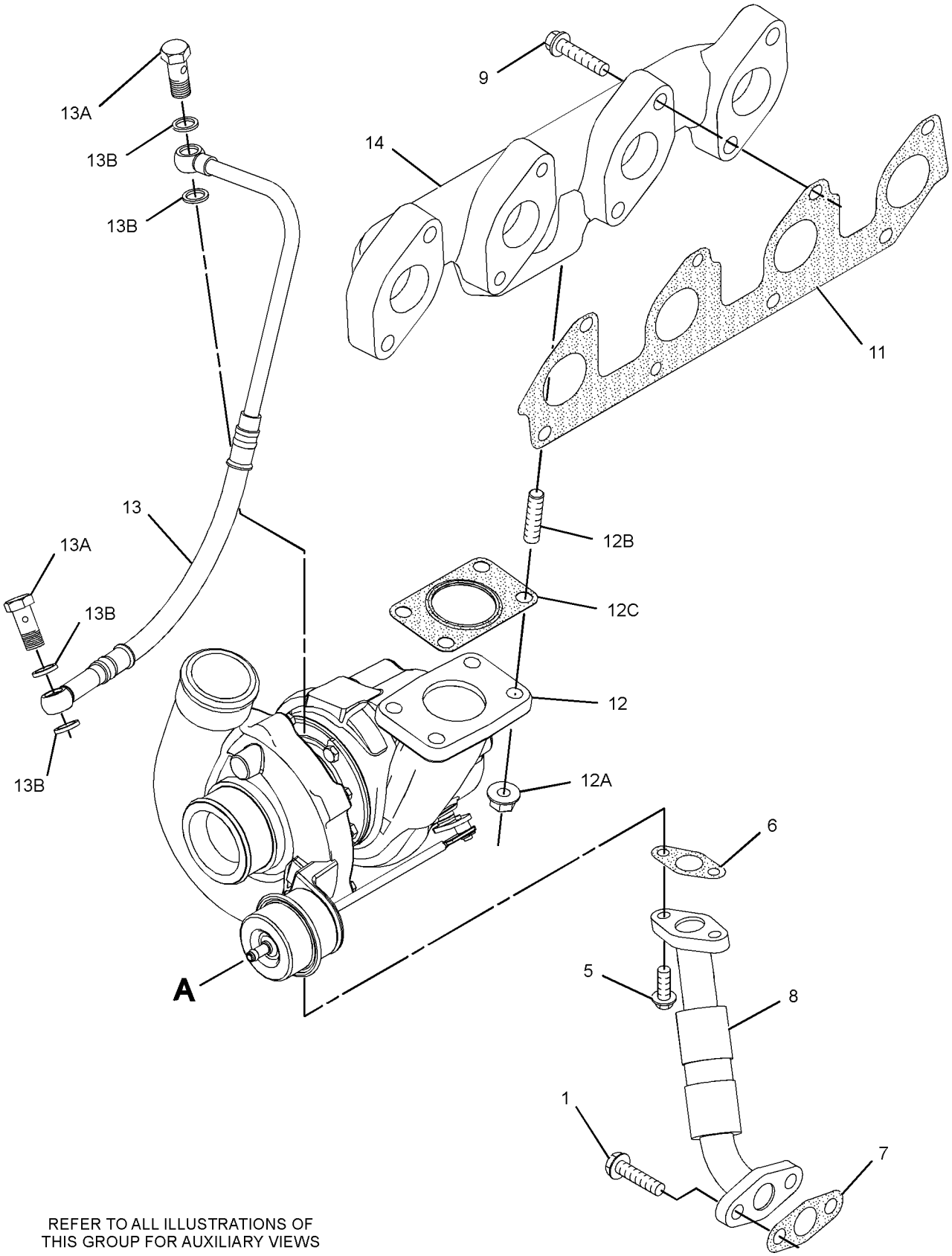

REFER TO ALL ILLUSTRATIONS OF
THIS GROUP FOR AUXILIARY VIEWS

GRAPHIC #1

g01349118

303-4622 **TURBOCHARGER GP (**contd.**)** **i02637644**

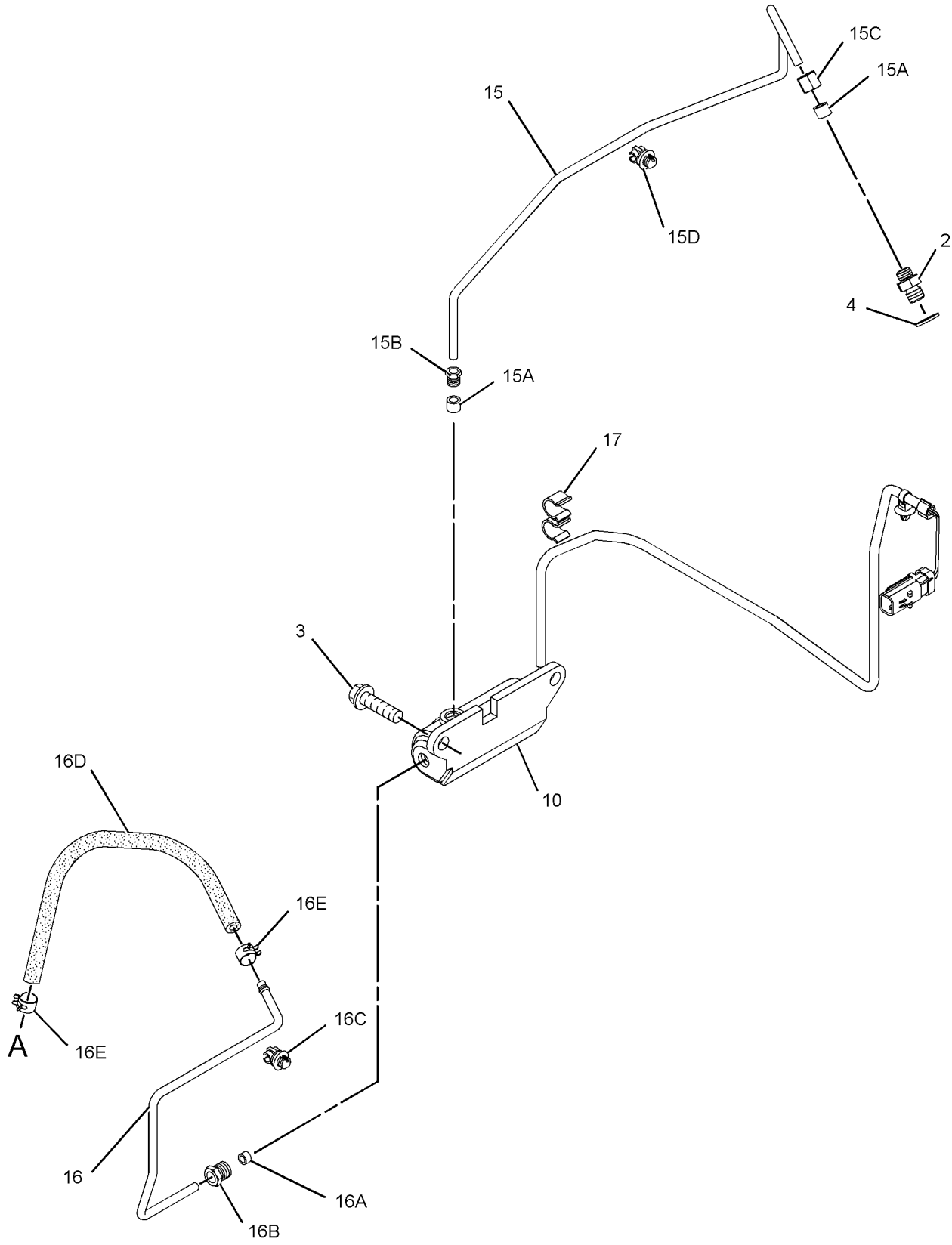

GRAPHIC #2 <END> g01349119

303-4622 TURBOCHARGER GP

TYPE 2

SMCS-1052, 1053 **i03293268**

NOTE	REF NO	GRAPHIC REF	PART NUMBER	QTY	PART NAME 1 2 3 4 5 6 (PRODUCT LEVEL)	SEE PAGE
M	1	1	**6I-0217**	2	BOLT (M8X1.25X20-MM)	
	2	2	**6I-0817**	1	ADAPTER	
M	3	2	**6I-4200**	2	BOLT (M10X1.5X16-MM)	
	4	2	**9Y-9381**	1	WASHER-HARD	
M	5	1	**106-8916**	2	BOLT (M6X16-MM)	
	6	1	**225-8533**	1	GASKET	
	7	1	**225-8534**	1	GASKET	
	8	1	**232-6189**	1	TUBE AS	
M	9	1	**278-0361**	8	BOLT (M10X1.5X45-MM)	
	10	2	**294-7375**	1	SOLENOID (BOOST)	
	11	1	**298-4570**	1	GASKET-EXHAUST MANIFOLD	
C	12	1	**316-0525**	1	TURBOCHARGER GP	
	13	1	**301-8255**	1	TUBE AS	
	13A	1	**225-8524**	2	BOLT-SPECIAL	
	13B	1	**225-8526**	4	WASHER (10.4X13.75X1.37-MM THK)	
	14	1	**301-8256**	1	MANIFOLD-EXHAUST	
	15	2	**326-4508**	1	TUBE AS	
	15A	2	**032-8047**	2	FERRULE	
	15B	2	**032-8191**	1	NUT	
	15C	2	**035-8014**	1	NUT	
	16	2	**311-7458**	1	TUBE AS	
	16A	2	**032-8047**	1	FERRULE	
	16B	2	**032-8191**	1	NUT	
	16C	2	**298-4576**	2	CLIP	
	16D	2	**300-6520**	1	HOSE AS	
	16E	2	**107-2348**	2	CLIP	
	17	2	**303-2116**	8	CLIP	
C	18	1	**194-5390**	1	GASKET-MANIFOLD	
CM	19	1	**147-5553**	4	STUD (M10X1.5X40-MM)	
CM	20	1	**6I-0563**	4	NUT (M10X1.5-THD)	
	21	2	**303-5792**	1	BRACKET	
	22	2	**298-4576**	1	CLIP	
	23	2	**127-8165**	1	SPACER	
M	24	2	**100-4830**	1	BOLT (M10X1.5X20-MM)	

C - CHANGE FROM PREVIOUS TYPE
M - METRIC PART

303-4622 **TURBOCHARGER GP (**contd.**)** **i03293268**

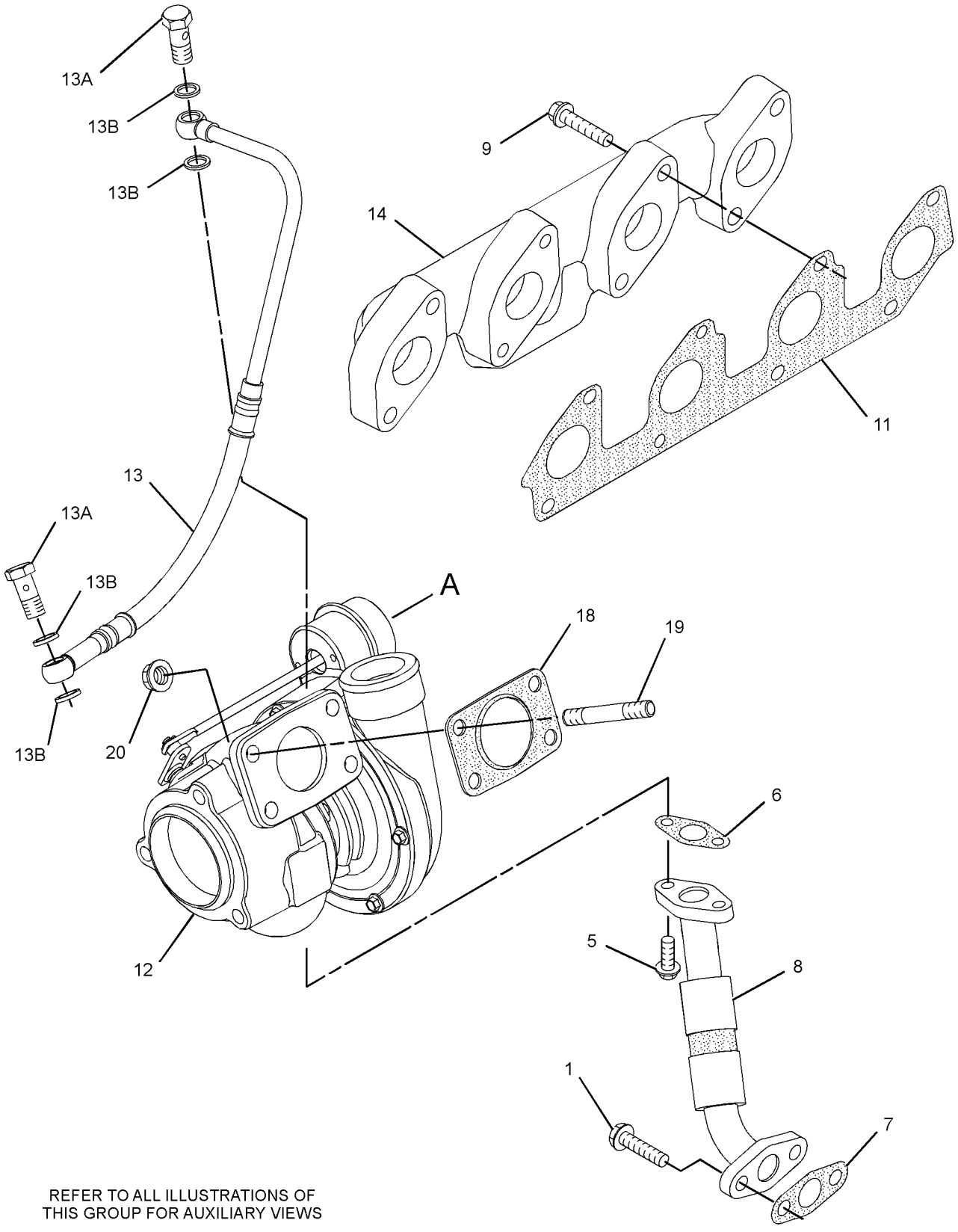

REFER TO ALL ILLUSTRATIONS OF
THIS GROUP FOR AUXILIARY VIEWS

GRAPHIC #1 g01395201

303-4622 **TURBOCHARGER GP (**contd.**)** **i03293268**

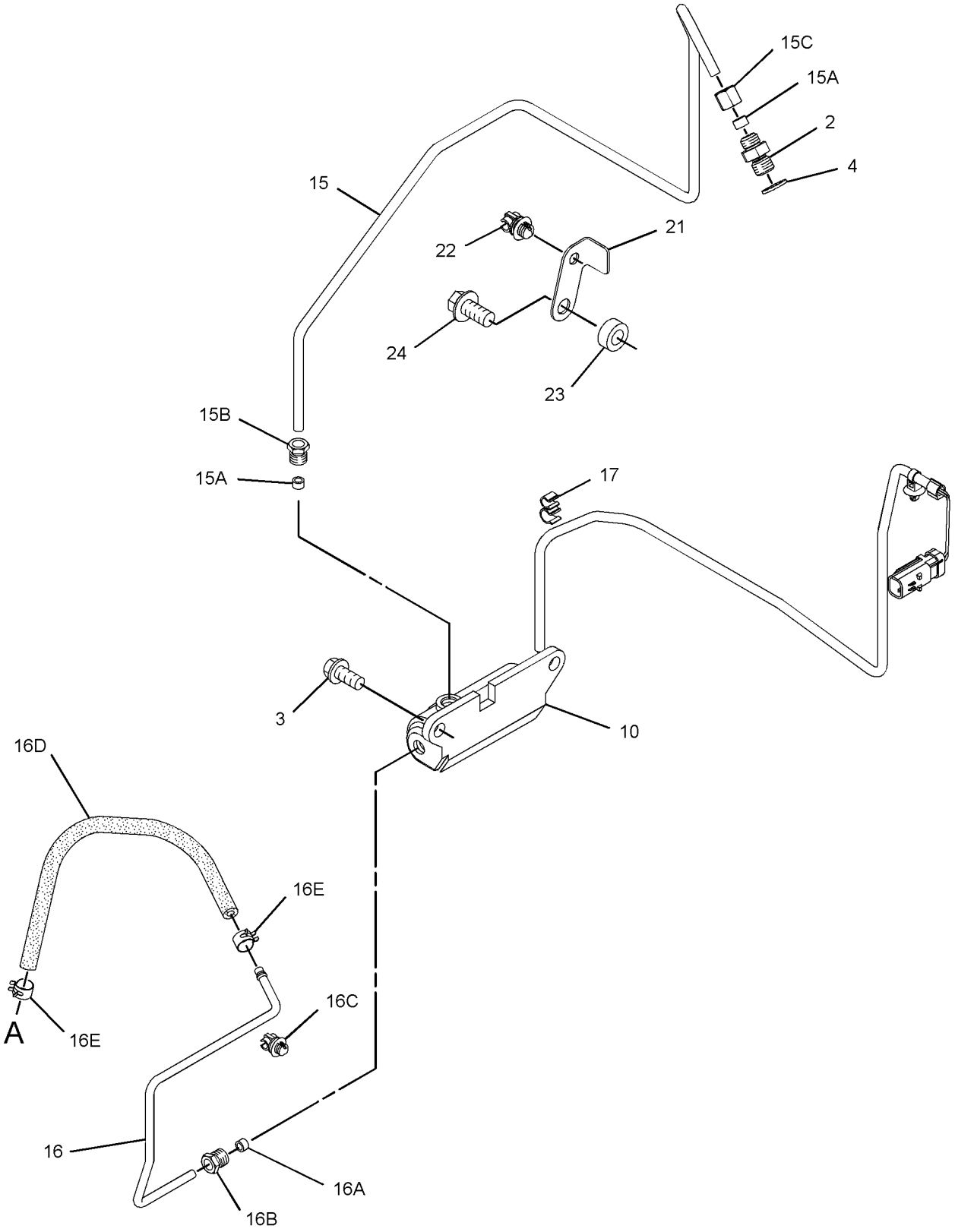

GRAPHIC #2 <END> g01676414

303-4622 TURBOCHARGER GP

TYPE 3

SMCS-1052, 1053 **i07030408**

NOTE	REF NO	GRAPHIC REF	PART NUMBER	QTY	PART NAME 1 2 3 4 5 6 (PRODUCT LEVEL)	SEE PAGE
M	1	1	**6I-0217**	2	BOLT (M8X1.25X20-MM)	
	2	2	**6I-0817**	1	ADAPTER	
CM	3	2	**6I-4200**	3	BOLT (M10X1.5X16-MM)	
	4	2	**9Y-9381**	1	WASHER-HARD	
M	5	1	**106-8916**	2	BOLT (M6X16-MM)	
	6	1	**353-3477**	1	GASKET-TURBOCHARGER	
	7	1	**353-3478**	1	GASKET-TURBOCHARGER	
	8	1	**507-5019**	1	LINE AS-OIL	
	8A	1	**269-3086**	2	CLAMP-BAND	
M	9	1	**278-0361**	8	BOLT (M10X1.5X45-MM)	
	10	2	**294-7375**	1	SOLENOID (BOOST)	
	11	1	**298-4570**	1	GASKET-EXHAUST MANIFOLD	
	12	1	**316-0525**	1	TURBOCHARGER GP	
	13	1	**301-8255**	1	TUBE AS	
	13A	1	**225-8524**	2	BOLT-SPECIAL	
	13B	1	**225-8526**	4	WASHER (10.4X13.75X1.37-MM THK)	
	14	1	**301-8256**	1	MANIFOLD-EXHAUST	
	15	2	**326-4508**	1	TUBE AS	
	16	2	**311-7458**	1	TUBE AS	
	16A	2	**298-4576**	2	CLIP	
	16B	2	**300-6520**	1	HOSE AS	
	16C	2	**107-2348**	2	CLIP	
	17	2	**303-2116**	5	CLIP	
	18	1	**194-5390**	1	GASKET-MANIFOLD	
	19	1	**361-7519**	4	ROD-THREADED	
M	20	1	**6I-0563**	4	NUT (M10X1.5-THD)	
C	21	2	**377-6869**	1	BRACKET	
	22	2	**298-4576**	1	CLIP	

C - CHANGE FROM PREVIOUS TYPE
M - METRIC PART

303-4622 **TURBOCHARGER GP (**contd.**)** **i07030408**

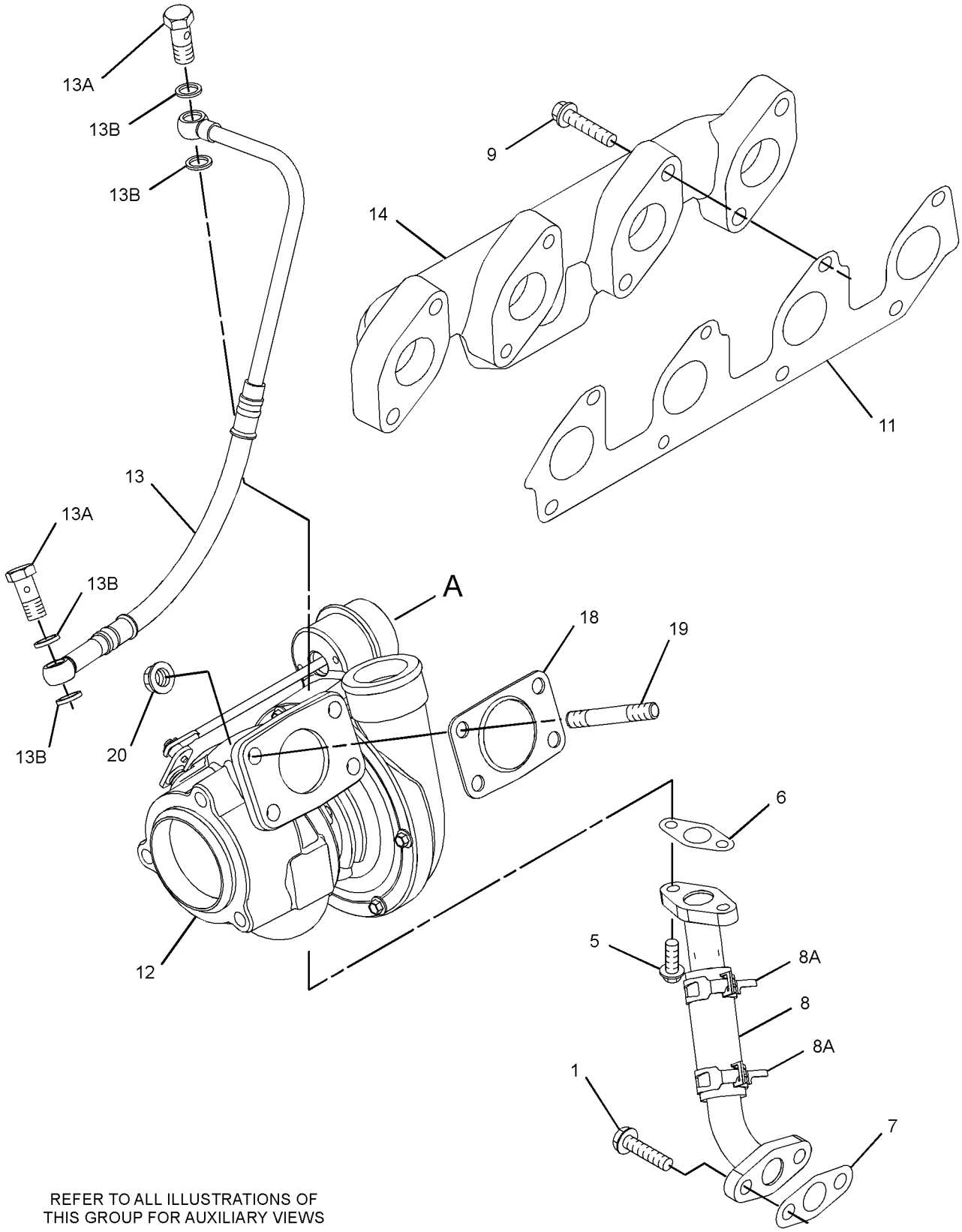

REFER TO ALL ILLUSTRATIONS OF
THIS GROUP FOR AUXILIARY VIEWS

GRAPHIC #1 g06209084

303-4622 **TURBOCHARGER GP (**contd.**)** **i07030408**

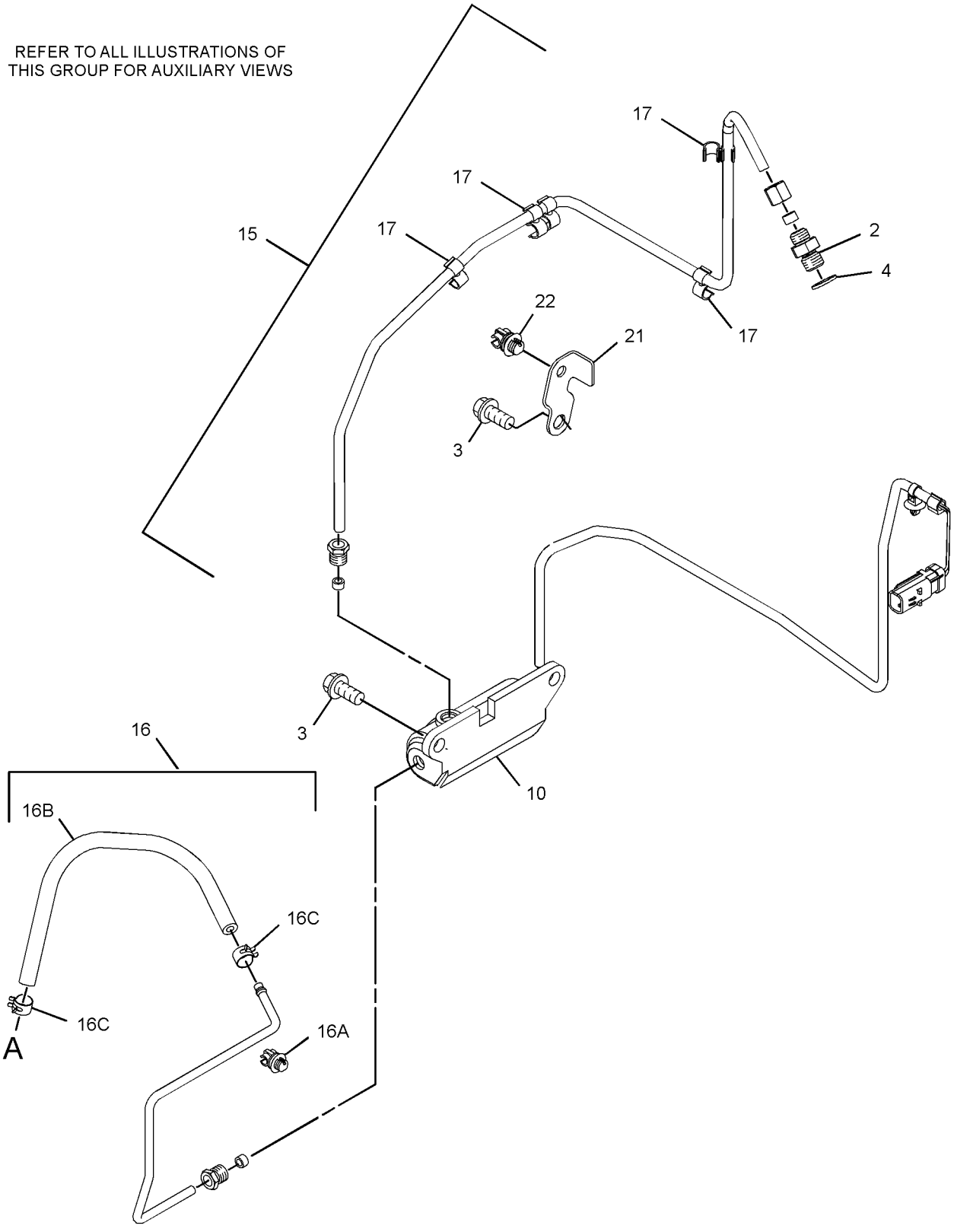

GRAPHIC #2 <END> g06209086

303-5776 TURBOCHARGER GP

SMCS-1052, 1053 **i05171200**

NOTE	REF NO	GRAPHIC REF	PART NUMBER	QTY	PART NAME 1 2 3 4 5 6 (PRODUCT LEVEL)	SEE PAGE
M	1	1	**6I-0217**	2	BOLT (M8X1.25X20-MM)	
M	2	1	**6I-0593**	1	BOLT (M10X1.5X30-MM)	
M	3	1	**6I-0654**	1	BOLT (M10X1.5X25-MM)	
	4	2	**6I-0817**	1	ADAPTER	
M	5	2	**6I-4200**	3	BOLT (M10X1.5X16-MM)	
	6	2	**9Y-9381**	1	WASHER-HARD	
	7	1	**194-5390**	1	GASKET-MANIFOLD	
M	8	1	**106-8916**	2	BOLT (M6X16-MM)	
	9	1	**123-4038**	1	SPACER	
	10	2	**127-8162**	1	CLIP	
	11	1	**172-4325**	1	SPACER	
	12	1	**353-3477**	1	GASKET-TURBOCHARGER	
	13	1	**353-3478**	1	GASKET-TURBOCHARGER	
	14	1	**238-8292**	1	BOLT-FLANGE HEAD	
M	15	1	**278-0361**	7	BOLT (M10X1.5X45-MM)	
	16	2	**294-7375**	1	SOLENOID (WASTEGATE)	
	17	1	**298-4570**	1	GASKET-EXHAUST MANIFOLD	
	18	2	**298-4576**	1	CLIP	
	19	2	**303-2116**	6	CLIP	
R	20	1	**316-0555**	1	TURBOCHARGER	
	21	1	**383-8543**	1	TUBE AS-TURBOCHARGER OIL	
	21A	1	**383-8542**	1	CLIP-PIPE	
	21B	1	**225-8524**	2	BOLT-SPECIAL	
	21C	1	**225-8526**	4	WASHER (10.4X13.75X1.37-MM THK)	
	22	1	**303-5787**	1	TUBE AS-TURBOCHARGER OIL (DRAIN)	
	22A	1	**103-2135**	1	CLIP	
	23	1	**303-5788**	1	MANIFOLD-EXHAUST	
	24	1	**361-7519**	4	ROD-THREADED	
	25	2	**377-6869**	1	BRACKET	
	26	2	**303-5793**	1	TUBE AS	
	26A	2	**4B-8774**	1	NUT-FLARED	
	26B	2	**032-8047**	1	FERRULE	
	26C	2	**278-0316**	2	CLIP	
	26D	2	**300-6520**	1	HOSE AS	
	26E	2	**107-2348**	2	CLIP	
M	27	1	**6I-0563**	4	NUT (M10X1.5-THD)	

M - METRIC PART
R - REMANUFACTURED PART MAY BE AVAILABLE

303-5776 **TURBOCHARGER GP (**contd.**)** **i05171200**

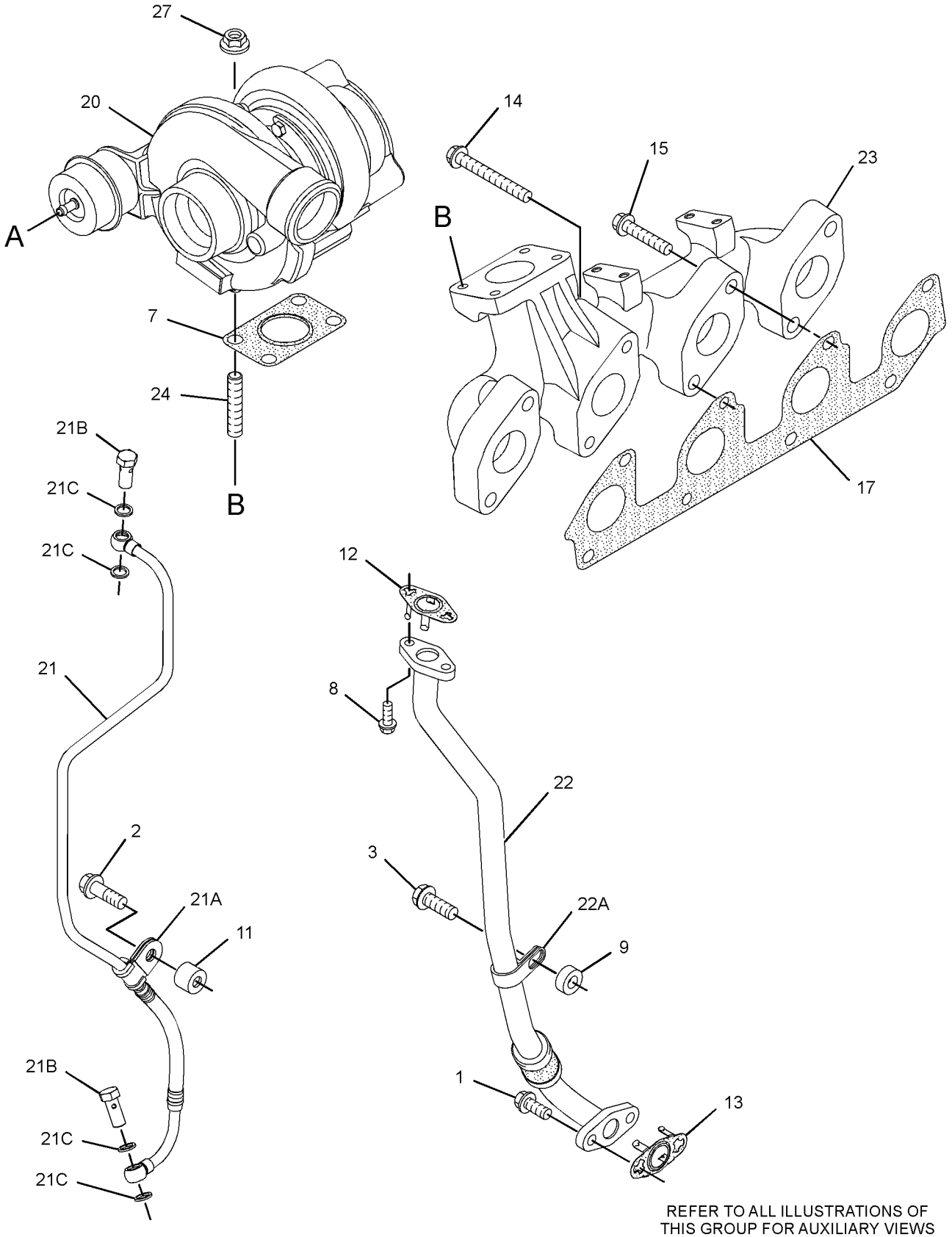

REFER TO ALL ILLUSTRATIONS OF
THIS GROUP FOR AUXILIARY VIEWS

GRAPHIC #1

g03346460

303-5776 **TURBOCHARGER GP (**contd.**)** **i05171200**

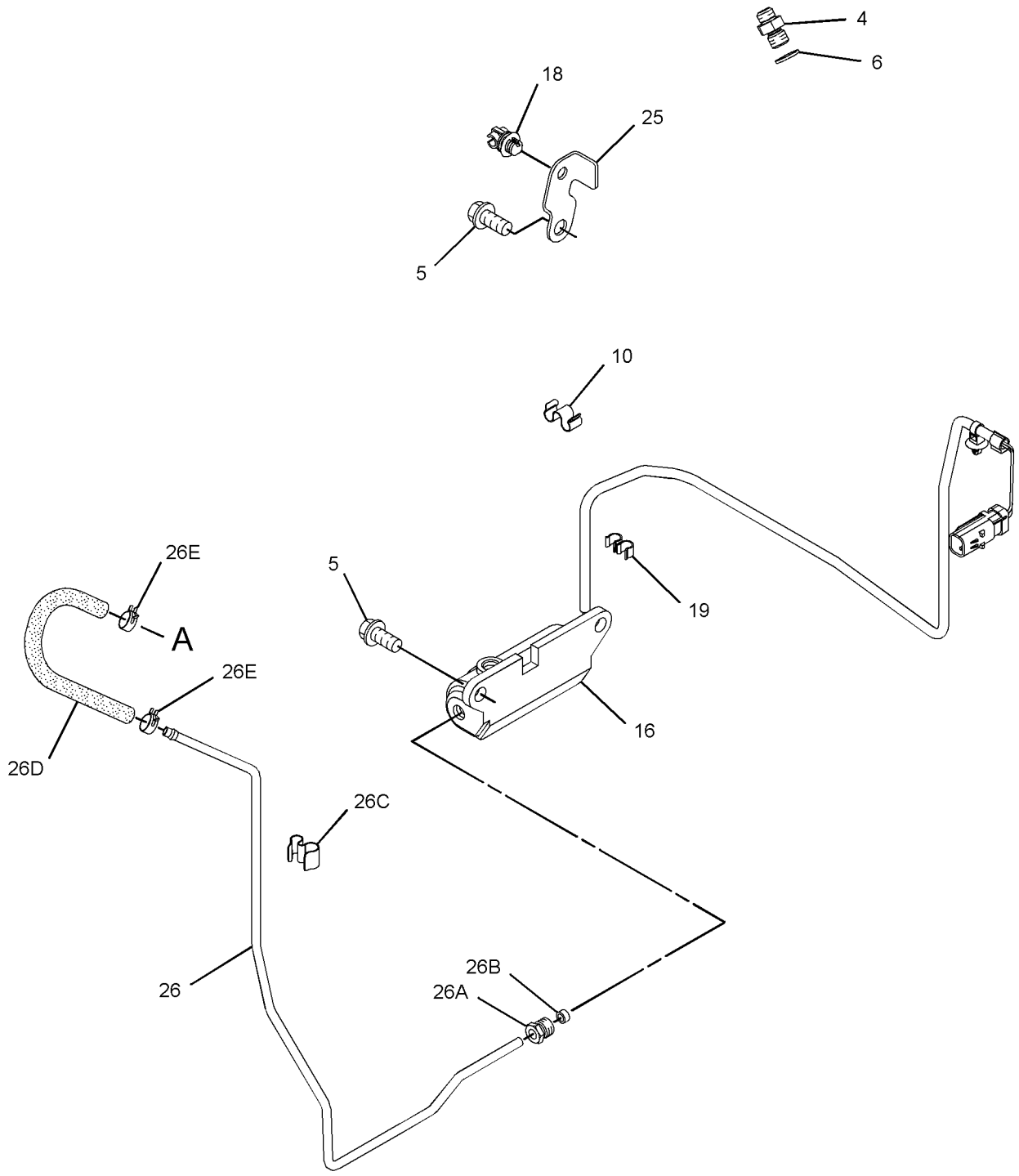

GRAPHIC #2 <END> g03346461

304-0729 TURBOCHARGER GP

TYPE 1

SMCS-1052, 1053 **i04367143**

NOTE	REF NO	GRAPHIC REF	PART NUMBER	QTY	PART NAME 1 2 3 4 5 6 (PRODUCT LEVEL)	SEE PAGE
	1	1	**298-4566**	1	TUBE AS	
	1A	1	**225-8524**	2	BOLT-SPECIAL	
	1B	1	**225-8526**	4	WASHER (10.4X13.75X1.37-MM THK)	
	2	1	**298-4568**	1	TUBE AS	
	3	1	**225-8533**	1	GASKET	
M	4	1	**106-8916**	2	BOLT (M6X16-MM)	
	5	1	**225-8534**	1	GASKET (TURBOCHARGER)	
M	6	1	**6I-0217**	2	BOLT (M8X1.25X20-MM)	
	7	1	**227-4562**	1	ELBOW-EXHAUST	
	8	2	**303-5792**	1	BRACKET	
M	9	1	**6I-0593**	2	BOLT (M10X1.5X30-MM)	
M	10	1,2	**6I-0654**	5	BOLT (M10X1.5X25-MM)	
	11	1	**302-0581**	1	ADAPTER-EXHAUST	
M	12	1	**147-5553**	7	STUD (M10X1.5X40-MM)	
M	13	1	**6I-0563**	7	NUT (M10X1.5-THD)	
	14	1	**225-8530**	1	GASKET (ELBOW)	
	15	1	**298-4569**	1	MANIFOLD-EXHAUST	
	16	1	**298-4570**	1	GASKET-EXHAUST MANIFOLD	
M	17	1	**278-0361**	7	BOLT (M10X1.5X45-MM)	
	18	1	**238-8292**	1	BOLT-FLANGE HEAD	
	19	2	**294-7375**	1	SOLENOID (WASTEGATE)	
	20	2	**310-7533**	1	BRACKET	
	21	2	**298-4573**	2	BOLT	
	22	2	**310-7536**	1	TUBE AS	
	22A	2	**4B-8774**	1	NUT-FLARED	
	22B	2	**032-8047**	1	FERRULE	
	22C	2	**298-4576**	1	CLIP	
	22D	2	**300-6520**	1	HOSE AS	
	22E	2	**107-2348**	2	CLIP	
M	23	2	**100-4830**	1	BOLT (M10X1.5X20-MM)	
	24	2	**127-8165**	1	SPACER	
	25	2	**6I-0817**	1	ADAPTER	
	26	2	**9Y-9381**	1	WASHER-HARD	
	27	2	**324-6530**	1	TUBE AS-TURBOCHARGER	
	27A	2	**4B-8774**	1	NUT-FLARED	
	27B	2	**032-8047**	2	FERRULE	
	27C	2	**035-8014**	1	NUT	
	28	2	**303-2116**	6	CLIP	
	29	1	**316-0510**	1	TURBOCHARGER	
	30	1	**194-5390**	1	GASKET-MANIFOLD	
	31	1	**314-3723**	1	BRACKET	
	32	2	**298-4576**	1	CLIP	

M - METRIC PART

304-0729 **TURBOCHARGER GP (**contd.**)** **i04367143**

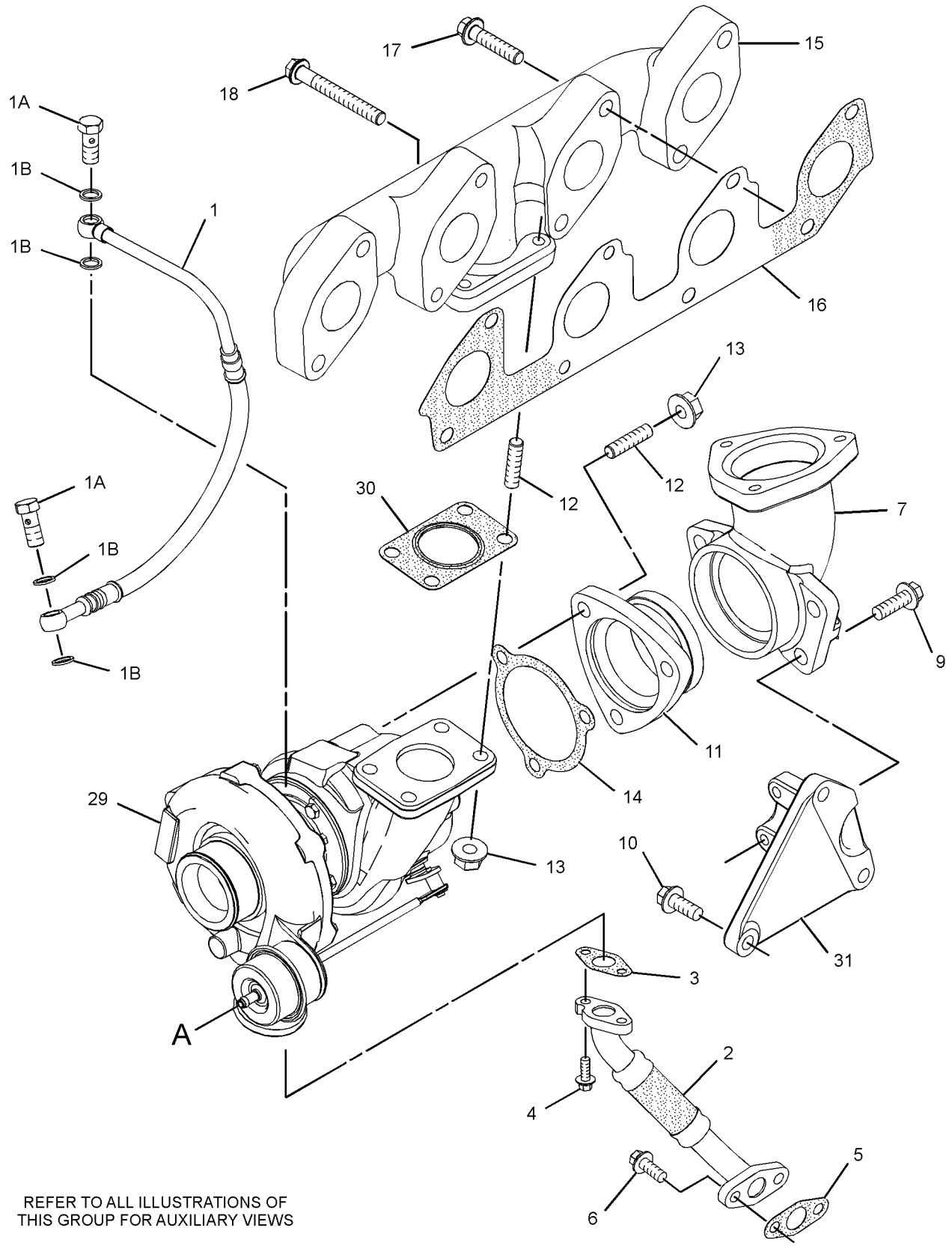

REFER TO ALL ILLUSTRATIONS OF
THIS GROUP FOR AUXILIARY VIEWS

GRAPHIC #1 g01432675

304-0729 **TURBOCHARGER GP (**contd.**)** **i04367143**

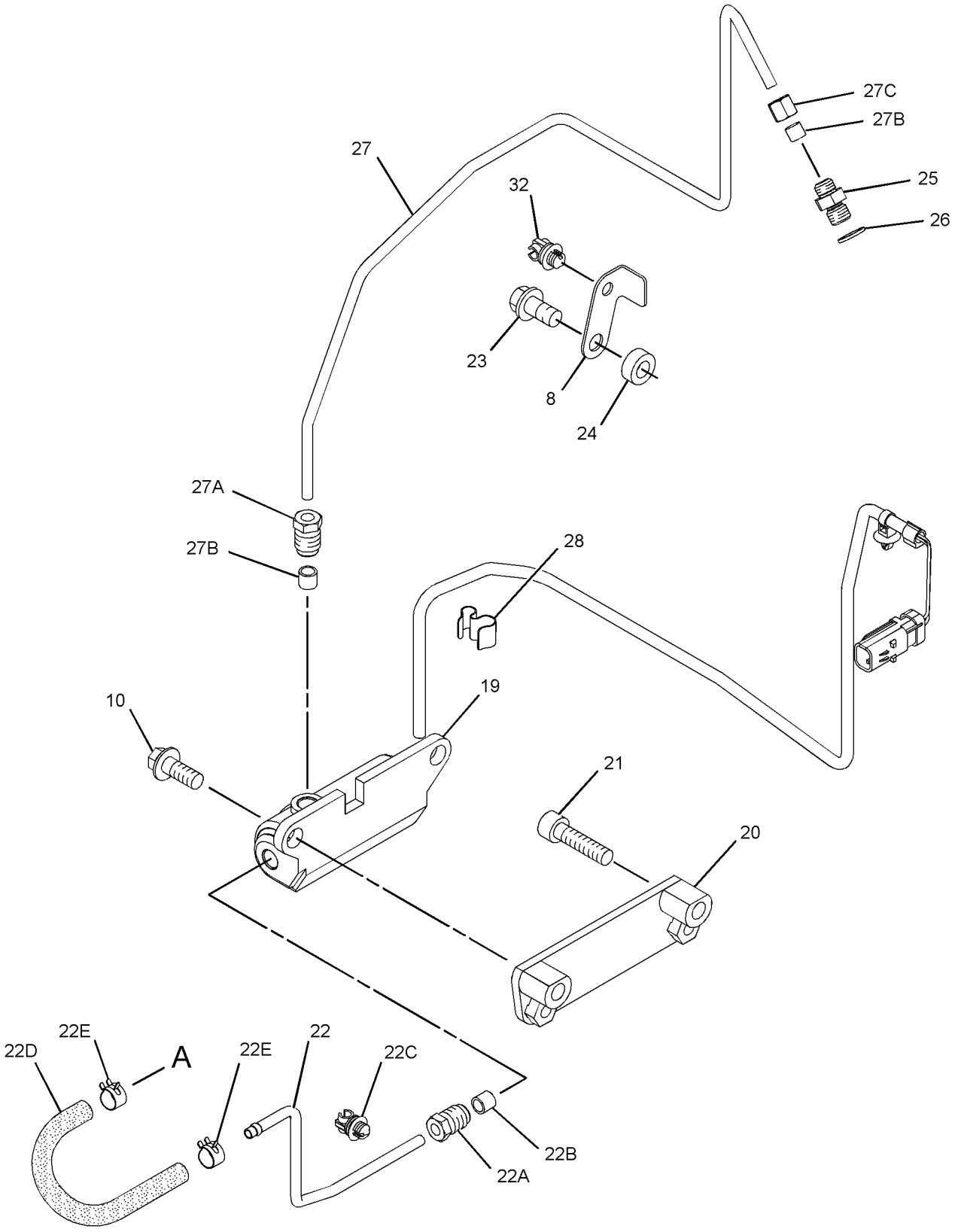

GRAPHIC #2 <END> g01468812

304-0729 TURBOCHARGER GP

TYPE 2

SMCS-1052, 1053 **i07030413**

NOTE	REF NO	GRAPHIC REF	PART NUMBER	QTY	PART NAME 1 2 3 4 5 6 (PRODUCT LEVEL)	SEE PAGE
	1	1	**298-4566**	1	TUBE AS	
	1A	1	**225-8524**	2	BOLT-SPECIAL	
	1B	1	**225-8526**	4	WASHER (10.4X13.75X1.37-MM THK)	
	2	1	**507-5015**	1	LINE AS	
	2A	1	**269-3086**	2	CLAMP-BAND	
	3	1	**353-3477**	1	GASKET-TURBOCHARGER	
M	4	1	**106-8916**	2	BOLT (M6X16-MM)	
	5	1	**353-3478**	1	GASKET-TURBOCHARGER	
M	6	1	**6I-0217**	2	BOLT (M8X1.25X20-MM)	
	7	1	**227-4562**	1	ELBOW-EXHAUST	
C	8	2	**377-6869**	1	BRACKET	
M	9	1	**6I-0593**	2	BOLT (M10X1.5X30-MM)	
M	10	1,2	**6I-0654**	5	BOLT (M10X1.5X25-MM)	
	11	1	**302-0581**	1	ADAPTER-EXHAUST	
	12	1	**361-7519**	7	ROD-THREADED	
M	13	1	**6I-0563**	7	NUT (M10X1.5-THD)	
	14	1	**225-8530**	1	GASKET (ELBOW)	
	15	1	**298-4569**	1	MANIFOLD-EXHAUST	
	16	1	**298-4570**	1	GASKET-EXHAUST MANIFOLD	
M	17	1	**278-0361**	7	BOLT (M10X1.5X45-MM)	
	18	1	**238-8292**	1	BOLT-FLANGE HEAD	
	19	2	**294-7375**	1	SOLENOID (WASTEGATE)	
	20	2	**310-7533**	1	BRACKET	
M	21	2	**8T-9515**	2	BOLT-SOCKET HEAD (M10X1.5X40-MM)	
	22	2	**310-7536**	1	TUBE AS	
	22A	2	**298-4576**	1	CLIP	
	22B	2	**300-6520**	1	HOSE AS	
	22C	2	**107-2348**	2	CLIP	
CM	23	2	**6I-4200**	1	BOLT (M10X1.5X16-MM)	
	25	2	**6I-0817**	1	ADAPTER	
	26	2	**9Y-9381**	1	WASHER-HARD	
	27	2	**324-6530**	1	TUBE AS-TURBOCHARGER	
	28	2	**303-2116**	6	CLIP	
	29	1	**316-0510**	1	TURBOCHARGER	
	30	1	**194-5390**	1	GASKET-MANIFOLD	
	31	1	**314-3723**	1	BRACKET	
	32	2	**298-4576**	1	CLIP	

C - CHANGE FROM PREVIOUS TYPE
M - METRIC PART

304-0729 **TURBOCHARGER GP (**contd.**)** **i07030413**

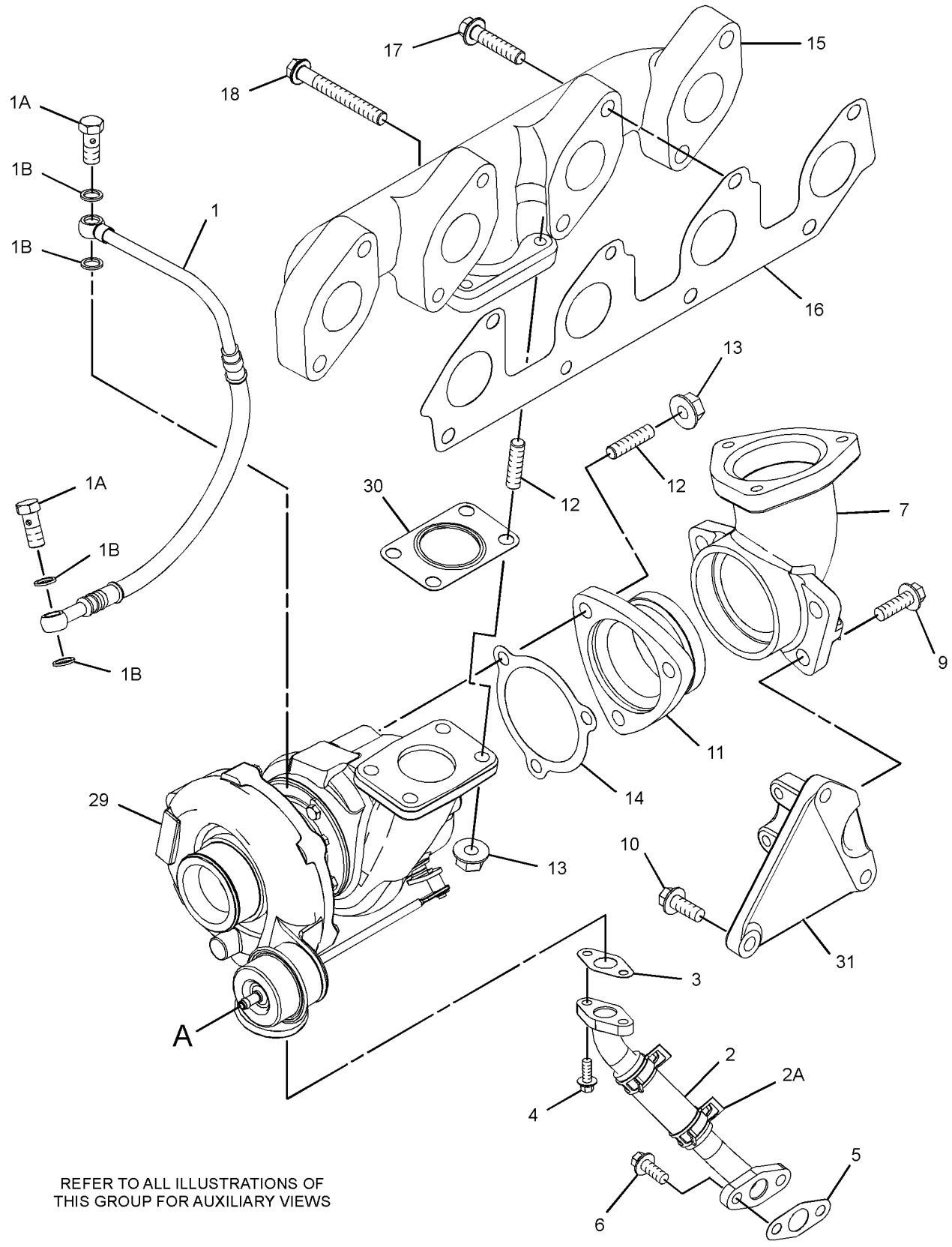

REFER TO ALL ILLUSTRATIONS OF
THIS GROUP FOR AUXILIARY VIEWS

GRAPHIC #1 g06211490

304-0729 **TURBOCHARGER GP (**contd.**)** **i07030413**

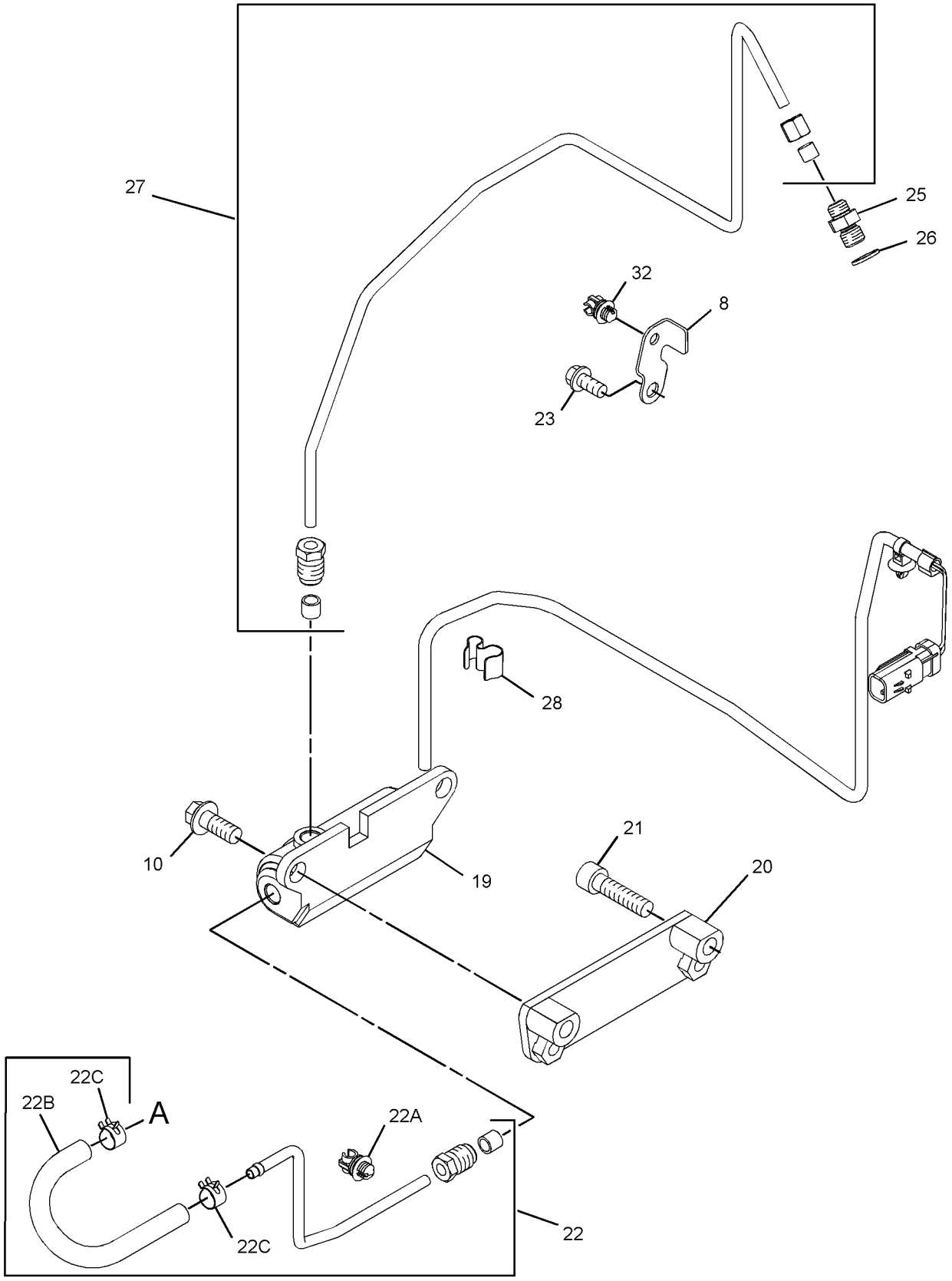

GRAPHIC #2 <END> g06211491

305-0637 TURBOCHARGER GP

TYPE 1

SMCS-1052, 1053 **i03311063**

NOTE	REF NO	GRAPHIC REF	PART NUMBER	QTY	PART NAME 1 2 3 4 5 6 (PRODUCT LEVEL)	SEE PAGE
M	1	1	**6I-0217**	2	BOLT (M8X1.25X20-MM)	
M	2	1	**6I-0260**	4	BOLT (M8X1.25X25-MM)	
	3	2	**6I-0817**	1	ADAPTER	
M	4	2	**6I-4200**	2	BOLT (M10X1.5X16-MM)	
	5	2	**9Y-9381**	1	WASHER-HARD	
M	6	1	**106-8916**	2	BOLT (M6X16-MM)	
	7	1	**266-7092**	2	CLAMP-HOSE	
	8	1	**225-8533**	1	GASKET	
	9	1	**225-8534**	1	GASKET	
	10	1	**232-6189**	1	TUBE AS	
	11	1	**234-3029**	1	HOSE	
	12	1	**234-3030**	1	GASKET-INLET	
M	13	1	**278-0361**	8	BOLT (M10X1.5X45-MM)	
	14	2	**294-7375**	1	SOLENOID (WASTEGATE)	
	15	1	**298-4570**	1	GASKET-EXHAUST MANIFOLD	
	16	1	**301-8255**	1	TUBE AS	
	16A	1	**225-8524**	2	BOLT-SPECIAL	
	16B	1	**225-8526**	4	WASHER (10.4X13.75X1.37-MM THK)	
	17	1	**301-8256**	1	MANIFOLD-EXHAUST	
	18	2	**326-4508**	1	TUBE AS	
	18A	2	**032-8191**	1	NUT	
	18B	2	**032-8047**	2	FERRULE	
	18C	2	**035-8014**	1	NUT	
	19	2	**311-7458**	1	TUBE AS	
	19A	2	**032-8047**	1	FERRULE	
	19B	2	**032-8191**	1	NUT	
	19C	2	**298-4576**	2	CLIP	
	19D	2	**300-6520**	1	HOSE AS	
	19E	2	**107-2348**	2	CLIP	
	20	2	**303-2116**	6	CLIP	
	21	1	**305-0657**	1	TUBE (CROSSOVER)	
	22	1	**316-0562**	1	TURBOCHARGER	
	23	1	**194-5390**	1	GASKET-MANIFOLD	
M	24	1	**6I-0563**	4	NUT (M10X1.5-THD)	
M	25	1	**147-5553**	4	STUD (M10X1.5X40-MM)	
	26	2	**303-5792**	1	BRACKET	
	27	2	**298-4576**	1	CLIP	
	28	2	**127-8165**	1	SPACER	
M	29	2	**100-4830**	1	BOLT (M10X1.5X20-MM)	

M - METRIC PART

305-0637 **TURBOCHARGER GP (**contd.**)** **i03311063**

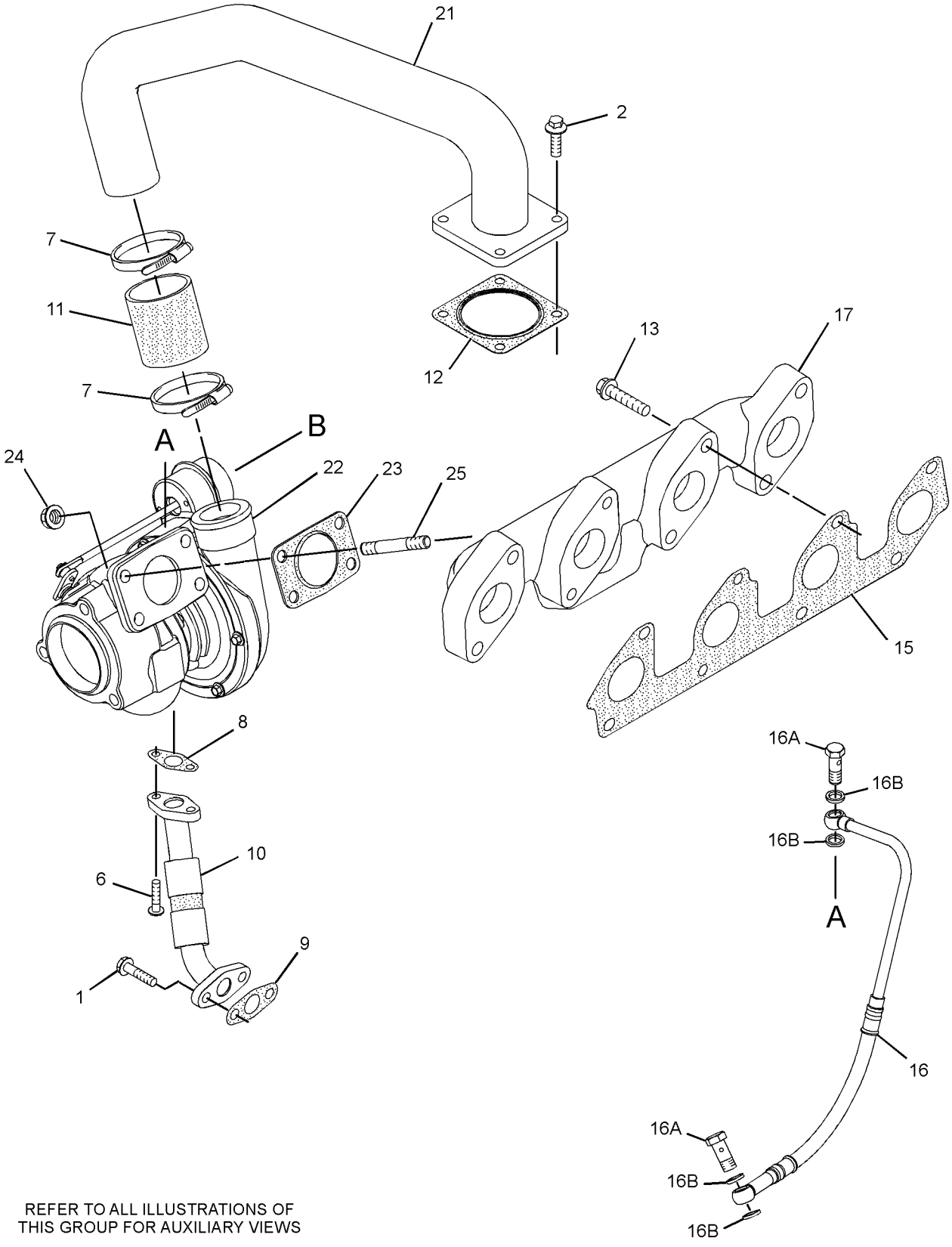

REFER TO ALL ILLUSTRATIONS OF
THIS GROUP FOR AUXILIARY VIEWS

GRAPHIC #1

g01673073

305-0637 **TURBOCHARGER GP (**contd.**)** **i03311063**

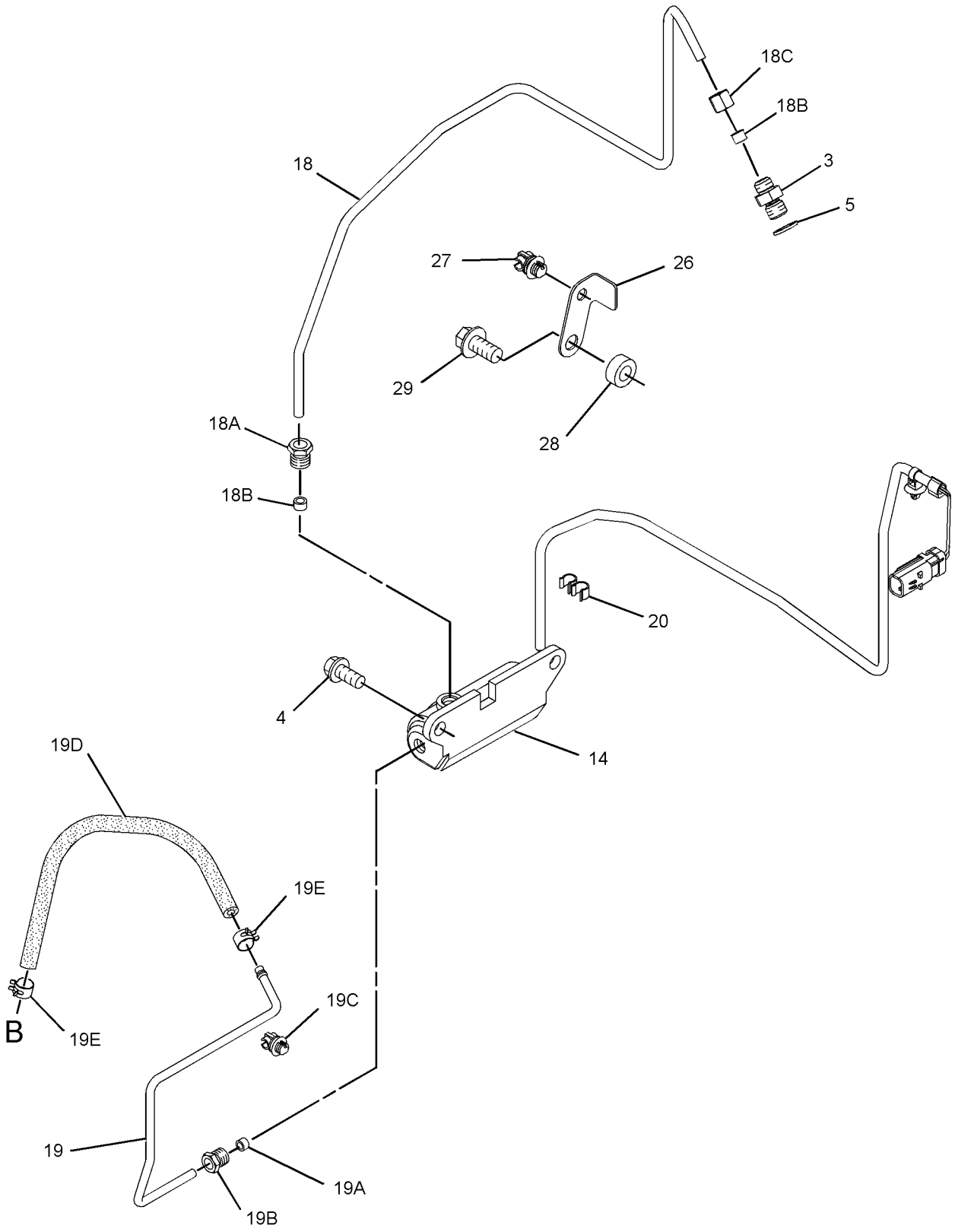

GRAPHIC #2 <END> g01673074

305-0637 TURBOCHARGER GP

TYPE 2

SMCS-1052, 1053 **i05942366**

NOTE	REF NO	GRAPHIC REF	PART NUMBER	QTY	PART NAME 1 2 3 4 5 6 (PRODUCT LEVEL)	SEE PAGE
M	1	1	**6I-0217**	2	BOLT (M8X1.25X20-MM)	
M	2	1	**6I-0260**	4	BOLT (M8X1.25X25-MM)	
	3	2	**6I-0817**	1	ADAPTER	
CM	4	2	**6I-4200**	3	BOLT (M10X1.5X16-MM)	
	5	2	**9Y-9381**	1	WASHER-HARD	
M	6	1	**106-8916**	2	BOLT (M6X16-MM)	
	7	1	**266-7092**	2	CLAMP-HOSE	
	8	1	**353-3477**	1	GASKET-TURBOCHARGER	
	9	1	**353-3478**	1	GASKET-TURBOCHARGER	
	10	1	**232-6189**	1	TUBE AS	
	11	1	**234-3029**	1	HOSE	
	12	1	**234-3030**	1	GASKET-INLET	
M	13	1	**278-0361**	8	BOLT (M10X1.5X45-MM)	
	14	2	**294-7375**	1	SOLENOID (WASTEGATE)	
	15	1	**298-4570**	1	GASKET-EXHAUST MANIFOLD	
	16	1	**301-8255**	1	TUBE AS	
	16A	1	**225-8524**	2	BOLT-SPECIAL	
	16B	1	**225-8526**	4	WASHER (10.4X13.75X1.37-MM THK)	
	17	1	**301-8256**	1	MANIFOLD-EXHAUST	
	18	2	**326-4508**	1	TUBE AS	
	18A	2	**032-8191**	1	NUT	
	18B	2	**032-8047**	2	FERRULE	
	18C	2	**035-8014**	1	NUT	
	19	2	**311-7458**	1	TUBE AS	
	19A	2	**032-8047**	1	FERRULE	
	19B	2	**032-8191**	1	NUT	
	19C	2	**298-4576**	2	CLIP	
	19D	2	**300-6520**	1	HOSE AS	
	19E	2	**107-2348**	2	CLIP	
	20	2	**303-2116**	6	CLIP	
	21	1	**305-0657**	1	TUBE (CROSSOVER)	
	22	1	**316-0562**	1	TURBOCHARGER	
	23	1	**194-5390**	1	GASKET-MANIFOLD	
M	24	1	**6I-0563**	4	NUT (M10X1.5-THD)	
	25	1	**361-7519**	4	ROD-THREADED	
C	26	2	**377-6869**	1	BRACKET	
	27	2	**298-4576**	1	CLIP	

C - CHANGE FROM PREVIOUS TYPE
M - METRIC PART

305-0637 **TURBOCHARGER GP** (contd.) **i05942366**

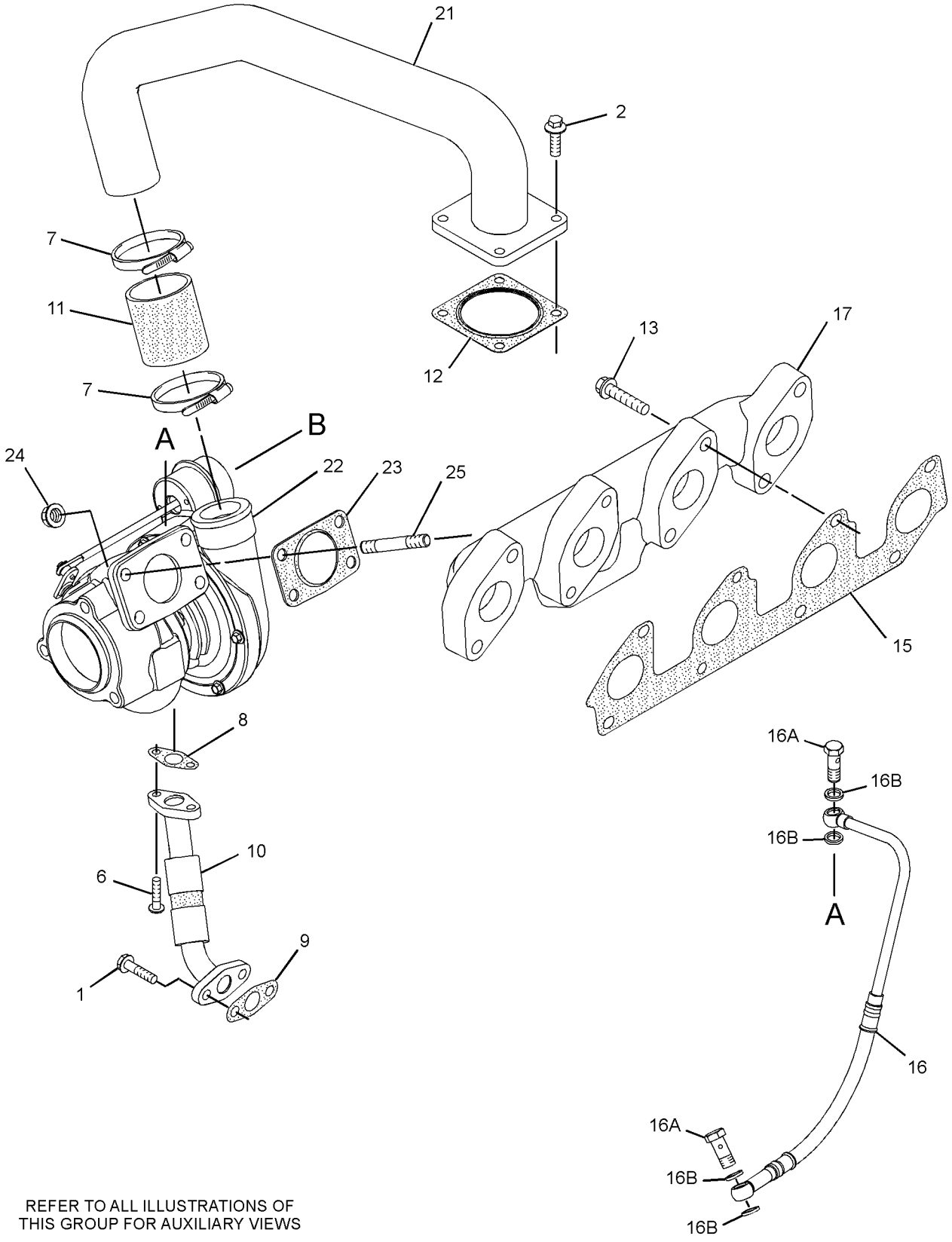

REFER TO ALL ILLUSTRATIONS OF
THIS GROUP FOR AUXILIARY VIEWS

GRAPHIC #1

g01673073

305-0637 **TURBOCHARGER GP (**contd.**)** **i05942366**

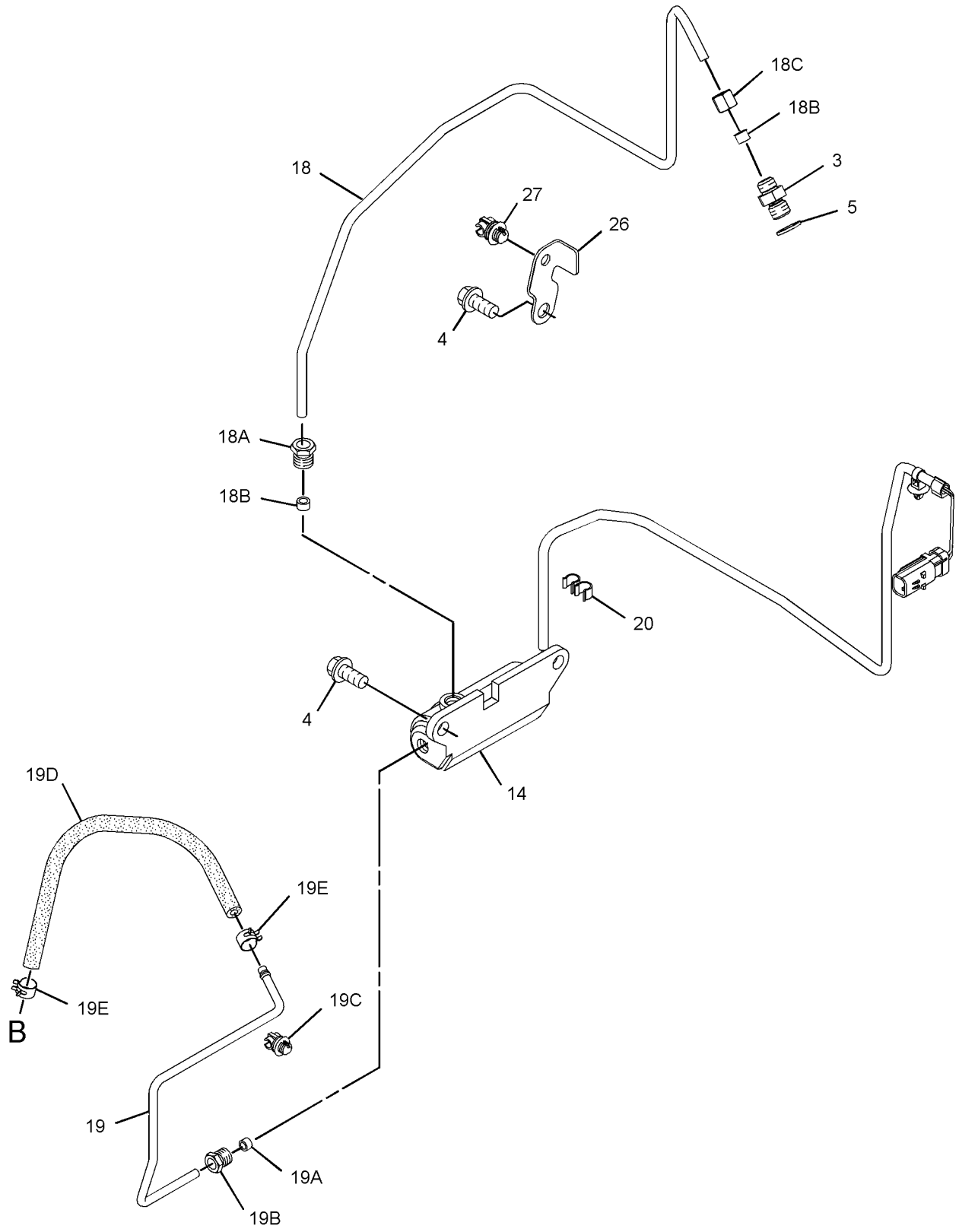

GRAPHIC #2 <END> g03129999

305-1948 TURBOCHARGER GP

TYPE 1

SMCS-1052, 1053 **i03311064**

NOTE	REF NO	GRAPHIC REF	PART NUMBER	QTY	PART NAME 1 2 3 4 5 6 (PRODUCT LEVEL)	SEE PAGE
	1	1	**316-0562**	1	TURBOCHARGER	
	2	1	**301-8255**	1	TUBE AS	
	2A	1	**225-8526**	4	WASHER (10.4X13.75X1.37-MM THK)	
	2B	1	**225-8524**	2	BOLT-SPECIAL	
	3	1	**232-6189**	1	TUBE AS	
	4	1	**225-8533**	1	GASKET	
	5	1	**225-8534**	1	GASKET	
M	6	1	**106-8916**	2	BOLT (M6X16-MM)	
M	7	1	**6I-0217**	2	BOLT (M8X1.25X20-MM)	
	8	1	**301-8256**	1	MANIFOLD-EXHAUST	
	9	1	**298-4570**	1	GASKET-EXHAUST MANIFOLD	
M	10	1	**278-0361**	8	BOLT (M10X1.5X45-MM)	
	11	1	**305-0657**	1	TUBE (CROSSOVER)	
	12	1	**234-3030**	1	GASKET-INLET	
	13	1	**234-3029**	1	HOSE	
	14	1	**266-7092**	2	CLAMP-HOSE	
	15	2	**9Y-9381**	1	WASHER-HARD	
	16	2	**278-0310**	1	SOLENOID AS (WASTEGATE)	
M	17	2	**6I-4200**	2	BOLT (M10X1.5X16-MM)	
	18	2	**303-2116**	8	CLIP	
	19	2	**326-4508**	1	TUBE AS	
	19A	2	**032-8191**	1	NUT	
	19B	2	**032-8047**	2	FERRULE	
	19C	2	**035-8014**	1	NUT	
	20	2	**6I-0817**	1	ADAPTER	
M	21	1	**6I-0260**	4	BOLT (M8X1.25X25-MM)	
	22	2	**311-7458**	1	TUBE AS	
	22A	2	**032-8191**	1	NUT	
	22B	2	**032-8047**	1	FERRULE	
	22C	2	**300-6520**	1	HOSE AS	
	22D	2	**107-2348**	2	CLIP	
	22E	2	**298-4576**	2	CLIP	
	23	1	**194-5390**	1	GASKET-MANIFOLD	
M	24	1	**6I-0563**	4	NUT (M10X1.5-THD)	
M	25	1	**147-5553**	4	STUD (M10X1.5X40-MM)	
	26	2	**303-5792**	1	BRACKET	
	27	2	**298-4576**	1	CLIP	
	28	2	**127-8165**	1	SPACER	
M	29	2	**100-4830**	1	BOLT (M10X1.5X20-MM)	

M - METRIC PART

305-1948 **TURBOCHARGER GP (**contd.**)** **i03311064**

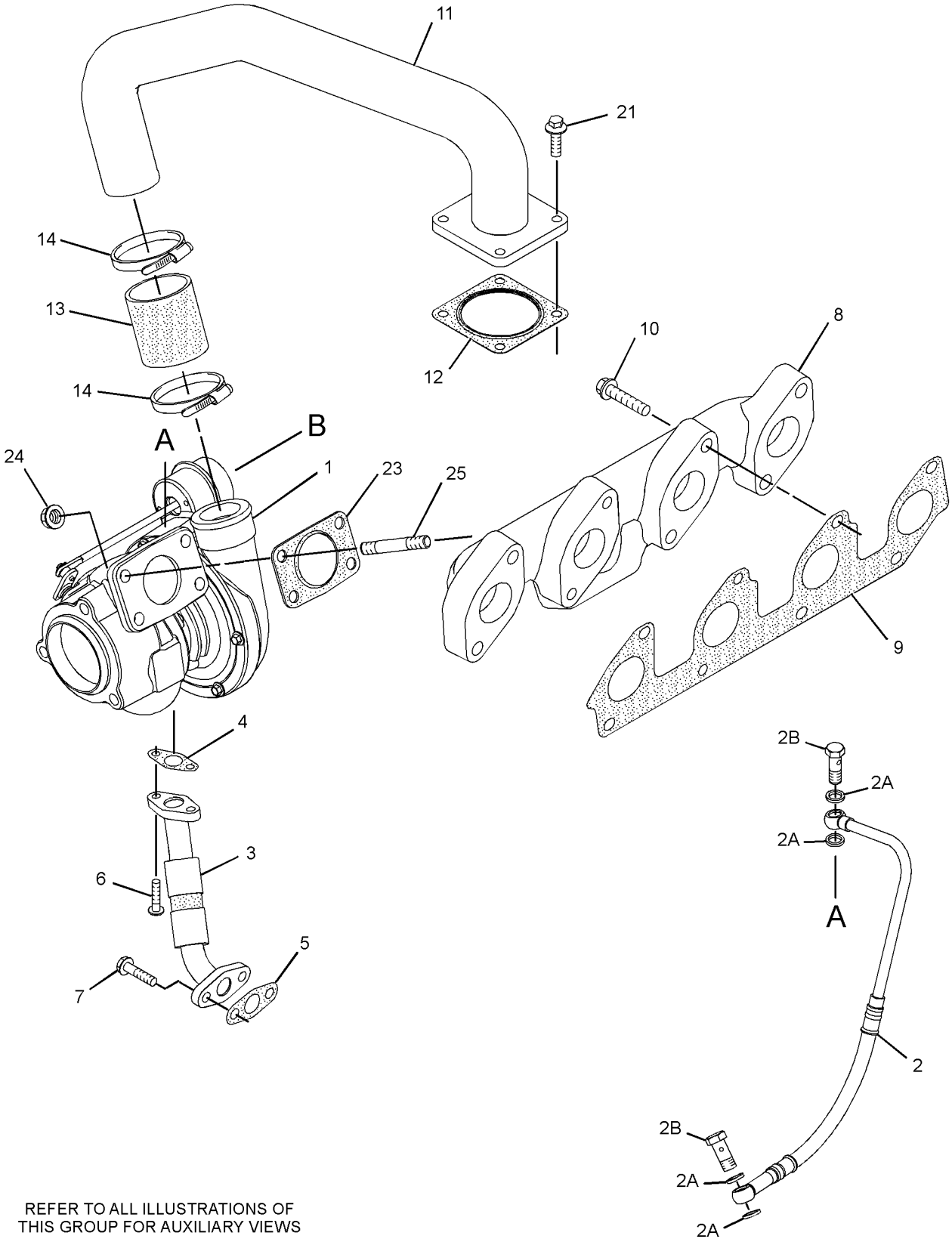

REFER TO ALL ILLUSTRATIONS OF
THIS GROUP FOR AUXILIARY VIEWS

GRAPHIC #1 g01672937

305-1948 **TURBOCHARGER GP (**contd.**)** **i03311064**

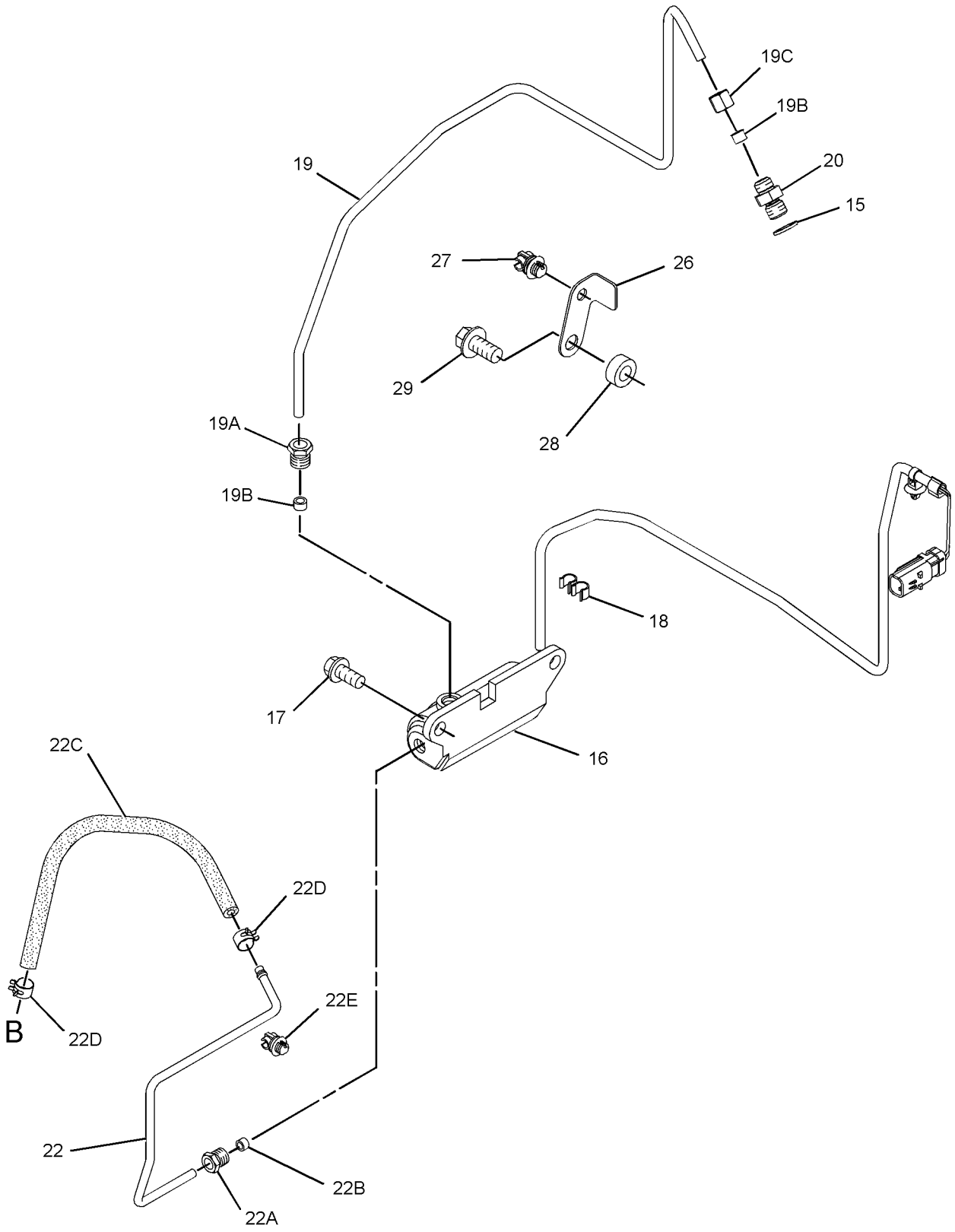

GRAPHIC #2 <END> g01672938

305-1948 TURBOCHARGER GP
TYPE 2

SMCS-1052, 1053 **i07030388**

NOTE	REF NO	GRAPHIC REF	PART NUMBER	QTY	PART NAME 1 2 3 4 5 6 (PRODUCT LEVEL)	SEE PAGE
	1	1	**316-0562**	1	TURBOCHARGER	
	2	1	**301-8255**	1	TUBE AS	
	2A	1	**225-8526**	4	WASHER (10.4X13.75X1.37-MM THK)	
	2B	1	**225-8524**	2	BOLT-SPECIAL	
	3	1	**507-5019**	1	LINE AS-OIL	
	3A	1	**269-3086**	2	CLAMP-BAND	
	4	1	**353-3477**	1	GASKET-TURBOCHARGER	
	5	1	**353-3478**	1	GASKET-TURBOCHARGER	
M	6	1	**106-8916**	2	BOLT (M6X16-MM)	
M	7	1	**6I-0217**	2	BOLT (M8X1.25X20-MM)	
	8	1	**301-8256**	1	MANIFOLD-EXHAUST	
	9	1	**298-4570**	1	GASKET-EXHAUST MANIFOLD	
M	10	1	**278-0361**	8	BOLT (M10X1.5X45-MM)	
	11	1	**305-0657**	1	TUBE (CROSSOVER)	
	12	1	**492-3310**	1	GASKET	
	13	1	**234-3029**	1	HOSE	
	14	1	**266-7092**	2	CLAMP-HOSE	
	15	2	**9Y-9381**	1	WASHER-HARD	
	16	2	**278-0310**	1	SOLENOID AS (WASTEGATE)	
CM	17	2	**6I-4200**	3	BOLT (M10X1.5X16-MM)	
	18	2	**303-2116**	8	CLIP	
	19	2	**326-4508**	1	TUBE AS	
	20	2	**6I-0817**	1	ADAPTER	
M	21	1	**6I-0260**	4	BOLT (M8X1.25X25-MM)	
	22	2	**311-7458**	1	TUBE AS	
	22A	2	**300-6520**	1	HOSE AS	
	22B	2	**107-2348**	2	CLIP	
	22C	2	**298-4576**	2	CLIP	
	23	1	**194-5390**	1	GASKET-MANIFOLD	
M	24	1	**6I-0563**	4	NUT (M10X1.5-THD)	
	25	1	**361-7519**	4	ROD-THREADED	
C	26	2	**377-6869**	1	BRACKET	
	27	2	**298-4576**	1	CLIP	

C - CHANGE FROM PREVIOUS TYPE
M - METRIC PART

305-1948 **TURBOCHARGER GP** (contd.) **i07030388**

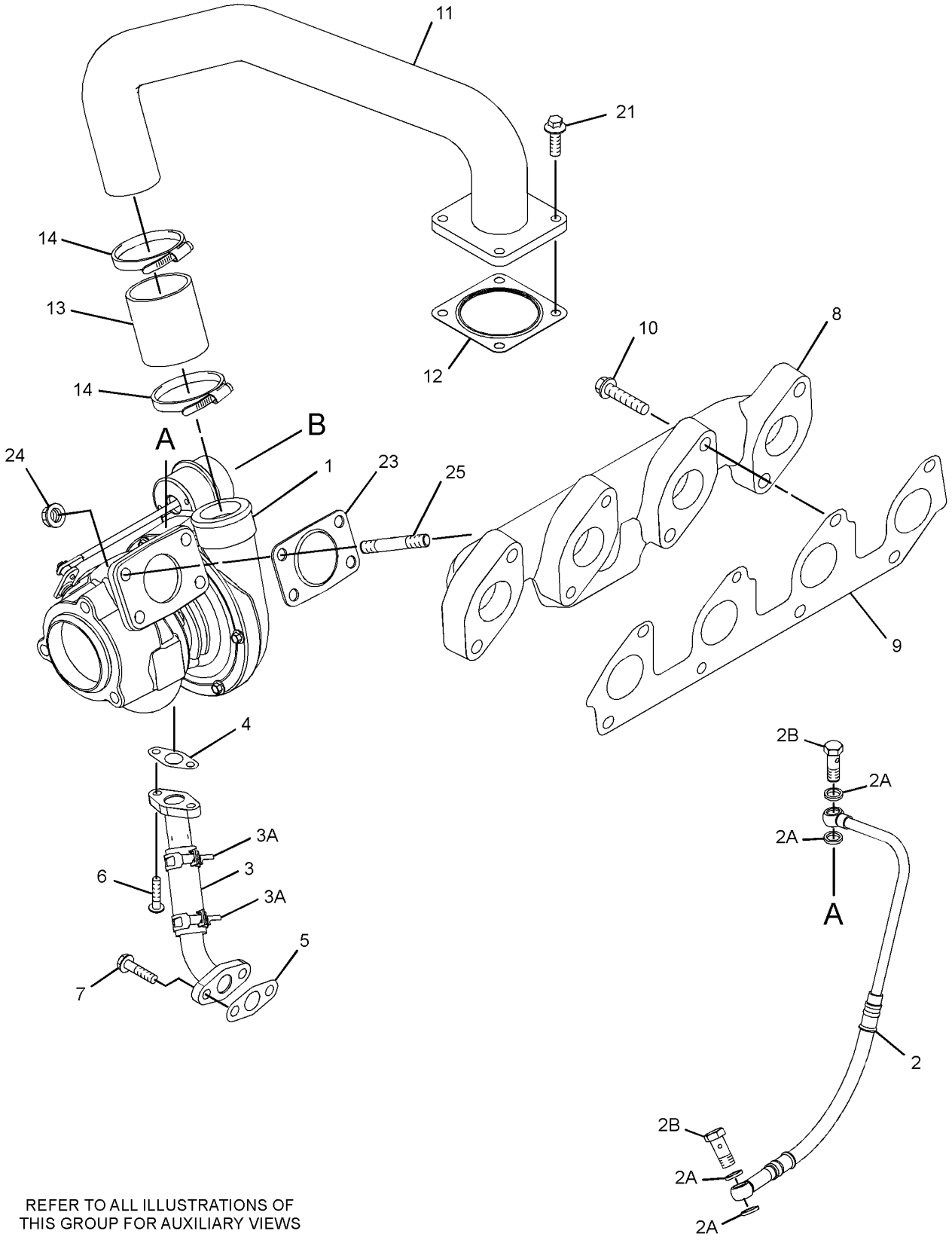

REFER TO ALL ILLUSTRATIONS OF
THIS GROUP FOR AUXILIARY VIEWS

GRAPHIC #1 g06208855

305-1948 **TURBOCHARGER GP (**contd.**)** **i07030388**

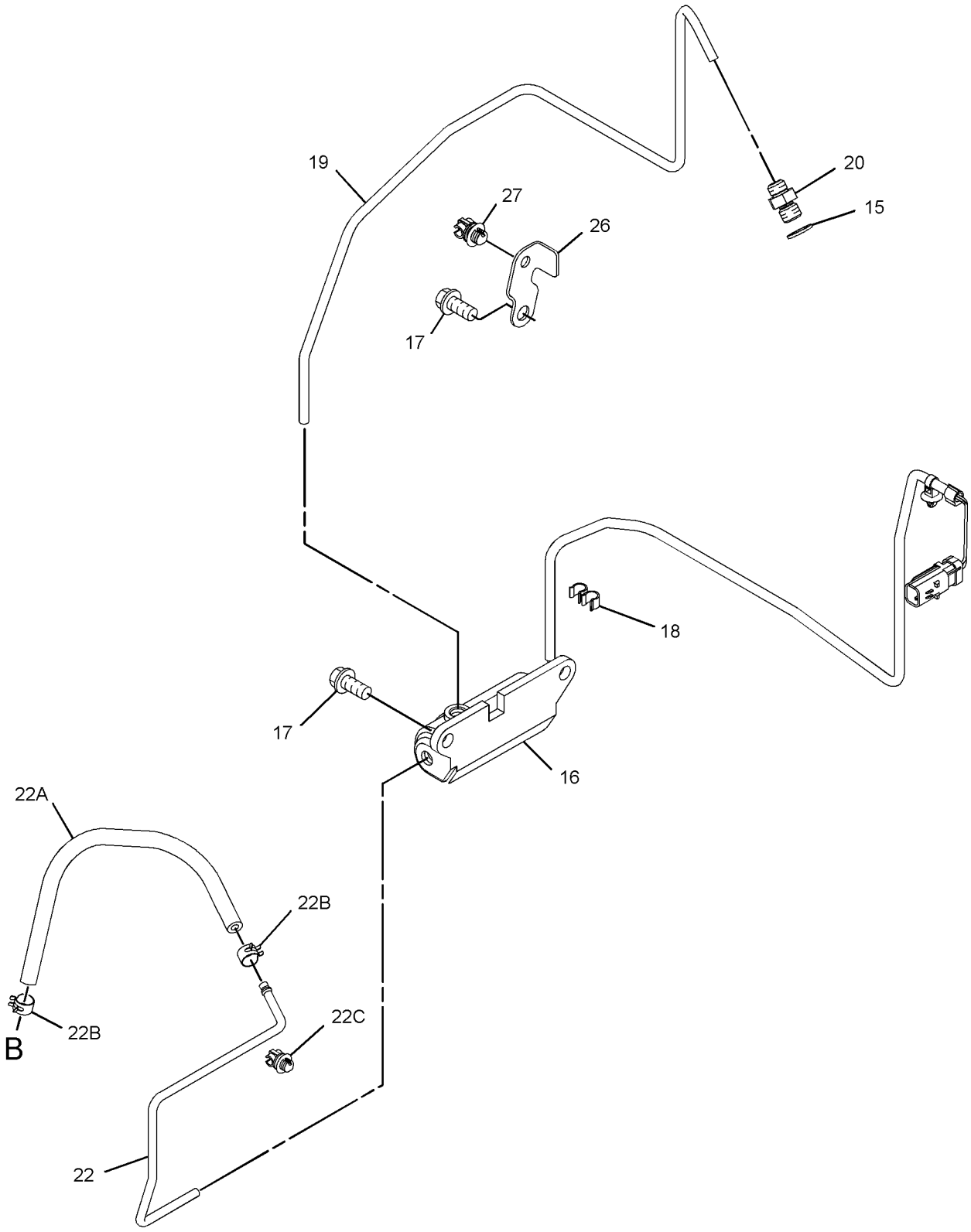

GRAPHIC #2 <END> g06208856

305-2167 TURBOCHARGER GP

TYPE 1

SMCS-1052, 1053 **i04810407**

NOTE	REF NO	GRAPHIC REF	PART NUMBER	QTY	PART NAME 1 2 3 4 5 6 (PRODUCT LEVEL)	SEE PAGE
M	1	1	**6I-0217**	2	BOLT (M8X1.25X20-MM)	
M	2	1	**6I-0645**	4	BOLT (M8X1.25X25-MM)	
	3	2	**6I-0817**	1	ADAPTER	
M	4	2	**6I-4200**	2	BOLT (M10X1.5X16-MM)	
	5	2	**9Y-9381**	1	WASHER-HARD	
M	6	1	**106-8916**	2	BOLT (M6X16-MM)	
	7	1	**266-7092**	2	CLAMP-HOSE	
	8	1	**225-8533**	1	GASKET	
	9	1	**225-8534**	1	GASKET (TURBOCHARGER)	
	10	1	**232-6189**	1	TUBE AS	
	11	1	**234-3029**	1	HOSE	
	12	1	**234-3030**	1	GASKET-INLET	
M	13	1	**278-0361**	8	BOLT (M10X1.5X45-MM)	
	14	2	**294-7375**	1	SOLENOID (WASTEGATE)	
	15	1	**298-4570**	1	GASKET-EXHAUST MANIFOLD	
	16	1	**301-8255**	1	TUBE AS	
	16A	1	**225-8524**	2	BOLT-SPECIAL	
	16B	1	**225-8526**	4	WASHER (10.4X13.75X1.37-MM THK)	
	17	1	**301-8256**	1	MANIFOLD-EXHAUST	
	18	2	**326-4508**	1	TUBE AS	
	18A	2	**032-8191**	1	NUT	
	18B	2	**032-8047**	2	FERRULE	
	18C	2	**035-8014**	1	NUT	
	19	2	**311-7458**	1	TUBE AS	
	19A	2	**032-8047**	1	FERRULE	
	19B	2	**032-8191**	1	NUT	
	19C	2	**298-4576**	2	CLIP	
	19D	2	**300-6520**	1	HOSE AS	
	19E	2	**107-2348**	2	CLIP	
	20	2	**303-2116**	8	CLIP	
	21	1	**341-4024**	1	TUBE	
	22	1	**316-0562**	1	TURBOCHARGER	
	23	1	**194-5390**	1	GASKET-MANIFOLD	
M	24	1	**6I-0563**	4	NUT (M10X1.5-THD)	
M	25	1	**147-5553**	4	STUD (M10X1.5X40-MM)	
	26	2	**303-5792**	1	BRACKET	
	27	2	**298-4576**	1	CLIP	
	28	2	**127-8165**	1	SPACER	
M	29	2	**100-4830**	1	BOLT (M10X1.5X20-MM)	

M - METRIC PART

305-2167 **TURBOCHARGER GP (**contd.**)** **i04810407**

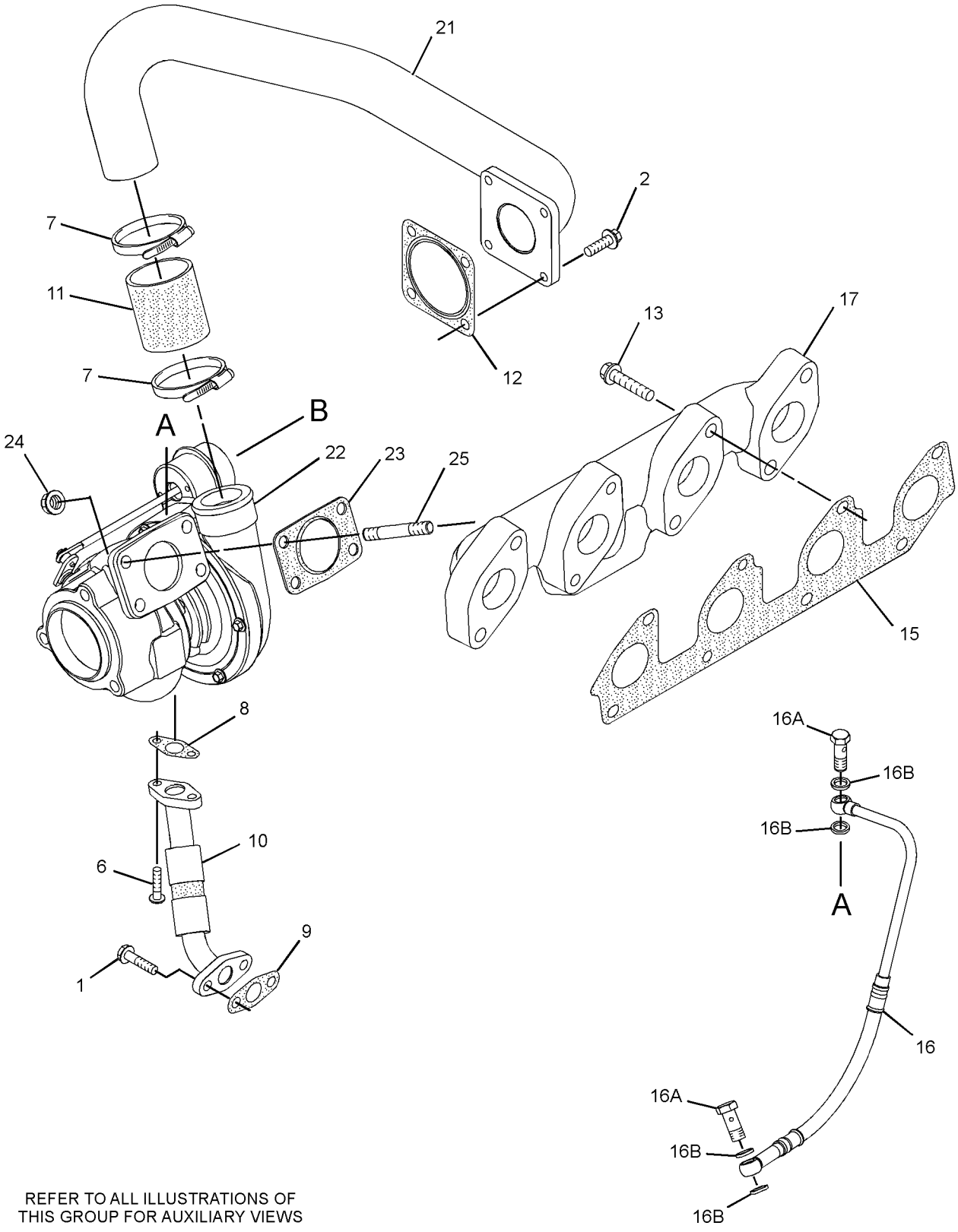

REFER TO ALL ILLUSTRATIONS OF
THIS GROUP FOR AUXILIARY VIEWS

GRAPHIC #1

g01673453

305-2167 **TURBOCHARGER GP** (contd.) **i04810407**

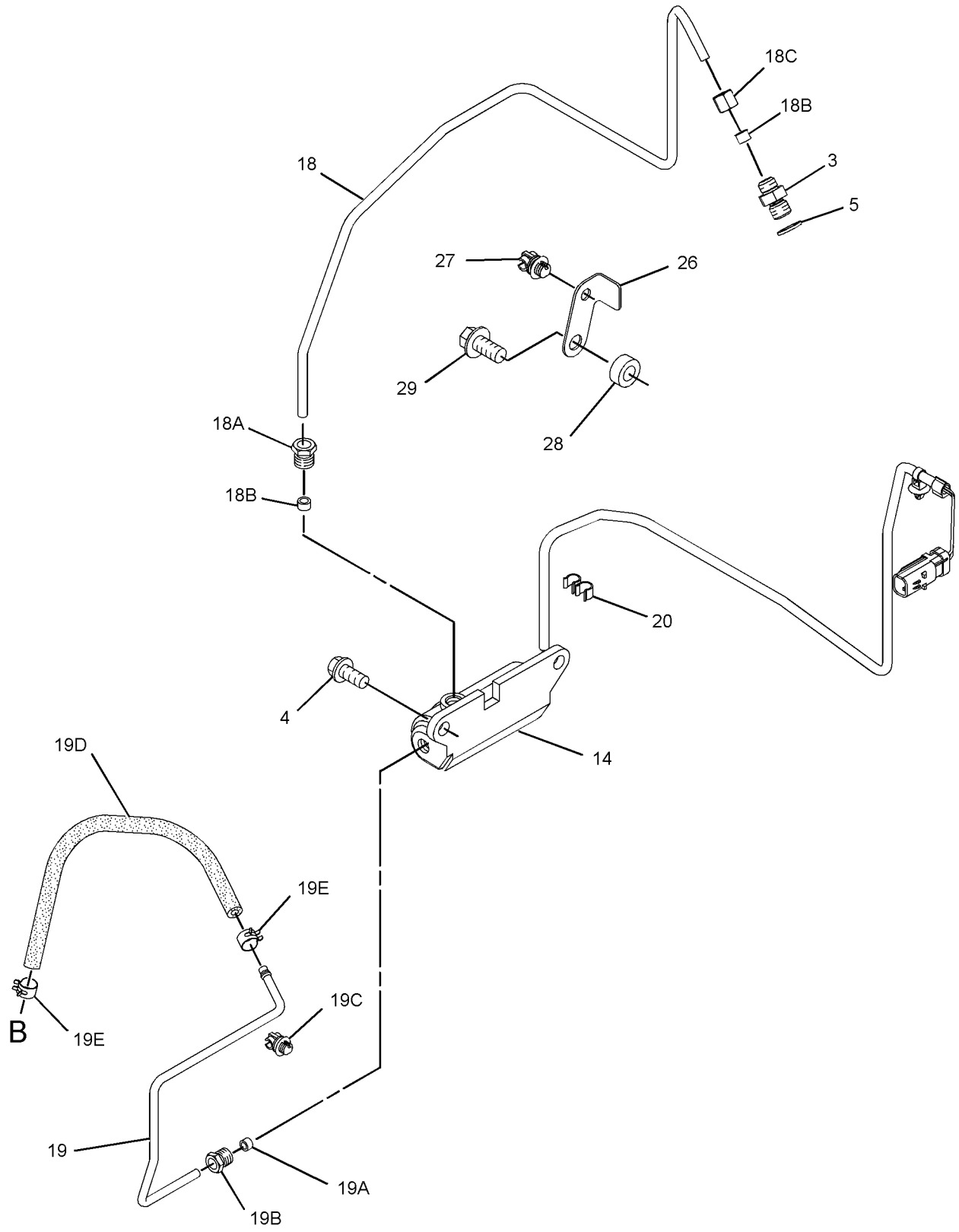

GRAPHIC #2 <END> g01673454

305-2167 TURBOCHARGER GP

TYPE 2

SMCS-1052, 1053 **i07030412**

NOTE	REF NO	GRAPHIC REF	PART NUMBER	QTY	PART NAME 1 2 3 4 5 6 (PRODUCT LEVEL)	SEE PAGE
M	1	1	**6I-0217**	2	BOLT (M8X1.25X20-MM)	
M	2	1	**6I-0645**	4	BOLT (M8X1.25X25-MM)	
	3	2	**6I-0817**	1	ADAPTER	
CM	4	2	**6I-4200**	3	BOLT (M10X1.5X16-MM)	
	5	2	**9Y-9381**	1	WASHER-HARD	
M	6	1	**106-8916**	2	BOLT (M6X16-MM)	
	7	1	**266-7092**	2	CLAMP-HOSE	
	8	1	**353-3477**	1	GASKET-TURBOCHARGER	
	9	1	**353-3478**	1	GASKET-TURBOCHARGER	
	10	1	**507-5019**	1	LINE AS-OIL	
	10A	1	**269-3086**	2	CLAMP-BAND	
	11	1	**234-3029**	1	HOSE	
	12	1	**492-3310**	1	GASKET	
M	13	1	**278-0361**	8	BOLT (M10X1.5X45-MM)	
	14	2	**294-7375**	1	SOLENOID (WASTEGATE)	
	15	1	**298-4570**	1	GASKET-EXHAUST MANIFOLD	
	16	1	**301-8255**	1	TUBE AS	
	16A	1	**225-8524**	2	BOLT-SPECIAL	
	16B	1	**225-8526**	4	WASHER (10.4X13.75X1.37-MM THK)	
	17	1	**301-8256**	1	MANIFOLD-EXHAUST	
	18	2	**326-4508**	1	TUBE AS	
	19	2	**311-7458**	1	TUBE AS	
	19A	2	**298-4576**	2	CLIP	
	19B	2	**300-6520**	1	HOSE AS	
	19C	2	**107-2348**	2	CLIP	
	20	2	**303-2116**	8	CLIP	
	21	1	**341-4024**	1	TUBE	
	22	1	**316-0562**	1	TURBOCHARGER	
	23	1	**194-5390**	1	GASKET-MANIFOLD	
M	24	1	**6I-0563**	4	NUT (M10X1.5-THD)	
	25	1	**361-7519**	4	ROD-THREADED	
C	26	2	**377-6869**	1	BRACKET	
	27	2	**298-4576**	1	CLIP	

C - CHANGE FROM PREVIOUS TYPE
M - METRIC PART

305-2167 **TURBOCHARGER GP** (contd.) **i07030412**

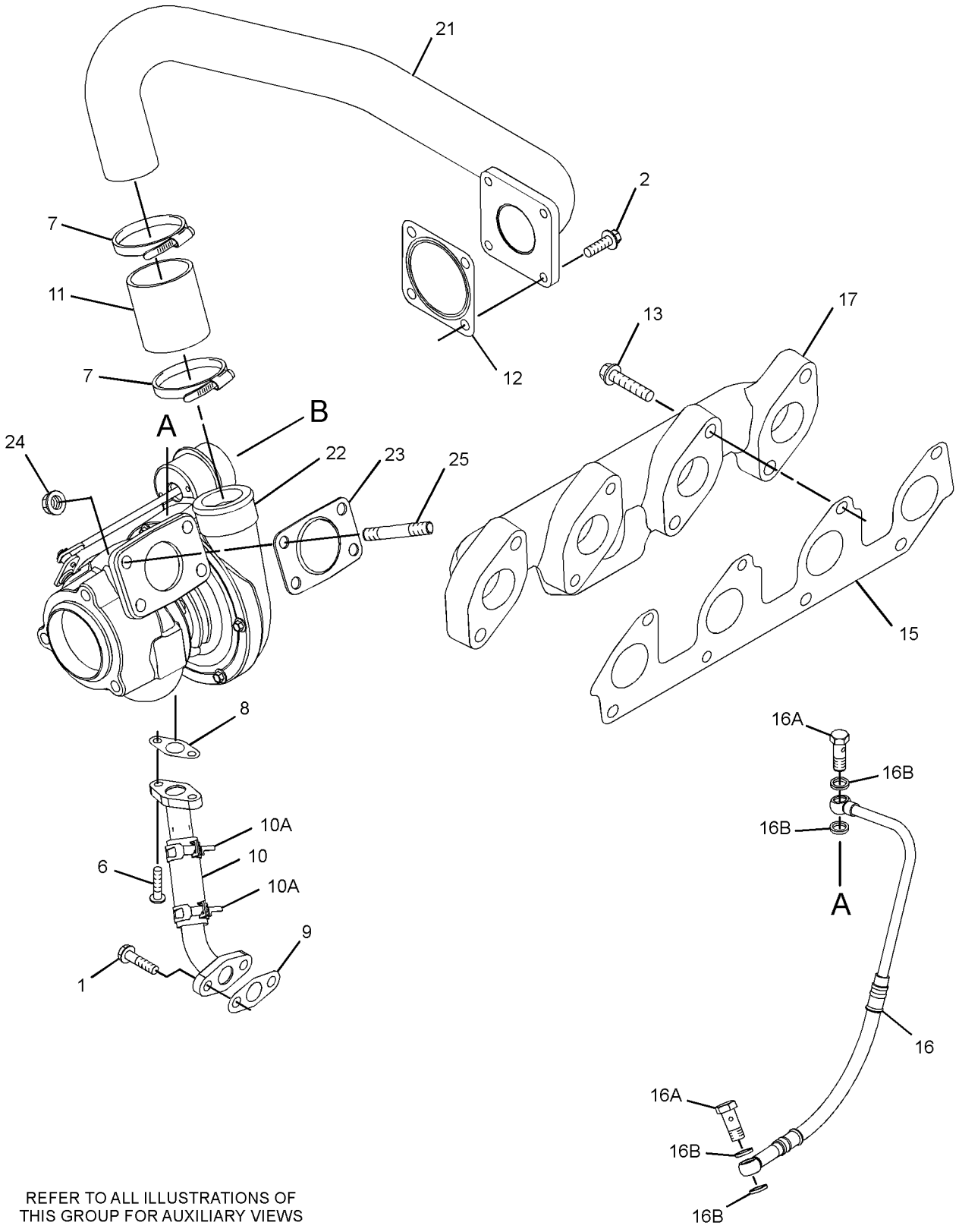

REFER TO ALL ILLUSTRATIONS OF
THIS GROUP FOR AUXILIARY VIEWS

GRAPHIC #1 g06209000

305-2167 **TURBOCHARGER GP (**contd.**)** **i07030412**

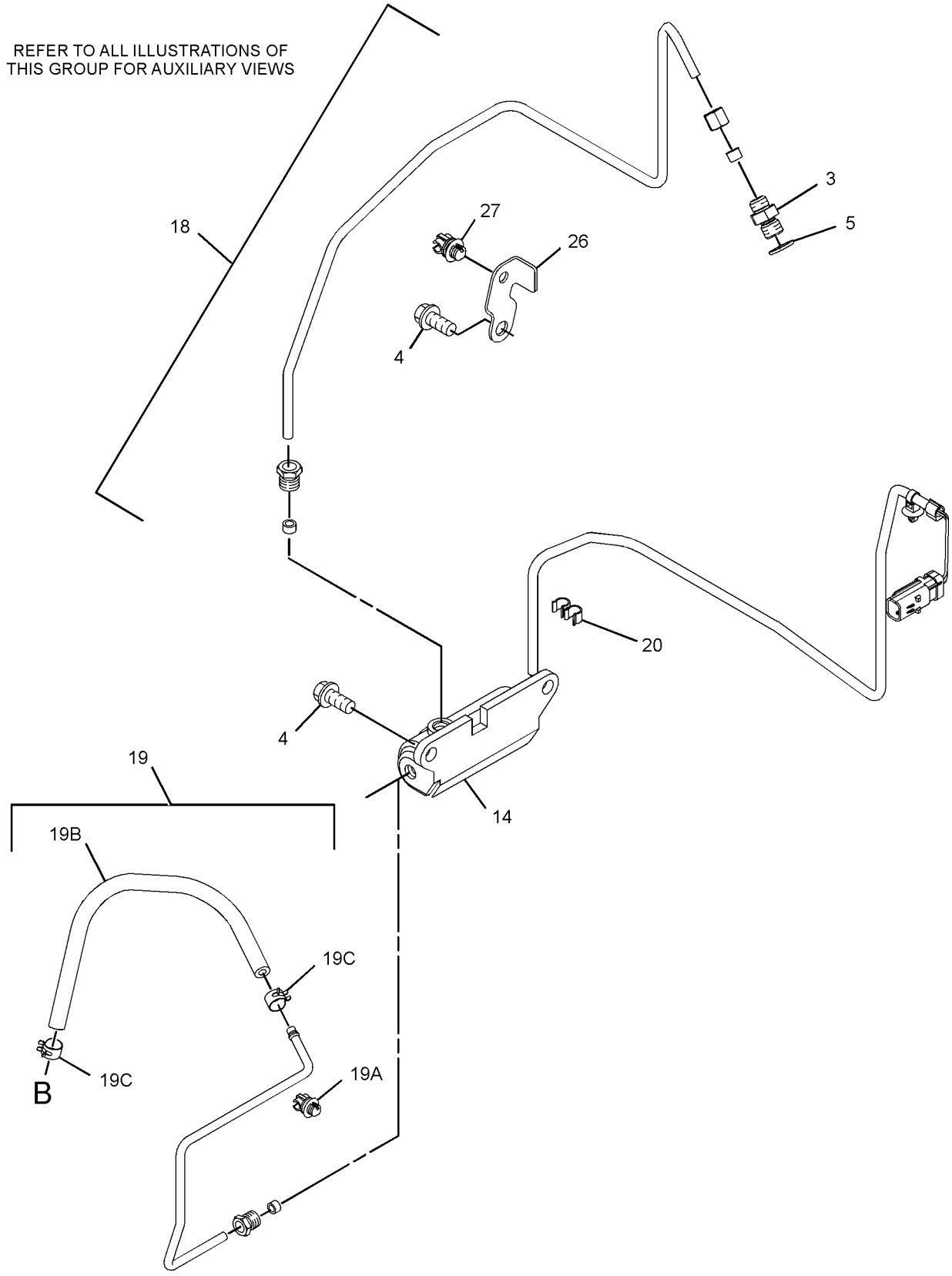

GRAPHIC #2 <END> g06209001

305-2581 TURBOCHARGER GP

S/N: 4441-421

SMCS-1052, 1053 **i02860145**

NOTE	REF NO	GRAPHIC REF	PART NUMBER	QTY	PART NAME 1 2 3 4 5 6 (PRODUCT LEVEL)	SEE PAGE
R	1	1	**316-0477**	1	TURBOCHARGER	
	2	1	**298-4566**	1	TUBE AS	
	2A	1	**225-8524**	2	BOLT-SPECIAL	
	2B	1	**225-8526**	4	WASHER (10.4X13.75X1.37-MM THK)	
	3	1	**298-4568**	1	TUBE AS	
	4	1	**225-8533**	1	GASKET	
M	5	1	**106-8916**	2	BOLT (M6X16-MM)	
	6	1	**225-8534**	1	GASKET	
M	7	1	**6I-0217**	2	BOLT (M8X1.25X20-MM)	
	8	1	**298-4569**	1	MANIFOLD-EXHAUST	
	9	1	**298-4570**	1	GASKET-EXHAUST MANIFOLD	
M	10	1	**278-0361**	7	BOLT (M10X1.5X45-MM)	
	11	1	**238-8292**	1	BOLT-FLANGE HEAD	
	12	2	**278-0310**	1	SOLENOID AS (WASTEGATE)	
M	13	2	**6I-4200**	2	BOLT (M10X1.5X16-MM)	
	14	2	**303-2116**	5	CLIP	
	15	2	**303-5791**	1	TUBE AS	
	15A	2	**4B-8774**	1	NUT-FLARED	
	15B	2	**032-8047**	2	FERRULE	
	15C	2	**035-8014**	1	NUT	
	16	2	**6I-0817**	1	ADAPTER	
	17	2	**9Y-9381**	1	WASHER-HARD	
	18	2	**303-5792**	1	BRACKET	
M	19	2	**100-4830**	1	BOLT (M10X1.5X20-MM)	
	20	2	**127-8165**	1	SPACER	
	21	2	**298-4576**	1	CLIP	
	22	2	**305-2582**	1	TUBE AS	
	22A	2	**032-8047**	1	FERRULE	
	22B	2	**032-8191**	1	NUT	
	22C	2	**298-4576**	1	CLIP	
	22D	2	**300-6520**	1	HOSE AS	
	22E	2	**107-2348**	2	CLIP	
	23	1	**194-5390**	1	GASKET-MANIFOLD	
M	24	1	**147-5553**	4	STUD (M10X1.5X40-MM)	
M	25	1	**6I-0563**	4	NUT (M10X1.5-THD)	

M - METRIC PART
R - REMANUFACTURED PART MAY BE AVAILABLE

305-2581 **TURBOCHARGER GP (**contd.**)** **i02860145**

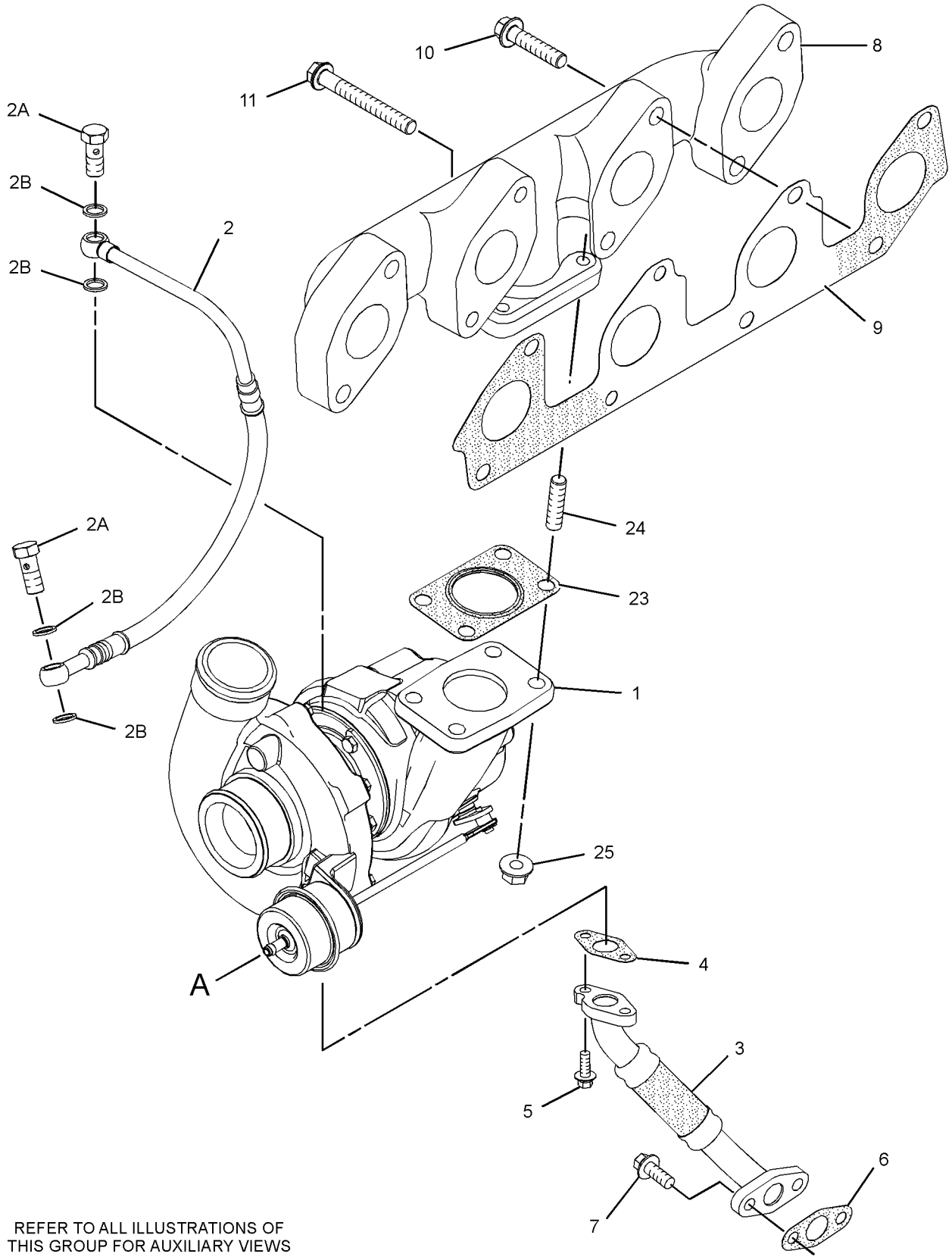

REFER TO ALL ILLUSTRATIONS OF
THIS GROUP FOR AUXILIARY VIEWS

GRAPHIC #1

g01430316

305-2581 **TURBOCHARGER GP (**contd.**)** **i02860145**

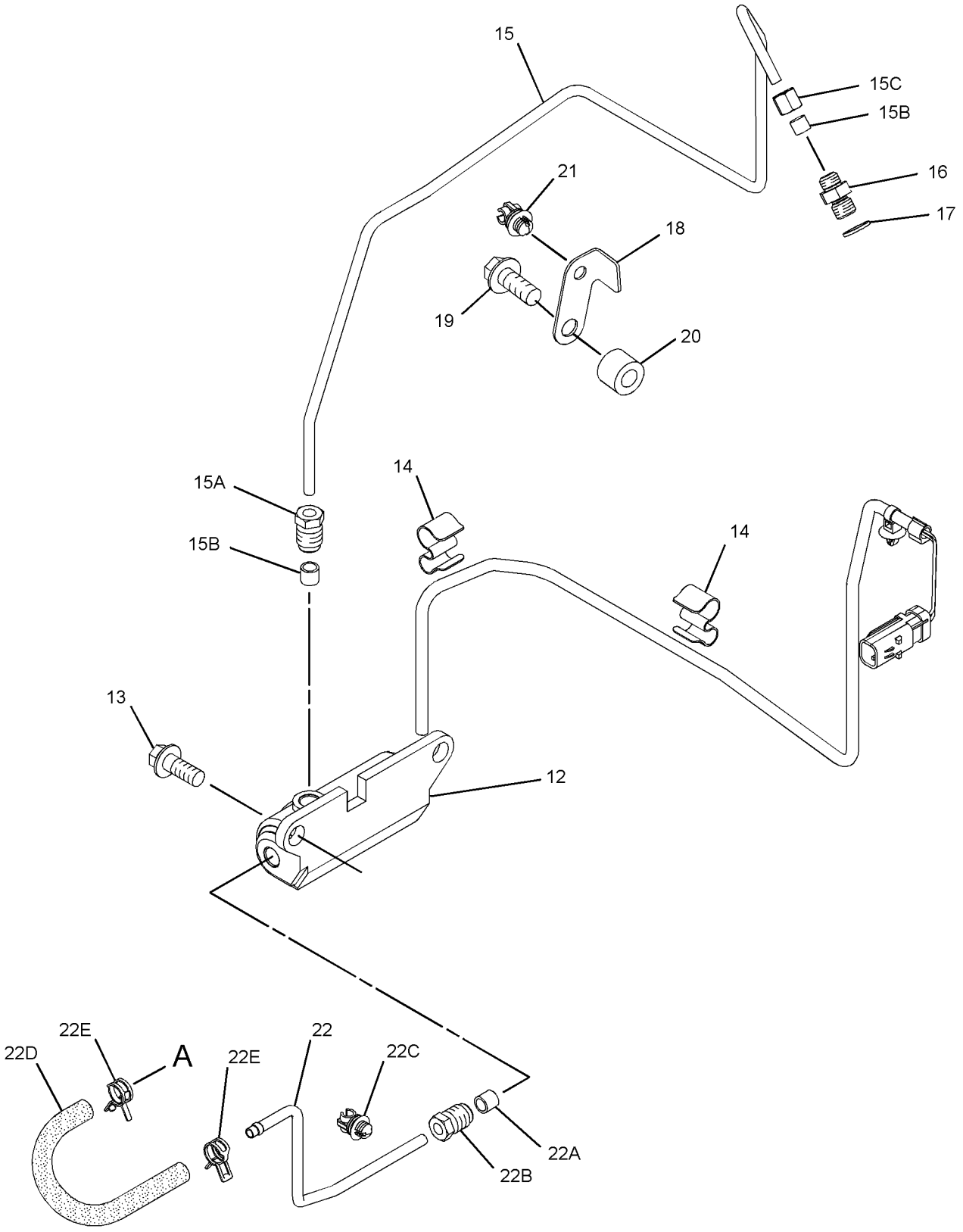

GRAPHIC #2 <END> g01368921

305-2581 TURBOCHARGER GP

S/N: 444422-UP

TYPE 1

SMCS-1052, 1053 **i04367144**

NOTE	REF NO	GRAPHIC REF	PART NUMBER	QTY	PART NAME 1 2 3 4 5 6 (PRODUCT LEVEL)	SEE PAGE
R	1	1	**316-0477**	1	TURBOCHARGER	
	2	1	**298-4566**	1	TUBE AS	
	2A	1	**225-8524**	2	BOLT-SPECIAL	
	2B	1	**225-8526**	4	WASHER (10.4X13.75X1.37-MM THK)	
	3	1	**298-4568**	1	TUBE AS	
	4	1	**225-8533**	1	GASKET	
M	5	1	**106-8916**	2	BOLT (M6X16-MM)	
	6	1	**225-8534**	1	GASKET	
M	7	1	**6I-0217**	2	BOLT (M8X1.25X20-MM)	
	8	1	**298-4569**	1	MANIFOLD-EXHAUST	
	9	1	**298-4570**	1	GASKET-EXHAUST MANIFOLD	
M	10	1	**278-0361**	7	BOLT (M10X1.5X45-MM)	
	11	1	**238-8292**	1	BOLT-FLANGE HEAD	
	12	2	**278-0310**	1	SOLENOID AS (WASTEGATE)	
CM	13	2	**6I-0654**	2	BOLT (M10X1.5X25-MM)	
	14	2	**303-2116**	6	CLIP	
C	15	2	**324-6530**	1	TUBE AS-TURBOCHARGER	
	15A	2	**4B-8774**	1	NUT-FLARED	
	15B	2	**032-8047**	2	FERRULE	
	15C	2	**035-8014**	1	NUT	
	16	2	**6I-0817**	1	ADAPTER	
	17	2	**9Y-9381**	1	WASHER-HARD	
	18	2	**303-5792**	1	BRACKET	
M	19	2	**100-4830**	1	BOLT (M10X1.5X20-MM)	
	20	2	**127-8165**	1	SPACER	
	21	2	**298-4576**	1	CLIP	
C	22	2	**310-7536**	1	TUBE AS (BOOST)	
	22A	2	**032-8047**	1	FERRULE	
	22B	2	**4B-8774**	1	NUT-FLARED	
	22C	2	**298-4576**	1	CLIP	
	22D	2	**300-6520**	1	HOSE AS	
	22E	2	**107-2348**	2	CLIP	
	23	1	**194-5390**	1	GASKET-MANIFOLD	
M	24	1	**147-5553**	4	STUD (M10X1.5X40-MM)	
M	25	1	**6I-0563**	4	NUT (M10X1.5-THD)	
C	26	2	**310-7533**	1	BRACKET	
C	27	2	**298-4573**	2	BOLT	

C - CHANGE FROM PREVIOUS TYPE
M - METRIC PART
R - REMANUFACTURED PART MAY BE AVAILABLE

305-2581 **TURBOCHARGER GP (**contd.**)** **i04367144**

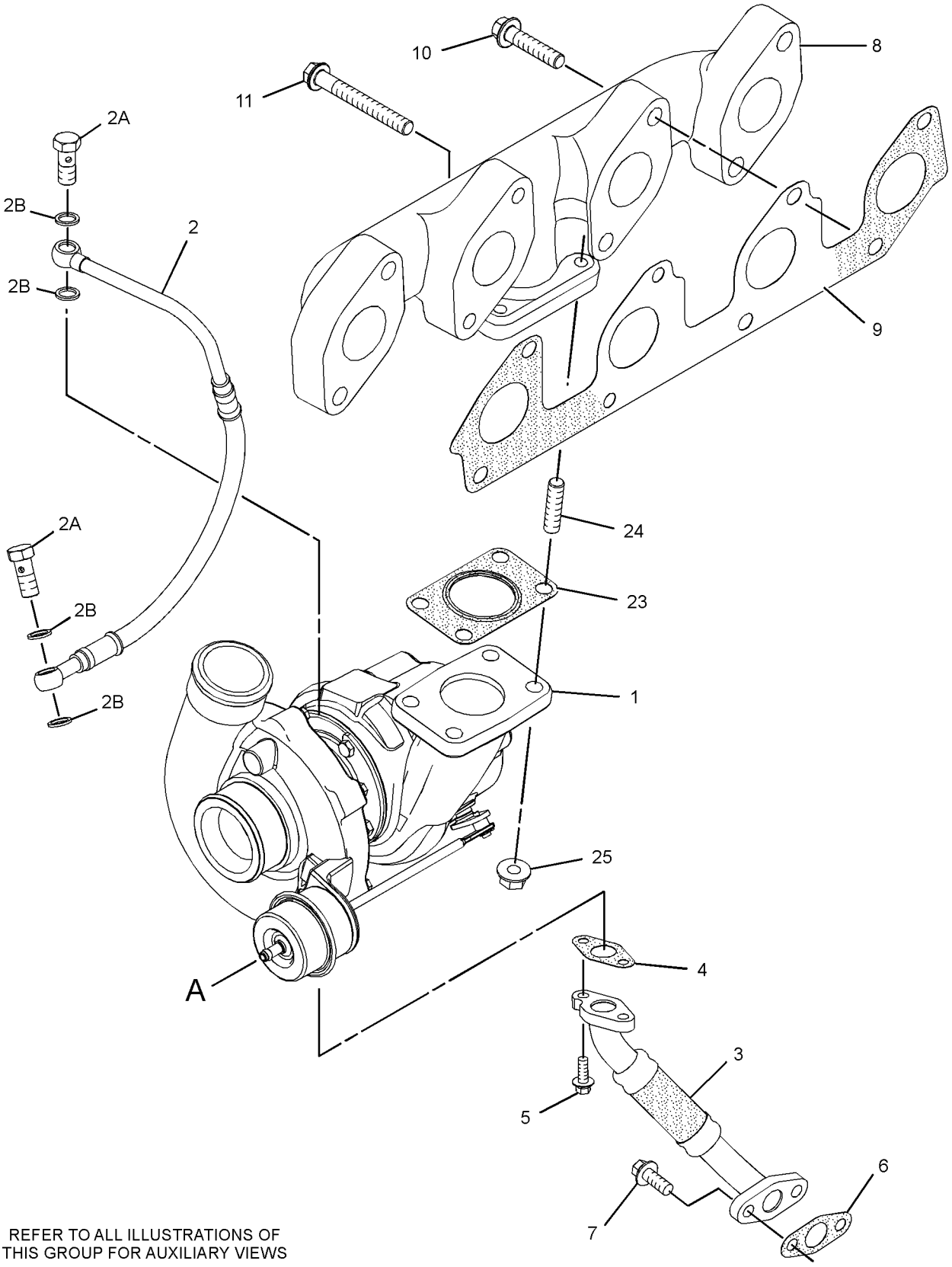

REFER TO ALL ILLUSTRATIONS OF
THIS GROUP FOR AUXILIARY VIEWS

GRAPHIC #1 g01670193

305-2581 **TURBOCHARGER GP (**contd.**)** **i04367144**

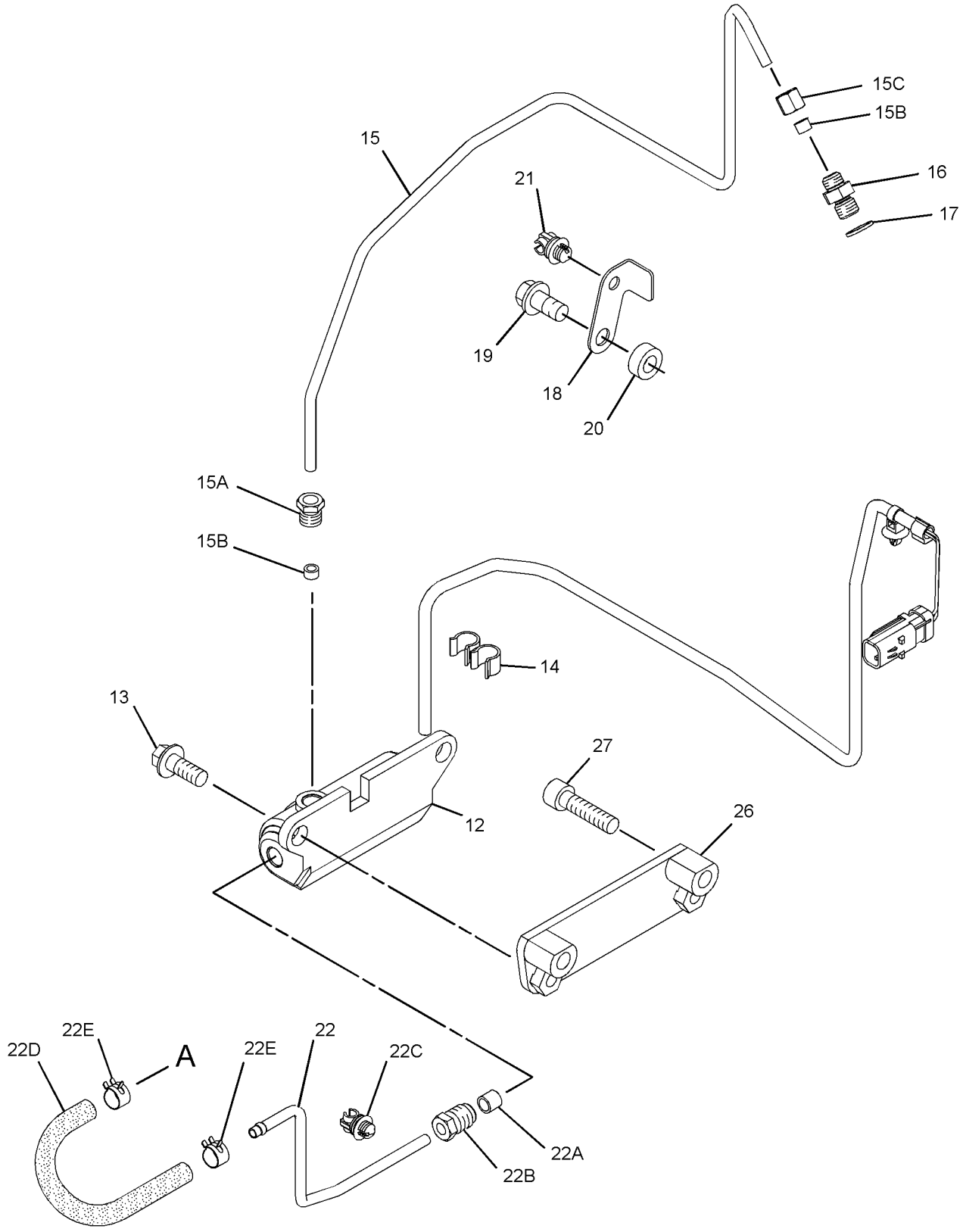

GRAPHIC #2 <END> g01670053

305-2581 TURBOCHARGER GP

S/N: 444422-UP

TYPE 2

SMCS-1052, 1053 **i07030410**

NOTE	REF NO	GRAPHIC REF	PART NUMBER	QTY	PART NAME 1 2 3 4 5 6 (PRODUCT LEVEL)	SEE PAGE
R	1	1	**316-0477**	1	TURBOCHARGER	
	2	1	**298-4566**	1	TUBE AS	
	2A	1	**225-8524**	2	BOLT-SPECIAL	
	2B	1	**225-8526**	4	WASHER (10.4X13.75X1.37-MM THK)	
	3	1	**507-5015**	1	LINE AS	
	3A	1	**269-3086**	2	CLAMP-BAND	
	4	1	**353-3477**	1	GASKET-TURBOCHARGER	
M	5	1	**106-8916**	2	BOLT (M6X16-MM)	
	6	1	**353-3478**	1	GASKET-TURBOCHARGER	
M	7	1	**6I-0217**	2	BOLT (M8X1.25X20-MM)	
	8	1	**298-4569**	1	MANIFOLD-EXHAUST	
	9	1	**298-4570**	1	GASKET-EXHAUST MANIFOLD	
M	10	1	**278-0361**	7	BOLT (M10X1.5X45-MM)	
	11	1	**238-8292**	1	BOLT-FLANGE HEAD	
	12	2	**278-0310**	1	SOLENOID AS (WASTEGATE)	
M	13	2	**6I-0654**	2	BOLT (M10X1.5X25-MM)	
	14	2	**303-2116**	6	CLIP	
	15	2	**324-6530**	1	TUBE AS-TURBOCHARGER	
	16	2	**6I-0817**	1	ADAPTER	
	17	2	**9Y-9381**	1	WASHER-HARD	
C	18	2	**377-6869**	1	BRACKET	
CM	19	2	**6I-4200**	1	BOLT (M10X1.5X16-MM)	
	21	2	**298-4576**	1	CLIP	
	22	2	**310-7536**	1	TUBE AS (BOOST)	
	22A	2	**298-4576**	1	CLIP	
	22B	2	**300-6520**	1	HOSE AS	
	22C	2	**107-2348**	2	CLIP	
	23	1	**194-5390**	1	GASKET-MANIFOLD	
	24	1	**361-7519**	4	ROD-THREADED	
M	25	1	**6I-0563**	4	NUT (M10X1.5-THD)	
	26	2	**310-7533**	1	BRACKET	
M	27	2	**101-7398**	2	BOLT-SOCKET HEAD (M10X1.5X40-MM)	

C - CHANGE FROM PREVIOUS TYPE
M - METRIC PART
R - REMANUFACTURED PART MAY BE AVAILABLE

305-2581 **TURBOCHARGER GP (**contd.**)** **i07030410**

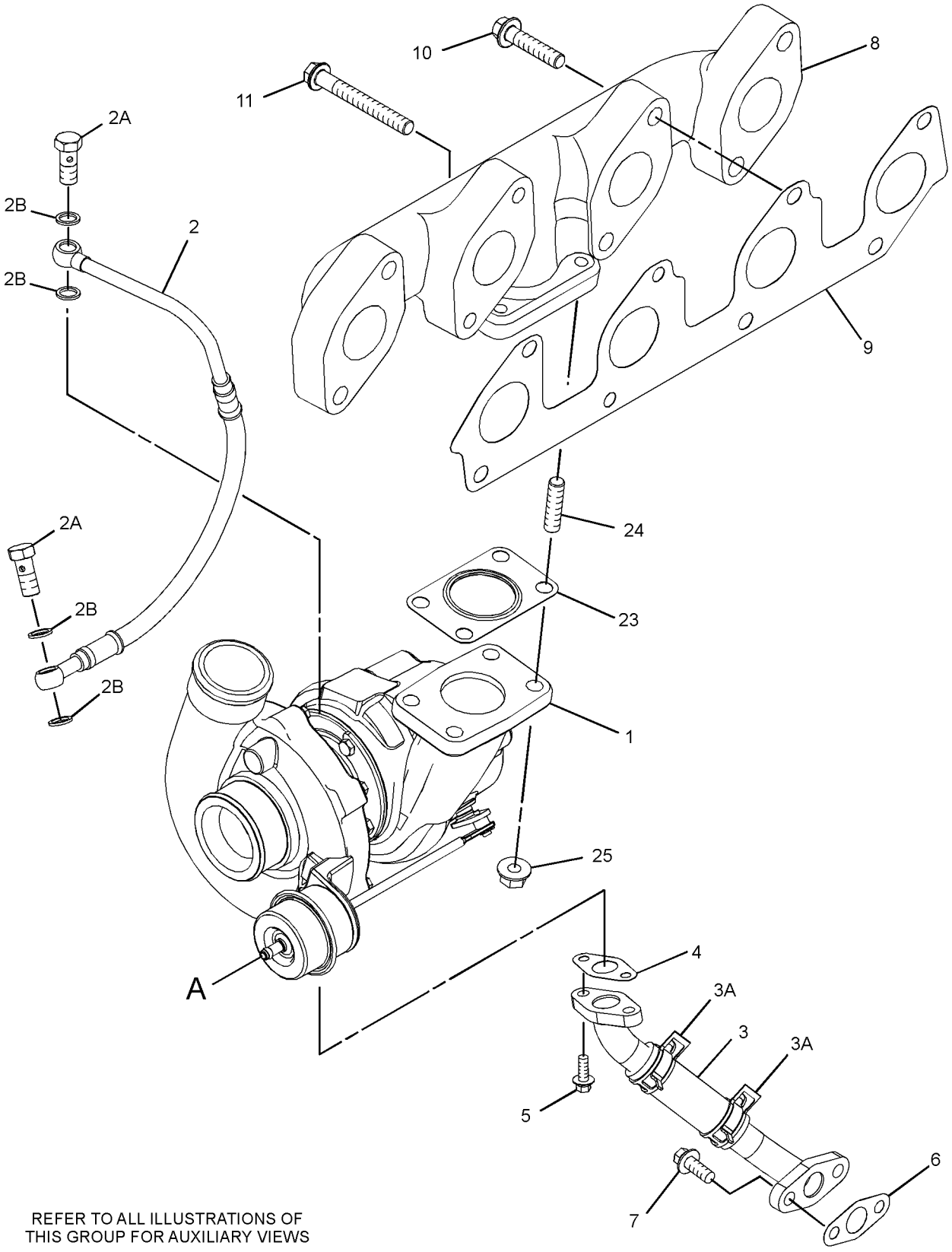

REFER TO ALL ILLUSTRATIONS OF
THIS GROUP FOR AUXILIARY VIEWS

GRAPHIC #1 g06208808

305-2581 **TURBOCHARGER GP (**contd.**)** **i07030410**

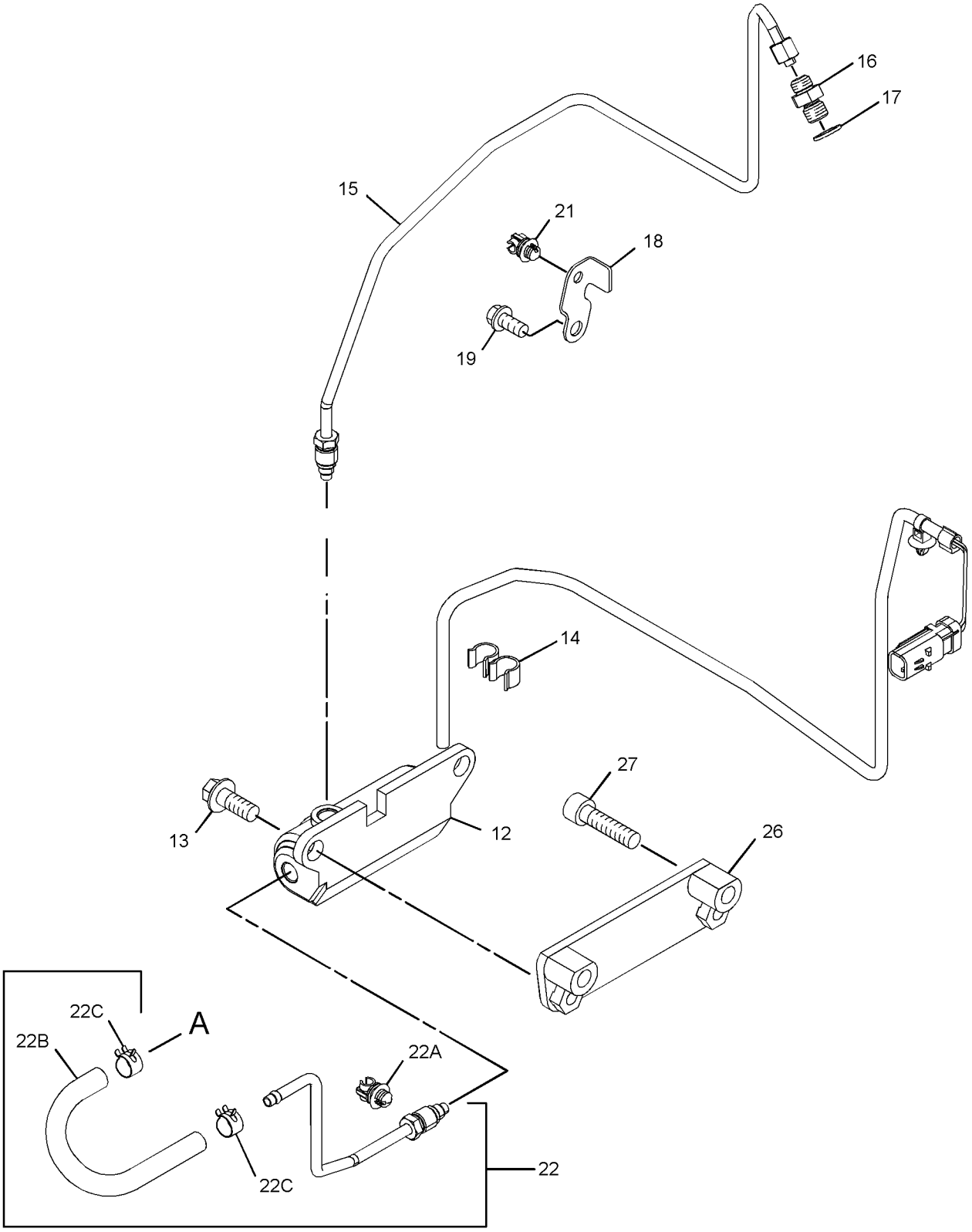

GRAPHIC #2 <END> g06208809

307-2850 TURBOCHARGER GP

TYPE 1

SMCS-1052, 1053 **i03116447**

NOTE	REF NO	GRAPHIC REF	PART NUMBER	QTY	PART NAME 1 2 3 4 5 6 (PRODUCT LEVEL)	SEE PAGE
M	1	1	**6I-0217**	2	BOLT (M8X1.25X20-MM)	
M	2	3	**6I-0254**	2	BOLT (M8X1.25X30-MM)	
M	3	1	**6I-0563**	7	NUT (M10X1.5-THD)	
M	4	1	**6I-0593**	2	BOLT (M10X1.5X30-MM)	
M	5	1	**6I-0654**	3	BOLT (M10X1.5X25-MM)	
M	6	3	**6I-0789**	4	BOLT (M10X1.5X60-MM)	
	7	2	**6I-0817**	1	ADAPTER	
M	8	2	**6I-4200**	2	BOLT (M10X1.5X16-MM)	
	9	3	**9M-7959**	1	CLAMP-HOSE	
	10	2	**9Y-9381**	1	WASHER-HARD	
M	11	2	**100-4830**	1	BOLT (M10X1.5X20-MM)	
M	12	1	**106-8916**	2	BOLT (M6X16-MM)	
	13	2	**127-8165**	1	SPACER	
M	14	1	**147-5553**	7	STUD (M10X1.5X40-MM)	
	15	1	**225-8530**	1	GASKET (ELBOW)	
	16	1	**225-8533**	1	GASKET	
	17	1	**225-8534**	1	GASKET	
	18	1	**227-4562**	1	ELBOW-EXHAUST	
	19	1	**232-6189**	1	TUBE AS	
	20	2	**278-0310**	1	SOLENOID AS (WASTEGATE)	
M	21	1	**278-0361**	8	BOLT (M10X1.5X45-MM)	
	22	3	**293-0598**	1	CLIP	
	23	1	**298-4570**	1	GASKET-EXHAUST MANIFOLD	
	24	2	**298-4576**	1	CLIP	
	25	1	**301-8255**	1	TUBE AS	
	25A	1	**225-8524**	2	BOLT-SPECIAL	
	25B	1	**225-8526**	4	WASHER (10.4X13.75X1.37-MM THK)	
	26	1	**301-8256**	1	MANIFOLD-EXHAUST	
	27	1	**302-0581**	1	ADAPTER-EXHAUST	
	28	2	**303-2116**	5	CLIP	
	29	2	**326-4508**	1	TUBE AS	
	29A	2	**032-8047**	2	FERRULE	
	29B	2	**032-8191**	1	NUT	
	29C	2	**035-8014**	1	NUT	
	30	2	**303-5792**	1	BRACKET	
	31	1	**316-0514**	1	TURBOCHARGER	
	32	1	**307-2805**	1	BRACKET	
	33	2	**311-7458**	1	TUBE AS	
	33A	2	**032-8191**	1	NUT	
	33B	2	**032-8047**	1	FERRULE	
	33C	2	**298-4576**	2	CLIP	
	33D	2	**300-6520**	1	HOSE AS	
	33E	2	**107-2348**	2	CLIP	
Y	34	3	**307-2807**	1	AIR CLEANER GP	772
	35	3	**307-2831**	1	BRACKET	
	36	3	**307-2832**	1	HOSE-AIR	
	37	1	**194-5390**	1	GASKET-MANIFOLD	

M - METRIC PART
Y - SEPARATE ILLUSTRATION

307-2850 **TURBOCHARGER GP** (contd.) **i03116447**

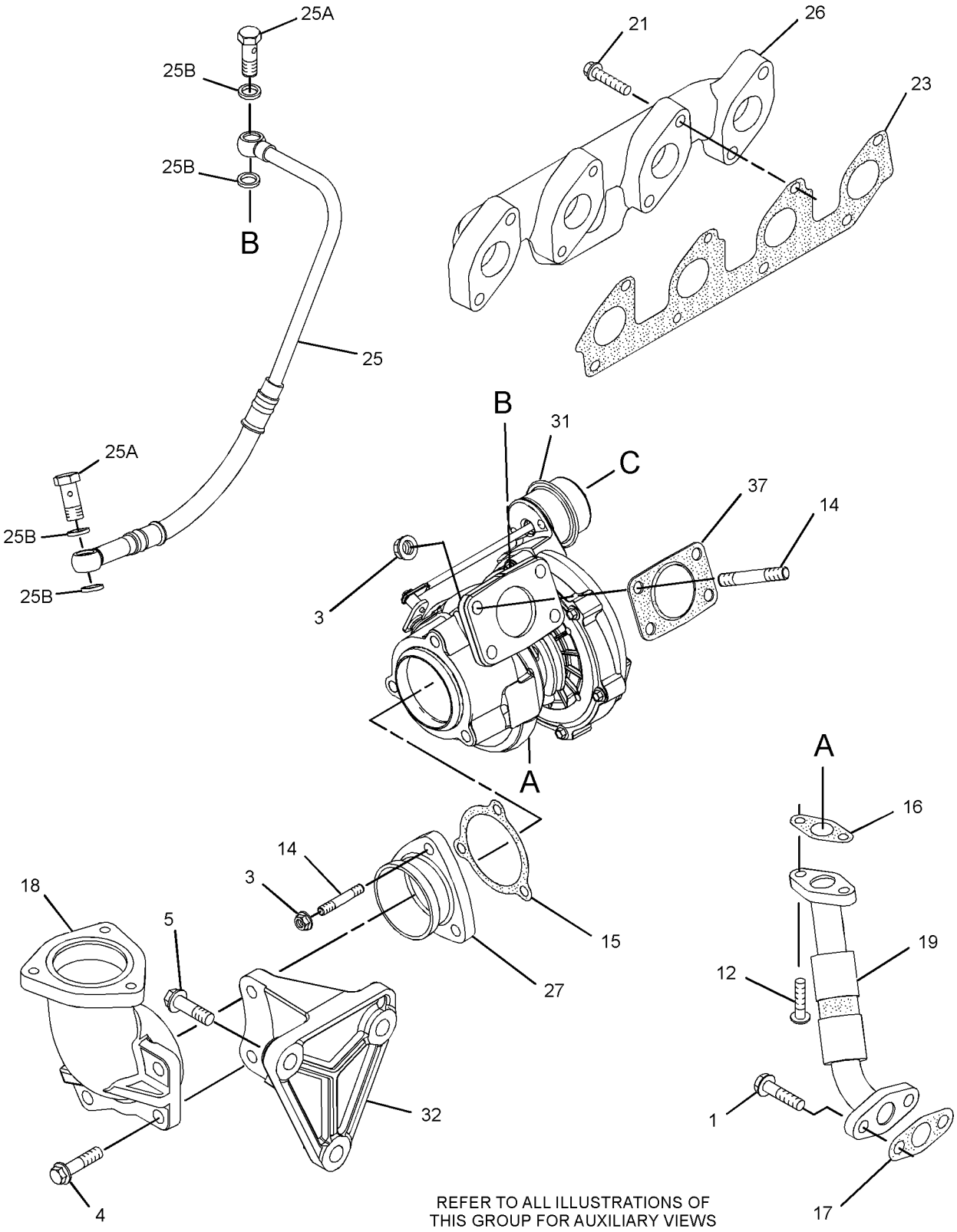

REFER TO ALL ILLUSTRATIONS OF
THIS GROUP FOR AUXILIARY VIEWS

GRAPHIC #1 g01677841

307-2850 **TURBOCHARGER GP (**contd.**)** **i03116447**

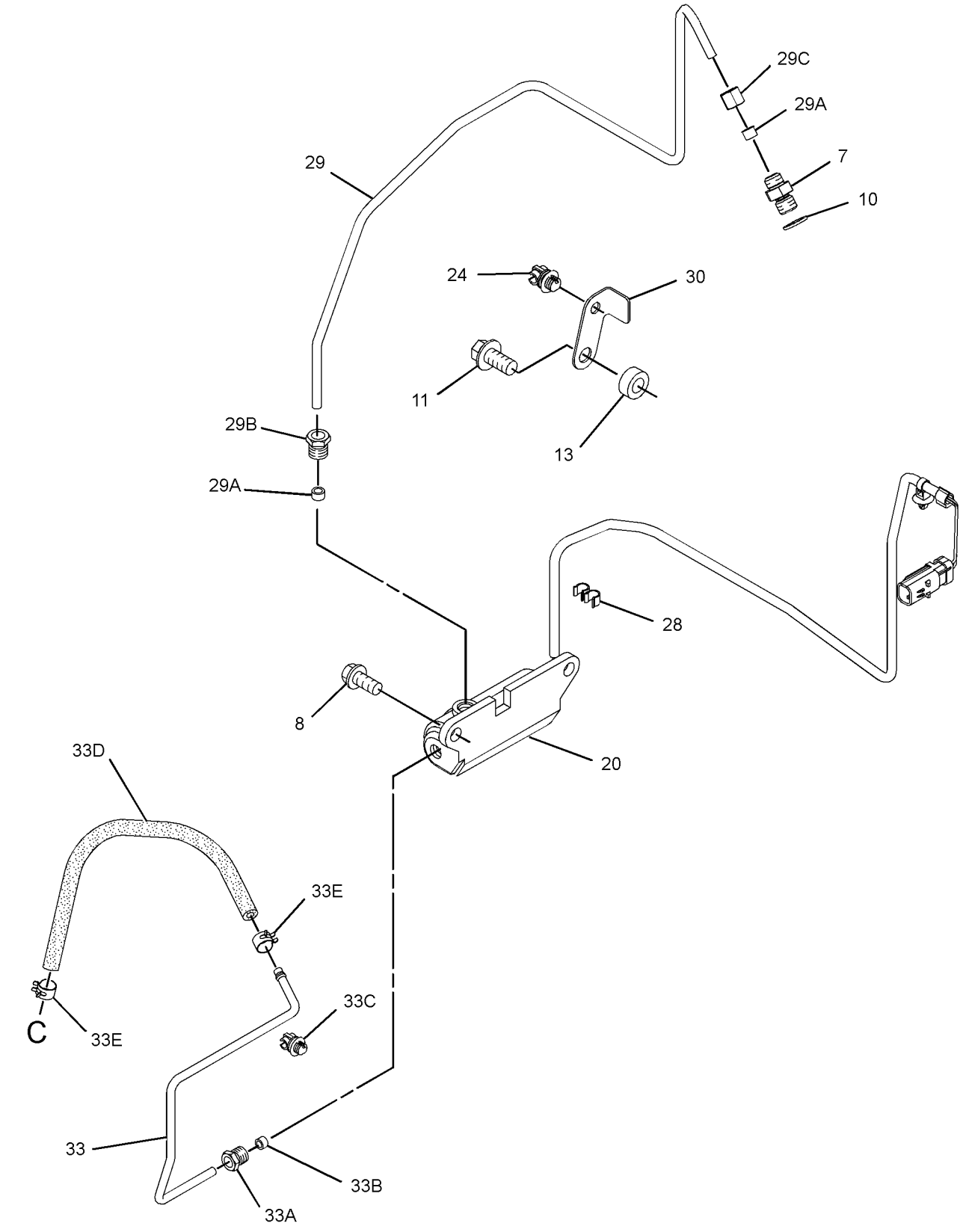

GRAPHIC #2 g01677842

307-2850 **TURBOCHARGER GP** (contd.) **i03116447**

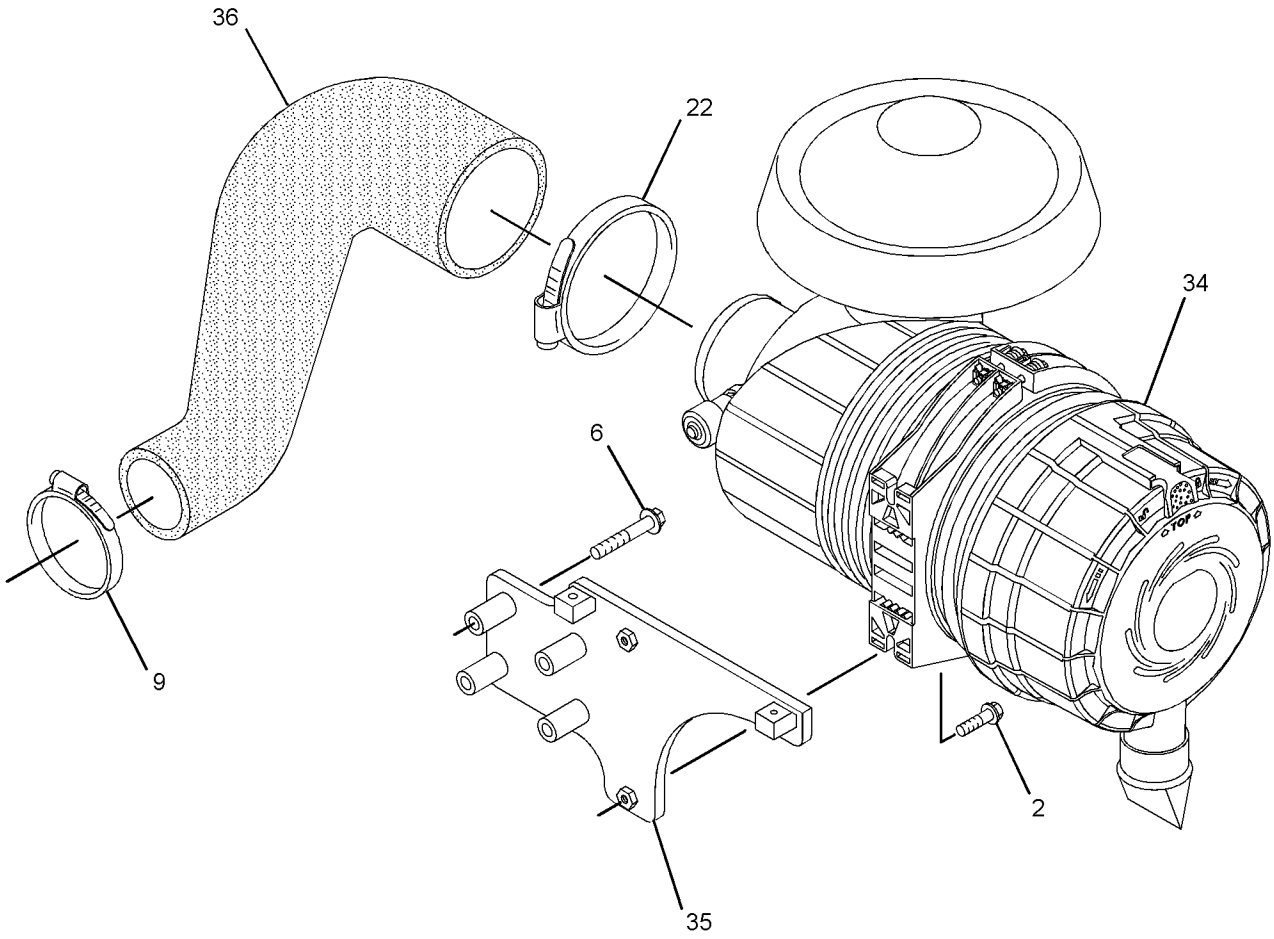

GRAPHIC #3 <END> g01677918

307-2850 TURBOCHARGER GP

TYPE 2

SMCS-1052, 1053 **i05940026**

NOTE	REF NO	GRAPHIC REF	PART NUMBER	QTY	PART NAME 1 2 3 4 5 6 (PRODUCT LEVEL)	SEE PAGE
M	1	1	**6I-0217**	2	BOLT (M8X1.25X20-MM)	
M	2	3	**6I-0254**	2	BOLT (M8X1.25X30-MM)	
M	3	1	**6I-0563**	7	NUT (M10X1.5-THD)	
M	4	1	**6I-0593**	2	BOLT (M10X1.5X30-MM)	
M	5	1	**6I-0654**	3	BOLT (M10X1.5X25-MM)	
M	6	3	**6I-0789**	4	BOLT (M10X1.5X60-MM)	
	7	2	**6I-0817**	1	ADAPTER	
CM	8	2	**6I-4200**	3	BOLT (M10X1.5X16-MM)	
	9	3	**385-7317**	1	CLAMP-HOSE	
	10	2	**9Y-9381**	1	WASHER-HARD	
M	12	1	**106-8916**	2	BOLT (M6X16-MM)	
	14	1	**361-7519**	7	ROD-THREADED	
	15	1	**225-8530**	1	GASKET (ELBOW)	
	16	1	**353-3477**	1	GASKET-TURBOCHARGER	
	17	1	**353-3478**	1	GASKET-TURBOCHARGER	
	18	1	**227-4562**	1	ELBOW-EXHAUST	
	19	1	**232-6189**	1	TUBE AS	
	20	2	**278-0310**	1	SOLENOID AS (WASTEGATE)	
M	21	1	**278-0361**	8	BOLT (M10X1.5X45-MM)	
	22	3	**293-0598**	1	CLIP	
	23	1	**298-4570**	1	GASKET-EXHAUST MANIFOLD	
	24	2	**298-4576**	1	CLIP	
	25	1	**301-8255**	1	TUBE AS	
	25A	1	**225-8524**	2	BOLT-SPECIAL	
	25B	1	**225-8526**	4	WASHER (10.4X13.75X1.37-MM THK)	
	26	1	**301-8256**	1	MANIFOLD-EXHAUST	
	27	1	**302-0581**	1	ADAPTER-EXHAUST	
	28	2	**303-2116**	4	CLIP	
	29	2	**326-4508**	1	TUBE AS	
	29A	2	**032-8047**	2	FERRULE	
	29B	2	**032-8191**	1	NUT	
	29C	2	**035-8014**	1	NUT	
C	30	2	**377-6869**	1	BRACKET	
	31	1	**316-0514**	1	TURBOCHARGER	
	32	1	**307-2805**	1	BRACKET	
	33	2	**311-7458**	1	TUBE AS	
	33A	2	**032-8191**	1	NUT	
	33B	2	**032-8047**	1	FERRULE	
	33C	2	**298-4576**	2	CLIP	
	33D	2	**300-6520**	1	HOSE AS	
	33E	2	**107-2348**	2	CLIP	
Y	34	3	**307-2807**	1	AIR CLEANER GP (TURBOCHARGER)	772
	35	3	**384-4084**	1	BRACKET	
	36	3	**385-7318**	1	HOSE-AIR	
	37	1	**194-5390**	1	GASKET-MANIFOLD	

C - CHANGE FROM PREVIOUS TYPE
M - METRIC PART
Y - SEPARATE ILLUSTRATION

307-2850 **TURBOCHARGER GP (**contd.**)** **i05940026**

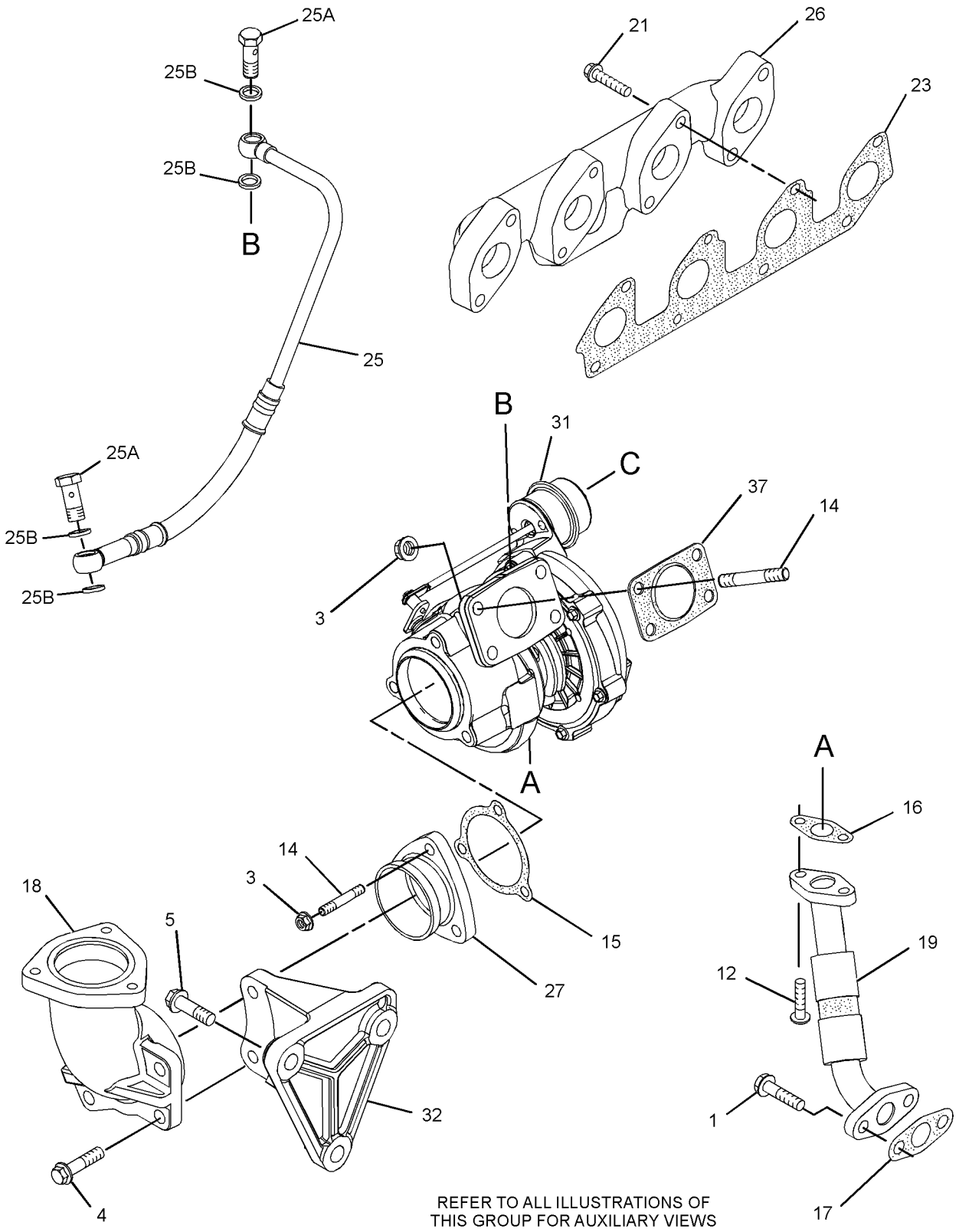

REFER TO ALL ILLUSTRATIONS OF
THIS GROUP FOR AUXILIARY VIEWS

GRAPHIC #1 g01677841

307-2850 **TURBOCHARGER GP (**contd.**)** **i05940026**

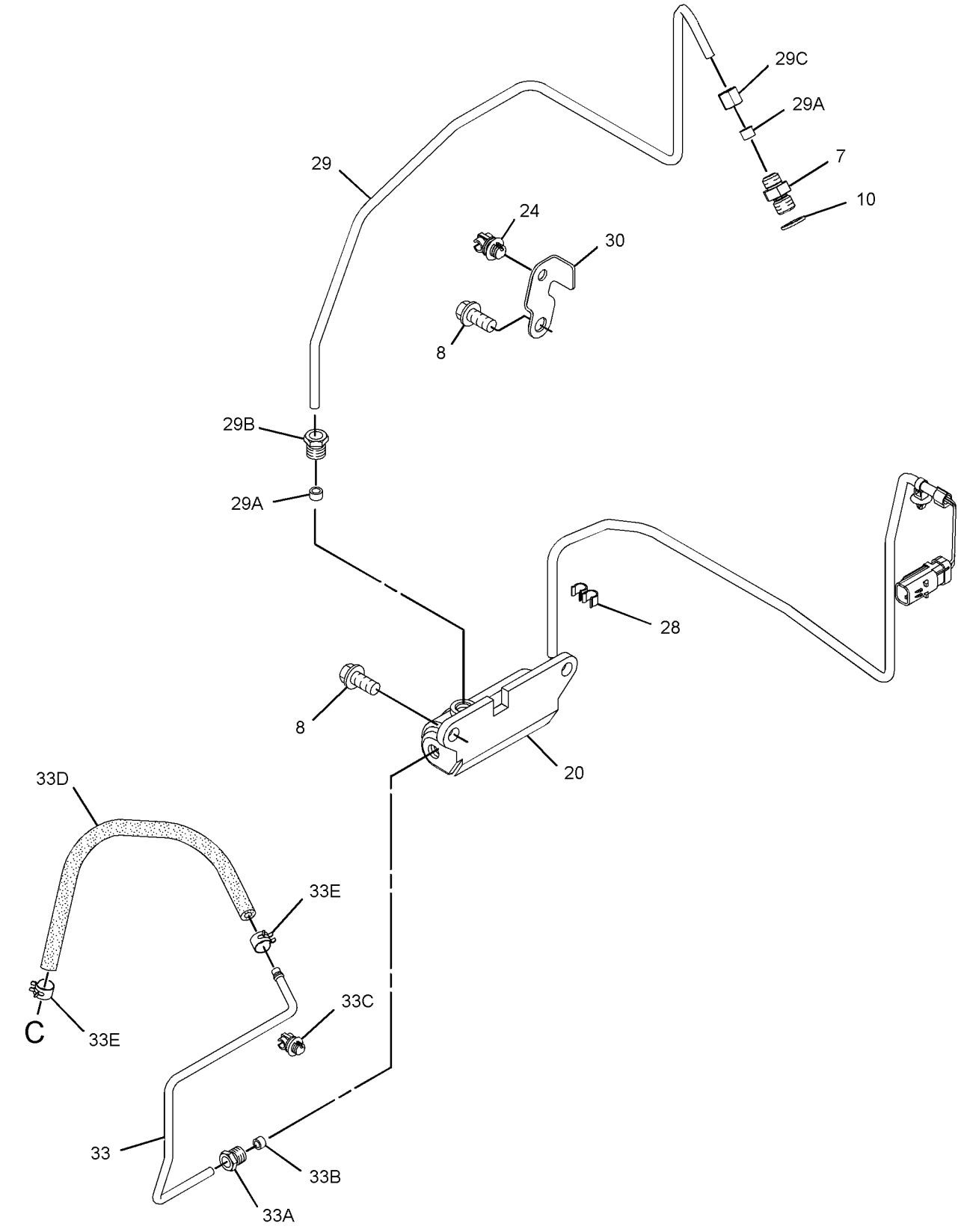

GRAPHIC #2 g03130056

307-2850 **TURBOCHARGER GP (**contd.**)** **i05940026**

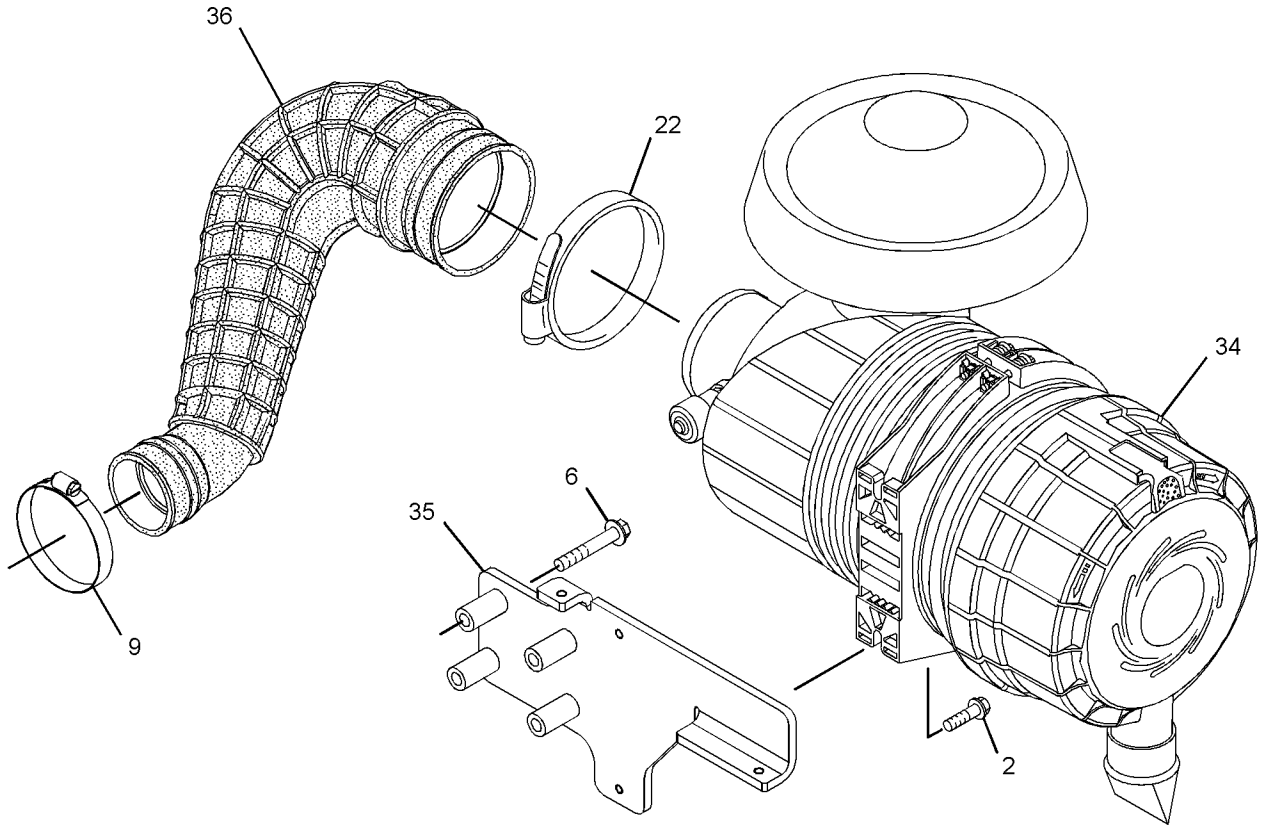

GRAPHIC #3 <END> g03130057

307-2850 TURBOCHARGER GP

PART OF 522-8303 ENGINE AR-PRIMARY

SMCS-1052, 1053 **i07033717**

NOTE	REF NO	GRAPHIC REF	PART NUMBER	QTY	PART NAME 1 2 3 4 5 6 (PRODUCT LEVEL)	SEE PAGE
M	1	2	**6I-0217**	2	BOLT (M8X1.25X20-MM)	
M	2	1	**6I-0260**	2	BOLT (M8X1.25X25-MM)	
M	3	2	**6I-0563**	7	NUT (M10X1.5-THD)	
M	4	2	**6I-0593**	2	BOLT (M10X1.5X30-MM)	
M	5	2	**6I-0654**	3	BOLT (M10X1.5X25-MM)	
M	6	1	**6I-0789**	4	BOLT (M10X1.5X60-MM)	
	7	3	**6I-0817**	1	ADAPTER	
M	8	3	**6I-4200**	3	BOLT (M10X1.5X16-MM)	
	9	1	**385-7317**	1	CLAMP-HOSE	
	10	3	**9Y-9381**	1	WASHER-HARD	
M	12	2	**106-8916**	2	BOLT (M6X16-MM)	
	14	2	**361-7519**	7	ROD-THREADED	
	15	2	**225-8530**	1	GASKET (ELBOW)	
	16	2	**353-3477**	1	GASKET-TURBOCHARGER	
	17	2	**353-3478**	1	GASKET-TURBOCHARGER	
	18	2	**227-4562**	1	ELBOW-EXHAUST	
	19	2	**507-5019**	1	LINE AS-OIL	
	19A	2	**269-3086**	2	CLAMP-BAND	
	20	3	**278-0310**	1	SOLENOID AS (WASTEGATE)	
M	21	2	**278-0361**	8	BOLT (M10X1.5X45-MM)	
	22	1	**293-0598**	1	CLIP	
	23	2	**298-4570**	1	GASKET-EXHAUST MANIFOLD	
	24	3	**298-4576**	1	CLIP	
	25	2	**301-8255**	1	TUBE AS	
	25A	2	**225-8524**	2	BOLT-SPECIAL	
	25B	2	**225-8526**	4	WASHER (10.4X13.75X1.37-MM THK)	
	26	2	**301-8256**	1	MANIFOLD-EXHAUST	
	27	2	**302-0581**	1	ADAPTER-EXHAUST	
	28	3	**303-2116**	4	CLIP	
	29	3	**326-4508**	1	TUBE AS	
	30	3	**377-6869**	1	BRACKET	
	31	2	**316-0514**	1	TURBOCHARGER	
	32	2	**307-2805**	1	BRACKET	
	33	3	**311-7458**	1	TUBE AS	
	33A	3	**298-4576**	2	CLIP	
	33B	3	**300-6520**	1	HOSE AS	
	33C	3	**107-2348**	2	CLIP	
CY	34	1	**449-7366**	1	AIR CLEANER GP (TURBOCHARGER)	773
	35	1	**445-1434**	1	BRACKET AS	
	36	1	**385-7318**	1	HOSE-AIR	
	37	2	**194-5390**	1	GASKET-MANIFOLD	
	38	1	**217-0099**	2	SPACER (8.2X25X2-MM THK)	

C - CHANGE FROM PREVIOUS TYPE
M - METRIC PART
Y - SEPARATE ILLUSTRATION

307-2850 **TURBOCHARGER GP** (contd.) **i07033717**

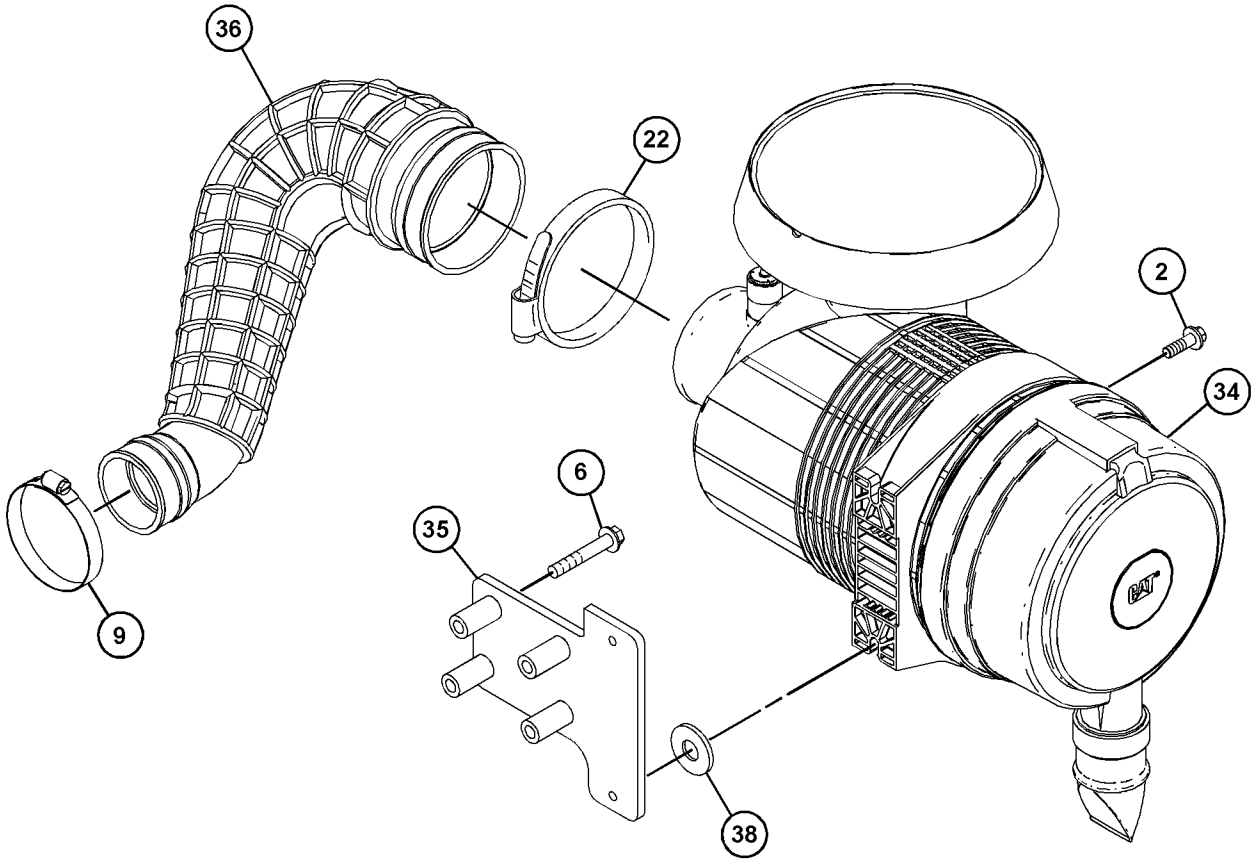

GRAPHIC #1 g06208760

307-2850 **TURBOCHARGER GP (**contd.**)** **i07033717**

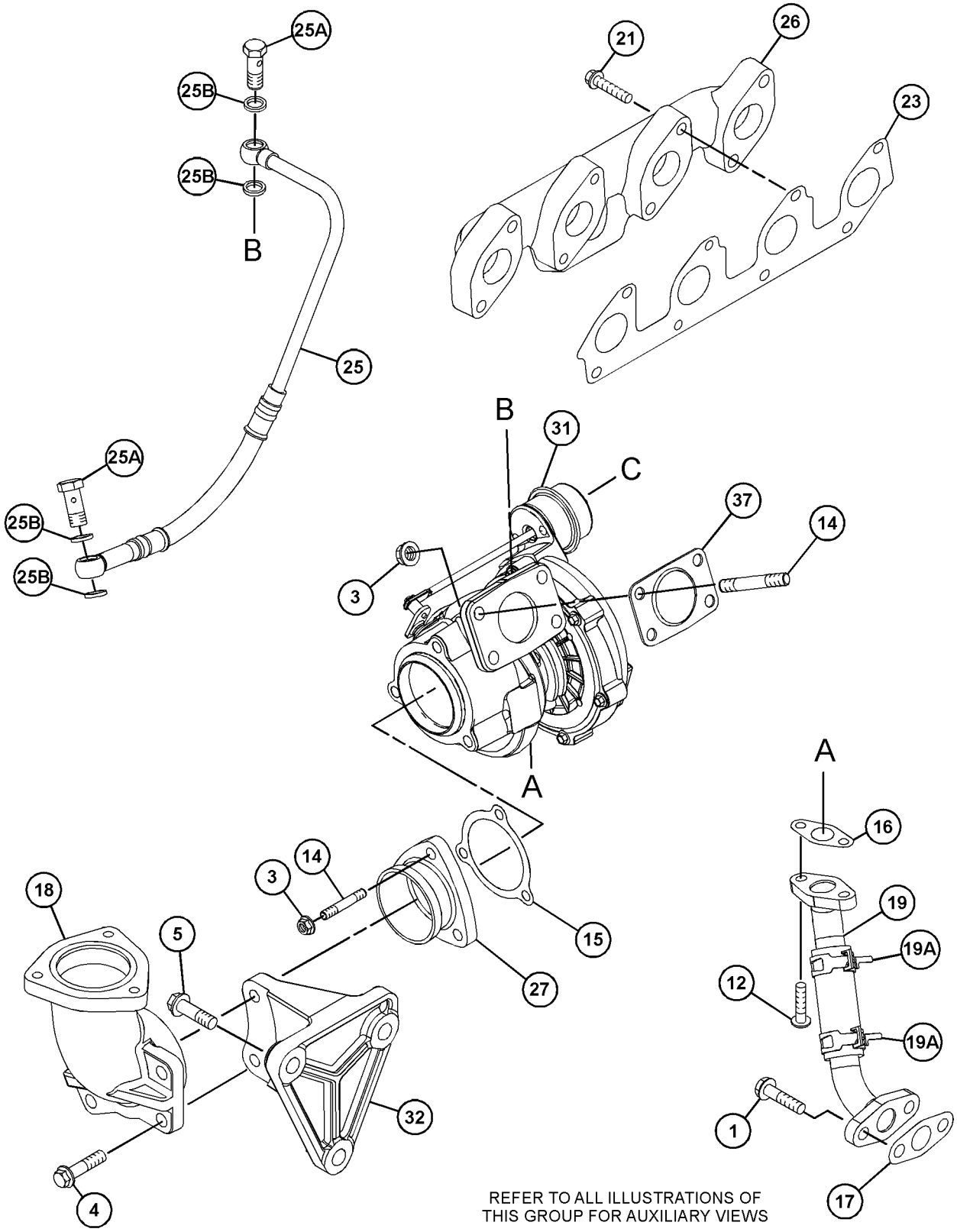

GRAPHIC #2

g06208758

307-2850 **TURBOCHARGER GP** (contd.) **i07033717**

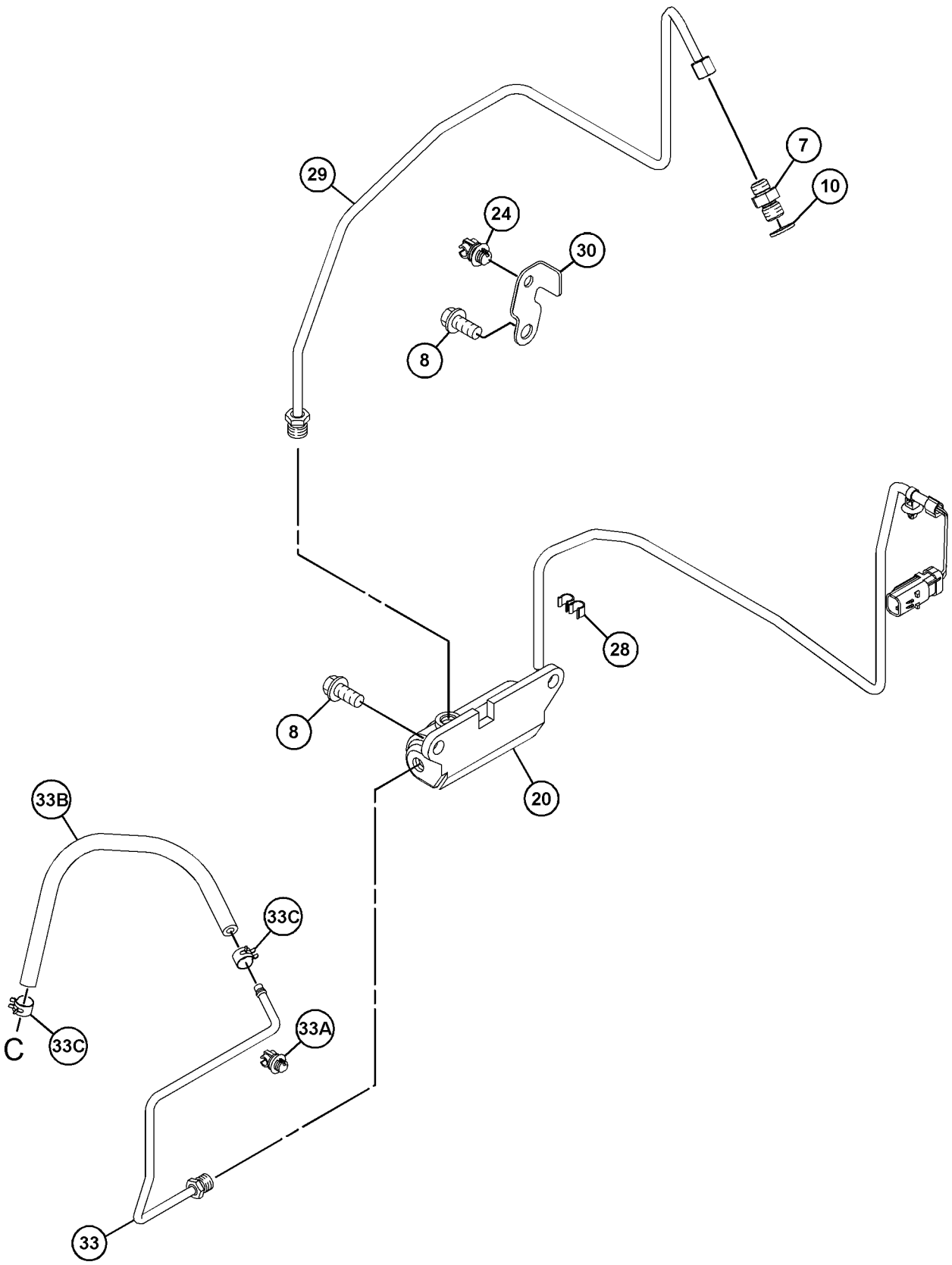

GRAPHIC #3 <END> g06208759

308-0305 TURBOCHARGER GP

TYPE 1

SMCS-1052, 1053 **i03116481**

NOTE	REF NO	GRAPHIC REF	PART NUMBER	QTY	PART NAME 1 2 3 4 5 6 (PRODUCT LEVEL)	SEE PAGE
M	1	1	**6I-0217**	2	BOLT (M8X1.25X20-MM)	
M	2	1	**6I-0563**	7	NUT (M10X1.5-THD)	
M	3	1	**6I-0593**	2	BOLT (M10X1.5X30-MM)	
M	4	1	**6I-0654**	3	BOLT (M10X1.5X25-MM)	
	5	2	**6I-0817**	1	ADAPTER	
M	6	2	**6I-4200**	2	BOLT (M10X1.5X16-MM)	
	7	2	**9Y-9381**	1	WASHER-HARD	
M	8	1	**106-8916**	2	BOLT (M6X16-MM)	
M	9	1	**147-5553**	7	STUD (M10X1.5X40-MM)	
	10	1	**225-8530**	1	GASKET (ELBOW)	
	11	1	**225-8533**	1	GASKET (TURBOCHARGER)	
	12	1	**225-8534**	1	GASKET (TURBOCHARGER)	
	13	1	**227-4562**	1	ELBOW-EXHAUST	
	14	1	**232-6189**	1	TUBE AS	
	15	1	**307-2805**	1	BRACKET	
M	16	1	**278-0361**	8	BOLT (M10X1.5X45-MM)	
	17	2	**294-7375**	1	SOLENOID (BOOST)	
	18	1	**298-4570**	1	GASKET-EXHAUST MANIFOLD	
	19	1	**316-0525**	1	TURBOCHARGER GP	
	20	1	**301-8255**	1	TUBE AS	
	20A	1	**225-8524**	2	BOLT-SPECIAL	
	20B	1	**225-8526**	4	WASHER (10.4X13.75X1.37-MM THK)	
	21	1	**301-8256**	1	MANIFOLD-EXHAUST	
	22	2	**326-4508**	1	TUBE AS	
	22A	2	**032-8047**	2	FERRULE	
	22B	2	**032-8191**	1	NUT	
	22C	2	**035-8014**	1	NUT	
	23	2	**311-7458**	1	TUBE AS	
	23A	2	**032-8047**	1	FERRULE	
	23B	2	**032-8191**	1	NUT	
	23C	2	**298-4576**	2	CLIP	
	23D	2	**300-6520**	1	HOSE AS	
	23E	2	**107-2348**	2	CLIP	
	24	1	**302-0581**	1	ADAPTER-EXHAUST	
	25	2	**303-2116**	8	CLIP	
	26	1	**194-5390**	1	GASKET-MANIFOLD	
	27	2	**303-5792**	1	BRACKET	
	28	2	**298-4576**	1	CLIP	
	29	2	**127-8165**	1	SPACER	
M	30	2	**100-4830**	1	BOLT (M10X1.5X20-MM)	

M - METRIC PART

308-0305 **TURBOCHARGER GP** (contd.) **i03116481**

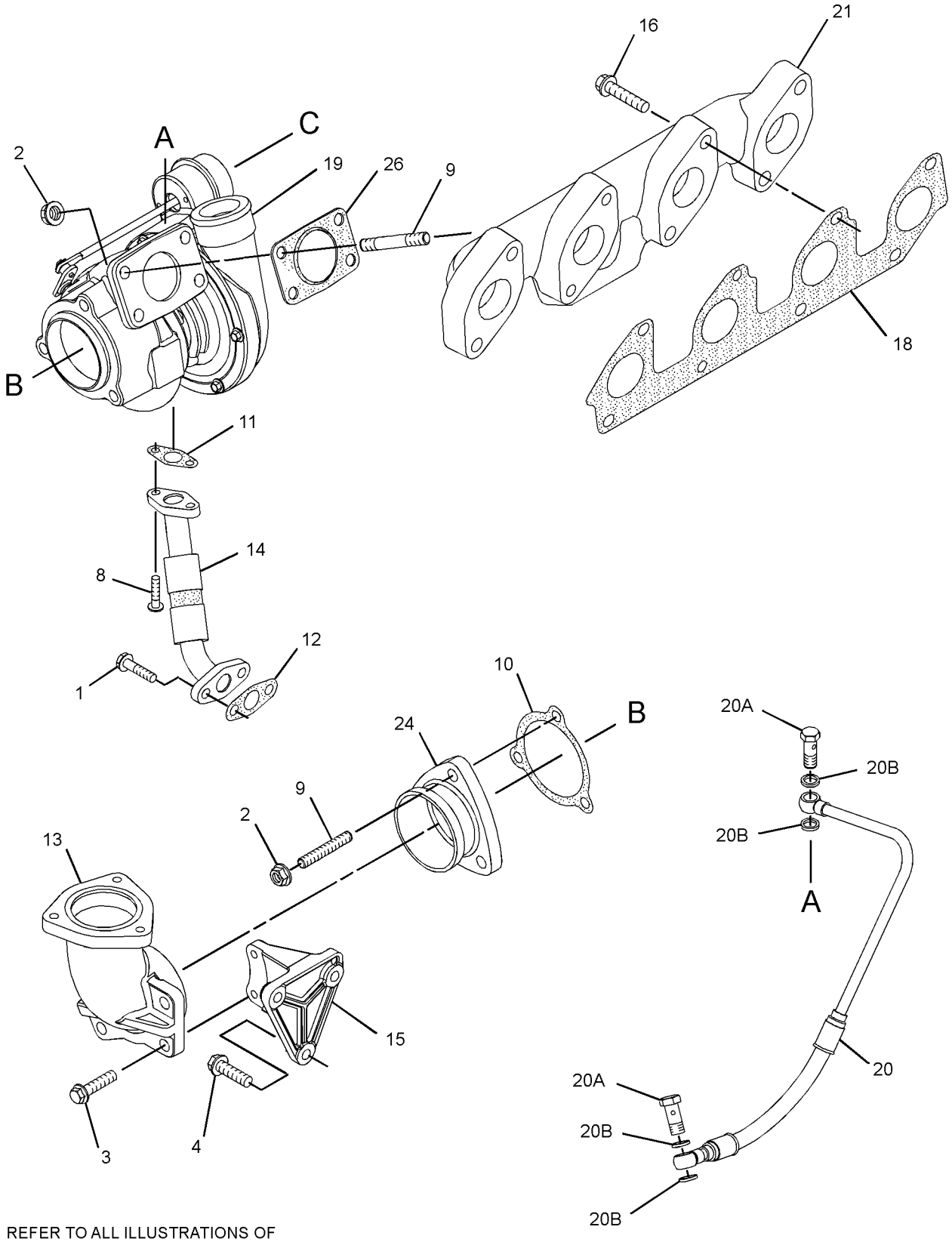

REFER TO ALL ILLUSTRATIONS OF
THIS GROUP FOR AUXILIARY VIEWS

GRAPHIC #1 g01432523

308-0305 **TURBOCHARGER GP** (contd.) **i03116481**

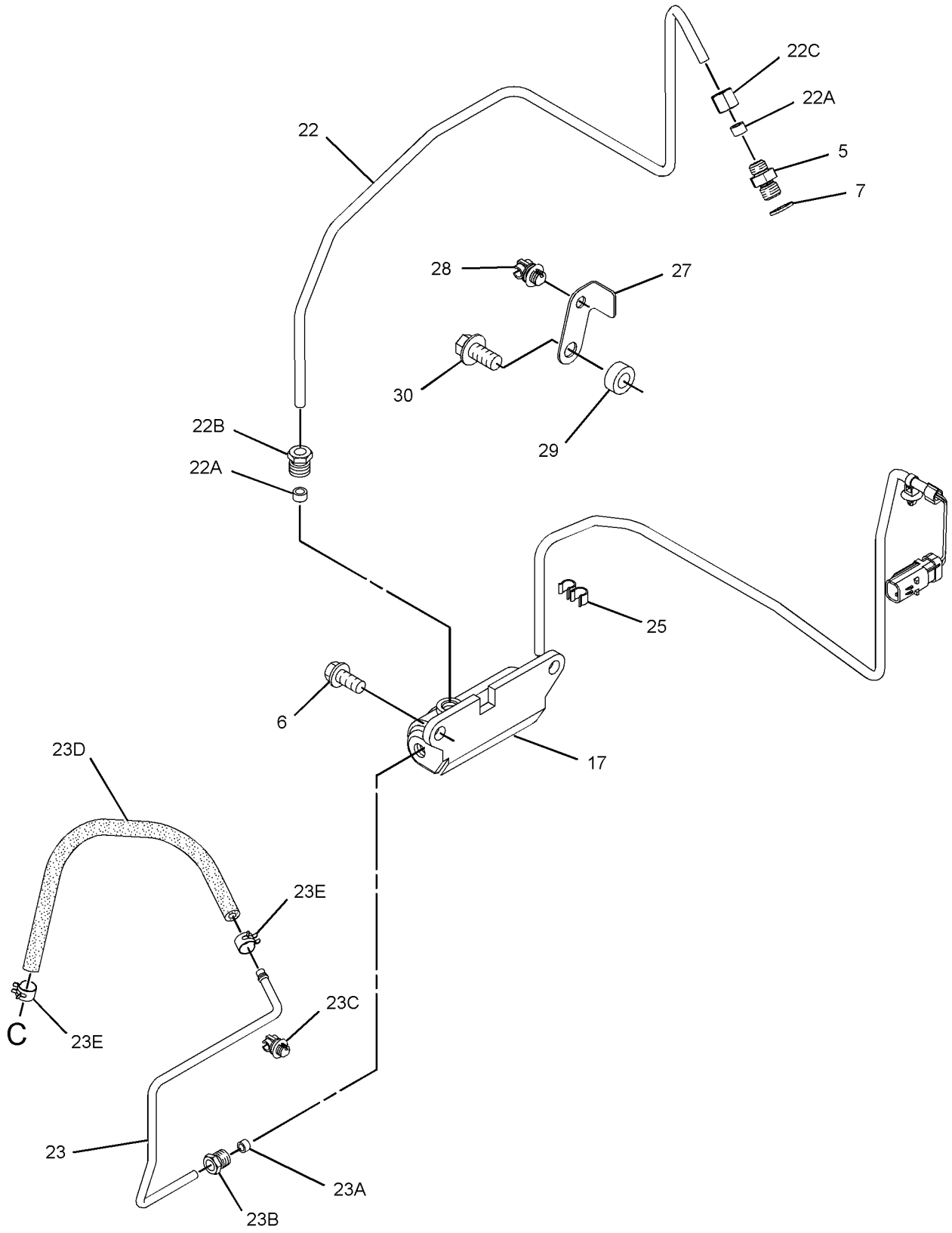

GRAPHIC #2 <END> g01617053

308-0305 TURBOCHARGER GP

TYPE 2

SMCS-1052, 1053 **i07030402**

NOTE	REF NO	GRAPHIC REF	PART NUMBER	QTY	PART NAME 1 2 3 4 5 6 (PRODUCT LEVEL)	SEE PAGE
M	1	1	**6I-0217**	2	BOLT (M8X1.25X20-MM)	
M	2	1	**6I-0563**	7	NUT (M10X1.5-THD)	
M	3	1	**6I-0593**	2	BOLT (M10X1.5X30-MM)	
M	4	1	**6I-0654**	3	BOLT (M10X1.5X25-MM)	
	5	2	**6I-0817**	1	ADAPTER	
CM	6	2	**6I-4200**	3	BOLT (M10X1.5X16-MM)	
	7	2	**9Y-9381**	1	WASHER-HARD	
M	8	1	**106-8916**	2	BOLT (M6X16-MM)	
	9	1	**361-7519**	7	ROD-THREADED	
	10	1	**225-8530**	1	GASKET (ELBOW)	
	11	1	**353-3477**	1	GASKET-TURBOCHARGER	
	12	1	**353-3478**	1	GASKET-TURBOCHARGER	
	13	1	**227-4562**	1	ELBOW-EXHAUST	
	14	1	**507-5019**	1	LINE AS-OIL	
	14A	1	**269-3086**	2	CLAMP-BAND	
	15	1	**307-2805**	1	BRACKET	
M	16	1	**278-0361**	8	BOLT (M10X1.5X45-MM)	
	17	2	**294-7375**	1	SOLENOID (BOOST)	
	18	1	**298-4570**	1	GASKET-EXHAUST MANIFOLD	
	19	1	**316-0525**	1	TURBOCHARGER GP	
	20	1	**301-8255**	1	TUBE AS	
	20A	1	**225-8524**	2	BOLT-SPECIAL	
	20B	1	**225-8526**	4	WASHER (10.4X13.75X1.37-MM THK)	
	21	1	**301-8256**	1	MANIFOLD-EXHAUST	
	22	2	**326-4508**	1	TUBE AS	
	23	2	**311-7458**	1	TUBE AS	
	23A	2	**298-4576**	2	CLIP	
	23B	2	**300-6520**	1	HOSE AS	
	23C	2	**107-2348**	2	CLIP	
	24	1	**302-0581**	1	ADAPTER-EXHAUST	
	25	2	**303-2116**	8	CLIP	
	26	1	**194-5390**	1	GASKET-MANIFOLD	
C	27	2	**377-6869**	1	BRACKET	
	28	2	**298-4576**	1	CLIP	

C - CHANGE FROM PREVIOUS TYPE
M - METRIC PART

308-0305 **TURBOCHARGER GP (**contd.**)** **i07030402**

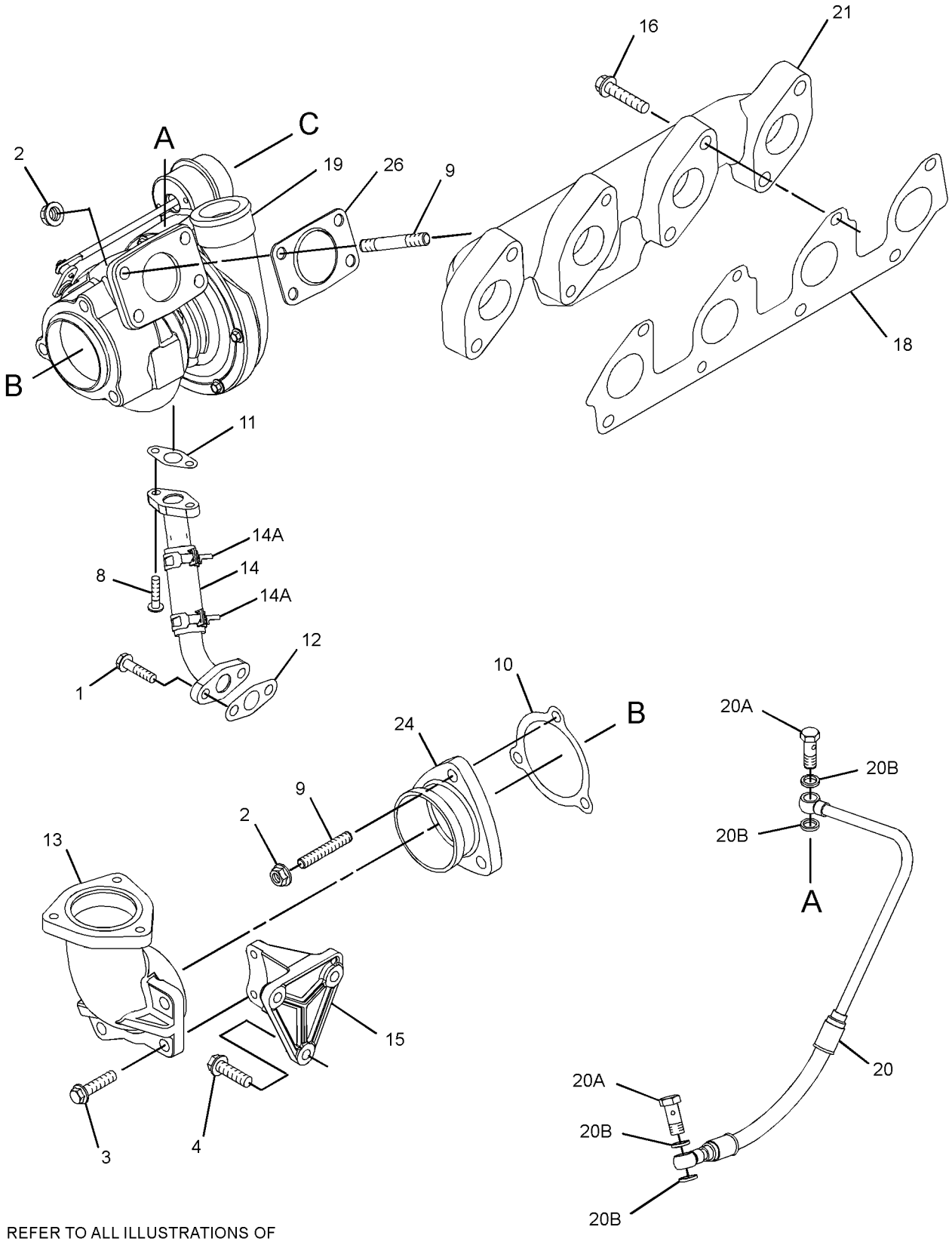

REFER TO ALL ILLUSTRATIONS OF
THIS GROUP FOR AUXILIARY VIEWS

GRAPHIC #1 g06209042

308-0305 **TURBOCHARGER GP (**contd.**)** **i07030402**

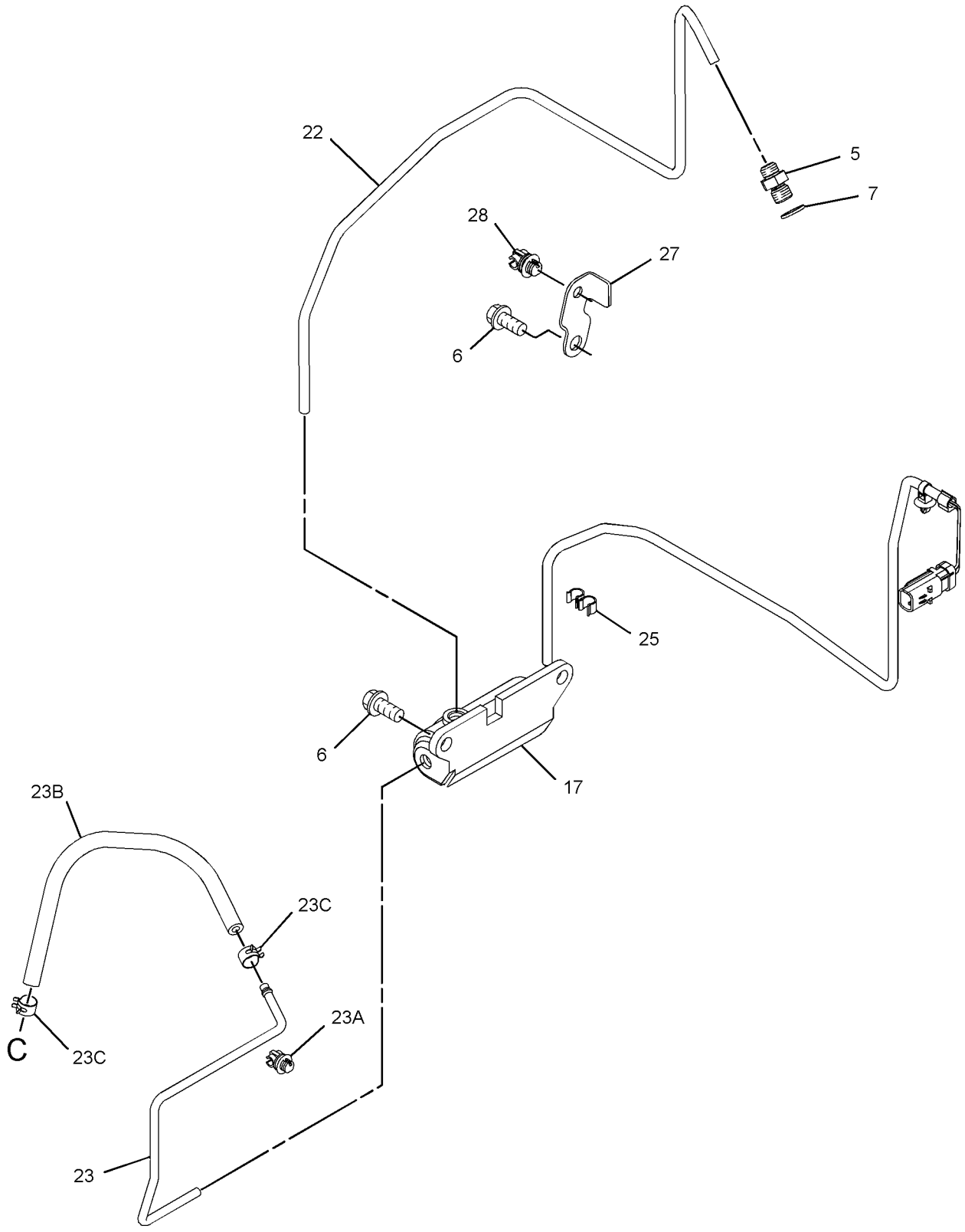

GRAPHIC #2 <END> g06209043

308-3350 TURBOCHARGER GP

TYPE 1

SMCS-1052, 1053 **i03311126**

NOTE	REF NO	GRAPHIC REF	PART NUMBER	QTY	PART NAME 1 2 3 4 5 6 (PRODUCT LEVEL)	SEE PAGE
	1	2	**266-7092**	2	CLAMP-HOSE	
M	2	1	**6I-0217**	2	BOLT (M8X1.25X20-MM)	
M	3	2	**6I-0260**	4	BOLT (M8X1.25X25-MM)	
M	4	1	**6I-0593**	1	BOLT (M10X1.5X30-MM)	
M	5	1	**6I-0654**	1	BOLT (M10X1.5X25-MM)	
	6	2	**6I-0817**	1	ADAPTER	
M	7	2	**6I-4200**	2	BOLT (M10X1.5X16-MM)	
	8	2	**9Y-9381**	1	WASHER-HARD	
M	9	2	**100-4830**	1	BOLT (M10X1.5X20-MM)	
M	10	1	**106-8916**	2	BOLT (M6X16-MM)	
	11	1	**123-4038**	1	SPACER	
	12	2	**127-8165**	1	SPACER	
	13	1	**172-4325**	1	SPACER	
	14	1	**225-8533**	1	GASKET	
	15	1	**225-8534**	1	GASKET	
	16	2	**234-3030**	1	GASKET-INLET	
	17	1	**238-8292**	1	BOLT-FLANGE HEAD	
	18	2	**263-5376**	1	HOSE	
M	19	1	**278-0361**	7	BOLT (M10X1.5X45-MM)	
	20	2	**294-7375**	1	SOLENOID (WASTEGATE)	
	21	1	**298-4570**	1	GASKET-EXHAUST MANIFOLD	
	22	2	**298-4576**	1	CLIP	
	23	2	**303-2116**	6	CLIP	
	24	1	**303-5786**	1	TUBE AS-TURBOCHARGER OIL (SUPPLY)	
	24A	1	**220-7163**	1	CLIP	
	24B	1	**225-8524**	2	BOLT-SPECIAL	
	24C	1	**225-8526**	4	WASHER (10.4X13.75X1.37-MM THK)	
	25	1	**303-5787**	1	TUBE AS-TURBOCHARGER OIL (DRAIN)	
	25A	1	**103-2135**	1	CLIP	
	26	1	**303-5788**	1	MANIFOLD-EXHAUST	
	27	2	**326-4508**	1	TUBE AS	
	27A	2	**032-8191**	1	NUT	
	27B	2	**032-8047**	2	FERRULE	
	27C	2	**035-8014**	1	NUT	
	28	2	**303-5792**	1	BRACKET	
	29	2	**303-5793**	1	TUBE AS	
	29A	2	**4B-8774**	1	NUT-FLARED	
	29B	2	**032-8047**	1	FERRULE	
	29C	2	**278-0316**	2	CLIP	
	29D	2	**300-6520**	1	HOSE AS	
	29E	2	**107-2348**	2	CLIP	
R	30	1	**316-0468**	1	TURBOCHARGER	
	31	2	**308-7532**	1	TUBE-AIR	
M	32	1	**147-5553**	4	STUD (M10X1.5X40-MM)	
	33	1	**194-5390**	1	GASKET-MANIFOLD	
M	34	1	**6I-0563**	4	NUT (M10X1.5-THD)	

M - METRIC PART
R - REMANUFACTURED PART MAY BE AVAILABLE

308-3350 **TURBOCHARGER GP** (contd.) **i03311126**

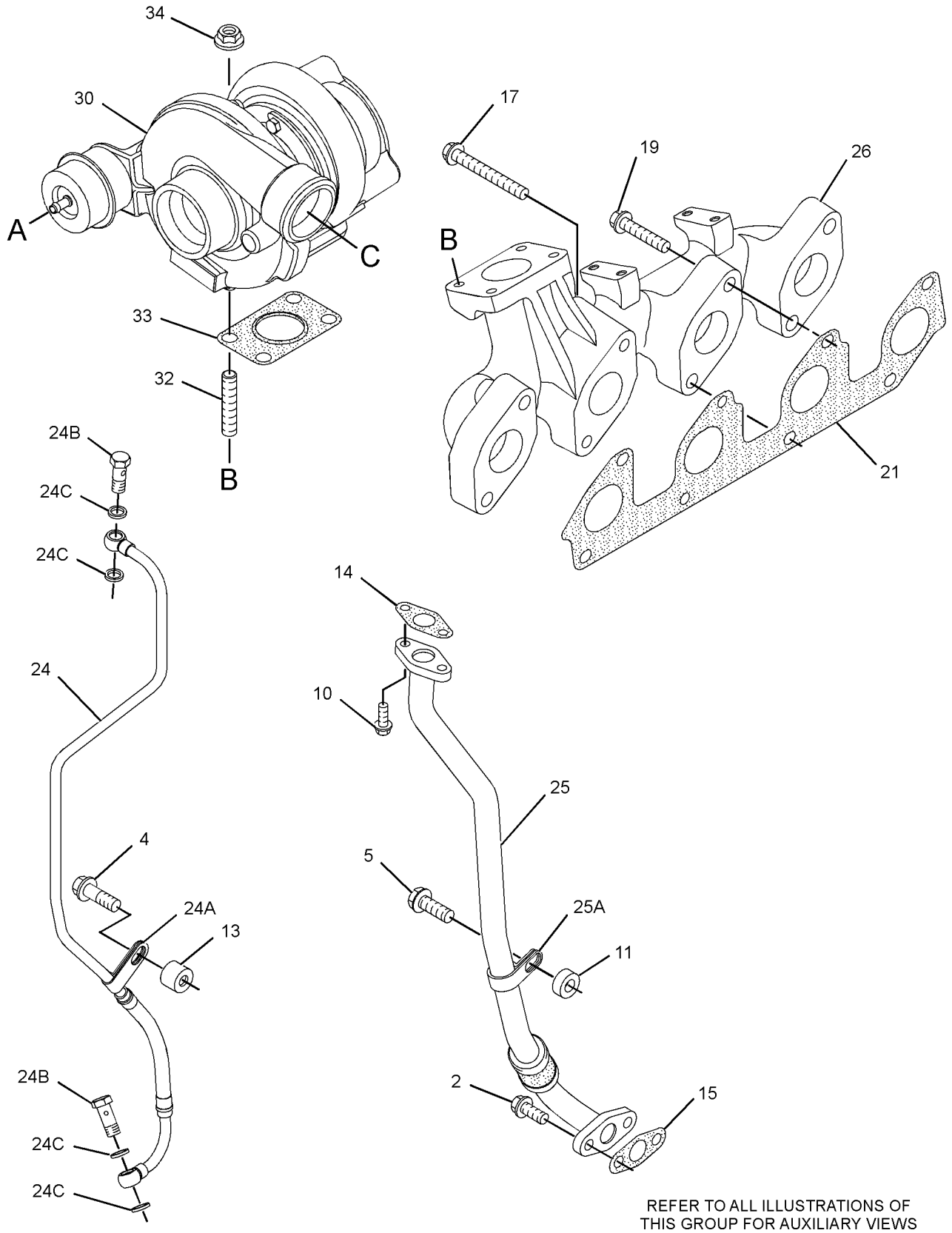

REFER TO ALL ILLUSTRATIONS OF
THIS GROUP FOR AUXILIARY VIEWS

GRAPHIC #1 g01430931

308-3350 **TURBOCHARGER GP** (contd.) **i03311126**

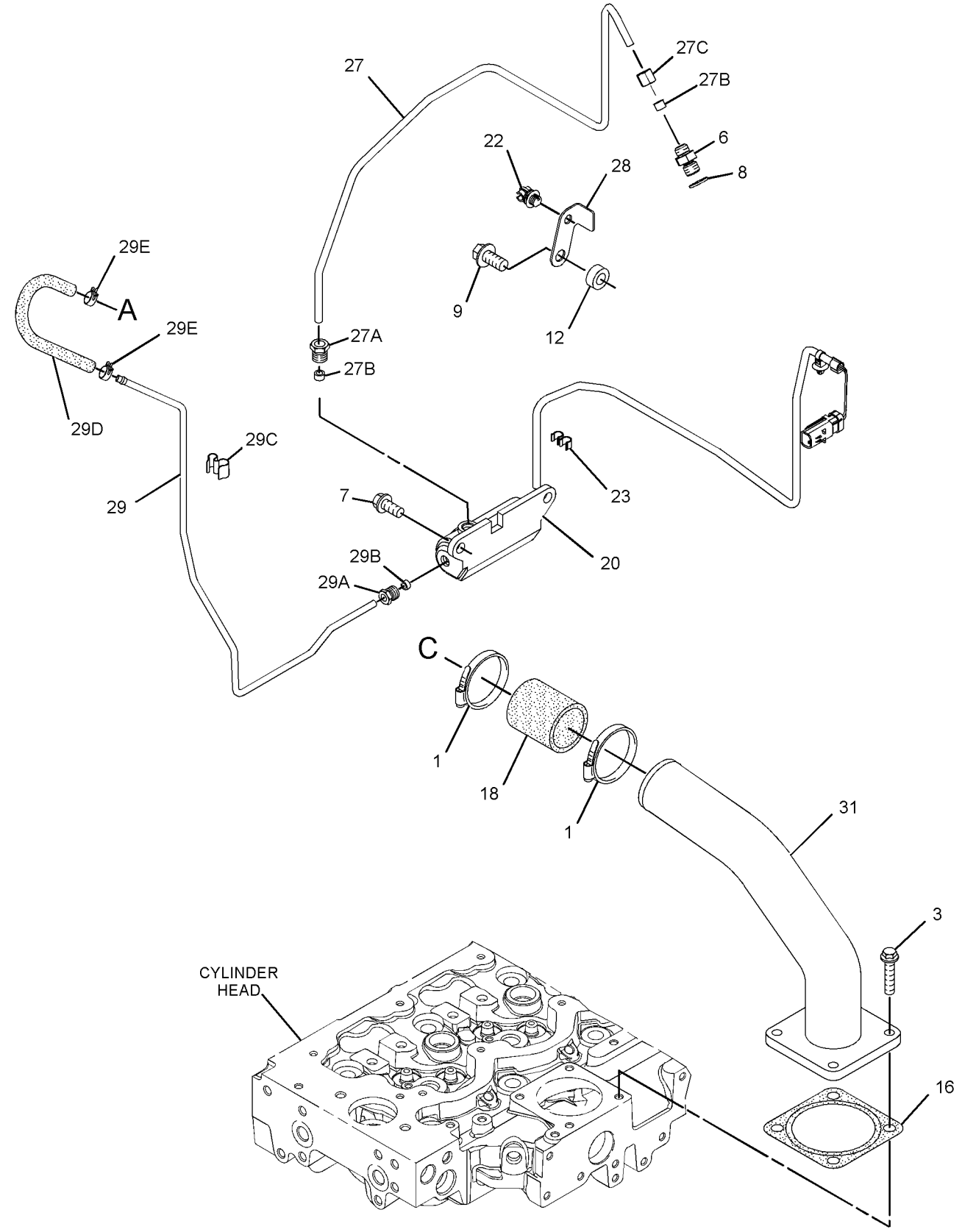

GRAPHIC #2 <END> g01675978

308-3350 TURBOCHARGER GP

TYPE 2

SMCS-1052, 1053 **i06863525**

NOTE	REF NO	GRAPHIC REF	PART NUMBER	QTY	PART NAME 1 2 3 4 5 6 (PRODUCT LEVEL)	SEE PAGE
	1	2	**266-7092**	2	CLAMP-HOSE	
M	2	1	**6I-0217**	2	BOLT (M8X1.25X20-MM)	
M	3	2	**6I-0260**	4	BOLT (M8X1.25X25-MM)	
M	4	1	**6I-0593**	1	BOLT (M10X1.5X30-MM)	
M	5	1	**6I-0654**	1	BOLT (M10X1.5X25-MM)	
	6	2	**6I-0817**	1	ADAPTER	
CM	7	2	**6I-4200**	3	BOLT (M10X1.5X16-MM)	
	8	2	**9Y-9381**	1	WASHER-HARD	
M	10	1	**106-8916**	2	BOLT (M6X16-MM)	
	11	1	**123-4038**	1	SPACER	
	13	1	**172-4325**	1	SPACER	
	14	1	**353-3477**	1	GASKET-TURBOCHARGER	
	15	1	**353-3478**	1	GASKET-TURBOCHARGER	
	16	2	**492-3310**	1	GASKET	
	17	1	**238-8292**	1	BOLT-FLANGE HEAD	
	18	2	**263-5376**	1	HOSE	
M	19	1	**278-0361**	7	BOLT (M10X1.5X45-MM)	
	20	2	**294-7375**	1	SOLENOID (WASTEGATE)	
	21	1	**298-4570**	1	GASKET-EXHAUST MANIFOLD	
	22	2	**298-4576**	1	CLIP	
	23	2	**303-2116**	6	CLIP	
	24	1	**383-8543**	1	TUBE AS-TURBOCHARGER OIL	
	24A	1	**383-8542**	1	CLIP-PIPE	
	24B	1	**225-8524**	2	BOLT-SPECIAL	
	24C	1	**225-8526**	4	WASHER (10.4X13.75X1.37-MM THK)	
	25	1	**303-5787**	1	TUBE AS-TURBOCHARGER OIL (DRAIN)	
	25A	1	**103-2135**	1	CLIP	
	26	1	**303-5788**	1	MANIFOLD-EXHAUST	
	27	2	**326-4508**	1	TUBE AS	
	27A	2	**032-8191**	1	NUT	
	27B	2	**032-8047**	2	FERRULE	
	27C	2	**035-8014**	1	NUT	
C	28	2	**377-6869**	1	BRACKET	
	29	2	**303-5793**	1	TUBE AS	
	29A	2	**4B-8774**	1	NUT-FLARED	
	29B	2	**032-8047**	1	FERRULE	
	29C	2	**278-0316**	2	CLIP	
	29D	2	**300-6520**	1	HOSE AS	
	29E	2	**107-2348**	2	CLIP	
R	30	1	**316-0468**	1	TURBOCHARGER	
	31	2	**308-7532**	1	TUBE-AIR	
	32	1	**361-7519**	4	ROD-THREADED	
	33	1	**194-5390**	1	GASKET-MANIFOLD	
M	34	1	**6I-0563**	4	NUT (M10X1.5-THD)	

C - CHANGE FROM PREVIOUS TYPE
M - METRIC PART
R - REMANUFACTURED PART MAY BE AVAILABLE

308-3350 **TURBOCHARGER GP (**contd.**)** **i06863525**

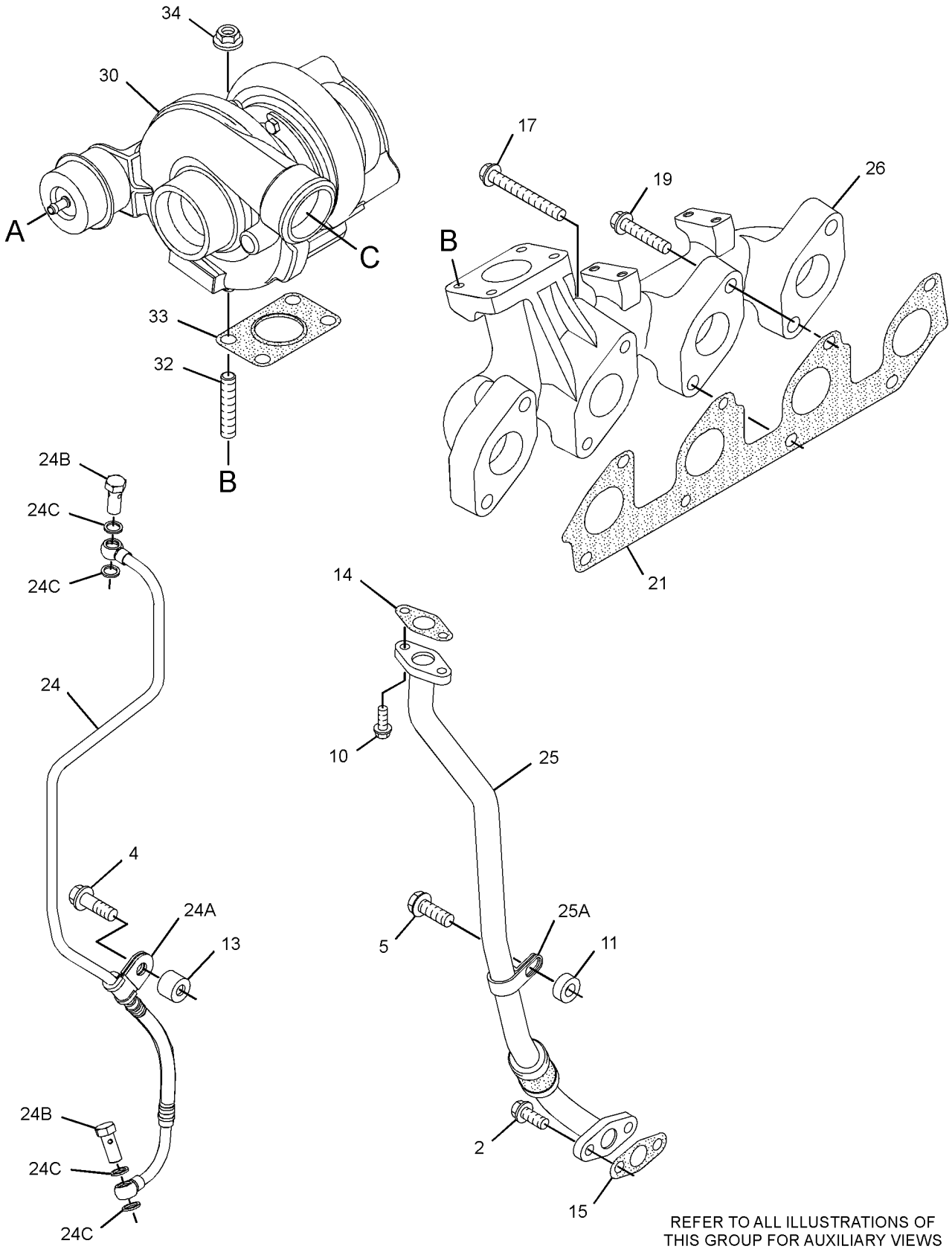

REFER TO ALL ILLUSTRATIONS OF THIS GROUP FOR AUXILIARY VIEWS

GRAPHIC #1

g03138757

308-3350 **TURBOCHARGER GP (**contd.**)** **i06863525**

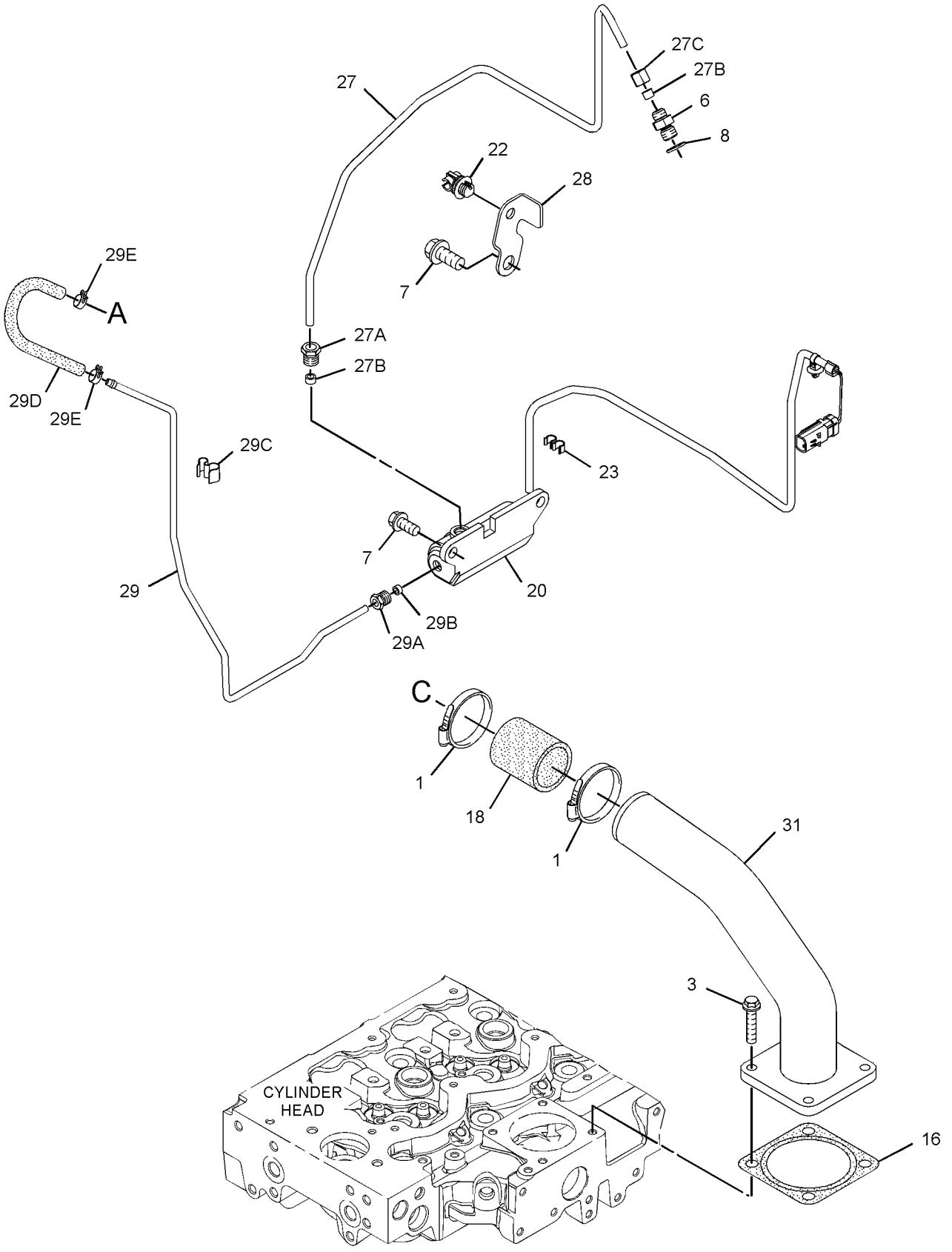

GRAPHIC #2 <END> g03138776

308-4277 TURBOCHARGER GP

TYPE 1

SMCS-1052, 1053 **i03115340**

NOTE	REF NO	GRAPHIC REF	PART NUMBER	QTY	PART NAME 1 2 3 4 5 6 (PRODUCT LEVEL)	SEE PAGE
M	1	1	**6I-0217**	2	BOLT (M8X1.25X20-MM)	
M	2	1	**6I-0563**	7	NUT (M10X1.5-THD)	
M	3	1	**6I-0593**	2	BOLT (M10X1.5X30-MM)	
M	4	1	**6I-0654**	3	BOLT (M10X1.5X25-MM)	
	5	2	**6I-0817**	1	ADAPTER	
M	6	2	**6I-4200**	2	BOLT (M10X1.5X16-MM)	
	7	2	**9Y-9381**	1	WASHER-HARD	
M	8	1	**106-8916**	2	BOLT (M6X16-MM)	
M	9	1	**147-5553**	7	STUD (M10X1.5X40-MM)	
	10	1	**225-8530**	1	GASKET (ELBOW)	
	11	1	**225-8533**	1	GASKET	
	12	1	**225-8534**	1	GASKET	
	13	1	**227-4562**	1	ELBOW-EXHAUST	
	14	1	**302-0581**	1	ADAPTER-EXHAUST	
	15	1	**232-6189**	1	TUBE AS	
	16	1	**307-2805**	1	BRACKET	
M	18	1	**278-0361**	8	BOLT (M10X1.5X45-MM)	
	19	2	**294-7375**	1	SOLENOID (WASTEGATE)	
	20	1	**298-4570**	1	GASKET-EXHAUST MANIFOLD	
	21	1	**316-0525**	1	TURBOCHARGER GP	
	22	1	**301-8255**	1	TUBE AS	
	22A	1	**225-8524**	2	BOLT-SPECIAL	
	22B	1	**225-8526**	4	WASHER (10.4X13.75X1.37-MM THK)	
	23	1	**301-8256**	1	MANIFOLD-EXHAUST	
	24	2	**326-4508**	1	TUBE AS	
	24A	2	**032-8047**	2	FERRULE	
	24B	2	**032-8191**	1	NUT	
	24C	2	**035-8014**	1	NUT	
	25	2	**311-7458**	1	TUBE AS	
	25A	2	**032-8047**	1	FERRULE	
	25B	2	**032-8191**	1	NUT	
	25C	2	**298-4576**	2	CLIP	
	25D	2	**300-6520**	1	HOSE AS	
	25E	2	**107-2348**	2	CLIP	
	26	1	**194-5390**	1	GASKET-MANIFOLD	
	27	2	**303-5792**	1	BRACKET	
	28	2	**303-2116**	8	CLIP	
	29	2	**298-4576**	1	CLIP	
	30	2	**127-8165**	1	SPACER	
M	31	2	**100-4830**	1	BOLT (M10X1.5X20-MM)	

M - METRIC PART

308-4277 **TURBOCHARGER GP** (contd.) **i03115340**

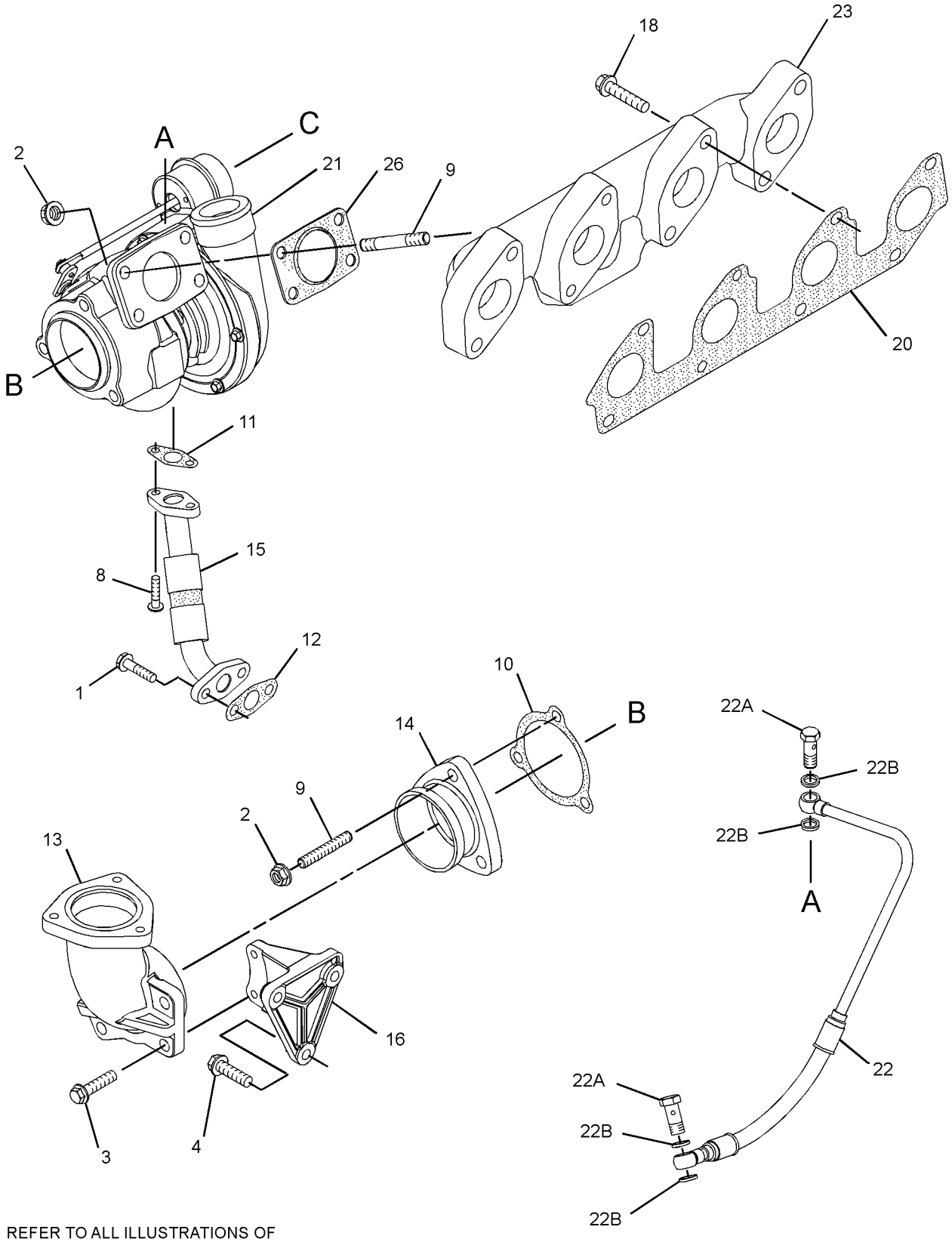

REFER TO ALL ILLUSTRATIONS OF
THIS GROUP FOR AUXILIARY VIEWS

GRAPHIC #1 g01431650

308-4277 **TURBOCHARGER GP (**contd.**)** **i03115340**

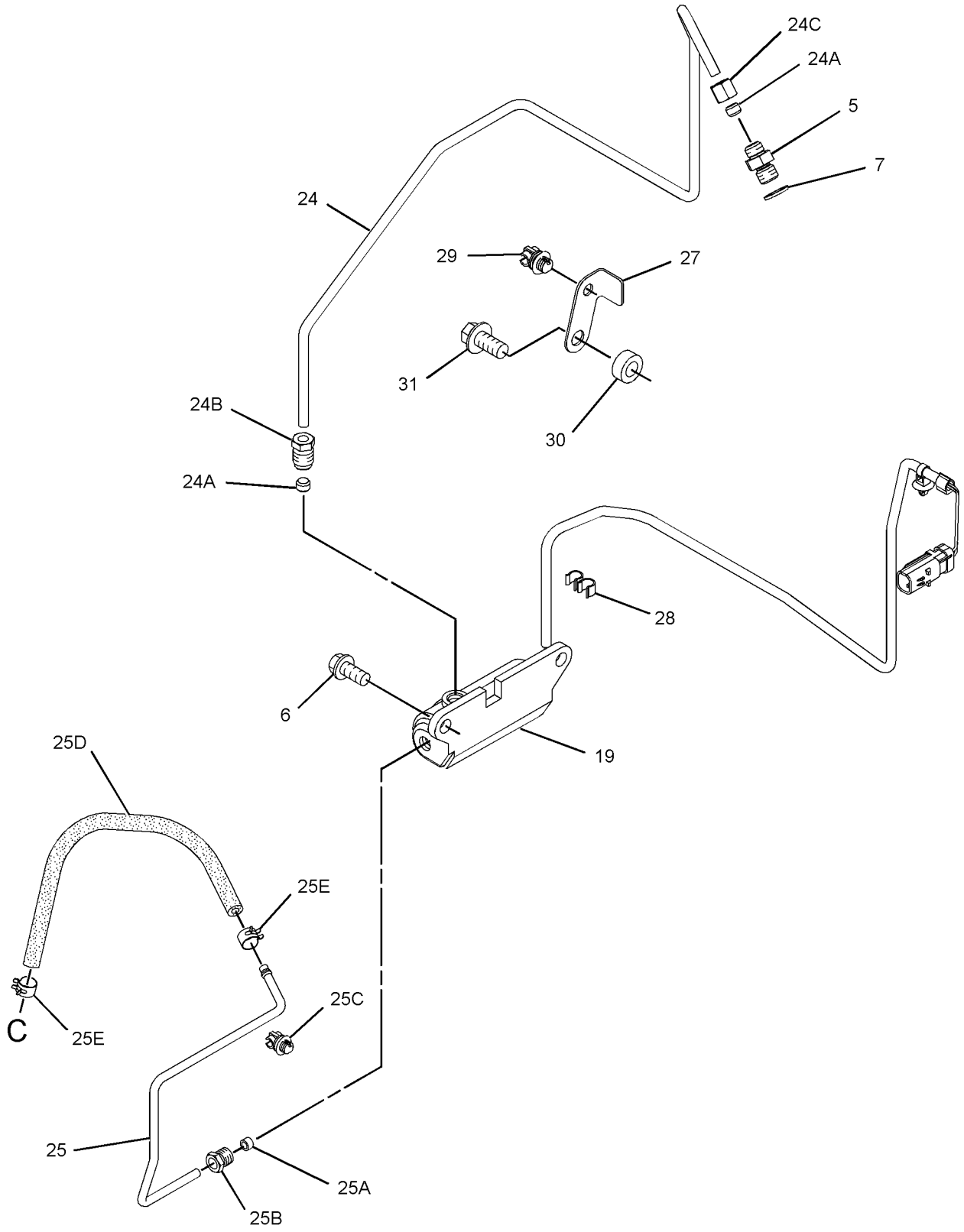

GRAPHIC #2 <END> g01431651

308-4277 TURBOCHARGER GP

TYPE 2

SMCS-1052, 1053 **i06943363**

NOTE	REF NO	GRAPHIC REF	PART NUMBER	QTY	PART NAME 1 2 3 4 5 6 (PRODUCT LEVEL)	SEE PAGE
M	1	1	**6I-0217**	2	BOLT (M8X1.25X20-MM)	
M	2	1	**6I-0563**	7	NUT (M10X1.5-THD)	
M	3	1	**6I-0593**	2	BOLT (M10X1.5X30-MM)	
M	4	1	**6I-0654**	3	BOLT (M10X1.5X25-MM)	
	5	2	**6I-0817**	1	ADAPTER	
CM	6	2	**6I-4200**	3	BOLT (M10X1.5X16-MM)	
	7	2	**9Y-9381**	1	WASHER-HARD	
M	8	1	**106-8916**	2	BOLT (M6X16-MM)	
	9	1	**361-7519**	7	ROD-THREADED	
	10	1	**225-8530**	1	GASKET (ELBOW)	
	11	1	**353-3477**	1	GASKET-TURBOCHARGER	
	12	1	**353-3478**	1	GASKET-TURBOCHARGER	
	13	1	**227-4562**	1	ELBOW-EXHAUST	
	14	1	**302-0581**	1	ADAPTER-EXHAUST	
	15	1	**507-5019**	1	LINE AS-OIL	
	15A	1	**269-3086**	2	CLAMP-BAND	
	16	1	**307-2805**	1	BRACKET	
M	18	1	**278-0361**	8	BOLT (M10X1.5X45-MM)	
	19	2	**294-7375**	1	SOLENOID (WASTEGATE)	
	20	1	**298-4570**	1	GASKET-EXHAUST MANIFOLD	
	21	1	**316-0525**	1	TURBOCHARGER GP	
	22	1	**301-8255**	1	TUBE AS	
	22A	1	**225-8524**	2	BOLT-SPECIAL	
	22B	1	**225-8526**	4	WASHER (10.4X13.75X1.37-MM THK)	
	23	1	**301-8256**	1	MANIFOLD-EXHAUST	
	24	2	**326-4508**	1	TUBE AS	
	25	2	**311-7458**	1	TUBE AS	
	25A	2	**298-4576**	2	CLIP	
	25B	2	**300-6520**	1	HOSE AS	
	25C	2	**107-2348**	2	CLIP	
	26	1	**194-5390**	1	GASKET-MANIFOLD	
C	27	2	**377-6869**	1	BRACKET	
	28	2	**303-2116**	8	CLIP	
	29	2	**298-4576**	1	CLIP	

C - CHANGE FROM PREVIOUS TYPE
M - METRIC PART

308-4277 **TURBOCHARGER GP** (contd.) **i06943363**

REFER TO ALL ILLUSTRATIONS OF
THIS GROUP FOR AUXILIARY VIEWS

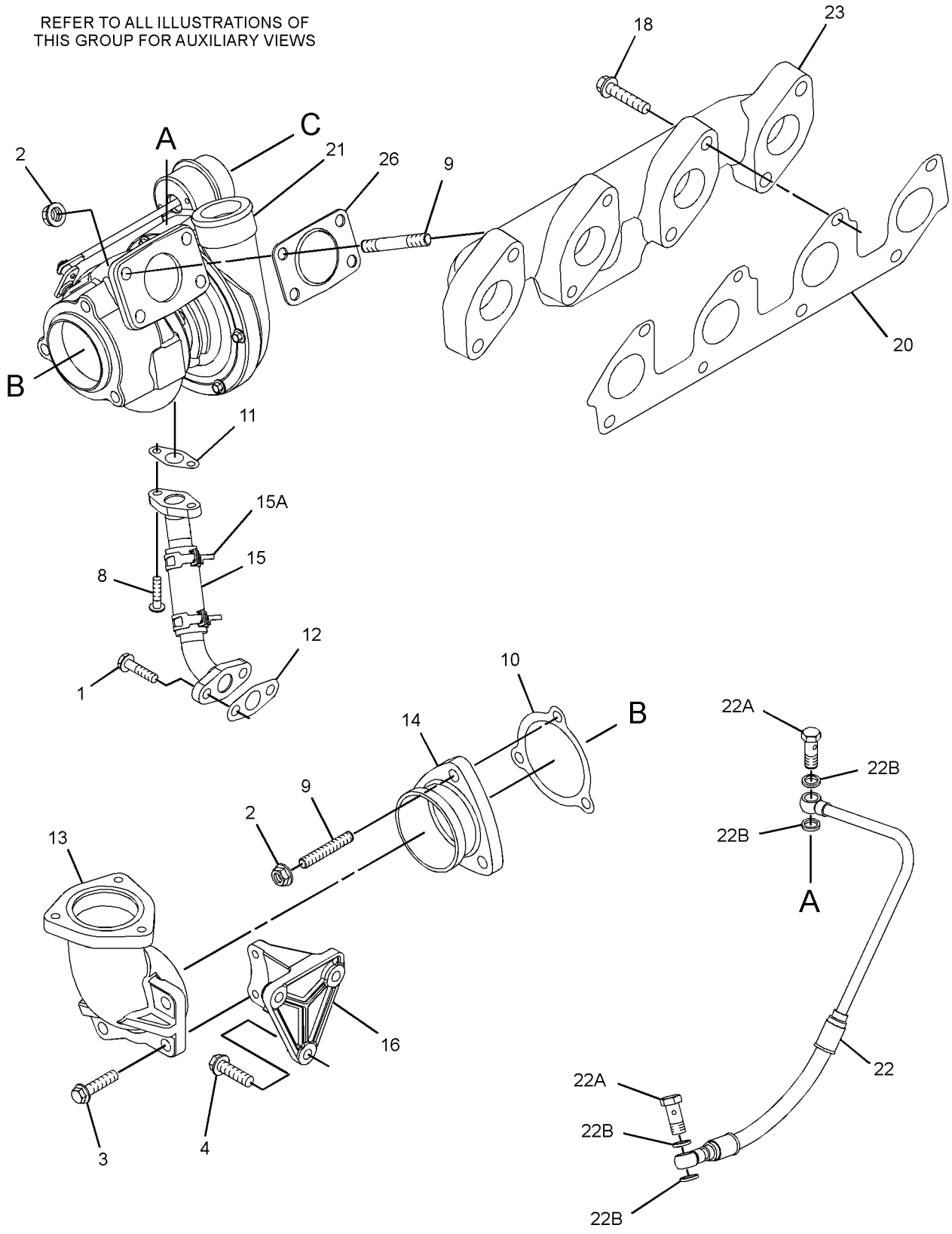

GRAPHIC #1 g06204954

308-4277 **TURBOCHARGER GP** (contd.) **i06943363**

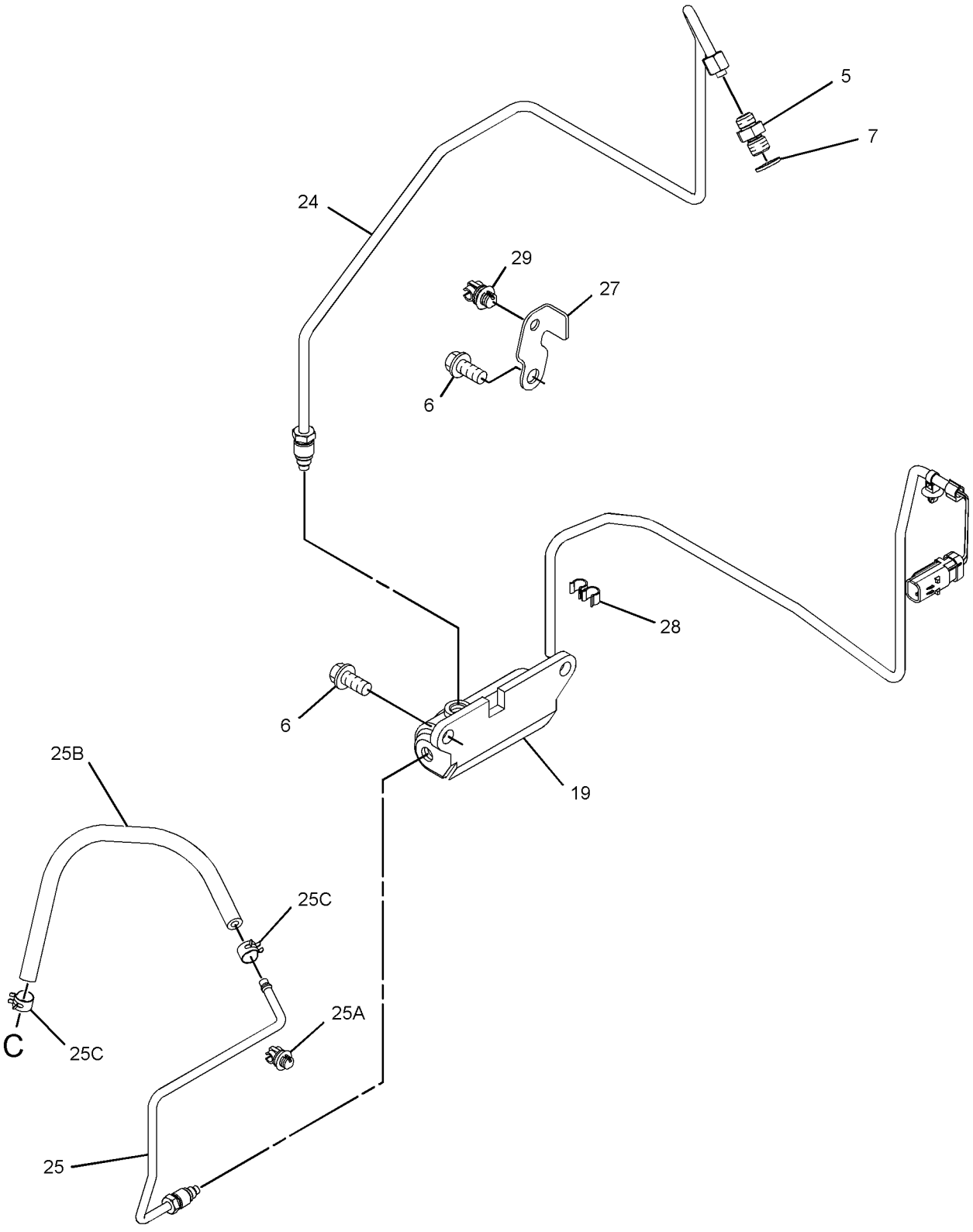

GRAPHIC #2 <END> g06204955

311-7456 TURBOCHARGER GP

PART OF 435-1699 ENGINE AR, 437-5409 ENGINE AR-PRIMARY

TYPE 1

SMCS-1052, 1053 **i07023930**

NOTE	REF NO	GRAPHIC REF	PART NUMBER	QTY	PART NAME 1 2 3 4 5 6 (PRODUCT LEVEL)	SEE PAGE
M	1	1	**6I-0217**	2	BOLT (M8X1.25X20-MM)	
M	2	3	**6I-0254**	2	BOLT (M8X1.25X30-MM)	
M	3	1	**6I-0563**	7	NUT (M10X1.5-THD)	
M	4	1	**6I-0593**	2	BOLT (M10X1.5X30-MM)	
M	5	1	**6I-0654**	3	BOLT (M10X1.5X25-MM)	
M	6	3	**6I-0789**	4	BOLT (M10X1.5X60-MM)	
	7	2	**6I-0817**	1	ADAPTER	
M	8	2	**6I-4200**	3	BOLT (M10X1.5X16-MM)	
	9	3	**385-7317**	1	CLAMP-HOSE	
	10	2	**9Y-9381**	1	WASHER-HARD	
	11	3	**385-7318**	1	HOSE-AIR	
M	12	1	**106-8916**	2	BOLT (M6X16-MM)	
	14	1	**361-7519**	7	ROD-THREADED	
	15	1	**194-5390**	1	GASKET-MANIFOLD	
	16	1	**225-8530**	1	GASKET	
	17	1	**353-3477**	1	GASKET-TURBOCHARGER	
	18	1	**353-3478**	1	GASKET-TURBOCHARGER	
	19	1	**227-4562**	1	ELBOW-EXHAUST	
	20	1	**232-6189**	1	TUBE AS	
M	21	1	**278-0361**	8	BOLT (M10X1.5X45-MM)	
	22	3	**293-0598**	1	CLIP	
	23	2	**294-7375**	1	SOLENOID (WASTEGATE)	
	24	1	**298-4570**	1	GASKET-EXHAUST MANIFOLD	
	25	2	**298-4576**	1	CLIP	
	26	1	**301-8255**	1	TUBE AS	
	26A	1	**225-8524**	2	BOLT-SPECIAL	
	26B	1	**225-8526**	4	WASHER (10.4X13.75X1.37-MM THK)	
	27	1	**301-8256**	1	MANIFOLD-EXHAUST	
	28	1	**302-0581**	1	ADAPTER-EXHAUST	
	29	2	**303-2116**	4	CLIP	
	30	2	**326-4508**	1	TUBE AS	
	30A	2	**032-8047**	2	FERRULE	
	30B	2	**032-8191**	1	NUT	
	30C	2	**035-8014**	1	NUT	
	31	2	**377-6869**	1	BRACKET	
	32	1	**307-2805**	1	BRACKET	
Y	33	3	**307-2807**	1	AIR CLEANER GP (TURBOCHARGER)	772
	34	3	**384-4084**	1	BRACKET	
	36	2	**311-7458**	1	TUBE AS	
	36A	2	**032-8047**	1	FERRULE	
	36B	2	**032-8191**	1	NUT	
	36C	2	**298-4576**	2	CLIP	
	36D	2	**300-6520**	1	HOSE AS	
	36E	2	**107-2348**	2	CLIP	
	37	1	**316-0514**	1	TURBOCHARGER	

M - METRIC PART
Y - SEPARATE ILLUSTRATION

311-7456 **TURBOCHARGER GP** (contd.) **i07023930**

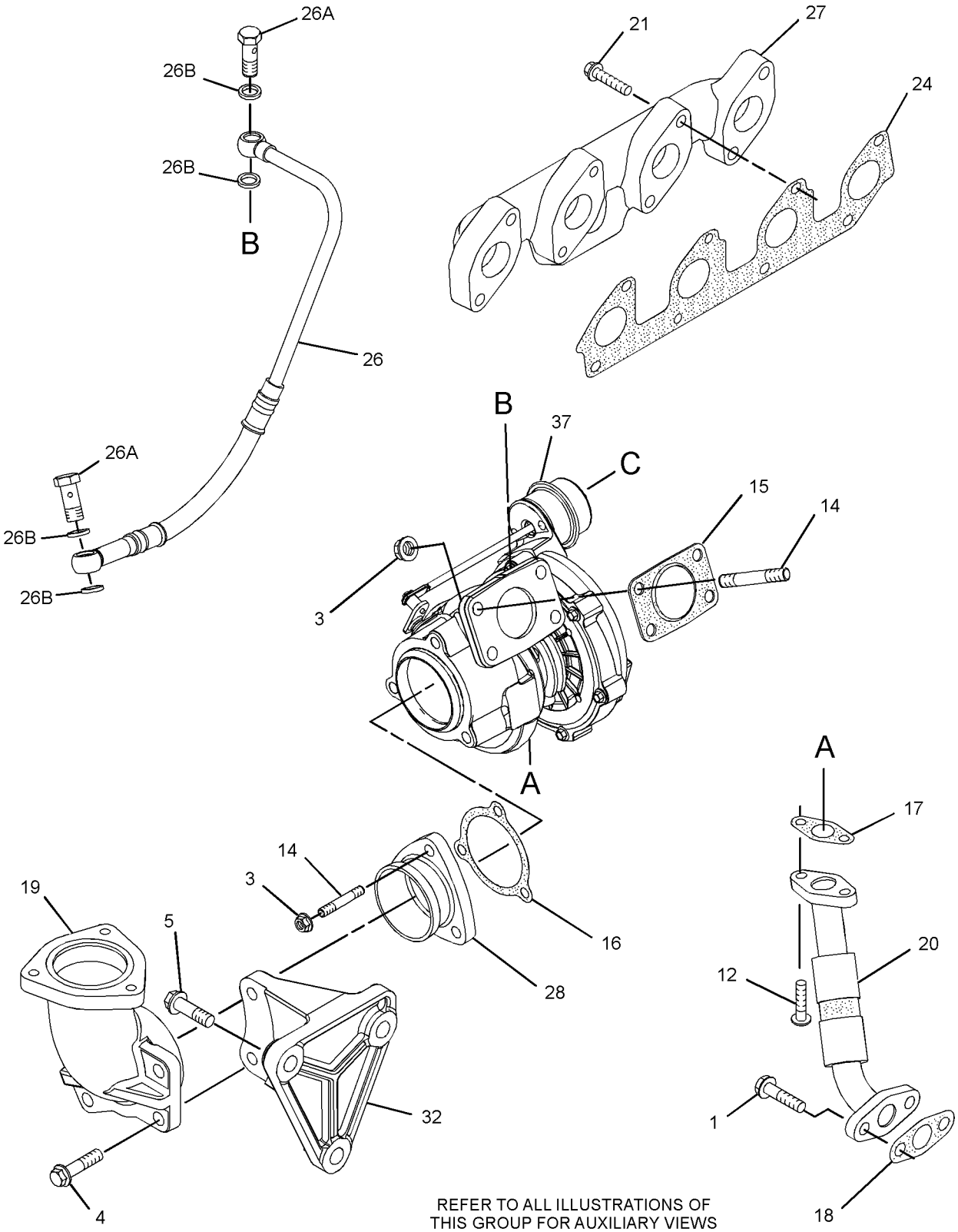

REFER TO ALL ILLUSTRATIONS OF THIS GROUP FOR AUXILIARY VIEWS

GRAPHIC #1 g01677944

311-7456 **TURBOCHARGER GP (**contd.**)** **i07023930**

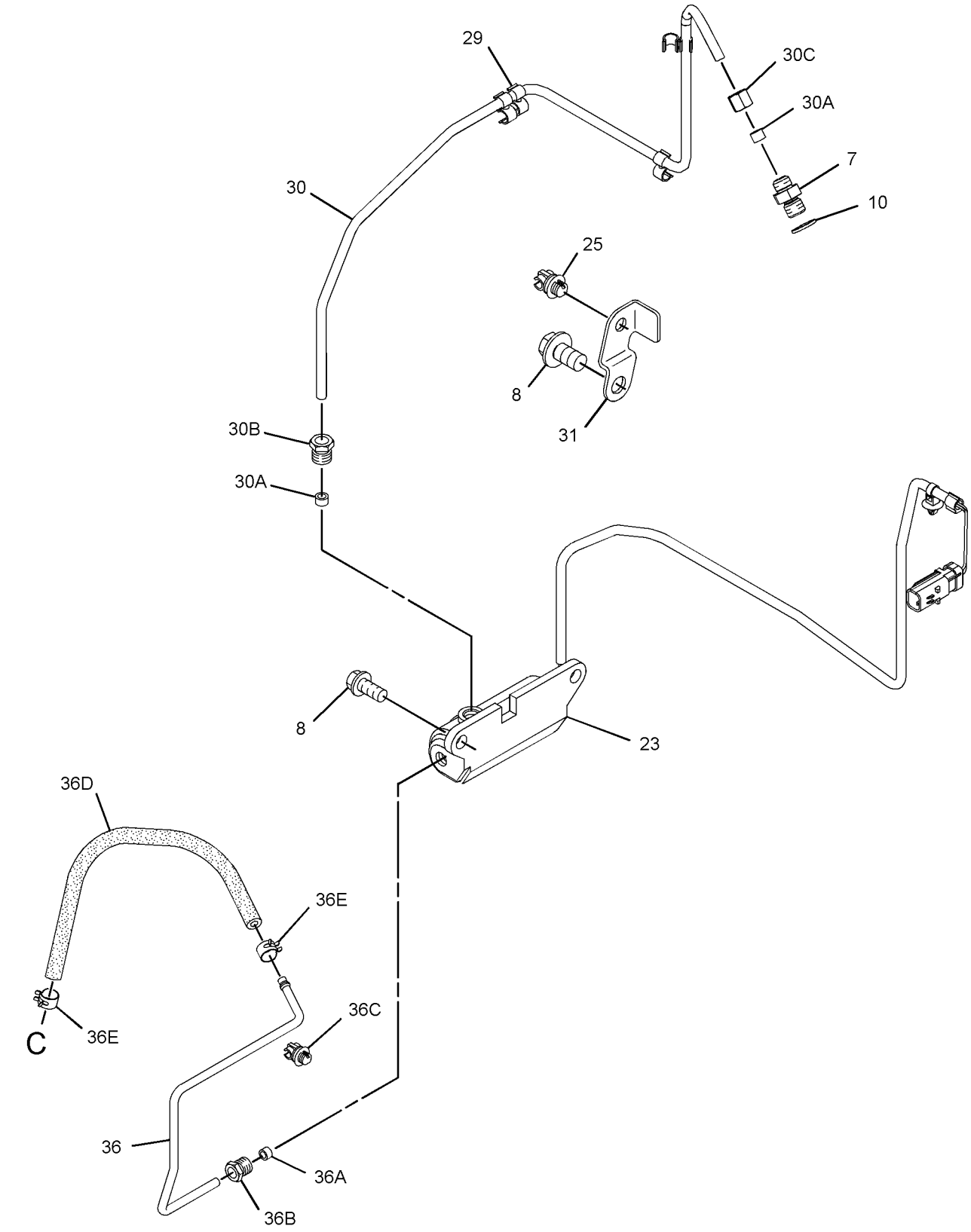

GRAPHIC #2 g03473337

311-7456 **TURBOCHARGER GP (**contd.**)** **i07023930**

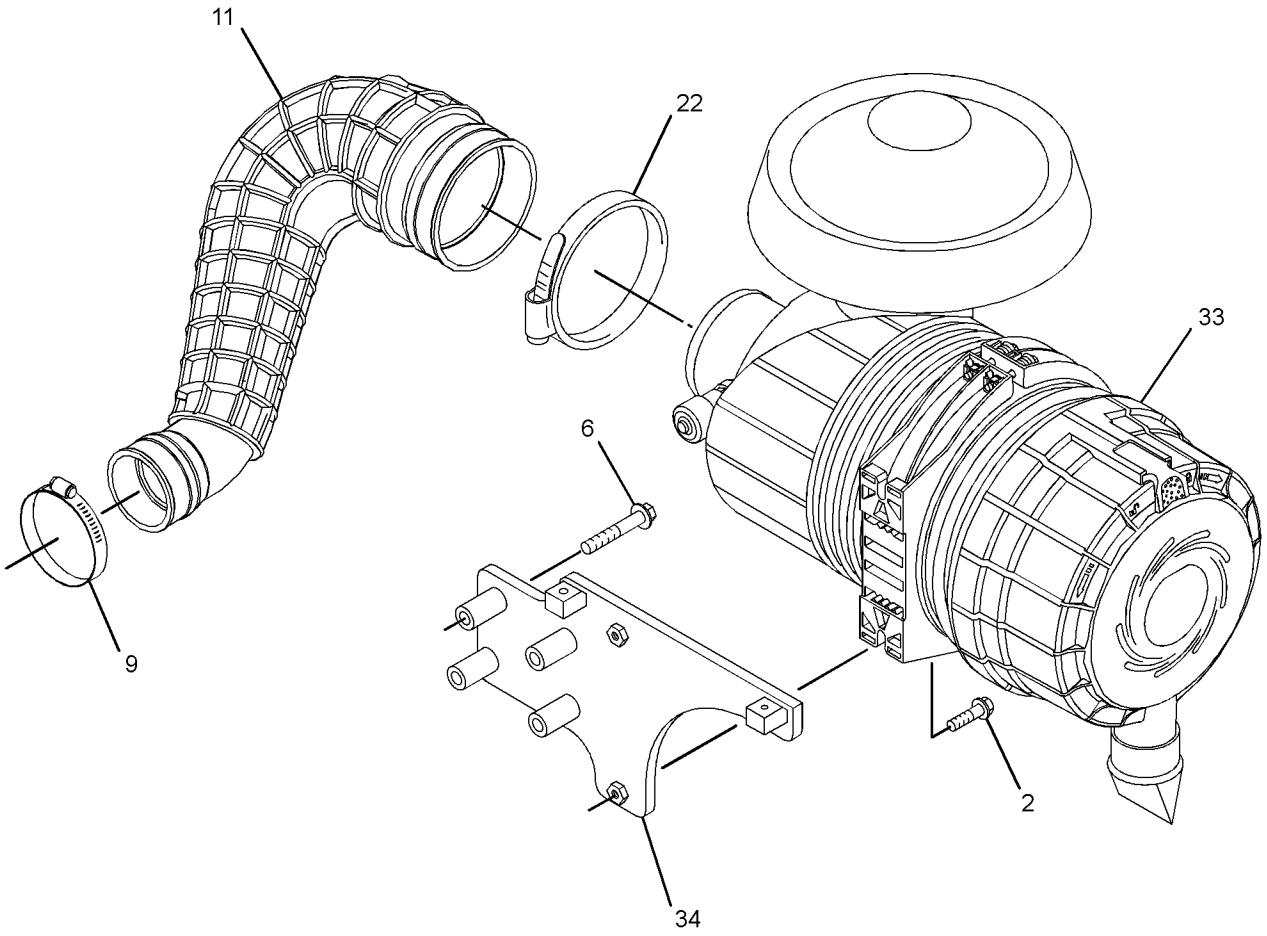

GRAPHIC #3 <END> g03473338

311-7456 TURBOCHARGER GP

PART OF 435-1699 ENGINE AR, 437-5409, 540-1155 ENGINE AR-PRIMARY
TYPE 2

SMCS-1052, 1053 **i07024343**

NOTE	REF NO	GRAPHIC REF	PART NUMBER	QTY	PART NAME 1 2 3 4 5 6 (PRODUCT LEVEL)	SEE PAGE
M	1	1	**6I-0217**	2	BOLT (M8X1.25X20-MM)	
M	2	3	**6I-0260**	2	BOLT (M8X1.25X25-MM)	
M	3	1	**6I-0563**	7	NUT (M10X1.5-THD)	
M	4	1	**6I-0593**	2	BOLT (M10X1.5X30-MM)	
M	5	1	**6I-0654**	3	BOLT (M10X1.5X25-MM)	
M	6	3	**6I-0789**	4	BOLT (M10X1.5X60-MM)	
	7	2	**6I-0817**	1	ADAPTER	
M	8	2	**6I-4200**	3	BOLT (M10X1.5X16-MM)	
	9	3	**385-7317**	1	CLAMP-HOSE	
	10	2	**9Y-9381**	1	WASHER-HARD	
	11	3	**385-7318**	1	HOSE-AIR	
M	12	1	**106-8916**	2	BOLT (M6X16-MM)	
	14	1	**361-7519**	7	ROD-THREADED	
	15	1	**194-5390**	1	GASKET-MANIFOLD	
	16	1	**225-8530**	1	GASKET	
	17	1	**353-3477**	1	GASKET-TURBOCHARGER	
	18	1	**353-3478**	1	GASKET-TURBOCHARGER	
	19	1	**227-4562**	1	ELBOW-EXHAUST	
	20	1	**507-5019**	1	LINE AS-OIL	
	20A	1	**269-3086**	2	CLAMP-BAND	
M	21	1	**278-0361**	8	BOLT (M10X1.5X45-MM)	
	22	3	**293-0598**	1	CLIP	
	23	2	**294-7375**	1	SOLENOID (WASTEGATE)	
	24	1	**298-4570**	1	GASKET-EXHAUST MANIFOLD	
	25	2	**298-4576**	1	CLIP	
	26	1	**301-8255**	1	TUBE AS	
	26A	1	**225-8524**	2	BOLT-SPECIAL	
	26B	1	**225-8526**	4	WASHER (10.4X13.75X1.37-MM THK)	
	27	1	**301-8256**	1	MANIFOLD-EXHAUST	
	28	1	**302-0581**	1	ADAPTER-EXHAUST	
	29	2	**303-2116**	4	CLIP	
	30	2	**326-4508**	1	TUBE AS	
	30A	2	**032-8047**	2	FERRULE	
	30B	2	**032-8191**	1	NUT	
	30C	2	**035-8014**	1	NUT	
	31	2	**377-6869**	1	BRACKET	
	32	1	**307-2805**	1	BRACKET	
CY	33	3	**449-7366**	1	AIR CLEANER GP (TURBOCHARGER)	773
	34	3	**445-1434**	1	BRACKET AS	
	36	2	**311-7458**	1	TUBE AS	
	36A	2	**032-8047**	1	FERRULE	
	36B	2	**032-8191**	1	NUT	
	36C	2	**298-4576**	2	CLIP	
	36D	2	**300-6520**	1	HOSE AS	
	36E	2	**107-2348**	2	CLIP	
	37	1	**316-0514**	1	TURBOCHARGER	
	38	3	**217-0099**	2	SPACER (8.2X25X2-MM THK)	

311-7456 **TURBOCHARGER GP (**contd.**)** **i07024343**

NOTE	REF NO	GRAPHIC REF	PART NUMBER	QTY	PART NAME 1 2 3 4 5 6 (PRODUCT LEVEL)	SEE PAGE

C - CHANGE FROM PREVIOUS TYPE
M - METRIC PART
Y - SEPARATE ILLUSTRATION

311-7456 **TURBOCHARGER GP** (contd.) **i07024343**

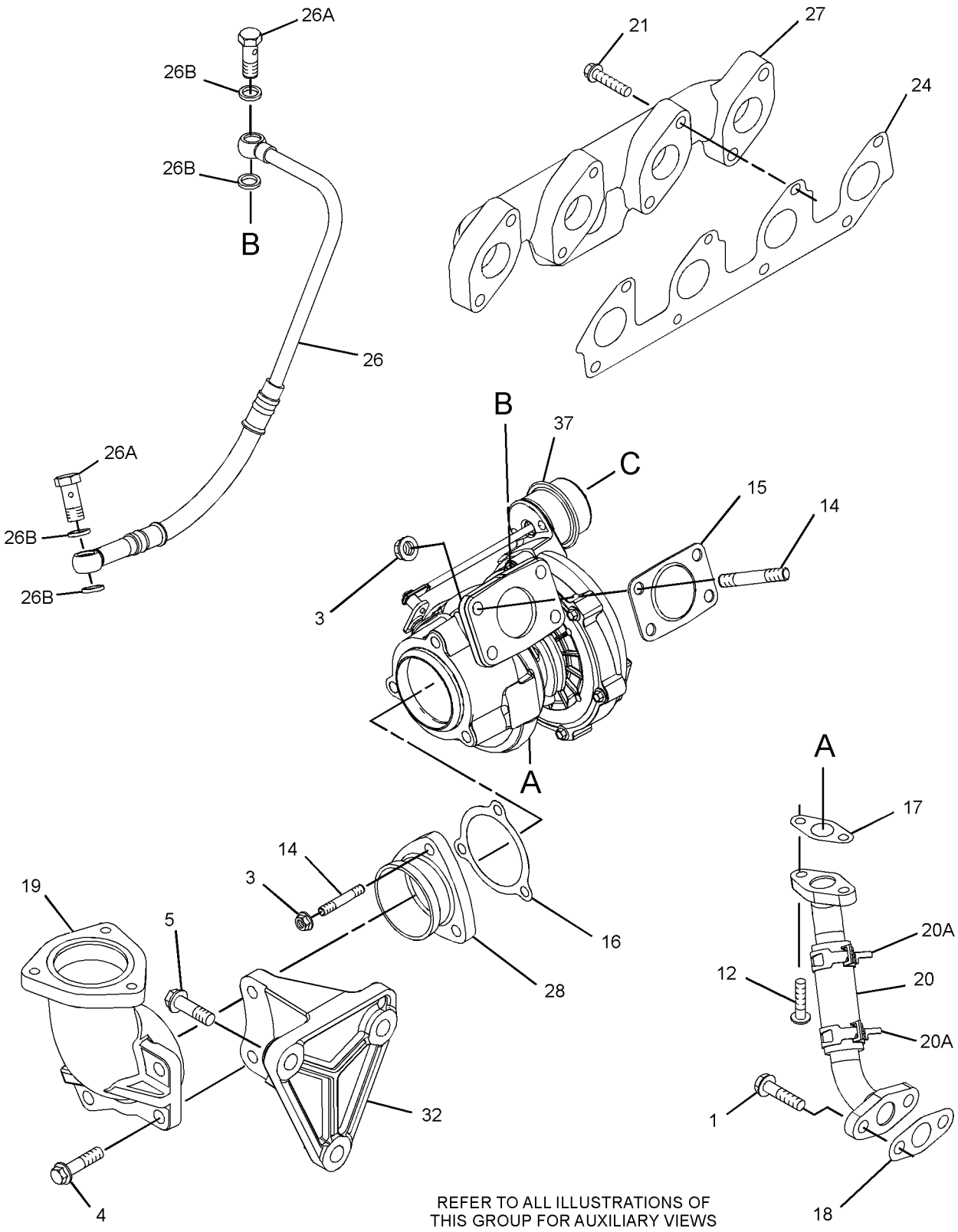

REFER TO ALL ILLUSTRATIONS OF THIS GROUP FOR AUXILIARY VIEWS

GRAPHIC #1 g06211027

311-7456 **TURBOCHARGER GP** (contd.) **i07024343**

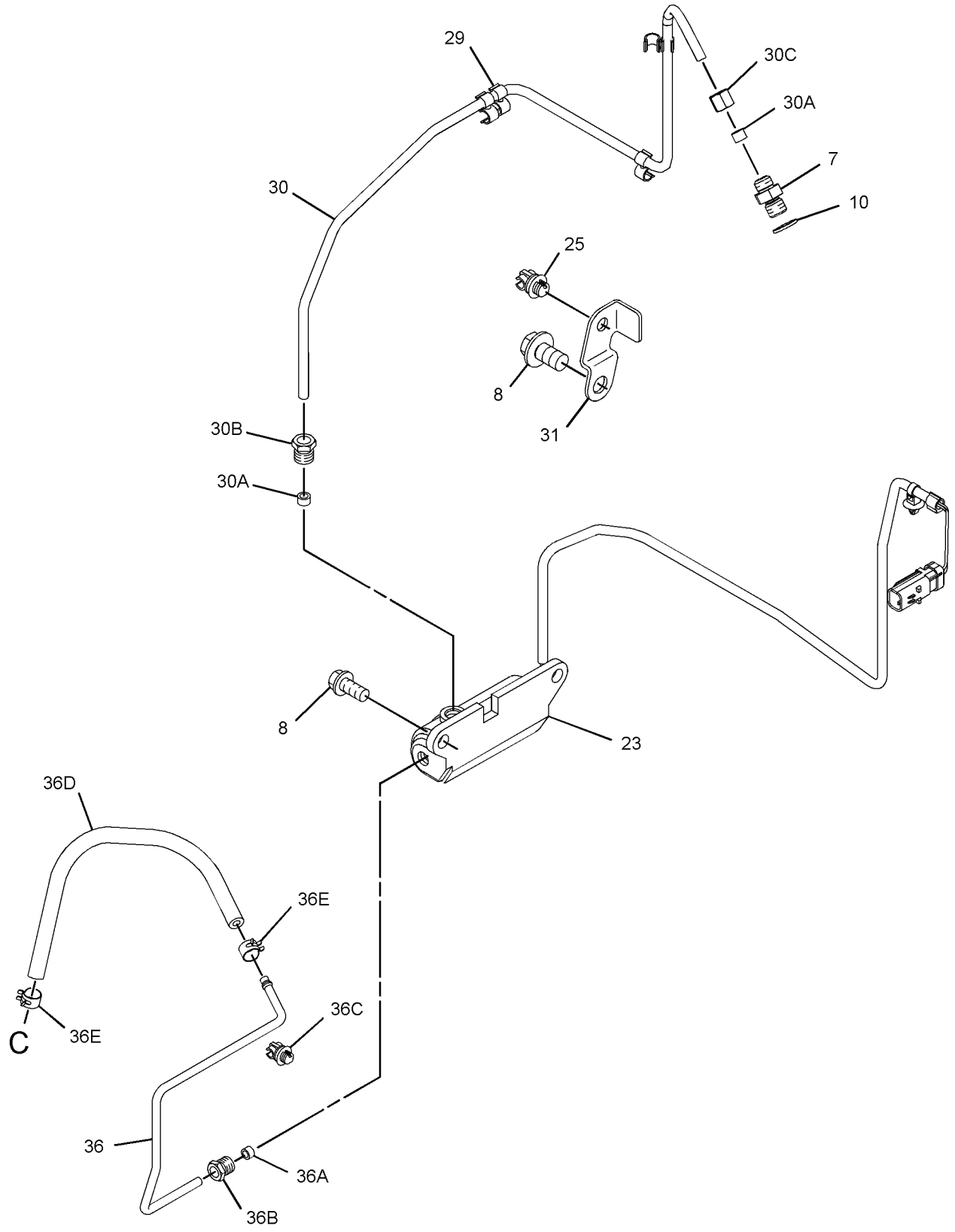

GRAPHIC #2 g06211029

311-7456 **TURBOCHARGER GP (**contd.**)** **i07024343**

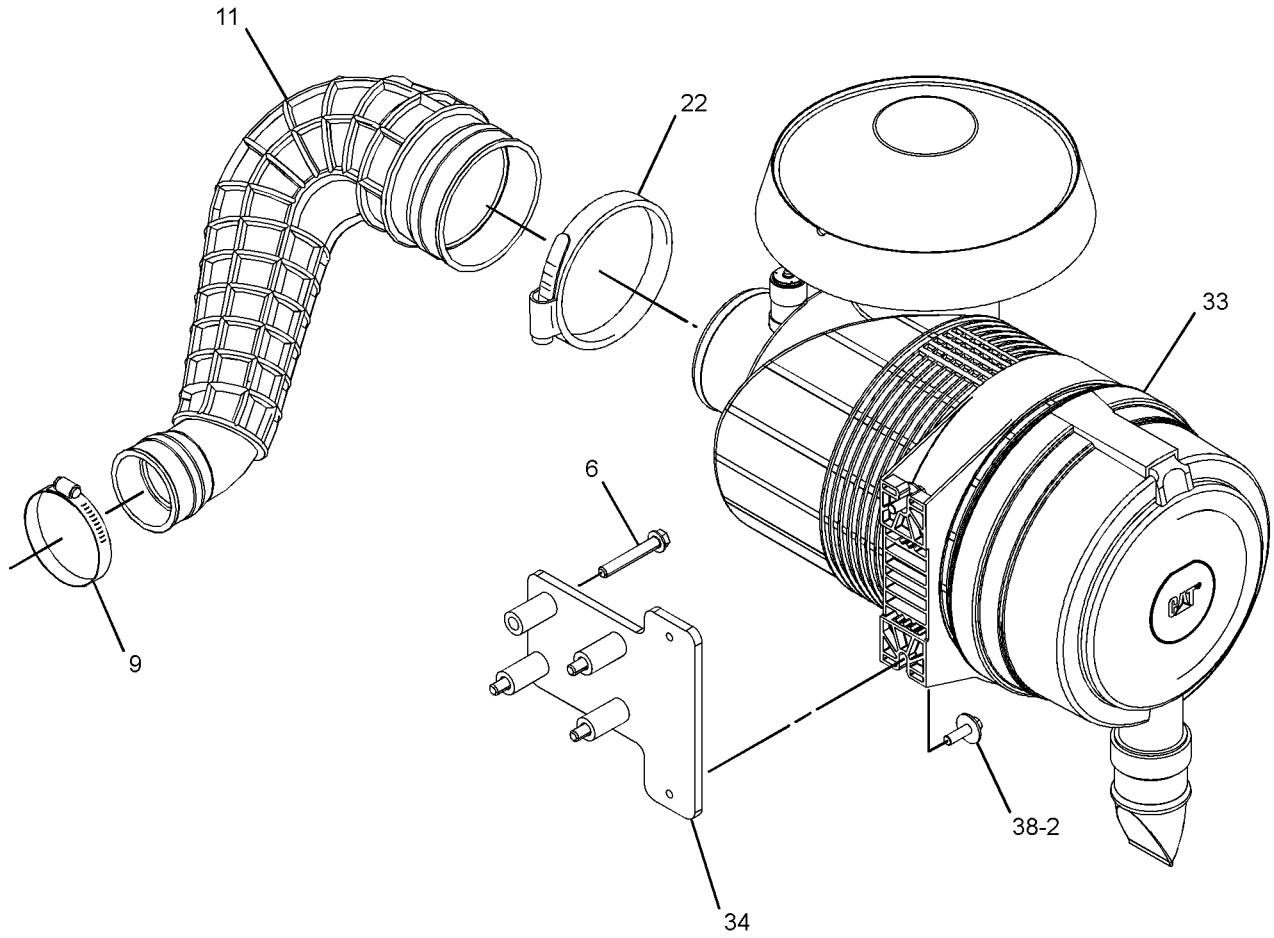

GRAPHIC #3 <END> g06198979

312-5964 TURBOCHARGER GP

TYPE 1

SMCS-1052, 1053 **i03202332**

NOTE	REF NO	GRAPHIC REF	PART NUMBER	QTY	PART NAME 1 2 3 4 5 6 (PRODUCT LEVEL)	SEE PAGE
M	1	1	**6I-0217**	2	BOLT (M8X1.25X20-MM)	
M	2	1	**6I-0563**	7	NUT (M10X1.5-THD)	
M	3	1	**6I-0593**	2	BOLT (M10X1.5X30-MM)	
M	4	1	**6I-0654**	3	BOLT (M10X1.5X25-MM)	
	5	2	**6I-0817**	1	ADAPTER	
M	6	2	**6I-4200**	2	BOLT (M10X1.5X16-MM)	
	7	2	**9Y-9381**	1	WASHER-HARD	
M	8	2	**100-4830**	1	BOLT (M10X1.5X20-MM)	
M	9	1	**106-8916**	2	BOLT (M6X16-MM)	
	10	2	**127-8165**	1	SPACER	
M	11	1	**147-5553**	7	STUD (M10X1.5X40-MM)	
	12	1	**225-8530**	1	GASKET	
	13	1	**225-8533**	1	GASKET	
	14	1	**225-8534**	1	GASKET	
	15	1	**227-4562**	1	ELBOW-EXHAUST	
	16	1	**232-6189**	1	TUBE AS	
M	17	1	**278-0361**	8	BOLT (M10X1.5X45-MM)	
	18	2	**294-7375**	1	SOLENOID (WASTEGATE)	
	19	1	**298-4570**	1	GASKET-EXHAUST MANIFOLD	
	20	2	**298-4576**	1	CLIP	
	21	1	**301-8255**	1	TUBE AS	
	21A	1	**225-8524**	2	BOLT-SPECIAL	
	21B	1	**225-8526**	4	WASHER (10.4X13.75X1.37-MM THK)	
	22	1	**194-5390**	1	GASKET-MANIFOLD	
	23	1	**301-8256**	1	MANIFOLD-EXHAUST	
	24	1	**302-0581**	1	ADAPTER-EXHAUST	
	25	2	**303-2116**	5	CLIP	
	26	2	**326-4508**	1	TUBE AS	
	26A	2	**032-8191**	1	NUT	
	26B	2	**032-8047**	2	FERRULE	
	26C	2	**035-8014**	1	NUT	
	27	2	**303-5792**	1	BRACKET	
	28	1	**316-0514**	1	TURBOCHARGER	
	29	1	**307-2805**	1	BRACKET	
	30	2	**311-7458**	1	TUBE AS	
	30A	2	**032-8191**	1	NUT	
	30B	2	**032-8047**	1	FERRULE	
	30C	2	**298-4576**	2	CLIP	
	30D	2	**300-6520**	1	HOSE AS	
	30E	2	**107-2348**	2	CLIP	

M - METRIC PART

312-5964 **TURBOCHARGER GP (**contd.**)** **i03202332**

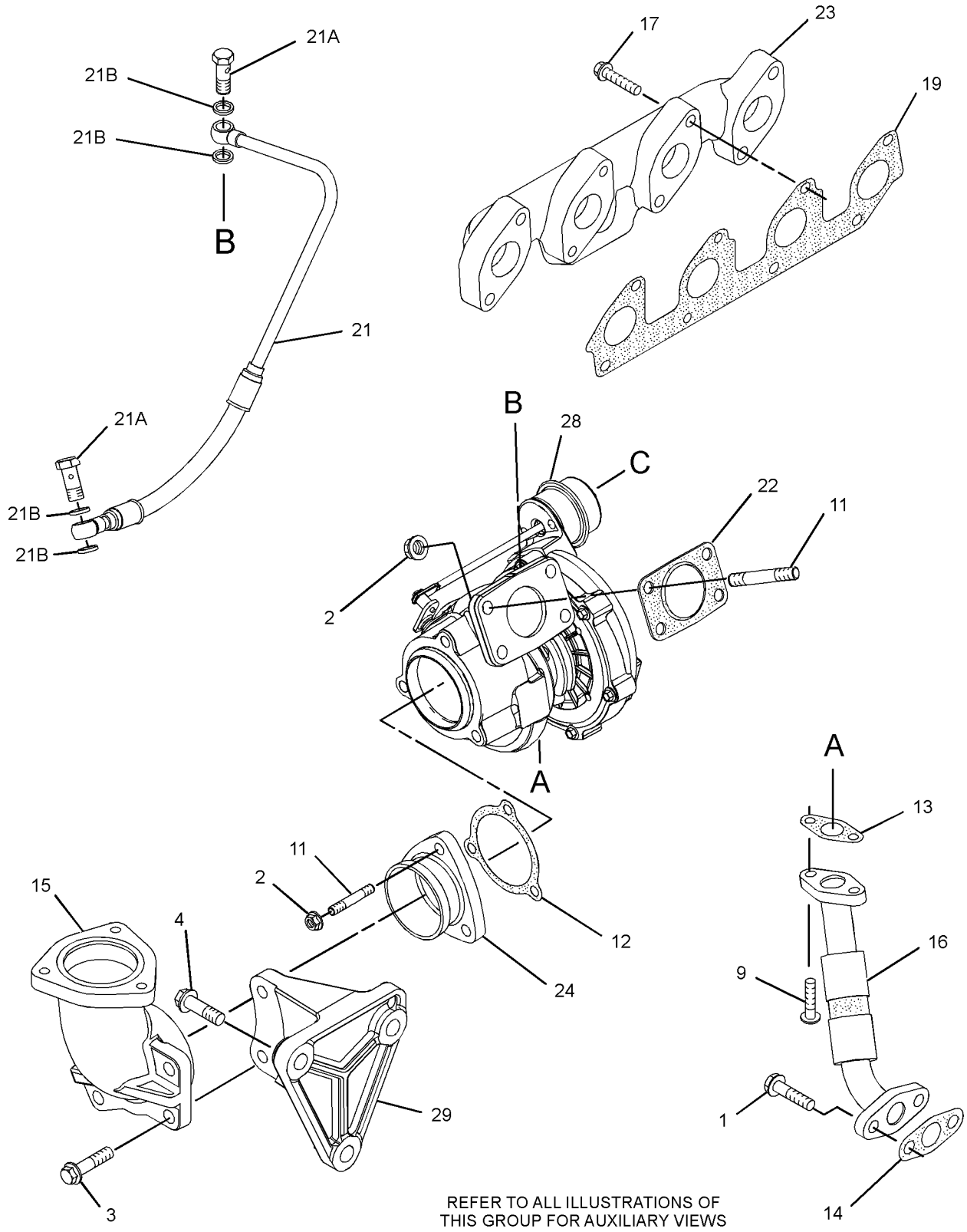

GRAPHIC #1 g01622549

312-5964 **TURBOCHARGER GP (**contd.**)** **i03202332**

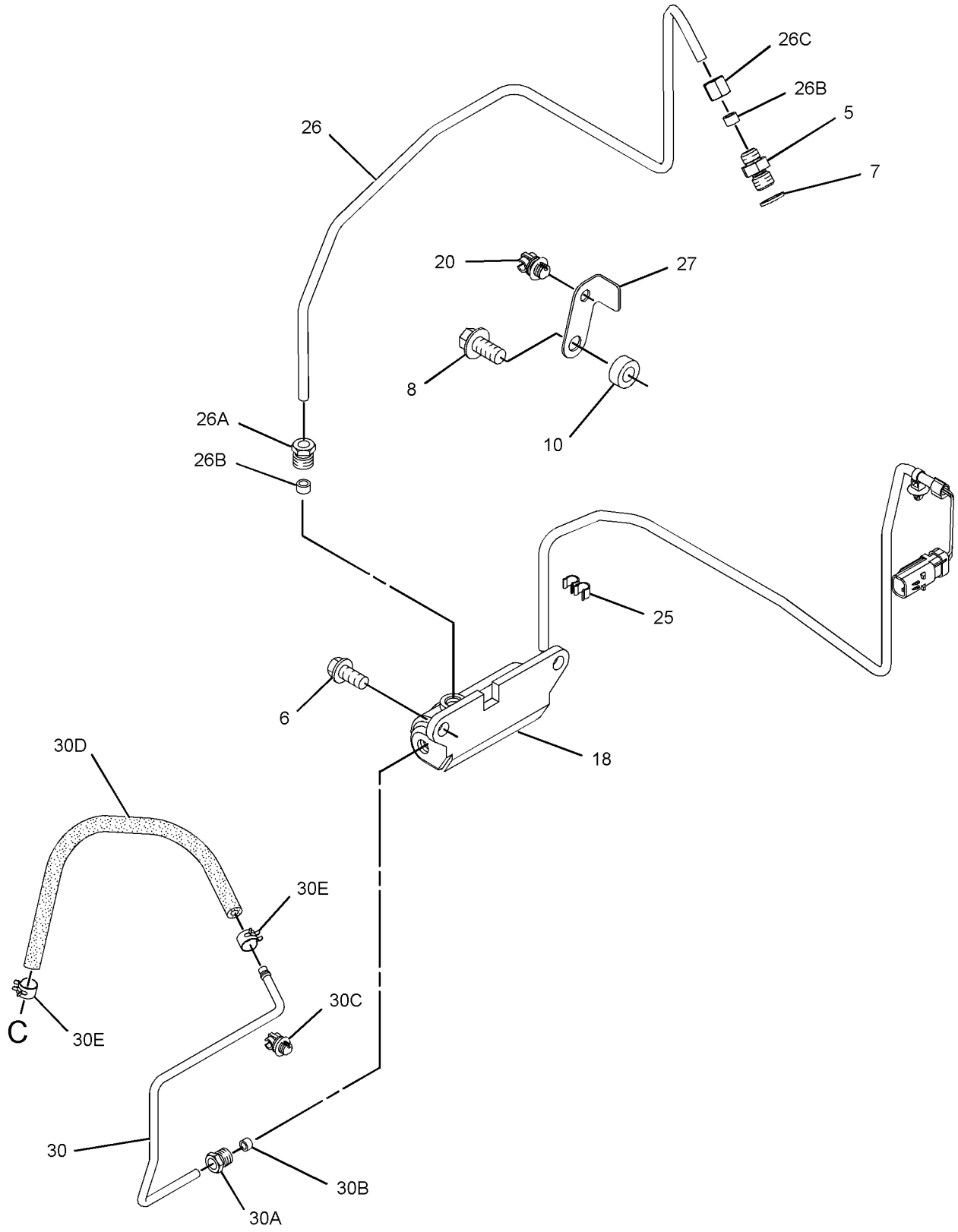

GRAPHIC #2 <END> g01636477

312-5964 TURBOCHARGER GP

TYPE 2

SMCS-1052, 1053 **i06943403**

NOTE	REF NO	GRAPHIC REF	PART NUMBER	QTY	PART NAME 1 2 3 4 5 6 (PRODUCT LEVEL)	SEE PAGE
M	1	1	**6I-0217**	2	BOLT (M8X1.25X20-MM)	
M	2	1	**6I-0563**	7	NUT (M10X1.5-THD)	
M	3	1	**6I-0593**	2	BOLT (M10X1.5X30-MM)	
M	4	1	**6I-0654**	3	BOLT (M10X1.5X25-MM)	
	5	2	**6I-0817**	1	ADAPTER	
CM	6	2	**6I-4200**	3	BOLT (M10X1.5X16-MM)	
	7	2	**9Y-9381**	1	WASHER-HARD	
M	9	1	**106-8916**	2	BOLT (M6X16-MM)	
M	11	1	**147-5553**	7	STUD (M10X1.5X40-MM)	
	12	1	**225-8530**	1	GASKET	
	13	1	**353-3477**	1	GASKET-TURBOCHARGER	
	14	1	**353-3478**	1	GASKET-TURBOCHARGER	
	15	1	**227-4562**	1	ELBOW-EXHAUST	
	16	1	**507-5019**	1	LINE AS-OIL	
	16A	1	**269-3086**	2	CLAMP-BAND	
M	17	1	**278-0361**	8	BOLT (M10X1.5X45-MM)	
	18	2	**294-7375**	1	SOLENOID (WASTEGATE)	
	19	1	**298-4570**	1	GASKET-EXHAUST MANIFOLD	
	20	2	**298-4576**	1	CLIP	
	21	1	**301-8255**	1	TUBE AS	
	21A	1	**225-8524**	2	BOLT-SPECIAL	
	21B	1	**225-8526**	4	WASHER (10.4X13.75X1.37-MM THK)	
	22	1	**194-5390**	1	GASKET-MANIFOLD	
	23	1	**301-8256**	1	MANIFOLD-EXHAUST	
	24	1	**302-0581**	1	ADAPTER-EXHAUST	
	25	2	**303-2116**	5	CLIP	
	26	2	**326-4508**	1	TUBE AS	
	26A	2	**032-8191**	1	NUT	
	26B	2	**032-8047**	2	FERRULE	
	26C	2	**035-8014**	1	NUT	
C	27	2	**377-6869**	1	BRACKET	
	28	1	**316-0514**	1	TURBOCHARGER	
	29	1	**307-2805**	1	BRACKET	
	30	2	**311-7458**	1	TUBE AS	
	30A	2	**032-8191**	1	NUT	
	30B	2	**032-8047**	1	FERRULE	
	30C	2	**298-4576**	2	CLIP	
	30D	2	**300-6520**	1	HOSE AS	
	30E	2	**107-2348**	2	CLIP	

C - CHANGE FROM PREVIOUS TYPE
M - METRIC PART

312-5964 **TURBOCHARGER GP** (contd.) **i06943403**

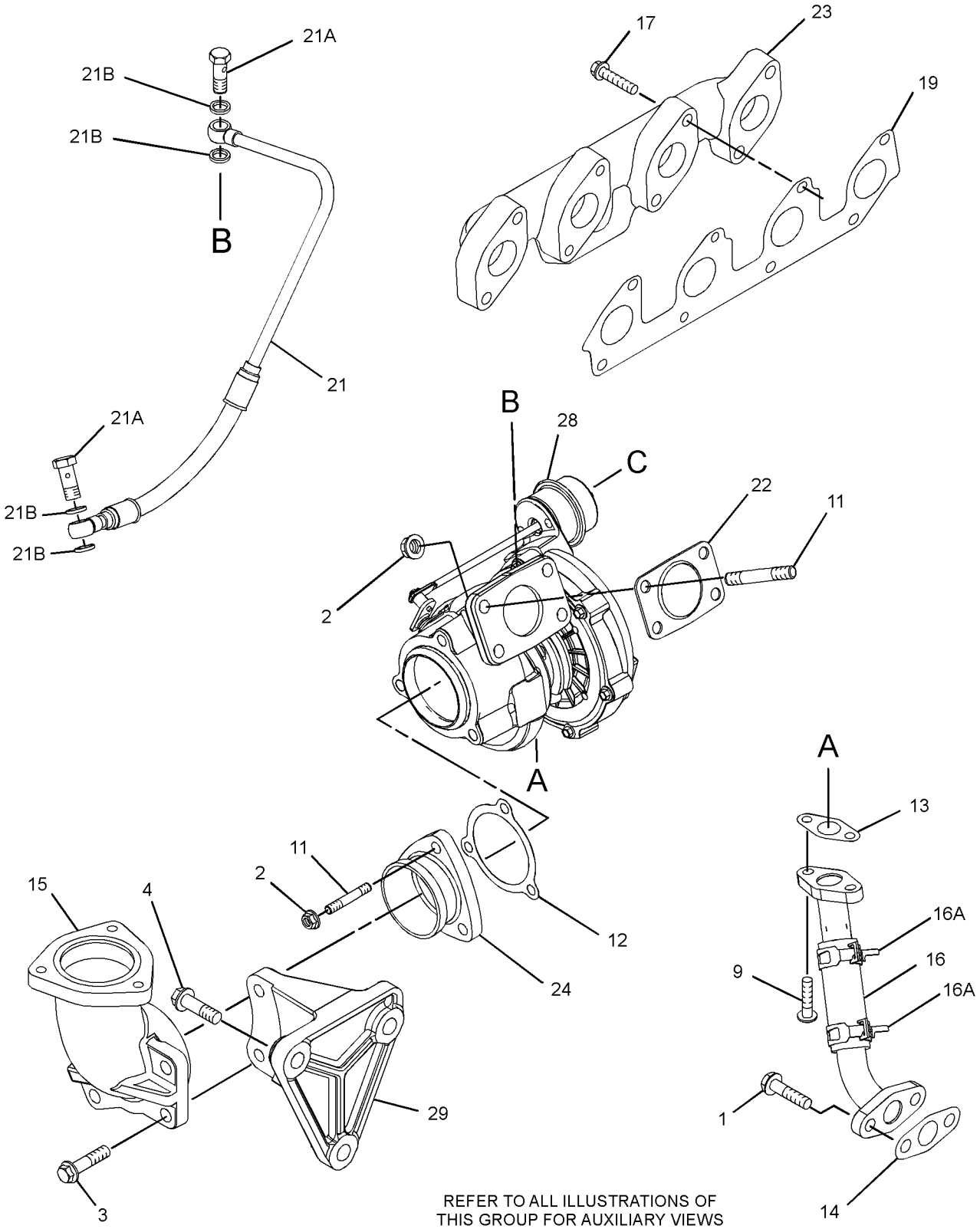

REFER TO ALL ILLUSTRATIONS OF
THIS GROUP FOR AUXILIARY VIEWS

GRAPHIC #1 g06207073

312-5964 **TURBOCHARGER GP (**contd.**)** **i06943403**

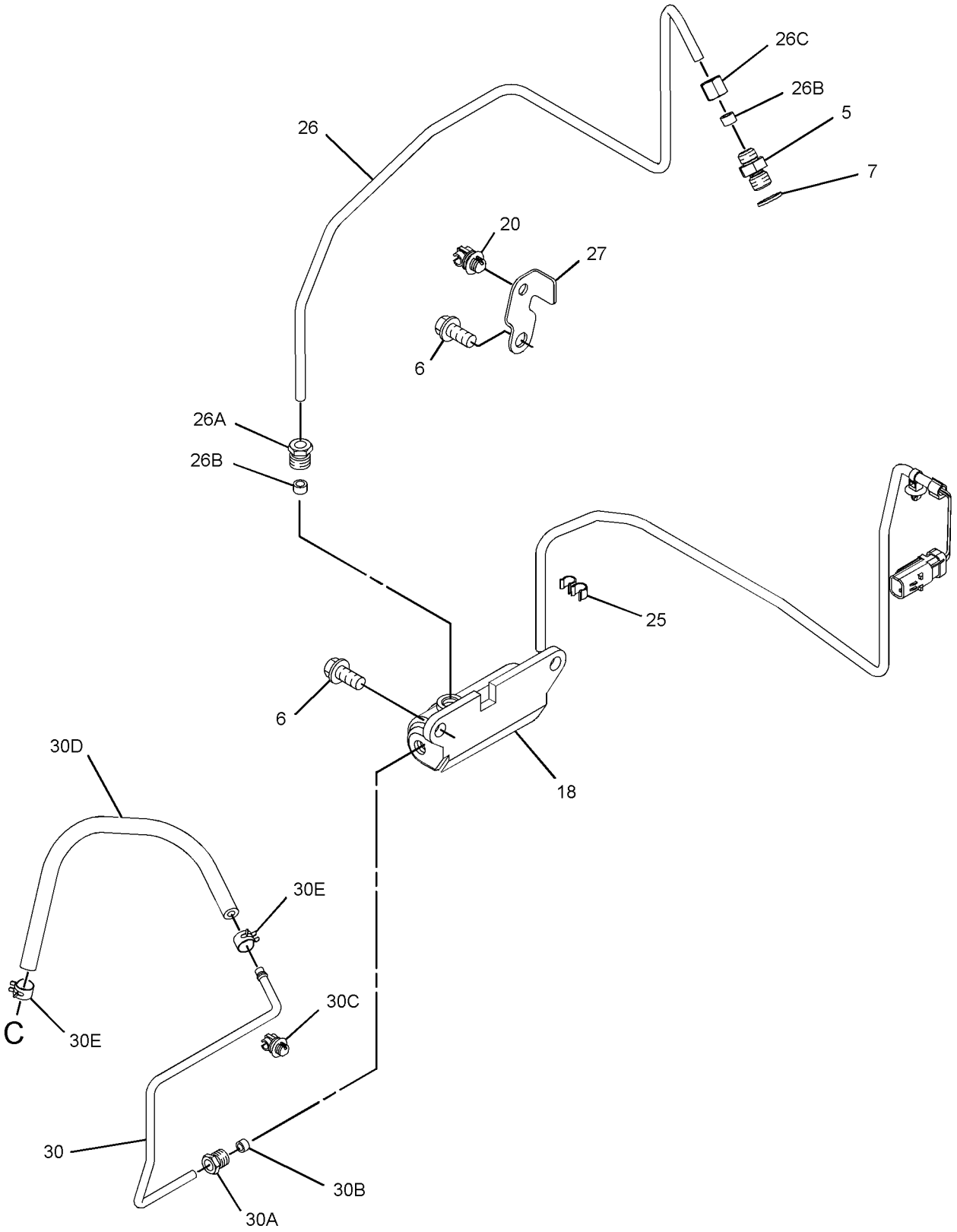

GRAPHIC #2 <END> g06207074

318-0333 TURBOCHARGER GP

S/N: 4441-9302

SMCS-1052, 1053 **i04822160**

NOTE	REF NO	GRAPHIC REF	PART NUMBER	QTY	PART NAME 1 2 3 4 5 6 (PRODUCT LEVEL)	SEE PAGE
	1	2	**5P-0597**	2	CLAMP-HOSE	
M	2	1	**6I-0217**	2	BOLT (M8X1.25X20-MM)	
M	3	2	**6I-0260**	4	BOLT (M8X1.25X25-MM)	
M	4	1	**6I-0563**	4	NUT (M10X1.5-THD)	
M	5	1	**6I-0593**	1	BOLT (M10X1.5X30-MM)	
M	6	1	**6I-0654**	1	BOLT (M10X1.5X25-MM)	
	7	2	**6I-0817**	1	ADAPTER	
M	8	2	**6I-4200**	2	BOLT (M10X1.5X16-MM)	
	9	2	**9Y-9381**	1	WASHER-HARD	
M	10	2	**100-4830**	3	BOLT (M10X1.5X20-MM)	
M	11	1	**106-8916**	2	BOLT (M6X16-MM)	
	12	1	**123-4038**	1	SPACER	
	13	2	**127-8165**	2	SPACER	
M	14	1	**147-5553**	4	STUD (M10X1.5X40-MM)	
	15	1	**172-4325**	1	SPACER	
	16	1	**194-5390**	1	GASKET-MANIFOLD	
	17	1	**225-8533**	1	GASKET	
	18	1	**225-8534**	1	GASKET	
	19	2	**234-3030**	1	GASKET-INLET	
	20	1	**238-8292**	1	BOLT-FLANGE HEAD	
	21	2	**263-5376**	1	HOSE	
M	22	1	**278-0361**	7	BOLT (M10X1.5X45-MM)	
	23	2	**294-7375**	1	SOLENOID (WASTEGATE)	
	24	1	**298-4570**	1	GASKET-EXHAUST MANIFOLD	
	25	2	**303-2116**	6	CLIP	
	26	1	**303-5786**	1	TUBE AS-TURBOCHARGER OIL (SUPPLY)	
	26A	1	**220-7163**	1	CLIP	
	26B	1	**225-8524**	2	BOLT-SPECIAL	
	26C	1	**225-8526**	4	WASHER (10.4X13.75X1.37-MM THK)	
	27	1	**303-5787**	1	TUBE AS-TURBOCHARGER OIL (DRAIN)	
	27A	1	**103-2135**	1	CLIP	
	28	1	**303-5788**	1	MANIFOLD-EXHAUST	
	29	2	**303-5793**	1	TUBE AS	
	29A	2	**4B-8774**	1	NUT-FLARED	
	29B	2	**032-8047**	1	FERRULE	
	29C	2	**278-0316**	2	CLIP	
	29D	2	**300-6520**	1	HOSE AS	
	29E	2	**107-2348**	2	CLIP	
	30	2	**363-9700**	1	TUBE AS	
	30A	2	**032-8191**	1	NUT	
	30B	2	**032-8047**	2	FERRULE	
	30C	2	**035-8014**	1	NUT	
	30D	2	**133-9469**	2	CLIP	
	30E	2	**278-0316**	4	CLIP	
	31	2	**308-7532**	1	TUBE-AIR	
R	32	1	**316-0468**	1	TURBOCHARGER	
	33	2	**303-5792**	1	BRACKET	
	34	2	**298-4576**	1	CLIP	

318-0333 **TURBOCHARGER GP** (contd.) **i04822160**

NOTE	REF NO	GRAPHIC REF	PART NUMBER	QTY	PART NAME 1 2 3 4 5 6 (PRODUCT LEVEL)	SEE PAGE

M - METRIC PART
R - REMANUFACTURED PART MAY BE AVAILABLE

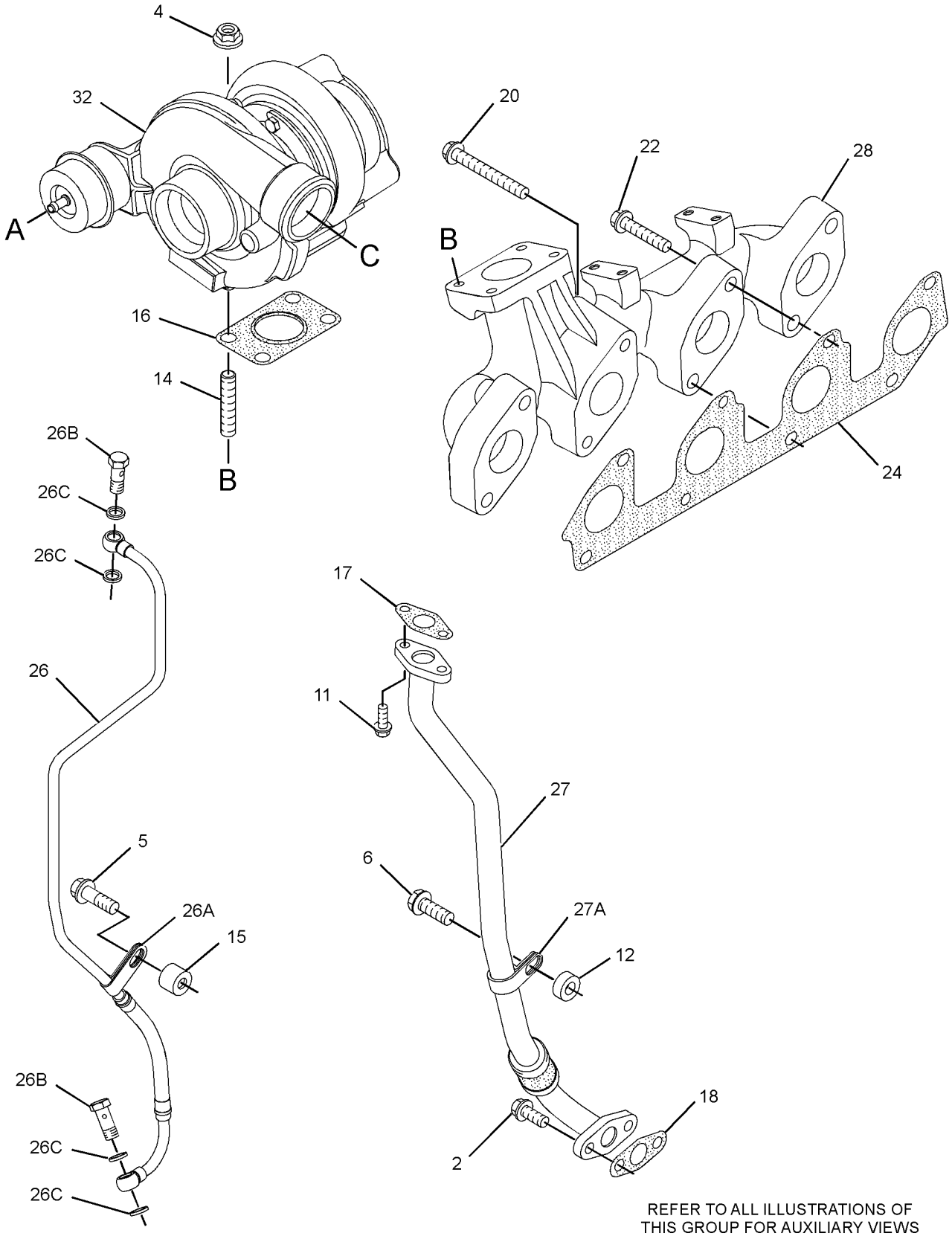

REFER TO ALL ILLUSTRATIONS OF
THIS GROUP FOR AUXILIARY VIEWS

GRAPHIC #1 g01429147

318-0333 **TURBOCHARGER GP** (contd.) **i04822160**

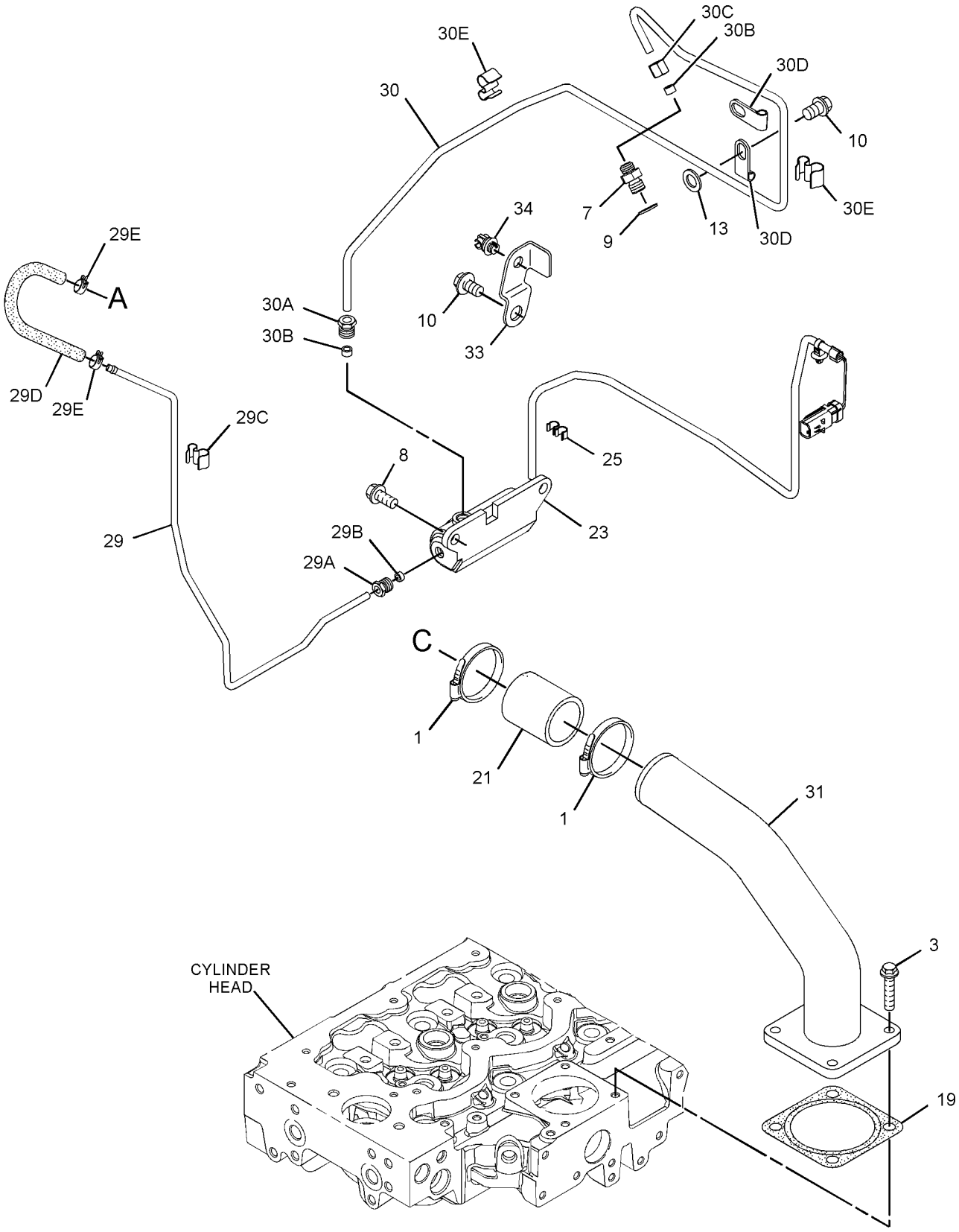

GRAPHIC #2 <END> g02992736

318-0333 TURBOCHARGER GP

S/N: 4449303-UP

SMCS-1052, 1053 **i06863524**

NOTE	REF NO	GRAPHIC REF	PART NUMBER	QTY	PART NAME 1 2 3 4 5 6 (PRODUCT LEVEL)	SEE PAGE
	1	2	**5P-0597**	2	CLAMP-HOSE	
M	2	1	**6I-0217**	2	BOLT (M8X1.25X20-MM)	
M	3	2	**6I-0260**	4	BOLT (M8X1.25X25-MM)	
M	4	1	**6I-0563**	4	NUT (M10X1.5-THD)	
M	5	1	**6I-0593**	1	BOLT (M10X1.5X30-MM)	
M	6	1	**6I-0654**	1	BOLT (M10X1.5X25-MM)	
	7	2	**6I-0817**	1	ADAPTER	
M	8	2	**6I-4200**	2	BOLT (M10X1.5X16-MM)	
	9	2	**9Y-9381**	1	WASHER-HARD	
CM	10	2	**100-4830**	2	BOLT (M10X1.5X20-MM)	
M	11	1	**106-8916**	2	BOLT (M6X16-MM)	
	12	1	**123-4038**	1	SPACER	
	13	2	**127-8165**	2	SPACER	
	14	1	**361-7519**	4	ROD-THREADED	
	15	1	**172-4325**	1	SPACER	
	16	1	**194-5390**	1	GASKET-MANIFOLD	
	17	1	**353-3477**	1	GASKET-TURBOCHARGER	
	18	1	**353-3478**	1	GASKET-TURBOCHARGER	
	19	2	**492-3310**	1	GASKET	
	20	1	**238-8292**	1	BOLT-FLANGE HEAD	
	21	2	**263-5376**	1	HOSE	
M	22	1	**278-0361**	7	BOLT (M10X1.5X45-MM)	
	23	2	**294-7375**	1	SOLENOID (WASTEGATE)	
	24	1	**298-4570**	1	GASKET-EXHAUST MANIFOLD	
	25	2	**303-2116**	6	CLIP	
	26	1	**383-8543**	1	TUBE AS-TURBOCHARGER OIL	
	26A	1	**383-8542**	1	CLIP-PIPE	
	26B	1	**225-8524**	2	BOLT-SPECIAL	
	26C	1	**225-8526**	4	WASHER (10.4X13.75X1.37-MM THK)	
	27	1	**303-5787**	1	TUBE AS-TURBOCHARGER OIL (DRAIN)	
	27A	1	**103-2135**	1	CLIP	
	28	1	**303-5788**	1	MANIFOLD-EXHAUST	
	29	2	**303-5793**	1	TUBE AS	
	29A	2	**4B-8774**	1	NUT-FLARED	
	29B	2	**032-8047**	1	FERRULE	
	29C	2	**278-0316**	2	CLIP	
	29D	2	**300-6520**	1	HOSE AS	
	29E	2	**107-2348**	2	CLIP	
C	30	2	**304-3704**	1	TUBE AS	
	30A	2	**4B-8774**	1	NUT-FLARED	
	30B	2	**032-8047**	1	FERRULE	
	30C	2	**035-8014**	1	NUT	
	30D	2	**133-9469**	2	CLIP	
	31	2	**308-7532**	1	TUBE-AIR	
R	32	1	**316-0468**	1	TURBOCHARGER	

C - CHANGE FROM PREVIOUS TYPE
M - METRIC PART
R - REMANUFACTURED PART MAY BE AVAILABLE

318-0333 **TURBOCHARGER GP** (contd.) **i06863524**

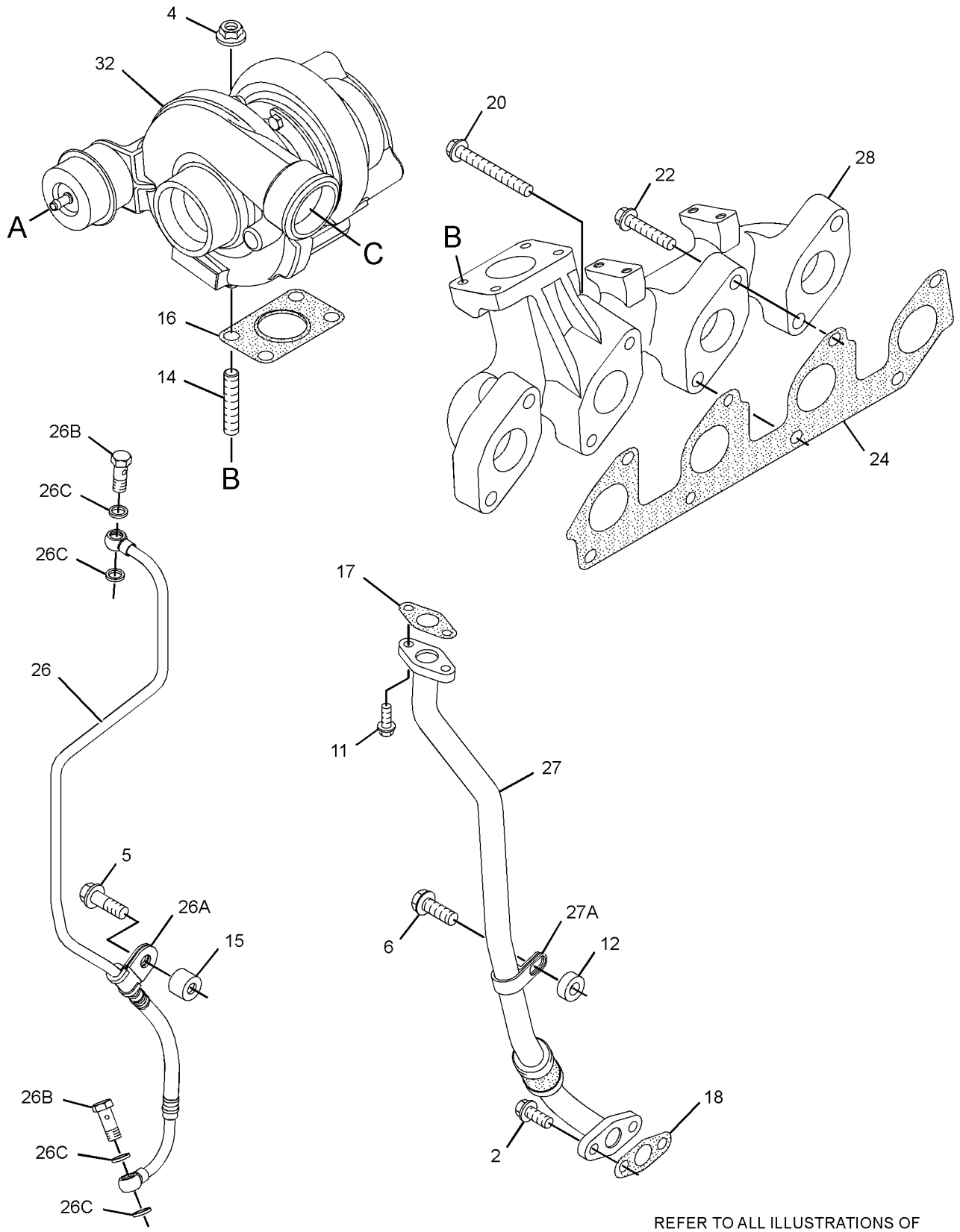

REFER TO ALL ILLUSTRATIONS OF
THIS GROUP FOR AUXILIARY VIEWS

GRAPHIC #1

g03112725

318-0333 **TURBOCHARGER GP (**contd.**)** **i06863524**

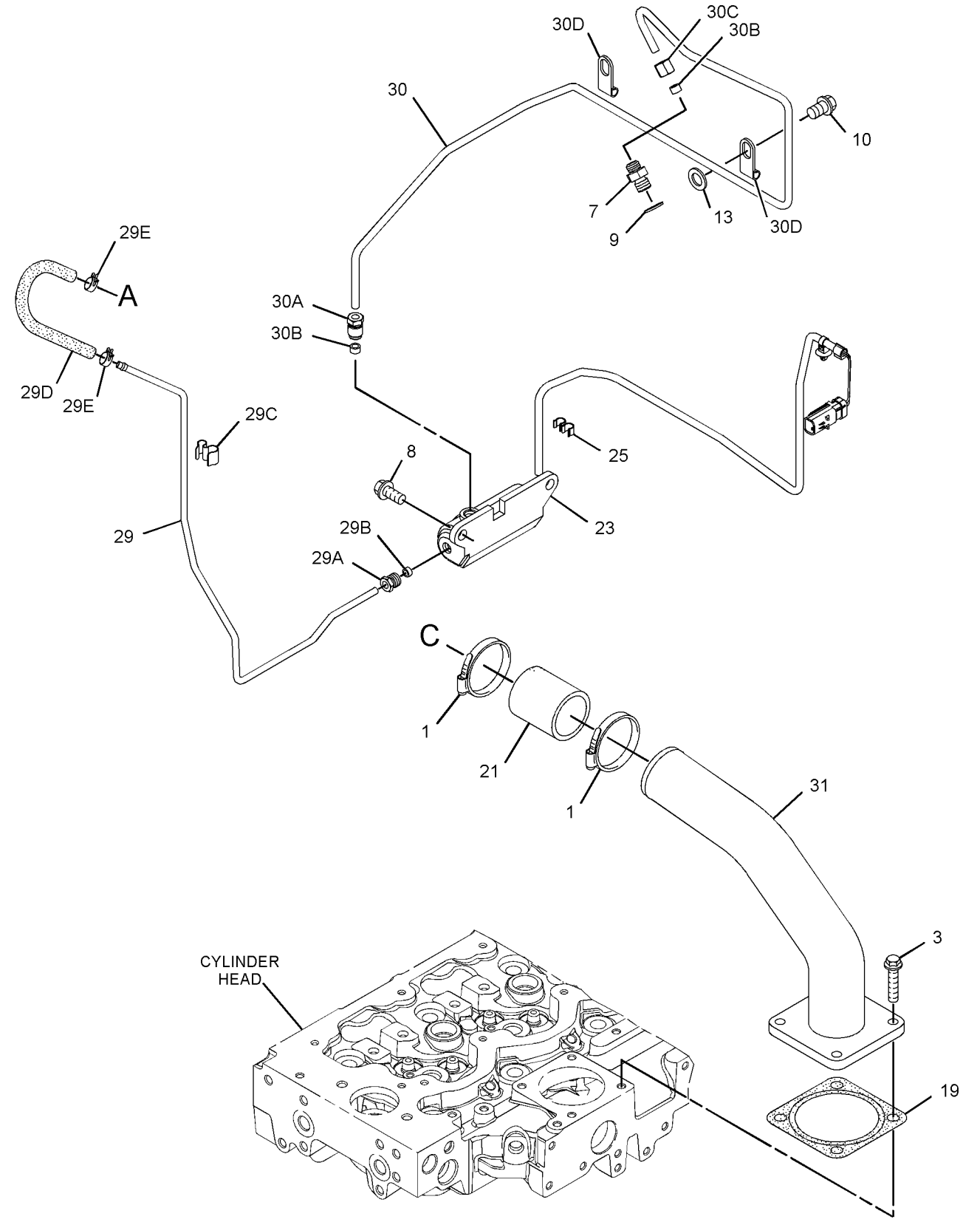

GRAPHIC #2 <END> g03029603

322-2604 TURBOCHARGER GP

TYPE 1

SMCS-1052, 1053 **i03312339**

NOTE	REF NO	GRAPHIC REF	PART NUMBER	QTY	PART NAME 1 2 3 4 5 6 (PRODUCT LEVEL)	SEE PAGE
M	1	1	**6I-0217**	2	BOLT (M8X1.25X20-MM)	
M	2	2	**6I-0260**	4	BOLT (M8X1.25X25-MM)	
M	3	1	**6I-0563**	7	NUT (M10X1.5-THD)	
M	4	1	**6I-0593**	2	BOLT (M10X1.5X30-MM)	
M	5	1	**6I-0654**	3	BOLT (M10X1.5X25-MM)	
	6	2	**6I-0817**	1	ADAPTER	
M	7	2	**6I-4200**	2	BOLT (M10X1.5X16-MM)	
	8	2	**9Y-9381**	1	WASHER-HARD	
M	9	2	**100-4830**	1	BOLT (M10X1.5X20-MM)	
M	10	1	**106-8916**	2	BOLT (M6X16-MM)	
	11	2	**127-8165**	1	SPACER	
	12	2	**266-7092**	2	CLAMP-HOSE	
M	13	1	**147-5553**	7	STUD (M10X1.5X40-MM)	
	14	1	**194-5390**	1	GASKET-MANIFOLD	
	15	1	**225-8530**	1	GASKET (ELBOW)	
	16	1	**225-8533**	1	GASKET (TURBOCHARGER)	
	17	1	**225-8534**	1	GASKET (TURBOCHARGER)	
	18	1	**227-4562**	1	ELBOW-EXHAUST	
	19	1	**232-6189**	1	TUBE AS	
	20	2	**234-3029**	1	HOSE	
	21	2	**234-3030**	1	GASKET-INLET	
	22	2	**278-0310**	1	SOLENOID AS (WASTEGATE)	
M	23	1	**278-0361**	8	BOLT (M10X1.5X45-MM)	
	24	1	**298-4570**	1	GASKET-EXHAUST MANIFOLD	
	25	2	**298-4576**	1	CLIP	
	26	1	**301-8255**	1	TUBE AS	
	26A	1	**225-8524**	2	BOLT-SPECIAL	
	26B	1	**225-8526**	4	WASHER (10.4X13.75X1.37-MM THK)	
	27	1	**301-8256**	1	MANIFOLD-EXHAUST	
	28	1	**302-0581**	1	ADAPTER-EXHAUST	
	29	2	**303-2116**	5	CLIP	
	30	2	**326-4508**	1	TUBE AS	
	30A	1	**032-8047**	2	FERRULE	
	30B	1	**032-8191**	1	NUT	
	30C	1	**035-8014**	1	NUT	
	31	2	**303-5792**	1	BRACKET	
	32	2	**305-0657**	1	TUBE (CROSSOVER)	
	33	1	**307-2805**	1	BRACKET	
	34	2	**311-7458**	1	TUBE AS	
	34A	2	**032-8047**	1	FERRULE	
	34B	2	**032-8191**	1	NUT	
	34C	2	**298-4576**	2	CLIP	
	34D	2	**300-6520**	1	HOSE AS	
	34E	2	**107-2348**	2	CLIP	
	35	1	**316-0562**	1	TURBOCHARGER	

M - METRIC PART

322-2604 **TURBOCHARGER GP (**contd.**)** **i03312339**

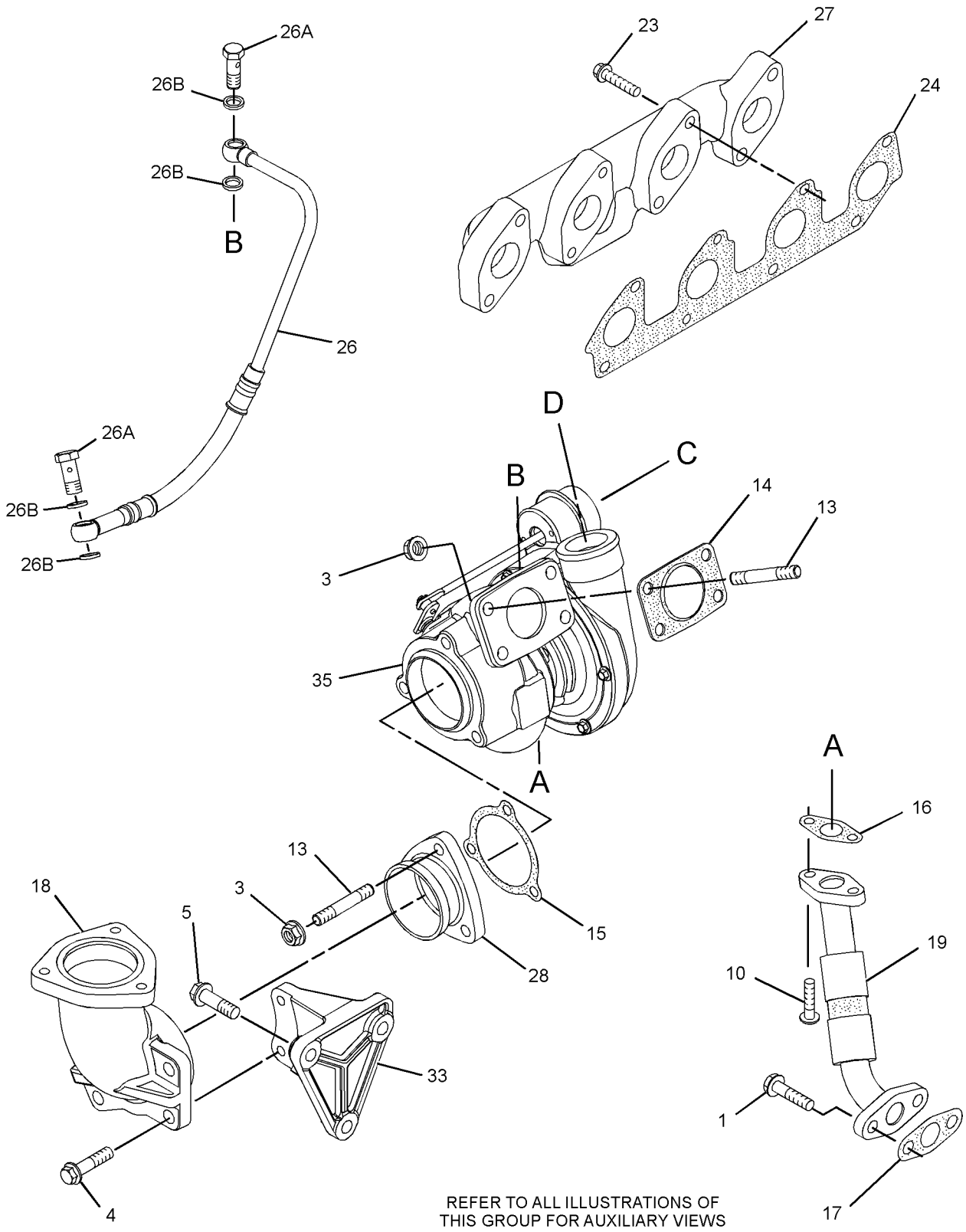

REFER TO ALL ILLUSTRATIONS OF
THIS GROUP FOR AUXILIARY VIEWS

GRAPHIC #1

g01675166

322-2604 **TURBOCHARGER GP (**contd.**)** **i03312339**

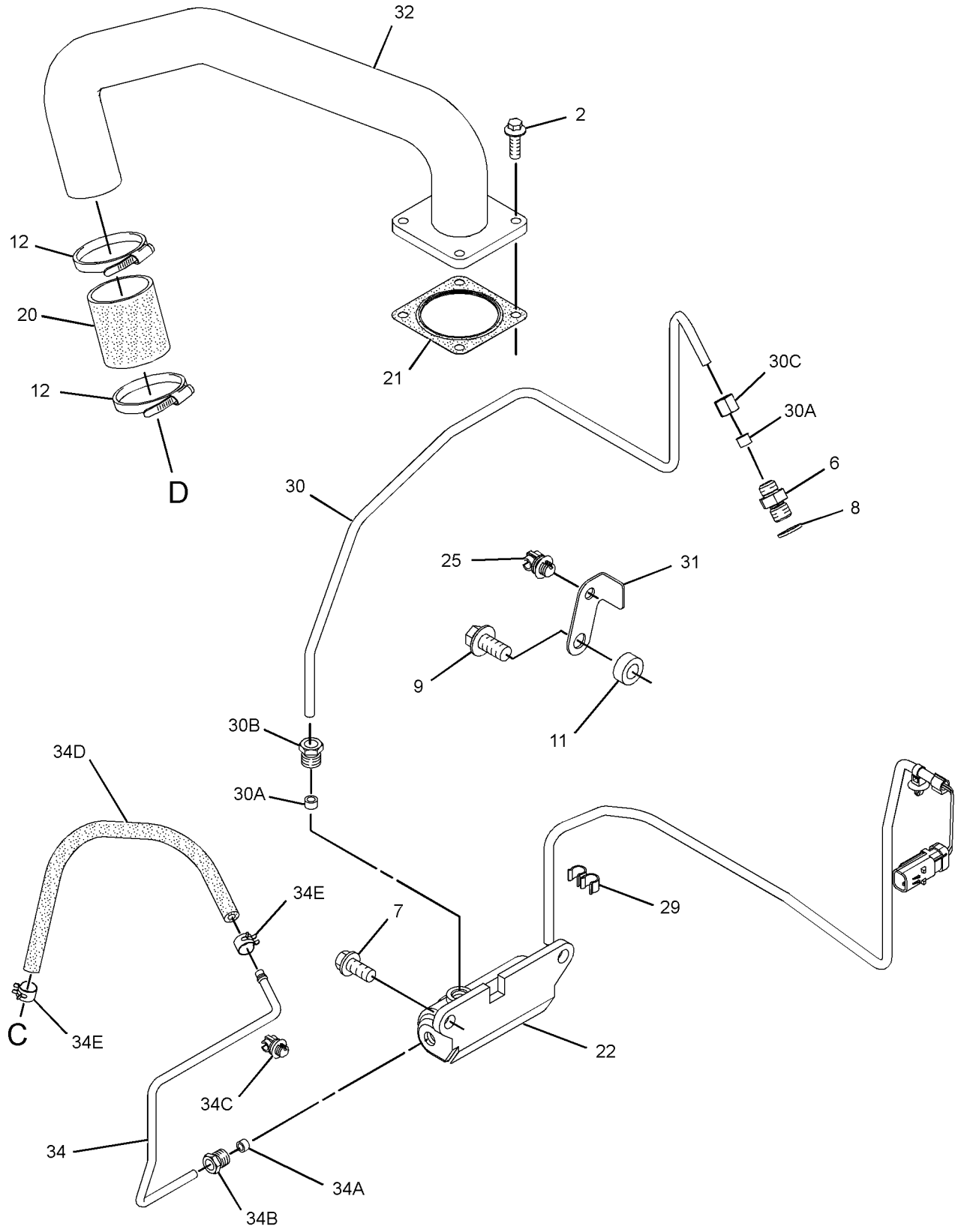

GRAPHIC #2 <END> g01675167

322-2604 TURBOCHARGER GP

TYPE 2

SMCS-1052, 1053 **i05939636**

NOTE	REF NO	GRAPHIC REF	PART NUMBER	QTY	PART NAME 1 2 3 4 5 6 (PRODUCT LEVEL)	SEE PAGE
M	1	1	**6I-0217**	2	BOLT (M8X1.25X20-MM)	
M	2	2	**6I-0260**	4	BOLT (M8X1.25X25-MM)	
M	3	1	**6I-0563**	7	NUT (M10X1.5-THD)	
M	4	1	**6I-0593**	2	BOLT (M10X1.5X30-MM)	
M	5	1	**6I-0654**	3	BOLT (M10X1.5X25-MM)	
	6	2	**6I-0817**	1	ADAPTER	
CM	7	2	**6I-4200**	3	BOLT (M10X1.5X16-MM)	
	8	2	**9Y-9381**	1	WASHER-HARD	
M	10	1	**106-8916**	2	BOLT (M6X16-MM)	
	12	2	**266-7092**	2	CLAMP-HOSE	
	13	1	**361-7519**	7	ROD-THREADED	
	14	1	**194-5390**	1	GASKET-MANIFOLD	
	15	1	**225-8530**	1	GASKET (ELBOW)	
	16	1	**353-3477**	1	GASKET-TURBOCHARGER	
	17	1	**353-3478**	1	GASKET-TURBOCHARGER	
	18	1	**227-4562**	1	ELBOW-EXHAUST	
	19	1	**232-6189**	1	TUBE AS	
	20	2	**234-3029**	1	HOSE	
	21	2	**234-3030**	1	GASKET-INLET	
	22	2	**278-0310**	1	SOLENOID AS (WASTEGATE)	
M	23	1	**278-0361**	8	BOLT (M10X1.5X45-MM)	
	24	1	**298-4570**	1	GASKET-EXHAUST MANIFOLD	
	25	2	**298-4576**	1	CLIP	
	26	1	**301-8255**	1	TUBE AS	
	26A	1	**225-8524**	2	BOLT-SPECIAL	
	26B	1	**225-8526**	4	WASHER (10.4X13.75X1.37-MM THK)	
	27	1	**301-8256**	1	MANIFOLD-EXHAUST	
	28	1	**302-0581**	1	ADAPTER-EXHAUST	
	29	2	**303-2116**	5	CLIP	
	30	2	**326-4508**	1	TUBE AS	
	30A	2	**032-8047**	2	FERRULE	
	30B	2	**032-8191**	1	NUT	
	30C	2	**035-8014**	1	NUT	
C	31	2	**377-6869**	1	BRACKET	
	32	2	**305-0657**	1	TUBE (CROSSOVER)	
	33	1	**307-2805**	1	BRACKET	
	34	2	**311-7458**	1	TUBE AS	
	34A	2	**032-8047**	1	FERRULE	
	34B	2	**032-8191**	1	NUT	
	34C	2	**298-4576**	2	CLIP	
	34D	2	**300-6520**	1	HOSE AS	
	34E	2	**107-2348**	2	CLIP	
	35	1	**316-0562**	1	TURBOCHARGER	

C - CHANGE FROM PREVIOUS TYPE
M - METRIC PART

322-2604 **TURBOCHARGER GP (**contd.**)** **i05939636**

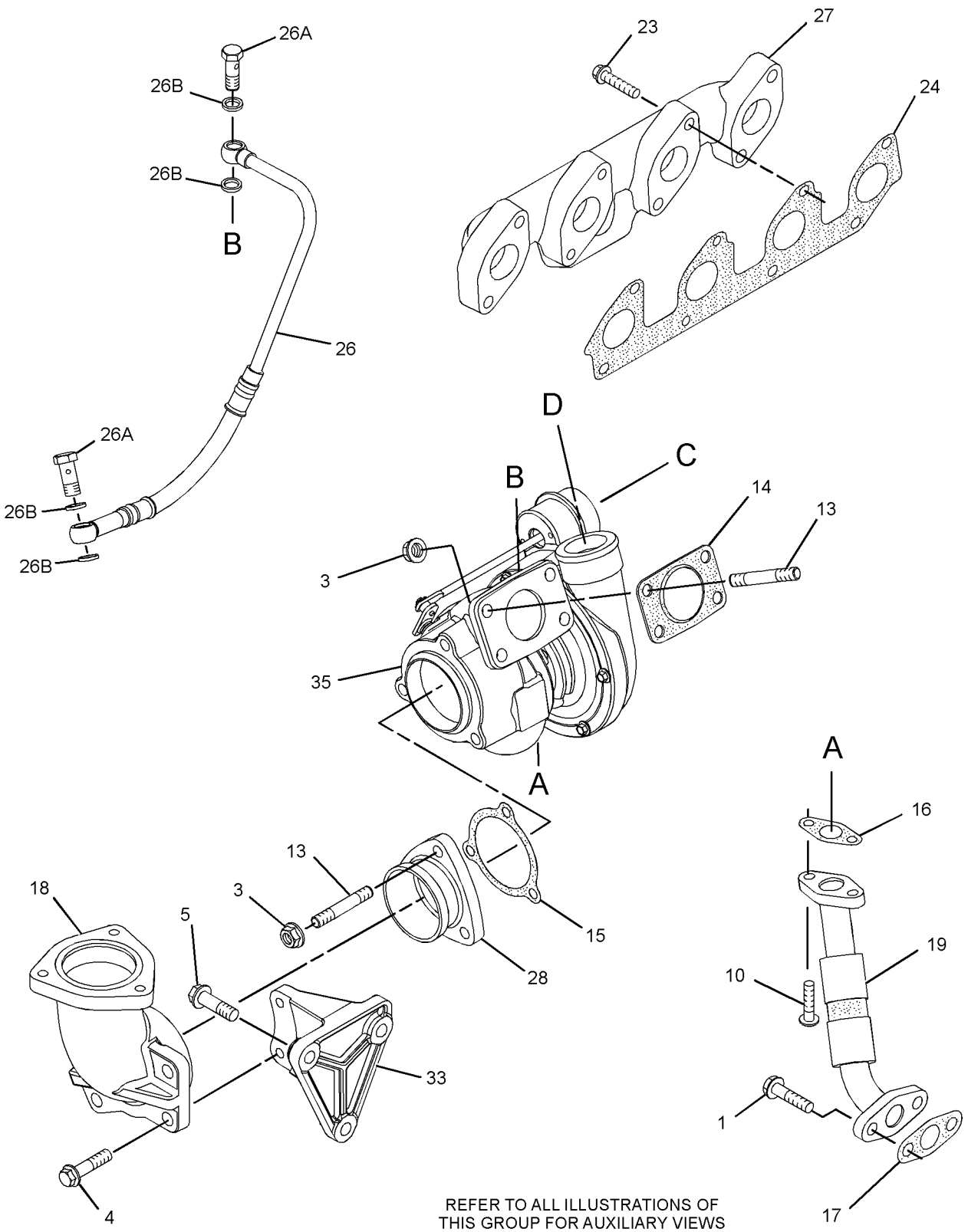

REFER TO ALL ILLUSTRATIONS OF
THIS GROUP FOR AUXILIARY VIEWS

GRAPHIC #1 g01675166

322-2604 **TURBOCHARGER GP (**contd.**)** **i05939636**

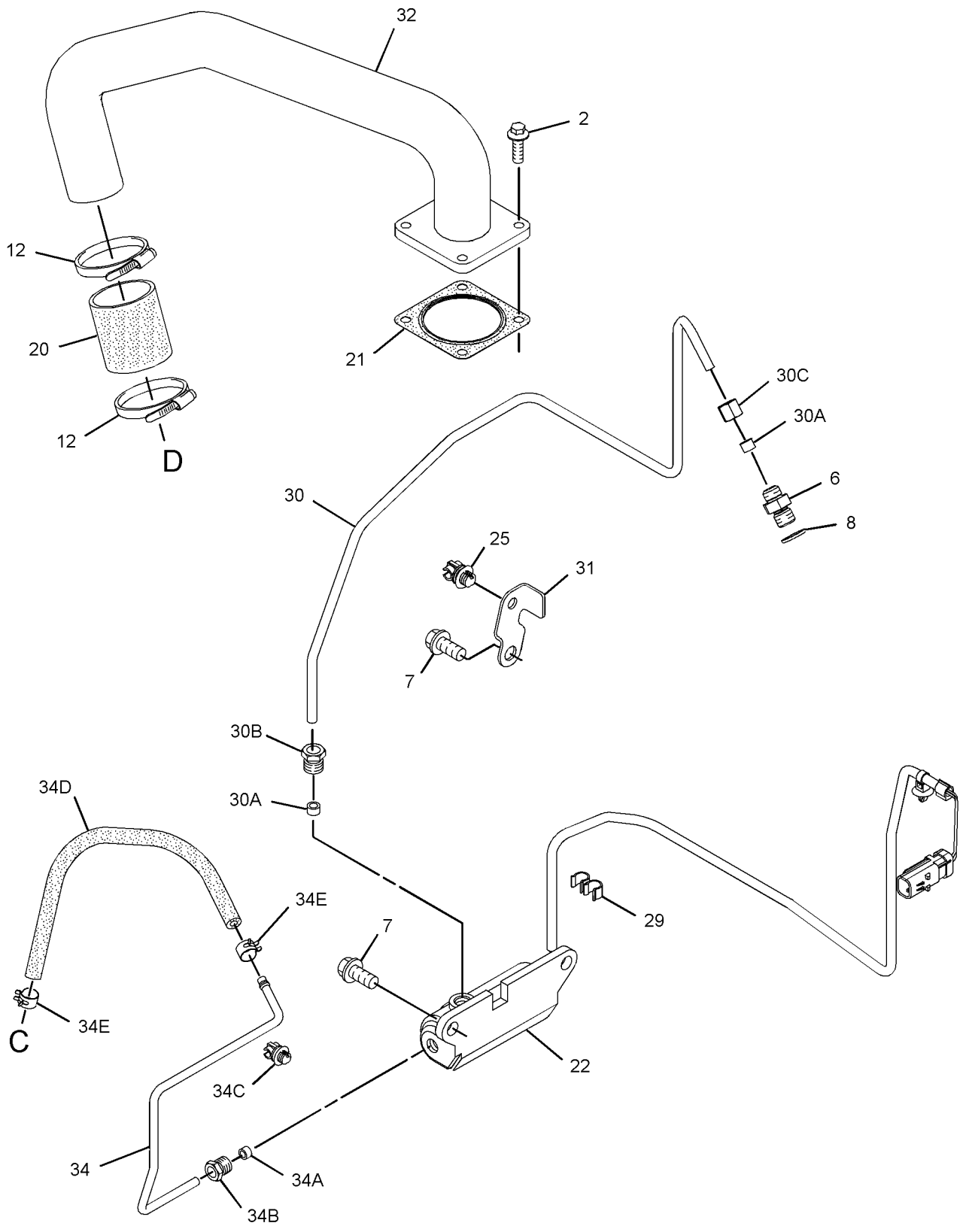

GRAPHIC #2 <END> g03121636

325-0585 TURBOCHARGER GP

TYPE 1

SMCS-1052, 1053 **i03405545**

NOTE	REF NO	GRAPHIC REF	PART NUMBER	QTY	PART NAME 1 2 3 4 5 6 (PRODUCT LEVEL)	SEE PAGE
M	1	1	**6I-0217**	2	BOLT (M8X1.25X20-MM)	
M	2	2	**6I-0260**	4	BOLT (M8X1.25X25-MM)	
M	3	1	**6I-0563**	7	NUT (M10X1.5-THD)	
M	4	1	**6I-0593**	2	BOLT (M10X1.5X30-MM)	
M	5	1	**6I-0654**	3	BOLT (M10X1.5X25-MM)	
	6	2	**6I-0817**	1	ADAPTER	
M	7	2	**6I-4200**	2	BOLT (M10X1.5X16-MM)	
	8	2	**9Y-9381**	1	WASHER-HARD	
M	9	2	**100-4830**	1	BOLT (M10X1.5X20-MM)	
M	10	1	**106-8916**	2	BOLT (M6X16-MM)	
	11	2	**127-8165**	1	SPACER	
	12	2	**266-7092**	2	CLAMP-HOSE	
M	13	1	**147-5553**	7	STUD (M10X1.5X40-MM)	
	14	1	**194-5390**	1	GASKET-MANIFOLD	
	15	1	**225-8530**	1	GASKET	
	16	1	**225-8533**	1	GASKET	
	17	1	**225-8534**	1	GASKET	
	18	1	**227-4562**	1	ELBOW-EXHAUST	
	19	1	**232-6189**	1	TUBE AS	
	20	2	**234-3029**	1	HOSE	
	21	2	**234-3030**	1	GASKET-INLET	
M	22	1	**278-0361**	8	BOLT (M10X1.5X45-MM)	
	23	2	**294-7375**	1	SOLENOID (WASTEGATE)	
	24	1	**298-4570**	1	GASKET-EXHAUST MANIFOLD	
	25	2	**298-4576**	1	CLIP	
	26	1	**301-8255**	1	TUBE AS	
	26A	1	**225-8524**	2	BOLT-SPECIAL	
	26B	1	**225-8526**	4	WASHER (10.4X13.75X1.37-MM THK)	
	27	1	**301-8256**	1	MANIFOLD-EXHAUST	
	28	1	**302-0581**	1	ADAPTER-EXHAUST	
	29	2	**303-2116**	5	CLIP	
	30	2	**303-5792**	1	BRACKET	
	31	2	**305-0657**	1	TUBE (CROSSOVER)	
	32	1	**307-2805**	1	BRACKET	
	33	2	**311-7458**	1	TUBE AS	
	33A	2	**032-8047**	1	FERRULE	
	33B	2	**032-8191**	1	NUT	
	33C	2	**298-4576**	2	CLIP	
	33D	2	**300-6520**	1	HOSE AS	
	33E	2	**107-2348**	2	CLIP	
	34	1	**316-0562**	1	TURBOCHARGER	
	35	2	**326-4508**	1	TUBE AS	
	35A	2	**032-8047**	2	FERRULE	
	35B	2	**032-8191**	1	NUT	
	35C	2	**035-8014**	1	NUT	

M - METRIC PART

325-0585 **TURBOCHARGER GP (**contd.**)** **i03405545**

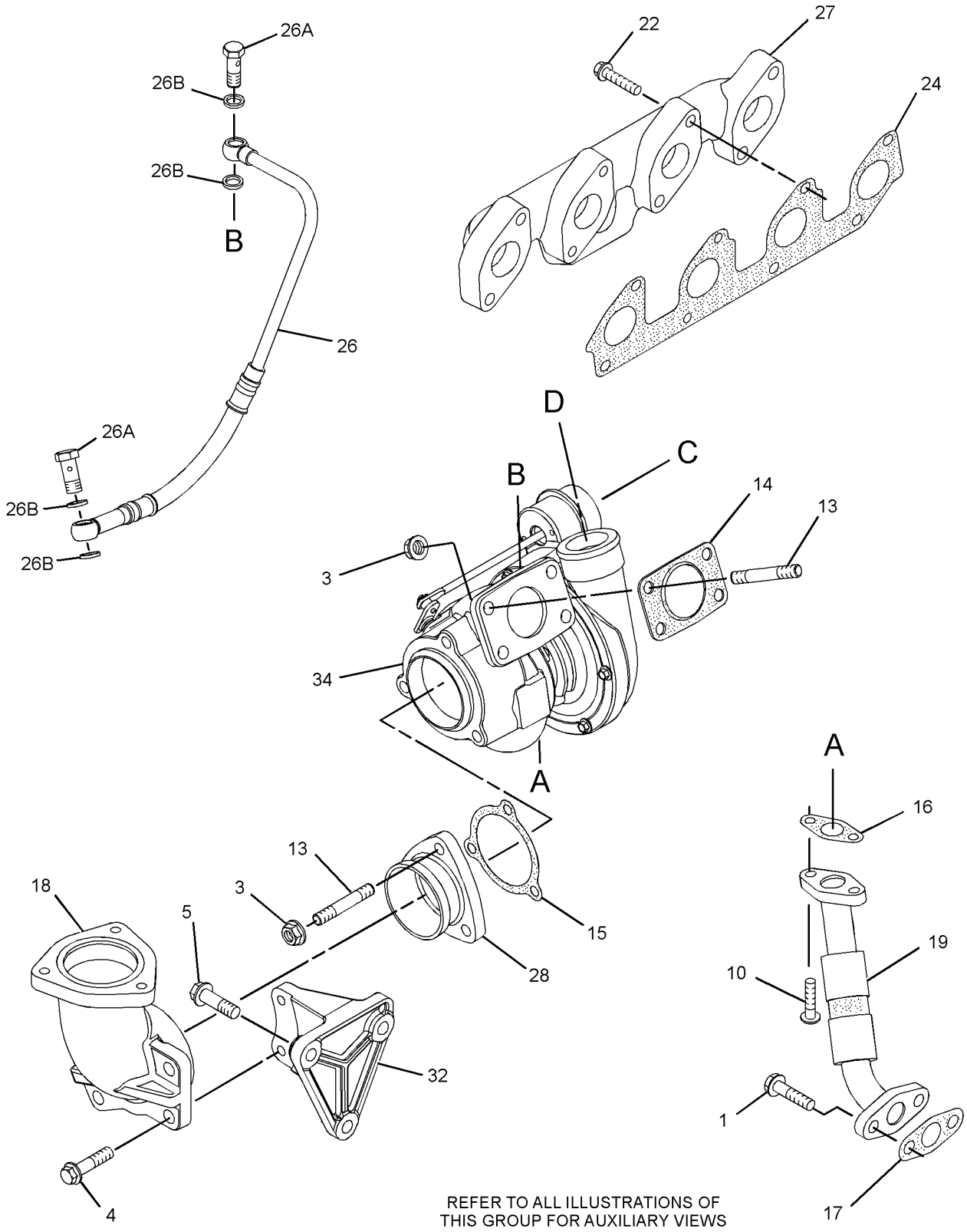

GRAPHIC #1 g01670922

325-0585 **TURBOCHARGER GP (**contd.**)** **i03405545**

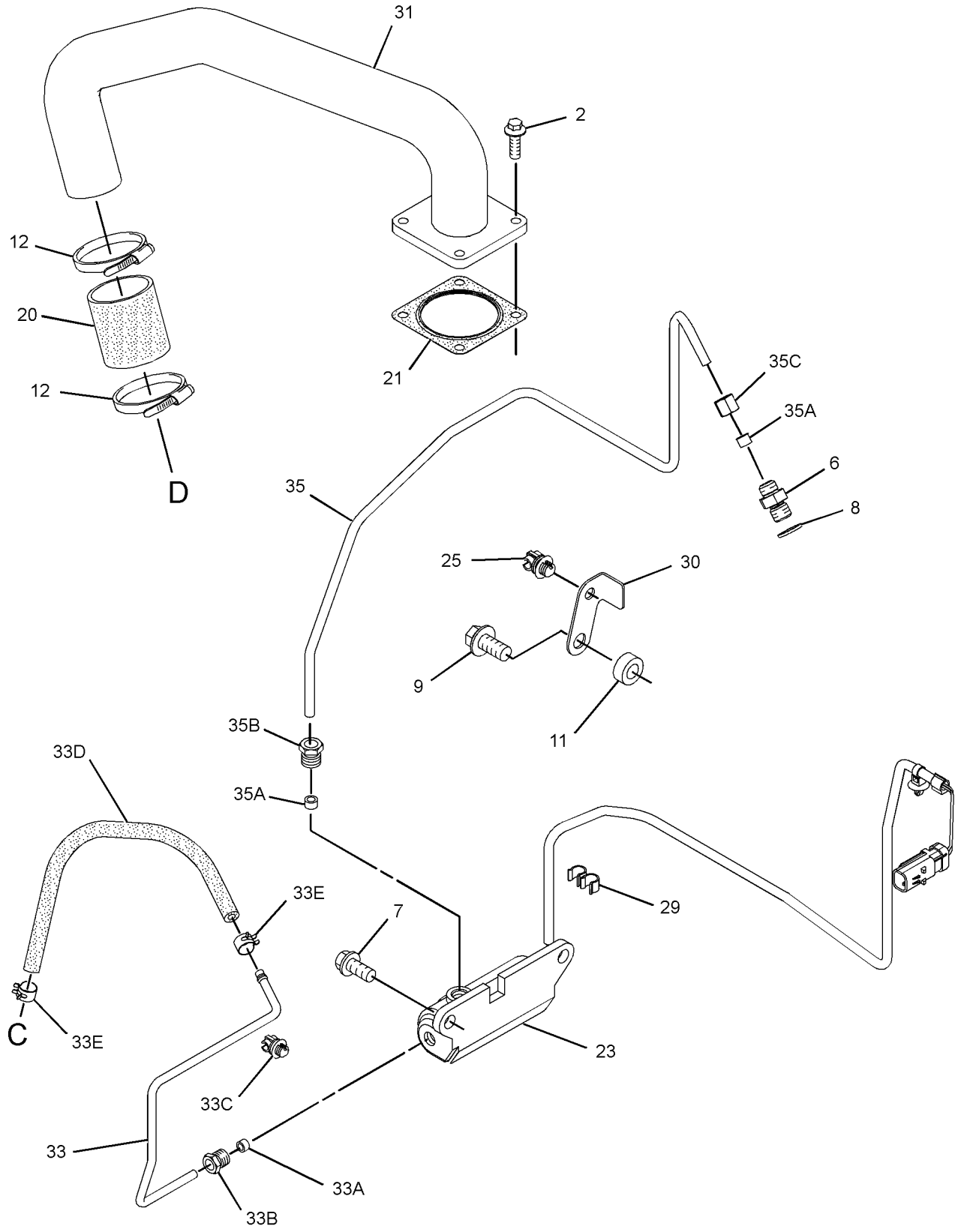

GRAPHIC #2 <END> g01670924

325-0585 TURBOCHARGER GP

TYPE 2

SMCS-1052, 1053 **i07023932**

NOTE	REF NO	GRAPHIC REF	PART NUMBER	QTY	PART NAME 1 2 3 4 5 6 (PRODUCT LEVEL)	SEE PAGE
M	1	1	**6I-0217**	2	BOLT (M8X1.25X20-MM)	
M	2	2	**6I-0260**	4	BOLT (M8X1.25X25-MM)	
M	3	1	**6I-0563**	7	NUT (M10X1.5-THD)	
M	4	1	**6I-0593**	2	BOLT (M10X1.5X30-MM)	
M	5	1	**6I-0654**	3	BOLT (M10X1.5X25-MM)	
	6	2	**6I-0817**	1	ADAPTER	
CM	7	2	**6I-4200**	3	BOLT (M10X1.5X16-MM)	
	8	2	**9Y-9381**	1	WASHER-HARD	
M	10	1	**106-8916**	2	BOLT (M6X16-MM)	
	12	2	**266-7092**	2	CLAMP-HOSE	
	13	1	**361-7519**	7	ROD-THREADED	
	14	1	**194-5390**	1	GASKET-MANIFOLD	
	15	1	**225-8530**	1	GASKET	
	16	1	**353-3477**	1	GASKET-TURBOCHARGER	
	17	1	**353-3478**	1	GASKET-TURBOCHARGER	
	18	1	**227-4562**	1	ELBOW-EXHAUST	
	19	1	**507-5019**	1	LINE AS-OIL	
	19A	1	**269-3086**	2	CLAMP-BAND	
	20	2	**234-3029**	1	HOSE	
	21	2	**492-3310**	1	GASKET	
M	22	1	**278-0361**	8	BOLT (M10X1.5X45-MM)	
	23	2	**294-7375**	1	SOLENOID (WASTEGATE)	
	24	1	**298-4570**	1	GASKET-EXHAUST MANIFOLD	
	25	2	**298-4576**	1	CLIP	
	26	1	**301-8255**	1	TUBE AS	
	26A	1	**225-8524**	2	BOLT-SPECIAL	
	26B	1	**225-8526**	4	WASHER (10.4X13.75X1.37-MM THK)	
	27	1	**301-8256**	1	MANIFOLD-EXHAUST	
	28	1	**302-0581**	1	ADAPTER-EXHAUST	
	29	2	**303-2116**	5	CLIP	
C	30	2	**377-6869**	1	BRACKET	
	31	2	**305-0657**	1	TUBE (CROSSOVER)	
	32	1	**307-2805**	1	BRACKET	
	33	2	**311-7458**	1	TUBE AS	
	33A	2	**298-4576**	2	CLIP	
	33B	2	**300-6520**	1	HOSE AS	
	33C	2	**107-2348**	2	CLIP	
	34	1	**316-0562**	1	TURBOCHARGER	
	35	2	**326-4508**	1	TUBE AS	

C - CHANGE FROM PREVIOUS TYPE
M - METRIC PART

325-0585 **TURBOCHARGER GP (**contd.**)** **i07023932**

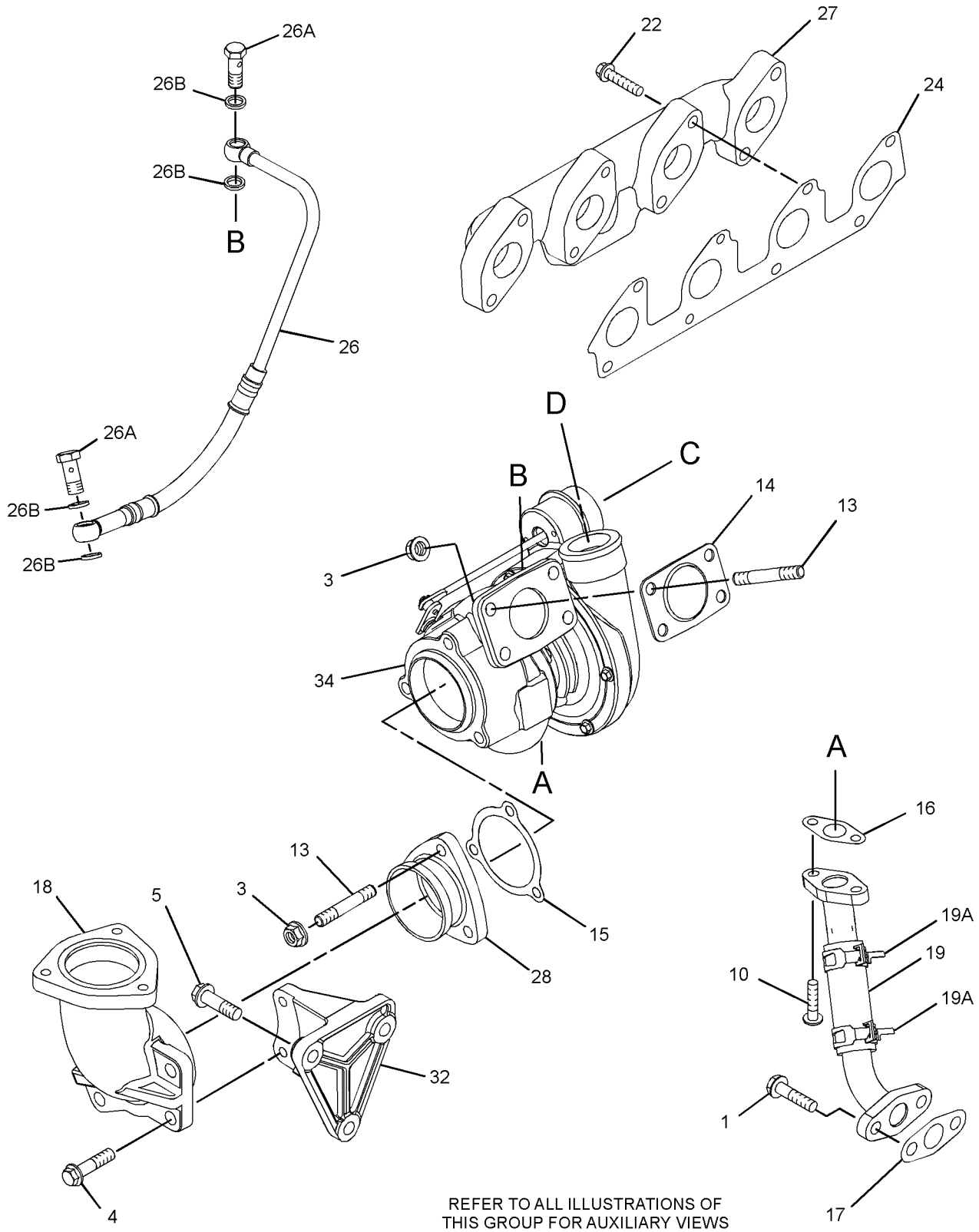

REFER TO ALL ILLUSTRATIONS OF
THIS GROUP FOR AUXILIARY VIEWS

GRAPHIC #1 g06208652

325-0585 **TURBOCHARGER GP (**contd.**)** **i07023932**

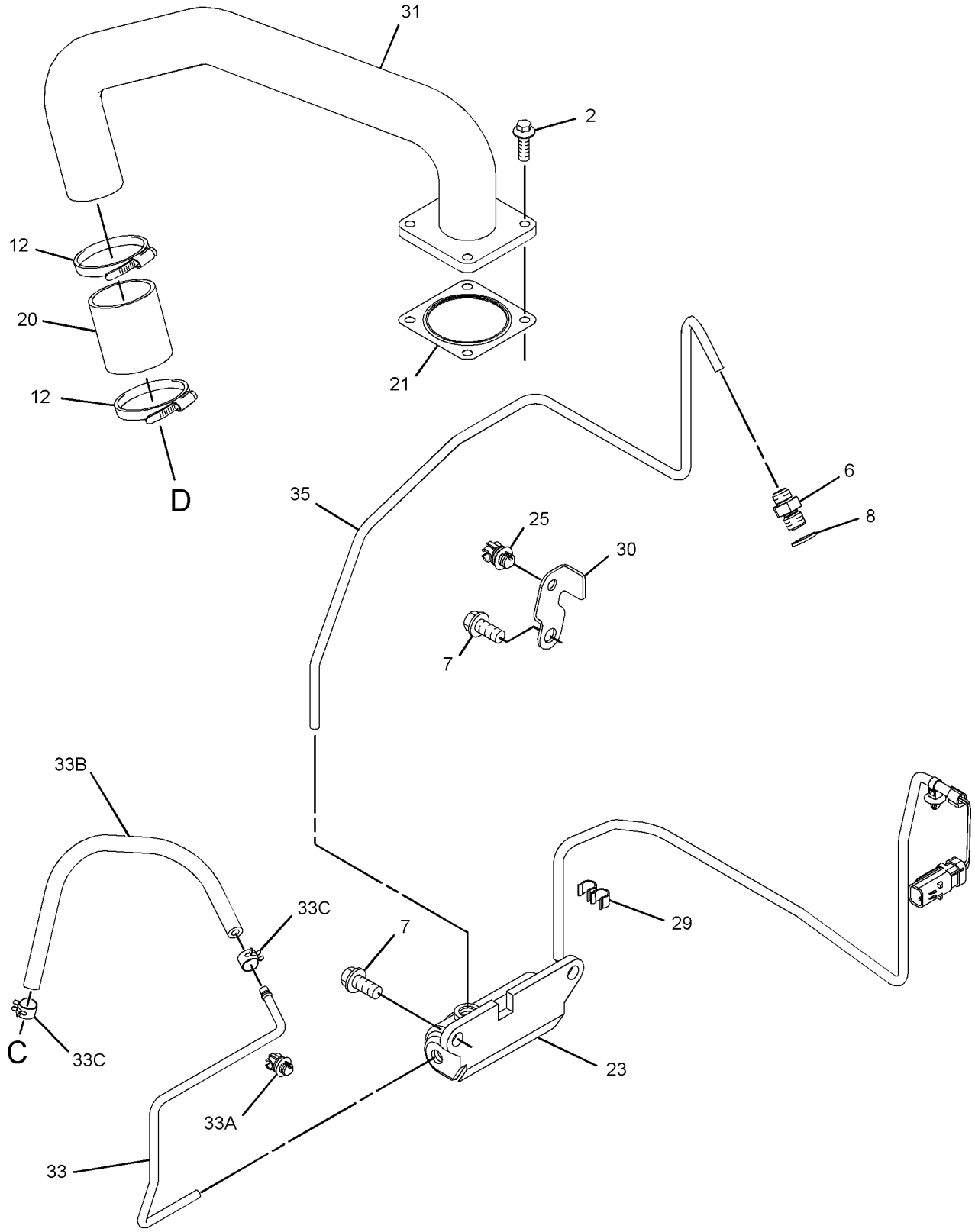

GRAPHIC #2 <END> g06208653

325-1069 TURBOCHARGER GP

S/N: 4442313-UP

PART OF 435-1692 ENGINE AR-COMPLETE, 435-1685 ENGINE AR-PRIMARY

SMCS-1052, 1053

i04367284

NOTE	REF NO	GRAPHIC REF	PART NUMBER	QTY	PART NAME 1 2 3 4 5 6 (PRODUCT LEVEL)	SEE PAGE
M	1	1	**6I-0217**	2	BOLT (M8X1.25X20-MM)	
M	2	1	**6I-0563**	7	NUT (M10X1.5-THD)	
M	3	1	**6I-0593**	2	BOLT (M10X1.5X30-MM)	
M	4	1,2	**6I-0654**	5	BOLT (M10X1.5X25-MM)	
	5	2	**6I-0817**	1	ADAPTER	
	6	2	**9Y-9381**	1	WASHER-HARD	
M	7	2	**100-4830**	1	BOLT (M10X1.5X20-MM)	
M	8	1	**106-8916**	2	BOLT (M6X16-MM)	
	9	2	**127-8165**	1	SPACER	
M	10	1	**147-5553**	7	STUD (M10X1.5X40-MM)	
	11	1	**194-5390**	1	GASKET-MANIFOLD	
	12	1	**225-8530**	1	GASKET	
	13	1	**225-8533**	1	GASKET	
	14	1	**225-8534**	1	GASKET	
	15	1	**227-4562**	1	ELBOW-EXHAUST	
	16	1	**238-8292**	1	BOLT-FLANGE HEAD	
M	17	1	**278-0361**	7	BOLT (M10X1.5X45-MM)	
	18	2	**294-7375**	1	SOLENOID (WASTEGATE)	
	19	1	**298-4566**	1	TUBE AS	
	19A	1	**225-8524**	2	BOLT-SPECIAL	
	19B	1	**225-8526**	4	WASHER (10.4X13.75X1.37-MM THK)	
	20	1	**298-4568**	1	TUBE AS	
	21	1	**298-4569**	1	MANIFOLD-EXHAUST	
	22	1	**298-4570**	1	GASKET-EXHAUST MANIFOLD	
	23	2	**298-4573**	2	BOLT	
	24	2	**298-4576**	1	CLIP	
	25	1	**302-0581**	1	ADAPTER-EXHAUST	
	26	2	**303-2116**	6	CLIP	
	27	2	**303-5792**	1	BRACKET	
	28	2	**310-7533**	1	BRACKET	
	29	2	**310-7536**	1	TUBE AS	
	29A	2	**4B-8774**	1	NUT-FLARED	
	29B	2	**032-8047**	1	FERRULE	
	29C	2	**298-4576**	1	CLIP	
	29D	2	**300-6520**	1	HOSE AS	
	29E	2	**107-2348**	2	CLIP	
	30	1	**314-3723**	1	BRACKET	
R	31	1	**316-0477**	1	TURBOCHARGER	
	32	2	**324-6530**	1	TUBE AS-TURBOCHARGER	
	32A	2	**4B-8774**	1	NUT-FLARED	
	32B	2	**032-8047**	2	FERRULE	
	32C	2	**035-8014**	1	NUT	

M - METRIC PART
R - REMANUFACTURED PART MAY BE AVAILABLE

325-1069 **TURBOCHARGER GP (**contd.**)** **i04367284**

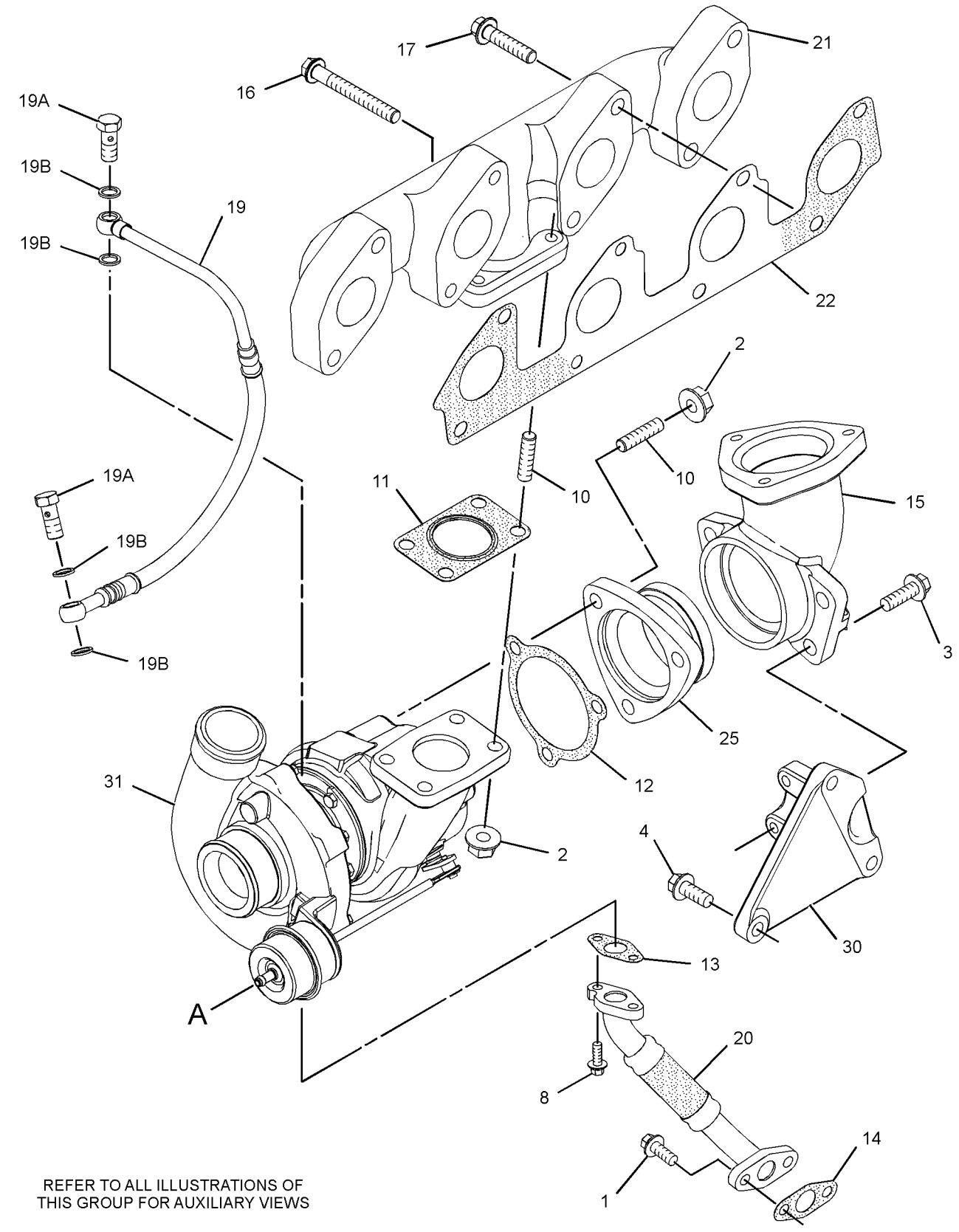

REFER TO ALL ILLUSTRATIONS OF
THIS GROUP FOR AUXILIARY VIEWS

GRAPHIC #1 g01682997

325-1069 **TURBOCHARGER GP (**contd.**)** **i04367284**

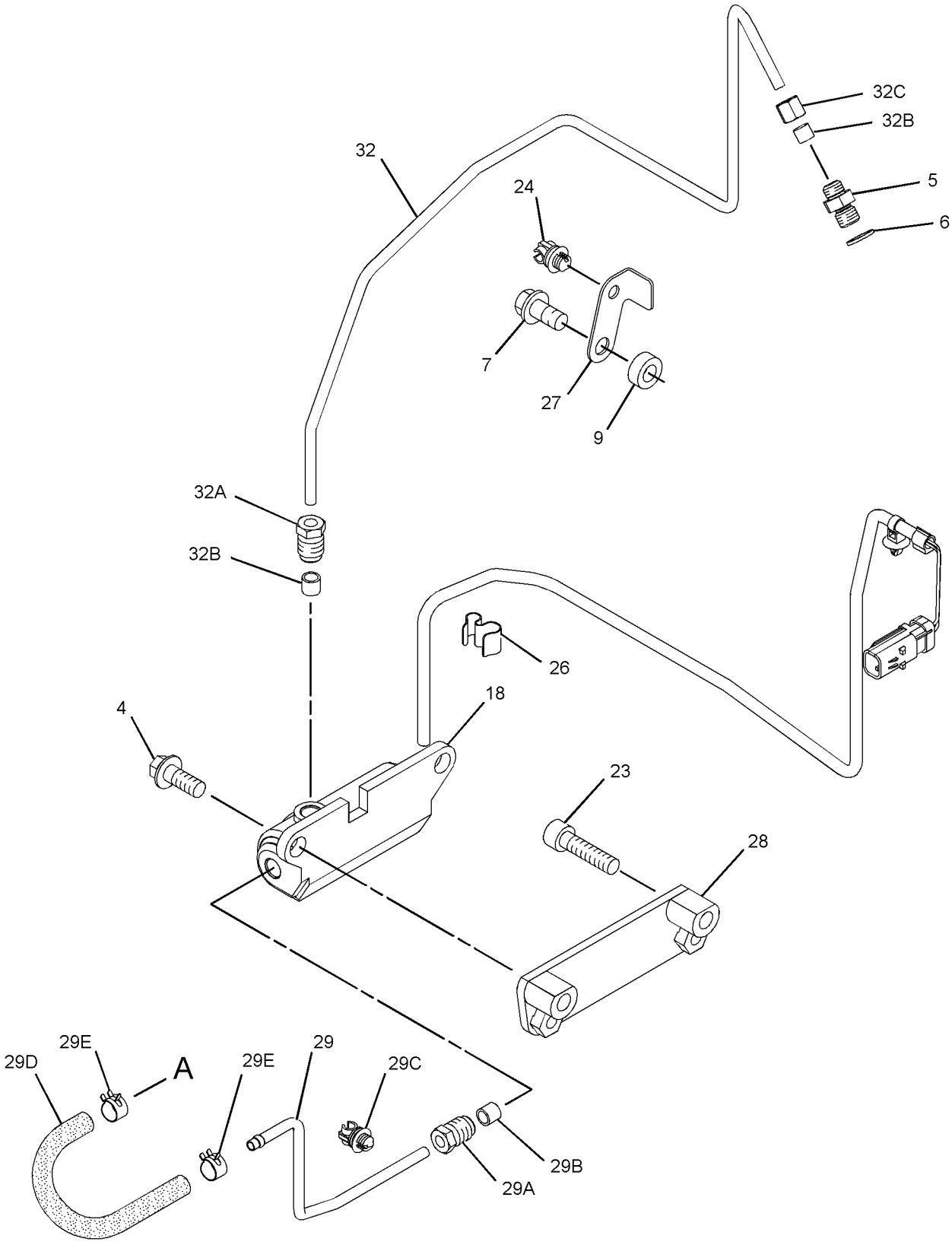

GRAPHIC #2 <END> g01682998

325-1069 TURBOCHARGER GP

PART OF 435-1692 ENGINE AR-COMPLETE, 435-1685, 540-0570 ENGINE AR-PRIMARY

SMCS-1052, 1053 **i06943386**

NOTE	REF NO	GRAPHIC REF	PART NUMBER	QTY	PART NAME 1 2 3 4 5 6 (PRODUCT LEVEL)	SEE PAGE
M	1	2	**6I-0217**	2	BOLT (M8X1.25X20-MM)	
M	2	2	**6I-0563**	7	NUT (M10X1.5-THD)	
M	3	2	**6I-0593**	2	BOLT (M10X1.5X30-MM)	
M	4	1,2	**6I-0654**	5	BOLT (M10X1.5X25-MM)	
	5	1	**6I-0817**	1	ADAPTER	
	6	1	**9Y-9381**	1	WASHER-HARD	
CM	7	1	**6I-4200**	1	BOLT (M10X1.5X16-MM)	
M	8	2	**106-8916**	2	BOLT (M6X16-MM)	
	10	2	**361-7519**	7	ROD-THREADED	
	11	2	**194-5390**	1	GASKET-MANIFOLD	
	12	2	**225-8530**	1	GASKET	
	13	2	**353-3477**	1	GASKET-TURBOCHARGER	
	14	2	**353-3478**	1	GASKET-TURBOCHARGER	
	15	2	**227-4562**	1	ELBOW-EXHAUST	
	16	2	**238-8292**	1	BOLT-FLANGE HEAD	
M	17	2	**278-0361**	7	BOLT (M10X1.5X45-MM)	
	18	1	**294-7375**	1	SOLENOID (WASTEGATE)	
	19	2	**298-4566**	1	TUBE AS	
	19A	2	**225-8524**	2	BOLT-SPECIAL	
	19B	2	**225-8526**	4	WASHER (10.4X13.75X1.37-MM THK)	
	20	2	**507-5015**	1	LINE AS	
	20A	2	**269-3086**	2	CLAMP-BAND	
	21	2	**298-4569**	1	MANIFOLD-EXHAUST	
	22	2	**298-4570**	1	GASKET-EXHAUST MANIFOLD	
M	23	1	**101-7398**	2	BOLT-SOCKET HEAD (M10X1.5X40-MM)	
	24	1	**298-4576**	1	CLIP	
	25	2	**302-0581**	1	ADAPTER-EXHAUST	
	26	1	**303-2116**	6	CLIP	
C	27	1	**377-6869**	1	BRACKET	
	28	1	**310-7533**	1	BRACKET	
	29	1	**310-7536**	1	TUBE AS	
	29A	1	**4B-8774**	1	NUT-FLARED	
	29B	1	**032-8047**	1	FERRULE	
	29C	1	**298-4576**	1	CLIP	
	29D	1	**300-6520**	1	HOSE AS	
	29E	1	**107-2348**	2	CLIP	
	30	2	**314-3723**	1	BRACKET	
R	31	2	**316-0477**	1	TURBOCHARGER	
	32	1	**324-6530**	1	TUBE AS-TURBOCHARGER	
	32A	1	**4B-8774**	1	NUT-FLARED	
	32B	1	**032-8047**	2	FERRULE	
	32C	1	**035-8014**	1	NUT	

C - CHANGE FROM PREVIOUS TYPE
M - METRIC PART
R - REMANUFACTURED PART MAY BE AVAILABLE

325-1069 **TURBOCHARGER GP (**contd.**)** **i06943386**

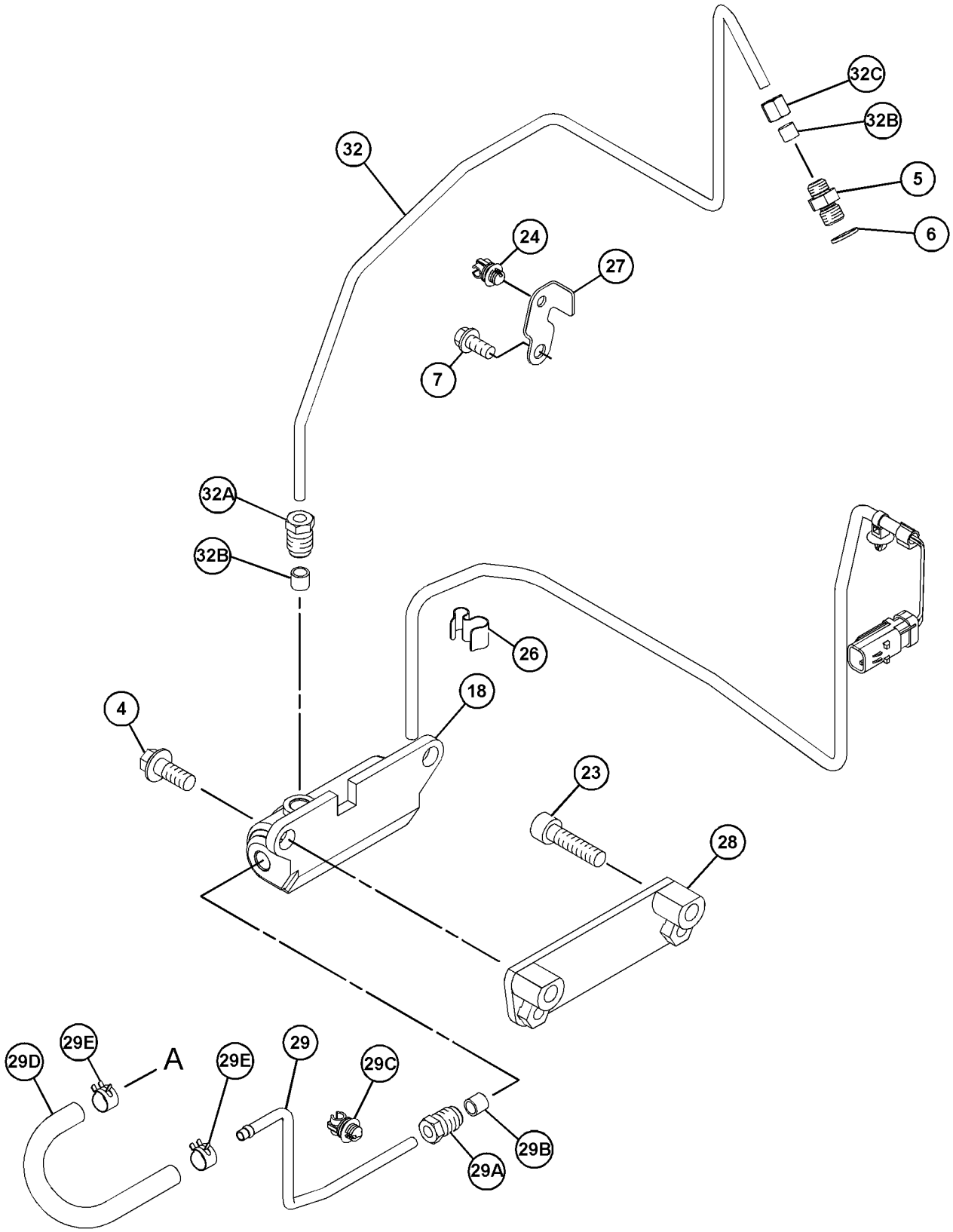

GRAPHIC #1 g06204575

325-1069 **TURBOCHARGER GP** (contd.) **i06943386**

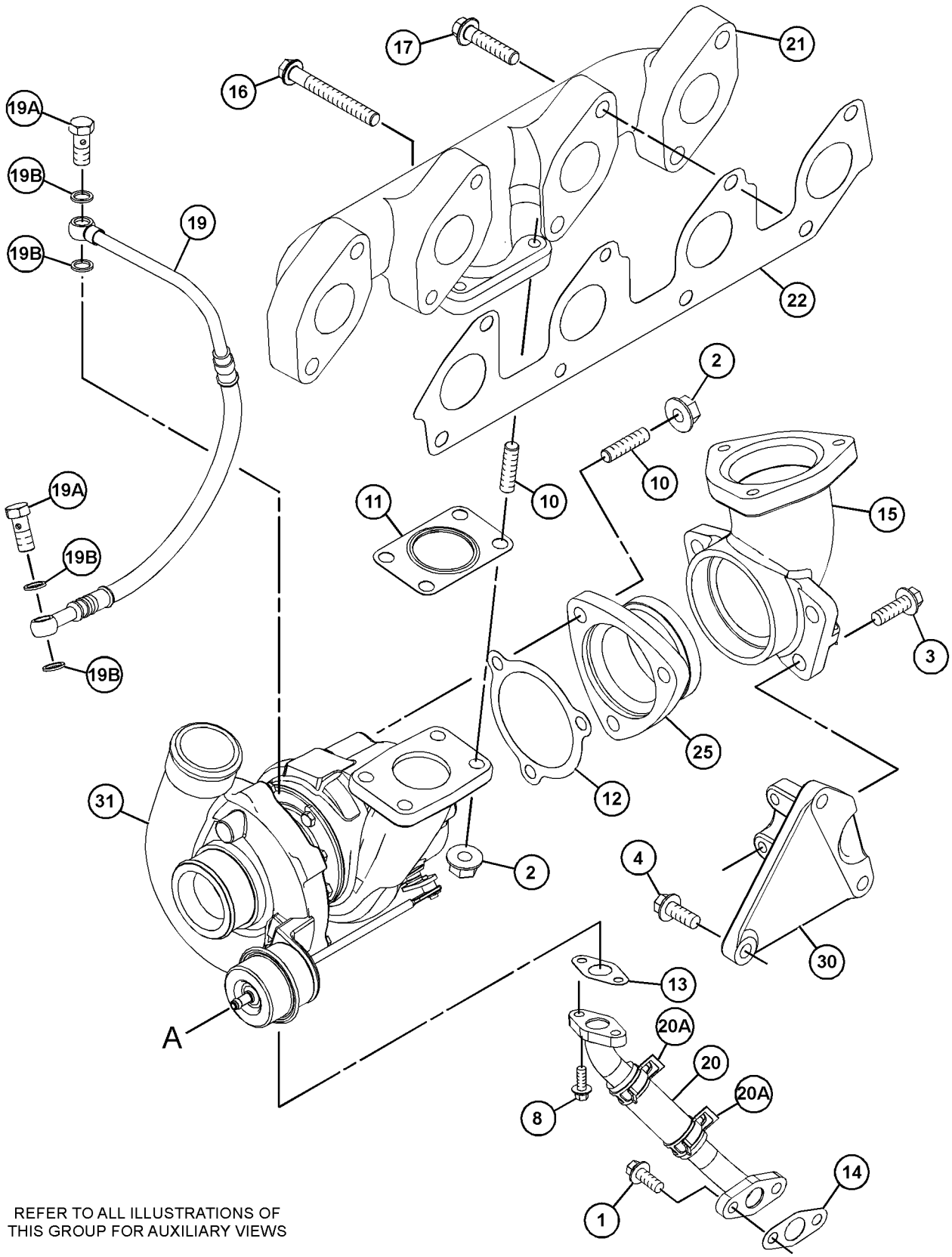

REFER TO ALL ILLUSTRATIONS OF
THIS GROUP FOR AUXILIARY VIEWS

GRAPHIC #2 <END> g06204574

326-4510 TURBOCHARGER GP

TYPE 1

SMCS-1052, 1053 **i03312338**

NOTE	REF NO	GRAPHIC REF	PART NUMBER	QTY	PART NAME 1 2 3 4 5 6 (PRODUCT LEVEL)	SEE PAGE
M	1	1	**6I-0217**	2	BOLT (M8X1.25X20-MM)	
M	2	2	**6I-0260**	4	BOLT (M8X1.25X25-MM)	
M	3	1	**6I-0563**	7	NUT (M10X1.5-THD)	
M	4	1	**6I-0593**	2	BOLT (M10X1.5X30-MM)	
M	5	1	**6I-0654**	3	BOLT (M10X1.5X25-MM)	
	6	2	**6I-0817**	1	ADAPTER	
M	7	2	**6I-4200**	2	BOLT (M10X1.5X16-MM)	
	8	2	**9Y-9381**	1	WASHER-HARD	
M	9	2	**100-4830**	1	BOLT (M10X1.5X20-MM)	
M	10	1	**106-8916**	2	BOLT (M6X16-MM)	
	11	2	**127-8165**	1	SPACER	
	12	2	**266-7092**	2	CLAMP-HOSE	
M	13	1	**147-5553**	7	STUD (M10X1.5X40-MM)	
	14	1	**194-5390**	1	GASKET-MANIFOLD	
	15	1	**225-8530**	1	GASKET (ELBOW)	
	16	1	**225-8533**	1	GASKET (TURBOCHARGER)	
	17	1	**225-8534**	1	GASKET (TURBOCHARGER)	
	18	1	**227-4562**	1	ELBOW-EXHAUST	
	19	1	**232-6189**	1	TUBE AS	
	20	2	**234-3029**	1	HOSE	
	21	2	**234-3030**	1	GASKET-INLET	
M	22	1	**278-0361**	8	BOLT (M10X1.5X45-MM)	
	23	2	**294-7375**	1	SOLENOID (WASTEGATE)	
	24	1	**298-4570**	1	GASKET-EXHAUST MANIFOLD	
	25	2	**298-4576**	1	CLIP	
	26	1	**301-8255**	1	TUBE AS	
	26A	1	**225-8524**	2	BOLT-SPECIAL	
	26B	1	**225-8526**	4	WASHER (10.4X13.75X1.37-MM THK)	
	27	1	**301-8256**	1	MANIFOLD-EXHAUST	
	28	1	**302-0581**	1	ADAPTER-EXHAUST	
	29	2	**303-2116**	5	CLIP	
	30	2	**303-5792**	1	BRACKET	
	31	2	**326-4509**	1	TUBE	
	32	1	**307-2805**	1	BRACKET	
	33	2	**311-7458**	1	TUBE AS	
	33A	2	**032-8047**	1	FERRULE	
	33B	2	**032-8191**	1	NUT	
	33C	2	**298-4576**	2	CLIP	
	33D	2	**300-6520**	1	HOSE AS	
	33E	2	**107-2348**	2	CLIP	
	34	1	**316-0562**	1	TURBOCHARGER	
	35	2	**326-4508**	1	TUBE AS	
	35A	2	**032-8047**	2	FERRULE	
	35B	2	**032-8191**	1	NUT	
	35C	2	**035-8014**	1	NUT	

M - METRIC PART

326-4510 **TURBOCHARGER GP (**contd.**)** **i03312338**

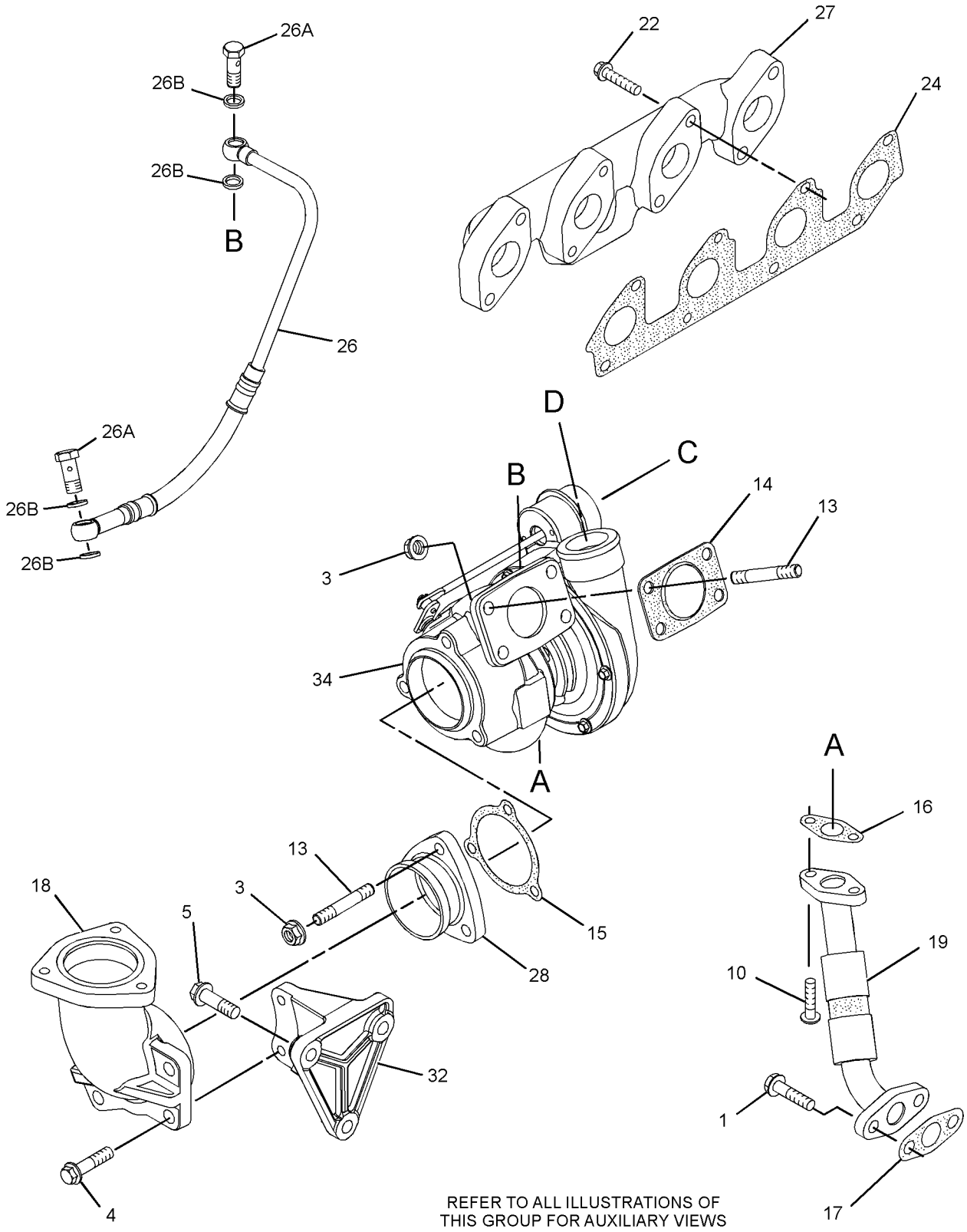

GRAPHIC #1 g01673579

326-4510 **TURBOCHARGER GP** (contd.) **i03312338**

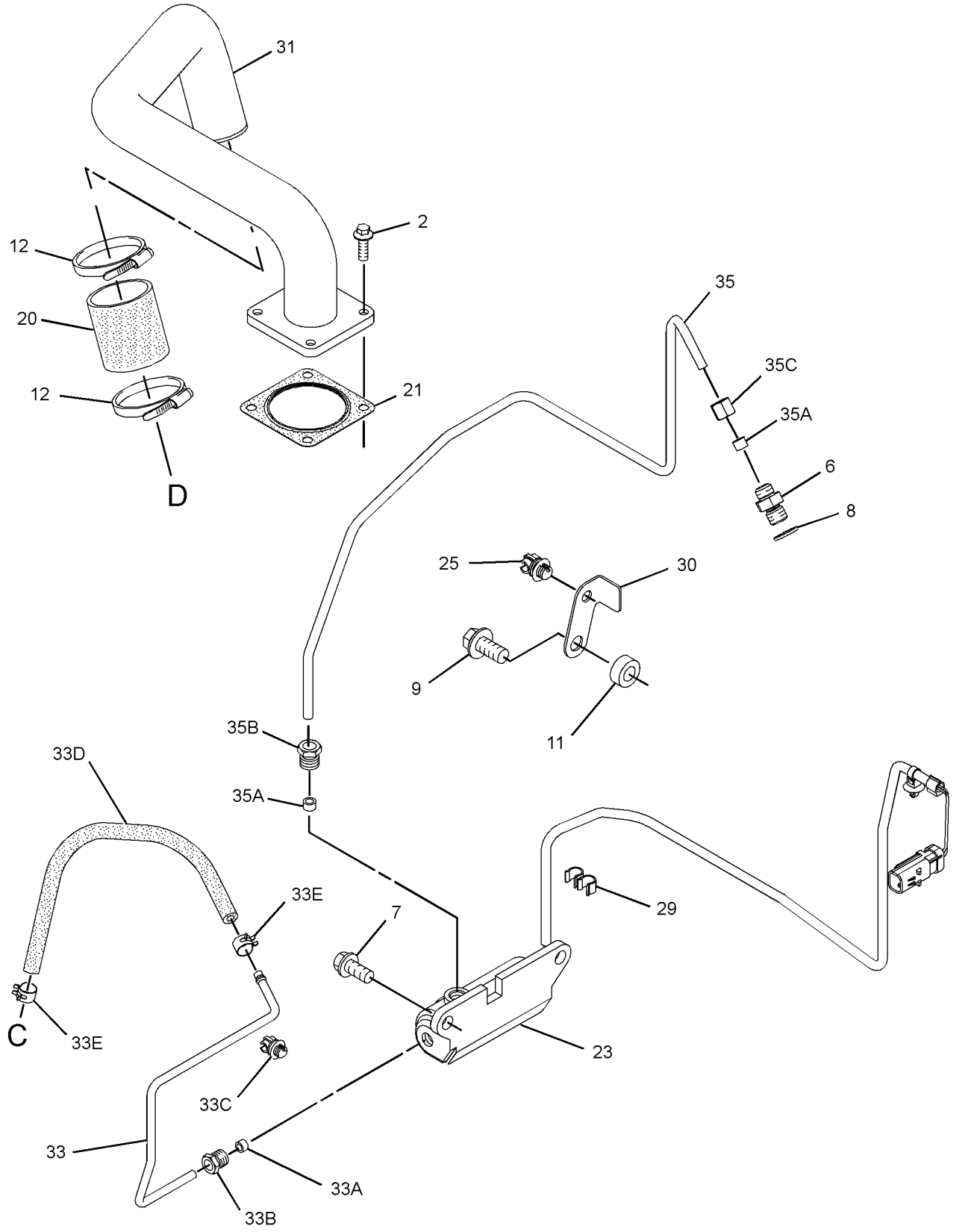

GRAPHIC #2 <END> g01673582

326-4510 TURBOCHARGER GP

TYPE 2

SMCS-1052, 1053 **i05947869**

NOTE	REF NO	GRAPHIC REF	PART NUMBER	QTY	PART NAME 1 2 3 4 5 6 (PRODUCT LEVEL)	SEE PAGE
M	1	1	**6I-0217**	1	BOLT (M8X1.25X20-MM)	
M	2	2	**6I-0260**	4	BOLT (M8X1.25X25-MM)	
M	3	1	**6I-0563**	7	NUT (M10X1.5-THD)	
M	4	1	**6I-0593**	2	BOLT (M10X1.5X30-MM)	
M	5	1	**6I-0654**	3	BOLT (M10X1.5X25-MM)	
	6	2	**6I-0817**	1	ADAPTER	
CM	7	2	**6I-4200**	3	BOLT (M10X1.5X16-MM)	
	8	2	**9Y-9381**	1	WASHER-HARD	
M	10	1	**106-8916**	2	BOLT (M6X16-MM)	
	12	2	**266-7092**	2	CLAMP-HOSE	
	13	1	**361-7519**	7	ROD-THREADED	
	14	1	**194-5390**	1	GASKET-MANIFOLD	
	15	1	**225-8530**	1	GASKET (ELBOW)	
	16	1	**353-3477**	1	GASKET-TURBOCHARGER	
	17	1	**353-3478**	1	GASKET-TURBOCHARGER	
	18	1	**227-4562**	1	ELBOW-EXHAUST	
	19	1	**232-6189**	1	TUBE AS	
	20	2	**234-3029**	1	HOSE	
	21	2	**234-3030**	1	GASKET-INLET	
M	22	1	**278-0361**	8	BOLT (M10X1.5X45-MM)	
	23	2	**294-7375**	1	SOLENOID (WASTEGATE)	
	24	1	**298-4570**	1	GASKET-EXHAUST MANIFOLD	
	25	2	**298-4576**	1	CLIP	
	26	1	**301-8255**	1	TUBE AS	
	26A	1	**225-8524**	2	BOLT-SPECIAL	
	26B	1	**225-8526**	4	WASHER (10.4X13.75X1.37-MM THK)	
	27	1	**301-8256**	1	MANIFOLD-EXHAUST	
	28	1	**302-0581**	1	ADAPTER-EXHAUST	
	29	2	**303-2116**	5	CLIP	
C	30	2	**377-6869**	1	BRACKET	
	31	2	**326-4509**	1	TUBE	
	32	1	**307-2805**	1	BRACKET	
	33	2	**311-7458**	1	TUBE AS	
	33A	2	**032-8047**	1	FERRULE	
	33B	2	**032-8191**	1	NUT	
	33C	2	**298-4576**	2	CLIP	
	33D	2	**300-6520**	1	HOSE AS	
	33E	2	**107-2348**	2	CLIP	
	34	1	**316-0562**	1	TURBOCHARGER	
	35	2	**326-4508**	1	TUBE AS	
	35A	2	**032-8047**	2	FERRULE	
	35B	2	**032-8191**	1	NUT	
	35C	2	**035-8014**	1	NUT	

C - CHANGE FROM PREVIOUS TYPE
M - METRIC PART

326-4510 **TURBOCHARGER GP (**contd.**)** **i05947869**

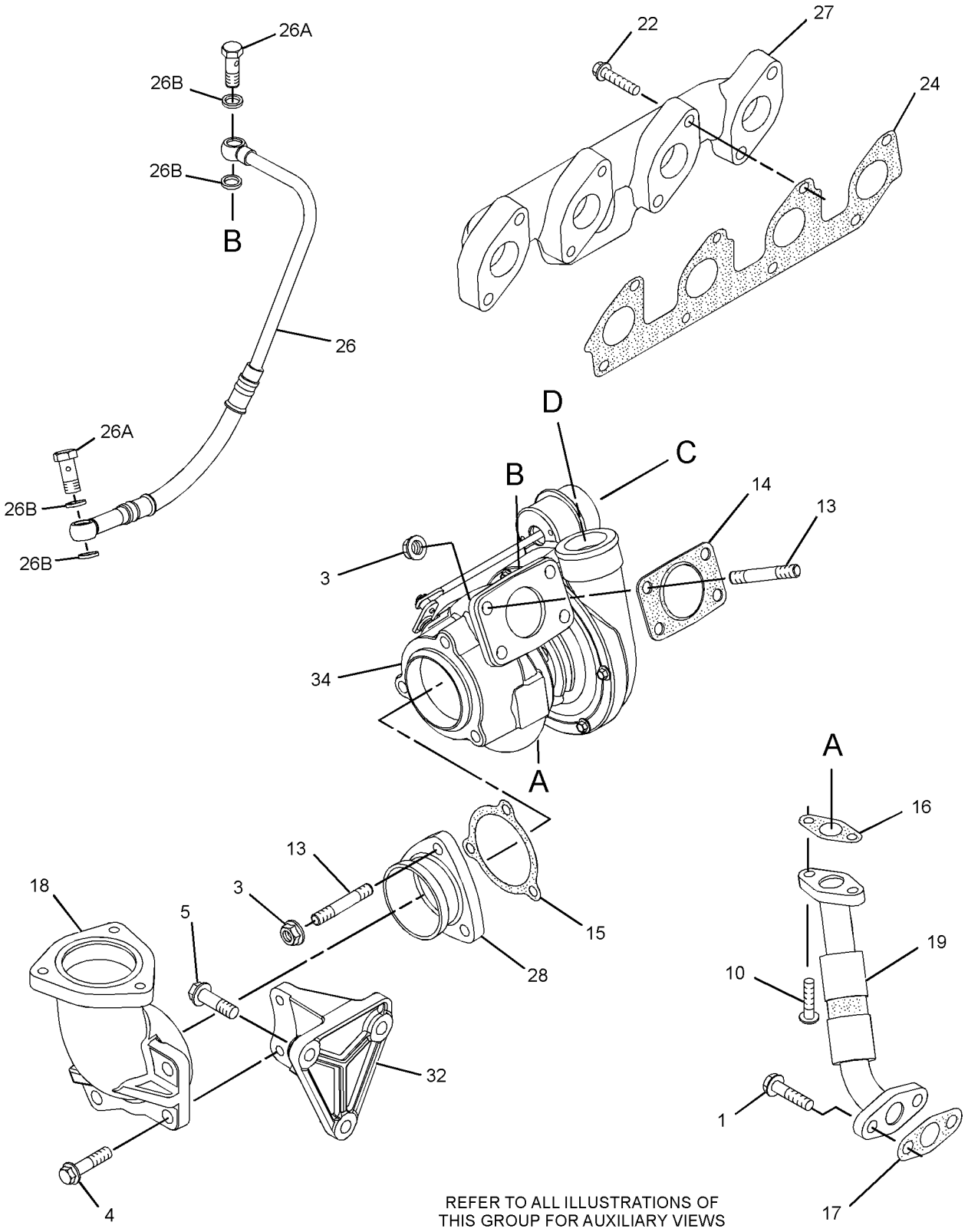

REFER TO ALL ILLUSTRATIONS OF
THIS GROUP FOR AUXILIARY VIEWS

GRAPHIC #1 g01673579

326-4510 **TURBOCHARGER GP (**contd.**)** **i05947869**

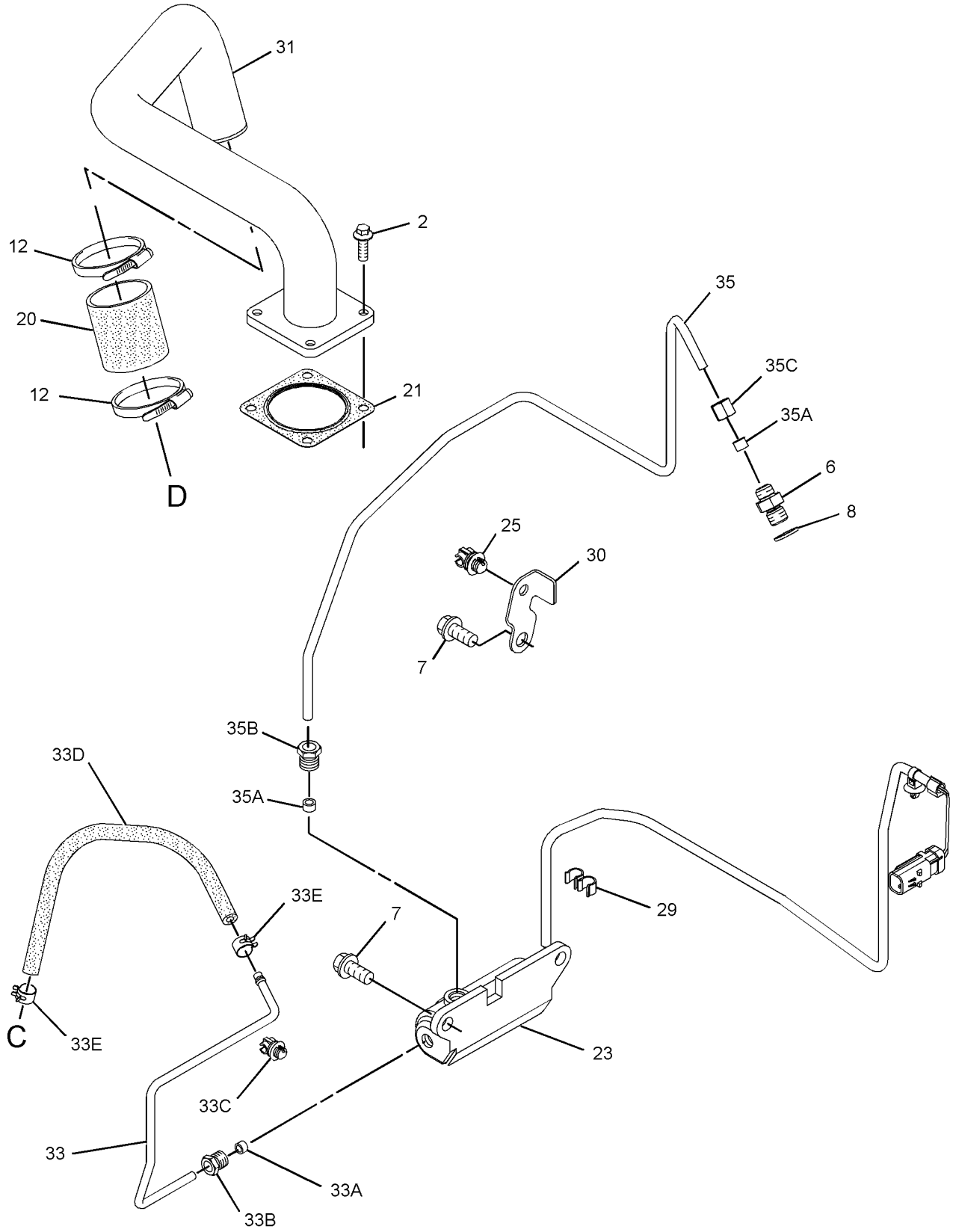

GRAPHIC #2 <END> g03121639

328-5896 TURBOCHARGER GP

TYPE 1

SMCS-1052, 1053 **i03098403**

NOTE	REF NO	GRAPHIC REF	PART NUMBER	QTY	PART NAME 1 2 3 4 5 6 (PRODUCT LEVEL)	SEE PAGE
M	1	1	**6I-0217**	2	BOLT (M8X1.25X20-MM)	
M	2	1	**6I-0563**	7	NUT (M10X1.5-THD)	
M	3	1	**6I-0593**	2	BOLT (M10X1.5X30-MM)	
M	4	1	**6I-0654**	3	BOLT (M10X1.5X25-MM)	
	5	2	**6I-0817**	1	ADAPTER	
M	6	2	**6I-4200**	2	BOLT (M10X1.5X16-MM)	
	7	2	**9Y-9381**	1	WASHER-HARD	
M	8	2	**100-4830**	1	BOLT (M10X1.5X20-MM)	
M	9	1	**106-8916**	2	BOLT (M6X16-MM)	
	10	2	**127-8165**	1	SPACER	
M	11	1	**147-5553**	7	STUD (M10X1.5X40-MM)	
	12	1	**194-5390**	1	GASKET-MANIFOLD	
	13	1	**225-8530**	1	GASKET (ELBOW)	
	14	1	**225-8533**	1	GASKET (TURBOCHARGER)	
	15	1	**225-8534**	1	GASKET (TURBOCHARGER)	
	16	1	**227-4562**	1	ELBOW-EXHAUST	
	17	1	**232-6189**	1	TUBE AS	
	18	2	**278-0310**	1	SOLENOID AS (WASTEGATE)	
M	19	1	**278-0361**	8	BOLT (M10X1.5X45-MM)	
	20	1	**298-4570**	1	GASKET-EXHAUST MANIFOLD	
	21	2	**298-4576**	1	CLIP	
	22	1	**301-8255**	1	TUBE AS	
	22A	1	**225-8524**	2	BOLT-SPECIAL	
	22B	1	**225-8526**	4	WASHER (10.4X13.75X1.37-MM THK)	
	23	1	**301-8256**	1	MANIFOLD-EXHAUST	
	24	1	**302-0581**	1	ADAPTER-EXHAUST	
	25	2	**303-2116**	5	CLIP	
	26	2	**303-5792**	1	BRACKET	
	27	1	**307-2805**	1	BRACKET	
	28	2	**311-7458**	1	TUBE AS	
	28A	2	**032-8047**	1	FERRULE	
	28B	2	**032-8191**	1	NUT	
	28C	2	**298-4576**	2	CLIP	
	28D	2	**300-6520**	1	HOSE AS	
	28E	2	**107-2348**	2	CLIP	
	29	1	**316-0525**	1	TURBOCHARGER GP	
	30	2	**326-4508**	1	TUBE AS	
	30A	2	**032-8047**	2	FERRULE	
	30B	2	**032-8191**	1	NUT	
	30C	2	**035-8014**	1	NUT	

M - METRIC PART

328-5896 **TURBOCHARGER GP (**contd.**)** **i03098403**

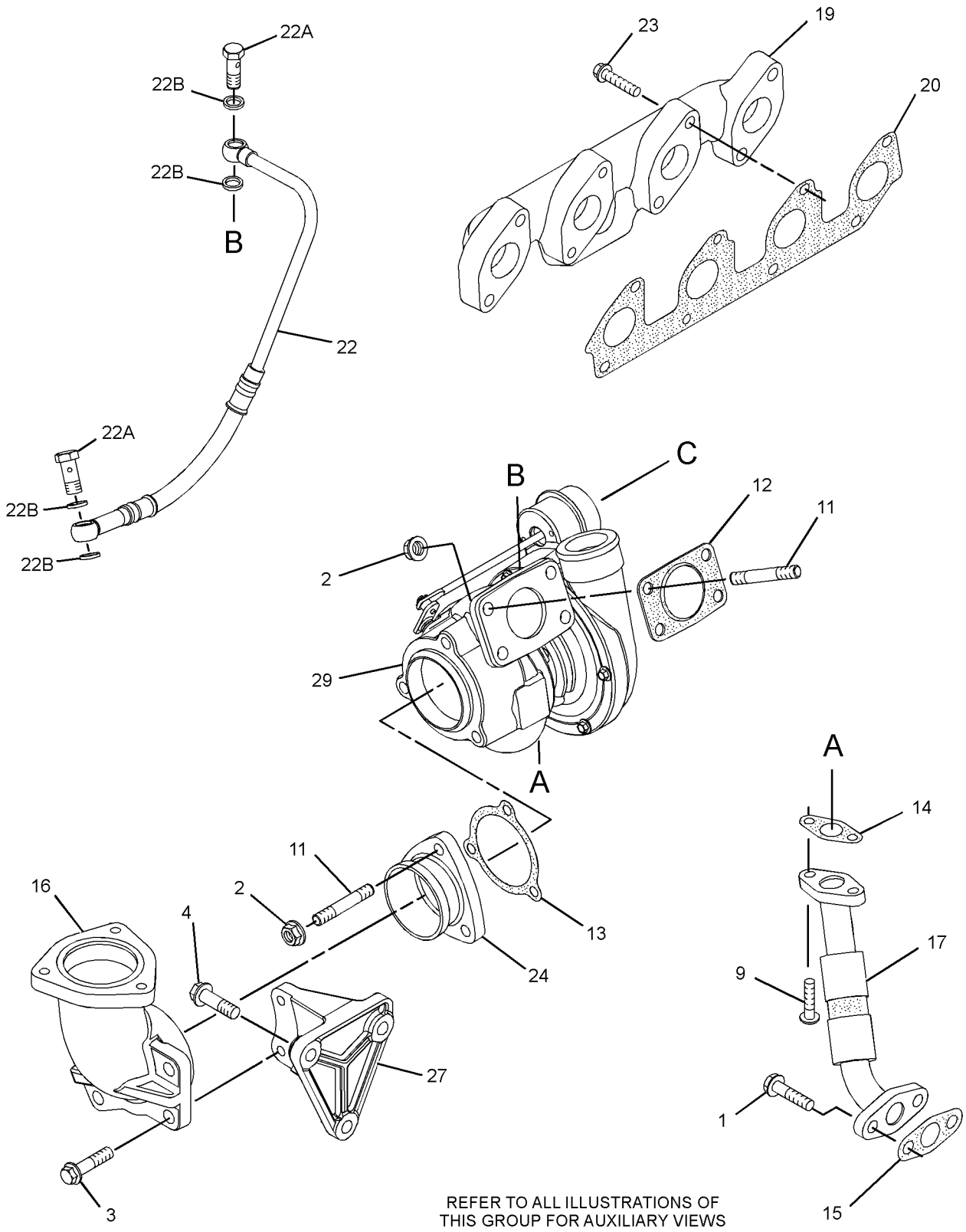

GRAPHIC #1 g01678381

328-5896 **TURBOCHARGER GP (**contd.**)** **i03098403**

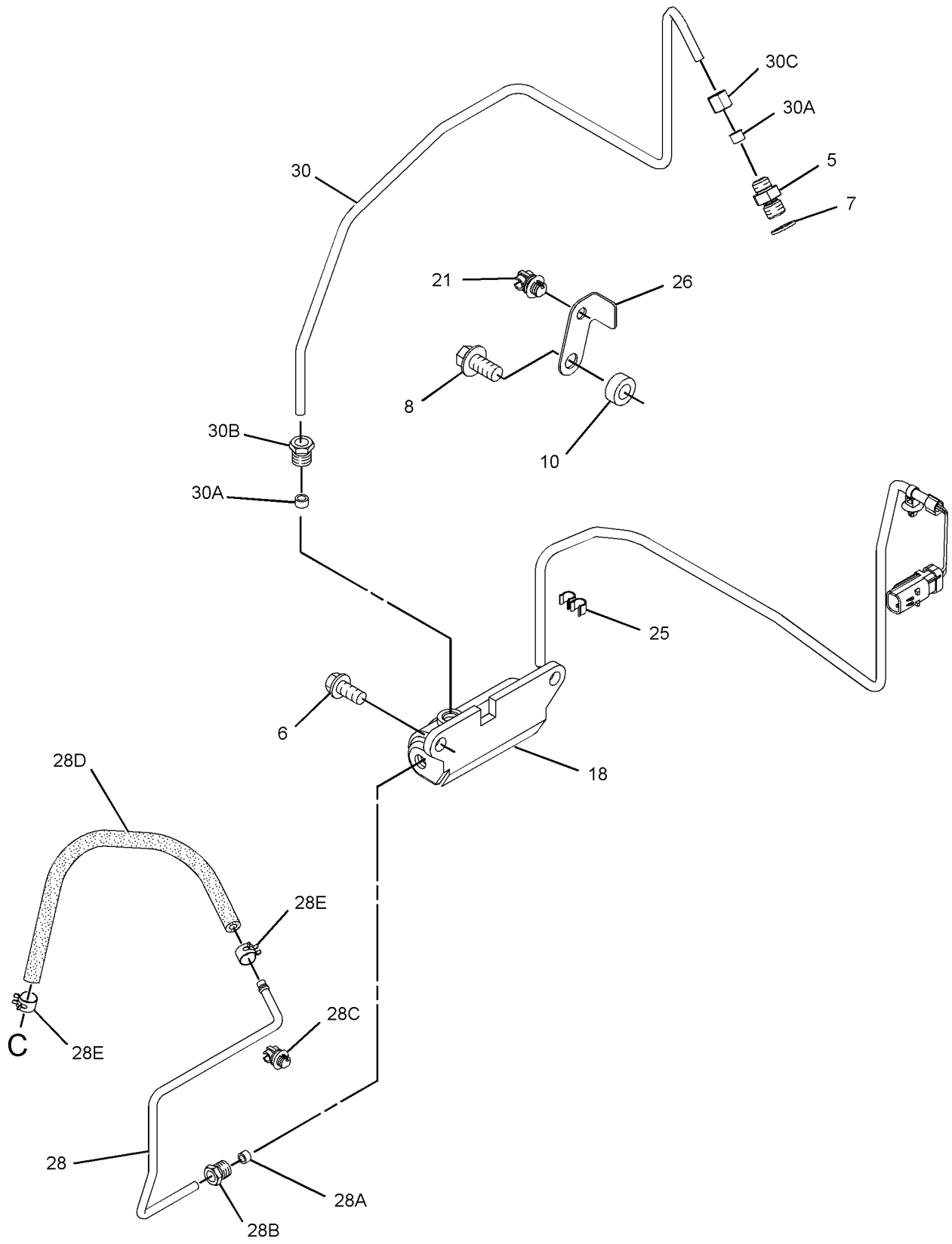

GRAPHIC #2 <END> g01678382

328-5896 TURBOCHARGER GP

TYPE 2

SMCS-1052, 1053 **i06943325**

NOTE	REF NO	GRAPHIC REF	PART NUMBER	QTY	PART NAME 1 2 3 4 5 6 (PRODUCT LEVEL)	SEE PAGE
M	1	2	**6I-0217**	2	BOLT (M8X1.25X20-MM)	
M	2	2	**6I-0563**	7	NUT (M10X1.5-THD)	
M	3	2	**6I-0593**	2	BOLT (M10X1.5X30-MM)	
M	4	2	**6I-0654**	3	BOLT (M10X1.5X25-MM)	
	5	1	**6I-0817**	1	ADAPTER	
CM	6	1	**6I-4200**	3	BOLT (M10X1.5X16-MM)	
	7	1	**9Y-9381**	1	WASHER-HARD	
M	9	2	**106-8916**	2	BOLT (M6X16-MM)	
	11	2	**361-7519**	7	ROD-THREADED	
	12	2	**194-5390**	1	GASKET-MANIFOLD	
	13	2	**225-8530**	1	GASKET (ELBOW)	
	14	2	**353-3477**	1	GASKET-TURBOCHARGER	
	15	2	**353-3478**	1	GASKET-TURBOCHARGER	
	16	2	**227-4562**	1	ELBOW-EXHAUST	
	17	2	**507-5019**	1	LINE AS-OIL	
	17A	2	**269-3086**	2	CLAMP-BAND	
	18	1	**278-0310**	1	SOLENOID AS (WASTEGATE)	
M	19	2	**278-0361**	8	BOLT (M10X1.5X45-MM)	
	20	2	**298-4570**	1	GASKET-EXHAUST MANIFOLD	
	21	1	**298-4576**	1	CLIP	
	22	2	**301-8255**	1	TUBE AS	
	22A	2	**225-8524**	2	BOLT-SPECIAL	
	22B	2	**225-8526**	4	WASHER (10.4X13.75X1.37-MM THK)	
	23	2	**301-8256**	1	MANIFOLD-EXHAUST	
	24	2	**302-0581**	1	ADAPTER-EXHAUST	
	25	1	**303-2116**	5	CLIP	
C	26	1	**377-6869**	1	BRACKET	
	27	2	**307-2805**	1	BRACKET	
	28	1	**311-7458**	1	TUBE AS	
	28A	1	**032-8047**	1	FERRULE	
	28B	1	**032-8191**	1	NUT	
	28C	1	**298-4576**	2	CLIP	
	28D	1	**300-6520**	1	HOSE AS	
	28E	1	**107-2348**	2	CLIP	
	29	2	**316-0525**	1	TURBOCHARGER GP	
	30	1	**326-4508**	1	TUBE AS	
	30A	1	**032-8047**	2	FERRULE	
	30B	1	**032-8191**	1	NUT	
	30C	1	**035-8014**	1	NUT	

C - CHANGE FROM PREVIOUS TYPE
M - METRIC PART

328-5896 **TURBOCHARGER GP** (contd.) **i06943325**

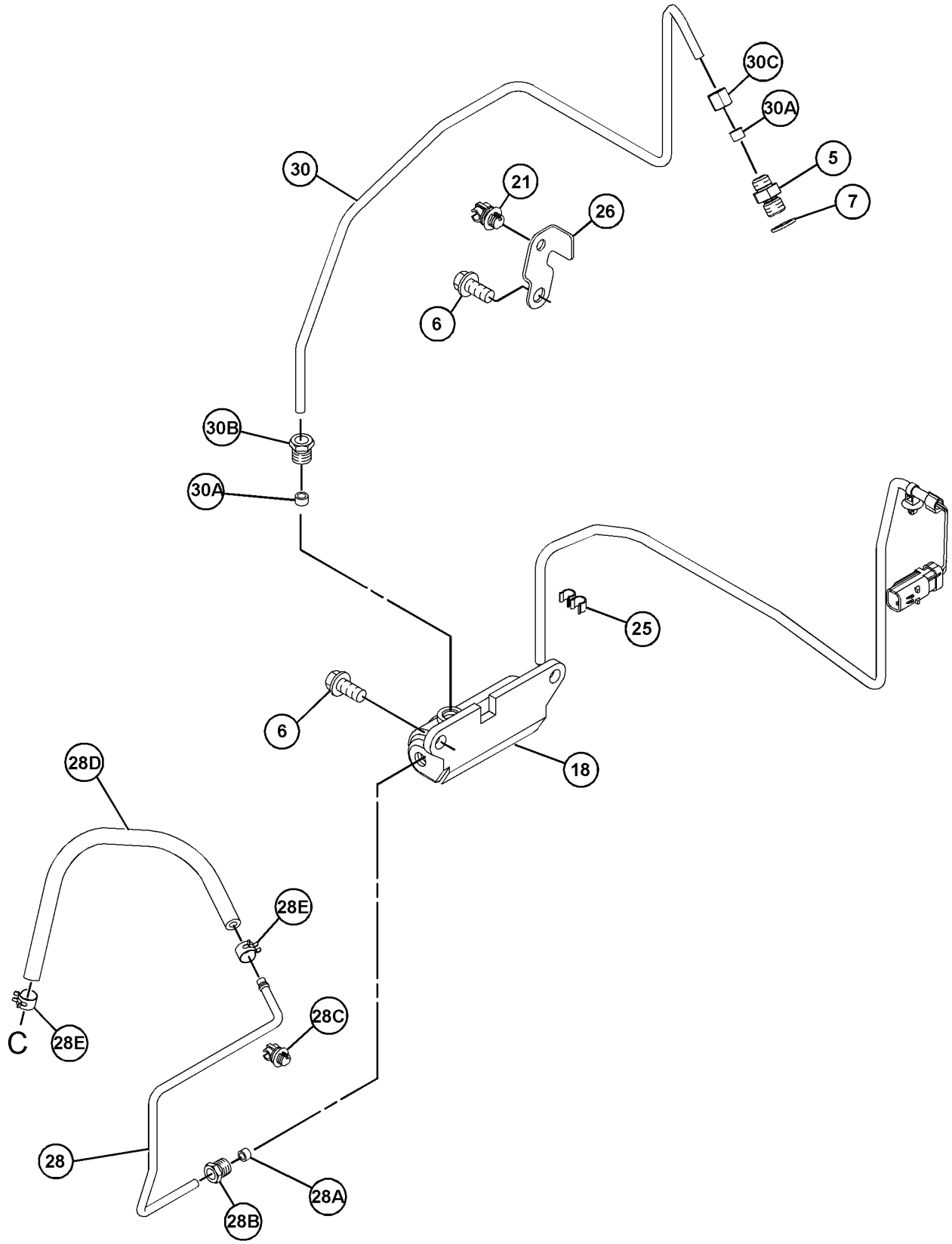

GRAPHIC #1 g06204532

328-5896 **TURBOCHARGER GP** (contd.) **i06943325**

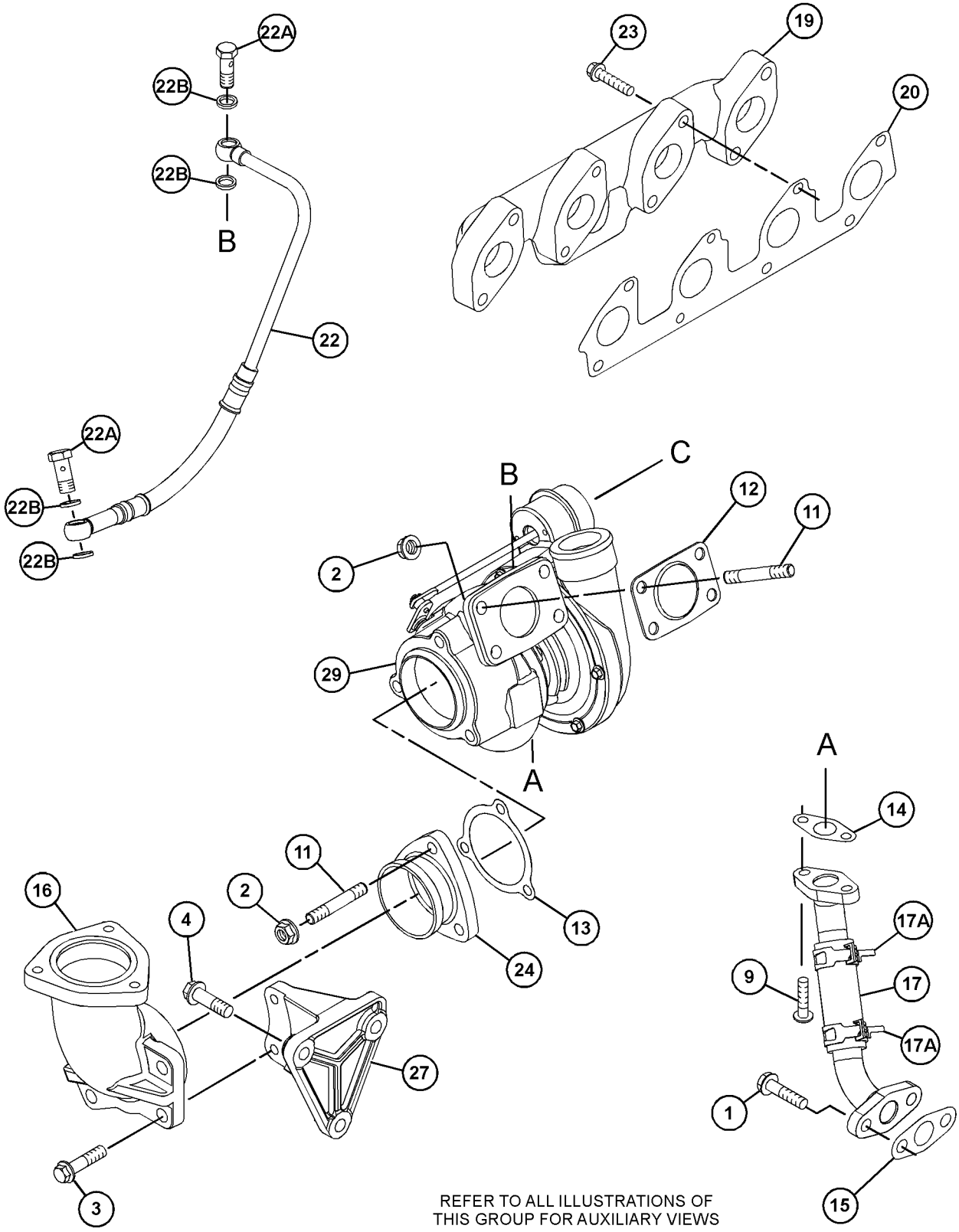

REFER TO ALL ILLUSTRATIONS OF
THIS GROUP FOR AUXILIARY VIEWS

GRAPHIC #2 <END> g06204531

328-7279 TURBOCHARGER GP

TYPE 1

SMCS-1052, 1053 **i03730741**

NOTE	REF NO	GRAPHIC REF	PART NUMBER	QTY	PART NAME 1 2 3 4 5 6 (PRODUCT LEVEL)	SEE PAGE
M	1	1	**6I-0217**	2	BOLT (M8X1.25X20-MM)	
M	2	3	**6I-0254**	2	BOLT (M8X1.25X30-MM)	
M	3	2	**6I-0260**	4	BOLT (M8X1.25X25-MM)	
M	4	1	**6I-0563**	7	NUT (M10X1.5-THD)	
M	5	1	**6I-0593**	2	BOLT (M10X1.5X30-MM)	
M	6	1	**6I-0654**	3	BOLT (M10X1.5X25-MM)	
M	7	3	**6I-0789**	4	BOLT (M10X1.5X60-MM)	
	8	2	**6I-0817**	1	ADAPTER	
M	9	2	**6I-4200**	2	BOLT (M10X1.5X16-MM)	
	10	2	**9Y-9381**	1	WASHER-HARD	
M	11	2	**100-4830**	1	BOLT (M10X1.5X20-MM)	
M	12	1	**106-8916**	2	BOLT (M6X16-MM)	
	13	2	**127-8165**	1	SPACER	
	14	2	**141-1667**	2	CLAMP-HOSE	
M	15	1	**147-5553**	7	STUD (M10X1.5X40-MM)	
	16	1	**194-5390**	1	GASKET-MANIFOLD	
	17	1	**225-8530**	1	GASKET	
	18	1	**225-8533**	1	GASKET	
	19	1	**225-8534**	1	GASKET	
	20	1	**227-4562**	1	ELBOW-EXHAUST	
	21	1	**232-6189**	1	TUBE AS	
	22	2	**234-3029**	1	HOSE	
	23	2	**234-3030**	1	GASKET-INLET	
M	24	1	**278-0361**	8	BOLT (M10X1.5X45-MM)	
	25	3	**293-0598**	1	CLIP	
	26	2	**294-7375**	1	SOLENOID (WASTEGATE)	
	27	1	**298-4570**	1	GASKET-EXHAUST MANIFOLD	
	28	2	**298-4576**	1	CLIP	
	29	1	**301-8255**	1	TUBE AS	
	29A	1	**225-8524**	2	BOLT-SPECIAL	
	29B	1	**225-8526**	4	WASHER (10.4X13.75X1.37-MM THK)	
	30	1	**301-8256**	1	MANIFOLD-EXHAUST	
	31	1	**302-0581**	1	ADAPTER-EXHAUST	
	32	2	**303-2116**	5	CLIP	
	33	2	**303-5792**	1	BRACKET	
	34	2	**305-0657**	1	TUBE (CROSSOVER)	
	35	1	**307-2805**	1	BRACKET	
Y	36	3	**307-2807**	1	AIR CLEANER GP	772
	37	3	**307-2831**	1	BRACKET	
	38	3	**307-2832**	1	HOSE-AIR	
	39	2	**311-7458**	1	TUBE AS	
	39A	2	**032-8047**	1	FERRULE	
	39B	2	**032-8191**	1	NUT	
	39C	2	**298-4576**	2	CLIP	
	39D	2	**300-6520**	1	HOSE AS	
	39E	2	**107-2348**	2	CLIP	
	40	1	**316-0562**	1	TURBOCHARGER	
	41	3	**326-1010**	1	CLAMP-HOSE	

328-7279 **TURBOCHARGER GP (**contd.**)** **i03730741**

NOTE	REF NO	GRAPHIC REF	PART NUMBER	QTY	PART NAME 1 2 3 4 5 6 (PRODUCT LEVEL)	SEE PAGE
	42	2	**326-4508**	1	TUBE AS	
	42A	2	**032-8047**	2	FERRULE	
	42B	2	**032-8191**	1	NUT	
	42C	2	**035-8014**	1	NUT	

M - METRIC PART
Y - SEPARATE ILLUSTRATION

328-7279 **TURBOCHARGER GP** (contd.) **i03730741**

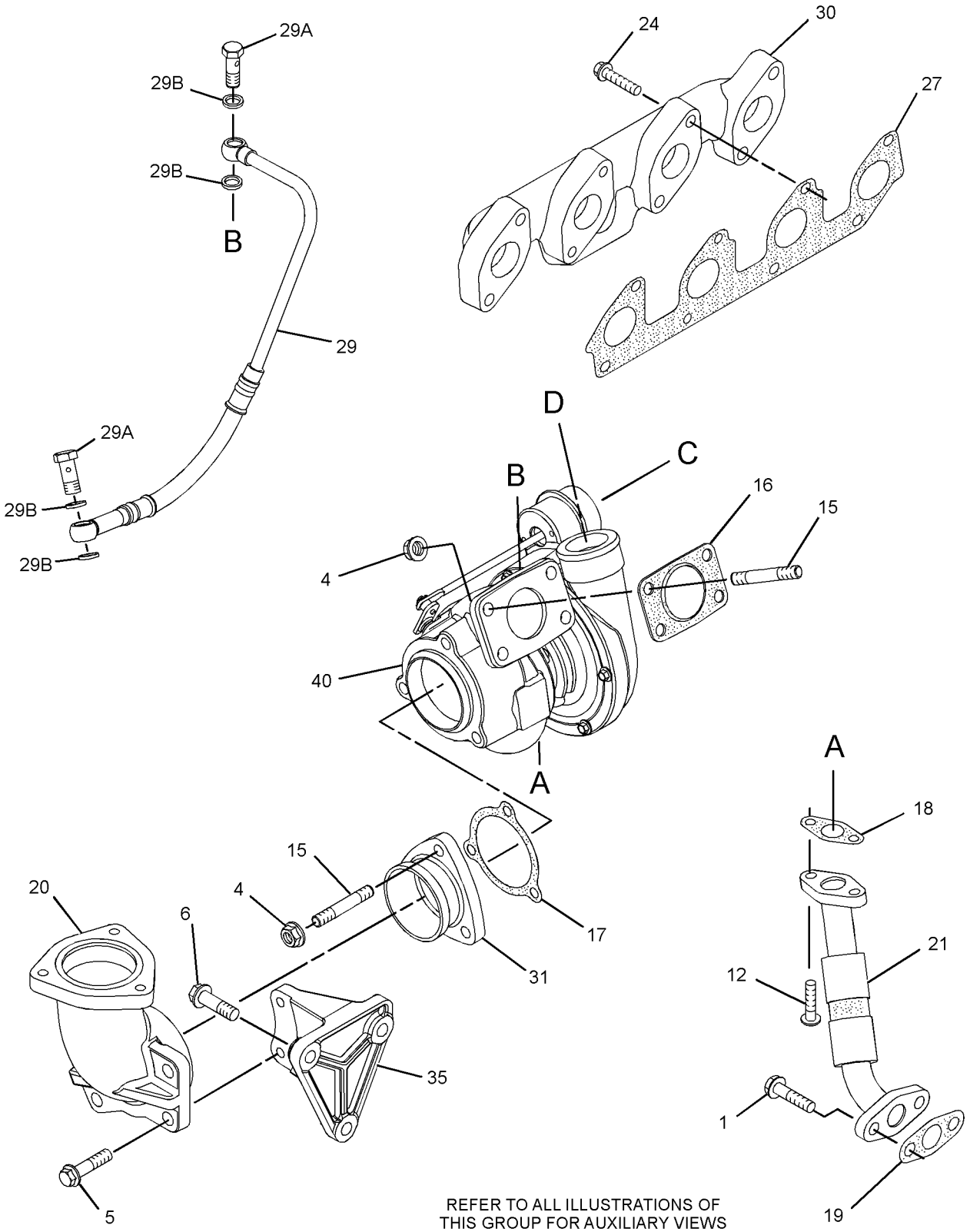

REFER TO ALL ILLUSTRATIONS OF THIS GROUP FOR AUXILIARY VIEWS

GRAPHIC #1 g01683035

328-7279 **TURBOCHARGER GP (**contd.**)** **i03730741**

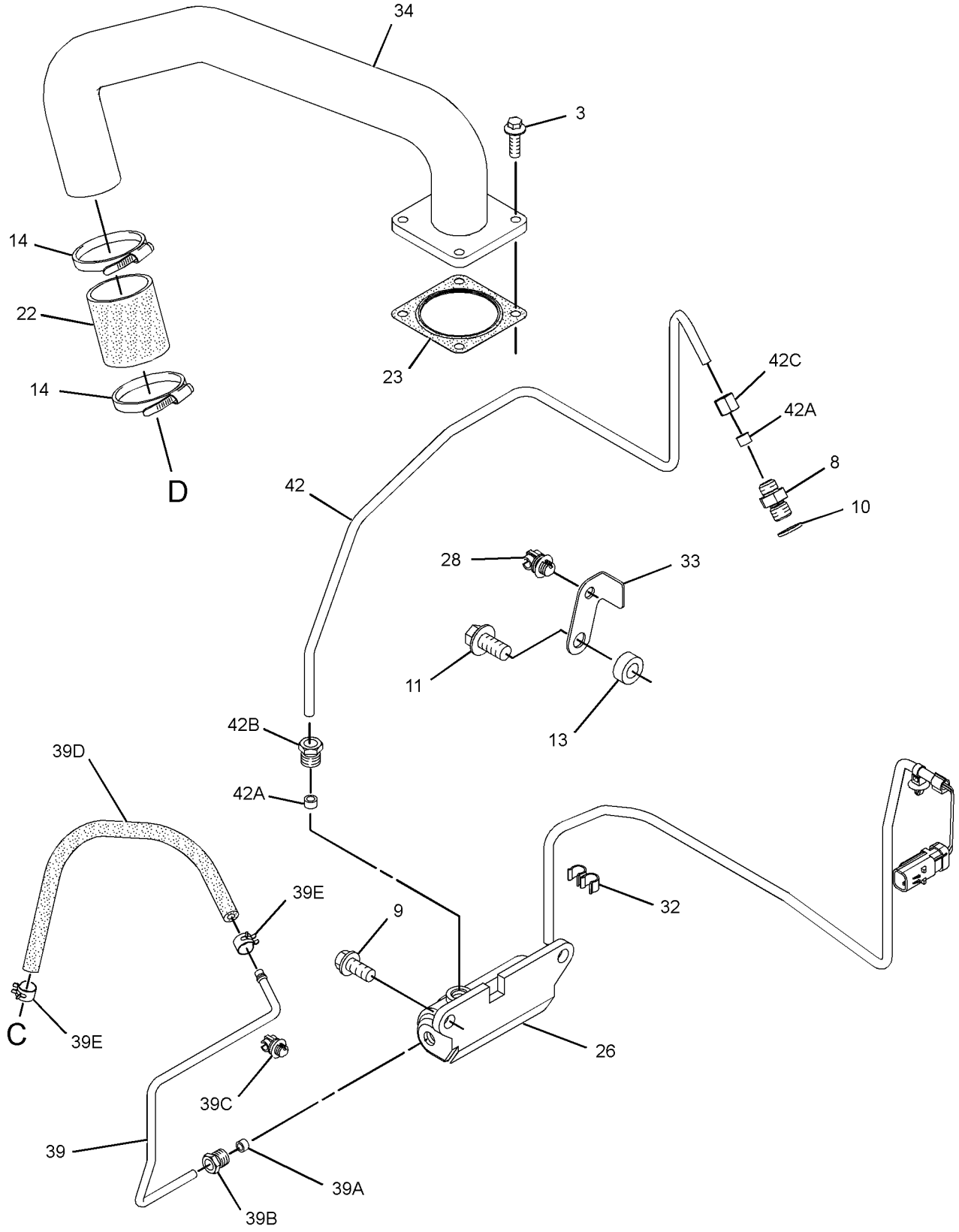

GRAPHIC #2 g01683037

328-7279 **TURBOCHARGER GP** (contd.) **i03730741**

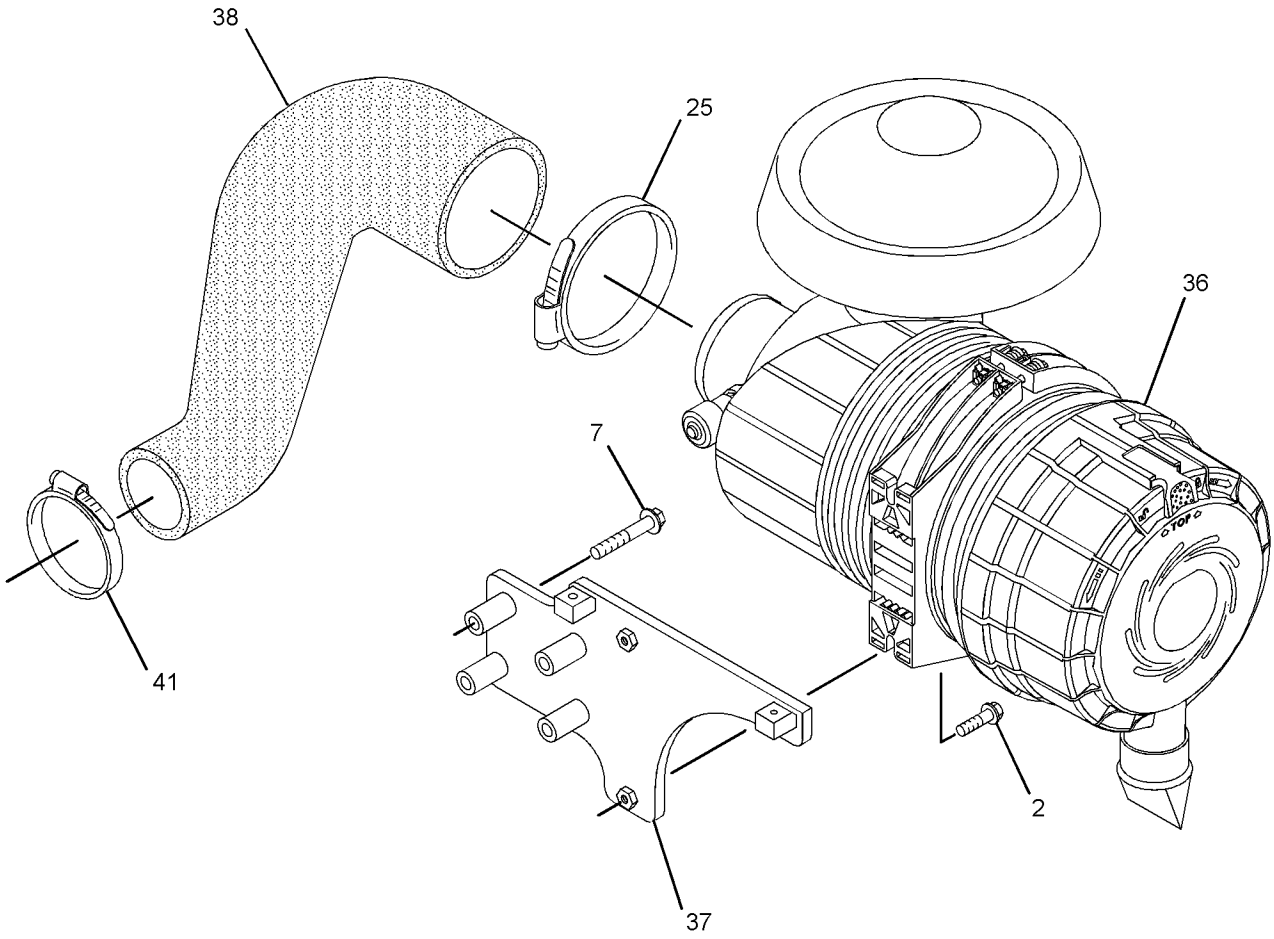

GRAPHIC #3 <END> g01683038

328-7279 TURBOCHARGER GP

TYPE 2

SMCS-1052, 1053 **i06697735**

NOTE	REF NO	GRAPHIC REF	PART NUMBER	QTY	PART NAME 1 2 3 4 5 6 (PRODUCT LEVEL)	SEE PAGE
M	1	1	**6I-0217**	2	BOLT (M8X1.25X20-MM)	
M	3	2,3	**6I-0260**	6	BOLT (M8X1.25X25-MM)	
M	4	1	**6I-0563**	7	NUT (M10X1.5-THD)	
M	5	1	**6I-0593**	2	BOLT (M10X1.5X30-MM)	
M	6	1	**6I-0654**	3	BOLT (M10X1.5X25-MM)	
M	7	3	**6I-0789**	4	BOLT (M10X1.5X60-MM)	
	8	2	**6I-0817**	1	ADAPTER	
CM	9	2	**6I-4200**	3	BOLT (M10X1.5X16-MM)	
	10	2	**9Y-9381**	1	WASHER-HARD	
M	12	1	**106-8916**	2	BOLT (M6X16-MM)	
	14	2	**141-1667**	2	CLAMP-HOSE	
	15	1	**361-7519**	7	ROD-THREADED	
	16	1	**194-5390**	1	GASKET-MANIFOLD	
	17	1	**225-8530**	1	GASKET	
	18	1	**353-3477**	1	GASKET-TURBOCHARGER	
	19	1	**353-3478**	1	GASKET-TURBOCHARGER	
	20	1	**227-4562**	1	ELBOW-EXHAUST	
	21	1	**232-6189**	1	TUBE AS	
	22	2	**234-3029**	1	HOSE	
	23	2	**234-3030**	1	GASKET-INLET	
M	24	1	**278-0361**	8	BOLT (M10X1.5X45-MM)	
	25	3	**293-0598**	1	CLIP	
	26	2	**294-7375**	1	SOLENOID (WASTEGATE)	
	27	1	**298-4570**	1	GASKET-EXHAUST MANIFOLD	
	28	2	**298-4576**	1	CLIP	
	29	1	**301-8255**	1	TUBE AS	
	29A	1	**225-8524**	2	BOLT-SPECIAL	
	29B	1	**225-8526**	4	WASHER (10.4X13.75X1.37-MM THK)	
	30	1	**301-8256**	1	MANIFOLD-EXHAUST	
	31	1	**302-0581**	1	ADAPTER-EXHAUST	
	32	2	**303-2116**	5	CLIP	
C	33	2	**377-6869**	1	BRACKET	
	34	2	**305-0657**	1	TUBE (CROSSOVER)	
	35	1	**307-2805**	1	BRACKET	
Y	36	3	**307-2807**	1	AIR CLEANER GP (TURBOCHARGER)	772
	37	3	**445-1434**	1	BRACKET AS	
	38	3	**385-7318**	1	HOSE-AIR	
	39	2	**311-7458**	1	TUBE AS	
	39A	2	**032-8047**	1	FERRULE	
	39B	2	**032-8191**	1	NUT	
	39C	2	**298-4576**	2	CLIP	
	39D	2	**300-6520**	1	HOSE AS	
	39E	2	**107-2348**	2	CLIP	
	40	1	**316-0562**	1	TURBOCHARGER	
	41	3	**385-7317**	1	CLAMP-HOSE	
	42	2	**326-4508**	1	TUBE AS	
	42A	2	**032-8047**	2	FERRULE	

328-7279 **TURBOCHARGER GP (**contd.**)** **i06697735**

NOTE	REF NO	GRAPHIC REF	PART NUMBER	QTY	PART NAME 1 2 3 4 5 6 (PRODUCT LEVEL)	SEE PAGE
	42B	2	**032-8191**	1	NUT	
	42C	2	**035-8014**	1	NUT	

C - CHANGE FROM PREVIOUS TYPE
M - METRIC PART
Y - SEPARATE ILLUSTRATION

328-7279 **TURBOCHARGER GP (**contd.**)** **i06697735**

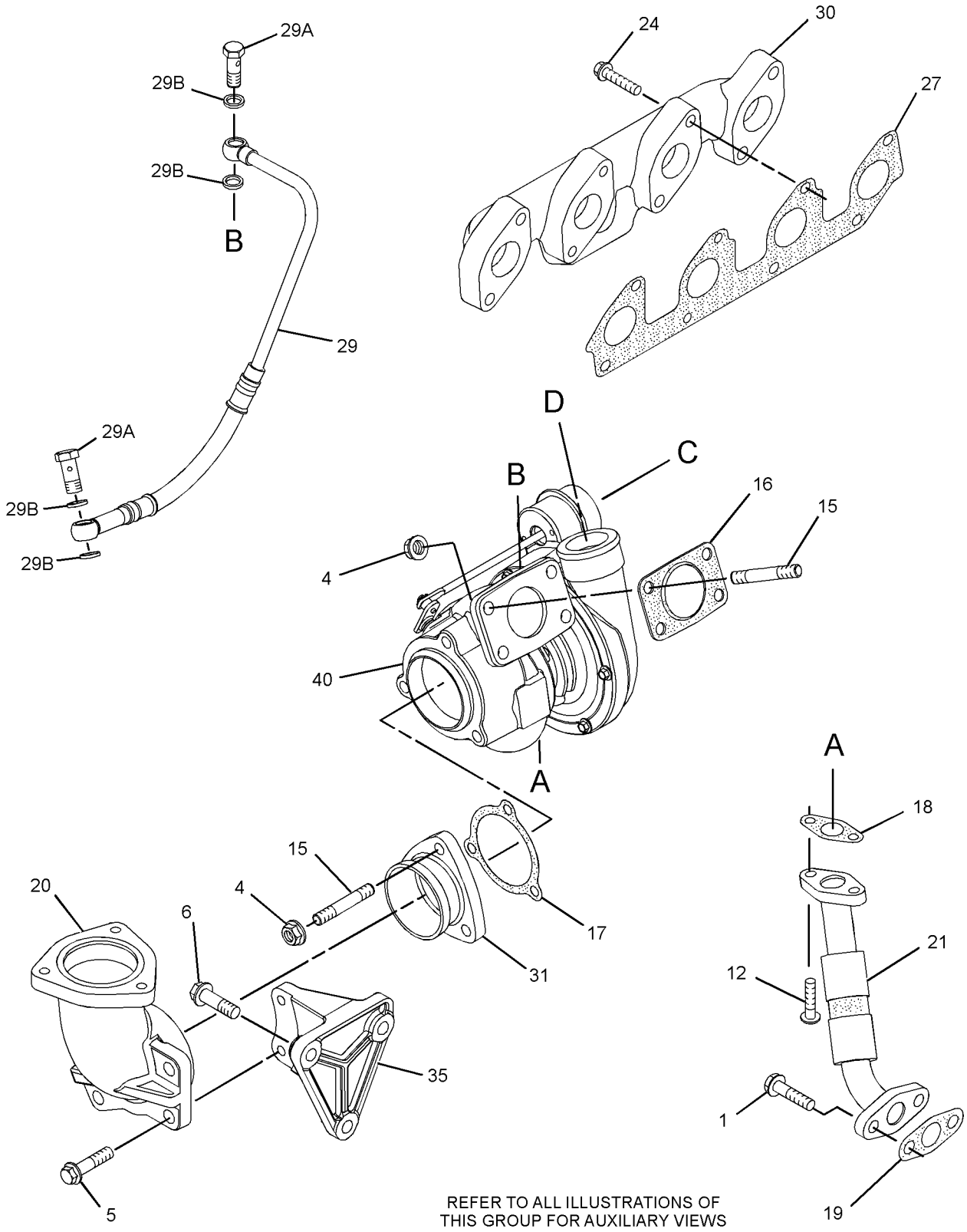

REFER TO ALL ILLUSTRATIONS OF
THIS GROUP FOR AUXILIARY VIEWS

GRAPHIC #1 g01683035

328-7279 **TURBOCHARGER GP** (contd.) **i06697735**

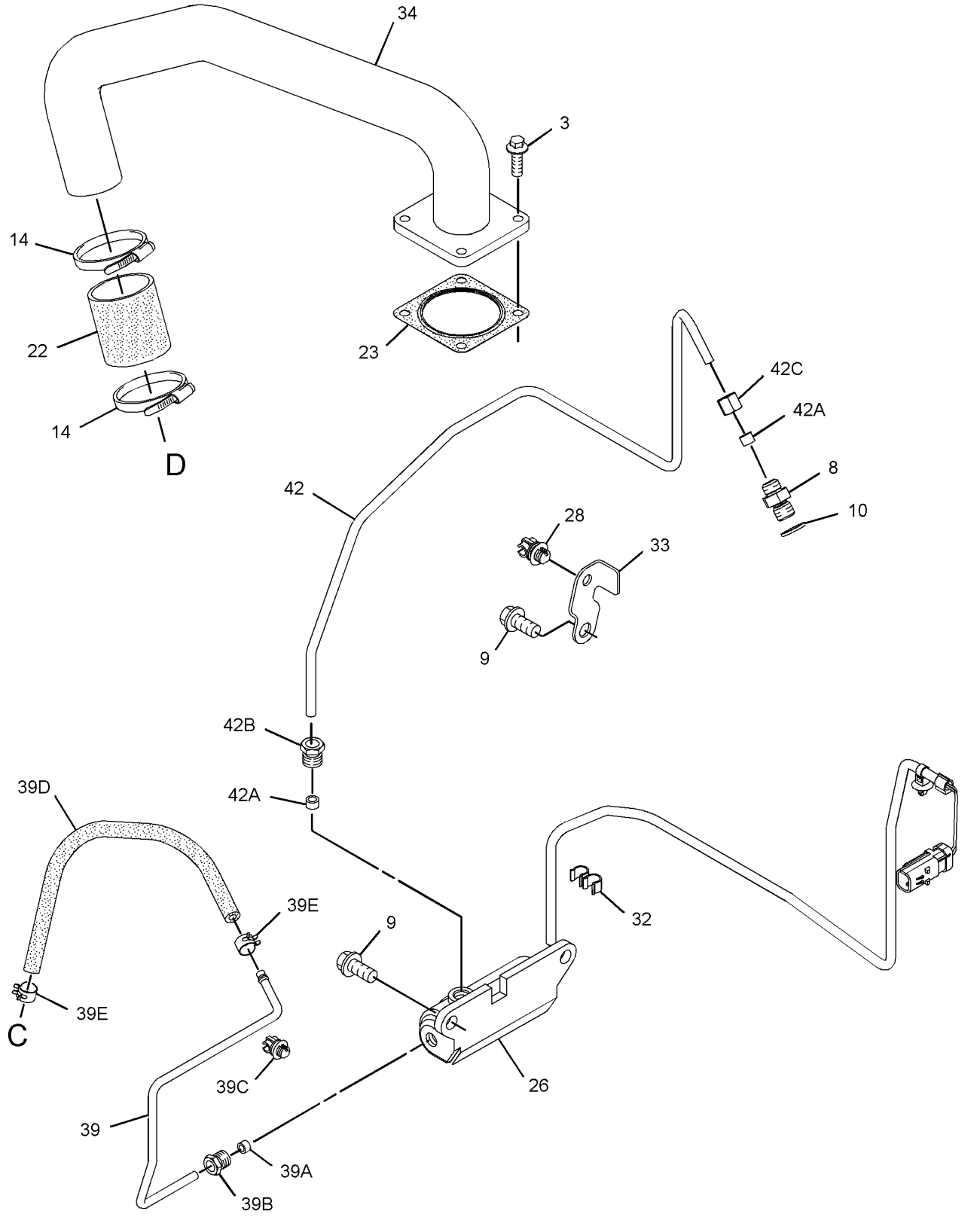

GRAPHIC #2 g03130036

328-7279 **TURBOCHARGER GP (**contd.**)** **i06697735**

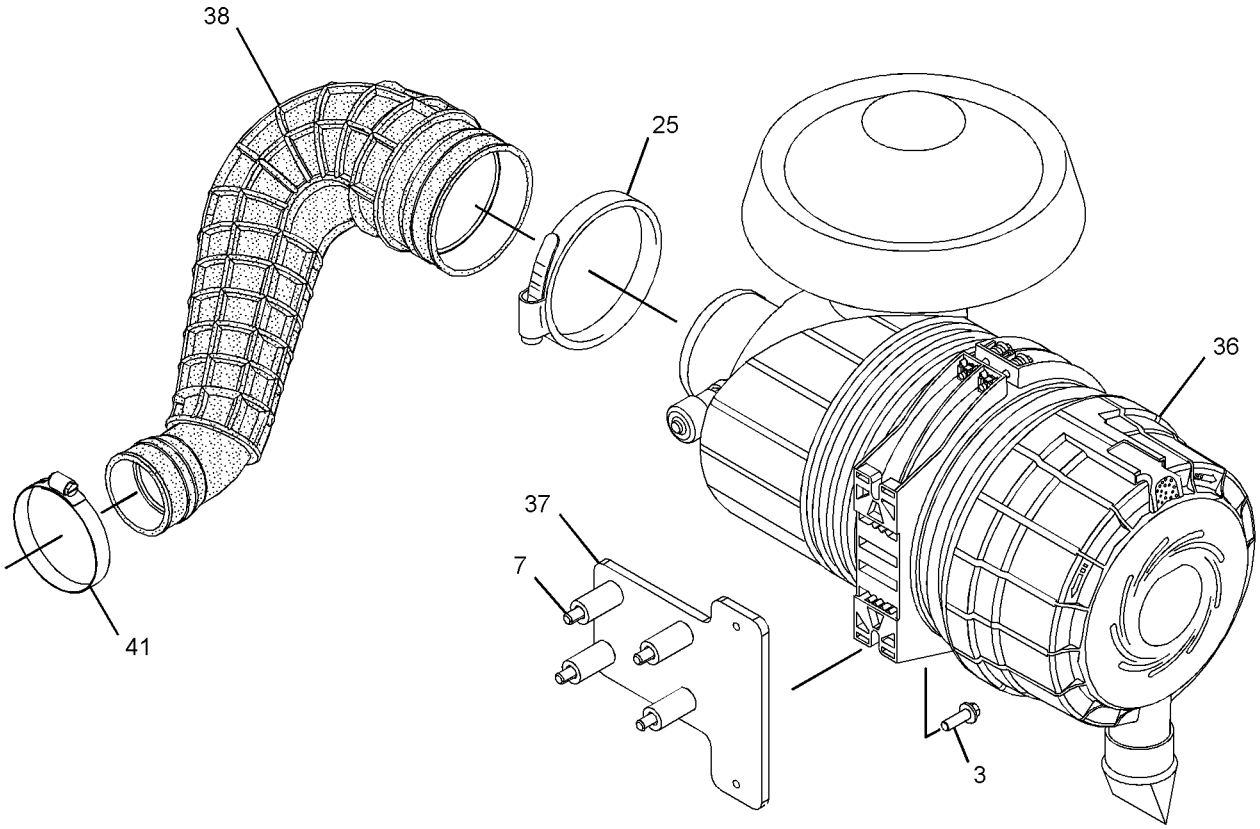

GRAPHIC #3 <END> g06131283

AIR INLET AND EXHAUST SYSTEM

329-9129 TURBOCHARGER GP

SMCS-1052, 1053 **i06244696**

NOTE	REF NO	GRAPHIC REF	PART NUMBER	QTY	PART NAME 1 2 3 4 5 6 (PRODUCT LEVEL)	SEE PAGE
M	1	1	**6I-0217**	2	BOLT (M8X1.25X20-MM)	
M	2	1	**6I-0563**	4	NUT (M10X1.5-THD)	
M	3	1	**6I-0593**	1	BOLT (M10X1.5X30-MM)	
M	4	1	**6I-0654**	1	BOLT (M10X1.5X25-MM)	
	5	2	**6I-0817**	1	ADAPTER	
M	6	2	**6I-4200**	2	BOLT (M10X1.5X16-MM)	
	7	2	**9Y-9381**	1	WASHER-HARD	
M	8	2	**100-4830**	1	BOLT (M10X1.5X20-MM)	
M	9	1	**106-8916**	2	BOLT (M6X16-MM)	
	10	1	**123-4038**	1	SPACER	
	11	2	**127-8165**	1	SPACER	
M	12	1	**147-5553**	4	STUD (M10X1.5X40-MM)	
	13	1	**172-4325**	1	SPACER	
	14	1	**194-5390**	1	GASKET-MANIFOLD	
	15	1	**225-8533**	1	GASKET	
	16	1	**225-8534**	1	GASKET	
	17	1	**238-8292**	1	BOLT-FLANGE HEAD	
M	18	1	**278-0361**	7	BOLT (M10X1.5X45-MM)	
	19	2	**294-7375**	1	SOLENOID (WASTEGATE)	
	20	1	**298-4570**	1	GASKET-EXHAUST MANIFOLD	
	21	2	**298-4576**	1	CLIP	
	22	2	**303-2116**	5	CLIP	
	23	1	**303-5786**	1	TUBE AS-TURBOCHARGER OIL (SUPPLY)	
	23A	1	**220-7163**	1	CLIP	
	23B	1	**225-8524**	2	BOLT-SPECIAL	
	23C	1	**225-8526**	4	WASHER (10.4X13.75X1.37-MM THK)	
	24	1	**303-5787**	1	TUBE AS-TURBOCHARGER OIL (DRAIN)	
	24A	1	**103-2135**	1	CLIP	
	25	1	**303-5788**	1	MANIFOLD-EXHAUST	
	26	2	**303-5792**	1	BRACKET	
	27	2	**303-5793**	1	TUBE AS	
	27A	2	**300-6520**	1	HOSE AS	
	27B	2	**107-2348**	2	CLIP	
	27C	2	**278-0316**	2	CLIP	
R	28	1	**316-0555**	1	TURBOCHARGER	
	29	2	**303-5791**	1	TUBE AS	

M - METRIC PART
R - REMANUFACTURED PART MAY BE AVAILABLE

329-9129 **TURBOCHARGER GP** (contd.) **i06244696**

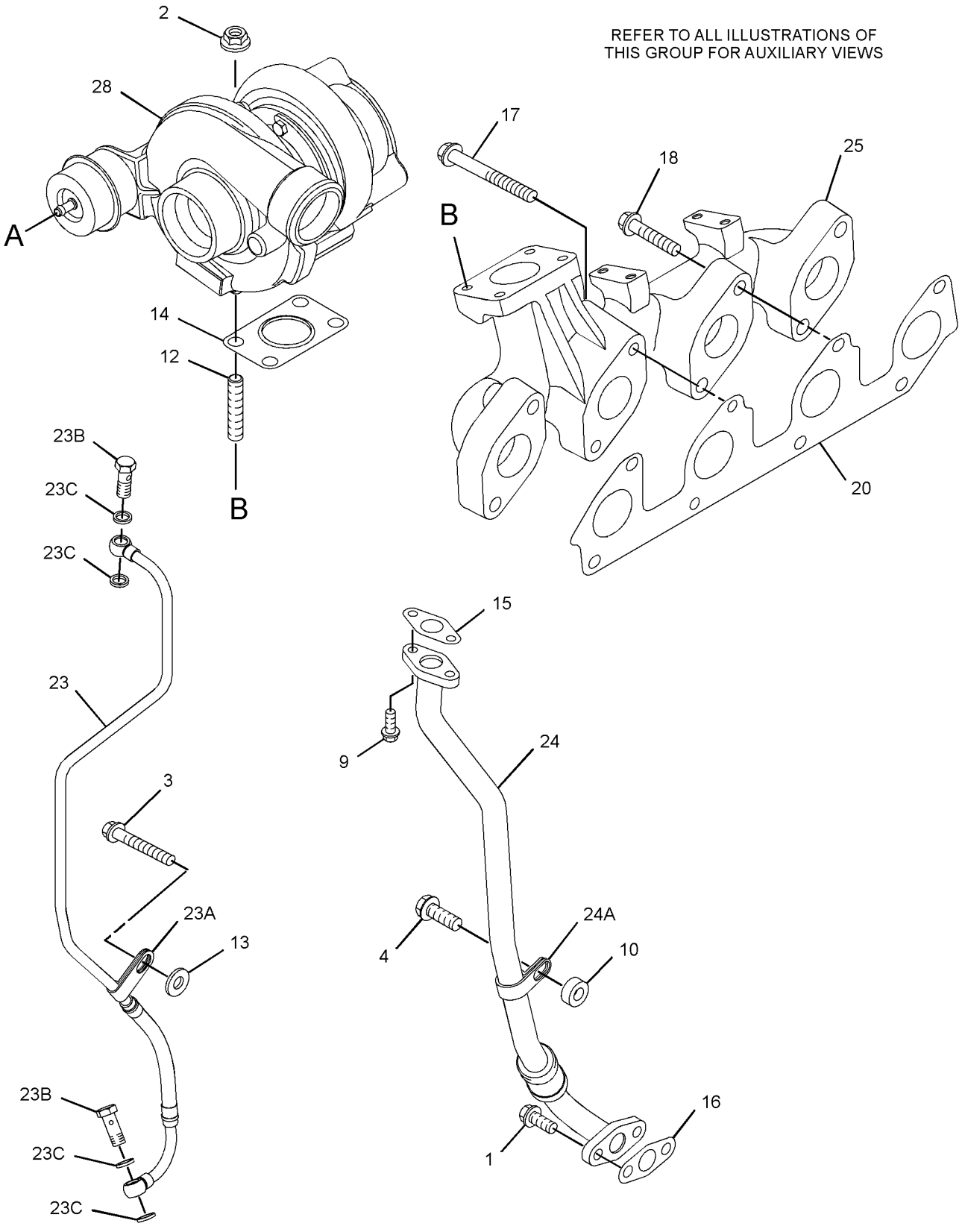

GRAPHIC #1 g06160513

329-9129 **TURBOCHARGER GP (**contd.**)** **i06244696**

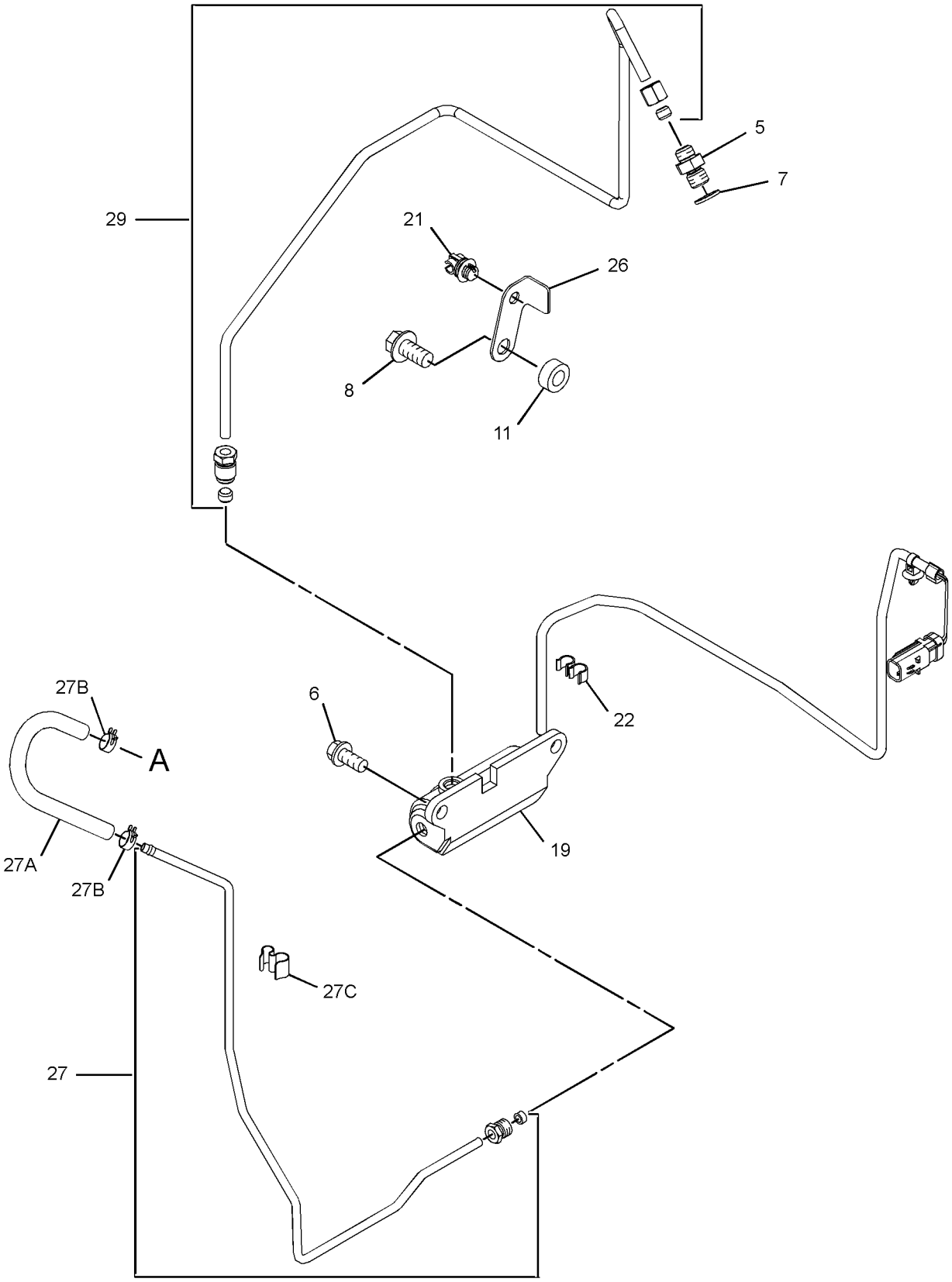

GRAPHIC #2 <END> g06160514

329-9129 TURBOCHARGER GP

ALSO AN ATTACHMENT

SMCS-1052, 1053 **i06920573**

NOTE	REF NO	GRAPHIC REF	PART NUMBER	QTY	PART NAME 1 2 3 4 5 6 (PRODUCT LEVEL)	SEE PAGE
M	1	2	**6I-0217**	2	BOLT (M8X1.25X20-MM)	
M	2	2	**6I-0563**	4	NUT (M10X1.5-THD)	
M	3	2	**6I-0593**	1	BOLT (M10X1.5X30-MM)	
M	4	2	**6I-0654**	1	BOLT (M10X1.5X25-MM)	
	5	1	**6I-0817**	1	ADAPTER	
CM	6	1	**6I-4200**	3	BOLT (M10X1.5X16-MM)	
	7	1	**9Y-9381**	1	WASHER-HARD	
M	9	2	**106-8916**	2	BOLT (M6X16-MM)	
	10	2	**123-4038**	1	SPACER	
	12	2	**361-7519**	4	ROD-THREADED	
	13	2	**172-4325**	1	SPACER	
	14	2	**194-5390**	1	GASKET-MANIFOLD	
	15	2	**353-3477**	1	GASKET-TURBOCHARGER	
	16	2	**353-3478**	1	GASKET-TURBOCHARGER	
	17	2	**238-8292**	1	BOLT-FLANGE HEAD	
M	18	2	**278-0361**	7	BOLT (M10X1.5X45-MM)	
	19	1	**294-7375**	1	SOLENOID (WASTEGATE)	
	20	2	**298-4570**	1	GASKET-EXHAUST MANIFOLD	
	21	1	**298-4576**	1	CLIP	
	22	1	**303-2116**	5	CLIP	
	23	2	**383-8543**	1	TUBE AS-TURBOCHARGER OIL	
	23A	2	**383-8542**	1	CLIP-PIPE	
	23B	2	**225-8524**	2	BOLT-SPECIAL	
	23C	2	**225-8526**	4	WASHER (10.4X13.75X1.37-MM THK)	
	24	2	**303-5787**	1	TUBE AS-TURBOCHARGER OIL (DRAIN)	
	24A	2	**103-2135**	1	CLIP	
	25	2	**303-5788**	1	MANIFOLD-EXHAUST	
C	26	1	**377-6869**	1	BRACKET	
	27	1	**303-5793**	1	TUBE AS	
	27A	1	**300-6520**	1	HOSE AS	
	27B	1	**107-2348**	2	CLIP	
	27C	1	**278-0316**	2	CLIP	
R	28	2	**316-0555**	1	TURBOCHARGER	
	29	1	**303-5791**	1	TUBE AS	

C - CHANGE FROM PREVIOUS TYPE
M - METRIC PART
R - REMANUFACTURED PART MAY BE AVAILABLE

329-9129 **TURBOCHARGER GP (**contd.**)** **i06920573**

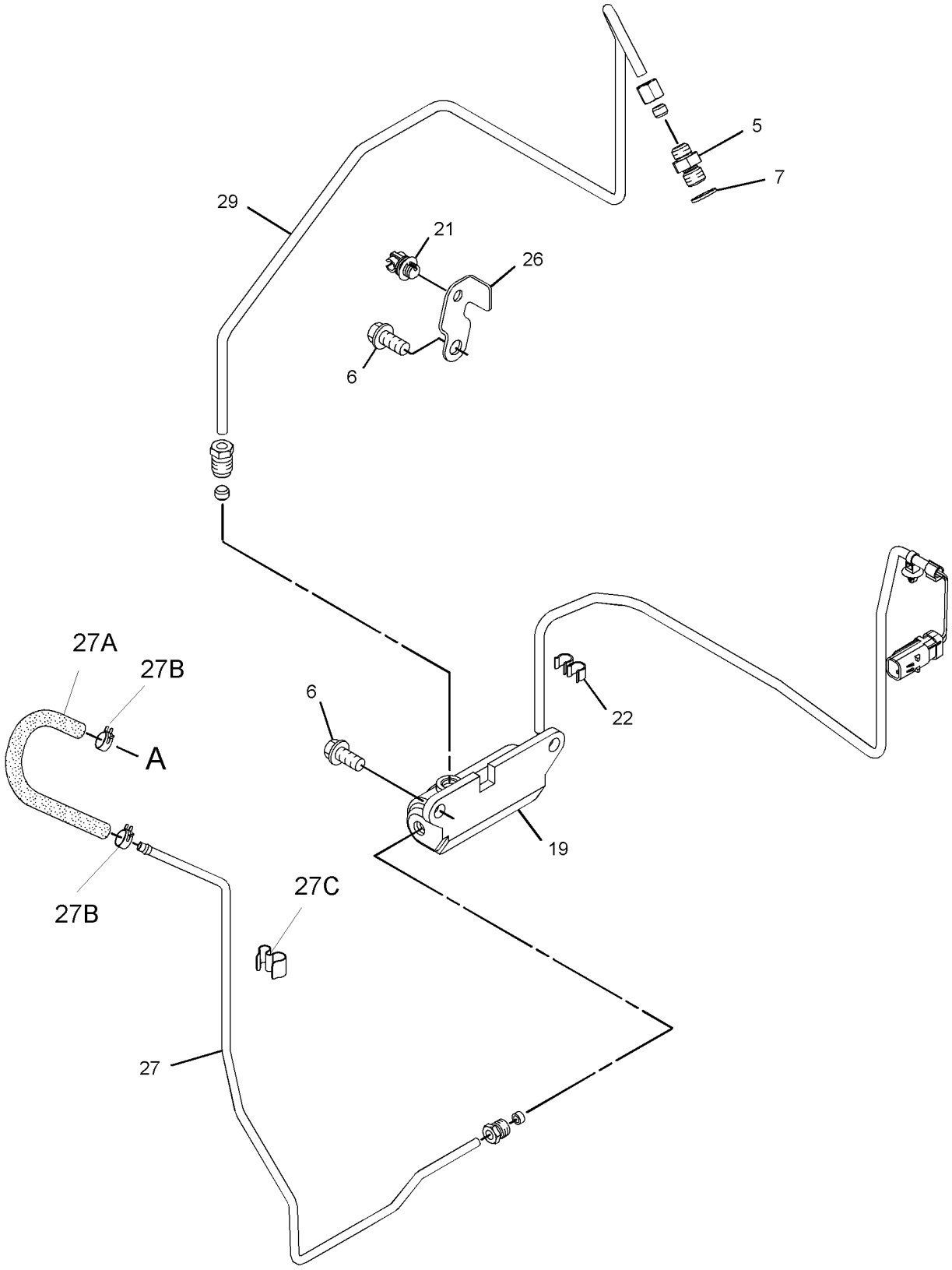

GRAPHIC #1 g06168246

329-9129 **TURBOCHARGER GP** (contd.) **i06920573**

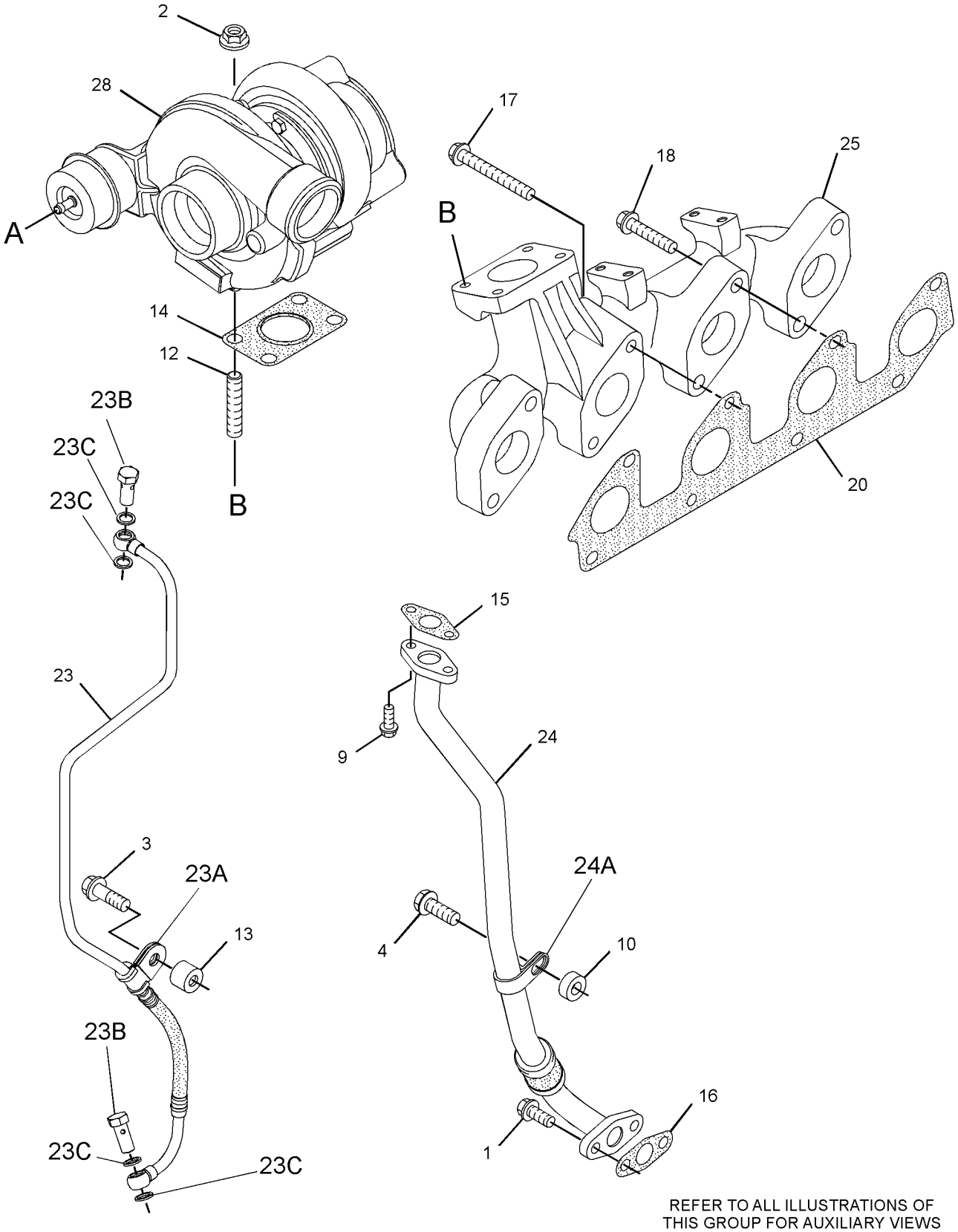

REFER TO ALL ILLUSTRATIONS OF
THIS GROUP FOR AUXILIARY VIEWS

GRAPHIC #2 <END> g06168252

331-8682 TURBOCHARGER GP

TYPE 1

SMCS-1052, 1053 **i04367289**

NOTE	REF NO	GRAPHIC REF	PART NUMBER	QTY	PART NAME 1 2 3 4 5 6 (PRODUCT LEVEL)	SEE PAGE
M	1	1	**6I-0217**	2	BOLT (M8X1.25X20-MM)	
M	2	1	**6I-0260**	4	BOLT (M8X1.25X25-MM)	
M	3	1	**6I-0563**	4	NUT (M10X1.5-THD)	
M	4	2	**6I-0654**	2	BOLT (M10X1.5X25-MM)	
	5	2	**6I-0817**	1	ADAPTER	
	6	2	**9Y-9381**	1	WASHER-HARD	
M	7	2	**100-4830**	1	BOLT (M10X1.5X20-MM)	
M	8	1	**106-8916**	2	BOLT (M6X16-MM)	
	9	2	**127-8165**	1	SPACER	
	10	1	**266-7092**	2	CLAMP-HOSE	
M	11	1	**147-5553**	4	STUD (M10X1.5X40-MM)	
	12	1	**194-5390**	1	GASKET-MANIFOLD	
	13	1	**225-8533**	1	GASKET (TURBOCHARGER)	
	14	1	**225-8534**	1	GASKET (TURBOCHARGER)	
	15	1	**234-3030**	1	GASKET-INLET	
	16	1	**238-8292**	1	BOLT-FLANGE HEAD	
	17	1	**263-5376**	1	HOSE	
M	18	1	**278-0361**	7	BOLT (M10X1.5X45-MM)	
	19	2	**294-7375**	1	SOLENOID (WASTEGATE)	
	20	1	**298-4566**	1	TUBE AS	
	20A	1	**225-8524**	2	BOLT-SPECIAL	
	20B	1	**225-8526**	4	WASHER (10.4X13.75X1.37-MM THK)	
	21	1	**298-4568**	1	TUBE AS	
	22	1	**298-4569**	1	MANIFOLD-EXHAUST	
	23	1	**298-4570**	1	GASKET-EXHAUST MANIFOLD	
	24	2	**298-4573**	2	BOLT	
	25	2	**298-4576**	1	CLIP	
	26	2	**303-2116**	5	CLIP	
	27	2	**303-5792**	1	BRACKET	
	28	2	**310-7533**	1	BRACKET	
	29	2	**310-7536**	1	TUBE AS	
	29A	2	**4B-8774**	1	NUT-FLARED	
	29B	2	**032-8047**	1	FERRULE	
	29C	2	**298-4576**	1	CLIP	
	29D	2	**300-6520**	1	HOSE AS	
	29E	2	**107-2348**	2	CLIP	
R	30	1	**316-0603**	1	TURBOCHARGER	
	31	1	**324-6529**	1	TUBE	
	32	2	**324-6530**	1	TUBE AS-TURBOCHARGER	
	32A	2	**4B-8774**	1	NUT-FLARED	
	32B	2	**032-8047**	2	FERRULE	
	32C	2	**035-8014**	1	NUT	

M - METRIC PART
R - REMANUFACTURED PART MAY BE AVAILABLE

331-8682 **TURBOCHARGER GP (**contd.**)** **i04367289**

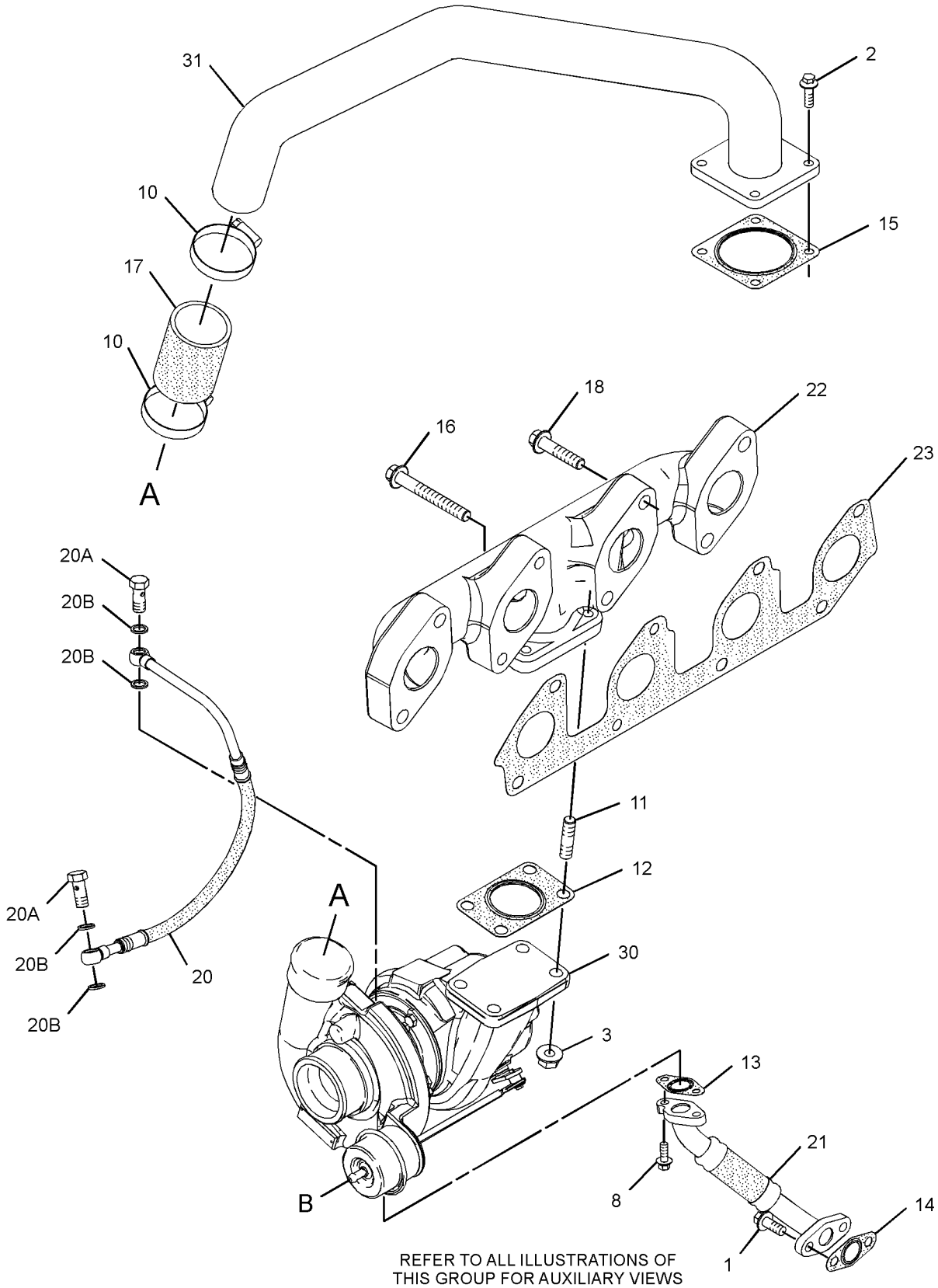

GRAPHIC #1 g01670273

331-8682 **TURBOCHARGER GP (**contd.**)** **i04367289**

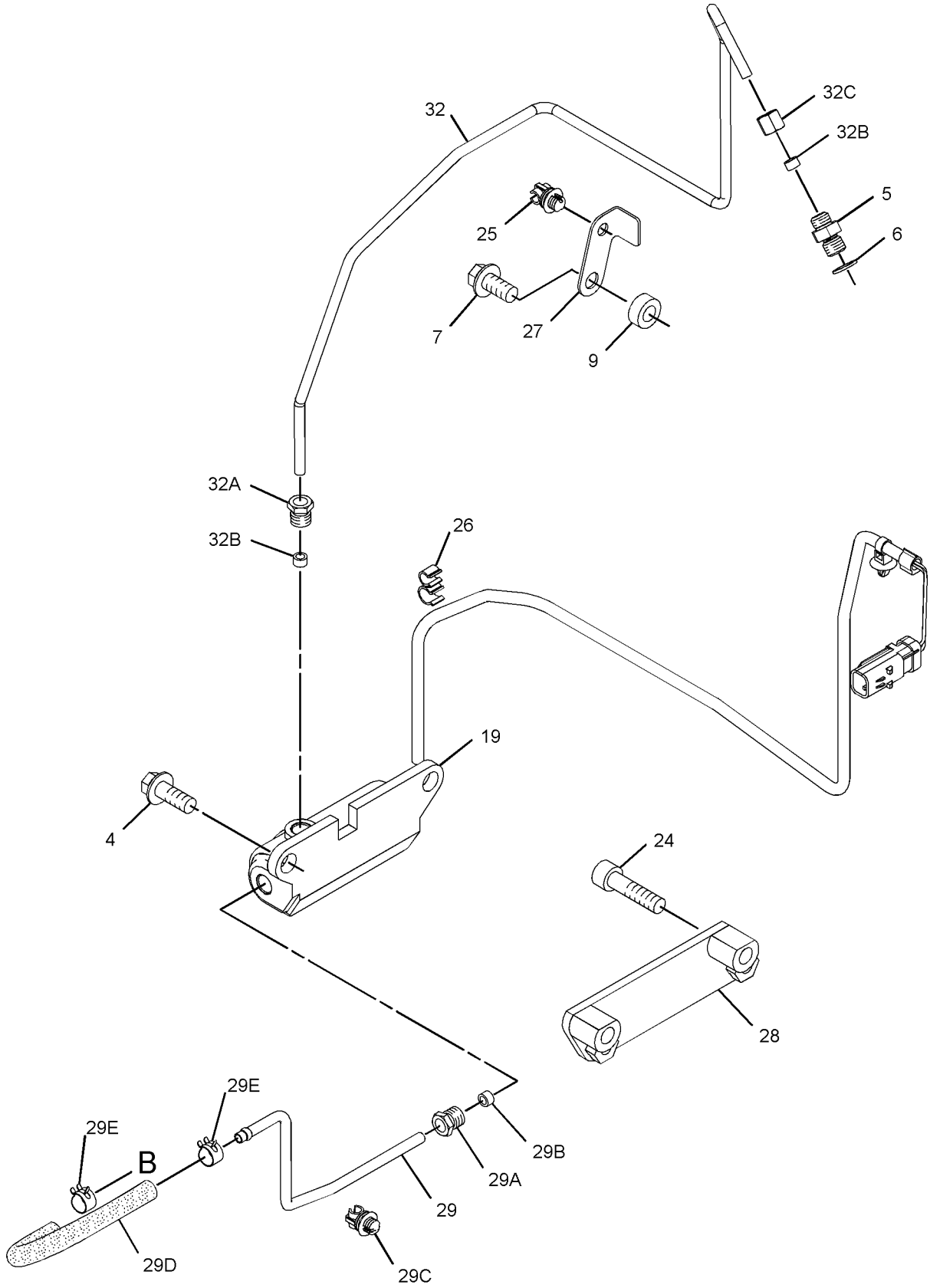

GRAPHIC #2 <END> g01669194

331-8682 TURBOCHARGER GP

TYPE 2

SMCS-1052, 1053 **i05941622**

NOTE	REF NO	GRAPHIC REF	PART NUMBER	QTY	PART NAME 1 2 3 4 5 6 (PRODUCT LEVEL)	SEE PAGE
M	1	1	**6I-0217**	2	BOLT (M8X1.25X20-MM)	
M	2	1	**6I-0260**	4	BOLT (M8X1.25X25-MM)	
M	3	1	**6I-0563**	4	NUT (M10X1.5-THD)	
M	4	2	**6I-0654**	2	BOLT (M10X1.5X25-MM)	
	5	2	**6I-0817**	1	ADAPTER	
	6	2	**9Y-9381**	1	WASHER-HARD	
CM	7	2	**6I-4200**	1	BOLT (M10X1.5X16-MM)	
M	8	1	**106-8916**	2	BOLT (M6X16-MM)	
	10	1	**266-7092**	2	CLAMP-HOSE	
	11	1	**361-7519**	4	ROD-THREADED	
	12	1	**194-5390**	1	GASKET-MANIFOLD	
	13	1	**353-3477**	1	GASKET-TURBOCHARGER	
	14	1	**353-3478**	1	GASKET-TURBOCHARGER	
	15	1	**234-3030**	1	GASKET-INLET	
	16	1	**238-8292**	1	BOLT-FLANGE HEAD	
	17	1	**263-5376**	1	HOSE	
M	18	1	**278-0361**	7	BOLT (M10X1.5X45-MM)	
	19	2	**294-7375**	1	SOLENOID (WASTEGATE)	
	20	1	**298-4566**	1	TUBE AS	
	20A	1	**225-8524**	2	BOLT-SPECIAL	
	20B	1	**225-8526**	4	WASHER (10.4X13.75X1.37-MM THK)	
	21	1	**298-4568**	1	TUBE AS	
	22	1	**298-4569**	1	MANIFOLD-EXHAUST	
	23	1	**298-4570**	1	GASKET-EXHAUST MANIFOLD	
M	24	2	**8T-9515**	2	BOLT-SOCKET HEAD (M10X1.5X40-MM)	
	25	2	**298-4576**	1	CLIP	
	26	2	**303-2116**	5	CLIP	
C	27	2	**377-6869**	1	BRACKET	
	28	2	**310-7533**	1	BRACKET	
	29	2	**310-7536**	1	TUBE AS	
	29A	2	**4B-8774**	1	NUT-FLARED	
	29B	2	**032-8047**	1	FERRULE	
	29C	2	**298-4576**	1	CLIP	
	29D	2	**300-6520**	1	HOSE AS	
	29E	2	**107-2348**	2	CLIP	
R	30	1	**316-0603**	1	TURBOCHARGER	
	31	1	**324-6529**	1	TUBE	
	32	2	**324-6530**	1	TUBE AS-TURBOCHARGER	
	32A	2	**4B-8774**	1	NUT-FLARED	
	32B	2	**032-8047**	2	FERRULE	
	32C	2	**035-8014**	1	NUT	

C - CHANGE FROM PREVIOUS TYPE
M - METRIC PART
R - REMANUFACTURED PART MAY BE AVAILABLE

331-8682 **TURBOCHARGER GP** (contd.) **i05941622**

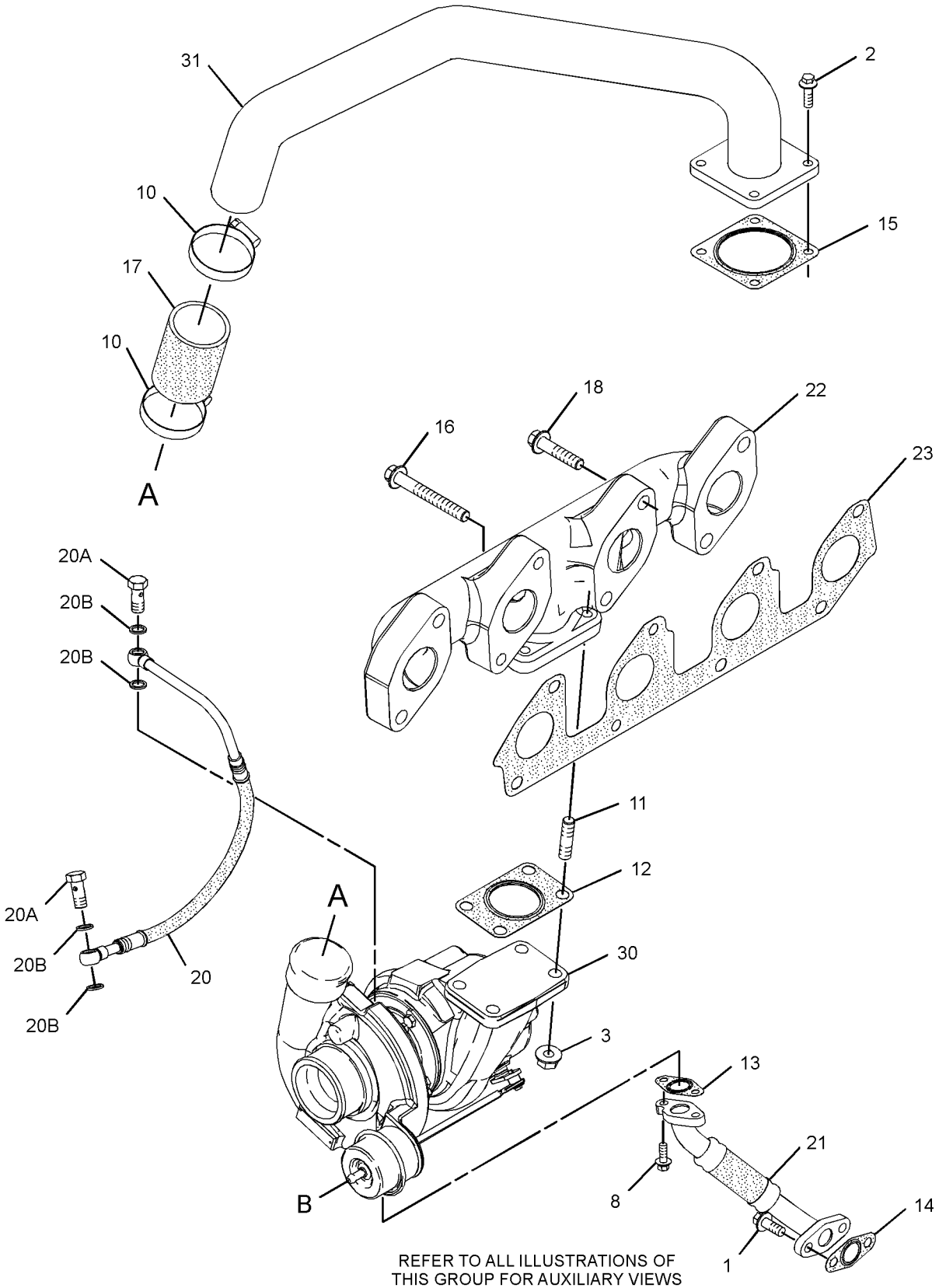

REFER TO ALL ILLUSTRATIONS OF
THIS GROUP FOR AUXILIARY VIEWS

GRAPHIC #1 g01670273

331-8682 **TURBOCHARGER GP (**contd.**)** **i05941622**

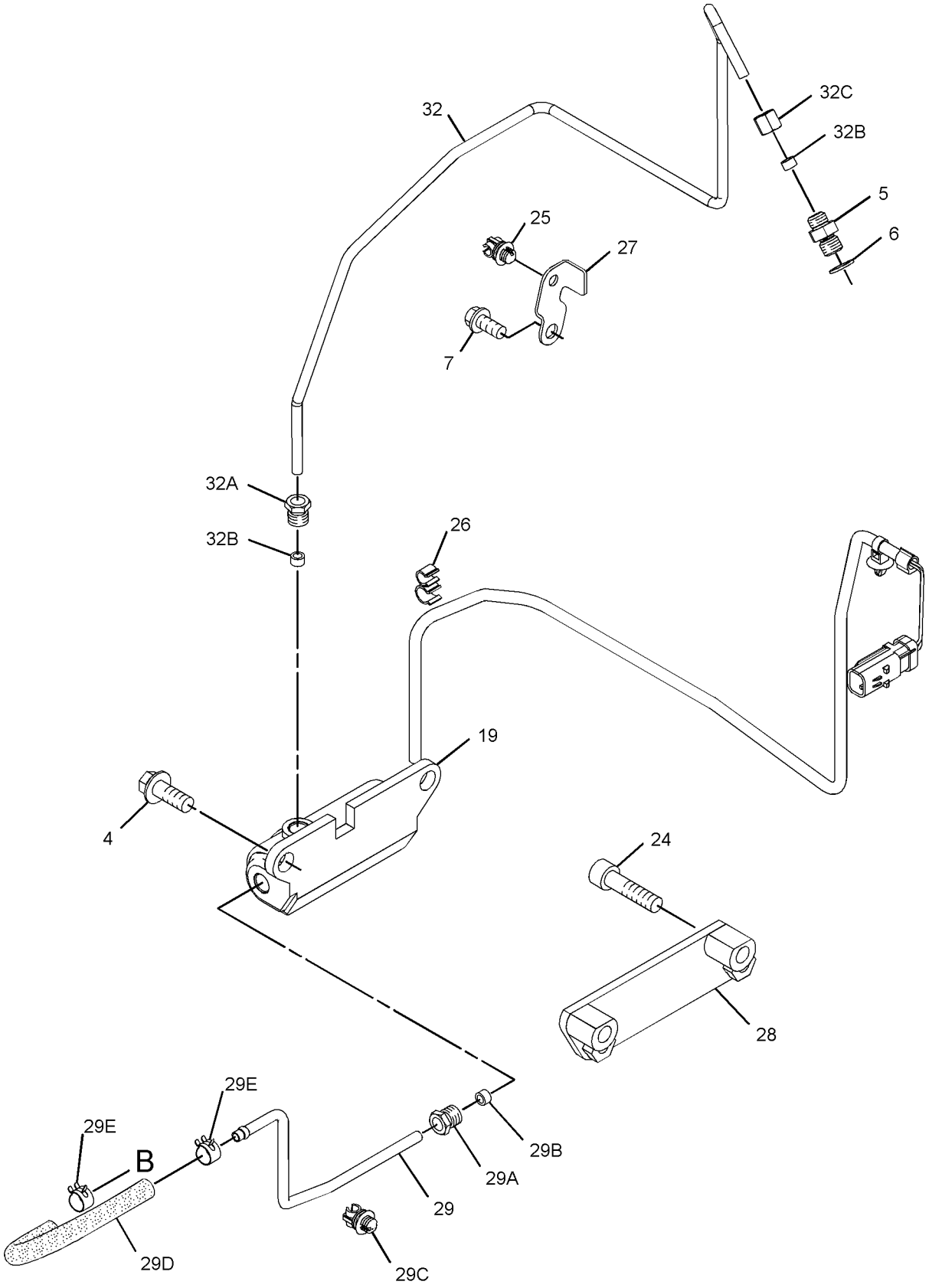

GRAPHIC #2 <END> g03121677

AIR INLET AND EXHAUST SYSTEM

333-8976 TURBOCHARGER GP

S/N: 4444097-UP

SMCS-1052, 1053 **i03730742**

NOTE	REF NO	GRAPHIC REF	PART NUMBER	QTY	PART NAME 1 2 3 4 5 6 (PRODUCT LEVEL)	SEE PAGE
M	1	1	**6I-0217**	2	BOLT (M8X1.25X20-MM)	
M	2	1	**6I-0563**	7	NUT (M10X1.5-THD)	
M	3	1	**6I-0593**	2	BOLT (M10X1.5X30-MM)	
M	4	1	**6I-0654**	3	BOLT (M10X1.5X25-MM)	
M	5	2	**6I-0789**	4	BOLT (M10X1.5X60-MM)	
	6	2	**6I-0817**	1	ADAPTER	
M	7	2	**6I-4200**	2	BOLT (M10X1.5X16-MM)	
	8	2	**9Y-9381**	1	WASHER-HARD	
M	9	2	**100-4830**	1	BOLT (M10X1.5X20-MM)	
M	10	1	**106-8916**	2	BOLT (M6X16-MM)	
	11	2	**127-8165**	1	SPACER	
M	12	1	**147-5553**	7	STUD (M10X1.5X40-MM)	
	13	1	**194-5390**	1	GASKET-MANIFOLD	
	14	1	**225-8530**	1	GASKET	
	15	1	**225-8533**	1	GASKET	
	16	1	**225-8534**	1	GASKET	
	17	1	**227-4562**	1	ELBOW-EXHAUST	
	18	1	**232-6189**	1	TUBE AS	
M	19	1	**278-0361**	8	BOLT (M10X1.5X45-MM)	
	20	2	**294-7375**	1	SOLENOID (WASTEGATE)	
	21	1	**298-4570**	1	GASKET-EXHAUST MANIFOLD	
	22	2	**298-4576**	1	CLIP	
	23	1	**301-8255**	1	TUBE AS	
	23A	1	**225-8524**	2	BOLT-SPECIAL	
	23B	1	**225-8526**	4	WASHER (10.4X13.75X1.37-MM THK)	
	24	1	**301-8256**	1	MANIFOLD-EXHAUST	
	25	1	**302-0581**	1	ADAPTER-EXHAUST	
	26	2	**303-2116**	4	CLIP	
	27	2	**303-5792**	1	BRACKET	
	28	1	**307-2805**	1	BRACKET	
	29	2	**307-2831**	1	BRACKET	
	30	2	**311-7458**	1	TUBE AS	
	30A	2	**032-8047**	1	FERRULE	
	30B	2	**032-8191**	1	NUT	
	30C	2	**298-4576**	2	CLIP	
	30D	2	**300-6520**	1	HOSE AS	
	30E	2	**107-2348**	2	CLIP	
	31	3	**315-4691**	1	INDICATOR-AIR FILTER CHANGE	
	32	1	**316-0514**	1	TURBOCHARGER	
	33	3	**321-2413**	1	FILTER AS-AIR	
	33A	3	**321-2411**	1	FILTER ELEMENT-AIR (PRIMARY)	
	33B	3	**321-2412**	1	FILTER ELEMENT-AIR (SECONDARY)	
	34	2	**326-4508**	1	TUBE AS	
	34A	2	**032-8047**	2	FERRULE	
	34B	2	**032-8191**	1	NUT	
	34C	2	**035-8014**	1	NUT	
	35	3	**333-8970**	1	VALVE-EXHAUST	
	36	3	**333-8971**	1	ORIFICE	

M - METRIC PART

333-8976 **TURBOCHARGER GP (**contd.**)** **i03730742**

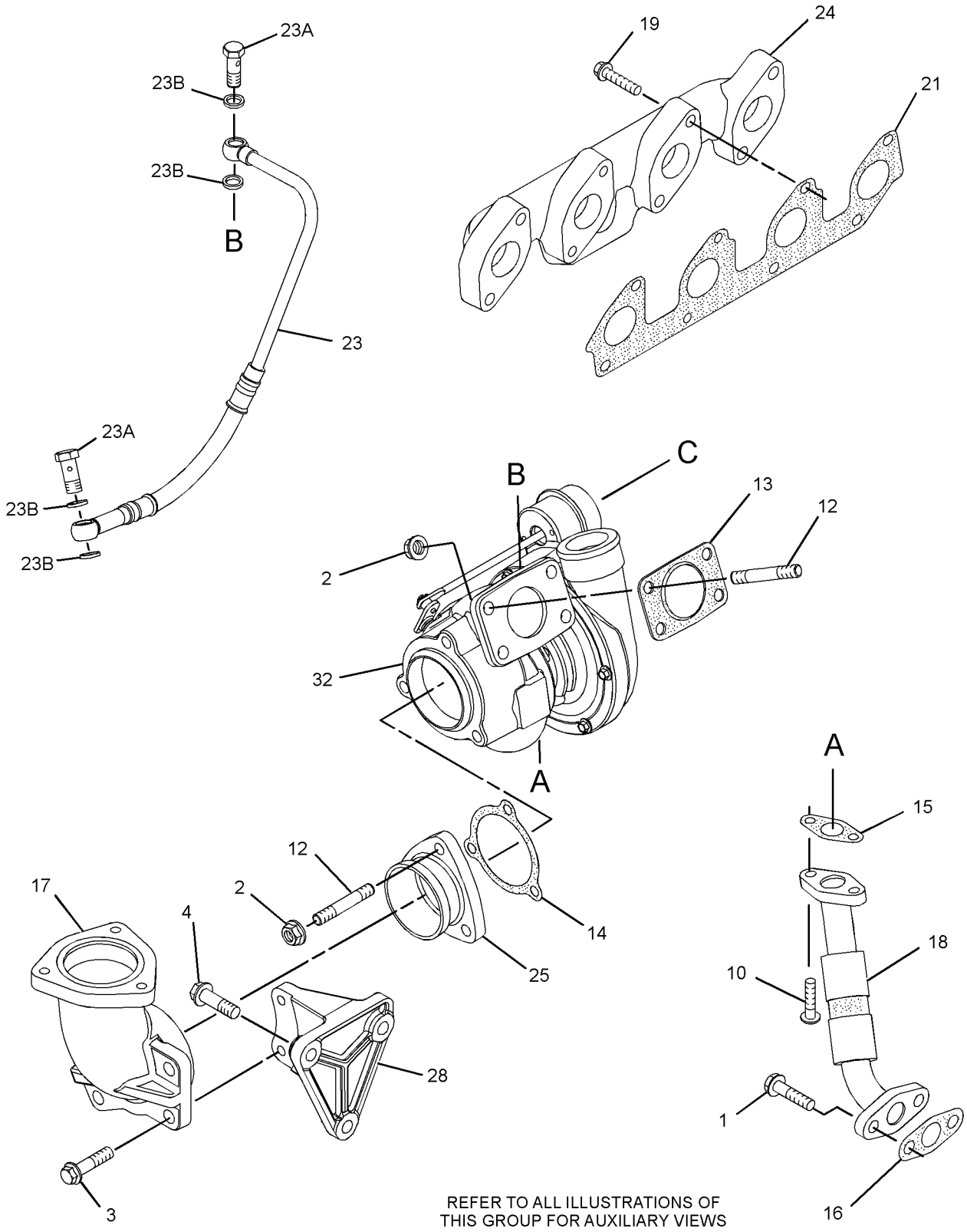

GRAPHIC #1 g01916133

333-8976 **TURBOCHARGER GP (**contd.**)** **i03730742**

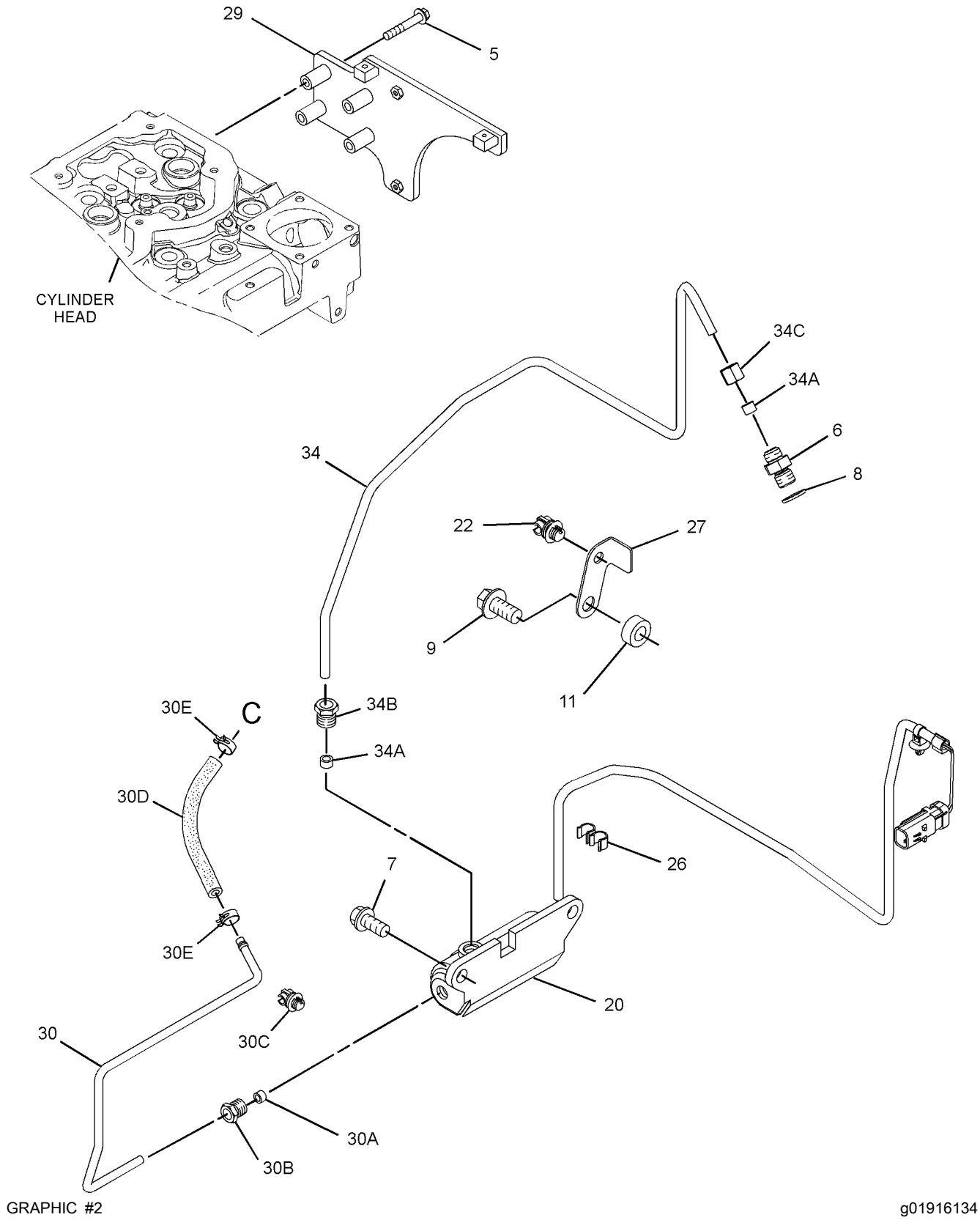

GRAPHIC #2

g01916134

333-8976 **TURBOCHARGER GP (**contd.**)** **i03730742**

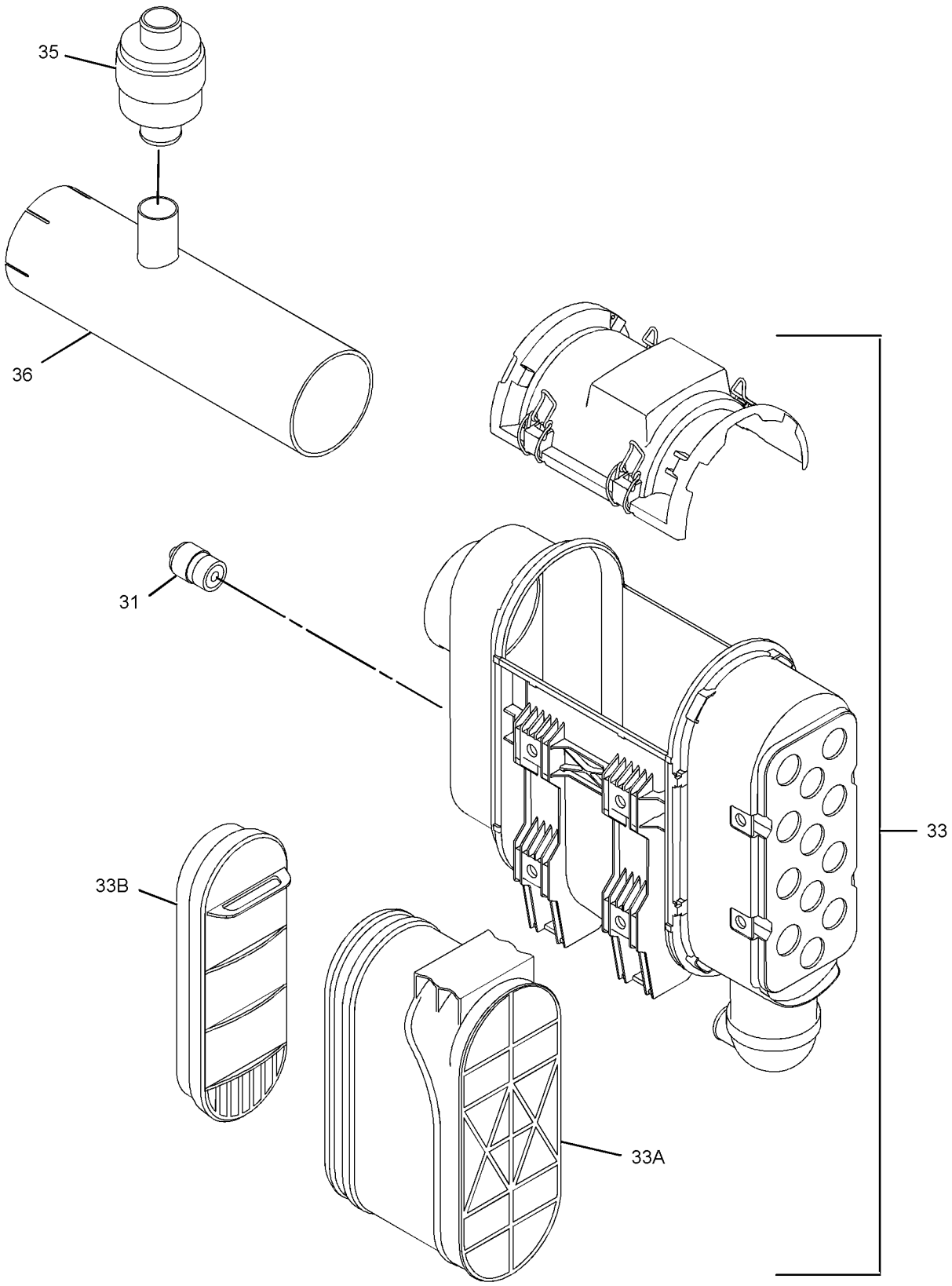

GRAPHIC #3 <END> g01916135

333-8976 TURBOCHARGER GP

SMCS-1052, 1053 **i06948865**

NOTE	REF NO	GRAPHIC REF	PART NUMBER	QTY	PART NAME 1 2 3 4 5 6 (PRODUCT LEVEL)	SEE PAGE
M	1	1	**6I-0217**	2	BOLT (M8X1.25X20-MM)	
M	2	1	**6I-0563**	7	NUT (M10X1.5-THD)	
M	3	1	**6I-0593**	2	BOLT (M10X1.5X30-MM)	
M	4	1	**6I-0654**	3	BOLT (M10X1.5X25-MM)	
M	5	2	**6I-0789**	4	BOLT (M10X1.5X60-MM)	
	6	2	**6I-0817**	1	ADAPTER	
CM	7	2	**6I-4200**	3	BOLT (M10X1.5X16-MM)	
	8	2	**9Y-9381**	1	WASHER-HARD	
M	10	1	**106-8916**	2	BOLT (M6X16-MM)	
	12	1	**361-7519**	7	ROD-THREADED	
	13	1	**194-5390**	1	GASKET-MANIFOLD	
	14	1	**225-8530**	1	GASKET	
	15	1	**353-3477**	1	GASKET-TURBOCHARGER	
	16	1	**353-3478**	1	GASKET-TURBOCHARGER	
	17	1	**227-4562**	1	ELBOW-EXHAUST	
	18	1	**507-5019**	1	LINE AS-OIL	
	18A	1	**269-3086**	2	CLAMP-BAND	
M	19	1	**278-0361**	8	BOLT (M10X1.5X45-MM)	
	20	2	**294-7375**	1	SOLENOID (WASTEGATE)	
	21	1	**298-4570**	1	GASKET-EXHAUST MANIFOLD	
	22	2	**298-4576**	1	CLIP	
	23	1	**301-8255**	1	TUBE AS	
	23A	1	**225-8524**	2	BOLT-SPECIAL	
	23B	1	**225-8526**	4	WASHER (10.4X13.75X1.37-MM THK)	
	24	1	**301-8256**	1	MANIFOLD-EXHAUST	
	25	1	**302-0581**	1	ADAPTER-EXHAUST	
	26	2	**303-2116**	4	CLIP	
C	27	2	**377-6869**	1	BRACKET	
	28	1	**307-2805**	1	BRACKET	
	29	2	**445-1434**	1	BRACKET AS	
	30	2	**311-7458**	1	TUBE AS	
	30A	2	**298-4576**	2	CLIP	
	30B	2	**300-6520**	1	HOSE AS	
	30C	2	**107-2348**	2	CLIP	
	31	3	**315-4691**	1	INDICATOR-AIR FILTER CHANGE	
	32	1	**316-0514**	1	TURBOCHARGER	
	33	3	**321-2413**	1	FILTER AS-AIR	
	33A	3	**321-2411**	1	FILTER ELEMENT-AIR (PRIMARY)	
	33B	3	**321-2412**	1	FILTER ELEMENT-AIR (SECONDARY)	
	34	2	**326-4508**	1	TUBE AS	
	35	3	**333-8970**	1	VALVE-EXHAUST	
	36	3	**333-8971**	1	ORIFICE	

C - CHANGE FROM PREVIOUS TYPE
M - METRIC PART

333-8976 **TURBOCHARGER GP (**contd.**)** **i06948865**

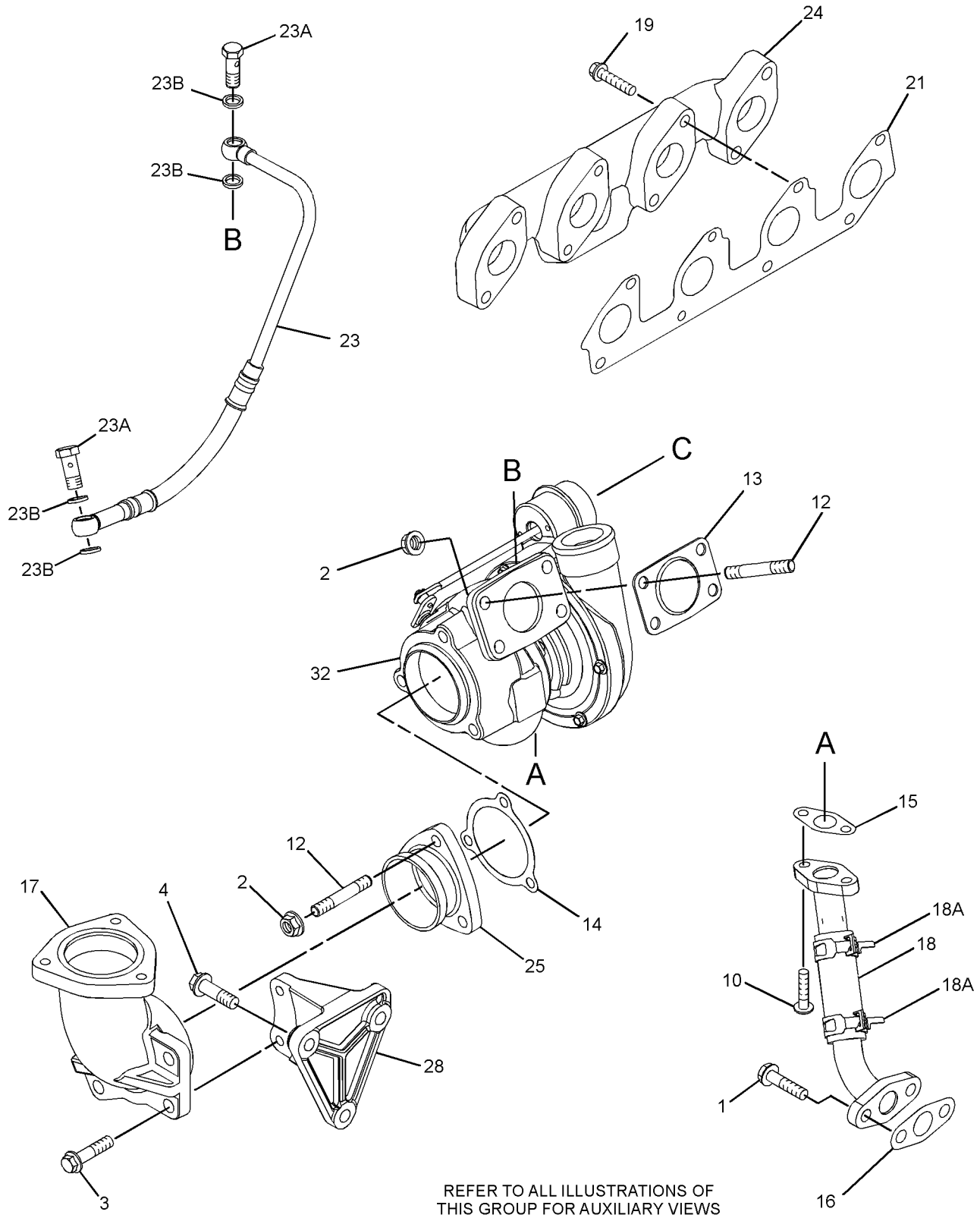

REFER TO ALL ILLUSTRATIONS OF
THIS GROUP FOR AUXILIARY VIEWS

GRAPHIC #1 g06202755

333-8976 **TURBOCHARGER GP (**contd.**)** **i06948865**

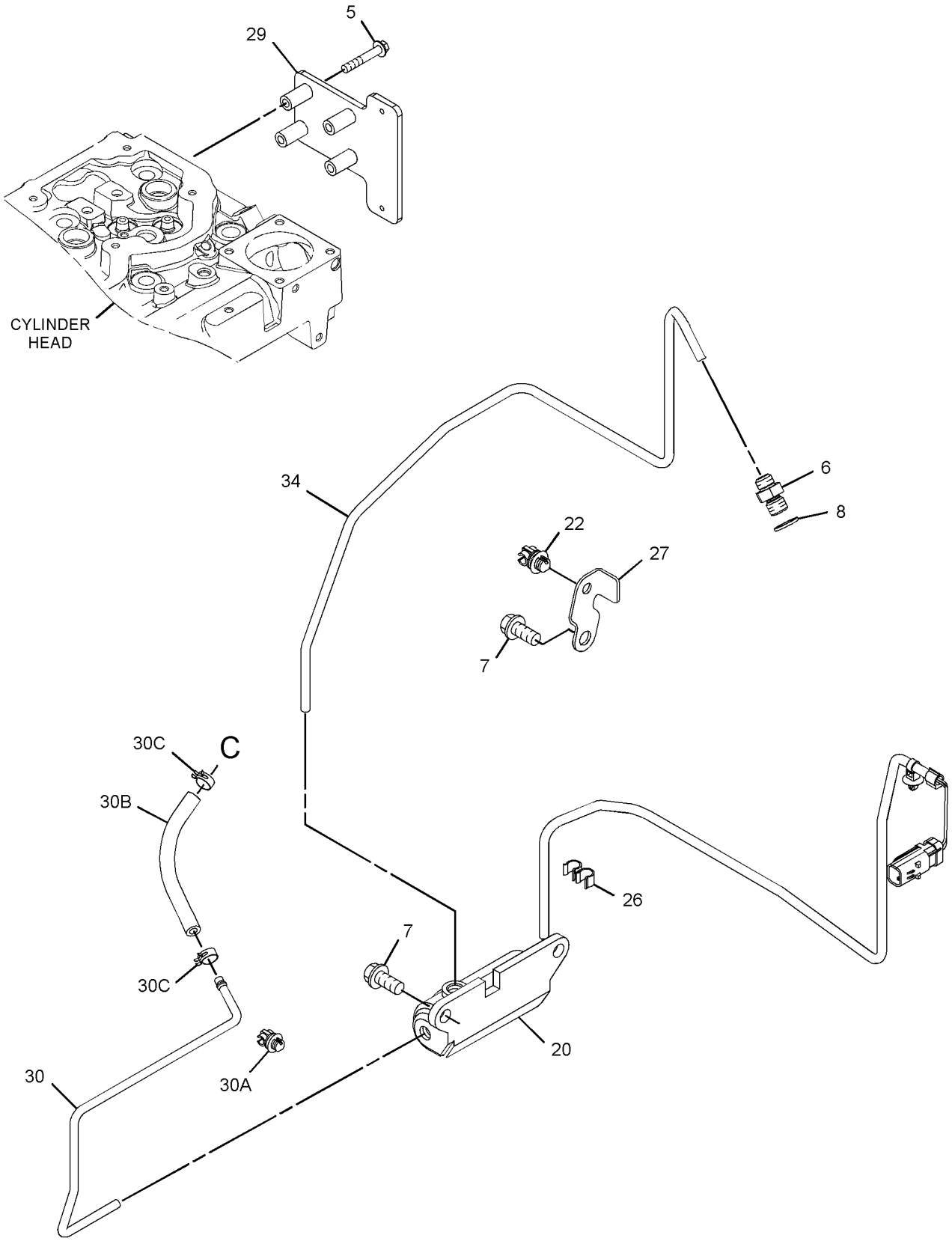

GRAPHIC #2 g06202756

333-8976 **TURBOCHARGER GP (**contd.**)** **i06948865**

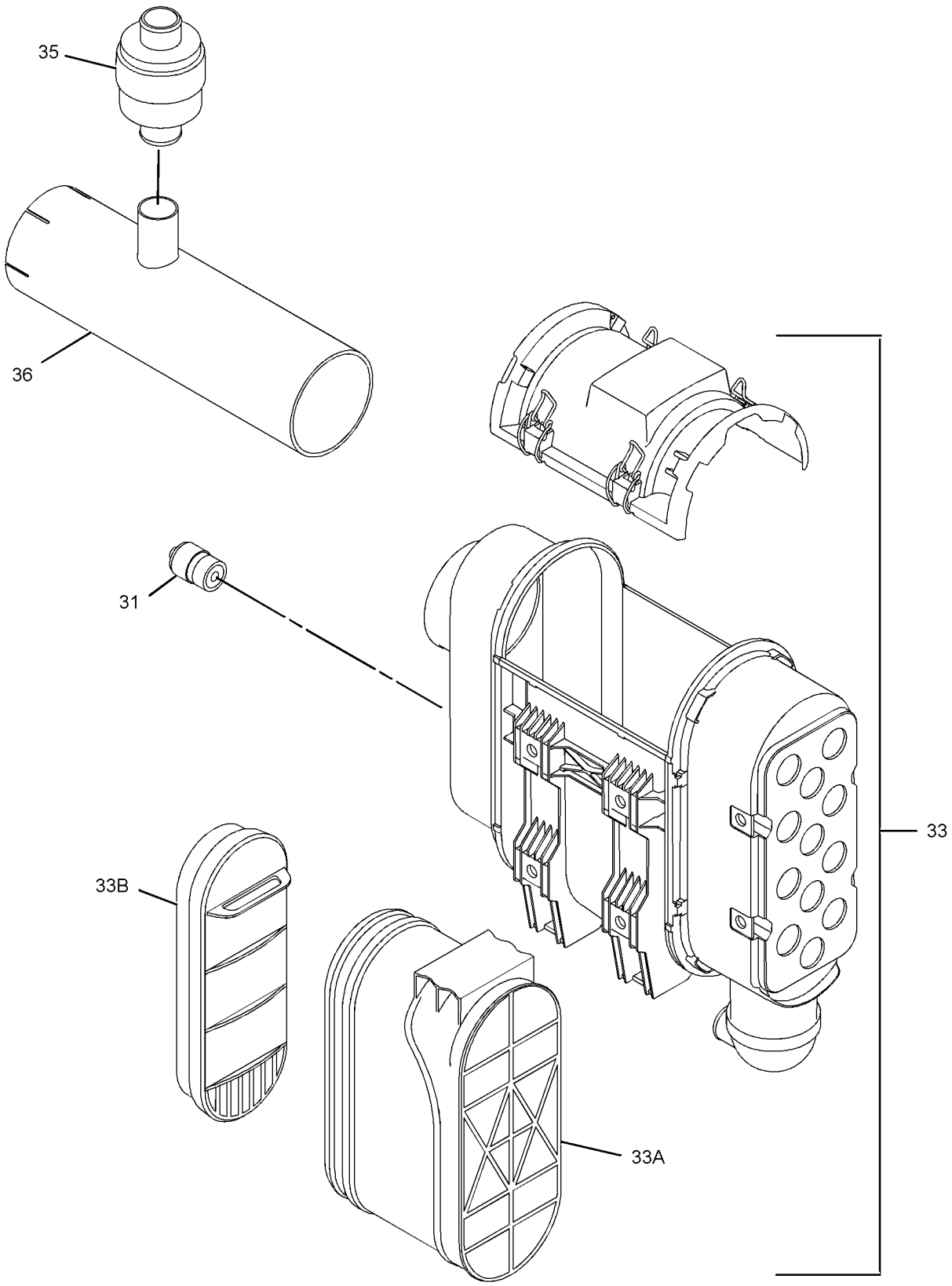

GRAPHIC #3 <END> g01916135

339-1795 TURBOCHARGER GP

S/N: 4441-11071

SMCS-1052, 1053 **i03730743**

NOTE	REF NO	GRAPHIC REF	PART NUMBER	QTY	PART NAME 1 2 3 4 5 6 (PRODUCT LEVEL)	SEE PAGE
M	1	1	**6I-0217**	2	BOLT (M8X1.25X20-MM)	
M	2	1	**6I-0563**	7	NUT (M10X1.5-THD)	
M	3	1	**6I-0593**	2	BOLT (M10X1.5X30-MM)	
M	4	2	**6I-0645**	4	BOLT (M8X1.25X25-MM)	
M	5	1	**6I-0654**	3	BOLT (M10X1.5X25-MM)	
	6	2	**6I-0817**	1	ADAPTER	
M	7	2	**6I-4200**	2	BOLT (M10X1.5X16-MM)	
	8	2	**9Y-9381**	1	WASHER-HARD	
M	9	2	**100-4830**	1	BOLT (M10X1.5X20-MM)	
M	10	1	**106-8916**	2	BOLT (M6X16-MM)	
	11	2	**127-8165**	1	SPACER	
M	12	1	**147-5553**	7	STUD (M10X1.5X40-MM)	
	13	1	**194-5390**	1	GASKET-MANIFOLD	
	14	1	**225-8530**	1	GASKET	
	15	1	**225-8533**	1	GASKET	
	16	1	**225-8534**	1	GASKET	
	17	1	**227-4562**	1	ELBOW-EXHAUST	
	18	1	**232-6189**	1	TUBE AS	
	19	2	**234-3029**	1	HOSE	
	20	2	**234-3030**	1	GASKET-INLET	
	21	2	**266-7092**	2	CLAMP-HOSE	
M	22	1	**278-0361**	8	BOLT (M10X1.5X45-MM)	
	23	2	**294-7375**	1	SOLENOID (WASTEGATE)	
	24	1	**298-4570**	1	GASKET-EXHAUST MANIFOLD	
	25	2	**298-4576**	1	CLIP	
	26	1	**301-8255**	1	TUBE AS	
	26A	1	**225-8524**	2	BOLT-SPECIAL	
	26B	1	**225-8526**	4	WASHER (10.4X13.75X1.37-MM THK)	
	27	1	**301-8256**	1	MANIFOLD-EXHAUST	
	28	1	**302-0581**	1	ADAPTER-EXHAUST	
	29	2	**303-2116**	4	CLIP	
	30	2	**303-5792**	1	BRACKET	
	31	1	**307-2805**	1	BRACKET	
	32	2	**311-7458**	1	TUBE AS	
	32A	2	**032-8047**	1	FERRULE	
	32B	2	**032-8191**	1	NUT	
	32C	2	**298-4576**	2	CLIP	
	32D	2	**300-6520**	1	HOSE AS	
	32E	2	**107-2348**	2	CLIP	
	33	1	**316-0562**	1	TURBOCHARGER	
	34	2	**326-4508**	1	TUBE AS	
	34A	2	**032-8047**	2	FERRULE	
	34B	2	**032-8191**	1	NUT	
	34C	2	**035-8014**	1	NUT	
	35	2	**341-4024**	1	TUBE	

M - METRIC PART

339-1795 **TURBOCHARGER GP (**contd.**)** **i03730743**

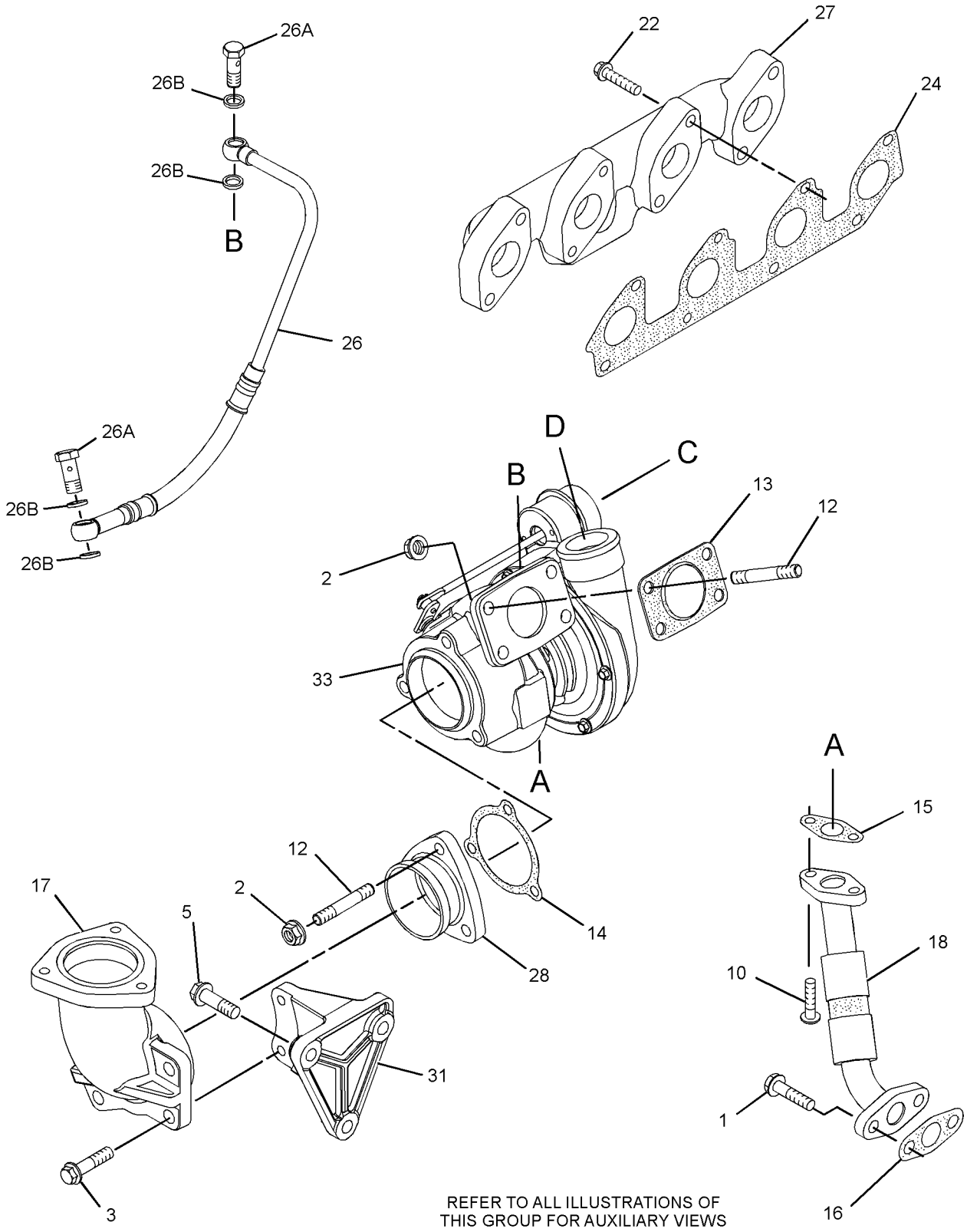

GRAPHIC #1 g01993315

339-1795 **TURBOCHARGER GP (**contd.**)** **i03730743**

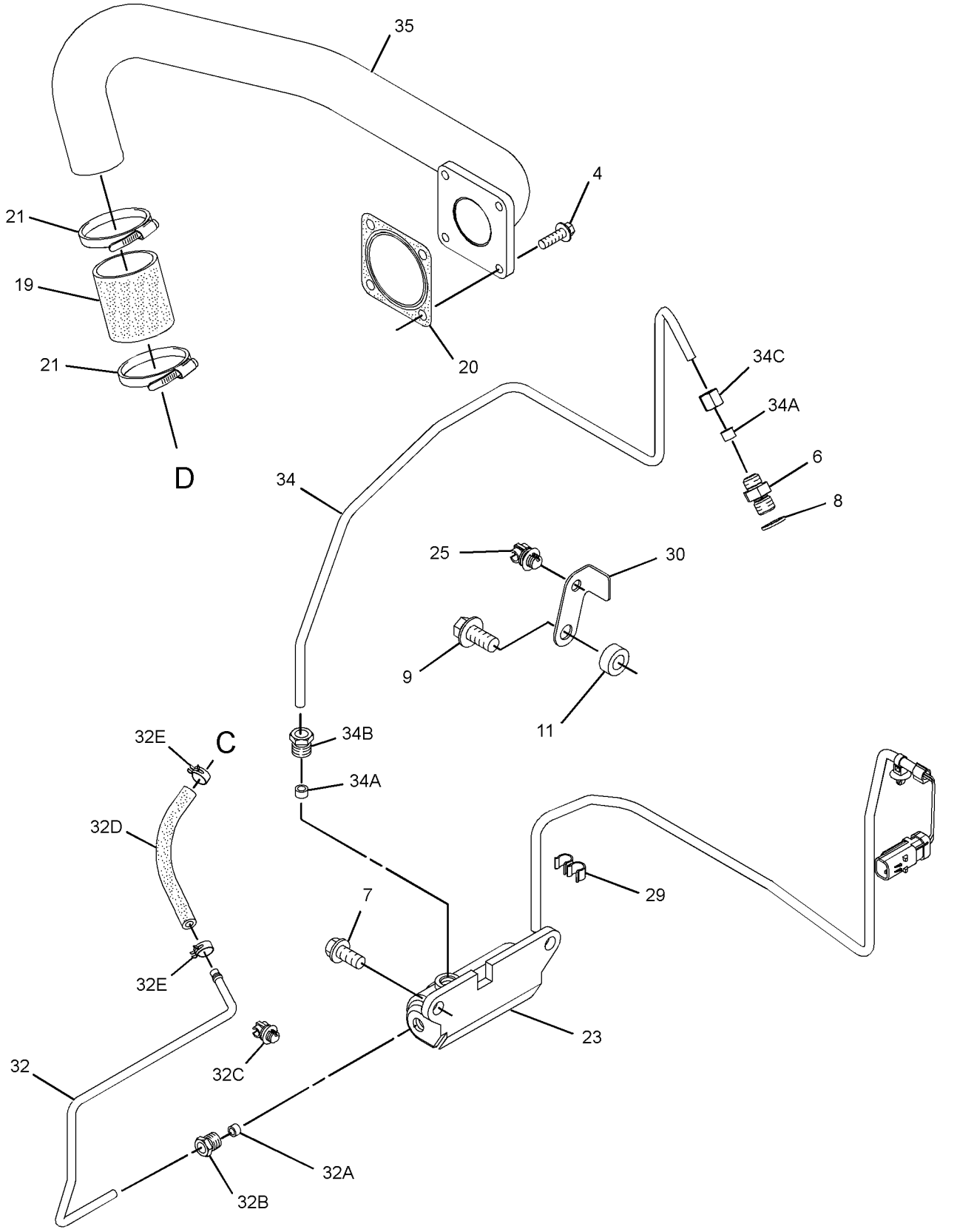

GRAPHIC #2 <END> g01995154

339-1795 TURBOCHARGER GP

SMCS-1052, 1053 **i05948541**

NOTE	REF NO	GRAPHIC REF	PART NUMBER	QTY	PART NAME 1 2 3 4 5 6 (PRODUCT LEVEL)	SEE PAGE
M	1	1	**6I-0217**	2	BOLT (M8X1.25X20-MM)	
M	2	1	**6I-0563**	7	NUT (M10X1.5-THD)	
M	3	1	**6I-0593**	2	BOLT (M10X1.5X30-MM)	
M	4	2	**6I-0645**	4	BOLT (M8X1.25X25-MM)	
M	5	1	**6I-0654**	3	BOLT (M10X1.5X25-MM)	
	6	2	**6I-0817**	1	ADAPTER	
CM	7	2	**6I-4200**	3	BOLT (M10X1.5X16-MM)	
	8	2	**9Y-9381**	1	WASHER-HARD	
M	10	1	**106-8916**	2	BOLT (M6X16-MM)	
	12	1	**361-7519**	7	ROD-THREADED	
	13	1	**194-5390**	1	GASKET-MANIFOLD	
	14	1	**225-8530**	1	GASKET	
	15	1	**353-3477**	1	GASKET-TURBOCHARGER	
	16	1	**353-3478**	1	GASKET-TURBOCHARGER	
	17	1	**227-4562**	1	ELBOW-EXHAUST	
	18	1	**232-6189**	1	TUBE AS	
	19	2	**234-3029**	1	HOSE	
	20	2	**234-3030**	1	GASKET-INLET	
	21	2	**266-7092**	2	CLAMP-HOSE	
M	22	1	**278-0361**	8	BOLT (M10X1.5X45-MM)	
	23	2	**294-7375**	1	SOLENOID (WASTEGATE)	
	24	1	**298-4570**	1	GASKET-EXHAUST MANIFOLD	
	25	2	**298-4576**	1	CLIP	
	26	1	**301-8255**	1	TUBE AS	
	26A	1	**225-8524**	2	BOLT-SPECIAL	
	26B	1	**225-8526**	4	WASHER (10.4X13.75X1.37-MM THK)	
	27	1	**301-8256**	1	MANIFOLD-EXHAUST	
	28	1	**302-0581**	1	ADAPTER-EXHAUST	
	29	2	**303-2116**	4	CLIP	
C	30	2	**377-6869**	1	BRACKET	
	31	1	**307-2805**	1	BRACKET	
	32	2	**311-7458**	1	TUBE AS	
	32A	2	**032-8047**	1	FERRULE	
	32B	2	**032-8191**	1	NUT	
	32C	2	**298-4576**	2	CLIP	
	32D	2	**300-6520**	1	HOSE AS	
	32E	2	**107-2348**	2	CLIP	
	33	1	**316-0562**	1	TURBOCHARGER	
	34	2	**326-4508**	1	TUBE AS	
	34A	2	**032-8047**	2	FERRULE	
	34B	2	**032-8191**	1	NUT	
	34C	2	**035-8014**	1	NUT	
	35	2	**341-4024**	1	TUBE	

C - CHANGE FROM PREVIOUS TYPE
M - METRIC PART

339-1795 **TURBOCHARGER GP (**contd.**)** **i05948541**

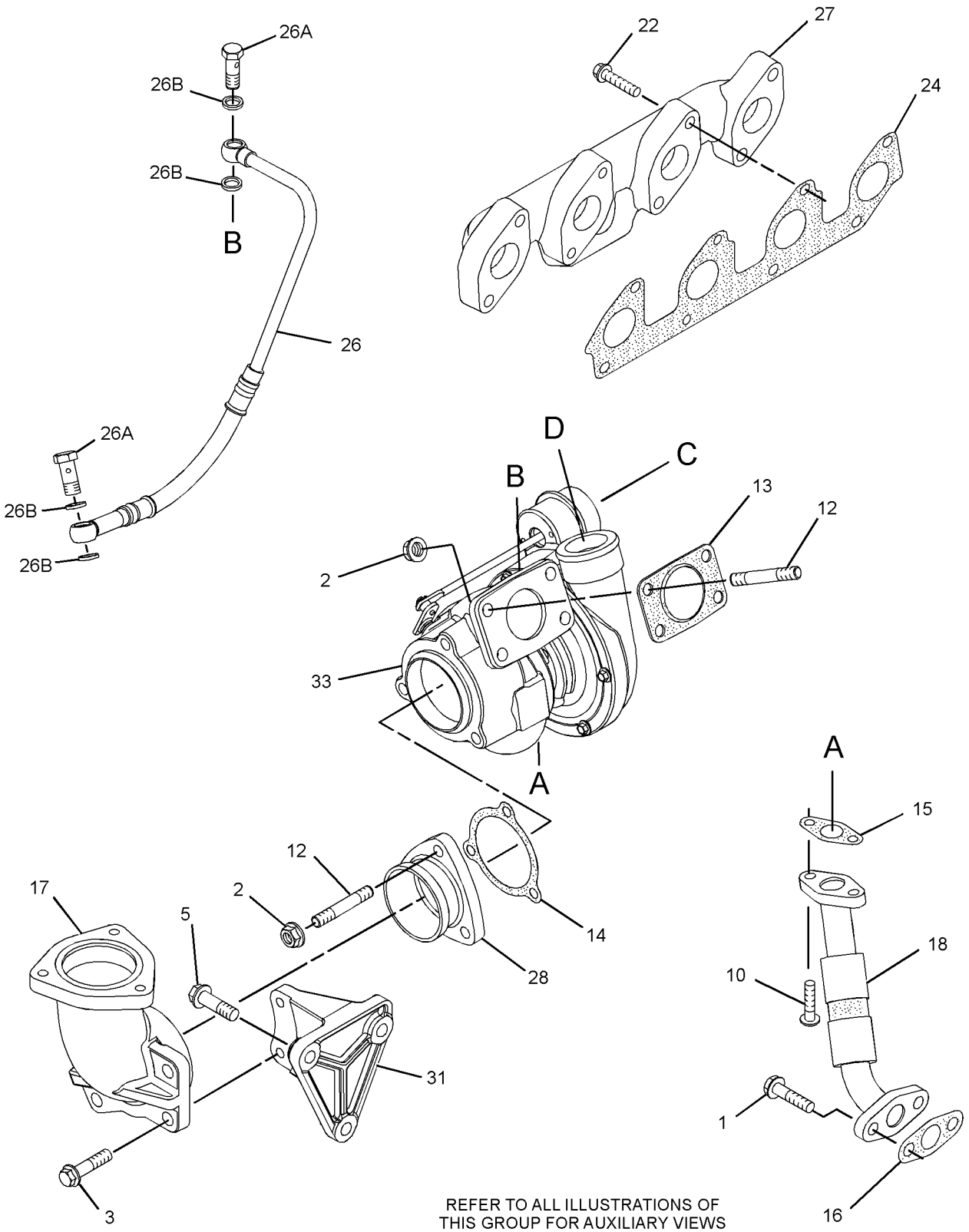

GRAPHIC #1 g01993315

339-1795 **TURBOCHARGER GP (**contd.**)** **i05948541**

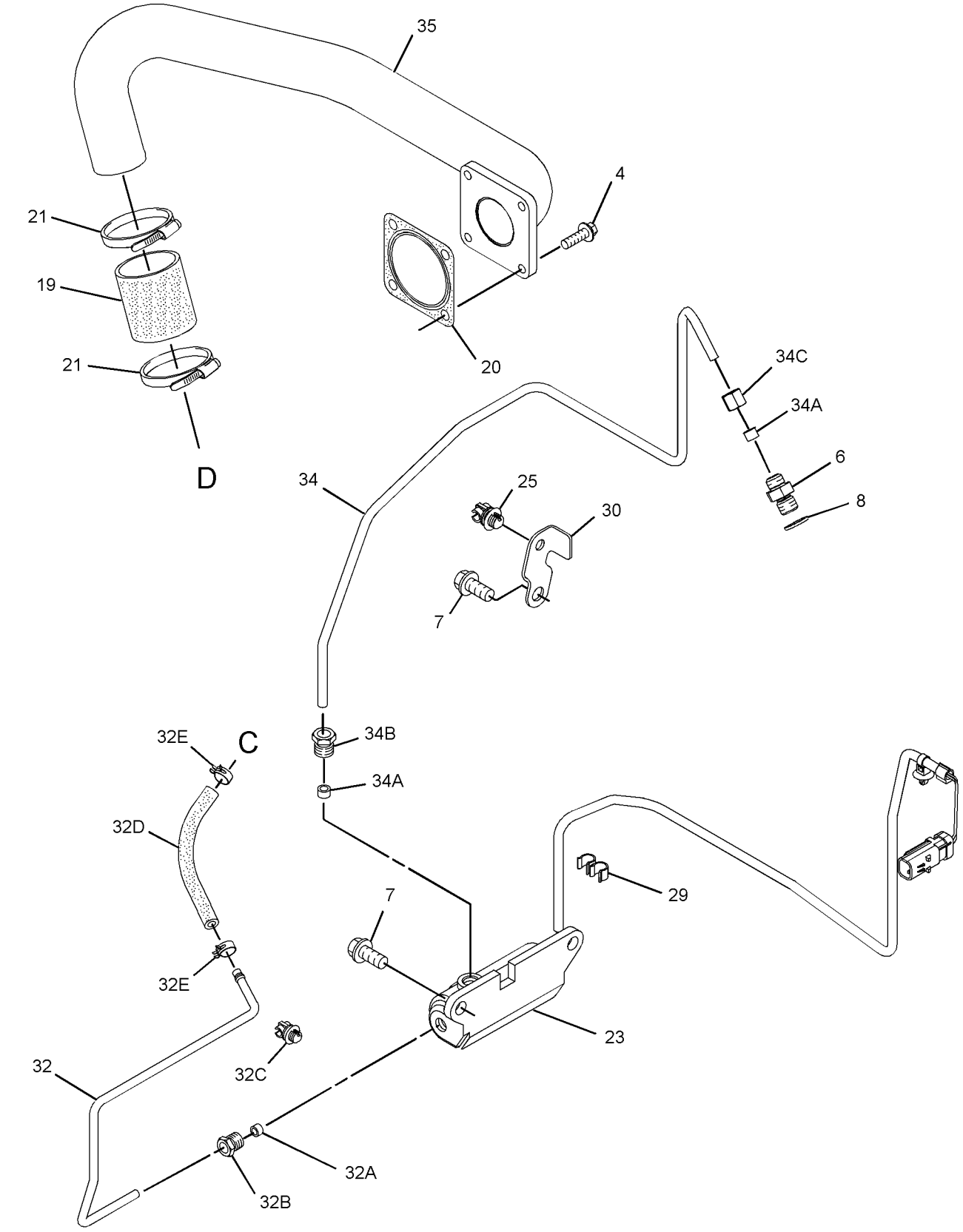

GRAPHIC #2 <END> g03121678

342-8097 TURBOCHARGER GP

TYPE 1

SMCS-1052, 1053 **i03730744**

NOTE	REF NO	GRAPHIC REF	PART NUMBER	QTY	PART NAME 1 2 3 4 5 6 (PRODUCT LEVEL)	SEE PAGE
M	1	1	**6I-0217**	2	BOLT (M8X1.25X20-MM)	
M	2	1	**6I-0563**	4	NUT (M10X1.5-THD)	
M	3	1	**6I-0593**	1	BOLT (M10X1.5X30-MM)	
M	4	1	**6I-0654**	1	BOLT (M10X1.5X25-MM)	
	5	2	**6I-0817**	1	ADAPTER	
M	6	2	**6I-4200**	2	BOLT (M10X1.5X16-MM)	
	7	2	**9Y-9381**	1	WASHER-HARD	
M	8	2	**100-4830**	1	BOLT (M10X1.5X20-MM)	
M	9	1	**106-8916**	2	BOLT (M6X16-MM)	
	10	1	**123-4038**	1	SPACER	
	11	2	**127-8165**	1	SPACER	
M	12	1	**147-5553**	4	STUD (M10X1.5X40-MM)	
	13	1	**172-4325**	1	SPACER	
	14	1	**194-5390**	1	GASKET-MANIFOLD	
	15	1	**225-8533**	1	GASKET	
	16	1	**225-8534**	1	GASKET	
	17	1	**238-8292**	1	BOLT-FLANGE HEAD	
M	18	1	**278-0361**	7	BOLT (M10X1.5X45-MM)	
	19	2	**294-7375**	1	SOLENOID (WASTEGATE)	
	20	1	**298-4570**	1	GASKET-EXHAUST MANIFOLD	
	21	2	**298-4576**	1	CLIP	
	22	2	**303-2116**	5	CLIP	
	23	1	**303-5786**	1	TUBE AS-TURBOCHARGER OIL (SUPPLY)	
	23A	1	**220-7163**	1	CLIP	
	23B	1	**225-8524**	2	BOLT-SPECIAL	
	23C	1	**225-8526**	4	WASHER (10.4X13.75X1.37-MM THK)	
	24	1	**303-5787**	1	TUBE AS-TURBOCHARGER OIL (DRAIN)	
	24A	1	**103-2135**	1	CLIP	
	25	1	**303-5788**	1	MANIFOLD-EXHAUST	
	26	2	**303-5792**	1	BRACKET	
	27	2	**303-5793**	1	TUBE AS	
	27A	2	**4B-8774**	1	NUT-FLARED	
	27B	2	**032-8047**	1	FERRULE	
	27C	2	**300-6520**	1	HOSE AS	
	27D	2	**107-2348**	2	CLIP	
	27E	2	**278-0316**	2	CLIP	
R	28	1	**316-0555**	1	TURBOCHARGER	
	29	2	**326-4508**	1	TUBE AS	
	29A	2	**032-8047**	2	FERRULE	
	29B	2	**032-8191**	1	NUT	
	29C	2	**035-8014**	1	NUT	

M - METRIC PART
R - REMANUFACTURED PART MAY BE AVAILABLE

342-8097 **TURBOCHARGER GP** (contd.) **i03730744**

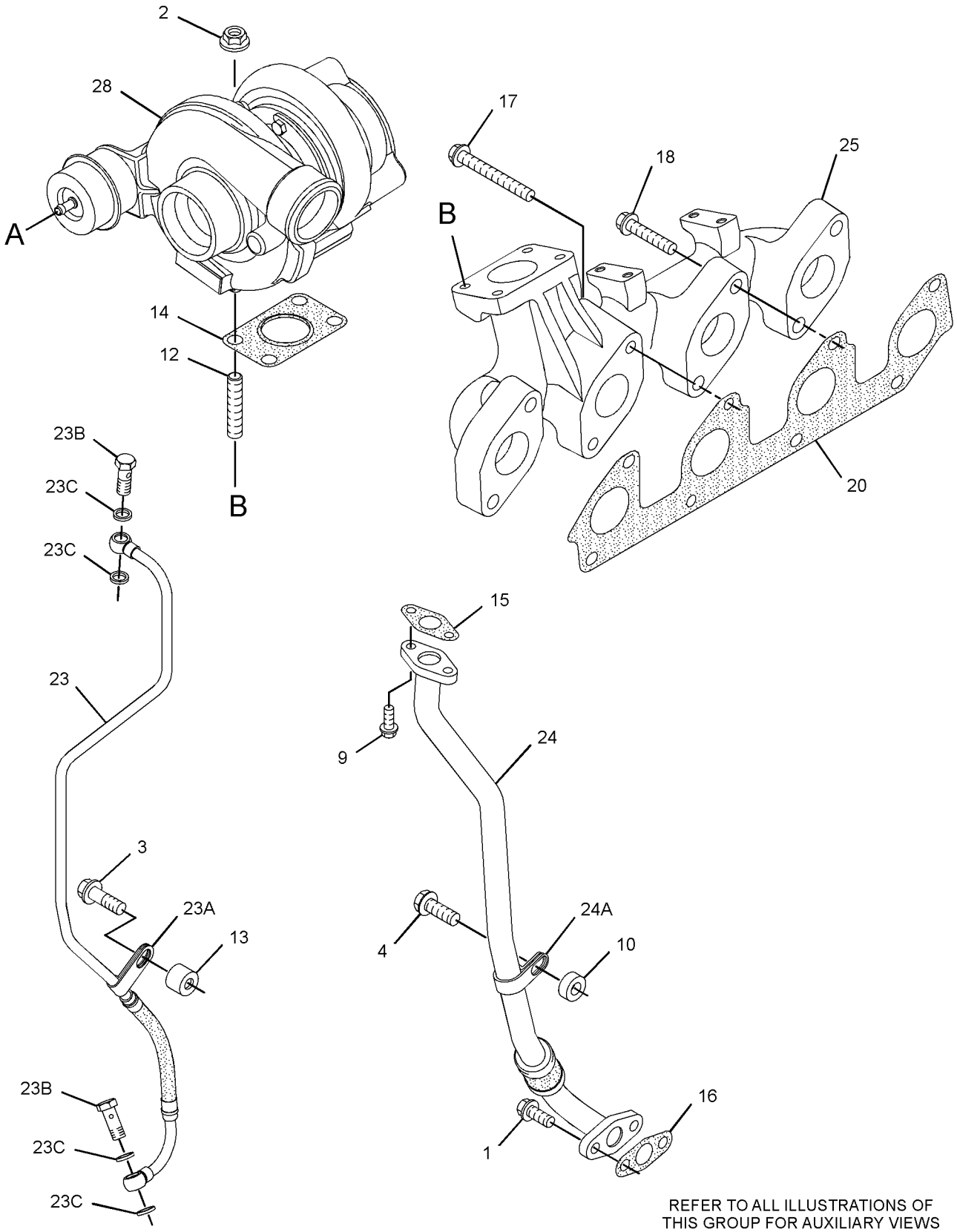

REFER TO ALL ILLUSTRATIONS OF THIS GROUP FOR AUXILIARY VIEWS

GRAPHIC #1

g01992615

342-8097 **TURBOCHARGER GP (**contd.**)** **i03730744**

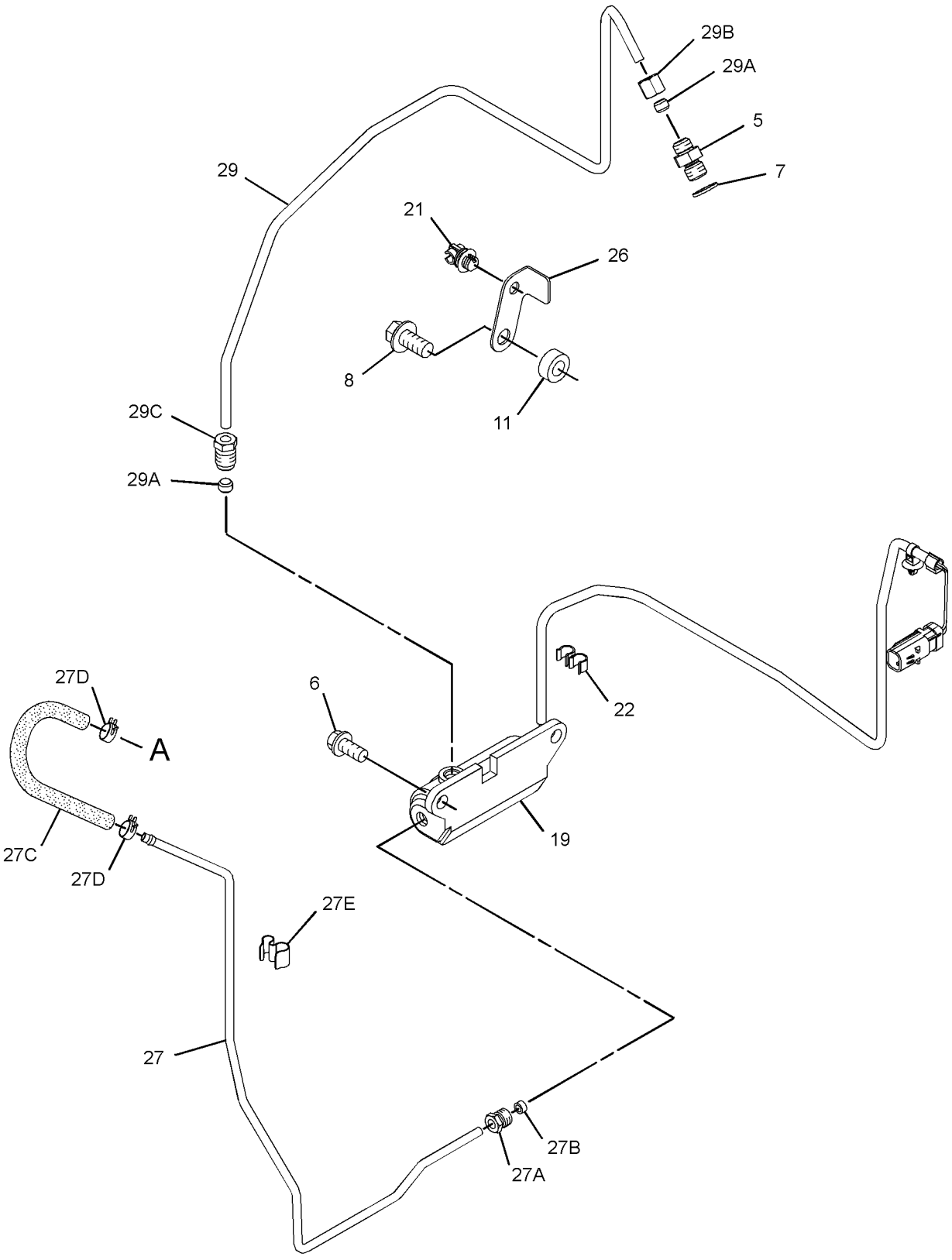

GRAPHIC #2 <END> g01992616

342-8097 TURBOCHARGER GP

TYPE 2

SMCS-1052, 1053 **i05941624**

NOTE	REF NO	GRAPHIC REF	PART NUMBER	QTY	PART NAME 1 2 3 4 5 6 (PRODUCT LEVEL)	SEE PAGE
M	1	1	**6I-0217**	2	BOLT (M8X1.25X20-MM)	
M	2	1	**6I-0563**	4	NUT (M10X1.5-THD)	
M	3	1	**6I-0593**	1	BOLT (M10X1.5X30-MM)	
M	4	1	**6I-0654**	1	BOLT (M10X1.5X25-MM)	
	5	2	**6I-0817**	1	ADAPTER	
M	6	2	**6I-4200**	3	BOLT (M10X1.5X16-MM)	
	7	2	**9Y-9381**	1	WASHER-HARD	
M	9	1	**106-8916**	2	BOLT (M6X16-MM)	
	10	1	**123-4038**	1	SPACER	
	12	1	**361-7519**	4	ROD-THREADED	
	13	1	**172-4325**	1	SPACER	
	14	1	**194-5390**	1	GASKET-MANIFOLD	
	15	1	**353-3477**	1	GASKET-TURBOCHARGER	
	16	1	**353-3478**	1	GASKET-TURBOCHARGER	
	17	1	**238-8292**	1	BOLT-FLANGE HEAD	
M	18	1	**278-0361**	7	BOLT (M10X1.5X45-MM)	
	19	2	**294-7375**	1	SOLENOID (WASTEGATE)	
	20	1	**298-4570**	1	GASKET-EXHAUST MANIFOLD	
	21	2	**298-4576**	1	CLIP	
	22	2	**303-2116**	5	CLIP	
	23	1	**383-8543**	1	TUBE AS-TURBOCHARGER OIL	
	23A	1	**220-7163**	1	CLIP	
	23B	1	**225-8524**	2	BOLT-SPECIAL	
	23C	1	**225-8526**	4	WASHER (10.4X13.75X1.37-MM THK)	
	24	1	**303-5787**	1	TUBE AS-TURBOCHARGER OIL (DRAIN)	
	24A	1	**103-2135**	1	CLIP	
	25	1	**303-5788**	1	MANIFOLD-EXHAUST	
	26	2	**377-6869**	1	BRACKET	
	27	2	**303-5793**	1	TUBE AS	
	27A	2	**4B-8774**	1	NUT-FLARED	
	27B	2	**032-8047**	1	FERRULE	
	27C	2	**300-6520**	1	HOSE AS	
	27D	2	**107-2348**	2	CLIP	
	27E	2	**278-0316**	2	CLIP	
R	28	1	**316-0555**	1	TURBOCHARGER	
	29	2	**326-4508**	1	TUBE AS	
	29A	2	**032-8047**	2	FERRULE	
	29B	2	**032-8191**	1	NUT	
	29C	2	**035-8014**	1	NUT	

M - METRIC PART
R - REMANUFACTURED PART MAY BE AVAILABLE

342-8097 **TURBOCHARGER GP** (contd.) **i05941624**

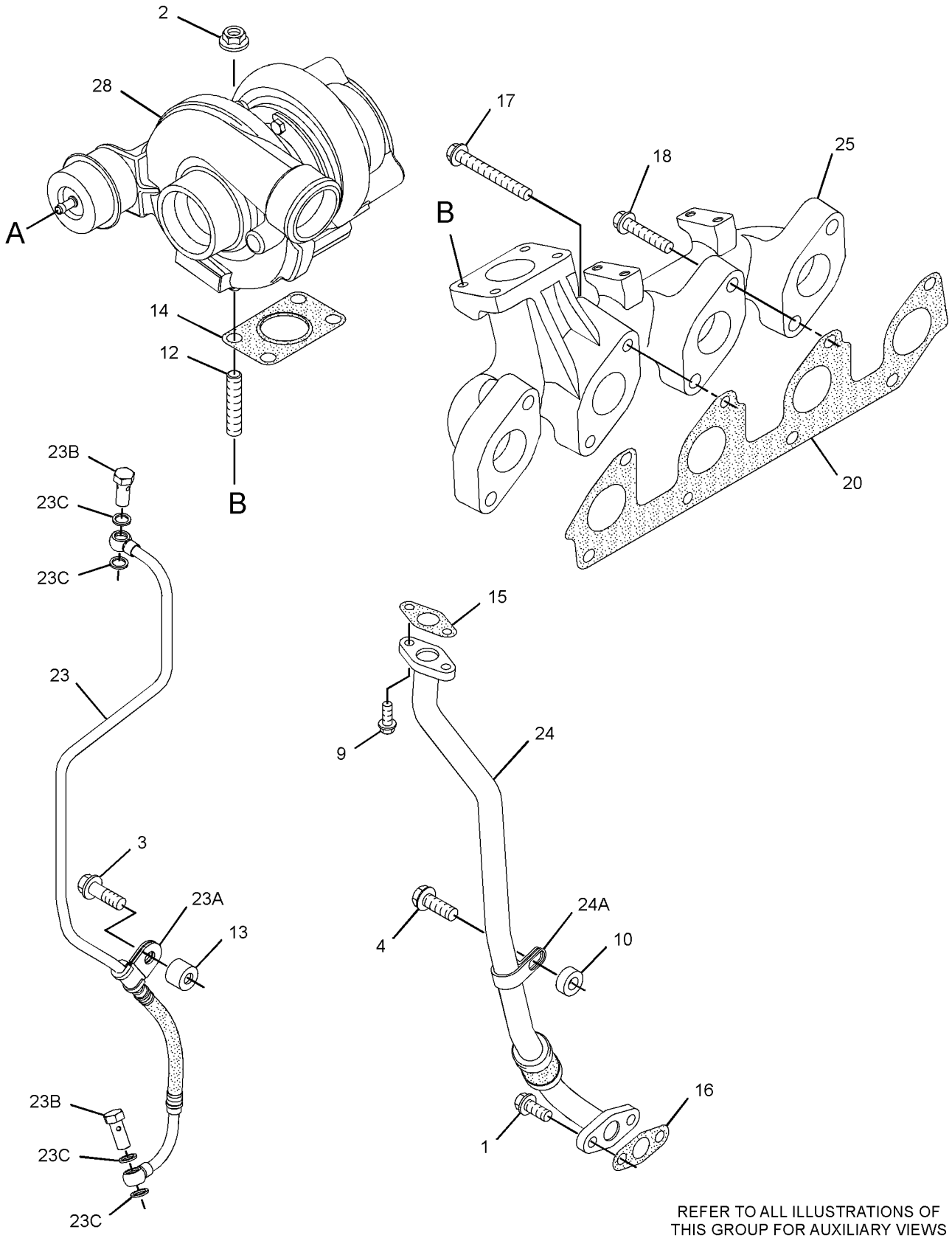

REFER TO ALL ILLUSTRATIONS OF
THIS GROUP FOR AUXILIARY VIEWS

GRAPHIC #1

g03076959

342-8097 **TURBOCHARGER GP (**contd.**)** **i05941624**

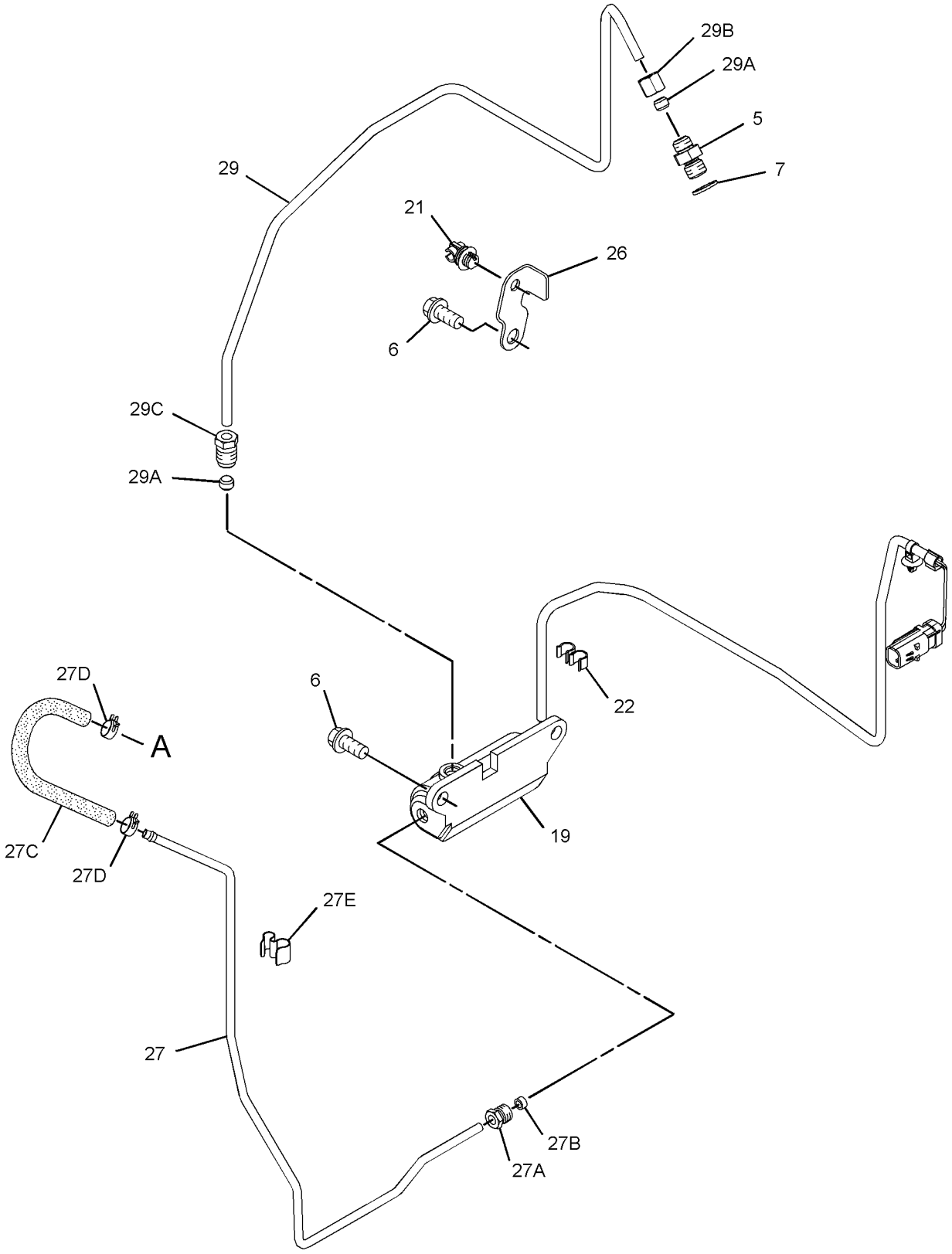

GRAPHIC #2 <END> g03076960

353-7405 TURBOCHARGER GP

TYPE 1

SMCS-1052, 1053 **i04367290**

NOTE	REF NO	GRAPHIC REF	PART NUMBER	QTY	PART NAME 1 2 3 4 5 6 (PRODUCT LEVEL)	SEE PAGE
M	1	1	**6I-0217**	2	BOLT (M8X1.25X20-MM)	
M	2	1	**6I-0563**	7	NUT (M10X1.5-THD)	
	3	2	**6I-0817**	1	ADAPTER	
	4	2	**9Y-9381**	1	WASHER-HARD	
M	5	2	**100-4830**	1	BOLT (M10X1.5X20-MM)	
M	6	1	**106-8916**	2	BOLT (M6X16-MM)	
	7	2	**127-8165**	1	SPACER	
M	8	1	**147-5553**	7	STUD (M10X1.5X40-MM)	
	9	1	**194-5390**	1	GASKET-MANIFOLD	
	10	1	**225-8530**	1	GASKET	
	11	1	**225-8533**	1	GASKET	
	12	1	**225-8534**	1	GASKET	
	13	1	**238-8292**	1	BOLT-FLANGE HEAD	
M	14	1	**278-0361**	7	BOLT (M10X1.5X45-MM)	
	15	2	**278-0310**	1	SOLENOID AS (WASTEGATE) (AIR FUEL RATIO CONTROL)	
	16	1	**298-4566**	1	TUBE AS	
	16A	1	**225-8524**	2	BOLT-SPECIAL	
	16B	1	**225-8526**	4	WASHER (10.4X13.75X1.37-MM THK)	
	17	1	**298-4568**	1	TUBE AS	
	18	1	**298-4569**	1	MANIFOLD-EXHAUST	
	19	1	**298-4570**	1	GASKET-EXHAUST MANIFOLD	
	20	2	**298-4573**	2	BOLT	
	21	2	**298-4576**	1	CLIP	
	22	1	**302-0581**	1	ADAPTER-EXHAUST	
	23	2	**303-2116**	5	CLIP	
	24	2	**303-5792**	1	BRACKET	
	25	2	**310-7533**	1	BRACKET	
	26	2	**310-7536**	1	TUBE AS	
	26A	2	**4B-8774**	1	NUT-FLARED	
	26B	2	**032-8047**	1	FERRULE	
	26C	2	**298-4576**	1	CLIP	
	26D	2	**300-6520**	1	HOSE AS	
	26E	2	**107-2348**	2	CLIP	
R	27	1	**316-0477**	1	TURBOCHARGER	
	28	2	**324-6530**	1	TUBE AS-TURBOCHARGER	
	28A	2	**4B-8774**	1	NUT-FLARED	
	28B	2	**032-8047**	2	FERRULE	
	28C	2	**035-8014**	1	NUT	
	29	1	**314-3723**	1	BRACKET	
M	30	1,2	**6I-0654**	5	BOLT (M10X1.5X25-MM)	
M	31	1	**6I-0593**	2	BOLT (M10X1.5X30-MM)	
	32	1	**227-4562**	1	ELBOW-EXHAUST	

M - METRIC PART
R - REMANUFACTURED PART MAY BE AVAILABLE

353-7405 **TURBOCHARGER GP (**contd.**)** **i04367290**

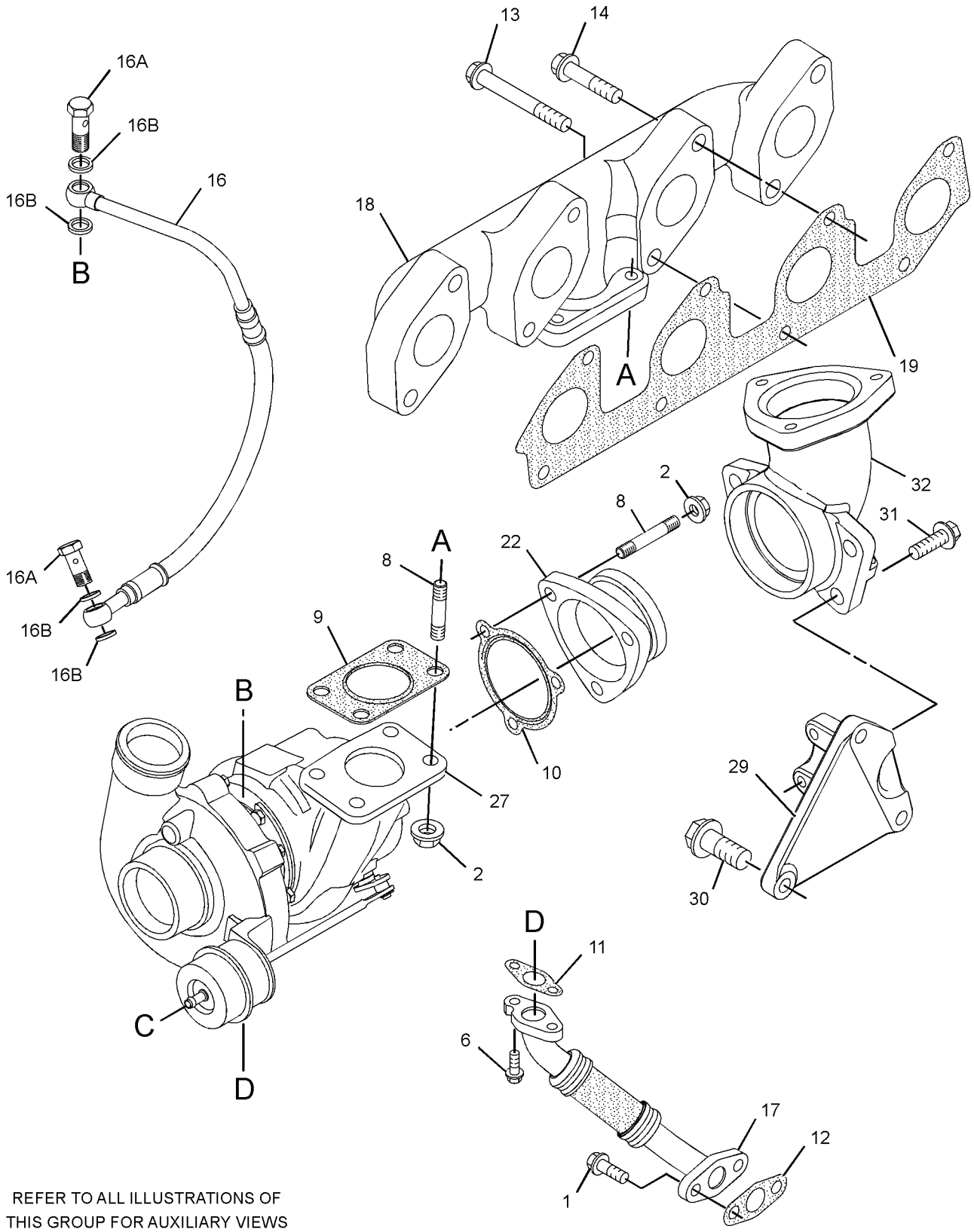

REFER TO ALL ILLUSTRATIONS OF
THIS GROUP FOR AUXILIARY VIEWS

GRAPHIC #1

g02087093

353-7405 **TURBOCHARGER GP (**contd.**)** **i04367290**

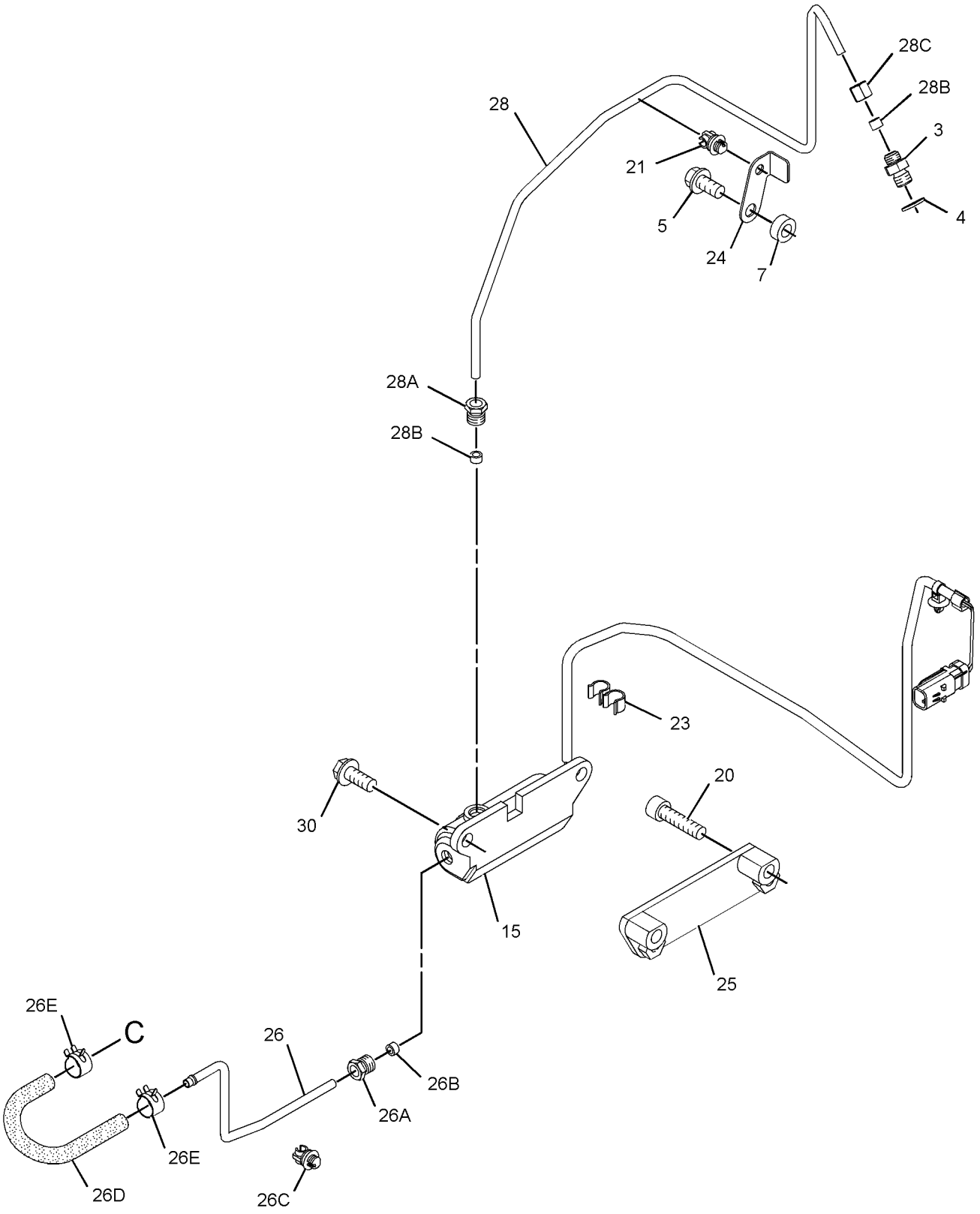

GRAPHIC #2 <END> g01739495

353-7405 TURBOCHARGER GP

TYPE 2

SMCS-1052, 1053 **i06943333**

NOTE	REF NO	GRAPHIC REF	PART NUMBER	QTY	PART NAME 1 2 3 4 5 6 (PRODUCT LEVEL)	SEE PAGE
M	1	1	**6I-0217**	2	BOLT (M8X1.25X20-MM)	
M	2	1	**6I-0563**	7	NUT (M10X1.5-THD)	
	3	2	**6I-0817**	1	ADAPTER	
	4	2	**9Y-9381**	1	WASHER-HARD	
CM	5	2	**6I-4200**	1	BOLT (M10X1.5X16-MM)	
M	6	1	**106-8916**	2	BOLT (M6X16-MM)	
	8	1	**361-7519**	7	ROD-THREADED	
	9	1	**194-5390**	1	GASKET-MANIFOLD	
	10	1	**225-8530**	1	GASKET	
	11	1	**353-3477**	1	GASKET-TURBOCHARGER	
	12	1	**353-3478**	1	GASKET-TURBOCHARGER	
	13	1	**238-8292**	1	BOLT-FLANGE HEAD	
M	14	1	**278-0361**	7	BOLT (M10X1.5X45-MM)	
	15	2	**278-0310**	1	SOLENOID AS (WASTEGATE) (AIR FUEL RATIO CONTROL)	
	16	1	**298-4566**	1	TUBE AS	
	16A	1	**225-8524**	2	BOLT-SPECIAL	
	16B	1	**225-8526**	4	WASHER (10.4X13.75X1.37-MM THK)	
	17	1	**507-5015**	1	LINE AS	
	17A	1	**269-3086**	2	CLAMP-BAND	
	18	1	**298-4569**	1	MANIFOLD-EXHAUST	
	19	1	**298-4570**	1	GASKET-EXHAUST MANIFOLD	
M	20	2	**8T-9515**	2	BOLT-SOCKET HEAD (M10X1.5X40-MM)	
	21	2	**298-4576**	1	CLIP	
	22	1	**302-0581**	1	ADAPTER-EXHAUST	
	23	2	**303-2116**	5	CLIP	
C	24	2	**377-6869**	1	BRACKET	
	25	2	**310-7533**	1	BRACKET	
	26	2	**310-7536**	1	TUBE AS	
	26A	2	**4B-8774**	1	NUT-FLARED	
	26B	2	**032-8047**	1	FERRULE	
	26C	2	**298-4576**	1	CLIP	
	26D	2	**300-6520**	1	HOSE AS	
	26E	2	**107-2348**	2	CLIP	
R	27	1	**316-0477**	1	TURBOCHARGER	
	28	2	**324-6530**	1	TUBE AS-TURBOCHARGER	
	28A	2	**4B-8774**	1	NUT-FLARED	
	28B	2	**032-8047**	2	FERRULE	
	28C	2	**035-8014**	1	NUT	
	29	1	**314-3723**	1	BRACKET	
M	30	1,2	**6I-0654**	5	BOLT (M10X1.5X25-MM)	
M	31	1	**6I-0593**	2	BOLT (M10X1.5X30-MM)	
	32	1	**227-4562**	1	ELBOW-EXHAUST	

C - CHANGE FROM PREVIOUS TYPE
M - METRIC PART
R - REMANUFACTURED PART MAY BE AVAILABLE

353-7405 **TURBOCHARGER GP** (contd.) **i06943333**

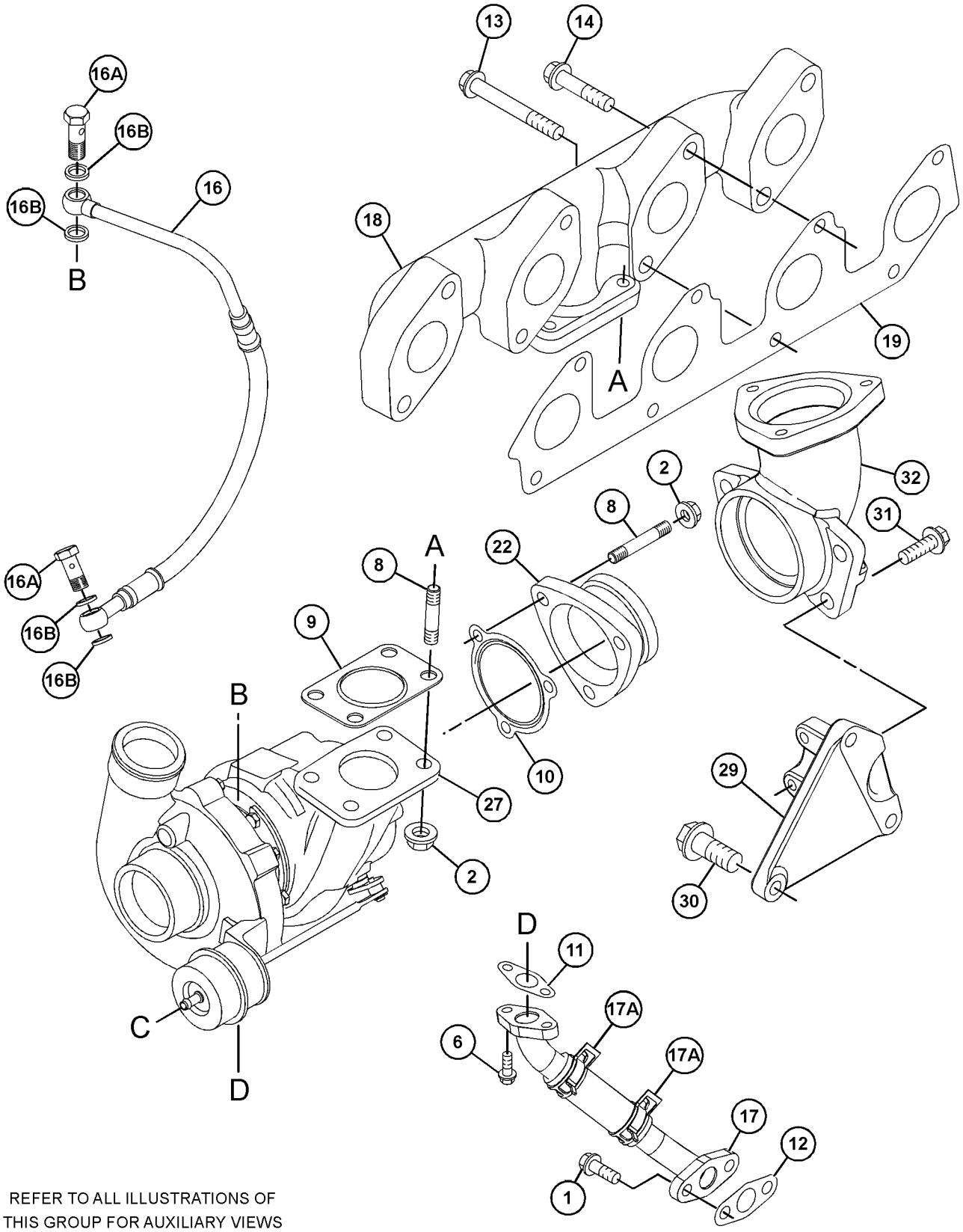

REFER TO ALL ILLUSTRATIONS OF
THIS GROUP FOR AUXILIARY VIEWS

GRAPHIC #1

g06204642

353-7405 **TURBOCHARGER GP (**contd.**)** **i06943333**

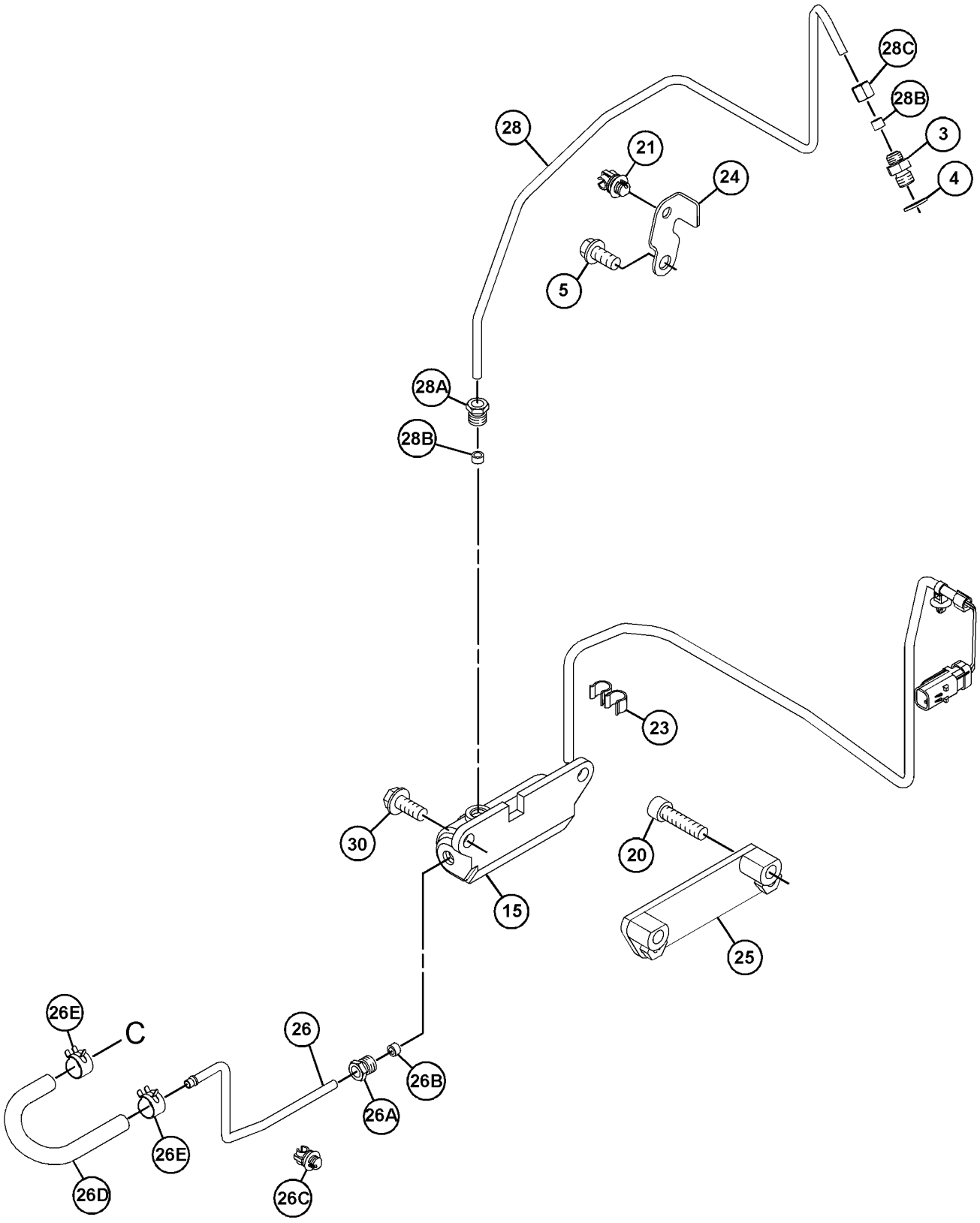

GRAPHIC #2 <END> g06204643

365-1581 TURBOCHARGER GP

S/N: 4447123-UP

PART OF 435-1687 ENGINE AR-PRIMARY

SMCS-1052, 1053 **i04452449**

NOTE	REF NO	GRAPHIC REF	PART NUMBER	QTY	PART NAME 1 2 3 4 5 6 (PRODUCT LEVEL)	SEE PAGE
M	1	1	**6I-0217**	2	BOLT (M8X1.25X20-MM)	
M	2	1	**6I-0563**	7	NUT (M10X1.5-THD)	
M	3	1	**6I-0593**	2	BOLT (M10X1.5X30-MM)	
M	4	1	**6I-0654**	3	BOLT (M10X1.5X25-MM)	
M	5	2	**6I-0789**	4	BOLT (M10X1.5X60-MM)	
	6	2	**6I-0817**	1	ADAPTER	
M	7	2	**6I-4200**	2	BOLT (M10X1.5X16-MM)	
	8	2	**9Y-9381**	1	WASHER-HARD	
M	9	2	**100-4830**	1	BOLT (M10X1.5X20-MM)	
M	10	1	**106-8916**	2	BOLT (M6X16-MM)	
	11	2	**127-8165**	1	SPACER	
M	12	1	**147-5553**	7	STUD (M10X1.5X40-MM)	
	13	1	**194-5390**	1	GASKET-MANIFOLD	
	14	1	**225-8530**	1	GASKET	
	15	1	**225-8533**	1	GASKET	
	16	1	**225-8534**	1	GASKET	
	17	1	**227-4562**	1	ELBOW-EXHAUST	
	18	1	**232-6189**	1	TUBE AS	
M	19	1	**278-0361**	8	BOLT (M10X1.5X45-MM)	
	20	2	**294-7375**	1	SOLENOID	
	21	1	**298-4570**	1	GASKET-EXHAUST MANIFOLD	
	22	2	**298-4576**	1	CLIP	
	23	1	**301-8255**	1	TUBE AS	
	23A	1	**225-8524**	2	BOLT-SPECIAL	
	23B	1	**225-8526**	4	WASHER (10.4X13.75X1.37-MM THK)	
	24	1	**301-8256**	1	MANIFOLD-EXHAUST	
	25	1	**302-0581**	1	ADAPTER-EXHAUST	
	26	2	**303-2116**	4	CLIP	
	27	2	**303-5792**	1	BRACKET	
	28	1	**307-2805**	1	BRACKET	
	29	2	**307-2831**	1	BRACKET	
	30	2	**311-7458**	1	TUBE AS	
	30A	2	**032-8047**	1	FERRULE	
	30B	2	**032-8191**	1	NUT	
	30C	2	**298-4576**	2	CLIP	
	30D	2	**300-6520**	1	HOSE AS	
	30E	2	**107-2348**	2	CLIP	
	31	1	**316-0514**	1	TURBOCHARGER	
	32	2	**326-4508**	1	TUBE AS	
	32A	2	**032-8047**	2	FERRULE	
	32B	2	**032-8191**	1	NUT	
	32C	2	**035-8014**	1	NUT	

M - METRIC PART

365-1581 **TURBOCHARGER GP (**contd.**)** **i04452449**

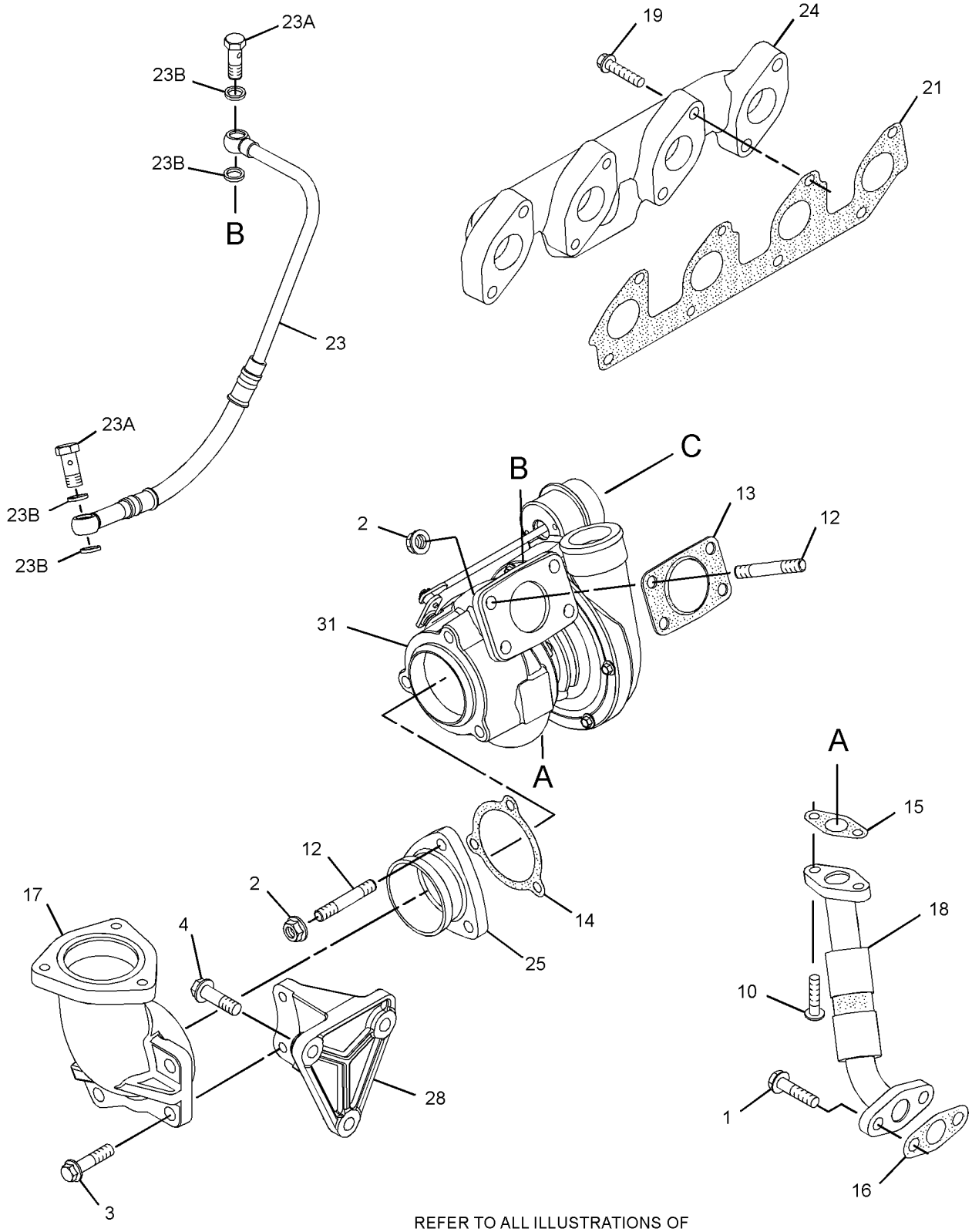

REFER TO ALL ILLUSTRATIONS OF
THIS GROUP FOR AUXILIARY VIEWS

GRAPHIC #1 g02645765

365-1581 **TURBOCHARGER GP (**contd.**)** **i04452449**

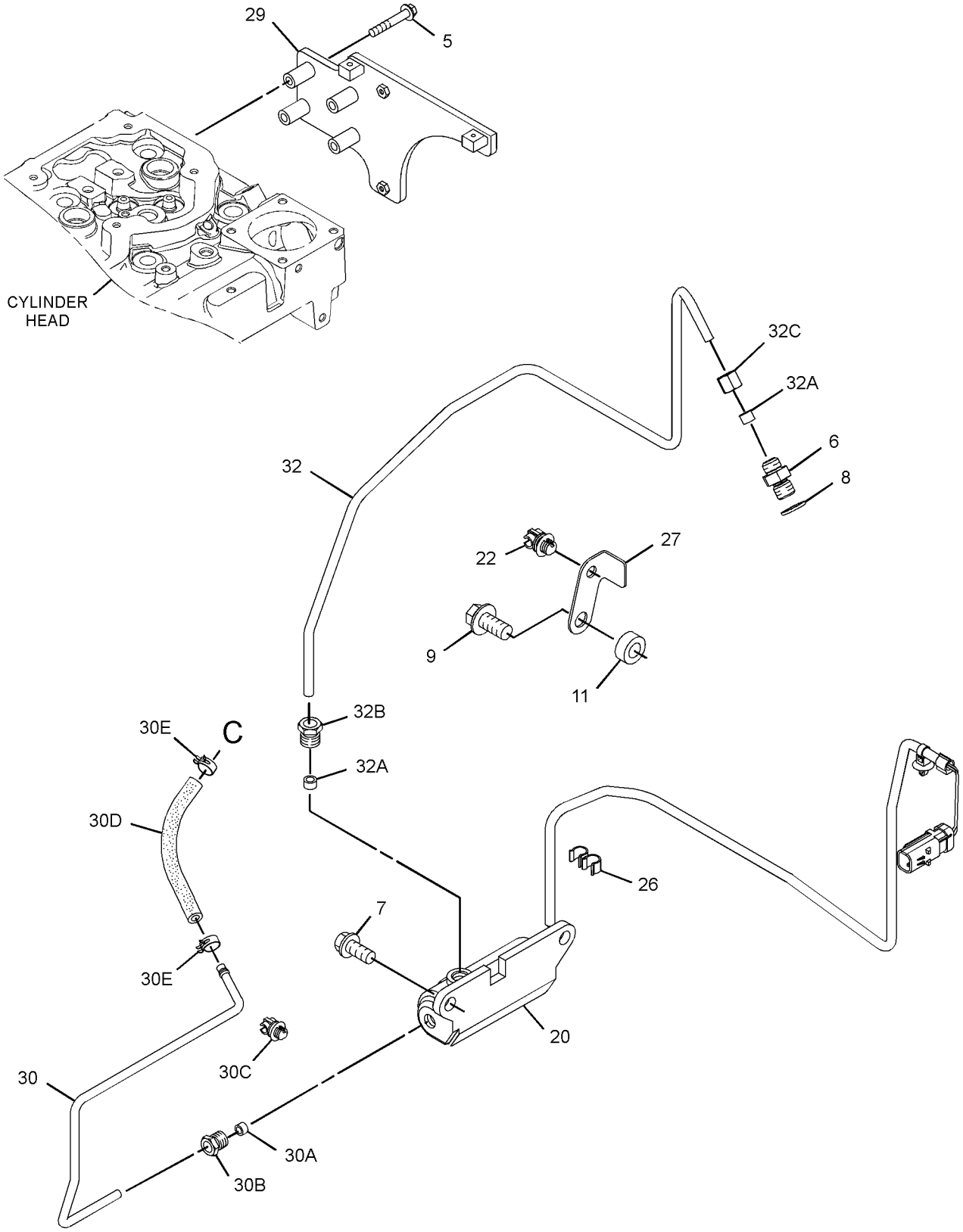

GRAPHIC #2 <END> g02645779

365-1581 TURBOCHARGER GP

PART OF 435-1687, 540-1156 ENGINE AR-PRIMARY

SMCS-1052, 1053 **i06943347**

NOTE	REF NO	GRAPHIC REF	PART NUMBER	QTY	PART NAME 1 2 3 4 5 6 (PRODUCT LEVEL)	SEE PAGE
M	1	1	**6I-0217**	2	BOLT (M8X1.25X20-MM)	
M	2	1	**6I-0563**	7	NUT (M10X1.5-THD)	
M	3	1	**6I-0593**	2	BOLT (M10X1.5X30-MM)	
M	4	1	**6I-0654**	3	BOLT (M10X1.5X25-MM)	
M	5	2	**6I-0789**	4	BOLT (M10X1.5X60-MM)	
	6	2	**6I-0817**	1	ADAPTER	
M	7	2	**6I-4200**	3	BOLT (M10X1.5X16-MM)	
	8	2	**9Y-9381**	1	WASHER-HARD	
M	9	1	**106-8916**	2	BOLT (M6X16-MM)	
	10	1	**194-5390**	1	GASKET-MANIFOLD	
	11	1	**227-4562**	1	ELBOW-EXHAUST	
	12	1	**507-5019**	1	LINE AS-OIL	
	12A	1	**269-3086**	2	CLAMP-BAND	
M	13	1	**278-0361**	8	BOLT (M10X1.5X45-MM)	
	14	2	**294-7375**	1	SOLENOID	
	15	1	**298-4570**	1	GASKET-EXHAUST MANIFOLD	
	16	2	**298-4576**	1	CLIP	
	17	1	**301-8255**	1	TUBE AS	
	17A	1	**225-8524**	2	BOLT-SPECIAL	
	17B	1	**225-8526**	4	WASHER (10.4X13.75X1.37-MM THK)	
	18	1	**301-8256**	1	MANIFOLD-EXHAUST	
	19	1	**302-0581**	1	ADAPTER-EXHAUST	
	20	2	**303-2116**	5	CLIP	
	21	1	**307-2805**	1	BRACKET	
	22	2	**311-7458**	1	TUBE AS	
	22A	2	**032-8047**	1	FERRULE	
	22B	2	**032-8191**	1	NUT	
	22C	2	**298-4576**	2	CLIP	
	22D	2	**300-6520**	1	HOSE AS	
	22E	2	**107-2348**	2	CLIP	
	23	1	**316-0514**	1	TURBOCHARGER	
	24	2	**326-4508**	1	TUBE AS	
	24A	2	**032-8047**	2	FERRULE	
	24B	2	**032-8191**	1	NUT	
	24C	2	**035-8014**	1	NUT	
	25	1	**353-3477**	1	GASKET-TURBOCHARGER	
	26	1	**353-3478**	1	GASKET-TURBOCHARGER	
	27	1	**361-7519**	7	ROD-THREADED	
	28	2	**377-6869**	1	BRACKET	
	29	2	**445-1434**	1	BRACKET AS	
	30	1	**225-8530**	1	GASKET	

M - METRIC PART

365-1581 **TURBOCHARGER GP** (contd.) **i06943347**

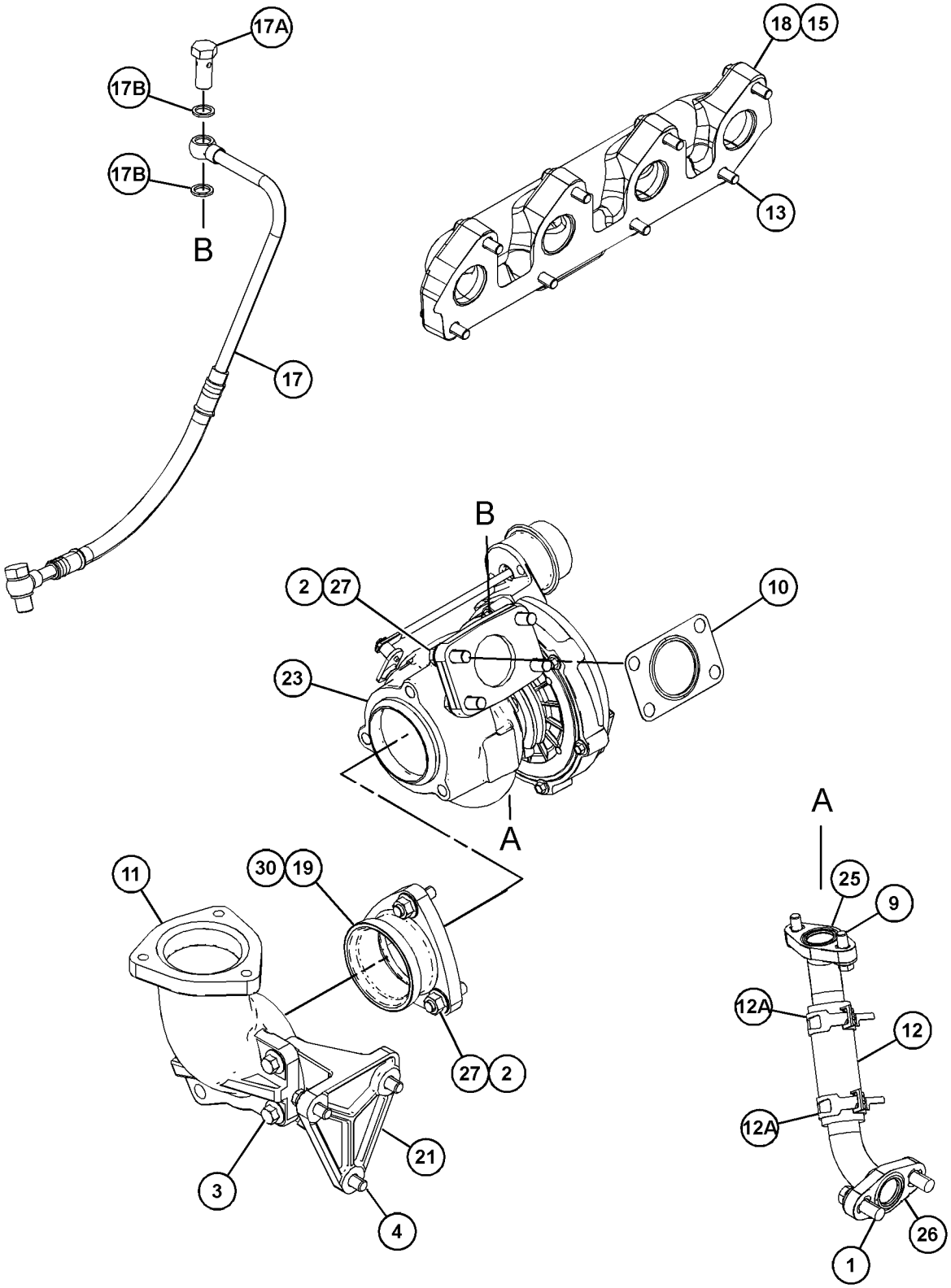

REFER TO ALL ILLUSTRATIONS OF
THIS GROUP FOR AUXILIARY VIEWS

GRAPHIC #1 g06204654

365-1581 **TURBOCHARGER GP** (contd.) **i06943347**

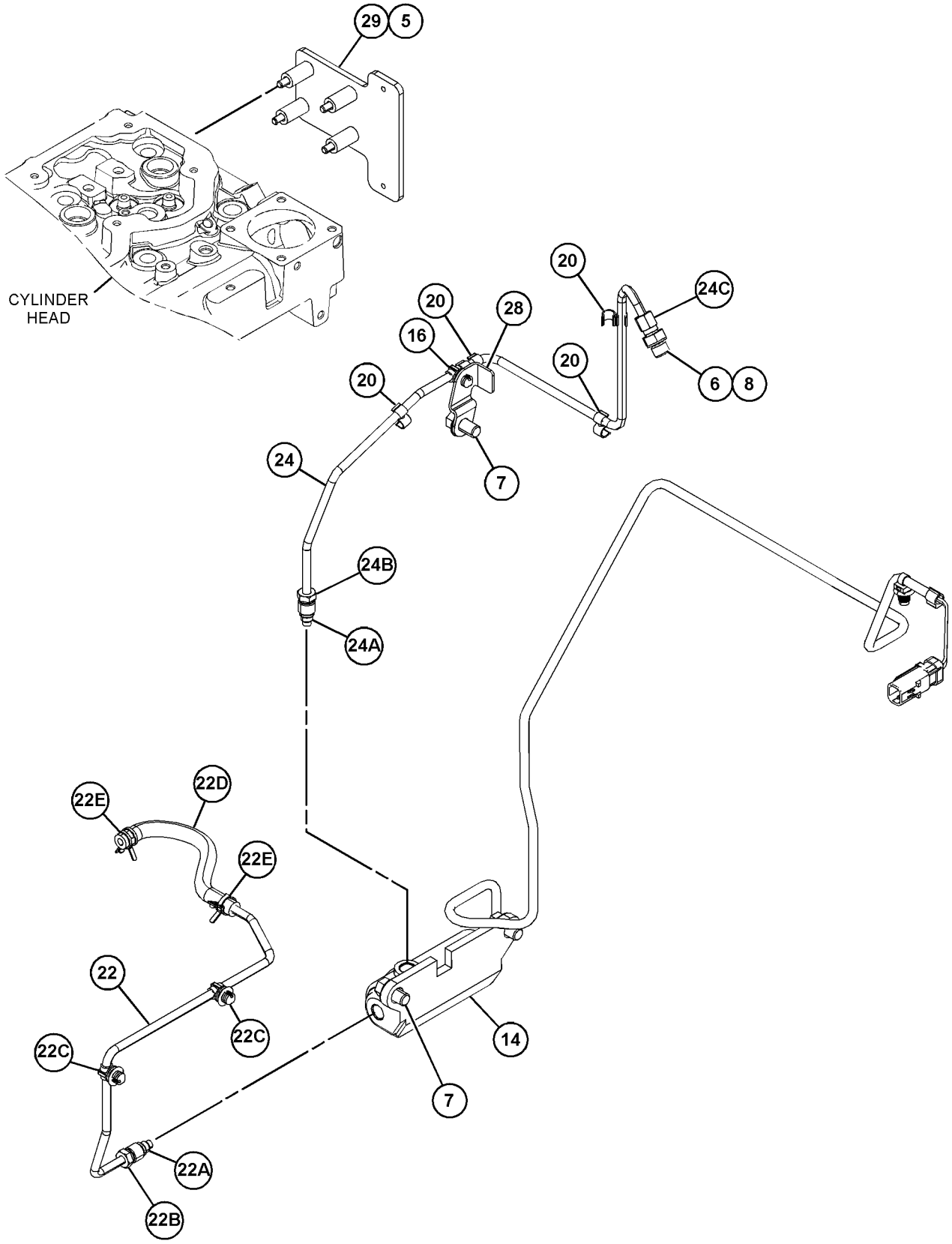

GRAPHIC #2 <END> g06204655

383-1390 TURBOCHARGER GP

SMCS-1052, 1053 **i05171247**

NOTE	REF NO	GRAPHIC REF	PART NUMBER	QTY	PART NAME 1 2 3 4 5 6 (PRODUCT LEVEL)	SEE PAGE
M	1	1	**6I-0217**	2	BOLT (M8X1.25X20-MM)	
M	2	1	**6I-0563**	7	NUT (M10X1.5-THD)	
M	3	1	**6I-0593**	2	BOLT (M10X1.5X30-MM)	
M	4	1	**6I-0654**	3	BOLT (M10X1.5X25-MM)	
	5	2	**377-6869**	1	BRACKET	
	6	2	**6I-0817**	1	ADAPTER	
M	7	2	**6I-4200**	3	BOLT (M10X1.5X16-MM)	
	8	2	**9Y-9381**	1	WASHER-HARD	
M	10	1	**106-8916**	2	BOLT (M6X16-MM)	
	11	2	**326-4508**	1	TUBE AS	
	11A	2	**032-8047**	2	FERRULE	
	11B	2	**032-8191**	1	NUT	
	11C	2	**035-8014**	1	NUT	
	12	1	**361-7519**	7	ROD-THREADED	
	13	1	**194-5390**	1	GASKET-MANIFOLD	
	14	1	**225-8530**	1	GASKET	
	15	1	**353-3477**	1	GASKET-TURBOCHARGER	
	16	1	**353-3478**	1	GASKET-TURBOCHARGER	
	17	1	**227-4562**	1	ELBOW-EXHAUST	
	18	1	**232-6189**	1	TUBE AS	
M	19	1	**278-0361**	8	BOLT (M10X1.5X45-MM)	
	20	2	**278-0310**	1	SOLENOID AS (WASTEGATE)	
	21	1	**298-4570**	1	GASKET-EXHAUST MANIFOLD	
	22	2	**298-4576**	1	CLIP	
	23	1	**301-8255**	1	TUBE AS	
	23A	1	**225-8524**	2	BOLT-SPECIAL	
	23B	1	**225-8526**	4	WASHER (10.4X13.75X1.37-MM THK)	
	24	1	**301-8256**	1	MANIFOLD-EXHAUST	
	25	1	**302-0581**	1	ADAPTER-EXHAUST	
	26	2	**303-2116**	4	CLIP	
	27	2	**311-7458**	1	TUBE AS	
	27A	2	**032-8047**	1	FERRULE	
	27B	2	**032-8191**	1	NUT	
	27C	2	**298-4576**	2	CLIP	
	27D	2	**300-6520**	1	HOSE AS	
	27E	2	**107-2348**	2	CLIP	
	28	1	**307-2805**	1	BRACKET	
	31	1	**316-0514**	1	TURBOCHARGER	

M - METRIC PART

383-1390 **TURBOCHARGER GP (**contd.**)** **i05171247**

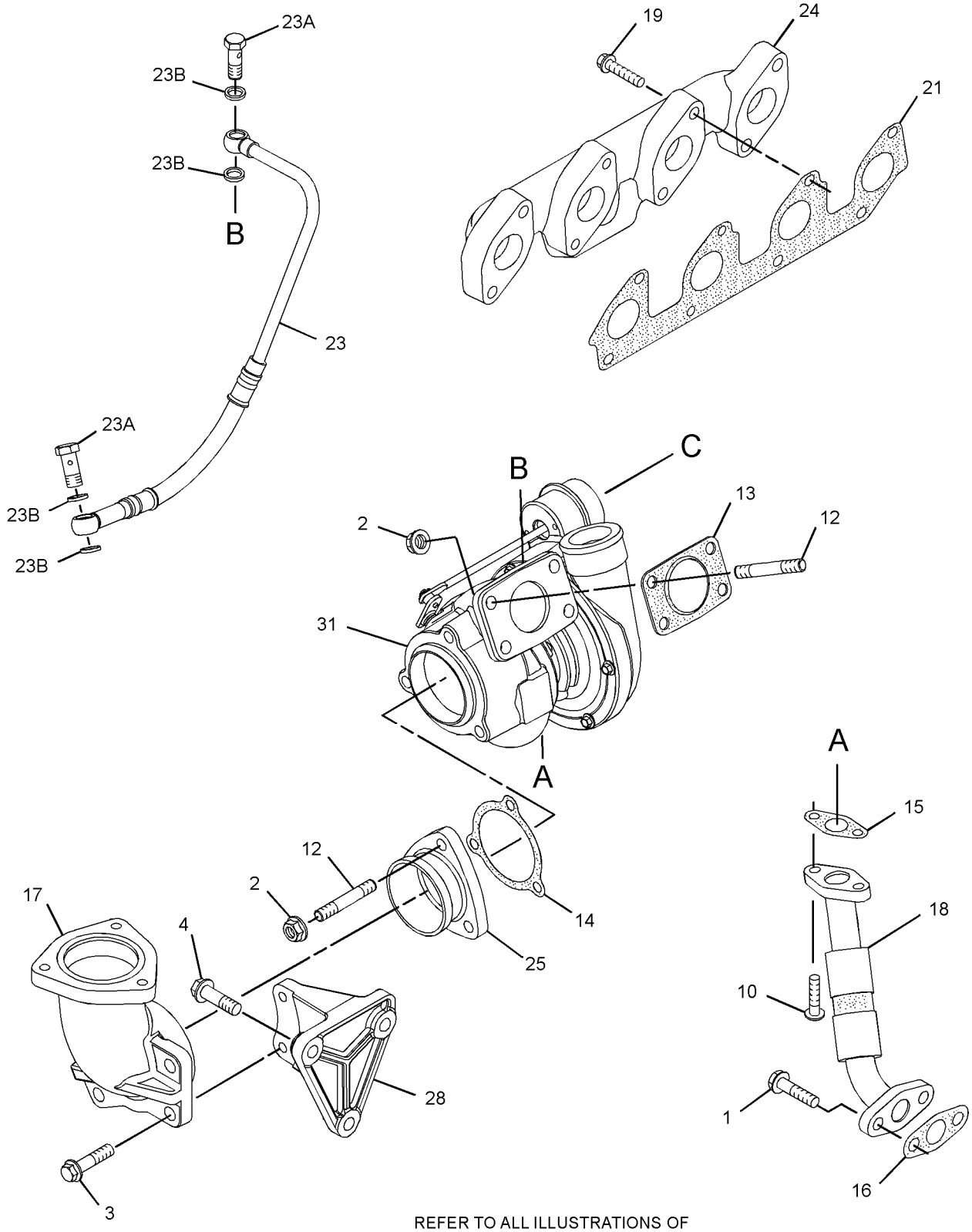

REFER TO ALL ILLUSTRATIONS OF
THIS GROUP FOR AUXILIARY VIEWS

GRAPHIC #1 g02645765

383-1390 **TURBOCHARGER GP** (contd.) **i05171247**

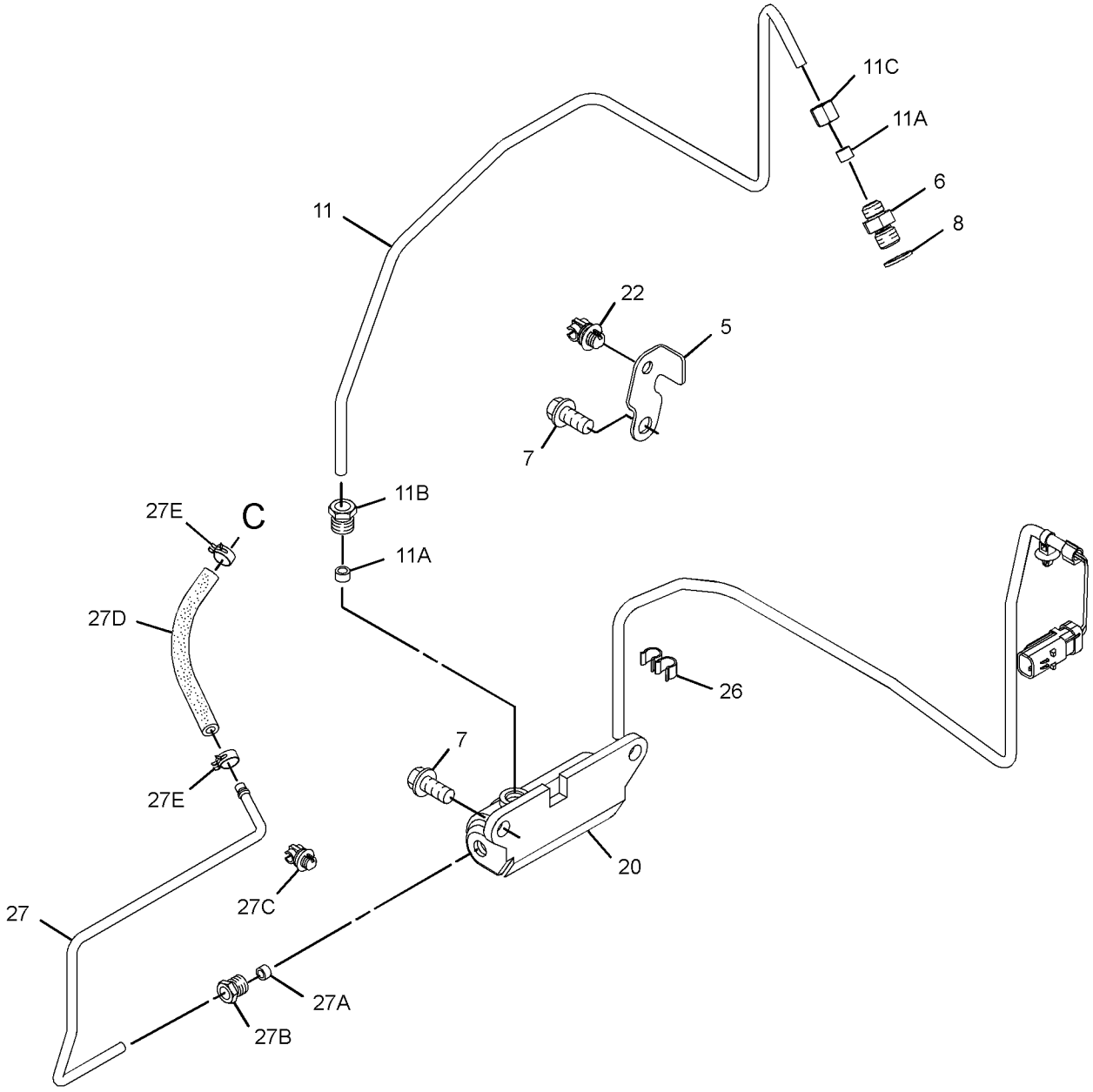

GRAPHIC #2 <END> g03044823

454-6650 TURBOCHARGER GP

SMCS-1052, 1053 **i07184925**

NOTE	REF NO	GRAPHIC REF	PART NUMBER	QTY	PART NAME 1 2 3 4 5 6 (PRODUCT LEVEL)	SEE PAGE
M	1	2	**6I-0217**	2	BOLT (M8X1.25X20-MM)	
M	2	1	**6I-0260**	4	BOLT (M8X1.25X25-MM)	
M	3	1	**6I-0563**	7	NUT (M10X1.5-THD)	
M	4	1	**6I-0593**	2	BOLT (M10X1.5X30-MM)	
M	5	1	**6I-0654**	3	BOLT (M10X1.5X25-MM)	
	6	2	**6I-0817**	1	ADAPTER	
M	7	2	**6I-4200**	2	BOLT (M10X1.5X16-MM)	
	8	2	**9Y-9381**	1	WASHER-HARD	
M	9	2	**106-8916**	2	BOLT (M6X16-MM)	
	10	1	**194-5390**	1	GASKET-MANIFOLD	
	11	1	**225-8530**	1	GASKET	
	12	1	**227-4562**	1	ELBOW-EXHAUST	
	13	2	**507-5019**	1	LINE AS-OIL	
	13A	2	**269-3086**	2	CLAMP-BAND	
	14	1	**234-3029**	1	HOSE	
	15	1	**492-3310**	1	GASKET	
	16	1	**266-7092**	2	CLAMP-HOSE	
	17	2	**278-0310**	1	SOLENOID AS (WASTEGATE)	
M	18	1	**278-0361**	8	BOLT (M10X1.5X45-MM)	
	19	1	**298-4570**	1	GASKET-EXHAUST MANIFOLD	
	20	2	**298-4576**	1	CLIP	
	21	2	**301-8255**	1	TUBE AS	
	21A	2	**225-8524**	2	BOLT-SPECIAL	
	21B	2	**225-8526**	4	WASHER (10.4X13.75X1.37-MM THK)	
	22	1	**301-8256**	1	MANIFOLD-EXHAUST	
	23	1	**302-0581**	1	ADAPTER-EXHAUST	
	24	2	**303-2116**	4	CLIP	
	25	1	**307-2805**	1	BRACKET	
	26	2	**311-7458**	1	TUBE AS	
	26A	2	**298-4576**	2	CLIP	
	26B	2	**300-6520**	1	HOSE AS	
	26C	2	**107-2348**	2	CLIP	
	27	1	**316-0562**	1	TURBOCHARGER	
	28	2	**326-4508**	1	TUBE AS	
	29	1	**326-4509**	1	TUBE	
	30	2	**353-3477**	1	GASKET-TURBOCHARGER	
	31	2	**353-3478**	1	GASKET-TURBOCHARGER	
	32	1	**361-7519**	7	ROD-THREADED	
	33	2	**377-6869**	1	BRACKET	

M - METRIC PART

454-6650 **TURBOCHARGER GP (**contd.**)** **i07184925**

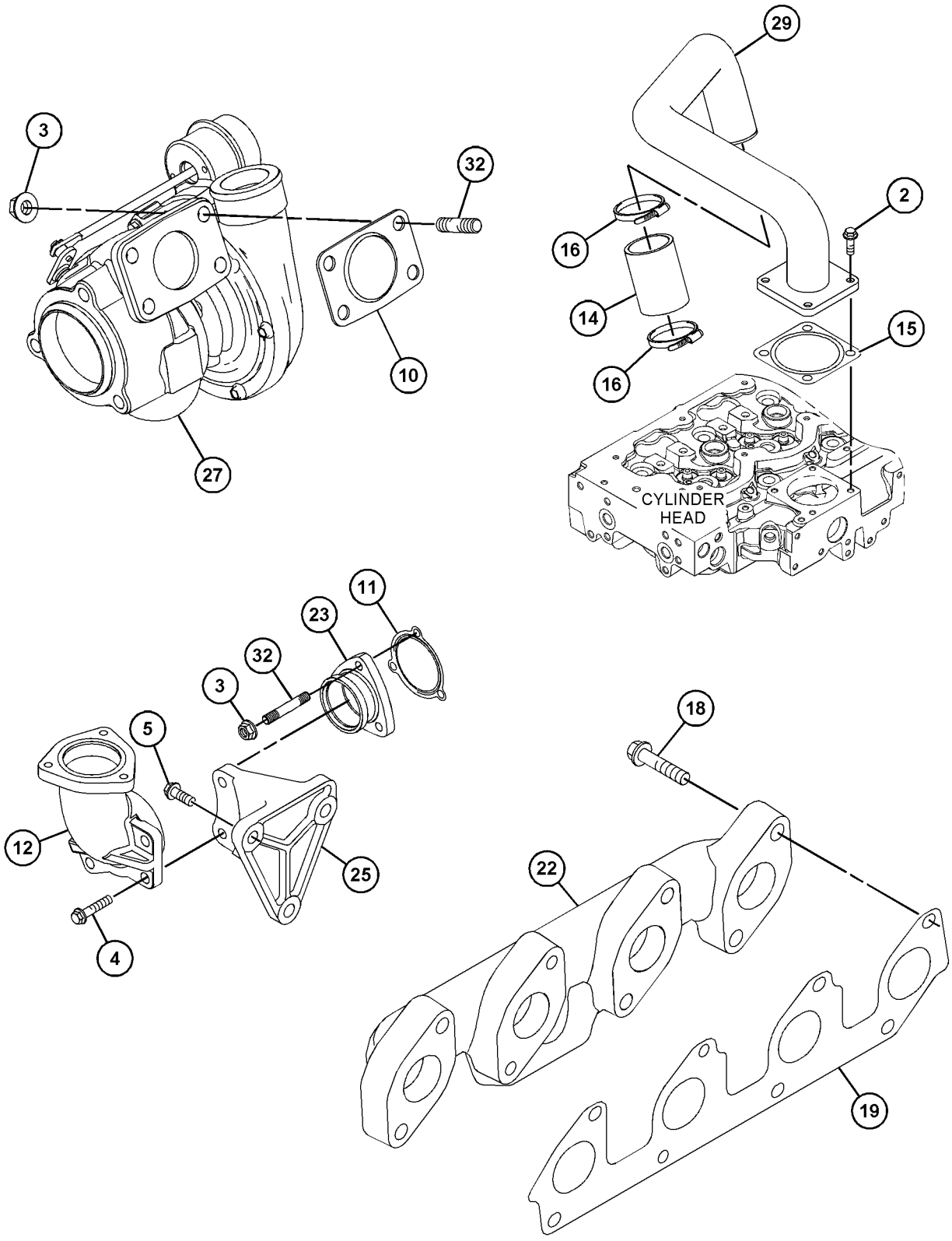

GRAPHIC #1 g03778937

454-6650 **TURBOCHARGER GP (**contd.**)** **i07184925**

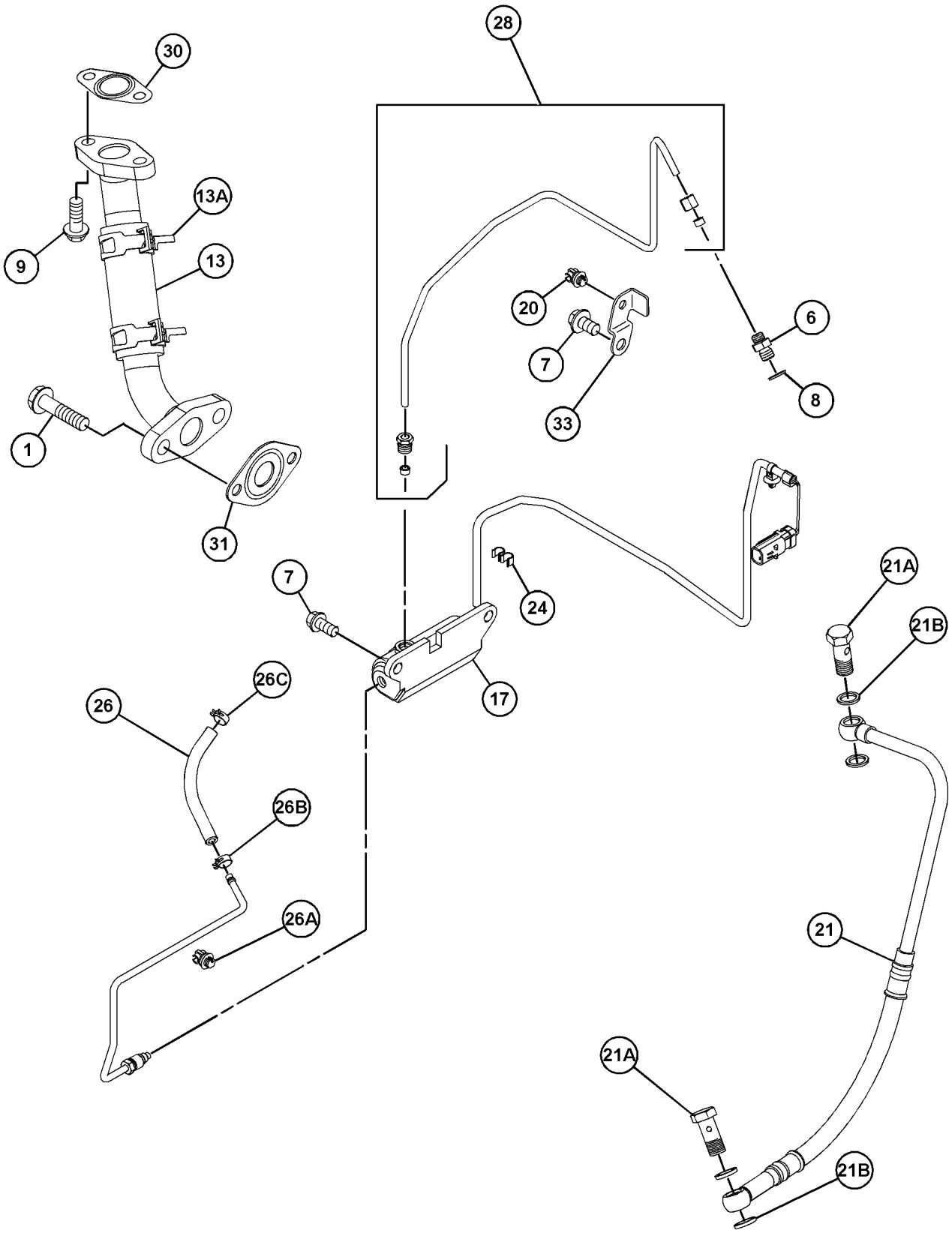

GRAPHIC #2 <END> g06244520

346-0523 FILTER AS-FUEL

PART OF 322-8426 FILTER GP-FUEL

ALSO AN ATTACHMENT

SMCS-1261 **i03725814**

NOTE	REF NO	GRAPHIC REF	PART NUMBER	QTY	PART NAME 1 2 3 4 5 6 (PRODUCT LEVEL)	SEE PAGE
	1	1	**299-8229**	1	FILTER ELEMENT-FUEL (ULTRA HIGH EFFICIENCY)	

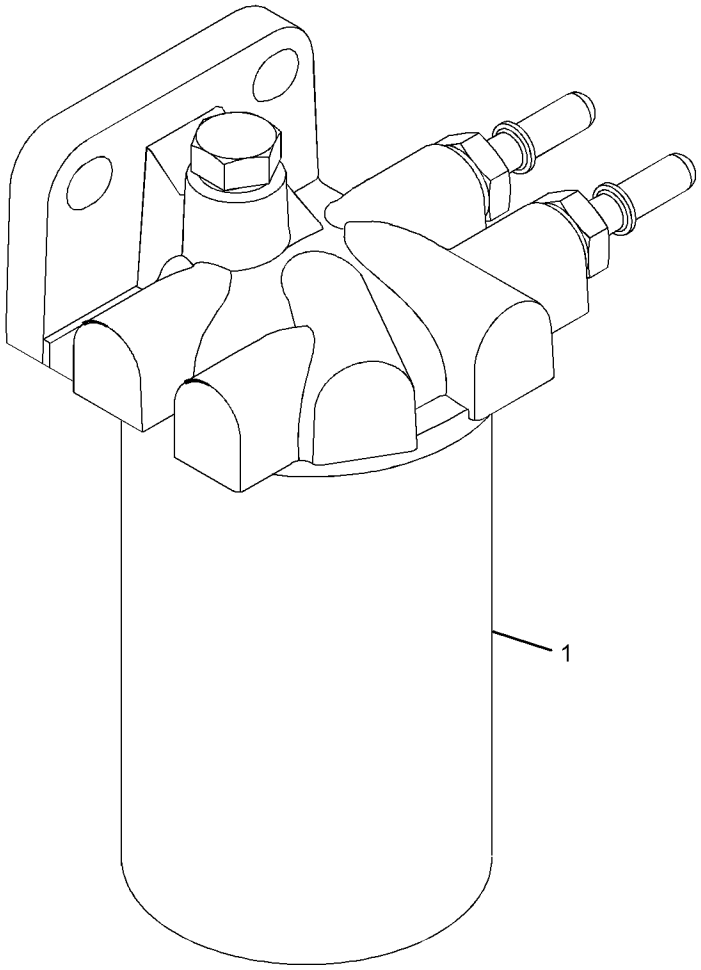

GRAPHIC #1 <END> g02010673

303-5780 FILTER GP-FUEL

PART OF 435-1687, 540-1156 ENGINE AR-PRIMARY

SMCS-1261 **i02762640**

NOTE	REF NO	GRAPHIC REF	PART NUMBER	QTY	PART NAME 1 2 3 4 5 6 (PRODUCT LEVEL)	SEE PAGE
Y	1	1	**263-7148**	1	FILTER GP-WATER SEP & FUEL	1012
	2	1	**277-4990**	1	ELBOW	
	3	1	**277-4991**	1	CONNECTION	
	4	1	**277-4993**	1	SEAL-O-RING	
F			**278-4138**	1	KIT-FUEL LINE PROTECTION	

F - NOT SHOWN
Y - SEPARATE ILLUSTRATION

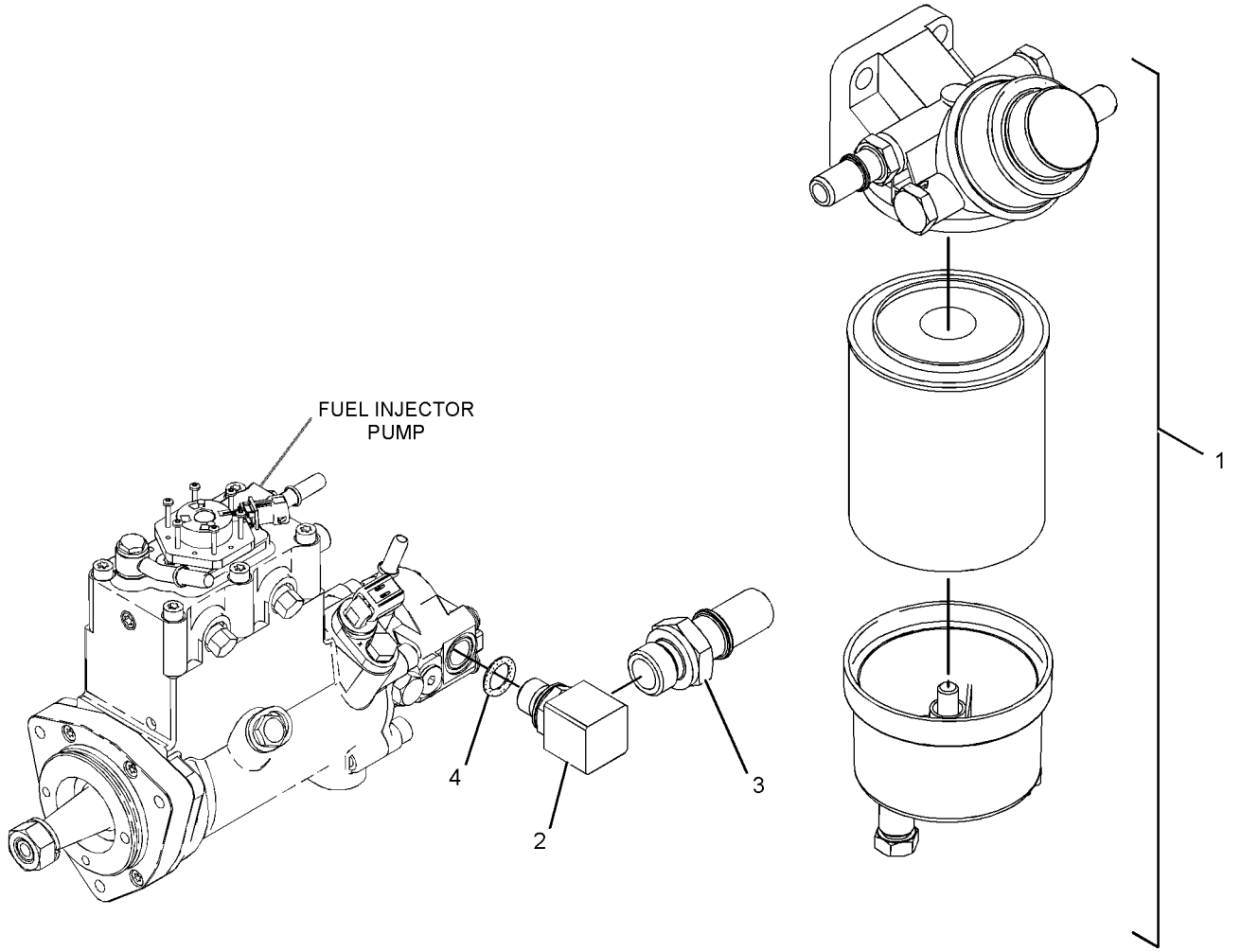

GRAPHIC #1 <END> g01383103

305-0642 FILTER GP-FUEL

S/N: 4441-321

SMCS-1261 **i02755663**

NOTE	REF NO	GRAPHIC REF	PART NUMBER	QTY	PART NAME 1 2 3 4 5 6 (PRODUCT LEVEL)	SEE PAGE
	1	1	**305-0651**	1	FILTER GP-FUEL	
	1A	1	**289-0600**	1	FILTER-FUEL (ULTRA HIGH EFFICIENCY)	
F			**278-4138**	1	KIT-FUEL LINE PROTECTION (LINE, LOW PRESSURE)	

F - NOT SHOWN

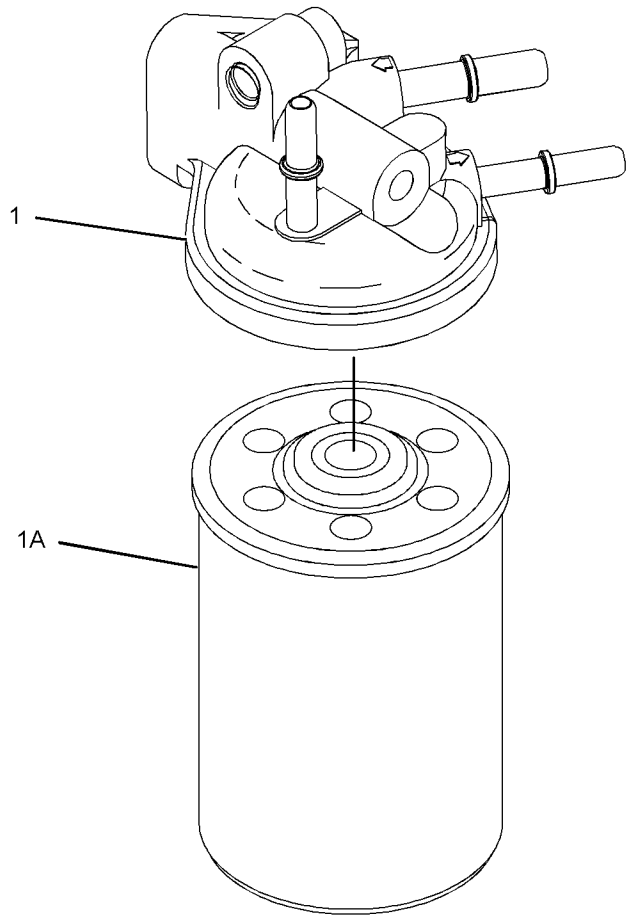

GRAPHIC #1 <END> g01357827

305-0642 FILTER GP-FUEL

TYPE 1

SMCS-1261 **i07034570**

NOTE	REF NO	GRAPHIC REF	PART NUMBER	QTY	PART NAME 1 2 3 4 5 6 (PRODUCT LEVEL)	SEE PAGE
	1	1	**311-2376**	1	FILTER AS-FUEL (SECONDARY)	
	1A	1	**299-8229**	1	FILTER ELEMENT-FUEL (ULTRA HIGH EFFICIENCY)	
F			**278-4138**	1	KIT-FUEL LINE PROTECTION (LINE, LOW PRESSURE)	

F - NOT SHOWN

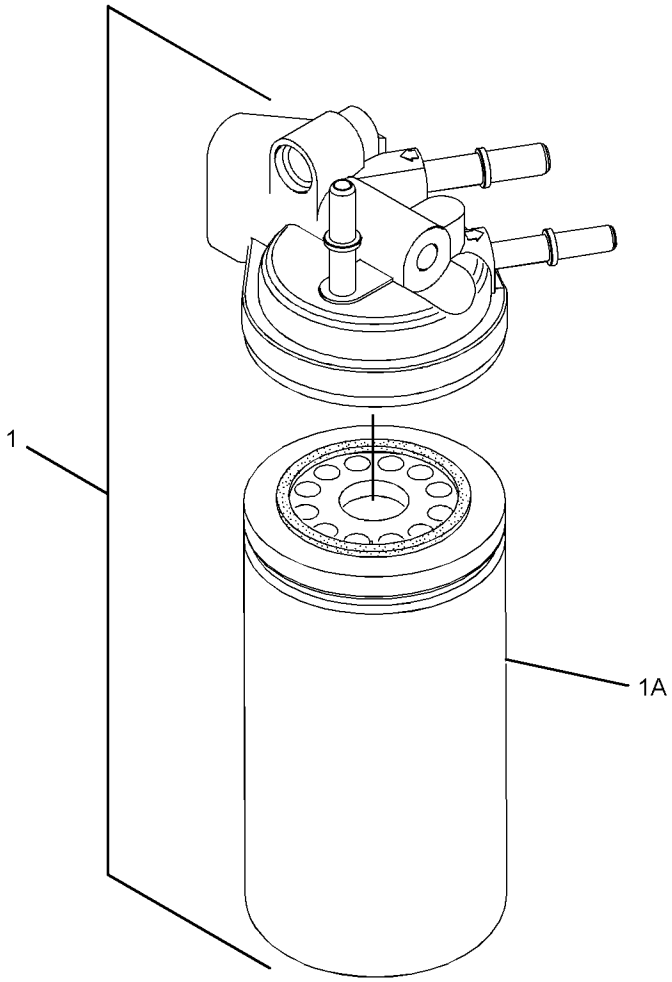

GRAPHIC #1 <END> g01370317

305-0642 FILTER GP-FUEL
TYPE 2

SMCS-1261 **i07034571**

NOTE	REF NO	GRAPHIC REF	PART NUMBER	QTY	PART NAME 1 2 3 4 5 6 (PRODUCT LEVEL)	SEE PAGE
C	1	1	**343-7104**	1	FILTER AS-FUEL (SECONDARY)	
	1A	1	**299-8229**	1	FILTER ELEMENT-FUEL (ULTRA HIGH EFFICIENCY)	
F			**278-4138**	1	KIT-FUEL LINE PROTECTION	

C - CHANGE FROM PREVIOUS TYPE
F - NOT SHOWN

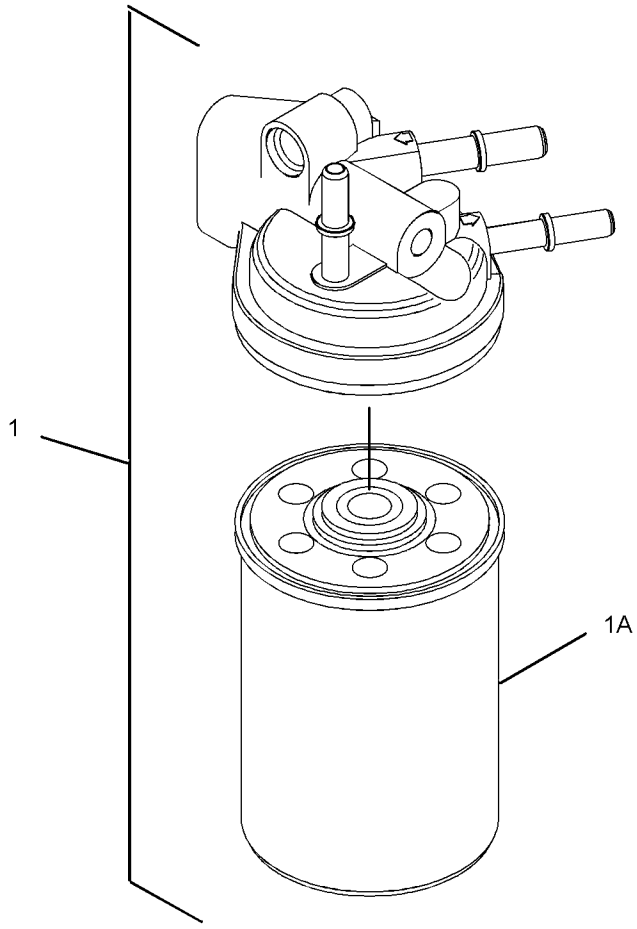

GRAPHIC #1 <END> g01890133

314-2286 FILTER GP-FUEL

S/N: 4441-415

SMCS-1261 **i03730745**

NOTE	PART NUMBER	QTY	PART NAME 1 2 3 4 5 6 (PRODUCT LEVEL)	SEE PAGE
	298-4603	1	FILTER AS-FUEL	
M	**6I-0254**	1	BOLT (M8X1.25X30-MM)	
	311-2270	1	SPACER	
	311-2376	1	FILTER AS-FUEL	
	311-2379	1	TUBE	
	278-4138	1	KIT-FUEL LINE PROTECTION	

M - METRIC PART

<END>

314-2301 FILTER GP-FUEL

S/N: 4441-1441

SMCS-1261 **i03730746**

NOTE	PART NUMBER	QTY	PART NAME 1 2 3 4 5 6 (PRODUCT LEVEL)	SEE PAGE
	305-0651	1	FILTER GP-FUEL	
M	**6I-0254**	1	BOLT (M8X1.25X30-MM)	
	311-2270	1	SPACER	
	311-2376	1	FILTER AS-FUEL	
	311-2379	1	TUBE	
	278-4138	1	KIT-FUEL LINE PROTECTION	

M - METRIC PART

<END>

316-1100 FILTER GP-FUEL

ALSO AN ATTACHMENT

SMCS-1261 **i03995516**

NOTE	REF NO	GRAPHIC REF	PART NUMBER	QTY	PART NAME 1 2 3 4 5 6 (PRODUCT LEVEL)	SEE PAGE
	1	1	**355-6862**	1	FILTER ELEMENT-FUEL (ULTRA HIGH EFFICIENCY)	
	1A	1	**299-8229**	1	FILTER ELEMENT-FUEL (ULTRA HIGH EFFICIENCY)	
F			**278-4138**	1	KIT-FUEL LINE PROTECTION	

F - NOT SHOWN

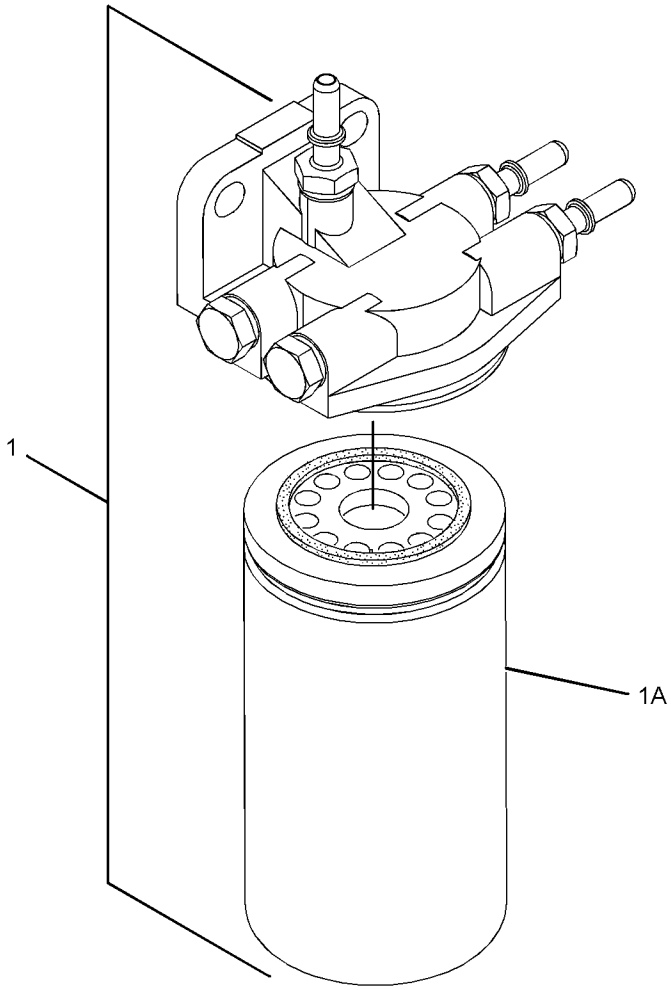

GRAPHIC #1 <END> g01431273

322-3755 FILTER GP-FUEL

PART OF 435-1687, 540-1156 ENGINE AR-PRIMARY

SMCS-1261 **i04489956**

NOTE	REF NO	GRAPHIC REF	PART NUMBER	QTY	PART NAME 1 2 3 4 5 6 (PRODUCT LEVEL)	SEE PAGE
	1	1	**355-6862**	1	FILTER ELEMENT-FUEL (ULTRA HIGH EFFICIENCY) (SECONDARY)	
	1A	1	**299-8229**	1	FILTER ELEMENT-FUEL (ULTRA HIGH EFFICIENCY)	
	2	1	**368-5935**	1	FILTER AS-FUEL (ULTRA HIGH EFFICIENCY) (ULTRA HIGH EFFICIENCY)	
	2A	1	**299-8229**	1	FILTER ELEMENT-FUEL (ULTRA HIGH EFFICIENCY)	
F			**278-4138**	2	KIT-FUEL LINE PROTECTION	

F - NOT SHOWN

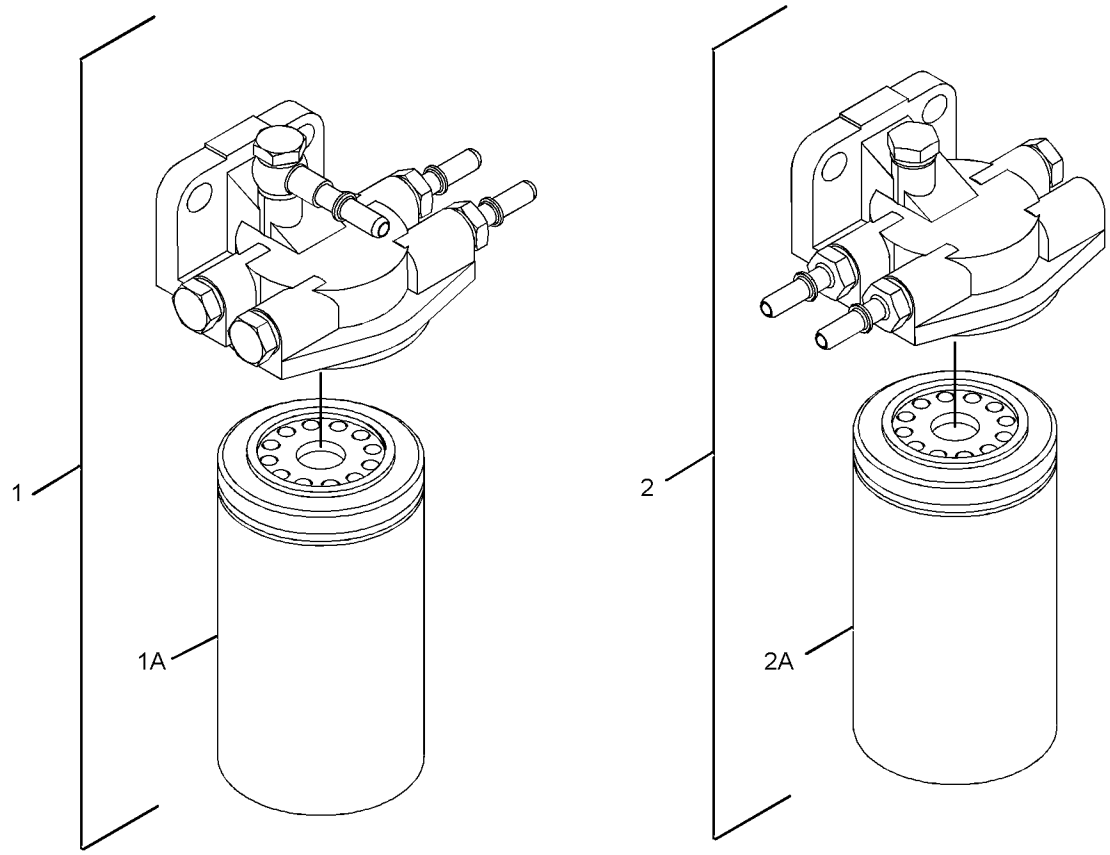

GRAPHIC #1 <END> g02686958

322-8426 FILTER GP-FUEL

TYPE 1

SMCS-1261 **i03314700**

NOTE	REF NO	GRAPHIC REF	PART NUMBER	QTY	PART NAME 1 2 3 4 5 6 (PRODUCT LEVEL)	SEE PAGE
	1	1	**311-1110**	1	FILTER AS-FUEL	
	1A	1	**299-8229**	1	FILTER ELEMENT-FUEL (ULTRA HIGH EFFICIENCY)	
	2	1	**311-2376**	1	FILTER AS-FUEL	
	2A	1	**299-8229**	1	FILTER ELEMENT-FUEL (ULTRA HIGH EFFICIENCY)	
F			**278-4138**	1	KIT-FUEL LINE PROTECTION (LINE, LOW PRESSURE)	

F - NOT SHOWN

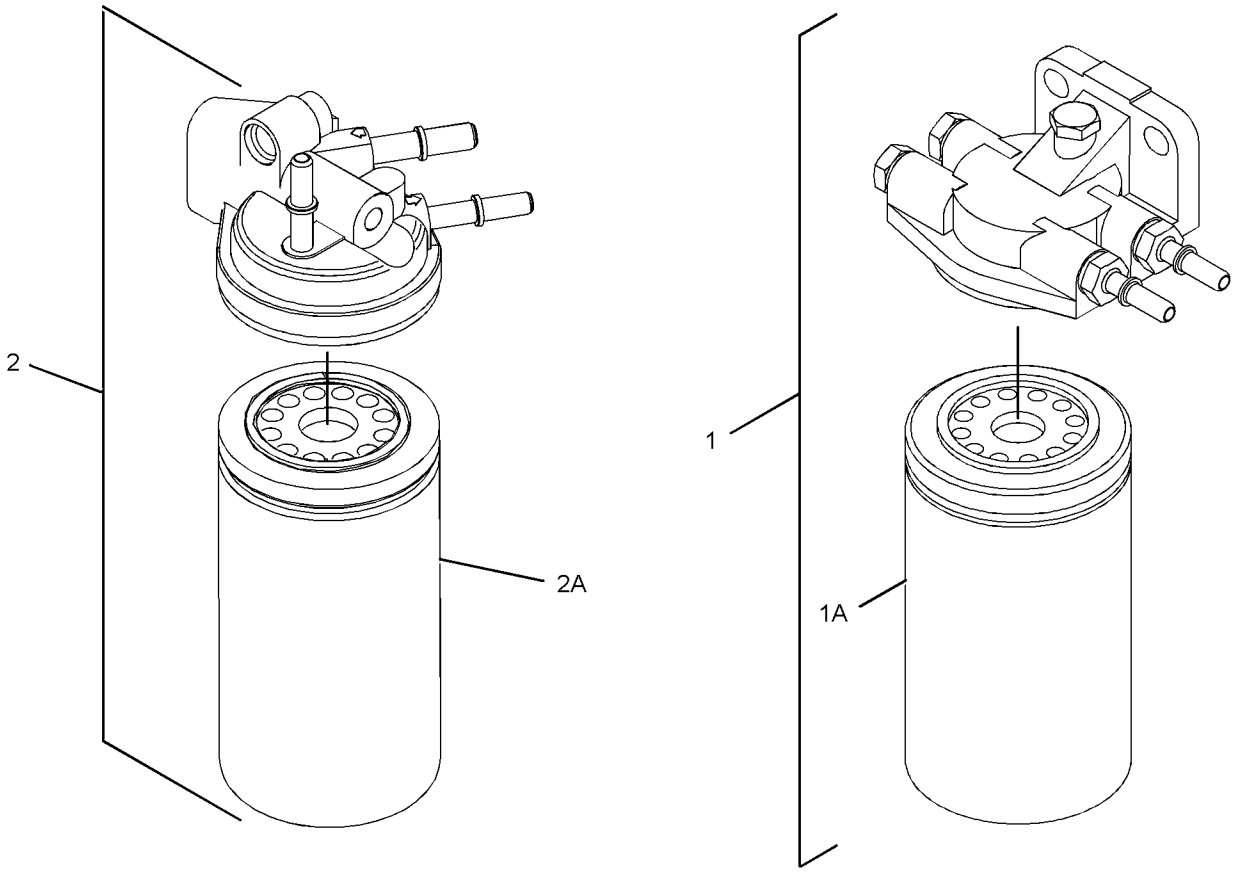

GRAPHIC #1 <END> g01446803

322-8426 FILTER GP-FUEL

TYPE 2

SMCS-1261 **i04489957**

NOTE	REF NO	GRAPHIC REF	PART NUMBER	QTY	PART NAME 1 2 3 4 5 6 (PRODUCT LEVEL)	SEE PAGE
Y	1	1	**346-0523**	1	FILTER AS-FUEL (ULTRA HIGH EFFICIENCY)	998
	1A	1	**299-8229**		FILTER ELEMENT-FUEL (ULTRA HIGH EFFICIENCY)	
	2	1	**343-7104**	1	FILTER AS-FUEL	
	2A	1	**299-8229**	1	FILTER ELEMENT-FUEL (ULTRA HIGH EFFICIENCY)	
F			**278-4138**	1	KIT-FUEL LINE PROTECTION (LINE, LOW PRESSURE)	

F - NOT SHOWN
Y - SEPARATE ILLUSTRATION

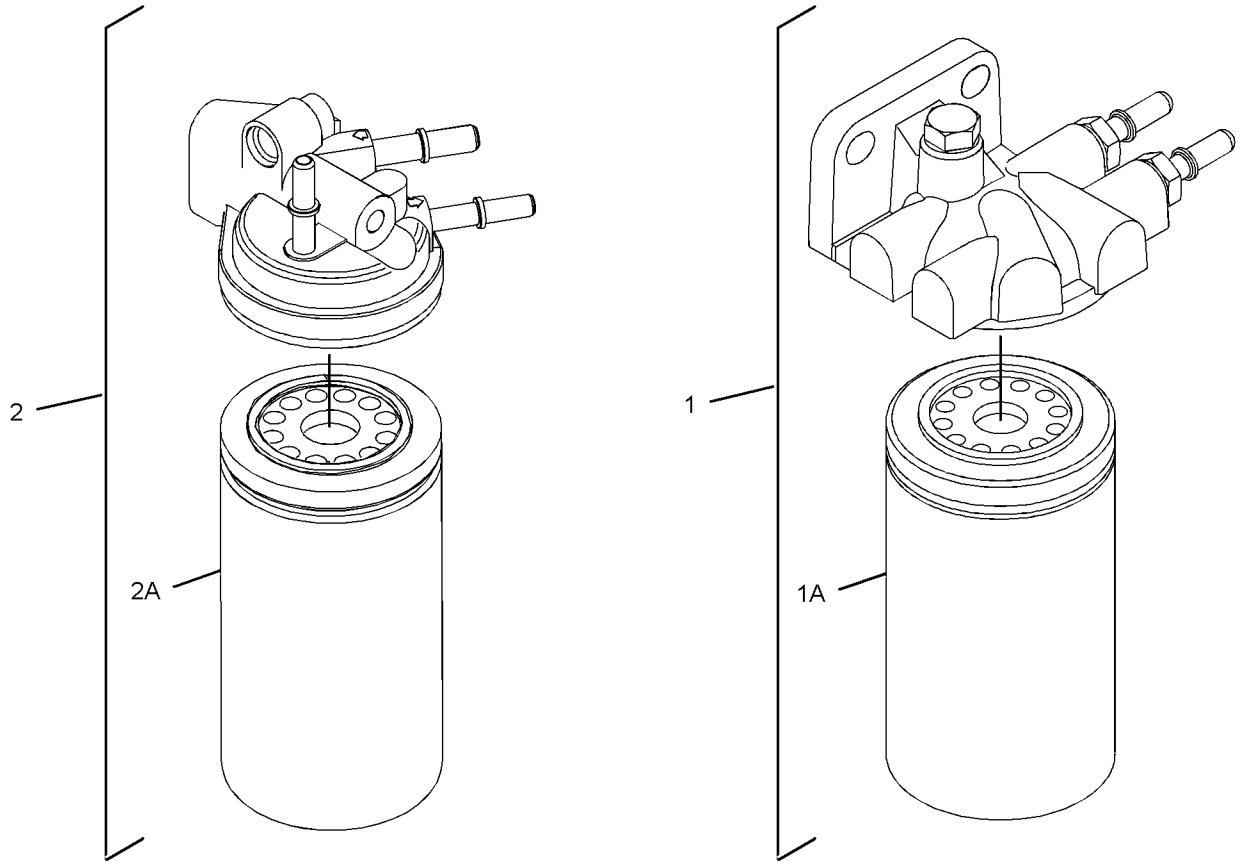

GRAPHIC #1

<END>

g02686577

333-5523 FILTER GP-FUEL

SMCS-1261 **i05268807**

NOTE	REF NO	GRAPHIC REF	PART NUMBER	QTY	PART NAME 1 2 3 4 5 6 (PRODUCT LEVEL)	SEE PAGE
	1	1	**368-5934**	1	FILTER AS-FUEL (ULTRA HIGH EFFICIENCY)	
	1A	1	**299-8229**	1	FILTER ELEMENT-FUEL (ULTRA HIGH EFFICIENCY)	
F			**278-4138**	1	KIT-FUEL LINE PROTECTION	

F - NOT SHOWN

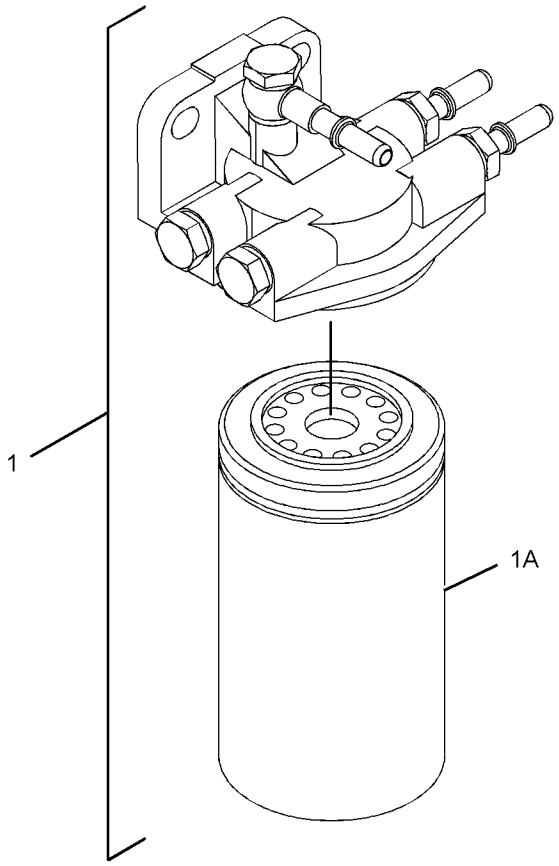

GRAPHIC #1 <END> g01962591

298-5123 FILTER GP-PRIMARY FUEL

S/N: 4441-321

PART OF 435-1692 ENGINE AR-COMPLETE, 435-1685, 437-5409 ENGINE AR-PRIMARY

SMCS-1260, 1261

i02896281

NOTE	REF NO	GRAPHIC REF	PART NUMBER	QTY	PART NAME 1 2 3 4 5 6 (PRODUCT LEVEL)	SEE PAGE
	1	1	**298-4603**	1	FILTER AS-FUEL (PRIMARY)	
	1A	1	**289-0600**	1	FILTER-FUEL (ULTRA HIGH EFFICIENCY)	
F			**278-4138**	1	KIT-FUEL LINE PROTECTION	

F - NOT SHOWN

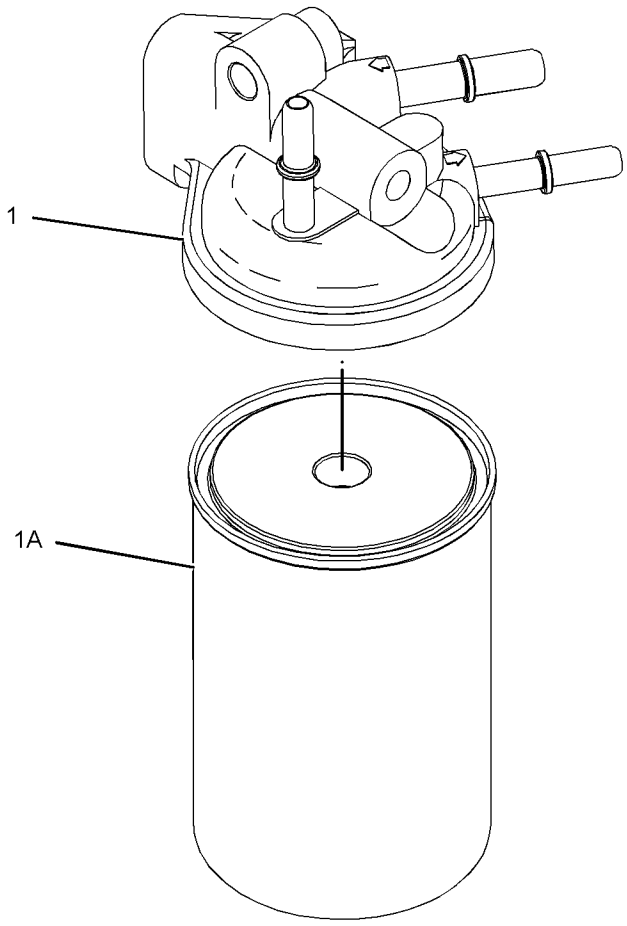

GRAPHIC #1 <END> g01304976

298-5123 FILTER GP-PRIMARY FUEL

S/N: 444322-UP

PART OF 435-1692 ENGINE AR-COMPLETE, 435-1685, 437-5409 ENGINE AR-PRIMARY

SMCS-1260, 1261

i03021825

NOTE	REF NO	GRAPHIC REF	PART NUMBER	QTY	PART NAME 1 2 3 4 5 6 (PRODUCT LEVEL)	SEE PAGE
	1	1	**311-2376**	1	FILTER AS-FUEL	
	1A	1	**299-8229**	1	FILTER ELEMENT-FUEL (ULTRA HIGH EFFICIENCY)	
F			**278-4138**	1	KIT-FUEL LINE PROTECTION	

F - NOT SHOWN

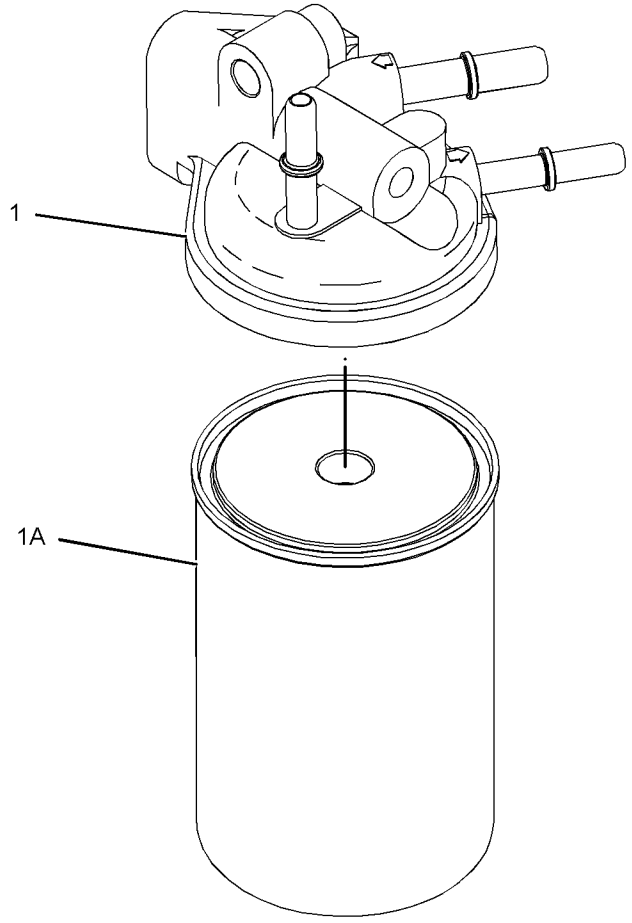

GRAPHIC #1

<END>

g01304976

298-5123 FILTER GP-PRIMARY FUEL

PART OF 435-1699 ENGINE AR, 435-1692 ENGINE AR-COMPLETE, 435-1685, 437-5409, 522-8303, 540-0570, 540-1155 ENGINE AR-PRIMARY

SMCS-1260, 1261

i05194795

NOTE	REF NO	GRAPHIC REF	PART NUMBER	QTY	PART NAME 1 2 3 4 5 6 (PRODUCT LEVEL)	SEE PAGE
	1	1	**343-7104**	1	FILTER AS-FUEL (SECONDARY)	
	1A	1	**299-8229**	1	FILTER ELEMENT-FUEL (ULTRA HIGH EFFICIENCY)	
F			**278-4138**	1	KIT-FUEL LINE PROTECTION	

F - NOT SHOWN

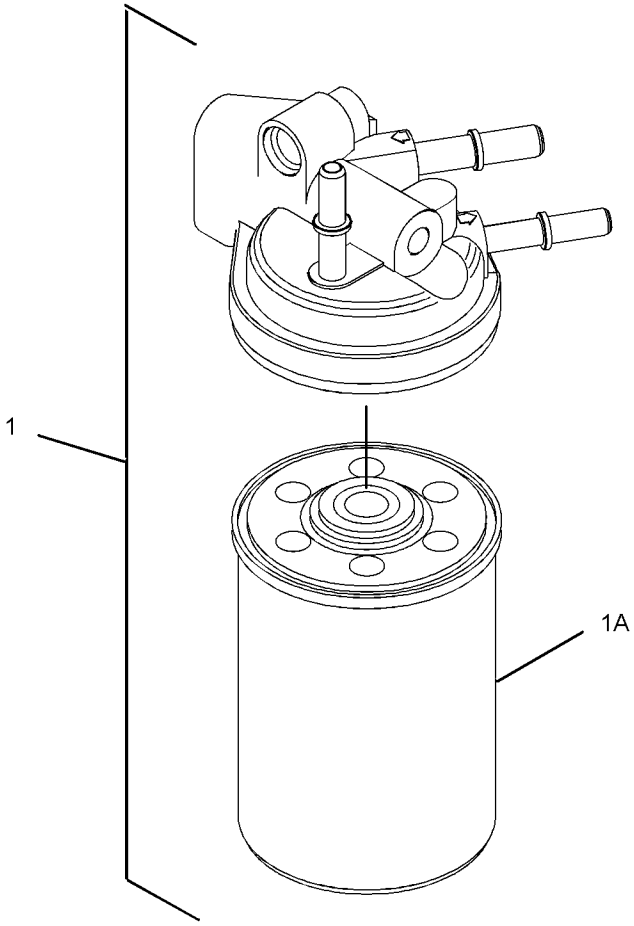

GRAPHIC #1

<END>

g01890133

263-7148 FILTER GP-WATER SEP & FUEL

PART OF 303-5780 FILTER GP-FUEL, 301-8251, 322-2606 FILTER GP-WATER SEP & FUEL, 322-4952 LINES GP-FUEL

SMCS-1261, 1263

i03654260

NOTE	REF NO	GRAPHIC REF	PART NUMBER	QTY	PART NAME 1 2 3 4 5 6 (PRODUCT LEVEL)	SEE PAGE
	1	1	**308-7576**	1	FILTER GP-WATER SEP & FUEL	
	1A	1	**308-7298**	1	FILTER AS-WATER SEP & FUEL	
	1B	1	**310-5912**	1	BOWL AS	
	2	1	**313-1663**	1	SENSOR-PRESSURE (FUEL)	

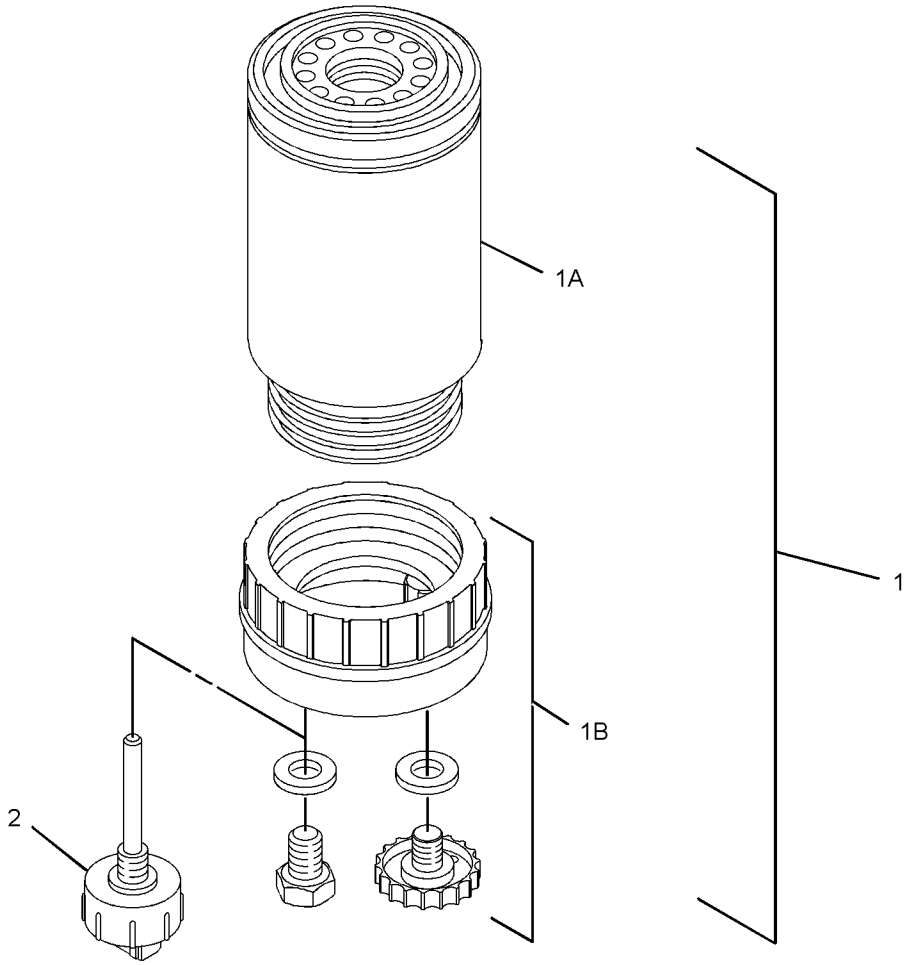

GRAPHIC #1 <END> g01702414

301-8251 FILTER GP-WATER SEP & FUEL

S/N: 4441-3189

PART OF 435-1699 ENGINE AR, 437-5409 ENGINE AR-PRIMARY

SMCS-1261, 1263

i02762638

NOTE	REF NO	GRAPHIC REF	PART NUMBER	QTY	PART NAME 1 2 3 4 5 6 (PRODUCT LEVEL)	SEE PAGE
Y	1	1	**263-7148**	1	FILTER GP-WATER SEP & FUEL	1012
	2	1	**277-4990**	1	ELBOW	
	3	1	**277-4991**	1	CONNECTION	
	4	1	**277-4993**	1	SEAL-O-RING	

Y - SEPARATE ILLUSTRATION

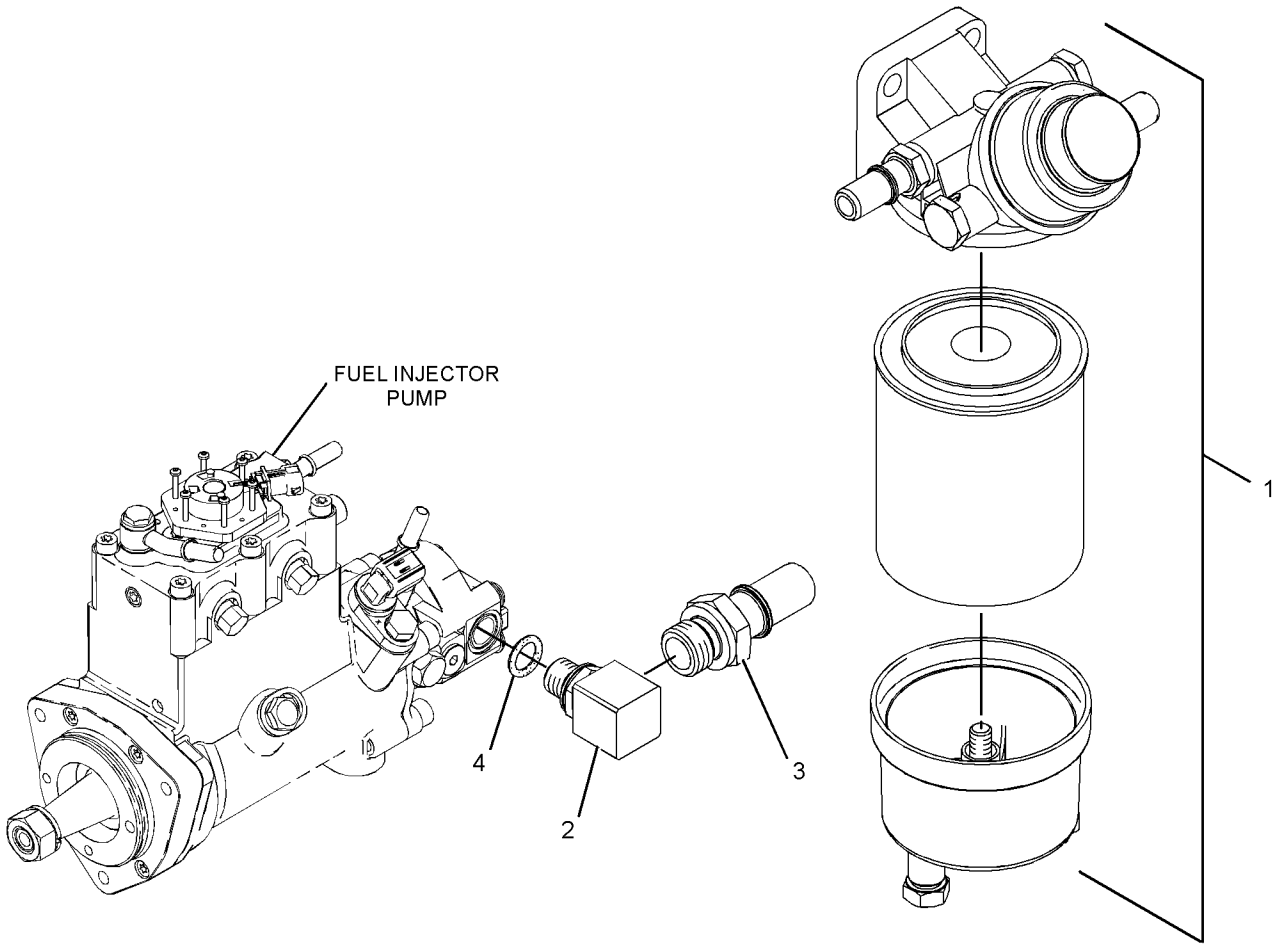

GRAPHIC #1 <END> g01383094

301-8251 FILTER GP-WATER SEP & FUEL

PART OF 435-1699 ENGINE AR, 522-8303, 540-1155 ENGINE AR-PRIMARY

SMCS-1261, 1263 **i03142543**

NOTE	REF NO	GRAPHIC REF	PART NUMBER	QTY	PART NAME 1 2 3 4 5 6 (PRODUCT LEVEL)	SEE PAGE
CY	1	1	**318-8064**	1	FILTER GP-WATER SEP & FUEL	1015
	2	1	**277-4990**	1	ELBOW	
	3	1	**277-4991**	1	CONNECTION	
	4	1	**277-4993**	1	SEAL-O-RING	

C - CHANGE FROM PREVIOUS TYPE
Y - SEPARATE ILLUSTRATION

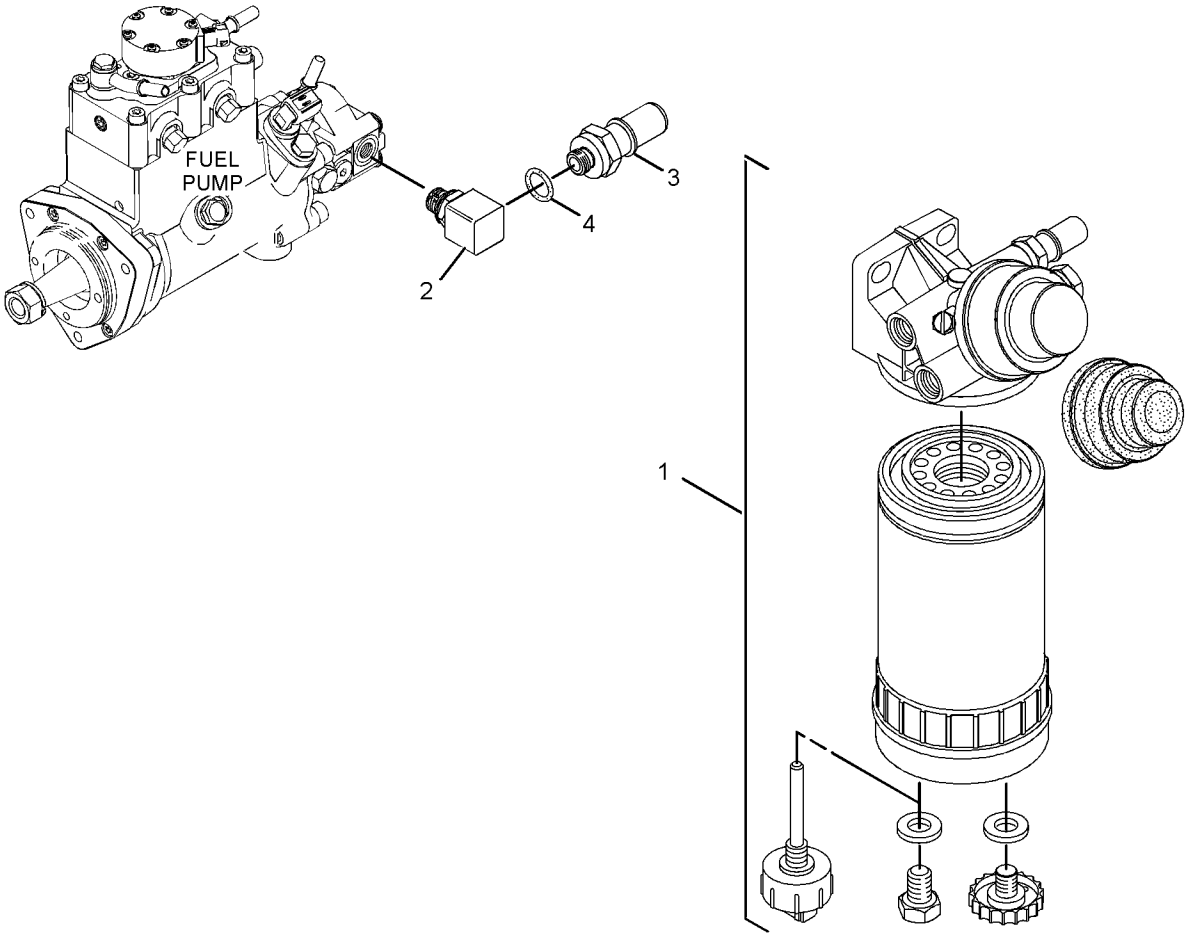

GRAPHIC #1 <END> g01622390

318-8064 FILTER GP-WATER SEP & FUEL

S/N: 4443190-UP

PART OF 301-8251, 322-2606 FILTER GP-WATER SEP & FUEL, 322-4952 LINES GP-FUEL

SMCS-1261, 1263

i06244763

NOTE	REF NO	GRAPHIC REF	PART NUMBER	QTY	PART NAME 1 2 3 4 5 6 (PRODUCT LEVEL)	SEE PAGE
	1	1	**308-7576**	1	FILTER GP-WATER SEP & FUEL	
	1A	1	**308-7298**	1	FILTER AS-WATER SEP & FUEL	
	1B	1	**310-5912**	1	BOWL AS	
	2	1	**291-6570**	1	SENSOR AS-LIQUID LEVEL (FUEL, WATER SEPARATOR)	
	3	1	**333-9694**	1	BOOT-SEAL	
	4	1	**333-9693**	1	KIT-CONNECTION (FUEL, WATER SEPARATOR)	
					(INCLUDES CONNECTORS & O-RINGS)	

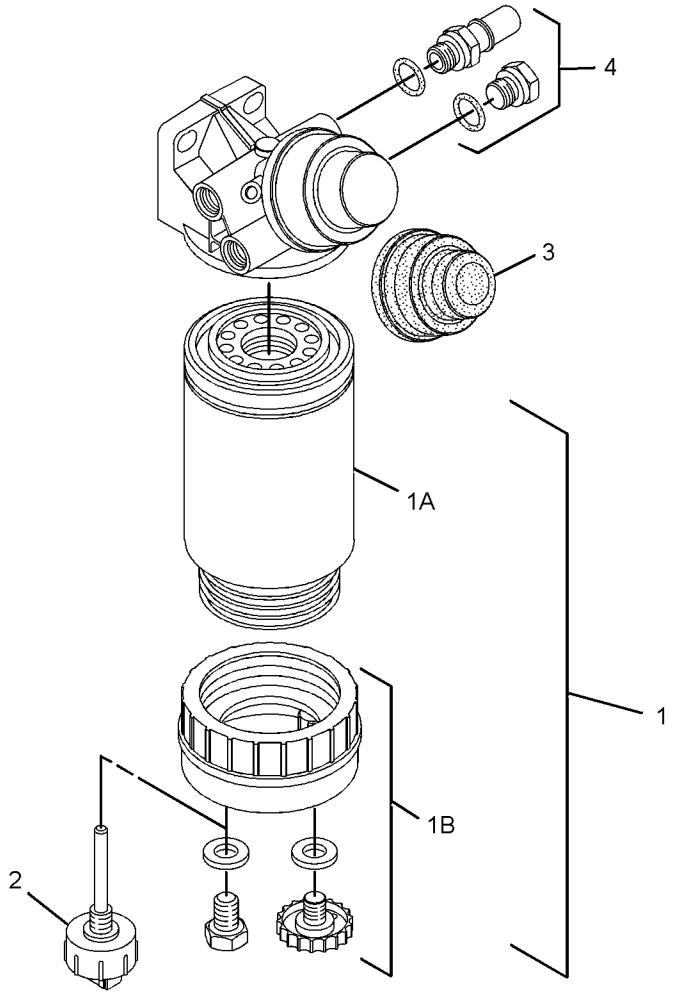

GRAPHIC #1

<END>

g01622416

322-2606 FILTER GP-WATER SEP & FUEL

S/N: 4441-3189

SMCS-1261, 1263 **i02883171**

NOTE	REF NO	GRAPHIC REF	PART NUMBER	QTY	PART NAME 1 2 3 4 5 6 (PRODUCT LEVEL)	SEE PAGE
Y	1	1	**263-7148**	1	FILTER GP-WATER SEP & FUEL	1012
	2	1	**277-4990**	1	ELBOW	
	3	1	**277-4991**	1	CONNECTION	
	4	1	**277-4993**	1	SEAL-O-RING	
F			**278-4138**	1	KIT-FUEL LINE PROTECTION (LINE, LOW PRESSURE)	

F - NOT SHOWN
Y - SEPARATE ILLUSTRATION

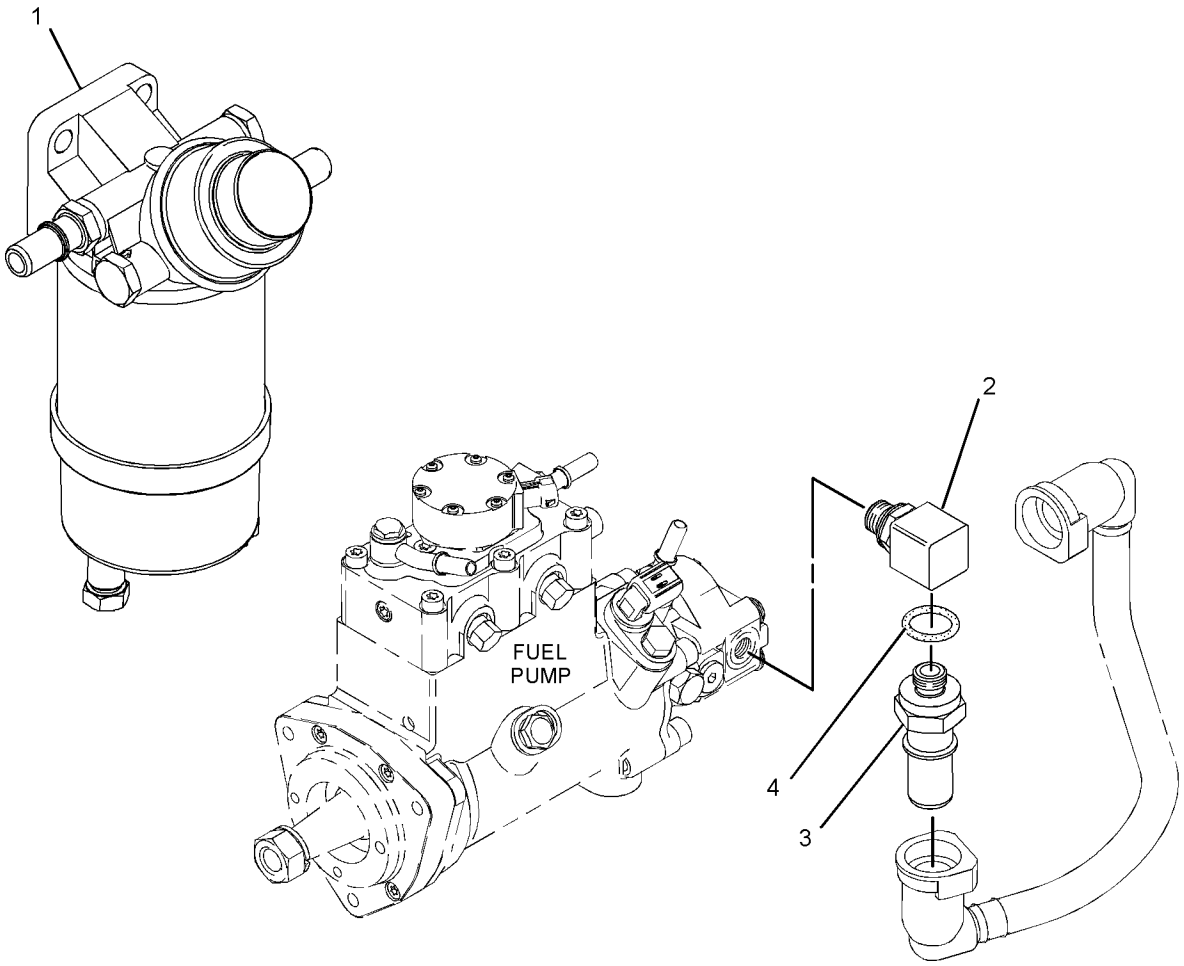

GRAPHIC #1 <END> g01438175

322-2606 FILTER GP-WATER SEP & FUEL

S/N: 4443190-UP

SMCS-1261, 1263 **i03133466**

NOTE	REF NO	GRAPHIC REF	PART NUMBER	QTY	PART NAME 1 2 3 4 5 6 (PRODUCT LEVEL)	SEE PAGE
CY	1	1	**318-8064**	1	FILTER GP-WATER SEP & FUEL	1015
	2	1	**277-4990**	1	ELBOW	
	3	1	**277-4991**	1	CONNECTION	
	4	1	**277-4993**	1	SEAL-O-RING	
F			**278-4138**	1	KIT-FUEL LINE PROTECTION (LINE, LOW PRESSURE)	

C - CHANGE FROM PREVIOUS TYPE
F - NOT SHOWN
Y - SEPARATE ILLUSTRATION

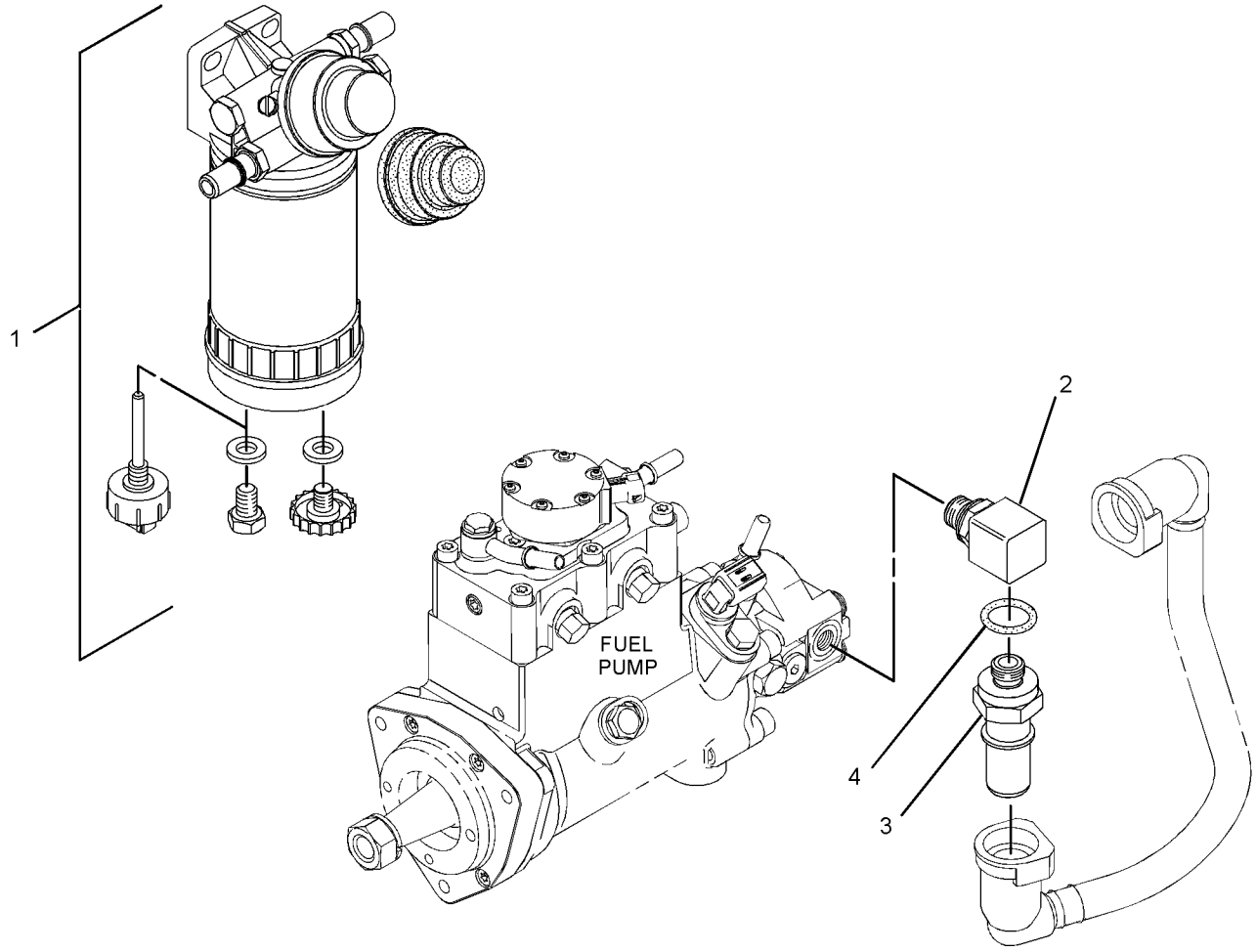

GRAPHIC #1 <END> g01673580

282-0470 INJECTOR GP-FUEL

AN ATTACHMENT

SMCS-1251, 1254, 1290, 1713 **i02713194**

NOTE	REF NO	GRAPHIC REF	PART NUMBER	QTY	PART NAME 1 2 3 4 5 6 (PRODUCT LEVEL)	SEE PAGE
	1	1	**287-7637**	1	WASHER	
	2	1	**274-1639**	1	SEAL	

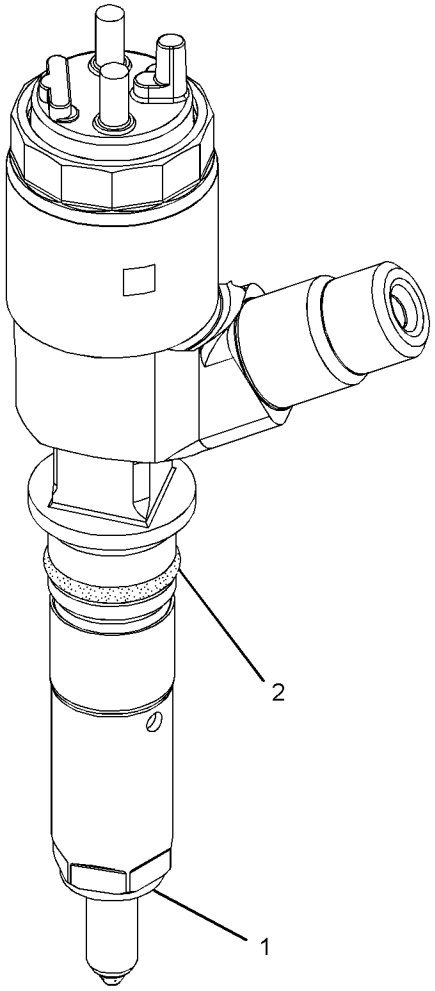

GRAPHIC #1 <END> g01321917

282-0480 INJECTOR GP-FUEL

PART OF 298-5893, 301-8235, 304-0725, 305-0634, 305-1955, 307-2847, 313-3514, 313-4350 PUMP GP-FUEL INJECTION

SMCS-1251, 1254, 1290, 1713

i02635997

NOTE	REF NO	GRAPHIC REF	PART NUMBER	QTY	PART NAME 1 2 3 4 5 6 (PRODUCT LEVEL)	SEE PAGE
	1	1	**274-1639**	1	SEAL	
	2	1	**287-7637**	1	WASHER	

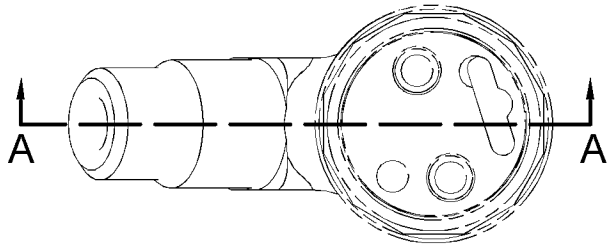

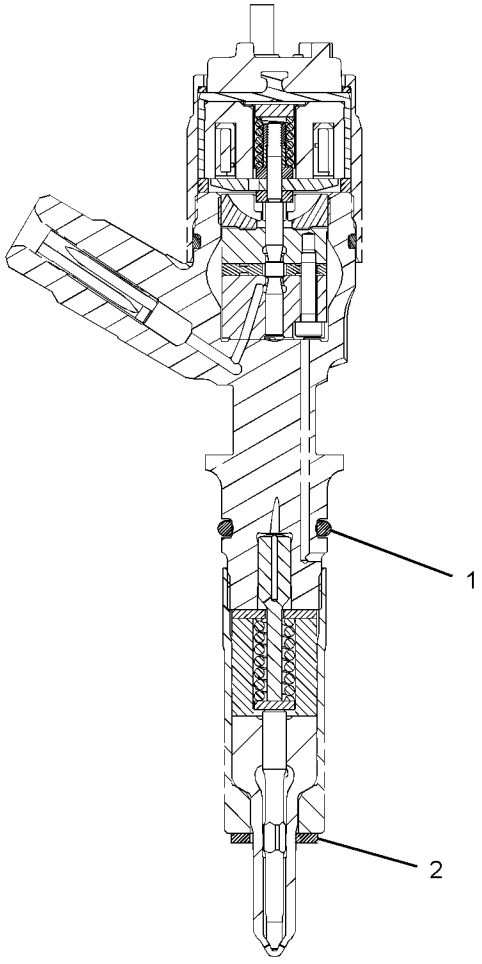

SECTION A-A

GRAPHIC #1

<END>

g01306918

292-3770 INJECTOR GP-FUEL

AN ATTACHMENT

SMCS-1251, 1254, 1290, 1713 **i02605465**

NOTE	REF NO	GRAPHIC REF	PART NUMBER	QTY	PART NAME 1 2 3 4 5 6 (PRODUCT LEVEL)	SEE PAGE
	1	1	**274-1639**	1	SEAL	
	2	1	**287-7637**	1	WASHER	

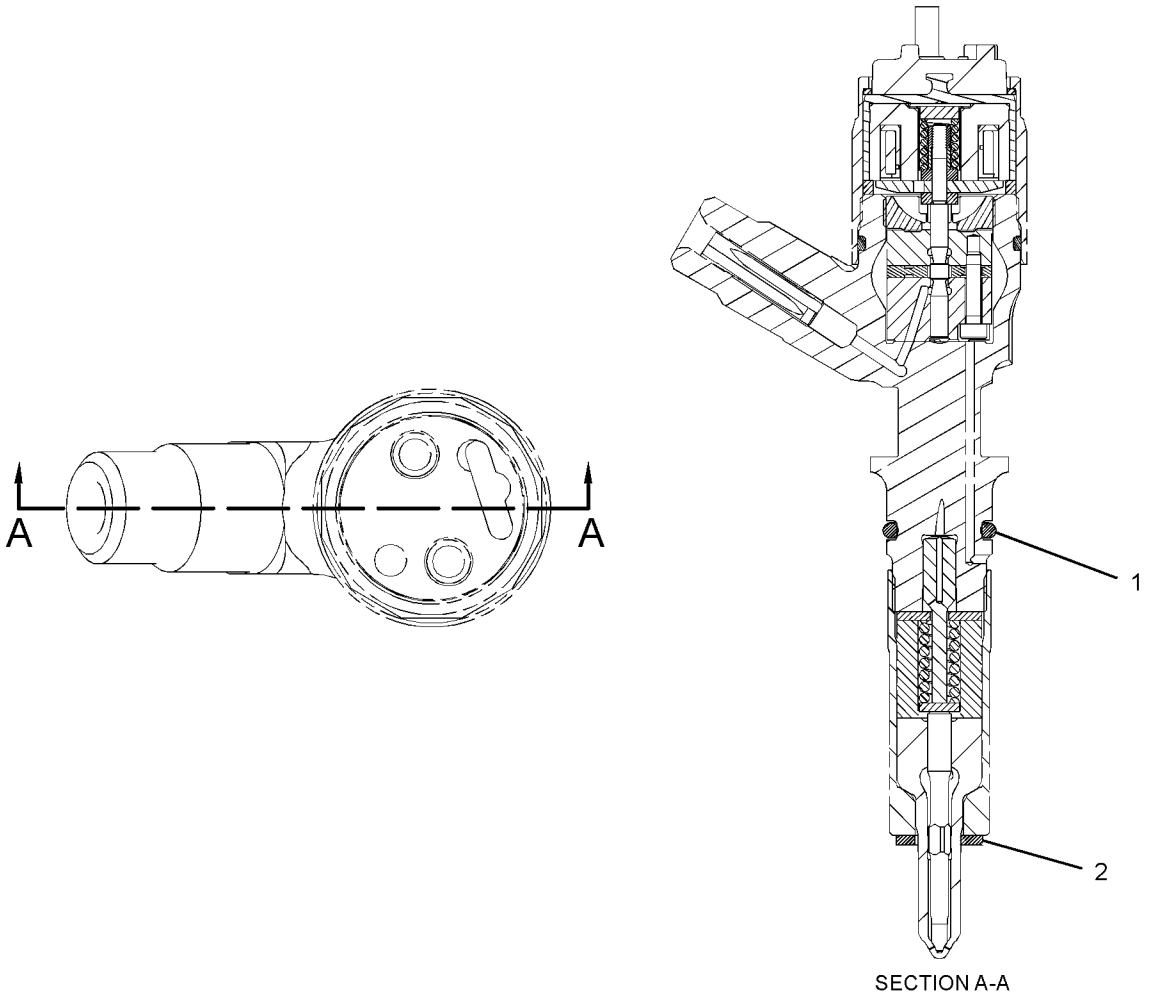

SECTION A-A

GRAPHIC #1 <END> g01306918

292-3780 INJECTOR GP-FUEL

PART OF 298-5091, 298-5893, 303-4615, 304-6570, 304-7189, 304-7192, 304-8755, 305-2575, 305-6701, 308-4153 PUMP GP-FUEL INJECTION

SMCS-1251, 1254, 1290, 1713

i02681120

NOTE	REF NO	GRAPHIC REF	PART NUMBER	QTY	PART NAME 1 2 3 4 5 6 (PRODUCT LEVEL)	SEE PAGE
	1	1	**287-7637**	1	WASHER	
	2	1	**274-1639**	1	SEAL	

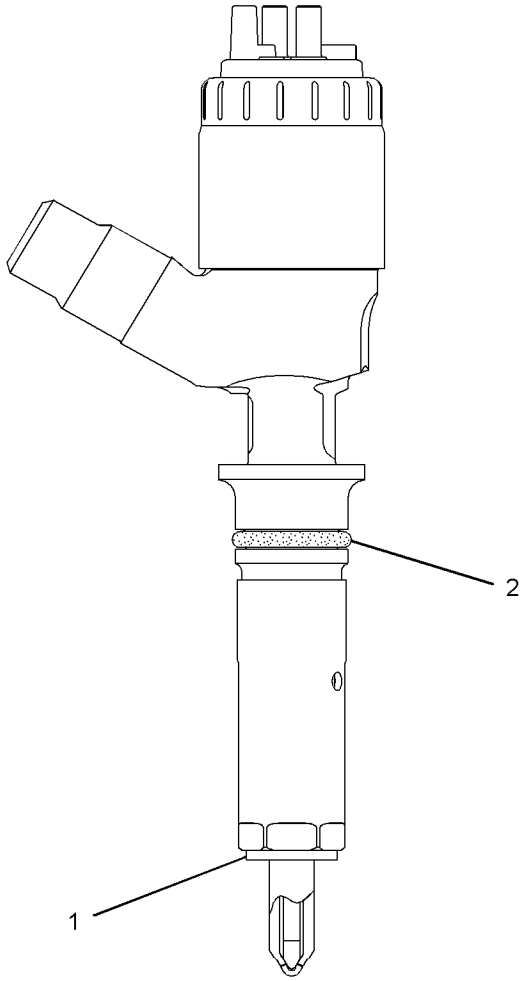

GRAPHIC #1

<END>

g01321405

293-9570 INJECTOR GP-FUEL*R

AN ATTACHMENT

SMCS-1251, 1254, 1290, 1713 **i02720185**

NOTE	REF NO	GRAPHIC REF	PART NUMBER	QTY	PART NAME 1 2 3 4 5 6 (PRODUCT LEVEL)	SEE PAGE
	1	1	**287-7637**	1	WASHER	
	2	1	**274-1639**	1	SEAL	

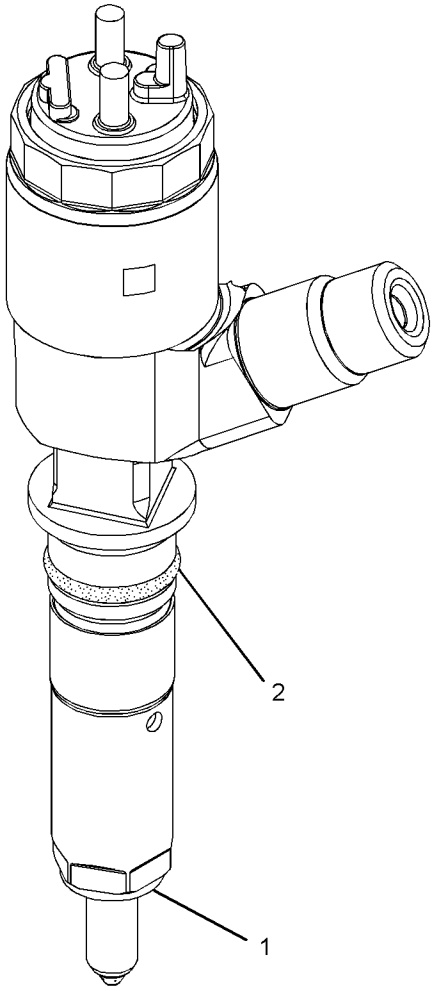

GRAPHIC #1 <END> g01321917

306-9370 INJECTOR GP-FUEL*R

AN ATTACHMENT

SMCS-1251, 1254, 1290, 1713 **i02720355**

NOTE	REF NO	GRAPHIC REF	PART NUMBER	QTY	PART NAME 1 2 3 4 5 6 (PRODUCT LEVEL)	SEE PAGE
	1	1	**287-7637**	1	WASHER	
	2	1	**274-1639**	1	SEAL	

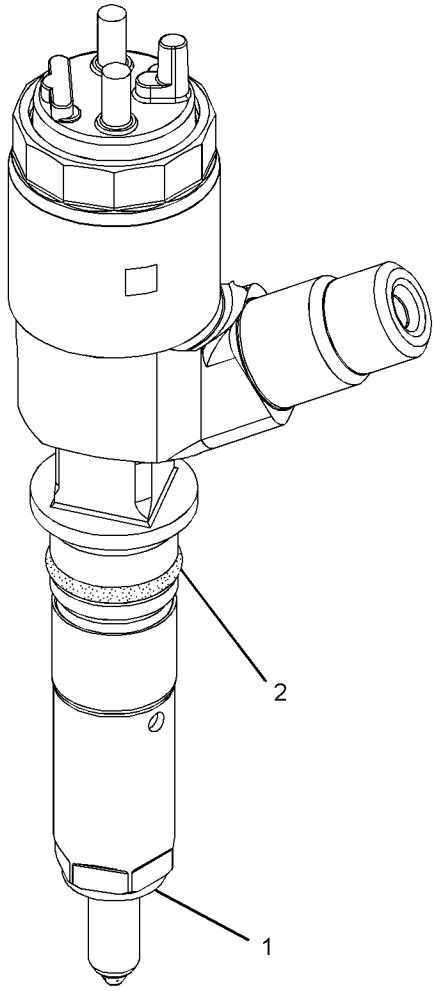

GRAPHIC #1 <END> g01321917

306-9377 INJECTOR GP-FUEL*R

AN ATTACHMENT

SMCS-1251, 1254, 1290, 1713 **i02862699**

NOTE	REF NO	GRAPHIC REF	PART NUMBER	QTY	PART NAME 1 2 3 4 5 6 (PRODUCT LEVEL)	SEE PAGE
	1	1	**287-7637**	1	WASHER	
	2	1	**274-1639**	1	SEAL	

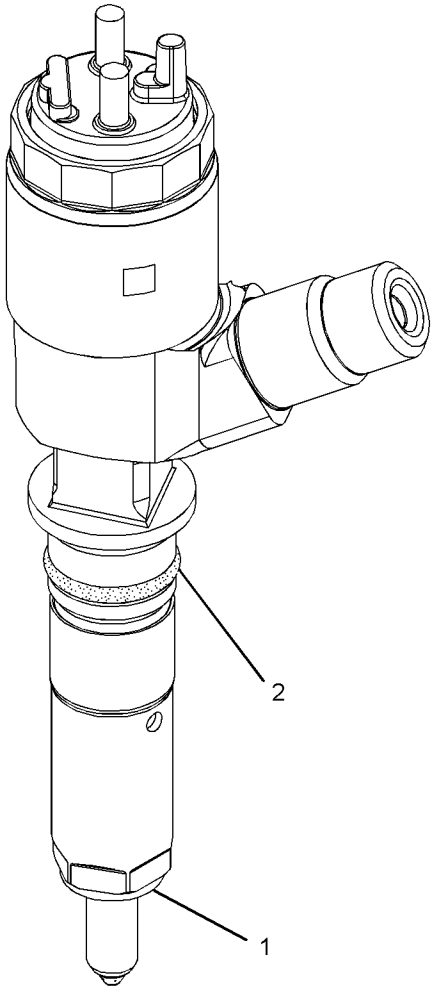

GRAPHIC #1 <END> g01425853

306-9388 INJECTOR GP-FUEL

AN ATTACHMENT

SMCS-1251, 1254, 1290, 1713 **i02838373**

NOTE	REF NO	GRAPHIC REF	PART NUMBER	QTY	PART NAME 1 2 3 4 5 6 (PRODUCT LEVEL)	SEE PAGE
	1	1	**287-7637**	1	WASHER	
	2	1	**274-1639**	1	SEAL	

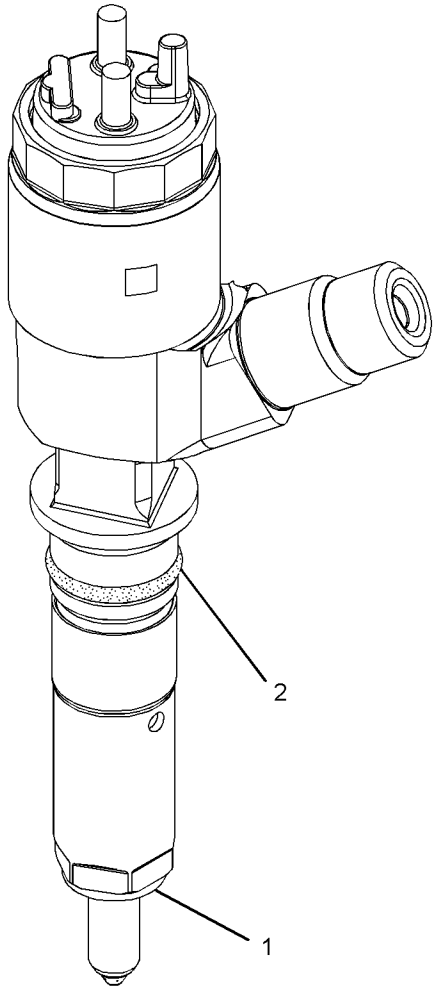

GRAPHIC #1 <END> g01321917

320-0677 INJECTOR GP-FUEL*R

PART OF 305-1955, 313-3514, 313-4350, 339-1745 PUMP GP-FUEL INJECTION

SMCS-1251, 1254, 1290, 1713

i02966445

NOTE	REF NO	GRAPHIC REF	PART NUMBER	QTY	PART NAME 1 2 3 4 5 6 (PRODUCT LEVEL)	SEE PAGE
	1	1	**287-7637**	1	WASHER	
	2	1	**274-1639**	1	SEAL	

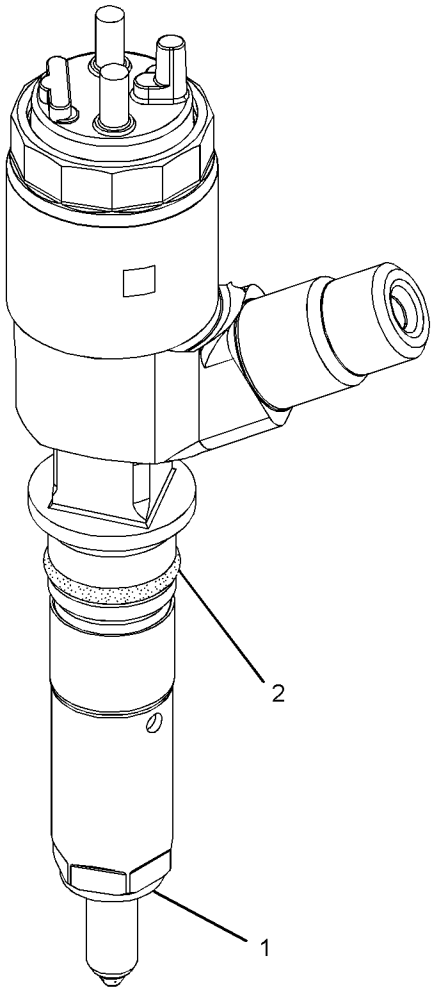

GRAPHIC #1

<END>

g01321917

320-0680 INJECTOR GP-FUEL*R

PART OF 298-5091, 298-5893, 301-8235, 303-4615, 304-0725, 304-6570, 304-7189, 304-7192, 304-8755, 305-2575, 305-6701, 307-2847, 308-4153, 316-1109, 317-7967, 317-7968, 320-2397, 320-2398, 322-3753, 353-7341 PUMP GP-FUEL INJECTION
ALSO AN ATTACHMENT

SMCS-1251, 1254, 1290, 1713

i04929968

NOTE	REF NO	GRAPHIC REF	PART NUMBER	QTY	PART NAME 1 2 3 4 5 6 (PRODUCT LEVEL)	SEE PAGE
	1	1	**287-7637**	1	WASHER	
	2	1	**274-1639**	1	SEAL	

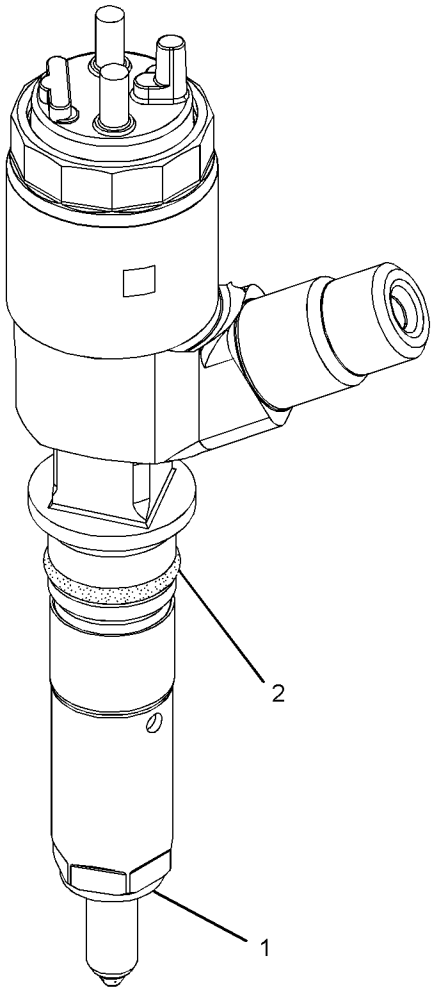

GRAPHIC #1

<END>

g01321917

347-2161 KIT-FUEL FILTER

FOR USE WITH REHS3742
AN ATTACHMENT

SMCS-1261 **i03725795**

NOTE	REF NO	GRAPHIC REF	PART NUMBER	QTY	PART NAME 1 2 3 4 5 6 (PRODUCT LEVEL)	SEE PAGE
	1	1	**215-9515**	4	CONNECTOR-HOSE (QUICK DISCONNECT)	
	2	1	**346-0523**	1	FILTER AS-FUEL (ULTRA HIGH EFFICIENCY)	
	2A	1	**299-8229**	1	FILTER ELEMENT-FUEL (ULTRA HIGH EFFICIENCY)	
	3	1	**346-2938**	4	CONNECTOR	

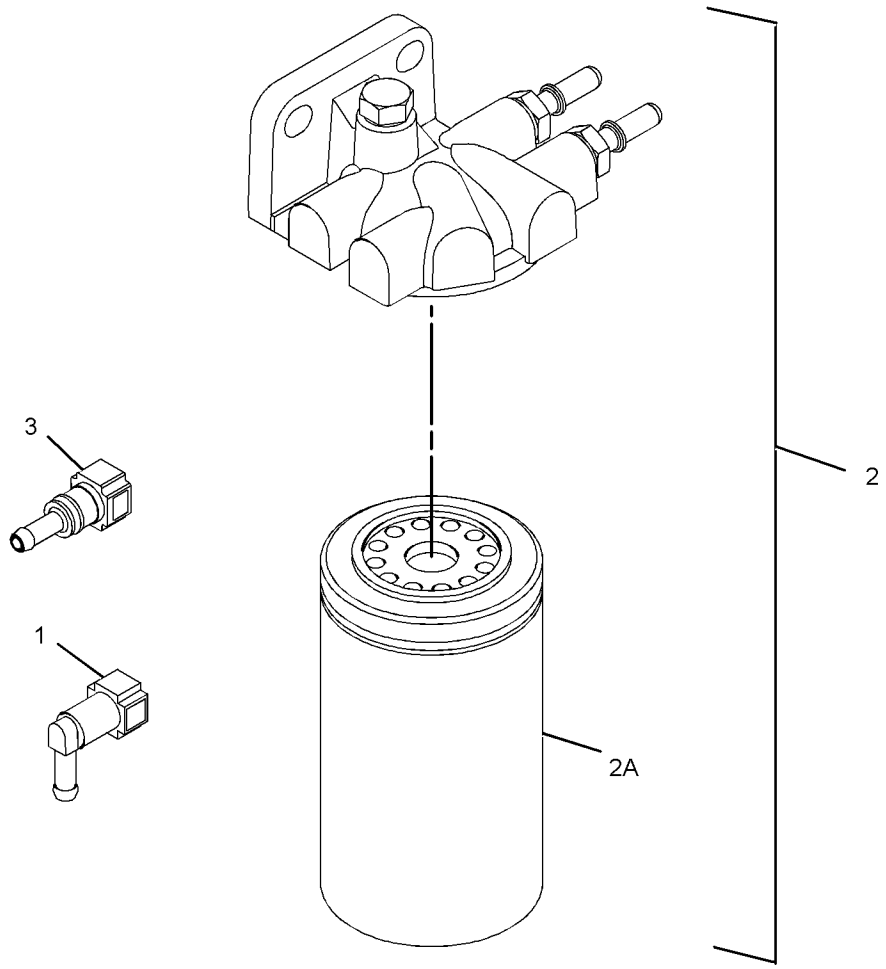

GRAPHIC #1 <END> g02010599

375-6315 KIT-FUEL FILTER

FUEL

AN ATTACHMENT

SMCS-1261 **i07327837**

NOTE	REF NO	GRAPHIC REF	PART NUMBER	QTY	PART NAME 1 2 3 4 5 6 (PRODUCT LEVEL)	SEE PAGE
	1	1	**215-9515**	4	CONNECTOR-HOSE (QUICK DISCONNECT)	
	2	1	**346-2938**	4	CONNECTOR	
	3	1	**371-4587**	1	FILTER AS-FUEL (IN-LINE)	
		1	**299-8229**	1	FILTER ELEMENT-FUEL (ULTRA HIGH EFFICIENCY)	

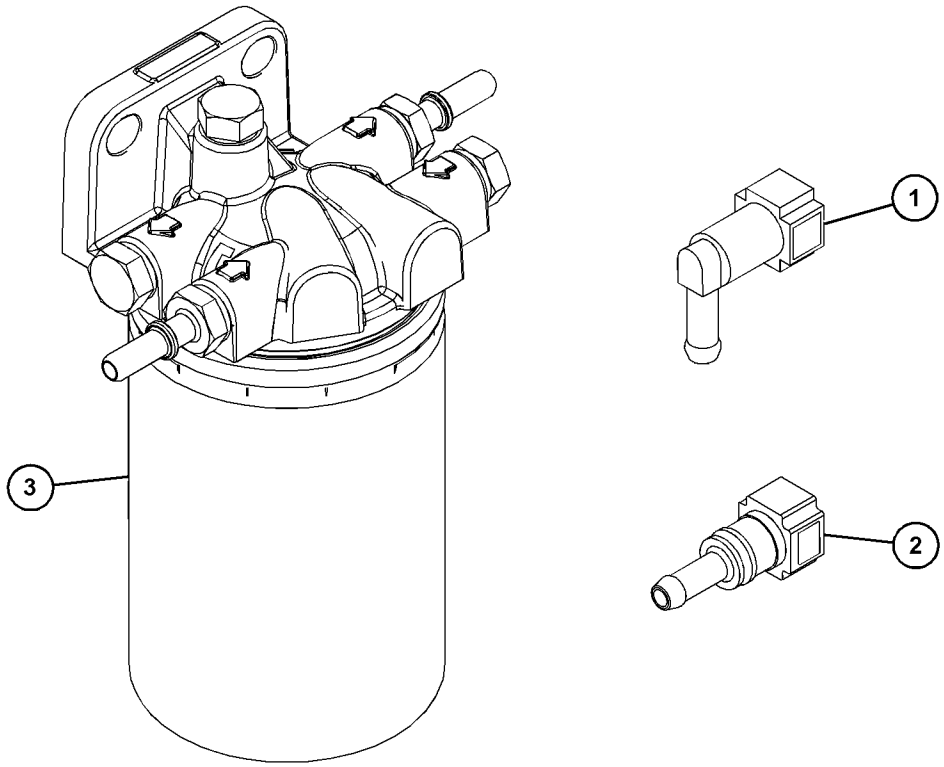

GRAPHIC #1 <END> g03746671

298-5120 LINES GP-FUEL

S/N: 4441-1441

SMCS-1274 **i05162479**

NOTE	REF NO	GRAPHIC REF	PART NUMBER	QTY	PART NAME 1 2 3 4 5 6 (PRODUCT LEVEL)	SEE PAGE
M	1	2	**6I-0260**	1	BOLT (M8X1.25X25-MM)	
M	2	2	**127-3361**	1	BOLT (M8X1.25X95-MM)	
	3	2	**215-9509**	1	FITTING (QUICK DISCONNECT, MALE)	
	4	1,2	**232-1115**	2	CLIP-PIPE	
	5	2	**234-3063**	2	CLIP	
	6	2	**277-6165**	1	CONNECTION-FUEL	
	7	1	**316-1156**	1	TUBE	
	8	1	**298-4595**	1	TUBE AS	
	9	1	**298-4597**	1	TUBE AS	
	10	2	**308-7487**	1	TUBE AS	
	11	1	**308-7571**	1	TUBE AS	
	11A	1	**295-4670**	2	BOLT-SPECIAL (BANJO)	
	11B	1	**308-7577**	4	WASHER	
F			**278-4138**	5	KIT-FUEL LINE PROTECTION	

F - NOT SHOWN
M - METRIC PART

298-5120 **LINES GP-FUEL (**contd.**)** **i05162479**

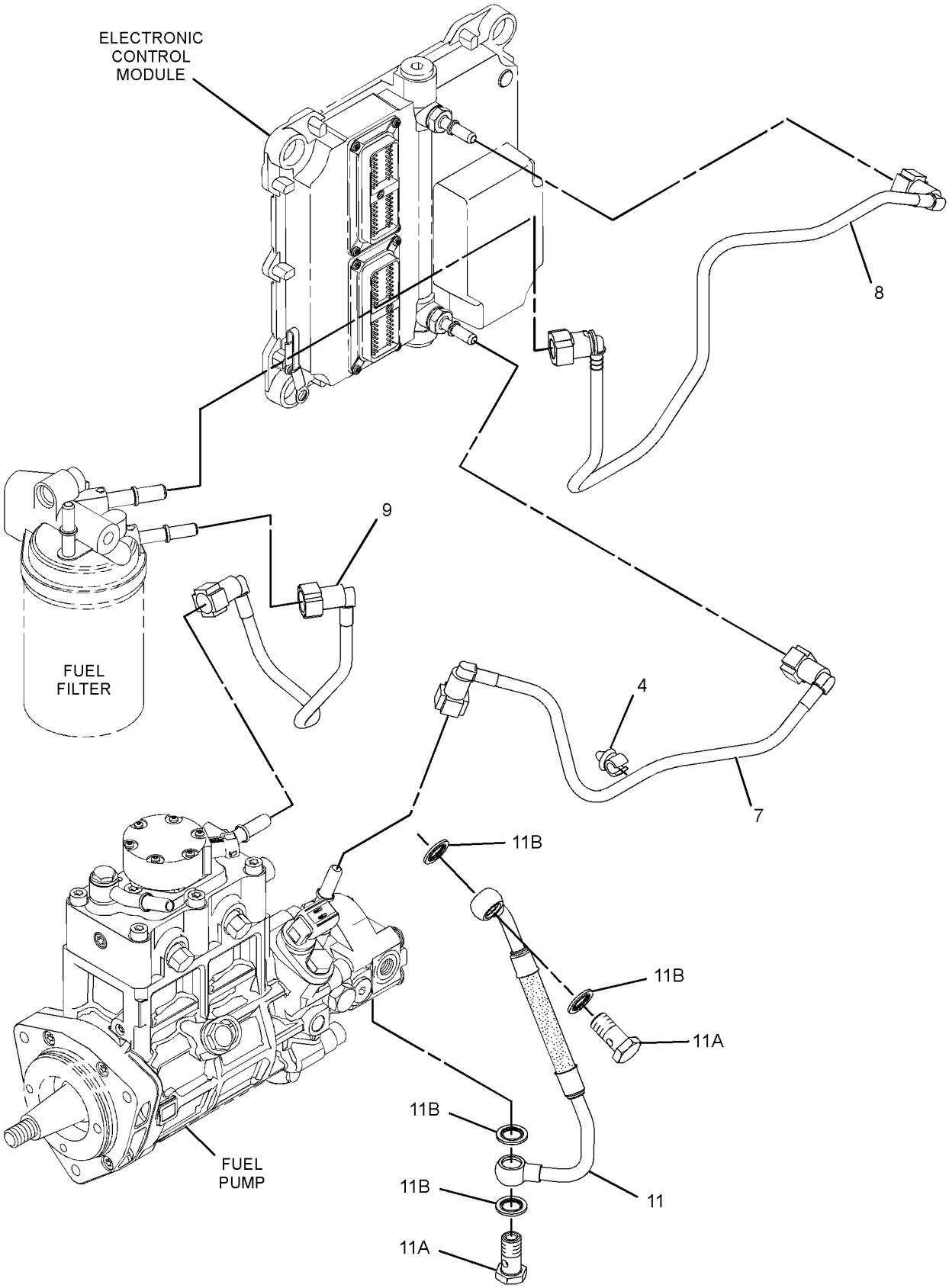

GRAPHIC #1 g01378112

298-5120 **LINES GP-FUEL (**contd.**)** **i05162479**

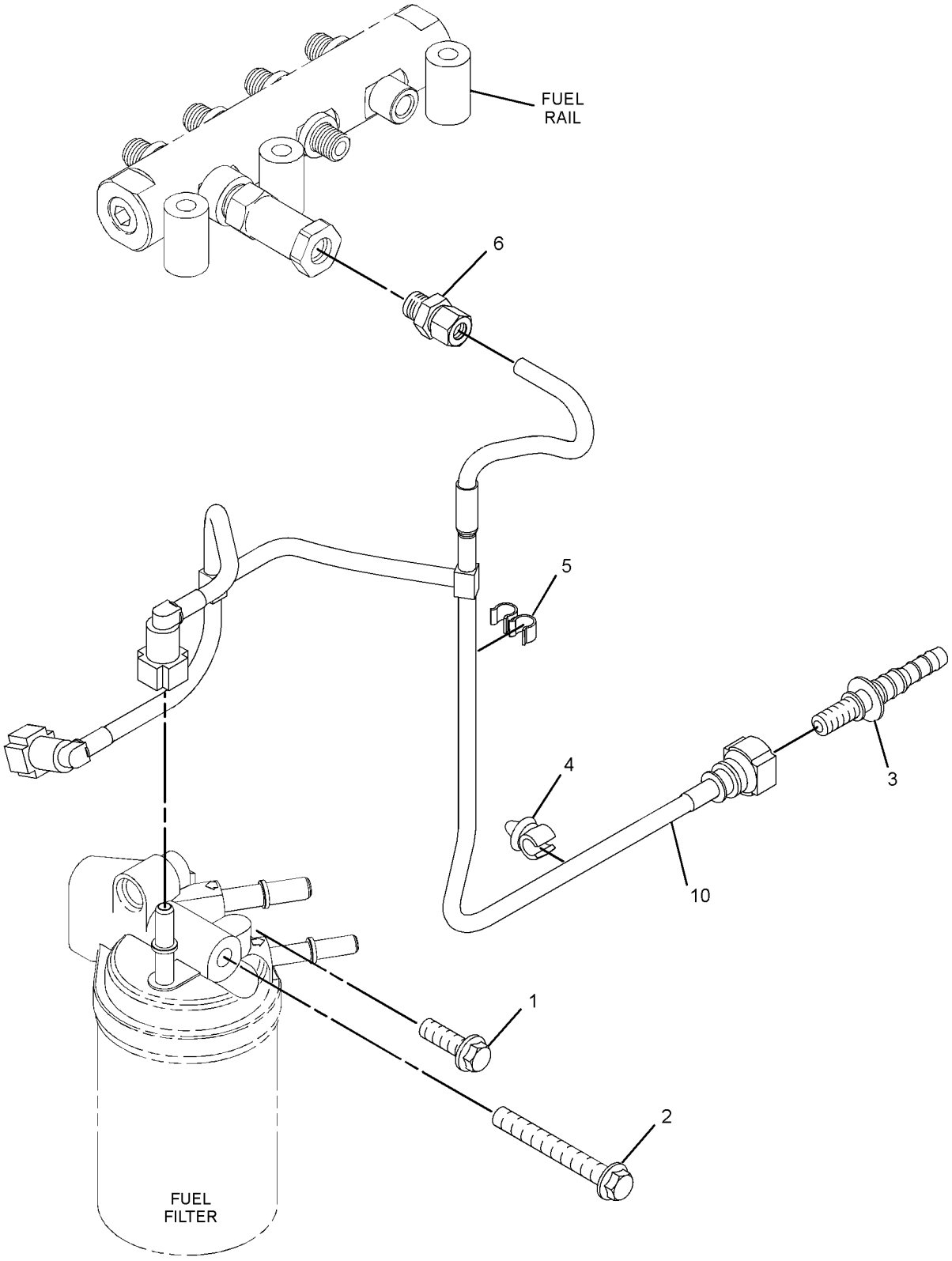

GRAPHIC #2 <END> g01411810

316-1179 LINES GP-FUEL

ALSO AN ATTACHMENT

SMCS-1274 **i05215867**

NOTE	REF NO	GRAPHIC REF	PART NUMBER	QTY	PART NAME 1 2 3 4 5 6 (PRODUCT LEVEL)	SEE PAGE
M	1	2	**6I-0260**	2	BOLT (M8X1.25X25-MM)	
M	2	2	**6I-0594**	2	NUT (M10X1.5-THD)	
M	3	2	**100-4458**	3	BOLT (M8X1.25X14-MM)	
	4	2	**215-9509**	1	FITTING (QUICK DISCONNECT, MALE)	
	5	1	**232-1115**	1	CLIP-PIPE	
	6	2	**335-9215**	1	CLIP	
	7	1	**308-7571**	1	TUBE AS	
	7A	1	**295-4670**	2	BOLT-SPECIAL (BANJO)	
	7B	1	**286-2890**	4	WASHER	
	8	1	**316-1156**	1	TUBE	
	9	1	**316-1157**	1	TUBE	
	10	1	**316-1158**	1	TUBE	
	11	2	**316-1159**	1	TUBE	
	12	2	**295-4670**	1	BOLT-SPECIAL (BANJO)	
	13	2	**286-2890**	2	WASHER	
	14	2	**316-1165**	1	BRACKET AS	
	14A	2	**232-1115**	1	CLIP-PIPE	
	15	2	**365-7752**	1	BRACKET	
	15A	2	**232-1115**	1	CLIP-PIPE	
F			**278-4138**	1	KIT-FUEL LINE PROTECTION	

F - NOT SHOWN
M - METRIC PART

316-1179 **LINES GP-FUEL (**contd.**)** **i05215867**

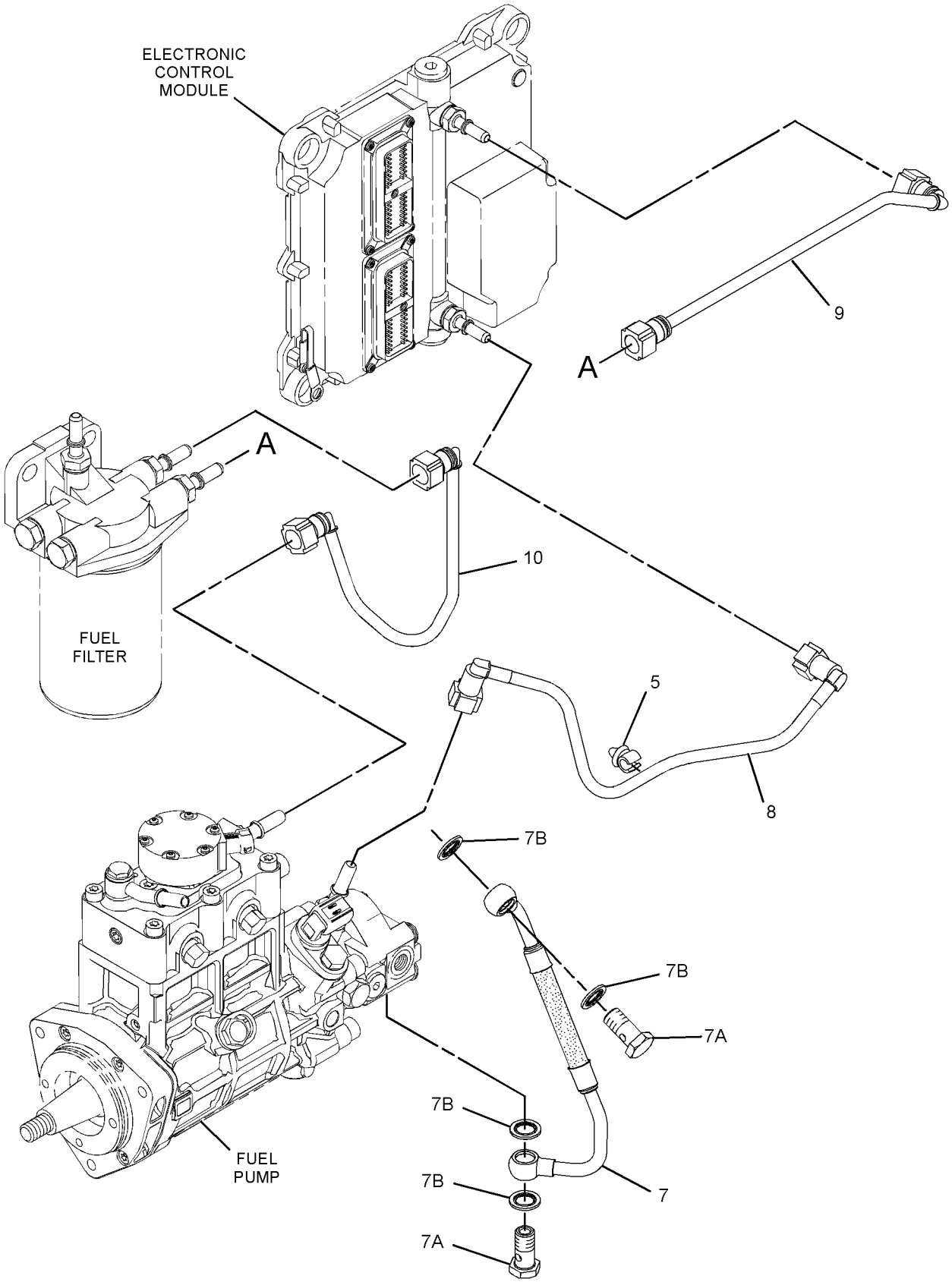

GRAPHIC #1 g01992394

316-1179 **LINES GP-FUEL (**contd.**)** **i05215867**

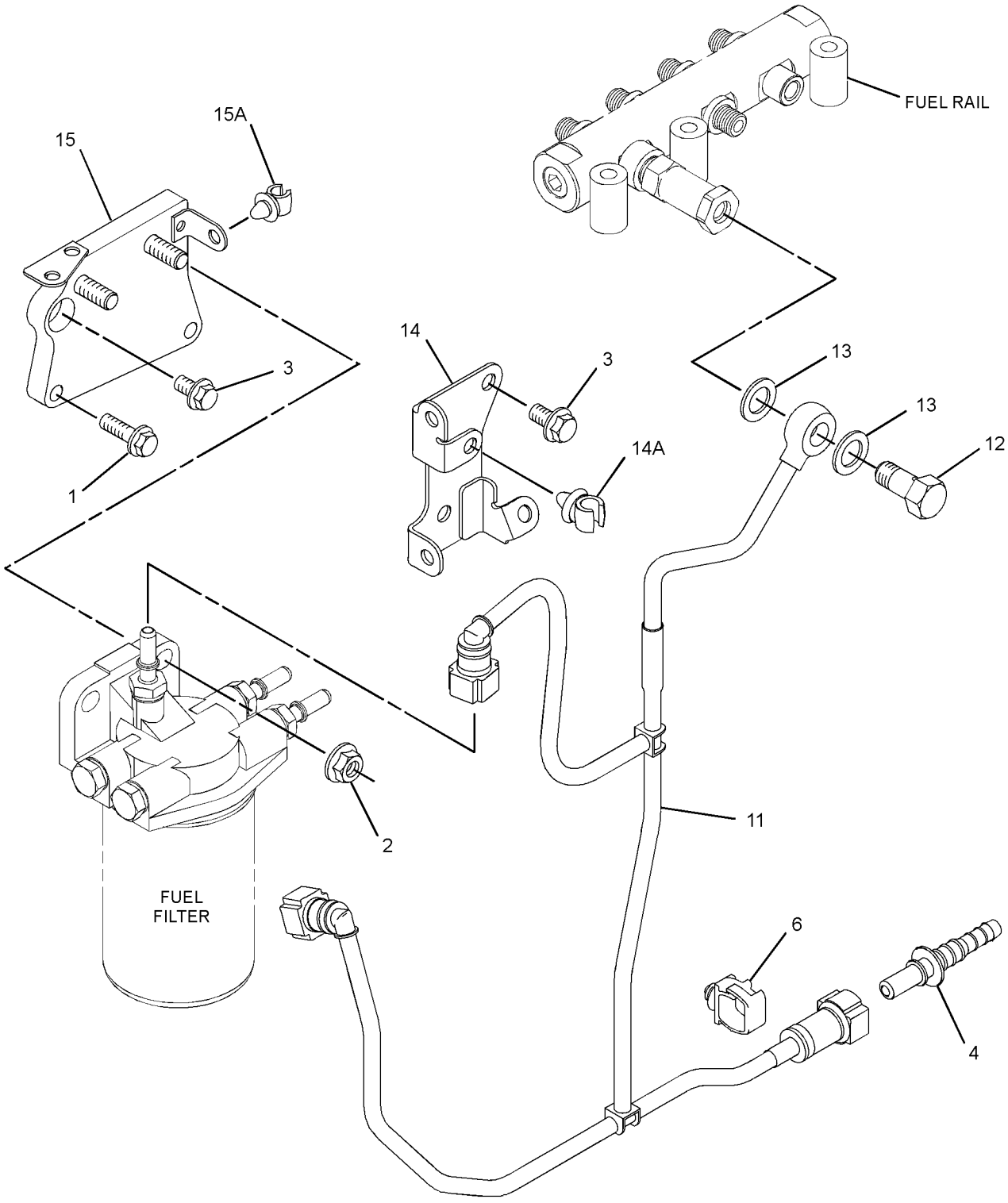

GRAPHIC #2 <END> g01993245

322-3754 LINES GP-FUEL

PART OF 435-1687, 540-1156 ENGINE AR-PRIMARY

SMCS-1274 **i04871370**

NOTE	REF NO	GRAPHIC REF	PART NUMBER	QTY	PART NAME 1 2 3 4 5 6 (PRODUCT LEVEL)	SEE PAGE
M	1	2	**6I-0260**	2	BOLT (M8X1.25X25-MM)	
M	2	2	**6I-0594**	2	NUT (M10X1.5-THD)	
M	3	2	**100-4458**	3	BOLT (M8X1.25X14-MM)	
	4	2	**215-9509**	1	FITTING (QUICK DISCONNECT, MALE)	
	5	1	**232-1115**	1	CLIP-PIPE	
	6	2	**335-9215**	1	CLIP	
	7	1	**308-7571**	1	TUBE AS	
	7A	1	**295-4670**	2	BOLT-SPECIAL (BANJO)	
	7B	1	**286-2890**	4	WASHER	
	8	1	**316-1156**	1	TUBE	
	9	1	**316-1157**	1	TUBE	
	10	1	**316-1158**	1	TUBE	
	11	2	**316-1159**	1	TUBE	
	12	2	**295-4670**	1	BOLT-SPECIAL (BANJO)	
	13	2	**286-2890**	2	WASHER	
	14	2	**316-1165**	1	BRACKET AS	
	14A	2	**232-1115**	1	CLIP-PIPE	
	15	2	**365-7752**	1	BRACKET	
	15A	2	**232-1115**	1	CLIP-PIPE	
F			**278-4138**	1	KIT-FUEL LINE PROTECTION	

F - NOT SHOWN
M - METRIC PART

322-3754 **LINES GP-FUEL (**contd.**)** **i04871370**

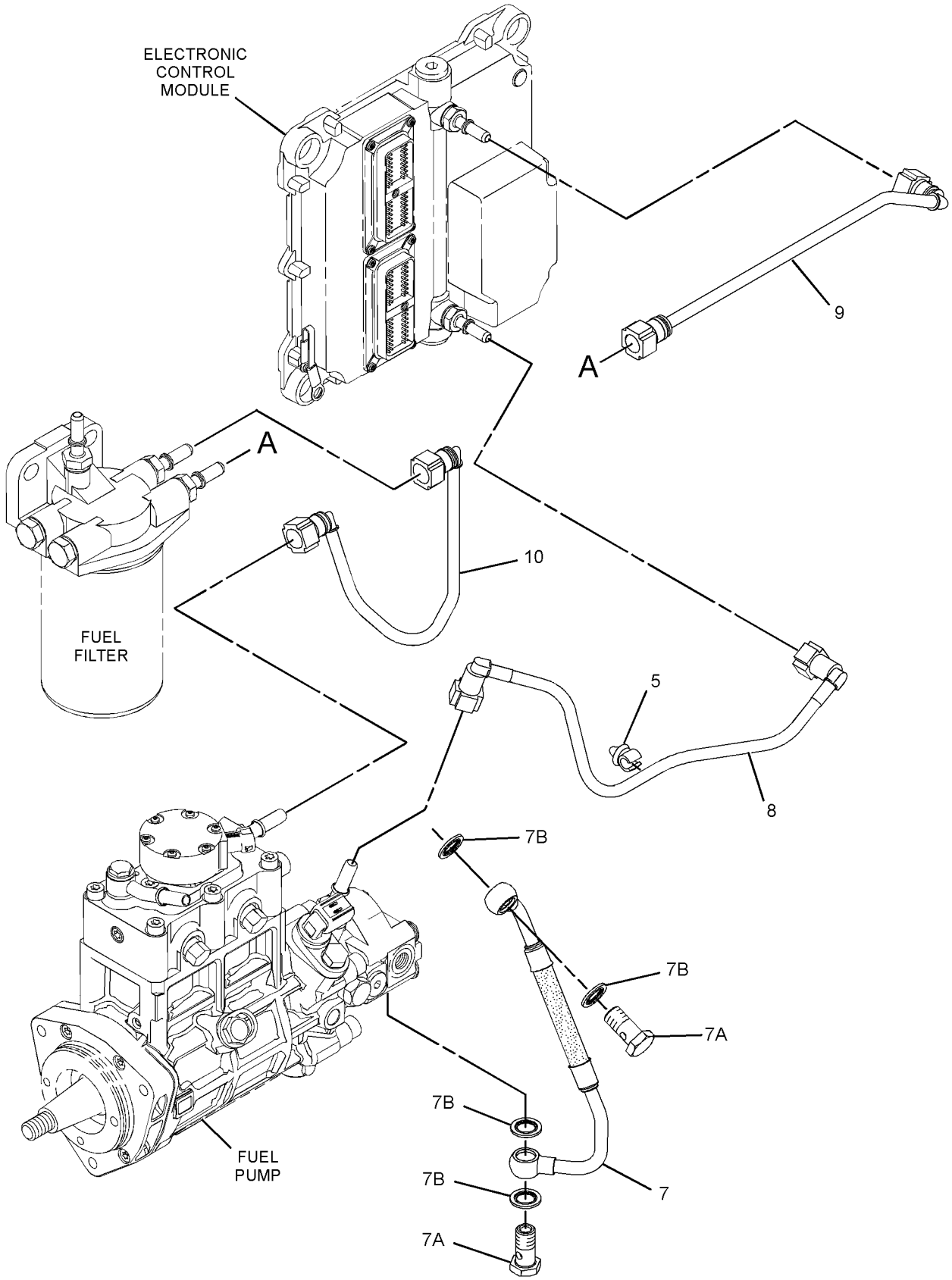

GRAPHIC #1 g01992394

322-3754 **LINES GP-FUEL (**contd.**)** **i04871370**

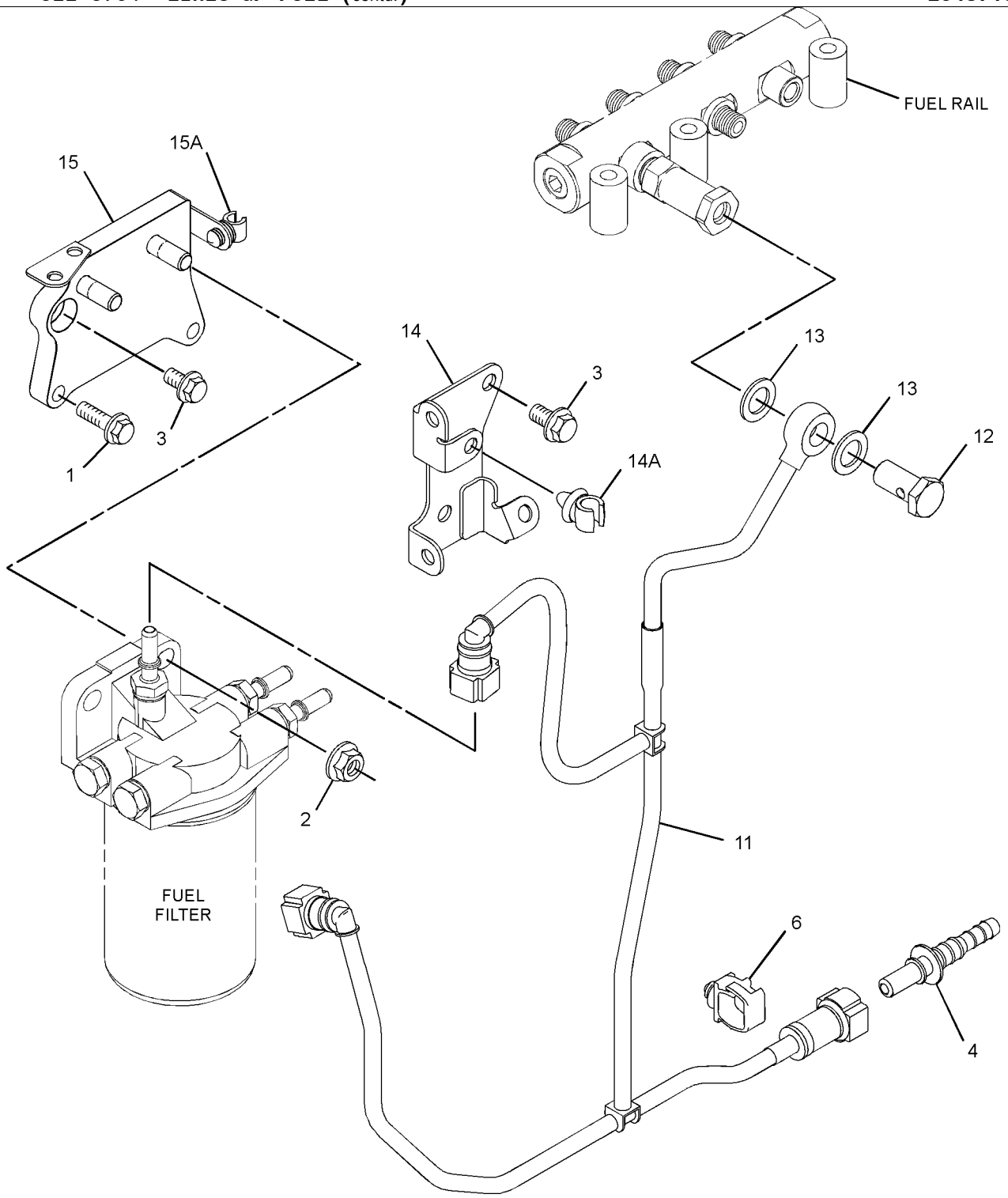

GRAPHIC #2 <END> g03024658

322-4952 LINES GP-FUEL

S/N: 4441-3189

SMCS-1274 **i02892488**

NOTE	REF NO	GRAPHIC REF	PART NUMBER	QTY	PART NAME 1 2 3 4 5 6 (PRODUCT LEVEL)	SEE PAGE
Y	1	1	**263-7148**	1	FILTER GP-WATER SEP & FUEL	1012
	2	1	**277-4990**	1	ELBOW	
	3	1	**277-4991**	1	CONNECTION	
	4	1	**277-4993**	1	SEAL-O-RING	
F			**278-4138**	1	KIT-FUEL LINE PROTECTION (LINE, LOW PRESSURE)	

F - NOT SHOWN
Y - SEPARATE ILLUSTRATION

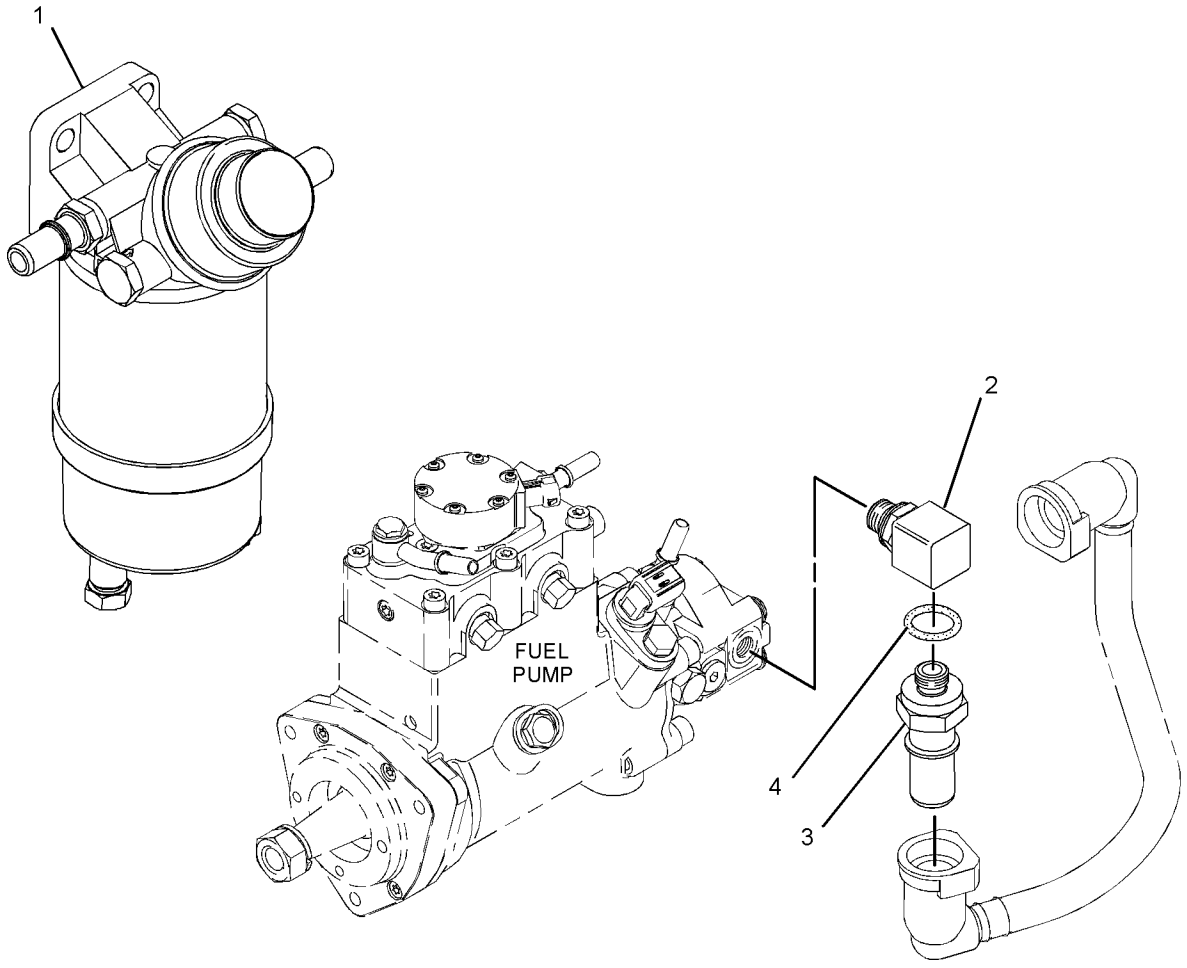

GRAPHIC #1 <END> g01438175

322-4952 LINES GP-FUEL

SMCS-1274 **i03133461**

NOTE	REF NO	GRAPHIC REF	PART NUMBER	QTY	PART NAME 1 2 3 4 5 6 (PRODUCT LEVEL)	SEE PAGE
CY	1	1	**318-8064**	1	FILTER GP-WATER SEP & FUEL	1015
	2	1	**277-4990**	1	ELBOW	
	3	1	**277-4991**	1	CONNECTION	
	4	1	**277-4993**	1	SEAL-O-RING	
F			**278-4138**	1	KIT-FUEL LINE PROTECTION (LINE, LOW PRESSURE)	

C - CHANGE FROM PREVIOUS TYPE
F - NOT SHOWN
Y - SEPARATE ILLUSTRATION

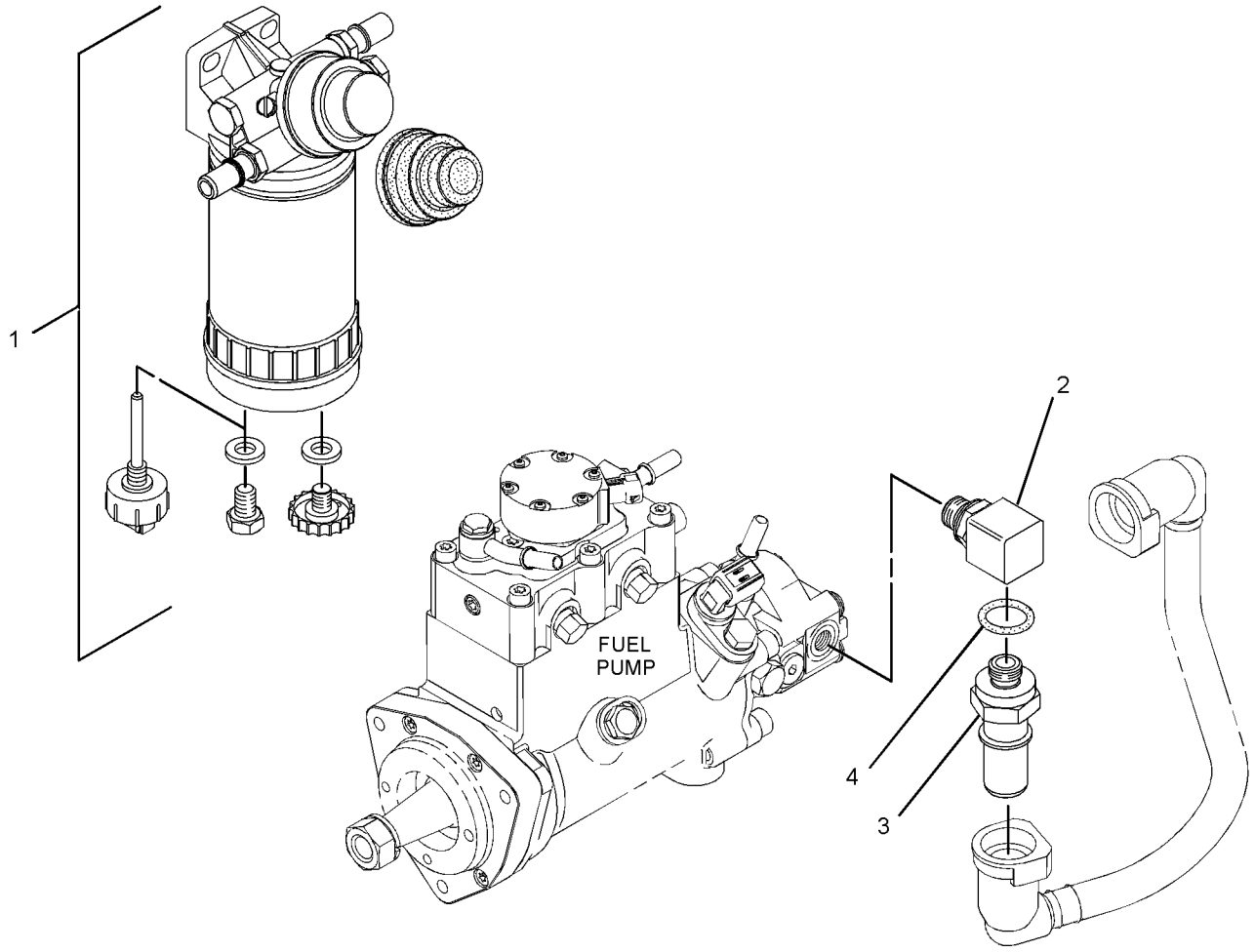

GRAPHIC #1 <END> g01673580

322-8425 LINES GP-FUEL

TYPE 1

SMCS-1274 **i02900470**

NOTE	REF NO	GRAPHIC REF	PART NUMBER	QTY	PART NAME 1 2 3 4 5 6 (PRODUCT LEVEL)	SEE PAGE
M	1	2	**6I-0254**	1	BOLT (M8X1.25X30-MM)	
M	2	2	**6I-4709**	1	BOLT (M8X1.25X100-MM)	
M	3	2	**100-4458**	2	BOLT (M8X1.25X14-MM)	
	5	1	**232-1115**	1	CLIP-PIPE	
	6	2	**277-6165**	1	CONNECTION-FUEL	
	7	2	**289-2478**	1	CLIP	
	8	1	**298-4597**	1	TUBE AS	
	9	1	**308-7571**	1	TUBE AS	
	9A	1	**295-4670**	2	BOLT-SPECIAL (BANJO)	
	9B	1	**317-8476**	4	WASHER-SEALING	
	10	1	**316-1156**	1	TUBE	
	11	1	**322-8419**	1	TUBE	
	12	2	**322-8420**	1	TUBE	
	13	2	**322-8421**	1	BRACKET GP-SUPPORT	
	13A	2	**7C-1281**	1	BRACKET	
M	13B	2	**101-3615**	1	BOLT (M8X1.25X10-MM)	
	13C	2	**232-1115**	2	CLIP-PIPE	
	14	2	**311-2270**	1	SPACER	
	15	2	**215-9509**	1	FITTING (QUICK DISCONNECT, MALE)	
F			**278-4138**	1	KIT-FUEL LINE PROTECTION	
F			**215-8509**	1	FLANGE	

F - NOT SHOWN
M - METRIC PART

322-8425 **LINES GP-FUEL (**contd.**)** **i02900470**

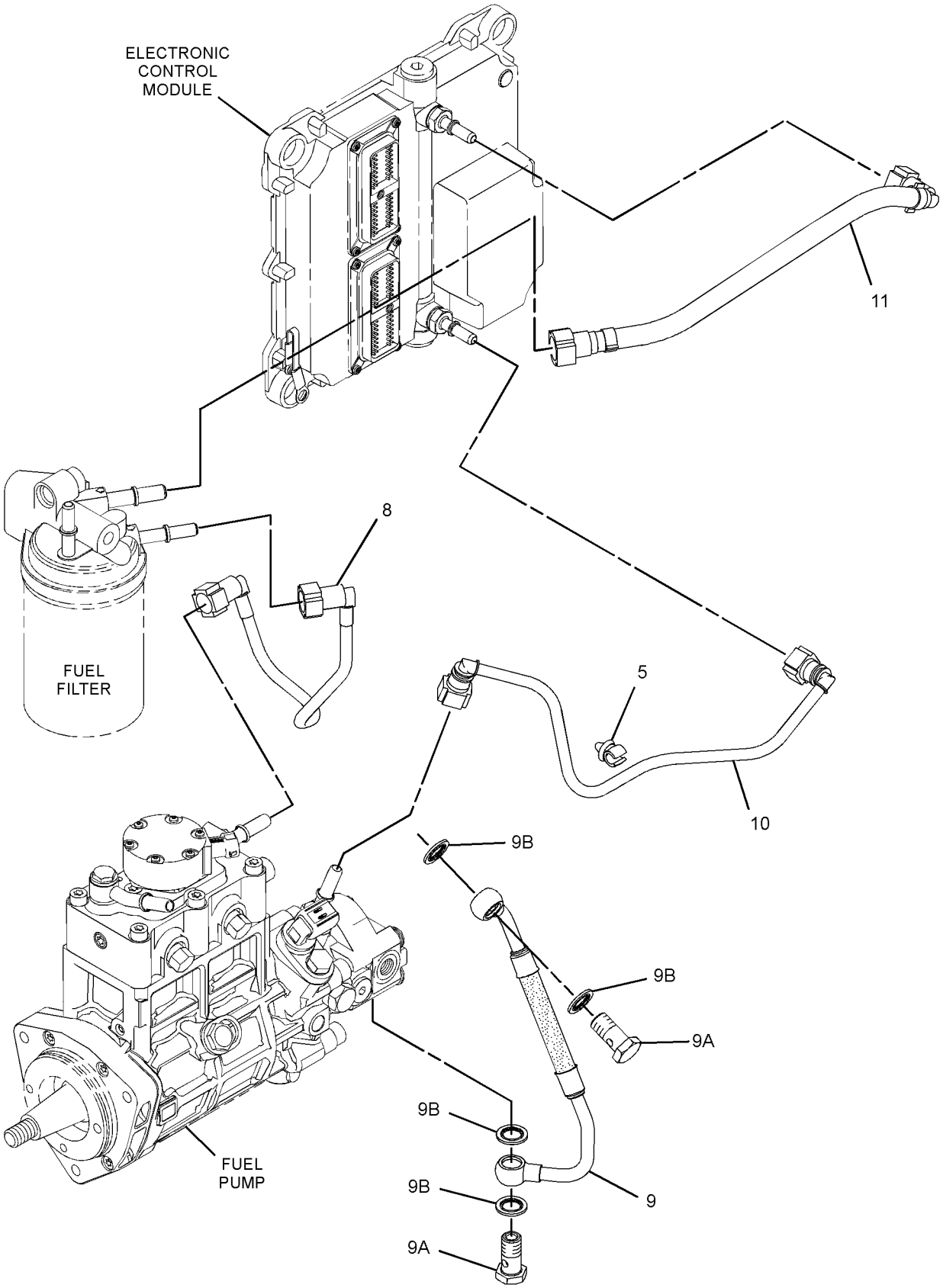

GRAPHIC #1 g01446799

322-8425 **LINES GP-FUEL (**contd.**)** **i02900470**

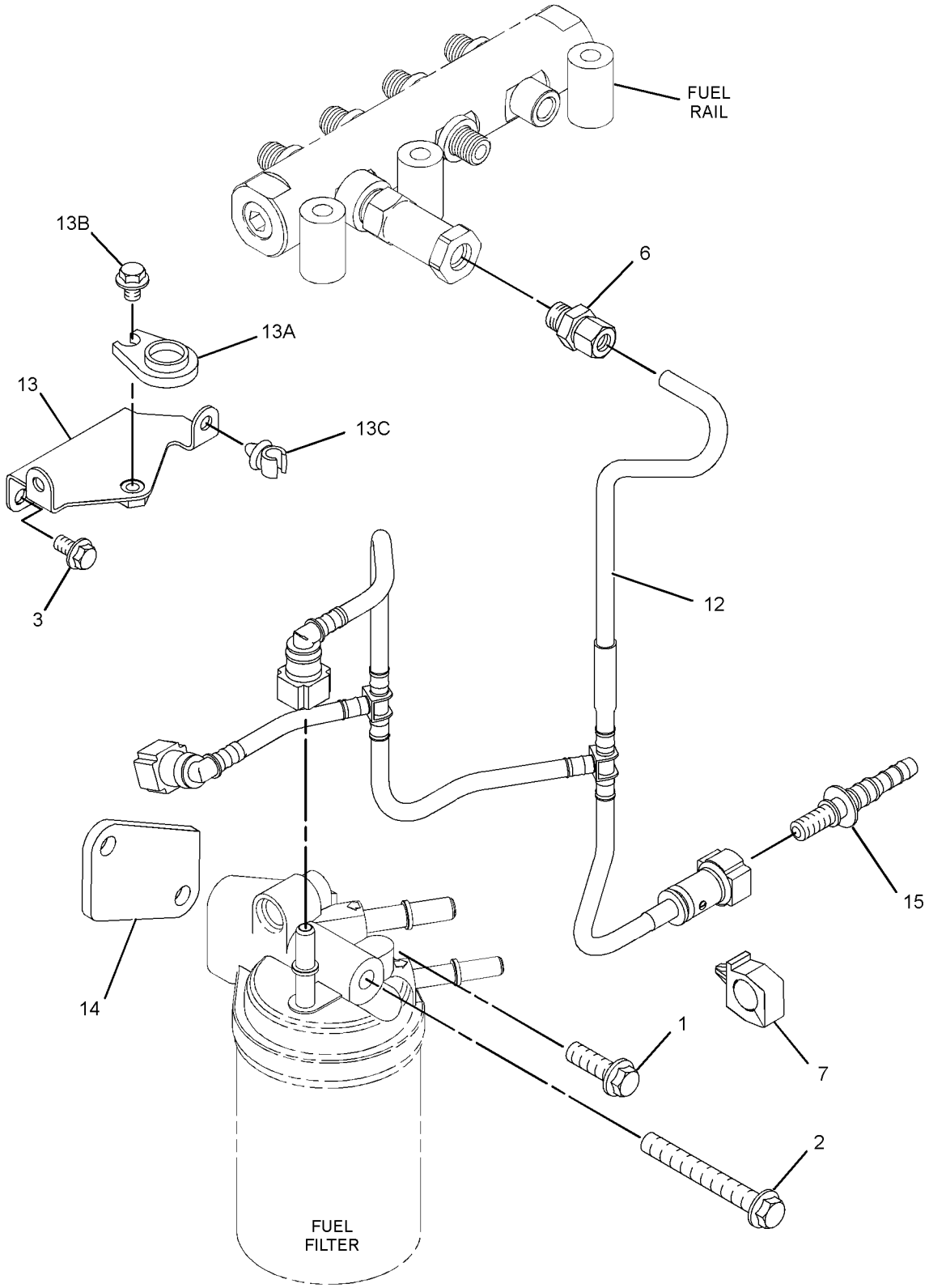

GRAPHIC #2 <END> g01446800

322-8425 LINES GP-FUEL

TYPE 2

SMCS-1274 **i03819550**

NOTE	REF NO	GRAPHIC REF	PART NUMBER	QTY	PART NAME 1 2 3 4 5 6 (PRODUCT LEVEL)	SEE PAGE
	1	1	**215-9509**	1	FITTING (QUICK DISCONNECT, MALE)	
M	2	1	**6I-4709**	1	BOLT (M8X1.25X100-MM)	
M	3	1	**100-4458**	2	BOLT (M8X1.25X14-MM)	
CM	4	1	**6I-0260**	1	BOLT (M8X1.25X25-MM)	
	5	2	**232-1115**	1	CLIP-PIPE	
	6	1	**277-6165**	1	CONNECTION-FUEL	
C	7	1	**335-9215**	1	CLIP	
	8	2	**298-4597**	1	TUBE AS	
	9	2	**308-7571**	1	TUBE AS	
	9A	2	**295-4670**	2	BOLT-SPECIAL (BANJO)	
	9B	2	**286-2890**	4	WASHER	
	10	2	**316-1156**	1	TUBE	
	11	2	**322-8419**	1	TUBE	
	12	1	**322-8420**	1	TUBE	
	13	1	**322-8421**	1	BRACKET GP-SUPPORT	
	13A	1	**7C-1281**	1	BRACKET	
M	13B	1	**101-3615**	1	BOLT (M8X1.25X10-MM)	
	13C	1	**232-1115**	2	CLIP-PIPE	
F			**278-4138**	4	KIT-FUEL LINE PROTECTION	
F			**215-8509**	1	FLANGE	

C - CHANGE FROM PREVIOUS TYPE
F - NOT SHOWN
M - METRIC PART

322-8425 **LINES GP-FUEL (**contd.**)** **i03819550**

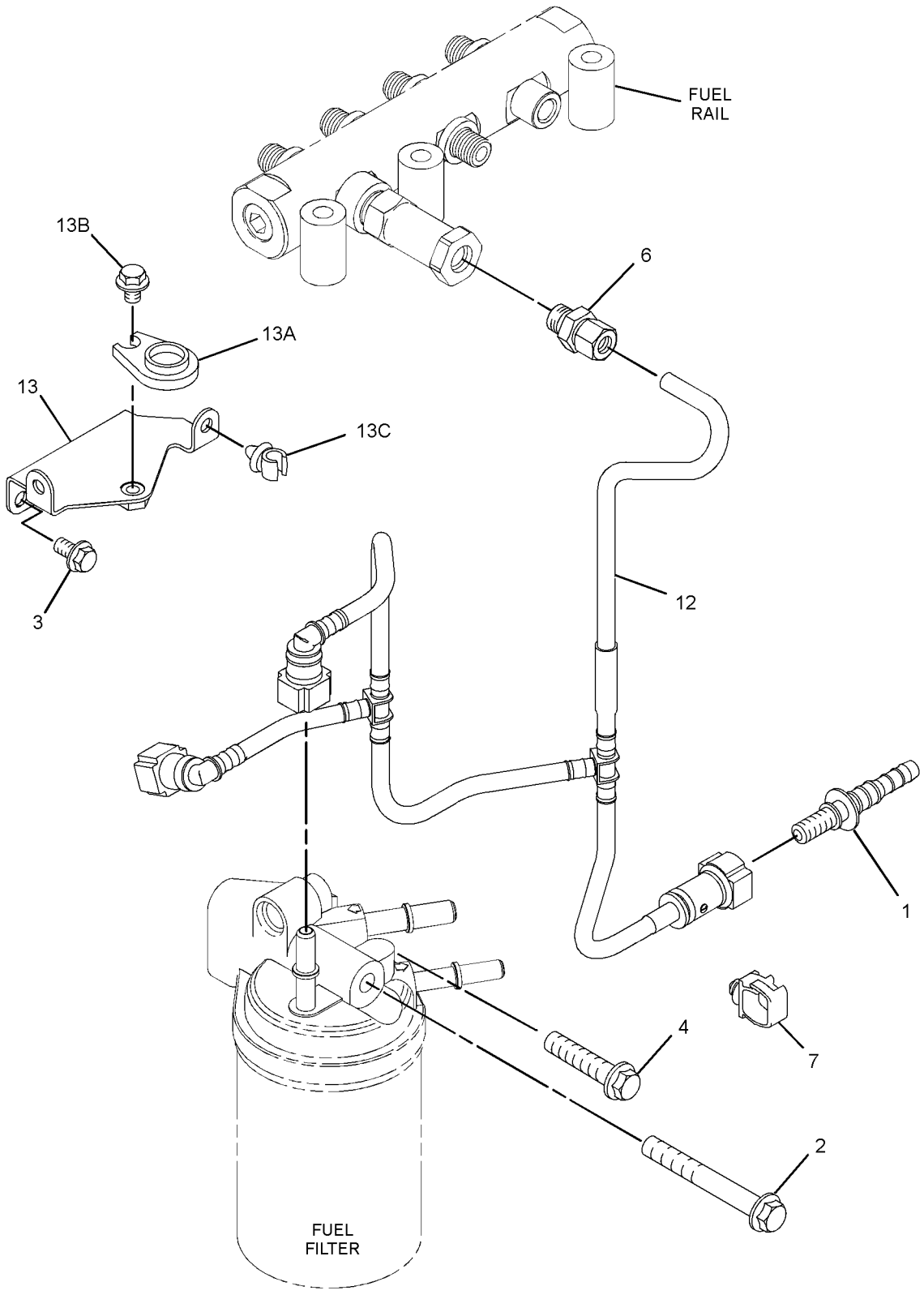

GRAPHIC #1 g02092493

322-8425 **LINES GP-FUEL (**contd.**)** **i03819550**

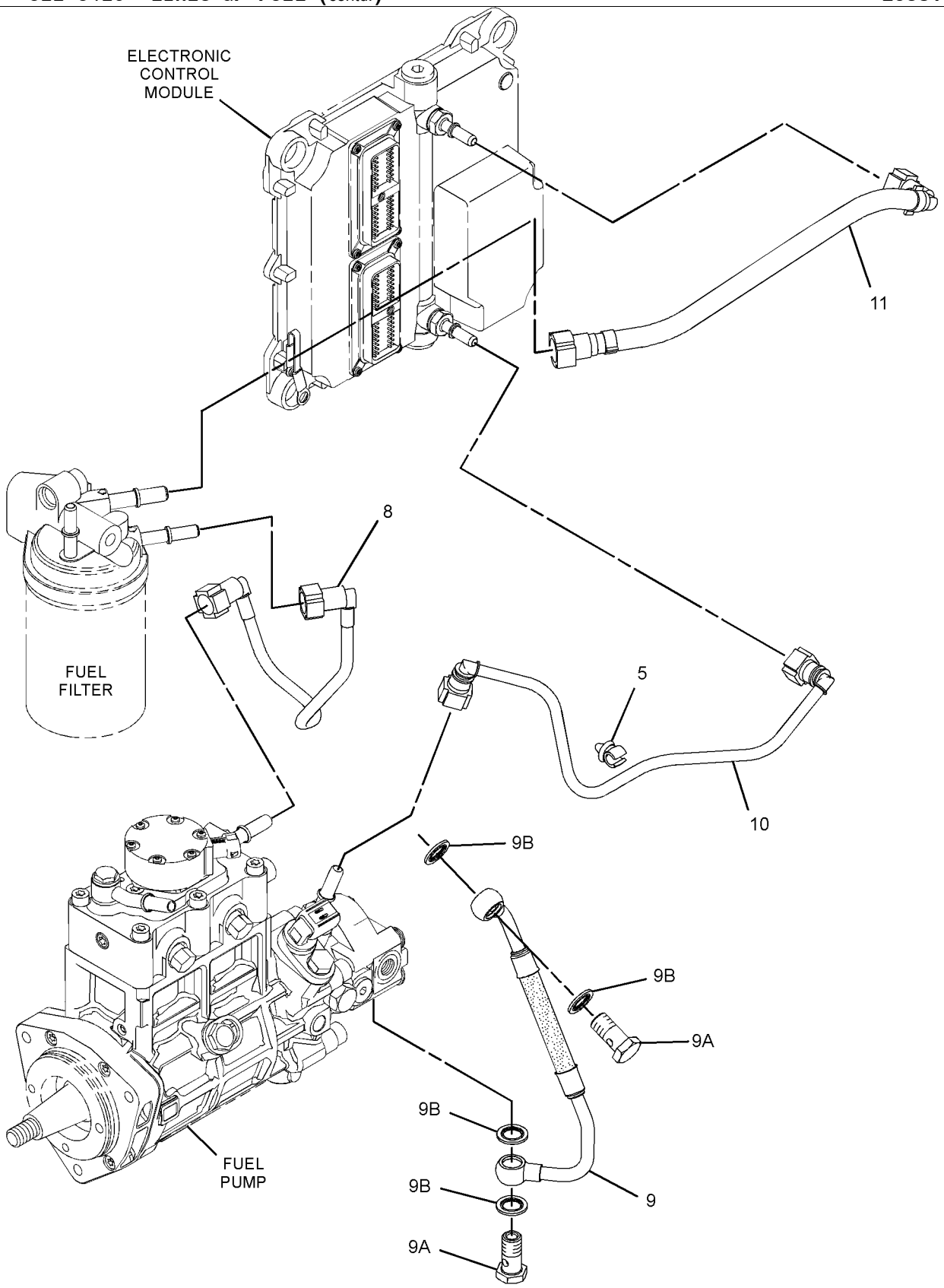

GRAPHIC #2 <END> g01446799

333-5521 LINES GP-FUEL

SMCS-1274 **i07573693**

NOTE	REF NO	GRAPHIC REF	PART NUMBER	QTY	PART NAME 1 2 3 4 5 6 (PRODUCT LEVEL)	SEE PAGE
M	1	2	**6I-0254**	3	BOLT (M8X1.25X30-MM)	
M	2	2	**6I-0593**	2	BOLT (M10X1.5X30-MM)	
M	3	1	**6I-0631**	1	BOLT (M6X1X12-MM)	
M	4	1	**124-3815**	2	BOLT (M8X1.25X16-MM)	
	5	2	**232-1115**	1	CLIP-PIPE	
	6	2	**286-2890**	2	WASHER	
	7	2	**308-7571**	1	TUBE AS (LEAK OFF)	
	7A	2	**286-2890**	4	WASHER	
	7B	2	**295-4670**	2	BOLT-SPECIAL (BANJO)	
	8	2	**295-4670**	1	BOLT-SPECIAL (BANJO)	
	9	2	**324-1481**	1	BRACKET	
	10	1	**333-5483**	1	TUBE-FUEL	
	11	1	**333-5484**	1	BRACKET	
	11A	1	**232-1115**	3	CLIP-PIPE	
	12	1	**333-5485**	1	TUBE-FUEL	
	13	1	**333-5486**	1	TUBE-FUEL FILTER	
	14	1	**333-5487**	1	BRACKET	
	14A	1	**232-1115**	3	CLIP-PIPE	
	15	2	**333-5488**	1	TUBE-FUEL	
	16	2	**333-5489**	1	BRACKET	
F			**278-4138**	5	KIT-FUEL LINE PROTECTION	

F - NOT SHOWN
M - METRIC PART

333-5521 **LINES GP-FUEL (**contd.**)** **i07573693**

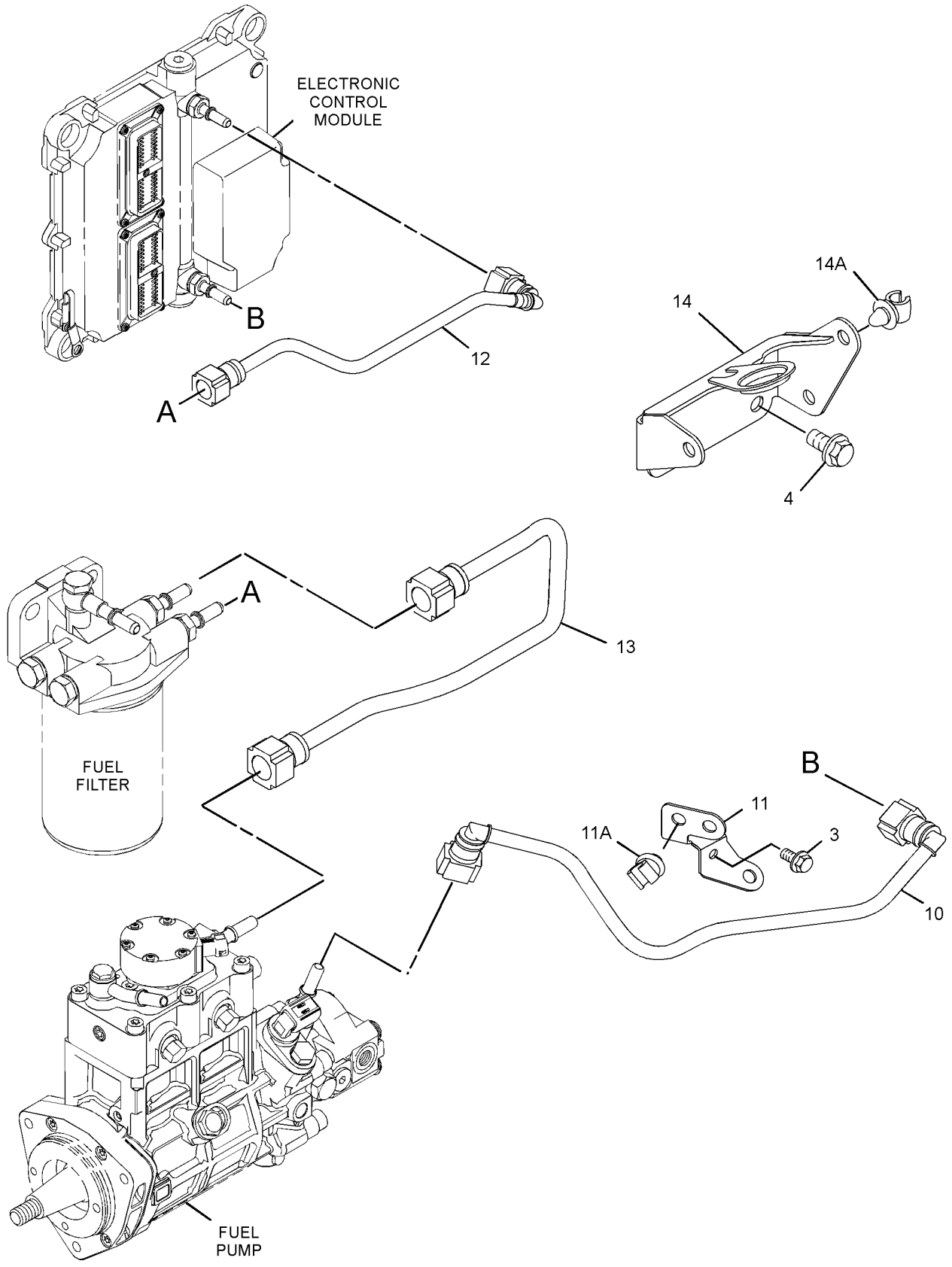

GRAPHIC #1 g01976896

333-5521 **LINES GP-FUEL (**contd.**)** **i07573693**

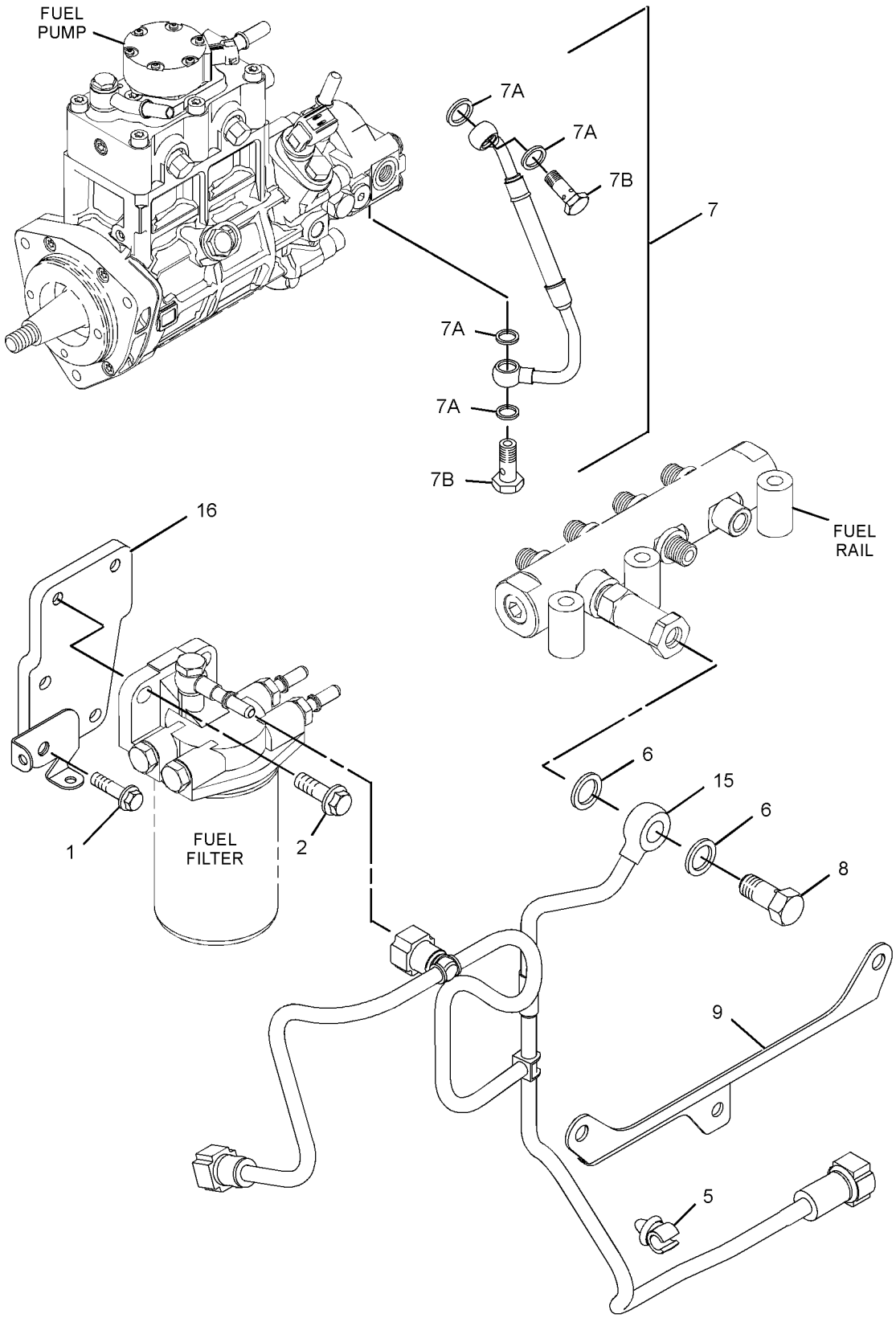

GRAPHIC #2 <END> g01976897

311-2271 LINES GP-FUEL FILTER

S/N: 4441-8412

PART OF 435-1692 ENGINE AR-COMPLETE, 435-1685, 437-5409 ENGINE AR-PRIMARY

SMCS-1261, 1274

i04683134

NOTE	REF NO	GRAPHIC REF	PART NUMBER	QTY	PART NAME 1 2 3 4 5 6 (PRODUCT LEVEL)	SEE PAGE
M	1	2	**6I-0260**	1	BOLT (M8X1.25X25-MM)	
M	2	2	**6I-4709**	1	BOLT (M8X1.25X100-MM)	
	3	2	**215-9509**	1	FITTING (QUICK DISCONNECT, MALE)	
	4	1,2	**232-1115**	3	CLIP-PIPE	
	5	2	**234-3063**	3	CLIP	
	6	2	**277-6165**	1	CONNECTION-FUEL	
	7	1	**298-4592**	1	TUBE AS	
	8	1	**365-9448**	1	TUBE-FUEL	
	9	1	**298-4597**	1	TUBE AS	
	10	2	**360-3198**	1	TUBE AS	
		2	**289-2478**	1	CLIP	
	11	1	**308-7571**	1	TUBE AS	
	11A	1	**295-4670**	2	BOLT-SPECIAL (BANJO)	
	11B	1	**286-2890**	4	WASHER	
	12	2	**335-9215**	1	CLIP	
	13	1	**365-9449**	1	BRACKET	
M	14	1	**114-4363**	1	BOLT (M8X1.25X12-MM)	
F			**278-4138**	5	KIT-FUEL LINE PROTECTION	

F - NOT SHOWN
M - METRIC PART

311-2271 **LINES GP-FUEL FILTER (**contd.**)** **i04683134**

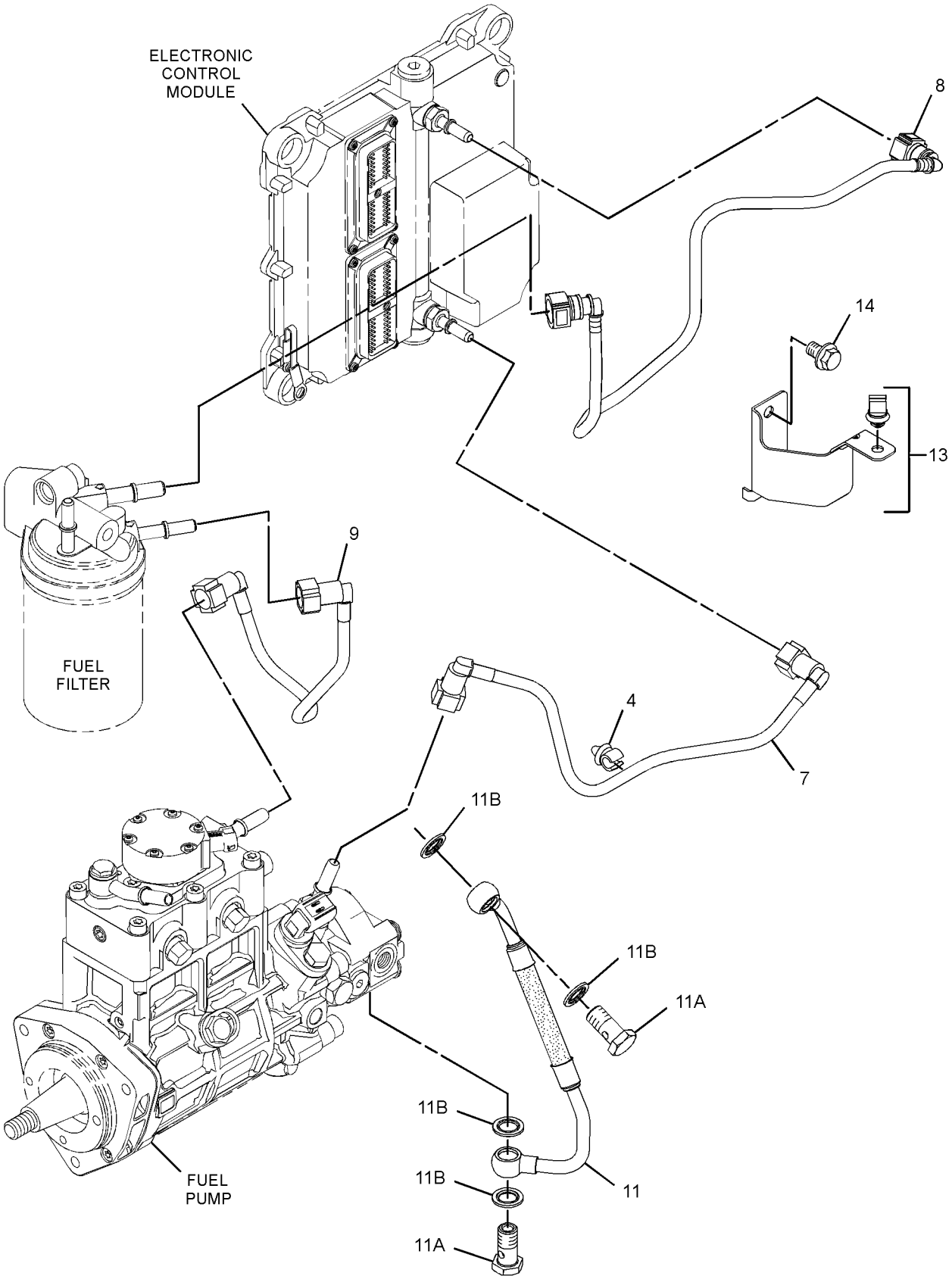

GRAPHIC #1 g02797677

311-2271 **LINES GP-FUEL FILTER (**contd.**)** **i04683134**

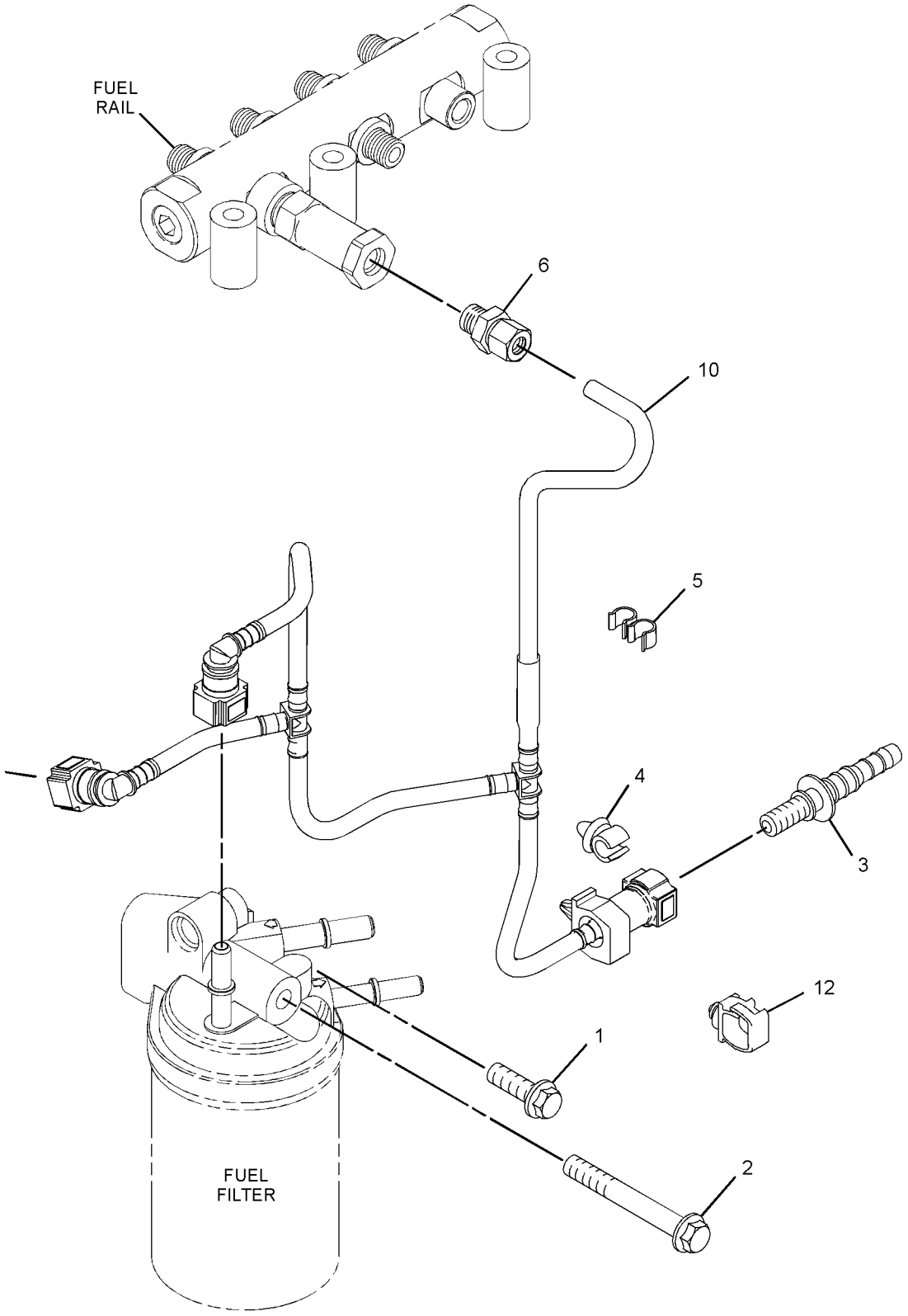

GRAPHIC #2 <END> g02797676

311-2271 LINES GP-FUEL FILTER

PART OF 435-1699 ENGINE AR, 435-1692 ENGINE AR-COMPLETE, 435-1685, 437-5409, 522-8303, 540-0570, 540-1155 ENGINE AR-PRIMARY

SMCS-1261, 1274 **i04846618**

NOTE	REF NO	GRAPHIC REF	PART NUMBER	QTY	PART NAME 1 2 3 4 5 6 (PRODUCT LEVEL)	SEE PAGE
M	1	2	**6I-0260**	1	BOLT (M8X1.25X25-MM)	
M	2	2	**6I-4709**	1	BOLT (M8X1.25X100-MM)	
	3	2	**215-9509**	1	FITTING (QUICK DISCONNECT, MALE)	
	4	1,2	**232-1115**	3	CLIP-PIPE	
	5	2	**234-3063**	3	CLIP	
	6	2	**277-6165**	1	CONNECTION-FUEL	
	7	1	**316-1156**	1	TUBE	
	8	1	**365-9448**	1	TUBE-FUEL	
	9	1	**298-4597**	1	TUBE AS	
	10	2	**360-3198**	1	TUBE AS	
		2	**289-2478**	1	CLIP	
	11	1	**308-7571**	1	TUBE AS	
	11A	1	**295-4670**	2	BOLT-SPECIAL (BANJO)	
	11B	1	**286-2890**	4	WASHER	
	12	2	**335-9215**	1	CLIP	
F			**278-4138**	5	KIT-FUEL LINE PROTECTION	

F - NOT SHOWN
M - METRIC PART

311-2271 **LINES GP-FUEL FILTER (**contd.**)** **i04846618**

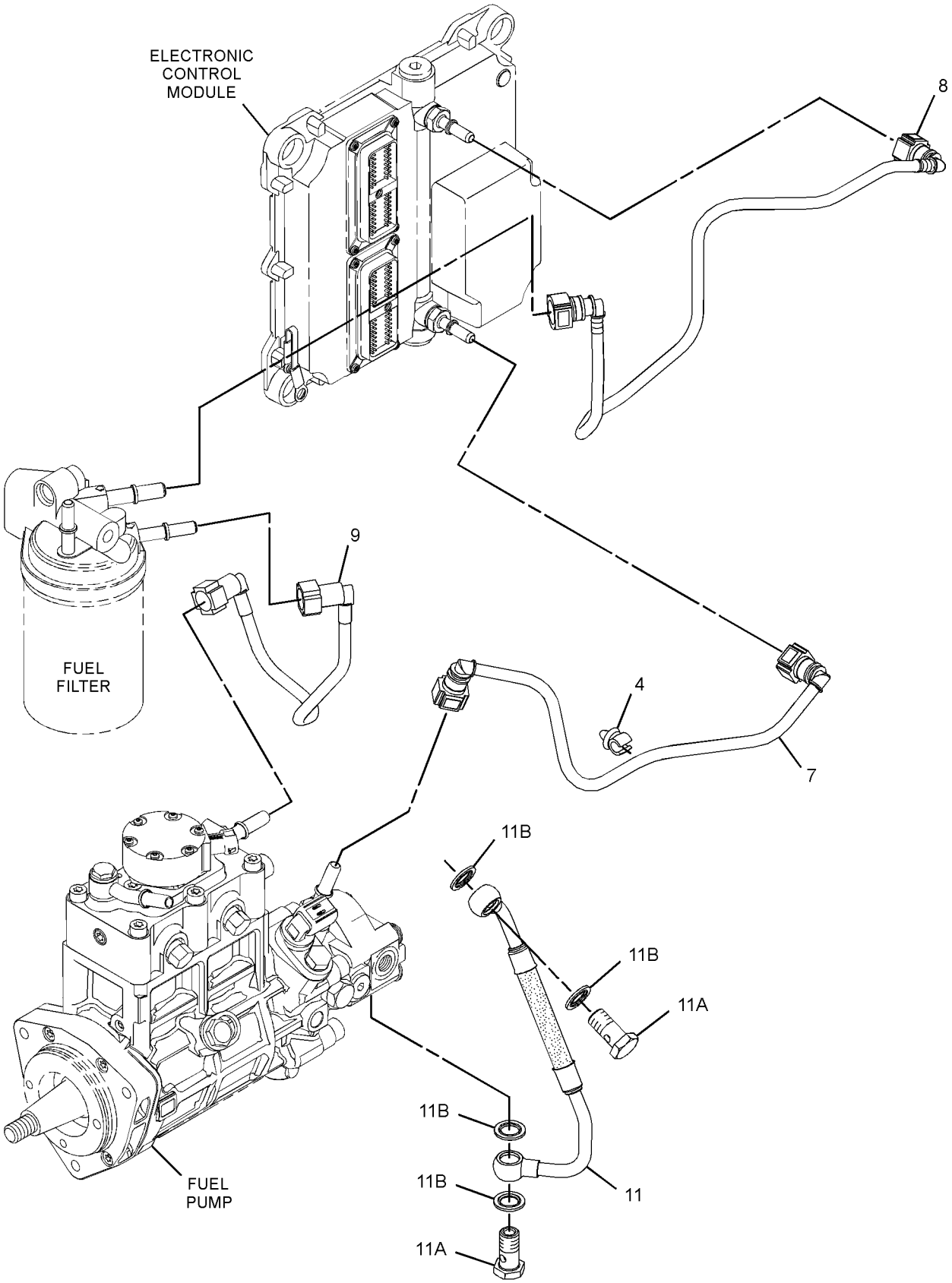

GRAPHIC #1 g03000756

311-2271 **LINES GP-FUEL FILTER (**contd.**)** **i04846618**

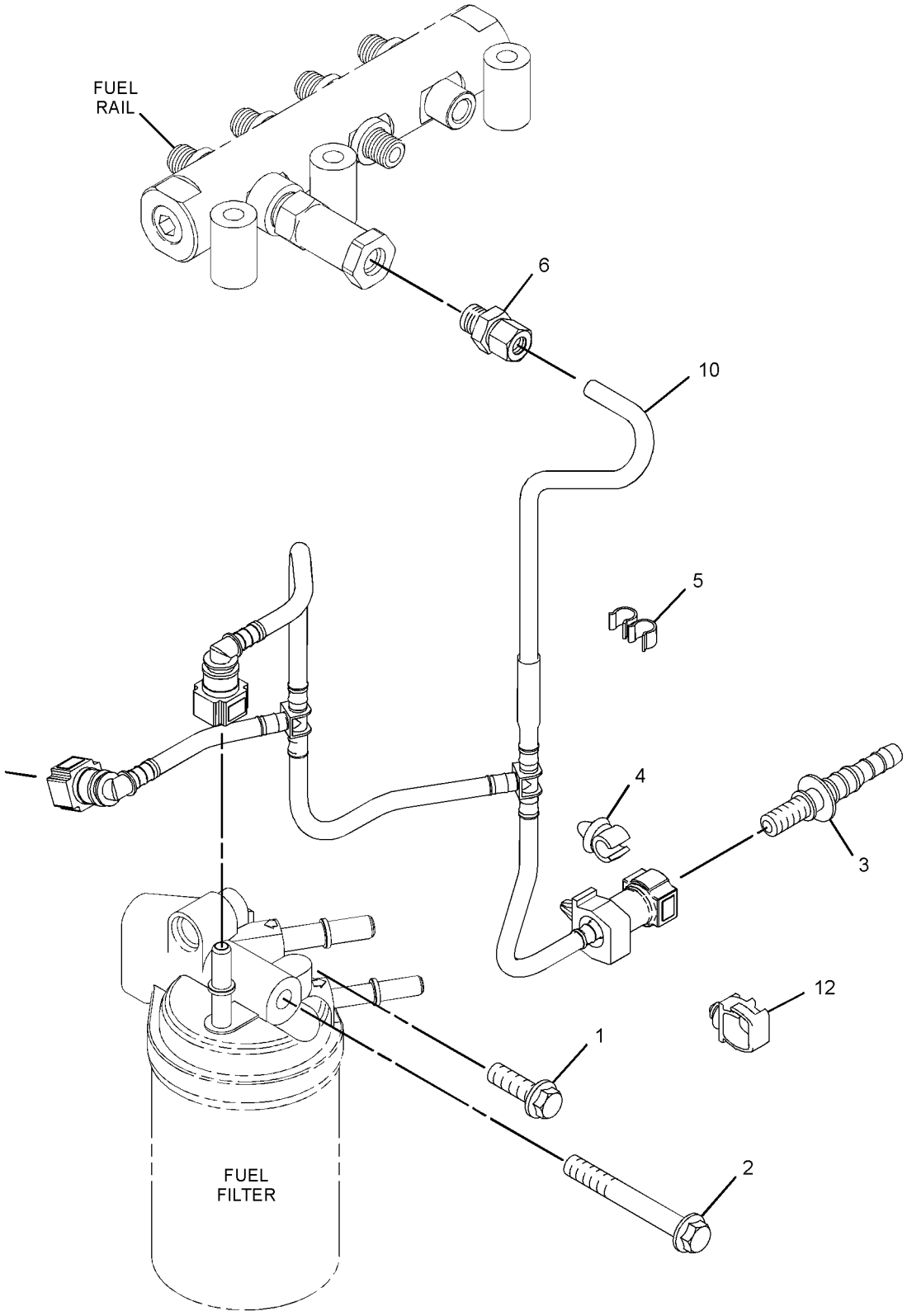

GRAPHIC #2 <END> g02797676

314-9819 LINES GP-FUEL FILTER

SMCS-1261, 1274 **i04929923**

NOTE	REF NO	GRAPHIC REF	PART NUMBER	QTY	PART NAME 1 2 3 4 5 6 (PRODUCT LEVEL)	SEE PAGE
M	1	2	**6I-0260**	1	BOLT (M8X1.25X25-MM)	
M	2	2	**6I-4709**	1	BOLT (M8X1.25X100-MM)	
M	3	2	**114-4363**	2	BOLT (M8X1.25X12-MM)	
	4	2	**215-9509**	1	FITTING (QUICK DISCONNECT, MALE)	
	5	2	**234-3063**	1	CLIP	
	6	2	**277-6165**	1	CONNECTION-FUEL	
	7	1	**316-1156**	1	TUBE	
	8	1	**298-4595**	1	TUBE AS	
	9	1	**298-4597**	1	TUBE AS	
	10	1	**308-7571**	1	TUBE AS	
	10A	1	**295-4670**	2	BOLT-SPECIAL (BANJO)	
	10B	1	**286-2890**	4	WASHER	
	12	2	**314-9820**	1	TUBE AS	
	13	2	**314-9821**	1	BRACKET AS	
	13A	2	**7C-1281**	1	BRACKET	
M	13B	2	**101-3615**	1	BOLT (M8X1.25X10-MM)	
	13C	1,2	**232-1115**	3	CLIP-PIPE	
	14	2	**318-2365**	1	CLIP	
F			**278-4138**	5	KIT-FUEL LINE PROTECTION	

F - NOT SHOWN
M - METRIC PART

314-9819 **LINES GP-FUEL FILTER (**contd.**)** **i04929923**

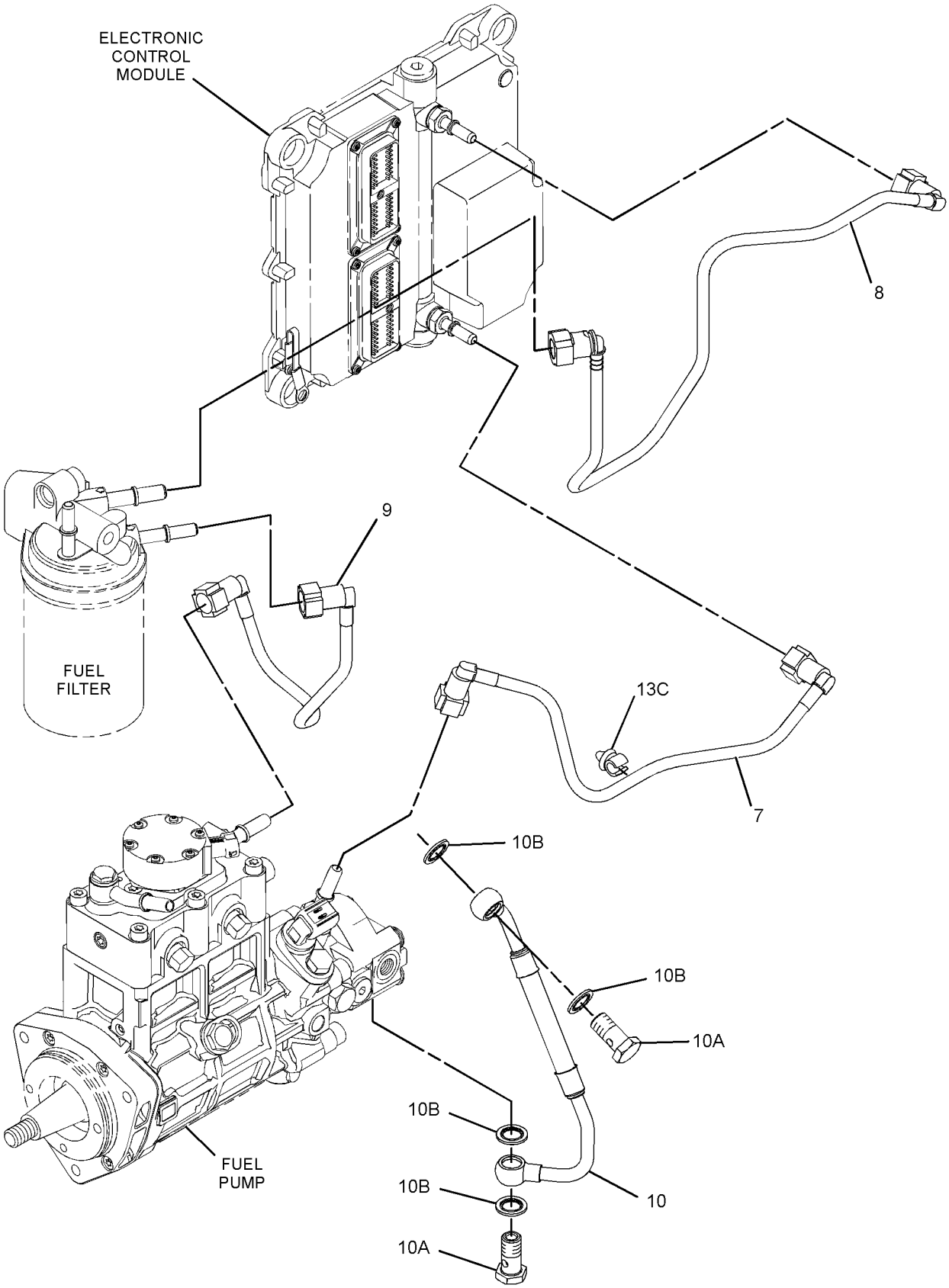

GRAPHIC #1 g01393456

314-9819 **LINES GP-FUEL FILTER (**contd.**)** **i04929923**

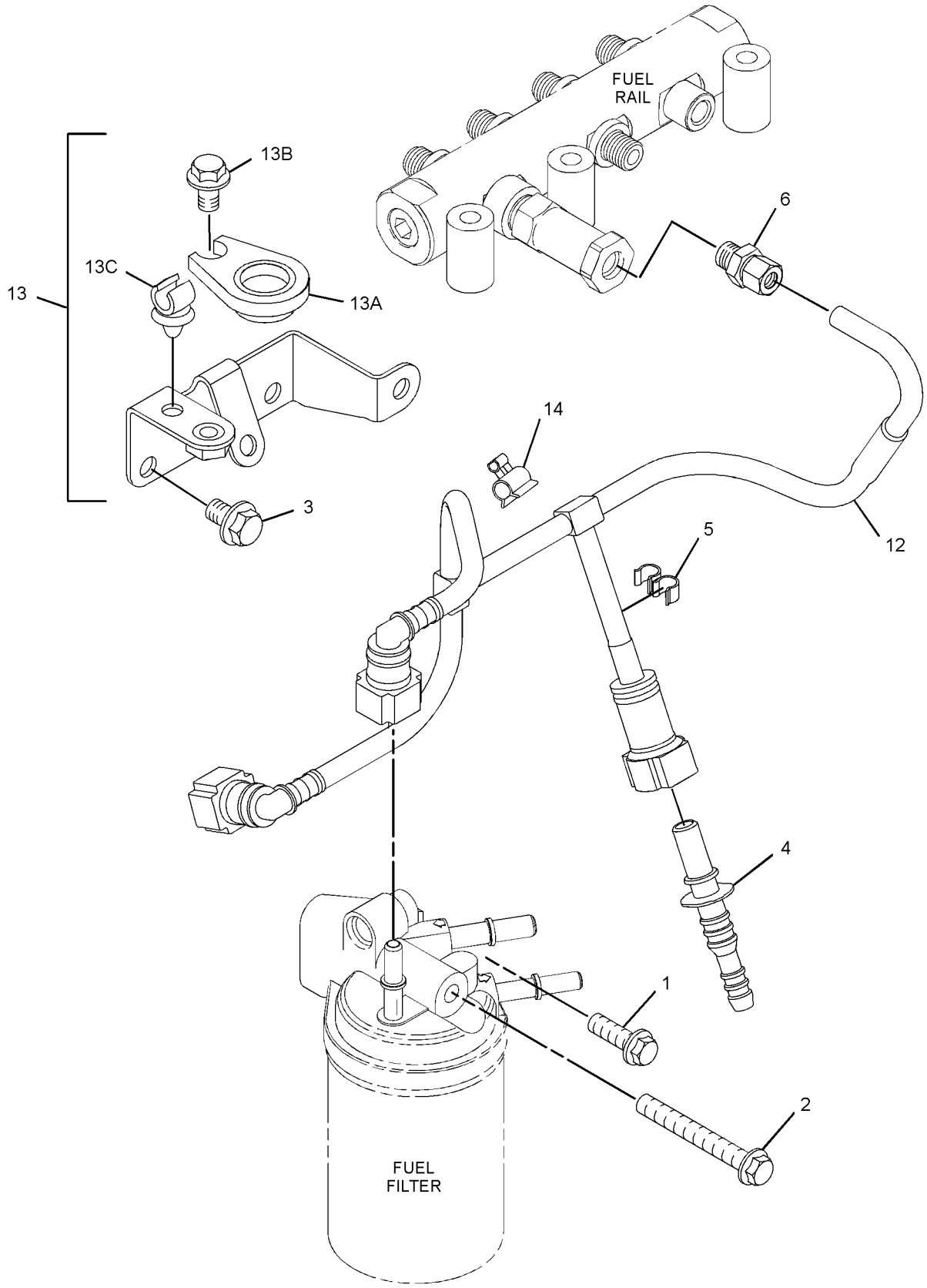

GRAPHIC #2 <END> g03112156

250-9405 PUMP & MTG GP-UNIT INJ HYD

AN ATTACHMENT AND FIELD INSTALLATION

SMCS-1714 **i03314740**

NOTE	REF NO	GRAPHIC REF	PART NUMBER	QTY	PART NAME 1 2 3 4 5 6 (PRODUCT LEVEL)	SEE PAGE
	1	1	**238-0120**	1	SENSOR GP-SPEED (INJECTION PUMP)	
M	2	1	**104-6385**	2	STUD (M8X1.25-THD)	
	3	1	**247-6023**	1	PUMP GP-FUEL TRANSFER	
	4	1	**247-6020**	1	SEAL	
	5	1	**117-1385**	1	SEAL-O-RING	
	6	1	**249-0740**	1	BOLT	
	7	1	**6D-7889**	1	SEAL-O-RING	
M	8	1	**6V-3940**	3	BOLT (M8X1.25X25-MM)	

M - METRIC PART

250-9405 **PUMP & MTG GP-UNIT INJ HYD (**contd.**)** **i03314740**

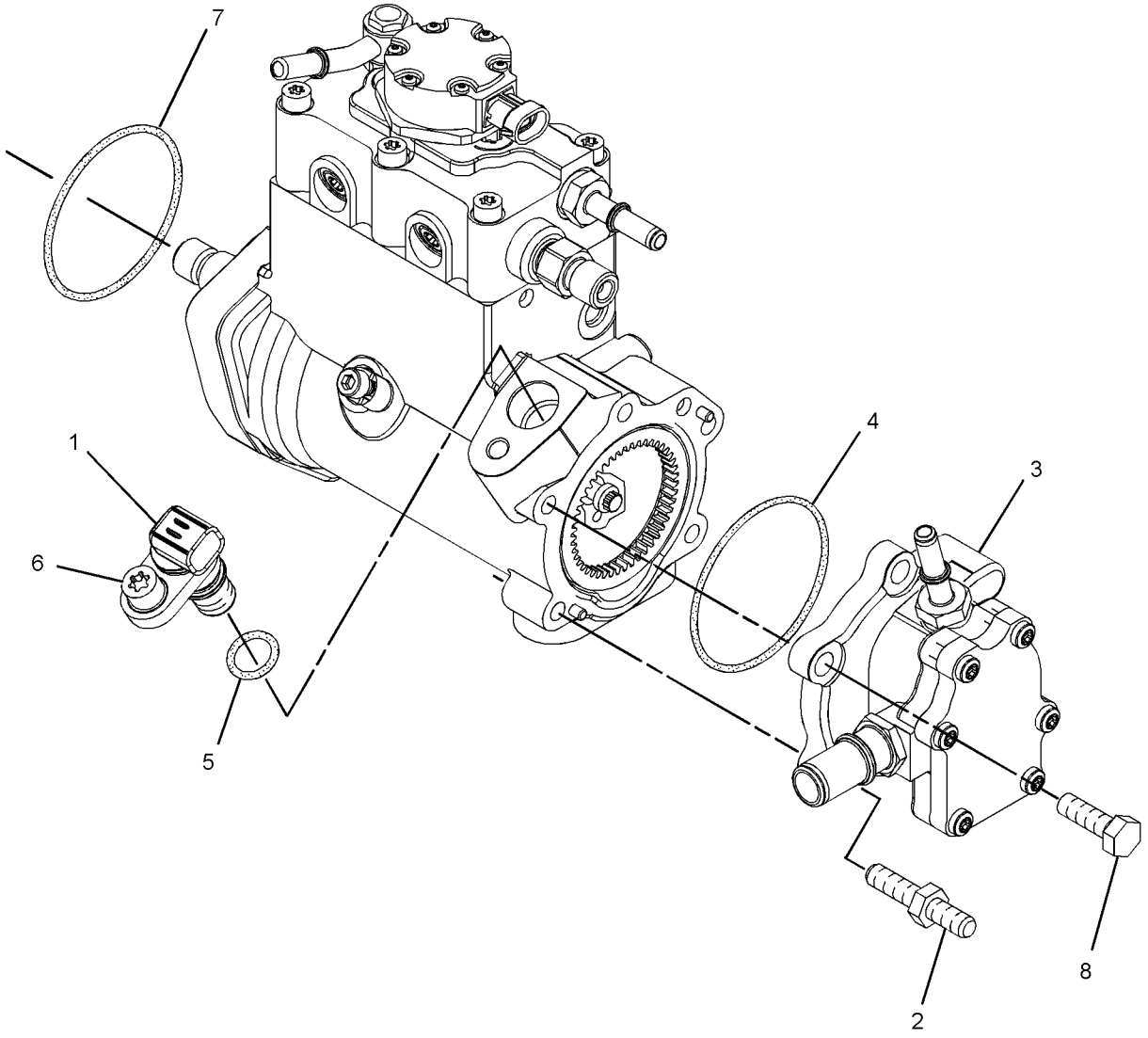

GRAPHIC #1 <END> g01447732

250-9406 PUMP & MTG GP-UNIT INJ HYD

FIELD INSTALLATION

SMCS-1714 **i03314741**

NOTE	REF NO	GRAPHIC REF	PART NUMBER	QTY	PART NAME 1 2 3 4 5 6 (PRODUCT LEVEL)	SEE PAGE
	1	1	**238-0120**	1	SENSOR GP-SPEED (INJECTION PUMP)	
M	2	1	**104-6385**	1	STUD (M8X1.25-THD)	
	3	1	**247-6022**	1	PUMP GP-FUEL TRANSFER	
	4	1	**247-6020**	2	SEAL	
	5	1	**117-1385**	1	SEAL-O-RING	
	6	1	**249-0740**	1	BOLT	
	7	1	**6D-7889**	1	SEAL-O-RING	
M	8	1	**6V-3940**	4	BOLT (M8X1.25X25-MM)	

M - METRIC PART

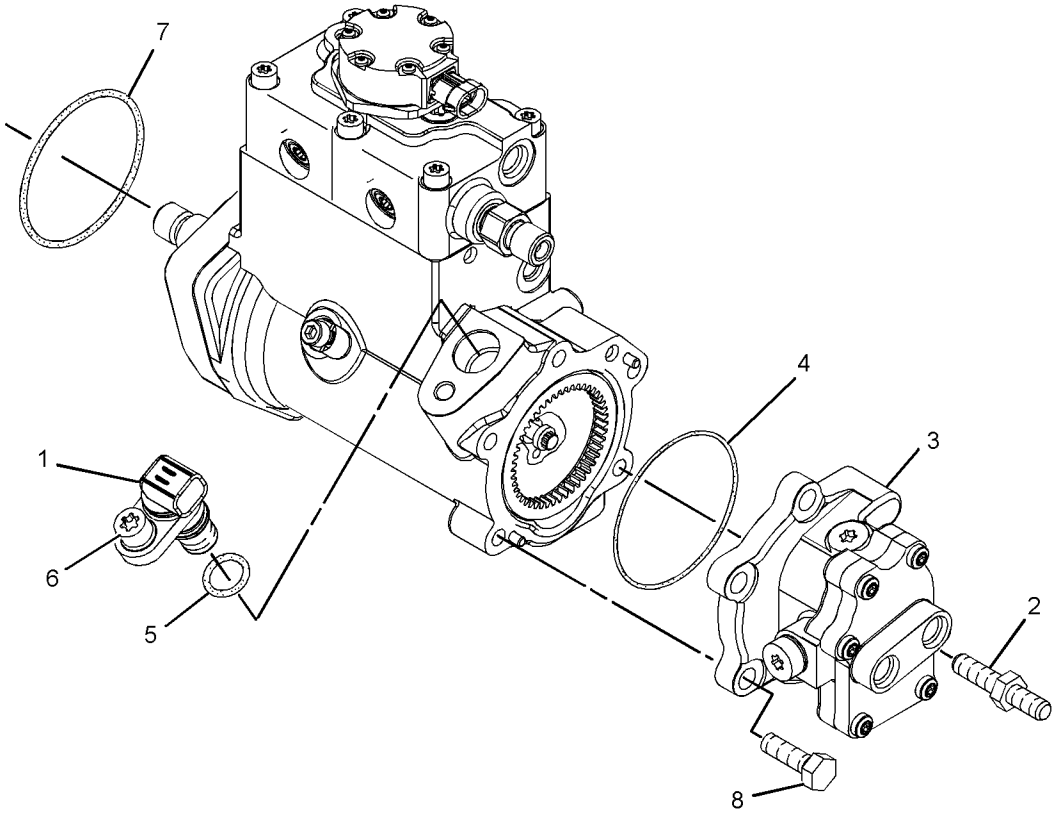

GRAPHIC #1 <END> g01447543

295-9125 PUMP & MTG GP-UNIT INJ HYD*R

PART OF 298-5893, 305-1955, 313-3514, 313-4350, 316-1109, 322-3753 PUMP GP-FUEL INJECTION

ALSO AN ATTACHMENT

SMCS-1714 **i02906550**

NOTE	REF NO	GRAPHIC REF	PART NUMBER	QTY	PART NAME 1 2 3 4 5 6 (PRODUCT LEVEL)	SEE PAGE
M	1	1	**5A-3604**	5	BOLT-SOCKET HEAD (M8X1.25X25-MM)	
	2	1	**238-0120**	1	SENSOR GP-SPEED (FUEL PUMP)	
	3	1	**117-1385**	1	SEAL-O-RING	
	4	1	**6D-7889**	1	SEAL-O-RING	
M	5	1	**295-4801**	1	NUT (M14X1.5-THD)	
	6	1	**296-3542**	1	LOCKWASHER	
	7	1	**228-7100**	1	SEAL-O-RING	
	8	1	**248-1066**	1	FITTING-FUEL	
	9	1	**293-0249**	1	PUMP GP-FUEL TRANSFER	
	10	1	**247-6020**	1	SEAL	
M	11	1	**8T-4200**	1	BOLT (M8X1.25X16-MM)	

M - METRIC PART

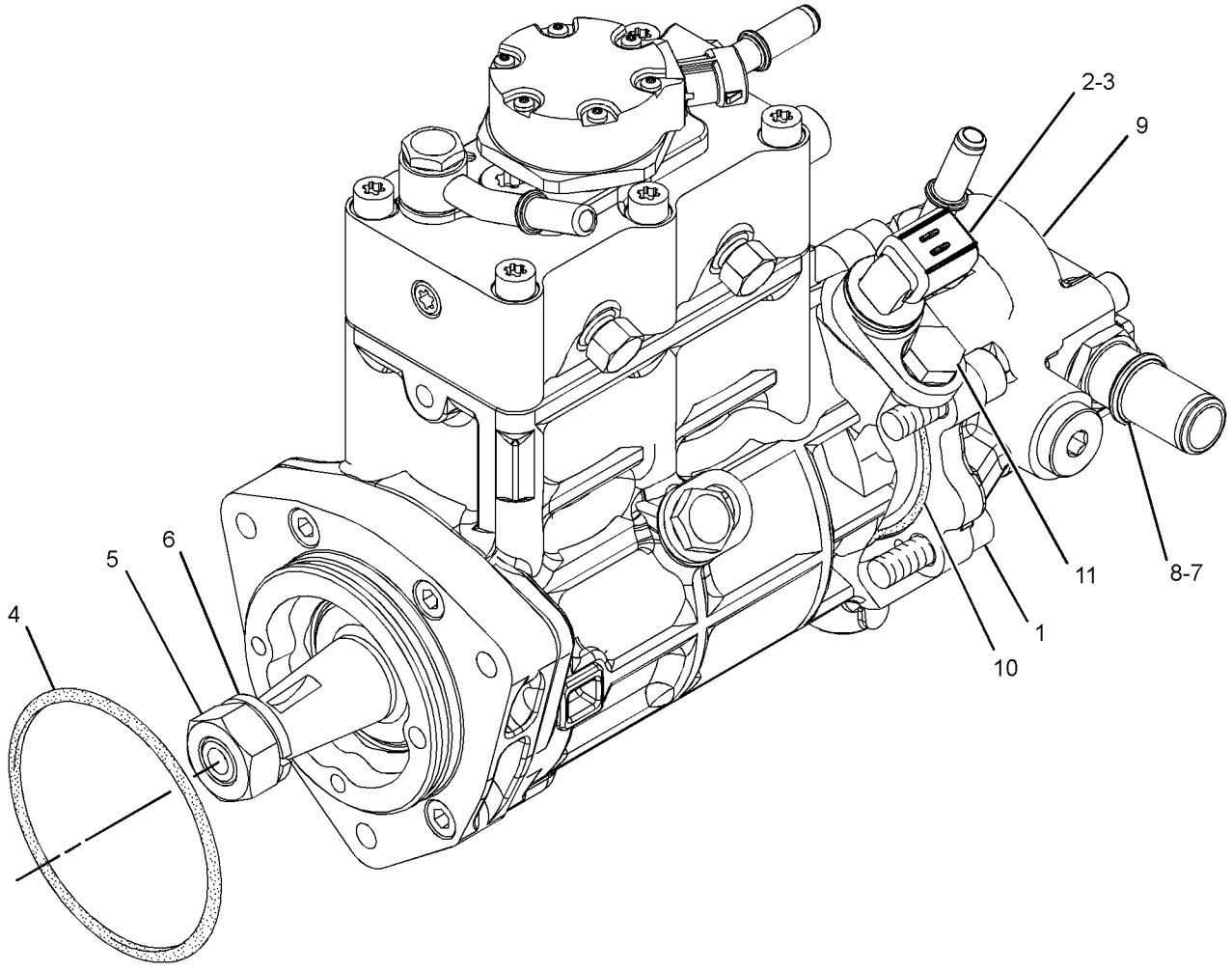

GRAPHIC #1 <END> g01447455

315-3020 PUMP & MTG GP-UNIT INJ HYD

AN ATTACHMENT

SMCS-1714 **i03314745**

NOTE	REF NO	GRAPHIC REF	PART NUMBER	QTY	PART NAME 1 2 3 4 5 6 (PRODUCT LEVEL)	SEE PAGE
	1	1	**228-0172**	2	FITTING-FUEL	
	2	1	**228-7100**	3	SEAL-O-RING	
	3	1	**238-0120**	1	SENSOR GP-SPEED (INJECTION PUMP)	
	4	1	**247-6019**	2	SEAL-O-RING (FUEL SYSTEM)	
	5	1	**248-1066**	1	FITTING-FUEL	
	6	1	**293-0249**	1	PUMP GP-FUEL TRANSFER	
M	7	1	**295-4801**	1	NUT (M14X1.5-THD) (M14X1.5 THD)	
	8	1	**296-3542**	1	LOCKWASHER	
	9	1	**117-1385**	1	SEAL-O-RING	
M	10	1	**5A-3604**	5	BOLT-SOCKET HEAD (M8X1.25X25-MM)	
	11	1	**6D-7889**	1	SEAL-O-RING	
	12	1	**8L-2779**	4	SEAL-O-RING	
M	13	1	**8T-4200**	1	BOLT (M8X1.25X16-MM)	

M - METRIC PART

315-3020 **PUMP & MTG GP-UNIT INJ HYD (**contd.**)** **i03314745**

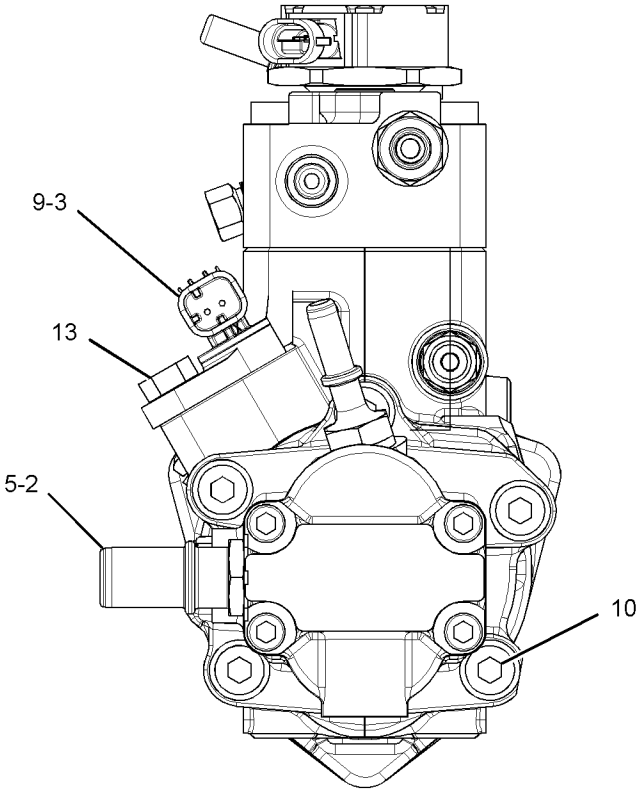

FRONT VIEW OF ENGINE

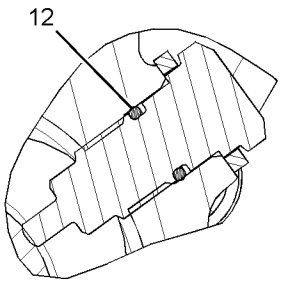

SECTION C-C

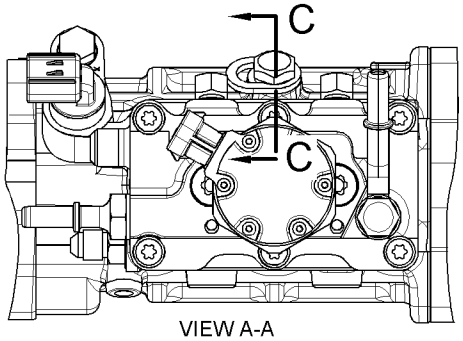

VIEW A-A

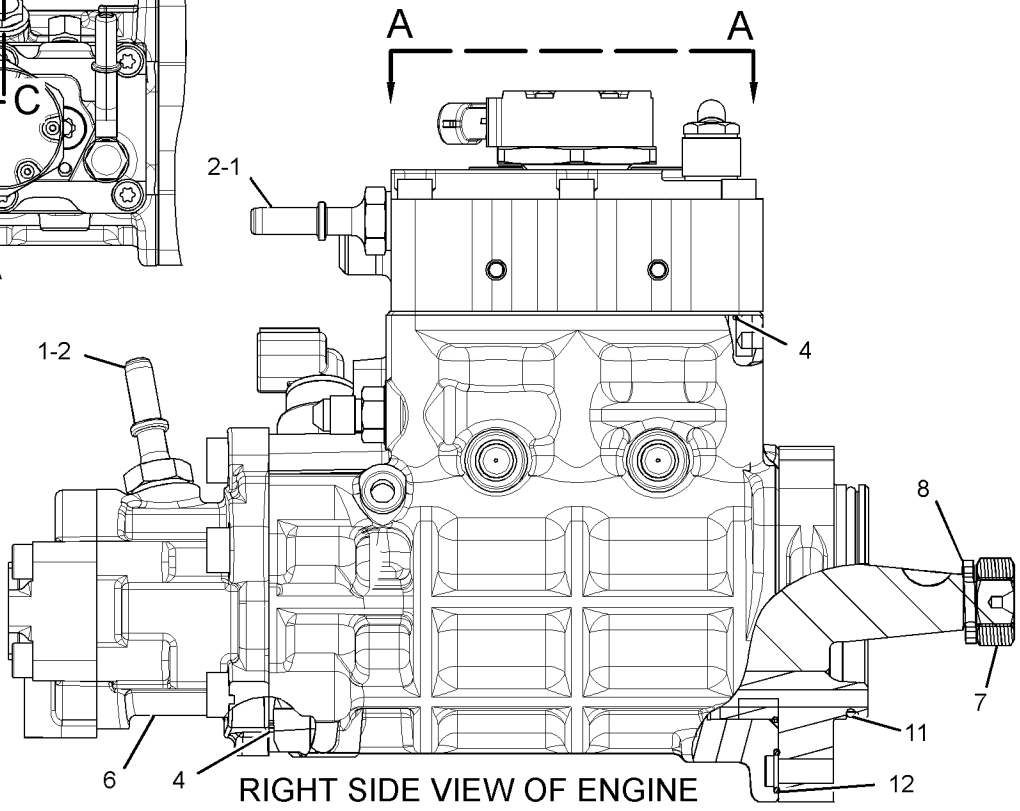

RIGHT SIDE VIEW OF ENGINE

GRAPHIC #1 <END> g01667482

349-5735 PUMP & MTG GP-UNIT INJ HYD

AN ATTACHMENT

SMCS-1714 **i03900441**

NOTE	REF NO	GRAPHIC REF	PART NUMBER	QTY	PART NAME 1 2 3 4 5 6 (PRODUCT LEVEL)	SEE PAGE
	1	1	**228-0172**	1	FITTING-FUEL	
	2	1	**228-7100**	3	SEAL-O-RING	
	3	1	**238-0120**	1	SENSOR GP-SPEED (FUEL PUMP)	
	4	1	**248-1066**	1	FITTING-FUEL	
	5	1	**257-2381**	2	PIN	
	6	1	**257-2382**	2	PLUG	
	7	1	**258-8149**	2	SPRING	
	8	1	**293-0249**	1	PUMP GP-FUEL TRANSFER	
	9	1	**294-3031**	1	BOLT-SPECIAL	
	10	1	**294-3032**	1	WASHER-SPECIAL	
M	11	1	**295-4801**	1	NUT (M14X1.5-THD)	
	12	1	**296-3542**	1	LOCKWASHER	
	13	1	**351-2799**	1	FITTING	
	14	1	**117-1385**	1	SEAL-O-RING	
	15	1	**334-2932**	1	SEAL-O-RING	
M	16	1	**5A-3604**	5	BOLT-SOCKET HEAD (M8X1.25X25-MM)	
M	17	1	**8T-4200**	1	BOLT (M8X1.25X16-MM)	
	18	1	**247-6019**	1	SEAL-O-RING	
	19	1	**8L-2779**	1	SEAL-O-RING	

M - METRIC PART

349-5735 **PUMP & MTG GP-UNIT INJ HYD (**contd.**)** **i03900441**

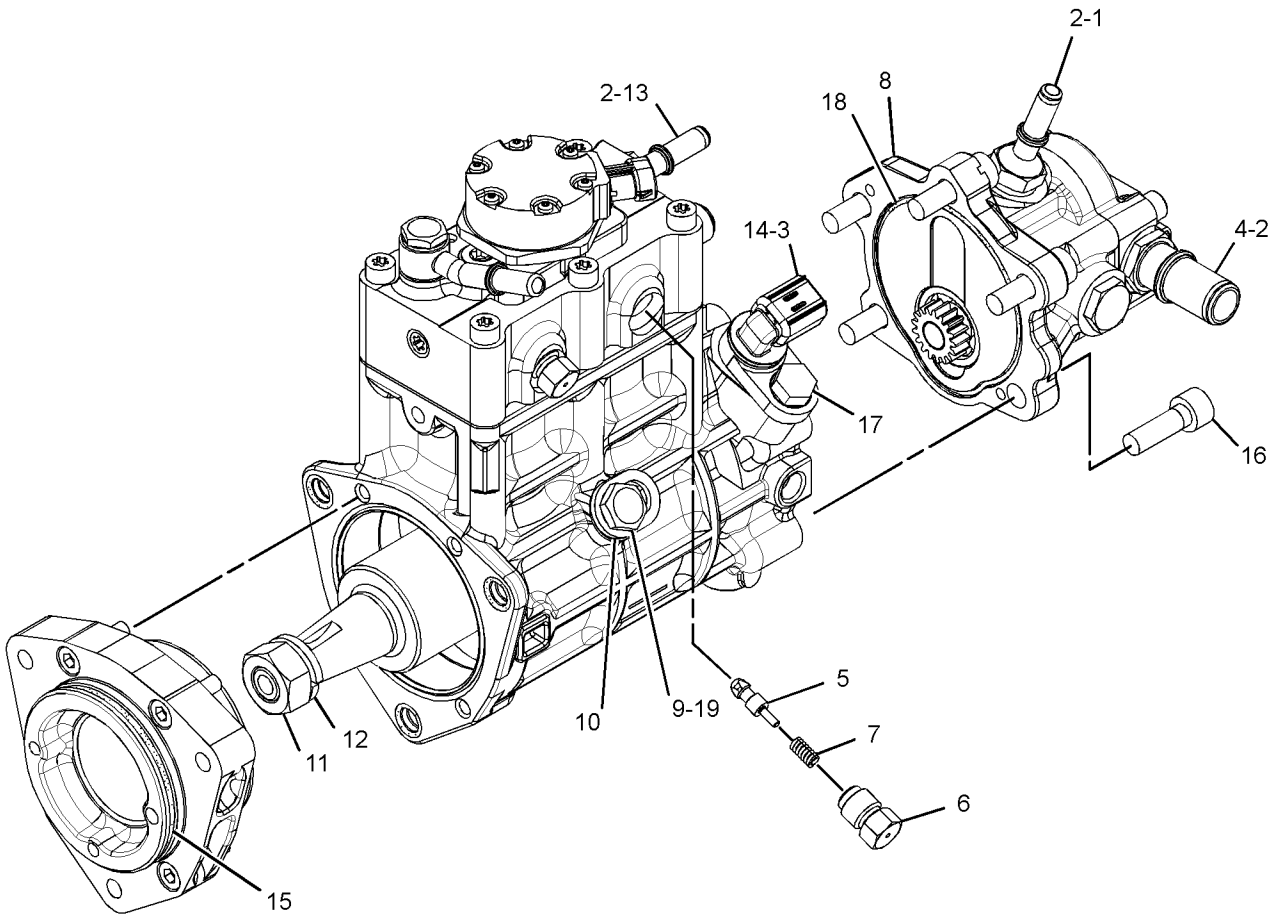

GRAPHIC #1 <END> g02257573

283-2271 PUMP GP-FUEL INJECTION

PART OF 298-5091, 298-5893, 301-8235, 303-4615, 304-0725, 304-6570, 304-7189, 304-7192, 304-8755, 305-0634, 305-1955, 305-2575, 305-6701, 307-2847, 308-4153, 313-3514, 313-4350 PUMP GP-FUEL INJECTION

SMCS-1251, 1290 **i03327681**

NOTE	REF NO	GRAPHIC REF	PART NUMBER	QTY	PART NAME 1 2 3 4 5 6 (PRODUCT LEVEL)	SEE PAGE
M	1	1	**5A-3604**	5	BOLT-SOCKET HEAD (M8X1.25X25-MM)	
	2	1	**238-0120**	1	SENSOR GP-SPEED (SECONDARY, TIMING)	
	3	1	**117-1385**	1	SEAL-O-RING	
	4	1	**6D-7889**	1	SEAL-O-RING	
	5	1	**277-1950**	1	NUT	
	6	1	**277-1949**	1	WASHER	
	7	1	**228-7100**	1	SEAL-O-RING	
	8	1	**248-1066**	1	FITTING-FUEL	
	9	1	**293-0249**	1	PUMP GP-FUEL TRANSFER	
	10	1	**247-6019**	1	SEAL-O-RING	
M	11	1	**8T-4200**	1	BOLT (M8X1.25X16-MM)	

M - METRIC PART

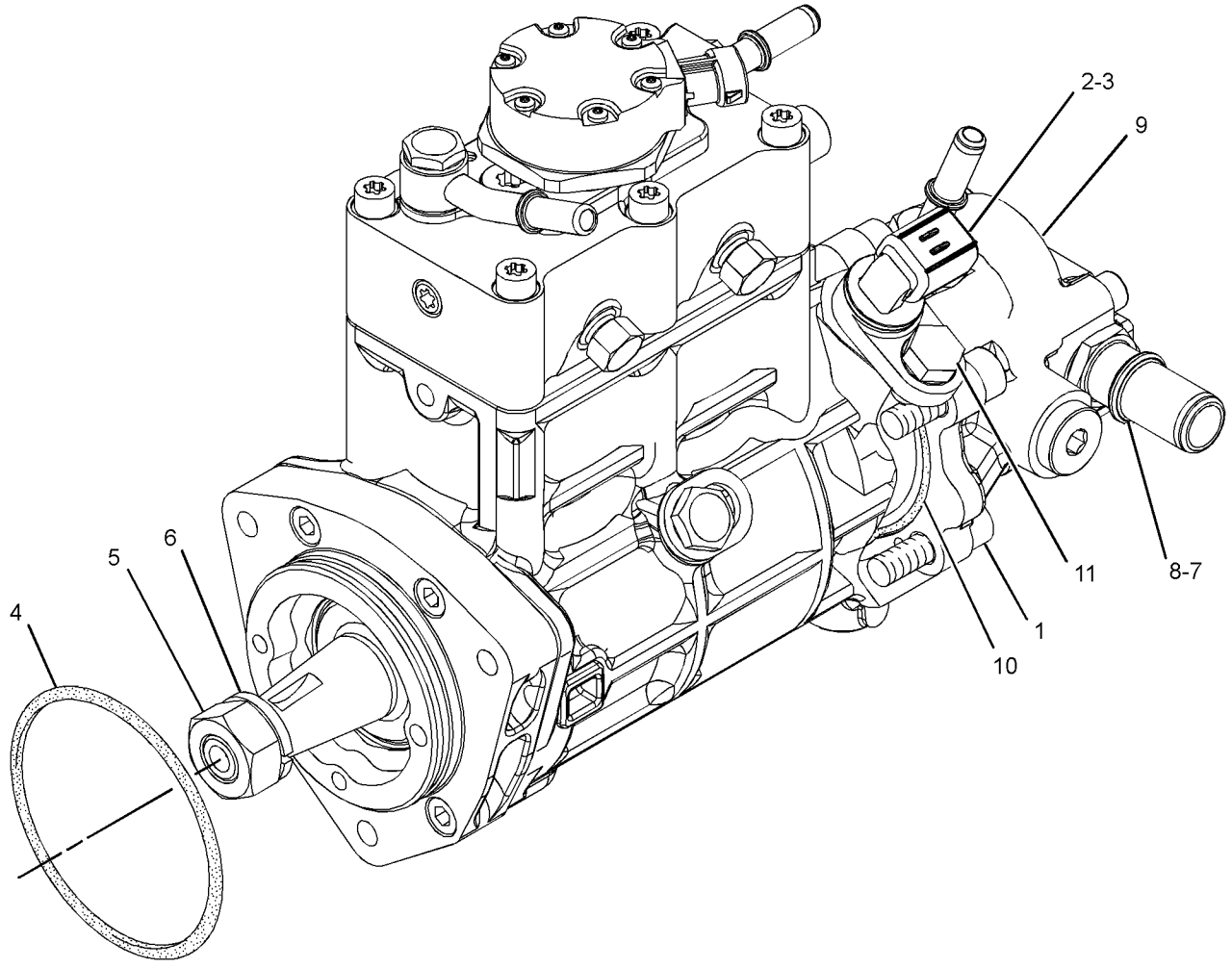

GRAPHIC #1 <END> g01447455

292-3749 PUMP GP-FUEL INJECTION

AN ATTACHMENT

SMCS-1251, 1290 **i03314762**

NOTE	REF NO	GRAPHIC REF	PART NUMBER	QTY	PART NAME 1 2 3 4 5 6 (PRODUCT LEVEL)	SEE PAGE
M	1	1	**5A-3604**	5	BOLT-SOCKET HEAD (M8X1.25X25-MM)	
	2	1	**6D-7889**	1	SEAL-O-RING	
	3	1	**8L-2779**	3	SEAL-O-RING	
M	4	1	**8T-4200**	1	BOLT (M8X1.25X16-MM)	
M	6	1	**105-3487**	4	BOLT-SOCKET HEAD (M6X1X20-MM)	
	7	1	**117-1385**	1	SEAL-O-RING	
	8	1	*248-1064*	1	VALVE GP-SOLENOID (FUEL SHUTOFF)	
		1	**106-9586**	1	SEAL-O-RING	
		1	**286-1511**	1	SOLENOID AS (FUEL SHUTOFF)	
	9	1	**238-0120**	1	SENSOR GP-SPEED (INJECTION PUMP)	
	11	1	*283-2335*	1	HOUSING AS-PUMP	
		1	**6V-3508**	2	PLUG-CUP	
		1	**099-3095**	4	DOWEL	
		1	**239-9555**	3	BALL	

M - METRIC PART

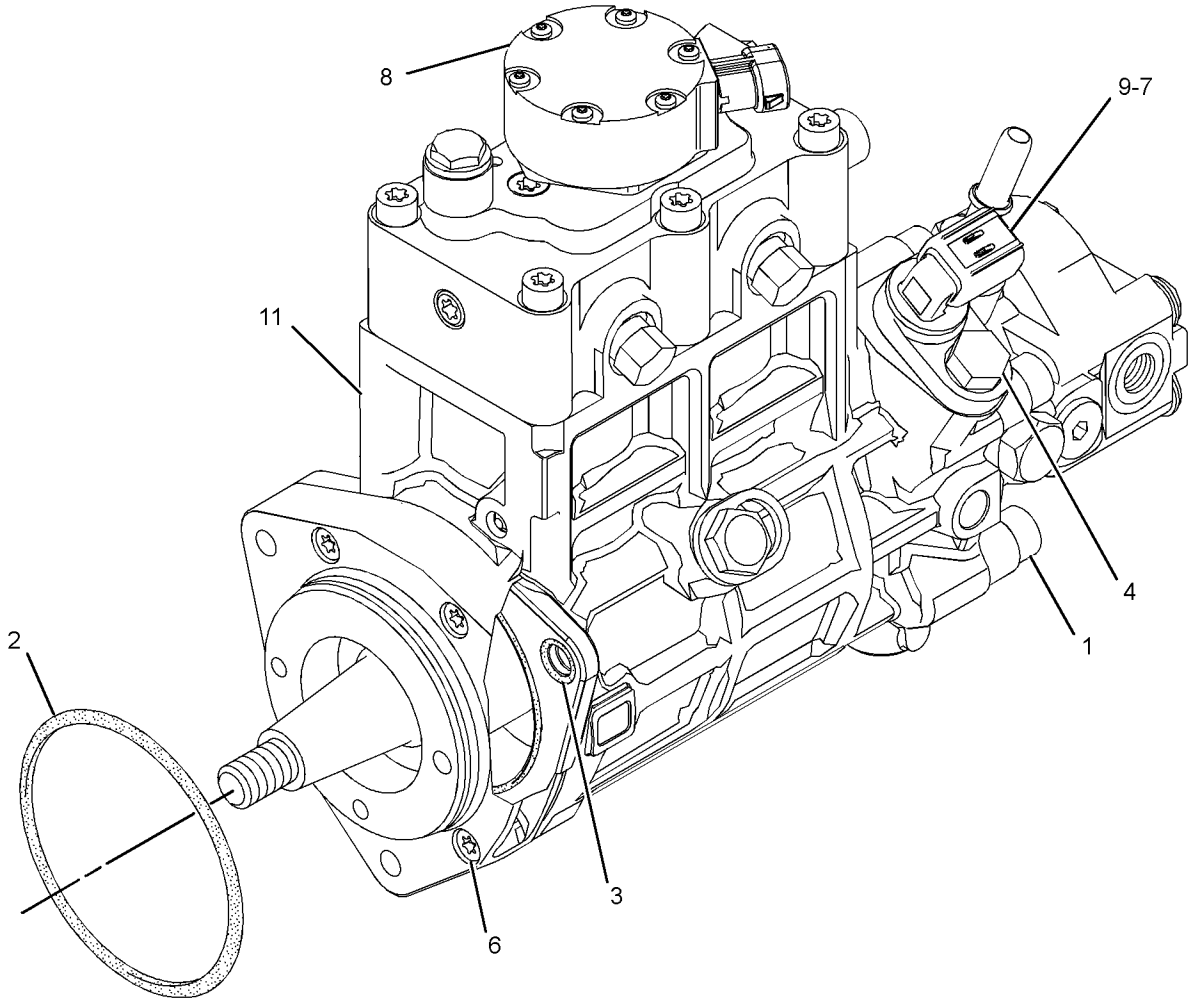

GRAPHIC #1 <END> g01308188

298-5091 PUMP GP-FUEL INJECTION

TYPE 1

SMCS-1251, 1290 **i02883098**

NOTE	REF NO	GRAPHIC REF	PART NUMBER	QTY	PART NAME 1 2 3 4 5 6 (PRODUCT LEVEL)	SEE PAGE
M	1	1	**6I-0260**	3	BOLT (M8X1.25X25-MM)	
M	2	1	**6I-0455**	3	BOLT (M8X1.25X55-MM)	
M	3	2	**6I-0572**	4	BOLT (M8X1.25X20-MM)	
	4	2	**7W-2632**	1	WASHER (8.5X16.8X1.6-MM THK)	
M	5	1	**100-4830**	1	BOLT (M10X1.5X20-MM)	
M	6	1	**101-3895**	4	BOLT (M8X1.25X35-MM)	
M	7	1,3	**124-3815**	4	BOLT (M8X1.25X16-MM)	
M	8	2	**141-8584**	4	BOLT (M8X1.25X50-MM)	
	9	2	**300-6714**	8	MOUNT	
	10	1	**160-0162**	2	WASHER	
	11	2	**217-0099**	4	SPACER (8.2X25X2-MM THK)	
	12	2	**217-8477**	1	CLIP	
	13	1	**230-8989**	1	GEAR-FUEL PUMP (68-TEETH)	
	14	1	**232-3149**	6	WASHER (8.35X16.85X1.55-MM THK)	
	16	2	**268-6678**	1	BRACKET AS	
		2	**260-3719**	1	BRACKET	
M	16A	2	**260-3939**	1	SCREW-HEX HEAD (M6X1X25-MM)	
	17	2	**268-6677**	1	BRACKET AS	
		2	**260-3718**	1	BRACKET	
M	17A	2	**260-3939**	1	SCREW-HEX HEAD (M6X1X25-MM)	
	18	1	**308-8425**	1	RAIL AS-FUEL	
	19	1	**278-5168**	4	CLAMP-INJECTOR	
	20	1	**278-5170**	4	BOLT	
	23	2	**278-5203**	4	SPACER	
Y	25	1	**283-2271**	1	PUMP GP-FUEL INJECTION	1067
	27	1	**298-4535**	1	BRACKET-SUPPORT	
	28	1	**298-4536**	1	BRACKET-MOUNTING	
	29	1	**298-4542**	1	TUBE AS	
	30	1	**298-4543**	1	BOLT	
	31	2	**308-3395**	1	BRACKET-MOUNTING	
Y	32	1	**292-3780**	4	INJECTOR GP-FUEL	1021
	33	1	**298-4537**	1	TUBE AS	
	34	1	**298-4538**	1	TUBE AS (CYL NO. 1)	
	35	1	**298-4539**	1	TUBE AS (CYL NO. 2)	
	36	1	**298-4540**	1	TUBE AS (CYL NO. 3)	
	37	1	**298-4541**	1	TUBE AS (CYL NO. 4)	
	38	3	**278-5225**	1	KIT-SENSOR (ENGINE OIL PRESSURE)	
	38A	3	**199-9267**	1	SEAL-O-RING	
	39	3	**311-3858**	1	KIT-SENSOR (ENGINE SPEED)	
		3	**238-0120**	1	SENSOR GP-SPEED	
	39A	3	**274-1639**	1	SEAL	
	40	3	**278-5272**	1	KIT-SENSOR (AIR TEMPERATURE)	
	40A	3	**278-5226**	1	SEAL-O-RING	
	41	3	**278-5273**	1	KIT-SENSOR (AIR PRESSURE)	
	41A	3	**199-9252**	1	SEAL-O-RING	
	42	3	**278-5307**	1	KIT-SENSOR (COOLANT TEMPERATURE)	
	42A	3	**199-9267**	1	SEAL-O-RING	
	43	1	**311-6342**	1	SENSOR AS-PRESSURE (FUEL RAIL PRESSURE)	

298-5091 **PUMP GP-FUEL INJECTION (**contd.**)** **i02883098**

NOTE	REF NO	GRAPHIC REF	PART NUMBER	QTY	PART NAME 1 2 3 4 5 6 (PRODUCT LEVEL)	SEE PAGE
	43A	1	**309-8006**	1	WASHER	
F			**278-4138**	5	KIT-FUEL LINE PROTECTION	

F - NOT SHOWN
M - METRIC PART
Y - SEPARATE ILLUSTRATION

298-5091 **PUMP GP-FUEL INJECTION (**contd.**)** **i02883098**

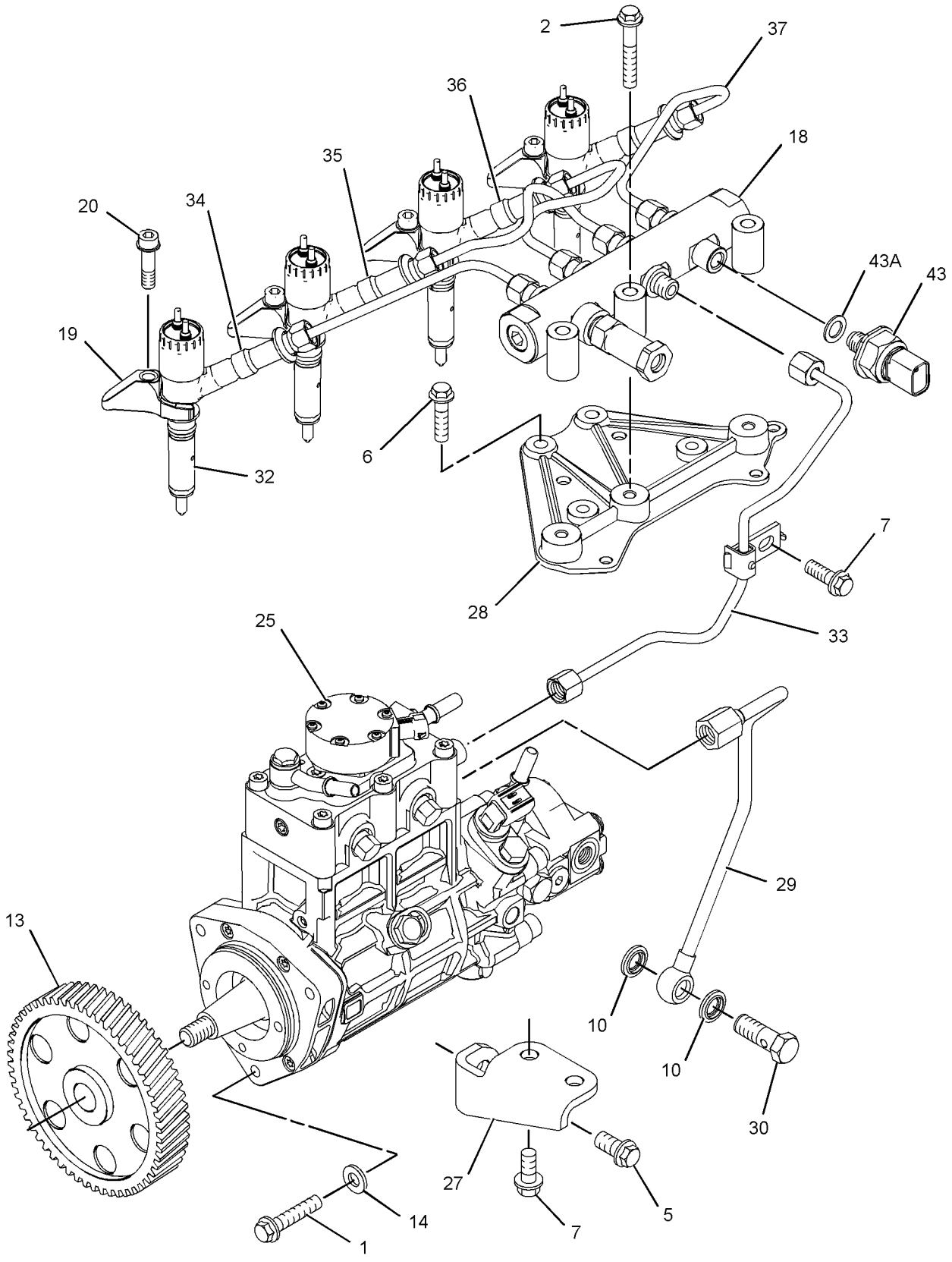

GRAPHIC #1 g01371988

298-5091 **PUMP GP-FUEL INJECTION (**contd.**)** **i02883098**

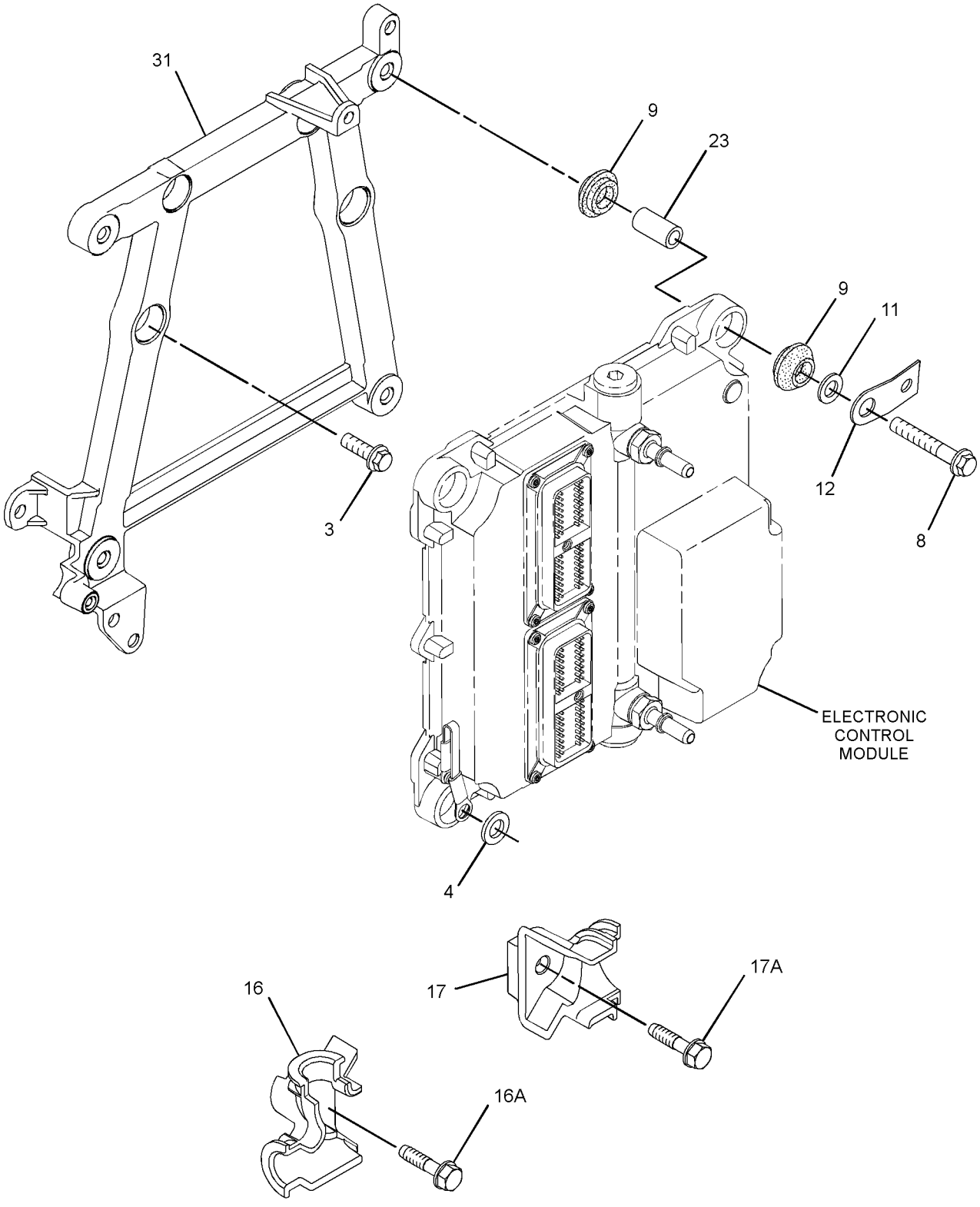

GRAPHIC #2 g01432336

298-5091 **PUMP GP-FUEL INJECTION (**contd.**)** **i02883098**

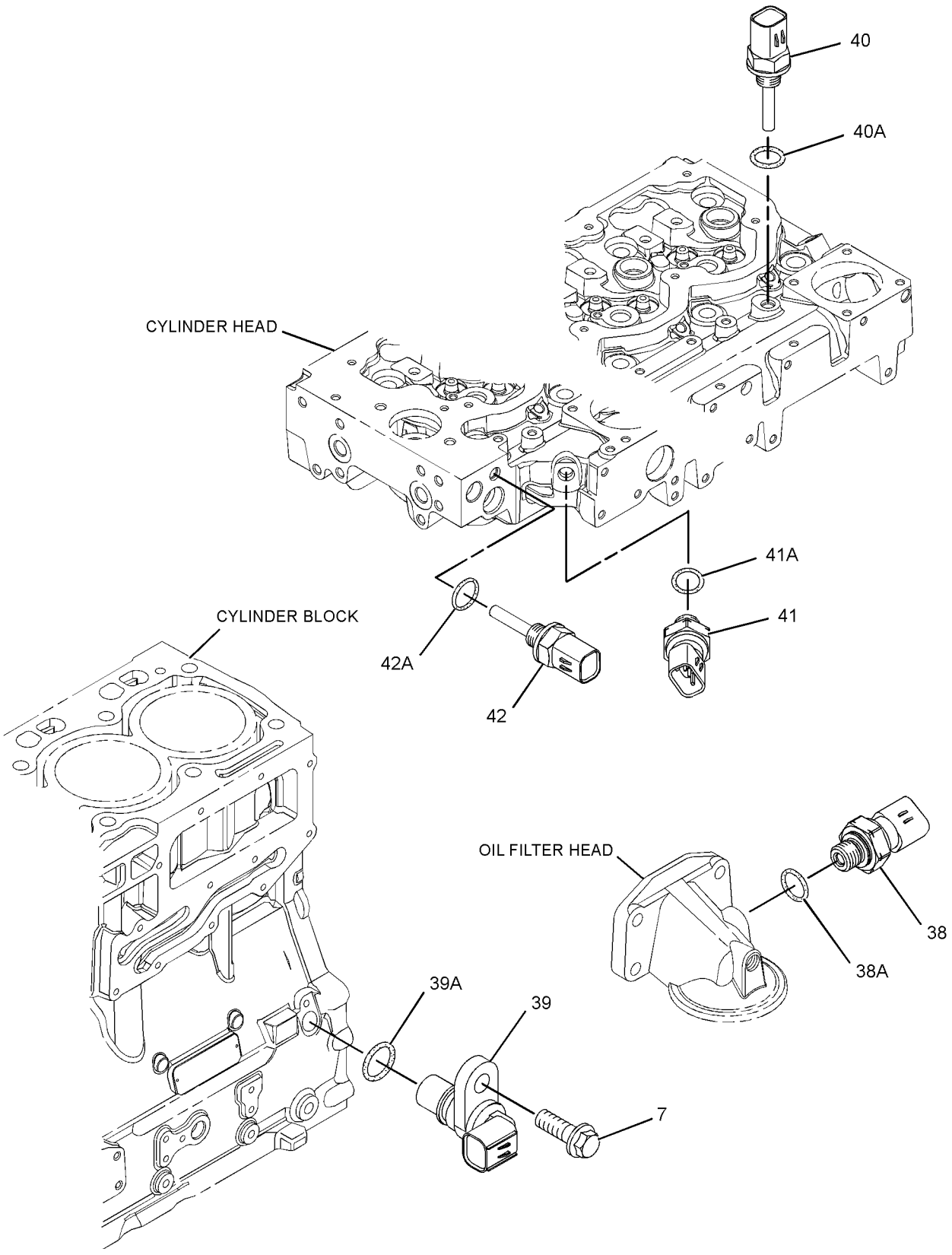

GRAPHIC #3 <END> g01308319

298-5091 PUMP GP-FUEL INJECTION

TYPE 2

SMCS-1251, 1290 **i03730780**

NOTE	REF NO	GRAPHIC REF	PART NUMBER	QTY	PART NAME 1 2 3 4 5 6 (PRODUCT LEVEL)	SEE PAGE
M	1	1	**6I-0260**	3	BOLT (M8X1.25X25-MM)	
M	2	1	**6I-0455**	3	BOLT (M8X1.25X55-MM)	
M	3	2	**6I-0572**	4	BOLT (M8X1.25X20-MM)	
	4	2	**7W-2632**	1	WASHER (8.5X16.8X1.6-MM THK)	
M	5	1	**100-4830**	1	BOLT (M10X1.5X20-MM)	
M	6	1	**101-3895**	4	BOLT (M8X1.25X35-MM)	
M	7	1,3	**124-3815**	4	BOLT (M8X1.25X16-MM)	
M	8	2	**141-8584**	4	BOLT (M8X1.25X50-MM)	
	9	2	**300-6714**	8	MOUNT	
	10	1	**160-0162**	2	WASHER	
	11	2	**217-0099**	5	SPACER (8.2X25X2-MM THK)	
	13	1	**230-8989**	1	GEAR-FUEL PUMP (68-TEETH)	
C	14	1	**232-3149**	3	WASHER (8.35X16.85X1.55-MM THK)	
	16	2	**268-6678**	1	BRACKET AS	
M	16A	2	**260-3939**	1	SCREW-HEX HEAD (M6X1X25-MM)	
	17	2	**268-6677**	1	BRACKET AS	
M	17A	2	**260-3939**	1	SCREW-HEX HEAD (M6X1X25-MM)	
	18	1	**318-2394**	1	RAIL AS-FUEL	
	18A	1	**305-5291**	1	VALVE AS-RELIEF	
	19	1	**278-5168**	4	CLAMP-INJECTOR	
	20	1	**278-5170**	4	BOLT	
	23	2	**278-5203**	4	SPACER	
CYR	25	1	**324-0532**	1	PUMP GP-FUEL INJECTION	1523
	27	1	**298-4535**	1	BRACKET-SUPPORT	
	28	1	**337-3573**	1	BRACKET	
	29	1	**298-4542**	1	TUBE AS	
	30	1	**298-4543**	1	BOLT	
	31	2	**317-3144**	1	BRACKET	
YR	32	1	**320-0680**	4	INJECTOR GP-FUEL	1027
	33	1	**337-3574**	1	TUBE	
	34	1	**322-3745**	1	TUBE (CYL NO. 1)	
	35	1	**322-3746**	1	TUBE (CYL NO. 2)	
	36	1	**333-4732**	1	LINE-FUEL INJECTION (CYL NO. 3)	
	37	1	**333-4733**	1	LINE-FUEL INJECTION (CYL NO. 4)	
	38	3	**278-5225**	1	KIT-SENSOR (ENGINE OIL PRESSURE)	
	38A	3	**199-9267**	1	SEAL-O-RING	
	39	3	**311-3858**	1	KIT-SENSOR (ENGINE SPEED)	
	39A	3	**274-1639**	1	SEAL	
	40	3	**278-5272**	1	KIT-SENSOR (AIR TEMPERATURE)	
	40A	3	**278-5226**	1	SEAL-O-RING	
	41	3	**278-5273**	1	KIT-SENSOR (AIR PRESSURE)	
	41A	3	**199-9252**	1	SEAL-O-RING	
	42	3	**278-5307**	1	KIT-SENSOR (COOLANT TEMPERATURE)	
	42A	3	**199-9267**	1	SEAL-O-RING	
	43	1	**311-6342**	1	SENSOR AS-PRESSURE (FUEL RAIL PRESSURE)	
	43A	1	**309-8006**	1	WASHER	
F			**278-4138**	5	KIT-FUEL LINE PROTECTION	

298-5091 **PUMP GP-FUEL INJECTION** (contd.) **i03730780**

NOTE	REF NO	GRAPHIC REF	PART NUMBER	QTY	PART NAME 1 2 3 4 5 6 (PRODUCT LEVEL)	SEE PAGE

C - CHANGE FROM PREVIOUS TYPE
F - NOT SHOWN
M - METRIC PART
R - REMANUFACTURED PART MAY BE AVAILABLE
Y - SEPARATE ILLUSTRATION

298-5091 **PUMP GP-FUEL INJECTION (**contd.**)** **i03730780**

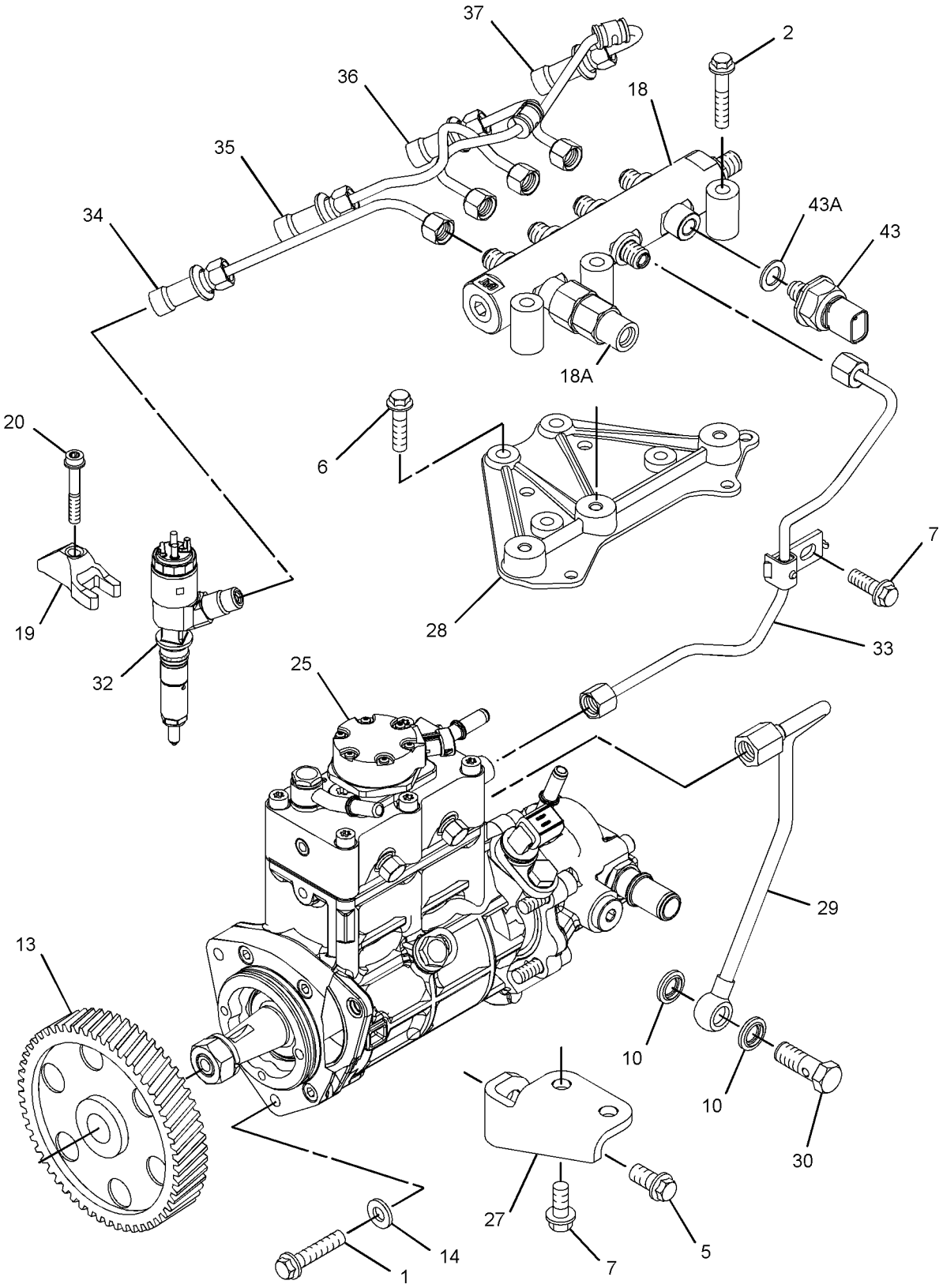

GRAPHIC #1 g01838456

298-5091 **PUMP GP-FUEL INJECTION (**contd.**)** **i03730780**

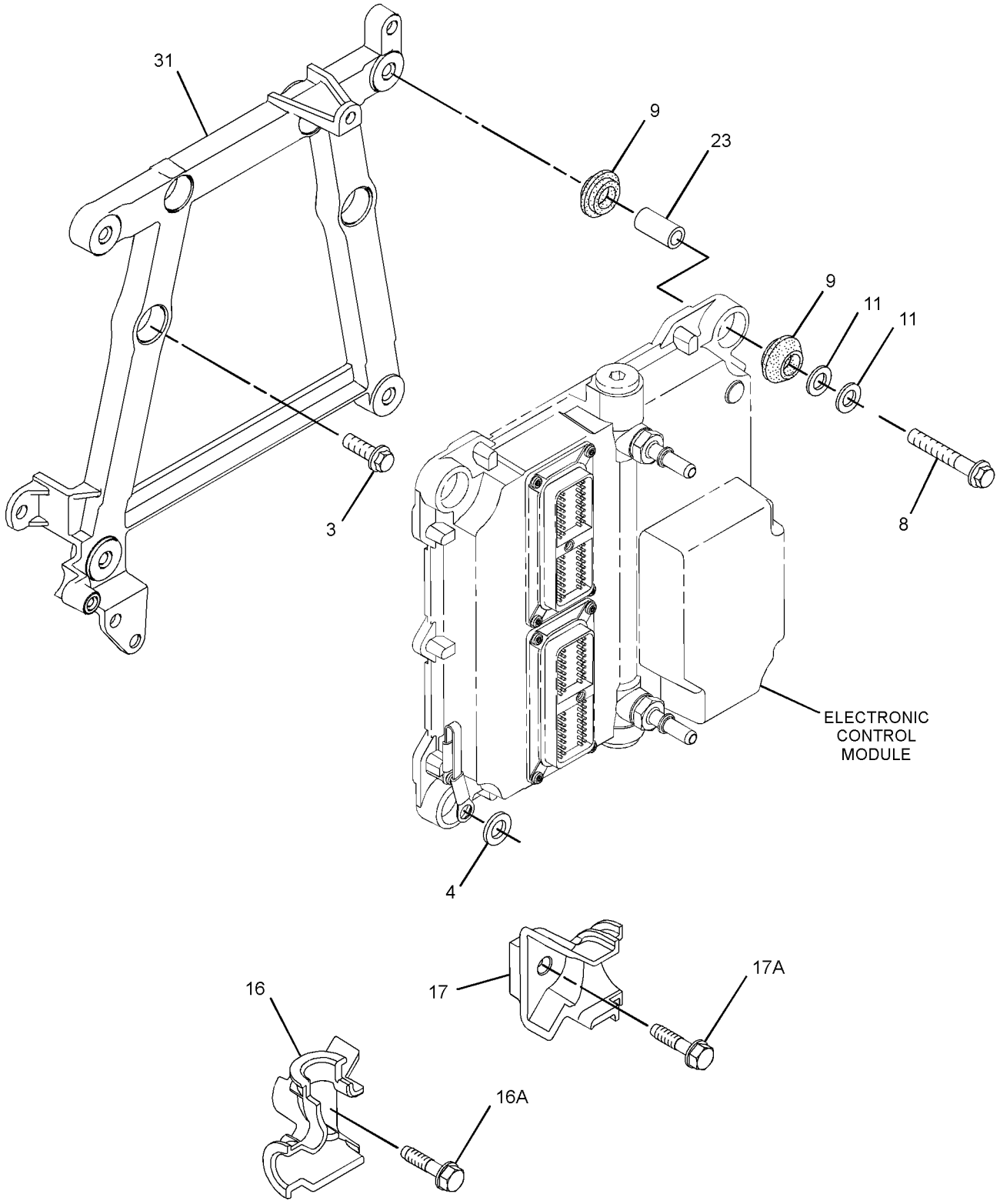

GRAPHIC #2 g01884867

298-5091 **PUMP GP-FUEL INJECTION (**contd.**)** **i03730780**

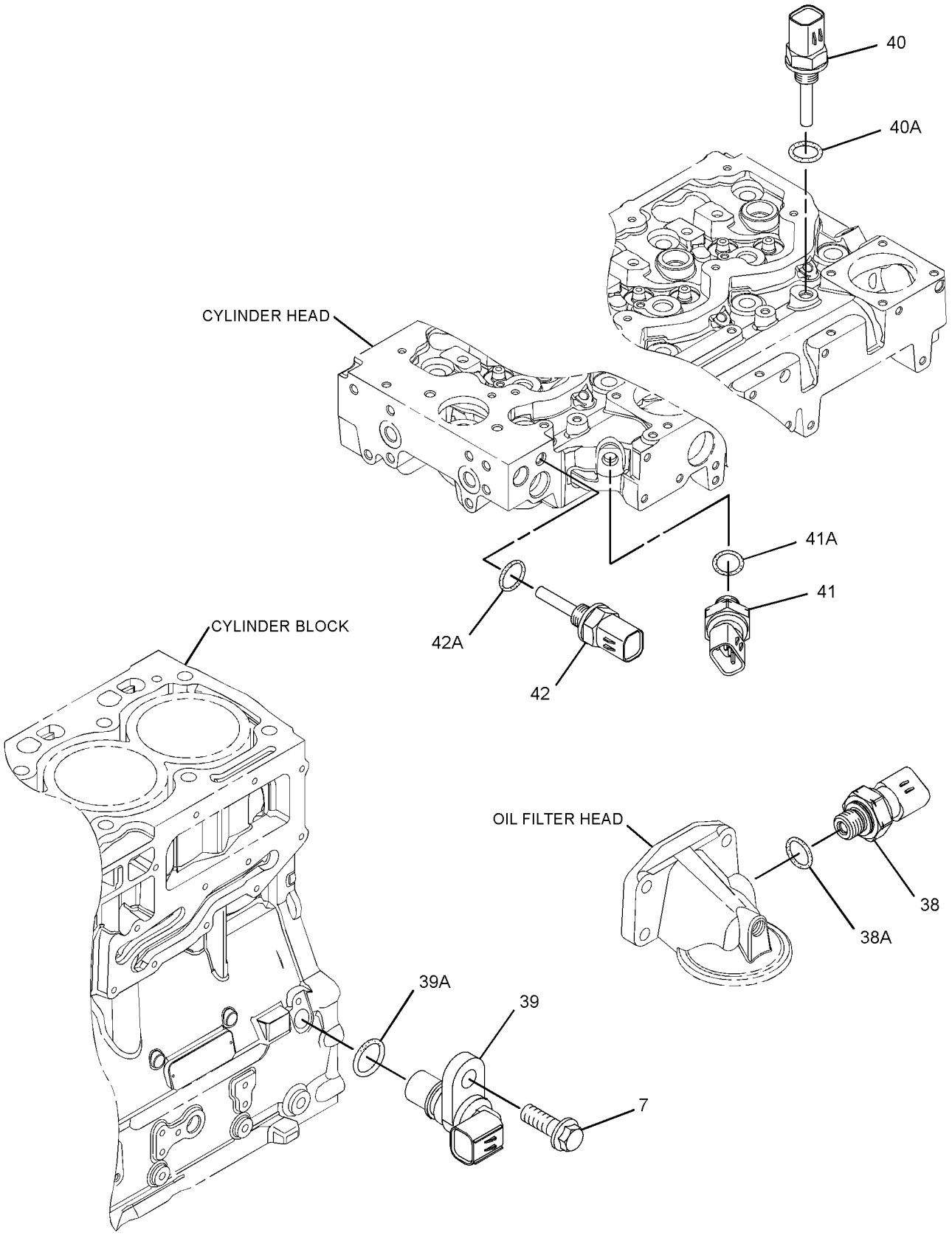

GRAPHIC #3 <END> g01644055

298-5091 PUMP GP-FUEL INJECTION

TYPE 3

SMCS-1251, 1290 **i03956798**

NOTE	REF NO	GRAPHIC REF	PART NUMBER	QTY	PART NAME 1 2 3 4 5 6 (PRODUCT LEVEL)	SEE PAGE
M	1	1	**6I-0260**	3	BOLT (M8X1.25X25-MM)	
M	2	1	**6I-0455**	3	BOLT (M8X1.25X55-MM)	
M	3	2	**6I-0572**	4	BOLT (M8X1.25X20-MM)	
	4	2	**7W-2632**	1	WASHER (8.5X16.8X1.6-MM THK)	
M	5	1	**100-4830**	1	BOLT (M10X1.5X20-MM)	
M	6	1	**101-3895**	4	BOLT (M8X1.25X35-MM)	
M	7	1,3	**124-3815**	4	BOLT (M8X1.25X16-MM)	
M	8	2	**141-8584**	4	BOLT (M8X1.25X50-MM)	
	9	2	**300-6714**	8	MOUNT	
	10	1	**160-0162**	2	WASHER	
	11	2	**217-0099**	5	SPACER (8.2X25X2-MM THK)	
	13	1	**230-8989**	1	GEAR-FUEL PUMP (68-TEETH)	
	14	1	**232-3149**	3	WASHER (8.35X16.85X1.55-MM THK)	
	16	2	**268-6678**	1	BRACKET AS	
M	16A	2	**260-3939**	1	SCREW-HEX HEAD (M6X1X25-MM)	
	17	2	**268-6677**	1	BRACKET AS	
M	17A	2	**260-3939**	1	SCREW-HEX HEAD (M6X1X25-MM)	
	18	1	**318-2394**	1	RAIL AS-FUEL	
	18A	1	**305-5291**	1	VALVE AS-RELIEF	
	19	1	**278-5168**	4	CLAMP-INJECTOR	
	20	1	**278-5170**	4	BOLT	
	23	2	**278-5203**	4	SPACER	
CYR	25	1	**352-6584**	1	PUMP GP-FUEL INJECTION	1540
	27	1	**298-4535**	1	BRACKET-SUPPORT	
	28	1	**337-3573**	1	BRACKET	
	29	1	**298-4542**	1	TUBE AS	
	30	1	**298-4543**	1	BOLT	
	31	2	**317-3144**	1	BRACKET	
YR	32	1	**320-0680**	4	INJECTOR GP-FUEL	1027
	33	1	**337-3574**	1	TUBE	
	34	1	**322-3745**	1	TUBE (CYL NO. 1)	
	35	1	**322-3746**	1	TUBE (CYL NO. 2)	
	36	1	**333-4732**	1	LINE-FUEL INJECTION (CYL NO. 3)	
	37	1	**333-4733**	1	LINE-FUEL INJECTION (CYL NO. 4)	
	38	3	**278-5225**	1	KIT-SENSOR (ENGINE OIL PRESSURE)	
	38A	3	**199-9267**	1	SEAL-O-RING	
	39	3	**311-3858**	1	KIT-SENSOR (ENGINE SPEED)	
	39A	3	**274-1639**	1	SEAL	
		3	**238-0120**	1	SENSOR GP-SPEED	
	40	3	**278-5272**	1	KIT-SENSOR (AIR TEMPERATURE)	
	40A	3	**278-5226**	1	SEAL-O-RING	
	41	3	**278-5273**	1	KIT-SENSOR (AIR PRESSURE)	
	41A	3	**199-9252**	1	SEAL-O-RING	
	42	3	**278-5307**	1	KIT-SENSOR (COOLANT TEMPERATURE)	
	42A	3	**199-9267**	1	SEAL-O-RING	
	43	1	**311-6342**	1	SENSOR AS-PRESSURE (FUEL RAIL PRESSURE)	
	43A	1	**309-8006**	1	WASHER	

298-5091 **PUMP GP-FUEL INJECTION (**contd.**)** **i03956798**

NOTE	REF NO	GRAPHIC REF	PART NUMBER	QTY	PART NAME 1 2 3 4 5 6 (PRODUCT LEVEL)	SEE PAGE
F			**278-4138**	5	KIT-FUEL LINE PROTECTION	

C - CHANGE FROM PREVIOUS TYPE
F - NOT SHOWN
M - METRIC PART
R - REMANUFACTURED PART MAY BE AVAILABLE
Y - SEPARATE ILLUSTRATION

298-5091 **PUMP GP-FUEL INJECTION (**contd.**)** **i03956798**

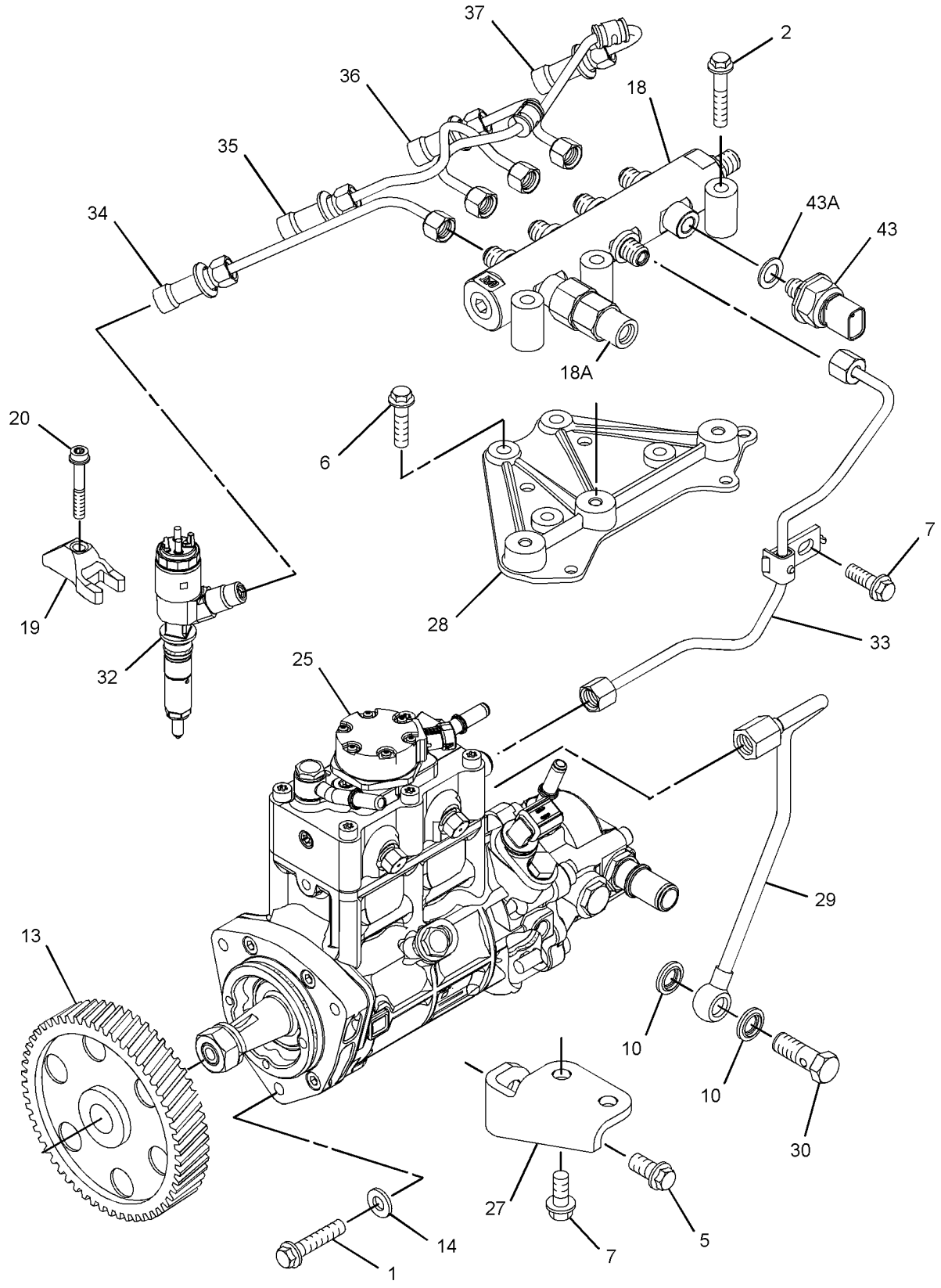

GRAPHIC #1 g02248954

298-5091 **PUMP GP-FUEL INJECTION (**contd.**)** **i03956798**

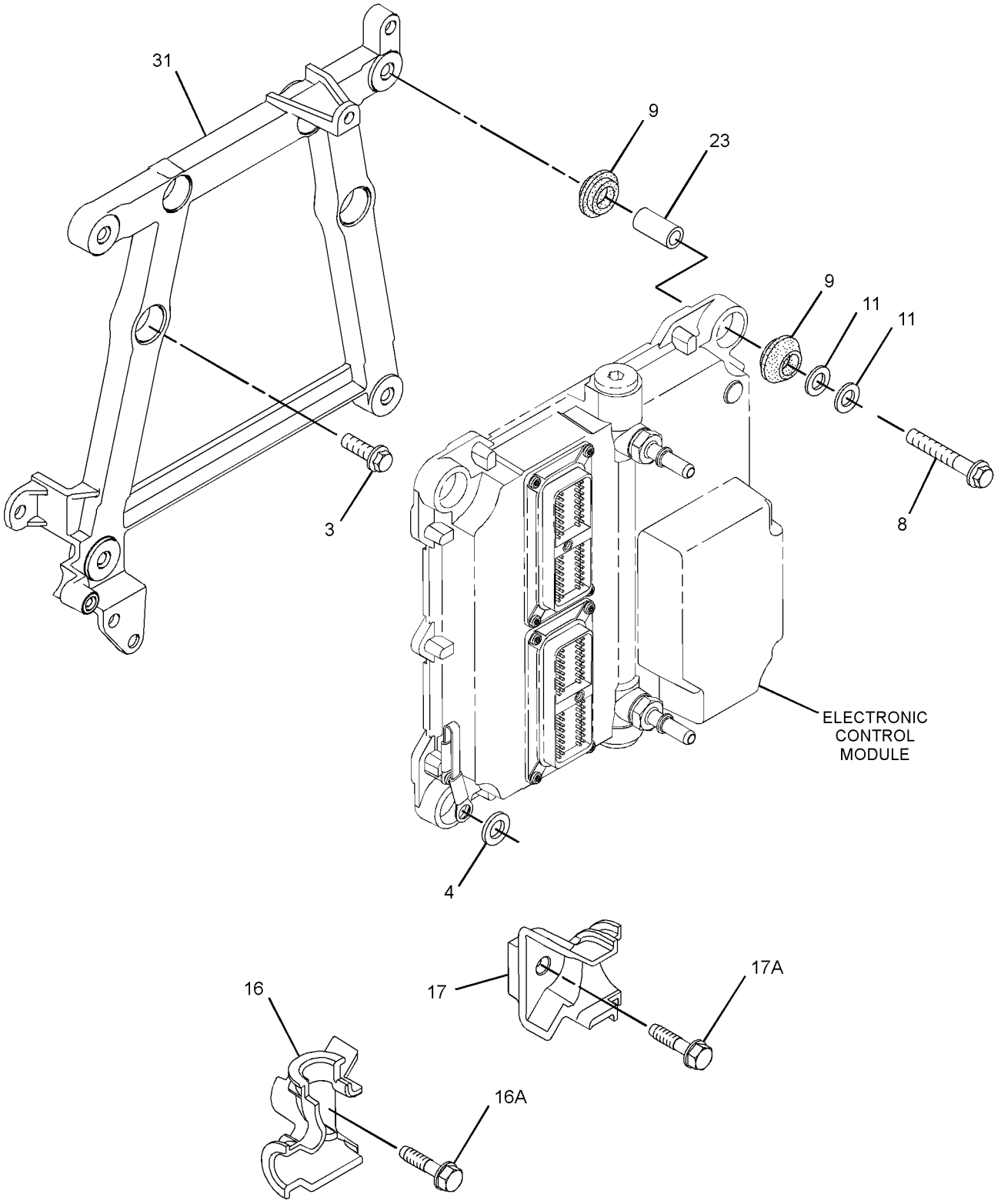

GRAPHIC #2 g01884867

298-5091 **PUMP GP-FUEL INJECTION (**contd.**)** **i03956798**

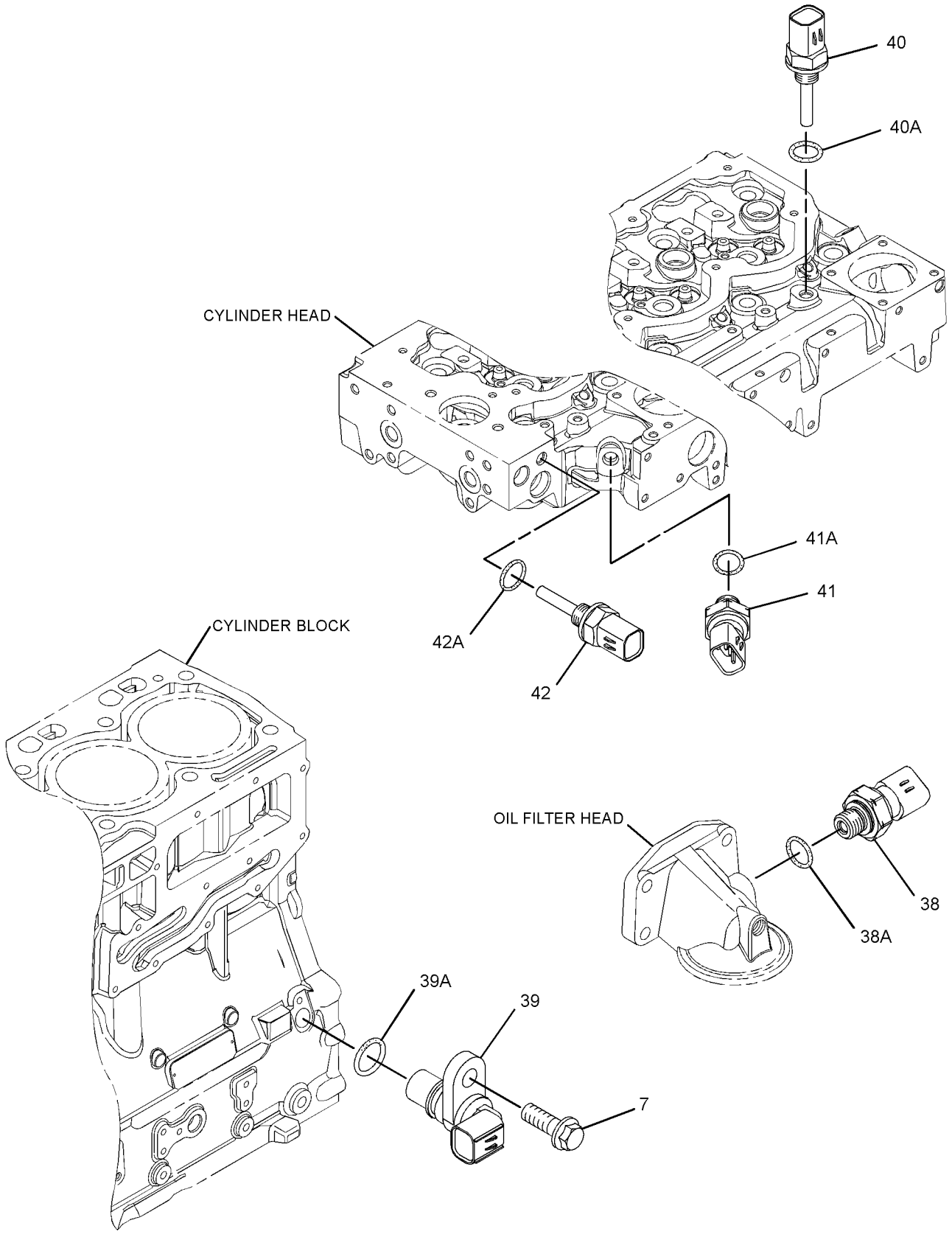

GRAPHIC #3 <END> g01644055

298-5091 PUMP GP-FUEL INJECTION

TYPE 4

SMCS-1251, 1290 **i04702851**

NOTE	REF NO	GRAPHIC REF	PART NUMBER	QTY	PART NAME 1 2 3 4 5 6 (PRODUCT LEVEL)	SEE PAGE
M	1	1	**6I-0260**	3	BOLT (M8X1.25X25-MM)	
M	2	1	**6I-0455**	3	BOLT (M8X1.25X55-MM)	
M	3	2	**6I-0572**	4	BOLT (M8X1.25X20-MM)	
	4	2	**7W-2632**	1	WASHER (8.5X16.8X1.6-MM THK)	
M	5	1	**100-4830**	1	BOLT (M10X1.5X20-MM)	
M	6	1	**101-3895**	4	BOLT (M8X1.25X35-MM)	
M	7	1,3	**124-3815**	4	BOLT (M8X1.25X16-MM)	
M	8	2	**141-8584**	4	BOLT (M8X1.25X50-MM)	
	9	2	**300-6714**	8	MOUNT	
	10	1	**160-0162**	2	WASHER	
	11	2	**217-0099**	5	SPACER (8.2X25X2-MM THK)	
	13	1	**230-8989**	1	GEAR-FUEL PUMP (68-TEETH)	
	14	1	**232-3149**	3	WASHER (8.35X16.85X1.55-MM THK)	
	16	2	**268-6678**	1	BRACKET AS	
M	16A	2	**260-3939**	1	SCREW-HEX HEAD (M6X1X25-MM)	
	17	2	**268-6677**	1	BRACKET AS	
M	17A	2	**260-3939**	1	SCREW-HEX HEAD (M6X1X25-MM)	
	18	1	**358-6632**	1	RAIL GP-FUEL	
	18A	1	**305-5291**	1	VALVE AS-RELIEF	
	19	1	**278-5168**	4	CLAMP-INJECTOR	
	20	1	**278-5170**	4	BOLT	
	23	2	**278-5203**	4	SPACER	
CYR	25	1	**324-0532**	1	PUMP GP-FUEL INJECTION	1523
	27	1	**298-4535**	1	BRACKET-SUPPORT	
	28	1	**337-3573**	1	BRACKET	
	29	1	**298-4542**	1	TUBE AS	
	30	1	**298-4543**	1	BOLT	
	31	2	**317-3144**	1	BRACKET	
YR	32	1	**320-0680**	4	INJECTOR GP-FUEL	1027
	33	1	**337-3574**	1	TUBE	
	34	1	**322-3745**	1	TUBE (CYL NO. 1)	
	35	1	**322-3746**	1	TUBE (CYL NO. 2)	
	36	1	**333-4732**	1	LINE-FUEL INJECTION (CYL NO. 3)	
	37	1	**333-4733**	1	LINE-FUEL INJECTION (CYL NO. 4)	
	38	3	**278-5225**	1	KIT-SENSOR (ENGINE OIL PRESSURE)	
	38A	3	**199-9267**	1	SEAL-O-RING	
	39	3	**311-3858**	1	KIT-SENSOR (ENGINE SPEED)	
	39A	3	**274-1639**	1	SEAL	
		3	**238-0120**	1	SENSOR GP-SPEED	
	40	3	**278-5272**	1	KIT-SENSOR (AIR TEMPERATURE)	
	40A	3	**278-5226**	1	SEAL-O-RING	
	41	3	**278-5273**	1	KIT-SENSOR (AIR PRESSURE)	
	41A	3	**199-9252**	1	SEAL-O-RING	
	42	3	**278-5307**	1	KIT-SENSOR (COOLANT TEMPERATURE)	
	42A	3	**199-9267**	1	SEAL-O-RING	
	43	1	**311-6342**	1	SENSOR AS-PRESSURE (FUEL RAIL PRESSURE)	
	43A	1	**309-8006**	1	WASHER	

298-5091 **PUMP GP-FUEL INJECTION** (contd.) **i04702851**

NOTE	REF NO	GRAPHIC REF	PART NUMBER	QTY	PART NAME 1 2 3 4 5 6 (PRODUCT LEVEL)	SEE PAGE
F			**278-4138**	5	KIT-FUEL LINE PROTECTION	

C - CHANGE FROM PREVIOUS TYPE
F - NOT SHOWN
M - METRIC PART
R - REMANUFACTURED PART MAY BE AVAILABLE
Y - SEPARATE ILLUSTRATION

298-5091 **PUMP GP-FUEL INJECTION (**contd.**)** **i04702851**

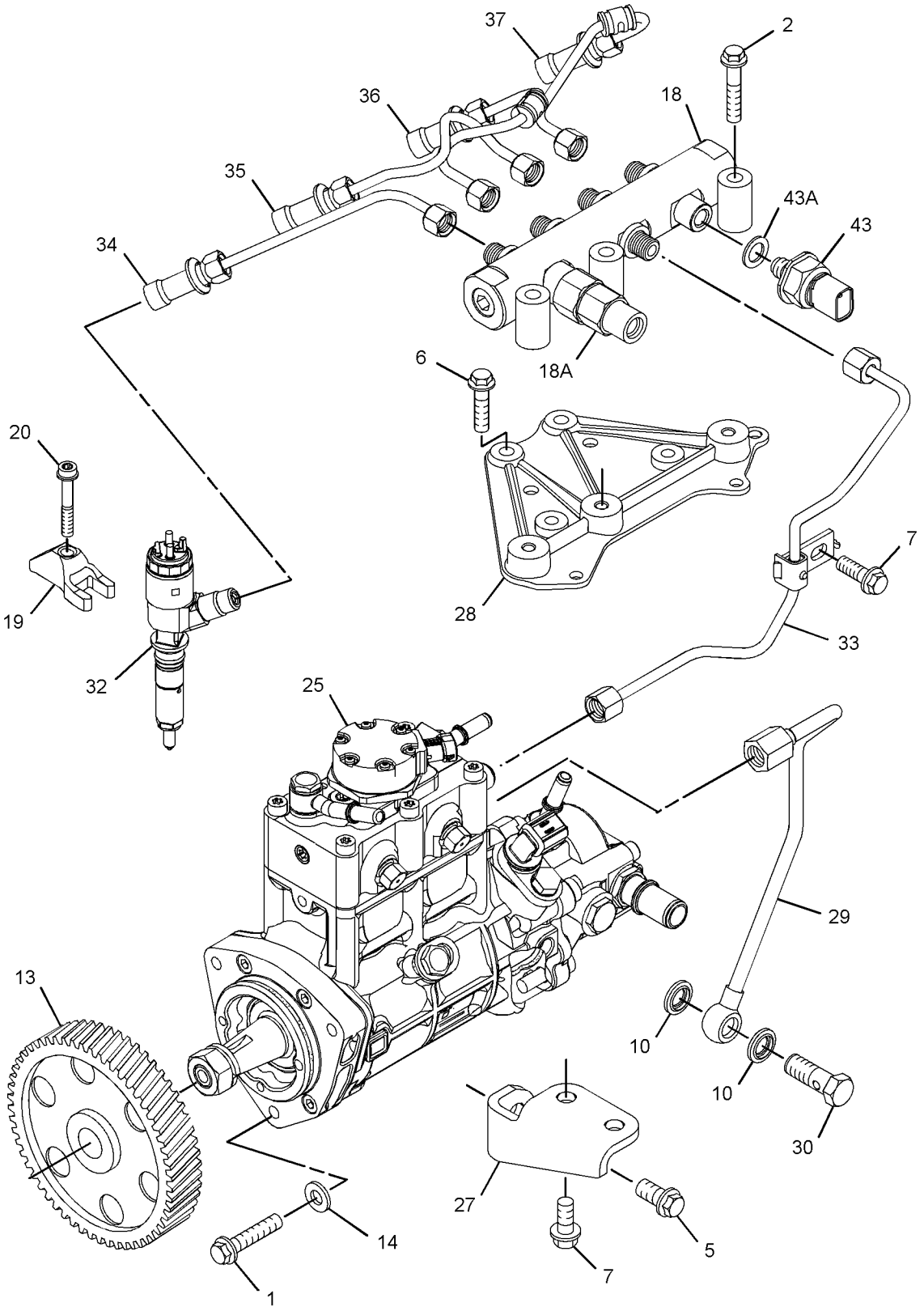

GRAPHIC #1 g02856538

298-5091 **PUMP GP-FUEL INJECTION (**contd.**)** **i04702851**

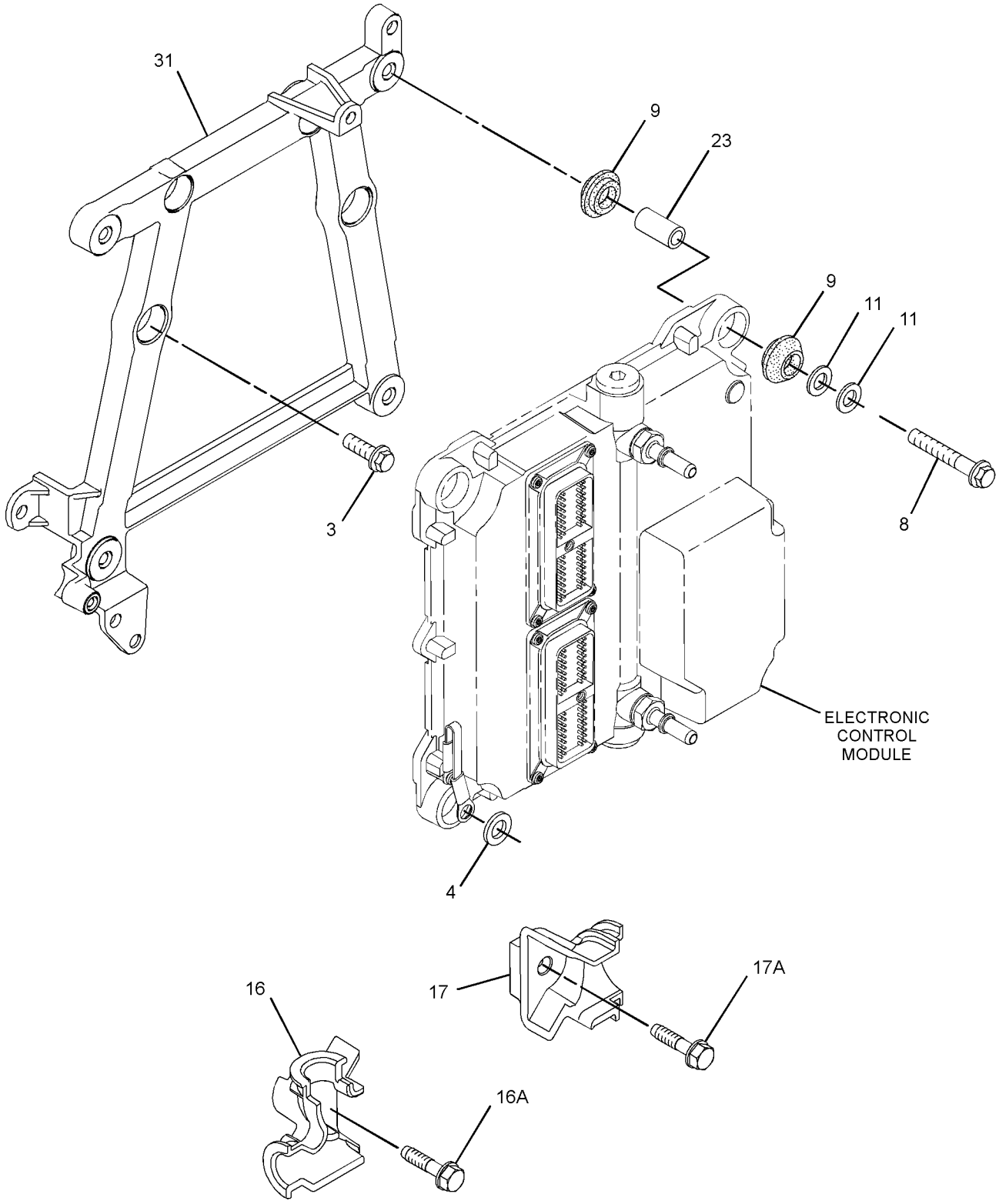

GRAPHIC #2 g01884867

298-5091 **PUMP GP-FUEL INJECTION (**contd.**)** **i04702851**

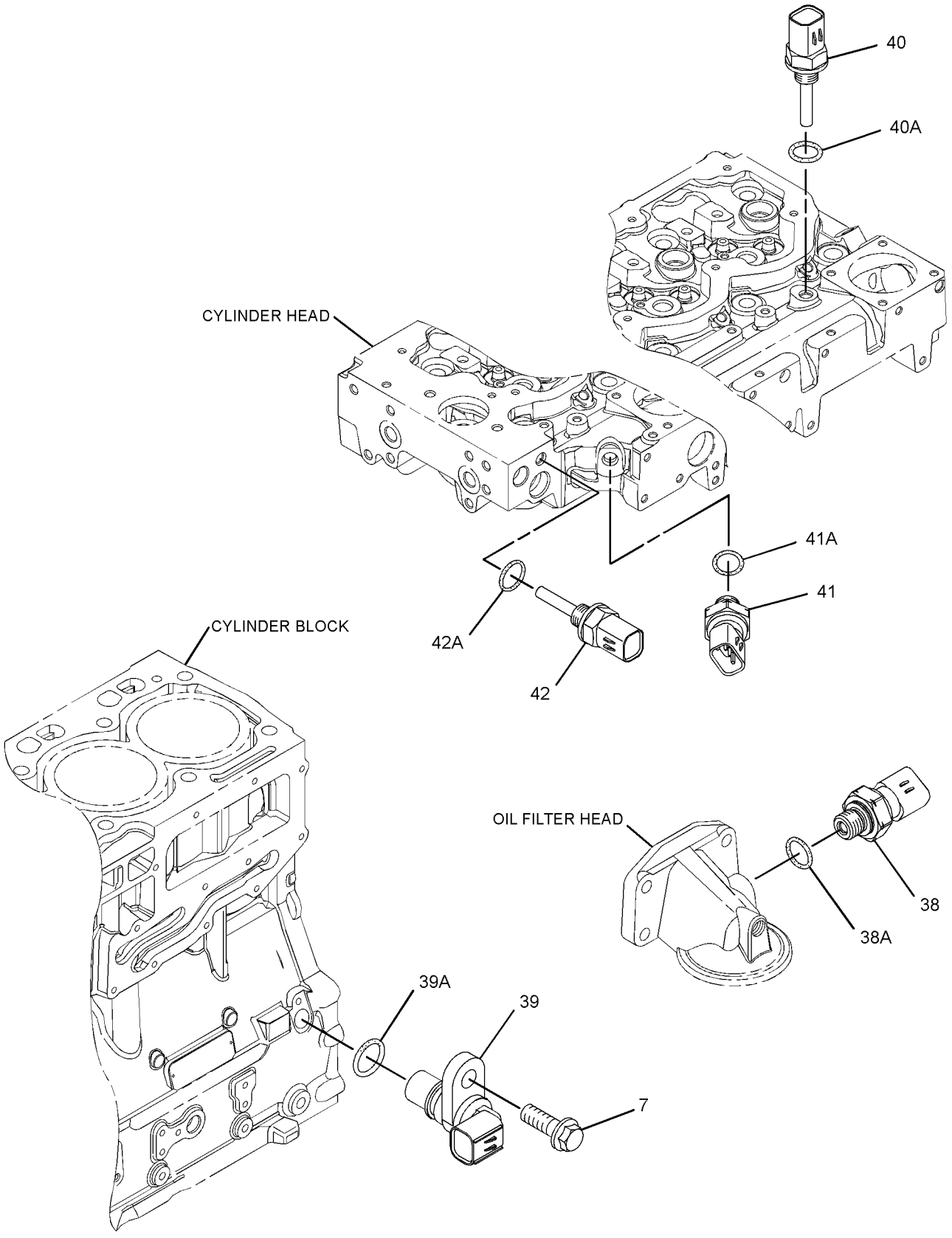

GRAPHIC #3 <END> g01644055

298-5893 PUMP GP-FUEL INJECTION

TYPE 1

SMCS-1251, 1290 **i03730783**

NOTE	REF NO	GRAPHIC REF	PART NUMBER	QTY	PART NAME 1 2 3 4 5 6 (PRODUCT LEVEL)	SEE PAGE
M	1	1	**6I-0260**	3	BOLT (M8X1.25X25-MM)	
M	2	1	**6I-0455**	3	BOLT (M8X1.25X55-MM)	
M	3	2	**6I-0572**	4	BOLT (M8X1.25X20-MM)	
	4	2	**7W-2632**	1	WASHER (8.5X16.8X1.6-MM THK)	
M	5	1	**100-4830**	1	BOLT (M10X1.5X20-MM)	
M	6	1	**101-3895**	4	BOLT (M8X1.25X35-MM)	
M	7	1,3	**124-3815**	4	BOLT (M8X1.25X16-MM)	
M	8	2	**141-8584**	4	BOLT (M8X1.25X50-MM)	
	9	2	**155-0576**	8	MOUNT-ISOLATION	
	10	1	**160-0162**	2	WASHER	
	11	2	**217-0099**	5	SPACER (8.2X25X2-MM THK)	
	12	2	**217-8477**	1	CLIP	
	13	1	**230-8989**	1	GEAR-FUEL PUMP (68-TEETH)	
	14	1	**232-3149**	6	WASHER (8.35X16.85X1.55-MM THK)	
	16	2	**268-6678**	1	BRACKET AS	
M	16A	2	**260-3939**	1	SCREW-HEX HEAD (M6X1X25-MM)	
	17	2	**268-6677**	1	BRACKET AS	
M	17A	2	**260-3939**	1	SCREW-HEX HEAD (M6X1X25-MM)	
	18	1	**308-8425**	1	RAIL AS-FUEL	
	19	1	**278-5168**	4	CLAMP-INJECTOR	
	20	1	**278-5170**	4	BOLT	
	23	2	**278-5203**	4	SPACER	
Y	25	1	**283-2271**	1	PUMP GP-FUEL INJECTION	1067
	27	1	**298-4535**	1	BRACKET-SUPPORT	
	28	1	**298-4536**	1	BRACKET-MOUNTING	
	29	1	**298-4542**	1	TUBE AS	
	30	1	**298-4543**	1	BOLT	
	31	2	**308-3395**	1	BRACKET-MOUNTING	
Y	32	1	**282-0480**	4	INJECTOR GP-FUEL	1019
	33	1	**298-4537**	1	TUBE AS	
	34	1	**298-4538**	1	TUBE AS (CYL NO. 1)	
	35	1	**298-4539**	1	TUBE AS (CYL NO. 2)	
	36	1	**298-4540**	1	TUBE AS (CYL NO. 3)	
	37	1	**298-4541**	1	TUBE AS (CYL NO. 4)	
	38	3	**278-5225**	1	KIT-SENSOR (ENGINE OIL PRESSURE)	
	38A	3	**199-9267**	1	SEAL-O-RING	
	39	3	**278-5228**	1	KIT-SENSOR (ENGINE SPEED)	
	39A	3	**278-5227**	1	SEAL-O-RING	
	40	3	**278-5272**	1	KIT-SENSOR (AIR TEMPERATURE)	
	40A	3	**278-5226**	1	SEAL-O-RING	
	41	3	**278-5273**	1	KIT-SENSOR (WATER PRESSURE)	
	41A	3	**199-9252**	1	SEAL-O-RING	
	42	3	**278-5307**	1	KIT-SENSOR (WATER TEMPERATURE)	
	42A	3	**199-9267**	1	SEAL-O-RING	
	43	1	**311-6342**	1	SENSOR AS-PRESSURE (FUEL RAIL PRESSURE)	
	43A	1	**309-8006**	1	WASHER	
F			**278-4138**	5	KIT-FUEL LINE PROTECTION	

298-5893 **PUMP GP-FUEL INJECTION (**contd.**)** **i03730783**

NOTE	REF NO	GRAPHIC REF	PART NUMBER	QTY	PART NAME 1 2 3 4 5 6 (PRODUCT LEVEL)	SEE PAGE

F - NOT SHOWN
M - METRIC PART
Y - SEPARATE ILLUSTRATION

298-5893 **PUMP GP-FUEL INJECTION (**contd.**)** **i03730783**

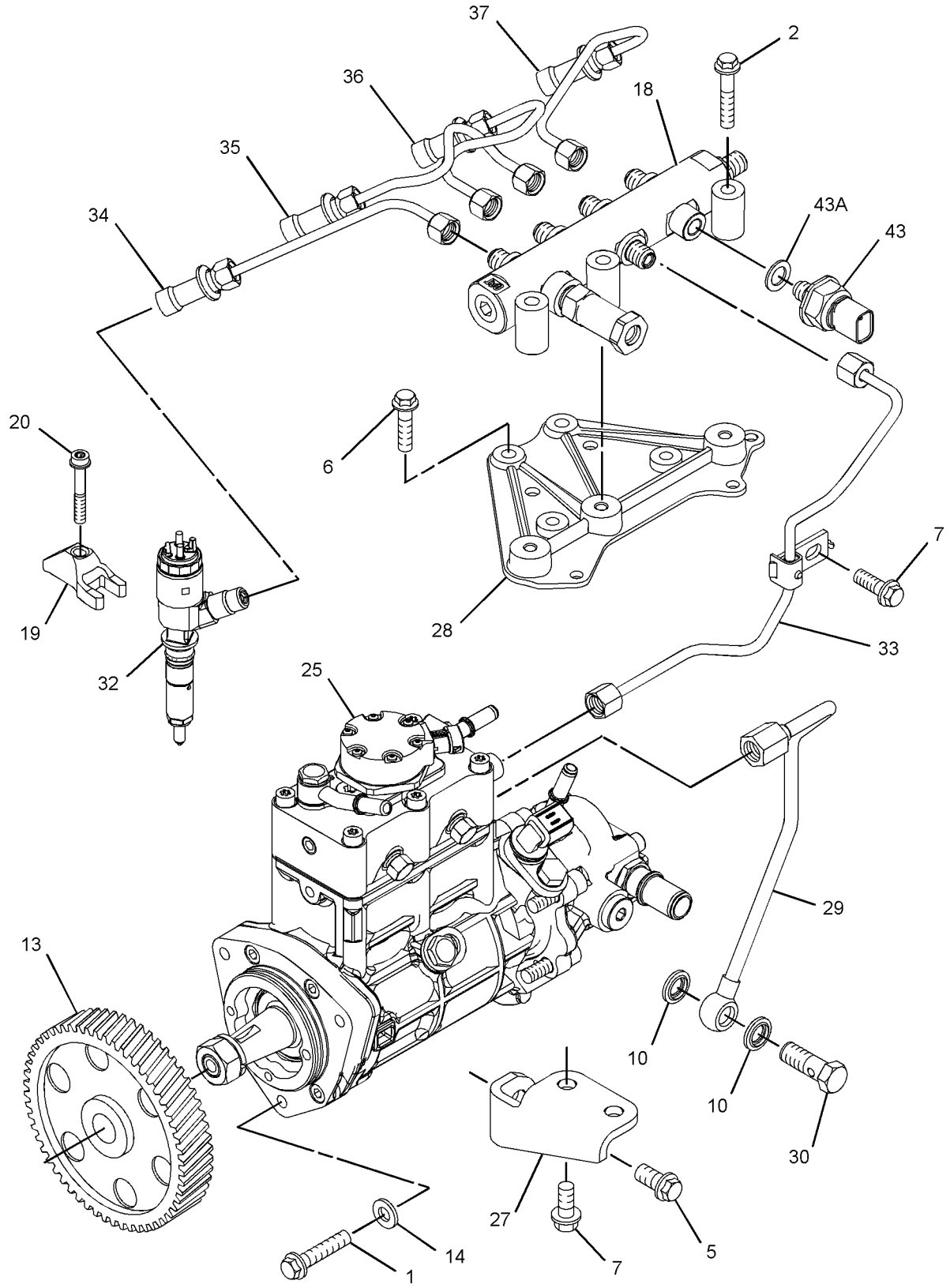

GRAPHIC #1 g01780014

298-5893 **PUMP GP-FUEL INJECTION (**contd.**)** **i03730783**

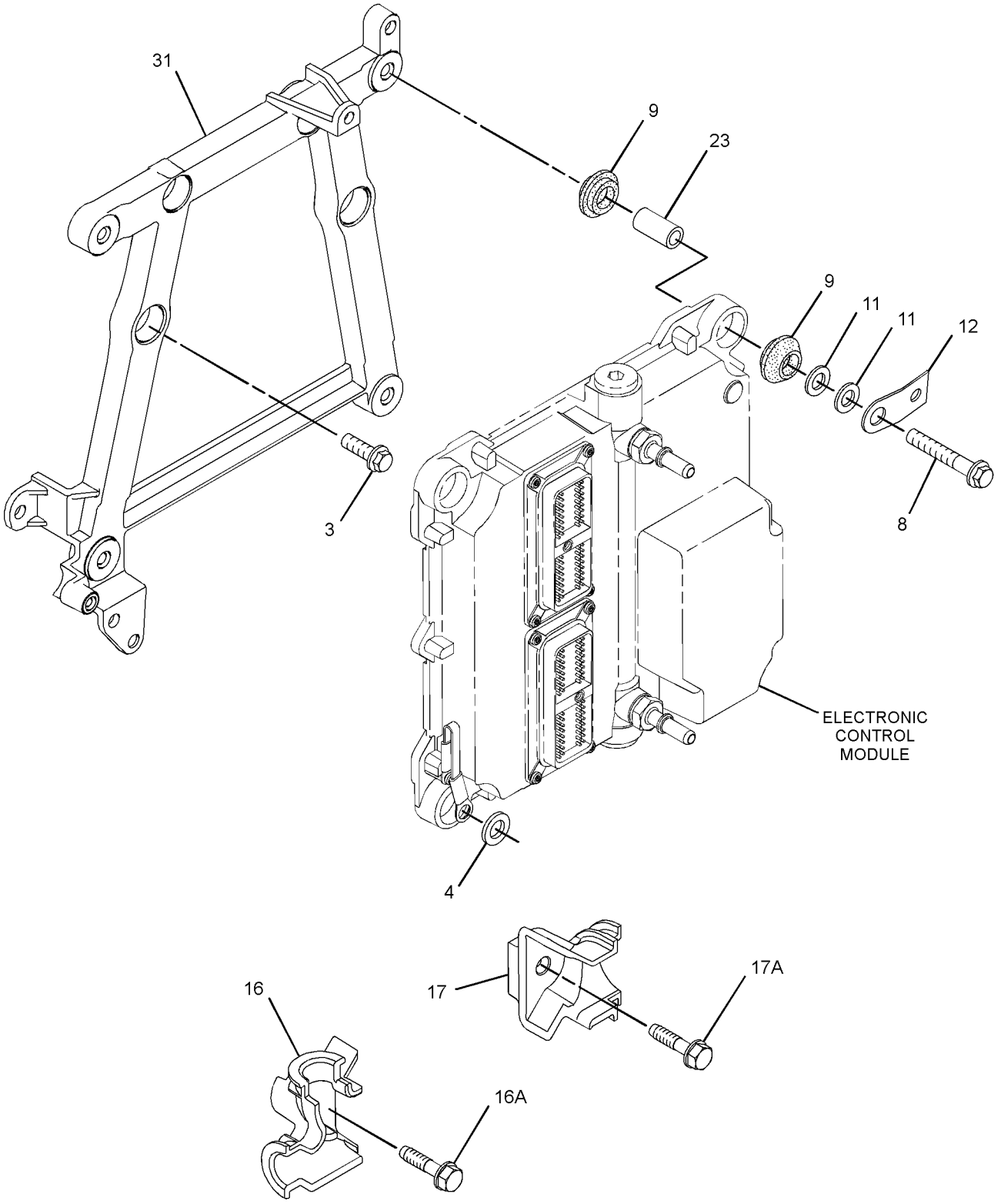

GRAPHIC #2 g01780015

298-5893 **PUMP GP-FUEL INJECTION (**contd.**)** **i03730783**

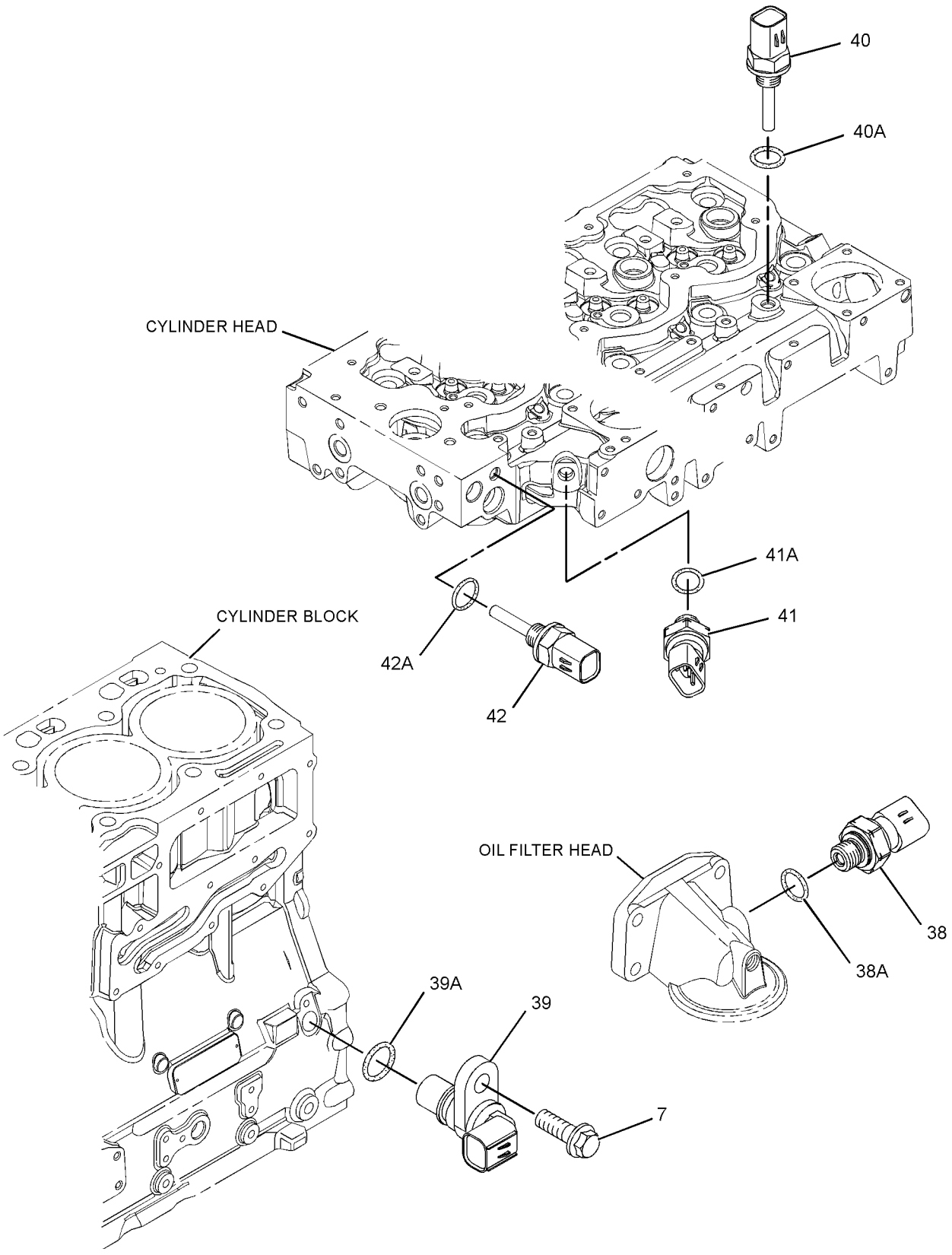

GRAPHIC #3 <END> g01308319

298-5893 PUMP GP-FUEL INJECTION

S/N: 4441-1149

SMCS-1251, 1290 **i03355387**

NOTE	REF NO	GRAPHIC REF	PART NUMBER	QTY	PART NAME 1 2 3 4 5 6 (PRODUCT LEVEL)	SEE PAGE
M	1	1	**6I-0260**	3	BOLT (M8X1.25X25-MM)	
M	2	1	**6I-0455**	3	BOLT (M8X1.25X55-MM)	
M	3	2	**6I-0572**	4	BOLT (M8X1.25X20-MM)	
	4	2	**7W-2632**	1	WASHER (8.5X16.8X1.6-MM THK)	
M	5	1	**100-4830**	1	BOLT (M10X1.5X20-MM)	
M	6	1	**101-3895**	4	BOLT (M8X1.25X35-MM)	
M	7	1,3	**124-3815**	4	BOLT (M8X1.25X16-MM)	
M	8	2	**141-8584**	4	BOLT (M8X1.25X50-MM)	
C	9	2	**300-6714**	8	MOUNT	
	10	1	**160-0162**	2	WASHER	
	11	2	**217-0099**	5	SPACER (8.2X25X2-MM THK)	
	12	2	**217-8477**	1	CLIP	
	13	1	**230-8989**	1	GEAR-FUEL PUMP (68-TEETH)	
C	14	1	**232-3149**	3	WASHER (8.35X16.85X1.55-MM THK)	
	16	2	**268-6678**	1	BRACKET AS	
M	16A	2	**260-3939**	1	SCREW-HEX HEAD (M6X1X25-MM)	
	17	2	**268-6677**	1	BRACKET AS	
M	17A	2	**260-3939**	1	SCREW-HEX HEAD (M6X1X25-MM)	
	18	1	**308-8425**	1	RAIL AS-FUEL	
	19	1	**278-5168**	4	CLAMP-INJECTOR	
	20	1	**278-5170**	4	BOLT	
	23	2	**278-5203**	4	SPACER	
CYR	25	1	**295-9125**	1	PUMP & MTG GP-UNIT INJ HYD	1062
	27	1	**298-4535**	1	BRACKET-SUPPORT	
	28	1	**298-4536**	1	BRACKET-MOUNTING	
	29	1	**298-4542**	1	TUBE AS	
	30	1	**298-4543**	1	BOLT	
C	31	2	**317-3144**	1	BRACKET	
Y	32	1	**292-3780**	4	INJECTOR GP-FUEL	1021
	33	1	**298-4537**	1	TUBE AS	
	34	1	**298-4538**	1	TUBE AS (CYL NO. 1)	
	35	1	**298-4539**	1	TUBE AS (CYL NO. 2)	
	36	1	**298-4540**	1	TUBE AS (CYL NO. 3)	
	37	1	**298-4541**	1	TUBE AS (CYL NO. 4)	
	38	3	**278-5225**	1	KIT-SENSOR (ENGINE OIL PRESSURE)	
	38A	3	**278-5226**	1	SEAL-O-RING	
	39	3	**311-3858**	1	KIT-SENSOR (ENGINE SPEED)	
	39A	3	**274-1639**	1	SEAL	
	40	3	**278-5272**	1	KIT-SENSOR (AIR TEMPERATURE)	
	40A	3	**278-5226**	1	SEAL-O-RING	
	41	3	**278-5273**	1	KIT-SENSOR (WATER PRESSURE)	
	41A	3	**199-9252**	1	SEAL-O-RING	
	42	3	**278-5307**	1	KIT-SENSOR (WATER TEMPERATURE)	
	42A	3	**199-9267**	1	SEAL-O-RING	
C	43	1	**311-6342**	1	SENSOR AS-PRESSURE (FUEL RAIL PRESSURE)	
	43A	1	**309-8006**	1	WASHER	
F			**278-4138**	5	KIT-FUEL LINE PROTECTION	

298-5893 **PUMP GP-FUEL INJECTION** (contd.) **i03355387**

NOTE	REF NO	GRAPHIC REF	PART NUMBER	QTY	PART NAME 1 2 3 4 5 6 (PRODUCT LEVEL)	SEE PAGE

C - CHANGE FROM PREVIOUS TYPE
F - NOT SHOWN
M - METRIC PART
R - REMANUFACTURED PART MAY BE AVAILABLE
Y - SEPARATE ILLUSTRATION

298-5893 **PUMP GP-FUEL INJECTION (**contd.**)** **i03355387**

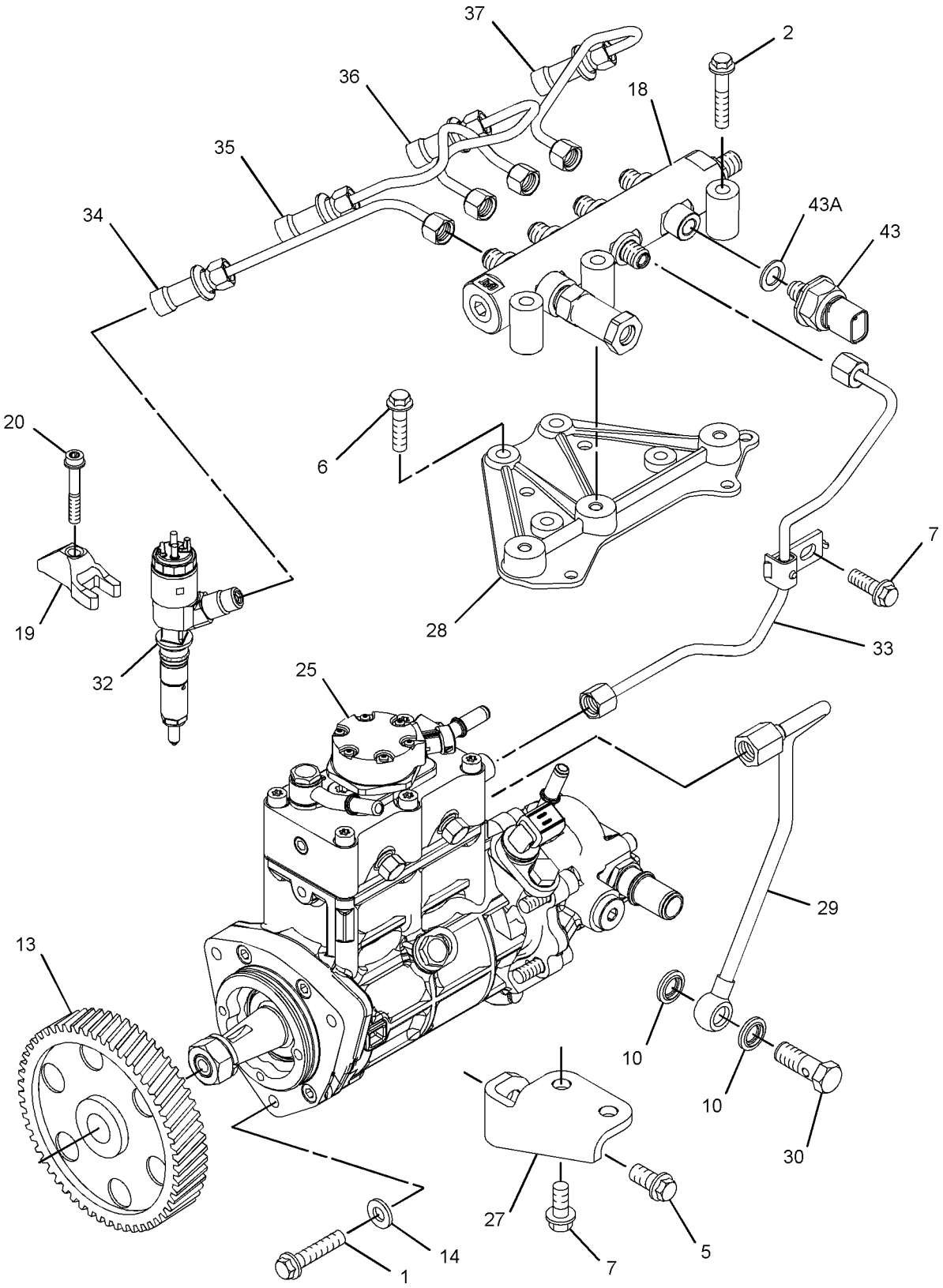

GRAPHIC #1 g01780053

298-5893 **PUMP GP-FUEL INJECTION (**contd.**)** **i03355387**

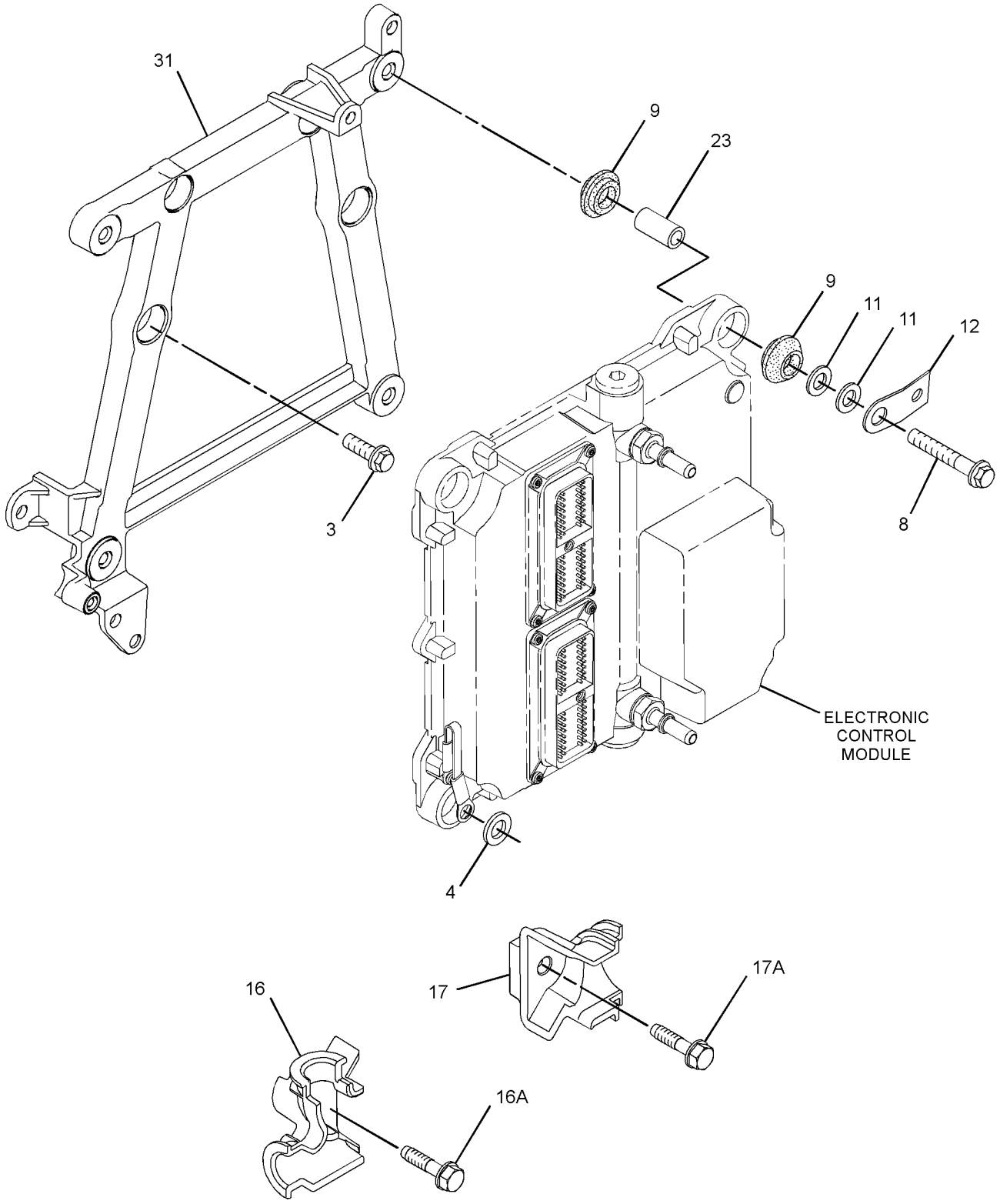

GRAPHIC #2 g01780015

298-5893 **PUMP GP-FUEL INJECTION (**contd.**)** **i03355387**

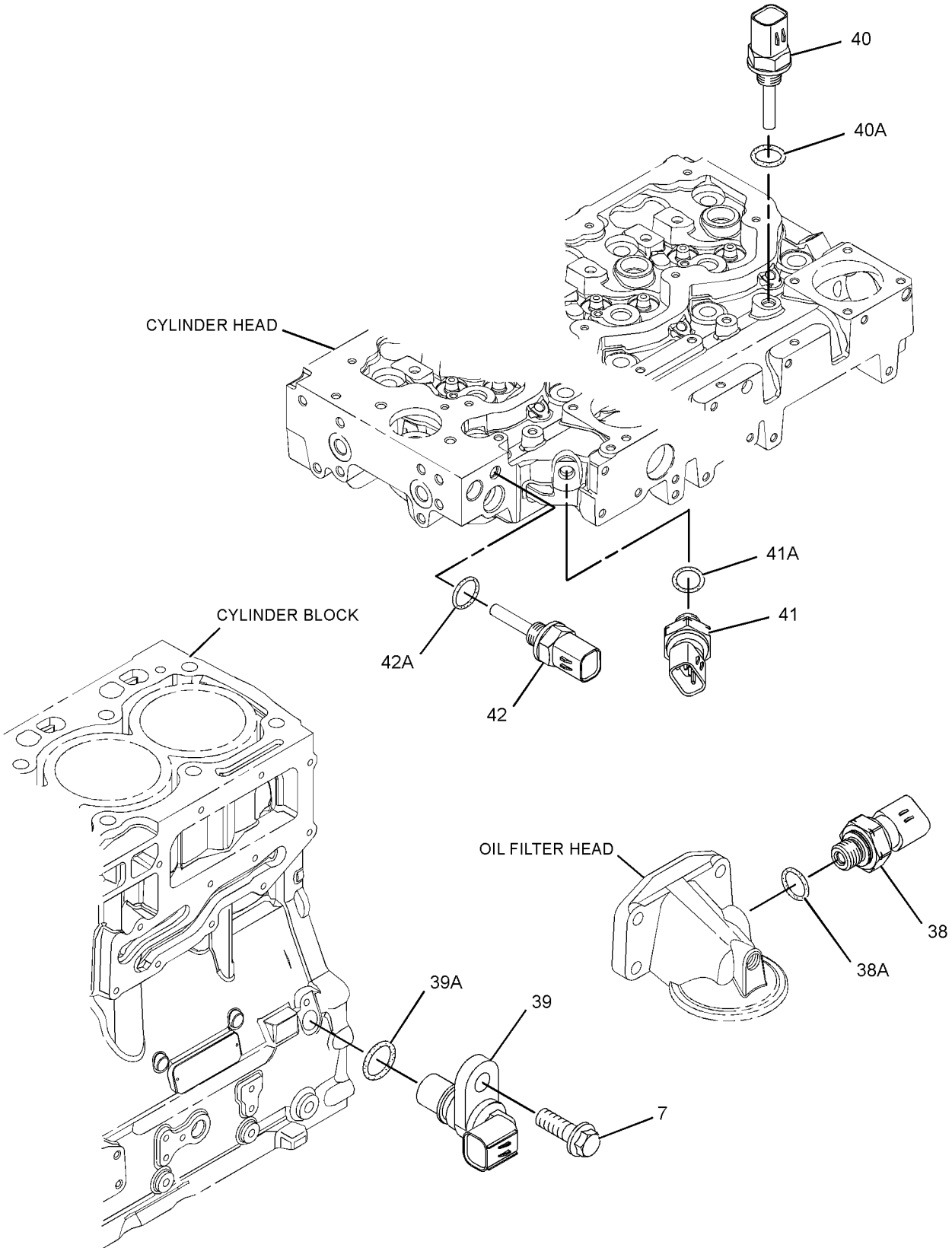

GRAPHIC #3 <END> g01308319

298-5893 PUMP GP-FUEL INJECTION

S/N: 4441150-UP

SMCS-1251, 1290 **i03730786**

NOTE	REF NO	GRAPHIC REF	PART NUMBER	QTY	PART NAME 1 2 3 4 5 6 (PRODUCT LEVEL)	SEE PAGE
M	1	1	**6I-0260**	3	BOLT (M8X1.25X25-MM)	
M	2	1	**6I-0455**	3	BOLT (M8X1.25X55-MM)	
M	3	2	**6I-0572**	4	BOLT (M8X1.25X20-MM)	
	4	2	**7W-2632**	1	WASHER (8.5X16.8X1.6-MM THK)	
M	5	1	**100-4830**	1	BOLT (M10X1.5X20-MM)	
M	6	1	**101-3895**	4	BOLT (M8X1.25X35-MM)	
M	7	1,3	**124-3815**	4	BOLT (M8X1.25X16-MM)	
M	8	2	**141-8584**	4	BOLT (M8X1.25X50-MM)	
	9	2	**300-6714**	8	MOUNT	
C	10	1	**160-0162**	2	WASHER	
	11	2	**217-0099**	5	SPACER (8.2X25X2-MM THK)	
	13	1	**230-8989**	1	GEAR-FUEL PUMP (68-TEETH)	
	14	1	**232-3149**	3	WASHER (8.35X16.85X1.55-MM THK)	
	16	2	**268-6678**	1	BRACKET AS	
M	16A	2	**260-3939**	1	SCREW-HEX HEAD (M6X1X25-MM)	
	17	2	**268-6677**	1	BRACKET AS	
M	17A	2	**260-3939**	1	SCREW-HEX HEAD (M6X1X25-MM)	
C	18	1	**318-2394**	1	RAIL AS-FUEL	
	18A	1	**305-5291**	1	VALVE AS-RELIEF	
	19	1	**278-5168**	4	CLAMP-INJECTOR	
	20	1	**278-5170**	4	BOLT	
	23	2	**278-5203**	4	SPACER	
YR	25	1	**324-0532**	1	PUMP GP-FUEL INJECTION	1523
	27	1	**298-4535**	1	BRACKET-SUPPORT	
	28	1	**337-3573**	1	BRACKET	
	29	1	**298-4542**	1	TUBE AS	
	30	1	**298-4543**	1	BOLT	
	31	2	**317-3144**	1	BRACKET	
CYR	32	1	**320-0680**	4	INJECTOR GP-FUEL	1027
	33	1	**337-3574**	1	TUBE	
	34	1	**322-3745**	1	TUBE (CYL NO. 1)	
	35	1	**322-3746**	1	TUBE (CYL NO. 2)	
	36	1	**333-4732**	1	LINE-FUEL INJECTION (CYL NO. 3)	
	37	1	**333-4733**	1	LINE-FUEL INJECTION (CYL NO. 4)	
	38	3	**278-5225**	1	KIT-SENSOR (ENGINE OIL PRESSURE)	
	38A	3	**199-9267**	1	SEAL-O-RING	
	39	3	**311-3858**	1	KIT-SENSOR (ENGINE SPEED)	
		3	**238-0120**	1	SENSOR GP-SPEED	
	39A	3	**274-1639**	1	SEAL	
	40	3	**278-5272**	1	KIT-SENSOR (AIR TEMPERATURE)	
	40A	3	**278-5226**	1	SEAL-O-RING	
	41	3	**278-5273**	1	KIT-SENSOR (WATER PRESSURE)	
	41A	3	**199-9252**	1	SEAL-O-RING	
	42	3	**278-5307**	1	KIT-SENSOR (WATER TEMPERATURE)	
	42A	3	**199-9267**	1	SEAL-O-RING	
	43	1	**311-6342**	1	SENSOR AS-PRESSURE (FUEL RAIL PRESSURE)	
	43A	1	**309-8006**	1	WASHER	

298-5893 **PUMP GP-FUEL INJECTION (**contd.**)** **i03730786**

NOTE	REF NO	GRAPHIC REF	PART NUMBER	QTY	PART NAME 1 2 3 4 5 6 (PRODUCT LEVEL)	SEE PAGE
F			**278-4138**	5	KIT-FUEL LINE PROTECTION	

C - CHANGE FROM PREVIOUS TYPE
F - NOT SHOWN
M - METRIC PART
R - REMANUFACTURED PART MAY BE AVAILABLE
Y - SEPARATE ILLUSTRATION

298-5893 **PUMP GP-FUEL INJECTION (**contd.**)** **i03730786**

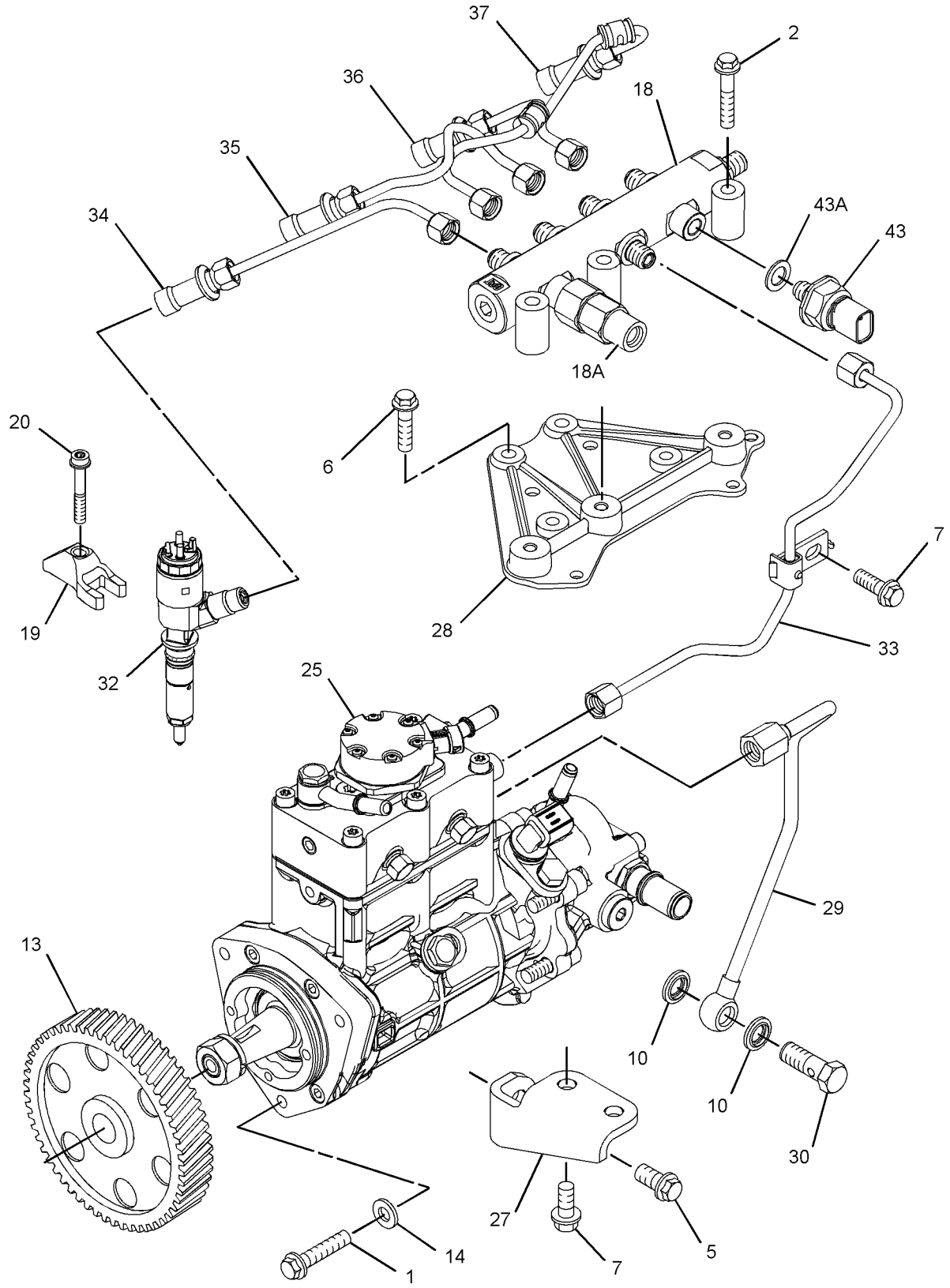

GRAPHIC #1 g01838496

298-5893 **PUMP GP-FUEL INJECTION (**contd.**)** **i03730786**

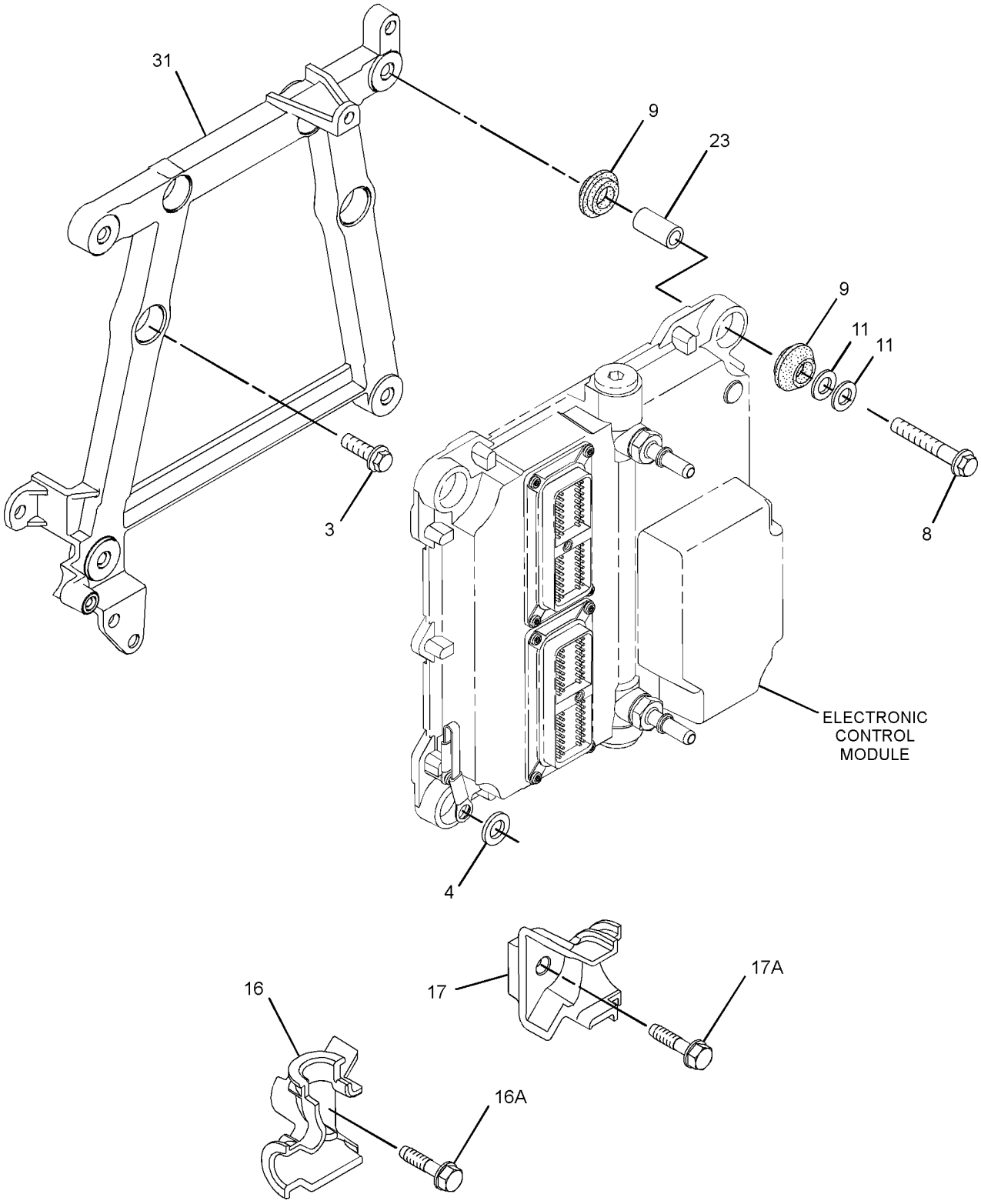

GRAPHIC #2 g01884994

298-5893 **PUMP GP-FUEL INJECTION (**contd.**)** **i03730786**

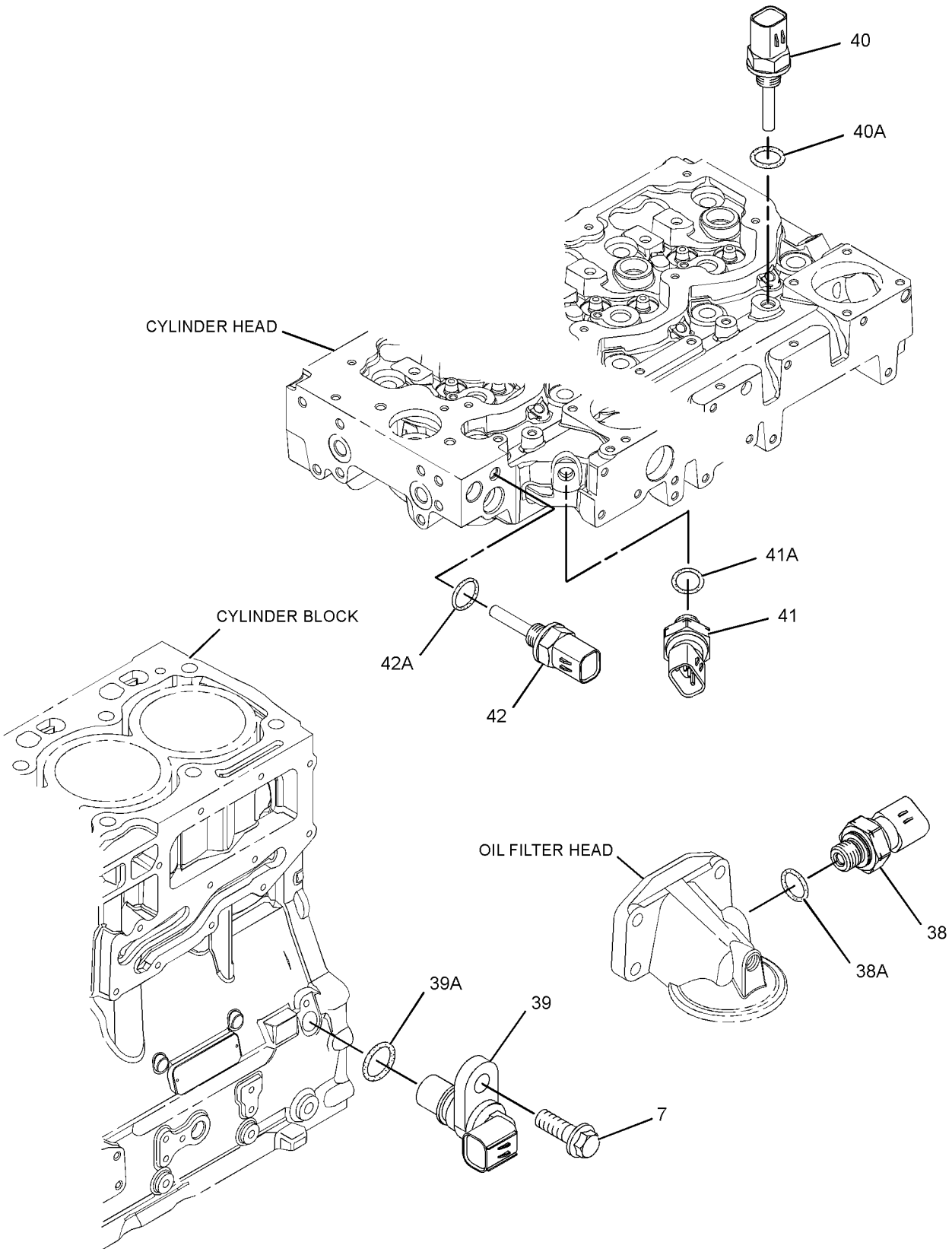

GRAPHIC #3 <END> g01308319

298-5893 PUMP GP-FUEL INJECTION

TYPE 2

SMCS-1251, 1290 **i03956810**

NOTE	REF NO	GRAPHIC REF	PART NUMBER	QTY	PART NAME 1 2 3 4 5 6 (PRODUCT LEVEL)	SEE PAGE
M	1	1	**6I-0260**	3	BOLT (M8X1.25X25-MM)	
M	2	1	**6I-0455**	3	BOLT (M8X1.25X55-MM)	
M	3	2	**6I-0572**	4	BOLT (M8X1.25X20-MM)	
	4	2	**7W-2632**	1	WASHER (8.5X16.8X1.6-MM THK)	
M	5	1	**100-4830**	1	BOLT (M10X1.5X20-MM)	
M	6	1	**101-3895**	4	BOLT (M8X1.25X35-MM)	
M	7	1,3	**124-3815**	4	BOLT (M8X1.25X16-MM)	
M	8	2	**141-8584**	4	BOLT (M8X1.25X50-MM)	
	9	2	**300-6714**	8	MOUNT	
	10	1	**160-0162**	2	WASHER	
	11	2	**217-0099**	5	SPACER (8.2X25X2-MM THK)	
	13	1	**230-8989**	1	GEAR-FUEL PUMP (68-TEETH)	
	14	1	**232-3149**	3	WASHER (8.35X16.85X1.55-MM THK)	
	16	2	**268-6678**	1	BRACKET AS	
M	16A	2	**260-3939**	1	SCREW-HEX HEAD (M6X1X25-MM)	
	17	2	**268-6677**	1	BRACKET AS	
M	17A	2	**260-3939**	1	SCREW-HEX HEAD (M6X1X25-MM)	
	18	1	**318-2394**	1	RAIL AS-FUEL	
	18A	1	**305-5291**	1	VALVE AS-RELIEF	
	19	1	**278-5168**	4	CLAMP-INJECTOR	
	20	1	**278-5170**	4	BOLT	
	23	2	**278-5203**	4	SPACER	
CYR	25	1	**352-6584**	1	PUMP GP-FUEL INJECTION	1540
	27	1	**298-4535**	1	BRACKET-SUPPORT	
	28	1	**337-3573**	1	BRACKET	
	29	1	**298-4542**	1	TUBE AS	
	30	1	**298-4543**	1	BOLT	
	31	2	**317-3144**	1	BRACKET	
YR	32	1	**320-0680**	4	INJECTOR GP-FUEL	1027
	33	1	**337-3574**	1	TUBE	
	34	1	**322-3745**	1	TUBE (CYL NO. 1)	
	35	1	**322-3746**	1	TUBE (CYL NO. 2)	
	36	1	**333-4732**	1	LINE-FUEL INJECTION (CYL NO. 3)	
	37	1	**333-4733**	1	LINE-FUEL INJECTION (CYL NO. 4)	
	38	3	**278-5225**	1	KIT-SENSOR (ENGINE OIL PRESSURE)	
	38A	3	**199-9267**	1	SEAL-O-RING	
	39	3	**311-3858**	1	KIT-SENSOR (ENGINE SPEED)	
		3	**238-0120**	1	SENSOR GP-SPEED	
	39A	3	**274-1639**	1	SEAL	
	40	3	**278-5272**	1	KIT-SENSOR (AIR TEMPERATURE)	
	40A	3	**278-5226**	1	SEAL-O-RING	
	41	3	**278-5273**	1	KIT-SENSOR (WATER PRESSURE)	
	41A	3	**199-9252**	1	SEAL-O-RING	
	42	3	**278-5307**	1	KIT-SENSOR (WATER TEMPERATURE)	
	42A	3	**199-9267**	1	SEAL-O-RING	
	43	1	**311-6342**	1	SENSOR AS-PRESSURE (FUEL RAIL PRESSURE)	
	43A	1	**309-8006**	1	WASHER	

298-5893 **PUMP GP-FUEL INJECTION** (contd.) **i03956810**

NOTE	REF NO	GRAPHIC REF	PART NUMBER	QTY	PART NAME 1 2 3 4 5 6 (PRODUCT LEVEL)	SEE PAGE
F			**278-4138**	5	KIT-FUEL LINE PROTECTION	

C - CHANGE FROM PREVIOUS TYPE
F - NOT SHOWN
M - METRIC PART
R - REMANUFACTURED PART MAY BE AVAILABLE
Y - SEPARATE ILLUSTRATION

298-5893 **PUMP GP-FUEL INJECTION (**contd.**)** **i03956810**

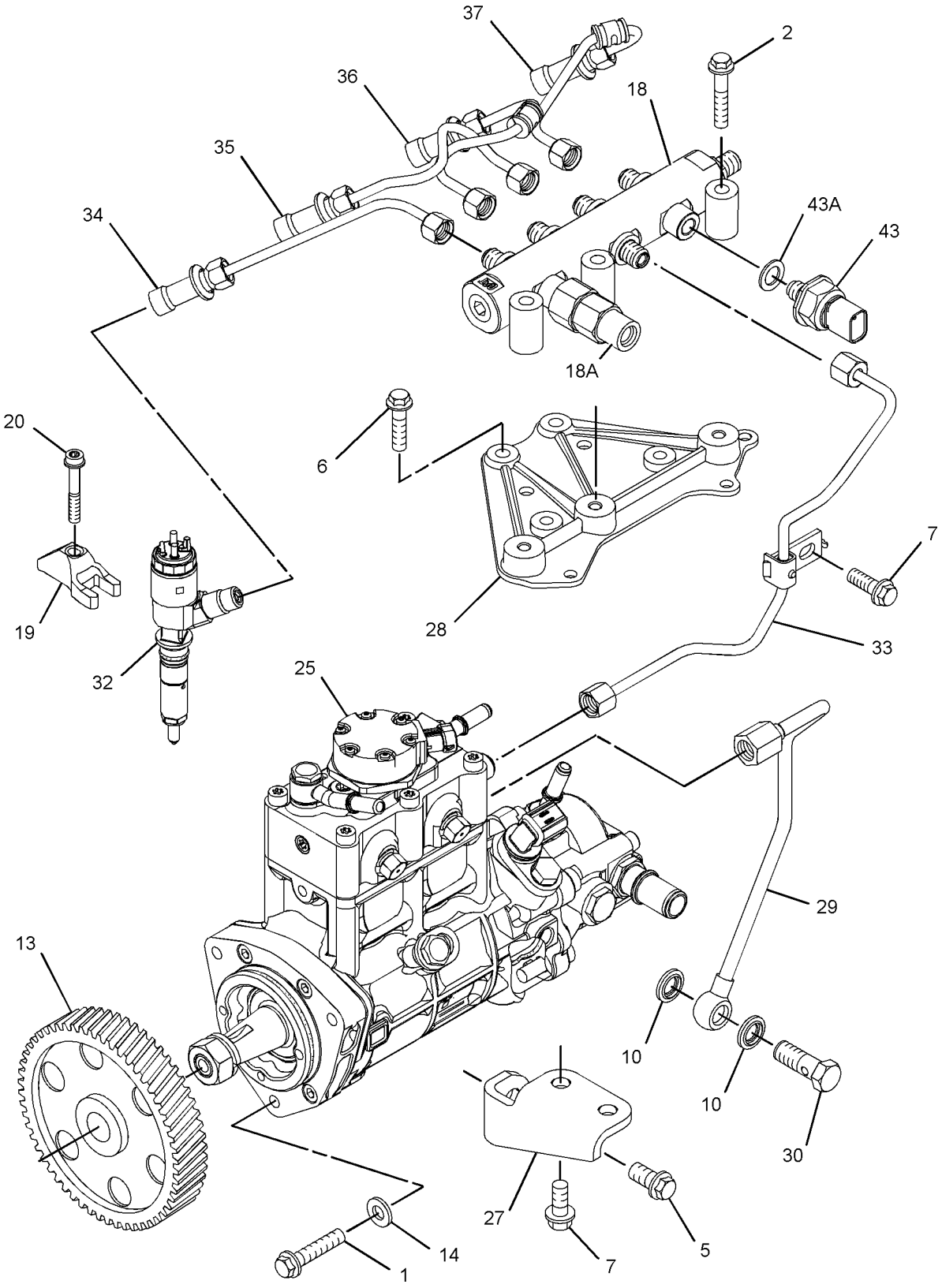

GRAPHIC #1 g02242553

298-5893 **PUMP GP-FUEL INJECTION (**contd.**)** **i03956810**

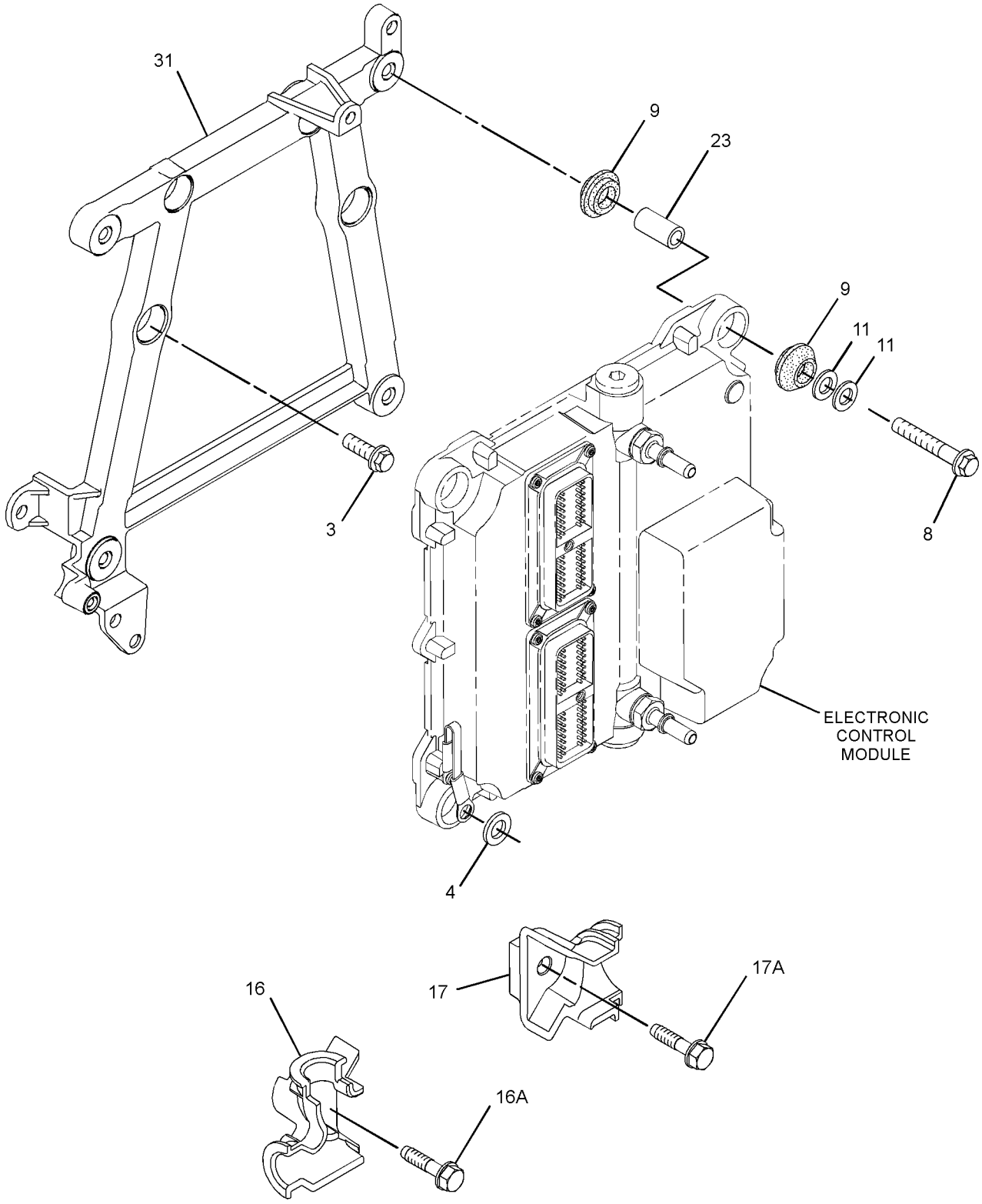

GRAPHIC #2 g01884994

298-5893 **PUMP GP-FUEL INJECTION (**contd.**)** **i03956810**

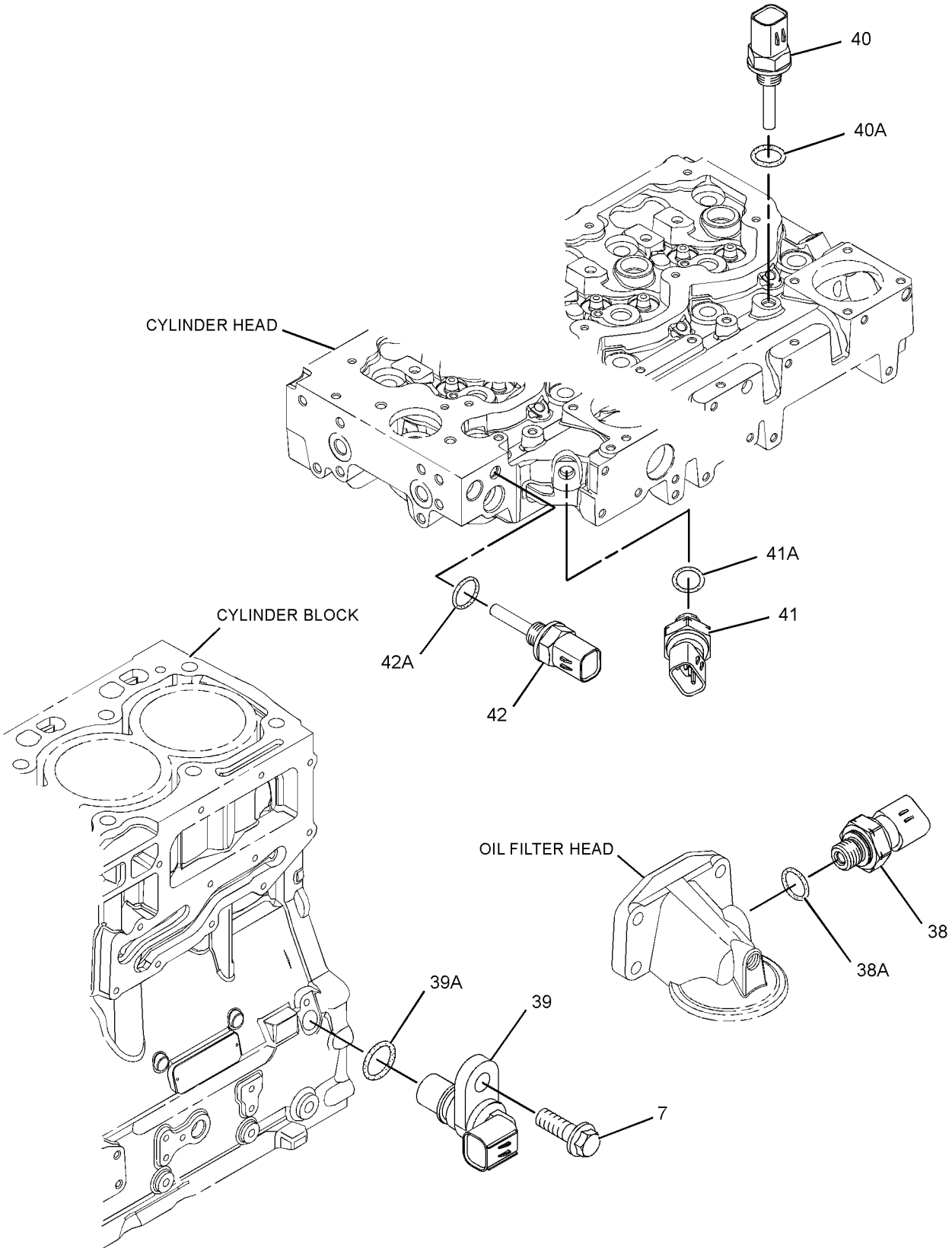

GRAPHIC #3 <END> g01308319

298-5893 PUMP GP-FUEL INJECTION

TYPE 3

SMCS-1251, 1290 **i04702827**

NOTE	REF NO	GRAPHIC REF	PART NUMBER	QTY	PART NAME 1 2 3 4 5 6 (PRODUCT LEVEL)	SEE PAGE
M	1	1	**6I-0260**	3	BOLT (M8X1.25X25-MM)	
M	2	1	**6I-0455**	3	BOLT (M8X1.25X55-MM)	
M	3	2	**6I-0572**	4	BOLT (M8X1.25X20-MM)	
	4	2	**7W-2632**	1	WASHER (8.5X16.8X1.6-MM THK)	
M	5	1	**100-4830**	1	BOLT (M10X1.5X20-MM)	
M	6	1	**101-3895**	4	BOLT (M8X1.25X35-MM)	
M	7	1,3	**124-3815**	4	BOLT (M8X1.25X16-MM)	
M	8	2	**141-8584**	4	BOLT (M8X1.25X50-MM)	
	9	2	**300-6714**	8	MOUNT	
	10	1	**160-0162**	2	WASHER	
	11	2	**217-0099**	5	SPACER (8.2X25X2-MM THK)	
	13	1	**230-8989**	1	GEAR-FUEL PUMP (68-TEETH)	
	14	1	**232-3149**	3	WASHER (8.35X16.85X1.55-MM THK)	
	16	2	**268-6678**	1	BRACKET AS	
M	16A	2	**260-3939**	1	SCREW-HEX HEAD (M6X1X25-MM)	
	17	2	**268-6677**	1	BRACKET AS	
M	17A	2	**260-3939**	1	SCREW-HEX HEAD (M6X1X25-MM)	
C	18	1	**358-6632**	1	RAIL GP-FUEL	
	18A	1	**305-5291**	1	VALVE AS-RELIEF	
	19	1	**278-5168**	4	CLAMP-INJECTOR	
	20	1	**278-5170**	4	BOLT	
	23	2	**278-5203**	4	SPACER	
CYR	25	1	**324-0532**	1	PUMP GP-FUEL INJECTION	1523
	27	1	**298-4535**	1	BRACKET-SUPPORT	
	28	1	**337-3573**	1	BRACKET	
	29	1	**298-4542**	1	TUBE AS	
	30	1	**298-4543**	1	BOLT	
	31	2	**317-3144**	1	BRACKET	
YR	32	1	**320-0680**	4	INJECTOR GP-FUEL	1027
	33	1	**337-3574**	1	TUBE	
	34	1	**322-3745**	1	TUBE (CYL NO. 1)	
	35	1	**322-3746**	1	TUBE (CYL NO. 2)	
	36	1	**333-4732**	1	LINE-FUEL INJECTION (CYL NO. 3)	
	37	1	**333-4733**	1	LINE-FUEL INJECTION (CYL NO. 4)	
	38	3	**278-5225**	1	KIT-SENSOR (ENGINE OIL PRESSURE)	
	38A	3	**199-9267**	1	SEAL-O-RING	
	39	3	**311-3858**	1	KIT-SENSOR (ENGINE SPEED)	
		3	**238-0120**	1	SENSOR GP-SPEED	
	39A	3	**274-1639**	1	SEAL	
	40	3	**278-5272**	1	KIT-SENSOR (AIR TEMPERATURE)	
	40A	3	**278-5226**	1	SEAL-O-RING	
	41	3	**278-5273**	1	KIT-SENSOR (WATER PRESSURE)	
	41A	3	**199-9252**	1	SEAL-O-RING	
	42	3	**278-5307**	1	KIT-SENSOR (WATER TEMPERATURE)	
	42A	3	**199-9267**	1	SEAL-O-RING	
	43	1	**311-6342**	1	SENSOR AS-PRESSURE (FUEL RAIL PRESSURE)	
	43A	1	**309-8006**	1	WASHER	

298-5893 **PUMP GP-FUEL INJECTION (**contd.**)** **i04702827**

NOTE	REF NO	GRAPHIC REF	PART NUMBER	QTY	PART NAME 1 2 3 4 5 6 (PRODUCT LEVEL)	SEE PAGE
F			**278-4138**	5	KIT-FUEL LINE PROTECTION	

C - CHANGE FROM PREVIOUS TYPE
F - NOT SHOWN
M - METRIC PART
R - REMANUFACTURED PART MAY BE AVAILABLE
Y - SEPARATE ILLUSTRATION

298-5893 **PUMP GP-FUEL INJECTION (**contd.**)** **i04702827**

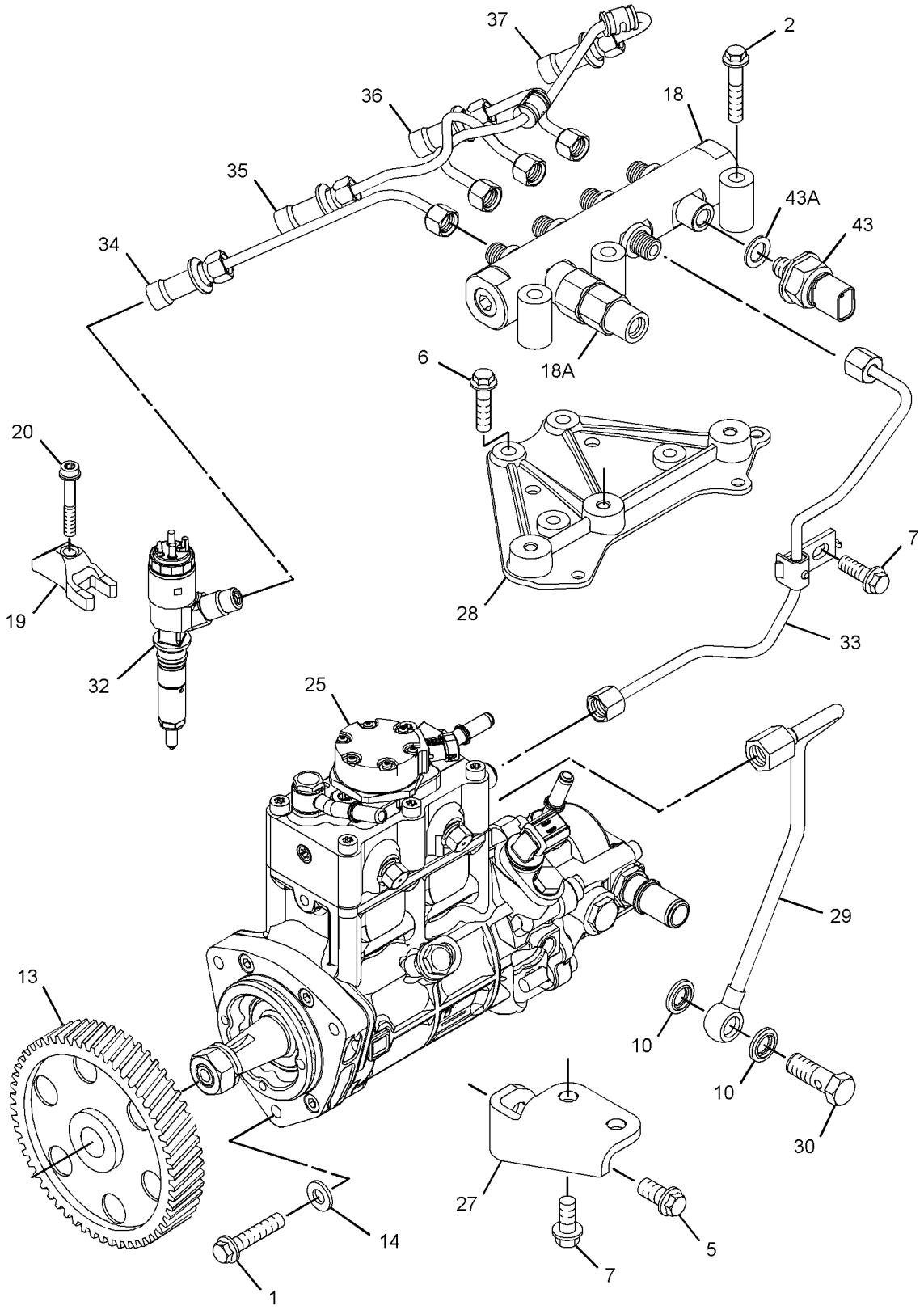

GRAPHIC #1 g02856538

298-5893 **PUMP GP-FUEL INJECTION (**contd.**)** **i04702827**

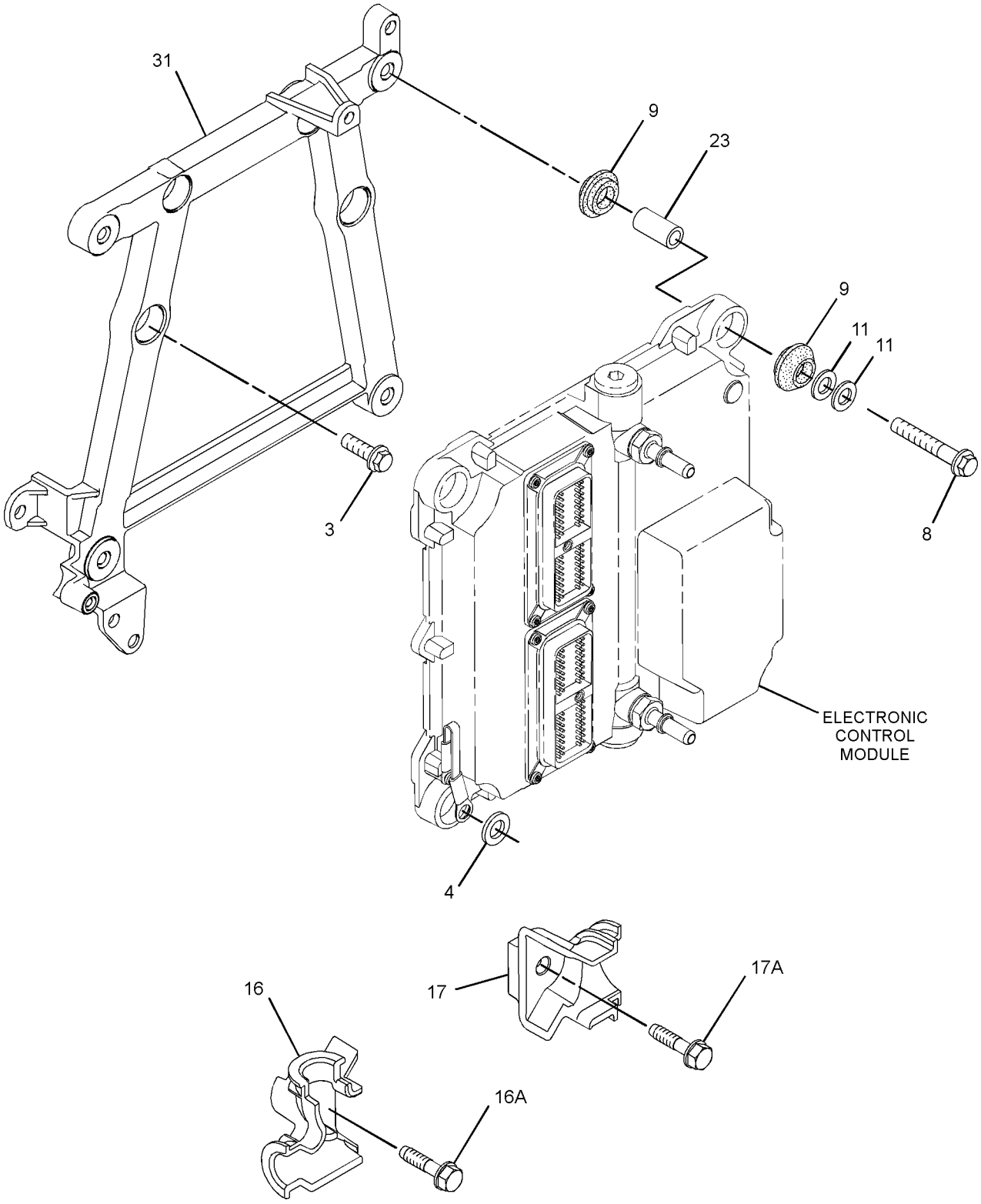

GRAPHIC #2 g01884994

298-5893 **PUMP GP-FUEL INJECTION (**contd.**)** **i04702827**

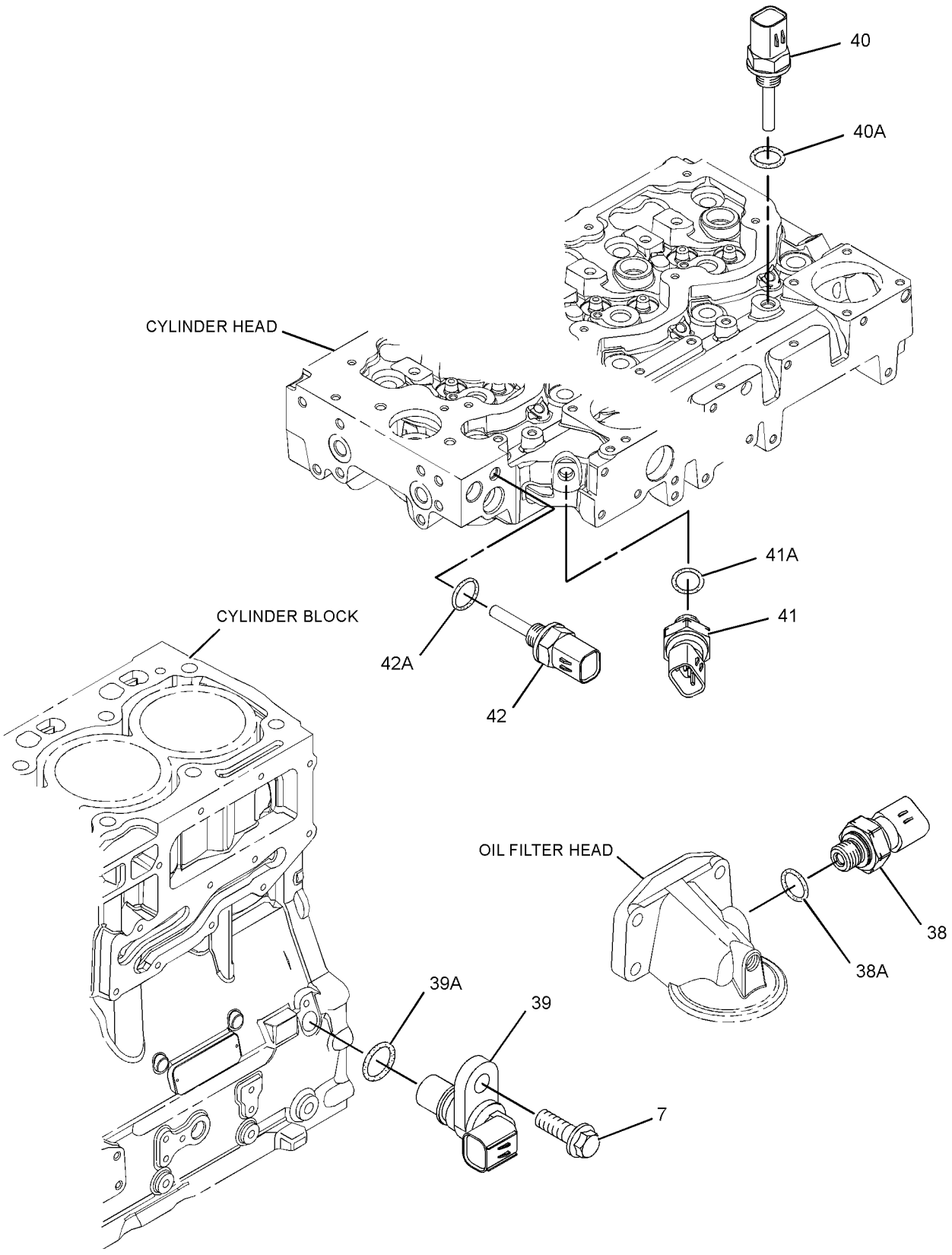

GRAPHIC #3 <END> g01308319

301-8235 PUMP GP-FUEL INJECTION

TYPE 1

SMCS-1251, 1290 **i02757241**

NOTE	REF NO	GRAPHIC REF	PART NUMBER	QTY	PART NAME 1 2 3 4 5 6 (PRODUCT LEVEL)	SEE PAGE
M	1	1	**6I-0260**	3	BOLT (M8X1.25X25-MM)	
M	2	1	**6I-0455**	3	BOLT (M8X1.25X55-MM)	
M	3	2	**6I-0572**	4	BOLT (M8X1.25X20-MM)	
	4	2	**7W-2632**	1	WASHER (8.5X16.8X1.6-MM THK)	
M	5	1	**100-4830**	1	BOLT (M10X1.5X20-MM)	
M	6	1	**101-3895**	4	BOLT (M8X1.25X35-MM)	
M	7	1,3	**124-3815**	4	BOLT (M8X1.25X16-MM)	
M	8	2	**141-8584**	4	BOLT (M8X1.25X50-MM)	
	9	2	**155-0576**	8	MOUNT-ISOLATION	
	10	1	**160-0162**	2	WASHER	
	11	2	**217-0099**	4	SPACER (8.2X25X2-MM THK)	
	12	2	**217-8477**	1	CLIP	
	13	1	**230-8989**	1	GEAR-FUEL PUMP (68-TEETH)	
	14	1	**232-3149**	6	WASHER (8.35X16.85X1.55-MM THK)	
	15	2	**268-6678**	1	BRACKET AS	
		2	**260-3719**	1	BRACKET	
M	15A	2	**260-3939**	1	SCREW-HEX HEAD (M6X1X25-MM)	
	16	2	**268-6677**	1	BRACKET AS	
		2	**260-3718**	1	BRACKET	
M	16A	2	**260-3939**	1	SCREW-HEX HEAD (M6X1X25-MM)	
	17	1	**308-8425**	1	RAIL AS-FUEL	
	19	1	**278-5168**	4	CLAMP-INJECTOR	
	20	1	**278-5170**	4	BOLT	
	22	2	**278-5203**	4	SPACER	
	23	3	**278-5225**	1	KIT-SENSOR (ENGINE OIL PRESSURE)	
	23A	3	**278-5226**	1	SEAL-O-RING	
	24	3	**278-5228**	1	KIT-SENSOR (ENGINE SPEED)	
	24A	3	**278-5227**	1	SEAL-O-RING	
	25	3	**278-5272**	1	KIT-SENSOR (AIR TEMPERATURE)	
	25A	3	**278-5226**	1	SEAL-O-RING	
	26	3	**278-5273**	1	KIT-SENSOR (AIR PRESSURE)	
	26A	3	**199-9252**	1	SEAL-O-RING	
	27	3	**278-5307**	1	KIT-SENSOR (WATER TEMPERATURE)	
	27A	3	**199-9267**	1	SEAL-O-RING	
	28	1	**278-5308**	1	KIT-SENSOR (FUEL RAIL PRESSURE)	
	28A	1	**278-5309**	1	WASHER	
Y	29	1	**282-0480**	4	INJECTOR GP-FUEL	1019
Y	30	1	**283-2271**	1	PUMP GP-FUEL INJECTION	1067
	31	1	**298-4535**	1	BRACKET-SUPPORT	
	32	1	**298-4536**	1	BRACKET-MOUNTING	
	33	1	**298-4537**	1	TUBE AS	
	34	1	**298-4538**	1	TUBE AS (CYL NO. 1)	
	35	1	**298-4539**	1	TUBE AS (CYL NO. 2)	
	36	1	**298-4540**	1	TUBE AS (CYL NO. 3)	
	37	1	**298-4541**	1	TUBE AS (CYL NO. 4)	
	38	1	**298-4542**	1	TUBE AS	
	39	1	**298-4543**	1	BOLT	
	40	2	**308-3395**	1	BRACKET-MOUNTING	

301-8235 **PUMP GP-FUEL INJECTION** (contd.) **i02757241**

NOTE	REF NO	GRAPHIC REF	PART NUMBER	QTY	PART NAME 1 2 3 4 5 6 (PRODUCT LEVEL)	SEE PAGE
F			**278-4138**	6	KIT-FUEL LINE PROTECTION	
F			**278-5202**	1	SEAL-O-RING	

F - NOT SHOWN
M - METRIC PART
Y - SEPARATE ILLUSTRATION

301-8235 **PUMP GP-FUEL INJECTION (**contd.**)** **i02757241**

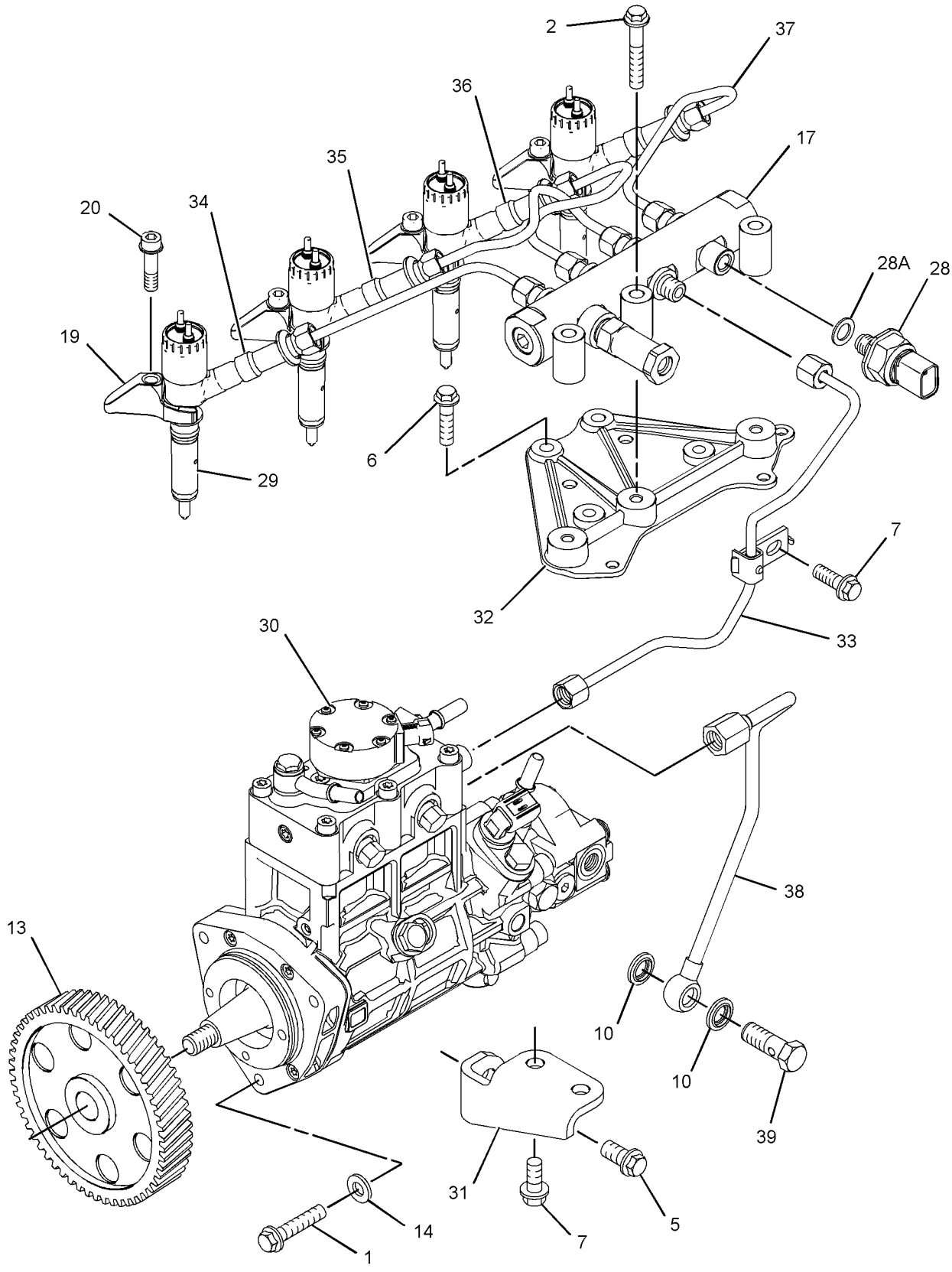

GRAPHIC #1 g01369904

301-8235 **PUMP GP-FUEL INJECTION (**contd.**)** **i02757241**

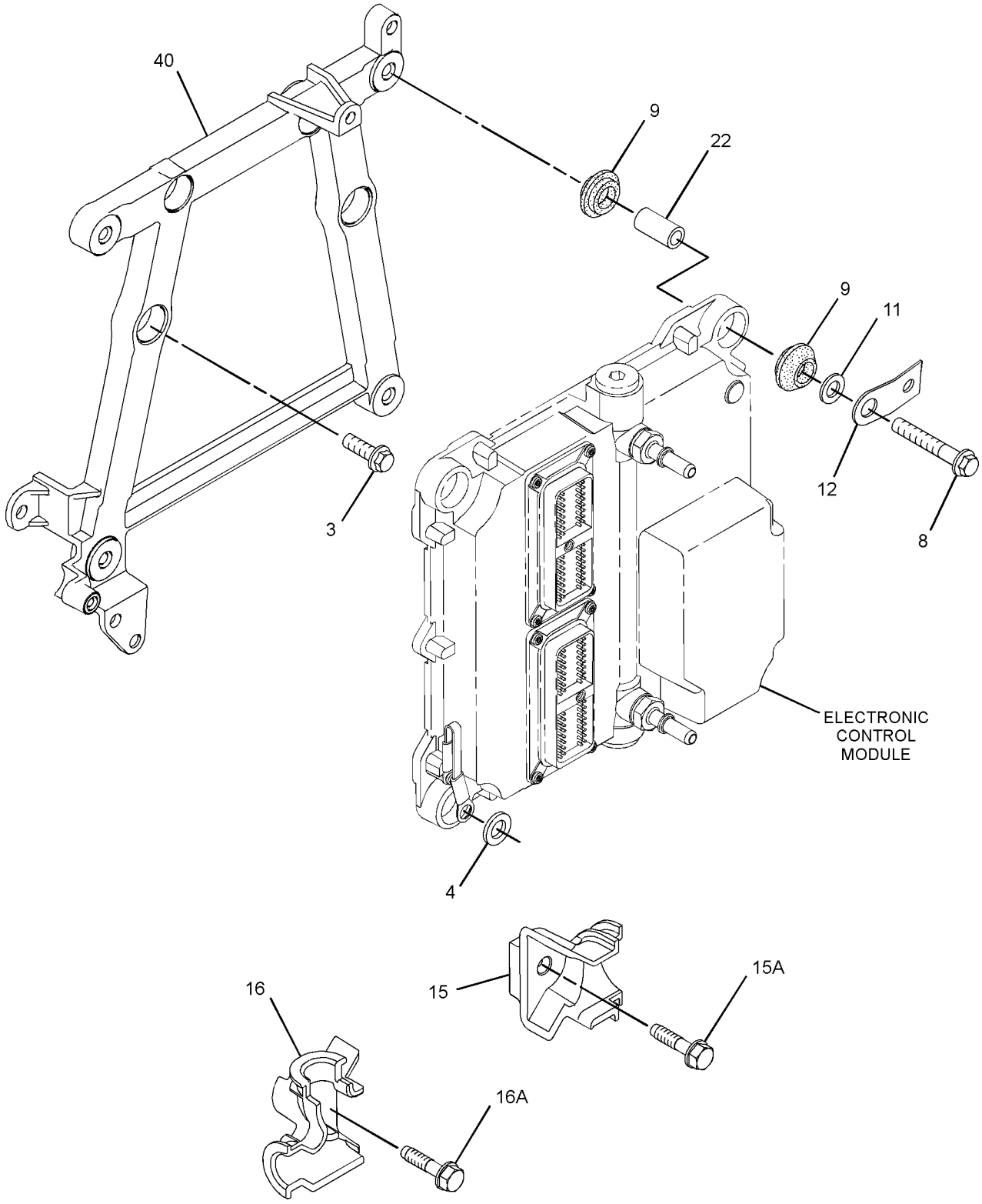

GRAPHIC #2 g01398392

301-8235 **PUMP GP-FUEL INJECTION (**contd.**)** **i02757241**

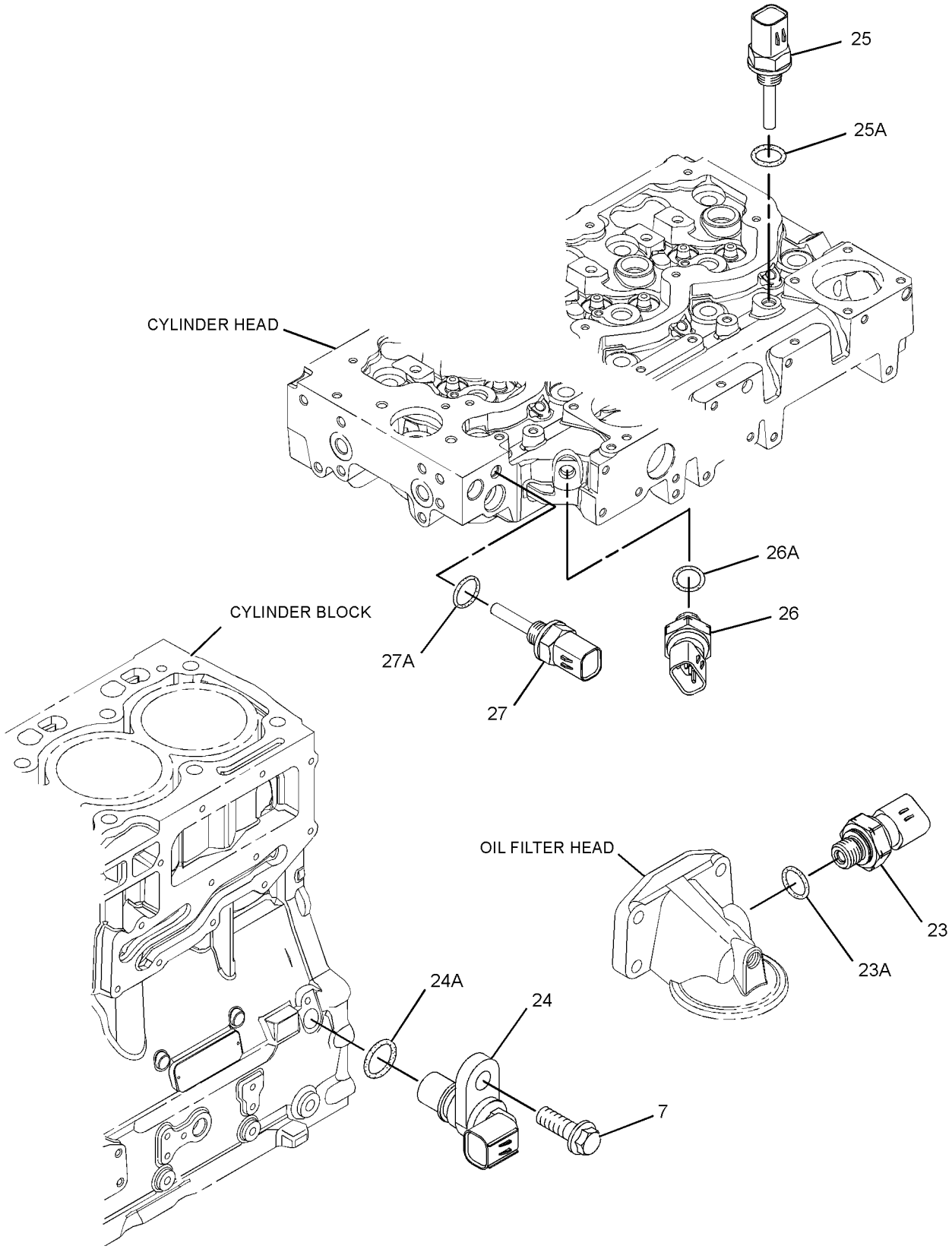

GRAPHIC #3 <END> g01369906

301-8235 PUMP GP-FUEL INJECTION

TYPE 2

SMCS-1251, 1290 **i03730788**

NOTE	REF NO	GRAPHIC REF	PART NUMBER	QTY	PART NAME 1 2 3 4 5 6 (PRODUCT LEVEL)	SEE PAGE
M	1	1	**6I-0260**	3	BOLT (M8X1.25X25-MM)	
M	2	1	**6I-0455**	3	BOLT (M8X1.25X55-MM)	
M	3	2	**6I-0572**	4	BOLT (M8X1.25X20-MM)	
	4	2	**7W-2632**	1	WASHER (8.5X16.8X1.6-MM THK)	
M	5	1	**100-4830**	1	BOLT (M10X1.5X20-MM)	
M	6	1	**101-3895**	4	BOLT (M8X1.25X35-MM)	
M	7	1,3	**124-3815**	4	BOLT (M8X1.25X16-MM)	
M	8	2	**141-8584**	4	BOLT (M8X1.25X50-MM)	
C	9	2	**300-6714**	8	MOUNT	
	10	1	**160-0162**	2	WASHER	
	11	2	**217-0099**	5	SPACER (8.2X25X2-MM THK)	
	13	1	**230-8989**	1	GEAR-FUEL PUMP (68-TEETH)	
C	14	1	**232-3149**	3	WASHER (8.35X16.85X1.55-MM THK)	
	15	2	**268-6678**	1	BRACKET AS	
M	15A	2	**260-3939**	1	SCREW-HEX HEAD (M6X1X25-MM)	
	16	2	**268-6677**	1	BRACKET AS	
M	16A	2	**260-3939**	1	SCREW-HEX HEAD (M6X1X25-MM)	
	17	1	**318-2394**	1	RAIL AS-FUEL	
	17A	1	**305-5291**	1	VALVE AS-RELIEF	
	19	1	**278-5168**	4	CLAMP-INJECTOR	
	20	1	**278-5170**	4	BOLT	
	22	2	**278-5203**	4	SPACER	
	23	3	**278-5225**	1	KIT-SENSOR (ENGINE OIL PRESSURE)	
	23A	3	**199-9267**	1	SEAL-O-RING	
C	24	3	**311-3858**	1	KIT-SENSOR (ENGINE SPEED)	
	24A	3	**274-1639**	1	SEAL	
	25	3	**278-5272**	1	KIT-SENSOR (AIR TEMPERATURE)	
	25A	3	**278-5226**	1	SEAL-O-RING	
	26	3	**278-5273**	1	KIT-SENSOR (AIR PRESSURE)	
	26A	3	**199-9252**	1	SEAL-O-RING	
	27	3	**278-5307**	1	KIT-SENSOR (COOLANT TEMPERATURE)	
	27A	3	**199-9267**	1	SEAL-O-RING	
C	28	1	**311-6342**	1	SENSOR AS-PRESSURE (FUEL RAIL PRESSURE)	
	28A	1	**309-8006**	1	WASHER	
YR	29	1	**320-0680**	4	INJECTOR GP-FUEL	1027
CYR	30	1	**324-0532**	1	PUMP GP-FUEL INJECTION	1523
	31	1	**298-4535**	1	BRACKET-SUPPORT	
	32	1	**337-3573**	1	BRACKET	
	33	1	**337-3574**	1	TUBE	
	34	1	**322-3745**	1	TUBE (CYL NO. 1)	
	35	1	**322-3746**	1	TUBE (CYL NO. 2)	
	36	1	**333-4732**	1	LINE-FUEL INJECTION (CYL NO. 3)	
	37	1	**333-4733**	1	LINE-FUEL INJECTION (CYL NO. 4)	
	38	1	**298-4542**	1	TUBE AS	
	39	1	**298-4543**	1	BOLT	
C	40	2	**317-3144**	1	BRACKET	

301-8235 **PUMP GP-FUEL INJECTION (**contd.**)** **i03730788**

NOTE	REF NO	GRAPHIC REF	PART NUMBER	QTY	PART NAME 1 2 3 4 5 6 (PRODUCT LEVEL)	SEE PAGE
F			**278-4138**	6	KIT-FUEL LINE PROTECTION	
F			**278-5202**	1	SEAL-O-RING	

C - CHANGE FROM PREVIOUS TYPE
F - NOT SHOWN
M - METRIC PART
R - REMANUFACTURED PART MAY BE AVAILABLE
Y - SEPARATE ILLUSTRATION

301-8235 **PUMP GP-FUEL INJECTION (**contd.**)** **i03730788**

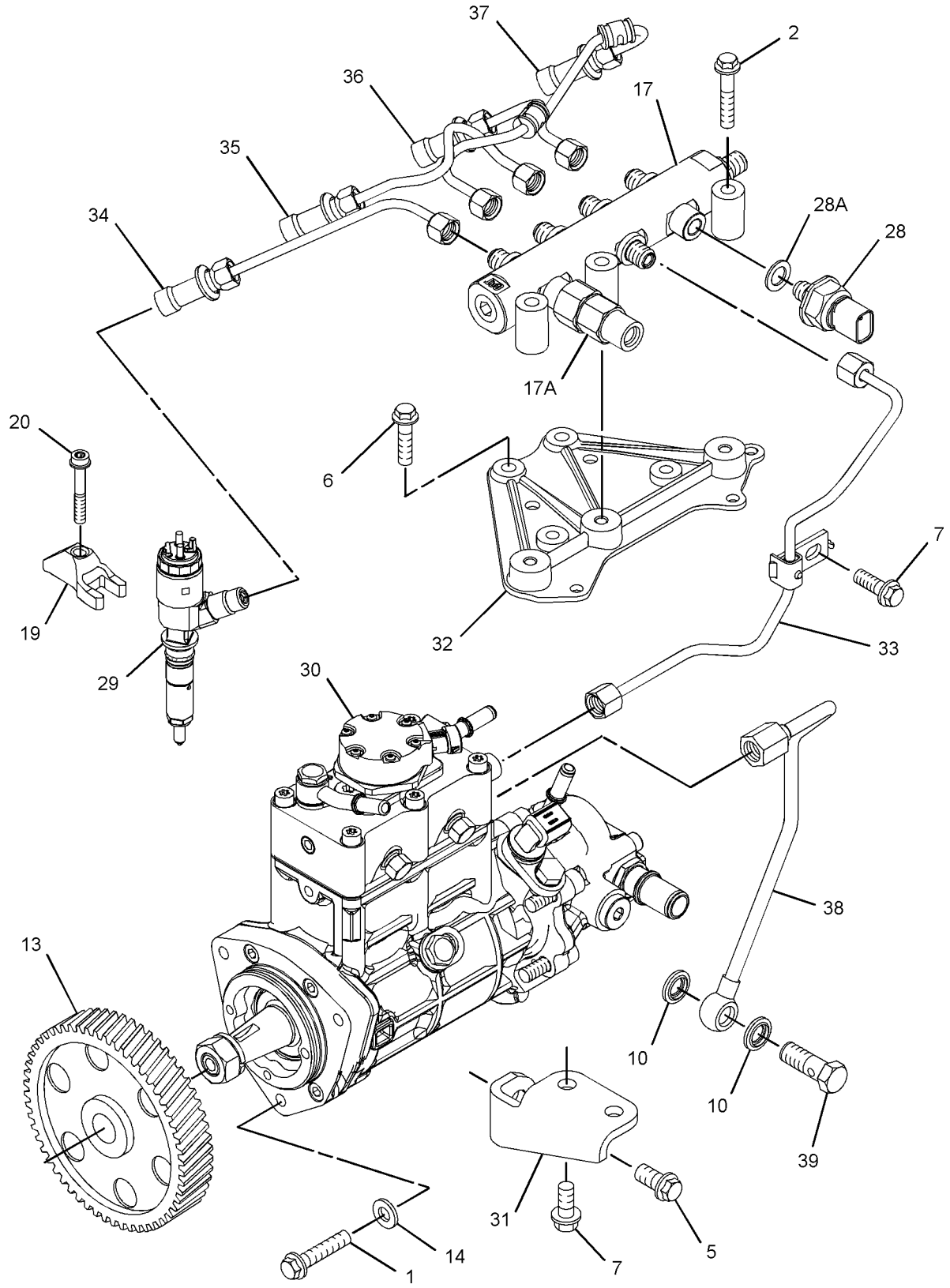

GRAPHIC #1 g01779854

301-8235 **PUMP GP-FUEL INJECTION (**contd.**)** **i03730788**

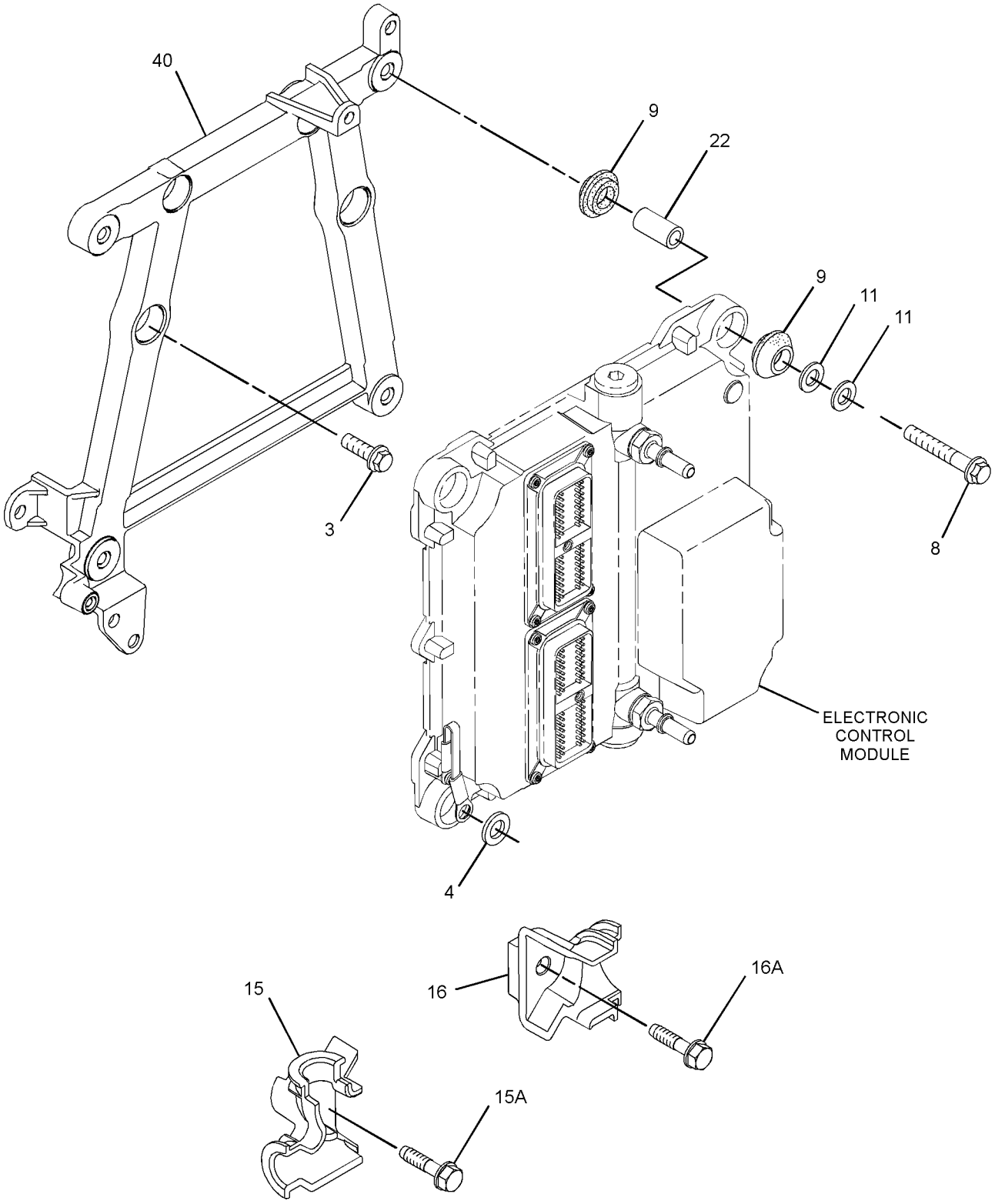

GRAPHIC #2 g01885033

301-8235 **PUMP GP-FUEL INJECTION (**contd.**)** **i03730788**

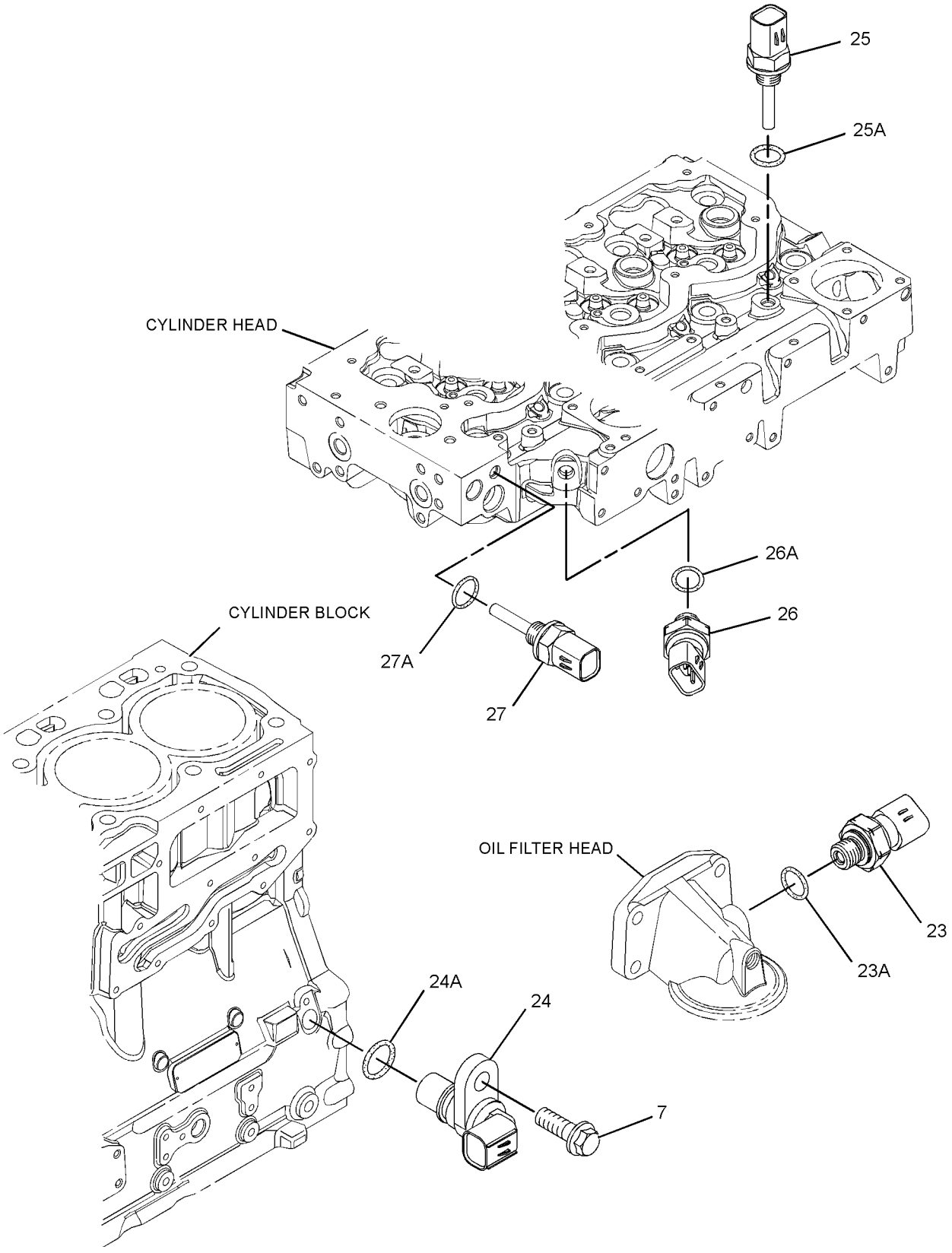

GRAPHIC #3 <END> g01369906

301-8235 PUMP GP-FUEL INJECTION

TYPE 3

SMCS-1251, 1290 **i03956809**

NOTE	REF NO	GRAPHIC REF	PART NUMBER	QTY	PART NAME 1 2 3 4 5 6 (PRODUCT LEVEL)	SEE PAGE
M	1	1	**6I-0260**	3	BOLT (M8X1.25X25-MM)	
M	2	1	**6I-0455**	3	BOLT (M8X1.25X55-MM)	
M	3	2	**6I-0572**	4	BOLT (M8X1.25X20-MM)	
	4	2	**7W-2632**	1	WASHER (8.5X16.8X1.6-MM THK)	
M	5	1	**100-4830**	1	BOLT (M10X1.5X20-MM)	
M	6	1	**101-3895**	4	BOLT (M8X1.25X35-MM)	
M	7	1,3	**124-3815**	4	BOLT (M8X1.25X16-MM)	
M	8	2	**141-8584**	4	BOLT (M8X1.25X50-MM)	
	9	2	**300-6714**	8	MOUNT	
	10	1	**160-0162**	2	WASHER	
	11	2	**217-0099**	5	SPACER (8.2X25X2-MM THK)	
	13	1	**230-8989**	1	GEAR-FUEL PUMP (68-TEETH)	
	14	1	**232-3149**	3	WASHER (8.35X16.85X1.55-MM THK)	
	15	2	**268-6678**	1	BRACKET AS	
M	15A	2	**260-3939**	1	SCREW-HEX HEAD (M6X1X25-MM)	
	16	2	**268-6677**	1	BRACKET AS	
M	16A	2	**260-3939**	1	SCREW-HEX HEAD (M6X1X25-MM)	
	17	1	**318-2394**	1	RAIL AS-FUEL	
	17A	1	**305-5291**	1	VALVE AS-RELIEF	
	19	1	**278-5168**	4	CLAMP-INJECTOR	
	20	1	**278-5170**	4	BOLT	
	22	2	**278-5203**	4	SPACER	
	23	3	**278-5225**	1	KIT-SENSOR (ENGINE OIL PRESSURE)	
	23A	3	**199-9267**	1	SEAL-O-RING	
	24	3	**311-3858**	1	KIT-SENSOR (ENGINE SPEED)	
	24A	3	**274-1639**	1	SEAL	
		3	**238-0120**	1	SENSOR GP-SPEED	
	25	3	**278-5272**	1	KIT-SENSOR (AIR TEMPERATURE)	
	25A	3	**278-5226**	1	SEAL-O-RING	
	26	3	**278-5273**	1	KIT-SENSOR (AIR PRESSURE)	
	26A	3	**199-9252**	1	SEAL-O-RING	
	27	3	**278-5307**	1	KIT-SENSOR (COOLANT TEMPERATURE)	
	27A	3	**199-9267**	1	SEAL-O-RING	
	28	1	**311-6342**	1	SENSOR AS-PRESSURE (FUEL RAIL PRESSURE)	
	28A	1	**309-8006**	1	WASHER	
YR	29	1	**320-0680**	4	INJECTOR GP-FUEL	1027
CYR	30	1	**352-6584**	1	PUMP GP-FUEL INJECTION	1540
	31	1	**298-4535**	1	BRACKET-SUPPORT	
	32	1	**337-3573**	1	BRACKET	
	33	1	**337-3574**	1	TUBE	
	34	1	**322-3745**	1	TUBE (CYL NO. 1)	
	35	1	**322-3746**	1	TUBE (CYL NO. 2)	
	36	1	**333-4732**	1	LINE-FUEL INJECTION (CYL NO. 3)	
	37	1	**333-4733**	1	LINE-FUEL INJECTION (CYL NO. 4)	
	38	1	**298-4542**	1	TUBE AS	
	39	1	**298-4543**	1	BOLT	
	40	2	**317-3144**	1	BRACKET	

301-8235 **PUMP GP-FUEL INJECTION** (contd.) **i03956809**

NOTE	REF NO	GRAPHIC REF	PART NUMBER	QTY	PART NAME 1 2 3 4 5 6 (PRODUCT LEVEL)	SEE PAGE
F			**278-4138**	6	KIT-FUEL LINE PROTECTION	
F			**278-5202**	1	SEAL-O-RING	

C - CHANGE FROM PREVIOUS TYPE
F - NOT SHOWN
M - METRIC PART
R - REMANUFACTURED PART MAY BE AVAILABLE
Y - SEPARATE ILLUSTRATION

301-8235 **PUMP GP-FUEL INJECTION (**contd.**)** **i03956809**

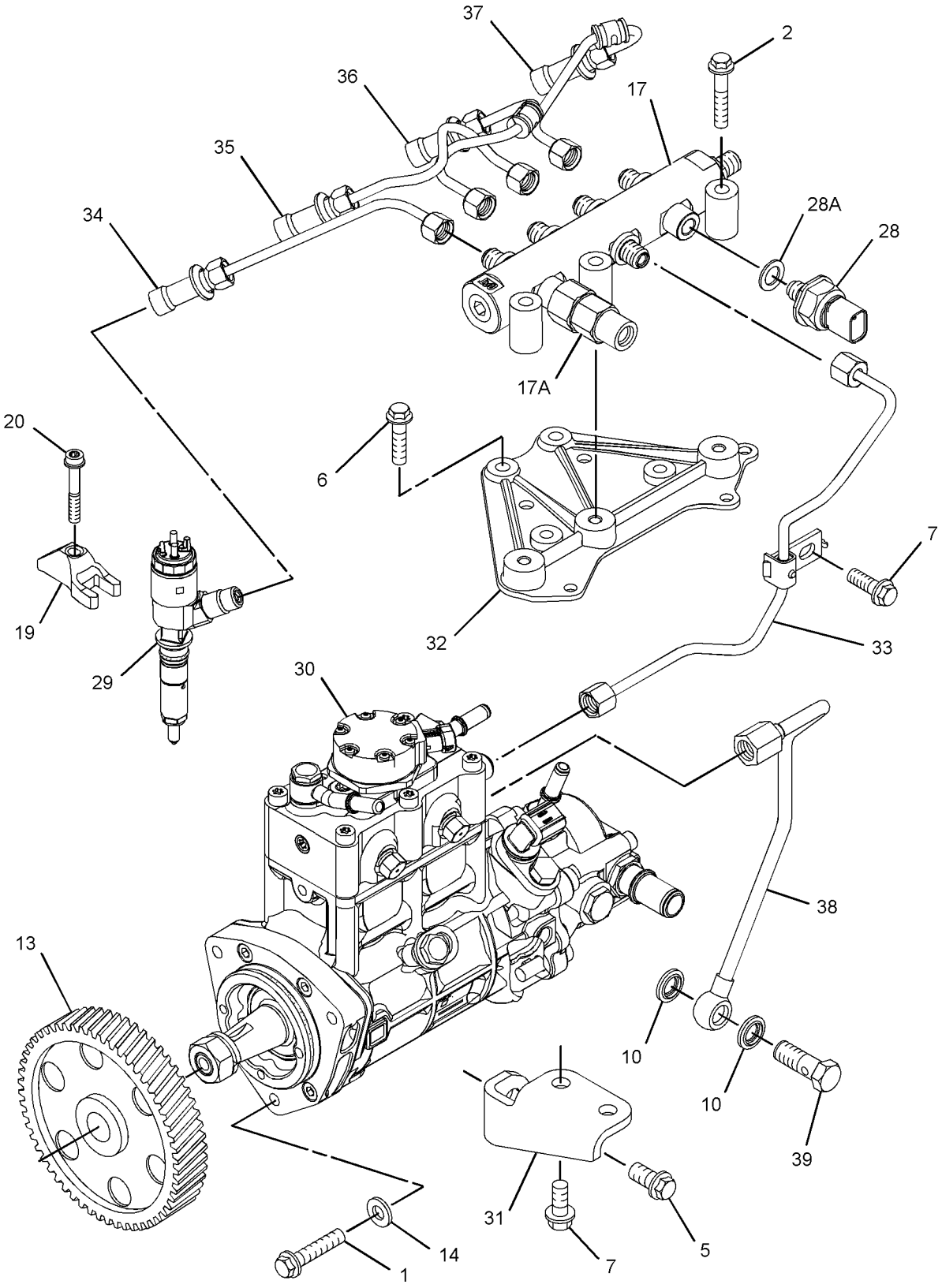

GRAPHIC #1 g02242597

301-8235 **PUMP GP-FUEL INJECTION (**contd.**)** **i03956809**

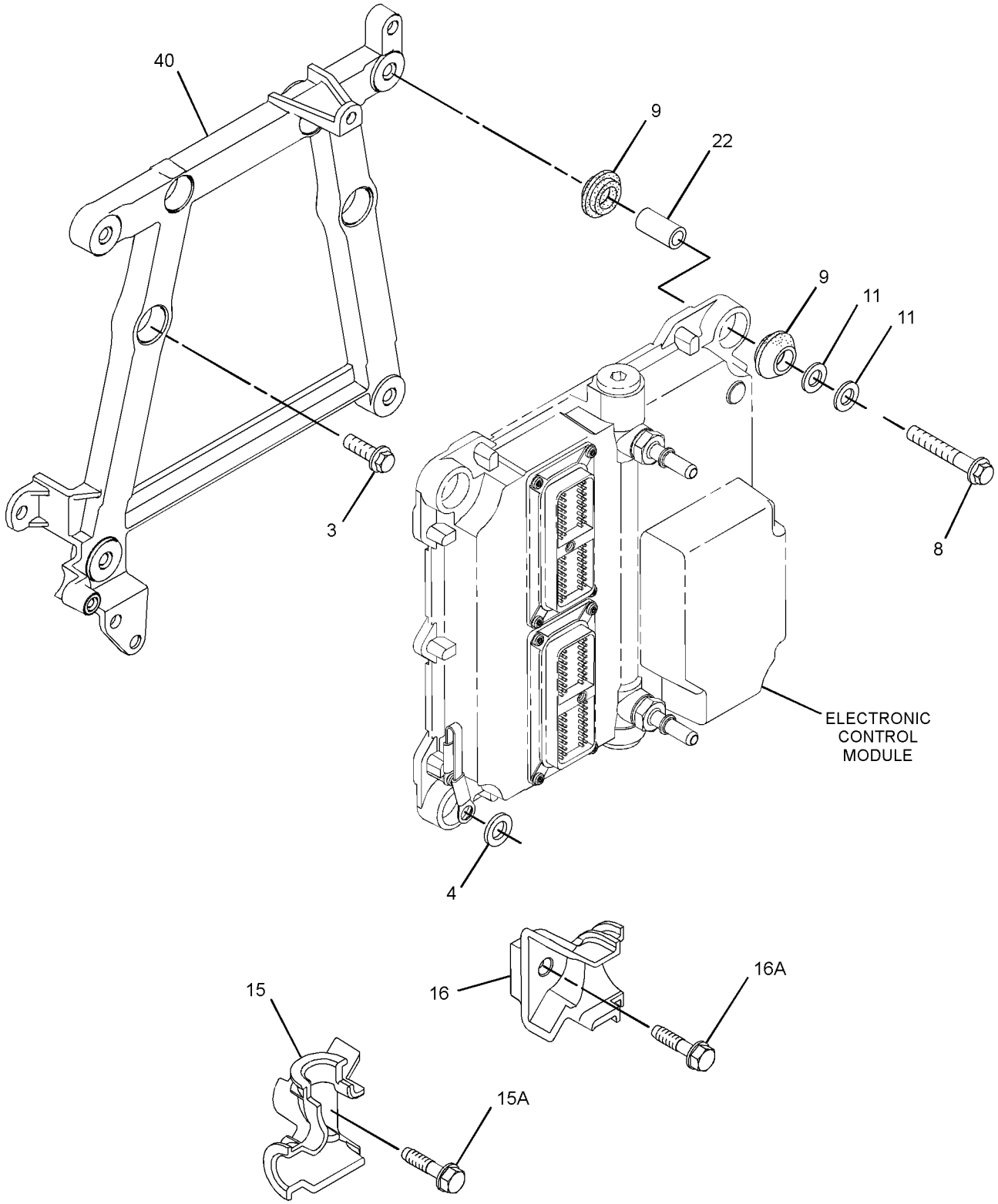

GRAPHIC #2 g01885033

301-8235 **PUMP GP-FUEL INJECTION (**contd.**)** **i03956809**

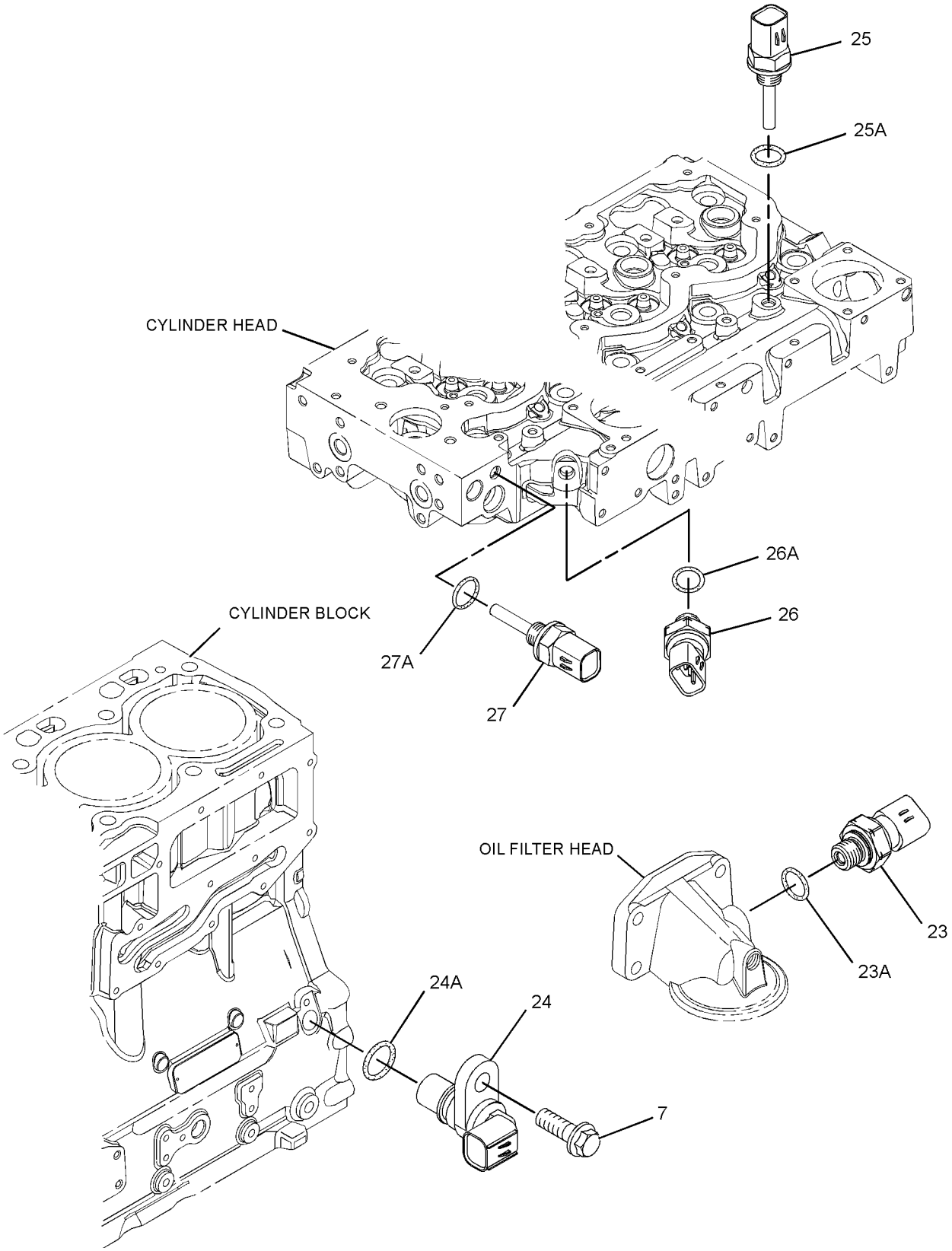

GRAPHIC #3 <END> g01369906

301-8235 PUMP GP-FUEL INJECTION

TYPE 4

SMCS-1251, 1290 **i05932882**

NOTE	REF NO	GRAPHIC REF	PART NUMBER	QTY	PART NAME 1 2 3 4 5 6 (PRODUCT LEVEL)	SEE PAGE
M	1	1	**6I-0260**	3	BOLT (M8X1.25X25-MM)	
M	2	1	**6I-0455**	3	BOLT (M8X1.25X55-MM)	
M	3	2	**6I-0572**	4	BOLT (M8X1.25X20-MM)	
	4	2	**7W-2632**	1	WASHER (8.5X16.8X1.6-MM THK)	
M	5	1	**100-4830**	1	BOLT (M10X1.5X20-MM)	
M	6	1	**101-3895**	4	BOLT (M8X1.25X35-MM)	
M	7	1,3	**124-3815**	4	BOLT (M8X1.25X16-MM)	
M	8	2	**141-8584**	4	BOLT (M8X1.25X50-MM)	
	9	2	**300-6714**	8	MOUNT	
	10	1	**346-0007**	2	WASHER	
	11	2	**217-0099**	5	SPACER (8.2X25X2-MM THK)	
	13	1	**230-8989**	1	GEAR-FUEL PUMP (68-TEETH)	
	14	1	**232-3149**	3	WASHER (8.35X16.85X1.55-MM THK)	
	15	2	**268-6678**	1	BRACKET AS	
M	15A	2	**260-3939**	1	SCREW-HEX HEAD (M6X1X25-MM)	
	16	2	**268-6677**	1	BRACKET AS	
M	16A	2	**260-3939**	1	SCREW-HEX HEAD (M6X1X25-MM)	
	17	1	**438-3415**	1	RAIL AS-FUEL	
	17A	1	**416-7101**	1	VALVE AS-RELIEF	
	19	1	**278-5168**	4	CLAMP-INJECTOR	
	20	1	**278-5170**	4	BOLT	
	22	2	**278-5203**	4	SPACER	
	23	3	**278-5225**	1	KIT-SENSOR (ENGINE OIL PRESSURE)	
	23A	3	**199-9267**	1	SEAL-O-RING	
	24	3	**311-3858**	1	KIT-SENSOR (ENGINE SPEED)	
	24A	3	**228-4947**	1	SEAL-O-RING	
		3	**238-0120**	1	SENSOR GP-SPEED	
	25	3	**278-5272**	1	KIT-SENSOR (AIR TEMPERATURE)	
	25A	3	**278-5226**	1	SEAL-O-RING	
	26	3	**278-5273**	1	KIT-SENSOR (AIR PRESSURE)	
	26A	3	**199-9252**	1	SEAL-O-RING	
	27	3	**278-5307**	1	KIT-SENSOR (COOLANT TEMPERATURE)	
	27A	3	**199-9267**	1	SEAL-O-RING	
	28	1	**311-6342**	1	SENSOR AS-PRESSURE (FUEL RAIL PRESSURE)	
	28A	1	**309-8006**	1	WASHER	
YR	29	1	**320-0680**	4	INJECTOR GP-FUEL	1027
CYR	30	1	**324-0532**	1	PUMP GP-FUEL INJECTION	1523
	31	1	**298-4535**	1	BRACKET-SUPPORT	
	32	1	**337-3573**	1	BRACKET	
	33	1	**337-3574**	1	TUBE	
	34	1	**322-3745**	1	TUBE (CYL NO. 1)	
	35	1	**322-3746**	1	TUBE (CYL NO. 2)	
	36	1	**333-4732**	1	LINE-FUEL INJECTION (CYL NO. 3)	
	37	1	**333-4733**	1	LINE-FUEL INJECTION (CYL NO. 4)	
	38	1	**298-4542**	1	TUBE AS	
	39	1	**363-3908**	1	BOLT-SPECIAL	
	40	2	**317-3144**	1	BRACKET	

301-8235 **PUMP GP-FUEL INJECTION (**contd.**)** **i05932882**

NOTE	REF NO	GRAPHIC REF	PART NUMBER	QTY	PART NAME 1 2 3 4 5 6 (PRODUCT LEVEL)	SEE PAGE
F			**278-4138**	6	KIT-FUEL LINE PROTECTION	
F			**228-7100**	1	SEAL-O-RING	

C - CHANGE FROM PREVIOUS TYPE
F - NOT SHOWN
M - METRIC PART
R - REMANUFACTURED PART MAY BE AVAILABLE
Y - SEPARATE ILLUSTRATION

301-8235 **PUMP GP-FUEL INJECTION (**contd.**)** **i05932882**

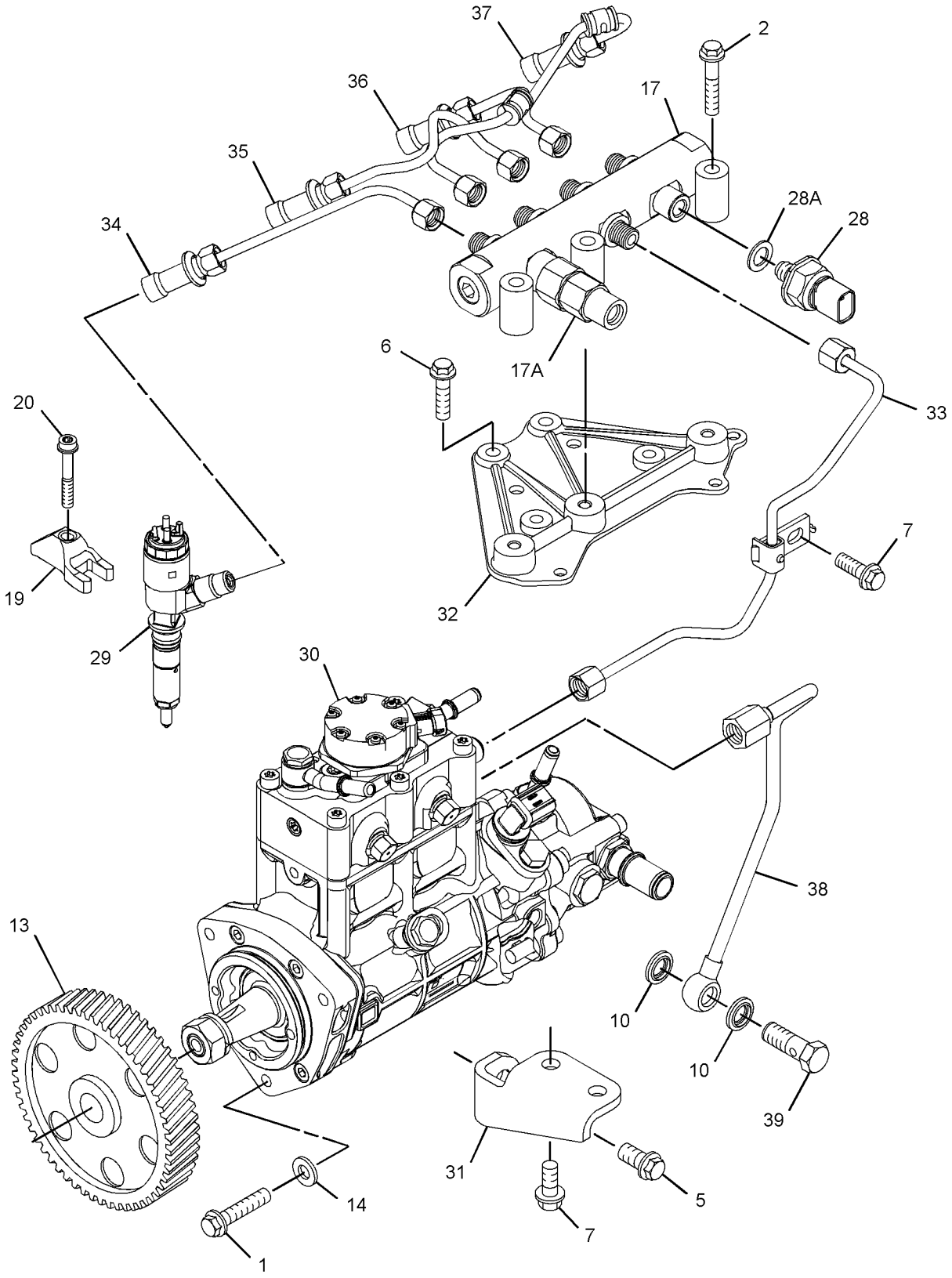

GRAPHIC #1 g03024516

301-8235 **PUMP GP-FUEL INJECTION (**contd.**)** **i05932882**

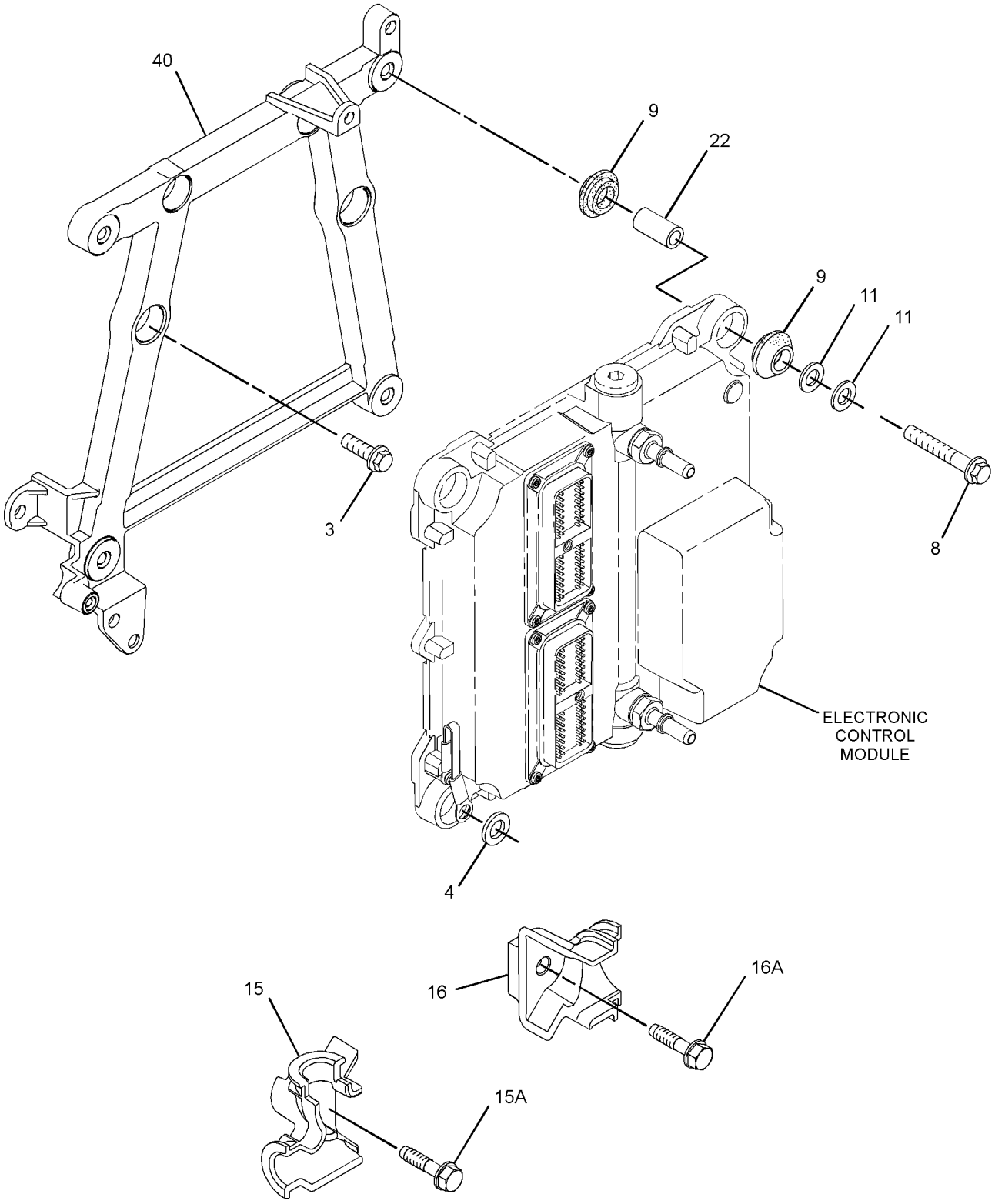

GRAPHIC #2 g01885033

301-8235 **PUMP GP-FUEL INJECTION (**contd.**)** **i05932882**

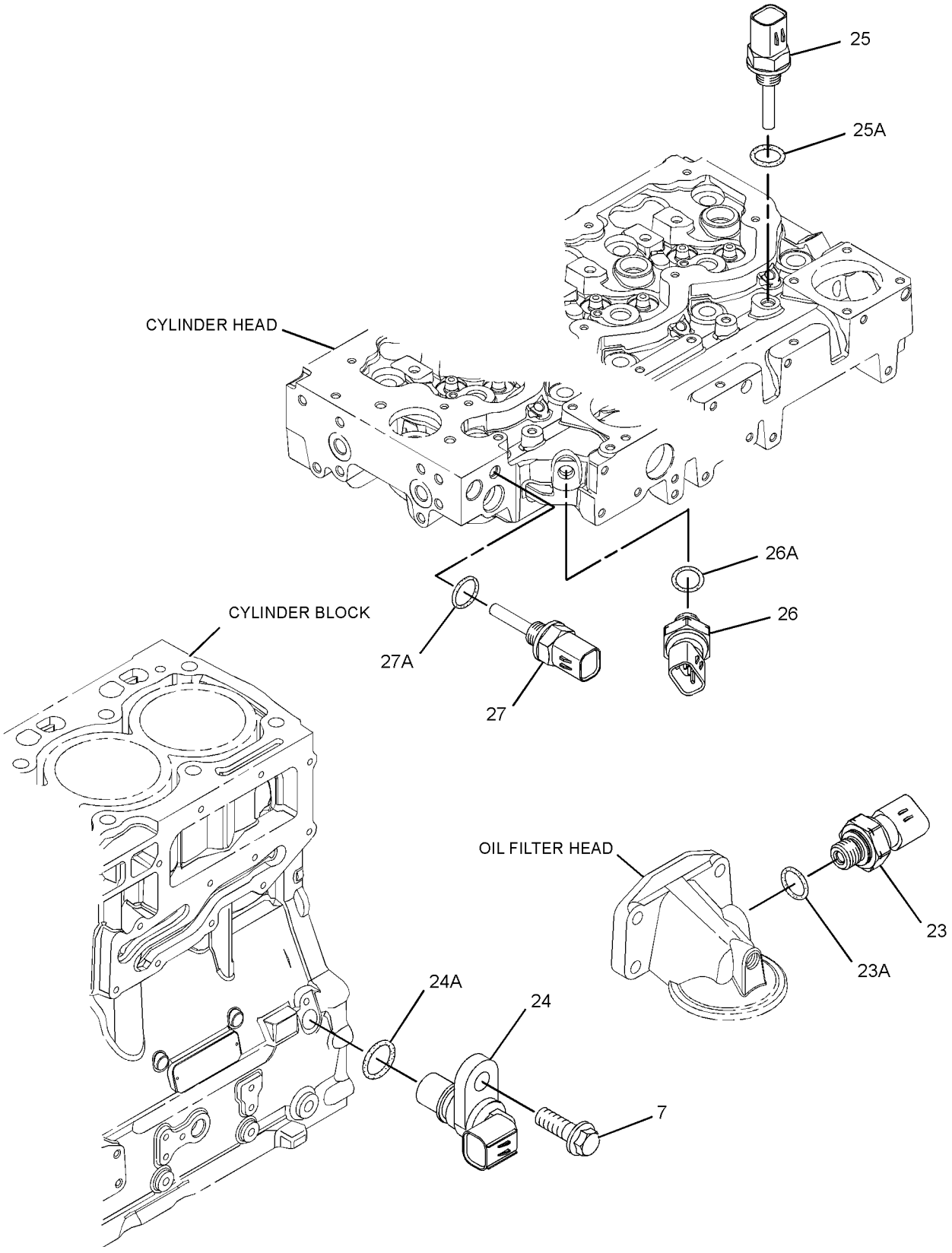

GRAPHIC #3 <END> g01369906

303-4615 PUMP GP-FUEL INJECTION

TYPE 1

SMCS-1251, 1290 **i02885331**

NOTE	REF NO	GRAPHIC REF	PART NUMBER	QTY	PART NAME 1 2 3 4 5 6 (PRODUCT LEVEL)	SEE PAGE
M	1	1	**6I-0260**	3	BOLT (M8X1.25X25-MM)	
M	2	1	**6I-0455**	3	BOLT (M8X1.25X55-MM)	
M	3	2	**6I-0572**	4	BOLT (M8X1.25X20-MM)	
	4	2	**7W-2632**	1	WASHER (8.5X16.8X1.6-MM THK)	
M	5	1	**100-4830**	1	BOLT (M10X1.5X20-MM)	
M	6	1	**101-3895**	4	BOLT (M8X1.25X35-MM)	
M	7	1,3	**124-3815**	4	BOLT (M8X1.25X16-MM)	
M	8	2	**141-8584**	4	BOLT (M8X1.25X50-MM)	
	9	2	**300-6714**	8	MOUNT	
	10	1	**160-0162**	2	WASHER	
	11	2	**217-0099**	4	SPACER (8.2X25X2-MM THK)	
	13	1	**230-8989**	1	GEAR-FUEL PUMP (68-TEETH)	
	14	1	**232-3149**	6	WASHER (8.35X16.85X1.55-MM THK)	
	15	2	**268-6678**	1	BRACKET AS	
M	15A	2	**260-3939**	1	SCREW-HEX HEAD (M6X1X25-MM)	
	16	2	**268-6677**	1	BRACKET AS	
M	16A	2	**260-3939**	1	SCREW-HEX HEAD (M6X1X25-MM)	
	17	1	**308-8425**	1	RAIL AS-FUEL	
	18	1	**278-5168**	4	CLAMP-INJECTOR	
	19	1	**278-5170**	4	BOLT	
	20	2	**278-5203**	4	SPACER	
	21	3	**278-5225**	1	KIT-SENSOR (ENGINE OIL PRESSURE)	
	21A	3	**199-9267**	1	SEAL-O-RING	
	22	3	**311-3858**	1	KIT-SENSOR (ENGINE SPEED)	
		3	**238-0120**	1	SENSOR GP-SPEED	
	22A	3	**274-1639**	1	SEAL	
	23	3	**278-5272**	1	KIT-SENSOR (INTAKE AIR TEMPERATURE)	
	23A	3	**278-5226**	1	SEAL-O-RING	
	24	3	**278-5273**	1	KIT-SENSOR (AIR PRESSURE)	
	24A	3	**199-9252**	1	SEAL-O-RING	
	25	3	**278-5307**	1	KIT-SENSOR (COOLANT TEMPERATURE)	
	25A	3	**199-9267**	1	SEAL-O-RING	
	26	1	**311-6342**	1	SENSOR AS-PRESSURE (FUEL RAIL PRESSURE)	
	26A	1	**309-8006**	1	WASHER	
Y	27	1	**283-2271**	1	PUMP GP-FUEL INJECTION	1067
Y	28	1	**292-3780**	4	INJECTOR GP-FUEL	1021
	29	1	**298-4535**	1	BRACKET-SUPPORT	
	30	1	**298-4536**	1	BRACKET-MOUNTING	
	31	1	**298-4537**	1	TUBE AS	
	32	1	**298-4538**	1	TUBE AS (CYL NO. 1)	
	33	1	**298-4539**	1	TUBE AS (CYL NO. 2)	
	34	1	**298-4540**	1	TUBE AS (CYL NO. 3)	
	35	1	**298-4541**	1	TUBE AS (CYL NO. 4)	
	36	1	**298-4542**	1	TUBE AS	
	37	1	**298-4543**	1	BOLT	
	38	2	**308-3395**	1	BRACKET-MOUNTING	
F			**278-4138**	5	KIT-FUEL LINE PROTECTION	

303-4615 **PUMP GP-FUEL INJECTION** (contd.) **i02885331**

NOTE	REF NO	GRAPHIC REF	PART NUMBER	QTY	PART NAME 1 2 3 4 5 6 (PRODUCT LEVEL)	SEE PAGE

F - NOT SHOWN
M - METRIC PART
Y - SEPARATE ILLUSTRATION

303-4615 **PUMP GP-FUEL INJECTION (**contd.**)** **i02885331**

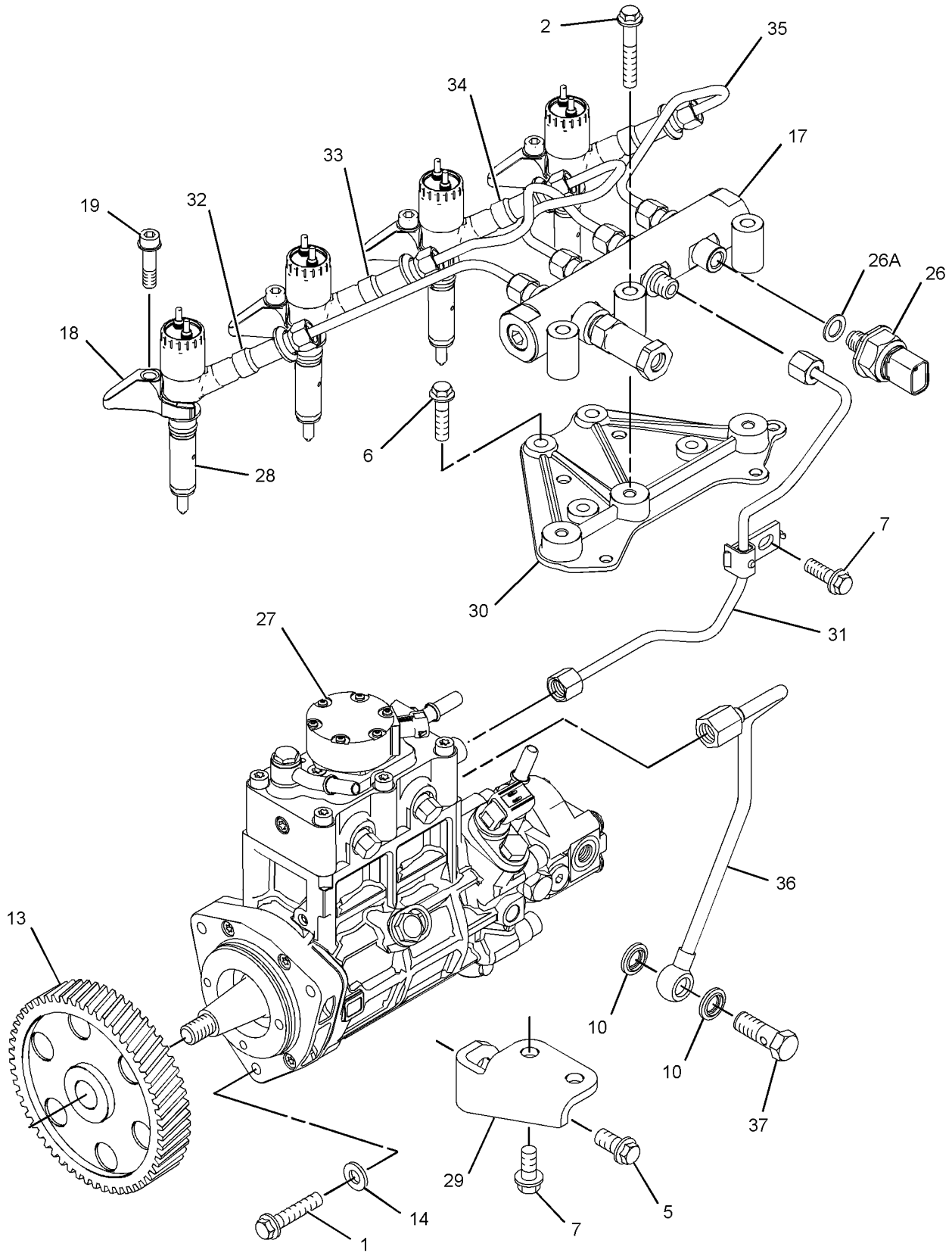

GRAPHIC #1 g01372242

303-4615 **PUMP GP-FUEL INJECTION (**contd.**)** **i02885331**

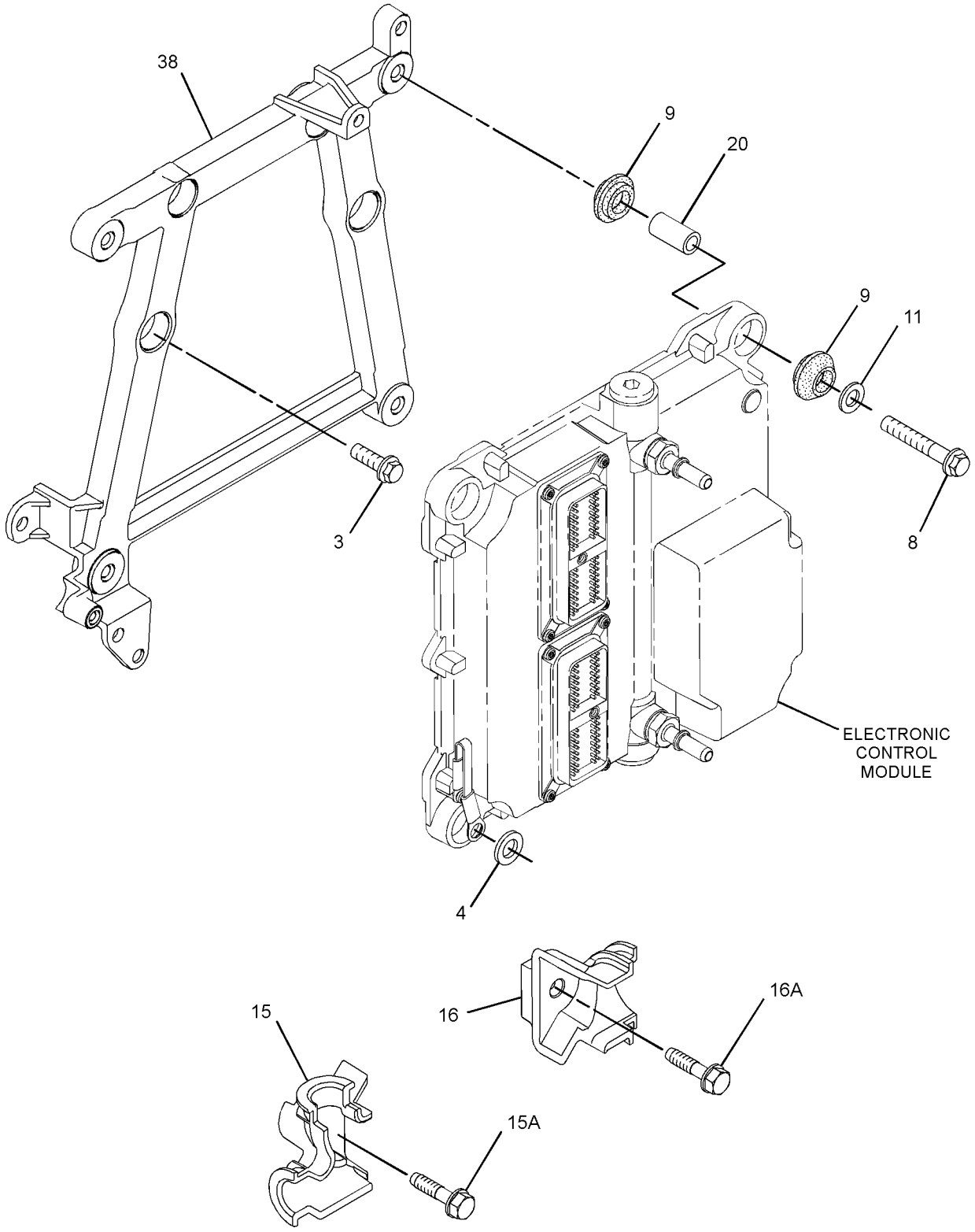

GRAPHIC #2 g01436398

303-4615 **PUMP GP-FUEL INJECTION (**contd.**)** **i02885331**

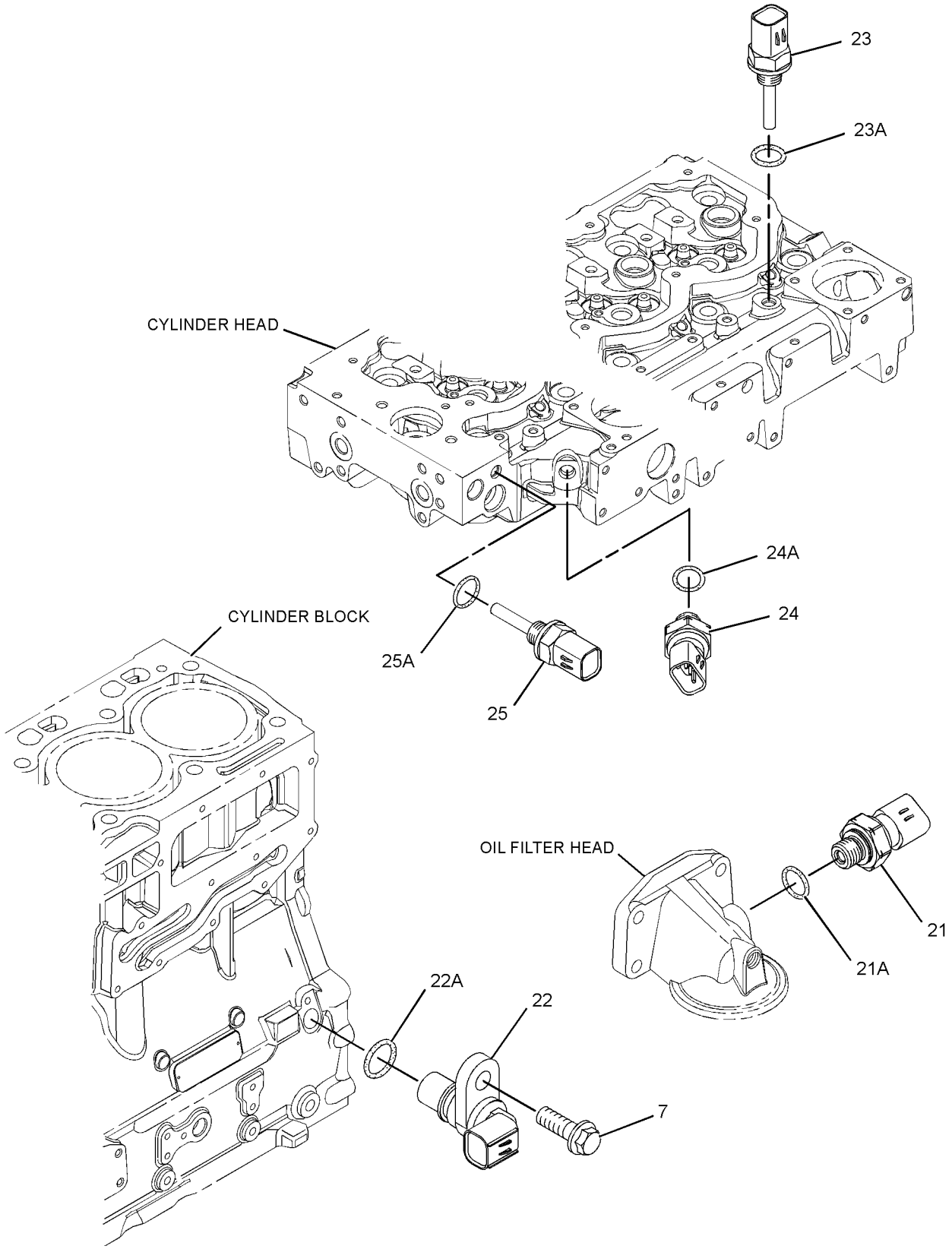

GRAPHIC #3 <END> g01372244

303-4615 PUMP GP-FUEL INJECTION

TYPE 2

SMCS-1251, 1290 **i03730790**

NOTE	REF NO	GRAPHIC REF	PART NUMBER	QTY	PART NAME 1 2 3 4 5 6 (PRODUCT LEVEL)	SEE PAGE
M	1	1	**6I-0260**	3	BOLT (M8X1.25X25-MM)	
M	2	1	**6I-0455**	3	BOLT (M8X1.25X55-MM)	
M	3	2	**6I-0572**	4	BOLT (M8X1.25X20-MM)	
	4	2	**7W-2632**	1	WASHER (8.5X16.8X1.6-MM THK)	
M	5	1	**100-4830**	1	BOLT (M10X1.5X20-MM)	
M	6	1	**101-3895**	4	BOLT (M8X1.25X35-MM)	
M	7	1,3	**124-3815**	4	BOLT (M8X1.25X16-MM)	
M	8	2	**141-8584**	4	BOLT (M8X1.25X50-MM)	
	9	2	**300-6714**	8	MOUNT	
	10	1	**160-0162**	2	WASHER	
	11	2	**217-0099**	5	SPACER (8.2X25X2-MM THK)	
	13	1	**230-8989**	1	GEAR-FUEL PUMP (68-TEETH)	
C	14	1	**232-3149**	3	WASHER (8.35X16.85X1.55-MM THK)	
	15	2	**268-6678**	1	BRACKET AS	
M	15A	2	**260-3939**	1	SCREW-HEX HEAD (M6X1X25-MM)	
	16	2	**268-6677**	1	BRACKET AS	
M	16A	2	**260-3939**	1	SCREW-HEX HEAD (M6X1X25-MM)	
	17	1	**318-2394**	1	RAIL AS-FUEL	
	17A	1	**305-5291**	1	VALVE AS-RELIEF	
	18	1	**278-5168**	4	CLAMP-INJECTOR	
	19	1	**278-5170**	4	BOLT	
	20	2	**278-5203**	4	SPACER	
	21	3	**278-5225**	1	KIT-SENSOR (ENGINE OIL PRESSURE)	
	21A	3	**199-9267**	1	SEAL-O-RING	
	22	3	**311-3858**	1	KIT-SENSOR (ENGINE SPEED)	
	22A	3	**274-1639**	1	SEAL	
	23	3	**278-5272**	1	KIT-SENSOR (INTAKE AIR TEMPERATURE)	
	23A	3	**278-5226**	1	SEAL-O-RING	
	24	3	**278-5273**	1	KIT-SENSOR (AIR PRESSURE)	
	24A	3	**199-9252**	1	SEAL-O-RING	
	25	3	**278-5307**	1	KIT-SENSOR (COOLANT TEMPERATURE)	
	25A	3	**199-9267**	1	SEAL-O-RING	
	26	1	**311-6342**	1	SENSOR AS-PRESSURE (FUEL RAIL PRESSURE)	
	26A	1	**309-8006**	1	WASHER	
CYR	27	1	**324-0532**	1	PUMP GP-FUEL INJECTION	1523
YR	28	1	**320-0680**	4	INJECTOR GP-FUEL	1027
	29	1	**298-4535**	1	BRACKET-SUPPORT	
	30	1	**337-3573**	1	BRACKET	
	31	1	**337-3574**	1	TUBE	
	32	1	**322-3745**	1	TUBE (CYL NO. 1)	
	33	1	**322-3746**	1	TUBE (CYL NO. 2)	
	34	1	**333-4732**	1	LINE-FUEL INJECTION (CYL NO. 3)	
	35	1	**333-4733**	1	LINE-FUEL INJECTION (CYL NO. 4)	
	36	1	**298-4542**	1	TUBE AS	
	37	1	**298-4543**	1	BOLT	
	38	2	**317-3144**	1	BRACKET	
F			**278-4138**	5	KIT-FUEL LINE PROTECTION	

303-4615 **PUMP GP-FUEL INJECTION (**contd.**)** **i03730790**

NOTE	REF NO	GRAPHIC REF	PART NUMBER	QTY	PART NAME 1 2 3 4 5 6 (PRODUCT LEVEL)	SEE PAGE

C - CHANGE FROM PREVIOUS TYPE
F - NOT SHOWN
M - METRIC PART
R - REMANUFACTURED PART MAY BE AVAILABLE
Y - SEPARATE ILLUSTRATION

303-4615 **PUMP GP-FUEL INJECTION (**contd.**)** **i03730790**

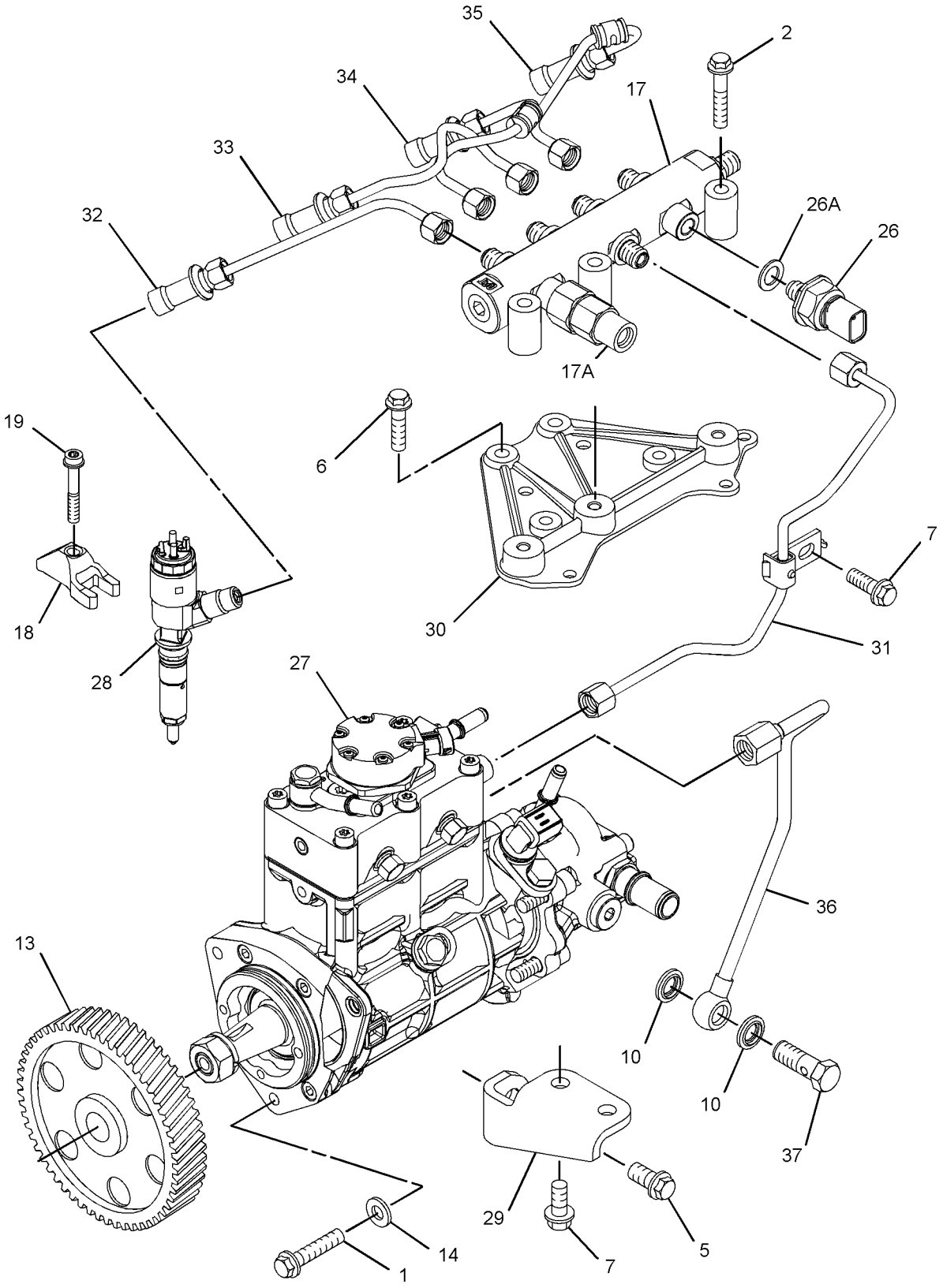

GRAPHIC #1 g01838513

303-4615 **PUMP GP-FUEL INJECTION (**contd.**)** **i03730790**

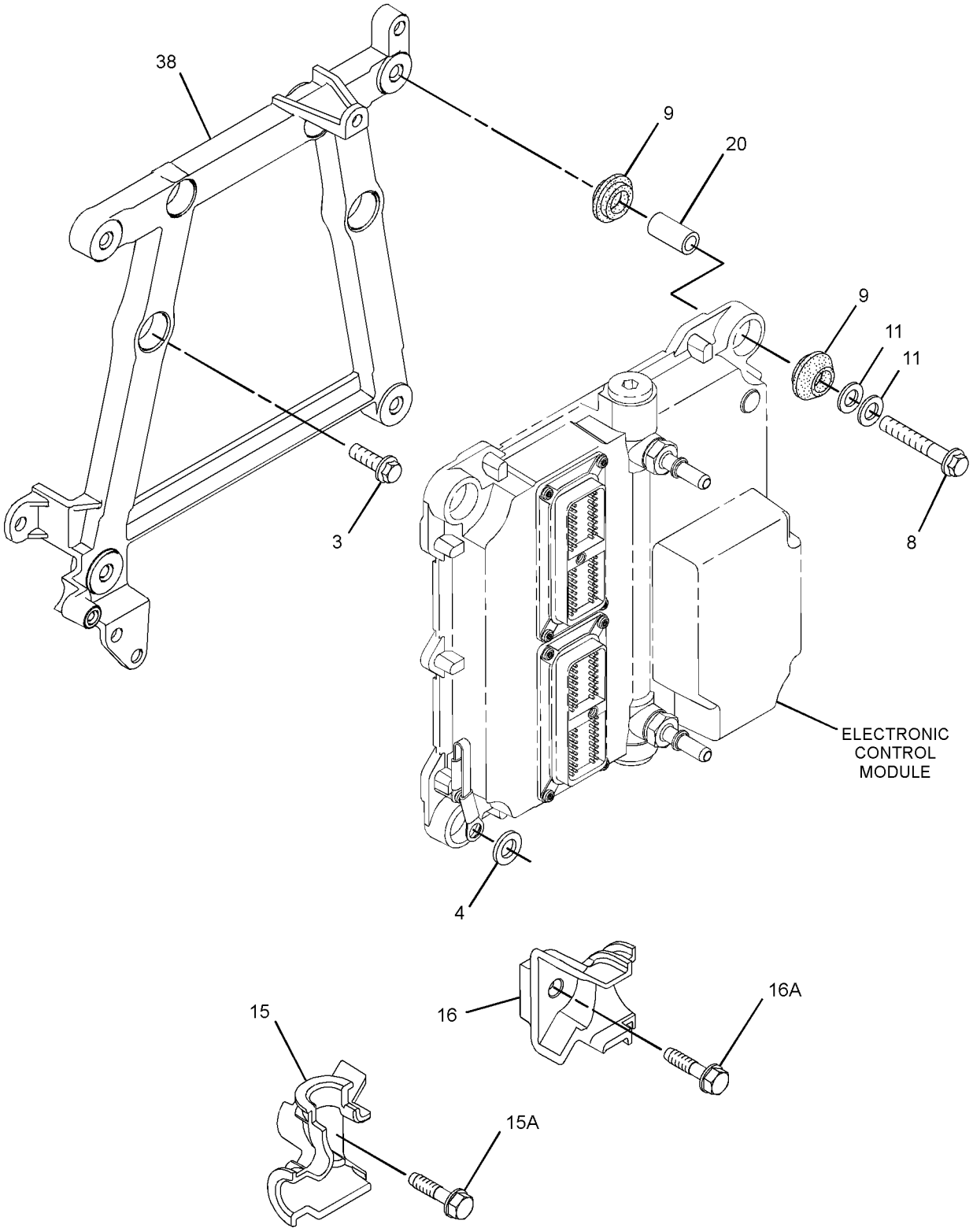

GRAPHIC #2 g01681914

303-4615 **PUMP GP-FUEL INJECTION (**contd.**)** **i03730790**

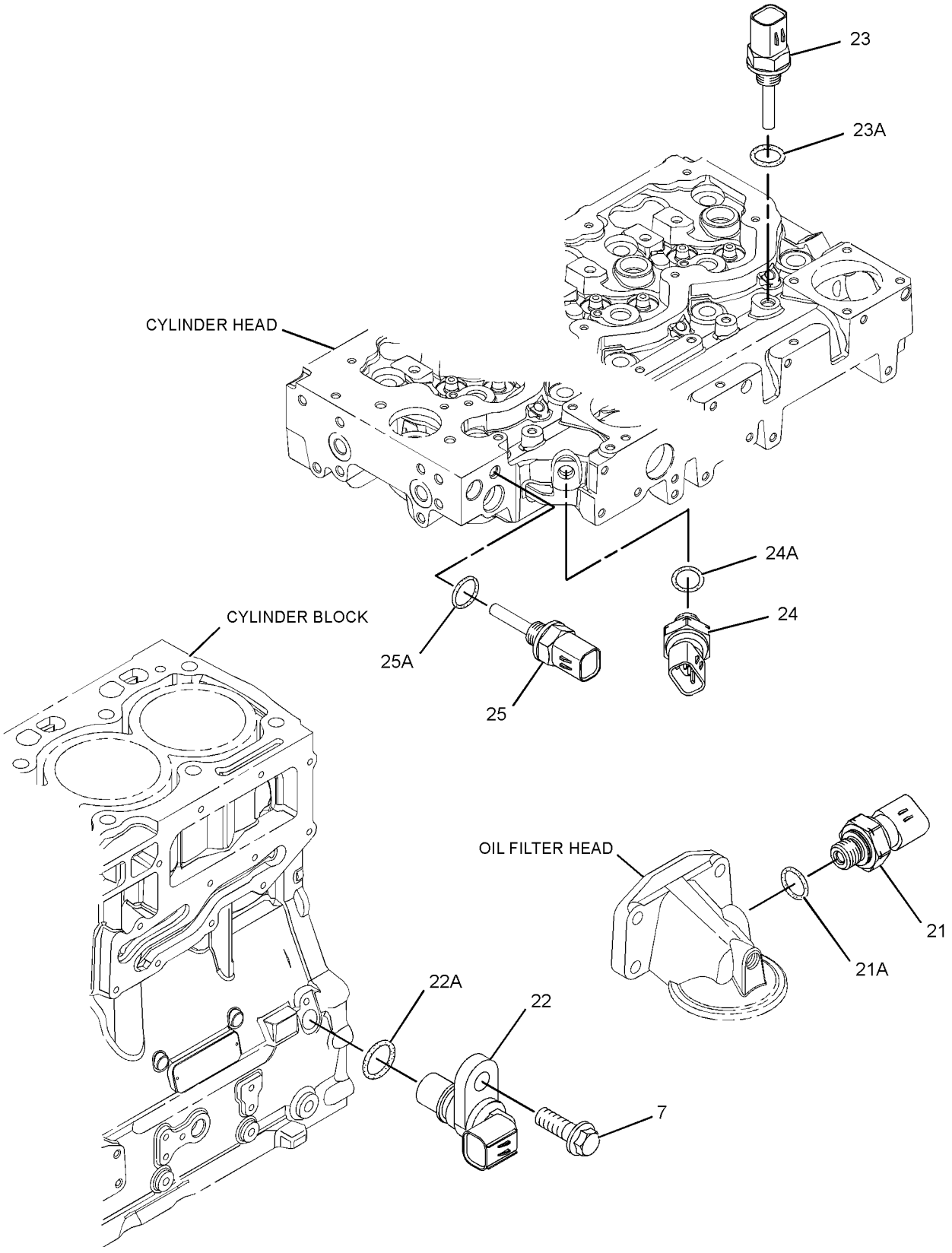

GRAPHIC #3 <END> g01372244

303-4615 PUMP GP-FUEL INJECTION

TYPE 3

SMCS-1251, 1290 **i03956829**

NOTE	REF NO	GRAPHIC REF	PART NUMBER	QTY	PART NAME 1 2 3 4 5 6 (PRODUCT LEVEL)	SEE PAGE
M	1	1	**6I-0260**	3	BOLT (M8X1.25X25-MM)	
M	2	1	**6I-0455**	3	BOLT (M8X1.25X55-MM)	
M	3	2	**6I-0572**	4	BOLT (M8X1.25X20-MM)	
	4	2	**7W-2632**	1	WASHER (8.5X16.8X1.6-MM THK)	
M	5	1	**100-4830**	1	BOLT (M10X1.5X20-MM)	
M	6	1	**101-3895**	4	BOLT (M8X1.25X35-MM)	
M	7	1,3	**124-3815**	4	BOLT (M8X1.25X16-MM)	
M	8	2	**141-8584**	4	BOLT (M8X1.25X50-MM)	
	9	2	**300-6714**	8	MOUNT	
	10	1	**160-0162**	2	WASHER	
	11	2	**217-0099**	5	SPACER (8.2X25X2-MM THK)	
	13	1	**230-8989**	1	GEAR-FUEL PUMP (68-TEETH)	
	14	1	**232-3149**	3	WASHER (8.35X16.85X1.55-MM THK)	
	15	2	**268-6678**	1	BRACKET AS	
M	15A	2	**260-3939**	1	SCREW-HEX HEAD (M6X1X25-MM)	
	16	2	**268-6677**	1	BRACKET AS	
M	16A	2	**260-3939**	1	SCREW-HEX HEAD (M6X1X25-MM)	
	17	1	**318-2394**	1	RAIL AS-FUEL	
	17A	1	**305-5291**	1	VALVE AS-RELIEF	
	18	1	**278-5168**	4	CLAMP-INJECTOR	
	19	1	**278-5170**	4	BOLT	
	20	2	**278-5203**	4	SPACER	
	21	3	**278-5225**	1	KIT-SENSOR (ENGINE OIL PRESSURE)	
	21A	3	**199-9267**	1	SEAL-O-RING	
	22	3	**311-3858**	1	KIT-SENSOR (ENGINE SPEED)	
	22A	3	**274-1639**	1	SEAL	
		3	**238-0120**	1	SENSOR GP-SPEED	
	23	3	**278-5272**	1	KIT-SENSOR (INTAKE AIR TEMPERATURE)	
	23A	3	**278-5226**	1	SEAL-O-RING	
	24	3	**278-5273**	1	KIT-SENSOR (AIR PRESSURE)	
	24A	3	**199-9252**	1	SEAL-O-RING	
	25	3	**278-5307**	1	KIT-SENSOR (COOLANT TEMPERATURE)	
	25A	3	**199-9267**	1	SEAL-O-RING	
	26	1	**311-6342**	1	SENSOR AS-PRESSURE (FUEL RAIL PRESSURE)	
	26A	1	**309-8006**	1	WASHER	
CYR	27	1	**352-6584**	1	PUMP GP-FUEL INJECTION	1540
YR	28	1	**320-0680**	4	INJECTOR GP-FUEL	1027
	29	1	**298-4535**	1	BRACKET-SUPPORT	
	30	1	**337-3573**	1	BRACKET	
	31	1	**337-3574**	1	TUBE	
	32	1	**322-3745**	1	TUBE (CYL NO. 1)	
	33	1	**322-3746**	1	TUBE (CYL NO. 2)	
	34	1	**333-4732**	1	LINE-FUEL INJECTION (CYL NO. 3)	
	35	1	**333-4733**	1	LINE-FUEL INJECTION (CYL NO. 4)	
	36	1	**298-4542**	1	TUBE AS	
	37	1	**298-4543**	1	BOLT	
	38	2	**317-3144**	1	BRACKET	

303-4615 **PUMP GP-FUEL INJECTION** (contd.) **i03956829**

NOTE	REF NO	GRAPHIC REF	PART NUMBER	QTY	PART NAME 1 2 3 4 5 6 (PRODUCT LEVEL)	SEE PAGE
F			**278-4138**	5	KIT-FUEL LINE PROTECTION	

C - CHANGE FROM PREVIOUS TYPE
F - NOT SHOWN
M - METRIC PART
R - REMANUFACTURED PART MAY BE AVAILABLE
Y - SEPARATE ILLUSTRATION

303-4615 **PUMP GP-FUEL INJECTION (**contd.**)** **i03956829**

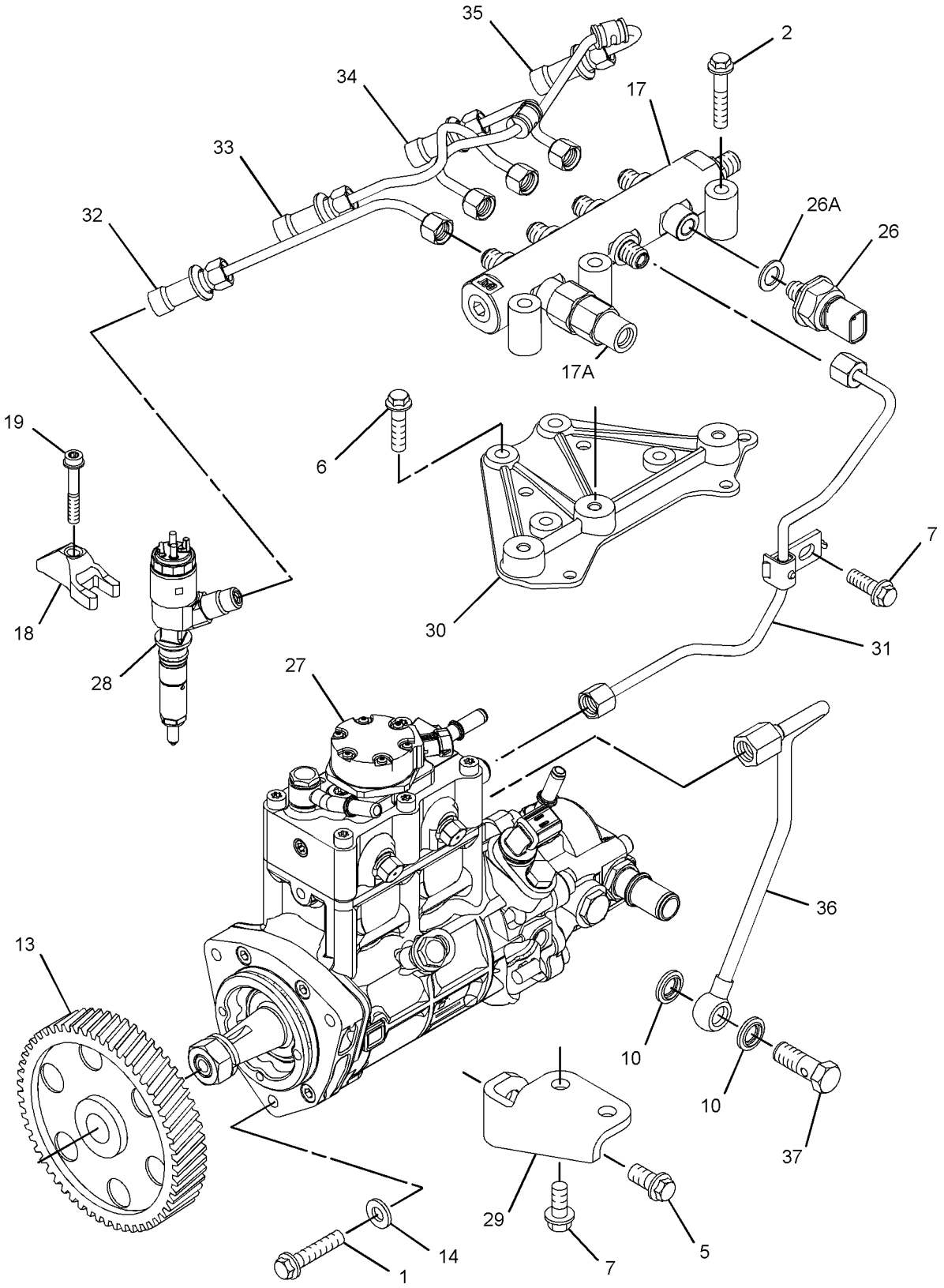

GRAPHIC #1 g02242554

303-4615 **PUMP GP-FUEL INJECTION (**contd.**)** **i03956829**

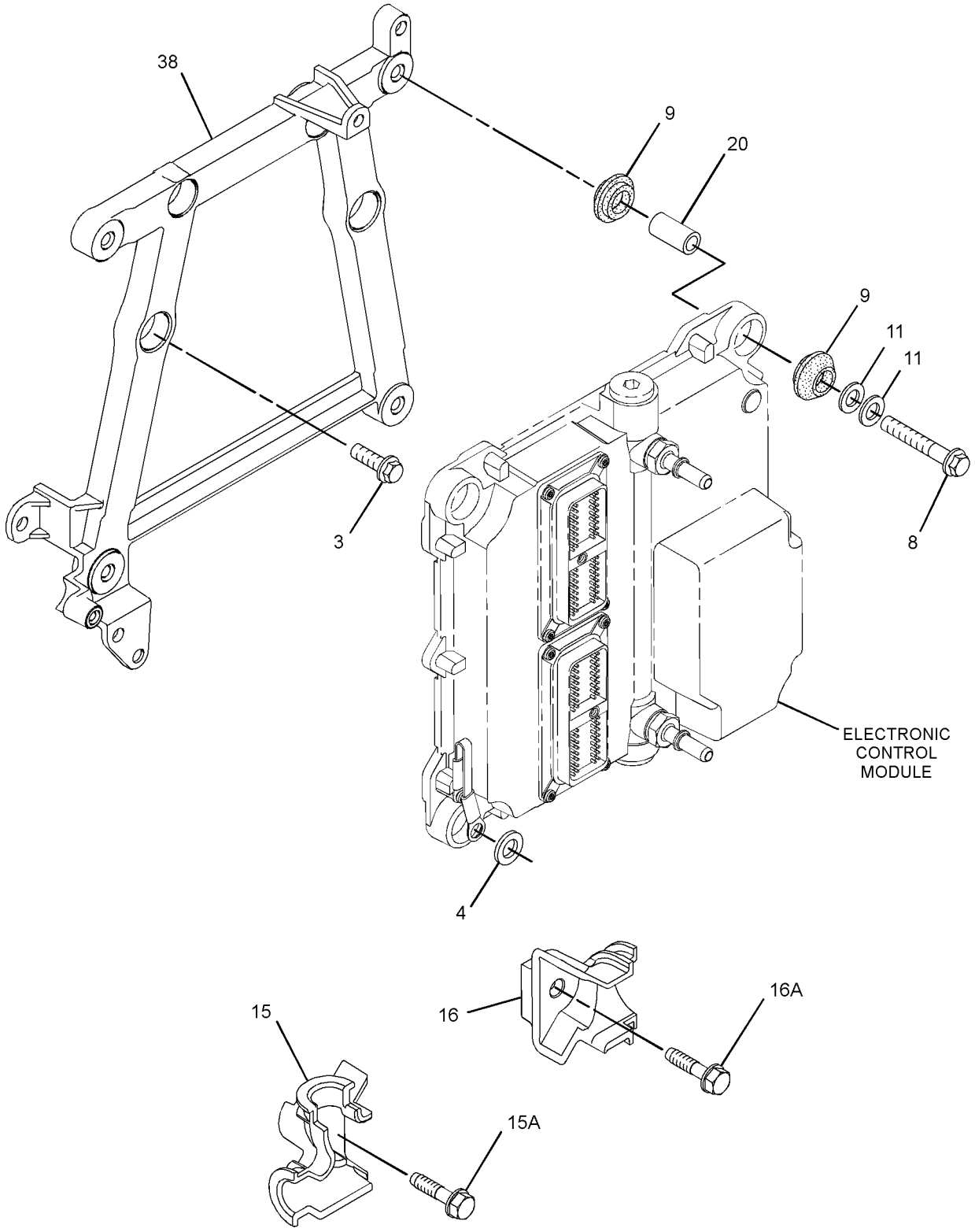

GRAPHIC #2 g01681914

303-4615 **PUMP GP-FUEL INJECTION (**contd.**)** **i03956829**

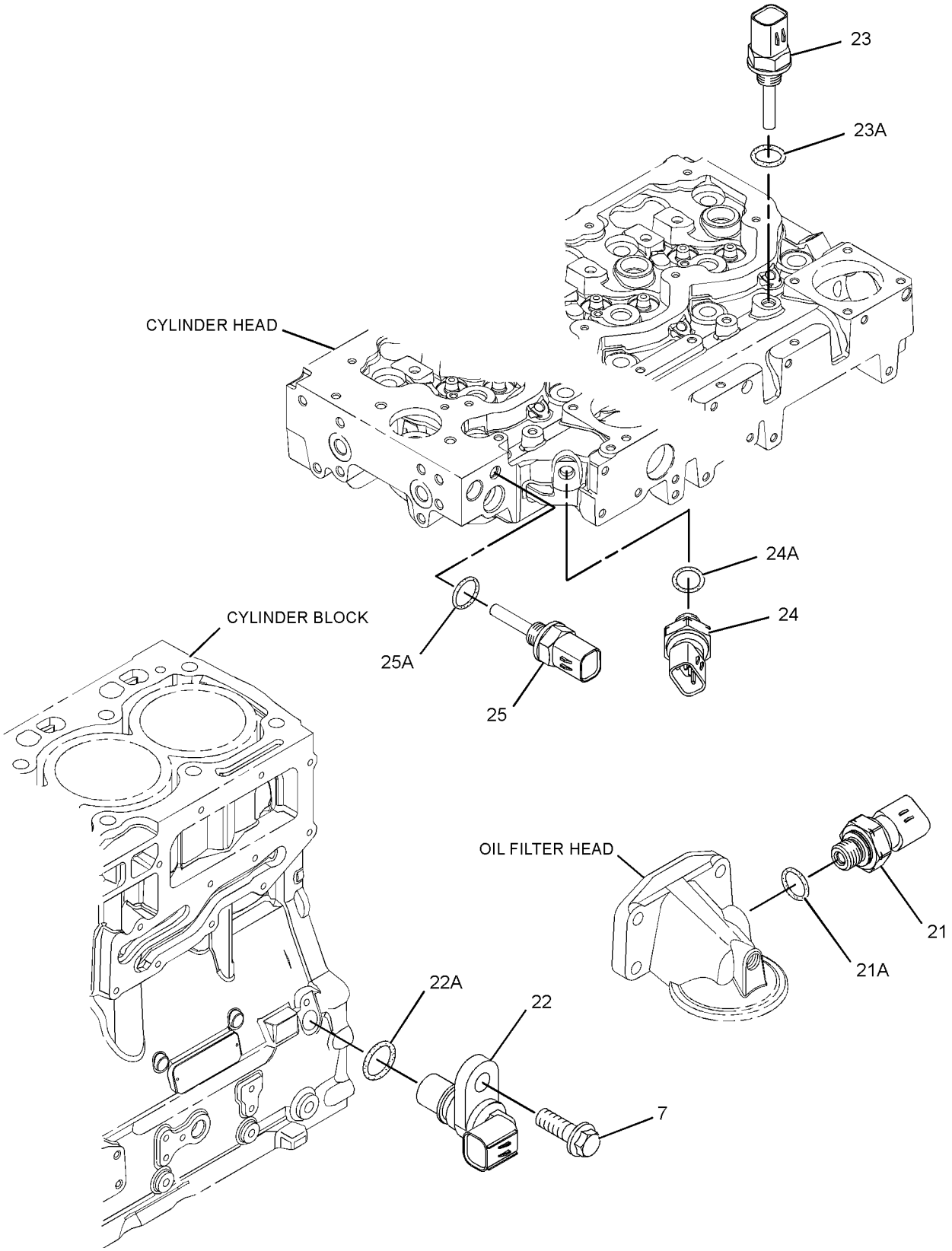

GRAPHIC #3 <END> g01372244

303-4615 PUMP GP-FUEL INJECTION

TYPE 4

SMCS-1251, 1290 **i05871678**

NOTE	REF NO	GRAPHIC REF	PART NUMBER	QTY	PART NAME 1 2 3 4 5 6 (PRODUCT LEVEL)	SEE PAGE
M	1	1	**6I-0260**	3	BOLT (M8X1.25X25-MM)	
M	2	1	**6I-0455**	3	BOLT (M8X1.25X55-MM)	
M	3	2	**6I-0572**	4	BOLT (M8X1.25X20-MM)	
	4	2	**7W-2632**	1	WASHER (8.5X16.8X1.6-MM THK)	
M	5	1	**100-4830**	1	BOLT (M10X1.5X20-MM)	
M	6	1	**101-3895**	4	BOLT (M8X1.25X35-MM)	
M	7	1,3	**124-3815**	4	BOLT (M8X1.25X16-MM)	
M	8	2	**141-8584**	4	BOLT (M8X1.25X50-MM)	
	9	2	**300-6714**	8	MOUNT	
	10	1	**346-0007**	2	WASHER	
	11	2	**217-0099**	5	SPACER (8.2X25X2-MM THK)	
	13	1	**230-8989**	1	GEAR-FUEL PUMP (68-TEETH)	
	14	1	**232-3149**	3	WASHER (8.35X16.85X1.55-MM THK)	
	15	2	**268-6678**	1	BRACKET AS	
M	15A	2	**260-3939**	1	SCREW-HEX HEAD (M6X1X25-MM)	
	16	2	**268-6677**	1	BRACKET AS	
M	16A	2	**260-3939**	1	SCREW-HEX HEAD (M6X1X25-MM)	
	17	1	**358-6632**	1	RAIL GP-FUEL	
	17A	1	**305-5291**	1	VALVE AS-RELIEF	
	18	1	**278-5168**	4	CLAMP-INJECTOR	
	19	1	**278-5170**	4	BOLT	
	20	2	**278-5203**	4	SPACER	
	21	3	**278-5225**	1	KIT-SENSOR (ENGINE OIL PRESSURE)	
	21A	3	**199-9267**	1	SEAL-O-RING	
	22	3	**311-3858**	1	KIT-SENSOR (ENGINE SPEED)	
	22A	3	**274-1639**	1	SEAL	
		3	**238-0120**	1	SENSOR GP-SPEED	
	23	3	**278-5272**	1	KIT-SENSOR (INTAKE AIR TEMPERATURE)	
	23A	3	**278-5226**	1	SEAL-O-RING	
	24	3	**278-5273**	1	KIT-SENSOR (AIR PRESSURE)	
	24A	3	**199-9252**	1	SEAL-O-RING	
	25	3	**278-5307**	1	KIT-SENSOR (COOLANT TEMPERATURE)	
	25A	3	**199-9267**	1	SEAL-O-RING	
	26	1	**311-6342**	1	SENSOR AS-PRESSURE (FUEL RAIL PRESSURE)	
	26A	1	**309-8006**	1	WASHER	
CYR	27	1	**324-0532**	1	PUMP GP-FUEL INJECTION	1523
YR	28	1	**320-0680**	4	INJECTOR GP-FUEL	1027
	29	1	**298-4535**	1	BRACKET-SUPPORT	
	30	1	**337-3573**	1	BRACKET	
	31	1	**337-3574**	1	TUBE	
	32	1	**322-3745**	1	TUBE (CYL NO. 1)	
	33	1	**322-3746**	1	TUBE (CYL NO. 2)	
	34	1	**333-4732**	1	LINE-FUEL INJECTION (CYL NO. 3)	
	35	1	**333-4733**	1	LINE-FUEL INJECTION (CYL NO. 4)	
	36	1	**298-4542**	1	TUBE AS	
	37	1	**363-3908**	1	BOLT-SPECIAL	
	38	2	**317-3144**	1	BRACKET	

303-4615 **PUMP GP-FUEL INJECTION** (contd.) **i05871678**

NOTE	REF NO	GRAPHIC REF	PART NUMBER	QTY	PART NAME 1 2 3 4 5 6 (PRODUCT LEVEL)	SEE PAGE
F			**278-4138**	5	KIT-FUEL LINE PROTECTION	

C - CHANGE FROM PREVIOUS TYPE
F - NOT SHOWN
M - METRIC PART
R - REMANUFACTURED PART MAY BE AVAILABLE
Y - SEPARATE ILLUSTRATION

303-4615 **PUMP GP-FUEL INJECTION (**contd.**)** **i05871678**

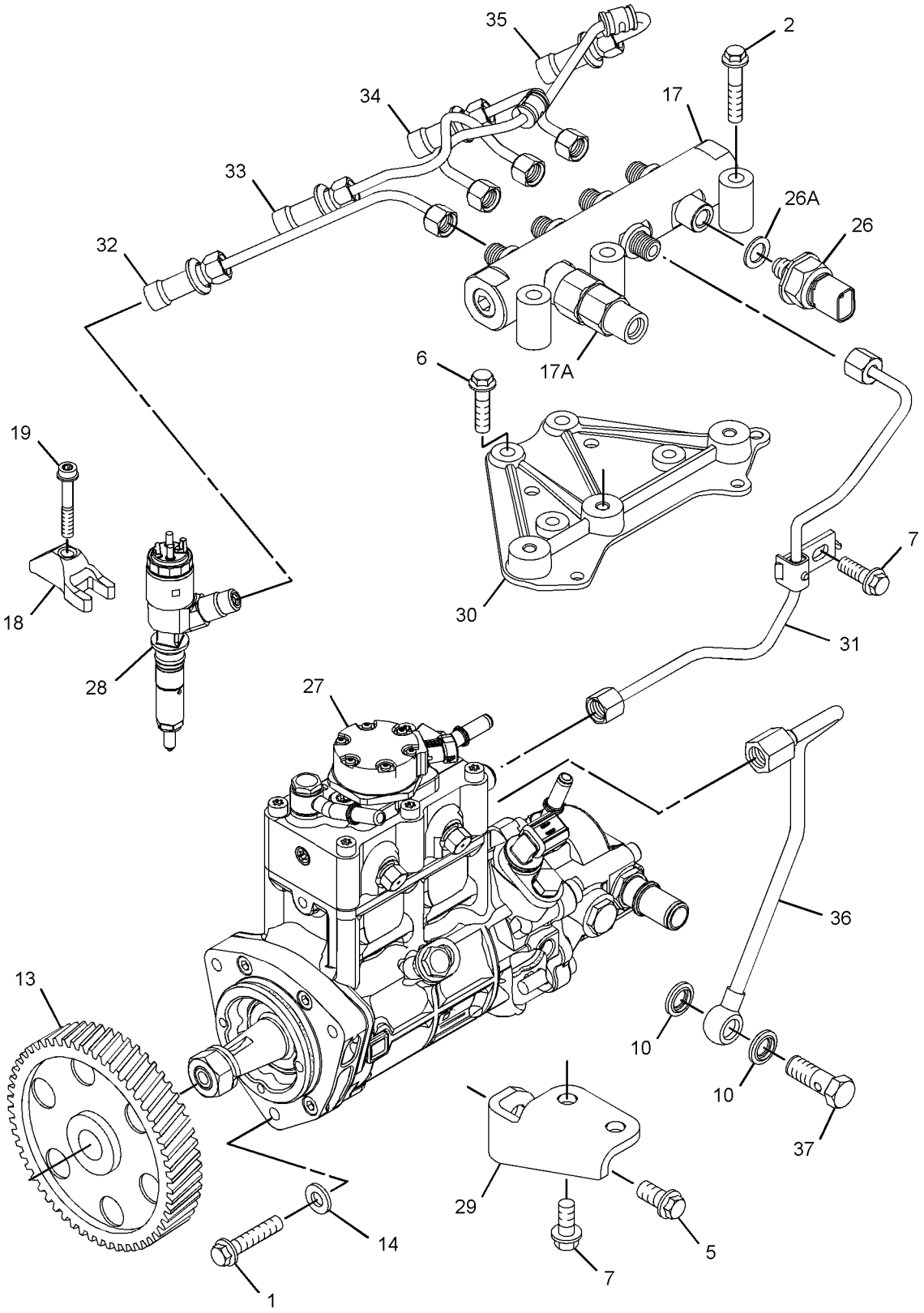

GRAPHIC #1 g02856540

303-4615 **PUMP GP-FUEL INJECTION (**contd.**)** **i05871678**

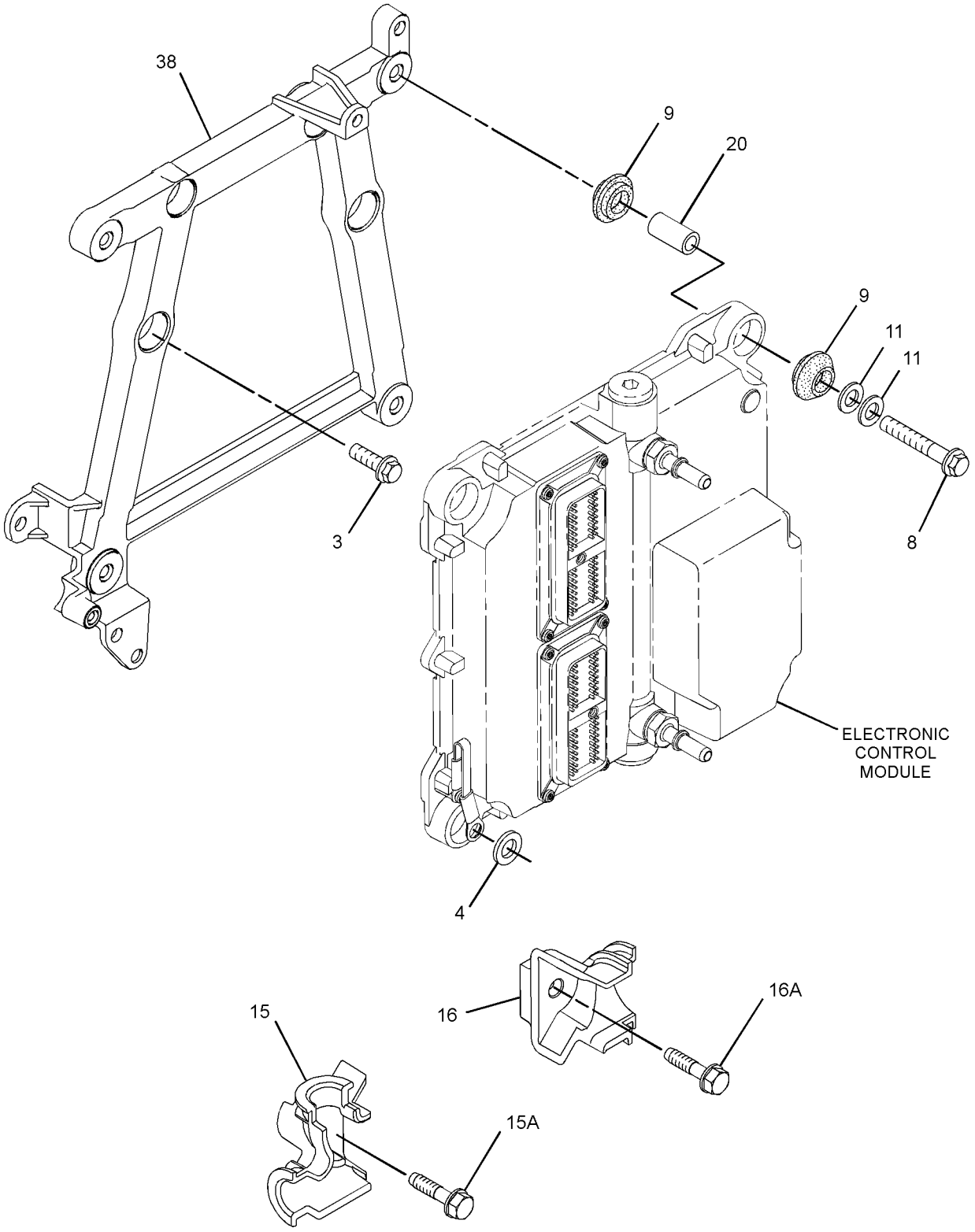

GRAPHIC #2 g01681914

303-4615 **PUMP GP-FUEL INJECTION (**contd.**)** **i05871678**

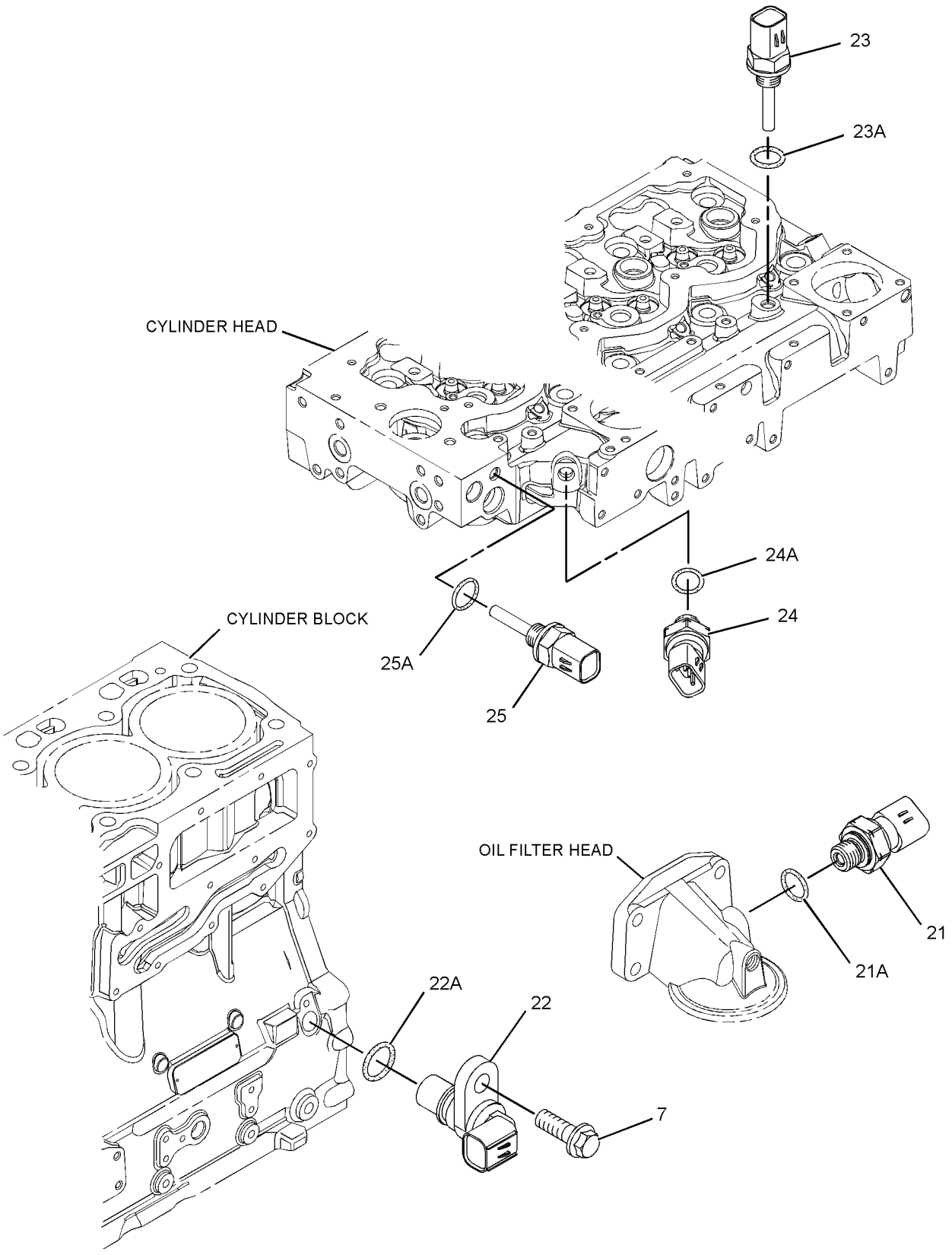

GRAPHIC #3 <END> g01372244

304-0725 PUMP GP-FUEL INJECTION

TYPE 1

SMCS-1251, 1290 **i02755699**

NOTE	REF NO	GRAPHIC REF	PART NUMBER	QTY	PART NAME 1 2 3 4 5 6 (PRODUCT LEVEL)	SEE PAGE
M	1	1	**6I-0260**	3	BOLT (M8X1.25X25-MM)	
M	2	1	**6I-0455**	3	BOLT (M8X1.25X55-MM)	
M	3	2	**6I-0572**	4	BOLT (M8X1.25X20-MM)	
	4	2	**7W-2632**	1	WASHER (8.5X16.8X1.6-MM THK)	
M	5	1	**100-4830**	1	BOLT (M10X1.5X20-MM)	
M	6	1	**101-3895**	4	BOLT (M8X1.25X35-MM)	
M	7	1,3	**124-3815**	4	BOLT (M8X1.25X16-MM)	
M	8	2	**141-8584**	4	BOLT (M8X1.25X50-MM)	
	9	2	**155-0576**	8	MOUNT-ISOLATION	
	10	1	**160-0162**	2	WASHER	
	11	2	**217-0099**	4	SPACER (8.2X25X2-MM THK)	
	12	2	**217-8477**	1	CLIP	
	13	1	**230-8989**	1	GEAR-FUEL PUMP (68-TEETH)	
	14	1	**232-3149**	6	WASHER (8.35X16.85X1.55-MM THK)	
	16	2	**268-6678**	1	BRACKET AS	
		2	**260-3719**	1	BRACKET	
	16A	2	**260-6678**	1	BOLT (M8X1.25X30-MM)	
	17	2	**268-6677**	1	BRACKET AS	
		2	**260-3718**	1	BRACKET	
M	17A	2	**260-3939**	1	SCREW-HEX HEAD (M6X1X25-MM)	
	18	1	**308-8425**	1	RAIL AS-FUEL	
	19	1	**278-5168**	4	CLAMP-INJECTOR	
	20	1	**278-5170**	4	BOLT	
	23	2	**278-5203**	4	SPACER	
Y	25	1	**283-2271**	1	PUMP GP-FUEL INJECTION	1067
	27	1	**298-4535**	1	BRACKET-SUPPORT	
	28	1	**298-4536**	1	BRACKET-MOUNTING	
	29	1	**298-4542**	1	TUBE AS	
	30	1	**298-4543**	1	BOLT	
	31	2	**308-3395**	1	BRACKET-MOUNTING	
Y	32	1	**282-0480**	4	INJECTOR GP-FUEL	1019
	33	1	**298-4537**	1	TUBE AS	
	34	1	**298-4538**	1	TUBE AS (CYL NO. 1)	
	35	1	**298-4539**	1	TUBE AS (CYL NO. 2)	
	36	1	**298-4540**	1	TUBE AS (CYL NO. 3)	
	37	1	**298-4541**	1	TUBE AS (CYL NO. 4)	
	38	3	**278-5225**	1	KIT-SENSOR (ENGINE OIL PRESSURE)	
	38A	3	**278-5226**	1	SEAL-O-RING	
	39	3	**278-5228**	1	KIT-SENSOR (ENGINE SPEED)	
	39A	3	**278-5227**	1	SEAL-O-RING	
	40	3	**278-5272**	1	KIT-SENSOR (AIR TEMPERATURE)	
	40A	3	**278-5226**	1	SEAL-O-RING	
	41	3	**278-5273**	1	KIT-SENSOR (WATER PRESSURE)	
	41A	3	**199-9252**	1	SEAL-O-RING	
	42	3	**278-5307**	1	KIT-SENSOR (WATER TEMPERATURE)	
	42A	3	**199-9267**	1	SEAL-O-RING	
	43	1	**278-5308**	1	KIT-SENSOR (FUEL RAIL PRESSURE)	
	43A	1	**309-8006**	1	WASHER	

304-0725 **PUMP GP-FUEL INJECTION** (contd.) **i02755699**

NOTE	REF NO	GRAPHIC REF	PART NUMBER	QTY	PART NAME 1 2 3 4 5 6 (PRODUCT LEVEL)	SEE PAGE
F			**278-4138**	5	KIT-FUEL LINE PROTECTION	

F - NOT SHOWN
M - METRIC PART
Y - SEPARATE ILLUSTRATION

304-0725 **PUMP GP-FUEL INJECTION (**contd.**)** **i02755699**

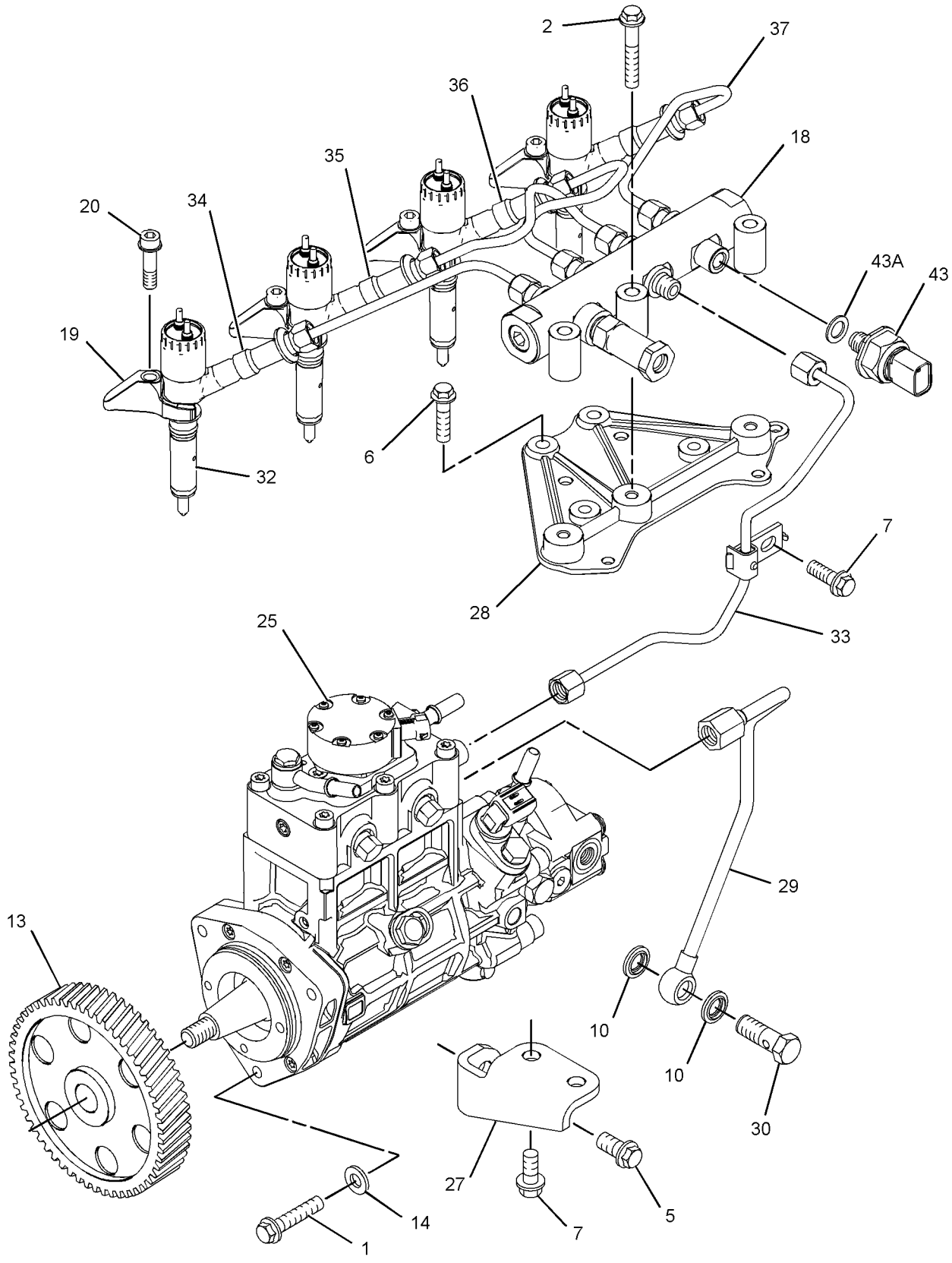

GRAPHIC #1 g01378907

304-0725 **PUMP GP-FUEL INJECTION (**contd.**)** **i02755699**

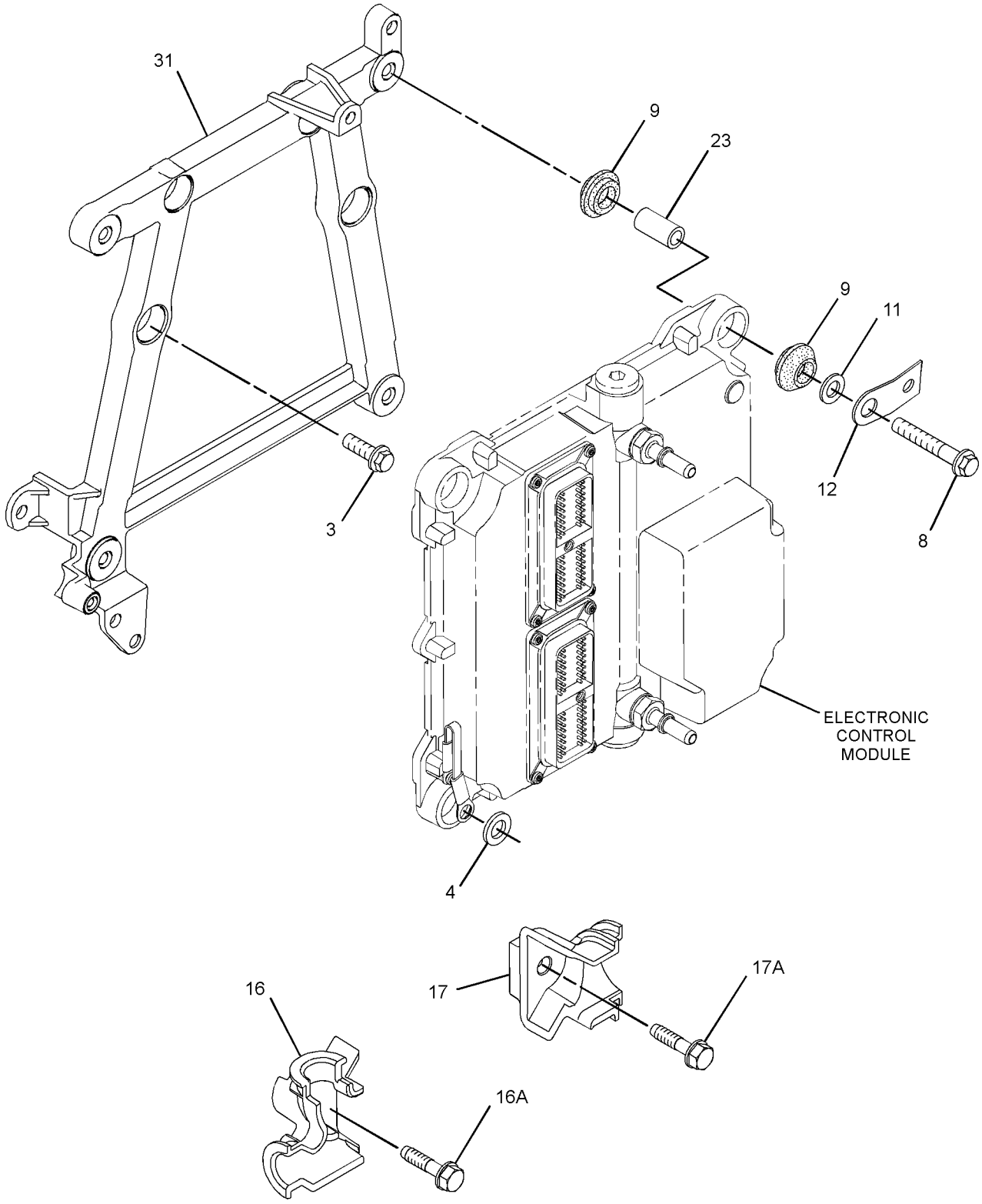

GRAPHIC #2 g01378908

304-0725 **PUMP GP-FUEL INJECTION (**contd.**)** **i02755699**

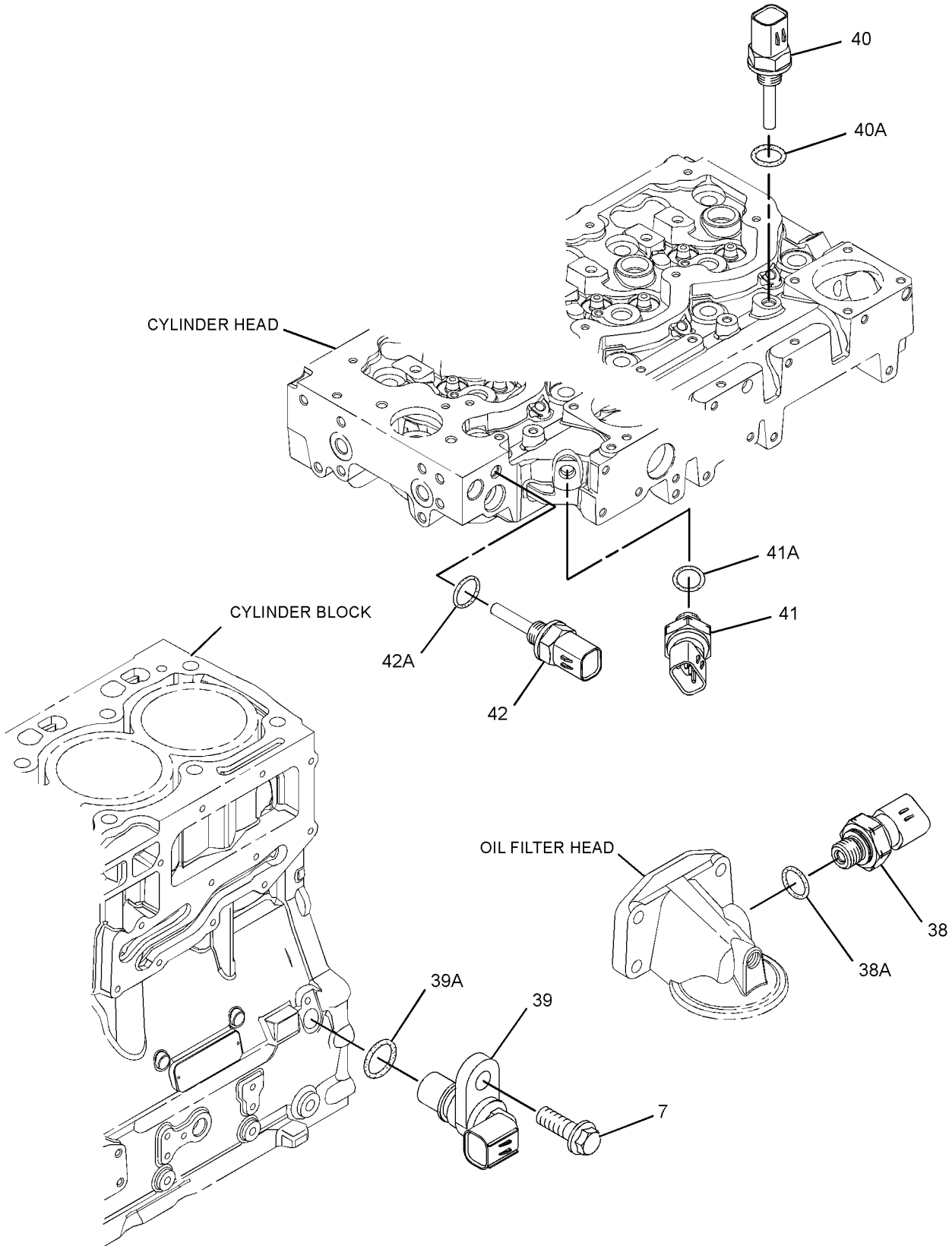

GRAPHIC #3 <END> g01378910

304-0725 PUMP GP-FUEL INJECTION

TYPE 2

SMCS-1251, 1290 **i02805055**

NOTE	REF NO	GRAPHIC REF	PART NUMBER	QTY	PART NAME 1 2 3 4 5 6 (PRODUCT LEVEL)	SEE PAGE
M	1	1	**6I-0260**	3	BOLT (M8X1.25X25-MM)	
M	2	1	**6I-0455**	3	BOLT (M8X1.25X55-MM)	
M	3	2	**6I-0572**	4	BOLT (M8X1.25X20-MM)	
	4	2	**7W-2632**	1	WASHER (8.5X16.8X1.6-MM THK)	
M	5	1	**100-4830**	1	BOLT (M10X1.5X20-MM)	
M	6	1	**101-3895**	4	BOLT (M8X1.25X35-MM)	
M	7	1,3	**124-3815**	4	BOLT (M8X1.25X16-MM)	
M	8	2	**141-8584**	4	BOLT (M8X1.25X50-MM)	
C	9	2	**300-6714**	8	MOUNT	
	10	1	**160-0162**	2	WASHER	
	11	2	**217-0099**	4	SPACER (8.2X25X2-MM THK)	
	12	2	**217-8477**	1	CLIP	
	13	1	**230-8989**	1	GEAR-FUEL PUMP (68-TEETH)	
	14	1	**232-3149**	6	WASHER (8.35X16.85X1.55-MM THK)	
	16	2	**268-6678**	1	BRACKET AS	
	16A	2	**260-6678**	1	BOLT (M8X1.25X30-MM)	
	17	2	**268-6677**	1	BRACKET AS	
M	17A	2	**260-3939**	1	SCREW-HEX HEAD (M6X1X25-MM)	
	18	1	**308-8425**	1	RAIL AS-FUEL	
	19	1	**278-5168**	4	CLAMP-INJECTOR	
	20	1	**278-5170**	4	BOLT	
	23	2	**278-5203**	4	SPACER	
Y	25	1	**283-2271**	1	PUMP GP-FUEL INJECTION	1067
	27	1	**298-4535**	1	BRACKET-SUPPORT	
	28	1	**298-4536**	1	BRACKET-MOUNTING	
	29	1	**298-4542**	1	TUBE AS	
	30	1	**298-4543**	1	BOLT	
	31	2	**308-3395**	1	BRACKET-MOUNTING	
Y	32	1	**282-0480**	4	INJECTOR GP-FUEL	1019
	33	1	**298-4537**	1	TUBE AS	
	34	1	**298-4538**	1	TUBE AS (CYL NO. 1)	
	35	1	**298-4539**	1	TUBE AS (CYL NO. 2)	
	36	1	**298-4540**	1	TUBE AS (CYL NO. 3)	
	37	1	**298-4541**	1	TUBE AS (CYL NO. 4)	
	38	3	**278-5225**	1	KIT-SENSOR (ENGINE OIL PRESSURE)	
	38A	3	**278-5226**	1	SEAL-O-RING	
C	39	3	**311-3858**	1	KIT-SENSOR (ENGINE SPEED)	
	39A	3	**274-1639**	1	SEAL	
	40	3	**278-5272**	1	KIT-SENSOR (AIR TEMPERATURE)	
	40A	3	**278-5226**	1	SEAL-O-RING	
	41	3	**278-5273**	1	KIT-SENSOR (WATER PRESSURE)	
	41A	3	**199-9252**	1	SEAL-O-RING	
	42	3	**278-5307**	1	KIT-SENSOR (WATER TEMPERATURE)	
	42A	3	**199-9267**	1	SEAL-O-RING	
C	43	1	**311-6342**	1	SENSOR AS-PRESSURE (FUEL RAIL PRESSURE)	
	43A	1	**309-8006**	1	WASHER	
F			**278-4138**	5	KIT-FUEL LINE PROTECTION	

304-0725 **PUMP GP-FUEL INJECTION (**contd.**)** **i02805055**

NOTE	REF NO	GRAPHIC REF	PART NUMBER	QTY	PART NAME 1 2 3 4 5 6 (PRODUCT LEVEL)	SEE PAGE

C - CHANGE FROM PREVIOUS TYPE
F - NOT SHOWN
M - METRIC PART
Y - SEPARATE ILLUSTRATION

304-0725 **PUMP GP-FUEL INJECTION (**contd.**)** **i02805055**

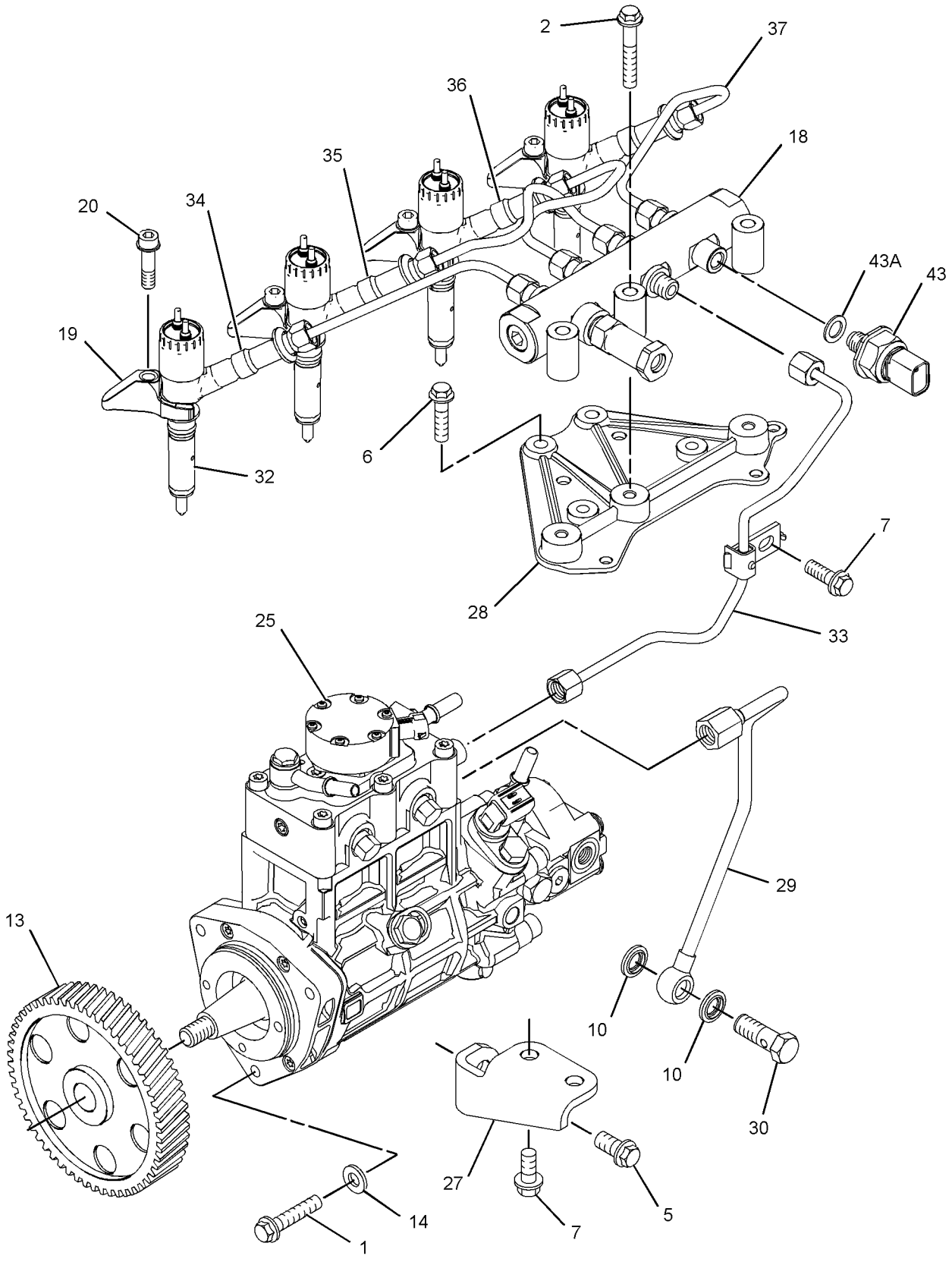

GRAPHIC #1 g01378907

304-0725 **PUMP GP-FUEL INJECTION (**contd.**)** **i02805055**

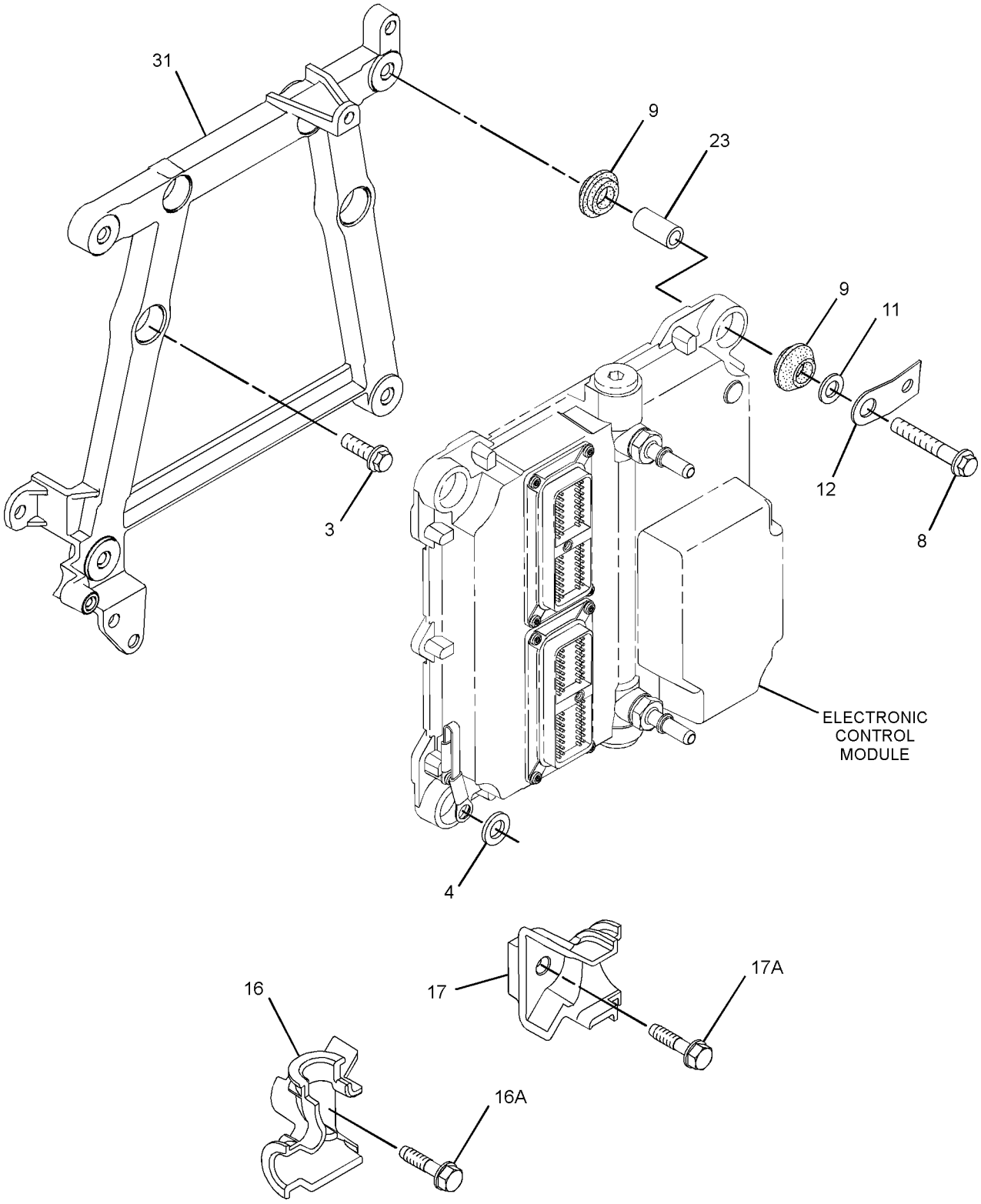

GRAPHIC #2 g01378908

304-0725 **PUMP GP-FUEL INJECTION (**contd.**)** **i02805055**

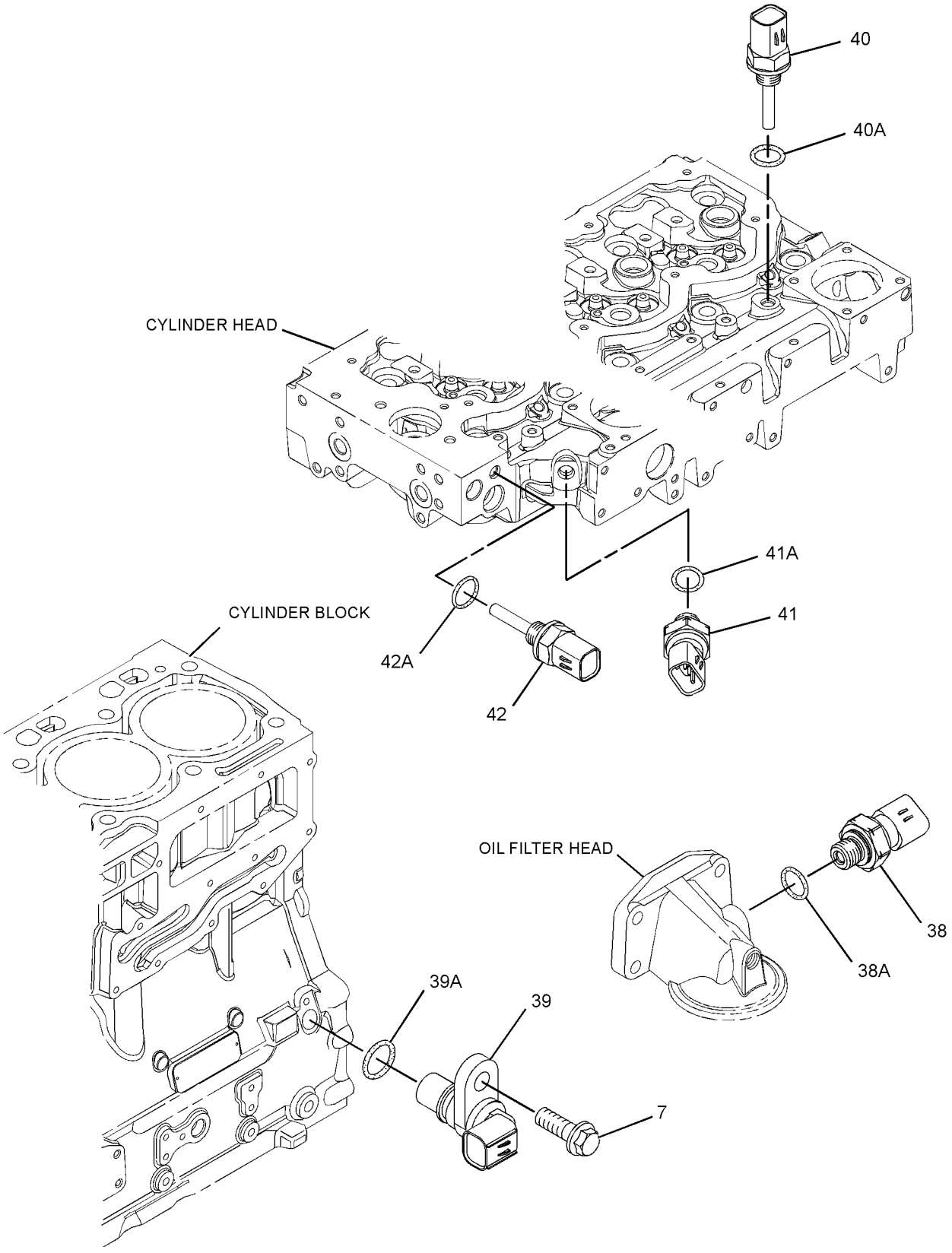

GRAPHIC #3 <END> g01378910

304-0725 PUMP GP-FUEL INJECTION

TYPE 3

SMCS-1251, 1290 **i03730791**

NOTE	REF NO	GRAPHIC REF	PART NUMBER	QTY	PART NAME 1 2 3 4 5 6 (PRODUCT LEVEL)	SEE PAGE
M	1	1	**6I-0260**	3	BOLT (M8X1.25X25-MM)	
M	2	1	**6I-0455**	3	BOLT (M8X1.25X55-MM)	
M	3	2	**6I-0572**	4	BOLT (M8X1.25X20-MM)	
	4	2	**7W-2632**	1	WASHER (8.5X16.8X1.6-MM THK)	
M	5	1	**100-4830**	1	BOLT (M10X1.5X20-MM)	
M	6	1	**101-3895**	4	BOLT (M8X1.25X35-MM)	
M	7	1,3	**124-3815**	4	BOLT (M8X1.25X16-MM)	
M	8	2	**141-8584**	4	BOLT (M8X1.25X50-MM)	
	9	2	**300-6714**	8	MOUNT	
C	10	1	**160-0162**	2	WASHER	
	11	2	**217-0099**	5	SPACER (8.2X25X2-MM THK)	
	13	1	**230-8989**	1	GEAR-FUEL PUMP (68-TEETH)	
C	14	1	**232-3149**	3	WASHER (8.35X16.85X1.55-MM THK)	
	16	2	**268-6678**	1	BRACKET AS	
M	16A	2	**260-3939**	1	SCREW-HEX HEAD (M6X1X25-MM)	
	17	2	**268-6677**	1	BRACKET AS	
M	17A	2	**260-3939**	1	SCREW-HEX HEAD (M6X1X25-MM)	
C	18	1	**318-2394**	1	RAIL AS-FUEL	
	18A	1	**305-5291**	1	VALVE AS-RELIEF	
	19	1	**278-5168**	4	CLAMP-INJECTOR	
	20	1	**278-5170**	4	BOLT	
	23	2	**278-5203**	4	SPACER	
CYR	25	1	**324-0532**	1	PUMP GP-FUEL INJECTION	1523
	27	1	**298-4535**	1	BRACKET-SUPPORT	
	28	1	**337-3573**	1	BRACKET	
	29	1	**298-4542**	1	TUBE AS	
	30	1	**298-4543**	1	BOLT	
C	31	2	**317-3144**	1	BRACKET	
CYR	32	1	**320-0680**	4	INJECTOR GP-FUEL	1027
	33	1	**337-3574**	1	TUBE	
	34	1	**322-3745**	1	TUBE (CYL NO. 1)	
	35	1	**322-3746**	1	TUBE (CYL NO. 2)	
	36	1	**333-4732**	1	LINE-FUEL INJECTION (CYL NO. 3)	
	37	1	**333-4733**	1	LINE-FUEL INJECTION (CYL NO. 4)	
	38	3	**278-5225**	1	KIT-SENSOR (ENGINE OIL PRESSURE)	
	38A	3	**199-9267**	1	SEAL-O-RING	
	39	3	**311-3858**	1	KIT-SENSOR (ENGINE SPEED)	
	39A	3	**274-1639**	1	SEAL	
	40	3	**278-5272**	1	KIT-SENSOR (AIR TEMPERATURE)	
	40A	3	**278-5226**	1	SEAL-O-RING	
	41	3	**278-5273**	1	KIT-SENSOR (WATER PRESSURE)	
	41A	3	**199-9252**	1	SEAL-O-RING	
	42	3	**278-5307**	1	KIT-SENSOR (WATER TEMPERATURE)	
	42A	3	**199-9267**	1	SEAL-O-RING	
	43	1	**311-6342**	1	SENSOR AS-PRESSURE (FUEL RAIL PRESSURE)	
	43A	1	**309-8006**	1	WASHER	
F			**278-4138**	5	KIT-FUEL LINE PROTECTION	

304-0725 **PUMP GP-FUEL INJECTION** (contd.) **i03730791**

NOTE	REF NO	GRAPHIC REF	PART NUMBER	QTY	PART NAME 1 2 3 4 5 6 (PRODUCT LEVEL)	SEE PAGE

C - CHANGE FROM PREVIOUS TYPE
F - NOT SHOWN
M - METRIC PART
R - REMANUFACTURED PART MAY BE AVAILABLE
Y - SEPARATE ILLUSTRATION

304-0725 **PUMP GP-FUEL INJECTION (**contd.**)** **i03730791**

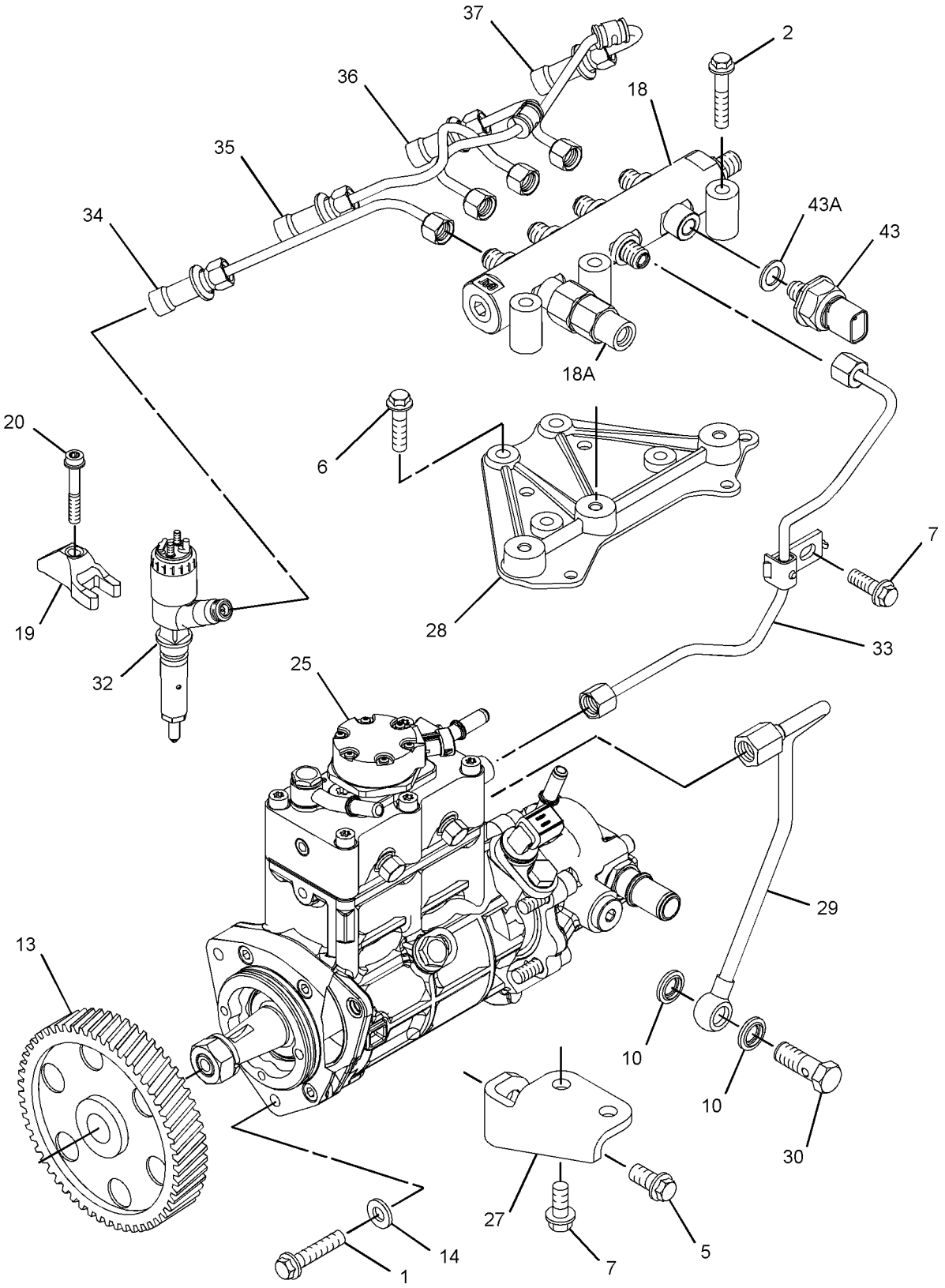

GRAPHIC #1 g01838553

304-0725 **PUMP GP-FUEL INJECTION (**contd.**)** **i03730791**

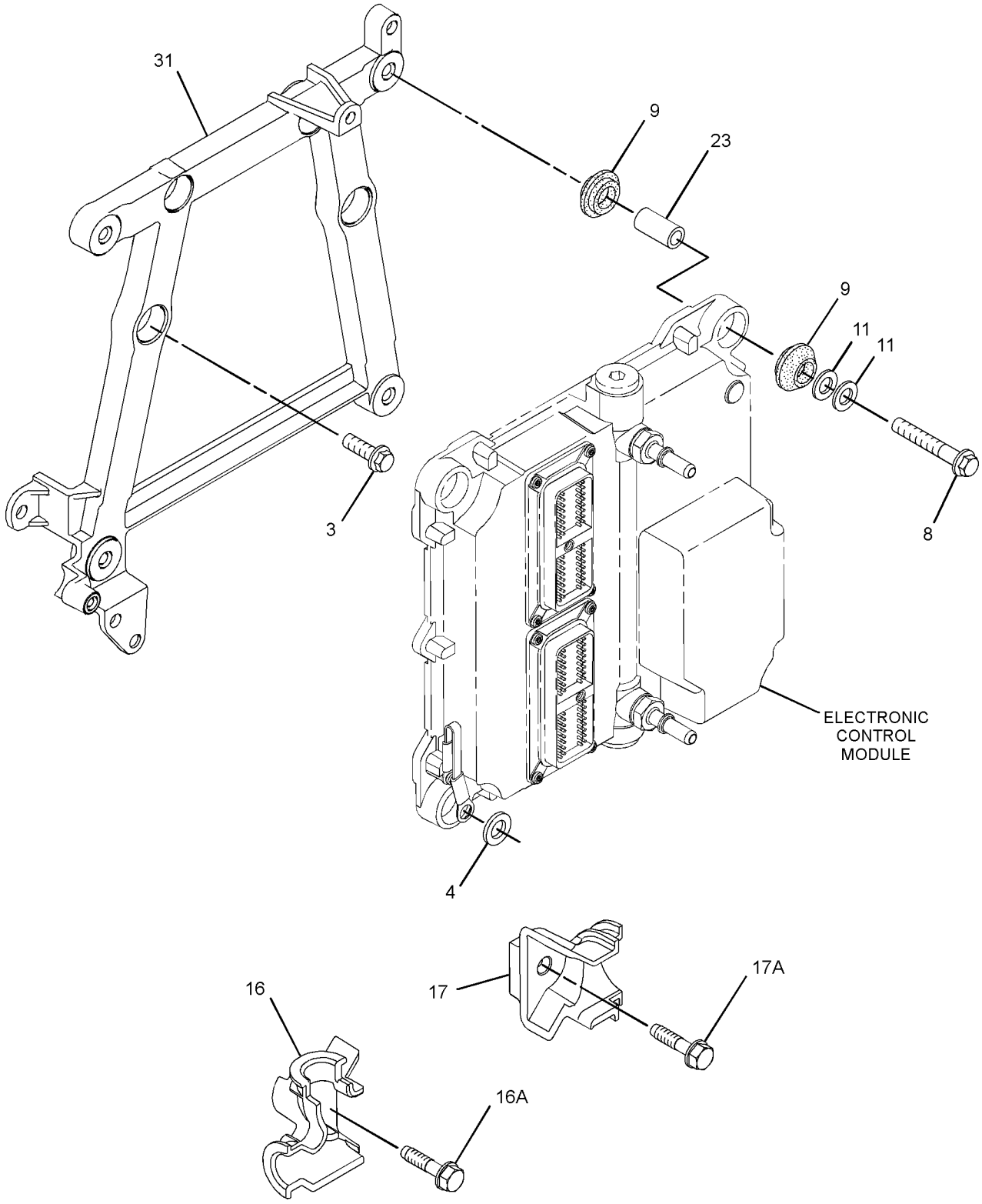

GRAPHIC #2 g01934154

304-0725 **PUMP GP-FUEL INJECTION (**contd.**)** **i03730791**

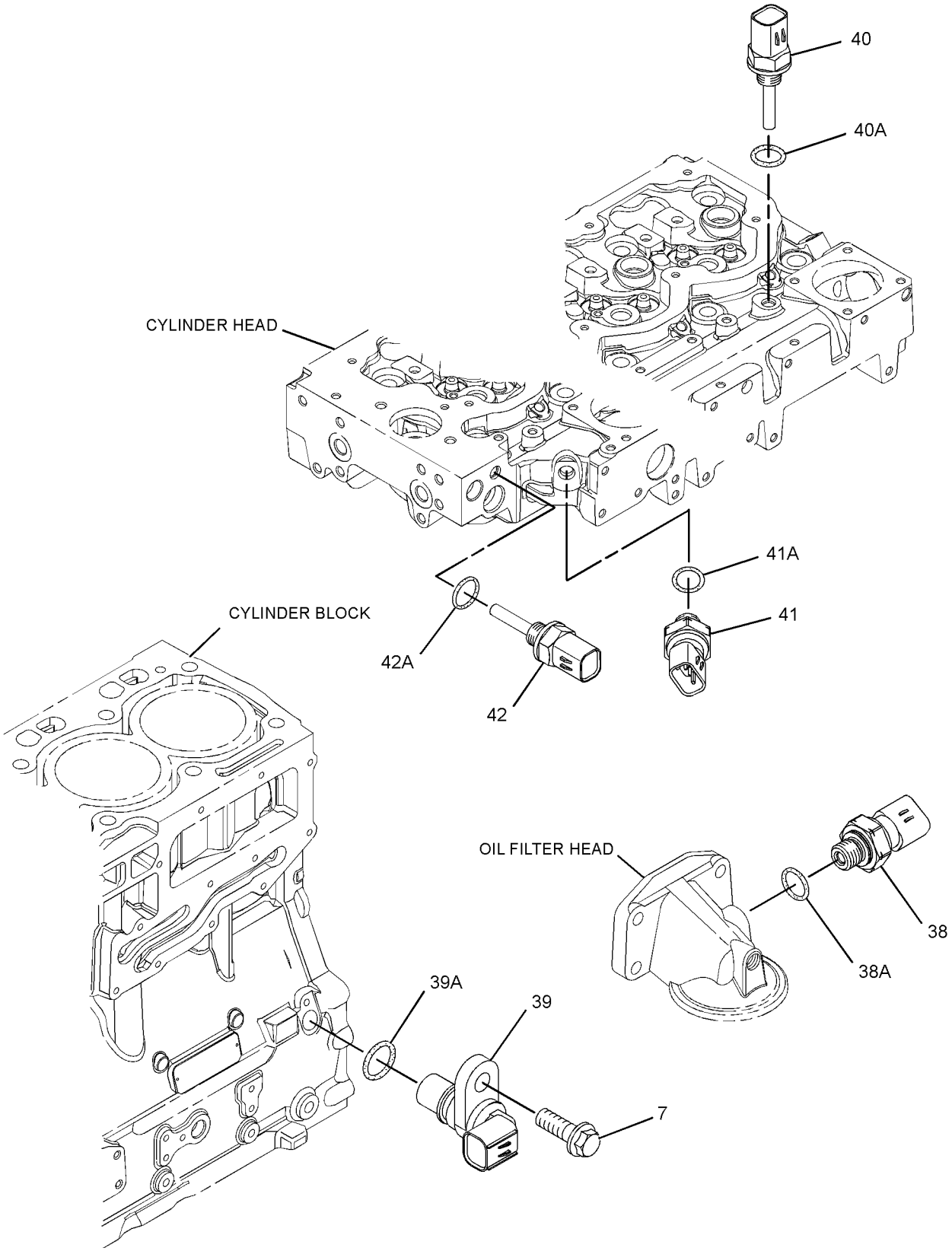

GRAPHIC #3 <END> g01378910

304-0725 PUMP GP-FUEL INJECTION

TYPE 4

SMCS-1251, 1290 **i03956832**

NOTE	REF NO	GRAPHIC REF	PART NUMBER	QTY	PART NAME 1 2 3 4 5 6 (PRODUCT LEVEL)	SEE PAGE
M	1	1	**6I-0260**	3	BOLT (M8X1.25X25-MM)	
M	2	1	**6I-0455**	3	BOLT (M8X1.25X55-MM)	
M	3	2	**6I-0572**	4	BOLT (M8X1.25X20-MM)	
	4	2	**7W-2632**	1	WASHER (8.5X16.8X1.6-MM THK)	
M	5	1	**100-4830**	1	BOLT (M10X1.5X20-MM)	
M	6	1	**101-3895**	4	BOLT (M8X1.25X35-MM)	
M	7	1,3	**124-3815**	4	BOLT (M8X1.25X16-MM)	
M	8	2	**141-8584**	4	BOLT (M8X1.25X50-MM)	
	9	2	**300-6714**	8	MOUNT	
	10	1	**160-0162**	2	WASHER	
	11	2	**217-0099**	5	SPACER (8.2X25X2-MM THK)	
	13	1	**230-8989**	1	GEAR-FUEL PUMP (68-TEETH)	
	14	1	**232-3149**	3	WASHER (8.35X16.85X1.55-MM THK)	
	16	2	**268-6678**	1	BRACKET AS	
M	16A	2	**260-3939**	1	SCREW-HEX HEAD (M6X1X25-MM)	
	17	2	**268-6677**	1	BRACKET AS	
M	17A	2	**260-3939**	1	SCREW-HEX HEAD (M6X1X25-MM)	
	18	1	**318-2394**	1	RAIL AS-FUEL	
	18A	1	**305-5291**	1	VALVE AS-RELIEF	
	19	1	**278-5168**	4	CLAMP-INJECTOR	
	20	1	**278-5170**	4	BOLT	
	23	2	**278-5203**	4	SPACER	
CYR	25	1	**352-6584**	1	PUMP GP-FUEL INJECTION	1540
	27	1	**298-4535**	1	BRACKET-SUPPORT	
	28	1	**337-3573**	1	BRACKET	
	29	1	**298-4542**	1	TUBE AS	
	30	1	**298-4543**	1	BOLT	
	31	2	**317-3144**	1	BRACKET	
YR	32	1	**320-0680**	4	INJECTOR GP-FUEL	1027
	33	1	**337-3574**	1	TUBE	
	34	1	**322-3745**	1	TUBE (CYL NO. 1)	
	35	1	**322-3746**	1	TUBE (CYL NO. 2)	
	36	1	**333-4732**	1	LINE-FUEL INJECTION (CYL NO. 3)	
	37	1	**333-4733**	1	LINE-FUEL INJECTION (CYL NO. 4)	
	38	3	**278-5225**	1	KIT-SENSOR (ENGINE OIL PRESSURE)	
	38A	3	**199-9267**	1	SEAL-O-RING	
	39	3	**311-3858**	1	KIT-SENSOR (ENGINE SPEED)	
	39A	3	**274-1639**	1	SEAL	
		3	**238-0120**	1	SENSOR GP-SPEED	
	40	3	**278-5272**	1	KIT-SENSOR (AIR TEMPERATURE)	
	40A	3	**278-5226**	1	SEAL-O-RING	
	41	3	**278-5273**	1	KIT-SENSOR (WATER PRESSURE)	
	41A	3	**199-9252**	1	SEAL-O-RING	
	42	3	**278-5307**	1	KIT-SENSOR (WATER TEMPERATURE)	
	42A	3	**199-9267**	1	SEAL-O-RING	
	43	1	**311-6342**	1	SENSOR AS-PRESSURE (FUEL RAIL PRESSURE)	
	43A	1	**309-8006**	1	WASHER	

304-0725 **PUMP GP-FUEL INJECTION (**contd.**)** **i03956832**

NOTE	REF NO	GRAPHIC REF	PART NUMBER	QTY	PART NAME 1 2 3 4 5 6 (PRODUCT LEVEL)	SEE PAGE
F			**278-4138**	5	KIT-FUEL LINE PROTECTION	

C - CHANGE FROM PREVIOUS TYPE
F - NOT SHOWN
M - METRIC PART
R - REMANUFACTURED PART MAY BE AVAILABLE
Y - SEPARATE ILLUSTRATION

304-0725 **PUMP GP-FUEL INJECTION (**contd.**)** **i03956832**

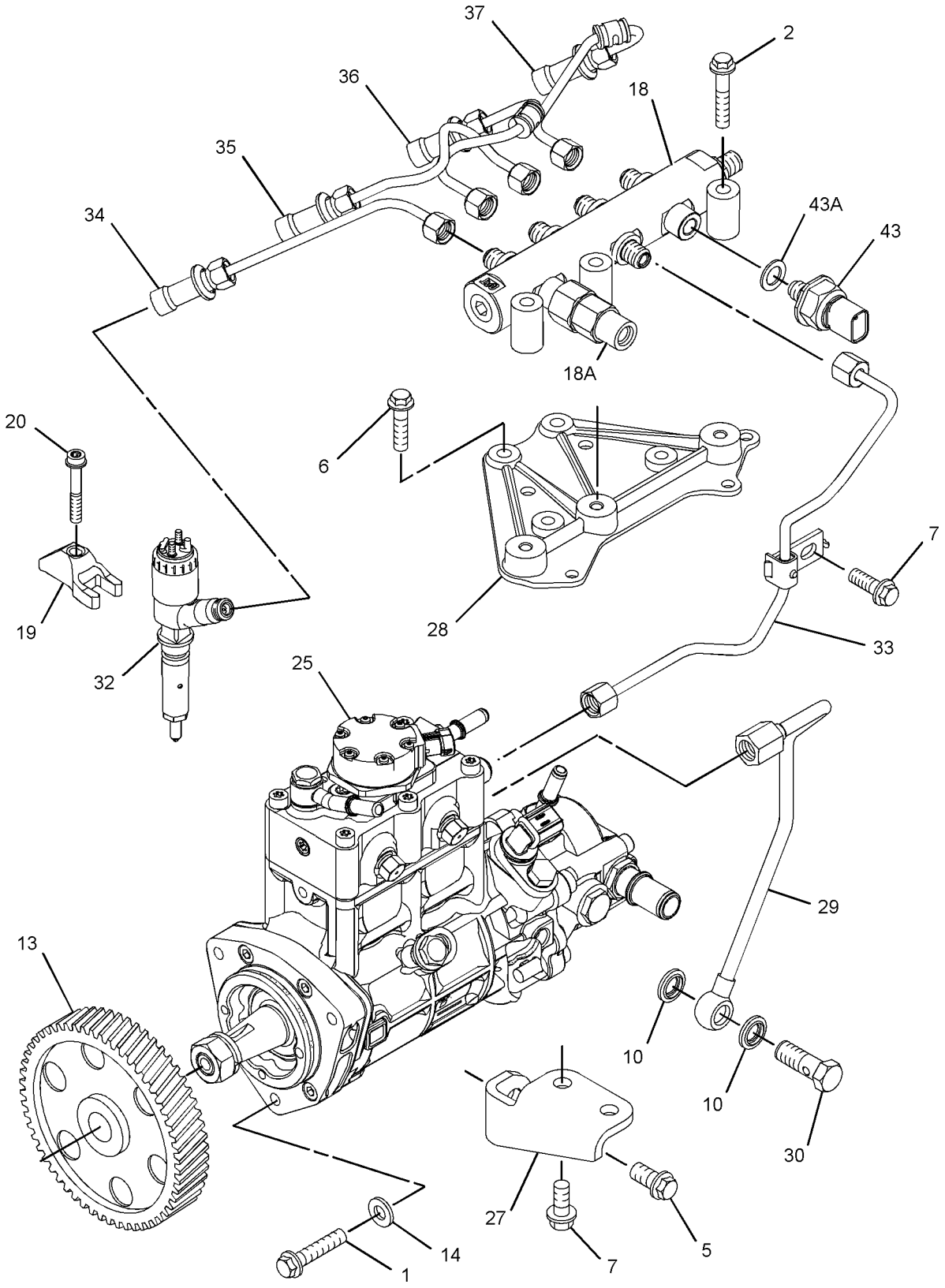

GRAPHIC #1 g02243755

304-0725 **PUMP GP-FUEL INJECTION (**contd.**)** **i03956832**

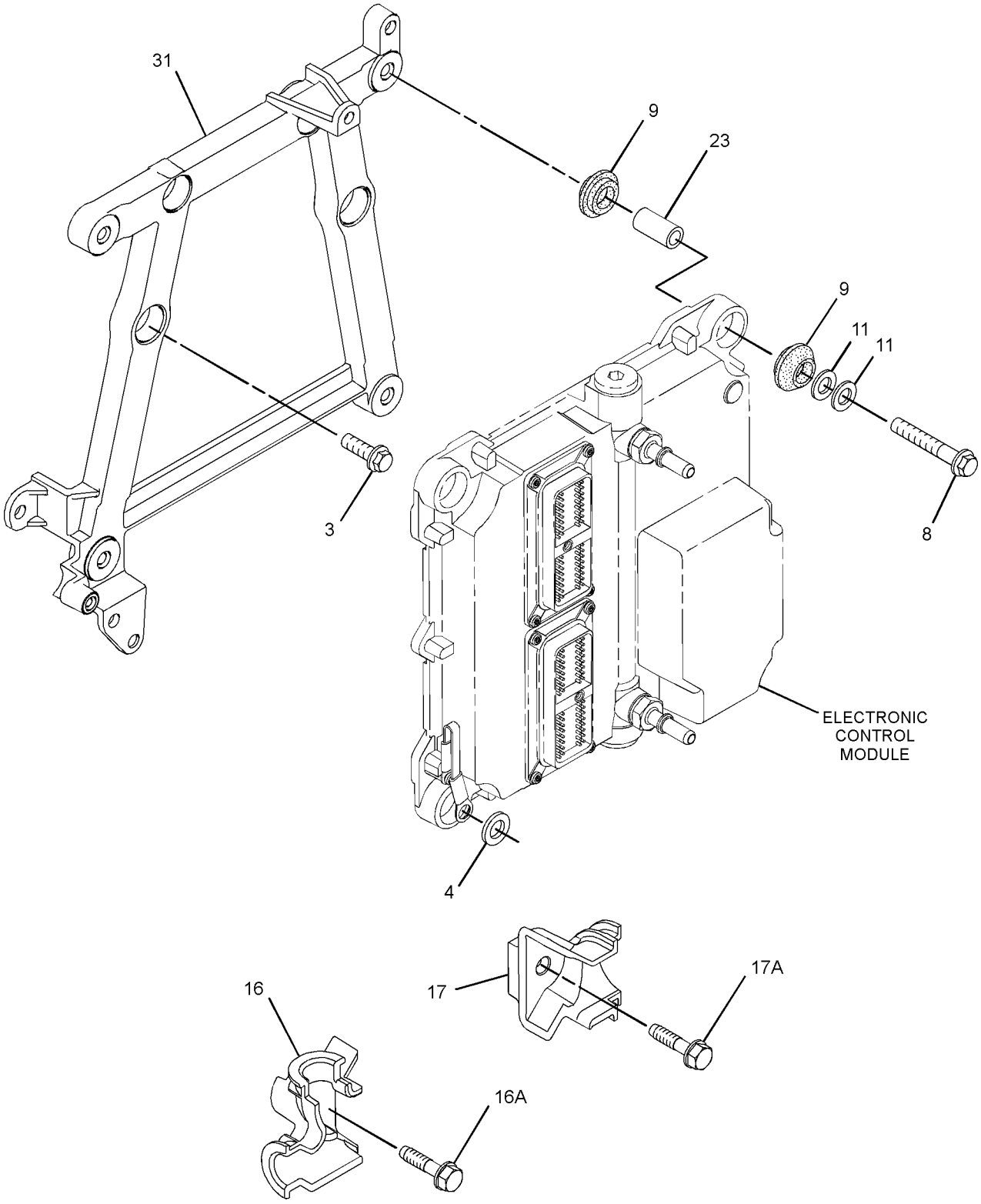

GRAPHIC #2 g01934154

304-0725 **PUMP GP-FUEL INJECTION (**contd.**)** **i03956832**

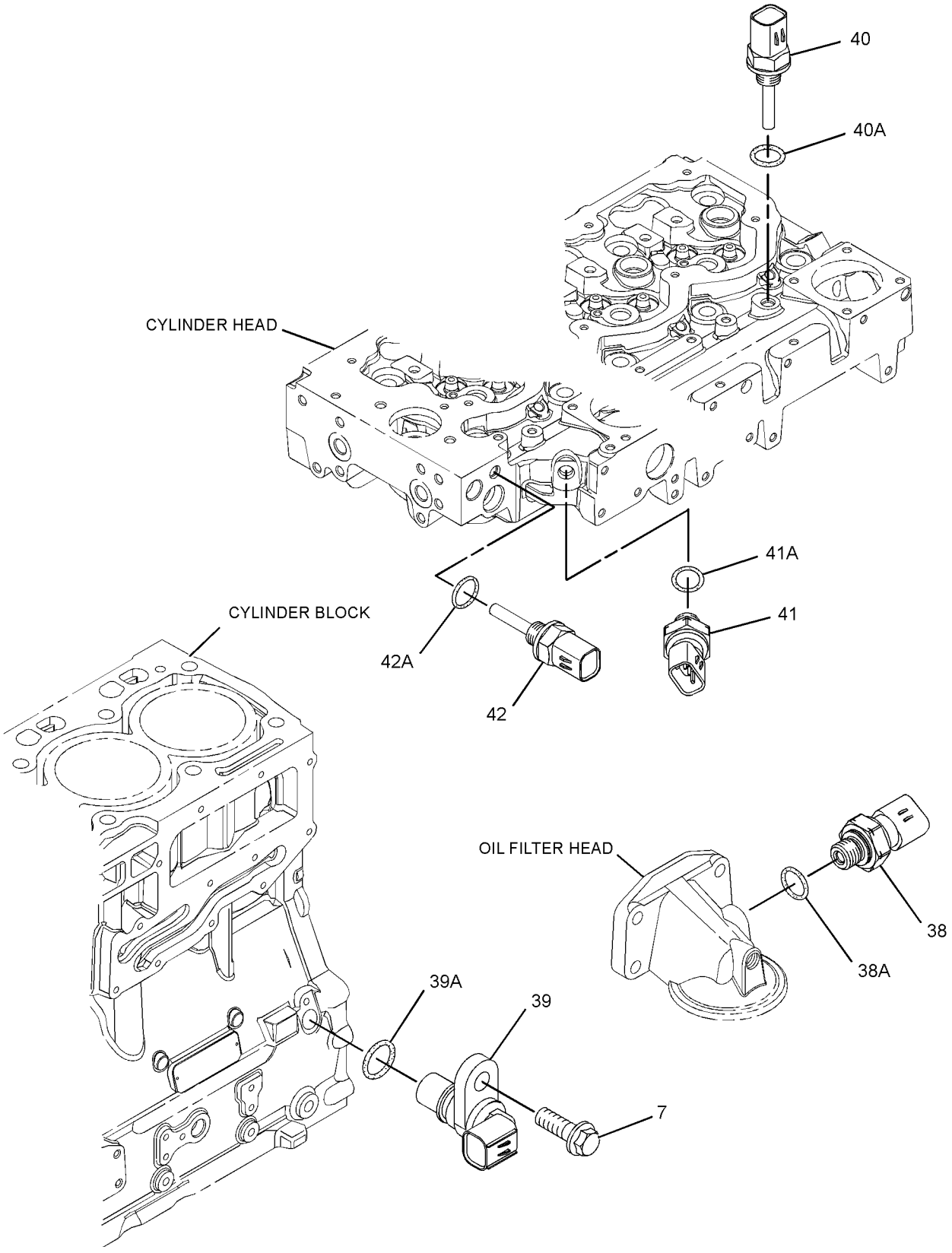

GRAPHIC #3 <END> g01378910

304-0725 PUMP GP-FUEL INJECTION

TYPE 5

SMCS-1251, 1290 **i05880371**

NOTE	REF NO	GRAPHIC REF	PART NUMBER	QTY	PART NAME 1 2 3 4 5 6 (PRODUCT LEVEL)	SEE PAGE
M	1	1	**6I-0260**	3	BOLT (M8X1.25X25-MM)	
M	2	1	**6I-0455**	3	BOLT (M8X1.25X55-MM)	
M	3	2	**6I-0572**	4	BOLT (M8X1.25X20-MM)	
	4	2	**7W-2632**	1	WASHER (8.5X16.8X1.6-MM THK)	
M	5	1	**100-4830**	1	BOLT (M10X1.5X20-MM)	
M	6	1	**101-3895**	4	BOLT (M8X1.25X35-MM)	
M	7	1,3	**124-3815**	4	BOLT (M8X1.25X16-MM)	
M	8	2	**141-8584**	4	BOLT (M8X1.25X50-MM)	
	9	2	**300-6714**	8	MOUNT	
	10	1	**346-0007**	2	WASHER	
	11	2	**217-0099**	5	SPACER (8.2X25X2-MM THK)	
	13	1	**230-8989**	1	GEAR-FUEL PUMP (68-TEETH)	
	14	1	**232-3149**	3	WASHER (8.35X16.85X1.55-MM THK)	
	16	2	**268-6678**	1	BRACKET AS	
M	16A	2	**260-3939**	1	SCREW-HEX HEAD (M6X1X25-MM)	
	17	2	**268-6677**	1	BRACKET AS	
M	17A	2	**260-3939**	1	SCREW-HEX HEAD (M6X1X25-MM)	
	18	1	**358-6632**	1	RAIL GP-FUEL	
	18A	1	**305-5291**	1	VALVE AS-RELIEF	
	19	1	**278-5168**	4	CLAMP-INJECTOR	
	20	1	**278-5170**	4	BOLT	
	23	2	**278-5203**	4	SPACER	
CYR	25	1	**324-0532**	1	PUMP GP-FUEL INJECTION	1523
	27	1	**298-4535**	1	BRACKET-SUPPORT	
	28	1	**337-3573**	1	BRACKET	
	29	1	**298-4542**	1	TUBE AS	
	30	1	**363-3908**	1	BOLT-SPECIAL	
	31	2	**317-3144**	1	BRACKET	
YR	32	1	**320-0680**	4	INJECTOR GP-FUEL	1027
	33	1	**337-3574**	1	TUBE	
	34	1	**322-3745**	1	TUBE (CYL NO. 1)	
	35	1	**322-3746**	1	TUBE (CYL NO. 2)	
	36	1	**333-4732**	1	LINE-FUEL INJECTION (CYL NO. 3)	
	37	1	**333-4733**	1	LINE-FUEL INJECTION (CYL NO. 4)	
	38	3	**278-5225**	1	KIT-SENSOR (ENGINE OIL PRESSURE)	
	38A	3	**199-9267**	1	SEAL-O-RING	
	39	3	**311-3858**	1	KIT-SENSOR (ENGINE SPEED)	
	39A	3	**274-1639**	1	SEAL	
		3	**238-0120**	1	SENSOR GP-SPEED	
	40	3	**278-5272**	1	KIT-SENSOR (AIR TEMPERATURE)	
	40A	3	**278-5226**	1	SEAL-O-RING	
	41	3	**278-5273**	1	KIT-SENSOR (WATER PRESSURE)	
	41A	3	**199-9252**	1	SEAL-O-RING	
	42	3	**278-5307**	1	KIT-SENSOR (WATER TEMPERATURE)	
	42A	3	**199-9267**	1	SEAL-O-RING	
	43	1	**311-6342**	1	SENSOR AS-PRESSURE (FUEL RAIL PRESSURE)	
	43A	1	**309-8006**	1	WASHER	

304-0725 **PUMP GP-FUEL INJECTION** (contd.) **i05880371**

NOTE	REF NO	GRAPHIC REF	PART NUMBER	QTY	PART NAME 1 2 3 4 5 6 (PRODUCT LEVEL)	SEE PAGE
F			**278-4138**	5	KIT-FUEL LINE PROTECTION	

C - CHANGE FROM PREVIOUS TYPE
F - NOT SHOWN
M - METRIC PART
R - REMANUFACTURED PART MAY BE AVAILABLE
Y - SEPARATE ILLUSTRATION

304-0725 **PUMP GP-FUEL INJECTION (**contd.**)** **i05880371**

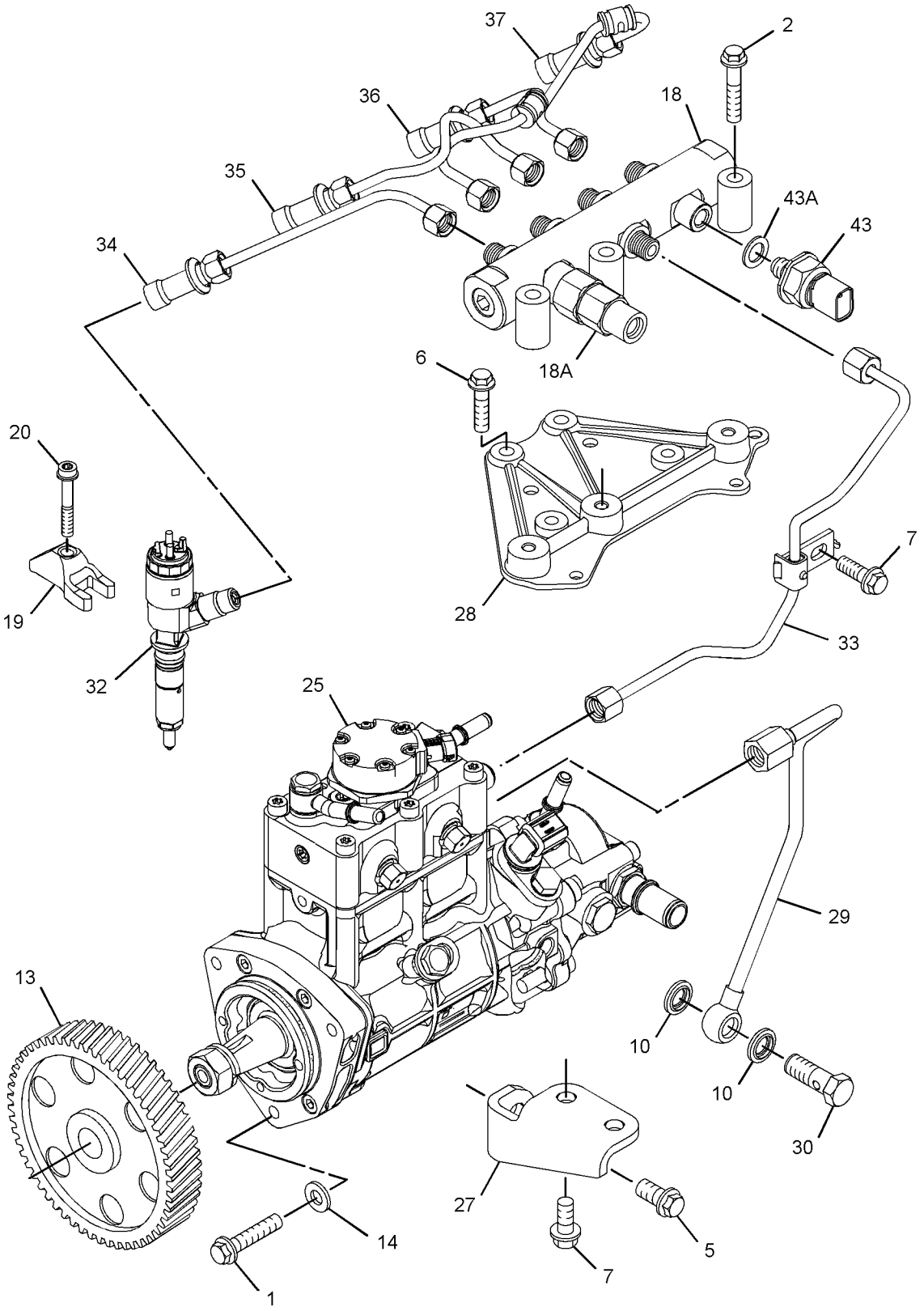

GRAPHIC #1 g02857524

304-0725 **PUMP GP-FUEL INJECTION (**contd.**)** **i05880371**

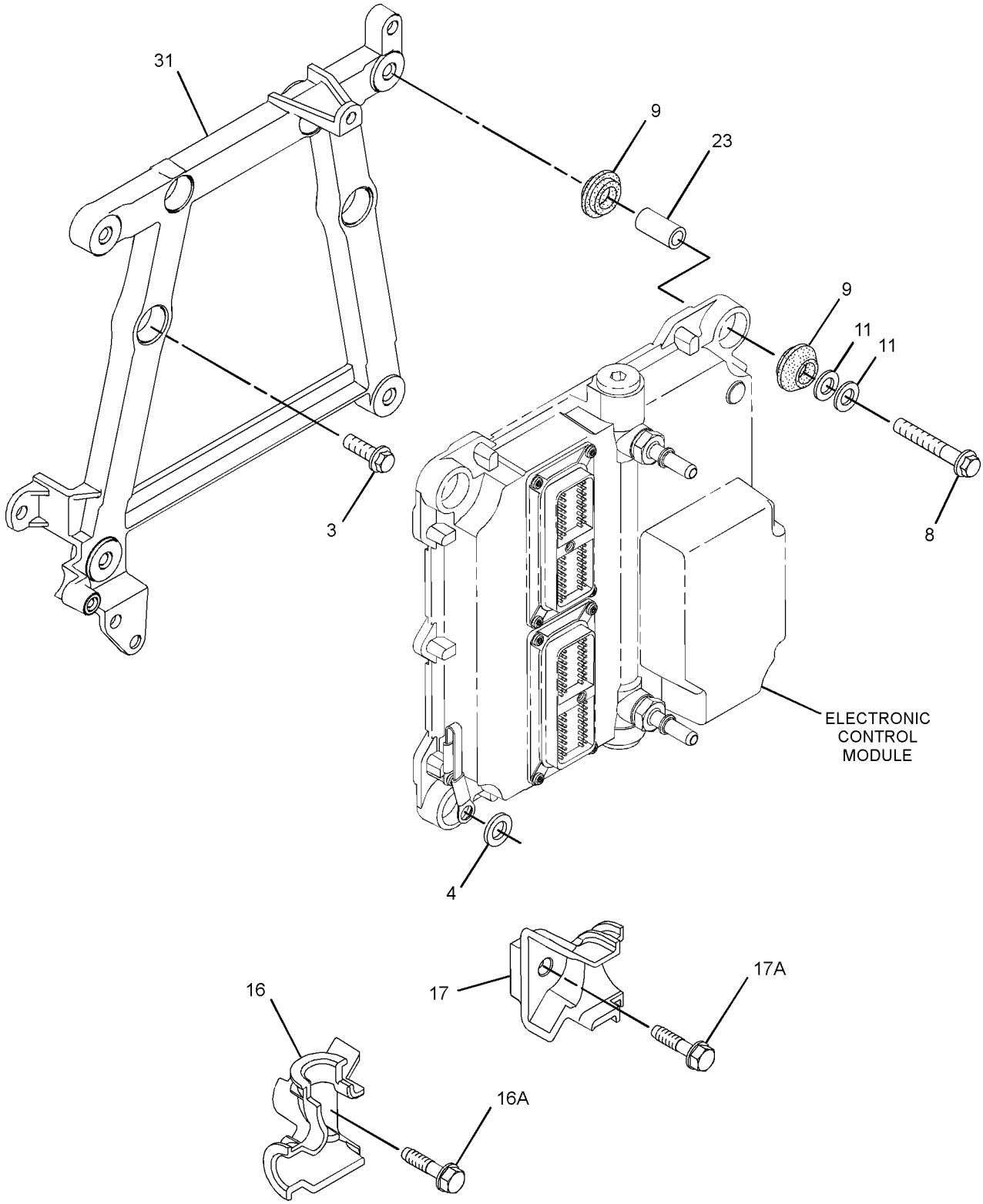

GRAPHIC #2 g01934154

304-0725 **PUMP GP-FUEL INJECTION (**contd.**)** **i05880371**

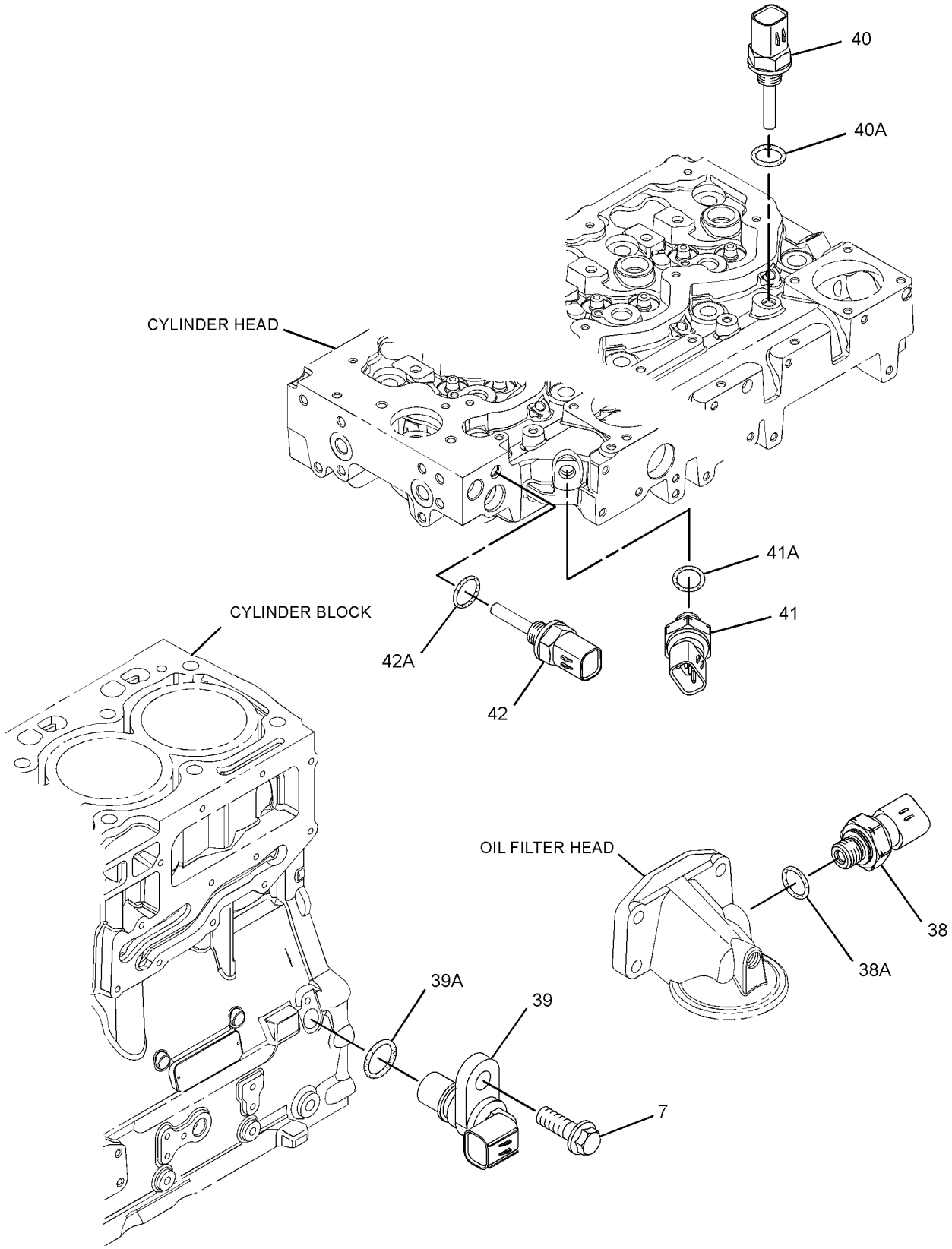

GRAPHIC #3 <END> g01378910

304-6570 PUMP GP-FUEL INJECTION

TYPE 1

SMCS-1251, 1290 **i06543841**

NOTE	REF NO	GRAPHIC REF	PART NUMBER	QTY	PART NAME 1 2 3 4 5 6 (PRODUCT LEVEL)	SEE PAGE
M	1	1	**6I-0260**	3	BOLT (M8X1.25X25-MM)	
M	2	1	**6I-0455**	3	BOLT (M8X1.25X55-MM)	
M	3	2	**6I-0572**	4	BOLT (M8X1.25X20-MM)	
	4	2	**7W-2632**	1	WASHER (8.5X16.8X1.6-MM THK)	
M	5	1	**100-4830**	1	BOLT (M10X1.5X20-MM)	
M	6	1	**101-3895**	4	BOLT (M8X1.25X35-MM)	
M	7	1,3	**124-3815**	4	BOLT (M8X1.25X16-MM)	
M	8	2	**141-8584**	4	BOLT (M8X1.25X50-MM)	
	9	2	**155-0576**	8	MOUNT-ISOLATION	
	10	1	**160-0162**	2	WASHER	
	11	2	**217-0099**	4	SPACER (8.2X25X2-MM THK)	
	12	2	**217-8477**	1	CLIP	
	13	1	**230-8989**	1	GEAR-FUEL PUMP (68-TEETH)	
	14	1	**232-3149**	6	WASHER (8.35X16.85X1.55-MM THK)	
	15	1	**308-8425**	1	RAIL AS-FUEL	
	16	2	**268-6677**	1	BRACKET AS	
		2	**260-3718**	1	BRACKET	
M	16A	2	**260-3939**	1	SCREW-HEX HEAD (M6X1X25-MM)	
	17	2	**268-6678**	1	BRACKET AS	
		2	**260-3719**	1	BRACKET	
M	17A	2	**260-3939**	1	SCREW-HEX HEAD (M6X1X25-MM)	
	18	1	**278-5168**	4	CLAMP-INJECTOR	
	19	1	**278-5170**	4	BOLT	
	20	2	**278-5203**	4	SPACER	
	21	3	**278-5225**	1	KIT-SENSOR (ENGINE OIL PRESSURE)	
	21A	3	**278-5226**	1	SEAL-O-RING	
	22	3	**278-5228**	1	KIT-SENSOR (ENGINE SPEED)	
	22A	3	**278-5227**	1	SEAL-O-RING	
	23	3	**278-5272**	1	KIT-SENSOR (AIR TEMPERATURE)	
	23A	3	**278-5226**	1	SEAL-O-RING	
	24	3	**278-5273**	1	KIT-SENSOR (AIR PRESSURE)	
	24A	3	**199-9252**	1	SEAL-O-RING	
	25	3	**278-5307**	1	KIT-SENSOR (WATER TEMPERATURE)	
	25A	3	**199-9267**	1	SEAL-O-RING	
	26	1	**278-5308**	1	KIT-SENSOR (FUEL RAIL PRESSURE)	
	26A	1	**309-8006**	1	WASHER	
Y	27	1	**283-2271**	1	PUMP GP-FUEL INJECTION	1067
Y	28	1	**292-3780**	4	INJECTOR GP-FUEL	1021
	29	1	**298-4535**	1	BRACKET-SUPPORT	
	30	1	**298-4536**	1	BRACKET-MOUNTING	
	31	1	**298-4537**	1	TUBE AS	
	32	1	**298-4538**	1	TUBE AS (CYL NO. 1)	
	33	1	**298-4539**	1	TUBE AS (CYL NO. 2)	
	34	1	**298-4540**	1	TUBE AS (CYL NO. 3)	
	35	1	**298-4541**	1	TUBE AS (CYL NO. 4)	
	36	1	**298-4542**	1	TUBE AS	
	37	1	**298-4543**	1	BOLT	
	38	2	**308-3395**	1	BRACKET-MOUNTING	

304-6570 **PUMP GP-FUEL INJECTION (**contd.**)** **i06543841**

NOTE	REF NO	GRAPHIC REF	PART NUMBER	QTY	PART NAME 1 2 3 4 5 6 (PRODUCT LEVEL)	SEE PAGE
F			**278-4138**	4	KIT-FUEL LINE PROTECTION	

F - NOT SHOWN
M - METRIC PART
Y - SEPARATE ILLUSTRATION

304-6570 **PUMP GP-FUEL INJECTION (**contd.**)** **i06543841**

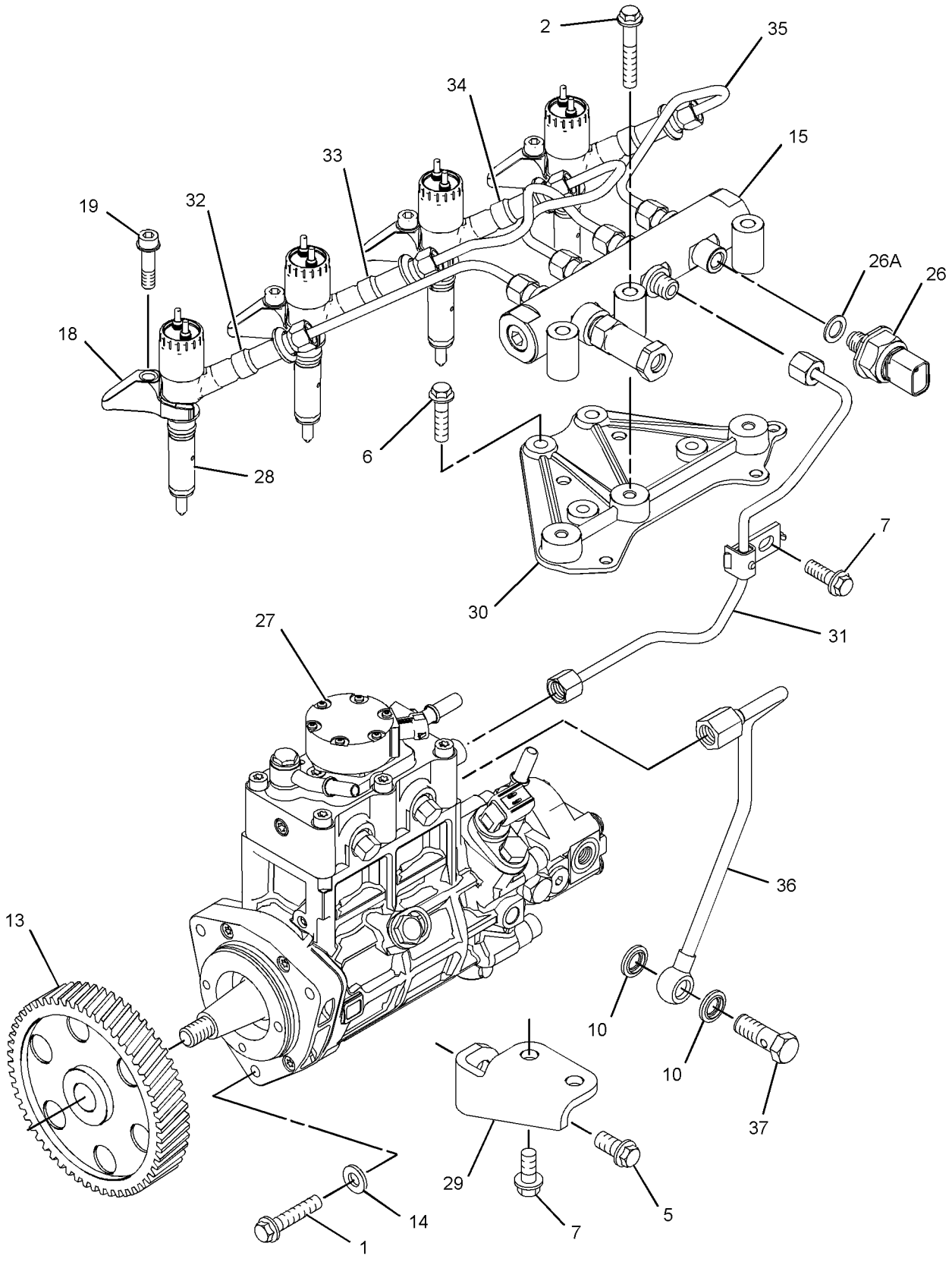

GRAPHIC #1 g01375172

304-6570 **PUMP GP-FUEL INJECTION (**contd.**)** **i06543841**

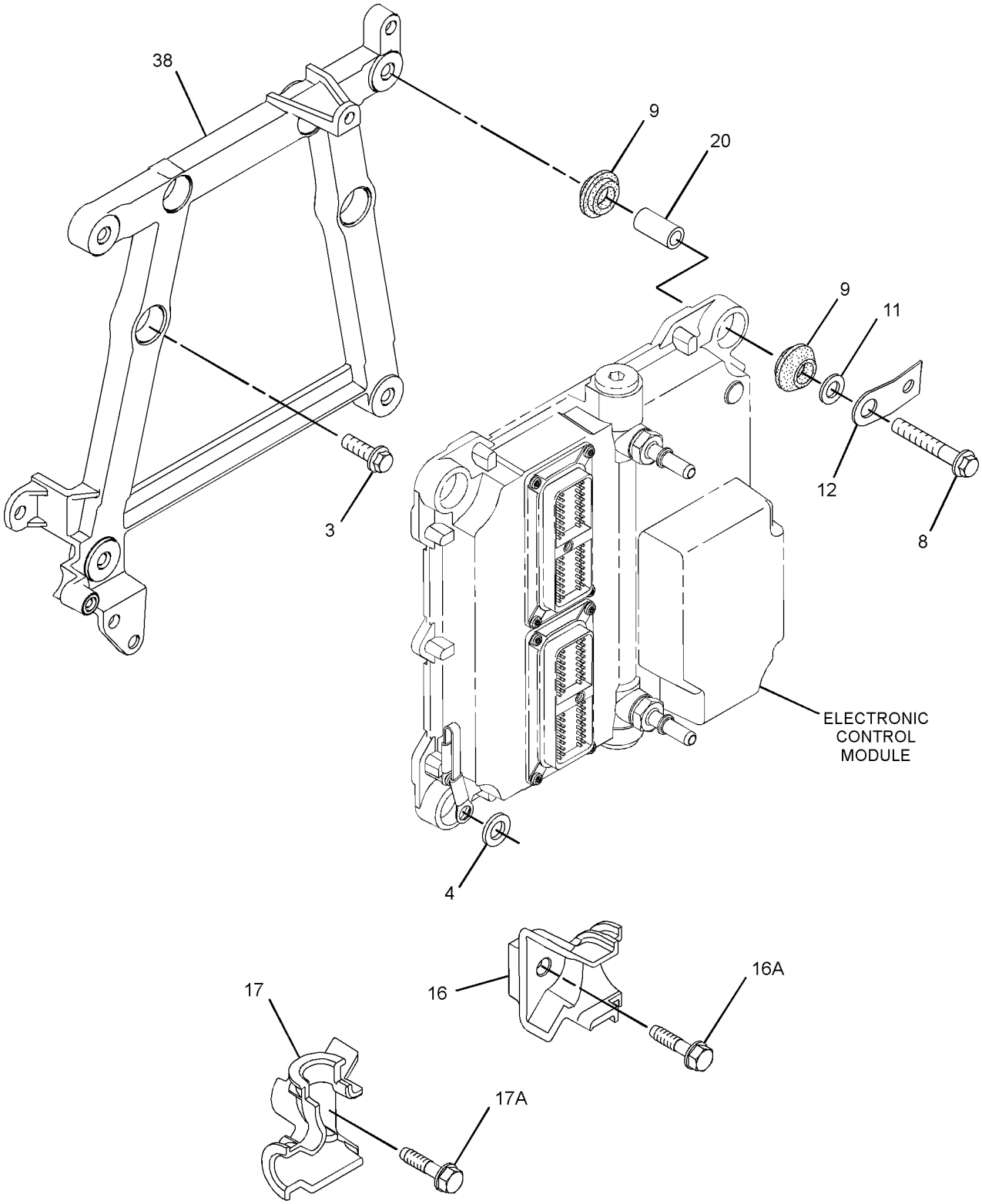

GRAPHIC #2 g01375784

304-6570 **PUMP GP-FUEL INJECTION (**contd.**)** **i06543841**

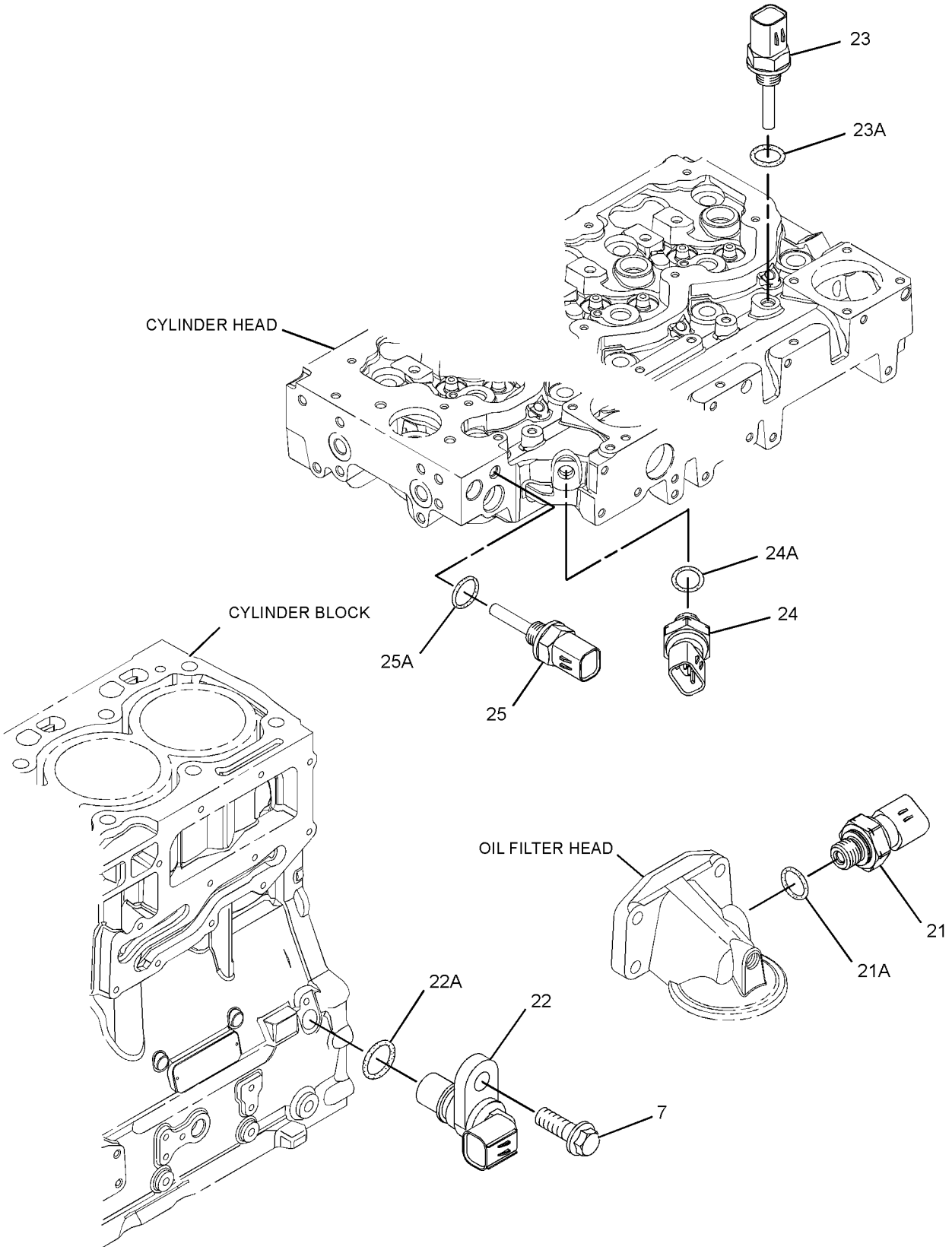

GRAPHIC #3 <END> g01374374

304-6570 PUMP GP-FUEL INJECTION

TYPE 2

SMCS-1251, 1290 **i06543848**

NOTE	REF NO	GRAPHIC REF	PART NUMBER	QTY	PART NAME 1 2 3 4 5 6 (PRODUCT LEVEL)	SEE PAGE
M	1	1	**6I-0260**	3	BOLT (M8X1.25X25-MM)	
M	2	1	**6I-0455**	3	BOLT (M8X1.25X55-MM)	
M	3	2	**6I-0572**	4	BOLT (M8X1.25X20-MM)	
	4	2	**7W-2632**	1	WASHER (8.5X16.8X1.6-MM THK)	
M	5	1	**100-4830**	1	BOLT (M10X1.5X20-MM)	
M	6	1	**101-3895**	4	BOLT (M8X1.25X35-MM)	
M	7	1,3	**124-3815**	4	BOLT (M8X1.25X16-MM)	
M	8	2	**141-8584**	4	BOLT (M8X1.25X50-MM)	
C	9	2	**300-6714**	8	MOUNT	
	10	1	**160-0162**	2	WASHER	
	11	2	**217-0099**	4	SPACER (8.2X25X2-MM THK)	
	12	2	**217-8477**	1	CLIP	
	13	1	**230-8989**	1	GEAR-FUEL PUMP (68-TEETH)	
	14	1	**232-3149**	6	WASHER (8.35X16.85X1.55-MM THK)	
	15	1	**308-8425**	1	RAIL AS-FUEL	
	16	2	**268-6677**	1	BRACKET AS	
M	16A	2	**260-3939**	1	SCREW-HEX HEAD (M6X1X25-MM)	
	17	2	**268-6678**	1	BRACKET AS	
M	17A	2	**260-3939**	1	SCREW-HEX HEAD (M6X1X25-MM)	
	18	1	**278-5168**	4	CLAMP-INJECTOR	
	19	1	**278-5170**	4	BOLT	
	20	2	**278-5203**	4	SPACER	
	21	3	**278-5225**	1	KIT-SENSOR (ENGINE OIL PRESSURE)	
	21A	3	**278-5226**	1	SEAL-O-RING	
C	22	3	**311-3858**	1	KIT-SENSOR (ENGINE SPEED)	
	22A	3	**274-1639**	1	SEAL	
	23	3	**278-5272**	1	KIT-SENSOR (AIR TEMPERATURE)	
	23A	3	**278-5226**	1	SEAL-O-RING	
	24	3	**278-5273**	1	KIT-SENSOR (AIR PRESSURE)	
	24A	3	**199-9252**	1	SEAL-O-RING	
	25	3	**278-5307**	1	KIT-SENSOR (WATER TEMPERATURE)	
	25A	3	**199-9267**	1	SEAL-O-RING	
C	26	1	**311-6342**	1	SENSOR AS-PRESSURE (FUEL RAIL PRESSURE)	
	26A	1	**309-8006**	1	WASHER	
Y	27	1	**283-2271**	1	PUMP GP-FUEL INJECTION	1067
Y	28	1	**292-3780**	4	INJECTOR GP-FUEL	1021
	29	1	**298-4535**	1	BRACKET-SUPPORT	
	30	1	**298-4536**	1	BRACKET-MOUNTING	
	31	1	**298-4537**	1	TUBE AS	
	32	1	**298-4538**	1	TUBE AS (CYL NO. 1)	
	33	1	**298-4539**	1	TUBE AS (CYL NO. 2)	
	34	1	**298-4540**	1	TUBE AS (CYL NO. 3)	
	35	1	**298-4541**	1	TUBE AS (CYL NO. 4)	
	36	1	**298-4542**	1	TUBE AS	
	37	1	**298-4543**	1	BOLT	
	38	2	**308-3395**	1	BRACKET-MOUNTING	
F			**278-4138**	4	KIT-FUEL LINE PROTECTION	

304-6570 **PUMP GP-FUEL INJECTION** (contd.) **i06543848**

NOTE	REF NO	GRAPHIC REF	PART NUMBER	QTY	PART NAME 1 2 3 4 5 6 (PRODUCT LEVEL)	SEE PAGE

C - CHANGE FROM PREVIOUS TYPE
F - NOT SHOWN
M - METRIC PART
Y - SEPARATE ILLUSTRATION

304-6570 **PUMP GP-FUEL INJECTION (**contd.**)** **i06543848**

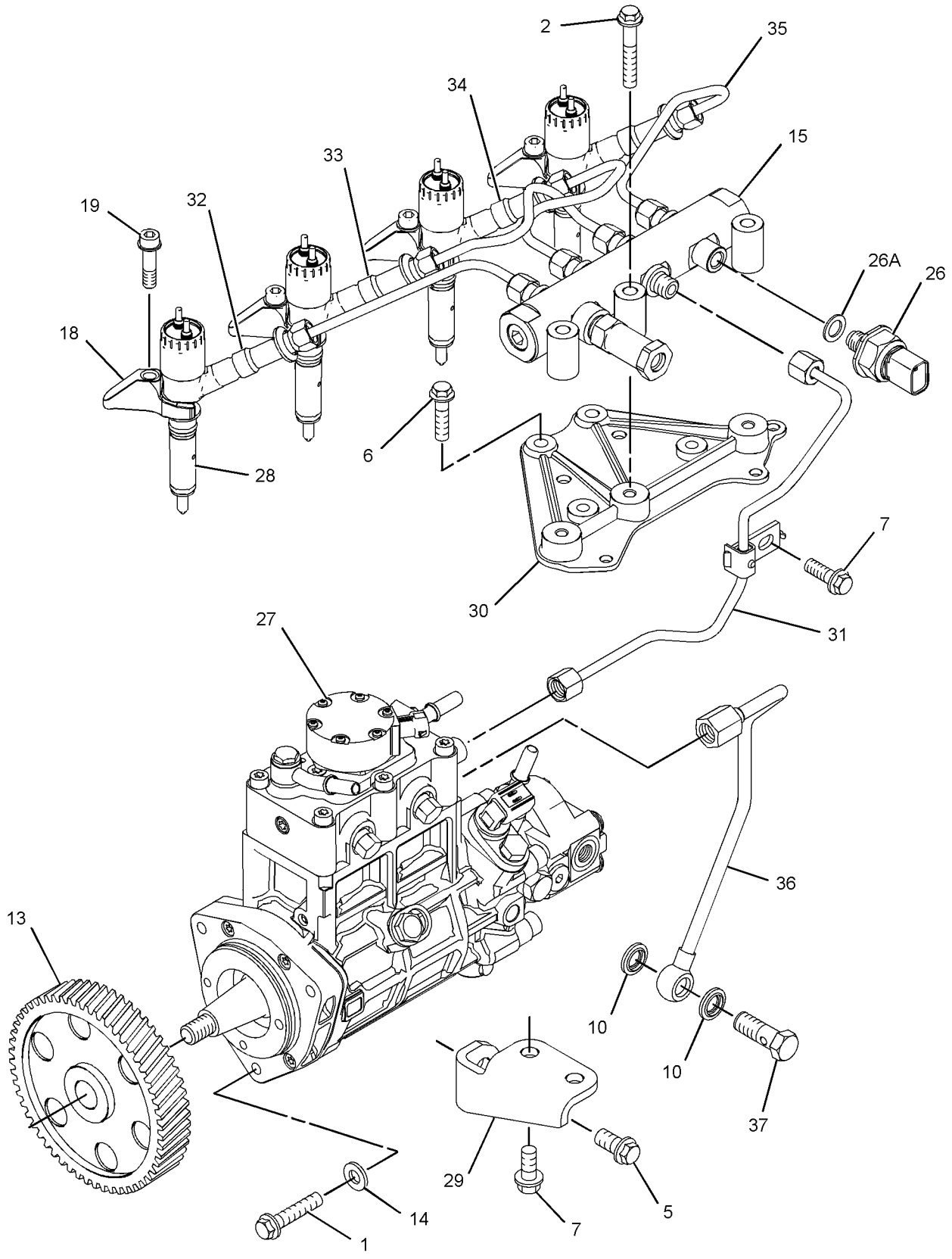

GRAPHIC #1 g01375172

304-6570 **PUMP GP-FUEL INJECTION (**contd.**)** **i06543848**

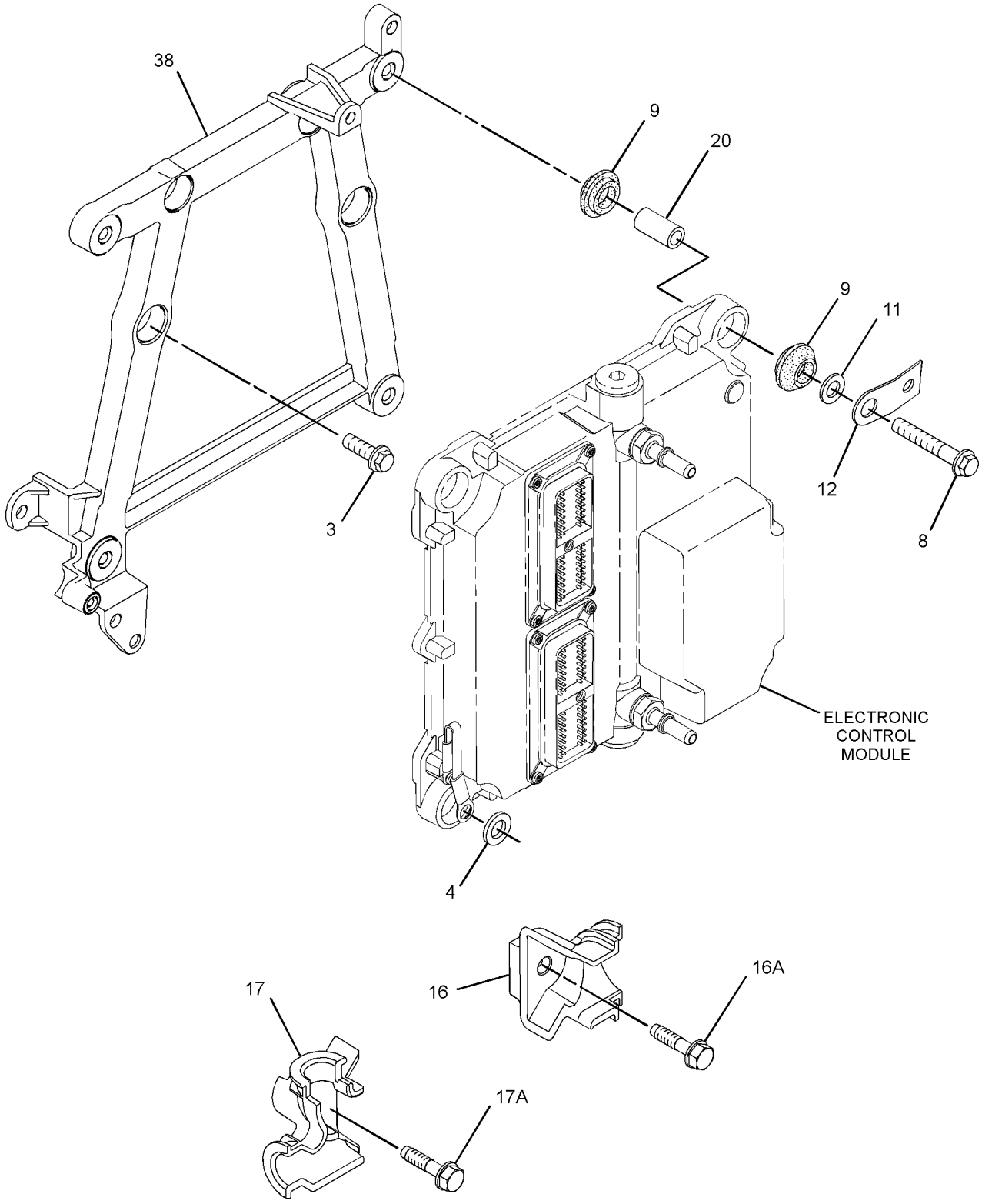

GRAPHIC #2 g01375784

304-6570 **PUMP GP-FUEL INJECTION (**contd.**)** **i06543848**

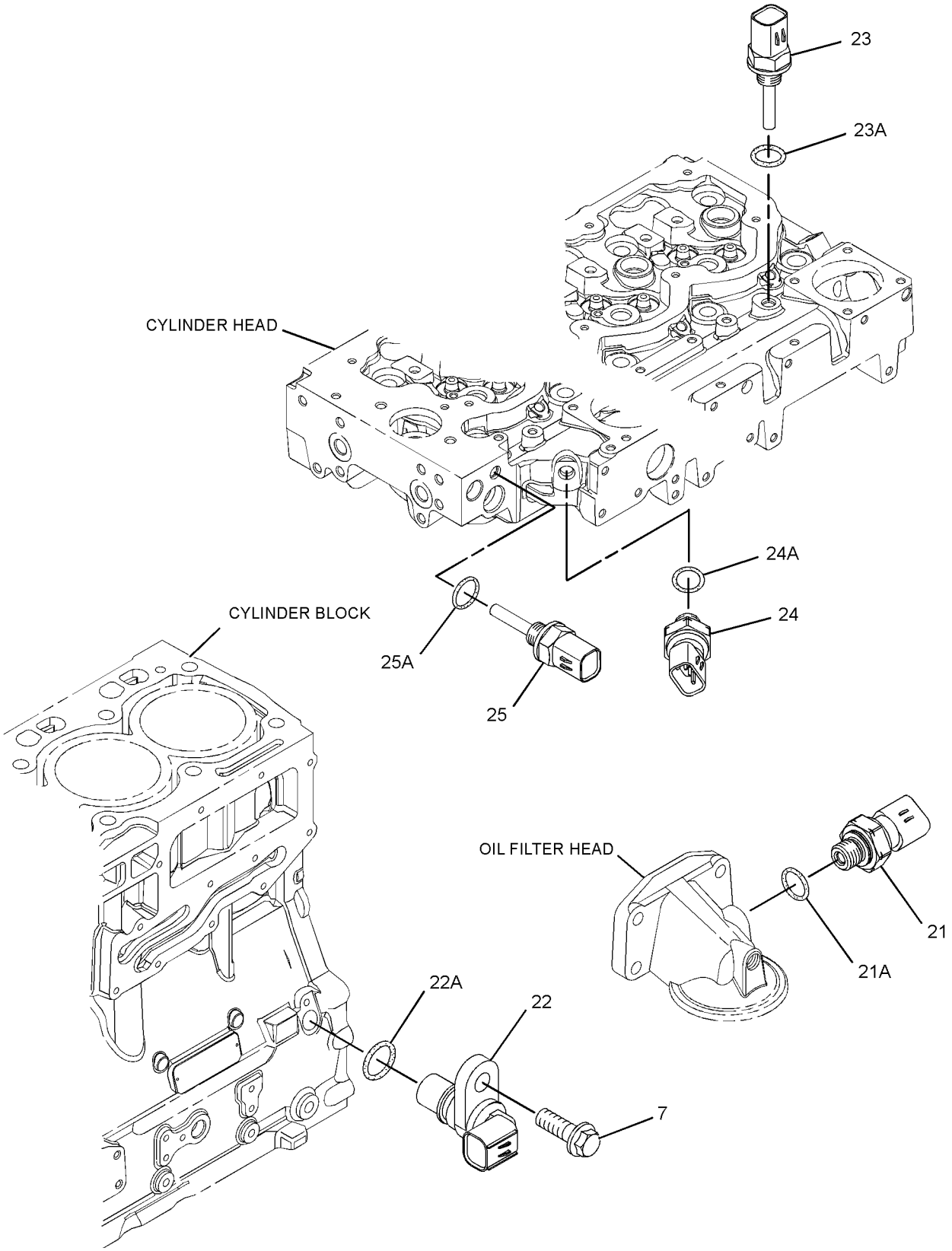

GRAPHIC #3 <END> g01374374

304-6570 PUMP GP-FUEL INJECTION

TYPE 3

SMCS-1251, 1290 **i06543846**

NOTE	REF NO	GRAPHIC REF	PART NUMBER	QTY	PART NAME 1 2 3 4 5 6 (PRODUCT LEVEL)	SEE PAGE
M	1	1	**6I-0260**	3	BOLT (M8X1.25X25-MM)	
M	2	1	**6I-0455**	3	BOLT (M8X1.25X55-MM)	
M	3	2	**6I-0572**	4	BOLT (M8X1.25X20-MM)	
	4	2	**7W-2632**	1	WASHER (8.5X16.8X1.6-MM THK)	
M	5	1	**100-4830**	1	BOLT (M10X1.5X20-MM)	
M	6	1	**101-3895**	4	BOLT (M8X1.25X35-MM)	
M	7	1,3	**124-3815**	4	BOLT (M8X1.25X16-MM)	
M	8	2	**141-8584**	4	BOLT (M8X1.25X50-MM)	
	9	2	**300-6714**	8	MOUNT	
	10	1	**160-0162**	2	WASHER	
	11	2	**217-0099**	5	SPACER (8.2X25X2-MM THK)	
	13	1	**230-8989**	1	GEAR-FUEL PUMP (68-TEETH)	
C	14	1	**232-3149**	3	WASHER (8.35X16.85X1.55-MM THK)	
	15	1	**318-2394**	1	RAIL AS-FUEL	
	15A	1	**305-5291**	1	VALVE AS-RELIEF	
	16	2	**268-6677**	1	BRACKET AS	
M	16A	2	**260-3939**	1	SCREW-HEX HEAD (M6X1X25-MM)	
	17	2	**268-6678**	1	BRACKET AS	
M	17A	2	**260-3939**	1	SCREW-HEX HEAD (M6X1X25-MM)	
	18	1	**278-5168**	4	CLAMP-INJECTOR	
	19	1	**278-5170**	4	BOLT	
	20	2	**278-5203**	4	SPACER	
	21	3	**278-5225**	1	KIT-SENSOR (ENGINE OIL PRESSURE)	
	21A	3	**199-9267**	1	SEAL-O-RING	
	22	3	**311-3858**	1	KIT-SENSOR (ENGINE SPEED)	
	22A	3	**274-1639**	1	SEAL	
	23	3	**278-5272**	1	KIT-SENSOR (AIR TEMPERATURE)	
	23A	3	**278-5226**	1	SEAL-O-RING	
	24	3	**278-5273**	1	KIT-SENSOR (AIR PRESSURE)	
	24A	3	**199-9252**	1	SEAL-O-RING	
	25	3	**278-5307**	1	KIT-SENSOR (WATER TEMPERATURE)	
	25A	3	**199-9267**	1	SEAL-O-RING	
	26	1	**311-6342**	1	SENSOR AS-PRESSURE (FUEL RAIL PRESSURE)	
	26A	1	**309-8006**	1	WASHER	
CYR	27	1	**324-0532**	1	PUMP GP-FUEL INJECTION	1523
YR	28	1	**320-0680**	4	INJECTOR GP-FUEL	1027
	29	1	**298-4535**	1	BRACKET-SUPPORT	
	30	1	**337-3573**	1	BRACKET	
	31	1	**337-3574**	1	TUBE	
	32	1	**322-3745**	1	TUBE (CYL NO. 1)	
	33	1	**322-3746**	1	TUBE (CYL NO. 2)	
	34	1	**333-4732**	1	LINE-FUEL INJECTION (CYL NO. 3)	
	35	1	**333-4733**	1	LINE-FUEL INJECTION (CYL NO. 4)	
	36	1	**298-4542**	1	TUBE AS	
	37	1	**298-4543**	1	BOLT	
C	38	2	**317-3144**	1	BRACKET (MOUNTING)	
F			**278-4138**	3	KIT-FUEL LINE PROTECTION	

304-6570 **PUMP GP-FUEL INJECTION (**contd.**)** **i06543846**

NOTE	REF NO	GRAPHIC REF	PART NUMBER	QTY	PART NAME 1 2 3 4 5 6 (PRODUCT LEVEL)	SEE PAGE

C - CHANGE FROM PREVIOUS TYPE
F - NOT SHOWN
M - METRIC PART
R - REMANUFACTURED PART MAY BE AVAILABLE
Y - SEPARATE ILLUSTRATION

304-6570 **PUMP GP-FUEL INJECTION (**contd.**)** **i06543846**

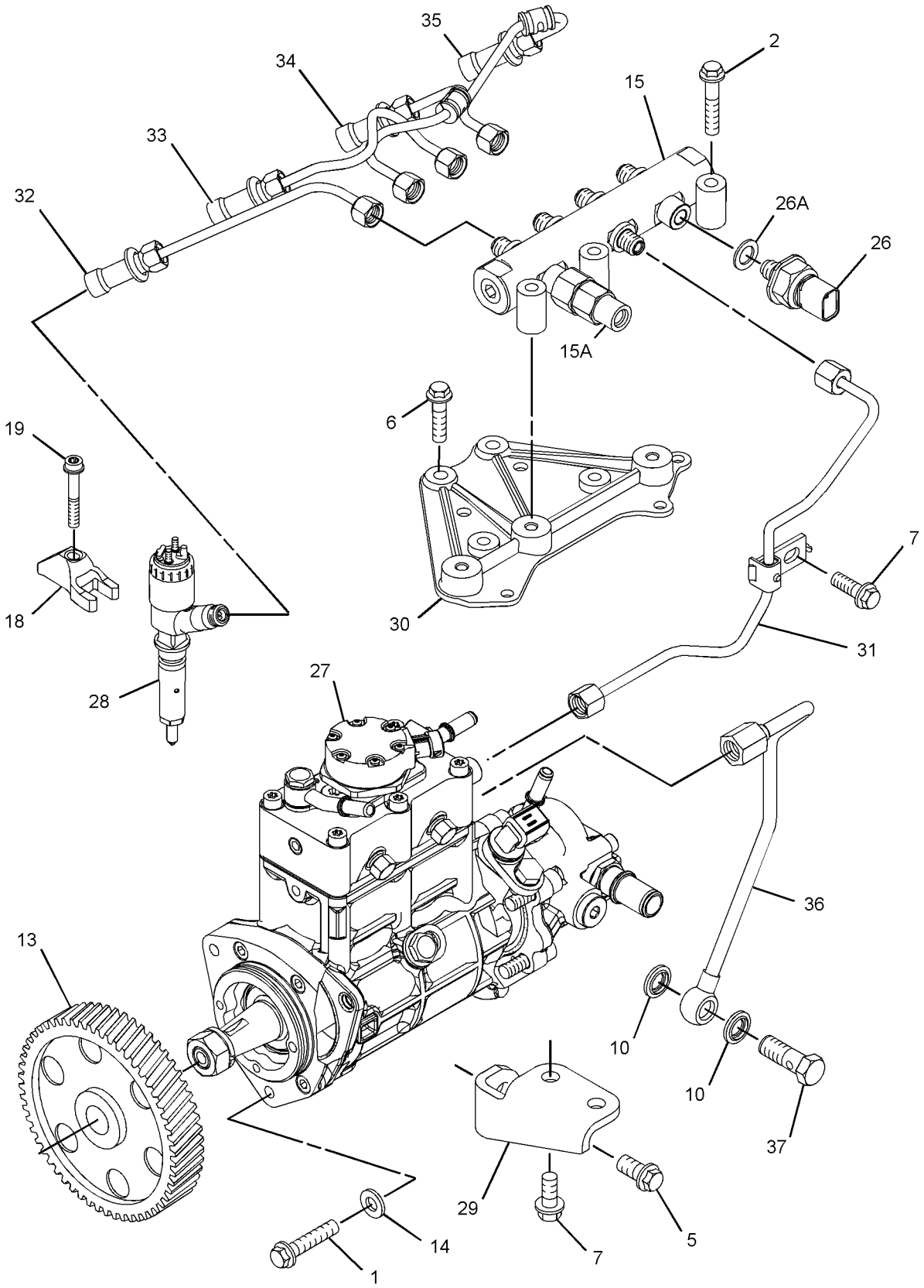

GRAPHIC #1 g01838578

304-6570 **PUMP GP-FUEL INJECTION (**contd.**)** **i06543846**

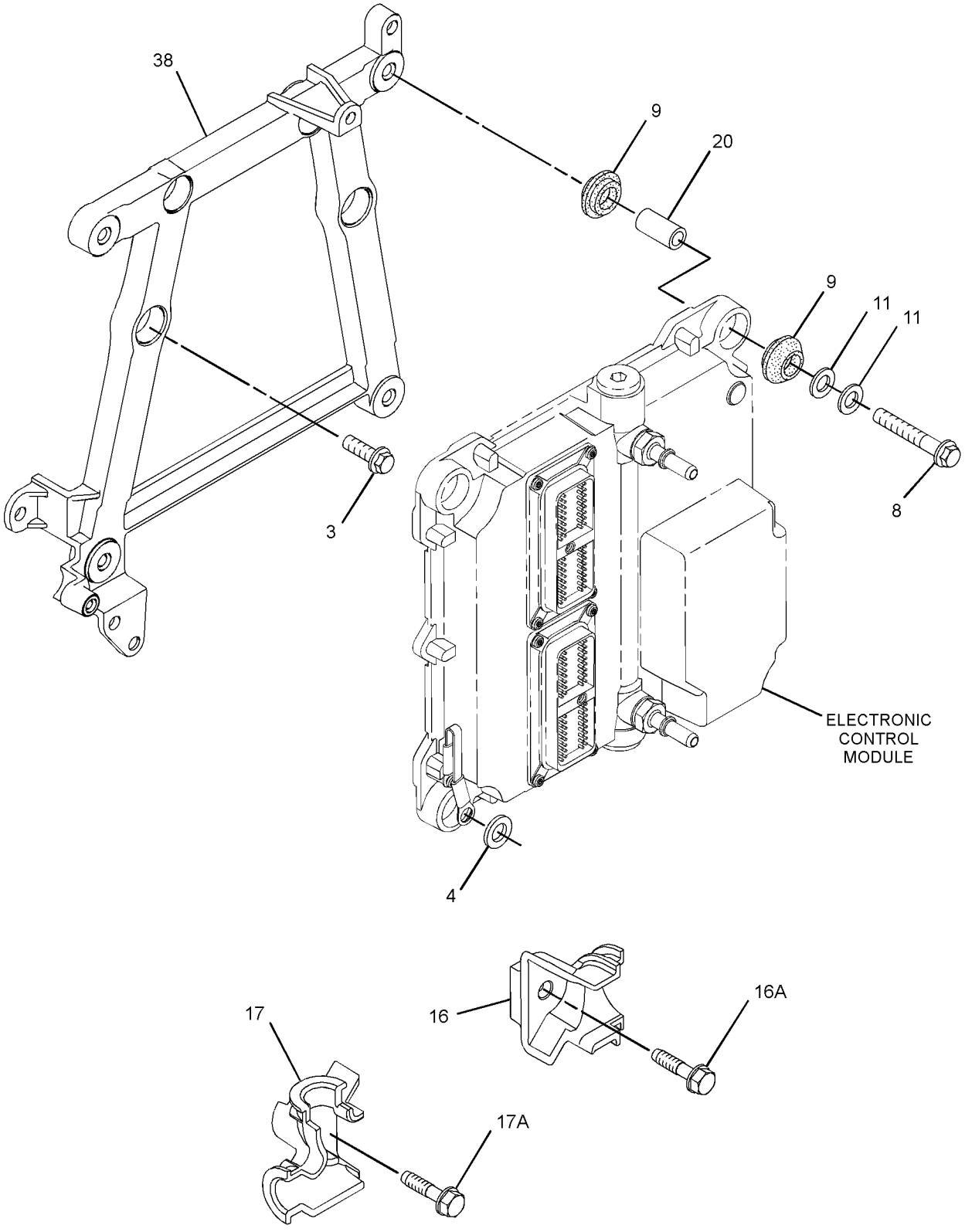

GRAPHIC #2 g01914618

304-6570 **PUMP GP-FUEL INJECTION (**contd.**)** **i06543846**

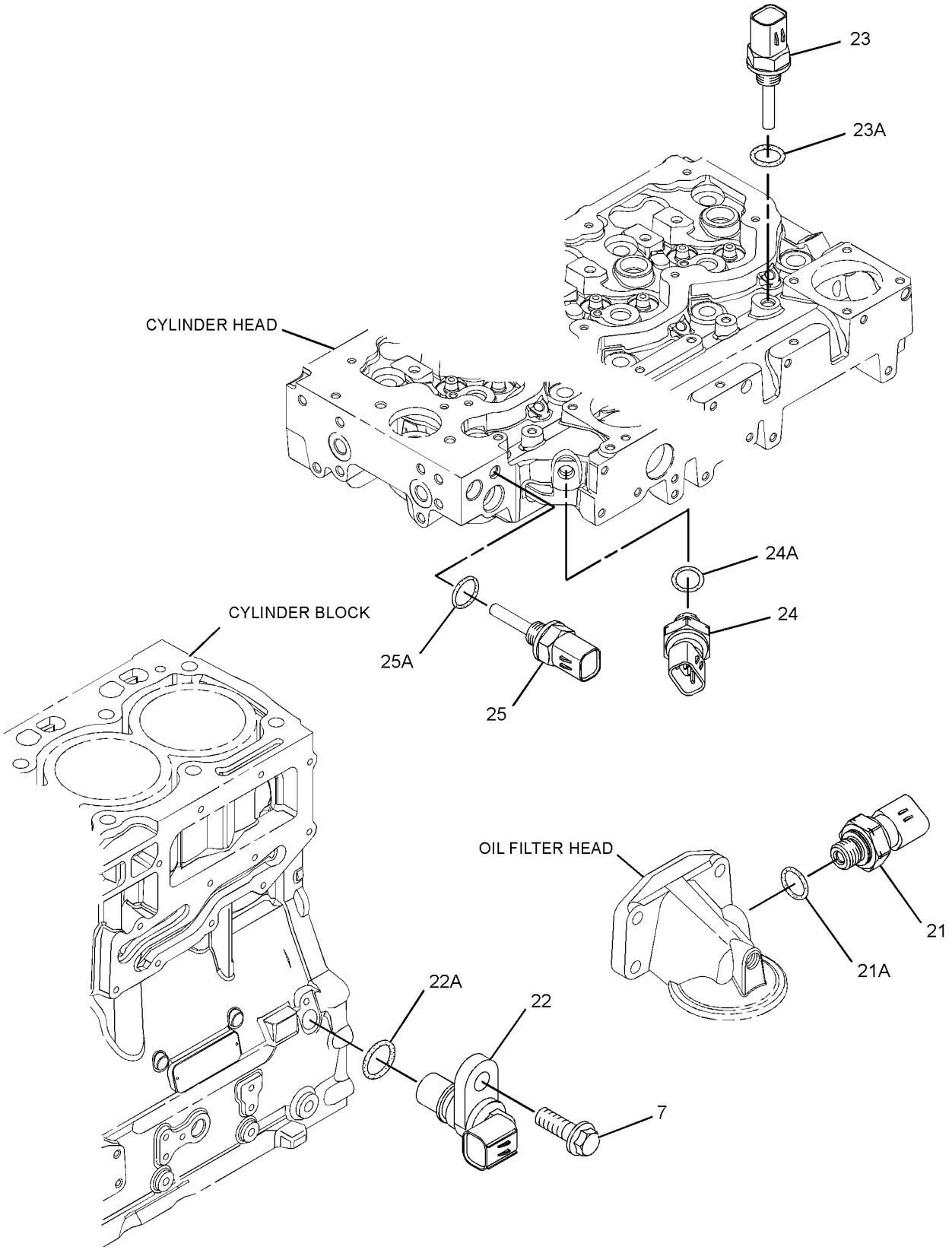

GRAPHIC #3 <END> g01374374

304-6570 PUMP GP-FUEL INJECTION

TYPE 4

SMCS-1251, 1290 **i06543850**

NOTE	REF NO	GRAPHIC REF	PART NUMBER	QTY	PART NAME 1 2 3 4 5 6 (PRODUCT LEVEL)	SEE PAGE
M	1	1	**6I-0260**	3	BOLT (M8X1.25X25-MM)	
M	2	1	**6I-0455**	3	BOLT (M8X1.25X55-MM)	
M	3	2	**6I-0572**	4	BOLT (M8X1.25X20-MM)	
	4	2	**7W-2632**	1	WASHER (8.5X16.8X1.6-MM THK)	
M	5	1	**100-4830**	1	BOLT (M10X1.5X20-MM)	
M	6	1	**101-3895**	4	BOLT (M8X1.25X35-MM)	
M	7	1,3	**124-3815**	4	BOLT (M8X1.25X16-MM)	
M	8	2	**141-8584**	4	BOLT (M8X1.25X50-MM)	
	9	2	**300-6714**	8	MOUNT	
	10	1	**160-0162**	2	WASHER	
	11	2	**217-0099**	5	SPACER (8.2X25X2-MM THK)	
	13	1	**230-8989**	1	GEAR-FUEL PUMP (68-TEETH)	
	14	1	**232-3149**	3	WASHER (8.35X16.85X1.55-MM THK)	
	15	1	**318-2394**	1	RAIL AS-FUEL	
	15A	1	**305-5291**	1	VALVE AS-RELIEF	
	16	2	**268-6677**	1	BRACKET AS	
M	16A	2	**260-3939**	1	SCREW-HEX HEAD (M6X1X25-MM)	
	17	2	**268-6678**	1	BRACKET AS	
M	17A	2	**260-3939**	1	SCREW-HEX HEAD (M6X1X25-MM)	
	18	1	**278-5168**	4	CLAMP-INJECTOR	
	19	1	**278-5170**	4	BOLT	
	20	2	**278-5203**	4	SPACER	
	21	3	**278-5225**	1	KIT-SENSOR (ENGINE OIL PRESSURE)	
	21A	3	**199-9267**	1	SEAL-O-RING	
	22	3	**311-3858**	1	KIT-SENSOR (ENGINE SPEED)	
	22A	3	**274-1639**	1	SEAL	
		3	**238-0120**	1	SENSOR GP-SPEED	
	23	3	**278-5272**	1	KIT-SENSOR (AIR TEMPERATURE)	
	23A	3	**278-5226**	1	SEAL-O-RING	
	24	3	**278-5273**	1	KIT-SENSOR (AIR PRESSURE)	
	24A	3	**199-9252**	1	SEAL-O-RING	
	25	3	**278-5307**	1	KIT-SENSOR (WATER TEMPERATURE)	
	25A	3	**199-9267**	1	SEAL-O-RING	
	26	1	**311-6342**	1	SENSOR AS-PRESSURE (FUEL RAIL PRESSURE)	
	26A	1	**309-8006**	1	WASHER	
CYR	27	1	**352-6584**	1	PUMP GP-FUEL INJECTION	1540
YR	28	1	**320-0680**	4	INJECTOR GP-FUEL	1027
	29	1	**298-4535**	1	BRACKET-SUPPORT	
	30	1	**337-3573**	1	BRACKET	
	31	1	**337-3574**	1	TUBE	
	32	1	**322-3745**	1	TUBE (CYL NO. 1)	
	33	1	**322-3746**	1	TUBE (CYL NO. 2)	
	34	1	**333-4732**	1	LINE-FUEL INJECTION (CYL NO. 3)	
	35	1	**333-4733**	1	LINE-FUEL INJECTION (CYL NO. 4)	
	36	1	**298-4542**	1	TUBE AS	
	37	1	**298-4543**	1	BOLT	
	38	2	**317-3144**	1	BRACKET (MOUNTING)	

304-6570 **PUMP GP-FUEL INJECTION** (contd.) **i06543850**

NOTE	REF NO	GRAPHIC REF	PART NUMBER	QTY	PART NAME 1 2 3 4 5 6 (PRODUCT LEVEL)	SEE PAGE
F			**278-4138**	3	KIT-FUEL LINE PROTECTION	

C - CHANGE FROM PREVIOUS TYPE
F - NOT SHOWN
M - METRIC PART
R - REMANUFACTURED PART MAY BE AVAILABLE
Y - SEPARATE ILLUSTRATION

304-6570 **PUMP GP-FUEL INJECTION (**contd.**)** **i06543850**

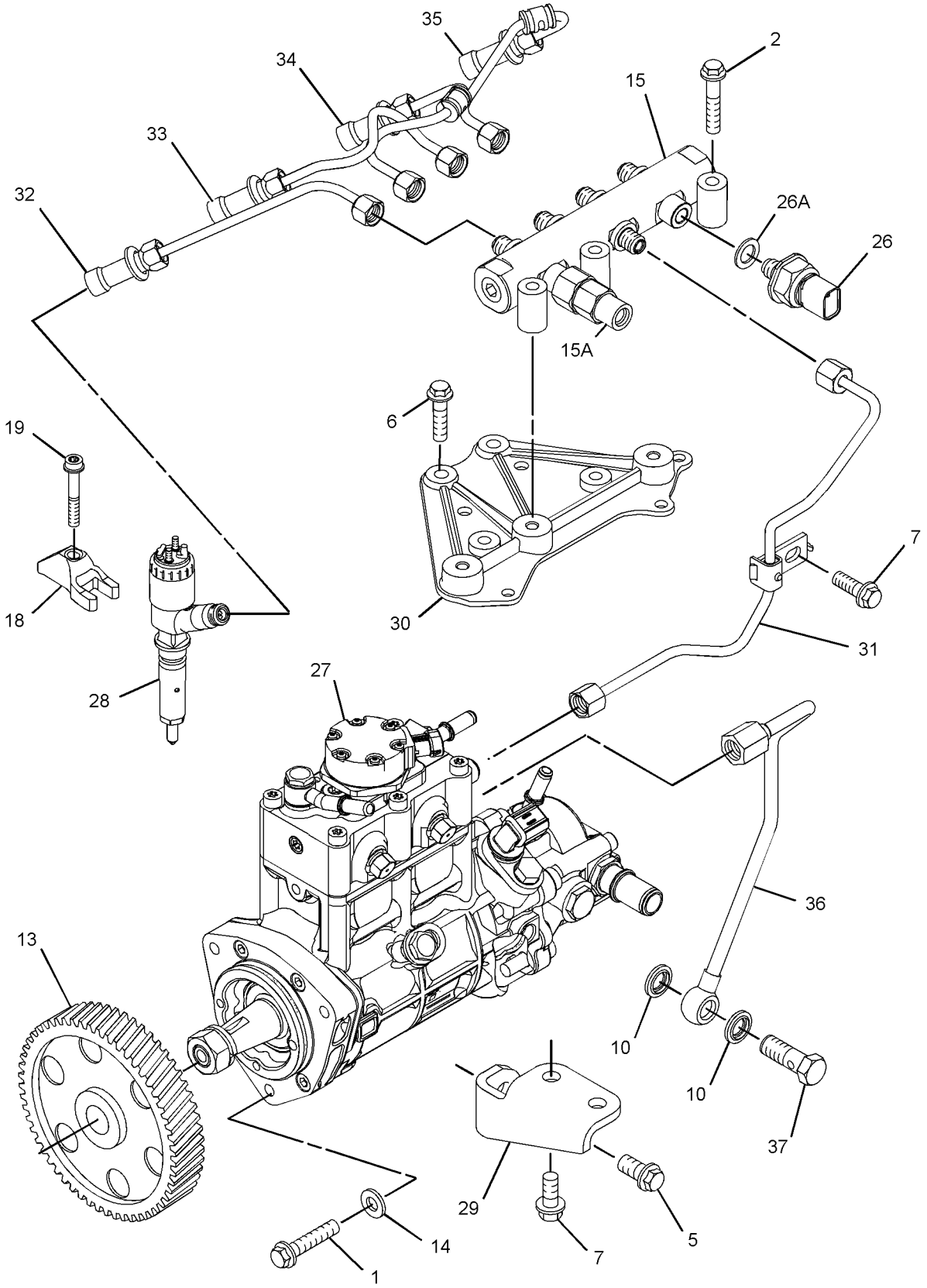

GRAPHIC #1 g02223075

304-6570 **PUMP GP-FUEL INJECTION (**contd.**)** **i06543850**

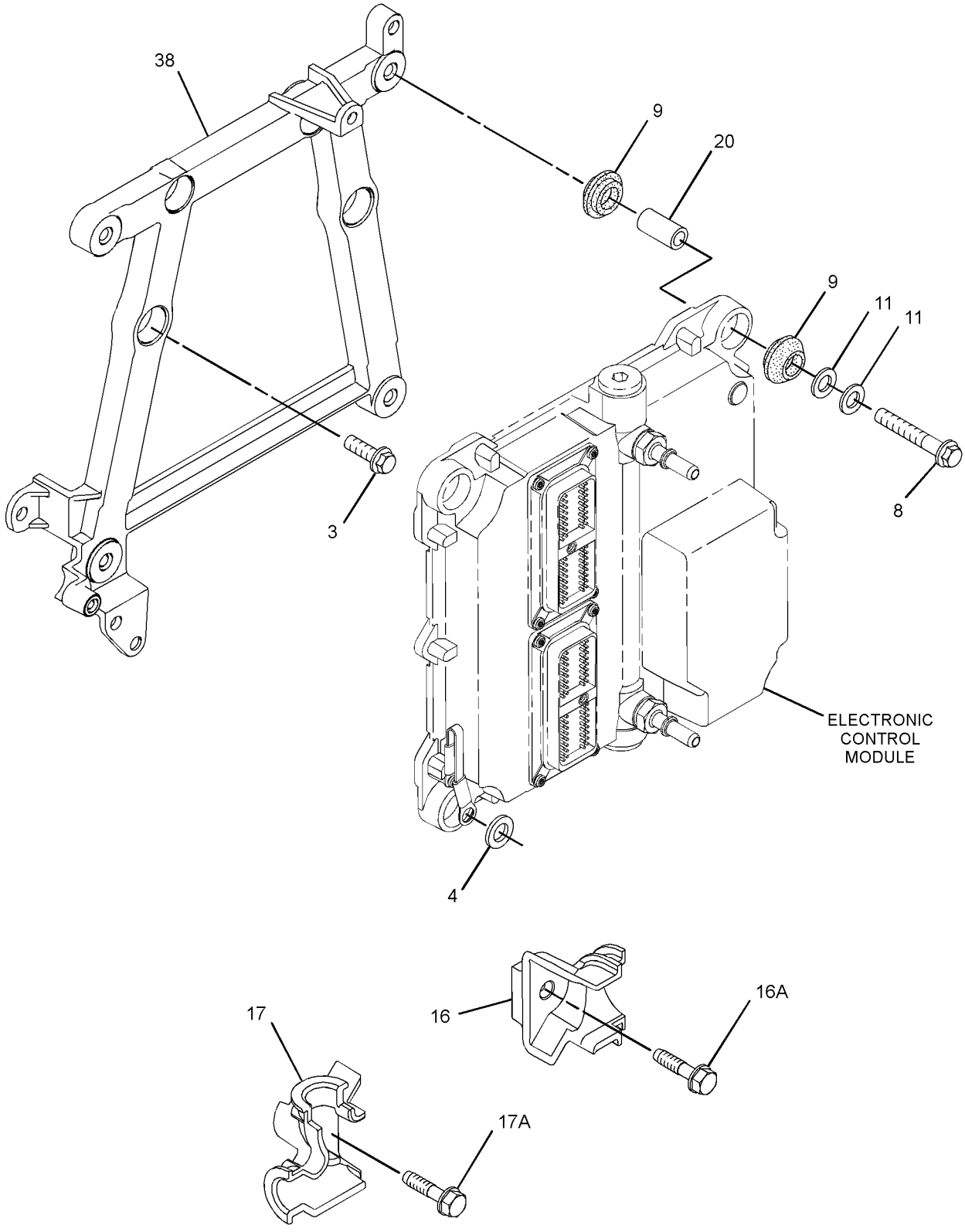

GRAPHIC #2 g01914618

304-6570 **PUMP GP-FUEL INJECTION (**contd.**)** **i06543850**

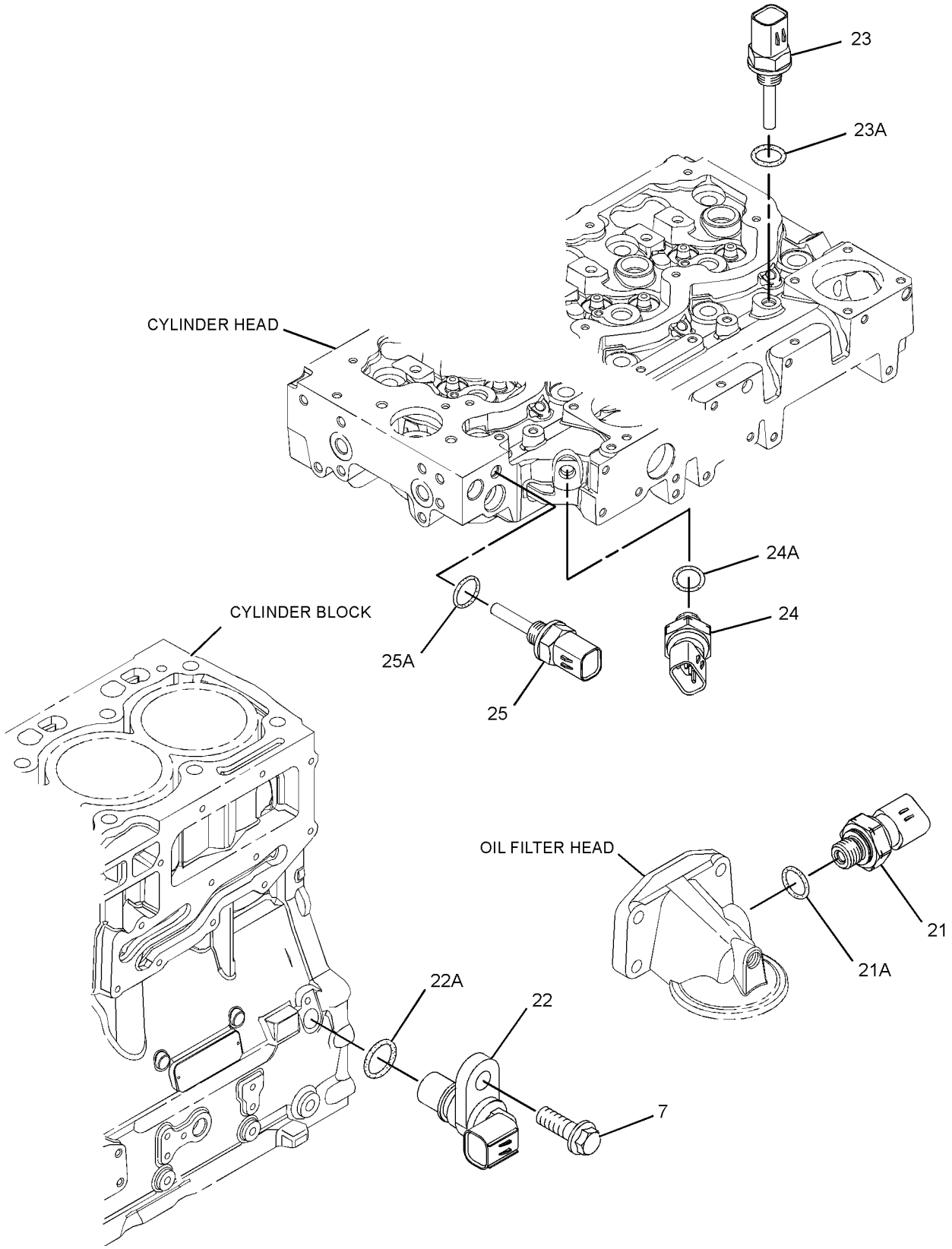

GRAPHIC #3 <END> g01374374

304-6570 PUMP GP-FUEL INJECTION

TYPE 5

SMCS-1251, 1290 **i05880372**

NOTE	REF NO	GRAPHIC REF	PART NUMBER	QTY	PART NAME 1 2 3 4 5 6 (PRODUCT LEVEL)	SEE PAGE
M	1	1	**6I-0260**	3	BOLT (M8X1.25X25-MM)	
M	2	1	**6I-0455**	3	BOLT (M8X1.25X55-MM)	
M	3	2	**6I-0572**	4	BOLT (M8X1.25X20-MM)	
	4	2	**7W-2632**	1	WASHER (8.5X16.8X1.6-MM THK)	
M	5	1	**100-4830**	1	BOLT (M10X1.5X20-MM)	
M	6	1	**101-3895**	4	BOLT (M8X1.25X35-MM)	
M	7	1,3	**124-3815**	4	BOLT (M8X1.25X16-MM)	
M	8	2	**141-8584**	4	BOLT (M8X1.25X50-MM)	
	9	2	**300-6714**	8	MOUNT	
	10	1	**346-0007**	2	WASHER	
	11	2	**217-0099**	5	SPACER (8.2X25X2-MM THK)	
	13	1	**230-8989**	1	GEAR-FUEL PUMP (68-TEETH)	
	14	1	**232-3149**	3	WASHER (8.35X16.85X1.55-MM THK)	
	15	1	**358-6632**	1	RAIL GP-FUEL	
	15A	1	**305-5291**	1	VALVE AS-RELIEF	
	16	2	**268-6677**	1	BRACKET AS	
M	16A	2	**260-3939**	1	SCREW-HEX HEAD (M6X1X25-MM)	
	17	2	**268-6678**	1	BRACKET AS	
M	17A	2	**260-3939**	1	SCREW-HEX HEAD (M6X1X25-MM)	
	18	1	**278-5168**	4	CLAMP-INJECTOR	
	19	1	**278-5170**	4	BOLT	
	20	2	**278-5203**	4	SPACER	
	21	3	**278-5225**	1	KIT-SENSOR (ENGINE OIL PRESSURE)	
	21A	3	**199-9267**	1	SEAL-O-RING	
	22	3	**311-3858**	1	KIT-SENSOR (ENGINE SPEED)	
	22A	3	**274-1639**	1	SEAL	
		3	**238-0120**	1	SENSOR GP-SPEED	
	23	3	**278-5272**	1	KIT-SENSOR (AIR TEMPERATURE)	
	23A	3	**278-5226**	1	SEAL-O-RING	
	24	3	**278-5273**	1	KIT-SENSOR (WATER PRESSURE)	
	24A	3	**199-9252**	1	SEAL-O-RING	
	25	3	**278-5307**	1	KIT-SENSOR (WATER TEMPERATURE)	
	25A	3	**199-9267**	1	SEAL-O-RING	
	26	1	**311-6342**	1	SENSOR AS-PRESSURE (FUEL RAIL PRESSURE)	
	26A	1	**309-8006**	1	WASHER	
CYR	27	1	**324-0532**	1	PUMP GP-FUEL INJECTION	1523
YR	28	1	**320-0680**	4	INJECTOR GP-FUEL	1027
	29	1	**298-4535**	1	BRACKET-SUPPORT	
	30	1	**337-3573**	1	BRACKET	
	31	1	**337-3574**	1	TUBE	
	32	1	**322-3745**	1	TUBE (CYL NO. 1)	
	33	1	**322-3746**	1	TUBE (CYL NO. 2)	
	34	1	**333-4732**	1	LINE-FUEL INJECTION (CYL NO. 3)	
	35	1	**333-4733**	1	LINE-FUEL INJECTION (CYL NO. 4)	
	36	1	**298-4542**	1	TUBE AS	
	37	1	**363-3908**	1	BOLT-SPECIAL	
	38	2	**317-3144**	1	BRACKET (MOUNTING)	

304-6570 **PUMP GP-FUEL INJECTION (**contd.**)** **i05880372**

NOTE	REF NO	GRAPHIC REF	PART NUMBER	QTY	PART NAME 1 2 3 4 5 6 (PRODUCT LEVEL)	SEE PAGE
F			**278-4138**	3	KIT-FUEL LINE PROTECTION	

C - CHANGE FROM PREVIOUS TYPE
F - NOT SHOWN
M - METRIC PART
R - REMANUFACTURED PART MAY BE AVAILABLE
Y - SEPARATE ILLUSTRATION

304-6570 **PUMP GP-FUEL INJECTION (**contd.**)** **i05880372**

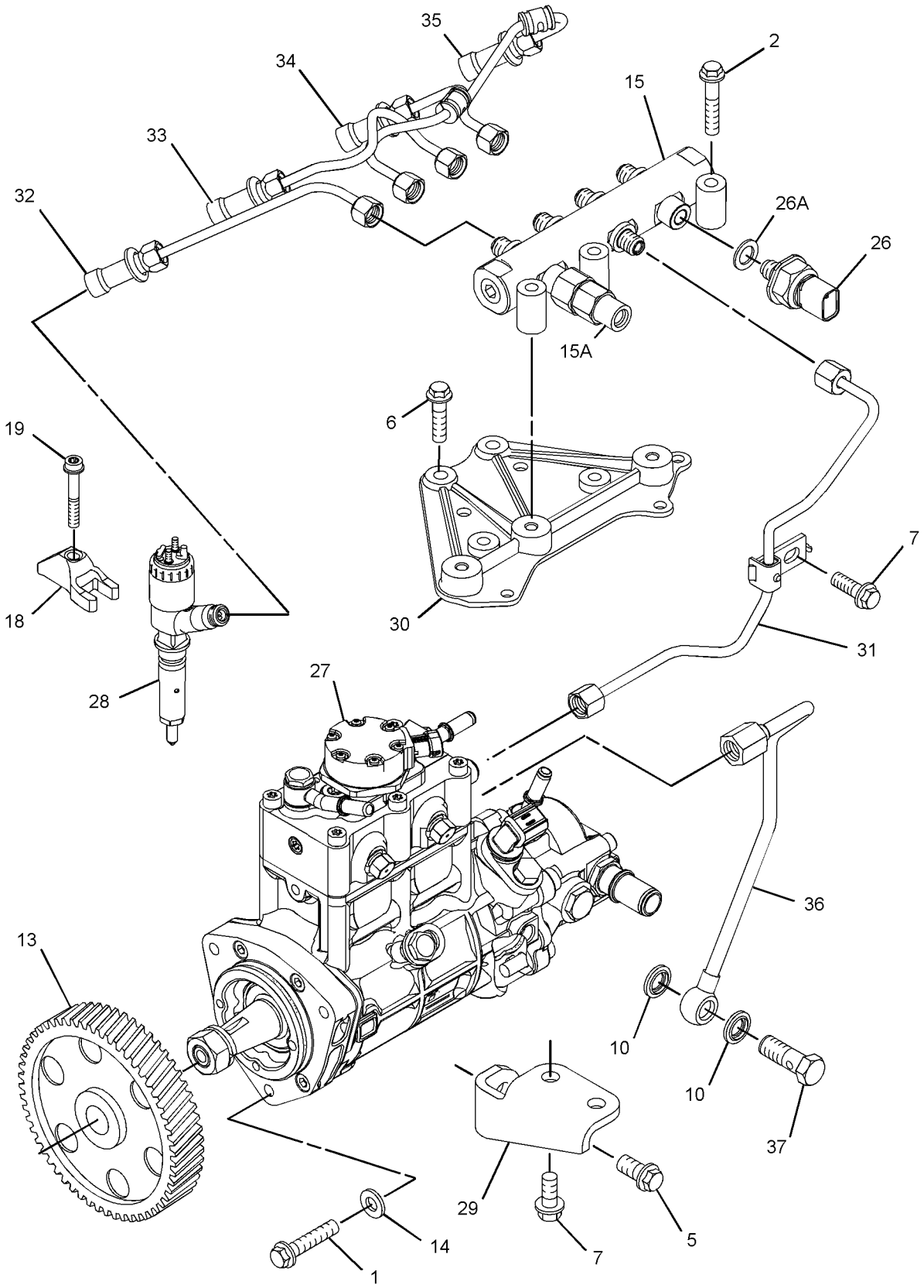

GRAPHIC #1 g02223075

304-6570 **PUMP GP-FUEL INJECTION (**contd.**)** **i05880372**

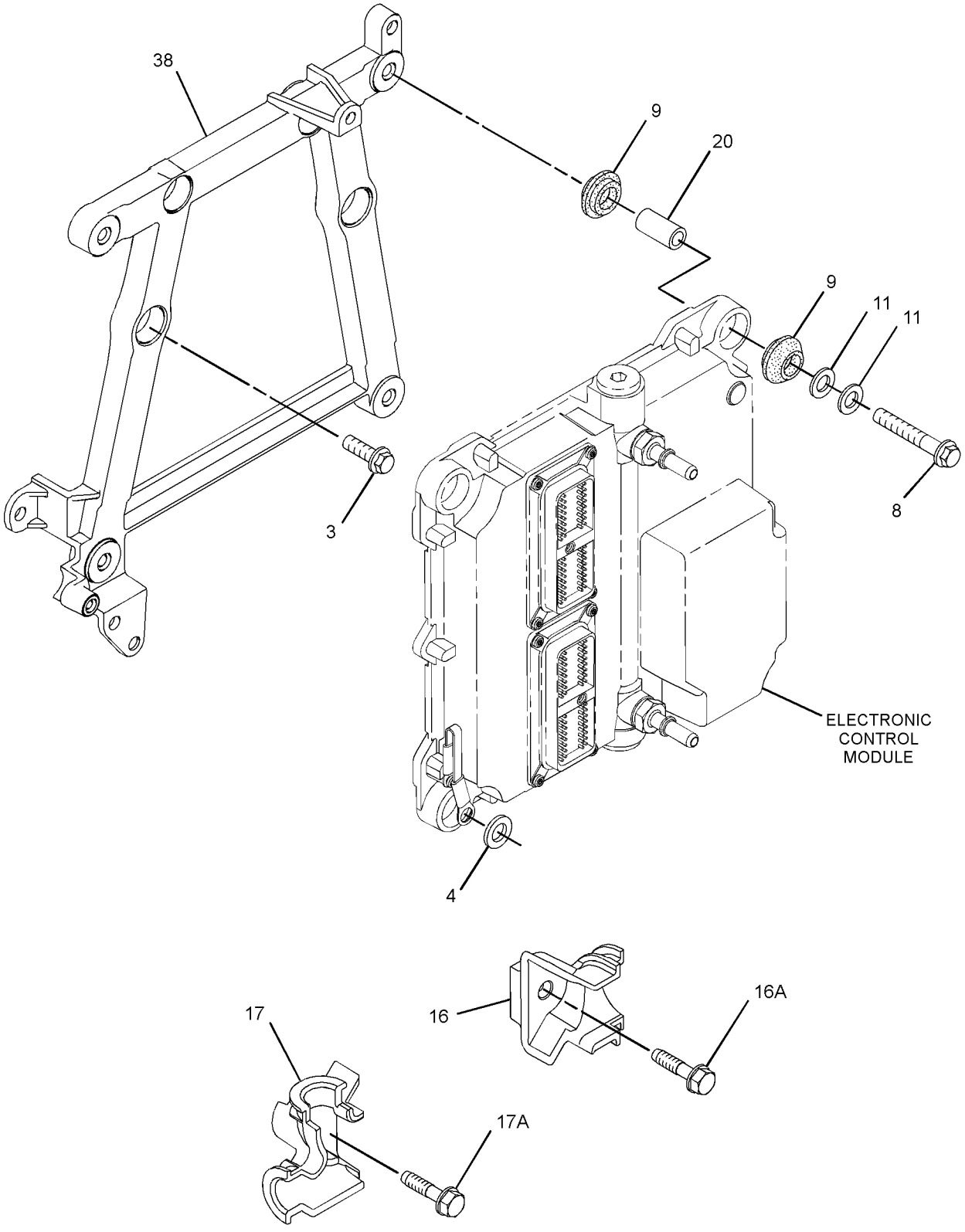

GRAPHIC #2 g01914618

304-6570 **PUMP GP-FUEL INJECTION (**contd.**)** **i05880372**

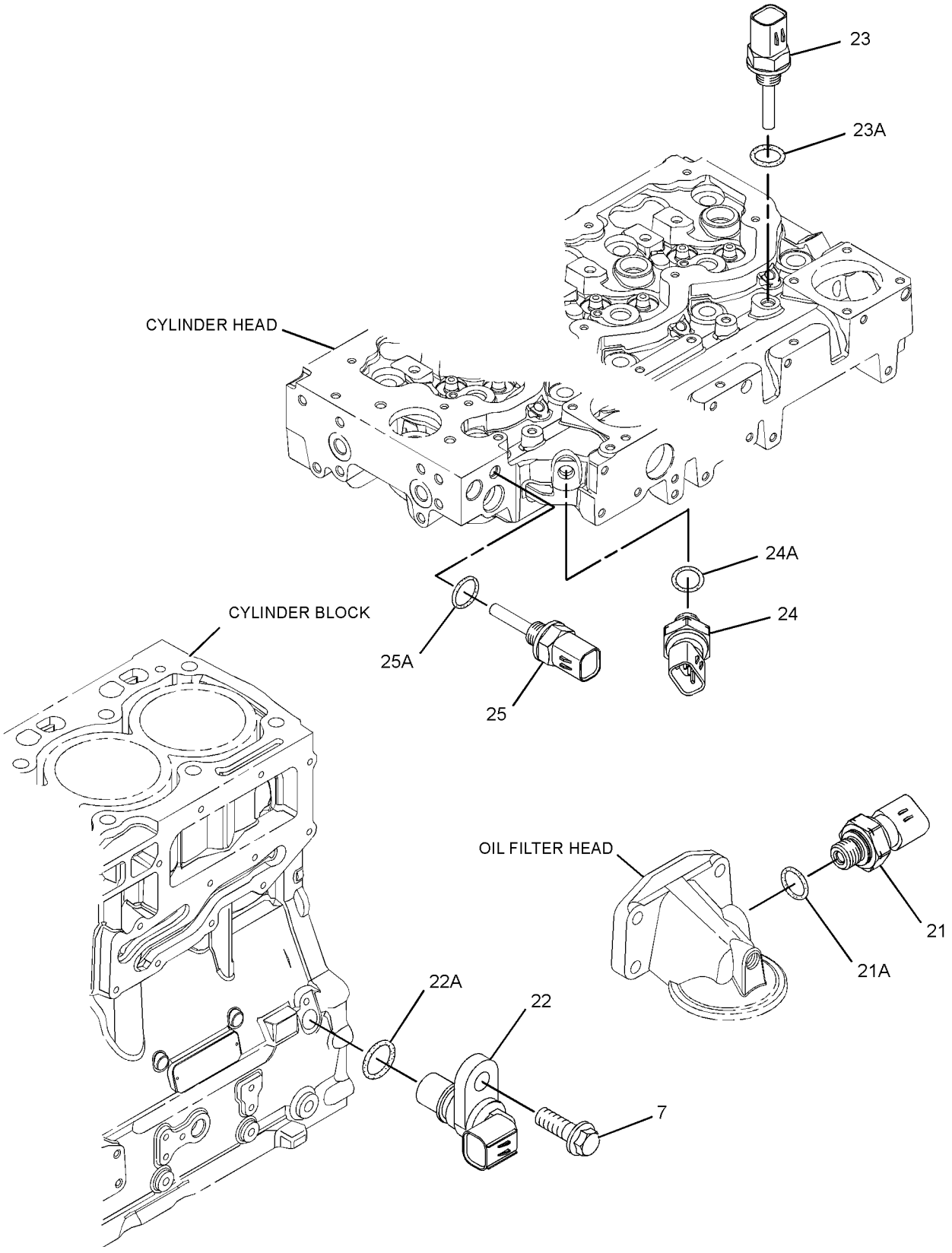

GRAPHIC #3 <END> g01374374

304-7189 PUMP GP-FUEL INJECTION

TYPE 1

SMCS-1251, 1290 **i03314922**

NOTE	REF NO	GRAPHIC REF	PART NUMBER	QTY	PART NAME 1 2 3 4 5 6 (PRODUCT LEVEL)	SEE PAGE
M	1	1	**6I-0260**	3	BOLT (M8X1.25X25-MM)	
M	2	1	**6I-0455**	3	BOLT (M8X1.25X55-MM)	
M	3	2	**6I-0572**	4	BOLT (M8X1.25X20-MM)	
	4	2	**7W-2632**	1	WASHER (8.5X16.8X1.6-MM THK)	
M	5	1	**100-4830**	1	BOLT (M10X1.5X20-MM)	
M	6	1	**101-3895**	4	BOLT (M8X1.25X35-MM)	
M	7	1,3	**124-3815**	4	BOLT (M8X1.25X16-MM)	
M	8	2	**141-8584**	4	BOLT (M8X1.25X50-MM)	
	9	2	**300-6714**	8	MOUNT	
	10	1	**160-0162**	2	WASHER	
	11	2	**217-0099**	4	SPACER (8.2X25X2-MM THK)	
	13	1	**230-8989**	1	GEAR-FUEL PUMP (68-TEETH)	
	14	1	**232-3149**	6	WASHER (8.35X16.85X1.55-MM THK)	
	15	1	**308-8425**	1	RAIL AS-FUEL	
	16	2	**268-6677**	1	BRACKET AS	
		2	**260-3718**	1	BRACKET	
M	16A	2	**260-3939**	1	SCREW-HEX HEAD (M6X1X25-MM)	
	17	2	**268-6678**	1	BRACKET AS	
		2	**260-3719**	1	BRACKET	
M	17A	2	**260-3939**	1	SCREW-HEX HEAD (M6X1X25-MM)	
	18	1	**278-5168**	4	CLAMP-INJECTOR	
	19	1	**278-5170**	4	BOLT	
	20	2	**278-5203**	4	SPACER	
	21	3	**278-5225**	1	KIT-SENSOR (ENGINE OIL PRESSURE)	
	21A	3	**199-9267**	1	SEAL-O-RING	
	22	3	**311-3858**	1	KIT-SENSOR (ENGINE SPEED)	
	22A	3	**274-1639**	1	SEAL	
	23	3	**278-5272**	1	KIT-SENSOR (AIR TEMPERATURE)	
	23A	3	**278-5226**	1	SEAL-O-RING	
	24	3	**278-5273**	1	KIT-SENSOR (WATER PRESSURE)	
	24A	3	**199-9252**	1	SEAL-O-RING	
	25	3	**278-5307**	1	KIT-SENSOR (WATER TEMPERATURE)	
	25A	3	**199-9267**	1	SEAL-O-RING	
	26	1	**311-6342**	1	SENSOR AS-PRESSURE (FUEL RAIL PRESSURE)	
	26A	1	**309-8006**	1	WASHER	
Y	27	1	**283-2271**	1	PUMP GP-FUEL INJECTION	1067
Y	28	1	**292-3780**	4	INJECTOR GP-FUEL	1021
	29	1	**298-4535**	1	BRACKET-SUPPORT	
	30	1	**298-4536**	1	BRACKET-MOUNTING	
	31	1	**298-4537**	1	TUBE AS	
	32	1	**298-4538**	1	TUBE AS (CYL NO. 1)	
	33	1	**298-4539**	1	TUBE AS (CYL NO. 2)	
	34	1	**298-4540**	1	TUBE AS (CYL NO. 3)	
	35	1	**298-4541**	1	TUBE AS (CYL NO. 4)	
	36	1	**298-4542**	1	TUBE AS	
	37	1	**298-4543**	1	BOLT	
	38	2	**308-3395**	1	BRACKET-MOUNTING	

304-7189 **PUMP GP-FUEL INJECTION** (contd.) **i03314922**

NOTE	REF NO	GRAPHIC REF	PART NUMBER	QTY	PART NAME 1 2 3 4 5 6 (PRODUCT LEVEL)	SEE PAGE
F			**278-4138**	4	KIT-FUEL LINE PROTECTION	

F - NOT SHOWN
M - METRIC PART
Y - SEPARATE ILLUSTRATION

304-7189 **PUMP GP-FUEL INJECTION (**contd.**)** **i03314922**

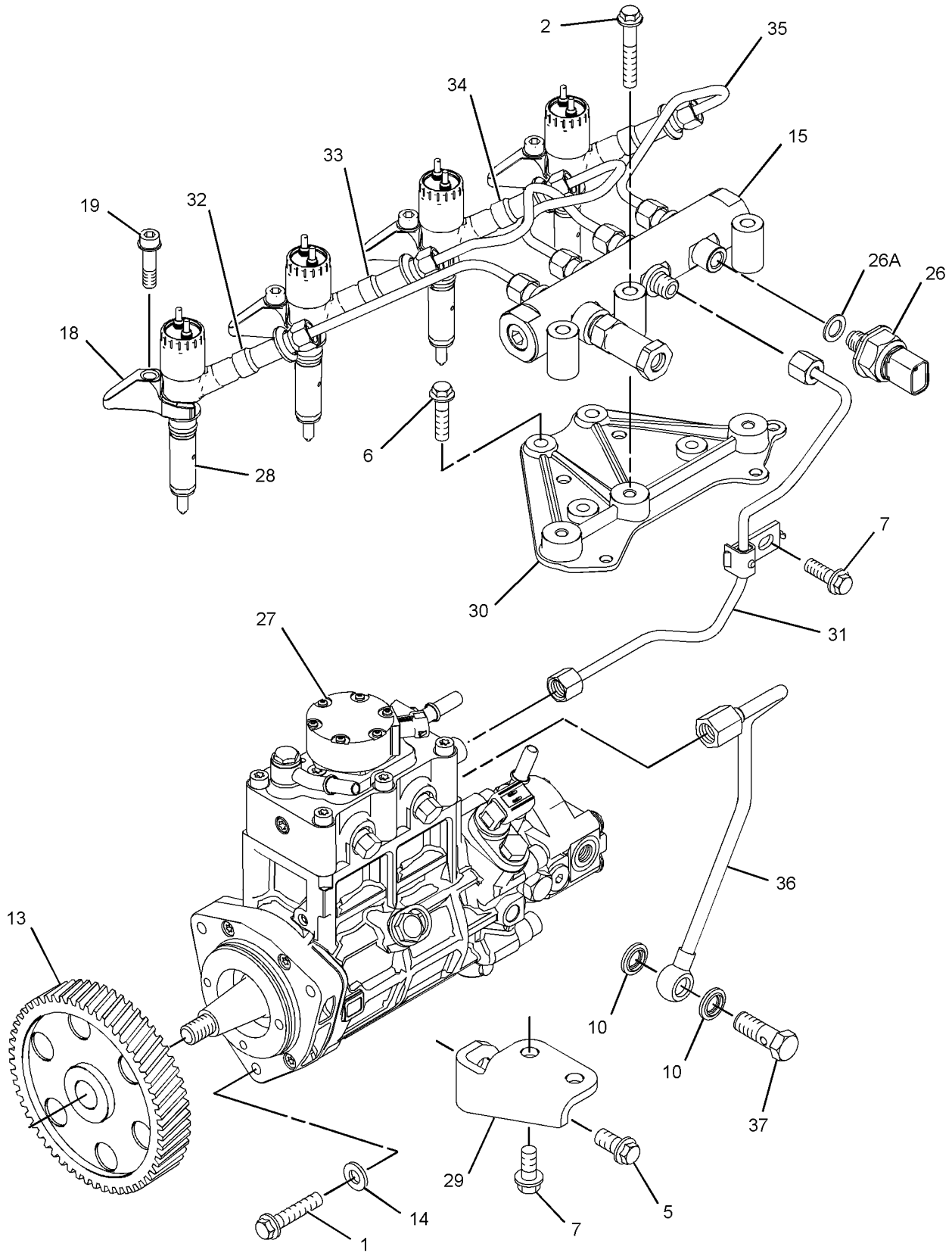

GRAPHIC #1 g01375172

304-7189 **PUMP GP-FUEL INJECTION (**contd.**)** **i03314922**

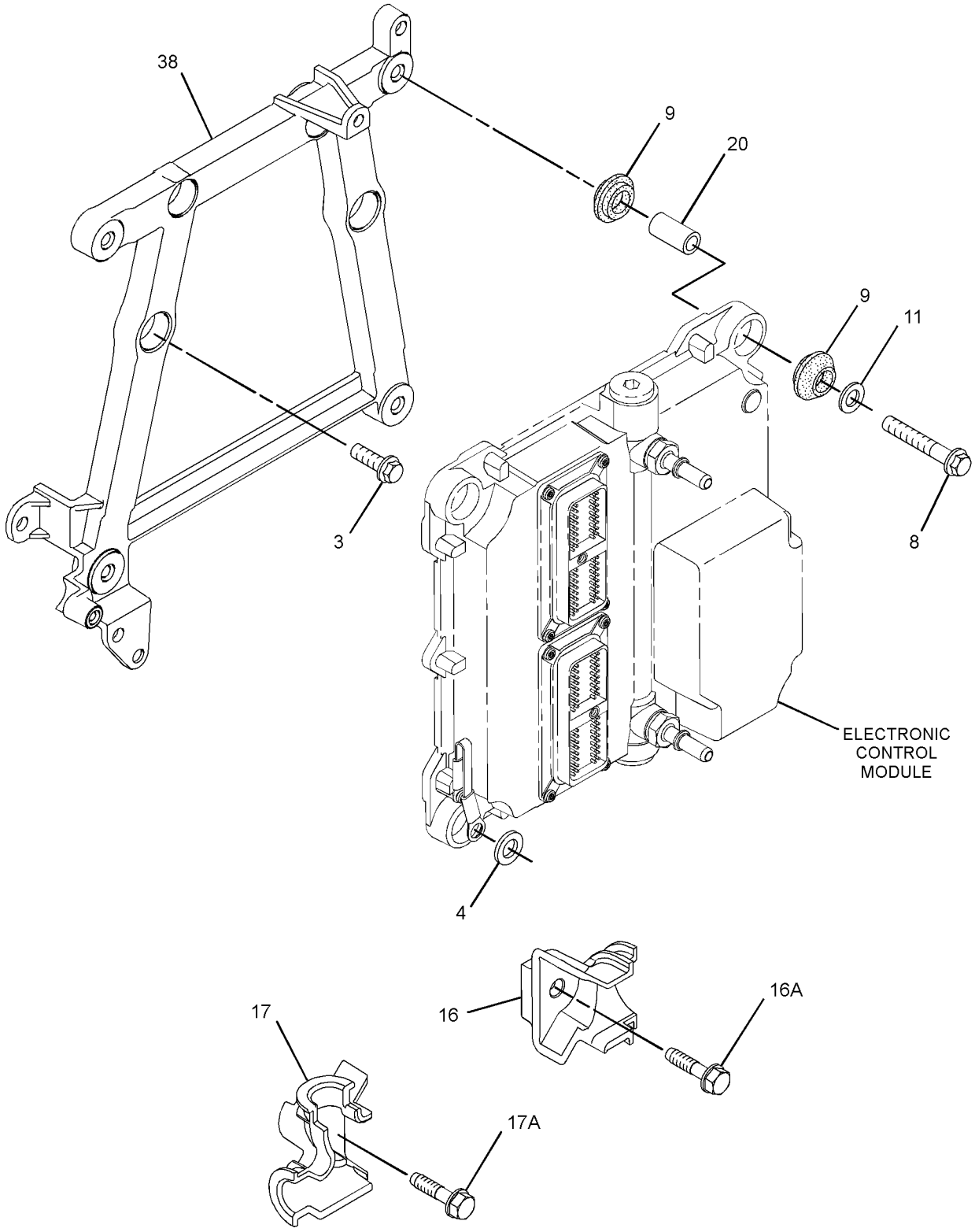

GRAPHIC #2 g01434560

304-7189 **PUMP GP-FUEL INJECTION (**contd.**)** **i03314922**

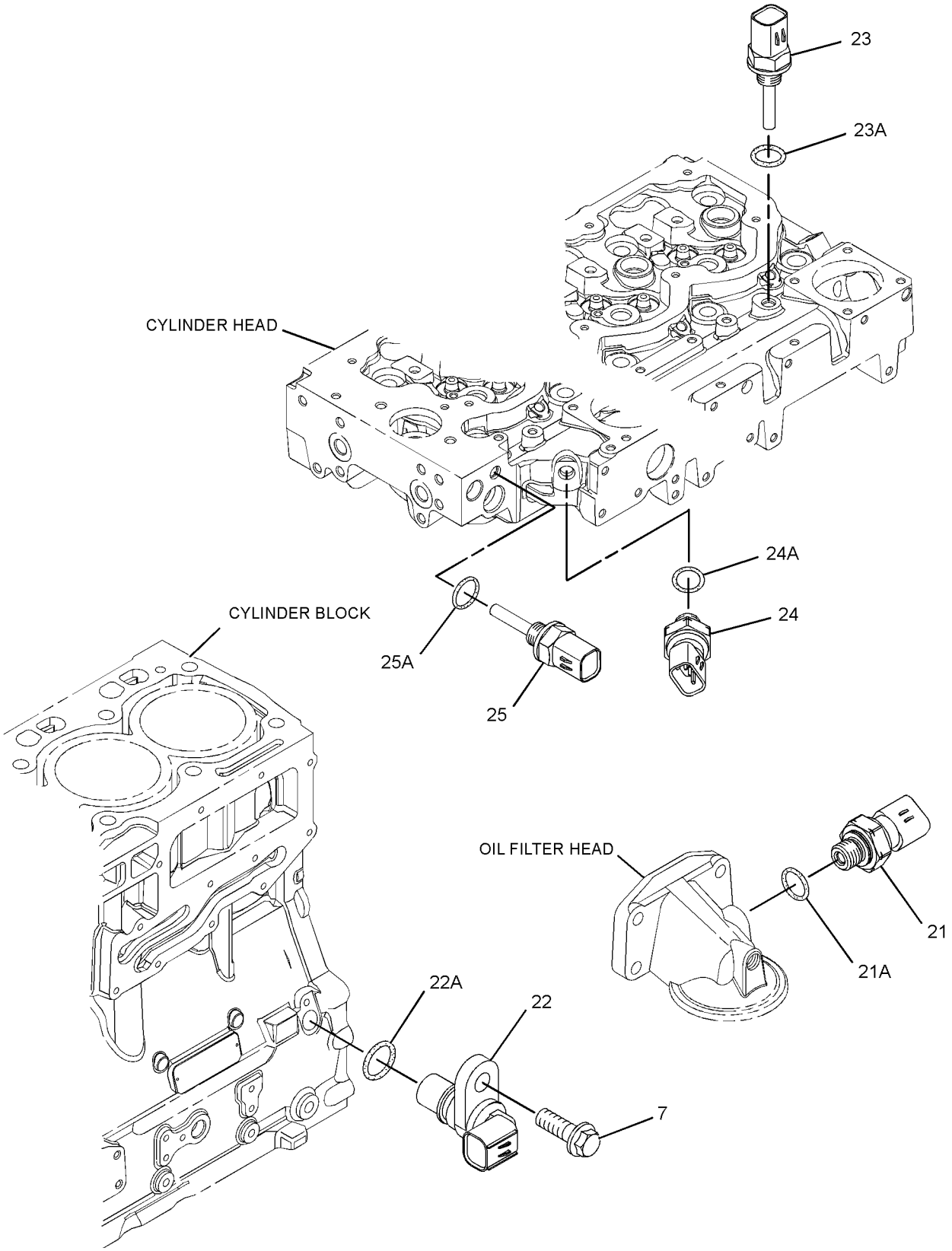

GRAPHIC #3 <END> g01374374

304-7189 PUMP GP-FUEL INJECTION

TYPE 2

SMCS-1251, 1290 **i03730803**

NOTE	REF NO	GRAPHIC REF	PART NUMBER	QTY	PART NAME 1 2 3 4 5 6 (PRODUCT LEVEL)	SEE PAGE
M	1	1	**6I-0260**	3	BOLT (M8X1.25X25-MM)	
M	2	1	**6I-0455**	3	BOLT (M8X1.25X55-MM)	
M	3	2	**6I-0572**	4	BOLT (M8X1.25X20-MM)	
	4	2	**7W-2632**	1	WASHER (8.5X16.8X1.6-MM THK)	
M	5	1	**100-4830**	1	BOLT (M10X1.5X20-MM)	
M	6	1	**101-3895**	4	BOLT (M8X1.25X35-MM)	
M	7	1,3	**124-3815**	4	BOLT (M8X1.25X16-MM)	
M	8	2	**141-8584**	4	BOLT (M8X1.25X50-MM)	
	9	2	**300-6714**	8	MOUNT	
	10	1	**160-0162**	2	WASHER	
	11	2	**217-0099**	5	SPACER (8.2X25X2-MM THK)	
	13	1	**230-8989**	1	GEAR-FUEL PUMP (68-TEETH)	
C	14	1	**232-3149**	3	WASHER (8.35X16.85X1.55-MM THK)	
	15	1	**318-2394**	1	RAIL AS-FUEL	
	15A	1	**305-5291**		VALVE AS-RELIEF	
	16	2	**268-6677**	1	BRACKET AS	
M	16A	2	**260-3939**	1	SCREW-HEX HEAD (M6X1X25-MM)	
	17	2	**268-6678**	1	BRACKET AS	
M	17A	2	**260-3939**	1	SCREW-HEX HEAD (M6X1X25-MM)	
	18	1	**278-5168**	4	CLAMP-INJECTOR	
	19	1	**278-5170**	4	BOLT	
	20	2	**278-5203**	4	SPACER	
	21	3	**278-5225**	1	KIT-SENSOR (ENGINE OIL PRESSURE)	
	21A	3	**199-9267**	1	SEAL-O-RING	
	22	3	**311-3858**	1	KIT-SENSOR (ENGINE SPEED)	
	22A	3	**274-1639**	1	SEAL	
	23	3	**278-5272**	1	KIT-SENSOR (AIR TEMPERATURE)	
	23A	3	**278-5226**	1	SEAL-O-RING	
	24	3	**278-5273**	1	KIT-SENSOR (WATER PRESSURE)	
	24A	3	**199-9252**	1	SEAL-O-RING	
	25	3	**278-5307**	1	KIT-SENSOR (WATER TEMPERATURE)	
	25A	3	**199-9267**	1	SEAL-O-RING	
	26	1	**311-6342**	1	SENSOR AS-PRESSURE (FUEL RAIL PRESSURE)	
	26A	1	**309-8006**	1	WASHER	
CYR	27	1	**324-0532**	1	PUMP GP-FUEL INJECTION	1523
YR	28	1	**320-0680**	4	INJECTOR GP-FUEL	1027
	29	1	**298-4535**	1	BRACKET-SUPPORT	
	30	1	**337-3573**	1	BRACKET	
	31	1	**337-3574**	1	TUBE	
	32	1	**322-3745**	1	TUBE (CYL NO. 1)	
	33	1	**322-3746**	1	TUBE (CYL NO. 2)	
	34	1	**333-4732**	1	LINE-FUEL INJECTION (CYL NO. 3)	
	35	1	**333-4733**	1	LINE-FUEL INJECTION (CYL NO. 4)	
	36	1	**298-4542**	1	TUBE AS	
	37	1	**298-4543**	1	BOLT	
	38	2	**317-3144**	1	BRACKET	
F			**278-4138**	4	KIT-FUEL LINE PROTECTION	

304-7189 **PUMP GP-FUEL INJECTION (**contd.**)** **i03730803**

NOTE	REF NO	GRAPHIC REF	PART NUMBER	QTY	PART NAME 1 2 3 4 5 6 (PRODUCT LEVEL)	SEE PAGE

C - CHANGE FROM PREVIOUS TYPE
F - NOT SHOWN
M - METRIC PART
R - REMANUFACTURED PART MAY BE AVAILABLE
Y - SEPARATE ILLUSTRATION

304-7189 **PUMP GP-FUEL INJECTION (**contd.**)** **i03730803**

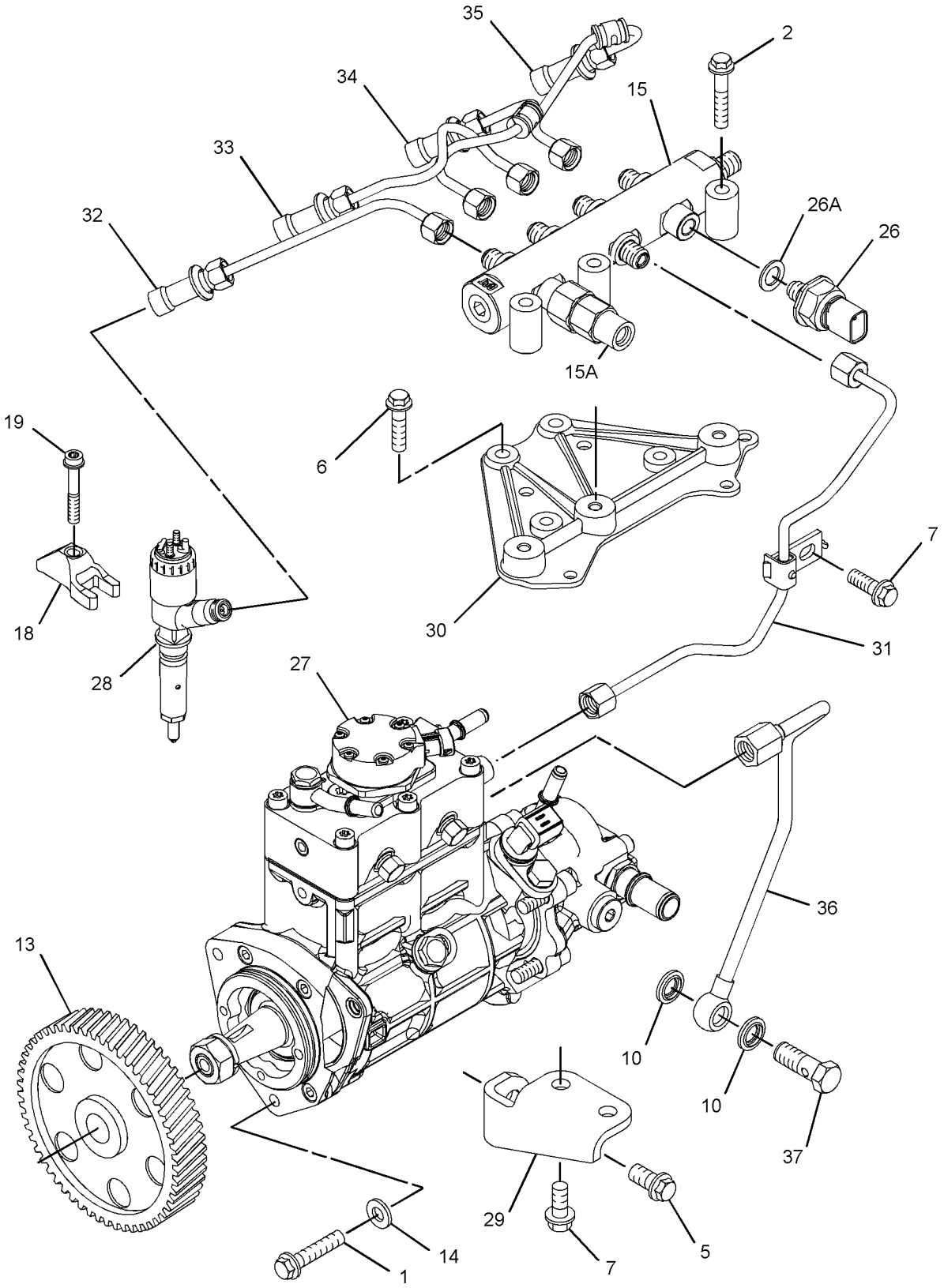

GRAPHIC #1 g01838595

304-7189 **PUMP GP-FUEL INJECTION (**contd.**)** **i03730803**

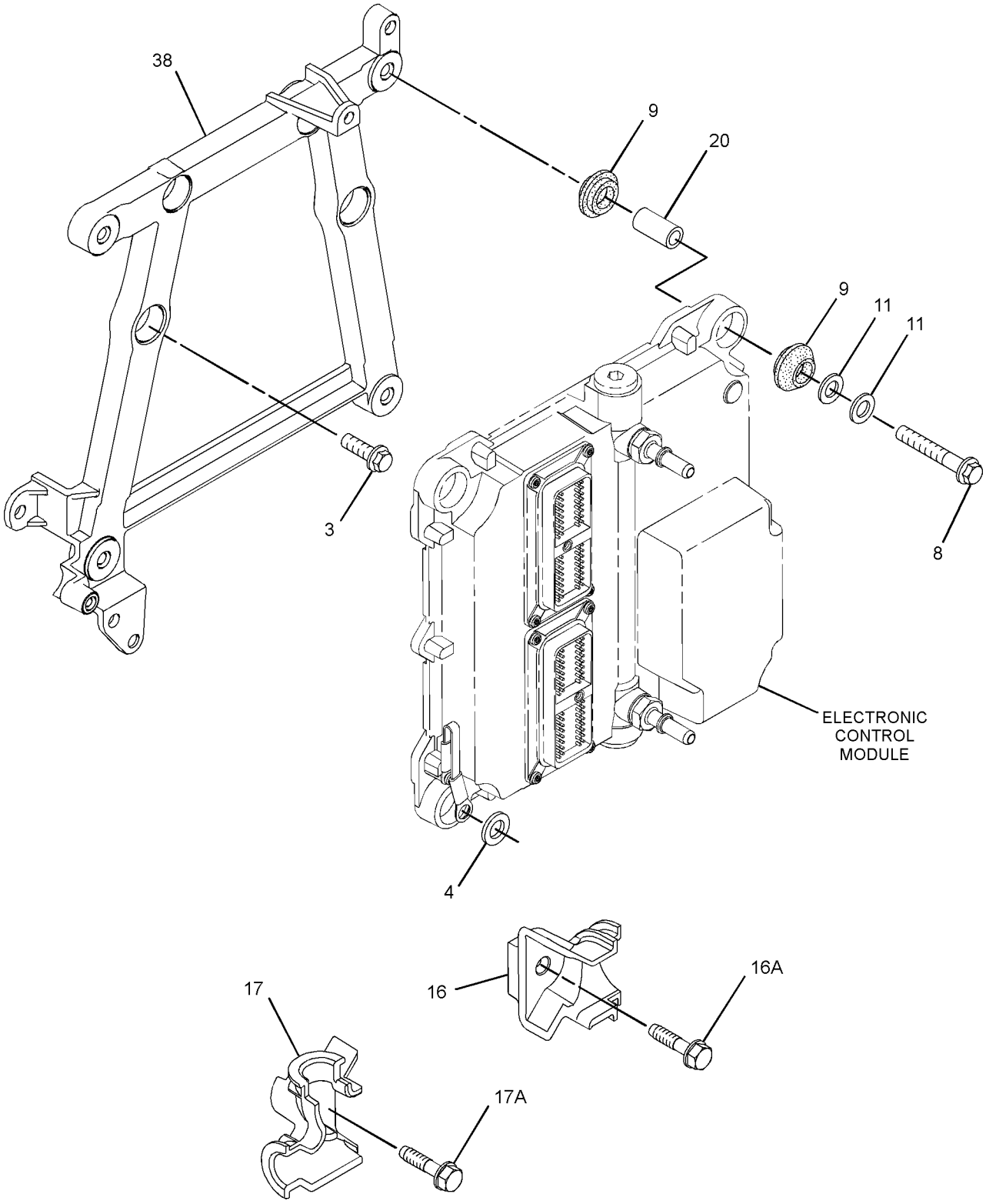

GRAPHIC #2 g01673273

304-7189 **PUMP GP-FUEL INJECTION (**contd.**)** **i03730803**

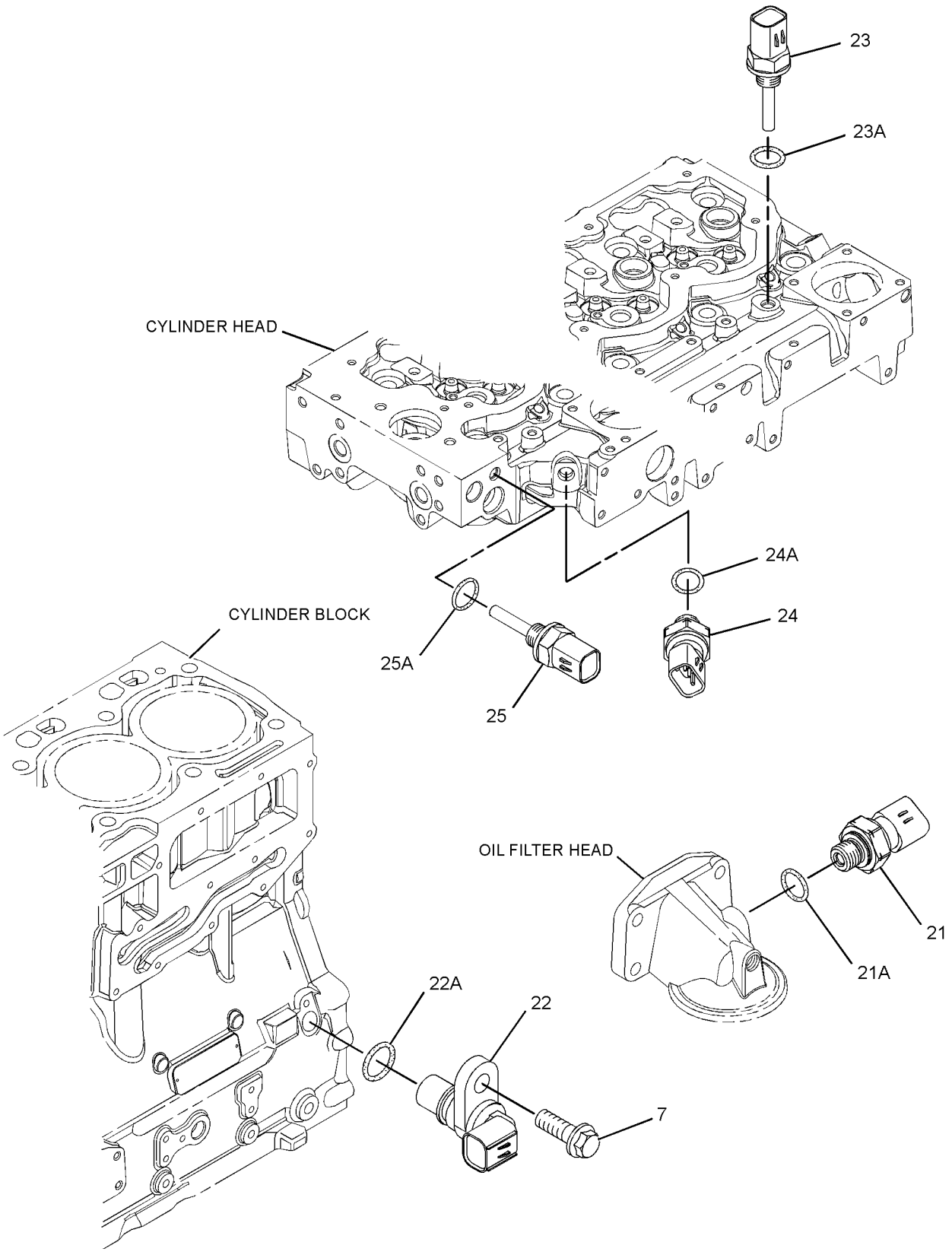

GRAPHIC #3 <END> g01374374

304-7189 PUMP GP-FUEL INJECTION

TYPE 3

SMCS-1251, 1290 **i04724523**

NOTE	REF NO	GRAPHIC REF	PART NUMBER	QTY	PART NAME 1 2 3 4 5 6 (PRODUCT LEVEL)	SEE PAGE
M	1	1	**6I-0260**	3	BOLT (M8X1.25X25-MM)	
M	2	1	**6I-0455**	3	BOLT (M8X1.25X55-MM)	
M	3	2	**6I-0572**	4	BOLT (M8X1.25X20-MM)	
	4	2	**7W-2632**	1	WASHER (8.5X16.8X1.6-MM THK)	
M	5	1	**100-4830**	1	BOLT (M10X1.5X20-MM)	
M	6	1	**101-3895**	4	BOLT (M8X1.25X35-MM)	
M	7	1,3	**124-3815**	4	BOLT (M8X1.25X16-MM)	
M	8	2	**141-8584**	4	BOLT (M8X1.25X50-MM)	
	9	2	**300-6714**	8	MOUNT	
	10	1	**160-0162**	2	WASHER	
	11	2	**217-0099**	5	SPACER (8.2X25X2-MM THK)	
	13	1	**230-8989**	1	GEAR-FUEL PUMP (68-TEETH)	
	14	1	**232-3149**	3	WASHER (8.35X16.85X1.55-MM THK)	
	15	1	**318-2394**	1	RAIL AS-FUEL	
	15A	1	**305-5291**	1	VALVE AS-RELIEF	
	16	2	**268-6677**	1	BRACKET AS	
M	16A	2	**260-3939**	1	SCREW-HEX HEAD (M6X1X25-MM)	
	17	2	**268-6678**	1	BRACKET AS	
M	17A	2	**260-3939**	1	SCREW-HEX HEAD (M6X1X25-MM)	
	18	1	**278-5168**	4	CLAMP-INJECTOR	
	19	1	**278-5170**	4	BOLT	
	20	2	**278-5203**	4	SPACER	
	21	3	**278-5225**	1	KIT-SENSOR (ENGINE OIL PRESSURE)	
	21A	3	**199-9267**	1	SEAL-O-RING	
	22	3	**311-3858**	1	KIT-SENSOR (ENGINE SPEED)	
	22A	3	**274-1639**	1	SEAL	
		3	**238-0120**	1	SENSOR GP-SPEED	
	23	3	**278-5272**	1	KIT-SENSOR (AIR TEMPERATURE)	
	23A	3	**278-5226**	1	SEAL-O-RING	
	24	3	**278-5273**	1	KIT-SENSOR (WATER PRESSURE)	
	24A	3	**199-9252**	1	SEAL-O-RING	
	25	3	**278-5307**	1	KIT-SENSOR (WATER TEMPERATURE)	
	25A	3	**199-9267**	1	SEAL-O-RING	
	26	1	**311-6342**	1	SENSOR AS-PRESSURE (FUEL RAIL PRESSURE)	
	26A	1	**309-8006**	1	WASHER	
CYR	27	1	**352-6584**	1	PUMP GP-FUEL INJECTION	1540
YR	28	1	**320-0680**	4	INJECTOR GP-FUEL	1027
	29	1	**298-4535**	1	BRACKET-SUPPORT	
	30	1	**337-3573**	1	BRACKET	
	31	1	**337-3574**	1	TUBE	
	32	1	**322-3745**	1	TUBE (CYL NO. 1)	
	33	1	**322-3746**	1	TUBE (CYL NO. 2)	
	34	1	**333-4732**	1	LINE-FUEL INJECTION (CYL NO. 3)	
	35	1	**333-4733**	1	LINE-FUEL INJECTION (CYL NO. 4)	
	36	1	**298-4542**	1	TUBE AS	
	37	1	**298-4543**	1	BOLT	
	38	2	**317-3144**	1	BRACKET	

304-7189 **PUMP GP-FUEL INJECTION** (contd.) **i04724523**

NOTE	REF NO	GRAPHIC REF	PART NUMBER	QTY	PART NAME 1 2 3 4 5 6 (PRODUCT LEVEL)	SEE PAGE
F			**278-4138**	4	KIT-FUEL LINE PROTECTION	

C - CHANGE FROM PREVIOUS TYPE
F - NOT SHOWN
M - METRIC PART
R - REMANUFACTURED PART MAY BE AVAILABLE
Y - SEPARATE ILLUSTRATION

304-7189 **PUMP GP-FUEL INJECTION (**contd.**)** **i04724523**

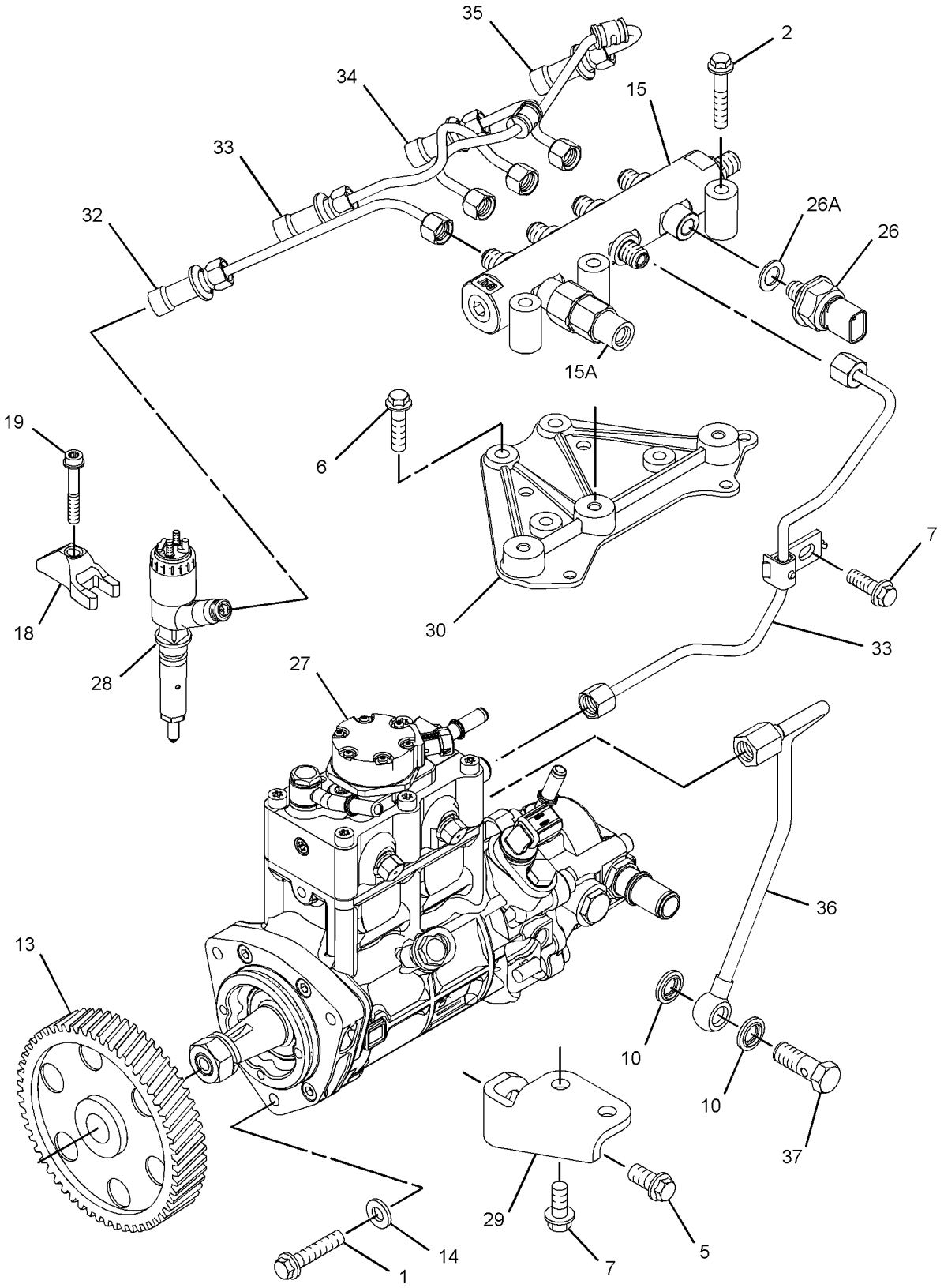

GRAPHIC #1 g02223054

304-7189 **PUMP GP-FUEL INJECTION (**contd.**)** **i04724523**

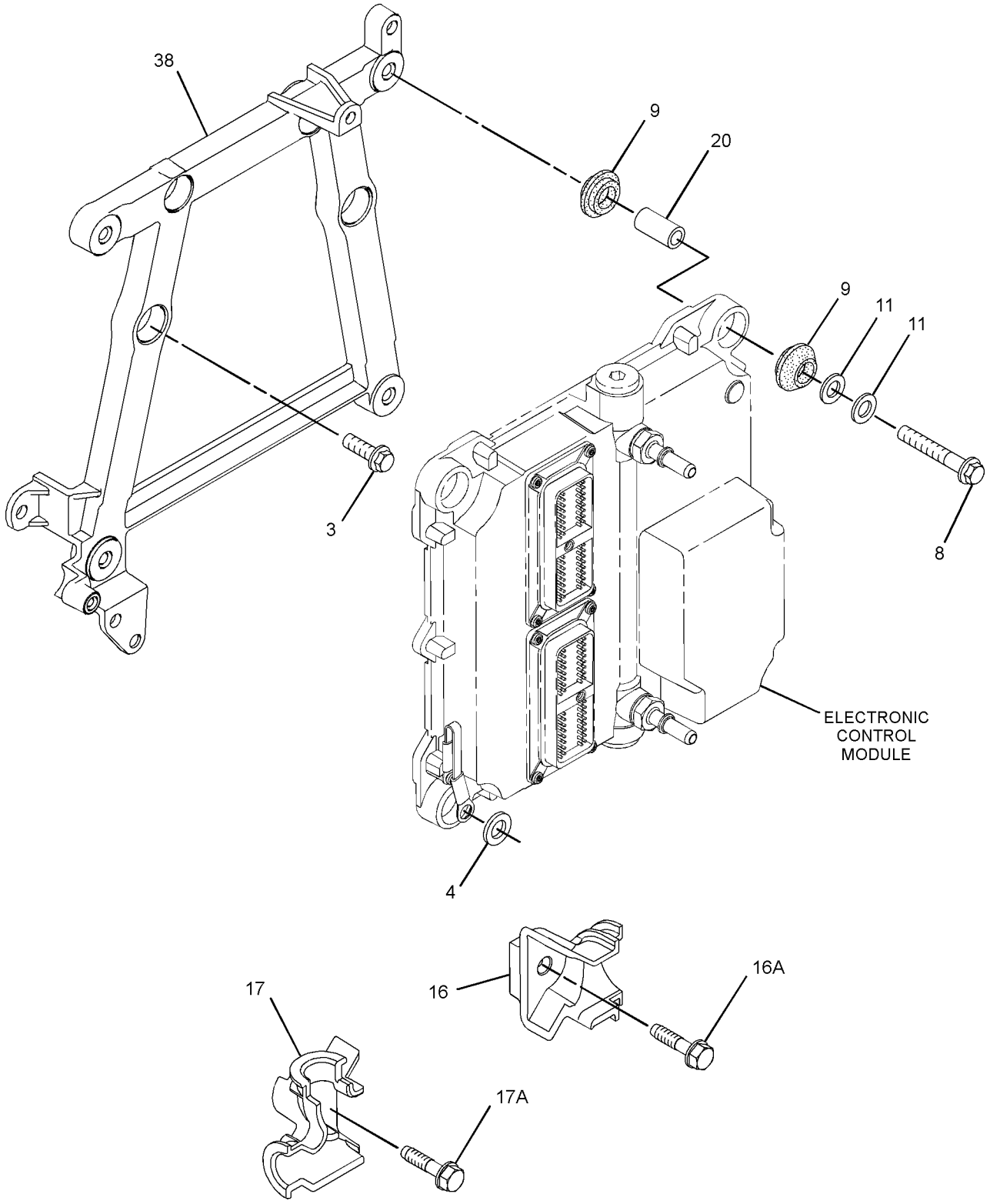

GRAPHIC #2 g01673273

304-7189 **PUMP GP-FUEL INJECTION (**contd.**)** **i04724523**

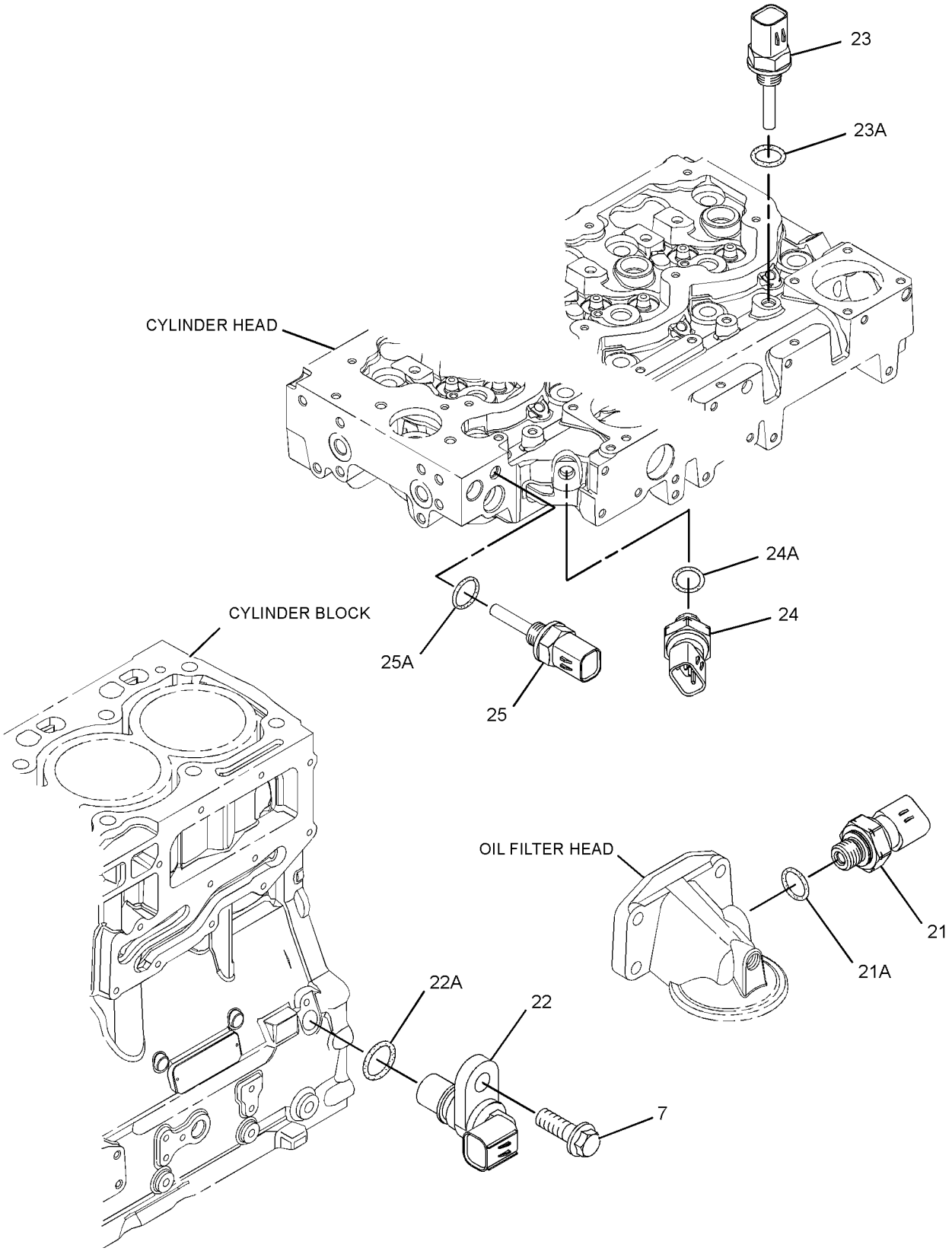

GRAPHIC #3 <END> g01374374

304-7189 PUMP GP-FUEL INJECTION

TYPE 4

SMCS-1251, 1290 **i05880373**

NOTE	REF NO	GRAPHIC REF	PART NUMBER	QTY	PART NAME 1 2 3 4 5 6 (PRODUCT LEVEL)	SEE PAGE
M	1	1	**6I-0260**	3	BOLT (M8X1.25X25-MM)	
M	2	1	**6I-0455**	3	BOLT (M8X1.25X55-MM)	
M	3	2	**6I-0572**	4	BOLT (M8X1.25X20-MM)	
	4	2	**7W-2632**	1	WASHER (8.5X16.8X1.6-MM THK)	
M	5	1	**100-4830**	1	BOLT (M10X1.5X20-MM)	
M	6	1	**101-3895**	4	BOLT (M8X1.25X35-MM)	
M	7	1,3	**124-3815**	4	BOLT (M8X1.25X16-MM)	
M	8	2	**141-8584**	4	BOLT (M8X1.25X50-MM)	
	9	2	**300-6714**	8	MOUNT	
	10	1	**346-0007**	2	WASHER	
	11	2	**217-0099**	5	SPACER (8.2X25X2-MM THK)	
	13	1	**230-8989**	1	GEAR-FUEL PUMP (68-TEETH)	
	14	1	**232-3149**	3	WASHER (8.35X16.85X1.55-MM THK)	
	15	1	**358-6632**	1	RAIL GP-FUEL	
	15A	1	**305-5291**	1	VALVE AS-RELIEF	
	16	2	**268-6677**	1	BRACKET AS	
M	16A	2	**260-3939**	1	SCREW-HEX HEAD (M6X1X25-MM)	
	17	2	**268-6678**	1	BRACKET AS	
M	17A	2	**260-3939**	1	SCREW-HEX HEAD (M6X1X25-MM)	
	18	1	**278-5168**	4	CLAMP-INJECTOR	
	19	1	**278-5170**	4	BOLT	
	20	2	**278-5203**	4	SPACER	
	21	3	**278-5225**	1	KIT-SENSOR (ENGINE OIL PRESSURE)	
	21A	3	**199-9267**	1	SEAL-O-RING	
	22	3	**311-3858**	1	KIT-SENSOR (ENGINE SPEED)	
	22A	3	**274-1639**	1	SEAL	
		3	**238-0120**	1	SENSOR GP-SPEED	
	23	3	**278-5272**	1	KIT-SENSOR (AIR TEMPERATURE)	
	23A	3	**278-5226**	1	SEAL-O-RING	
	24	3	**278-5273**	1	KIT-SENSOR (WATER PRESSURE)	
	24A	3	**199-9252**	1	SEAL-O-RING	
	25	3	**278-5307**	1	KIT-SENSOR (WATER TEMPERATURE)	
	25A	3	**199-9267**	1	SEAL-O-RING	
	26	1	**311-6342**	1	SENSOR AS-PRESSURE (FUEL RAIL PRESSURE)	
	26A	1	**309-8006**	1	WASHER	
CYR	27	1	*324-0532*	1	PUMP GP-FUEL INJECTION	1523
YR	28	1	**320-0680**	4	INJECTOR GP-FUEL	1027
	29	1	**298-4535**	1	BRACKET-SUPPORT	
	30	1	**337-3573**	1	BRACKET	
	31	1	**337-3574**	1	TUBE	
	32	1	**322-3745**	1	TUBE (CYL NO. 1)	
	33	1	**322-3746**	1	TUBE (CYL NO. 2)	
	34	1	**333-4732**	1	LINE-FUEL INJECTION (CYL NO. 3)	
	35	1	**333-4733**	1	LINE-FUEL INJECTION (CYL NO. 4)	
	36	1	**298-4542**	1	TUBE AS	
	37	1	**363-3908**	1	BOLT-SPECIAL	
	38	2	**317-3144**	1	BRACKET	

304-7189 **PUMP GP-FUEL INJECTION (**contd.**)** **i05880373**

NOTE	REF NO	GRAPHIC REF	PART NUMBER	QTY	PART NAME 1 2 3 4 5 6 (PRODUCT LEVEL)	SEE PAGE
F			**278-4138**	4	KIT-FUEL LINE PROTECTION	

C - CHANGE FROM PREVIOUS TYPE
F - NOT SHOWN
M - METRIC PART
R - REMANUFACTURED PART MAY BE AVAILABLE
Y - SEPARATE ILLUSTRATION

304-7189 **PUMP GP-FUEL INJECTION (**contd.**)** **i05880373**

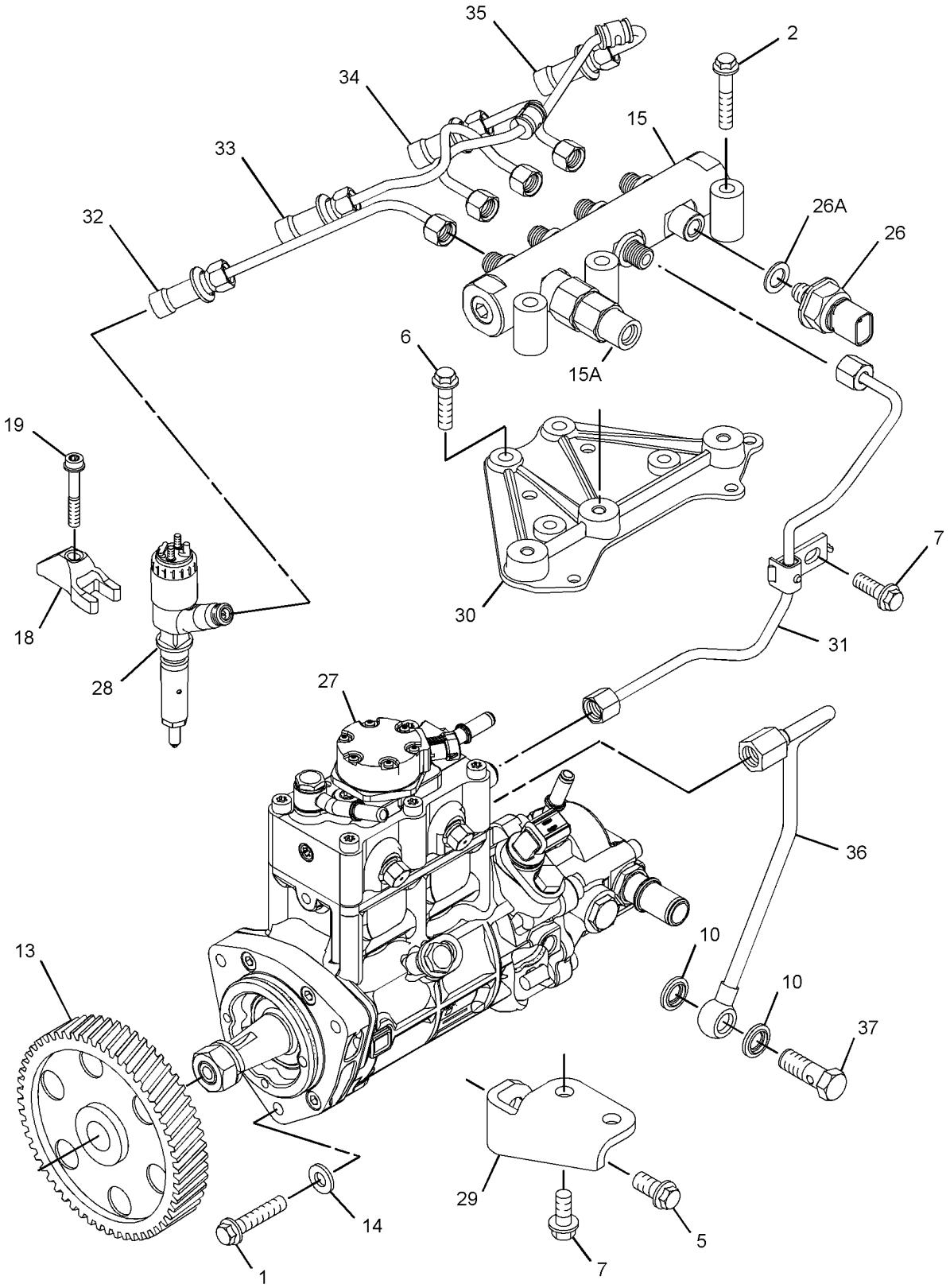

GRAPHIC #1 g02822276

304-7189 **PUMP GP-FUEL INJECTION (**contd.**)** **i05880373**

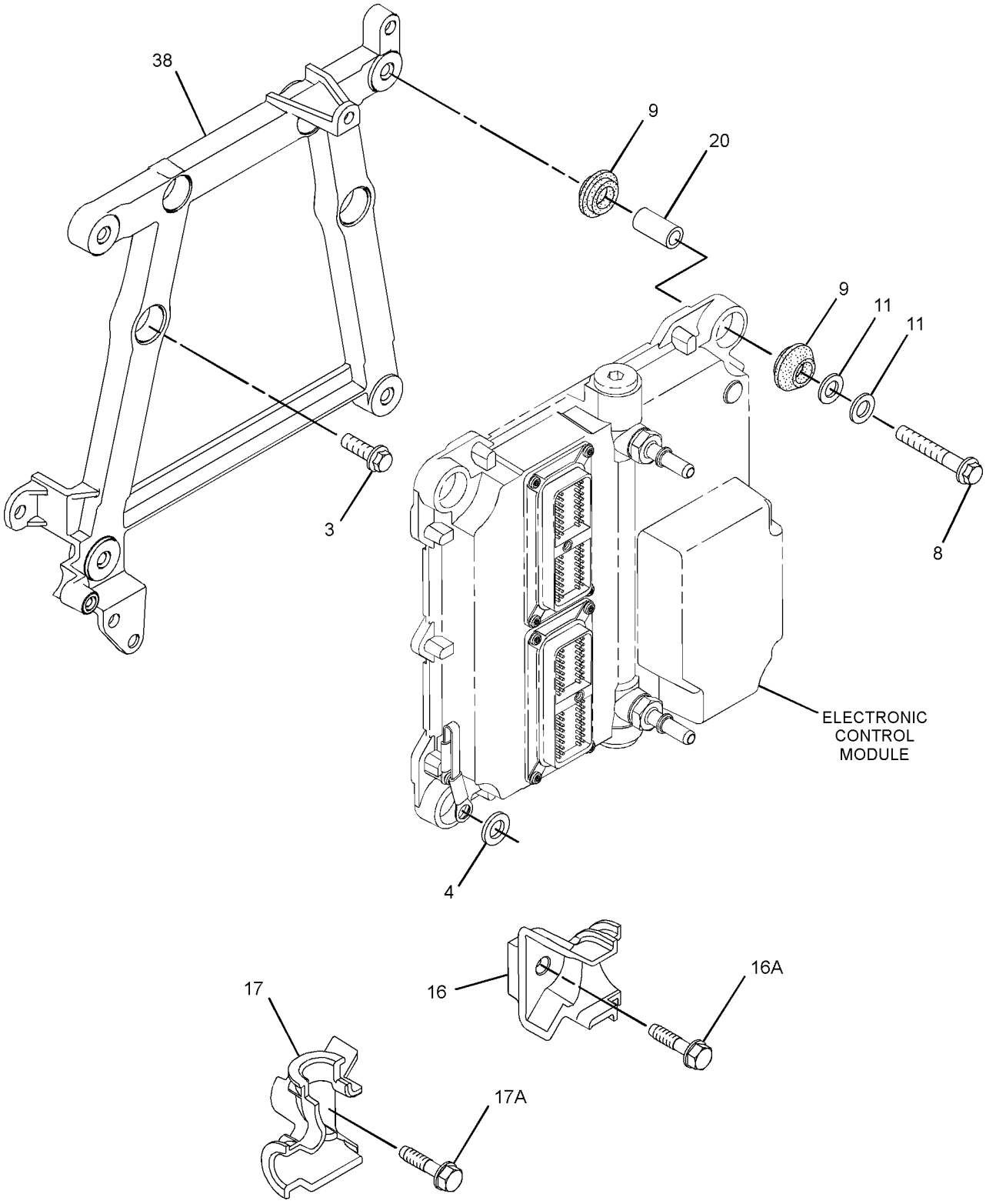

GRAPHIC #2 g01673273

304-7189 **PUMP GP-FUEL INJECTION (**contd.**)** **i05880373**

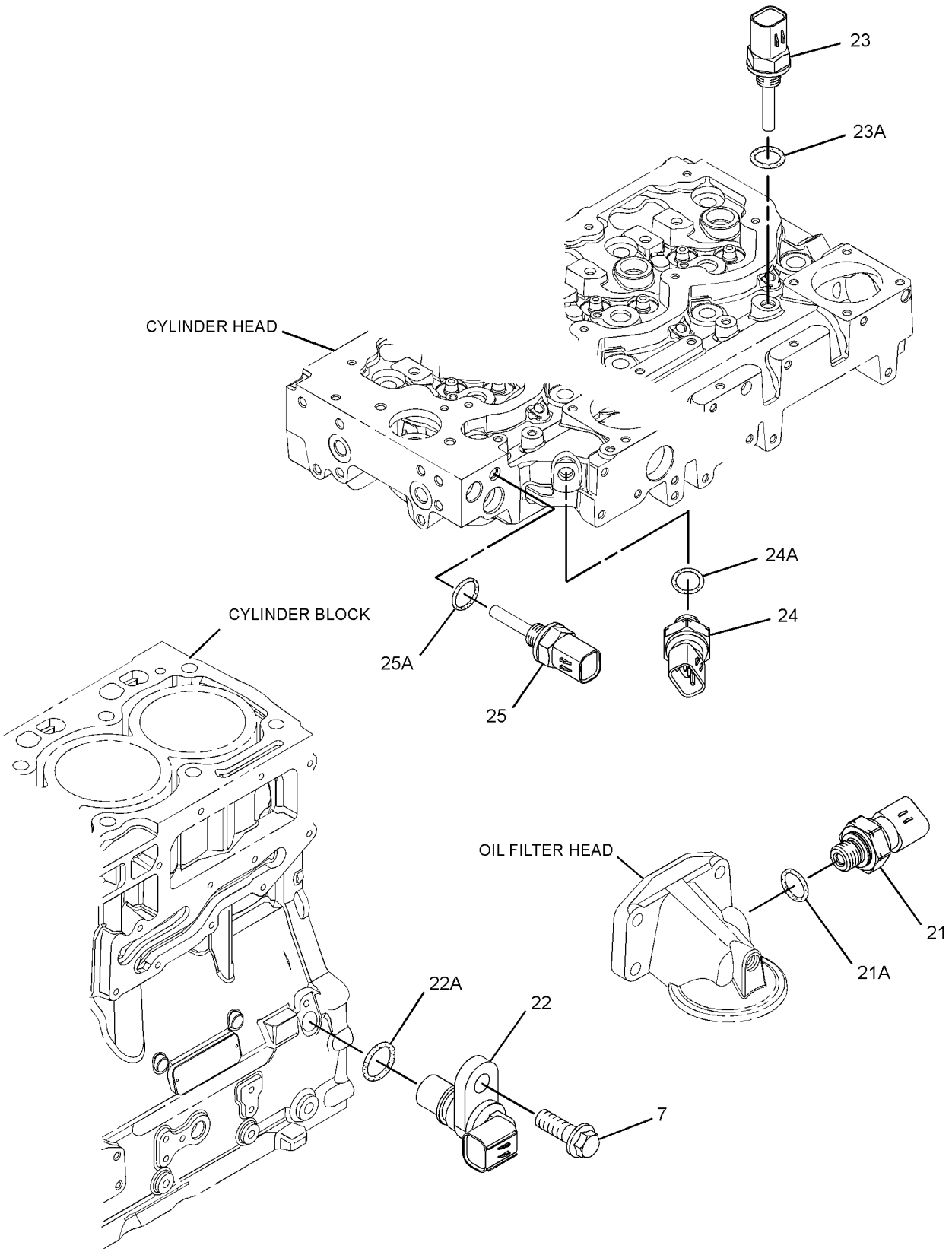

GRAPHIC #3 <END> g01374374

304-7192 PUMP GP-FUEL INJECTION

TYPE 1

SMCS-1251, 1290 **i03314925**

NOTE	REF NO	GRAPHIC REF	PART NUMBER	QTY	PART NAME 1 2 3 4 5 6 (PRODUCT LEVEL)	SEE PAGE
M	1	1	**6I-0260**	3	BOLT (M8X1.25X25-MM)	
M	2	1	**6I-0455**	3	BOLT (M8X1.25X55-MM)	
M	3	2	**6I-0572**	4	BOLT (M8X1.25X20-MM)	
	4	2	**7W-2632**	1	WASHER (8.5X16.8X1.6-MM THK)	
M	5	1	**100-4830**	1	BOLT (M10X1.5X20-MM)	
M	6	1	**101-3895**	4	BOLT (M8X1.25X35-MM)	
M	7	1,3	**124-3815**	4	BOLT (M8X1.25X16-MM)	
M	8	2	**141-8584**	4	BOLT (M8X1.25X50-MM)	
	9	2	**300-6714**	8	MOUNT	
	10	1	**160-0162**	2	WASHER	
	11	2	**217-0099**	4	SPACER (8.2X25X2-MM THK)	
	12	2	**217-8477**	1	CLIP	
	13	1	**230-8989**	1	GEAR-FUEL PUMP (68-TEETH)	
	14	1	**232-3149**	6	WASHER (8.35X16.85X1.55-MM THK)	
	16	2	**268-6678**	1	BRACKET AS	
		2	**260-3719**	1	BRACKET	
M	16A	2	**260-3939**	1	SCREW-HEX HEAD (M6X1X25-MM)	
	17	2	**268-6677**	1	BRACKET AS	
		2	**260-3718**	1	BRACKET	
M	17A	2	**260-3939**	1	SCREW-HEX HEAD (M6X1X25-MM)	
	18	1	**308-8425**	1	RAIL AS-FUEL	
	19	1	**278-5168**	4	CLAMP-INJECTOR	
	20	1	**278-5170**	4	BOLT	
	21	2	**278-5203**	4	SPACER	
	23	3	**278-5225**	1	KIT-SENSOR (ENGINE OIL PRESSURE)	
	23A	3	**199-9267**	1	SEAL-O-RING	
	24	3	**311-3858**	1	KIT-SENSOR (ENGINE SPEED)	
	24A	3	**274-1639**	1	SEAL	
	25	3	**278-5272**	1	KIT-SENSOR (AIR TEMPERATURE)	
	25A	3	**278-5226**	1	SEAL-O-RING	
	26	3	**278-5273**	1	KIT-SENSOR (AIR PRESSURE)	
	26A	3	**199-9252**	1	SEAL-O-RING	
	27	3	**278-5307**	1	KIT-SENSOR (WATER TEMPERATURE)	
	27A	3	**199-9267**	1	SEAL-O-RING	
	28	1	**311-6342**	1	SENSOR AS-PRESSURE (FUEL RAIL PRESSURE)	
	28A	1	**309-8006**	1	WASHER	
Y	29	1	**283-2271**	1	PUMP GP-FUEL INJECTION	1067
Y	30	1	**292-3780**	4	INJECTOR GP-FUEL	1021
	31	1	**298-4535**	1	BRACKET-SUPPORT	
	32	1	**298-4536**	1	BRACKET-MOUNTING	
	33	1	**298-4537**	1	TUBE AS	
	34	1	**298-4538**	1	TUBE AS (CYL NO. 1)	
	35	1	**298-4539**	1	TUBE AS (CYL NO. 2)	
	36	1	**298-4540**	1	TUBE AS (CYL NO. 3)	
	37	1	**298-4541**	1	TUBE AS (CYL NO. 4)	
	38	1	**298-4542**	1	TUBE AS	
	39	1	**298-4543**	1	BOLT	
	40	2	**308-3395**	1	BRACKET-MOUNTING	

304-7192 **PUMP GP-FUEL INJECTION** (contd.) **i03314925**

NOTE	REF NO	GRAPHIC REF	PART NUMBER	QTY	PART NAME 1 2 3 4 5 6 (PRODUCT LEVEL)	SEE PAGE
F			**278-4138**	4	KIT-FUEL LINE PROTECTION	

F - NOT SHOWN
M - METRIC PART
Y - SEPARATE ILLUSTRATION

304-7192 **PUMP GP-FUEL INJECTION (**contd.**)** **i03314925**

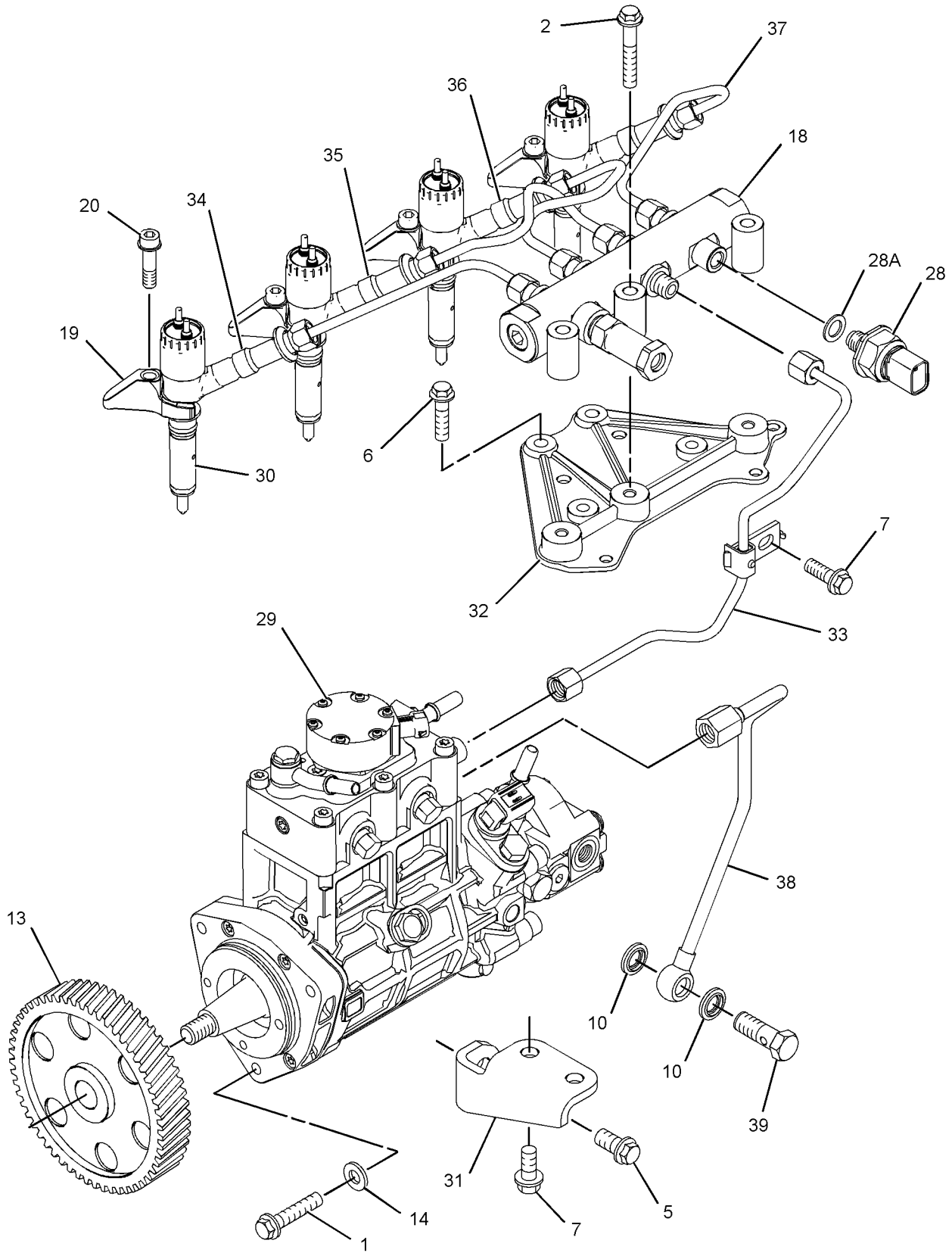

GRAPHIC #1 g01374879

304-7192 **PUMP GP-FUEL INJECTION (**contd.**)** **i03314925**

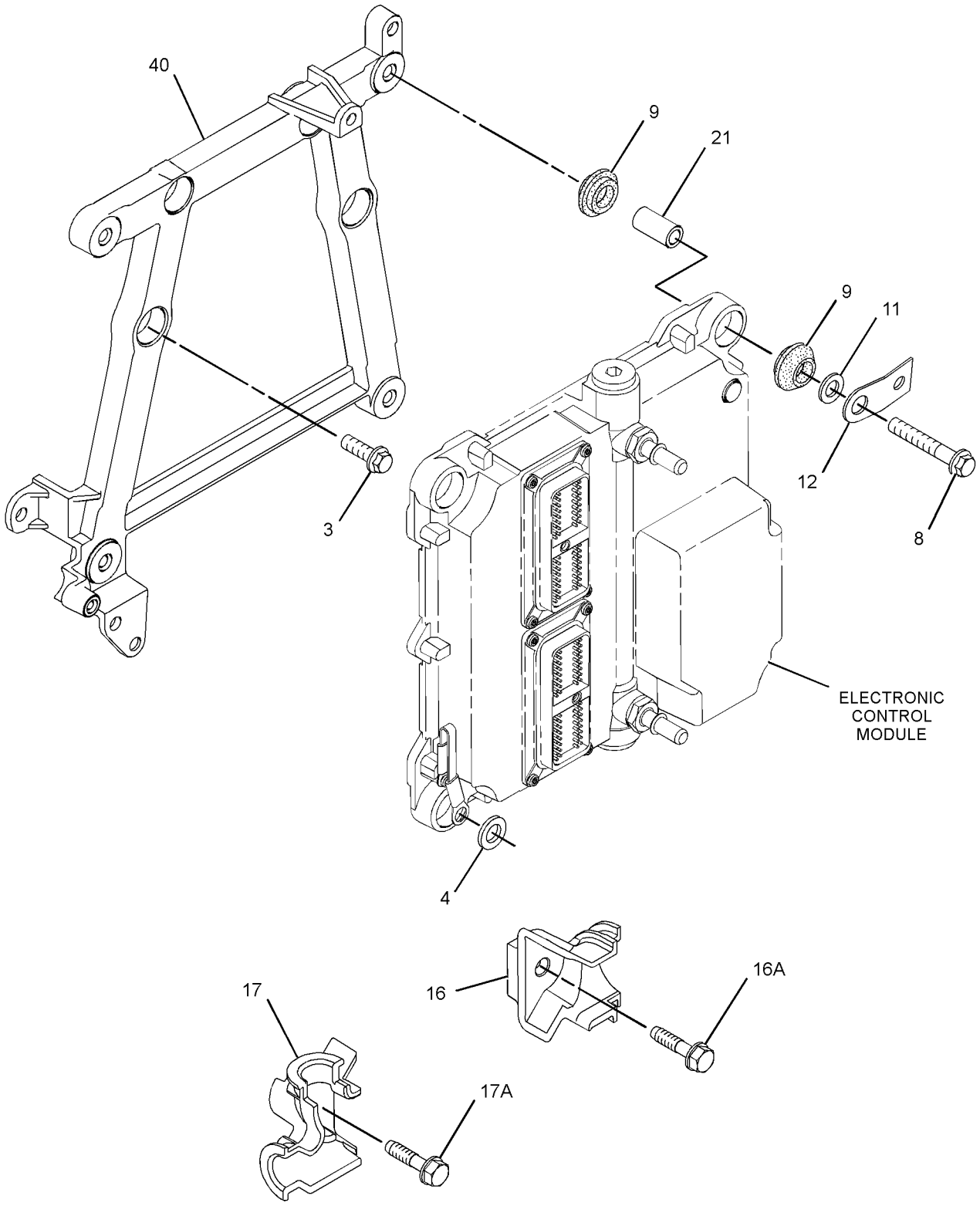

GRAPHIC #2 g01432786

304-7192 **PUMP GP-FUEL INJECTION (**contd.**)** **i03314925**

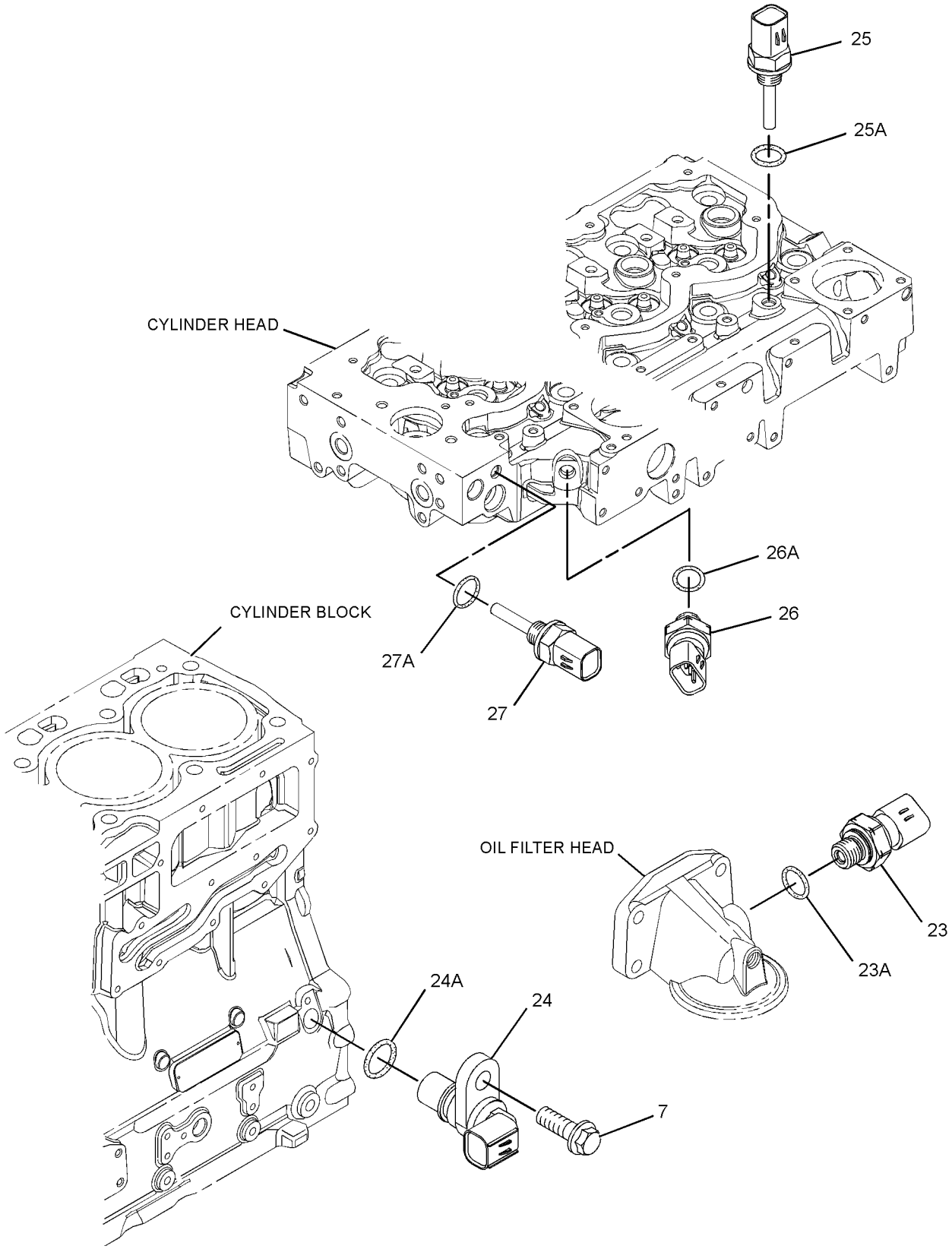

GRAPHIC #3 <END> g01374881

304-7192 PUMP GP-FUEL INJECTION

TYPE 2

SMCS-1251, 1290 **i03730807**

NOTE	REF NO	GRAPHIC REF	PART NUMBER	QTY	PART NAME 1 2 3 4 5 6 (PRODUCT LEVEL)	SEE PAGE
M	1	1	**6I-0260**	3	BOLT (M8X1.25X25-MM)	
M	2	1	**6I-0455**	3	BOLT (M8X1.25X55-MM)	
M	3	2	**6I-0572**	4	BOLT (M8X1.25X20-MM)	
	4	2	**7W-2632**	1	WASHER (8.5X16.8X1.6-MM THK)	
M	5	1	**100-4830**	1	BOLT (M10X1.5X20-MM)	
M	6	1	**101-3895**	4	BOLT (M8X1.25X35-MM)	
M	7	1,3	**124-3815**	4	BOLT (M8X1.25X16-MM)	
M	8	2	**141-8584**	4	BOLT (M8X1.25X50-MM)	
	9	2	**300-6714**	8	MOUNT	
	10	1	**160-0162**	2	WASHER	
	11	2	**217-0099**	5	SPACER (8.2X25X2-MM THK)	
	13	1	**230-8989**	1	GEAR-FUEL PUMP (68-TEETH)	
C	14	1	**232-3149**	3	WASHER (8.35X16.85X1.55-MM THK)	
	16	2	**268-6678**	1	BRACKET AS	
M	16A	2	**260-3939**	1	SCREW-HEX HEAD (M6X1X25-MM)	
	17	2	**268-6677**	1	BRACKET AS	
M	17A	2	**260-3939**	1	SCREW-HEX HEAD (M6X1X25-MM)	
	18	1	**318-2394**	1	RAIL AS-FUEL	
	18A	1	**305-5291**	1	VALVE AS-RELIEF	
	19	1	**278-5168**	4	CLAMP-INJECTOR	
	20	1	**278-5170**	4	BOLT	
	21	2	**278-5203**	4	SPACER	
	23	3	**278-5225**	1	KIT-SENSOR (ENGINE OIL PRESSURE)	
	23A	3	**199-9267**	1	SEAL-O-RING	
	24	3	**311-3858**	1	KIT-SENSOR (ENGINE SPEED)	
	24A	3	**274-1639**	1	SEAL	
	25	3	**278-5272**	1	KIT-SENSOR (AIR TEMPERATURE)	
	25A	3	**278-5226**	1	SEAL-O-RING	
	26	3	**278-5273**	1	KIT-SENSOR (AIR PRESSURE)	
	26A	3	**199-9252**	1	SEAL-O-RING	
	27	3	**278-5307**	1	KIT-SENSOR (WATER TEMPERATURE)	
	27A	3	**199-9267**	1	SEAL-O-RING	
	28	1	**311-6342**	1	SENSOR AS-PRESSURE (FUEL RAIL PRESSURE)	
	28A	1	**309-8006**	1	WASHER	
CYR	29	1	**324-0532**	1	PUMP GP-FUEL INJECTION	1523
YR	30	1	**320-0680**	4	INJECTOR GP-FUEL	1027
	31	1	**298-4535**	1	BRACKET-SUPPORT	
	32	1	**337-3573**	1	BRACKET	
	33	1	**337-3574**	1	TUBE	
	34	1	**322-3745**	1	TUBE (CYL NO. 1)	
	35	1	**322-3746**	1	TUBE (CYL NO. 2)	
	36	1	**333-4732**	1	LINE-FUEL INJECTION (CYL NO. 3)	
	37	1	**333-4733**	1	LINE-FUEL INJECTION (CYL NO. 4)	
	38	1	**298-4542**	1	TUBE AS	
	39	1	**298-4543**	1	BOLT	
	40	2	**317-3144**	1	BRACKET	
F			**278-4138**	4	KIT-FUEL LINE PROTECTION	

304-7192 **PUMP GP-FUEL INJECTION (**contd.**)** **i03730807**

NOTE	REF NO	GRAPHIC REF	PART NUMBER	QTY	PART NAME 1 2 3 4 5 6 (PRODUCT LEVEL)	SEE PAGE

C - CHANGE FROM PREVIOUS TYPE
F - NOT SHOWN
M - METRIC PART
R - REMANUFACTURED PART MAY BE AVAILABLE
Y - SEPARATE ILLUSTRATION

304-7192 **PUMP GP-FUEL INJECTION (**contd.**)** **i03730807**

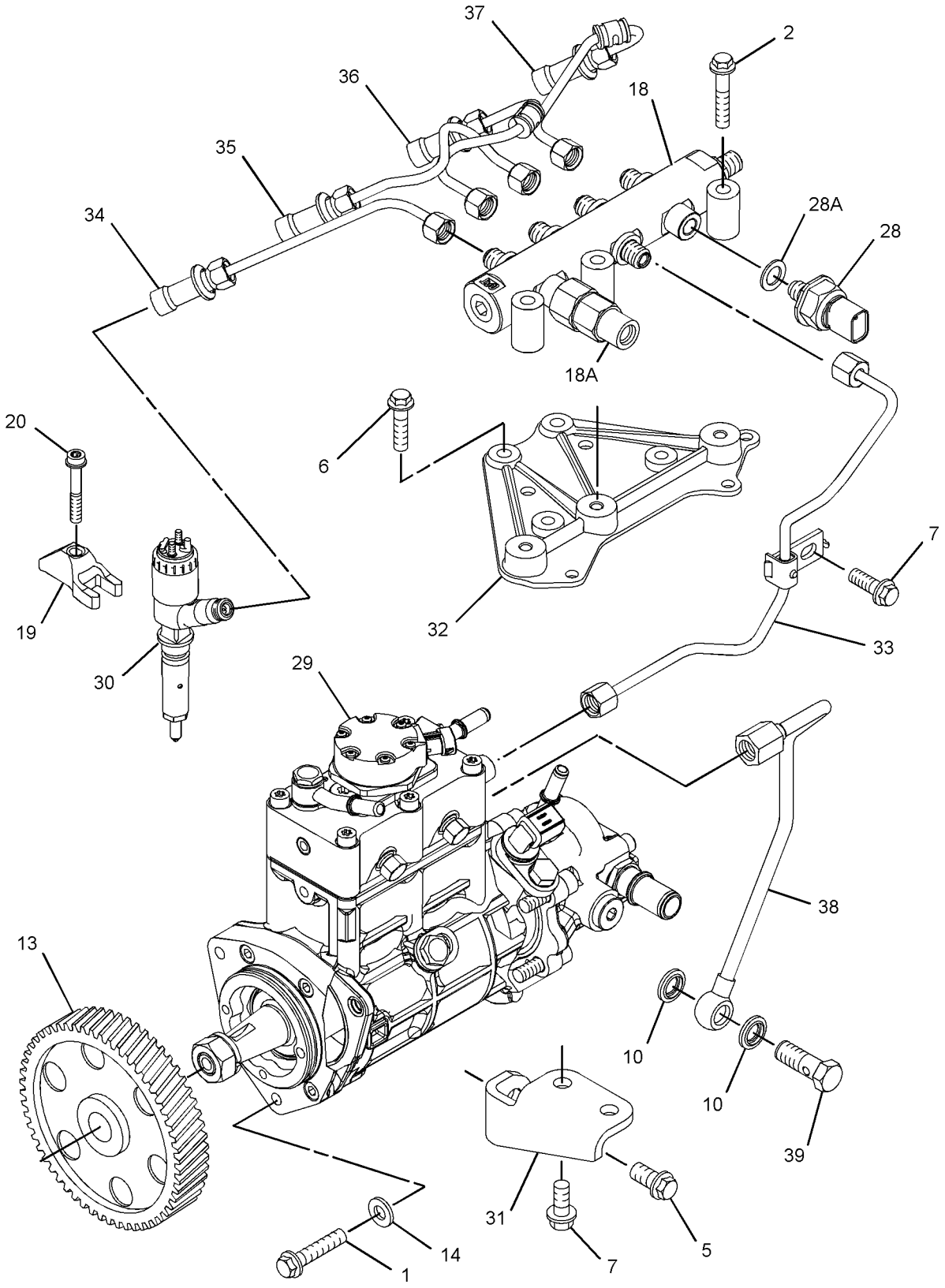

GRAPHIC #1 g01838613

304-7192 **PUMP GP-FUEL INJECTION (**contd.**)** **i03730807**

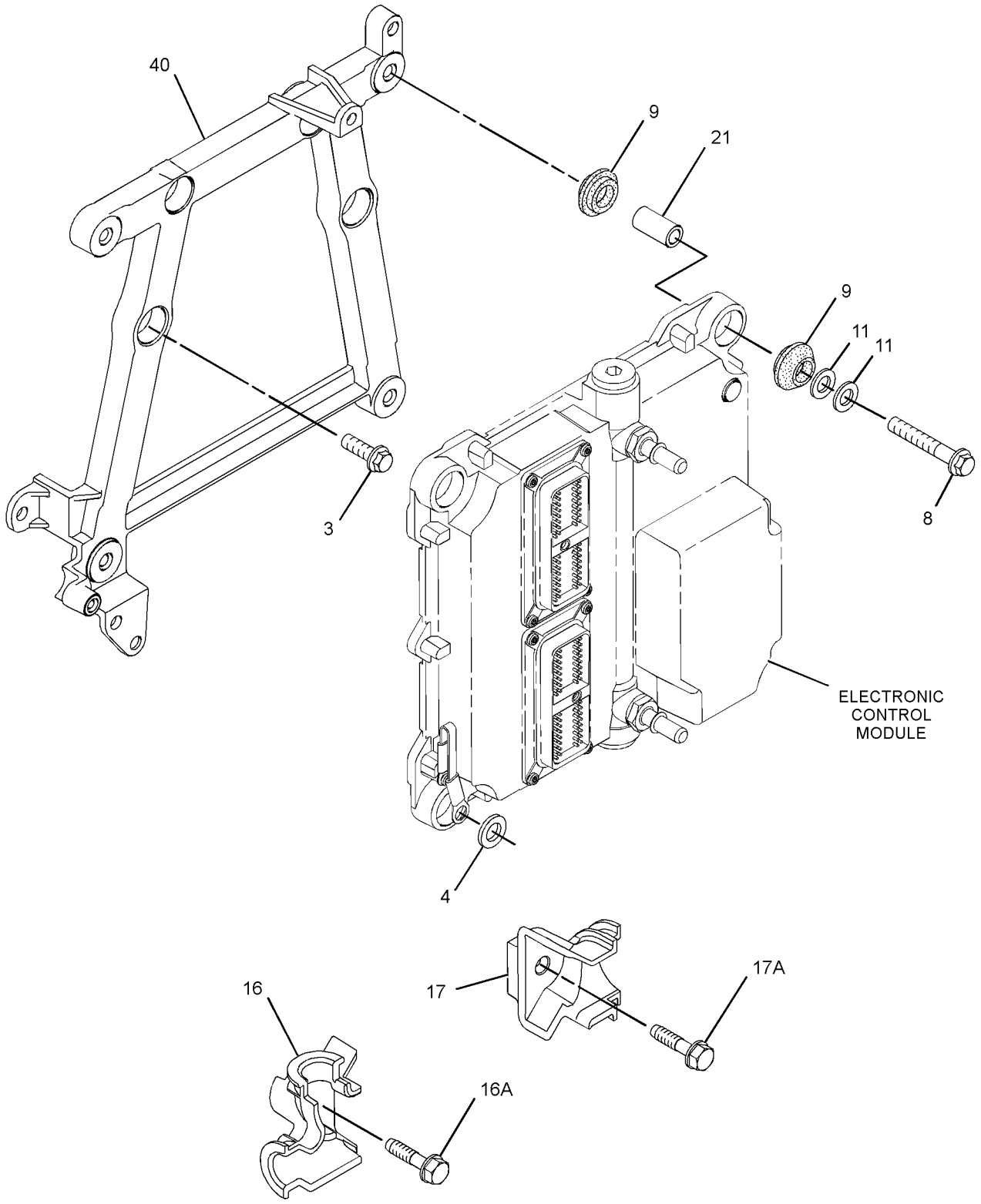

GRAPHIC #2 g01934134

304-7192 **PUMP GP-FUEL INJECTION (**contd.**)** **i03730807**

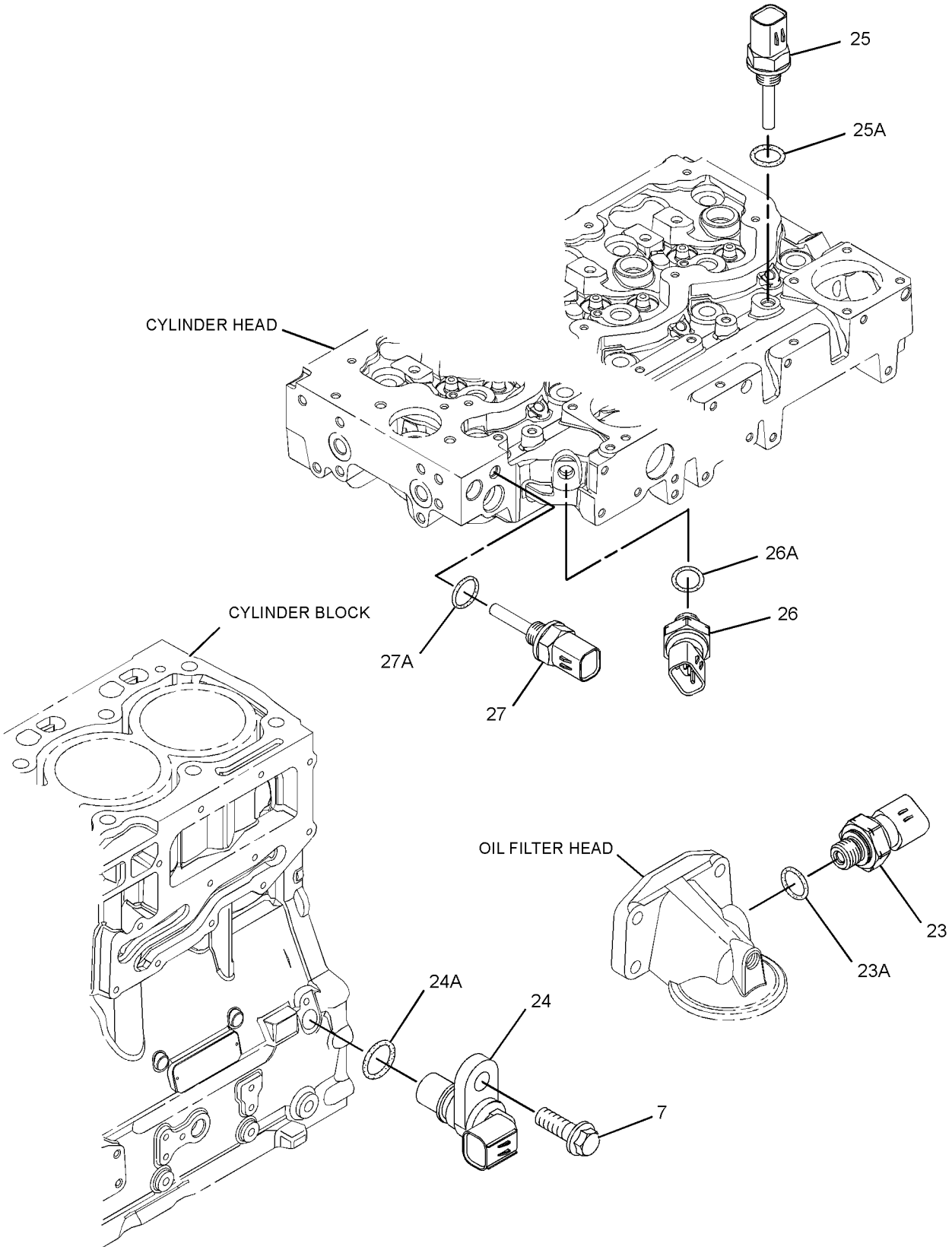

GRAPHIC #3 <END> g01374881

304-7192 PUMP GP-FUEL INJECTION

TYPE 3

SMCS-1251, 1290 **i04724552**

NOTE	REF NO	GRAPHIC REF	PART NUMBER	QTY	PART NAME 1 2 3 4 5 6 (PRODUCT LEVEL)	SEE PAGE
M	1	1	**6I-0260**	3	BOLT (M8X1.25X25-MM)	
M	2	1	**6I-0455**	3	BOLT (M8X1.25X55-MM)	
M	3	2	**6I-0572**	4	BOLT (M8X1.25X20-MM)	
	4	2	**7W-2632**	1	WASHER (8.5X16.8X1.6-MM THK)	
M	5	1	**100-4830**	1	BOLT (M10X1.5X20-MM)	
M	6	1	**101-3895**	4	BOLT (M8X1.25X35-MM)	
M	7	1,3	**124-3815**	4	BOLT (M8X1.25X16-MM)	
M	8	2	**141-8584**	4	BOLT (M8X1.25X50-MM)	
	9	2	**300-6714**	8	MOUNT	
	10	1	**160-0162**	2	WASHER	
	11	2	**217-0099**	5	SPACER (8.2X25X2-MM THK)	
	13	1	**230-8989**	1	GEAR-FUEL PUMP (68-TEETH)	
	14	1	**232-3149**	3	WASHER (8.35X16.85X1.55-MM THK)	
	16	2	**268-6678**	1	BRACKET AS	
M	16A	2	**260-3939**	1	SCREW-HEX HEAD (M6X1X25-MM)	
	17	2	**268-6677**	1	BRACKET AS	
M	17A	2	**260-3939**	1	SCREW-HEX HEAD (M6X1X25-MM)	
	18	1	**318-2394**	1	RAIL AS-FUEL	
	18A	1	**305-5291**	1	VALVE AS-RELIEF	
	19	1	**278-5168**	4	CLAMP-INJECTOR	
	20	1	**278-5170**	4	BOLT	
	21	2	**278-5203**	4	SPACER	
	23	3	**278-5225**	1	KIT-SENSOR (ENGINE OIL PRESSURE)	
	23A	3	**199-9267**	1	SEAL-O-RING	
	24	3	**311-3858**	1	KIT-SENSOR (ENGINE SPEED)	
	24A	3	**274-1639**	1	SEAL	
		3	**238-0120**	1	SENSOR GP-SPEED	
	25	3	**278-5272**	1	KIT-SENSOR (AIR TEMPERATURE)	
	25A	3	**278-5226**	1	SEAL-O-RING	
	26	3	**278-5273**	1	KIT-SENSOR (AIR PRESSURE)	
	26A	3	**199-9252**	1	SEAL-O-RING	
	27	3	**278-5307**	1	KIT-SENSOR (WATER TEMPERATURE)	
	27A	3	**199-9267**	1	SEAL-O-RING	
	28	1	**311-6342**	1	SENSOR AS-PRESSURE (FUEL RAIL PRESSURE)	
	28A	1	**309-8006**	1	WASHER	
CYR	29	1	**352-6584**	1	PUMP GP-FUEL INJECTION	1540
YR	30	1	**320-0680**	4	INJECTOR GP-FUEL	1027
	31	1	**298-4535**	1	BRACKET-SUPPORT	
	32	1	**337-3573**	1	BRACKET	
	33	1	**337-3574**	1	TUBE	
	34	1	**322-3745**	1	TUBE (CYL NO. 1)	
	35	1	**322-3746**	1	TUBE (CYL NO. 2)	
	36	1	**333-4732**	1	LINE-FUEL INJECTION (CYL NO. 3)	
	37	1	**333-4733**	1	LINE-FUEL INJECTION (CYL NO. 4)	
	38	1	**298-4542**	1	TUBE AS	
	39	1	**298-4543**	1	BOLT	
	40	2	**317-3144**	1	BRACKET	

304-7192 **PUMP GP-FUEL INJECTION** (contd.) **i04724552**

NOTE	REF NO	GRAPHIC REF	PART NUMBER	QTY	PART NAME 1 2 3 4 5 6 (PRODUCT LEVEL)	SEE PAGE
F			**278-4138**	4	KIT-FUEL LINE PROTECTION	

C - CHANGE FROM PREVIOUS TYPE
F - NOT SHOWN
M - METRIC PART
R - REMANUFACTURED PART MAY BE AVAILABLE
Y - SEPARATE ILLUSTRATION

304-7192 **PUMP GP-FUEL INJECTION (**contd.**)** **i04724552**

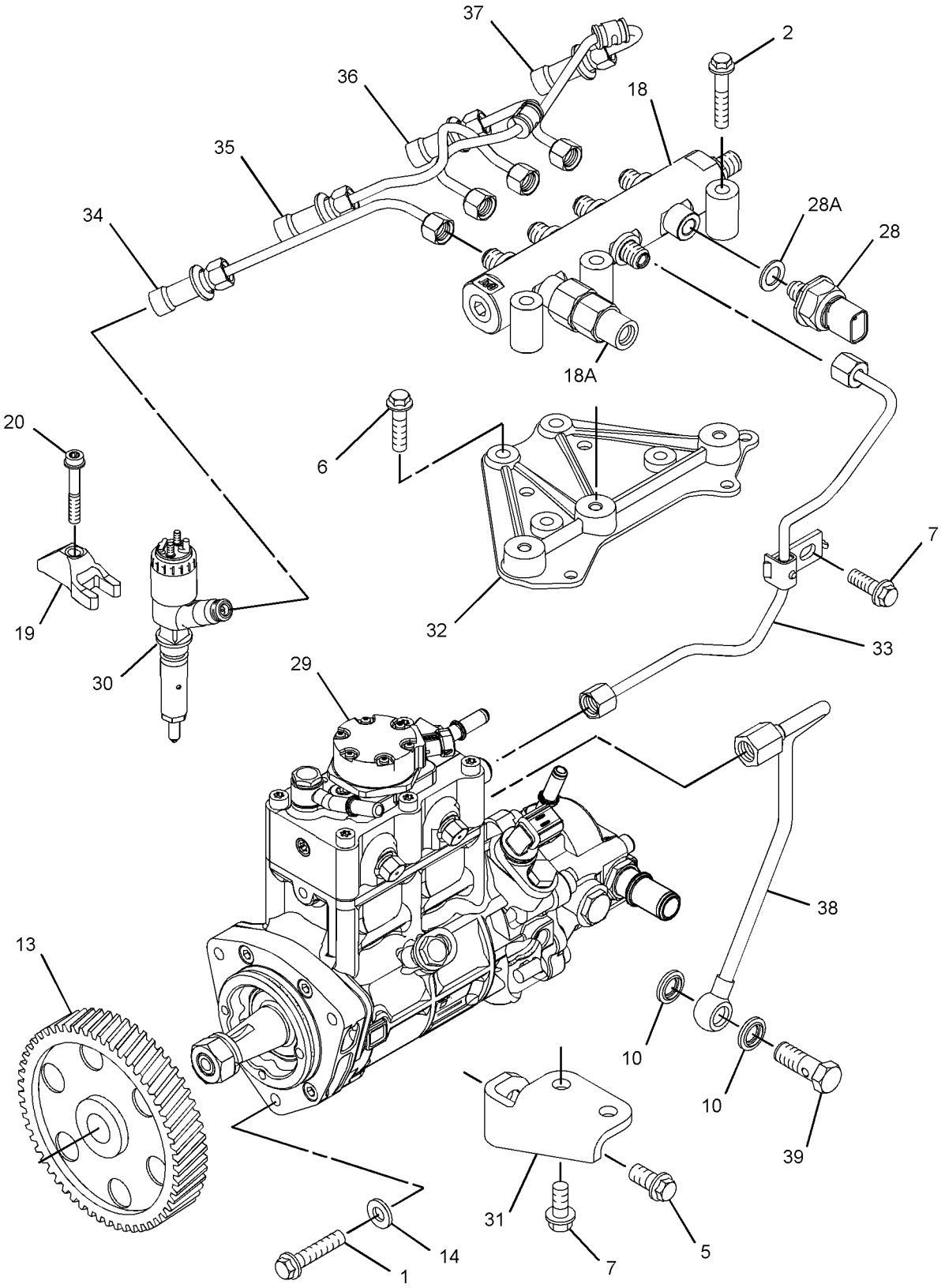

GRAPHIC #1 g02223034

304-7192 **PUMP GP-FUEL INJECTION (**contd.**)** **i04724552**

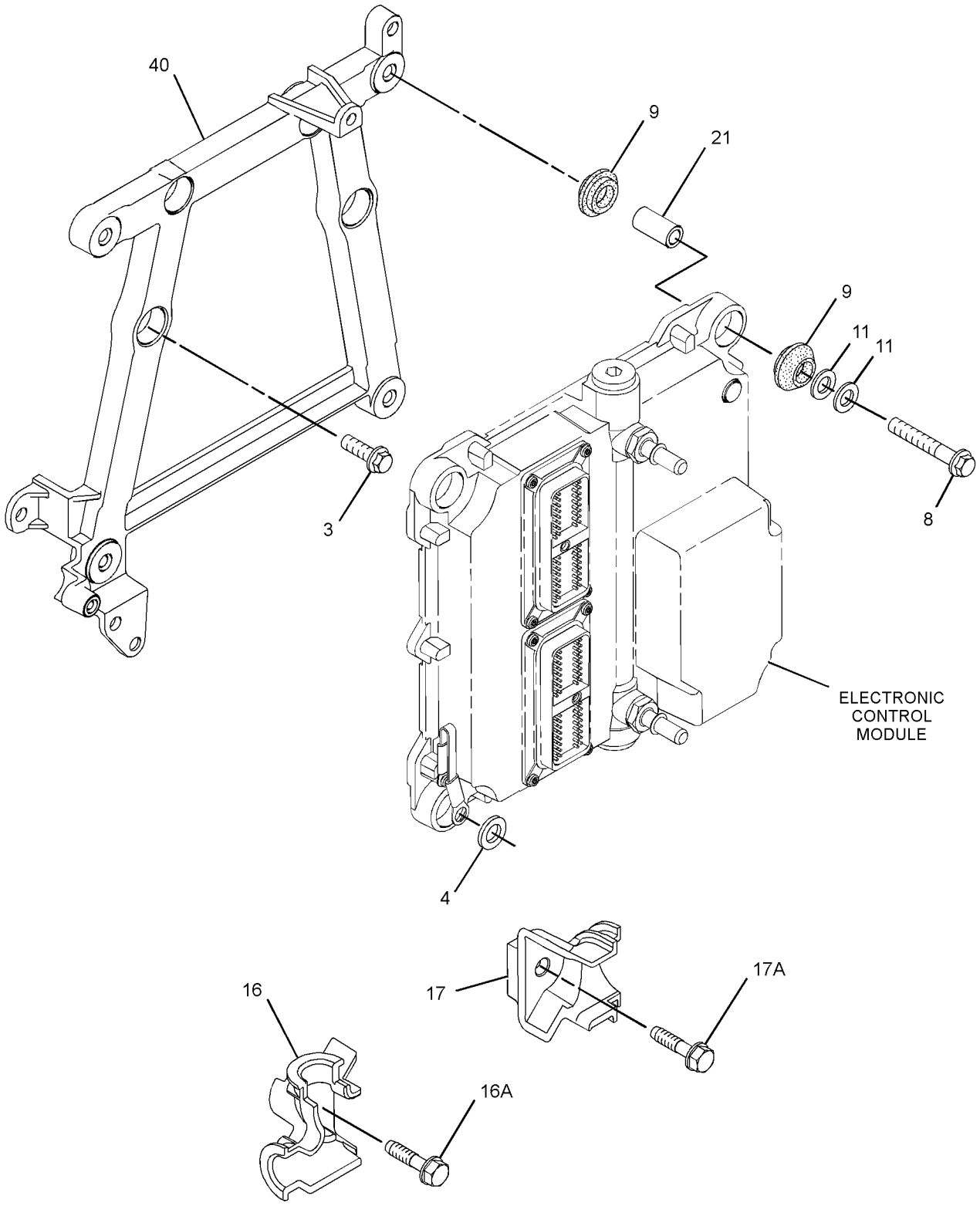

GRAPHIC #2 g01934134

304-7192 **PUMP GP-FUEL INJECTION (**contd.**)** **i04724552**

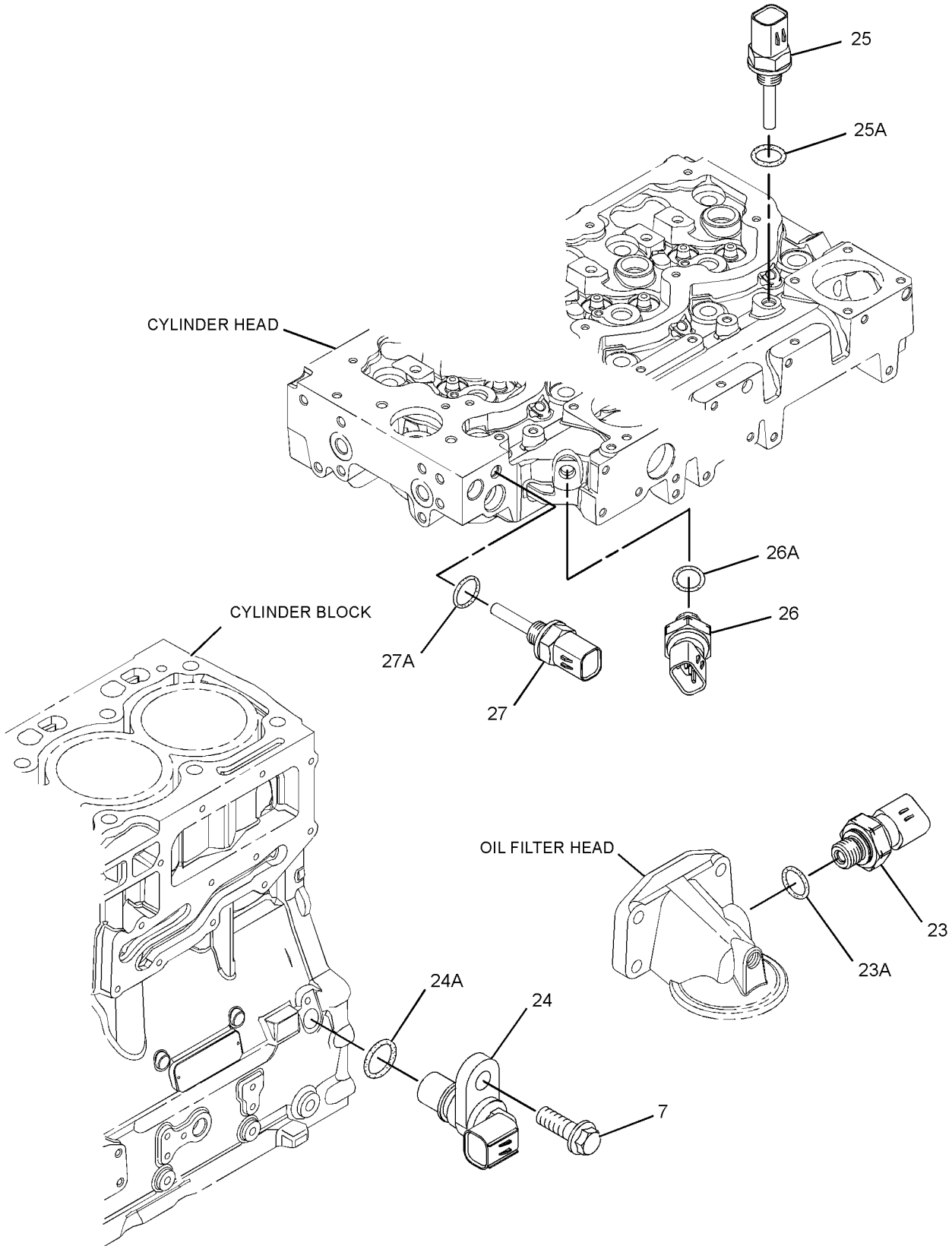

GRAPHIC #3 <END> g01374881

304-7192 PUMP GP-FUEL INJECTION

TYPE 4

SMCS-1251, 1290 **i05880374**

NOTE	REF NO	GRAPHIC REF	PART NUMBER	QTY	PART NAME 1 2 3 4 5 6 (PRODUCT LEVEL)	SEE PAGE
M	1	1	**6I-0260**	3	BOLT (M8X1.25X25-MM)	
M	2	1	**6I-0455**	3	BOLT (M8X1.25X55-MM)	
M	3	2	**6I-0572**	4	BOLT (M8X1.25X20-MM)	
	4	2	**7W-2632**	1	WASHER (8.5X16.8X1.6-MM THK)	
M	5	1	**100-4830**	1	BOLT (M10X1.5X20-MM)	
M	6	1	**101-3895**	4	BOLT (M8X1.25X35-MM)	
M	7	1,3	**124-3815**	4	BOLT (M8X1.25X16-MM)	
M	8	2	**141-8584**	4	BOLT (M8X1.25X50-MM)	
	9	2	**300-6714**	8	MOUNT	
	10	1	**346-0007**	2	WASHER	
	11	2	**217-0099**	5	SPACER (8.2X25X2-MM THK)	
	13	1	**230-8989**	1	GEAR-FUEL PUMP (68-TEETH)	
	14	1	**232-3149**	3	WASHER (8.35X16.85X1.55-MM THK)	
	16	2	**268-6678**	1	BRACKET AS	
M	16A	2	**260-3939**	1	SCREW-HEX HEAD (M6X1X25-MM)	
	17	2	**268-6677**	1	BRACKET AS	
M	17A	2	**260-3939**	1	SCREW-HEX HEAD (M6X1X25-MM)	
	18	1	**358-6632**	1	RAIL GP-FUEL	
	18A	1	**305-5291**	1	VALVE AS-RELIEF	
	19	1	**278-5168**	4	CLAMP-INJECTOR	
	20	1	**278-5170**	4	BOLT	
	21	2	**278-5203**	4	SPACER	
	23	3	**278-5225**	1	KIT-SENSOR (ENGINE OIL PRESSURE)	
	23A	3	**199-9267**	1	SEAL-O-RING	
	24	3	**311-3858**	1	KIT-SENSOR (ENGINE SPEED)	
	24A	3	**274-1639**	1	SEAL	
		3	**238-0120**	1	SENSOR GP-SPEED	
	25	3	**278-5272**	1	KIT-SENSOR (AIR TEMPERATURE)	
	25A	3	**278-5226**	1	SEAL-O-RING	
	26	3	**278-5273**	1	KIT-SENSOR (AIR PRESSURE)	
	26A	3	**199-9252**	1	SEAL-O-RING	
	27	3	**278-5307**	1	KIT-SENSOR (WATER TEMPERATURE)	
	27A	3	**199-9267**	1	SEAL-O-RING	
	28	1	**311-6342**	1	SENSOR AS-PRESSURE (FUEL RAIL PRESSURE)	
	28A	1	**309-8006**	1	WASHER	
CYR	29	1	*324-0532*	1	PUMP GP-FUEL INJECTION	1523
YR	30	1	**320-0680**	4	INJECTOR GP-FUEL	1027
	31	1	**298-4535**	1	BRACKET-SUPPORT	
	32	1	**337-3573**	1	BRACKET	
	33	1	**337-3574**	1	TUBE	
	34	1	**322-3745**	1	TUBE (CYL NO. 1)	
	35	1	**322-3746**	1	TUBE (CYL NO. 2)	
	36	1	**333-4732**	1	LINE-FUEL INJECTION (CYL NO. 3)	
	37	1	**333-4733**	1	LINE-FUEL INJECTION (CYL NO. 4)	
	38	1	**298-4542**	1	TUBE AS	
	39	1	**363-3908**	1	BOLT-SPECIAL	
	40	2	**317-3144**	1	BRACKET	

304-7192 **PUMP GP-FUEL INJECTION (**contd.**)** **i05880374**

NOTE	REF NO	GRAPHIC REF	PART NUMBER	QTY	PART NAME 1 2 3 4 5 6 (PRODUCT LEVEL)	SEE PAGE
F			**278-4138**	4	KIT-FUEL LINE PROTECTION	

C - CHANGE FROM PREVIOUS TYPE
F - NOT SHOWN
M - METRIC PART
R - REMANUFACTURED PART MAY BE AVAILABLE
Y - SEPARATE ILLUSTRATION

304-7192 **PUMP GP-FUEL INJECTION (**contd.**)** **i05880374**

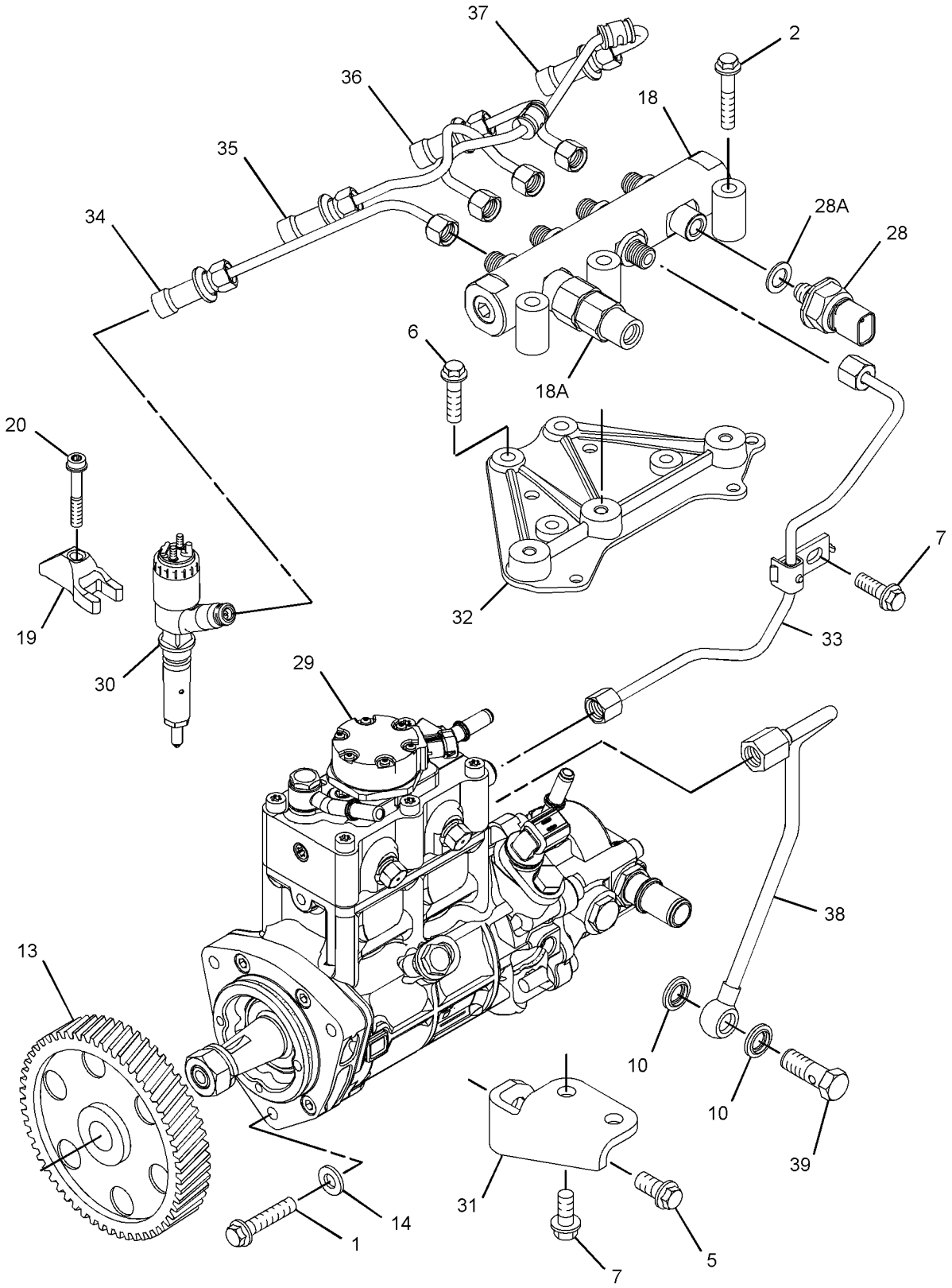

GRAPHIC #1 g02822696

304-7192 **PUMP GP-FUEL INJECTION (**contd.**)** **i05880374**

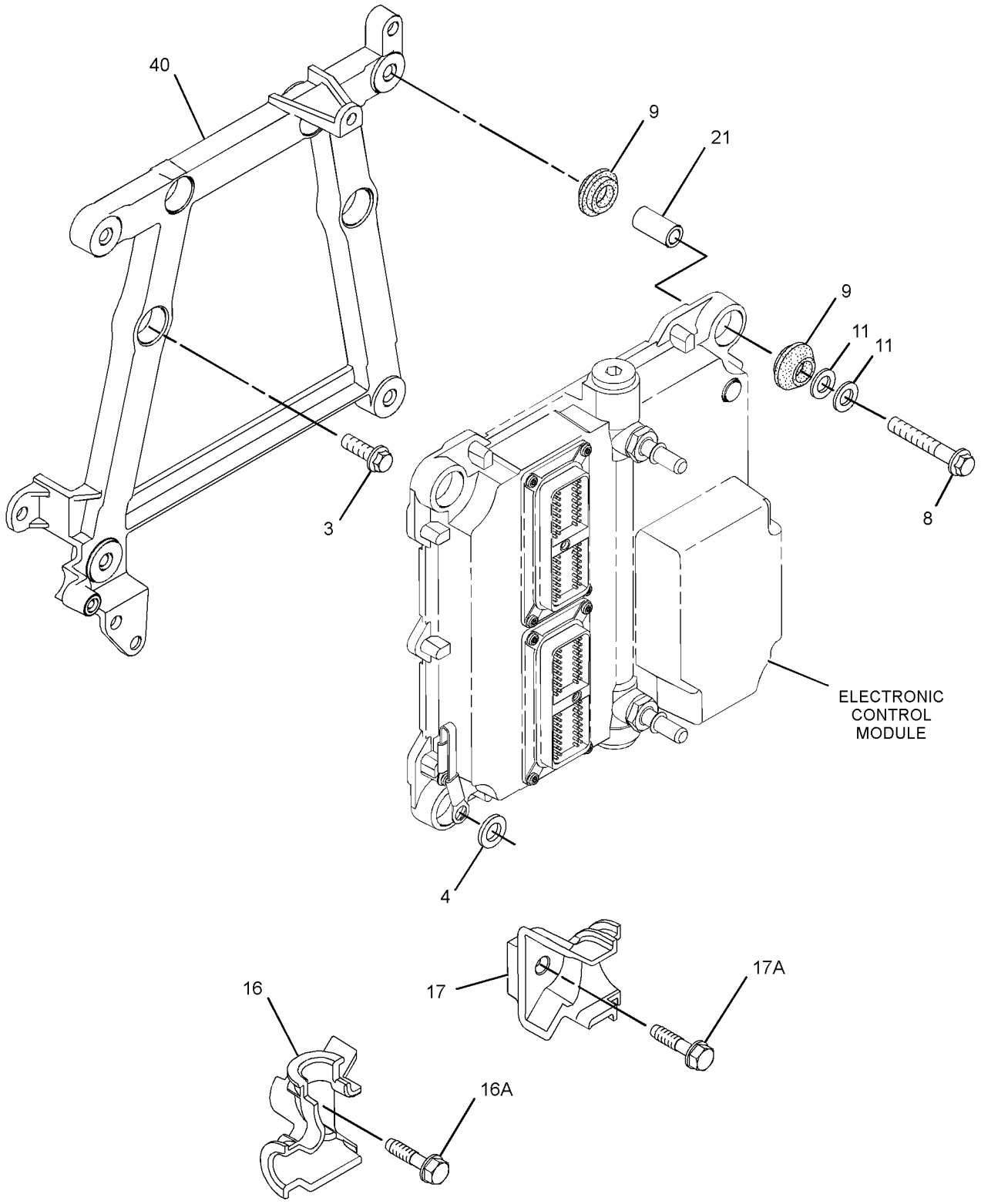

GRAPHIC #2 g01934134

304-7192 **PUMP GP-FUEL INJECTION (**contd.**)** **i05880374**

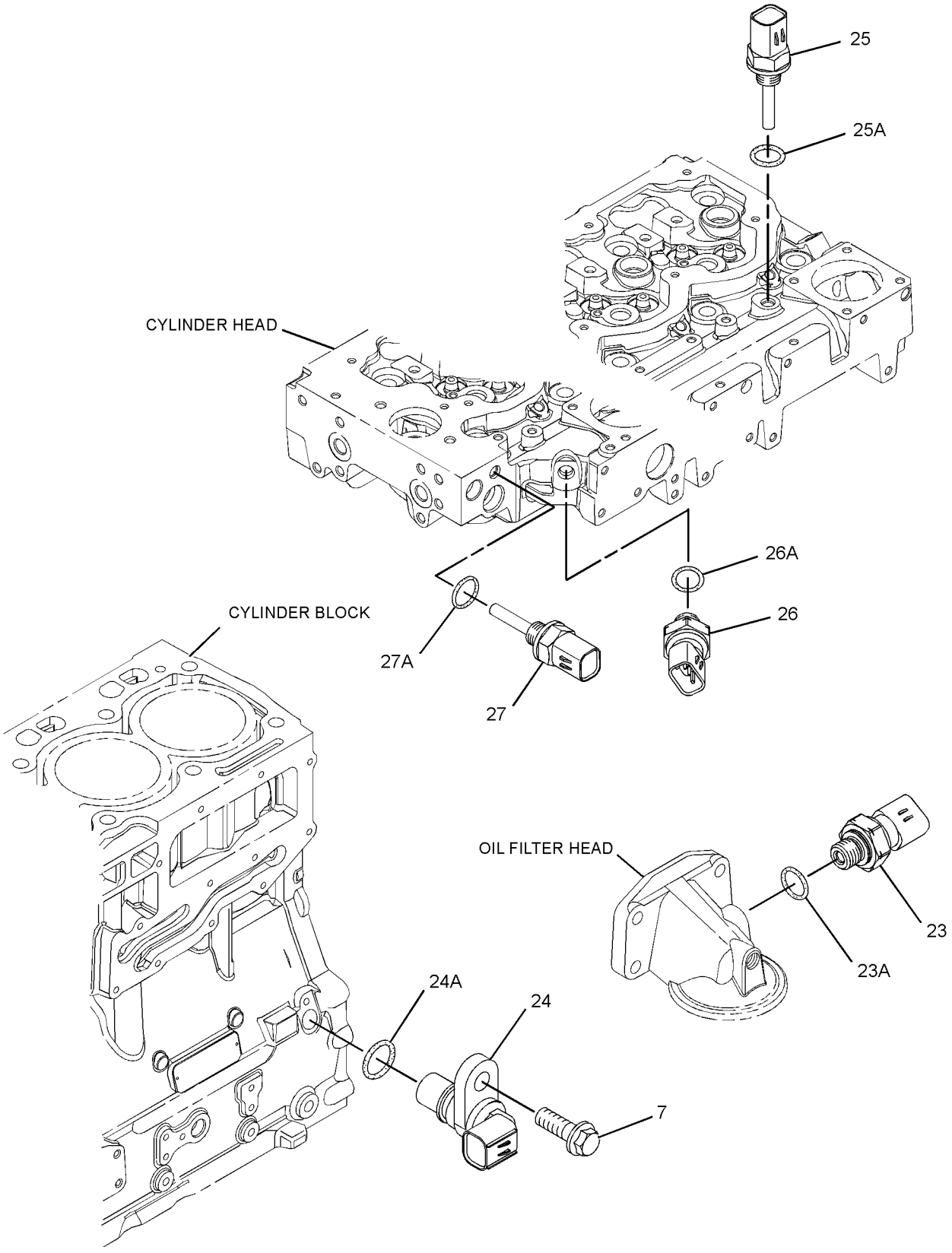

GRAPHIC #3 <END> g01374881

304-8755 PUMP GP-FUEL INJECTION

TYPE 1

SMCS-1251, 1290 **i02818151**

NOTE	REF NO	GRAPHIC REF	PART NUMBER	QTY	PART NAME 1 2 3 4 5 6 (PRODUCT LEVEL)	SEE PAGE
M	1	1	**6I-0260**	3	BOLT (M8X1.25X25-MM)	
M	2	1	**6I-0455**	3	BOLT (M8X1.25X55-MM)	
M	3	2	**6I-0572**	4	BOLT (M8X1.25X20-MM)	
	4	2	**7W-2632**	1	WASHER (8.5X16.8X1.6-MM THK)	
M	5	1	**100-4830**	1	BOLT (M10X1.5X20-MM)	
M	6	1	**101-3895**	4	BOLT (M8X1.25X35-MM)	
M	7	1,3	**124-3815**	4	BOLT (M8X1.25X16-MM)	
M	8	2	**141-8584**	4	BOLT (M8X1.25X50-MM)	
	9	2	**300-6714**	8	MOUNT	
	10	1	**160-0162**	2	WASHER	
	11	2	**217-0099**	4	SPACER (8.2X25X2-MM THK)	
	13	1	**230-8989**	1	GEAR-FUEL PUMP (68-TEETH)	
	14	1	**232-3149**	6	WASHER (8.35X16.85X1.55-MM THK)	
	15	1	**308-8425**	1	RAIL AS-FUEL	
	16	2	**268-6677**	1	BRACKET AS	
M	16A	2	**260-3939**	1	SCREW-HEX HEAD (M6X1X25-MM)	
	17	2	**268-6678**	1	BRACKET AS	
M	17A	2	**260-3939**	1	SCREW-HEX HEAD (M6X1X25-MM)	
	18	1	**278-5168**	4	CLAMP-INJECTOR	
	19	1	**278-5170**	4	BOLT	
	20	2	**278-5203**	4	SPACER	
	21	3	**278-5225**	1	KIT-SENSOR (ENGINE OIL PRESSURE)	
	21A	3	**278-5226**	1	SEAL-O-RING	
	22	3	**311-3858**	1	KIT-SENSOR (ENGINE SPEED)	
	22A	3	**274-1639**	1	SEAL	
	23	3	**278-5272**	1	KIT-SENSOR (AIR TEMPERATURE)	
	23A	3	**278-5226**	1	SEAL-O-RING	
	24	3	**278-5273**	1	KIT-SENSOR (AIR PRESSURE)	
	24A	3	**199-9252**	1	SEAL-O-RING	
	25	3	**278-5307**	1	KIT-SENSOR (COOLANT TEMPERATURE)	
	25A	3	**199-9267**	1	SEAL-O-RING	
	26	1	**311-6342**	1	SENSOR AS-PRESSURE (FUEL RAIL PRESSURE)	
	26A	1	**309-8006**	1	WASHER	
Y	27	1	**283-2271**	1	PUMP GP-FUEL INJECTION	1067
Y	28	1	**292-3780**	4	INJECTOR GP-FUEL	1021
	29	1	**298-4535**	1	BRACKET-SUPPORT	
	30	1	**298-4536**	1	BRACKET-MOUNTING	
	31	1	**298-4537**	1	TUBE AS	
	32	1	**298-4538**	1	TUBE AS (CYL NO. 1)	
	33	1	**298-4539**	1	TUBE AS (CYL NO. 2)	
	34	1	**298-4540**	1	TUBE AS (CYL NO. 3)	
	35	1	**298-4541**	1	TUBE AS (CYL NO. 4)	
	36	1	**298-4542**	1	TUBE AS	
	37	1	**298-4543**	1	BOLT	
	38	2	**308-3395**	1	BRACKET-MOUNTING	
F			**278-4138**	4	KIT-FUEL LINE PROTECTION	

F - NOT SHOWN
M - METRIC PART
Y - SEPARATE ILLUSTRATION

304-8755 **PUMP GP-FUEL INJECTION (**contd.**)** **i02818151**

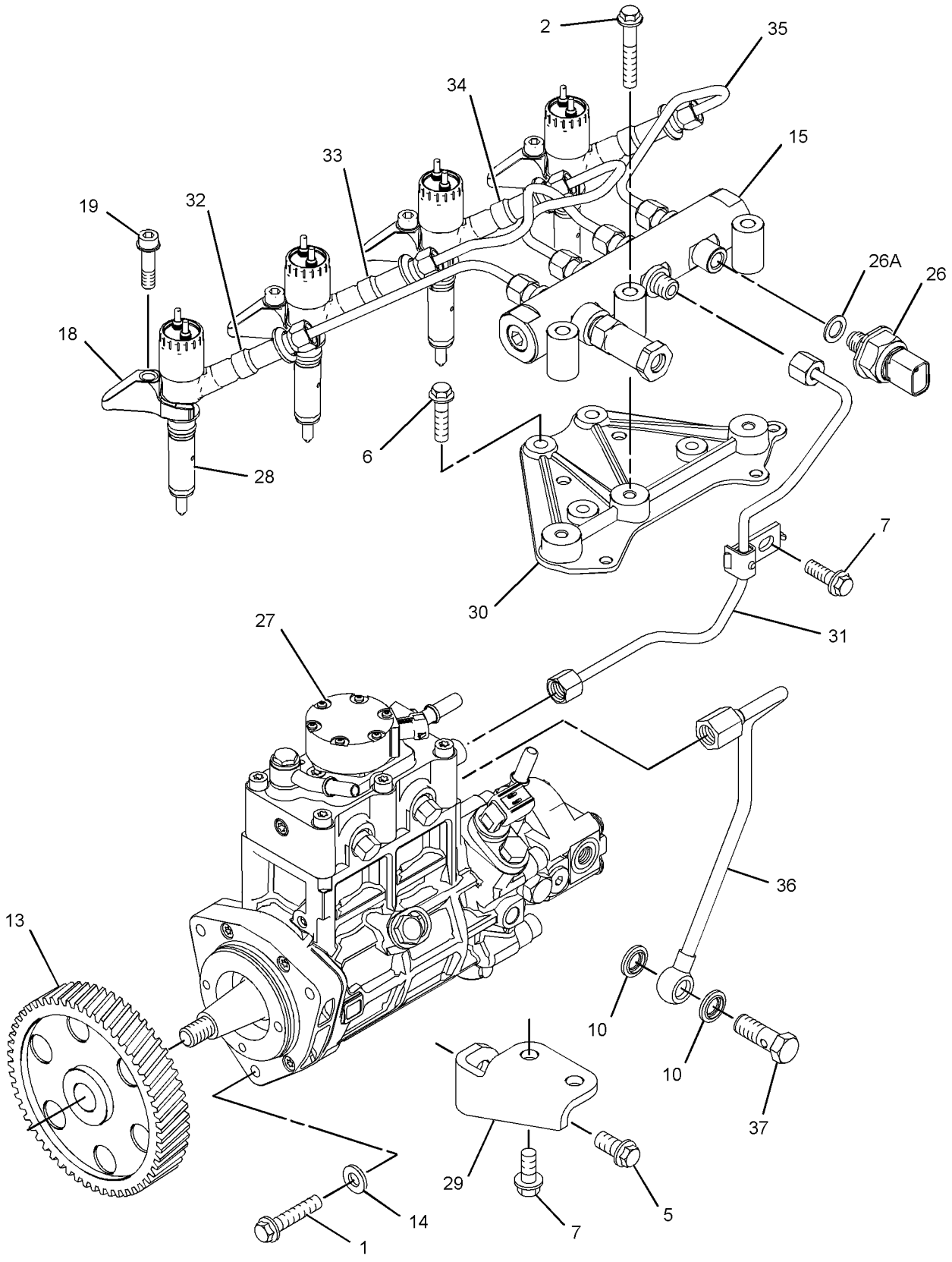

GRAPHIC #1 g01375172

304-8755 **PUMP GP-FUEL INJECTION (**contd.**)** **i02818151**

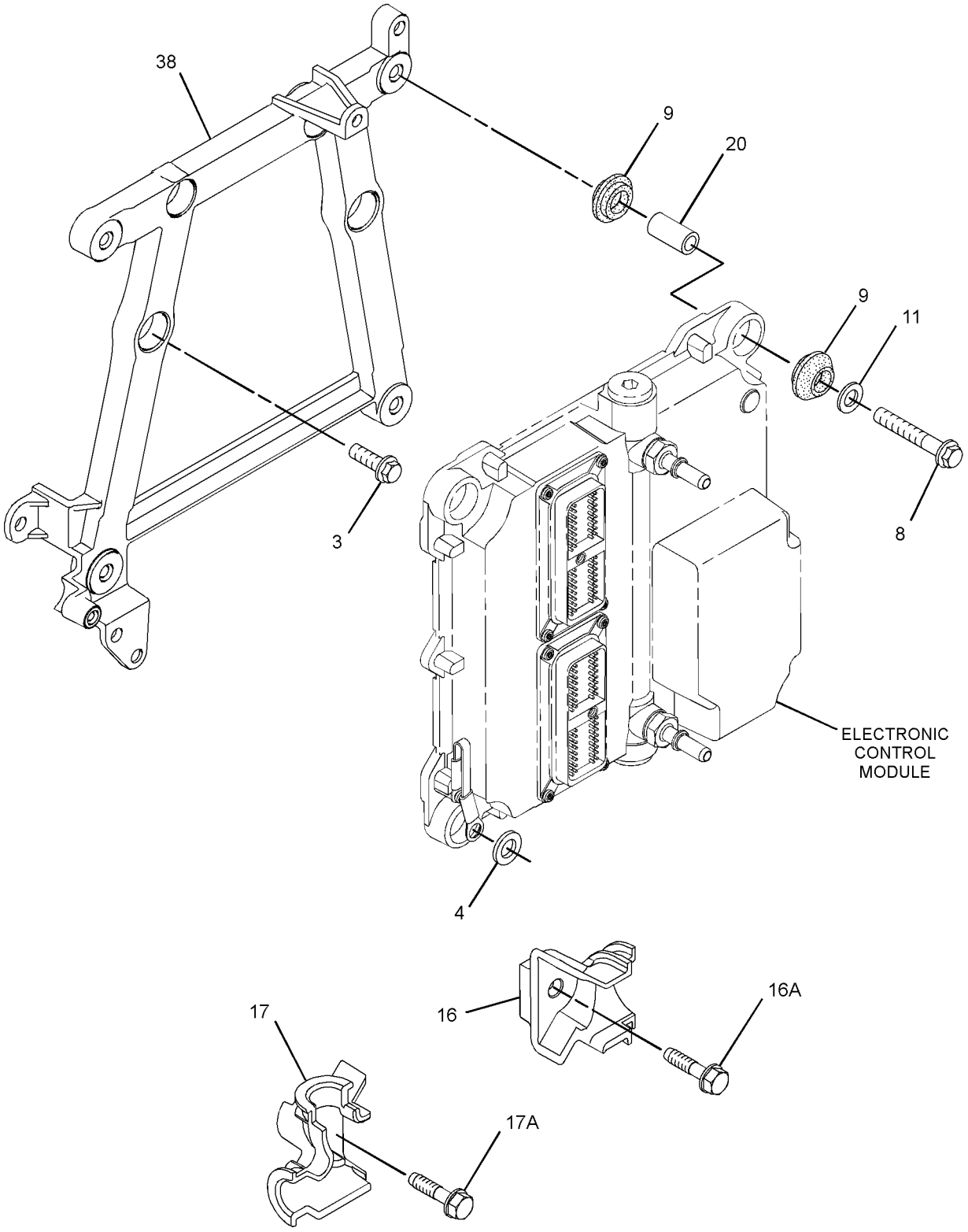

GRAPHIC #2 g01430427

304-8755 **PUMP GP-FUEL INJECTION** (contd.) **i02818151**

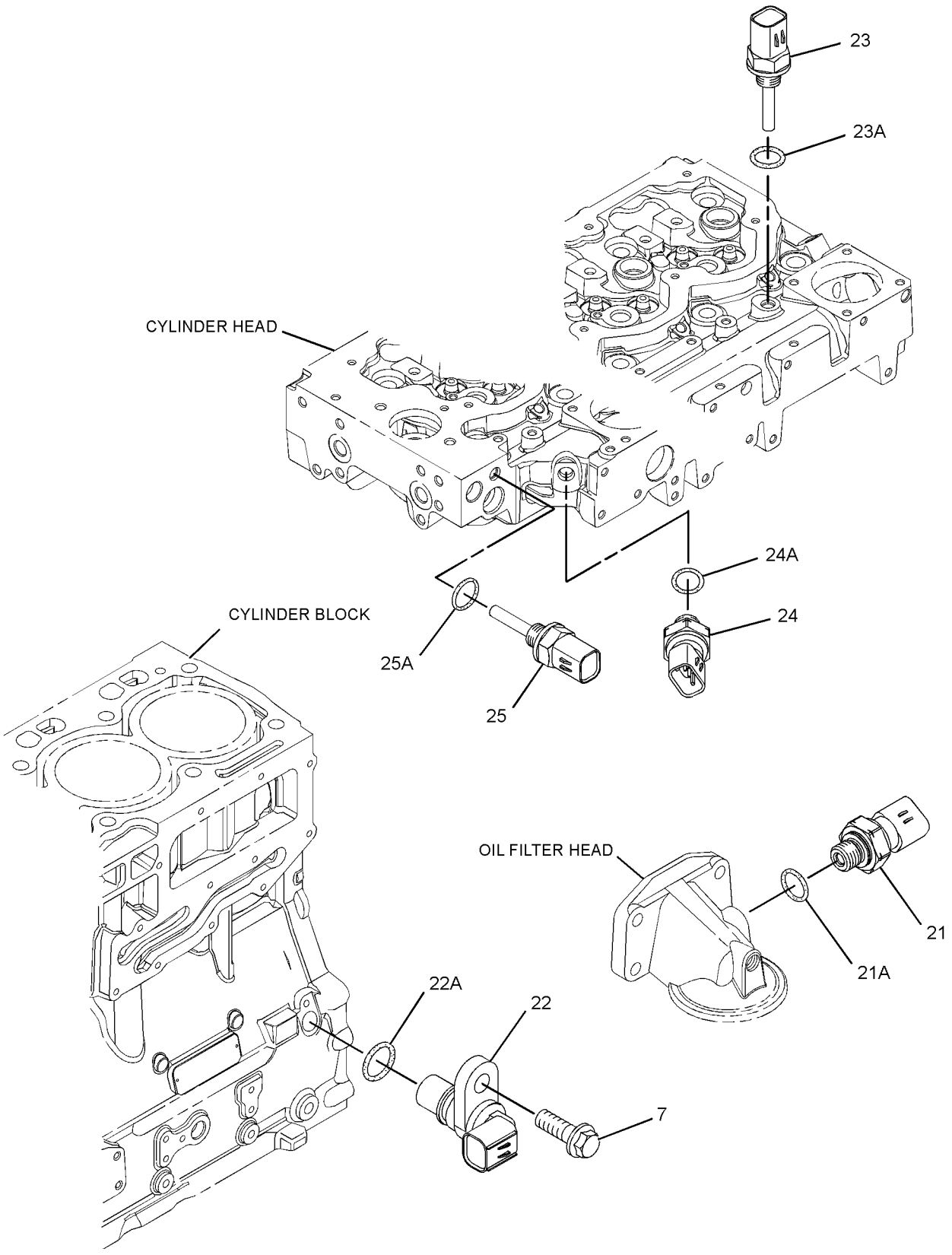

GRAPHIC #3 <END> g01374374

304-8755 PUMP GP-FUEL INJECTION

TYPE 2

SMCS-1251, 1290 **i03888657**

NOTE	REF NO	GRAPHIC REF	PART NUMBER	QTY	PART NAME 1 2 3 4 5 6 (PRODUCT LEVEL)	SEE PAGE
M	1	1	**6I-0260**	3	BOLT (M8X1.25X25-MM)	
M	2	1	**6I-0455**	3	BOLT (M8X1.25X55-MM)	
M	3	2	**6I-0572**	4	BOLT (M8X1.25X20-MM)	
	4	2	**7W-2632**	1	WASHER (8.5X16.8X1.6-MM THK)	
M	5	1	**100-4830**	1	BOLT (M10X1.5X20-MM)	
M	6	1	**101-3895**	4	BOLT (M8X1.25X35-MM)	
M	7	1,3	**124-3815**	4	BOLT (M8X1.25X16-MM)	
M	8	2	**141-8584**	4	BOLT (M8X1.25X50-MM)	
	9	2	**300-6714**	8	MOUNT	
	10	1	**160-0162**	2	WASHER	
	11	2	**217-0099**	5	SPACER (8.2X25X2-MM THK)	
	13	1	**230-8989**	1	GEAR-FUEL PUMP (68-TEETH)	
C	14	1	**232-3149**	3	WASHER (8.35X16.85X1.55-MM THK)	
	15	1	**318-2394**	1	RAIL AS-FUEL	
	15A	1	**305-5291**	1	VALVE AS-RELIEF (FUEL RAIL)	
	16	2	**268-6677**	1	BRACKET AS	
M	16A	2	**260-3939**	1	SCREW-HEX HEAD (M6X1X25-MM)	
	17	2	**268-6678**	1	BRACKET AS	
M	17A	2	**260-3939**	1	SCREW-HEX HEAD (M6X1X25-MM)	
	18	1	**278-5168**	4	CLAMP-INJECTOR	
	19	1	**278-5170**	4	BOLT	
	20	2	**278-5203**	4	SPACER	
	21	3	**278-5225**	1	KIT-SENSOR (ENGINE OIL PRESSURE)	
	21A	3	**199-9267**	1	SEAL-O-RING	
	22	3	**311-3858**	1	KIT-SENSOR (ENGINE SPEED)	
	22A	3	**274-1639**	1	SEAL	
	23	3	**278-5272**	1	KIT-SENSOR (AIR TEMPERATURE)	
	23A	3	**278-5226**	1	SEAL-O-RING	
	24	3	**278-5273**	1	KIT-SENSOR (AIR PRESSURE)	
	24A	3	**199-9252**	1	SEAL-O-RING	
	25	3	**278-5307**	1	KIT-SENSOR (COOLANT TEMPERATURE)	
	25A	3	**199-9267**	1	SEAL-O-RING	
	26	1	**311-6342**	1	SENSOR AS-PRESSURE (FUEL RAIL PRESSURE)	
	26A	1	**309-8006**	1	WASHER	
CYR	27	1	**324-0532**	1	PUMP GP-FUEL INJECTION	1523
YR	28	1	**320-0680**	4	INJECTOR GP-FUEL	1027
	29	1	**298-4535**	1	BRACKET-SUPPORT	
	30	1	**337-3573**	1	BRACKET	
	31	1	**337-3574**	1	TUBE	
	32	1	**322-3745**	1	TUBE (CYL NO. 1)	
	33	1	**322-3746**	1	TUBE (CYL NO. 2)	
	34	1	**333-4732**	1	LINE-FUEL INJECTION (CYL NO. 3)	
	35	1	**333-4733**	1	LINE-FUEL INJECTION (CYL NO. 4)	
	36	1	**298-4542**	1	TUBE AS	
	37	1	**298-4543**	1	BOLT	
C	38	2	**317-3144**	1	BRACKET	
F			**278-4138**	4	KIT-FUEL LINE PROTECTION	

304-8755 **PUMP GP-FUEL INJECTION** (contd.) **i03888657**

NOTE	REF NO	GRAPHIC REF	PART NUMBER	QTY	PART NAME 1 2 3 4 5 6 (PRODUCT LEVEL)	SEE PAGE

C - CHANGE FROM PREVIOUS TYPE
F - NOT SHOWN
M - METRIC PART
R - REMANUFACTURED PART MAY BE AVAILABLE
Y - SEPARATE ILLUSTRATION

304-8755 **PUMP GP-FUEL INJECTION (**contd.**)** **i03888657**

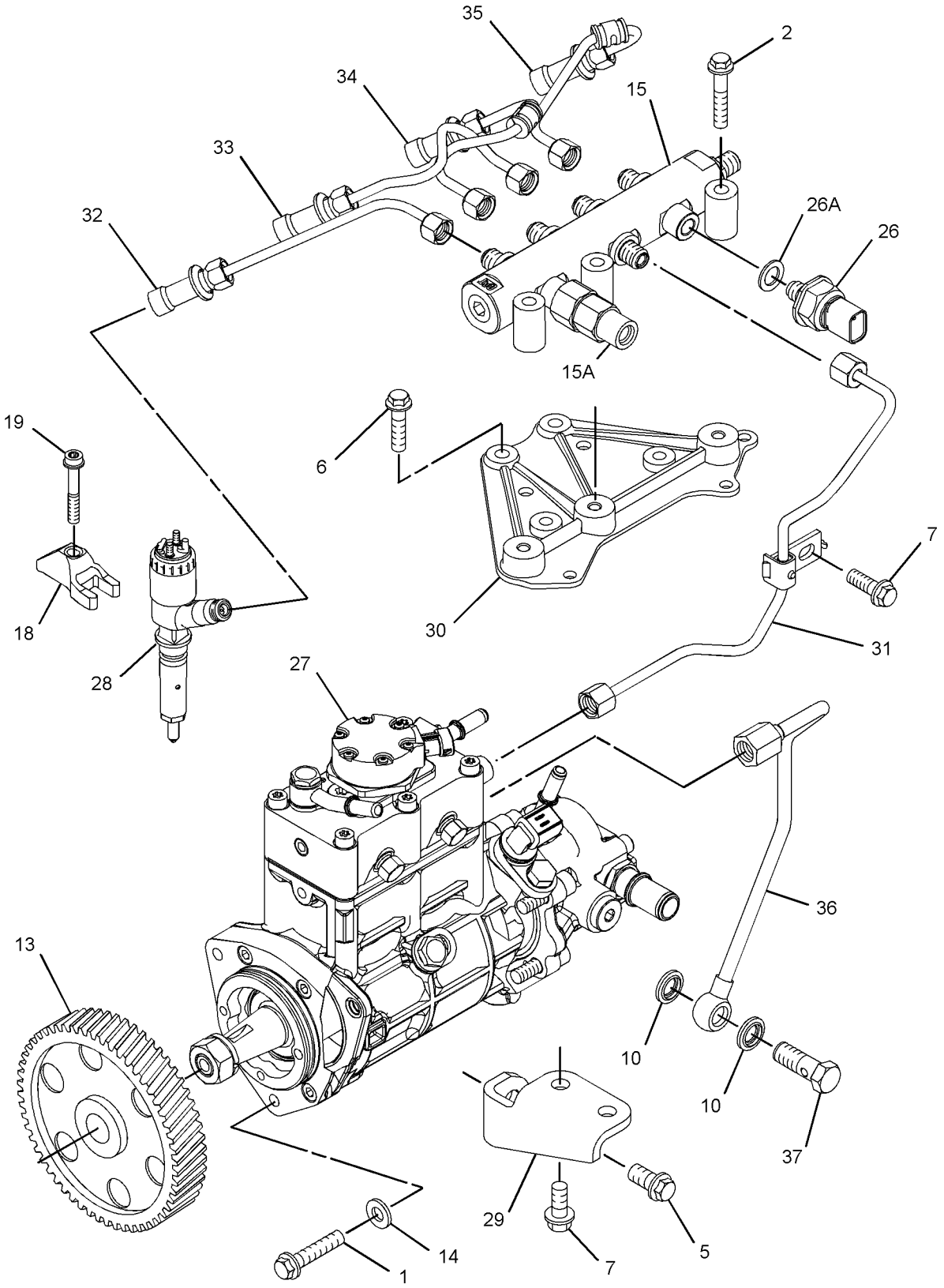

GRAPHIC #1 g01846353

304-8755 **PUMP GP-FUEL INJECTION (**contd.**)** **i03888657**

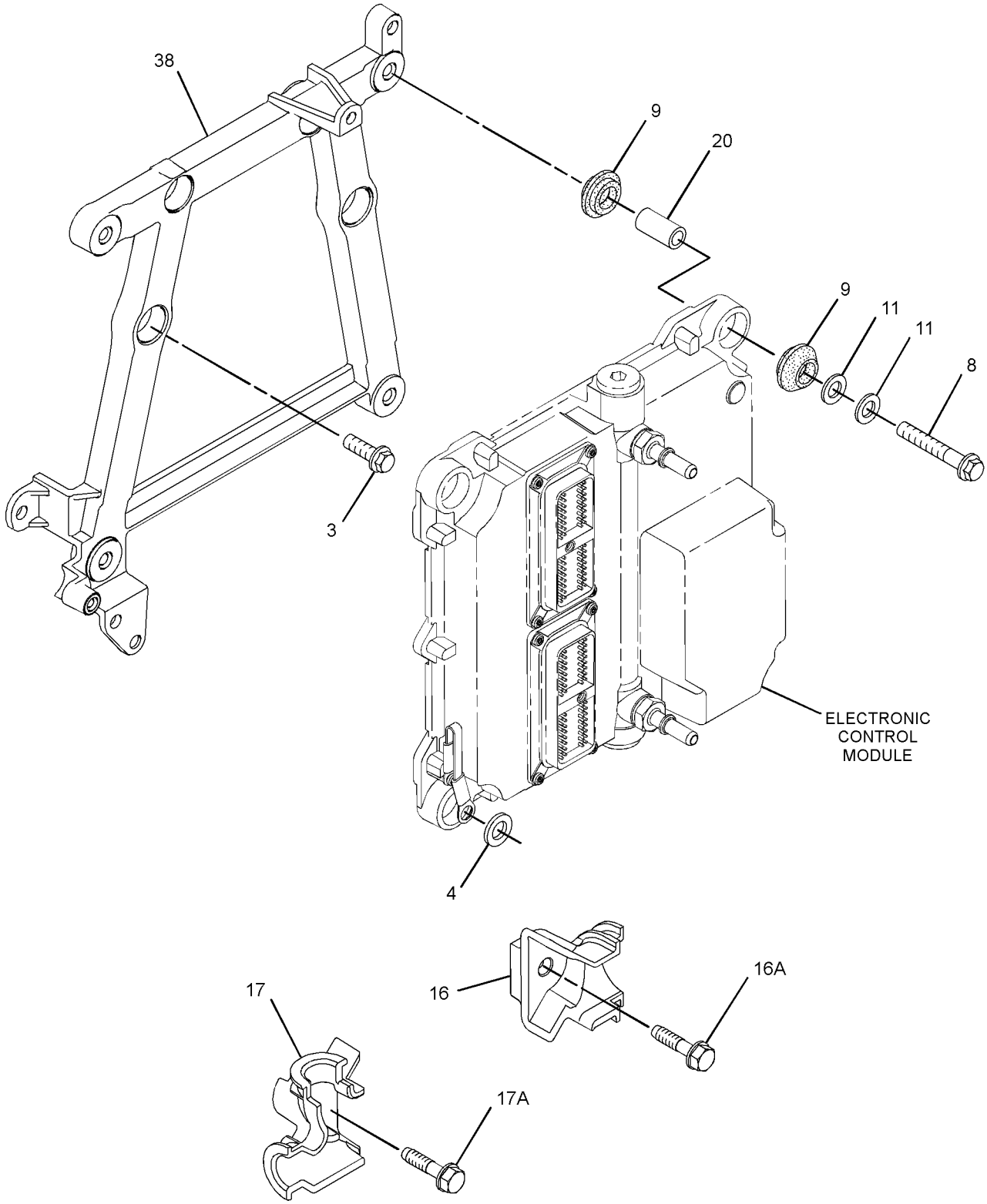

GRAPHIC #2 g01681912

304-8755 **PUMP GP-FUEL INJECTION (**contd.**)** **i03888657**

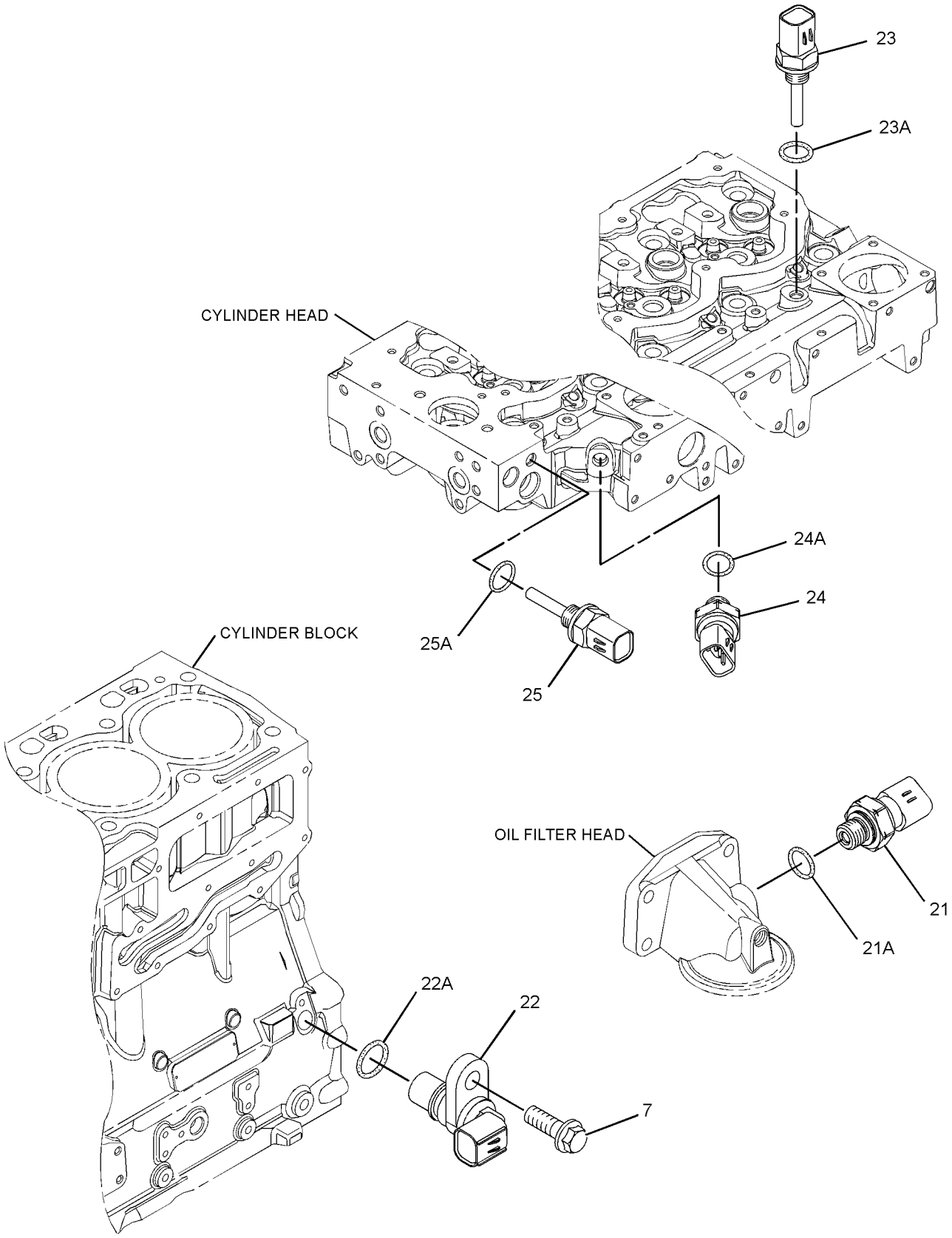

GRAPHIC #3 <END> g01643273

304-8755 PUMP GP-FUEL INJECTION

TYPE 3

SMCS-1251, 1290 **i04017548**

NOTE	REF NO	GRAPHIC REF	PART NUMBER	QTY	PART NAME 1 2 3 4 5 6 (PRODUCT LEVEL)	SEE PAGE
M	1	1	**6I-0260**	3	BOLT (M8X1.25X25-MM)	
M	2	1	**6I-0455**	3	BOLT (M8X1.25X55-MM)	
M	3	2	**6I-0572**	4	BOLT (M8X1.25X20-MM)	
	4	2	**7W-2632**	1	WASHER (8.5X16.8X1.6-MM THK)	
M	5	1	**100-4830**	1	BOLT (M10X1.5X20-MM)	
M	6	1	**101-3895**	4	BOLT (M8X1.25X35-MM)	
M	7	1,3	**124-3815**	4	BOLT (M8X1.25X16-MM)	
M	8	2	**141-8584**	4	BOLT (M8X1.25X50-MM)	
	9	2	**300-6714**	8	MOUNT	
	10	1	**160-0162**	2	WASHER	
	11	2	**217-0099**	5	SPACER (8.2X25X2-MM THK)	
	13	1	**230-8989**	1	GEAR-FUEL PUMP (68-TEETH)	
	14	1	**232-3149**	3	WASHER (8.35X16.85X1.55-MM THK)	
	15	1	**318-2394**	1	RAIL AS-FUEL	
	15A	1	**305-5291**	1	VALVE AS-RELIEF (FUEL RAIL)	
	16	2	**268-6677**	1	BRACKET AS	
M	16A	2	**260-3939**	1	SCREW-HEX HEAD (M6X1X25-MM)	
	17	2	**268-6678**	1	BRACKET AS	
M	17A	2	**260-3939**	1	SCREW-HEX HEAD (M6X1X25-MM)	
	18	1	**278-5168**	4	CLAMP-INJECTOR	
	19	1	**278-5170**	4	BOLT	
	20	2	**278-5203**	4	SPACER	
	21	3	**278-5225**	1	KIT-SENSOR (ENGINE OIL PRESSURE)	
	21A	3	**199-9267**	1	SEAL-O-RING	
	22	3	**311-3858**	1	KIT-SENSOR (ENGINE SPEED)	
	22A	3	**274-1639**	1	SEAL	
		3	**238-0120**	1	SENSOR GP-SPEED	
	23	3	**278-5272**	1	KIT-SENSOR (AIR TEMPERATURE)	
	23A	3	**278-5226**	1	SEAL-O-RING	
	24	3	**278-5273**	1	KIT-SENSOR (AIR PRESSURE)	
	24A	3	**199-9252**	1	SEAL-O-RING	
	25	3	**278-5307**	1	KIT-SENSOR (COOLANT TEMPERATURE)	
	25A	3	**199-9267**	1	SEAL-O-RING	
	26	1	**311-6342**	1	SENSOR AS-PRESSURE (FUEL RAIL PRESSURE)	
	26A	1	**309-8006**	1	WASHER	
CYR	27	1	**352-6584**	1	PUMP GP-FUEL INJECTION	1540
YR	28	1	**320-0680**	4	INJECTOR GP-FUEL	1027
	29	1	**298-4535**	1	BRACKET-SUPPORT	
	30	1	**337-3573**	1	BRACKET	
	31	1	**337-3574**	1	TUBE	
	32	1	**322-3745**	1	TUBE (CYL NO. 1)	
	33	1	**322-3746**	1	TUBE (CYL NO. 2)	
	34	1	**333-4732**	1	LINE-FUEL INJECTION (CYL NO. 3)	
	35	1	**333-4733**	1	LINE-FUEL INJECTION (CYL NO. 4)	
	36	1	**298-4542**	1	TUBE AS	
	37	1	**298-4543**	1	BOLT	
	38	2	**317-3144**	1	BRACKET	

304-8755 **PUMP GP-FUEL INJECTION** (contd.) **i04017548**

NOTE	REF NO	GRAPHIC REF	PART NUMBER	QTY	PART NAME 1 2 3 4 5 6 (PRODUCT LEVEL)	SEE PAGE
F			**278-4138**	4	KIT-FUEL LINE PROTECTION	

C - CHANGE FROM PREVIOUS TYPE
F - NOT SHOWN
M - METRIC PART
R - REMANUFACTURED PART MAY BE AVAILABLE
Y - SEPARATE ILLUSTRATION

304-8755 **PUMP GP-FUEL INJECTION (**contd.**)** **i04017548**

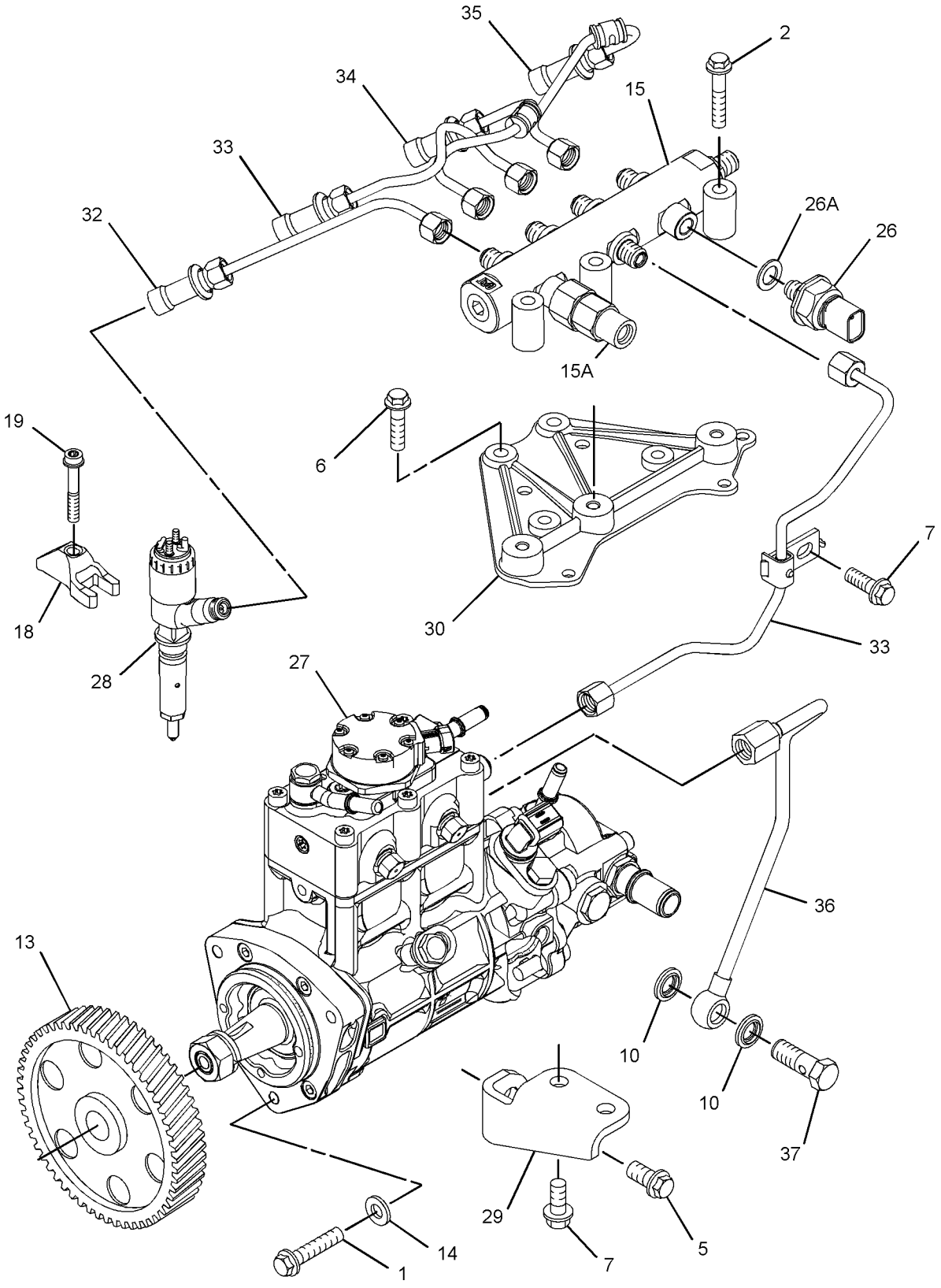

GRAPHIC #1 g02222994

304-8755 **PUMP GP-FUEL INJECTION (**contd.**)** **i04017548**

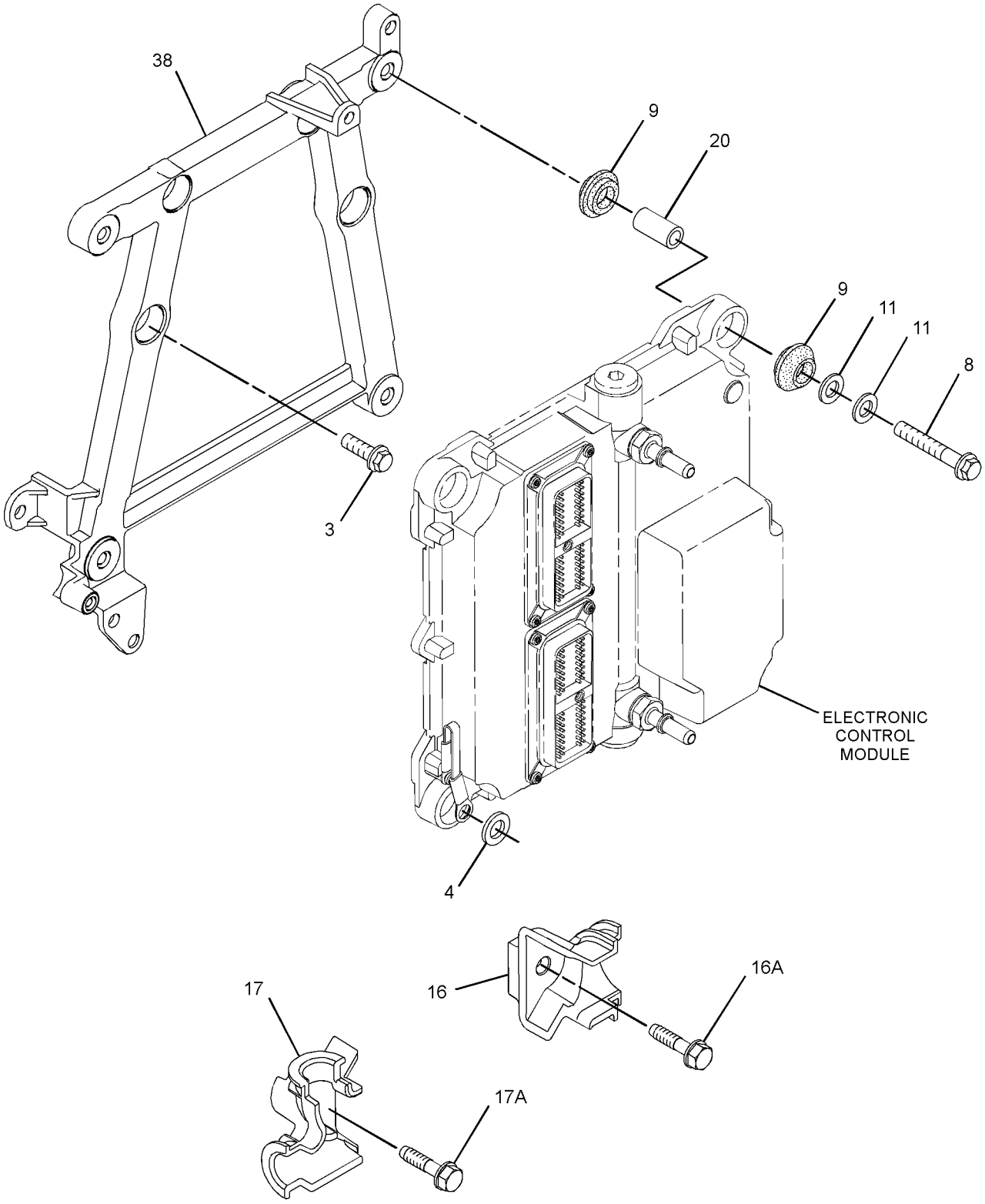

GRAPHIC #2 g01681912

304-8755 **PUMP GP-FUEL INJECTION (**contd.**)** **i04017548**

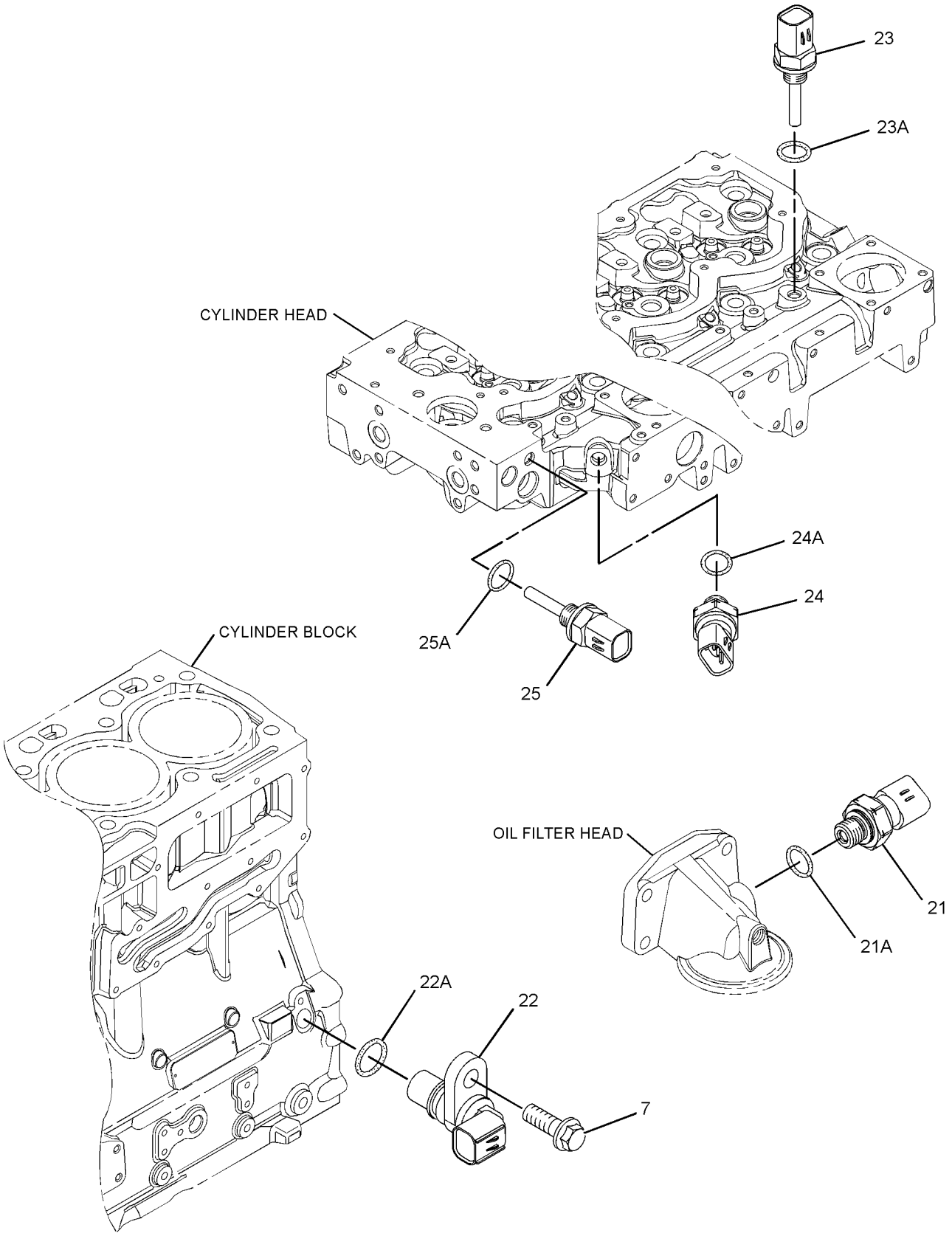

GRAPHIC #3 <END> g01643273

304-8755 PUMP GP-FUEL INJECTION

TYPE 4

SMCS-1251, 1290 **i05881678**

NOTE	REF NO	GRAPHIC REF	PART NUMBER	QTY	PART NAME 1 2 3 4 5 6 (PRODUCT LEVEL)	SEE PAGE
M	1	1	**6I-0260**	3	BOLT (M8X1.25X25-MM)	
M	2	1	**6I-0455**	3	BOLT (M8X1.25X55-MM)	
M	3	2	**6I-0572**	4	BOLT (M8X1.25X20-MM)	
	4	2	**7W-2632**	1	WASHER (8.5X16.8X1.6-MM THK)	
M	5	1	**100-4830**	1	BOLT (M10X1.5X20-MM)	
M	6	1	**101-3895**	4	BOLT (M8X1.25X35-MM)	
M	7	1,3	**124-3815**	4	BOLT (M8X1.25X16-MM)	
M	8	2	**141-8584**	4	BOLT (M8X1.25X50-MM)	
	9	2	**300-6714**	8	MOUNT	
	10	1	**346-0007**	2	WASHER	
	11	2	**217-0099**	5	SPACER (8.2X25X2-MM THK)	
	13	1	**230-8989**	1	GEAR-FUEL PUMP (68-TEETH)	
	14	1	**232-3149**	3	WASHER (8.35X16.85X1.55-MM THK)	
	15	1	**358-6632**	1	RAIL GP-FUEL	
	15A	1	**305-5291**	1	VALVE AS-RELIEF (FUEL RAIL)	
	16	2	**268-6677**	1	BRACKET AS	
M	16A	2	**260-3939**	1	SCREW-HEX HEAD (M6X1X25-MM)	
	17	2	**268-6678**	1	BRACKET AS	
M	17A	2	**260-3939**	1	SCREW-HEX HEAD (M6X1X25-MM)	
	18	1	**278-5168**	4	CLAMP-INJECTOR	
	19	1	**278-5170**	4	BOLT	
	20	2	**278-5203**	4	SPACER	
	21	3	**278-5225**	1	KIT-SENSOR (ENGINE OIL PRESSURE)	
	21A	3	**199-9267**	1	SEAL-O-RING	
	22	3	**311-3858**	1	KIT-SENSOR (ENGINE SPEED)	
	22A	3	**274-1639**	1	SEAL	
		3	**238-0120**	1	SENSOR GP-SPEED	
	23	3	**278-5272**	1	KIT-SENSOR (AIR TEMPERATURE)	
	23A	3	**278-5226**	1	SEAL-O-RING	
	24	3	**278-5273**	1	KIT-SENSOR (AIR PRESSURE)	
	24A	3	**199-9252**	1	SEAL-O-RING	
	25	3	**278-5307**	1	KIT-SENSOR (COOLANT TEMPERATURE)	
	25A	3	**199-9267**	1	SEAL-O-RING	
	26	1	**311-6342**	1	SENSOR AS-PRESSURE (FUEL RAIL PRESSURE)	
	26A	1	**309-8006**	1	WASHER	
CYR	27	1	*324-0532*	1	PUMP GP-FUEL INJECTION	1523
YR	28	1	**320-0680**	4	INJECTOR GP-FUEL	1027
	29	1	**298-4535**	1	BRACKET-SUPPORT	
	30	1	**337-3573**	1	BRACKET	
	31	1	**337-3574**	1	TUBE	
	32	1	**322-3745**	1	TUBE (CYL NO. 1)	
	33	1	**322-3746**	1	TUBE (CYL NO. 2)	
	34	1	**333-4732**	1	LINE-FUEL INJECTION (CYL NO. 3)	
	35	1	**333-4733**	1	LINE-FUEL INJECTION (CYL NO. 4)	
	36	1	**298-4542**	1	TUBE AS	
	37	1	**363-3908**	1	BOLT-SPECIAL	
	38	2	**317-3144**	1	BRACKET	

304-8755 **PUMP GP-FUEL INJECTION** (contd.) **i05881678**

NOTE	REF NO	GRAPHIC REF	PART NUMBER	QTY	PART NAME 1 2 3 4 5 6 (PRODUCT LEVEL)	SEE PAGE
F			**278-4138**	4	KIT-FUEL LINE PROTECTION	

C - CHANGE FROM PREVIOUS TYPE
F - NOT SHOWN
M - METRIC PART
R - REMANUFACTURED PART MAY BE AVAILABLE
Y - SEPARATE ILLUSTRATION

304-8755 **PUMP GP-FUEL INJECTION (**contd.**)** **i05881678**

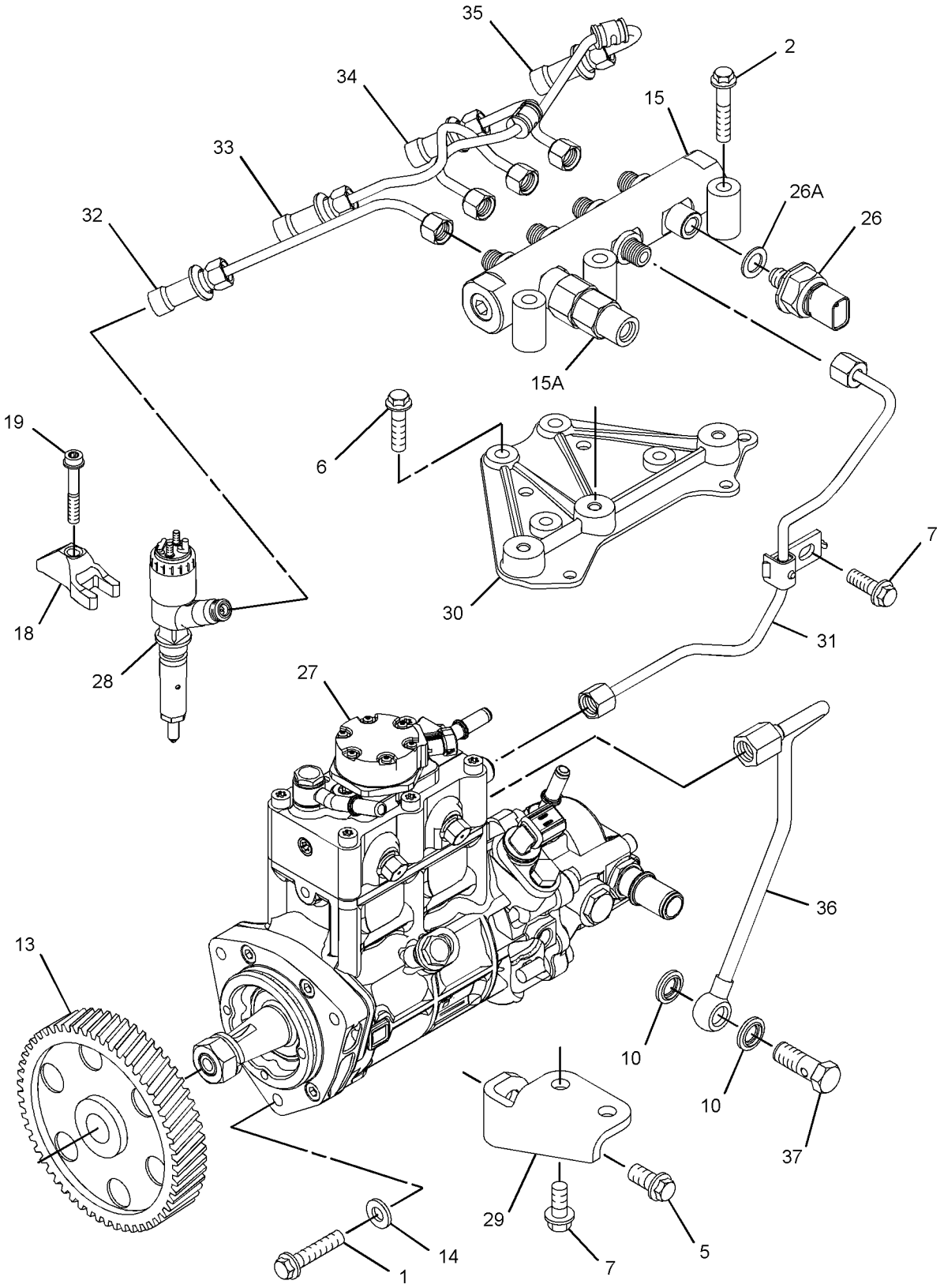

GRAPHIC #1 g02822576

304-8755 **PUMP GP-FUEL INJECTION (**contd.**)** **i05881678**

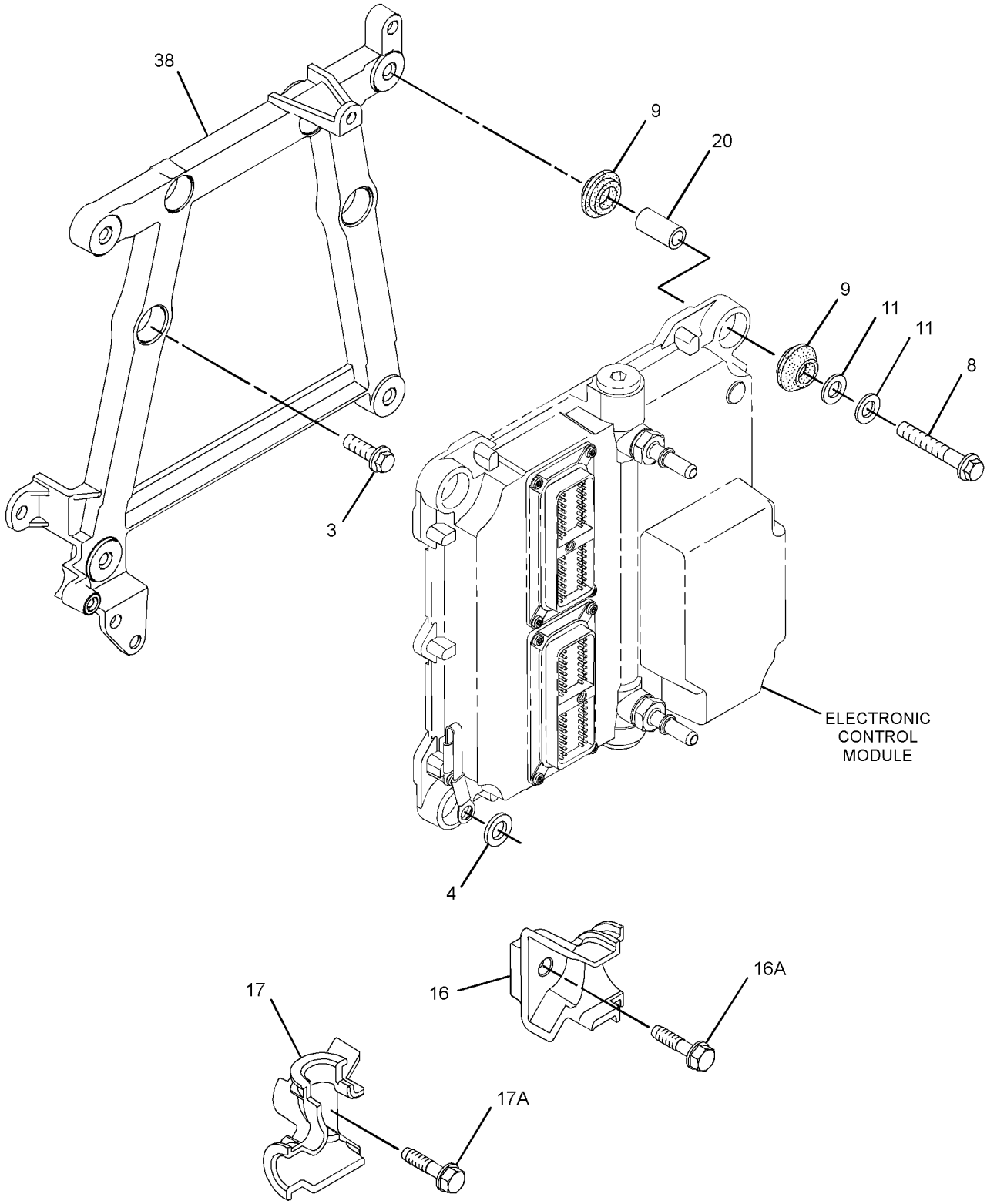

GRAPHIC #2 g01681912

304-8755 **PUMP GP-FUEL INJECTION (**contd.**)** **i05881678**

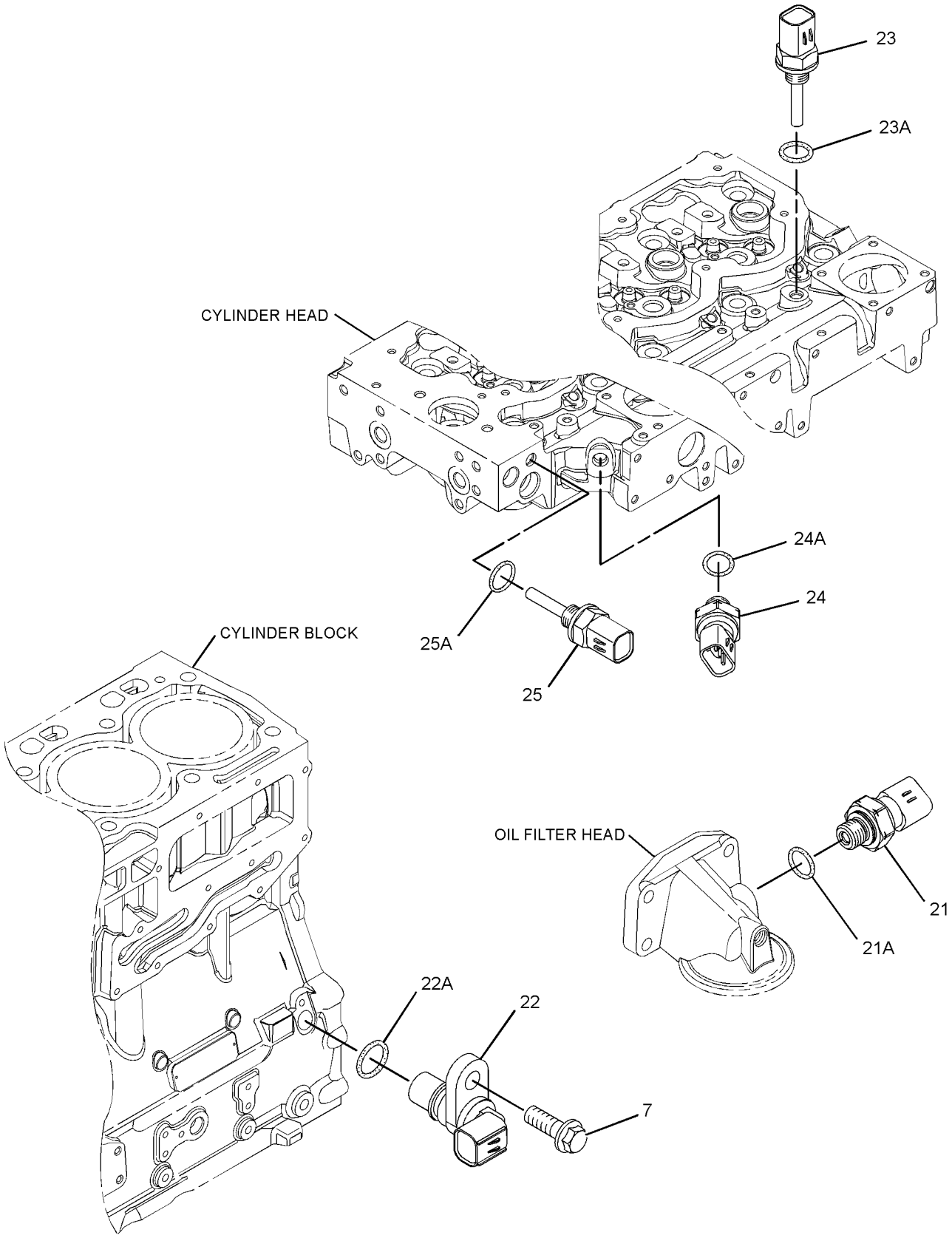

GRAPHIC #3 <END> g01643273

305-0634 PUMP GP-FUEL INJECTION

S/N: 4441-321

SMCS-1251, 1290 **i02755326**

NOTE	REF NO	GRAPHIC REF	PART NUMBER	QTY	PART NAME 1 2 3 4 5 6 (PRODUCT LEVEL)	SEE PAGE
M	1	1	**6I-0260**	3	BOLT (M8X1.25X25-MM)	
M	2	1	**6I-0455**	3	BOLT (M8X1.25X55-MM)	
M	3	2	**6I-0572**	4	BOLT (M8X1.25X20-MM)	
	4	2	**7W-2632**	1	WASHER (8.5X16.8X1.6-MM THK)	
	5	3	**035-8017**	2	UNION	
	6	3	**067-6264**	2	FITTING-FLARED	
	7	3	**067-6265**	2	FITTING-BRASS	
M	8	1	**100-4830**	1	BOLT (M10X1.5X20-MM)	
M	9	1	**101-3895**	4	BOLT (M8X1.25X35-MM)	
M	10	1,3	**124-3815**	4	BOLT (M8X1.25X16-MM)	
M	11	2	**141-8584**	4	BOLT (M8X1.25X50-MM)	
	12	2	**155-0576**	8	MOUNT-ISOLATION	
	13	1	**160-0162**	2	WASHER	
	14	3	**199-9252**	1	SEAL-O-RING	
	15	2	**217-0099**	4	SPACER (8.2X25X2-MM THK)	
	16	2	**217-8477**	1	CLIP	
	17	1	**230-8989**	1	GEAR-FUEL PUMP (68-TEETH)	
	18	1	**232-3149**	6	WASHER (8.35X16.85X1.55-MM THK)	
	19	2	**232-9758**	2	WASHER (6.51X17.785X1.6-MM THK)	
	20	2	**268-6677**	1	BRACKET AS	
M	20A	2	**260-3939**	1	SCREW-HEX HEAD (M6X1X25-MM)	
	21	2	**268-6678**	1	BRACKET AS	
M	21A	2	**260-3939**	1	SCREW-HEX HEAD (M6X1X25-MM)	
	22	1	**308-8425**	1	RAIL AS-FUEL	
	24	1	**278-5168**	4	CLAMP-INJECTOR	
	25	1	**278-5170**	4	BOLT	
	26	2	**278-5203**	4	SPACER	
	28	3	**278-5225**	1	KIT-SENSOR (ENGINE OIL PRESSURE)	
	28A	3	**278-5226**	1	SEAL-O-RING	
	29	3	**278-5228**	1	KIT-SENSOR (ENGINE SPEED)	
	29A	3	**278-5227**	1	SEAL-O-RING	
	30	3	**304-3687**	1	SENSOR-AIR TEMPERATURE	
	30A	3	**278-5226**	1	SEAL-O-RING	
	31	3	**278-5273**	1	KIT-SENSOR (AIR PRESSURE)	
	31A	3	**199-9252**	1	SEAL-O-RING	
	32	3	**278-5307**	1	KIT-SENSOR (COOLANT TEMPERATURE)	
	32A	3	**199-9267**	1	SEAL-O-RING	
	33	1	**278-5308**	1	KIT-SENSOR (FUEL RAIL PRESSURE)	
	33A	1	**278-5309**	1	WASHER	
Y	34	1	**282-0480**	4	INJECTOR GP-FUEL	1019
Y	35	1	**283-2271**	1	PUMP GP-FUEL INJECTION	1067
	36	1	**298-4535**	1	BRACKET-SUPPORT	
	37	1	**298-4536**	1	BRACKET-MOUNTING	
	38	1	**298-4537**	1	TUBE AS	
	39	1	**298-4538**	1	TUBE AS (CYL NO. 1)	
	40	1	**298-4539**	1	TUBE AS (CYL NO. 2)	
	41	1	**298-4540**	1	TUBE AS (CYL NO. 3)	
	42	1	**298-4541**	1	TUBE AS (CYL NO. 4)	

305-0634 **PUMP GP-FUEL INJECTION** (contd.) **i02755326**

NOTE	REF NO	GRAPHIC REF	PART NUMBER	QTY	PART NAME 1 2 3 4 5 6 (PRODUCT LEVEL)	SEE PAGE
	43	1	**298-4542**	1	TUBE AS	
	44	1	**298-4543**	1	BOLT	
	45	2	**308-3395**	1	BRACKET-MOUNTING	
	46	3	**304-3689**	1	ADAPTER	
	47	3	**305-0659**	1	TUBE	
F			**278-4138**	4	KIT-FUEL LINE PROTECTION	

F - NOT SHOWN
M - METRIC PART
Y - SEPARATE ILLUSTRATION

305-0634 **PUMP GP-FUEL INJECTION (**contd.**)** **i02755326**

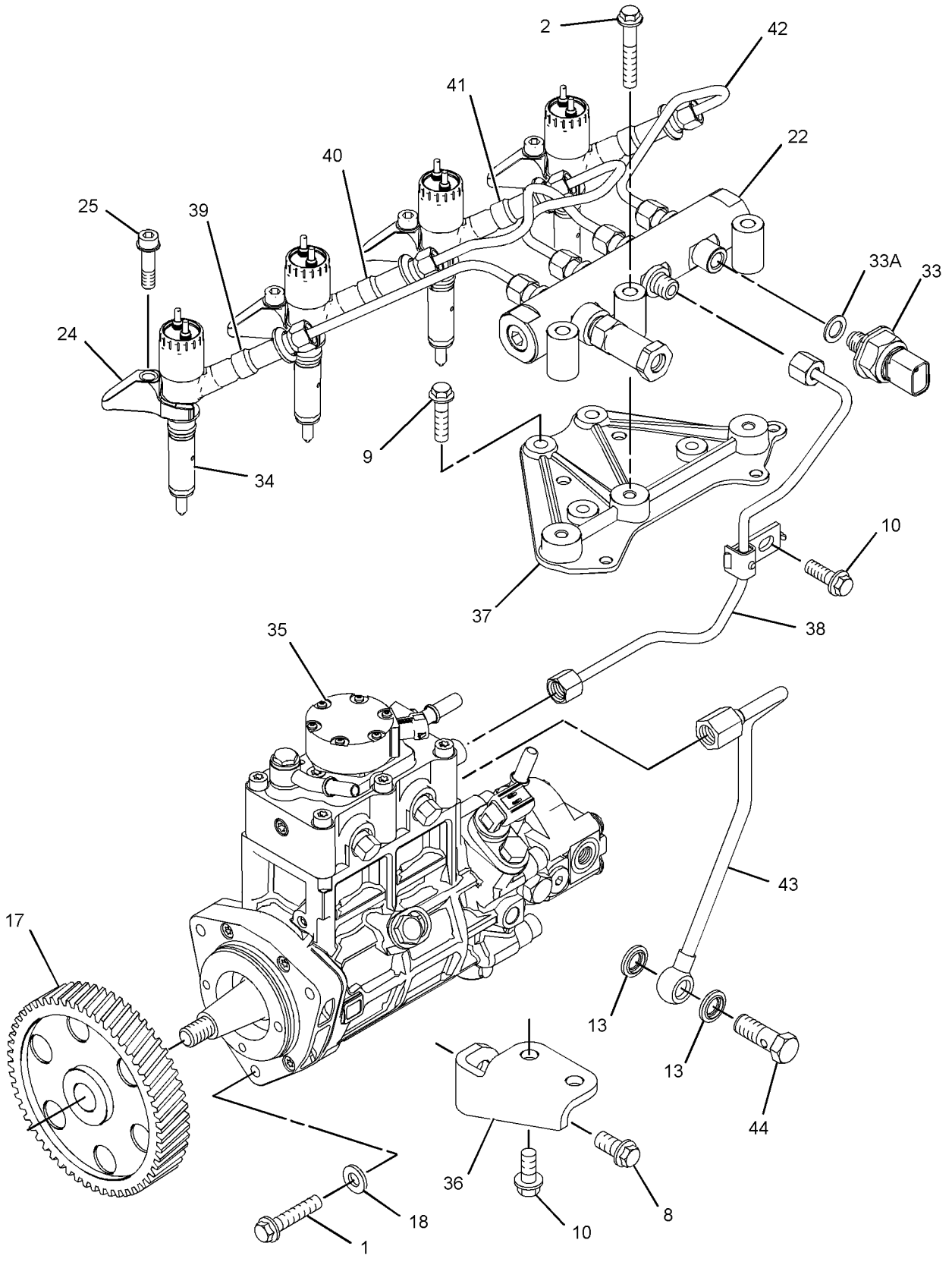

GRAPHIC #1 g01376871

305-0634 **PUMP GP-FUEL INJECTION (**contd.**)** **i02755326**

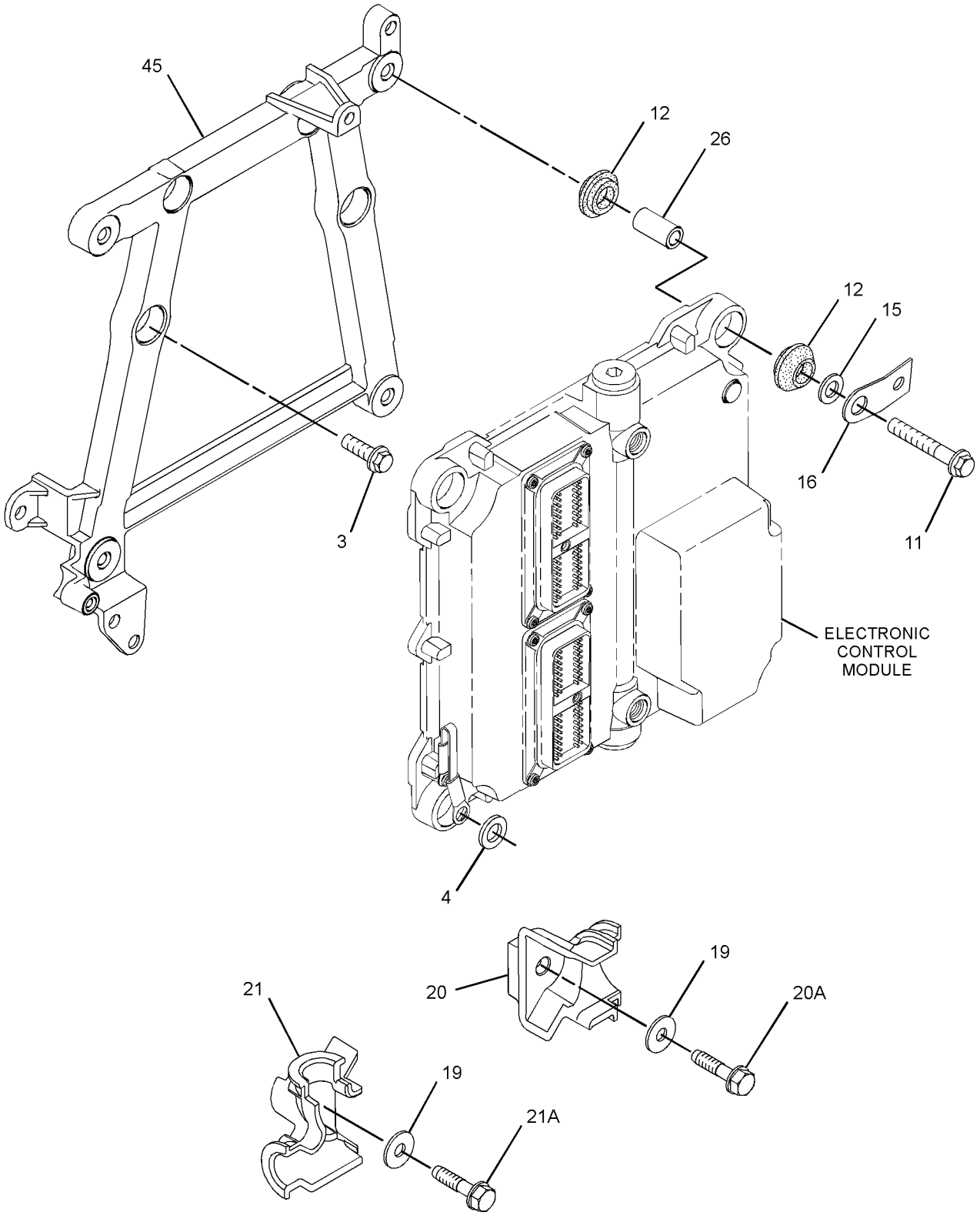

GRAPHIC #2 g01431358

305-0634 **PUMP GP-FUEL INJECTION (**contd.**)** **i02755326**

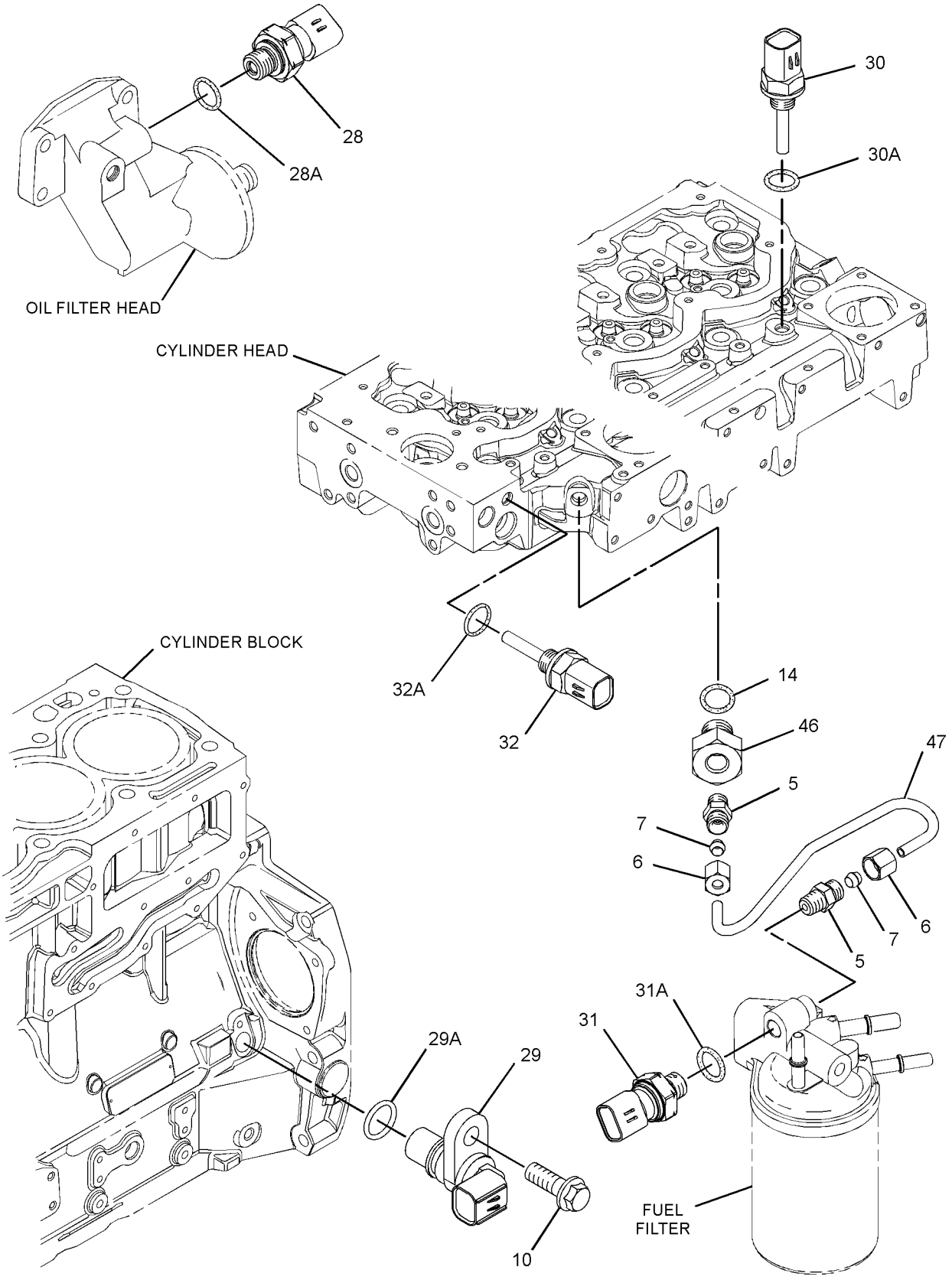

GRAPHIC #3 <END> g01376874

305-1955 PUMP GP-FUEL INJECTION

TYPE 1

SMCS-1251, 1290 **i03082442**

NOTE	REF NO	GRAPHIC REF	PART NUMBER	QTY	PART NAME 1 2 3 4 5 6 (PRODUCT LEVEL)	SEE PAGE
Y	1	1	**283-2271**	1	PUMP GP-FUEL INJECTION	1067
	2	1	**230-8989**	1	GEAR-FUEL PUMP (68-TEETH)	
M	3	1	**6I-0260**	3	BOLT (M8X1.25X25-MM)	
	4	1	**232-3149**	6	WASHER (8.35X16.85X1.55-MM THK)	
	5	1	**298-4535**	1	BRACKET-SUPPORT	
M	6	1,3	**124-3815**	4	BOLT (M8X1.25X16-MM)	
M	7	1	**100-4830**	1	BOLT (M10X1.5X20-MM)	
	8	1	**308-8425**	1	RAIL AS-FUEL	
M	9	1	**6I-0455**	3	BOLT (M8X1.25X55-MM)	
	10	1	**298-4536**	1	BRACKET-MOUNTING	
M	11	1	**101-3895**	4	BOLT (M8X1.25X35-MM)	
	12	1	**298-4537**	1	TUBE AS	
Y	13	1	**282-0480**	4	INJECTOR GP-FUEL	1019
	14	1	**278-5168**	4	CLAMP-INJECTOR	
	15	1	**278-5170**	4	BOLT	
	16	1	**298-4538**	1	TUBE AS (CYL NO. 1)	
	17	1	**298-4539**	1	TUBE AS (CYL NO. 2)	
	18	1	**298-4540**	1	TUBE AS (CYL NO. 3)	
	19	1	**298-4541**	1	TUBE AS (CYL NO. 4)	
	20	1	**298-4542**	1	TUBE AS	
	21	1	**298-4543**	1	BOLT	
	22	1	**160-0162**	2	WASHER	
	23	2	**308-3395**	1	BRACKET-MOUNTING	
M	24	2	**6I-0572**	4	BOLT (M8X1.25X20-MM)	
M	25	2	**141-8584**	4	BOLT (M8X1.25X50-MM)	
	26	2	**217-0099**	4	SPACER (8.2X25X2-MM THK)	
	27	2	**300-6714**	8	MOUNT	
	28	2	**278-5203**	4	SPACER	
	29	2	**217-8477**	1	CLIP	
	30	2	**7W-2632**	1	WASHER (8.5X16.8X1.6-MM THK)	
	31	2	**268-6678**	1	BRACKET AS	
M	31A	2	**260-3939**	1	SCREW-HEX HEAD (M6X1X25-MM)	
	34	2	**268-6677**	1	BRACKET AS	
M	34A	2	**260-3939**	1	SCREW-HEX HEAD (M6X1X25-MM)	
	35	3	**278-5225**	1	KIT-SENSOR (ENGINE OIL PRESSURE)	
	35A	3	**278-5226**	1	SEAL-O-RING	
	36	3	**311-3858**	1	KIT-SENSOR (ENGINE SPEED)	
	36A	3	**274-1639**	1	SEAL	
	37	3	**313-2455**	1	SENSOR-TEMPERATURE (AIR)	
	37A	3	**278-5226**	1	SEAL-O-RING	
	38	3	**278-5273**	1	KIT-SENSOR (AIR PRESSURE)	
	38A	3	**199-9252**	1	SEAL-O-RING	
	39	3	**278-5307**	1	KIT-SENSOR (COOLANT TEMPERATURE)	
	39A	3	**199-9267**	1	SEAL-O-RING	
	40	1	**311-6342**	1	SENSOR AS-PRESSURE (FUEL RAIL PRESSURE)	
	40A	1	**309-8006**	1	WASHER	
	41	3	**305-0659**	1	TUBE	
	42	3	**067-6264**	2	FITTING-FLARED	

305-1955 **PUMP GP-FUEL INJECTION** (contd.) **i03082442**

NOTE	REF NO	GRAPHIC REF	PART NUMBER	QTY	PART NAME 1 2 3 4 5 6 (PRODUCT LEVEL)	SEE PAGE
	43	3	**067-6265**	2	FITTING-BRASS	
	44	3	**035-8017**	2	UNION	
	45	3	**304-3689**	1	ADAPTER	
	46	3	**199-9252**	1	SEAL-O-RING	
F			**278-4138**	5	KIT-FUEL LINE PROTECTION (LINE, LOW PRESSURE)	

F - NOT SHOWN
M - METRIC PART
Y - SEPARATE ILLUSTRATION

305-1955 **PUMP GP-FUEL INJECTION (**contd.**)** **i03082442**

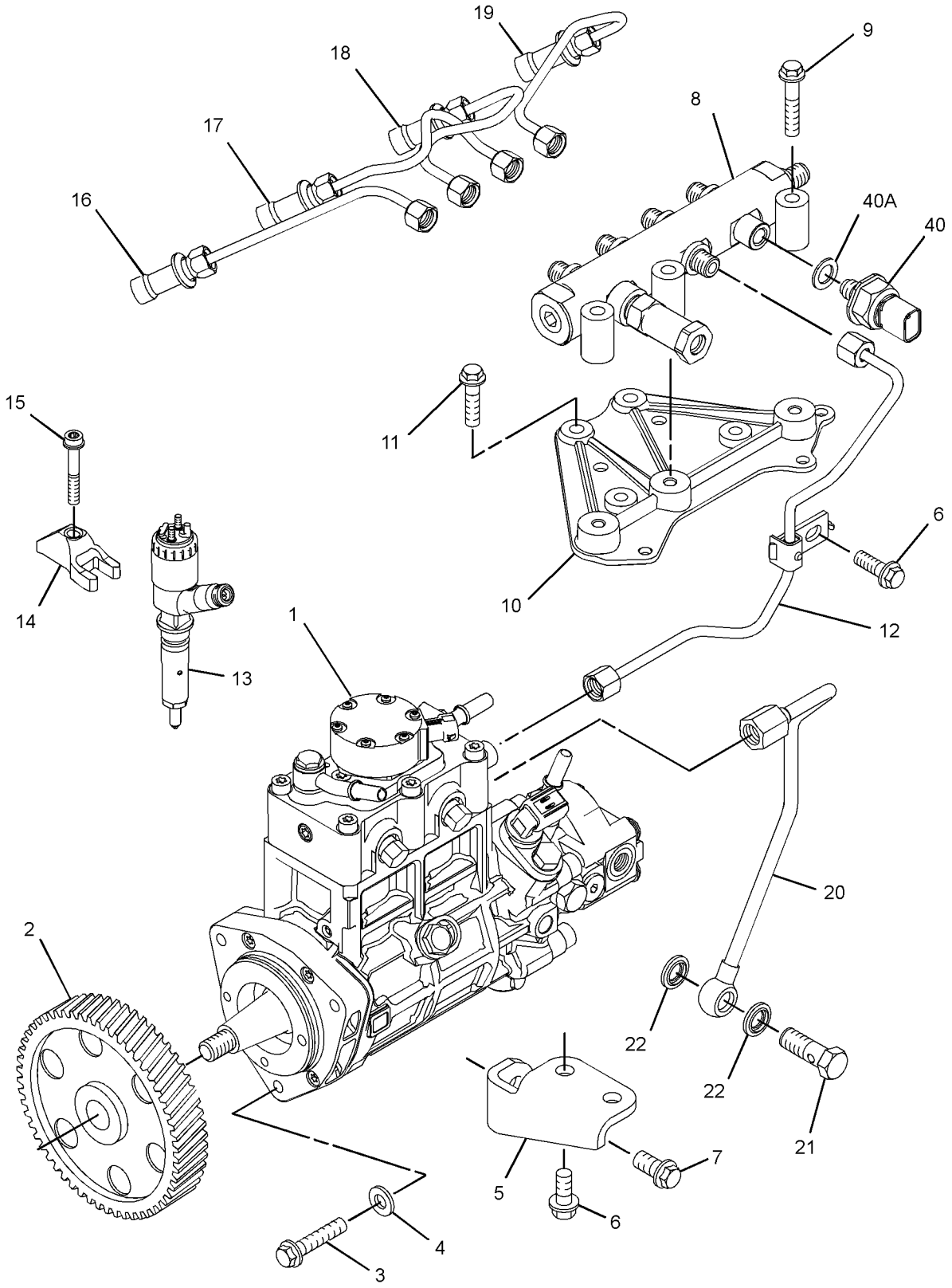

GRAPHIC #1 g01671154

305-1955 **PUMP GP-FUEL INJECTION (**contd.**)** **i03082442**

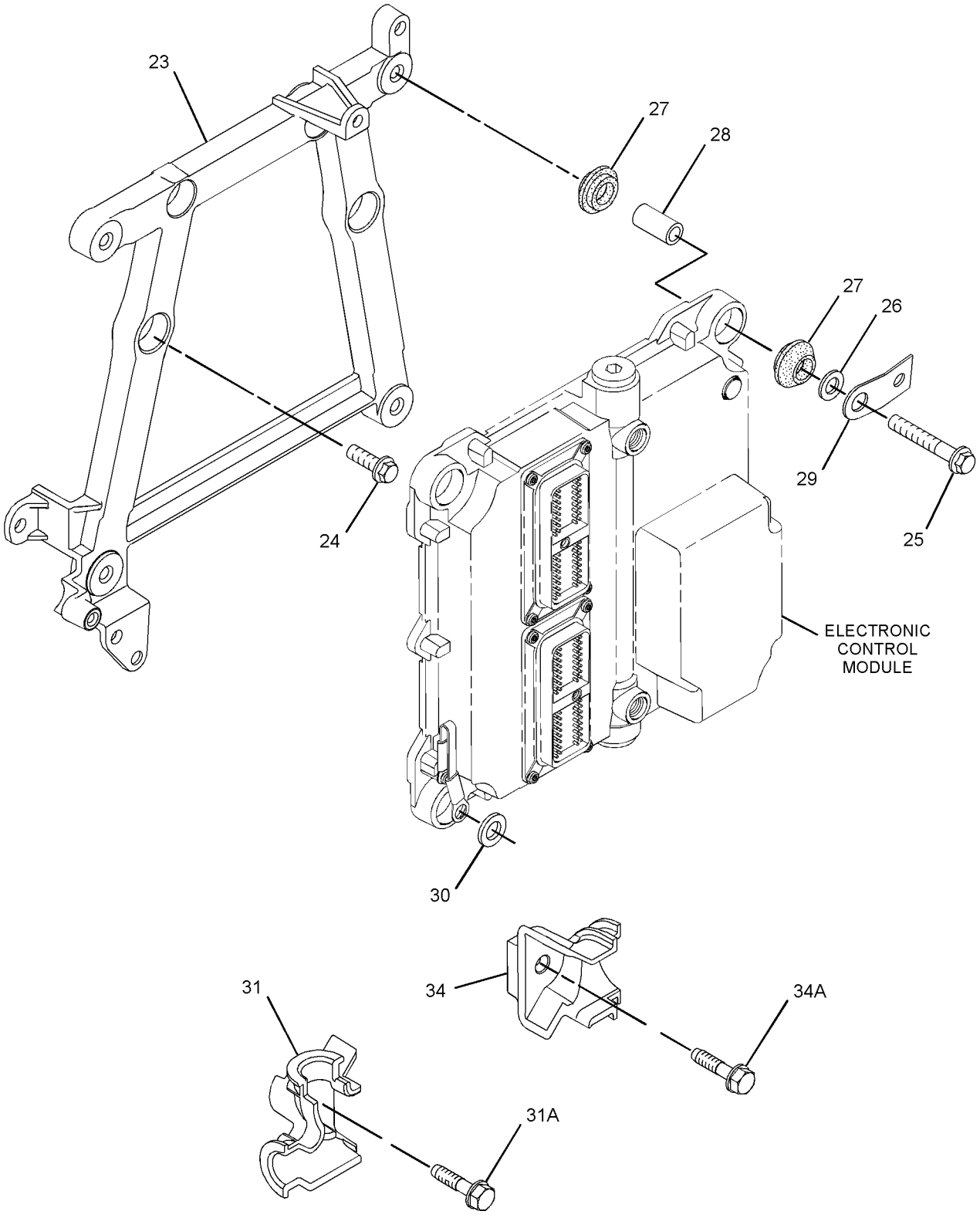

GRAPHIC #2 g01671155

305-1955 **PUMP GP-FUEL INJECTION (**contd.**)** **i03082442**

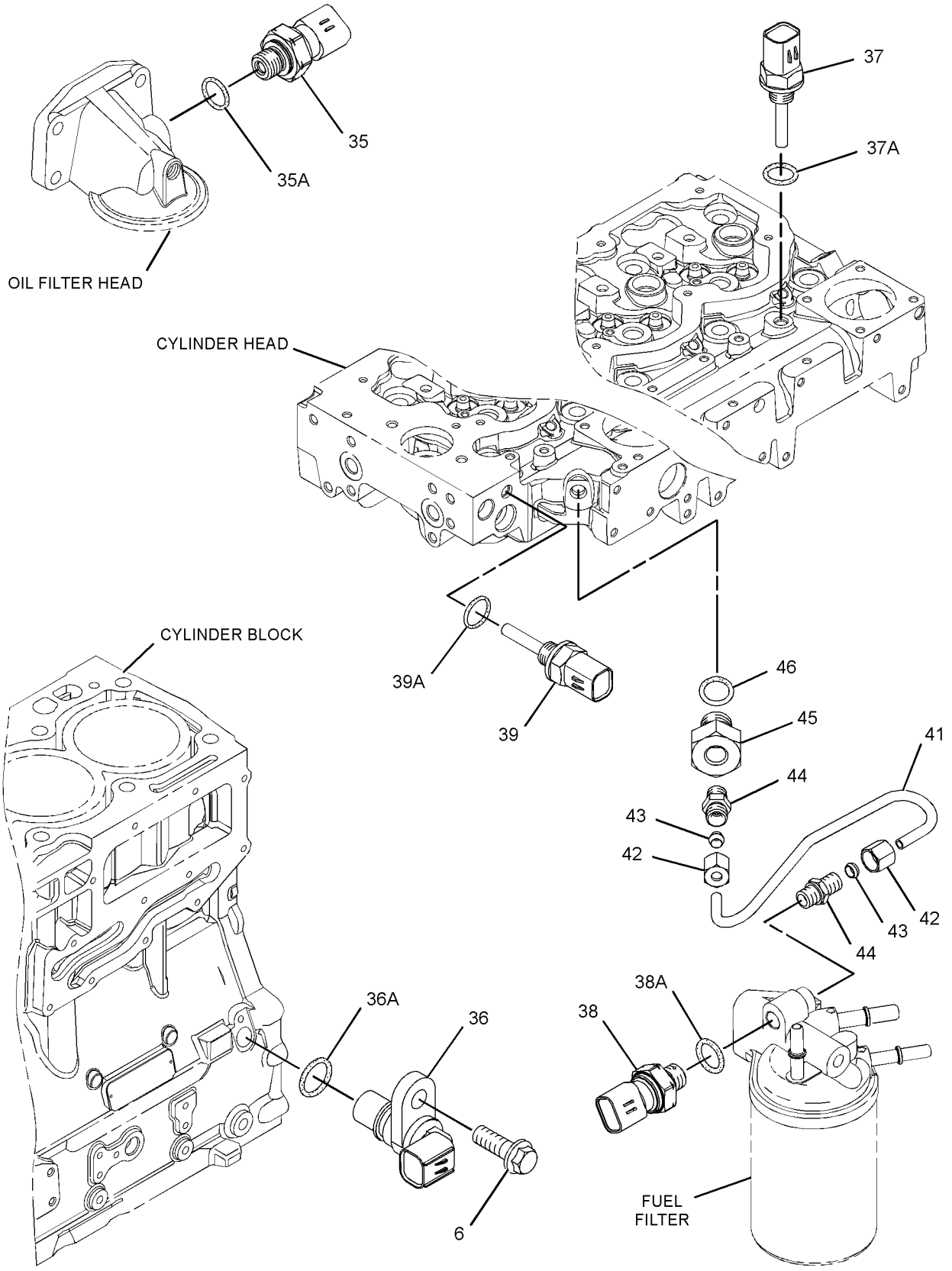

GRAPHIC #3 <END> g01671156

305-1955 PUMP GP-FUEL INJECTION

TYPE 2

SMCS-1251, 1290 **i03291086**

NOTE	REF NO	GRAPHIC REF	PART NUMBER	QTY	PART NAME 1 2 3 4 5 6 (PRODUCT LEVEL)	SEE PAGE
CYR	1	1	**295-9125**	1	PUMP & MTG GP-UNIT INJ HYD	1062
	2	1	**230-8989**	1	GEAR-FUEL PUMP (68-TEETH)	
M	3	1	**6I-0260**	3	BOLT (M8X1.25X25-MM)	
C	4	1	**232-3149**	3	WASHER (8.35X16.85X1.55-MM THK)	
	5	1	**298-4535**	1	BRACKET-SUPPORT	
M	6	1,3	**124-3815**	4	BOLT (M8X1.25X16-MM)	
M	7	1	**100-4830**	1	BOLT (M10X1.5X20-MM)	
C	8	1	**311-6631**	1	RAIL AS-FUEL	
M	9	1	**6I-0455**	3	BOLT (M8X1.25X55-MM)	
	10	1	**298-4536**	1	BRACKET-MOUNTING	
M	11	1	**101-3895**	4	BOLT (M8X1.25X35-MM)	
	12	1	**298-4537**	1	TUBE AS	
CYR	13	1	**320-0677**	4	INJECTOR GP-FUEL	1026
	14	1	**278-5168**	4	CLAMP-INJECTOR	
	15	1	**278-5170**	4	BOLT	
C	16	1	**322-3745**	1	TUBE (CYL NO. 1) (CYL NO. 1)	
C	17	1	**322-3746**	1	TUBE (CYL NO. 2) (CYL NO. 2)	
C	18	1	**322-3747**	1	TUBE (CYL NO. 3) (CYL NO. 3)	
C	19	1	**322-3748**	1	TUBE (CYL NO. 4) (CYL NO. 4)	
	20	1	**322-3744**	1	TUBE	
	21	1	**298-4543**	1	BOLT	
	22	1	**160-0162**	2	WASHER	
C	23	2	**317-3144**	1	BRACKET	
M	24	2	**6I-0572**	4	BOLT (M8X1.25X20-MM)	
M	25	2	**141-8584**	4	BOLT (M8X1.25X50-MM)	
	26	2	**217-0099**	4	SPACER (8.2X25X2-MM THK)	
	27	2	**300-6714**	8	MOUNT	
	28	2	**278-5203**	4	SPACER	
	29	2	**217-8477**	1	CLIP	
	30	2	**7W-2632**	1	WASHER (8.5X16.8X1.6-MM THK)	
	31	2	**268-6678**	1	BRACKET AS	
M	31A	2	**260-3939**	1	SCREW-HEX HEAD (M6X1X25-MM)	
	34	2	**268-6677**	1	BRACKET AS	
M	34A	2	**260-3939**	1	SCREW-HEX HEAD (M6X1X25-MM)	
	35	3	**278-5225**	1	KIT-SENSOR (ENGINE OIL PRESSURE)	
	35A	3	**199-9267**	1	SEAL-O-RING	
	36	3	**311-3858**	1	KIT-SENSOR (ENGINE SPEED)	
	36A	3	**274-1639**	1	SEAL	
	37	3	**313-2455**	1	SENSOR-TEMPERATURE (AIR)	
	37A	3	**278-5226**	1	SEAL-O-RING	
	38	3	**278-5273**	1	KIT-SENSOR (AIR PRESSURE)	
	38A	3	**199-9252**	1	SEAL-O-RING	
	39	3	**278-5307**	1	KIT-SENSOR (COOLANT TEMPERATURE)	
	39A	3	**199-9267**	1	SEAL-O-RING	
	40	1	**311-6342**	1	SENSOR AS-PRESSURE (FUEL RAIL PRESSURE)	
	40A	1	**309-8006**	1	WASHER	
	41	3	**305-0659**	1	TUBE	
	42	3	**067-6264**	2	FITTING-FLARED	

305-1955 **PUMP GP-FUEL INJECTION (**contd.**)** **i03291086**

NOTE	REF NO	GRAPHIC REF	PART NUMBER	QTY	PART NAME 1 2 3 4 5 6 (PRODUCT LEVEL)	SEE PAGE
	43	3	**067-6265**	2	FITTING-BRASS	
	44	3	**035-8017**	2	UNION	
	45	3	**304-3689**	1	ADAPTER	
	46	3	**199-9252**	1	SEAL-O-RING	
F			**278-4138**	5	KIT-FUEL LINE PROTECTION (LINE, LOW PRESSURE)	

C - CHANGE FROM PREVIOUS TYPE
F - NOT SHOWN
M - METRIC PART
R - REMANUFACTURED PART MAY BE AVAILABLE
Y - SEPARATE ILLUSTRATION

305-1955 **PUMP GP-FUEL INJECTION (**contd.**)** **i03291086**

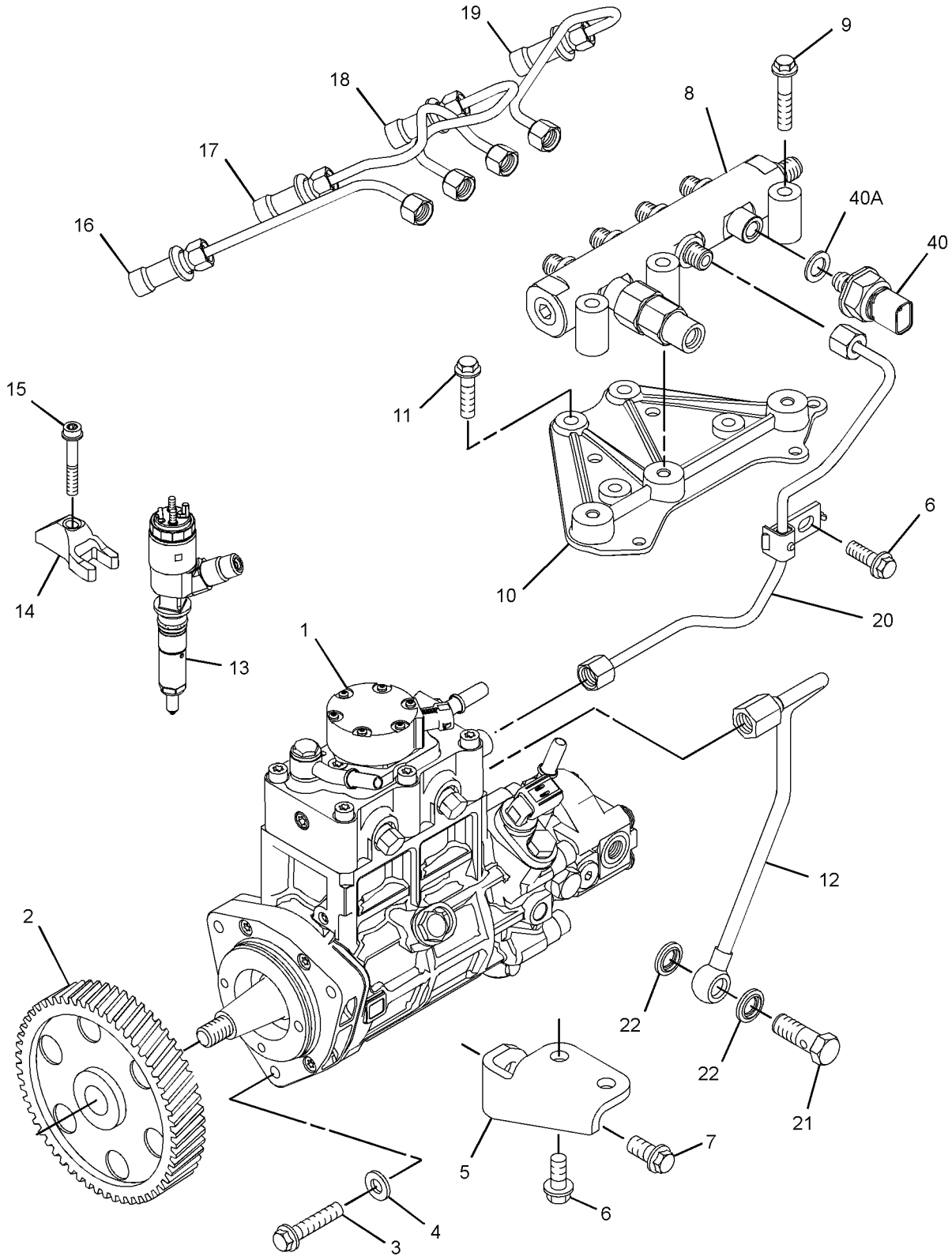

GRAPHIC #1 g01677155

305-1955 **PUMP GP-FUEL INJECTION (**contd.**)** **i03291086**

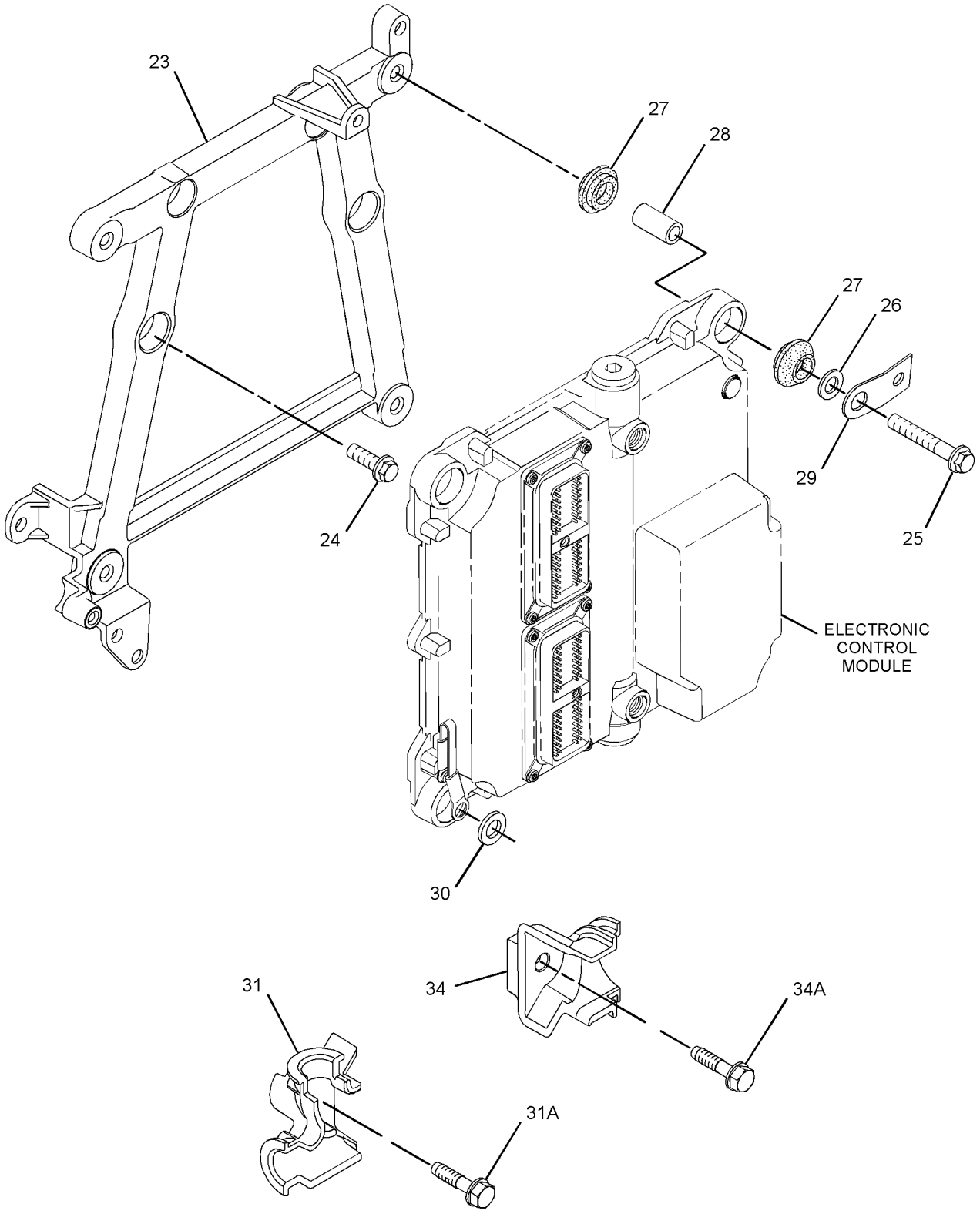

GRAPHIC #2 g01671155

305-1955 **PUMP GP-FUEL INJECTION (**contd.**)** **i03291086**

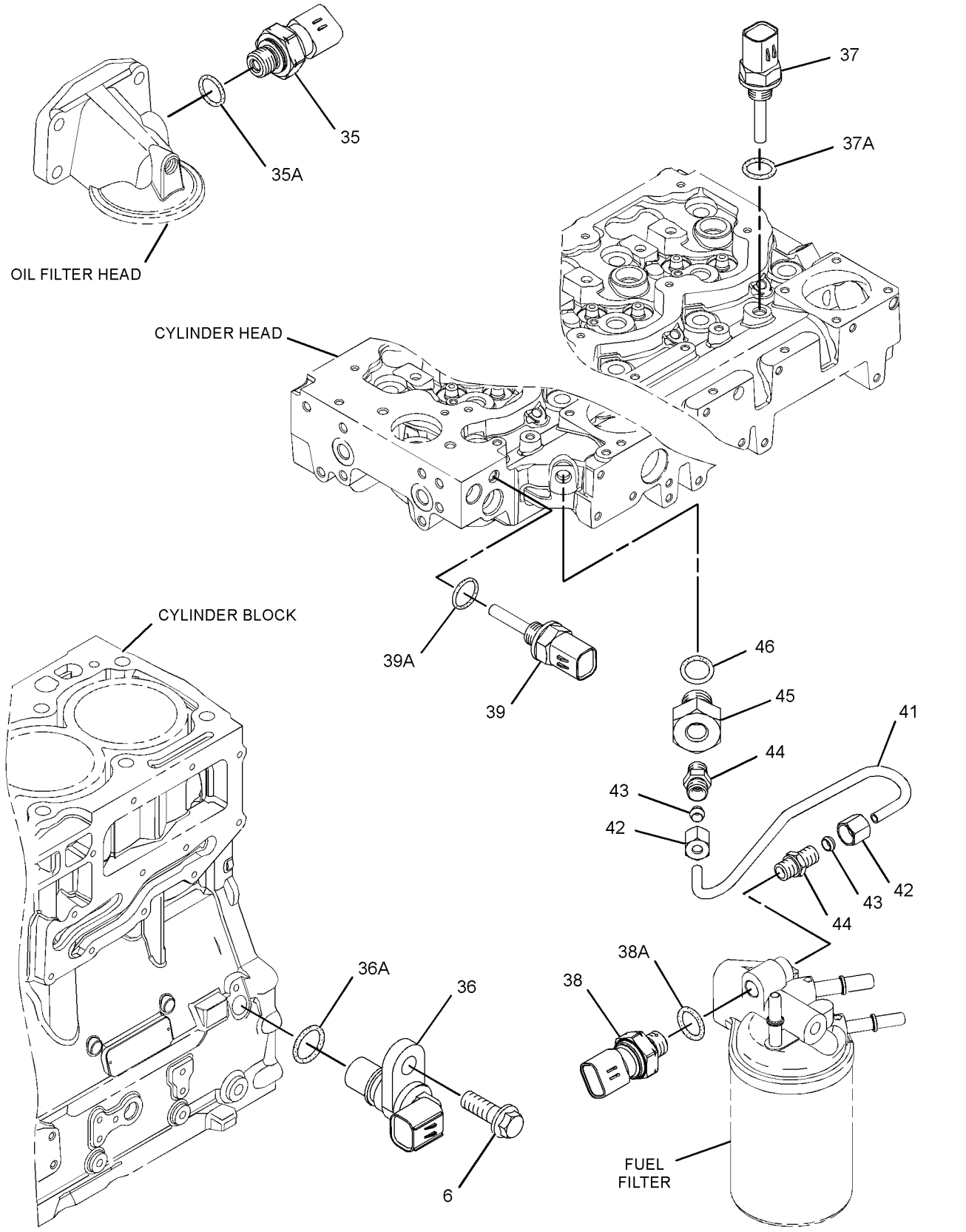

GRAPHIC #3 <END> g01671156

305-2575 PUMP GP-FUEL INJECTION

TYPE 1

SMCS-1251, 1290 **i06096434**

NOTE	REF NO	GRAPHIC REF	PART NUMBER	QTY	PART NAME 1 2 3 4 5 6 (PRODUCT LEVEL)	SEE PAGE
M	1	1	**6I-0260**	3	BOLT (M8X1.25X25-MM)	
M	2	1	**6I-0455**	3	BOLT (M8X1.25X55-MM)	
M	3	2	**6I-0572**	4	BOLT (M8X1.25X20-MM)	
	4	2	**7W-2632**	1	WASHER (8.5X16.8X1.6-MM THK)	
M	5	1	**100-4830**	1	BOLT (M10X1.5X20-MM)	
M	6	1	**101-3895**	4	BOLT (M8X1.25X35-MM)	
M	7	1,3	**124-3815**	4	BOLT (M8X1.25X16-MM)	
M	8	2	**141-8584**	4	BOLT (M8X1.25X50-MM)	
	9	2	**155-0576**	8	MOUNT-ISOLATION	
	10	1	**160-0162**	2	WASHER	
	11	2	**217-0099**	4	SPACER (8.2X25X2-MM THK)	
	12	2	**217-8477**	1	CLIP	
	13	1	**230-8989**	1	GEAR-FUEL PUMP (68-TEETH)	
	14	1	**232-3149**	6	WASHER (8.35X16.85X1.55-MM THK)	
	15	1	**308-8425**	1	RAIL AS-FUEL	
	16	2	**268-6677**	1	BRACKET AS	
		2	**260-3718**	1	BRACKET	
M	16A	2	**260-3939**	1	SCREW-HEX HEAD (M6X1X25-MM)	
	17	2	**268-6678**	1	BRACKET AS	
		2	**260-3719**	1	BRACKET	
M	17A	2	**260-3939**	1	SCREW-HEX HEAD (M6X1X25-MM)	
	18	1	**278-5168**	4	CLAMP-INJECTOR	
	19	1	**278-5170**	4	BOLT	
	20	2	**278-5203**	4	SPACER	
	21	3	**278-5225**	1	KIT-SENSOR (ENGINE OIL PRESSURE)	
	21A	3	**278-5226**	1	SEAL-O-RING	
	22	3	**278-5228**	1	KIT-SENSOR (ENGINE SPEED)	
	22A	3	**278-5227**	1	SEAL-O-RING	
	23	3	**278-5272**	1	KIT-SENSOR (AIR TEMPERATURE)	
	23A	3	**278-5226**	1	SEAL-O-RING	
	24	3	**278-5273**	1	KIT-SENSOR (ATMOSPHERIC PRESSURE)	
	24A	3	**199-9252**	1	SEAL-O-RING	
	25	3	**278-5307**	1	KIT-SENSOR (WATER TEMPERATURE)	
	25A	3	**199-9267**	1	SEAL-O-RING	
	26	1	**278-5308**	1	KIT-SENSOR (FUEL RAIL PRESSURE)	
	26A	1	**309-8006**	1	WASHER	
Y	27	1	**283-2271**	1	PUMP GP-FUEL INJECTION	1067
Y	28	1	**292-3780**	4	INJECTOR GP-FUEL	1021
	29	1	**298-4535**	1	BRACKET-SUPPORT	
	30	1	**298-4536**	1	BRACKET-MOUNTING	
	31	1	**298-4537**	1	TUBE AS	
	32	1	**298-4538**	1	TUBE AS (CYL NO. 1)	
	33	1	**298-4539**	1	TUBE AS (CYL NO. 2)	
	34	1	**298-4540**	1	TUBE AS (CYL NO. 3)	
	35	1	**298-4541**	1	TUBE AS (CYL NO. 4)	
	36	1	**298-4542**	1	TUBE AS	
	37	1	**298-4543**	1	BOLT	
	38	2	**308-3395**	1	BRACKET-MOUNTING	

305-2575 **PUMP GP-FUEL INJECTION** (contd.) **i06096434**

NOTE	REF NO	GRAPHIC REF	PART NUMBER	QTY	PART NAME 1 2 3 4 5 6 (PRODUCT LEVEL)	SEE PAGE
F			**278-4138**	4	KIT-FUEL LINE PROTECTION	

F - NOT SHOWN
M - METRIC PART
Y - SEPARATE ILLUSTRATION

305-2575 **PUMP GP-FUEL INJECTION (**contd.**)** **i06096434**

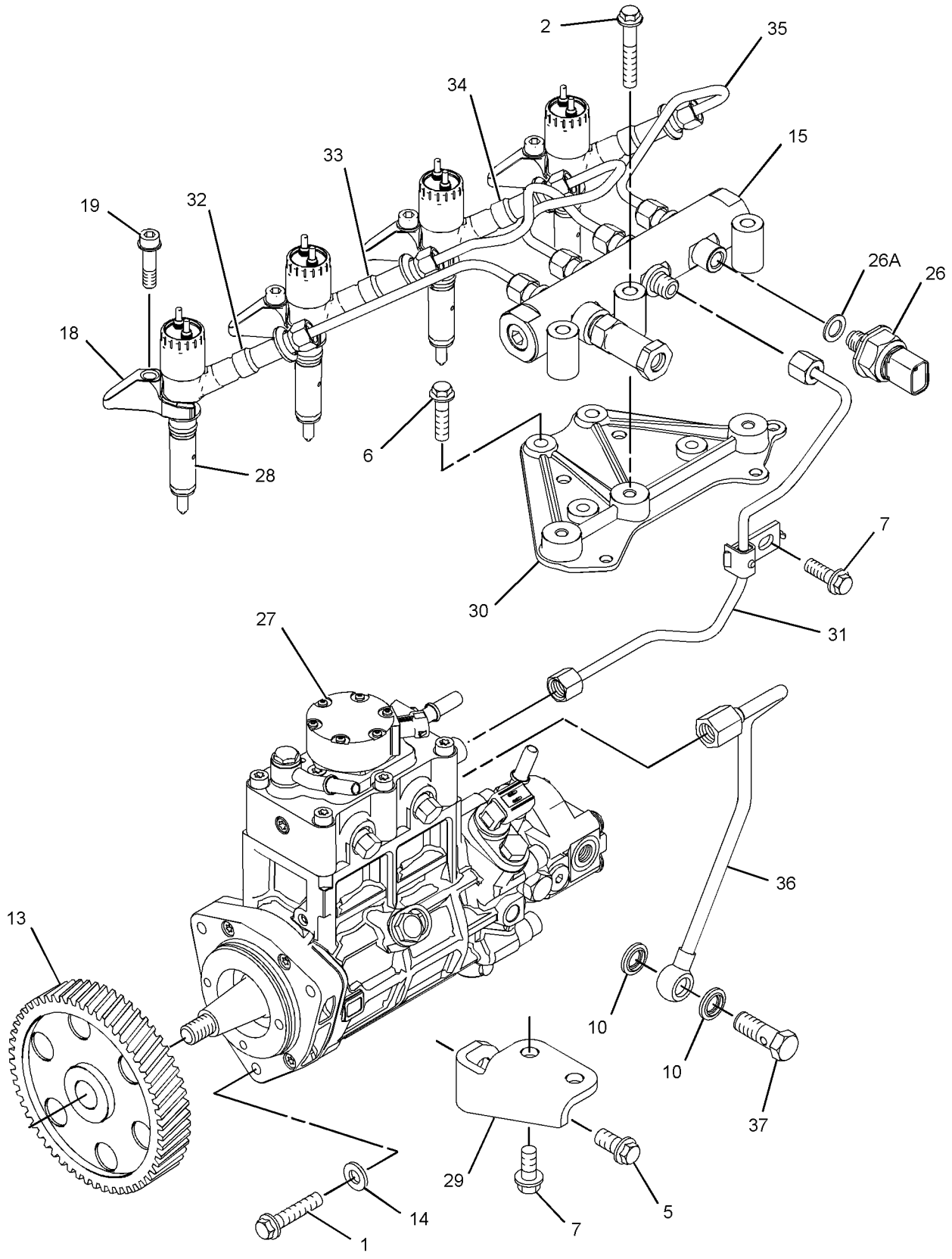

GRAPHIC #1 g01375172

305-2575 **PUMP GP-FUEL INJECTION (**contd.**)** **i06096434**

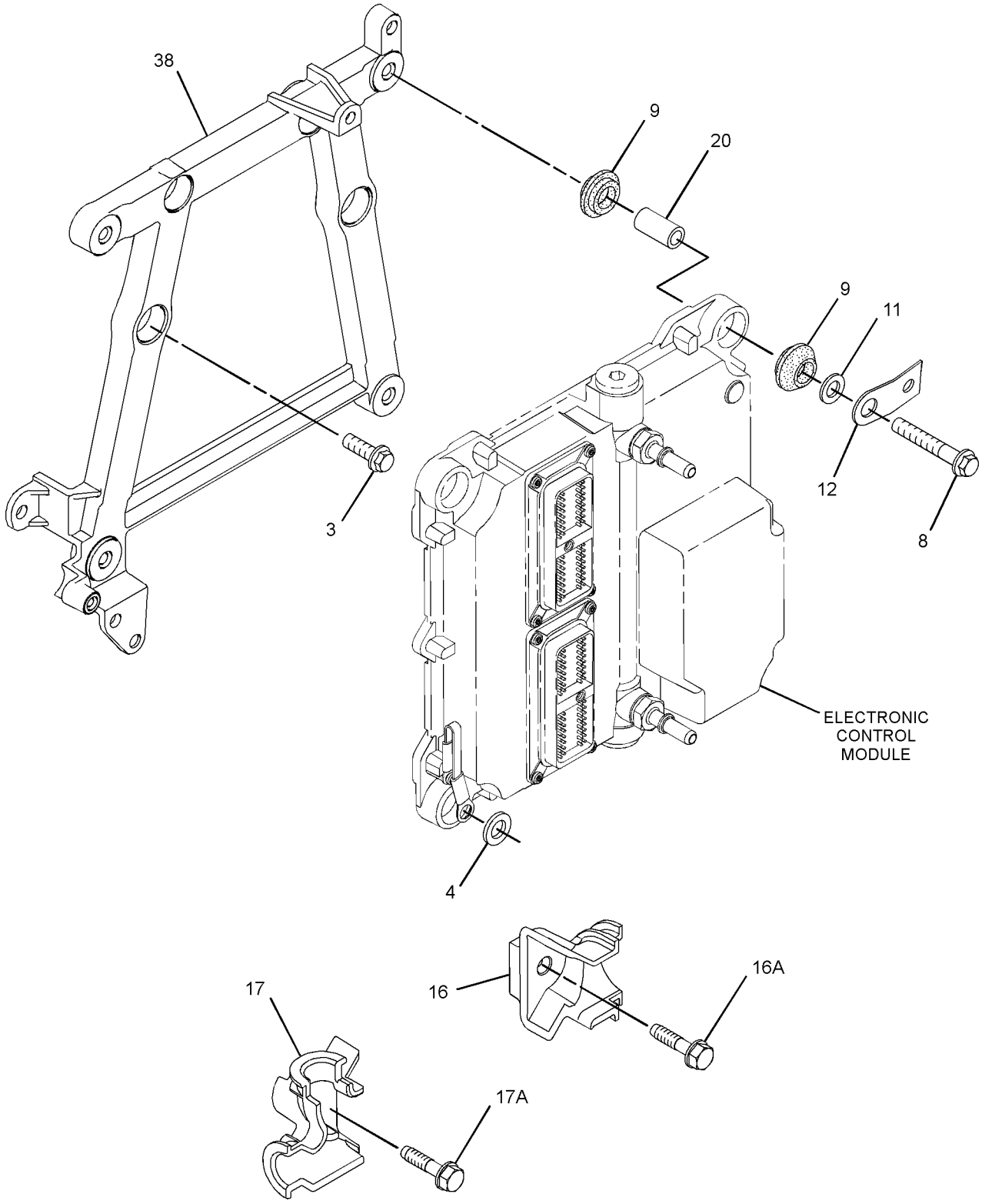

GRAPHIC #2 g01375784

305-2575 **PUMP GP-FUEL INJECTION (**contd.**)** **i06096434**

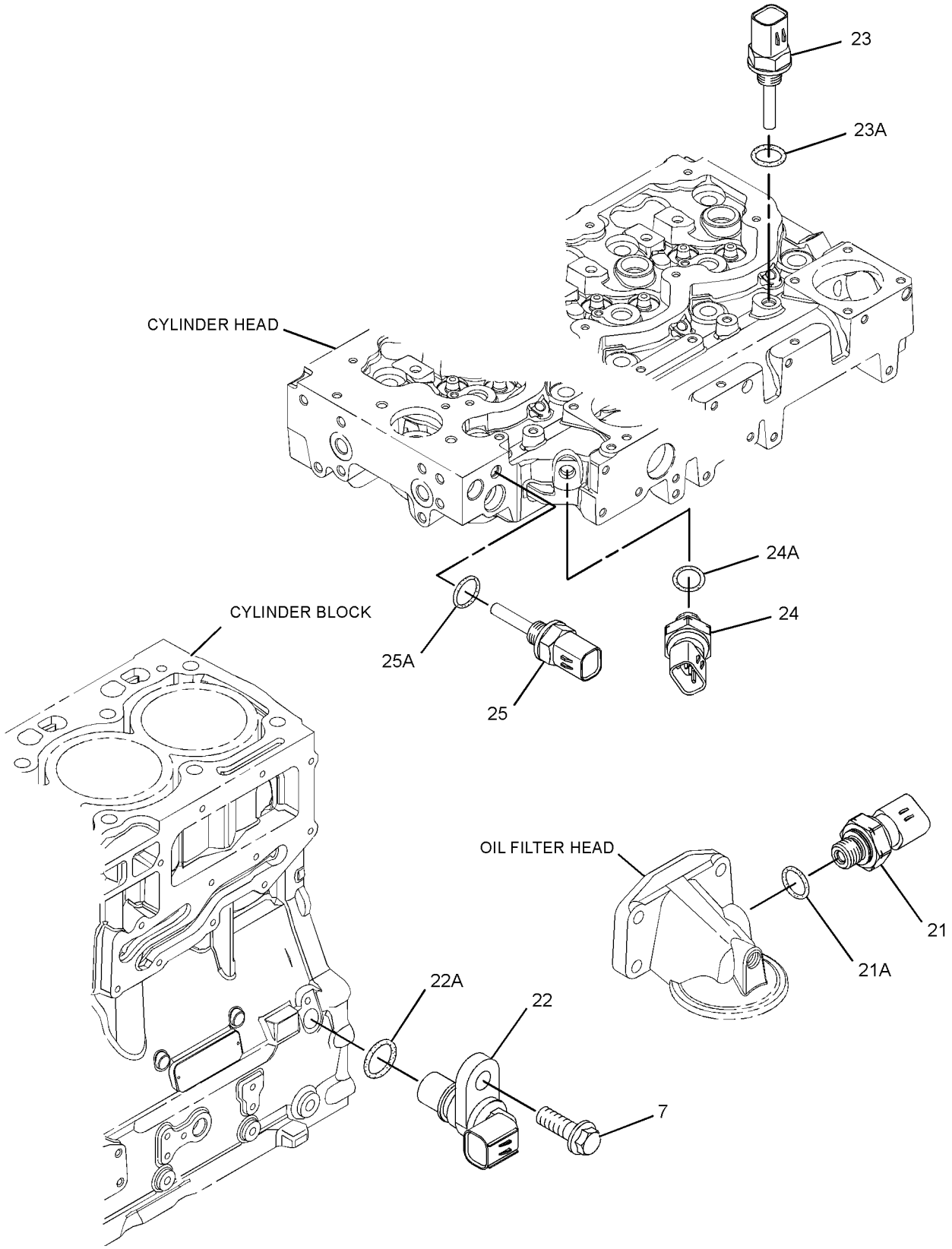

GRAPHIC #3 <END> g01374374

305-2575 PUMP GP-FUEL INJECTION

TYPE 2

SMCS-1251, 1290 **i06096437**

NOTE	REF NO	GRAPHIC REF	PART NUMBER	QTY	PART NAME 1 2 3 4 5 6 (PRODUCT LEVEL)	SEE PAGE
M	1	1	**6I-0260**	3	BOLT (M8X1.25X25-MM)	
M	2	1	**6I-0455**	3	BOLT (M8X1.25X55-MM)	
M	3	2	**6I-0572**	4	BOLT (M8X1.25X20-MM)	
	4	2	**7W-2632**	1	WASHER (8.5X16.8X1.6-MM THK)	
M	5	1	**100-4830**	1	BOLT (M10X1.5X20-MM)	
M	6	1	**101-3895**	4	BOLT (M8X1.25X35-MM)	
M	7	1,3	**124-3815**	4	BOLT (M8X1.25X16-MM)	
M	8	2	**141-8584**	4	BOLT (M8X1.25X50-MM)	
C	9	2	**300-6714**	8	MOUNT	
	10	1	**160-0162**	2	WASHER	
	11	2	**217-0099**	4	SPACER (8.2X25X2-MM THK)	
	12	2	**217-8477**	1	CLIP	
	13	1	**230-8989**	1	GEAR-FUEL PUMP (68-TEETH)	
	14	1	**232-3149**	6	WASHER (8.35X16.85X1.55-MM THK)	
	15	1	**308-8425**	1	RAIL AS-FUEL	
	16	2	**268-6677**	1	BRACKET AS	
M	16A	2	**260-3939**	1	SCREW-HEX HEAD (M6X1X25-MM)	
	17	2	**268-6678**	1	BRACKET AS	
M	17A	2	**260-3939**	1	SCREW-HEX HEAD (M6X1X25-MM)	
	18	1	**278-5168**	4	CLAMP-INJECTOR	
	19	1	**278-5170**	4	BOLT	
	20	2	**278-5203**	4	SPACER	
	21	3	**278-5225**	1	KIT-SENSOR (ENGINE OIL PRESSURE)	
	21A	3	**278-5226**	1	SEAL-O-RING	
C	22	3	**311-3858**	1	KIT-SENSOR (ENGINE SPEED)	
	22A	3	**274-1639**	1	SEAL	
	23	3	**278-5272**	1	KIT-SENSOR (AIR TEMPERATURE)	
	23A	3	**278-5226**	1	SEAL-O-RING	
	24	3	**278-5273**	1	KIT-SENSOR (ATMOSPHERIC PRESSURE)	
	24A	3	**199-9252**	1	SEAL-O-RING	
	25	3	**278-5307**	1	KIT-SENSOR (WATER TEMPERATURE)	
	25A	3	**199-9267**	1	SEAL-O-RING	
C	26	1	**311-6342**	1	SENSOR AS-PRESSURE (FUEL RAIL PRESSURE)	
	26A	1	**309-8006**	1	WASHER	
Y	27	1	**283-2271**	1	PUMP GP-FUEL INJECTION	1067
Y	28	1	**292-3780**	4	INJECTOR GP-FUEL	1021
	29	1	**298-4535**	1	BRACKET-SUPPORT	
	30	1	**298-4536**	1	BRACKET-MOUNTING	
	31	1	**298-4537**	1	TUBE AS	
	32	1	**298-4538**	1	TUBE AS (CYL NO. 1)	
	33	1	**298-4539**	1	TUBE AS (CYL NO. 2)	
	34	1	**298-4540**	1	TUBE AS (CYL NO. 3)	
	35	1	**298-4541**	1	TUBE AS (CYL NO. 4)	
	36	1	**298-4542**	1	TUBE AS	
	37	1	**298-4543**	1	BOLT	
	38	2	**308-3395**	1	BRACKET-MOUNTING	
F			**278-4138**	4	KIT-FUEL LINE PROTECTION	

305-2575 **PUMP GP-FUEL INJECTION (**contd.**)** **i06096437**

NOTE	REF NO	GRAPHIC REF	PART NUMBER	QTY	PART NAME 1 2 3 4 5 6 (PRODUCT LEVEL)	SEE PAGE

C - CHANGE FROM PREVIOUS TYPE
F - NOT SHOWN
M - METRIC PART
Y - SEPARATE ILLUSTRATION

305-2575 **PUMP GP-FUEL INJECTION (**contd.**)** **i06096437**

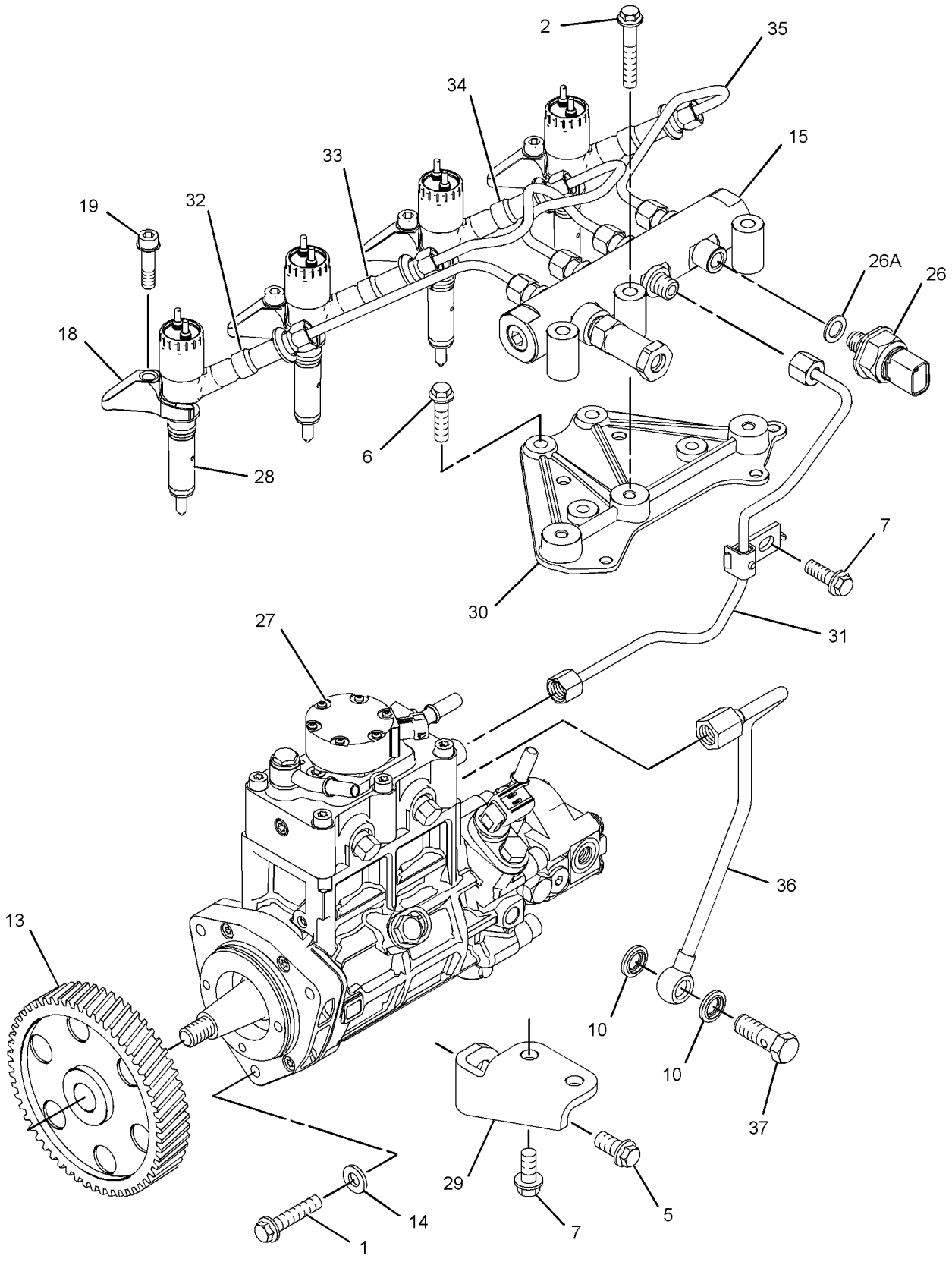

GRAPHIC #1 g01375172

305-2575 **PUMP GP-FUEL INJECTION (**contd.**)** **i06096437**

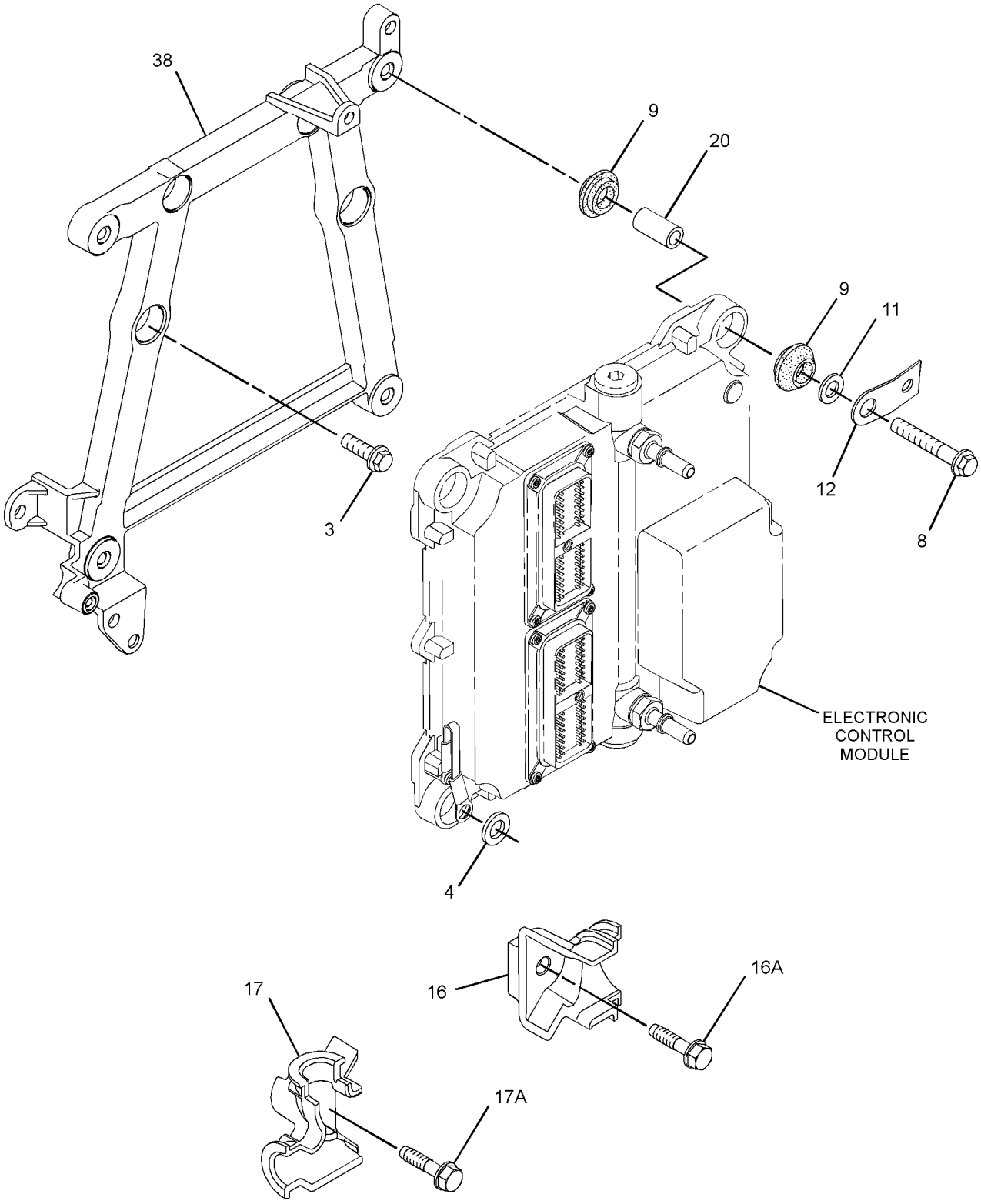

GRAPHIC #2 g01375784

305-2575 **PUMP GP-FUEL INJECTION (**contd.**)** **i06096437**

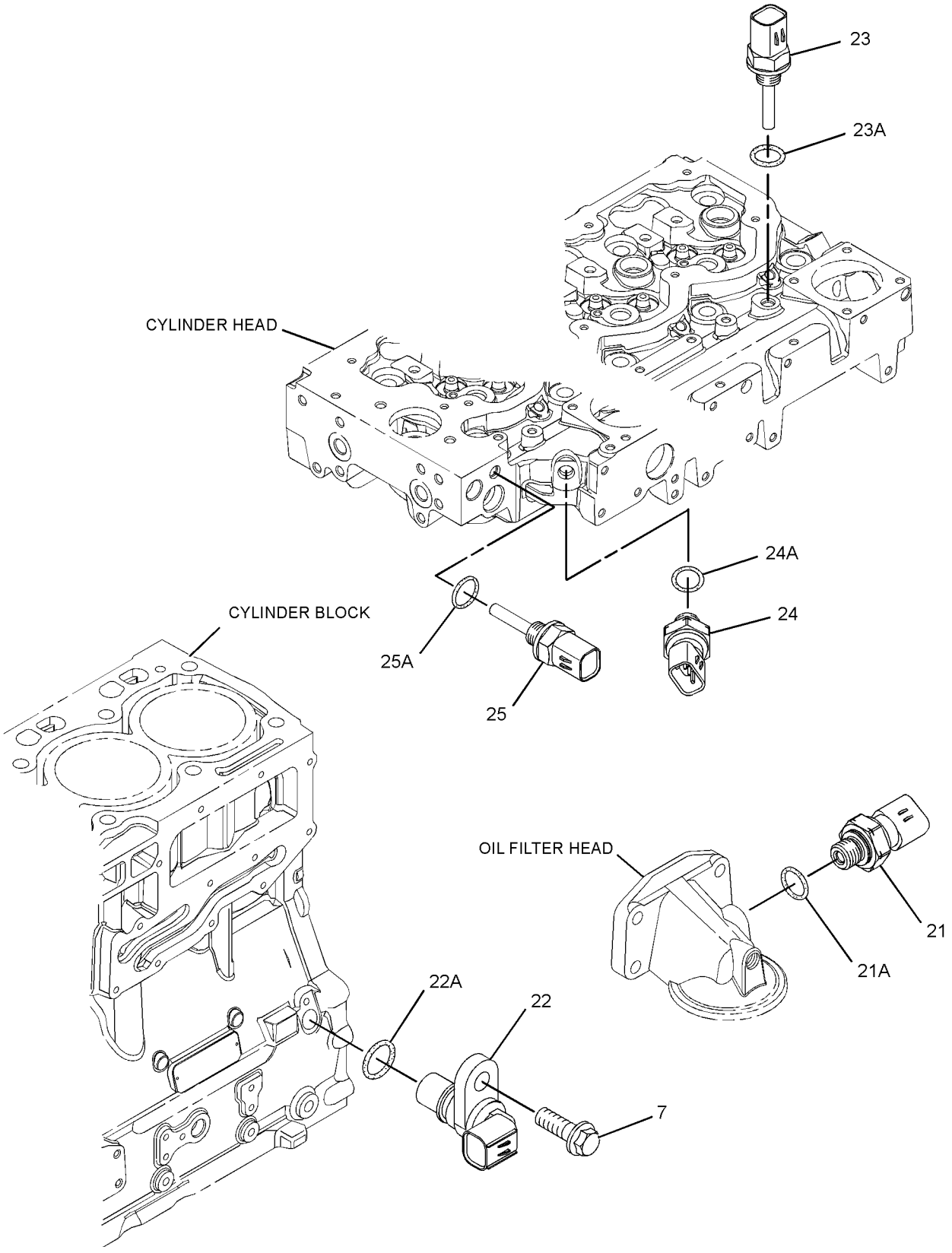

GRAPHIC #3 <END> g01374374

305-2575 PUMP GP-FUEL INJECTION

TYPE 3

SMCS-1251, 1290 **i06096439**

NOTE	REF NO	GRAPHIC REF	PART NUMBER	QTY	PART NAME 1 2 3 4 5 6 (PRODUCT LEVEL)	SEE PAGE
M	1	1	**6I-0260**	3	BOLT (M8X1.25X25-MM)	
M	2	1	**6I-0455**	3	BOLT (M8X1.25X55-MM)	
M	3	2	**6I-0572**	4	BOLT (M8X1.25X20-MM)	
	4	2	**7W-2632**	1	WASHER (8.5X16.8X1.6-MM THK)	
M	5	1	**100-4830**	1	BOLT (M10X1.5X20-MM)	
M	6	1	**101-3895**	4	BOLT (M8X1.25X35-MM)	
M	7	1,3	**124-3815**	4	BOLT (M8X1.25X16-MM)	
M	8	2	**141-8584**	4	BOLT (M8X1.25X50-MM)	
	9	2	**300-6714**	8	MOUNT	
C	10	1	**160-0162**	2	WASHER	
	11	2	**217-0099**	5	SPACER (8.2X25X2-MM THK)	
	13	1	**230-8989**	1	GEAR-FUEL PUMP (68-TEETH)	
C	14	1	**232-3149**	3	WASHER (8.35X16.85X1.55-MM THK)	
C	15	1	**318-2394**	1	RAIL AS-FUEL	
	15A	1	**305-5291**	1	VALVE AS-RELIEF	
	16	2	**268-6677**	1	BRACKET AS	
M	16A	2	**260-3939**	1	SCREW-HEX HEAD (M6X1X25-MM)	
	17	2	**268-6678**	1	BRACKET AS	
M	17A	2	**260-3939**	1	SCREW-HEX HEAD (M6X1X25-MM)	
	18	1	**278-5168**	4	CLAMP-INJECTOR	
	19	1	**278-5170**	4	BOLT	
	20	2	**278-5203**	4	SPACER	
	21	3	**278-5225**	1	KIT-SENSOR (ENGINE OIL PRESSURE)	
	21A	3	**199-9267**	1	SEAL-O-RING	
	22	3	**311-3858**	1	KIT-SENSOR (ENGINE SPEED)	
	22A	3	**274-1639**	1	SEAL	
	23	3	**278-5272**	1	KIT-SENSOR (AIR TEMPERATURE)	
	23A	3	**278-5226**	1	SEAL-O-RING	
	24	3	**278-5273**	1	KIT-SENSOR (ATMOSPHERIC PRESSURE)	
	24A	3	**199-9252**	1	SEAL-O-RING	
	25	3	**278-5307**	1	KIT-SENSOR (WATER TEMPERATURE)	
	25A	3	**199-9267**	1	SEAL-O-RING	
	26	1	**311-6342**	1	SENSOR AS-PRESSURE (FUEL RAIL PRESSURE)	
	26A	1	**309-8006**	1	WASHER	
CYR	27	1	**324-0532**	1	PUMP GP-FUEL INJECTION	1523
CYR	28	1	**320-0680**	4	INJECTOR GP-FUEL	1027
	29	1	**298-4535**	1	BRACKET-SUPPORT	
	30	1	**337-3573**	1	BRACKET	
	31	1	**337-3574**	1	TUBE	
	32	1	**322-3745**	1	TUBE (CYL NO. 1)	
	33	1	**322-3746**	1	TUBE (CYL NO. 2)	
	34	1	**333-4732**	1	LINE-FUEL INJECTION (CYL NO. 3)	
	35	1	**333-4733**	1	LINE-FUEL INJECTION (CYL NO. 4)	
	36	1	**298-4542**	1	TUBE AS	
	37	1	**298-4543**	1	BOLT	
C	38	2	**317-3144**	1	BRACKET	
F			**278-4138**	4	KIT-FUEL LINE PROTECTION	

305-2575 **PUMP GP-FUEL INJECTION** (contd.) **i06096439**

NOTE	REF NO	GRAPHIC REF	PART NUMBER	QTY	PART NAME 1 2 3 4 5 6 (PRODUCT LEVEL)	SEE PAGE

C - CHANGE FROM PREVIOUS TYPE
F - NOT SHOWN
M - METRIC PART
R - REMANUFACTURED PART MAY BE AVAILABLE
Y - SEPARATE ILLUSTRATION

305-2575 **PUMP GP-FUEL INJECTION (**contd.**)** **i06096439**

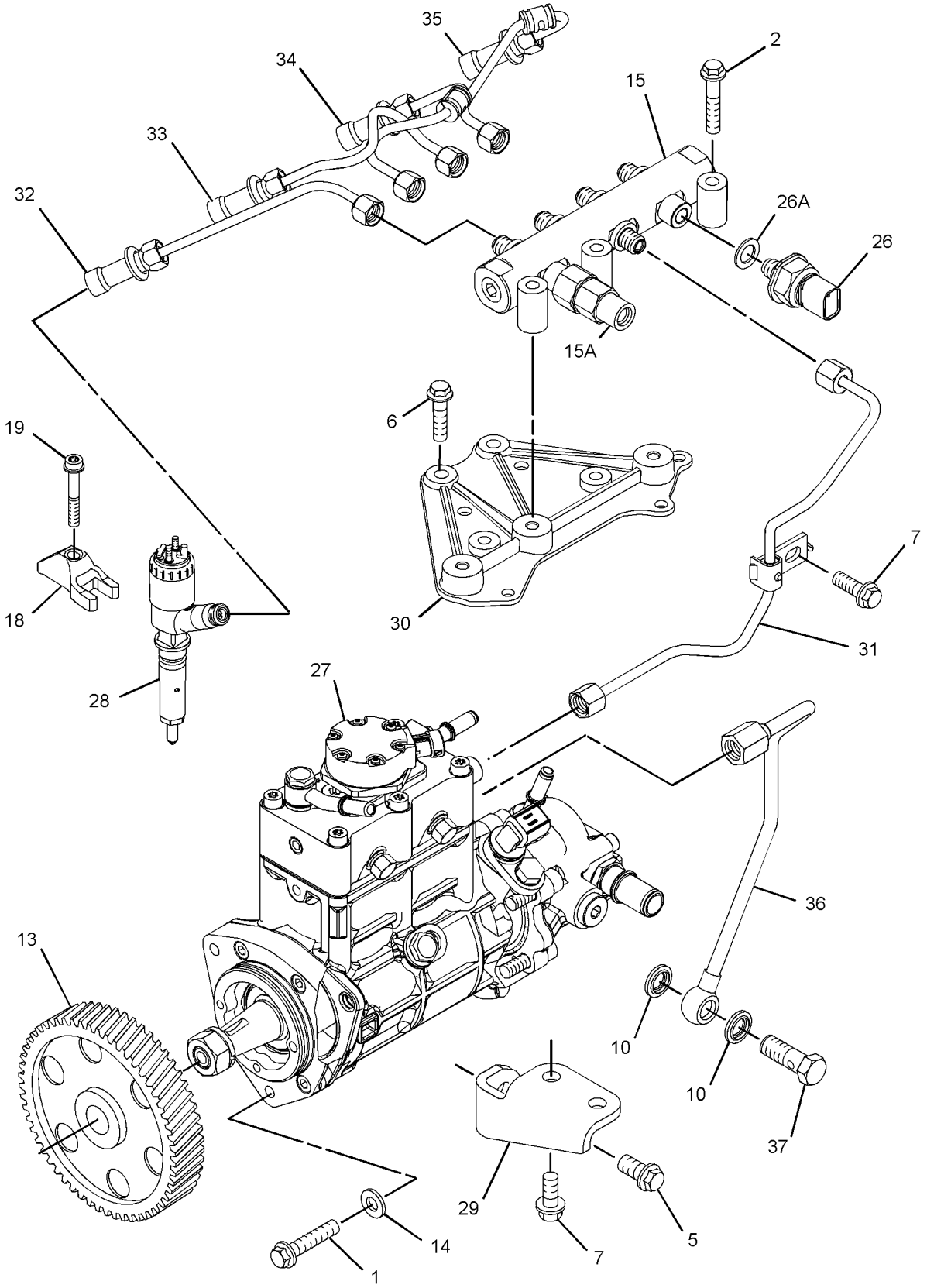

GRAPHIC #1 g01838615

305-2575 **PUMP GP-FUEL INJECTION (**contd.**)** **i06096439**

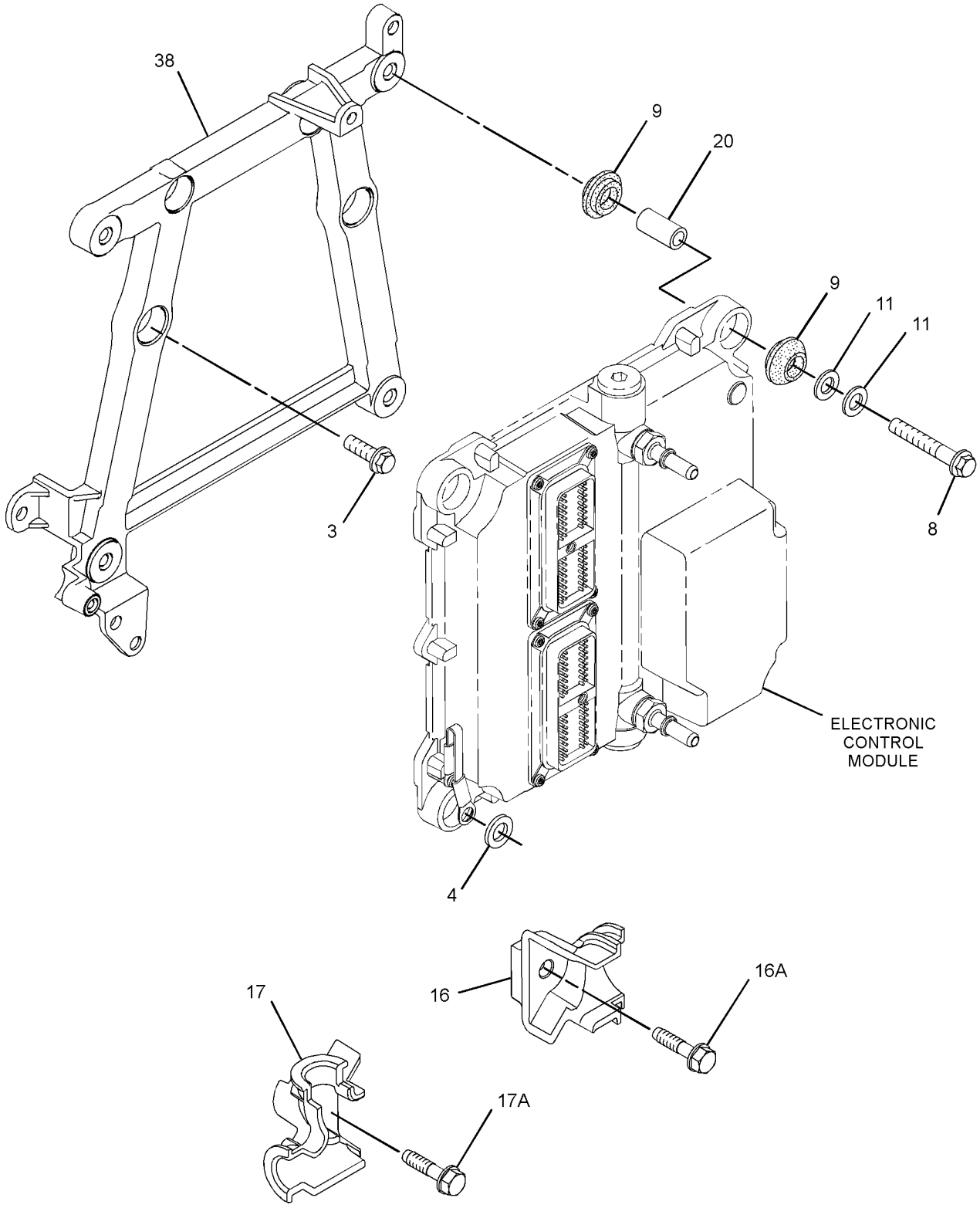

GRAPHIC #2 g01934215

305-2575 **PUMP GP-FUEL INJECTION (**contd.**)** **i06096439**

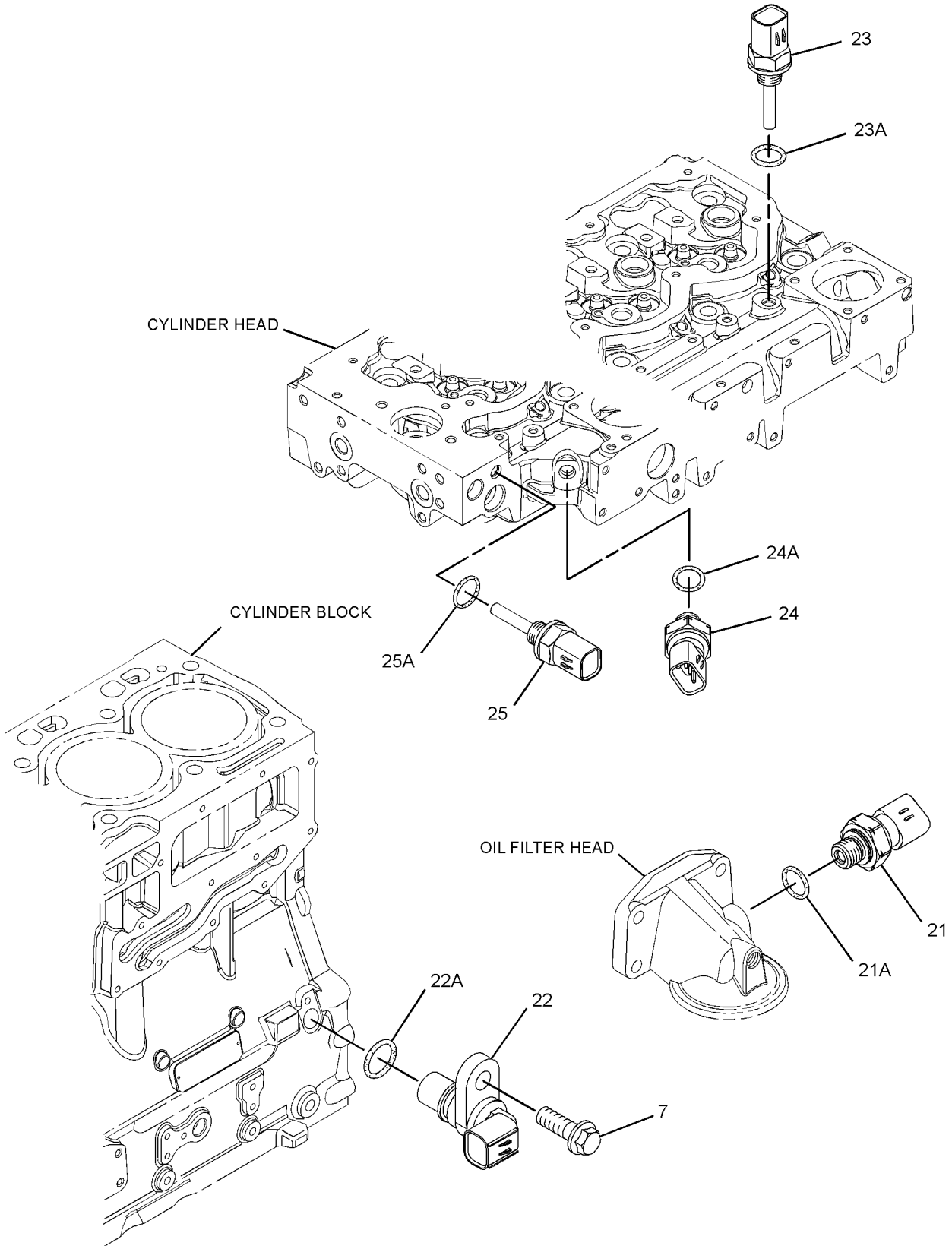

GRAPHIC #3 <END> g01374374

305-2575 PUMP GP-FUEL INJECTION

TYPE 4

SMCS-1251, 1290 **i06096449**

NOTE	REF NO	GRAPHIC REF	PART NUMBER	QTY	PART NAME 1 2 3 4 5 6 (PRODUCT LEVEL)	SEE PAGE
M	1	1	**6I-0260**	3	BOLT (M8X1.25X25-MM)	
M	2	1	**6I-0455**	3	BOLT (M8X1.25X55-MM)	
M	3	2	**6I-0572**	4	BOLT (M8X1.25X20-MM)	
	4	2	**7W-2632**	1	WASHER (8.5X16.8X1.6-MM THK)	
M	5	1	**100-4830**	1	BOLT (M10X1.5X20-MM)	
M	6	1	**101-3895**	4	BOLT (M8X1.25X35-MM)	
M	7	1,3	**124-3815**	4	BOLT (M8X1.25X16-MM)	
M	8	2	**141-8584**	4	BOLT (M8X1.25X50-MM)	
	9	2	**300-6714**	8	MOUNT	
	10	1	**160-0162**	2	WASHER	
	11	2	**217-0099**	5	SPACER (8.2X25X2-MM THK)	
	13	1	**230-8989**	1	GEAR-FUEL PUMP (68-TEETH)	
	14	1	**232-3149**	3	WASHER (8.35X16.85X1.55-MM THK)	
	15	1	**318-2394**	1	RAIL AS-FUEL	
	15A	1	**305-5291**	1	VALVE AS-RELIEF	
	16	2	**268-6677**	1	BRACKET AS	
M	16A	2	**260-3939**	1	SCREW-HEX HEAD (M6X1X25-MM)	
	17	2	**268-6678**	1	BRACKET AS	
M	17A	2	**260-3939**	1	SCREW-HEX HEAD (M6X1X25-MM)	
	18	1	**278-5168**	4	CLAMP-INJECTOR	
	19	1	**278-5170**	4	BOLT	
	20	2	**278-5203**	4	SPACER	
	21	3	**278-5225**	1	KIT-SENSOR (ENGINE OIL PRESSURE)	
	21A	3	**199-9267**	1	SEAL-O-RING	
	22	3	**311-3858**	1	KIT-SENSOR (ENGINE SPEED)	
	22A	3	**274-1639**	1	SEAL	
		3	**238-0120**	1	SENSOR GP-SPEED	
	23	3	**278-5272**	1	KIT-SENSOR (AIR TEMPERATURE)	
	23A	3	**278-5226**	1	SEAL-O-RING	
	24	3	**278-5273**	1	KIT-SENSOR (ATMOSPHERIC PRESSURE)	
	24A	3	**199-9252**	1	SEAL-O-RING	
	25	3	**278-5307**	1	KIT-SENSOR (WATER TEMPERATURE)	
	25A	3	**199-9267**	1	SEAL-O-RING	
	26	1	**311-6342**	1	SENSOR AS-PRESSURE (FUEL RAIL PRESSURE)	
	26A	1	**309-8006**	1	WASHER	
CYR	27	1	**352-6584**	1	PUMP GP-FUEL INJECTION	1540
YR	28	1	**320-0680**	4	INJECTOR GP-FUEL	1027
	29	1	**298-4535**	1	BRACKET-SUPPORT	
	30	1	**337-3573**	1	BRACKET	
	31	1	**337-3574**	1	TUBE	
	32	1	**322-3745**	1	TUBE (CYL NO. 1)	
	33	1	**322-3746**	1	TUBE (CYL NO. 2)	
	34	1	**333-4732**	1	LINE-FUEL INJECTION (CYL NO. 3)	
	35	1	**333-4733**	1	LINE-FUEL INJECTION (CYL NO. 4)	
	36	1	**298-4542**	1	TUBE AS	
	37	1	**298-4543**	1	BOLT	
	38	2	**317-3144**	1	BRACKET	

305-2575 **PUMP GP-FUEL INJECTION (**contd.**)** **i06096449**

NOTE	REF NO	GRAPHIC REF	PART NUMBER	QTY	PART NAME 1 2 3 4 5 6 (PRODUCT LEVEL)	SEE PAGE
F			**278-4138**	4	KIT-FUEL LINE PROTECTION	

C - CHANGE FROM PREVIOUS TYPE
F - NOT SHOWN
M - METRIC PART
R - REMANUFACTURED PART MAY BE AVAILABLE
Y - SEPARATE ILLUSTRATION

305-2575 **PUMP GP-FUEL INJECTION (**contd.**)** **i06096449**

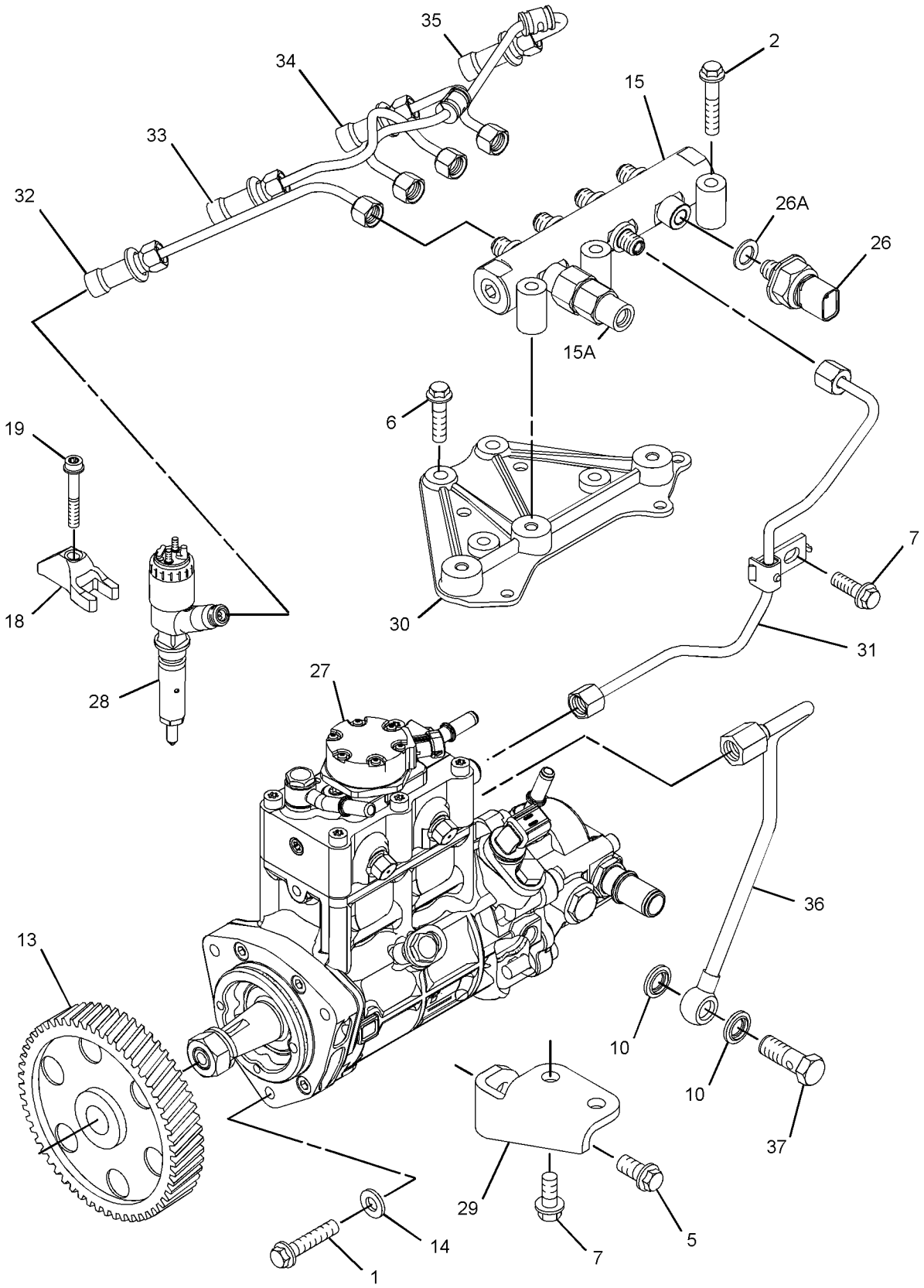

GRAPHIC #1 g02243235

305-2575 **PUMP GP-FUEL INJECTION (**contd.**)** **i06096449**

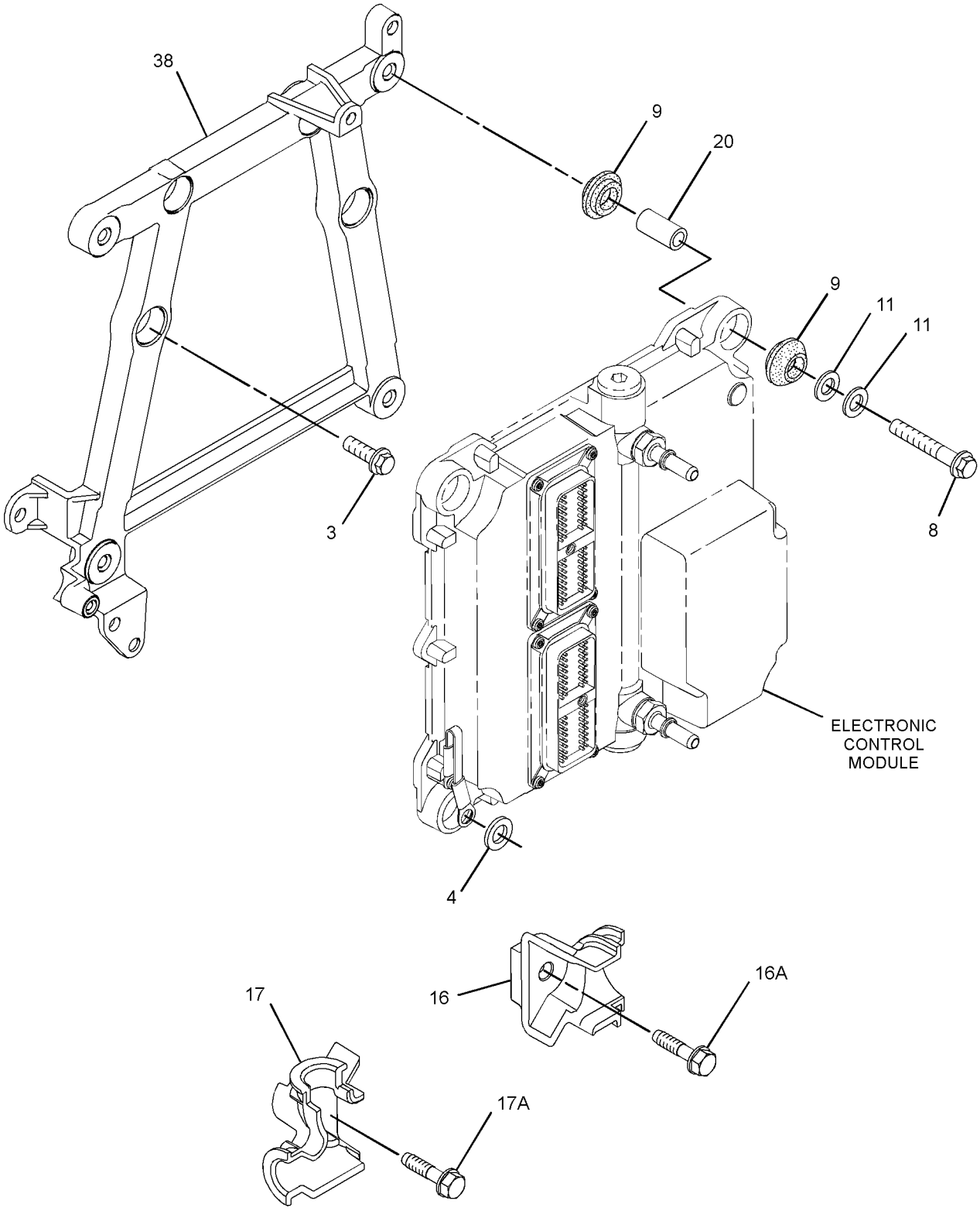

GRAPHIC #2 g01934215

305-2575 **PUMP GP-FUEL INJECTION (**contd.**)** **i06096449**

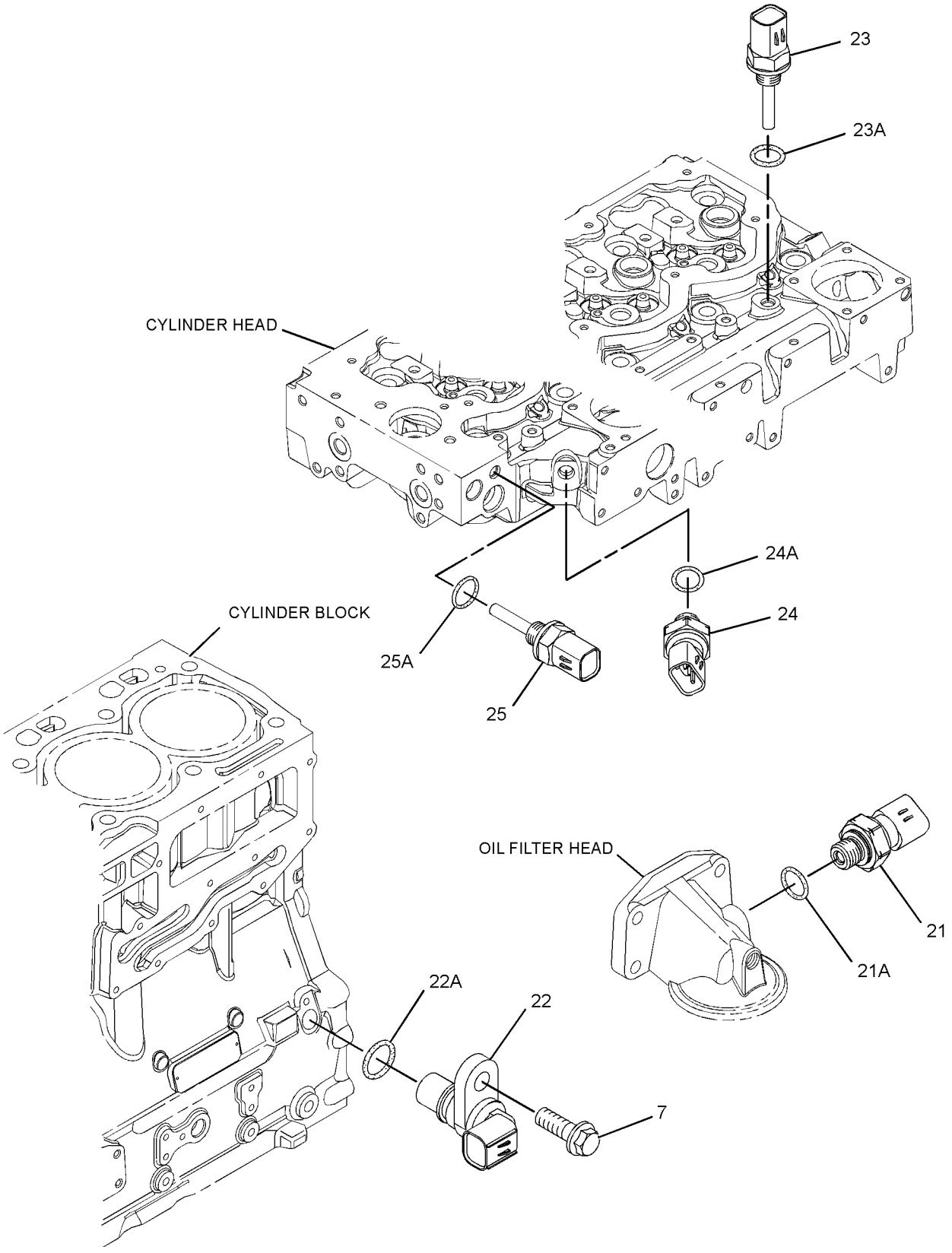

GRAPHIC #3 <END> g01374374

305-2575 PUMP GP-FUEL INJECTION

TYPE 5

SMCS-1251, 1290 **i06096450**

NOTE	REF NO	GRAPHIC REF	PART NUMBER	QTY	PART NAME 1 2 3 4 5 6 (PRODUCT LEVEL)	SEE PAGE
M	1	1	**6I-0260**	3	BOLT (M8X1.25X25-MM)	
M	2	1	**6I-0455**	3	BOLT (M8X1.25X55-MM)	
M	3	2	**6I-0572**	4	BOLT (M8X1.25X20-MM)	
	4	2	**7W-2632**	1	WASHER (8.5X16.8X1.6-MM THK)	
M	5	1	**100-4830**	1	BOLT (M10X1.5X20-MM)	
M	6	1	**101-3895**	4	BOLT (M8X1.25X35-MM)	
M	7	1,3	**124-3815**	4	BOLT (M8X1.25X16-MM)	
M	8	2	**141-8584**	4	BOLT (M8X1.25X50-MM)	
	9	2	**300-6714**	8	MOUNT	
	10	1	**346-0007**	2	WASHER	
	11	2	**217-0099**	5	SPACER (8.2X25X2-MM THK)	
	13	1	**230-8989**	1	GEAR-FUEL PUMP (68-TEETH)	
	14	1	**232-3149**	3	WASHER (8.35X16.85X1.55-MM THK)	
	15	1	**358-6632**	1	RAIL GP-FUEL	
	15A	1	**305-5291**	1	VALVE AS-RELIEF	
	16	2	**268-6677**	1	BRACKET AS	
M	16A	2	**260-3939**	1	SCREW-HEX HEAD (M6X1X25-MM)	
	17	2	**268-6678**	1	BRACKET AS	
M	17A	2	**260-3939**	1	SCREW-HEX HEAD (M6X1X25-MM)	
	18	1	**278-5168**	4	CLAMP-INJECTOR	
	19	1	**278-5170**	4	BOLT	
	20	2	**278-5203**	4	SPACER	
	21	3	**278-5225**	1	KIT-SENSOR (ENGINE OIL PRESSURE)	
	21A	3	**199-9267**	1	SEAL-O-RING	
	22	3	**311-3858**	1	KIT-SENSOR (ENGINE SPEED)	
	22A	3	**274-1639**	1	SEAL	
		3	**238-0120**	1	SENSOR GP-SPEED	
	23	3	**278-5272**	1	KIT-SENSOR (AIR TEMPERATURE)	
	23A	3	**278-5226**	1	SEAL-O-RING	
	24	3	**278-5273**	1	KIT-SENSOR (ATMOSPHERIC PRESSURE)	
	24A	3	**199-9252**	1	SEAL-O-RING	
	25	3	**278-5307**	1	KIT-SENSOR (WATER TEMPERATURE)	
	25A	3	**199-9267**	1	SEAL-O-RING	
	26	1	**311-6342**	1	SENSOR AS-PRESSURE (FUEL RAIL PRESSURE)	
	26A	1	**309-8006**	1	WASHER	
CYR	27	1	**324-0532**	1	PUMP GP-FUEL INJECTION	1523
YR	28	1	**320-0680**	4	INJECTOR GP-FUEL	1027
	29	1	**298-4535**	1	BRACKET-SUPPORT	
	30	1	**337-3573**	1	BRACKET	
	31	1	**337-3574**	1	TUBE	
	32	1	**322-3745**	1	TUBE (CYL NO. 1)	
	33	1	**322-3746**	1	TUBE (CYL NO. 2)	
	34	1	**333-4732**	1	LINE-FUEL INJECTION (CYL NO. 3)	
	35	1	**333-4733**	1	LINE-FUEL INJECTION (CYL NO. 4)	
	36	1	**298-4542**	1	TUBE AS	
	37	1	**363-3908**	1	BOLT-SPECIAL	
	38	2	**317-3144**	1	BRACKET	

305-2575 **PUMP GP-FUEL INJECTION** (contd.) **i06096450**

NOTE	REF NO	GRAPHIC REF	PART NUMBER	QTY	PART NAME 1 2 3 4 5 6 (PRODUCT LEVEL)	SEE PAGE
F			**278-4138**	4	KIT-FUEL LINE PROTECTION	

C - CHANGE FROM PREVIOUS TYPE
F - NOT SHOWN
M - METRIC PART
R - REMANUFACTURED PART MAY BE AVAILABLE
Y - SEPARATE ILLUSTRATION

305-2575 **PUMP GP-FUEL INJECTION (**contd.**)** **i06096450**

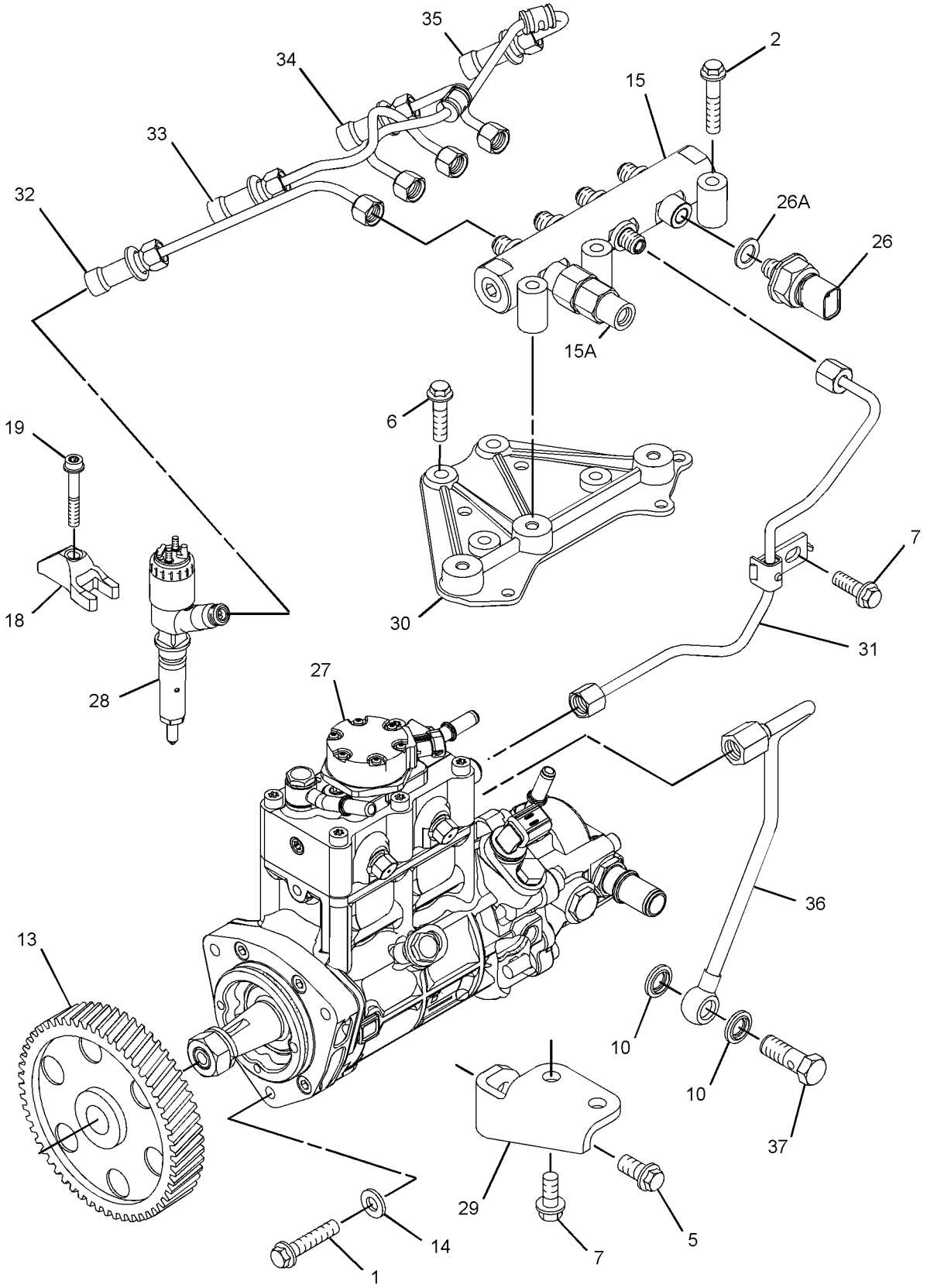

GRAPHIC #1 g02243235

305-2575 **PUMP GP-FUEL INJECTION (**contd.**)** **i06096450**

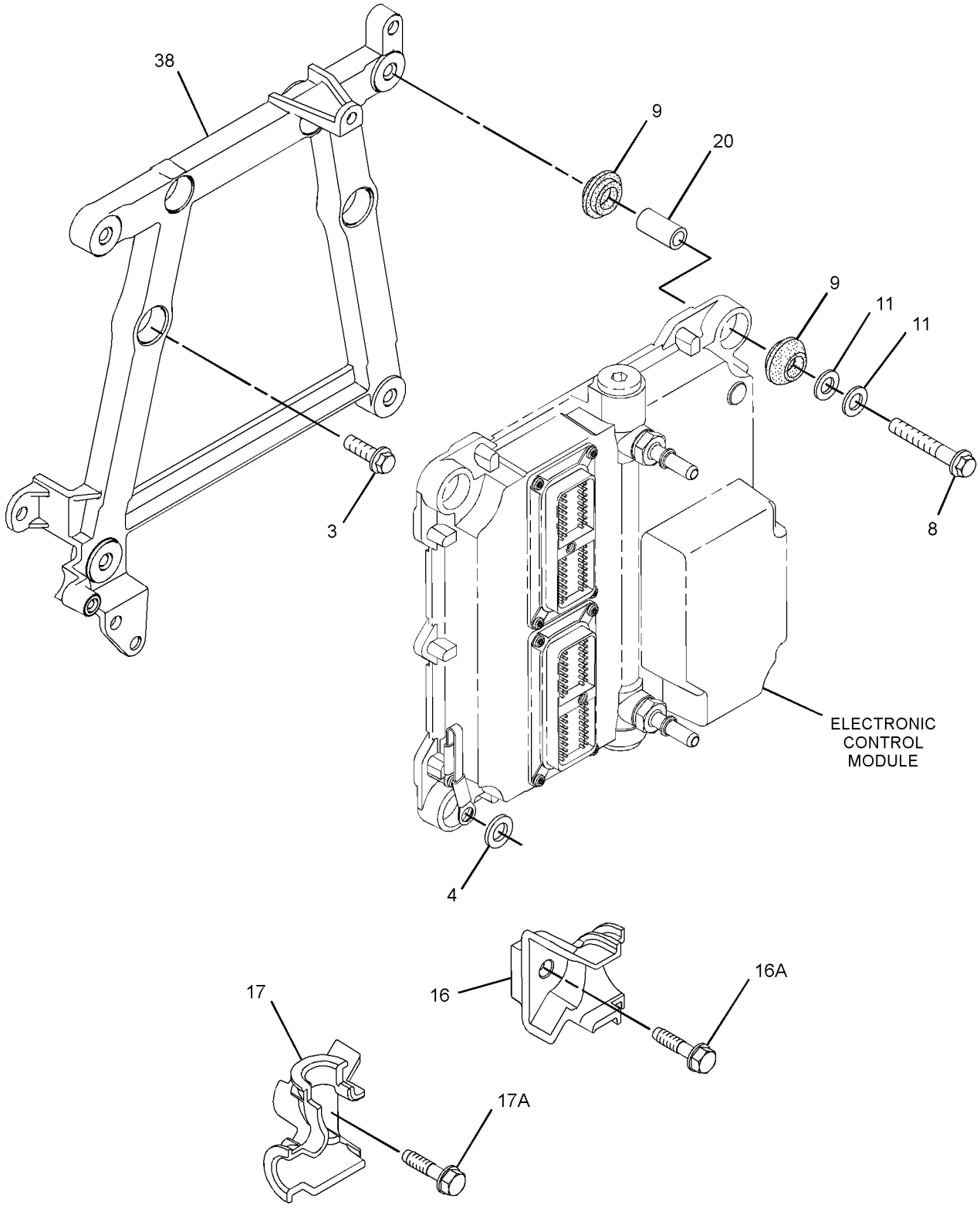

GRAPHIC #2 g01934215

305-2575 **PUMP GP-FUEL INJECTION (**contd.**)** **i06096450**

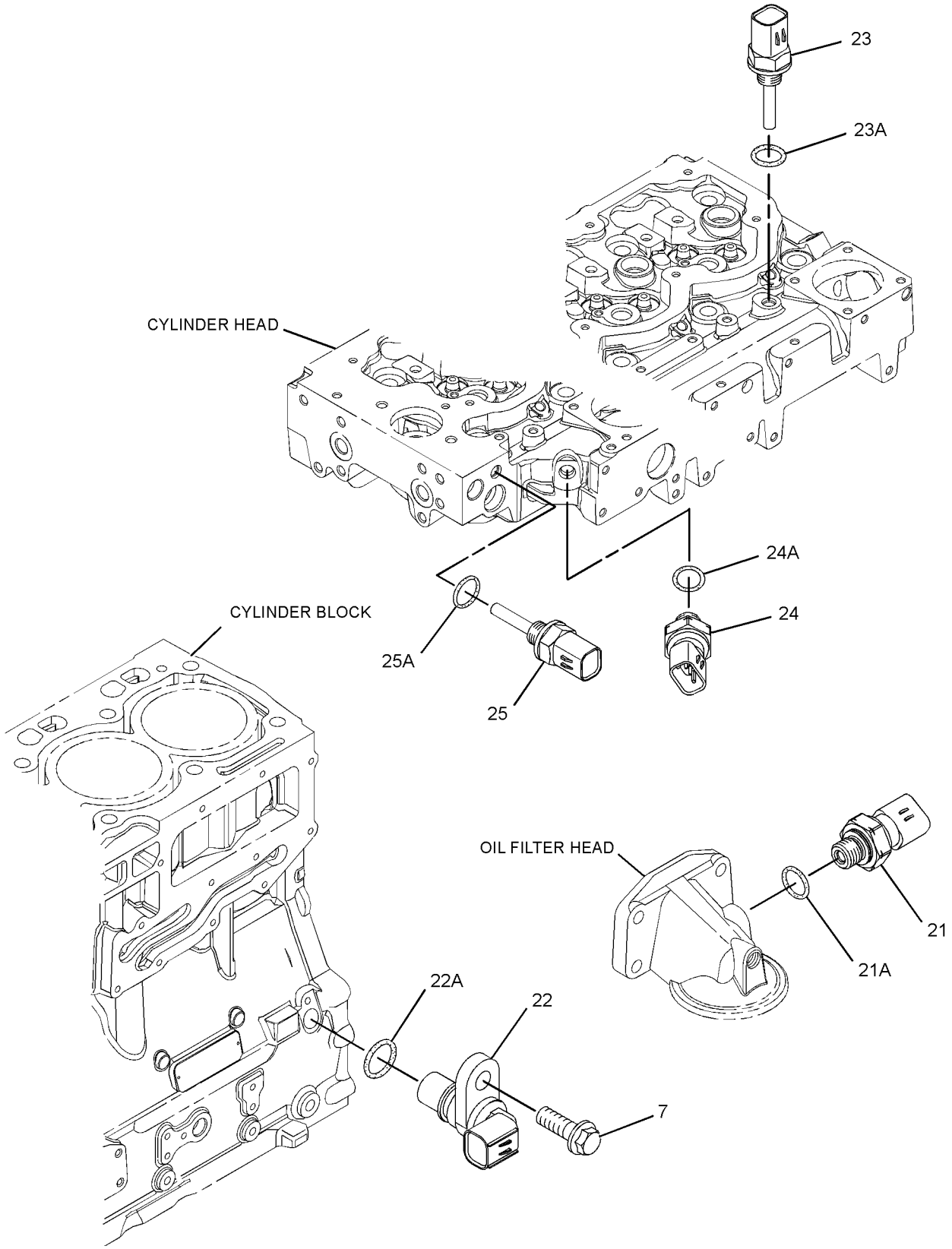

GRAPHIC #3 <END> g01374374

305-6701 PUMP GP-FUEL INJECTION

PART OF 437-5409 ENGINE AR-PRIMARY

TYPE 1

SMCS-1251, 1290 **i02883011**

NOTE	REF NO	GRAPHIC REF	PART NUMBER	QTY	PART NAME 1 2 3 4 5 6 (PRODUCT LEVEL)	SEE PAGE
M	1	1	**6I-0260**	3	BOLT (M8X1.25X25-MM)	
M	2	1	**6I-0455**	3	BOLT (M8X1.25X55-MM)	
M	3	2	**6I-0572**	4	BOLT (M8X1.25X20-MM)	
	4	2	**7W-2632**	1	WASHER (8.5X16.8X1.6-MM THK)	
M	5	1	**100-4830**	1	BOLT (M10X1.5X20-MM)	
M	6	1	**101-3895**	4	BOLT (M8X1.25X35-MM)	
M	7	1,3	**124-3815**	4	BOLT (M8X1.25X16-MM)	
M	8	2	**141-8584**	4	BOLT (M8X1.25X50-MM)	
	9	2	**300-6714**	8	MOUNT	
	10	1	**160-0162**	2	WASHER	
	11	2	**217-0099**	4	SPACER (8.2X25X2-MM THK)	
	12	2	**217-8477**	1	CLIP	
	13	1	**230-8989**	1	GEAR-FUEL PUMP (68-TEETH)	
	14	1	**232-3149**	6	WASHER (8.35X16.85X1.55-MM THK)	
	15	1	**308-8425**	1	RAIL AS-FUEL	
	16	2	**268-6677**	1	BRACKET AS	
		2	**260-3718**	1	BRACKET	
M	16A	2	**260-3939**	1	SCREW-HEX HEAD (M6X1X25-MM)	
	17	2	**268-6678**	1	BRACKET AS	
		2	**260-3719**	1	BRACKET	
M	17A	2	**260-3939**	1	SCREW-HEX HEAD (M6X1X25-MM)	
	18	1	**278-5168**	4	CLAMP-INJECTOR	
	19	1	**278-5170**	4	BOLT	
	20	2	**278-5203**	4	SPACER	
	21	3	**278-5225**	1	KIT-SENSOR (ENGINE OIL PRESSURE)	
	21A	3	**199-9267**	1	SEAL-O-RING	
	22	3	**311-3858**	1	KIT-SENSOR (ENGINE SPEED)	
		3	**238-0120**	1	SENSOR GP-SPEED	
	22A	3	**274-1639**	1	SEAL	
	23	3	**278-5272**	1	KIT-SENSOR (INTAKE AIR TEMPERATURE)	
	23A	3	**278-5226**	1	SEAL-O-RING	
	24	3	**278-5273**	1	KIT-SENSOR (AIR PRESSURE)	
	24A	3	**199-9252**	1	SEAL-O-RING	
	25	3	**278-5307**	1	KIT-SENSOR (COOLANT TEMPERATURE)	
	25A	3	**199-9267**	1	SEAL-O-RING	
	26	1	**311-6342**	1	SENSOR AS-PRESSURE (FUEL RAIL PRESSURE)	
	26A	1	**309-8006**	1	WASHER	
Y	27	1	**283-2271**	1	PUMP GP-FUEL INJECTION	1067
Y	28	1	**292-3780**	4	INJECTOR GP-FUEL	1021
	29	1	**298-4535**	1	BRACKET-SUPPORT	
	30	1	**298-4536**	1	BRACKET-MOUNTING	
	31	1	**298-4537**	1	TUBE AS	
	32	1	**298-4538**	1	TUBE AS (CYL NO. 1)	
	33	1	**298-4539**	1	TUBE AS (CYL NO. 2)	
	34	1	**298-4540**	1	TUBE AS (CYL NO. 3)	
	35	1	**298-4541**	1	TUBE AS (CYL NO. 4)	
	36	1	**298-4542**	1	TUBE AS	

305-6701 **PUMP GP-FUEL INJECTION (**contd.**)** **i02883011**

NOTE	REF NO	GRAPHIC REF	PART NUMBER	QTY	PART NAME 1 2 3 4 5 6 (PRODUCT LEVEL)	SEE PAGE
	37	1	**298-4543**	1	BOLT	
	38	2	**308-3395**	1	BRACKET-MOUNTING	
F			**278-4138**	4	KIT-FUEL LINE PROTECTION	

F - NOT SHOWN
M - METRIC PART
Y - SEPARATE ILLUSTRATION

305-6701 **PUMP GP-FUEL INJECTION (**contd.**)** **i02883011**

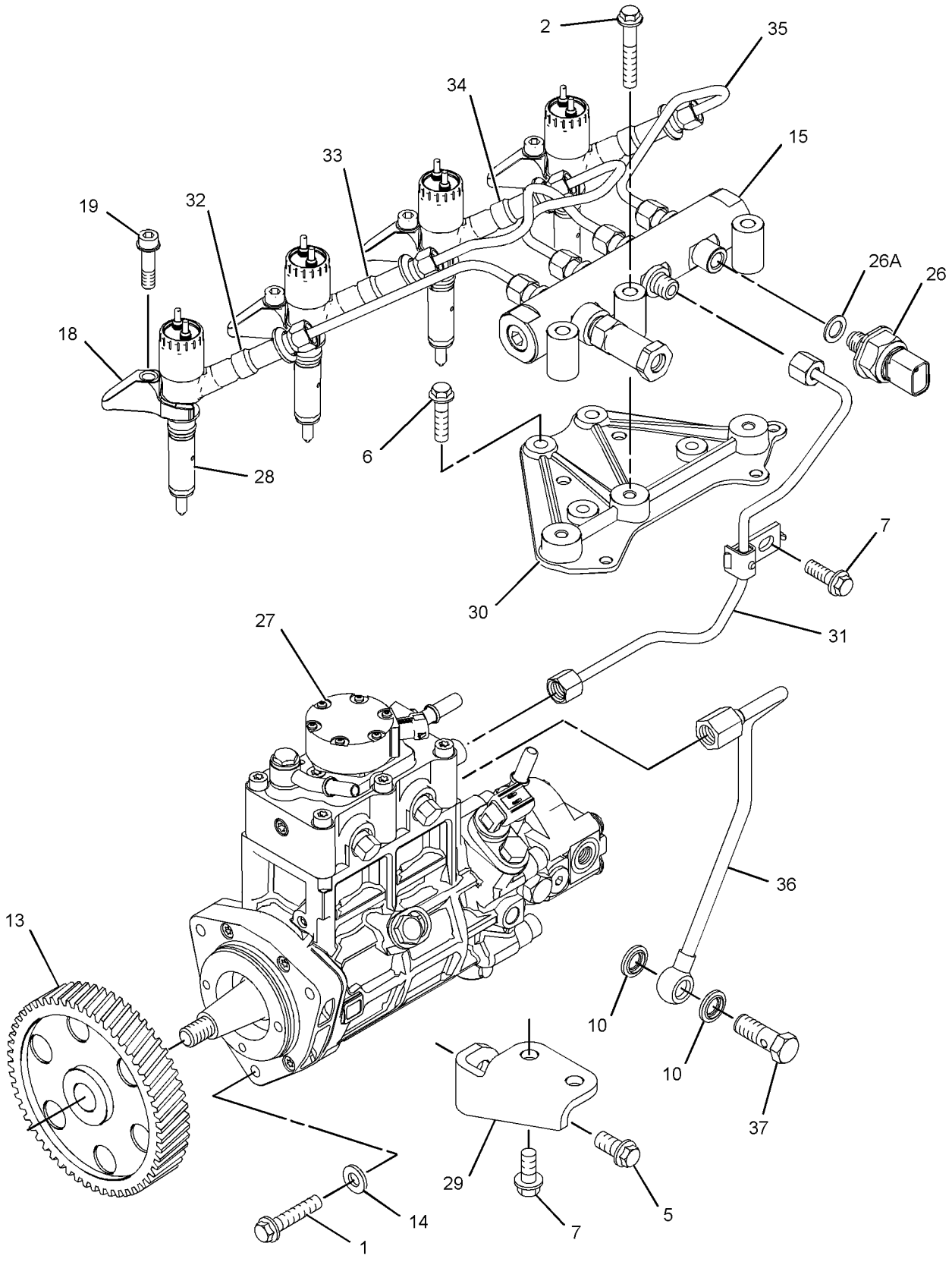

GRAPHIC #1 g01374372

305-6701 **PUMP GP-FUEL INJECTION (**contd.**)** **i02883011**

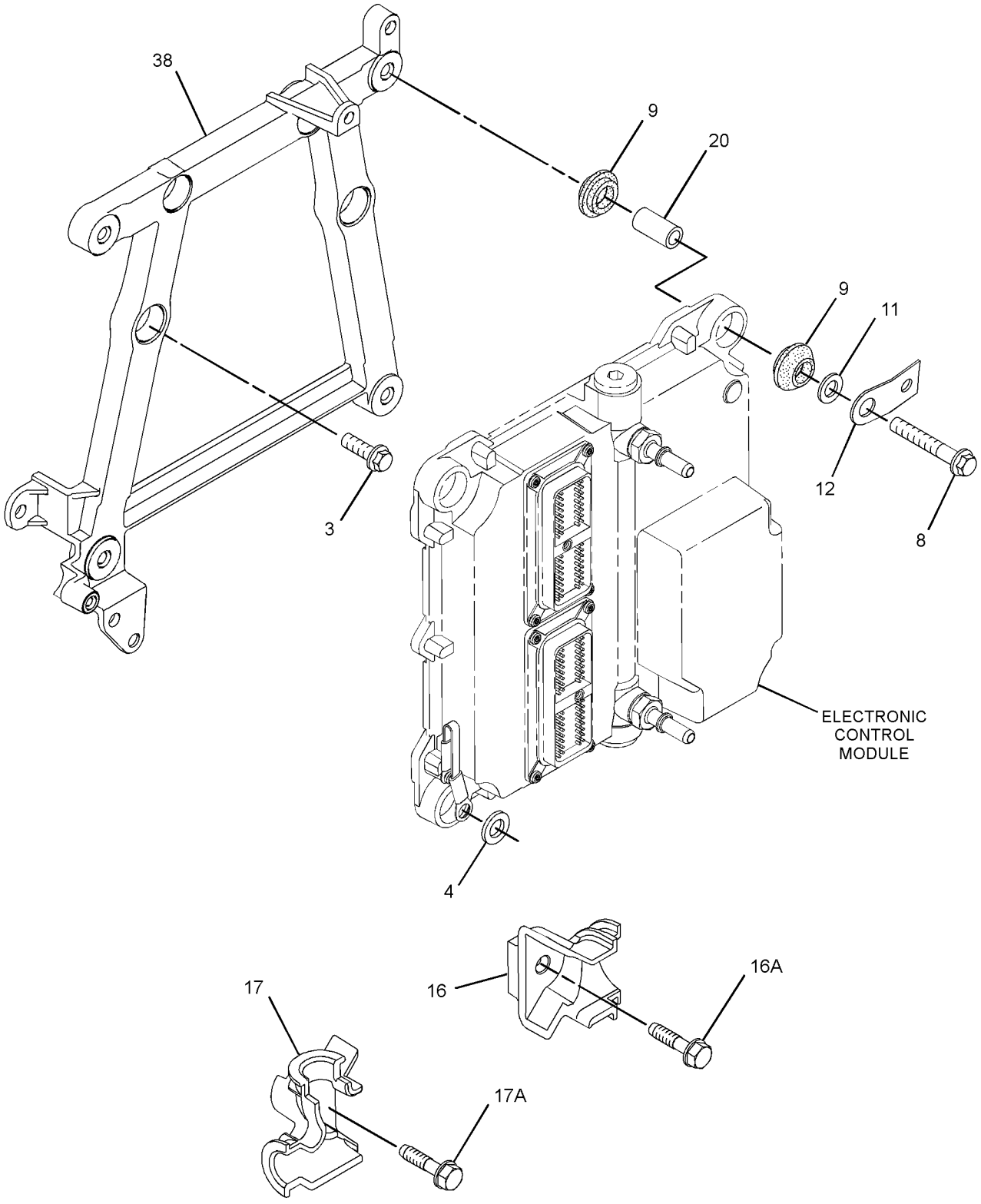

GRAPHIC #2 g01425669

305-6701 **PUMP GP-FUEL INJECTION (**contd.**)** **i02883011**

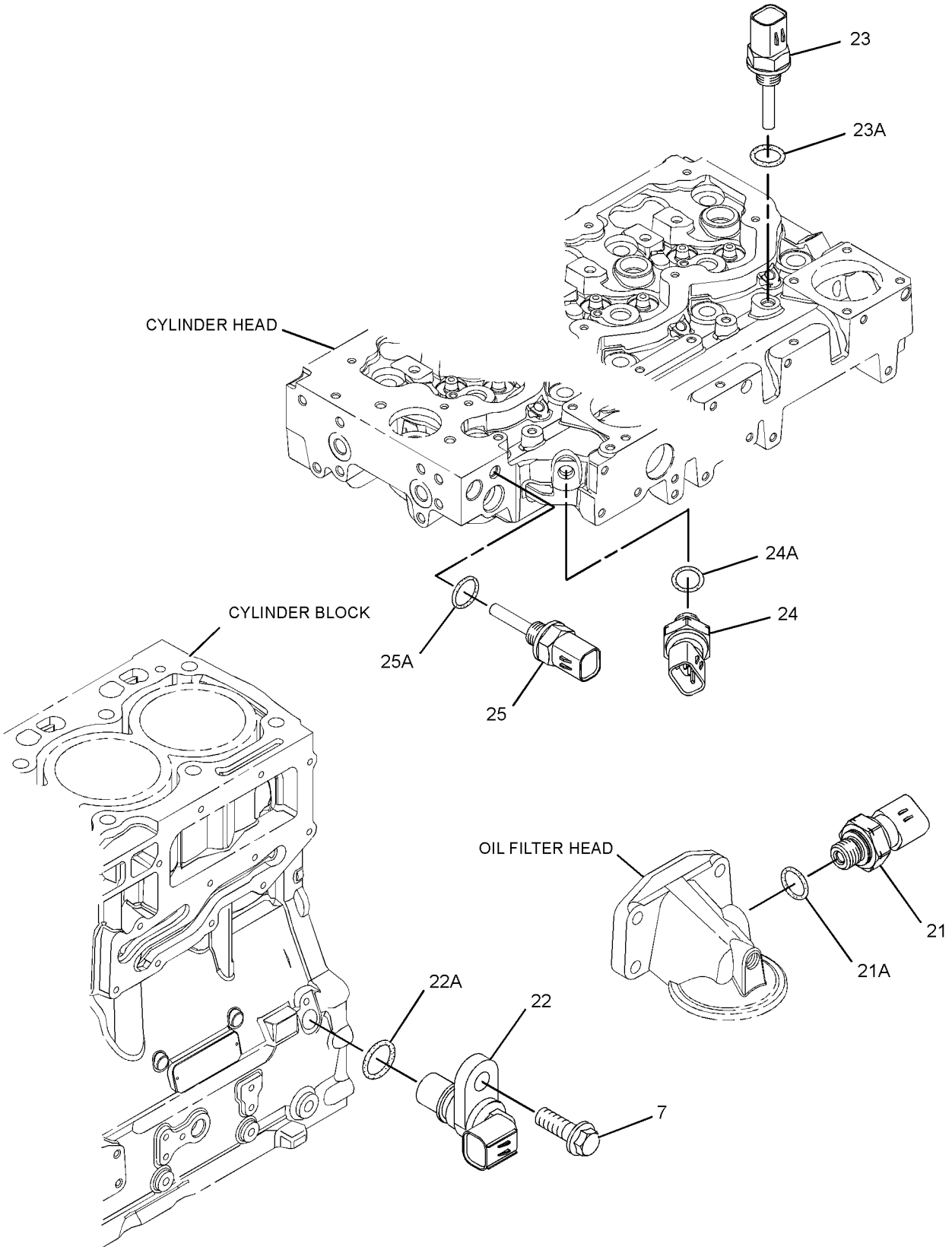

GRAPHIC #3 <END> g01374374

305-6701 PUMP GP-FUEL INJECTION

PART OF 437-5409 ENGINE AR-PRIMARY

TYPE 2

SMCS-1251, 1290 **i03730842**

NOTE	REF NO	GRAPHIC REF	PART NUMBER	QTY	PART NAME 1 2 3 4 5 6 (PRODUCT LEVEL)	SEE PAGE
M	1	1	**6I-0260**	3	BOLT (M8X1.25X25-MM)	
M	2	1	**6I-0455**	3	BOLT (M8X1.25X55-MM)	
M	3	2	**6I-0572**	4	BOLT (M8X1.25X20-MM)	
	4	2	**7W-2632**	1	WASHER (8.5X16.8X1.6-MM THK)	
M	5	1	**100-4830**	1	BOLT (M10X1.5X20-MM)	
M	6	1	**101-3895**	4	BOLT (M8X1.25X35-MM)	
M	7	1,3	**124-3815**	4	BOLT (M8X1.25X16-MM)	
M	8	2	**141-8584**	4	BOLT (M8X1.25X50-MM)	
	9	2	**300-6714**	8	MOUNT	
C	10	1	**160-0162**	2	WASHER	
	11	2	**217-0099**	5	SPACER (8.2X25X2-MM THK)	
	13	1	**230-8989**	1	GEAR-FUEL PUMP (68-TEETH)	
	14	1	**232-3149**	3	WASHER (8.35X16.85X1.55-MM THK)	
C	15	1	**318-2394**	1	RAIL AS-FUEL	
	15A	1	**305-5291**	1	VALVE AS-RELIEF	
	16	2	**268-6677**	1	BRACKET AS	
M	16A	2	**260-3939**	1	SCREW-HEX HEAD (M6X1X25-MM)	
	17	2	**268-6678**	1	BRACKET AS	
M	17A	2	**260-3939**	1	SCREW-HEX HEAD (M6X1X25-MM)	
	18	1	**278-5168**	4	CLAMP-INJECTOR	
	19	1	**278-5170**	4	BOLT	
	20	2	**278-5203**	4	SPACER	
	21	3	**278-5225**	1	KIT-SENSOR (ENGINE OIL PRESSURE)	
	21A	3	**199-9267**	1	SEAL-O-RING	
	22	3	**311-3858**	1	KIT-SENSOR (ENGINE SPEED)	
	22A	3	**274-1639**	1	SEAL	
	23	3	**278-5272**	1	KIT-SENSOR (INTAKE AIR TEMPERATURE)	
	23A	3	**278-5226**	1	SEAL-O-RING	
	24	3	**278-5273**	1	KIT-SENSOR (AIR PRESSURE)	
	24A	3	**199-9252**	1	SEAL-O-RING	
	25	3	**278-5307**	1	KIT-SENSOR (COOLANT TEMPERATURE)	
	25A	3	**199-9267**	1	SEAL-O-RING	
	26	1	**311-6342**	1	SENSOR AS-PRESSURE (FUEL RAIL PRESSURE)	
	26A	1	**309-8006**	1	WASHER	
YR	27	1	**324-0532**	1	PUMP GP-FUEL INJECTION	1523
CYR	28	1	**320-0680**	4	INJECTOR GP-FUEL	1027
	29	1	**298-4535**	1	BRACKET-SUPPORT	
	30	1	**337-3573**	1	BRACKET	
	31	1	**337-3574**	1	TUBE	
	32	1	**322-3745**	1	TUBE (CYL NO. 1)	
	33	1	**322-3746**	1	TUBE (CYL NO. 2)	
	34	1	**333-4732**	1	LINE-FUEL INJECTION (CYL NO. 3)	
	35	1	**333-4733**	1	LINE-FUEL INJECTION (CYL NO. 4)	
	36	1	**298-4542**	1	TUBE AS	
	37	1	**298-4543**	1	BOLT	
	38	2	**317-3144**	1	BRACKET	

305-6701 **PUMP GP-FUEL INJECTION** (contd.) **i03730842**

NOTE	REF NO	GRAPHIC REF	PART NUMBER	QTY	PART NAME 1 2 3 4 5 6 (PRODUCT LEVEL)	SEE PAGE
F			**278-4138**	4	KIT-FUEL LINE PROTECTION	

C - CHANGE FROM PREVIOUS TYPE
F - NOT SHOWN
M - METRIC PART
R - REMANUFACTURED PART MAY BE AVAILABLE
Y - SEPARATE ILLUSTRATION

305-6701 **PUMP GP-FUEL INJECTION (**contd.**)** **i03730842**

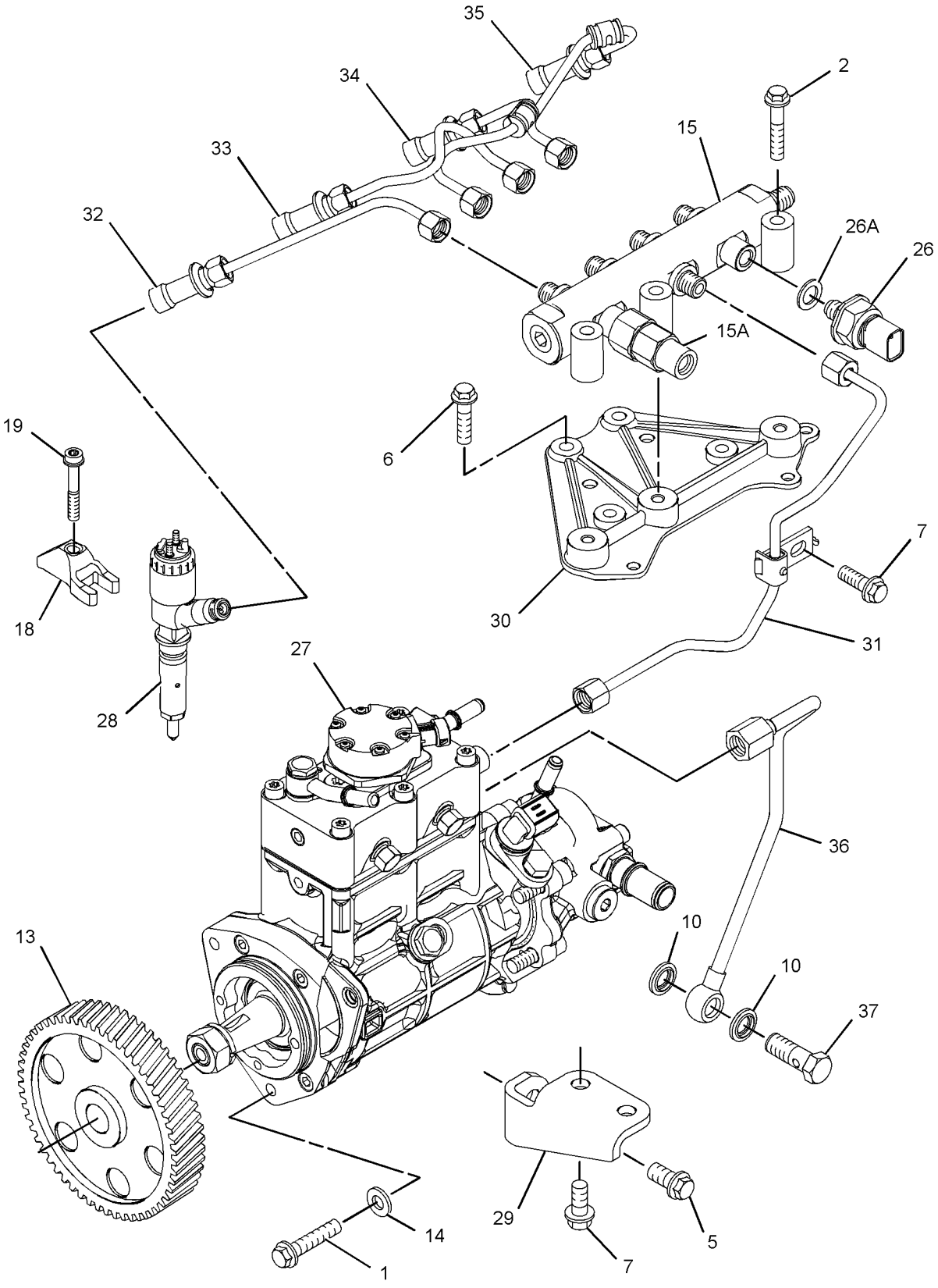

GRAPHIC #1 g01944084

305-6701 **PUMP GP-FUEL INJECTION (**contd.**)** **i03730842**

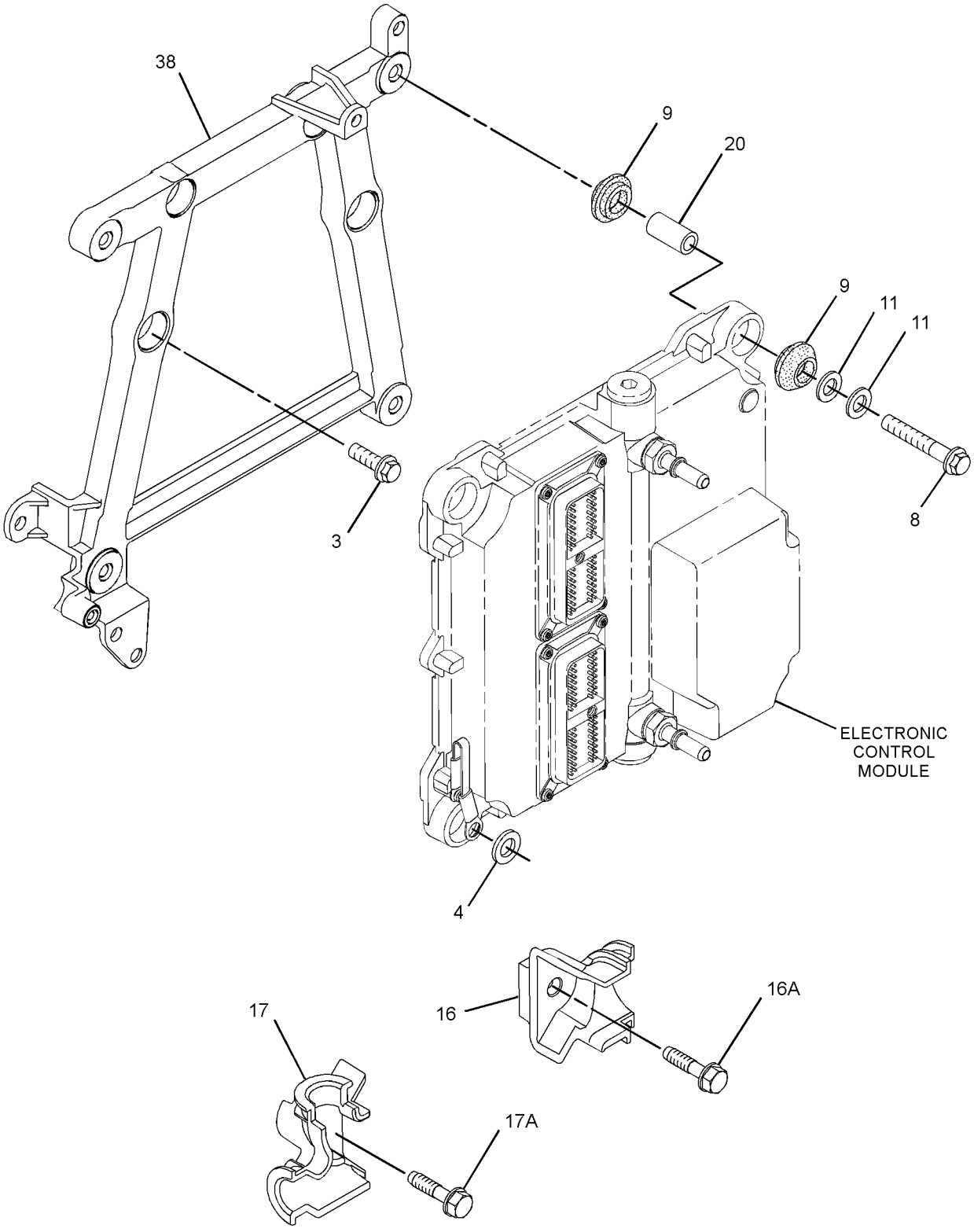

GRAPHIC #2 g01944085

305-6701 **PUMP GP-FUEL INJECTION (**contd.**)** **i03730842**

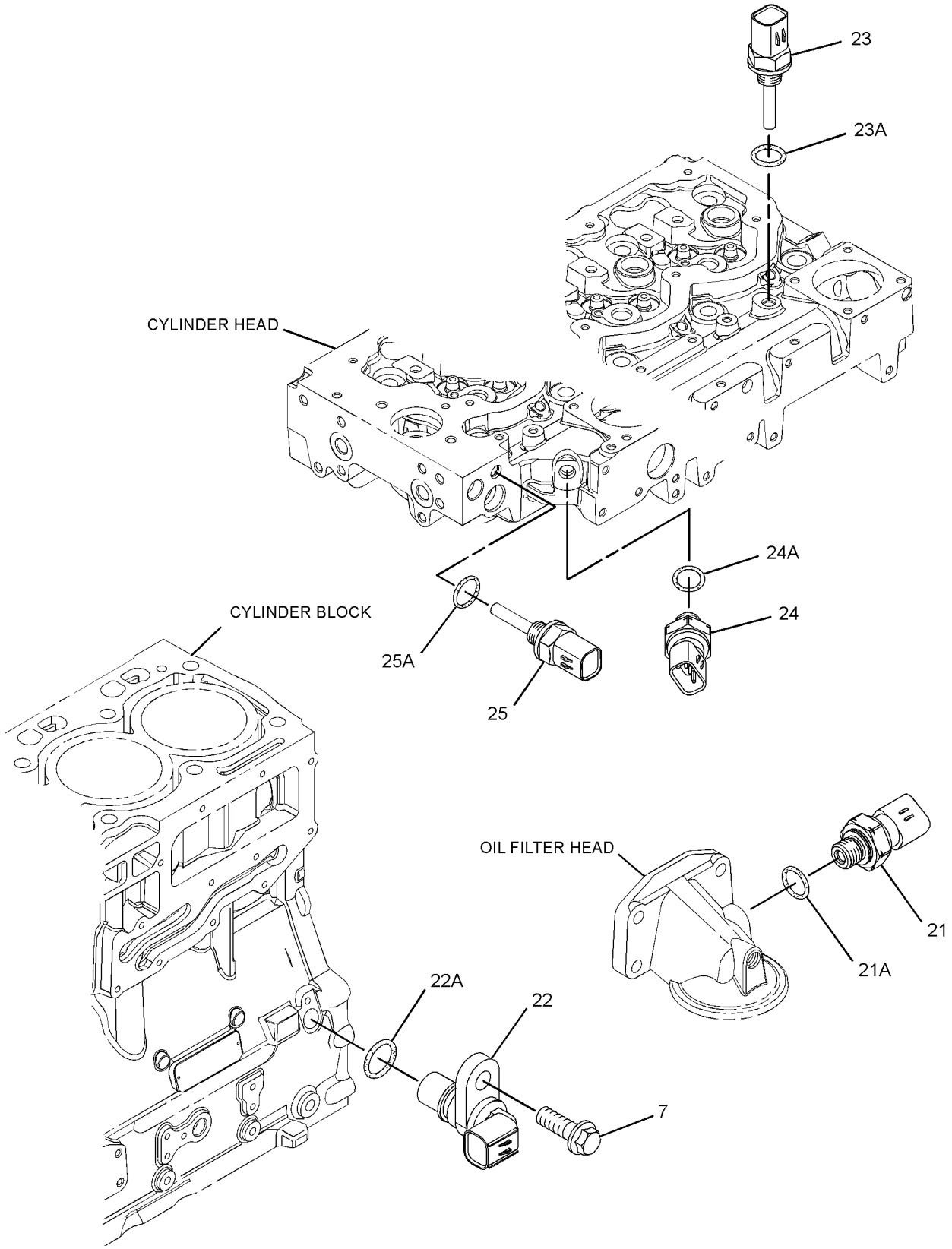

GRAPHIC #3 <END> g01374374

305-6701 PUMP GP-FUEL INJECTION

PART OF 437-5409 ENGINE AR-PRIMARY

TYPE 3

SMCS-1251, 1290 **i04017769**

NOTE	REF NO	GRAPHIC REF	PART NUMBER	QTY	PART NAME 1 2 3 4 5 6 (PRODUCT LEVEL)	SEE PAGE
M	1	1	**6I-0260**	3	BOLT (M8X1.25X25-MM)	
M	2	1	**6I-0455**	3	BOLT (M8X1.25X55-MM)	
M	3	2	**6I-0572**	4	BOLT (M8X1.25X20-MM)	
	4	2	**7W-2632**	1	WASHER (8.5X16.8X1.6-MM THK)	
M	5	1	**100-4830**	1	BOLT (M10X1.5X20-MM)	
M	6	1	**101-3895**	4	BOLT (M8X1.25X35-MM)	
M	7	1,3	**124-3815**	4	BOLT (M8X1.25X16-MM)	
M	8	2	**141-8584**	4	BOLT (M8X1.25X50-MM)	
	9	2	**300-6714**	8	MOUNT	
	10	1	**160-0162**	2	WASHER	
	11	2	**217-0099**	5	SPACER (8.2X25X2-MM THK)	
	13	1	**230-8989**	1	GEAR-FUEL PUMP (68-TEETH)	
	14	1	**232-3149**	3	WASHER (8.35X16.85X1.55-MM THK)	
	15	1	**318-2394**	1	RAIL AS-FUEL	
	15A	1	**305-5291**	1	VALVE AS-RELIEF	
	16	2	**268-6677**	1	BRACKET AS	
M	16A	2	**260-3939**	1	SCREW-HEX HEAD (M6X1X25-MM)	
	17	2	**268-6678**	1	BRACKET AS	
M	17A	2	**260-3939**	1	SCREW-HEX HEAD (M6X1X25-MM)	
	18	1	**278-5168**	4	CLAMP-INJECTOR	
	19	1	**278-5170**	4	BOLT	
	20	2	**278-5203**	4	SPACER	
	21	3	**278-5225**	1	KIT-SENSOR (ENGINE OIL PRESSURE)	
	21A	3	**199-9267**	1	SEAL-O-RING	
	22	3	**311-3858**	1	KIT-SENSOR (ENGINE SPEED)	
		3	**238-0120**	1	SENSOR GP-SPEED	
	22A	3	**274-1639**	1	SEAL	
	23	3	**278-5272**	1	KIT-SENSOR (INTAKE AIR TEMPERATURE)	
	23A	3	**278-5226**	1	SEAL-O-RING	
	24	3	**278-5273**	1	KIT-SENSOR (AIR PRESSURE)	
	24A	3	**199-9252**	1	SEAL-O-RING	
	25	3	**278-5307**	1	KIT-SENSOR (COOLANT TEMPERATURE)	
	25A	3	**199-9267**	1	SEAL-O-RING	
	26	1	**311-6342**	1	SENSOR AS-PRESSURE (FUEL RAIL PRESSURE)	
	26A	1	**309-8006**	1	WASHER	
CYR	27	1	**352-6584**	1	PUMP GP-FUEL INJECTION	1540
YR	28	1	**320-0680**	4	INJECTOR GP-FUEL	1027
	29	1	**298-4535**	1	BRACKET-SUPPORT	
	30	1	**337-3573**	1	BRACKET	
	31	1	**337-3574**	1	TUBE	
	32	1	**322-3745**	1	TUBE (CYL NO. 1)	
	33	1	**322-3746**	1	TUBE (CYL NO. 2)	
	34	1	**333-4732**	1	LINE-FUEL INJECTION (CYL NO. 3)	
	35	1	**333-4733**	1	LINE-FUEL INJECTION (CYL NO. 4)	
	36	1	**298-4542**	1	TUBE AS	
	37	1	**298-4543**	1	BOLT	
	38	2	**317-3144**	1	BRACKET	

305-6701 **PUMP GP-FUEL INJECTION (**contd.**)** **i04017769**

NOTE	REF NO	GRAPHIC REF	PART NUMBER	QTY	PART NAME 1 2 3 4 5 6 (PRODUCT LEVEL)	SEE PAGE
F			**278-4138**	4	KIT-FUEL LINE PROTECTION	

C - CHANGE FROM PREVIOUS TYPE
F - NOT SHOWN
M - METRIC PART
R - REMANUFACTURED PART MAY BE AVAILABLE
Y - SEPARATE ILLUSTRATION

305-6701 **PUMP GP-FUEL INJECTION (**contd.**)** **i04017769**

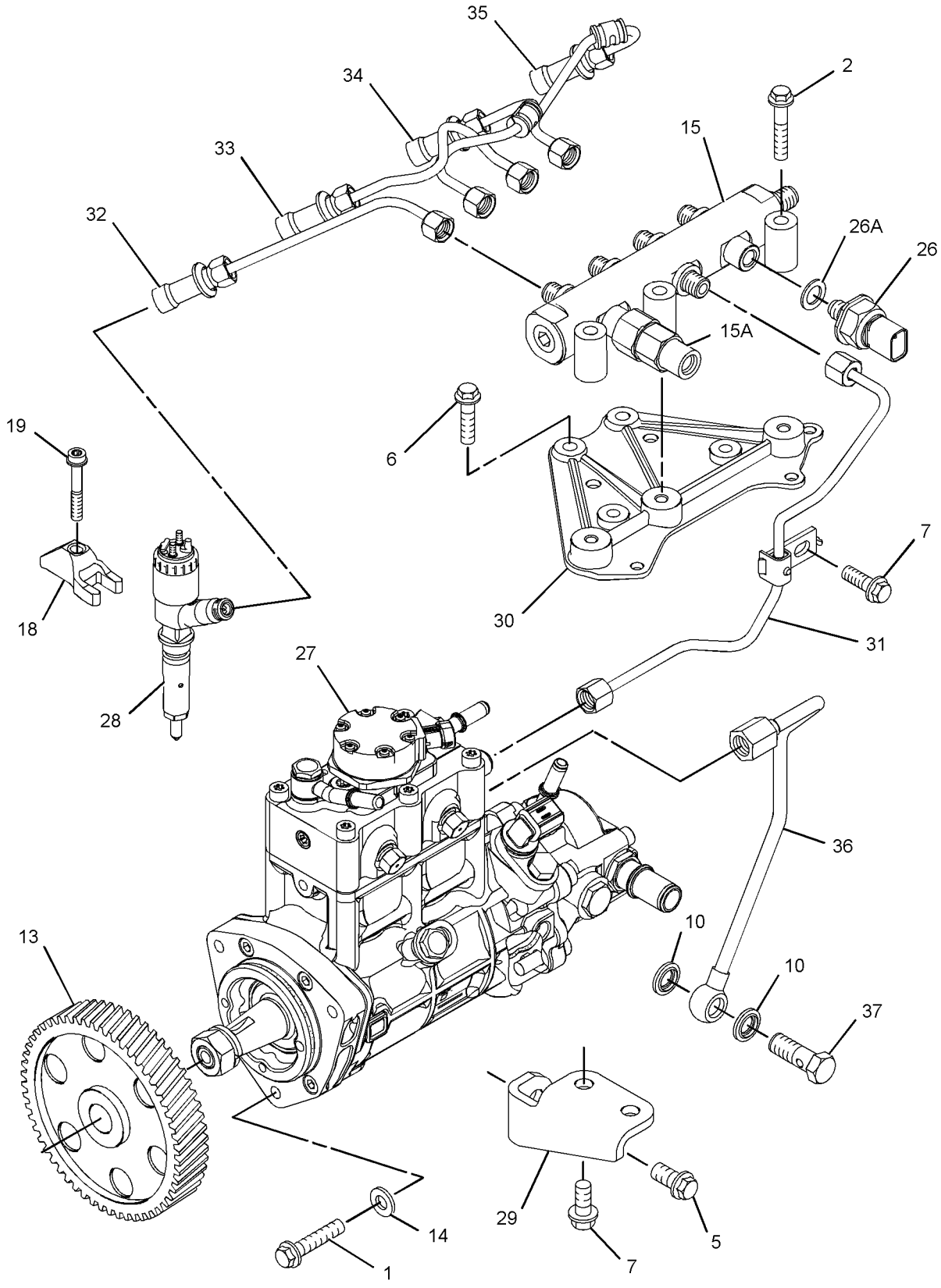

GRAPHIC #1 g02230573

305-6701 **PUMP GP-FUEL INJECTION (**contd.**)** **i04017769**

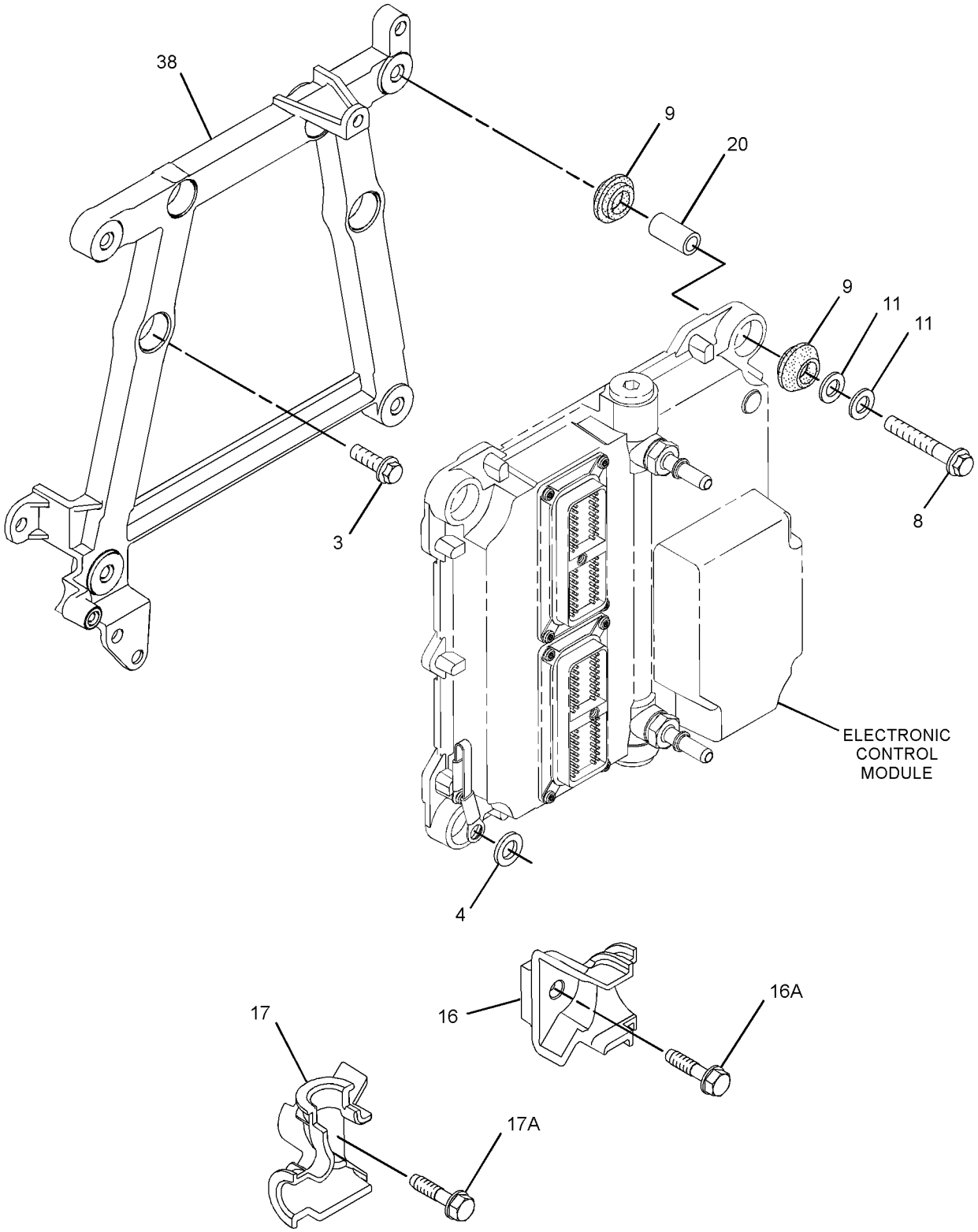

GRAPHIC #2 g01944085

305-6701 **PUMP GP-FUEL INJECTION (**contd.**)** **i04017769**

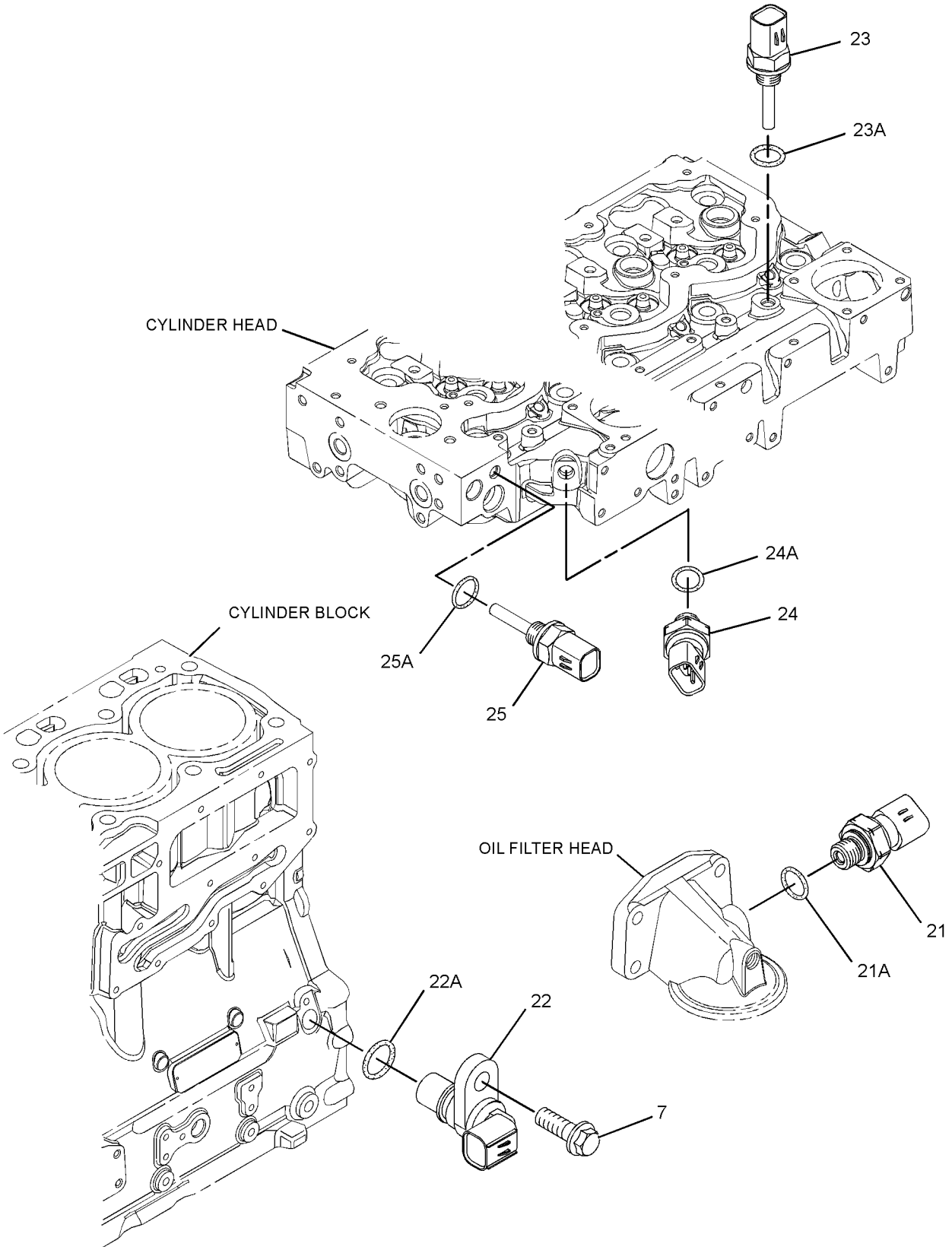

GRAPHIC #3 <END> g01374374

305-6701 PUMP GP-FUEL INJECTION

PART OF 435-1699 ENGINE AR, 437-5409, 522-8303, 540-1155 ENGINE AR-PRIMARY
TYPE 4

SMCS-1251, 1290 **i05793985**

NOTE	REF NO	GRAPHIC REF	PART NUMBER	QTY	PART NAME 1 2 3 4 5 6 (PRODUCT LEVEL)	SEE PAGE
M	1	1	**6I-0260**	3	BOLT (M8X1.25X25-MM)	
M	2	1	**6I-0455**	3	BOLT (M8X1.25X55-MM)	
M	3	2	**6I-0572**	4	BOLT (M8X1.25X20-MM)	
	4	2	**7W-2632**	1	WASHER (8.5X16.8X1.6-MM THK)	
M	5	1	**100-4830**	1	BOLT (M10X1.5X20-MM)	
M	6	1	**101-3895**	4	BOLT (M8X1.25X35-MM)	
M	7	1,3	**124-3815**	4	BOLT (M8X1.25X16-MM)	
M	8	2	**141-8584**	4	BOLT (M8X1.25X50-MM)	
	9	2	**300-6714**	8	MOUNT	
	10	1	**346-0007**	2	WASHER	
	11	2	**217-0099**	5	SPACER (8.2X25X2-MM THK)	
	13	1	**230-8989**	1	GEAR-FUEL PUMP (68-TEETH)	
	14	1	**232-3149**	3	WASHER (8.35X16.85X1.55-MM THK)	
	15	1	**358-6632**	1	RAIL GP-FUEL	
	15A	1	**305-5291**	1	VALVE AS-RELIEF	
	16	2	**268-6677**	1	BRACKET AS	
M	16A	2	**260-3939**	1	SCREW-HEX HEAD (M6X1X25-MM)	
	17	2	**268-6678**	1	BRACKET AS	
M	17A	2	**260-3939**	1	SCREW-HEX HEAD (M6X1X25-MM)	
	18	1	**278-5168**	4	CLAMP-INJECTOR	
	19	1	**278-5170**	4	BOLT	
	20	2	**278-5203**	4	SPACER	
	21	3	**278-5225**	1	KIT-SENSOR (ENGINE OIL PRESSURE)	
	21A	3	**199-9267**	1	SEAL-O-RING	
	22	3	**311-3858**	1	KIT-SENSOR (ENGINE SPEED)	
		3	**238-0120**	1	SENSOR GP-SPEED	
	22A	3	**274-1639**	1	SEAL	
	23	3	**278-5272**	1	KIT-SENSOR (INTAKE AIR TEMPERATURE)	
	23A	3	**278-5226**	1	SEAL-O-RING	
	24	3	**278-5273**	1	KIT-SENSOR (AIR PRESSURE)	
	24A	3	**199-9252**	1	SEAL-O-RING	
	25	3	**278-5307**	1	KIT-SENSOR (COOLANT TEMPERATURE)	
	25A	3	**199-9267**	1	SEAL-O-RING	
	26	1	**311-6342**	1	SENSOR AS-PRESSURE (FUEL RAIL PRESSURE)	
	26A	1	**309-8006**	1	WASHER	
CYR	27	1	*324-0532*	1	PUMP GP-FUEL INJECTION	1523
YR	28	1	**320-0680**	4	INJECTOR GP-FUEL	1027
	29	1	**298-4535**	1	BRACKET-SUPPORT	
	30	1	**337-3573**	1	BRACKET	
	31	1	**337-3574**	1	TUBE	
	32	1	**322-3745**	1	TUBE (CYL NO. 1)	
	33	1	**322-3746**	1	TUBE (CYL NO. 2)	
	34	1	**333-4732**	1	LINE-FUEL INJECTION (CYL NO. 3)	
	35	1	**333-4733**	1	LINE-FUEL INJECTION (CYL NO. 4)	
	36	1	**298-4542**	1	TUBE AS	
	37	1	**363-3908**	1	BOLT-SPECIAL	
	38	2	**317-3144**	1	BRACKET	

305-6701 **PUMP GP-FUEL INJECTION** (contd.) **i05793985**

NOTE	REF NO	GRAPHIC REF	PART NUMBER	QTY	PART NAME 1 2 3 4 5 6 (PRODUCT LEVEL)	SEE PAGE
F			**278-4138**	4	KIT-FUEL LINE PROTECTION	

C - CHANGE FROM PREVIOUS TYPE
F - NOT SHOWN
M - METRIC PART
R - REMANUFACTURED PART MAY BE AVAILABLE
Y - SEPARATE ILLUSTRATION

305-6701 **PUMP GP-FUEL INJECTION (**contd.**)** **i05793985**

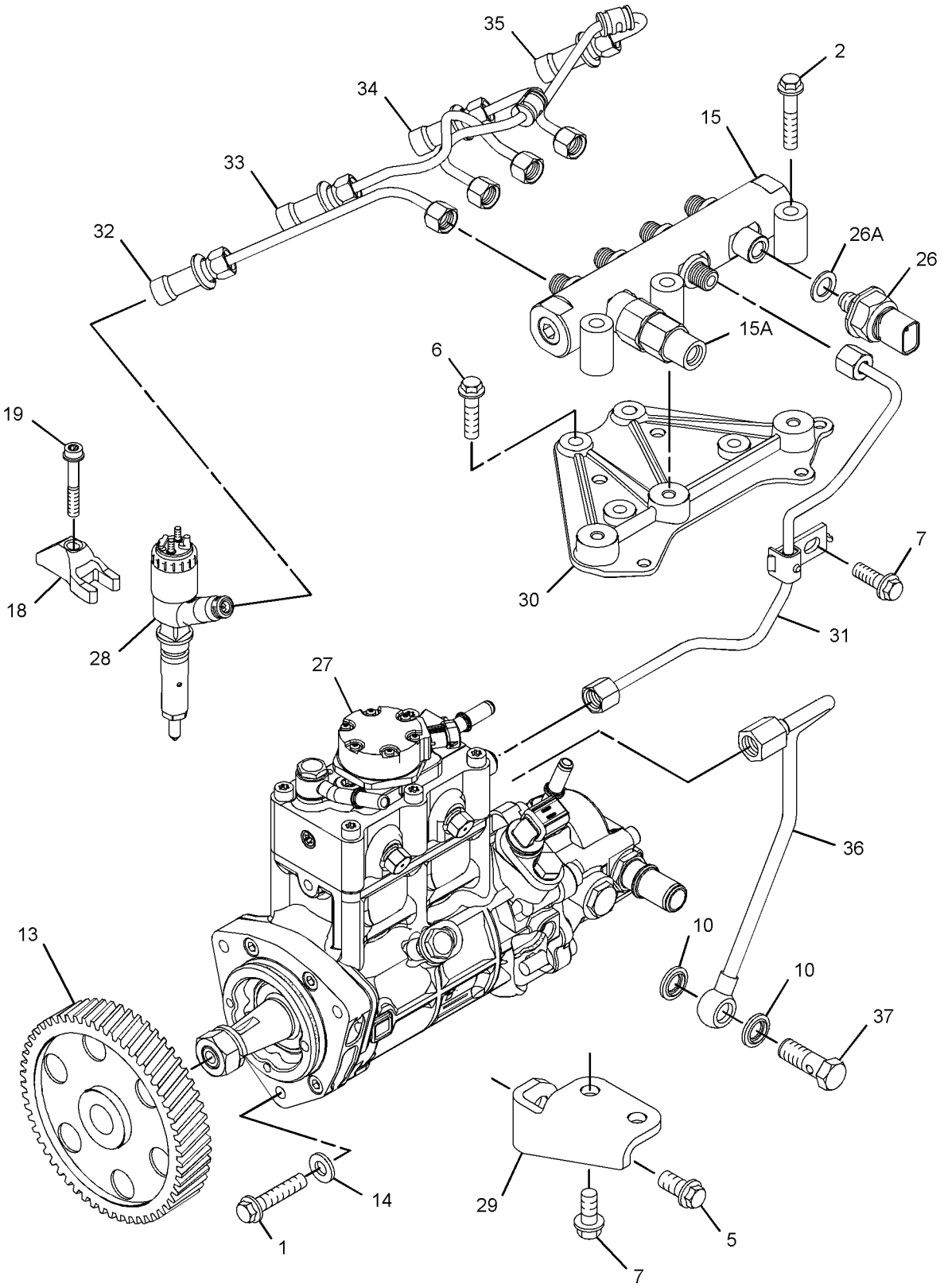

GRAPHIC #1 g02822357

305-6701 **PUMP GP-FUEL INJECTION (**contd.**)** **i05793985**

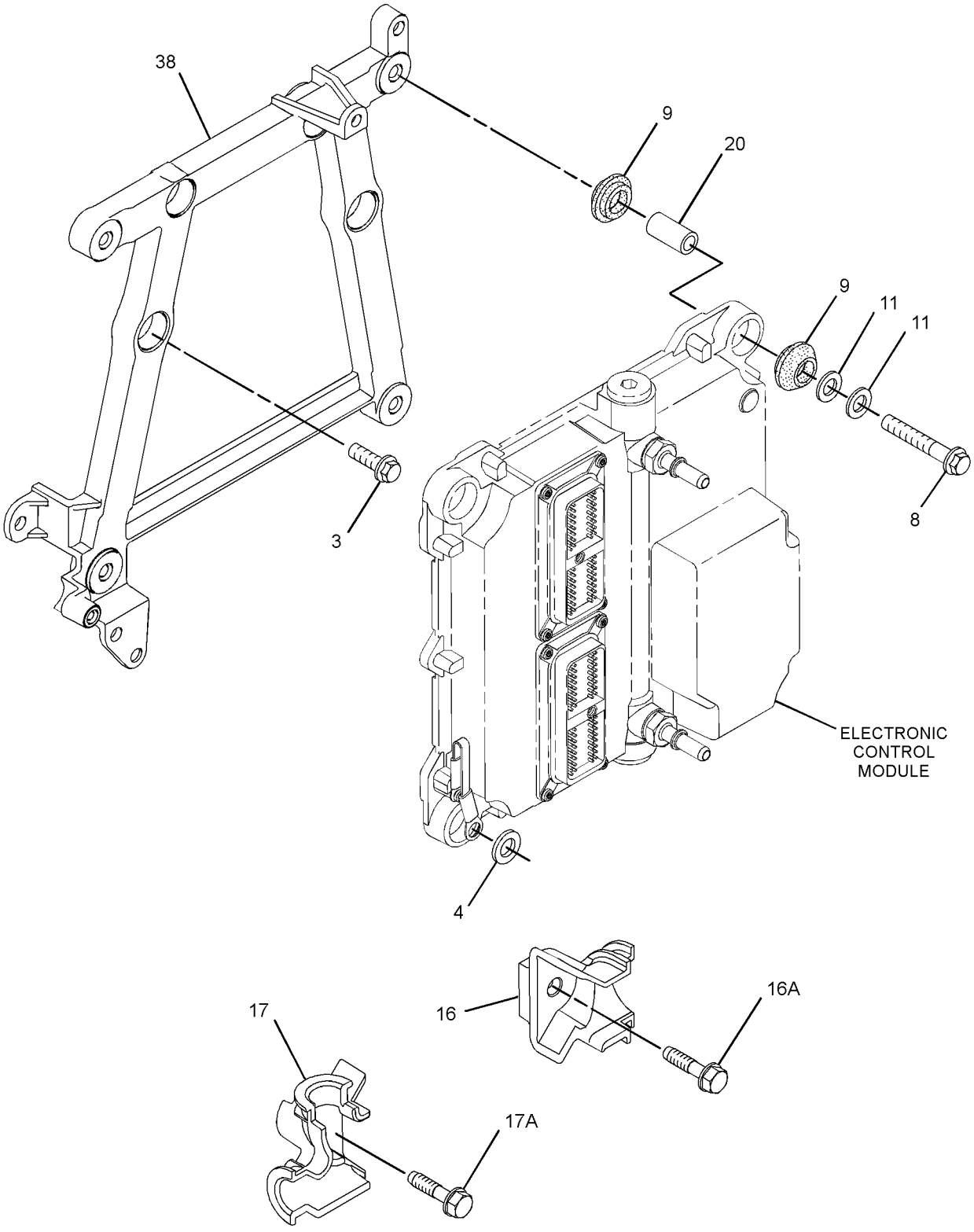

GRAPHIC #2 g01944085

305-6701 **PUMP GP-FUEL INJECTION (**contd.**)** **i05793985**

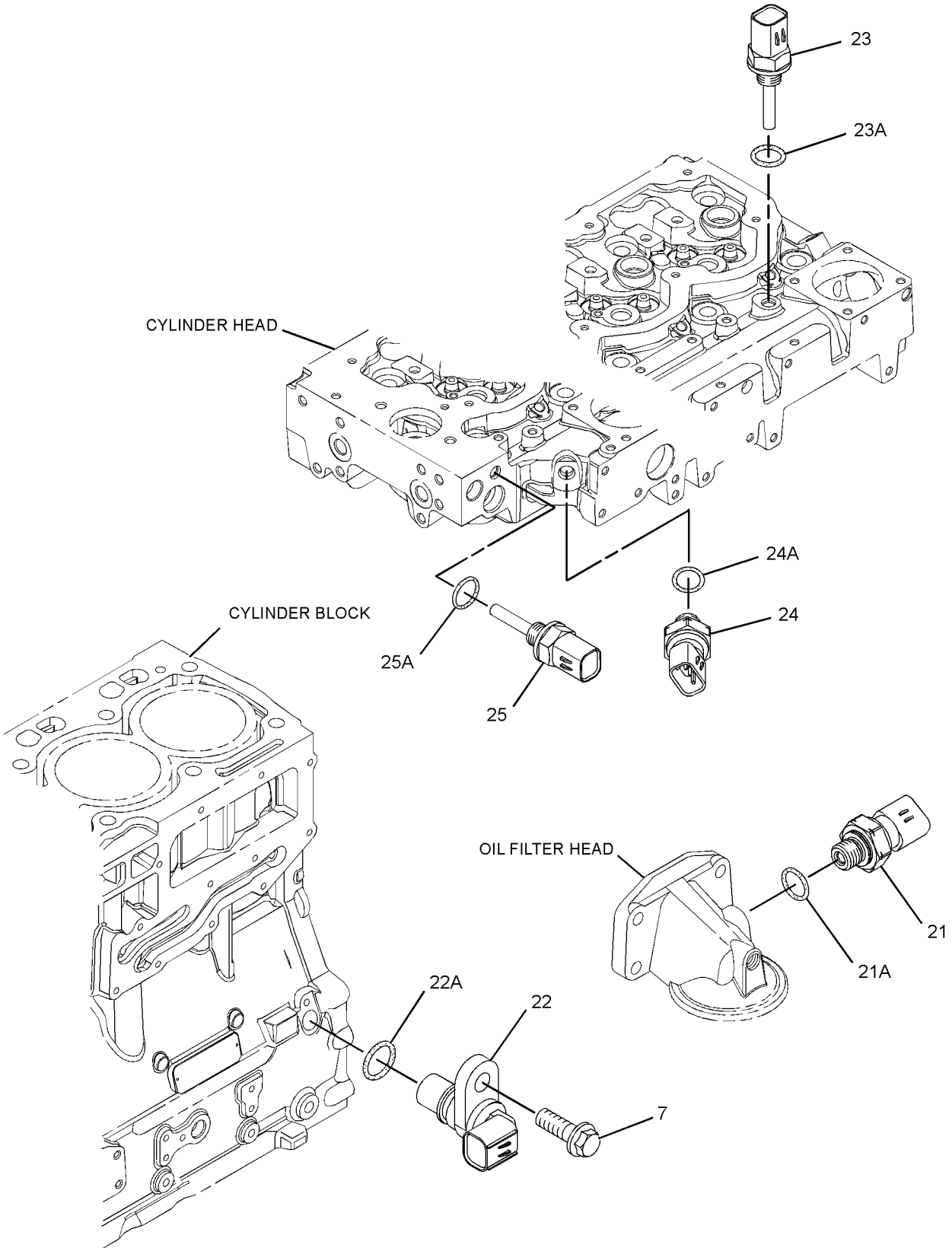

GRAPHIC #3 <END> g01374374

307-2847 PUMP GP-FUEL INJECTION

TYPE 1

SMCS-1251, 1290 **i02713411**

NOTE	REF NO	GRAPHIC REF	PART NUMBER	QTY	PART NAME 1 2 3 4 5 6 (PRODUCT LEVEL)	SEE PAGE
M	1	1	**6I-0260**	3	BOLT (M8X1.25X25-MM)	
M	2	1	**6I-0455**	3	BOLT (M8X1.25X55-MM)	
M	3	2	**6I-0572**	4	BOLT (M8X1.25X20-MM)	
	4	2	**7W-2632**	1	WASHER (8.5X16.8X1.6-MM THK)	
M	5	1	**100-4830**	1	BOLT (M10X1.5X20-MM)	
M	6	1	**101-3895**	4	BOLT (M8X1.25X35-MM)	
M	7	1,3	**124-3815**	4	BOLT (M8X1.25X16-MM)	
M	8	2	**141-8584**	4	BOLT (M8X1.25X50-MM)	
	9	2	**155-0576**	8	MOUNT-ISOLATION	
	10	1	**160-0162**	2	WASHER	
	11	2	**217-0099**	4	SPACER (8.2X25X2-MM THK)	
	12	2	**217-8477**	1	CLIP	
	13	1	**230-8989**	1	GEAR-FUEL PUMP (68-TEETH)	
	14	1	**232-3149**	6	WASHER (8.35X16.85X1.55-MM THK)	
	15	1	**308-8425**	1	RAIL AS-FUEL	
	16	2	**268-6677**	1	BRACKET AS	
		2	**260-3719**	1	BRACKET	
M	16A	2	**260-3939**	1	SCREW-HEX HEAD (M6X1X25-MM)	
	17	2	**268-6678**	1	BRACKET AS	
		2	**260-3718**	1	BRACKET	
M	17A	2	**260-3939**	1	SCREW-HEX HEAD (M6X1X25-MM)	
	18	1	**278-5168**	4	CLAMP-INJECTOR	
	19	1	**278-5170**	4	BOLT	
	20	2	**278-5203**	4	SPACER	
	21	3	**278-5225**	1	KIT-SENSOR (ENGINE OIL PRESSURE)	
	21A	3	**278-5226**	1	SEAL-O-RING	
	22	3	**278-5228**	1	KIT-SENSOR (ENGINE SPEED)	
	22A	3	**278-5227**	1	SEAL-O-RING	
	23	3	**278-5272**	1	KIT-SENSOR (INTAKE AIR TEMPERATURE)	
	23A	3	**278-5226**	1	SEAL-O-RING	
	24	3	**278-5273**	1	KIT-SENSOR (AIR PRESSURE)	
	24A	3	**199-9252**	1	SEAL-O-RING	
	25	3	**278-5307**	1	KIT-SENSOR (COOLANT TEMPERATURE)	
	25A	3	**199-9267**	1	SEAL-O-RING	
	26	1	**278-5308**	1	KIT-SENSOR (FUEL RAIL PRESSURE)	
	26A	1	**309-8006**	1	WASHER	
Y	27	1	**283-2271**	1	PUMP GP-FUEL INJECTION	1067
Y	28	1	**282-0480**	4	INJECTOR GP-FUEL	1019
	29	1	**298-4535**	1	BRACKET-SUPPORT	
	30	1	**298-4536**	1	BRACKET-MOUNTING	
	31	1	**298-4537**	1	TUBE AS	
	32	1	**298-4538**	1	TUBE AS (CYL NO. 1)	
	33	1	**298-4539**	1	TUBE AS (CYL NO. 2)	
	34	1	**298-4540**	1	TUBE AS (CYL NO. 3)	
	35	1	**298-4541**	1	TUBE AS (CYL NO. 4)	
	36	1	**298-4542**	1	TUBE AS	
	37	1	**298-4543**	1	BOLT	
	38	2	**308-3395**	1	BRACKET-MOUNTING	

307-2847 **PUMP GP-FUEL INJECTION (**contd.**)** **i02713411**

NOTE	REF NO	GRAPHIC REF	PART NUMBER	QTY	PART NAME 1 2 3 4 5 6 (PRODUCT LEVEL)	SEE PAGE
F			**278-4138**	4	KIT-FUEL LINE PROTECTION	

F - NOT SHOWN
M - METRIC PART
Y - SEPARATE ILLUSTRATION

307-2847 **PUMP GP-FUEL INJECTION (**contd.**)** **i02713411**

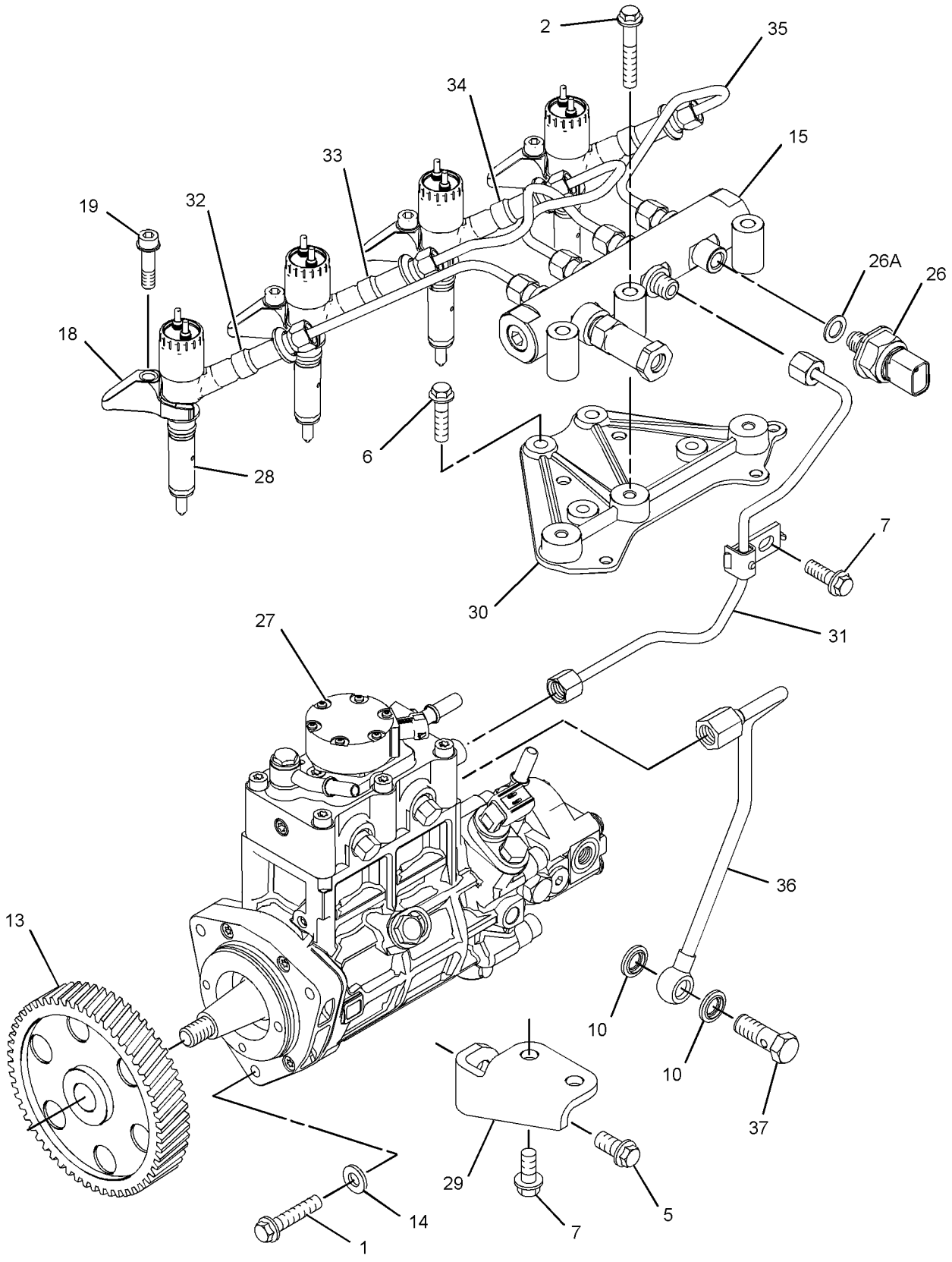

GRAPHIC #1 g01375172

307-2847 **PUMP GP-FUEL INJECTION (**contd.**)** **i02713411**

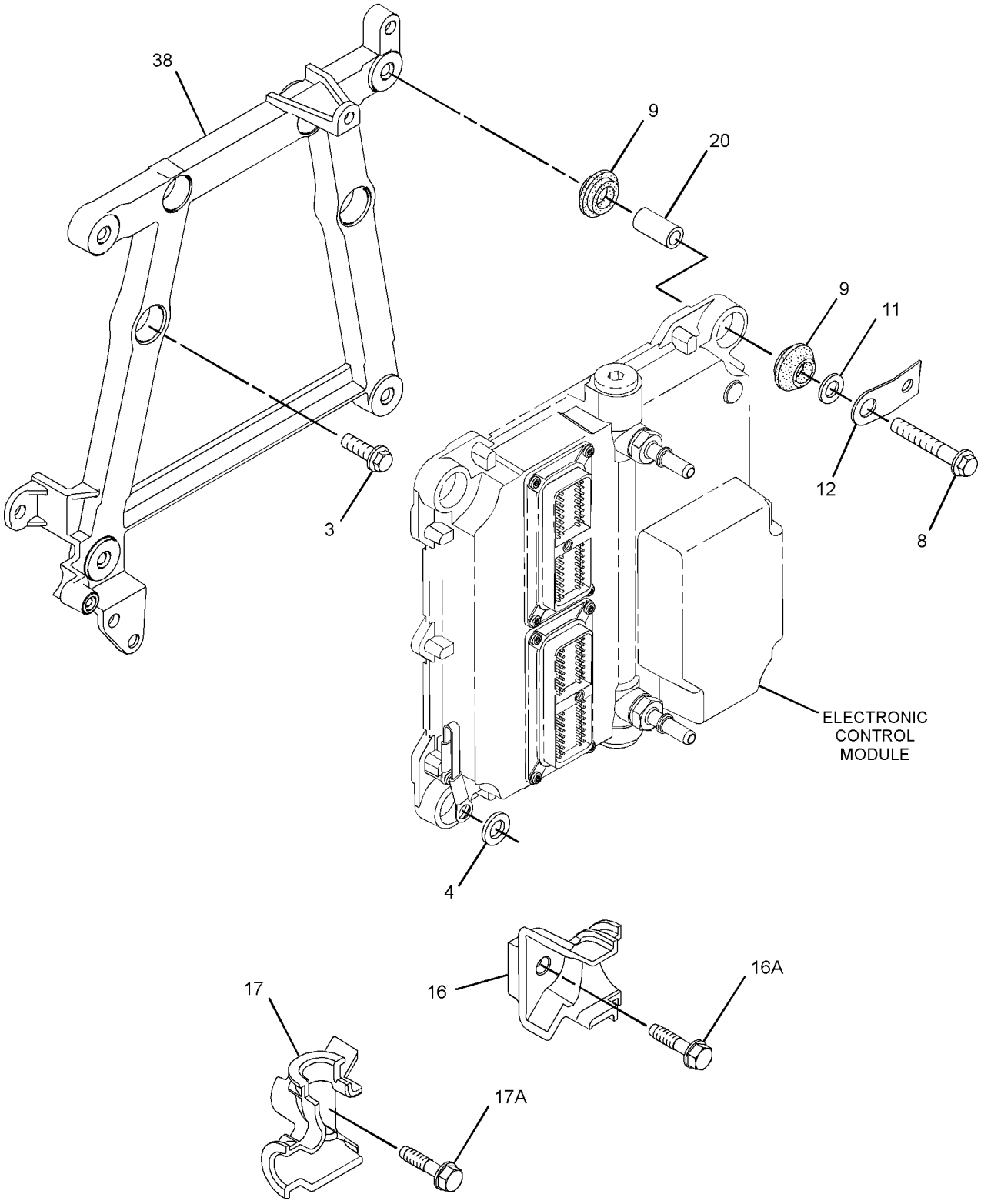

GRAPHIC #2 g01375784

307-2847 **PUMP GP-FUEL INJECTION (**contd.**)** **i02713411**

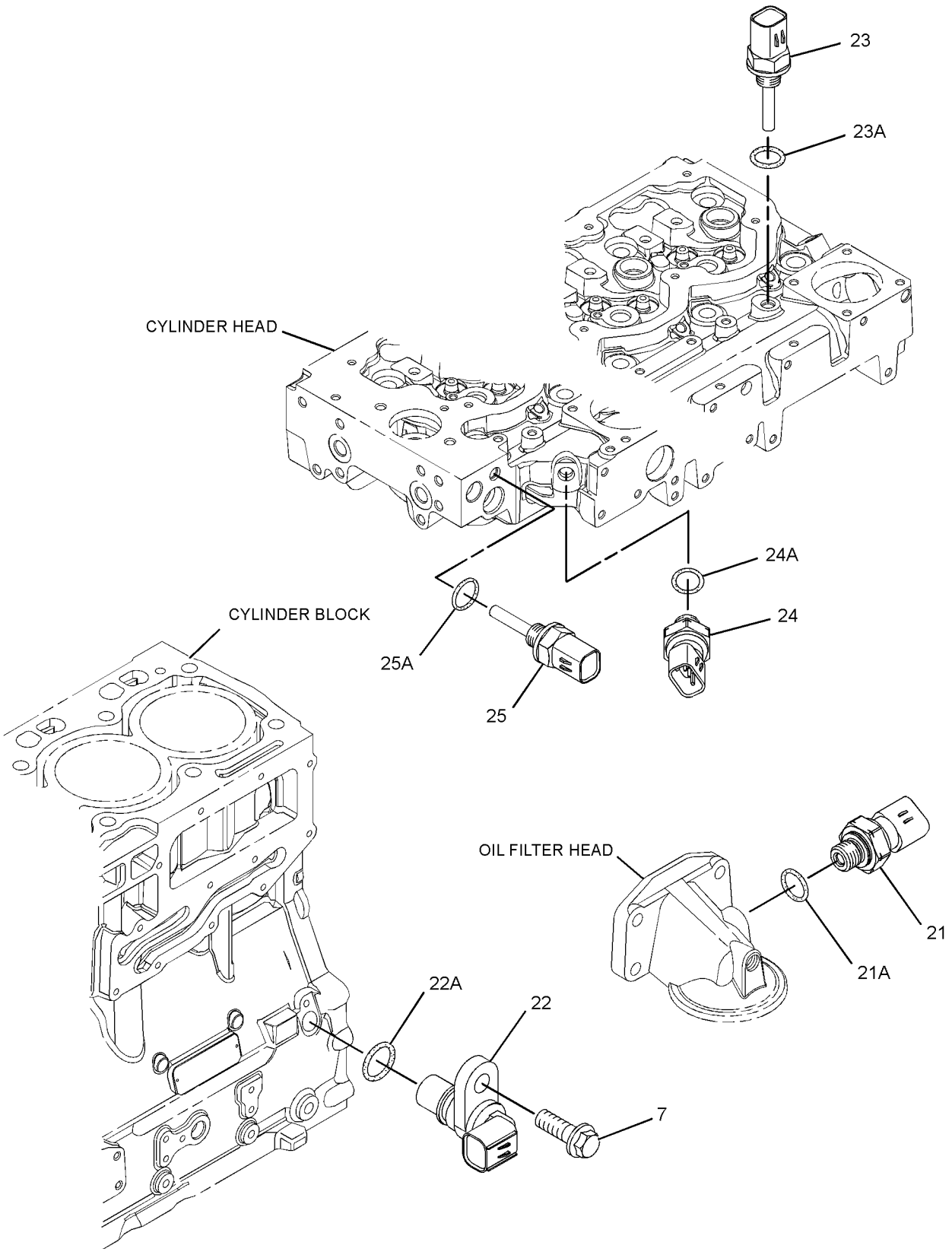

GRAPHIC #3 <END> g01374374

307-2847 PUMP GP-FUEL INJECTION

TYPE 2

SMCS-1251, 1290 **i03730844**

NOTE	REF NO	GRAPHIC REF	PART NUMBER	QTY	PART NAME 1 2 3 4 5 6 (PRODUCT LEVEL)	SEE PAGE
M	1	1	**6I-0260**	3	BOLT (M8X1.25X25-MM)	
M	2	1	**6I-0455**	3	BOLT (M8X1.25X55-MM)	
M	3	2	**6I-0572**	4	BOLT (M8X1.25X20-MM)	
	4	2	**7W-2632**	1	WASHER (8.5X16.8X1.6-MM THK)	
M	5	1	**100-4830**	1	BOLT (M10X1.5X20-MM)	
M	6	1	**101-3895**	4	BOLT (M8X1.25X35-MM)	
M	7	1,3	**124-3815**	4	BOLT (M8X1.25X16-MM)	
M	8	2	**141-8584**	4	BOLT (M8X1.25X50-MM)	
C	9	2	**300-6714**	8	MOUNT	
	10	1	**160-0162**	2	WASHER	
	11	2	**217-0099**	4	SPACER (8.2X25X2-MM THK)	
	12	2	**217-8477**	1	CLIP	
	13	1	**230-8989**	1	GEAR-FUEL PUMP (68-TEETH)	
	14	1	**232-3149**	6	WASHER (8.35X16.85X1.55-MM THK)	
	15	1	**308-8425**	1	RAIL AS-FUEL	
	16	2	**268-6677**	1	BRACKET AS	
		2	**260-3718**	1	BRACKET	
M	16A	2	**260-3939**	1	SCREW-HEX HEAD (M6X1X25-MM)	
	17	2	**268-6678**	1	BRACKET AS	
		2	**260-3719**	1	BRACKET	
M	17A	2	**260-3939**	1	SCREW-HEX HEAD (M6X1X25-MM)	
	18	1	**278-5168**	4	CLAMP-INJECTOR	
	19	1	**278-5170**	4	BOLT	
	20	2	**278-5203**	4	SPACER	
	21	3	**278-5225**	1	KIT-SENSOR (ENGINE OIL PRESSURE)	
	21A	3	**199-9267**	1	SEAL-O-RING	
	22	3	**311-3858**	1	KIT-SENSOR (ENGINE SPEED)	
		3	**238-0120**	1	SENSOR GP-SPEED	
	22A	3	**274-1639**	1	SEAL	
	23	3	**278-5272**	1	KIT-SENSOR (INTAKE AIR TEMPERATURE)	
	23A	3	**278-5226**	1	SEAL-O-RING	
	24	3	**278-5273**	1	KIT-SENSOR (AIR PRESSURE)	
	24A	3	**199-9252**	1	SEAL-O-RING	
	25	3	**278-5307**	1	KIT-SENSOR (COOLANT TEMPERATURE)	
	25A	3	**199-9267**	1	SEAL-O-RING	
	26	1	**311-6342**	1	SENSOR AS-PRESSURE (FUEL RAIL PRESSURE)	
	26A	1	**309-8006**	1	WASHER	
Y	27	1	**283-2271**	1	PUMP GP-FUEL INJECTION	1067
Y	28	1	**282-0480**	4	INJECTOR GP-FUEL	1019
	29	1	**298-4535**	1	BRACKET-SUPPORT	
	30	1	**298-4536**	1	BRACKET-MOUNTING	
	31	1	**298-4537**	1	TUBE AS	
	32	1	**298-4538**	1	TUBE AS (CYL NO. 1)	
	33	1	**298-4539**	1	TUBE AS (CYL NO. 2)	
	34	1	**298-4540**	1	TUBE AS (CYL NO. 3)	
	35	1	**298-4541**	1	TUBE AS (CYL NO. 4)	
	36	1	**298-4542**	1	TUBE AS	
	37	1	**298-4543**	1	BOLT	

307-2847 **PUMP GP-FUEL INJECTION** (contd.) **i03730844**

NOTE	REF NO	GRAPHIC REF	PART NUMBER	QTY	PART NAME 1 2 3 4 5 6 (PRODUCT LEVEL)	SEE PAGE
	38	2	**308-3395**	1	BRACKET-MOUNTING	
F			**278-4138**	4	KIT-FUEL LINE PROTECTION	

C - CHANGE FROM PREVIOUS TYPE
F - NOT SHOWN
M - METRIC PART
Y - SEPARATE ILLUSTRATION

307-2847 **PUMP GP-FUEL INJECTION (**contd.**)** **i03730844**

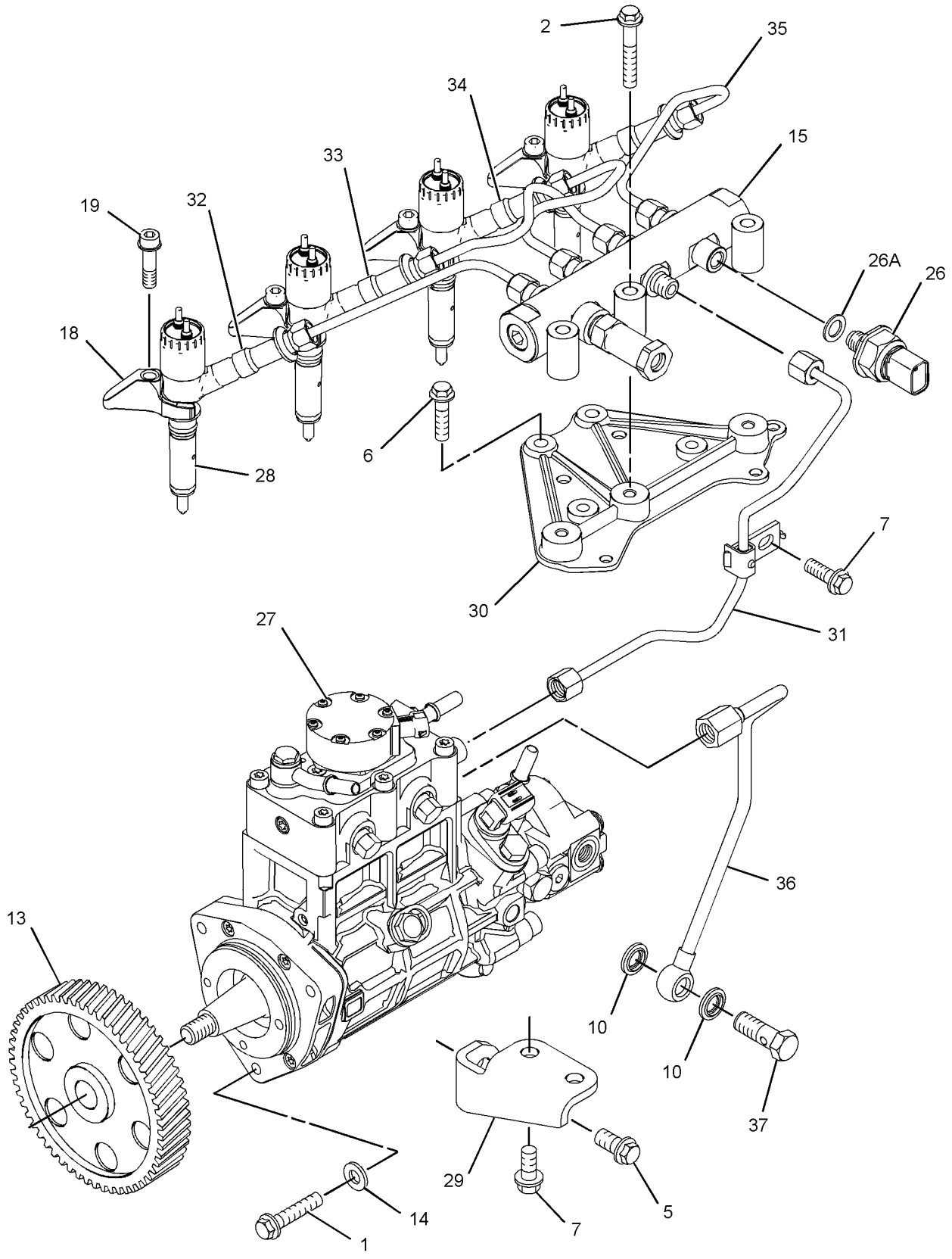

GRAPHIC #1 g01375172

307-2847 **PUMP GP-FUEL INJECTION (**contd.**)** **i03730844**

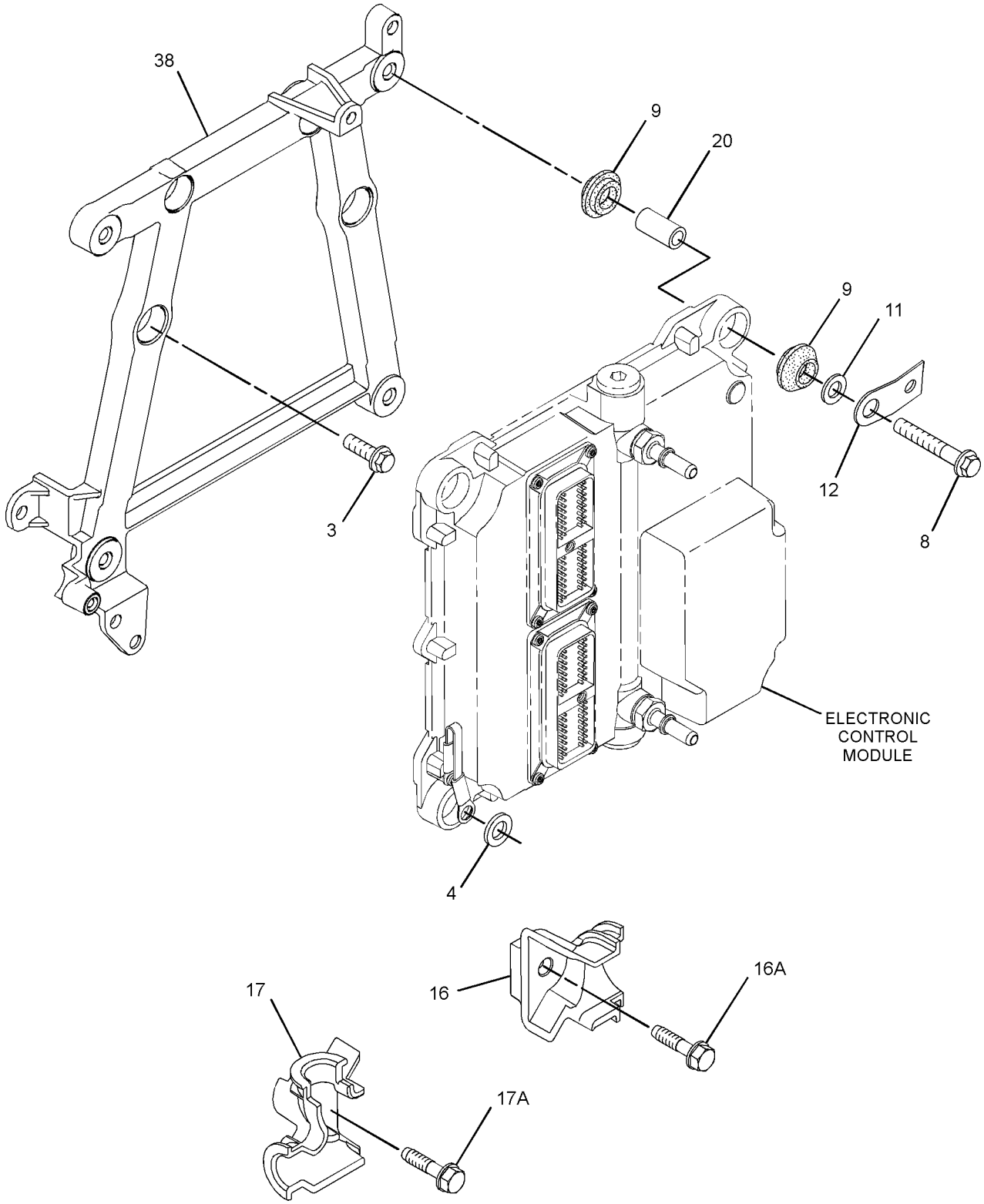

GRAPHIC #2 g01375784

307-2847 **PUMP GP-FUEL INJECTION (**contd.**)** **i03730844**

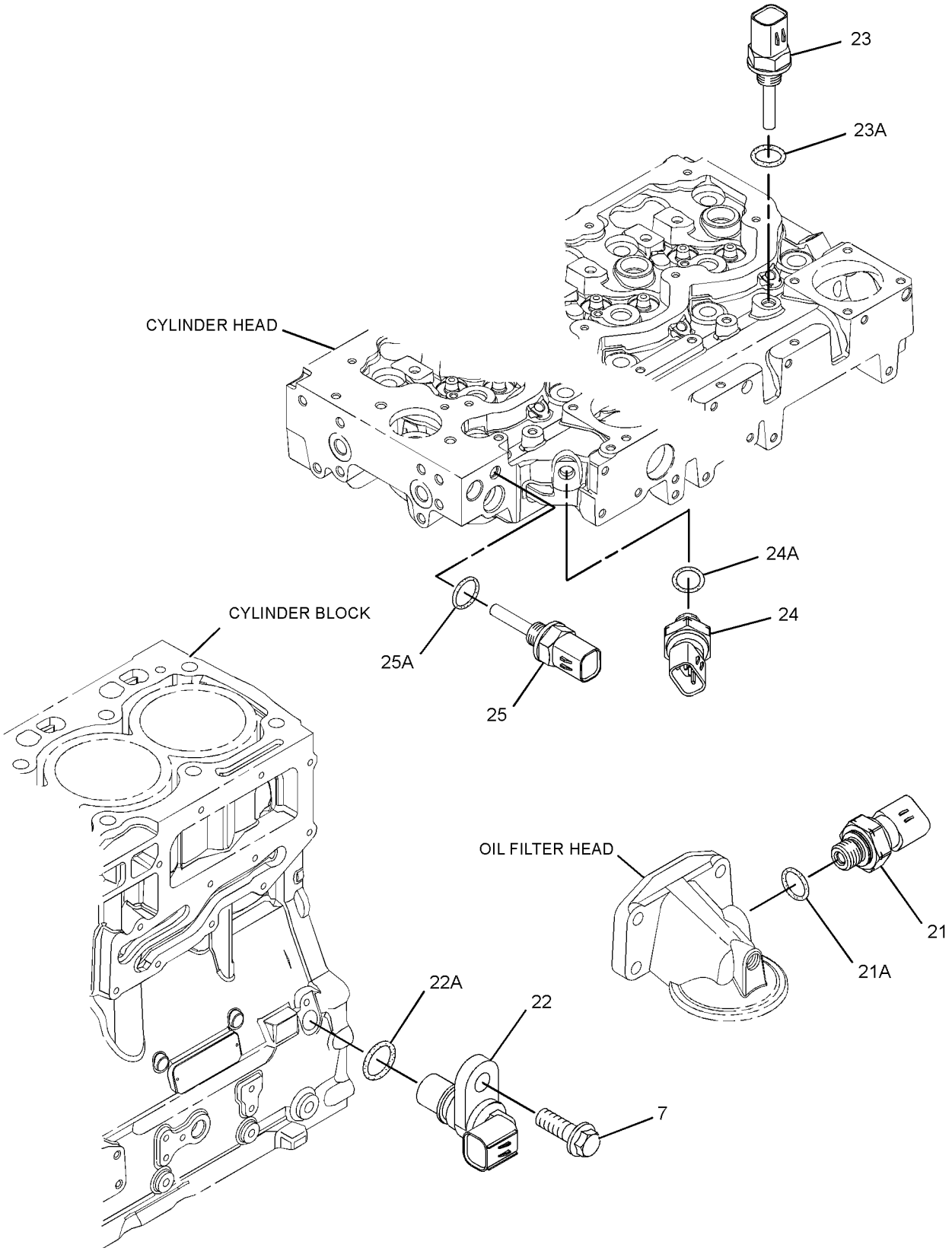

GRAPHIC #3 <END> g01374374

307-2847 PUMP GP-FUEL INJECTION

TYPE 3

SMCS-1251, 1290 **i03730847**

NOTE	REF NO	GRAPHIC REF	PART NUMBER	QTY	PART NAME 1 2 3 4 5 6 (PRODUCT LEVEL)	SEE PAGE
M	1	1	**6I-0260**	3	BOLT (M8X1.25X25-MM)	
M	2	1	**6I-0455**	3	BOLT (M8X1.25X55-MM)	
M	3	2	**6I-0572**	4	BOLT (M8X1.25X20-MM)	
	4	2	**7W-2632**	1	WASHER (8.5X16.8X1.6-MM THK)	
M	5	1	**100-4830**	1	BOLT (M10X1.5X20-MM)	
M	6	1	**101-3895**	4	BOLT (M8X1.25X35-MM)	
M	7	1,3	**124-3815**	4	BOLT (M8X1.25X16-MM)	
M	8	2	**141-8584**	4	BOLT (M8X1.25X50-MM)	
	9	2	**300-6714**	8	MOUNT	
	10	1	**160-0162**	2	WASHER	
	11	2	**217-0099**	5	SPACER (8.2X25X2-MM THK)	
	13	1	**230-8989**	1	GEAR-FUEL PUMP (68-TEETH)	
C	14	1	**232-3149**	3	WASHER (8.35X16.85X1.55-MM THK)	
C	15	1	**318-2394**	1	RAIL AS-FUEL	
	15A	1	**305-5291**	1	VALVE AS-RELIEF	
	16	2	**268-6677**	1	BRACKET AS	
M	16A	2	**260-3939**	1	SCREW-HEX HEAD (M6X1X25-MM)	
	17	2	**268-6678**	1	BRACKET AS	
M	17A	2	**260-3939**	1	SCREW-HEX HEAD (M6X1X25-MM)	
	18	1	**278-5168**	4	CLAMP-INJECTOR	
	19	1	**278-5170**	4	BOLT	
	20	2	**278-5203**	4	SPACER	
	21	3	**278-5225**	1	KIT-SENSOR (ENGINE OIL PRESSURE)	
	21A	3	**199-9267**	1	SEAL-O-RING	
	22	3	**311-3858**	1	KIT-SENSOR (ENGINE SPEED)	
	22A	3	**274-1639**	1	SEAL	
	23	3	**278-5272**	1	KIT-SENSOR (INTAKE AIR TEMPERATURE)	
	23A	3	**278-5226**	1	SEAL-O-RING	
	24	3	**278-5273**	1	KIT-SENSOR (AIR PRESSURE)	
	24A	3	**199-9252**	1	SEAL-O-RING	
	25	3	**278-5307**	1	KIT-SENSOR (COOLANT TEMPERATURE)	
	25A	3	**199-9267**	1	SEAL-O-RING	
	26	1	**311-6342**	1	SENSOR AS-PRESSURE (FUEL RAIL PRESSURE)	
	26A	1	**309-8006**	1	WASHER	
CYR	27	1	**324-0532**	1	PUMP GP-FUEL INJECTION	1523
CYR	28	1	**320-0680**	4	INJECTOR GP-FUEL	1027
	29	1	**298-4535**	1	BRACKET-SUPPORT	
	30	1	**337-3573**	1	BRACKET	
C	31	1	**337-3574**	1	TUBE	
C	32	1	**322-3745**	1	TUBE (CYL NO. 1)	
C	33	1	**322-3746**	1	TUBE (CYL NO. 2)	
C	34	1	**333-4732**	1	LINE-FUEL INJECTION (CYL NO. 3)	
C	35	1	**333-4733**	1	LINE-FUEL INJECTION (CYL NO. 4)	
	36	1	**298-4542**	1	TUBE AS	
	37	1	**298-4543**	1	BOLT	
C	38	2	**317-3144**	1	BRACKET	
F			**278-4138**	4	KIT-FUEL LINE PROTECTION	

307-2847 **PUMP GP-FUEL INJECTION (**contd.**)** **i03730847**

NOTE	REF NO	GRAPHIC REF	PART NUMBER	QTY	PART NAME 1 2 3 4 5 6 (PRODUCT LEVEL)	SEE PAGE

C - CHANGE FROM PREVIOUS TYPE
F - NOT SHOWN
M - METRIC PART
R - REMANUFACTURED PART MAY BE AVAILABLE
Y - SEPARATE ILLUSTRATION

307-2847 **PUMP GP-FUEL INJECTION (**contd.**)** **i03730847**

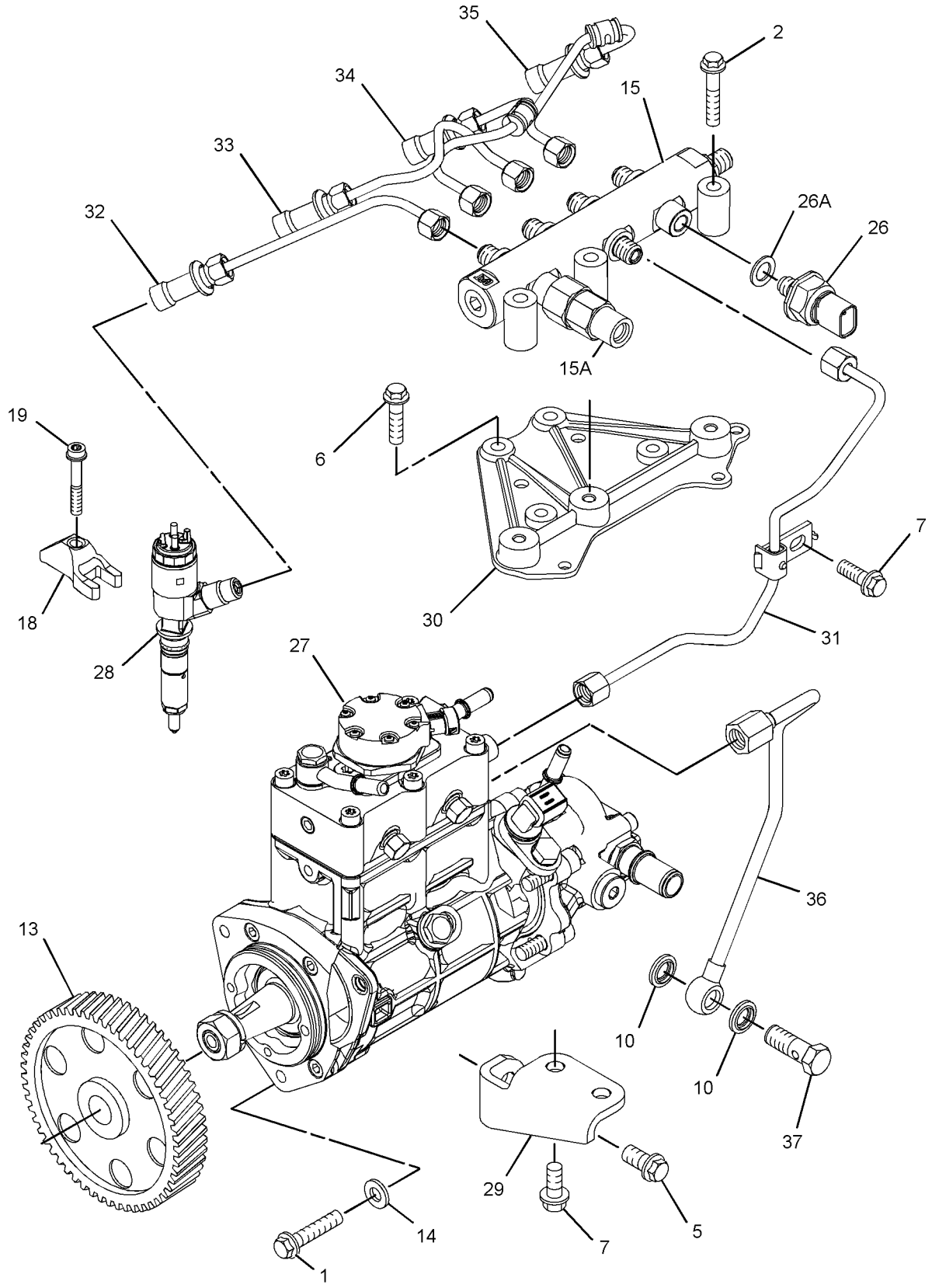

GRAPHIC #1 g01846641

307-2847 **PUMP GP-FUEL INJECTION (**contd.**)** **i03730847**

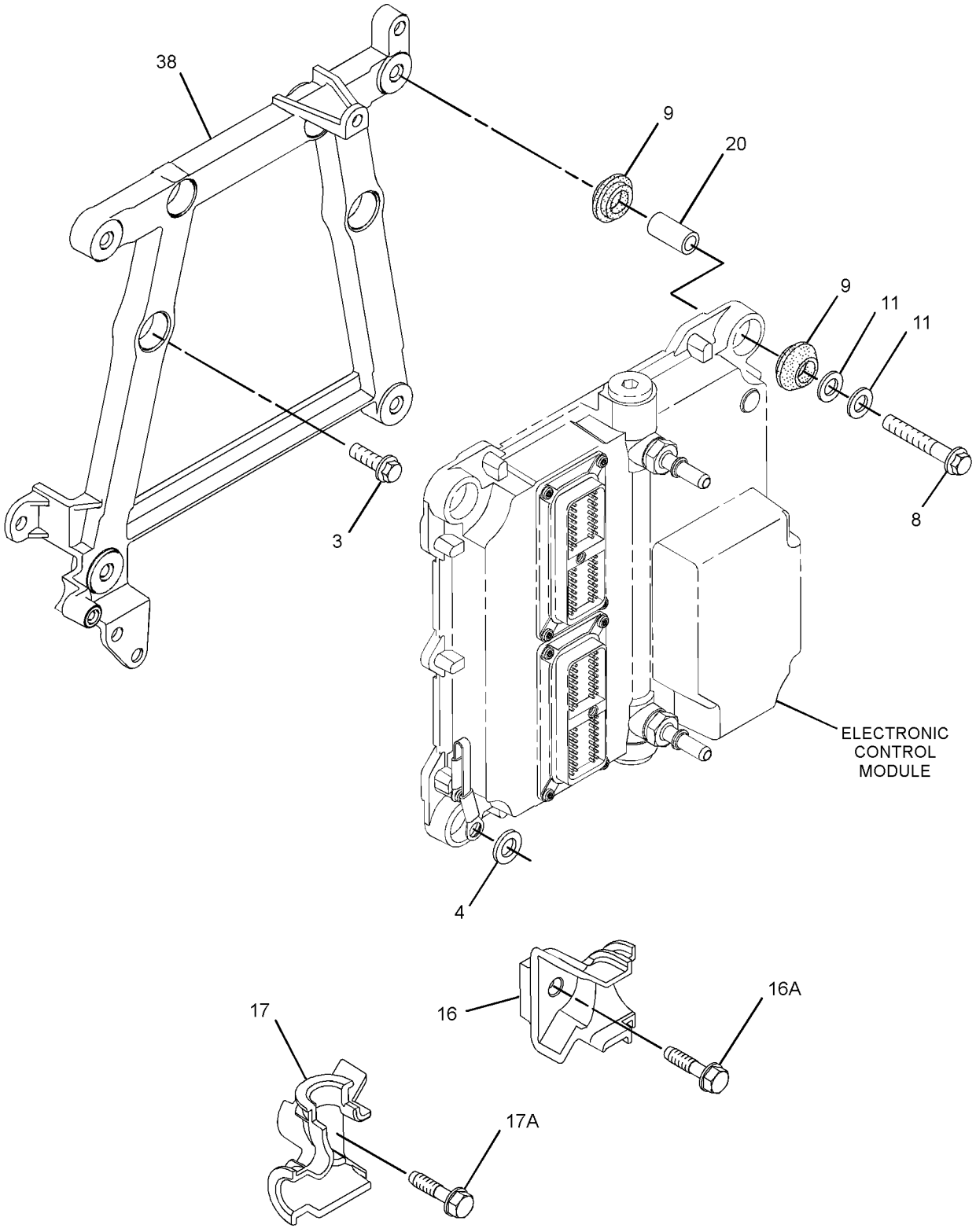

GRAPHIC #2 g01944085

307-2847 **PUMP GP-FUEL INJECTION (**contd.**)** **i03730847**

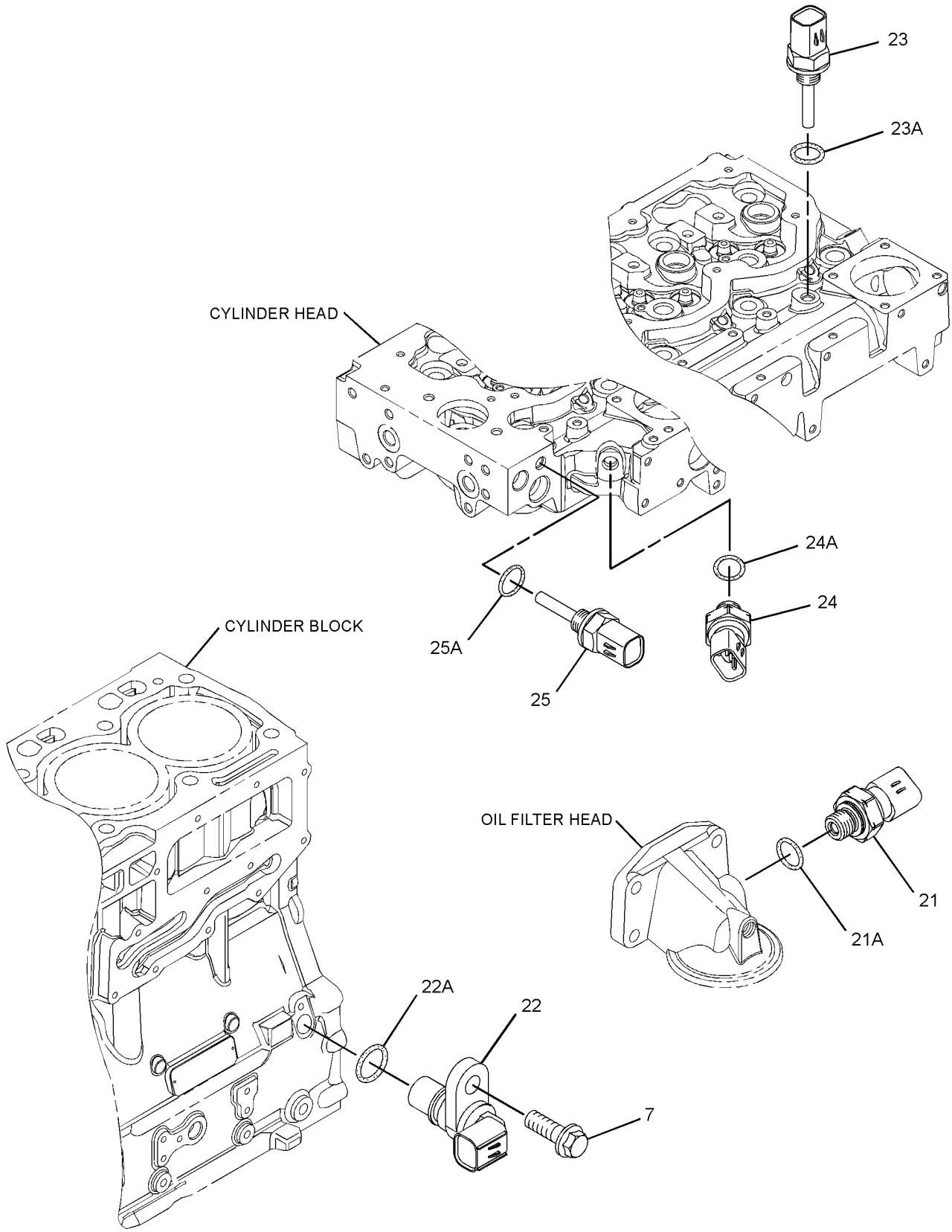

GRAPHIC #3 <END> g01644673

307-2847 PUMP GP-FUEL INJECTION

TYPE 4

SMCS-1251, 1290 **i04017993**

NOTE	REF NO	GRAPHIC REF	PART NUMBER	QTY	PART NAME 1 2 3 4 5 6 (PRODUCT LEVEL)	SEE PAGE
M	1	1	**6I-0260**	3	BOLT (M8X1.25X25-MM)	
M	2	1	**6I-0455**	3	BOLT (M8X1.25X55-MM)	
M	3	2	**6I-0572**	4	BOLT (M8X1.25X20-MM)	
	4	2	**7W-2632**	1	WASHER (8.5X16.8X1.6-MM THK)	
M	5	1	**100-4830**	1	BOLT (M10X1.5X20-MM)	
M	6	1	**101-3895**	4	BOLT (M8X1.25X35-MM)	
M	7	1,3	**124-3815**	4	BOLT (M8X1.25X16-MM)	
M	8	2	**141-8584**	4	BOLT (M8X1.25X50-MM)	
	9	2	**300-6714**	8	MOUNT	
	10	1	**160-0162**	2	WASHER	
	11	2	**217-0099**	5	SPACER (8.2X25X2-MM THK)	
	13	1	**230-8989**	1	GEAR-FUEL PUMP (68-TEETH)	
	14	1	**232-3149**	3	WASHER (8.35X16.85X1.55-MM THK)	
	15	1	**318-2394**	1	RAIL AS-FUEL	
	15A	1	**305-5291**	1	VALVE AS-RELIEF	
	16	2	**268-6677**	1	BRACKET AS	
M	16A	2	**260-3939**	1	SCREW-HEX HEAD (M6X1X25-MM)	
	17	2	**268-6678**	1	BRACKET AS	
M	17A	2	**260-3939**	1	SCREW-HEX HEAD (M6X1X25-MM)	
	18	1	**278-5168**	4	CLAMP-INJECTOR	
	19	1	**278-5170**	4	BOLT	
	20	2	**278-5203**	4	SPACER	
	21	3	**278-5225**	1	KIT-SENSOR (ENGINE OIL PRESSURE)	
	21A	3	**199-9267**	1	SEAL-O-RING	
	22	3	**311-3858**	1	KIT-SENSOR (ENGINE SPEED)	
	22A	3	**274-1639**	1	SEAL	
		3	**238-0120**	1	SENSOR GP-SPEED	
	23	3	**278-5272**	1	KIT-SENSOR (INTAKE AIR TEMPERATURE)	
	23A	3	**278-5226**	1	SEAL-O-RING	
	24	3	**278-5273**	1	KIT-SENSOR (AIR PRESSURE)	
	24A	3	**199-9252**	1	SEAL-O-RING	
	25	3	**278-5307**	1	KIT-SENSOR (COOLANT TEMPERATURE)	
	25A	3	**199-9267**	1	SEAL-O-RING	
	26	1	**311-6342**	1	SENSOR AS-PRESSURE (FUEL RAIL PRESSURE)	
	26A	1	**309-8006**	1	WASHER	
CYR	27	1	**352-6584**	1	PUMP GP-FUEL INJECTION	1540
YR	28	1	**320-0680**	4	INJECTOR GP-FUEL	1027
	29	1	**298-4535**	1	BRACKET-SUPPORT	
	30	1	**337-3573**	1	BRACKET	
	31	1	**337-3574**	1	TUBE	
	32	1	**322-3745**	1	TUBE (CYL NO. 1)	
	33	1	**322-3746**	1	TUBE (CYL NO. 2)	
	34	1	**333-4732**	1	LINE-FUEL INJECTION (CYL NO. 3)	
	35	1	**333-4733**	1	LINE-FUEL INJECTION (CYL NO. 4)	
	36	1	**298-4542**	1	TUBE AS	
	37	1	**298-4543**	1	BOLT	
	38	2	**317-3144**	1	BRACKET	

307-2847 **PUMP GP-FUEL INJECTION** (contd.) **i04017993**

NOTE	REF NO	GRAPHIC REF	PART NUMBER	QTY	PART NAME 1 2 3 4 5 6 (PRODUCT LEVEL)	SEE PAGE
F			**278-4138**	4	KIT-FUEL LINE PROTECTION	

C - CHANGE FROM PREVIOUS TYPE
F - NOT SHOWN
M - METRIC PART
R - REMANUFACTURED PART MAY BE AVAILABLE
Y - SEPARATE ILLUSTRATION

307-2847 **PUMP GP-FUEL INJECTION (**contd.**)** **i04017993**

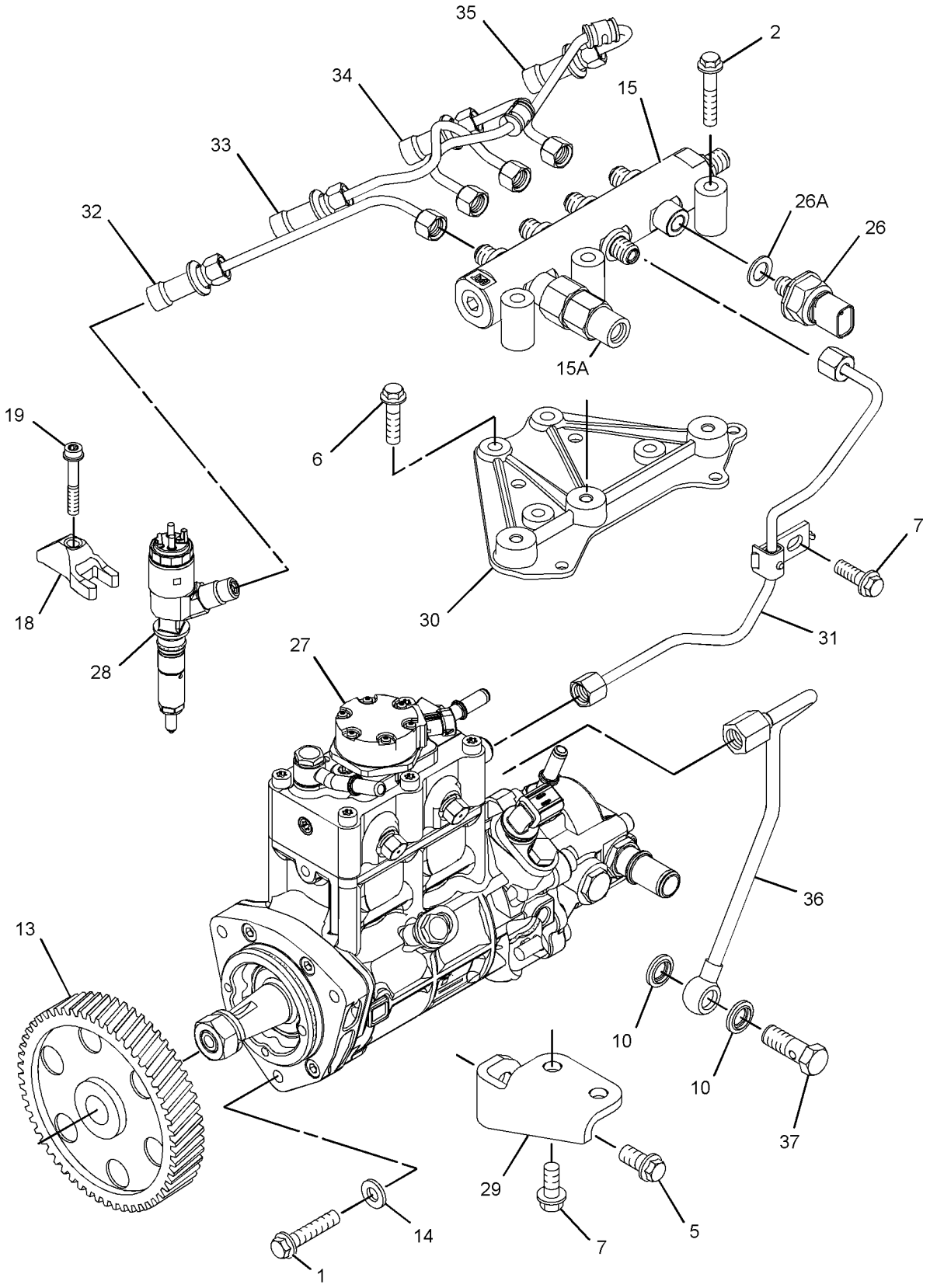

GRAPHIC #1 g02243435

307-2847 **PUMP GP-FUEL INJECTION (**contd.**)** **i04017993**

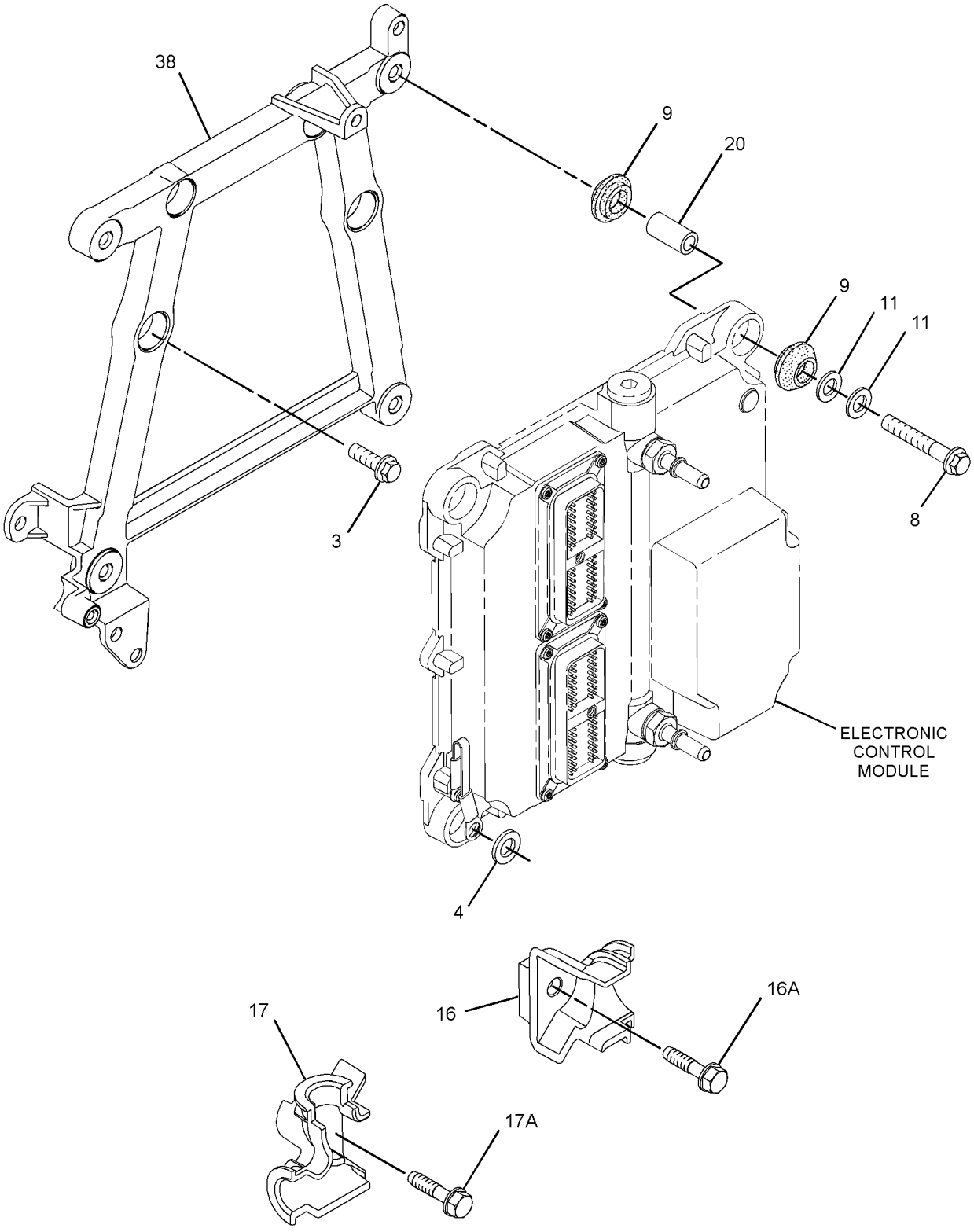

GRAPHIC #2 g01944085

307-2847 **PUMP GP-FUEL INJECTION (**contd.**)** **i04017993**

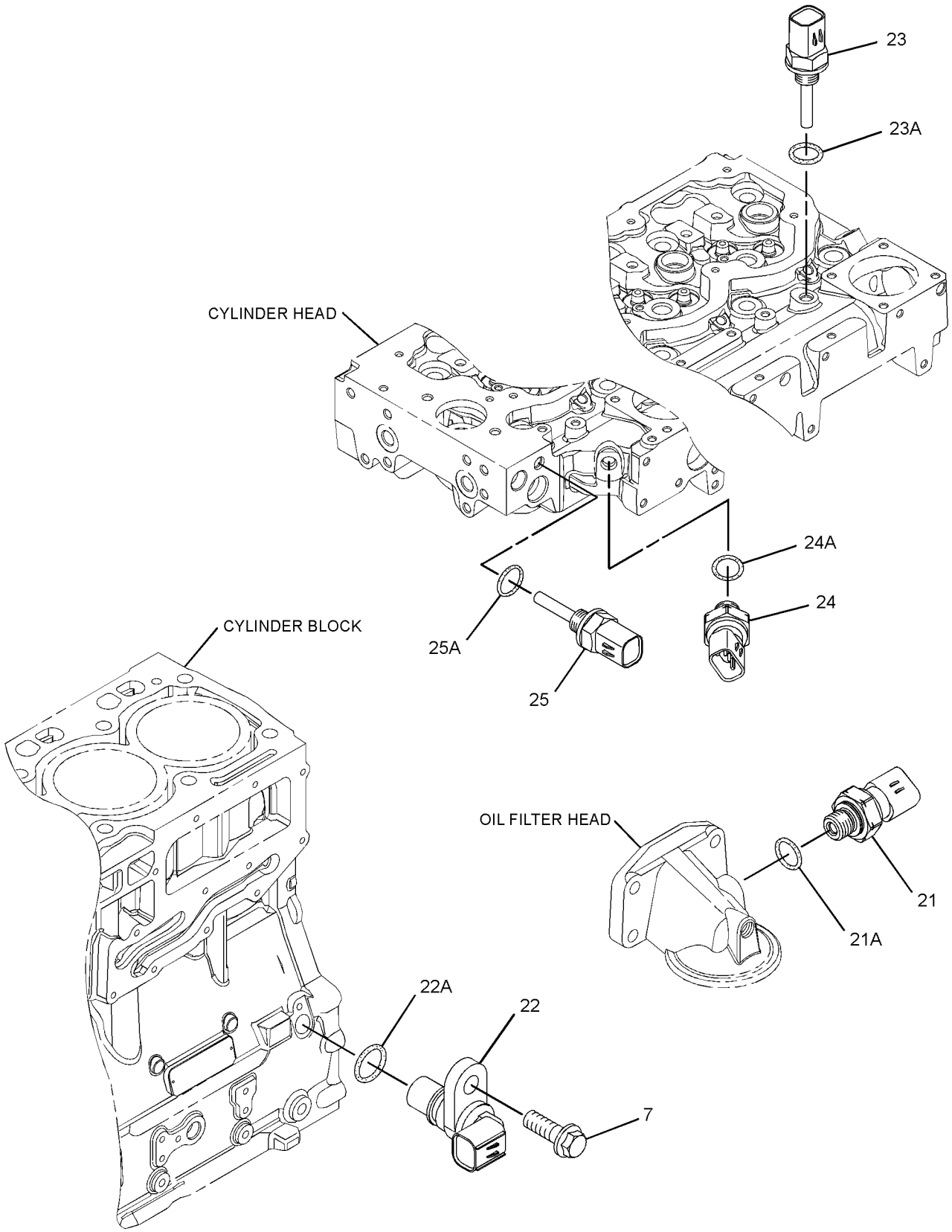

GRAPHIC #3 <END> g01644673

307-2847 PUMP GP-FUEL INJECTION

TYPE 5

SMCS-1251, 1290 **i05880379**

NOTE	REF NO	GRAPHIC REF	PART NUMBER	QTY	PART NAME 1 2 3 4 5 6 (PRODUCT LEVEL)	SEE PAGE
M	1	1	**6I-0260**	3	BOLT (M8X1.25X25-MM)	
M	2	1	**6I-0455**	3	BOLT (M8X1.25X55-MM)	
M	3	2	**6I-0572**	4	BOLT (M8X1.25X20-MM)	
	4	2	**7W-2632**	1	WASHER (8.5X16.8X1.6-MM THK)	
M	5	1	**100-4830**	1	BOLT (M10X1.5X20-MM)	
M	6	1	**101-3895**	4	BOLT (M8X1.25X35-MM)	
M	7	1,3	**124-3815**	4	BOLT (M8X1.25X16-MM)	
M	8	2	**141-8584**	4	BOLT (M8X1.25X50-MM)	
	9	2	**300-6714**	8	MOUNT	
	10	1	**346-0007**	2	WASHER	
	11	2	**217-0099**	5	SPACER (8.2X25X2-MM THK)	
	13	1	**230-8989**	1	GEAR-FUEL PUMP (68-TEETH)	
	14	1	**232-3149**	3	WASHER (8.35X16.85X1.55-MM THK)	
	15	1	**358-6632**	1	RAIL GP-FUEL	
	15A	1	**305-5291**	1	VALVE AS-RELIEF	
	16	2	**268-6677**	1	BRACKET AS	
M	16A	2	**260-3939**	1	SCREW-HEX HEAD (M6X1X25-MM)	
	17	2	**268-6678**	1	BRACKET AS	
M	17A	2	**260-3939**	1	SCREW-HEX HEAD (M6X1X25-MM)	
	18	1	**278-5168**	4	CLAMP-INJECTOR	
	19	1	**278-5170**	4	BOLT	
	20	2	**278-5203**	4	SPACER	
	21	3	**278-5225**	1	KIT-SENSOR (ENGINE OIL PRESSURE)	
	21A	3	**199-9267**	1	SEAL-O-RING	
	22	3	**311-3858**	1	KIT-SENSOR (ENGINE SPEED)	
	22A	3	**274-1639**	1	SEAL	
		3	**238-0120**	1	SENSOR GP-SPEED	
	23	3	**278-5272**	1	KIT-SENSOR (INTAKE AIR TEMPERATURE)	
	23A	3	**278-5226**	1	SEAL-O-RING	
	24	3	**278-5273**	1	KIT-SENSOR (AIR PRESSURE)	
	24A	3	**199-9252**	1	SEAL-O-RING	
	25	3	**278-5307**	1	KIT-SENSOR (COOLANT TEMPERATURE)	
	25A	3	**199-9267**	1	SEAL-O-RING	
	26	1	**311-6342**	1	SENSOR AS-PRESSURE (FUEL RAIL PRESSURE)	
	26A	1	**309-8006**	1	WASHER	
CYR	27	1	*324-0532*	1	PUMP GP-FUEL INJECTION	1523
YR	28	1	**320-0680**	4	INJECTOR GP-FUEL	1027
	29	1	**298-4535**	1	BRACKET-SUPPORT	
	30	1	**337-3573**	1	BRACKET	
	31	1	**337-3574**	1	TUBE	
	32	1	**322-3745**	1	TUBE (CYL NO. 1)	
	33	1	**322-3746**	1	TUBE (CYL NO. 2)	
	34	1	**333-4732**	1	LINE-FUEL INJECTION (CYL NO. 3)	
	35	1	**333-4733**	1	LINE-FUEL INJECTION (CYL NO. 4)	
	36	1	**298-4542**	1	TUBE AS	
	37	1	**363-3908**	1	BOLT-SPECIAL	
	38	2	**317-3144**	1	BRACKET	

307-2847 **PUMP GP-FUEL INJECTION (**contd.**)** **i05880379**

NOTE	REF NO	GRAPHIC REF	PART NUMBER	QTY	PART NAME 1 2 3 4 5 6 (PRODUCT LEVEL)	SEE PAGE
F			**278-4138**	4	KIT-FUEL LINE PROTECTION	

C - CHANGE FROM PREVIOUS TYPE
F - NOT SHOWN
M - METRIC PART
R - REMANUFACTURED PART MAY BE AVAILABLE
Y - SEPARATE ILLUSTRATION

307-2847 **PUMP GP-FUEL INJECTION (**contd.**)** **i05880379**

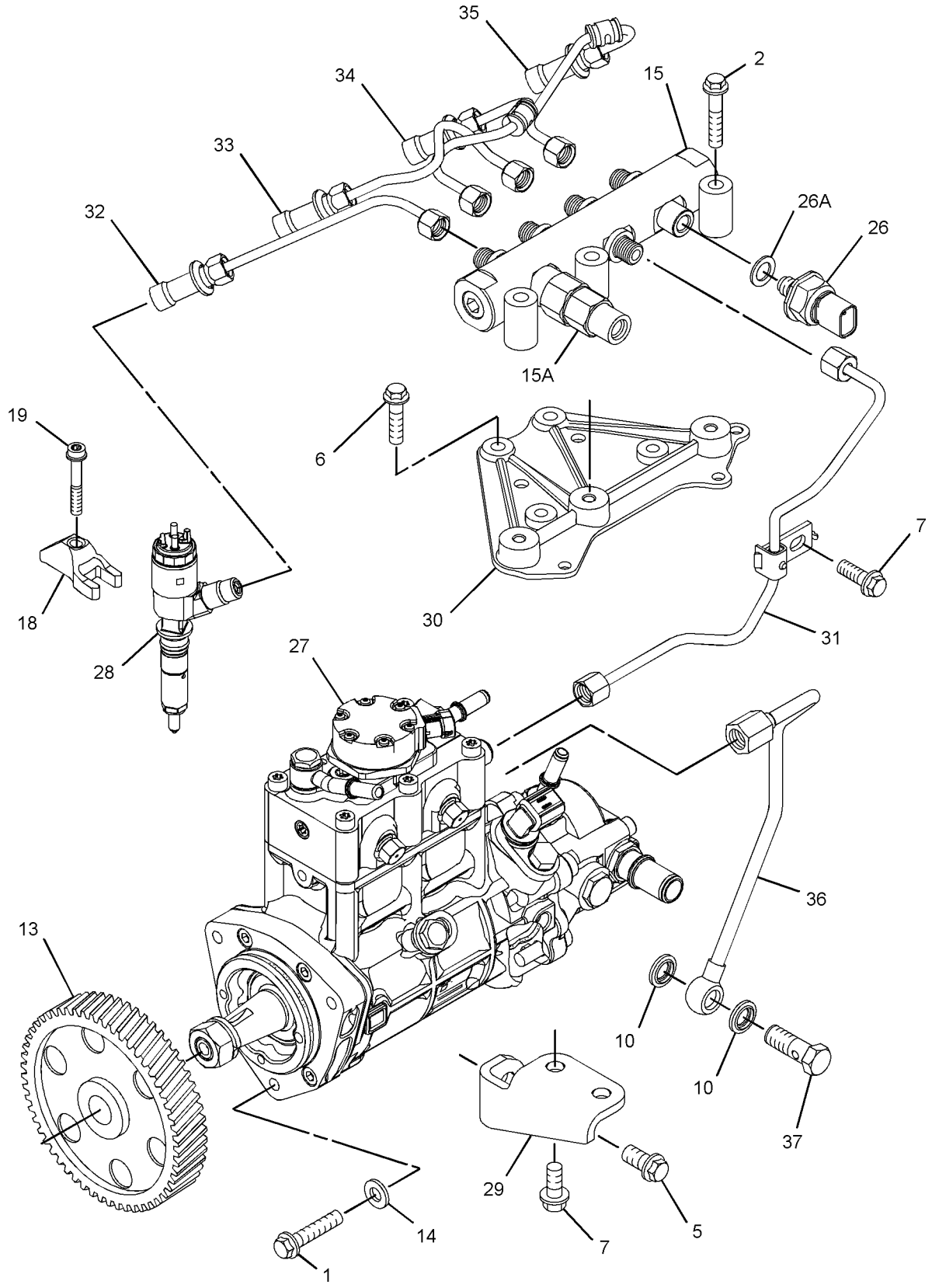

GRAPHIC #1 g02822317

307-2847 **PUMP GP-FUEL INJECTION (**contd.**)** **i05880379**

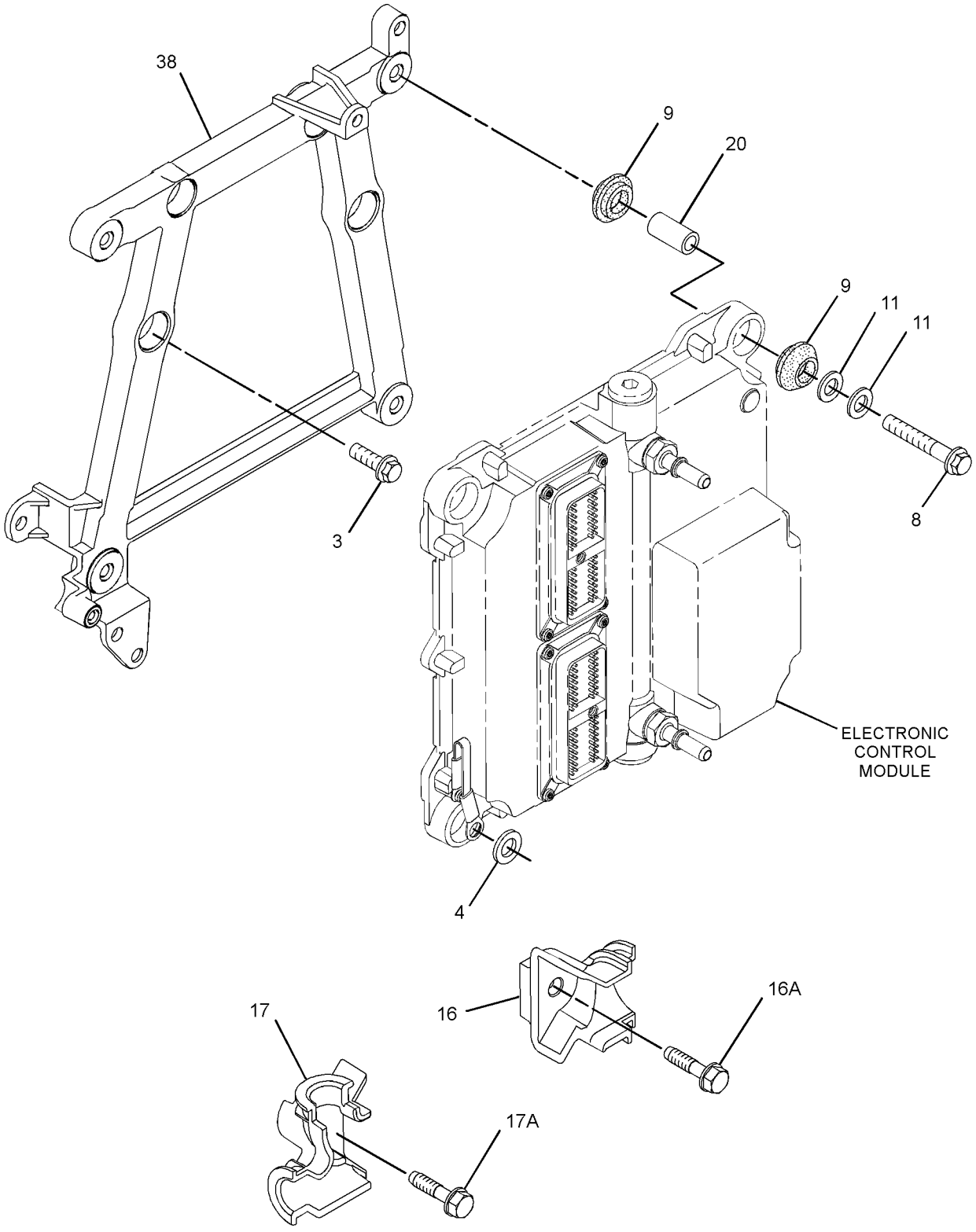

GRAPHIC #2 g01944085

307-2847 **PUMP GP-FUEL INJECTION (**contd.**)** **i05880379**

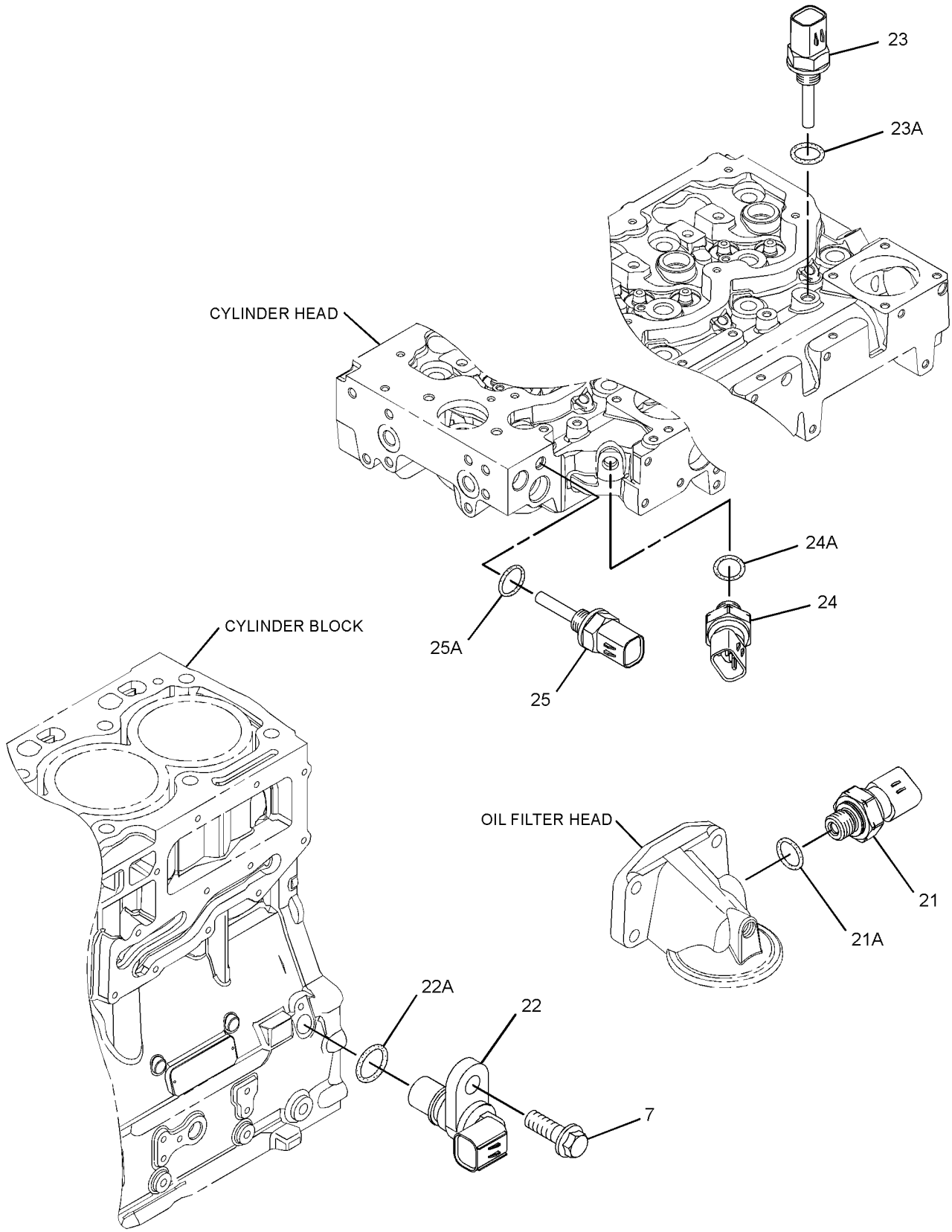

GRAPHIC #3 <END> g01644673

308-4153 PUMP GP-FUEL INJECTION

TYPE 1

SMCS-1251, 1290 **i02736264**

NOTE	REF NO	GRAPHIC REF	PART NUMBER	QTY	PART NAME 1 2 3 4 5 6 (PRODUCT LEVEL)	SEE PAGE
M	1	1	**6I-0260**	3	BOLT (M8X1.25X25-MM)	
M	2	1	**6I-0455**	3	BOLT (M8X1.25X55-MM)	
M	3	2	**6I-0572**	4	BOLT (M8X1.25X20-MM)	
	4	2	**7W-2632**	1	WASHER (8.5X16.8X1.6-MM THK)	
M	5	1	**100-4830**	1	BOLT (M10X1.5X20-MM)	
M	6	1	**101-3895**	4	BOLT (M8X1.25X35-MM)	
M	7	1,3	**124-3815**	4	BOLT (M8X1.25X16-MM)	
M	8	2	**141-8584**	4	BOLT (M8X1.25X50-MM)	
	9	2	**155-0576**	8	MOUNT-ISOLATION	
	10	1	**160-0162**	2	WASHER	
	11	2	**217-0099**	4	SPACER (8.2X25X2-MM THK)	
	13	1	**230-8989**	1	GEAR-FUEL PUMP (68-TEETH)	
	14	1	**232-3149**	6	WASHER (8.35X16.85X1.55-MM THK)	
	15	1	**308-8425**	1	RAIL AS-FUEL	
	16	2	**268-6677**	1	BRACKET AS	
		2	**260-3718**	1	BRACKET	
M	16A	2	**260-3939**	1	SCREW-HEX HEAD (M6X1X25-MM)	
	17	2	**268-6678**	1	BRACKET AS	
		2	**260-3719**	1	BRACKET	
M	17A	2	**260-3939**	1	SCREW-HEX HEAD (M6X1X25-MM)	
	18	1	**278-5168**	4	CLAMP-INJECTOR	
	19	1	**278-5170**	4	BOLT	
	20	2	**278-5203**	4	SPACER	
	21	3	**278-5225**	1	KIT-SENSOR (ENGINE OIL PRESSURE)	
	21A	3	**278-5226**	1	SEAL-O-RING	
	22	3	**278-5228**	1	KIT-SENSOR (ENGINE SPEED)	
	22A	3	**278-5227**	1	SEAL-O-RING	
	23	3	**278-5272**	1	KIT-SENSOR (AIR TEMPERATURE)	
	23A	3	**278-5226**	1	SEAL-O-RING	
	24	3	**278-5273**	1	KIT-SENSOR (WATER PRESSURE)	
	24A	3	**199-9252**	1	SEAL-O-RING	
	25	3	**278-5307**	1	KIT-SENSOR (WATER TEMPERATURE)	
	25A	3	**199-9267**	1	SEAL-O-RING	
	26	1	**278-5308**	1	KIT-SENSOR (FUEL RAIL PRESSURE)	
	26A	1	**309-8006**	1	WASHER	
Y	27	1	**283-2271**	1	PUMP GP-FUEL INJECTION	1067
Y	28	1	**292-3780**	4	INJECTOR GP-FUEL	1021
	29	1	**298-4535**	1	BRACKET-SUPPORT	
	30	1	**298-4536**	1	BRACKET-MOUNTING	
	31	1	**298-4537**	1	TUBE AS	
	32	1	**298-4538**	1	TUBE AS (CYL NO. 1)	
	33	1	**298-4539**	1	TUBE AS (CYL NO. 2)	
	34	1	**298-4540**	1	TUBE AS (CYL NO. 3)	
	35	1	**298-4541**	1	TUBE AS (CYL NO. 4)	
	36	1	**298-4542**	1	TUBE AS	
	37	1	**298-4543**	1	BOLT	
	38	2	**308-3395**	1	BRACKET-MOUNTING	

308-4153 **PUMP GP-FUEL INJECTION** (contd.) **i02736264**

NOTE	REF NO	GRAPHIC REF	PART NUMBER	QTY	PART NAME 1 2 3 4 5 6 (PRODUCT LEVEL)	SEE PAGE
F			**278-4138**	4	KIT-FUEL LINE PROTECTION	
F			**217-8477**	1	CLIP	

F - NOT SHOWN
M - METRIC PART
Y - SEPARATE ILLUSTRATION

308-4153 **PUMP GP-FUEL INJECTION (**contd.**)** **i02736264**

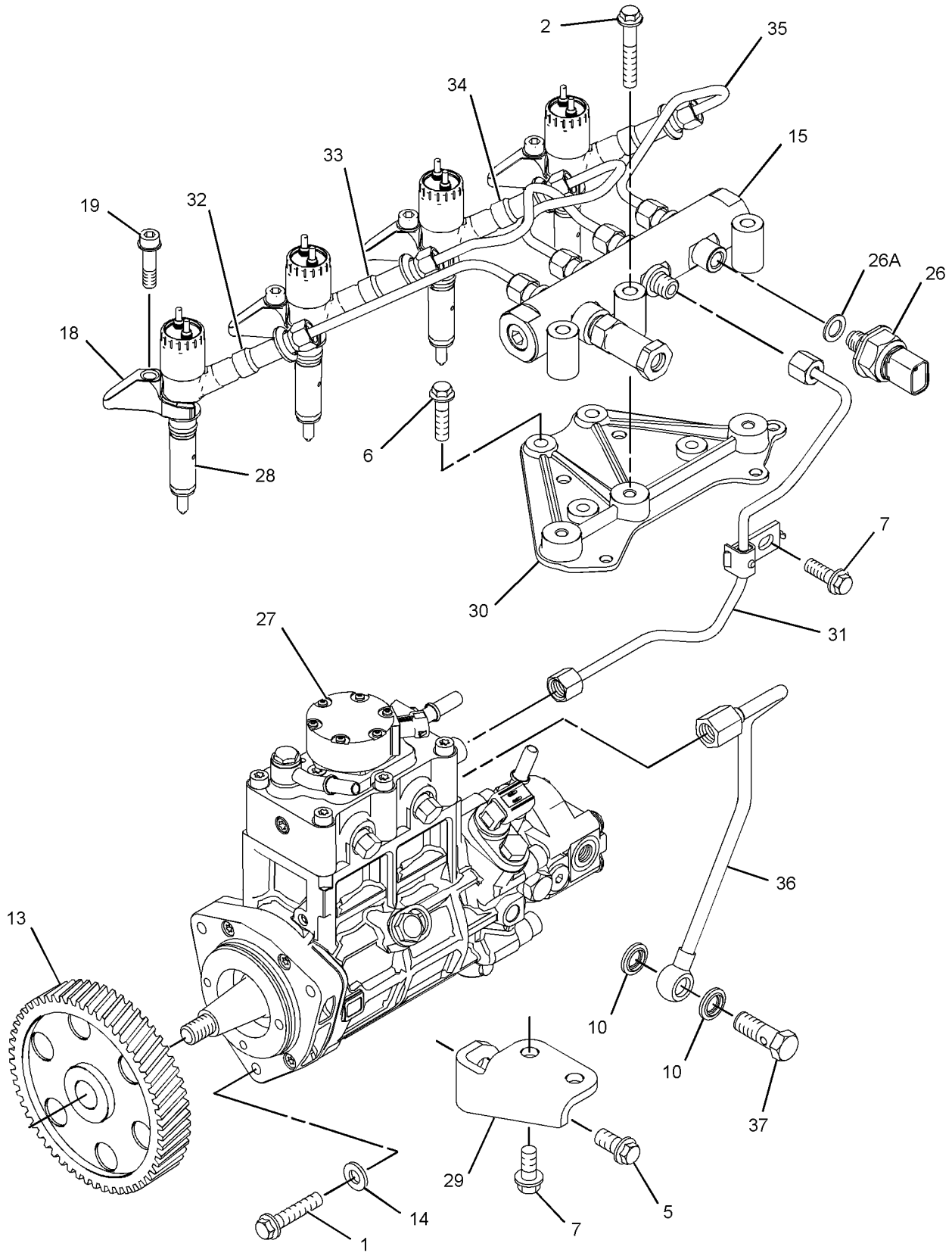

GRAPHIC #1 g01375172

308-4153 **PUMP GP-FUEL INJECTION (**contd.**)** **i02736264**

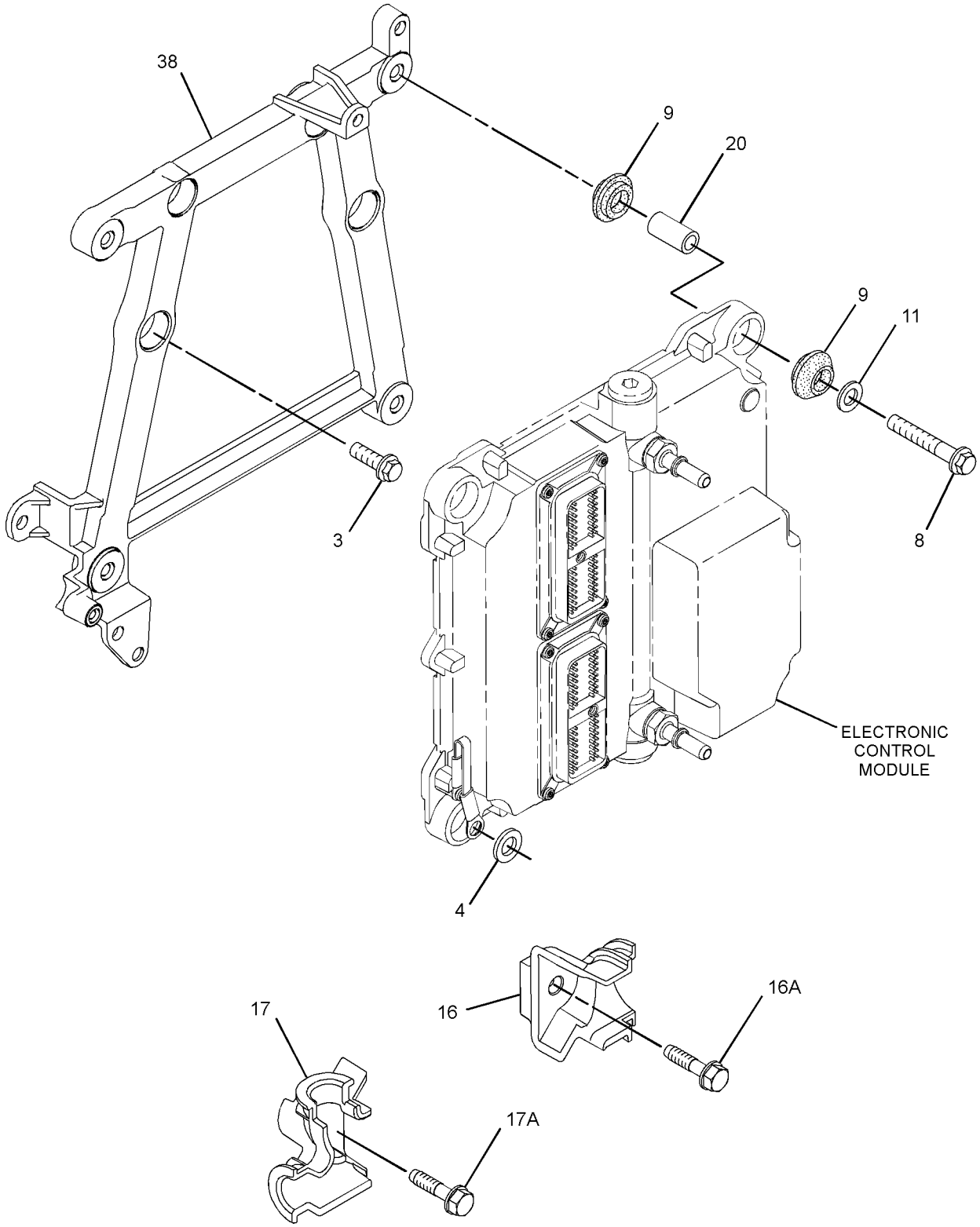

GRAPHIC #2 g01375173

308-4153 **PUMP GP-FUEL INJECTION (**contd.**)** **i02736264**

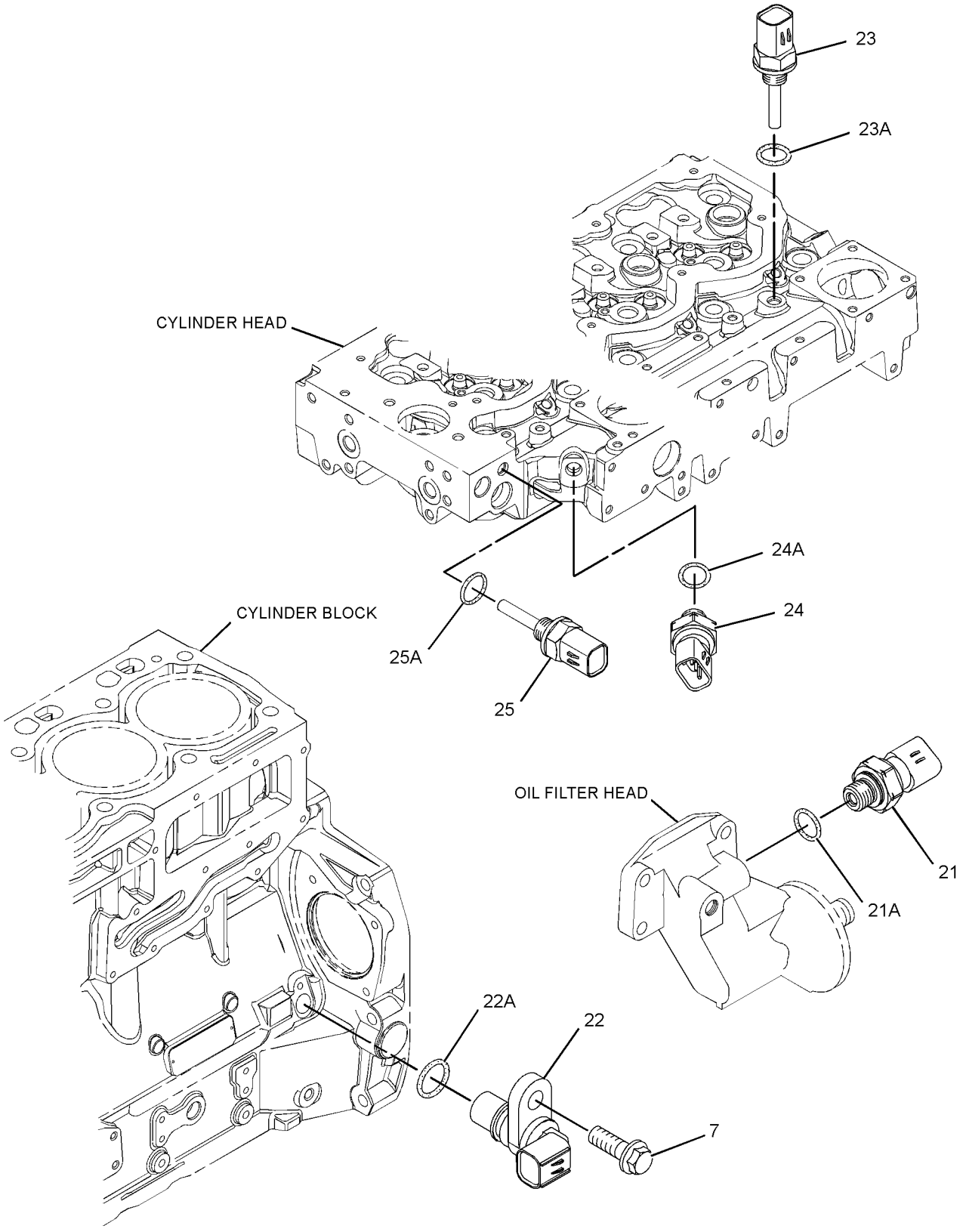

GRAPHIC #3 <END> g01375176

308-4153 PUMP GP-FUEL INJECTION

TYPE 2

SMCS-1251, 1290 **i03075410**

NOTE	REF NO	GRAPHIC REF	PART NUMBER	QTY	PART NAME 1 2 3 4 5 6 (PRODUCT LEVEL)	SEE PAGE
M	1	1	**6I-0260**	3	BOLT (M8X1.25X25-MM)	
M	2	1	**6I-0455**	3	BOLT (M8X1.25X55-MM)	
M	3	2	**6I-0572**	4	BOLT (M8X1.25X20-MM)	
	4	2	**7W-2632**	1	WASHER (8.5X16.8X1.6-MM THK)	
M	5	1	**100-4830**	1	BOLT (M10X1.5X20-MM)	
M	6	1	**101-3895**	4	BOLT (M8X1.25X35-MM)	
M	7	1,3	**124-3815**	4	BOLT (M8X1.25X16-MM)	
M	8	2	**141-8584**	4	BOLT (M8X1.25X50-MM)	
	9	2	**300-6714**	8	MOUNT	
	10	1	**160-0162**	2	WASHER	
	11	2	**217-0099**	4	SPACER (8.2X25X2-MM THK)	
	13	1	**230-8989**	1	GEAR-FUEL PUMP (68-TEETH)	
	14	1	**232-3149**	6	WASHER (8.35X16.85X1.55-MM THK)	
	15	1	**308-8425**	1	RAIL AS-FUEL	
	16	2	**268-6677**	1	BRACKET AS	
M	16A	2	**260-3939**	1	SCREW-HEX HEAD (M6X1X25-MM)	
	17	2	**268-6678**	1	BRACKET AS	
M	17A	2	**260-3939**	1	SCREW-HEX HEAD (M6X1X25-MM)	
	18	1	**278-5168**	4	CLAMP-INJECTOR	
	19	1	**278-5170**	4	BOLT	
	20	2	**278-5203**	4	SPACER	
	21	3	**278-5225**	1	KIT-SENSOR (ENGINE OIL PRESSURE)	
	21A	3	**199-9267**	1	SEAL-O-RING	
C	22	3	**311-3858**	1	KIT-SENSOR (ENGINE SPEED)	
	22A	3	**274-1639**	1	SEAL	
		3	**238-0120**	1	SENSOR GP-SPEED	
	23	3	**278-5272**	1	KIT-SENSOR (AIR TEMPERATURE)	
	23A	3	**278-5226**	1	SEAL-O-RING	
	24	3	**278-5273**	1	KIT-SENSOR (WATER PRESSURE)	
	24A	3	**199-9252**	1	SEAL-O-RING	
	25	3	**278-5307**	1	KIT-SENSOR (WATER TEMPERATURE)	
	25A	3	**199-9267**	1	SEAL-O-RING	
C	26	1	**311-6342**	1	SENSOR AS-PRESSURE (FUEL RAIL PRESSURE)	
	26A	1	**309-8006**	1	WASHER	
Y	27	1	**283-2271**	1	PUMP GP-FUEL INJECTION	1067
Y	28	1	**292-3780**	4	INJECTOR GP-FUEL	1021
	29	1	**298-4535**	1	BRACKET-SUPPORT	
	30	1	**298-4536**	1	BRACKET-MOUNTING	
	31	1	**298-4537**	1	TUBE AS	
	32	1	**298-4538**	1	TUBE AS (CYL NO. 1)	
	33	1	**298-4539**	1	TUBE AS (CYL NO. 2)	
	34	1	**298-4540**	1	TUBE AS (CYL NO. 3)	
	35	1	**298-4541**	1	TUBE AS (CYL NO. 4)	
	36	1	**298-4542**	1	TUBE AS	
	37	1	**298-4543**	1	BOLT	
	38	2	**308-3395**	1	BRACKET-MOUNTING	

308-4153 **PUMP GP-FUEL INJECTION (**contd.**)** **i03075410**

NOTE	REF NO	GRAPHIC REF	PART NUMBER	QTY	PART NAME 1 2 3 4 5 6 (PRODUCT LEVEL)	SEE PAGE
F			**278-4138**	4	KIT-FUEL LINE PROTECTION	
F			**217-8477**	1	CLIP	

C - CHANGE FROM PREVIOUS TYPE
F - NOT SHOWN
M - METRIC PART
Y - SEPARATE ILLUSTRATION

308-4153 **PUMP GP-FUEL INJECTION (**contd.**)** **i03075410**

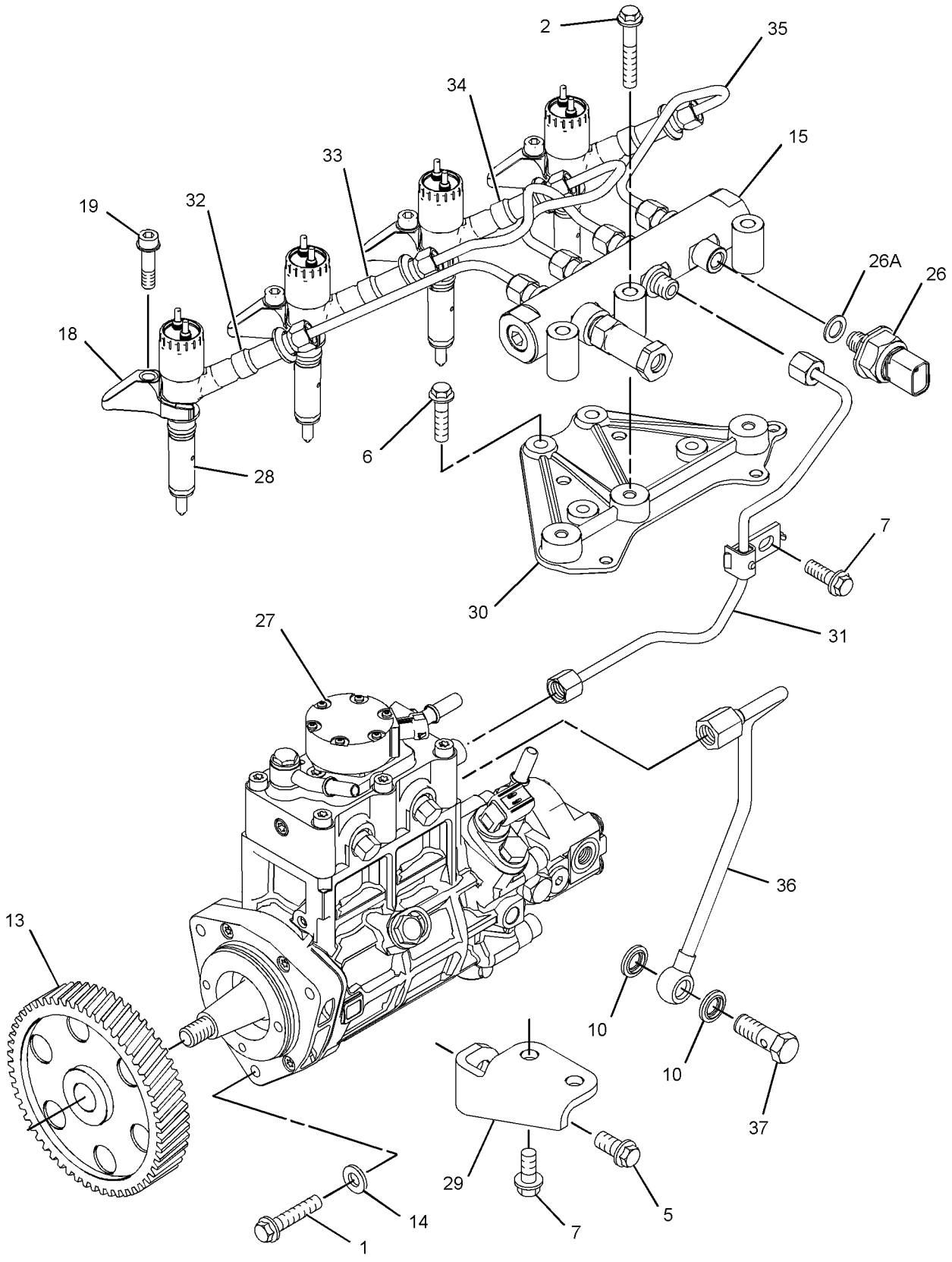

GRAPHIC #1 g01375172

308-4153 **PUMP GP-FUEL INJECTION (**contd.**)** **i03075410**

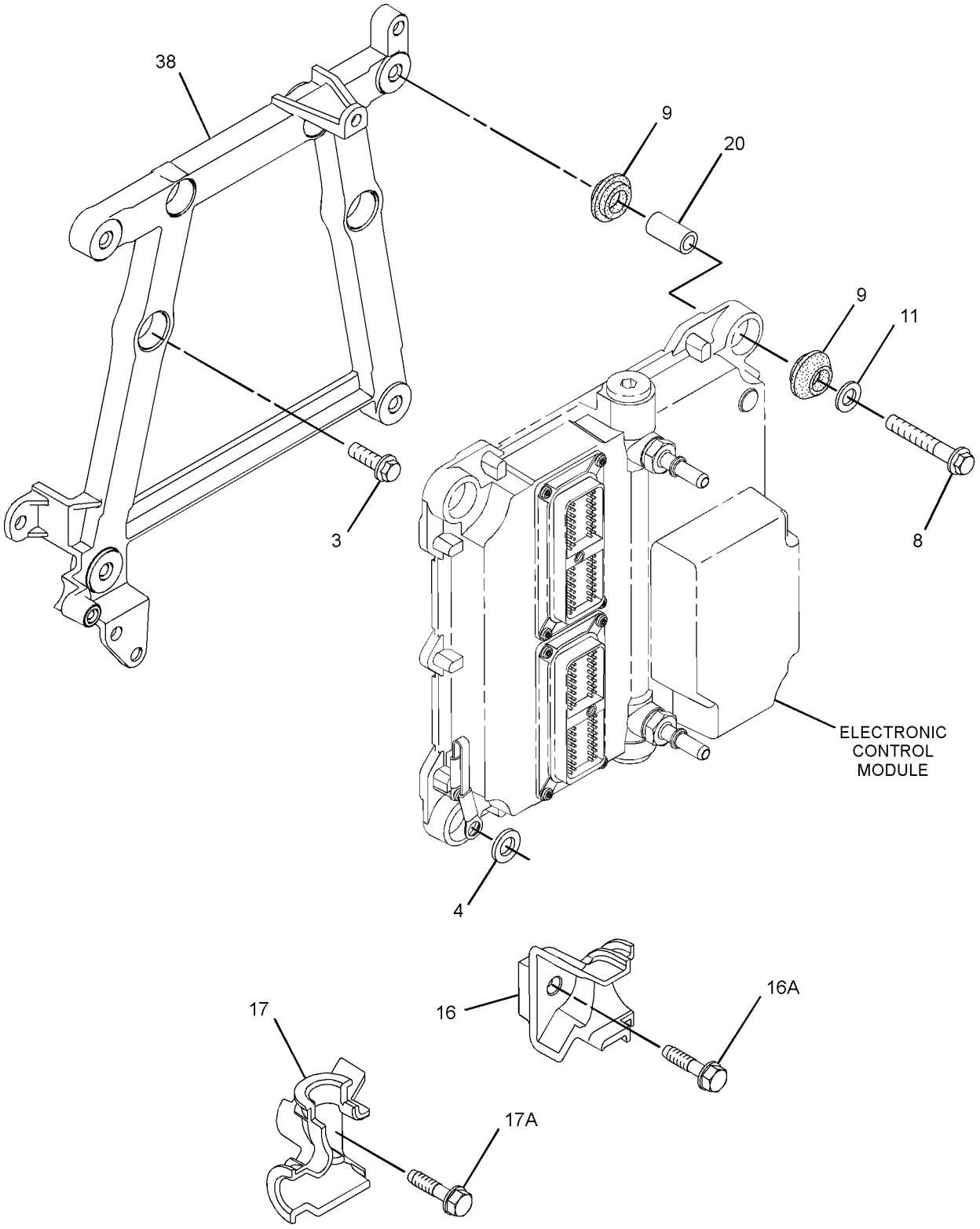

GRAPHIC #2 g01375173

308-4153 **PUMP GP-FUEL INJECTION (**contd.**)** **i03075410**

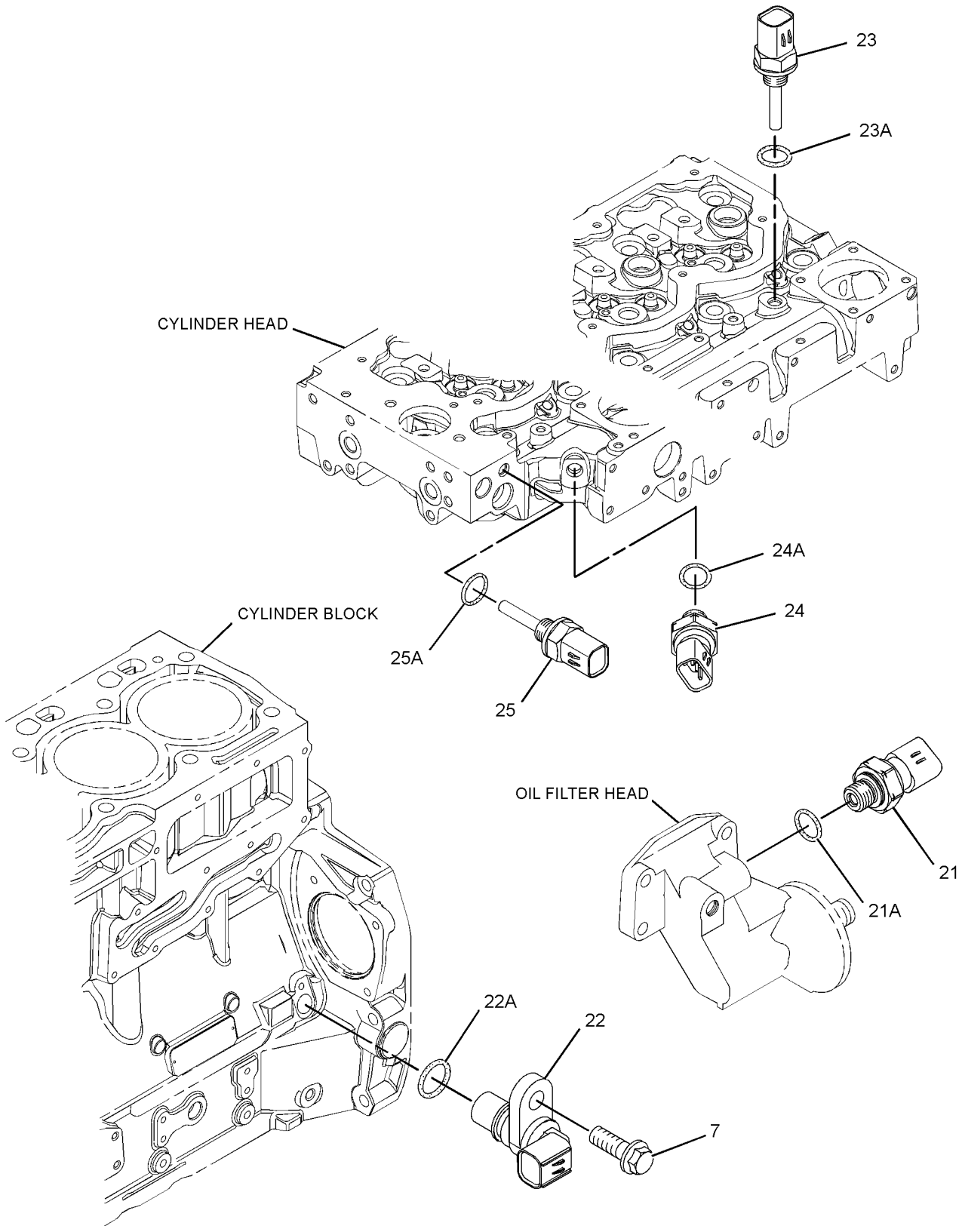

GRAPHIC #3 <END> g01375176

308-4153 PUMP GP-FUEL INJECTION

TYPE 3

SMCS-1251, 1290 **i03730848**

NOTE	REF NO	GRAPHIC REF	PART NUMBER	QTY	PART NAME 1 2 3 4 5 6 (PRODUCT LEVEL)	SEE PAGE
M	1	1	**6I-0260**	3	BOLT (M8X1.25X25-MM)	
M	2	1	**6I-0455**	3	BOLT (M8X1.25X55-MM)	
M	3	2	**6I-0572**	4	BOLT (M8X1.25X20-MM)	
	4	2	**7W-2632**	1	WASHER (8.5X16.8X1.6-MM THK)	
M	5	1	**100-4830**	1	BOLT (M10X1.5X20-MM)	
M	6	1	**101-3895**	4	BOLT (M8X1.25X35-MM)	
M	7	1,3	**124-3815**	4	BOLT (M8X1.25X16-MM)	
M	8	2	**141-8584**	4	BOLT (M8X1.25X50-MM)	
	9	2	**300-6714**	8	MOUNT	
	10	1	**160-0162**	2	WASHER	
	11	2	**217-0099**	5	SPACER (8.2X25X2-MM THK)	
	13	1	**230-8989**	1	GEAR-FUEL PUMP (68-TEETH)	
	14	1	**232-3149**	3	WASHER (8.35X16.85X1.55-MM THK)	
	15	1	**318-2394**	1	RAIL AS-FUEL	
	15A	1	**305-5291**	1	VALVE AS-RELIEF	
	16	2	**268-6677**	1	BRACKET AS	
M	16A	2	**260-3939**	1	SCREW-HEX HEAD (M6X1X25-MM)	
	17	2	**268-6678**	1	BRACKET AS	
M	17A	2	**260-3939**	1	SCREW-HEX HEAD (M6X1X25-MM)	
	18	1	**278-5168**	4	CLAMP-INJECTOR	
	19	1	**278-5170**	4	BOLT	
	20	2	**278-5203**	4	SPACER	
	21	3	**278-5225**	1	KIT-SENSOR (ENGINE OIL PRESSURE)	
	21A	3	**199-9267**	1	SEAL-O-RING	
	22	3	**311-3858**	1	KIT-SENSOR (ENGINE SPEED)	
	22A	3	**274-1639**	1	SEAL	
	23	3	**278-5272**	1	KIT-SENSOR (AIR TEMPERATURE)	
	23A	3	**278-5226**	1	SEAL-O-RING	
	24	3	**278-5273**	1	KIT-SENSOR (WATER PRESSURE)	
	24A	3	**199-9252**	1	SEAL-O-RING	
	25	3	**278-5307**	1	KIT-SENSOR (WATER TEMPERATURE)	
	25A	3	**199-9267**	1	SEAL-O-RING	
	26	1	**311-6342**	1	SENSOR AS-PRESSURE (FUEL RAIL PRESSURE)	
	26A	1	**309-8006**	1	WASHER	
CYR	27	1	**324-0532**	1	PUMP GP-FUEL INJECTION	1523
YR	28	1	**320-0680**	4	INJECTOR GP-FUEL	1027
	29	1	**298-4535**	1	BRACKET-SUPPORT	
	30	1	**337-3573**	1	BRACKET	
	31	1	**337-3574**	1	TUBE	
	32	1	**322-3745**	1	TUBE (CYL NO. 1)	
	33	1	**322-3746**	1	TUBE (CYL NO. 2)	
	34	1	**333-4732**	1	LINE-FUEL INJECTION (CYL NO. 3)	
	35	1	**333-4733**	1	LINE-FUEL INJECTION (CYL NO. 4)	
	36	1	**298-4542**	1	TUBE AS	
	37	1	**298-4543**	1	BOLT	
	38	2	**317-3144**	1	BRACKET	
F			**278-4138**	4	KIT-FUEL LINE PROTECTION	

308-4153 **PUMP GP-FUEL INJECTION** (contd.) **i03730848**

NOTE	REF NO	GRAPHIC REF	PART NUMBER	QTY	PART NAME 1 2 3 4 5 6 (PRODUCT LEVEL)	SEE PAGE

C - CHANGE FROM PREVIOUS TYPE
F - NOT SHOWN
M - METRIC PART
R - REMANUFACTURED PART MAY BE AVAILABLE
Y - SEPARATE ILLUSTRATION

308-4153 **PUMP GP-FUEL INJECTION (**contd.**)** **i03730848**

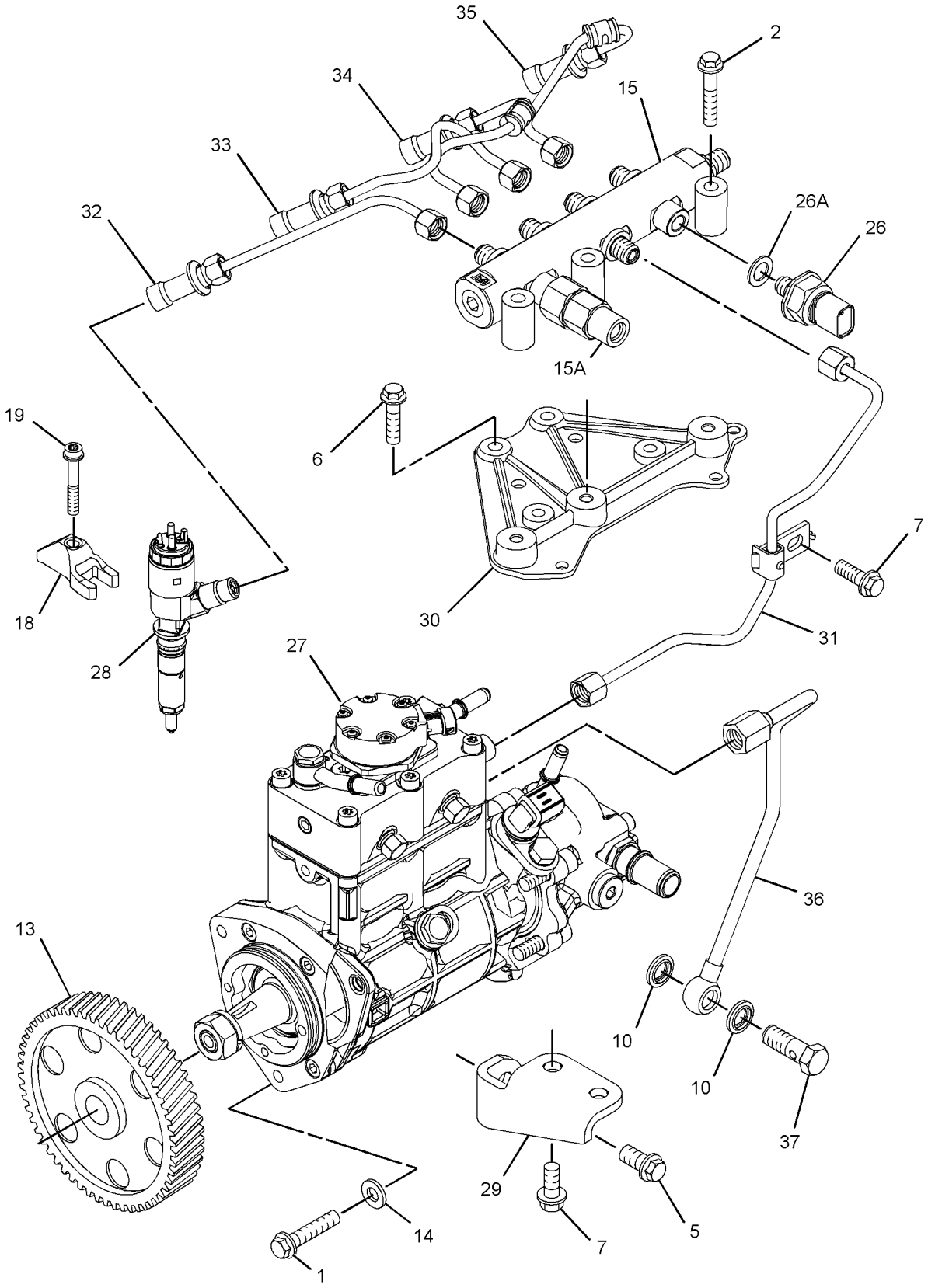

GRAPHIC #1 g01825211

308-4153 **PUMP GP-FUEL INJECTION (**contd.**)** **i03730848**

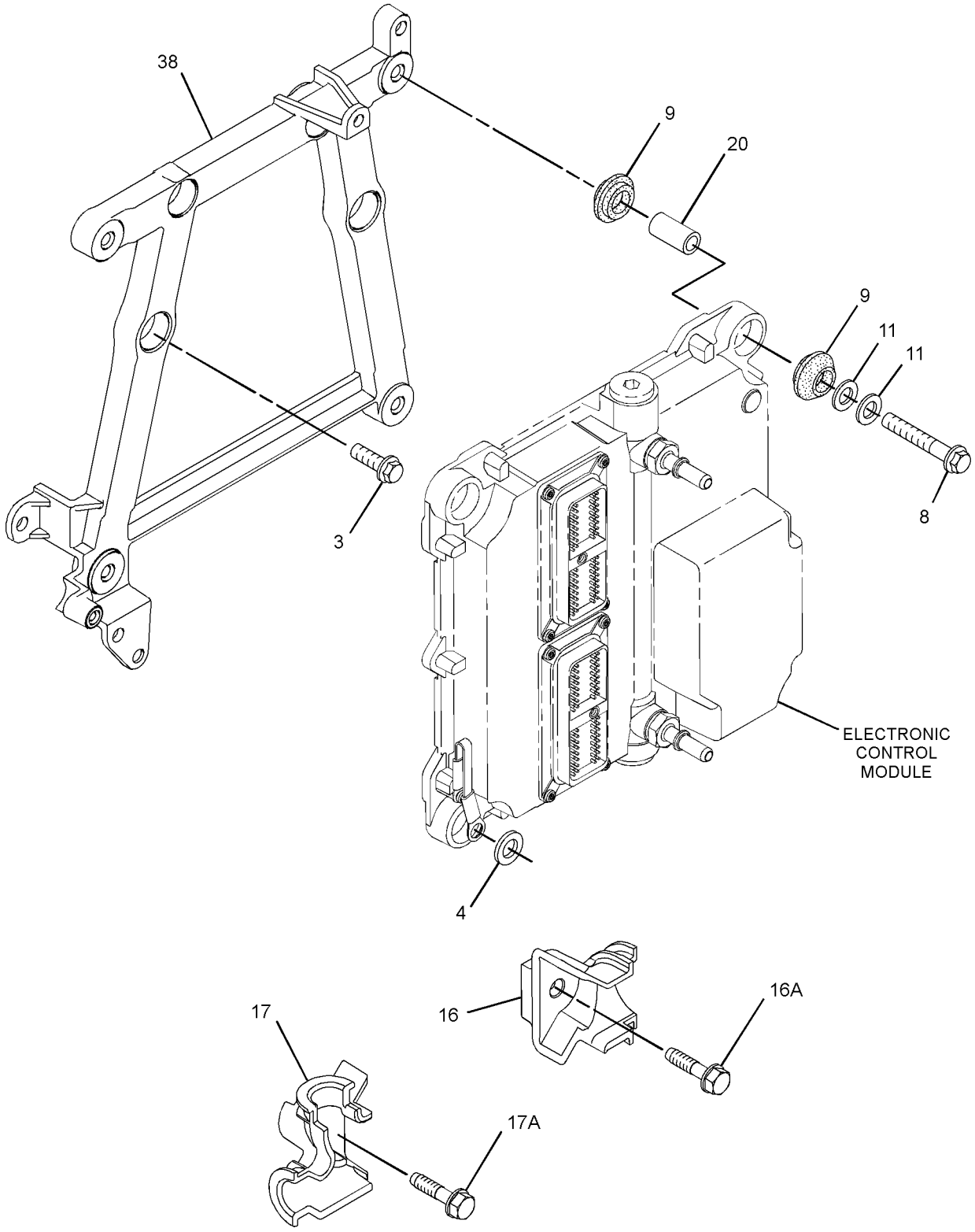

GRAPHIC #2 g01825213

308-4153 **PUMP GP-FUEL INJECTION (**contd.**)** **i03730848**

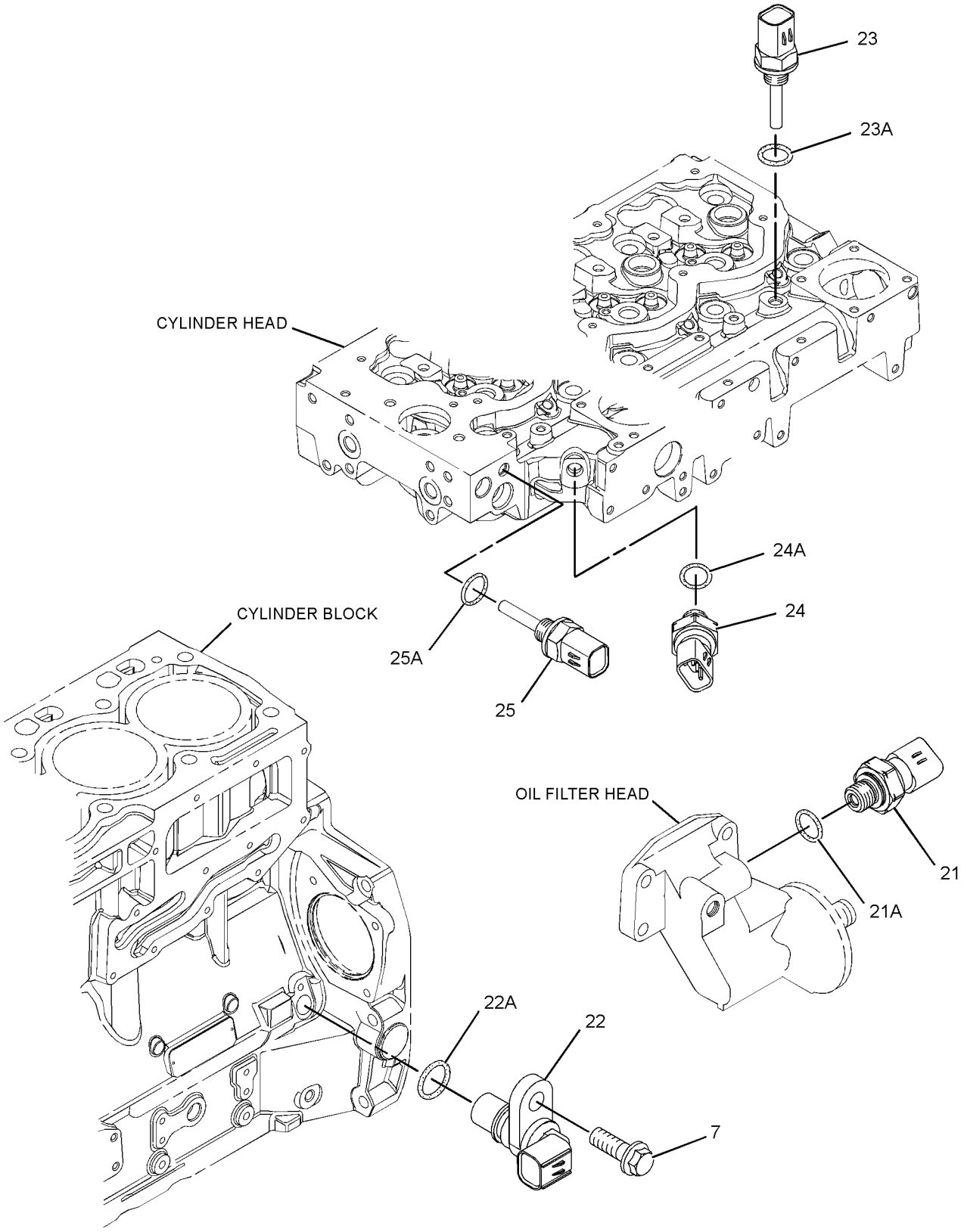

GRAPHIC #3 <END> g01375176

308-4153 PUMP GP-FUEL INJECTION

TYPE 4

SMCS-1251, 1290 **i04017660**

NOTE	REF NO	GRAPHIC REF	PART NUMBER	QTY	PART NAME 1 2 3 4 5 6 (PRODUCT LEVEL)	SEE PAGE
M	1	1	**6I-0260**	3	BOLT (M8X1.25X25-MM)	
M	2	1	**6I-0455**	3	BOLT (M8X1.25X55-MM)	
M	3	2	**6I-0572**	4	BOLT (M8X1.25X20-MM)	
	4	2	**7W-2632**	1	WASHER (8.5X16.8X1.6-MM THK)	
M	5	1	**100-4830**	1	BOLT (M10X1.5X20-MM)	
M	6	1	**101-3895**	4	BOLT (M8X1.25X35-MM)	
M	7	1,3	**124-3815**	4	BOLT (M8X1.25X16-MM)	
M	8	2	**141-8584**	4	BOLT (M8X1.25X50-MM)	
	9	2	**300-6714**	8	MOUNT	
	10	1	**160-0162**	2	WASHER	
	11	2	**217-0099**	5	SPACER (8.2X25X2-MM THK)	
	13	1	**230-8989**	1	GEAR-FUEL PUMP (68-TEETH)	
	14	1	**232-3149**	3	WASHER (8.35X16.85X1.55-MM THK)	
	15	1	**318-2394**	1	RAIL AS-FUEL	
	15A	1	**305-5291**	1	VALVE AS-RELIEF	
	16	2	**268-6677**	1	BRACKET AS	
M	16A	2	**260-3939**	1	SCREW-HEX HEAD (M6X1X25-MM)	
	17	2	**268-6678**	1	BRACKET AS	
M	17A	2	**260-3939**	1	SCREW-HEX HEAD (M6X1X25-MM)	
	18	1	**278-5168**	4	CLAMP-INJECTOR	
	19	1	**278-5170**	4	BOLT	
	20	2	**278-5203**	4	SPACER	
	21	3	**278-5225**	1	KIT-SENSOR (ENGINE OIL PRESSURE)	
	21A	3	**199-9267**	1	SEAL-O-RING	
	22	3	**311-3858**	1	KIT-SENSOR (ENGINE SPEED)	
		3	**238-0120**	1	SENSOR GP-SPEED (ENGINE)	
	22A	3	**274-1639**	1	SEAL	
	23	3	**278-5272**	1	KIT-SENSOR (AIR TEMPERATURE)	
	23A	3	**278-5226**	1	SEAL-O-RING	
	24	3	**278-5273**	1	KIT-SENSOR (WATER PRESSURE)	
	24A	3	**199-9252**	1	SEAL-O-RING	
	25	3	**278-5307**	1	KIT-SENSOR (WATER TEMPERATURE)	
	25A	3	**199-9267**	1	SEAL-O-RING	
	26	1	**311-6342**	1	SENSOR AS-PRESSURE (FUEL RAIL PRESSURE)	
	26A	1	**309-8006**	1	WASHER	
CYR	27	1	**352-6584**	1	PUMP GP-FUEL INJECTION	1540
YR	28	1	**320-0680**	4	INJECTOR GP-FUEL	1027
	29	1	**298-4535**	1	BRACKET-SUPPORT	
	30	1	**337-3573**	1	BRACKET	
	31	1	**337-3574**	1	TUBE	
	32	1	**322-3745**	1	TUBE (CYL NO. 1)	
	33	1	**322-3746**	1	TUBE (CYL NO. 2)	
	34	1	**333-4732**	1	LINE-FUEL INJECTION (CYL NO. 3)	
	35	1	**333-4733**	1	LINE-FUEL INJECTION (CYL NO. 4)	
	36	1	**298-4542**	1	TUBE AS	
	37	1	**298-4543**	1	BOLT	
	38	2	**317-3144**	1	BRACKET	

308-4153 **PUMP GP-FUEL INJECTION (**contd.**)** **i04017660**

NOTE	REF NO	GRAPHIC REF	PART NUMBER	QTY	PART NAME 1 2 3 4 5 6 (PRODUCT LEVEL)	SEE PAGE
F			**278-4138**	4	KIT-FUEL LINE PROTECTION	

C - CHANGE FROM PREVIOUS TYPE
F - NOT SHOWN
M - METRIC PART
R - REMANUFACTURED PART MAY BE AVAILABLE
Y - SEPARATE ILLUSTRATION

308-4153 **PUMP GP-FUEL INJECTION (**contd.**)** **i04017660**

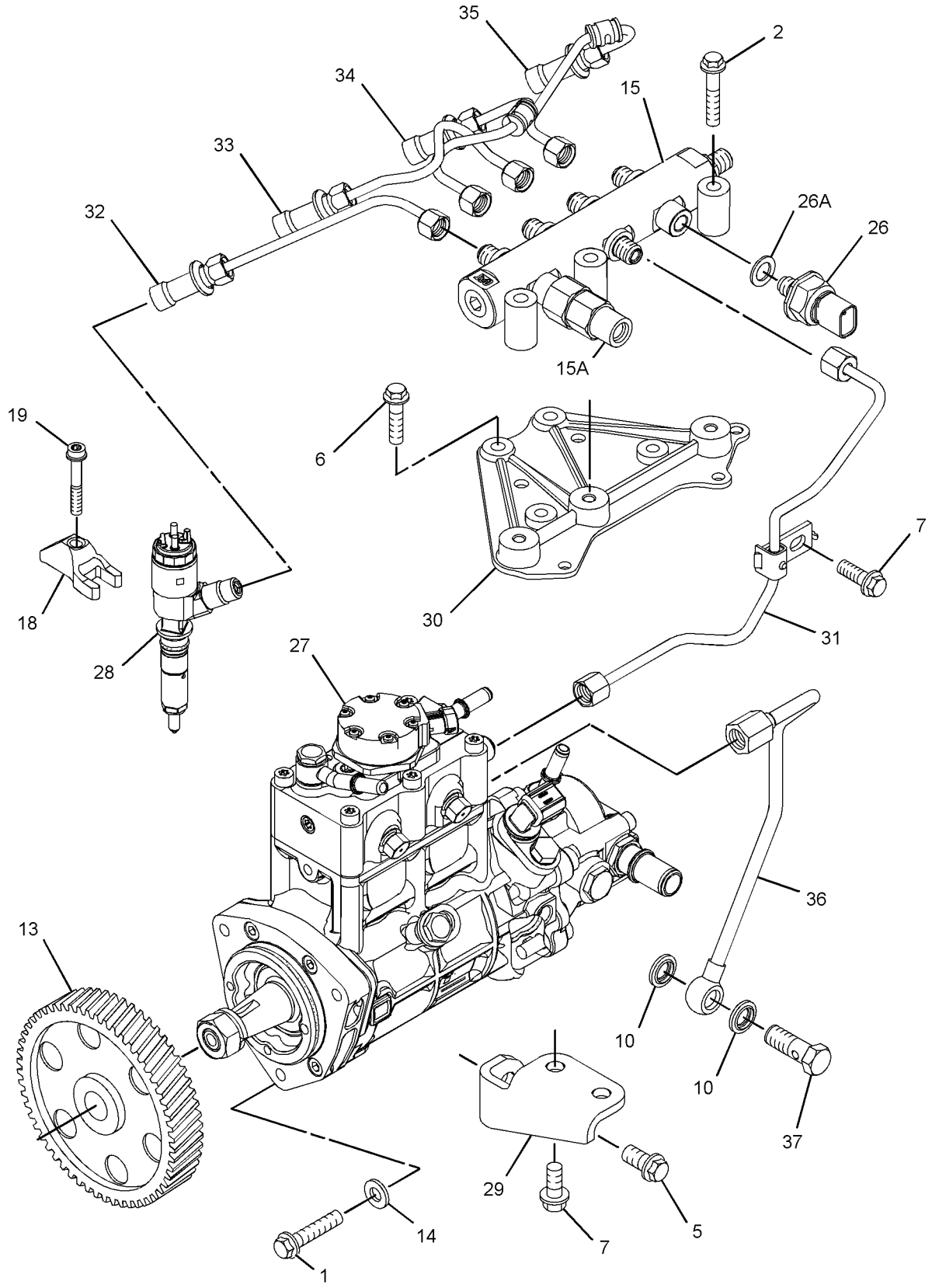

GRAPHIC #1 g02230285

308-4153 **PUMP GP-FUEL INJECTION (**contd.**)** **i04017660**

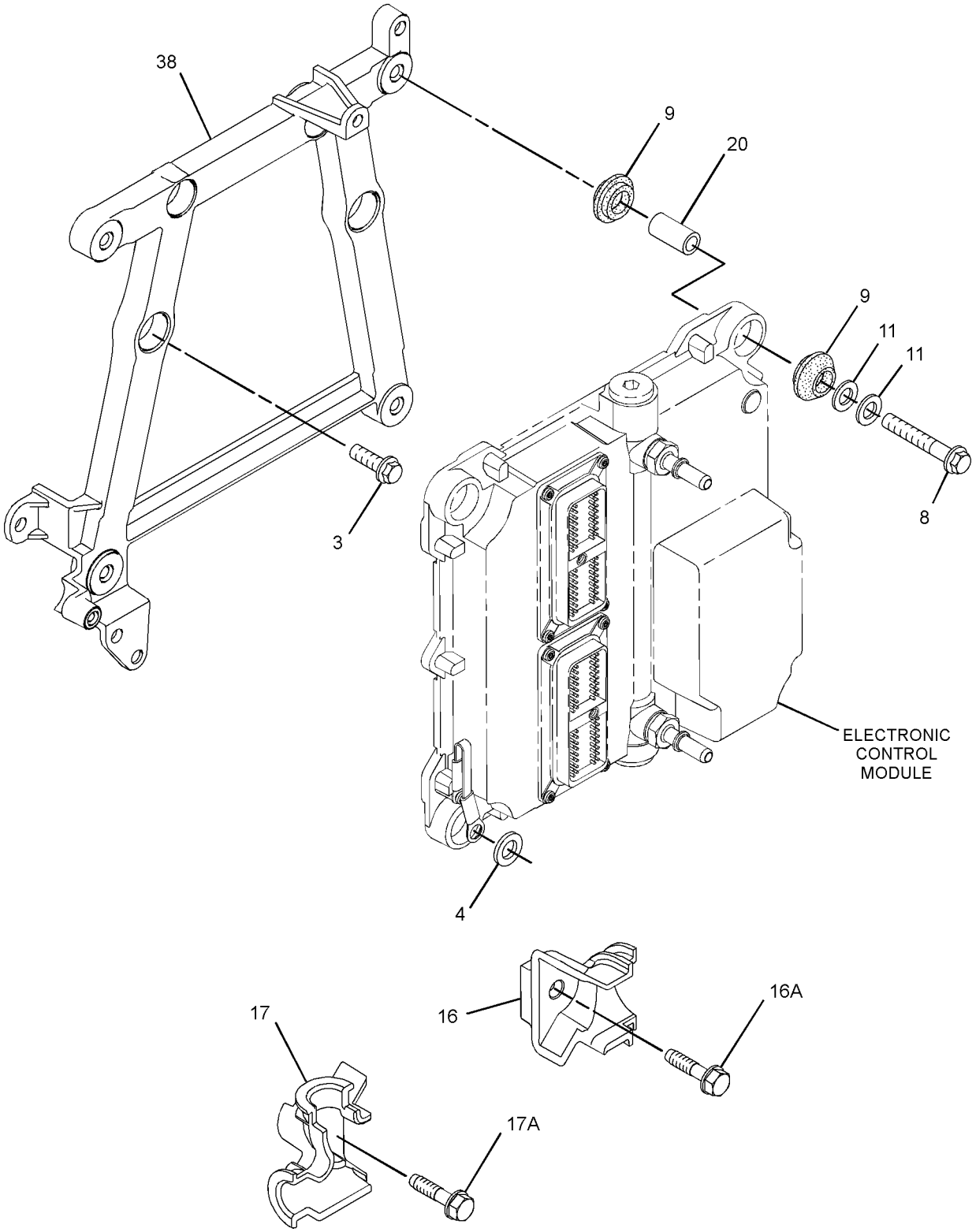

GRAPHIC #2 g01825213

308-4153 **PUMP GP-FUEL INJECTION (**contd.**)** **i04017660**

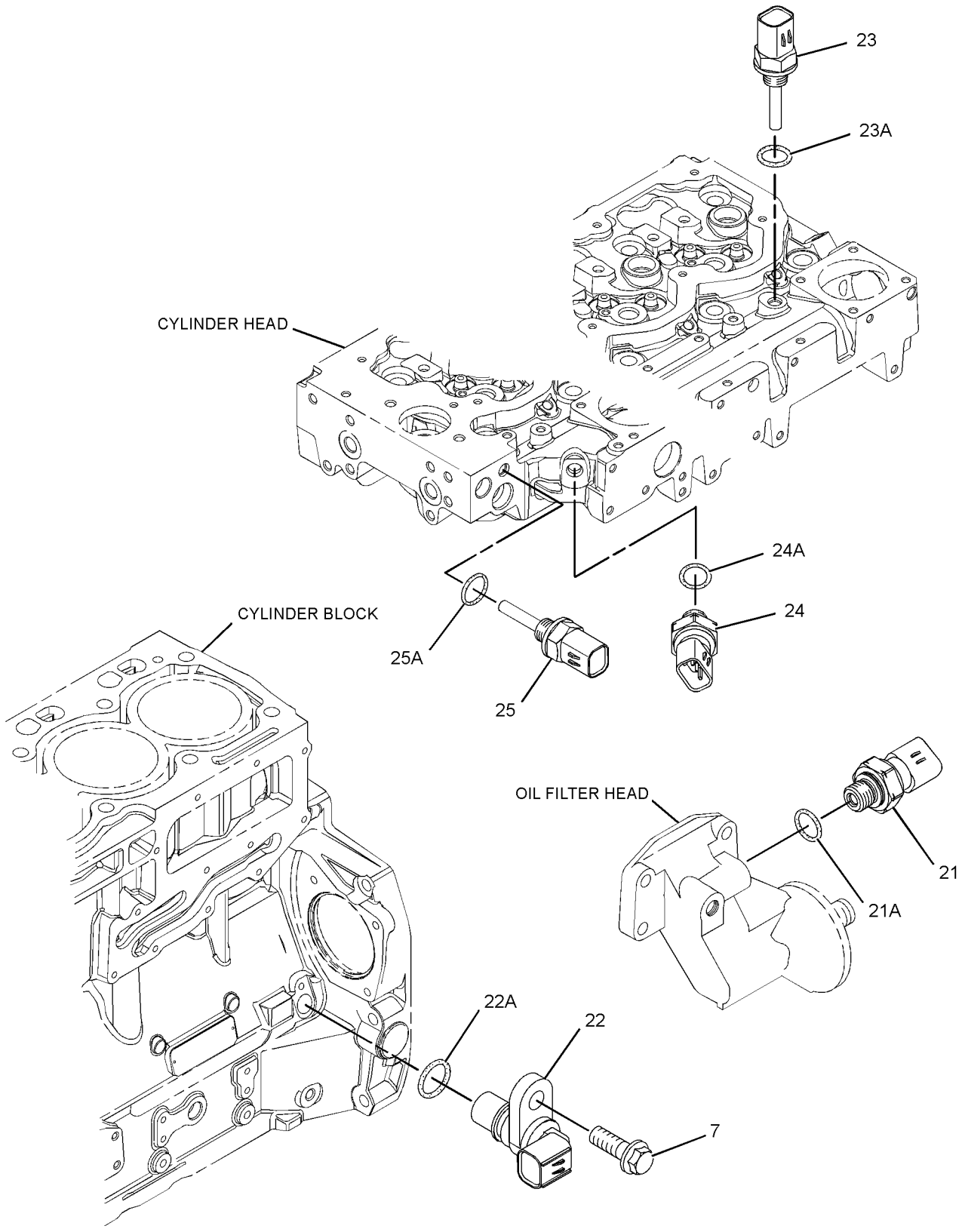

GRAPHIC #3 <END> g01375176

308-4153 PUMP GP-FUEL INJECTION

TYPE 5

SMCS-1251, 1290 **i05880382**

NOTE	REF NO	GRAPHIC REF	PART NUMBER	QTY	PART NAME 1 2 3 4 5 6 (PRODUCT LEVEL)	SEE PAGE
M	1	1	**6I-0260**	3	BOLT (M8X1.25X25-MM)	
M	2	1	**6I-0455**	3	BOLT (M8X1.25X55-MM)	
M	3	2	**6I-0572**	4	BOLT (M8X1.25X20-MM)	
	4	2	**7W-2632**	1	WASHER (8.5X16.8X1.6-MM THK)	
M	5	1	**100-4830**	1	BOLT (M10X1.5X20-MM)	
M	6	1	**101-3895**	4	BOLT (M8X1.25X35-MM)	
M	7	1,3	**124-3815**	4	BOLT (M8X1.25X16-MM)	
M	8	2	**141-8584**	4	BOLT (M8X1.25X50-MM)	
	9	2	**300-6714**	8	MOUNT	
	10	1	**346-0007**	2	WASHER	
	11	2	**217-0099**	5	SPACER (8.2X25X2-MM THK)	
	13	1	**230-8989**	1	GEAR-FUEL PUMP (68-TEETH)	
	14	1	**232-3149**	3	WASHER (8.35X16.85X1.55-MM THK)	
	15	1	**358-6632**	1	RAIL GP-FUEL	
	15A	1	**305-5291**	1	VALVE AS-RELIEF	
	16	2	**268-6677**	1	BRACKET AS	
M	16A	2	**260-3939**	1	SCREW-HEX HEAD (M6X1X25-MM)	
	17	2	**268-6678**	1	BRACKET AS	
M	17A	2	**260-3939**	1	SCREW-HEX HEAD (M6X1X25-MM)	
	18	1	**278-5168**	4	CLAMP-INJECTOR	
	19	1	**278-5170**	4	BOLT	
	20	2	**278-5203**	4	SPACER	
	21	3	**278-5225**	1	KIT-SENSOR (ENGINE OIL PRESSURE)	
	21A	3	**199-9267**	1	SEAL-O-RING	
	22	3	**311-3858**	1	KIT-SENSOR (ENGINE SPEED)	
		3	**238-0120**	1	SENSOR GP-SPEED (ENGINE)	
	22A	3	**274-1639**	1	SEAL	
	23	3	**278-5272**	1	KIT-SENSOR (AIR TEMPERATURE)	
	23A	3	**278-5226**	1	SEAL-O-RING	
	24	3	**278-5273**	1	KIT-SENSOR (WATER PRESSURE)	
	24A	3	**199-9252**	1	SEAL-O-RING	
	25	3	**278-5307**	1	KIT-SENSOR (WATER TEMPERATURE)	
	25A	3	**199-9267**	1	SEAL-O-RING	
	26	1	**311-6342**	1	SENSOR AS-PRESSURE (FUEL RAIL PRESSURE)	
	26A	1	**309-8006**	1	WASHER	
CYR	27	1	*324-0532*	1	PUMP GP-FUEL INJECTION	1523
YR	28	1	**320-0680**	4	INJECTOR GP-FUEL	1027
	29	1	**298-4535**	1	BRACKET-SUPPORT	
	30	1	**337-3573**	1	BRACKET	
	31	1	**337-3574**	1	TUBE	
	32	1	**322-3745**	1	TUBE (CYL NO. 1)	
	33	1	**322-3746**	1	TUBE (CYL NO. 2)	
	34	1	**333-4732**	1	LINE-FUEL INJECTION (CYL NO. 3)	
	35	1	**333-4733**	1	LINE-FUEL INJECTION (CYL NO. 4)	
	36	1	**298-4542**	1	TUBE AS	
	37	1	**363-3908**	1	BOLT-SPECIAL	
	38	2	**317-3144**	1	BRACKET	

308-4153 **PUMP GP-FUEL INJECTION** (contd.) **i05880382**

NOTE	REF NO	GRAPHIC REF	PART NUMBER	QTY	PART NAME 1 2 3 4 5 6 (PRODUCT LEVEL)	SEE PAGE
F			**278-4138**	4	KIT-FUEL LINE PROTECTION	

C - CHANGE FROM PREVIOUS TYPE
F - NOT SHOWN
M - METRIC PART
R - REMANUFACTURED PART MAY BE AVAILABLE
Y - SEPARATE ILLUSTRATION

308-4153 **PUMP GP-FUEL INJECTION (**contd.**)** **i05880382**

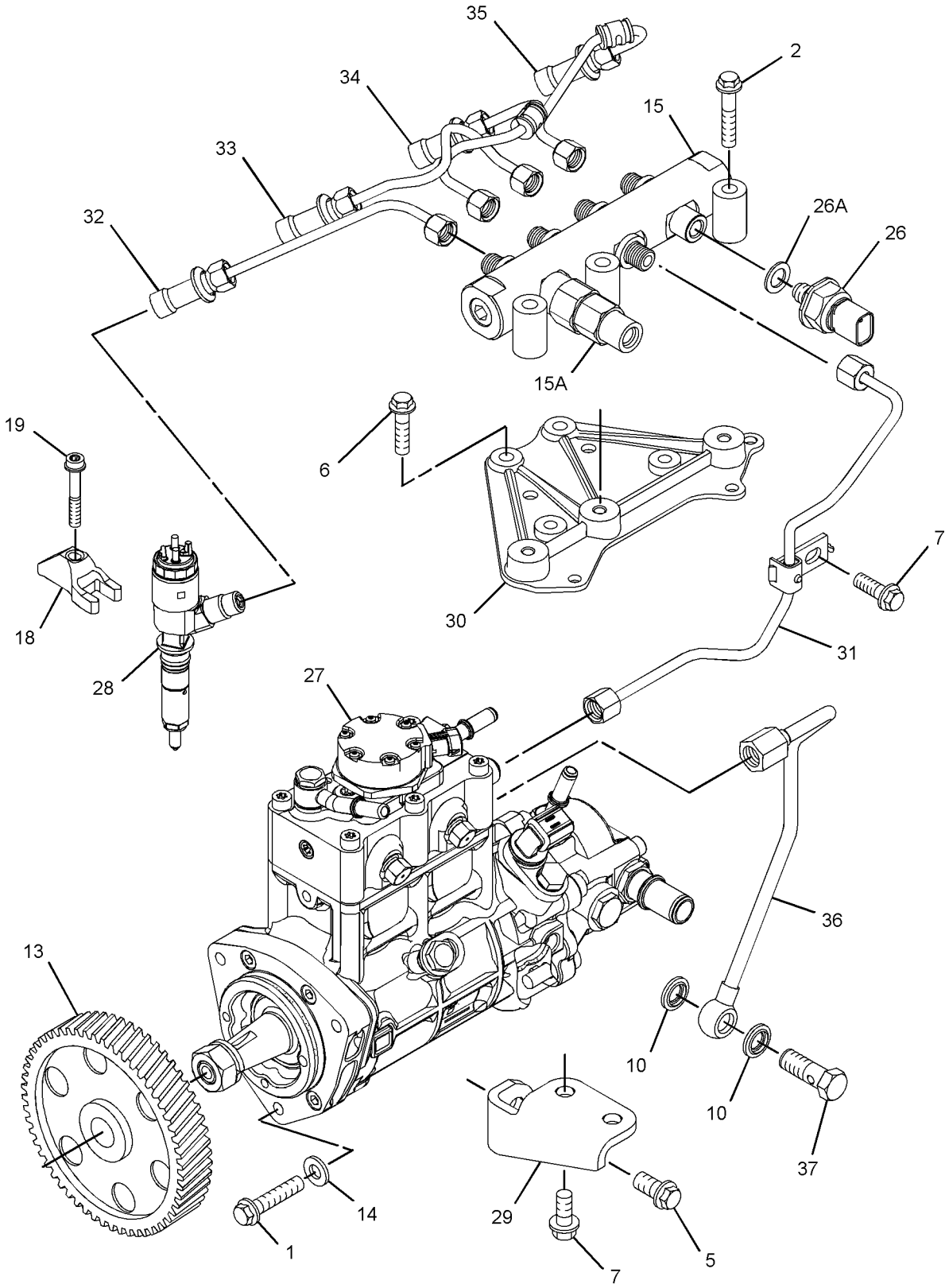

GRAPHIC #1 g02822556

308-4153 **PUMP GP-FUEL INJECTION (**contd.**)** **i05880382**

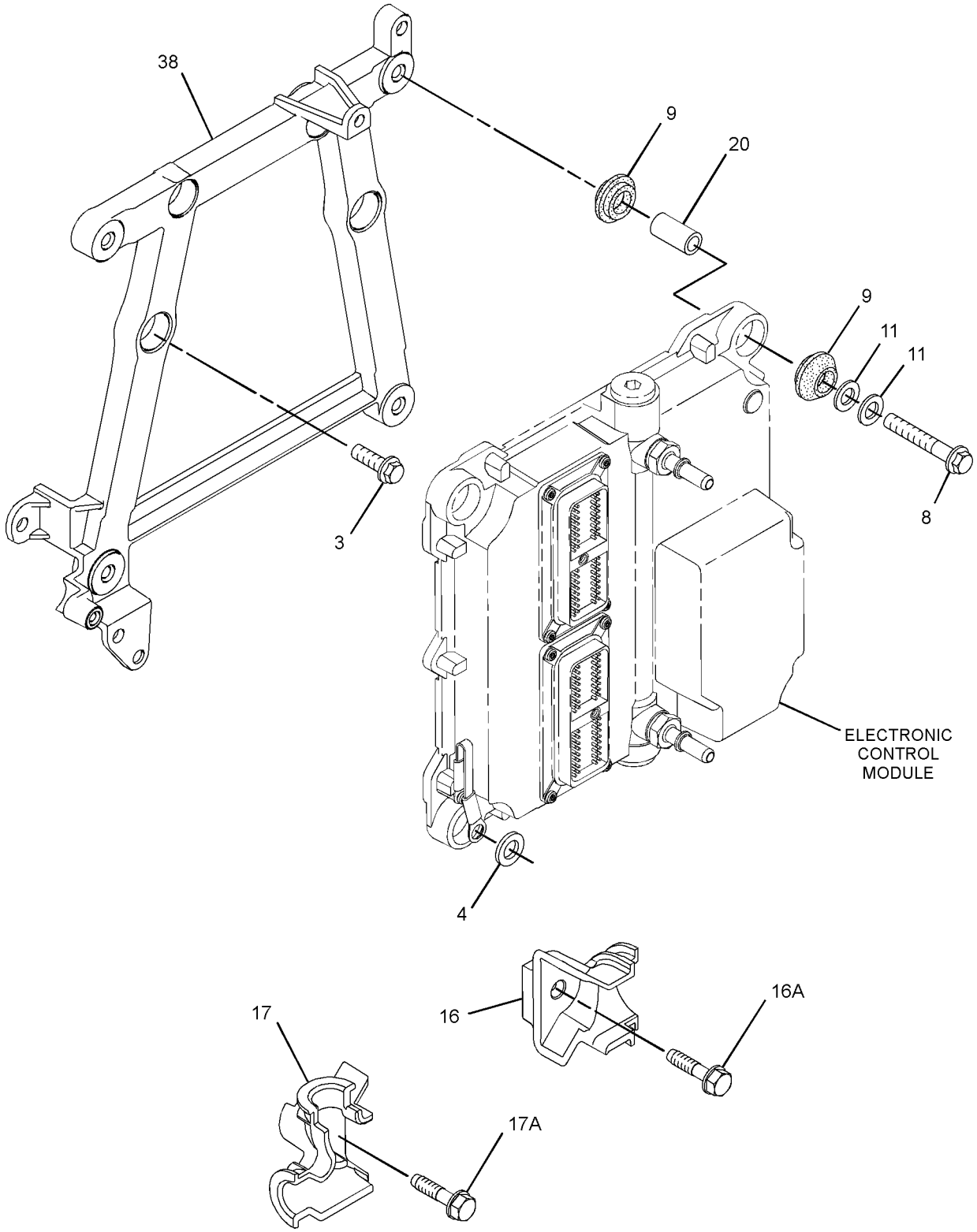

GRAPHIC #2 g01825213

308-4153 **PUMP GP-FUEL INJECTION (**contd.**)** **i05880382**

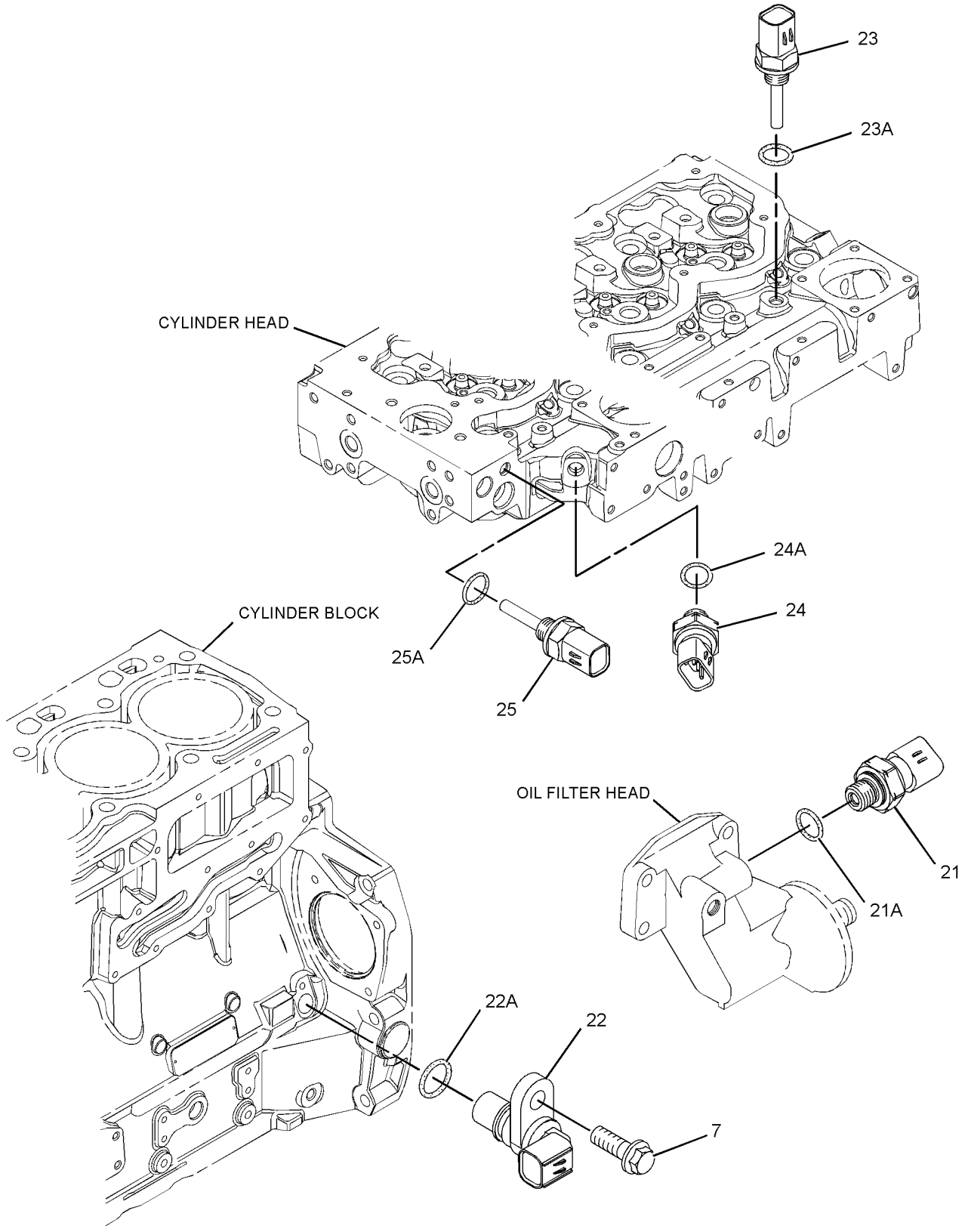

GRAPHIC #3 <END> g01375176

313-3514 PUMP GP-FUEL INJECTION

S/N: 444322-UP

TYPE 1

SMCS-1251, 1290 **i04706253**

NOTE	REF NO	GRAPHIC REF	PART NUMBER	QTY	PART NAME 1 2 3 4 5 6 (PRODUCT LEVEL)	SEE PAGE
M	1	1	**6I-0260**	3	BOLT (M8X1.25X25-MM)	
M	2	1	**6I-0455**	3	BOLT (M8X1.25X55-MM)	
M	3	2	**6I-0572**	4	BOLT (M8X1.25X20-MM)	
	4	2	**7W-2632**	1	WASHER (8.5X16.8X1.6-MM THK)	
	5	3	**035-8017**	2	UNION	
	6	3	**365-3308**	2	NUT-COMPRESSION	
	7	3	**067-6265**	2	FITTING-BRASS	
M	8	1	**100-4830**	1	BOLT (M10X1.5X20-MM)	
M	9	1	**101-3895**	4	BOLT (M8X1.25X35-MM)	
M	10	1,3	**124-3815**	4	BOLT (M8X1.25X16-MM)	
M	11	2	**141-8584**	4	BOLT (M8X1.25X50-MM)	
	12	1	**160-0162**	2	WASHER	
	13	3	**199-9252**	1	SEAL-O-RING	
	14	2	**217-0099**	4	SPACER (8.2X25X2-MM THK)	
	15	1	**230-8989**	1	GEAR-FUEL PUMP (68-TEETH)	
	16	1	**232-3149**	3	WASHER (8.35X16.85X1.55-MM THK)	
	17	2	**268-6677**	1	BRACKET AS	
		2	**260-3718**	1	BRACKET	
M	17A	2	**260-3939**	1	SCREW-HEX HEAD (M6X1X25-MM)	
	18	2	**268-6678**	1	BRACKET AS	
		2	**260-3719**	1	BRACKET	
M	18A	2	**260-3939**	1	SCREW-HEX HEAD (M6X1X25-MM)	
	19	1	**278-5168**	4	CLAMP-INJECTOR	
	20	1	**278-5170**	4	BOLT	
	21	2	**278-5203**	4	SPACER	
	22	3	**278-5225**	1	KIT-SENSOR (ENGINE OIL PRESSURE)	
	22A	3	**199-9267**	1	SEAL-O-RING	
	23	3	**278-5273**	1	KIT-SENSOR (AIR PRESSURE)	
	23A	3	**199-9252**	1	SEAL-O-RING	
	24	3	**278-5307**	1	KIT-SENSOR (COOLANT TEMPERATURE)	
	24A	3	**199-9267**	1	SEAL-O-RING	
Y	25	1	**282-0480**	4	INJECTOR GP-FUEL	1019
Y	26	1	**283-2271**	1	PUMP GP-FUEL INJECTION	1067
	27	1	**298-4535**	1	BRACKET-SUPPORT	
	28	1	**298-4536**	1	BRACKET-MOUNTING	
	29	1	**298-4537**	1	TUBE AS	
	30	1	**298-4538**	1	TUBE AS (CYL NO. 1)	
	31	1	**298-4539**	1	TUBE AS (CYL NO. 2)	
	32	1	**298-4540**	1	TUBE AS (CYL NO. 3)	
	33	1	**298-4541**	1	TUBE AS (CYL NO. 4)	
	34	1	**298-4542**	1	TUBE AS	
	35	1	**298-4543**	1	BOLT	
	36	3	**304-3689**	1	ADAPTER	
	37	2	**300-6714**	8	MOUNT	
	38	2	**308-3395**	1	BRACKET-MOUNTING	
	39	1	**308-8425**	1	RAIL AS-FUEL	
	40	3	**311-2379**	1	TUBE	

313-3514 **PUMP GP-FUEL INJECTION (**contd.**)** **i04706253**

NOTE	REF NO	GRAPHIC REF	PART NUMBER	QTY	PART NAME 1 2 3 4 5 6 (PRODUCT LEVEL)	SEE PAGE
	41	3	**311-3858**	1	KIT-SENSOR (ENGINE SPEED)	
	41A	3	**274-1639**	1	SEAL	
	42	1	**311-6342**	1	SENSOR AS-PRESSURE (FUEL)	
	42A	1	**309-8006**	1	WASHER	
	43	3	**313-2455**	1	SENSOR-TEMPERATURE (AIR)	
	43A	3	**278-5226**	1	SEAL-O-RING	
F			**278-4138**	4	KIT-FUEL LINE PROTECTION	

F - NOT SHOWN
M - METRIC PART
Y - SEPARATE ILLUSTRATION

313-3514 **PUMP GP-FUEL INJECTION (**contd.**)** **i04706253**

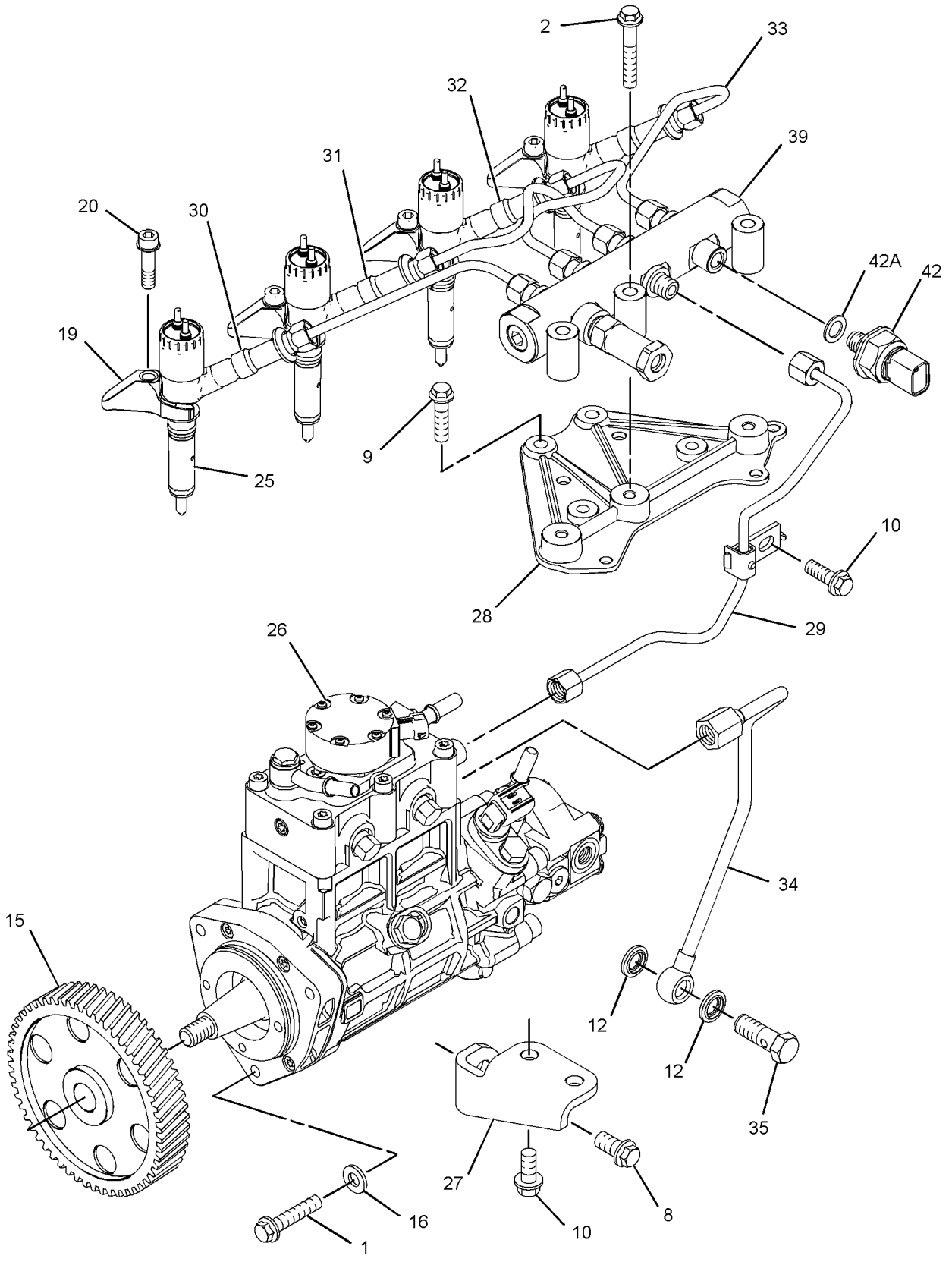

GRAPHIC #1 g01399258

313-3514 **PUMP GP-FUEL INJECTION (**contd.**)** **i04706253**

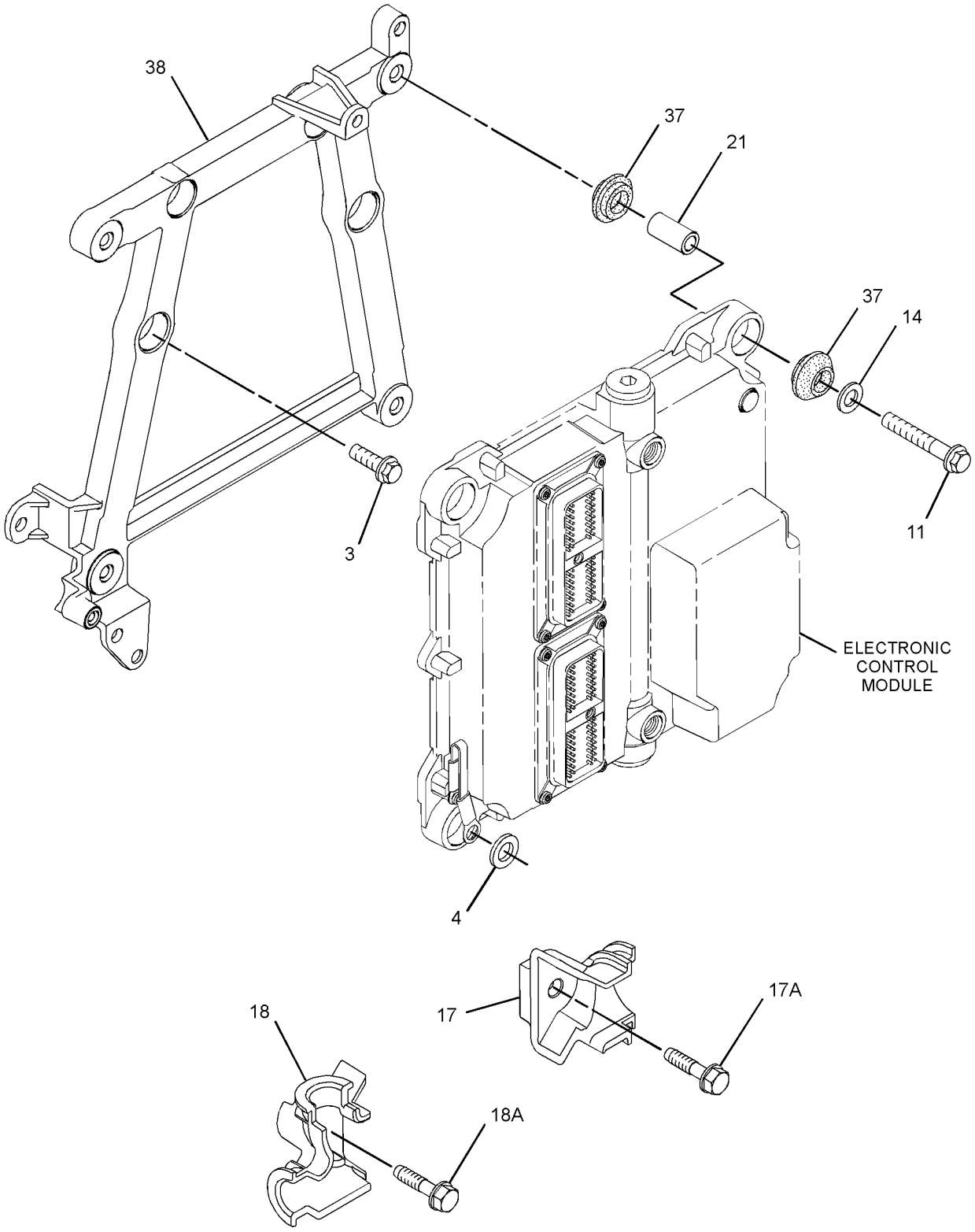

GRAPHIC #2 g01399266

313-3514 **PUMP GP-FUEL INJECTION (**contd.**)** **i04706253**

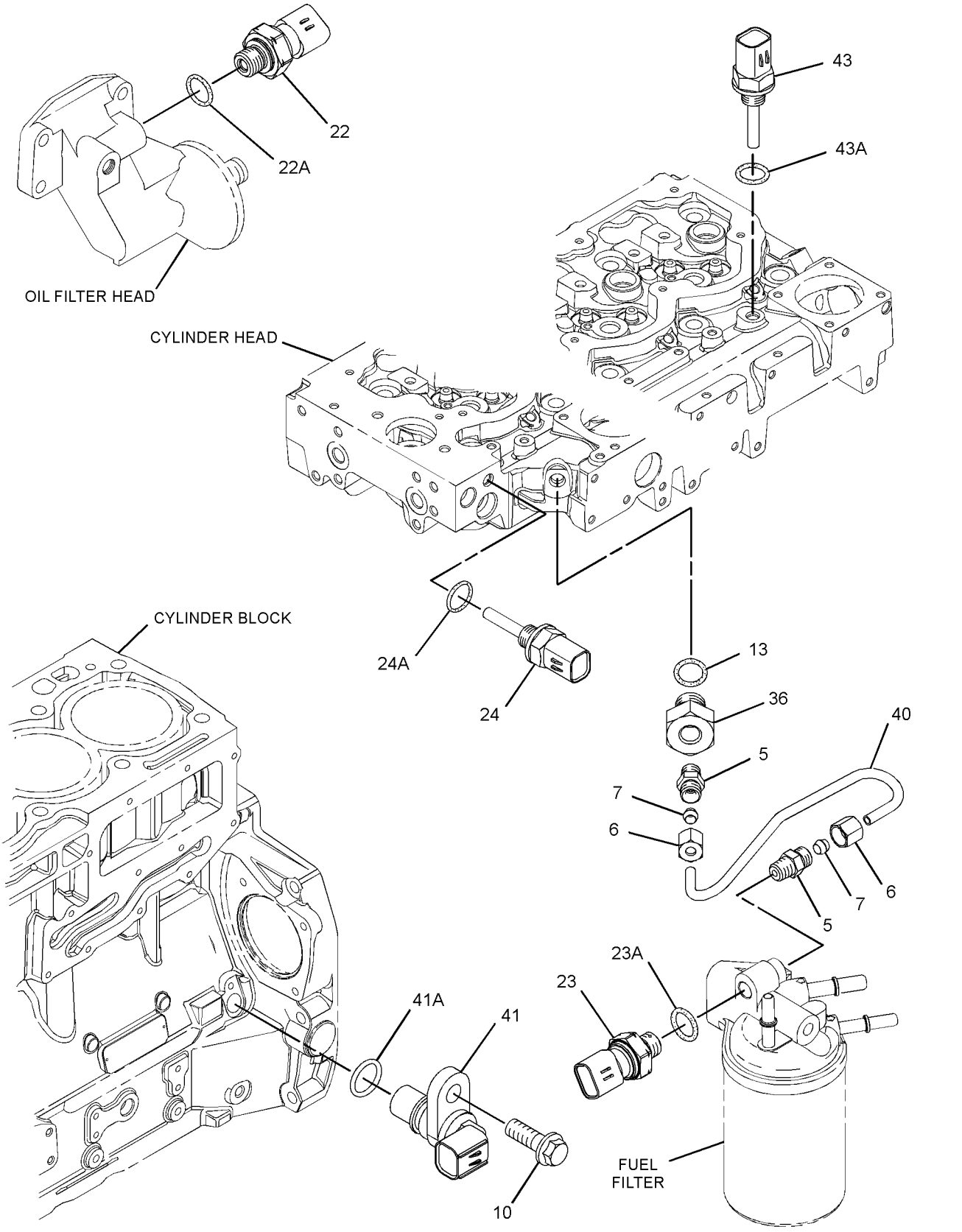

GRAPHIC #3 <END> g01399269

313-3514 PUMP GP-FUEL INJECTION

S/N: 444322-UP

TYPE 2

SMCS-1251, 1290 **i04706252**

NOTE	REF NO	GRAPHIC REF	PART NUMBER	QTY	PART NAME 1 2 3 4 5 6 (PRODUCT LEVEL)	SEE PAGE
M	1	1	**6I-0260**	3	BOLT (M8X1.25X25-MM)	
M	2	1	**6I-0455**	3	BOLT (M8X1.25X55-MM)	
M	3	2	**6I-0572**	4	BOLT (M8X1.25X20-MM)	
	4	2	**7W-2632**	1	WASHER (8.5X16.8X1.6-MM THK)	
	5	3	**035-8017**	2	UNION	
	6	3	**365-3308**	2	NUT-COMPRESSION	
	7	3	**067-6265**	2	FITTING-BRASS	
M	8	1	**100-4830**	1	BOLT (M10X1.5X20-MM)	
M	9	1	**101-3895**	4	BOLT (M8X1.25X35-MM)	
M	10	1,3	**124-3815**	4	BOLT (M8X1.25X16-MM)	
M	11	2	**141-8584**	4	BOLT (M8X1.25X50-MM)	
	12	1	**160-0162**	2	WASHER	
	13	3	**199-9252**	1	SEAL-O-RING	
	14	2	**217-0099**	4	SPACER (8.2X25X2-MM THK)	
	15	1	**230-8989**	1	GEAR-FUEL PUMP (68-TEETH)	
	17	2	**268-6677**	1	BRACKET AS	
M	17A	2	**260-3939**	1	SCREW-HEX HEAD (M6X1X25-MM)	
	18	2	**268-6678**	1	BRACKET AS	
M	18A	2	**260-3939**	1	SCREW-HEX HEAD (M6X1X25-MM)	
	19	1	**278-5168**	4	CLAMP-INJECTOR	
	20	1	**278-5170**	4	BOLT	
	21	2	**278-5203**	4	SPACER	
	22	3	**278-5225**	1	KIT-SENSOR (ENGINE OIL PRESSURE)	
	22A	3	**199-9267**	1	SEAL-O-RING	
	23	3	**278-5273**	1	KIT-SENSOR (AIR PRESSURE)	
	23A	3	**199-9252**	1	SEAL-O-RING	
	24	3	**278-5307**	1	KIT-SENSOR (COOLANT TEMPERATURE)	
	24A	3	**199-9267**	1	SEAL-O-RING	
Y	25	1	**282-0480**	4	INJECTOR GP-FUEL	1019
CYR	26	1	**295-9125**	1	PUMP & MTG GP-UNIT INJ HYD	1062
	27	1	**298-4535**	1	BRACKET-SUPPORT	
	28	1	**298-4536**	1	BRACKET-MOUNTING	
	29	1	**298-4537**	1	TUBE AS	
	30	1	**298-4538**	1	TUBE AS (CYL NO. 1)	
	31	1	**298-4539**	1	TUBE AS (CYL NO. 2)	
	32	1	**298-4540**	1	TUBE AS (CYL NO. 3)	
	33	1	**298-4541**	1	TUBE AS (CYL NO. 4)	
	34	1	**298-4542**	1	TUBE AS	
	35	1	**298-4543**	1	BOLT	
	36	3	**304-3689**	1	ADAPTER	
	37	2	**300-6714**	8	MOUNT	
C	38	1	**317-3144**	1	BRACKET	
	39	1	**308-8425**	1	RAIL AS-FUEL	
	40	3	**311-2379**	1	TUBE	
	41	3	**311-3858**	1	KIT-SENSOR (ENGINE SPEED)	
	41A	3	**274-1639**	1	SEAL	
	42	1	**311-6342**	1	SENSOR AS-PRESSURE (FUEL)	

313-3514 **PUMP GP-FUEL INJECTION** (contd.) **i04706252**

NOTE	REF NO	GRAPHIC REF	PART NUMBER	QTY	PART NAME 1 2 3 4 5 6 (PRODUCT LEVEL)	SEE PAGE
	42A	1	**309-8006**	1	WASHER	
	43	3	**313-2455**	1	SENSOR-TEMPERATURE (AIR)	
	43A	3	**278-5226**	1	SEAL-O-RING	
F			**278-4138**	4	KIT-FUEL LINE PROTECTION	

C - CHANGE FROM PREVIOUS TYPE
F - NOT SHOWN
M - METRIC PART
R - REMANUFACTURED PART MAY BE AVAILABLE
Y - SEPARATE ILLUSTRATION

313-3514 **PUMP GP-FUEL INJECTION (**contd.**)** **i04706252**

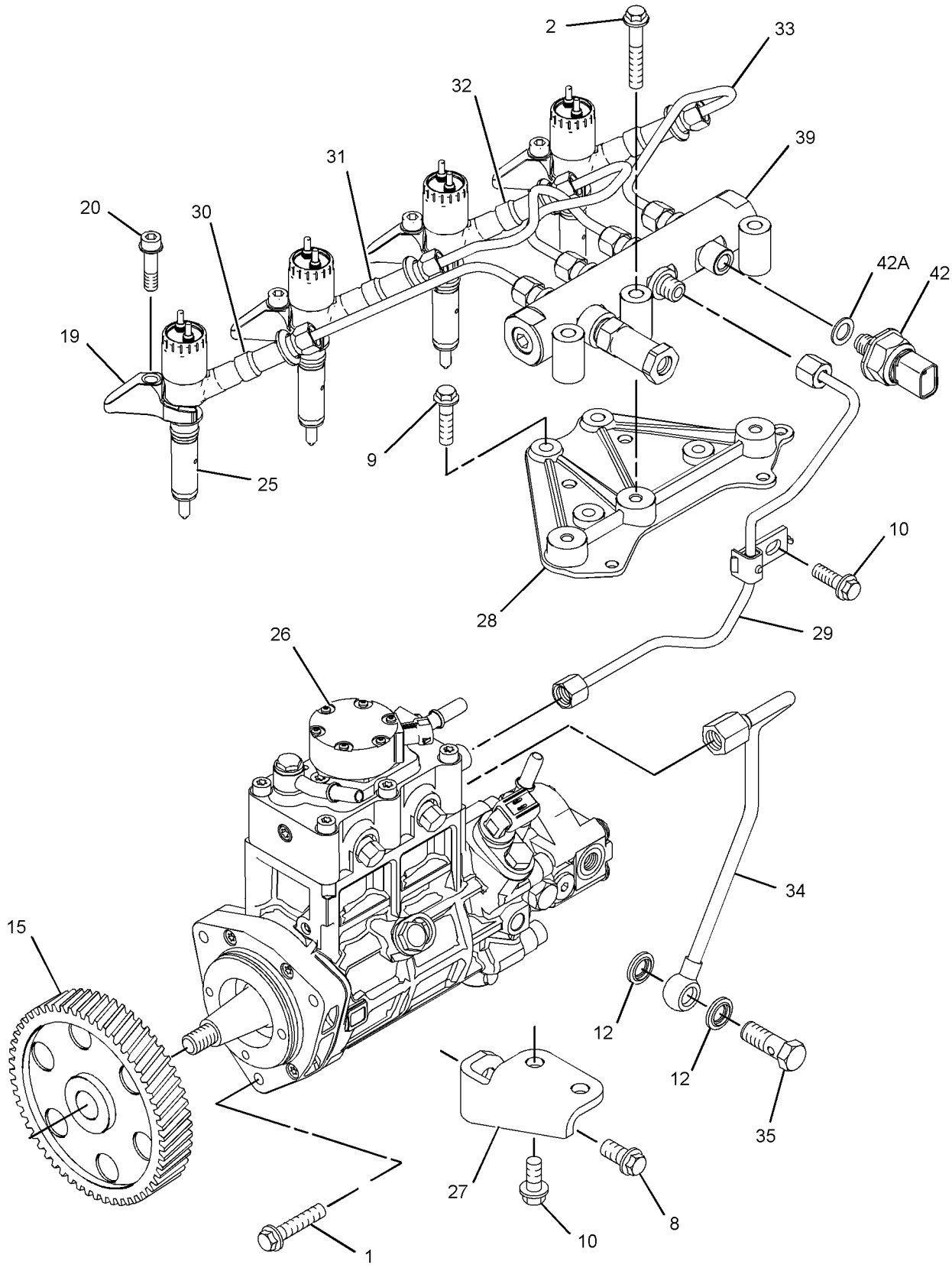

GRAPHIC #1 g01431210

313-3514 **PUMP GP-FUEL INJECTION (**contd.**)** **i04706252**

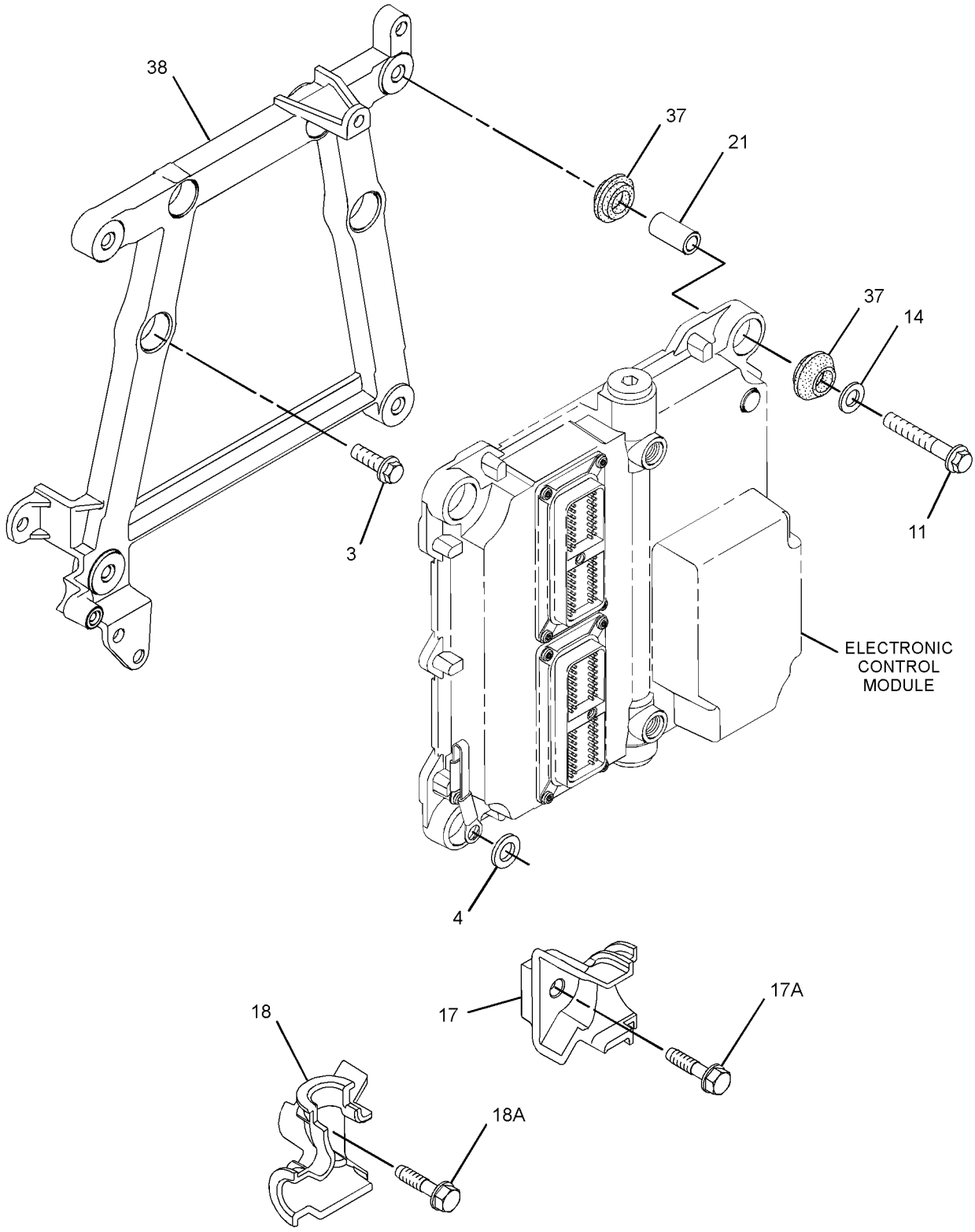

GRAPHIC #2 g01399266

313-3514 **PUMP GP-FUEL INJECTION (**contd.**)** **i04706252**

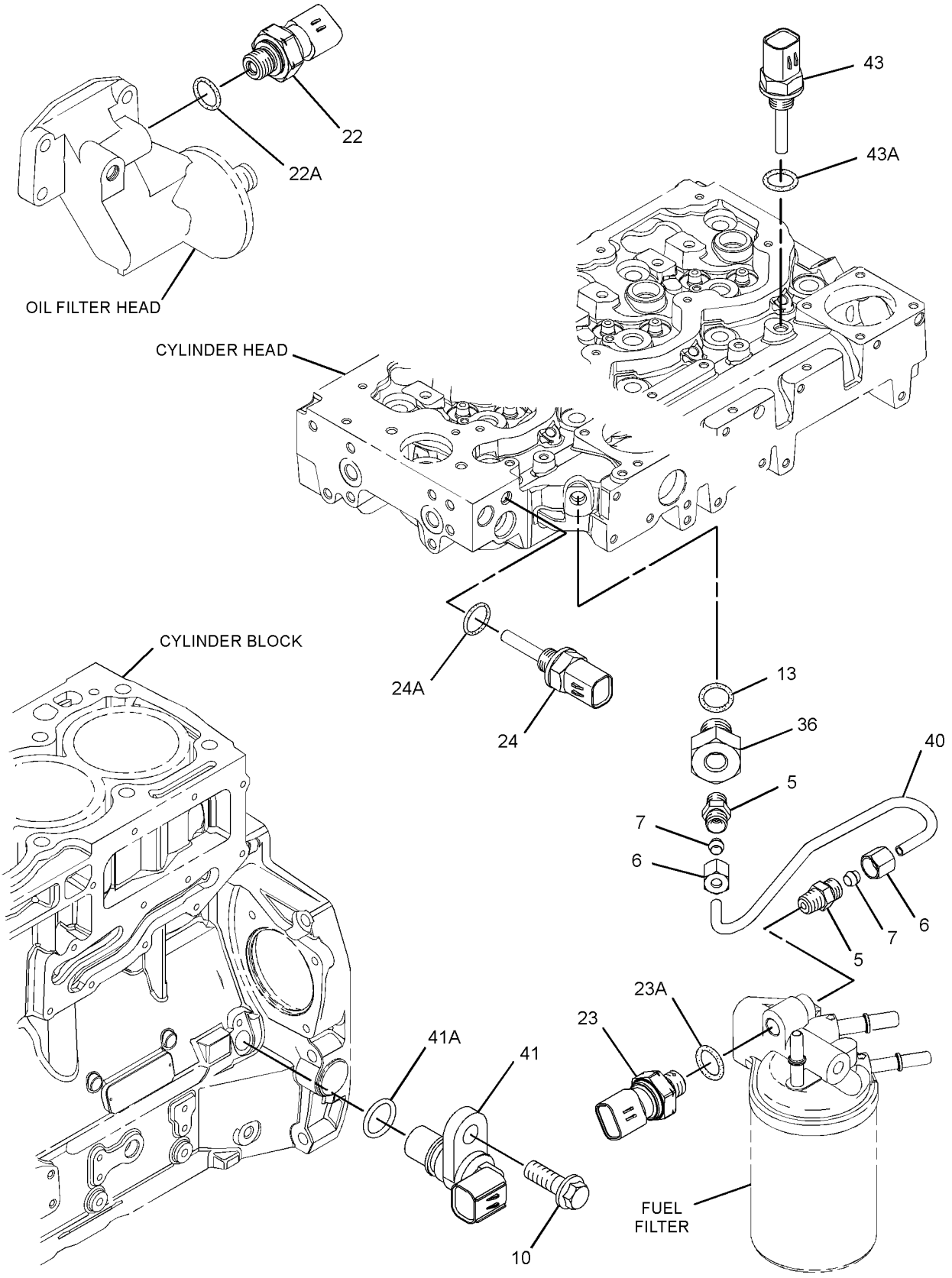

GRAPHIC #3 <END> g01399269

313-3514 PUMP GP-FUEL INJECTION

TYPE 1

SMCS-1251, 1290 **i04706254**

NOTE	REF NO	GRAPHIC REF	PART NUMBER	QTY	PART NAME 1 2 3 4 5 6 (PRODUCT LEVEL)	SEE PAGE
M	1	1	**6I-0260**	3	BOLT (M8X1.25X25-MM)	
M	2	1	**6I-0455**	3	BOLT (M8X1.25X55-MM)	
M	3	2	**6I-0572**	4	BOLT (M8X1.25X20-MM)	
	4	2	**7W-2632**	1	WASHER (8.5X16.8X1.6-MM THK)	
	5	3	**035-8017**	2	UNION	
	6	3	**365-3308**	2	NUT-COMPRESSION	
	7	3	**067-6265**	2	FITTING-BRASS	
M	8	1	**100-4830**	1	BOLT (M10X1.5X20-MM)	
M	9	1	**101-3895**	4	BOLT (M8X1.25X35-MM)	
M	10	1,3	**124-3815**	4	BOLT (M8X1.25X16-MM)	
M	11	2	**141-8584**	4	BOLT (M8X1.25X50-MM)	
C	12	1	**160-0162**	2	WASHER	
	13	3	**199-9252**	1	SEAL-O-RING	
	14	2	**217-0099**	5	SPACER (8.2X25X2-MM THK)	
	15	1	**230-8989**	1	GEAR-FUEL PUMP (68-TEETH)	
	17	2	**268-6677**	1	BRACKET AS	
M	17A	2	**260-3939**	1	SCREW-HEX HEAD (M6X1X25-MM)	
	18	2	**268-6678**	1	BRACKET AS	
M	18A	2	**260-3939**	1	SCREW-HEX HEAD (M6X1X25-MM)	
	19	1	**278-5168**	4	CLAMP-INJECTOR	
	20	1	**278-5170**	4	BOLT	
	21	2	**278-5203**	4	SPACER	
	22	3	**278-5225**	1	KIT-SENSOR (ENGINE OIL PRESSURE)	
	22A	3	**199-9267**	1	SEAL-O-RING	
	23	3	**278-5273**	1	KIT-SENSOR (AIR PRESSURE)	
	23A	3	**199-9252**	1	SEAL-O-RING	
	24	3	**278-5307**	1	KIT-SENSOR (COOLANT TEMPERATURE)	
	24A	3	**199-9267**	1	SEAL-O-RING	
CYR	25	1	**320-0677**	4	INJECTOR GP-FUEL	1026
YR	26	1	**324-0532**	1	PUMP GP-FUEL INJECTION	1523
	27	1	**298-4535**	1	BRACKET-SUPPORT	
	28	1	**337-3573**	1	BRACKET	
	29	1	**337-3574**	1	TUBE	
	30	1	**322-3745**	1	TUBE (CYL NO. 1)	
	31	1	**322-3746**	1	TUBE (CYL NO. 2)	
	32	1	**333-4732**	1	LINE-FUEL INJECTION (CYL NO. 3)	
	33	1	**333-4733**	1	LINE-FUEL INJECTION (CYL NO. 4)	
	34	1	**298-4542**	1	TUBE AS	
	35	1	**298-4543**	1	BOLT	
	36	3	**304-3689**	1	ADAPTER	
	37	2	**300-6714**	8	MOUNT	
	38	2	**317-3144**	1	BRACKET	
C	39	1	**318-2394**	1	RAIL AS-FUEL	
	39A	1	**305-5291**	1	VALVE AS-RELIEF	
	40	3	**305-0659**	1	TUBE	
	41	3	**311-3858**	1	KIT-SENSOR (ENGINE SPEED)	
	41A	3	**274-1639**	1	SEAL	
	42	1	**311-6342**	1	SENSOR AS-PRESSURE (FUEL)	

313-3514 **PUMP GP-FUEL INJECTION (**contd.**)** **i04706254**

NOTE	REF NO	GRAPHIC REF	PART NUMBER	QTY	PART NAME 1 2 3 4 5 6 (PRODUCT LEVEL)	SEE PAGE
	42A	1	**309-8006**	1	WASHER	
	43	3	**313-2455**	1	SENSOR-TEMPERATURE (AIR)	
	43A	3	**278-5226**	1	SEAL-O-RING	
F			**278-4138**	4	KIT-FUEL LINE PROTECTION	

C - CHANGE FROM PREVIOUS TYPE
F - NOT SHOWN
M - METRIC PART
R - REMANUFACTURED PART MAY BE AVAILABLE
Y - SEPARATE ILLUSTRATION

313-3514 **PUMP GP-FUEL INJECTION (**contd.**)** **i04706254**

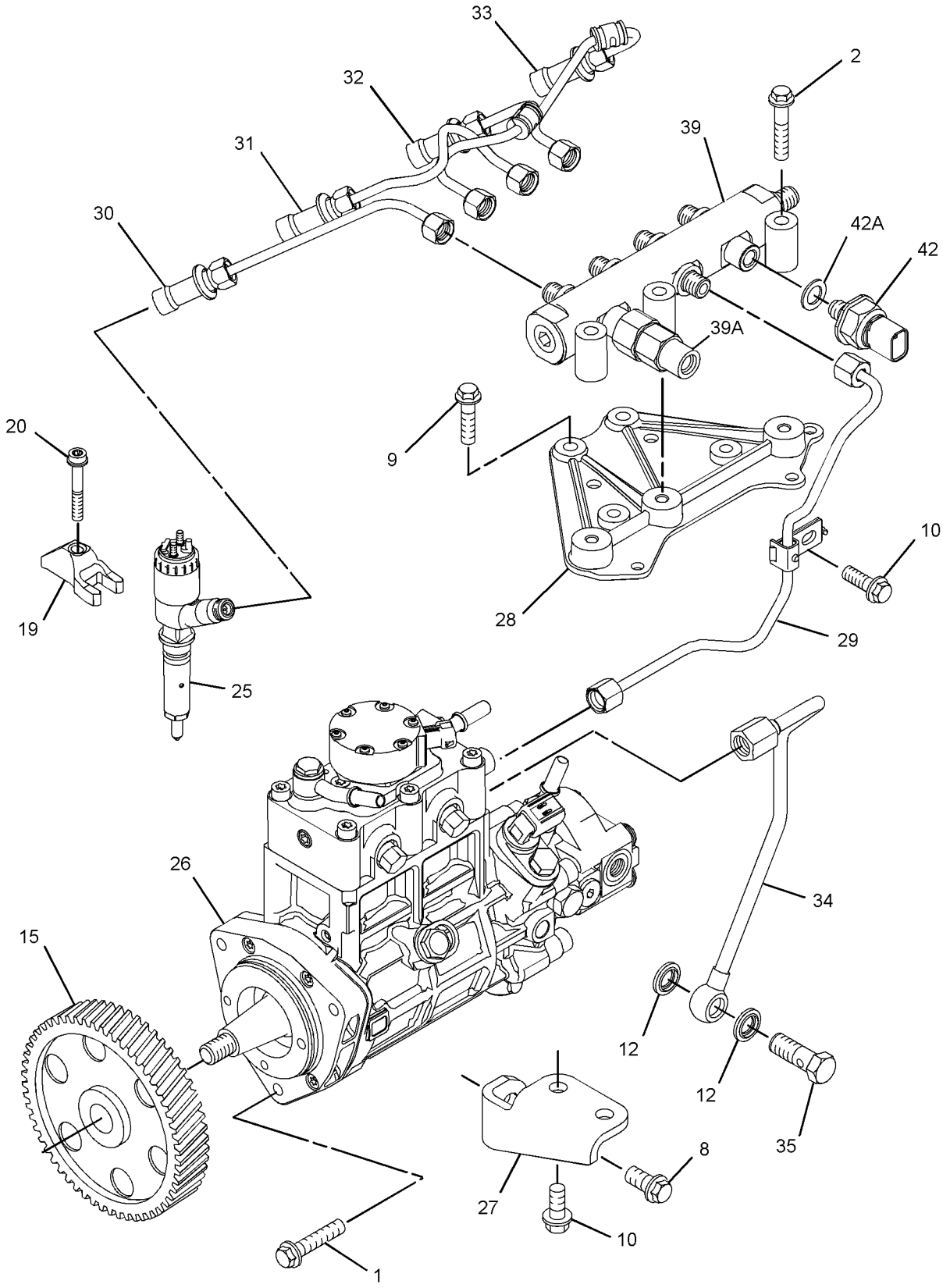

GRAPHIC #1 g01851374

313-3514 **PUMP GP-FUEL INJECTION (**contd.**)** **i04706254**

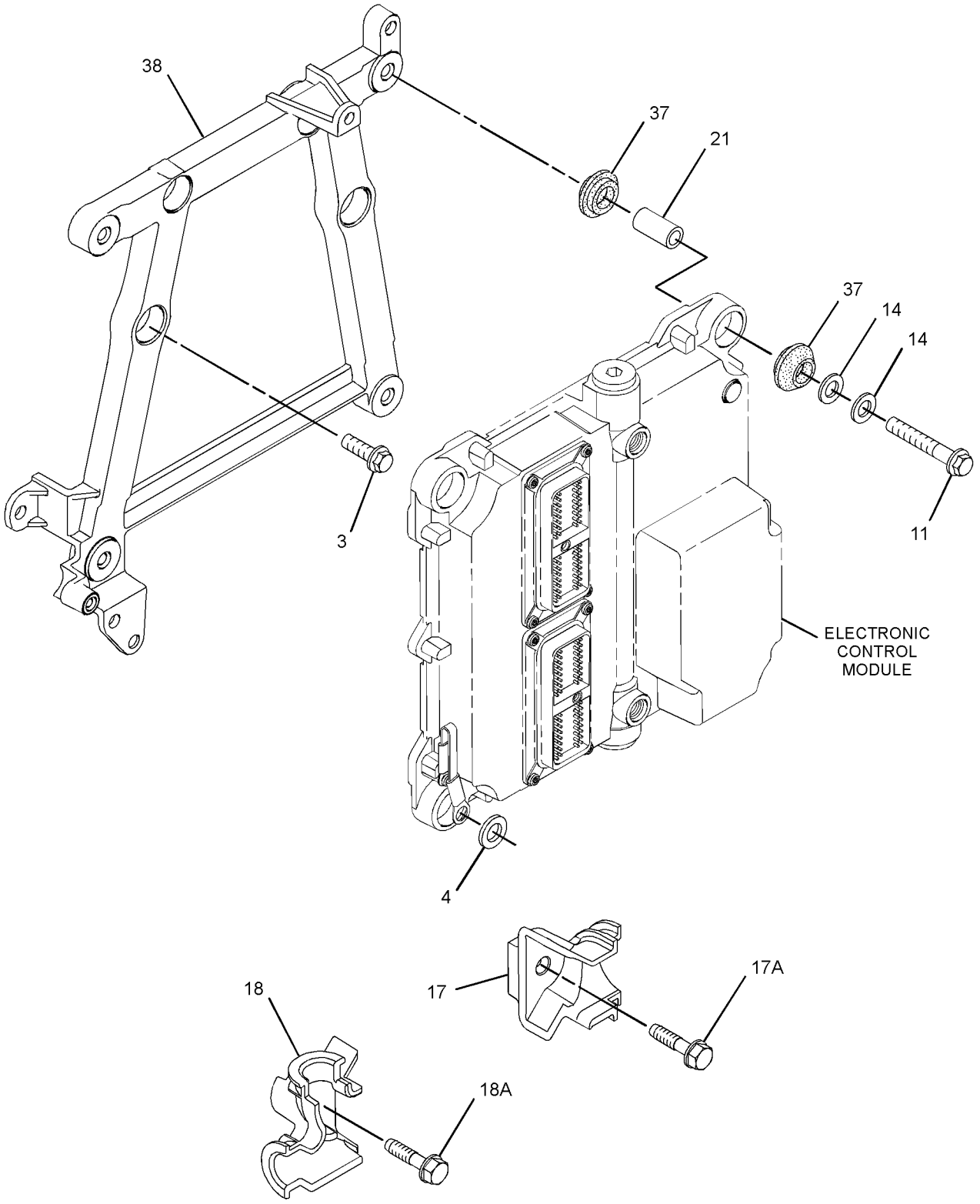

GRAPHIC #2 g01667488

313-3514 **PUMP GP-FUEL INJECTION (**contd.**)** **i04706254**

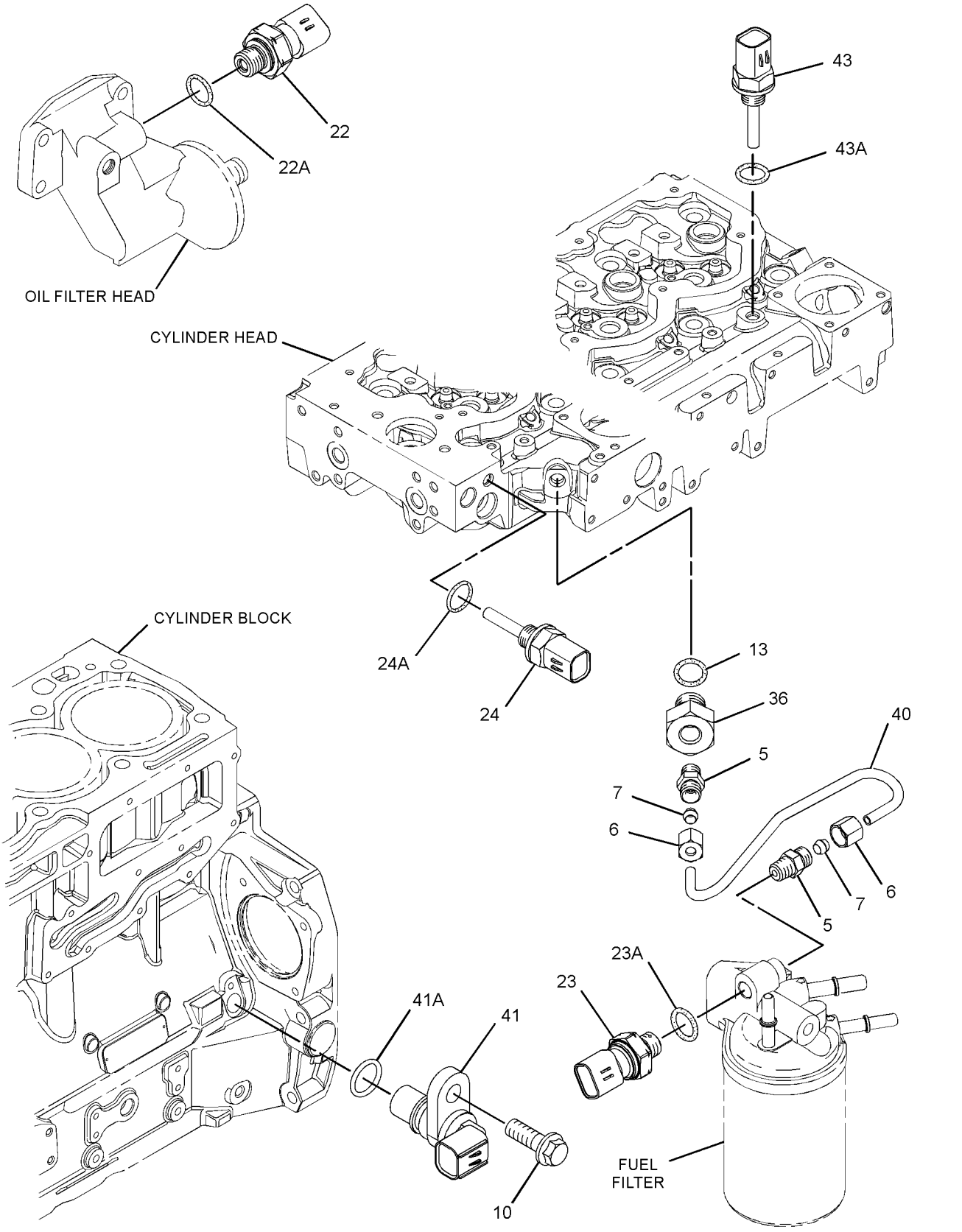

GRAPHIC #3 <END> g01399269

313-3514 PUMP GP-FUEL INJECTION

TYPE 2

SMCS-1251, 1290 **i04706255**

NOTE	REF NO	GRAPHIC REF	PART NUMBER	QTY	PART NAME 1 2 3 4 5 6 (PRODUCT LEVEL)	SEE PAGE
M	1	1	**6I-0260**	3	BOLT (M8X1.25X25-MM)	
M	2	1	**6I-0455**	3	BOLT (M8X1.25X55-MM)	
M	3	2	**6I-0572**	4	BOLT (M8X1.25X20-MM)	
	4	2	**7W-2632**	1	WASHER (8.5X16.8X1.6-MM THK)	
	5	3	**035-8017**	2	UNION	
	6	3	**365-3308**	2	NUT-COMPRESSION	
	7	3	**067-6265**	2	FITTING-BRASS	
M	8	1	**100-4830**	1	BOLT (M10X1.5X20-MM)	
M	9	1	**101-3895**	4	BOLT (M8X1.25X35-MM)	
M	10	1,3	**124-3815**	4	BOLT (M8X1.25X16-MM)	
M	11	2	**141-8584**	4	BOLT (M8X1.25X50-MM)	
	12	1	**160-0162**	2	WASHER	
	13	3	**199-9252**	1	SEAL-O-RING	
	14	2	**217-0099**	5	SPACER (8.2X25X2-MM THK)	
	15	1	**230-8989**	1	GEAR-FUEL PUMP (68-TEETH)	
	17	2	**268-6677**	1	BRACKET AS	
M	17A	2	**260-3939**	1	SCREW-HEX HEAD (M6X1X25-MM)	
	18	2	**268-6678**	1	BRACKET AS	
M	18A	2	**260-3939**	1	SCREW-HEX HEAD (M6X1X25-MM)	
	19	1	**278-5168**	4	CLAMP-INJECTOR	
	20	1	**278-5170**	4	BOLT	
	21	2	**278-5203**	4	SPACER	
	22	3	**278-5225**	1	KIT-SENSOR (ENGINE OIL PRESSURE)	
	22A	3	**199-9267**	1	SEAL-O-RING	
	23	3	**278-5273**	1	KIT-SENSOR (AIR PRESSURE)	
	23A	3	**199-9252**	1	SEAL-O-RING	
	24	3	**278-5307**	1	KIT-SENSOR (COOLANT TEMPERATURE)	
	24A	3	**199-9267**	1	SEAL-O-RING	
YR	25	1	**320-0677**	4	INJECTOR GP-FUEL	1026
CYR	26	1	**352-6584**	1	PUMP GP-FUEL INJECTION	1540
	27	1	**298-4535**	1	BRACKET-SUPPORT	
	28	1	**337-3573**	1	BRACKET	
	29	1	**337-3574**	1	TUBE	
	30	1	**322-3745**	1	TUBE (CYL NO. 1)	
	31	1	**322-3746**	1	TUBE (CYL NO. 2)	
	32	1	**333-4732**	1	LINE-FUEL INJECTION (CYL NO. 3)	
	33	1	**333-4733**	1	LINE-FUEL INJECTION (CYL NO. 4)	
	34	1	**298-4542**	1	TUBE AS	
	35	1	**298-4543**	1	BOLT	
	36	3	**304-3689**	1	ADAPTER	
	37	2	**300-6714**	8	MOUNT	
	38	2	**317-3144**	1	BRACKET	
	39	1	**318-2394**	1	RAIL AS-FUEL	
	39A	1	**305-5291**	1	VALVE AS-RELIEF	
	40	3	**305-0659**	1	TUBE	
	41	3	**311-3858**	1	KIT-SENSOR (ENGINE SPEED)	
	41A	3	**274-1639**	1	SEAL	
		3	**238-0120**	1	SENSOR GP-SPEED	

313-3514 **PUMP GP-FUEL INJECTION** (contd.) **i04706255**

NOTE	REF NO	GRAPHIC REF	PART NUMBER	QTY	PART NAME 1 2 3 4 5 6 (PRODUCT LEVEL)	SEE PAGE
	42	1	**311-6342**	1	SENSOR AS-PRESSURE (FUEL)	
	42A	1	**309-8006**	1	WASHER	
	43	3	**313-2455**	1	SENSOR-TEMPERATURE (AIR)	
	43A	3	**278-5226**	1	SEAL-O-RING	
F			**278-4138**	4	KIT-FUEL LINE PROTECTION	

C - CHANGE FROM PREVIOUS TYPE
F - NOT SHOWN
M - METRIC PART
R - REMANUFACTURED PART MAY BE AVAILABLE
Y - SEPARATE ILLUSTRATION

313-3514 **PUMP GP-FUEL INJECTION (**contd.**)** **i04706255**

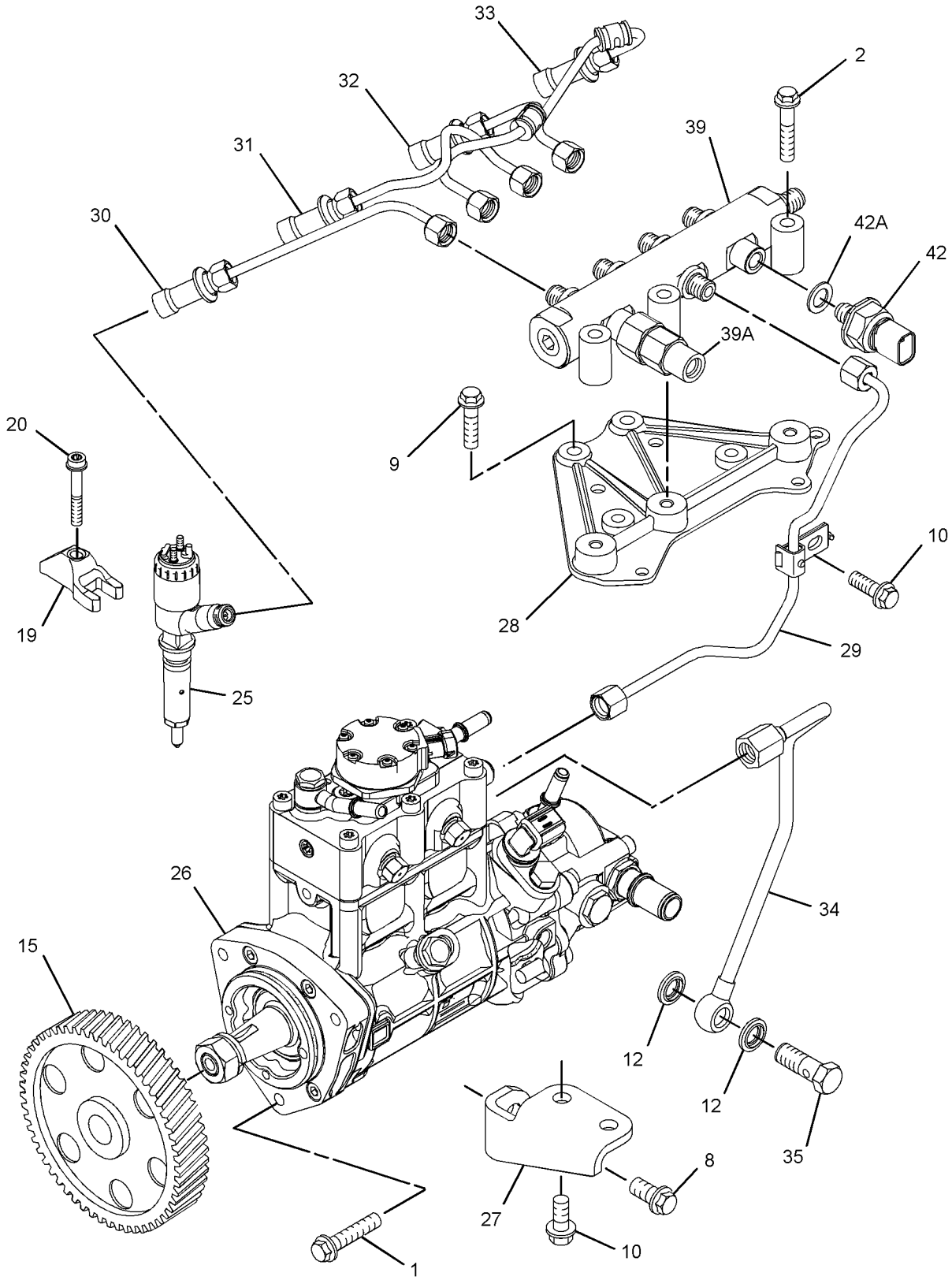

GRAPHIC #1 g02248897

313-3514 **PUMP GP-FUEL INJECTION (**contd.**)** **i04706255**

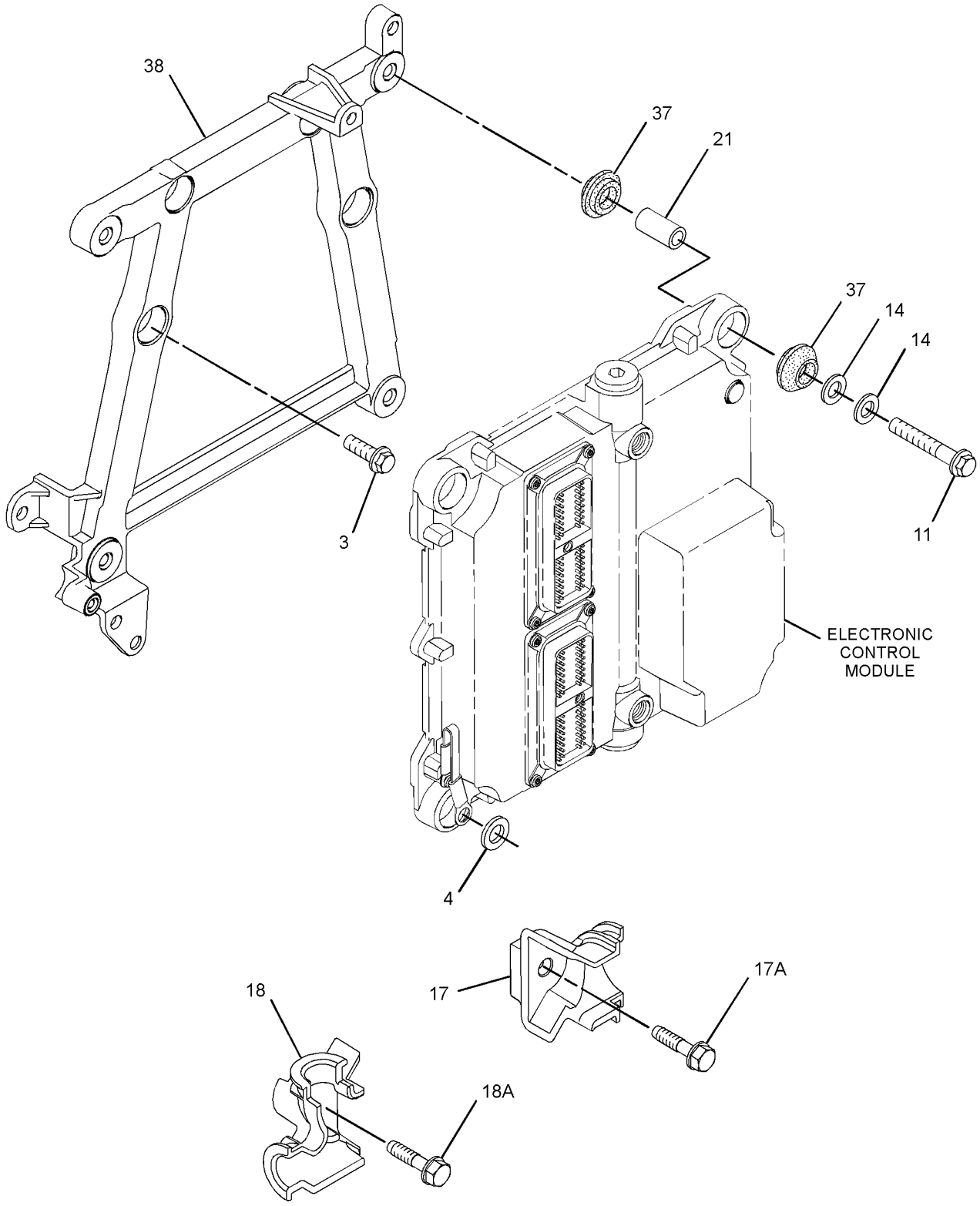

GRAPHIC #2 g01667488

313-3514 **PUMP GP-FUEL INJECTION (**contd.**)** **i04706255**

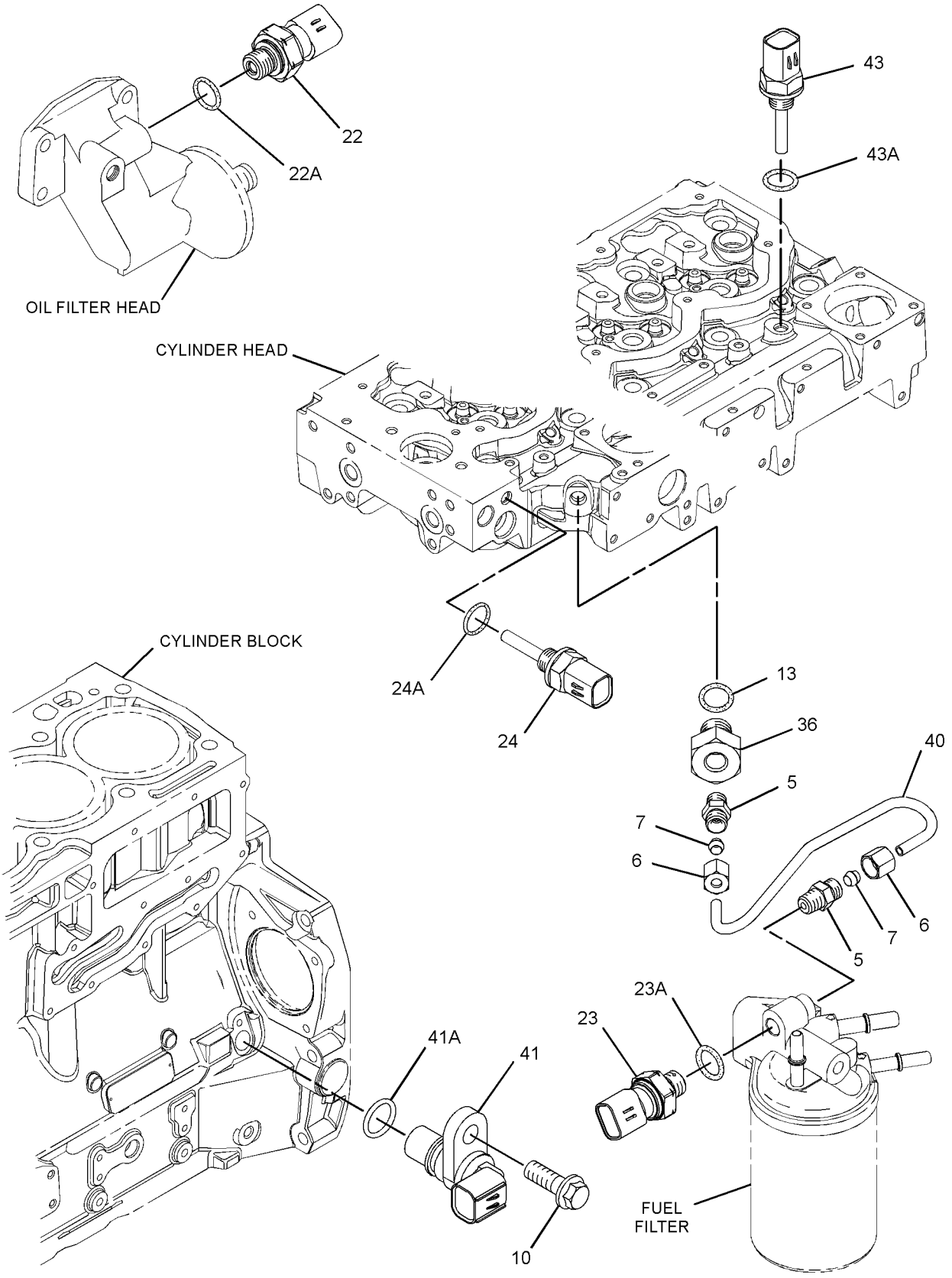

GRAPHIC #3 <END> g01399269

313-3514 PUMP GP-FUEL INJECTION

TYPE 3

SMCS-1251, 1290 **i05880383**

NOTE	REF NO	GRAPHIC REF	PART NUMBER	QTY	PART NAME 1 2 3 4 5 6 (PRODUCT LEVEL)	SEE PAGE
M	1	1	**6I-0260**	3	BOLT (M8X1.25X25-MM)	
M	2	1	**6I-0455**	3	BOLT (M8X1.25X55-MM)	
M	3	2	**6I-0572**	4	BOLT (M8X1.25X20-MM)	
	4	2	**7W-2632**	1	WASHER (8.5X16.8X1.6-MM THK)	
	5	3	**035-8017**	2	UNION	
	6	3	**365-3308**	2	NUT-COMPRESSION	
	7	3	**067-6265**	2	FITTING-BRASS	
M	8	1	**100-4830**	1	BOLT (M10X1.5X20-MM)	
M	9	1	**101-3895**	4	BOLT (M8X1.25X35-MM)	
M	10	1,3	**124-3815**	4	BOLT (M8X1.25X16-MM)	
M	11	2	**141-8584**	4	BOLT (M8X1.25X50-MM)	
	12	1	**346-0007**	2	WASHER	
	13	3	**199-9252**	1	SEAL-O-RING	
	14	2	**217-0099**	5	SPACER (8.2X25X2-MM THK)	
	15	1	**230-8989**	1	GEAR-FUEL PUMP (68-TEETH)	
	17	2	**268-6677**	1	BRACKET AS	
M	17A	2	**260-3939**	1	SCREW-HEX HEAD (M6X1X25-MM)	
	18	2	**268-6678**	1	BRACKET AS	
M	18A	2	**260-3939**	1	SCREW-HEX HEAD (M6X1X25-MM)	
	19	1	**278-5168**	4	CLAMP-INJECTOR	
	20	1	**278-5170**	4	BOLT	
	21	2	**278-5203**	4	SPACER	
	22	3	**278-5225**	1	KIT-SENSOR (ENGINE OIL PRESSURE)	
	22A	3	**199-9267**	1	SEAL-O-RING	
	23	3	**278-5273**	1	KIT-SENSOR (AIR PRESSURE)	
	23A	3	**199-9252**	1	SEAL-O-RING	
	24	3	**278-5307**	1	KIT-SENSOR (COOLANT TEMPERATURE)	
	24A	3	**199-9267**	1	SEAL-O-RING	
YR	25	1	**320-0677**	4	INJECTOR GP-FUEL	1026
CYR	26	1	**324-0532**	1	PUMP GP-FUEL INJECTION	1523
	27	1	**298-4535**	1	BRACKET-SUPPORT	
	28	1	**337-3573**	1	BRACKET	
	29	1	**337-3574**	1	TUBE	
	30	1	**322-3745**	1	TUBE (CYL NO. 1)	
	31	1	**322-3746**	1	TUBE (CYL NO. 2)	
	32	1	**333-4732**	1	LINE-FUEL INJECTION (CYL NO. 3)	
	33	1	**333-4733**	1	LINE-FUEL INJECTION (CYL NO. 4)	
	34	1	**298-4542**	1	TUBE AS	
	35	1	**363-3908**	1	BOLT-SPECIAL	
	36	3	**304-3689**	1	ADAPTER	
	37	2	**300-6714**	8	MOUNT	
	38	2	**317-3144**	1	BRACKET	
C	39	1	**358-6632**	1	RAIL GP-FUEL	
	39A	1	**305-5291**	1	VALVE AS-RELIEF	
	40	3	**305-0659**	1	TUBE	
	41	3	**311-3858**	1	KIT-SENSOR (ENGINE SPEED)	
	41A	3	**274-1639**	1	SEAL	
		3	**238-0120**	1	SENSOR GP-SPEED	

313-3514 **PUMP GP-FUEL INJECTION (**contd.**)** **i05880383**

NOTE	REF NO	GRAPHIC REF	PART NUMBER	QTY	PART NAME 1 2 3 4 5 6 (PRODUCT LEVEL)	SEE PAGE
	42	1	**311-6342**	1	SENSOR AS-PRESSURE (FUEL)	
	42A	1	**309-8006**	1	WASHER	
C	43	3	**364-1102**	1	KIT-TEMPERATURE SENSOR (AIR)	
					(INCLUDES SEAL & SENSOR)	
F			**278-4138**	4	KIT-FUEL LINE PROTECTION	

C - CHANGE FROM PREVIOUS TYPE
F - NOT SHOWN
M - METRIC PART
R - REMANUFACTURED PART MAY BE AVAILABLE
Y - SEPARATE ILLUSTRATION

313-3514 **PUMP GP-FUEL INJECTION (**contd.**)** **i05880383**

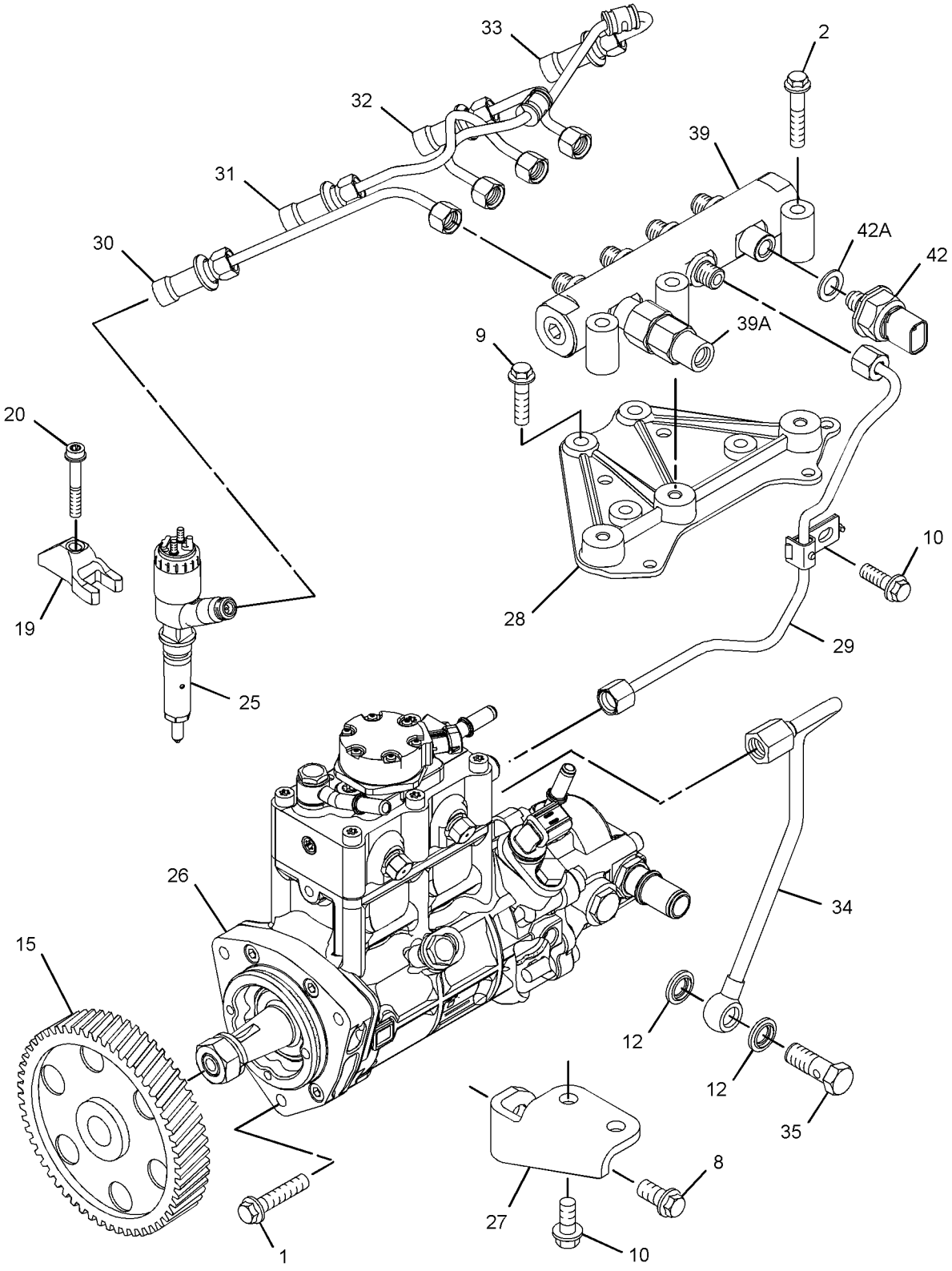

GRAPHIC #1 g03203117

313-3514 **PUMP GP-FUEL INJECTION (**contd.**)** **i05880383**

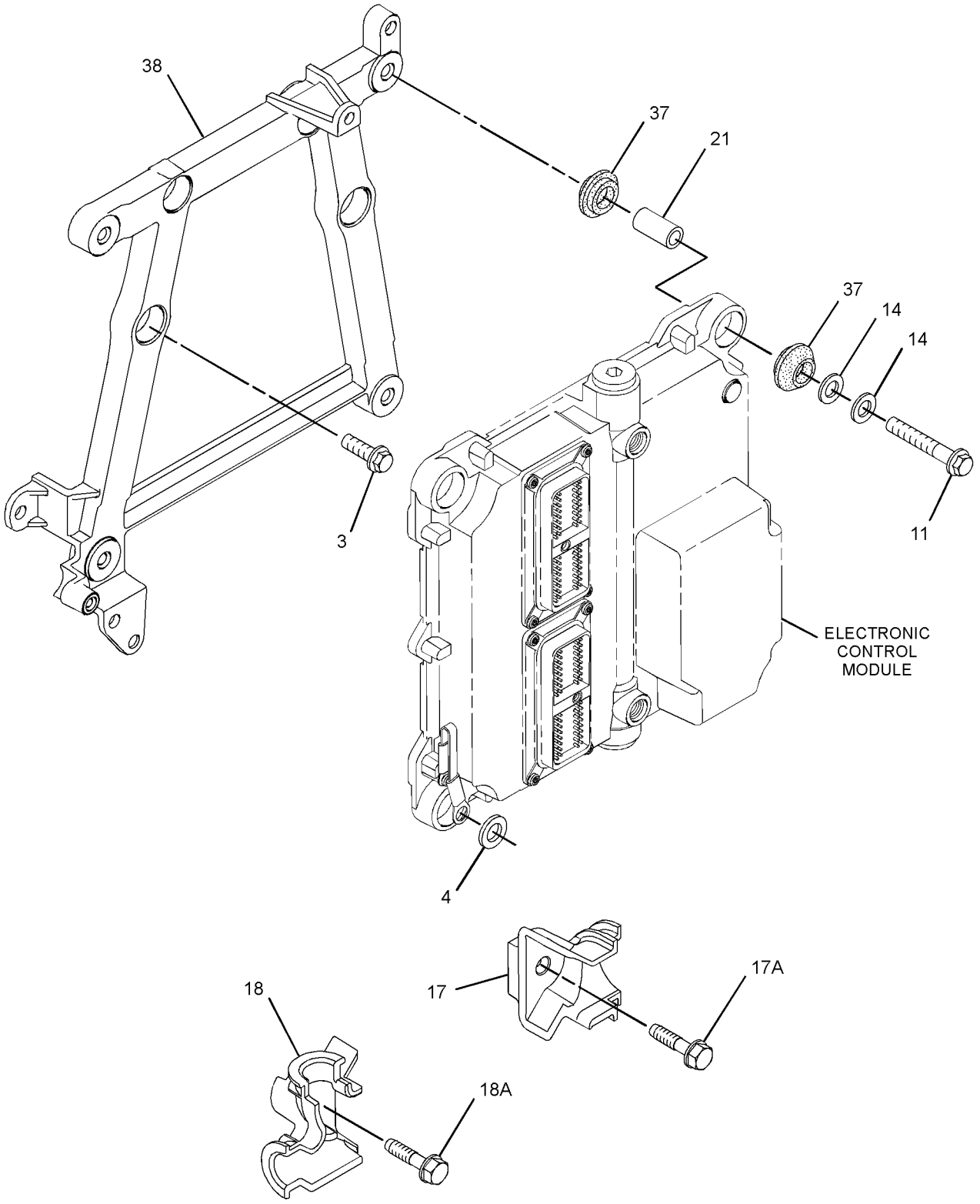

GRAPHIC #2 g01667488

313-3514 **PUMP GP-FUEL INJECTION (**contd.**)** **i05880383**

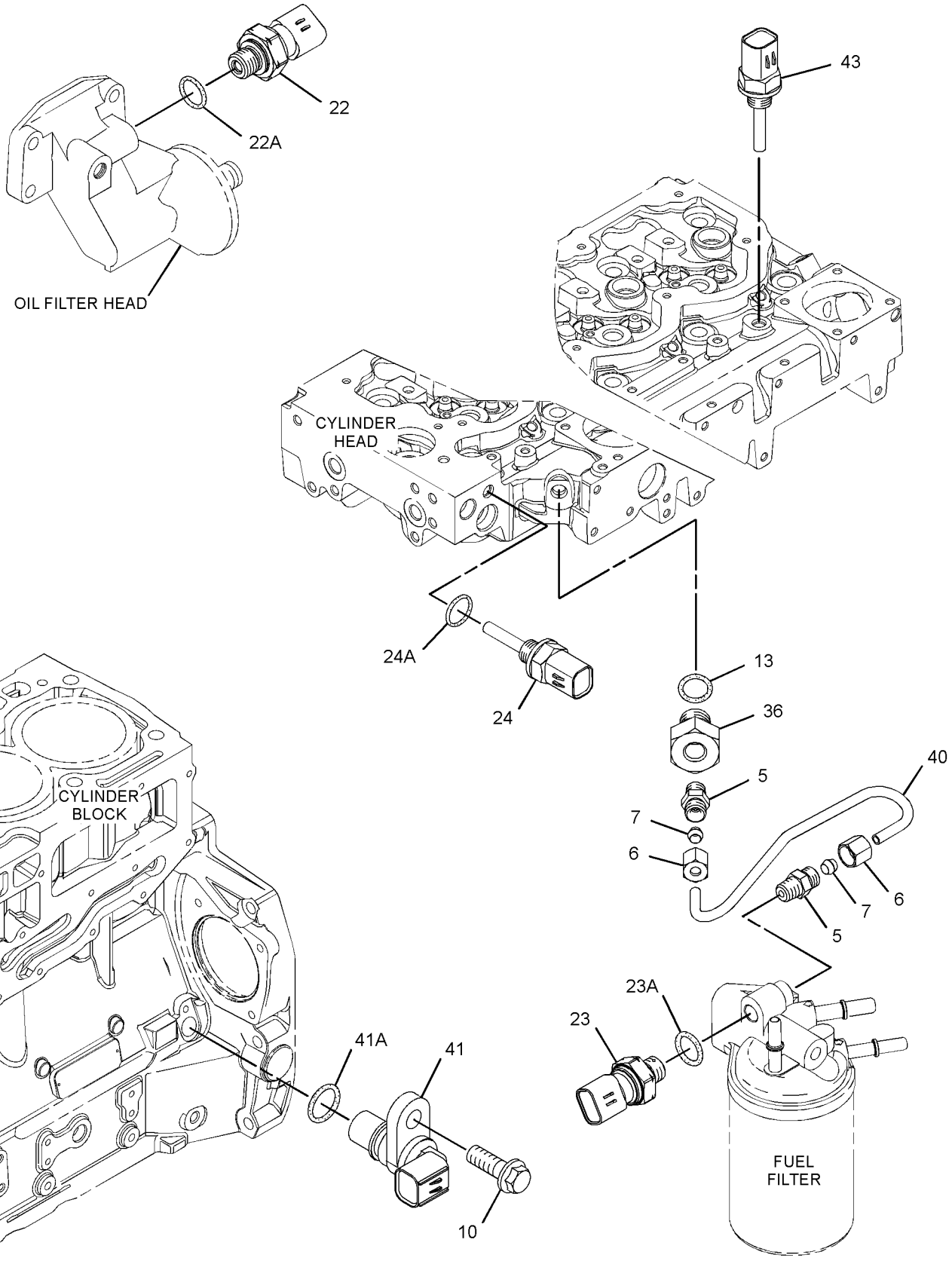

GRAPHIC #3 <END> g03203156

313-4350 PUMP GP-FUEL INJECTION

S/N: 444322-UP

TYPE 1

SMCS-1251, 1290 **i04950312**

NOTE	REF NO	GRAPHIC REF	PART NUMBER	QTY	PART NAME 1 2 3 4 5 6 (PRODUCT LEVEL)	SEE PAGE
M	1	1	**6I-0260**	3	BOLT (M8X1.25X25-MM)	
M	2	1	**6I-0455**	3	BOLT (M8X1.25X55-MM)	
M	3	2	**6I-0572**	4	BOLT (M8X1.25X20-MM)	
	4	2	**7W-2632**	1	WASHER (8.5X16.8X1.6-MM THK)	
	5	3	**035-8017**	2	UNION	
	6	3	**365-3308**	2	NUT-COMPRESSION	
	7	3	**067-6265**	2	FITTING-BRASS	
M	8	1	**100-4830**	1	BOLT (M10X1.5X20-MM)	
M	9	1	**101-3895**	4	BOLT (M8X1.25X35-MM)	
M	10	1,3	**124-3815**	2	BOLT (M8X1.25X16-MM)	
M	11	2	**141-8584**	4	BOLT (M8X1.25X50-MM)	
	12	1	**160-0162**	2	WASHER	
	13	3	**199-9252**	1	SEAL-O-RING	
	14	2	**217-0099**	4	SPACER (8.2X25X2-MM THK)	
	15	1	**230-8989**	1	GEAR-FUEL PUMP (68-TEETH)	
	16	1	**232-3149**	6	WASHER (8.35X16.85X1.55-MM THK)	
	17	2	**268-6677**	1	BRACKET AS	
		2	**260-3718**	1	BRACKET	
M	17A	2	**260-3939**	1	SCREW-HEX HEAD (M6X1X25-MM)	
	18	2	**268-6678**	1	BRACKET AS	
		2	**260-3719**	1	BRACKET	
M	18A	2	**260-3939**	1	SCREW-HEX HEAD (M6X1X25-MM)	
	19	1	**278-5168**	4	CLAMP-INJECTOR	
	20	1	**278-5170**	4	BOLT	
	21	2	**278-5203**	4	SPACER	
	22	3	**278-5225**	1	KIT-SENSOR (ENGINE OIL PRESSURE)	
	22A	3	**199-9267**	1	SEAL-O-RING	
	23	3	**278-5273**	1	KIT-SENSOR (AIR PRESSURE)	
	23A	3	**199-9252**	1	SEAL-O-RING	
	24	3	**278-5307**	1	KIT-SENSOR (COOLANT TEMPERATURE)	
	24A	3	**199-9267**	1	SEAL-O-RING	
Y	25	1	**282-0480**	1	INJECTOR GP-FUEL	1019
Y	26	1	**283-2271**	1	PUMP GP-FUEL INJECTION	1067
	27	1	**298-4535**	1	BRACKET-SUPPORT	
	28	1	**298-4536**	1	BRACKET-MOUNTING	
	29	1	**298-4537**	1	TUBE AS	
	30	1	**298-4538**	1	TUBE AS (CYL NO. 1)	
	31	1	**298-4539**	1	TUBE AS (CYL NO. 2)	
	32	1	**298-4540**	1	TUBE AS (CYL NO. 3)	
	33	1	**298-4541**	1	TUBE AS (CYL NO. 4)	
	34	1	**298-4542**	1	TUBE AS	
	35	1	**298-4543**	1	BOLT	
	36	3	**304-3689**	1	ADAPTER	
	37	2	**300-6714**	8	MOUNT	
	38	2	**308-3395**	1	BRACKET-MOUNTING	
	39	1	**308-8425**	1	RAIL AS-FUEL	
	40	3	**311-2379**	1	TUBE	

313-4350 **PUMP GP-FUEL INJECTION** (contd.) **i04950312**

NOTE	REF NO	GRAPHIC REF	PART NUMBER	QTY	PART NAME 1 2 3 4 5 6 (PRODUCT LEVEL)	SEE PAGE
	41	3	**311-3858**	1	KIT-SENSOR (ENGINE SPEED)	
	41A	3	**274-1639**	1	SEAL	
	42	1	**311-6342**	1	SENSOR AS-PRESSURE (FUEL)	
	42A	1	**309-8006**	1	WASHER	
	43	3	**313-2455**	1	SENSOR-TEMPERATURE (AIR)	
	43A	3	**278-5226**	1	SEAL-O-RING	
F			**278-4138**	1	KIT-FUEL LINE PROTECTION	

F - NOT SHOWN
M - METRIC PART
Y - SEPARATE ILLUSTRATION

313-4350 **PUMP GP-FUEL INJECTION (**contd.**)** **i04950312**

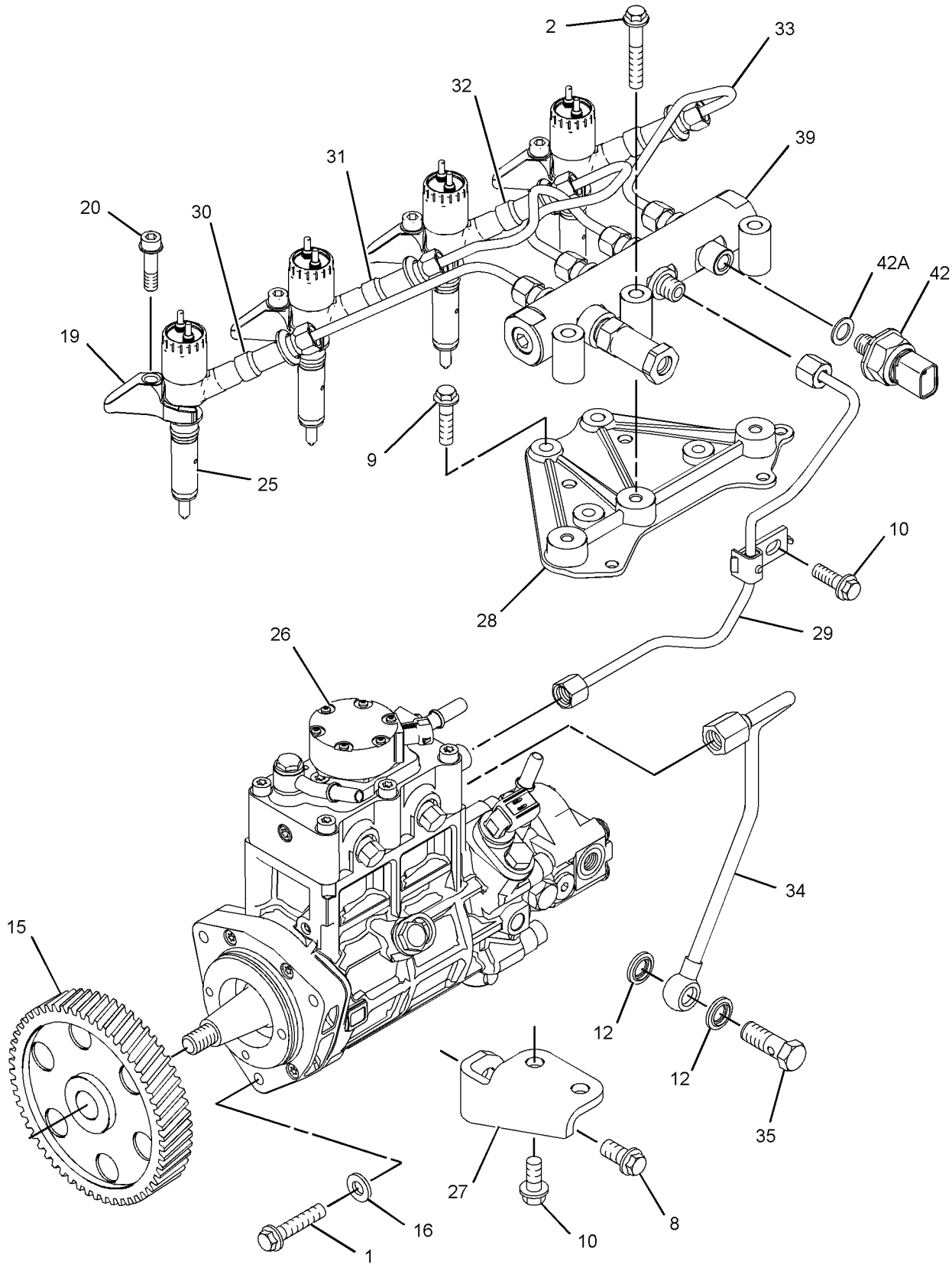

GRAPHIC #1 g01399258

313-4350 **PUMP GP-FUEL INJECTION (**contd.**)** **i04950312**

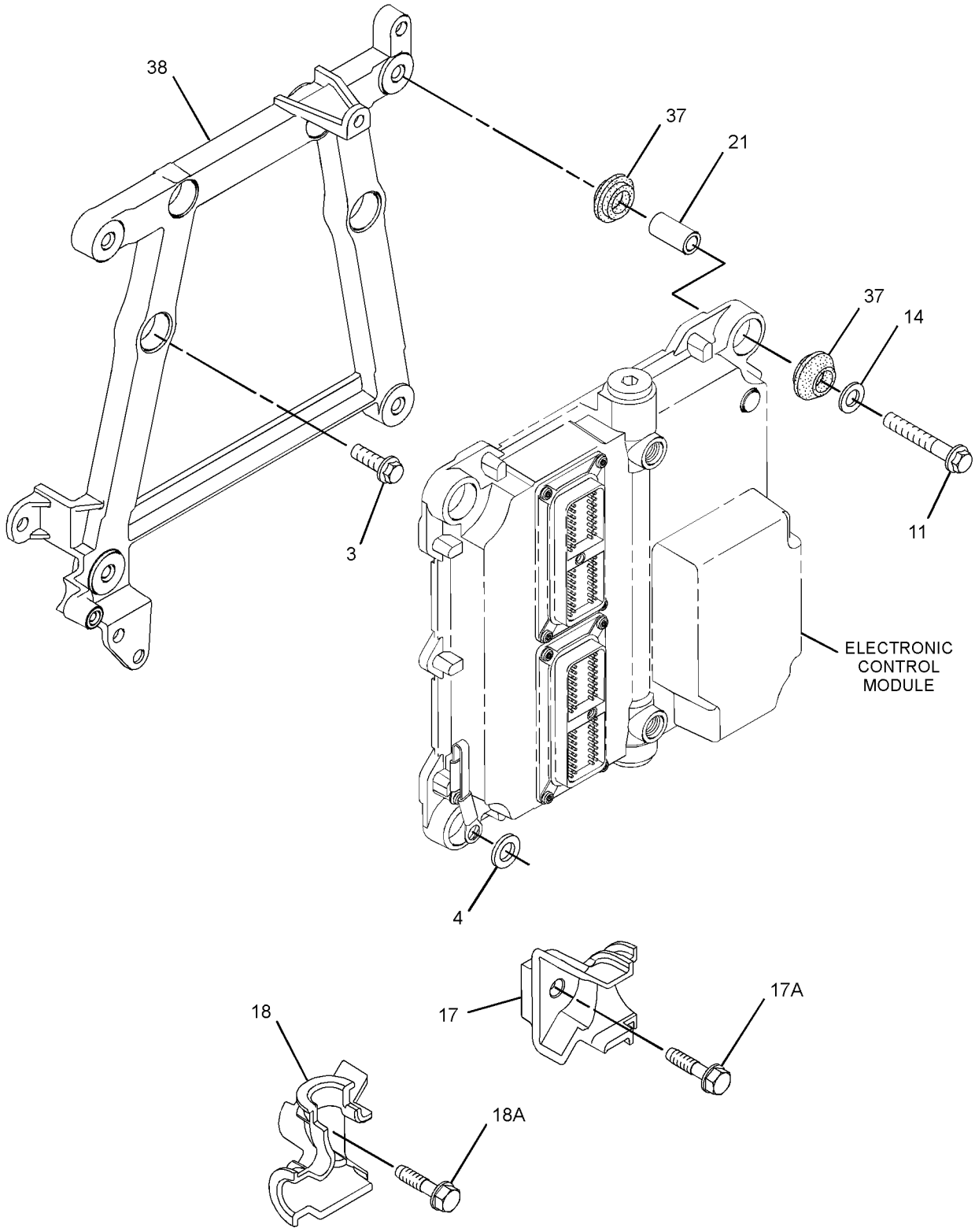

GRAPHIC #2 g01399266

313-4350 **PUMP GP-FUEL INJECTION (**contd.**)** **i04950312**

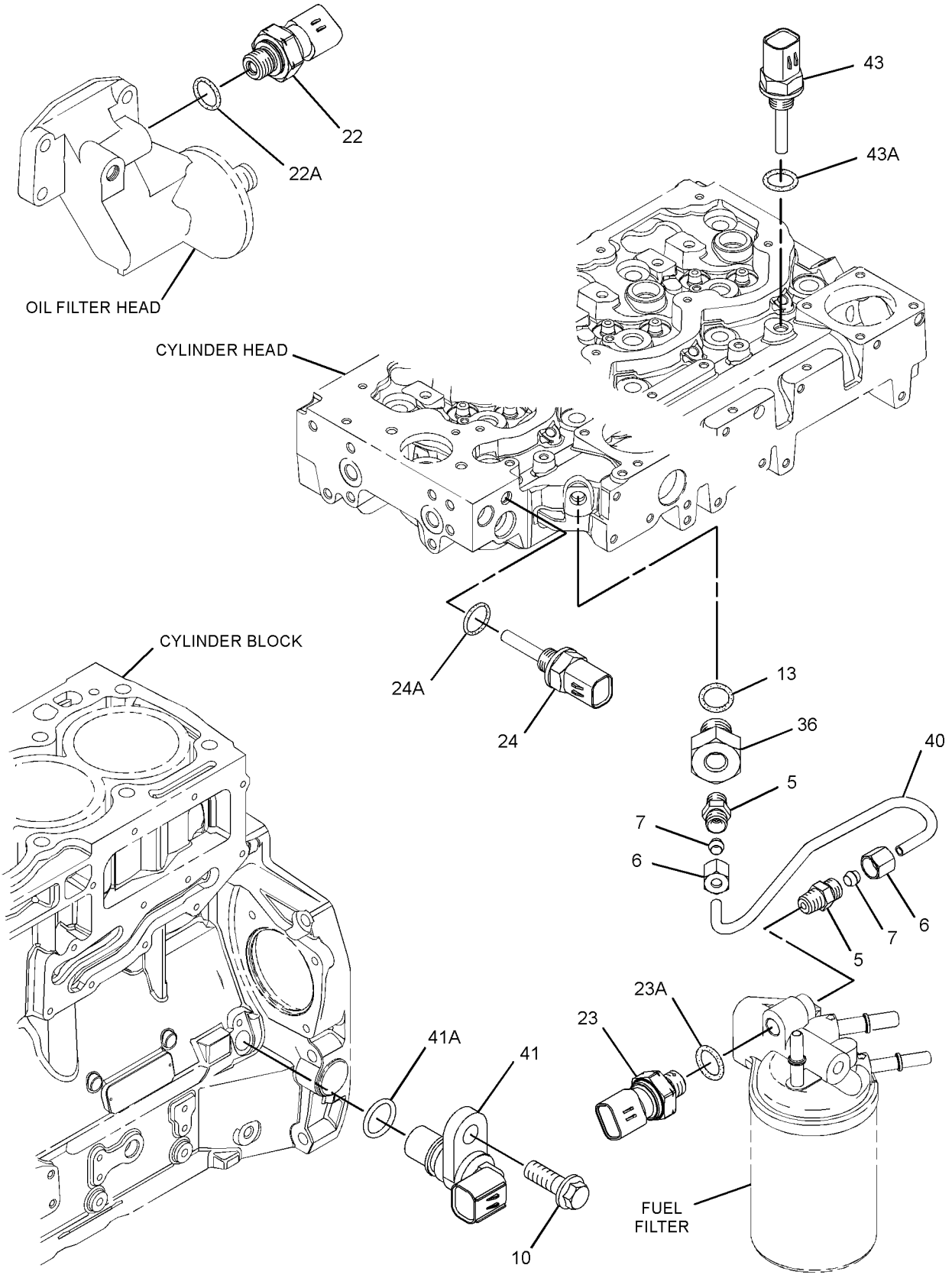

GRAPHIC #3 <END> g01399269

313-4350 PUMP GP-FUEL INJECTION

S/N: 444322-UP

TYPE 2

SMCS-1251, 1290 **i04950313**

NOTE	REF NO	GRAPHIC REF	PART NUMBER	QTY	PART NAME 1 2 3 4 5 6 (PRODUCT LEVEL)	SEE PAGE
M	1	1	**6I-0260**	3	BOLT (M8X1.25X25-MM)	
M	2	1	**6I-0455**	3	BOLT (M8X1.25X55-MM)	
M	3	2	**6I-0572**	4	BOLT (M8X1.25X20-MM)	
	4	2	**7W-2632**	1	WASHER (8.5X16.8X1.6-MM THK)	
	5	3	**035-8017**	2	UNION	
	6	3	**365-3308**	2	NUT-COMPRESSION	
	7	3	**067-6265**	2	FITTING-BRASS	
M	8	1	**100-4830**	1	BOLT (M10X1.5X20-MM)	
M	9	1	**101-3895**	4	BOLT (M8X1.25X35-MM)	
M	10	1,3	**124-3815**	2	BOLT (M8X1.25X16-MM)	
M	11	2	**141-8584**	4	BOLT (M8X1.25X50-MM)	
	12	1	**160-0162**	2	WASHER	
	13	3	**199-9252**	1	SEAL-O-RING	
	14	2	**217-0099**	4	SPACER (8.2X25X2-MM THK)	
	15	1	**230-8989**	1	GEAR-FUEL PUMP (68-TEETH)	
C	16	1	**232-3149**	3	WASHER (8.35X16.85X1.55-MM THK)	
	17	2	**268-6677**	1	BRACKET AS	
		2	**260-3718**	1	BRACKET	
M	17A	2	**260-3939**	1	SCREW-HEX HEAD (M6X1X25-MM)	
	18	2	**268-6678**	1	BRACKET AS	
		2	**260-3719**	1	BRACKET	
M	18A	2	**260-3939**	1	SCREW-HEX HEAD (M6X1X25-MM)	
	19	1	**278-5168**	4	CLAMP-INJECTOR	
	20	1	**278-5170**	4	BOLT	
	21	2	**278-5203**	4	SPACER	
	22	3	**278-5225**	1	KIT-SENSOR (ENGINE OIL PRESSURE)	
	22A	3	**199-9267**	1	SEAL-O-RING	
	23	3	**278-5273**	1	KIT-SENSOR (AIR PRESSURE)	
	23A	3	**199-9252**	1	SEAL-O-RING	
	24	3	**278-5307**	1	KIT-SENSOR (COOLANT TEMPERATURE)	
	24A	3	**199-9267**	1	SEAL-O-RING	
Y	25	1	**282-0480**	1	INJECTOR GP-FUEL	1019
CYR	26	1	**295-9125**	1	PUMP & MTG GP-UNIT INJ HYD	1062
	27	1	**298-4535**	1	BRACKET-SUPPORT	
	28	1	**298-4536**	1	BRACKET-MOUNTING	
	29	1	**298-4537**	1	TUBE AS	
	30	1	**298-4538**	1	TUBE AS (CYL NO. 1)	
	31	1	**298-4539**	1	TUBE AS (CYL NO. 2)	
	32	1	**298-4540**	1	TUBE AS (CYL NO. 3)	
	33	1	**298-4541**	1	TUBE AS (CYL NO. 4)	
	34	1	**298-4542**	1	TUBE AS	
	35	1	**298-4543**	1	BOLT	
	36	3	**304-3689**	1	ADAPTER	
	37	2	**300-6714**	8	MOUNT	
C	38	2	**317-3144**	1	BRACKET	
	39	1	**308-8425**	1	RAIL AS-FUEL	
	40	3	**311-2379**	1	TUBE	

313-4350 **PUMP GP-FUEL INJECTION (**contd.**)** **i04950313**

NOTE	REF NO	GRAPHIC REF	PART NUMBER	QTY	PART NAME 1 2 3 4 5 6 (PRODUCT LEVEL)	SEE PAGE
	41	3	**311-3858**	1	KIT-SENSOR (ENGINE SPEED)	
	41A	3	**274-1639**	1	SEAL	
	42	1	**311-6342**	1	SENSOR AS-PRESSURE (FUEL)	
	42A	1	**309-8006**	1	WASHER	
	43	3	**313-2455**	1	SENSOR-TEMPERATURE (AIR)	
	43A	3	**278-5226**	1	SEAL-O-RING	
F			**278-4138**	1	KIT-FUEL LINE PROTECTION	

C - CHANGE FROM PREVIOUS TYPE
F - NOT SHOWN
M - METRIC PART
R - REMANUFACTURED PART MAY BE AVAILABLE
Y - SEPARATE ILLUSTRATION

313-4350 **PUMP GP-FUEL INJECTION (**contd.**)** **i04950313**

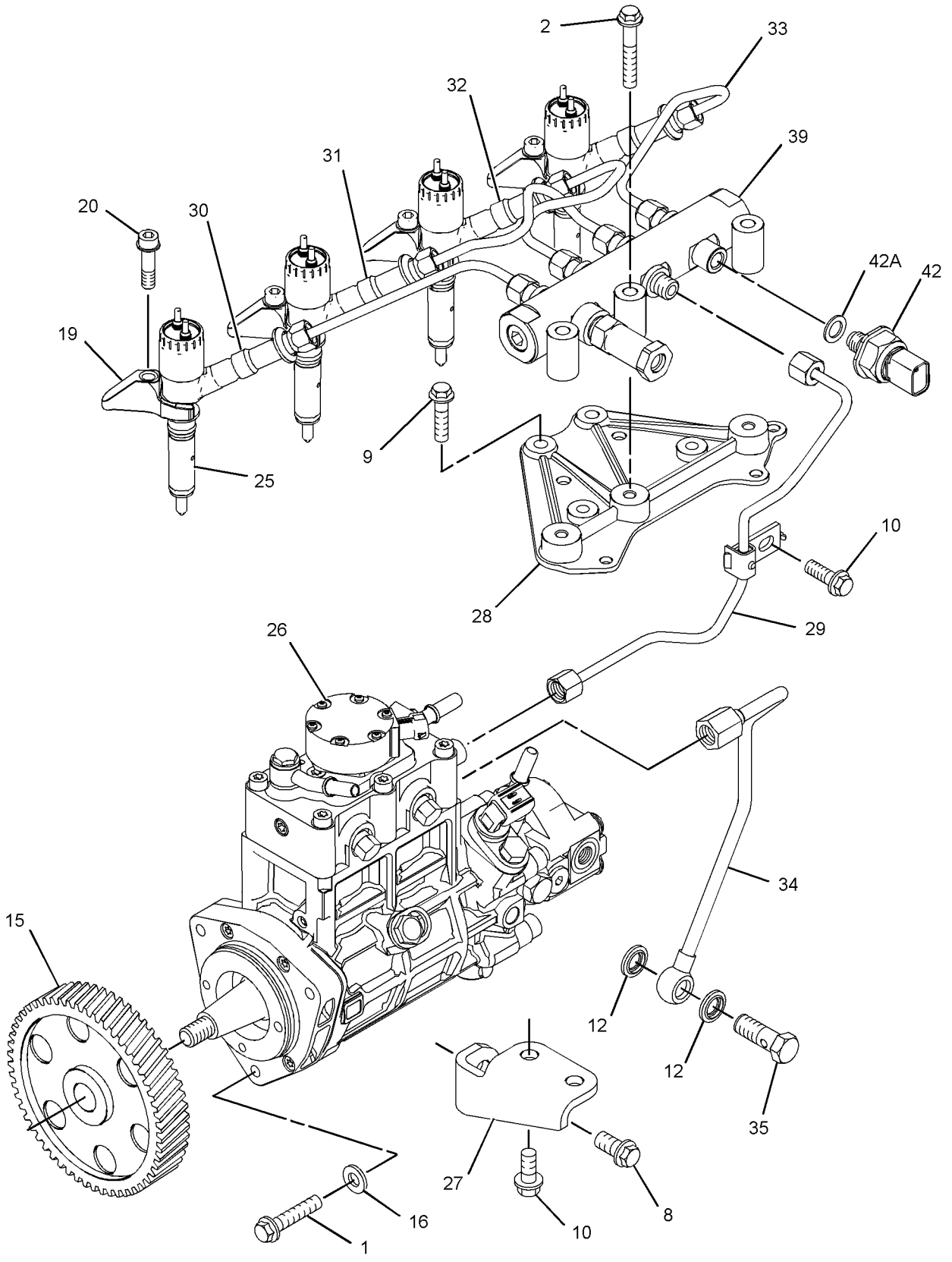

GRAPHIC #1 g01399258

313-4350 **PUMP GP-FUEL INJECTION (**contd.**)** **i04950313**

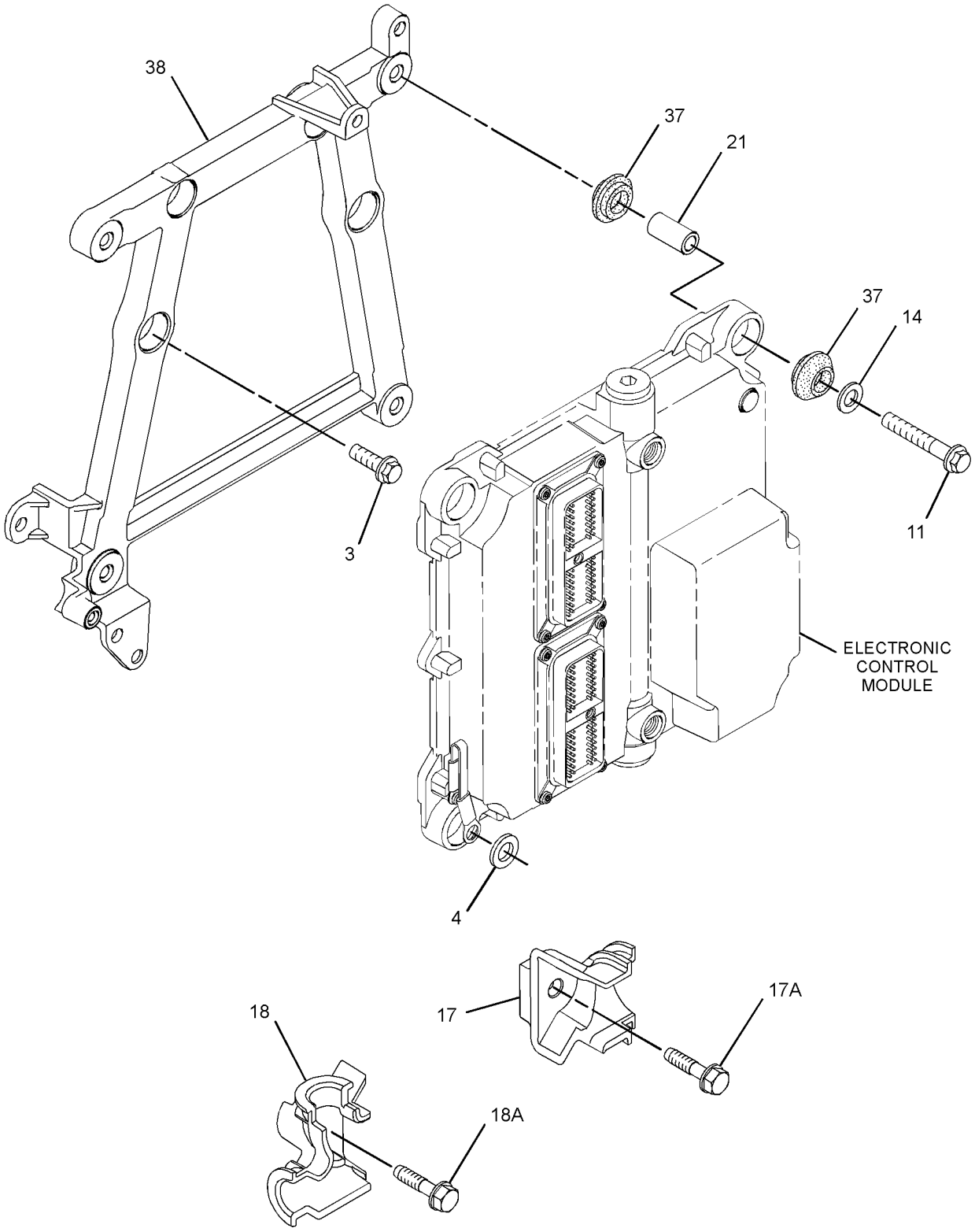

GRAPHIC #2 g01399266

313-4350 **PUMP GP-FUEL INJECTION** (contd.) **i04950313**

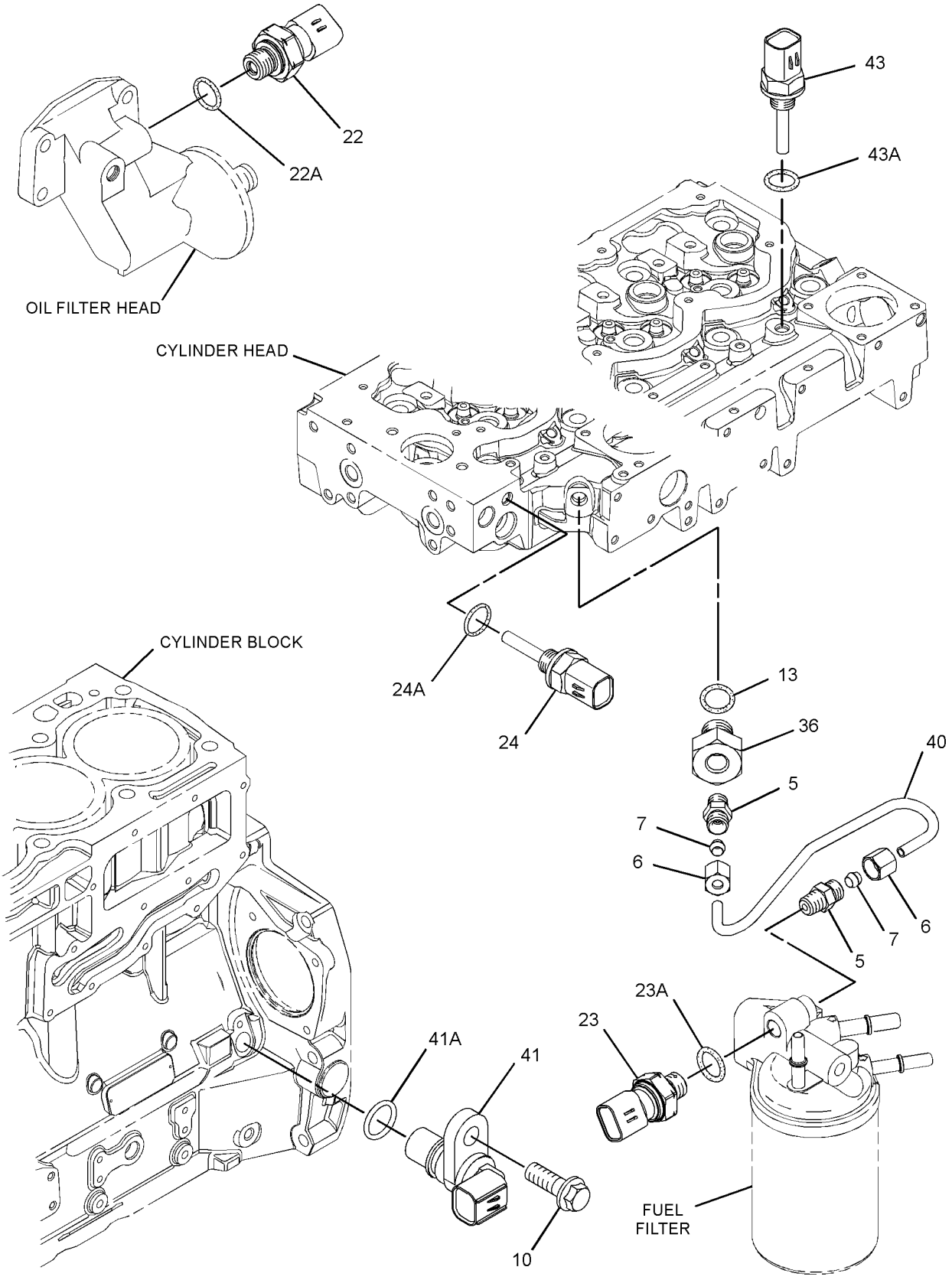

GRAPHIC #3 <END> g01399269

313-4350 PUMP GP-FUEL INJECTION

TYPE 1

SMCS-1251, 1290 **i04950310**

NOTE	REF NO	GRAPHIC REF	PART NUMBER	QTY	PART NAME 1 2 3 4 5 6 (PRODUCT LEVEL)	SEE PAGE
M	1	1	**6I-0260**	3	BOLT (M8X1.25X25-MM)	
M	2	1	**6I-0455**	3	BOLT (M8X1.25X55-MM)	
M	3	2	**6I-0572**	4	BOLT (M8X1.25X20-MM)	
	4	2	**7W-2632**	1	WASHER (8.5X16.8X1.6-MM THK)	
	5	3	**035-8017**	2	UNION	
	6	3	**365-3308**	2	NUT-COMPRESSION	
	7	3	**067-6265**	2	FITTING-BRASS	
M	8	1	**100-4830**	1	BOLT (M10X1.5X20-MM)	
M	9	1	**101-3895**	4	BOLT (M8X1.25X35-MM)	
M	10	1,3	**124-3815**	2	BOLT (M8X1.25X16-MM)	
M	11	2	**141-8584**	4	BOLT (M8X1.25X50-MM)	
	12	1	**160-0162**	2	WASHER	
	13	3	**199-9252**	1	SEAL-O-RING	
	14	2	**217-0099**	5	SPACER (8.2X25X2-MM THK)	
	15	1	**230-8989**	1	GEAR-FUEL PUMP (68-TEETH)	
	16	1	**232-3149**	3	WASHER (8.35X16.85X1.55-MM THK)	
	17	2	**268-6677**	1	BRACKET AS	
M	17A	2	**260-3939**	1	SCREW-HEX HEAD (M6X1X25-MM)	
	18	2	**268-6678**	1	BRACKET AS	
M	18A	2	**260-3939**	1	SCREW-HEX HEAD (M6X1X25-MM)	
	19	1	**278-5168**	4	CLAMP-INJECTOR	
	20	1	**278-5170**	4	BOLT	
	21	2	**278-5203**	4	SPACER	
	22	3	**278-5225**	1	KIT-SENSOR (ENGINE OIL PRESSURE)	
	22A	3	**199-9267**	1	SEAL-O-RING	
	23	3	**278-5273**	1	KIT-SENSOR (AIR PRESSURE)	
	23A	3	**199-9252**	1	SEAL-O-RING	
	24	3	**278-5307**	1	KIT-SENSOR (COOLANT TEMPERATURE)	
	24A	3	**199-9267**	1	SEAL-O-RING	
CYR	25	1	**320-0677**	4	INJECTOR GP-FUEL	1026
YR	26	1	**324-0532**	1	PUMP GP-FUEL INJECTION	1523
	27	1	**298-4535**	1	BRACKET-SUPPORT	
	28	1	**337-3573**	1	BRACKET	
	29	1	**337-3574**	1	TUBE	
	30	1	**322-3745**	1	TUBE (CYL NO. 1)	
	31	1	**322-3746**	1	TUBE (CYL NO. 2)	
	32	1	**333-4732**	1	LINE-FUEL INJECTION (CYL NO. 3)	
	33	1	**333-4733**	1	LINE-FUEL INJECTION (CYL NO. 4)	
	34	1	**298-4542**	1	TUBE AS	
	35	1	**298-4543**	1	BOLT	
	36	3	**304-3689**	1	ADAPTER	
	37	2	**300-6714**	8	MOUNT	
	38	2	**317-3144**	1	BRACKET	
C	39	1	**318-2394**	1	RAIL AS-FUEL	
	39A	1	**305-5291**	1	VALVE AS-RELIEF	
	40	3	**305-0659**	1	TUBE	
	41	3	**311-3858**	1	KIT-SENSOR (ENGINE SPEED)	
	41A	3	**274-1639**	1	SEAL	

313-4350 **PUMP GP-FUEL INJECTION** (contd.) **i04950310**

NOTE	REF NO	GRAPHIC REF	PART NUMBER	QTY	PART NAME 1 2 3 4 5 6 (PRODUCT LEVEL)	SEE PAGE
	42	1	**311-6342**	1	SENSOR AS-PRESSURE (FUEL)	
	42A	1	**309-8006**	1	WASHER	
	43	3	**313-2455**	1	SENSOR-TEMPERATURE (AIR)	
	43A	3	**278-5226**	1	SEAL-O-RING	
F			**278-4138**	1	KIT-FUEL LINE PROTECTION	

C - CHANGE FROM PREVIOUS TYPE
F - NOT SHOWN
M - METRIC PART
R - REMANUFACTURED PART MAY BE AVAILABLE
Y - SEPARATE ILLUSTRATION

313-4350 **PUMP GP-FUEL INJECTION (**contd.**)** **i04950310**

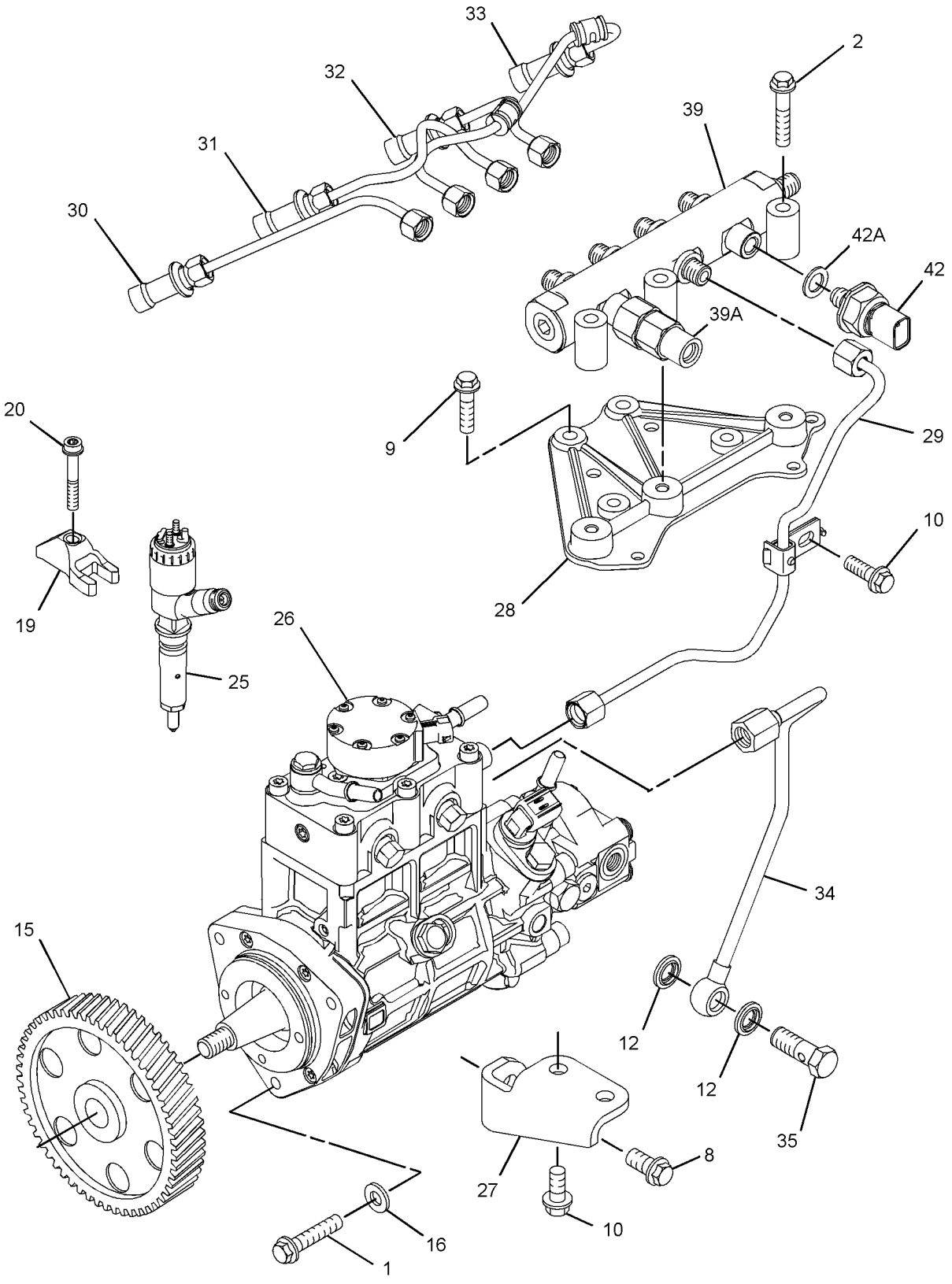

GRAPHIC #1 g01851417

313-4350 **PUMP GP-FUEL INJECTION (**contd.**)** **i04950310**

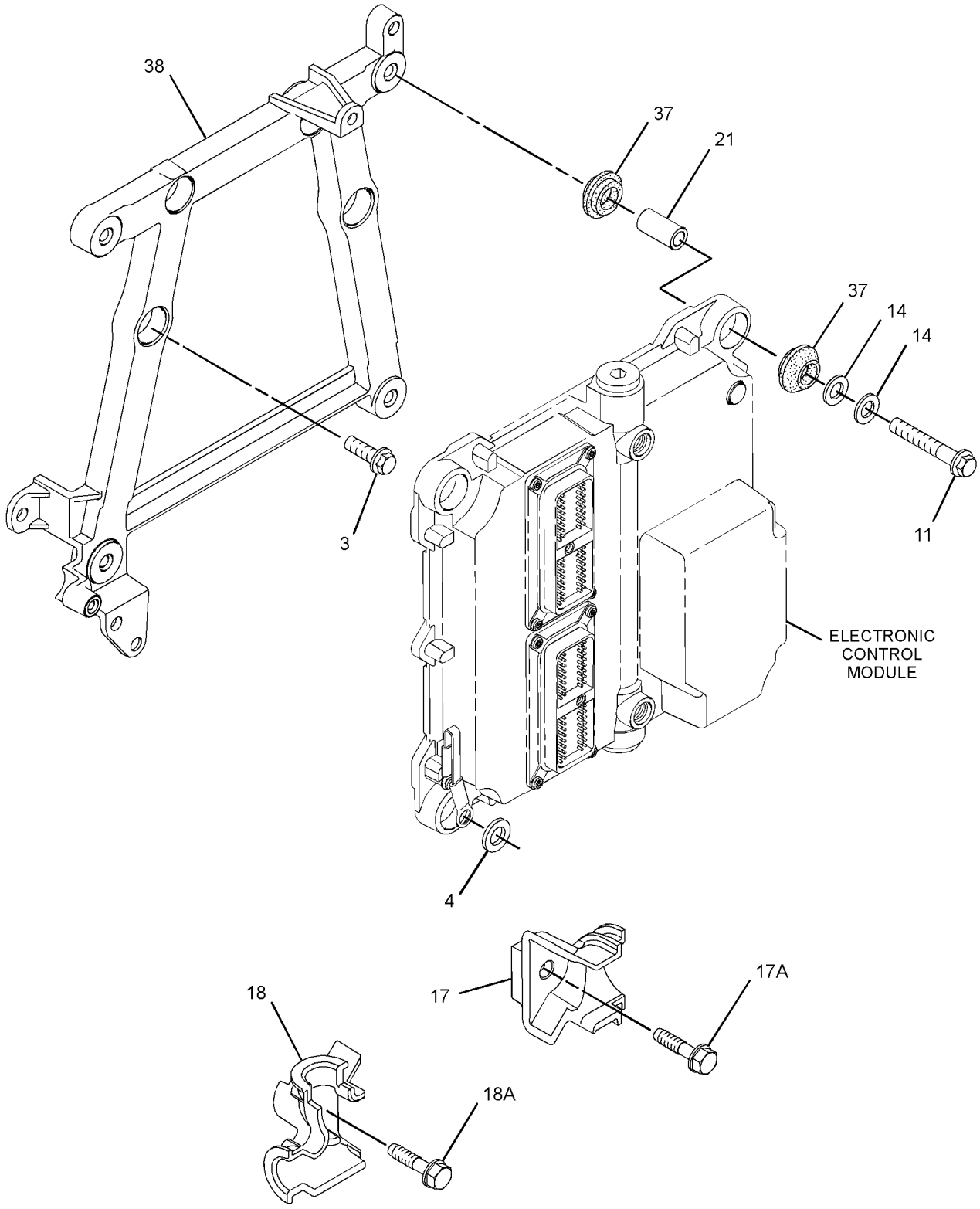

GRAPHIC #2 g01667498

313-4350 **PUMP GP-FUEL INJECTION (**contd.**)** **i04950310**

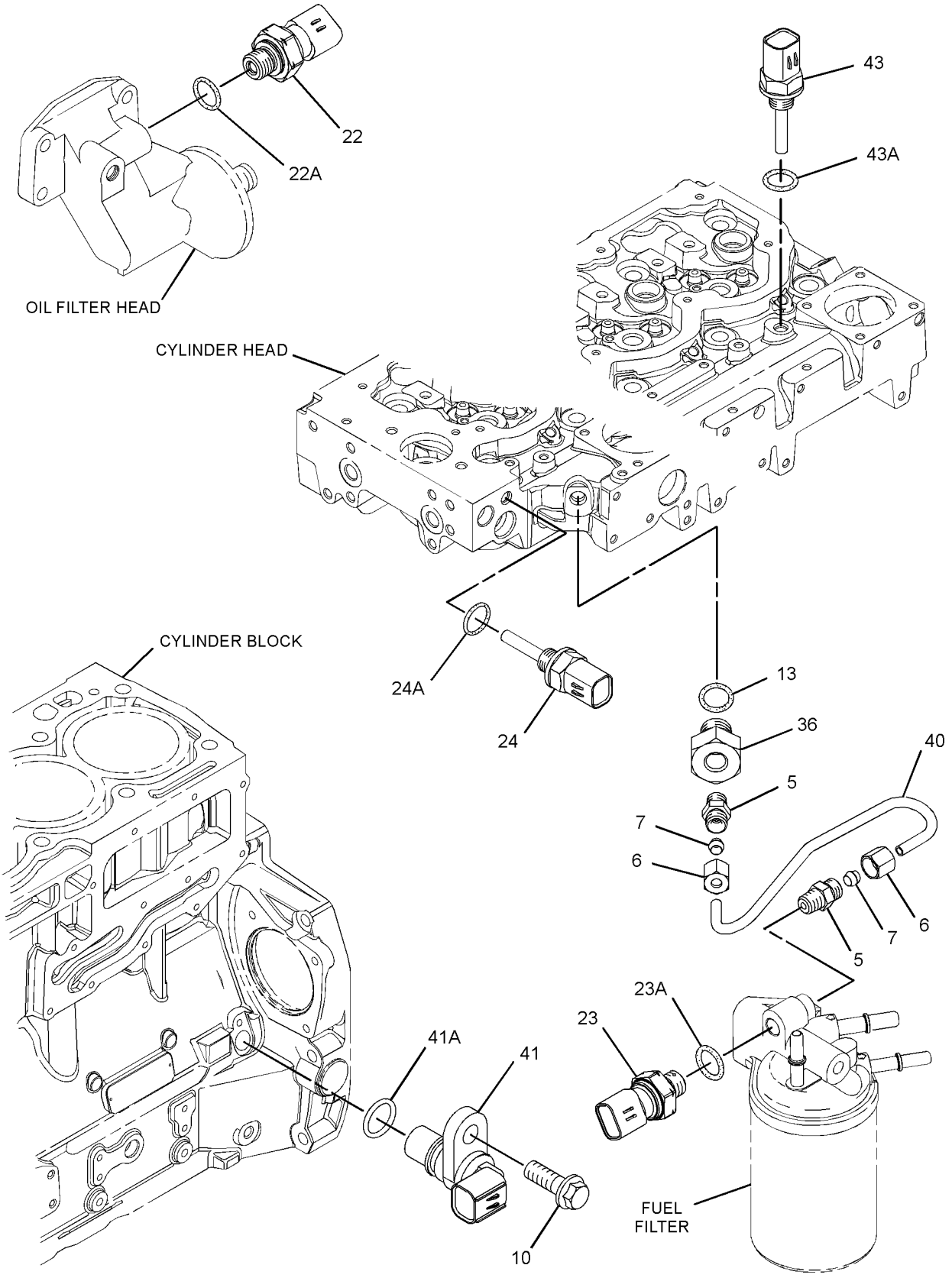

GRAPHIC #3 <END> g01399269

313-4350 PUMP GP-FUEL INJECTION

TYPE 2

SMCS-1251, 1290 **i04950311**

NOTE	REF NO	GRAPHIC REF	PART NUMBER	QTY	PART NAME 1 2 3 4 5 6 (PRODUCT LEVEL)	SEE PAGE
M	1	1	**6I-0260**	3	BOLT (M8X1.25X25-MM)	
M	2	1	**6I-0455**	3	BOLT (M8X1.25X55-MM)	
M	3	2	**6I-0572**	4	BOLT (M8X1.25X20-MM)	
	4	2	**7W-2632**	1	WASHER (8.5X16.8X1.6-MM THK)	
	5	3	**035-8017**	2	UNION	
	6	3	**365-3308**	2	NUT-COMPRESSION	
	7	3	**067-6265**	2	FITTING-BRASS	
M	8	1	**100-4830**	1	BOLT (M10X1.5X20-MM)	
M	9	1	**101-3895**	4	BOLT (M8X1.25X35-MM)	
M	10	1,3	**124-3815**	2	BOLT (M8X1.25X16-MM)	
M	11	2	**141-8584**	4	BOLT (M8X1.25X50-MM)	
	12	1	**160-0162**	2	WASHER	
	13	3	**199-9252**	1	SEAL-O-RING	
	14	2	**217-0099**	5	SPACER (8.2X25X2-MM THK)	
	15	1	**230-8989**	1	GEAR-FUEL PUMP (68-TEETH)	
	16	1	**232-3149**	3	WASHER (8.35X16.85X1.55-MM THK)	
	17	2	**268-6677**	1	BRACKET AS	
M	17A	2	**260-3939**	1	SCREW-HEX HEAD (M6X1X25-MM)	
	18	2	**268-6678**	1	BRACKET AS	
M	18A	2	**260-3939**	1	SCREW-HEX HEAD (M6X1X25-MM)	
	19	1	**278-5168**	4	CLAMP-INJECTOR	
	20	1	**278-5170**	4	BOLT	
	21	2	**278-5203**	4	SPACER	
	22	3	**278-5225**	1	KIT-SENSOR (ENGINE OIL PRESSURE)	
	22A	3	**199-9267**	1	SEAL-O-RING	
	23	3	**278-5273**	1	KIT-SENSOR (AIR PRESSURE)	
	23A	3	**199-9252**	1	SEAL-O-RING	
	24	3	**278-5307**	1	KIT-SENSOR (COOLANT TEMPERATURE)	
	24A	3	**199-9267**	1	SEAL-O-RING	
YR	25	1	**320-0677**	4	INJECTOR GP-FUEL	1026
CYR	26	1	**352-6584**	1	PUMP GP-FUEL INJECTION	1540
	27	1	**298-4535**	1	BRACKET-SUPPORT	
	28	1	**337-3573**	1	BRACKET	
	29	1	**337-3574**	1	TUBE	
	30	1	**322-3745**	1	TUBE (CYL NO. 1)	
	31	1	**322-3746**	1	TUBE (CYL NO. 2)	
	32	1	**333-4732**	1	LINE-FUEL INJECTION (CYL NO. 3)	
	33	1	**333-4733**	1	LINE-FUEL INJECTION (CYL NO. 4)	
	34	1	**298-4542**	1	TUBE AS	
	35	1	**298-4543**	1	BOLT	
	36	3	**304-3689**	1	ADAPTER	
	37	2	**300-6714**	8	MOUNT	
	38	2	**317-3144**	1	BRACKET	
	39	1	**318-2394**	1	RAIL AS-FUEL	
	39A	1	**305-5291**	1	VALVE AS-RELIEF	
	40	3	**305-0659**	1	TUBE	
	41	3	**311-3858**	1	KIT-SENSOR (ENGINE SPEED)	
		3	**238-0120**	1	SENSOR GP-SPEED	

313-4350 **PUMP GP-FUEL INJECTION (**contd.**)** **i04950311**

NOTE	REF NO	GRAPHIC REF	PART NUMBER	QTY	PART NAME 1 2 3 4 5 6 (PRODUCT LEVEL)	SEE PAGE
	41A	3	**274-1639**	1	SEAL	
	42	1	**311-6342**	1	SENSOR AS-PRESSURE (FUEL)	
	42A	1	**309-8006**	1	WASHER	
	43	3	**364-1102**	1	KIT-TEMPERATURE SENSOR (AIR)	
F			**278-4138**	1	KIT-FUEL LINE PROTECTION	

C - CHANGE FROM PREVIOUS TYPE
F - NOT SHOWN
M - METRIC PART
R - REMANUFACTURED PART MAY BE AVAILABLE
Y - SEPARATE ILLUSTRATION

313-4350 **PUMP GP-FUEL INJECTION (**contd.**)** **i04950311**

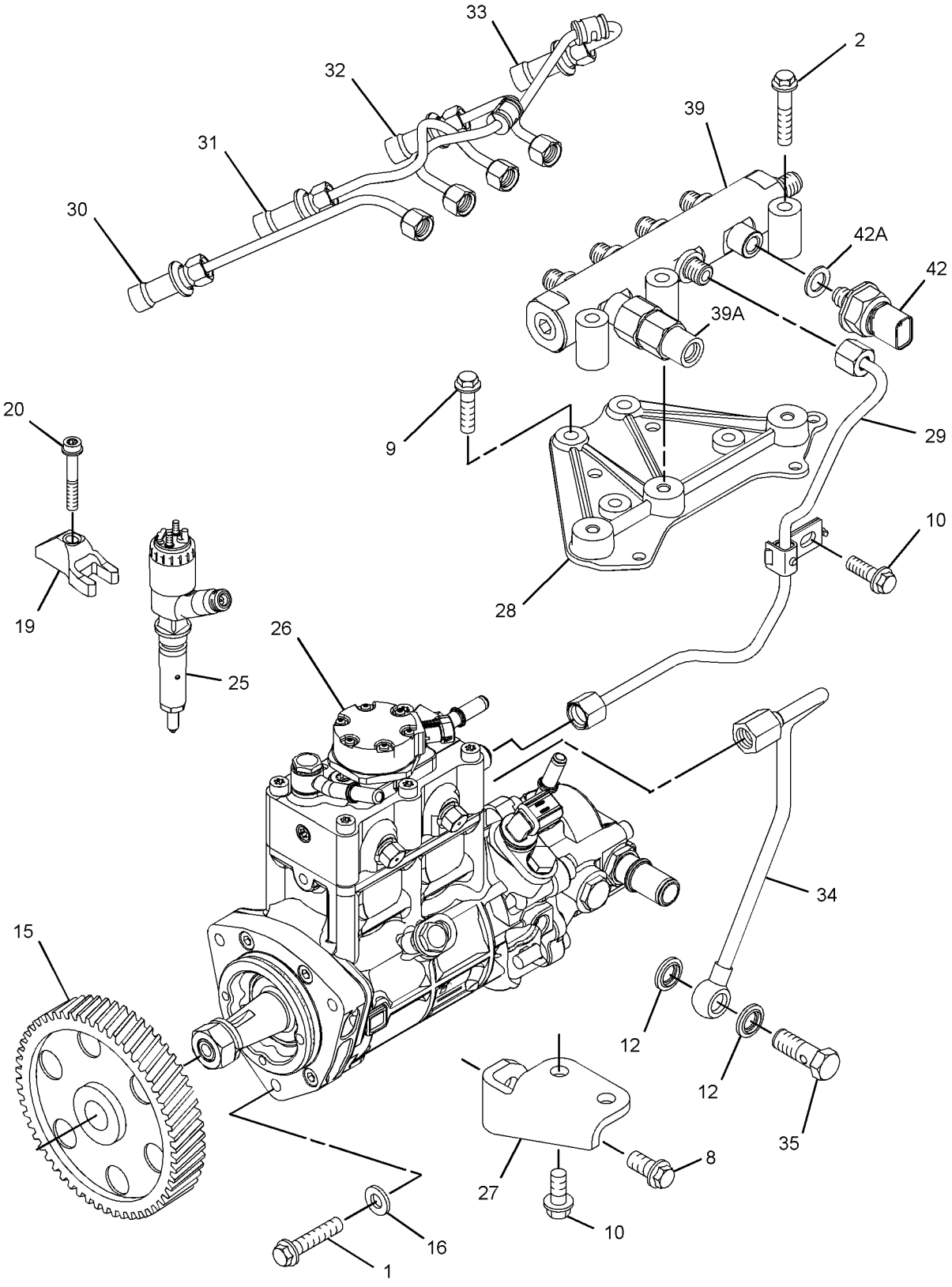

GRAPHIC #1 g02213434

313-4350 **PUMP GP-FUEL INJECTION (**contd.**)** **i04950311**

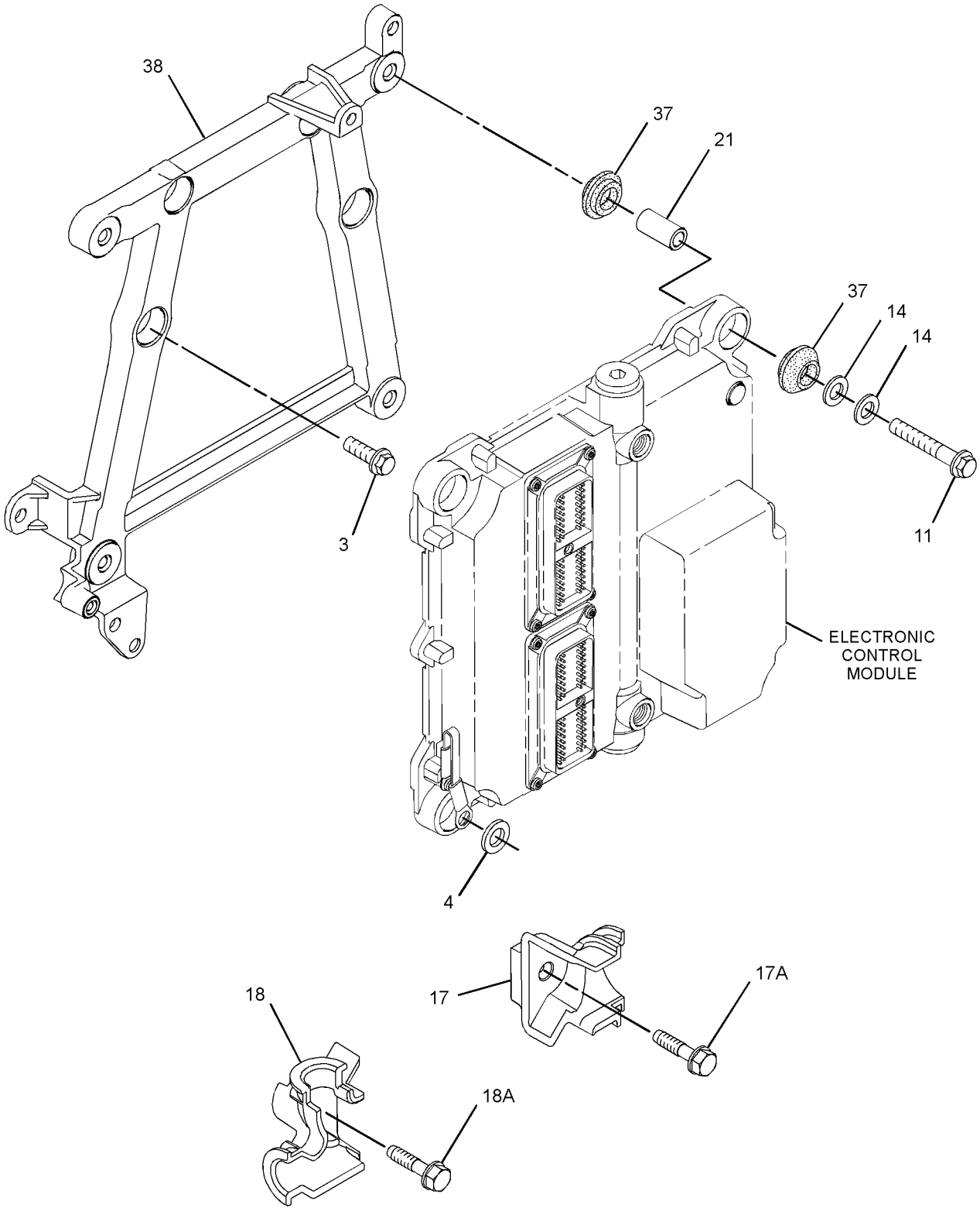

GRAPHIC #2 g01667498

313-4350 **PUMP GP-FUEL INJECTION** (contd.) **i04950311**

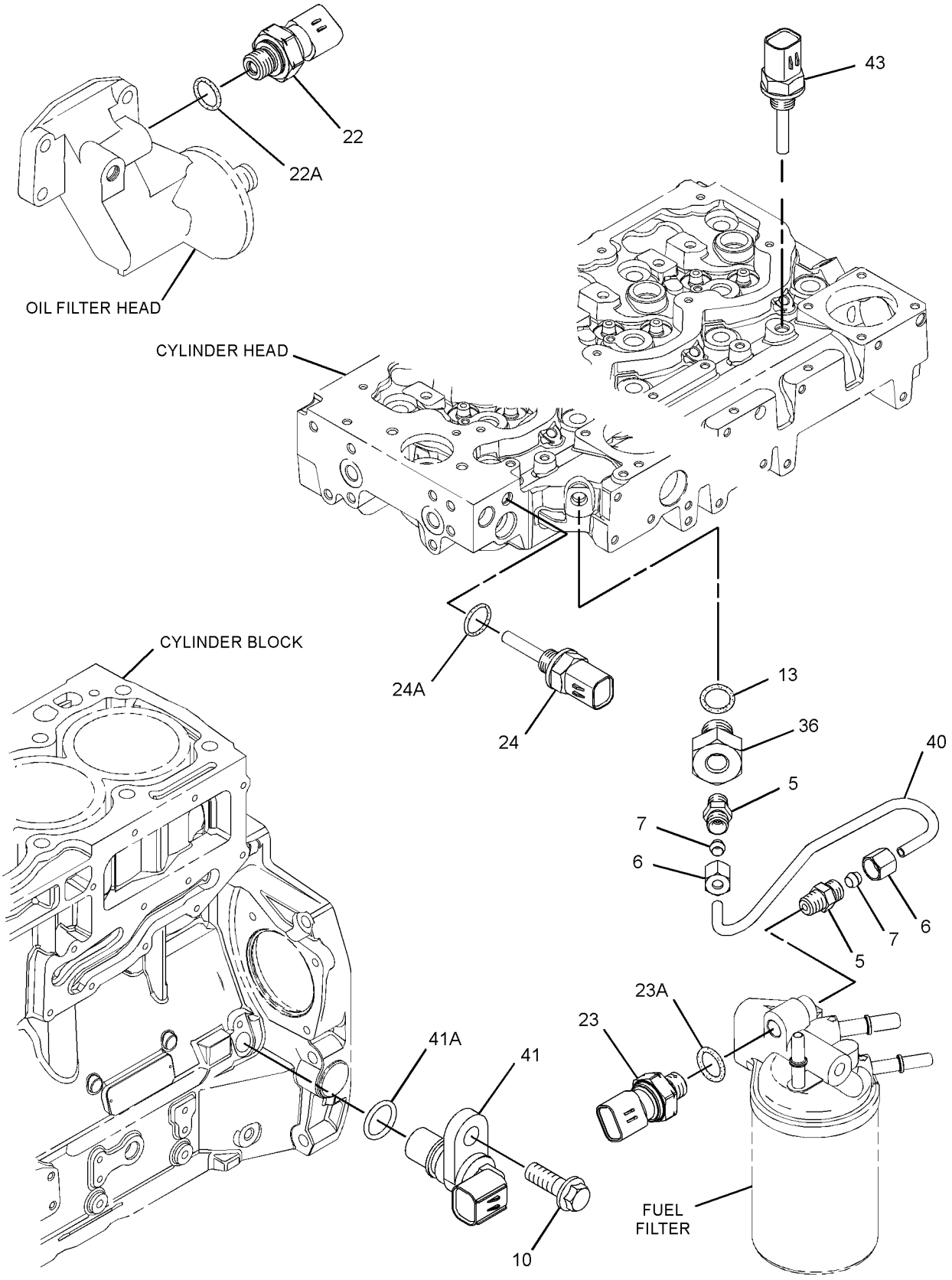

GRAPHIC #3 <END> g03137121

313-4350 PUMP GP-FUEL INJECTION

TYPE 3

SMCS-1251, 1290 **i05881477**

NOTE	REF NO	GRAPHIC REF	PART NUMBER	QTY	PART NAME 1 2 3 4 5 6 (PRODUCT LEVEL)	SEE PAGE
M	1	1	**6I-0260**	3	BOLT (M8X1.25X25-MM)	
M	2	1	**6I-0455**	3	BOLT (M8X1.25X55-MM)	
M	3	2	**6I-0572**	4	BOLT (M8X1.25X20-MM)	
	4	2	**7W-2632**	1	WASHER (8.5X16.8X1.6-MM THK)	
	5	3	**035-8017**	2	UNION	
	6	3	**365-3308**	2	NUT-COMPRESSION	
	7	3	**067-6265**	2	FITTING-BRASS	
M	8	1	**100-4830**	1	BOLT (M10X1.5X20-MM)	
M	9	1	**101-3895**	4	BOLT (M8X1.25X35-MM)	
M	10	1,3	**124-3815**	2	BOLT (M8X1.25X16-MM)	
M	11	2	**141-8584**	4	BOLT (M8X1.25X50-MM)	
	12	1	**346-0007**	2	WASHER	
	13	3	**199-9252**	1	SEAL-O-RING	
	14	2	**217-0099**	5	SPACER (8.2X25X2-MM THK)	
	15	1	**230-8989**	1	GEAR-FUEL PUMP (68-TEETH)	
	16	1	**232-3149**	3	WASHER (8.35X16.85X1.55-MM THK)	
	17	2	**268-6677**	1	BRACKET AS	
M	17A	2	**260-3939**	1	SCREW-HEX HEAD (M6X1X25-MM)	
	18	2	**268-6678**	1	BRACKET AS	
M	18A	2	**260-3939**	1	SCREW-HEX HEAD (M6X1X25-MM)	
	19	1	**278-5168**	4	CLAMP-INJECTOR	
	20	1	**278-5170**	4	BOLT	
	21	2	**278-5203**	4	SPACER	
	22	3	**278-5225**	1	KIT-SENSOR (ENGINE OIL PRESSURE)	
	22A	3	**199-9267**	1	SEAL-O-RING	
	23	3	**278-5273**	1	KIT-SENSOR (AIR PRESSURE)	
	23A	3	**199-9252**	1	SEAL-O-RING	
	24	3	**278-5307**	1	KIT-SENSOR (COOLANT TEMPERATURE)	
	24A	3	**199-9267**	1	SEAL-O-RING	
YR	25	1	**320-0677**	4	INJECTOR GP-FUEL	1026
CYR	26	1	**324-0532**	1	PUMP GP-FUEL INJECTION	1523
	27	1	**298-4535**	1	BRACKET-SUPPORT	
	28	1	**337-3573**	1	BRACKET	
	29	1	**337-3574**	1	TUBE	
	30	1	**322-3745**	1	TUBE (CYL NO. 1)	
	31	1	**322-3746**	1	TUBE (CYL NO. 2)	
	32	1	**333-4732**	1	LINE-FUEL INJECTION (CYL NO. 3)	
	33	1	**333-4733**	1	LINE-FUEL INJECTION (CYL NO. 4)	
	34	1	**298-4542**	1	TUBE AS	
	35	1	**363-3908**	1	BOLT-SPECIAL	
	36	3	**304-3689**	1	ADAPTER	
	37	2	**300-6714**	8	MOUNT	
	38	2	**317-3144**	1	BRACKET	
	39	1	**358-6632**	1	RAIL GP-FUEL	
	39A	1	**305-5291**	1	VALVE AS-RELIEF	
	40	3	**305-0659**	1	TUBE	
	41	3	**311-3858**	1	KIT-SENSOR (ENGINE SPEED)	
		3	**238-0120**	1	SENSOR GP-SPEED	

313-4350 **PUMP GP-FUEL INJECTION** (contd.) **i05881477**

NOTE	REF NO	GRAPHIC REF	PART NUMBER	QTY	PART NAME 1 2 3 4 5 6 (PRODUCT LEVEL)	SEE PAGE
	41A	3	**274-1639**	1	SEAL	
	42	1	**311-6342**	1	SENSOR AS-PRESSURE (FUEL)	
	42A	1	**309-8006**	1	WASHER	
	43	3	**364-1102**	1	KIT-TEMPERATURE SENSOR (AIR)	
F			**278-4138**	1	KIT-FUEL LINE PROTECTION	

C - CHANGE FROM PREVIOUS TYPE
F - NOT SHOWN
M - METRIC PART
R - REMANUFACTURED PART MAY BE AVAILABLE
Y - SEPARATE ILLUSTRATION

313-4350 **PUMP GP-FUEL INJECTION (**contd.**)** **i05881477**

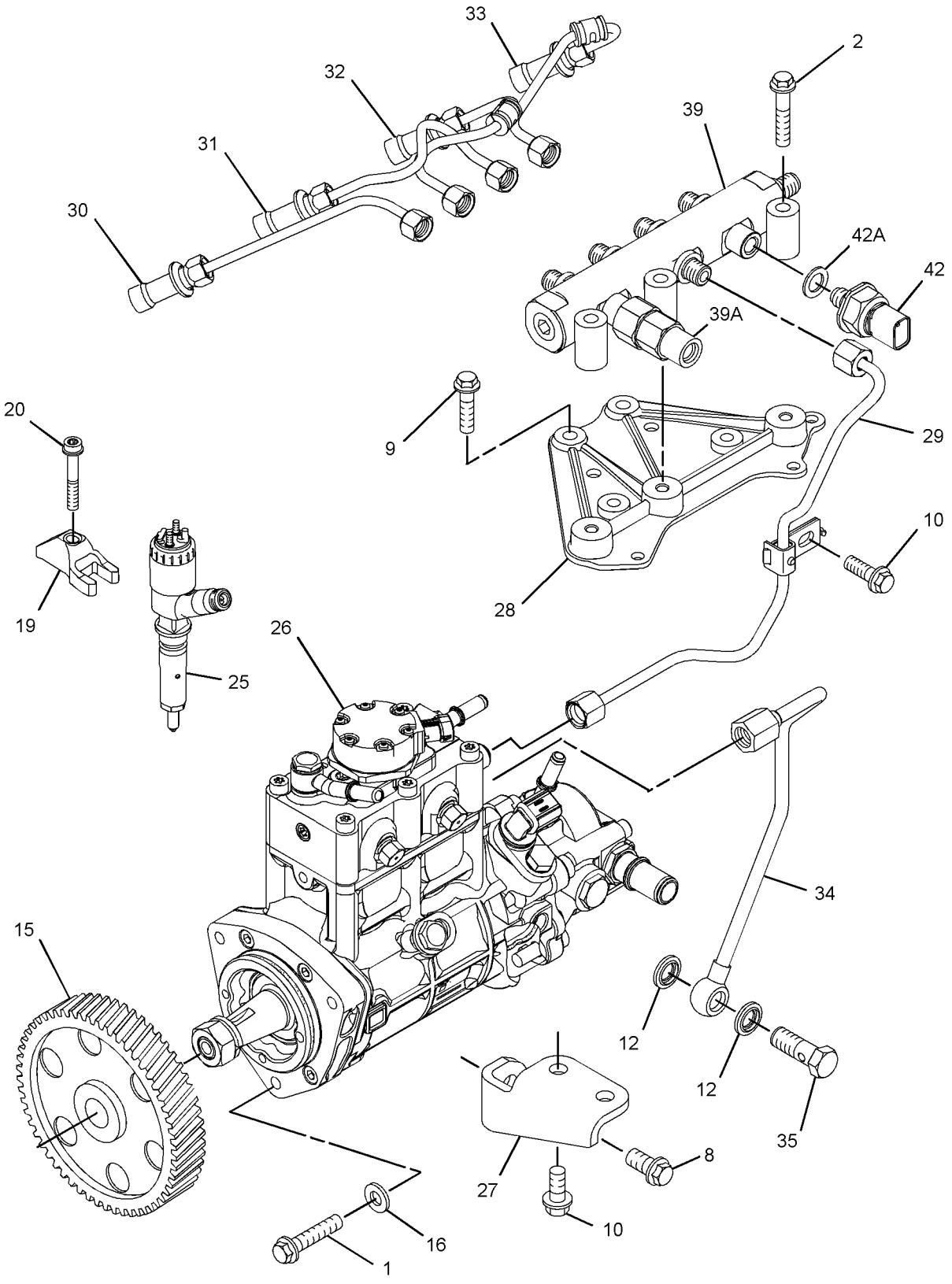

GRAPHIC #1 g02213434

313-4350 **PUMP GP-FUEL INJECTION (**contd.**)** **i05881477**

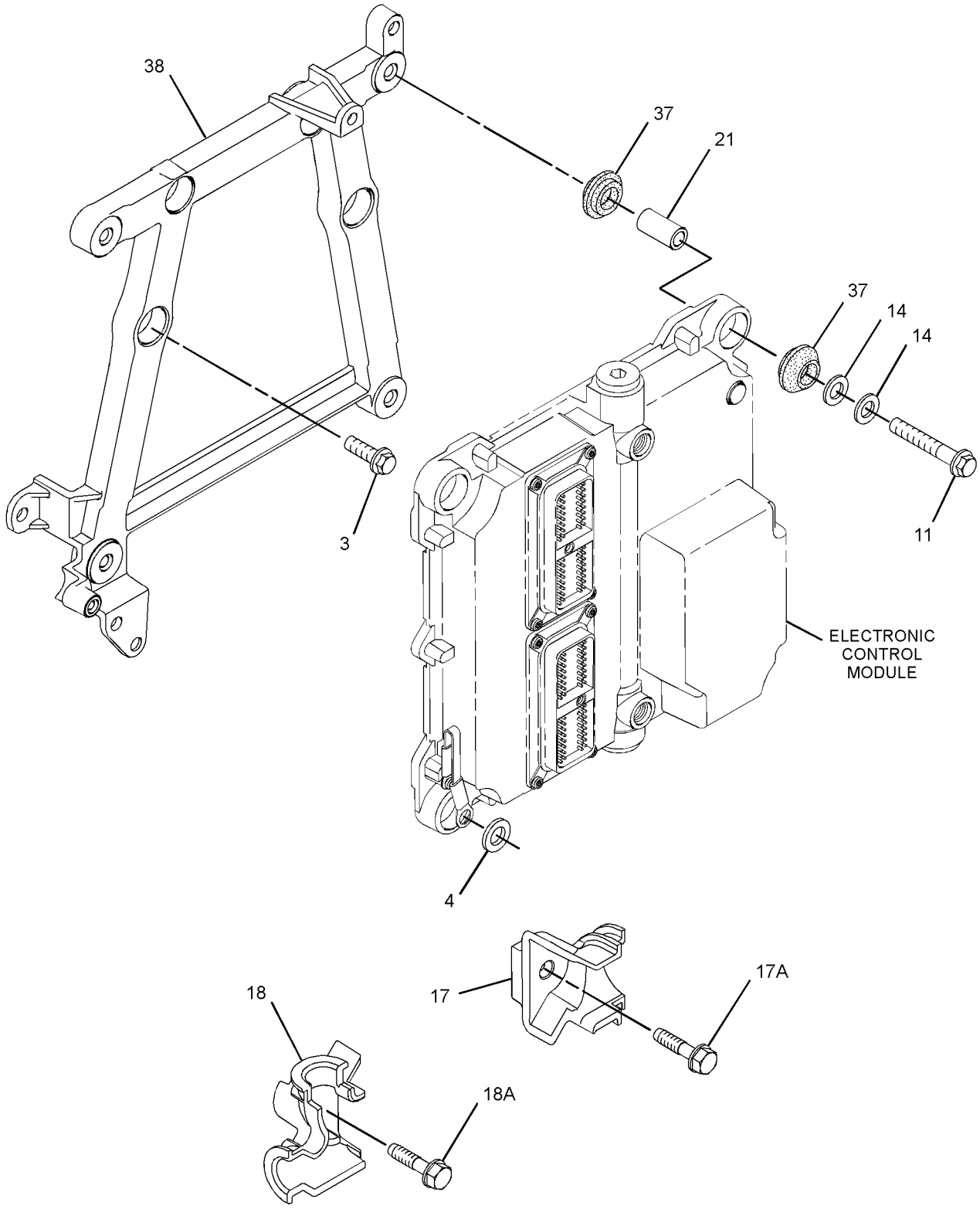

GRAPHIC #2 g01667498

313-4350 **PUMP GP-FUEL INJECTION (**contd.**)** **i05881477**

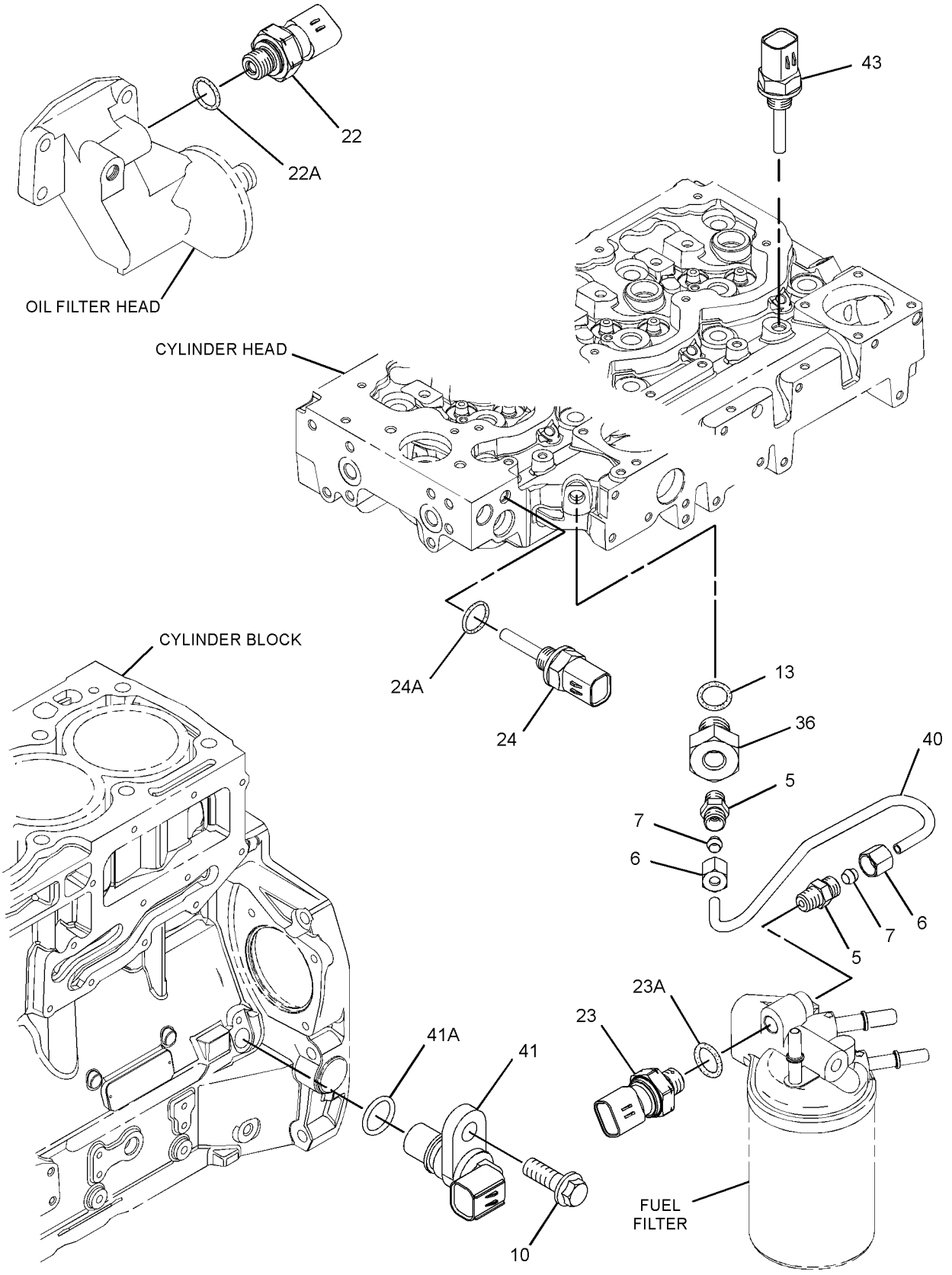

GRAPHIC #3 <END> g03137121

316-1109 PUMP GP-FUEL INJECTION

S/N: 4441-4115

SMCS-1251, 1290 **i03730880**

NOTE	REF NO	GRAPHIC REF	PART NUMBER	QTY	PART NAME 1 2 3 4 5 6 (PRODUCT LEVEL)	SEE PAGE
M	1	1	**6I-0260**	3	BOLT (M8X1.25X25-MM)	
M	2	1	**6I-0455**	3	BOLT (M8X1.25X55-MM)	
M	3	2	**6I-0572**	4	BOLT (M8X1.25X20-MM)	
	4	2	**7W-2632**	1	WASHER (8.5X16.8X1.6-MM THK)	
M	5	1	**100-4830**	1	BOLT (M10X1.5X20-MM)	
M	6	1	**101-3895**	4	BOLT (M8X1.25X35-MM)	
M	7	1,3	**124-3815**	4	BOLT (M8X1.25X16-MM)	
M	8	2	**141-8584**	4	BOLT (M8X1.25X50-MM)	
	9	1	**160-0162**	2	WASHER	
	10	2	**217-0099**	4	SPACER (8.2X25X2-MM THK)	
	11	1	**230-8989**	1	GEAR-FUEL PUMP (68-TEETH)	
	12	1	**232-3149**	3	WASHER (8.35X16.85X1.55-MM THK)	
	13	2	**268-6677**	1	BRACKET AS	
M	13A	2	**260-3939**	1	SCREW-HEX HEAD (M6X1X25-MM)	
	14	2	**268-6678**	1	BRACKET AS	
M	14A	2	**260-3939**	1	SCREW-HEX HEAD (M6X1X25-MM)	
	15	1	**278-5168**	4	CLAMP-INJECTOR	
	16	1	**278-5170**	4	BOLT	
	17	2	**278-5203**	4	SPACER	
	18	3	**278-5225**	1	KIT-SENSOR (ENGINE OIL PRESSURE)	
	18A	3	**199-9267**	1	SEAL-O-RING	
	19	3	**278-5272**	1	KIT-SENSOR (AIR TEMPERATURE)	
	19A	3	**278-5226**	1	SEAL-O-RING	
	20	3	**278-5273**	1	KIT-SENSOR (AIR PRESSURE)	
	20A	3	**199-9252**	1	SEAL-O-RING	
	21	3	**278-5307**	1	KIT-SENSOR (COOLANT TEMPERATURE)	
	21A	3	**199-9267**	1	SEAL-O-RING	
YR	22	1	**320-0680**	4	INJECTOR GP-FUEL	1027
YR	23	1	**295-9125**	1	PUMP & MTG GP-UNIT INJ HYD	1062
	24	1	**298-4536**	1	BRACKET-MOUNTING	
	25	1	**322-3744**	1	TUBE	
	26	1	**322-3745**	1	TUBE (CYL NO. 1)	
	27	1	**322-3746**	1	TUBE (CYL NO. 2)	
	28	1	**322-3747**	1	TUBE (CYL NO. 3)	
	29	1	**322-3748**	1	TUBE (CYL NO. 4)	
	30	1	**298-4542**	1	TUBE AS	
	31	1	**298-4543**	1	BOLT	
	32	2	**300-6714**	8	MOUNT	
	33	2	**317-3144**	1	BRACKET	
	34	1	**311-6631**	1	RAIL AS-FUEL	
	34A	1	**305-5291**	1	VALVE AS-RELIEF	
	35	3	**311-3858**	1	KIT-SENSOR (ENGINE SPEED)	
	35A	3	**274-1639**	1	SEAL	
		3	**238-0120**	1	SENSOR GP-SPEED	
	36	1	**311-6342**	1	SENSOR AS-PRESSURE (FUEL RAIL)	
	36A	1	**309-8006**	1	WASHER	
	37	1	**316-1189**	1	BRACKET AS	
	37A	1	**232-1115**	1	CLIP-PIPE	

316-1109 **PUMP GP-FUEL INJECTION (**contd.**)** **i03730880**

NOTE	REF NO	GRAPHIC REF	PART NUMBER	QTY	PART NAME 1 2 3 4 5 6 (PRODUCT LEVEL)	SEE PAGE
F			**278-4138**	4	KIT-FUEL LINE PROTECTION (LINE, LOW PRESSURE)	

F - NOT SHOWN
M - METRIC PART
R - REMANUFACTURED PART MAY BE AVAILABLE
Y - SEPARATE ILLUSTRATION

316-1109 **PUMP GP-FUEL INJECTION (**contd.**)** **i03730880**

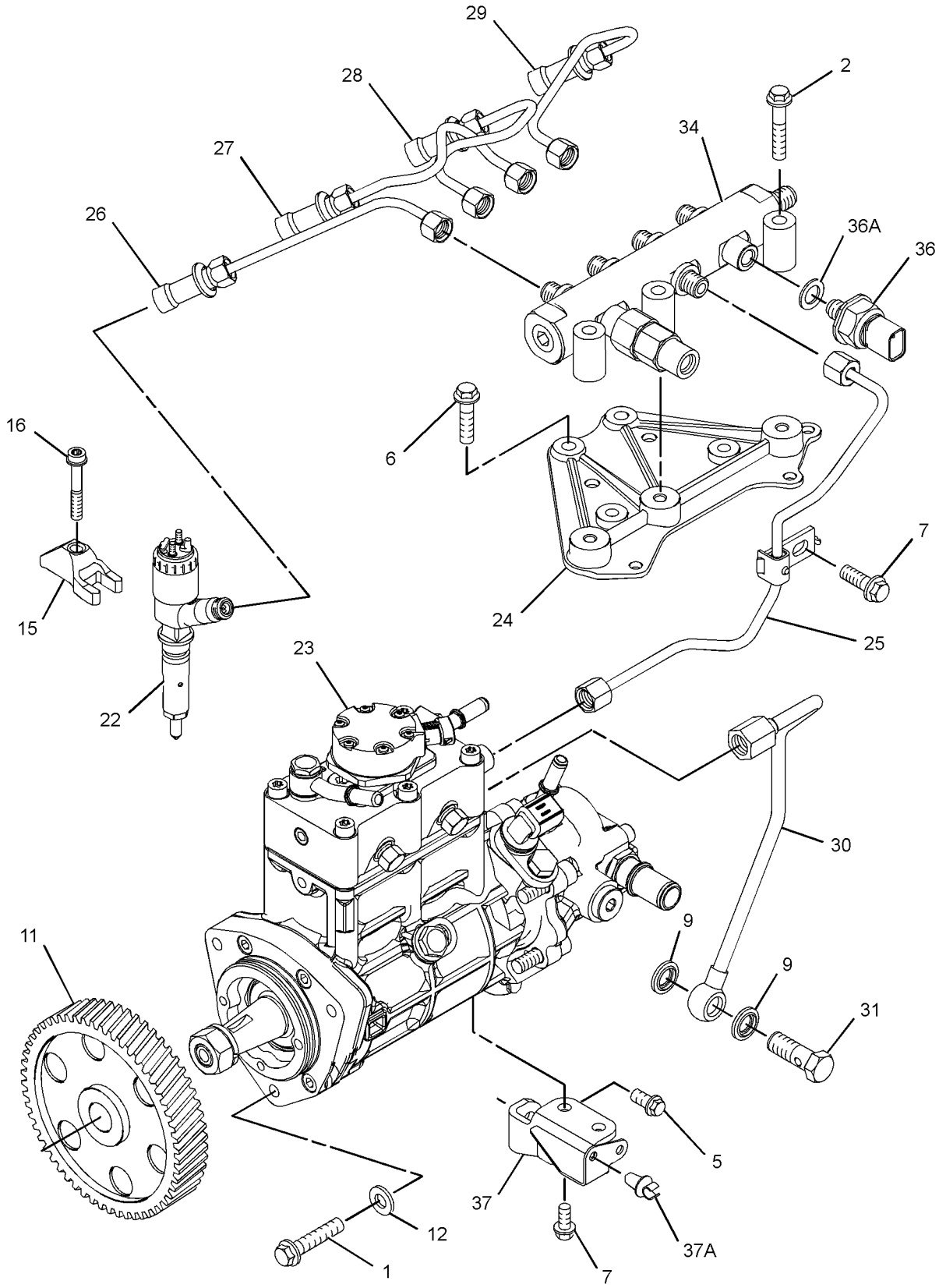

GRAPHIC #1 g01716856

316-1109 **PUMP GP-FUEL INJECTION (**contd.**)** **i03730880**

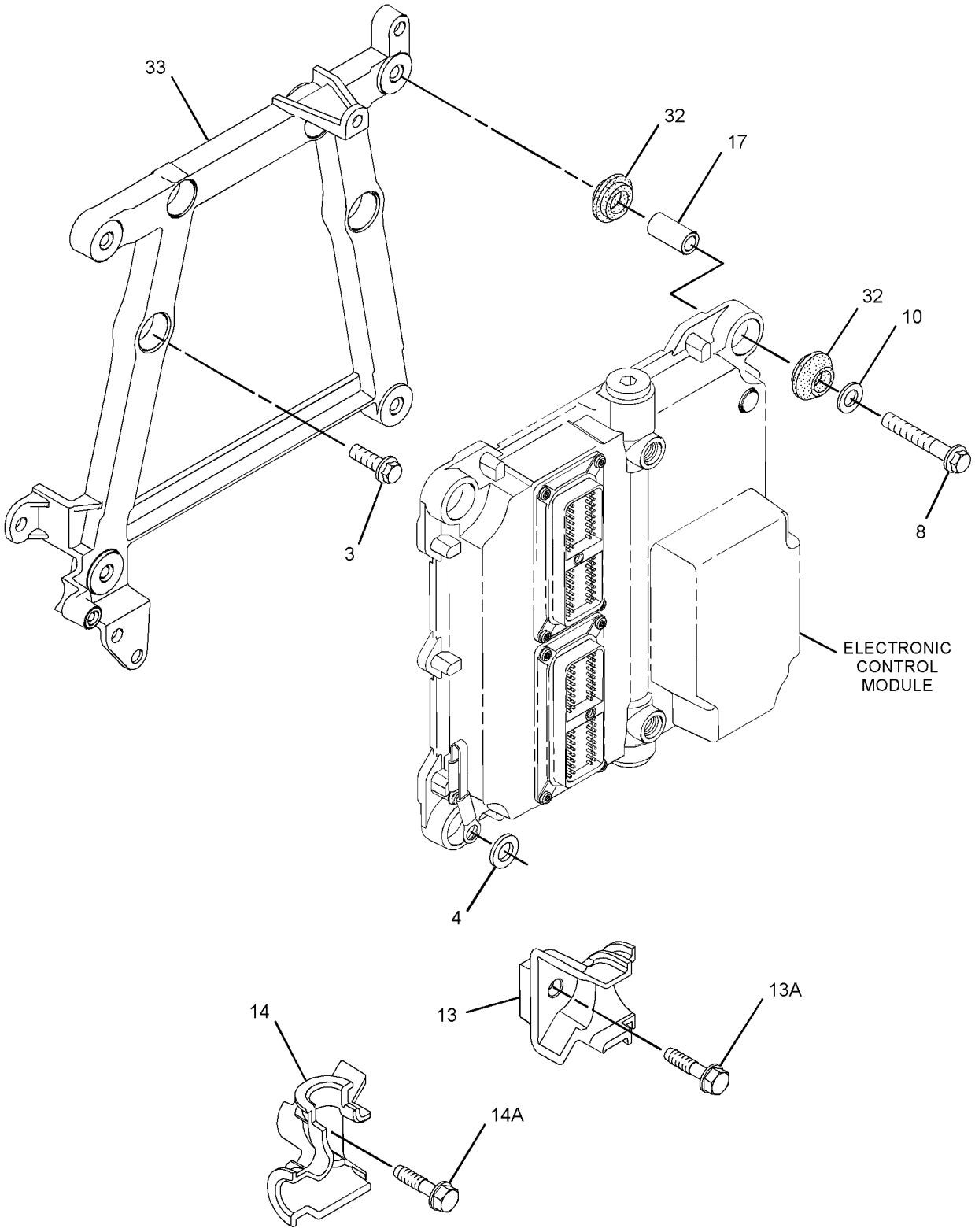

GRAPHIC #2 g01437732

316-1109 **PUMP GP-FUEL INJECTION (**contd.**)** **i03730880**

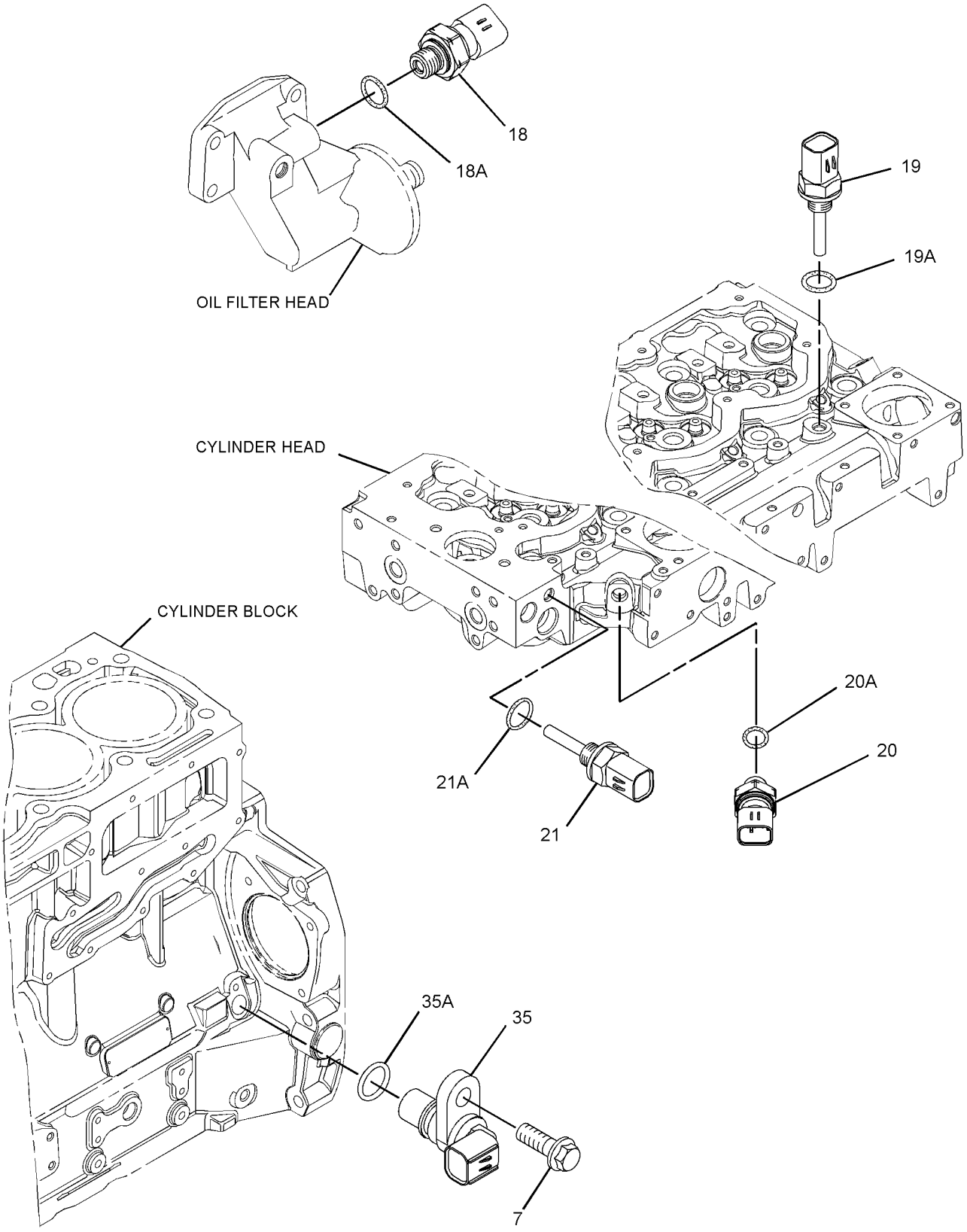

GRAPHIC #3 <END> g01437734

316-1109 PUMP GP-FUEL INJECTION

S/N: 4444116-UP

TYPE 1

SMCS-1251, 1290 **i03730881**

NOTE	REF NO	GRAPHIC REF	PART NUMBER	QTY	PART NAME 1 2 3 4 5 6 (PRODUCT LEVEL)	SEE PAGE
M	1	1	**6I-0260**	3	BOLT (M8X1.25X25-MM)	
M	2	1	**6I-0455**	3	BOLT (M8X1.25X55-MM)	
M	3	2	**6I-0572**	4	BOLT (M8X1.25X20-MM)	
	4	2	**7W-2632**	1	WASHER (8.5X16.8X1.6-MM THK)	
M	5	1	**100-4830**	1	BOLT (M10X1.5X20-MM)	
M	6	1	**101-3895**	4	BOLT (M8X1.25X35-MM)	
M	7	1,3	**124-3815**	4	BOLT (M8X1.25X16-MM)	
M	8	2	**141-8584**	4	BOLT (M8X1.25X50-MM)	
	9	1	**160-0162**	2	WASHER	
C	10	2	**217-0099**	5	SPACER (8.2X25X2-MM THK)	
	11	1	**230-8989**	1	GEAR-FUEL PUMP (68-TEETH)	
	12	1	**232-3149**	3	WASHER (8.35X16.85X1.55-MM THK)	
	13	2	**268-6677**	1	BRACKET AS	
M	13A	2	**260-3939**	1	SCREW-HEX HEAD (M6X1X25-MM)	
	14	2	**268-6678**	1	BRACKET AS	
M	14A	2	**260-3939**	1	SCREW-HEX HEAD (M6X1X25-MM)	
	15	1	**278-5168**	4	CLAMP-INJECTOR	
	16	1	**278-5170**	4	BOLT	
	17	2	**278-5203**	4	SPACER	
	18	3	**278-5225**	1	KIT-SENSOR (ENGINE OIL PRESSURE)	
	18A	3	**199-9267**	1	SEAL-O-RING	
	19	3	**278-5272**	1	KIT-SENSOR (AIR TEMPERATURE)	
	19A	3	**278-5226**	1	SEAL-O-RING	
	20	3	**278-5273**	1	KIT-SENSOR (AIR PRESSURE)	
	20A	3	**199-9252**	1	SEAL-O-RING	
	21	3	**278-5307**	1	KIT-SENSOR (COOLANT TEMPERATURE)	
	21A	3	**199-9267**	1	SEAL-O-RING	
YR	22	1	**320-0680**	4	INJECTOR GP-FUEL	1027
CYR	23	1	**324-0532**	1	PUMP GP-FUEL INJECTION	1523
	24	1	**337-3573**	1	BRACKET	
	25	1	**337-3574**	1	TUBE	
	26	1	**322-3745**	1	TUBE (CYL NO. 1)	
	27	1	**322-3746**	1	TUBE (CYL NO. 2)	
	28	1	**333-4732**	1	LINE-FUEL INJECTION (CYL NO. 3)	
	29	1	**333-4733**	1	LINE-FUEL INJECTION (CYL NO. 4)	
	30	1	**298-4542**	1	TUBE AS	
	31	1	**298-4543**	1	BOLT	
	32	2	**300-6714**	8	MOUNT	
	33	2	**317-3144**	1	BRACKET	
	34	1	**318-2394**	1	RAIL AS-FUEL	
	34A	1	**305-5291**	1	VALVE AS-RELIEF	
	35	3	**311-3858**	1	KIT-SENSOR (ENGINE SPEED)	
	35A	3	**274-1639**	1	SEAL	
	36	1	**311-6342**	1	SENSOR AS-PRESSURE (FUEL RAIL)	
	36A	1	**309-8006**	1	WASHER	
	37	1	**316-1189**	1	BRACKET AS	
	37A	1	**232-1115**	1	CLIP-PIPE	

316-1109 **PUMP GP-FUEL INJECTION** (contd.) **i03730881**

NOTE	REF NO	GRAPHIC REF	PART NUMBER	QTY	PART NAME 1 2 3 4 5 6 (PRODUCT LEVEL)	SEE PAGE
F			**278-4138**	4	KIT-FUEL LINE PROTECTION (LINE, LOW PRESSURE)	

C - CHANGE FROM PREVIOUS TYPE
F - NOT SHOWN
M - METRIC PART
R - REMANUFACTURED PART MAY BE AVAILABLE
Y - SEPARATE ILLUSTRATION

316-1109 **PUMP GP-FUEL INJECTION (**contd.**)** **i03730881**

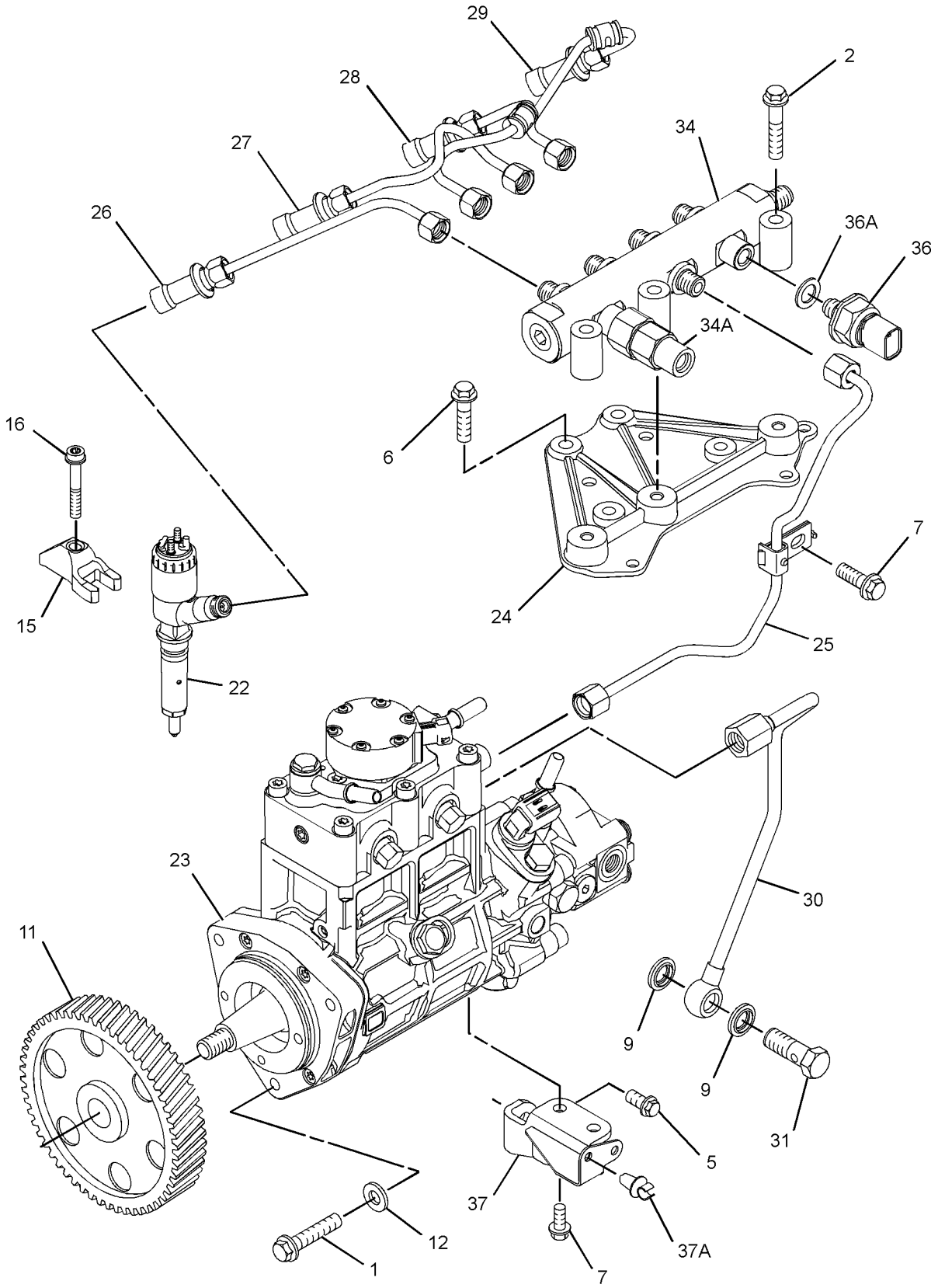

GRAPHIC #1 g01852975

316-1109 **PUMP GP-FUEL INJECTION (**contd.**)** **i03730881**

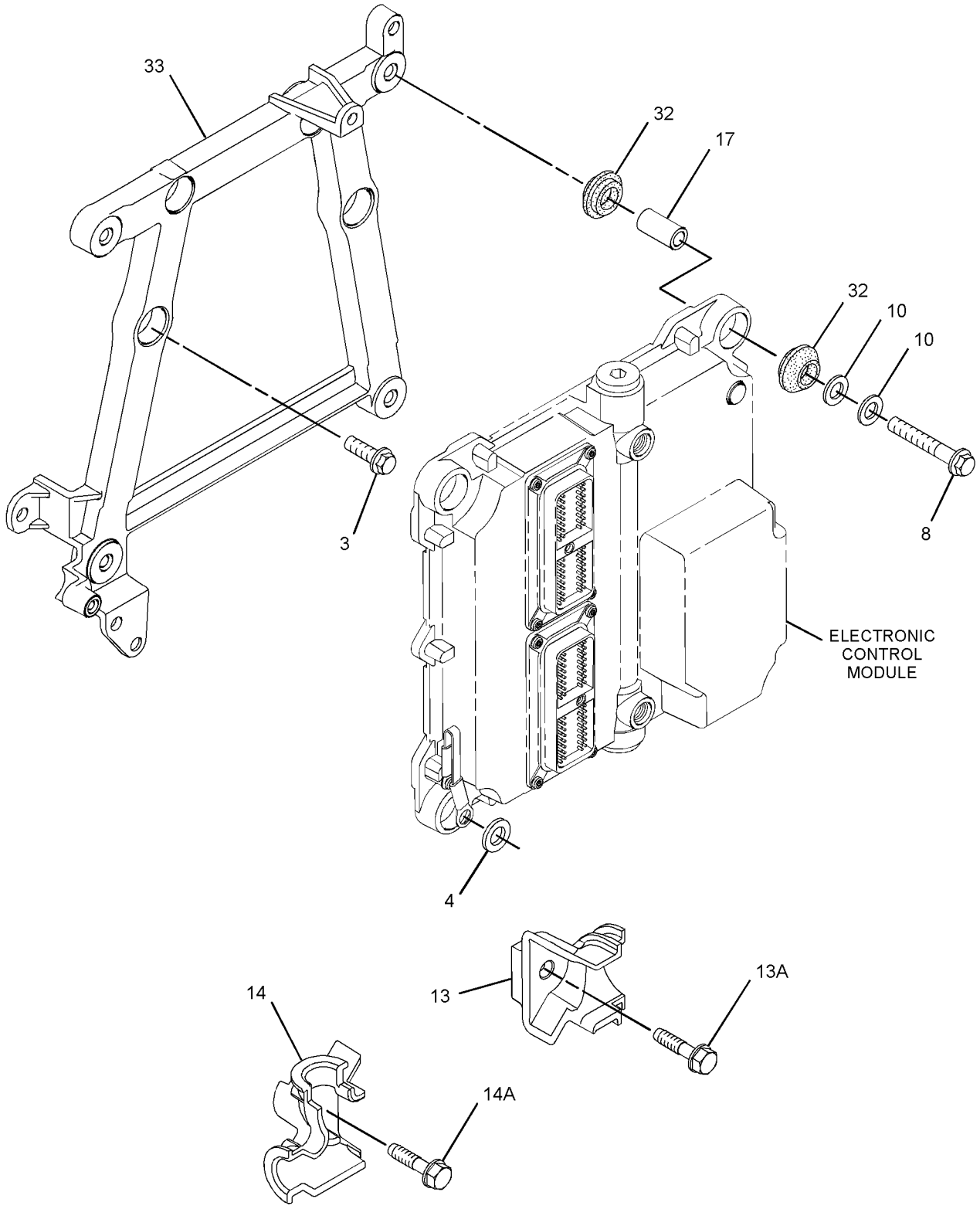

GRAPHIC #2 g01645273

316-1109 **PUMP GP-FUEL INJECTION (**contd.**)** **i03730881**

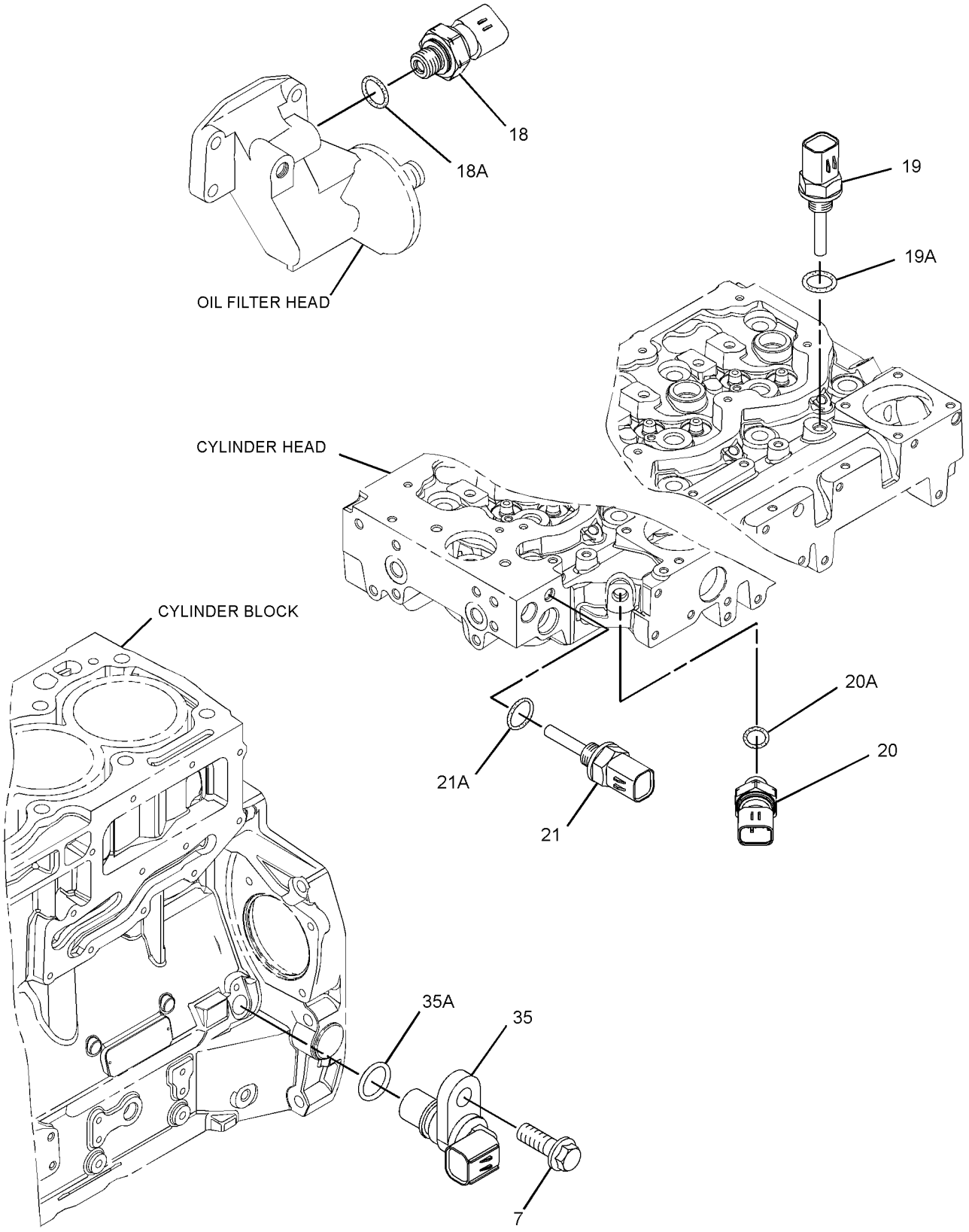

GRAPHIC #3 <END> g01437734

316-1109 PUMP GP-FUEL INJECTION

S/N: 4444116-UP

TYPE 2

SMCS-1251, 1290 **i04020244**

NOTE	REF NO	GRAPHIC REF	PART NUMBER	QTY	PART NAME 1 2 3 4 5 6 (PRODUCT LEVEL)	SEE PAGE
M	1	1	**6I-0260**	3	BOLT (M8X1.25X25-MM)	
M	2	1	**6I-0455**	3	BOLT (M8X1.25X55-MM)	
M	3	2	**6I-0572**	4	BOLT (M8X1.25X20-MM)	
	4	2	**7W-2632**	1	WASHER (8.5X16.8X1.6-MM THK)	
M	5	1	**100-4830**	1	BOLT (M10X1.5X20-MM)	
M	6	1	**101-3895**	4	BOLT (M8X1.25X35-MM)	
M	7	1,3	**124-3815**	4	BOLT (M8X1.25X16-MM)	
M	8	2	**141-8584**	4	BOLT (M8X1.25X50-MM)	
	9	1	**160-0162**	2	WASHER	
	10	2	**217-0099**	5	SPACER (8.2X25X2-MM THK)	
	11	1	**230-8989**	1	GEAR-FUEL PUMP (68-TEETH)	
	12	1	**232-3149**	3	WASHER (8.35X16.85X1.55-MM THK)	
	13	2	**268-6677**	1	BRACKET AS	
M	13A	2	**260-3939**	1	SCREW-HEX HEAD (M6X1X25-MM)	
	14	2	**268-6678**	1	BRACKET AS	
M	14A	2	**260-3939**	1	SCREW-HEX HEAD (M6X1X25-MM)	
	15	1	**278-5168**	4	CLAMP-INJECTOR	
	16	1	**278-5170**	4	BOLT	
	17	2	**278-5203**	4	SPACER	
	18	3	**278-5225**	1	KIT-SENSOR (ENGINE OIL PRESSURE)	
	18A	3	**199-9267**	1	SEAL-O-RING	
	19	3	**278-5272**	1	KIT-SENSOR (AIR TEMPERATURE)	
	19A	3	**278-5226**	1	SEAL-O-RING	
	20	3	**278-5273**	1	KIT-SENSOR (AIR PRESSURE)	
	20A	3	**199-9252**	1	SEAL-O-RING	
	21	3	**278-5307**	1	KIT-SENSOR (COOLANT TEMPERATURE)	
	21A	3	**199-9267**	1	SEAL-O-RING	
YR	22	1	**320-0680**	4	INJECTOR GP-FUEL	1027
CYR	23	1	**352-6584**	1	PUMP GP-FUEL INJECTION	1540
	24	1	**337-3573**	1	BRACKET	
	25	1	**337-3574**	1	TUBE	
	26	1	**322-3745**	1	TUBE (CYL NO. 1)	
	27	1	**322-3746**	1	TUBE (CYL NO. 2)	
	28	1	**333-4732**	1	LINE-FUEL INJECTION (CYL NO. 3)	
	29	1	**333-4733**	1	LINE-FUEL INJECTION (CYL NO. 4)	
	30	1	**298-4542**	1	TUBE AS	
	31	1	**298-4543**	1	BOLT	
	32	2	**300-6714**	8	MOUNT	
	33	2	**317-3144**	1	BRACKET	
	34	1	**318-2394**	1	RAIL AS-FUEL	
	34A	1	**305-5291**	1	VALVE AS-RELIEF	
	35	3	**311-3858**	1	KIT-SENSOR (ENGINE SPEED)	
	35A	3	**274-1639**	1	SEAL	
		3	**238-0120**	1	SENSOR GP-SPEED	
	36	1	**311-6342**	1	SENSOR AS-PRESSURE (FUEL RAIL)	
	36A	1	**309-8006**	1	WASHER	
	37	1	**316-1189**	1	BRACKET AS	

316-1109 **PUMP GP-FUEL INJECTION (**contd.**)** **i04020244**

NOTE	REF NO	GRAPHIC REF	PART NUMBER	QTY	PART NAME 1 2 3 4 5 6 (PRODUCT LEVEL)	SEE PAGE
	37A	1	**232-1115**	1	CLIP-PIPE	
F			**278-4138**	4	KIT-FUEL LINE PROTECTION (LINE, LOW PRESSURE)	

C - CHANGE FROM PREVIOUS TYPE
F - NOT SHOWN
M - METRIC PART
R - REMANUFACTURED PART MAY BE AVAILABLE
Y - SEPARATE ILLUSTRATION

316-1109 **PUMP GP-FUEL INJECTION (**contd.**)** **i04020244**

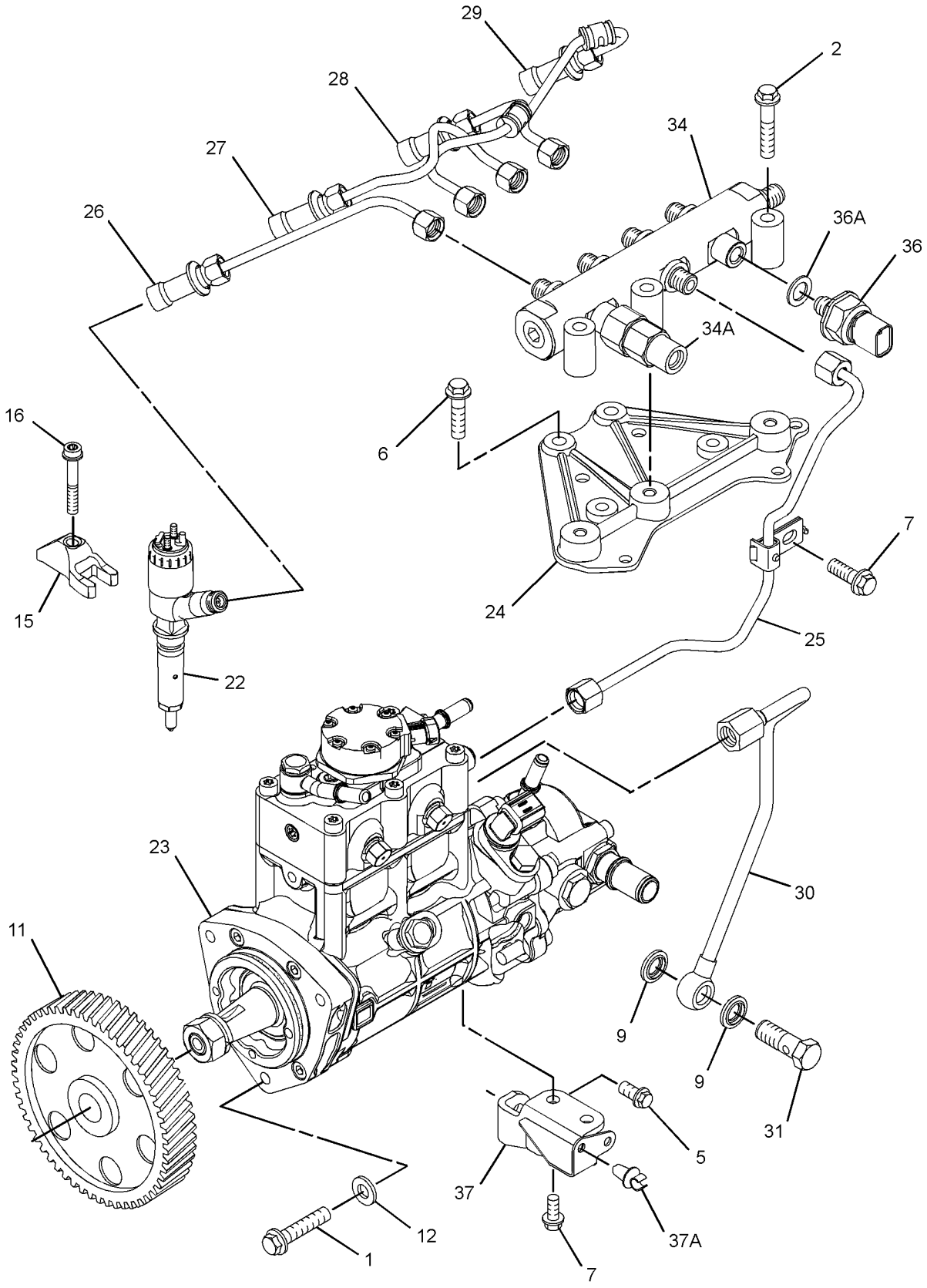

GRAPHIC #1 g02248453

316-1109 **PUMP GP-FUEL INJECTION (**contd.**)** **i04020244**

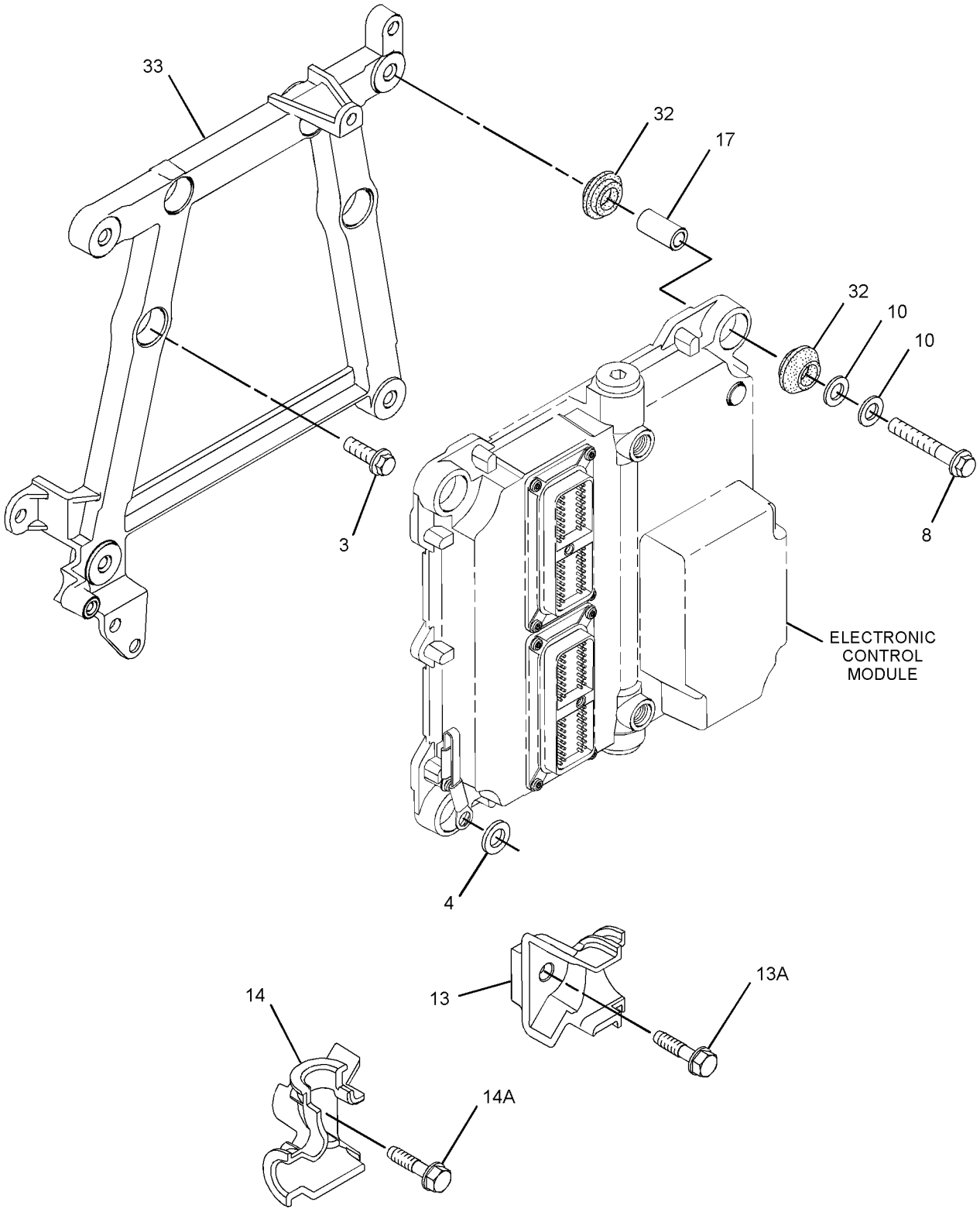

GRAPHIC #2 g01645273

316-1109 **PUMP GP-FUEL INJECTION (**contd.**)** **i04020244**

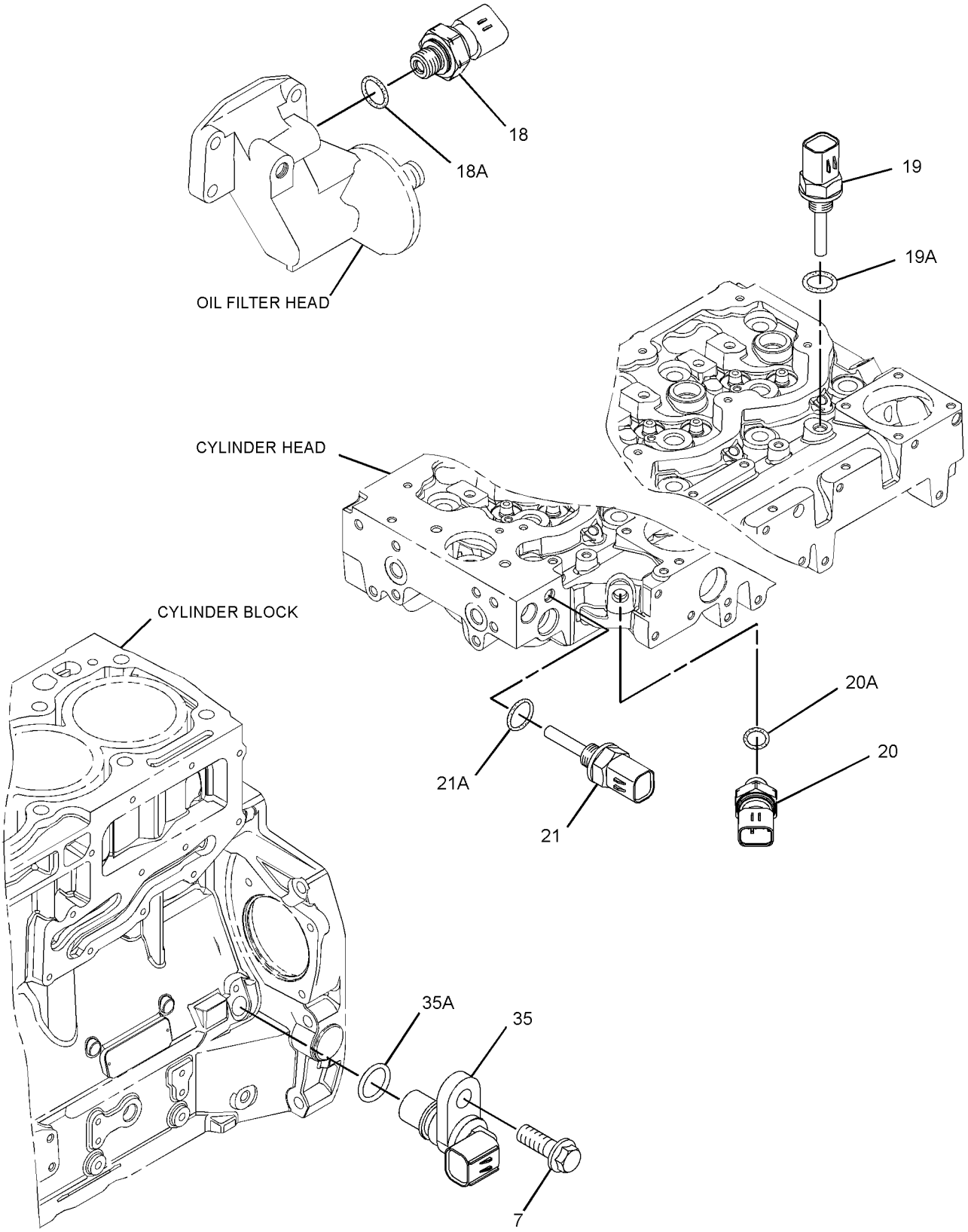

GRAPHIC #3 <END> g01437734

316-1109 PUMP GP-FUEL INJECTION

S/N: 4444116-UP
ALSO AN ATTACHMENT

SMCS-1251, 1290 **i05881478**

NOTE	REF NO	GRAPHIC REF	PART NUMBER	QTY	PART NAME 1 2 3 4 5 6 (PRODUCT LEVEL)	SEE PAGE
M	1	1	**6I-0260**	3	BOLT (M8X1.25X25-MM)	
M	2	1	**6I-0455**	3	BOLT (M8X1.25X55-MM)	
M	3	2	**6I-0572**	4	BOLT (M8X1.25X20-MM)	
	4	2	**7W-2632**	1	WASHER (8.5X16.8X1.6-MM THK)	
M	5	1	**100-4830**	1	BOLT (M10X1.5X20-MM)	
M	6	1	**101-3895**	4	BOLT (M8X1.25X35-MM)	
M	7	1,3	**124-3815**	4	BOLT (M8X1.25X16-MM)	
M	8	2	**141-8584**	4	BOLT (M8X1.25X50-MM)	
	9	1	**346-0007**	2	WASHER	
	10	2	**217-0099**	5	SPACER (8.2X25X2-MM THK)	
	11	1	**230-8989**	1	GEAR-FUEL PUMP (68-TEETH)	
	12	1	**232-3149**	3	WASHER (8.35X16.85X1.55-MM THK)	
	13	2	**268-6677**	1	BRACKET AS	
M	13A	2	**260-3939**	1	SCREW-HEX HEAD (M6X1X25-MM)	
	14	2	**268-6678**	1	BRACKET AS	
M	14A	2	**260-3939**	1	SCREW-HEX HEAD (M6X1X25-MM)	
	15	1	**278-5168**	4	CLAMP-INJECTOR	
	16	1	**278-5170**	4	BOLT	
	17	2	**278-5203**	4	SPACER	
	18	3	**278-5225**	1	KIT-SENSOR (ENGINE OIL PRESSURE)	
	18A	3	**199-9267**	1	SEAL-O-RING	
	19	3	**278-5272**	1	KIT-SENSOR (AIR TEMPERATURE)	
	19A	3	**278-5226**	1	SEAL-O-RING	
	20	3	**278-5273**	1	KIT-SENSOR (AIR PRESSURE)	
	20A	3	**199-9252**	1	SEAL-O-RING	
	21	3	**278-5307**	1	KIT-SENSOR (COOLANT TEMPERATURE)	
	21A	3	**199-9267**	1	SEAL-O-RING	
YR	22	1	**320-0680**	4	INJECTOR GP-FUEL	1027
CYR	23	1	*324-0532*	1	PUMP GP-FUEL INJECTION	1523
	24	1	**337-3573**	1	BRACKET	
	25	1	**337-3574**	1	TUBE	
	26	1	**322-3745**	1	TUBE (CYL NO. 1)	
	27	1	**322-3746**	1	TUBE (CYL NO. 2)	
	28	1	**333-4732**	1	LINE-FUEL INJECTION (CYL NO. 3)	
	29	1	**333-4733**	1	LINE-FUEL INJECTION (CYL NO. 4)	
	30	1	**298-4542**	1	TUBE AS	
	31	1	**363-3908**	1	BOLT-SPECIAL	
	32	2	**300-6714**	8	MOUNT	
	33	2	**317-3144**	1	BRACKET	
	34	1	**358-6632**	1	RAIL GP-FUEL	
	34A	1	**305-5291**	1	VALVE AS-RELIEF	
	35	3	**311-3858**	1	KIT-SENSOR (ENGINE SPEED)	
	35A	3	**274-1639**	1	SEAL	
		3	**238-0120**	1	SENSOR GP-SPEED	
	36	1	**311-6342**	1	SENSOR AS-PRESSURE (FUEL RAIL)	
	36A	1	**309-8006**	1	WASHER	
	37	1	**316-1189**	1	BRACKET AS	

316-1109 **PUMP GP-FUEL INJECTION** (contd.) **i05881478**

NOTE	REF NO	GRAPHIC REF	PART NUMBER	QTY	PART NAME 1 2 3 4 5 6 (PRODUCT LEVEL)	SEE PAGE
	37A	1	**232-1115**	1	CLIP-PIPE	
F			**278-4138**	4	KIT-FUEL LINE PROTECTION (LINE, LOW PRESSURE)	

C - CHANGE FROM PREVIOUS TYPE
F - NOT SHOWN
M - METRIC PART
R - REMANUFACTURED PART MAY BE AVAILABLE
Y - SEPARATE ILLUSTRATION

316-1109 **PUMP GP-FUEL INJECTION (**contd.**)** **i05881478**

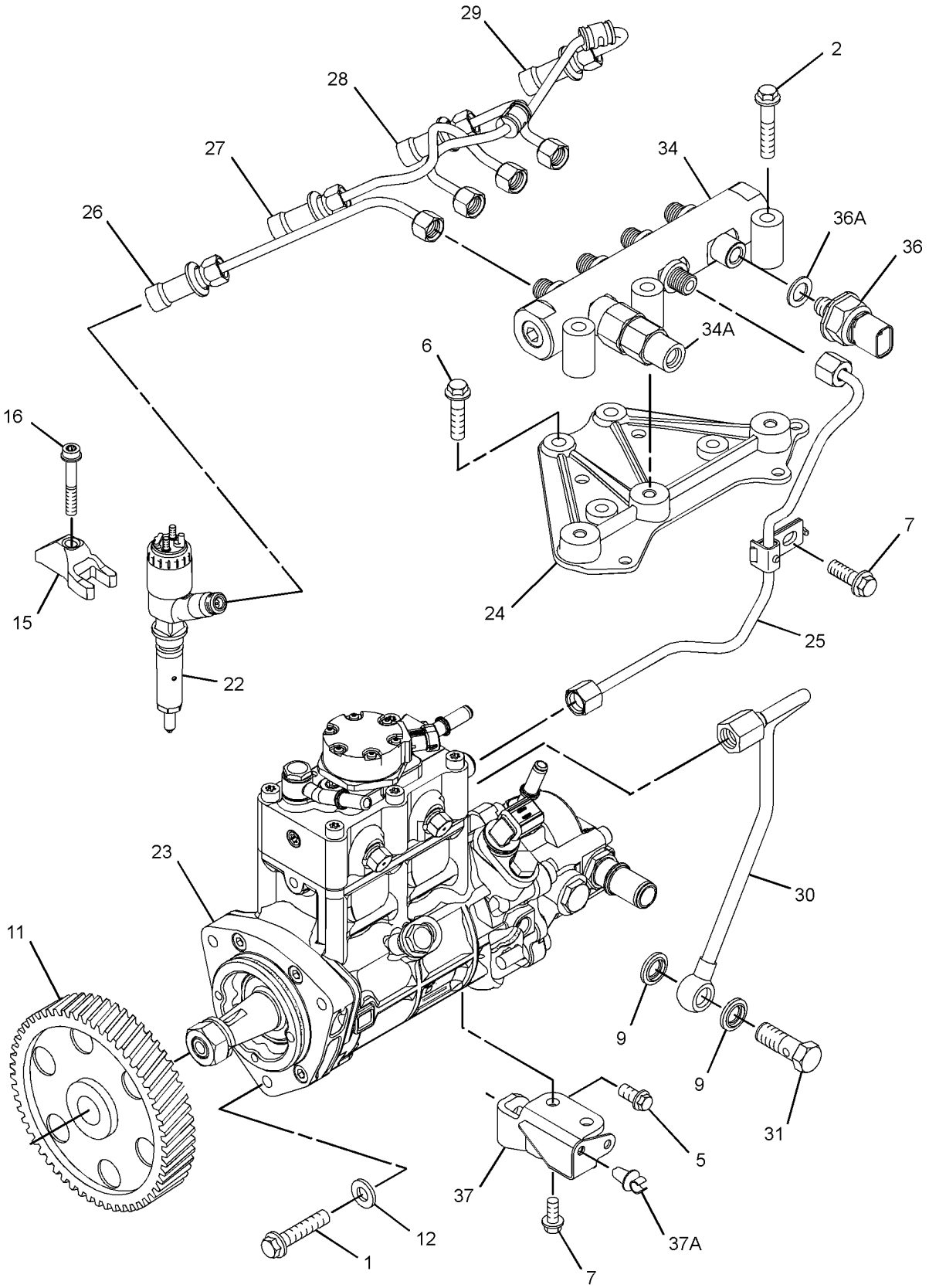

GRAPHIC #1 g02822256

316-1109 **PUMP GP-FUEL INJECTION (**contd.**)** **i05881478**

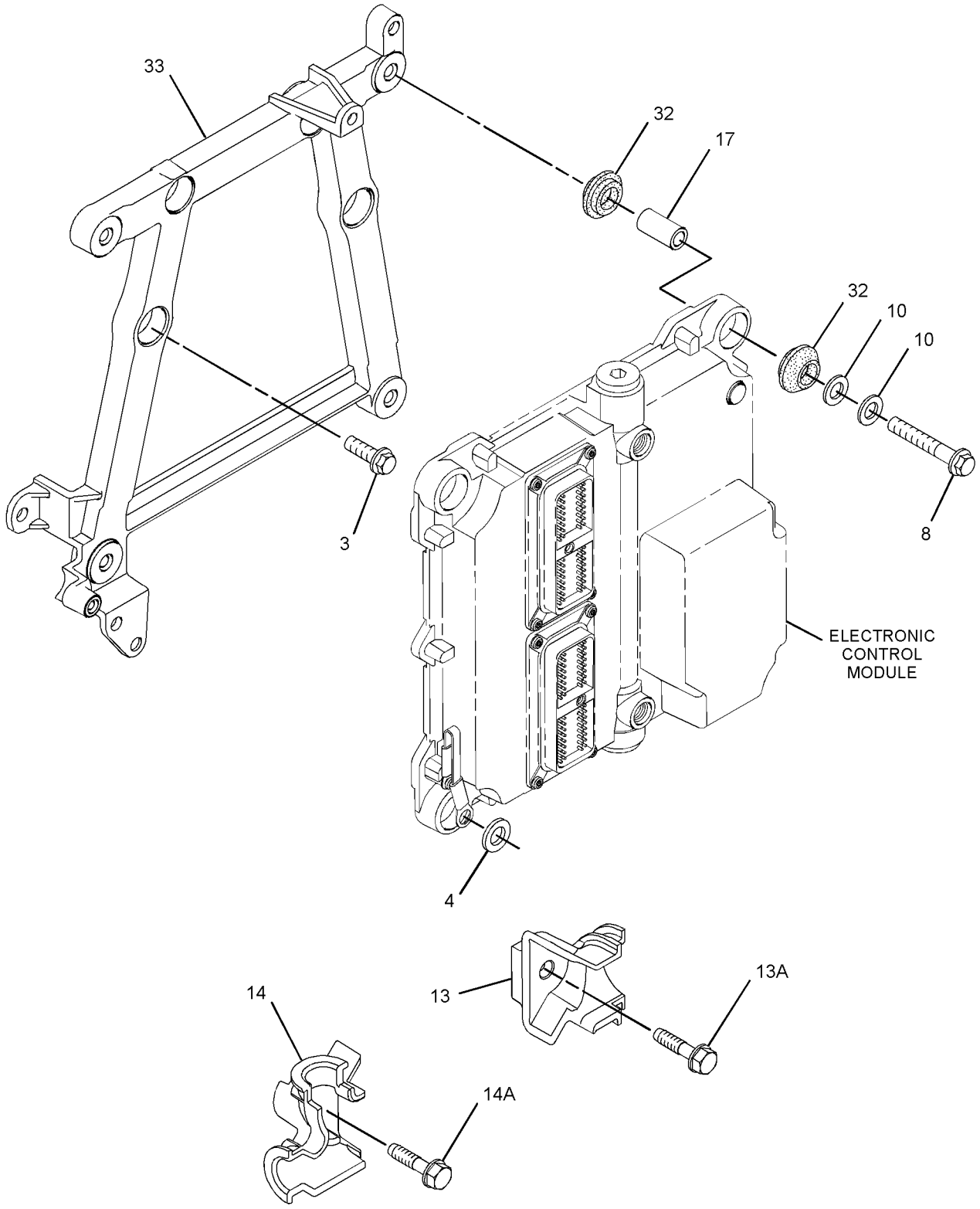

GRAPHIC #2 g01645273

316-1109 **PUMP GP-FUEL INJECTION (**contd.**)** **i05881478**

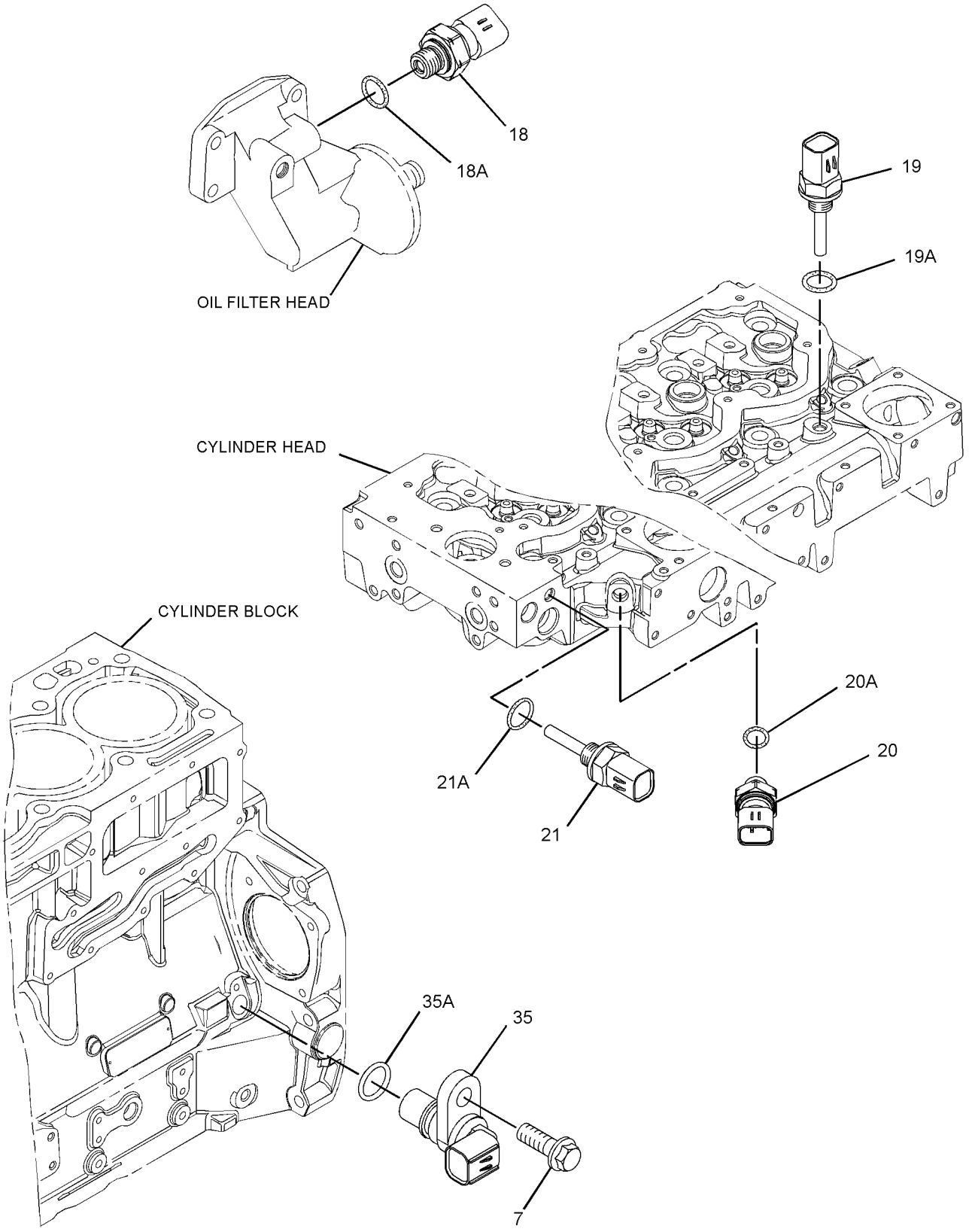

GRAPHIC #3 <END> g01437734

317-7967 PUMP GP-FUEL INJECTION

TYPE 1

SMCS-1251, 1290 **i03730900**

NOTE	REF NO	GRAPHIC REF	PART NUMBER	QTY	PART NAME 1 2 3 4 5 6 (PRODUCT LEVEL)	SEE PAGE
M	1	1	**6I-0260**	3	BOLT (M8X1.25X25-MM)	
M	2	1	**6I-0455**	3	BOLT (M8X1.25X55-MM)	
M	3	2	**6I-0572**	4	BOLT (M8X1.25X20-MM)	
	4	2	**7W-2632**	1	WASHER (8.5X16.8X1.6-MM THK)	
M	5	1	**100-4830**	1	BOLT (M10X1.5X20-MM)	
M	6	1	**101-3895**	4	BOLT (M8X1.25X35-MM)	
M	7	1,3	**124-3815**	4	BOLT (M8X1.25X16-MM)	
M	8	2	**141-8584**	4	BOLT (M8X1.25X50-MM)	
	9	1	**160-0162**	2	WASHER	
	10	2	**217-0099**	5	SPACER (8.2X25X2-MM THK)	
	11	1	**230-8989**	1	GEAR-FUEL PUMP (68-TEETH)	
	12	2	**268-6677**	1	BRACKET AS	
M	12A	2	**260-3939**	1	SCREW-HEX HEAD (M6X1X25-MM)	
	13	2	**268-6678**	1	BRACKET AS	
M	13A	2	**260-3939**	1	SCREW-HEX HEAD (M6X1X25-MM)	
	14	1	**278-5168**	4	CLAMP-INJECTOR	
	15	1	**278-5170**	4	BOLT	
	16	2	**278-5203**	4	SPACER	
	17	3	**278-5225**	1	KIT-SENSOR (ENGINE OIL PRESSURE)	
	17A	3	**199-9267**	1	SEAL-O-RING	
	18	3	**278-5272**	1	KIT-SENSOR (AIR TEMPERATURE)	
	18A	3	**278-5226**	1	SEAL-O-RING	
	19	3	**278-5273**	1	KIT-SENSOR (AIR PRESSURE)	
	19A	3	**199-9252**	1	SEAL-O-RING	
	20	3	**278-5307**	1	KIT-SENSOR (COOLANT TEMPERATURE)	
	20A	3	**199-9267**	1	SEAL-O-RING	
YR	21	1	**324-0532**	1	PUMP GP-FUEL INJECTION	1523
	22	1	**337-3573**	1	BRACKET	
	23	1	**298-4542**	1	TUBE AS	
	24	1	**298-4543**	1	BOLT	
	25	2	**300-6714**	8	MOUNT	
	26	1	**318-2394**	1	RAIL AS-FUEL	
	26A	1	**305-5291**	1	VALVE AS-RELIEF	
	27	3	**311-3858**	1	KIT-SENSOR (ENGINE SPEED)	
	27A	3	**274-1639**	1	SEAL	
	28	1	**311-6342**	1	SENSOR AS-PRESSURE	
	28A	1	**309-8006**	1	WASHER	
	29	1	**316-1189**	1	BRACKET AS	
	29A	1	**232-1115**	1	CLIP-PIPE	
	30	2	**317-3144**	1	BRACKET	
	31	1	**232-3149**	3	WASHER (8.35X16.85X1.55-MM THK)	
	32	1	**337-3574**	1	TUBE	
	33	1	**322-3745**	1	TUBE (CYL NO. 1)	
	34	1	**322-3746**	1	TUBE (CYL NO. 2)	
	35	1	**333-4732**	1	LINE-FUEL INJECTION (CYL NO. 3)	
	36	1	**333-4733**	1	LINE-FUEL INJECTION (CYL NO. 4)	
YR	37	1	**320-0680**	4	INJECTOR GP-FUEL	1027

317-7967 **PUMP GP-FUEL INJECTION (**contd.**)** **i03730900**

NOTE	REF NO	GRAPHIC REF	PART NUMBER	QTY	PART NAME 1 2 3 4 5 6 (PRODUCT LEVEL)	SEE PAGE
F			**278-4138**	4	KIT-FUEL LINE PROTECTION	

F - NOT SHOWN
M - METRIC PART
R - REMANUFACTURED PART MAY BE AVAILABLE
Y - SEPARATE ILLUSTRATION

317-7967 **PUMP GP-FUEL INJECTION (**contd.**)** **i03730900**

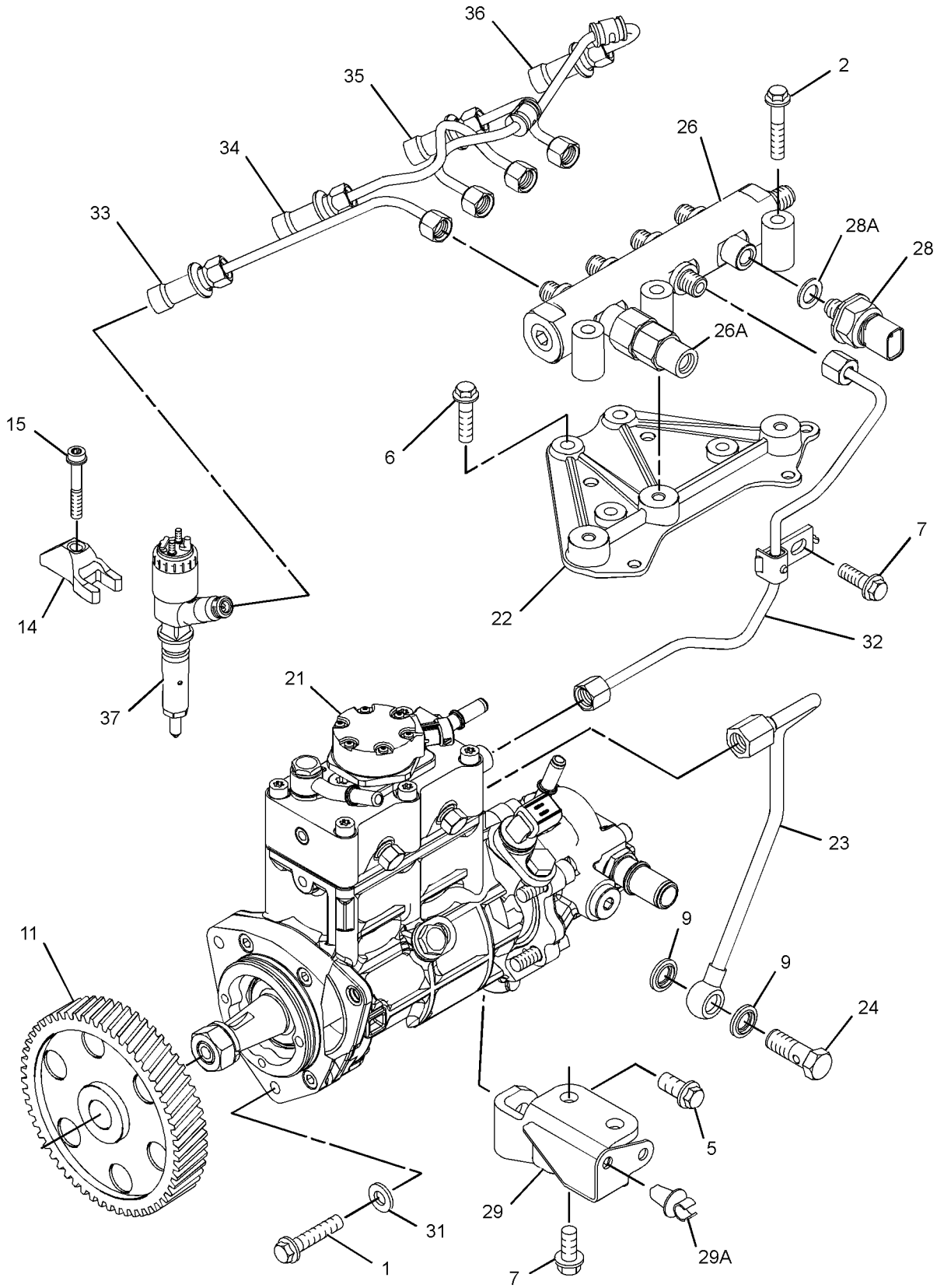

GRAPHIC #1 g01862933

317-7967 **PUMP GP-FUEL INJECTION (**contd.**)** **i03730900**

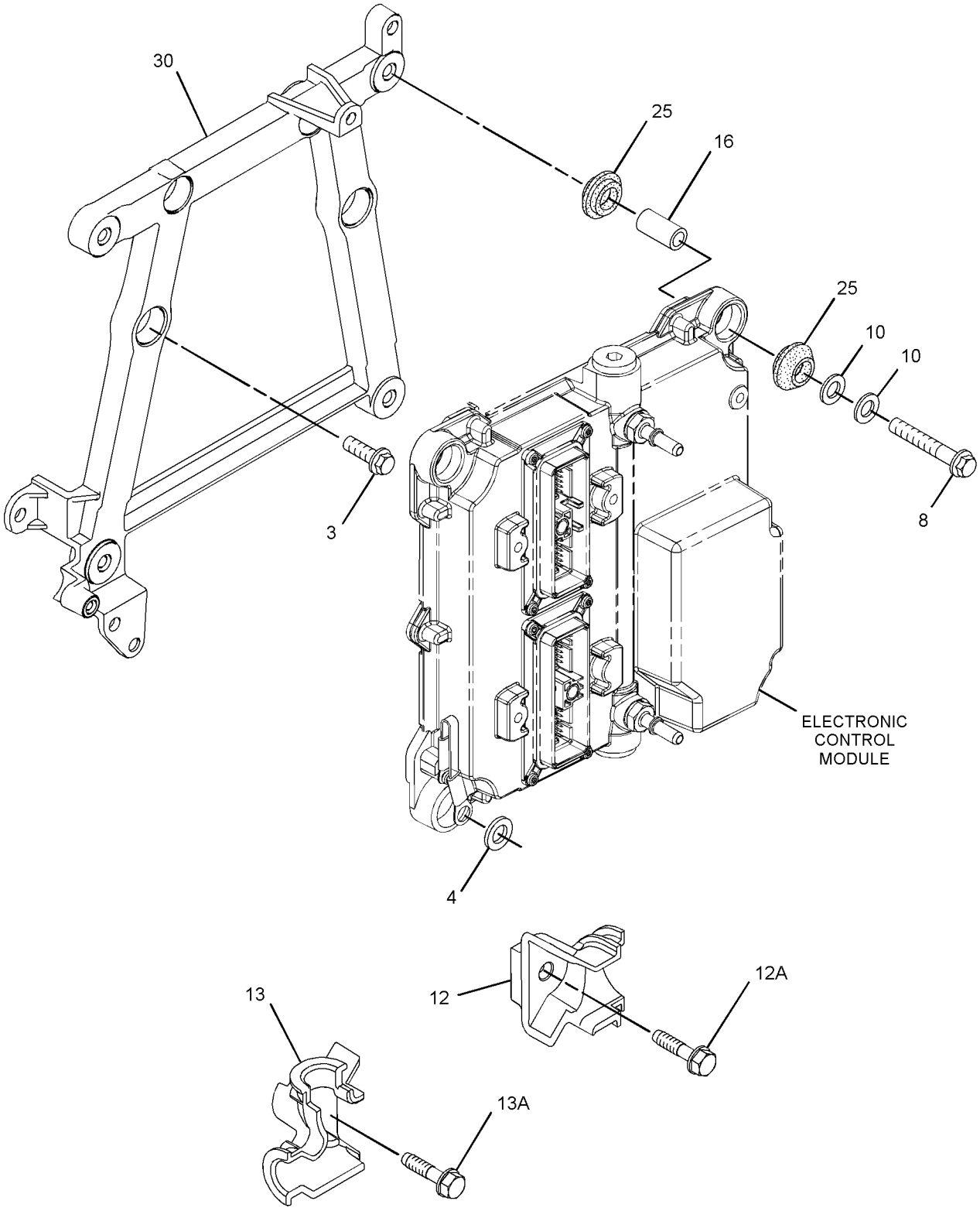

GRAPHIC #2 g01862935

317-7967 **PUMP GP-FUEL INJECTION (**contd.**)** **i03730900**

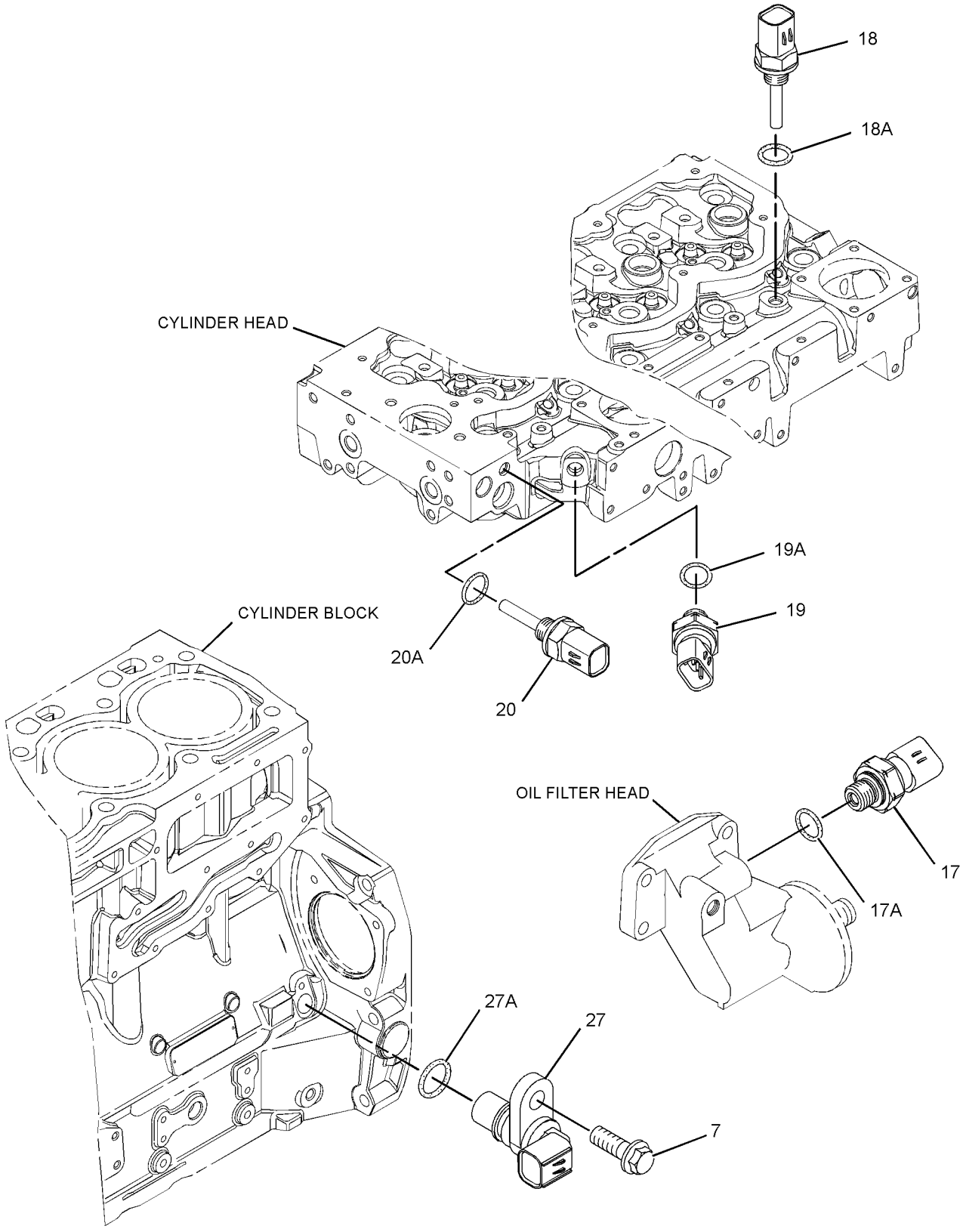

GRAPHIC #3 <END> g01670476

317-7967 PUMP GP-FUEL INJECTION

TYPE 2

SMCS-1251, 1290 **i04019469**

NOTE	REF NO	GRAPHIC REF	PART NUMBER	QTY	PART NAME 1 2 3 4 5 6 (PRODUCT LEVEL)	SEE PAGE
M	1	1	**6I-0260**	3	BOLT (M8X1.25X25-MM)	
M	2	1	**6I-0455**	3	BOLT (M8X1.25X55-MM)	
M	3	2	**6I-0572**	4	BOLT (M8X1.25X20-MM)	
	4	2	**7W-2632**	1	WASHER (8.5X16.8X1.6-MM THK)	
M	5	1	**100-4830**	1	BOLT (M10X1.5X20-MM)	
M	6	1	**101-3895**	4	BOLT (M8X1.25X35-MM)	
M	7	1,3	**124-3815**	4	BOLT (M8X1.25X16-MM)	
M	8	2	**141-8584**	4	BOLT (M8X1.25X50-MM)	
	9	1	**160-0162**	2	WASHER	
	10	2	**217-0099**	5	SPACER (8.2X25X2-MM THK)	
	11	1	**230-8989**	1	GEAR-FUEL PUMP (68-TEETH)	
	12	2	**268-6677**	1	BRACKET AS	
M	12A	2	**260-3939**	1	SCREW-HEX HEAD (M6X1X25-MM)	
	13	2	**268-6678**	1	BRACKET AS	
M	13A	2	**260-3939**	1	SCREW-HEX HEAD (M6X1X25-MM)	
	14	1	**278-5168**	4	CLAMP-INJECTOR	
	15	1	**278-5170**	4	BOLT	
	16	2	**278-5203**	4	SPACER	
	17	3	**278-5225**	1	KIT-SENSOR (ENGINE OIL PRESSURE)	
	17A	3	**199-9267**	1	SEAL-O-RING	
	18	3	**278-5272**	1	KIT-SENSOR (AIR TEMPERATURE)	
	18A	3	**278-5226**	1	SEAL-O-RING	
	19	3	**278-5273**	1	KIT-SENSOR (AIR PRESSURE)	
	19A	3	**199-9252**	1	SEAL-O-RING	
	20	3	**278-5307**	1	KIT-SENSOR (COOLANT TEMPERATURE)	
	20A	3	**199-9267**	1	SEAL-O-RING	
CYR	21	1	**352-6584**	1	PUMP GP-FUEL INJECTION	1540
	22	1	**337-3573**	1	BRACKET	
	23	1	**298-4542**	1	TUBE AS	
	24	1	**298-4543**	1	BOLT	
	25	2	**300-6714**	8	MOUNT	
	26	1	**318-2394**	1	RAIL AS-FUEL	
	26A	1	**305-5291**	1	VALVE AS-RELIEF	
	27	3	**311-3858**	1	KIT-SENSOR (ENGINE SPEED)	
	27A	3	**274-1639**	1	SEAL	
		3	**238-0120**	1	SENSOR GP-SPEED	
	28	1	**311-6342**	1	SENSOR AS-PRESSURE	
	28A	1	**309-8006**	1	WASHER	
	29	1	**316-1189**	1	BRACKET AS	
	29A	1	**232-1115**	1	CLIP-PIPE	
	30	2	**317-3144**	1	BRACKET	
	31	1	**232-3149**	3	WASHER (8.35X16.85X1.55-MM THK)	
	32	1	**337-3574**	1	TUBE	
	33	1	**322-3745**	1	TUBE (CYL NO. 1)	
	34	1	**322-3746**	1	TUBE (CYL NO. 2)	
	35	1	**333-4732**	1	LINE-FUEL INJECTION (CYL NO. 3)	
	36	1	**333-4733**	1	LINE-FUEL INJECTION (CYL NO. 4)	
YR	37	1	**320-0680**	4	INJECTOR GP-FUEL	1027

317-7967 **PUMP GP-FUEL INJECTION** (contd.) **i04019469**

NOTE	REF NO	GRAPHIC REF	PART NUMBER	QTY	PART NAME 1 2 3 4 5 6 (PRODUCT LEVEL)	SEE PAGE
F			**278-4138**	4	KIT-FUEL LINE PROTECTION	

C - CHANGE FROM PREVIOUS TYPE
F - NOT SHOWN
M - METRIC PART
R - REMANUFACTURED PART MAY BE AVAILABLE
Y - SEPARATE ILLUSTRATION

317-7967 **PUMP GP-FUEL INJECTION (**contd.**)** **i04019469**

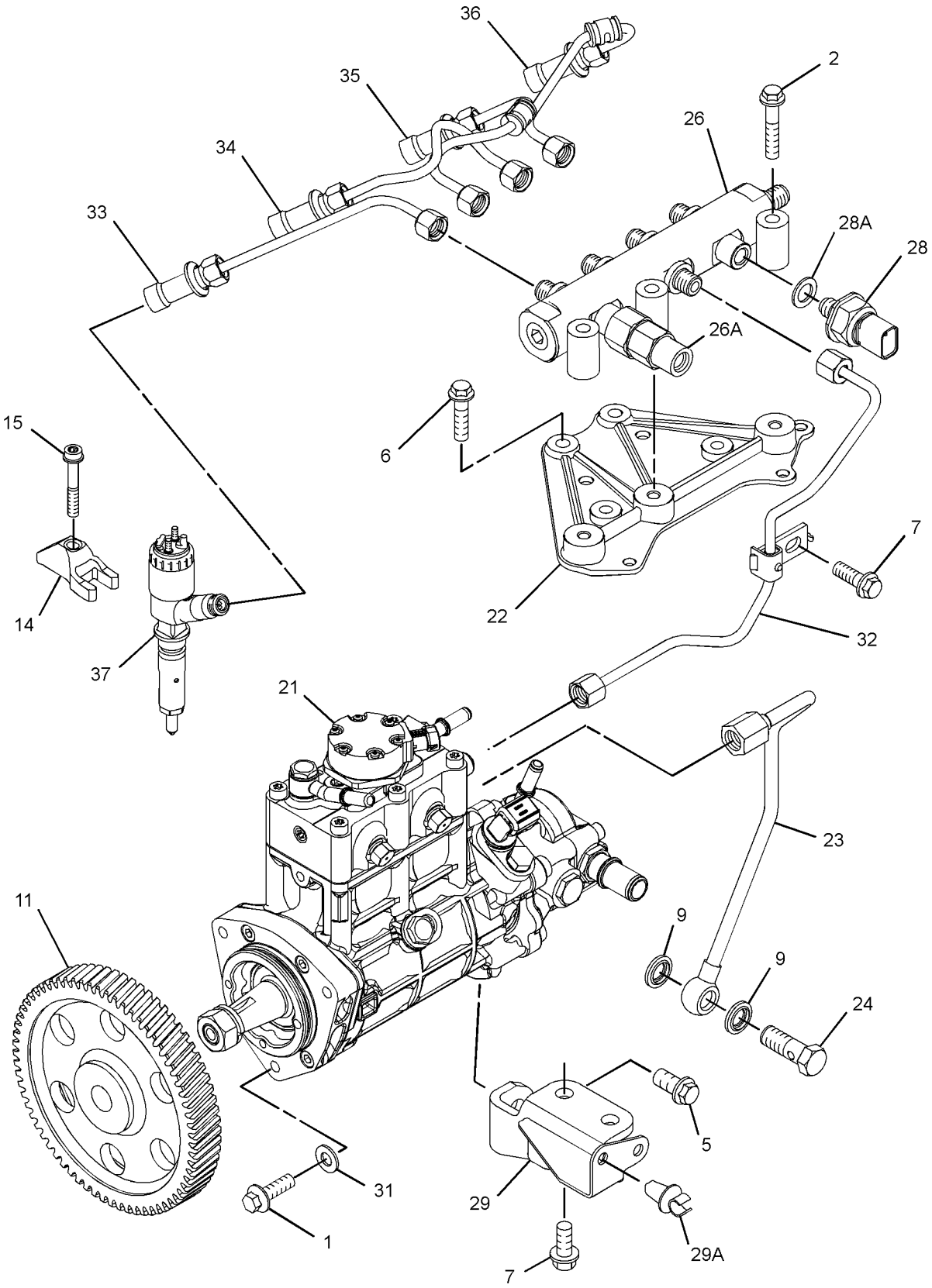

GRAPHIC #1 g02248393

317-7967 **PUMP GP-FUEL INJECTION (**contd.**)** **i04019469**

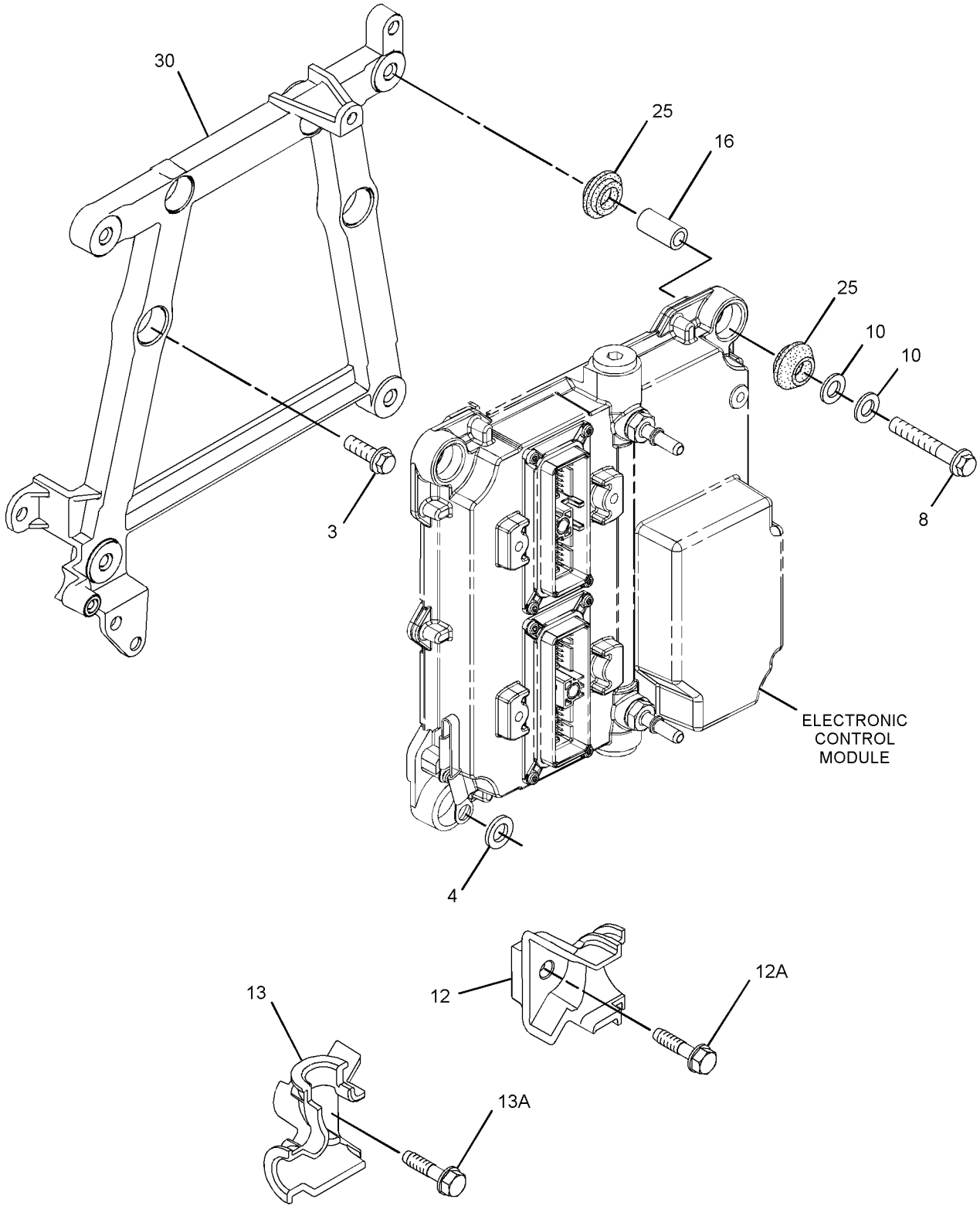

GRAPHIC #2 g01862935

317-7967 **PUMP GP-FUEL INJECTION (**contd.**)** **i04019469**

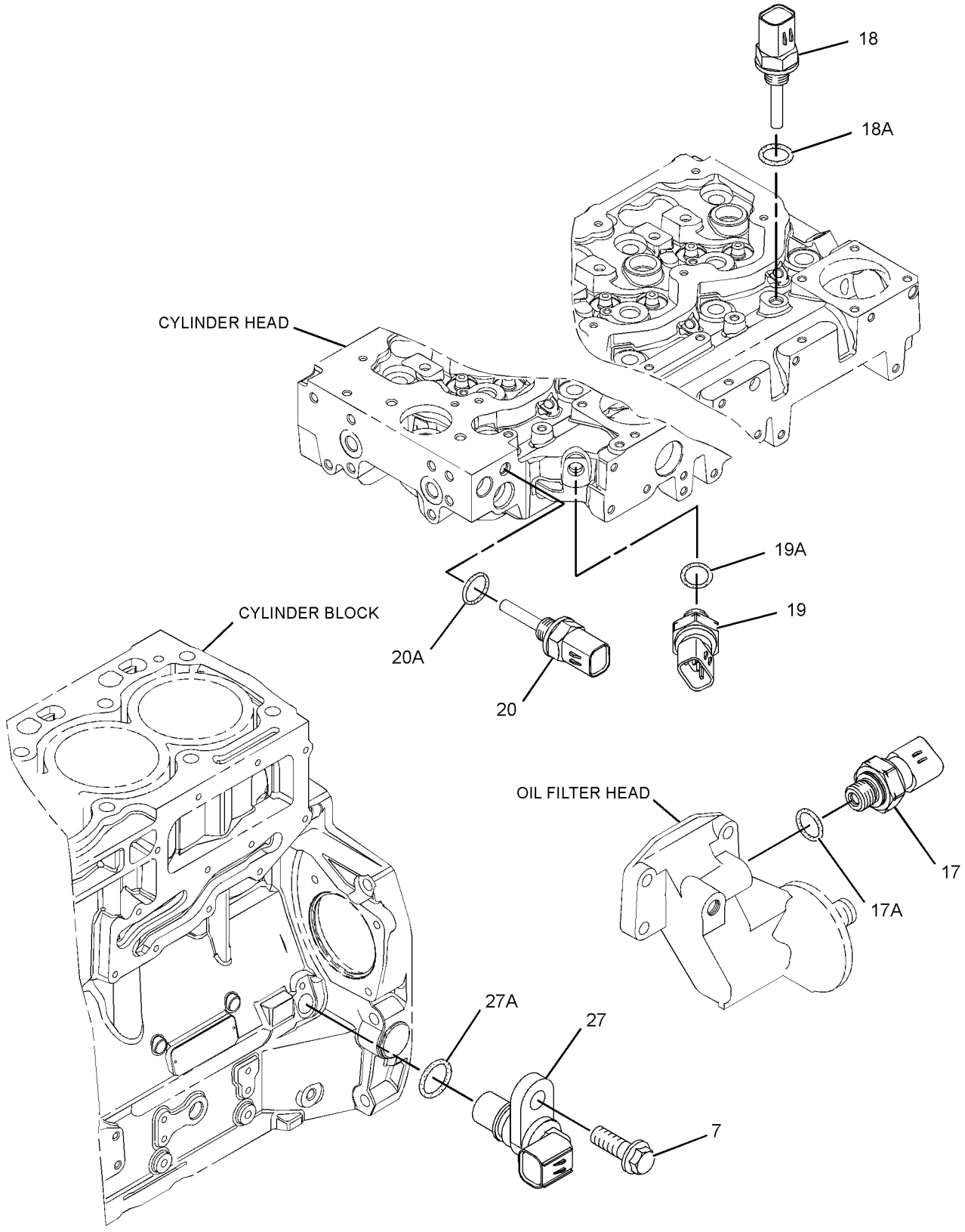

GRAPHIC #3 <END> g01670476

317-7967 PUMP GP-FUEL INJECTION

TYPE 3

SMCS-1251, 1290 **i05881479**

NOTE	REF NO	GRAPHIC REF	PART NUMBER	QTY	PART NAME 1 2 3 4 5 6 (PRODUCT LEVEL)	SEE PAGE
M	1	1	**6I-0260**	3	BOLT (M8X1.25X25-MM)	
M	2	1	**6I-0455**	3	BOLT (M8X1.25X55-MM)	
M	3	2	**6I-0572**	4	BOLT (M8X1.25X20-MM)	
	4	2	**7W-2632**	1	WASHER (8.5X16.8X1.6-MM THK)	
M	5	1	**100-4830**	1	BOLT (M10X1.5X20-MM)	
M	6	1	**101-3895**	4	BOLT (M8X1.25X35-MM)	
M	7	1,3	**124-3815**	4	BOLT (M8X1.25X16-MM)	
M	8	2	**141-8584**	4	BOLT (M8X1.25X50-MM)	
	9	1	**346-0007**	2	WASHER	
	10	2	**217-0099**	5	SPACER (8.2X25X2-MM THK)	
	11	1	**230-8989**	1	GEAR-FUEL PUMP (68-TEETH)	
	12	2	**268-6677**	1	BRACKET AS	
M	12A	2	**260-3939**	1	SCREW-HEX HEAD (M6X1X25-MM)	
	13	2	**268-6678**	1	BRACKET AS	
M	13A	2	**260-3939**	1	SCREW-HEX HEAD (M6X1X25-MM)	
	14	1	**278-5168**	4	CLAMP-INJECTOR	
	15	1	**278-5170**	4	BOLT	
	16	2	**278-5203**	4	SPACER	
	17	3	**278-5225**	1	KIT-SENSOR (ENGINE OIL PRESSURE)	
	17A	3	**199-9267**	1	SEAL-O-RING	
	18	3	**278-5272**	1	KIT-SENSOR (AIR TEMPERATURE)	
	18A	3	**278-5226**	1	SEAL-O-RING	
	19	3	**278-5273**	1	KIT-SENSOR (AIR PRESSURE)	
	19A	3	**199-9252**	1	SEAL-O-RING	
	20	3	**278-5307**	1	KIT-SENSOR (COOLANT TEMPERATURE)	
	20A	3	**199-9267**	1	SEAL-O-RING	
CYR	21	1	*324-0532*	1	PUMP GP-FUEL INJECTION	1523
	22	1	**337-3573**	1	BRACKET	
	23	1	**298-4542**	1	TUBE AS	
	24	1	**363-3908**	1	BOLT-SPECIAL	
	25	2	**300-6714**	8	MOUNT	
	26	1	**358-6632**	1	RAIL GP-FUEL	
	26A	1	**305-5291**	1	VALVE AS-RELIEF	
	27	3	**311-3858**	1	KIT-SENSOR (ENGINE SPEED)	
	27A	3	**274-1639**	1	SEAL	
		3	**238-0120**	1	SENSOR GP-SPEED	
	28	1	**311-6342**	1	SENSOR AS-PRESSURE	
	28A	1	**309-8006**	1	WASHER	
	29	1	**316-1189**	1	BRACKET AS	
	29A	1	**232-1115**	1	CLIP-PIPE	
	30	2	**317-3144**	1	BRACKET	
	31	1	**232-3149**	3	WASHER (8.35X16.85X1.55-MM THK)	
	32	1	**337-3574**	1	TUBE	
	33	1	**322-3745**	1	TUBE (CYL NO. 1)	
	34	1	**322-3746**	1	TUBE (CYL NO. 2)	
	35	1	**333-4732**	1	LINE-FUEL INJECTION (CYL NO. 3)	
	36	1	**333-4733**	1	LINE-FUEL INJECTION (CYL NO. 4)	
YR	37	1	**320-0680**	4	INJECTOR GP-FUEL	1027

317-7967 **PUMP GP-FUEL INJECTION (**contd.**)** **i05881479**

NOTE	REF NO	GRAPHIC REF	PART NUMBER	QTY	PART NAME 1 2 3 4 5 6 (PRODUCT LEVEL)	SEE PAGE
F			**278-4138**	4	KIT-FUEL LINE PROTECTION	

C - CHANGE FROM PREVIOUS TYPE
F - NOT SHOWN
M - METRIC PART
R - REMANUFACTURED PART MAY BE AVAILABLE
Y - SEPARATE ILLUSTRATION

317-7967 **PUMP GP-FUEL INJECTION (**contd.**)** **i05881479**

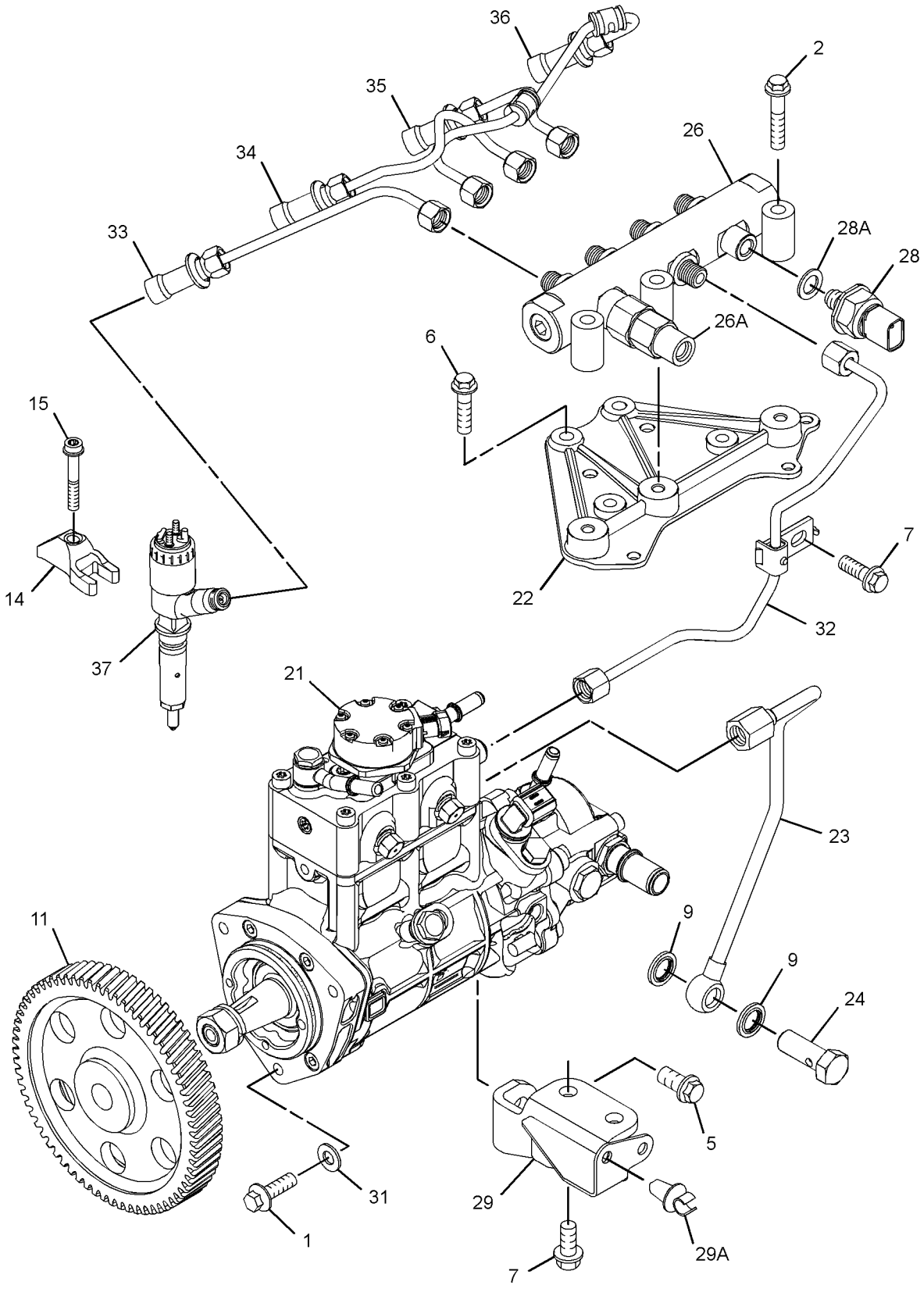

GRAPHIC #1 g03681402

317-7967 **PUMP GP-FUEL INJECTION (**contd.**)** **i05881479**

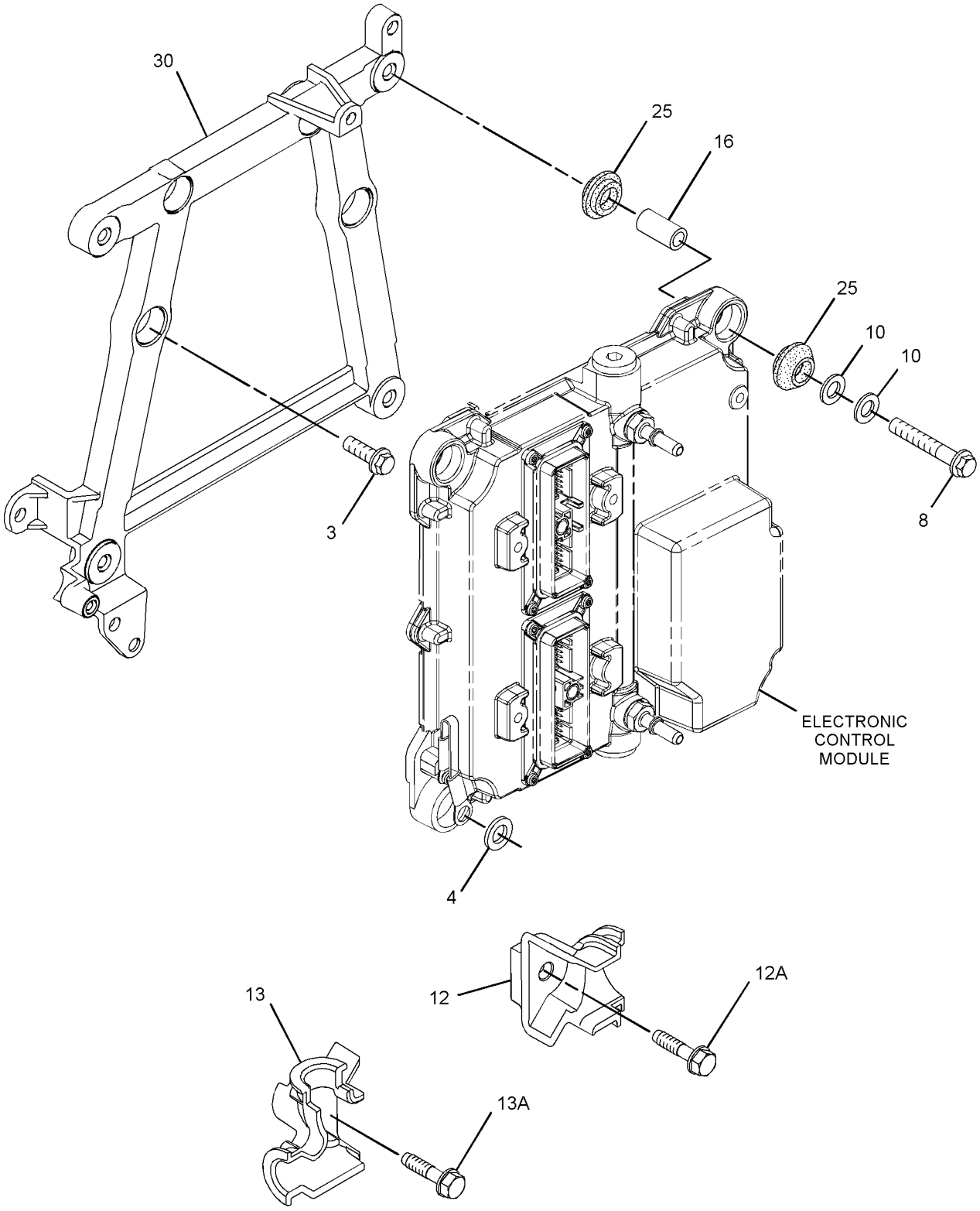

GRAPHIC #2 g01862935

317-7967 **PUMP GP-FUEL INJECTION (**contd.**)** **i05881479**

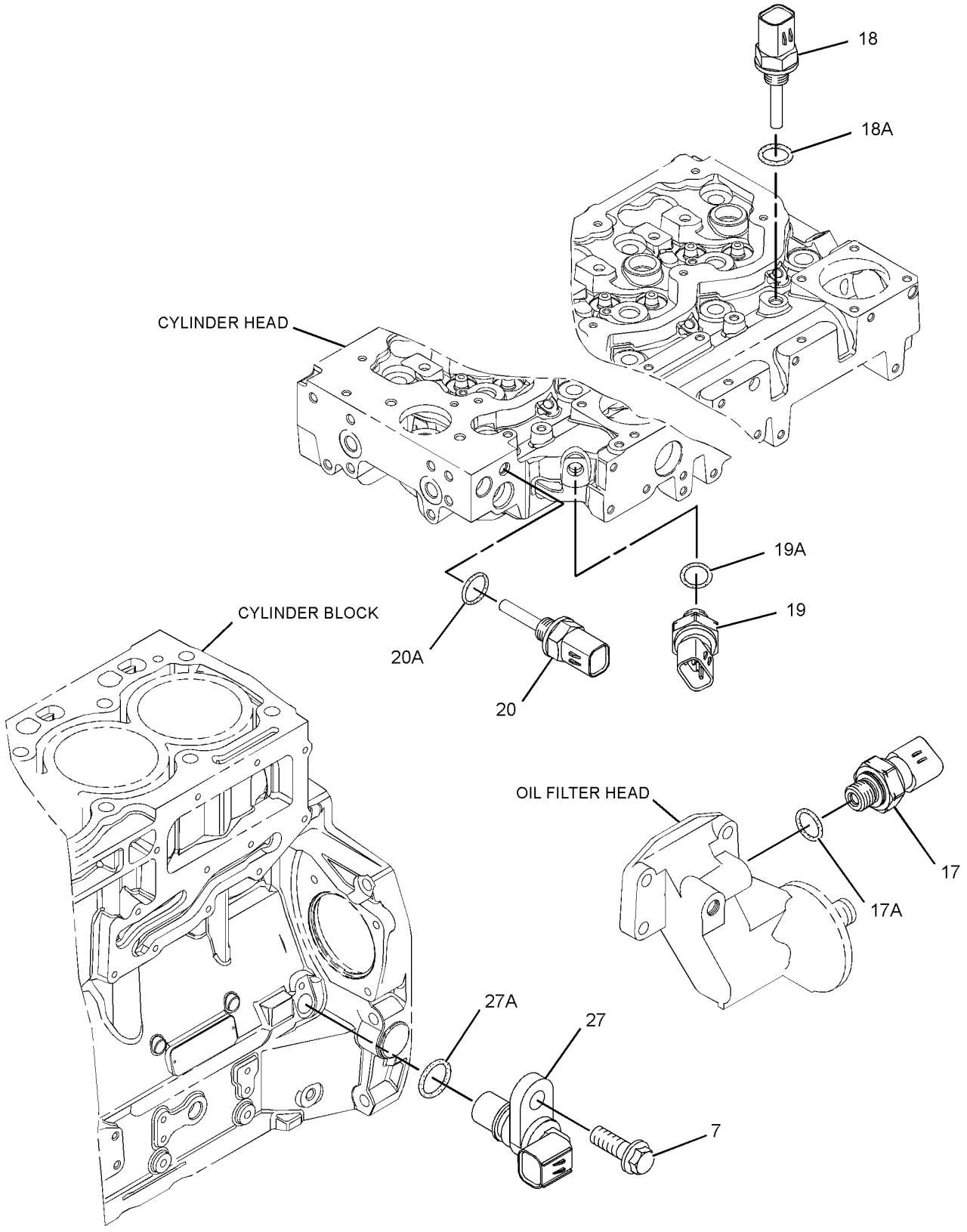

GRAPHIC #3 <END> g01670476

317-7968 PUMP GP-FUEL INJECTION

TYPE 1

SMCS-1251, 1290 **i03730903**

NOTE	REF NO	GRAPHIC REF	PART NUMBER	QTY	PART NAME 1 2 3 4 5 6 (PRODUCT LEVEL)	SEE PAGE
M	1	1	**6I-0260**	3	BOLT (M8X1.25X25-MM)	
M	2	1	**6I-0455**	3	BOLT (M8X1.25X55-MM)	
M	3	2	**6I-0572**	4	BOLT (M8X1.25X20-MM)	
	4	2	**7W-2632**	1	WASHER (8.5X16.8X1.6-MM THK)	
M	5	1	**100-4830**	1	BOLT (M10X1.5X20-MM)	
M	6	1	**101-3895**	4	BOLT (M8X1.25X35-MM)	
M	7	1,3	**124-3815**	4	BOLT (M8X1.25X16-MM)	
M	8	2	**141-8584**	4	BOLT (M8X1.25X50-MM)	
	9	1	**160-0162**	2	WASHER	
	10	2	**217-0099**	5	SPACER (8.2X25X2-MM THK)	
	11	1	**230-8989**	1	GEAR-FUEL PUMP (68-TEETH)	
	12	1	**232-3149**	3	WASHER (8.35X16.85X1.55-MM THK)	
	13	2	**268-6677**	1	BRACKET AS	
M	13A	2	**260-3939**	1	SCREW-HEX HEAD (M6X1X25-MM)	
	14	2	**268-6678**	1	BRACKET AS	
M	14A	2	**260-3939**	1	SCREW-HEX HEAD (M6X1X25-MM)	
	15	1	**278-5168**	4	CLAMP-INJECTOR	
	16	1	**278-5170**	4	BOLT	
	17	2	**278-5203**	4	SPACER	
	18	3	**278-5225**	1	KIT-SENSOR (ENGINE OIL PRESSURE)	
	18A	3	**199-9267**	1	SEAL-O-RING	
	19	3	**278-5272**	1	KIT-SENSOR (AIR TEMPERATURE)	
	19A	3	**278-5226**	1	SEAL-O-RING	
	20	3	**278-5273**	1	KIT-SENSOR (AIR PRESSURE)	
	20A	3	**199-9252**	1	SEAL-O-RING	
	21	3	**278-5307**	1	KIT-SENSOR (COOLANT TEMPERATURE)	
	21A	3	**199-9267**	1	SEAL-O-RING	
YR	22	1	**320-0680**	4	INJECTOR GP-FUEL	1027
CYR	23	1	**324-0532**	1	PUMP GP-FUEL INJECTION	1523
	24	1	**337-3573**	1	BRACKET	
	25	1	**337-3574**	1	TUBE	
	26	1	**322-3745**	1	TUBE (CYL NO. 1)	
	27	1	**322-3746**	1	TUBE (CYL NO. 2)	
	28	1	**333-4732**	1	LINE-FUEL INJECTION (CYL NO. 3)	
	29	1	**333-4733**	1	LINE-FUEL INJECTION (CYL NO. 4)	
	30	1	**298-4542**	1	TUBE AS	
	31	1	**298-4543**	1	BOLT	
	32	1,2	**300-6714**	8	MOUNT	
	33	1	**318-2394**	1	RAIL AS-FUEL	
	33A	1	**305-5291**	1	VALVE AS-RELIEF	
	34	3	**311-3858**	1	KIT-SENSOR (ENGINE SPEED)	
	34A	3	**274-1639**	1	SEAL	
	35	1	**311-6342**	1	SENSOR AS-PRESSURE (FUEL RAIL)	
	35A	1	**309-8006**	1	WASHER	
	36	1	**316-1189**	1	BRACKET AS	
	36A	1	**232-1115**	1	CLIP-PIPE	
	37	2	**317-3144**	1	BRACKET	

317-7968 **PUMP GP-FUEL INJECTION** (contd.) **i03730903**

NOTE	REF NO	GRAPHIC REF	PART NUMBER	QTY	PART NAME 1 2 3 4 5 6 (PRODUCT LEVEL)	SEE PAGE
F			**278-4138**	4	KIT-FUEL LINE PROTECTION (LINE, LOW PRESSURE)	

C - CHANGE FROM PREVIOUS TYPE
F - NOT SHOWN
M - METRIC PART
R - REMANUFACTURED PART MAY BE AVAILABLE
Y - SEPARATE ILLUSTRATION

317-7968 **PUMP GP-FUEL INJECTION (**contd.**)** **i03730903**

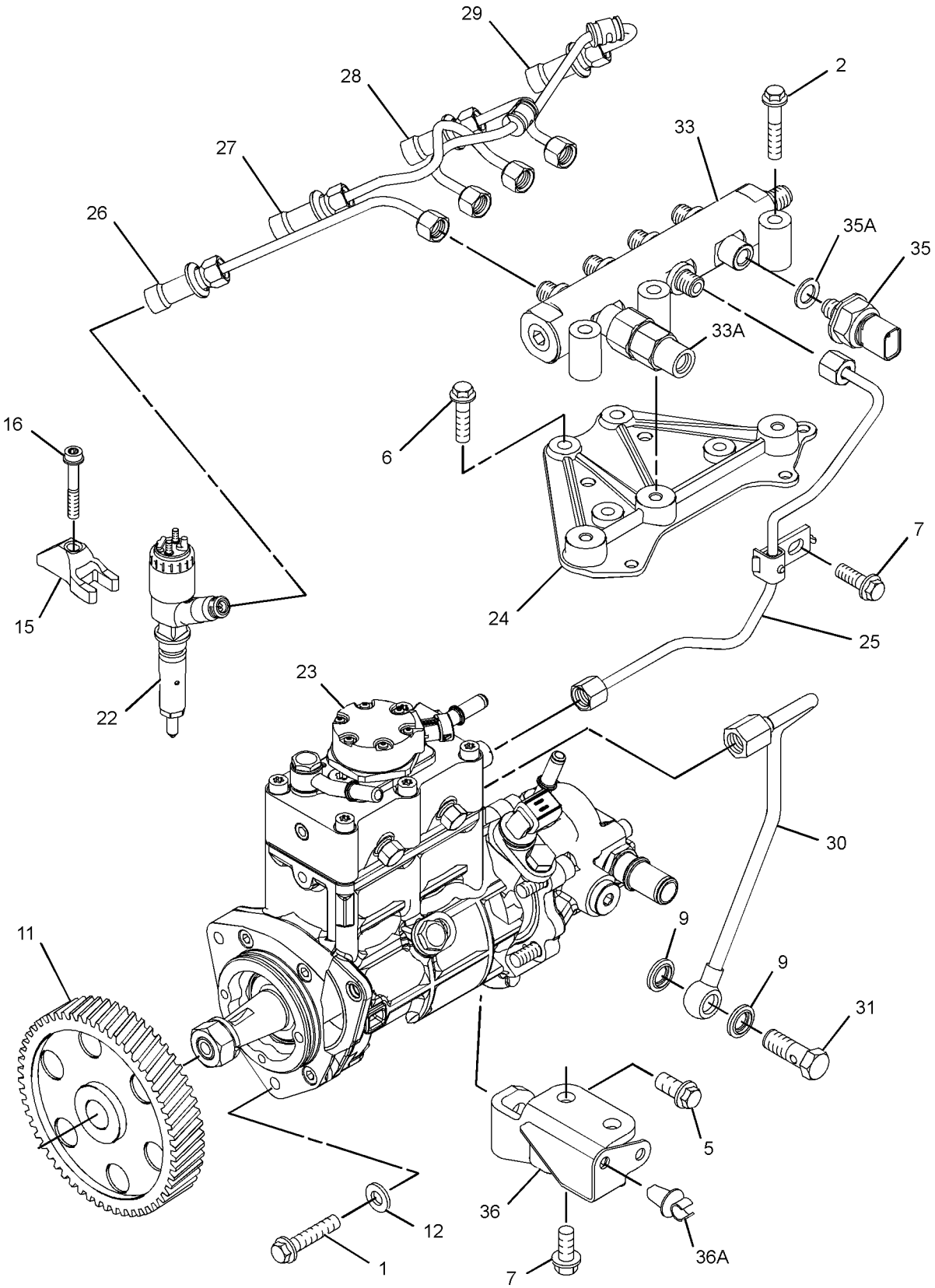

GRAPHIC #1 g01863133

317-7968 **PUMP GP-FUEL INJECTION (**contd.**)** **i03730903**

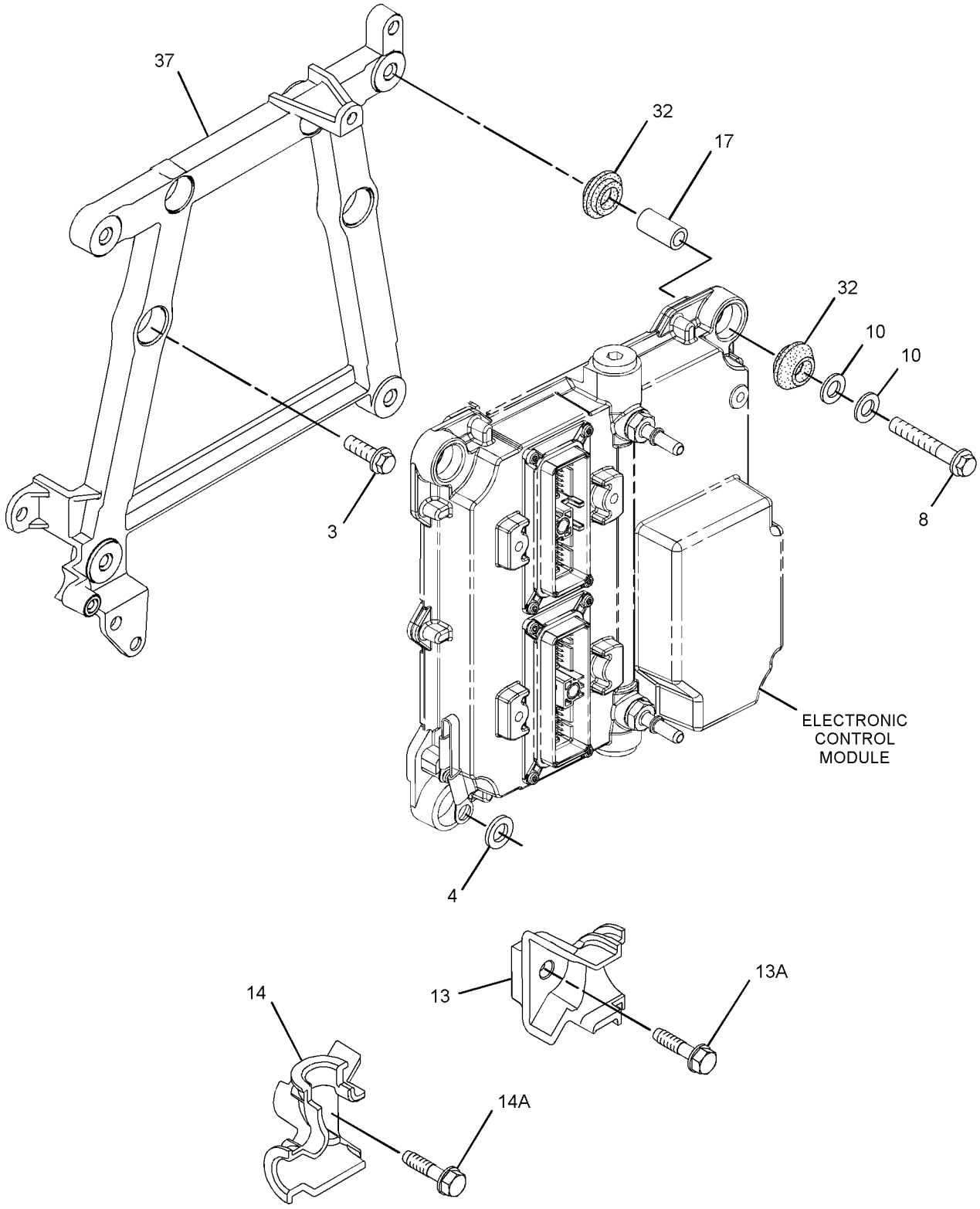

GRAPHIC #2 g01863134

317-7968 **PUMP GP-FUEL INJECTION (**contd.**)** **i03730903**

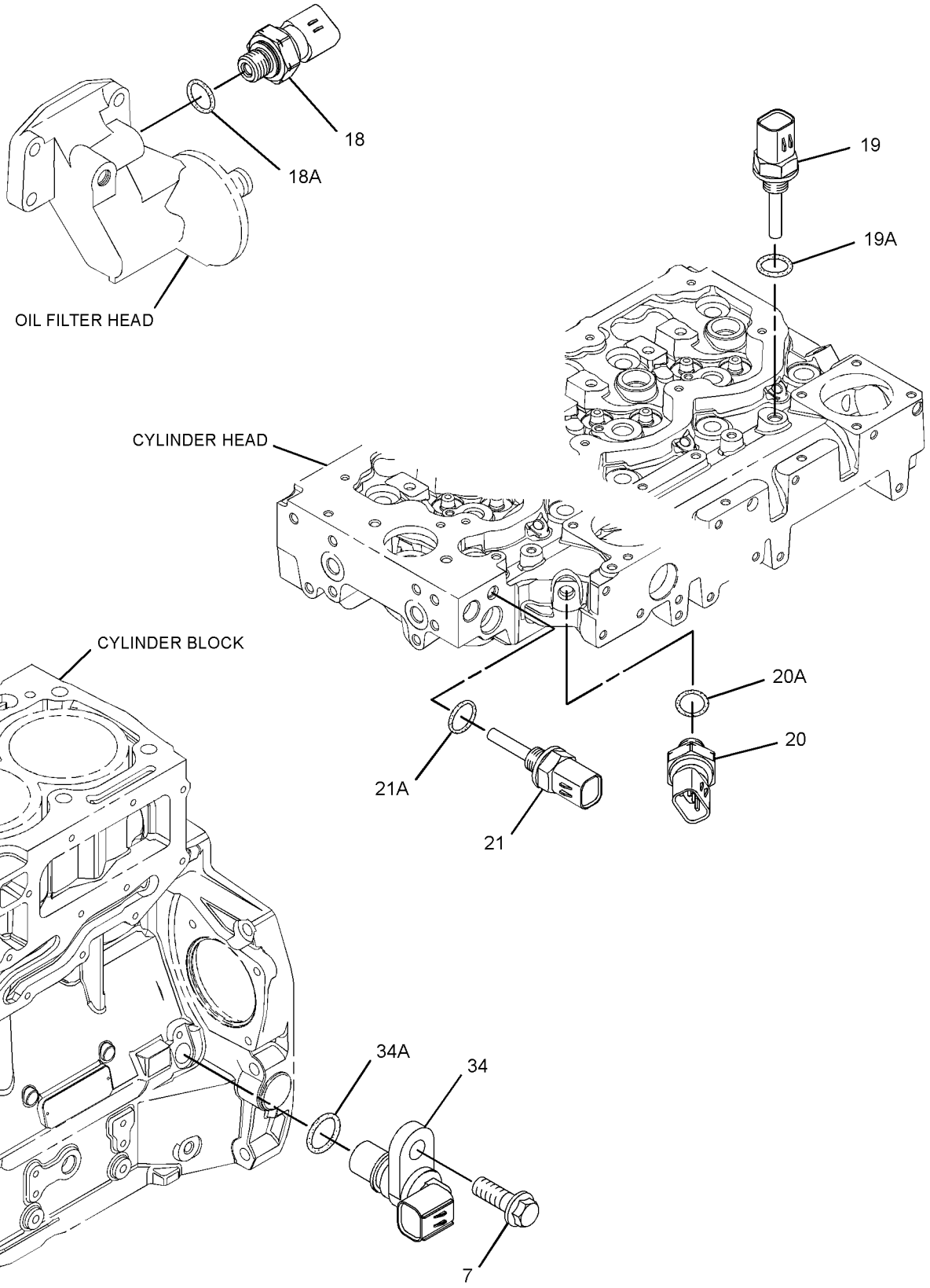

GRAPHIC #3 <END> g01437742

317-7968 PUMP GP-FUEL INJECTION

TYPE 2

SMCS-1251, 1290 **i04020237**

NOTE	REF NO	GRAPHIC REF	PART NUMBER	QTY	PART NAME 1 2 3 4 5 6 (PRODUCT LEVEL)	SEE PAGE
M	1	1	**6I-0260**	3	BOLT (M8X1.25X25-MM)	
M	2	1	**6I-0455**	3	BOLT (M8X1.25X55-MM)	
M	3	2	**6I-0572**	4	BOLT (M8X1.25X20-MM)	
	4	2	**7W-2632**	1	WASHER (8.5X16.8X1.6-MM THK)	
M	5	1	**100-4830**	1	BOLT (M10X1.5X20-MM)	
M	6	1	**101-3895**	4	BOLT (M8X1.25X35-MM)	
M	7	1,3	**124-3815**	4	BOLT (M8X1.25X16-MM)	
M	8	2	**141-8584**	4	BOLT (M8X1.25X50-MM)	
	9	1	**160-0162**	2	WASHER	
	10	2	**217-0099**	5	SPACER (8.2X25X2-MM THK)	
	11	1	**230-8989**	1	GEAR-FUEL PUMP (68-TEETH)	
	12	1	**232-3149**	3	WASHER (8.35X16.85X1.55-MM THK)	
	13	2	**268-6677**	1	BRACKET AS	
M	13A	2	**260-3939**	1	SCREW-HEX HEAD (M6X1X25-MM)	
	14	2	**268-6678**	1	BRACKET AS	
M	14A	2	**260-3939**	1	SCREW-HEX HEAD (M6X1X25-MM)	
	15	1	**278-5168**	4	CLAMP-INJECTOR	
	16	1	**278-5170**	4	BOLT	
	17	2	**278-5203**	4	SPACER	
	18	3	**278-5225**	1	KIT-SENSOR (ENGINE OIL PRESSURE)	
	18A	3	**199-9267**	1	SEAL-O-RING	
	19	3	**278-5272**	1	KIT-SENSOR (AIR TEMPERATURE)	
	19A	3	**278-5226**	1	SEAL-O-RING	
	20	3	**278-5273**	1	KIT-SENSOR (AIR PRESSURE)	
	20A	3	**199-9252**	1	SEAL-O-RING	
	21	3	**278-5307**	1	KIT-SENSOR (COOLANT TEMPERATURE)	
	21A	3	**199-9267**	1	SEAL-O-RING	
YR	22	1	**320-0680**	4	INJECTOR GP-FUEL	1027
CYR	23	1	**352-6584**	1	PUMP GP-FUEL INJECTION	1540
	24	1	**337-3573**	1	BRACKET	
	25	1	**337-3574**	1	TUBE	
	26	1	**322-3745**	1	TUBE (CYL NO. 1)	
	27	1	**322-3746**	1	TUBE (CYL NO. 2)	
	28	1	**333-4732**	1	LINE-FUEL INJECTION (CYL NO. 3)	
	29	1	**333-4733**	1	LINE-FUEL INJECTION (CYL NO. 4)	
	30	1	**298-4542**	1	TUBE AS	
	31	1	**298-4543**	1	BOLT	
	32	1,2	**300-6714**	8	MOUNT	
	33	1	**318-2394**	1	RAIL AS-FUEL	
	33A	1	**305-5291**	1	VALVE AS-RELIEF	
	34	3	**311-3858**	1	KIT-SENSOR (ENGINE SPEED)	
	34A	3	**274-1639**	1	SEAL	
		3	**238-0120**	1	SENSOR GP-SPEED	
	35	1	**311-6342**	1	SENSOR AS-PRESSURE (FUEL RAIL)	
	35A	1	**309-8006**	1	WASHER	
	36	1	**316-1189**	1	BRACKET AS	
	36A	1	**232-1115**	1	CLIP-PIPE	
	37	2	**317-3144**	1	BRACKET	

317-7968 **PUMP GP-FUEL INJECTION (**contd.**)** **i04020237**

NOTE	REF NO	GRAPHIC REF	PART NUMBER	QTY	PART NAME 1 2 3 4 5 6 (PRODUCT LEVEL)	SEE PAGE
F			**278-4138**	4	KIT-FUEL LINE PROTECTION (LINE, LOW PRESSURE)	

C - CHANGE FROM PREVIOUS TYPE
F - NOT SHOWN
M - METRIC PART
R - REMANUFACTURED PART MAY BE AVAILABLE
Y - SEPARATE ILLUSTRATION

317-7968 **PUMP GP-FUEL INJECTION (**contd.**)** **i04020237**

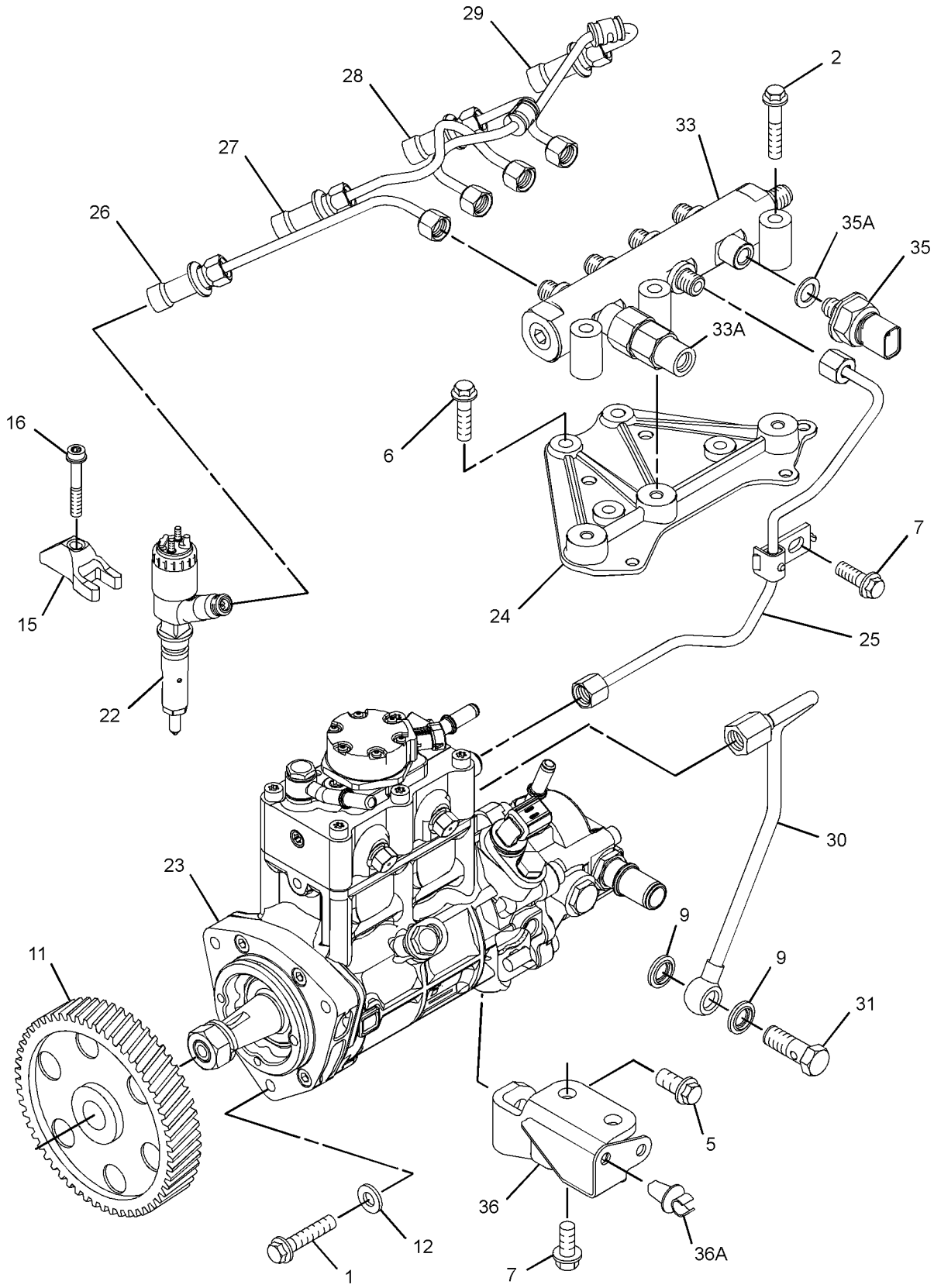

GRAPHIC #1 g02248773

317-7968 **PUMP GP-FUEL INJECTION (**contd.**)** **i04020237**

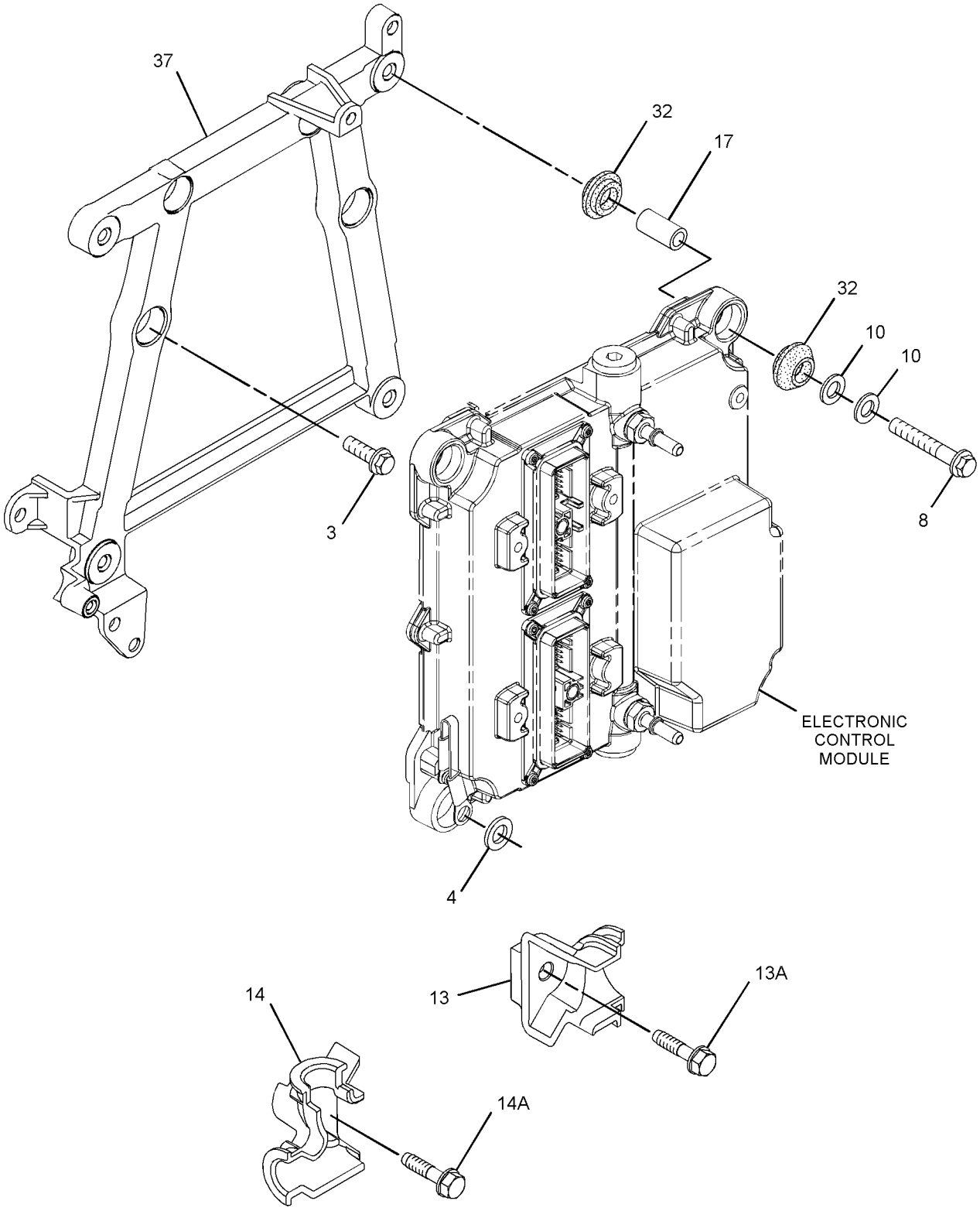

GRAPHIC #2 g01863134

317-7968 **PUMP GP-FUEL INJECTION** (contd.) **i04020237**

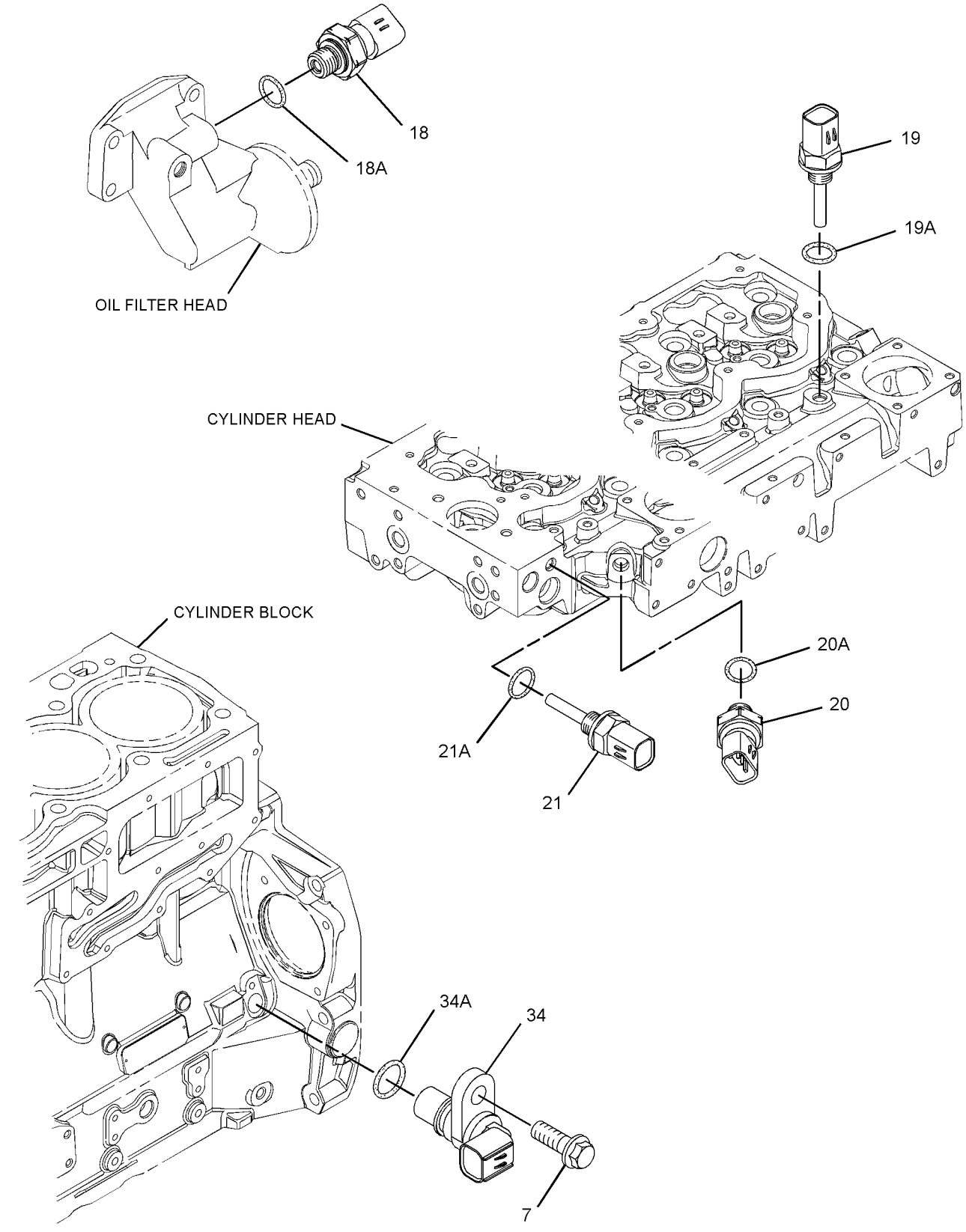

GRAPHIC #3 <END> g01437742

317-7968 PUMP GP-FUEL INJECTION

TYPE 3

SMCS-1251, 1290 **i05935474**

NOTE	REF NO	GRAPHIC REF	PART NUMBER	QTY	PART NAME 1 2 3 4 5 6 (PRODUCT LEVEL)	SEE PAGE
M	1	1	**6I-0260**	3	BOLT (M8X1.25X25-MM)	
M	2	1	**6I-0455**	3	BOLT (M8X1.25X55-MM)	
M	3	2	**6I-0572**	4	BOLT (M8X1.25X20-MM)	
	4	2	**7W-2632**	1	WASHER (8.5X16.8X1.6-MM THK)	
M	5	1	**100-4830**	1	BOLT (M10X1.5X20-MM)	
M	6	1	**101-3895**	4	BOLT (M8X1.25X35-MM)	
M	7	1,3	**124-3815**	4	BOLT (M8X1.25X16-MM)	
M	8	2	**141-8584**	4	BOLT (M8X1.25X50-MM)	
	9	1	**346-0007**	2	WASHER	
	10	2	**217-0099**	5	SPACER (8.2X25X2-MM THK)	
	11	1	**230-8989**	1	GEAR-FUEL PUMP (68-TEETH)	
	12	1	**232-3149**	3	WASHER (8.35X16.85X1.55-MM THK)	
	13	2	**268-6677**	1	BRACKET AS	
M	13A	2	**260-3939**	1	SCREW-HEX HEAD (M6X1X25-MM)	
	14	2	**268-6678**	1	BRACKET AS	
M	14A	2	**260-3939**	1	SCREW-HEX HEAD (M6X1X25-MM)	
	15	1	**278-5168**	4	CLAMP-INJECTOR	
	16	1	**278-5170**	4	BOLT	
	17	2	**278-5203**	4	SPACER	
	18	3	**278-5225**	1	KIT-SENSOR (ENGINE OIL PRESSURE)	
	18A	3	**199-9267**	1	SEAL-O-RING	
	19	3	**278-5272**	1	KIT-SENSOR (AIR TEMPERATURE)	
	19A	3	**278-5226**	1	SEAL-O-RING	
	20	3	**278-5273**	1	KIT-SENSOR (AIR PRESSURE)	
	20A	3	**199-9252**	1	SEAL-O-RING	
	21	3	**278-5307**	1	KIT-SENSOR (COOLANT TEMPERATURE)	
	21A	3	**199-9267**	1	SEAL-O-RING	
YR	22	1	**320-0680**	4	INJECTOR GP-FUEL	1027
CYR	23	1	*324-0532*	1	PUMP GP-FUEL INJECTION	1523
	24	1	**337-3573**	1	BRACKET	
	25	1	**337-3574**	1	TUBE	
	26	1	**322-3745**	1	TUBE (CYL NO. 1)	
	27	1	**322-3746**	1	TUBE (CYL NO. 2)	
	28	1	**333-4732**	1	LINE-FUEL INJECTION (CYL NO. 3)	
	29	1	**333-4733**	1	LINE-FUEL INJECTION (CYL NO. 4)	
	30	1	**298-4542**	1	TUBE AS	
	31	1	**363-3908**	1	BOLT-SPECIAL	
	32	2	**300-6714**	8	MOUNT	
	33	1	**438-3414**	1	RAIL AS-FUEL	
	33A	1	**416-7101**	1	VALVE AS-RELIEF	
	34	3	**311-3858**	1	KIT-SENSOR (ENGINE SPEED)	
	34A	3	**274-1639**	1	SEAL	
		3	**238-0120**	1	SENSOR GP-SPEED	
	35	1	**311-6342**	1	SENSOR AS-PRESSURE (FUEL RAIL)	
	35A	1	**309-8006**	1	WASHER	
	36	1	**316-1189**	1	BRACKET AS	
	36A	1	**232-1115**	1	CLIP-PIPE	
	37	2	**317-3144**	1	BRACKET	

317-7968 **PUMP GP-FUEL INJECTION** (contd.) **i05935474**

NOTE	REF NO	GRAPHIC REF	PART NUMBER	QTY	PART NAME 1 2 3 4 5 6 (PRODUCT LEVEL)	SEE PAGE
F			**278-4138**	4	KIT-FUEL LINE PROTECTION (LINE, LOW PRESSURE)	

C - CHANGE FROM PREVIOUS TYPE
F - NOT SHOWN
M - METRIC PART
R - REMANUFACTURED PART MAY BE AVAILABLE
Y - SEPARATE ILLUSTRATION

317-7968 **PUMP GP-FUEL INJECTION (**contd.**)** **i05935474**

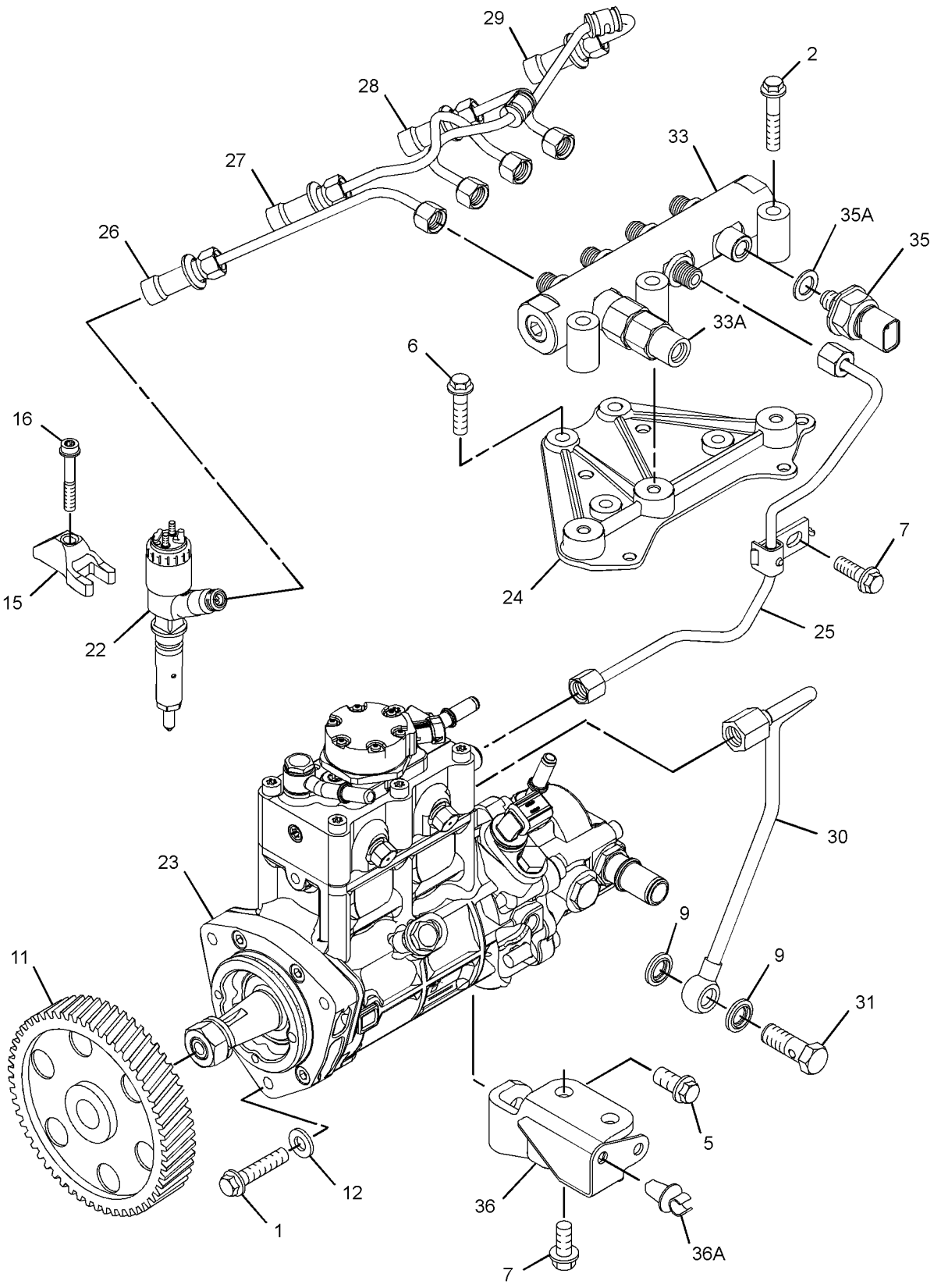

GRAPHIC #1 g02821836

317-7968 **PUMP GP-FUEL INJECTION (**contd.**)** **i05935474**

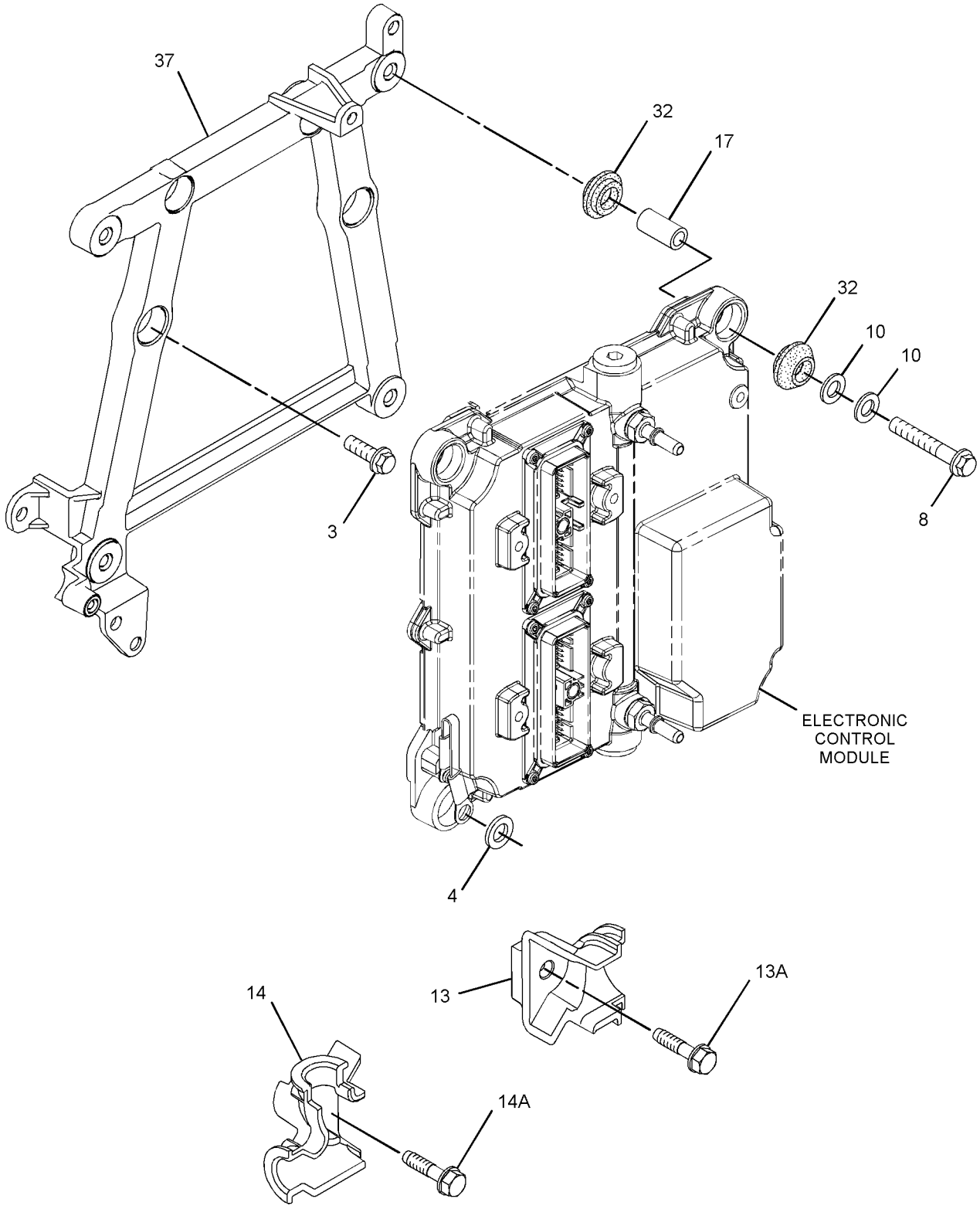

GRAPHIC #2 g01863134

317-7968 **PUMP GP-FUEL INJECTION (**contd.**)** **i05935474**

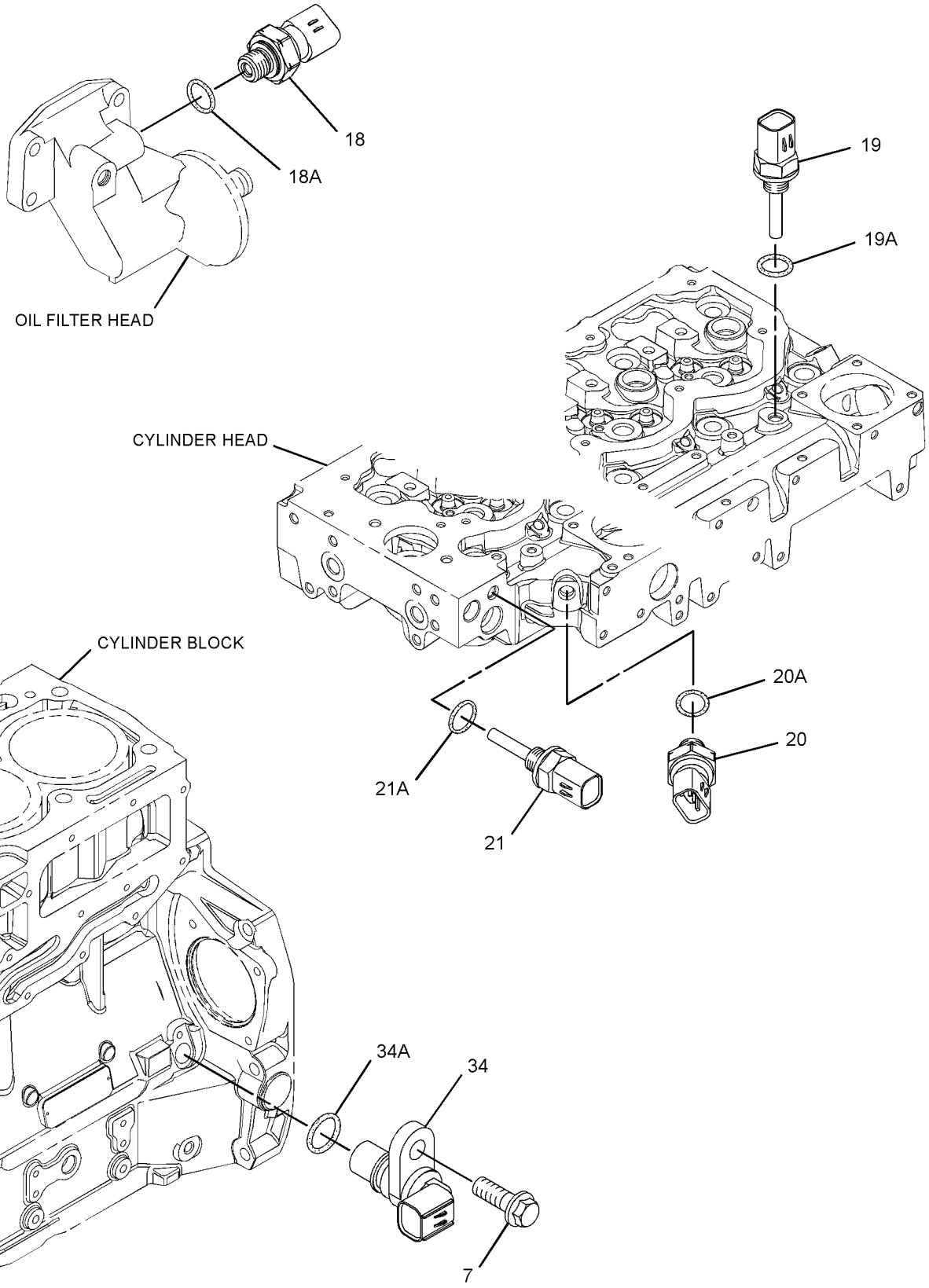

GRAPHIC #3 <END> g01437742

320-2397 PUMP GP-FUEL INJECTION

PART OF 435-1685 ENGINE AR-PRIMARY

TYPE 1

SMCS-1251, 1290 **i03730905**

NOTE	REF NO	GRAPHIC REF	PART NUMBER	QTY	PART NAME 1 2 3 4 5 6 (PRODUCT LEVEL)	SEE PAGE
M	1	3	**6I-0260**	3	BOLT (M8X1.25X25-MM)	
M	2	3	**6I-0455**	3	BOLT (M8X1.25X55-MM)	
M	3	1	**6I-0572**	4	BOLT (M8X1.25X20-MM)	
	4	1	**7W-2632**	1	WASHER (8.5X16.8X1.6-MM THK)	
M	5	3	**100-4830**	1	BOLT (M10X1.5X20-MM)	
M	6	3	**101-3895**	4	BOLT (M8X1.25X35-MM)	
M	7	2,3	**124-3815**	4	BOLT (M8X1.25X16-MM)	
M	8	1	**141-8584**	4	BOLT (M8X1.25X50-MM)	
	9	1	**217-0099**	5	SPACER (8.2X25X2-MM THK)	
	10	3	**230-8989**	1	GEAR-FUEL PUMP (68-TEETH)	
	11	1	**268-6677**	1	BRACKET AS	
M	11A	1	**260-3939**	1	SCREW-HEX HEAD (M6X1X25-MM)	
	12	1	**268-6678**	1	BRACKET AS	
M	12A	1	**260-3939**	1	SCREW-HEX HEAD (M6X1X25-MM)	
	13	3	**278-5168**	4	CLAMP-INJECTOR	
	14	3	**278-5170**	4	BOLT	
	15	1	**278-5203**	4	SPACER	
	16	2	**278-5225**	1	KIT-SENSOR (ENGINE OIL PRESSURE)	
	16A	2	**199-9267**	1	SEAL-O-RING	
	17	2	**278-5272**	1	KIT-SENSOR (INTAKE AIR TEMPERATURE)	
	17A	2	**278-5226**	1	SEAL-O-RING	
	18	2	**278-5273**	1	KIT-SENSOR (AIR PRESSURE)	
	18A	2	**199-9252**	1	SEAL-O-RING	
	19	2	**278-5307**	1	KIT-SENSOR (COOLANT TEMPERATURE)	
	19A	2	**199-9267**	1	SEAL-O-RING	
YR	20	3	**324-0532**	1	PUMP GP-FUEL INJECTION	1523
	21	3	**298-4535**	1	BRACKET-SUPPORT	
	22	3	**337-3573**	1	BRACKET	
	23	3	**298-4542**	1	TUBE AS	
	24	3	**298-4543**	1	BOLT	
	25	1	**300-6714**	8	MOUNT	
	26	2	**311-3858**	1	KIT-SENSOR (ENGINE SPEED)	
	26A	2	**274-1639**	1	SEAL	
	27	3	**311-6342**	1	SENSOR AS-PRESSURE (FUEL)	
	27A	3	**309-8006**	1	WASHER	
	28	3	**318-2394**	1	RAIL AS-FUEL	
	28A	3	**305-5291**	1	VALVE AS-RELIEF	
	29	1	**317-3144**	1	BRACKET	
	30	3	**160-0162**	2	WASHER	
	31	3	**232-3149**	3	WASHER (8.35X16.85X1.55-MM THK)	
	32	3	**337-3574**	1	TUBE	
	33	3	**322-3745**	1	TUBE (CYL NO. 1)	
	34	3	**322-3746**	1	TUBE (CYL NO. 2)	
	35	3	**333-4732**	1	LINE-FUEL INJECTION (CYL NO. 3)	
	36	3	**333-4733**	1	LINE-FUEL INJECTION (CYL NO. 4)	
YR	37	3	**320-0680**	4	INJECTOR GP-FUEL	1027

320-2397 **PUMP GP-FUEL INJECTION (**contd.**)** **i03730905**

NOTE	REF NO	GRAPHIC REF	PART NUMBER	QTY	PART NAME 1 2 3 4 5 6 (PRODUCT LEVEL)	SEE PAGE
F			**278-4138**	4	KIT-FUEL LINE PROTECTION	

F - NOT SHOWN
M - METRIC PART
R - REMANUFACTURED PART MAY BE AVAILABLE
Y - SEPARATE ILLUSTRATION

320-2397 **PUMP GP-FUEL INJECTION (**contd.**)** **i03730905**

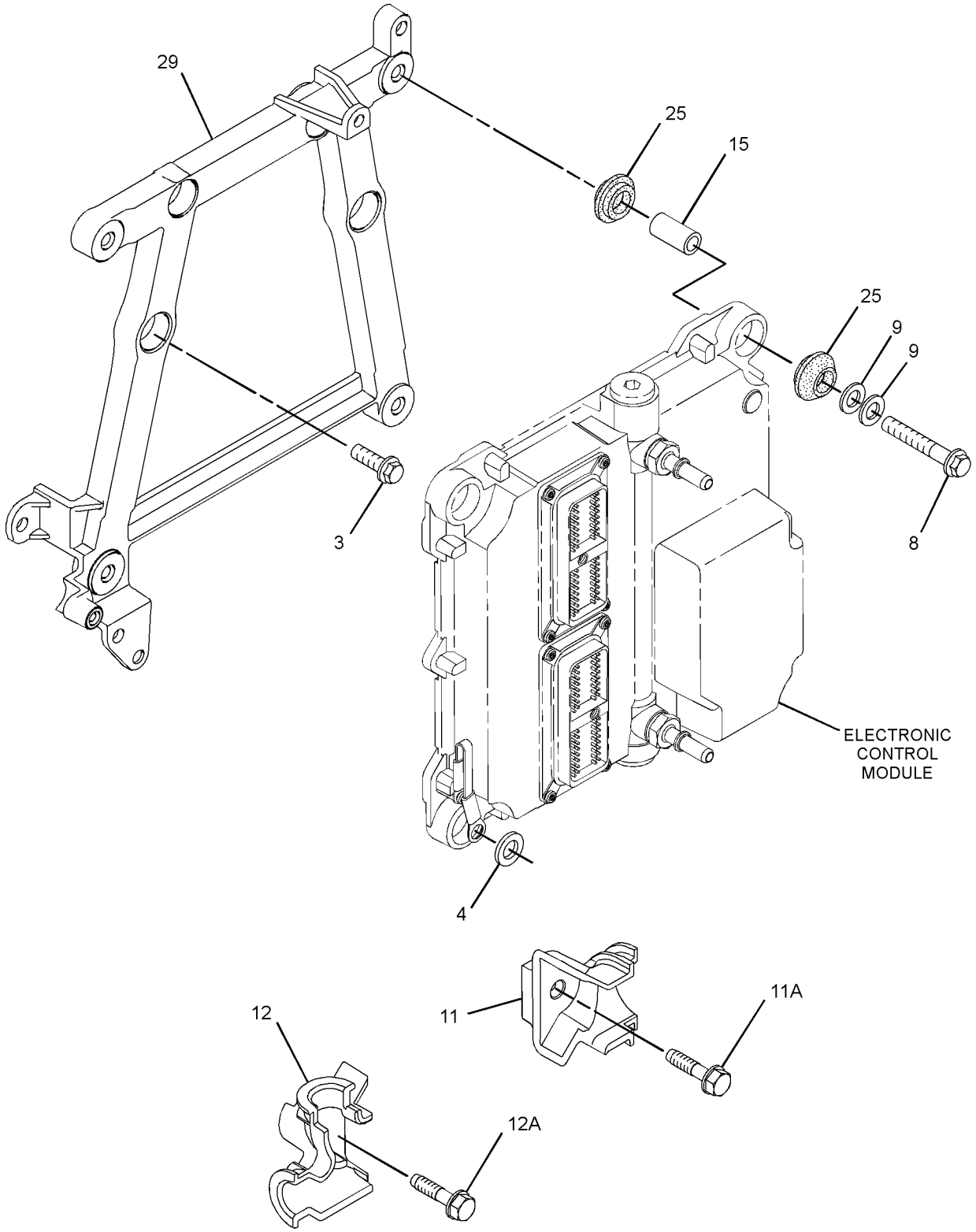

GRAPHIC #1 g01773218

320-2397 **PUMP GP-FUEL INJECTION (**contd.**)** **i03730905**

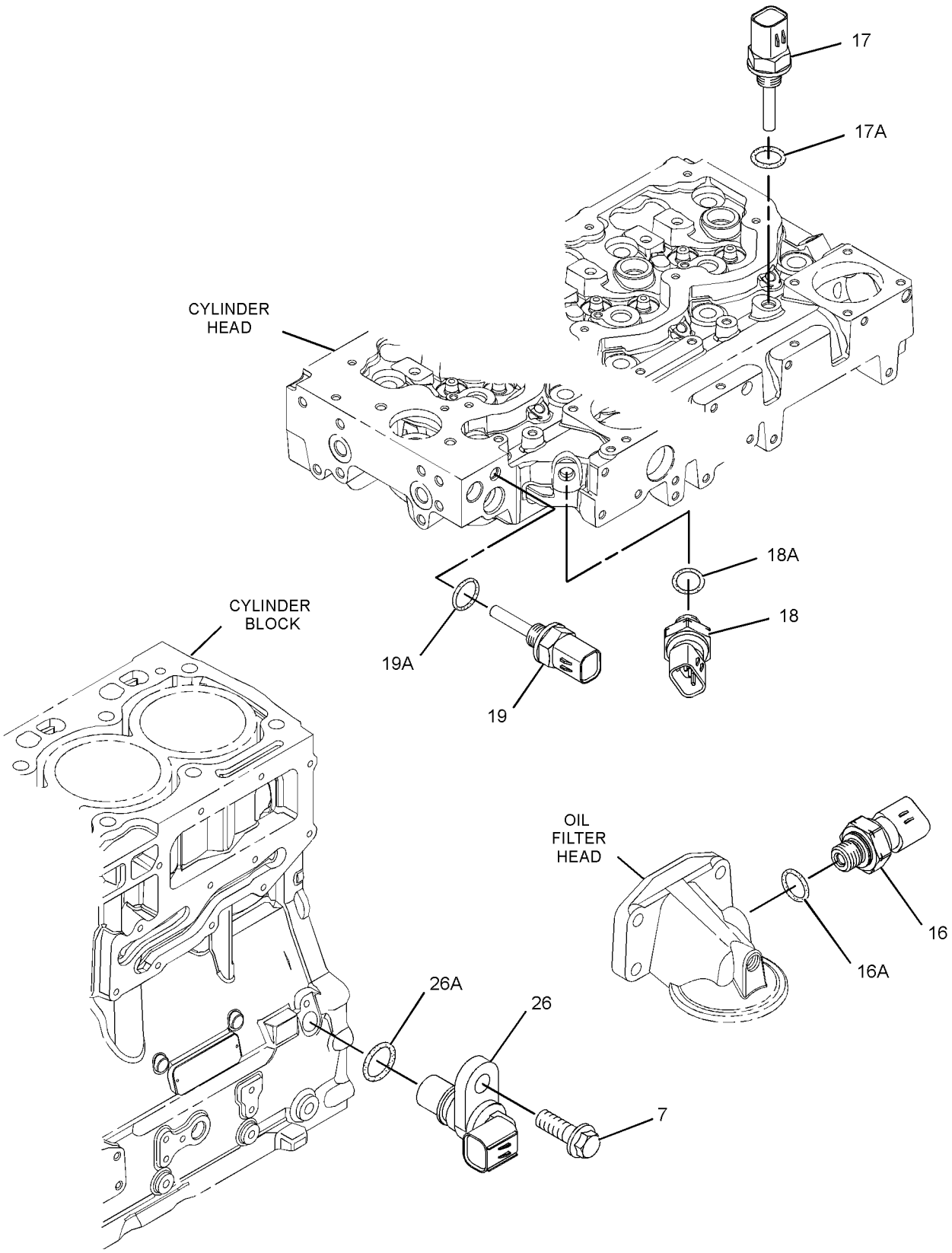

GRAPHIC #2 g01446606

320-2397 **PUMP GP-FUEL INJECTION (**contd.**)** **i03730905**

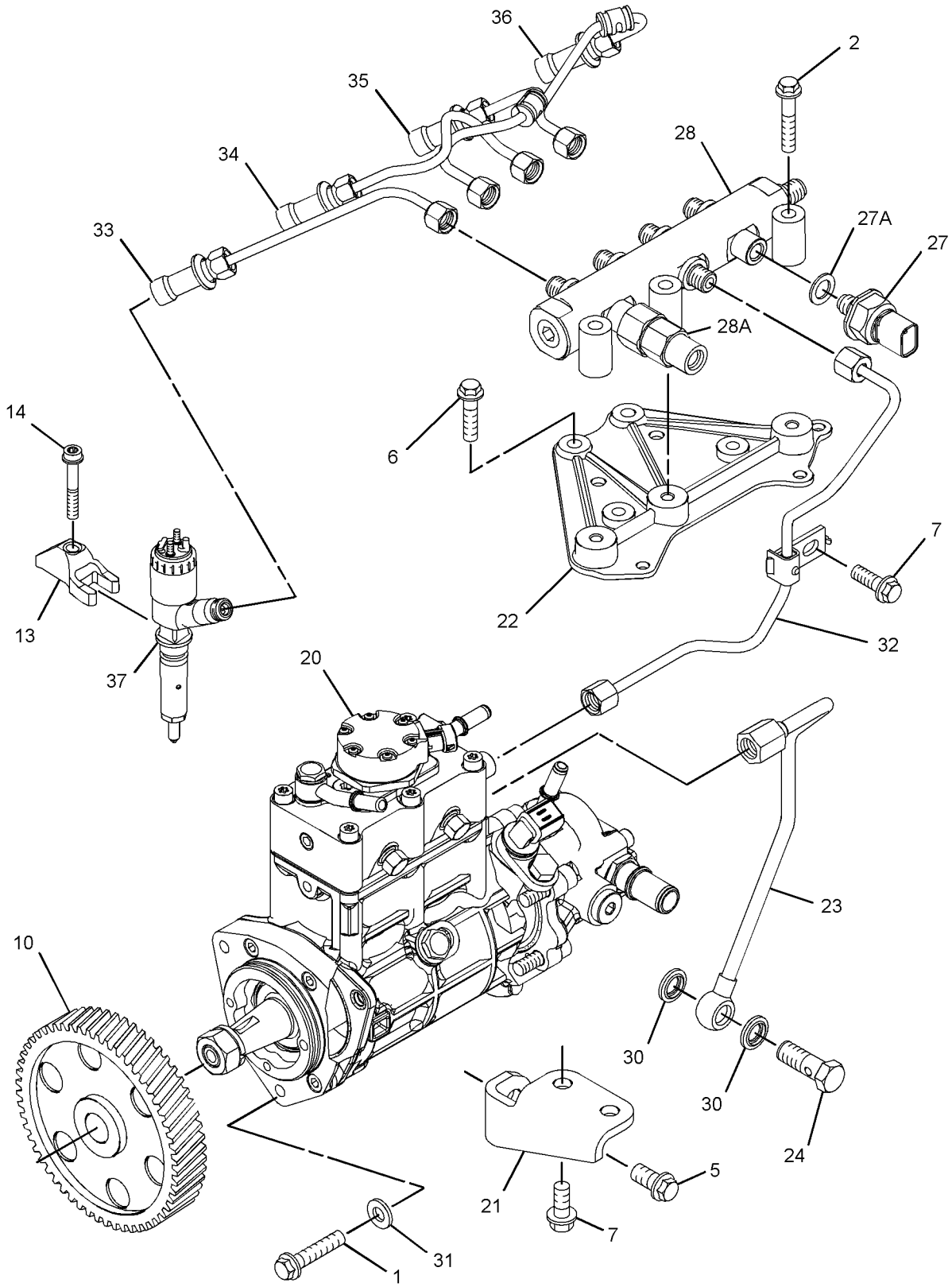

GRAPHIC #3 <END> g01957449

320-2397 PUMP GP-FUEL INJECTION

PART OF 435-1685 ENGINE AR-PRIMARY

TYPE 2

SMCS-1251, 1290 **i04019489**

NOTE	REF NO	GRAPHIC REF	PART NUMBER	QTY	PART NAME 1 2 3 4 5 6 (PRODUCT LEVEL)	SEE PAGE
M	1	1	**6I-0260**	3	BOLT (M8X1.25X25-MM)	
M	2	1	**6I-0455**	3	BOLT (M8X1.25X55-MM)	
M	3	2	**6I-0572**	4	BOLT (M8X1.25X20-MM)	
	4	2	**7W-2632**	1	WASHER (8.5X16.8X1.6-MM THK)	
M	5	1	**100-4830**	1	BOLT (M10X1.5X20-MM)	
M	6	1	**101-3895**	4	BOLT (M8X1.25X35-MM)	
M	7	1,3	**124-3815**	4	BOLT (M8X1.25X16-MM)	
M	8	2	**141-8584**	4	BOLT (M8X1.25X50-MM)	
	9	2	**217-0099**	5	SPACER (8.2X25X2-MM THK)	
	10	1	**230-8989**	1	GEAR-FUEL PUMP (68-TEETH)	
	11	2	**268-6677**	1	BRACKET AS	
M	11A	2	**260-3939**	1	SCREW-HEX HEAD (M6X1X25-MM)	
	12	2	**268-6678**	1	BRACKET AS	
M	12A	2	**260-3939**	1	SCREW-HEX HEAD (M6X1X25-MM)	
	13	1	**278-5168**	4	CLAMP-INJECTOR	
	14	1	**278-5170**	4	BOLT	
	15	2	**278-5203**	4	SPACER	
	16	3	**278-5225**	1	KIT-SENSOR (ENGINE OIL PRESSURE)	
	16A	3	**199-9267**	1	SEAL-O-RING	
	17	3	**278-5272**	1	KIT-SENSOR (INTAKE AIR TEMPERATURE)	
	17A	3	**278-5226**	1	SEAL-O-RING	
	18	3	**278-5273**	1	KIT-SENSOR (AIR PRESSURE)	
	18A	3	**199-9252**	1	SEAL-O-RING	
	19	3	**278-5307**	1	KIT-SENSOR (COOLANT TEMPERATURE)	
	19A	3	**199-9267**	1	SEAL-O-RING	
CYR	20	1	**352-6584**	1	PUMP GP-FUEL INJECTION	1540
	21	1	**298-4535**	1	BRACKET-SUPPORT	
	22	1	**337-3573**	1	BRACKET	
	23	1	**298-4542**	1	TUBE AS	
	24	1	**298-4543**	1	BOLT	
	25	2	**300-6714**	8	MOUNT	
	26	3	**311-3858**	1	KIT-SENSOR (ENGINE SPEED)	
	26A	3	**274-1639**	1	SEAL	
		3	**238-0120**	1	SENSOR GP-SPEED	
	27	1	**311-6342**	1	SENSOR AS-PRESSURE (FUEL)	
	27A	1	**309-8006**	1	WASHER	
	28	1	**318-2394**	1	RAIL AS-FUEL	
	28A	1	**305-5291**	1	VALVE AS-RELIEF	
	29	2	**317-3144**	1	BRACKET	
	30	1	**160-0162**	2	WASHER	
	31	1	**232-3149**	3	WASHER (8.35X16.85X1.55-MM THK)	
	32	1	**337-3574**	1	TUBE	
	33	1	**322-3745**	1	TUBE (CYL NO. 1)	
	34	1	**322-3746**	1	TUBE (CYL NO. 2)	
	35	1	**333-4732**	1	LINE-FUEL INJECTION (CYL NO. 3)	
	36	1	**333-4733**	1	LINE-FUEL INJECTION (CYL NO. 4)	
YR	37	1	**320-0680**	4	INJECTOR GP-FUEL	1027

320-2397 **PUMP GP-FUEL INJECTION** (contd.) **i04019489**

NOTE	REF NO	GRAPHIC REF	PART NUMBER	QTY	PART NAME 1 2 3 4 5 6 (PRODUCT LEVEL)	SEE PAGE
F			**278-4138**	4	KIT-FUEL LINE PROTECTION	

C - CHANGE FROM PREVIOUS TYPE
F - NOT SHOWN
M - METRIC PART
R - REMANUFACTURED PART MAY BE AVAILABLE
Y - SEPARATE ILLUSTRATION

320-2397 **PUMP GP-FUEL INJECTION (**contd.**)** **i04019489**

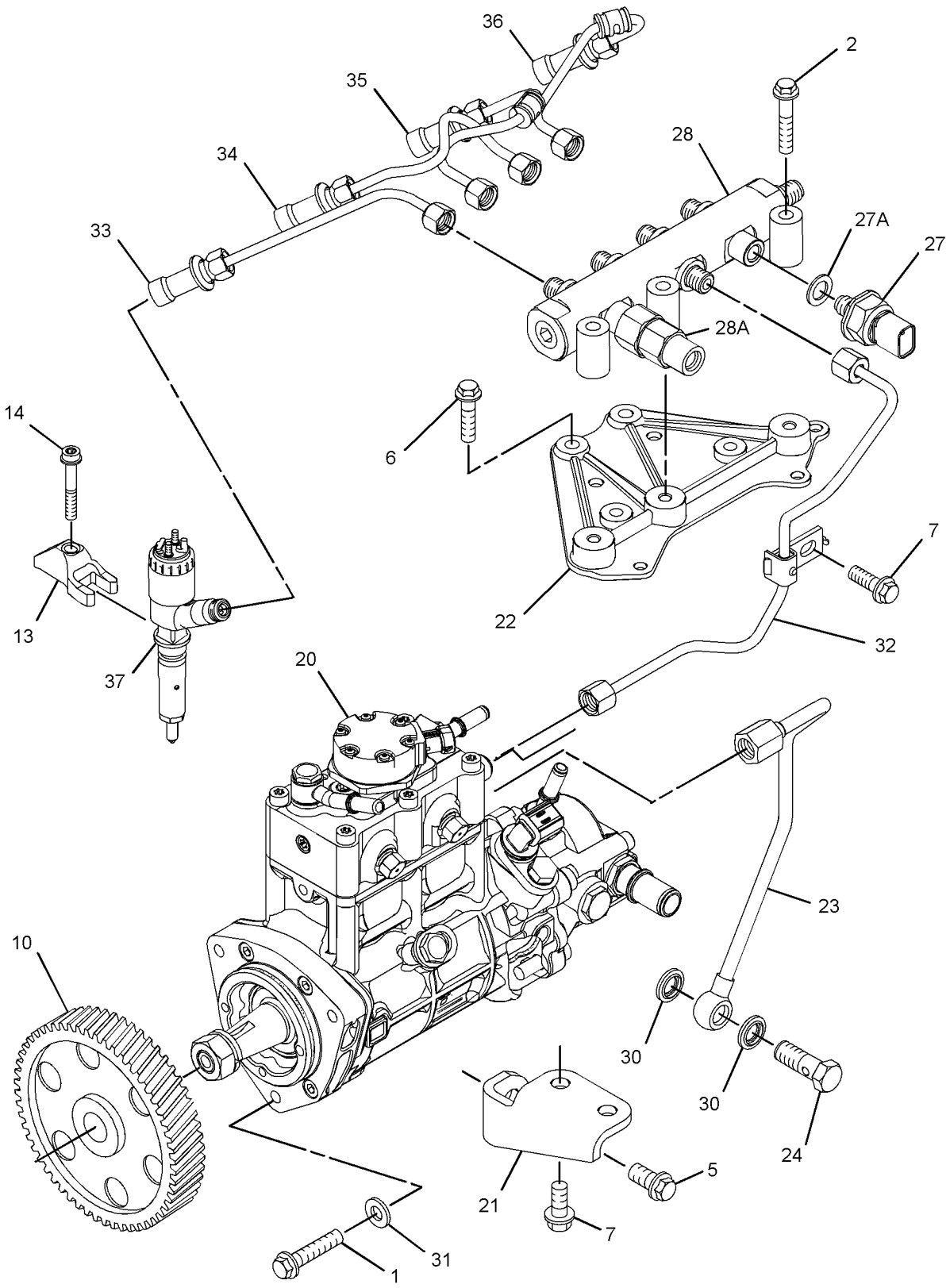

GRAPHIC #1 g02248973

320-2397 **PUMP GP-FUEL INJECTION (**contd.**)** **i04019489**

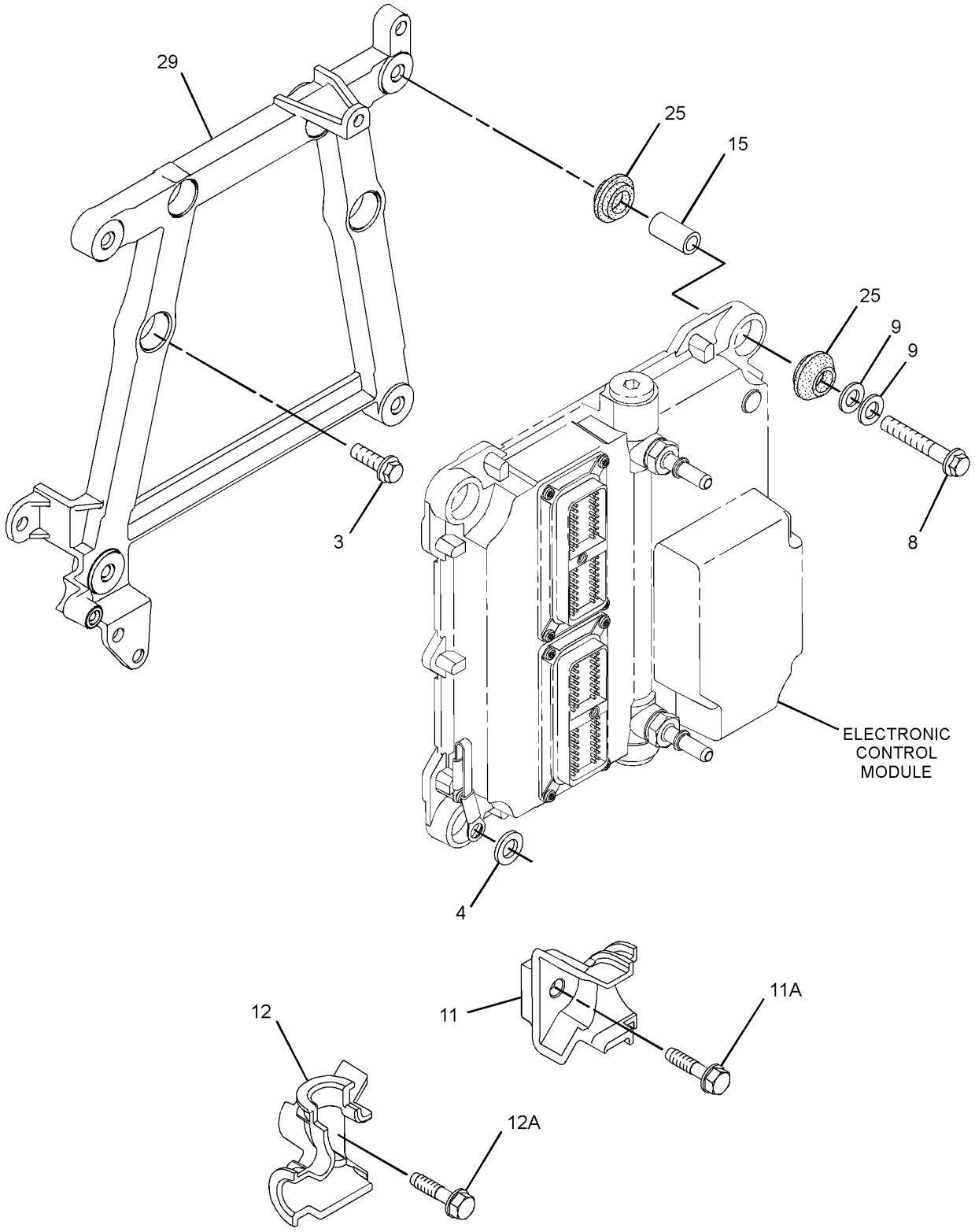

GRAPHIC #2 g01773218

320-2397 **PUMP GP-FUEL INJECTION (**contd.**)** **i04019489**

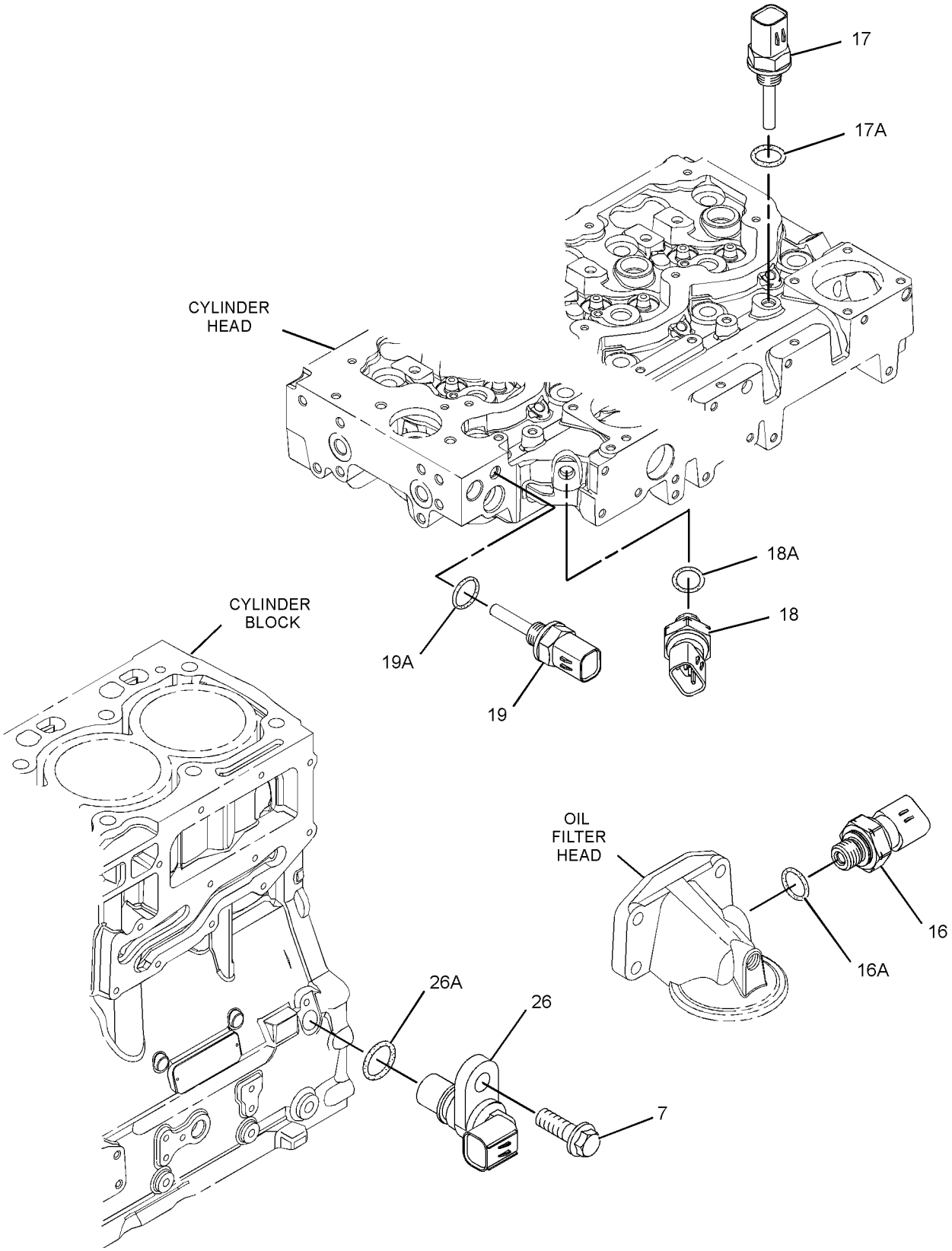

GRAPHIC #3 <END> g01446606

320-2397 PUMP GP-FUEL INJECTION

PART OF 435-1685 ENGINE AR-PRIMARY

TYPE 3

SMCS-1251, 1290 **i04706012**

NOTE	REF NO	GRAPHIC REF	PART NUMBER	QTY	PART NAME 1 2 3 4 5 6 (PRODUCT LEVEL)	SEE PAGE
M	1	1	**6I-0260**	3	BOLT (M8X1.25X25-MM)	
M	2	1	**6I-0455**	3	BOLT (M8X1.25X55-MM)	
M	3	2	**6I-0572**	4	BOLT (M8X1.25X20-MM)	
	4	2	**7W-2632**	1	WASHER (8.5X16.8X1.6-MM THK)	
M	5	1	**100-4830**	1	BOLT (M10X1.5X20-MM)	
M	6	1	**101-3895**	4	BOLT (M8X1.25X35-MM)	
M	7	1,3	**124-3815**	4	BOLT (M8X1.25X16-MM)	
M	8	2	**141-8584**	4	BOLT (M8X1.25X50-MM)	
	9	2	**217-0099**	5	SPACER (8.2X25X2-MM THK)	
	10	1	**230-8989**	1	GEAR-FUEL PUMP (68-TEETH)	
	11	2	**268-6677**	1	BRACKET AS	
M	11A	2	**260-3939**	1	SCREW-HEX HEAD (M6X1X25-MM)	
	12	2	**268-6678**	1	BRACKET AS	
M	12A	2	**260-3939**	1	SCREW-HEX HEAD (M6X1X25-MM)	
	13	1	**278-5168**	4	CLAMP-INJECTOR	
	14	1	**278-5170**	4	BOLT	
	15	2	**278-5203**	4	SPACER	
	16	3	**278-5225**	1	KIT-SENSOR (ENGINE OIL PRESSURE)	
	16A	3	**199-9267**	1	SEAL-O-RING	
	17	3	**278-5272**	1	KIT-SENSOR (INTAKE AIR TEMPERATURE)	
	17A	3	**278-5226**	1	SEAL-O-RING	
	18	3	**278-5273**	1	KIT-SENSOR (AIR PRESSURE)	
	18A	3	**199-9252**	1	SEAL-O-RING	
	19	3	**278-5307**	1	KIT-SENSOR (COOLANT TEMPERATURE)	
	19A	3	**199-9267**	1	SEAL-O-RING	
CYR	20	1	**324-0532**	1	PUMP GP-FUEL INJECTION	1523
	21	1	**298-4535**	1	BRACKET-SUPPORT	
	22	1	**337-3573**	1	BRACKET	
	23	1	**298-4542**	1	TUBE AS	
	24	1	**298-4543**	1	BOLT	
	25	2	**300-6714**	8	MOUNT	
	26	3	**311-3858**	1	KIT-SENSOR (ENGINE SPEED)	
	26A	3	**274-1639**	1	SEAL	
		3	**238-0120**	1	SENSOR GP-SPEED	
	27	1	**311-6342**	1	SENSOR AS-PRESSURE (FUEL)	
	27A	1	**309-8006**	1	WASHER	
	28	1	**358-6632**	1	RAIL GP-FUEL	
	28A	1	**305-5291**	1	VALVE AS-RELIEF	
	29	2	**317-3144**	1	BRACKET	
	30	1	**160-0162**	2	WASHER	
	31	1	**232-3149**	3	WASHER (8.35X16.85X1.55-MM THK)	
	32	1	**337-3574**	1	TUBE	
	33	1	**322-3745**	1	TUBE (CYL NO. 1)	
	34	1	**322-3746**	1	TUBE (CYL NO. 2)	
	35	1	**333-4732**	1	LINE-FUEL INJECTION (CYL NO. 3)	
	36	1	**333-4733**	1	LINE-FUEL INJECTION (CYL NO. 4)	
YR	37	1	**320-0680**	4	INJECTOR GP-FUEL	1027

320-2397 **PUMP GP-FUEL INJECTION (**contd.**)** **i04706012**

NOTE	REF NO	GRAPHIC REF	PART NUMBER	QTY	PART NAME 1 2 3 4 5 6 (PRODUCT LEVEL)	SEE PAGE
F			**278-4138**	4	KIT-FUEL LINE PROTECTION	

C - CHANGE FROM PREVIOUS TYPE
F - NOT SHOWN
M - METRIC PART
R - REMANUFACTURED PART MAY BE AVAILABLE
Y - SEPARATE ILLUSTRATION

320-2397 **PUMP GP-FUEL INJECTION (**contd.**)** **i04706012**

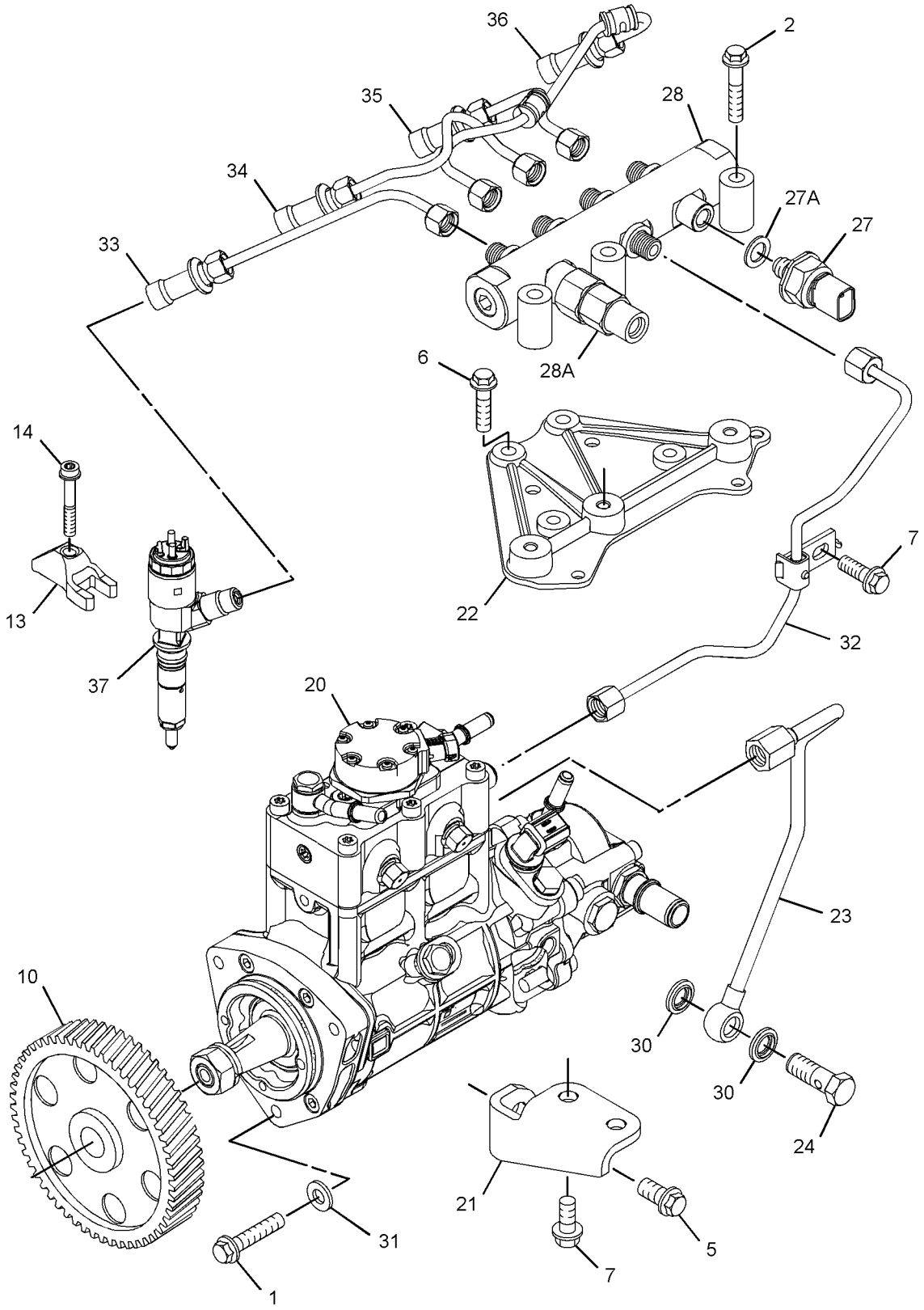

GRAPHIC #1 g02857557

320-2397 **PUMP GP-FUEL INJECTION (**contd.**)** **i04706012**

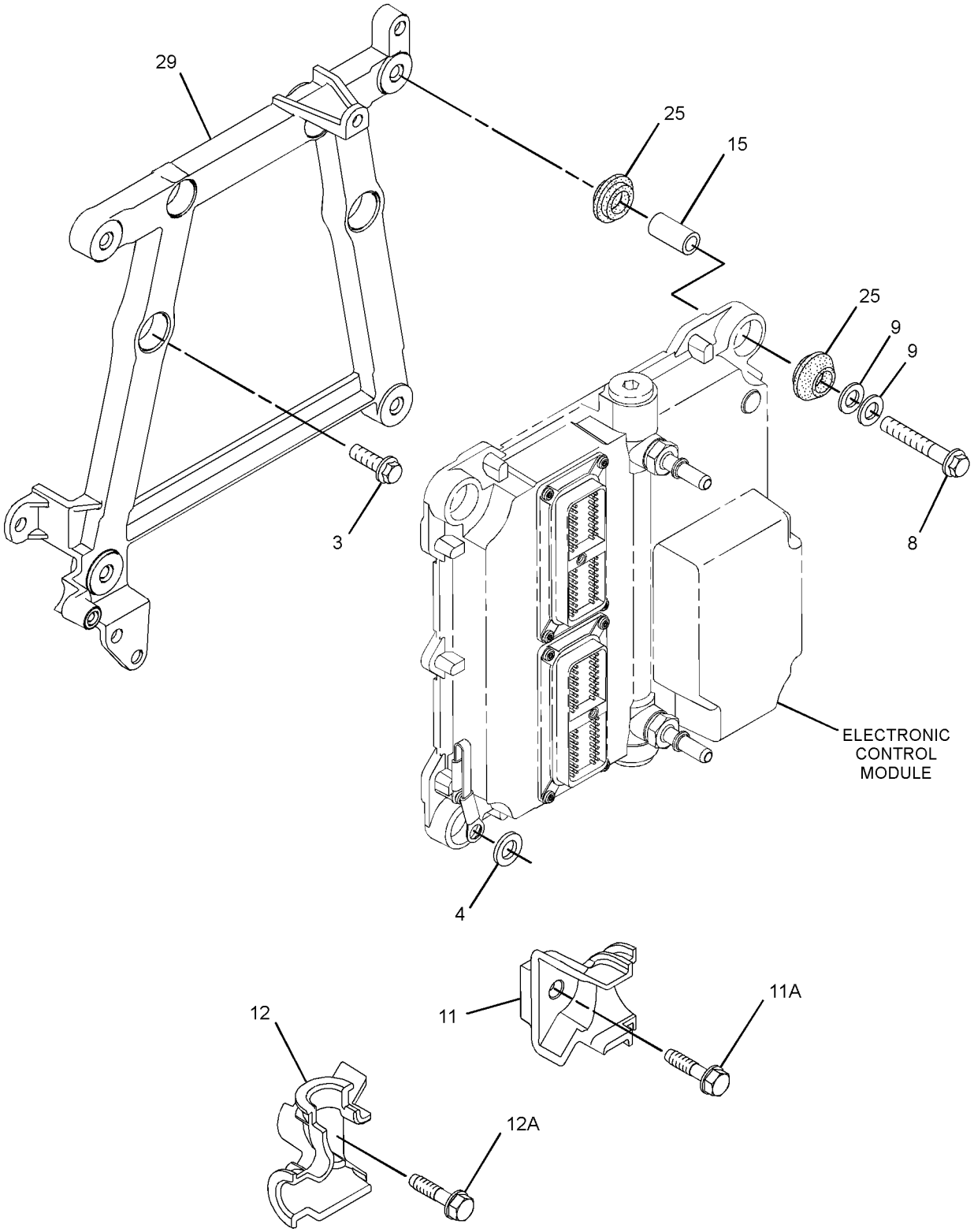

GRAPHIC #2 g01773218

320-2397 **PUMP GP-FUEL INJECTION (**contd.**)** **i04706012**

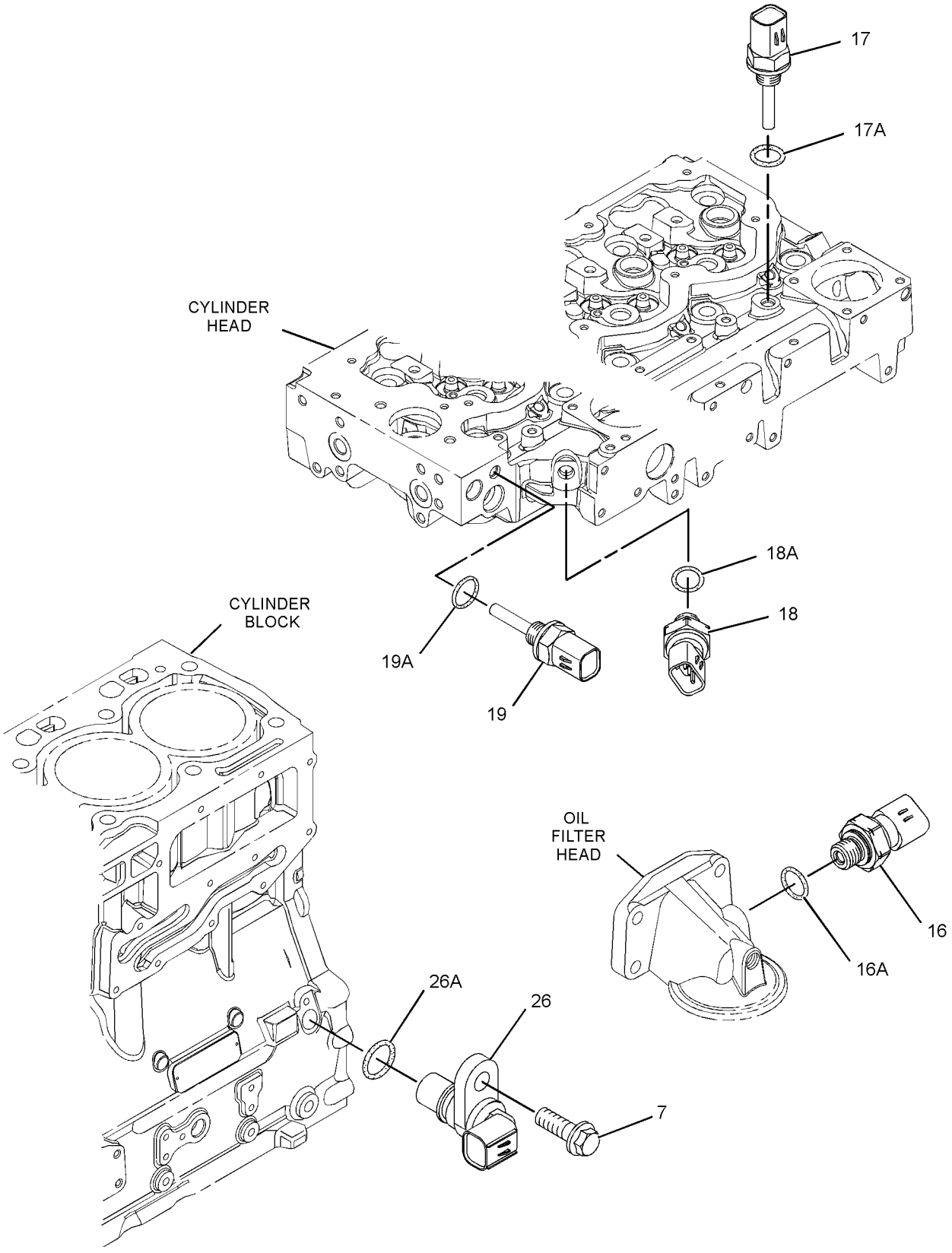

GRAPHIC #3 <END> g01446606

320-2398 PUMP GP-FUEL INJECTION

S/N: 4441360-UP

PART OF 435-1692 ENGINE AR-COMPLETE

SMCS-1251, 1290 **i03730923**

NOTE	REF NO	GRAPHIC REF	PART NUMBER	QTY	PART NAME 1 2 3 4 5 6 (PRODUCT LEVEL)	SEE PAGE
M	1	1	**6I-0260**	3	BOLT (M8X1.25X25-MM)	
M	2	1	**6I-0455**	3	BOLT (M8X1.25X55-MM)	
M	3	2	**6I-0572**	4	BOLT (M8X1.25X20-MM)	
	4	2	**7W-2632**	1	WASHER (8.5X16.8X1.6-MM THK)	
M	5	1	**100-4830**	1	BOLT (M10X1.5X20-MM)	
M	6	1	**101-3895**	4	BOLT (M8X1.25X35-MM)	
M	7	1,3	**124-3815**	4	BOLT (M8X1.25X16-MM)	
M	8	2	**141-8584**	4	BOLT (M8X1.25X50-MM)	
	9	2	**217-0099**	5	SPACER (8.2X25X2-MM THK)	
	10	1	**230-8989**	1	GEAR-FUEL PUMP (68-TEETH)	
	11	2	**268-6677**	1	BRACKET AS	
M	11A	2	**260-3939**	1	SCREW-HEX HEAD (M6X1X25-MM)	
	12	2	**268-6678**	1	BRACKET AS	
M	12A	2	**260-3939**	1	SCREW-HEX HEAD (M6X1X25-MM)	
	13	1	**278-5168**	4	CLAMP-INJECTOR	
	14	1	**278-5170**	4	BOLT	
	15	2	**278-5203**	4	SPACER	
	16	3	**278-5225**	1	KIT-SENSOR (ENGINE OIL PRESSURE)	
	16A	3	**199-9267**	1	SEAL-O-RING	
	17	3	**278-5272**	1	KIT-SENSOR (INTAKE AIR TEMPERATURE)	
	17A	3	**278-5226**	1	SEAL-O-RING	
	18	3	**278-5273**	1	KIT-SENSOR (AIR PRESSURE)	
	18A	3	**199-9252**	1	SEAL-O-RING	
	19	3	**278-5307**	1	KIT-SENSOR (COOLANT TEMPERATURE)	
	19A	3	**199-9267**	1	SEAL-O-RING	
YR	20	1	**324-0532**	1	PUMP GP-FUEL INJECTION	1523
	21	1	**298-4535**	1	BRACKET-SUPPORT	
	22	1	**337-3573**	1	BRACKET	
	23	1	**298-4542**	1	TUBE AS	
	24	1	**298-4543**	1	BOLT	
	25	2	**300-6714**	8	MOUNT	
	26	3	**311-3858**	1	KIT-SENSOR (ENGINE SPEED)	
	26A	3	**274-1639**	1	SEAL	
	27	1	**311-6342**	1	SENSOR AS-PRESSURE (FUEL RAIL)	
	27A	1	**309-8006**	1	WASHER	
	28	1	**318-2394**	1	RAIL AS-FUEL	
	28A	1	**305-5291**	1	VALVE AS-RELIEF	
	29	2	**317-3144**	1	BRACKET	
	30	1	**160-0162**	2	WASHER	
	31	1	**232-3149**	3	WASHER (8.35X16.85X1.55-MM THK)	
	32	1	**337-3574**	1	TUBE	
	33	1	**322-3745**	1	TUBE (CYL NO. 1)	
	34	1	**322-3746**	1	TUBE (CYL NO. 2)	
	35	1	**333-4732**	1	LINE-FUEL INJECTION (CYL NO. 3)	
	36	1	**333-4733**	1	LINE-FUEL INJECTION (CYL NO. 4)	
YR	37	1	**320-0680**	4	INJECTOR GP-FUEL	1027

320-2398 **PUMP GP-FUEL INJECTION** (contd.) **i03730923**

NOTE	REF NO	GRAPHIC REF	PART NUMBER	QTY	PART NAME 1 2 3 4 5 6 (PRODUCT LEVEL)	SEE PAGE
F			**278-4138**	5	KIT-FUEL LINE PROTECTION (LINE, LOW PRESSURE)	

F - NOT SHOWN
M - METRIC PART
R - REMANUFACTURED PART MAY BE AVAILABLE
Y - SEPARATE ILLUSTRATION

320-2398 **PUMP GP-FUEL INJECTION (**contd.**)** **i03730923**

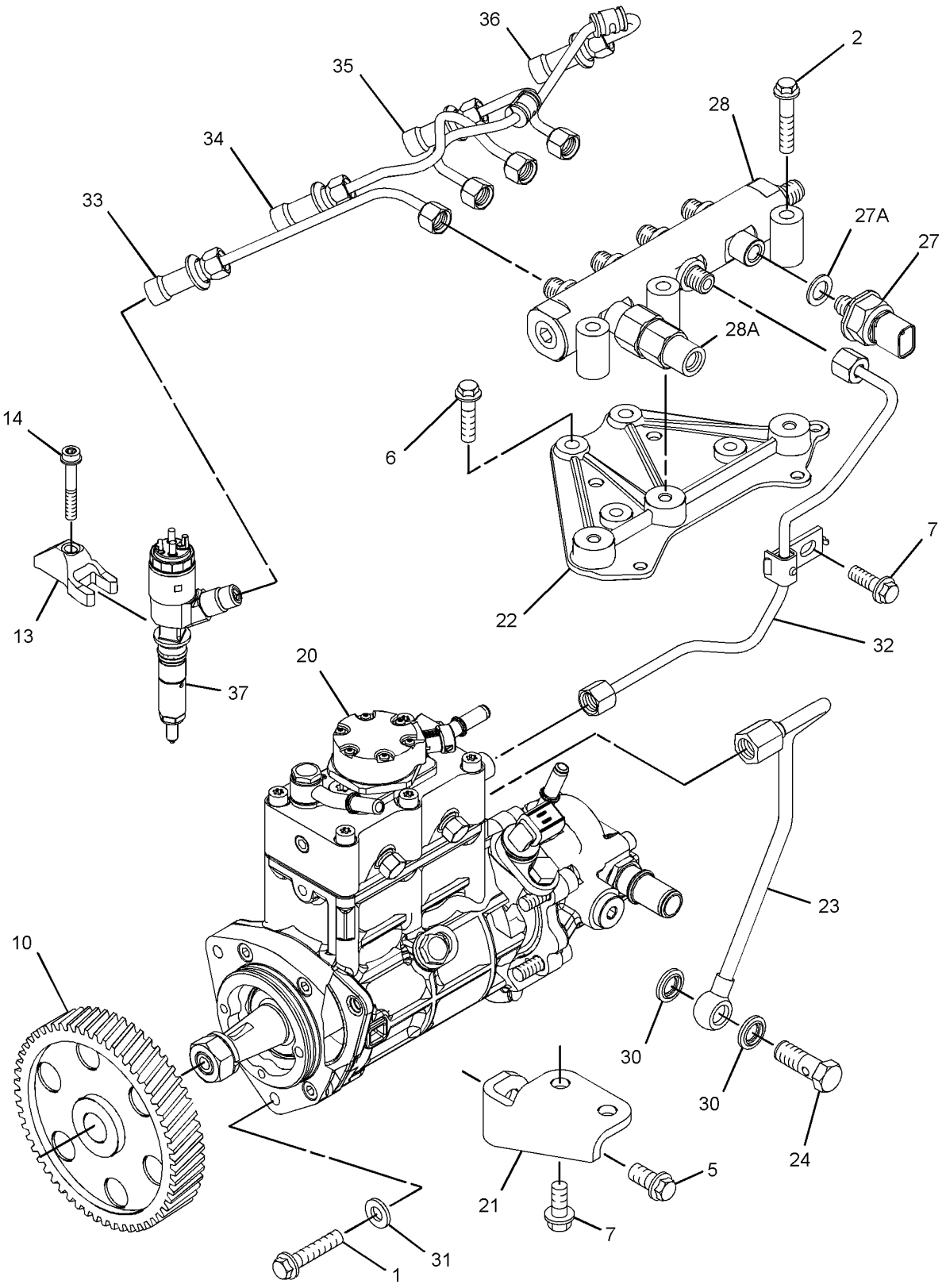

GRAPHIC #1 g01963134

320-2398 **PUMP GP-FUEL INJECTION (**contd.**)** **i03730923**

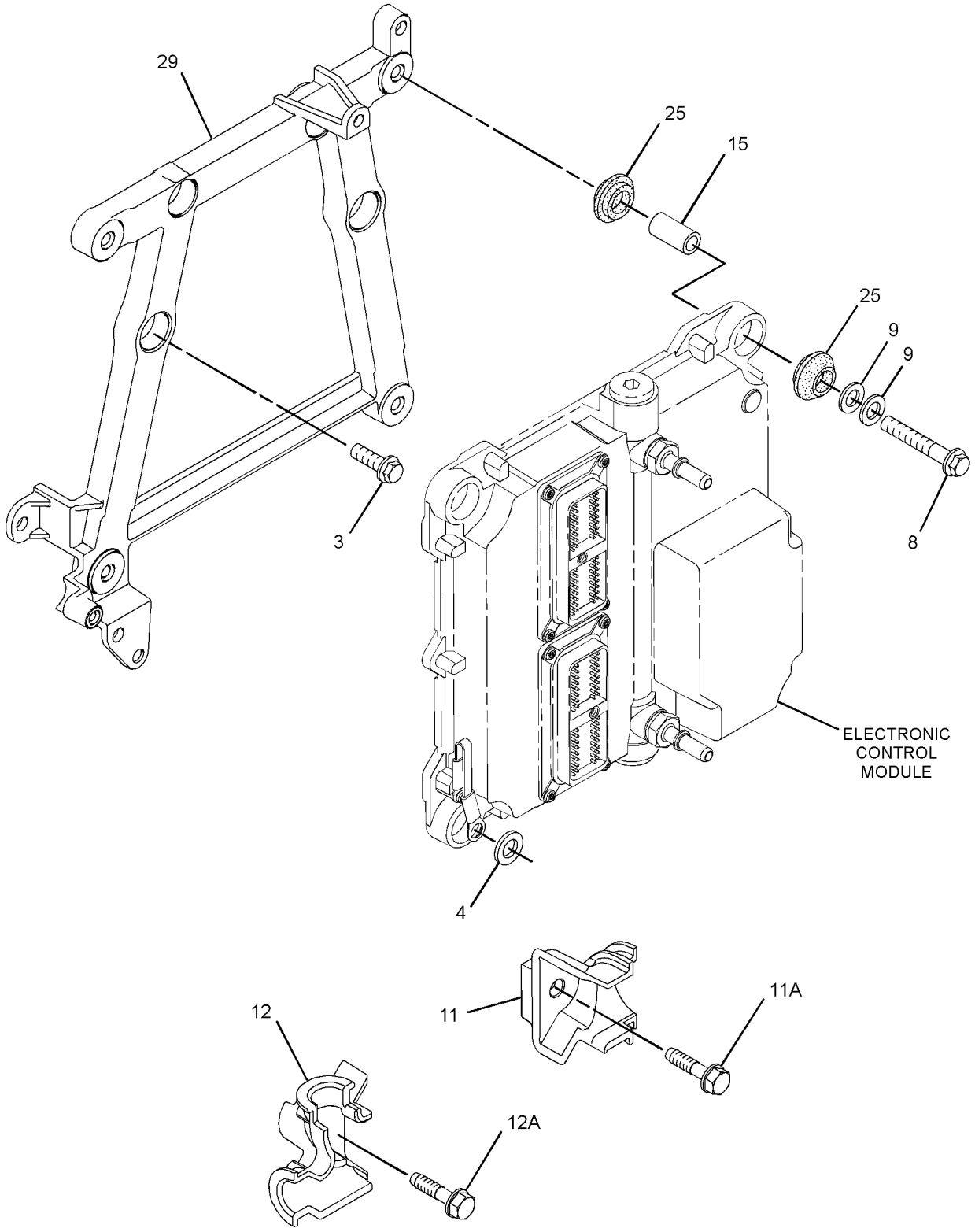

GRAPHIC #2 g01773230

320-2398 **PUMP GP-FUEL INJECTION (**contd.**)** **i03730923**

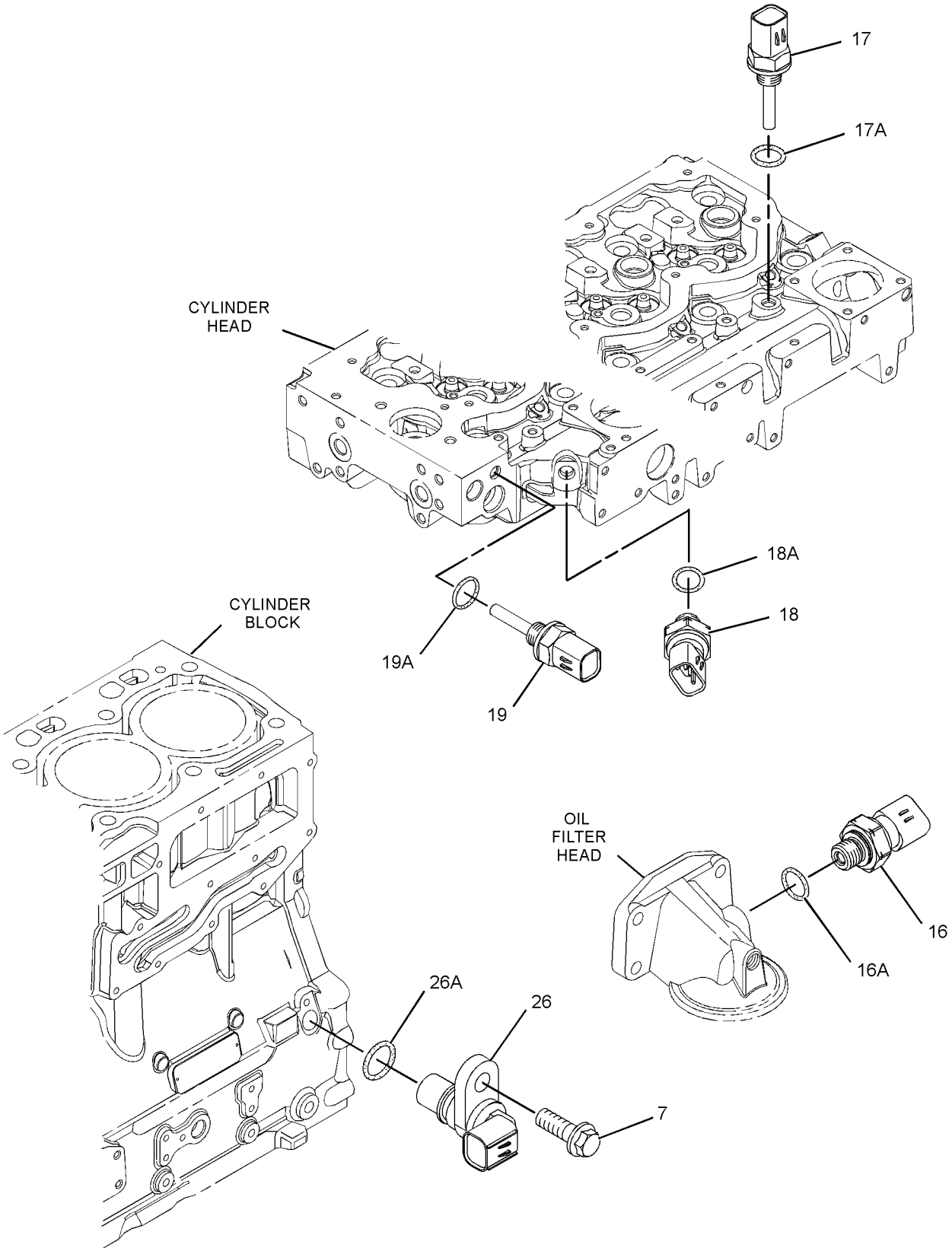

GRAPHIC #3 <END> g01446606

320-2398 PUMP GP-FUEL INJECTION

S/N: 4441360-UP

SMCS-1251, 1290 **i04020217**

NOTE	REF NO	GRAPHIC REF	PART NUMBER	QTY	PART NAME 1 2 3 4 5 6 (PRODUCT LEVEL)	SEE PAGE
M	1	1	**6I-0260**	3	BOLT (M8X1.25X25-MM)	
M	2	1	**6I-0455**	3	BOLT (M8X1.25X55-MM)	
M	3	2	**6I-0572**	4	BOLT (M8X1.25X20-MM)	
	4	2	**7W-2632**	1	WASHER (8.5X16.8X1.6-MM THK)	
M	5	1	**100-4830**	1	BOLT (M10X1.5X20-MM)	
M	6	1	**101-3895**	4	BOLT (M8X1.25X35-MM)	
M	7	1,3	**124-3815**	4	BOLT (M8X1.25X16-MM)	
M	8	2	**141-8584**	4	BOLT (M8X1.25X50-MM)	
	9	2	**217-0099**	5	SPACER (8.2X25X2-MM THK)	
	10	1	**230-8989**	1	GEAR-FUEL PUMP (68-TEETH)	
	11	2	**268-6677**	1	BRACKET AS	
M	11A	2	**260-3939**	1	SCREW-HEX HEAD (M6X1X25-MM)	
	12	2	**268-6678**	1	BRACKET AS	
M	12A	2	**260-3939**	1	SCREW-HEX HEAD (M6X1X25-MM)	
	13	1	**278-5168**	4	CLAMP-INJECTOR	
	14	1	**278-5170**	4	BOLT	
	15	2	**278-5203**	4	SPACER	
	16	3	**278-5225**	1	KIT-SENSOR (ENGINE OIL PRESSURE)	
	16A	3	**199-9267**	1	SEAL-O-RING	
	17	3	**278-5272**	1	KIT-SENSOR (INTAKE AIR TEMPERATURE)	
	17A	3	**278-5226**	1	SEAL-O-RING	
	18	3	**278-5273**	1	KIT-SENSOR (AIR PRESSURE)	
	18A	3	**199-9252**	1	SEAL-O-RING	
	19	3	**278-5307**	1	KIT-SENSOR (COOLANT TEMPERATURE)	
	19A	3	**199-9267**	1	SEAL-O-RING	
CYR	20	1	**352-6584**	1	PUMP GP-FUEL INJECTION	1540
	21	1	**298-4535**	1	BRACKET-SUPPORT	
	22	1	**337-3573**	1	BRACKET	
	23	1	**298-4542**	1	TUBE AS	
	24	1	**298-4543**	1	BOLT	
	25	2	**300-6714**	8	MOUNT	
	26	3	**311-3858**	1	KIT-SENSOR (ENGINE SPEED)	
	26A	3	**274-1639**	1	SEAL	
		3	**238-0120**	1	SENSOR GP-SPEED	
	27	1	**311-6342**	1	SENSOR AS-PRESSURE (FUEL RAIL)	
	27A	1	**309-8006**	1	WASHER	
	28	1	**318-2394**	1	RAIL AS-FUEL	
	28A	1	**305-5291**	1	VALVE AS-RELIEF	
	29	2	**317-3144**	1	BRACKET	
	30	1	**160-0162**	2	WASHER	
	31	1	**232-3149**	3	WASHER (8.35X16.85X1.55-MM THK)	
	32	1	**337-3574**	1	TUBE	
	33	1	**322-3745**	1	TUBE (CYL NO. 1)	
	34	1	**322-3746**	1	TUBE (CYL NO. 2)	
	35	1	**333-4732**	1	LINE-FUEL INJECTION (CYL NO. 3)	
	36	1	**333-4733**	1	LINE-FUEL INJECTION (CYL NO. 4)	
YR	37	1	**320-0680**	4	INJECTOR GP-FUEL	1027

320-2398 **PUMP GP-FUEL INJECTION (**contd.**)** **i04020217**

NOTE	REF NO	GRAPHIC REF	PART NUMBER	QTY	PART NAME 1 2 3 4 5 6 (PRODUCT LEVEL)	SEE PAGE
F			**278-4138**	5	KIT-FUEL LINE PROTECTION (LINE, LOW PRESSURE)	

C - CHANGE FROM PREVIOUS TYPE
F - NOT SHOWN
M - METRIC PART
R - REMANUFACTURED PART MAY BE AVAILABLE
Y - SEPARATE ILLUSTRATION

320-2398 **PUMP GP-FUEL INJECTION (**contd.**)** **i04020217**

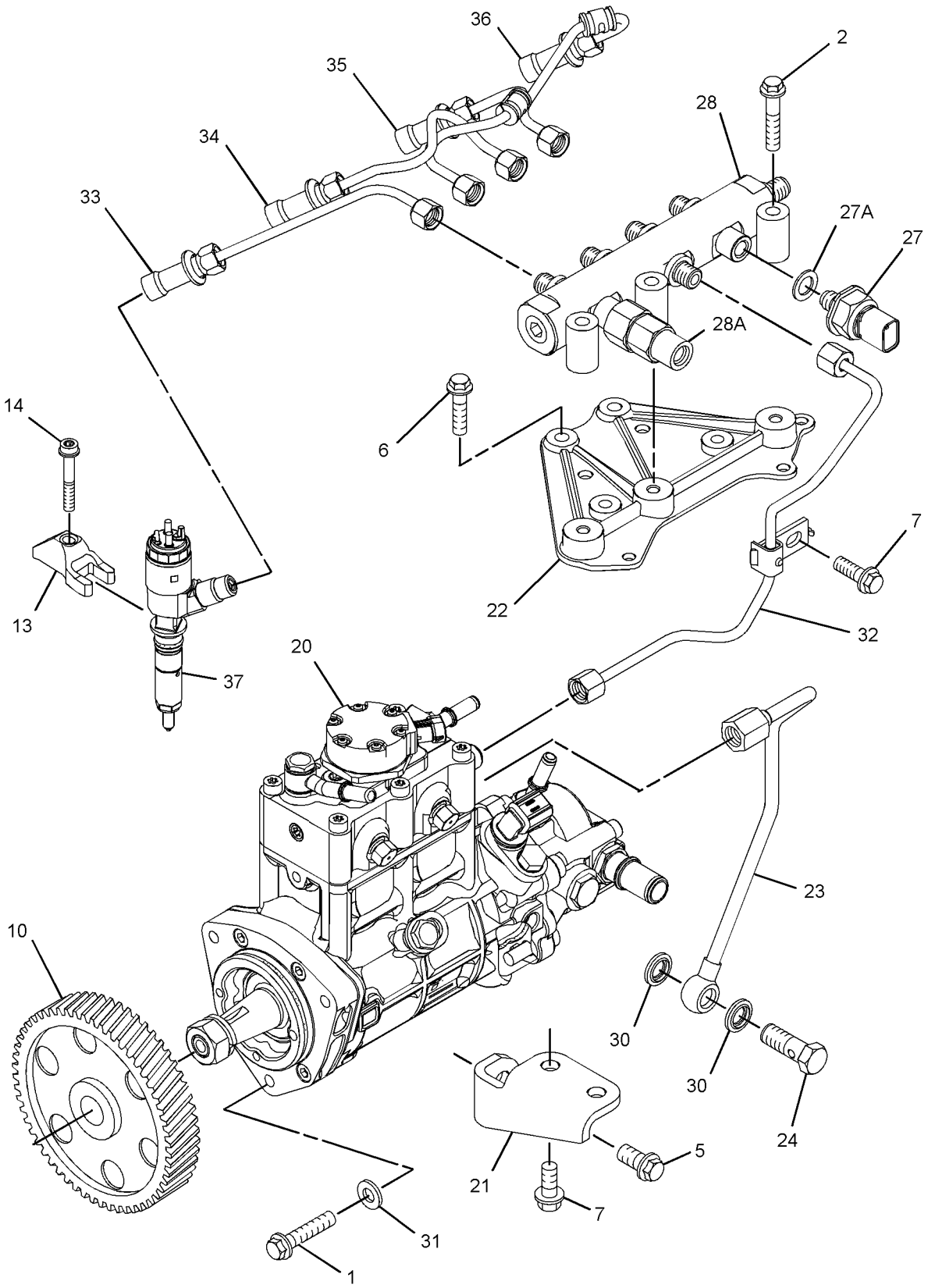

GRAPHIC #1 g02248875

320-2398 **PUMP GP-FUEL INJECTION (**contd.**)** **i04020217**

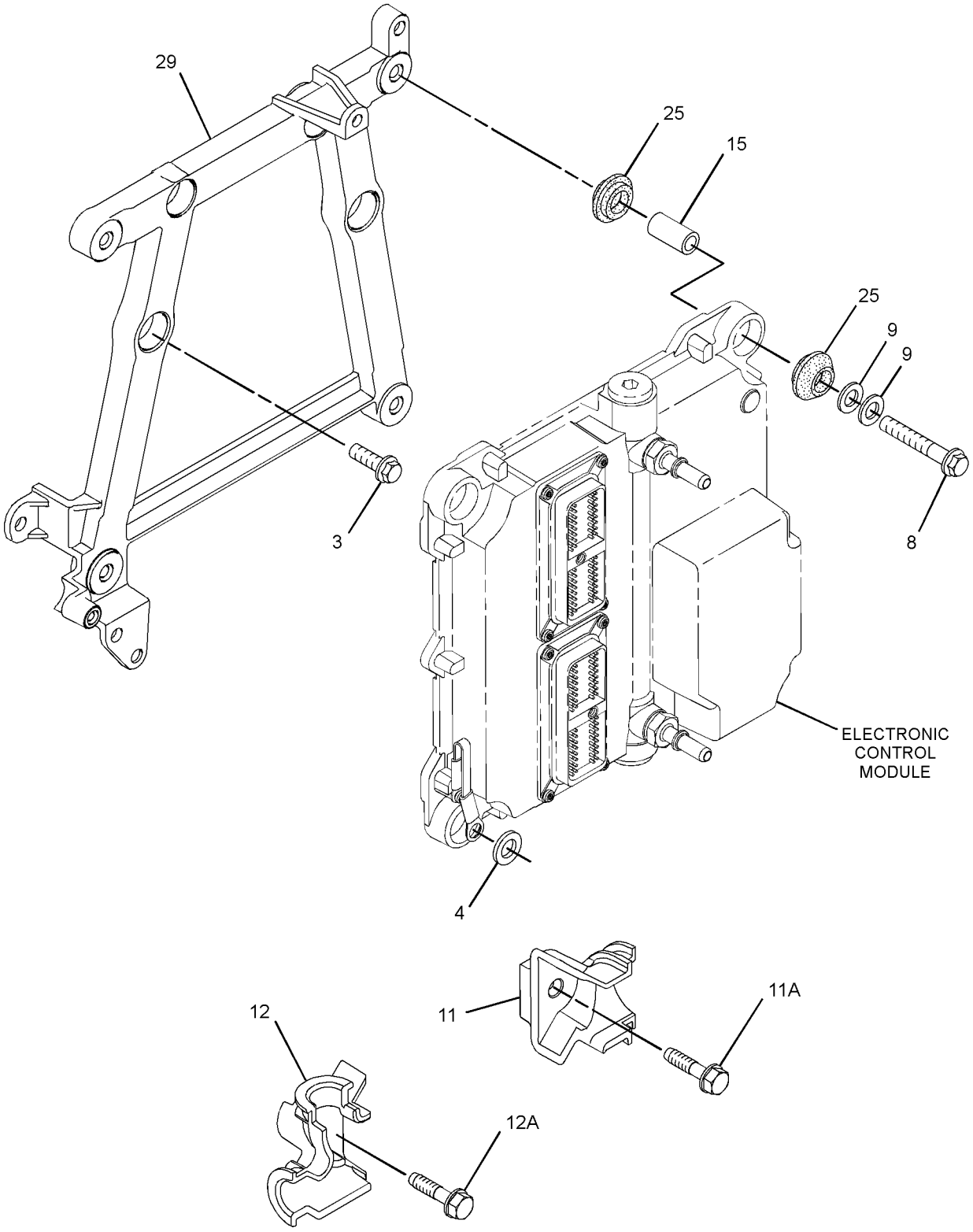

GRAPHIC #2 g01773230

320-2398 **PUMP GP-FUEL INJECTION (**contd.**)** **i04020217**

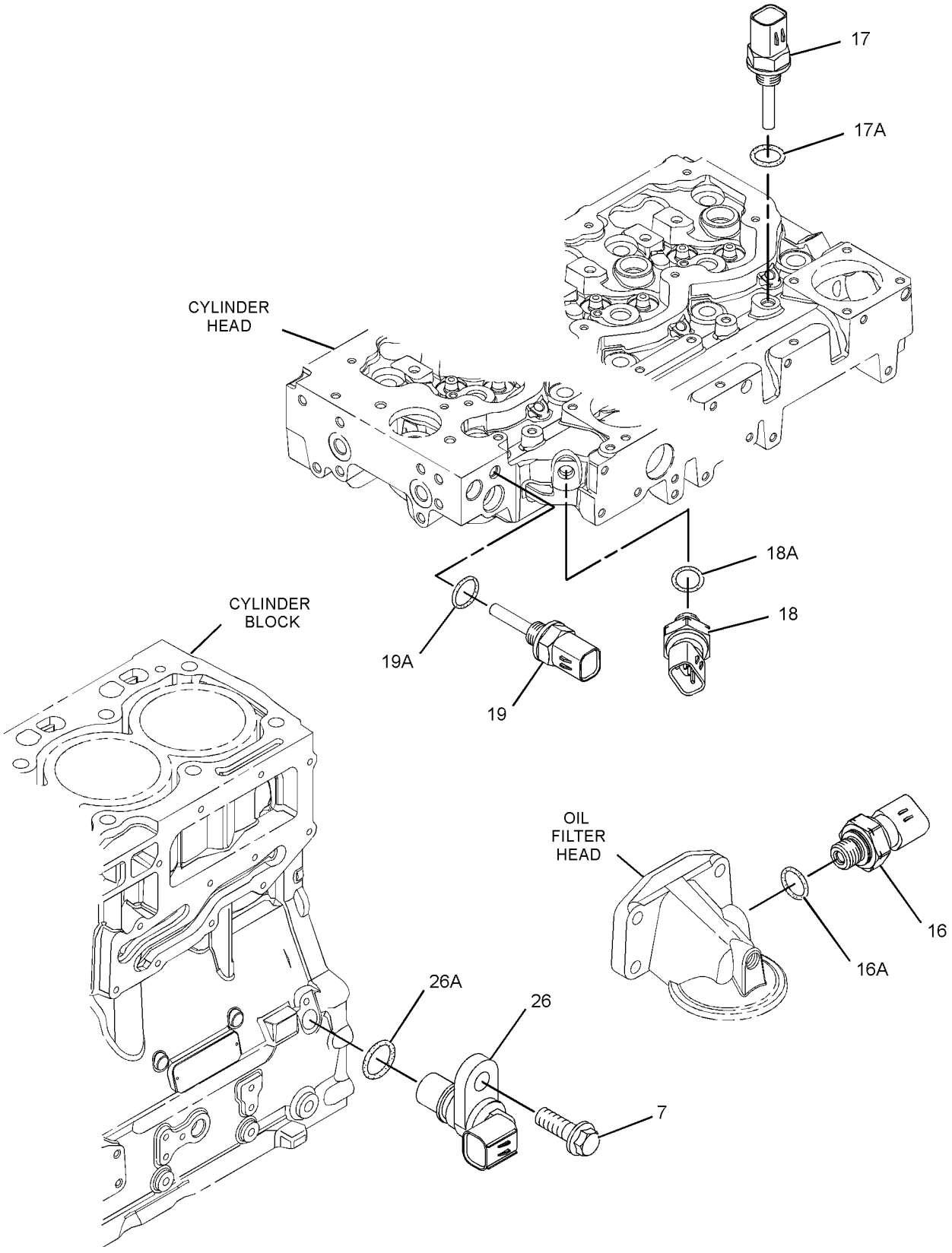

GRAPHIC #3 <END> g01446606

320-2398 PUMP GP-FUEL INJECTION

PART OF 435-1692 ENGINE AR-COMPLETE, 540-0570 ENGINE AR-PRIMARY

SMCS-1251, 1290 **i04705990**

NOTE	REF NO	GRAPHIC REF	PART NUMBER	QTY	PART NAME 1 2 3 4 5 6 (PRODUCT LEVEL)	SEE PAGE
M	1	1	**6I-0260**	3	BOLT (M8X1.25X25-MM)	
M	2	1	**6I-0455**	3	BOLT (M8X1.25X55-MM)	
M	3	2	**6I-0572**	4	BOLT (M8X1.25X20-MM)	
	4	2	**7W-2632**	1	WASHER (8.5X16.8X1.6-MM THK)	
M	5	1	**100-4830**	1	BOLT (M10X1.5X20-MM)	
M	6	1	**101-3895**	4	BOLT (M8X1.25X35-MM)	
M	7	1,3	**124-3815**	4	BOLT (M8X1.25X16-MM)	
M	8	2	**141-8584**	4	BOLT (M8X1.25X50-MM)	
	9	2	**217-0099**	5	SPACER (8.2X25X2-MM THK)	
	10	1	**230-8989**	1	GEAR-FUEL PUMP (68-TEETH)	
	11	2	**268-6677**	1	BRACKET AS	
M	11A	2	**260-3939**	1	SCREW-HEX HEAD (M6X1X25-MM)	
	12	2	**268-6678**	1	BRACKET AS	
M	12A	2	**260-3939**	1	SCREW-HEX HEAD (M6X1X25-MM)	
	13	1	**278-5168**	4	CLAMP-INJECTOR	
	14	1	**278-5170**	4	BOLT	
	15	2	**278-5203**	4	SPACER	
	16	3	**278-5225**	1	KIT-SENSOR (ENGINE OIL PRESSURE)	
	16A	3	**199-9267**	1	SEAL-O-RING	
	17	3	**278-5272**	1	KIT-SENSOR (INTAKE AIR TEMPERATURE)	
	17A	3	**278-5226**	1	SEAL-O-RING	
	18	3	**278-5273**	1	KIT-SENSOR (AIR PRESSURE)	
	18A	3	**199-9252**	1	SEAL-O-RING	
	19	3	**278-5307**	1	KIT-SENSOR (COOLANT TEMPERATURE)	
	19A	3	**199-9267**	1	SEAL-O-RING	
CYR	20	1	**324-0532**	1	PUMP GP-FUEL INJECTION	1523
	21	1	**298-4535**	1	BRACKET-SUPPORT	
	22	1	**337-3573**	1	BRACKET	
	23	1	**298-4542**	1	TUBE AS	
	24	1	**298-4543**	1	BOLT	
	25	2	**300-6714**	8	MOUNT	
	26	3	**311-3858**	1	KIT-SENSOR (ENGINE SPEED)	
	26A	3	**274-1639**	1	SEAL	
		3	**238-0120**	1	SENSOR GP-SPEED	
	27	1	**311-6342**	1	SENSOR AS-PRESSURE (FUEL RAIL)	
	27A	1	**309-8006**	1	WASHER	
	28	1	**358-6632**	1	RAIL GP-FUEL	
	28A	1	**305-5291**	1	VALVE AS-RELIEF	
	29	2	**317-3144**	1	BRACKET	
	30	1	**160-0162**	2	WASHER	
	31	1	**232-3149**	3	WASHER (8.35X16.85X1.55-MM THK)	
	32	1	**337-3574**	1	TUBE	
	33	1	**322-3745**	1	TUBE (CYL NO. 1)	
	34	1	**322-3746**	1	TUBE (CYL NO. 2)	
	35	1	**333-4732**	1	LINE-FUEL INJECTION (CYL NO. 3)	
	36	1	**333-4733**	1	LINE-FUEL INJECTION (CYL NO. 4)	
YR	37	1	**320-0680**	4	INJECTOR GP-FUEL	1027

320-2398 **PUMP GP-FUEL INJECTION** (contd.) **i04705990**

NOTE	REF NO	GRAPHIC REF	PART NUMBER	QTY	PART NAME 1 2 3 4 5 6 (PRODUCT LEVEL)	SEE PAGE
F			**278-4138**	5	KIT-FUEL LINE PROTECTION (LINE, LOW PRESSURE)	

C - CHANGE FROM PREVIOUS TYPE
F - NOT SHOWN
M - METRIC PART
R - REMANUFACTURED PART MAY BE AVAILABLE
Y - SEPARATE ILLUSTRATION

320-2398 **PUMP GP-FUEL INJECTION (**contd.**)** **i04705990**

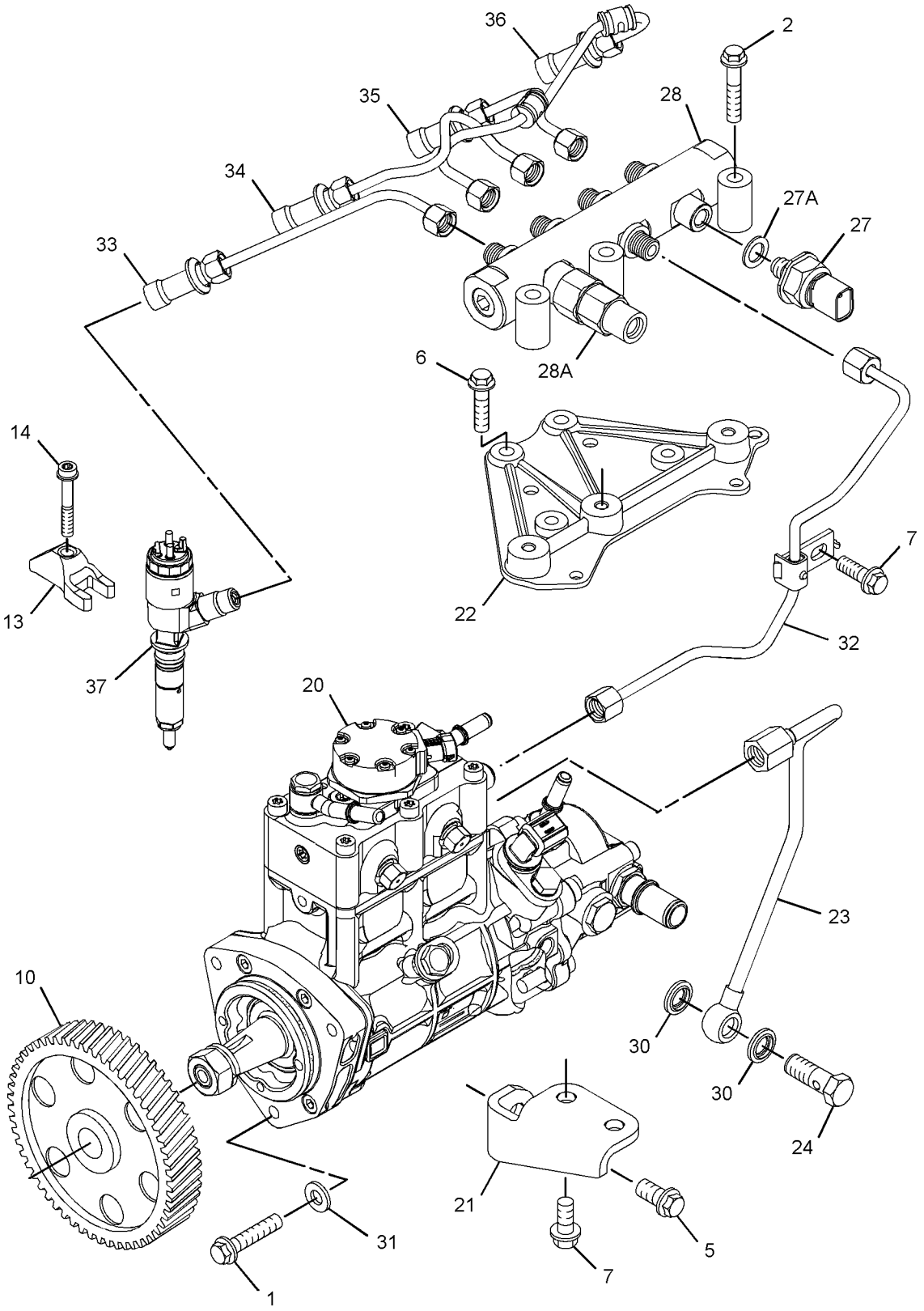

GRAPHIC #1 g02857557

320-2398 **PUMP GP-FUEL INJECTION (**contd.**)** **i04705990**

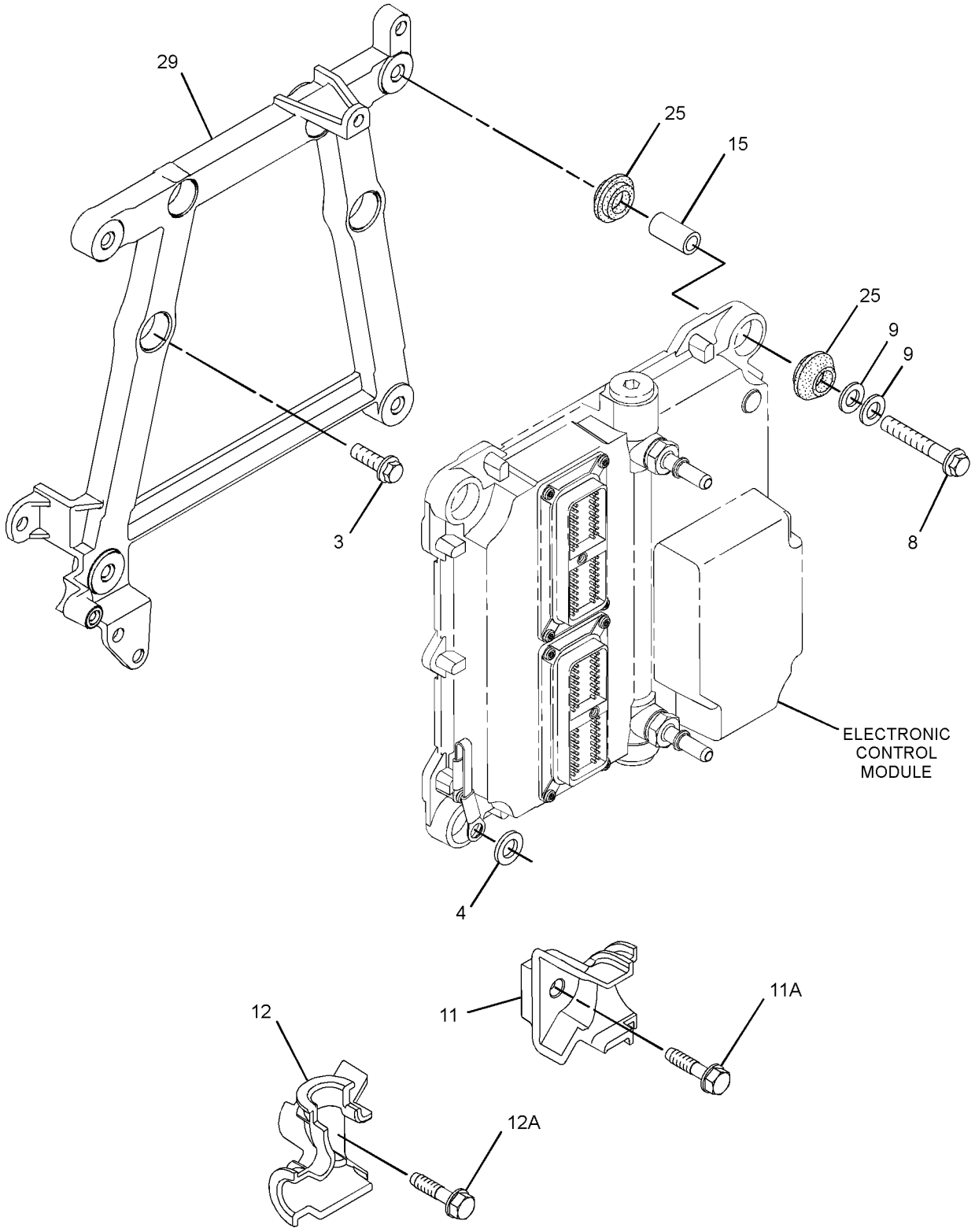

GRAPHIC #2 g01773230

320-2398 **PUMP GP-FUEL INJECTION (**contd.**)** **i04705990**

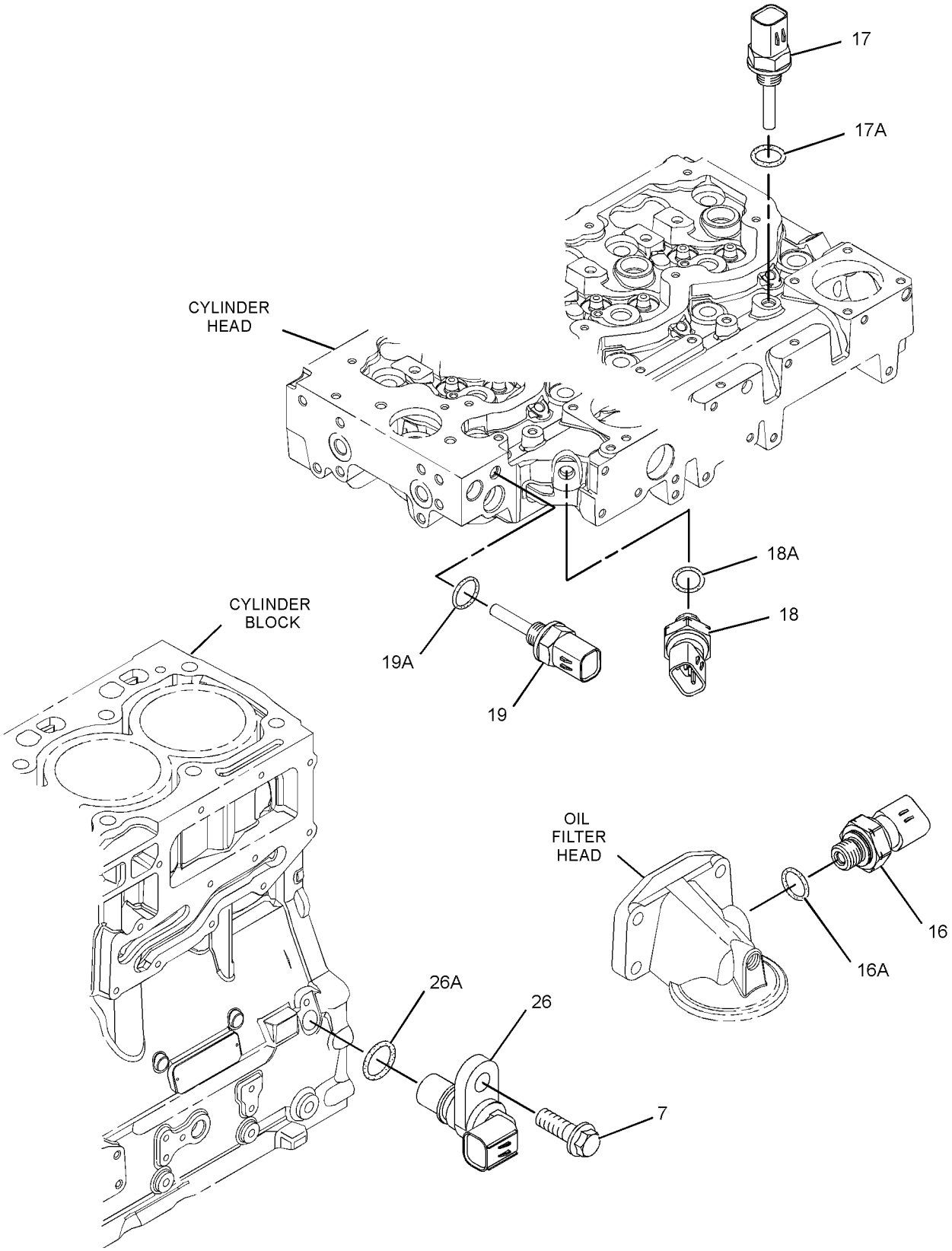

GRAPHIC #3 <END> g01446606

322-3753 PUMP GP-FUEL INJECTION

S/N: 4441-4115

PART OF 435-1687 ENGINE AR-PRIMARY

SMCS-1251, 1290 **i03315202**

NOTE	REF NO	GRAPHIC REF	PART NUMBER	QTY	PART NAME 1 2 3 4 5 6 (PRODUCT LEVEL)	SEE PAGE
M	1	1	**6I-0260**	3	BOLT (M8X1.25X25-MM)	
M	2	1	**6I-0455**	3	BOLT (M8X1.25X55-MM)	
M	3	2	**6I-0572**	4	BOLT (M8X1.25X20-MM)	
	4	2	**7W-2632**	1	WASHER (8.5X16.8X1.6-MM THK)	
M	5	1	**100-4830**	1	BOLT (M10X1.5X20-MM)	
M	6	1	**101-3895**	4	BOLT (M8X1.25X35-MM)	
M	7	1,3	**124-3815**	4	BOLT (M8X1.25X16-MM)	
M	8	2	**141-8584**	4	BOLT (M8X1.25X50-MM)	
	9	2	**217-0099**	4	SPACER (8.2X25X2-MM THK)	
	10	1	**230-8989**	1	GEAR-FUEL PUMP (68-TEETH)	
	11	2	**268-6677**	1	BRACKET AS	
M	11A	2	**260-3939**	1	SCREW-HEX HEAD (M6X1X25-MM)	
	12	2	**268-6678**	1	BRACKET AS	
M	12A	2	**260-3939**	1	SCREW-HEX HEAD (M6X1X25-MM)	
	13	1	**278-5168**	4	CLAMP-INJECTOR	
	14	1	**278-5170**	4	BOLT	
	15	2	**278-5203**	4	SPACER	
	16	3	**278-5225**	1	KIT-SENSOR (ENGINE OIL PRESSURE)	
	16A	3	**199-9267**	1	SEAL-O-RING	
	17	3	**278-5272**	2	KIT-SENSOR (INTAKE AIR TEMPERATURE)	
	17A	3	**278-5226**	1	SEAL-O-RING	
	18	3	**278-5273**	1	KIT-SENSOR (AIR PRESSURE)	
	18A	3	**199-9252**	1	SEAL-O-RING	
YR	19	1	**295-9125**	1	PUMP & MTG GP-UNIT INJ HYD	1062
	20	1	**298-4536**	1	BRACKET-MOUNTING	
	21	1	**298-4542**	1	TUBE AS	
	22	1	**298-4543**	1	BOLT	
	23	2	**308-3394**	8	BRACKET-MOUNTING	
	24	3	**311-3858**	1	KIT-SENSOR (ENGINE SPEED)	
	24A	3	**274-1639**	1	SEAL	
	25	1	**311-6342**	1	SENSOR AS-PRESSURE (FUEL)	
	25A	1	**309-8006**	1	WASHER	
	26	1	**311-6631**	1	RAIL AS-FUEL	
	27	1	**316-1189**	1	BRACKET AS	
	27A	1	**232-1115**		CLIP-PIPE	
	28	2	**317-3144**	1	BRACKET	
	29	1	**160-0162**	2	WASHER	
	30	1	**322-3744**	1	TUBE	
	31	1	**322-3745**	1	TUBE (CYL NO. 1) (CYL NO. 1)	
	32	1	**322-3746**	1	TUBE (CYL NO. 2) (CYL NO. 2)	
	33	1	**322-3747**	1	TUBE (CYL NO. 3) (CYL NO. 3)	
	34	1	**322-3748**	1	TUBE (CYL NO. 4) (CYL NO. 4)	
	35	1	**232-3149**	3	WASHER (8.35X16.85X1.55-MM THK)	
YR	36	1	**320-0680**	4	INJECTOR GP-FUEL	1027
F			**278-4138**	4	KIT-FUEL LINE PROTECTION	

322-3753 **PUMP GP-FUEL INJECTION (**contd.**)** **i03315202**

NOTE	REF NO	GRAPHIC REF	PART NUMBER	QTY	PART NAME 1 2 3 4 5 6 (PRODUCT LEVEL)	SEE PAGE

F - NOT SHOWN
M - METRIC PART
R - REMANUFACTURED PART MAY BE AVAILABLE
Y - SEPARATE ILLUSTRATION

322-3753 **PUMP GP-FUEL INJECTION (**contd.**)** **i03315202**

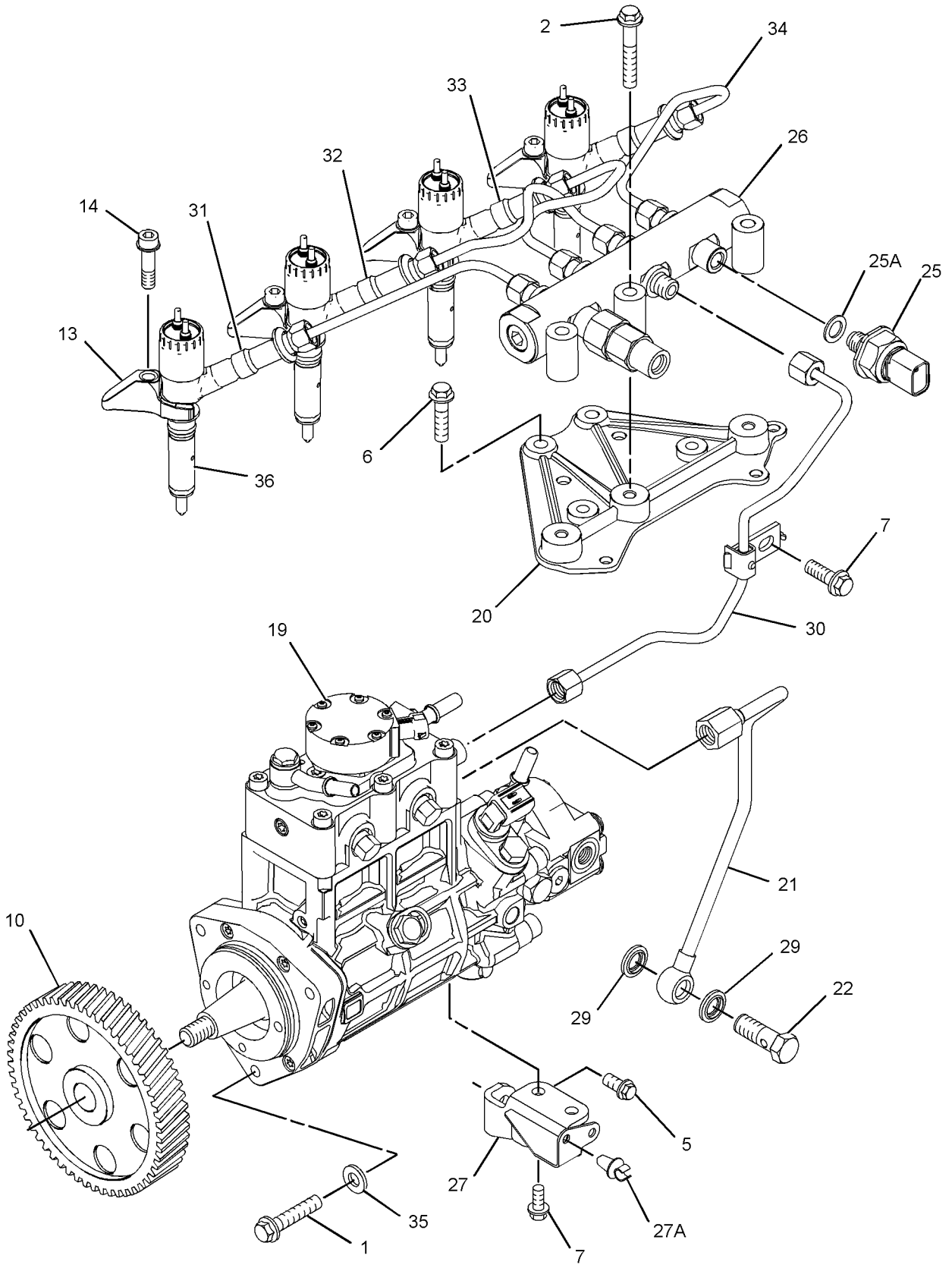

GRAPHIC #1 g01437074

322-3753 **PUMP GP-FUEL INJECTION (**contd.**)** **i03315202**

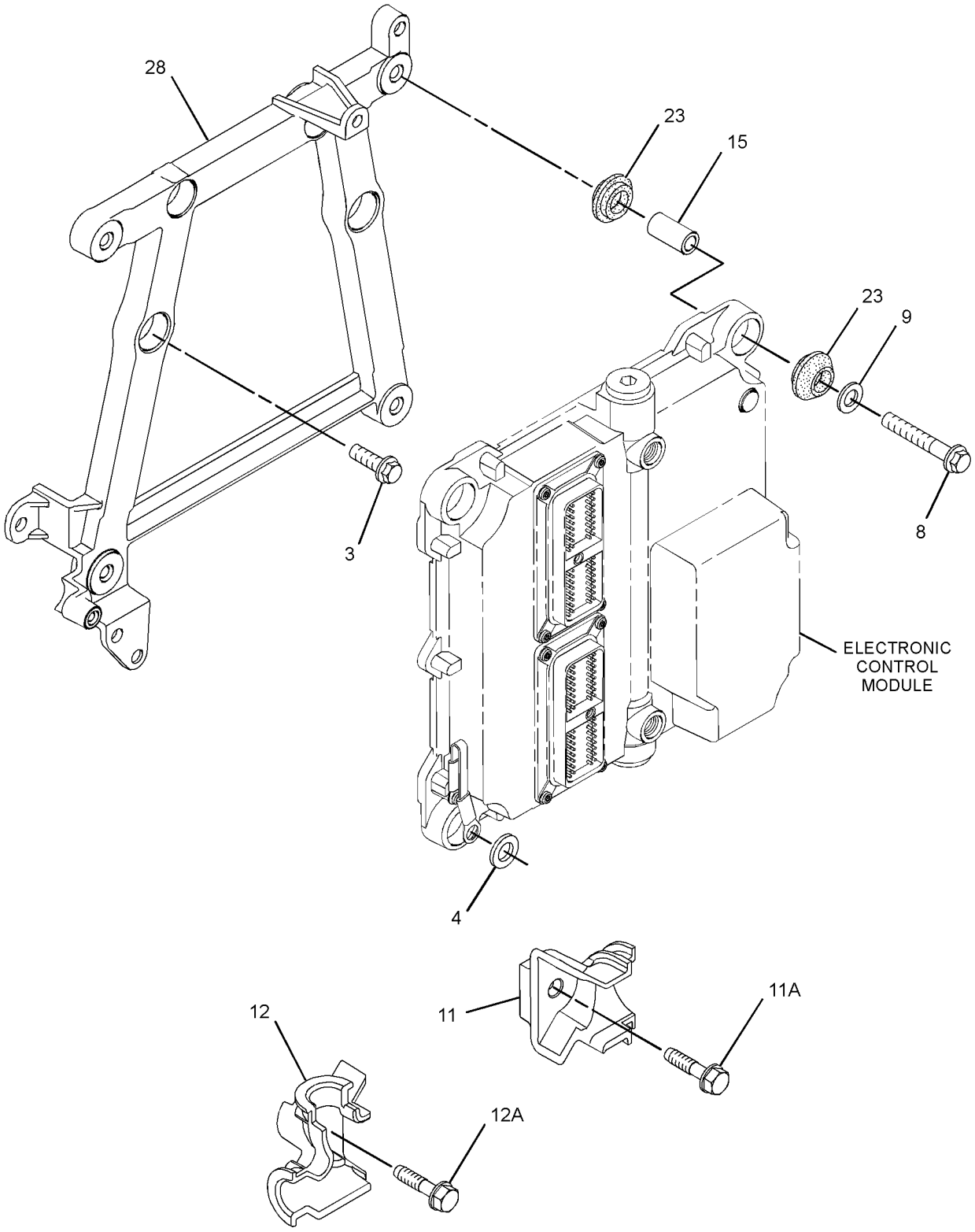

GRAPHIC #2 g01437075

322-3753 **PUMP GP-FUEL INJECTION (**contd.**)** **i03315202**

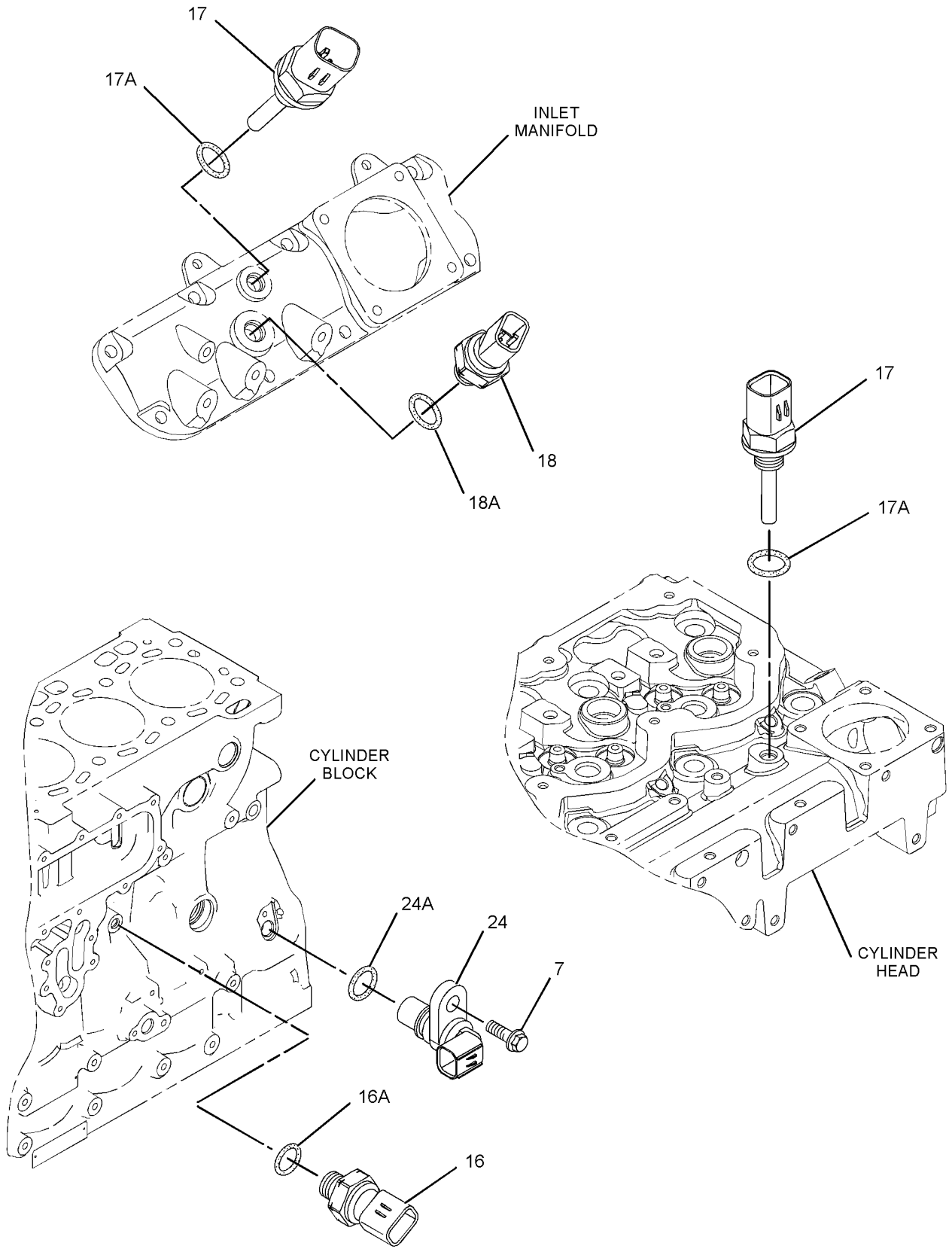

GRAPHIC #3 <END> g01437076

322-3753 PUMP GP-FUEL INJECTION

PART OF 435-1687, 540-1156 ENGINE AR-PRIMARY

SMCS-1251, 1290 **i05881481**

NOTE	REF NO	GRAPHIC REF	PART NUMBER	QTY	PART NAME 1 2 3 4 5 6 (PRODUCT LEVEL)	SEE PAGE
M	1	1	**6I-0260**	3	BOLT (M8X1.25X25-MM)	
M	2	1	**6I-0455**	3	BOLT (M8X1.25X55-MM)	
M	3	2	**6I-0572**	4	BOLT (M8X1.25X20-MM)	
	4	2	**7W-2632**	1	WASHER (8.5X16.8X1.6-MM THK)	
M	5	1	**100-4830**	1	BOLT (M10X1.5X20-MM)	
M	6	1	**101-3895**	4	BOLT (M8X1.25X35-MM)	
M	7	1,3	**124-3815**	4	BOLT (M8X1.25X16-MM)	
M	8	2	**141-8584**	4	BOLT (M8X1.25X50-MM)	
	9	2	**217-0099**	5	SPACER (8.2X25X2-MM THK)	
	10	1	**230-8989**	1	GEAR-FUEL PUMP (68-TEETH)	
	11	2	**268-6677**	1	BRACKET AS	
M	11A	2	**260-3939**	1	SCREW-HEX HEAD (M6X1X25-MM)	
	12	2	**268-6678**	1	BRACKET AS	
M	12A	2	**260-3939**	1	SCREW-HEX HEAD (M6X1X25-MM)	
	13	1	**278-5168**	4	CLAMP-INJECTOR	
	14	1	**278-5170**	4	BOLT	
	15	2	**278-5203**	4	SPACER	
	16	3	**278-5225**	1	KIT-SENSOR (ENGINE OIL PRESSURE)	
	16A	3	**199-9267**	1	SEAL-O-RING	
	17	3	**278-5272**	2	KIT-SENSOR (INTAKE AIR TEMPERATURE)	
	17A	3	**278-5226**	1	SEAL-O-RING	
	18	3	**278-5273**	1	KIT-SENSOR (AIR PRESSURE)	
	18A	3	**199-9252**	1	SEAL-O-RING	
CYR	19	1	**324-0532**	1	PUMP GP-FUEL INJECTION	1523
	20	1	**337-3573**	1	BRACKET	
	21	1	**298-4542**	1	TUBE AS	
	22	1	**363-3908**	1	BOLT-SPECIAL	
	23	2	**300-6714**	8	MOUNT	
	24	3	**311-3858**	1	KIT-SENSOR (ENGINE SPEED)	
	24A	3	**274-1639**	1	SEAL	
		3	**238-0120**	1	SENSOR GP-SPEED	
	25	1	**311-6342**	1	SENSOR AS-PRESSURE (FUEL)	
	25A	1	**309-8006**	1	WASHER	
	26	1	**358-6632**	1	RAIL GP-FUEL	
	26A	1	**305-5291**	1	VALVE AS-RELIEF	
	27	1	**316-1189**	1	BRACKET AS	
	27A	1	**232-1115**	1	CLIP-PIPE	
	28	2	**317-3144**	1	BRACKET	
	29	1	**346-0007**	2	WASHER	
	30	1	**337-3574**	1	TUBE	
	31	1	**322-3745**	1	TUBE (CYL NO. 1)	
	32	1	**322-3746**	1	TUBE (CYL NO. 2)	
	33	1	**333-4732**	1	LINE-FUEL INJECTION (CYL NO. 3)	
	34	1	**333-4733**	1	LINE-FUEL INJECTION (CYL NO. 4)	
	35	1	**232-3149**	3	WASHER (8.35X16.85X1.55-MM THK)	
YR	36	1	**320-0680**	4	INJECTOR GP-FUEL	1027
F			**278-4138**	4	KIT-FUEL LINE PROTECTION	

322-3753 **PUMP GP-FUEL INJECTION** (contd.) **i05881481**

NOTE	REF NO	GRAPHIC REF	PART NUMBER	QTY	PART NAME 1 2 3 4 5 6 (PRODUCT LEVEL)	SEE PAGE

C - CHANGE FROM PREVIOUS TYPE
F - NOT SHOWN
M - METRIC PART
R - REMANUFACTURED PART MAY BE AVAILABLE
Y - SEPARATE ILLUSTRATION

322-3753 **PUMP GP-FUEL INJECTION (**contd.**)** **i05881481**

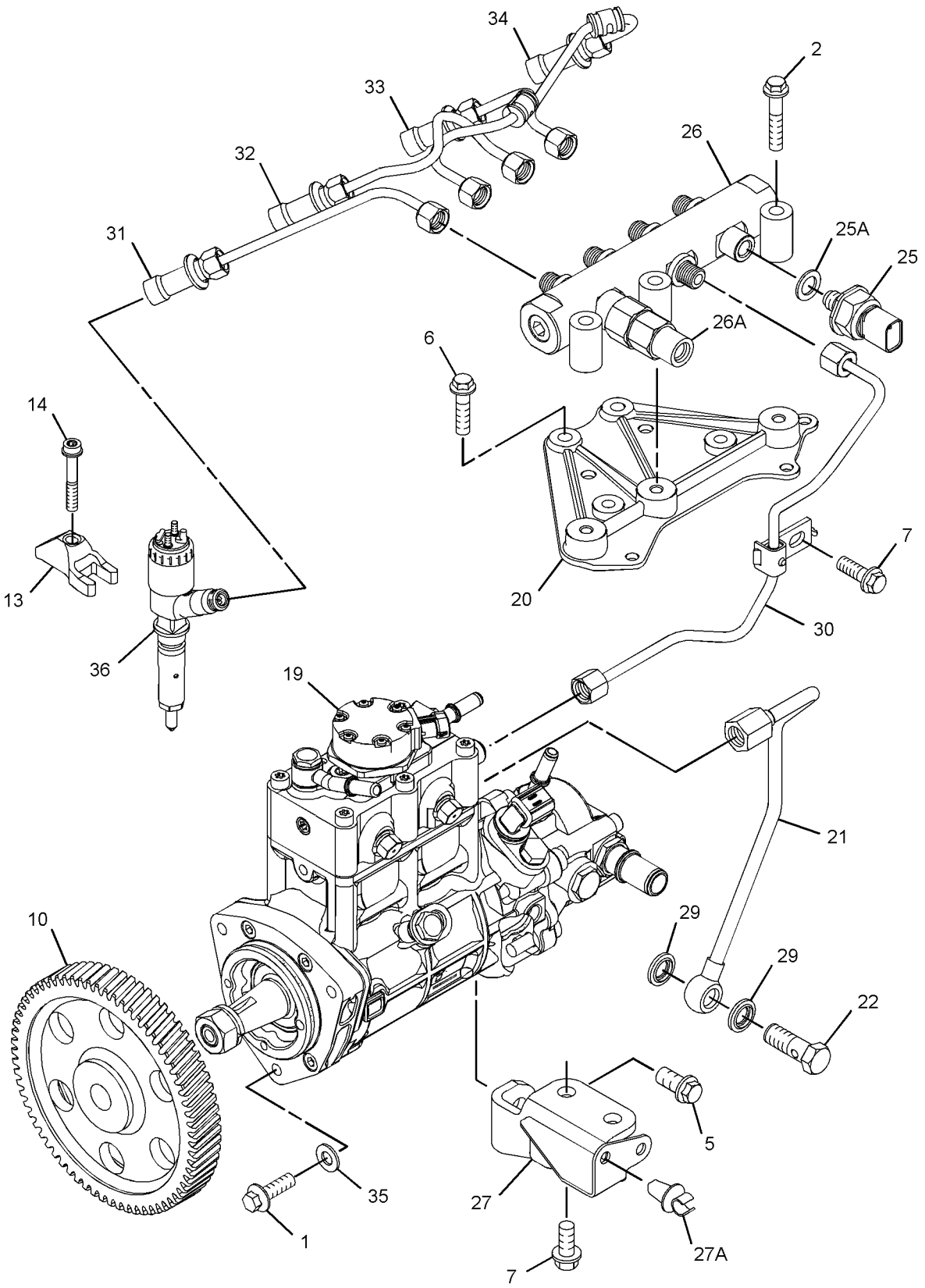

GRAPHIC #1 g02857576

322-3753 **PUMP GP-FUEL INJECTION (**contd.**)** **i05881481**

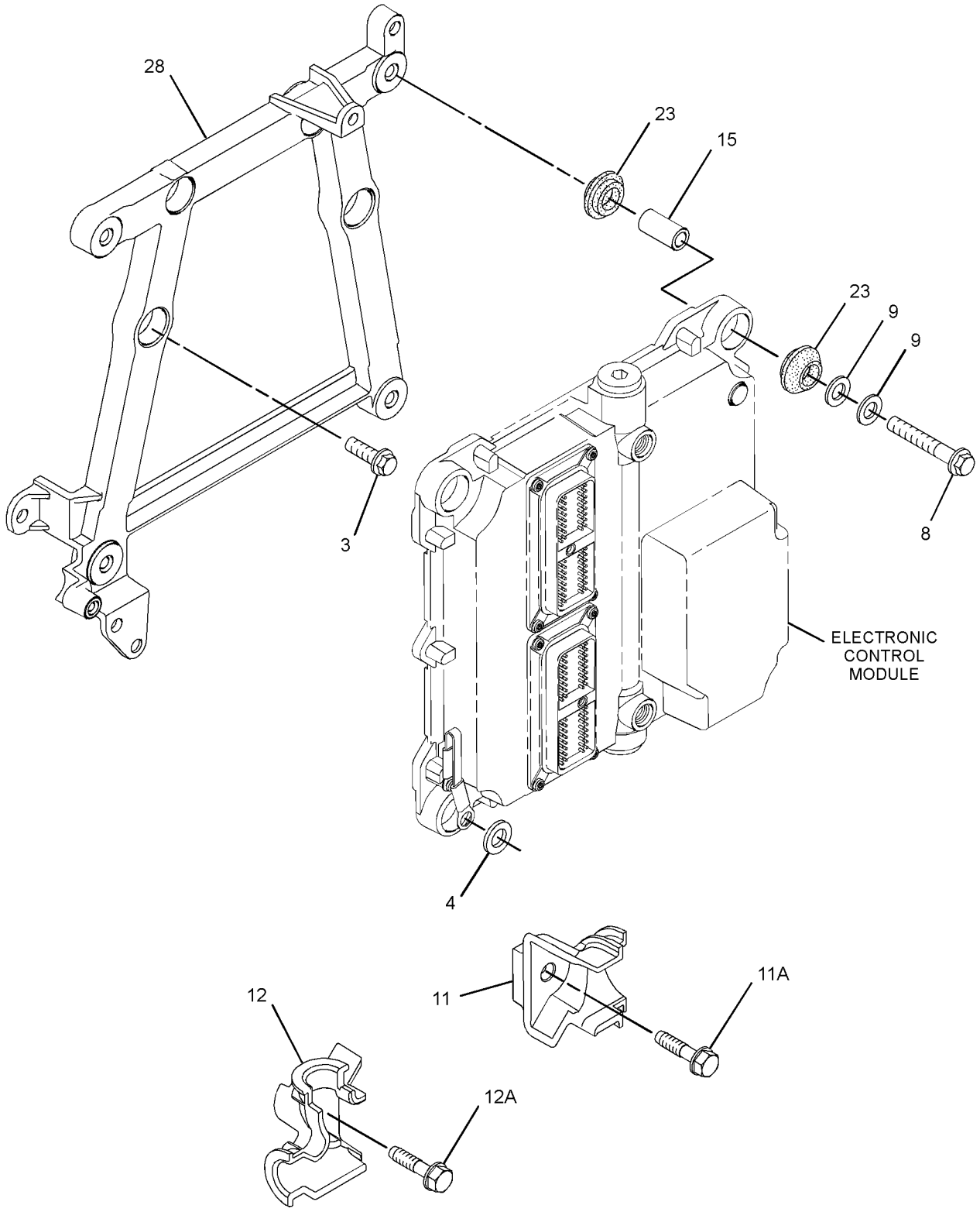

GRAPHIC #2 g01645294

322-3753 **PUMP GP-FUEL INJECTION (**contd.**)** **i05881481**

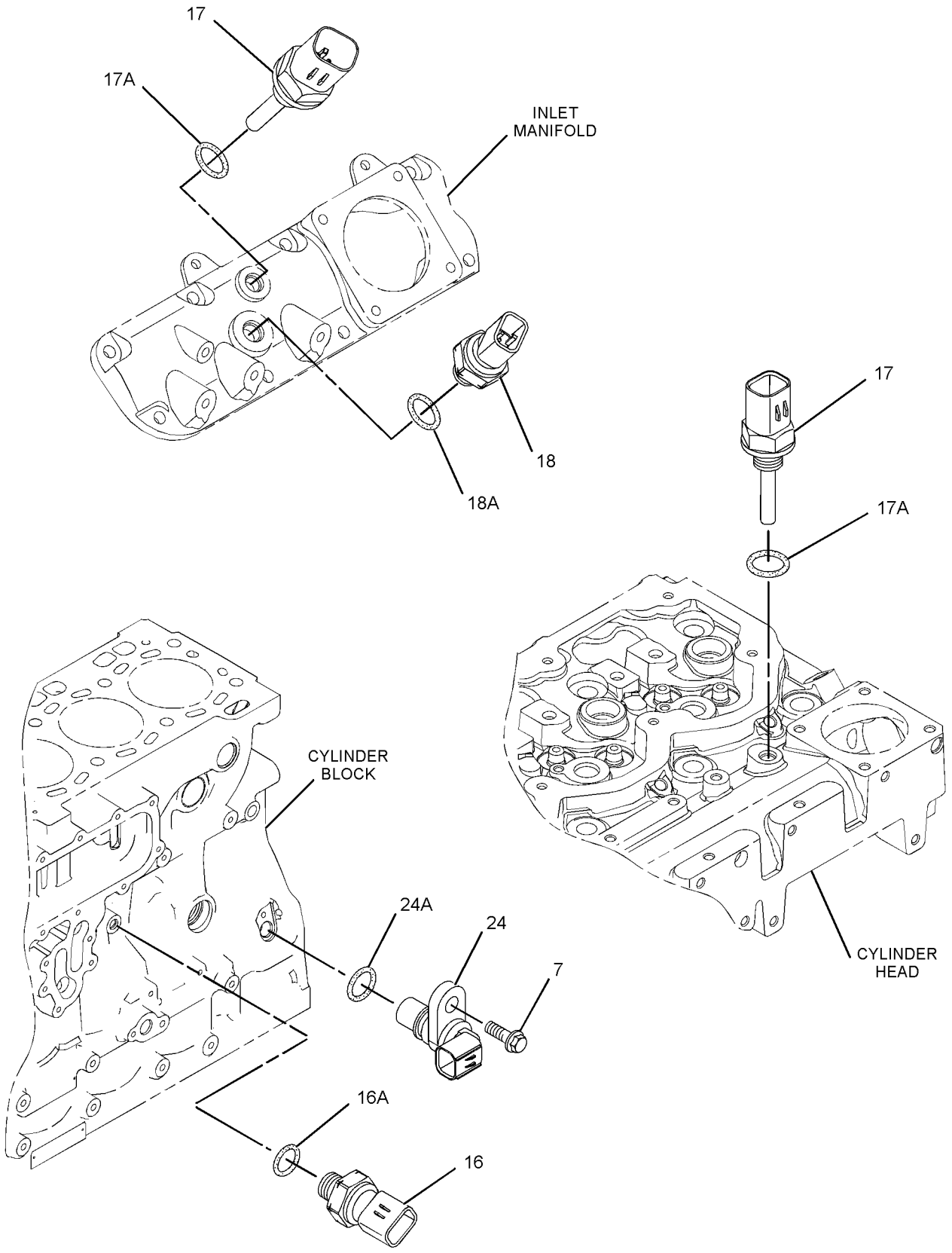

GRAPHIC #3 <END> g01437076

322-3753 PUMP GP-FUEL INJECTION

S/N: 4444116-UP

TYPE 1

SMCS-1251, 1290 **i03730924**

NOTE	REF NO	GRAPHIC REF	PART NUMBER	QTY	PART NAME 1 2 3 4 5 6 (PRODUCT LEVEL)	SEE PAGE
M	1	1	**6I-0260**	3	BOLT (M8X1.25X25-MM)	
M	2	1	**6I-0455**	3	BOLT (M8X1.25X55-MM)	
M	3	2	**6I-0572**	4	BOLT (M8X1.25X20-MM)	
	4	2	**7W-2632**	1	WASHER (8.5X16.8X1.6-MM THK)	
M	5	1	**100-4830**	1	BOLT (M10X1.5X20-MM)	
M	6	1	**101-3895**	4	BOLT (M8X1.25X35-MM)	
M	7	1,3	**124-3815**	4	BOLT (M8X1.25X16-MM)	
M	8	2	**141-8584**	4	BOLT (M8X1.25X50-MM)	
C	9	2	**217-0099**	5	SPACER (8.2X25X2-MM THK)	
	10	1	**230-8989**	1	GEAR-FUEL PUMP (68-TEETH)	
	11	2	**268-6677**	1	BRACKET AS	
M	11A	2	**260-3939**	1	SCREW-HEX HEAD (M6X1X25-MM)	
	12	2	**268-6678**	1	BRACKET AS	
M	12A	2	**260-3939**	1	SCREW-HEX HEAD (M6X1X25-MM)	
	13	1	**278-5168**	4	CLAMP-INJECTOR	
	14	1	**278-5170**	4	BOLT	
	15	2	**278-5203**	4	SPACER	
	16	3	**278-5225**	1	KIT-SENSOR (ENGINE OIL PRESSURE)	
	16A	3	**199-9267**	1	SEAL-O-RING	
	17	3	**278-5272**	2	KIT-SENSOR (INTAKE AIR TEMPERATURE)	
	17A	3	**278-5226**	1	SEAL-O-RING	
	18	3	**278-5273**	1	KIT-SENSOR (AIR PRESSURE)	
	18A	3	**199-9252**	1	SEAL-O-RING	
CYR	19	1	**324-0532**	1	PUMP GP-FUEL INJECTION	1523
	20	1	**337-3573**	1	BRACKET	
	21	1	**298-4542**	1	TUBE AS	
	22	1	**298-4543**	1	BOLT	
	23	2	**300-6714**	8	MOUNT	
	24	3	**311-3858**	1	KIT-SENSOR (ENGINE SPEED)	
	24A	3	**274-1639**	1	SEAL	
	25	1	**311-6342**	1	SENSOR AS-PRESSURE (FUEL)	
	25A	1	**309-8006**	1	WASHER	
	26	1	**318-2394**	1	RAIL AS-FUEL	
	26A	1	**305-5291**	1	VALVE AS-RELIEF	
	27	1	**316-1189**	1	BRACKET AS	
	27A	1	**232-1115**		CLIP-PIPE	
	28	2	**317-3144**	1	BRACKET	
	29	1	**160-0162**	2	WASHER	
	30	1	**337-3574**	1	TUBE	
	31	1	**322-3745**	1	TUBE (CYL NO. 1)	
	32	1	**322-3746**	1	TUBE (CYL NO. 2)	
	33	1	**333-4732**	1	LINE-FUEL INJECTION (CYL NO. 3)	
	34	1	**333-4733**	1	LINE-FUEL INJECTION (CYL NO. 4)	
	35	1	**232-3149**	3	WASHER (8.35X16.85X1.55-MM THK)	
YR	36	1	**320-0680**	4	INJECTOR GP-FUEL	1027
F			**278-4138**	4	KIT-FUEL LINE PROTECTION	

322-3753 **PUMP GP-FUEL INJECTION (**contd.**)** **i03730924**

NOTE	REF NO	GRAPHIC REF	PART NUMBER	QTY	PART NAME 1 2 3 4 5 6 (PRODUCT LEVEL)	SEE PAGE

C - CHANGE FROM PREVIOUS TYPE
F - NOT SHOWN
M - METRIC PART
R - REMANUFACTURED PART MAY BE AVAILABLE
Y - SEPARATE ILLUSTRATION

322-3753 **PUMP GP-FUEL INJECTION (**contd.**)** **i03730924**

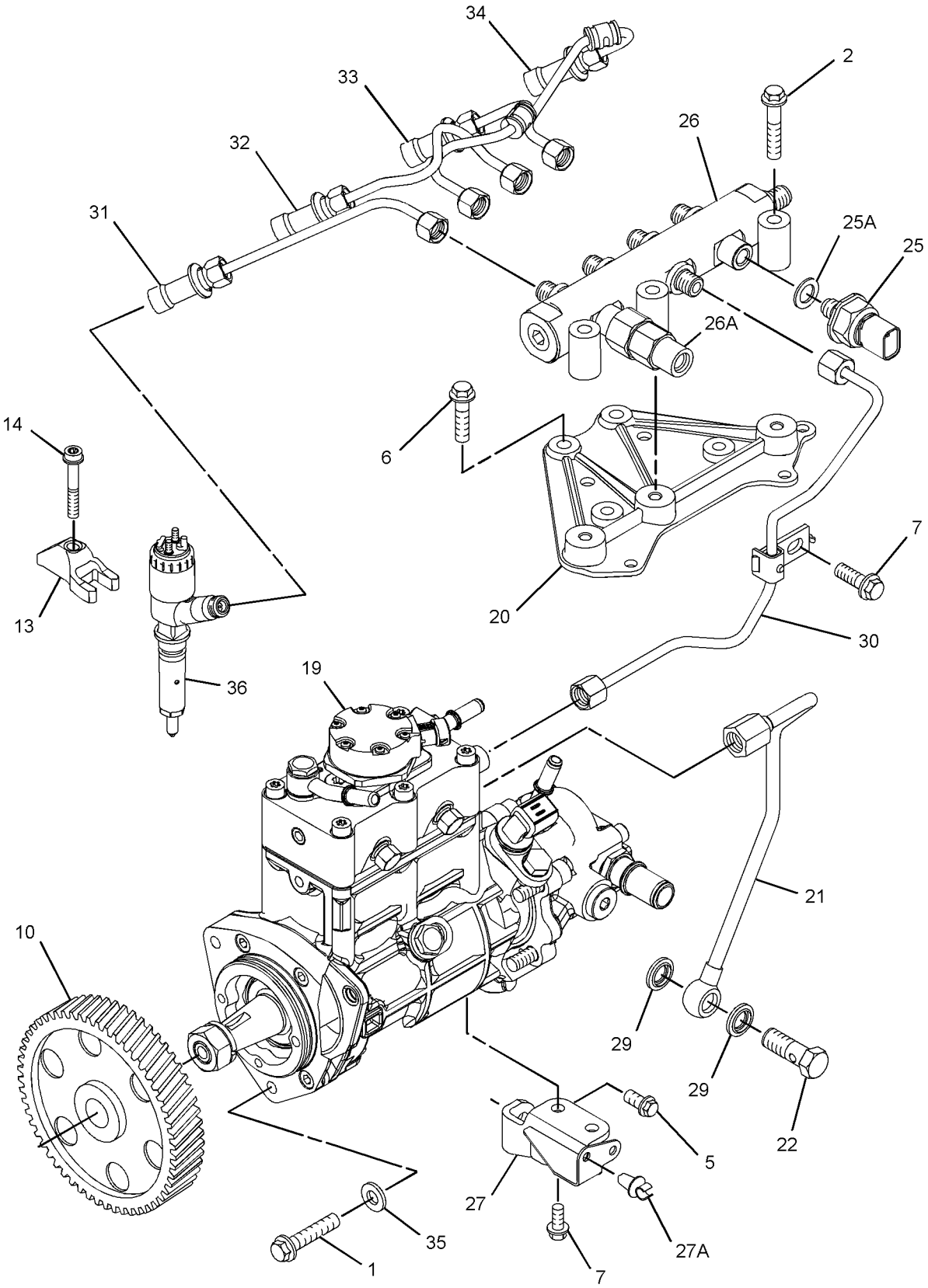

GRAPHIC #1 g01864113

322-3753 **PUMP GP-FUEL INJECTION (**contd.**)** **i03730924**

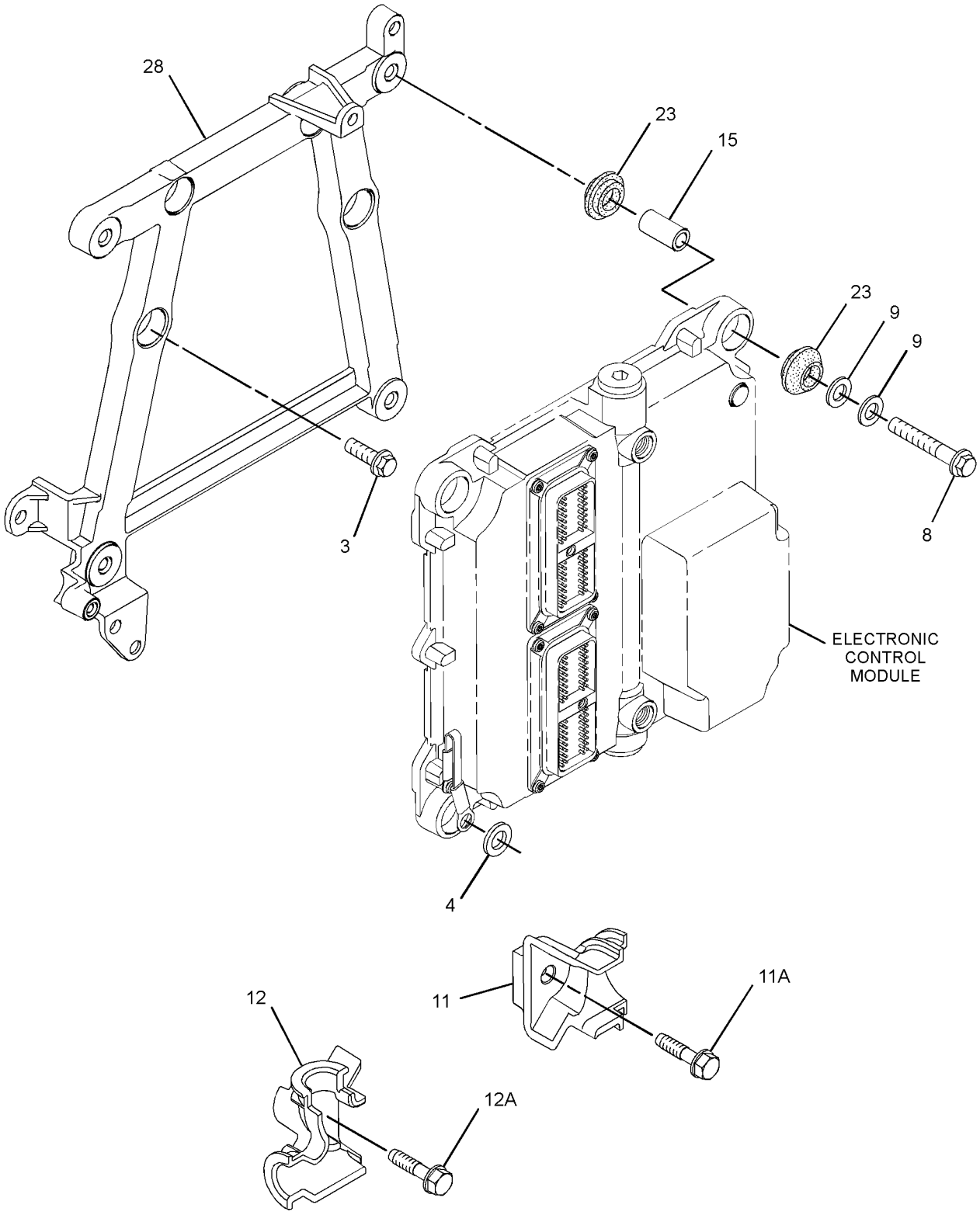

GRAPHIC #2 g01645294

322-3753 **PUMP GP-FUEL INJECTION (**contd.**)** **i03730924**

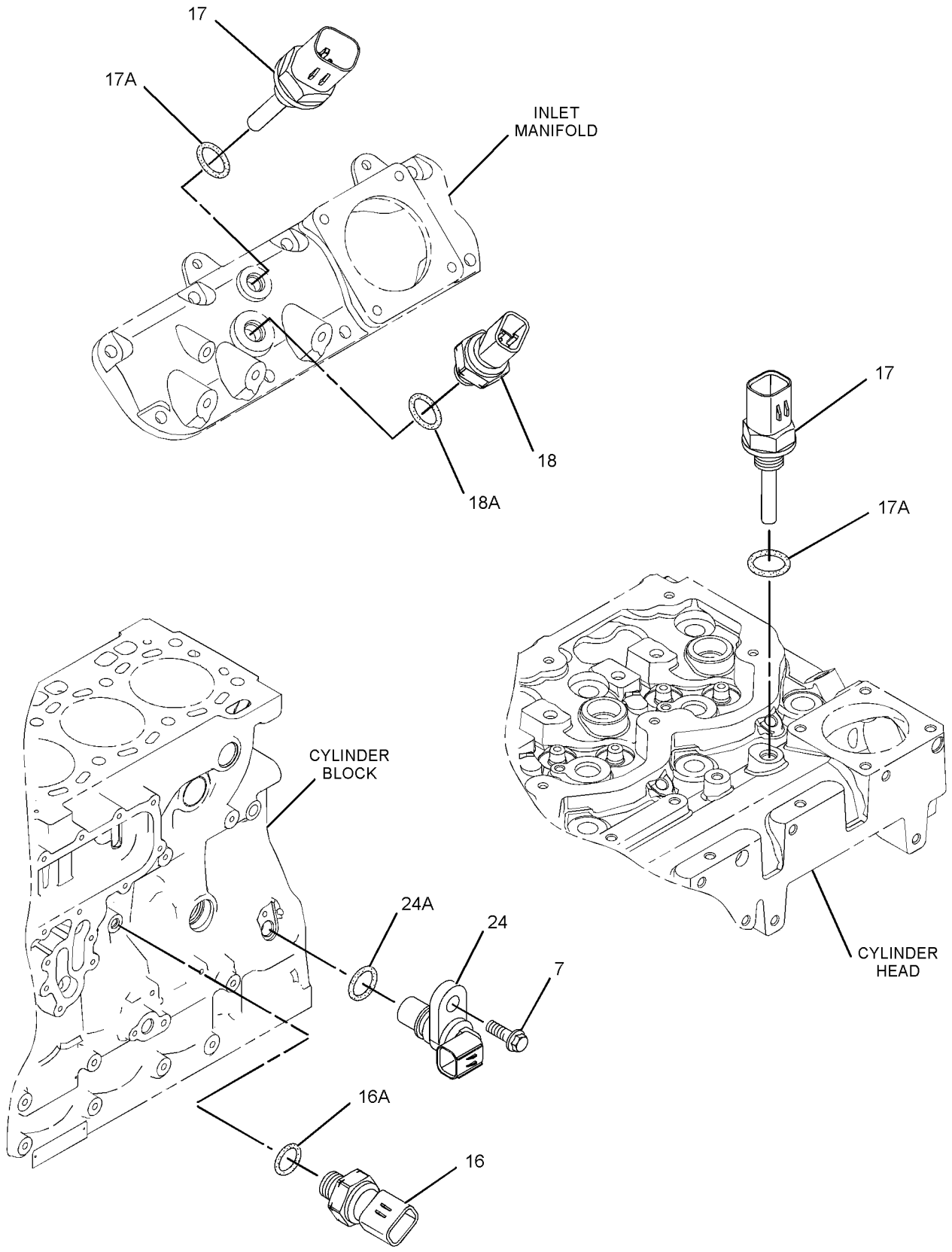

GRAPHIC #3 <END> g01437076

322-3753 PUMP GP-FUEL INJECTION

S/N: 4444116-UP

TYPE 2

SMCS-1251, 1290 **i04019518**

NOTE	REF NO	GRAPHIC REF	PART NUMBER	QTY	PART NAME 1 2 3 4 5 6 (PRODUCT LEVEL)	SEE PAGE
M	1	1	**6I-0260**	3	BOLT (M8X1.25X25-MM)	
M	2	1	**6I-0455**	3	BOLT (M8X1.25X55-MM)	
M	3	2	**6I-0572**	4	BOLT (M8X1.25X20-MM)	
	4	2	**7W-2632**	1	WASHER (8.5X16.8X1.6-MM THK)	
M	5	1	**100-4830**	1	BOLT (M10X1.5X20-MM)	
M	6	1	**101-3895**	4	BOLT (M8X1.25X35-MM)	
M	7	1,3	**124-3815**	4	BOLT (M8X1.25X16-MM)	
M	8	2	**141-8584**	4	BOLT (M8X1.25X50-MM)	
	9	2	**217-0099**	5	SPACER (8.2X25X2-MM THK)	
	10	1	**230-8989**	1	GEAR-FUEL PUMP (68-TEETH)	
	11	2	**268-6677**	1	BRACKET AS	
M	11A	2	**260-3939**	1	SCREW-HEX HEAD (M6X1X25-MM)	
	12	2	**268-6678**	1	BRACKET AS	
M	12A	2	**260-3939**	1	SCREW-HEX HEAD (M6X1X25-MM)	
	13	1	**278-5168**	4	CLAMP-INJECTOR	
	14	1	**278-5170**	4	BOLT	
	15	2	**278-5203**	4	SPACER	
	16	3	**278-5225**	1	KIT-SENSOR (ENGINE OIL PRESSURE)	
	16A	3	**199-9267**	1	SEAL-O-RING	
	17	3	**278-5272**	2	KIT-SENSOR (INTAKE AIR TEMPERATURE)	
	17A	3	**278-5226**	1	SEAL-O-RING	
	18	3	**278-5273**	1	KIT-SENSOR (AIR PRESSURE)	
	18A	3	**199-9252**	1	SEAL-O-RING	
CYR	19	1	**352-6584**	1	PUMP GP-FUEL INJECTION	1540
	20	1	**337-3573**	1	BRACKET	
	21	1	**298-4542**	1	TUBE AS	
	22	1	**298-4543**	1	BOLT	
	23	2	**300-6714**	8	MOUNT	
	24	3	**311-3858**	1	KIT-SENSOR (ENGINE SPEED)	
	24A	3	**274-1639**	1	SEAL	
		3	**238-0120**	1	SENSOR GP-SPEED	
	25	1	**311-6342**	1	SENSOR AS-PRESSURE (FUEL)	
	25A	1	**309-8006**	1	WASHER	
	26	1	**318-2394**	1	RAIL AS-FUEL	
	26A	1	**305-5291**	1	VALVE AS-RELIEF	
	27	1	**316-1189**	1	BRACKET AS	
	27A	1	**232-1115**	1	CLIP-PIPE	
	28	2	**317-3144**	1	BRACKET	
	29	1	**160-0162**	2	WASHER	
	30	1	**337-3574**	1	TUBE	
	31	1	**322-3745**	1	TUBE (CYL NO. 1)	
	32	1	**322-3746**	1	TUBE (CYL NO. 2)	
	33	1	**333-4732**	1	LINE-FUEL INJECTION (CYL NO. 3)	
	34	1	**333-4733**	1	LINE-FUEL INJECTION (CYL NO. 4)	
	35	1	**232-3149**	3	WASHER (8.35X16.85X1.55-MM THK)	
YR	36	1	**320-0680**	4	INJECTOR GP-FUEL	1027

322-3753 **PUMP GP-FUEL INJECTION** (contd.) **i04019518**

NOTE	REF NO	GRAPHIC REF	PART NUMBER	QTY	PART NAME 1 2 3 4 5 6 (PRODUCT LEVEL)	SEE PAGE
F			**278-4138**	4	KIT-FUEL LINE PROTECTION	

C - CHANGE FROM PREVIOUS TYPE
F - NOT SHOWN
M - METRIC PART
R - REMANUFACTURED PART MAY BE AVAILABLE
Y - SEPARATE ILLUSTRATION

322-3753 **PUMP GP-FUEL INJECTION (**contd.**)** **i04019518**

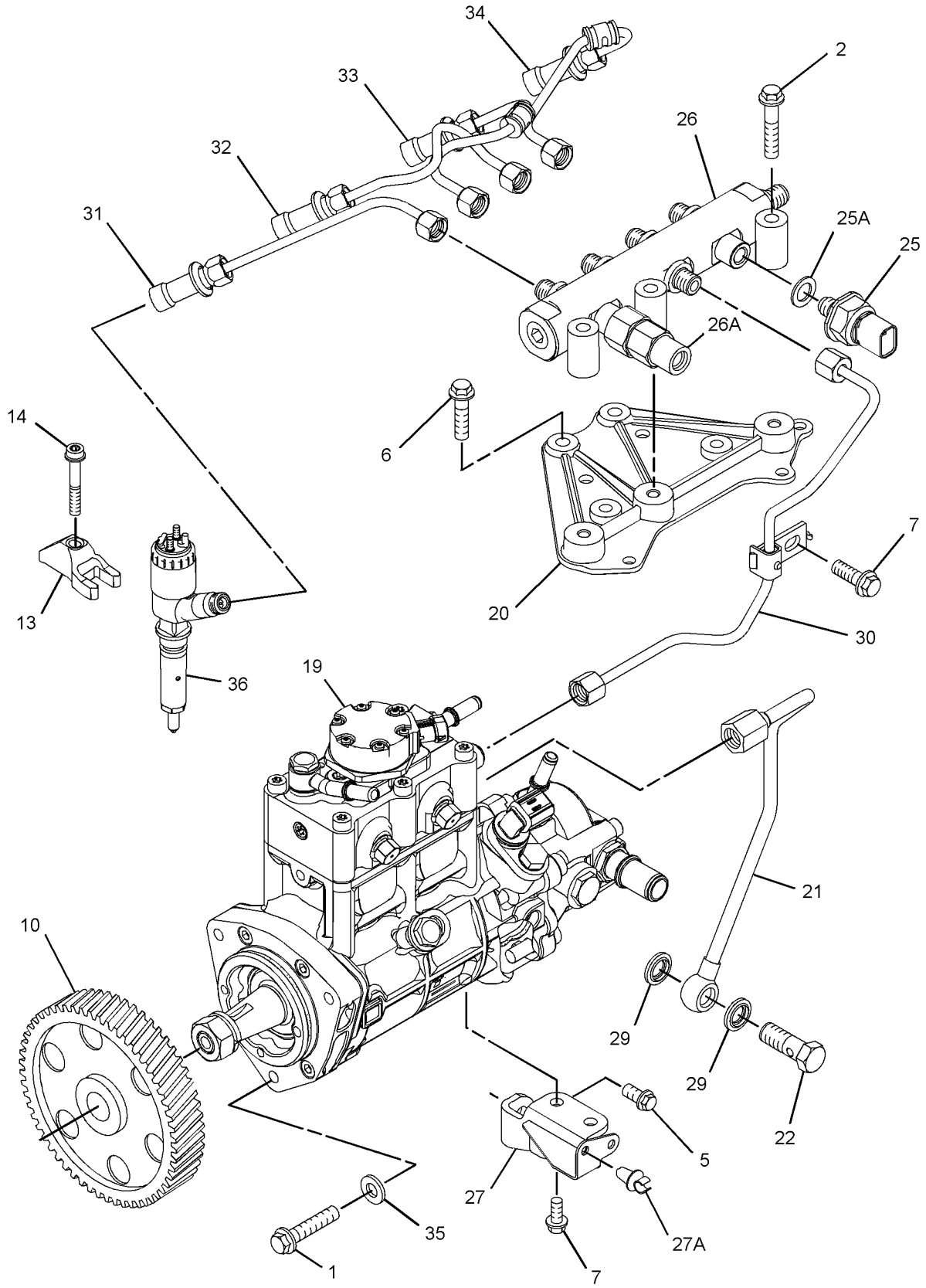

GRAPHIC #1 g02248913

322-3753 **PUMP GP-FUEL INJECTION (**contd.**)** **i04019518**

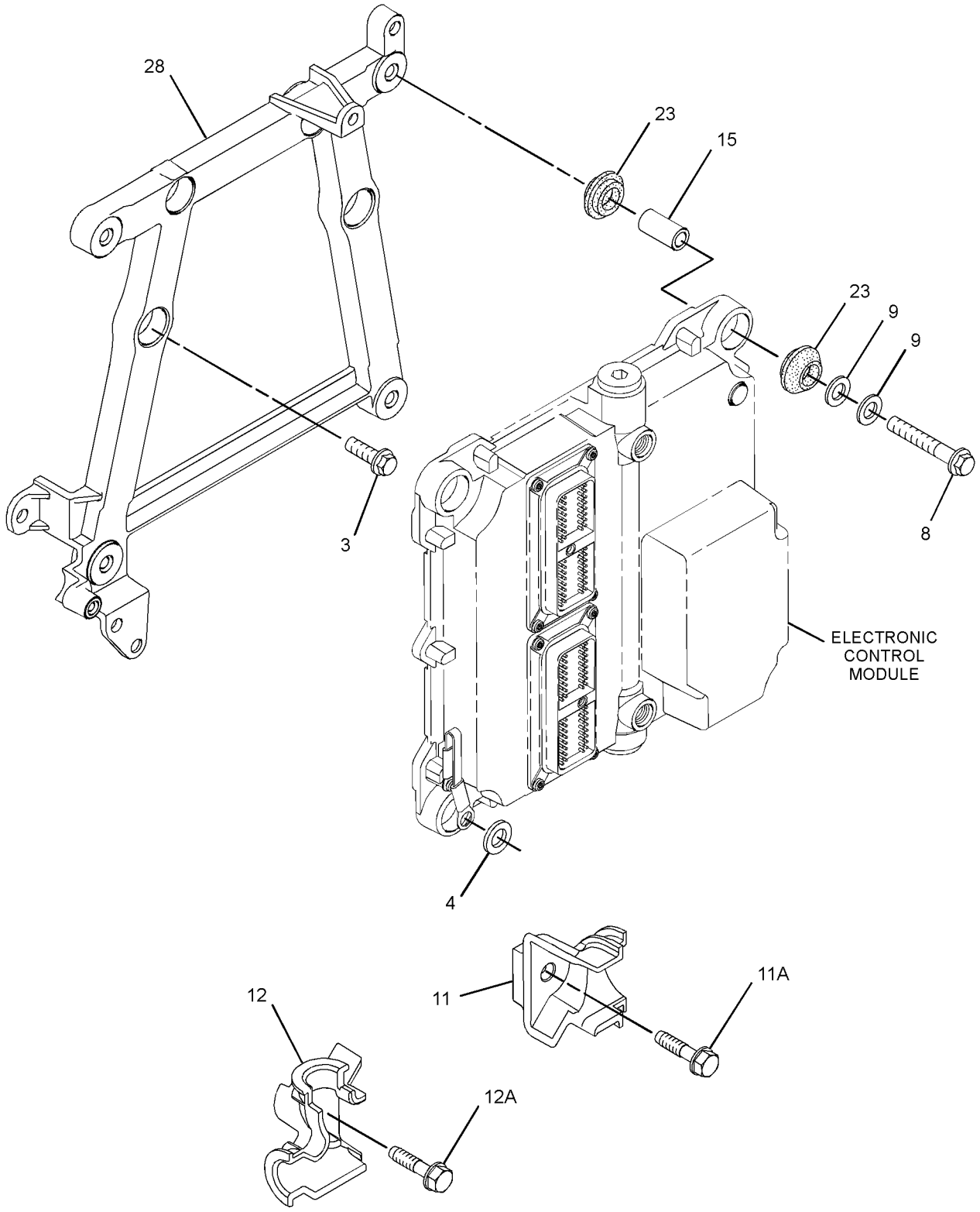

GRAPHIC #2 g01645294

322-3753 **PUMP GP-FUEL INJECTION (**contd.**)** **i04019518**

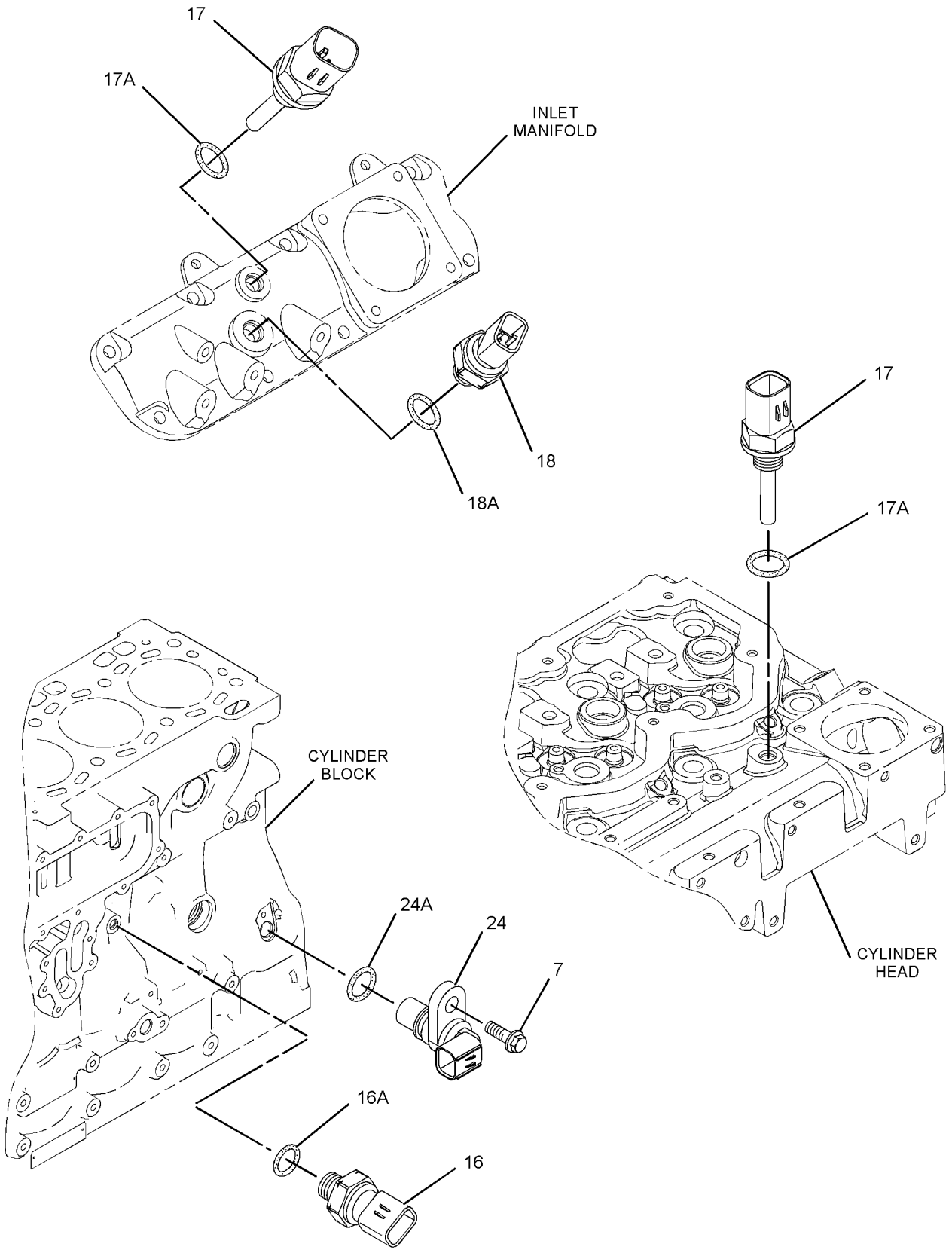

GRAPHIC #3 <END> g01437076

324-0532 PUMP GP-FUEL INJECTION*R

PART OF 298-5091, 298-5893, 301-8235, 303-4615, 304-0725, 304-6570, 304-7189, 304-7192, 304-8755, 305-2575, 305-6701, 307-2847, 308-4153, 313-3514, 313-4350, 316-1109, 317-7967, 317-7968, 320-2397, 320-2398, 322-3753, 339-1745, 353-7341 PUMP GP-FUEL INJECTION
ALSO AN ATTACHMENT

SMCS-1251, 1290 **i05697560**

NOTE	REF NO	GRAPHIC REF	PART NUMBER	QTY	PART NAME 1 2 3 4 5 6 (PRODUCT LEVEL)	SEE PAGE
	1	1	**228-0172**	1	FITTING-FUEL	
	2	1	**228-7100**	3	SEAL-O-RING	
	3	1	**238-0120**	1	SENSOR GP-SPEED (SECONDARY, TIMING)	
	4	1	**247-6019**	1	SEAL-O-RING	
	5	1	**248-1066**	1	FITTING-FUEL	
	6	1	**257-2381**	2	PIN	
	7	1	**257-2382**	2	PLUG	
	8	1	**258-8149**	2	SPRING	
	9	1	**294-3031**	1	BOLT-SPECIAL	
	10	1	**294-3032**	1	WASHER-SPECIAL	
M	11	1	**295-4801**	1	NUT (M14X1.5-THD)	
	12	1	**426-4806**	1	PUMP GP-FUEL TRANSFER	
	13	1	**117-1385**	1	SEAL-O-RING	
	14	1	**287-7272**	1	CONNECTOR	
		1	**3E-4296**	1	SEAL-O-RING	
	15	1	**334-2932**	1	SEAL-O-RING	
	16	1	**3B-4509**	1	LOCKWASHER	
M	17	1	**5A-3604**	5	BOLT-SOCKET HEAD (M8X1.25X25-MM)	
	18	1	**8C-3076**	1	SEAL-O-RING	
	19	1	**8L-2779**	1	SEAL-O-RING	
M	20	1	**8T-4200**	1	BOLT (M8X1.25X16-MM)	

M - METRIC PART

324-0532 **PUMP GP-FUEL INJECTION (**contd.**)** **i05697560**

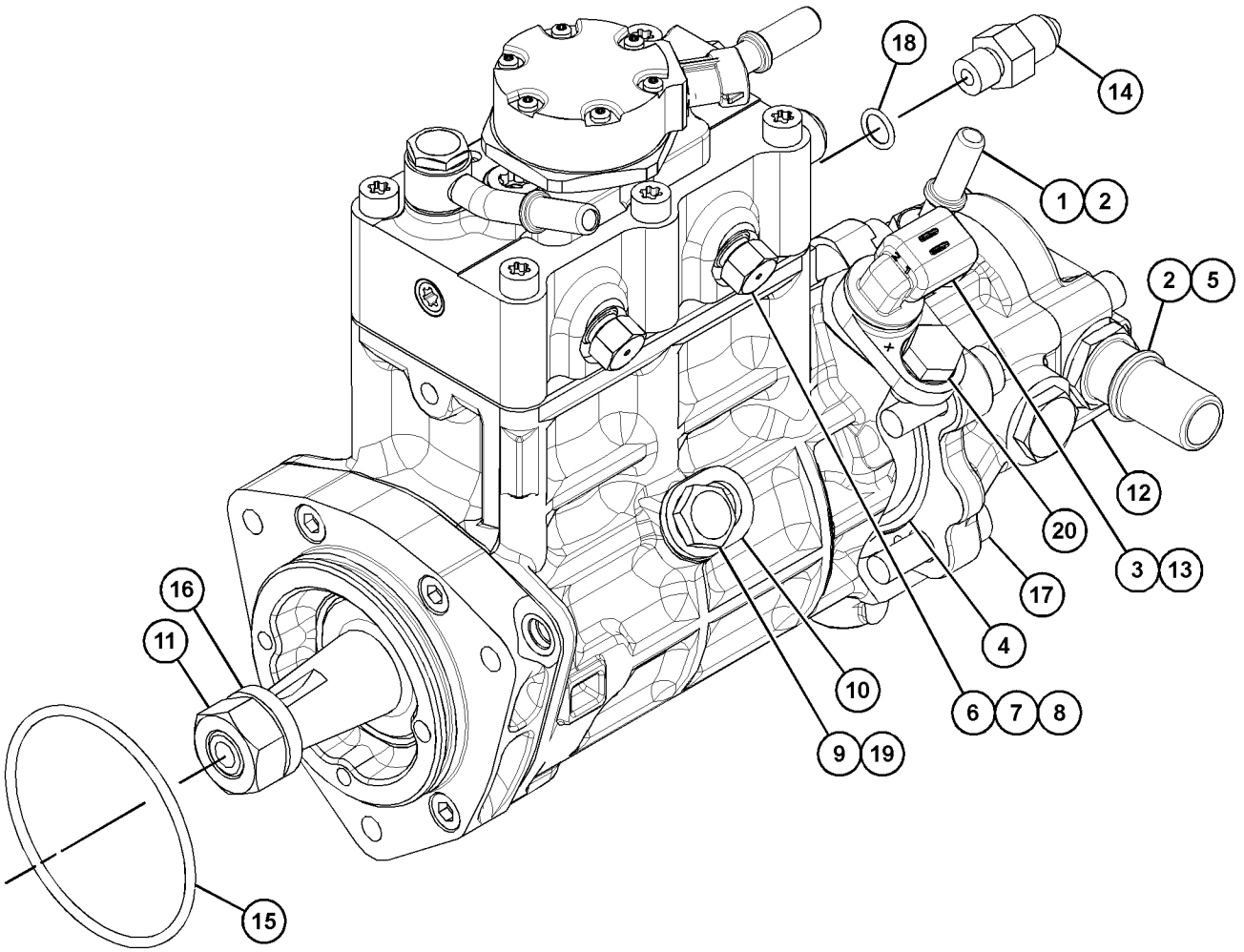

GRAPHIC #1 <END> g03619000

339-1745 PUMP GP-FUEL INJECTION

TYPE 1

SMCS-1251, 1290 **i04711590**

NOTE	REF NO	GRAPHIC REF	PART NUMBER	QTY	PART NAME 1 2 3 4 5 6 (PRODUCT LEVEL)	SEE PAGE
M	1	1	**6I-0260**	3	BOLT (M8X1.25X25-MM)	
M	2	1	**6I-0455**	3	BOLT (M8X1.25X55-MM)	
M	3	2	**6I-0572**	4	BOLT (M8X1.25X20-MM)	
	4	2	**7W-2632**	1	WASHER (8.5X16.8X1.6-MM THK)	
M	5	1	**100-4830**	1	BOLT (M10X1.5X20-MM)	
M	6	1,3	**101-3895**	4	BOLT (M8X1.25X35-MM)	
M	7	1,3	**124-3815**	4	BOLT (M8X1.25X16-MM)	
M	8	2	**141-8584**	4	BOLT (M8X1.25X50-MM)	
	9	1	**160-0162**	2	WASHER	
	10	2	**217-0099**	5	SPACER (8.2X25X2-MM THK)	
	11	1	**230-8989**	1	GEAR-FUEL PUMP (68-TEETH)	
	12	2	**268-6677**	1	BRACKET AS	
M	12A	2	**260-3939**	1	SCREW-HEX HEAD (M6X1X25-MM)	
	13	2	**268-6678**	1	BRACKET AS	
M	13A	2	**260-3939**	1	SCREW-HEX HEAD (M6X1X25-MM)	
	14	1	**278-5168**	4	CLAMP-INJECTOR	
	15	1	**278-5170**	4	BOLT	
	16	2	**278-5203**	4	SPACER	
	17	3	**278-5225**	1	KIT-SENSOR (ENGINE OIL PRESSURE)	
	17A	3	**199-9267**	1	SEAL-O-RING	
	18	3	**313-2455**	1	SENSOR-TEMPERATURE (AIR)	
	18A	3	**278-5226**	1	SEAL-O-RING	
	19	3	**278-5273**	1	KIT-SENSOR (AIR PRESSURE)	
	19A	3	**199-9252**	1	SEAL-O-RING	
	20	3	**278-5307**	1	KIT-SENSOR (COOLANT TEMPERATURE)	
	20A	3	**199-9267**	1	SEAL-O-RING	
	21	1	**298-4535**	1	BRACKET-SUPPORT	
	22	1	**298-4542**	1	TUBE AS	
	23	1	**298-4543**	1	BOLT	
	24	2	**300-6714**	8	MOUNT	
	25	3	**311-3858**	1	KIT-SENSOR (ENGINE SPEED)	
	25A	3	**274-1639**	1	SEAL	
	26	1	**311-6342**	1	SENSOR AS-PRESSURE (FUEL RAIL)	
	26A	1	**309-8006**	1	WASHER	
	27	1	**318-2394**	1	RAIL AS-FUEL	
	27A	1	**305-5291**	1	VALVE AS-RELIEF	
	28	2	**317-3144**	1	BRACKET	
	29	1	**322-3745**	1	TUBE (CYL NO. 1)	
	30	1	**322-3746**	1	TUBE (CYL NO. 2)	
YR	31	1	**324-0532**	1	PUMP GP-FUEL INJECTION	1523
	32	1	**333-4732**	1	LINE-FUEL INJECTION (CYL NO. 3)	
	33	1	**333-4733**	1	LINE-FUEL INJECTION (CYL NO. 4)	
	34	1	**337-3573**	1	BRACKET	
	35	1	**337-3574**	1	TUBE	
	36	1	**232-3149**	3	WASHER (8.35X16.85X1.55-MM THK)	
YR	37	1	**320-0677**	4	INJECTOR GP-FUEL	1026
	38	3	**035-8017**	2	UNION	
	39	3	**365-3308**	2	NUT-COMPRESSION	

339-1745 **PUMP GP-FUEL INJECTION** (contd.) **i04711590**

NOTE	REF NO	GRAPHIC REF	PART NUMBER	QTY	PART NAME 1 2 3 4 5 6 (PRODUCT LEVEL)	SEE PAGE
	40	3	**067-6265**	2	FITTING-BRASS	
	41	3	**199-9252**	1	SEAL-O-RING	
	42	3	**304-3689**	1	ADAPTER	
	43	3	**305-0659**	1	TUBE	
F			**278-4138**	4	KIT-FUEL LINE PROTECTION	

F - NOT SHOWN
M - METRIC PART
R - REMANUFACTURED PART MAY BE AVAILABLE
Y - SEPARATE ILLUSTRATION

339-1745 **PUMP GP-FUEL INJECTION (**contd.**)** **i04711590**

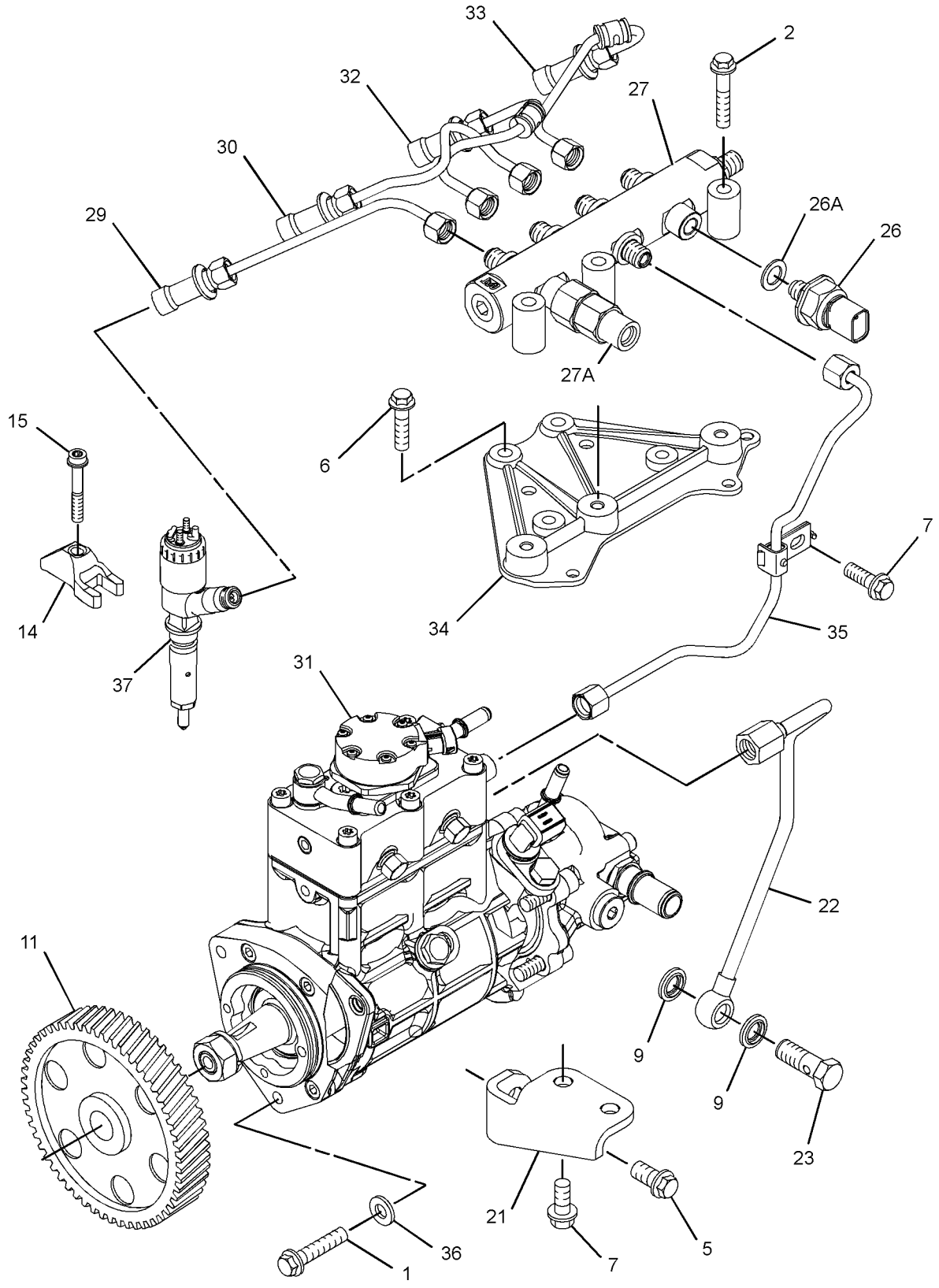

GRAPHIC #1 g01996973

339-1745 **PUMP GP-FUEL INJECTION (**contd.**)** **i04711590**

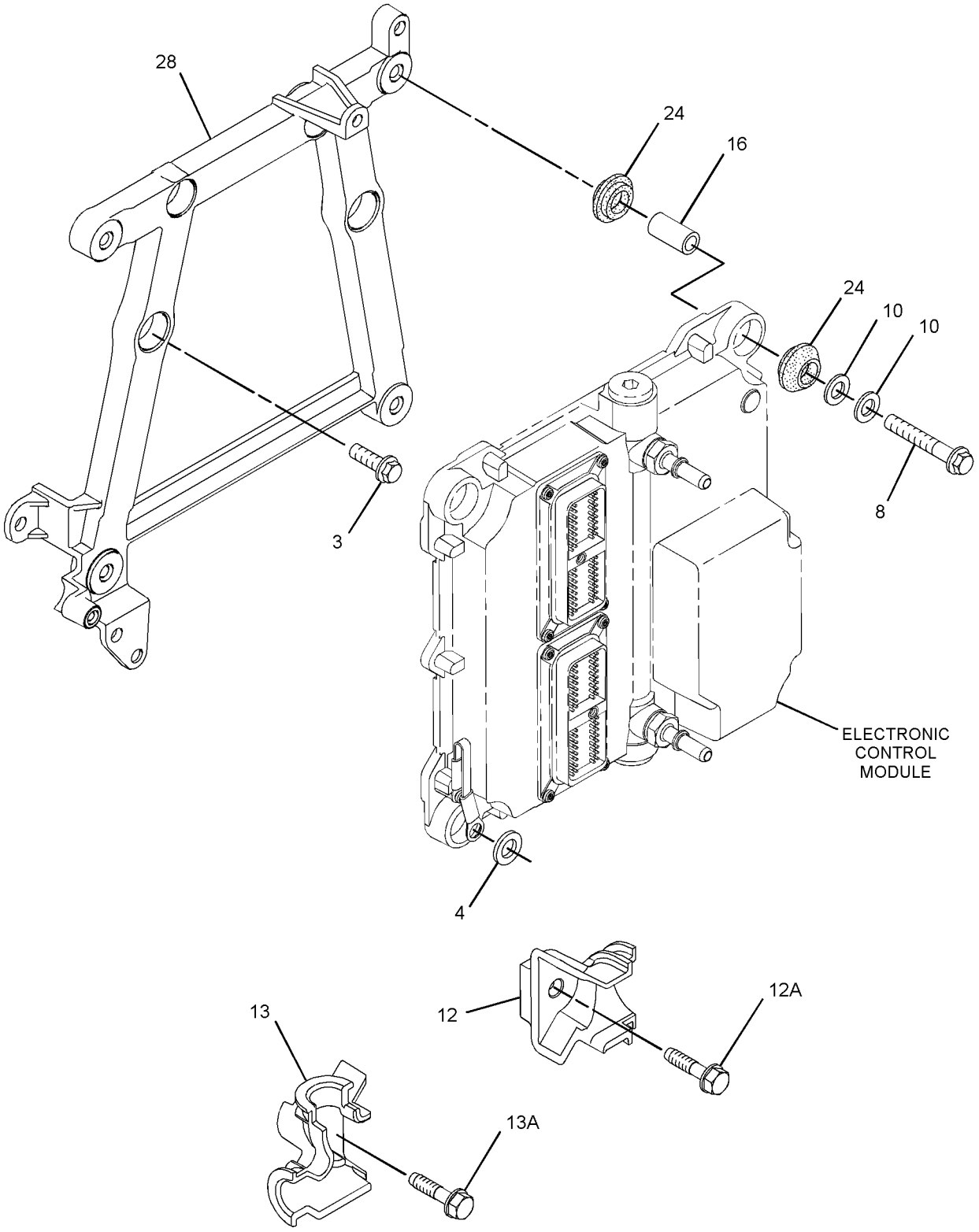

GRAPHIC #2 g01994895

339-1745 **PUMP GP-FUEL INJECTION (**contd.**)** **i04711590**

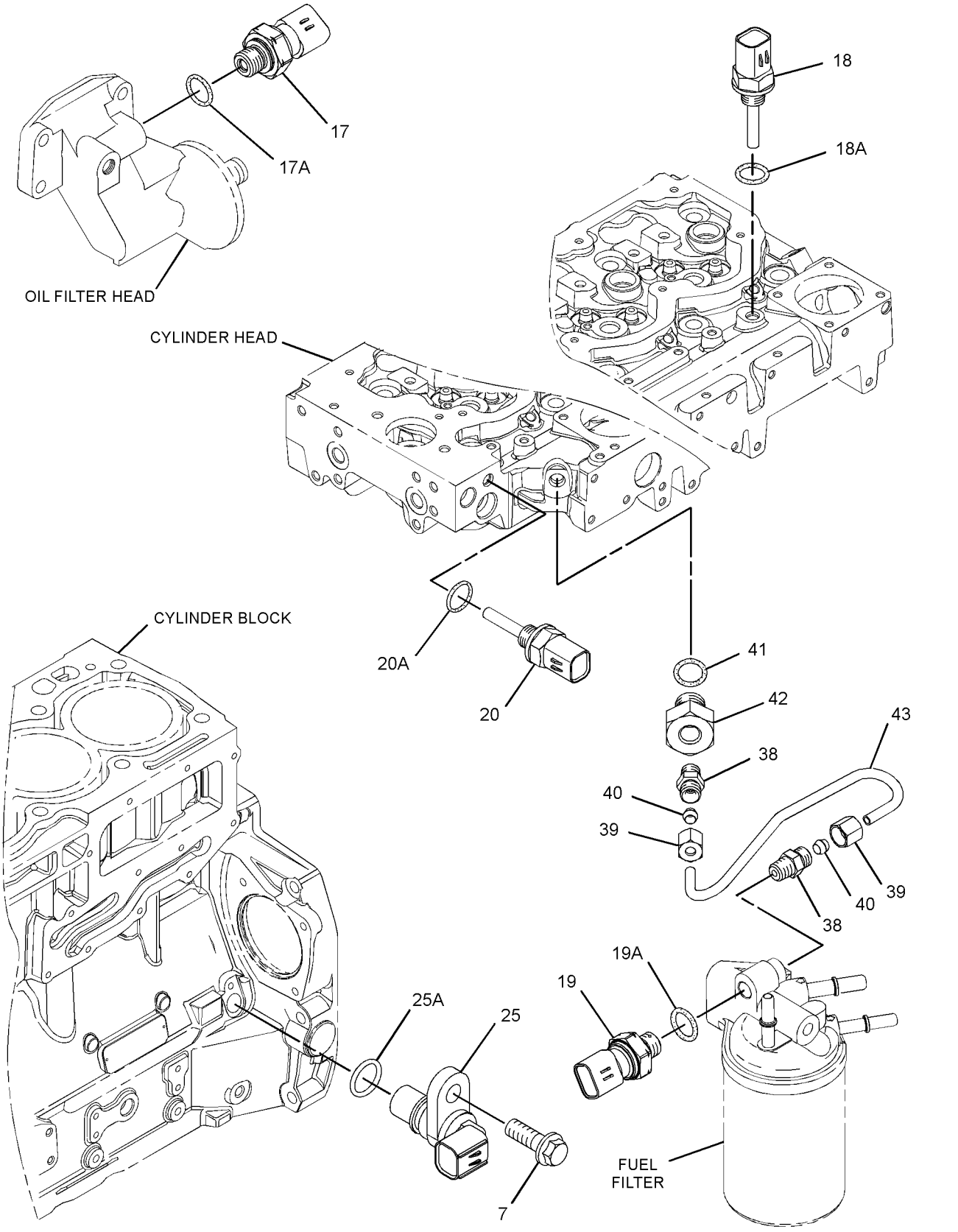

GRAPHIC #3 <END> g01994898

339-1745 PUMP GP-FUEL INJECTION

TYPE 2

SMCS-1251, 1290 **i04855850**

NOTE	REF NO	GRAPHIC REF	PART NUMBER	QTY	PART NAME 1 2 3 4 5 6 (PRODUCT LEVEL)	SEE PAGE
M	1	1	**6I-0260**	3	BOLT (M8X1.25X25-MM)	
M	2	1	**6I-0455**	3	BOLT (M8X1.25X55-MM)	
M	3	2	**6I-0572**	4	BOLT (M8X1.25X20-MM)	
	4	2	**7W-2632**	1	WASHER (8.5X16.8X1.6-MM THK)	
M	5	1	**100-4830**	1	BOLT (M10X1.5X20-MM)	
M	6	1,3	**101-3895**	4	BOLT (M8X1.25X35-MM)	
M	7	1,3	**124-3815**	4	BOLT (M8X1.25X16-MM)	
M	8	2	**141-8584**	4	BOLT (M8X1.25X50-MM)	
	9	1	**160-0162**	2	WASHER	
	10	2	**217-0099**	5	SPACER (8.2X25X2-MM THK)	
	11	1	**230-8989**	1	GEAR-FUEL PUMP (68-TEETH)	
	12	2	**268-6677**	1	BRACKET AS	
M	12A	2	**260-3939**	1	SCREW-HEX HEAD (M6X1X25-MM)	
	13	2	**268-6678**	1	BRACKET AS	
M	13A	2	**260-3939**	1	SCREW-HEX HEAD (M6X1X25-MM)	
	14	1	**278-5168**	4	CLAMP-INJECTOR	
	15	1	**278-5170**	4	BOLT	
	16	2	**278-5203**	4	SPACER	
	17	3	**278-5225**	1	KIT-SENSOR (ENGINE OIL PRESSURE)	
	17A	3	**199-9267**	1	SEAL-O-RING	
	18	3	**313-2455**	1	SENSOR-TEMPERATURE (AIR)	
	18A	3	**278-5226**	1	SEAL-O-RING	
	19	3	**278-5273**	1	KIT-SENSOR (AIR PRESSURE)	
	19A	3	**199-9252**	1	SEAL-O-RING	
	20	3	**278-5307**	1	KIT-SENSOR (COOLANT TEMPERATURE)	
	20A	3	**199-9267**	1	SEAL-O-RING	
	21	1	**298-4535**	1	BRACKET-SUPPORT	
	22	1	**298-4542**	1	TUBE AS	
	23	1	**298-4543**	1	BOLT	
	24	2	**300-6714**	8	MOUNT	
	25	3	**311-3858**	1	KIT-SENSOR (ENGINE SPEED)	
	25A	3	**274-1639**	1	SEAL	
		3	**238-0120**	1	SENSOR GP-SPEED	
	26	1	**311-6342**	1	SENSOR AS-PRESSURE (FUEL RAIL)	
	26A	1	**309-8006**	1	WASHER	
	27	1	**318-2394**	1	RAIL AS-FUEL	
	27A	1	**305-5291**	1	VALVE AS-RELIEF	
	28	2	**317-3144**	1	BRACKET	
	29	1	**322-3745**	1	TUBE (CYL NO. 1)	
	30	1	**322-3746**	1	TUBE (CYL NO. 2)	
YR	31	1	**324-0532**	1	PUMP GP-FUEL INJECTION	1523
	32	1	**333-4732**	1	LINE-FUEL INJECTION (CYL NO. 3)	
	33	1	**333-4733**	1	LINE-FUEL INJECTION (CYL NO. 4)	
	34	1	**337-3573**	1	BRACKET	
	35	1	**337-3574**	1	TUBE	
	36	1	**232-3149**	3	WASHER (8.35X16.85X1.55-MM THK)	
YR	37	1	**320-0677**	4	INJECTOR GP-FUEL	1026
	38	3	**035-8017**	2	UNION	

339-1745 **PUMP GP-FUEL INJECTION** (contd.) **i04855850**

NOTE	REF NO	GRAPHIC REF	PART NUMBER	QTY	PART NAME 1 2 3 4 5 6 (PRODUCT LEVEL)	SEE PAGE
	39	3	**365-3308**	2	NUT-COMPRESSION	
	40	3	**067-6265**	2	FITTING-BRASS	
	41	3	**199-9252**	1	SEAL-O-RING	
	42	3	**304-3689**	1	ADAPTER	
C	43	3	**305-0659**	1	TUBE	
F			**278-4138**	4	KIT-FUEL LINE PROTECTION	

C - CHANGE FROM PREVIOUS TYPE
F - NOT SHOWN
M - METRIC PART
R - REMANUFACTURED PART MAY BE AVAILABLE
Y - SEPARATE ILLUSTRATION

339-1745 **PUMP GP-FUEL INJECTION (**contd.**)** **i04855850**

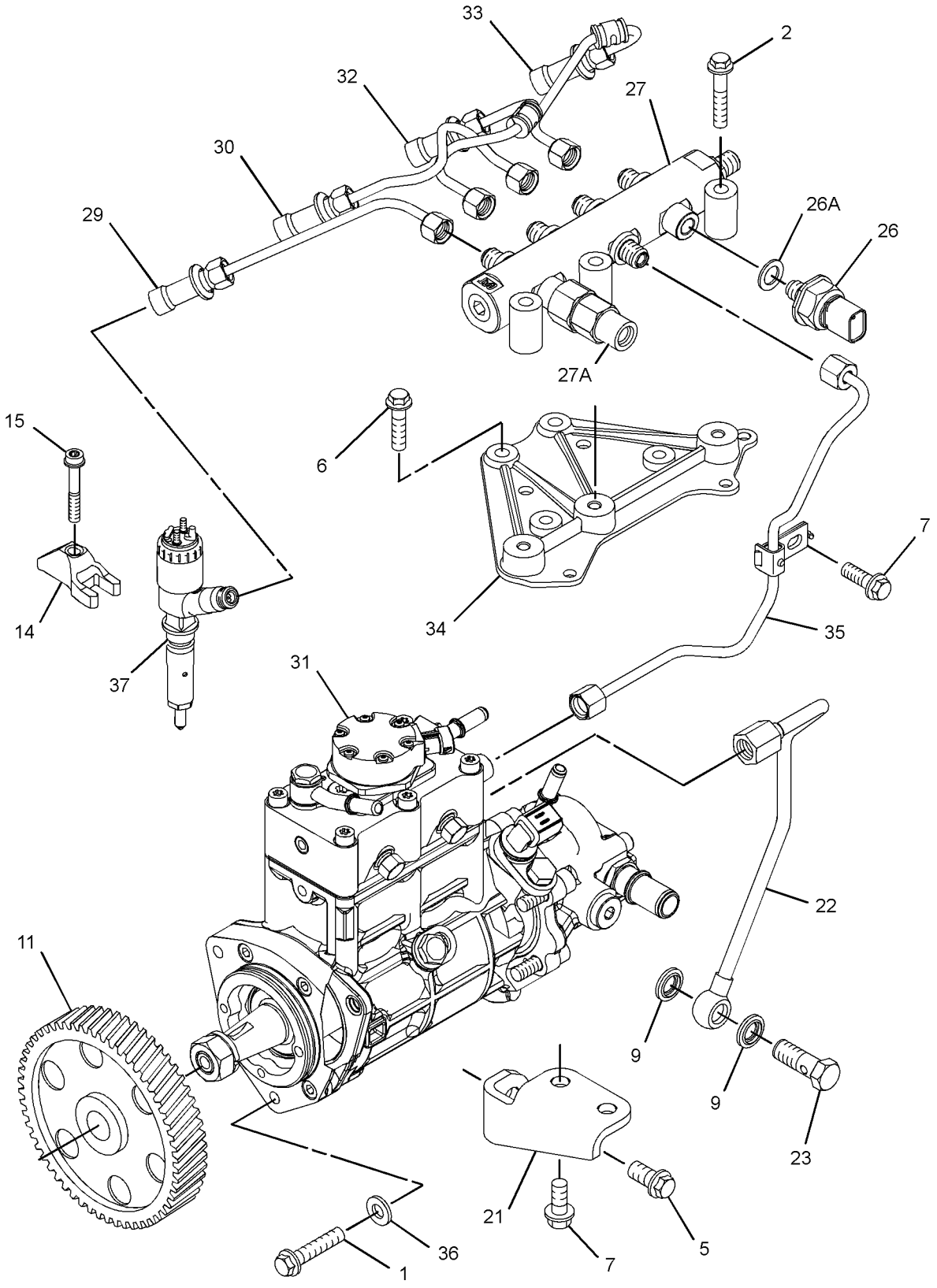

GRAPHIC #1 g01996973

339-1745 **PUMP GP-FUEL INJECTION (**contd.**)** **i04855850**

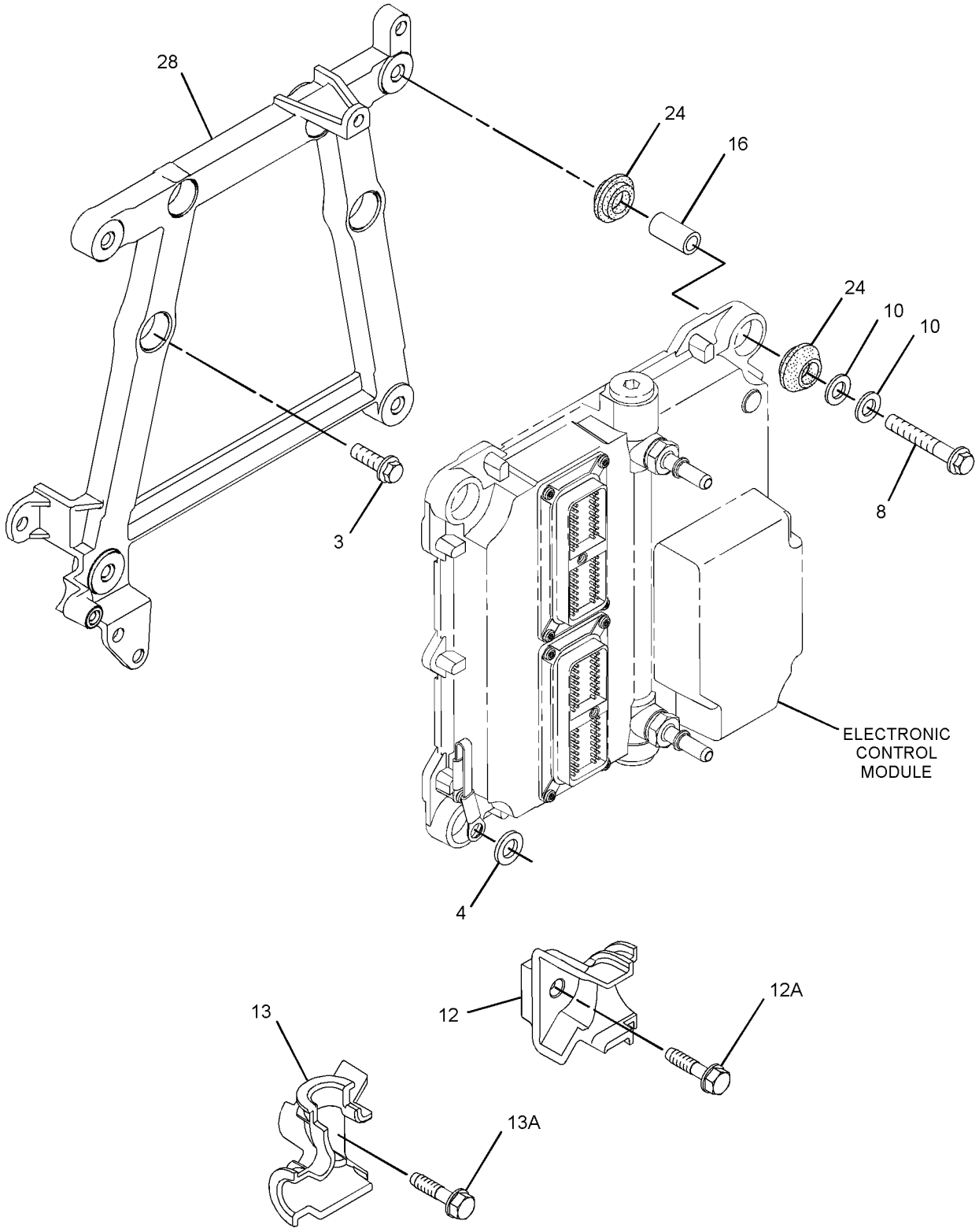

GRAPHIC #2 g01994895

339-1745 **PUMP GP-FUEL INJECTION (**contd.**)** **i04855850**

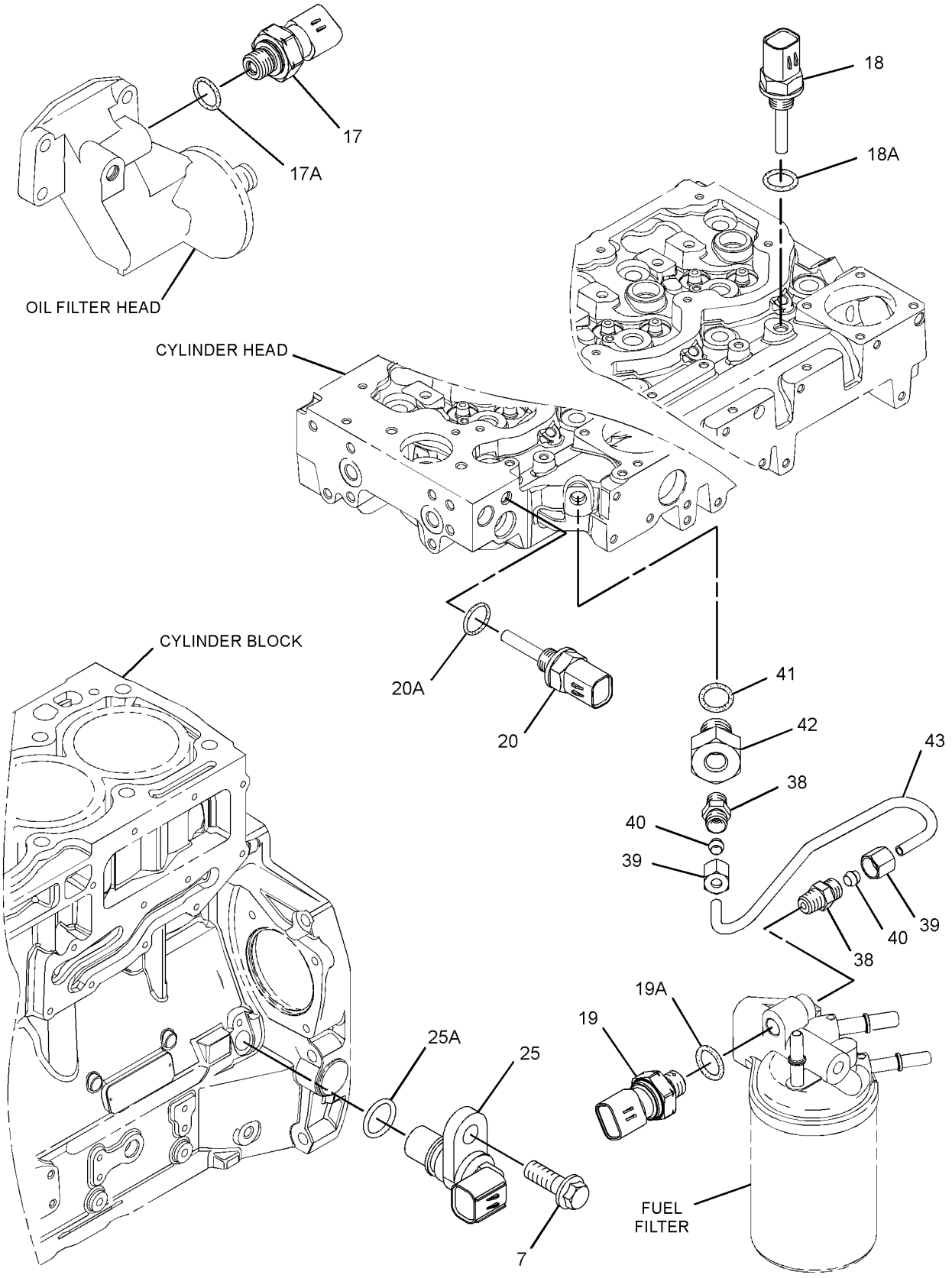

GRAPHIC #3 <END> g01994898

339-1745 PUMP GP-FUEL INJECTION

TYPE 3

SMCS-1251, 1290 **i07175215**

NOTE	REF NO	GRAPHIC REF	PART NUMBER	QTY	PART NAME 1 2 3 4 5 6 (PRODUCT LEVEL)	SEE PAGE
M	1	1	**6I-0260**	3	BOLT (M8X1.25X25-MM)	
M	2	1	**6I-0455**	3	BOLT (M8X1.25X55-MM)	
M	3	2	**6I-0572**	4	BOLT (M8X1.25X20-MM)	
	4	2	**7W-2632**	1	WASHER (8.5X16.8X1.6-MM THK)	
M	5	1	**100-4830**	1	BOLT (M10X1.5X20-MM)	
M	6	1,3	**101-3895**	4	BOLT (M8X1.25X35-MM)	
M	7	1,3	**124-3815**	4	BOLT (M8X1.25X16-MM)	
M	8	2	**141-8584**	4	BOLT (M8X1.25X50-MM)	
	9	1	**160-0162**	2	WASHER	
	10	2	**217-0099**	5	SPACER (8.2X25X2-MM THK)	
	11	1	**230-8989**	1	GEAR-FUEL PUMP (68-TEETH)	
	12	2	**268-6677**	1	BRACKET AS	
M	12A	2	**260-3939**	1	SCREW-HEX HEAD (M6X1X25-MM)	
	13	2	**268-6678**	1	BRACKET AS	
M	13A	2	**260-3939**	1	SCREW-HEX HEAD (M6X1X25-MM)	
	14	1	**278-5168**	4	CLAMP-INJECTOR	
	15	1	**278-5170**	4	BOLT	
	16	2	**278-5203**	4	SPACER	
	17	3	**278-5225**	1	KIT-SENSOR (ENGINE OIL PRESSURE)	
	17A	3	**199-9267**	1	SEAL-O-RING	
	18	3	**364-1102**	1	KIT-TEMPERATURE SENSOR (AIR)	
	19	3	**278-5273**	1	KIT-SENSOR (AIR PRESSURE)	
	19A	3	**199-9252**	1	SEAL-O-RING	
	20	3	**278-5307**	1	KIT-SENSOR (COOLANT TEMPERATURE)	
	20A	3	**199-9267**	1	SEAL-O-RING	
	21	1	**298-4535**	1	BRACKET-SUPPORT	
	22	1	**298-4542**	1	TUBE AS	
	23	1	**298-4543**	1	BOLT	
	24	2	**300-6714**	8	MOUNT	
	25	3	**311-3858**	1	KIT-SENSOR (ENGINE SPEED)	
	25A	3	**274-1639**	1	SEAL	
		3	**238-0120**	1	SENSOR GP-SPEED	
	26	1	**311-6342**	1	SENSOR AS-PRESSURE (FUEL RAIL)	
	26A	1	**309-8006**	1	WASHER	
	27	1	**358-6633**	1	RAIL GP-FUEL	
	27A	1	**305-5291**	1	VALVE AS-RELIEF	
	28	2	**317-3144**	1	BRACKET	
	29	1	**322-3745**	1	TUBE (CYL NO. 1)	
	30	1	**322-3746**	1	TUBE (CYL NO. 2)	
CYR	31	1	**324-0532**	1	PUMP GP-FUEL INJECTION	1523
	32	1	**333-4732**	1	LINE-FUEL INJECTION (CYL NO. 3)	
	33	1	**333-4733**	1	LINE-FUEL INJECTION (CYL NO. 4)	
	34	1	**337-3573**	1	BRACKET	
	35	1	**337-3574**	1	TUBE	
	36	1	**232-3149**	3	WASHER (8.35X16.85X1.55-MM THK)	
YR	37	1	**320-0677**	4	INJECTOR GP-FUEL	1026
	38	3	**035-8017**	2	UNION	
	39	3	**365-3308**	2	NUT-COMPRESSION	

339-1745 **PUMP GP-FUEL INJECTION** (contd.) **i07175215**

NOTE	REF NO	GRAPHIC REF	PART NUMBER	QTY	PART NAME 1 2 3 4 5 6 (PRODUCT LEVEL)	SEE PAGE
	40	3	**067-6265**	2	FITTING-BRASS	
	41	3	**199-9252**	1	SEAL-O-RING	
	42	3	**304-3689**	1	ADAPTER	
	43	3	**305-0659**	1	TUBE	
F			**278-4138**	4	KIT-FUEL LINE PROTECTION	

C - CHANGE FROM PREVIOUS TYPE
F - NOT SHOWN
M - METRIC PART
R - REMANUFACTURED PART MAY BE AVAILABLE
Y - SEPARATE ILLUSTRATION

339-1745 **PUMP GP-FUEL INJECTION (**contd.**)** **i07175215**

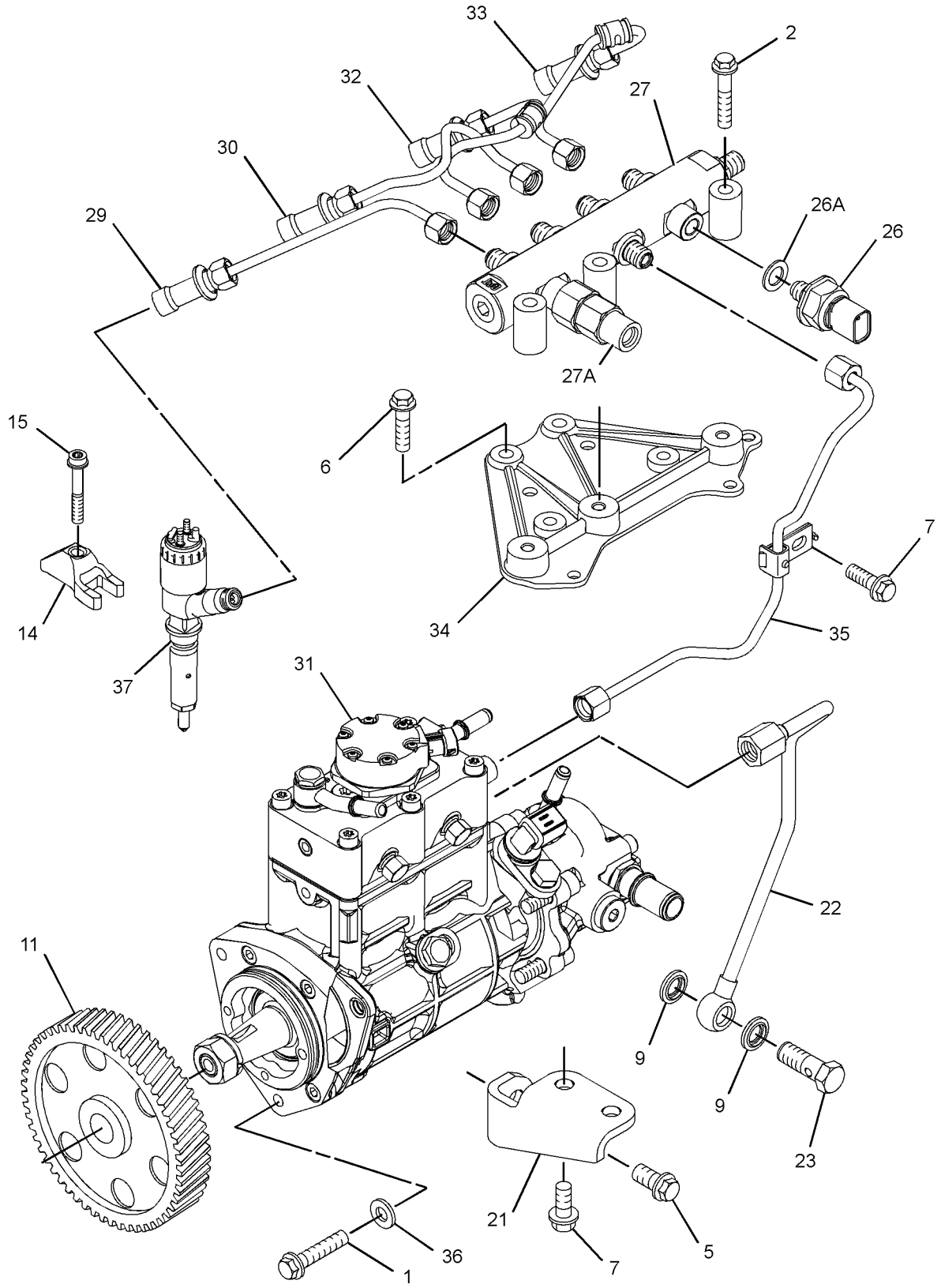

GRAPHIC #1 g01996973

339-1745 **PUMP GP-FUEL INJECTION (**contd.**)** **i07175215**

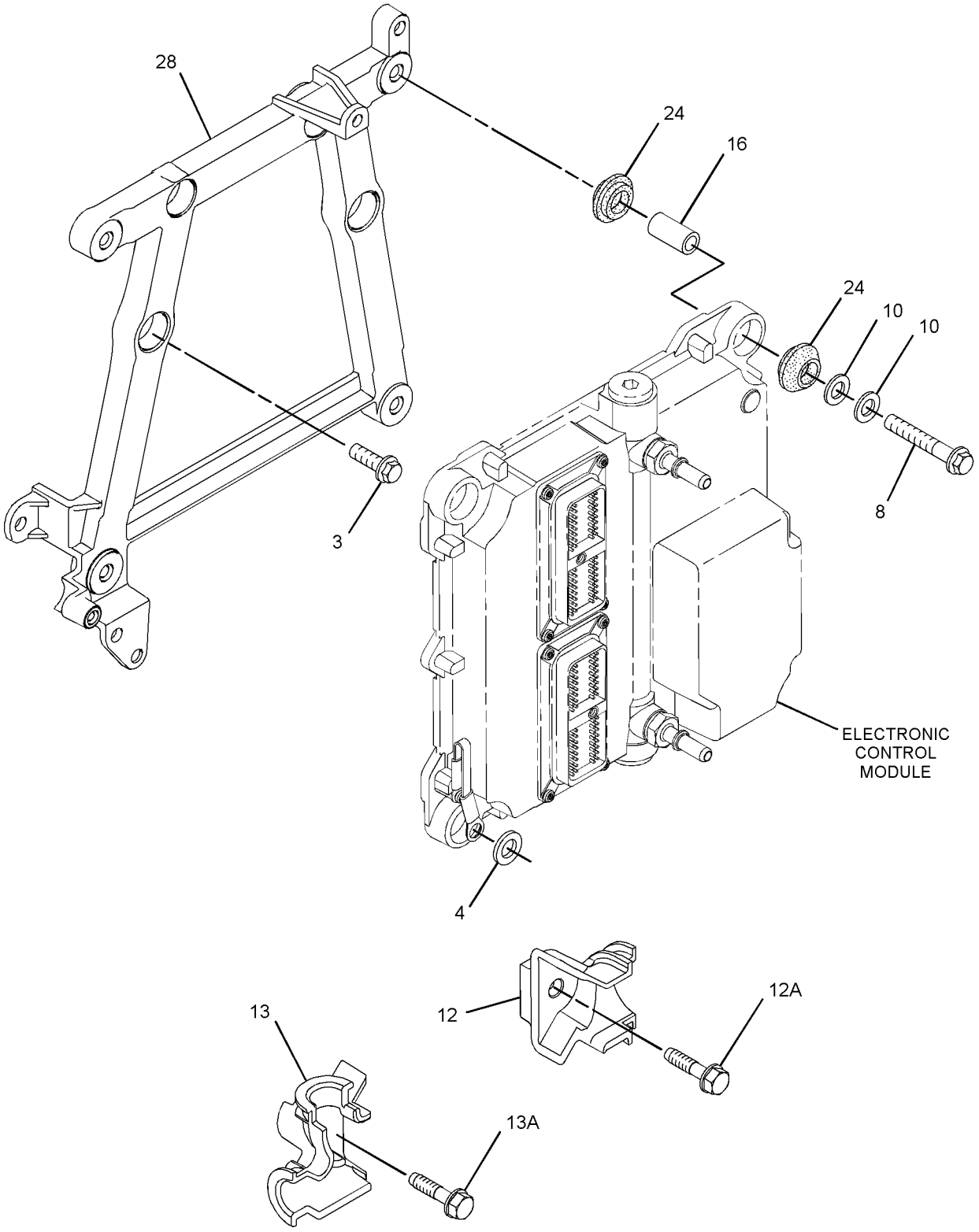

GRAPHIC #2 g01994895

339-1745 **PUMP GP-FUEL INJECTION (**contd.**)** **i07175215**

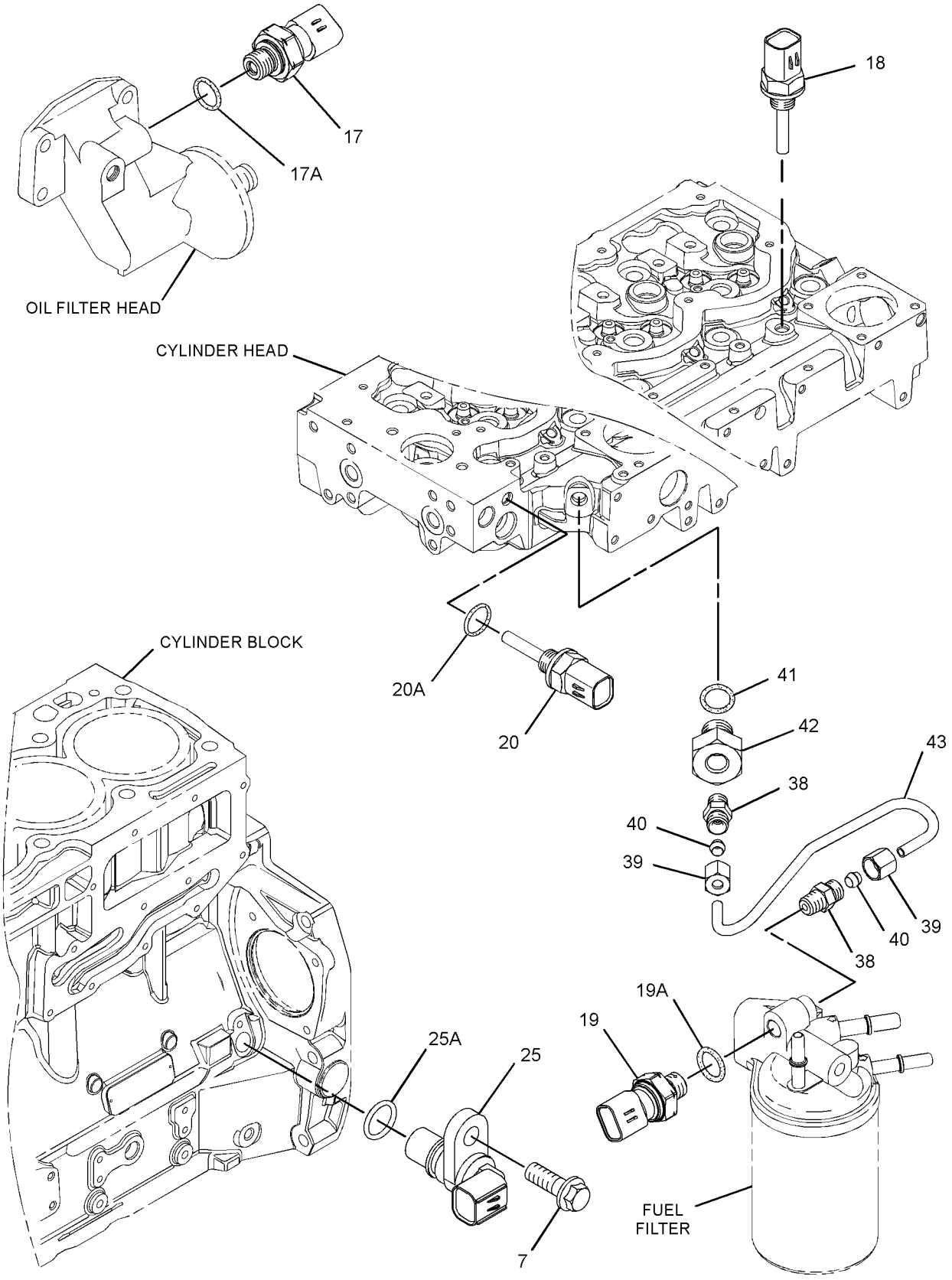

GRAPHIC #3 <END> g03168556

352-6584 PUMP GP-FUEL INJECTION*R

PART OF 298-5091, 298-5893, 301-8235, 303-4615, 304-0725, 304-6570, 304-7189, 304-7192, 304-8755, 305-2575, 305-6701, 307-2847, 308-4153, 313-3514, 313-4350, 316-1109, 317-7967, 317-7968, 320-2397, 320-2398, 322-3753, 353-7341 PUMP GP-FUEL INJECTION

SMCS-1251, 1290 **i03995514**

NOTE	REF NO	GRAPHIC REF	PART NUMBER	QTY	PART NAME 1 2 3 4 5 6 (PRODUCT LEVEL)	SEE PAGE
	1	1	**228-0172**	1	FITTING-FUEL	
	2	1	**228-7100**	3	SEAL-O-RING	
	3	1	**238-0120**	1	SENSOR GP-SPEED (INJECTION PUMP)	
	4	1	**248-1066**	1	FITTING-FUEL	
M	5	1	**295-4801**	1	NUT (M14X1.5-THD)	
	6	1	**296-3542**	1	LOCKWASHER	
	7	1	**117-1385**	1	SEAL-O-RING	
	8	1	**334-2932**	1	SEAL-O-RING	
M	9	1	**5A-3604**	5	BOLT-SOCKET HEAD (M8X1.25X25-MM)	
M	10	1	**8T-4200**	1	BOLT (M8X1.25X16-MM)	
	11	1	**247-6019**	1	SEAL-O-RING	
	12	1	**8L-2779**	1	SEAL-O-RING	
	13	1	**351-2799**	1	FITTING	

M - METRIC PART

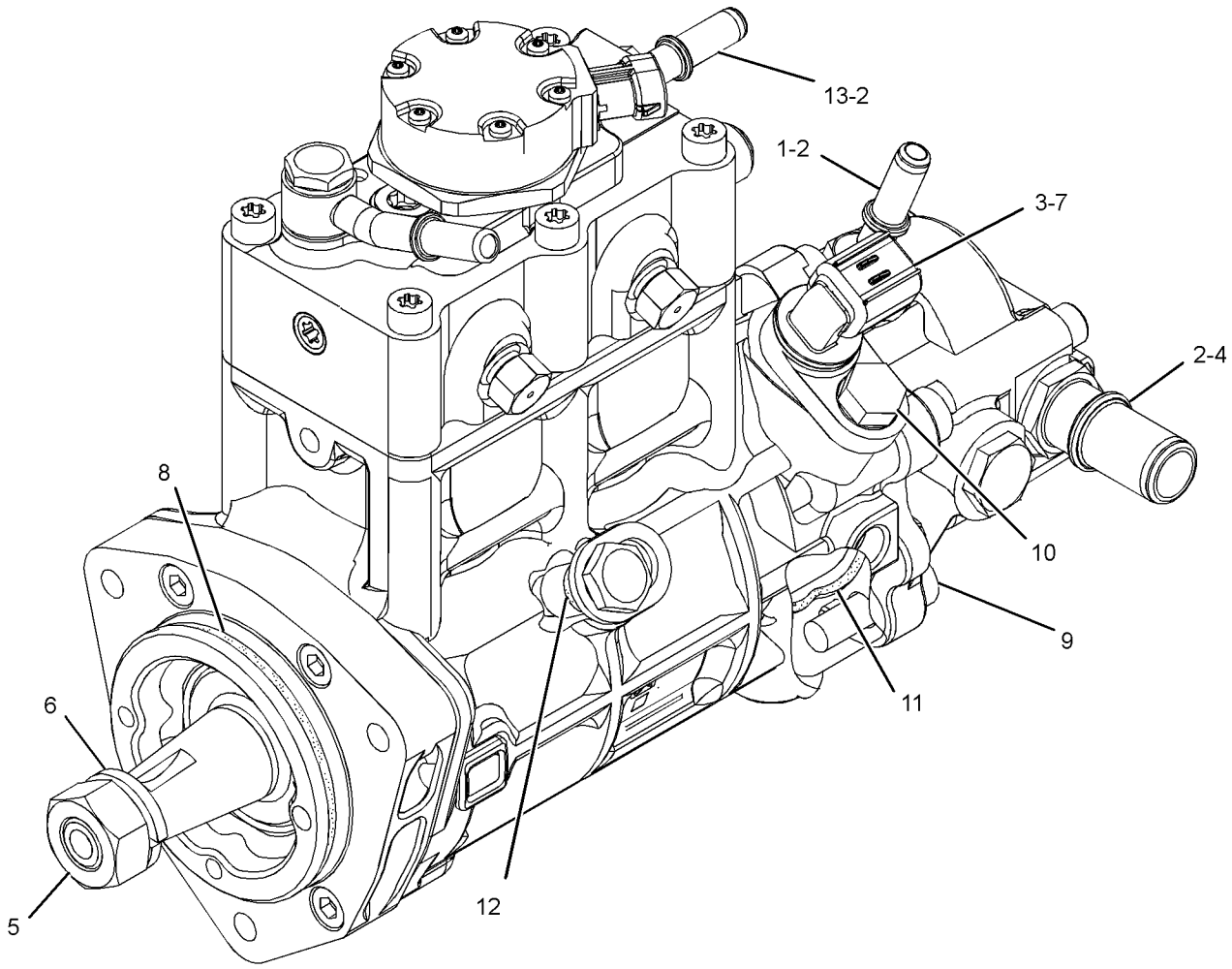

GRAPHIC #1 <END> g02199955

353-7341 PUMP GP-FUEL INJECTION

TYPE 1

SMCS-1251, 1290 **i03834160**

NOTE	REF NO	GRAPHIC REF	PART NUMBER	QTY	PART NAME 1 2 3 4 5 6 (PRODUCT LEVEL)	SEE PAGE
M	1	1	**6I-0260**	3	BOLT (M8X1.25X25-MM)	
M	2	1	**6I-0455**	3	BOLT (M8X1.25X55-MM)	
M	3	2	**6I-0572**	4	BOLT (M8X1.25X20-MM)	
	4	2	**7W-2632**	1	WASHER (8.5X16.8X1.6-MM THK)	
M	5	1	**100-4830**	1	BOLT (M10X1.5X20-MM)	
M	6	1	**101-3895**	4	BOLT (M8X1.25X35-MM)	
M	7	1	**124-3815**	3	BOLT (M8X1.25X16-MM)	
M	8	2	**141-8584**	4	BOLT (M8X1.25X50-MM)	
	9	2	**300-6714**	8	MOUNT	
	10	1	**160-0162**	2	WASHER	
	11	2	**217-0099**	5	SPACER (8.2X25X2-MM THK)	
	12	1	**333-4733**	1	LINE-FUEL INJECTION (CYL NO. 4)	
	13	1	**230-8989**	1	GEAR-FUEL PUMP (68-TEETH)	
	14	1	**232-3149**	3	WASHER (8.35X16.85X1.55-MM THK)	
	15	1	**333-4732**	1	LINE-FUEL INJECTION (CYL NO. 3)	
	16	2	**268-6678**	1	BRACKET AS	
M	16A	2	**260-3939**	1	SCREW-HEX HEAD (M6X1X25-MM)	
	17	2	**268-6677**	1	BRACKET AS	
M	17A	2	**260-3939**	1	SCREW-HEX HEAD (M6X1X25-MM)	
	18	1	**318-2394**	1	RAIL AS-FUEL	
	18A	1	**305-5291**	1	VALVE AS-RELIEF	
	19	1	**278-5168**	4	CLAMP-INJECTOR	
	20	1	**278-5170**	4	BOLT	
	21	1	**322-3746**	1	TUBE (CYL NO. 2)	
	22	1	**322-3745**	1	TUBE (CYL NO. 1)	
	23	2	**278-5203**	4	SPACER	
	24	1	**337-3574**	1	TUBE	
YR	25	1	**324-0532**	1	PUMP GP-FUEL INJECTION	1523
YR	26	1	**320-0680**	4	INJECTOR GP-FUEL	1027
	27	1	**298-4535**	1	BRACKET-SUPPORT	
	28	1	**337-3573**	1	BRACKET	
	29	1	**298-4542**	1	TUBE AS	
	30	1	**298-4543**	1	BOLT	
	31	2	**317-3144**	1	BRACKET	
F			**278-4138**	1	KIT-FUEL LINE PROTECTION	

F - NOT SHOWN
M - METRIC PART
R - REMANUFACTURED PART MAY BE AVAILABLE
Y - SEPARATE ILLUSTRATION

353-7341 **PUMP GP-FUEL INJECTION (**contd.**)** **i03834160**

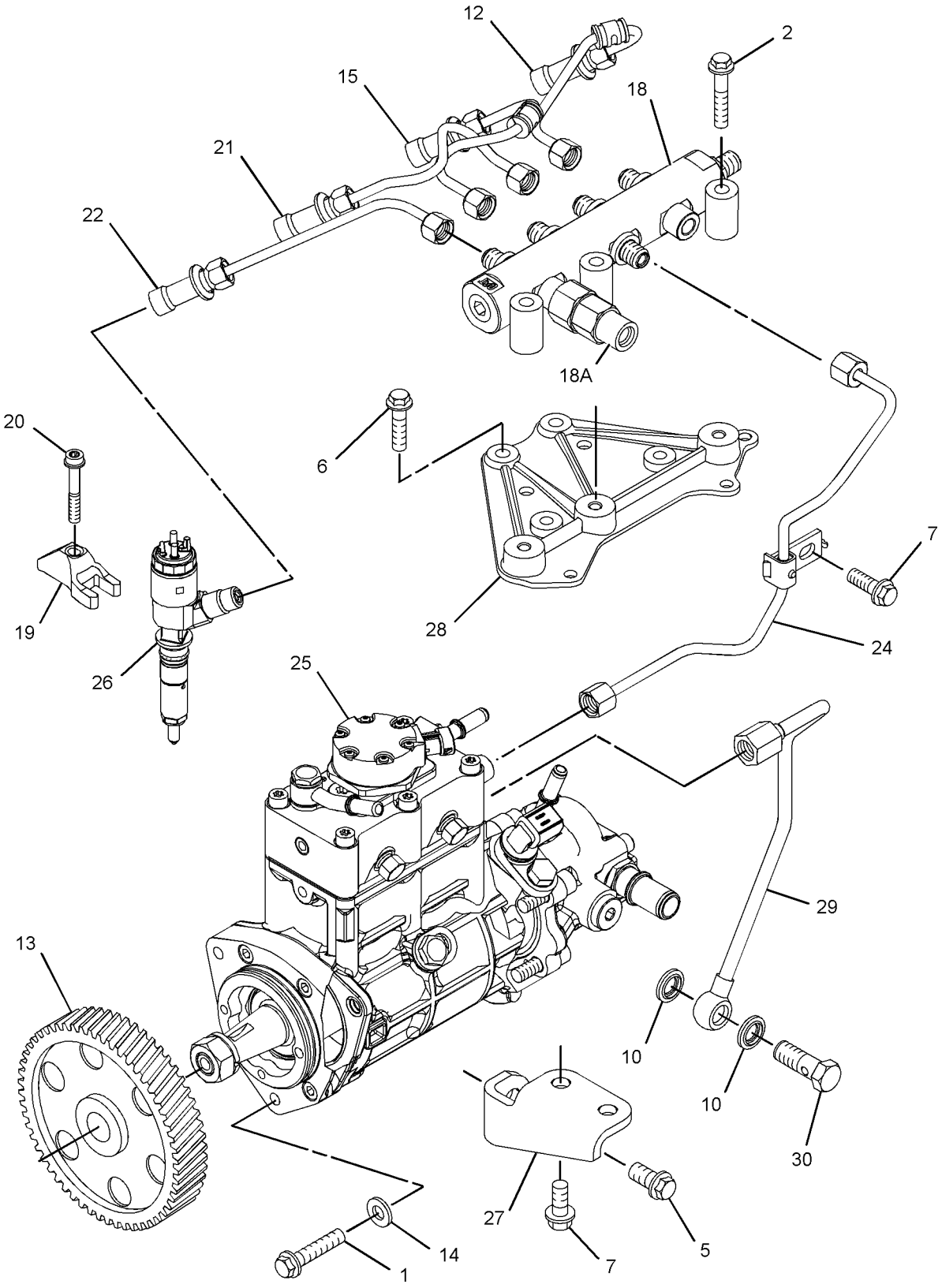

GRAPHIC #1 g02089173

353-7341 **PUMP GP-FUEL INJECTION (**contd.**)** **i03834160**

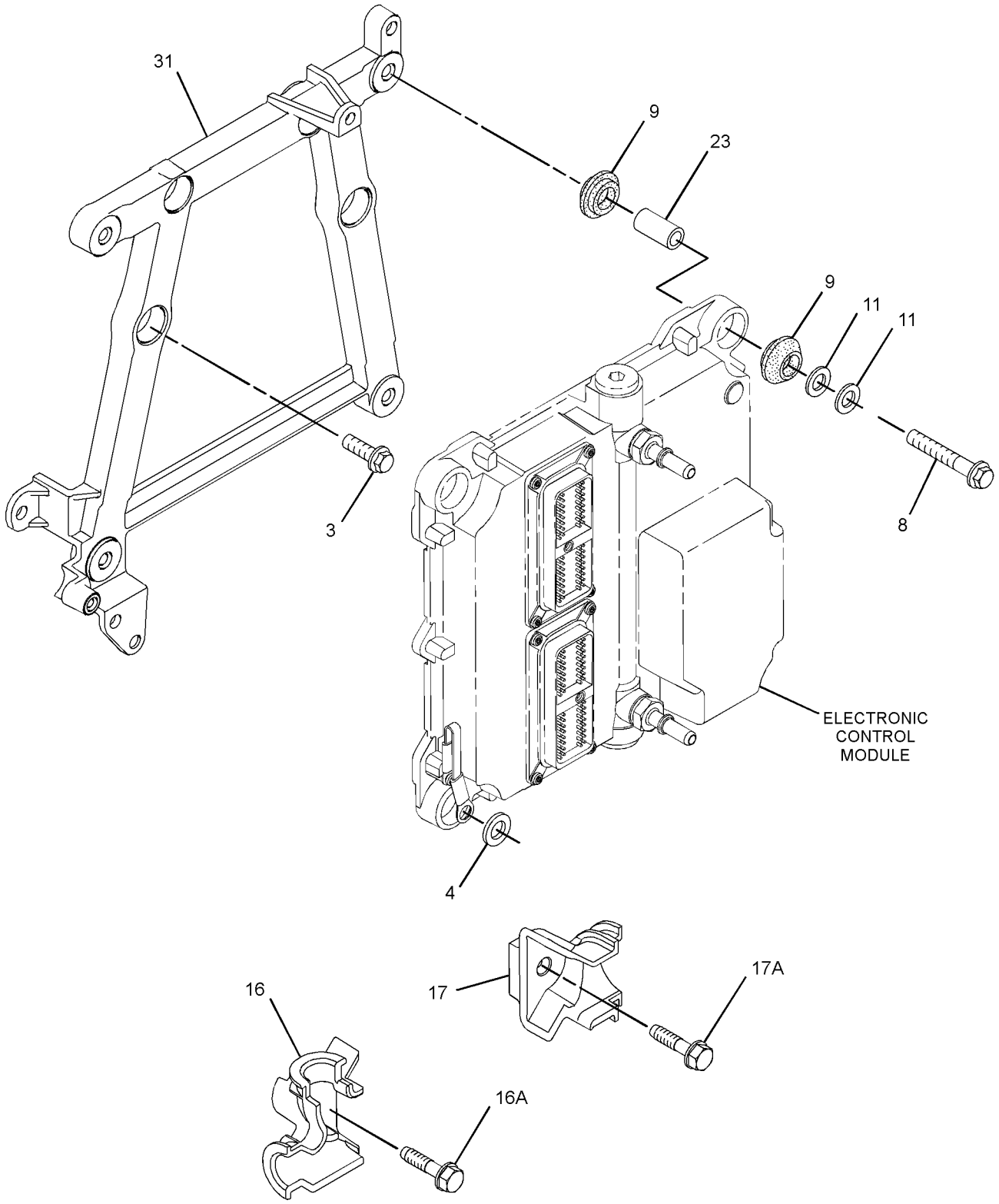

GRAPHIC #2 <END> g01884867

353-7341 PUMP GP-FUEL INJECTION

TYPE 2

SMCS-1251, 1290 **i04000490**

NOTE	REF NO	GRAPHIC REF	PART NUMBER	QTY	PART NAME 1 2 3 4 5 6 (PRODUCT LEVEL)	SEE PAGE
M	1	1	**6I-0260**	3	BOLT (M8X1.25X25-MM)	
M	2	1	**6I-0455**	3	BOLT (M8X1.25X55-MM)	
M	3	2	**6I-0572**	4	BOLT (M8X1.25X20-MM)	
	4	2	**7W-2632**	1	WASHER (8.5X16.8X1.6-MM THK)	
M	5	1	**100-4830**	1	BOLT (M10X1.5X20-MM)	
M	6	1	**101-3895**	4	BOLT (M8X1.25X35-MM)	
M	7	1	**124-3815**	3	BOLT (M8X1.25X16-MM)	
M	8	2	**141-8584**	4	BOLT (M8X1.25X50-MM)	
	9	2	**300-6714**	8	MOUNT	
	10	1	**160-0162**	2	WASHER	
	11	2	**217-0099**	5	SPACER (8.2X25X2-MM THK)	
	12	1	**333-4733**	1	LINE-FUEL INJECTION (CYL NO. 4)	
	13	1	**230-8989**	1	GEAR-FUEL PUMP (68-TEETH)	
	14	1	**232-3149**	3	WASHER (8.35X16.85X1.55-MM THK)	
	15	1	**333-4732**	1	LINE-FUEL INJECTION (CYL NO. 3)	
	16	2	**268-6678**	1	BRACKET AS	
M	16A	2	**260-3939**	1	SCREW-HEX HEAD (M6X1X25-MM)	
	17	2	**268-6677**	1	BRACKET AS	
M	17A	2	**260-3939**	1	SCREW-HEX HEAD (M6X1X25-MM)	
	18	1	**318-2394**	1	RAIL AS-FUEL	
	18A	1	**305-5291**	1	VALVE AS-RELIEF	
	19	1	**278-5168**	4	CLAMP-INJECTOR	
	20	1	**278-5170**	4	BOLT	
	21	1	**322-3746**	1	TUBE (CYL NO. 2)	
	22	1	**322-3745**	1	TUBE (CYL NO. 1)	
	23	2	**278-5203**	4	SPACER	
	24	1	**337-3574**	1	TUBE	
CYR	25	1	**352-6584**	1	PUMP GP-FUEL INJECTION	1540
YR	26	1	**320-0680**	4	INJECTOR GP-FUEL	1027
	27	1	**298-4535**	1	BRACKET-SUPPORT	
	28	1	**337-3573**	1	BRACKET	
	29	1	**298-4542**	1	TUBE AS	
	30	1	**298-4543**	1	BOLT	
	31	2	**317-3144**	1	BRACKET	
F			**278-4138**	1	KIT-FUEL LINE PROTECTION	

C - CHANGE FROM PREVIOUS TYPE
F - NOT SHOWN
M - METRIC PART
R - REMANUFACTURED PART MAY BE AVAILABLE
Y - SEPARATE ILLUSTRATION

353-7341 **PUMP GP-FUEL INJECTION (**contd.**)** **i04000490**

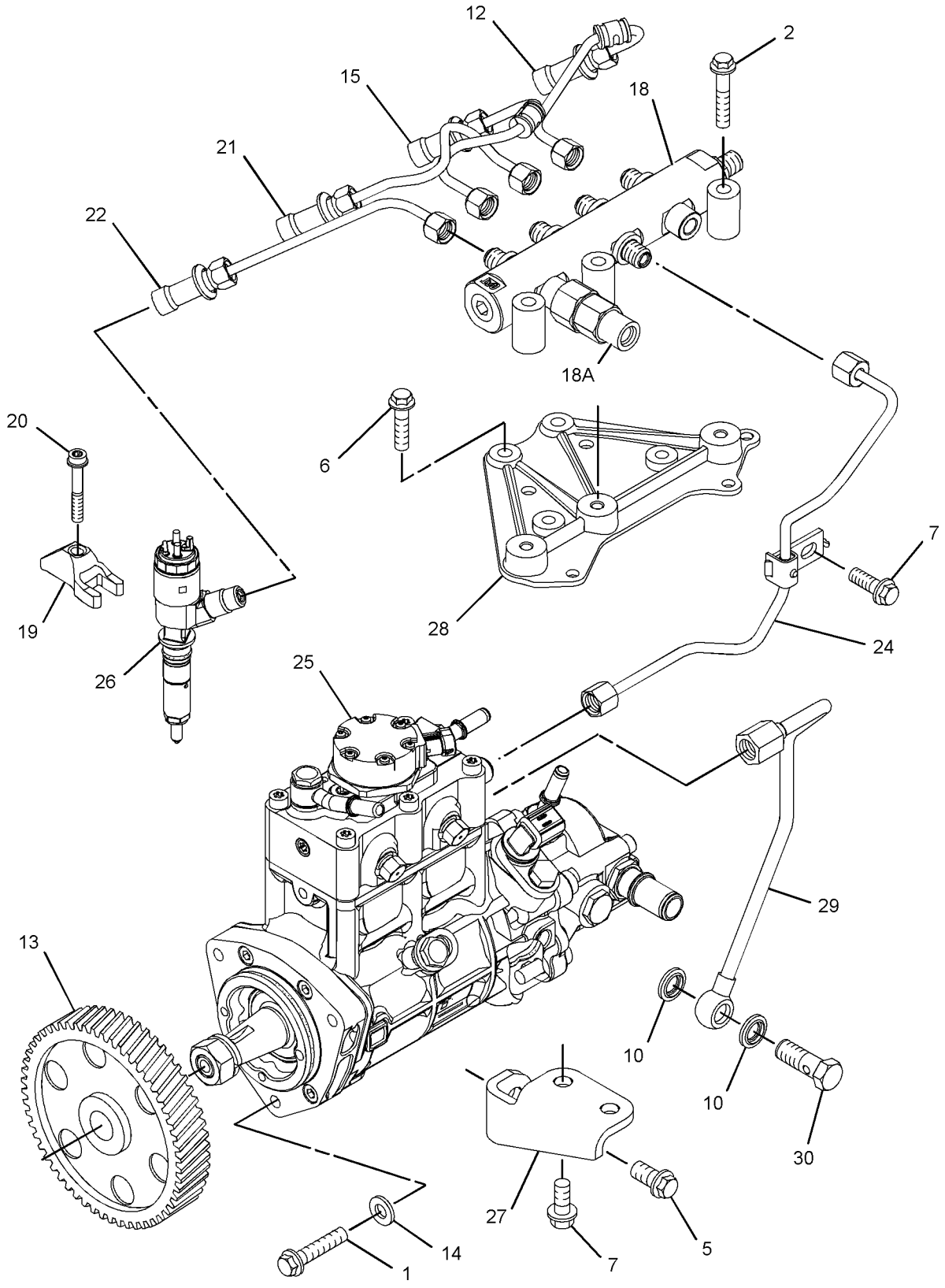

GRAPHIC #1 g02242574

353-7341 **PUMP GP-FUEL INJECTION (**contd.**)** **i04000490**

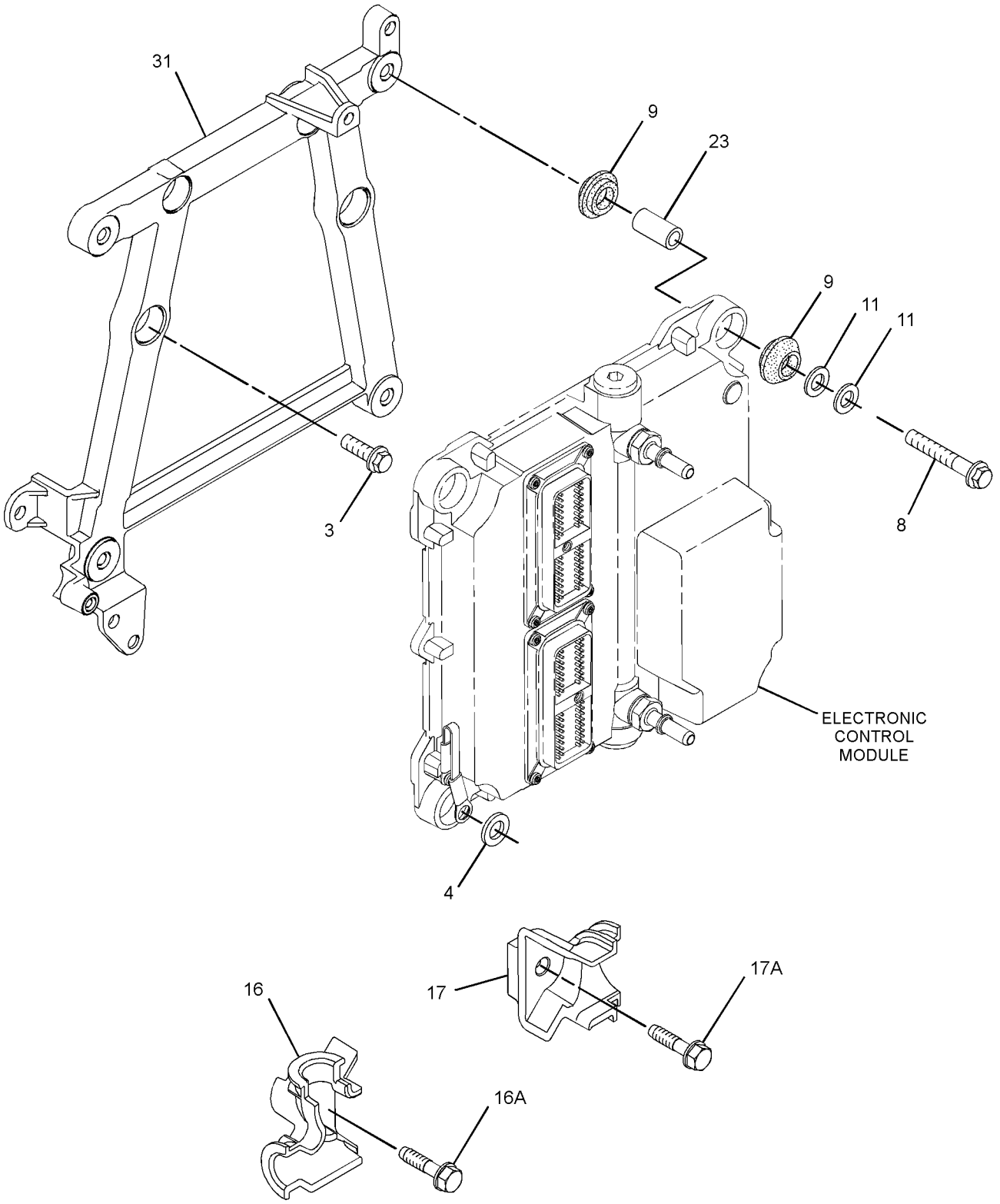

GRAPHIC #2 <END> g01884867

353-7341 PUMP GP-FUEL INJECTION

TYPE 3

SMCS-1251, 1290 **i05881510**

NOTE	REF NO	GRAPHIC REF	PART NUMBER	QTY	PART NAME 1 2 3 4 5 6 (PRODUCT LEVEL)	SEE PAGE
M	1	1	**6I-0260**	3	BOLT (M8X1.25X25-MM)	
M	2	1	**6I-0455**	3	BOLT (M8X1.25X55-MM)	
M	3	2	**6I-0572**	4	BOLT (M8X1.25X20-MM)	
	4	2	**7W-2632**	1	WASHER (8.5X16.8X1.6-MM THK)	
M	5	1	**100-4830**	1	BOLT (M10X1.5X20-MM)	
M	6	1	**101-3895**	4	BOLT (M8X1.25X35-MM)	
M	7	1	**124-3815**	3	BOLT (M8X1.25X16-MM)	
M	8	2	**141-8584**	4	BOLT (M8X1.25X50-MM)	
	9	2	**300-6714**	8	MOUNT	
	10	1	**346-0007**	2	WASHER	
	11	2	**217-0099**	5	SPACER (8.2X25X2-MM THK)	
	12	1	**333-4733**	1	LINE-FUEL INJECTION (CYL NO. 4)	
	13	1	**230-8989**	1	GEAR-FUEL PUMP (68-TEETH)	
	14	1	**232-3149**	3	WASHER (8.35X16.85X1.55-MM THK)	
	15	1	**333-4732**	1	LINE-FUEL INJECTION (CYL NO. 3)	
	16	2	**268-6678**	1	BRACKET AS	
M	16A	2	**260-3939**	1	SCREW-HEX HEAD (M6X1X25-MM)	
	17	2	**268-6677**	1	BRACKET AS	
M	17A	2	**260-3939**	1	SCREW-HEX HEAD (M6X1X25-MM)	
	18	1	**358-6632**	1	RAIL GP-FUEL	
	18A	1	**305-5291**	1	VALVE AS-RELIEF	
	19	1	**278-5168**	4	CLAMP-INJECTOR	
	20	1	**278-5170**	4	BOLT	
	21	1	**322-3746**	1	TUBE (CYL NO. 2)	
	22	1	**322-3745**	1	TUBE (CYL NO. 1)	
	23	2	**278-5203**	4	SPACER	
	24	1	**337-3574**	1	TUBE	
CYR	25	1	**324-0532**	1	PUMP GP-FUEL INJECTION	1523
YR	26	1	**320-0680**	4	INJECTOR GP-FUEL	1027
	27	1	**298-4535**	1	BRACKET-SUPPORT	
	28	1	**337-3573**	1	BRACKET	
	29	1	**298-4542**	1	TUBE AS	
	30	1	**363-3908**	1	BOLT-SPECIAL	
	31	2	**317-3144**	1	BRACKET	
F			**278-4138**	1	KIT-FUEL LINE PROTECTION	

C - CHANGE FROM PREVIOUS TYPE
F - NOT SHOWN
M - METRIC PART
R - REMANUFACTURED PART MAY BE AVAILABLE
Y - SEPARATE ILLUSTRATION

353-7341 **PUMP GP-FUEL INJECTION (**contd.**)** **i05881510**

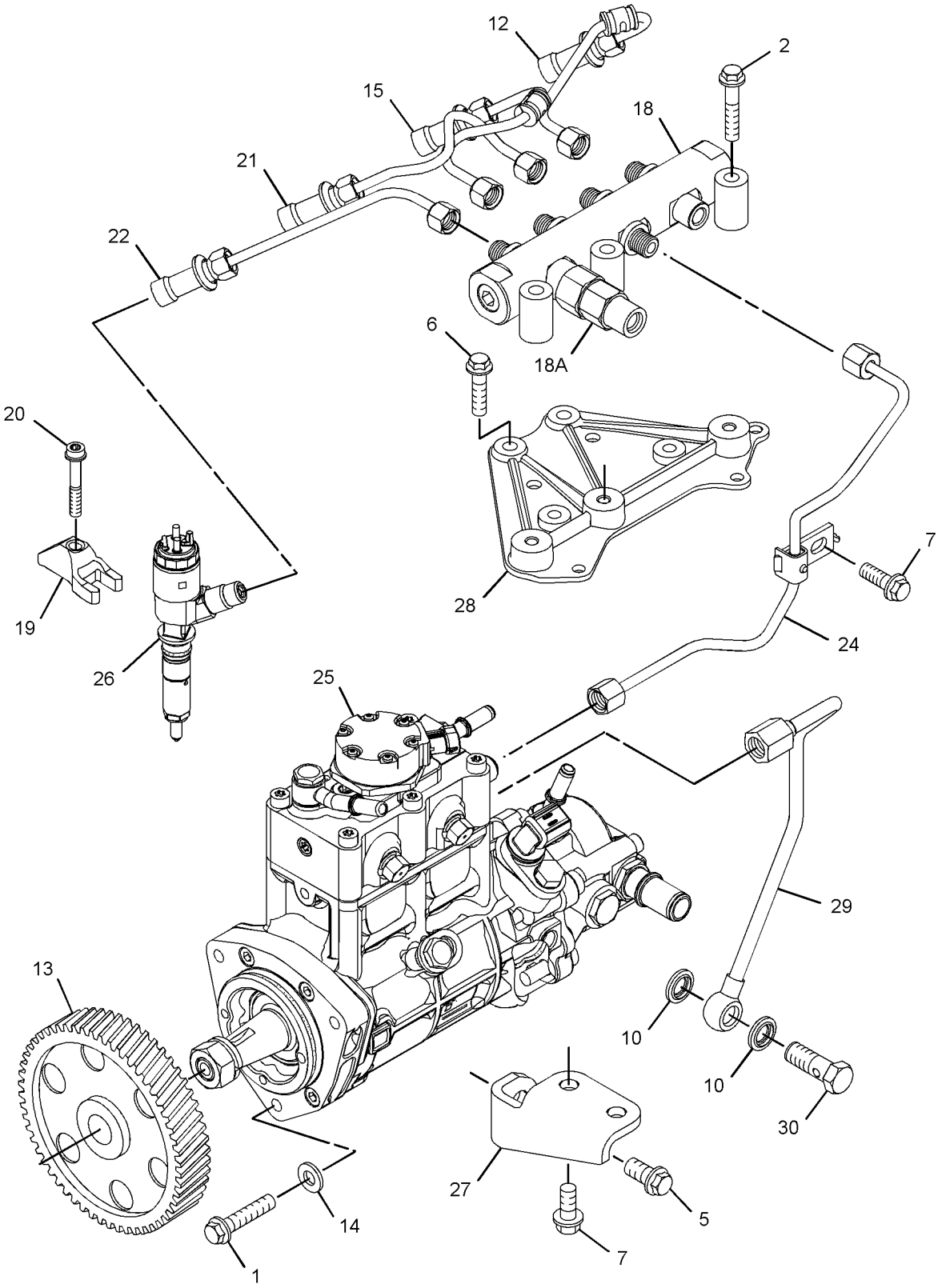

GRAPHIC #1 g02857597

353-7341 **PUMP GP-FUEL INJECTION (**contd.**)** **i05881510**

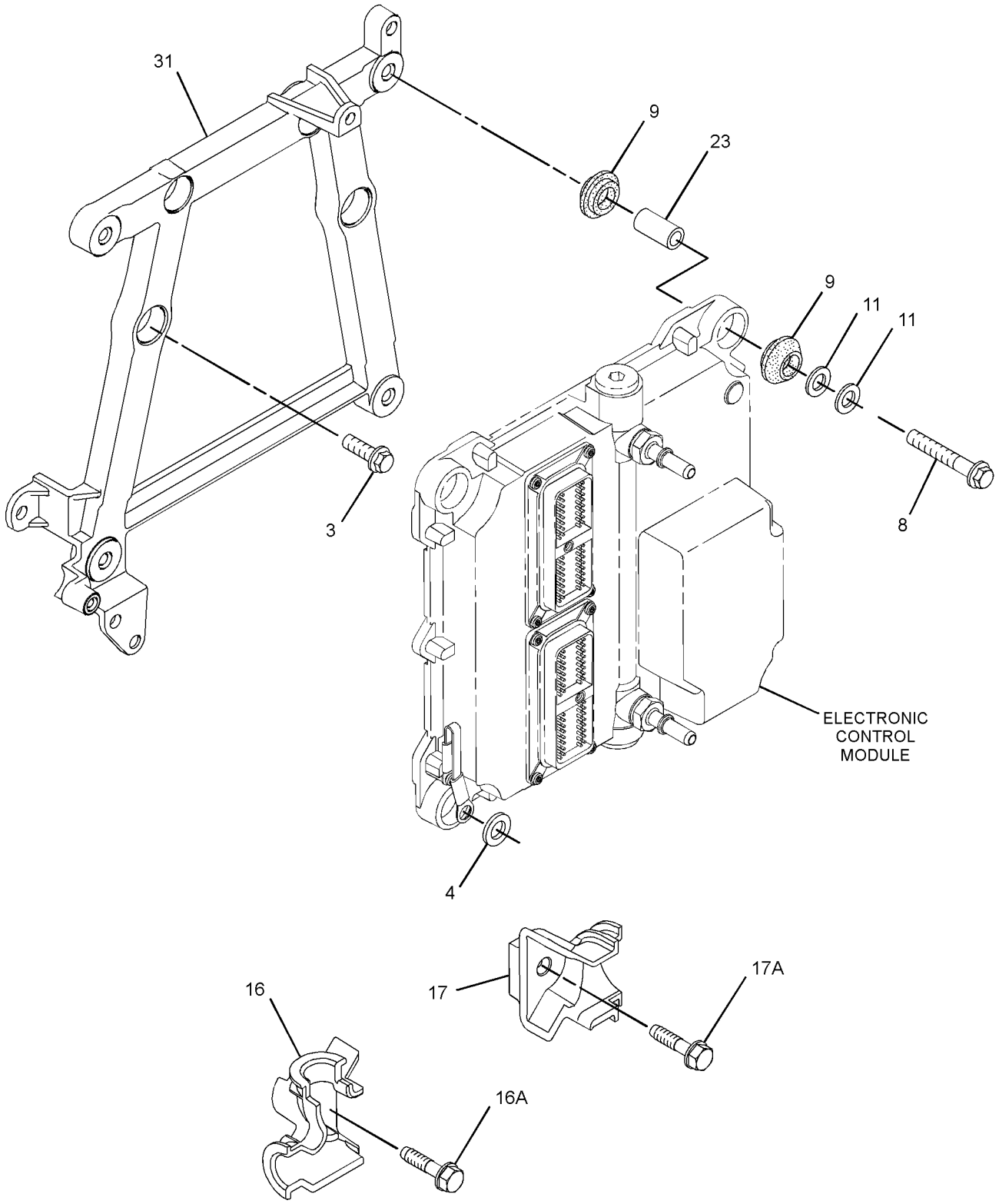

GRAPHIC #2 <END> g01884867

368-9172 PUMP GP-FUEL INJECTION*R

AN ATTACHMENT

SMCS-1251, 1290 **i05441969**

NOTE	REF NO	GRAPHIC REF	PART NUMBER	QTY	PART NAME 1 2 3 4 5 6 (PRODUCT LEVEL)	SEE PAGE
	1	1	**228-0172**	1	FITTING-FUEL	
	2	1	**228-7100**	3	SEAL-O-RING	
	3	1	**238-0120**	1	SENSOR GP-SPEED	
	4	1	**248-1066**	1	FITTING-FUEL	
	5	1	**257-2381**	2	PIN	
	6	1	**257-2382**	2	PLUG	
	7	1	**258-8149**	2	SPRING	
	8	1	**426-4806**	1	PUMP GP-FUEL TRANSFER	
	9	1	**294-3031**	1	BOLT-SPECIAL	
	10	1	**294-3032**	1	WASHER-SPECIAL	
M	11	1	**295-4801**	1	NUT (M14X1.5-THD)	
	12	1	**3B-4509**	1	LOCKWASHER	
	13	1	**117-1385**	1	SEAL-O-RING	
	14	1	**334-2932**	1	SEAL-O-RING	
M	15	1	**5A-3604**	5	BOLT-SOCKET HEAD (M8X1.25X25-MM)	
M	16	1	**8T-4200**	1	BOLT (M8X1.25X16-MM)	
	17	1	**247-6019**	1	SEAL-O-RING	
	18	1	**8L-2779**	1	SEAL-O-RING	
	19	1	**287-7272**	1	CONNECTOR	
	20	1	**8C-3076**	1	SEAL-O-RING	

M - METRIC PART

368-9172 **PUMP GP-FUEL INJECTION** (contd.) **i05441969**

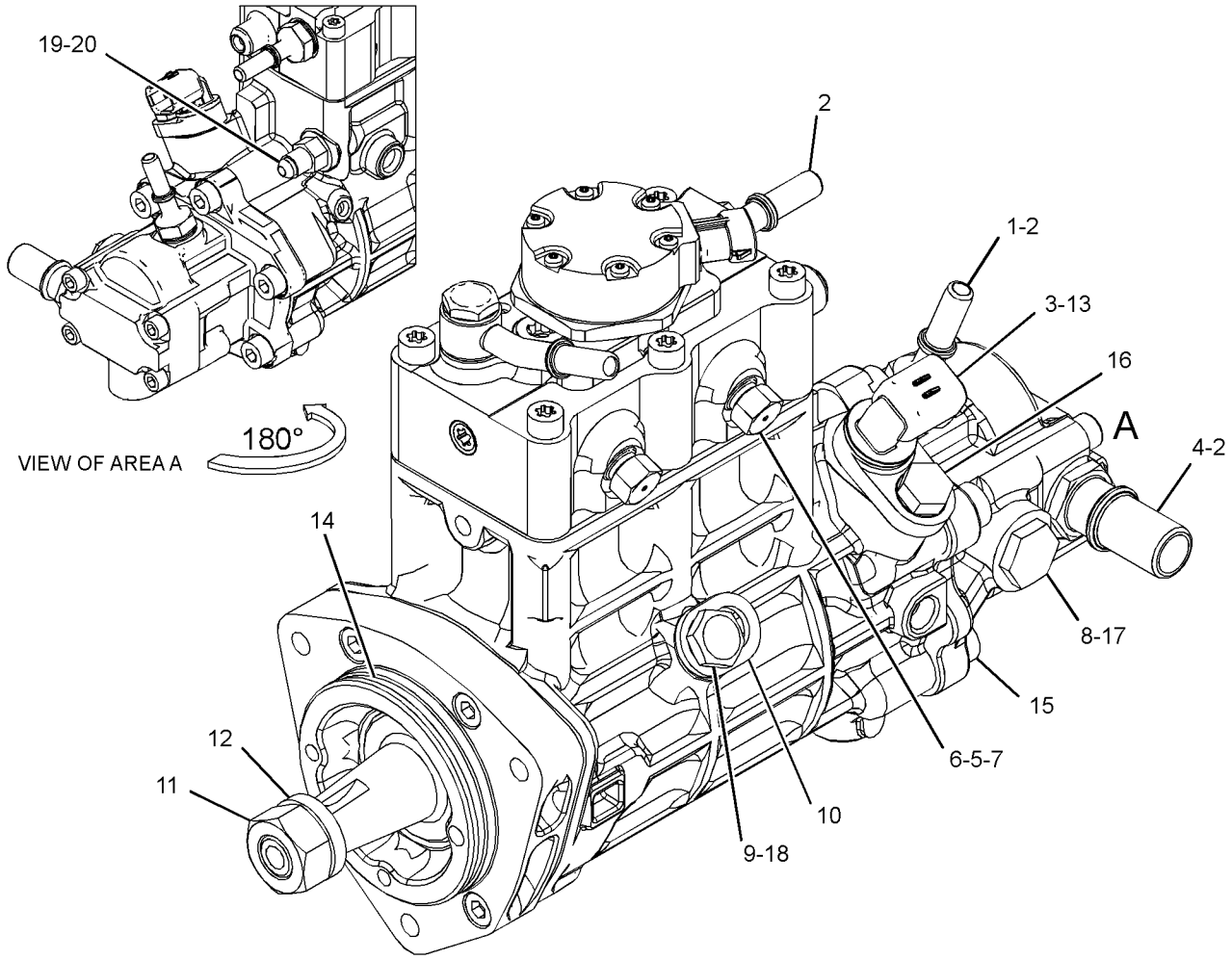

GRAPHIC #1 <END> g03686876

280-0683 RAIL GP-FUEL

AN ATTACHMENT

SMCS-1288 **i03725222**

NOTE	REF NO	GRAPHIC REF	PART NUMBER	QTY	PART NAME 1 2 3 4 5 6 (PRODUCT LEVEL)	SEE PAGE
					(NO SERVICED PARTS)	

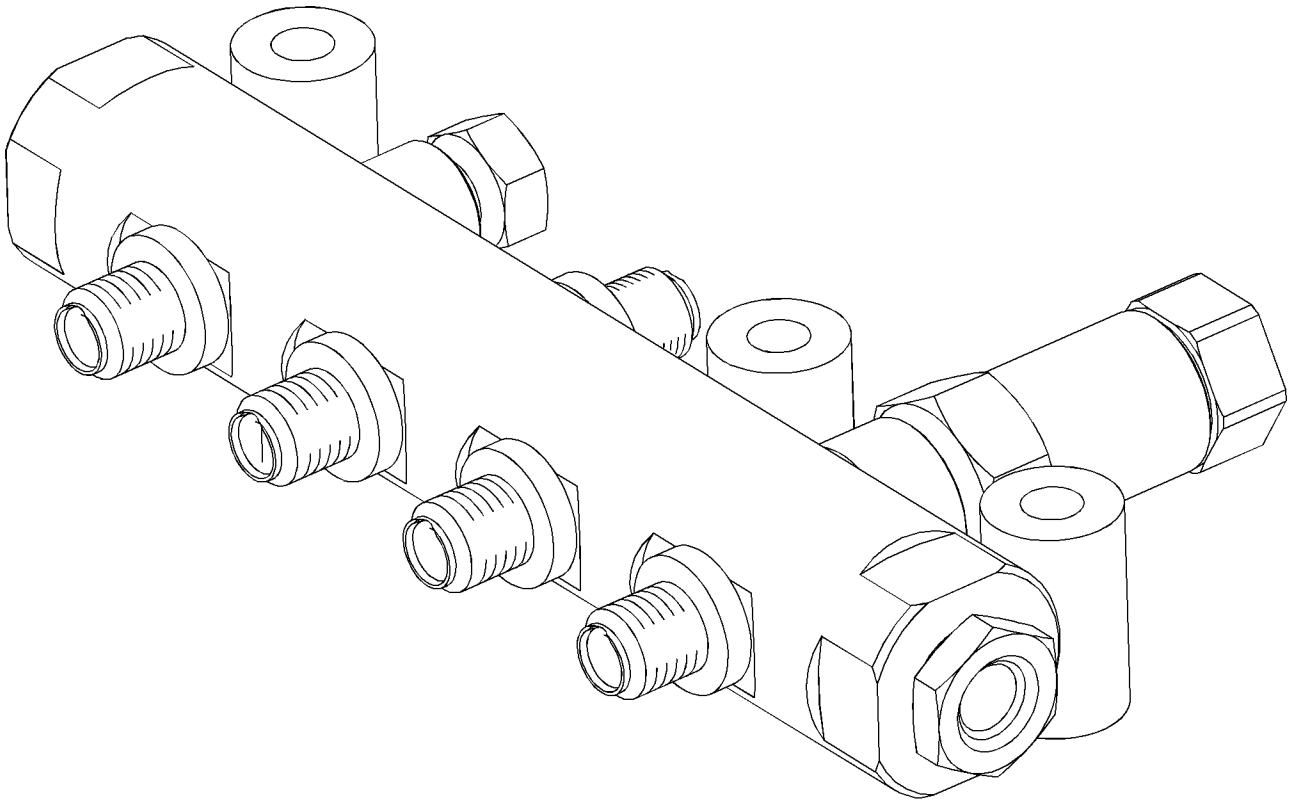

GRAPHIC #1 <END> g02009562

312-4598 RAIL GP-FUEL

AN ATTACHMENT

SMCS-1288 **i03732044**

NOTE	REF NO	GRAPHIC REF	PART NUMBER	QTY	PART NAME 1 2 3 4 5 6 (PRODUCT LEVEL)	SEE PAGE
	1	1	**305-5291**	1	VALVE AS-RELIEF (FUEL RAIL)	

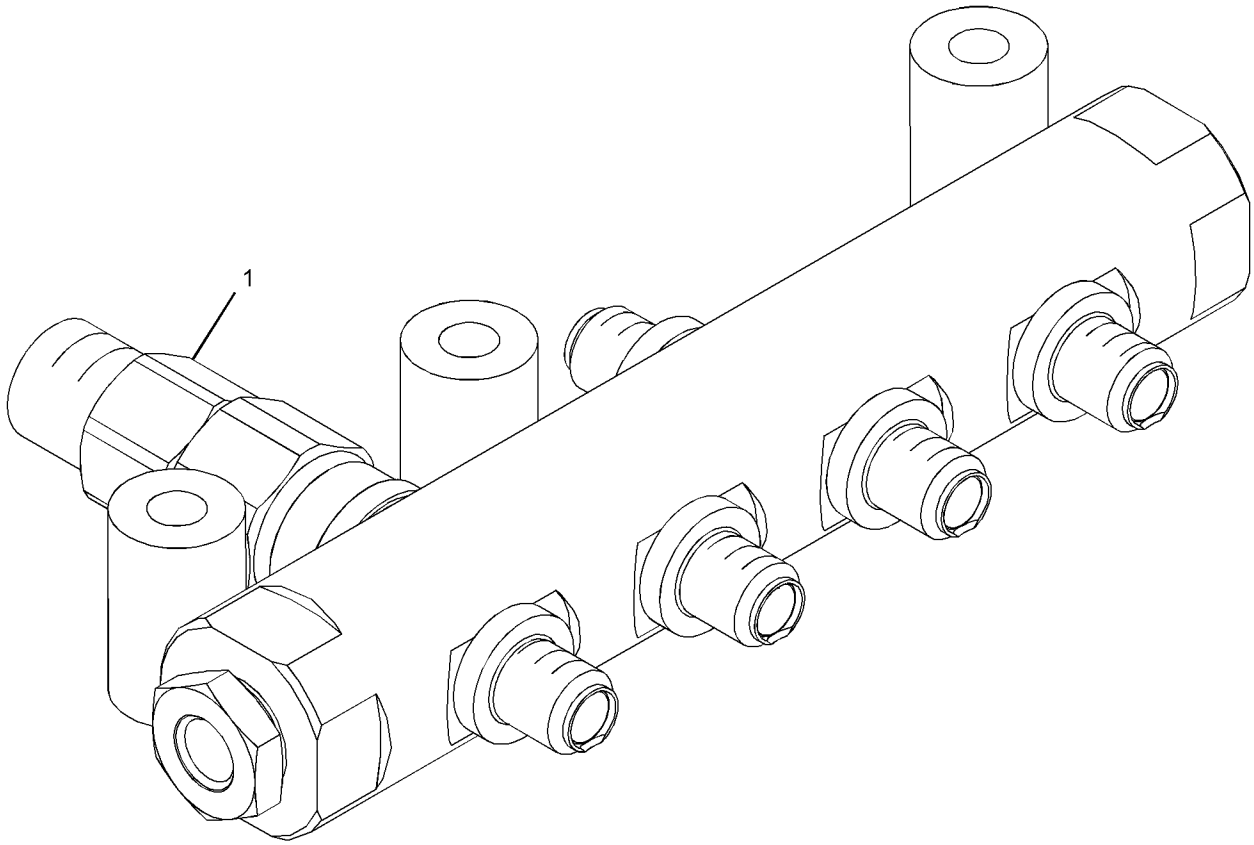

GRAPHIC #1 <END> g02009575

318-2391 RAIL GP-FUEL

AN ATTACHMENT

SMCS-1288 **i03732045**

NOTE	REF NO	GRAPHIC REF	PART NUMBER	QTY	PART NAME 1 2 3 4 5 6 (PRODUCT LEVEL)	SEE PAGE
	1	1	**305-5291**	1	VALVE AS-RELIEF (FUEL RAIL)	

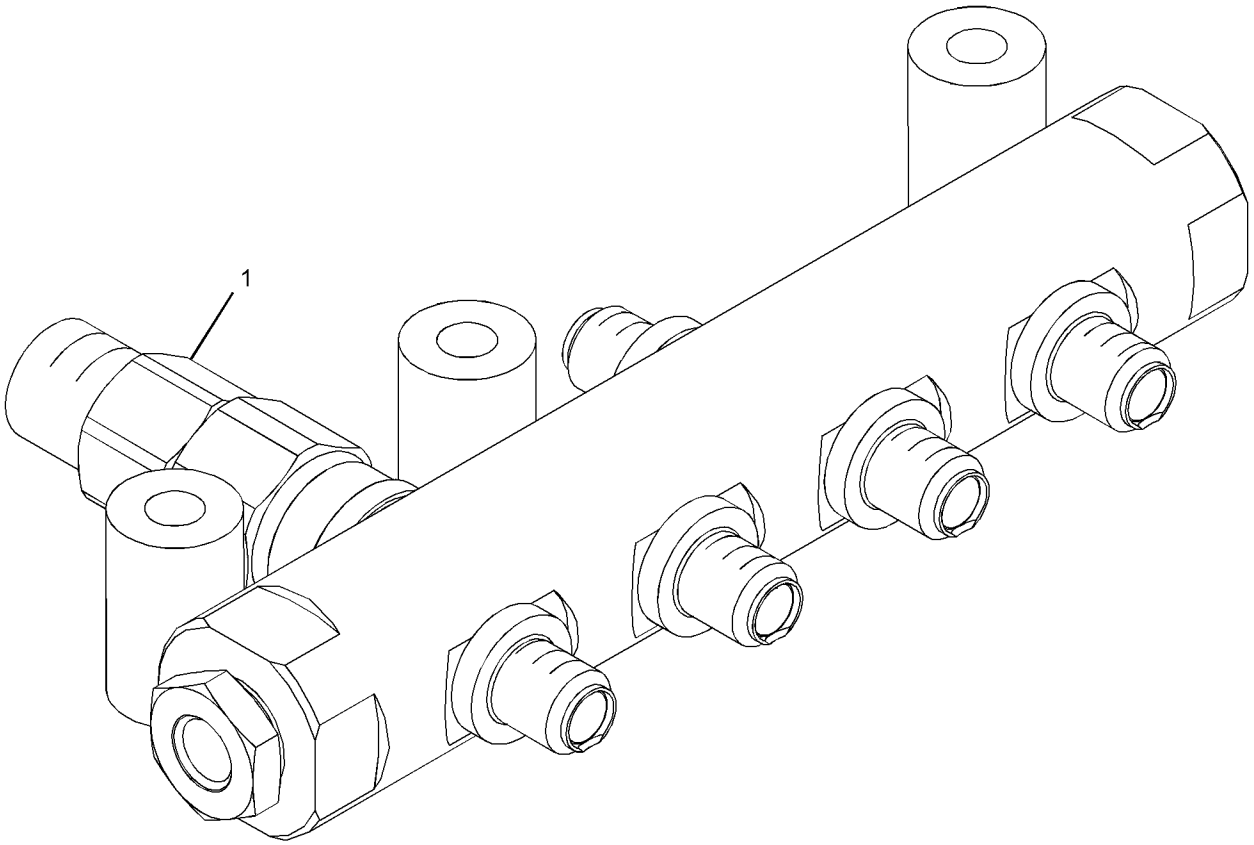

GRAPHIC #1 <END> g02009575

358-6633 RAIL GP-FUEL

AN ATTACHMENT

SMCS-1288 **i04020469**

NOTE	REF NO	GRAPHIC REF	PART NUMBER	QTY	PART NAME 1 2 3 4 5 6 (PRODUCT LEVEL)	SEE PAGE
	1	1	**305-5291**	1	VALVE AS-RELIEF (FUEL RAIL)	

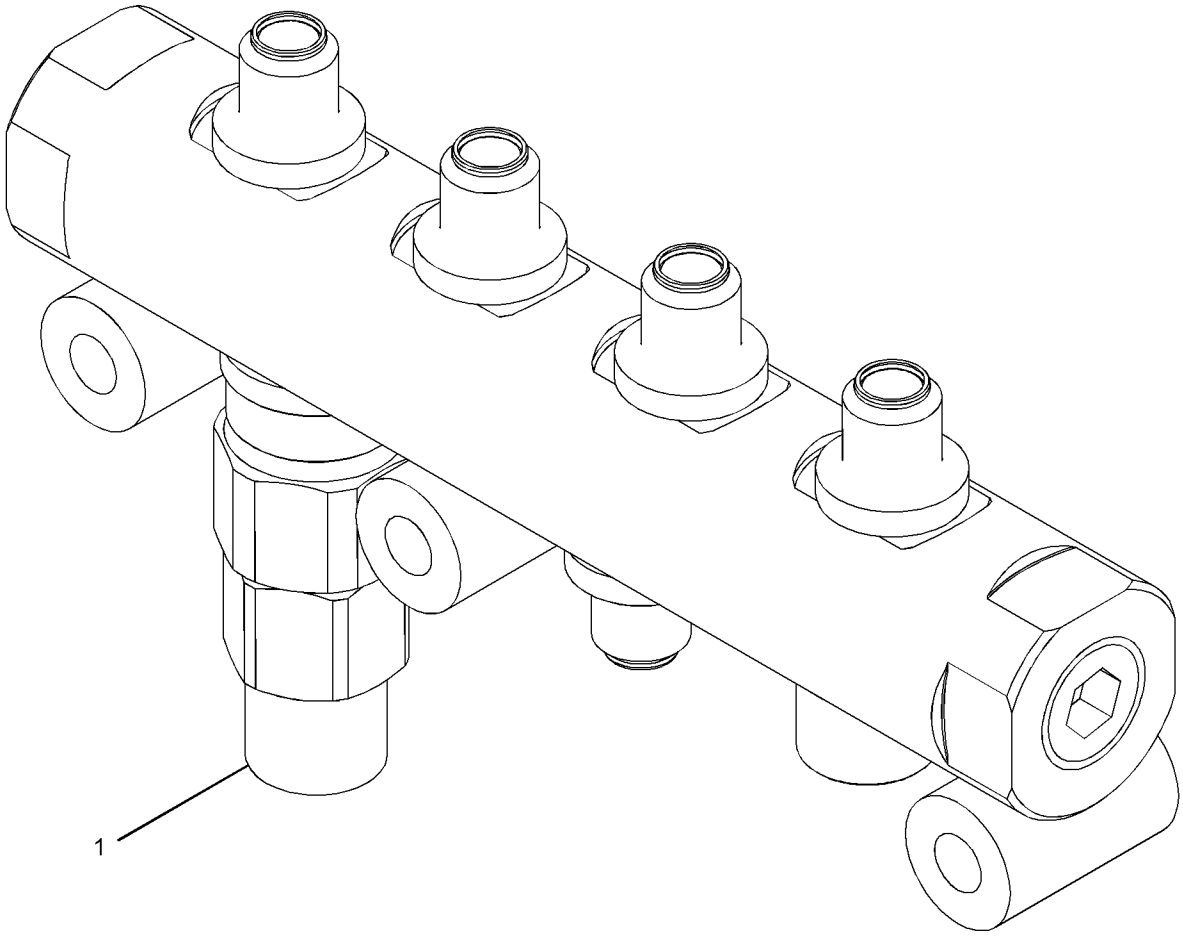

GRAPHIC #1 <END> g02203695

298-5109 ALTERNATOR GP-CHARGING

SMCS-1405 **i02604346**

NOTE	REF NO	GRAPHIC REF	PART NUMBER	QTY	PART NAME 1 2 3 4 5 6 (PRODUCT LEVEL)	SEE PAGE
M	1	1	**6I-0260**	1	BOLT (M8X1.25X25-MM)	
M	2	1	**6I-0593**	3	BOLT (M10X1.5X30-MM)	
M	3	1	**6I-0650**	1	BOLT (M10X1.5X65-MM)	
M	4	1	**100-8451**	1	BOLT (M8X1.25X130-MM)	
M	5	1	**113-6349**	1	NUT (M8X1.25-THD)	
M	6	1	**140-8783**	2	BOLT (M10X1.5X45-MM)	
	7	1	**225-3143**	1	ALTERNATOR GP-CHARGING (12-VOLT, 85-AMPERE)	
	8	1	**261-0371**	1	PLATE	
	9	1	**261-0406**	1	BELT TENSIONER	
	10	1	**284-3425**	1	PULLEY-ALTERNATOR	
	11	1	**298-4562**	1	BRACKET-ALTERNATOR	
	11A	1	**161-9820**	2	PIN	

M - METRIC PART

298-5109 **ALTERNATOR GP-CHARGING (**contd.**)** **i02604346**

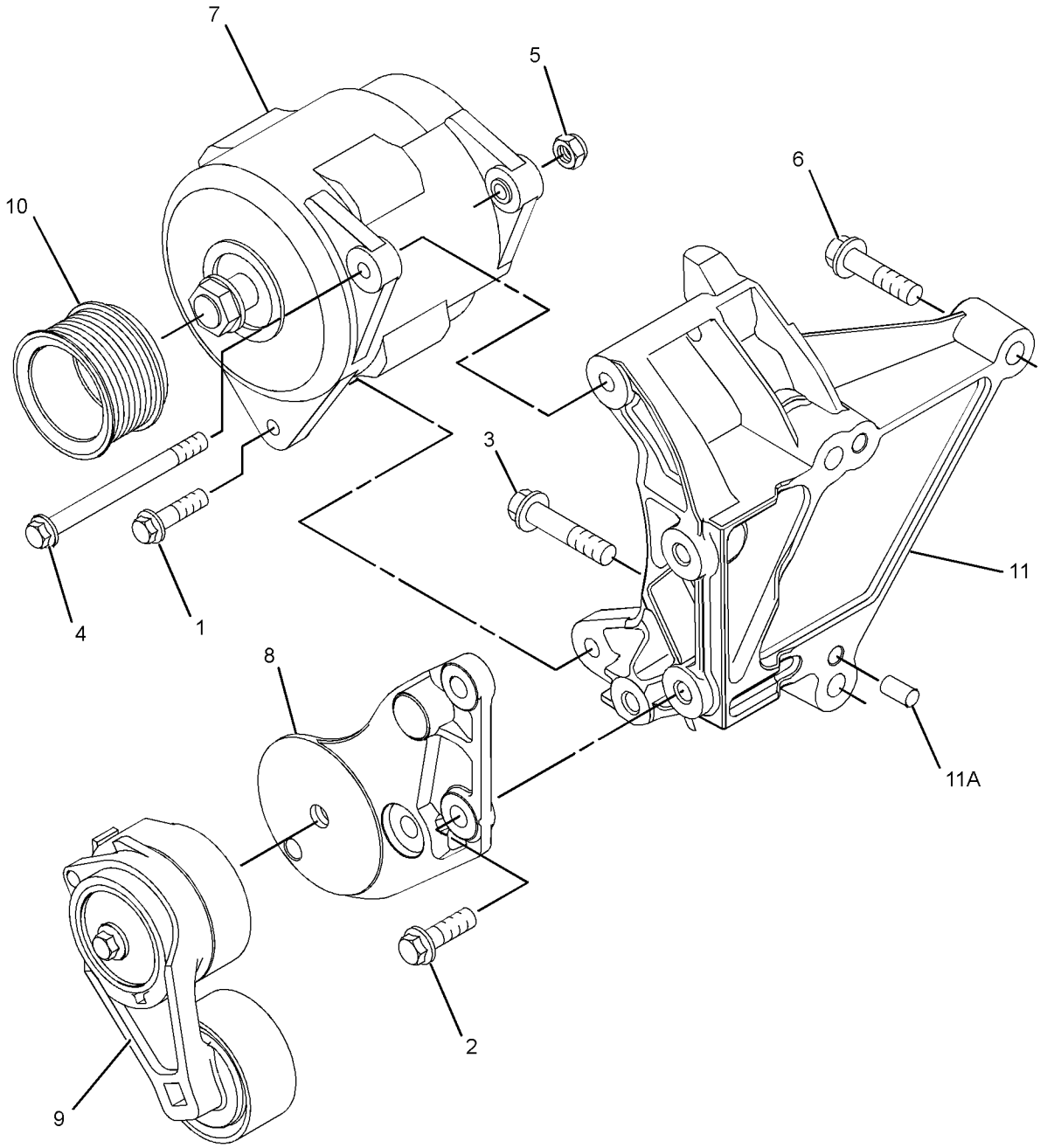

GRAPHIC #1 <END> g01304371

299-5112 ALTERNATOR GP-CHARGING

24 VOLT

SMCS-1405 **i06232825**

NOTE	REF NO	GRAPHIC REF	PART NUMBER	QTY	PART NAME 1 2 3 4 5 6 (PRODUCT LEVEL)	SEE PAGE
	1	1	**6B-0933**	1	SPACER (10.31X19.05X6.35-MM THK)	
M	2	1	**6I-0260**	1	BOLT (M8X1.25X25-MM)	
M	3	1	**6I-0454**	1	BOLT (M10X1.5X70-MM)	
M	4	1	**175-7141**	1	NUT-HEX FLANGE (M10X1.5-THD)	
	5	1	**233-9532**	1	PULLEY-ALTERNATOR	
	6	1	**067-6366**	1	WASHER	
M	7	1	**359-9666**	1	BOLT-FLANGE HEAD (M8X1.25X130-MM)	
M	8	1	**6V-9189**	1	LOCKNUT (M8X1.25-THD)	
M	9	1	**140-8783**	2	BOLT (M10X1.5X45-MM)	
R	10	1	**424-6821**	1	ALTERNATOR (24-VOLT, 55-AMPERE)	
	11	1	**453-3595**	1	BRACKET	
	12	1	**233-9531**	1	LEVER	
	13	1	**132-8848**	1	WASHER	

M - METRIC PART
R - REMANUFACTURED PART MAY BE AVAILABLE

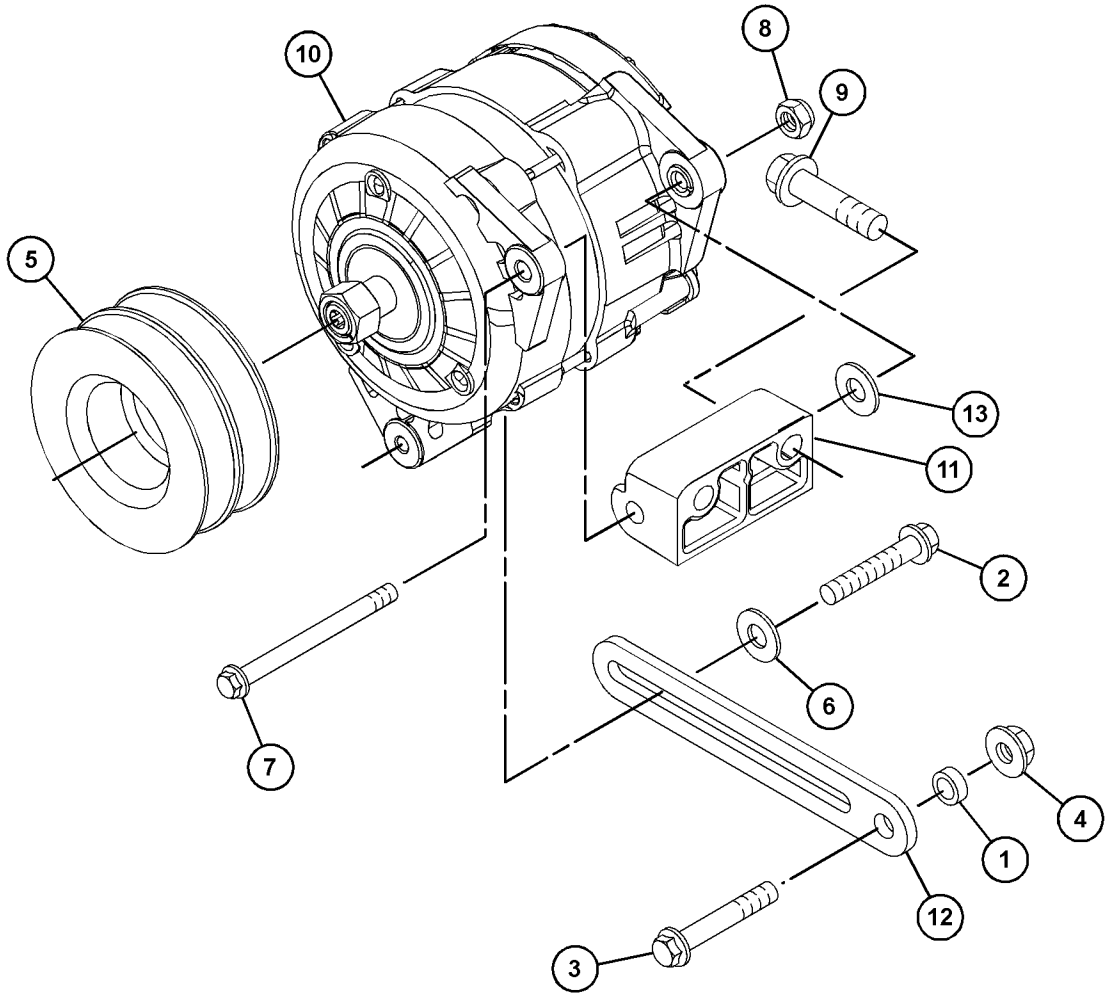

GRAPHIC #1 <END> g03872746

301-8244 ALTERNATOR GP-CHARGING

24 VOLT

SMCS-1405 **i06217442**

NOTE	REF NO	GRAPHIC REF	PART NUMBER	QTY	PART NAME 1 2 3 4 5 6 (PRODUCT LEVEL)	SEE PAGE
	1	1	**6B-0933**	1	SPACER (10.31X19.05X6.35-MM THK)	
M	2	1	**6I-0260**	1	BOLT (M8X1.25X25-MM)	
M	3	1	**6I-0454**	1	BOLT (M10X1.5X70-MM)	
M	4	1	**6I-0594**	1	NUT (M10X1.5-THD)	
	6	1	**067-6366**	1	WASHER	
M	7	1	**359-9666**	1	BOLT-FLANGE HEAD (M8X1.25X130-MM)	
M	8	1	**113-6349**	1	NUT (M8X1.25-THD)	
M	9	1	**140-8783**	2	BOLT (M10X1.5X45-MM)	
R	10	1	**424-6821**	1	ALTERNATOR (24-VOLT, 55-AMPERE)	
	11	1	**453-3595**	1	BRACKET	
	12	1	**233-9531**	1	LEVER	
	13	1	**243-4300**	1	PULLEY-ALTERNATOR	
	14	1	**132-8848**	1	WASHER	

M - METRIC PART
R - REMANUFACTURED PART MAY BE AVAILABLE

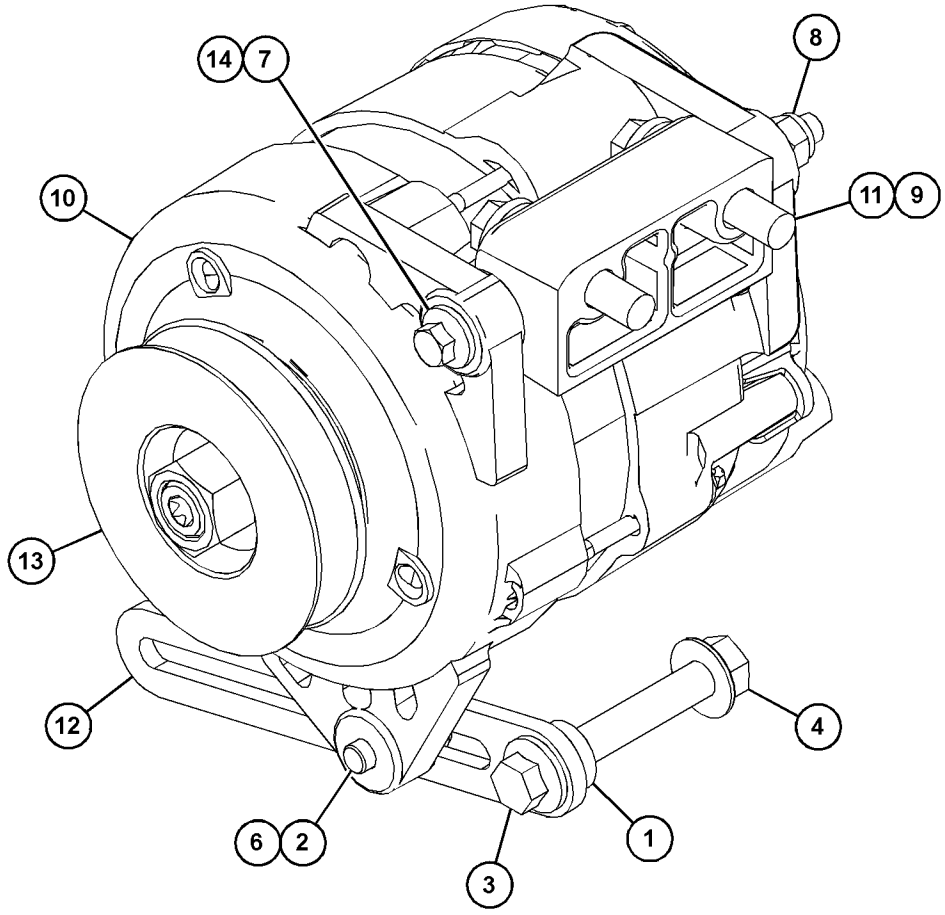

GRAPHIC #1 <END> g03868312

303-4621 ALTERNATOR GP-CHARGING

12 VOLT, 65-AMPERE

SMCS-1405 **i06097233**

NOTE	REF NO	GRAPHIC REF	PART NUMBER	QTY	PART NAME 1 2 3 4 5 6 (PRODUCT LEVEL)	SEE PAGE
	1	1	**6B-0933**	1	SPACER (10.31X19.05X6.35-MM THK)	
M	2	1	**6I-0260**	1	BOLT (M8X1.25X25-MM)	
M	3	1	**6I-0454**	1	BOLT (M10X1.5X70-MM)	
M	4	1	**175-7141**	1	NUT-HEX FLANGE (M10X1.5-THD)	
	5	1	**243-4300**	1	PULLEY-ALTERNATOR	
	6	1	**067-6366**	1	WASHER	
M	7	1	**359-9666**	1	BOLT-FLANGE HEAD (M8X1.25X130-MM)	
M	8	1	**6V-9189**	1	LOCKNUT (M8X1.25-THD)	
M	9	1	**140-8783**	2	BOLT (M10X1.5X45-MM)	
	10	1	**339-7767**	1	ALTERNATOR GP-CHARGING (12-VOLT)	
	11	1	**453-3595**	1	BRACKET	
	12	1	**233-9531**	1	LEVER	
	13	1	**132-8848**	1	WASHER	

M - METRIC PART

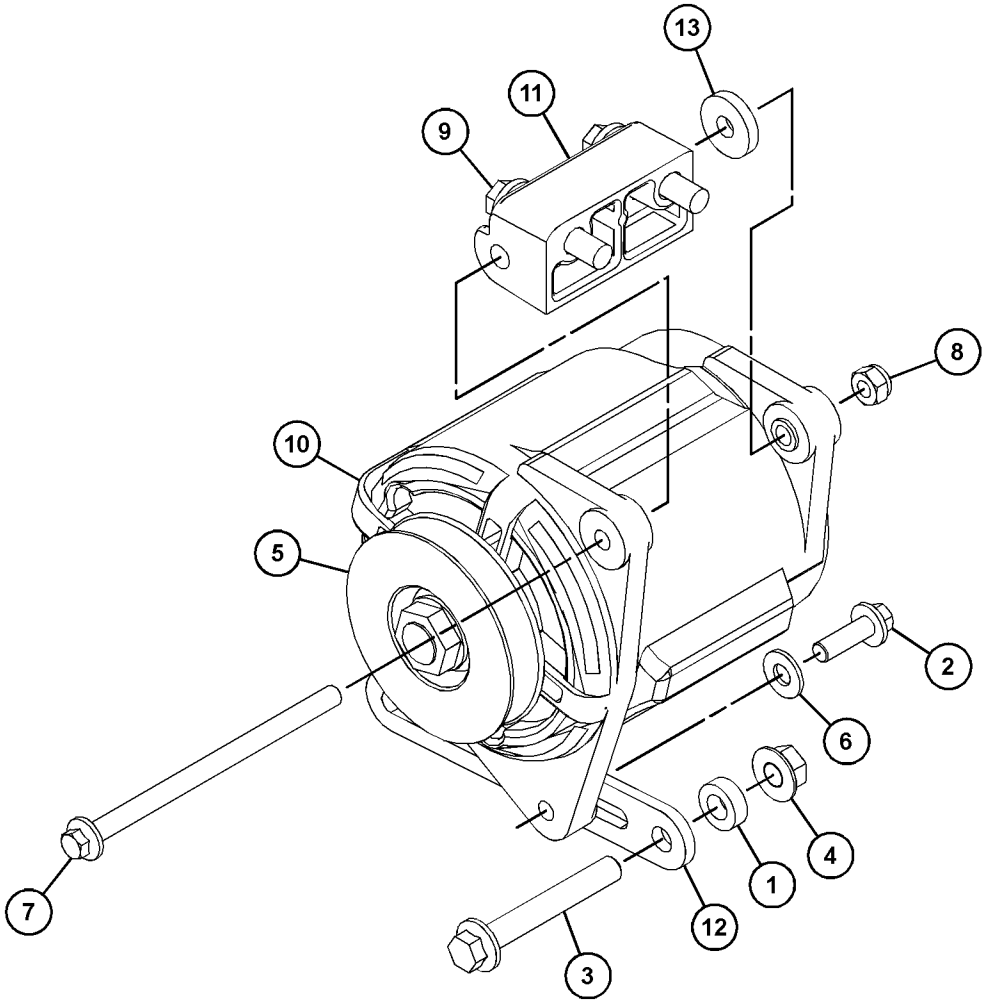

GRAPHIC #1 <END> g03819392

303-5774 ALTERNATOR GP-CHARGING

12 VOLT

SMCS-1405 **i05180982**

NOTE	REF NO	GRAPHIC REF	PART NUMBER	QTY	PART NAME 1 2 3 4 5 6 (PRODUCT LEVEL)	SEE PAGE
M	1	1	**6I-0260**	1	BOLT (M8X1.25X25-MM)	
M	2	1	**6I-0593**	3	BOLT (M10X1.5X30-MM)	
M	3	1	**6I-0650**	1	BOLT (M10X1.5X65-MM)	
M	4	1	**359-9666**	1	BOLT-FLANGE HEAD (M8X1.25X130-MM)	
M	5	1	**113-6349**	1	NUT (M8X1.25-THD)	
M	6	1	**140-8783**	2	BOLT (M10X1.5X45-MM)	
	7	1	**383-2557**	1	ALTERNATOR (12-VOLT, 120-AMPERE)	
	8	1	**377-9082**	1	BELT TENSIONER	
	9	1	**390-7340**	1	PULLEY-ALTERNATOR (8-GROOVE)	
	10	1	**339-5256**	1	BRACKET	
	11	1	**349-3261**	1	PLATE-TENSIONER	

M - METRIC PART

303-5774 **ALTERNATOR GP-CHARGING (**contd.**)** **i05180982**

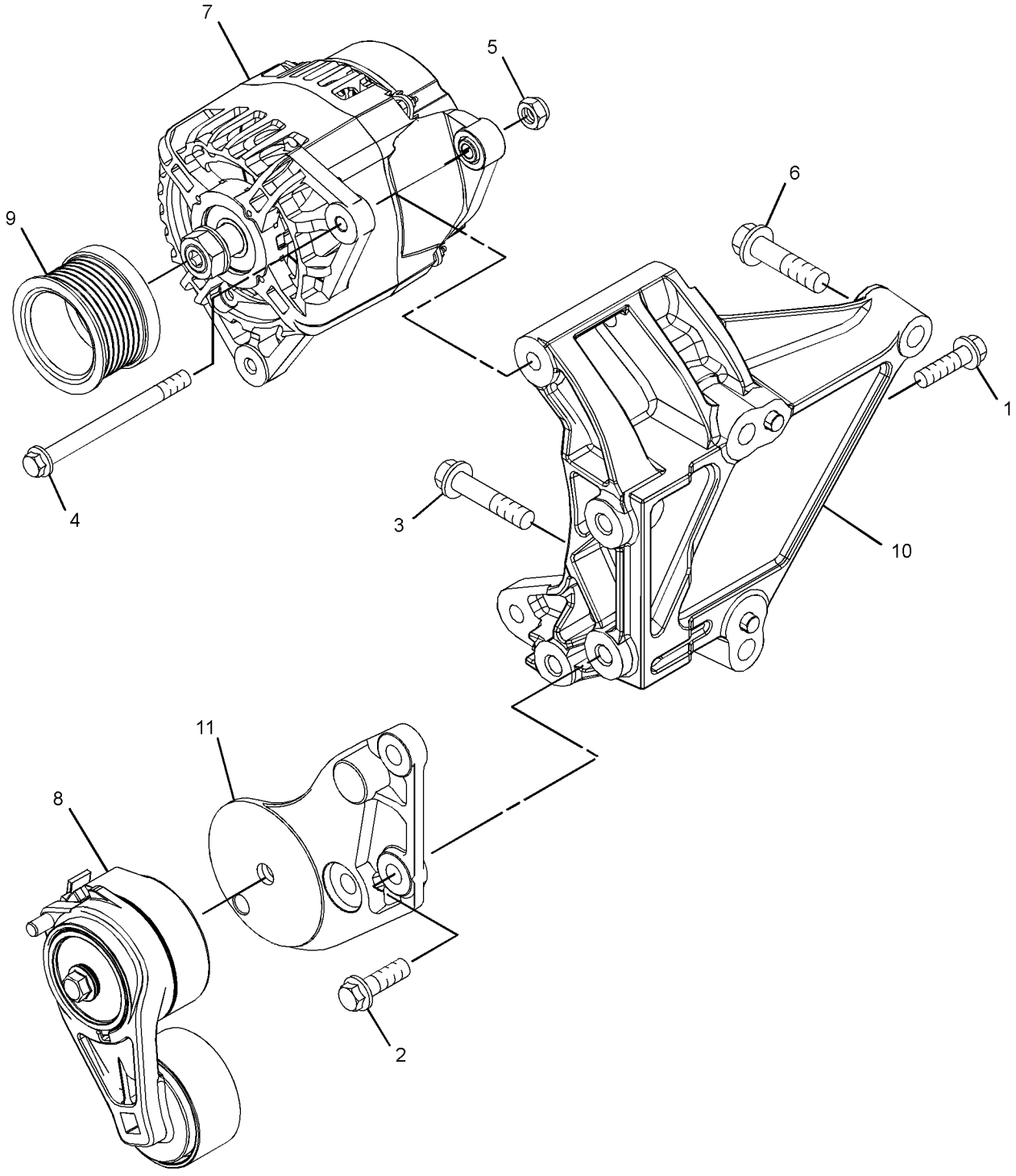

GRAPHIC #1 <END> g03332280

303-8449 ALTERNATOR GP-CHARGING

12 VOLT

SMCS-1405 **i04882810**

NOTE	REF NO	GRAPHIC REF	PART NUMBER	QTY	PART NAME 1 2 3 4 5 6 (PRODUCT LEVEL)	SEE PAGE
M	1	1	**6I-0260**	1	BOLT (M8X1.25X25-MM)	
M	2	1	**6I-0593**	3	BOLT (M10X1.5X30-MM)	
M	3	1	**6I-0650**	1	BOLT (M10X1.5X65-MM)	
M	4	1	**359-9666**	1	BOLT-FLANGE HEAD (M8X1.25X130-MM)	
M	5	1	**113-6349**	1	NUT (M8X1.25-THD)	
M	6	1	**140-8783**	2	BOLT (M10X1.5X45-MM)	
	7	1	**339-7767**	1	ALTERNATOR GP-CHARGING (12-VOLT)	
	8	1	**349-3261**	1	PLATE-TENSIONER	
	9	1	**377-9082**	1	BELT TENSIONER	
	10	1	**390-7340**	1	PULLEY-ALTERNATOR (8-GROOVE)	
	11	1	**339-5256**	1	BRACKET	

M - METRIC PART

303-8449 **ALTERNATOR GP-CHARGING (**contd.**)** **i04882810**

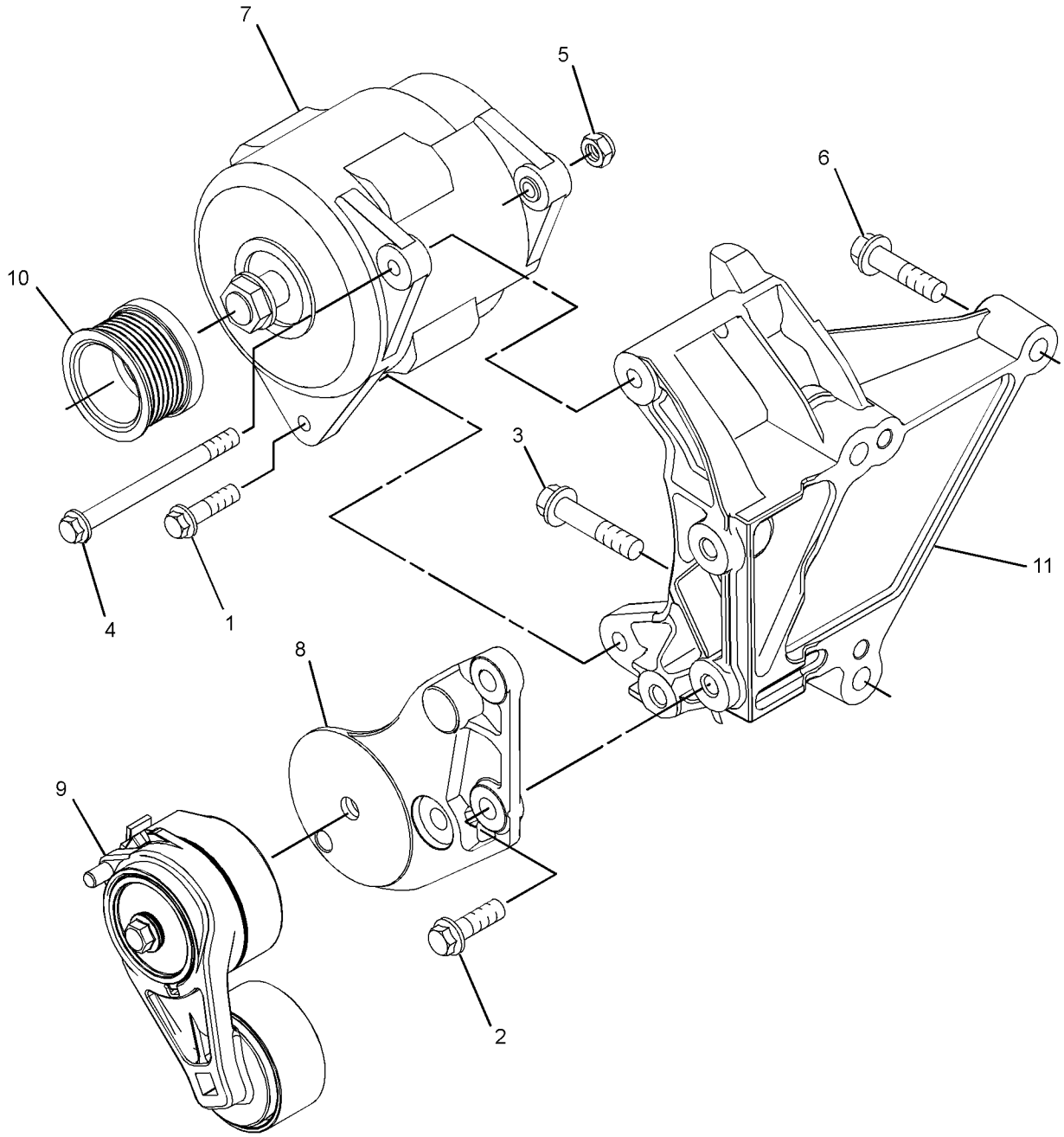

GRAPHIC #1 <END> g03161696

305-2580 ALTERNATOR GP-CHARGING

24 VOLT

SMCS-1405 **i06236279**

NOTE	REF NO	GRAPHIC REF	PART NUMBER	QTY	PART NAME 1 2 3 4 5 6 (PRODUCT LEVEL)	SEE PAGE
	1	1	**6B-0933**	1	SPACER (10.31X19.05X6.35-MM THK)	
M	2	1	**6I-0260**	1	BOLT (M8X1.25X25-MM)	
M	3	1	**6I-0454**	1	BOLT (M10X1.5X70-MM)	
M	4	1	**175-7141**	1	NUT-HEX FLANGE (M10X1.5-THD)	
	5	1	**233-9532**	1	PULLEY-ALTERNATOR	
	6	1	**067-6366**	1	WASHER	
M	7	1	**359-9666**	1	BOLT-FLANGE HEAD (M8X1.25X130-MM)	
M	8	1	**6V-9189**	1	LOCKNUT (M8X1.25-THD)	
M	9	1	**140-8783**	2	BOLT (M10X1.5X45-MM)	
R	10	1	**399-1485**	1	ALTERNATOR (24-VOLT, 75-AMPERE)	
	11	1	**453-3595**	1	BRACKET	
	12	1	**233-9531**	1	LEVER	
	13	1	**132-8848**	1	WASHER	

M - METRIC PART
R - REMANUFACTURED PART MAY BE AVAILABLE

305-2580 **ALTERNATOR GP-CHARGING (**contd.**)** **i06236279**

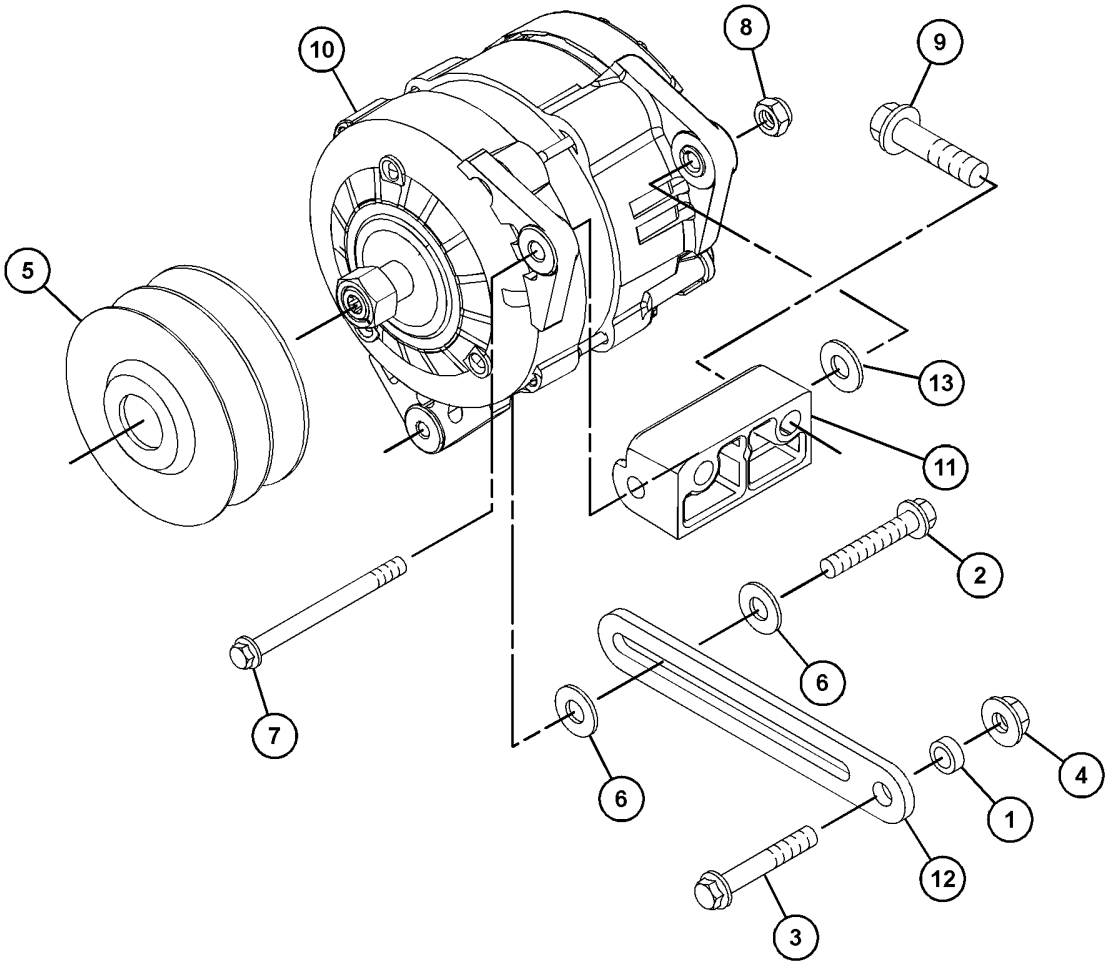

GRAPHIC #1 <END> g03866360

306-2320 ALTERNATOR GP-CHARGING

24-VOLT

SMCS-1405 **i05465753**

NOTE	REF NO	GRAPHIC REF	PART NUMBER	QTY	PART NAME 1 2 3 4 5 6 (PRODUCT LEVEL)	SEE PAGE
M	1	1	**6I-0260**	1	BOLT (M8X1.25X25-MM)	
M	2	1	**6I-0593**	3	BOLT (M10X1.5X30-MM)	
M	3	1	**6I-0650**	1	BOLT (M10X1.5X65-MM)	
M	4	1	**359-9666**	1	BOLT-FLANGE HEAD (M8X1.25X130-MM)	
M	5	1	**113-6349**	1	NUT (M8X1.25-THD)	
M	6	1	**140-8783**	2	BOLT (M10X1.5X45-MM)	
R	7	1	**399-1485**	1	ALTERNATOR (24-VOLT, 75-AMPERE)	
	8	1	**377-9082**	1	BELT TENSIONER	
	9	1	**390-7340**	1	PULLEY-ALTERNATOR (8-GROOVE)	
	10	1	**305-7881**	1	BRACKET AS-ALTERNATOR	
	10A	1	**161-9820**	2	PIN	
	11	1	**349-3261**	1	PLATE-TENSIONER	

M - METRIC PART
R - REMANUFACTURED PART MAY BE AVAILABLE

306-2320 **ALTERNATOR GP-CHARGING (**contd.**)** **i05465753**

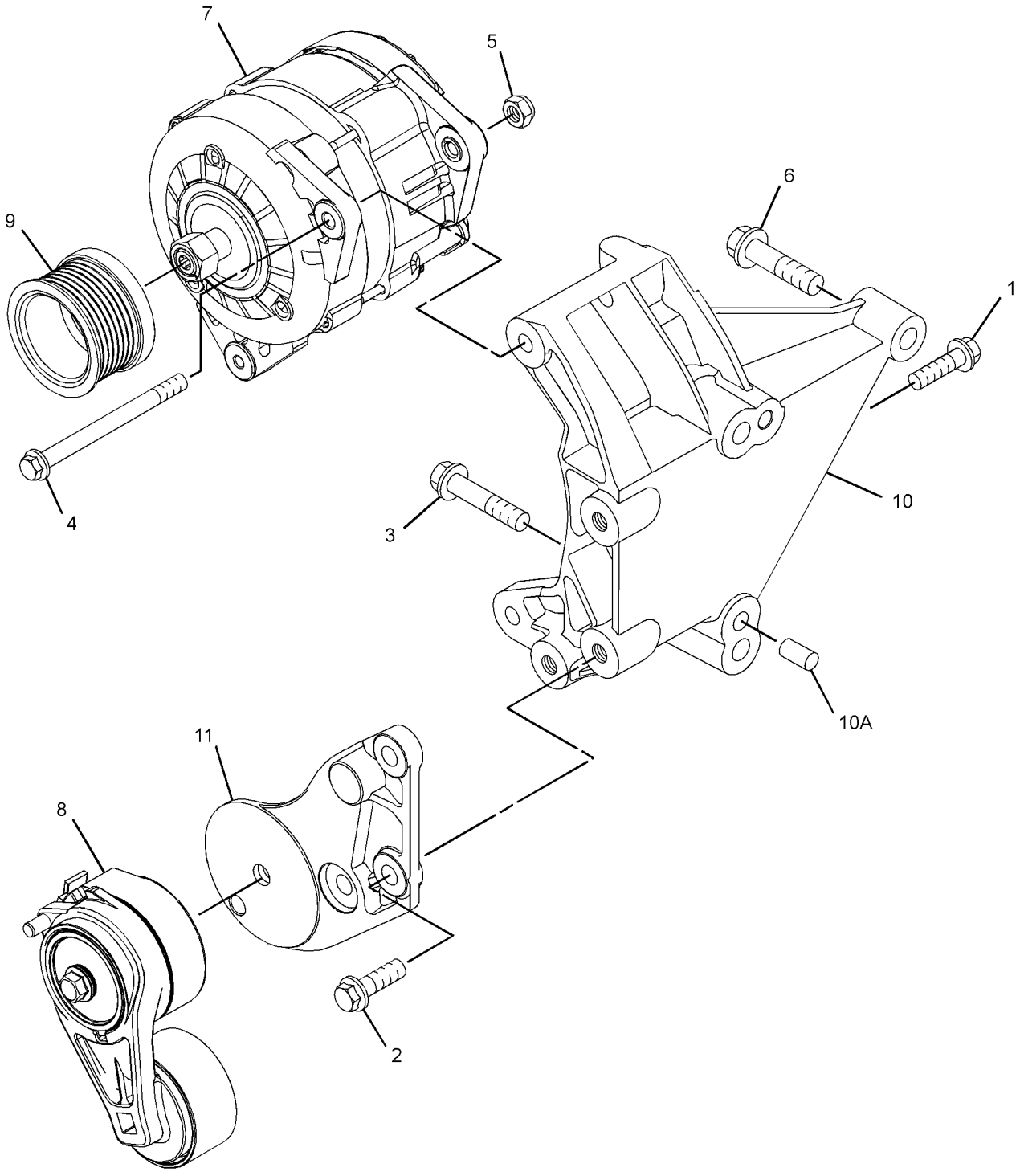

GRAPHIC #1 <END> g03474237

306-8856 ALTERNATOR GP-CHARGING

SMCS-1405 **i05662511**

NOTE	REF NO	GRAPHIC REF	PART NUMBER	QTY	PART NAME 1 2 3 4 5 6 (PRODUCT LEVEL)	SEE PAGE
M	1	1	**6I-0260**	1	BOLT (M8X1.25X25-MM)	
M	2	1	**6I-0593**	3	BOLT (M10X1.5X30-MM)	
M	3	1	**6I-0650**	1	BOLT (M10X1.5X65-MM)	
M	4	1	**359-9666**	1	BOLT-FLANGE HEAD (M8X1.25X130-MM)	
M	5	1	**113-6349**	1	NUT (M8X1.25-THD)	
M	6	1	**140-8783**	2	BOLT (M10X1.5X45-MM)	
R	7	1	**424-6821**	1	ALTERNATOR (24-VOLT, 55-AMPERE)	
	8	1	**377-9082**	1	BELT TENSIONER	
	9	1	**390-7340**	1	PULLEY-ALTERNATOR (8-GROOVE)	
	10	1	**305-7881**	1	BRACKET AS-ALTERNATOR	
	10A	1	**161-9820**	2	PIN	
	11	1	**349-3261**	1	PLATE-TENSIONER	

M - METRIC PART
R - REMANUFACTURED PART MAY BE AVAILABLE

306-8856 **ALTERNATOR GP-CHARGING (**contd.**)** **i05662511**

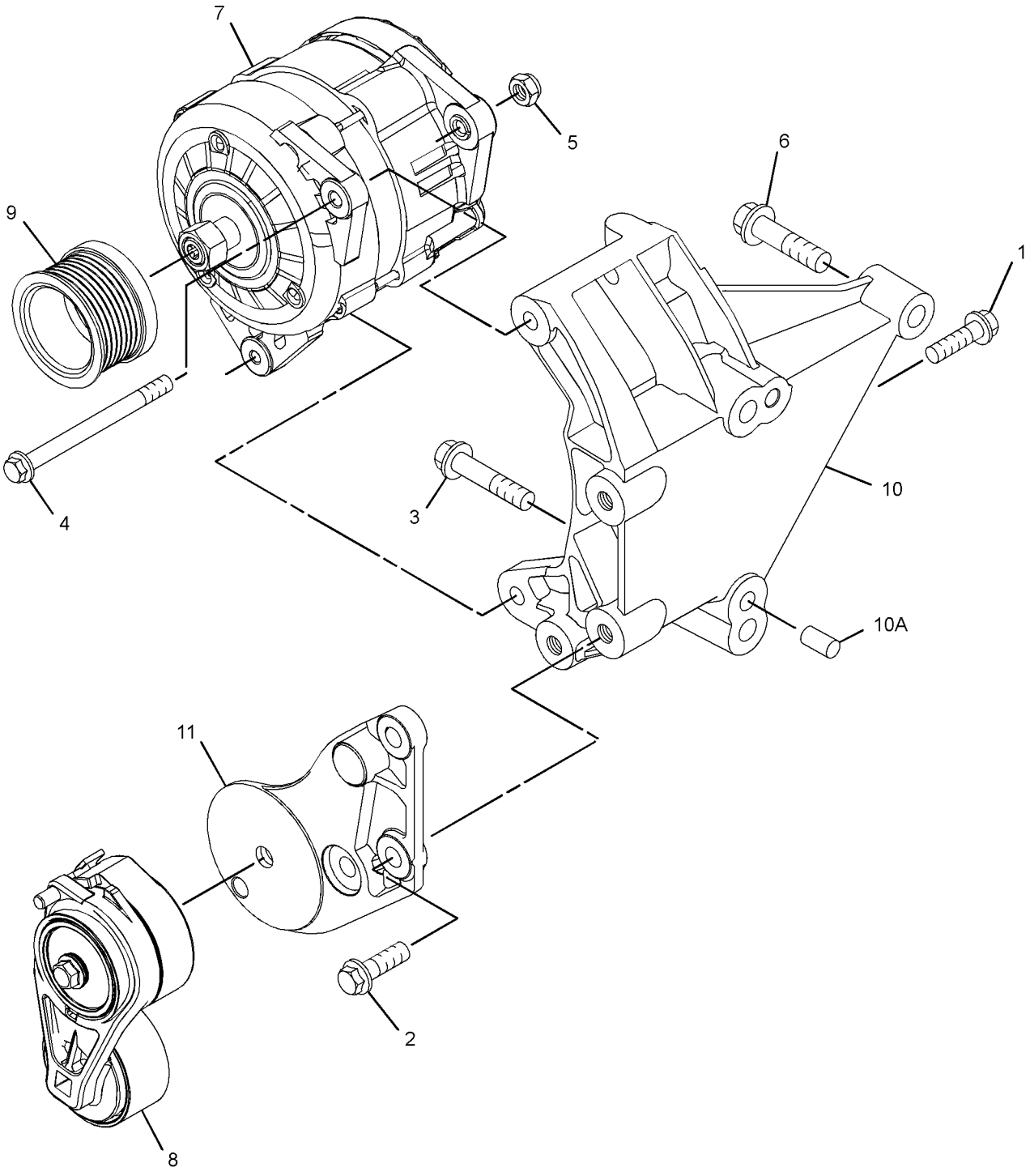

GRAPHIC #1 <END> g03642993

308-0304 ALTERNATOR GP-CHARGING

12 VOLT

SMCS-1405 **i06232828**

NOTE	REF NO	GRAPHIC REF	PART NUMBER	QTY	PART NAME 1 2 3 4 5 6 (PRODUCT LEVEL)	SEE PAGE
	1	1	**453-3595**	1	BRACKET	
M	2	1	**140-8783**	2	BOLT (M10X1.5X45-MM)	
M	3	1	**359-9666**	1	BOLT-FLANGE HEAD (M8X1.25X130-MM)	
M	4	1	**6V-9189**	1	LOCKNUT (M8X1.25-THD)	
	5	1	**233-9532**	1	PULLEY-ALTERNATOR	
	6	1	**233-9531**	1	LEVER	
M	7	1	**6I-0260**	1	BOLT (M8X1.25X25-MM)	
	8	1	**067-6366**	1	WASHER	
M	9	1	**6I-0454**	1	BOLT (M10X1.5X70-MM)	
M	10	1	**175-7141**	1	NUT-HEX FLANGE (M10X1.5-THD)	
	11	1	**6B-0933**	1	SPACER (10.31X19.05X6.35-MM THK)	
	12	1	**383-2557**	1	ALTERNATOR (12-VOLT, 120-AMPERE)	
	13	1	**132-8848**	1	WASHER	

M - METRIC PART

308-0304 **ALTERNATOR GP-CHARGING (**contd.**)** **i06232828**

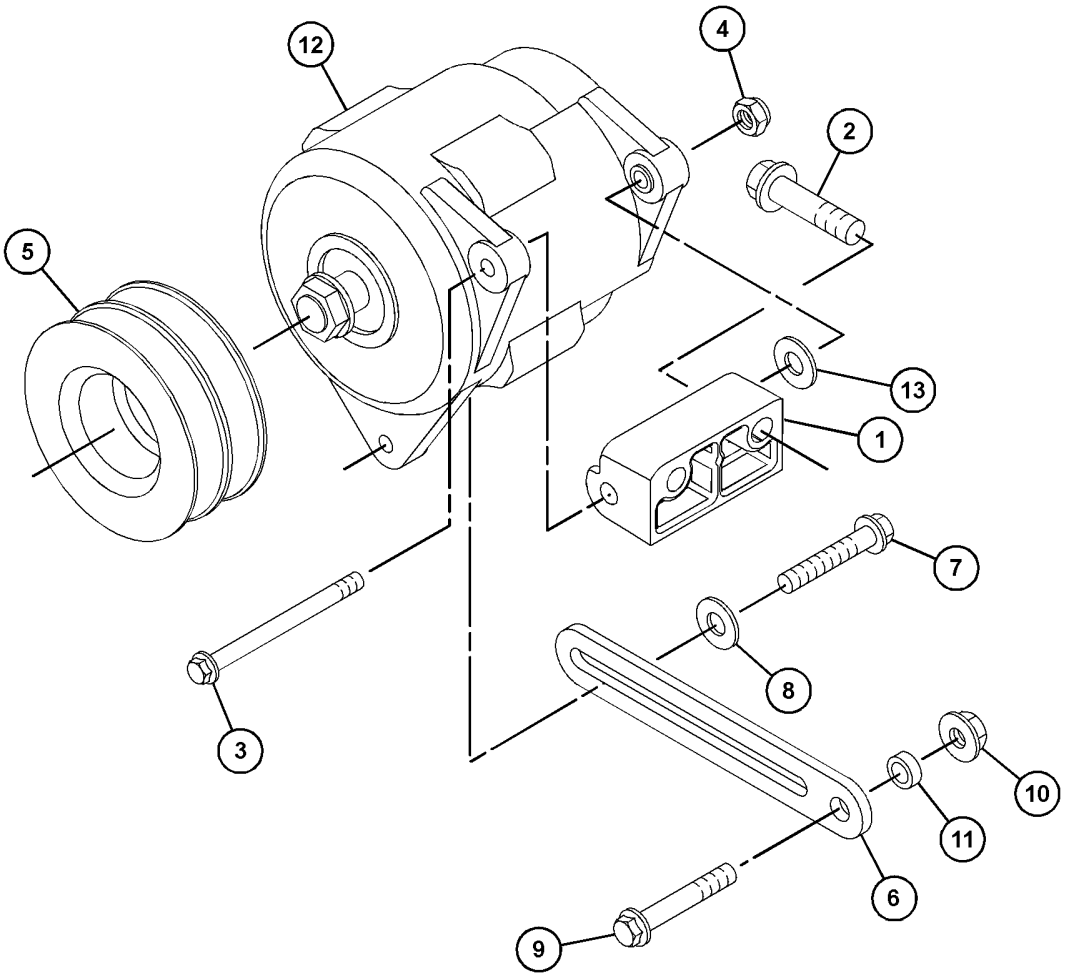

GRAPHIC #1 <END> g03872751

308-3351 ALTERNATOR GP-CHARGING

12 VOLT

PART OF 435-1692 ENGINE AR-COMPLETE, 435-1685, 540-0570 ENGINE AR-PRIMARY

SMCS-1405 **i05260427**

NOTE	REF NO	GRAPHIC REF	PART NUMBER	QTY	PART NAME 1 2 3 4 5 6 (PRODUCT LEVEL)	SEE PAGE
M	1	1	**6I-0260**	1	BOLT (M8X1.25X25-MM)	
M	2	1	**6I-0593**	3	BOLT (M10X1.5X30-MM)	
M	3	1	**6I-0650**	1	BOLT (M10X1.5X65-MM)	
M	4	1	**359-9666**	1	BOLT-FLANGE HEAD (M8X1.25X130-MM)	
M	5	1	**113-6349**	1	NUT (M8X1.25-THD)	
M	6	1	**140-8783**	2	BOLT (M10X1.5X45-MM)	
	7	1	**346-9824**	1	ALTERNATOR GP-CHARGING	
	8	1	**349-3261**	1	PLATE-TENSIONER	
	9	1	**377-9082**	1	BELT TENSIONER	
	10	1	**390-7340**	1	PULLEY-ALTERNATOR (8-GROOVE)	
	11	1	**305-7881**	1	BRACKET AS-ALTERNATOR	
	11A	1	**161-9820**	2	PIN	

M - METRIC PART

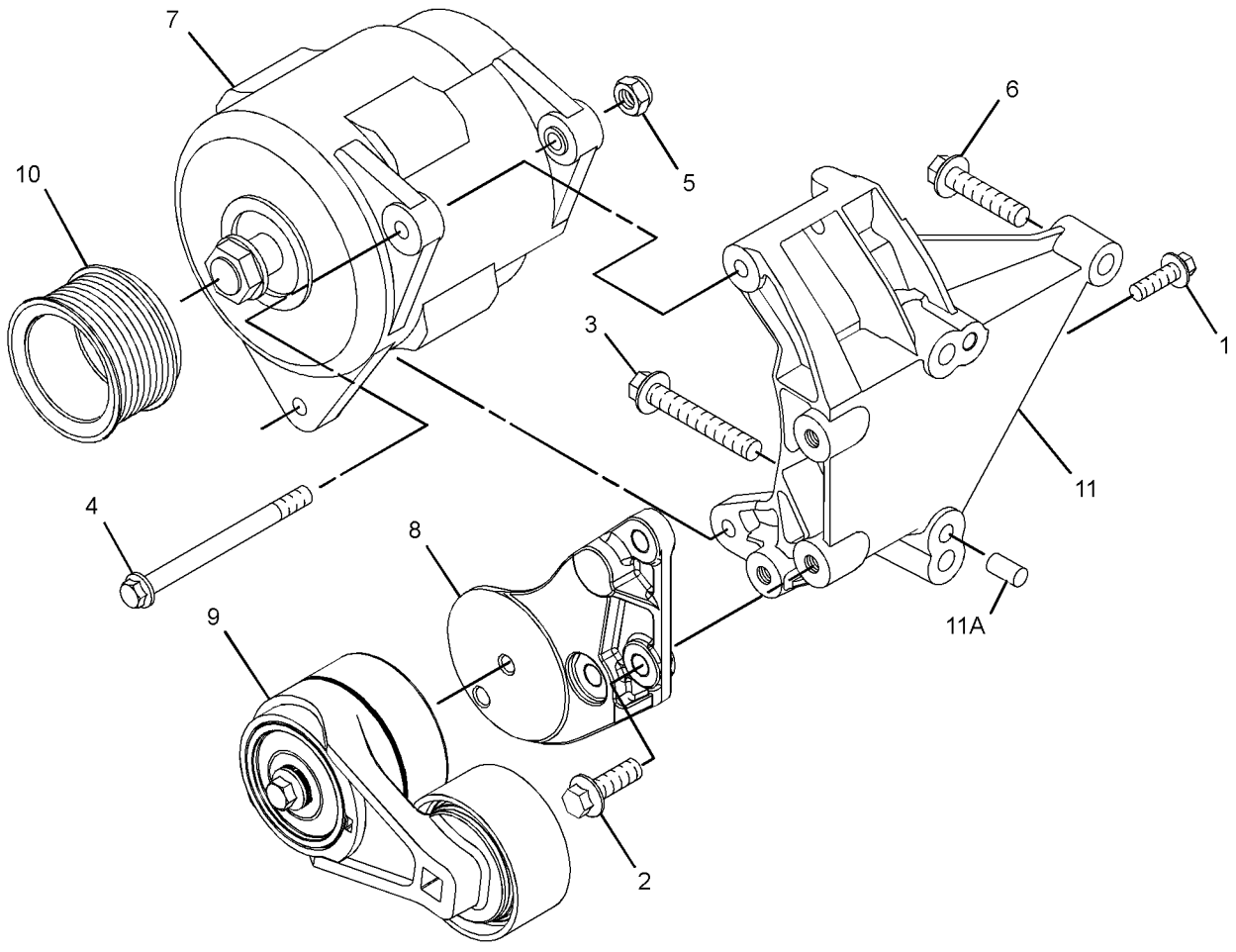

GRAPHIC #1 <END> g02230853

308-4274 ALTERNATOR GP-CHARGING

12 VOLT

SMCS-1405 **i06232827**

NOTE	REF NO	GRAPHIC REF	PART NUMBER	QTY	PART NAME 1 2 3 4 5 6 (PRODUCT LEVEL)	SEE PAGE
	1	1	**6B-0933**	1	SPACER (10.31X19.05X6.35-MM THK)	
M	2	1	**6I-0260**	1	BOLT (M8X1.25X25-MM)	
M	3	1	**6I-0454**	1	BOLT (M10X1.5X70-MM)	
M	4	1	**175-7141**	1	NUT-HEX FLANGE (M10X1.5-THD)	
	6	1	**067-6366**	1	WASHER	
M	7	1	**359-9666**	1	BOLT-FLANGE HEAD (M8X1.25X130-MM)	
M	8	1	**6V-9189**	1	LOCKNUT (M8X1.25-THD)	
M	9	1	**140-8783**	2	BOLT (M10X1.5X45-MM)	
R	10	1	**339-7768**	1	ALTERNATOR GP-CHARGING	
	11	1	**453-3595**	1	BRACKET	
	12	1	**233-9531**	1	LEVER	
	13	1	**233-9532**	1	PULLEY-ALTERNATOR	
	14	1	**132-8848**	1	WASHER	

M - METRIC PART
R - REMANUFACTURED PART MAY BE AVAILABLE

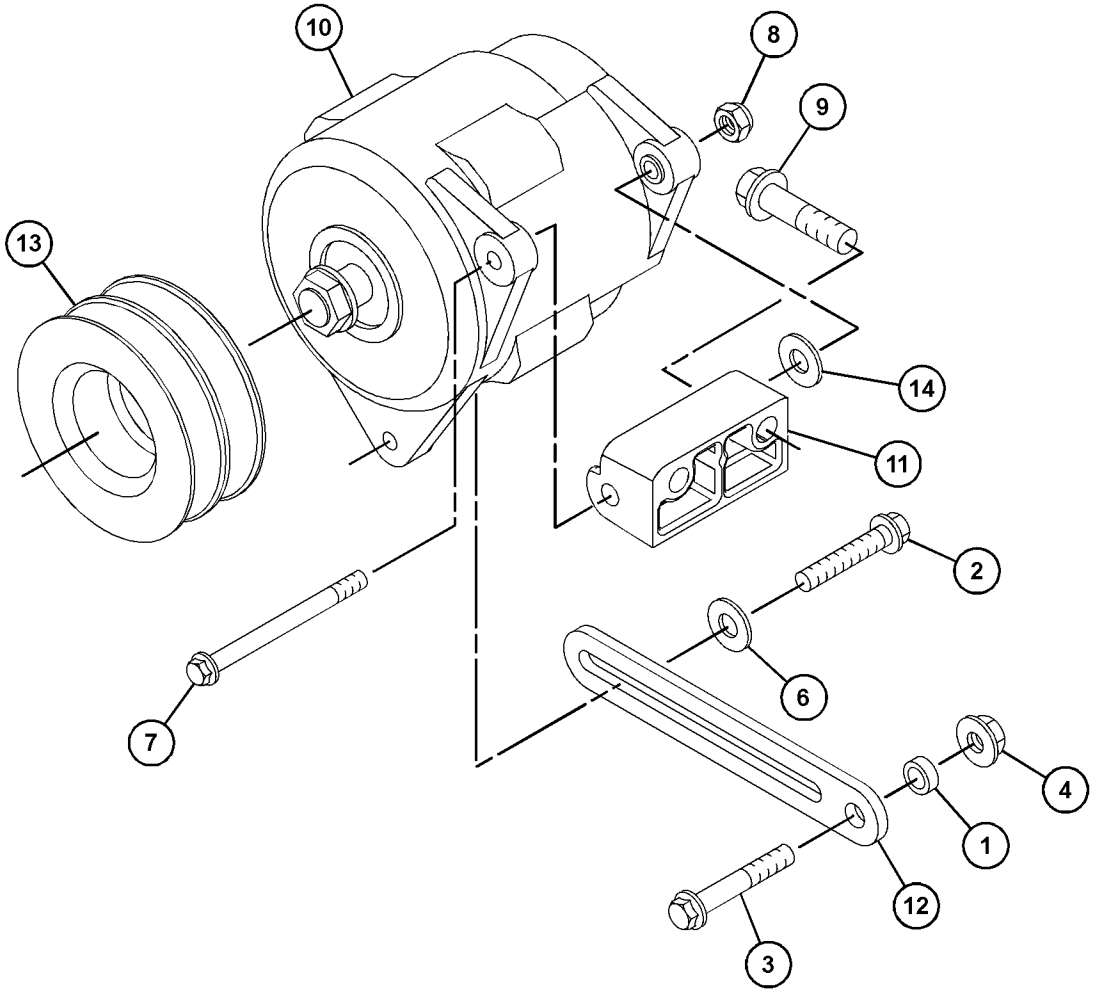

GRAPHIC #1 <END> g03872759

311-4639 ALTERNATOR GP-CHARGING

24 VOLT

PART OF 522-8303 ENGINE AR-PRIMARY

SMCS-1405 **i06217426**

NOTE	REF NO	GRAPHIC REF	PART NUMBER	QTY	PART NAME 1 2 3 4 5 6 (PRODUCT LEVEL)	SEE PAGE
	1	1	**6B-0933**	1	SPACER (10.31X19.05X6.35-MM THK)	
M	2	1	**6I-0260**	1	BOLT (M8X1.25X25-MM)	
M	3	1	**6I-0454**	1	BOLT (M10X1.5X70-MM)	
M	4	1	**6I-0594**	1	NUT (M10X1.5-THD)	
	5	1	**067-6366**	1	WASHER	
M	6	1	**359-9666**	1	BOLT-FLANGE HEAD (M8X1.25X130-MM)	
M	7	1	**113-6349**	1	NUT (M8X1.25-THD)	
M	8	1	**140-8783**	2	BOLT (M10X1.5X45-MM)	
R	9	1	**424-6821**	1	ALTERNATOR (24-VOLT, 55-AMPERE)	
	10	1	**453-3595**	1	BRACKET	
	11	1	**233-9531**	1	LEVER	
	12	1	**228-7391**	1	PULLEY-ALTERNATOR	
	13	1	**132-8848**	1	WASHER	

M - METRIC PART
R - REMANUFACTURED PART MAY BE AVAILABLE

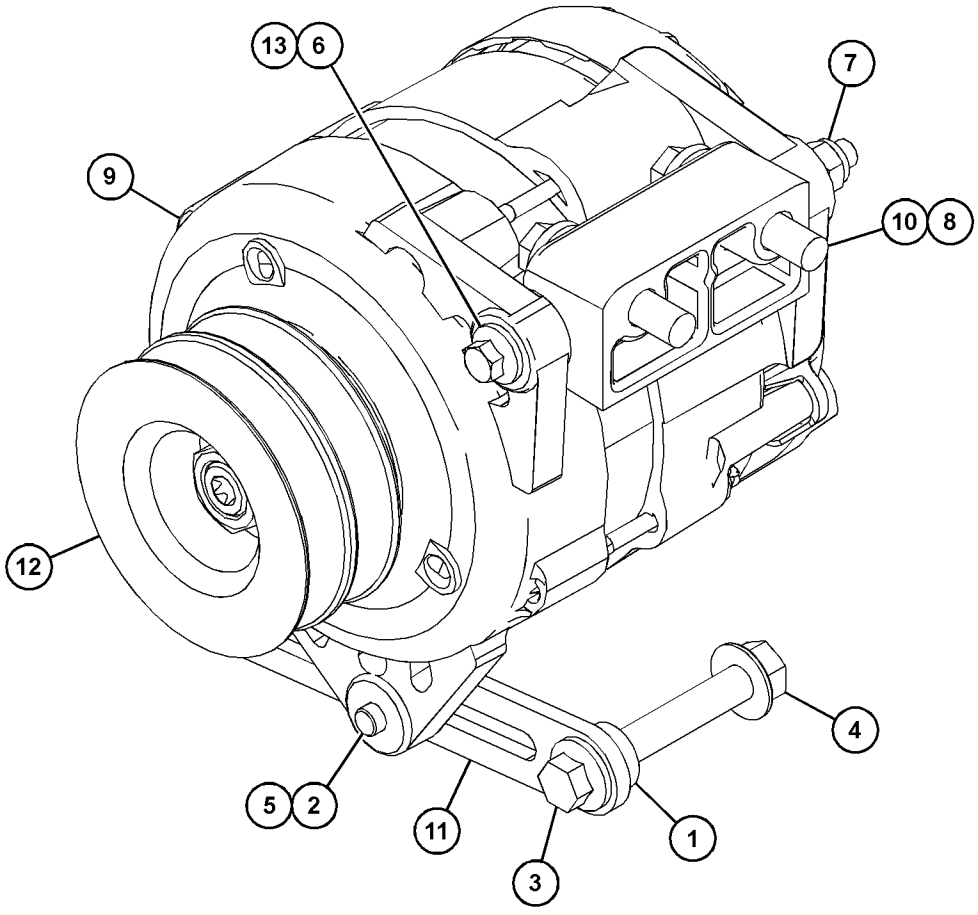

GRAPHIC #1 <END> g03868344

311-5794 ALTERNATOR GP-CHARGING

12 VOLT

SMCS-1405 **i06232821**

NOTE	REF NO	GRAPHIC REF	PART NUMBER	QTY	PART NAME 1 2 3 4 5 6 (PRODUCT LEVEL)	SEE PAGE
	1	1	**6B-0933**	1	SPACER (10.31X19.05X6.35-MM THK)	
M	2	1	**6I-0260**	1	BOLT (M8X1.25X25-MM)	
M	3	1	**6I-0454**	1	BOLT (M10X1.5X70-MM)	
M	4	1	**175-7141**	1	NUT-HEX FLANGE (M10X1.5-THD)	
	5	1	**067-6366**	1	WASHER	
M	6	1	**359-9666**	1	BOLT-FLANGE HEAD (M8X1.25X130-MM)	
M	7	1	**6V-9189**	1	LOCKNUT (M8X1.25-THD)	
M	8	1	**140-8783**	2	BOLT (M10X1.5X45-MM)	
	9	1	**339-7767**	1	ALTERNATOR GP-CHARGING (12-VOLT)	
	10	1	**453-3595**	1	BRACKET	
	11	1	**233-9531**	1	LEVER	
	12	1	**233-9532**	1	PULLEY-ALTERNATOR	
	13	1	**132-8848**	1	WASHER	

M - METRIC PART

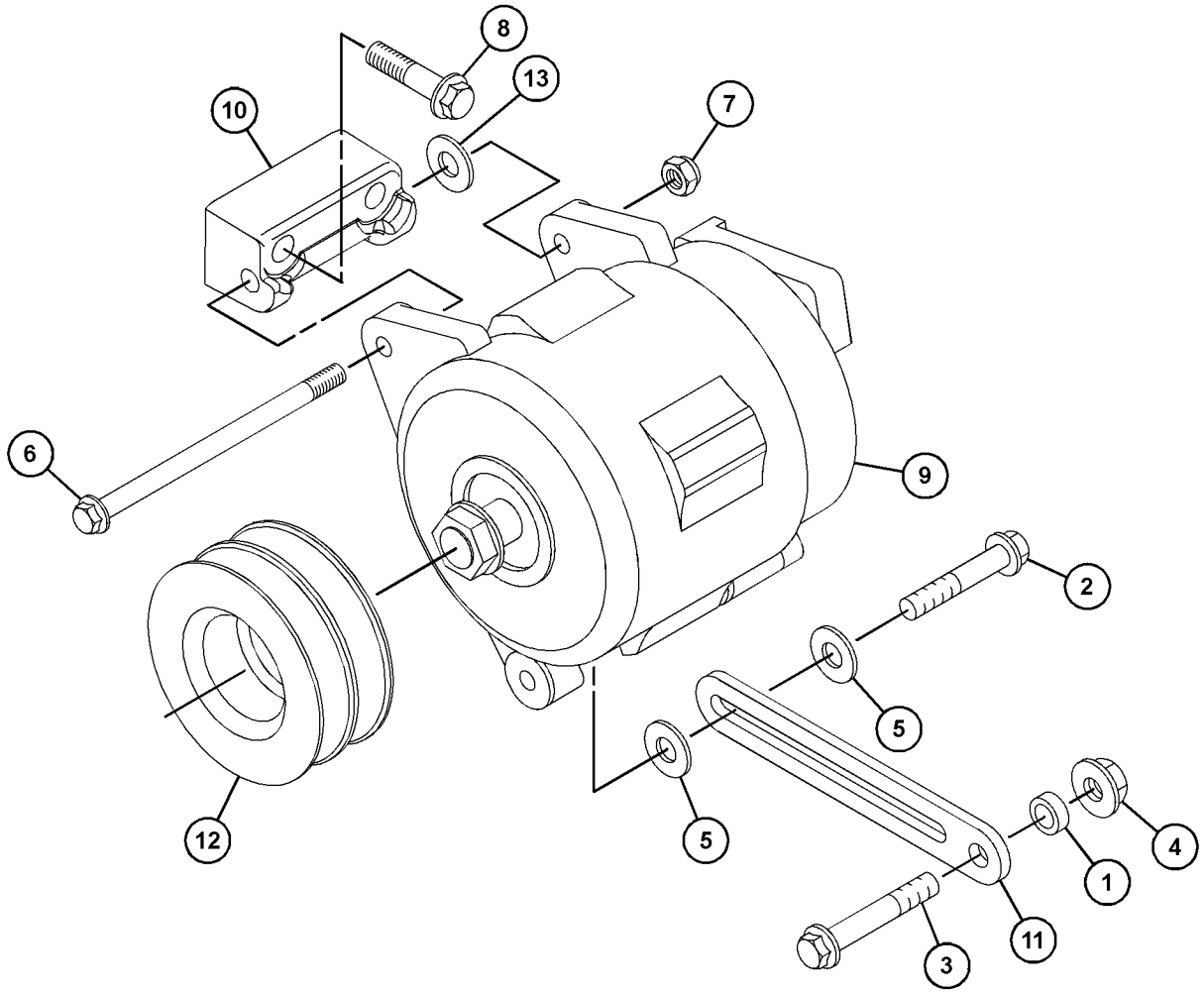

GRAPHIC #1 <END> g03877332

311-7455 ALTERNATOR GP-CHARGING

12 VOLT

PART OF 435-1699 ENGINE AR, 435-1687, 437-5409, 540-1155, 540-1156 ENGINE AR-PRIMARY

SMCS-1405 **i04556213**

NOTE	REF NO	GRAPHIC REF	PART NUMBER	QTY	PART NAME 1 2 3 4 5 6 (PRODUCT LEVEL)	SEE PAGE
	1	1	**6B-0933**	1	SPACER (10.31X19.05X6.35-MM THK)	
M	2	1	**6I-0260**	1	BOLT (M8X1.25X25-MM)	
M	3	1	**6I-0454**	1	BOLT (M10X1.5X70-MM)	
M	4	1	**6I-0594**	1	NUT (M10X1.5-THD)	
	5	1	**067-6366**	2	WASHER	
M	6	1	**359-9666**	1	BOLT-FLANGE HEAD (M8X1.25X130-MM)	
M	7	1	**113-6349**	1	NUT (M8X1.25-THD)	
M	8	1	**140-8783**	2	BOLT (M10X1.5X45-MM)	
	9	1	**339-7767**	1	ALTERNATOR GP-CHARGING (12-VOLT)	
	10	1	**233-9530**	1	BRACKET	
	11	1	**233-9531**	1	LEVER	
	12	1	**228-7391**	1	PULLEY-ALTERNATOR	

M - METRIC PART

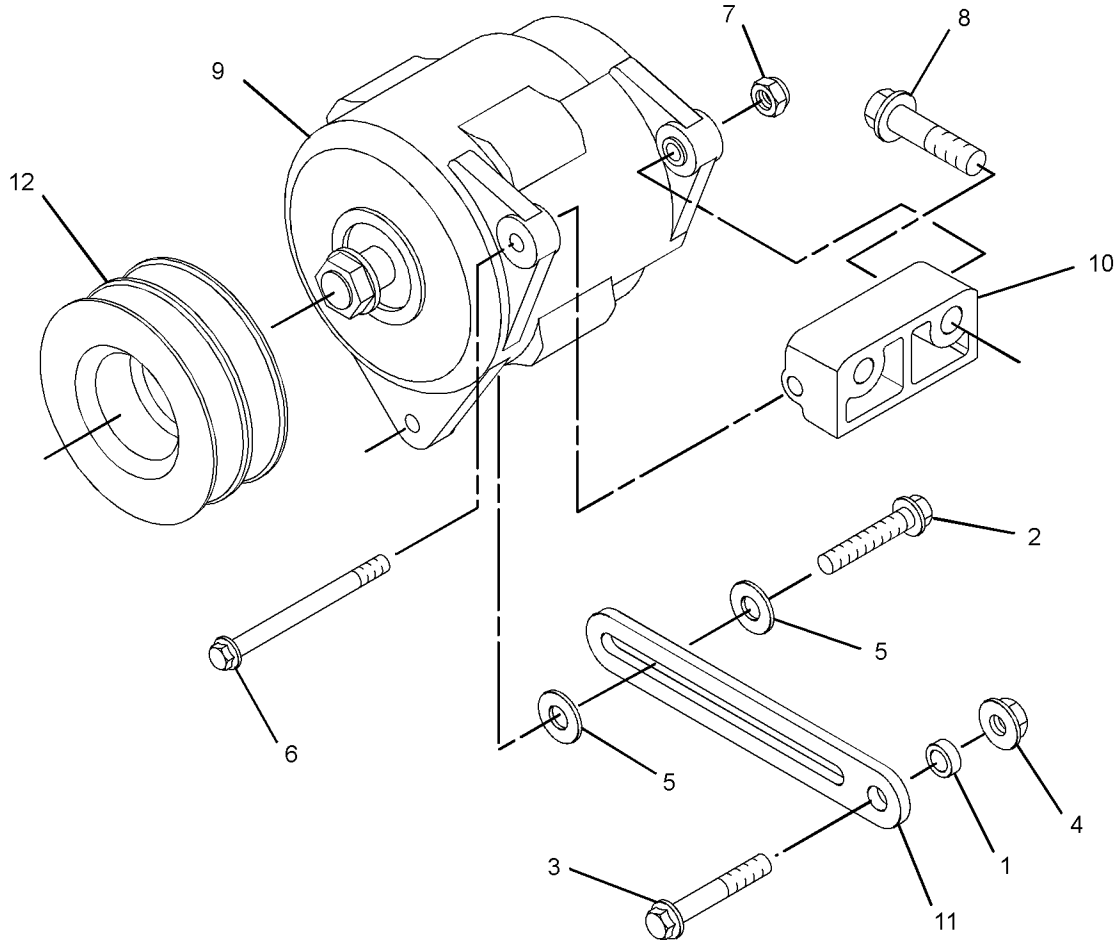

GRAPHIC #1 <END> g02726504

315-3414 ALTERNATOR GP-CHARGING

12 VOLT

SMCS-1405 **i06210323**

NOTE	REF NO	GRAPHIC REF	PART NUMBER	QTY	PART NAME 1 2 3 4 5 6 (PRODUCT LEVEL)	SEE PAGE
	1	1	**6B-0933**	1	SPACER (10.31X19.05X6.35-MM THK)	
M	2	1	**6I-0260**	1	BOLT (M8X1.25X25-MM)	
M	3	1	**6I-0454**	1	BOLT (M10X1.5X70-MM)	
M	4	1	**175-7141**	1	NUT-HEX FLANGE (M10X1.5-THD)	
	5	1	**067-6366**	1	WASHER	
M	6	1	**359-9666**	1	BOLT-FLANGE HEAD (M8X1.25X130-MM)	
M	7	1	**6V-9189**	1	LOCKNUT (M8X1.25-THD)	
M	8	1	**140-8783**	2	BOLT (M10X1.5X45-MM)	
R	9	1	**339-7768**	1	ALTERNATOR GP-CHARGING	
	10	1	**228-7391**	1	PULLEY-ALTERNATOR	
	11	1	**453-3595**	1	BRACKET	
	12	1	**233-9531**	1	LEVER	
	13	1	**132-8848**	1	WASHER	

M - METRIC PART
R - REMANUFACTURED PART MAY BE AVAILABLE

315-3414 **ALTERNATOR GP-CHARGING (**contd.**)** **i06210323**

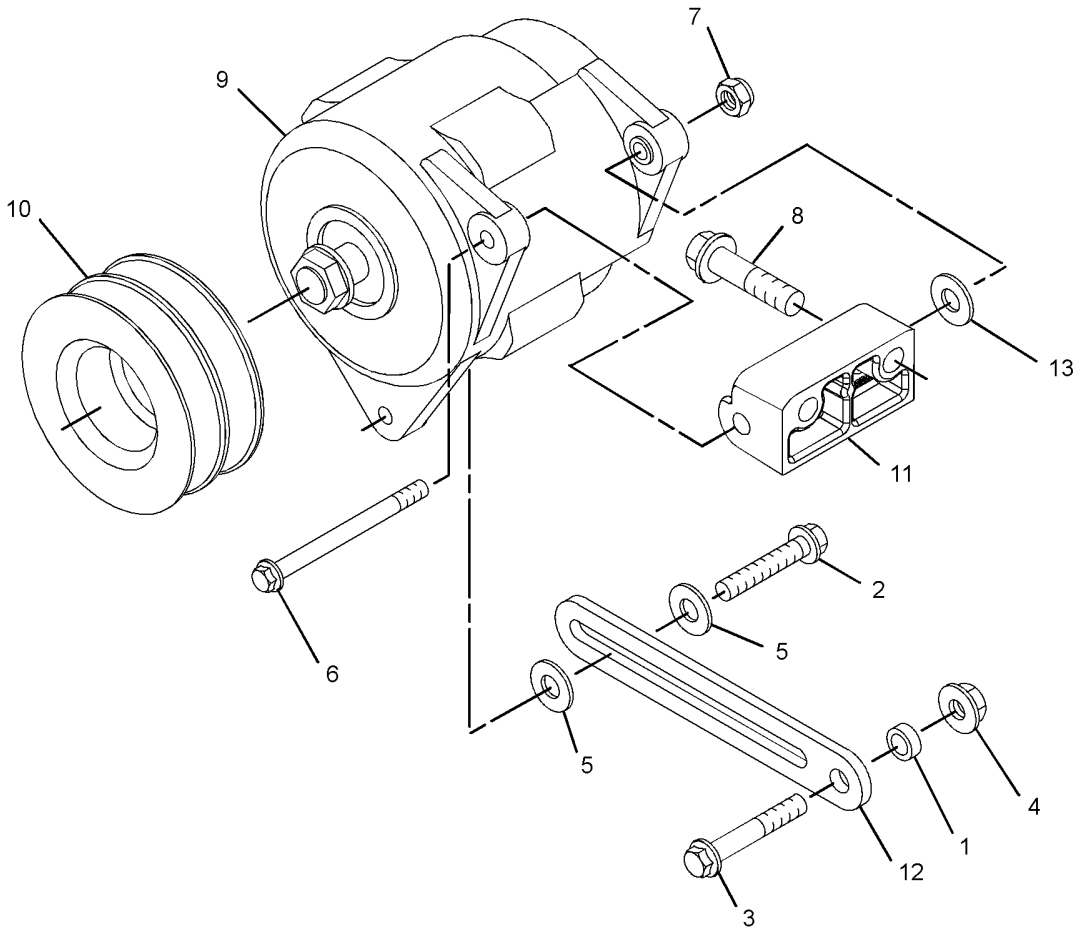

GRAPHIC #1 <END> g03867739

322-3055 ALTERNATOR GP-CHARGING

24 VOLT

SMCS-1405 **i06124247**

NOTE	REF NO	GRAPHIC REF	PART NUMBER	QTY	PART NAME 1 2 3 4 5 6 (PRODUCT LEVEL)	SEE PAGE
	1	1	**6B-0933**	1	SPACER (10.31X19.05X6.35-MM THK)	
M	2	1	**6I-0260**	1	BOLT (M8X1.25X25-MM)	
M	3	1	**6I-0454**	1	BOLT (M10X1.5X70-MM)	
M	4	1	**175-7141**	1	NUT-HEX FLANGE (M10X1.5-THD)	
	5	1	**067-6366**	1	WASHER	
M	6	1	**359-9666**	1	BOLT-FLANGE HEAD (M8X1.25X130-MM)	
M	7	1	**6V-9189**	1	LOCKNUT (M8X1.25-THD)	
M	8	1	**140-8783**	2	BOLT (M10X1.5X45-MM)	
R	9	1	**399-1485**	1	ALTERNATOR	
	10	1	**228-7391**	1	PULLEY-ALTERNATOR	
	11	1	**453-3595**	1	BRACKET	
	12	1	**233-9531**	1	LEVER	
	13	1	**132-8848**	1	WASHER	

M - METRIC PART
R - REMANUFACTURED PART MAY BE AVAILABLE

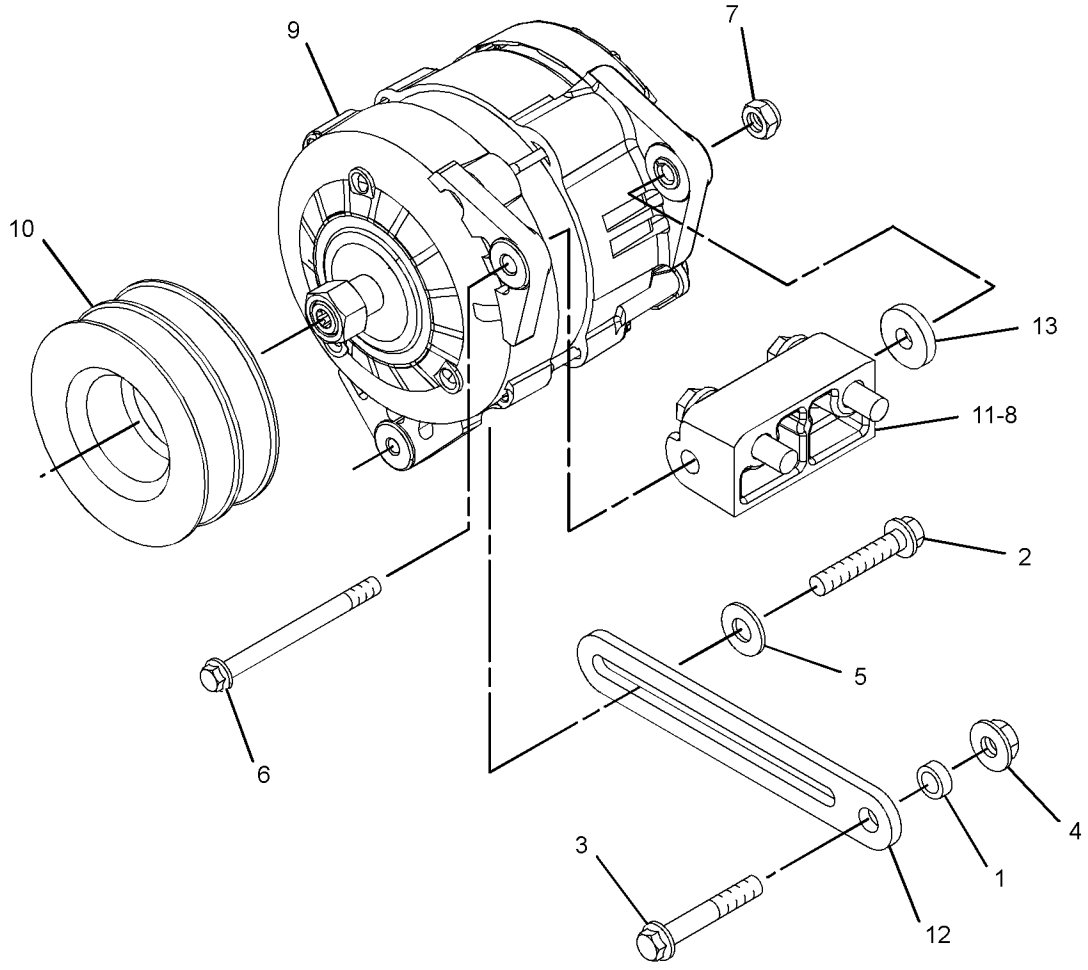

GRAPHIC #1 <END> g06048050

322-4890 ALTERNATOR GP-CHARGING

12 VOLT

SMCS-1405 **i06124248**

NOTE	REF NO	GRAPHIC REF	PART NUMBER	QTY	PART NAME 1 2 3 4 5 6 (PRODUCT LEVEL)	SEE PAGE
	1	1	**6B-0933**	1	SPACER (10.31X19.05X6.35-MM THK)	
M	2	1	**6I-0260**	1	BOLT (M8X1.25X25-MM)	
M	3	1	**6I-0454**	1	BOLT (M10X1.5X70-MM)	
M	4	1	**175-7141**	1	NUT-HEX FLANGE (M10X1.5-THD)	
	5	1	**067-6366**	1	WASHER	
M	6	1	**359-9666**	1	BOLT-FLANGE HEAD (M8X1.25X130-MM)	
M	7	1	**6V-9189**	1	LOCKNUT (M8X1.25-THD)	
M	8	1	**140-8783**	2	BOLT (M10X1.5X45-MM)	
	9	1	**339-7766**	1	ALTERNATOR GP-CHARGING	
	10	1	**228-7391**	1	PULLEY-ALTERNATOR	
	11	1	**453-3595**	1	BRACKET	
	12	1	**233-9531**	1	LEVER	
	13	1	**132-8848**	1	WASHER	

M - METRIC PART

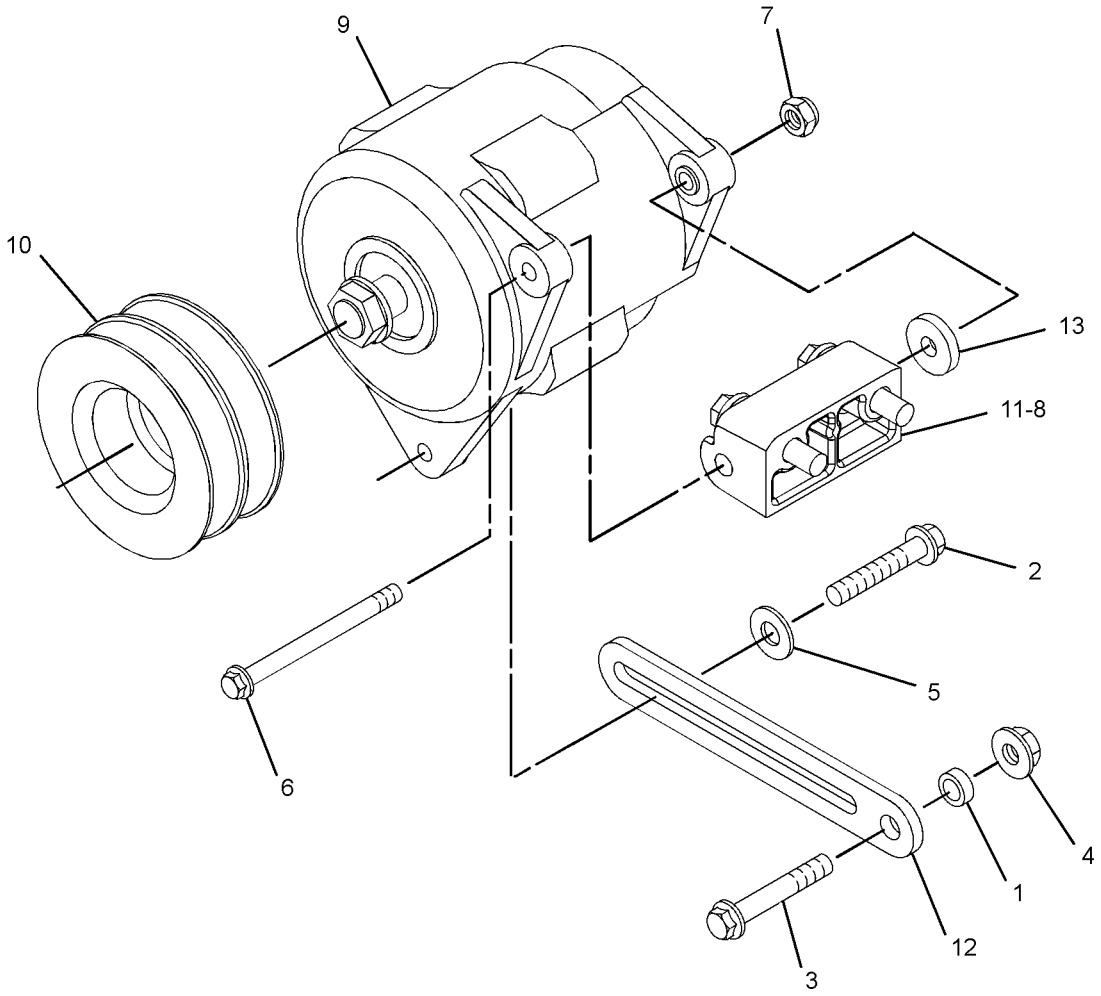

GRAPHIC #1 <END> g06048074

330-4296 ALTERNATOR GP-CHARGING

SMCS-1405 **i06124249**

NOTE	REF NO	GRAPHIC REF	PART NUMBER	QTY	PART NAME 1 2 3 4 5 6 (PRODUCT LEVEL)	SEE PAGE
	1	1	**6B-0933**	1	SPACER (10.31X19.05X6.35-MM THK)	
M	2	1	**6I-0260**	1	BOLT (M8X1.25X25-MM)	
M	3	1	**6I-0454**	1	BOLT (M10X1.5X70-MM)	
M	4	1	**175-7141**	1	NUT-HEX FLANGE (M10X1.5-THD)	
	5	1	**067-6366**	1	WASHER	
M	6	1	**359-9666**	1	BOLT-FLANGE HEAD (M8X1.25X130-MM)	
M	7	1	**6V-9189**	1	LOCKNUT (M8X1.25-THD)	
M	8	1	**140-8783**	2	BOLT (M10X1.5X45-MM)	
	9	1	**383-2557**	1	ALTERNATOR (12-VOLT, 120-AMPERE)	
	10	1	**228-7391**	1	PULLEY-ALTERNATOR	
	11	1	**453-3595**	1	BRACKET	
	12	1	**233-9531**	1	LEVER	
	13	1	**132-8848**	1	WASHER	

M - METRIC PART

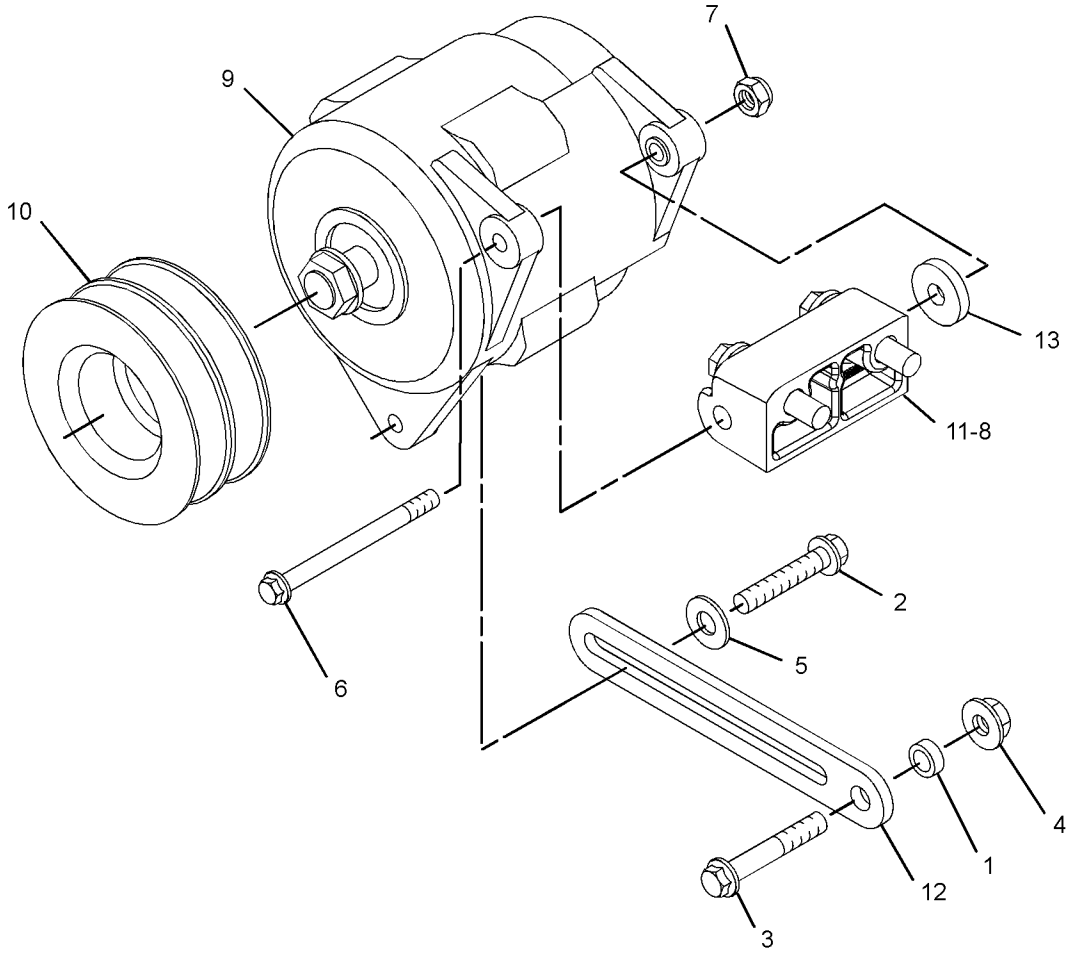

GRAPHIC #1 <END> g06014812

330-7211 ALTERNATOR GP-CHARGING

12 VOLT

SMCS-1405 **i06232822**

NOTE	REF NO	GRAPHIC REF	PART NUMBER	QTY	PART NAME 1 2 3 4 5 6 (PRODUCT LEVEL)	SEE PAGE
	1	1	**6B-0933**	1	SPACER (10.31X19.05X6.35-MM THK)	
M	2	1	**6I-0260**	1	BOLT (M8X1.25X25-MM)	
M	3	1	**6I-0454**	1	BOLT (M10X1.5X70-MM)	
M	4	1	**175-7141**	1	NUT-HEX FLANGE (M10X1.5-THD)	
	5	1	**067-6366**	1	WASHER	
M	6	1	**359-9666**	1	BOLT-FLANGE HEAD (M8X1.25X130-MM)	
M	7	1	**6V-9189**	1	LOCKNUT (M8X1.25-THD)	
M	8	1	**140-8783**	2	BOLT (M10X1.5X45-MM)	
	9	1	**339-7766**	1	ALTERNATOR GP-CHARGING	
	10	1	**243-4300**	1	PULLEY-ALTERNATOR	
	11	1	**453-3595**	1	BRACKET	
	12	1	**233-9531**	1	LEVER	
	13	1	**132-8848**	1	WASHER	

M - METRIC PART

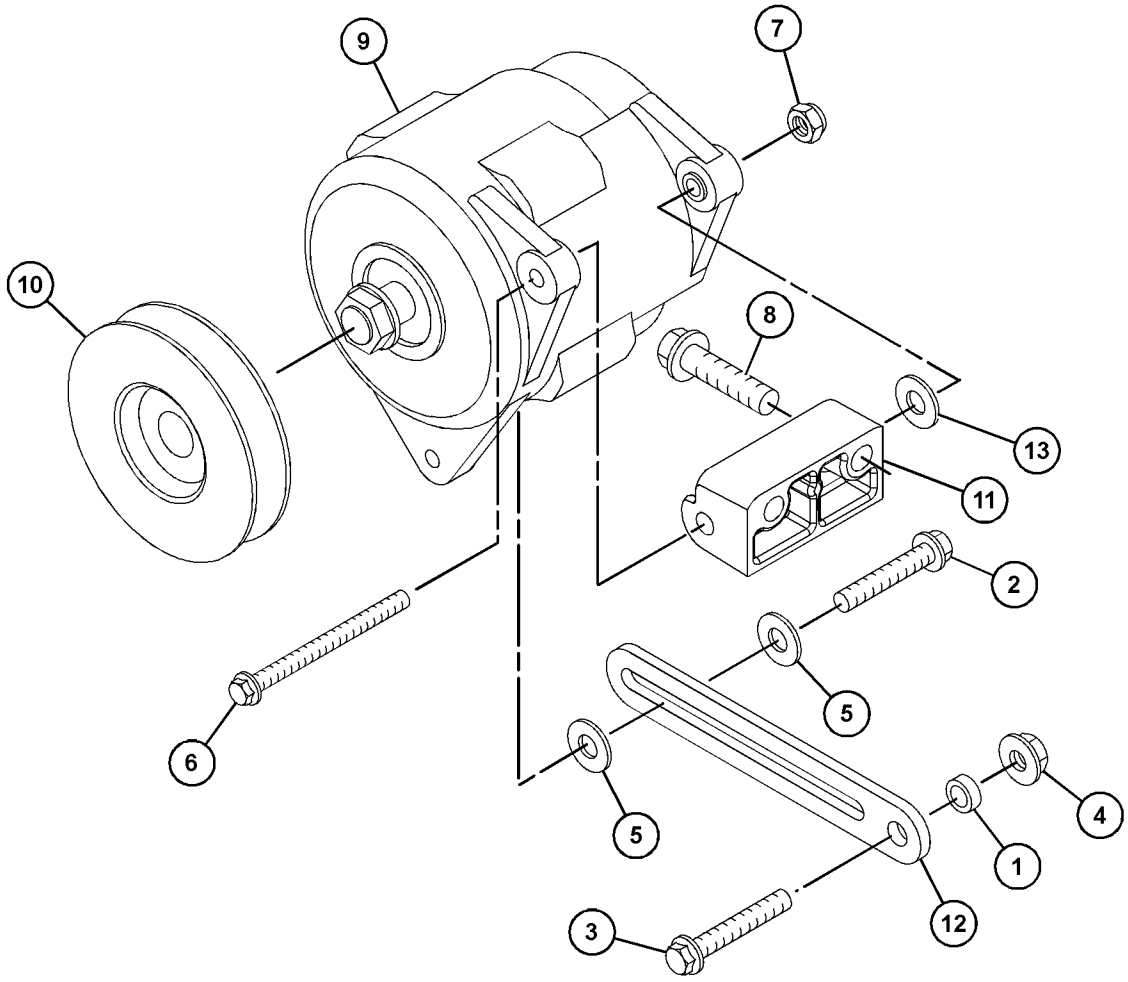

GRAPHIC #1 <END> g03877365

304-6436 CONTROL GP-ENGINE ELECTRONIC

PART OF 435-1699 ENGINE AR, 435-1692 ENGINE AR-COMPLETE, 435-1685, 435-1687, 437-5409, 522-8303, 540-0570, 540-1155, 540-1156 ENGINE AR-PRIMARY
ALSO AN ATTACHMENT

SMCS-1901 **i05195088**

NOTE	REF NO	GRAPHIC REF	PART NUMBER	QTY	PART NAME 1 2 3 4 5 6 (PRODUCT LEVEL)	SEE PAGE
R	1	1	**331-7539**	1	CONTROL GP-UNPROGRAMMED (ENGINE)	
	2	1	**278-5201**	2	CONNECTION	
	3	1	**228-7100**	2	SEAL-O-RING	

R - REMANUFACTURED PART MAY BE AVAILABLE

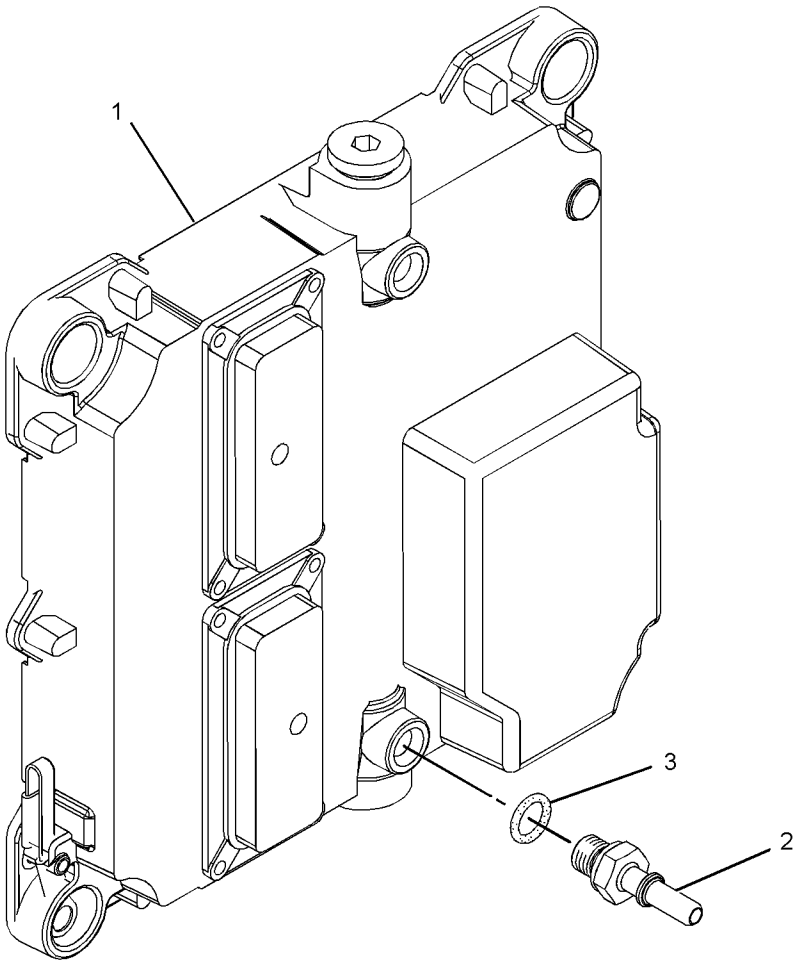

GRAPHIC #1 <END> g01340330

440-2105 CONTROL GP-UNPROGRAMMED–PL641E CELLULAR*R

PART OF 426-5363 INSTALLATION GP-COMMUNICATION

SMCS-7610 **i07395706**

NOTE	PART NUMBER	QTY	PART NAME 1 2 3 4 5 6 (PRODUCT LEVEL)	SEE PAGE
	560-0261	1	SOFTWARE GP-MONITOR (CELLULAR)	

<END>

298-5125 GLOW PLUG GP

PART OF 435-1699 ENGINE AR, 435-1692 ENGINE AR-COMPLETE, 435-1685, 435-1687, 437-5409, 540-0570, 540-1155, 540-1156 ENGINE AR-PRIMARY
ALSO AN ATTACHMENT

SMCS-1412 **i06635717**

NOTE	REF NO	GRAPHIC REF	PART NUMBER	QTY	PART NAME 1 2 3 4 5 6 (PRODUCT LEVEL)	SEE PAGE
	1	1	**452-3112**	4	GLOW PLUG (12-VOLT)	
	2	1	**368-3147**	1	BUS BAR AS	

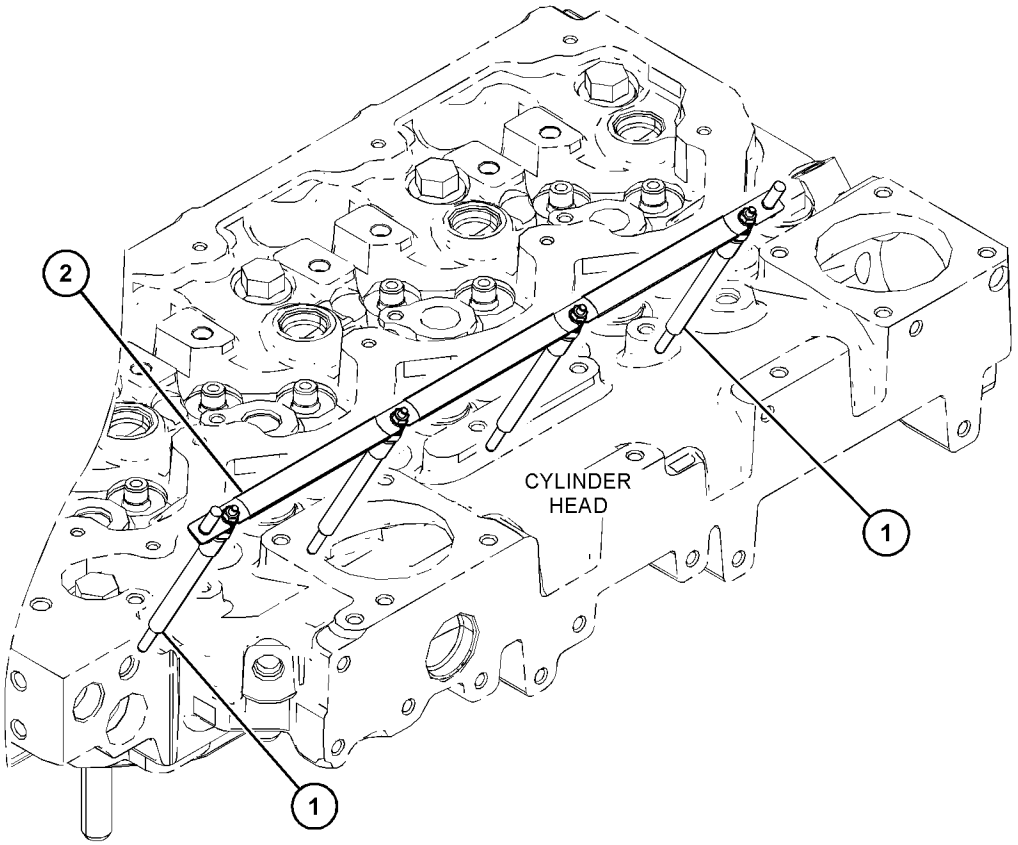

GRAPHIC #1 <END> g06103124

299-5075 GLOW PLUG GP

PART OF 522-8303 ENGINE AR-PRIMARY

SMCS-1412 **i06238670**

NOTE	REF NO	GRAPHIC REF	PART NUMBER	QTY	PART NAME 1 2 3 4 5 6 (PRODUCT LEVEL)	SEE PAGE
	1	1	**462-2235**	4	GLOW PLUG (24-VOLT)	
	2	1	**368-3147**	1	BUS BAR AS	

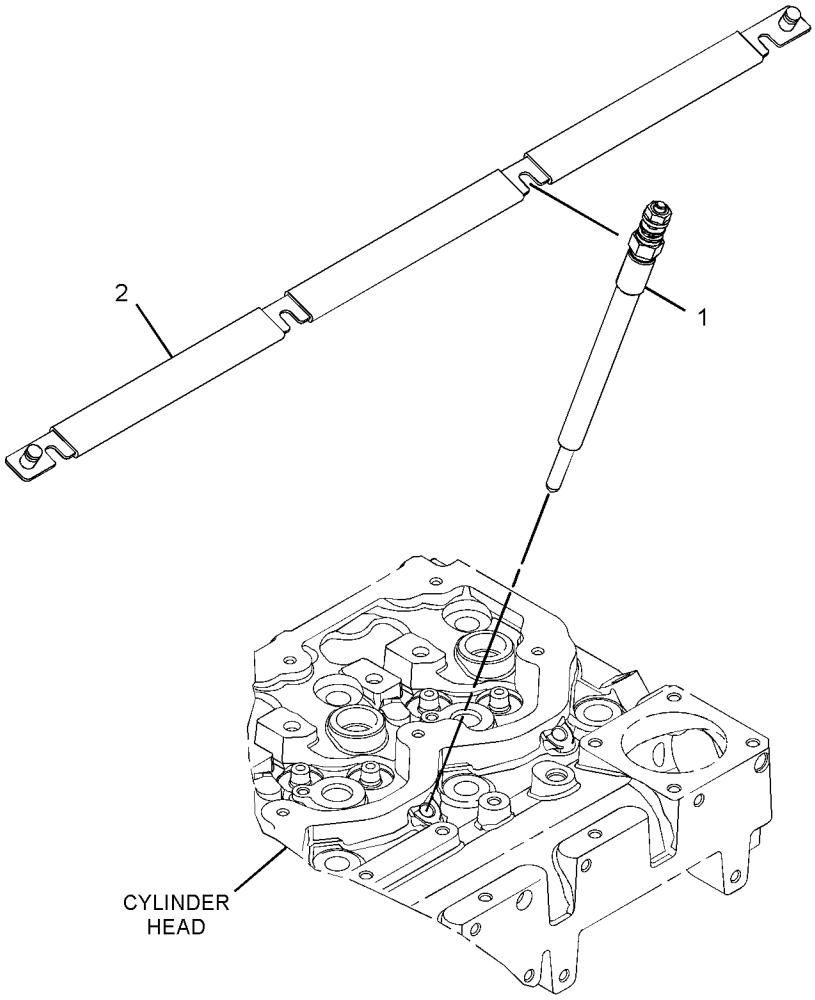

GRAPHIC #1 <END> g02729773

360-4226 HARNESS AS-CONTROL—PRODUCT LINK

PART OF 426-5362 INSTALLATION GP-COMMUNICATION

SMCS-1408 **i06097262**

NOTE	PART NUMBER	QTY	PART NAME 1 2 3 4 5 6 (PRODUCT LEVEL)	SEE PAGE
	340-7298	1	CAP AS	
	374-7466	1	CAP-SEAL	
	374-7468	1	CAP-SEAL	
	133-0969	1	CONNECTOR-SOCKET (16-GA TO 18-GA)	
	126-1774	1	COVER-CONNECTOR	
	155-2256	2	KIT-CONNECTING PLUG (12-PIN)	
	155-2260	2	KIT-CONNECTING PLUG (3-PIN)	
	155-2274	1	KIT-CONNECTING PLUG (6-PIN)	
			(EACH PLUG KIT INCLUDES PLUS AS, WEDGE, & INTERFACE SEAL)	
	102-8803	1	KIT-RECEPTACLE (3-PIN)	
			(INCLUDES RECEPTACLE AS & WEDGE)	
	8T-8729	6	PIN-CONNECTOR (16-GA TO 18-GA)	
	147-1445	1	PLUG AS-CONNECTOR (70-PIN)	
	159-9322	1	SEAL-O-RING	
	8T-8737	63	PLUG-SEAL	
	133-0970	1	RECEPTACLE AS-CONNECTOR (TEE)	
	210-8950	1	RECEPTACLE-CONNECTOR (9-PIN)	
	8T-8730	48	SOCKET-CONNECTOR (16-GA TO 18-GA)	
	7K-1181	2	STRAP-CABLE	
E	**125-7874**		TUBE-HEAT SHRINK (5.72-MM DIA) (15-CM)	
E	**125-7875**		TUBE-HEAT SHRINK (7.44-MM DIA) (10-CM)	

E - ORDER BY THE CENTIMETER

<END>

423-7018 HARNESS AS-WIRING—PRODUCT LINK RADIO

3-METER EXTENSION

PART OF 426-5363 INSTALLATION GP-COMMUNICATION

SMCS-1408 **i06733922**

NOTE	PART NUMBER	QTY	PART NAME 1 2 3 4 5 6 (PRODUCT LEVEL)	SEE PAGE
	155-2255	1	KIT-CONNECTING PLUG (12-PIN)	
	155-2256	1	KIT-CONNECTING PLUG (12-PIN)	
			(EACH KIT INCLUDES PLUG AS, WEDGE, & INTERFACE SEAL)	
	102-8801	1	KIT-RECEPTACLE (12-PIN)	
	190-7614	1	KIT-RECEPTACLE (12-PIN)	
			(EACH KIT INCLUDES RECEPTACLE AS & WEDGE)	
	8T-8729	8	PIN-CONNECTOR (16-GA TO 18-GA)	
	8T-8737	8	PLUG-SEAL	
	8T-8730	8	SOCKET-CONNECTOR (16-GA TO 18-GA)	

<END>

447-5512 HARNESS AS-WIRING—PL461 TO PL462 CONVERSION

PART OF 426-5363 INSTALLATION GP-COMMUNICATION

SMCS-1408 **i05433648**

NOTE	PART NUMBER	QTY	PART NAME 1 2 3 4 5 6 (PRODUCT LEVEL)	SEE PAGE
	8T-8729	8	PIN-CONNECTOR (16-GA TO 18-GA)	
	8T-8730	8	SOCKET-CONNECTOR (16-GA TO 18-GA)	
	8T-8737	8	PLUG-SEAL	
	155-2255	1	KIT-CONNECTING PLUG (12-PIN)	
			(KIT INCLUDES PLUG AS, WEDGE & INTERFACE SEAL)	
	190-7614	1	KIT-RECEPTACLE (12-PIN)	
			(KIT INCLUDES RECEPTACLE AS & WEDGE)	

<END>

426-5362 INSTALLATION GP-COMMUNICATION—PLE601 NETWORK MANAGER

FIELD INSTALLATION

SMCS-1408, 1901, 1902, 7610, 7620 **i06098882**

NOTE	PART NUMBER	QTY	PART NAME 1 2 3 4 5 6 (PRODUCT LEVEL)	SEE PAGE
Y	**360-4226**	1	HARNESS AS-CONTROL	1588
M	**7X-2534**	4	BOLT (M6X1X50-MM)	
	417-4722	1	CONTROL GP-COMMUNICATION (NETWORK MANAGER)	
	8C-5607	8	MOUNT-ISOLATION	
M	**344-5673**	4	NUT (M6X1-THD)	
	8C-5608	4	SPACER (6.5X9.5X25.4-MM THK)	
	7K-1181	15	STRAP-CABLE	
	9X-6165	4	WASHER (6.5X22X2.5-MM THK)	
	9X-8256	4	WASHER (6.6X12X2-MM THK)	

M - METRIC PART
Y - SEPARATE ILLUSTRATION

<END>

426-5363 INSTALLATION GP-COMMUNICATION—PL641 CELLULAR

FIELD INSTALLATION

SMCS-1408, 1901, 1902, 7610, 7620 **i06632416**

NOTE	PART NUMBER	QTY	PART NAME 1 2 3 4 5 6 (PRODUCT LEVEL)	SEE PAGE
Y	**423-7018**	1	HARNESS AS-WIRING (PRODUCT LINK RADIO)	1588
CYR	**440-2105**	1	CONTROL GP-UNPROGRAMMED (PRODUCT LINK ELITE 641 CELLULAR)	1585
M	**8T-4971**	4	BOLT (M6X1X30-MM)	
	433-9722	1	FILM-IDENTIFICATION (WIRELESS COM DEVICE, READ OMM)	
	433-9728	1	FILM-WARNING (EXPLOSION, WIRELESS, OMM, U.S.)	
	433-9730	1	FILM-WARNING (EXPLOSION, WIRELESS, OMM, INTL)	
M	**344-5673**	4	NUT (M6X1-THD)	
	9X-8256	8	WASHER (6.6X12X2-MM THK)	

C - CHANGE FROM PREVIOUS TYPE
M - METRIC PART
R - REMANUFACTURED PART MAY BE AVAILABLE
Y - SEPARATE ILLUSTRATION

<END>

298-5094 STARTING MOTOR GP-ELECTRIC

12 VOLT, 3.2 KW

SMCS-1453 **i03096560**

NOTE	REF NO	GRAPHIC REF	PART NUMBER	QTY	PART NAME 1 2 3 4 5 6 (PRODUCT LEVEL)	SEE PAGE
M	1	1	**6I-0364**	3	STUD (M10X1.5X45-MM)	
M	2	1	**6I-0594**	3	NUT (M10X1.5-THD)	
	3	1	**329-0290**	1	STARTING MOTOR GP-ELECTRIC	

M - METRIC PART

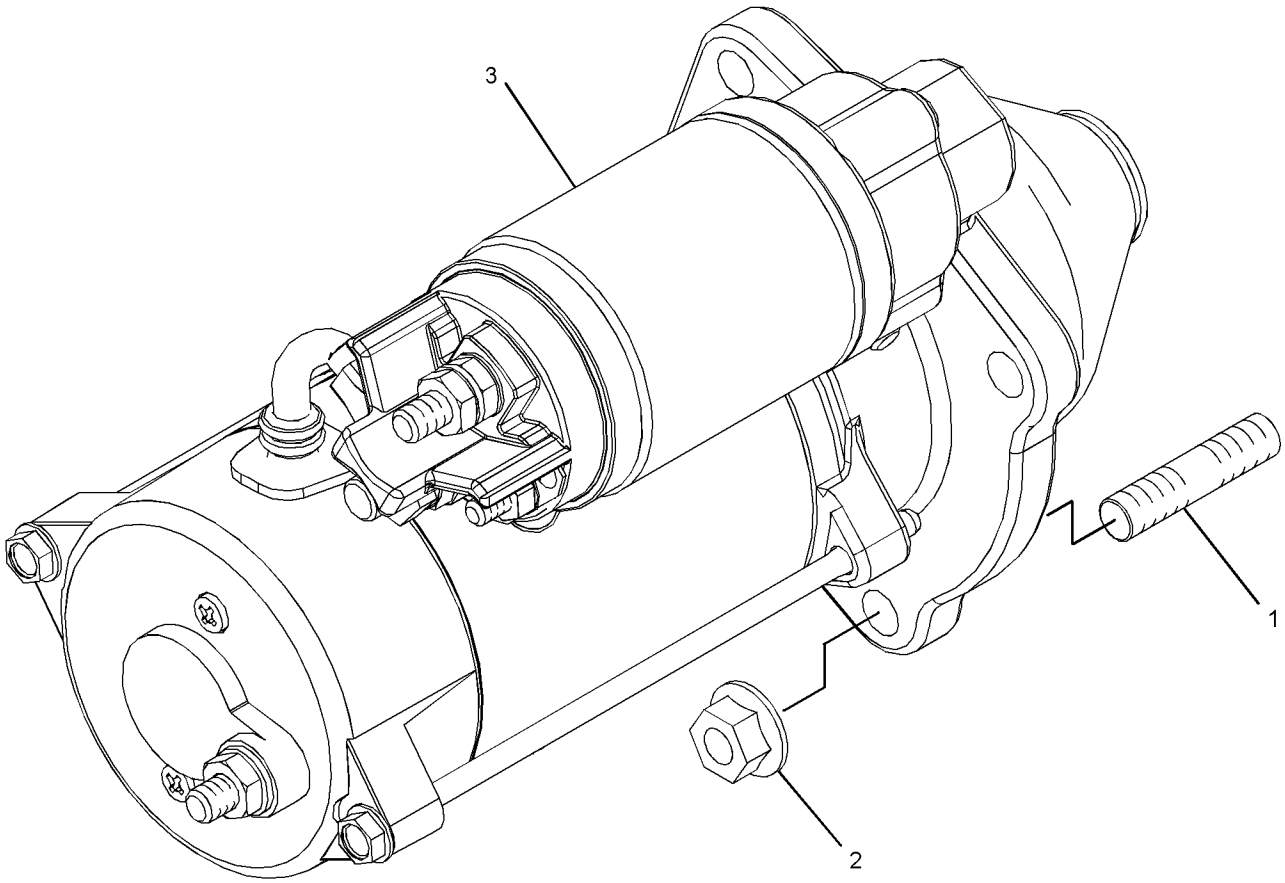

GRAPHIC #1 <END> g01636810

299-5067 STARTING MOTOR GP-ELECTRIC

24-VOLT

PART OF 522-8303 ENGINE AR-PRIMARY

SMCS-1453 **i02664784**

NOTE	REF NO	GRAPHIC REF	PART NUMBER	QTY	PART NAME 1 2 3 4 5 6 (PRODUCT LEVEL)	SEE PAGE
M	1	1	**6I-0364**	3	STUD (M10X1.5X45-MM)	
M	2	1	**6I-0594**	3	NUT (M10X1.5-THD)	
R	3	1	**225-3150**	1	STARTING MOTOR GP-ELECTRIC	

M - METRIC PART
R - REMANUFACTURED PART MAY BE AVAILABLE

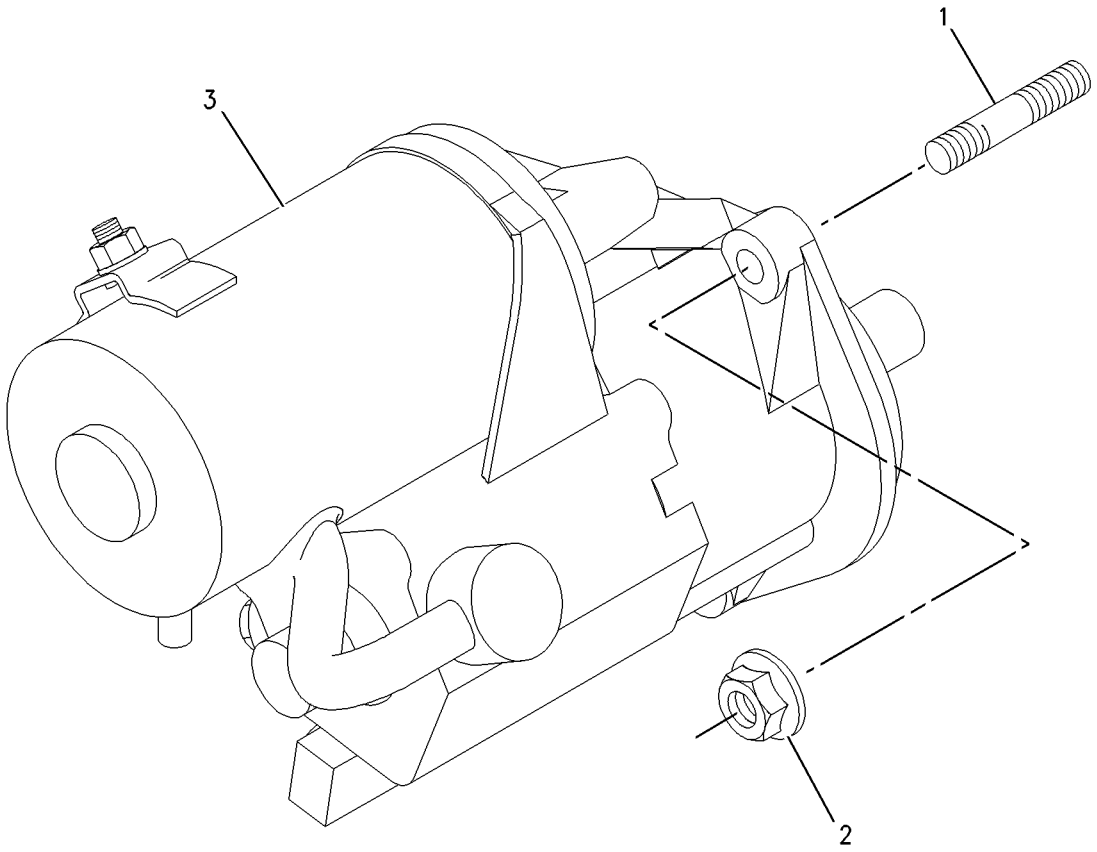

GRAPHIC #1 <END> g00933413

303-4619 STARTING MOTOR GP-ELECTRIC

12 VOLT, 3 KW

SMCS-1453 **i05348865**

NOTE	REF NO	GRAPHIC REF	PART NUMBER	QTY	PART NAME 1 2 3 4 5 6 (PRODUCT LEVEL)	SEE PAGE
M	1	1	**6I-0364**	3	STUD (M10X1.5X45-MM)	
M	2	1	**6I-0594**	3	NUT (M10X1.5-THD)	
R	3	1	**364-4130**	1	STARTING MOTOR GP-ELECTRIC	

M - METRIC PART
R - REMANUFACTURED PART MAY BE AVAILABLE

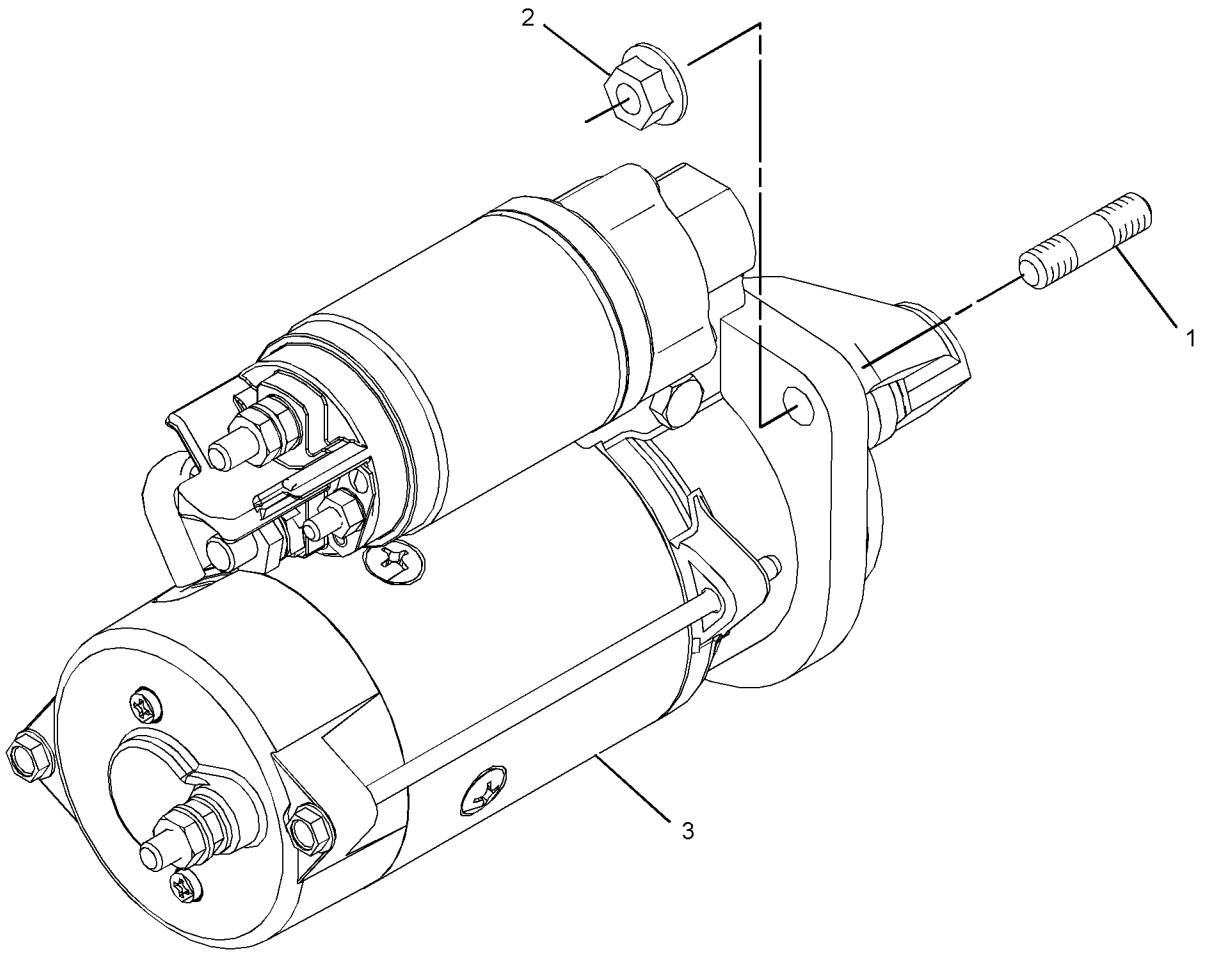

GRAPHIC #1 <END> g01534854

303-5769 STARTING MOTOR GP-ELECTRIC–12-VOLT

SMCS-1453 **i02746632**

NOTE	REF NO	GRAPHIC REF	PART NUMBER	QTY	PART NAME 1 2 3 4 5 6 (PRODUCT LEVEL)	SEE PAGE
M	1	1	**6I-0364**	3	STUD (M10X1.5X45-MM)	
M	2	1	**6I-0594**	3	NUT (M10X1.5-THD)	
R	3	1	**303-5795**	1	STARTING MOTOR-ELECTRIC	

M - METRIC PART
R - REMANUFACTURED PART MAY BE AVAILABLE

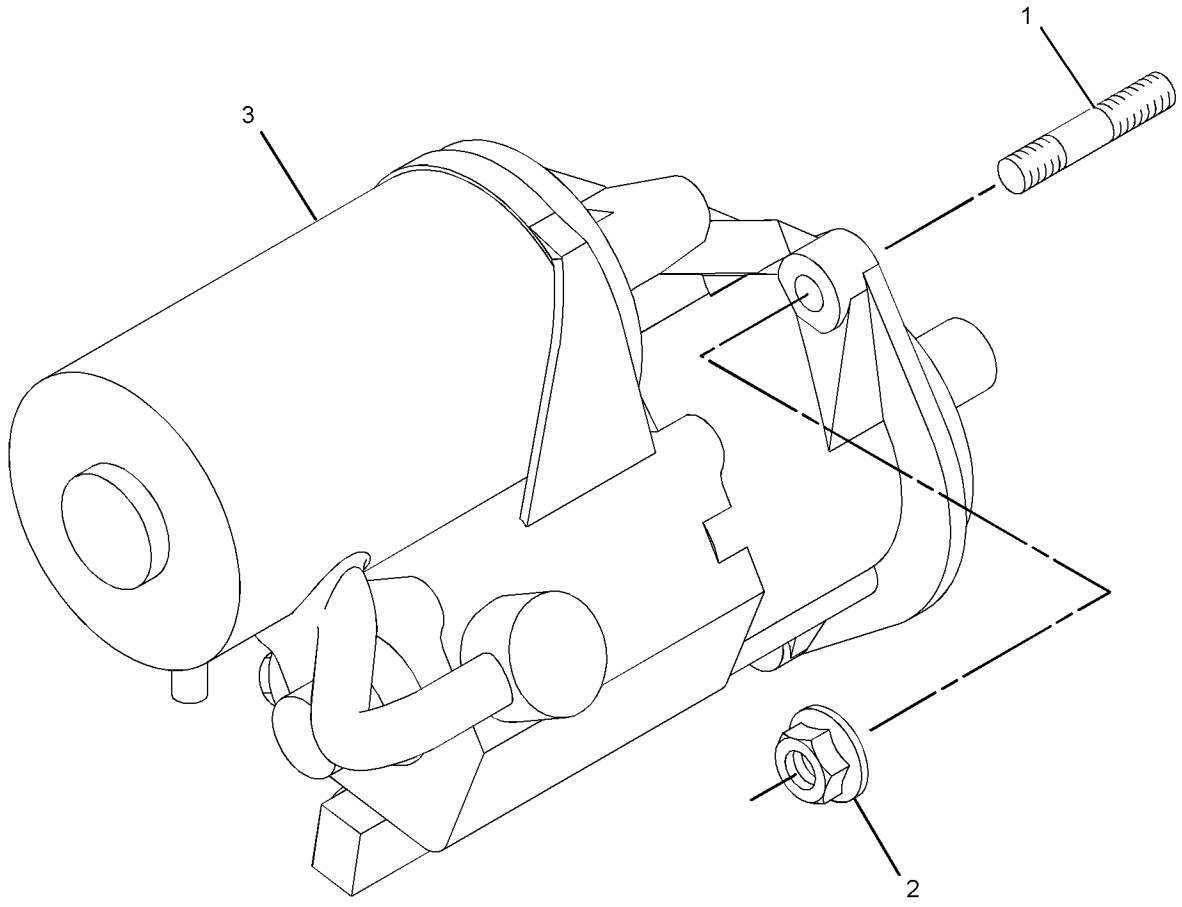

GRAPHIC #1 <END> g01376189

304-3655 STARTING MOTOR GP-ELECTRIC

12 VOLT, 4 KW
TYPE 1

SMCS-1453 **i02902110**

NOTE	REF NO	GRAPHIC REF	PART NUMBER	QTY	PART NAME 1 2 3 4 5 6 (PRODUCT LEVEL)	SEE PAGE
	1	1	**7W-4540**	1	SPACER	
M	2	1	**128-1599**	3	STUD (M10X1.5X50-MM)	
M	3	1	**6I-0594**	3	NUT (M10X1.5-THD)	
	4	1	**300-4415**	1	STARTING MOTOR GP-ELECTRIC	

M - METRIC PART

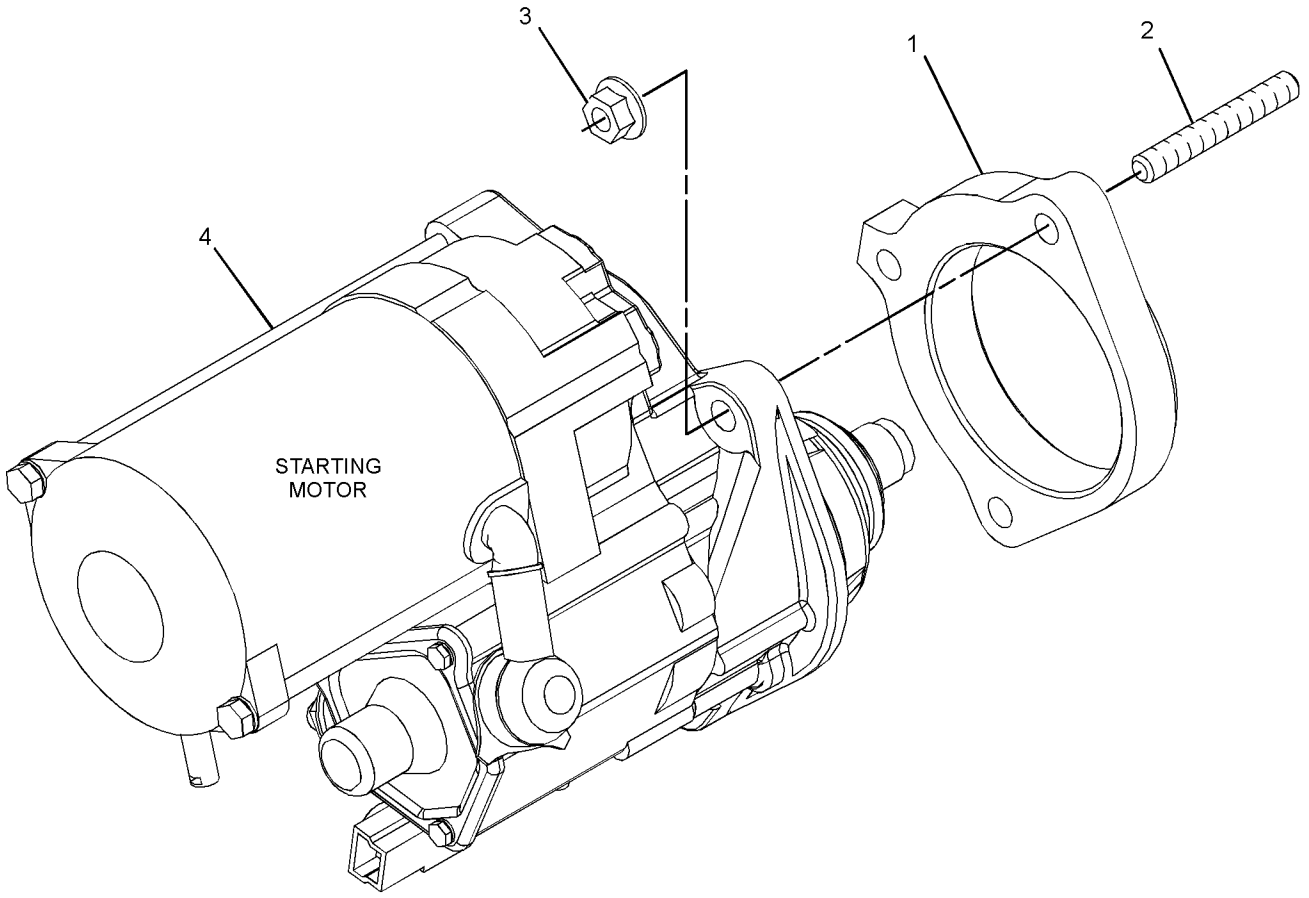

GRAPHIC #1 <END> g01384280

304-3655 STARTING MOTOR GP-ELECTRIC

12 VOLT, 4 KW
TYPE 2

SMCS-1453 **i05814464**

NOTE	REF NO	GRAPHIC REF	PART NUMBER	QTY	PART NAME 1 2 3 4 5 6 (PRODUCT LEVEL)	SEE PAGE
R	1	1	**321-8965**	1	STARTING MOTOR-ELECTRIC (12-VOLT, 4-KW)	
M	2	1	**6I-0594**	3	NUT (M10X1.5-THD)	
M	3	1	**6I-4012**	3	STUD	

M - METRIC PART
R - REMANUFACTURED PART MAY BE AVAILABLE

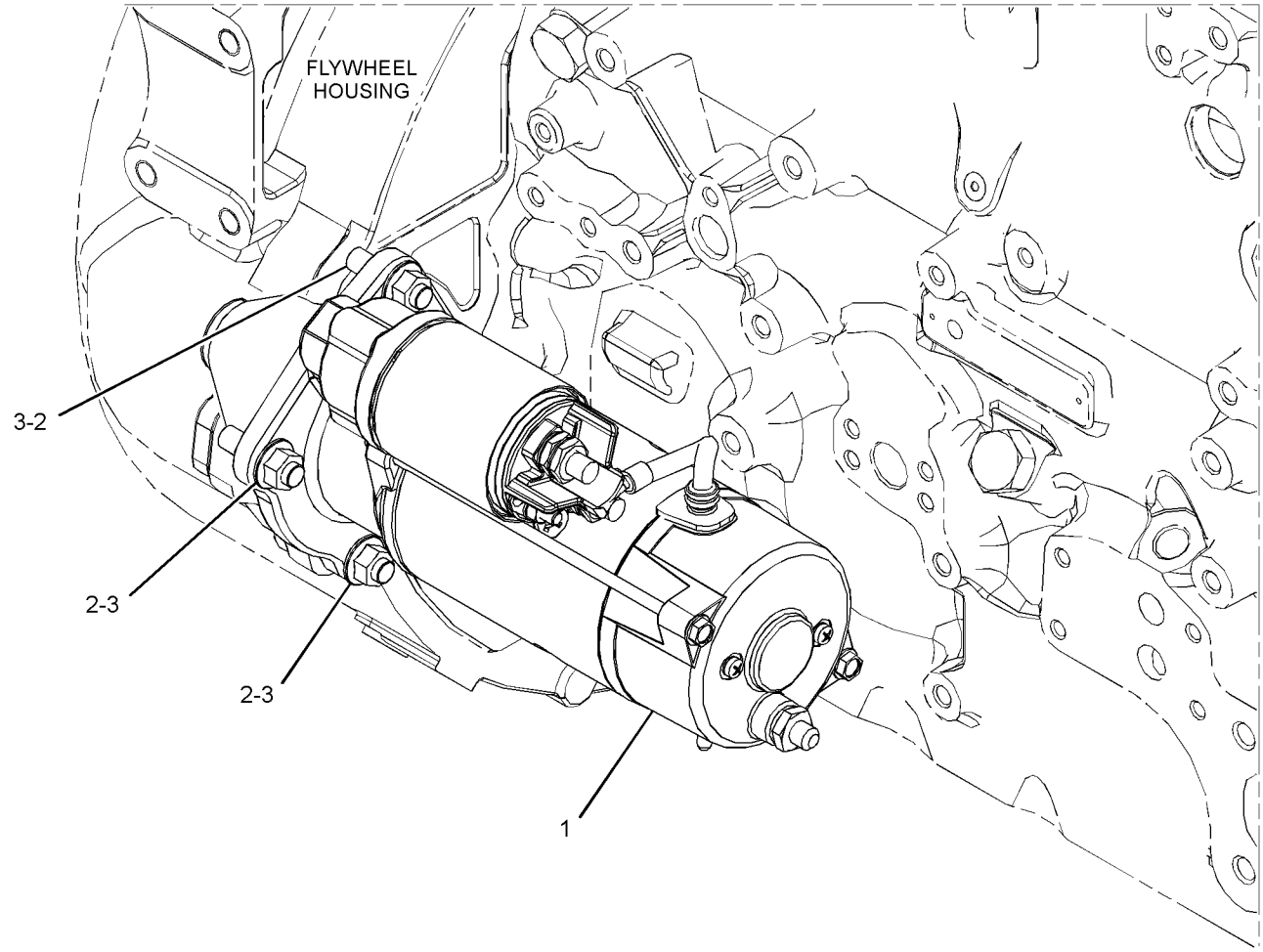

GRAPHIC #1 <END> g02750614

322-4887 STARTING MOTOR GP-ELECTRIC

12 VOLT, 3.2 KW

SMCS-1453 **i03075288**

NOTE	REF NO	GRAPHIC REF	PART NUMBER	QTY	PART NAME 1 2 3 4 5 6 (PRODUCT LEVEL)	SEE PAGE
M	1	1	**6I-0364**	3	STUD (M10X1.5X45-MM)	
M	2	1	**6I-0594**	3	NUT (M10X1.5-THD)	
	3	1	**329-0290**	1	STARTING MOTOR GP-ELECTRIC	

M - METRIC PART

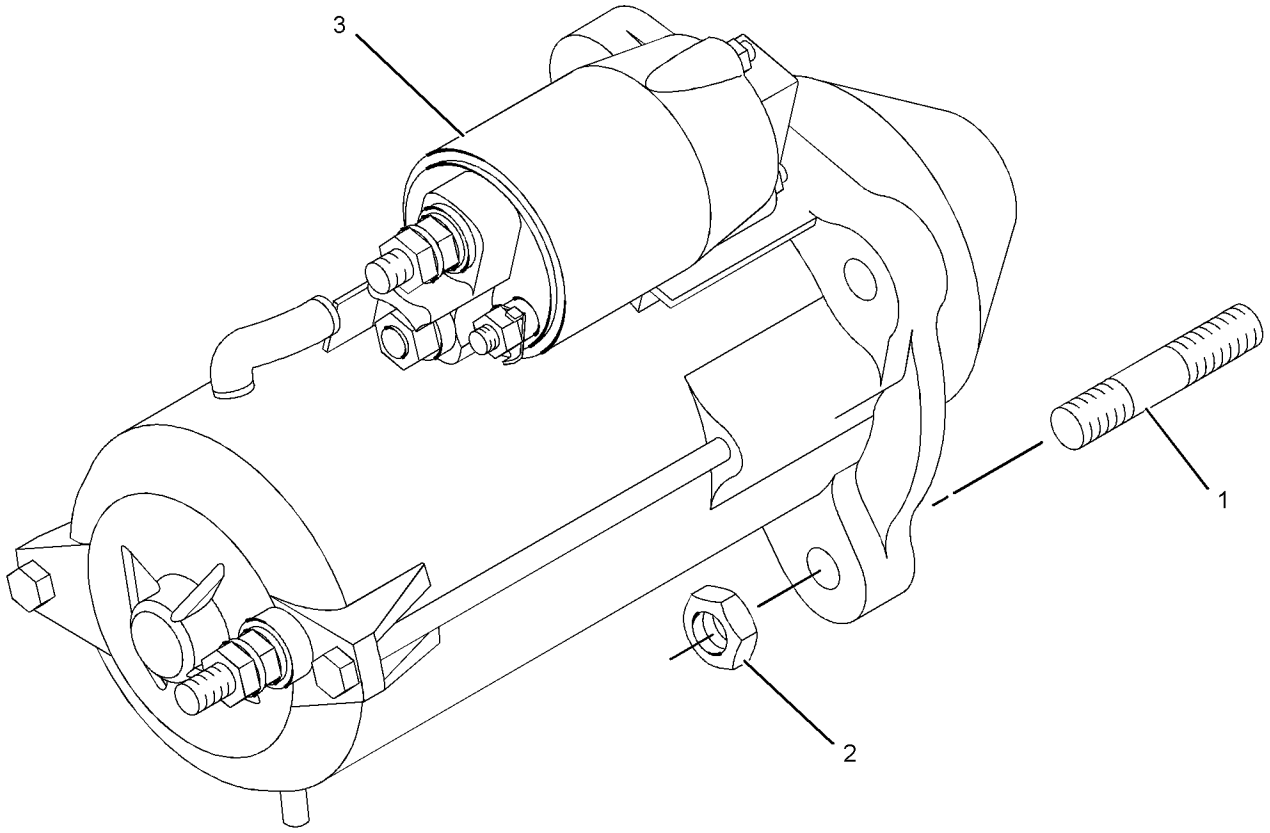

GRAPHIC #1 <END> g01326043

325-5612 STARTING MOTOR GP-ELECTRIC

12 VOLT, 3.2 KW

PART OF 435-1699 ENGINE AR, 435-1687, 437-5409, 540-1155, 540-1156 ENGINE AR-PRIMARY

SMCS-1453 **i07419732**

NOTE	REF NO	GRAPHIC REF	PART NUMBER	QTY	PART NAME 1 2 3 4 5 6 (PRODUCT LEVEL)	SEE PAGE
M	1	1	**6I-0364**	3	STUD (M10X1.5X45-MM)	
M	2	1	**175-7141**	3	NUT-HEX FLANGE (M10X1.5-THD)	
R	3	1	**526-9854**	1	STARTING MOTOR GP-ELECTRIC (12-VOLT, 3.2-KW) (12-VOLT, 3.2-KW)	

M - METRIC PART
R - REMANUFACTURED PART MAY BE AVAILABLE

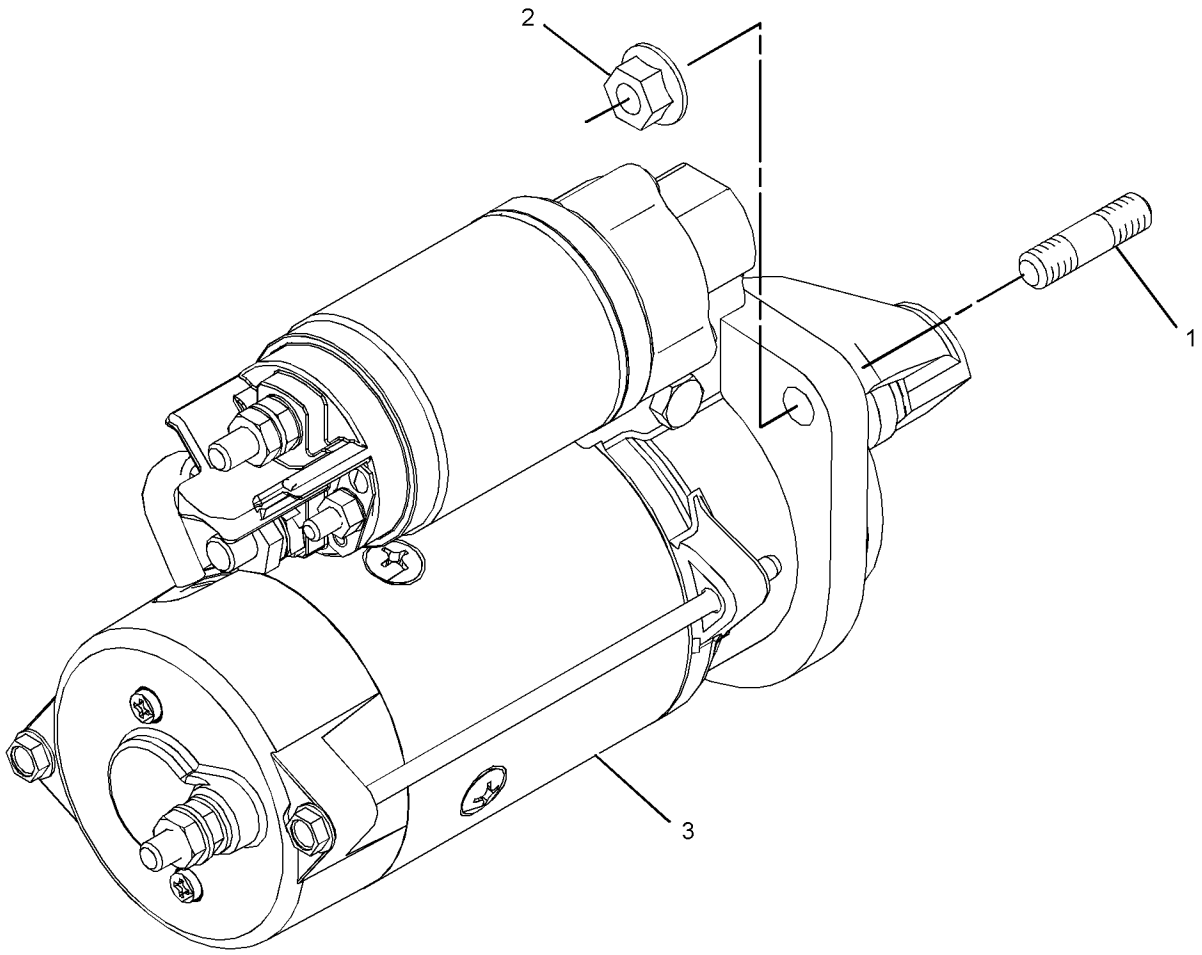

GRAPHIC #1 <END> g01534854

327-8999 STARTING MOTOR GP-ELECTRIC

12 VOLT, 3.2 KW

PART OF 435-1692 ENGINE AR-COMPLETE, 435-1685, 540-0570 ENGINE AR-PRIMARY

SMCS-1453 **i06259810**

NOTE	REF NO	GRAPHIC REF	PART NUMBER	QTY	PART NAME 1 2 3 4 5 6 (PRODUCT LEVEL)	SEE PAGE
M	1	1	**6I-4012**	3	STUD	
M	2	1	**6I-0594**	3	NUT (M10X1.5-THD)	
R	3	1	**357-5203**	1	STARTING MOTOR GP-ELECTRIC (12-VOLT, 3.2-KW)	

M - METRIC PART
R - REMANUFACTURED PART MAY BE AVAILABLE

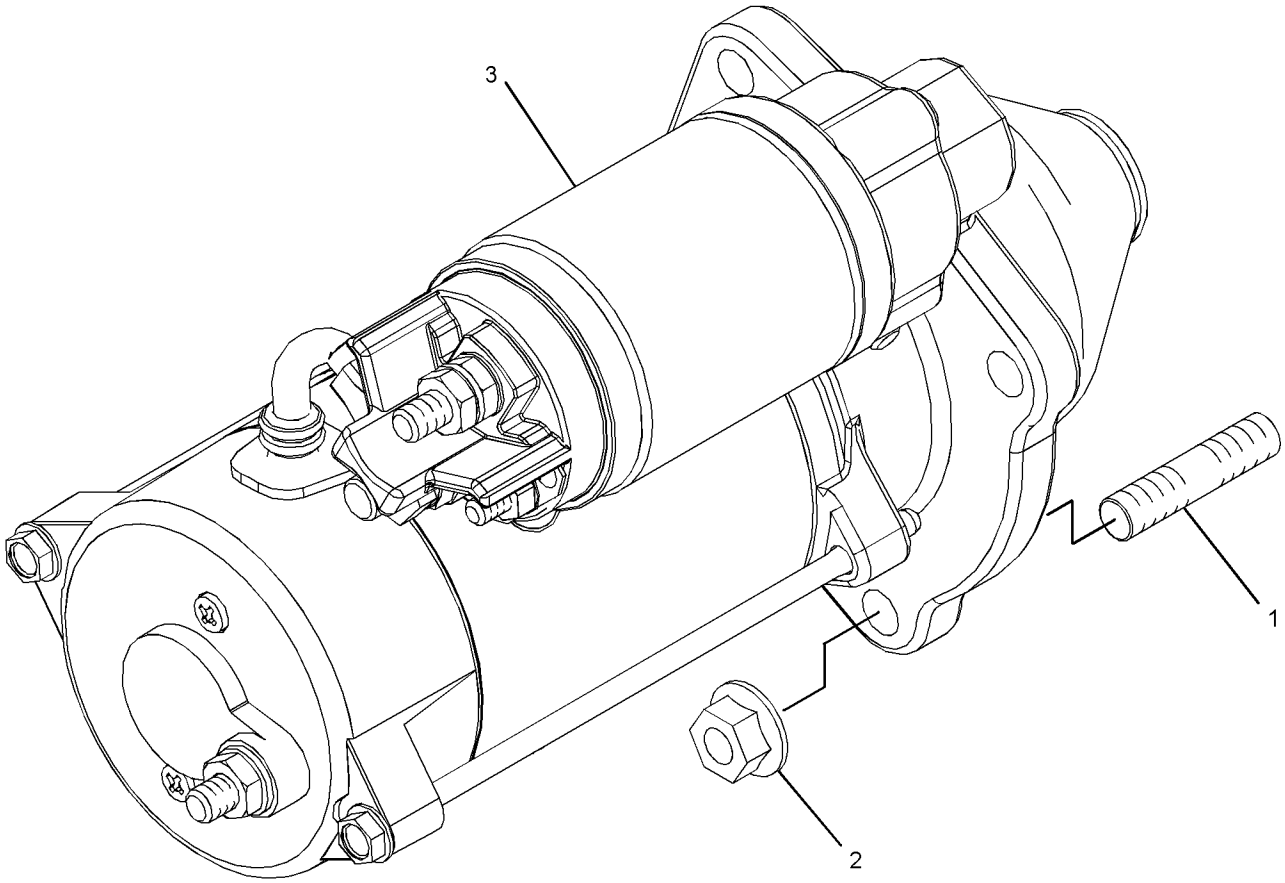

GRAPHIC #1 <END> g01636810

328-0666 STARTING MOTOR GP-ELECTRIC

12 VOLT, 4 KW

SMCS-1453 **i06628455**

NOTE	REF NO	GRAPHIC REF	PART NUMBER	QTY	PART NAME 1 2 3 4 5 6 (PRODUCT LEVEL)	SEE PAGE
M	1	1	**6I-0364**	3	STUD (M10X1.5X45-MM)	
M	2	1	**175-7141**	3	NUT-HEX FLANGE (M10X1.5-THD)	
	3	1	**357-5204**	1	STARTING MOTOR-ELECTRIC (12-VOLT)	

M - METRIC PART

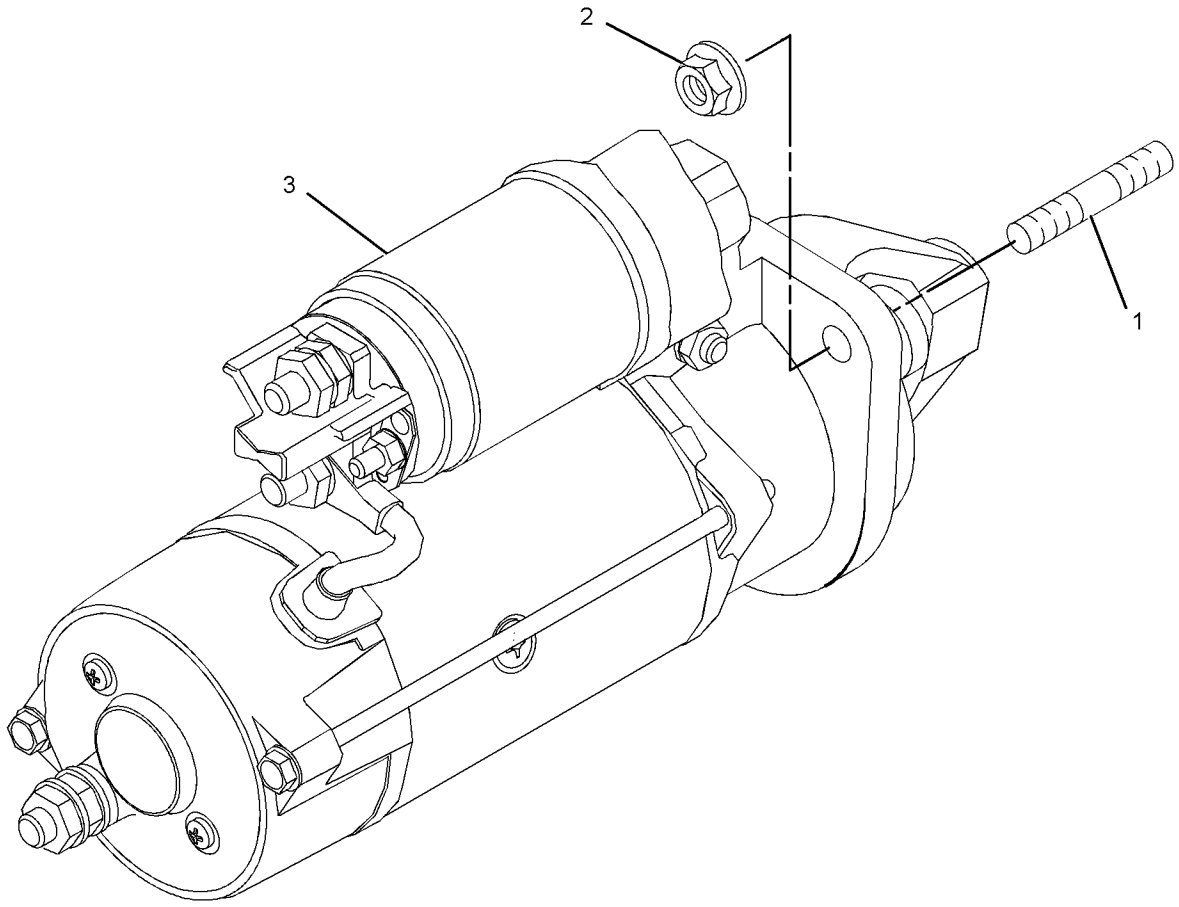

GRAPHIC #1 <END> g01526684

328-5921 STARTING MOTOR GP-ELECTRIC

12 VOLT, 4.2 KW

SMCS-1453 **i05328957**

NOTE	REF NO	GRAPHIC REF	PART NUMBER	QTY	PART NAME 1 2 3 4 5 6 (PRODUCT LEVEL)	SEE PAGE
M	1	1	**6I-0364**	3	STUD (M10X1.5X45-MM)	
M	2	1	**6I-0594**	3	NUT (M10X1.5-THD)	
	3	1	**364-4129**	1	STARTING MOTOR GP-ELECTRIC	

M - METRIC PART

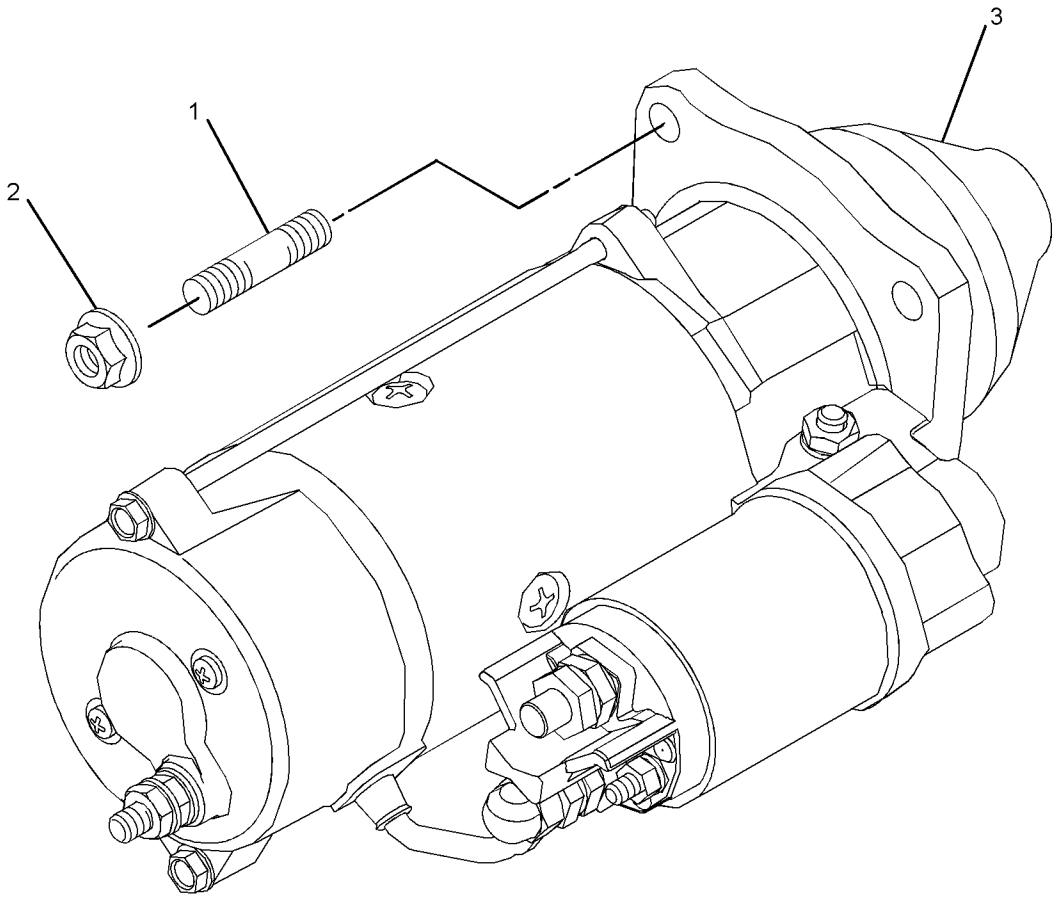

GRAPHIC #1 <END> g03654506

399-1113 STARTING MOTOR GP-ELECTRIC

SMCS-1453 **i06124283**

NOTE	REF NO	GRAPHIC REF	PART NUMBER	QTY	PART NAME 1 2 3 4 5 6 (PRODUCT LEVEL)	SEE PAGE
M	1	1	**6I-0364**	3	STUD (M10X1.5X45-MM)	
M	2	1	**6I-0594**	3	NUT (M10X1.5-THD)	
R	3	1	**331-7010**	1	STARTING MOTOR-ELECTRIC (12-VOLT, 4-KW)	

M - METRIC PART
R - REMANUFACTURED PART MAY BE AVAILABLE

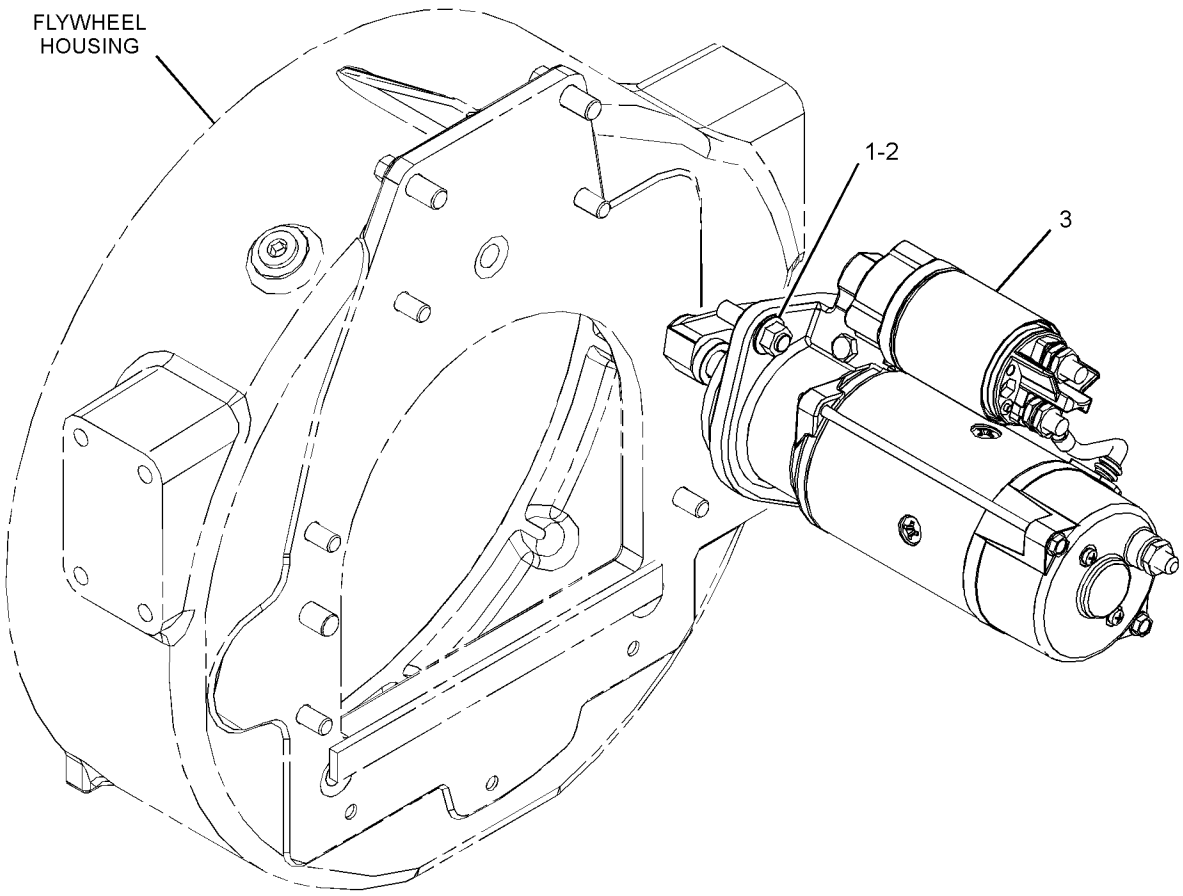

GRAPHIC #1 <END> g03326446

307-2861 SWITCH GP-HEAT START

SMCS-1416 **i02896285**

NOTE	REF NO	GRAPHIC REF	PART NUMBER	QTY	PART NAME 1 2 3 4 5 6 (PRODUCT LEVEL)	SEE PAGE
	1	1	**7E-5219**	1	SWITCH AS-KEY	
	1A	1	**128-7723**	1	KEY (START)	
	2	1	**7E-5218**	1	PLATE-SWITCH INDEX	
	3	1	**101-3990**	1	CONNECTOR	
	4	1	**101-3992**	1	SLEEVE	
	5	1	**101-3991**	6	CONNECTOR	
	6	1	**101-3993**	6	SLEEVE	

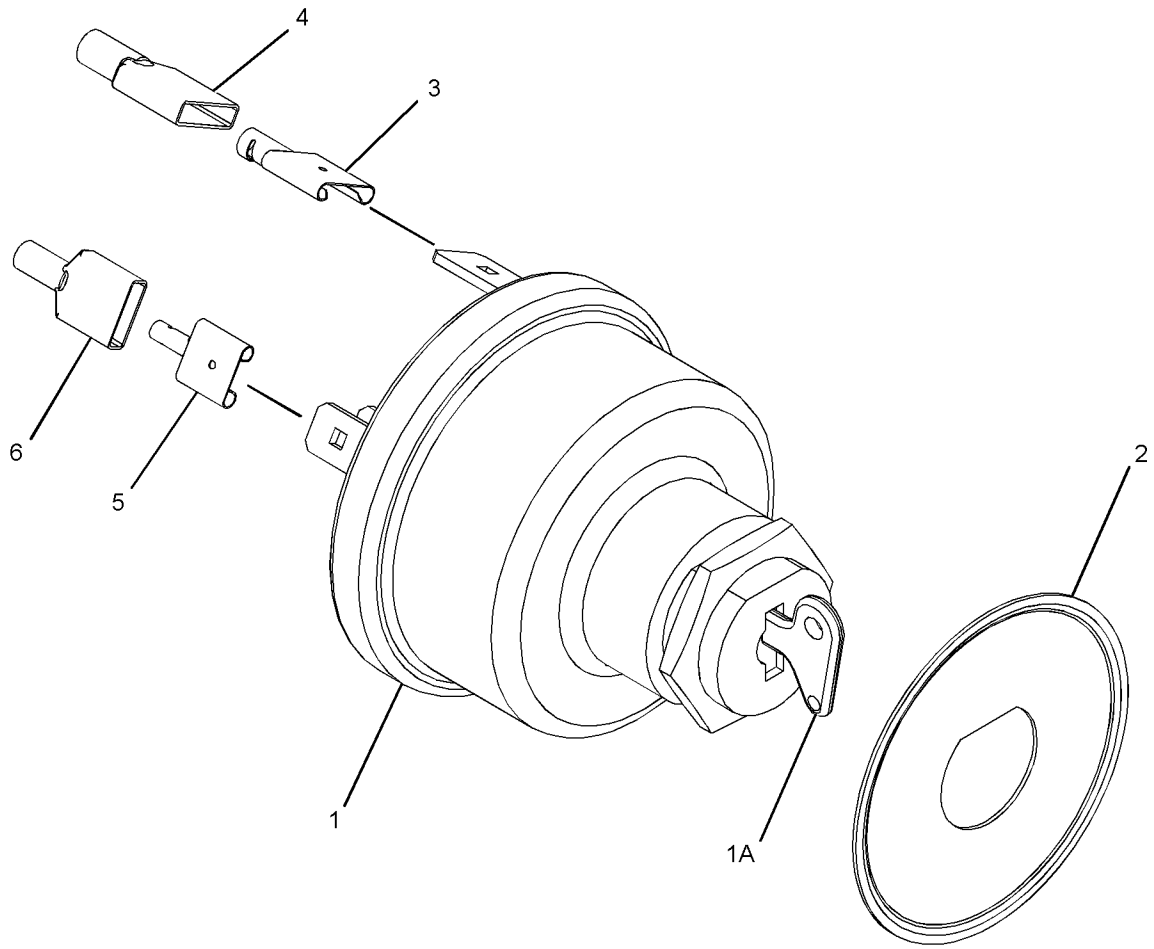

GRAPHIC #1 <END> g01377292

312-2579 SWITCH GP-HEAT START

SMCS-1416 **i02810583**

NOTE	REF NO	GRAPHIC REF	PART NUMBER	QTY	PART NAME 1 2 3 4 5 6 (PRODUCT LEVEL)	SEE PAGE
	1	1	**101-3987**	1	SWITCH AS (IGNITION)	
	2	1	**101-3989**	1	PLATE	
	3	1	**101-3990**	1	CONNECTOR	
	4	1	**101-3991**	6	CONNECTOR	
	5	1	**101-3992**	1	SLEEVE	
	6	1	**101-3993**	6	SLEEVE	

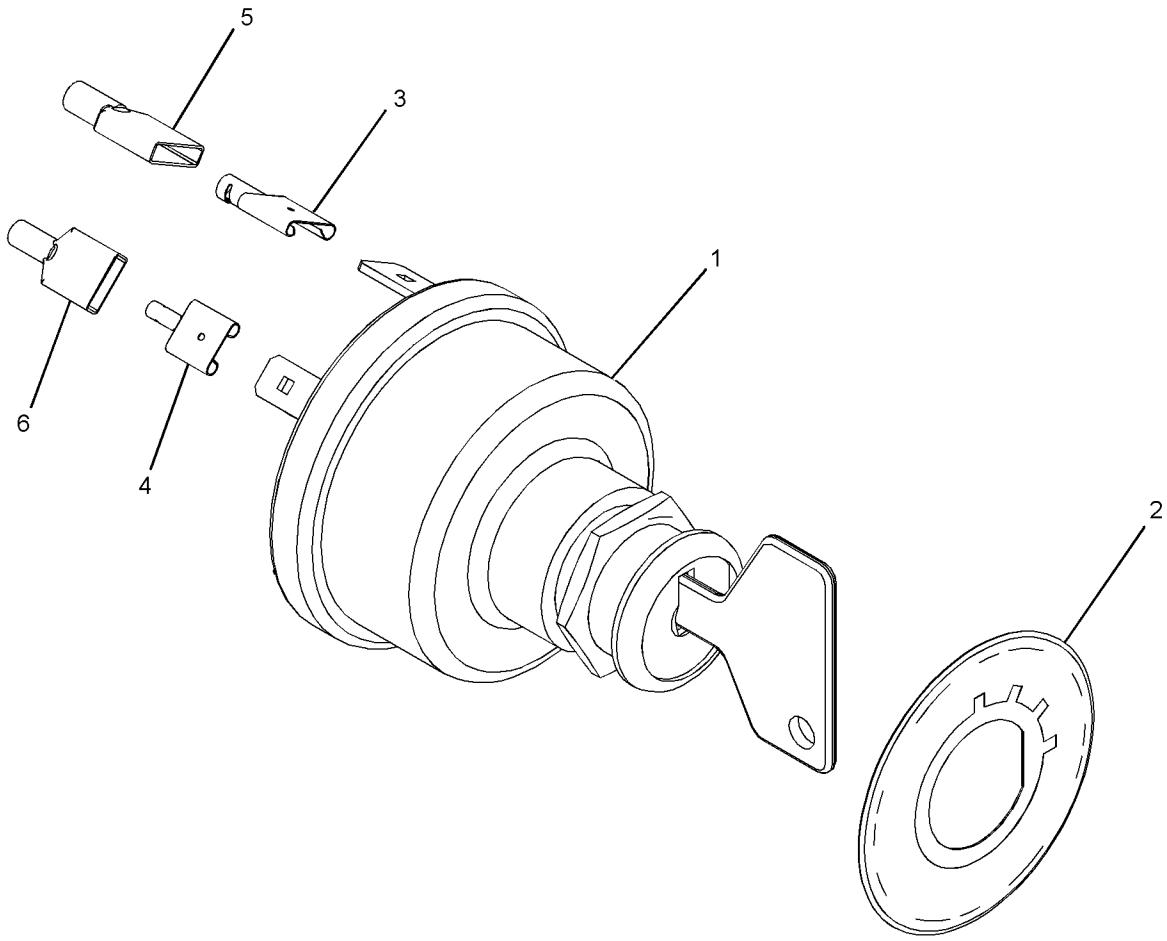

GRAPHIC #1 <END> g01430521

298-5130 WIRING GP-ENGINE

PART OF 435-1699 ENGINE AR, 435-1692 ENGINE AR-COMPLETE, 435-1685, 437-5409, 522-8303, 540-0570, 540-1155 ENGINE AR-PRIMARY

SMCS-1403 **i04480951**

NOTE	REF NO	GRAPHIC REF	PART NUMBER	QTY	PART NAME 1 2 3 4 5 6 (PRODUCT LEVEL)	SEE PAGE
M	1	1	**124-3815**	1	BOLT (M8X1.25X16-MM)	
	2	1	**217-9039**	3	STRAP-CABLE	
	3	1	**236-5539**	1	CLIP	
	4	1	**278-5209**	1	BRACKET	
	5	1	**348-4637**	1	BOLT	
	6	1	**346-1449**	1	BRACKET	
	7	1	**304-5163**	1	HARNESS AS-ENGINE	

M - METRIC PART

298-5130 **WIRING GP-ENGINE (**contd.**)** **i04480951**

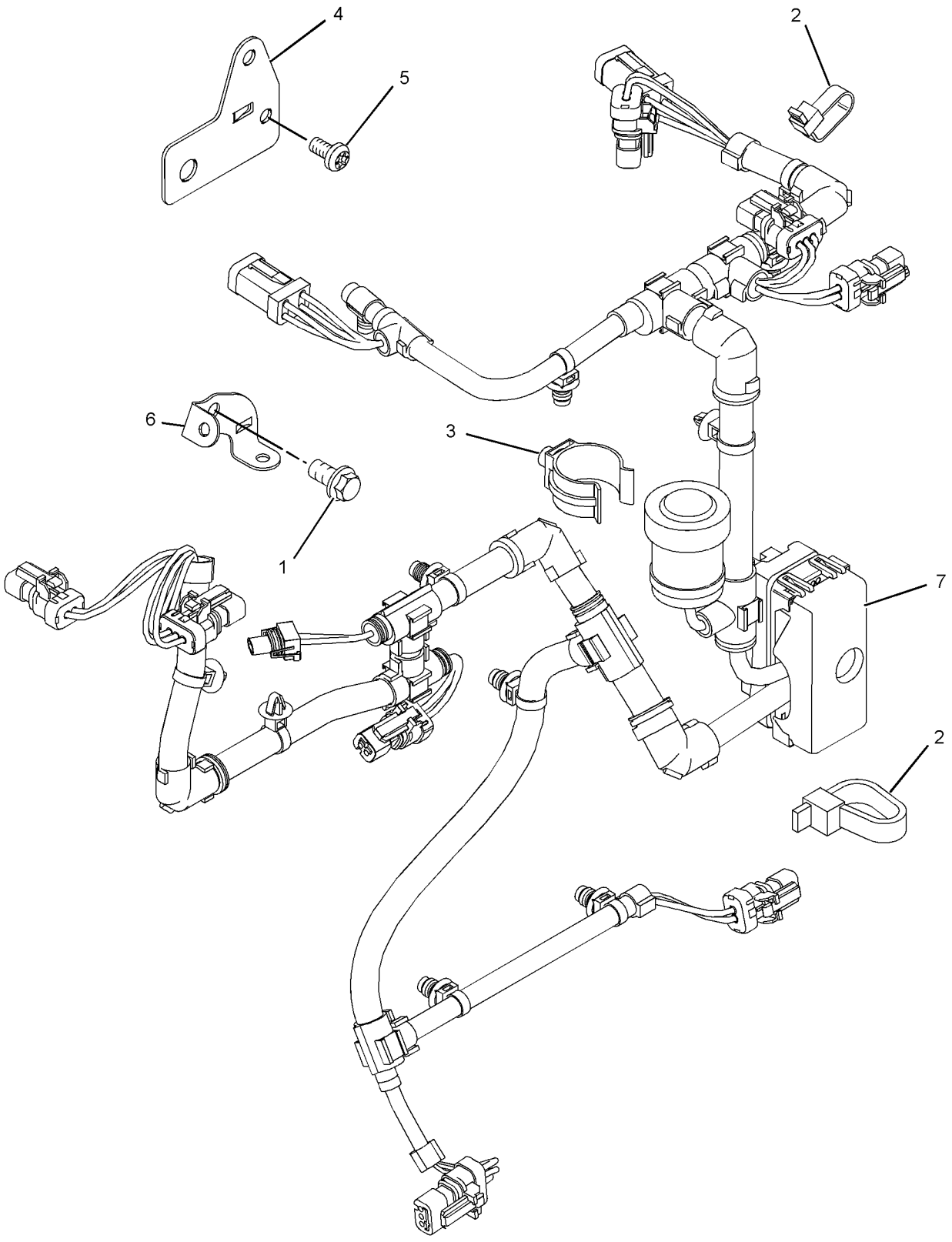

GRAPHIC #1 <END> g01922034

299-5092 WIRING GP-ENGINE

S/N: 4441-657

SMCS-1403 **i02656765**

NOTE	REF NO	GRAPHIC REF	PART NUMBER	QTY	PART NAME 1 2 3 4 5 6 (PRODUCT LEVEL)	SEE PAGE
	1	1	**288-0526**	1	HARNESS AS-ENGINE	
	2	1	**298-4605**	1	BRACKET	
M	3	1	**124-3815**	3	BOLT (M8X1.25X16-MM)	
	4	1	**217-8477**	1	CLIP	
	5	1	**298-4606**	1	BRACKET	
	6	1	**298-4607**	1	BRACKET	
	7	1	**217-9039**	3	STRAP-CABLE	

M - METRIC PART

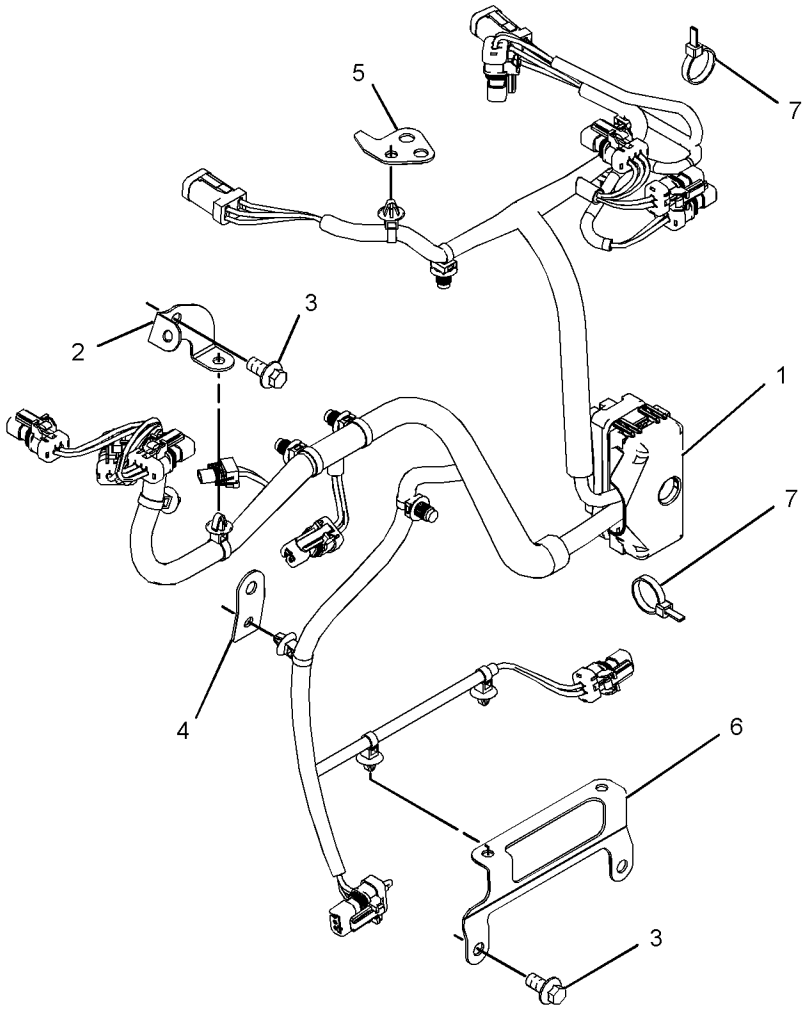

GRAPHIC #1 <END> g01337588

299-5092 WIRING GP-ENGINE

SMCS-1403 **i03568854**

NOTE	REF NO	GRAPHIC REF	PART NUMBER	QTY	PART NAME 1 2 3 4 5 6 (PRODUCT LEVEL)	SEE PAGE
CM	1	1	**124-3815**	1	BOLT (M8X1.25X16-MM)	
	2	1	**217-9039**	3	STRAP-CABLE	
	3	1	**346-1449**	1	BRACKET	
C	4	1	**304-5165**	1	HARNESS AS-ENGINE	

C - CHANGE FROM PREVIOUS TYPE
M - METRIC PART

299-5092 **WIRING GP-ENGINE (**contd.**)** **i03568854**

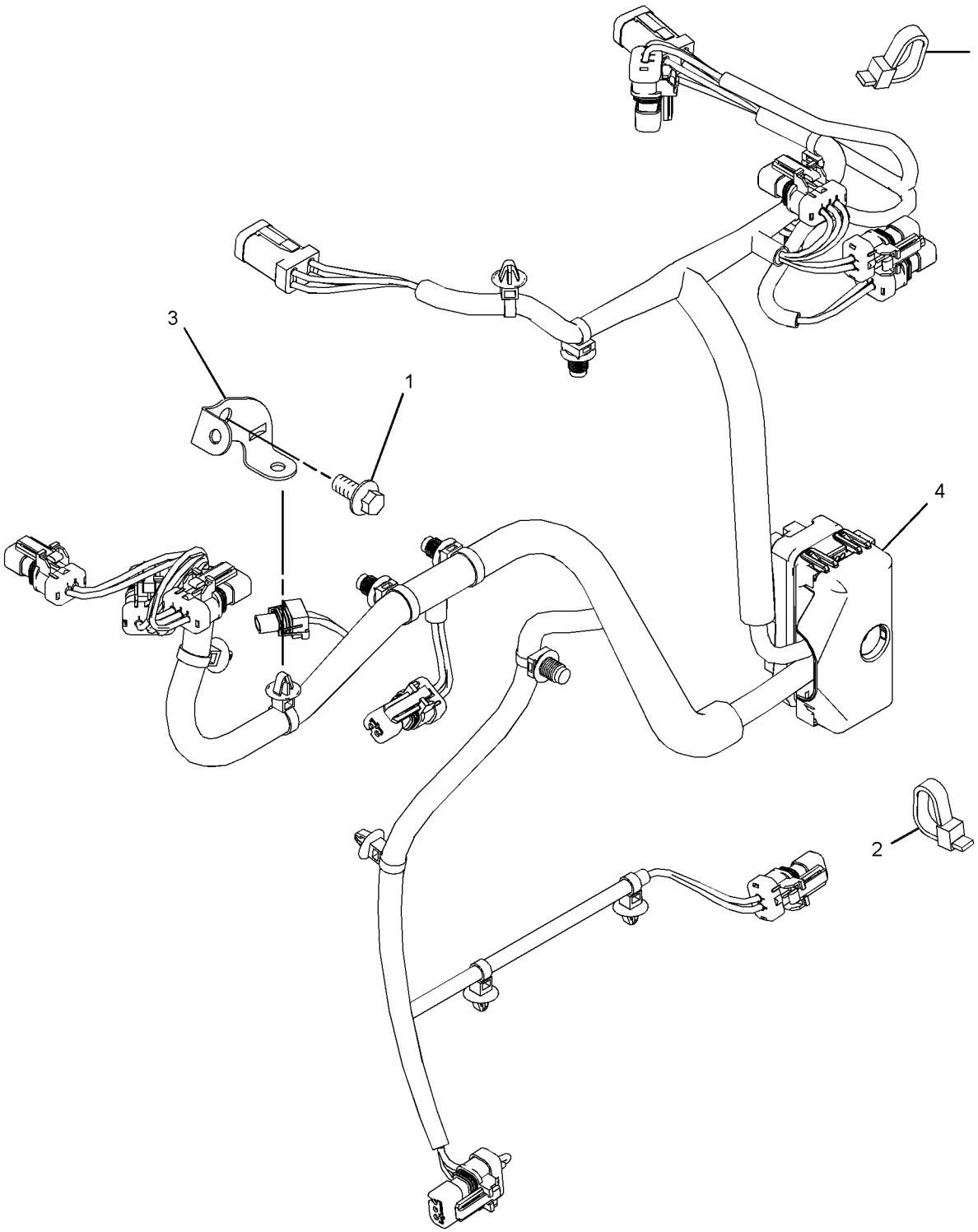

GRAPHIC #1 <END> g01922053

304-5577 WIRING GP-ENGINE

S/N: 4441-657

SMCS-1403 **i02685885**

NOTE	REF NO	GRAPHIC REF	PART NUMBER	QTY	PART NAME 1 2 3 4 5 6 (PRODUCT LEVEL)	SEE PAGE
M	1	1	**124-3815**	3	BOLT (M8X1.25X16-MM)	
	2	1	**217-8477**	1	CLIP	
	3	1	**217-9039**	3	STRAP-CABLE	
	4	1	**288-0515**	1	HARNESS AS-ENGINE	
	5	1	**298-4605**	1	BRACKET	
	6	1	**298-4606**	1	BRACKET	
	7	1	**298-4607**	1	BRACKET	

M - METRIC PART

304-5577 **WIRING GP-ENGINE (**contd.**)** **i02685885**

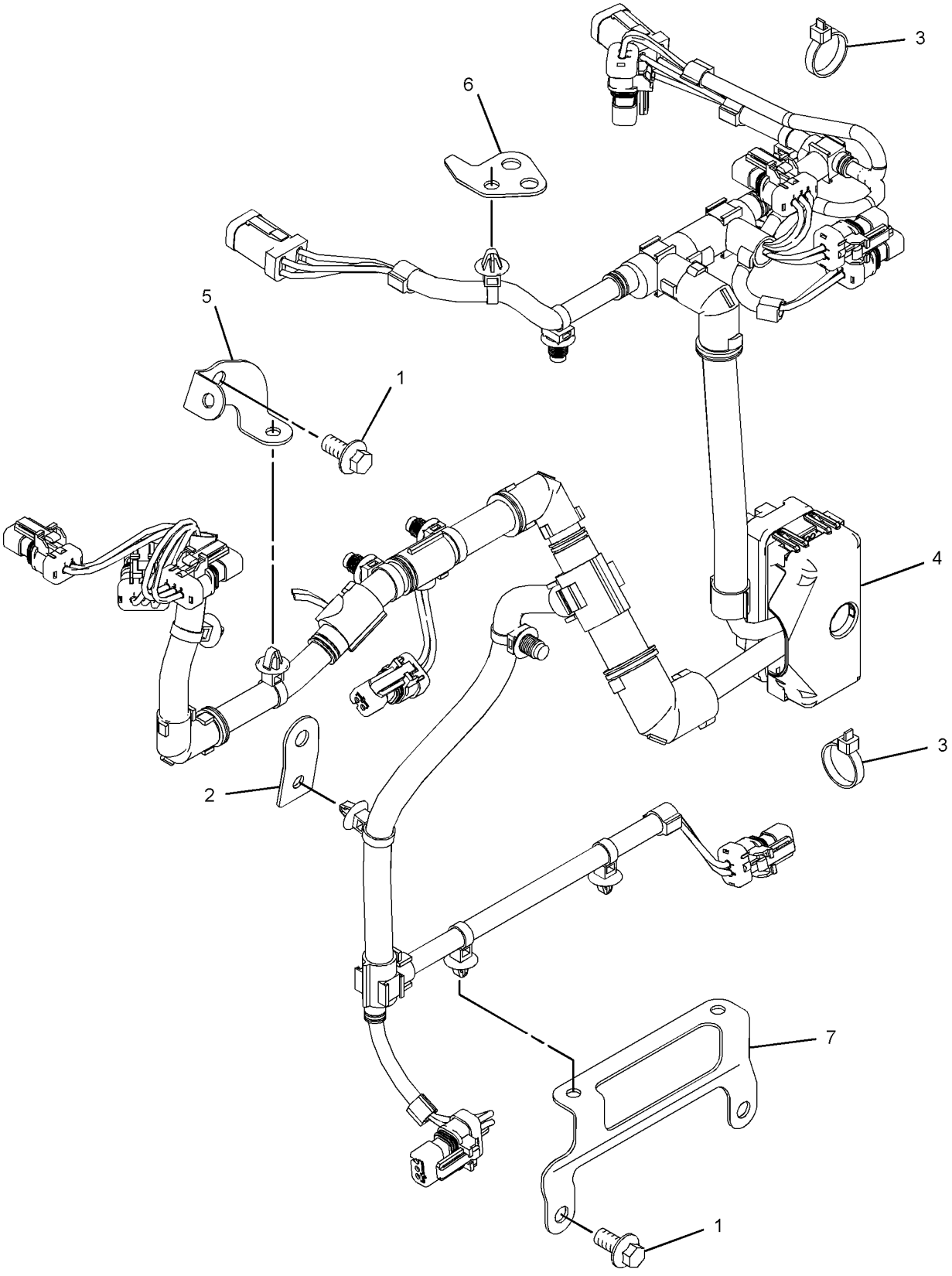

GRAPHIC #1 <END> g01371348

304-5577 WIRING GP-ENGINE

SMCS-1403 **i06693661**

NOTE	REF NO	GRAPHIC REF	PART NUMBER	QTY	PART NAME 1 2 3 4 5 6 (PRODUCT LEVEL)	SEE PAGE
CM	1	1	**124-3815**	1	BOLT (M8X1.25X16-MM)	
	2	1	**217-9039**	3	STRAP-CABLE	
C	3	1	**304-5164**	1	HARNESS AS-ENGINE	
	4	1	**346-1449**	1	BRACKET	
C	5	1	**278-5209**	1	BRACKET	
C	6	1	**348-4637**	1	BOLT	

C - CHANGE FROM PREVIOUS TYPE
M - METRIC PART

304-5577 **WIRING GP-ENGINE (**contd.**)** **i06693661**

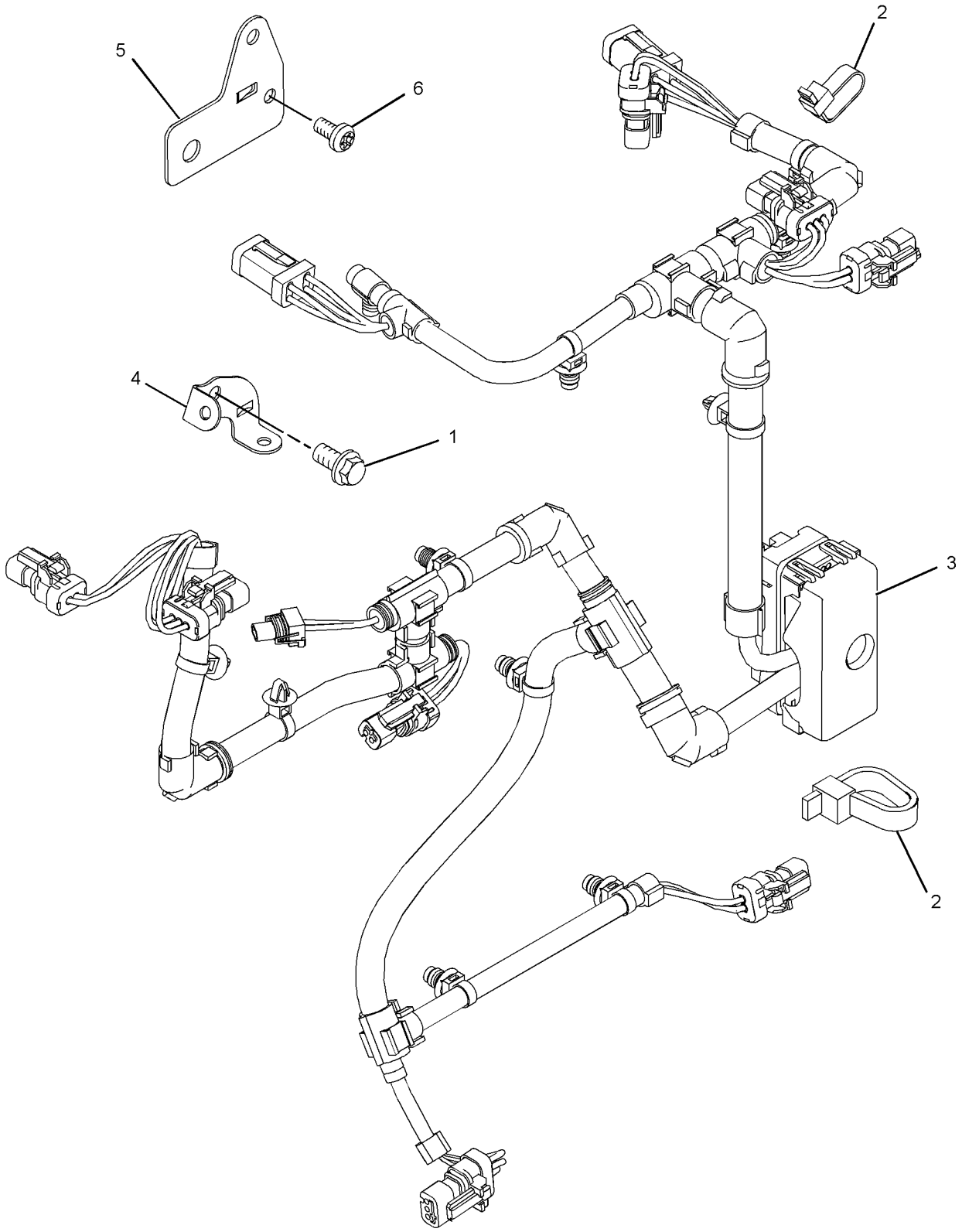

GRAPHIC #1 <END> g01922057

316-1102 WIRING GP-ENGINE

PART OF 435-1687, 540-1156 ENGINE AR-PRIMARY
ALSO AN ATTACHMENT

SMCS-1403 **i06692100**

NOTE	REF NO	GRAPHIC REF	PART NUMBER	QTY	PART NAME 1 2 3 4 5 6 (PRODUCT LEVEL)	SEE PAGE
	1	1	**308-3378**	1	HARNESS AS-SENSOR	
	2	1	**278-5209**	1	BRACKET	
	3	1	**236-5539**	1	CLIP	
	4	1	**348-4637**	1	BOLT	
	5	1	**217-9039**	4	STRAP-CABLE	

316-1102 **WIRING GP-ENGINE (**contd.**)** **i06692100**

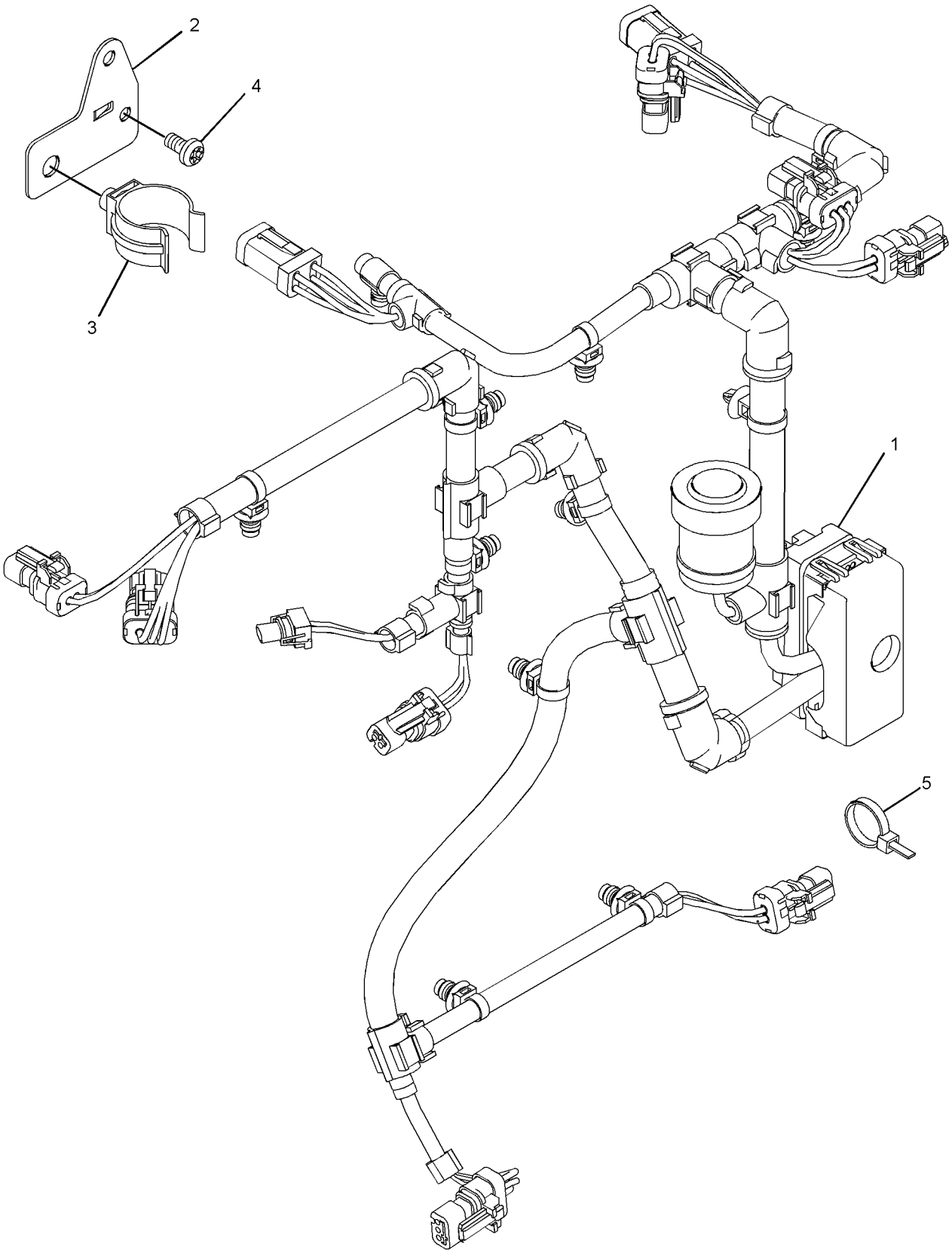

GRAPHIC #1 <END> g06142330

335-6238 WIRING GP-ENGINE

SMCS-1403 **i06561569**

NOTE	REF NO	GRAPHIC REF	PART NUMBER	QTY	PART NAME 1 2 3 4 5 6 (PRODUCT LEVEL)	SEE PAGE
	1	1	**217-8477**	1	CLIP	
	2	1	**217-9039**	4	STRAP-CABLE	
	3	1	**235-6281**	1	TIE-CABLE	
	4	1	**236-5539**	1	CLIP	
	5	1	**278-5209**	1	BRACKET	
	6	1	**348-4637**	1	BOLT	
	7	1	**304-5163**	1	HARNESS AS-ENGINE	

335-6238 **WIRING GP-ENGINE (**contd.**)** **i06561569**

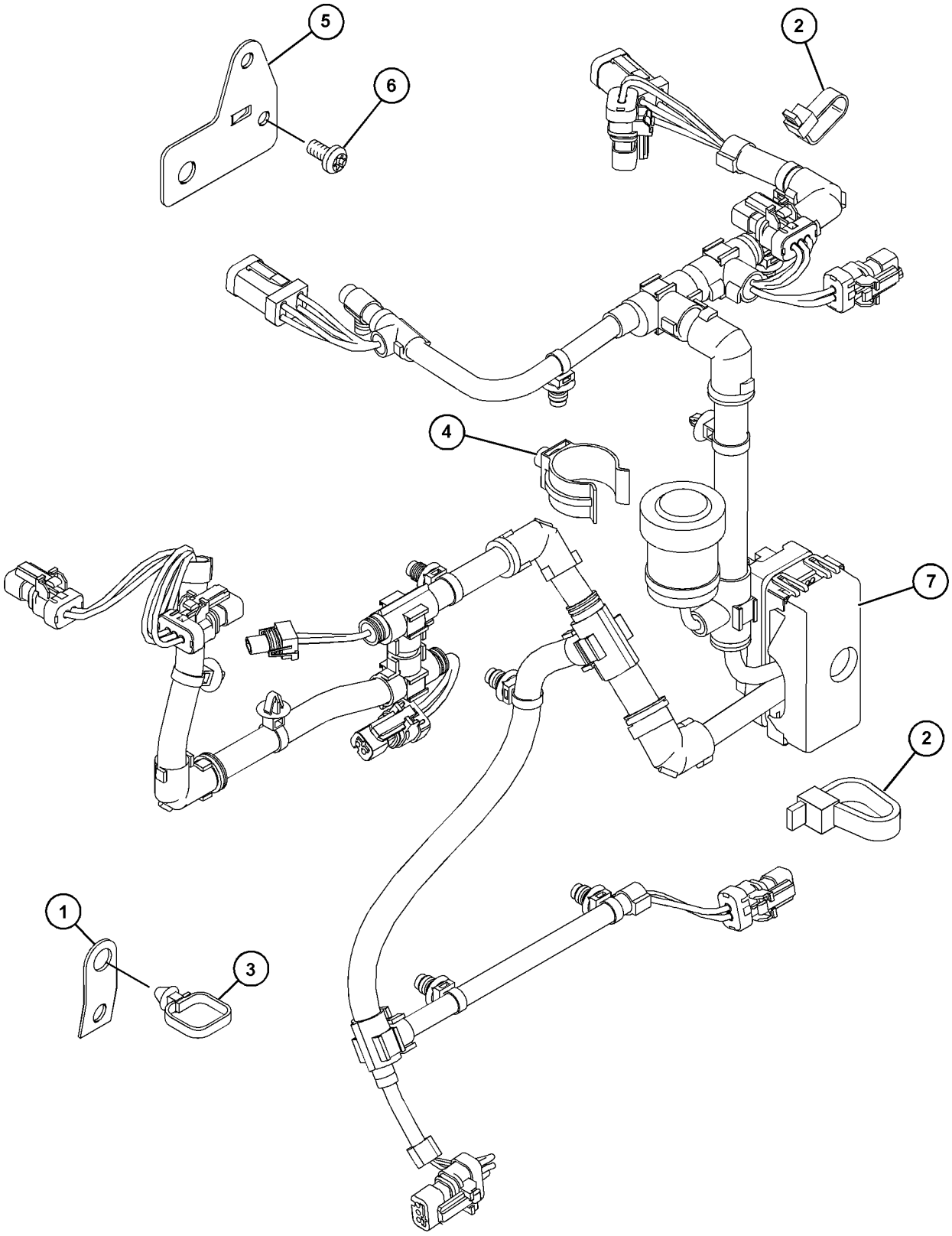

GRAPHIC #1 <END> g06110882

352-6443 WIRING GP-ENGINE

SMCS-1403 **i04480873**

NOTE	REF NO	GRAPHIC REF	PART NUMBER	QTY	PART NAME 1 2 3 4 5 6 (PRODUCT LEVEL)	SEE PAGE
	1	1	**217-8477**	1	CLIP	
	2	1	**217-9039**	3	STRAP-CABLE	
	3	1	**235-6281**	1	TIE-CABLE	
	4	1	**236-5539**	1	CLIP	
	5	1	**278-5209**	1	BRACKET	
	6	1	**348-4637**	1	BOLT	
	7	1	**304-5163**	1	HARNESS AS-ENGINE	
M	8	1	**124-3815**	1	BOLT (M8X1.25X16-MM)	
	9	1	**346-1449**	1	BRACKET	

M - METRIC PART

352-6443 **WIRING GP-ENGINE (**contd.**)** **i04480873**

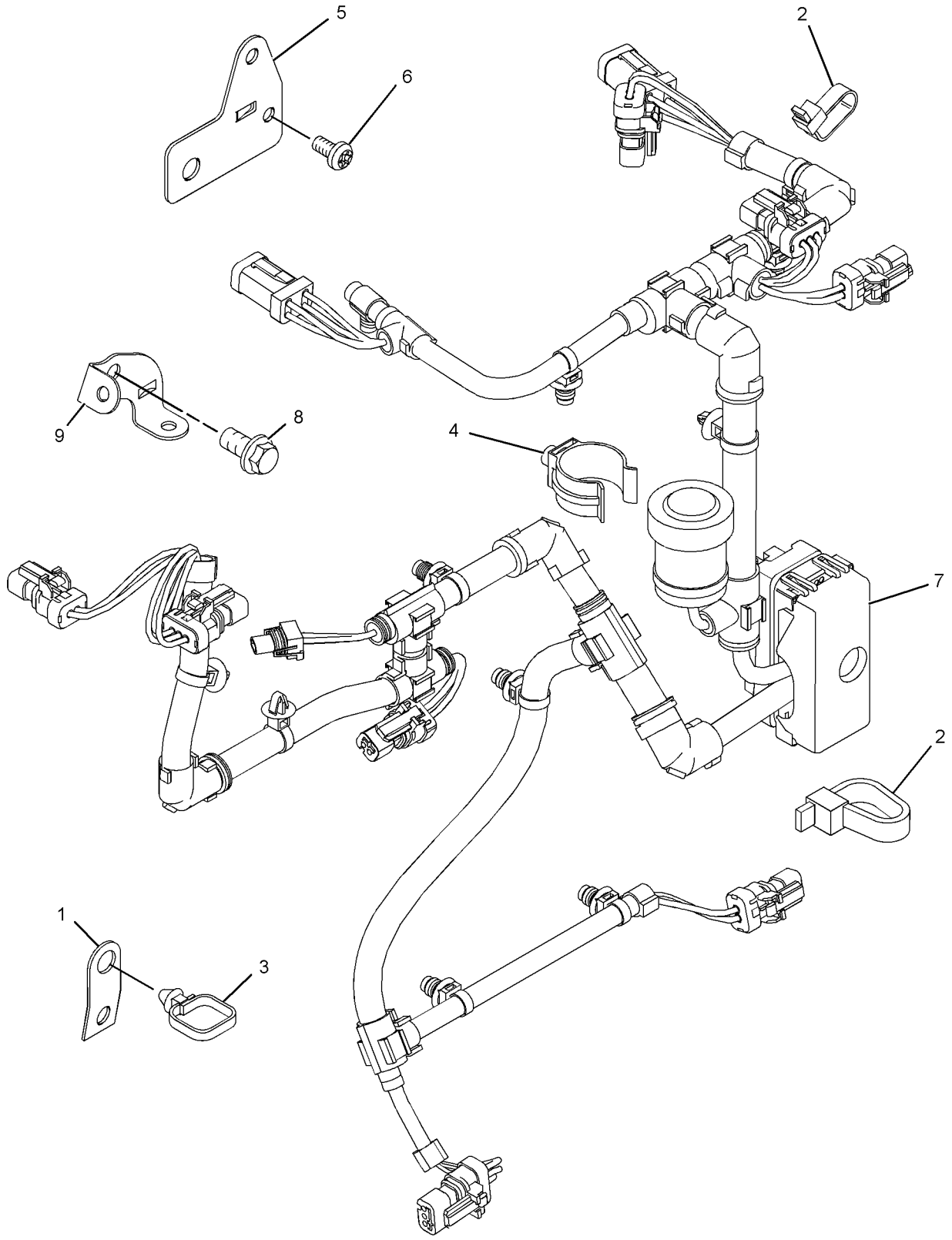

GRAPHIC #1 <END> g02087716

6L-4502 CHART-PLATE & FILM

AN ATTACHMENT

SMCS-7557 **i03731060**

NOTE	PART NUMBER	QTY	PART NAME 1 2 3 4 5 6 (PRODUCT LEVEL)	SEE PAGE
	299-7879	1	FILM-WARNING (UNIVERSAL, READ OMM)	

<END>

342-8118 PARTS GP-MISCELLANEOUS

SMCS-1000, 7950 **i03427231**

NOTE	REF NO	GRAPHIC REF	PART NUMBER	QTY	PART NAME 1 2 3 4 5 6 (PRODUCT LEVEL)	SEE PAGE
	1	1	**2B-0858**	3	PLUG-PIPE	
	2	1	**6V-0675**	1	ELBOW	
	3	1	**331-8708**	1	CONNECTOR	

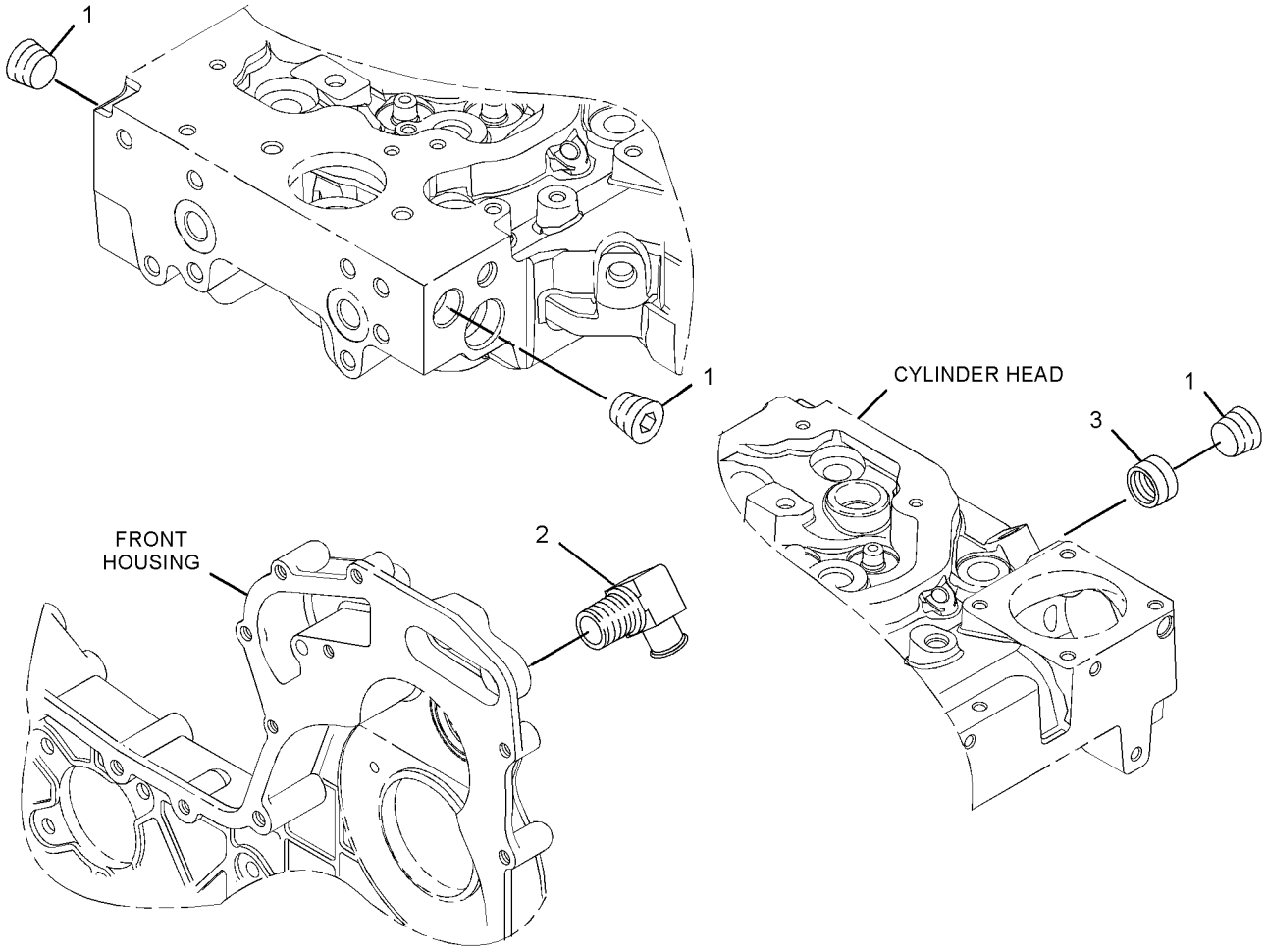

GRAPHIC #1 <END> g01972453

PART NUMBER INDEX

Part Page

0

0S-1603 453
454
455
456
457
459
460
461
462
465
467
468
469
470
471
473
474
0S-2353 412

1

1B-8736 388

2

2B-0858 416
485
491
563
632
634
635
640
688
689
1620
2S-3440 363

3

3B-4509 1523
1550
3E-3377 326
329
335
338
344
349
351
360
363
366
372
375
3E-4296 1523
3S-8447 446

4

4B-8774 791
794
800
821
824
848
851
875
878
902
905
920
923
954
957
974
977
980
983
4H-0408 481
483
4K-7502 458
4N-8771 427
432
436

5

5A-3604 1062
1063
1065
1067
1068
1523
1540
1550
5C-1809 533
535
541
565
575
579
582
585
587
589
591
597
5C-9553 499
5D-1026 313
315
326
335
338
341
344
347
349
351
357
360
369
5L-4995 426
5P-0597 738
742
746
750
754
758
762
902
905
5P-0598 738
742
746
750
754
758
762
5P-8245 453
456
459
460
465
466
467
468
469
470
471

6

6B-0933 1558
1559
1560
1565
1571
1574
1575
1576
1577
1578
1580
1581
1582
1583
6D-0044 299
6D-7889 1059
1061
1062
1063
1067
1068
6H-3616 485
514
515
517
519
521
522
523
525
526
528
530
633
638
6H-3957 300
305
306
307
6I-0217 326
329
335
341
351
357
363
366
369
475
492
495
497
499
501
503
506
509
533
535
537
539
541
545
547
553
555
557
559
563
565
571
573
575
579
582
585
587
589
591
593
595
597
607
690
693
696
714
716
718
720
722
724
726
778
786
791
794
797
800
803
806
809
812
815
818
821
824
827
830
833
836
839
842
845
848
851
854
857
861
865
869
872
875
878
881
884
887
891
896
899
902

► PRIMARY REFERENCE

PART NUMBER INDEX

Part	Page	Part	Page	Part	Page	Part	Page
	905		563		1114		1483
	908		565		1119		1488
	911		567		1124		1493
	914		571		1129		1498
	917		573		1134		1503
	920		577		1139		1508
	923		579		1144		1513
	926		582		1149		1518
	929		585		1154		1525
	932		587		1159		1530
	935		589		1164		1535
	938		591		1169		1541
	943		593		1174		1544
	948		595		1179		1547
	951		599		1184		1556
	954		603		1189		1558
	957		605		1194		1559
	960		607		1199		1560
	964		671		1204		1561
	968		674		1209		1563
	971		675		1214		1565
	974		690		1219		1567
	977		693		1224		1569
	980		696		1229		1571
	983		730		1234		1573
	986		734		1239		1574
	989		738		1244		1575
	992		742		1248		1576
	995		746		1253		1577
6I-0233	315		750		1258		1578
6I-0254	299		754		1263		1580
	492		758		1268		1581
	506		762		1273		1582
	541		766		1278		1583
	565		769		1283	6I-0289	537
	575		774		1288		539
	597		776		1293		541
	670		830		1298		543
	672		833		1303		545
	676		836		1308		547
	677		839		1313		551
	714		865		1318		553
	716		875		1323		555
	718		878		1328		563
	720		891		1333		565
	730		902		1338		567
	734		905		1343		569
	857		908		1348		571
	861		911		1353		573
	887		914		1358		575
	938		917		1363		577
	1003		926		1368		593
	1041		929		1373		595
	1047		938		1378		597
6I-0260	309		943		1383		599
	311		954		1388		605
	313		957		1393		607
	315		995		1398	6I-0291	561
	333		1030		1403		597
	492		1033		1408		599
	506		1036		1413		601
	533		1044		1418		730
	535		1050		1423		734
	537		1053		1428		738
	539		1056		1433		742
	543		1069		1438		746
	545		1074		1443		750
	547		1079		1448		754
	549		1084		1453		758
	551		1089		1458		762
	553		1094		1463		769
	555		1099		1468	6I-0292	541
	557		1104		1473		549
	559		1109		1478		551

PART NUMBER INDEX

Part	Page
	561
	563
	565
	569
	575
	597
	601
	603
	605
6I-0293	541
	557
	559
	561
	563
	565
	569
	575
	597
	601
6I-0363	415
	537
	541
	545
	549
	551
	553
	557
	561
	563
	571
	575
	579
	585
	589
	591
	593
	597
	599
	601
	603
	605
6I-0364	1590
	1591
	1592
	1593
	1596
	1597
	1599
	1600
	1601
6I-0423	477
	478
	479
	481
	483
	485
	486
	487
	488
	489
	490
	520
	521
	526
	528
	529
	531
6I-0454	317
	492
	501
	503
	506
	1558
	1559
	1560
	1565
	1571
	1574
	1575
	1576
	1577
	1578
	1580
	1581
	1582
	1583
6I-0455	1069
	1074
	1079
	1084
	1089
	1094
	1099
	1104
	1109
	1114
	1119
	1124
	1129
	1134
	1139
	1144
	1149
	1154
	1159
	1164
	1169
	1174
	1179
	1184
	1189
	1194
	1199
	1204
	1209
	1214
	1219
	1224
	1229
	1234
	1239
	1244
	1248
	1253
	1258
	1263
	1268
	1273
	1278
	1283
	1288
	1293
	1298
	1303
	1308
	1313
	1318
	1323
	1328
	1333
	1338
	1343
	1348
	1353
	1358
	1363
	1368
	1373
	1378
	1383
	1388
	1393
	1398
	1403
	1408
	1413
	1418
	1423
	1428
	1433
	1438
	1443
	1448
	1453
	1458
	1463
	1468
	1473
	1478
	1483
	1488
	1493
	1498
	1503
	1508
	1513
	1518
	1525
	1530
	1535
	1541
	1544
	1547
6I-0456	673
6I-0501	424
	643
	644
	645
	648
	649
6I-0502	643
6I-0563	788
	789
	790
	791
	794
	797
	800
	803
	806
	809
	812
	815
	818
	821
	824
	827
	830
	833
	836
	839
	842
	845
	848
	851
	854
	857
	861
	865
	869
	872
	875
	878
	881
	884
	887
	891
	896
	899
	902
	905
	908
	911
	914
	917
	920
	923
	926
	929
	932
	935
	938
	943
	948
	951
	954
	957
	960
	964
	968
	971
	974
	977
	980
	983
	986
	989
	992
	995
6I-0572	347
	537
	539
	545
	547
	553
	555
	557
	559
	571
	573
	593
	595
	607
	690
	692
	698
	784
	1069
	1074
	1079
	1084
	1089
	1094
	1099
	1104
	1109
	1114
	1119
	1124
	1129
	1134
	1139
	1144
	1149
	1154
	1159

► PRIMARY REFERENCE

PART NUMBER INDEX

Part	Page	Part	Page	Part	Page	Part	Page
	1164		1535		1590		794
	1169		1541		1591		797
	1174		1544		1592		800
	1179		1547		1593		803
	1184	6I-0593	479		1594		821
	1189		487		1595		824
	1194		800		1596		827
	1199		803		1598		851
	1204		821		1600		854
	1209		824		1601		857
	1214		827	6I-0631	477		861
	1219		857		478		865
	1224		861		487		869
	1229		865		488		872
	1234		869		489		875
	1239		872		490		878
	1244		875		1047		881
	1248		878	6I-0645	408		884
	1253		881		410		887
	1258		884		412		891
	1263		887		414		896
	1268		891		475		899
	1273		896		492		902
	1278		899		495		905
	1283		902		497		908
	1288		905		499		911
	1293		908		501		914
	1298		911		503		917
	1303		914		506		920
	1308		917		509		923
	1313		920		690		926
	1318		923		692		929
	1323		926		693		932
	1328		929		695		935
	1333		932		697		938
	1338		935		700		943
	1343		938		842		948
	1348		943		845		951
	1353		948		968		954
	1358		951		971		957
	1363		960	6I-0646	300		960
	1368		964		301		964
	1373		968		303		968
	1378		971		305		971
	1383		974		307		974
	1388		977		332		977
	1393		980		334		980
	1398		983		408		983
	1403		986		410		986
	1408		989		412		989
	1413		992		414		992
	1418		995		415		995
	1423		1047		636	6I-0789	857
	1428		1556	6I-0650	434		861
	1433		1561		439		865
	1438		1563		440		887
	1443		1567		447		891
	1448		1569		475		938
	1453		1573		495		943
	1458	6I-0594	730		497		960
	1463		734		509		964
	1468		738		646		986
	1473		742		1556		989
	1478		746		1561	6I-0817	791
	1483		750		1563		794
	1488		754		1567		797
	1493		758		1569		800
	1498		762		1573		803
	1503		769	6I-0654	309		806
	1508		1033		311		809
	1513		1036		490		812
	1518		1559		511		815
	1525		1575		512		818
	1530		1577		513		821

PART NUMBER INDEX

Part	Page
	824
	827
	830
	833
	836
	839
	842
	845
	848
	851
	854
	857
	861
	865
	869
	872
	875
	878
	881
	884
	887
	891
	896
	899
	902
	905
	908
	911
	914
	917
	920
	923
	926
	929
	932
	935
	938
	943
	948
	951
	954
	957
	960
	964
	968
	971
	974
	977
	980
	983
	986
	989
	992
	995
6I-0839	718
	720
	724
	726
6I-0846	349
	549
	551
	571
	573
	579
	582
6I-1090	690
	693
	696
6I-1201	333
	675
6I-1497	533
	535
	537
	539
	541
	543
	549
	551
	553
	555
	557
	559
	561
	563
	565
	567
	569
	571
	573
	575
	577
	579
	582
	585
	587
	589
	591
	593
	595
	597
	599
	601
	603
	605
	607
6I-3981	644
6I-4012	789
	790
	1595
	1598
6I-4013	790
6I-4039	790
6I-4072	533
	535
	579
	582
	585
	587
	589
	591
6I-4079	533
	535
	537
	539
	541
	543
	553
	555
	557
	587
	589
	593
	595
	597
	601
	603
	605
	607
6I-4200	477
	478
	486
	488
	489
	490
	491
	791
	797
	803
	806
	809
	812
	815
	818
	821
	827
	830
	833
	836
	839
	842
	845
	848
	854
	857
	861
	865
	869
	872
	875
	878
	881
	884
	887
	891
	896
	899
	902
	905
	908
	911
	914
	917
	923
	926
	929
	932
	935
	938
	943
	948
	951
	957
	960
	964
	968
	971
	974
	977
	983
	986
	989
	992
	995
6I-4374	670
	672
	673
	676
	677
6I-4709	1041
	1044
	1050
	1053
	1056
6L-4502	►1619
6V-0447	773
6V-0675	1620
6V-3508	1068
6V-3940	1059
	1061
6V-9189	701
	703
	704
	706
	707
	708
	710
	1558
	1560
	1565
	1571
	1574
	1576
	1578
	1580
	1581
	1582
	1583

7

Part	Page
7C-0351	533
	535
	537
	539
	541
	543
	545
	547
	549
	551
	553
	555
	557
	559
	561
	563
	565
	567
	569
	571
	573
	575
	577
	579
	582
	585
	587
	589
	591
	593
	595
	597
	599
	601
	603
	605
	607
7C-1224	537
	545
	549
	553
	557
	571
	593
	603

► PRIMARY REFERENCE

PART NUMBER INDEX

Part	Page
7C-1281	326
	329
	335
	338
	341
	344
	347
	349
	351
	354
	357
	360
	363
	366
	369
	372
	375
	1041
	1044
	1056
7C-4616	475
	492
	495
	497
	499
	501
	506
	509
	647
	656
7E-5218	1602
7E-5219	1602
7K-1181	1588
	1589
7W-1176	479
	481
	483
7W-2326	678
7W-2562	299
7W-2601	730
	734
	738
	742
	746
	750
	754
	758
	762
	766
	769
7W-2632	1069
	1074
	1079
	1084
	1089
	1094
	1099
	1104
	1109
	1114
	1119
	1124
	1129
	1134
	1139
	1144
	1149
	1154
	1159
	1164
	1169
	1174
	1179
	1184
	1189
	1194
	1199
	1204
	1209
	1214
	1219
	1224
	1229
	1234
	1239
	1244
	1248
	1253
	1258
	1263
	1268
	1273
	1278
	1283
	1288
	1293
	1298
	1303
	1308
	1313
	1318
	1323
	1328
	1333
	1338
	1343
	1348
	1353
	1358
	1363
	1368
	1373
	1378
	1383
	1388
	1393
	1398
	1403
	1408
	1413
	1418
	1423
	1428
	1433
	1438
	1443
	1448
	1453
	1458
	1463
	1468
	1473
	1478
	1483
	1488
	1493
	1498
	1503
	1508
	1513
	1518
	1525
	1530
	1535
	1541
	1544
	1547
7W-4540	1594
7W-4634	424
	643
	644
	645
	648
	649
7W-4642	484
	489
7W-4669	634
7X-2534	1589

8

Part	Page
8C-3076	1523
	1550
8C-3445	682
8C-5607	1589
8C-5608	1589
8L-2779	1063
	1065
	1068
	1523
	1540
	1550
8N-7998	317
8T-0269	533
	535
	539
	543
	547
	555
	559
	565
	567
	569
	573
	577
	582
	587
	595
	607
8T-4200	1062
	1063
	1065
	1067
	1068
	1523
	1540
	1550
8T-4971	1589
8T-7876	637
	680
	683
8T-8729	1588
	1589
8T-8730	1588
	1589
8T-8737	1588
	1589
8T-9515	797
	803
	827
	957
	983

9

Part	Page
9M-7959	857
9V-3811	455
9X-3401	326
	329
	338
	344
	349
	351
	354
	360
	363
	366
	372
	375
9X-6165	1589
9X-8256	1589
9Y-1590	705
9Y-9381	791
	794
	797
	800
	803
	806
	809
	812
	815
	818
	821
	824
	827
	830
	833
	836
	839
	842
	845
	848
	851
	854
	857
	861
	865
	869
	872
	875
	878
	881
	884
	887
	891
	896
	899
	902
	905
	908
	911
	914
	917
	920
	923
	926
	929
	932
	935
	938
	943
	948
	951
	954
	957
	960
	964
	968
	971
	974
	977
	980
	983

PART NUMBER INDEX

Part	Page
	986
	989
	992
	995
0	
006-9566	466
032-8047	791
	794
	800
	806
	812
	815
	821
	824
	830
	833
	836
	842
	848
	851
	857
	861
	869
	875
	878
	881
	887
	891
	896
	899
	902
	905
	908
	911
	914
	920
	923
	926
	929
	932
	935
	938
	939
	943
	954
	957
	960
	968
	971
	974
	977
	980
	983
	986
	989
	992
032-8191	791
	806
	812
	815
	830
	833
	836
	842
	848
	857
	861
	869
	875
	878
	881
	887
	891
	896
	899
	902
	908
	911
	914
	926
	929
	932
	935
	938
	939
	943
	944
	960
	968
	971
	974
	977
	986
	989
	992
032-9020	326
	329
	338
	344
	349
	354
	360
	363
	366
	372
	375
032-9090	388
	390
	392
	394
032-9091	388
	390
	392
	394
033-7687	453
	454
	455
	456
	457
	458
	459
	460
	461
	462
	463
	465
	466
	467
	468
	469
	470
	471
	472
035-8014	791
	794
	800
	806
	812
	815
	824
	830
	833
	836
	842
	848
	851
	857
	861
	869
	875
	878
	881
	887
	891
	896
	899
	902
	905
	908
	911
	914
	920
	923
	926
	929
	932
	935
	939
	944
	954
	957
	960
	968
	971
	974
	977
	980
	983
	986
	989
	992
035-8017	313
	315
	1263
	1269
	1274
	1373
	1378
	1383
	1388
	1393
	1398
	1403
	1408
	1413
	1418
	1525
	1530
	1535
035-8063	408
	410
	412
	414
	415
	637
	680
	682
	684
035-8068	408
	410
067-6002	408
	410
	412
067-6006	408
	410
	491
067-6043	408
	410
	412
067-6119	472
067-6135	320
	321
	322
	323
	324
	379
	381
	383
	385
	387
067-6179	475
	492
	495
	497
	499
	501
	503
	506
	509
067-6213	533
	537
	539
	541
	543
	545
	547
	549
	551
	553
	555
	557
	559
	561
	563
	569
	571
	573
	575
	577
	579
	585
	593
	595
	597
	599
	601
	603
	605
	607
067-6264	309
	1263
	1268
	1273
067-6265	309
	311
	1263
	1269
	1274
	1373
	1378
	1383
	1388
	1393
	1398
	1403
	1408
	1413
	1418
	1526
	1531
	1536
067-6344	299

► PRIMARY REFERENCE

PART NUMBER INDEX

Part	Page
067-6366	1558
	1559
	1560
	1565
	1571
	1574
	1575
	1576
	1577
	1578
	1580
	1581
	1582
	1583
067-6809	642
067-6823	541
	565
	575
	597
067-6873	388
	390
	391
	392
	394
067-6874	388
	390
	391
	392
	394
099-3095	1068
1	
100-3751	475
	492
	495
	497
	499
	501
	503
	506
	509
	696
100-4458	730
	734
	738
	742
	746
	750
	754
	758
	762
	766
	769
	1033
	1036
	1041
	1044
100-4461	681
	730
	734
	738
	742
	746
	750
	754
	758
	762
	766
	769
100-4830	307
	332
	334
	475
	499
	501
	503
	730
	734
	738
	742
	746
	750
	754
	758
	762
	766
	769
	791
	794
	800
	806
	815
	824
	830
	836
	842
	848
	851
	857
	869
	875
	881
	896
	902
	905
	908
	914
	920
	926
	932
	938
	948
	954
	960
	968
	974
	980
	986
	1069
	1074
	1079
	1084
	1089
	1094
	1099
	1104
	1109
	1114
	1119
	1124
	1129
	1134
	1139
	1144
	1149
	1154
	1159
	1164
	1169
	1174
	1179
	1184
	1189
	1194
	1199
	1204
	1209
	1214
	1219
	1224
	1229
	1234
	1239
	1244
	1248
	1253
	1258
	1263
	1268
	1273
	1278
	1283
	1288
	1293
	1298
	1303
	1308
	1313
	1318
	1323
	1328
	1333
	1338
	1343
	1348
	1353
	1358
	1363
	1368
	1373
	1378
	1383
	1388
	1393
	1398
	1403
	1408
	1413
	1418
	1423
	1428
	1433
	1438
	1443
	1448
	1453
	1458
	1463
	1468
	1473
	1478
	1483
	1488
	1493
	1498
	1503
	1508
	1513
	1518
	1525
	1530
	1535
	1541
	1544
	1547
100-4841	347
	408
	410
	412
	414
100-8451	1556
101-3615	1041
	1044
	1056
101-3771	537
	539
	545
	547
	553
	555
	571
	573
	593
	595
	607
	690
	693
101-3805	543
	567
	577
	599
101-3895	475
	492
	495
	497
	499
	501
	503
	506
	509
	541
	543
	561
	569
	575
	577
	597
	599
	601
	722
	724
	726
	1069
	1074
	1079
	1084
	1089
	1094
	1099
	1104
	1109
	1114
	1119
	1124
	1129
	1134
	1139
	1144
	1149
	1154
	1159
	1164
	1169
	1174
	1179
	1184
	1189
	1194
	1199
	1204
	1209
	1214
	1219

PART NUMBER INDEX

Part	Page
	1224
	1229
	1234
	1239
	1244
	1248
	1253
	1258
	1263
	1268
	1273
	1278
	1283
	1288
	1293
	1298
	1303
	1308
	1313
	1318
	1323
	1328
	1333
	1338
	1343
	1348
	1353
	1358
	1363
	1368
	1373
	1378
	1383
	1388
	1393
	1398
	1403
	1408
	1413
	1418
	1423
	1428
	1433
	1438
	1443
	1448
	1453
	1458
	1463
	1468
	1473
	1478
	1483
	1488
	1493
	1498
	1503
	1508
	1513
	1518
	1525
	1530
	1535
	1541
	1544
	1547
101-3987	1603
101-3989	1603
101-3990	1602
	1603
101-3991	1602
	1603
101-3992	1602
	1603
101-3993	1602
	1603
101-7185	520
	521
	526
	528
	529
	531
101-7186	520
	521
	526
	528
	529
	531
101-7398	854
	923
101-7537	730
	734
	738
	742
	746
	750
	754
	758
	762
	766
	769
101-7538	730
	734
	738
	742
	746
	750
	754
	758
	762
	766
	769
101-7540	730
	734
	738
	742
	746
	750
	754
	758
	762
	766
	769
101-7541	730
	734
	738
	742
	746
	750
	754
	758
	762
	766
	769
101-7546	730
	734
	738
	742
	746
	750
	754
	758
	762
	766
	769
102-1957	477
	478
	487
	488
	490
102-2073	300
	305
	306
	307
	313
	315
102-2075	300
	305
	306
	307
102-2076	300
	305
	306
	307
102-2078	300
	305
	306
	307
102-8801	1588
102-8803	1588
102-9690	557
	559
102-9941	301
	303
	424
	648
	654
	655
103-2135	821
	875
	878
	902
	905
	948
	951
	974
	977
103-5687	685
	686
103-5916	703
	709
	712
103-6714	730
	734
	738
	742
	746
	750
	754
	758
	762
	766
	769
104-2083	772
	773
104-6385	1059
	1061
105-3487	1068
106-8916	791
	794
	797
	800
	803
	806
	809
	812
	815
	818
	821
	824
	827
	830
	833
	836
	839
	842
	845
	848
	851
	854
	857
	861
	865
	869
	872
	875
	878
	881
	884
	887
	891
	896
	899
	902
	905
	908
	911
	914
	917
	920
	923
	926
	929
	932
	935
	938
	943
	948
	951
	954
	957
	960
	964
	968
	971
	974
	977
	980
	983
	986
	989
	992
	995
106-8954	484
106-9586	1068
107-2348	791
	794
	797
	800
	806
	809
	812
	815
	818
	821
	824
	827
	830
	833
	836
	839
	842
	845
	848
	851
	854

► PRIMARY REFERENCE

PART NUMBER INDEX

Part	Page
	857
	861
	865
	869
	872
	875
	878
	881
	884
	887
	891
	896
	899
	902
	905
	908
	911
	914
	917
	920
	923
	926
	929
	932
	935
	938
	943
	948
	951
	954
	957
	960
	964
	968
	971
	974
	977
	980
	983
	986
	989
	992
	995
111-0859	425-450
	452
	646
111-3297	649
111-5767	704
111-8222	325
	332
	334
	728
	774
	776
	778
	780
	786
113-1504	670
	672
	673
	676
	677
113-4598	299
113-4604	299
113-4608	309
	311
	313
	315
113-4616	689
113-4630	326
	329
	335
	338
	344
	349
	351
	354
	360
	363
	366
	372
	375
113-6349	532
	702
	705
	709
	711
	712
	1556
	1559
	1561
	1563
	1567
	1569
	1573
	1575
	1577
113-7130	437
113-7543	458
113-7547	463
113-7548	463
113-7549	463
113-7550	463
113-8076	313
	315
113-8129	714
	716
	718
	720
	722
	724
	726
114-2405	460
	465
114-2474	701
	707
	711
114-2579	325
	774
	776
	778
	780
	782
	784
	786
114-4363	479
	481
	483
	728
	730
	734
	738
	742
	746
	750
	754
	758
	762
	1050
	1056
117-1385	1059
	1061
	1062
	1063
	1065
	1067
	1068
	1523
	1540
	1550
119-4034	466
121-0883	477
	478
	479
	481
	483
	485
	486
	487
	488
	489
	490
123-2899	513
	685
	686
	687
123-4038	821
	875
	878
	902
	905
	948
	951
	974
	977
124-0506	335
	338
	341
	344
	351
	354
	363
	366
	369
	372
	375
124-3536	415
	609
	611
	613
	615
	617
	619
	621
	623
	625
	627
124-3815	325
	475
	495
	497
	499
	501
	503
	509
	533
	535
	549
	551
	571
	573
	579
	582
	585
	587
	589
	591
	774
	776
	778
	780
	782
	784
	786
	1047
	1069
	1074
	1079
	1084
	1089
	1094
	1099
	1104
	1109
	1114
	1119
	1124
	1129
	1134
	1139
	1144
	1149
	1154
	1159
	1164
	1169
	1174
	1179
	1184
	1189
	1194
	1199
	1204
	1209
	1214
	1219
	1224
	1229
	1234
	1239
	1244
	1248
	1253
	1258
	1263
	1268
	1273
	1278
	1283
	1288
	1293
	1298
	1303
	1308
	1313
	1318
	1323
	1328
	1333
	1338
	1343
	1348
	1353
	1358
	1363
	1368
	1373
	1378
	1383
	1388
	1393
	1398
	1403
	1408
	1413
	1418

► PRIMARY REFERENCE

PART NUMBER INDEX

Part	Page
	1423
	1428
	1433
	1438
	1443
	1448
	1453
	1458
	1463
	1468
	1473
	1478
	1483
	1488
	1493
	1498
	1503
	1508
	1513
	1518
	1525
	1530
	1535
	1541
	1544
	1547
	1604
	1606
	1607
	1609
	1611
	1617
124-7702	533
	535
	541
	543
	553
	555
	563
	565
	567
	569
	575
	577
	585
	587
	593
	595
	601
124-7703	553
	555
	593
	595
125-7874	1588
125-7875	1588
126-1767	326
	329
	338
	344
	349
	351
	354
	360
	363
	366
	372
	375
126-1774	1588
126-3212	300
	305
	306
	307
126-3216	299
126-3219	309
	311
	313
	315
127-3361	1030
127-8162	821
127-8165	791
	794
	800
	806
	815
	824
	830
	836
	842
	848
	851
	857
	869
	875
	881
	896
	902
	905
	908
	914
	920
	926
	932
	938
	948
	954
	960
	968
	974
	980
	986
128-1599	1594
128-5247	433
	448
	449
128-5250	438
128-7723	1602
130-1161	533
	535
	585
	587
130-3879	426
	433
	438
	448
	449
130-3880	427
	432
	435
	436
	437
	443
	452
130-3881	423
130-9888	670
	672
	673
	676
	677
131-3777	601
131-4291	541
	543
	563
	565
	567
	569
	575
	577
132-8848	1558
	1559
	1560
	1565
	1571
	1574
	1575
	1576
	1578
	1580
	1581
	1582
	1583
133-0969	1588
133-0970	1588
133-1011	475
	492
	495
	497
	499
	501
	506
	509
133-7403	772
	773
133-7668	701
	702
	709
133-9469	902
	905
134-3856	634
	635
	688
134-4139	703
	708
135-5417	705
	706
135-6362	532
	704
	707
	710
	711
	712
135-6363	712
136-3608	335
	338
	341
	344
	351
	354
	363
	366
	369
	372
	375
139-7007	523
140-8783	1556
	1558
	1559
	1560
	1561
	1563
	1565
	1567
	1569
	1571
	1573
	1574
	1575
	1576
	1577
	1578
	1580
	1581
	1582
	1583
141-1667	938
	943
141-2652	485
141-8584	1069
	1074
	1079
	1084
	1089
	1094
	1099
	1104
	1109
	1114
	1119
	1124
	1129
	1134
	1139
	1144
	1149
	1154
	1159
	1164
	1169
	1174
	1179
	1184
	1189
	1194
	1199
	1204
	1209
	1214
	1219
	1224
	1229
	1234
	1239
	1244
	1248
	1253
	1258
	1263
	1268
	1273
	1278
	1283
	1288
	1293
	1298
	1303
	1308
	1313
	1318
	1323
	1328
	1333
	1338
	1343
	1348
	1353
	1358
	1363
	1368
	1373
	1378
	1383
	1388
	1393
	1398
	1403
	1408
	1413

► PRIMARY REFERENCE

PART NUMBER INDEX

Part	Page
	1418
	1423
	1428
	1433
	1438
	1443
	1448
	1453
	1458
	1463
	1468
	1473
	1478
	1483
	1488
	1493
	1498
	1503
	1508
	1513
	1518
	1525
	1530
	1535
	1541
	1544
	1547
143-8170	772
145-2881	523
145-4911	454
	455
	457
	458
	461
	462
	463
	468
	472
	473
	474
147-1445	1588
147-5553	791
	794
	800
	806
	812
	815
	824
	830
	836
	842
	848
	851
	857
	869
	875
	881
	896
	899
	902
	908
	914
	920
	926
	932
	938
	948
	954
	960
	968
	974
	980
	986
149-5599	455
149-9176	478
	487
	490
152-6730	549
	551
	603
	605
155-0576	1089
	1114
	1154
	1179
	1263
	1278
	1323
	1348
155-2255	1588
	1589
155-2256	1588
155-2260	1588
155-2274	1588
155-4828	541
	543
	561
	563
	565
	567
	569
	575
	577
	597
	599
	601
159-8336	683
159-9322	1588
160-0162	1069
	1074
	1079
	1084
	1089
	1094
	1099
	1104
	1109
	1114
	1119
	1124
	1134
	1139
	1144
	1154
	1159
	1164
	1169
	1179
	1184
	1189
	1194
	1204
	1209
	1214
	1224
	1229
	1234
	1244
	1248
	1253
	1263
	1268
	1273
	1278
	1283
	1288
	1293
	1303
	1308
	1313
	1323
	1328
	1333
	1338
	1348
	1353
	1358
	1363
	1373
	1378
	1383
	1388
	1398
	1403
	1408
	1413
	1423
	1428
	1433
	1443
	1448
	1458
	1463
	1473
	1478
	1483
	1488
	1493
	1498
	1503
	1513
	1518
	1525
	1530
	1535
	1541
	1544
161-9820	1556
	1567
	1569
	1573
162-1565	335
	338
	341
	344
	347
	349
	351
	354
	357
	360
	369
	372
	375
164-3289	488
164-3300	488
166-6189	490
172-4325	821
	875
	878
	902
	905
	948
	951
	974
	977
175-7141	766
	1558
	1560
	1565
	1571
	1574
	1576
	1578
	1580
	1581
	1582
	1583
	1597
	1599
178-3336	541
	543
	563
	565
	567
	569
	575
	577
	766
179-7071	713
180-9339	335
183-1343	514
	522
	523
	524
	525
	528
	530
	531
184-0983	313
185-0884	408
	410
	412
185-6627	325
	774
	776
	778
	780
	782
	784
185-7149	549
	551
	603
	605
185-8627	786
185-9538	710
186-2362	491
186-2364	491
186-3594	523
187-0555	549
	551
	571
	573
	579
	582
190-7614	1588
	1589
194-5390	791
	794
	797
	800
	803
	806
	809
	812
	815
	818
	821
	824
	827
	830
	833
	836
	839
	842
	845

PART NUMBER INDEX

Part	Page
	848
	851
	854
	857
	861
	865
	869
	872
	875
	878
	881
	884
	887
	891
	896
	899
	902
	905
	908
	911
	914
	917
	920
	923
	926
	929
	932
	935
	938
	943
	948
	951
	954
	957
	960
	964
	968
	971
	974
	977
	980
	983
	986
	989
	992
	995
195-2132	515
	517
195-2134	515
	517
195-2136	515
	517
195-2221	309
	311
	317
	514
	515
	517
	522
	523
	524
	525
	528
	531
198-8262	307
	309
	311
	313
	315
	334
198-8263	307
	309
	311
	313
	315
	334
198-8645	335
	338
	341
	344
	347
	349
	357
	360
198-9169	351
	354
	369
	372
199-3108	478
	487
	490
199-3109	477
	478
	479
	481
	486
	487
	490
199-9252	1069
	1074
	1079
	1084
	1089
	1094
	1099
	1104
	1109
	1114
	1119
	1124
	1129
	1134
	1139
	1144
	1149
	1154
	1159
	1164
	1169
	1174
	1179
	1184
	1189
	1194
	1199
	1204
	1209
	1214
	1219
	1224
	1229
	1234
	1239
	1244
	1248
	1253
	1258
	1263
	1268
	1273
	1278
	1283
	1288
	1293
	1298
	1303
	1308
	1313
	1318
	1323
	1328
	1333
	1338
	1343
	1348
	1353
	1358
	1363
	1368
	1373
	1378
	1383
	1388
	1393
	1398
	1403
	1408
	1413
	1418
	1423
	1428
	1433
	1438
	1443
	1448
	1453
	1458
	1463
	1468
	1473
	1478
	1483
	1488
	1493
	1498
	1503
	1508
	1513
	1518
	1525
	1526
	1530
	1531
	1535
	1536
199-9267	637
	684
	1069
	1074
	1079
	1084
	1089
	1094
	1099
	1104
	1109
	1114
	1119
	1124
	1129
	1134
	1139
	1144
	1149
	1154
	1159
	1164
	1169
	1174
	1179
	1184
	1189
	1194
	1199
	1204
	1209
	1214
	1219
	1224
	1229
	1234
	1239
	1244
	1248
	1253
	1258
	1263
	1268
	1273
	1278
	1283
	1288
	1293
	1298
	1303
	1308
	1313
	1318
	1323
	1328
	1333
	1338
	1343
	1348
	1353
	1358
	1363
	1368
	1373
	1378
	1383
	1388
	1393
	1398
	1403
	1408
	1413
	1418
	1423
	1428
	1433
	1438
	1443
	1448
	1453
	1458
	1463
	1468
	1473
	1478
	1483
	1488
	1493
	1498
	1503
	1508
	1513
	1518
	1525
	1530
	1535
199-9751	416
	629

► PRIMARY REFERENCE

PART NUMBER INDEX

Part	Page
2	
206-5234	772
	773
206-5235	772
	773
206-5237	772
209-6825	313
	315
209-6881	313
209-6883	313
209-9219	398
	399
	400
	401
	402
	403
	404
	405
	406
	407
	415
210-8950	1588
214-3203	300
	301
	303
	305
	307
	309
	311
	313
	315
	332
	334
	408
	410
	412
	414
	415
	636
	642
214-3281	533
	535
	579
	582
	589
	591
215-8509	1041
	1044
215-9509	1030
	1033
	1036
	1041
	1044
	1050
	1053
	1056
215-9515	1028
	1029
216-8314	379
	381
	383
	385
	387
	388
216-8634	495
	499
216-9633	682
	684
217-0099	865
	891
	1069
	1074
	1079
	1084
	1089
	1094
	1099
	1104
	1109
	1114
	1119
	1124
	1129
	1134
	1139
	1144
	1149
	1154
	1159
	1164
	1169
	1174
	1179
	1184
	1189
	1194
	1199
	1204
	1209
	1214
	1219
	1224
	1229
	1234
	1239
	1244
	1248
	1253
	1258
	1263
	1268
	1273
	1278
	1283
	1288
	1293
	1298
	1303
	1308
	1313
	1318
	1323
	1328
	1333
	1338
	1343
	1348
	1353
	1358
	1363
	1368
	1373
	1378
	1383
	1388
	1393
	1398
	1403
	1408
	1413
	1418
	1423
	1428
	1433
	1438
	1443
	1448
	1453
	1458
	1463
	1468
	1473
	1478
	1483
	1488
	1493
	1498
	1503
	1508
	1513
	1518
	1525
	1530
	1535
	1541
	1544
	1547
217-7877	305
217-8477	1069
	1089
	1094
	1114
	1154
	1159
	1179
	1184
	1224
	1263
	1268
	1273
	1278
	1283
	1303
	1323
	1328
	1349
	1354
	1606
	1609
	1615
	1617
217-9039	338
	344
	349
	354
	360
	372
	375
	1604
	1606
	1607
	1609
	1611
	1613
	1615
	1617
219-4136	585
	587
220-2745	645
220-7163	875
	902
	948
	974
	977
220-8311	541
	563
	565
	575
	597
	778
	786
220-8631	483
220-8632	479
	481
222-8625	305
224-6635	299
225-3143	1556
225-3150	1591
225-5438	415
	609
	611
	617
	621
	623
	625
	627
225-5439	609
	613
	615
	617
	621
	625
225-5441	609
	613
	617
	621
	625
225-5451	609
	613
	617
	621
	625
225-5453	609
	613
	617
	621
	625
225-5454	609
	613
	617
	621
	625
225-5458	609
	613
	617
	621
	625
225-5459	609
	613
	617
	621
	625
225-5501	418
	419
	420
	421
	422
225-5959	452
225-6005	533
	537
	541
	545
	549
	551
	553
	557
	563
	565
	571
	575
	579
	585
	589
	591
	593

PART NUMBER INDEX

Part	Page
	597
	599
	603
225-6041	537
	539
	545
	547
	553
	555
	571
	573
	593
	595
	607
225-6522	475
	631
	639
	673
	674
225-6524	639
	672
	675
	677
225-7738	714
	716
	718
	720
	722
	724
	726
225-7772	388
225-7941	637
	680
	683
225-7944	690
	692
	693
	695
	697
	698
	700
225-8019	714
	716
	718
	722
	724
225-8287	495
	497
225-8524	309
	311
	791
	794
	797
	800
	803
	806
	809
	812
	815
	818
	821
	824
	827
	830
	833
	836
	839
	842
	845
	848
	851
	854
	857
	861
	865
	869
	872
	875
	878
	881
	884
	887
	891
	896
	899
	902
	905
	908
	911
	914
	917
	920
	923
	926
	929
	932
	935
	938
	943
	948
	951
	954
	957
	960
	964
	968
	971
	974
	977
	980
	983
	986
	989
	992
	995
225-8526	791
	794
	797
	800
	803
	806
	809
	812
	815
	818
	821
	824
	827
	830
	833
	836
	839
	842
	845
	848
	851
	854
	857
	861
	865
	869
	872
	875
	878
	881
	884
	887
	891
	896
	899
	902
	905
	908
	911
	914
	917
	920
	923
	926
	929
	932
	935
	938
	943
	948
	951
	954
	957
	960
	964
	968
	971
	974
	977
	980
	983
	986
	989
	992
	995
225-8530	800
	803
	824
	827
	857
	861
	865
	869
	872
	881
	884
	887
	891
	896
	899
	908
	911
	914
	917
	920
	923
	926
	929
	932
	935
	938
	943
	960
	964
	968
	971
	980
	983
	986
	989
	992
	995
225-8533	791
	794
	800
	812
	815
	824
	830
	836
	842
	848
	851
	857
	869
	875
	881
	896
	902
	908
	914
	920
	926
	932
	938
	948
	954
	960
	968
	974
	980
	986
225-8534	791
	794
	800
	812
	815
	824
	830
	836
	842
	848
	851
	857
	869
	875
	881
	896
	902
	908
	914
	920
	926
	932
	938
	948
	954
	960
	968
	974
	980
	986
225-8858	408
	410
	412
226-8766	475
	499
	501
	503
	509
226-8767	475
	499
	501
	503
	509
227-4562	800
	803
	824
	827
	857
	861

► PRIMARY REFERENCE

PART NUMBER INDEX

Part	Page
	865
	869
	872
	881
	884
	887
	891
	896
	899
	908
	911
	914
	917
	920
	923
	926
	929
	932
	935
	938
	943
	960
	964
	968
	971
	980
	983
	986
	989
	992
	995
228-0172	1063
	1065
	1523
	1540
	1550
228-4947	1129
228-7089	679
228-7100	1062
	1063
	1065
	1067
	1130
	1523
	1540
	1550
	1584
228-7391	1575
	1577
	1578
	1580
	1581
	1582
230-7924	484
230-8065	426
	427
	432
	433
	436
	437
	438
	446
	448
	449
	450
230-8094	415
	533
	535
	537
	539
	541
	543
	545
	547
	549
	551
	553
	555
	557
	559
	561
	563
	565
	567
	569
	571
	573
	575
	577
	579
	582
	585
	587
	589
	591
	593
	595
	597
	599
	601
	603
	605
	607
230-8218	533
	579
	585
230-8251	541
	563
	565
	575
	597
230-8989	1069
	1074
	1079
	1084
	1089
	1094
	1099
	1104
	1109
	1114
	1119
	1124
	1129
	1134
	1139
	1144
	1149
	1154
	1159
	1164
	1169
	1174
	1179
	1184
	1189
	1194
	1199
	1204
	1209
	1214
	1219
	1224
	1229
	1234
	1239
	1244
	1248
	1253
	1258
	1263
	1268
	1273
	1278
	1283
	1288
	1293
	1298
	1303
	1308
	1313
	1318
	1323
	1328
	1333
	1338
	1343
	1348
	1353
	1358
	1363
	1368
	1373
	1378
	1383
	1388
	1393
	1398
	1403
	1408
	1413
	1418
	1423
	1428
	1433
	1438
	1443
	1448
	1453
	1458
	1463
	1468
	1473
	1478
	1483
	1488
	1493
	1498
	1503
	1508
	1513
	1518
	1525
	1530
	1535
	1541
	1544
	1547
230-9194	306
230-9195	306
232-1115	1030
	1033
	1036
	1041
	1044
	1047
	1050
	1053
	1056
	1423
	1428
	1434
	1439
	1443
	1448
	1453
	1458
	1463
	1468
	1503
	1508
	1513
	1518
232-1322	416
	629
232-2551	537
	539
	561
232-3149	1069
	1074
	1079
	1084
	1089
	1094
	1099
	1104
	1109
	1114
	1119
	1124
	1129
	1134
	1139
	1144
	1149
	1154
	1159
	1164
	1169
	1174
	1179
	1184
	1189
	1194
	1199
	1204
	1209
	1214
	1219
	1224
	1229
	1234
	1239
	1244
	1248
	1253
	1258
	1263
	1268
	1273
	1278
	1283
	1288
	1293
	1298
	1303
	1308
	1313
	1318
	1323
	1328
	1333
	1338
	1343
	1348
	1353

► PRIMARY REFERENCE

PART NUMBER INDEX

Part	Page
	1358
	1363
	1368
	1373
	1398
	1403
	1408
	1413
	1418
	1423
	1428
	1433
	1438
	1443
	1448
	1453
	1458
	1463
	1468
	1473
	1478
	1483
	1488
	1493
	1498
	1503
	1508
	1513
	1518
	1525
	1530
	1535
	1541
	1544
	1547
232-3657	495
	497
232-3666	475
	492
	495
	497
	499
	501
	503
	506
	509
232-3751	690
	692
	698
232-3861	637
	684
232-6189	806
	812
	815
	830
	833
	836
	842
	857
	861
	869
	881
	887
	896
	908
	911
	914
	926
	929
	932
	938
	943
	960
	968
	971
	986
	992
232-7440	408
	410
232-7449	398
	399
	400
	401
	402
	403
	404
	405
	406
	407
	415
232-7596	408
	410
	412
232-7597	408
	410
	412
232-7599	408
	410
	412
232-9758	1263
233-3784	388
233-3785	388
233-3786	388
233-4695	561
233-7489	784
233-8148	541
	543
	575
	577
	597
	599
233-9408	408
	410
	412
	414
	697
	698
	700
233-9436	518
	519
	520
	526
	633
	638
	642
233-9530	1577
233-9531	1558
	1559
	1560
	1565
	1571
	1574
	1575
	1576
	1577
	1578
	1580
	1581
	1582
	1583
233-9532	1558
	1565
	1571
	1574
	1576
234-0189	317
234-0198	317
234-0201	317
234-0204	317
234-0205	317
234-0212	317
234-0220	317
234-0223	317
234-0590	317
234-0591	317
234-0613	317
234-0614	317
234-0615	317
234-0616	317
234-3029	830
	833
	836
	839
	842
	845
	908
	911
	914
	917
	926
	929
	938
	943
	968
	971
	995
234-3030	830
	833
	836
	842
	875
	902
	908
	911
	914
	926
	929
	938
	943
	954
	957
	968
	971
234-3063	1030
	1050
	1053
	1056
234-3459	693
	695
235-1061	300
	307
235-1063	300
	307
235-1064	499
235-1352	499
235-1358	499
235-1391	499
235-1398	499
235-1418	499
235-2375	485
235-2435	557
	559
235-2451	698
	700
235-6281	1615
	1617
236-5539	1604
	1613
	1615
	1617
236-7722	730
	734
236-7734	730
	734
	738
	742
	746
	750
	754
	758
	762
	766
	769
236-7735	730
	734
	738
	742
	746
	750
	754
	758
	762
	766
	769
236-7760	728
	730
	734
	738
	742
	746
	750
	754
	758
	762
236-7763	728
	730
	734
	738
	742
	746
	750
	754
	758
	762
236-7764	728
	730
	734
	738
	742
	746
	750
	754
	758
	762
236-7765	728
	730
	734
	738
	742
	746
	750
	754
	758
	762
236-7766	730
	734
	738

► PRIMARY REFERENCE

PART NUMBER INDEX

Part	Page
	742
	746
	750
	754
	758
	762
236-8773	730
	734
	738
	742
	746
	750
	754
	758
	762
	766
	769
236-8777	730
	734
	738
	742
	746
	750
	754
	758
	762
	766
	769
236-8780	730
	734
	738
	742
	746
	750
	754
	758
	762
	766
	769
236-8781	730
	734
	738
	742
	746
	750
	754
	758
	762
	766
	769
236-8782	738
	742
	746
	750
	754
	758
	762
236-8784	738
	742
	750
	754
237-5932	601
237-5933	569
238-0120	1059
	1061
	1062
	1063
	1065
	1067
	1068
	1069
	1079
	1084
	1099
	1104
	1109
	1124
	1129
	1134
	1144
	1149
	1169
	1174
	1194
	1199
	1214
	1219
	1234
	1239
	1253
	1258
	1293
	1298
	1303
	1313
	1318
	1328
	1338
	1343
	1353
	1363
	1368
	1388
	1393
	1413
	1418
	1423
	1433
	1438
	1448
	1453
	1463
	1468
	1478
	1483
	1493
	1498
	1508
	1518
	1523
	1530
	1535
	1540
	1550
238-8288	774
	776
	778
	784
	786
238-8289	774
	776
238-8292	791
	794
	797
	800
	803
	821
	824
	827
	848
	851
	854
	875
	878
	902
	905
	920
	923
	948
	951
	954
	957
	974
	977
	980
	983
239-9555	1068
243-1800	561
243-1801	607
243-3253	503
243-4278	467
	471
243-4300	1559
	1560
	1583
244-6872	698
	700
246-4361	309
	311
247-4928	313
	315
	557
	559
247-6019	1063
	1065
	1067
	1523
	1540
	1550
247-6020	1059
	1061
	1062
247-6022	1061
247-6023	1059
247-8314	523
248-1064	1068
248-1066	1062
	1063
	1065
	1067
	1523
	1540
	1550
249-0740	1059
	1061
249-0974	690
	692
	693
	695
	697
249-0975	698
	700
250-9405	►1059
250-9406	►1061
251-2437	428
251-4336	475
	495
	509
251-8261	557
	559
251-8262	557
	559
251-8282	557
	559
	597
	599
251-8283	557
	559
252-6318	408
	410
	412
	414
	697
	700
254-6819	484
256-4447	778
	784
	786
257-2381	1065
	1523
	1550
257-2382	1065
	1523
	1550
258-8149	1065
	1523
	1550
259-2611	313
	315
259-2612	313
	315
259-2614	313
	315
259-2623	313
	315
260-3718	1069
	1114
	1154
	1179
	1204
	1224
	1278
	1303
	1323
	1328
	1348
	1373
	1398
	1403
260-3719	1069
	1114
	1154
	1179
	1204
	1224
	1278
	1303
	1323
	1328
	1348
	1373
	1398
	1403
260-3939	1069
	1074
	1079
	1084
	1089
	1094
	1099
	1104
	1109
	1114
	1119
	1124
	1129
	1134
	1139
	1144
	1149
	1154
	1159
	1164
	1169
	1174
	1179

► PRIMARY REFERENCE

PART NUMBER INDEX

Part	Page	Part	Page	Part	Page	Part	Page
	1184	260-6678	1154		1194		1079
	1189		1159		1199		1084
	1194	261-0371	1556		1204		1089
	1199	261-0406	1556		1209		1094
	1204	261-0428	434		1214		1099
	1209		439		1219		1104
	1214		440		1224		1109
	1219		447		1229		1114
	1224		646		1234		1119
	1229	261-4320	440		1239		1124
	1234	263-2162	537		1244		1129
	1239		539		1248		1134
	1244	263-5376	875		1253		1139
	1248		878		1258		1144
	1253		902		1263		1149
	1258		905		1268		1154
	1263		954		1273		1159
	1268		957		1278		1164
	1273	263-7148	999		1283		1169
	1278		►1012		1288		1174
	1283		1013		1293		1179
	1288		1016		1298		1184
	1293		1039		1303		1189
	1298	265-6527	730		1308		1194
	1303		734		1313		1199
	1308		766		1318		1204
	1313		769		1323		1209
	1318	266-7092	830		1328		1214
	1323		833		1333		1219
	1328		836		1338		1224
	1333		839		1343		1229
	1338		842		1348		1234
	1343		845		1353		1239
	1348		875		1358		1244
	1353		878		1363		1248
	1358		908		1368		1253
	1363		911		1373		1258
	1368		914		1378		1263
	1373		917		1383		1268
	1378		926		1388		1273
	1383		929		1393		1278
	1388		954		1398		1283
	1393		957		1403		1288
	1398		968		1408		1293
	1403		971		1413		1298
	1408		995		1418		1303
	1413	268-3630	470		1423		1308
	1418	268-3642	446		1428		1313
	1423		450		1433		1318
	1428	268-6677	1069		1438		1323
	1433		1074		1443		1328
	1438		1079		1448		1333
	1443		1084		1453		1338
	1448		1089		1458		1343
	1453		1094		1463		1348
	1458		1099		1468		1353
	1463		1104		1473		1358
	1468		1109		1478		1363
	1473		1114		1483		1368
	1478		1119		1488		1373
	1483		1124		1493		1378
	1488		1129		1498		1383
	1493		1134		1503		1388
	1498		1139		1508		1393
	1503		1144		1513		1398
	1508		1149		1518		1403
	1513		1154		1525		1408
	1518		1159		1530		1413
	1525		1164		1535		1418
	1530		1169		1541		1423
	1535		1174		1544		1428
	1541		1179		1547		1433
	1544		1184	268-6678	1069		1438
	1547		1189		1074		1443

► PRIMARY REFERENCE

PART NUMBER INDEX

Part	Page
	1448
	1453
	1458
	1463
	1468
	1473
	1478
	1483
	1488
	1493
	1498
	1503
	1508
	1513
	1518
	1525
	1530
	1535
	1541
	1544
	1547
269-3086	797
	803
	809
	818
	827
	839
	845
	854
	865
	872
	884
	891
	899
	917
	923
	935
	964
	983
	989
	995
272-2226	563
272-6504	683
	684
273-3690	313
	315
273-3691	313
	315
273-5711	669
274-1639	1018
	1019
	1020
	1021
	1022
	1023
	1024
	1025
	1026
	1027
	1069
	1074
	1079
	1084
	1094
	1099
	1104
	1109
	1119
	1124
	1134
	1139
	1144
	1149
	1159
	1164
	1169
	1174
	1184
	1189
	1194
	1199
	1204
	1209
	1214
	1219
	1224
	1229
	1234
	1239
	1244
	1248
	1253
	1258
	1268
	1273
	1283
	1288
	1293
	1298
	1303
	1308
	1313
	1318
	1328
	1333
	1338
	1343
	1353
	1358
	1363
	1368
	1374
	1378
	1383
	1388
	1393
	1399
	1404
	1408
	1414
	1419
	1423
	1428
	1433
	1438
	1443
	1448
	1453
	1458
	1463
	1468
	1473
	1478
	1483
	1488
	1493
	1498
	1503
	1508
	1513
	1518
	1525
	1530
	1535
274-1931	648
	655
275-9173	►26
275-9174	►26
275-9883	533
	535
	537
	539
	541
	543
	545
	547
	549
	551
	553
	555
	557
	559
	561
	563
	565
	567
	569
	571
	573
	575
	577
	579
	582
	585
	587
	589
	591
	593
	595
	597
	599
	601
	605
	607
275-9891	679
276-5605	408
	410
	412
	414
276-7394	378
	379
	380
	381
	382
	383
	384
	385
	386
	387
	415
276-7476	415
	609
	611
	613
	615
	617
	619
	621
	623
	625
	627
276-7478	613
	615
	619
276-8116	416
276-8117	416
276-8123	416
276-8133	416
276-9200	657
276-9201	657
276-9206	657
276-9207	657
276-9230	657
277-1949	1067
277-1950	1067
277-2923	714
	716
	718
	720
	722
	724
	726
277-2925	714
	716
	718
	720
	722
	724
	726
277-2942	486
277-3012	475
	492
	495
	497
	499
	501
	503
	506
	509
277-3419	451
277-4990	999
	1013
	1014
	1016
	1017
	1039
	1040
277-4991	999
	1013
	1014
	1016
	1017
	1039
	1040
277-4993	999
	1013
	1014
	1016
	1017
	1039
	1040
277-5031	326
	329
	335
	338
	341
	344
	347
	349
	351
	354
	357
	360
	363
	366
	369
	372
	375
277-5064	326
	329
	335
	338
	341
	344
	347
	349

► PRIMARY REFERENCE

PART NUMBER INDEX

Part	Page
	351
	354
	357
	360
	363
	366
	369
	372
	375
277-5065	326
	329
	335
	338
	341
	344
	347
	349
	351
	354
	357
	360
	363
	366
	369
	372
	375
277-5067	335
	341
	347
	351
	357
	363
	366
	369
277-5094	335
	341
	347
	351
	357
	369
277-5096	335
	341
	347
	351
	357
	369
277-6165	1030
	1041
	1044
	1050
	1053
	1056
278-0310	800
	803
	806
	809
	836
	839
	848
	851
	854
	857
	861
	865
	908
	911
	932
	935
	980
	983
	992
	995
278-0316	821
	875
	878
	902
	905
	948
	951
	974
	977
278-0361	791
	794
	797
	800
	803
	806
	809
	812
	815
	818
	821
	824
	827
	830
	833
	836
	839
	842
	845
	848
	851
	854
	857
	861
	865
	869
	872
	875
	878
	881
	884
	887
	891
	896
	899
	902
	905
	908
	911
	914
	917
	920
	923
	926
	929
	932
	935
	938
	943
	948
	951
	954
	957
	960
	964
	968
	971
	974
	977
	980
	983
	986
	989
	992
	995
278-3242	714
	720
	726
278-4138	999
	1000
	1001
	1002
	1003
	1004
	1005
	1006
	1007
	1008
	1009
	1010
	1011
	1016
	1017
	1030
	1033
	1036
	1039
	1040
	1041
	1044
	1047
	1050
	1053
	1056
	1070
	1074
	1080
	1085
	1089
	1094
	1100
	1105
	1110
	1115
	1120
	1125
	1130
	1134
	1139
	1145
	1150
	1155
	1159
	1164
	1170
	1175
	1180
	1184
	1189
	1195
	1200
	1205
	1209
	1215
	1220
	1225
	1229
	1235
	1240
	1244
	1248
	1254
	1259
	1264
	1269
	1274
	1279
	1283
	1288
	1294
	1299
	1304
	1309
	1314
	1319
	1324
	1329
	1333
	1339
	1344
	1349
	1354
	1358
	1364
	1369
	1374
	1379
	1384
	1389
	1394
	1399
	1404
	1409
	1414
	1419
	1424
	1429
	1434
	1439
	1444
	1449
	1454
	1459
	1464
	1469
	1474
	1479
	1484
	1489
	1494
	1499
	1503
	1508
	1513
	1519
	1526
	1531
	1536
	1541
	1544
	1547
278-5111	657
278-5112	657
278-5113	657
278-5126	322
278-5168	1069
	1074
	1079
	1084
	1089
	1094
	1099
	1104
	1109
	1114
	1119
	1124
	1129
	1134
	1139
	1144
	1149
	1154
	1159
	1164

► PRIMARY REFERENCE

PART NUMBER INDEX

Part	Page	Part	Page	Part	Page	Part	Page
	1169		1541		1423		1288
	1174		1544		1428		1293
	1179		1547		1433		1298
	1184	278-5170	1069		1438		1303
	1189		1074		1443		1308
	1194		1079		1448		1313
	1199		1084		1453		1318
	1204		1089		1458		1323
	1209		1094		1463		1328
	1214		1099		1468		1333
	1219		1104		1473		1338
	1224		1109		1478		1343
	1229		1114		1483		1348
	1234		1119		1488		1353
	1239		1124		1493		1358
	1244		1129		1498		1363
	1248		1134		1503		1368
	1253		1139		1508		1373
	1258		1144		1513		1378
	1263		1149		1518		1383
	1268		1154		1525		1388
	1273		1159		1530		1393
	1278		1164		1535		1398
	1283		1169		1541		1403
	1288		1174		1544		1408
	1293		1179		1547		1413
	1298		1184	278-5201	1584		1418
	1303		1189	278-5202	1115		1423
	1308		1194		1120		1428
	1313		1199		1125		1433
	1318		1204	278-5203	1069		1438
	1323		1209		1074		1443
	1328		1214		1079		1448
	1333		1219		1084		1453
	1338		1224		1089		1458
	1343		1229		1094		1463
	1348		1234		1099		1468
	1353		1239		1104		1473
	1358		1244		1109		1478
	1363		1248		1114		1483
	1368		1253		1119		1488
	1373		1258		1124		1493
	1378		1263		1129		1498
	1383		1268		1134		1503
	1388		1273		1139		1508
	1393		1278		1144		1513
	1398		1283		1149		1518
	1403		1288		1154		1525
	1408		1293		1159		1530
	1413		1298		1164		1535
	1418		1303		1169		1541
	1423		1308		1174		1544
	1428		1313		1179		1547
	1433		1318		1184	278-5209	1604
	1438		1323		1189		1611
	1443		1328		1194		1613
	1448		1333		1199		1615
	1453		1338		1204		1617
	1458		1343		1209	278-5225	1069
	1463		1348		1214		1074
	1468		1353		1219		1079
	1473		1358		1224		1084
	1478		1363		1229		1089
	1483		1368		1234		1094
	1488		1373		1239		1099
	1493		1378		1244		1104
	1498		1383		1248		1109
	1503		1388		1253		1114
	1508		1393		1258		1119
	1513		1398		1263		1124
	1518		1403		1268		1129
	1525		1408		1273		1134
	1530		1413		1278		1139
	1535		1418		1283		1144

PART NUMBER INDEX

Part	Page	Part	Page	Part	Page	Part	Page
	1149		1518		1433		1258
	1154		1525		1438		1278
	1159		1530		1443		1283
	1164		1535		1448		1288
	1169	278-5226	1069		1453		1293
	1174		1074		1458		1298
	1179		1079		1463		1303
	1184		1084		1468		1308
	1189		1089		1473		1313
	1194		1094		1478		1318
	1199		1099		1483		1323
	1204		1104		1488		1328
	1209		1109		1493		1333
	1214		1114		1498		1338
	1219		1119		1503		1343
	1224		1124		1508		1348
	1229		1129		1513		1353
	1234		1134		1518		1358
	1239		1139		1525		1363
	1244		1144		1530		1368
	1248		1149	278-5227	1089		1423
	1253		1154		1114		1428
	1258		1159		1154		1433
	1263		1164		1179		1438
	1268		1169		1263		1443
	1273		1174		1278		1448
	1278		1179		1323		1453
	1283		1184		1348		1458
	1288		1189	278-5228	1089		1463
	1293		1194		1114		1468
	1298		1199		1154		1473
	1303		1204		1179		1478
	1308		1209		1263		1483
	1313		1214		1278		1488
	1318		1219		1323		1493
	1323		1224		1348		1498
	1328		1229	278-5272	1069		1503
	1333		1234		1074		1508
	1338		1239		1079		1513
	1343		1244		1084		1518
	1348		1248		1089	278-5273	1069
	1353		1253		1094		1074
	1358		1258		1099		1079
	1363		1263		1104		1084
	1368		1268		1109		1089
	1373		1273		1114		1094
	1378		1278		1119		1099
	1383		1283		1124		1104
	1388		1288		1129		1109
	1393		1293		1134		1114
	1398		1298		1139		1119
	1403		1303		1144		1124
	1408		1308		1149		1129
	1413		1313		1154		1134
	1418		1318		1159		1139
	1423		1323		1164		1144
	1428		1328		1169		1149
	1433		1333		1174		1154
	1438		1338		1179		1159
	1443		1343		1184		1164
	1448		1348		1189		1169
	1453		1353		1194		1174
	1458		1358		1199		1179
	1463		1363		1204		1184
	1468		1368		1209		1189
	1473		1374		1214		1194
	1478		1379		1219		1199
	1483		1384		1224		1204
	1488		1389		1229		1209
	1493		1399		1234		1214
	1498		1404		1239		1219
	1503		1409		1244		1224
	1508		1423		1248		1229
	1513		1428		1253		1234

► PRIMARY REFERENCE

PART NUMBER INDEX

Part	Page
	1239
	1244
	1248
	1253
	1258
	1263
	1268
	1273
	1278
	1283
	1288
	1293
	1298
	1303
	1308
	1313
	1318
	1323
	1328
	1333
	1338
	1343
	1348
	1353
	1358
	1363
	1368
	1373
	1378
	1383
	1388
	1393
	1398
	1403
	1408
	1413
	1418
	1423
	1428
	1433
	1438
	1443
	1448
	1453
	1458
	1463
	1468
	1473
	1478
	1483
	1488
	1493
	1498
	1503
	1508
	1513
	1518
	1525
	1530
	1535
278-5307	1069
	1074
	1079
	1084
	1089
	1094
	1099
	1104
	1109
	1114
	1119
	1124
	1129
	1134
	1139
	1144
	1149
	1154
	1159
	1164
	1169
	1174
	1179
	1184
	1189
	1194
	1199
	1204
	1209
	1214
	1219
	1224
	1229
	1234
	1239
	1244
	1248
	1253
	1258
	1263
	1268
	1273
	1278
	1283
	1288
	1293
	1298
	1303
	1308
	1313
	1318
	1323
	1328
	1333
	1338
	1343
	1348
	1353
	1358
	1363
	1368
	1373
	1378
	1383
	1388
	1393
	1398
	1403
	1408
	1413
	1418
	1423
	1428
	1433
	1438
	1443
	1448
	1453
	1458
	1463
	1468
	1473
	1478
	1483
	1488
	1493
	1498
	1525
	1530
	1535
278-5308	1114
	1154
	1179
	1263
	1278
	1323
	1348
278-5309	1114
	1263
279-9651	511
	513
280-0683	►1552
280-1912	657
280-1913	657
280-1914	657
280-2023	326
	329
	363
	366
281-8744	685
	686
	687
282-0470	►1018
282-0480	►1019
	1089
	1114
	1154
	1159
	1263
	1268
	1323
	1328
	1373
	1378
	1398
	1403
283-2271	►1067
	1069
	1089
	1114
	1134
	1154
	1159
	1179
	1184
	1204
	1224
	1244
	1263
	1268
	1278
	1283
	1303
	1323
	1328
	1348
	1353
	1373
	1398
283-2335	1068
283-4148	425
	429
	430
	439
	441
	646
283-4674	647
	656
284-1026	434
	442
	444
	445
	447
284-3425	1556
285-1973	326
	329
	335
	338
	341
	344
	347
	349
	351
	354
	357
	360
	363
	366
	369
	372
	375
285-2040	425
	430
285-9082	441
286-1511	1068
286-2890	1033
	1036
	1044
	1047
	1050
	1053
	1056
286-7848	424
	654
287-6842	445
287-7272	1523
	1550
287-7430	714
287-7637	1018
	1019
	1020
	1021
	1022
	1023
	1024
	1025
	1026
	1027
287-8597	477
	478
	479
	481
	483
	484
	485
	486
	487
	488
	489
	490
	491
288-0422	475
	492
	495
	497
	499
	501
	503
	506
	509
288-0515	1609
288-0526	1606
288-2354	434
	439
	440
	447

► PRIMARY REFERENCE

PART NUMBER INDEX

Part	Page
	646
289-0600	1000
	1009
289-2358	440
	447
289-2478	1041
	1050
	1053
289-3260	442
289-8336	425
	429
	430
	441
	442
	444
	445
291-6517	492
	501
	503
	506
291-6519	506
291-6521	492
	506
291-6522	492
	506
291-6523	492
	506
291-6524	492
	506
291-6526	301
	303
291-6528	301
	303
291-6529	301
	303
291-6530	301
291-6531	301
291-6570	1015
292-3749	▶1068
292-3770	▶1020
292-3780	▶1021
	1069
	1094
	1134
	1179
	1184
	1204
	1224
	1244
	1278
	1283
	1303
	1348
	1353
292-5304	▶27
292-5307	▶29
292-5308	▶31
292-5310	▶33
292-5311	▶35
293-0249	1062
	1063
	1065
	1067
293-0598	857
	861
	865
	887
	891
	938
	943
293-1875	313
	315
293-1877	▶299
	313
	315
293-1881	689
293-4776	309
	311
293-9309	557
293-9570	▶1022
293-9737	301
	303
294-0288	495
	497
294-3031	1065
	1523
	1550
294-3032	1065
	1523
	1550
294-7184	▶36
294-7185	▶38
294-7187	▶40
294-7188	▶42
294-7189	▶44
294-7190	▶46
294-7191	▶47
294-7192	▶48
294-7193	▶49
294-7195	▶51
294-7198	▶52
294-7200	▶54
294-7203	▶55
294-7375	791
	794
	797
	812
	815
	818
	821
	824
	827
	830
	833
	842
	845
	869
	872
	875
	878
	881
	884
	887
	891
	896
	899
	902
	905
	914
	917
	920
	923
	926
	929
	938
	943
	948
	951
	954
	957
	960
	964
	968
	971
	974
	977
	986
	989
294-9392	309
	311
294-9393	309
294-9396	309
295-0440	730
	754
	758
	762
	769
295-1042	335
	341
	347
295-1711	495
295-2157	▶57
295-2163	▶58
295-2167	▶59
295-2169	▶61
295-2170	▶63
295-2171	▶64
295-4670	1030
	1033
	1036
	1041
	1044
	1047
	1050
	1053
	1056
295-4801	1062
	1063
	1065
	1523
	1540
	1550
295-6661	416
295-9125	▶1062
	1094
	1273
	1378
	1403
	1423
	1503
296-3542	1062
	1063
	1065
	1540
298-3513	453
	469
298-4523	35
298-4524	388
298-4526	▶416
	418
	419
	420
	421
	422
298-4527	416
298-4528	416
298-4533	▶657
	658
	661
	663
	665
	667
298-4535	1069
	1074
	1079
	1084
	1089
	1094
	1099
	1104
	1109
	1114
	1119
	1124
	1129
	1134
	1139
	1144
	1149
	1154
	1159
	1164
	1169
	1174
	1179
	1184
	1189
	1194
	1199
	1204
	1209
	1214
	1219
	1224
	1229
	1234
	1239
	1244
	1248
	1253
	1258
	1263
	1268
	1273
	1278
	1283
	1288
	1293
	1298
	1303
	1308
	1313
	1318
	1323
	1328
	1333
	1338
	1343
	1348
	1353
	1358
	1363
	1368
	1373
	1378
	1383
	1388
	1393
	1398
	1403
	1408
	1413
	1418
	1473
	1478
	1483
	1488
	1493
	1498
	1525
	1530
	1535
	1541
	1544
	1547
298-4536	1069

▶ PRIMARY REFERENCE

PART NUMBER INDEX

Part	Page
	1089
	1094
	1114
	1134
	1154
	1159
	1179
	1184
	1204
	1224
	1244
	1263
	1268
	1273
	1278
	1283
	1303
	1323
	1328
	1348
	1353
	1373
	1378
	1398
	1403
	1423
	1503
298-4537	1069
	1089
	1094
	1114
	1134
	1154
	1159
	1179
	1184
	1204
	1224
	1244
	1263
	1268
	1273
	1278
	1283
	1303
	1323
	1328
	1348
	1353
	1373
	1378
	1398
	1403
298-4538	1069
	1089
	1094
	1114
	1134
	1154
	1159
	1179
	1184
	1204
	1224
	1244
	1263
	1268
	1278
	1283
	1303
	1323
	1328
	1348
	1353
298-4539	1069
	1089
	1094
	1114
	1134
	1154
	1159
	1179
	1184
	1204
	1224
	1244
	1263
	1268
	1278
	1283
	1303
	1323
	1328
	1348
	1353
	1373
	1378
	1398
	1403
298-4540	1069
	1089
	1094
	1114
	1134
	1154
	1159
	1179
	1184
	1204
	1224
	1244
	1263
	1268
	1278
	1283
	1303
	1323
	1328
	1348
	1353
	1373
	1378
	1398
	1403
298-4541	1069
	1089
	1094
	1114
	1134
	1154
	1159
	1179
	1184
	1204
	1224
	1244
	1263
	1268
	1278
	1283
	1303
	1323
	1328
	1348
	1353
	1373
	1378
	1398
	1403
298-4542	1069
	1074
	1079
	1084
	1089
	1094
	1099
	1104
	1109
	1114
	1119
	1124
	1129
	1134
	1139
	1144
	1149
	1154
	1159
	1164
	1169
	1174
	1179
	1184
	1189
	1194
	1199
	1204
	1209
	1214
	1219
	1224
	1229
	1234
	1239
	1244
	1248
	1253
	1258
	1264
	1268
	1278
	1283
	1288
	1293
	1298
	1303
	1308
	1313
	1318
	1323
	1328
	1333
	1338
	1343
	1348
	1353
	1358
	1363
	1368
	1373
	1378
	1383
	1388
	1393
	1398
	1403
	1408
	1413
298-4543	1069
	1074
	1079
	1084
	1089
	1094
	1099
	1104
	1109
	1114
	1119
	1124
	1134
	1139
	1144
	1154
	1159
	1164
	1169
	1179
	1184
	1189
	1194
	1204
	1209
	1214
	1224
	1229
	1234
	1244
	1248
	1253
	1264
	1268
	1273
	1278
	1283
	1288
	1293
	1304
	1308
	1313
	1323
	1328
	1333
	1338
	1348
298-4544	1069
	1074
	1079
	1084
	1089
	1094
	1099
	1104
	1109
	1114
	1119
	1124
	1129
	1134
	1139
	1144
	1149
	1154
	1159
	1164
	1169
	1174
	1179
	1184
	1189
	1194
	1199
	1204
	1209
	1214
	1219
	1224
	1229
	1234
	1239
	1244
	1248
	1253
	1258
	1264
	1268
	1278
	1283
	1288
	1293
	1298
	1303
	1308
	1313
	1318
	1323
	1328
	1333
	1338
	1343
	1348
	1353
	1358
	1363
	1368
	1373
	1378
	1383
	1388
	1393
	1398
	1403
	1408
	1413
298-4545	1069
	1074
	1079
	1084
	1089
	1094
	1099
	1104
	1109
	1114
	1119
	1124
	1129
	1134
	1139
	1144
	1149
	1154
	1159
	1164
	1169
	1174
	1179
	1184
	1189
	1194
	1199
	1204
	1209
	1214
	1219
	1224
	1229
	1234
	1239
	1244
	1248
	1253
	1258
	1264
	1268
	1278
	1283
	1288
	1293
	1298
	1303
	1308
	1313
	1318
	1323
	1328
	1333
	1338
	1343
	1348
	1353
	1358
	1363
	1368
	1373
	1378
	1383
	1388
	1393
	1398
	1403
	1408
	1413

► PRIMARY REFERENCE

PART NUMBER INDEX

Part	Page
	1353
	1358
	1363
	1373
	1378
	1383
	1388
	1398
	1403
	1408
	1413
	1423
	1428
	1433
	1443
	1448
	1458
	1463
	1473
	1478
	1483
	1488
	1493
	1498
	1503
	1513
	1518
	1525
	1530
	1535
	1541
	1544
298-4545	335
	338
	366
	369
	372
298-4546	326
	329
	335
	338
	341
	344
	347
	349
	351
	354
	357
	360
	363
	366
	369
	372
	375
298-4547	335
	341
	347
298-4548	326
	329
	335
	338
	341
	344
	347
	349
	351
	354
	363
	366
	369
	372
	375
298-4549	326
	329
	335
	341
	347
298-4550	326
	329
	335
	338
	341
	344
	347
	349
	351
	354
	357
	360
	363
	366
	369
	372
	375
298-4551	326
	329
	335
	338
	341
	344
	347
	349
	351
	354
	357
	360
	363
	366
	369
	372
	375
298-4552	326
	329
	335
	338
	341
	344
	347
	349
	351
	354
	357
	360
	363
	366
	369
	372
	375
298-4553	690
	693
298-4558	690
	693
	696
298-4559	690
	693
298-4560	690
	693
	696
298-4562	1556
298-4566	791
	794
	797
	800
	803
	824
	827
	848
	851
	854
	920
	923
	926
	954
	957
	980
	983
298-4568	791
	794
	800
	824
	848
	851
	920
	954
	957
	980
298-4569	791
	794
	797
	800
	803
	824
	827
	848
	851
	854
	920
	923
	954
	957
	980
	983
298-4570	791
	794
	797
	800
	803
	806
	809
	812
	815
	818
	821
	824
	827
	830
	833
	836
	839
	842
	845
	848
	851
	854
	857
	861
	865
	869
	872
	875
	878
	881
	884
	887
	891
	896
	899
	902
	908
	911
	914
	917
	920
	923
	926
	929
	932
	935
	938
	943
	948
	951
	954
	957
	960
	964
	968
	971
	974
	977
	980
	983
	986
	989
	992
	995
298-4573	794
	800
	824
	851
	920
	954
	980
298-4576	791
	794
	797
	800
	803
	806
	809
	812
	815
	818
	821
	824
	827
	830
	833
	836
	839
	842
	845
	848
	851
	854
	857
	861
	865
	869
	872
	875
	878
	881
	884
	887
	891
	896
	899
	902
	905
	908
	911
	914
	917
	920
	923
	926

► PRIMARY REFERENCE

PART NUMBER INDEX

Part	Page
	929
	932
	935
	938
	943
	948
	951
	954
	957
	960
	964
	968
	971
	974
	977
	980
	983
	986
	989
	992
	995
298-4592	1050
298-4595	1030
	1056
298-4597	1030
	1041
	1044
	1050
	1053
	1056
298-4603	1003
	1009
298-4604	511
298-4605	1606
	1609
298-4606	1606
	1609
298-4607	1606
	1609
298-5076	32
	171
	173
298-5085	10
	11
	21
	27
	31
	35
	38
	47
	48
	52
	58
	63
	80
	83
	87
	125
	129
	132
	134
	135
	136
	137
	141
	142
	143
	145
	149
	155
	156
	158
	161
	164
	171
	172
	177
	178
	183
	192
	193
	197
	206
	209
	216
	219
	227
	228
	229
	232
	233
	234
	235
	244
	245
	247
	251
	259
	261
	263
	266
	273
	276
	278
	279
	280
	289
	290
	291
	▶398
	▶399
298-5086	10
	11
	21
	27
	31
	35
	38
	47
	48
	52
	58
	63
	80
	83
	87
	125
	129
	132
	134
	135
	136
	137
	141
	142
	143
	145
	149
	155
	156
	158
	161
	164
	171
	172
	177
	178
	180
	182
	183
	192
	193
	197
	206
	209
	216
	219
	227
	228
	229
	232
	233
	234
	235
	244
	245
	247
	251
	259
	261
	263
	266
	273
	276
	278
	279
	280
	289
	290
	291
	▶378
	▶379
298-5087	10
	11
	21
	27
	31
	35
	38
	47
	48
	52
	58
	63
	80
	83
	87
	125
	129
	132
	134
	135
	136
	137
	141
	142
	143
	145
	149
	155
	156
	158
	161
	164
	171
	172
	177
	178
	180
	182
	183
	192
	193
	197
	206
	209
	216
	219
	227
	228
	229
	232
	233
	234
	235
	244
	245
	247
	251
	259
	261
	263
	266
	273
	276
	278
	279
	280
	289
	290
	291
	▶609
	▶611
298-5088	10
	11
	21
	27
	31
	35
	38
	47
	48
	52
	58
	63
	80
	83
	87
	125
	129
	132
	134
	135
	136
	137
	141
	142
	143
	145
	149
	155
	156
	158
	161
	164
	171
	172
	177
	178
	180
	182
	183
	192
	193

PART NUMBER INDEX

Part	Page
	197
	206
	209
	216
	219
	227
	228
	229
	232
	233
	234
	235
	244
	245
	247
	251
	259
	261
	263
	266
	273
	276
	278
	279
	280
	289
	290
	291
	▶418
298-5089	10
	11
	21
	28
	31
	35
	38
	47
	48
	52
	58
	63
	80
	83
	87
	125
	129
	132
	134
	135
	136
	137
	141
	142
	143
	145
	149
	155
	156
	158
	161
	164
	171
	172
	177
	178
	180
	182
	183
	192
	193
	197
	206
	216
	219
	227
	228
	229
	232
	233
	234
	235
	244
	245
	247
	251
	259
	261
	263
	266
	273
	276
	278
	279
	280
	289
	290
	291
	▶658
298-5090	10
	11
	21
	27
	31
	35
	38
	47
	48
	52
	58
	63
	80
	83
	87
	125
	129
	132
	134
	135
	136
	137
	141
	142
	143
	145
	149
	155
	156
	158
	161
	164
	171
	172
	177
	178
	180
	182
	183
	192
	193
	197
	206
	209
	216
	219
	227
	228
	229
	232
	233
	234
	235
	244
	245
	247
	251
	259
	261
	263
	266
	273
	276
	278
	279
	280
	289
	290
	291
	▶320
298-5091	28
	31
	171
	172
	▶1069
	▶1074
	▶1079
	▶1084
298-5092	17
	27
	29
	31
	▶477
298-5093	25
	27
	29
	31
	176
	178
	205
	206
	263
	296
	▶453
298-5094	28
	30
	31
	▶1590
298-5095	25
	27
	29
	31
	149
	169
	176
	177
	178
	204
	205
	206
	216
	263
	296
	▶425
298-5096	7
	19
	27
	29
	31
	38
	42
	44
	48
	49
	51
	55
	70
	72
	74
	80
	83
	84
	87
	89
	90
	93
	94
	102
	103
	105
	106
	109
	110
	114
	117
	119
	125
	131
	135
	136
	153
	158
	159
	161
	164
	170
	171
	193
	197
	198
	199
	200
	203
	214
	219
	224
	225
	226
	227
	231
	232
	235
	254
	262
	266
	267
	274
	278
	280
	281
	285
	287
	290
	291
	▶533
	▶535
298-5097	25
	27
	29
	31
	54
	57
	58
	91
	147
	151
	153
	161

▶ PRIMARY REFERENCE

PART NUMBER INDEX

Part	Page	Part	Page	Part	Page	Part	Page
	162		94		232		90
	166		96		233		91
	169		98		235		93
	176		100		238		94
	177		102		239		102
	178		103		240		103
	180		104		241		105
	182		105		242		106
	183		106		245		109
	191		107		248		110
	192		109		249		114
	202		110		255		117
	203		111		256		118
	204		112		258		119
	205		114		259		121
	206		116		260		122
	209		117		261		123
	213		121		262		125
	227		125		263		126
	230		126		268		131
	234		129		269		135
	246		132		270		136
	247		134		272		147
	250		135		274		151
	252		136		277		153
	263		137		278		158
	276		141		279		159
	296		142		280		161
	▶335		143		282		164
	▶338		145		285		169
298-5098	5		147		286		170
	7		151		287		172
	8		153		288		176
	11		155		289		177
	12		156		290		178
	14		159		291		183
	15		161		292		185
	18		162		293		193
	20		168		294		197
	23		169		295		198
	24		170		296		199
	25		174		297		200
	27		176		▶631		201
	29		177	298-5099	3		202
	31		178		7		203
	33		180		8		204
	35		182		10		205
	36		185		14		206
	38		188		16		217
	40		190		17		218
	42		193		19		219
	44		195		22		221
	46		196		23		223
	47		199		25		224
	48		200		27		225
	49		201		29		226
	51		203		31		227
	52		204		38		230
	55		205		42		231
	59		206		44		232
	61		214		48		235
	63		215		49		236
	64		217		51		237
	68		218		55		238
	70		219		72		239
	74		220		74		240
	77		221		76		241
	78		222		80		242
	83		223		81		258
	84		224		83		260
	87		225		84		263
	89		227		85		264
	90		228		87		266
	93		231		89		270

▶ PRIMARY REFERENCE

PART NUMBER INDEX

Part	Page
	271
	274
	275
	277
	278
	280
	283
	284
	285
	286
	287
	288
	290
	291
	293
	294
	296
	298
	▶690
	▶692
298-5100	3
	5
	7
	8
	10
	11
	12
	14
	15
	16
	17
	18
	19
	20
	21
	22
	23
	24
	25
	27
	29
	31
	33
	35
	36
	38
	40
	42
	44
	46
	47
	48
	49
	51
	52
	54
	55
	57
	58
	59
	61
	63
	64
	66
	68
	70
	72
	74
	76
	77
	78
	80
	81
	83
	84
	87
	89
	90
	91
	93
	94
	96
	98
	100
	102
	103
	104
	105
	106
	107
	109
	110
	111
	112
	114
	116
	117
	118
	119
	122
	123
	125
	126
	128
	129
	131
	132
	133
	134
	135
	136
	137
	139
	141
	142
	143
	145
	147
	149
	151
	153
	155
	156
	158
	159
	161
	162
	164
	166
	168
	169
	170
	171
	172
	174
	176
	177
	178
	180
	182
	183
	185
	186
	188
	189
	190
	191
	192
	193
	195
	196
	197
	198
	199
	200
	201
	202
	203
	204
	205
	206
	207
	209
	213
	214
	215
	216
	219
-264	
	266
-298	
	▶678
298-5101	27
	29
	31
	54
	57
	58
	66
	91
	129
	149
	151
	153
	162
	169
	172
	177
	185
	▶648
298-5102	27
	29
	31
	66
	129
	149
	151
	153
	172
	▶647
298-5105	1
	2
	7
	12
	15
	16
	17
	18
	19
	21
	22
	24
	25
	28
	30
	31
	33
	35
	36
	38
	40
	42
	44
	46
	47
	48
	49
	51
	54
	57
	58
	59
	61
	63
	64
	66
	68
	70
	72
	74
	76
	77
	78
	80
	81
	83
	84
	87
	89
	90
	91
	93
	94
	96
	98
	100
	102
	103
	104
	105
	106
	107
	109
	110
	111
	112
	114
	116
	117
	118
	119
	122
	123
	125
	126
	128
	129
	131
	132
	133
	134
	135
	136
	137
	139
	141
	142
	143
	145
	147
	149
	151
	153
	155
	156
	158
	159
	161
	162
	164
	166
	168
	169
	170
	171
	172
	174
	176
	177
	178
	180
	182
	183
	185
	186
	188
	189
	190
	191
	192

▶ PRIMARY REFERENCE

PART NUMBER INDEX

Part	Page
	191
	192
	193
	195
-220	
	224
	225
	226
	228
	229
	230
	231
	232
	233
	234
	235
	243
	244
	246
	247
	248
	250
	251
	252
	253
	254
	257
	259
	262
	263
	266
	267
	269
	271
	272
	273
	274
	275
	276
	279
	280
	281
	283
	284
	287
	292
	296
	297
	▶714
	▶716
	▶718
	▶720
298-5107	11
	21
	25
	27
	29
	72
	128
	201
	202
	229
	230
	251
	254
	263
	267
	281
	296
	▶685
298-5108	25
	27
	29
	31
	147
	263
	296
	▶701
298-5109	27
	29
	254
	267
	▶1556
298-5110	7
	12
	16
	17
	18
	19
	21
	24
	25
	27
	29
	31
	33
	35
	36
	38
	40
	42
	44
	46
	47
	48
	49
	51
	54
	57
	58
	70
	74
	76
	77
	78
	80
	81
	91
	93
	98
	100
	102
	105
	106
	107
	109
	110
	111
	118
	121
	122
	125
	132
	133
	135
	147
	149
	155
	156
	158
	159
	162
	164
	169
	170
	171
	176
	177
	178
	182
	186
	188
	189
	191
	192
	193
	195
	199
	200
	201
	203
	204
	205
	206
	207
	209
	213
	214
	215
	216
	217
	218
	219
	220
	224
	225
	229
	231
	232
	233
	234
	235
	243
	244
	246
	247
	248
	250
	251
	252
	253
	257
	259
	262
	263
	266
	269
	272
	274
	276
	279
	280
	281
	287
	292
	296
	297
	▶475
298-5111	7
	12
	16
	17
	18
	19
	21
	24
	25
	27
	29
	31
	33
	35
	36
	38
	40
	42
	44
	46
	47
	48
	49
	51
	54
	57
	58
	70
	74
	76
	77
	81
	93
	98
	100
	102
	105
	106
	107
	109
	110
	111
	118
	121
	122
	128
	132
	135
	147
	149
	155
	156
	159
	162
	169
	170
	171
	172
	176
	177
	178
	182
	186
	188
	189
	195
	199
	200
	204
	205
	206
	209
	213
	215
	216
	217
	218
	220
	224
	225
	229
	231
	232
	233
	234
	243
	244
	246
	247

▶ PRIMARY REFERENCE

PART NUMBER INDEX

Part	Page
	248
	250
	251
	259
	263
	269
	272
	274
	279
	280
	287
	292
	296
	297
	▶332
298-5112	3
	7
	8
	10
	11
	12
	14
	16
	17
	19
	21
	22
	23
	25
	27
	29
	31
	38
	42
	44
	48
	49
	51
	55
	70
	72
	74
	76
	77
	80
	81
	83
	84
	85
	87
	89
	90
	91
	93
	94
	102
	103
	105
	106
	109
	110
	114
	117
	118
	119
	121
	122
	123
	125
	126
	129
	131
	133
	135
	136
	147
	151
	153
	158
	159
	161
	164
	169
	170
	171
	172
	176
	177
	178
	180
	182
	183
	185
	189
	193
	197
	198
	199
	200
	201
	202
	203
	204
	205
	206
	214
	217
	218
	219
	221
	223
	224
	225
	226
	227
	228
	229
	230
	231
	232
	235
	236
	237
	238
	239
	240
	241
	242
	251
	254
	258
	260
	262
	263
	264
	266
	267
	270
	271
	273
	274
	275
	277
	278
	280
	281
	283
	284
	285
	286
	287
	288
	290
	291
	293
	294
	296
	298
	▶681
298-5113	28
	30
	31
	129
	149
	186
	216
	228
	273
	▶791
	▶794
	▶797
298-5116	1
	2
	11
	21
	25
	27
	29
	31
	69
	76
	80
	118
	129
	176
	177
	178
	180
	182
	183
	189
	195
	197
	198
	205
	206
	208
	210
	211
	212
	228
	229
	251
	253
	254
	257
	263
	267
	273
	296
	▶774
298-5120	27
	29
	31
	33
	35
	36
	38
	40
	42
	44
	46
	47
	48
	49
	51
	52
	55
	59
	61
	63
	64
	68
	70
	72
	74
	77
	78
	81
	85
	▶1030
298-5123	7
	8
	10
	15
	16
	17
	18
	19
	20
	21
	24
	25
	27
	29
	31
	35
	38
	40
	46
	47
	48
	49
	51
	52
	54
	57
	58
	59
	63
	66
	68
	70
	74
	76
	77
	78
	80
	83
	84
	87
	89
	91
	93
	94
	96
	98
	100
	102
	103
	104
	105
	106
	107
	109
	110

▶ PRIMARY REFERENCE

PART NUMBER INDEX

Part	Page
	111
	112
	114
	116
	117
	118
	119
	121
	122
	123
	125
	126
	129
	131
	132
	134
	135
	136
	137
	139
	141
	142
	143
	149
	151
	155
	156
	158
	161
	164
	166
	170
	171
	172
	174
	176
	177
	178
	183
	185
	186
	188
	190
	191
	192
	193
	195
	196
	197
	198
	199
	200
	201
	203
	205
	206
	207
	209
	213
	214
	215
	216
	217
	218
	219
	220
	221
	224
	225
	226
	227
	228
	229
	231
	232
	233
	234
	235
	243
	244
	246
	247
	248
	249
	250
	251
	252
	253
	254
	255
	256
	257
	259
	261
	262
	263
	266
	267
	269
	270
	271
	272
	273
	274
	276
	278
	279
	280
	282
	285
	287
	289
	290
	291
	292
	295
	296
	297
	►1009
	1010
	1011
298-5125	1
	2
	3
	8
	12
	14
	15
	16
	17
	18
	21
	22
	23
	24
	25
	27
	29
	31
	33
	35
	38
	40
	42
	49
	52
	54
	55
	57
	58
	59
	61
	66
	69
	70
	72
	78
	81
	83
	84
	85
	91
	93
	94
	96
	98
	105
	106
	107
	110
	112
	114
	118
	119
	121
	122
	123
	126
	128
	129
	131
	132
	137
	139
	141
	143
	145
	149
	151
	153
	155
	159
	161
	162
	164
	166
	168
	169
	176
	177
	178
	183
	186
	193
	195
	196
	197
	198
	201
	202
	204
	205
	206
	208
	209
	210
	211
	212
	213
	214
	215
	216
	217
	218
	220
	221
	223
	224
	225
	226
	227
	228
	229
	230
	233
	234
	236
	237
	238
	239
	240
	241
	242
	243
	244
	245
	246
	247
	248
	250
	251
	253
	254
	255
	256
	257
	258
	259
	260
	261
	262
	263
	264
	267
	269
	270
	271
	272
	273
	274
	277
	279
	281
	282
	286
	288
	289
	293
	294
	296
	297
	298
	►1586
298-5127	11
	21
	25
	27
	29
	66
	72
	81
	85
	128
	186
	201
	202

► PRIMARY REFERENCE

PART NUMBER INDEX

Part	Page	Part	Page	Part	Page	Part	Page
	229		103		217		51
	230		104		218		52
	251		107		219		54
	254		109		220		55
	263		110		221		57
	267		111		222		58
	281		112		223		59
	296		114		226		61
	►511		116	-264			63
298-5128	1		117		266		64
	2		118		267		66
	3		119		268		68
	5		121		269		69
	7		122		270		70
	8		125		272		72
	14		126		273		74
	15		128		274		76
	16		129		276		77
	17		131		277		78
	18		132		278		80
	19		133		279		81
	20		134		280		83
	21		135		281		84
	22		136		282		85
	23		137		285		87
	24		141		286		89
	25		142		287		90
	27		143		288		91
	29		145		289		93
	31		147		290		94
	33		149		291		96
	35		151		292		98
	36		153		293		100
	38		155		294		102
	40		156		295		103
	42		158		296		104
	44		159		297		105
	46		161		298		106
	47		164		►680		107
	48		168	298-5129	1		109
	49		169		2		110
	51		170		3		111
	52		174		5		112
	54		176		7		114
	55		177		8		116
	57		178		10		117
	58		185		11		118
	59		186		12		119
	61		188		14		121
	63		190		15		122
	64		191		16		123
	66		192		17		125
	68		193		18		126
	69		195		19		128
	70		196		20		129
	72		197		21		131
	74		198		22		132
	77		199		23		133
	78		200		24		134
	80		201		25		135
	81		202		27		136
	83		204		29		137
	84		205		31		139
	85		206		33		141
	87		207		35		142
	89		208		36		143
	90		209		38		145
	91		210		40		147
	93		211		42		149
	94		212		44		151
	96		213		46		153
	98		214		47		155
	100		215		48		156
	102		216		49		158

► PRIMARY REFERENCE

PART NUMBER INDEX

Part	Page	Part	Page	Part	Page	Part	Page
	159		72		193		17
	161		74		195		18
	162		76		197		20
	164		78		198		21
	166		80		199		22
	168		82		200		23
	169		83		201		24
	170		84		202		25
	171		87		203		27
	172		89		204		29
	174		90		205		31
	176		91		206		33
	177		93		207		35
	178		94		209		36
	180		96		213		38
	182		98		214		40
	183		100		215		42
	185		102		216		44
	186		103		219		46
	188		104		220		47
	189		105		221		48
	190		106		223		49
	191		107		224		51
	192		109		225		52
	193		110		226		54
	195		111		227		55
-264			112		228		57
	266		114		229		58
-298			116		230		59
	▶629		117		231		61
	▶630		118		232		63
298-5130	7		119		233		64
	9		122		234		68
	10		123		235		69
	11		125		238		72
	12		127		239		74
	14		128		240		76
	16		129		241		78
	17		131		242		80
	18		132		243		81
	19		133		244		83
	20		134		246		84
	21		135		247		85
	22		136		248		87
	23		137		249		89
	24		139		250		90
	25		141		251		93
	27		142		252		94
	30		143		253		96
	31		147		254		98
	33		149		255		100
	35		151		256		102
	36		153		257		103
	38		155		258		104
	40		156		259		105
	42		158		260		106
	44		159		261		107
	46		161		262		109
	47		162		263		110
	48		164		266		111
	49		166		267		112
	51		169		269		114
	52		170	-297			116
	54		171		▶1604		117
	55		176	298-5131	1		118
	57		177		2		119
	58		178		3		121
	59		180		7		122
	61		182		8		123
	63		186		10		125
	64		188		11		126
	66		189		12		131
	68		191		14		132
	71		192		16		133

▶ PRIMARY REFERENCE

PART NUMBER INDEX

Part	Page	Part	Page	Part	Page	Part	Page
	134		248		15		208
	135		249		16		213
	136		250		17		214
	137		251		18		215
	139		252		19		217
	141		253		20		218
	142		254		23		220
	143		255		24		221
	155		256		25		222
	156		257		29		223
	158		258		40		224
	159		259		46		225
	161		260		49		226
	164		261		51		231
	166		263		54		236
	169		264		57		237
	170		266		59		238
	176		267		66		239
	177		269		68		240
	178		270		70		241
	180		271		74		242
	182		272		76		243
	188		274		77		246
	189		275		78		248
	191		276		84		249
	192		277		89		250
	193		278		91		252
	195		279		93		253
	197		280		94		254
	198		282		96		255
	199		283		98		256
	200		284		100		257
	201		285		102		258
	202		286		103		260
	203		287		104		262
	204		288		105		264
	205		289		106		267
	206		290		107		268
	207		291		109		269
	208		292		110		270
	209		293		111		271
	210		294		112		272
	211		295		114		274
	212		296		116		277
	213		297		117		282
	215		298		118		285
	217		▶632		119		286
	218	298-5771	22		121		287
	219		25		122		288
	220		27		123		292
	221		29		126		293
	223		31		131		294
	224		169		139		295
	225		176		147		296
	226		177		151		297
	227		178		166		298
	229		197		168		▶400
	230		198		170		▶401
	231		201		174	298-5888	3
	232		204		176		5
	233		205		185		7
	234		206		188		8
	235		263		189		14
	236		296		190		15
	237		▶514		191		16
	238	298-5866	434		195		17
	239	298-5883	131		196		18
	240		203		198		19
	241		226		199		20
	242	298-5887	3		200		23
	243		5		201		24
	244		7		203		25
	246		8		205		29
	247		14		207		40

▶ PRIMARY REFERENCE

PART NUMBER INDEX

Part	Page
	46
	49
	51
	54
	57
	59
	66
	68
	70
	74
	76
	77
	78
	84
	89
	91
	93
	94
	96
	98
	100
	102
	103
	104
	105
	106
	107
	109
	110
	111
	112
	114
	116
	117
	118
	119
	121
	122
	123
	126
	131
	139
	147
	151
	166
	168
	170
	174
	176
	185
	188
	189
	190
	191
	195
	196
	198
	199
	200
	201
	203
	205
	207
	208
	213
	214
	215
	217
	218
	220
	221
	222
	223
	224
	225
	226
	231
	236
	237
	238
	239
	240
	241
	242
	243
	246
	248
	249
	250
	252
	253
	254
	255
	256
	257
	258
	260
	262
	264
	267
	268
	269
	270
	271
	272
	274
	277
	282
	285
	286
	287
	288
	292
	293
	294
	295
	296
	297
	298
	▶380
	▶381
298-5889	3
	5
	7
	8
	14
	15
	16
	17
	18
	19
	20
	23
	24
	25
	29
	40
	46
	49
	51
	54
	57
	59
	66
	68
	70
	74
	76
	77
	78
	84
	89
	91
	93
	94
	96
	98
	100
	102
	246
	248
	249
	250
	252
	253
	254
	255
	256
	257
	258
	260
	262
	264
	267
	268
	269
	270
	271
	272
	274
	277
	282
	285
	286
	287
	288
	292
	293
	294
	295
	296
	297
	298
	▶621
	▶623
298-5890	3
	5
	7
	8
	14
	15
	16
	17
	18
	19
	20
	23
	24
	25
	29
	40
	46
	49
	51
	54
	57
	59
	66
	68
	70
	74
	76
	77
	78
	84
	89
	91
	93
	94
	96
	98
	100
	102

▶ PRIMARY REFERENCE

PART NUMBER INDEX

Part	Page
	103
	104
	105
	106
	107
	109
	110
	111
	112
	114
	116
	117
	118
	119
	121
	122
	123
	126
	131
	139
	147
	151
	166
	168
	170
	174
	176
	185
	188
	189
	190
	191
	195
	196
	198
	199
	200
	201
	203
	205
	207
	208
	213
	214
	215
	217
	218
	220
	221
	222
	223
	224
	225
	226
	231
	236
	237
	238
	239
	240
	241
	242
	243
	246
	248
	249
	250
	252
	253
	254
	255
	256
	257
	258
	260
	262
	264
	267
	268
	269
	270
	271
	272
	274
	277
	282
	285
	286
	287
	288
	292
	293
	294
	295
	296
	297
	298
	▶419
298-5891	4
	5
	7
	9
	14
	15
	16
	17
	18
	19
	20
	23
	24
	25
	30
	46
	49
	51
	54
	57
	59
	66
	68
	71
	74
	76
	77
	78
	84
	89
	91
	93
	94
	96
	98
	100
	102
	103
	104
	105
	106
	107
	109
	110
	111
	112
	114
	116
	117
	118
	119
	121
	122
	123
	127
	131
	139
	147
	151
	166
	168
	170
	174
	176
	185
	188
	189
	190
	191
	195
	196
	198
	199
	200
	201
	203
	205
	207
	208
	213
	214
	215
	217
	218
	220
	221
	222
	223
	224
	225
	226
	231
	236
	237
	238
	239
	240
	241
	242
	243
	246
	248
	249
	250
	252
	253
	254
	255
	256
	257
	258
	260
	262
	264
	267
	268
	269
	270
	271
	272
	274
	277
	282
	285
	286
	287
	288
	292
	293
	294
	295
	296
	297
	298
	▶661
298-5892	3
	5
	7
	8
	14
	15
	16
	17
	18
	19
	20
	23
	24
	25
	29
	40
	46
	49
	51
	54
	57
	59
	66
	68
	70
	74
	76
	77
	78
	84
	89
	91
	93
	94
	96
	98
	100
	102
	103
	104
	105
	106
	107
	109
	110
	111
	112
	114
	116
	117
	118
	119
	121
	122
	123
	126
	131
	139
	147
	151
	166
	168
	170

▶ PRIMARY REFERENCE

PART NUMBER INDEX

Part	Page
	174
	176
	185
	188
	189
	190
	191
	195
	196
	198
	199
	200
	201
	203
	205
	207
	208
	213
	214
	215
	217
	218
	220
	221
	222
	223
	224
	225
	226
	231
	236
	237
	238
	239
	240
	241
	242
	243
	246
	248
	249
	250
	252
	253
	254
	255
	256
	257
	258
	260
	262
	264
	267
	268
	269
	270
	271
	272
	274
	277
	282
	285
	286
	287
	288
	292
	293
	294
	295
	296
	297
	298
	▶321
298-5893	30
	131
	189
	203
	226
	▶1089
	▶1094
	▶1099
	▶1104
	▶1109
299-1601	738
	750
299-5024	512
299-5026	512
299-5030	70
	74
	77
	78
	105
	106
	131
	133
	▶643
299-5033	1
	2
	3
	5
	7
	8
	10
	12
	14
	15
	16
	17
	18
	19
	20
	23
	24
	31
	33
	35
	36
	38
	40
	42
	44
	46
	47
	48
	49
	51
	52
	54
	55
	57
	58
	59
	61
	63
	64
	68
	69
	70
	74
	76
	77
	78
	80
	83
	84
	87
	89
	90
	91
	93
	94
	96
	98
	100
	102
	103
	104
	105
	106
	107
	109
	110
	111
	112
	114
	116
	117
	118
	119
	121
	123
	125
	126
	129
	131
	132
	133
	134
	135
	136
	137
	139
	141
	142
	143
	145
	147
	149
	151
	153
	155
	156
	158
	159
	161
	162
	164
	166
	168
	170
	171
	172
	174
	180
	182
	183
	185
	188
	189
	190
	191
	192
	193
	195
	196
	199
	200
	203
	207
-228	
	231
	232
	233
	234
	235
	236
	237
	238
	239
	240
	241
	242
	243
	244
	245
	246
	247
	248
	249
	250
	252
	253
	255
	256
	257
	258
	259
	260
	261
	262
	264
	266
	268
	269
	270
	271
	272
	273
	274
	275
	276
	277
	278
	279
	280
	282
	283
	284
	285
	286
	287
	288
	289
	290
	291
	292
	293
	294
	295
	297
	298
	▶512
299-5043	185
	191
	192
	252
	276
	▶800
	▶803
299-5057	3
	12
	14
	19
	21
	23
	74

PART NUMBER INDEX

Part	Page
	126
	147
	159
	170
	171
	199
	200
	223
	229
	236
	237
	238
	239
	240
	241
	242
	251
	258
	260
	264
	275
	277
	283
	284
	286
	288
	293
	294
	298
	▶478
299-5063	3
	12
	14
	23
	126
	159
	223
	236
	237
	238
	239
	240
	241
	242
	258
	260
	264
	277
	286
	288
	293
	294
	298
	▶454
299-5067	5
	7
	10
	11
	19
	20
	36
	44
	46
	48
	51
	63
	64
	68
	74
	76
	77
	80
	87
	89
	90
	100
	102
	103
	104
	109
	111
	116
	117
	125
	133
	134
	135
	136
	142
	147
	156
	158
	170
	171
	172
	174
	180
	182
	185
	188
	189
	190
	191
	192
	199
	200
	203
	219
	222
	231
	232
	235
	249
	252
	266
	268
	275
	276
	278
	280
	283
	284
	285
	287
	290
	291
	292
	295
	▶1591
299-5069	74
	77
	105
	106
	131
	133
	224
	225
	226
	281
	▶426
299-5071	3
	70
	81
	236
	237
	264
	298
	▶670
299-5075	5
	7
	10
	11
	19
	20
	36
	44
	46
	47
	48
	51
	63
	64
	68
	74
	76
	77
	80
	87
	89
	90
	100
	102
	103
	104
	109
	111
	116
	117
	125
	133
	134
	135
	136
	142
	147
	156
	158
	170
	171
	172
	174
	180
	182
	185
	188
	189
	190
	191
	192
	199
	200
	203
	219
	222
	231
	232
	235
	249
	252
	266
	268
	275
	276
	278
	280
	283
	284
	285
	287
	290
	291
	292
	295
	▶1587
299-5078	16
	17
	70
	76
	77
	118
	122
	129
	133
	147
	149
	172
	180
	182
	214
	216
	228
	262
	273
	▶686
299-5082	21
	33
	35
	36
	38
	40
	42
	44
	46
	48
	49
	51
	52
	54
	55
	57
	58
	59
	61
	63
	64
	68
	77
	81
	83
	84
	87
	89
	90
	149
	161
	172
	174
	183
	190
	191
	192
	195
	202
	207
	209
	213
	216
	227
	229
	230
	234
	246
	247
	250
	251
	252

▶ PRIMARY REFERENCE

PART NUMBER INDEX

Part	Page
	253
	254
	257
	267
	276
	▶713
299-5092	77
	172
	▶1606
	▶1607
299-5112	74
	133
	▶1558
299-5125	171
	▶515
299-5167	121
	201
	217
	218
	▶784
299-5175	121
	201
	217
	218
	▶537
	▶539
299-5511	416
299-7879	1619
299-8229	998
	1001
	1002
	1004
	1005
	1006
	1007
	1008
	1010
	1011
	1028
	1029

3

Part	Page
300-4415	1594
300-5067	▶66
300-5078	▶68
300-5079	▶69
300-5080	▶70
300-6520	791
	794
	797
	800
	806
	809
	812
	815
	818
	821
	824
	827
	830
	833
	836
	839
	842
	845
	848
	851
	854
	857
	861
	865
	869
	872
	875
	878
	881
	884
	887
	891
	896
	899
	902
	905
	908
	911
	914
	917
	920
	923
	926
	929
	932
	935
	938
	943
	948
	951
	954
	957
	960
	964
	968
	971
	974
	977
	980
	983
	986
	989
	992
	995
300-6714	1069
	1074
	1079
	1084
	1094
	1099
	1104
	1109
	1119
	1124
	1129
	1134
	1139
	1144
	1149
	1159
	1164
	1169
	1174
	1184
	1189
	1194
	1199
	1204
	1209
	1214
	1219
	1224
	1229
	1234
	1239
	1244
	1248
	1253
	1258
	1268
	1273
	1283
	1288
	1293
	1298
	1303
	1308
	1313
	1318
	1328
	1333
	1338
	1343
	1353
	1358
	1363
	1368
	1373
	1378
	1383
	1388
	1393
	1398
	1403
	1408
	1413
	1418
	1423
	1428
	1433
	1438
	1443
	1448
	1453
	1458
	1463
	1468
	1473
	1478
	1483
	1488
	1493
	1498
	1508
	1513
	1518
	1525
	1530
	1535
	1541
	1544
	1547
301-8234	47
	52
	63
	132
	134
	137
	139
	141
	142
	143
	145
	149
	155
	156
	162
	168
	191
	192
	195
	196
	207
	279
	289
301-8235	35
	47
	52
	63
	132
	134
	137
	141
	142
	143
	145
	149
	155
	156
	216
	233
	244
	245
	259
	261
	276
	279
	289
	▶1114
	▶1119
	▶1124
	▶1129
301-8236	5
	8
	15
	18
	20
	24
	33
	35
	36
	40
	46
	47
	52
	59
	61
	63
	64
	68
	96
	98
	100
	104
	107
	111
	112
	116
	129
	132
	134
	137
	139
	141
	142
	143
	145
	149
	155
	156
	162
	168
	191
	192
	195
	196
	207

▶ PRIMARY REFERENCE

PART NUMBER INDEX

Part	Page
	215
	216
	220
	222
	233
	243
	244
	245
	248
	249
	252
	253
	255
	256
	257
	259
	261
	268
	269
	272
	276
	279
	282
	289
	292
	295
	297
	▶479
301-8237	5
	7
	8
	10
	15
	18
	19
	24
	33
	35
	36
	38
	40
	42
	44
	46
	47
	48
	49
	51
	52
	55
	59
	61
	63
	64
	68
	83
	84
	87
	89
	90
	93
	94
	96
	98
	100
	102
	103
	104
	107
	109
	110
	111
	112
	114
	116
	117
	123
	129
	132
	134
	135
	136
	137
	141
	142
	143
	145
	149
	155
	156
	162
	168
	170
	188
	189
	193
	195
	196
	199
	200
	203
	207
	215
	216
	220
	221
	222
	228
	231
	232
	233
	243
	244
	245
	248
	249
	253
	255
	256
	257
	259
	261
	268
	269
	270
	271
	272
	273
	274
	278
	279
	280
	282
	285
	287
	289
	290
	291
	292
	295
	297
	▶455
301-8238	11
	33
	35
	36
	38
	40
	42
	44
	46
	47
	48
	49
	51
	52
	55
	59
	61
	63
	64
	68
	83
	84
	87
	89
	90
	161
	227
	▶427
301-8239	8
	18
	24
	33
	35
	36
	40
	46
	47
	52
	54
	57
	58
	59
	61
	63
	64
	66
	68
	78
	96
	98
	100
	104
	107
	111
	112
	116
	132
	134
	137
	139
	141
	142
	143
	149
	155
	156
	162
	166
	188
	191
	195
	207
	209
	213
	215
	216
	220
	233
	234
	243
	244
	246
	247
	248
	249
	250
	252
	255
	256
	259
	261
	269
	272
	276
	279
	282
	289
	292
	295
	297
	▶541
	▶543
301-8240	5
	7
	8
	12
	15
	18
	19
	20
	24
	33
	35
	36
	38
	40
	42
	44
	46
	47
	48
	49
	51
	52
	55
	59
	61
	63
	64
	68
	70
	72
	74
	77
	83
	84
	87
	89
	90
	93
	94
	96
	98
	100
	102
	103
	104
	107
	109
	110
	111
	112
	114
	116

▶ PRIMARY REFERENCE

PART NUMBER INDEX

Part	Page
	117
	119
	125
	129
	132
	134
	135
	136
	137
	141
	142
	143
	155
	156
	158
	159
	164
	170
	174
	185
	188
	193
	195
	196
	199
	200
	207
	214
	215
	219
	220
	221
	228
	231
	232
	233
	235
	243
	244
	248
	249
	253
	255
	256
	257
	259
	261
	262
	266
	269
	270
	272
	273
	274
	278
	279
	280
	281
	282
	285
	287
	289
	290
	291
	292
	295
	297
	▶341
	▶344
301-8241	5
	8
	15
	18
	20
	24
	33
	35
	36
	40
	46
	47
	52
	54
	57
	58
	59
	61
	63
	64
	66
	68
	78
	96
	98
	100
	104
	107
	111
	112
	116
	132
	134
	137
	139
	141
	142
	143
	145
	149
	155
	156
	162
	166
	168
	174
	186
	188
	190
	191
	192
	195
	196
	207
	209
	213
	215
	216
	220
	222
	233
	234
	243
	244
	245
	246
	247
	248
	249
	250
	252
	253
	255
	256
	257
	259
	261
	268
	269
	272
	276
	279
	282
	289
	292
	295
	297
	▶697
301-8242	11
	33
	35
	36
	38
	40
	42
	44
	46
	47
	48
	49
	51
	52
	55
	59
	61
	63
	64
	68
	83
	84
	87
	89
	90
	119
	161
	▶644
301-8243	1
	2
	3
	5
	7
	8
	10
	12
	14
	15
	18
	19
	20
	22
	23
	24
	31
	33
	35
	36
	38
	40
	42
	44
	46
	47
	48
	49
	51
	52
	54
	55
	57
	58
	59
	61
	63
	64
	66
	68
	69
	74
	78
	80
	81
	83
	84
	85
	87
	89
	90
	91
	93
	94
	96
	98
	100
	102
	103
	104
	105
	106
	107
	109
	110
	111
	112
	114
	116
	117
	119
	121
	123
	125
	126
	131
	132
	134
	135
	136
	137
	139
	141
	142
	143
	145
	151
	153
	155
	156
	158
	159
	161
	162
	164
	166
	168
	169
	170
	171
	174
	176
	177
	178
	183
	185
	186
	188
	189
	190
	191

▶ PRIMARY REFERENCE

PART NUMBER INDEX

Part	Page	Part	Page	Part	Page	Part	Page
	192		282		145		24
	193		283		149		35
	195		284		155		38
	196		285		156		40
	197		286		162		46
	198		287		166		47
	199		288		168		48
	200		289		174		49
	203		290		186		51
	204		291		188		52
	205		292		190		54
	206		293		191		57
	207		294		192		58
	208		295		195		59
	209		297		196		63
	210		298		207		68
	211		▶687		208		74
	212	301-8244	11		209		77
	213		20		210		78
	215		36		211		83
	217		44		212		84
	218		46		213		87
	219		47		215		89
	220		48		216		91
	221		51		220		93
	222		63		222		94
	223		64		233		96
	224		68		234		98
	225		87		243		100
	226		89		244		102
	227		90		245		103
	231		▶1559		246		105
	232	301-8245	1		247		106
	233		2		248		107
	234		5		249		111
	235		8		250		112
	236		15		252		114
	237		18		253		117
	238		20		255		119
	239		24		256		125
	240		33		257		126
	241		35		259		134
	242		36		261		135
	243		40		268		136
	244		46		269		137
	245		47		272		139
	246		52		276		145
	247		54		279		149
	248		57		282		151
	249		58		289		155
	250		59		292		156
	252		61		295		158
	253		63		297		161
	255		64		▶317		164
	256		66	301-8246	46		166
	257		68		47		168
	258		69		48		170
	259		78		51		185
	260		96		63		188
	261		98		68		191
	264		100		87		192
	266		104		89		193
	268		107		▶806		196
	269		111		▶809		203
	270		112	301-8248	3		209
	271		116		5		213
	272		128		7		216
	274		132		10		219
	275		134		14		220
	276		137		15		221
	277		139		18		222
	278		141		19		223
	279		142		20		224
	280		143		23		225

▶ PRIMARY REFERENCE

PART NUMBER INDEX

Part	Page
	227
	231
	232
	233
	234
	235
	237
	240
	241
	242
	243
	244
	245
	246
	247
	248
	249
	250
	252
	255
	256
	258
	259
	260
	261
	264
	266
	268
	269
	270
	271
	272
	274
	276
	277
	278
	279
	280
	282
	285
	286
	287
	288
	289
	290
	291
	292
	293
	294
	295
	297
	298
	►776
301-8250	33
	35
	36
	38
	40
	42
	44
	46
	47
	48
	49
	51
	52
	55
	59
	61
	63
	64
	68
	70
	76
	81
	83
	84
	87
	89
	90
	102
	119
	125
	129
	133
	149
	161
	183
	195
	207
	214
	216
	219
	227
	228
	235
	253
	257
	262
	273
	281
	►633
301-8251	5
	7
	8
	12
	15
	16
	17
	18
	19
	20
	21
	22
	24
	33
	35
	36
	38
	40
	42
	44
	46
	47
	48
	49
	51
	52
	54
	55
	57
	58
	59
	61
	63
	64
	66
	68
	70
	76
	78
	83
	84
	87
	89
	90
	93
	94
	96
	98
	100
	102
	103
	104
	105
	106
	107
	109
	110
	111
	112
	114
	116
	117
	118
	119
	121
	122
	125
	128
	129
	131
	132
	134
	135
	136
	137
	141
	142
	143
	145
	147
	153
	155
	156
	159
	161
	162
	166
	168
	169
	170
	174
	176
	177
	178
	183
	188
	190
	191
	192
	193
	196
	197
	198
	199
	200
	201
	202
	204
	205
	206
	207
	209
	213
	214
	215
	217
	218
	219
	220
	221
	222
	224
	225
	226
	227
	228
	229
	230
	231
	232
	233
	234
	235
	243
	244
	245
	246
	247
	248
	249
	250
	251
	252
	253
	255
	256
	257
	259
	261
	262
	268
	269
	270
	272
	273
	274
	276
	278
	279
	280
	281
	282
	285
	287
	289
	290
	291
	292
	295
	297
	►1013
	►1014
301-8253	341
	344
	351
	354
	363
	375
301-8254	812
301-8255	806
	809
	812
	815
	818
	830
	833
	836
	839
	842
	845
	857
	861
	865
	869

► PRIMARY REFERENCE

PART NUMBER INDEX

Part	Page
	872
	881
	884
	887
	891
	896
	899
	908
	911
	914
	917
	926
	929
	932
	935
	938
	943
	960
	964
	968
	971
	986
	989
	992
	995
301-8256	806
	809
	812
	815
	818
	830
	833
	836
	839
	842
	845
	857
	861
	865
	869
	872
	881
	884
	887
	891
	896
	899
	908
	911
	914
	917
	926
	929
	932
	935
	938
	943
	960
	964
	968
	971
	986
	989
	992
	995
301-8257	812
301-8258	812
302-0581	800
	803
	824
	827
	857
	861
	865
	869
	872
	881
	884
	887
	891
	896
	899
	902
	905
	908
	911
	914
	917
	920
	923
	926
	929
	932
	935
	938
	943
	948
	951
	954
	957
	960
	964
	968
	971
	974
	977
	980
	983
	986
	989
	992
	995
303-2124	569
303-2160	730
	738
	742
	746
	750
	754
	758
	762
	769
303-3120	▶88
303-4615	14
	19
	23
	49
	51
	70
	76
	84
	89
	91
	93
	94
	102
	103
	105
	109
	110
	114
	117
	119
	123
	126
	147
	170
	185
	199
	200
	214
	223
	224
	238
	239
	240
	241
	242
	254
	258
	260
	262
	267
	271
	274
	277
	285
	286
	288
	293
	294
	▶1134
	▶1139
	▶1144
	▶1149
303-4618	7
	8
	10
	38
	42
	44
	48
	49
	51
	55
	76
	80
	83
	84
	87
	89
	90
	93
	94
	102
	103
	109
	110
	114
	117
	119
	123
	125
	133
	135
	136
	153
	158
	161
	164
	172
	183
	189
	193
	203
	219
	221
	227
	228
	231
	232
	235
	254
	266
	267
302-4332	299
302-6780	301
	303
302-8563	▶72
302-8564	▶74
302-8565	▶76
302-8568	▶77
302-8573	▶78
302-8575	▶80
302-8577	▶81
302-8579	▶83
302-8580	▶84
302-8581	▶85
302-8582	▶87
303-2116	791
	794
	797
	800
	803
	806
	809
	812
	815
	818
	821
	824
	827
	830
	833
	836
	839
	842
	845
	848
	851
	854
	857
	861
	865
	869
	872
	875
	878
	881

▶ PRIMARY REFERENCE

PART NUMBER INDEX

Part	Page
	270
	271
	273
	274
	278
	280
	285
	287
	290
	291
	▶481
303-4619	9
	33
	35
	38
	40
	42
	49
	52
	55
	59
	61
	78
	81
	83
	84
	91
	94
	96
	98
	107
	110
	112
	114
	119
	123
	127
	132
	137
	139
	141
	149
	153
	▶1592
303-4621	33
	35
	38
	40
	42
	49
	52
	55
	59
	61
	83
	84
	119
	▶1560
303-4622	35
	38
	40
	49
	52
	59
	83
	84
	121
	201
	217
	218
	▶812
	▶815
	▶818
303-5767	81
	85
	185
	▶483
303-5768	121
	185
	217
	218
	▶456
303-5769	85
	▶1593
303-5770	85
	185
	▶428
303-5771	85
	185
	▶545
	▶547
303-5772	1
	2
	21
	22
	69
	81
	85
	128
	171
	197
	198
	208
	210
	211
	212
	229
	251
	▶347
	▶349
303-5773	54
	57
	58
	149
	171
	172
	189
	216
	▶671
303-5774	21
	85
	183
	229
	251
	273
	▶1561
303-5775	70
	191
	201
	214
	252
	262
	276
	281
	▶300
303-5776	1
	2
	21
	69
	197
	198
	229
	251
	▶821
303-5777	66
	70
	186
	214
	262
	▶786
303-5778	85
	▶517
303-5779	10
	76
	105
	106
	162
	166
	172
	183
	224
	225
	275
	283
	284
	▶682
303-5780	3
	10
	11
	14
	23
	72
	74
	77
	80
	81
	85
	91
	123
	126
	151
	158
	164
	171
	172
	180
	182
	185
	186
	189
	203
	223
	236
	237
	238
	239
	240
	241
	242
	258
	260
	264
	266
	271
	275
	277
	283
	284
	286
	288
	293
	294
	298
	▶999
303-5781	347
	349
303-5782	347
303-5784	675
303-5786	875
	902
	948
	974
303-5787	821
	875
	878
	902
	905
	948
	951
	974
	977
303-5788	821
	875
	878
	902
	905
	948
	951
	974
	977
303-5791	791
	848
	948
	951
303-5792	791
	794
	800
	806
	815
	824
	830
	836
	842
	848
	851
	857
	869
	875
	881
	896
	902
	908
	914
	920
	926
	932
	938
	948
	954
	960
	968
	974
	980
	986
303-5793	821
	875
	878
	902
	905
	948
	951
	974
	977
303-5795	1593
303-8449	31
	91
	151
	153
	162
	▶1563
304-0721	492
	506
304-0725	57
	213
	246
	▶1154

PART NUMBER INDEX

Part	Page
	▶1159
	▶1164
	▶1169
	▶1174
304-0726	▶429
304-0727	3
	8
	10
	11
	14
	20
	23
	52
	55
	59
	61
	63
	64
	68
	83
	84
	87
	89
	90
	94
	96
	103
	104
	112
	114
	116
	117
	126
	136
	137
	143
	151
	161
	180
	193
	221
	223
	227
	236
	237
	238
	239
	240
	241
	242
	249
	255
	256
	258
	260
	261
	264
	270
	277
	278
	282
	285
	286
	288
	289
	290
	291
	293
	294
	295
	298
	▶492
304-0728	3
	8
	10
	11
	14
	20
	23
	52
	55
	59
	61
	63
	64
	68
	83
	84
	87
	89
	90
	94
	96
	103
	104
	112
	114
	116
	117
	126
	136
	137
	143
	151
	161
	180
	193
	221
	223
	227
	236
	237
	238
	239
	240
	241
	242
	249
	255
	256
	258
	260
	261
	264
	270
	277
	278
	282
	285
	286
	288
	289
	290
	291
	293
	294
	295
	298
	▶301
	▶303
304-0729	54
	57
	58
	66
	209
	213
	234
	246
	247
	250
	▶824
	▶827
304-0730	16
	54
	57
	58
	72
	77
	118
	209
	213
	234
	246
	247
	250
	▶518
304-3641	12
	22
	33
	36
	42
	44
	55
	61
	64
	72
	81
	85
	90
	133
	153
	159
	162
	169
	202
	204
	230
	275
	281
	283
	284
	▶402
	▶403
304-3642	12
	22
	33
	36
	42
	44
	55
	61
	64
	72
	81
	85
	90
	133
	153
	159
	162
	169
	202
	204
	230
	275
	281
	283
	284
	▶382
	▶383
304-3643	12
	22
	33
	36
	42
	44
	55
	61
	64
	72
	81
	85
	90
	133
	153
	159
	162
	169
	202
	204
	230
	275
	281
	▶613
	▶615
304-3645	12
	22
	33
	36
	42
	44
	55
	61
	64
	72
	81
	85
	90
	133
	153
	159
	162
	169
	202
	204
	230
	275
	281
	283
	284
	▶420
304-3647	12
	22
	33
	36
	42
	44
	55
	61
	64
	72
	82
	85
	90
	133
	153
	159
	162
	169
	202
	204
	230
	275
	281

▶ PRIMARY REFERENCE

PART NUMBER INDEX

Part	Page
	283
	284
	▶663
304-3648	12
	22
	33
	36
	42
	44
	55
	64
	72
	81
	85
	90
	133
	153
	159
	162
	169
	202
	204
	230
	275
	281
	283
	284
	▶322
304-3654	133
	153
	275
	283
	284
	▶457
304-3655	131
	226
	273
	▶1594
	▶1595
304-3656	8
	11
	123
	129
	172
	180
	182
	221
	228
	270
	271
	▶549
	▶551
304-3658	22
	81
	128
	159
	275
	281
	283
	284
	▶325
304-3663	5
	19
	66
	70
	77
	91
	128
	129
	145
	147
	151
	153
	168
	186
	214
	222
	228
	245
	262
	268
	273
	281
	▶634
	▶635
304-3687	1263
304-3689	1264
	1269
	1274
	1373
	1378
	1383
	1388
	1393
	1398
	1403
	1408
	1413
	1418
	1526
	1531
	1536
304-3692	549
	551
304-3693	549
	551
304-3695	549
	551
	571
	573
	579
	582
304-3698	549
	551
	603
	605
304-3704	905
304-5163	1604
	1615
	1617
304-5164	1611
304-5165	1607
304-5571	72
	121
	217
	218
	▶484
304-5574	3
	11
	14
	23
	78
	105
	106
	121
	123
	126
	189
	190
	201
	217
	218
	223
	224
	225
	236
	237
	238
	239
	240
	241
	242
	258
	260
	264
	271
	277
	286
	288
	293
	294
	298
	▶351
	▶354
304-5575	72
	▶645
304-5577	85
	121
	217
	218
	▶1609
	▶1611
304-6436	1
	2
	3
	5
	7
	8
	10
	11
	12
	14
	15
	16
	17
	18
	19
	20
	21
	22
	23
	24
	25
	27
	29
	31
	33
	35
	36
	38
	40
	42
	44
	46
	47
	48
	49
	51
	52
	54
	55
	58
	59
	61
	63
	64
	66
	68
	69
	70
	72
	74
	76
	77
	78
	80
	81
	83
	84
	85
	89
	90
	91
	93
	94
	96
	98
	100
	102
	103
	104
	105
	106
	107
	109
	110
	111
	112
	114
	116
	117
	118
	119
	121
	122
	123
	125
	126
	128
	129
	131
	132
	133
	134
	135
	136
	137
	139
	141
	142
	143
	145
	147
	149
	151
	153
	155
	156
	158
	159
	161
	162
	164
	166
	168
	169
	170
	171
	172
	174
	176
	177
	178
	180
	182
	183

▶ PRIMARY REFERENCE

PART NUMBER INDEX

Part	Page
	185
	186
	188
	189
	190
	191
	192
	193
	195
-264	
	266
-298	
	▶1584
304-6570	10
	11
	21
	38
	48
	80
	83
	87
	125
	129
	135
	136
	158
	161
	164
	180
	182
	183
	193
	197
	219
	227
	228
	229
	232
	235
	251
	266
	273
	278
	280
	290
	291
	▶1179
	▶1184
	▶1189
	▶1194
	▶1199
304-7189	54
	78
	191
	250
	252
	▶1204
	▶1209
	▶1214
	▶1219
304-7192	58
	192
	209
	234
	247
	▶1224
	▶1229
	▶1234
	▶1239
304-8755	16
	17
	118
	121
	122
	201
	217
	218
	▶1244
	▶1248
	▶1253
	▶1258
304-8756	66
	74
	91
	147
	151
	171
	▶458
304-8757	16
	17
	21
	76
	81
	118
	122
	133
	229
	251
	273
	▶553
	▶555
304-8758	10
	16
	17
	66
	76
	80
	118
	122
	131
	172
	186
	226
	275
	283
	284
	▶357
	▶360
304-8759	72
	▶672
304-8760	1
	2
	22
	66
	69
	72
	85
	119
	123
	131
	139
	166
	197
	198
	202
	208
	210
	211
	212
	226
	230
	254
	267
	271
	▶495
	▶497
304-8761	1
	2
	22
	66
	69
	72
	85
	119
	123
	131
	139
	166
	197
	198
	202
	208
	210
	211
	212
	226
	230
	254
	267
	271
	▶636
304-8762	3
	5
	7
	8
	10
	11
	12
	14
	15
	16
	17
	18
	19
	20
	23
	24
	66
	74
	91
	93
	94
	96
	98
	100
	102
	103
	104
	107
	109
	110
	111
	112
	114
	116
	117
	118
	119
	122
	123
	126
	132
	133
	134
	135
	136
	137
	139
	141
	142
	143
	145
	151
	153
	155
	156
	158
	159
	161
	164
	166
	168
	170
	172
	174
	180
	182
	183
	188
	189
	190
	191
	193
	195
	196
	199
	200
	202
	203
	207
	215
	220
	221
	222
	223
	227
	230
	231
	232
	233
	236
	237
	238
	239
	240
	241
	242
	243
	244
	245
	248
	249
	252
	253
	255
	256
	257
	258
	259
	260
	261
	264
	266
	268
	269
	270
	271
	272
	274
	275
	276
	277
	278
	279
	280
	282

▶ PRIMARY REFERENCE

PART NUMBER INDEX

Part	Page
	283
	284
	285
	286
	287
	288
	289
	290
	291
	292
	293
	294
	295
	297
	298
	▶790
304-8763	21
	66
	78
	131
	147
	180
	182
	226
	229
	251
	275
	283
	284
	▶519
304-8764	537
	545
	553
	571
	593
304-8766	326
	329
	357
	360
305-0471	▶89
305-0472	▶90
305-0484	▶91
305-0485	▶93
305-0486	▶94
305-0488	▶96
305-0489	▶98
305-0490	▶100
305-0634	33
	36
	61
	64
	▶1263
305-0637	33
	42
	55
	61
	▶830
	▶833
305-0640	12
	33
	36
	42
	44
	55
	61
	64
	85
	90
	133
	153
	162
	204
	▶780
305-0642	12
	22
	33
	36
	42
	44
	55
	61
	64
	72
	81
	85
	90
	128
	133
	153
	159
	162
	169
	202
	204
	230
	281
	▶1000
	1001
	1002
305-0651	1000
	1003
305-0657	830
	833
	836
	839
	908
	911
	914
	917
	938
	943
305-0659	1264
	1268
	1273
	1383
	1388
	1393
	1408
	1413
	1418
	1526
	1531
	1536
305-1948	36
	44
	64
	90
	▶836
	▶839
305-1955	42
	44
	55
	72
	81
	85
	▶1268
	▶1273
305-2166	72
	81
	85
	▶459
305-2167	72
	▶842
	▶845
305-2168	70
	214
	254
	262
	267
	281
	▶789
305-2169	72
	169
	202
	230
	▶782
305-2575	77
	106
	151
	225
	▶1278
	▶1283
	▶1288
	▶1293
	▶1298
305-2576	77
	▶485
305-2577	11
	70
	77
	214
	262
	▶460
305-2578	3
	77
	126
	275
	283
	284
	▶557
	▶559
305-2579	21
	70
	77
	129
	133
	214
	228
	229
	251
	254
	262
	267
	273
	281
	▶698
305-2580	77
	▶1565
305-2581	76
	77
	147
	▶848
	▶851
	▶854
305-2582	791
	848
305-5291	1074
	1079
	1084
	1099
	1104
	1109
	1119
	1124
	1139
	1144
	1149
	1164
	1169
	1174
	1189
	1194
	1199
	1209
	1214
	1219
	1229
	1234
	1239
	1248
	1253
	1258
	1288
	1293
	1298
	1308
	1313
	1318
	1333
	1338
	1343
	1358
	1363
	1368
	1383
	1388
	1393
	1408
	1413
	1418
	1423
	1428
	1433
	1438
	1443
	1448
	1453
	1458
	1463
	1473
	1478
	1483
	1488
	1493
	1498
	1508
	1513
	1518
	1525
	1530
	1535
	1541
	1544
	1547
	1553
	1554
	1555
305-6701	5
	8
	15
	18
	20
	24
	40
	46
	59
	68
	96
	98
	100
	104
	107
	111
	112
	116
	139

PART NUMBER INDEX

Part	Page
	166
	168
	195
	196
	207
	215
	220
	221
	222
	243
	248
	249
	253
	255
	256
	257
	268
	269
	270
	272
	282
	292
	295
	297
	▶1303
	▶1308
	▶1313
	▶1318
305-7881	1567
	1569
	1573
305-8453	34
	36
	62
	64
	128
	162
305-8454	5
	9
	15
	18
	20
	24
	40
	46
	59
	68
	96
	98
	100
	104
	107
	111
	112
	116
	139
	166
	168
	195
	196
	207
	215
	220
	221
	222
	243
	248
	249
	253
	255
	256
	257
	268
	269
305-8456	16
	17
	118
	121
	122
	201
	217
	218
305-8457	10
	11
	21
	38
	48
	80
	83
	87
	125
	130
	135
	136
	158
	161
	164
	180
	182
	183
	194
	197
	219
	227
	228
	229
	232
	235
	251
	266
	273
	278
	280
	290
	291
305-8458	4
	14
	19
	23
	49
	51
	71
	76
	84
	89
	91
	93
	94
	102
	103
	105
	109
	110
	114
	117
	119
	123
	127
	147
	170
	185
	199
	200
	214
	223
	224
	236
	237
	238
	239
	240
	241
	242
	254
	258
	260
	262
	264
	267
	271
	274
	277
	285
	286
	288
	293
	294
	298
305-8459	77
	106
	152
	225
305-8460	12
	22
	43
	44
	56
	73
	82
	85
	90
	133
	154
	159
	202
	230
	275
	281
	283
	284
305-8461	54
	78
	191
	250
	252
305-8462	58
	192
	209
	234
	247
305-8463	57
	213
	246
306-2314	20
	76
	80
	119
	125
	131
	139
	158
	161
	164
	180
	182
	183
	191
	192
	219
	226
	227
	235
	252
	254
	266
	267
	276
	▶461
306-2316	254
	267
	▶326
	▶329
306-2318	133
	139
	254
	267
	▶669
306-2319	11
	12
	171
	180
	182
	189
	▶693
	▶695
306-2320	172
	185
	▶1567
306-2321	91
	147
	151
	153
	172
	▶423
306-2323	192
	▶305
306-2328	12
	171
	▶637
306-2330	324
306-2333	326
	329
	363
	366
306-2337	670
	671
	672
	676
	677
306-5911	549
	603
306-8855	76
	81
	85
	183
	▶424
306-8856	275
	283
	284
	▶1569
306-8857	424
	648
306-8901	▶101
306-9370	▶1023
306-9377	▶1024
306-9388	▶1025
307-0425	▶102
307-0426	▶103
307-0427	▶104
307-0428	▶1

▶ PRIMARY REFERENCE

PART NUMBER INDEX

Part	Page
307-0430	▶2
307-0433	▶105
307-0438	▶106
307-2242	434
	439
	440
	447
	646
307-2805	857
	861
	865
	869
	872
	881
	884
	887
	891
	896
	899
	908
	911
	914
	917
	926
	929
	932
	935
	938
	943
	960
	964
	968
	971
	986
	989
	992
	995
307-2807	▶772
	857
	861
	887
	938
	943
307-2808	772
	773
307-2831	857
	938
	960
	986
307-2832	857
	938
307-2847	7
	74
	198
	231
	287
	▶1323
	▶1328
	▶1333
	▶1338
	▶1343
307-2848	7
	74
	198
	231
	287
307-2849	11
	22
	66
	74
	76
	78
	80
	105
	106
	129
	131
	171
	189
	197
	198
	224
	225
	226
	228
	273
	▶702
307-2850	5
	7
	10
	19
	74
	80
	100
	102
	103
	104
	109
	111
	116
	117
	125
	134
	135
	136
	142
	156
	158
	170
	172
	188
	189
	199
	200
	203
	219
	222
	231
	232
	235
	249
	266
	268
	278
	280
	285
	287
	290
	291
	292
	295
	▶857
	▶861
	▶865
307-2851	3
	126
	▶520
307-2861	74
	78
	91
	134
	151
	158
	164
	192
	266
	▶1602
307-9843	714
308-0302	70
	214
	262
	281
	▶486
308-0303	162
	281
	▶703
308-0304	70
	121
	214
	217
	218
	262
	281
	▶1571
308-0305	70
	105
	106
	119
	131
	176
	177
	178
	205
	206
	214
	224
	225
	226
	262
	▶869
	▶872
308-0307	131
	147
	171
	172
	174
	226
	▶778
308-3349	81
	▶430
308-3350	22
	82
	128
	▶875
	▶878
308-3351	22
	25
	27
	29
	81
	129
	149
	169
	176
	177
	178
	195
	197
	198
	204
	205
	206
	207
	216
	228
	253
	257
	263
	296
	▶1573
308-3378	1613
308-3394	1503
308-3395	1069
	1089
	1114
	1134
	1154
	1159
	1179
	1184
	1204
	1224
	1244
	1264
	1268
	1278
	1283
	1304
	1323
	1329
	1348
	1353
	1373
	1398
308-4145	1
	2
	69
	186
	210
	211
	212
	▶404
	▶405
308-4146	1
	2
	69
	186
	210
	211
	212
	▶384
	▶385
308-4149	1
	2
	69
	186
	210
	211
	212
	▶617
	▶619
308-4150	1
	2
	69
	186
	210
	211
	212
	▶421
308-4151	1
	2
	69
	186
	210
	211
	212
	▶665
308-4152	1
	2
	69
	186
	210
	211
	212
	▶323
308-4153	66

PART NUMBER INDEX

Part	Page
	▶1348
	▶1353
	▶1358
	▶1363
	▶1368
308-4154	67
308-4156	1
	2
	69
	208
	210
	211
	212
	▶431
308-4157	1
	2
	69
	208
	210
	211
	212
	▶561
308-4158	1
	2
	22
	66
	69
	123
	131
	197
	198
	208
	210
	211
	212
	226
	254
	267
	271
	▶673
308-4159	1
	2
	69
	128
	208
	210
	211
	212
	▶700
308-4160	1
	2
	3
	5
	7
	8
	10
	12
	69
	80
	93
	94
	96
	98
	100
	102
	103
	104
	107
	109
	110
	111
	112
	114
	116
	117
	118
	121
	122
	123
	125
	126
	128
	132
	134
	135
	136
	137
	139
	141
	142
	143
	145
	147
	155
	158
	159
	164
	166
	168
	170
	171
	174
	180
	182
	▶649
308-4162	561
308-4163	561
308-4164	561
308-4272	66
	78
	91
	151
	166
	174
	188
	190
	▶487
308-4273	78
	▶432
308-4274	78
	▶1574
308-4275	78
	80
	91
	125
	129
	133
	153
	158
	164
	193
	203
	207
	219
	228
	235
	253
	257
	266
	273
	▶306
308-4277	16
	17
	78
	118
	122
	207
	254
	267
	▶881
	▶884
308-5585	▶107
308-5586	▶109
308-5587	▶110
308-5588	▶111
308-5589	▶112
308-5590	▶114
308-5591	▶116
308-5592	▶117
308-5593	▶118
308-5601	▶119
308-5603	▶121
308-7298	1012
	1015
308-7487	1030
308-7532	875
	878
	902
	905
308-7571	1030
	1033
	1036
	1041
	1044
	1047
	1050
	1053
	1056
308-7576	1012
	1015
308-7577	1030
308-8425	1069
	1089
	1094
	1114
	1134
	1154
	1159
	1179
	1184
	1204
	1224
	1244
	1263
	1268
	1278
	1283
	1303
	1323
	1328
	1348
	1353
	1373
	1378
	1398
	1403
309-6667	646
309-6678	416
309-7555	85
	▶674
309-8006	1070
	1074
	1079
	1084
	1089
	1094
	1099
	1104
	1109
	1119
	1124
	1129
	1134
	1139
	1144
	1149
	1154
	1159
	1164
	1169
	1174
	1179
	1184
	1189
	1194
	1199
	1204
	1209
	1214
	1219
	1224
	1229
	1234
	1239
	1244
	1248
	1253
	1258
	1268
	1273
	1278
	1283
	1288
	1293
	1298
	1303
	1308
	1313
	1318
	1323
	1328
	1333
	1338
	1343
	1348
	1353
	1358
	1363
	1368
	1374
	1379
	1384
	1389
	1394
	1399
	1404
	1409
	1414
	1419
	1423
	1428
	1433
	1438
	1443
	1448
	1453
	1458
	1463
	1468
	1473
	1478
	1483
	1488
	1493
	1498
	1503

▶ PRIMARY REFERENCE

PART NUMBER INDEX

Part	Page
	1508
	1513
	1518
	1525
	1530
	1535
310-5912	1012
	1015
310-6934	▶122
310-7533	794
	797
	800
	803
	824
	827
	851
	854
	920
	923
	954
	957
	980
	983
310-7536	794
	797
	800
	803
	824
	827
	851
	854
	920
	923
	954
	957
	980
	983
310-8520	418
	419
	420
	421
	422
310-9269	415
	613
	615
	617
	619
	621
	623
	625
	627
310-9905	609
	611
311-1110	1006
311-2270	1003
	1041
311-2271	7
	8
	10
	12
	15
	16
	17
	18
	19
	20
	22
	24
	25
	27
	29
	31
	33
	35
	36
	38
	40
	42
	44
	46
	47
	48
	49
	51
	52
	54
	55
	57
	58
	59
	61
	63
	64
	66
	68
	70
	72
	74
	76
	77
	78
	80
	81
	83
	84
	85
	87
	89
	90
	91
	93
	94
	96
	98
	100
	102
	103
	104
	105
	106
	107
	109
	110
	111
	112
	114
	116
	117
	118
	119
	121
	122
	123
	125
	126
	128
	129
	131
	132
	133
	134
	135
	136
	137
	139
	141
	142
	143
	149
	151
	153
	155
	156
	158
	159
	161
	162
	164
	166
	169
	170
	171
	174
	176
	177
	178
	183
	185
	186
	188
	190
	191
	192
	193
	195
	196
	197
	198
	199
	200
	201
	203
	204
	205
	206
	207
	209
	213
	214
	215
	216
	217
	218
	219
	220
	221
	224
	225
	226
	227
	228
	231
	232
	233
	234
	235
	243
	244
	246
	247
	248
	249
	250
	252
	253
	254
	255
	256
	257
	259
	261
	262
	263
	266
	267
	269
	270
	271
	272
	273
	274
	276
	278
	279
	280
	281
	282
	285
	287
	289
	290
	291
	292
	295
	296
	297
	▶1050
	▶1053
311-2376	1001
	1003
	1006
	1010
311-2379	1003
	1373
	1378
	1398
	1403
311-3858	1069
	1074
	1079
	1084
	1094
	1099
	1104
	1109
	1119
	1124
	1129
	1134
	1139
	1144
	1149
	1159
	1164
	1169
	1174
	1184
	1189
	1194
	1199
	1204
	1209
	1214
	1219
	1224
	1229
	1234
	1239
	1244
	1248
	1253
	1258
	1268
	1273
	1283
	1288

▶ PRIMARY REFERENCE

PART NUMBER INDEX

Part	Page
	1293
	1298
	1303
	1308
	1313
	1318
	1328
	1333
	1338
	1343
	1353
	1358
	1363
	1368
	1374
	1378
	1383
	1388
	1393
	1399
	1404
	1408
	1413
	1418
	1423
	1428
	1433
	1438
	1443
	1448
	1453
	1458
	1463
	1468
	1473
	1478
	1483
	1488
	1493
	1498
	1503
	1508
	1513
	1518
	1525
	1530
	1535
311-4621	730
	734
	738
	742
	746
	750
	754
	758
	762
	766
	769
311-4623	738
	750
311-4624	730
	734
	738
	742
	746
	750
	754
	758
	762
	766
	769
311-4627	730
	734
	766
	769
311-4631	738
	742
	750
	754
311-4636	3
	5
	8
	10
	14
	23
	94
	96
	103
	104
	112
	114
	116
	117
	127
	136
	137
	143
	145
	168
	193
	221
	222
	223
	238
	239
	240
	241
	242
	245
	249
	255
	256
	258
	260
	261
	268
	270
	278
	282
	285
	288
	289
	290
	291
	294
	295
	▶730
	▶734
311-4639	7
	80
	100
	102
	103
	104
	109
	111
	116
	117
	125
	135
	136
	142
	156
	158
	170
	180
	182
	188
	199
	200
	203
	219
	231
	232
	235
	249
	266
	278
	280
	285
	287
	290
	291
	292
	295
	▶1575
311-4640	3
	8
	14
	18
	23
	93
	94
	96
	98
	100
	102
	103
	104
	126
	158
	164
	203
	221
	223
	236
	237
	238
	239
	240
	241
	242
	248
	249
	256
	258
	260
	264
	266
	270
	277
	282
	286
	288
	292
	293
	294
	295
	298
	▶704
311-4641	5
	7
	8
	10
	15
	18
	24
	93
	94
	96
	98
	100
	103
	104
	107
	109
	110
	111
	112
	114
	116
	117
	123
	132
	134
	135
	136
	137
	141
	142
	143
	145
	155
	156
	158
	164
	168
	193
	196
	203
	215
	220
	221
	222
	231
	232
	233
	243
	244
	245
	248
	249
	255
	256
	259
	261
	266
	268
	269
	270
	271
	272
	274
	278
	279
	280
	282
	285
	287
	289
	290
	291
	292
	295
	297
	▶521
311-4644	3
	5
	8
	12
	14
	18
	19
	93
	94
	96

▶ PRIMARY REFERENCE

PART NUMBER INDEX

Part	Page
	98
	100
	102
	103
	104
	107
	109
	110
	111
	112
	114
	116
	117
	119
	123
	125
	126
	139
	141
	142
	143
	145
	147
	155
	156
	158
	159
	164
	170
	188
	199
	200
	203
	219
	221
	222
	223
	235
	238
	239
	240
	241
	242
	245
	248
	249
	256
	258
	260
	266
	268
	270
	271
	282
	288
	292
	294
	295
	▶433
311-5793	17
	105
	106
	122
	224
	225
	▶638
311-5794	105
	106
	131
	224
	225
	226
	▶1576
311-5795	105

Part	Page
	106
	224
	225
	▶462
311-5796	105
	106
	224
	225
	▶488
311-6342	1069
	1074
	1079
	1084
	1089
	1094
	1099
	1104
	1109
	1119
	1124
	1129
	1134
	1139
	1144
	1149
	1159
	1164
	1169
	1174
	1184
	1189
	1194
	1199
	1204
	1209
	1214
	1219
	1224
	1229
	1234
	1239
	1244
	1248
	1253
	1258
	1268
	1273
	1283
	1288
	1293
	1298
	1303
	1308
	1313
	1318
	1328
	1333
	1338
	1343
	1353
	1358
	1363
	1368
	1374
	1378
	1383
	1389
	1394
	1399
	1404
	1409
	1414
	1419
	1423

Part	Page
	1428
	1433
	1438
	1443
	1448
	1453
	1458
	1463
	1468
	1473
	1478
	1483
	1488
	1493
	1498
	1503
	1508
	1513
	1518
	1525
	1530
	1535
311-6631	1273
	1423
	1503
311-7455	3
	12
	14
	15
	18
	23
	24
	93
	94
	96
	98
	107
	110
	112
	114
	126
	132
	137
	139
	141
	143
	145
	155
	159
	166
	168
	193
	196
	215
	220
	223
	233
	236
	237
	238
	239
	240
	241
	242
	243
	244
	245
	248
	255
	256
	258
	259
	260
	261

Part	Page
	264
	269
	272
	274
	277
	279
	282
	286
	288
	289
	293
	294
	297
	298
	▶1577
311-7456	4
	9
	15
	18
	24
	93
	94
	96
	98
	107
	110
	112
	114
	123
	127
	132
	137
	139
	141
	143
	145
	155
	161
	164
	166
	168
	193
	195
	196
	215
	220
	221
	227
	233
	243
	244
	245
	248
	255
	256
	259
	261
	269
	270
	271
	272
	274
	279
	282
	289
	297
	▶887
	▶891
311-7458	806
	809
	815
	818
	830
	833

PART NUMBER INDEX

Part	Page
	836
	839
	842
	845
	857
	861
	865
	869
	872
	881
	884
	887
	891
	896
	899
	908
	911
	914
	917
	926
	929
	932
	935
	938
	943
	960
	964
	968
	971
	986
	989
	992
	995
311-8533	21
	129
	228
	229
	251
	▶434
311-8534	91
	129
	151
	▶563
	▶565
	▶567
311-8535	266
	▶333
311-8536	91
	125
	151
	180
	182
	219
	235
	275
	283
	284
	▶705
	▶706
311-8537	19
	91
	170
	174
	188
	190
	199
	200
	▶522
311-8546	333
312-1672	7
	15
	18
	24
	93
	98
	100
	102
	107
	109
	110
	111
	123
	132
	135
	139
	155
	156
	158
	164
	166
	196
	203
	215
	220
	231
	232
	233
	243
	244
	248
	259
	266
	269
	271
	272
	274
	279
	280
	287
	292
	297
	▶738
	▶742
	▶746
312-2577	16
	17
	118
	119
	122
	▶532
312-2578	119
	139
	166
	202
	230
	▶639
312-2579	10
	119
	123
	131
	166
	172
	226
	271
	▶1603
312-4598	▶1553
312-5964	91
	151
	183
	253
	257
	▶896
	▶899
312-6022	191
	192
	252
	276
	▶523
313-1212	▶123
313-1225	▶125
313-1226	▶126
313-1663	1012
313-2455	1268
	1273
	1374
	1379
	1384
	1389
	1399
	1404
	1409
	1525
	1530
313-3514	33
	36
	61
	64
	128
	162
	▶1373
	▶1378
	▶1383
	▶1388
	▶1393
313-4350	12
	22
	42
	44
	55
	72
	81
	85
	90
	133
	153
	159
	202
	230
	275
	281
	283
	284
	▶1398
	▶1403
	▶1408
	▶1413
	▶1418
314-2286	70
	▶1003
314-2301	72
	81
	▶1003
314-2310	70
	214
	262
	▶660
314-2311	660
314-3723	800
	803
	824
	827
	920
	923
	980
	983
314-5003	5
	7
	10
	15
	24
	107
	109
	110
	111
	112
	114
	116
	117
	123
	132
	134
	135
	136
	137
	139
	141
	142
	143
	145
	155
	156
	166
	168
	193
	196
	215
	220
	222
	231
	232
	233
	243
	244
	245
	255
	259
	261
	268
	269
	271
	272
	274
	278
	279
	280
	285
	287
	289
	290
	291
	297
	▶707
314-5004	134
	141
	142
	▶750
	▶754
	▶758
	▶762
314-5375	121
	217
	218
	▶524
314-6667	66
	▶675
314-9819	21
	172
	202
	229
	230
	251
	▶1056
314-9820	1056
314-9821	1056
315-3020	▶1063
315-3384	320

▶ PRIMARY REFERENCE

PART NUMBER INDEX

Part	Page
	321
	322
	323
	324
315-3413	20
	121
	153
	217
	218
	▶708
315-3414	123
	186
	271
	▶1578
315-4691	773
	960
	964
315-8093	▶128
315-8094	▶129
315-8097	▶131
315-8099	▶132
315-8103	▶133
315-8104	▶134
315-8105	▶135
315-8106	▶136
315-8107	▶137
315-8108	▶139
316-0468	875
	878
	902
	905
316-0477	791
	794
	797
	848
	851
	854
	920
	923
	980
	983
316-0510	800
	803
	824
	827
316-0514	857
	861
	865
	887
	891
	896
	899
	960
	964
	986
	989
	992
316-0525	806
	809
	815
	818
	869
	872
	881
	884
	932
	935
316-0555	821
	948
	951
	974
	977
316-0562	830
	833
	836
	839
	842
	845
	908
	911
	914
	917
	926
	929
	938
	943
	968
	971
	995
316-0603	954
	957
316-1100	1
	2
	69
	208
	210
	211
	212
	▶1004
316-1102	1
	2
	4
	69
	208
	210
	211
	212
	236
	237
	264
	298
	▶1613
316-1109	2
	210
	▶1423
	▶1428
	▶1433
	▶1438
316-1156	1030
	1033
	1036
	1041
	1044
	1053
	1056
316-1157	1033
	1036
316-1158	1033
	1036
316-1159	1033
	1036
316-1165	1033
	1036
316-1179	1
	2
	69
	208
	210
	211
	212
	▶1033
316-1189	1423
	1428
	1433
	1438
	1443
	1448
	1453
	1458
	1463
	1468
	1503
	1508
	1513
	1518
316-1199	2
	210
316-6872	17
	▶463
316-6873	16
	17
	118
	▶435
316-6924	153
	185
	254
	267
	▶525
316-7959	3
	7
	10
	15
	24
	132
	134
	135
	136
	137
	166
	168
	193
	196
	215
	220
	231
	232
	233
	236
	237
	238
	242
	243
	244
	255
	259
	261
	264
	269
	272
	274
	277
	278
	279
	280
	285
	286
	287
	289
	290
	291
	293
	297
	298
	▶436
316-9351	326
	329
	335
	338
	344
	349
	351
	354
	360
	363
	366
	372
	375
317-3144	1074
	1079
	1084
	1094
	1099
	1104
	1109
	1119
	1124
	1129
	1139
	1144
	1149
	1164
	1169
	1174
	1189
	1194
	1199
	1209
	1214
	1219
	1229
	1234
	1239
	1248
	1253
	1258
	1273
	1288
	1293
	1298
	1308
	1313
	1318
	1333
	1338
	1343
	1358
	1363
	1368
	1378
	1383
	1388
	1393
	1403
	1408
	1413
	1418
	1423
	1428
	1433
	1438
	1443
	1448
	1453
	1458
	1463
	1468
	1473
	1478
	1483
	1488
	1493
	1498
	1503
	1508
	1513
	1518

▶ PRIMARY REFERENCE

PART NUMBER INDEX

Part	Page
	1525
	1530
	1535
	1541
	1544
	1547
317-3769	674
317-3773	673
317-3776	673
317-3778	674
317-6139	281
	▶465
317-6232	309
	311
317-6399	22
	72
	121
	129
	147
	162
	171
	186
	197
	198
	201
	217
	218
	228
	273
	▶788
317-7967	1
	208
	211
	▶1443
	▶1448
	▶1453
317-7968	69
	212
	▶1458
	▶1463
	▶1468
317-7969	69
	212
317-7971	1
	208
	211
317-8476	1041
317-9229	730
	734
	766
	769
318-0333	85
	▶902
	▶905
318-0774	676
	677
318-0775	16
	17
	19
	21
	54
	57
	58
	70
	76
	80
	81
	118
	122
	186
	191
	192
	207
	209
	213
	229
	234
	246
	247
	250
	251
	252
	253
	257
	273
	275
	276
	281
	283
	284
	▶676
318-1726	326
	329
318-2365	1056
318-2391	▶1554
318-2394	1074
	1079
	1099
	1104
	1119
	1124
	1139
	1144
	1164
	1169
	1189
	1194
	1209
	1214
	1229
	1234
	1248
	1253
	1288
	1293
	1308
	1313
	1333
	1338
	1358
	1363
	1383
	1388
	1408
	1413
	1428
	1433
	1443
	1448
	1458
	1463
	1473
	1478
	1488
	1493
	1513
	1518
	1525
	1530
	1541
	1544
318-3621	80
	128
	189
	▶437
318-3623	80
	162
	189
	▶526
318-3637	123
	139
	203
	271
	▶683
318-7147	▶3
318-7148	▶5
318-7150	▶141
318-7151	▶142
318-7152	▶143
318-7153	▶144
318-7154	▶145
318-7155	▶146
318-7156	▶7
318-7157	▶8
318-7160	▶147
318-7161	▶148
318-7165	▶9
318-8064	1014
	▶1015
	1017
	1040
319-1582	128
	129
	153
	172
	228
	273
	▶499
	▶501
319-4957	72
	▶677
319-8426	320
	321
	323
	324
320-0677	▶1026
	1273
	1383
	1388
	1393
	1408
	1413
	1418
	1525
	1530
	1535
320-0680	▶1027
	1074
	1079
	1084
	1099
	1104
	1109
	1119
	1124
	1129
	1139
	1144
	1149
	1164
	1169
	1174
	1189
	1194
	1199
	1209
	1214
	1219
	1229
	1234
	1239
	1248
	1253
	1258
	1288
	1293
	1298
	1308
	1313
	1318
	1333
	1338
	1343
	1358
	1363
	1368
	1423
	1428
	1433
	1438
	1443
	1448
	1453
	1458
	1463
	1468
	1473
	1478
	1483
	1488
	1493
	1498
	1503
	1508
	1513
	1518
	1541
	1544
	1547
320-2347	78
	166
	▶466
320-2360	349
320-2361	349
320-2362	349
320-2397	28
	177
	178
	206
	263
	▶1473
	▶1478
	▶1483
320-2398	25
	30
	176
	205
	296
	▶1488
	▶1493
	▶1498
320-2399	177
	178
	206
	263
320-2401	25
	30
	176
	205
	296
320-8383	309
	311
320-8384	309
	311
320-8385	309
	311

▶ PRIMARY REFERENCE

PART NUMBER INDEX

Part	Page
320-9223	▶180
	182
	186
	191
	192
	252
	276
	▶438
320-9921	375
321-2383	670
	672
321-2411	960
	964
321-2412	960
	964
321-2413	960
	964
321-3038	▶149
321-3043	▶150
321-3044	▶151
321-3045	▶153
321-3047	▶155
321-3048	▶156
321-3049	▶10
321-3051	▶157
321-3056	▶158
321-5594	489
321-5595	489
321-5596	22
	25
	27
	29
	169
	176
	177
	178
	197
	198
	201
	204
	205
	206
	263
	296
	▶489
321-8965	1595
322-2403	20
	172
	▶528
322-2434	11
	131
	180
	182
	226
	▶490
322-2604	133
	▶908
	▶911
322-2605	133
	▶363
322-2606	133
	▶1016
	▶1017
322-2607	133
	▶709
322-3055	5
	10
	19
	134
	147
	171
	174
	189
	190
	191
	192
	222
	252
	268
	276
	▶1580
322-3056	134
	141
	142
	275
	283
	284
	▶503
322-3059	134
	141
	142
	▶334
322-3744	1273
	1423
	1503
322-3745	1074
	1079
	1084
	1099
	1104
	1109
	1119
	1124
	1129
	1139
	1144
	1149
	1164
	1169
	1174
	1189
	1194
	1199
	1209
	1214
	1219
	1229
	1234
	1239
	1248
	1253
	1258
	1273
	1288
	1293
	1298
	1308
	1313
	1318
	1333
	1338
	1343
	1358
	1363
	1368
	1383
	1388
	1393
	1408
	1413
	1418
	1423
	1428
	1433
	1438
	1443
	1448
	1453
	1458
	1463
	1468
	1473
	1478
	1483
	1488
	1493
	1498
	1503
	1508
	1513
	1518
	1525
	1530
	1535
	1541
	1544
	1547
322-3746	1074
	1079
	1084
	1099
	1104
	1109
	1119
	1124
	1129
	1139
	1144
	1149
	1164
	1169
	1174
	1189
	1194
	1199
	1209
	1214
	1219
	1229
	1234
	1239
	1248
	1253
	1258
	1273
	1288
	1293
	1298
	1308
	1313
	1318
	1333
	1338
	1343
	1358
	1363
	1368
	1383
	1388
	1393
	1408
	1413
	1418
	1423
	1428
	1433
	1443
	1448
	1453
	1458
	1463
322-3747	1273
	1423
	1503
322-3748	1273
	1423
	1503
322-3753	3
	236
	237
	264
	298
	▶1503
	▶1508
	▶1513
	▶1518
322-3754	3
	236
	237
	264
	298
	▶1036
322-3755	3
	236
	237
	264
	298
	▶1005
322-4881	128
	▶406
	▶407
322-4882	128
	▶386
	▶387
322-4883	128
	▶625
	▶627
322-4884	128
	▶422
322-4885	128
	▶667
322-4886	128
	▶324
322-4887	128
	▶1596
322-4888	128
	▶569
322-4889	128
	▶710
322-4890	8
	128
	164
	221
	270
	▶1581
322-4951	139
	▶366
322-4952	139

▶ PRIMARY REFERENCE

PART NUMBER INDEX

Part	Page
	254
	267
	▶1039
	▶1040
322-4982	76
	▶319
322-4983	76
	▶439
322-8417	571
	573
	579
	582
322-8418	571
	573
322-8419	1041
	1044
322-8420	1041
	1044
322-8421	1041
	1044
322-8424	147
	202
	230
	▶571
	▶573
322-8425	11
	14
	23
	126
	147
	180
	182
	189
	223
	238
	239
	240
	241
	242
	258
	260
	275
	277
	283
	284
	286
	288
	293
	294
	▶1041
	▶1044
322-8426	11
	14
	23
	126
	147
	180
	182
	189
	223
	238
	239
	240
	241
	242
	258
	260
	275
	277
	283
	284
	286
	288
	293
	294
	▶1006
	▶1007
322-9662	716
	722
323-3515	475
	499
	501
	509
323-6222	149
	216
	▶369
	▶372
323-6240	149
	216
	▶688
323-6241	688
323-6804	3
	14
	23
	74
	126
	166
	223
	236
	237
	238
	239
	240
	241
	242
	258
	260
	▶529
323-8761	309
	311
323-8762	309
	311
323-8843	5
	15
	20
	145
	168
	196
	222
	245
	268
	▶575
	▶577
323-8844	5
	145
	168
	222
	245
	268
	▶506
323-8845	5
	145
	168
	222
	245
	268
	▶309
	▶311
323-8846	15
	174
	183
	185
	190
	196
	▶689
323-9150	22
	▶467
323-9282	579
	582
323-9283	10
	80
	▶579
	▶582
323-9312	415
	611
	615
	619
	623
	627
323-9874	66
	172
	▶440
324-0444	475
	495
	497
	509
324-0532	1074
	1084
	1099
	1109
	1119
	1129
	1139
	1149
	1164
	1174
	1189
	1199
	1209
	1219
	1229
	1239
	1248
	1258
	1288
	1298
	1308
	1318
	1333
	1343
	1358
	1368
	1383
	1393
	1408
	1418
	1428
	1438
	1443
	1453
	1458
	1468
	1473
	1483
	1488
	1498
	1508
	1513
	▶1523
	1525
	1530
	1535
	1541
	1547
324-1481	1047
324-2981	477
324-3528	730
	734
	766
	769
324-6508	12
	189
	▶585
	▶587
324-6529	954
	957
324-6530	794
	797
	800
	803
	824
	827
	851
	854
	920
	923
	954
	957
	980
	983
324-6531	▶468
324-7124	▶159
324-7125	▶160
324-7126	▶11
324-7127	▶12
324-7128	▶13
324-7129	▶161
324-7131	▶162
324-7139	▶163
324-7143	▶163
325-0577	153
	162
	253
	254
	257
	267
	275
	283
	284
	▶441
325-0585	153
	169
	204
	230
	▶914
	▶917
325-1069	25
	28
	30
	263
	296
	▶920
	▶923
325-5612	4
	9
	12
	14
	15
	18
	21
	23
	24
	33
	35
	38
	40
	42
	49
	52

PART NUMBER INDEX

Part	Page
	55
	59
	61
	66
	70
	78
	82
	83
	84
	91
	93
	94
	96
	98
	107
	110
	112
	114
	119
	123
	127
	129
	132
	137
	139
	141
	143
	145
	149
	151
	153
	155
	159
	161
	162
	164
	166
	168
	195
	196
	207
	214
	215
	216
	220
	221
	223
	227
	228
	229
	233
	236
	237
	238
	239
	240
	241
	242
	243
	244
	245
	248
	251
	253
	255
	256
	257
	258
	259
	260
	261
	262
	264
	269
	270
	271
	272
	274
	277
	279
	281
	282
	286
	288
	289
	293
	294
	297
	298
	▶1597
325-5613	22
	91
	151
	197
	198
	▶442
325-5614	151
	▶530
326-0478	22
	169
	176
	177
	178
	197
	198
	204
	205
	206
	▶513
326-0497	738
	750
326-1010	938
326-1876	434
	439
	440
	646
326-1877	447
326-1878	431
	435
	443
326-1880	428
326-4488	12
	19
	159
	169
	170
	176
	177
	178
	188
	199
	200
	204
	205
	206
	▶711
326-4508	806
	809
	815
	818
	830
	833
	836
	839
	842
	845
	857
	861
	865
	869
	872
	875
	878
	881
	884
	887
	891
	896
	899
	908
	911
	914
	917
	926
	929
	932
	935
	939
	943
	960
	964
	968
	971
	974
	977
	986
	989
	992
	995
326-4509	926
	929
	995
326-4510	159
	281
	▶926
	▶929
326-4549	11
	12
	159
	▶531
326-7861	671
327-4182	121
	217
	218
	▶443
327-4184	443
	452
327-8999	22
	25
	28
	30
	31
	169
	176
	177
	178
	197
	198
	204
	205
	206
	263
	296
	▶1598
328-0666	4
	105
	106
	183
	193
	224
	225
	254
	267
	▶1599
328-5896	11
	180
	182
	▶932
	▶935
328-5897	11
	180
	182
	189
	▶684
328-5921	128
	186
	▶1600
328-7279	12
	▶938
	▶943
329-0290	1590
	1596
329-3149	▶164
329-3160	▶165
329-3165	▶166
329-3166	▶167
329-3167	▶168
329-3543	5
	145
	168
	222
	245
	268
	▶375
329-7854	332
	334
329-7856	332
	334
329-9129	1
	2
	69
	208
	210
	211
	212
	▶948
	▶951
330-1736	378
	380
	382
	384
	386
	▶388
330-3666	54
	57
	58
	209
	213
	234
	246
	247
	250
	▶444
330-4296	201
	▶1582
330-4789	398
	400
	402
	▶408
330-4790	404
	406
	▶410
330-6130	528
	531
330-6131	528
	531

PART NUMBER INDEX

Part	Page
330-7211	161
	227
	▶1583
330-9698	742
	754
331-7010	1601
331-7539	1584
331-8052	366
331-8053	366
331-8682	162
	▶954
	▶957
331-8683	162
	171
	▶640
331-8708	640
	1620
333-4732	1074
	1079
	1084
	1099
	1104
	1109
	1119
	1124
	1129
	1139
	1144
	1149
	1164
	1169
	1174
	1189
	1194
	1199
	1209
	1214
	1219
	1229
	1234
	1239
	1248
	1253
	1258
	1288
	1293
	1298
	1308
	1313
	1318
	1333
	1338
	1343
	1358
	1363
	1368
	1383
	1388
	1393
	1408
	1413
	1418
	1428
	1433
	1438
	1443
	1448
	1453
	1458
	1463
	1468
	1473
	1478
	1483
	1488
	1493
	1498
	1508
	1513
	1518
	1525
	1530
	1535
	1541
	1544
	1547
333-4733	1074
	1079
	1084
	1099
	1104
	1109
	1119
	1124
	1129
	1139
	1144
	1149
	1164
	1169
	1174
	1189
	1194
	1199
	1209
	1214
	1219
	1229
	1234
	1239
	1248
	1253
	1258
	1288
	1293
	1298
	1308
	1313
	1318
	1333
	1338
	1343
	1358
	1363
	1368
	1383
	1388
	1393
	1408
	1413
	1418
	1428
	1433
	1438
	1443
	1448
	1453
	1458
	1463
	1468
	1473
	1478
	1483
	1488
	1493
	1498
	1508
	1513
	1518
	1525
	1530
	1535
	1541
	1544
	1547
333-5483	1047
333-5484	1047
333-5485	1047
333-5486	1047
333-5487	1047
333-5488	1047
333-5489	1047
333-5521	5
	145
	168
	222
	245
	268
	▶1047
333-5523	5
	145
	168
	222
	245
	268
	▶1008
333-8970	960
	964
333-8971	960
	964
333-8976	14
	23
	127
	223
	238
	239
	240
	241
	242
	258
	260
	277
	286
	288
	293
	294
	▶960
	▶964
333-9693	1015
333-9694	1015
334-2932	1065
	1523
	1540
	1550
334-7488	730
	742
	746
	754
	758
	762
	769
334-9334	650
	651
	652
	653
	654
	655
335-1530	▶169
335-2204	589
335-2214	589
	607
335-6238	5
	145
	168
	222
	245
	268
	▶1615
335-7585	533
	535
	539
	541
	543
	547
	551
	555
	559
	561
	563
	565
	567
	569
	573
	575
	577
	579
	582
	585
	587
	589
	591
	595
	597
	599
	601
	603
	605
	607
335-9215	1033
	1036
	1044
	1050
	1053
337-3573	1074
	1079
	1084
	1099
	1104
	1109
	1119
	1124
	1129
	1139
	1144
	1149
	1164
	1169
	1174
	1189
	1194
	1199
	1209
	1214
	1219
	1229
	1234
	1239
	1248
	1253
	1258
	1288
	1293
	1298
	1308
	1313
	1318

▶ PRIMARY REFERENCE

PART NUMBER INDEX

Part	Page
	1333
	1338
	1343
	1358
	1363
	1368
	1383
	1388
	1393
	1408
	1413
	1418
	1428
	1433
	1438
	1443
	1448
	1453
	1458
	1463
	1468
	1473
	1478
	1483
	1488
	1493
	1498
	1508
	1513
	1518
	1525
	1530
	1535
	1541
	1544
	1547
337-3574	1074
	1079
	1084
	1099
	1104
	1109
	1119
	1124
	1129
	1139
	1144
	1149
	1164
	1169
	1174
	1189
	1194
	1199
	1209
	1214
	1219
	1229
	1234
	1239
	1248
	1253
	1258
	1288
	1293
	1298
	1308
	1313
	1318
	1333
	1338
	1343
	1358
	1363
	1368
	1383
	1388
	1393
	1408
	1413
	1418
	1428
	1433
	1438
	1443
	1448
	1453
	1458
	1463
	1468
	1473
	1478
	1483
	1488
	1493
	1498
	1508
	1513
	1518
	1525
	1530
	1535
	1541
	1544
	1547
339-1745	169
	204
	▶1525
	▶1530
	▶1535
339-1786	169
	204
339-1787	169
	204
	▶469
339-1795	169
	202
	230
	▶968
	▶971
339-5256	1561
	1563
339-5862	473
339-5864	472
339-7766	1581
	1583
339-7767	1560
	1563
	1576
	1577
339-7768	1574
	1578
339-8100	183
	▶445
339-8775	326
	329
	363
	366
339-8780	379
	381
	383
	385
	387
	388
339-9637	416
340-3610	503
340-4692	3
	5
	8
	10
	11
	14
	20
	23
	52
	55
	59
	61
	63
	64
	68
	83
	84
	87
	89
	90
	94
	96
	103
	104
	112
	114
	116
	117
	127
	136
	137
	143
	145
	151
	161
	180
	193
	221
	222
	223
	227
	236
	237
	238
	239
	240
	241
	242
	245
	249
	255
	256
	258
	260
	261
	264
	268
	270
	277
	278
	282
	285
	286
	288
	289
	290
	291
	293
	294
	295
	298
	▶722
	▶724
	▶726
340-5314	▶170
340-5315	▶171
340-5316	▶172
340-5323	▶173
340-5324	▶173
340-5331	▶174
340-7298	1588
341-4024	842
	845
	968
	971
341-4028	378
	379
	380
	381
	382
	383
	384
	385
	386
	387
	415
342-8096	171
	174
	190
	▶446
342-8097	171
	▶974
	▶977
342-8117	172
	▶470
342-8118	172
	▶1620
343-7104	1002
	1007
	1011
344-3434	503
344-4809	▶175
344-4810	▶175
344-4811	▶175
344-4821	▶176
344-4824	▶177
344-4825	▶178
344-5673	1589
344-8201	22
	25
	27
	29
	169
	176
	177
	178
	197
	198
	204
	205
	206
	263
	296
	▶589
	▶591
346-0007	412
	414
	1129
	1149
	1174
	1199
	1219
	1239
	1258
	1298
	1318
	1343
	1368
	1393
	1418

▶ PRIMARY REFERENCE

PART NUMBER INDEX

Part	Page
	1438
	1453
	1468
	1508
	1547
346-0407	497
346-0408	475
	497
	509
346-0523	▶998
	1007
	1028
346-1449	1604
	1607
	1611
	1617
346-2938	1028
	1029
346-4709	658
	661
	663
	665
	667
346-9824	1573
347-2161	▶1028
348-4637	1604
	1611
	1613
	1615
	1617
348-8478	▶179
348-8480	▶180
348-8481	▶181
348-8482	▶182
348-8483	▶183
348-8492	▶184
348-8494	▶185
348-8495	▶186
348-8497	▶187
349-3261	1561
	1563
	1567
	1569
	1573
349-5735	▶1065
350-5725	679
351-2097	679
351-2098	591
	▶679
351-2799	1065
	1540
351-9871	21
	177
	197
	198
	201
	229
	251
	▶471
352-6355	183
	▶593
	▶595
352-6361	15
	174
	183
	185
	190
	196
	▶509
352-6375	313
	315
352-6382	174
	183
	185
	190
	▶313
352-6443	15
	174
	183
	185
	190
	196
	▶1617
352-6584	1079
	1104
	1124
	1144
	1169
	1194
	1214
	1234
	1253
	1293
	1313
	1338
	1363
	1388
	1413
	1433
	1448
	1463
	1478
	1493
	1518
	▶1540
	1544
353-2205	392
	394
	396
353-2206	392
	394
	396
353-2207	392
	394
	396
353-2208	392
	394
	396
353-3477	797
	803
	806
	809
	818
	821
	827
	833
	839
	845
	854
	861
	865
	872
	878
	884
	887
	891
	899
	905
	911
	917
	923
	929
	935
	943
	951
	957
	964
	971
	977
	983
	989
	992
	995
353-3478	797
	803
	806
	809
	818
	821
	827
	833
	839
	845
	854
	861
	865
	872
	878
	884
	887
	891
	899
	905
	911
	917
	923
	929
	935
	943
	951
	957
	964
	971
	977
	983
	989
	992
	995
353-5219	573
	595
	607
353-6814	▶188
353-6816	▶189
353-6828	▶190
353-7340	174
	186
	188
	190
353-7341	174
	186
	188
	190
	▶1541
	▶1544
	▶1547
353-7364	174
	190
	▶472
353-7368	597
	599
353-7377	174
	190
	192
	253
	257
	▶597
	▶599
353-7405	174
	190
	▶980
	▶983
353-7423	390
	392
353-7424	390
	392
353-7425	390
	392
353-7426	390
	392
353-7715	696
353-7717	692
	695
	▶696
	697
	698
	700
354-4754	718
	724
355-6862	1004
	1005
356-7044	▶191
356-7051	▶192
356-7053	▶193
357-5203	1598
357-5204	1599
357-8714	686
358-6632	1084
	1109
	1149
	1174
	1199
	1219
	1239
	1258
	1298
	1318
	1343
	1368
	1393
	1418
	1438
	1483
	1498
	1508
	1547
358-6633	1535
	▶1555
358-8821	186
	▶473
359-0716	379
	381
	383
	385
	387
	▶390
	▶391
	415
359-0719	415
	611
	615
	619
	623
	627
359-0720	415
	611
	615
	619
	623
	627
359-0721	415
	611
	615
	619
	623
	627

▶ PRIMARY REFERENCE

PART NUMBER INDEX

Part	Page
359-0722	415
	611
	615
	619
	623
	627
359-0723	415
	611
	615
	619
	623
	627
359-0724	415
	611
	615
	619
	623
	627
359-0737	4
	5
	7
	9
	12
	14
	15
	16
	17
	19
	20
	22
	23
	24
	25
	30
	34
	36
	40
	43
	44
	46
	49
	51
	54
	56
	57
	59
	62
	64
	67
	68
	71
	73
	74
	76
	77
	78
	82
	84
	85
	89
	90
	91
	93
	94
	96
	98
	102
	103
	104
	105
	106
	107
	109
	110
	111
	112
	114
	116
	117
	118
	119
	121
	122
	123
	127
	131
	133
	139
	147
	152
	154
	159
	162
	166
	168
	169
	170
	174
	176
	185
	188
	189
	190
	191
	195
	196
	198
	199
	200
	201
	202
	203
	204
	205
	207
	208
	213
	214
	215
	217
	218
	220
	221
	222
	223
	224
	226
	230
	231
	236
	237
	238
	239
	240
	241
	243
	246
	248
	249
	250
	252
	253
	254
	255
	256
	257
	258
	260
	262
	264
	267
	268
	269
	270
	271
	272
	274
	275
	277
	281
	282
	283
	284
	285
	286
	287
	288
	292
	293
	294
	295
	296
	297
	298
	▶415
359-0738	1
	2
	69
	128
	186
	210
	211
	212
359-0739	10
	11
	21
	28
	32
	38
	47
	48
	52
	58
	63
	80
	83
	87
	125
	130
	132
	134
	135
	136
	137
	141
	142
	143
	145
	149
	155
	156
	158
	161
	164
	171
	173
	177
	178
	180
	182
	183
	192
	194
	206
	209
	216
	219
	225
	227
	228
	229
	232
	233
	234
	235
	244
	245
	247
	251
	259
	261
	263
	266
	273
	276
	278
	279
	280
	289
	290
	291
359-0745	651
359-0746	652
359-0747	653
359-0749	650
359-0750	654
	655
359-9431	501
	503
359-9666	569
	601
	1558
	1559
	1560
	1561
	1563
	1565
	1567
	1569
	1571
	1573
	1574
	1575
	1576
	1577
	1578
	1580
	1581
	1582
	1583
360-0073	567
	577
	599
360-3198	1050
	1053
360-3693	607
360-3986	390
	391
360-4226	▶1588
	1589
360-7341	72
	▶650
360-7342	11
	20
	33
	35

► PRIMARY REFERENCE

PART NUMBER INDEX

Part	Page
	36
	38
	40
	42
	44
	46
	47
	48
	49
	51
	52
	55
	59
	61
	63
	64
	68
	83
	84
	87
	89
	90
	119
	161
	202
	227
	230
	▶651
360-7343	1
	2
	3
	5
	7
	8
	10
	12
	14
	15
	16
	17
	18
	19
	23
	24
	69
	80
	93
	94
	96
	98
	100
	102
	103
	104
	107
	109
	110
	111
	112
	114
	116
	117
	118
	121
	122
	123
	125
	126
	128
	132
	134
	135
	136
	137
	139
	141
	142
	143
	145
	147
	155
	156
	158
	159
	164
	166
	168
	170
	171
	174
	180
	182
	186
	188
	189
	190
	191
	192
	193
	196
	199
	200
	201
	203
	208
	210
	211
	212
	215
	217
	218
	219
	220
	221
	222
	223
	231
	232
	233
	235
	236
	237
	238
	239
	240
	241
	242
	243
	244
	245
	248
	249
	252
	255
	256
	258
	259
	260
	261
	264
	266
	268
	269
	270
	271
	272
	274
	276
	277
	278
	279
	280
	282
	285
	286
	287
	288
	289
	290
	291
	292
	293
	294
	295
	297
	298
	▶652
360-7344	70
	74
	77
	78
	105
	106
	131
	133
	214
	224
	225
	226
	262
	281
	▶653
360-7345	76
	81
	85
	183
	273
	▶654
360-7346	21
	22
	25
	27
	29
	31
	54
	57
	58
	66
	91
	129
	149
	151
	153
	162
	169
	172
	176
	177
	178
	185
	195
	197
	198
	204
	205
	206
	207
	209
	213
	216
	228
	229
	234
	246
	247
	250
	251
	253
	254
	257
	263
	267
	275
	283
	284
	296
	▶655
360-7355	22
	25
	27
	29
	31
	66
	129
	149
	151
	153
	172
	197
	198
	216
	228
	263
	296
	▶656
361-7519	788
	797
	803
	809
	818
	821
	827
	833
	839
	845
	854
	861
	865
	872
	878
	884
	887
	891
	905
	911
	917
	923
	929
	935
	943
	951
	957
	964
	971
	977
	983
	989
	992
	995
362-2817	601
362-2818	601
362-2831	186
	▶601
362-2833	186
	▶712
362-8050	730

▶ PRIMARY REFERENCE

PART NUMBER INDEX

Part	Page
	734
362-9374	▶19
362-9375	▶195
362-9376	▶196
362-9382	▶20
362-9383	▶21
362-9386	▶197
362-9387	▶198
362-9388	▶22
363-3907	399
	401
	403
	▶412
	415
363-3908	412
	414
	1129
	1149
	1174
	1199
	1219
	1239
	1258
	1298
	1318
	1343
	1368
	1393
	1418
	1438
	1453
	1468
	1508
	1547
363-9700	902
364-1102	1394
	1414
	1419
	1535
364-2829	▶392
	▶394
	▶396
364-4129	1600
364-4130	1592
365-1581	4
	236
	237
	264
	298
	▶986
	▶989
365-3308	311
	1373
	1378
	1383
	1388
	1393
	1398
	1403
	1408
	1413
	1418
	1525
	1531
	1535
365-7752	1033
	1036
365-9448	1050
	1053
365-9449	1050
366-5613	405
	407
	▶414
366-5914	313
366-8853	412
367-1817	685
367-4171	730
	734
	742
	746
	754
	758
	762
	766
	769
368-3147	1586
	1587
368-3158	503
368-5398	730
	734
	746
	758
	762
	766
	769
368-5399	730
	734
	746
	758
	762
	766
	769
368-5934	1008
368-5935	1005
368-9172	▶1550
369-6810	303
369-7944	456
	459
371-4587	1029
372-4241	728
372-8150	▶728
	766
	769
373-9785	535
	582
	587
	589
	591
373-9786	565
	567
374-4419	720
	726
374-7466	1588
374-7468	1588
375-5262	15
	196
	▶315
375-6315	▶1029
375-9272	477
	478
	479
	481
	483
	486
	487
	488
	489
	490
375-9812	311
375-9813	309
	311
377-0399	416
377-0400	416
377-6869	797
	803
	809
	818
	821
	827
	833
	839
	845
	854
	861
	865
	872
	878
	884
	887
	891
	899
	911
	917
	923
	929
	935
	943
	951
	957
	964
	971
	977
	983
	989
	992
	995
377-8326	603
	605
377-8327	603
	605
377-8331	3
	14
	23
	126
	223
	236
	237
	238
	239
	240
	241
	242
	258
	260
	264
	277
	286
	288
	293
	294
	298
	▶603
	▶605
377-9082	319
	1561
	1563
	1567
	1569
	1573
378-3549	195
	207
	▶447
380-2065	609
	611
	613
	615
	617
	619
	621
	623
	625
	627
380-2073	416
381-0115	3
	236
	237
	238
	242
	264
	277
	286
	293
	298
	▶766
	▶769
381-5651	309
	311
381-7585	▶23
381-9252	492
	506
382-0821	▶199
382-0822	▶200
383-1389	20
	▶448
383-1390	20
	▶992
383-2557	1561
	1571
	1582
383-8542	821
	878
	905
	951
383-8543	821
	878
	905
	951
	977
384-4084	861
	887
384-6663	▶201
384-6665	▶202
384-6670	▶203
385-7317	861
	865
	887
	891
	943
385-7318	861
	865
	887
	891
	943
386-1197	▶204
386-1198	▶205
386-1199	▶206
386-1203	▶207
386-1205	▶208
386-1206	▶209
386-1207	▶210
386-1208	▶211
386-1209	▶212
387-1619	▶213
387-8156	▶214
388-1875	▶215
388-1879	▶216
388-1880	▶217
388-2420	23
	▶449
389-1312	▶218
389-1320	▶24
389-8097	513
389-8101	513
389-9222	▶219
389-9225	▶220
389-9235	▶221

PART NUMBER INDEX

Part	Page
389-9236	▶222
389-9237	▶223
389-9240	▶224
389-9241	▶225
390-5142	▶226
390-5143	▶227
390-5144	▶228
390-5148	▶229
390-7340	1561
	1563
	1567
	1569
	1573
391-4903	▶230
391-4908	▶231
391-4910	▶232
391-4912	▶233
391-8751	▶234
391-8752	▶235
391-8755	▶236
391-8758	▶237
392-0442	▶238
392-0445	▶239
392-0447	▶240
392-0448	▶241
392-5649	▶242
392-5651	▶243
392-5652	▶244
392-5653	▶245
392-8742	▶14
393-2041	▶246
393-2042	▶247
393-2053	▶15
393-2054	▶16
393-2055	▶17
393-4006	477
	478
	481
	483
	485
	486
	488
	490
	491
394-1399	320
	321
	322
	323
394-9638	559
395-0733	▶248
395-0736	▶249
396-4482	613
	615
	617
	619
	621
	623
	625
	627
396-4516	609
	611
397-1544	▶250
397-3885	202
	230
	▶450
397-3886	202
	230
	▶491
397-3888	202
	230
	▶474
397-3889	202
	230
	▶642
397-3891	474
398-1566	▶251
398-1571	▶252
398-1577	▶253
398-1582	▶254
398-8353	517
399-1113	22
	197
	198
	201
	▶1601
399-1114	201
	▶607
399-1485	1565
	1567
	1580

4

Part	Page
416-4358	201
	▶451
416-7101	1129
	1468
417-0487	452
417-2318	▶255
417-2319	▶256
417-4722	1589
417-7782	687
418-7684	492
420-0609	326
	329
	363
	366
420-4748	▶257
423-7018	▶1588
	1589
423-8915	▶258
423-8918	▶259
423-8920	▶260
423-8921	▶261
424-6821	1558
	1559
	1569
	1575
425-7103	475
	492
	497
	501
	506
	509
426-4806	1523
	1550
426-5362	▶1589
426-5363	▶1589
433-0344	543
	567
	577
	599
433-9722	1589
433-9728	1589
433-9730	1589
434-6861	▶262
435-1685	▶263
435-1687	▶264
435-1692	▶25
435-1699	▶18
435-1701	▶265
435-3728	▶266
435-3730	▶267
436-0524	416
437-1249	▶268
437-2695	121
	217
	218
	▶452
437-5409	▶269
437-5411	▶270
437-5417	▶271
437-5419	▶272
438-0894	▶273
438-0898	▶274
438-3414	1468
438-3415	1129
439-3389	▶275
439-3392	▶276
439-3395	▶277
440-2105	▶1585
	1589
441-5485	▶278
441-5487	▶279
445-1434	865
	891
	943
	964
	989
445-2420	▶280
447-2007	▶281
447-5512	▶1589
447-8572	681
448-0292	▶282
449-7366	▶773
	865
	891
449-8021	▶283
449-8025	▶284
449-8033	▶285
449-9365	773
450-4924	▶286
451-1179	313
	315
451-5480	309
	311
451-9226	773
452-3112	1586
453-1368	▶287
453-3595	1558
	1559
	1560
	1565
	1571
	1574
	1575
	1576
	1578
	1580
	1581
	1582
	1583
453-9679	703
	708
453-9681	706
453-9682	532
	704
	707
	710
	711
453-9700	701
	702
	709
454-3554	▶288
454-5790	▶289
454-6621	275
	283
	284
	▶307
454-6650	275
	283
	284
	▶995
455-0744	273
	▶646
458-3400	455
	457
	461
458-3404	454
	468
458-3406	462
461-5528	▶290
461-5534	▶291
462-2235	1587
462-8161	▶292
465-5183	▶293
466-4849	613
	615
	619
467-8982	▶294
468-7762	390
	391
468-7769	390
	391
468-7770	390
	391
470-4925	630
470-7995	391
	396
470-8021	391
	396
471-2881	561
	569
471-2882	535
	539
	543
	547
	555
	559
	567
	573
	577
	582
	587
	595
	605
	607
474-1553	635
479-1570	551
	605
480-4406	539
	547
	555
485-4894	720
	726
485-4895	720
	726
487-5635	772
492-3310	839
	845
	878
	905
	917
	995

5

Part	Page
507-5015	797
	803
	827
	854
	923

▶ PRIMARY REFERENCE

PART NUMBER INDEX

Part	Page	Part	Page	Part	Page	Part	Page
	983						
507-5019	809						
	818						
	839						
	845						
	865						
	872						
	884						
	891						
	899						
	917						
	935						
	964						
	989						
	995						
517-8243	326						
	329						
	338						
	344						
	349						
	354						
	360						
	372						
	375						
518-5437	391						
	394						
	396						
518-5440	391						
	394						
	396						
518-5441	391						
	394						
	396						
518-5885	391						
	394						
	396						
518-5891	396						
518-5892	396						
518-5893	396						
522-8303	►295						
526-9854	1597						
540-0570	►296						
540-1155	►297						
540-1156	►298						
560-0261	1585						



©2019 Caterpillar
All Rights Reserved

CAT, CATERPILLAR, their respective logos, “Caterpillar Yellow”, and the POWER EDGE trade dress as well as corporate and product identity used herein, are trademarks of Caterpillar and may not be used without permission.