SEBP4544-52 (en-us)
January 2024

Parts Manual

C2.2 Industrial Engine

C6M1-UP (Engine)

Scan to find and purchase genuine Cat® parts and related service information.

Product and Dealer Information

Note: For product identification plate locations, see the section “Product Identification Information” in the Operation and Maintenance Manual.

Delivery Date: _____

Product Information

Model: _____

Product Identification Number: _____

Engine Serial Number: _____

Transmission Serial Number: _____

Generator Serial Number: _____

Attachment Serial Numbers: _____

Attachment Information: _____

Customer Equipment Number: _____

Dealer Equipment Number: _____

Dealer Information

Name: _____ Branch: _____

Address: _____

_____

_____

	Dealer Contact	Phone Number	Hours
Sales:	_____	_____	_____
Parts:	_____	_____	_____
Service:	_____	_____	_____

MEMORANDA

TABLE OF CONTENTS

NAME	PAGE
GENERAL INFORMATION	A3
REPAIR ALTERNATIVES	A5
SUPPLEMENTAL COOLANT ADDITIVES	A6
MAINTENANCE PARTS	A7
INDEX	A10
ENGINE ARRANGEMENT	1
ENGINE AR	1
ENGINE AR-PRIMARY	9
BASIC ENGINE	142
ACCESSORY GP-ENGINE	142
CAMSHAFT AS	143
CAMSHAFT GP	145
COVER GP-CYLINDER HEAD	179
COVER GP-FRONT HOUSING	183
COVER GP-VALVE MECHANISM	184
CRANKSHAFT GP	209
CYLINDER BLOCK GP	221
CYLINDER BLOCK GP-LONG	243
CYLINDER HEAD AS	245
CYLINDER HEAD GP	253
DRAIN GP-ECOLOGY	264
DRIVE GP-AUXILIARY	265
DRIVE GP-FAN	266
EXTENSION GP-FAN	270
FASTENER GP-COVER	275
FASTENER GP-FRONT HOUSING	276
FLYWHEEL GP	278
HOUSING GP-FLYWHEEL	287
HOUSING GP-FRONT	297
LIFTING GP-ENGINE	375
MECHANISM GP-FUEL PUMP & VALVE	381
MOUNTING GP-ENGINE	383
PAN GP-OIL	385
PISTON & ROD GP	408
PLUG GP-ENGINE	424
PLUG GP-OIL PAN	426
PULLEY AS-IDLER	429
PULLEY GP-AUXILIARY DRIVE	430
PULLEY GP-CRANKSHAFT	431
PULLEY GP-FAN	434
PULLEY GP-WATER PUMP	437
ROCKER ARM AS	439
ROCKER ARM GP	441
SHAFT GP-IDLER	442
V-BELT GP	443
VALVE & PLUG GP-OIL PAN DRAIN	451
VALVE MECHANISM GP	452
LUBRICATION SYSTEM	465
FASTENER GP-ENGINE OIL LINES	465
FILLER GP-ENGINE OIL	466
FILTER GP-ENGINE OIL	474
LINES GP-ENGINE OIL	480
MOUNTING GP-ENGINE OIL FILTER	482
COOLING SYSTEM	483
CONNECTION GP-WATER	483
CONNECTOR GP-CAB HEATER LINES	486
FAN GP	488
FAN GP-BLOWER	490
FAN GP-SUCTION	491
HOUSING GP-WATER REGULATOR	501
LINES GP-COOLANT	504
PUMP GP-WATER	506
RADIATOR & FAN GP	545
RADIATOR GP	564
AIR INLET AND EXHAUST SYSTEM	586
AIR CLEANER GP	586
CONNECTION GP-EXHAUST	606
COVER GP-EXHAUST	610
FASTENER GP-FILTER	612
GASKET GP-EXHAUST MANIFOLD	613
MANIFOLD GP-EXHAUST	614
MOUNTING GP-EXHAUST	619
MUFFLER GP	622
TURBOCHARGER GP	623
FUEL SYSTEM	696
CONTROL GP-GOVERNOR	696
CONTROL GP-THROTTLE	756
FILTER AS-FUEL	758
FILTER GP-FUEL	759
GOVERNOR GP	764
LEVER GP-CONTROL	793
LEVER GP-GOVERNOR CONTROL	794
PUMP & MTG GP-FUEL TRANSFER	795
PUMP GP-FILTER & FUEL TRANSFER	796
PUMP GP-FUEL INJECTION	806
PUMP GP-FUEL PRIMING	840
PUMP GP-FUEL PRM & PRIM FILTER	844
PUMP GP-FUEL TRANSFER	847
VALVE GP-PRESSURE CONTROL	856
VALVE GP-RELIEF	857
ELECTRICAL AND STARTING SYSTEM	858
ALTERNATOR GP-CHARGING	858
CONNECTION GP-ELECTRICAL	867

TABLE OF CONTENTS

NAME	PAGE	NAME	PAGE
CONTROL GP-ELECTRONIC	871		
CONTROL GP-ENGINE ELECTRONIC	872		
CONTROL GP-ENGINE SPEED	876		
CONTROL GP-MANUAL START/ STOP	878		
GLOW PLUG GP	881		
SENSOR GP-TEMPERATURE	885		
SHUTOFF GP-ELECTRICAL	887		
SOLENOID GP-CONTROL	888		
SOLENOID GP-SHUTOFF	889		
STARTING MOTOR GP-ELECTRIC	893		
SWITCH GP-PRESSURE	906		
SWITCH GP-START	915		
SWITCH GP-TEMPERATURE	917		
OPERATOR STATION	918		
LAMP GP	918		
SERVICE EQUIPMENT AND SUPPLIES	919		
CAP GP-PROTECTION	919		
FILM GP	920		
PARTS GP-MISCELLANEOUS	924		
PLATE & FILM GP	925		
PART NUMBER INDEX	B1		

1. ENGINE IDENTIFICATION

Cat engines are identified with Serial Numbers and Arrangement Numbers. In some cases, Modification Numbers are also used. The serial number plate which shows these numbers is mounted on the engine.

Cat dealers need this information to determine which components were included on the engine when it was assembled at the factory. This permits accurate identification of replacement part numbers.

2. ORDERING PARTS

⚠ WARNING

When replacement parts are required for this product Caterpillar recommends using Caterpillar replacement parts or parts with equivalent specifications including, but not limited to, physical dimensions, type, strength and material.

Failure to heed this warning can lead to premature failures, product damage, personal injury or death.

Quality Cat replacement parts are available from Cat dealers throughout the world. Their parts inventories are up to date and include all parts normally required to protect your investment in Cat Engines. Dealers may offer repair kits or remanufactured parts to allow selection of the most effective repair alternative for a particular situation. When ordering parts, your order should specify the quantity, part number, part name, and the serial number/product identification number of the engine for which the parts are needed.

3. PARTS MANUAL ORGANIZATION

Product information in this manual is presented as "information elements" that represent all of the components for the specific model. An Engine Arrangement is an example of an information element. The information elements are organized alphabetically by part name and secondarily by part number within each major section of the manual.

4. TABLE OF CONTENTS

A table of contents (TOC) is found at the beginning of the manual. The TOC lists each section of the manual with a complete list of all information elements organized as they appear in the manual. Page numbers are provided for quick reference to detailed parts identification illustrations and serviceable consist lists.

5. MAINTENANCE PARTS INDEX

The Maintenance Parts Index, located near the beginning of the manual, references most frequently used maintenance part numbers, providing description, quantity, usage and page number. This information is organized alphabetically by part description.

6. INDEX

The index located near the front of the manual is an alphabetical listing of all information elements included in the manual. Page numbers are provided for quick reference to detailed parts identification illustrations and serviceable consist lists.

7. PART NUMBER INDEX

A numerical index listing all part numbers and the corresponding page number(s) appears at the back of the manual.

8. CAPTIONS

Captions located at the beginning each information element identify the part number and part name along with additional descriptive information. S/N information found in each caption should be used to select correct information for a specific engine. Field replacement options, identification of optional attachment components, and where used ("part of") information is also provided.

The first line of a caption is shown in larger type font to indicate the beginning of an information element. Captions for additional pages that may be required to illustrate an information element will be shown in standard type font and will include the term (contd.).

9. NON-SERVICED PARTS

In some instances it is necessary to display non-serviced parts that are a link to lower level serviceable consist lists. These non-serviced part numbers are shown in italic type indicating that they are not available. All consist lists have not been converted to reflect this enhancement.

10. PARTS LIST REFERENCE NUMBERS

Numbers shown in the Ref No column correspond to numbers used in the associated graphic(s). An alphabetic suffix may be added to a reference number to identify lower level consist items. Numbers shown in the Graphic Ref column refer to the graphic number identifier displayed in the lower left corner of each illustration. The Graphic Ref number may be used in combination with the item Ref No to determine the correct part number. There may be intentional omission of a Ref No in a consist list as information is updated to reflect the latest serviceable part numbers.

11. INDENTED PART NAMES

When a part name is indented in a parts list, it is part of (included in) the group or assembly under which it is indented.

12. ILLUSTRATION REFERENCE LETTERS

When necessary, illustrations contain reference letters (A, B, C etc.) that are intended to track lines and harnesses from one point to another. They are also used to show where to reconnect illustrations that have been separated.

13. ABBREVIATIONS AND SYMBOLS

O.D. – Outside Diameter
I.D. – Inside Diameter
A – Not Part Of This Group
B – Use As Required
C – Change From Previous Type
D – Order By The Meter
E – Order By The Centimeter
F – Not Shown
G – Order By The Inch
I – Refer To Hydraulic Information System
M – Metric Part
R – Remfg Part May Be Available
Y – Separate Illustration
Z – Not Serviced Separately

14. DESCRIPTION OF TYPE CHANGES

Type - A type is defined as any configuration change that requires an additional Information Element for an Arrangement, Group, or Assembly. If serial number breaks for types are not available, a type # (Type 1, Type 2, etc.) will be displayed in the caption. These "type" changes are identified with a "C" note (change from previous type) in the Parts List. Only the "types" that apply to this Parts Manual will be included. Additional types may exist causing "C" notes to appear on an Information Element when no other types are shown.

15. <END>

This symbol indicates the end of an information element.

16. SUPPLEMENTAL COOLANT ADDITIVES

Information for Supplemental Coolant Additives is no longer included in this manual. See your Operation and Maintenance Manual for coolant maintenance information.

NOTE:

Continuing improvement and advancement of product design may cause changes to your engine which may not be included in this publication. Whenever a question arises regarding your Cat product or this publication, please consult your Cat dealer for the latest available information.

REMANUFACTURED COMPONENTS

As an option when making repairs consider Cat Remanufactured Components. Components that are available through the Cat Remanufactured Program are identified three ways in the parts book:

- with the letter R in the note field of the parts list
- with an R* at the beginning of the first line of the caption
- with an *R at the end of the first line of the caption

Typical components included in the Remanufacturing Program include:

ALTERNATORS
CONNECTING RODS
CRANKSHAFTS - UNDERSIZE
CRANKSHAFTS - UPGRADE TO NEW
CYLINDER HEADS
ELECTRONIC CONTROL MODULES (ECM)
ELECTRONIC SENSORS
FUEL INJECTORS
FUEL NOZZLES
FUEL PUMPS
GOVERNORS
OIL PUMPS
PISTONS
SHORT BLOCKS
STARTERS
TURBOCHARGERS - COMPLETE
TURBOCHARGER CARTRIDGES
WATER PUMPS

Cat Remanufactured engines for many engine arrangements are also available.

SUPPLEMENTAL COOLANT ADDITIVES

CUSTOMER BENEFITS:

Protects against cavitation, foam, erosion, corrosion, and scale buildup in cooling systems.

- Provides measured coolant conditioner.

DESCRIPTION:

Additives deplete from the coolant with normal operation. For this reason, Supplemental Coolant Additives (SCA) must be added to all heavy duty coolants at regular intervals. In addition, when not using a fully formulated, pre-charged antifreeze, like Cat DEAC, an initial charge of SCA must be added to the cooling system. The amount of SCA added to the system is dependent on the capacity of the system.

The SCA for initial fill is provided as a liquid. SCA's for maintenance intervals are available in liquid form and as a spin-on element. (No Spin-on available for 3600 Family of Engines)

NOTE:

The amount of SCA added at initial fill is not the same as the amount added at maintenance intervals.

The coolant additive elements can be used with any ethylene or propylene glycol type antifreeze which meets ASTM D4985 or ASTM D5345 Specifications.

NOTE:

For use with standard heavy duty coolant only, not for use with Extended Life Coolant.

PARTS NEEDED:

Cooling System Capacity		Liquid SCA at Initial Fill	Liquid SCA at Maintenance*	Spin-on SCA Maintenance Element*
Liters	Gallons			
22-30	(6-8)	3P-2044 (1)	6V-3542 (1)	111-2370 (1)
30-38	(8-10)	3P-2044 (1) 6V-3542 (1)	111-2372 (1)	111-2369 (1)
38-49	(10-13)	3P-2044 (1) 8T-1589 (1)	111-2372 (1)	111-2369 (1)
49-64	(13-17)	3P-2044 (2)	8T-1589 (1)	9N-3368 (1)
64-83	(17-22)	3P-2044 (2) 8T-1589 (1)	111-2372 (1) 6V-3542 (1)	111-2371 (1)
83-114	(22-30)	3P-2044 (3) 8T-1589 (1)	3P-2044 (1)	9N-3718 (1)
114-163	(30-43)	3P-2044 (5)	3P-2044 (1) 6V-3542 (1)	111-2371 (2)
163-242	(43-64)	3P-2044 (8)	3P-2044 (2)	9N-3718 (2)

* Normal maintenance period is 250 hrs. See your Operation and Maintenance Manual for complete coolant maintenance instructions.

( ) Indicates quantity required.

MAINTENANCE PARTS

DESCRIPTION	PART NUMBER	QTY	WHERE USED	PAGE
AIR INLET AND EXHAUST SYSTEM				
FILTER ELEMENT AS-AIR (TURBOCHARGER)	247-1378	1	AIR CLEANER GP	586
FILTER ELEMENT-AIR	247-1380	1	AIR CLEANER GP	586
	551-6183	1	AIR CLEANER GP	597
SEAL-VALVE COVER	233-0695	1	TURBOCHARGER GP	623
BASIC ENGINE				
BELT (ALTERNATOR)	448-3118	1	V-BELT GP	450
KEY	153-5518	1	CRANKSHAFT GP	209
PLUG-DRAIN	423-6224	1	DRAIN GP-ECOLOGY	264
		2	PLUG GP-OIL PAN	428
PLUG-DRAIN (ENGINE OIL DRAIN)	165-3605	2	PLUG GP-OIL PAN	427
PLUG-DRAIN (ENGINE OIL PAN)	423-6224	2	PLUG GP-OIL PAN	426
		1	VALVE & PLUG GP-OIL PAN DRAIN	451
SEAL-VALVE COVER	233-0695	1	ACCESSORY GP-ENGINE	142
		1	COVER GP-CYLINDER HEAD	179 181
		1	COVER GP-VALVE MECHANISM	1841- 8618- 9192
STRAINER	425-6360	1	PAN GP-OIL	404
STRAINER (ENGINE OIL)	305-0584	1	PAN GP-OIL	387
	425-6360	1	PAN GP-OIL	391
STRAINER (ENGINE)	425-6360	1	PAN GP-OIL	403
STRAINER (OIL PAN)	288-8813	1	PAN GP-OIL	401
STRAINER (OIL PAN) (ENGINE)	154-1948	1	PAN GP-OIL	385
STRAINER (SUCTION)	425-6360	1	PAN GP-OIL	406
V-BELT	338-3398	1	V-BELT GP	446
V-BELT (ALTERNATOR)	424-8611	1	V-BELT GP	449
	438-1597	1	V-BELT GP	443
V-BELT (WATER PUMP)	295-0887	1	V-BELT GP	445
	424-8611	1	V-BELT GP	444
	438-1597	1	V-BELT GP	447
COOLING SYSTEM				
CAP-RADIATOR	202-6616	1	RADIATOR & FAN GP	545
		1	RADIATOR GP	5655- 6857- 1574
	326-8552	1	RADIATOR & FAN GP	548
CAP-RADIATOR (16-PSI)	211-6574	1	RADIATOR GP	564
HOSE-RADIATOR	238-0265	1	RADIATOR GP	577
	238-0266	1	RADIATOR GP	577
	326-8555	1	RADIATOR GP	581
	326-8556	1	RADIATOR GP	581
	342-4357	1	RADIATOR & FAN GP	562
		1	RADIATOR GP	583
	342-4358	1	RADIATOR & FAN GP	562

MAINTENANCE PARTS

DESCRIPTION	PART NUMBER	QTY	WHERE USED	PAGE
		1	RADIATOR GP	583
HOSE-RADIATOR (LOWER)	238-0265	1	RADIATOR & FAN GP	545
		1	RADIATOR GP	5655-6857-1574
	326-8556	1	RADIATOR & FAN GP	548
	342-4357	1	RADIATOR & FAN GP	556
HOSE-RADIATOR (UPPER)	238-0266	1	RADIATOR & FAN GP	545
		1	RADIATOR GP	5655-6857-1574
	326-8555	1	RADIATOR & FAN GP	548
	342-4358	1	RADIATOR & FAN GP	556
PLUG-DRAIN	326-8553	1	RADIATOR & FAN GP	548
RADIATOR AS	607-4843	1	RADIATOR GP	577
REGULATOR-TEMPERATURE (82-DEG C)	249-5541	1	PUMP GP-WATER	506
REGULATOR-WATER TEMPERATURE	236-9986	1	PUMP GP-WATER	525
ELECTRICAL AND STARTING SYSTEM				
GLOW PLUG	172-4585	4	GLOW PLUG GP	881
	243-4402	4	GLOW PLUG GP	882
HOSE-RADIATOR	238-0265	1	CONNECTION GP-ELECTRICAL	869
KEY-IGNITION	361-3925	1	SWITCH GP-START	915
ENGINE ARRANGEMENT				
V-BELT GP	340-5966	1	ENGINE AR-PRIMARY	128
V-BELT GP (ALTERNATOR)	340-5966	1	ENGINE AR-PRIMARY	102
V-BELT GP (DRIVE)	340-5966	1	ENGINE AR-PRIMARY	80
V-BELT GP (WATER PUMP)	308-2306	1	ENGINE AR	2
		1	ENGINE AR-PRIMARY	9121-518
	311-9029	1	ENGINE AR-PRIMARY	39
	428-5948	1	ENGINE AR-PRIMARY	15
V-BELT GP (WATER PUMP) (DRIVE)	308-2306	1	ENGINE AR-PRIMARY	11
V-BELT GP (WATER PUMP) (WATER PUMP)	428-5948	1	ENGINE AR-PRIMARY	18
FUEL SYSTEM				
FILTER AS-FUEL	243-6411	1	PUMP GP-FUEL TRANSFER	847
	358-9226	1	PUMP GP-FILTER & FUEL TRANSFER	796
		1	PUMP GP-FUEL TRANSFER	8478-5085-2854
	481-2063	1	FILTER GP-FUEL	762
FILTER ELEMENT-FUEL	276-1806	1	FILTER GP-FUEL	759
		1	PUMP GP-FUEL PRM & PRIM FILTER	844
FILTER ELEMENT-FUEL (FILTER)	276-1806	1	FILTER GP-FUEL	761
FILTER-FUEL	067-6987	1	PUMP GP-FILTER & FUEL TRANSFER	796

DESCRIPTION	PART NUMBER	QTY	WHERE USED	PAGE
		1	PUMP GP-FUEL TRANSFER	8478-5085-2854
	432-6658	1	FILTER AS-FUEL	758
PLUG-DRAIN (FUEL FILTER)	302-7777	3	FILTER GP-FUEL	761
PLUG-DRAIN (WATER SEPARATOR)	302-7777	3	FILTER GP-FUEL	759
		3	PUMP GP-FUEL PRM & PRIM FILTER	844
LUBRICATION SYSTEM				
CAP-OIL FILLER	217-7358	1	FILLER GP-ENGINE OIL	472
CAP-OIL FILLER (ENGINE)	217-7358	1	FILLER GP-ENGINE OIL	466
FILTER AS-ENGINE OIL	220-1523	1	FILTER GP-ENGINE OIL	474
FILTER-HEAD	464-2086	1	FILTER GP-ENGINE OIL	475
OPERATOR STATION				
LAMP (INDICATORS)	198-5310	1	LAMP GP	918
SERVICE EQUIPMENT AND SUPPLIES				
SEAL-VALVE COVER	233-0695	1	PARTS GP-MISCELLANEOUS	924

INDEX

NAME PAGE

A

ACCESSORY GP-ENGINE 142
AIR CLEANER GP 586
588
590
591
593
595
597
598
600
601
603
605
ALTERNATOR GP-CHARGING 858
859
860
861
862
863
864
865
866

B

BELT (ALTERNATOR) 450

C

CAMSHAFT AS 143
144
CAMSHAFT GP 145
146
147
148
149
150
152
154
156
157
158
159
160
161
162
164
166
167
168
169
170
171
172
173
174
175
177
178
CAP GP-PROTECTION 919
CAP-OIL FILLER 472
473
CAP-OIL FILLER (ENGINE) 466
468
470
CAP-RADIATOR 545
548
565
568
571
574
577
CAP-RADIATOR (16-PSI). 564
CONNECTION GP-ELECTRICAL 867
868
869
870
CONNECTION GP-EXHAUST. 606
607
608
609
CONNECTION GP-OIL 634
637
640
643
646
649
654
678
687
689

INDEX

NAME PAGE

CONNECTION GP-WATER 483
484
485
CONNECTOR GP-CAB HEATER LINES 486
487
CONTROL GP-ELECTRONIC 871
CONTROL GP-ENGINE ELECTRONIC 872
874
CONTROL GP-ENGINE SPEED 876
CONTROL GP-GOVERNOR 304
696
698
700
701
703
705
707
709
711
713
715
717
719
721
723
725
727
729
731
733
735
737
739
741
743
745
746
747
749
752
793
CONTROL GP-GOVERNOR (ENGINE TIMING) 299
CONTROL GP-GOVERNOR (TIMING) 701
703
705
707
713
CONTROL GP-MANUAL START/STOP 878
879
880
CONTROL GP-THROTTLE 756
757
COVER GP-CYLINDER HEAD 179
181
COVER GP-EXHAUST 610
611
COVER GP-FRONT HOUSING 183

NAME PAGE

COVER GP-VALVE MECHANISM 184
186
189
192
194
196
198
201
203
206
CRANKSHAFT GP 209
211
213
215
217
219
CYLINDER BLOCK GP 221
223
225
227
229
231
233
235
237
239
CYLINDER BLOCK GP-LONG 243
244
CYLINDER HEAD AS 245
246
247
248
249
250
251
252
CYLINDER HEAD GP 253
255
257
258
260
262
263

D

DRAIN GP-ECOLOGY 264
DRIVE GP-AUXILIARY 265
DRIVE GP-FAN 266
267
268
269

E

ELECTRONICS GP-ENGINE 138

INDEX

NAME	PAGE
ENGINE AR	1
	3
	5
	6
	8
ENGINE AR-PRIMARY	9
	10
	12
	13
	16
	19
	21
	23
	25
	26
	27
	28
	30
	32
	35
	38
	40
	42
	44
	46
	48
	50
	51
	53
	56
	59
	60
	62
	65
	66
	67
	68
	70
	72
	73
	74
	78
	79
	80
	81
	82
	85
	88
	91
	94
	97
	100
	101
	102
	103
	104
	105
	108
	110
	112
	113
	115
	116
	117
	119
	120

INDEX

NAME PAGE

121
122
123
124
125
126
127
128
129
130
131
132
133
134
135
138
139
140
141
ENGINE AR-PRIMARY–24-VOLT 75
EXTENSION GP-FAN 270
271
272
273
274

F

FAN GP 488
489
FAN GP-BLOWER 490
FAN GP-SUCTION 491
492
494
495
496
497
499
500
FAN GP-SUCTION–6-BLADE 493
FAN GP-SUCTION–7-BLADE 498
FASTENER GP-COVER 275
FASTENER GP-ENGINE OIL LINES 465
FASTENER GP-FILTER 612
FASTENER GP-FRONT HOUSING 276
277
FILLER GP-ENGINE OIL 466
468
470
472
473
FILM GP 920
921
FILM GP–ALTERNATOR 922
FILM GP–RADIATOR 923
FILM-IDENTIFICATION (AIR FILTER) 600
601
603

NAME PAGE

FILM-IDENTIFICATION (CAT) 577
904
905
922
923
925
927
FILM-INFORMATION (FUEL FILTER) 925
FILM-WARNING (DO NOT SPRAY, READ OMM) 588
590
593
595
600
601
603
605
612
920
921
FILM-WARNING (UNIVERSAL WARNING) 925
927
FILTER AS-ENGINE OIL 474
477
FILTER AS-FUEL 758
762
796
799
802
847
850
852
854
FILTER ELEMENT AS-AIR (TURBOCHARGER) 586
588
591
593
FILTER ELEMENT-AIR 586
588
591
593
597
598
FILTER ELEMENT-FUEL 759
844
FILTER ELEMENT-FUEL (FILTER) 761
FILTER GP-ENGINE OIL 474
475
477
478
479
FILTER GP-FUEL 759
761
762
763
FILTER GP-FUEL (WATER SEPARATOR) 844
845
846

INDEX

NAME PAGE

FILTER-FUEL 758
796
799
802
847
850
852
854
FILTER-HEAD 475
479
FLYWHEEL GP 278
279
280
281
282
283
284
285
286

G

GASKET GP-EXHAUST MANIFOLD. 613
GAUGE AS-OIL LEVEL (DIPSTICK). 406
407
GAUGE AS-OIL LEVEL (DIPSTICK) (ENGINE) 397
399
403
GAUGE-OIL LEVEL (DIPSTICK) 391
404
GAUGE-OIL LEVEL (DIPSTICK) (ENGINE) 385
387
389
393
395
401
GLOW PLUG. 881
882
883
884
GLOW PLUG GP. 881
882
883
884

NAME PAGE

GOVERNOR GP. 709
745
764
766
768
770
772
775
778
780
782
784
785
786
788
791
GOVERNOR GP (ENGINE TIMING). 768
770
GOVERNOR GP-ANGLEICH. 746
GUARD GP-FAN 581
GUARD GP-FAN (LH) 552

H

HARNESS 731
756
HARNESS AS-ENGINE 731
756
HOSE-RADIATOR 562
577
581
583
869
HOSE-RADIATOR (LOWER). 545
548
552
556
559
565
568
571
574
HOSE-RADIATOR (UPPER) 545
548
552
556
559
565
568
571
574

INDEX

NAME PAGE

HOUSING GP-FLYWHEEL 287 288 289 290 291 292 293 294 295 296
HOUSING GP-FRONT 297 298 299 304 309 312 314 315 316 318 322 327 332 333 335 337 338 339 340 341 342 343 344 346 348 350 352 353 354 355 356 358 360 363 367 371
HOUSING GP-WATER REGULATOR. 501 502 503

I

INDICATOR (AIR FILTER SERVICE). 586 588 591 593 597 598

NAME PAGE

K

KEY 209 211 213 215 217 219
KEY-IGNITION. 915

L

LAMP (INDICATORS) 918
LAMP GP. 918
LEVER GP-CONTROL 793
LEVER GP-GOVERNOR 786
LEVER GP-GOVERNOR CONTROL. 794
LIFTING GP-ENGINE 375 376 377 378 379 380
LINES GP-COOLANT 505
LINES GP-COOLANT–ENGINE 504
LINES GP-ENGINE OIL. 480 481

M

MANIFOLD GP-EXHAUST. 614 615 616 617 618
MECHANISM GP-FUEL PUMP & VALVE. 381
MOUNTING GP-ENGINE 383 384
MOUNTING GP-ENGINE OIL FILTER. 482
MOUNTING GP-EXHAUST 619 620 621
MUFFLER GP. 622

INDEX

NAME PAGE

P

PAN GP-OIL 385
387
389
391
393
395
397
399
401
403
404
406
407
PARTS GP-MISCELLANEOUS 924
PISTON & ROD GP 408
409
410
411
413
414
416
417
419
420
421
422
PLATE & FILM GP 925
927
PLUG GP-ENGINE 424
425
PLUG GP-OIL PAN 427
428
PLUG GP-OIL PAN–DRAIN 426
PLUG-DRAIN 264
428
548
PLUG-DRAIN (ENGINE OIL DRAIN) 427
PLUG-DRAIN (ENGINE OIL PAN) 426
451
PLUG-DRAIN (FUEL FILTER) 761
PLUG-DRAIN (WATER SEPARATOR) 759
844
PULLEY AS-IDLER 429
PULLEY GP-AUXILIARY DRIVE 430
PULLEY GP-CRANKSHAFT 431
432
433
PULLEY GP-FAN 434
435
436
PULLEY GP-WATER PUMP 437
438
PUMP & MTG GP-FUEL TRANSFER 795
PUMP GP-FILTER & FUEL TRANSFER 796
799
802
805
PUMP GP-FUEL INJECTION 806
807
808
810
812
814
816
818
820
822
824
826
829
831
835
838
PUMP GP-FUEL PRIMING 840
841
842
843
PUMP GP-FUEL PRM & PRIM FILTER 844
845
846
PUMP GP-FUEL TRANSFER 847
850
852
854
PUMP GP-WATER 506
509
511
513
516
519
522
523
525
528
531
534
537
540
542
544

R

RADIATOR & FAN GP 545
548
552
556
559
562
RADIATOR AS 577

INDEX

NAME	PAGE
RADIATOR GP	548
	552
	564
	565
	568
	571
	574
	577
	581
	583
REGULATOR-TEMPERATURE (82-DEG C)	506
	509
	511
	513
	516
	519
	522
	523
	531
	534
	537
	540
	542
	544
REGULATOR-WATER TEMPERATURE	525
	528
ROCKER ARM AS	439
ROCKER ARM GP	441

S

NAME	PAGE
SEAL-VALVE COVER	142
	179
	181
	184
	186
	189
	192
	194
	196
	198
	201
	203
	206
	623
	627
	631
	634
	637
	640
	643
	646
	649
	654
	659
	662
	665
	668
	671
	674
	678
	682
	924
SENSOR AS-SPEED	327
	719
	727
	733
	749
	782
	786
SENSOR AS-SPEED (ENGINE TIMING)	323
	696
	698
	721
	723
	725
	729
	735
	741
	743
	764
	766
	772
	775
SENSOR AS-SPEED (TIMING)	333
	335
	778
	780
	876

INDEX

NAME PAGE

SENSOR GP-SPEED (MAGNETIC, HIGH OUTPUT) (GOVERNOR) 784
785
SENSOR GP-TEMPERATURE 7
15
18
30
34
37
55
58
61
64
68
77
84
87
90
96
106
110
114
136
885
886
SENSOR GP-TEMPERATURE (ENGINE COOLANT) 71
92
99
109
124
SENSOR-PRESSURE 756
SENSOR-PRESSURE (BOOSTER PRESSURE) 731
SHAFT GP-IDLER 442
SHUTOFF GP-ELECTRICAL 887
SOLENOID (24-VOLT) 879
880
892
SOLENOID (24-VOLT) (24-VOLT) 888
SOLENOID (24-VOLT) (FUEL SHUTOFF) 878
SOLENOID (STARTING MOTOR) 893
SOLENOID AS (12-VOLT) (FUEL SHUTOFF) . . . 889
890
891
SOLENOID GP-CONTROL 888
SOLENOID GP-SHUTOFF 889
890
891
892
STARTING MOTOR GP-ELECTRIC 893
895
896
897
898
899
901
902
903
904
905

NAME PAGE

STARTING MOTOR GP-ELECTRIC–12-VOLT . . . 900
STRAINER 404
407
STRAINER (ENGINE OIL) 387
389
391
393
395
397
399
STRAINER (ENGINE) 403
STRAINER (OIL PAN) 401
STRAINER (OIL PAN) (ENGINE) 385
STRAINER (SUCTION) 406
SWITCH (OIL PRESSURE) (ENGINE OIL) 908
SWITCH AS-START 915
SWITCH GP-PRESSURE 1
4
5
7
9
10
34
37
43
44
46
49
50
55
61
64
84
87
90
99
106
111
114
117
125
127
133
136
137
139
906
910
911
912
913
SWITCH GP-PRESSURE (ALARM) 58
93

INDEX

NAME	PAGE
SWITCH GP-PRESSURE (ENGINE OIL)	7
	8
	12
	15
	18
	20
	21
	23
	25
	27
	29
	38
	40
	51
	55
	58
	59
	61
	64
	67
	68
	71
	72
	73
	79
	80
	81
	84
	86
	90
	92
	96
	101
	102
	103
	104
	106
	109
	111
	112
	114
	115
	116
	119
	120
	121
	122
	123
	124
	126
	128
	130
	131
	132
	134
	138
	140
	141
	243
	244
SWITCH GP-PRESSURE (HEATER)	15
SWITCH GP-PRESSURE–ALARM	914
SWITCH GP-PRESSURE–ENGINE OIL	907
	908
	909
SWITCH GP-START	915
	916
SWITCH GP-TEMPERATURE	917

INDEX

NAME	PAGE
SWITCH GP-TEMPERATURE (ENGINE COOLANT)	2
	4
	7
	8
	9
	11
	12
	15
	18
	20
	22
	23
	25
	29
	37
	39
	41
	43
	44
	46
	51
	55
	58
	59
	61
	64
	67
	69
	71
	72
	73
	77
	84
	87
	90
	92
	96
	99
	101
	104
	106
	109
	111
	112
	114
	115
	116
	118
	119
	120
	121
	122
	123
	125
	126
	127
	129
	130
	131
	132
	133
	134
	136
	138
	139
	140
	141
	243
	244
SWITCH-OIL PRESSURE	911
	914
SWITCH-OIL PRESSURE (ENGINE OIL)	907
	909
SWITCH-PRESSURE (ENGINE OIL)	906
	910
	912
SWITCH-PRESSURE (OIL PRESSURE)	913
SWITCH-TEMPERATURE (12-VOLT) (ENGINE COOLANT)	917
SWITCH-TEMPERATURE (12-VOLT) (WATER)	886
SWITCH-TEMPERATURE (ENGINE COOLANT)	885

T

TURBOCHARGER GP	623
	627
	631
	634
	637
	640
	643
	646
	649
	654
	659
	662
	665
	668
	671
	674
	678
	682
	685
	687
	689
	692
	693
	695

V

V-BELT	446
V-BELT (ALTERNATOR)	443
	448
	449

INDEX

NAME	PAGE
V-BELT (WATER PUMP)	444
	445
	447
V-BELT GP	128
	444
	445
	446
	447
	448
	449
	450
V-BELT GP (ALTERNATOR)	102
	103
V-BELT GP (DRIVE)	80
V-BELT GP (WATER PUMP)	2
	4
	5
	9
	12
	15
	18
	20
	27
	29
	31
	39
	41
	43
	44
	47
	49
	55
	58
	59
	61
	64
	65
	67
	69
	72
	73
	79
	84
	87
	90
	96
	101
	116
	119
	120
	121
	122
	123
	124
	125
	126
	130
	131
	132
	133
	134
	138
	139
	140
	141
V-BELT GP (WATER PUMP) (DRIVE)	11
	22
	50
	52
	71
	96
V-BELT GP (WATER PUMP) (WATER PUMP)	18
V-BELT GP–WATER PUMP	443
VALVE & PLUG GP-OIL PAN DRAIN	451
VALVE AS-RELIEF	239

INDEX

NAME	PAGE	NAME	PAGE
VALVE GP-PRESSURE CONTROL	856		
VALVE GP-RELIEF	857		
VALVE MECHANISM GP	452		
	454		
	456		
	458		
	460		
	462		
	464		
VALVE-RELIEF (ENGINE OIL PRESSURE)	480		
	481		
	856		
	857		

ENGINE ARRANGEMENT

302-1819 ENGINE AR

37 BRAKE KW (50 BHP) AT 2800 RPM

FIELD REPLACEMENT ORDER 435-1646—PAGE: 112

SMCS-1000 **i10078253**

NOTE	PART NUMBER	QTY	PART NAME 1 2 3 4 5 6 (PRODUCT LEVEL)	SEE PAGE
Y	*308-2305*	1	ALTERNATOR GP-CHARGING	858
Y	*441-6514*	1	CAMSHAFT GP	169
			—OR—	
Y	*454-6144*	1	CAMSHAFT GP	170
Y	*308-2319*	1	CONNECTION GP-ELECTRICAL	867
Y	*308-2302*	1	CONNECTION GP-WATER	483
Y	*308-2307*	1	HOUSING GP-FRONT	297
Y	*317-0590*	1	COVER GP-VALVE MECHANISM	192
Y	*309-6713*	1	CRANKSHAFT GP	213
Y	*309-6712*	1	CYLINDER BLOCK GP	225
Y	*309-6715*	1	CYLINDER HEAD GP	255
Y	*308-2304*	1	EXTENSION GP-FAN	270
Y	*308-2303*	1	FAN GP-SUCTION	491
Y	*308-2297*	1	FILLER GP-ENGINE OIL	466
			S/N: C6M1-1621	
Y	*363-3165*	1	FILLER GP-ENGINE OIL	470
			S/N: C6M1622-UP	
Y	*308-2298*	1	FILTER GP-ENGINE OIL	474
Y	*317-0586*	1	FLYWHEEL GP	280
Y	*308-2311*	1	GLOW PLUG GP	881
Y	*441-6513*	1	CONTROL GP-GOVERNOR	727
			—OR—	
Y	*454-6143*	1	CONTROL GP-GOVERNOR	733
Y	*317-0588*	1	HOUSING GP-FLYWHEEL	291
Y	*309-6718*	1	HOUSING GP-FRONT	299
			—OR—	
Y	*441-6512*	1	HOUSING GP-FRONT	350
			—OR—	
Y	*454-6141*	1	HOUSING GP-FRONT	352
Y	*308-2321*	1	LAMP GP	918
			S/N: C6M1-1621	
Y	*309-6725*	1	LIFTING GP-ENGINE	376
Y	*309-6717*	1	LINES GP-ENGINE OIL	481
Y	*309-6724*	1	MANIFOLD GP-EXHAUST	614
Y	*308-4735*	1	MOUNTING GP-ENGINE OIL FILTER	482
Y	*308-2295*	1	PAN GP-OIL	385
Y	*309-6714*	1	PISTON & ROD GP	410
Y	*309-6720*	1	PLUG GP-OIL PAN	426
Y	*308-2300*	1	PULLEY GP-CRANKSHAFT	431
Y	*308-2294*	1	PULLEY GP-FAN	434
Y	*308-2310*	1	PUMP GP-FILTER & FUEL TRANSFER	796
Y	*309-6719*	1	PUMP GP-FUEL INJECTION	812
Y	*308-2320*	1	PUMP GP-FUEL PRIMING	840
Y	*309-6721*	1	PUMP GP-WATER	509
Y	*308-2313*	1	SOLENOID GP-SHUTOFF (FUEL)	889
Y	*308-2293*	1	STARTING MOTOR GP-ELECTRIC	895
Y	*308-2312*	1	SWITCH GP-PRESSURE	906
Y	*308-2314*	1	SWITCH GP-START	915

302-1819 **ENGINE AR (**contd.**)** **i10078253**

NOTE	PART NUMBER	QTY	PART NAME 1 2 3 4 5 6 (PRODUCT LEVEL)	SEE PAGE
Y	*308-2317*	1	SWITCH GP-TEMPERATURE (ENGINE COOLANT)	917
Y	*308-2306*	1	V-BELT GP (WATER PUMP)	443
Y	*309-6716*	1	VALVE MECHANISM GP	458

Y - SEPARATE ILLUSTRATION

<END>

308-6560 ENGINE AR

TIER III. 37 BRAKE KW (50 BHP) AT 2800 RPM
FIELD REPLACEMENT ORDER 435-1646—PAGE: 112

SMCS-1000 **i10078264**

NOTE	PART NUMBER	QTY	PART NAME 1 2 3 4 5 6 (PRODUCT LEVEL)	SEE PAGE
Y	*308-2305*	1	ALTERNATOR GP-CHARGING	858
Y	*441-6514*	1	CAMSHAFT GP	169
			—OR—	
Y	*454-6144*	1	CAMSHAFT GP	170
Y	*308-2319*	1	CONNECTION GP-ELECTRICAL	867
			—OR—	
Y	*321-6741*	1	CONNECTION GP-ELECTRICAL	868
Y	*308-2309*	1	CONNECTION GP-EXHAUST	606
Y	*308-2302*	1	CONNECTION GP-WATER	483
Y	*441-6513*	1	CONTROL GP-GOVERNOR	727
			—OR—	
Y	*454-6143*	1	CONTROL GP-GOVERNOR	733
Y	*308-2307*	1	HOUSING GP-FRONT	297
Y	*309-6722*	1	COVER GP-VALVE MECHANISM	184
Y	*309-6713*	1	CRANKSHAFT GP	213
Y	*309-6712*	1	CYLINDER BLOCK GP	225
Y	*309-6715*	1	CYLINDER HEAD GP	255
Y	*308-2304*	1	EXTENSION GP-FAN	270
Y	*308-2303*	1	FAN GP-SUCTION	491
Y	*308-2297*	1	FILLER GP-ENGINE OIL	466
			S/N: C6M1-200	
Y	*363-3165*	1	FILLER GP-ENGINE OIL	470
			S/N: C6M201-UP	
Y	*308-2298*	1	FILTER GP-ENGINE OIL	474
Y	*311-1884*	1	FLYWHEEL GP	279
Y	*308-2311*	1	GLOW PLUG GP	881
Y	*311-1883*	1	HOUSING GP-FLYWHEEL	289
Y	*309-6718*	1	HOUSING GP-FRONT	299
			—OR—	
Y	*441-6512*	1	HOUSING GP-FRONT	350
			—OR—	
Y	*454-6141*	1	HOUSING GP-FRONT	352
Y	*308-2321*	1	LAMP GP	918
Y	*309-6725*	1	LIFTING GP-ENGINE	376
Y	*309-6724*	1	MANIFOLD GP-EXHAUST	614
Y	*308-4735*	1	MOUNTING GP-ENGINE OIL FILTER	482
Y	*311-1886*	1	PAN GP-OIL	393
Y	*309-6714*	1	PISTON & ROD GP	410
Y	*309-6720*	1	PLUG GP-OIL PAN	426
Y	*308-2300*	1	PULLEY GP-CRANKSHAFT	431
Y	*308-2294*	1	PULLEY GP-FAN	434
Y	*309-6717*	1	LINES GP-ENGINE OIL	481
Y	*308-2310*	1	PUMP GP-FILTER & FUEL TRANSFER	796
Y	*309-6719*	1	PUMP GP-FUEL INJECTION	812
Y	*308-2320*	1	PUMP GP-FUEL PRIMING	840
Y	*309-6721*	1	PUMP GP-WATER	509
Y	*308-2313*	1	SOLENOID GP-SHUTOFF (FUEL)	889
Y	*308-2293*	1	STARTING MOTOR GP-ELECTRIC	895

308-6560 **ENGINE AR (**contd.**)** **i10078264**

NOTE	PART NUMBER	QTY	PART NAME 1 2 3 4 5 6 (PRODUCT LEVEL)	SEE PAGE
Y	*308-2312*	1	SWITCH GP-PRESSURE	906
Y	*308-2314*	1	SWITCH GP-START	915
Y	*308-2317*	1	SWITCH GP-TEMPERATURE (ENGINE COOLANT)	917
Y	*308-2306*	1	V-BELT GP (WATER PUMP)	443
Y	*309-6716*	1	VALVE MECHANISM GP	458

Y - SEPARATE ILLUSTRATION

<END>

308-6562 ENGINE AR

TIER III. 38 BRAKE KW (51 BHP) AT 3000 RPM
FIELD REPLACEMENT ORDER 433-1379—PAGE: 6

SMCS-1000 **i10078272**

NOTE	PART NUMBER	QTY	PART NAME 1 2 3 4 5 6 (PRODUCT LEVEL)	SEE PAGE
Y	*308-2305*	1	ALTERNATOR GP-CHARGING	858
Y	*325-9476*	1	CAMSHAFT GP	149
Y	*308-2319*	1	CONNECTION GP-ELECTRICAL	867
Y	*308-2309*	1	CONNECTION GP-EXHAUST	606
Y	*308-2302*	1	CONNECTION GP-WATER	483
Y	*325-9475*	1	CONTROL GP-GOVERNOR	701
Y	*308-2307*	1	HOUSING GP-FRONT	297
Y	*309-6722*	1	COVER GP-VALVE MECHANISM	184
Y	*309-6713*	1	CRANKSHAFT GP	213
Y	*309-6712*	1	CYLINDER BLOCK GP	225
Y	*309-6715*	1	CYLINDER HEAD GP	255
Y	*308-2304*	1	EXTENSION GP-FAN	270
Y	*308-2303*	1	FAN GP-SUCTION	491
Y	*308-2297*	1	FILLER GP-ENGINE OIL	466
			S/N: C6M1-205	
Y	*363-3165*	1	FILLER GP-ENGINE OIL	470
			S/N: C6M206-UP	
Y	*308-2298*	1	FILTER GP-ENGINE OIL	474
Y	*308-2291*	1	FLYWHEEL GP	278
Y	*308-2311*	1	GLOW PLUG GP	881
Y	*308-2290*	1	HOUSING GP-FLYWHEEL	287
Y	*311-1682*	1	HOUSING GP-FRONT	309
Y	*308-2321*	1	LAMP GP	918
Y	*309-6725*	1	LIFTING GP-ENGINE	376
Y	*309-6724*	1	MANIFOLD GP-EXHAUST	614
Y	*308-4735*	1	MOUNTING GP-ENGINE OIL FILTER	482
Y	*308-2295*	1	PAN GP-OIL	385
Y	*309-6714*	1	PISTON & ROD GP	410
Y	*309-6720*	1	PLUG GP-OIL PAN	426
Y	*308-2300*	1	PULLEY GP-CRANKSHAFT	431
Y	*308-2294*	1	PULLEY GP-FAN	434
Y	*309-6717*	1	LINES GP-ENGINE OIL	481
Y	*308-2310*	1	PUMP GP-FILTER & FUEL TRANSFER	796
Y	*311-1683*	1	PUMP GP-FUEL INJECTION	814
Y	*308-2320*	1	PUMP GP-FUEL PRIMING	840
Y	*309-6721*	1	PUMP GP-WATER	509
Y	*308-2313*	1	SOLENOID GP-SHUTOFF (FUEL)	889
Y	*308-2293*	1	STARTING MOTOR GP-ELECTRIC	895
Y	*308-2312*	1	SWITCH GP-PRESSURE	906
Y	*308-2314*	1	SWITCH GP-START	915
Y	*308-2306*	1	V-BELT GP (WATER PUMP)	443
Y	*309-6716*	1	VALVE MECHANISM GP	458

Y - SEPARATE ILLUSTRATION

<END>

433-1379 ENGINE AR

38 BRAKE KW (51 BHP) AT 3000 RPM
FIELD REPLACEMENT FOR 348-8504—PAGE: 74
: FOR 396-3725—PAGE: 81
: FOR 303-4098—PAGE: 13
: FOR 316-5690—PAGE: 42
: FOR 308-6562—PAGE: 5
: FOR 316-5692—PAGE: 44
: FOR 434-2173—PAGE: 102
: FOR 348-8504—PAGE: 74
ALSO AN ATTACHMENT

SMCS-1000 **i10081179**

NOTE	PART NUMBER	QTY	PART NAME 1 2 3 4 5 6 (PRODUCT LEVEL)	SEE PAGE
Y	*325-9476*	1	CAMSHAFT GP	149
			—OR—	
Y	*596-3428*	1	CAMSHAFT GP	175
Y	*398-4274*	1	FILM GP	920
Y	*612-8795*	1	PLATE & FILM GP	927
Y	*532-8293*	1	FILLER GP-ENGINE OIL	472
Y	*559-9084*	1	CAP GP-PROTECTION	919
Y	*584-3189*	1	ROCKER ARM GP	441
Y	*584-9800*	1	MANIFOLD GP-EXHAUST	617
Y	*308-2302*	1	CONNECTION GP-WATER	483
			—OR—	
Y	*398-5884*	1	CONNECTION GP-WATER	485
Y	*325-9475*	1	CONTROL GP-GOVERNOR	701
			—OR—	
Y	*596-3462*	1	GOVERNOR GP	788
Y	*342-1268*	1	FASTENER GP-COVER	275
Y	*309-6722*	1	COVER GP-VALVE MECHANISM	184
			—OR—	
Y	*586-6654*	1	COVER GP-VALVE MECHANISM	203
Y	*309-6713*	1	CRANKSHAFT GP	213
			—OR—	
Y	*399-4716*	1	CRANKSHAFT GP	217
Y	*309-6712*	1	CYLINDER BLOCK GP	225
Y	*309-6715*	1	CYLINDER HEAD GP	255
			—OR—	
Y	*596-2861*	1	CYLINDER HEAD GP	262
Y	*354-1245*	1	HOUSING GP-FRONT	340
Y	*308-2297*	1	FILLER GP-ENGINE OIL	466
Y	*308-2298*	1	FILTER GP-ENGINE OIL	474
			—OR—	
Y	*398-8178*	1	FILTER GP-ENGINE OIL	477
Y	*322-2412*	1	FLYWHEEL GP	281
			—OR—	
Y	*566-9450*	1	FLYWHEEL GP	285
Y	*308-2311*	1	GLOW PLUG GP	881
			—OR—	
Y	*587-0270*	1	GLOW PLUG GP	883
Y	*342-9604*	1	HOUSING GP-FLYWHEEL	292
			—OR—	
Y	*398-4795*	1	HOUSING GP-FLYWHEEL	294
Y	*311-1682*	1	HOUSING GP-FRONT	309

433-1379 **ENGINE AR (**contd.**)** **i10081179**

NOTE	PART NUMBER	QTY	PART NAME 1 2 3 4 5 6 (PRODUCT LEVEL)	SEE PAGE
			—OR—	
Y	*599-9836*	1	HOUSING GP-FRONT	371
Y	*584-3179*	1	CYLINDER BLOCK GP	239
			S/N: C6M11278-UP	
Y	*309-6725*	1	LIFTING GP-ENGINE	376
			—OR—	
Y	*603-1463*	1	LIFTING GP-ENGINE	380
Y	*308-4735*	1	MOUNTING GP-ENGINE OIL FILTER	482
Y	*308-2295*	1	PAN GP-OIL	385
			—OR—	
Y	*588-9925*	1	PAN GP-OIL	404
Y	*342-9607*	1	PARTS GP-MISCELLANEOUS	924
			—OR—	
Y	*600-6923*	1	ACCESSORY GP-ENGINE	142
Y	*309-6714*	1	PISTON & ROD GP	410
			—OR—	
Y	*596-2866*	1	PISTON & ROD GP	420
Y	*309-6720*	1	PLUG GP-OIL PAN	426
			—OR—	
Y	*398-5865*	1	PLUG GP-OIL PAN	428
Y	*308-2300*	1	PULLEY GP-CRANKSHAFT	431
			—OR—	
Y	*445-9988*	1	PULLEY GP-CRANKSHAFT	433
Y	*309-6717*	1	LINES GP-ENGINE OIL	481
Y	*311-1683*	1	PUMP GP-FUEL INJECTION	814
			—OR—	
Y	*596-2825*	1	PUMP GP-FUEL INJECTION	829
Y	*309-6721*	1	PUMP GP-WATER	509
			—OR—	
Y	*598-5726*	1	PUMP GP-WATER	544
Y	*308-2313*	1	SOLENOID GP-SHUTOFF (FUEL)	889
			—OR—	
Y	*519-4412*	1	SOLENOID GP-SHUTOFF (FUEL)	891
Y	*315-7819*	1	SWITCH GP-PRESSURE (ENGINE OIL)	908
			—OR—	
Y	*584-9822*	1	SWITCH GP-PRESSURE	914
Y	*308-2317*	1	SWITCH GP-TEMPERATURE (ENGINE COOLANT)	917
			—OR—	
Y	*601-4322*	1	SENSOR GP-TEMPERATURE	886
Y	*309-6716*	1	VALVE MECHANISM GP	458

Y - SEPARATE ILLUSTRATION

<END>

433-1380 ENGINE AR

46 BRAKE KW (61 BHP) AT 3000 RPM

FIELD REPLACEMENT FOR 417-8393—PAGE: 91
: FOR 389-9258—PAGE: 79
: FOR 358-1410—PAGE: 78
: FOR 393-7230—PAGE: 80
: FOR 309-1463—PAGE: 30
: FOR 489-9224—PAGE: 127
: FOR 358-1410—PAGE: 78

SMCS-1000 **i10080901**

NOTE	PART NUMBER	QTY	PART NAME 1 2 3 4 5 6 (PRODUCT LEVEL)	SEE PAGE
Y	*317-0971*	1	CAMSHAFT GP	146
Y	*308-2299*	1	LINES GP-COOLANT	504
			—OR—	
Y	*331-2589*	1	LINES GP-COOLANT	505
Y	*308-2302*	1	CONNECTION GP-WATER	483
Y	*341-1358*	1	CONTROL GP-GOVERNOR	709
Y	*442-9881*	1	CONTROL GP-THROTTLE	757
			—OR—	
Y	*308-2313*	1	SOLENOID GP-SHUTOFF (FUEL)	889
Y	*342-1268*	1	FASTENER GP-COVER	275
Y	*308-2283*	1	CRANKSHAFT GP	209
Y	*308-2281*	1	CYLINDER BLOCK GP	221
Y	*308-2284*	1	CYLINDER HEAD GP	253
Y	*354-1245*	1	HOUSING GP-FRONT	340
Y	*308-2297*	1	FILLER GP-ENGINE OIL	466
Y	*308-2298*	1	FILTER GP-ENGINE OIL	474
Y	*322-2412*	1	FLYWHEEL GP	281
Y	*308-2311*	1	GLOW PLUG GP	881
Y	*342-9604*	1	HOUSING GP-FLYWHEEL	292
Y	*317-0965*	1	HOUSING GP-FRONT	314
Y	*309-6725*	1	LIFTING GP-ENGINE	376
Y	*308-2295*	1	PAN GP-OIL	385
Y	*342-9607*	1	PARTS GP-MISCELLANEOUS	924
Y	*308-2286*	1	PISTON & ROD GP	408
Y	*309-6720*	1	PLUG GP-OIL PAN	426
Y	*321-6740*	1	PULLEY GP-CRANKSHAFT	432
Y	*308-2287*	1	LINES GP-ENGINE OIL	480
Y	*317-0977*	1	PUMP GP-FUEL INJECTION	818
Y	*317-0979*	1	PUMP GP-WATER	513
Y	*315-7819*	1	SWITCH GP-PRESSURE (ENGINE OIL)	908
Y	*308-2317*	1	SWITCH GP-TEMPERATURE (ENGINE COOLANT)	917
Y	*442-9826*	1	TURBOCHARGER GP	671
			—OR—	
Y	*508-8740*	1	TURBOCHARGER GP	682
Y	*308-2285*	1	VALVE MECHANISM GP	452

Y - SEPARATE ILLUSTRATION

<END>

301-2946 ENGINE AR-PRIMARY

37 BRAKE KW (50 BHP) AT 2800 RPM

SMCS-1000 **i10078274**

NOTE	PART NUMBER	QTY	PART NAME 1 2 3 4 5 6 (PRODUCT LEVEL)	SEE PAGE
Y	*308-2305*	1	ALTERNATOR GP-CHARGING	858
Y	*308-2319*	1	CONNECTION GP-ELECTRICAL	867
			—OR—	
Y	*321-6741*	1	CONNECTION GP-ELECTRICAL	868
Y	*308-2302*	1	CONNECTION GP-WATER	483
Y	*308-2307*	1	HOUSING GP-FRONT	297
Y	*309-6722*	1	COVER GP-VALVE MECHANISM	184
Y	*309-6713*	1	CRANKSHAFT GP	213
Y	*309-6712*	1	CYLINDER BLOCK GP	225
Y	*309-6715*	1	CYLINDER HEAD GP	255
Y	*308-2304*	1	EXTENSION GP-FAN	270
Y	*308-2303*	1	FAN GP-SUCTION	491
Y	*363-3165*	1	FILLER GP-ENGINE OIL	470
Y	*308-2298*	1	FILTER GP-ENGINE OIL	474
Y	*308-2291*	1	FLYWHEEL GP	278
Y	*308-2311*	1	GLOW PLUG GP	881
Y	*308-2290*	1	HOUSING GP-FLYWHEEL	287
Y	*309-6718*	1	HOUSING GP-FRONT	299
Y	*309-6725*	1	LIFTING GP-ENGINE	376
Y	*309-6717*	1	LINES GP-ENGINE OIL	481
Y	*309-6724*	1	MANIFOLD GP-EXHAUST	614
Y	*308-4735*	1	MOUNTING GP-ENGINE OIL FILTER	482
Y	*308-2295*	1	PAN GP-OIL	385
Y	*309-6714*	1	PISTON & ROD GP	410
Y	*309-6720*	1	PLUG GP-OIL PAN	426
Y	*308-2300*	1	PULLEY GP-CRANKSHAFT	431
Y	*308-2294*	1	PULLEY GP-FAN	434
Y	*308-2310*	1	PUMP GP-FILTER & FUEL TRANSFER	796
Y	*309-6719*	1	PUMP GP-FUEL INJECTION	812
Y	*308-2320*	1	PUMP GP-FUEL PRIMING	840
Y	*309-6721*	1	PUMP GP-WATER	509
Y	*308-2313*	1	SOLENOID GP-SHUTOFF (FUEL)	889
Y	*308-2293*	1	STARTING MOTOR GP-ELECTRIC	895
Y	*308-2312*	1	SWITCH GP-PRESSURE	906
Y	*308-2314*	1	SWITCH GP-START	915
Y	*308-2317*	1	SWITCH GP-TEMPERATURE (ENGINE COOLANT)	917
Y	*308-2306*	1	V-BELT GP (WATER PUMP)	443
Y	*309-6716*	1	VALVE MECHANISM GP	458

Y - SEPARATE ILLUSTRATION

<END>

302-1820 ENGINE AR-PRIMARY

37 BRAKE KW (50 BHP) AT 2800 RPM

FIELD REPLACEMENT ORDER 435-1646—PAGE: 112

SMCS-1000 **i10078297**

NOTE	PART NUMBER	QTY	PART NAME 1 2 3 4 5 6 (PRODUCT LEVEL)	SEE PAGE
Y	*308-2305*	1	ALTERNATOR GP-CHARGING	858
Y	*441-6514*	1	CAMSHAFT GP	169
			—OR—	
Y	*454-6144*	1	CAMSHAFT GP	170
Y	*308-2319*	1	CONNECTION GP-ELECTRICAL	867
			—OR—	
Y	*321-6741*	1	CONNECTION GP-ELECTRICAL	868
Y	*308-2309*	1	CONNECTION GP-EXHAUST	606
Y	*308-2302*	1	CONNECTION GP-WATER	483
Y	*441-6513*	1	CONTROL GP-GOVERNOR	727
			—OR—	
Y	*454-6143*	1	CONTROL GP-GOVERNOR	733
Y	*308-2307*	1	HOUSING GP-FRONT	297
Y	*317-0590*	1	COVER GP-VALVE MECHANISM	192
Y	*309-6713*	1	CRANKSHAFT GP	213
Y	*309-6712*	1	CYLINDER BLOCK GP	225
Y	*309-6715*	1	CYLINDER HEAD GP	255
Y	*308-2304*	1	EXTENSION GP-FAN	270
Y	*308-2303*	1	FAN GP-SUCTION	491
Y	*308-2297*	1	FILLER GP-ENGINE OIL	466
			—OR—	
Y	*363-3165*	1	FILLER GP-ENGINE OIL	470
Y	*308-2298*	1	FILTER GP-ENGINE OIL	474
Y	*308-2291*	1	FLYWHEEL GP	278
Y	*308-2311*	1	GLOW PLUG GP	881
Y	*308-2290*	1	HOUSING GP-FLYWHEEL	287
Y	*309-6718*	1	HOUSING GP-FRONT	299
			—OR—	
Y	*441-6512*	1	HOUSING GP-FRONT	350
			—OR—	
Y	*454-6141*	1	HOUSING GP-FRONT	352
Y	*308-2321*	1	LAMP GP	918
Y	*309-6725*	1	LIFTING GP-ENGINE	376
Y	*309-6717*	1	LINES GP-ENGINE OIL	481
Y	*309-6724*	1	MANIFOLD GP-EXHAUST	614
Y	*308-4735*	1	MOUNTING GP-ENGINE OIL FILTER	482
Y	*308-2295*	1	PAN GP-OIL	385
Y	*309-6714*	1	PISTON & ROD GP	410
Y	*309-6720*	1	PLUG GP-OIL PAN	426
Y	*308-2300*	1	PULLEY GP-CRANKSHAFT	431
Y	*308-2294*	1	PULLEY GP-FAN	434
Y	*308-2310*	1	PUMP GP-FILTER & FUEL TRANSFER	796
Y	*309-6719*	1	PUMP GP-FUEL INJECTION	812
Y	*308-2320*	1	PUMP GP-FUEL PRIMING	840
Y	*309-6721*	1	PUMP GP-WATER	509
Y	*308-2313*	1	SOLENOID GP-SHUTOFF (FUEL)	889
Y	*308-2293*	1	STARTING MOTOR GP-ELECTRIC	895
Y	*308-2312*	1	SWITCH GP-PRESSURE	906

302-1820 **ENGINE AR-PRIMARY (**contd.**)** **i10078297**

NOTE	PART NUMBER	QTY	PART NAME 1 2 3 4 5 6 (PRODUCT LEVEL)	SEE PAGE
Y	*308-2314*	1	SWITCH GP-START	915
Y	*308-2317*	1	SWITCH GP-TEMPERATURE (ENGINE COOLANT)	917
Y	*308-2306*	1	V-BELT GP (WATER PUMP) (DRIVE)	443
Y	*309-6716*	1	VALVE MECHANISM GP	458

Y - SEPARATE ILLUSTRATION

<END>

302-8138 ENGINE AR-PRIMARY*R

34 BRAKE KW (32 BHP) AT 2400 RPM

FIELD REPLACEMENT ORDER 435-1641—PAGE: 108

SMCS-1000 **i10078302**

NOTE	PART NUMBER	QTY	PART NAME 1 2 3 4 5 6 (PRODUCT LEVEL)	SEE PAGE
Y	*308-2305*	1	ALTERNATOR GP-CHARGING	858
Y	*311-9025*	1	CAMSHAFT GP	145
Y	*308-2302*	1	CONNECTION GP-WATER	483
Y	*308-2307*	1	HOUSING GP-FRONT	297
Y	*309-6722*	1	COVER GP-VALVE MECHANISM	184
Y	*309-6713*	1	CRANKSHAFT GP	213
Y	*309-6712*	1	CYLINDER BLOCK GP	225
Y	*309-6715*	1	CYLINDER HEAD GP	255
Y	*315-5252*	1	VALVE & PLUG GP-OIL PAN DRAIN	451
Y	*308-2297*	1	FILLER GP-ENGINE OIL	466
			—OR—	
Y	*363-3165*	1	FILLER GP-ENGINE OIL	470
Y	*308-2298*	1	FILTER GP-ENGINE OIL	474
Y	*308-2291*	1	FLYWHEEL GP	278
Y	*308-2311*	1	GLOW PLUG GP	881
Y	*311-9024*	1	GOVERNOR GP	764
Y	*308-2290*	1	HOUSING GP-FLYWHEEL	287
Y	*311-9023*	1	HOUSING GP-FRONT	312
Y	*309-6725*	1	LIFTING GP-ENGINE	376
Y	*309-6724*	1	MANIFOLD GP-EXHAUST	614
Y	*315-5256*	1	GASKET GP-EXHAUST MANIFOLD	613
Y	*308-4735*	1	MOUNTING GP-ENGINE OIL FILTER	482
Y	*315-7813*	1	EXTENSION GP-FAN	271
Y	*308-2295*	1	PAN GP-OIL	385
Y	*309-6714*	1	PISTON & ROD GP	410
Y	*308-2300*	1	PULLEY GP-CRANKSHAFT	431
Y	*308-2294*	1	PULLEY GP-FAN	434
Y	*315-7814*	1	PUMP & MTG GP-FUEL TRANSFER	795
Y	*309-6717*	1	LINES GP-ENGINE OIL	481
Y	*311-9026*	1	PUMP GP-FUEL INJECTION	816
Y	*309-6721*	1	PUMP GP-WATER	509
Y	*315-7817*	1	SOLENOID GP-SHUTOFF	890
Y	*308-2293*	1	STARTING MOTOR GP-ELECTRIC	895
Y	*315-7819*	1	SWITCH GP-PRESSURE (ENGINE OIL)	908
Y	*308-2317*	1	SWITCH GP-TEMPERATURE (ENGINE COOLANT)	917
Y	*308-2306*	1	V-BELT GP (WATER PUMP)	443
Y	*309-6716*	1	VALVE MECHANISM GP	458

Y - SEPARATE ILLUSTRATION

<END>

303-4098 ENGINE AR-PRIMARY

38 BRAKE KW (51 BHP) AT 3000 RPM. TIER III
FIELD REPLACEMENT ORDER 433-1379—PAGE: 6

SMCS-1000 **i10078364**

NOTE	PART NUMBER	QTY	PART NAME 1 2 3 4 5 6 (PRODUCT LEVEL)	SEE PAGE
Y	*317-0649*	1	AIR CLEANER GP	586
			—OR—	
Y	*611-6891*	1	AIR CLEANER GP	605
			—OR—	
Y	*600-5149*	1	AIR CLEANER GP	601
Y	*308-2305*	1	ALTERNATOR GP-CHARGING	858
			—OR—	
Y	*518-9064*	1	ALTERNATOR GP-CHARGING	865
Y	*325-9476*	1	CAMSHAFT GP	149
			—OR—	
Y	*596-3428*	1	CAMSHAFT GP	175
Y	*308-2319*	1	CONNECTION GP-ELECTRICAL	867
			—OR—	
Y	*541-6343*	1	CONNECTION GP-ELECTRICAL	870
Y	*308-2302*	1	CONNECTION GP-WATER	483
			—OR—	
Y	*398-5884*	1	CONNECTION GP-WATER	485
Y	*325-9475*	1	CONTROL GP-GOVERNOR	701
Y	*329-8577*	1	COVER GP-FRONT HOUSING	183
Y	*309-6722*	1	COVER GP-VALVE MECHANISM	184
			—OR—	
Y	*586-6654*	1	COVER GP-VALVE MECHANISM	203
Y	*309-6713*	1	CRANKSHAFT GP	213
			—OR—	
Y	*399-4716*	1	CRANKSHAFT GP	217
Y	*309-6712*	1	CYLINDER BLOCK GP	225
Y	*309-6715*	1	CYLINDER HEAD GP	255
			—OR—	
Y	*596-2861*	1	CYLINDER HEAD GP	262
Y	*398-9095*	1	EXTENSION GP-FAN	273
Y	*544-4891*	1	FAN GP-SUCTION	499
Y	*607-7117*	1	FILM GP (RADIATOR)	923
Y	*308-2297*	1	FILLER GP-ENGINE OIL	466
			—OR—	
Y	*363-3165*	1	FILLER GP-ENGINE OIL	470
			—OR—	
Y	*533-3936*	1	FILLER GP-ENGINE OIL	473
Y	*308-2298*	1	FILTER GP-ENGINE OIL	474
			—OR—	
Y	*398-8178*	1	FILTER GP-ENGINE OIL	477
Y	*308-2291*	1	FLYWHEEL GP	278
			—OR—	
Y	*398-4803*	1	FLYWHEEL GP	283
Y	*308-2311*	1	GLOW PLUG GP	881
			—OR—	
Y	*587-0270*	1	GLOW PLUG GP	883
Y	*308-2290*	1	HOUSING GP-FLYWHEEL	287

303-4098 **ENGINE AR-PRIMARY (**contd.**)** **i10078364**

NOTE	PART NUMBER	QTY	PART NAME 1 2 3 4 5 6 (PRODUCT LEVEL)	SEE PAGE
			—OR—	
Y	*591-2135*	1	HOUSING GP-FLYWHEEL	295
Y	*311-1682*	1	HOUSING GP-FRONT	309
			—OR—	
Y	*599-9816*	1	HOUSING GP-FRONT	363
Y	*584-3179*	1	CYLINDER BLOCK GP	239
Y	*308-2321*	1	LAMP GP	918
Y	*309-6725*	1	LIFTING GP-ENGINE	376
			—OR—	
Y	*584-9814*	1	LIFTING GP-ENGINE	378
Y	*309-6717*	1	LINES GP-ENGINE OIL	481
Y	*331-2589*	1	LINES GP-COOLANT	505
			—OR—	
Y	*596-3462*	1	GOVERNOR GP	788
Y	*309-6724*	1	MANIFOLD GP-EXHAUST	614
			—OR—	
Y	*584-9801*	1	MANIFOLD GP-EXHAUST	618
Y	*532-9705*	1	CONNECTION GP-EXHAUST	608
Y	*308-2295*	1	PAN GP-OIL	385
			—OR—	
Y	*588-9925*	1	PAN GP-OIL	404
Y	*309-6714*	1	PISTON & ROD GP	410
			—OR—	
Y	*596-2866*	1	PISTON & ROD GP	420
Y	*518-9053*	1	PLATE & FILM GP	925
Y	*309-6720*	1	PLUG GP-OIL PAN	426
			—OR—	
Y	*398-5865*	1	PLUG GP-OIL PAN	428
Y	*308-2300*	1	PULLEY GP-CRANKSHAFT	431
			—OR—	
Y	*445-9988*	1	PULLEY GP-CRANKSHAFT	433
Y	*308-2294*	1	PULLEY GP-FAN	434
			—OR—	
Y	*398-4866*	1	PULLEY GP-FAN	435
Y	*308-2310*	1	PUMP GP-FILTER & FUEL TRANSFER	796
			—OR—	
Y	*599-9752*	1	PUMP GP-FILTER & FUEL TRANSFER	805
Y	*311-1683*	1	PUMP GP-FUEL INJECTION	814
			—OR—	
Y	*596-2825*	1	PUMP GP-FUEL INJECTION	829
Y	*308-2320*	1	PUMP GP-FUEL PRIMING	840
			—OR—	
Y	*579-9444*	1	PUMP GP-FUEL PRIMING	843
			—OR—	
Y	*565-2285*	1	PUMP GP-FUEL PRIMING	842
Y	*308-2301*	1	PUMP GP-WATER	506
			—OR—	
Y	*598-5724*	1	PUMP GP-WATER	537
Y	*331-2552*	1	RADIATOR & FAN GP	545
			—OR—	
Y	*584-9829*	1	RADIATOR GP	577

303-4098 **ENGINE AR-PRIMARY (**contd.**)** **i10078364**

NOTE	PART NUMBER	QTY	PART NAME 1 2 3 4 5 6 (PRODUCT LEVEL)	SEE PAGE
Y	*584-3189*	1	ROCKER ARM GP	441
Y	*308-2293*	1	STARTING MOTOR GP-ELECTRIC	895
			—OR—	
Y	*398-4818*	1	STARTING MOTOR GP-ELECTRIC	903
Y	*308-2313*	1	SOLENOID GP-SHUTOFF (FUEL)	889
			—OR—	
Y	*519-4412*	1	SOLENOID GP-SHUTOFF (FUEL)	891
Y	*399-1115*	1	SWITCH GP-START	916
Y	*315-7819*	1	SWITCH GP-PRESSURE (ENGINE OIL)	908
Y	*308-2314*	1	SWITCH GP-START (HEATER)	915
			—OR—	
Y	*584-9822*	1	SWITCH GP-PRESSURE (HEATER)	914
Y	*308-2317*	1	SWITCH GP-TEMPERATURE (ENGINE COOLANT)	917
			—OR—	
Y	*601-4322*	1	SENSOR GP-TEMPERATURE	886
Y	*308-2306*	1	V-BELT GP (WATER PUMP)	443
			—OR—	
Y	*428-5948*	1	V-BELT GP (WATER PUMP)	448
Y	*309-6716*	1	VALVE MECHANISM GP	458

Y - SEPARATE ILLUSTRATION

<END>

303-4099 ENGINE AR-PRIMARY

38 BRAKE KW (51 BHP) AT 3000 RPM. TIER III

OPTIONAL FIELD REPLACEMENT ORDER 433-1379—PAGE: 6

SMCS-1000 **i10078766**

NOTE	PART NUMBER	QTY	PART NAME 1 2 3 4 5 6 (PRODUCT LEVEL)	SEE PAGE
Y	*317-0649*	1	AIR CLEANER GP	586
			—OR—	
Y	*611-6891*	1	AIR CLEANER GP	605
			—OR—	
Y	*600-5149*	1	AIR CLEANER GP	601
Y	*308-2305*	1	ALTERNATOR GP-CHARGING	858
			—OR—	
Y	*518-9064*	1	ALTERNATOR GP-CHARGING	865
Y	*325-9476*	1	CAMSHAFT GP	149
			—OR—	
Y	*596-3428*	1	CAMSHAFT GP	175
Y	*308-2319*	1	CONNECTION GP-ELECTRICAL	867
			—OR—	
Y	*321-6741*	1	CONNECTION GP-ELECTRICAL	868
Y	*308-2309*	1	CONNECTION GP-EXHAUST	606
Y	*308-2302*	1	CONNECTION GP-WATER	483
			—OR—	
Y	*398-5884*	1	CONNECTION GP-WATER	485
Y	*325-9475*	1	CONTROL GP-GOVERNOR	701
Y	*308-2307*	1	HOUSING GP-FRONT	297
			—OR—	
Y	*599-9816*	1	HOUSING GP-FRONT	363
Y	*541-6343*	1	CONNECTION GP-ELECTRICAL	870
Y	*532-9705*	1	CONNECTION GP-EXHAUST	608
Y	*309-6722*	1	COVER GP-VALVE MECHANISM	184
			—OR—	
Y	*586-6654*	1	COVER GP-VALVE MECHANISM	203
Y	*309-6713*	1	CRANKSHAFT GP	213
			—OR—	
Y	*399-4716*	1	CRANKSHAFT GP	217
Y	*309-6712*	1	CYLINDER BLOCK GP	225
			—OR—	
Y	*584-3179*	1	CYLINDER BLOCK GP	239
Y	*309-6715*	1	CYLINDER HEAD GP	255
			—OR—	
Y	*596-2861*	1	CYLINDER HEAD GP	262
Y	*398-9095*	1	EXTENSION GP-FAN	273
Y	*521-8165*	1	FAN GP-SUCTION	498
Y	*607-7117*	1	FILM GP (RADIATOR)	923
Y	*308-2297*	1	FILLER GP-ENGINE OIL	466
			—OR—	
Y	*363-3165*	1	FILLER GP-ENGINE OIL	470
			—OR—	
Y	*533-3936*	1	FILLER GP-ENGINE OIL	473
Y	*308-2298*	1	FILTER GP-ENGINE OIL	474
			—OR—	
Y	*398-8178*	1	FILTER GP-ENGINE OIL	477
Y	*308-2291*	1	FLYWHEEL GP	278

303-4099 **ENGINE AR-PRIMARY (**contd.**)** **i10078766**

NOTE	PART NUMBER	QTY	PART NAME 1 2 3 4 5 6 (PRODUCT LEVEL)	SEE PAGE
			—OR—	
Y	*398-4803*	1	FLYWHEEL GP	283
Y	*308-2311*	1	GLOW PLUG GP	881
			—OR—	
Y	*587-0270*	1	GLOW PLUG GP	883
Y	*596-3462*	1	GOVERNOR GP	788
Y	*308-2290*	1	HOUSING GP-FLYWHEEL	287
			—OR—	
Y	*591-2135*	1	HOUSING GP-FLYWHEEL	295
Y	*311-1682*	1	HOUSING GP-FRONT	309
Y	*308-2321*	1	LAMP GP	918
Y	*309-6725*	1	LIFTING GP-ENGINE	376
			—OR—	
Y	*584-9814*	1	LIFTING GP-ENGINE	378
Y	*331-2589*	1	LINES GP-COOLANT	505
Y	*309-6724*	1	MANIFOLD GP-EXHAUST	614
			—OR—	
Y	*584-9801*	1	MANIFOLD GP-EXHAUST	618
Y	*308-2295*	1	PAN GP-OIL	385
			—OR—	
Y	*588-9925*	1	PAN GP-OIL	404
Y	*309-6714*	1	PISTON & ROD GP	410
			—OR—	
Y	*596-2866*	1	PISTON & ROD GP	420
Y	*518-9053*	1	PLATE & FILM GP	925
Y	*309-6720*	1	PLUG GP-OIL PAN	426
			—OR—	
Y	*398-5865*	1	PLUG GP-OIL PAN	428
Y	*308-2300*	1	PULLEY GP-CRANKSHAFT	431
			—OR—	
Y	*445-9988*	1	PULLEY GP-CRANKSHAFT	433
Y	*308-2294*	1	PULLEY GP-FAN	434
			—OR—	
Y	*398-4866*	1	PULLEY GP-FAN	435
Y	*309-6717*	1	LINES GP-ENGINE OIL	481
Y	*308-2310*	1	PUMP GP-FILTER & FUEL TRANSFER	796
			—OR—	
Y	*599-9752*	1	PUMP GP-FILTER & FUEL TRANSFER	805
Y	*311-1683*	1	PUMP GP-FUEL INJECTION	814
			—OR—	
Y	*596-2825*	1	PUMP GP-FUEL INJECTION	829
Y	*308-2320*	1	PUMP GP-FUEL PRIMING	840
			—OR—	
Y	*579-9444*	1	PUMP GP-FUEL PRIMING	843
			—OR—	
Y	*565-2285*	1	PUMP GP-FUEL PRIMING	842
Y	*308-2301*	1	PUMP GP-WATER	506
			—OR—	
Y	*598-5724*	1	PUMP GP-WATER	537
Y	*331-3270*	1	RADIATOR GP	565
			—OR—	

303-4099 **ENGINE AR-PRIMARY (**contd.**)** **i10078766**

NOTE	PART NUMBER	QTY	PART NAME 1 2 3 4 5 6 (PRODUCT LEVEL)	SEE PAGE
Y	*584-9829*	1	RADIATOR GP	577
Y	*584-3189*	1	ROCKER ARM GP	441
Y	*308-2313*	1	SOLENOID GP-SHUTOFF (FUEL)	889
			—OR—	
Y	*519-4412*	1	SOLENOID GP-SHUTOFF (FUEL) (FUEL)	891
Y	*308-2293*	1	STARTING MOTOR GP-ELECTRIC	895
			—OR—	
Y	*398-4818*	1	STARTING MOTOR GP-ELECTRIC	903
Y	*315-7819*	1	SWITCH GP-PRESSURE (ENGINE OIL)	908
			—OR—	
Y	*584-9822*	1	SWITCH GP-PRESSURE (ENGINE OIL)	914
Y	*308-2317*	1	SWITCH GP-TEMPERATURE (ENGINE COOLANT)	917
			—OR—	
Y	*601-4322*	1	SENSOR GP-TEMPERATURE	886
Y	*308-2306*	1	V-BELT GP (WATER PUMP)	443
			—OR—	
Y	*428-5948*	1	V-BELT GP (WATER PUMP) (WATER PUMP)	448

Y - SEPARATE ILLUSTRATION

<END>

303-4225 ENGINE AR-PRIMARY

38 BRAKE KW (51 BHP) AT 2800 RPM. TIER III
FIELD REPLACEMENT ORDER 435-1646 CYLINDER BLOCK GP

SMCS-1000 **i10079228**

NOTE	PART NUMBER	QTY	PART NAME 1 2 3 4 5 6 (PRODUCT LEVEL)	SEE PAGE
Y	*317-0649*	1	AIR CLEANER GP	586
			—OR—	
Y	*611-6891*	1	AIR CLEANER GP	605
Y	*308-2305*	1	ALTERNATOR GP-CHARGING	858
Y	*465-2494*	1	CAMSHAFT GP	172
			—OR—	
Y	*454-6144*	1	CAMSHAFT GP	170
Y	*308-2319*	1	CONNECTION GP-ELECTRICAL	867
			—OR—	
Y	*321-6741*	1	CONNECTION GP-ELECTRICAL	868
Y	*308-2309*	1	CONNECTION GP-EXHAUST	606
Y	*308-2302*	1	CONNECTION GP-WATER	483
Y	*465-2493*	1	CONTROL GP-GOVERNOR	741
			—OR—	
Y	*454-6143*	1	CONTROL GP-GOVERNOR	733
Y	*329-8577*	1	COVER GP-FRONT HOUSING	183
Y	*309-6722*	1	COVER GP-VALVE MECHANISM	184
Y	*309-6713*	1	CRANKSHAFT GP	213
Y	*309-6712*	1	CYLINDER BLOCK GP	225
Y	*309-6715*	1	CYLINDER HEAD GP	255
Y	*308-2297*	1	FILLER GP-ENGINE OIL (ENGINE)	466
			—OR—	
Y	*363-3165*	1	FILLER GP-ENGINE OIL (PRIMARY)	470
Y	*308-2298*	1	FILTER GP-ENGINE OIL	474
Y	*308-2291*	1	FLYWHEEL GP	278
Y	*308-2311*	1	GLOW PLUG GP	881
Y	*308-2290*	1	HOUSING GP-FLYWHEEL	287
Y	*309-6718*	1	HOUSING GP-FRONT	299
			—OR—	
Y	*465-2492*	1	HOUSING GP-FRONT	354
			—OR—	
Y	*454-6141*	1	HOUSING GP-FRONT	352
Y	*308-2321*	1	LAMP GP	918
Y	*309-6725*	1	LIFTING GP-ENGINE	376
Y	*331-2589*	1	LINES GP-COOLANT	505
Y	*309-6717*	1	LINES GP-ENGINE OIL	481
Y	*309-6724*	1	MANIFOLD GP-EXHAUST	614
Y	*308-2295*	1	PAN GP-OIL	385
Y	*309-6714*	1	PISTON & ROD GP	410
Y	*309-6720*	1	PLUG GP-OIL PAN	426
Y	*308-2300*	1	PULLEY GP-CRANKSHAFT	431
Y	*308-2294*	1	PULLEY GP-FAN	434
Y	*308-2310*	1	PUMP GP-FILTER & FUEL TRANSFER	796
Y	*309-6719*	1	PUMP GP-FUEL INJECTION	812
Y	*308-2320*	1	PUMP GP-FUEL PRIMING	840
			—OR—	
Y	*579-9444*	1	PUMP GP-FUEL PRIMING	843
Y	*308-2301*	1	PUMP GP-WATER	506

303-4225 **ENGINE AR-PRIMARY (**contd.**)** **i10079228**

NOTE	PART NUMBER	QTY	PART NAME 1 2 3 4 5 6 (PRODUCT LEVEL)	SEE PAGE
Y	*331-3270*	1	RADIATOR GP	565
Y	*308-2313*	1	SOLENOID GP-SHUTOFF (FUEL)	889
Y	*308-2293*	1	STARTING MOTOR GP-ELECTRIC	895
Y	*315-7819*	1	SWITCH GP-PRESSURE (ENGINE OIL)	908
Y	*308-2314*	1	SWITCH GP-START	915
Y	*308-2317*	1	SWITCH GP-TEMPERATURE (ENGINE COOLANT)	917
Y	*308-2306*	1	V-BELT GP (WATER PUMP)	443
Y	*309-6716*	1	VALVE MECHANISM GP	458

Y - SEPARATE ILLUSTRATION

<END>

303-4226 ENGINE AR-PRIMARY

37 BRAKE KW (50 BHP) AT 2800 RPM. TIER III
FIELD REPLACEMENT ORDER 435-1646 CYLINDER BLOCK GP

SMCS-1000 **i10079250**

NOTE	PART NUMBER	QTY	PART NAME 1 2 3 4 5 6 (PRODUCT LEVEL)	SEE PAGE
Y	*317-0649*	1	AIR CLEANER GP	586
Y	*308-2305*	1	ALTERNATOR GP-CHARGING	858
Y	*308-2319*	1	CONNECTION GP-ELECTRICAL	867
			—OR—	
Y	*321-6741*	1	CONNECTION GP-ELECTRICAL	868
Y	*308-2302*	1	CONNECTION GP-WATER	483
Y	*308-2307*	1	HOUSING GP-FRONT	297
Y	*309-6722*	1	COVER GP-VALVE MECHANISM	184
Y	*309-6713*	1	CRANKSHAFT GP	213
Y	*309-6712*	1	CYLINDER BLOCK GP	225
Y	*309-6715*	1	CYLINDER HEAD GP	255
Y	*308-2297*	1	FILLER GP-ENGINE OIL	466
			—OR—	
Y	*363-3165*	1	FILLER GP-ENGINE OIL	470
Y	*308-2298*	1	FILTER GP-ENGINE OIL	474
Y	*317-0586*	1	FLYWHEEL GP	280
Y	*308-2311*	1	GLOW PLUG GP	881
Y	*317-0588*	1	HOUSING GP-FLYWHEEL	291
Y	*309-6718*	1	HOUSING GP-FRONT	299
			—OR—	
Y	*441-6512*	1	HOUSING GP-FRONT	350
			—OR—	
Y	*454-6141*	1	HOUSING GP-FRONT	352
Y	*441-6513*	1	CONTROL GP-GOVERNOR	727
			—OR—	
Y	*454-6143*	1	CONTROL GP-GOVERNOR	733
Y	*441-6514*	1	CAMSHAFT GP	169
			—OR—	
Y	*454-6144*	1	CAMSHAFT GP	170
Y	*308-2321*	1	LAMP GP	918
Y	*309-6725*	1	LIFTING GP-ENGINE	376
Y	*331-2589*	1	LINES GP-COOLANT	505
Y	*309-6724*	1	MANIFOLD GP-EXHAUST	614
Y	*308-2295*	1	PAN GP-OIL	385
Y	*309-6714*	1	PISTON & ROD GP	410
Y	*309-6720*	1	PLUG GP-OIL PAN	426
Y	*308-2300*	1	PULLEY GP-CRANKSHAFT	431
Y	*308-2294*	1	PULLEY GP-FAN	434
Y	*309-6717*	1	LINES GP-ENGINE OIL	481
Y	*308-2310*	1	PUMP GP-FILTER & FUEL TRANSFER	796
Y	*309-6719*	1	PUMP GP-FUEL INJECTION	812
Y	*308-2320*	1	PUMP GP-FUEL PRIMING	840
Y	*308-2301*	1	PUMP GP-WATER	506
Y	*331-3270*	1	RADIATOR GP	565
Y	*308-2313*	1	SOLENOID GP-SHUTOFF (FUEL)	889
Y	*308-2293*	1	STARTING MOTOR GP-ELECTRIC	895
Y	*315-7819*	1	SWITCH GP-PRESSURE (ENGINE OIL)	908
Y	*308-2314*	1	SWITCH GP-START	915

303-4226 **ENGINE AR-PRIMARY (**contd.**)** **i10079250**

NOTE	PART NUMBER	QTY	PART NAME 1 2 3 4 5 6 (PRODUCT LEVEL)	SEE PAGE
Y	*308-2317*	1	SWITCH GP-TEMPERATURE (ENGINE COOLANT)	917
Y	*308-2306*	1	V-BELT GP (WATER PUMP) (DRIVE)	443
Y	*309-6716*	1	VALVE MECHANISM GP	458

Y - SEPARATE ILLUSTRATION

<END>

307-9834 ENGINE AR-PRIMARY

37 BRAKE KW (50 BHP) AT 2800 RPM

FIELD REPLACEMENT ORDER 435-1645—PAGE: 243

SMCS-1000 **i10079261**

NOTE	PART NUMBER	QTY	PART NAME 1 2 3 4 5 6 (PRODUCT LEVEL)	SEE PAGE
Y	*365-4284*	1	CAMSHAFT GP	159
			—OR—	
Y	*465-2209*	1	CAMSHAFT GP	171
Y	*365-4283*	1	CONTROL GP-GOVERNOR	711
			—OR—	
Y	*465-2207*	1	CONTROL GP-GOVERNOR	737
Y	*308-2307*	1	HOUSING GP-FRONT	297
Y	*317-0590*	1	COVER GP-VALVE MECHANISM	192
Y	*309-6713*	1	CRANKSHAFT GP	213
Y	*309-6712*	1	CYLINDER BLOCK GP	225
Y	*309-6715*	1	CYLINDER HEAD GP	255
Y	*308-2304*	1	EXTENSION GP-FAN	270
Y	*308-2303*	1	FAN GP-SUCTION	491
Y	*308-2297*	1	FILLER GP-ENGINE OIL	466
			—OR—	
Y	*363-3165*	1	FILLER GP-ENGINE OIL	470
Y	*308-2298*	1	FILTER GP-ENGINE OIL	474
Y	*311-1884*	1	FLYWHEEL GP	279
Y	*308-2311*	1	GLOW PLUG GP	881
Y	*311-1883*	1	HOUSING GP-FLYWHEEL	289
Y	*309-6718*	1	HOUSING GP-FRONT	299
			—OR—	
Y	*365-4282*	1	HOUSING GP-FRONT	342
			—OR—	
Y	*465-2205*	1	HOUSING GP-FRONT	353
Y	*317-0980*	1	HOUSING GP-WATER REGULATOR	501
Y	*308-2321*	1	LAMP GP	918
Y	*309-6725*	1	LIFTING GP-ENGINE	376
Y	*309-6724*	1	MANIFOLD GP-EXHAUST	614
Y	*308-4735*	1	MOUNTING GP-ENGINE OIL FILTER	482
Y	*311-1886*	1	PAN GP-OIL	393
Y	*309-6714*	1	PISTON & ROD GP	410
Y	*309-6720*	1	PLUG GP-OIL PAN	426
Y	*308-2300*	1	PULLEY GP-CRANKSHAFT	431
Y	*308-2294*	1	PULLEY GP-FAN	434
Y	*309-6717*	1	LINES GP-ENGINE OIL	481
Y	*308-2310*	1	PUMP GP-FILTER & FUEL TRANSFER	796
Y	*309-6719*	1	PUMP GP-FUEL INJECTION	812
Y	*308-2320*	1	PUMP GP-FUEL PRIMING	840
			—OR—	
Y	*579-9444*	1	PUMP GP-FUEL PRIMING	843
Y	*309-6721*	1	PUMP GP-WATER	509
Y	*308-2313*	1	SOLENOID GP-SHUTOFF (FUEL)	889
Y	*315-7819*	1	SWITCH GP-PRESSURE (ENGINE OIL)	908
Y	*308-2314*	1	SWITCH GP-START	915
Y	*308-2317*	1	SWITCH GP-TEMPERATURE (ENGINE COOLANT)	917
Y	*309-6716*	1	VALVE MECHANISM GP	458

307-9834 **ENGINE AR-PRIMARY (**contd.**)** **i10079261**

NOTE	PART NUMBER	QTY	PART NAME 1 2 3 4 5 6 (PRODUCT LEVEL)	SEE PAGE
Y - SEPARATE ILLUSTRATION				

<END>

307-9835 ENGINE AR-PRIMARY*R

45 BRAKE KW (60 BHP) AT 2800 RPM

SMCS-1000 **i10080428**

NOTE	PART NUMBER	QTY	PART NAME 1 2 3 4 5 6 (PRODUCT LEVEL)	SEE PAGE
Y	*329-9278*	1	CAMSHAFT GP	150
			—OR—	
Y	*365-4292*	1	CAMSHAFT GP	160
			—OR—	
Y	*481-5624*	1	CAMSHAFT GP	173
Y	*308-2299*	1	LINES GP-COOLANT	504
Y	*308-2302*	1	CONNECTION GP-WATER	483
Y	*329-9277*	1	HOUSING GP-FRONT	333
			—OR—	
Y	*365-4290*	1	CONTROL GP-ENGINE SPEED	876
			—OR—	
Y	*481-5623*	1	GOVERNOR GP	782
Y	*308-2307*	1	HOUSING GP-FRONT	297
Y	*308-2283*	1	CRANKSHAFT GP	209
Y	*308-2281*	1	CYLINDER BLOCK GP	221
Y	*308-2284*	1	CYLINDER HEAD GP	253
Y	*363-3165*	1	FILLER GP-ENGINE OIL	470
Y	*308-2298*	1	FILTER GP-ENGINE OIL	474
Y	*322-2412*	1	FLYWHEEL GP	281
Y	*308-2311*	1	GLOW PLUG GP	881
Y	*311-1883*	1	HOUSING GP-FLYWHEEL	289
Y	*308-2288*	1	FASTENER GP-FRONT HOUSING	276
			—OR—	
Y	*365-4288*	1	HOUSING GP-FRONT	343
			—OR—	
Y	*481-5621*	1	HOUSING GP-FRONT	355
Y	*309-6725*	1	LIFTING GP-ENGINE	376
Y	*315-7813*	1	EXTENSION GP-FAN	271
Y	*311-1886*	1	PAN GP-OIL	393
Y	*308-2286*	1	PISTON & ROD GP	408
Y	*309-6720*	1	PLUG GP-OIL PAN	426
Y	*321-6740*	1	PULLEY GP-CRANKSHAFT	432
Y	*308-2294*	1	PULLEY GP-FAN	434
Y	*308-2287*	1	LINES GP-ENGINE OIL	480
Y	*308-2310*	1	PUMP GP-FILTER & FUEL TRANSFER	796
Y	*308-2289*	1	PUMP GP-FUEL INJECTION	808
Y	*308-2320*	1	PUMP GP-FUEL PRIMING	840
			—OR—	
Y	*579-9444*	1	PUMP GP-FUEL PRIMING	843
Y	*317-0979*	1	PUMP GP-WATER	513
Y	*308-2313*	1	SOLENOID GP-SHUTOFF (FUEL)	889
Y	*315-7819*	1	SWITCH GP-PRESSURE (ENGINE OIL)	908
Y	*308-2314*	1	SWITCH GP-START	915
Y	*308-2317*	1	SWITCH GP-TEMPERATURE (ENGINE COOLANT)	917
Y	*308-2308*	1	TURBOCHARGER GP	623
			—OR—	
Y	*442-7759*	1	TURBOCHARGER GP	665
Y	*308-2285*	1	VALVE MECHANISM GP	452

307-9835 **ENGINE AR-PRIMARY (**contd.**)** **i10080428**

NOTE	PART NUMBER	QTY	PART NAME 1 2 3 4 5 6 (PRODUCT LEVEL)	SEE PAGE
Y - SEPARATE ILLUSTRATION				

<END>

308-2868 ENGINE AR-PRIMARY

34 BRAKE KW (46 BHP) AT 2400 RPM

SMCS-1000 **i08288772**

NOTE	PART NUMBER	QTY	PART NAME 1 2 3 4 5 6 (PRODUCT LEVEL)	SEE PAGE
Y	**435-1646**	1	ENGINE AR-PRIMARY	112
Y - SEPARATE ILLUSTRATION				

<END>

308-6561 ENGINE AR-PRIMARY

33 BRAKE KW (44 BHP) AT 2800 RPM

SMCS-1000 **i10079518**

NOTE	PART NUMBER	QTY	PART NAME 1 2 3 4 5 6 (PRODUCT LEVEL)	SEE PAGE
Y	*308-2319*	1	CONNECTION GP-ELECTRICAL	867
Y	*308-2309*	1	CONNECTION GP-EXHAUST	606
Y	*308-2302*	1	CONNECTION GP-WATER	483
Y	*308-2307*	1	HOUSING GP-FRONT	297
Y	*309-6722*	1	COVER GP-VALVE MECHANISM	184
Y	*309-6713*	1	CRANKSHAFT GP	213
Y	*309-6712*	1	CYLINDER BLOCK GP	225
Y	*309-6715*	1	CYLINDER HEAD GP	255
Y	*308-2303*	1	FAN GP-SUCTION	491
Y	*308-2297*	1	FILLER GP-ENGINE OIL	466
			S/N: C6M1-229	
Y	*363-3165*	1	FILLER GP-ENGINE OIL	470
			S/N: C6M230-UP	
Y	*308-2298*	1	FILTER GP-ENGINE OIL	474
Y	*308-2291*	1	FLYWHEEL GP	278
Y	*308-2311*	1	GLOW PLUG GP	881
Y	*308-2290*	1	HOUSING GP-FLYWHEEL	287
Y	*309-6718*	1	HOUSING GP-FRONT	299
Y	*308-2321*	1	LAMP GP	918
Y	*309-6725*	1	LIFTING GP-ENGINE	376
Y	*309-6724*	1	MANIFOLD GP-EXHAUST	614
Y	*308-4735*	1	MOUNTING GP-ENGINE OIL FILTER	482
Y	*308-2295*	1	PAN GP-OIL	385
Y	*309-6714*	1	PISTON & ROD GP	410
Y	*309-6720*	1	PLUG GP-OIL PAN	426
Y	*308-2300*	1	PULLEY GP-CRANKSHAFT	431
Y	*309-6717*	1	LINES GP-ENGINE OIL	481
Y	*308-2310*	1	PUMP GP-FILTER & FUEL TRANSFER	796
Y	*308-2320*	1	PUMP GP-FUEL PRIMING	840
Y	*309-6721*	1	PUMP GP-WATER	509
Y	*308-2313*	1	SOLENOID GP-SHUTOFF (FUEL)	889
Y	*308-2293*	1	STARTING MOTOR GP-ELECTRIC	895
Y	*308-2312*	1	SWITCH GP-PRESSURE (ENGINE OIL)	906
Y	*308-2314*	1	SWITCH GP-START (HEATER)	915
Y	*308-2306*	1	V-BELT GP (WATER PUMP)	443
Y	*309-6716*	1	VALVE MECHANISM GP	458

Y - SEPARATE ILLUSTRATION

<END>

308-6563 ENGINE AR-PRIMARY

45 BRAKE KW (60 BHP) AT 2800 RPM

FIELD REPLACEMENT ORDER 435-1636—PAGE: 105

SMCS-1000 **i10079527**

NOTE	PART NUMBER	QTY	PART NAME 1 2 3 4 5 6 (PRODUCT LEVEL)	SEE PAGE
Y	*308-2305*	1	ALTERNATOR GP-CHARGING	858
Y	*323-9147*	1	CAMSHAFT GP	148
			—OR—	
Y	*329-9278*	1	CAMSHAFT GP	150
Y	*308-2319*	1	CONNECTION GP-ELECTRICAL	867
			—OR—	
Y	*321-6741*	1	CONNECTION GP-ELECTRICAL	868
Y	*308-2309*	1	CONNECTION GP-EXHAUST	606
Y	*308-2299*	1	LINES GP-COOLANT	504
			S/N: C6M1-4451	
Y	*331-2589*	1	LINES GP-COOLANT	505
			S/N: C6M4452-UP	
Y	*323-9146*	1	GOVERNOR GP	772
			—OR—	
Y	*329-9277*	1	HOUSING GP-FRONT	333
Y	*308-2302*	1	CONNECTION GP-WATER	483
Y	*308-2307*	1	HOUSING GP-FRONT	297
Y	*308-2283*	1	CRANKSHAFT GP	209
Y	*308-2281*	1	CYLINDER BLOCK GP	221
Y	*308-2284*	1	CYLINDER HEAD GP	253
Y	*308-2304*	1	EXTENSION GP-FAN	270
Y	*308-2303*	1	FAN GP-SUCTION	491
Y	*308-2297*	1	FILLER GP-ENGINE OIL	466
			S/N: C6M1-2638	
Y	*363-3165*	1	FILLER GP-ENGINE OIL	470
			S/N: C6M2639-UP	
Y	*308-2298*	1	FILTER GP-ENGINE OIL	474
Y	*308-2291*	1	FLYWHEEL GP	278
Y	*308-2311*	1	GLOW PLUG GP	881
Y	*308-2290*	1	HOUSING GP-FLYWHEEL	287
Y	*323-9145*	1	HOUSING GP-FRONT	332
			—OR—	
Y	*308-2288*	1	FASTENER GP-FRONT HOUSING	276
Y	*308-2321*	1	LAMP GP	918
Y	*308-2315*	1	LIFTING GP-ENGINE	375
			—OR—	
Y	*309-6725*	1	LIFTING GP-ENGINE	376
Y	*308-2295*	1	PAN GP-OIL	385
Y	*308-2286*	1	PISTON & ROD GP	408
Y	*309-6720*	1	PLUG GP-OIL PAN	426
Y	*321-6740*	1	PULLEY GP-CRANKSHAFT	432
Y	*308-2287*	1	LINES GP-ENGINE OIL	480
Y	*308-2310*	1	PUMP GP-FILTER & FUEL TRANSFER	796
Y	*308-2320*	1	PUMP GP-FUEL PRIMING	840
Y	*317-0979*	1	PUMP GP-WATER	513
			S/N: C6M1-4451	
Y	*442-7729*	1	PUMP GP-WATER	531

308-6563 **ENGINE AR-PRIMARY (**contd.**)** **i10079527**

NOTE	PART NUMBER	QTY	PART NAME 1 2 3 4 5 6 (PRODUCT LEVEL)	SEE PAGE
			S/N: C6M4452-UP	
Y	*308-2313*	1	SOLENOID GP-SHUTOFF (FUEL)	889
Y	*308-2293*	1	STARTING MOTOR GP-ELECTRIC	895
Y	*308-2312*	1	SWITCH GP-PRESSURE (ENGINE OIL)	906
Y	*308-2314*	1	SWITCH GP-START (HEATER)	915
Y	*308-2317*	1	SWITCH GP-TEMPERATURE (ENGINE COOLANT)	917
Y	*308-2308*	1	TURBOCHARGER GP	623
			—OR—	
Y	*442-7759*	1	TURBOCHARGER GP	665
Y	*308-2306*	1	V-BELT GP (WATER PUMP)	443
Y	*308-2285*	1	VALVE MECHANISM GP	452

Y - SEPARATE ILLUSTRATION

<END>

309-1463 ENGINE AR-PRIMARY

46 BRAKE KW (61 BHP) AT 3000 RPM

FIELD REPLACEMENT ORDER 433-1380—PAGE: 8

SMCS-1000 **i10080433**

NOTE	PART NUMBER	QTY	PART NAME 1 2 3 4 5 6 (PRODUCT LEVEL)	SEE PAGE
Y	*308-2305*	1	ALTERNATOR GP-CHARGING	858
Y	*341-1359*	1	CAMSHAFT GP	156
			S/N: C6M961-UP	
Y	*308-2309*	1	CONNECTION GP-EXHAUST	606
Y	*308-2299*	1	LINES GP-COOLANT	504
			S/N: C6M1-1959	
Y	*331-2589*	1	LINES GP-COOLANT	505
			S/N: C6M1960-UP	
Y	*308-2302*	1	CONNECTION GP-WATER	483
Y	*341-1358*	1	CONTROL GP-GOVERNOR	709
			S/N: C6M961-UP	
Y	*308-2307*	1	HOUSING GP-FRONT	297
Y	*308-2283*	1	CRANKSHAFT GP	209
Y	*308-2281*	1	CYLINDER BLOCK GP	221
Y	*308-2284*	1	CYLINDER HEAD GP	253
Y	*308-2297*	1	FILLER GP-ENGINE OIL	466
			S/N: C6M1-1959	
Y	*363-3165*	1	FILLER GP-ENGINE OIL	470
			S/N: C6M1960-UP	
Y	*308-2298*	1	FILTER GP-ENGINE OIL	474
Y	*327-7632*	1	FLYWHEEL GP	282
Y	*308-2311*	1	GLOW PLUG GP	881
Y	*317-0588*	1	HOUSING GP-FLYWHEEL	291
Y	*321-8207*	1	HOUSING GP-FRONT	322
			S/N: C6M1-960	
Y	*341-1357*	1	HOUSING GP-FRONT	338
			S/N: C6M961-UP	
Y	*311-9030*	1	SENSOR GP-TEMPERATURE	885
Y	*309-6725*	1	LIFTING GP-ENGINE	376
Y	*315-7813*	1	EXTENSION GP-FAN	271
			S/N: C6M1-1327	
Y	*311-1119*	1	DRIVE GP-FAN	266
			S/N: C6M1328-UP	
Y	*317-3037*	1	PAN GP-OIL	397
Y	*308-2286*	1	PISTON & ROD GP	408
Y	*309-6720*	1	PLUG GP-OIL PAN	426
Y	*321-6740*	1	PULLEY GP-CRANKSHAFT	432
Y	*328-2488*	1	PULLEY GP-WATER PUMP	438
Y	*308-2287*	1	LINES GP-ENGINE OIL	480
Y	*317-0977*	1	PUMP GP-FUEL INJECTION	818
Y	*311-9028*	1	PUMP GP-FUEL TRANSFER	847
Y	*317-0979*	1	PUMP GP-WATER	513
			S/N: C6M1-1959	
Y	*442-7729*	1	PUMP GP-WATER	531
			S/N: C6M1960-UP	
Y	*315-7817*	1	SOLENOID GP-SHUTOFF	890
Y	*308-2293*	1	STARTING MOTOR GP-ELECTRIC	895
Y	*321-4261*	1	SWITCH GP-PRESSURE (ENGINE OIL)	910

309-1463 **ENGINE AR-PRIMARY (**contd.**)** **i10080433**

NOTE	PART NUMBER	QTY	PART NAME 1 2 3 4 5 6 (PRODUCT LEVEL)	SEE PAGE
Y	*308-2308*	1	TURBOCHARGER GP	623
			S/N: C6M1-3904	
Y	*442-7759*	1	TURBOCHARGER GP	665
			S/N: C6M3905-UP	
Y	*308-2306*	1	V-BELT GP (WATER PUMP)	443
Y	*308-2285*	1	VALVE MECHANISM GP	452

Y - SEPARATE ILLUSTRATION

<END>

310-0598 ENGINE AR-PRIMARY

37 BRAKE KW (50 BHP) AT 2800 RPM

FIELD REPLACEMENT ORDER 435-1646 CYLINDER BLOCK GP

SMCS-1000 **i10053821**

NOTE	PART NUMBER	QTY	PART NAME 1 2 3 4 5 6 (PRODUCT LEVEL)	SEE PAGE
Y	*317-3038*	1	ALTERNATOR GP-CHARGING	860
			—OR—	
Y	*598-5745*	1	ALTERNATOR GP-CHARGING	866
Y	*441-6514*	1	CAMSHAFT GP	169
			—OR—	
Y	*454-6144*	1	CAMSHAFT GP	170
			—OR—	
Y	*596-3428*	1	CAMSHAFT GP	175
Y	*398-5884*	1	CONNECTION GP-WATER	485
Y	*308-2309*	1	CONNECTION GP-EXHAUST	606
			—OR—	
Y	*532-9705*	1	CONNECTION GP-EXHAUST	608
Y	*308-2302*	1	CONNECTION GP-WATER	483
			—OR—	
Y	*598-5726*	1	PUMP GP-WATER	544
Y	*441-6513*	1	CONTROL GP-GOVERNOR	727
			—OR—	
Y	*454-6143*	1	CONTROL GP-GOVERNOR	733
			—OR—	
Y	*596-3466*	1	CONTROL GP-GOVERNOR	749
Y	*317-3041*	1	CONTROL GP-MANUAL START/STOP	878
			—OR—	
Y	*600-5177*	1	CONTROL GP-MANUAL START/STOP	880
Y	*317-0590*	1	COVER GP-VALVE MECHANISM	192
			—OR—	
Y	*586-6656*	1	COVER GP-VALVE MECHANISM	206
Y	*309-6713*	1	CRANKSHAFT GP	213
			—OR—	
Y	*399-4716*	1	CRANKSHAFT GP	217
Y	*309-6712*	1	CYLINDER BLOCK GP	225
			—OR—	
Y	*584-3179*	1	CYLINDER BLOCK GP	239
Y	*309-6715*	1	CYLINDER HEAD GP	255
			—OR—	
Y	*596-2861*	1	CYLINDER HEAD GP	262
Y	*308-2304*	1	EXTENSION GP-FAN	270
			—OR—	
Y	*437-2623*	1	EXTENSION GP-FAN	274
Y	*604-4574*	1	FILM GP (ALTERNATOR)	922
Y	*398-4274*	1	FILM GP	920
			—OR—	
Y	*629-5293*	1	FASTENER GP-FILTER	612
Y	*308-2303*	1	FAN GP-SUCTION	491
			—OR—	
Y	*437-2599*	1	FAN GP-SUCTION	494
Y	*308-2297*	1	FILLER GP-ENGINE OIL	466
			—OR—	
Y	*363-3165*	1	FILLER GP-ENGINE OIL	470

310-0598 **ENGINE AR-PRIMARY (**contd.**)** **i10053821**

NOTE	PART NUMBER	QTY	PART NAME 1 2 3 4 5 6 (PRODUCT LEVEL)	SEE PAGE
			—OR—	
Y	*533-3936*	1	FILLER GP-ENGINE OIL	473
Y	*308-2298*	1	FILTER GP-ENGINE OIL	474
Y	*311-1884*	1	FLYWHEEL GP	279
			—OR—	
Y	*584-9457*	1	FLYWHEEL GP	286
Y	*317-3040*	1	GLOW PLUG GP	882
			—OR—	
Y	*600-5159*	1	GLOW PLUG GP	884
Y	*308-2290*	1	HOUSING GP-FLYWHEEL	287
			—OR—	
Y	*591-2135*	1	HOUSING GP-FLYWHEEL	295
Y	*309-6718*	1	HOUSING GP-FRONT	299
			—OR—	
Y	*441-6512*	1	HOUSING GP-FRONT	350
			—OR—	
Y	*454-6141*	1	HOUSING GP-FRONT	352
			—OR—	
Y	*596-3466*	1	CONTROL GP-GOVERNOR	749
Y	*308-2307*	1	HOUSING GP-FRONT	297
			—OR—	
Y	*599-9816*	1	HOUSING GP-FRONT	363
Y	*309-6725*	1	LIFTING GP-ENGINE	376
			—OR—	
Y	*584-9814*	1	LIFTING GP-ENGINE	378
Y	*309-6717*	1	LINES GP-ENGINE OIL	481
			—OR—	
Y	*584-9801*	1	MANIFOLD GP-EXHAUST	618
Y	*308-4735*	1	MOUNTING GP-ENGINE OIL FILTER	482
Y	*317-3037*	1	PAN GP-OIL	397
			—OR—	
Y	*598-5067*	1	PAN GP-OIL	406
Y	*309-6714*	1	PISTON & ROD GP	410
			—OR—	
Y	*596-2866*	1	PISTON & ROD GP	420
Y	*309-6720*	1	PLUG GP-OIL PAN	426
			—OR—	
Y	*398-5865*	1	PLUG GP-OIL PAN	428
Y	*308-2300*	1	PULLEY GP-CRANKSHAFT	431
			—OR—	
Y	*445-9988*	1	PULLEY GP-CRANKSHAFT	433
Y	*308-2294*	1	PULLEY GP-FAN	434
			—OR—	
Y	*398-4866*	1	PULLEY GP-FAN	435
Y	*308-2310*	1	PUMP GP-FILTER & FUEL TRANSFER	796
			—OR—	
Y	*599-9752*	1	PUMP GP-FILTER & FUEL TRANSFER	805
			—OR—	
Y	*599-9741*	1	FILTER GP-FUEL	763
Y	*309-6719*	1	PUMP GP-FUEL INJECTION	812
			—OR—	

310-0598 **ENGINE AR-PRIMARY (**contd.**)** **i10053821**

NOTE	PART NUMBER	QTY	PART NAME 1 2 3 4 5 6 (PRODUCT LEVEL)	SEE PAGE
Y	*596-2825*	1	PUMP GP-FUEL INJECTION	829
Y	*308-2320*	1	PUMP GP-FUEL PRIMING	840
			—OR—	
Y	*579-9444*	1	PUMP GP-FUEL PRIMING	843
			—OR—	
Y	*565-2285*	1	PUMP GP-FUEL PRIMING	842
Y	*309-6721*	1	PUMP GP-WATER	509
			—OR—	
Y	*598-5726*	1	PUMP GP-WATER	544
Y	*584-3189*	1	ROCKER ARM GP	441
Y	*317-3036*	1	STARTING MOTOR GP-ELECTRIC	899
			—OR—	
Y	*499-5166*	1	STARTING MOTOR GP-ELECTRIC	904
			—OR—	
Y	*587-7902*	1	STARTING MOTOR GP-ELECTRIC	905
Y	*532-8314*	1	SWITCH GP-PRESSURE	913
Y	*308-2312*	1	SWITCH GP-PRESSURE	906
			—OR—	
Y	*601-4322*	1	SENSOR GP-TEMPERATURE	886
Y	*598-5753*	1	V-BELT GP	450
Y	*317-3039*	1	V-BELT GP (WATER PUMP)	445
Y	*309-6716*	1	VALVE MECHANISM GP	458

Y - SEPARATE ILLUSTRATION

<END>

310-1532 ENGINE AR-PRIMARY*R

45 BRAKE KW (60 BHP) AT 2800 RPM

FIELD REPLACEMENT ORDER 435-1636—PAGE: 105

SMCS-1000 **i10053733**

NOTE	PART NUMBER	QTY	PART NAME 1 2 3 4 5 6 (PRODUCT LEVEL)	SEE PAGE
Y	**317-3038**	1	ALTERNATOR GP-CHARGING	860
			—OR—	
Y	*598-5745*	1	ALTERNATOR GP-CHARGING	866
Y	*329-9278*	1	CAMSHAFT GP	150
			S/N: C6M1-2672	
Y	*365-4292*	1	CAMSHAFT GP	160
			—OR—	
Y	*596-3442*	1	CAMSHAFT GP	178
Y	*308-2299*	1	LINES GP-COOLANT	504
			S/N: C6M1-4340	
Y	*331-2589*	1	LINES GP-COOLANT	505
			—OR—	
Y	*596-3460*	1	GOVERNOR GP	786
Y	*308-2302*	1	CONNECTION GP-WATER	483
			—OR—	
Y	*398-5884*	1	CONNECTION GP-WATER	485
Y	*329-9277*	1	HOUSING GP-FRONT	333
			S/N: C6M1-2672	
Y	*365-4290*	1	CONTROL GP-ENGINE SPEED	876
			—OR—	
Y	*596-3460*	1	GOVERNOR GP	786
Y	*317-3041*	1	CONTROL GP-MANUAL START/STOP	878
			—OR—	
Y	*600-5177*	1	CONTROL GP-MANUAL START/STOP	880
Y	*308-2307*	1	HOUSING GP-FRONT	297
			—OR—	
Y	*599-9816*	1	HOUSING GP-FRONT	363
Y	*308-2283*	1	CRANKSHAFT GP	209
			—OR—	
Y	*399-4716*	1	CRANKSHAFT GP	217
Y	*308-2281*	1	CYLINDER BLOCK GP	221
			—OR—	
Y	*584-3179*	1	CYLINDER BLOCK GP	239
Y	*308-2284*	1	CYLINDER HEAD GP	253
			—OR—	
Y	*596-2862*	1	CYLINDER HEAD GP	263
Y	*437-2623*	1	EXTENSION GP-FAN	274
Y	*308-2304*	1	EXTENSION GP-FAN	270
			—OR—	
Y	*398-4866*	1	PULLEY GP-FAN	435
Y	*308-2303*	1	FAN GP-SUCTION	491
			—OR—	
Y	*437-2599*	1	FAN GP-SUCTION	494
Y	*363-3165*	1	FILLER GP-ENGINE OIL	470
			—OR—	
Y	*533-3936*	1	FILLER GP-ENGINE OIL	473
Y	*308-2298*	1	FILTER GP-ENGINE OIL	474

310-1532 **ENGINE AR-PRIMARY (**contd.**)** **i10053733**

NOTE	PART NUMBER	QTY	PART NAME 1 2 3 4 5 6 (PRODUCT LEVEL)	SEE PAGE
			—OR—	
Y	*398-8178*	1	FILTER GP-ENGINE OIL	477
Y	*604-4574*	1	FILM GP (ALTERNATOR)	922
Y	*398-4274*	1	FILM GP	920
			—OR—	
Y	*629-5293*	1	FASTENER GP-FILTER	612
Y	*311-1884*	1	FLYWHEEL GP	279
			—OR—	
Y	*584-9457*	1	FLYWHEEL GP	286
Y	*317-3040*	1	GLOW PLUG GP	882
			—OR—	
Y	*600-5159*	1	GLOW PLUG GP	884
Y	*308-2290*	1	HOUSING GP-FLYWHEEL	287
			—OR—	
Y	*591-2135*	1	HOUSING GP-FLYWHEEL	295
Y	*308-2288*	1	FASTENER GP-FRONT HOUSING	276
			S/N: C6M1-2672	
Y	*365-4288*	1	HOUSING GP-FRONT	343
			—OR—	
Y	*596-3460*	1	GOVERNOR GP	786
Y	*309-6725*	1	LIFTING GP-ENGINE	376
			—OR—	
Y	*584-9814*	1	LIFTING GP-ENGINE	378
Y	*600-5139*	1	MOUNTING GP-EXHAUST	619
Y	*317-3037*	1	PAN GP-OIL	397
			—OR—	
Y	*598-5067*	1	PAN GP-OIL	406
Y	*308-2286*	1	PISTON & ROD GP	408
			—OR—	
Y	*596-2865*	1	PISTON & ROD GP	419
Y	*309-6720*	1	PLUG GP-OIL PAN	426
			—OR—	
Y	*398-5865*	1	PLUG GP-OIL PAN	428
Y	*518-9053*	1	PLATE & FILM GP	925
Y	*321-6740*	1	PULLEY GP-CRANKSHAFT	432
			—OR—	
Y	*445-9988*	1	PULLEY GP-CRANKSHAFT	433
Y	*308-2294*	1	PULLEY GP-FAN	434
			—OR—	
Y	*398-4866*	1	PULLEY GP-FAN	435
Y	*308-2287*	1	LINES GP-ENGINE OIL	480
			—OR—	
Y	*584-3179*	1	CYLINDER BLOCK GP	239
Y	*308-2310*	1	PUMP GP-FILTER & FUEL TRANSFER	796
			—OR—	
Y	*599-9752*	1	PUMP GP-FILTER & FUEL TRANSFER	805
Y	*308-2289*	1	PUMP GP-FUEL INJECTION	808
			—OR—	
Y	*596-2828*	1	PUMP GP-FUEL INJECTION	835
Y	*308-2320*	1	PUMP GP-FUEL PRIMING	840
			—OR—	

310-1532 **ENGINE AR-PRIMARY (**contd.**)** **i10053733**

NOTE	PART NUMBER	QTY	PART NAME 1 2 3 4 5 6 (PRODUCT LEVEL)	SEE PAGE
Y	*579-9444*	1	PUMP GP-FUEL PRIMING	843
			—OR—	
Y	*565-2285*	1	PUMP GP-FUEL PRIMING	842
Y	*317-0979*	1	PUMP GP-WATER	513
			S/N: C6M1-4340	
Y	*442-7729*	1	PUMP GP-WATER	531
			—OR—	
Y	*598-5724*	1	PUMP GP-WATER	537
Y	*584-3189*	1	ROCKER ARM GP	441
Y	*317-3036*	1	STARTING MOTOR GP-ELECTRIC	899
			S/N: C6M1-4340	
Y	*499-5166*	1	STARTING MOTOR GP-ELECTRIC	904
			—OR—	
Y	*587-7902*	1	STARTING MOTOR GP-ELECTRIC	905
Y	*308-2312*	1	SWITCH GP-PRESSURE	906
			—OR—	
Y	*584-3179*	1	CYLINDER BLOCK GP	239
Y	*532-8314*	1	SWITCH GP-PRESSURE	913
Y	*308-2317*	1	SWITCH GP-TEMPERATURE (ENGINE COOLANT)	917
			—OR—	
Y	*601-4322*	1	SENSOR GP-TEMPERATURE	886
Y	*308-2308*	1	TURBOCHARGER GP	623
			S/N: C6M1-3904	
Y	*442-7759*	1	TURBOCHARGER GP	665
			—OR—	
Y	*600-5115*	1	TURBOCHARGER GP	685
Y	*317-3039*	1	V-BELT GP (WATER PUMP)	445
			—OR—	
Y	*598-5753*	1	V-BELT GP	450
Y	*308-2285*	1	VALVE MECHANISM GP	452
			—OR—	
Y	*584-3179*	1	CYLINDER BLOCK GP	239

Y - SEPARATE ILLUSTRATION

<END>

310-7852 ENGINE AR-PRIMARY*R

45 BRAKE KW (60 BHP) AT 2800 RPM. TIER III

SMCS-1000 **i10079577**

NOTE	PART NUMBER	QTY	PART NAME 1 2 3 4 5 6 (PRODUCT LEVEL)	SEE PAGE
Y	*308-2305*	1	ALTERNATOR GP-CHARGING	858
Y	*323-9147*	1	CAMSHAFT GP	148
			—OR—	
Y	*329-9278*	1	CAMSHAFT GP	150
			—OR—	
Y	*365-4292*	1	CAMSHAFT GP	160
Y	*321-6741*	1	CONNECTION GP-ELECTRICAL	868
Y	*308-2309*	1	CONNECTION GP-EXHAUST	606
Y	*308-2302*	1	CONNECTION GP-WATER	483
Y	*308-2307*	1	HOUSING GP-FRONT	297
Y	*308-2283*	1	CRANKSHAFT GP	209
Y	*308-2281*	1	CYLINDER BLOCK GP	221
Y	*308-2284*	1	CYLINDER HEAD GP	253
Y	*308-2299*	1	LINES GP-COOLANT	504
			—OR—	
Y	*331-2589*	1	LINES GP-COOLANT (COOLER)	505
Y	*308-2297*	1	FILLER GP-ENGINE OIL	466
			—OR—	
Y	*363-3165*	1	FILLER GP-ENGINE OIL	470
Y	*308-2298*	1	FILTER GP-ENGINE OIL	474
Y	*327-7632*	1	FLYWHEEL GP	282
Y	*308-2311*	1	GLOW PLUG GP	881
Y	*323-9146*	1	GOVERNOR GP	772
			—OR—	
Y	*329-9277*	1	HOUSING GP-FRONT	333
			—OR—	
Y	*365-4290*	1	CONTROL GP-ENGINE SPEED	876
Y	*317-0588*	1	HOUSING GP-FLYWHEEL	291
Y	*323-9145*	1	HOUSING GP-FRONT	332
			—OR—	
Y	*308-2288*	1	FASTENER GP-FRONT HOUSING	276
			—OR—	
Y	*365-4288*	1	HOUSING GP-FRONT	343
Y	*309-6725*	1	LIFTING GP-ENGINE	376
Y	*315-7813*	1	EXTENSION GP-FAN	271
Y	*317-3037*	1	PAN GP-OIL	397
Y	*308-2286*	1	PISTON & ROD GP	408
Y	*309-6720*	1	PLUG GP-OIL PAN	426
Y	*321-6740*	1	PULLEY GP-CRANKSHAFT	432
Y	*311-9027*	1	PULLEY GP-WATER PUMP	437
Y	*308-2287*	1	LINES GP-ENGINE OIL	480
Y	*308-2289*	1	PUMP GP-FUEL INJECTION	808
Y	*327-7633*	1	PUMP GP-FUEL TRANSFER	850
Y	*317-0979*	1	PUMP GP-WATER	513
			—OR—	
Y	*442-7729*	1	PUMP GP-WATER	531
Y	*308-2313*	1	SOLENOID GP-SHUTOFF (FUEL)	889
Y	*308-2293*	1	STARTING MOTOR GP-ELECTRIC	895
Y	*315-7819*	1	SWITCH GP-PRESSURE (ENGINE OIL)	908

310-7852 **ENGINE AR-PRIMARY (**contd.**)** **i10079577**

NOTE	PART NUMBER	QTY	PART NAME 1 2 3 4 5 6 (PRODUCT LEVEL)	SEE PAGE
Y	*308-2317*	1	SWITCH GP-TEMPERATURE (ENGINE COOLANT)	917
Y	*308-2308*	1	TURBOCHARGER GP	623
Y	*311-9029*	1	V-BELT GP (WATER PUMP)	444
Y	*308-2285*	1	VALVE MECHANISM GP	452

Y - SEPARATE ILLUSTRATION

<END>

311-3840 ENGINE AR-PRIMARY

36 BRAKE KW (48 BHP) AT 2600 RPM

OPTIONAL FIELD REPLACEMENT ORDER 435-1645—PAGE: 243

SMCS-1000 **i10079590**

NOTE	PART NUMBER	QTY	PART NAME 1 2 3 4 5 6 (PRODUCT LEVEL)	SEE PAGE
Y	*308-2305*	1	ALTERNATOR GP-CHARGING	858
Y	*420-3212*	1	CAMSHAFT GP	166
Y	*317-7194*	1	CONNECTOR GP-CAB HEATER LINES	486
Y	*502-4820*	1	CONTROL GP-ELECTRONIC	871
Y	*420-3211*	1	CONTROL GP-GOVERNOR	719
Y	*308-2307*	1	HOUSING GP-FRONT	297
Y	*309-6722*	1	COVER GP-VALVE MECHANISM	184
Y	*309-6713*	1	CRANKSHAFT GP	213
Y	*309-6712*	1	CYLINDER BLOCK GP	225
Y	*309-6715*	1	CYLINDER HEAD GP	255
Y	*308-2304*	1	EXTENSION GP-FAN	270
			—OR—	
Y	*311-1119*	1	DRIVE GP-FAN	266
Y	*308-2303*	1	FAN GP-SUCTION	491
			—OR—	
Y	*319-1623*	1	FAN GP-BLOWER	490
			—OR—	
Y	*315-7813*	1	EXTENSION GP-FAN	271
Y	*363-3165*	1	FILLER GP-ENGINE OIL	470
Y	*308-2298*	1	FILTER GP-ENGINE OIL (ENGINE)	474
Y	*308-2291*	1	FLYWHEEL GP	278
Y	*308-2311*	1	GLOW PLUG GP	881
Y	*308-2290*	1	HOUSING GP-FLYWHEEL	287
Y	*420-3210*	1	HOUSING GP-FRONT	346
Y	*317-7191*	1	HOUSING GP-WATER REGULATOR	502
Y	*309-6725*	1	LIFTING GP-ENGINE	376
Y	*317-7192*	1	MANIFOLD GP-EXHAUST	615
			—OR—	
Y	*309-6724*	1	MANIFOLD GP-EXHAUST	614
Y	*308-4735*	1	MOUNTING GP-ENGINE OIL FILTER	482
Y	*317-7193*	1	MUFFLER GP	622
Y	*308-2295*	1	PAN GP-OIL	385
Y	*309-6714*	1	PISTON & ROD GP	410
Y	*309-6720*	1	PLUG GP-OIL PAN	426
Y	*308-2300*	1	PULLEY GP-CRANKSHAFT	431
Y	*308-2294*	1	PULLEY GP-FAN	434
Y	*309-6717*	1	LINES GP-ENGINE OIL	481
Y	*308-2310*	1	PUMP GP-FILTER & FUEL TRANSFER	796
Y	*317-7190*	1	PUMP GP-FUEL INJECTION	820
Y	*317-6706*	1	PUMP GP-FUEL PRM & PRIM FILTER	844
			—OR—	
Y	*579-9465*	1	PUMP GP-FUEL PRM & PRIM FILTER	846
Y	*309-6721*	1	PUMP GP-WATER	509
Y	*315-7817*	1	SOLENOID GP-SHUTOFF	890
			—OR—	
Y	*492-4924*	1	GOVERNOR GP	785
Y	*308-2293*	1	STARTING MOTOR GP-ELECTRIC	895
Y	*315-7819*	1	SWITCH GP-PRESSURE (ENGINE OIL)	908

311-3840 **ENGINE AR-PRIMARY (**contd.**)** **i10079590**

NOTE	PART NUMBER	QTY	PART NAME 1 2 3 4 5 6 (PRODUCT LEVEL)	SEE PAGE
Y	*308-2317*	1	SWITCH GP-TEMPERATURE (ENGINE COOLANT)	917
Y	*308-2306*	1	V-BELT GP (WATER PUMP)	443
Y	*309-6716*	1	VALVE MECHANISM GP	458

Y - SEPARATE ILLUSTRATION

<END>

316-5690 ENGINE AR-PRIMARY

38 BRAKE KW (51 BHP) AT 3000 RPM

FIELD REPLACEMENT ORDER 433-1379—PAGE: 6

SMCS-1000 **i10079600**

NOTE	PART NUMBER	QTY	PART NAME 1 2 3 4 5 6 (PRODUCT LEVEL)	SEE PAGE
Y	*308-2305*	1	ALTERNATOR GP-CHARGING	858
Y	*325-9476*	1	CAMSHAFT GP	149
			—OR—	
Y	*370-7834*	1	CAMSHAFT GP	161
Y	*308-2319*	1	CONNECTION GP-ELECTRICAL	867
			—OR—	
Y	*321-6741*	1	CONNECTION GP-ELECTRICAL	868
Y	*308-5610*	1	CONNECTION GP-EXHAUST	607
Y	*308-2302*	1	CONNECTION GP-WATER	483
Y	*325-9475*	1	CONTROL GP-GOVERNOR	701
			—OR—	
Y	*370-7833*	1	CONTROL GP-GOVERNOR	715
Y	*308-2307*	1	HOUSING GP-FRONT	297
Y	*309-6722*	1	COVER GP-VALVE MECHANISM	184
Y	*309-6713*	1	CRANKSHAFT GP	213
Y	*309-6712*	1	CYLINDER BLOCK GP	225
Y	*309-6715*	1	CYLINDER HEAD GP	255
Y	*308-2304*	1	EXTENSION GP-FAN	270
Y	*308-2303*	1	FAN GP-SUCTION	491
Y	*308-2297*	1	FILLER GP-ENGINE OIL	466
			—OR—	
Y	*363-3165*	1	FILLER GP-ENGINE OIL	470
Y	*308-2298*	1	FILTER GP-ENGINE OIL	474
Y	*308-2291*	1	FLYWHEEL GP	278
Y	*308-2311*	1	GLOW PLUG GP	881
Y	*308-2290*	1	HOUSING GP-FLYWHEEL	287
Y	*311-1682*	1	HOUSING GP-FRONT	309
			—OR—	
Y	*370-7831*	1	HOUSING GP-FRONT	344
Y	*309-6725*	1	LIFTING GP-ENGINE	376
Y	*309-6724*	1	MANIFOLD GP-EXHAUST	614
Y	*308-4735*	1	MOUNTING GP-ENGINE OIL FILTER	482
Y	*311-1886*	1	PAN GP-OIL	393
			—OR—	
Y	*317-3037*	1	PAN GP-OIL	397
Y	*309-6714*	1	PISTON & ROD GP	410
Y	*309-6720*	1	PLUG GP-OIL PAN	426
Y	*308-2300*	1	PULLEY GP-CRANKSHAFT	431
Y	*308-2294*	1	PULLEY GP-FAN	434
Y	*309-6717*	1	LINES GP-ENGINE OIL	481
Y	*308-2310*	1	PUMP GP-FILTER & FUEL TRANSFER	796
Y	*311-1683*	1	PUMP GP-FUEL INJECTION	814
Y	*317-6706*	1	PUMP GP-FUEL PRM & PRIM FILTER	844
			—OR—	
Y	*579-9465*	1	PUMP GP-FUEL PRM & PRIM FILTER	846
Y	*309-6721*	1	PUMP GP-WATER	509
Y	*308-2313*	1	SOLENOID GP-SHUTOFF (FUEL)	889
Y	*308-2293*	1	STARTING MOTOR GP-ELECTRIC	895

316-5690 **ENGINE AR-PRIMARY (**contd.**)** **i10079600**

NOTE	PART NUMBER	QTY	PART NAME 1 2 3 4 5 6 (PRODUCT LEVEL)	SEE PAGE
Y	*308-2312*	1	SWITCH GP-PRESSURE	906
Y	*308-2317*	1	SWITCH GP-TEMPERATURE (ENGINE COOLANT)	917
Y	*308-2306*	1	V-BELT GP (WATER PUMP)	443
Y	*309-6716*	1	VALVE MECHANISM GP	458

Y - SEPARATE ILLUSTRATION

<END>

316-5692 ENGINE AR-PRIMARY

38 BRAKE KW (51 BHP) AT 3000 RPM

FIELD REPLACEMENT ORDER 433-1379—PAGE: 6

SMCS-1000 **i10079622**

NOTE	PART NUMBER	QTY	PART NAME 1 2 3 4 5 6 (PRODUCT LEVEL)	SEE PAGE
Y	*308-2305*	1	ALTERNATOR GP-CHARGING	858
Y	*325-9476*	1	CAMSHAFT GP	149
			—OR—	
Y	*370-7834*	1	CAMSHAFT GP	161
Y	*308-2319*	1	CONNECTION GP-ELECTRICAL	867
			—OR—	
Y	*321-6741*	1	CONNECTION GP-ELECTRICAL	868
Y	*308-5610*	1	CONNECTION GP-EXHAUST	607
Y	*308-2302*	1	CONNECTION GP-WATER	483
Y	*325-9475*	1	CONTROL GP-GOVERNOR	701
			—OR—	
Y	*370-7833*	1	CONTROL GP-GOVERNOR	715
Y	*308-2307*	1	HOUSING GP-FRONT	297
Y	*309-6722*	1	COVER GP-VALVE MECHANISM	184
Y	*309-6713*	1	CRANKSHAFT GP	213
Y	*309-6712*	1	CYLINDER BLOCK GP	225
Y	*309-6715*	1	CYLINDER HEAD GP	255
Y	*311-1119*	1	DRIVE GP-FAN	266
Y	*319-1623*	1	FAN GP-BLOWER	490
Y	*308-2297*	1	FILLER GP-ENGINE OIL	466
			—OR—	
Y	*363-3165*	1	FILLER GP-ENGINE OIL	470
Y	*308-2298*	1	FILTER GP-ENGINE OIL	474
Y	*308-2291*	1	FLYWHEEL GP	278
Y	*308-2311*	1	GLOW PLUG GP	881
Y	*308-2290*	1	HOUSING GP-FLYWHEEL	287
Y	*311-1682*	1	HOUSING GP-FRONT	309
			—OR—	
Y	*370-7831*	1	HOUSING GP-FRONT	344
Y	*309-6725*	1	LIFTING GP-ENGINE	376
Y	*309-6724*	1	MANIFOLD GP-EXHAUST	614
Y	*308-4735*	1	MOUNTING GP-ENGINE OIL FILTER	482
Y	*311-1886*	1	PAN GP-OIL	393
Y	*309-6714*	1	PISTON & ROD GP	410
Y	*309-6720*	1	PLUG GP-OIL PAN	426
Y	*308-2300*	1	PULLEY GP-CRANKSHAFT	431
Y	*308-2294*	1	PULLEY GP-FAN	434
Y	*309-6717*	1	LINES GP-ENGINE OIL	481
Y	*308-2310*	1	PUMP GP-FILTER & FUEL TRANSFER	796
Y	*311-1683*	1	PUMP GP-FUEL INJECTION	814
Y	*317-6706*	1	PUMP GP-FUEL PRM & PRIM FILTER	844
Y	*309-6721*	1	PUMP GP-WATER	509
Y	*308-2313*	1	SOLENOID GP-SHUTOFF (FUEL)	889
Y	*308-2293*	1	STARTING MOTOR GP-ELECTRIC	895
Y	*308-2312*	1	SWITCH GP-PRESSURE	906
Y	*308-2317*	1	SWITCH GP-TEMPERATURE (ENGINE COOLANT)	917
Y	*308-2306*	1	V-BELT GP (WATER PUMP)	443
Y	*309-6716*	1	VALVE MECHANISM GP	458

316-5692 **ENGINE AR-PRIMARY (**contd.**)** **i10079622**

NOTE	PART NUMBER	QTY	PART NAME 1 2 3 4 5 6 (PRODUCT LEVEL)	SEE PAGE
Y - SEPARATE ILLUSTRATION				

<END>

316-5693 ENGINE AR-PRIMARY

48 BRAKE KW (60 BHP) AT 2800 RPM

FIELD REPLACEMENT ORDER 435-1636—PAGE: 105

SMCS-1000 **i10079630**

NOTE	PART NUMBER	QTY	PART NAME 1 2 3 4 5 6 (PRODUCT LEVEL)	SEE PAGE
Y	*308-2305*	1	ALTERNATOR GP-CHARGING	858
Y	*329-9278*	1	CAMSHAFT GP	150
			—OR—	
Y	*365-4292*	1	CAMSHAFT GP	160
Y	*308-2319*	1	CONNECTION GP-ELECTRICAL	867
			—OR—	
Y	*321-6741*	1	CONNECTION GP-ELECTRICAL	868
Y	*308-2299*	1	LINES GP-COOLANT	504
			—OR—	
Y	*331-2589*	1	LINES GP-COOLANT (COOLER)	505
Y	*308-5610*	2	CONNECTION GP-EXHAUST	607
Y	*308-2302*	1	CONNECTION GP-WATER	483
Y	*329-9277*	1	HOUSING GP-FRONT	333
			—OR—	
Y	*365-4290*	1	CONTROL GP-ENGINE SPEED	876
Y	*308-2307*	1	HOUSING GP-FRONT	297
Y	*308-2283*	1	CRANKSHAFT GP	209
Y	*308-2281*	1	CYLINDER BLOCK GP	221
Y	*308-2284*	1	CYLINDER HEAD GP	253
Y	*311-1119*	1	DRIVE GP-FAN	266
Y	*319-1623*	1	FAN GP-BLOWER	490
Y	*308-2297*	1	FILLER GP-ENGINE OIL	466
			—OR—	
Y	*363-3165*	1	FILLER GP-ENGINE OIL	470
Y	*308-2298*	1	FILTER GP-ENGINE OIL	474
Y	*308-2291*	1	FLYWHEEL GP	278
Y	*308-2311*	1	GLOW PLUG GP	881
Y	*308-2290*	1	HOUSING GP-FLYWHEEL	287
Y	*308-2288*	1	FASTENER GP-FRONT HOUSING	276
			—OR—	
Y	*365-4288*	1	HOUSING GP-FRONT	343
Y	*309-6725*	1	LIFTING GP-ENGINE	376
Y	*311-1886*	1	PAN GP-OIL	393
Y	*308-2286*	1	PISTON & ROD GP	408
Y	*309-6720*	1	PLUG GP-OIL PAN	426
Y	*321-6740*	1	PULLEY GP-CRANKSHAFT	432
Y	*308-2294*	1	PULLEY GP-FAN	434
Y	*308-2287*	1	LINES GP-ENGINE OIL	480
Y	*308-2310*	1	PUMP GP-FILTER & FUEL TRANSFER	796
Y	*308-2289*	1	PUMP GP-FUEL INJECTION	808
Y	*317-6706*	1	PUMP GP-FUEL PRM & PRIM FILTER	844
Y	*317-0979*	1	PUMP GP-WATER	513
			—OR—	
Y	*442-7729*	1	PUMP GP-WATER	531
Y	*308-2293*	1	STARTING MOTOR GP-ELECTRIC	895
Y	*308-2312*	1	SWITCH GP-PRESSURE	906
Y	*308-2317*	1	SWITCH GP-TEMPERATURE (ENGINE COOLANT)	917
Y	*308-2308*	1	TURBOCHARGER GP	623

316-5693 **ENGINE AR-PRIMARY (**contd.**)** **i10079630**

NOTE	PART NUMBER	QTY	PART NAME 1 2 3 4 5 6 (PRODUCT LEVEL)	SEE PAGE
			—OR—	
Y	*442-7759*	1	TURBOCHARGER GP	665
Y	*308-2306*	1	V-BELT GP (WATER PUMP)	443
Y	*308-2285*	1	VALVE MECHANISM GP	452

Y - SEPARATE ILLUSTRATION

<END>

318-1706 ENGINE AR-PRIMARY

37 BRAKE KW (50 BHP) AT 2800 RPM

FIELD REPLACEMENT ORDER 435-1646 CYLINDER BLOCK GP

SMCS-1000 **i10079638**

NOTE	PART NUMBER	QTY	PART NAME 1 2 3 4 5 6 (PRODUCT LEVEL)	SEE PAGE
Y	*308-2305*	1	ALTERNATOR GP-CHARGING	858
Y	*441-6514*	1	CAMSHAFT GP	169
			—OR—	
Y	*454-6144*	1	CAMSHAFT GP	170
Y	*321-6741*	1	CONNECTION GP-ELECTRICAL	868
Y	*308-2302*	1	CONNECTION GP-WATER	483
Y	*322-2427*	1	CONNECTOR GP-CAB HEATER LINES	487
Y	*441-6513*	1	CONTROL GP-GOVERNOR	727
			—OR—	
Y	*454-6143*	1	CONTROL GP-GOVERNOR	733
Y	*322-2424*	1	COVER GP-VALVE MECHANISM	194
Y	*309-6713*	1	CRANKSHAFT GP	213
Y	*309-6712*	1	CYLINDER BLOCK GP	225
Y	*309-6715*	1	CYLINDER HEAD GP	255
Y	*325-5669*	1	DRIVE GP-FAN	268
Y	*328-3296*	1	DRIVE GP-AUXILIARY	265
Y	*322-2421*	1	FILLER GP-ENGINE OIL	468
Y	*308-2298*	1	FILTER GP-ENGINE OIL	474
Y	*322-2412*	1	FLYWHEEL GP	281
Y	*315-5256*	1	GASKET GP-EXHAUST MANIFOLD	613
Y	*308-2311*	1	GLOW PLUG GP	881
Y	*311-1883*	1	HOUSING GP-FLYWHEEL	289
			S/N: C6M1-1996	
Y	*342-9604*	1	HOUSING GP-FLYWHEEL	292
			S/N: C6M1997-UP	
Y	*309-6718*	1	HOUSING GP-FRONT	299
			—OR—	
Y	*441-6512*	1	HOUSING GP-FRONT	350
			—OR—	
Y	*454-6141*	1	HOUSING GP-FRONT	352
Y	*309-6725*	1	LIFTING GP-ENGINE	376
Y	*309-6717*	1	LINES GP-ENGINE OIL	481
Y	*309-6724*	1	MANIFOLD GP-EXHAUST	614
Y	*308-4735*	1	MOUNTING GP-ENGINE OIL FILTER	482
Y	*322-2416*	1	PAN GP-OIL	401
Y	*309-6714*	1	PISTON & ROD GP	410
Y	*322-2426*	1	PLUG GP-ENGINE	424
Y	*322-2420*	1	PLUG GP-OIL PAN	427
Y	*322-2422*	1	PULLEY GP-AUXILIARY DRIVE	430
Y	*308-2300*	1	PULLEY GP-CRANKSHAFT	431
Y	*308-2294*	1	PULLEY GP-FAN	434
Y	*309-6719*	1	PUMP GP-FUEL INJECTION	812
Y	*311-9028*	1	PUMP GP-FUEL TRANSFER	847
			—OR—	
Y	*328-1882*	1	PUMP GP-FUEL TRANSFER	852
Y	*322-2425*	1	FAN GP-SUCTION	492
Y	*365-6506*	1	PUMP GP-WATER	523

318-1706 **ENGINE AR-PRIMARY (**contd.**)** **i10079638**

NOTE	PART NUMBER	QTY	PART NAME 1 2 3 4 5 6 (PRODUCT LEVEL)	SEE PAGE
			—OR—	
Y	*309-6721*	1	PUMP GP-WATER	509
Y	*308-2293*	1	STARTING MOTOR GP-ELECTRIC	895
			S/N: C6M1-1996	
Y	*308-2313*	1	SOLENOID GP-SHUTOFF (FUEL)	889
Y	*308-2312*	1	SWITCH GP-PRESSURE	906
Y	*309-6716*	1	VALVE MECHANISM GP	458
Y	*308-2306*	1	V-BELT GP (WATER PUMP)	443

Y - SEPARATE ILLUSTRATION

<END>

318-1707 ENGINE AR-PRIMARY*R

31 BRAKE KW (42 BHP) AT 2600 RPM

FIELD REPLACEMENT ORDER 435-1649—PAGE: 244

SMCS-1000 **i10079644**

NOTE	PART NUMBER	QTY	PART NAME 1 2 3 4 5 6 (PRODUCT LEVEL)	SEE PAGE
Y	*308-2305*	1	ALTERNATOR GP-CHARGING	858
Y	*321-6741*	1	CONNECTION GP-ELECTRICAL	868
Y	*308-2302*	1	CONNECTION GP-WATER	483
Y	*317-7194*	1	CONNECTOR GP-CAB HEATER LINES	486
Y	*308-2313*	1	SOLENOID GP-SHUTOFF (FUEL)	889
Y	*322-2424*	1	COVER GP-VALVE MECHANISM	194
Y	*309-6713*	1	CRANKSHAFT GP	213
Y	*309-6712*	1	CYLINDER BLOCK GP	225
Y	*309-6715*	1	CYLINDER HEAD GP	255
Y	*328-3296*	1	DRIVE GP-AUXILIARY	265
Y	*325-5669*	1	DRIVE GP-FAN	268
Y	*322-2425*	1	FAN GP-SUCTION	492
Y	*322-2421*	1	FILLER GP-ENGINE OIL	468
Y	*308-2298*	1	FILTER GP-ENGINE OIL	474
Y	*322-2412*	1	FLYWHEEL GP	281
Y	*308-2311*	1	GLOW PLUG GP	881
Y	*311-1883*	1	HOUSING GP-FLYWHEEL	289
			—OR—	
Y	*342-9604*	1	HOUSING GP-FLYWHEEL	292
Y	*322-3074*	1	HOUSING GP-FRONT	327
Y	*309-6725*	1	LIFTING GP-ENGINE	376
Y	*315-5256*	1	GASKET GP-EXHAUST MANIFOLD	613
Y	*309-6724*	1	MANIFOLD GP-EXHAUST	614
Y	*308-4735*	1	MOUNTING GP-ENGINE OIL FILTER	482
Y	*322-2416*	1	PAN GP-OIL	401
Y	*309-6714*	1	PISTON & ROD GP	410
Y	*322-2426*	1	PLUG GP-ENGINE	424
Y	*322-2420*	1	PLUG GP-OIL PAN	427
Y	*322-2422*	1	PULLEY GP-AUXILIARY DRIVE	430
Y	*308-2300*	1	PULLEY GP-CRANKSHAFT	431
Y	*308-2294*	1	PULLEY GP-FAN	434
Y	*309-6717*	1	LINES GP-ENGINE OIL	481
Y	*322-3075*	1	PUMP GP-FUEL INJECTION	824
			—OR—	
Y	*317-7190*	1	PUMP GP-FUEL INJECTION	820
Y	*311-9028*	1	PUMP GP-FUEL TRANSFER	847
			S/N: C6M1-1996	
Y	*328-1882*	1	PUMP GP-FUEL TRANSFER	852
			S/N: C6M1997-UP	
Y	*309-6721*	1	PUMP GP-WATER	509
Y	*308-2293*	1	STARTING MOTOR GP-ELECTRIC	895
Y	*308-2312*	1	SWITCH GP-PRESSURE	906
Y	*308-2306*	1	V-BELT GP (WATER PUMP) (DRIVE)	443
Y	*309-6716*	1	VALVE MECHANISM GP	458

Y - SEPARATE ILLUSTRATION

<END>

319-7216 ENGINE AR-PRIMARY

45 BRAKE KW (60 BHP) AT 2800 RPM

FIELD REPLACEMENT ORDER 435-1636—PAGE: 105

SMCS-1000 **i10079660**

NOTE	PART NUMBER	QTY	PART NAME 1 2 3 4 5 6 (PRODUCT LEVEL)	SEE PAGE
Y	*326-8543*	1	AIR CLEANER GP	591
Y	*308-2305*	1	ALTERNATOR GP-CHARGING	858
Y	*323-9147*	1	CAMSHAFT GP	148
			—OR—	
Y	*329-9278*	1	CAMSHAFT GP	150
Y	*308-2319*	1	CONNECTION GP-ELECTRICAL	867
			—OR—	
Y	*321-6741*	1	CONNECTION GP-ELECTRICAL	868
Y	*308-2309*	1	CONNECTION GP-EXHAUST	606
Y	*308-2302*	1	CONNECTION GP-WATER	483
Y	*308-2307*	1	HOUSING GP-FRONT	297
Y	*308-2283*	1	CRANKSHAFT GP	209
Y	*308-2281*	1	CYLINDER BLOCK GP	221
Y	*308-2284*	1	CYLINDER HEAD GP	253
Y	*363-3165*	1	FILLER GP-ENGINE OIL	470
Y	*308-2298*	1	FILTER GP-ENGINE OIL	474
Y	*311-1884*	1	FLYWHEEL GP	279
Y	*308-2311*	1	GLOW PLUG GP	881
Y	*323-9146*	1	GOVERNOR GP	772
			—OR—	
Y	*329-9277*	1	HOUSING GP-FRONT	333
Y	*311-1883*	1	HOUSING GP-FLYWHEEL	289
Y	*323-9145*	1	HOUSING GP-FRONT	332
			—OR—	
Y	*308-2288*	1	FASTENER GP-FRONT HOUSING	276
Y	*317-7191*	1	HOUSING GP-WATER REGULATOR	502
Y	*308-2321*	1	LAMP GP	918
Y	*309-6725*	1	LIFTING GP-ENGINE	376
Y	*331-2589*	1	LINES GP-COOLANT	505
Y	*308-2287*	1	LINES GP-ENGINE OIL	480
Y	*308-2295*	1	PAN GP-OIL	385
Y	*308-2286*	1	PISTON & ROD GP	408
Y	*309-6720*	1	PLUG GP-OIL PAN	426
Y	*321-6740*	1	PULLEY GP-CRANKSHAFT	432
Y	*308-2294*	1	PULLEY GP-FAN	434
Y	*308-2310*	1	PUMP GP-FILTER & FUEL TRANSFER	796
Y	*308-2289*	1	PUMP GP-FUEL INJECTION	808
Y	*317-6706*	1	PUMP GP-FUEL PRM & PRIM FILTER	844
Y	*317-0979*	1	PUMP GP-WATER	513
Y	*341-6658*	1	RADIATOR & FAN GP	548
Y	*308-2313*	1	SOLENOID GP-SHUTOFF (FUEL)	889
Y	*308-2293*	1	STARTING MOTOR GP-ELECTRIC	895
Y	*315-7819*	1	SWITCH GP-PRESSURE (ENGINE OIL)	908
Y	*308-2314*	1	SWITCH GP-START	915
Y	*308-2317*	1	SWITCH GP-TEMPERATURE (ENGINE COOLANT)	917
Y	*341-6642*	1	TURBOCHARGER GP	634
			—OR—	
Y	*441-8101*	1	TURBOCHARGER GP	649

319-7216 **ENGINE AR-PRIMARY (**contd.**)** **i10079660**

NOTE	PART NUMBER	QTY	PART NAME 1 2 3 4 5 6 (PRODUCT LEVEL)	SEE PAGE
Y	*341-6637*	1	V-BELT GP	447
			—OR—	
Y	*308-2306*	1	V-BELT GP (WATER PUMP) (DRIVE)	443
Y	*308-2285*	1	VALVE MECHANISM GP	452

Y - SEPARATE ILLUSTRATION

<END>

320-0290 ENGINE AR-PRIMARY

45 BRAKE KW (60 BHP) AT 2800 RPM

FIELD REPLACEMENT ORDER 435-1636—PAGE: 105

SMCS-1000 **i10081135**

NOTE	PART NUMBER	QTY	PART NAME 1 2 3 4 5 6 (PRODUCT LEVEL)	SEE PAGE
Y	*326-8543*	1	AIR CLEANER GP	591
			—OR—	
Y	*600-1135*	1	AIR CLEANER GP	600
			—OR—	
Y	*600-5153*	1	AIR CLEANER GP	603
Y	*308-2305*	1	ALTERNATOR GP-CHARGING	858
			—OR—	
Y	*518-9064*	1	ALTERNATOR GP-CHARGING	865
Y	*596-3442*	1	CAMSHAFT GP	178
Y	*323-9147*	1	CAMSHAFT GP	148
			—OR—	
Y	*329-9278*	1	CAMSHAFT GP	150
			—OR—	
Y	*584-3179*	1	CYLINDER BLOCK GP	239
Y	*308-2319*	1	CONNECTION GP-ELECTRICAL	867
			—OR—	
Y	*321-6741*	1	CONNECTION GP-ELECTRICAL	868
			—OR—	
Y	*541-6343*	1	CONNECTION GP-ELECTRICAL	870
Y	*308-2309*	1	CONNECTION GP-EXHAUST	606
Y	*308-2302*	1	CONNECTION GP-WATER	483
			—OR—	
Y	*398-5884*	1	CONNECTION GP-WATER	485
Y	*308-2307*	1	HOUSING GP-FRONT	297
Y	*308-2283*	1	CRANKSHAFT GP	209
			—OR—	
Y	*399-4716*	1	CRANKSHAFT GP	217
Y	*308-2281*	1	CYLINDER BLOCK GP	221
Y	*308-2284*	1	CYLINDER HEAD GP	253
			—OR—	
Y	*596-2862*	1	CYLINDER HEAD GP	263
Y	*437-2624*	1	FAN GP (EXTENSION)	489
Y	*423-6874*	1	FAN GP-SUCTION	493
			—OR—	
Y	*608-8936*	1	FAN GP-SUCTION	500
Y	*607-7117*	1	FILM GP (RADIATOR)	923
Y	*308-2297*	1	FILLER GP-ENGINE OIL	466
			—OR—	
Y	*363-3165*	1	FILLER GP-ENGINE OIL	470
			—OR—	
Y	*533-3936*	1	FILLER GP-ENGINE OIL	473
Y	*398-8178*	1	FILTER GP-ENGINE OIL	477
Y	*308-2298*	1	FILTER GP-ENGINE OIL	474
Y	*398-4803*	1	FLYWHEEL GP	283
Y	*308-2291*	1	FLYWHEEL GP	278
			—OR—	
Y	*398-4866*	1	PULLEY GP-FAN	435

320-0290 **ENGINE AR-PRIMARY (**contd.**)** **i10081135**

NOTE	PART NUMBER	QTY	PART NAME 1 2 3 4 5 6 (PRODUCT LEVEL)	SEE PAGE
			—OR—	
Y	*398-4900*	1	PULLEY GP-FAN	436
Y	*308-2311*	1	GLOW PLUG GP	881
			—OR—	
Y	*587-0270*	1	GLOW PLUG GP	883
Y	*323-9146*	1	GOVERNOR GP	772
			—OR—	
Y	*329-9277*	1	HOUSING GP-FRONT	333
			—OR—	
Y	*599-9816*	1	HOUSING GP-FRONT	363
Y	*308-2290*	1	HOUSING GP-FLYWHEEL	287
			—OR—	
Y	*591-2135*	1	HOUSING GP-FLYWHEEL	295
Y	*323-9145*	1	HOUSING GP-FRONT	332
			—OR—	
Y	*308-2288*	1	FASTENER GP-FRONT HOUSING	276
			—OR—	
Y	*596-3460*	1	GOVERNOR GP	786
Y	*308-2321*	1	LAMP GP	918
Y	*309-6725*	1	LIFTING GP-ENGINE	376
			—OR—	
Y	*584-9814*	1	LIFTING GP-ENGINE	378
Y	*331-2589*	1	LINES GP-COOLANT	505
Y	*308-2287*	1	LINES GP-ENGINE OIL	480
Y	*532-9705*	1	CONNECTION GP-EXHAUST	608
Y	*600-5140*	1	MOUNTING GP-EXHAUST	620
Y	*308-2295*	1	PAN GP-OIL	385
			—OR—	
Y	*588-9925*	1	PAN GP-OIL	404
Y	*308-2286*	1	PISTON & ROD GP	408
			—OR—	
Y	*596-2865*	1	PISTON & ROD GP	419
Y	*518-9053*	1	PLATE & FILM GP	925
Y	*309-6720*	1	PLUG GP-OIL PAN	426
			—OR—	
Y	*398-5865*	1	PLUG GP-OIL PAN	428
Y	*321-6740*	1	PULLEY GP-CRANKSHAFT	432
			—OR—	
Y	*445-9988*	1	PULLEY GP-CRANKSHAFT	433
Y	*308-2294*	1	PULLEY GP-FAN	434
Y	*308-2310*	1	PUMP GP-FILTER & FUEL TRANSFER	796
			—OR—	
Y	*599-9752*	1	PUMP GP-FILTER & FUEL TRANSFER	805
Y	*308-2289*	1	PUMP GP-FUEL INJECTION	808
			—OR—	
Y	*596-2828*	1	PUMP GP-FUEL INJECTION	835
Y	*317-6706*	1	PUMP GP-FUEL PRM & PRIM FILTER	844
			—OR—	
Y	*579-9465*	1	PUMP GP-FUEL PRM & PRIM FILTER	846
			—OR—	
Y	*565-2286*	1	PUMP GP-FUEL PRM & PRIM FILTER	845

320-0290 **ENGINE AR-PRIMARY (**contd.**)** **i10081135**

NOTE	PART NUMBER	QTY	PART NAME 1 2 3 4 5 6 (PRODUCT LEVEL)	SEE PAGE
Y	*317-0979*	1	PUMP GP-WATER	513
			—OR—	
Y	*598-5724*	1	PUMP GP-WATER	537
Y	*341-6658*	1	RADIATOR & FAN GP	548
			—OR—	
Y	*600-6119*	1	RADIATOR GP	581
Y	*584-3189*	1	ROCKER ARM GP	441
Y	*308-2313*	1	SOLENOID GP-SHUTOFF (FUEL)	889
			—OR—	
Y	*519-4412*	1	SOLENOID GP-SHUTOFF (FUEL)	891
Y	*308-2293*	1	STARTING MOTOR GP-ELECTRIC	895
			—OR—	
Y	*398-4818*	1	STARTING MOTOR GP-ELECTRIC	903
Y	*315-7819*	1	SWITCH GP-PRESSURE (ENGINE OIL)	908
			—OR—	
Y	*584-9822*	1	SWITCH GP-PRESSURE	914
Y	*308-2317*	1	SWITCH GP-TEMPERATURE (ENGINE COOLANT)	917
			—OR—	
Y	*601-4322*	1	SENSOR GP-TEMPERATURE	886
Y	*341-6642*	1	TURBOCHARGER GP	634
			—OR—	
Y	*441-8101*	1	TURBOCHARGER GP	649
			—OR—	
Y	*600-5117*	1	TURBOCHARGER GP	687
Y	*308-2306*	1	V-BELT GP (WATER PUMP)	443
			—OR—	
Y	*428-5948*	1	V-BELT GP (WATER PUMP)	448
			—OR—	
Y	*428-5949*	1	V-BELT GP	449
Y	*308-2285*	1	VALVE MECHANISM GP	452

Y - SEPARATE ILLUSTRATION

<END>

320-0291 ENGINE AR-PRIMARY

45 BRAKE KW (60 BHP) AT 2800 RPM

FIELD REPLACEMENT ORDER 435-1636—PAGE: 105

SMCS-1000 **i08775543**

NOTE	PART NUMBER	QTY	PART NAME 1 2 3 4 5 6 (PRODUCT LEVEL)	SEE PAGE
Y	*326-8543*	1	AIR CLEANER GP	591
			—OR—	
Y	*600-5153*	1	AIR CLEANER GP	603
Y	*308-2305*	1	ALTERNATOR GP-CHARGING	858
			—OR—	
Y	*518-9064*	1	ALTERNATOR GP-CHARGING	865
Y	*323-9147*	1	CAMSHAFT GP	148
			—OR—	
Y	*329-9278*	1	CAMSHAFT GP	150
			—OR—	
Y	*596-3442*	1	CAMSHAFT GP	178
Y	*308-2319*	1	CONNECTION GP-ELECTRICAL	867
			—OR—	
Y	*321-6741*	1	CONNECTION GP-ELECTRICAL	868
			—OR—	
Y	*541-6343*	1	CONNECTION GP-ELECTRICAL	870
Y	*308-2309*	1	CONNECTION GP-EXHAUST	606
			—OR—	
Y	*398-5884*	1	CONNECTION GP-WATER	485
Y	*308-2302*	1	CONNECTION GP-WATER	483
Y	*308-2307*	1	HOUSING GP-FRONT	297
			—OR—	
Y	*599-9816*	1	HOUSING GP-FRONT	363
Y	*308-2283*	1	CRANKSHAFT GP	209
			—OR—	
Y	*399-4716*	1	CRANKSHAFT GP	217
Y	*308-2281*	1	CYLINDER BLOCK GP	221
			—OR—	
Y	*584-3179*	1	CYLINDER BLOCK GP	239
Y	*308-2284*	1	CYLINDER HEAD GP	253
			—OR—	
Y	*596-2862*	1	CYLINDER HEAD GP	263
Y	*437-2624*	1	FAN GP (EXTENSION)	489
Y	*423-6874*	1	FAN GP-SUCTION	493
			—OR—	
	608-8936	1	FAN GP-SUCTION	
Y	*308-2297*	1	FILLER GP-ENGINE OIL	466
			—OR—	
Y	*363-3165*	1	FILLER GP-ENGINE OIL	470
			—OR—	
Y	*533-3936*	1	FILLER GP-ENGINE OIL	473
Y	*607-7117*	1	FILM GP (RADIATOR)	923
Y	*398-8178*	1	FILTER GP-ENGINE OIL	477
Y	*308-2298*	1	FILTER GP-ENGINE OIL	474
Y	*317-0586*	1	FLYWHEEL GP	280
			—OR—	
Y	*398-4807*	1	FLYWHEEL GP	284
Y	*308-2311*	1	GLOW PLUG GP	881

320-0291 **ENGINE AR-PRIMARY (**contd.**)** **i08775543**

NOTE	PART NUMBER	QTY	PART NAME 1 2 3 4 5 6 (PRODUCT LEVEL)	SEE PAGE
			—OR—	
Y	*587-0270*	1	GLOW PLUG GP	883
Y	*323-9146*	1	GOVERNOR GP	772
			—OR—	
Y	*329-9277*	1	HOUSING GP-FRONT	333
Y	*317-0588*	1	HOUSING GP-FLYWHEEL	291
			—OR—	
Y	*591-2138*	1	HOUSING GP-FLYWHEEL	296
Y	*323-9145*	1	HOUSING GP-FRONT	332
			—OR—	
Y	*308-2288*	1	FASTENER GP-FRONT HOUSING	276
			—OR—	
Y	*596-3460*	1	GOVERNOR GP	786
Y	*308-2321*	1	LAMP GP	918
Y	*309-6725*	1	LIFTING GP-ENGINE	376
			—OR—	
Y	*584-9814*	1	LIFTING GP-ENGINE	378
Y	*331-2589*	1	LINES GP-COOLANT	505
Y	*308-2287*	1	LINES GP-ENGINE OIL	480
Y	*532-9705*	1	CONNECTION GP-EXHAUST	608
Y	*600-5140*	1	MOUNTING GP-EXHAUST	620
Y	*308-2295*	1	PAN GP-OIL	385
			—OR—	
Y	*588-9925*	1	PAN GP-OIL	404
Y	*308-2286*	1	PISTON & ROD GP	408
			—OR—	
Y	*596-2865*	1	PISTON & ROD GP	419
Y	*518-9053*	1	PLATE & FILM GP	925
Y	*309-6720*	1	PLUG GP-OIL PAN	426
			—OR—	
Y	*398-5865*	1	PLUG GP-OIL PAN	428
Y	*321-6740*	1	PULLEY GP-CRANKSHAFT	432
			—OR—	
Y	*445-9988*	1	PULLEY GP-CRANKSHAFT	433
Y	*308-2294*	1	PULLEY GP-FAN	434
			—OR—	
Y	*398-4866*	1	PULLEY GP-FAN	435
			—OR—	
Y	*398-4900*	1	PULLEY GP-FAN	436
Y	*308-2310*	1	PUMP GP-FILTER & FUEL TRANSFER	796
			—OR—	
Y	*599-9752*	1	PUMP GP-FILTER & FUEL TRANSFER	805
Y	*308-2289*	1	PUMP GP-FUEL INJECTION	808
			—OR—	
Y	*596-2828*	1	PUMP GP-FUEL INJECTION	835
Y	*317-6706*	1	PUMP GP-FUEL PRM & PRIM FILTER	844
			—OR—	
Y	*579-9465*	1	PUMP GP-FUEL PRM & PRIM FILTER	846
			—OR—	
Y	*565-2286*	1	PUMP GP-FUEL PRM & PRIM FILTER	845
Y	*317-0979*	1	PUMP GP-WATER	513

320-0291 **ENGINE AR-PRIMARY (**contd.**)** **i08775543**

NOTE	PART NUMBER	QTY	PART NAME 1 2 3 4 5 6 (PRODUCT LEVEL)	SEE PAGE
			—OR—	
Y	*598-5724*	1	PUMP GP-WATER	537
Y	*341-6658*	1	RADIATOR & FAN GP	548
			—OR—	
Y	*600-6119*	1	RADIATOR GP	581
Y	*584-3189*	1	ROCKER ARM GP	441
Y	*308-2313*	1	SOLENOID GP-SHUTOFF (FUEL)	889
			—OR—	
Y	*519-4412*	1	SOLENOID GP-SHUTOFF (FUEL)	891
Y	*308-2293*	1	STARTING MOTOR GP-ELECTRIC	895
			—OR—	
Y	*398-4818*	1	STARTING MOTOR GP-ELECTRIC	903
Y	*315-7819*	1	SWITCH GP-PRESSURE (ENGINE OIL)	908
			—OR—	
Y	*584-9822*	1	SWITCH GP-PRESSURE (ALARM)	914
Y	*308-2317*	1	SWITCH GP-TEMPERATURE (ENGINE COOLANT)	917
			—OR—	
Y	*601-4322*	1	SENSOR GP-TEMPERATURE	886
Y	*308-2314*	1	SWITCH GP-START	915
Y	*341-6642*	1	TURBOCHARGER GP	634
			—OR—	
Y	*441-8101*	1	TURBOCHARGER GP	649
			—OR—	
Y	*600-5117*	1	TURBOCHARGER GP	687
Y	*308-2306*	1	V-BELT GP (WATER PUMP)	443
			—OR—	
Y	*428-5948*	1	V-BELT GP (WATER PUMP)	448
			—OR—	
Y	*428-5949*	1	V-BELT GP	449
Y	*308-2285*	1	VALVE MECHANISM GP	452

Y - SEPARATE ILLUSTRATION

<END>

320-0335 ENGINE AR-PRIMARY

49 BRAKE KW (66 BHP) AT 2800 RPM

FIELD REPLACEMENT ORDER 435-1658—PAGE: 115

SMCS-1000 **i10079712**

NOTE	PART NUMBER	QTY	PART NAME 1 2 3 4 5 6 (PRODUCT LEVEL)	SEE PAGE
Y	*326-8543*	1	AIR CLEANER GP	591
Y	*308-2305*	1	ALTERNATOR GP-CHARGING	858
Y	*344-5472*	1	CAMSHAFT GP	157
			—OR—	
Y	*373-7284*	1	CAMSHAFT GP	162
Y	*308-2319*	1	CONNECTION GP-ELECTRICAL	867
Y	*308-2309*	1	CONNECTION GP-EXHAUST	606
Y	*308-2302*	1	CONNECTION GP-WATER	483
Y	*308-2307*	1	HOUSING GP-FRONT	297
Y	*308-2283*	1	CRANKSHAFT GP	209
Y	*308-2281*	1	CYLINDER BLOCK GP	221
Y	*308-2284*	1	CYLINDER HEAD GP	253
Y	*363-3165*	1	FILLER GP-ENGINE OIL	470
Y	*308-2298*	1	FILTER GP-ENGINE OIL	474
Y	*311-1884*	1	FLYWHEEL GP	279
Y	*308-2311*	1	GLOW PLUG GP	881
Y	*344-5470*	1	GOVERNOR GP	775
			—OR—	
Y	*373-7283*	1	GOVERNOR GP	778
Y	*311-1883*	1	HOUSING GP-FLYWHEEL	289
Y	*344-5469*	1	HOUSING GP-FRONT	339
			—OR—	
Y	*308-3329*	1	HOUSING GP-FRONT	298
Y	*308-2321*	1	LAMP GP	918
Y	*309-6725*	1	LIFTING GP-ENGINE	376
Y	*331-2589*	1	LINES GP-COOLANT	505
Y	*308-2295*	1	PAN GP-OIL	385
Y	*308-2286*	1	PISTON & ROD GP	408
Y	*309-6720*	1	PLUG GP-OIL PAN	426
Y	*321-6740*	1	PULLEY GP-CRANKSHAFT	432
Y	*308-2294*	1	PULLEY GP-FAN	434
Y	*308-2287*	1	LINES GP-ENGINE OIL	480
Y	*308-2310*	1	PUMP GP-FILTER & FUEL TRANSFER	796
Y	*308-3330*	1	PUMP GP-FUEL INJECTION	810
Y	*317-6706*	1	PUMP GP-FUEL PRM & PRIM FILTER	844
Y	*317-0979*	1	PUMP GP-WATER	513
Y	*344-5881*	1	RADIATOR & FAN GP	556
Y	*308-2313*	1	SOLENOID GP-SHUTOFF (FUEL)	889
Y	*308-2293*	1	STARTING MOTOR GP-ELECTRIC	895
Y	*315-7819*	1	SWITCH GP-PRESSURE (ENGINE OIL)	908
Y	*308-2314*	1	SWITCH GP-START	915
Y	*308-2317*	1	SWITCH GP-TEMPERATURE (ENGINE COOLANT)	917
Y	*344-5515*	1	TURBOCHARGER GP	637
Y	*308-2306*	1	V-BELT GP (WATER PUMP)	443
Y	*308-2285*	1	VALVE MECHANISM GP	452

Y - SEPARATE ILLUSTRATION

<END>

320-0336 ENGINE AR-PRIMARY

49 BRAKE KW (66 BHP) AT 2800 RPM

FIELD REPLACEMENT ORDER 435-1658—PAGE: 115

SMCS-1000 **i10053720**

NOTE	PART NUMBER	QTY	PART NAME 1 2 3 4 5 6 (PRODUCT LEVEL)	SEE PAGE
Y	*326-8543*	1	AIR CLEANER GP	591
			—OR—	
Y	*600-1135*	1	AIR CLEANER GP	600
Y	*600-5153*	1	AIR CLEANER GP	603
Y	*518-9064*	1	ALTERNATOR GP-CHARGING	865
Y	*308-2305*	1	ALTERNATOR GP-CHARGING	858
Y	*344-5472*	1	CAMSHAFT GP	157
			—OR—	
Y	*373-7284*	1	CAMSHAFT GP	162
Y	*596-3442*	1	CAMSHAFT GP	178
Y	*308-2319*	1	CONNECTION GP-ELECTRICAL	867
			—OR—	
Y	*321-6741*	1	CONNECTION GP-ELECTRICAL	868
Y	*541-6343*	1	CONNECTION GP-ELECTRICAL	870
Y	*308-2309*	1	CONNECTION GP-EXHAUST	606
Y	*532-9705*	1	CONNECTION GP-EXHAUST	608
Y	*308-2302*	1	CONNECTION GP-WATER	483
Y	*398-5884*	1	CONNECTION GP-WATER	485
Y	*399-4716*	1	CRANKSHAFT GP	217
Y	*308-2283*	1	CRANKSHAFT GP	209
Y	*308-2281*	1	CYLINDER BLOCK GP	221
Y	*584-3179*	1	CYLINDER BLOCK GP	239
Y	*308-2284*	1	CYLINDER HEAD GP	253
Y	*596-2862*	1	CYLINDER HEAD GP	263
Y	*437-2624*	1	FAN GP (EXTENSION)	489
Y	*608-8936*	1	FAN GP-SUCTION	500
Y	*533-3936*	1	FILLER GP-ENGINE OIL	473
Y	*398-8178*	1	FILTER GP-ENGINE OIL	477
Y	*363-3165*	1	FILLER GP-ENGINE OIL	470
Y	*308-2298*	1	FILTER GP-ENGINE OIL	474
Y	*308-2291*	1	FLYWHEEL GP	278
Y	*398-4803*	1	FLYWHEEL GP	283
Y	*587-0270*	1	GLOW PLUG GP	883
Y	*308-2311*	1	GLOW PLUG GP	881
Y	*344-5470*	1	GOVERNOR GP	775
			—OR—	
Y	*373-7283*	1	GOVERNOR GP	778
Y	*596-3460*	1	GOVERNOR GP	786
Y	*308-2290*	1	HOUSING GP-FLYWHEEL	287
Y	*591-2135*	1	HOUSING GP-FLYWHEEL	295
Y	*344-5469*	1	HOUSING GP-FRONT	339
			—OR—	
Y	*308-3329*	1	HOUSING GP-FRONT	298
Y	*308-2307*	1	HOUSING GP-FRONT	297
Y	*599-9816*	1	HOUSING GP-FRONT	363
Y	*308-2321*	1	LAMP GP	918
Y	*309-6725*	1	LIFTING GP-ENGINE	376
Y	*584-9814*	1	LIFTING GP-ENGINE	378

320-0336 **ENGINE AR-PRIMARY (**contd.**)** **i10053720**

NOTE	PART NUMBER	QTY	PART NAME 1 2 3 4 5 6 (PRODUCT LEVEL)	SEE PAGE
Y	*331-2589*	1	LINES GP-COOLANT	505
Y	*308-2287*	1	LINES GP-ENGINE OIL	480
Y	*600-5140*	1	MOUNTING GP-EXHAUST	620
Y	*308-2295*	1	PAN GP-OIL	385
Y	*588-9925*	1	PAN GP-OIL	404
Y	*308-2286*	1	PISTON & ROD GP	408
Y	*596-2865*	1	PISTON & ROD GP	419
Y	*518-9053*	1	PLATE & FILM GP	925
Y	*309-6720*	1	PLUG GP-OIL PAN	426
Y	*398-5865*	1	PLUG GP-OIL PAN	428
Y	*321-6740*	1	PULLEY GP-CRANKSHAFT	432
Y	*445-9988*	1	PULLEY GP-CRANKSHAFT	433
Y	*308-2294*	1	PULLEY GP-FAN	434
Y	*398-4900*	1	PULLEY GP-FAN	436
Y	*308-2310*	1	PUMP GP-FILTER & FUEL TRANSFER	796
Y	*599-9752*	1	PUMP GP-FILTER & FUEL TRANSFER	805
Y	*308-3330*	1	PUMP GP-FUEL INJECTION	810
Y	*596-2833*	1	PUMP GP-FUEL INJECTION	838
Y	*317-6706*	1	PUMP GP-FUEL PRM & PRIM FILTER	844
			—OR—	
Y	*579-9465*	1	PUMP GP-FUEL PRM & PRIM FILTER	846
Y	*565-2286*	1	PUMP GP-FUEL PRM & PRIM FILTER	845
Y	*317-0979*	1	PUMP GP-WATER	513
Y	*598-5724*	1	PUMP GP-WATER	537
Y	*344-5881*	1	RADIATOR & FAN GP	556
Y	*600-6121*	1	RADIATOR GP	583
Y	*584-3189*	1	ROCKER ARM GP	441
Y	*601-4322*	1	SENSOR GP-TEMPERATURE	886
Y	*308-2313*	1	SOLENOID GP-SHUTOFF (FUEL)	889
Y	*519-4412*	1	SOLENOID GP-SHUTOFF (FUEL)	891
Y	*308-2293*	1	STARTING MOTOR GP-ELECTRIC	895
Y	*398-4818*	1	STARTING MOTOR GP-ELECTRIC	903
Y	*315-7819*	1	SWITCH GP-PRESSURE (ENGINE OIL)	908
Y	*308-2314*	1	SWITCH GP-START	915
			S/N: C6M1-8653	
Y	*308-2317*	1	SWITCH GP-TEMPERATURE (ENGINE COOLANT)	917
Y	*584-9822*	1	SWITCH GP-PRESSURE	914
Y	*344-5515*	1	TURBOCHARGER GP	637
Y	*600-5127*	1	TURBOCHARGER GP	689
Y	*308-2306*	1	V-BELT GP (WATER PUMP)	443
Y	*428-5949*	1	V-BELT GP	449
Y	*308-2285*	1	VALVE MECHANISM GP	452

Y - SEPARATE ILLUSTRATION

<END>

320-0337 ENGINE AR-PRIMARY

49 BRAKE KW (66 BHP) AT 2800 RPM

FIELD REPLACEMENT ORDER 435-1658—PAGE: 115

SMCS-1000 **i10079731**

NOTE	PART NUMBER	QTY	PART NAME 1 2 3 4 5 6 (PRODUCT LEVEL)	SEE PAGE
Y	*326-8543*	1	AIR CLEANER GP	591
			—OR—	
Y	*600-1135*	1	AIR CLEANER GP	600
			—OR—	
Y	*600-5153*	1	AIR CLEANER GP	603
Y	*308-2305*	1	ALTERNATOR GP-CHARGING	858
			—OR—	
Y	*518-9064*	1	ALTERNATOR GP-CHARGING	865
Y	*344-5472*	1	CAMSHAFT GP	157
Y	*373-7284*	1	CAMSHAFT GP	162
			—OR—	
Y	*596-3442*	1	CAMSHAFT GP	178
Y	*308-2319*	1	CONNECTION GP-ELECTRICAL	867
			S/N: C6M1-8845	
Y	*321-6741*	1	CONNECTION GP-ELECTRICAL	868
			—OR—	
Y	*541-6343*	1	CONNECTION GP-ELECTRICAL	870
Y	*308-2309*	1	CONNECTION GP-EXHAUST	606
Y	*308-2302*	1	CONNECTION GP-WATER	483
			—OR—	
Y	*398-5884*	1	CONNECTION GP-WATER	485
Y	*423-6874*	1	FAN GP-SUCTION	493
			—OR—	
Y	*608-8936*	1	FAN GP-SUCTION	500
Y	*607-7117*	1	FILM GP (RADIATOR)	923
Y	*308-2307*	1	HOUSING GP-FRONT	297
			—OR—	
Y	*599-9816*	1	HOUSING GP-FRONT	363
Y	*308-2283*	1	CRANKSHAFT GP	209
			—OR—	
Y	*399-4716*	1	CRANKSHAFT GP	217
Y	*308-2281*	1	CYLINDER BLOCK GP	221
			—OR—	
Y	*584-3179*	1	CYLINDER BLOCK GP	239
Y	*308-2284*	1	CYLINDER HEAD GP	253
			—OR—	
Y	*596-2862*	1	CYLINDER HEAD GP	263
Y	*315-5252*	1	VALVE & PLUG GP-OIL PAN DRAIN	451
			—OR—	
Y	*398-5865*	1	PLUG GP-OIL PAN	428
Y	*437-2624*	1	FAN GP (EXTENSION)	489
Y	*363-3165*	1	FILLER GP-ENGINE OIL	470
			—OR—	
Y	*533-3936*	1	FILLER GP-ENGINE OIL	473
Y	*308-2298*	1	FILTER GP-ENGINE OIL	474
			—OR—	
Y	*398-8178*	1	FILTER GP-ENGINE OIL	477
Y	*607-7117*	1	FILM GP (RADIATOR)	923

320-0337 **ENGINE AR-PRIMARY (**contd.**)** **i10079731**

NOTE	PART NUMBER	QTY	PART NAME 1 2 3 4 5 6 (PRODUCT LEVEL)	SEE PAGE
Y	*317-0586*	1	FLYWHEEL GP	280
			—OR—	
Y	*398-4807*	1	FLYWHEEL GP	284
Y	*308-2311*	1	GLOW PLUG GP	881
			—OR—	
Y	*587-0270*	1	GLOW PLUG GP	883
Y	*344-5470*	1	GOVERNOR GP	775
			—OR—	
Y	*373-7283*	1	GOVERNOR GP	778
			—OR—	
Y	*596-3460*	1	GOVERNOR GP	786
Y	*317-0588*	1	HOUSING GP-FLYWHEEL	291
			—OR—	
Y	*591-2138*	1	HOUSING GP-FLYWHEEL	296
Y	*344-5469*	1	HOUSING GP-FRONT	339
			—OR—	
Y	*308-3329*	1	HOUSING GP-FRONT	298
Y	*308-2321*	1	LAMP GP	918
Y	*309-6725*	1	LIFTING GP-ENGINE	376
			—OR—	
Y	*584-9814*	1	LIFTING GP-ENGINE	378
Y	*331-2589*	1	LINES GP-COOLANT	505
Y	*600-5140*	1	MOUNTING GP-EXHAUST	620
Y	*308-2295*	1	PAN GP-OIL	385
			—OR—	
Y	*588-9925*	1	PAN GP-OIL	404
Y	*308-2286*	1	PISTON & ROD GP	408
Y	*596-2865*	1	PISTON & ROD GP	419
Y	*518-9053*	1	PLATE & FILM GP	925
Y	*518-9053*	1	PLATE & FILM GP	925
Y	*321-6740*	1	PULLEY GP-CRANKSHAFT	432
			—OR—	
Y	*445-9988*	1	PULLEY GP-CRANKSHAFT	433
Y	*308-2294*	1	PULLEY GP-FAN	434
			—OR—	
Y	*398-4866*	1	PULLEY GP-FAN	435
			—OR—	
Y	*398-4900*	1	PULLEY GP-FAN	436
Y	*308-2287*	1	LINES GP-ENGINE OIL	480
Y	*308-2310*	1	PUMP GP-FILTER & FUEL TRANSFER	796
Y	*308-3330*	1	PUMP GP-FUEL INJECTION	810
			—OR—	
Y	*596-2833*	1	PUMP GP-FUEL INJECTION	838
Y	*599-9752*	1	PUMP GP-FILTER & FUEL TRANSFER	805
Y	*317-6706*	1	PUMP GP-FUEL PRM & PRIM FILTER	844
			—OR—	
Y	*579-9465*	1	PUMP GP-FUEL PRM & PRIM FILTER	846
			—OR—	
Y	*565-2286*	1	PUMP GP-FUEL PRM & PRIM FILTER	845
Y	*317-0979*	1	PUMP GP-WATER	513
			—OR—	

320-0337 **ENGINE AR-PRIMARY (**contd.**)** **i10079731**

NOTE	PART NUMBER	QTY	PART NAME 1 2 3 4 5 6 (PRODUCT LEVEL)	SEE PAGE
Y	*598-5724*	1	PUMP GP-WATER	537
Y	*344-5881*	1	RADIATOR & FAN GP	556
			—OR—	
Y	*600-6121*	1	RADIATOR GP	583
Y	*584-3189*	1	ROCKER ARM GP	441
Y	*308-2313*	1	SOLENOID GP-SHUTOFF (FUEL)	889
			—OR—	
Y	*519-4412*	1	SOLENOID GP-SHUTOFF (FUEL)	891
Y	*308-2293*	1	STARTING MOTOR GP-ELECTRIC	895
			—OR—	
Y	*398-4818*	1	STARTING MOTOR GP-ELECTRIC	903
Y	*315-7819*	1	SWITCH GP-PRESSURE (ENGINE OIL)	908
			—OR—	
Y	*584-9822*	1	SWITCH GP-PRESSURE	914
Y	*308-2314*	1	SWITCH GP-START	915
			S/N: C6M1-8845	
Y	*308-2317*	1	SWITCH GP-TEMPERATURE (ENGINE COOLANT)	917
			—OR—	
Y	*601-4322*	1	SENSOR GP-TEMPERATURE	886
Y	*344-5515*	1	TURBOCHARGER GP	637
			—OR—	
Y	*600-5127*	1	TURBOCHARGER GP	689
Y	*308-2306*	1	V-BELT GP (WATER PUMP)	443
			—OR—	
Y	*428-5948*	1	V-BELT GP (WATER PUMP)	448
			—OR—	
Y	*428-5949*	1	V-BELT GP	449
Y	*308-2285*	1	VALVE MECHANISM GP	452

Y - SEPARATE ILLUSTRATION

<END>

326-1872 ENGINE AR-PRIMARY*R

36 BRAKE KW (49 BHP) AT 2800 RPM

FIELD REPLACEMENT ORDER 435-1642—PAGE: 110

SMCS-1000 **i10079732**

NOTE	PART NUMBER	QTY	PART NAME 1 2 3 4 5 6 (PRODUCT LEVEL)	SEE PAGE
Y	*308-2305*	1	ALTERNATOR GP-CHARGING	858
Y	*365-4284*	1	CAMSHAFT GP	159
Y	*308-2302*	1	CONNECTION GP-WATER	483
Y	*365-4283*	1	CONTROL GP-GOVERNOR	711
Y	*308-2307*	1	HOUSING GP-FRONT	297
Y	*317-0590*	1	COVER GP-VALVE MECHANISM	192
Y	*309-6713*	1	CRANKSHAFT GP	213
Y	*309-6712*	1	CYLINDER BLOCK GP	225
Y	*309-6715*	1	CYLINDER HEAD GP	255
Y	*308-2297*	1	FILLER GP-ENGINE OIL	466
Y	*308-2298*	1	FILTER GP-ENGINE OIL	474
Y	*308-2291*	1	FLYWHEEL GP	278
Y	*308-2311*	1	GLOW PLUG GP	881
Y	*311-1883*	1	HOUSING GP-FLYWHEEL	289
Y	*309-6718*	1	HOUSING GP-FRONT	299
			—OR—	
Y	*365-4282*	1	HOUSING GP-FRONT	342
Y	*309-6725*	1	LIFTING GP-ENGINE	376
Y	*309-6724*	1	MANIFOLD GP-EXHAUST	614
Y	*308-4735*	1	MOUNTING GP-ENGINE OIL FILTER	482
Y	*315-7813*	1	EXTENSION GP-FAN	271
Y	*317-3037*	1	PAN GP-OIL	397
Y	*309-6714*	1	PISTON & ROD GP	410
Y	*322-2426*	1	PLUG GP-ENGINE	424
Y	*309-6720*	1	PLUG GP-OIL PAN	426
Y	*308-2300*	1	PULLEY GP-CRANKSHAFT	431
Y	*308-2294*	1	PULLEY GP-FAN	434
Y	*315-7814*	1	PUMP & MTG GP-FUEL TRANSFER	795
Y	*309-6717*	1	LINES GP-ENGINE OIL	481
Y	*309-6719*	1	PUMP GP-FUEL INJECTION	812
Y	*309-6721*	1	PUMP GP-WATER	509
Y	*315-7817*	1	SOLENOID GP-SHUTOFF	890
Y	*308-2293*	1	STARTING MOTOR GP-ELECTRIC	895
Y	*334-0268*	1	SWITCH GP-PRESSURE	912
Y	*308-2306*	1	V-BELT GP (WATER PUMP)	443
Y	*309-6716*	1	VALVE MECHANISM GP	458

Y - SEPARATE ILLUSTRATION

<END>

329-2158 ENGINE AR-PRIMARY

38 BRAKE KW (51 BHP) AT 3000 RPM

SMCS-1000 **i10079734**

NOTE	PART NUMBER	QTY	PART NAME 1 2 3 4 5 6 (PRODUCT LEVEL)	SEE PAGE
Y	*433-1379*	1	ENGINE AR	6

Y - SEPARATE ILLUSTRATION

<END>

329-2160 ENGINE AR-PRIMARY

45 BRAKE KW(60 BHP) AT 2800 RPM

SMCS-1000 **i10079735**

NOTE	PART NUMBER	QTY	PART NAME 1 2 3 4 5 6 (PRODUCT LEVEL)	SEE PAGE
Y	*435-1636*	1	ENGINE AR-PRIMARY	105

Y - SEPARATE ILLUSTRATION

<END>

334-0267 ENGINE AR-PRIMARY

33 BRAKE KW (44 BHP) AT 2800 RPM

SMCS-1000 **i10079741**

NOTE	PART NUMBER	QTY	PART NAME 1 2 3 4 5 6 (PRODUCT LEVEL)	SEE PAGE
Y	*317-0649*	1	AIR CLEANER GP	586
Y	*308-2305*	1	ALTERNATOR GP-CHARGING	858
Y	*308-2319*	1	CONNECTION GP-ELECTRICAL	867
			—OR—	
Y	*321-6741*	1	CONNECTION GP-ELECTRICAL	868
Y	*308-2309*	1	CONNECTION GP-EXHAUST	606
Y	*308-2302*	1	CONNECTION GP-WATER	483
Y	*308-2307*	1	HOUSING GP-FRONT	297
Y	*309-6722*	1	COVER GP-VALVE MECHANISM	184
Y	*309-6713*	1	CRANKSHAFT GP	213
Y	*309-6712*	1	CYLINDER BLOCK GP	225
Y	*309-6715*	1	CYLINDER HEAD GP	255
Y	*308-2297*	1	FILLER GP-ENGINE OIL	466
			—OR—	
Y	*363-3165*	1	FILLER GP-ENGINE OIL	470
Y	*308-2298*	1	FILTER GP-ENGINE OIL	474
Y	*317-0586*	1	FLYWHEEL GP	280
Y	*308-2311*	1	GLOW PLUG GP	881
Y	*317-0588*	1	HOUSING GP-FLYWHEEL	291
Y	*309-6718*	1	HOUSING GP-FRONT	299
Y	*308-2321*	1	LAMP GP	918
Y	*309-6725*	1	LIFTING GP-ENGINE	376
Y	*331-2589*	1	LINES GP-COOLANT	505
Y	*309-6724*	1	MANIFOLD GP-EXHAUST	614
Y	*308-2295*	1	PAN GP-OIL	385
Y	*309-6714*	1	PISTON & ROD GP	410
Y	*309-6720*	1	PLUG GP-OIL PAN	426
Y	*308-2300*	1	PULLEY GP-CRANKSHAFT	431
Y	*308-2294*	1	PULLEY GP-FAN	434
Y	*309-6717*	1	LINES GP-ENGINE OIL	481
Y	*308-2310*	1	PUMP GP-FILTER & FUEL TRANSFER	796
Y	*309-6719*	1	PUMP GP-FUEL INJECTION	812
Y	*308-2320*	1	PUMP GP-FUEL PRIMING	840
Y	*308-2301*	1	PUMP GP-WATER	506
Y	*331-3270*	1	RADIATOR GP	565
Y	*308-2313*	1	SOLENOID GP-SHUTOFF (FUEL)	889
Y	*308-2293*	1	STARTING MOTOR GP-ELECTRIC	895
Y	*315-7819*	1	SWITCH GP-PRESSURE (ENGINE OIL)	908
Y	*308-2314*	1	SWITCH GP-START	915
Y	*308-2317*	1	SWITCH GP-TEMPERATURE (ENGINE COOLANT)	917
Y	*308-2306*	1	V-BELT GP (WATER PUMP)	443
Y	*309-6716*	1	VALVE MECHANISM GP	458

Y - SEPARATE ILLUSTRATION

<END>

344-8934 ENGINE AR-PRIMARY

45 KW (60 BHP) AT 2000 RPM

FIELD REPLACEMENT ORDER 435-1636—PAGE: 105

SMCS-1000 **i10079751**

NOTE	PART NUMBER	QTY	PART NAME 1 2 3 4 5 6 (PRODUCT LEVEL)	SEE PAGE
Y	*326-8543*	1	AIR CLEANER GP	591
			—OR—	
Y	*600-1135*	1	AIR CLEANER GP	600
Y	*308-2305*	1	ALTERNATOR GP-CHARGING	858
Y	*323-9147*	1	CAMSHAFT GP	148
			—OR—	
Y	*329-9278*	1	CAMSHAFT GP	150
Y	*308-2319*	1	CONNECTION GP-ELECTRICAL	867
			—OR—	
Y	*321-6741*	1	CONNECTION GP-ELECTRICAL	868
Y	*308-2309*	1	CONNECTION GP-EXHAUST	606
Y	*308-2302*	1	CONNECTION GP-WATER	483
Y	*308-2307*	1	HOUSING GP-FRONT	297
Y	*308-2283*	1	CRANKSHAFT GP	209
Y	*308-2281*	1	CYLINDER BLOCK GP	221
Y	*308-2284*	1	CYLINDER HEAD GP	253
Y	*363-3165*	1	FILLER GP-ENGINE OIL	470
Y	*308-2298*	1	FILTER GP-ENGINE OIL	474
Y	*327-7632*	1	FLYWHEEL GP	282
Y	*308-2311*	1	GLOW PLUG GP	881
Y	*323-9146*	1	GOVERNOR GP	772
			—OR—	
Y	*329-9277*	1	HOUSING GP-FRONT	333
Y	*317-0588*	1	HOUSING GP-FLYWHEEL	291
Y	*323-9145*	1	HOUSING GP-FRONT	332
			—OR—	
Y	*308-2288*	1	FASTENER GP-FRONT HOUSING	276
Y	*308-2321*	1	LAMP GP	918
Y	*309-6725*	1	LIFTING GP-ENGINE	376
Y	*331-2589*	1	LINES GP-COOLANT	505
Y	*308-2287*	1	LINES GP-ENGINE OIL	480
Y	*308-2295*	1	PAN GP-OIL	385
Y	*308-2286*	1	PISTON & ROD GP	408
Y	*309-6720*	1	PLUG GP-OIL PAN	426
Y	*321-6740*	1	PULLEY GP-CRANKSHAFT	432
Y	*308-2294*	1	PULLEY GP-FAN	434
Y	*308-2310*	1	PUMP GP-FILTER & FUEL TRANSFER	796
Y	*308-2289*	1	PUMP GP-FUEL INJECTION	808
Y	*317-6706*	1	PUMP GP-FUEL PRM & PRIM FILTER	844
			—OR—	
Y	*579-9465*	1	PUMP GP-FUEL PRM & PRIM FILTER	846
Y	*317-0979*	1	PUMP GP-WATER	513
Y	*341-6658*	1	RADIATOR & FAN GP	548
Y	*308-2313*	1	SOLENOID GP-SHUTOFF (FUEL)	889
Y	*311-9030*	1	SENSOR GP-TEMPERATURE	885
Y	*308-2293*	1	STARTING MOTOR GP-ELECTRIC	895
Y	*315-7819*	1	SWITCH GP-PRESSURE (ENGINE OIL)	908
Y	*321-4261*	1	SWITCH GP-PRESSURE (ENGINE OIL)	910

344-8934 **ENGINE AR-PRIMARY (**contd.**)** **i10079751**

NOTE	PART NUMBER	QTY	PART NAME 1 2 3 4 5 6 (PRODUCT LEVEL)	SEE PAGE
Y	*308-2314*	1	SWITCH GP-START	915
Y	*308-2317*	1	SWITCH GP-TEMPERATURE (ENGINE COOLANT)	917
Y	*368-4106*	1	TURBOCHARGER GP	646
			—OR—	
Y	*477-6922*	1	TURBOCHARGER GP	678
			—OR—	
Y	*441-8101*	1	TURBOCHARGER GP	649
Y	*308-2306*	1	V-BELT GP (WATER PUMP)	443
Y	*308-2285*	1	VALVE MECHANISM GP	452

Y - SEPARATE ILLUSTRATION

<END>

345-0355 ENGINE AR-PRIMARY

37 BRAKE KW (50 BHP) AT 2800 RPM

FIELD REPLACEMENT ORDER 435-1646—PAGE: 112

SMCS-1000 **i10079762**

NOTE	PART NUMBER	QTY	PART NAME 1 2 3 4 5 6 (PRODUCT LEVEL)	SEE PAGE
Y	*317-0649*	1	AIR CLEANER GP	586
			—OR—	
Y	*611-6891*	1	AIR CLEANER GP	605
Y	*308-2305*	1	ALTERNATOR GP-CHARGING	858
Y	*441-6514*	1	CAMSHAFT GP	169
			—OR—	
Y	*454-6144*	1	CAMSHAFT GP	170
Y	*308-2319*	1	CONNECTION GP-ELECTRICAL	867
			—OR—	
Y	*321-6741*	1	CONNECTION GP-ELECTRICAL	868
Y	*308-2309*	1	CONNECTION GP-EXHAUST	606
Y	*308-2302*	1	CONNECTION GP-WATER	483
Y	*441-6513*	1	CONTROL GP-GOVERNOR	727
			—OR—	
Y	*454-6143*	1	CONTROL GP-GOVERNOR	733
Y	*308-2307*	1	HOUSING GP-FRONT	297
Y	*309-6722*	1	COVER GP-VALVE MECHANISM	184
Y	*309-6713*	1	CRANKSHAFT GP	213
Y	*309-6712*	1	CYLINDER BLOCK GP	225
Y	*309-6715*	1	CYLINDER HEAD GP	255
Y	*308-2297*	1	FILLER GP-ENGINE OIL	466
			—OR—	
Y	*363-3165*	1	FILLER GP-ENGINE OIL	470
Y	*308-2298*	1	FILTER GP-ENGINE OIL	474
Y	*327-7632*	1	FLYWHEEL GP	282
Y	*308-2311*	1	GLOW PLUG GP	881
Y	*317-0588*	1	HOUSING GP-FLYWHEEL	291
Y	*309-6718*	1	HOUSING GP-FRONT	299
			—OR—	
Y	*441-6512*	1	HOUSING GP-FRONT	350
			—OR—	
Y	*454-6141*	1	HOUSING GP-FRONT	352
Y	*308-2321*	1	LAMP GP	918
Y	*309-6725*	1	LIFTING GP-ENGINE	376
Y	*331-2589*	1	LINES GP-COOLANT	505
Y	*309-6724*	1	MANIFOLD GP-EXHAUST	614
			—OR—	
Y	*317-7192*	1	MANIFOLD GP-EXHAUST	615
Y	*308-2295*	1	PAN GP-OIL	385
Y	*309-6714*	1	PISTON & ROD GP	410
Y	*309-6720*	1	PLUG GP-OIL PAN	426
Y	*308-2300*	1	PULLEY GP-CRANKSHAFT	431
Y	*308-2294*	1	PULLEY GP-FAN	434
Y	*309-6717*	1	LINES GP-ENGINE OIL	481
Y	*308-2310*	1	PUMP GP-FILTER & FUEL TRANSFER	796
Y	*309-6719*	1	PUMP GP-FUEL INJECTION	812
Y	*308-2320*	1	PUMP GP-FUEL PRIMING	840

345-0355 **ENGINE AR-PRIMARY (**contd.**)** **i10079762**

NOTE	PART NUMBER	QTY	PART NAME 1 2 3 4 5 6 (PRODUCT LEVEL)	SEE PAGE
			—OR—	
Y	*579-9444*	1	PUMP GP-FUEL PRIMING	843
Y	*308-2301*	1	PUMP GP-WATER	506
Y	*331-3270*	1	RADIATOR GP	565
Y	*308-2313*	1	SOLENOID GP-SHUTOFF (FUEL)	889
Y	*308-2293*	1	STARTING MOTOR GP-ELECTRIC	895
Y	*315-7819*	1	SWITCH GP-PRESSURE (ENGINE OIL)	908
			—OR—	
Y	*321-4261*	1	SWITCH GP-PRESSURE (ENGINE OIL)	910
Y	*308-2314*	1	SWITCH GP-START (HEATER)	915
Y	*308-2317*	1	SWITCH GP-TEMPERATURE (ENGINE COOLANT)	917
			—OR—	
Y	*311-9030*	1	SENSOR GP-TEMPERATURE (ENGINE COOLANT)	885
Y	*308-2306*	1	V-BELT GP (WATER PUMP) (DRIVE)	443
Y	*309-6716*	1	VALVE MECHANISM GP	458

Y - SEPARATE ILLUSTRATION

<END>

345-0356 ENGINE AR-PRIMARY

49 KW (66 BHP) AT 2800 RPM

FIELD REPLACEMENT ORDER 435-1658—PAGE: 115

SMCS-1000 **i10079767**

NOTE	PART NUMBER	QTY	PART NAME 1 2 3 4 5 6 (PRODUCT LEVEL)	SEE PAGE
Y	*326-8543*	1	AIR CLEANER GP	591
Y	*308-2305*	1	ALTERNATOR GP-CHARGING	858
Y	*308-2319*	1	CONNECTION GP-ELECTRICAL	867
			—OR—	
Y	*321-6741*	1	CONNECTION GP-ELECTRICAL	868
Y	*308-2299*	1	LINES GP-COOLANT	504
			—OR—	
Y	*331-2589*	1	LINES GP-COOLANT	505
Y	*308-2309*	1	CONNECTION GP-EXHAUST	606
Y	*308-2302*	1	CONNECTION GP-WATER	483
Y	*308-2307*	1	HOUSING GP-FRONT	297
Y	*308-2283*	1	CRANKSHAFT GP	209
Y	*308-2281*	1	CYLINDER BLOCK GP	221
Y	*308-2284*	1	CYLINDER HEAD GP	253
Y	*363-3165*	1	FILLER GP-ENGINE OIL	470
Y	*308-2298*	1	FILTER GP-ENGINE OIL	474
Y	*327-7632*	1	FLYWHEEL GP	282
Y	*308-2311*	1	GLOW PLUG GP	881
Y	*317-0588*	1	HOUSING GP-FLYWHEEL	291
Y	*308-3329*	1	HOUSING GP-FRONT	298
Y	*309-6725*	1	LIFTING GP-ENGINE	376
Y	*308-2295*	1	PAN GP-OIL	385
Y	*308-2286*	1	PISTON & ROD GP	408
Y	*309-6720*	1	PLUG GP-OIL PAN	426
Y	*321-6740*	1	PULLEY GP-CRANKSHAFT	432
Y	*308-2294*	1	PULLEY GP-FAN	434
Y	*308-2310*	1	PUMP GP-FILTER & FUEL TRANSFER	796
Y	*308-3330*	1	PUMP GP-FUEL INJECTION	810
Y	*317-6706*	1	PUMP GP-FUEL PRM & PRIM FILTER	844
Y	*317-0979*	1	PUMP GP-WATER	513
			—OR—	
Y	*442-7729*	1	PUMP GP-WATER	531
Y	*344-5881*	1	RADIATOR & FAN GP	556
Y	*308-2313*	1	SOLENOID GP-SHUTOFF (FUEL)	889
Y	*308-2293*	1	STARTING MOTOR GP-ELECTRIC	895
Y	*315-7819*	1	SWITCH GP-PRESSURE (ENGINE OIL)	908
Y	*308-2314*	1	SWITCH GP-START	915
Y	*308-2317*	1	SWITCH GP-TEMPERATURE (ENGINE COOLANT)	917
Y	*365-4126*	1	TURBOCHARGER GP	640
Y	*308-2306*	1	V-BELT GP (WATER PUMP)	443
Y	*308-2285*	1	VALVE MECHANISM GP	452

Y - SEPARATE ILLUSTRATION

<END>

345-4149 ENGINE AR-PRIMARY

24 BRAKE KW (33 BHP) AT 1800 RPM

FIELD REPLACEMENT ORDER 435-1647—PAGE: 113

SMCS-1000 **i10080361**

NOTE	PART NUMBER	QTY	PART NAME 1 2 3 4 5 6 (PRODUCT LEVEL)	SEE PAGE
Y	*308-2305*	1	ALTERNATOR GP-CHARGING	858
			—OR—	
Y	*458-3287*	1	ALTERNATOR GP-CHARGING	864
Y	*308-2319*	1	CONNECTION GP-ELECTRICAL	867
			—OR—	
Y	*321-6741*	1	CONNECTION GP-ELECTRICAL	868
Y	*392-8657*	1	CONNECTION GP-ELECTRICAL	869
Y	*308-2309*	1	CONNECTION GP-EXHAUST	606
Y	*308-2302*	1	CONNECTION GP-WATER	483
Y	*308-2307*	1	HOUSING GP-FRONT	297
Y	*322-2424*	1	COVER GP-VALVE MECHANISM	194
			—OR—	
Y	*466-1519*	1	COVER GP-VALVE MECHANISM	201
Y	*309-6713*	1	CRANKSHAFT GP	213
Y	*309-6712*	1	CYLINDER BLOCK GP	225
Y	*309-6715*	1	CYLINDER HEAD GP	255
Y	*315-5252*	1	VALVE & PLUG GP-OIL PAN DRAIN	451
Y	*311-1119*	1	DRIVE GP-FAN	266
Y	*319-1623*	1	FAN GP-BLOWER	490
Y	*363-3165*	1	FILLER GP-ENGINE OIL	470
Y	*308-2298*	1	FILTER GP-ENGINE OIL	474
Y	*317-0586*	1	FLYWHEEL GP	280
Y	*308-2311*	1	GLOW PLUG GP	881
Y	*317-0588*	1	HOUSING GP-FLYWHEEL	291
Y	*321-4257*	1	HOUSING GP-FRONT	318
Y	*309-6725*	1	LIFTING GP-ENGINE	376
Y	*309-6724*	1	MANIFOLD GP-EXHAUST	614
Y	*308-4735*	1	MOUNTING GP-ENGINE OIL FILTER	482
Y	*308-2295*	1	PAN GP-OIL	385
Y	*309-6714*	1	PISTON & ROD GP	410
Y	*308-2300*	1	PULLEY GP-CRANKSHAFT	431
Y	*308-2294*	1	PULLEY GP-FAN	434
Y	*309-6717*	1	LINES GP-ENGINE OIL	481
Y	*308-2310*	1	PUMP GP-FILTER & FUEL TRANSFER	796
Y	*321-4258*	1	PUMP GP-FUEL INJECTION	822
Y	*308-2320*	1	PUMP GP-FUEL PRIMING	840
			—OR—	
Y	*579-9444*	1	PUMP GP-FUEL PRIMING	843
Y	*309-6721*	1	PUMP GP-WATER	509
Y	*320-9114*	1	SHUTOFF GP-ELECTRICAL	887
Y	*308-2313*	1	SOLENOID GP-SHUTOFF (FUEL)	889
Y	*308-2293*	1	STARTING MOTOR GP-ELECTRIC	895
Y	*315-7819*	1	SWITCH GP-PRESSURE (ENGINE OIL)	908
Y	*308-2314*	1	SWITCH GP-START	915
Y	*308-2317*	1	SWITCH GP-TEMPERATURE (ENGINE COOLANT)	917
Y	*308-2306*	1	V-BELT GP (WATER PUMP)	443
Y	*309-6716*	1	VALVE MECHANISM GP	458

345-4149 **ENGINE AR-PRIMARY (**contd.**)** **i10080361**

NOTE	PART NUMBER	QTY	PART NAME 1 2 3 4 5 6 (PRODUCT LEVEL)	SEE PAGE
Y - SEPARATE ILLUSTRATION				

<END>

345-9771 ENGINE AR-PRIMARY

36 BRAKE KW (49 BHP) AT 2800 RPM

FIELD REPLACEMENT ORDER 435-1642—PAGE: 110

SMCS-1000 **i10082676**

NOTE	PART NUMBER	QTY	PART NAME 1 2 3 4 5 6 (PRODUCT LEVEL)	SEE PAGE
			(NO SERVICED PARTS)	

<END>

348-8504 ENGINE AR-PRIMARY

38 BRAKE KW (50.9 BHP) AT 3000 RPM

FIELD REPLACEMENT ORDER 433-1379—PAGE: 6

SMCS-1000 **i10082680**

NOTE	PART NUMBER	QTY	PART NAME 1 2 3 4 5 6 (PRODUCT LEVEL)	SEE PAGE
			(NO SERVICED PARTS)	

<END>

354-8330 ENGINE AR-PRIMARY—24-VOLT

45 KW (60 BHP) AT 2800 RPM

FIELD REPLACEMENT ORDER 435-1636—PAGE: 105

SMCS-1000 **i09335484**

NOTE	PART NUMBER	QTY	PART NAME 1 2 3 4 5 6 (PRODUCT LEVEL)	SEE PAGE
Y	*317-3038*	1	ALTERNATOR GP-CHARGING	860
			—OR—	
Y	*598-5745*	1	ALTERNATOR GP-CHARGING	866
Y	*323-9147*	1	CAMSHAFT GP	148
			—OR—	
Y	*329-9278*	1	CAMSHAFT GP	150
			—OR—	
Y	*596-3442*	1	CAMSHAFT GP	178
Y	*398-4274*	1	FILM GP	920
Y	*308-2309*	1	CONNECTION GP-EXHAUST	606
			—OR—	
Y	*532-9705*	1	CONNECTION GP-EXHAUST	608
Y	*331-9611*	1	CONTROL GP-MANUAL START/STOP	879
			—OR—	
Y	*600-5174*	1	SOLENOID GP-SHUTOFF	892
Y	*308-2283*	1	CRANKSHAFT GP	209
			—OR—	
Y	*399-4716*	1	CRANKSHAFT GP	217
Y	*308-2281*	1	CYLINDER BLOCK GP	221
			—OR—	
Y	*584-3179*	1	CYLINDER BLOCK GP	239
Y	*308-2284*	1	CYLINDER HEAD GP	253
			—OR—	
Y	*596-2862*	1	CYLINDER HEAD GP	263
Y	*363-3165*	1	FILLER GP-ENGINE OIL	470
			—OR—	
Y	*533-3936*	1	FILLER GP-ENGINE OIL	473
Y	*308-2298*	1	FILTER GP-ENGINE OIL	474
			—OR—	
Y	*533-3936*	1	FILLER GP-ENGINE OIL	473
Y	*398-8178*	1	FILTER GP-ENGINE OIL	477
Y	*398-4807*	1	FLYWHEEL GP	284
Y	*317-0586*	1	FLYWHEEL GP	280
			—OR—	
Y	*587-7902*	1	STARTING MOTOR GP-ELECTRIC	905
Y	*317-3040*	1	GLOW PLUG GP	882
			—OR—	
Y	*600-5159*	1	GLOW PLUG GP	884
Y	*323-9146*	1	GOVERNOR GP	772
			—OR—	
Y	*329-9277*	1	HOUSING GP-FRONT	333
			—OR—	
Y	*596-3460*	1	GOVERNOR GP	786
Y	*317-0588*	1	HOUSING GP-FLYWHEEL	291
			—OR—	
Y	*591-2138*	1	HOUSING GP-FLYWHEEL	296
Y	*323-9145*	1	HOUSING GP-FRONT	332

354-8330 **ENGINE AR-PRIMARY (**contd.**)** **i09335484**

NOTE	PART NUMBER	QTY	PART NAME 1 2 3 4 5 6 (PRODUCT LEVEL)	SEE PAGE
			—OR—	
Y	*308-2288*	1	FASTENER GP-FRONT HOUSING	276
Y	*317-7191*	1	HOUSING GP-WATER REGULATOR	502
			—OR—	
Y	*398-3408*	1	CONNECTION GP-WATER	484
Y	*308-2299*	1	LINES GP-COOLANT	504
			—OR—	
Y	*331-2589*	1	LINES GP-COOLANT (COOLER)	505
			—OR—	
Y	*596-3460*	1	GOVERNOR GP	786
Y	*309-6725*	1	LIFTING GP-ENGINE	376
			—OR—	
Y	*584-9814*	1	LIFTING GP-ENGINE	378
Y	*315-7813*	1	EXTENSION GP-FAN	271
			—OR—	
Y	*398-9092*	1	EXTENSION GP-FAN	272
Y	*600-5139*	1	MOUNTING GP-EXHAUST	619
Y	*363-3164*	1	PAN GP-OIL	403
			—OR—	
Y	*600-9206*	1	PAN GP-OIL	407
Y	*308-2286*	1	PISTON & ROD GP	408
			—OR—	
Y	*596-2865*	1	PISTON & ROD GP	419
Y	*354-1245*	1	HOUSING GP-FRONT	340
			—OR—	
Y	*599-9836*	1	HOUSING GP-FRONT	371
Y	*323-9157*	1	PLUG GP-ENGINE	425
			—OR—	
Y	*610-3545*	1	FASTENER GP-ENGINE OIL LINES	465
Y	*309-6720*	1	PLUG GP-OIL PAN	426
			—OR—	
Y	*398-5865*	1	PLUG GP-OIL PAN	428
Y	*321-6740*	1	PULLEY GP-CRANKSHAFT	432
			—OR—	
Y	*445-9988*	1	PULLEY GP-CRANKSHAFT	433
Y	*308-2294*	1	PULLEY GP-FAN	434
			—OR—	
Y	*398-4866*	1	PULLEY GP-FAN	435
Y	*308-2310*	1	PUMP GP-FILTER & FUEL TRANSFER	796
			—OR—	
Y	*599-9741*	1	FILTER GP-FUEL	763
Y	*518-9053*	1	PLATE & FILM GP	925
Y	*308-2289*	1	PUMP GP-FUEL INJECTION	808
			—OR—	
Y	*596-2828*	1	PUMP GP-FUEL INJECTION	835
Y	*317-0979*	1	PUMP GP-WATER	513
			—OR—	
Y	*442-7729*	1	PUMP GP-WATER	531
			—OR—	
Y	*598-5724*	1	PUMP GP-WATER	537
Y	*584-3189*	1	ROCKER ARM GP	441

354-8330 **ENGINE AR-PRIMARY (**contd.**)** **i09335484**

NOTE	PART NUMBER	QTY	PART NAME 1 2 3 4 5 6 (PRODUCT LEVEL)	SEE PAGE
Y	*317-3036*	1	STARTING MOTOR GP-ELECTRIC	899
			—OR—	
Y	*499-5166*	1	STARTING MOTOR GP-ELECTRIC	904
			—OR—	
Y	*587-7902*	1	STARTING MOTOR GP-ELECTRIC	905
Y	*308-2317*	1	SWITCH GP-TEMPERATURE (ENGINE COOLANT)	917
			—OR—	
Y	*601-4322*	1	SENSOR GP-TEMPERATURE	886
Y	*308-2308*	1	TURBOCHARGER GP	623
			—OR—	
Y	*442-7759*	1	TURBOCHARGER GP	665
			—OR—	
Y	*600-5115*	1	TURBOCHARGER GP	685
Y	*317-3039*	1	V-BELT GP (WATER PUMP)	445
			—OR—	
Y	*598-5753*	1	V-BELT GP	450
Y	*308-2285*	1	VALVE MECHANISM GP	452

Y - SEPARATE ILLUSTRATION

<END>

358-1410 ENGINE AR-PRIMARY

45 BRAKE KW (61 BHP) AT 3000 RPM

FIELD REPLACEMENT ORDER 433-1380—PAGE: 8

SMCS-1000 **i10082509**

NOTE	PART NUMBER	QTY	PART NAME 1 2 3 4 5 6 (PRODUCT LEVEL)	SEE PAGE
			(NO SERVICED PARTS)	

<END>

389-9258 ENGINE AR-PRIMARY

46 BRAKE KW (61 BHP) AT 3000 RPM

FIELD REPLACEMENT ORDER 433-1380—PAGE: 8

SMCS-1000 **i10080370**

NOTE	PART NUMBER	QTY	PART NAME 1 2 3 4 5 6 (PRODUCT LEVEL)	SEE PAGE
Y	*399-2625*	1	ALTERNATOR GP-CHARGING	863
Y	*420-6419*	1	CAMSHAFT GP	167
Y	*308-2319*	1	CONNECTION GP-ELECTRICAL	867
			—OR—	
Y	*321-6741*	1	CONNECTION GP-ELECTRICAL	868
Y	*308-2302*	1	CONNECTION GP-WATER	483
Y	*420-6418*	1	CONTROL GP-GOVERNOR	723
Y	*390-3725*	1	CONTROL GP-THROTTLE	756
Y	*308-2283*	1	CRANKSHAFT GP	209
Y	*308-2281*	1	CYLINDER BLOCK GP	221
Y	*308-2284*	1	CYLINDER HEAD GP	253
Y	*354-1245*	1	HOUSING GP-FRONT	340
Y	*308-2304*	1	EXTENSION GP-FAN	270
Y	*363-3165*	1	FILLER GP-ENGINE OIL	470
Y	*308-2298*	1	FILTER GP-ENGINE OIL	474
Y	*308-2291*	1	FLYWHEEL GP	278
Y	*308-2311*	1	GLOW PLUG GP	881
Y	*308-2290*	1	HOUSING GP-FLYWHEEL	287
Y	*420-6417*	1	HOUSING GP-FRONT	348
Y	*309-6725*	1	LIFTING GP-ENGINE	376
Y	*331-2589*	1	LINES GP-COOLANT	505
Y	*308-2287*	1	LINES GP-ENGINE OIL	480
Y	*329-4424*	1	MANIFOLD GP-EXHAUST	616
Y	*363-3164*	1	PAN GP-OIL	403
Y	*308-2286*	1	PISTON & ROD GP	408
Y	*322-2426*	1	PLUG GP-ENGINE	424
Y	*309-6720*	1	PLUG GP-OIL PAN	426
Y	*322-2422*	1	PULLEY GP-AUXILIARY DRIVE	430
Y	*321-6740*	1	PULLEY GP-CRANKSHAFT	432
Y	*308-2294*	1	PULLEY GP-FAN	434
Y	*308-2310*	1	PUMP GP-FILTER & FUEL TRANSFER	796
Y	*317-0977*	1	PUMP GP-FUEL INJECTION	818
Y	*442-7729*	1	PUMP GP-WATER	531
Y	*308-2293*	1	STARTING MOTOR GP-ELECTRIC	895
Y	*315-7819*	1	SWITCH GP-PRESSURE (ENGINE OIL)	908
Y	*326-8542*	1	TURBOCHARGER GP	631
Y	*308-2306*	1	V-BELT GP (WATER PUMP)	443
Y	*308-2285*	1	VALVE MECHANISM GP	452

Y - SEPARATE ILLUSTRATION

<END>

393-7230 ENGINE AR-PRIMARY

46 BRAKE KW (61 BHP) AT 3000 RPM

OPTIONAL FIELD REPLACEMENT ORDER 433-1380—PAGE: 8

SMCS-1000 **i10080374**

NOTE	PART NUMBER	QTY	PART NAME 1 2 3 4 5 6 (PRODUCT LEVEL)	SEE PAGE
Y	*340-5947*	1	ALTERNATOR GP-CHARGING	862
Y	*420-6419*	1	CAMSHAFT GP	167
Y	*308-2319*	1	CONNECTION GP-ELECTRICAL	867
			—OR—	
Y	*321-6741*	1	CONNECTION GP-ELECTRICAL	868
Y	*308-2302*	1	CONNECTION GP-WATER	483
Y	*420-6418*	1	CONTROL GP-GOVERNOR	723
Y	*390-3725*	1	CONTROL GP-THROTTLE	756
			—OR—	
Y	*454-4365*	1	CONTROL GP-GOVERNOR	731
Y	*420-6408*	1	CRANKSHAFT GP	219
Y	*420-6407*	1	CYLINDER BLOCK GP	235
Y	*420-6410*	1	CYLINDER HEAD GP	260
Y	*354-1245*	1	HOUSING GP-FRONT	340
Y	*322-2423*	1	DRIVE GP-FAN	267
Y	*308-2297*	1	FILLER GP-ENGINE OIL	466
Y	*308-2298*	1	FILTER GP-ENGINE OIL	474
Y	*420-6416*	1	FILTER GP-ENGINE OIL	478
Y	*308-2291*	1	FLYWHEEL GP	278
Y	*308-2311*	1	GLOW PLUG GP	881
Y	*308-2290*	1	HOUSING GP-FLYWHEEL	287
Y	*420-6417*	1	HOUSING GP-FRONT	348
Y	*309-6725*	1	LIFTING GP-ENGINE	376
Y	*329-4424*	1	MANIFOLD GP-EXHAUST	616
Y	*420-6411*	1	MECHANISM GP-FUEL PUMP & VALVE	381
Y	*363-3164*	1	PAN GP-OIL	403
Y	*420-6409*	1	PISTON & ROD GP	416
Y	*322-2426*	1	PLUG GP-ENGINE	424
Y	*309-6720*	1	PLUG GP-OIL PAN	426
Y	*322-2422*	1	PULLEY GP-AUXILIARY DRIVE	430
Y	*321-6740*	1	PULLEY GP-CRANKSHAFT	432
Y	*308-2294*	1	PULLEY GP-FAN	434
Y	*317-0977*	1	PUMP GP-FUEL INJECTION	818
Y	*311-9028*	1	PUMP GP-FUEL TRANSFER	847
Y	*420-6415*	1	PUMP GP-WATER	525
Y	*308-2293*	1	STARTING MOTOR GP-ELECTRIC	895
Y	*315-7819*	1	SWITCH GP-PRESSURE (ENGINE OIL)	908
Y	*326-8542*	1	TURBOCHARGER GP	631
Y	*340-5966*	1	V-BELT GP (DRIVE)	446
Y	*420-6414*	1	VALVE GP-RELIEF	857

Y - SEPARATE ILLUSTRATION

<END>

396-3725 ENGINE AR-PRIMARY

38 BRAKE KW (50 BHP) AT 3000 RPM

FIELD REPLACEMENT ORDER 433-1379—PAGE: 6

SMCS-1000 **i10080379**

NOTE	PART NUMBER	QTY	PART NAME 1 2 3 4 5 6 (PRODUCT LEVEL)	SEE PAGE
Y	*340-5947*	1	ALTERNATOR GP-CHARGING	862
Y	*325-9476*	1	CAMSHAFT GP	149
Y	*308-2319*	1	CONNECTION GP-ELECTRICAL	867
			—OR—	
Y	*321-6741*	1	CONNECTION GP-ELECTRICAL	868
Y	*308-2302*	1	CONNECTION GP-WATER	483
Y	*325-9475*	1	CONTROL GP-GOVERNOR	701
Y	*322-2424*	1	COVER GP-VALVE MECHANISM	194
Y	*340-5782*	1	CRANKSHAFT GP	215
Y	*340-5781*	1	CYLINDER BLOCK GP	231
Y	*340-5784*	1	CYLINDER HEAD GP	258
Y	*354-1245*	1	HOUSING GP-FRONT	340
Y	*322-2423*	1	DRIVE GP-FAN	267
Y	*308-2297*	1	FILLER GP-ENGINE OIL	466
Y	*308-2298*	1	FILTER GP-ENGINE OIL	474
Y	*308-2291*	1	FLYWHEEL GP	278
Y	*308-2311*	1	GLOW PLUG GP	881
Y	*308-2290*	1	HOUSING GP-FLYWHEEL	287
Y	*311-1682*	1	HOUSING GP-FRONT	309
Y	*308-2315*	1	LIFTING GP-ENGINE	375
Y	*317-7192*	1	MANIFOLD GP-EXHAUST	615
Y	*329-4424*	1	MANIFOLD GP-EXHAUST	616
Y	*308-4735*	1	MOUNTING GP-ENGINE OIL FILTER	482
Y	*363-3164*	1	PAN GP-OIL	403
Y	*340-5783*	1	PISTON & ROD GP	413
Y	*322-2426*	1	PLUG GP-ENGINE	424
Y	*309-6720*	1	PLUG GP-OIL PAN	426
Y	*322-2422*	1	PULLEY GP-AUXILIARY DRIVE	430
Y	*308-2300*	1	PULLEY GP-CRANKSHAFT	431
Y	*308-2294*	1	PULLEY GP-FAN	434
Y	*311-1683*	1	PUMP GP-FUEL INJECTION	814
Y	*311-9028*	1	PUMP GP-FUEL TRANSFER	847
Y	*340-5886*	1	PUMP GP-WATER	522
Y	*308-2313*	1	SOLENOID GP-SHUTOFF (FUEL)	889
			—OR—	
Y	*315-7817*	1	SOLENOID GP-SHUTOFF	890
Y	*308-2293*	1	STARTING MOTOR GP-ELECTRIC	895
Y	*315-7819*	1	SWITCH GP-PRESSURE (ENGINE OIL)	908
Y	*340-5786*	1	VALVE GP-PRESSURE CONTROL	856
Y	*340-5785*	1	VALVE MECHANISM GP	462

Y - SEPARATE ILLUSTRATION

<END>

417-7273 ENGINE AR-PRIMARY

48.6 BHP (36.3 KW) @ 2800 RPM

SMCS-1000 **i10080390**

NOTE	PART NUMBER	QTY	PART NAME 1 2 3 4 5 6 (PRODUCT LEVEL)	SEE PAGE
Y	*317-0649*	1	AIR CLEANER GP	586
Y	*611-6891*	1	AIR CLEANER GP	605
			—OR—	
Y	*600-5149*	1	AIR CLEANER GP	601
Y	*308-2305*	1	ALTERNATOR GP-CHARGING	858
			—OR—	
Y	*518-9064*	1	ALTERNATOR GP-CHARGING	865
Y	*465-2494*	1	CAMSHAFT GP	172
			—OR—	
Y	*454-6144*	1	CAMSHAFT GP	170
			—OR—	
Y	*596-3428*	1	CAMSHAFT GP	175
Y	*321-6741*	1	CONNECTION GP-ELECTRICAL	868
Y	*308-2309*	1	CONNECTION GP-EXHAUST	606
Y	*398-5884*	1	CONNECTION GP-WATER	485
Y	*308-2302*	1	CONNECTION GP-WATER	483
			—OR—	
Y	*544-4891*	1	FAN GP-SUCTION	499
Y	*465-2493*	1	CONTROL GP-GOVERNOR	741
			—OR—	
Y	*454-6143*	1	CONTROL GP-GOVERNOR	733
Y	*308-2307*	1	HOUSING GP-FRONT	297
Y	*309-6722*	1	COVER GP-VALVE MECHANISM	184
Y	*541-6343*	1	CONNECTION GP-ELECTRICAL	870
Y	*309-6713*	1	CRANKSHAFT GP	213
			—OR—	
Y	*399-4716*	1	CRANKSHAFT GP	217
Y	*309-6712*	1	CYLINDER BLOCK GP	225
			—OR—	
Y	*584-3179*	1	CYLINDER BLOCK GP	239
Y	*309-6715*	1	CYLINDER HEAD GP	255
			—OR—	
Y	*596-2861*	1	CYLINDER HEAD GP	262
Y	*398-9095*	1	EXTENSION GP-FAN	273
Y	*363-3165*	1	FILLER GP-ENGINE OIL	470
			—OR—	
Y	*533-3936*	1	FILLER GP-ENGINE OIL	473
Y	*308-2298*	1	FILTER GP-ENGINE OIL	474
			—OR—	
Y	*398-8178*	1	FILTER GP-ENGINE OIL	477
Y	*607-7117*	1	FILM GP (RADIATOR)	923
Y	*308-2291*	1	FLYWHEEL GP	278
			—OR—	
Y	*398-4803*	1	FLYWHEEL GP	283
Y	*308-2311*	1	GLOW PLUG GP	881
			—OR—	
Y	*587-0270*	1	GLOW PLUG GP	883
Y	*596-3466*	1	CONTROL GP-GOVERNOR	749
Y	*308-2290*	1	HOUSING GP-FLYWHEEL	287

417-7273 **ENGINE AR-PRIMARY (**contd.**)** **i10080390**

NOTE	PART NUMBER	QTY	PART NAME 1 2 3 4 5 6 (PRODUCT LEVEL)	SEE PAGE
			—OR—	
Y	*591-2135*	1	HOUSING GP-FLYWHEEL	295
Y	*465-2492*	1	HOUSING GP-FRONT	354
			—OR—	
Y	*454-6141*	1	HOUSING GP-FRONT	352
			—OR—	
Y	*599-9816*	1	HOUSING GP-FRONT	363
Y	*586-6654*	1	COVER GP-VALVE MECHANISM	203
Y	*309-6725*	1	LIFTING GP-ENGINE	376
			—OR—	
Y	*584-9814*	1	LIFTING GP-ENGINE	378
Y	*331-2589*	1	LINES GP-COOLANT	505
Y	*309-6717*	1	LINES GP-ENGINE OIL	481
Y	*309-6724*	1	MANIFOLD GP-EXHAUST	614
			—OR—	
Y	*584-9801*	1	MANIFOLD GP-EXHAUST	618
Y	*532-9705*	1	CONNECTION GP-EXHAUST	608
Y	*308-2295*	1	PAN GP-OIL	385
			—OR—	
Y	*588-9925*	1	PAN GP-OIL	404
Y	*309-6714*	1	PISTON & ROD GP	410
			—OR—	
Y	*596-2866*	1	PISTON & ROD GP	420
Y	*518-9053*	1	PLATE & FILM GP	925
Y	*309-6720*	1	PLUG GP-OIL PAN	426
			—OR—	
Y	*398-5865*	1	PLUG GP-OIL PAN	428
Y	*308-2300*	1	PULLEY GP-CRANKSHAFT	431
Y	*445-9988*	1	PULLEY GP-CRANKSHAFT	433
Y	*308-2294*	1	PULLEY GP-FAN	434
			—OR—	
Y	*398-4866*	1	PULLEY GP-FAN	435
Y	*308-2310*	1	PUMP GP-FILTER & FUEL TRANSFER	796
			—OR—	
Y	*599-9752*	1	PUMP GP-FILTER & FUEL TRANSFER	805
Y	*309-6719*	1	PUMP GP-FUEL INJECTION	812
			—OR—	
Y	*596-2825*	1	PUMP GP-FUEL INJECTION	829
Y	*308-2320*	1	PUMP GP-FUEL PRIMING	840
			—OR—	
Y	*579-9444*	1	PUMP GP-FUEL PRIMING	843
			—OR—	
Y	*565-2285*	1	PUMP GP-FUEL PRIMING	842
Y	*308-2301*	1	PUMP GP-WATER	506
			—OR—	
Y	*598-5724*	1	PUMP GP-WATER	537
Y	*331-2552*	1	RADIATOR & FAN GP	545
			—OR—	
Y	*584-9829*	1	RADIATOR GP	577
Y	*584-3189*	1	ROCKER ARM GP	441
Y	*308-2313*	1	SOLENOID GP-SHUTOFF (FUEL)	889

417-7273 **ENGINE AR-PRIMARY (**contd.**)** **i10080390**

NOTE	PART NUMBER	QTY	PART NAME 1 2 3 4 5 6 (PRODUCT LEVEL)	SEE PAGE
			—OR—	
Y	*519-4412*	1	SOLENOID GP-SHUTOFF (FUEL)	891
Y	*308-2293*	1	STARTING MOTOR GP-ELECTRIC	895
			—OR—	
Y	*398-4818*	1	STARTING MOTOR GP-ELECTRIC	903
Y	*315-7819*	1	SWITCH GP-PRESSURE (ENGINE OIL)	908
			—OR—	
Y	*584-9822*	1	SWITCH GP-PRESSURE	914
Y	*308-2314*	1	SWITCH GP-START	915
			S/N: C6M1-8371	
Y	*308-2317*	1	SWITCH GP-TEMPERATURE (ENGINE COOLANT)	917
			—OR—	
Y	*601-4322*	1	SENSOR GP-TEMPERATURE	886
Y	*308-2306*	1	V-BELT GP (WATER PUMP)	443
			—OR—	
Y	*428-5948*	1	V-BELT GP (WATER PUMP)	448
Y	*309-6716*	1	VALVE MECHANISM GP	458

Y - SEPARATE ILLUSTRATION

<END>

417-7274 ENGINE AR-PRIMARY

36.3-KILO WATT, 2800-RPM

SMCS-1000 **i10080396**

NOTE	PART NUMBER	QTY	PART NAME 1 2 3 4 5 6 (PRODUCT LEVEL)	SEE PAGE
Y	*317-0649*	1	AIR CLEANER GP	586
			—OR—	
Y	*611-6891*	1	AIR CLEANER GP	605
			—OR—	
Y	*600-5149*	1	AIR CLEANER GP	601
Y	*308-2305*	1	ALTERNATOR GP-CHARGING	858
			—OR—	
Y	*518-9064*	1	ALTERNATOR GP-CHARGING	865
Y	*454-6144*	1	CAMSHAFT GP	170
			—OR—	
Y	*596-3428*	1	CAMSHAFT GP	175
Y	*321-6741*	1	CONNECTION GP-ELECTRICAL	868
			—OR—	
Y	*541-6343*	1	CONNECTION GP-ELECTRICAL	870
Y	*308-2309*	1	CONNECTION GP-EXHAUST	606
			—OR—	
Y	*532-9705*	1	CONNECTION GP-EXHAUST	608
Y	*308-2302*	1	CONNECTION GP-WATER	483
			—OR—	
Y	*398-5884*	1	CONNECTION GP-WATER	485
Y	*454-6143*	1	CONTROL GP-GOVERNOR	733
			—OR—	
Y	*596-3466*	1	CONTROL GP-GOVERNOR	749
Y	*308-2307*	1	HOUSING GP-FRONT	297
			—OR—	
Y	*599-9816*	1	HOUSING GP-FRONT	363
Y	*309-6722*	1	COVER GP-VALVE MECHANISM	184
			—OR—	
Y	*586-6654*	1	COVER GP-VALVE MECHANISM	203
Y	*399-4716*	1	CRANKSHAFT GP	217
Y	*309-6712*	1	CYLINDER BLOCK GP	225
			—OR—	
Y	*584-3179*	1	CYLINDER BLOCK GP	239
Y	*596-2861*	1	CYLINDER HEAD GP	262
Y	*398-9095*	1	EXTENSION GP-FAN	273
Y	*521-8165*	1	FAN GP-SUCTION	498
Y	*363-3165*	1	FILLER GP-ENGINE OIL	470
			—OR—	
Y	*533-3936*	1	FILLER GP-ENGINE OIL	473
Y	*607-7117*	1	FILM GP (RADIATOR)	923
Y	*308-2298*	1	FILTER GP-ENGINE OIL	474
			—OR—	
Y	*398-8178*	1	FILTER GP-ENGINE OIL	477
Y	*317-0586*	1	FLYWHEEL GP	280
			—OR—	
Y	*398-4807*	1	FLYWHEEL GP	284
Y	*308-2311*	1	GLOW PLUG GP	881
			—OR—	
Y	*587-0270*	1	GLOW PLUG GP	883

417-7274 **ENGINE AR-PRIMARY (**contd.**)** **i10080396**

NOTE	PART NUMBER	QTY	PART NAME 1 2 3 4 5 6 (PRODUCT LEVEL)	SEE PAGE
Y	*317-0588*	1	HOUSING GP-FLYWHEEL	291
			—OR—	
Y	*591-2138*	1	HOUSING GP-FLYWHEEL	296
Y	*454-6141*	1	HOUSING GP-FRONT	352
Y	*309-6725*	1	LIFTING GP-ENGINE	376
			—OR—	
Y	*584-9814*	1	LIFTING GP-ENGINE	378
Y	*331-2589*	1	LINES GP-COOLANT	505
Y	*309-6724*	1	MANIFOLD GP-EXHAUST	614
			—OR—	
Y	*584-9801*	1	MANIFOLD GP-EXHAUST	618
Y	*308-2295*	1	PAN GP-OIL	385
			—OR—	
Y	*588-9925*	1	PAN GP-OIL	404
Y	*596-2866*	1	PISTON & ROD GP	420
Y	*518-9053*	1	PLATE & FILM GP	925
Y	*309-6720*	1	PLUG GP-OIL PAN	426
			—OR—	
Y	*398-5865*	1	PLUG GP-OIL PAN	428
Y	*308-2300*	1	PULLEY GP-CRANKSHAFT	431
			—OR—	
Y	*445-9988*	1	PULLEY GP-CRANKSHAFT	433
Y	*308-2294*	1	PULLEY GP-FAN	434
			—OR—	
Y	*398-4866*	1	PULLEY GP-FAN	435
Y	*308-2310*	1	PUMP GP-FILTER & FUEL TRANSFER	796
			—OR—	
Y	*599-9752*	1	PUMP GP-FILTER & FUEL TRANSFER	805
Y	*309-6719*	1	PUMP GP-FUEL INJECTION	812
			—OR—	
Y	*596-2825*	1	PUMP GP-FUEL INJECTION	829
Y	*308-2320*	1	PUMP GP-FUEL PRIMING	840
			—OR—	
Y	*579-9444*	1	PUMP GP-FUEL PRIMING	843
			—OR—	
Y	*565-2285*	1	PUMP GP-FUEL PRIMING	842
Y	*308-2301*	1	PUMP GP-WATER	506
			—OR—	
Y	*598-5724*	1	PUMP GP-WATER	537
Y	*331-3270*	1	RADIATOR GP	565
			—OR—	
Y	*584-9829*	1	RADIATOR GP	577
Y	*584-3189*	1	ROCKER ARM GP	441
Y	*308-2313*	1	SOLENOID GP-SHUTOFF (FUEL)	889
			—OR—	
Y	*519-4412*	1	SOLENOID GP-SHUTOFF (FUEL)	891
Y	*308-2293*	1	STARTING MOTOR GP-ELECTRIC	895
			—OR—	
Y	*398-4818*	1	STARTING MOTOR GP-ELECTRIC	903
Y	*315-7819*	1	SWITCH GP-PRESSURE (ENGINE OIL)	908
			—OR—	

417-7274 **ENGINE AR-PRIMARY (**contd.**)** **i10080396**

NOTE	PART NUMBER	QTY	PART NAME 1 2 3 4 5 6 (PRODUCT LEVEL)	SEE PAGE
Y	*584-9822*	1	SWITCH GP-PRESSURE	914
Y	*308-2314*	1	SWITCH GP-START	915
Y	*308-2317*	1	SWITCH GP-TEMPERATURE (ENGINE COOLANT)	917
			—OR—	
Y	*601-4322*	1	SENSOR GP-TEMPERATURE	886
Y	*308-2306*	1	V-BELT GP (WATER PUMP)	443
			—OR—	
Y	*428-5948*	1	V-BELT GP (WATER PUMP)	448

Y - SEPARATE ILLUSTRATION

<END>

417-7275 ENGINE AR-PRIMARY

49 BRAKE KW (36 BHP) AT 2800 RPM

SMCS-1000 **i10080408**

NOTE	PART NUMBER	QTY	PART NAME 1 2 3 4 5 6 (PRODUCT LEVEL)	SEE PAGE
Y	*317-0649*	1	AIR CLEANER GP	586
			—OR—	
Y	*611-6891*	1	AIR CLEANER GP	605
			—OR—	
Y	*600-5149*	1	AIR CLEANER GP	601
Y	*308-2305*	1	ALTERNATOR GP-CHARGING	858
			—OR—	
Y	*518-9064*	1	ALTERNATOR GP-CHARGING	865
Y	*465-2494*	1	CAMSHAFT GP	172
			—OR—	
Y	*454-6144*	1	CAMSHAFT GP	170
			—OR—	
Y	*596-3428*	1	CAMSHAFT GP	175
Y	*532-9705*	1	CONNECTION GP-EXHAUST	608
Y	*541-6343*	1	CONNECTION GP-ELECTRICAL	870
Y	*308-2302*	1	CONNECTION GP-WATER	483
			—OR—	
Y	*398-5884*	1	CONNECTION GP-WATER	485
Y	*308-2307*	1	HOUSING GP-FRONT	297
			—OR—	
Y	*308-2309*	1	CONNECTION GP-EXHAUST	606
			—OR—	
Y	*309-6712*	1	CYLINDER BLOCK GP	225
			—OR—	
Y	*309-6717*	1	LINES GP-ENGINE OIL	481
			—OR—	
Y	*321-6741*	1	CONNECTION GP-ELECTRICAL	868
			—OR—	
Y	*331-2589*	1	LINES GP-COOLANT	505
			—OR—	
Y	*465-2493*	1	CONTROL GP-GOVERNOR	741
			—OR—	
Y	*454-6143*	1	CONTROL GP-GOVERNOR	733
			—OR—	
Y	*309-6716*	1	VALVE MECHANISM GP	458
			—OR—	
Y	*584-3179*	1	CYLINDER BLOCK GP	239
Y	*309-6722*	1	COVER GP-VALVE MECHANISM	184
			—OR—	
Y	*586-6654*	1	COVER GP-VALVE MECHANISM	203
Y	*309-6713*	1	CRANKSHAFT GP	213
			—OR—	
Y	*399-4716*	1	CRANKSHAFT GP	217
Y	*309-6715*	1	CYLINDER HEAD GP	255
			—OR—	
Y	*596-2861*	1	CYLINDER HEAD GP	262
Y	*398-9095*	1	EXTENSION GP-FAN	273
Y	*521-8165*	1	FAN GP-SUCTION	498
Y	*363-3165*	1	FILLER GP-ENGINE OIL	470

417-7275 **ENGINE AR-PRIMARY (**contd.**)** **i10080408**

NOTE	PART NUMBER	QTY	PART NAME 1 2 3 4 5 6 (PRODUCT LEVEL)	SEE PAGE
			—OR—	
Y	*533-3936*	1	FILLER GP-ENGINE OIL	473
Y	*607-7117*	1	FILM GP (RADIATOR)	923
Y	*308-2298*	1	FILTER GP-ENGINE OIL	474
			—OR—	
Y	*398-8178*	1	FILTER GP-ENGINE OIL	477
Y	*308-2291*	1	FLYWHEEL GP	278
			—OR—	
Y	*398-4803*	1	FLYWHEEL GP	283
Y	*308-2311*	1	GLOW PLUG GP	881
			—OR—	
Y	*587-0270*	1	GLOW PLUG GP	883
Y	*308-2290*	1	HOUSING GP-FLYWHEEL	287
			—OR—	
Y	*591-2135*	1	HOUSING GP-FLYWHEEL	295
Y	*309-6718*	1	HOUSING GP-FRONT	299
			—OR—	
Y	*465-2492*	1	HOUSING GP-FRONT	354
			—OR—	
Y	*454-6141*	1	HOUSING GP-FRONT	352
			—OR—	
Y	*308-2300*	1	PULLEY GP-CRANKSHAFT	431
			—OR—	
Y	*599-9816*	1	HOUSING GP-FRONT	363
Y	*445-9988*	1	PULLEY GP-CRANKSHAFT	433
Y	*309-6725*	1	LIFTING GP-ENGINE	376
			—OR—	
Y	*584-9814*	1	LIFTING GP-ENGINE	378
Y	*309-6724*	1	MANIFOLD GP-EXHAUST	614
			—OR—	
Y	*584-9801*	1	MANIFOLD GP-EXHAUST	618
Y	*308-2295*	1	PAN GP-OIL	385
			—OR—	
Y	*588-9925*	1	PAN GP-OIL	404
Y	*309-6714*	1	PISTON & ROD GP	410
			—OR—	
Y	*596-2866*	1	PISTON & ROD GP	420
Y	*518-9053*	1	PLATE & FILM GP	925
Y	*309-6720*	1	PLUG GP-OIL PAN	426
			—OR—	
Y	*398-5865*	1	PLUG GP-OIL PAN	428
Y	*308-2294*	1	PULLEY GP-FAN	434
			—OR—	
Y	*398-4866*	1	PULLEY GP-FAN	435
Y	*308-2310*	1	PUMP GP-FILTER & FUEL TRANSFER	796
			—OR—	
Y	*599-9752*	1	PUMP GP-FILTER & FUEL TRANSFER	805
Y	*309-6719*	1	PUMP GP-FUEL INJECTION	812
			—OR—	
Y	*596-2825*	1	PUMP GP-FUEL INJECTION	829
Y	*308-2320*	1	PUMP GP-FUEL PRIMING	840

417-7275 **ENGINE AR-PRIMARY (**contd.**)** **i10080408**

NOTE	PART NUMBER	QTY	PART NAME 1 2 3 4 5 6 (PRODUCT LEVEL)	SEE PAGE
			—OR—	
Y	*579-9444*	1	PUMP GP-FUEL PRIMING	843
			—OR—	
Y	*565-2285*	1	PUMP GP-FUEL PRIMING	842
Y	*308-2301*	1	PUMP GP-WATER	506
			—OR—	
Y	*598-5724*	1	PUMP GP-WATER	537
Y	*331-3270*	1	RADIATOR GP	565
			—OR—	
Y	*584-9829*	1	RADIATOR GP	577
Y	*584-3189*	1	ROCKER ARM GP	441
Y	*308-2313*	1	SOLENOID GP-SHUTOFF (FUEL)	889
			—OR—	
Y	*596-3466*	1	CONTROL GP-GOVERNOR	749
Y	*519-4412*	1	SOLENOID GP-SHUTOFF (FUEL)	891
Y	*308-2293*	1	STARTING MOTOR GP-ELECTRIC	895
			—OR—	
Y	*398-4818*	1	STARTING MOTOR GP-ELECTRIC	903
Y	*315-7819*	1	SWITCH GP-PRESSURE (ENGINE OIL)	908
			—OR—	
Y	*584-9822*	1	SWITCH GP-PRESSURE	914
Y	*308-2314*	1	SWITCH GP-START	915
			S/N: C6M1-8325	
Y	*308-2317*	1	SWITCH GP-TEMPERATURE (ENGINE COOLANT)	917
			—OR—	
Y	*601-4322*	1	SENSOR GP-TEMPERATURE	886
Y	*308-2306*	1	V-BELT GP (WATER PUMP)	443
			—OR—	
Y	*428-5948*	1	V-BELT GP (WATER PUMP)	448

Y - SEPARATE ILLUSTRATION

<END>

417-8393 ENGINE AR-PRIMARY

45 BRAKE KW (61 BHP) AT 3000 RPM

FIELD REPLACEMENT ORDER 433-1380—PAGE: 8

SMCS-1000 **i10081582**

NOTE	PART NUMBER	QTY	PART NAME 1 2 3 4 5 6 (PRODUCT LEVEL)	SEE PAGE
Y	*317-3038*	1	ALTERNATOR GP-CHARGING	860
			—OR—	
Y	*598-5745*	1	ALTERNATOR GP-CHARGING	866
Y	*317-0971*	1	CAMSHAFT GP	146
			—OR—	
Y	*596-3442*	1	CAMSHAFT GP	178
Y	*308-5610*	1	CONNECTION GP-EXHAUST	607
			—OR—	
Y	*532-9707*	1	CONNECTION GP-EXHAUST	609
Y	*308-2302*	1	CONNECTION GP-WATER	483
Y	*331-9611*	1	CONTROL GP-MANUAL START/STOP	879
			—OR—	
Y	*600-5174*	1	SOLENOID GP-SHUTOFF	892
Y	*308-2307*	1	HOUSING GP-FRONT	297
			—OR—	
Y	*599-9816*	1	HOUSING GP-FRONT	363
Y	*308-2283*	1	CRANKSHAFT GP	209
			—OR—	
Y	*399-4716*	1	CRANKSHAFT GP	217
Y	*308-2281*	1	CYLINDER BLOCK GP	221
			—OR—	
Y	*584-3179*	1	CYLINDER BLOCK GP	239
Y	*308-2284*	1	CYLINDER HEAD GP	253
			—OR—	
Y	*596-2862*	1	CYLINDER HEAD GP	263
Y	*315-5252*	1	VALVE & PLUG GP-OIL PAN DRAIN	451
Y	*322-2423*	1	DRIVE GP-FAN	267
			—OR—	
Y	*398-6016*	1	FAN GP	488
Y	*308-2303*	1	FAN GP-SUCTION	491
			—OR—	
Y	*499-5184*	1	FAN GP-SUCTION	496
			—OR—	
Y	*456-7945*	1	FAN GP-SUCTION	495
Y	*363-3165*	1	FILLER GP-ENGINE OIL	470
			—OR—	
Y	*533-3936*	1	FILLER GP-ENGINE OIL	473
Y	*308-2298*	1	FILTER GP-ENGINE OIL	474
			—OR—	
Y	*398-8178*	1	FILTER GP-ENGINE OIL	477
Y	*317-0974*	1	FILTER GP-ENGINE OIL	475
			—OR—	
Y	*596-3472*	1	GOVERNOR GP	791
Y	*308-2291*	1	FLYWHEEL GP	278
			—OR—	
Y	*398-4803*	1	FLYWHEEL GP	283
Y	*317-3040*	1	GLOW PLUG GP	882

417-8393 **ENGINE AR-PRIMARY (**contd.**)** **i10081582**

NOTE	PART NUMBER	QTY	PART NAME 1 2 3 4 5 6 (PRODUCT LEVEL)	SEE PAGE
			—OR—	
Y	*600-5159*	1	GLOW PLUG GP	884
Y	*317-0967*	1	GOVERNOR GP	768
Y	*308-2290*	1	HOUSING GP-FLYWHEEL	287
			—OR—	
Y	*591-2135*	1	HOUSING GP-FLYWHEEL	295
Y	*317-0965*	1	HOUSING GP-FRONT	314
Y	*309-6725*	1	LIFTING GP-ENGINE	376
			—OR—	
Y	*584-9814*	1	LIFTING GP-ENGINE	378
Y	*368-4112*	1	MOUNTING GP-ENGINE	383
			—OR—	
Y	*600-5739*	1	MOUNTING GP-ENGINE	384
Y	*317-3037*	1	PAN GP-OIL	397
			—OR—	
Y	*598-5067*	1	PAN GP-OIL	406
Y	*308-2286*	1	PISTON & ROD GP	408
			—OR—	
Y	*596-2865*	1	PISTON & ROD GP	419
Y	*322-2422*	1	PULLEY GP-AUXILIARY DRIVE	430
			—OR—	
Y	*398-5881*	1	PULLEY AS-IDLER	429
Y	*321-6740*	1	PULLEY GP-CRANKSHAFT	432
			—OR—	
Y	*445-9988*	1	PULLEY GP-CRANKSHAFT	433
Y	*308-2294*	1	PULLEY GP-FAN	434
			—OR—	
Y	*398-4866*	1	PULLEY GP-FAN	435
Y	*308-2287*	1	LINES GP-ENGINE OIL	480
Y	*308-2310*	1	PUMP GP-FILTER & FUEL TRANSFER	796
			—OR—	
Y	*599-9752*	1	PUMP GP-FILTER & FUEL TRANSFER	805
Y	*317-0977*	1	PUMP GP-FUEL INJECTION	818
			—OR—	
Y	*596-2828*	1	PUMP GP-FUEL INJECTION	835
Y	*317-0979*	1	PUMP GP-WATER	513
			—OR—	
Y	*598-5725*	1	PUMP GP-WATER	540
Y	*317-3036*	1	STARTING MOTOR GP-ELECTRIC	899
			—OR—	
Y	*499-5166*	1	STARTING MOTOR GP-ELECTRIC	904
			—OR—	
Y	*587-7902*	1	STARTING MOTOR GP-ELECTRIC	905
Y	*308-2312*	1	SWITCH GP-PRESSURE (ENGINE OIL)	906
Y	*308-2317*	1	SWITCH GP-TEMPERATURE (ENGINE COOLANT)	917
			—OR—	
Y	*601-4322*	1	SENSOR GP-TEMPERATURE (ENGINE COOLANT)	886
Y	*326-8542*	1	TURBOCHARGER GP	631
			—OR—	
Y	*442-6206*	1	TURBOCHARGER GP	659
			—OR—	

417-8393 **ENGINE AR-PRIMARY (**contd.**)** **i10081582**

NOTE	PART NUMBER	QTY	PART NAME 1 2 3 4 5 6 (PRODUCT LEVEL)	SEE PAGE
Y	*600-5115*	1	TURBOCHARGER GP	685
Y	*317-3039*	1	V-BELT GP (DRIVE)	445
			—OR—	
Y	*598-5753*	1	V-BELT GP (DRIVE)	450
Y	*308-2285*	1	VALVE MECHANISM GP	452
Y	*398-4274*	1	FILM GP	920
Y	*398-5866*	1	DRAIN GP-ECOLOGY	264
Y	*398-5884*	1	CONNECTION GP-WATER	485
Y	*518-9053*	1	PLATE & FILM GP	925
Y	*532-8314*	1	SWITCH GP-PRESSURE (ALARM)	913
Y	*584-3189*	1	ROCKER ARM GP	441
Y	*598-5721*	1	FILTER GP-ENGINE OIL	479
Y	*600-5140*	1	MOUNTING GP-EXHAUST	620

Y - SEPARATE ILLUSTRATION

<END>

420-4312 ENGINE AR-PRIMARY

36 BRAKE KW (49 BHP) AT 2800 RPM

FIELD REPLACEMENT ORDER 435-1642—PAGE: 110

SMCS-1000 **i09335486**

NOTE	PART NUMBER	QTY	PART NAME 1 2 3 4 5 6 (PRODUCT LEVEL)	SEE PAGE
Y	*398-4274*	1	FILM GP	920
Y	*308-2305*	1	ALTERNATOR GP-CHARGING	858
			—OR—	
Y	*518-9064*	1	ALTERNATOR GP-CHARGING	865
Y	*465-2494*	1	CAMSHAFT GP	172
			—OR—	
Y	*454-6144*	1	CAMSHAFT GP	170
			—OR—	
Y	*596-3428*	1	CAMSHAFT GP	175
Y	*308-2319*	1	CONNECTION GP-ELECTRICAL	867
			—OR—	
Y	*321-6741*	1	CONNECTION GP-ELECTRICAL	868
			—OR—	
Y	*541-6343*	1	CONNECTION GP-ELECTRICAL	870
Y	*308-5610*	1	CONNECTION GP-EXHAUST	607
			—OR—	
Y	*532-9707*	1	CONNECTION GP-EXHAUST	609
Y	*308-2302*	1	CONNECTION GP-WATER	483
			—OR—	
Y	*398-5884*	1	CONNECTION GP-WATER	485
Y	*308-2307*	1	HOUSING GP-FRONT	297
			—OR—	
Y	*599-9816*	1	HOUSING GP-FRONT	363
Y	*309-6722*	1	COVER GP-VALVE MECHANISM	184
Y	*309-6713*	1	CRANKSHAFT GP	213
			—OR—	
Y	*399-4716*	1	CRANKSHAFT GP	217
Y	*309-6712*	1	CYLINDER BLOCK GP	225
			—OR—	
Y	*584-3179*	1	CYLINDER BLOCK GP	239
Y	*309-6715*	1	CYLINDER HEAD GP	255
			—OR—	
Y	*596-2861*	1	CYLINDER HEAD GP	262
Y	*308-2304*	1	EXTENSION GP-FAN	270
			—OR—	
Y	*437-2623*	1	EXTENSION GP-FAN	274
Y	*308-2303*	1	FAN GP-SUCTION	491
			—OR—	
Y	*437-2599*	1	FAN GP-SUCTION	494
Y	*363-3165*	1	FILLER GP-ENGINE OIL	470
			—OR—	
Y	*533-3936*	1	FILLER GP-ENGINE OIL	473
Y	*308-2298*	1	FILTER GP-ENGINE OIL	474
Y	*398-8178*	1	FILTER GP-ENGINE OIL	477
Y	*308-2291*	1	FLYWHEEL GP	278
			—OR—	
Y	*398-4803*	1	FLYWHEEL GP	283
Y	*465-2493*	1	CONTROL GP-GOVERNOR	741

420-4312 **ENGINE AR-PRIMARY (**contd.**)** **i09335486**

NOTE	PART NUMBER	QTY	PART NAME 1 2 3 4 5 6 (PRODUCT LEVEL)	SEE PAGE
			—OR—	
Y	*454-6143*	1	CONTROL GP-GOVERNOR	733
			—OR—	
Y	*596-3466*	1	CONTROL GP-GOVERNOR	749
Y	*308-2311*	1	GLOW PLUG GP	881
			—OR—	
Y	*587-0270*	1	GLOW PLUG GP	883
Y	*586-6654*	1	COVER GP-VALVE MECHANISM	203
Y	*308-2290*	1	HOUSING GP-FLYWHEEL	287
			—OR—	
Y	*591-2135*	1	HOUSING GP-FLYWHEEL	295
Y	*309-6718*	1	HOUSING GP-FRONT	299
			—OR—	
Y	*465-2492*	1	HOUSING GP-FRONT	354
			—OR—	
Y	*454-6141*	1	HOUSING GP-FRONT	352
Y	*309-6725*	1	LIFTING GP-ENGINE	376
			—OR—	
Y	*584-9814*	1	LIFTING GP-ENGINE	378
Y	*309-6724*	1	MANIFOLD GP-EXHAUST	614
			—OR—	
Y	*584-9801*	1	MANIFOLD GP-EXHAUST	618
Y	*308-4735*	1	MOUNTING GP-ENGINE OIL FILTER	482
Y	*317-3037*	1	PAN GP-OIL	397
			—OR—	
Y	*598-5067*	1	PAN GP-OIL	406
Y	*309-6714*	1	PISTON & ROD GP	410
			—OR—	
Y	*596-2866*	1	PISTON & ROD GP	420
Y	*309-6720*	1	PLUG GP-OIL PAN	426
			—OR—	
Y	*398-5865*	1	PLUG GP-OIL PAN	428
Y	*308-2300*	1	PULLEY GP-CRANKSHAFT	431
			—OR—	
Y	*445-9988*	1	PULLEY GP-CRANKSHAFT	433
Y	*308-2294*	1	PULLEY GP-FAN	434
			—OR—	
Y	*398-4866*	1	PULLEY GP-FAN	435
Y	*309-6717*	1	LINES GP-ENGINE OIL	481
Y	*308-2310*	1	PUMP GP-FILTER & FUEL TRANSFER	796
			—OR—	
Y	*599-9752*	1	PUMP GP-FILTER & FUEL TRANSFER	805
Y	**518-9053**	1	PLATE & FILM GP	925
Y	*309-6719*	1	PUMP GP-FUEL INJECTION	812
			—OR—	
Y	*596-2825*	1	PUMP GP-FUEL INJECTION	829
Y	*317-6706*	1	PUMP GP-FUEL PRM & PRIM FILTER	844
			—OR—	
Y	*579-9465*	1	PUMP GP-FUEL PRM & PRIM FILTER	846
			—OR—	
Y	*565-2286*	1	PUMP GP-FUEL PRM & PRIM FILTER	845

420-4312 **ENGINE AR-PRIMARY (**contd.**)** **i09335486**

NOTE	PART NUMBER	QTY	PART NAME 1 2 3 4 5 6 (PRODUCT LEVEL)	SEE PAGE
Y	*598-5726*	1	PUMP GP-WATER	544
Y	*309-6721*	1	PUMP GP-WATER	509
Y	*584-3189*	1	ROCKER ARM GP	441
Y	*308-2313*	1	SOLENOID GP-SHUTOFF (FUEL)	889
			—OR—	
Y	*519-4412*	1	SOLENOID GP-SHUTOFF (FUEL)	891
Y	*308-2293*	1	STARTING MOTOR GP-ELECTRIC	895
			—OR—	
Y	*398-4818*	1	STARTING MOTOR GP-ELECTRIC	903
Y	*308-2312*	1	SWITCH GP-PRESSURE (ENGINE OIL)	906
			—OR—	
Y	*532-8314*	1	SWITCH GP-PRESSURE (ENGINE OIL)	913
Y	*308-2317*	1	SWITCH GP-TEMPERATURE (ENGINE COOLANT)	917
			—OR—	
Y	*601-4322*	1	SENSOR GP-TEMPERATURE	886
Y	*308-2306*	1	V-BELT GP (WATER PUMP) (DRIVE)	443
			—OR—	
Y	*428-5948*	1	V-BELT GP (WATER PUMP)	448
Y	*309-6716*	1	VALVE MECHANISM GP	458

Y - SEPARATE ILLUSTRATION

<END>

424-4164 ENGINE AR-PRIMARY

36 BRAKE KW (49 BHP) AT 2800 RPM

FIELD REPLACEMENT ORDER 435-1642—PAGE: 110

SMCS-1000 **i09596895**

NOTE	PART NUMBER	QTY	PART NAME 1 2 3 4 5 6 (PRODUCT LEVEL)	SEE PAGE
Y	*398-4274*	1	FILM GP	920
Y	*317-3038*	1	ALTERNATOR GP-CHARGING	860
			—OR—	
Y	*598-5745*	1	ALTERNATOR GP-CHARGING	866
Y	*441-6514*	1	CAMSHAFT GP	169
			—OR—	
Y	*454-6144*	1	CAMSHAFT GP	170
			—OR—	
Y	*596-3428*	1	CAMSHAFT GP	175
Y	*308-2309*	1	CONNECTION GP-EXHAUST	606
			—OR—	
Y	*532-9705*	1	CONNECTION GP-EXHAUST	608
Y	*308-2302*	1	CONNECTION GP-WATER	483
			—OR—	
Y	*398-5884*	1	CONNECTION GP-WATER	485
Y	*441-6513*	1	CONTROL GP-GOVERNOR	727
			—OR—	
Y	*454-6143*	1	CONTROL GP-GOVERNOR	733
			—OR—	
Y	*596-3466*	1	CONTROL GP-GOVERNOR	749
Y	*317-3041*	1	CONTROL GP-MANUAL START/STOP	878
			—OR—	
Y	*600-5177*	1	CONTROL GP-MANUAL START/STOP	880
Y	*317-0590*	1	COVER GP-VALVE MECHANISM	192
			—OR—	
Y	*586-6656*	1	COVER GP-VALVE MECHANISM	206
Y	*308-2307*	1	HOUSING GP-FRONT	297
			—OR—	
Y	*354-1245*	1	HOUSING GP-FRONT	340
			—OR—	
Y	*599-9836*	1	HOUSING GP-FRONT	371
Y	*309-6713*	1	CRANKSHAFT GP	213
			—OR—	
Y	*399-4716*	1	CRANKSHAFT GP	217
Y	*309-6712*	1	CYLINDER BLOCK GP	225
			—OR—	
Y	*584-3179*	1	CYLINDER BLOCK GP	239
Y	*309-6715*	1	CYLINDER HEAD GP	255
			—OR—	
Y	*596-2861*	1	CYLINDER HEAD GP	262
Y	*308-2304*	1	EXTENSION GP-FAN	270
			—OR—	
Y	*437-2623*	1	EXTENSION GP-FAN	274
Y	*363-3165*	1	FILLER GP-ENGINE OIL	470
			—OR—	
Y	*533-3936*	1	FILLER GP-ENGINE OIL	473
Y	*308-2298*	1	FILTER GP-ENGINE OIL	474

424-4164 **ENGINE AR-PRIMARY (**contd.**)** **i09596895**

NOTE	PART NUMBER	QTY	PART NAME 1 2 3 4 5 6 (PRODUCT LEVEL)	SEE PAGE
			—OR—	
Y	*398-8178*	1	FILTER GP-ENGINE OIL	477
Y	*311-1884*	1	FLYWHEEL GP	279
			—OR—	
Y	*584-9457*	1	FLYWHEEL GP	286
Y	*317-3040*	1	GLOW PLUG GP	882
			—OR—	
Y	*600-5159*	1	GLOW PLUG GP	884
Y	*308-2290*	1	HOUSING GP-FLYWHEEL	287
			—OR—	
Y	*591-2135*	1	HOUSING GP-FLYWHEEL	295
Y	*441-6512*	1	HOUSING GP-FRONT	350
			—OR—	
Y	*454-6141*	1	HOUSING GP-FRONT	352
Y	*309-6725*	1	LIFTING GP-ENGINE	376
			—OR—	
Y	*584-9814*	1	LIFTING GP-ENGINE	378
Y	*309-6724*	1	MANIFOLD GP-EXHAUST	614
			—OR—	
Y	*584-9801*	1	MANIFOLD GP-EXHAUST	618
Y	*308-4735*	1	MOUNTING GP-ENGINE OIL FILTER	482
Y	*317-3037*	1	PAN GP-OIL	397
			—OR—	
Y	*598-5067*	1	PAN GP-OIL	406
Y	*309-6714*	1	PISTON & ROD GP	410
			—OR—	
Y	*596-2866*	1	PISTON & ROD GP	420
Y	*518-9053*	1	PLATE & FILM GP	925
Y	*309-6720*	1	PLUG GP-OIL PAN	426
			—OR—	
Y	*398-5865*	1	PLUG GP-OIL PAN	428
Y	*308-2300*	1	PULLEY GP-CRANKSHAFT	431
			—OR—	
Y	*445-9988*	1	PULLEY GP-CRANKSHAFT	433
Y	*308-2294*	1	PULLEY GP-FAN	434
			—OR—	
Y	*398-4866*	1	PULLEY GP-FAN	435
Y	*584-3189*	1	ROCKER ARM GP	441
Y	*309-6717*	1	LINES GP-ENGINE OIL	481
Y	*308-2310*	1	PUMP GP-FILTER & FUEL TRANSFER	796
			—OR—	
Y	*599-9752*	1	PUMP GP-FILTER & FUEL TRANSFER	805
Y	*309-6719*	1	PUMP GP-FUEL INJECTION	812
			—OR—	
Y	*596-2825*	1	PUMP GP-FUEL INJECTION	829
Y	*308-2320*	1	PUMP GP-FUEL PRIMING	840
			—OR—	
Y	*579-9444*	1	PUMP GP-FUEL PRIMING	843
			—OR—	
Y	*565-2285*	1	PUMP GP-FUEL PRIMING	842
Y	*309-6721*	1	PUMP GP-WATER	509

424-4164 **ENGINE AR-PRIMARY (**contd.**)** **i09596895**

NOTE	PART NUMBER	QTY	PART NAME 1 2 3 4 5 6 (PRODUCT LEVEL)	SEE PAGE
			—OR—	
Y	*598-5726*	1	PUMP GP-WATER	544
Y	*317-3036*	1	STARTING MOTOR GP-ELECTRIC	899
			—OR—	
Y	*499-5166*	1	STARTING MOTOR GP-ELECTRIC	904
			—OR—	
Y	*587-7902*	1	STARTING MOTOR GP-ELECTRIC	905
Y	*532-8314*	1	SWITCH GP-PRESSURE	913
Y	*308-2317*	1	SWITCH GP-TEMPERATURE (ENGINE COOLANT)	917
			—OR—	
Y	*601-4322*	1	SENSOR GP-TEMPERATURE (ENGINE COOLANT)	886
Y	*317-3039*	1	V-BELT GP (DRIVE)	445
			—OR—	
Y	*598-5753*	1	V-BELT GP (DRIVE)	450
Y	*309-6716*	1	VALVE MECHANISM GP	458

Y - SEPARATE ILLUSTRATION

<END>

431-1760 ENGINE AR-PRIMARY

45 BRAKE KW (60 BHP) AT 2800 RPM

FIELD REPLACEMENT ORDER 435-1636—PAGE: 105

SMCS-1000 **i10082588**

NOTE	PART NUMBER	QTY	PART NAME 1 2 3 4 5 6 (PRODUCT LEVEL)	SEE PAGE
			(NO SERVICED PARTS)	

<END>

431-1761 ENGINE AR-PRIMARY

45 BRAKE KW (60 BHP) AT 2800 RPM

FIELD REPLACEMENT ORDER 435-1636—PAGE: 105

SMCS-1000 **i10080464**

NOTE	PART NUMBER	QTY	PART NAME 1 2 3 4 5 6 (PRODUCT LEVEL)	SEE PAGE
Y	*326-8543*	1	AIR CLEANER GP	591
Y	*308-2305*	1	ALTERNATOR GP-CHARGING	858
Y	*329-9278*	1	CAMSHAFT GP	150
Y	*321-6741*	1	CONNECTION GP-ELECTRICAL	868
Y	*308-2309*	1	CONNECTION GP-EXHAUST	606
Y	*308-2302*	1	CONNECTION GP-WATER	483
Y	*308-2307*	1	HOUSING GP-FRONT	297
Y	*308-2283*	1	CRANKSHAFT GP	209
Y	*308-2281*	1	CYLINDER BLOCK GP	221
Y	*308-2284*	1	CYLINDER HEAD GP	253
Y	*308-2288*	1	FASTENER GP-FRONT HOUSING	276
Y	*363-3165*	1	FILLER GP-ENGINE OIL	470
Y	*308-2298*	1	FILTER GP-ENGINE OIL	474
Y	*308-2291*	1	FLYWHEEL GP	278
Y	*308-2311*	1	GLOW PLUG GP	881
Y	*308-2290*	1	HOUSING GP-FLYWHEEL	287
Y	*329-9277*	1	HOUSING GP-FRONT	333
Y	*309-6725*	1	LIFTING GP-ENGINE	376
Y	*331-2589*	1	LINES GP-COOLANT	505
Y	*308-2287*	1	LINES GP-ENGINE OIL	480
Y	*308-2295*	1	PAN GP-OIL	385
Y	*308-2286*	1	PISTON & ROD GP	408
Y	*309-6720*	1	PLUG GP-OIL PAN	426
Y	*321-6740*	1	PULLEY GP-CRANKSHAFT	432
Y	*308-2294*	1	PULLEY GP-FAN	434
Y	*308-2310*	1	PUMP GP-FILTER & FUEL TRANSFER	796
Y	*308-2289*	1	PUMP GP-FUEL INJECTION	808
Y	*317-6706*	1	PUMP GP-FUEL PRM & PRIM FILTER	844
Y	*317-0979*	1	PUMP GP-WATER	513
Y	*341-6658*	1	RADIATOR & FAN GP	548
			—OR—	
Y	*315-7813*	1	EXTENSION GP-FAN	271
Y	*308-2313*	1	SOLENOID GP-SHUTOFF (FUEL)	889
Y	*308-2293*	1	STARTING MOTOR GP-ELECTRIC	895
Y	*315-7819*	1	SWITCH GP-PRESSURE (ENGINE OIL)	908
Y	*308-2314*	1	SWITCH GP-START	915
Y	*308-2317*	1	SWITCH GP-TEMPERATURE (ENGINE COOLANT)	917
Y	*441-8101*	1	TURBOCHARGER GP	649
Y	*308-2306*	1	V-BELT GP (WATER PUMP)	443
Y	*308-2285*	1	VALVE MECHANISM GP	452

Y - SEPARATE ILLUSTRATION

<END>

434-2173 ENGINE AR-PRIMARY

38 BRAKE KW (51 BHP) AT 3000 RPM

FIELD REPLACEMENT ORDER 433-1379—PAGE: 6

SMCS-1000 **i10080469**

NOTE	PART NUMBER	QTY	PART NAME 1 2 3 4 5 6 (PRODUCT LEVEL)	SEE PAGE
Y	*340-5947*	1	ALTERNATOR GP-CHARGING	862
Y	*325-9476*	1	CAMSHAFT GP	149
Y	*308-2319*	1	CONNECTION GP-ELECTRICAL	867
			—OR—	
Y	*321-6741*	1	CONNECTION GP-ELECTRICAL	868
Y	*308-2302*	1	CONNECTION GP-WATER	483
Y	*325-9475*	1	CONTROL GP-GOVERNOR	701
Y	*322-2424*	1	COVER GP-VALVE MECHANISM	194
Y	*340-5782*	1	CRANKSHAFT GP	215
Y	*340-5781*	1	CYLINDER BLOCK GP	231
Y	*340-5784*	1	CYLINDER HEAD GP	258
Y	*354-1245*	1	HOUSING GP-FRONT	340
Y	*322-2423*	1	DRIVE GP-FAN	267
Y	*308-2297*	1	FILLER GP-ENGINE OIL	466
Y	*308-2298*	1	FILTER GP-ENGINE OIL	474
Y	*308-2291*	1	FLYWHEEL GP	278
Y	*308-2311*	1	GLOW PLUG GP	881
Y	*308-2290*	1	HOUSING GP-FLYWHEEL	287
Y	*311-1682*	1	HOUSING GP-FRONT	309
Y	*308-2315*	1	LIFTING GP-ENGINE	375
Y	*317-7192*	1	MANIFOLD GP-EXHAUST	615
Y	*329-4424*	1	MANIFOLD GP-EXHAUST	616
Y	*308-4735*	1	MOUNTING GP-ENGINE OIL FILTER	482
Y	*363-3164*	1	PAN GP-OIL	403
Y	*340-5783*	1	PISTON & ROD GP	413
Y	*322-2426*	1	PLUG GP-ENGINE	424
Y	*309-6720*	1	PLUG GP-OIL PAN	426
Y	*322-2422*	1	PULLEY GP-AUXILIARY DRIVE	430
Y	*308-2300*	1	PULLEY GP-CRANKSHAFT	431
Y	*308-2294*	1	PULLEY GP-FAN	434
Y	*311-1683*	1	PUMP GP-FUEL INJECTION	814
Y	*311-9028*	1	PUMP GP-FUEL TRANSFER	847
Y	*340-5886*	1	PUMP GP-WATER	522
Y	*315-7817*	1	SOLENOID GP-SHUTOFF	890
Y	*308-2293*	1	STARTING MOTOR GP-ELECTRIC	895
Y	*315-7819*	1	SWITCH GP-PRESSURE (ENGINE OIL)	908
Y	*340-5966*	1	V-BELT GP (ALTERNATOR)	446
Y	*340-5786*	1	VALVE GP-PRESSURE CONTROL	856
Y	*340-5785*	1	VALVE MECHANISM GP	462

Y - SEPARATE ILLUSTRATION

<END>

434-2174 ENGINE AR-PRIMARY

46 BRAKE KW (61 BHP) AT 3000 RPM

SMCS-1000 **i10080473**

NOTE	PART NUMBER	QTY	PART NAME 1 2 3 4 5 6 (PRODUCT LEVEL)	SEE PAGE
Y	*340-5947*	1	ALTERNATOR GP-CHARGING	862
Y	*420-6419*	1	CAMSHAFT GP	167
Y	*308-2319*	1	CONNECTION GP-ELECTRICAL	867
			—OR—	
Y	*321-6741*	1	CONNECTION GP-ELECTRICAL	868
Y	*308-2302*	1	CONNECTION GP-WATER	483
Y	*420-6418*	1	CONTROL GP-GOVERNOR	723
Y	*454-4365*	1	CONTROL GP-GOVERNOR	731
Y	*420-6408*	1	CRANKSHAFT GP	219
Y	*420-6407*	1	CYLINDER BLOCK GP	235
Y	*420-6410*	1	CYLINDER HEAD GP	260
Y	*354-1245*	1	HOUSING GP-FRONT	340
Y	*322-2423*	1	DRIVE GP-FAN	267
Y	*308-2297*	1	FILLER GP-ENGINE OIL	466
Y	*308-2298*	1	FILTER GP-ENGINE OIL	474
Y	*420-6416*	1	FILTER GP-ENGINE OIL	478
Y	*308-2291*	1	FLYWHEEL GP	278
Y	*308-2311*	1	GLOW PLUG GP	881
Y	*308-2290*	1	HOUSING GP-FLYWHEEL	287
Y	*420-6417*	1	HOUSING GP-FRONT	348
Y	*309-6725*	1	LIFTING GP-ENGINE	376
Y	*329-4424*	1	MANIFOLD GP-EXHAUST	616
Y	*420-6411*	1	MECHANISM GP-FUEL PUMP & VALVE	381
Y	*363-3164*	1	PAN GP-OIL	403
Y	*420-6409*	1	PISTON & ROD GP	416
Y	*322-2426*	1	PLUG GP-ENGINE	424
Y	*309-6720*	1	PLUG GP-OIL PAN	426
Y	*322-2422*	1	PULLEY GP-AUXILIARY DRIVE	430
Y	*321-6740*	1	PULLEY GP-CRANKSHAFT	432
Y	*308-2294*	1	PULLEY GP-FAN	434
Y	*317-0977*	1	PUMP GP-FUEL INJECTION	818
Y	*311-9028*	1	PUMP GP-FUEL TRANSFER	847
Y	*420-6415*	1	PUMP GP-WATER	525
Y	*308-2293*	1	STARTING MOTOR GP-ELECTRIC	895
Y	*315-7819*	1	SWITCH GP-PRESSURE (ENGINE OIL)	908
Y	*326-8542*	1	TURBOCHARGER GP	631
Y	*340-5966*	1	V-BELT GP (ALTERNATOR)	446
Y	*420-6414*	1	VALVE GP-RELIEF	857

Y - SEPARATE ILLUSTRATION

<END>

435-1634 ENGINE AR-PRIMARY

36 BRAKE KW (49 BHP) AT 2800 RPM

FIELD REPLACEMENT FOR 514-6556—PAGE: 135

SMCS-1000 **i10081215**

NOTE	PART NUMBER	QTY	PART NAME 1 2 3 4 5 6 (PRODUCT LEVEL)	SEE PAGE
Y	*329-9278*	1	CAMSHAFT GP	150
			—OR—	
Y	*332-1364*	1	CAMSHAFT GP	154
Y	*331-2589*	1	LINES GP-COOLANT	505
Y	*308-2302*	1	CONNECTION GP-WATER	483
Y	*329-9277*	1	HOUSING GP-FRONT	333
			—OR—	
Y	*332-1362*	1	HOUSING GP-FRONT	337
Y	*442-9881*	1	CONTROL GP-THROTTLE	757
			—OR—	
Y	*308-2313*	1	SOLENOID GP-SHUTOFF (FUEL)	889
Y	*342-1268*	1	FASTENER GP-COVER	275
Y	*308-2283*	1	CRANKSHAFT GP	209
Y	*308-2281*	1	CYLINDER BLOCK GP	221
Y	*308-2284*	1	CYLINDER HEAD GP	253
Y	*354-1245*	1	HOUSING GP-FRONT	340
Y	*308-2297*	1	FILLER GP-ENGINE OIL	466
Y	*308-2298*	1	FILTER GP-ENGINE OIL	474
Y	*322-2412*	1	FLYWHEEL GP	281
Y	*308-2311*	1	GLOW PLUG GP	881
Y	*342-9604*	1	HOUSING GP-FLYWHEEL	292
Y	*308-2288*	1	FASTENER GP-FRONT HOUSING	276
			—OR—	
Y	*332-1363*	1	CONTROL GP-GOVERNOR	705
Y	*309-6725*	1	LIFTING GP-ENGINE	376
Y	*308-2295*	1	PAN GP-OIL	385
Y	*342-9607*	1	PARTS GP-MISCELLANEOUS	924
Y	*308-2286*	1	PISTON & ROD GP	408
Y	*309-6720*	1	PLUG GP-OIL PAN	426
Y	*321-6740*	1	PULLEY GP-CRANKSHAFT	432
Y	*308-2287*	1	LINES GP-ENGINE OIL	480
Y	*308-2289*	1	PUMP GP-FUEL INJECTION	808
Y	*317-0979*	1	PUMP GP-WATER	513
Y	*315-7819*	1	SWITCH GP-PRESSURE (ENGINE OIL)	908
Y	*308-2317*	1	SWITCH GP-TEMPERATURE (ENGINE COOLANT)	917
Y	*442-9826*	1	TURBOCHARGER GP	671
			—OR—	
Y	*508-8740*	1	TURBOCHARGER GP	682
Y	*308-2285*	1	VALVE MECHANISM GP	452

Y - SEPARATE ILLUSTRATION

<END>

435-1636 ENGINE AR-PRIMARY

45 BRAKE KW (60 BHP) AT 2800 RPM
FIELD REPLACEMENT FOR 320-0291—PAGE: 56
: FOR 354-8330—PAGE: 75
: FOR 320-0290—PAGE: 53
: FOR 344-8934—PAGE: 68
: FOR 308-6563—PAGE: 28
: FOR 319-7216—PAGE: 51
: FOR 431-1761—PAGE: 101
: FOR 446-7443—PAGE: 119
: FOR 310-1532—PAGE: 35
: FOR 316-5693—PAGE: 46
: FOR 506-0518—PAGE: 130
: FOR 506-0519—PAGE: 131
: FOR 512-7969—PAGE: 133
: FOR 516-2639—PAGE: 138
: FOR 557-6086—PAGE: 140
: FOR 471-9551—PAGE: 123
: FOR 478-7866—PAGE: 125
: FOR 431-1760—PAGE: 100

SMCS-1000 **i10053162**

NOTE	PART NUMBER	QTY	PART NAME 1 2 3 4 5 6 (PRODUCT LEVEL)	SEE PAGE
Y	*398-4274*	1	FILM GP	920
Y	*329-9278*	1	CAMSHAFT GP	150
			—OR—	
Y	*596-3460*	1	GOVERNOR GP	786
Y	*596-3442*	1	CAMSHAFT GP	178
Y	*398-5884*	1	CONNECTION GP-WATER	485
Y	*308-2302*	1	CONNECTION GP-WATER	483
Y	*442-9881*	1	CONTROL GP-THROTTLE	757
			—OR—	
Y	*308-2313*	1	SOLENOID GP-SHUTOFF (FUEL)	889
			—OR—	
Y	*519-4412*	1	SOLENOID GP-SHUTOFF (FUEL)	891
Y	*342-1268*	1	FASTENER GP-COVER	275
			—OR—	
Y	*559-9084*	1	CAP GP-PROTECTION	919
Y	*308-2283*	1	CRANKSHAFT GP	209
			—OR—	
Y	*399-4716*	1	CRANKSHAFT GP	217
Y	*308-2281*	1	CYLINDER BLOCK GP	221
			—OR—	
Y	*584-3179*	1	CYLINDER BLOCK GP	239
Y	*308-2284*	1	CYLINDER HEAD GP	253
			—OR—	
Y	*596-2865*	1	PISTON & ROD GP	419
Y	*354-1245*	1	HOUSING GP-FRONT	340
			—OR—	
Y	*599-9836*	1	HOUSING GP-FRONT	371
Y	*308-2297*	1	FILLER GP-ENGINE OIL	466
			—OR—	
Y	*532-8293*	1	FILLER GP-ENGINE OIL	472
Y	*308-2298*	1	FILTER GP-ENGINE OIL	474
			—OR—	

435-1636 **ENGINE AR-PRIMARY (**contd.**)** **i10053162**

NOTE	PART NUMBER	QTY	PART NAME 1 2 3 4 5 6 (PRODUCT LEVEL)	SEE PAGE
Y	*398-8178*	1	FILTER GP-ENGINE OIL	477
Y	*322-2412*	1	FLYWHEEL GP	281
			—OR—	
Y	*566-9450*	1	FLYWHEEL GP	285
Y	*308-2311*	1	GLOW PLUG GP	881
			—OR—	
Y	*587-0270*	1	GLOW PLUG GP	883
Y	*342-9604*	1	HOUSING GP-FLYWHEEL	292
			—OR—	
Y	*398-4795*	1	HOUSING GP-FLYWHEEL	294
Y	*329-9277*	1	HOUSING GP-FRONT	333
Y	*308-2288*	1	FASTENER GP-FRONT HOUSING (MOUNTING)	276
Y	*309-6725*	1	LIFTING GP-ENGINE	376
			—OR—	
Y	*603-1463*	1	LIFTING GP-ENGINE	380
Y	*308-2299*	1	LINES GP-COOLANT	504
			—OR—	
Y	*331-2589*	1	LINES GP-COOLANT	505
Y	*308-2287*	1	LINES GP-ENGINE OIL	480
Y	*600-5135*	1	COVER GP-EXHAUST	610
Y	*308-2295*	1	PAN GP-OIL	385
			—OR—	
Y	*588-9925*	1	PAN GP-OIL	404
Y	*342-9607*	1	PARTS GP-MISCELLANEOUS	924
			—OR—	
Y	*600-6923*	1	ACCESSORY GP-ENGINE	142
Y	*308-2286*	1	PISTON & ROD GP	408
			—OR—	
Y	*596-2862*	1	CYLINDER HEAD GP	263
Y	*309-6720*	1	PLUG GP-OIL PAN	426
			—OR—	
Y	*398-5865*	1	PLUG GP-OIL PAN	428
Y	*321-6740*	1	PULLEY GP-CRANKSHAFT	432
			—OR—	
Y	*445-9988*	1	PULLEY GP-CRANKSHAFT	433
Y	*308-2289*	1	PUMP GP-FUEL INJECTION	808
			—OR—	
Y	*596-2828*	1	PUMP GP-FUEL INJECTION	835
Y	*317-0979*	1	PUMP GP-WATER	513
			—OR—	
Y	*598-5724*	1	PUMP GP-WATER	537
Y	*584-3189*	1	ROCKER ARM GP	441
Y	*315-7819*	1	SWITCH GP-PRESSURE (ENGINE OIL)	908
			—OR—	
Y	*584-9822*	1	SWITCH GP-PRESSURE	914
Y	*308-2317*	1	SWITCH GP-TEMPERATURE (ENGINE COOLANT)	917
			—OR—	
Y	*601-4322*	1	SENSOR GP-TEMPERATURE	886
Y	*442-9826*	1	TURBOCHARGER GP	671
			—OR—	
Y	*508-8740*	1	TURBOCHARGER GP	682

435-1636 **ENGINE AR-PRIMARY (**contd.**)** **i10053162**

NOTE	PART NUMBER	QTY	PART NAME 1 2 3 4 5 6 (PRODUCT LEVEL)	SEE PAGE
			—OR—	
Y	*600-5115*	1	TURBOCHARGER GP	685
Y	*308-2285*	1	VALVE MECHANISM GP	452
Y	*518-9053*	1	PLATE & FILM GP	925
			—OR—	
Y	*612-8795*	1	PLATE & FILM GP	927

Y - SEPARATE ILLUSTRATION

<END>

435-1641 ENGINE AR-PRIMARY

34 BRAKE KW (46 BHP) AT 2400 RPM

FIELD REPLACEMENT FOR 475-2473—PAGE: 124

SMCS-1000 **i10081149**

NOTE	PART NUMBER	QTY	PART NAME 1 2 3 4 5 6 (PRODUCT LEVEL)	SEE PAGE
Y	*600-6923*	1	ACCESSORY GP-ENGINE	142
Y	*398-4274*	1	FILM GP	920
Y	*311-9025*	1	CAMSHAFT GP	145
			—OR—	
Y	*596-3428*	1	CAMSHAFT GP	175
Y	*559-9084*	1	CAP GP-PROTECTION	919
Y	*308-2302*	1	CONNECTION GP-WATER	483
			—OR—	
Y	*398-5884*	1	CONNECTION GP-WATER	485
Y	*309-6722*	1	COVER GP-VALVE MECHANISM	184
			—OR—	
Y	*586-6654*	1	COVER GP-VALVE MECHANISM	203
Y	*309-6713*	1	CRANKSHAFT GP	213
			—OR—	
Y	*399-4716*	1	CRANKSHAFT GP	217
Y	*309-6715*	1	CYLINDER HEAD GP	255
			—OR—	
Y	*596-2861*	1	CYLINDER HEAD GP	262
Y	*309-6712*	1	CYLINDER BLOCK GP	225
			—OR—	
Y	*584-3179*	1	CYLINDER BLOCK GP	239
Y	*342-1268*	1	FASTENER GP-COVER	275
Y	*308-2297*	1	FILLER GP-ENGINE OIL	466
			—OR—	
Y	*532-8293*	1	FILLER GP-ENGINE OIL	472
Y	*308-2298*	1	FILTER GP-ENGINE OIL	474
			—OR—	
Y	*398-8178*	1	FILTER GP-ENGINE OIL	477
Y	*322-2412*	1	FLYWHEEL GP	281
			—OR—	
Y	*566-9450*	1	FLYWHEEL GP	285
Y	*311-9024*	1	GOVERNOR GP	764
			—OR—	
Y	*596-3470*	1	CONTROL GP-GOVERNOR	752
Y	*308-2311*	1	GLOW PLUG GP	881
			—OR—	
Y	*587-0270*	1	GLOW PLUG GP	883
Y	*342-9604*	1	HOUSING GP-FLYWHEEL	292
			—OR—	
Y	*398-4795*	1	HOUSING GP-FLYWHEEL	294
Y	*311-9023*	1	HOUSING GP-FRONT	312
			—OR—	
Y	*599-9836*	1	HOUSING GP-FRONT	371
Y	*354-1245*	1	HOUSING GP-FRONT	340
Y	*309-6725*	1	LIFTING GP-ENGINE	376
			—OR—	
Y	*603-1463*	1	LIFTING GP-ENGINE	380
Y	*309-6717*	1	LINES GP-ENGINE OIL	481

435-1641 **ENGINE AR-PRIMARY (**contd.**)** **i10081149**

NOTE	PART NUMBER	QTY	PART NAME 1 2 3 4 5 6 (PRODUCT LEVEL)	SEE PAGE
Y	*584-9800*	1	MANIFOLD GP-EXHAUST	617
Y	*308-4735*	1	MOUNTING GP-ENGINE OIL FILTER	482
Y	*308-2295*	1	PAN GP-OIL	385
			—OR—	
Y	*588-9925*	1	PAN GP-OIL	404
Y	*342-9607*	1	PARTS GP-MISCELLANEOUS	924
Y	*309-6714*	1	PISTON & ROD GP	410
			—OR—	
Y	*596-2866*	1	PISTON & ROD GP	420
Y	*612-8795*	1	PLATE & FILM GP	927
Y	*309-6720*	1	PLUG GP-OIL PAN	426
			—OR—	
Y	*398-5865*	1	PLUG GP-OIL PAN	428
Y	*308-2300*	1	PULLEY GP-CRANKSHAFT	431
			—OR—	
Y	*445-9988*	1	PULLEY GP-CRANKSHAFT	433
Y	*311-9026*	1	PUMP GP-FUEL INJECTION	816
			—OR—	
Y	*596-2825*	1	PUMP GP-FUEL INJECTION	829
Y	*309-6721*	1	PUMP GP-WATER	509
			—OR—	
Y	*598-5726*	1	PUMP GP-WATER	544
Y	*584-3189*	1	ROCKER ARM GP	441
Y	*308-2313*	1	SOLENOID GP-SHUTOFF (FUEL)	889
			—OR—	
Y	*519-4412*	1	SOLENOID GP-SHUTOFF (FUEL) (FUEL)	891
Y	*315-7819*	1	SWITCH GP-PRESSURE (ENGINE OIL)	908
			—OR—	
Y	*584-9822*	1	SWITCH GP-PRESSURE (ENGINE OIL)	914
Y	*308-2317*	1	SWITCH GP-TEMPERATURE (ENGINE COOLANT)	917
			—OR—	
Y	*601-4322*	1	SENSOR GP-TEMPERATURE (ENGINE COOLANT)	886
Y	*309-6716*	1	VALVE MECHANISM GP	458

Y - SEPARATE ILLUSTRATION

<END>

435-1642 ENGINE AR-PRIMARY

36 BRAKE KW (49 BHP)

FIELD REPLACEMENT FOR 326-1872—PAGE: 65
: FOR 420-4312—PAGE: 94
: FOR 326-1872—PAGE: 65
: FOR 557-7471—PAGE: 141
: FOR 499-6420—PAGE: 128
: FOR 506-0520—PAGE: 132
: FOR 345-9771—PAGE: 74

SMCS-1000 **i10081196**

NOTE	PART NUMBER	QTY	PART NAME 1 2 3 4 5 6 (PRODUCT LEVEL)	SEE PAGE
Y	*465-2494*	1	CAMSHAFT GP	172
			S/N: C6M1-10542	
Y	*398-4274*	1	FILM GP	920
Y	*398-8178*	1	FILTER GP-ENGINE OIL	477
Y	*584-3189*	1	ROCKER ARM GP	441
Y	*584-9800*	1	MANIFOLD GP-EXHAUST	617
Y	*586-6654*	1	COVER GP-VALVE MECHANISM	203
Y	*596-3466*	1	CONTROL GP-GOVERNOR	749
Y	*601-4322*	1	SENSOR GP-TEMPERATURE	886
Y	*454-6144*	1	CAMSHAFT GP	170
			—OR—	
Y	*596-3428*	1	CAMSHAFT GP	175
Y	*308-2302*	1	CONNECTION GP-WATER	483
			—OR—	
Y	*398-5884*	1	CONNECTION GP-WATER	485
Y	*465-2493*	1	CONTROL GP-GOVERNOR	741
			S/N: C6M1-10542	
Y	*454-6143*	1	CONTROL GP-GOVERNOR	733
Y	*342-1268*	1	FASTENER GP-COVER	275
Y	*309-6722*	1	COVER GP-VALVE MECHANISM	184
			—OR—	
Y	*599-9836*	1	HOUSING GP-FRONT	371
Y	*309-6713*	1	CRANKSHAFT GP	213
			—OR—	
Y	*399-4716*	1	CRANKSHAFT GP	217
Y	*309-6712*	1	CYLINDER BLOCK GP	225
Y	*309-6715*	1	CYLINDER HEAD GP	255
			—OR—	
Y	*596-2861*	1	CYLINDER HEAD GP	262
Y	*354-1245*	1	HOUSING GP-FRONT	340
Y	*308-2297*	1	FILLER GP-ENGINE OIL	466
			—OR—	
Y	*532-8293*	1	FILLER GP-ENGINE OIL	472
Y	*308-2298*	1	FILTER GP-ENGINE OIL	474
Y	*322-2412*	1	FLYWHEEL GP	281
			—OR—	
Y	*566-9450*	1	FLYWHEEL GP	285
Y	*308-2311*	1	GLOW PLUG GP	881
			—OR—	
Y	*587-0270*	1	GLOW PLUG GP	883
Y	*342-9604*	1	HOUSING GP-FLYWHEEL	292
			—OR—	
Y	*398-4795*	1	HOUSING GP-FLYWHEEL	294

435-1642 **ENGINE AR-PRIMARY (**contd.**)** **i10081196**

NOTE	PART NUMBER	QTY	PART NAME 1 2 3 4 5 6 (PRODUCT LEVEL)	SEE PAGE
Y	*465-2492*	1	HOUSING GP-FRONT	354
			S/N: C6M1-10542	
Y	*454-6141*	1	HOUSING GP-FRONT	352
Y	*309-6725*	1	LIFTING GP-ENGINE	376
			—OR—	
Y	*603-1463*	1	LIFTING GP-ENGINE	380
Y	*309-6717*	1	LINES GP-ENGINE OIL	481
Y	*308-4735*	1	MOUNTING GP-ENGINE OIL FILTER	482
Y	*308-2295*	1	PAN GP-OIL	385
			—OR—	
Y	*588-9925*	1	PAN GP-OIL	404
Y	*342-9607*	1	PARTS GP-MISCELLANEOUS	924
			—OR—	
Y	*600-6923*	1	ACCESSORY GP-ENGINE	142
Y	*309-6714*	1	PISTON & ROD GP	410
			—OR—	
Y	*596-2866*	1	PISTON & ROD GP	420
Y	*309-6720*	1	PLUG GP-OIL PAN	426
			—OR—	
Y	*398-5865*	1	PLUG GP-OIL PAN	428
Y	*308-2300*	1	PULLEY GP-CRANKSHAFT	431
			—OR—	
Y	*445-9988*	1	PULLEY GP-CRANKSHAFT	433
Y	*584-3179*	1	CYLINDER BLOCK GP	239
Y	*309-6719*	1	PUMP GP-FUEL INJECTION	812
			—OR—	
Y	*596-2825*	1	PUMP GP-FUEL INJECTION	829
Y	*309-6721*	1	PUMP GP-WATER	509
			—OR—	
Y	*598-5726*	1	PUMP GP-WATER	544
Y	*308-2313*	1	SOLENOID GP-SHUTOFF (FUEL)	889
			—OR—	
Y	*519-4412*	1	SOLENOID GP-SHUTOFF (FUEL)	891
Y	*315-7819*	1	SWITCH GP-PRESSURE (ENGINE OIL)	908
			—OR—	
Y	*584-9822*	1	SWITCH GP-PRESSURE	914
Y	*308-2317*	1	SWITCH GP-TEMPERATURE (ENGINE COOLANT)	917
			—OR—	
Y	*598-5726*	1	PUMP GP-WATER	544
Y	*309-6716*	1	VALVE MECHANISM GP	458
Y	*612-8795*	1	PLATE & FILM GP	927

Y - SEPARATE ILLUSTRATION

<END>

435-1646 ENGINE AR-PRIMARY

37 BRAKE KW (50 BHP) AT 2800 RPM
FIELD REPLACEMENT FOR 303-4225—PAGE: 19
: FOR 302-1819—PAGE: 1
: FOR 308-6560—PAGE: 3
: FOR 318-1706—PAGE: 48
: FOR 457-3739—PAGE: 120
: FOR 345-0355—PAGE: 70
: FOR 303-4226—PAGE: 21
: FOR 307-9834—PAGE: 23
: FOR 302-1820—PAGE: 10
PART OF 489-4263 ENGINE AR-PRIMARY
ALSO FIELD INSTALLATION

SMCS-1000 **i10081157**

NOTE	PART NUMBER	QTY	PART NAME 1 2 3 4 5 6 (PRODUCT LEVEL)	SEE PAGE
Y	*308-2302*	1	CONNECTION GP-WATER	483
Y	*342-1268*	1	FASTENER GP-COVER	275
Y	*309-6722*	1	COVER GP-VALVE MECHANISM	184
Y	*309-6713*	1	CRANKSHAFT GP	213
Y	*309-6712*	1	CYLINDER BLOCK GP	225
Y	*309-6715*	1	CYLINDER HEAD GP	255
Y	*354-1245*	1	HOUSING GP-FRONT	340
Y	*308-2297*	1	FILLER GP-ENGINE OIL	466
Y	*308-2298*	1	FILTER GP-ENGINE OIL	474
Y	*322-2412*	1	FLYWHEEL GP	281
Y	*308-2311*	1	GLOW PLUG GP	881
Y	*342-9604*	1	HOUSING GP-FLYWHEEL	292
Y	*309-6718*	1	HOUSING GP-FRONT	299
Y	*309-6725*	1	LIFTING GP-ENGINE	376
Y	*308-4735*	1	MOUNTING GP-ENGINE OIL FILTER	482
Y	*308-2295*	1	PAN GP-OIL	385
Y	*342-9607*	1	PARTS GP-MISCELLANEOUS	924
Y	*309-6714*	1	PISTON & ROD GP	410
Y	*309-6720*	1	PLUG GP-OIL PAN	426
Y	*308-2300*	1	PULLEY GP-CRANKSHAFT	431
Y	*309-6717*	1	LINES GP-ENGINE OIL	481
Y	*309-6719*	1	PUMP GP-FUEL INJECTION	812
Y	*309-6721*	1	PUMP GP-WATER	509
Y	*308-2313*	1	SOLENOID GP-SHUTOFF (FUEL)	889
Y	*315-7819*	1	SWITCH GP-PRESSURE (ENGINE OIL)	908
Y	*308-2317*	1	SWITCH GP-TEMPERATURE (ENGINE COOLANT)	917
Y	*309-6716*	1	VALVE MECHANISM GP	458

Y - SEPARATE ILLUSTRATION

<END>

435-1647 ENGINE AR-PRIMARY

24 BRAKE KW (33 BHP) AT 1800 RPM
FIELD REPLACEMENT FOR 345-4149—PAGE: 73
FIELD INSTALLATION

SMCS-1000 **i10081116**

NOTE	PART NUMBER	QTY	PART NAME 1 2 3 4 5 6 (PRODUCT LEVEL)	SEE PAGE
Y	*364-2522*	1	CAMSHAFT GP	158
			—OR—	
Y	*596-3440*	1	CAMSHAFT GP	177
Y	*308-2302*	1	CONNECTION GP-WATER	483
			—OR—	
Y	*398-5884*	1	CONNECTION GP-WATER	485
Y	*364-2521*	1	CONTROL GP-ENGINE ELECTRONIC	872
Y	*596-3463*	1	CONTROL GP-GOVERNOR	747
Y	*342-1268*	1	FASTENER GP-COVER	275
Y	*308-2307*	1	HOUSING GP-FRONT	297
			—OR—	
Y	*599-9816*	1	HOUSING GP-FRONT	363
Y	*309-6722*	1	COVER GP-VALVE MECHANISM	184
			—OR—	
Y	*586-6654*	1	COVER GP-VALVE MECHANISM	203
Y	*309-6713*	1	CRANKSHAFT GP	213
			—OR—	
Y	*399-4716*	1	CRANKSHAFT GP	217
Y	*309-6712*	1	CYLINDER BLOCK GP	225
Y	*309-6715*	1	CYLINDER HEAD GP	255
			—OR—	
Y	*596-2861*	1	CYLINDER HEAD GP	262
Y	*308-2297*	1	FILLER GP-ENGINE OIL	466
			—OR—	
Y	*532-8293*	1	FILLER GP-ENGINE OIL	472
Y	*398-4274*	1	FILM GP	920
Y	*308-2298*	1	FILTER GP-ENGINE OIL	474
			—OR—	
Y	*398-8178*	1	FILTER GP-ENGINE OIL	477
Y	*322-2412*	1	FLYWHEEL GP	281
			—OR—	
Y	*566-9450*	1	FLYWHEEL GP	285
Y	*308-2311*	1	GLOW PLUG GP	881
			—OR—	
Y	*587-0270*	1	GLOW PLUG GP	883
Y	*342-9604*	1	HOUSING GP-FLYWHEEL	292
			—OR—	
Y	*398-4795*	1	HOUSING GP-FLYWHEEL	294
Y	*364-2520*	1	HOUSING GP-FRONT	341
Y	*309-6725*	1	LIFTING GP-ENGINE	376
			—OR—	
Y	*603-1463*	1	LIFTING GP-ENGINE	380
Y	*584-9800*	1	MANIFOLD GP-EXHAUST	617
Y	*308-4735*	1	MOUNTING GP-ENGINE OIL FILTER	482
			—OR—	
Y	*584-3179*	1	CYLINDER BLOCK GP	239
Y	*308-2295*	1	PAN GP-OIL	385

435-1647 **ENGINE AR-PRIMARY (**contd.**)** **i10081116**

NOTE	PART NUMBER	QTY	PART NAME 1 2 3 4 5 6 (PRODUCT LEVEL)	SEE PAGE
			—OR—	
Y	*588-9925*	1	PAN GP-OIL	404
Y	*342-9607*	1	PARTS GP-MISCELLANEOUS	924
			—OR—	
Y	*600-6923*	1	ACCESSORY GP-ENGINE	142
Y	*309-6714*	1	PISTON & ROD GP	410
			—OR—	
Y	*596-2866*	1	PISTON & ROD GP	420
Y	*612-8795*	1	PLATE & FILM GP	927
Y	*309-6720*	1	PLUG GP-OIL PAN	426
			—OR—	
Y	*398-5865*	1	PLUG GP-OIL PAN	428
Y	*308-2300*	1	PULLEY GP-CRANKSHAFT	431
			—OR—	
Y	*445-9988*	1	PULLEY GP-CRANKSHAFT	433
Y	*309-6717*	1	LINES GP-ENGINE OIL	481
Y	*612-8795*	1	PLATE & FILM GP	927
Y	*321-4258*	1	PUMP GP-FUEL INJECTION	822
			—OR—	
Y	*596-2826*	1	PUMP GP-FUEL INJECTION	831
Y	*309-6721*	1	PUMP GP-WATER	509
			—OR—	
Y	*598-5726*	1	PUMP GP-WATER	544
Y	*584-3189*	1	ROCKER ARM GP	441
Y	*308-2313*	1	SOLENOID GP-SHUTOFF (FUEL)	889
			—OR—	
Y	*519-4412*	1	SOLENOID GP-SHUTOFF (FUEL)	891
Y	*315-7819*	1	SWITCH GP-PRESSURE (ENGINE OIL)	908
			—OR—	
Y	*584-9822*	1	SWITCH GP-PRESSURE	914
Y	*308-2317*	1	SWITCH GP-TEMPERATURE (ENGINE COOLANT)	917
			—OR—	
Y	*601-4322*	1	SENSOR GP-TEMPERATURE	886
Y	*309-6716*	1	VALVE MECHANISM GP	458

Y - SEPARATE ILLUSTRATION

<END>

435-1658 ENGINE AR-PRIMARY

66 BRAKE KW (49 BHP) AT 2800 RPM

FIELD REPLACEMENT FOR 320-0335—PAGE: 59
: FOR 320-0336—PAGE: 60
: FOR 320-0337—PAGE: 62
: FOR 458-9832—PAGE: 121
: FOR 436-6743—PAGE: 116
: FOR 471-7111—PAGE: 122

SMCS-1000 **i10081190**

NOTE	PART NUMBER	QTY	PART NAME 1 2 3 4 5 6 (PRODUCT LEVEL)	SEE PAGE
Y	*373-7284*	1	CAMSHAFT GP	162
Y	*308-2302*	1	CONNECTION GP-WATER	483
Y	*308-2283*	1	CRANKSHAFT GP	209
Y	*308-2281*	1	CYLINDER BLOCK GP	221
Y	*308-2284*	1	CYLINDER HEAD GP	253
Y	*342-1268*	1	FASTENER GP-COVER	275
Y	*308-2297*	1	FILLER GP-ENGINE OIL	466
Y	*308-2298*	1	FILTER GP-ENGINE OIL	474
Y	*322-2412*	1	FLYWHEEL GP	281
Y	*308-2311*	1	GLOW PLUG GP	881
Y	*373-7283*	1	GOVERNOR GP	778
Y	*342-9604*	1	HOUSING GP-FLYWHEEL	292
Y	*354-1245*	1	HOUSING GP-FRONT	340
Y	*308-3329*	1	HOUSING GP-FRONT	298
Y	*309-6725*	1	LIFTING GP-ENGINE	376
Y	*331-2589*	1	LINES GP-COOLANT	505
Y	*308-2287*	1	LINES GP-ENGINE OIL	480
Y	*308-2295*	1	PAN GP-OIL	385
Y	*342-9607*	1	PARTS GP-MISCELLANEOUS	924
Y	*308-2286*	1	PISTON & ROD GP	408
Y	*309-6720*	1	PLUG GP-OIL PAN	426
Y	*321-6740*	1	PULLEY GP-CRANKSHAFT	432
Y	*308-3330*	1	PUMP GP-FUEL INJECTION	810
Y	*317-0979*	1	PUMP GP-WATER	513
Y	*308-2313*	1	SOLENOID GP-SHUTOFF (FUEL)	889
Y	*315-7819*	1	SWITCH GP-PRESSURE (ENGINE OIL)	908
Y	*308-2317*	1	SWITCH GP-TEMPERATURE (ENGINE COOLANT)	917
Y	*450-7277*	1	TURBOCHARGER GP	674
Y	*308-2285*	1	VALVE MECHANISM GP	452

Y - SEPARATE ILLUSTRATION

<END>

436-6743 ENGINE AR-PRIMARY

49 BRAKE KW (66 BHP) AT 2800 RPM

OPTIONAL FIELD REPLACEMENT ORDER 435-1658—PAGE: 115

SMCS-1000 **i10080476**

NOTE	PART NUMBER	QTY	PART NAME 1 2 3 4 5 6 (PRODUCT LEVEL)	SEE PAGE
Y	*326-8543*	1	AIR CLEANER GP	591
Y	*308-2305*	1	ALTERNATOR GP-CHARGING	858
Y	*373-7284*	1	CAMSHAFT GP	162
Y	*321-6741*	1	CONNECTION GP-ELECTRICAL	868
Y	*308-2309*	1	CONNECTION GP-EXHAUST	606
Y	*308-2302*	1	CONNECTION GP-WATER	483
Y	*373-7283*	1	GOVERNOR GP	778
Y	*308-2307*	1	HOUSING GP-FRONT	297
Y	*308-2283*	1	CRANKSHAFT GP	209
Y	*308-2281*	1	CYLINDER BLOCK GP	221
Y	*308-2284*	1	CYLINDER HEAD GP	253
Y	*363-3165*	1	FILLER GP-ENGINE OIL	470
Y	*308-2298*	1	FILTER GP-ENGINE OIL	474
Y	*317-0586*	1	FLYWHEEL GP	280
Y	*308-2311*	1	GLOW PLUG GP	881
Y	*317-0588*	1	HOUSING GP-FLYWHEEL	291
Y	*308-3329*	1	HOUSING GP-FRONT	298
Y	*309-6725*	1	LIFTING GP-ENGINE	376
Y	*331-2589*	1	LINES GP-COOLANT	505
Y	*308-2295*	1	PAN GP-OIL	385
Y	*308-2286*	1	PISTON & ROD GP	408
Y	*309-6720*	1	PLUG GP-OIL PAN	426
Y	*321-6740*	1	PULLEY GP-CRANKSHAFT	432
Y	*308-2294*	1	PULLEY GP-FAN	434
Y	*308-2287*	1	LINES GP-ENGINE OIL	480
Y	*308-2310*	1	PUMP GP-FILTER & FUEL TRANSFER	796
Y	*308-3330*	1	PUMP GP-FUEL INJECTION	810
Y	*317-6706*	1	PUMP GP-FUEL PRM & PRIM FILTER	844
			—OR—	
Y	*579-9465*	1	PUMP GP-FUEL PRM & PRIM FILTER	846
Y	*317-0979*	1	PUMP GP-WATER	513
Y	*344-5881*	1	RADIATOR & FAN GP	556
Y	*308-2313*	1	SOLENOID GP-SHUTOFF (FUEL)	889
Y	*308-2293*	1	STARTING MOTOR GP-ELECTRIC	895
Y	*315-7819*	1	SWITCH GP-PRESSURE (ENGINE OIL)	908
Y	*308-2314*	1	SWITCH GP-START	915
Y	*308-2317*	1	SWITCH GP-TEMPERATURE (ENGINE COOLANT)	917
Y	*344-5515*	1	TURBOCHARGER GP	637
Y	*308-2306*	1	V-BELT GP (WATER PUMP)	443
Y	*308-2285*	1	VALVE MECHANISM GP	452

Y - SEPARATE ILLUSTRATION

<END>

438-7874 ENGINE AR-PRIMARY

37 BRAKE KW (50 BHP) AT 2800 RPM

OPTIONAL FIELD REPLACEMENT ORDER 435-1646—PAGE: 112

SMCS-1000 **i10080501**

NOTE	PART NUMBER	QTY	PART NAME 1 2 3 4 5 6 (PRODUCT LEVEL)	SEE PAGE
Y	*317-3038*	1	ALTERNATOR GP-CHARGING	860
Y	*441-6514*	1	CAMSHAFT GP	169
			—OR—	
Y	*454-6144*	1	CAMSHAFT GP	170
Y	*308-2309*	1	CONNECTION GP-EXHAUST	606
Y	*308-2302*	1	CONNECTION GP-WATER	483
Y	*441-6513*	1	CONTROL GP-GOVERNOR	727
			—OR—	
Y	*454-6143*	1	CONTROL GP-GOVERNOR	733
Y	*317-3041*	1	CONTROL GP-MANUAL START/STOP	878
Y	*308-2307*	1	HOUSING GP-FRONT	297
			S/N: C6M1-7422	
Y	*354-1245*	1	HOUSING GP-FRONT	340
			S/N: C6M7423-UP	
Y	*317-0590*	1	COVER GP-VALVE MECHANISM	192
Y	*309-6713*	1	CRANKSHAFT GP	213
Y	*309-6712*	1	CYLINDER BLOCK GP	225
Y	*309-6715*	1	CYLINDER HEAD GP	255
Y	*308-2304*	1	EXTENSION GP-FAN	270
Y	*308-2303*	1	FAN GP-SUCTION	491
			S/N: C6M1-7422	
Y	*363-3165*	1	FILLER GP-ENGINE OIL	470
Y	*308-2298*	1	FILTER GP-ENGINE OIL	474
Y	*311-1884*	1	FLYWHEEL GP	279
Y	*317-3040*	1	GLOW PLUG GP	882
Y	*308-2290*	1	HOUSING GP-FLYWHEEL	287
Y	*441-6512*	1	HOUSING GP-FRONT	350
			—OR—	
Y	*454-6141*	1	HOUSING GP-FRONT	352
Y	*309-6725*	1	LIFTING GP-ENGINE	376
Y	*309-6724*	1	MANIFOLD GP-EXHAUST	614
Y	*308-4735*	1	MOUNTING GP-ENGINE OIL FILTER	482
Y	*317-3037*	1	PAN GP-OIL	397
Y	*309-6714*	1	PISTON & ROD GP	410
Y	*309-6720*	1	PLUG GP-OIL PAN	426
Y	*308-2300*	1	PULLEY GP-CRANKSHAFT	431
Y	*308-2294*	1	PULLEY GP-FAN	434
Y	*309-6717*	1	LINES GP-ENGINE OIL	481
Y	*308-2310*	1	PUMP GP-FILTER & FUEL TRANSFER	796
Y	*309-6719*	1	PUMP GP-FUEL INJECTION	812
Y	*308-2320*	1	PUMP GP-FUEL PRIMING	840
			—OR—	
Y	*579-9444*	1	PUMP GP-FUEL PRIMING	843
Y	*309-6721*	1	PUMP GP-WATER	509
Y	*317-3036*	1	STARTING MOTOR GP-ELECTRIC	899
			—OR—	
Y	*499-5166*	1	STARTING MOTOR GP-ELECTRIC	904
Y	*308-2312*	1	SWITCH GP-PRESSURE	906

438-7874 **ENGINE AR-PRIMARY (**contd.**)** **i10080501**

NOTE	PART NUMBER	QTY	PART NAME 1 2 3 4 5 6 (PRODUCT LEVEL)	SEE PAGE
Y	*308-2317*	1	SWITCH GP-TEMPERATURE (ENGINE COOLANT)	917
Y	*317-3039*	1	V-BELT GP (DRIVE)	445
Y	*309-6716*	1	VALVE MECHANISM GP	458

Y - SEPARATE ILLUSTRATION

<END>

446-7443 ENGINE AR-PRIMARY

50 BRAKE KW (60 BHP) AT 2800 RPM

FIELD REPLACEMENT ORDER 435-1636—PAGE: 105

SMCS-1000 **i10080510**

NOTE	PART NUMBER	QTY	PART NAME 1 2 3 4 5 6 (PRODUCT LEVEL)	SEE PAGE
Y	*326-8543*	1	AIR CLEANER GP	591
Y	*308-2305*	1	ALTERNATOR GP-CHARGING	858
Y	*329-9278*	1	CAMSHAFT GP	150
Y	*308-2319*	1	CONNECTION GP-ELECTRICAL	867
			—OR—	
Y	*321-6741*	1	CONNECTION GP-ELECTRICAL	868
Y	*308-2309*	1	CONNECTION GP-EXHAUST	606
Y	*308-2302*	1	CONNECTION GP-WATER	483
Y	*329-9277*	1	HOUSING GP-FRONT	333
Y	*308-2307*	1	HOUSING GP-FRONT	297
Y	*308-2283*	1	CRANKSHAFT GP	209
Y	*308-2281*	1	CYLINDER BLOCK GP	221
Y	*308-2284*	1	CYLINDER HEAD GP	253
Y	*363-3165*	1	FILLER GP-ENGINE OIL	470
Y	*308-2298*	1	FILTER GP-ENGINE OIL	474
Y	*317-0586*	1	FLYWHEEL GP	280
Y	*308-2311*	1	GLOW PLUG GP	881
Y	*317-0588*	1	HOUSING GP-FLYWHEEL	291
Y	*308-2288*	1	FASTENER GP-FRONT HOUSING	276
Y	*309-6725*	1	LIFTING GP-ENGINE	376
Y	*331-2589*	1	LINES GP-COOLANT	505
Y	*308-2295*	1	PAN GP-OIL	385
Y	*308-2286*	1	PISTON & ROD GP	408
Y	*309-6720*	1	PLUG GP-OIL PAN	426
Y	*321-6740*	1	PULLEY GP-CRANKSHAFT	432
Y	*308-2294*	1	PULLEY GP-FAN	434
Y	*308-2287*	1	LINES GP-ENGINE OIL	480
Y	*308-2310*	1	PUMP GP-FILTER & FUEL TRANSFER	796
Y	*308-2289*	1	PUMP GP-FUEL INJECTION	808
Y	*317-6706*	1	PUMP GP-FUEL PRM & PRIM FILTER	844
			—OR—	
Y	*579-9465*	1	PUMP GP-FUEL PRM & PRIM FILTER	846
Y	*317-0979*	1	PUMP GP-WATER	513
Y	*341-6658*	1	RADIATOR & FAN GP	548
Y	*308-2313*	1	SOLENOID GP-SHUTOFF (FUEL)	889
Y	*308-2293*	1	STARTING MOTOR GP-ELECTRIC	895
Y	*315-7819*	1	SWITCH GP-PRESSURE (ENGINE OIL)	908
Y	*308-2314*	1	SWITCH GP-START (HEATER)	915
Y	*308-2317*	1	SWITCH GP-TEMPERATURE (ENGINE COOLANT)	917
Y	*441-8101*	1	TURBOCHARGER GP	649
Y	*308-2306*	1	V-BELT GP (WATER PUMP)	443
Y	**308-2285**	1	VALVE MECHANISM GP	452

Y - SEPARATE ILLUSTRATION

<END>

457-3739 ENGINE AR-PRIMARY

36 BRAKE KW (49 BHP) AT 2800 RPM

OPTIONAL FIELD REPLACEMENT ORDER 435-1646—PAGE: 112

SMCS-1000 **i10080522**

NOTE	PART NUMBER	QTY	PART NAME 1 2 3 4 5 6 (PRODUCT LEVEL)	SEE PAGE
Y	*317-0649*	1	AIR CLEANER GP	586
Y	*308-2305*	1	ALTERNATOR GP-CHARGING	858
Y	*465-2494*	1	CAMSHAFT GP	172
			—OR—	
Y	*454-6144*	1	CAMSHAFT GP	170
Y	*321-6741*	1	CONNECTION GP-ELECTRICAL	868
Y	*308-2309*	1	CONNECTION GP-EXHAUST	606
Y	*308-2302*	1	CONNECTION GP-WATER	483
Y	*308-2307*	1	HOUSING GP-FRONT	297
Y	*309-6722*	1	COVER GP-VALVE MECHANISM	184
Y	*309-6713*	1	CRANKSHAFT GP	213
Y	*309-6712*	1	CYLINDER BLOCK GP	225
Y	*309-6715*	1	CYLINDER HEAD GP	255
Y	*363-3165*	1	FILLER GP-ENGINE OIL	470
Y	*308-2298*	1	FILTER GP-ENGINE OIL	474
Y	*308-2291*	1	FLYWHEEL GP	278
Y	*308-2311*	1	GLOW PLUG GP	881
Y	*465-2493*	1	CONTROL GP-GOVERNOR	741
			—OR—	
Y	*454-6143*	1	CONTROL GP-GOVERNOR	733
Y	*308-2290*	1	HOUSING GP-FLYWHEEL	287
Y	*465-2492*	1	HOUSING GP-FRONT	354
			—OR—	
Y	*454-6141*	1	HOUSING GP-FRONT	352
Y	*309-6725*	1	LIFTING GP-ENGINE	376
Y	*331-2589*	1	LINES GP-COOLANT	505
Y	*309-6724*	1	MANIFOLD GP-EXHAUST	614
Y	*308-2295*	1	PAN GP-OIL	385
Y	*309-6714*	1	PISTON & ROD GP	410
Y	*309-6720*	1	PLUG GP-OIL PAN	426
Y	*308-2300*	1	PULLEY GP-CRANKSHAFT	431
Y	*308-2294*	1	PULLEY GP-FAN	434
Y	*309-6717*	1	LINES GP-ENGINE OIL	481
Y	*308-2310*	1	PUMP GP-FILTER & FUEL TRANSFER	796
Y	*309-6719*	1	PUMP GP-FUEL INJECTION	812
Y	*308-2320*	1	PUMP GP-FUEL PRIMING	840
			—OR—	
Y	*579-9444*	1	PUMP GP-FUEL PRIMING	843
Y	*308-2301*	1	PUMP GP-WATER	506
Y	*331-3270*	1	RADIATOR GP	565
Y	*308-2313*	1	SOLENOID GP-SHUTOFF (FUEL)	889
Y	*308-2293*	1	STARTING MOTOR GP-ELECTRIC	895
Y	*315-7819*	1	SWITCH GP-PRESSURE (ENGINE OIL)	908
Y	*308-2314*	1	SWITCH GP-START	915
Y	*308-2317*	1	SWITCH GP-TEMPERATURE (ENGINE COOLANT)	917
Y	*308-2306*	1	V-BELT GP (WATER PUMP)	443
Y	*309-6716*	1	VALVE MECHANISM GP	458

457-3739 **ENGINE AR-PRIMARY (**contd.**)** **i10080522**

NOTE	PART NUMBER	QTY	PART NAME 1 2 3 4 5 6 (PRODUCT LEVEL)	SEE PAGE
Y - SEPARATE ILLUSTRATION				

<END>

458-9832 ENGINE AR-PRIMARY

66 BHP (49 KW) AT 2800 RPM

OPTIONAL FIELD REPLACEMENT ORDER 435-1658—PAGE: 115

SMCS-1000 **i10052565**

NOTE	PART NUMBER	QTY	PART NAME 1 2 3 4 5 6 (PRODUCT LEVEL)	SEE PAGE
Y	*326-8543*	1	AIR CLEANER GP	591
Y	*308-2305*	1	ALTERNATOR GP-CHARGING	858
Y	*373-7284*	1	CAMSHAFT GP	162
Y	*321-6741*	1	CONNECTION GP-ELECTRICAL	868
Y	*308-2309*	1	CONNECTION GP-EXHAUST	606
Y	*308-2302*	1	CONNECTION GP-WATER	483
Y	*308-2283*	1	CRANKSHAFT GP	209
Y	*308-2281*	1	CYLINDER BLOCK GP	221
Y	*308-2284*	1	CYLINDER HEAD GP	253
Y	*363-3165*	1	FILLER GP-ENGINE OIL	470
Y	*308-2298*	1	FILTER GP-ENGINE OIL	474
Y	*327-7632*	1	FLYWHEEL GP	282
Y	*308-2311*	1	GLOW PLUG GP	881
Y	*373-7283*	1	GOVERNOR GP	778
Y	*317-0588*	1	HOUSING GP-FLYWHEEL	291
Y	*308-2307*	1	HOUSING GP-FRONT	297
Y	*308-3329*	1	HOUSING GP-FRONT	298
Y	*309-6725*	1	LIFTING GP-ENGINE	376
Y	*331-2589*	1	LINES GP-COOLANT	505
Y	*308-2287*	1	LINES GP-ENGINE OIL	480
Y	*308-2295*	1	PAN GP-OIL	385
Y	*308-2286*	1	PISTON & ROD GP	408
Y	*309-6720*	1	PLUG GP-OIL PAN	426
Y	*321-6740*	1	PULLEY GP-CRANKSHAFT	432
Y	*308-2294*	1	PULLEY GP-FAN	434
Y	*308-2310*	1	PUMP GP-FILTER & FUEL TRANSFER	796
Y	*308-3330*	1	PUMP GP-FUEL INJECTION	810
Y	*317-6706*	1	PUMP GP-FUEL PRM & PRIM FILTER	844
Y	*317-0979*	1	PUMP GP-WATER	513
Y	*344-5881*	1	RADIATOR & FAN GP	556
Y	*308-2313*	1	SOLENOID GP-SHUTOFF (FUEL)	889
Y	*308-2293*	1	STARTING MOTOR GP-ELECTRIC	895
Y	*315-7819*	1	SWITCH GP-PRESSURE (ENGINE OIL)	908
Y	*308-2314*	1	SWITCH GP-START	915
Y	*308-2317*	1	SWITCH GP-TEMPERATURE (ENGINE COOLANT)	917
Y	*344-5515*	1	TURBOCHARGER GP	637
Y	*308-2306*	1	V-BELT GP (WATER PUMP)	443
Y	*308-2285*	1	VALVE MECHANISM GP	452
Y - SEPARATE ILLUSTRATION				

<END>

471-7111 ENGINE AR-PRIMARY

50 BRAKE KW (56 BHP) AT 2800 RPM

FIELD REPLACEMENT ORDER 435-1658—PAGE: 115

SMCS-1000 **i10080530**

NOTE	PART NUMBER	QTY	PART NAME 1 2 3 4 5 6 (PRODUCT LEVEL)	SEE PAGE
Y	*326-8543*	1	AIR CLEANER GP	591
			—OR—	
Y	*600-1135*	1	AIR CLEANER GP	600
Y	*308-2305*	1	ALTERNATOR GP-CHARGING	858
Y	*373-7284*	1	CAMSHAFT GP	162
Y	*321-6741*	1	CONNECTION GP-ELECTRICAL	868
Y	*308-2309*	1	CONNECTION GP-EXHAUST	606
Y	*308-2302*	1	CONNECTION GP-WATER	483
Y	*373-7283*	1	GOVERNOR GP	778
Y	*308-2307*	1	HOUSING GP-FRONT	297
Y	*308-2283*	1	CRANKSHAFT GP	209
Y	*308-2281*	1	CYLINDER BLOCK GP	221
Y	*308-2284*	1	CYLINDER HEAD GP	253
Y	*363-3165*	1	FILLER GP-ENGINE OIL	470
Y	*607-7117*	1	FILM GP (RADIATOR)	923
Y	*308-2298*	1	FILTER GP-ENGINE OIL	474
Y	*317-0586*	1	FLYWHEEL GP	280
			—OR—	
Y	*327-7632*	1	FLYWHEEL GP	282
Y	*308-2311*	1	GLOW PLUG GP	881
Y	*317-0588*	1	HOUSING GP-FLYWHEEL	291
Y	*308-3329*	1	HOUSING GP-FRONT	298
Y	*309-6725*	1	LIFTING GP-ENGINE	376
Y	*331-2589*	1	LINES GP-COOLANT	505
Y	*308-2287*	1	LINES GP-ENGINE OIL	480
Y	*308-2295*	1	PAN GP-OIL	385
Y	*308-2286*	1	PISTON & ROD GP	408
Y	*309-6720*	1	PLUG GP-OIL PAN	426
Y	*321-6740*	1	PULLEY GP-CRANKSHAFT	432
Y	*308-2294*	1	PULLEY GP-FAN	434
Y	*308-2310*	1	PUMP GP-FILTER & FUEL TRANSFER	796
Y	*308-3330*	1	PUMP GP-FUEL INJECTION	810
Y	*317-6706*	1	PUMP GP-FUEL PRM & PRIM FILTER	844
			—OR—	
Y	*579-9465*	1	PUMP GP-FUEL PRM & PRIM FILTER	846
Y	*317-0979*	1	PUMP GP-WATER	513
Y	*344-5881*	1	RADIATOR & FAN GP	556
			—OR—	
Y	*505-6230*	1	RADIATOR & FAN GP	562
Y	*308-2313*	1	SOLENOID GP-SHUTOFF (FUEL)	889
Y	*308-2293*	1	STARTING MOTOR GP-ELECTRIC	895
Y	*315-7819*	1	SWITCH GP-PRESSURE (ENGINE OIL)	908
Y	*308-2314*	1	SWITCH GP-START	915
Y	*308-2317*	1	SWITCH GP-TEMPERATURE (ENGINE COOLANT)	917
Y	*344-5515*	1	TURBOCHARGER GP	637
Y	*308-2306*	1	V-BELT GP (WATER PUMP)	443
Y	*308-2285*	1	VALVE MECHANISM GP	452

471-7111 **ENGINE AR-PRIMARY (**contd.**)** **i10080530**

NOTE	PART NUMBER	QTY	PART NAME 1 2 3 4 5 6 (PRODUCT LEVEL)	SEE PAGE
Y - SEPARATE ILLUSTRATION				

<END>

471-9551 ENGINE AR-PRIMARY

48 BRAKE KW (60 BHP) AT 2200 RPM

OPTIONAL FIELD REPLACEMENT ORDER 435-1636—PAGE: 105

SMCS-1000 **i10080898**

NOTE	PART NUMBER	QTY	PART NAME 1 2 3 4 5 6 (PRODUCT LEVEL)	SEE PAGE
Y	*326-8543*	1	AIR CLEANER GP	591
Y	*308-2305*	1	ALTERNATOR GP-CHARGING	858
Y	*329-9278*	1	CAMSHAFT GP	150
Y	*321-6741*	1	CONNECTION GP-ELECTRICAL	868
Y	*308-2309*	1	CONNECTION GP-EXHAUST	606
Y	*308-2302*	1	CONNECTION GP-WATER	483
Y	*308-2283*	1	CRANKSHAFT GP	209
Y	*308-2281*	1	CYLINDER BLOCK GP	221
Y	*308-2284*	1	CYLINDER HEAD GP	253
Y	*308-2288*	1	FASTENER GP-FRONT HOUSING	276
Y	*363-3165*	1	FILLER GP-ENGINE OIL	470
Y	*308-2298*	1	FILTER GP-ENGINE OIL	474
Y	*317-0586*	1	FLYWHEEL GP	280
Y	*308-2311*	1	GLOW PLUG GP	881
Y	*317-0588*	1	HOUSING GP-FLYWHEEL	291
Y	*308-2307*	1	HOUSING GP-FRONT	297
Y	*329-9277*	1	HOUSING GP-FRONT	333
Y	*309-6725*	1	LIFTING GP-ENGINE	376
Y	*331-2589*	1	LINES GP-COOLANT	505
Y	*308-2287*	1	LINES GP-ENGINE OIL	480
Y	*308-2295*	1	PAN GP-OIL	385
Y	*308-2286*	1	PISTON & ROD GP	408
Y	*309-6720*	1	PLUG GP-OIL PAN	426
Y	*321-6740*	1	PULLEY GP-CRANKSHAFT	432
Y	*308-2294*	1	PULLEY GP-FAN	434
Y	*308-2310*	1	PUMP GP-FILTER & FUEL TRANSFER	796
Y	*308-2289*	1	PUMP GP-FUEL INJECTION	808
Y	*317-6706*	1	PUMP GP-FUEL PRM & PRIM FILTER	844
Y	*317-0979*	1	PUMP GP-WATER	513
Y	*341-6658*	1	RADIATOR & FAN GP	548
Y	*308-2313*	1	SOLENOID GP-SHUTOFF (FUEL)	889
Y	*308-2293*	1	STARTING MOTOR GP-ELECTRIC	895
Y	*315-7819*	1	SWITCH GP-PRESSURE (ENGINE OIL)	908
Y	*308-2314*	1	SWITCH GP-START	915
Y	*308-2317*	1	SWITCH GP-TEMPERATURE (ENGINE COOLANT)	917
Y	*441-8101*	1	TURBOCHARGER GP	649
Y	*308-2306*	1	V-BELT GP (WATER PUMP)	443
Y	*308-2285*	1	VALVE MECHANISM GP	452
Y - SEPARATE ILLUSTRATION				

<END>

475-2473 ENGINE AR-PRIMARY

34 BRAKE KW (46 BHP) AT 2400 RPM

FIELD REPLACEMENT ORDER 435-1641—PAGE: 108

SMCS-1000 **i10080532**

NOTE	PART NUMBER	QTY	PART NAME 1 2 3 4 5 6 (PRODUCT LEVEL)	SEE PAGE
Y	*308-2305*	1	ALTERNATOR GP-CHARGING	858
Y	*311-9025*	1	CAMSHAFT GP	145
Y	*308-2302*	1	CONNECTION GP-WATER	483
Y	*309-6722*	1	COVER GP-VALVE MECHANISM	184
Y	*309-6713*	1	CRANKSHAFT GP	213
Y	*309-6712*	1	CYLINDER BLOCK GP	225
Y	*309-6715*	1	CYLINDER HEAD GP	255
Y	*308-2304*	1	EXTENSION GP-FAN	270
Y	*308-2303*	1	FAN GP-SUCTION	491
Y	*308-2297*	1	FILLER GP-ENGINE OIL	466
Y	*308-2298*	1	FILTER GP-ENGINE OIL	474
Y	*308-5704*	1	FILTER GP-FUEL	761
Y	*308-2291*	1	FLYWHEEL GP	278
Y	*308-2311*	1	GLOW PLUG GP	881
Y	*311-9024*	1	GOVERNOR GP	764
Y	*308-2290*	1	HOUSING GP-FLYWHEEL	287
Y	*308-2307*	1	HOUSING GP-FRONT	297
Y	*311-9023*	1	HOUSING GP-FRONT	312
Y	*309-6725*	1	LIFTING GP-ENGINE	376
Y	*309-6717*	1	LINES GP-ENGINE OIL	481
Y	*309-6724*	1	MANIFOLD GP-EXHAUST	614
Y	*308-4735*	1	MOUNTING GP-ENGINE OIL FILTER	482
Y	*311-1886*	1	PAN GP-OIL	393
Y	*309-6714*	1	PISTON & ROD GP	410
Y	*309-6720*	1	PLUG GP-OIL PAN (DRAIN)	426
Y	*308-2300*	1	PULLEY GP-CRANKSHAFT	431
Y	*311-9027*	1	PULLEY GP-WATER PUMP	437
Y	*311-9026*	1	PUMP GP-FUEL INJECTION	816
Y	*311-9028*	1	PUMP GP-FUEL TRANSFER	847
Y	*309-6721*	1	PUMP GP-WATER	509
Y	*311-9030*	1	SENSOR GP-TEMPERATURE (ENGINE COOLANT)	885
Y	*308-2313*	1	SOLENOID GP-SHUTOFF (FUEL)	889
Y	*308-2293*	1	STARTING MOTOR GP-ELECTRIC	895
Y	*308-2312*	1	SWITCH GP-PRESSURE (ENGINE OIL)	906
Y	*311-9029*	1	V-BELT GP (WATER PUMP)	444
Y	*309-6716*	1	VALVE MECHANISM GP	458

Y - SEPARATE ILLUSTRATION

<END>

478-7866 ENGINE AR-PRIMARY

45 BRAKE KW (60 BHP) AT 2800 RPM

OPTIONAL FIELD REPLACEMENT ORDER 435-1636—PAGE: 105

SMCS-1000 **i10080534**

NOTE	PART NUMBER	QTY	PART NAME 1 2 3 4 5 6 (PRODUCT LEVEL)	SEE PAGE
Y	*308-2305*	1	ALTERNATOR GP-CHARGING	858
Y	*329-9278*	1	CAMSHAFT GP	150
Y	*321-6741*	1	CONNECTION GP-ELECTRICAL	868
Y	*308-2309*	1	CONNECTION GP-EXHAUST	606
Y	*308-2302*	1	CONNECTION GP-WATER	483
Y	*308-2283*	1	CRANKSHAFT GP	209
Y	*308-2281*	1	CYLINDER BLOCK GP	221
Y	*308-2284*	1	CYLINDER HEAD GP	253
Y	*308-2304*	1	EXTENSION GP-FAN	270
Y	*308-2303*	1	FAN GP-SUCTION	491
Y	*308-2288*	1	FASTENER GP-FRONT HOUSING	276
Y	*363-3165*	1	FILLER GP-ENGINE OIL	470
Y	*308-2298*	1	FILTER GP-ENGINE OIL	474
Y	*308-2291*	1	FLYWHEEL GP	278
Y	*308-2311*	1	GLOW PLUG GP	881
Y	*308-2290*	1	HOUSING GP-FLYWHEEL	287
Y	*308-2307*	1	HOUSING GP-FRONT	297
Y	*329-9277*	1	HOUSING GP-FRONT	333
Y	*309-6725*	1	LIFTING GP-ENGINE	376
Y	*331-2589*	1	LINES GP-COOLANT	505
Y	*308-2287*	1	LINES GP-ENGINE OIL	480
Y	*308-2295*	1	PAN GP-OIL	385
Y	*308-2286*	1	PISTON & ROD GP	408
Y	*309-6720*	1	PLUG GP-OIL PAN	426
Y	*321-6740*	1	PULLEY GP-CRANKSHAFT	432
Y	*308-2294*	1	PULLEY GP-FAN	434
Y	*308-2310*	1	PUMP GP-FILTER & FUEL TRANSFER	796
Y	*308-2289*	1	PUMP GP-FUEL INJECTION	808
Y	*308-2320*	1	PUMP GP-FUEL PRIMING	840
Y	*442-7729*	1	PUMP GP-WATER	531
Y	*308-2313*	1	SOLENOID GP-SHUTOFF (FUEL)	889
Y	*308-2293*	1	STARTING MOTOR GP-ELECTRIC	895
Y	*308-2312*	1	SWITCH GP-PRESSURE	906
Y	*308-2314*	1	SWITCH GP-START	915
Y	*308-2317*	1	SWITCH GP-TEMPERATURE (ENGINE COOLANT)	917
Y	*442-7759*	1	TURBOCHARGER GP	665
Y	*308-2306*	1	V-BELT GP (WATER PUMP)	443
Y	*308-2285*	1	VALVE MECHANISM GP	452

Y - SEPARATE ILLUSTRATION

<END>

489-4263 ENGINE AR-PRIMARY

36 BRAKE KW (49 BHP) AT 2800 RPM

FIELD REPLACEMENT ORDER 435-1646—PAGE: 112

SMCS-1000 **i10080542**

NOTE	PART NUMBER	QTY	PART NAME 1 2 3 4 5 6 (PRODUCT LEVEL)	SEE PAGE
Y	*317-0649*	1	AIR CLEANER GP	586
Y	*308-2305*	1	ALTERNATOR GP-CHARGING	858
Y	*465-2494*	1	CAMSHAFT GP	172
			—OR—	
Y	*454-6144*	1	CAMSHAFT GP	170
Y	*321-6741*	1	CONNECTION GP-ELECTRICAL	868
Y	*308-2309*	1	CONNECTION GP-EXHAUST	606
Y	*308-2302*	1	CONNECTION GP-WATER	483
Y	*308-2307*	1	HOUSING GP-FRONT	297
Y	*309-6722*	1	COVER GP-VALVE MECHANISM	184
Y	*309-6713*	1	CRANKSHAFT GP	213
Y	*309-6712*	1	CYLINDER BLOCK GP	225
Y	*309-6715*	1	CYLINDER HEAD GP	255
Y	*363-3165*	1	FILLER GP-ENGINE OIL	470
Y	*308-2298*	1	FILTER GP-ENGINE OIL	474
Y	*308-2291*	1	FLYWHEEL GP	278
Y	*308-2311*	1	GLOW PLUG GP	881
Y	*465-2493*	1	CONTROL GP-GOVERNOR	741
			—OR—	
Y	*454-6143*	1	CONTROL GP-GOVERNOR	733
Y	*308-2290*	1	HOUSING GP-FLYWHEEL	287
Y	*465-2492*	1	HOUSING GP-FRONT	354
			—OR—	
Y	*454-6141*	1	HOUSING GP-FRONT	352
Y	*309-6725*	1	LIFTING GP-ENGINE	376
Y	*331-2589*	1	LINES GP-COOLANT	505
Y	*309-6724*	1	MANIFOLD GP-EXHAUST	614
Y	*308-2295*	1	PAN GP-OIL	385
Y	*309-6714*	1	PISTON & ROD GP	410
Y	*309-6720*	1	PLUG GP-OIL PAN	426
Y	*308-2300*	1	PULLEY GP-CRANKSHAFT	431
Y	*308-2294*	1	PULLEY GP-FAN	434
Y	*309-6717*	1	LINES GP-ENGINE OIL	481
Y	*308-2310*	1	PUMP GP-FILTER & FUEL TRANSFER	796
Y	*309-6719*	1	PUMP GP-FUEL INJECTION	812
Y	*308-2320*	1	PUMP GP-FUEL PRIMING	840
			—OR—	
Y	*579-9444*	1	PUMP GP-FUEL PRIMING	843
Y	*308-2301*	1	PUMP GP-WATER	506
Y	*331-3270*	1	RADIATOR GP	565
Y	*308-2313*	1	SOLENOID GP-SHUTOFF (FUEL)	889
Y	*308-2293*	1	STARTING MOTOR GP-ELECTRIC	895
Y	*315-7819*	1	SWITCH GP-PRESSURE (ENGINE OIL)	908
Y	*308-2314*	1	SWITCH GP-START	915
Y	*308-2317*	1	SWITCH GP-TEMPERATURE (ENGINE COOLANT)	917
Y	*308-2306*	1	V-BELT GP (WATER PUMP)	443
Y	*309-6716*	1	VALVE MECHANISM GP	458

489-4263 **ENGINE AR-PRIMARY (**contd.**)** **i10080542**

NOTE	PART NUMBER	QTY	PART NAME 1 2 3 4 5 6 (PRODUCT LEVEL)	SEE PAGE
Y - SEPARATE ILLUSTRATION				

<END>

489-9224 ENGINE AR-PRIMARY

46 BRAKE KW (61 BHP) AT 3000 RPM

OPTIONAL FIELD REPLACEMENT ORDER 433-1380—PAGE: 8

SMCS-1000 **i10080544**

NOTE	PART NUMBER	QTY	PART NAME 1 2 3 4 5 6 (PRODUCT LEVEL)	SEE PAGE
Y	*317-3038*	1	ALTERNATOR GP-CHARGING	860
Y	*317-0971*	1	CAMSHAFT GP	146
Y	*308-5610*	1	CONNECTION GP-EXHAUST	607
Y	*308-2302*	1	CONNECTION GP-WATER	483
Y	*308-2283*	1	CRANKSHAFT GP	209
Y	*308-2281*	1	CYLINDER BLOCK GP	221
Y	*308-2284*	1	CYLINDER HEAD GP	253
Y	*322-2423*	1	DRIVE GP-FAN	267
Y	*499-5184*	1	FAN GP-SUCTION	496
Y	*363-3165*	1	FILLER GP-ENGINE OIL	470
Y	*308-2298*	1	FILTER GP-ENGINE OIL (PRIMARY)	474
Y	*317-0974*	1	FILTER GP-ENGINE OIL (SECONDARY)	475
Y	*308-2291*	1	FLYWHEEL GP	278
Y	*317-3040*	1	GLOW PLUG GP	882
Y	*317-0967*	1	GOVERNOR GP	768
Y	*308-2290*	1	HOUSING GP-FLYWHEEL	287
Y	*308-2307*	1	HOUSING GP-FRONT	297
Y	*317-0965*	1	HOUSING GP-FRONT	314
Y	*309-6725*	1	LIFTING GP-ENGINE	376
Y	*308-2287*	1	LINES GP-ENGINE OIL	480
Y	*368-4112*	1	MOUNTING GP-ENGINE	383
Y	*317-3037*	1	PAN GP-OIL	397
Y	*308-2286*	1	PISTON & ROD GP	408
Y	*322-2422*	1	PULLEY GP-AUXILIARY DRIVE	430
Y	*321-6740*	1	PULLEY GP-CRANKSHAFT	432
Y	*308-2294*	1	PULLEY GP-FAN	434
Y	*308-2310*	1	PUMP GP-FILTER & FUEL TRANSFER	796
Y	*317-0977*	1	PUMP GP-FUEL INJECTION	818
Y	*317-0979*	1	PUMP GP-WATER	513
Y	*308-2313*	1	SOLENOID GP-SHUTOFF (FUEL)	889
Y	*499-5166*	1	STARTING MOTOR GP-ELECTRIC	904
Y	*308-2312*	1	SWITCH GP-PRESSURE	906
Y	*308-2317*	1	SWITCH GP-TEMPERATURE (ENGINE COOLANT)	917
Y	*442-6206*	1	TURBOCHARGER GP	659
Y	*317-3039*	1	V-BELT GP	445
Y	*315-5252*	1	VALVE & PLUG GP-OIL PAN DRAIN	451
Y	*308-2285*	1	VALVE MECHANISM GP	452
Y - SEPARATE ILLUSTRATION				

<END>

499-6420 ENGINE AR-PRIMARY

36 BRAKE KW (49 BHP) AT 2800 RPM

FIELD REPLACEMENT ORDER 435-1642—PAGE: 110

SMCS-1000 **i10080547**

NOTE	PART NUMBER	QTY	PART NAME 1 2 3 4 5 6 (PRODUCT LEVEL)	SEE PAGE
Y	*340-5947*	1	ALTERNATOR GP-CHARGING	862
Y	*321-6741*	1	CONNECTION GP-ELECTRICAL	868
Y	*308-2302*	1	CONNECTION GP-WATER	483
Y	*322-2424*	1	COVER GP-VALVE MECHANISM	194
Y	*340-5782*	1	CRANKSHAFT GP	215
Y	*340-5781*	1	CYLINDER BLOCK GP	231
Y	*340-5784*	1	CYLINDER HEAD GP	258
Y	*354-1245*	1	HOUSING GP-FRONT	340
Y	*322-2423*	1	DRIVE GP-FAN	267
Y	*308-2297*	1	FILLER GP-ENGINE OIL	466
Y	*308-2298*	1	FILTER GP-ENGINE OIL	474
Y	*308-2291*	1	FLYWHEEL GP	278
Y	*308-2311*	1	GLOW PLUG GP	881
Y	*308-2290*	1	HOUSING GP-FLYWHEEL	287
Y	*309-6718*	1	HOUSING GP-FRONT	299
Y	*308-2315*	1	LIFTING GP-ENGINE	375
Y	*317-7192*	1	MANIFOLD GP-EXHAUST	615
Y	*329-4424*	1	MANIFOLD GP-EXHAUST	616
Y	*308-4735*	1	MOUNTING GP-ENGINE OIL FILTER	482
Y	*363-3164*	1	PAN GP-OIL	403
Y	*340-5783*	1	PISTON & ROD GP	413
Y	*322-2426*	1	PLUG GP-ENGINE	424
Y	*309-6720*	1	PLUG GP-OIL PAN	426
Y	*322-2422*	1	PULLEY GP-AUXILIARY DRIVE	430
Y	*308-2300*	1	PULLEY GP-CRANKSHAFT	431
Y	*308-2294*	1	PULLEY GP-FAN	434
Y	*309-6719*	1	PUMP GP-FUEL INJECTION	812
Y	*311-9028*	1	PUMP GP-FUEL TRANSFER	847
Y	*340-5886*	1	PUMP GP-WATER	522
Y	*315-7817*	1	SOLENOID GP-SHUTOFF	890
Y	*308-2293*	1	STARTING MOTOR GP-ELECTRIC	895
Y	*315-7819*	1	SWITCH GP-PRESSURE (ENGINE OIL)	908
			—OR—	
Y	*308-2312*	1	SWITCH GP-PRESSURE (ENGINE OIL)	906
Y	*340-5966*	1	V-BELT GP	446
Y	*340-5786*	1	VALVE GP-PRESSURE CONTROL	856
Y	*340-5785*	1	VALVE MECHANISM GP	462

Y - SEPARATE ILLUSTRATION

<END>

504-4602 ENGINE AR-PRIMARY

46 BRAKE KW (61 BHP) AT 3000 RPM

SMCS-1000 **i10080550**

NOTE	PART NUMBER	QTY	PART NAME 1 2 3 4 5 6 (PRODUCT LEVEL)	SEE PAGE
Y	*317-0971*	1	CAMSHAFT GP	146
Y	*308-2302*	1	CONNECTION GP-WATER	483
Y	*341-1358*	1	CONTROL GP-GOVERNOR	709
Y	*420-6408*	1	CRANKSHAFT GP	219
Y	*420-6407*	1	CYLINDER BLOCK GP	235
Y	*420-6410*	1	CYLINDER HEAD GP	260
Y	*342-1268*	1	FASTENER GP-COVER	275
Y	*308-2297*	1	FILLER GP-ENGINE OIL	466
Y	*516-8900*	1	FILM GP	921
Y	*308-2298*	1	FILTER GP-ENGINE OIL	474
Y	*420-6416*	1	FILTER GP-ENGINE OIL (OIL COOLER)	478
Y	*322-2412*	1	FLYWHEEL GP	281
Y	*308-2311*	1	GLOW PLUG GP	881
Y	*342-9604*	1	HOUSING GP-FLYWHEEL	292
Y	*354-1245*	1	HOUSING GP-FRONT	340
Y	*317-0965*	1	HOUSING GP-FRONT	314
Y	*329-8514*	1	HOUSING GP-WATER REGULATOR	503
Y	*309-6725*	1	LIFTING GP-ENGINE	376
Y	*420-6411*	1	MECHANISM GP-FUEL PUMP & VALVE	381
Y	*308-2295*	1	PAN GP-OIL	385
Y	*342-9607*	1	PARTS GP-MISCELLANEOUS	924
Y	*420-6409*	1	PISTON & ROD GP	416
Y	*309-6720*	1	PLUG GP-OIL PAN	426
Y	*321-6740*	1	PULLEY GP-CRANKSHAFT	432
Y	*317-0977*	1	PUMP GP-FUEL INJECTION	818
Y	*420-6415*	1	PUMP GP-WATER	525
Y	*308-2313*	1	SOLENOID GP-SHUTOFF (FUEL)	889
Y	*315-6638*	1	SWITCH GP-PRESSURE (ENGINE OIL)	907
Y	*308-2317*	1	SWITCH GP-TEMPERATURE (ENGINE COOLANT)	917
Y	*508-8740*	1	TURBOCHARGER GP	682

Y - SEPARATE ILLUSTRATION

<END>

506-0518 ENGINE AR-PRIMARY

45 BRAKE KW (60 BHP) AT 2800 RPM

OPTIONAL FIELD REPLACEMENT ORDER 435-1636—PAGE: 105

SMCS-1000 **i10080895**

NOTE	PART NUMBER	QTY	PART NAME 1 2 3 4 5 6 (PRODUCT LEVEL)	SEE PAGE
Y	*326-8543*	1	AIR CLEANER GP	591
Y	*308-2305*	1	ALTERNATOR GP-CHARGING	858
Y	*329-9278*	1	CAMSHAFT GP	150
Y	*321-6741*	1	CONNECTION GP-ELECTRICAL	868
Y	*308-2309*	1	CONNECTION GP-EXHAUST	606
Y	*308-2302*	1	CONNECTION GP-WATER	483
Y	*308-2307*	1	HOUSING GP-FRONT	297
Y	*308-2283*	1	CRANKSHAFT GP	209
Y	*308-2281*	1	CYLINDER BLOCK GP	221
Y	*308-2284*	1	CYLINDER HEAD GP	253
Y	*363-3165*	1	FILLER GP-ENGINE OIL	470
Y	*308-2298*	1	FILTER GP-ENGINE OIL	474
Y	*308-2291*	1	FLYWHEEL GP	278
Y	*308-2311*	1	GLOW PLUG GP	881
Y	*308-2290*	1	HOUSING GP-FLYWHEEL	287
Y	*308-2288*	1	FASTENER GP-FRONT HOUSING	276
Y	*329-9277*	1	HOUSING GP-FRONT	333
Y	*309-6725*	1	LIFTING GP-ENGINE	376
Y	*331-2589*	1	LINES GP-COOLANT	505
Y	*308-2287*	1	LINES GP-ENGINE OIL	480
Y	*308-2295*	1	PAN GP-OIL	385
Y	*308-2286*	1	PISTON & ROD GP	408
Y	*321-6740*	1	PULLEY GP-CRANKSHAFT	432
Y	*308-2294*	1	PULLEY GP-FAN	434
Y	*308-2310*	1	PUMP GP-FILTER & FUEL TRANSFER	796
Y	*308-2289*	1	PUMP GP-FUEL INJECTION	808
Y	*317-6706*	1	PUMP GP-FUEL PRM & PRIM FILTER	844
			—OR—	
Y	*579-9465*	1	PUMP GP-FUEL PRM & PRIM FILTER	846
Y	*317-0979*	1	PUMP GP-WATER	513
Y	*341-6658*	1	RADIATOR & FAN GP	548
Y	*308-2313*	1	SOLENOID GP-SHUTOFF (FUEL)	889
Y	*308-2293*	1	STARTING MOTOR GP-ELECTRIC	895
Y	*315-7819*	1	SWITCH GP-PRESSURE (ENGINE OIL)	908
Y	*308-2314*	1	SWITCH GP-START	915
Y	*308-2317*	1	SWITCH GP-TEMPERATURE (ENGINE COOLANT)	917
Y	*441-8101*	1	TURBOCHARGER GP	649
Y	*308-2306*	1	V-BELT GP (WATER PUMP)	443
Y	*308-2285*	1	VALVE MECHANISM GP	452

Y - SEPARATE ILLUSTRATION

<END>

506-0519 ENGINE AR-PRIMARY

45 BRAKE KW (60 BHP) AT 2800 RPM

FIELD REPLACEMENT ORDER 435-1636—PAGE: 105

SMCS-1000 **i10080554**

NOTE	PART NUMBER	QTY	PART NAME 1 2 3 4 5 6 (PRODUCT LEVEL)	SEE PAGE
Y	*326-8543*	1	AIR CLEANER GP	591
Y	*308-2305*	1	ALTERNATOR GP-CHARGING	858
Y	*329-9278*	1	CAMSHAFT GP	150
Y	*321-6741*	1	CONNECTION GP-ELECTRICAL	868
Y	*308-2309*	1	CONNECTION GP-EXHAUST	606
Y	*308-2302*	1	CONNECTION GP-WATER	483
Y	*308-2307*	1	HOUSING GP-FRONT	297
Y	*308-2283*	1	CRANKSHAFT GP	209
Y	*308-2281*	1	CYLINDER BLOCK GP	221
Y	*308-2284*	1	CYLINDER HEAD GP	253
Y	*363-3165*	1	FILLER GP-ENGINE OIL	470
Y	*308-2298*	1	FILTER GP-ENGINE OIL	474
Y	*308-2291*	1	FLYWHEEL GP	278
Y	*308-2311*	1	GLOW PLUG GP	881
Y	*308-2290*	1	HOUSING GP-FLYWHEEL	287
Y	*308-2288*	1	FASTENER GP-FRONT HOUSING	276
Y	*329-9277*	1	HOUSING GP-FRONT	333
Y	*309-6725*	1	LIFTING GP-ENGINE	376
Y	*331-2589*	1	LINES GP-COOLANT	505
Y	*308-2287*	1	LINES GP-ENGINE OIL	480
Y	*308-2295*	1	PAN GP-OIL	385
Y	*308-2286*	1	PISTON & ROD GP	408
Y	*309-6720*	1	PLUG GP-OIL PAN	426
Y	*321-6740*	1	PULLEY GP-CRANKSHAFT	432
Y	*308-2294*	1	PULLEY GP-FAN	434
Y	*308-2310*	1	PUMP GP-FILTER & FUEL TRANSFER	796
Y	*308-2289*	1	PUMP GP-FUEL INJECTION	808
Y	*317-6706*	1	PUMP GP-FUEL PRM & PRIM FILTER	844
			—OR—	
Y	*579-9465*	1	PUMP GP-FUEL PRM & PRIM FILTER	846
Y	*317-0979*	1	PUMP GP-WATER	513
Y	*341-6658*	1	RADIATOR & FAN GP	548
Y	*308-2313*	1	SOLENOID GP-SHUTOFF (FUEL)	889
Y	*308-2293*	1	STARTING MOTOR GP-ELECTRIC	895
Y	*315-7819*	1	SWITCH GP-PRESSURE (ENGINE OIL)	908
Y	*308-2314*	1	SWITCH GP-START	915
Y	*308-2317*	1	SWITCH GP-TEMPERATURE (ENGINE COOLANT)	917
Y	*441-8101*	1	TURBOCHARGER GP	649
Y	*308-2306*	1	V-BELT GP (WATER PUMP)	443
Y	*308-2285*	1	VALVE MECHANISM GP	452

Y - SEPARATE ILLUSTRATION

<END>

506-0520 ENGINE AR-PRIMARY

36 BRAKE KW (49 BHP) AT 2800 RPM

FIELD REPLACEMENT ORDER 435-1642—PAGE: 110

SMCS-1000 **i10080559**

NOTE	PART NUMBER	QTY	PART NAME 1 2 3 4 5 6 (PRODUCT LEVEL)	SEE PAGE
Y	*317-0649*	1	AIR CLEANER GP	586
Y	*308-2305*	1	ALTERNATOR GP-CHARGING	858
Y	*454-6144*	1	CAMSHAFT GP	170
Y	*321-6741*	1	CONNECTION GP-ELECTRICAL	868
Y	*308-2309*	1	CONNECTION GP-EXHAUST	606
Y	*308-2302*	1	CONNECTION GP-WATER	483
Y	*454-6143*	1	CONTROL GP-GOVERNOR	733
Y	*308-2307*	1	HOUSING GP-FRONT	297
Y	*309-6722*	1	COVER GP-VALVE MECHANISM	184
Y	*309-6713*	1	CRANKSHAFT GP	213
Y	*309-6712*	1	CYLINDER BLOCK GP	225
Y	*309-6715*	1	CYLINDER HEAD GP	255
Y	*363-3165*	1	FILLER GP-ENGINE OIL	470
Y	*308-2298*	1	FILTER GP-ENGINE OIL	474
Y	*308-2291*	1	FLYWHEEL GP	278
Y	*308-2311*	1	GLOW PLUG GP	881
Y	*308-2290*	1	HOUSING GP-FLYWHEEL	287
Y	*454-6141*	1	HOUSING GP-FRONT	352
Y	*309-6725*	1	LIFTING GP-ENGINE	376
Y	*331-2589*	1	LINES GP-COOLANT	505
Y	*309-6724*	1	MANIFOLD GP-EXHAUST	614
Y	*308-2295*	1	PAN GP-OIL	385
Y	*309-6714*	1	PISTON & ROD GP	410
Y	*309-6720*	1	PLUG GP-OIL PAN	426
Y	*308-2300*	1	PULLEY GP-CRANKSHAFT	431
Y	*308-2294*	1	PULLEY GP-FAN	434
Y	*309-6717*	1	LINES GP-ENGINE OIL	481
Y	*308-2310*	1	PUMP GP-FILTER & FUEL TRANSFER	796
Y	*309-6719*	1	PUMP GP-FUEL INJECTION	812
Y	*308-2320*	1	PUMP GP-FUEL PRIMING	840
			—OR—	
Y	*579-9444*	1	PUMP GP-FUEL PRIMING	843
Y	*308-2301*	1	PUMP GP-WATER	506
Y	*331-3270*	1	RADIATOR GP	565
Y	*308-2313*	1	SOLENOID GP-SHUTOFF (FUEL)	889
Y	*308-2293*	1	STARTING MOTOR GP-ELECTRIC	895
Y	*315-7819*	1	SWITCH GP-PRESSURE (ENGINE OIL)	908
Y	*308-2314*	1	SWITCH GP-START	915
Y	*308-2317*	1	SWITCH GP-TEMPERATURE (ENGINE COOLANT)	917
Y	*308-2306*	1	V-BELT GP (WATER PUMP)	443
Y	*309-6716*	1	VALVE MECHANISM GP	458

Y - SEPARATE ILLUSTRATION

<END>

512-7969 ENGINE AR-PRIMARY

45 BRAKE KW (60 BHP) AT 2800 RPM

FIELD REPLACEMENT ORDER 435-1636—PAGE: 105

SMCS-1000 **i10080562**

NOTE	PART NUMBER	QTY	PART NAME 1 2 3 4 5 6 (PRODUCT LEVEL)	SEE PAGE
Y	*308-2305*	1	ALTERNATOR GP-CHARGING	858
Y	*329-9278*	1	CAMSHAFT GP	150
Y	*321-6741*	1	CONNECTION GP-ELECTRICAL	868
Y	*308-2309*	1	CONNECTION GP-EXHAUST	606
Y	*308-2302*	1	CONNECTION GP-WATER	483
Y	*308-2283*	1	CRANKSHAFT GP	209
Y	*308-2281*	1	CYLINDER BLOCK GP	221
Y	*308-2284*	1	CYLINDER HEAD GP	253
Y	*354-1245*	1	HOUSING GP-FRONT	340
Y	*308-2304*	1	EXTENSION GP-FAN	270
Y	*308-2303*	1	FAN GP-SUCTION	491
Y	*363-3165*	1	FILLER GP-ENGINE OIL	470
Y	*308-2298*	1	FILTER GP-ENGINE OIL	474
Y	*308-2291*	1	FLYWHEEL GP	278
Y	*308-2311*	1	GLOW PLUG GP	881
Y	*308-2290*	1	HOUSING GP-FLYWHEEL	287
Y	*329-9277*	1	HOUSING GP-FRONT	333
Y	*308-2288*	1	FASTENER GP-FRONT HOUSING	276
Y	*309-6725*	1	LIFTING GP-ENGINE	376
Y	*331-2589*	1	LINES GP-COOLANT	505
Y	*308-2287*	1	LINES GP-ENGINE OIL	480
Y	*308-2295*	1	PAN GP-OIL	385
Y	*308-2286*	1	PISTON & ROD GP	408
Y	*309-6720*	1	PLUG GP-OIL PAN	426
Y	*321-6740*	1	PULLEY GP-CRANKSHAFT	432
Y	*308-2294*	1	PULLEY GP-FAN	434
Y	*308-2310*	1	PUMP GP-FILTER & FUEL TRANSFER	796
Y	*308-2289*	1	PUMP GP-FUEL INJECTION	808
Y	*308-2320*	1	PUMP GP-FUEL PRIMING	840
			—OR—	
Y	*579-9444*	1	PUMP GP-FUEL PRIMING	843
Y	*317-0979*	1	PUMP GP-WATER	513
Y	*308-2313*	1	SOLENOID GP-SHUTOFF (FUEL)	889
Y	*308-2293*	1	STARTING MOTOR GP-ELECTRIC	895
Y	*308-2312*	1	SWITCH GP-PRESSURE	906
Y	*308-2314*	1	SWITCH GP-START	915
Y	*308-2317*	1	SWITCH GP-TEMPERATURE (ENGINE COOLANT)	917
Y	*442-7759*	1	TURBOCHARGER GP	665
Y	*308-2306*	1	V-BELT GP (WATER PUMP)	443
Y	*308-2285*	1	VALVE MECHANISM GP	452

Y - SEPARATE ILLUSTRATION

<END>

513-2239 ENGINE AR-PRIMARY

36 BRAKE KW (49 BHP) AT 2800 RPM

FIELD REPLACEMENT ORDER 435-1642—PAGE: 110

SMCS-1000 **i10080566**

NOTE	PART NUMBER	QTY	PART NAME 1 2 3 4 5 6 (PRODUCT LEVEL)	SEE PAGE
Y	*317-0649*	1	AIR CLEANER GP	586
Y	*308-2305*	1	ALTERNATOR GP-CHARGING	858
Y	*454-6144*	1	CAMSHAFT GP	170
Y	*321-6741*	1	CONNECTION GP-ELECTRICAL	868
Y	*308-2309*	1	CONNECTION GP-EXHAUST	606
Y	*308-2302*	1	CONNECTION GP-WATER	483
Y	*454-6143*	1	CONTROL GP-GOVERNOR	733
Y	*308-2307*	1	HOUSING GP-FRONT	297
Y	*309-6722*	1	COVER GP-VALVE MECHANISM	184
Y	*309-6713*	1	CRANKSHAFT GP	213
Y	*309-6712*	1	CYLINDER BLOCK GP	225
Y	*309-6715*	1	CYLINDER HEAD GP	255
Y	*363-3165*	1	FILLER GP-ENGINE OIL	470
Y	*308-2298*	1	FILTER GP-ENGINE OIL	474
Y	*308-2291*	1	FLYWHEEL GP	278
Y	*308-2311*	1	GLOW PLUG GP	881
Y	*308-2290*	1	HOUSING GP-FLYWHEEL	287
Y	*454-6141*	1	HOUSING GP-FRONT	352
Y	*309-6725*	1	LIFTING GP-ENGINE	376
Y	*331-2589*	1	LINES GP-COOLANT	505
Y	*309-6717*	1	LINES GP-ENGINE OIL	481
Y	*309-6724*	1	MANIFOLD GP-EXHAUST	614
Y	*308-2295*	1	PAN GP-OIL	385
Y	*309-6714*	1	PISTON & ROD GP	410
Y	*309-6720*	1	PLUG GP-OIL PAN	426
Y	*308-2300*	1	PULLEY GP-CRANKSHAFT	431
Y	*308-2294*	1	PULLEY GP-FAN	434
Y	*308-2310*	1	PUMP GP-FILTER & FUEL TRANSFER	796
Y	*309-6719*	1	PUMP GP-FUEL INJECTION	812
Y	*308-2320*	1	PUMP GP-FUEL PRIMING	840
			—OR—	
Y	*579-9444*	1	PUMP GP-FUEL PRIMING	843
Y	*308-2301*	1	PUMP GP-WATER	506
Y	*331-3270*	1	RADIATOR GP	565
Y	*308-2313*	1	SOLENOID GP-SHUTOFF (FUEL)	889
Y	*308-2293*	1	STARTING MOTOR GP-ELECTRIC	895
Y	*315-7819*	1	SWITCH GP-PRESSURE (ENGINE OIL)	908
Y	*308-2314*	1	SWITCH GP-START	915
Y	*308-2317*	1	SWITCH GP-TEMPERATURE (ENGINE COOLANT)	917
Y	*308-2306*	1	V-BELT GP (WATER PUMP)	443
Y	*309-6716*	1	VALVE MECHANISM GP	458

Y - SEPARATE ILLUSTRATION

<END>

514-6556 ENGINE AR-PRIMARY

36 BRAKE KW (49 BHP) AT 2800 RPM

FIELD REPLACEMENT ORDER 435-1634—PAGE: 104

SMCS-1000 **i10026614**

NOTE	PART NUMBER	QTY	PART NAME 1 2 3 4 5 6 (PRODUCT LEVEL)	SEE PAGE
Y	*317-3038*	1	ALTERNATOR GP-CHARGING	860
			—OR—	
Y	*598-5745*	1	ALTERNATOR GP-CHARGING	866
Y	*332-1364*	1	CAMSHAFT GP	154
			—OR—	
Y	*596-3442*	1	CAMSHAFT GP	178
Y	*308-5610*	1	CONNECTION GP-EXHAUST	607
Y	*308-2302*	1	CONNECTION GP-WATER	483
			—OR—	
Y	*398-5884*	1	CONNECTION GP-WATER	485
Y	*332-1363*	1	CONTROL GP-GOVERNOR	705
Y	*308-2307*	1	HOUSING GP-FRONT	297
Y	*308-2283*	1	CRANKSHAFT GP	209
			—OR—	
Y	*399-4716*	1	CRANKSHAFT GP	217
Y	*308-2281*	1	CYLINDER BLOCK GP	221
			—OR—	
Y	*584-3179*	1	CYLINDER BLOCK GP	239
Y	*308-2284*	1	CYLINDER HEAD GP	253
			—OR—	
Y	*596-2862*	1	CYLINDER HEAD GP	263
Y	*315-5252*	1	VALVE & PLUG GP-OIL PAN DRAIN	451
			—OR—	
Y	*398-5866*	1	DRAIN GP-ECOLOGY	264
Y	*322-2423*	1	DRIVE GP-FAN	267
Y	*398-4866*	1	PULLEY GP-FAN	435
Y	*398-6016*	1	FAN GP	488
Y	*499-5184*	1	FAN GP-SUCTION	496
			—OR—	
Y	*456-7945*	1	FAN GP-SUCTION	495
Y	*363-3165*	1	FILLER GP-ENGINE OIL	470
			—OR—	
Y	*533-3936*	1	FILLER GP-ENGINE OIL	473
Y	*516-8900*	1	FILM GP	921
Y	*308-2298*	1	FILTER GP-ENGINE OIL (PRIMARY)	474
			—OR—	
Y	*598-5721*	1	FILTER GP-ENGINE OIL	479
Y	*317-0974*	1	FILTER GP-ENGINE OIL (SECONDARY)	475
Y	*308-2291*	1	FLYWHEEL GP (STARTER)	278
			—OR—	
Y	*398-4803*	1	FLYWHEEL GP	283
Y	*317-3040*	1	GLOW PLUG GP	882
			—OR—	
Y	*600-5159*	1	GLOW PLUG GP	884
Y	*308-2290*	1	HOUSING GP-FLYWHEEL	287
			—OR—	
Y	*591-2135*	1	HOUSING GP-FLYWHEEL	295
Y	*332-1362*	1	HOUSING GP-FRONT	337

514-6556 **ENGINE AR-PRIMARY (**contd.**)** **i10026614**

NOTE	PART NUMBER	QTY	PART NAME 1 2 3 4 5 6 (PRODUCT LEVEL)	SEE PAGE
			—OR—	
Y	*599-9816*	1	HOUSING GP-FRONT	363
Y	*309-6725*	1	LIFTING GP-ENGINE	376
			—OR—	
Y	*584-9814*	1	LIFTING GP-ENGINE	378
Y	*308-2287*	1	LINES GP-ENGINE OIL	480
			—OR—	
Y	*398-8178*	1	FILTER GP-ENGINE OIL	477
Y	*368-4112*	1	MOUNTING GP-ENGINE	383
Y	*317-3037*	1	PAN GP-OIL	397
			—OR—	
Y	*598-5067*	1	PAN GP-OIL	406
Y	*308-2286*	1	PISTON & ROD GP	408
			—OR—	
Y	*596-2865*	1	PISTON & ROD GP	419
Y	*322-2422*	1	PULLEY GP-AUXILIARY DRIVE	430
			—OR—	
Y	*398-5881*	1	PULLEY AS-IDLER	429
Y	*321-6740*	1	PULLEY GP-CRANKSHAFT	432
			—OR—	
Y	*445-9988*	1	PULLEY GP-CRANKSHAFT	433
Y	*308-2294*	1	PULLEY GP-FAN	434
Y	*308-2310*	1	PUMP GP-FILTER & FUEL TRANSFER	796
			—OR—	
Y	*599-9741*	1	FILTER GP-FUEL	763
Y	*308-2289*	1	PUMP GP-FUEL INJECTION	808
			—OR—	
Y	*596-2828*	1	PUMP GP-FUEL INJECTION	835
Y	*317-0979*	1	PUMP GP-WATER	513
			—OR—	
Y	*598-5725*	1	PUMP GP-WATER	540
Y	*522-0710*	1	SOLENOID GP-CONTROL	888
			—OR—	
Y	*600-5174*	1	SOLENOID GP-SHUTOFF	892
Y	*499-5166*	1	STARTING MOTOR GP-ELECTRIC	904
Y	*308-2317*	1	SWITCH GP-TEMPERATURE (ENGINE COOLANT)	917
			—OR—	
Y	*601-4322*	1	SENSOR GP-TEMPERATURE	886
Y	*442-6206*	1	TURBOCHARGER GP	659
			—OR—	
Y	*600-5115*	1	TURBOCHARGER GP	685
Y	*317-3039*	1	V-BELT GP (WATER PUMP)	445
			—OR—	
Y	*598-5753*	1	V-BELT GP	450
Y	*308-2285*	1	VALVE MECHANISM GP	452
Y	*398-4274*	1	FILM GP	920
Y	*532-8314*	1	SWITCH GP-PRESSURE	913
Y	*532-9707*	1	CONNECTION GP-EXHAUST	609
Y	*584-3189*	1	ROCKER ARM GP	441
Y	*587-7902*	1	STARTING MOTOR GP-ELECTRIC	905
Y	*596-3460*	1	GOVERNOR GP	786

514-6556 **ENGINE AR-PRIMARY (**contd.**)** **i10026614**

NOTE	PART NUMBER	QTY	PART NAME 1 2 3 4 5 6 (PRODUCT LEVEL)	SEE PAGE
Y	*600-5140*	1	MOUNTING GP-EXHAUST	620
Y	*600-5739*	1	MOUNTING GP-ENGINE	384
Y	*308-2312*	1	SWITCH GP-PRESSURE	906

Y - SEPARATE ILLUSTRATION

<END>

516-2639 ENGINE AR-PRIMARY

45 BRAKE KW (60 BHP) AT 2800 RPM

FIELD REPLACEMENT ORDER 435-1636—PAGE: 105

SMCS-1000 **i10080575**

NOTE	PART NUMBER	QTY	PART NAME 1 2 3 4 5 6 (PRODUCT LEVEL)	SEE PAGE
Y	*326-8543*	1	AIR CLEANER GP	591
			—OR—	
Y	*600-1135*	1	AIR CLEANER GP	600
Y	*308-2305*	1	ALTERNATOR GP-CHARGING	858
Y	*329-9278*	1	CAMSHAFT GP	150
Y	*321-6741*	1	CONNECTION GP-ELECTRICAL	868
Y	*308-2309*	1	CONNECTION GP-EXHAUST	606
Y	*308-2302*	1	CONNECTION GP-WATER	483
Y	*308-2307*	1	HOUSING GP-FRONT	297
Y	*308-2283*	1	CRANKSHAFT GP	209
Y	*308-2281*	1	CYLINDER BLOCK GP	221
Y	*308-2284*	1	CYLINDER HEAD GP	253
Y	*363-3165*	1	FILLER GP-ENGINE OIL	470
Y	*308-2298*	1	FILTER GP-ENGINE OIL	474
Y	*308-2291*	1	FLYWHEEL GP	278
Y	*308-2311*	1	GLOW PLUG GP	881
Y	*492-4881*	1	GOVERNOR GP	784
Y	*308-2290*	1	HOUSING GP-FLYWHEEL	287
Y	*308-2288*	1	FASTENER GP-FRONT HOUSING	276
Y	*329-9277*	1	HOUSING GP-FRONT	333
Y	*309-6725*	1	LIFTING GP-ENGINE	376
Y	*331-2589*	1	LINES GP-COOLANT	505
Y	*308-2287*	1	LINES GP-ENGINE OIL	480
Y	*315-7813*	1	EXTENSION GP-FAN	271
Y	*308-2295*	1	PAN GP-OIL	385
Y	*308-2286*	1	PISTON & ROD GP	408
Y	*309-6720*	1	PLUG GP-OIL PAN	426
Y	*321-6740*	1	PULLEY GP-CRANKSHAFT	432
Y	*308-2294*	1	PULLEY GP-FAN	434
Y	*308-2310*	1	PUMP GP-FILTER & FUEL TRANSFER	796
Y	*308-2289*	1	PUMP GP-FUEL INJECTION	808
Y	*317-6706*	1	PUMP GP-FUEL PRM & PRIM FILTER	844
			—OR—	
Y	*579-9465*	1	PUMP GP-FUEL PRM & PRIM FILTER	846
Y	*317-0979*	1	PUMP GP-WATER	513
Y	*308-2293*	1	STARTING MOTOR GP-ELECTRIC	895
Y	*315-7819*	1	SWITCH GP-PRESSURE (ENGINE OIL)	908
Y	*308-2314*	1	SWITCH GP-START	915
Y	*308-2317*	1	SWITCH GP-TEMPERATURE (ENGINE COOLANT)	917
Y	*441-8101*	1	TURBOCHARGER GP	649
Y	*308-2306*	1	V-BELT GP (WATER PUMP)	443
Y	*308-2285*	1	VALVE MECHANISM GP	452
	538-6939	1	ELECTRONICS GP-ENGINE	

Y - SEPARATE ILLUSTRATION

<END>

518-0165 ENGINE AR-PRIMARY

36.4KW (48.8BHP) @ 2500RPM

SMCS-1000 **i10080576**

NOTE	PART NUMBER	QTY	PART NAME 1 2 3 4 5 6 (PRODUCT LEVEL)	SEE PAGE
Y	*326-8543*	1	AIR CLEANER GP	591
Y	*308-2305*	1	ALTERNATOR GP-CHARGING	858
Y	*525-9936*	1	CAMSHAFT GP	174
Y	*321-6741*	1	CONNECTION GP-ELECTRICAL	868
Y	*308-2309*	1	CONNECTION GP-EXHAUST	606
Y	*308-2302*	1	CONNECTION GP-WATER	483
Y	*308-2283*	1	CRANKSHAFT GP	209
Y	*308-2281*	1	CYLINDER BLOCK GP	221
Y	*308-2284*	1	CYLINDER HEAD GP	253
Y	*354-1245*	1	HOUSING GP-FRONT	340
Y	*363-3165*	1	FILLER GP-ENGINE OIL	470
Y	*308-2298*	1	FILTER GP-ENGINE OIL	474
Y	*308-2291*	1	FLYWHEEL GP	278
Y	*308-2311*	1	GLOW PLUG GP	881
Y	*308-2290*	1	HOUSING GP-FLYWHEEL	287
Y	*525-9935*	1	HOUSING GP-FRONT	360
Y	*309-6725*	1	LIFTING GP-ENGINE	376
Y	*331-2589*	1	LINES GP-COOLANT	505
Y	*308-2287*	1	LINES GP-ENGINE OIL	480
Y	*525-9934*	1	FASTENER GP-FRONT HOUSING	277
Y	*308-2295*	1	PAN GP-OIL	385
Y	*308-2286*	1	PISTON & ROD GP	408
Y	*309-6720*	1	PLUG GP-OIL PAN	426
Y	*321-6740*	1	PULLEY GP-CRANKSHAFT	432
Y	*308-2294*	1	PULLEY GP-FAN	434
Y	*308-2310*	1	PUMP GP-FILTER & FUEL TRANSFER	796
Y	*526-0230*	1	PUMP GP-FUEL INJECTION	826
Y	*308-2320*	1	PUMP GP-FUEL PRIMING	840
Y	*317-0979*	1	PUMP GP-WATER	513
Y	*341-6658*	1	RADIATOR & FAN GP	548
Y	*308-2313*	1	SOLENOID GP-SHUTOFF (FUEL)	889
Y	*308-2293*	1	STARTING MOTOR GP-ELECTRIC	895
Y	*308-2312*	1	SWITCH GP-PRESSURE	906
Y	*308-2317*	1	SWITCH GP-TEMPERATURE (ENGINE COOLANT)	917
Y	*477-6922*	1	TURBOCHARGER GP	678
Y	*308-2306*	1	V-BELT GP (WATER PUMP)	443
Y	*308-2285*	1	VALVE MECHANISM GP	452

Y - SEPARATE ILLUSTRATION

<END>

557-6086 ENGINE AR-PRIMARY

45 BRAKE KW (60 BHP) AT 2800 RPM

OPTIONAL FIELD REPLACEMENT ORDER 435-1636—PAGE: 105

SMCS-1000 **i10080579**

NOTE	PART NUMBER	QTY	PART NAME 1 2 3 4 5 6 (PRODUCT LEVEL)	SEE PAGE
Y	*326-8543*	1	AIR CLEANER GP	591
Y	*308-2305*	1	ALTERNATOR GP-CHARGING	858
Y	*329-9278*	1	CAMSHAFT GP	150
Y	*321-6741*	1	CONNECTION GP-ELECTRICAL	868
Y	*308-2309*	1	CONNECTION GP-EXHAUST	606
Y	*308-2302*	1	CONNECTION GP-WATER	483
Y	*308-2307*	1	HOUSING GP-FRONT	297
Y	*308-2283*	1	CRANKSHAFT GP	209
Y	*308-2281*	1	CYLINDER BLOCK GP	221
Y	*308-2284*	1	CYLINDER HEAD GP	253
Y	*363-3165*	1	FILLER GP-ENGINE OIL	470
Y	*308-2298*	1	FILTER GP-ENGINE OIL	474
Y	*308-2291*	1	FLYWHEEL GP	278
Y	*308-2311*	1	GLOW PLUG GP	881
Y	*308-2290*	1	HOUSING GP-FLYWHEEL	287
Y	*308-2288*	1	FASTENER GP-FRONT HOUSING	276
Y	*329-9277*	1	HOUSING GP-FRONT	333
Y	*309-6725*	1	LIFTING GP-ENGINE	376
Y	*331-2589*	1	LINES GP-COOLANT	505
Y	*308-2287*	1	LINES GP-ENGINE OIL	480
Y	*308-2295*	1	PAN GP-OIL	385
Y	*308-2286*	1	PISTON & ROD GP	408
Y	*309-6720*	1	PLUG GP-OIL PAN	426
Y	*321-6740*	1	PULLEY GP-CRANKSHAFT	432
Y	*308-2294*	1	PULLEY GP-FAN	434
Y	*308-2310*	1	PUMP GP-FILTER & FUEL TRANSFER	796
Y	*308-2289*	1	PUMP GP-FUEL INJECTION	808
Y	*579-9465*	1	PUMP GP-FUEL PRM & PRIM FILTER	846
Y	*317-0979*	1	PUMP GP-WATER	513
Y	*341-6658*	1	RADIATOR & FAN GP	548
Y	*308-2313*	1	SOLENOID GP-SHUTOFF (FUEL)	889
Y	*308-2293*	1	STARTING MOTOR GP-ELECTRIC	895
Y	*315-7819*	1	SWITCH GP-PRESSURE (ENGINE OIL)	908
Y	*308-2317*	1	SWITCH GP-TEMPERATURE (ENGINE COOLANT)	917
Y	*441-8101*	1	TURBOCHARGER GP	649
Y	*308-2306*	1	V-BELT GP (WATER PUMP)	443
Y	*308-2285*	1	VALVE MECHANISM GP	452

Y - SEPARATE ILLUSTRATION

<END>

557-7471 ENGINE AR-PRIMARY

36.30KW (46.60BHP) @ 2800RPM

OPTIONAL FIELD REPLACEMENT ORDER 435-1642—PAGE: 110

SMCS-1000 **i10080585**

NOTE	PART NUMBER	QTY	PART NAME 1 2 3 4 5 6 (PRODUCT LEVEL)	SEE PAGE
Y	*317-0649*	1	AIR CLEANER GP	586
			—OR—	
Y	*611-6891*	1	AIR CLEANER GP	605
Y	*308-2305*	1	ALTERNATOR GP-CHARGING	858
Y	*454-6144*	1	CAMSHAFT GP	170
Y	*321-6741*	1	CONNECTION GP-ELECTRICAL	868
Y	*308-2309*	1	CONNECTION GP-EXHAUST	606
Y	*308-2302*	1	CONNECTION GP-WATER	483
Y	*454-6143*	1	CONTROL GP-GOVERNOR	733
Y	*308-2307*	1	HOUSING GP-FRONT	297
Y	*309-6722*	1	COVER GP-VALVE MECHANISM	184
Y	*309-6713*	1	CRANKSHAFT GP	213
Y	*309-6712*	1	CYLINDER BLOCK GP	225
Y	*309-6715*	1	CYLINDER HEAD GP	255
Y	*363-3165*	1	FILLER GP-ENGINE OIL	470
Y	*308-2291*	1	FLYWHEEL GP	278
Y	*308-2311*	1	GLOW PLUG GP	881
Y	*308-2290*	1	HOUSING GP-FLYWHEEL	287
Y	*454-6141*	1	HOUSING GP-FRONT	352
Y	*309-6725*	1	LIFTING GP-ENGINE	376
Y	*331-2589*	1	LINES GP-COOLANT	505
Y	*309-6724*	1	MANIFOLD GP-EXHAUST	614
Y	*308-2295*	1	PAN GP-OIL	385
Y	*309-6714*	1	PISTON & ROD GP	410
Y	*309-6720*	1	PLUG GP-OIL PAN	426
Y	*308-2300*	1	PULLEY GP-CRANKSHAFT	431
Y	*308-2294*	1	PULLEY GP-FAN	434
Y	*309-6717*	1	LINES GP-ENGINE OIL	481
Y	*308-2310*	1	PUMP GP-FILTER & FUEL TRANSFER	796
Y	*309-6719*	1	PUMP GP-FUEL INJECTION	812
Y	*308-2320*	1	PUMP GP-FUEL PRIMING	840
			—OR—	
Y	*579-9444*	1	PUMP GP-FUEL PRIMING	843
Y	*308-2301*	1	PUMP GP-WATER	506
Y	*331-3270*	1	RADIATOR GP	565
Y	*308-2313*	1	SOLENOID GP-SHUTOFF (FUEL)	889
Y	*308-2293*	1	STARTING MOTOR GP-ELECTRIC	895
Y	*315-7819*	1	SWITCH GP-PRESSURE (ENGINE OIL)	908
Y	*308-2317*	1	SWITCH GP-TEMPERATURE (ENGINE COOLANT)	917
Y	*308-2306*	1	V-BELT GP (WATER PUMP)	443
Y	*309-6716*	1	VALVE MECHANISM GP	458

Y - SEPARATE ILLUSTRATION

<END>

600-6923 ACCESSORY GP-ENGINE

PART OF 433-1379 ENGINE AR, 435-1636, 435-1641, 435-1642, 435-1647 ENGINE AR-PRIMARY
AN ATTACHMENT

SMCS-1358, 1405, 1802 **i08614871**

NOTE	REF NO	GRAPHIC REF	PART NUMBER	QTY	PART NAME 1 2 3 4 5 6 (PRODUCT LEVEL)	SEE PAGE
	1	1	**154-2427**	1	GASKET-EXHAUST MANIFOLD	
	2	1	**233-0695**	1	SEAL-VALVE COVER	
	3	1	**458-6608**	1	PLUG-SEAL	

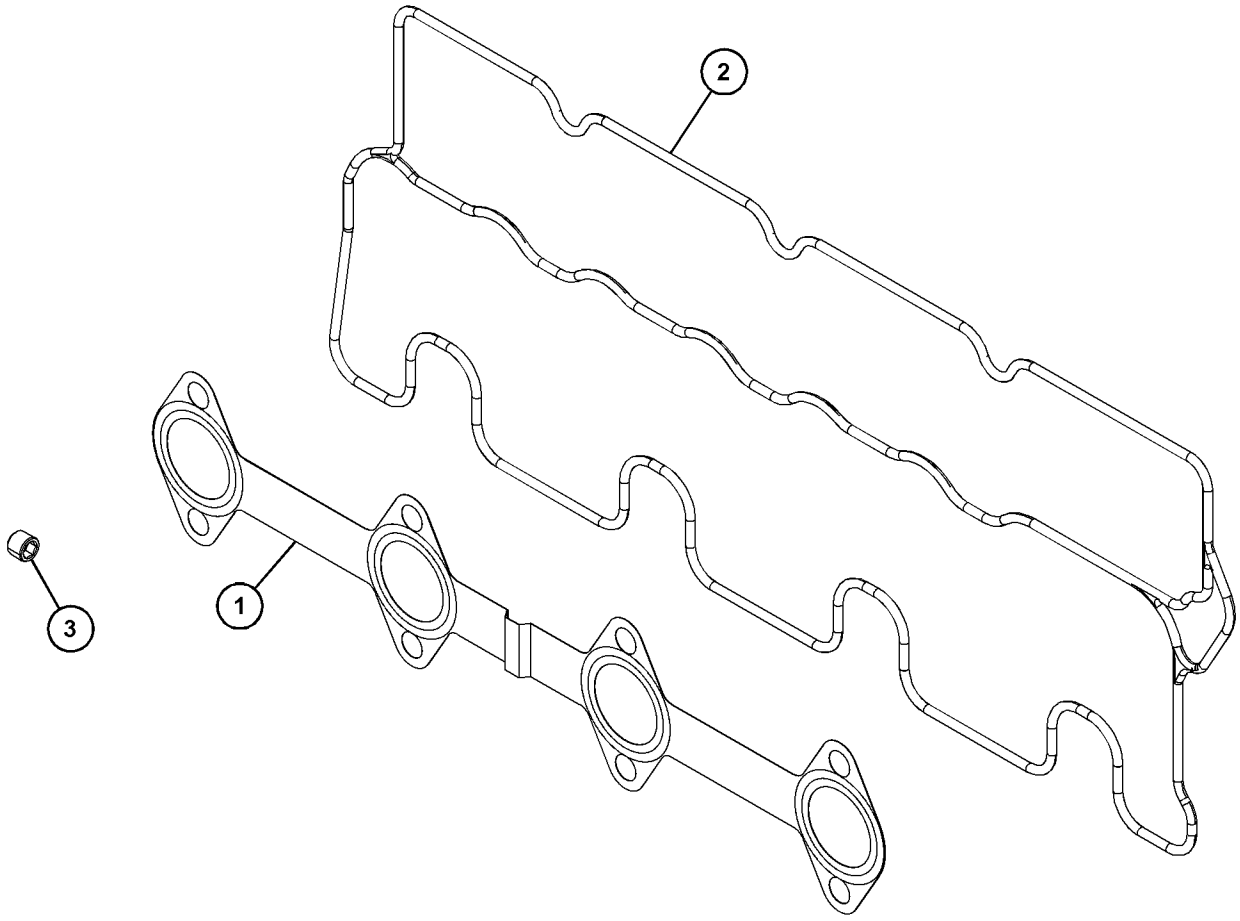

GRAPHIC #1 <END> g06724195

308-1902 CAMSHAFT AS

PART OF 596-3442 CAMSHAFT GP

SMCS-1210 **i08712042**

NOTE	REF NO	GRAPHIC REF	PART NUMBER	QTY	PART NAME 1 2 3 4 5 6 (PRODUCT LEVEL)	SEE PAGE
F			**153-6492**	1	KEY-WOODRUFF	
F			**154-4505**	1	BEARING	
F			**308-1903**	1	GEAR-CAMSHAFT (66-TEETH)	
F			**313-9323**	1	SPACER (20.5X28X9.3-MM THK)	

F - NOT SHOWN

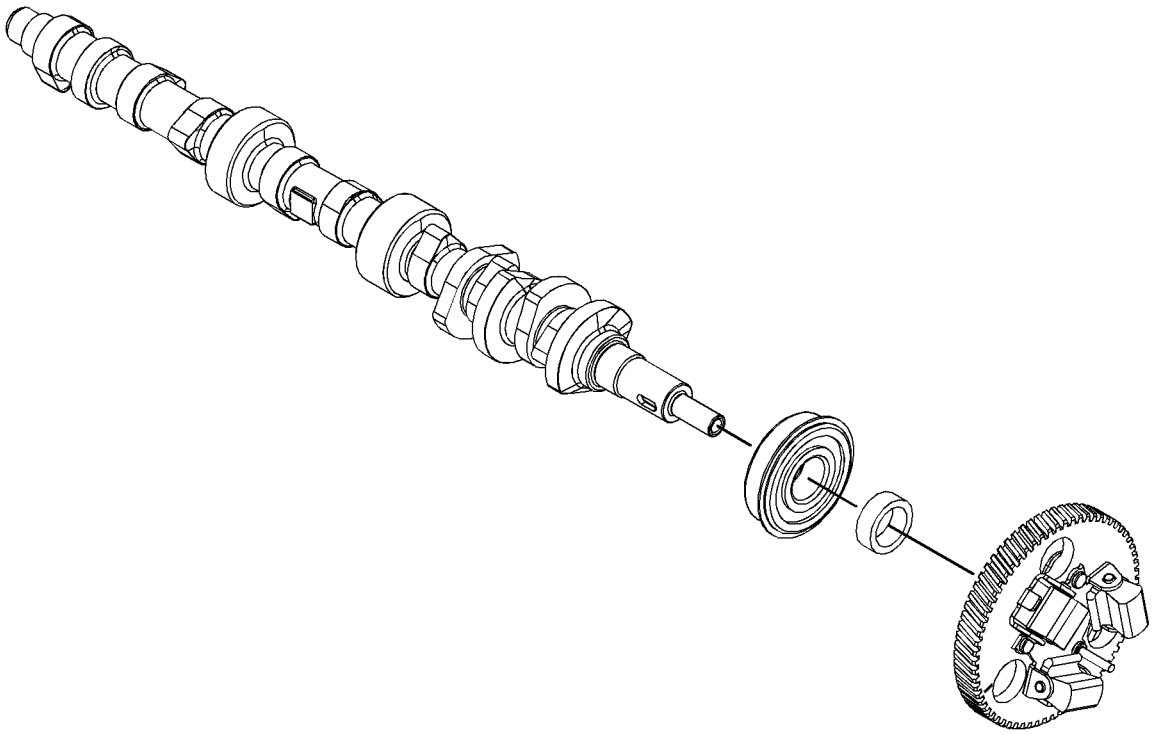

GRAPHIC #1 <END> g07516311

343-2871 CAMSHAFT AS

PART OF 364-2522, 596-3440 CAMSHAFT GP, 321-4257 HOUSING GP-FRONT

SMCS-1210 **i08198003**

NOTE	REF NO	GRAPHIC REF	PART NUMBER	QTY	PART NAME 1 2 3 4 5 6 (PRODUCT LEVEL)	SEE PAGE
	1	1	**153-6492**	1	KEY-WOODRUFF	
	2	1	**154-4505**	1	BEARING	
	3	1	**313-9323**	1	SPACER (20.5X28X9.3-MM THK)	
	4	1	**342-8499**	1	GEAR-CAMSHAFT (62-TEETH)	

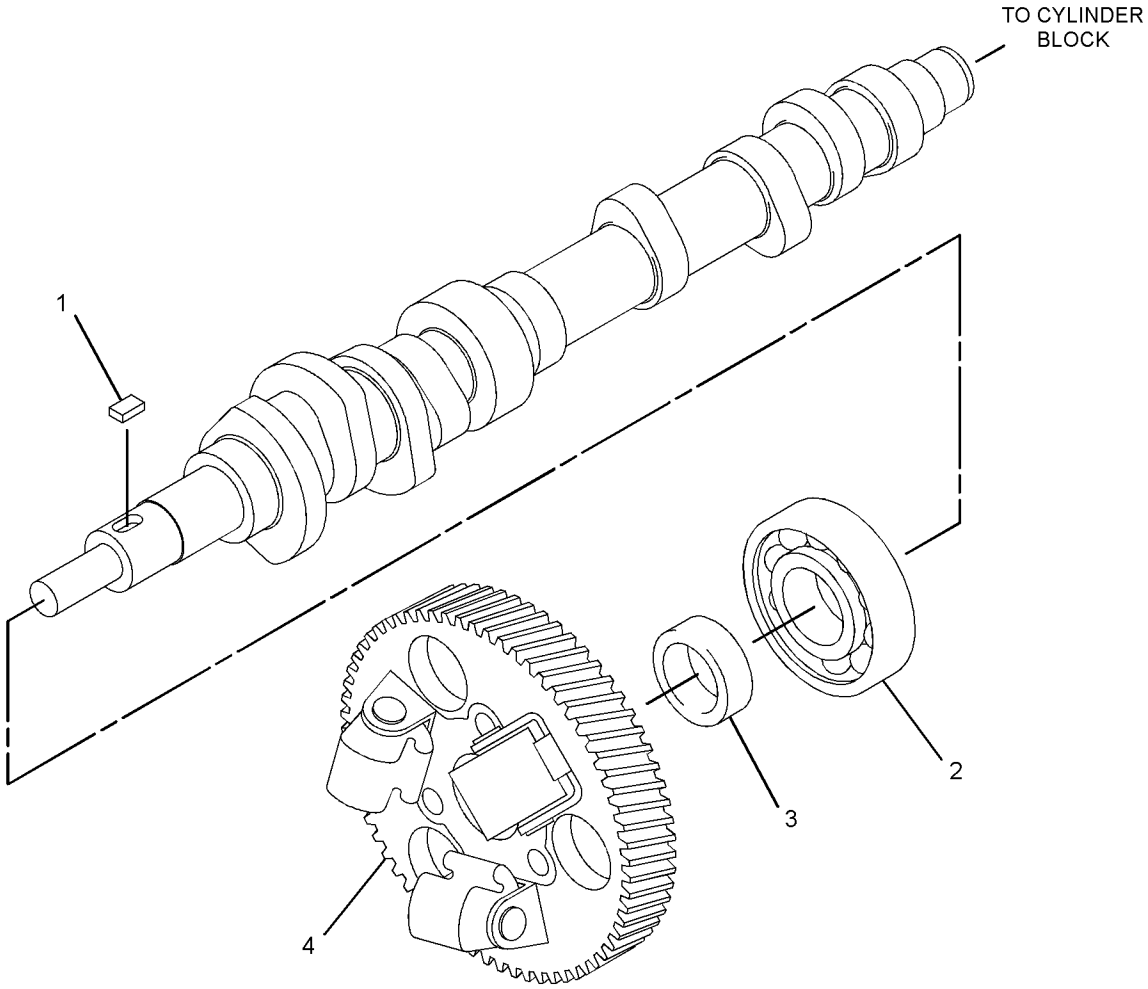

GRAPHIC #1 <END> g03333891

311-9025 CAMSHAFT GP

PART OF 435-1641 ENGINE AR-PRIMARY

SMCS-1210 **i02770463**

NOTE	REF NO	GRAPHIC REF	PART NUMBER	QTY	PART NAME 1 2 3 4 5 6 (PRODUCT LEVEL)	SEE PAGE
	1	1	**153-6838**	2	BOLT AS	
	2	1	**154-1680**	1	PLATE	
	3	1	**308-1904**	1	SLIDER	
	4	1	**309-6733**	1	CAMSHAFT AS	
	4A	1	**153-6492**	1	KEY-WOODRUFF	
	4B	1	**154-4505**	1	BEARING	
	4C	1	**308-1903**	1	GEAR-CAMSHAFT (66-TEETH)	
	4D	1	**313-9323**	1	SPACER (20.5X28X9.3-MM THK)	

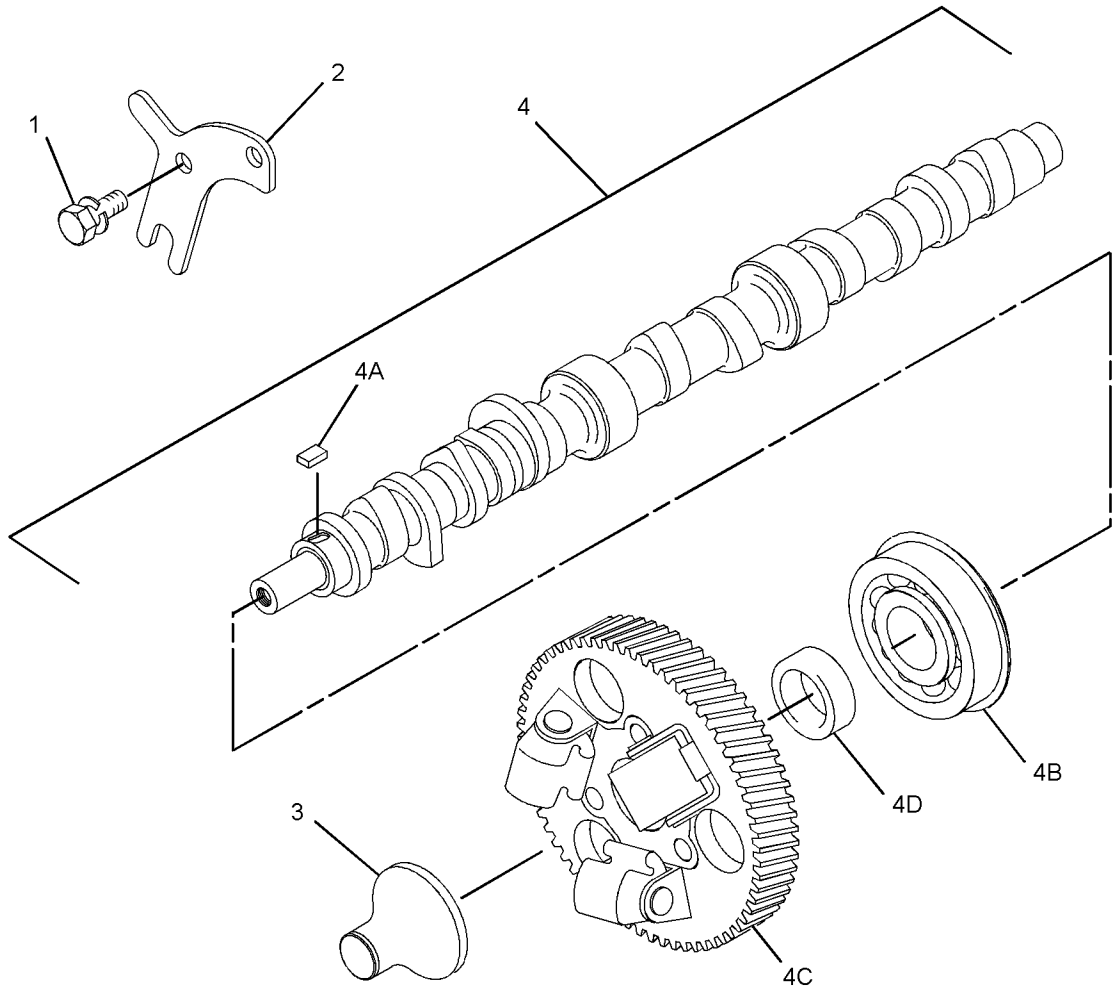

GRAPHIC #1 <END> g01418833

317-0971 CAMSHAFT GP

PART OF 433-1380 ENGINE AR, 489-9224, 504-4602 ENGINE AR-PRIMARY

SMCS-1210 **i05364672**

NOTE	REF NO	GRAPHIC REF	PART NUMBER	QTY	PART NAME 1 2 3 4 5 6 (PRODUCT LEVEL)	SEE PAGE
	1	1	**153-6838**	2	BOLT AS	
	2	1	**154-1680**	1	PLATE	
	3	1	**308-1904**	1	SLIDER	
	4	1	**308-1902**	1	CAMSHAFT AS	
	4A	1	**153-6492**	1	KEY-WOODRUFF	
	4B	1	**154-4505**	1	BEARING	
	4C	1	**308-1903**	1	GEAR-CAMSHAFT (66-TEETH) (66-TEETH)	
	4D	1	**313-9323**	1	SPACER (20.5X28X9.3-MM THK)	

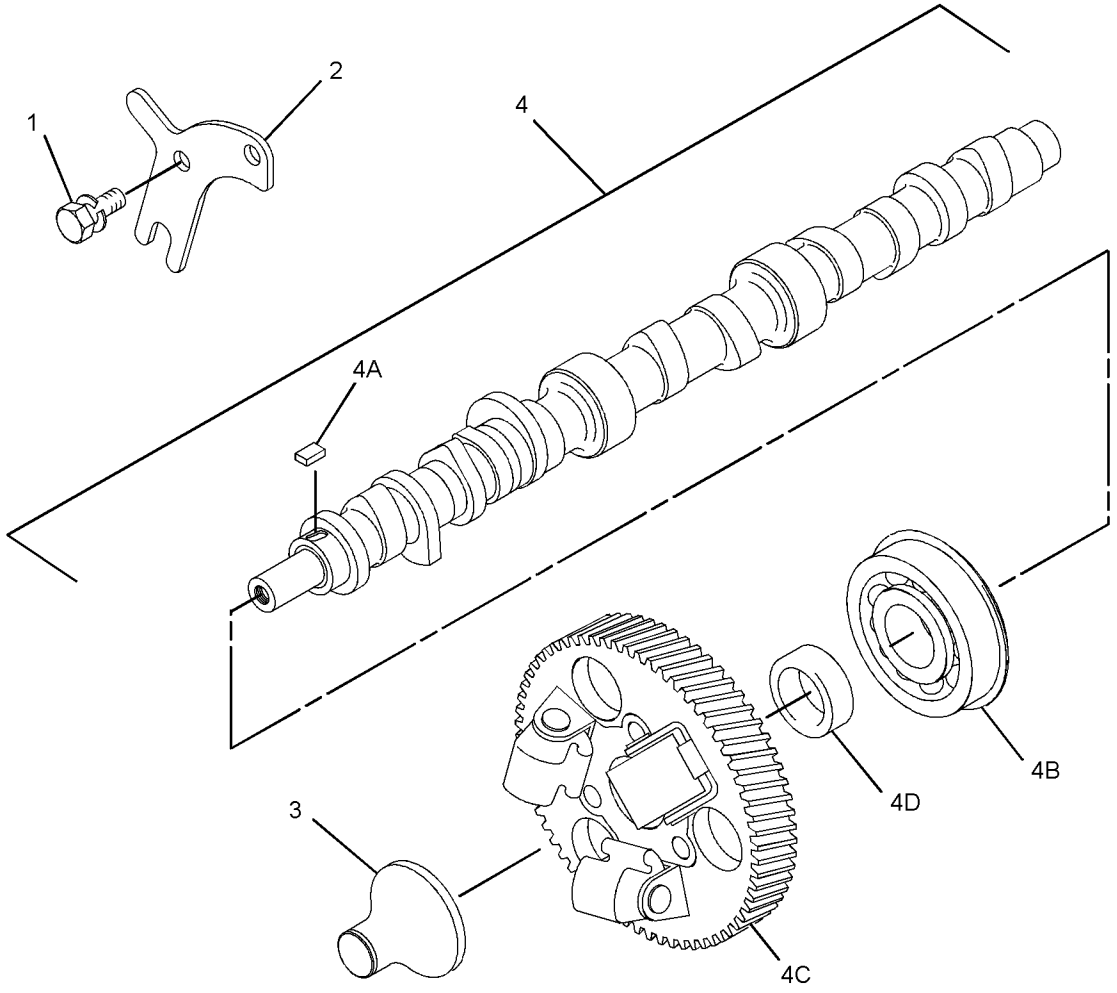

GRAPHIC #1 <END> g01418833

317-7188 CAMSHAFT GP

PART OF 435-1645, 435-1649 CYLINDER BLOCK GP-LONG

SMCS-1210 **i04404846**

NOTE	REF NO	GRAPHIC REF	PART NUMBER	QTY	PART NAME 1 2 3 4 5 6 (PRODUCT LEVEL)	SEE PAGE
	1	1	**153-6838**	2	BOLT AS	
	2	1	**154-1680**	1	PLATE	
	3	1	**321-4252**	1	SLIDER	
	4	1	**309-6733**	1	CAMSHAFT AS	
	4A	1	**153-6492**	1	KEY-WOODRUFF	
	4B	1	**154-4505**	1	BEARING	
	4C	1	**308-1903**	1	GEAR-CAMSHAFT (66-TEETH) (66-TEETH)	
	4D	1	**313-9323**	1	SPACER (20.5X28X9.3-MM THK)	

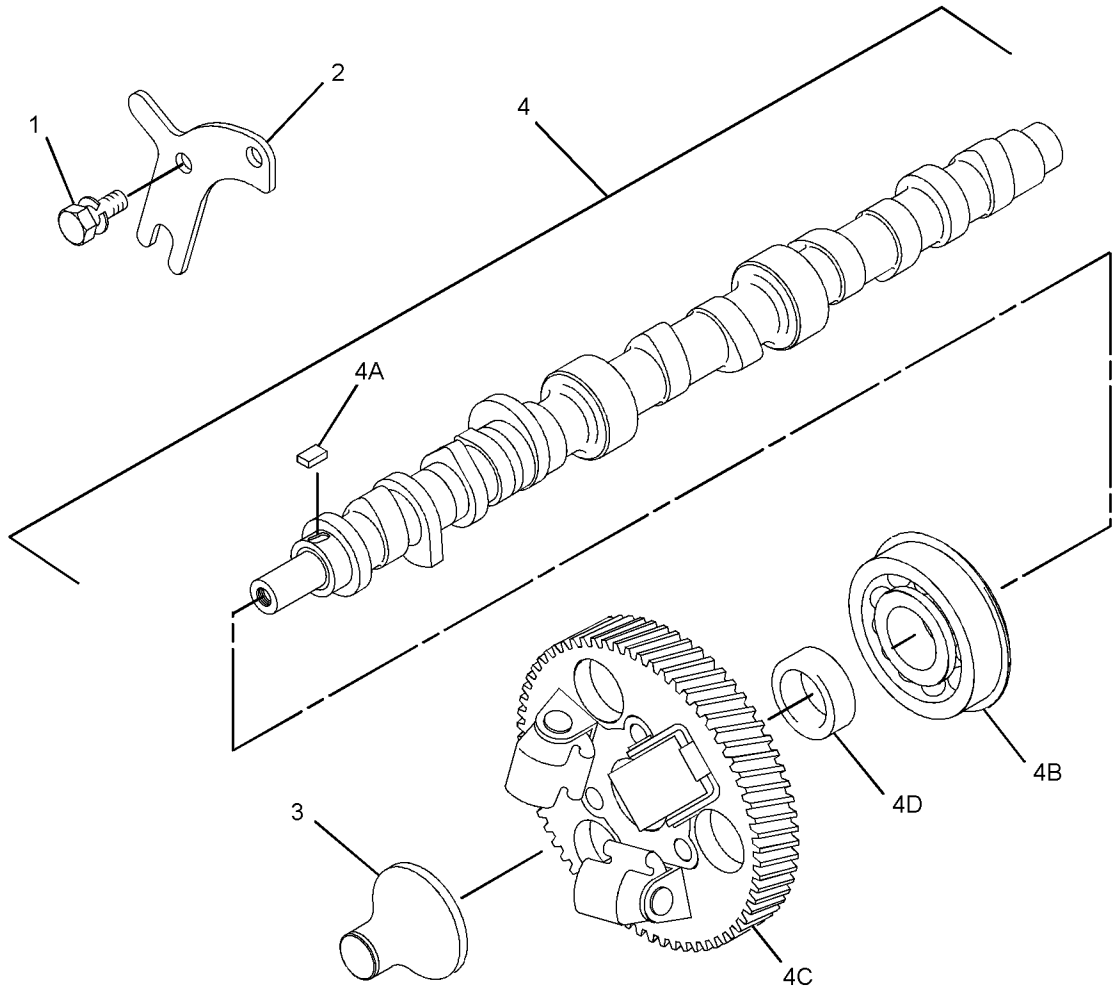

GRAPHIC #1 <END> g01418833

323-9147 CAMSHAFT GP

SMCS-1210 **i02959284**

NOTE	REF NO	GRAPHIC REF	PART NUMBER	QTY	PART NAME 1 2 3 4 5 6 (PRODUCT LEVEL)	SEE PAGE
	1	1	**153-6838**	2	BOLT AS	
	2	1	**154-1680**	1	PLATE	
	3	1	**308-1902**	1	CAMSHAFT AS	
	3A	1	**153-6492**	1	KEY-WOODRUFF	
	3B	1	**154-4505**	1	BEARING	
	3C	1	**308-1903**	1	GEAR-CAMSHAFT (66-TEETH)	
	3D	1	**313-9323**	1	SPACER (20.5X28X9.3-MM THK)	
	4	1	**308-1904**	1	SLIDER	

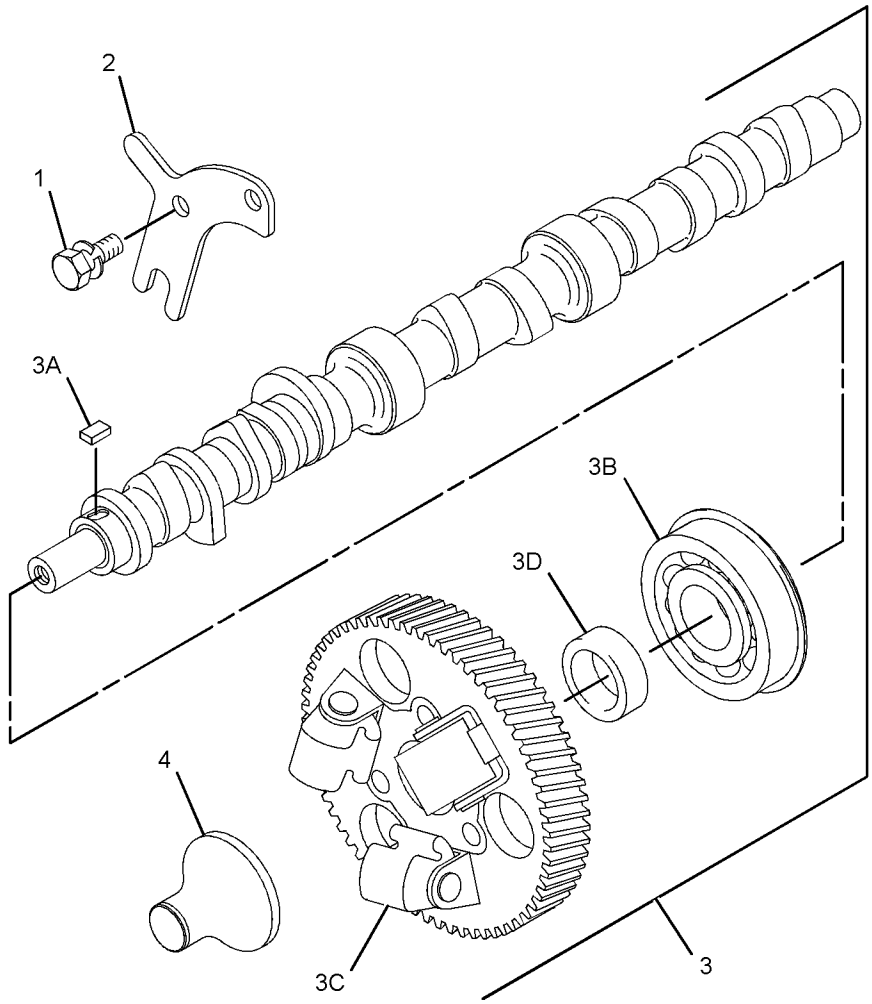

GRAPHIC #1 <END> g01629653

325-9476 CAMSHAFT GP

PART OF 433-1379 ENGINE AR
ALSO AN ATTACHMENT

SMCS-1210 **i02958750**

NOTE	REF NO	GRAPHIC REF	PART NUMBER	QTY	PART NAME 1 2 3 4 5 6 (PRODUCT LEVEL)	SEE PAGE
	1	1	**153-6838**	2	BOLT AS	
	2	1	**154-1680**	1	PLATE	
	3	1	**308-1904**	1	SLIDER	
	4	1	**309-6733**	1	CAMSHAFT AS	
	4A	1	**153-6492**	1	KEY-WOODRUFF	
	4B	1	**154-4505**	1	BEARING	
	4C	1	**308-1903**	1	GEAR-CAMSHAFT (66-TEETH)	
	4D	1	**313-9323**	1	SPACER (20.5X28X9.3-MM THK)	

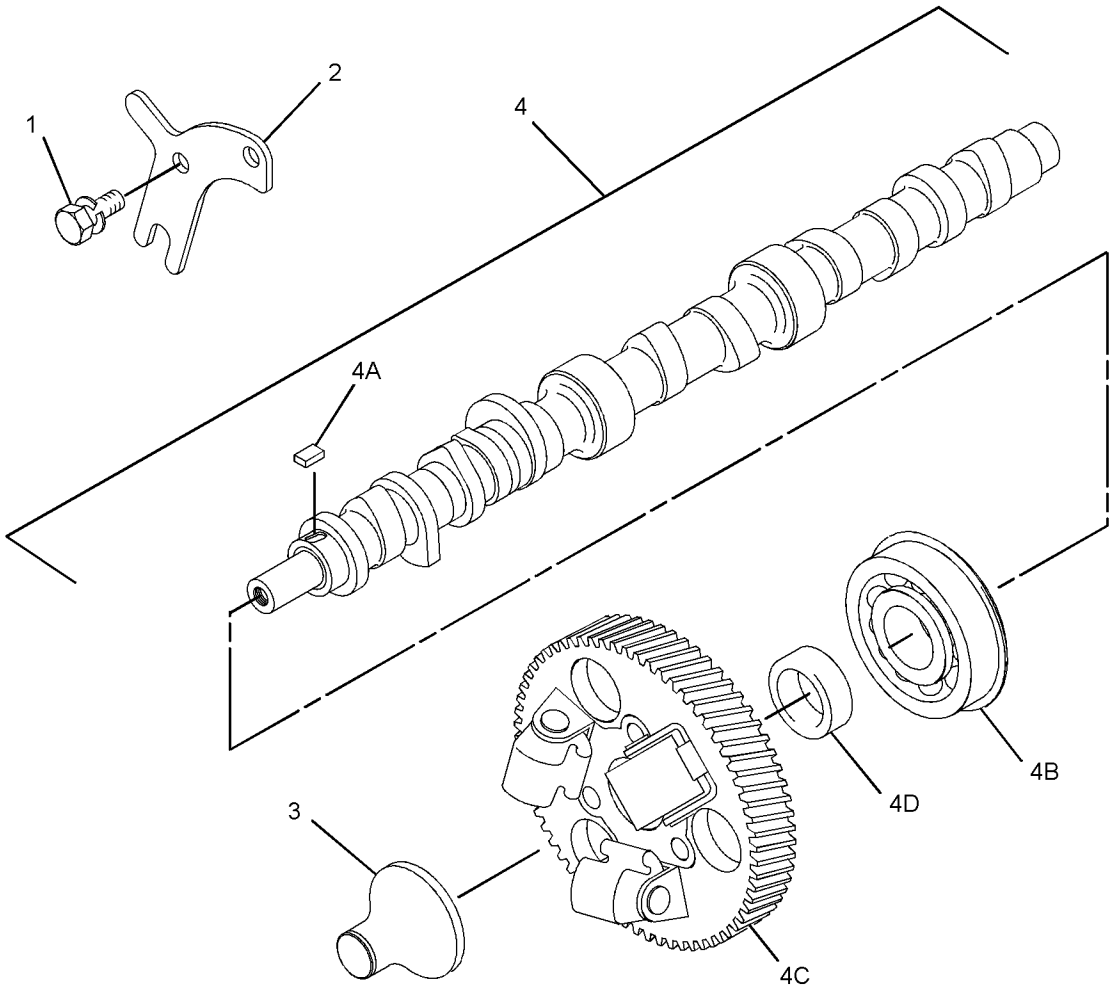

GRAPHIC #1 <END> g01418833

329-9278 CAMSHAFT GP

PART OF 435-1636 ENGINE AR-PRIMARY

TYPE 1

SMCS-1210 **i03075443**

NOTE	REF NO	GRAPHIC REF	PART NUMBER	QTY	PART NAME 1 2 3 4 5 6 (PRODUCT LEVEL)	SEE PAGE
M	1	1	**6I-0846**	1	BOLT (M6X1X14-MM)	
	2	1	**153-6415**	1	WASHER (SEAL)	
	3	1	**153-6838**	2	BOLT AS	
	4	1	**154-1680**	1	PLATE	
	5	1	**308-1902**	1	CAMSHAFT AS	
	5A	1	**153-6492**	1	KEY-WOODRUFF	
	5B	1	**154-4505**	1	BEARING	
	5C	1	**308-1903**	1	GEAR-CAMSHAFT (66-TEETH)	
	5D	1	**313-9323**	1	SPACER (20.5X28X9.3-MM THK)	
	6	1	**308-1904**	1	SLIDER	

M - METRIC PART

329-9278 **CAMSHAFT GP (**contd.**)** **i03075443**

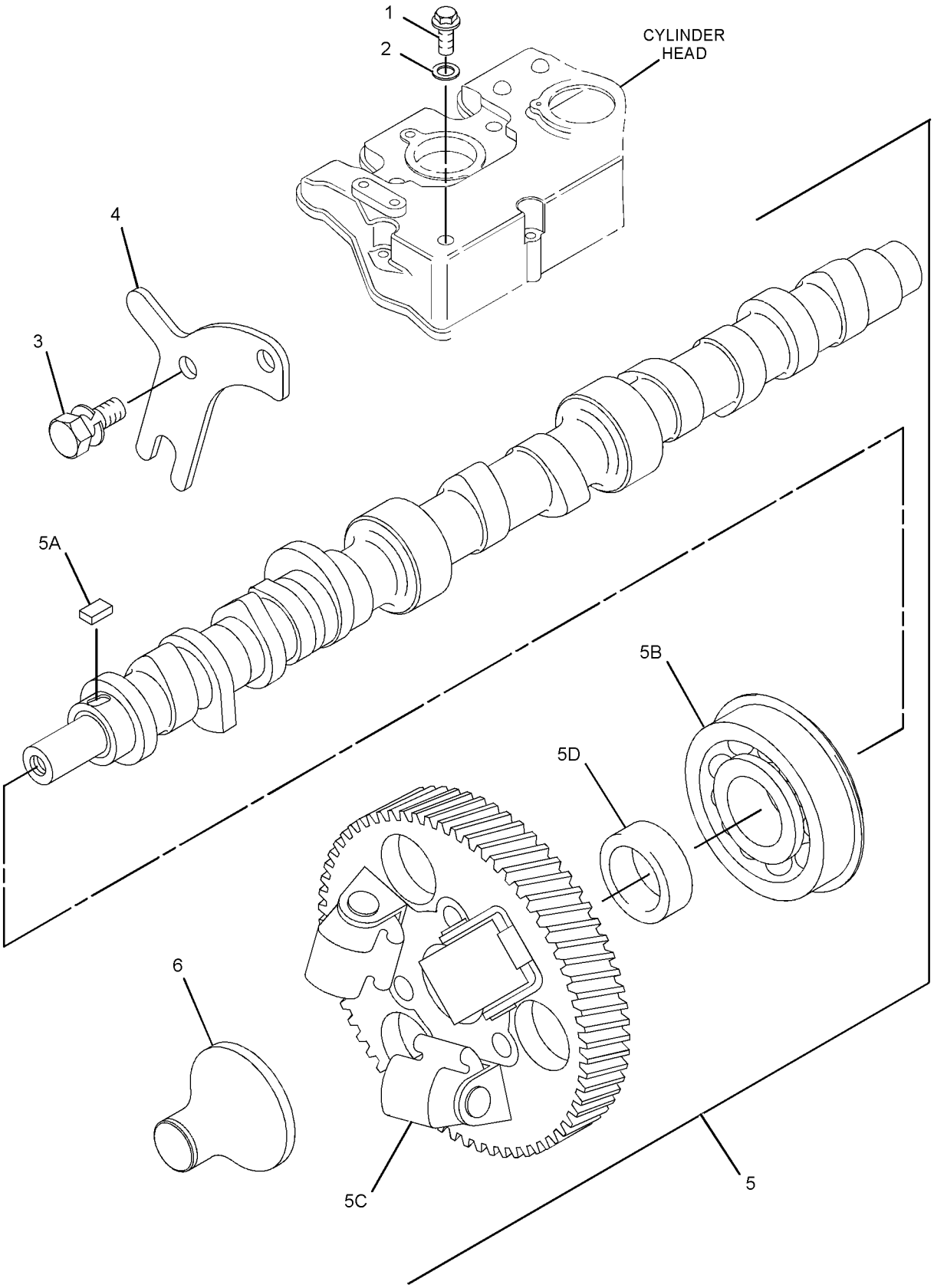

GRAPHIC #1 <END> g01616642

329-9278 CAMSHAFT GP

PART OF 435-1636, 506-0518, 506-0519, 512-7969, 516-2639, 557-6086 ENGINE AR-PRIMARY
TYPE 2

SMCS-1210 **i06842572**

NOTE	REF NO	GRAPHIC REF	PART NUMBER	QTY	PART NAME 1 2 3 4 5 6 (PRODUCT LEVEL)	SEE PAGE
	1	1	**308-1902**	1	CAMSHAFT AS	
	1A	1	**153-6492**	1	KEY-WOODRUFF	
	1B	1	**154-4505**	1	BEARING	
	1C	1	**308-1903**	1	GEAR-CAMSHAFT (66-TEETH)	
	1D	1	**313-9323**	1	SPACER (20.5X28X9.3-MM THK)	
	2	1	**308-1904**	1	SLIDER	
	3	1	**153-6838**	2	BOLT AS	
	4	1	**154-1680**	1	PLATE	

329-9278 **CAMSHAFT GP (**contd.**)** **i06842572**

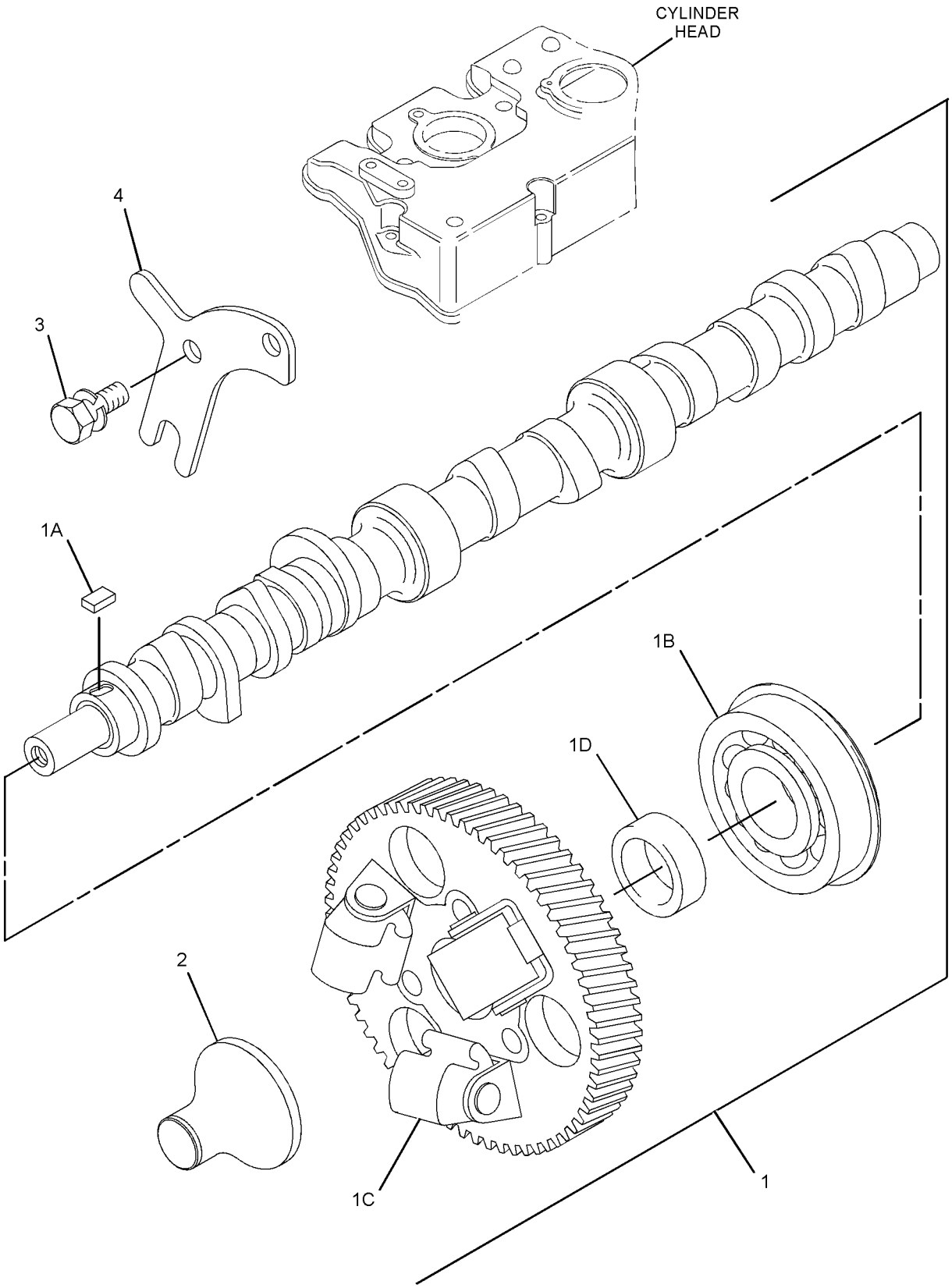

GRAPHIC #1 <END> g06138171

332-1364 CAMSHAFT GP

PART OF 514-6556 ENGINE AR-PRIMARY

SMCS-1210 **i06842599**

NOTE	REF NO	GRAPHIC REF	PART NUMBER	QTY	PART NAME 1 2 3 4 5 6 (PRODUCT LEVEL)	SEE PAGE
	1	1	**308-1902**	1	CAMSHAFT AS	
	1A	1	**153-6492**	1	KEY-WOODRUFF	
	1B	1	**154-4505**	1	BEARING	
	1C	1	**308-1903**	1	GEAR-CAMSHAFT (66-TEETH)	
	1D	1	**313-9323**	1	SPACER (20.5X28X9.3-MM THK)	
	2	1	**308-1904**	1	SLIDER	
	3	1	**153-6838**	2	BOLT AS	
					(EACH INCLUDES)	
		1	**3B-4504**	1	LOCKWASHER	
M		1	**8T-4171**	1	BOLT (M6X1X12-MM)	
	4	1	**154-1680**	1	PLATE	

M - METRIC PART

332-1364 **CAMSHAFT GP (**contd.**)** **i06842599**

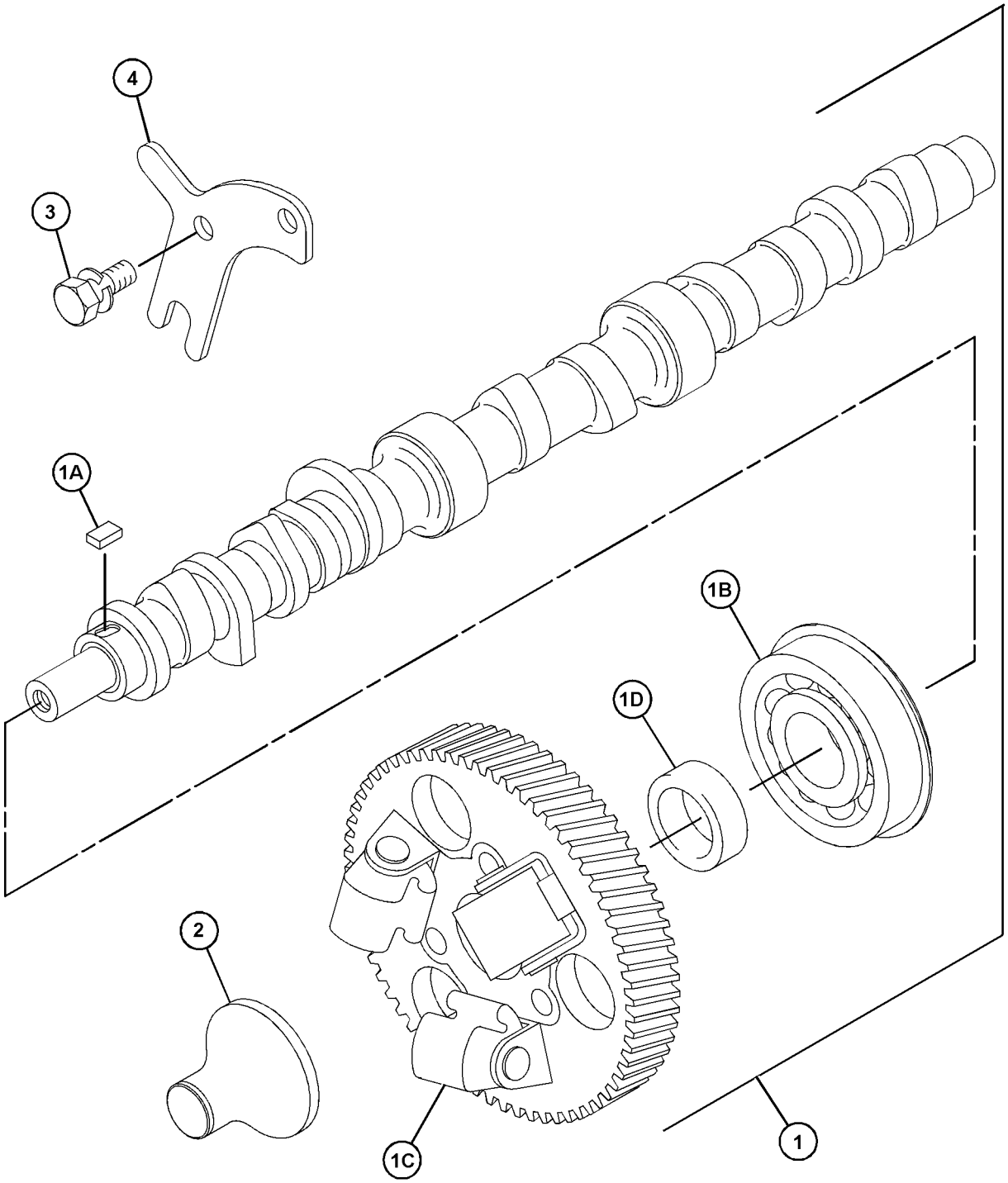

GRAPHIC #1 <END> g06196138

341-1359 CAMSHAFT GP

S/N: C6M961-UP

SMCS-1210 **i03521401**

NOTE	REF NO	GRAPHIC REF	PART NUMBER	QTY	PART NAME 1 2 3 4 5 6 (PRODUCT LEVEL)	SEE PAGE
	1	1	**153-6838**	2	BOLT AS	
	2	1	**154-1680**	1	PLATE	
	3	1	**308-1902**	1	CAMSHAFT AS	
	3A	1	**153-6492**	1	KEY-WOODRUFF	
	3B	1	**154-4505**	1	BEARING	
	3C	1	**308-1903**	1	GEAR-CAMSHAFT (66-TEETH)	
	3D	1	**313-9323**	1	SPACER (20.5X28X9.3-MM THK)	
	4	1	**308-1904**	1	SLIDER	

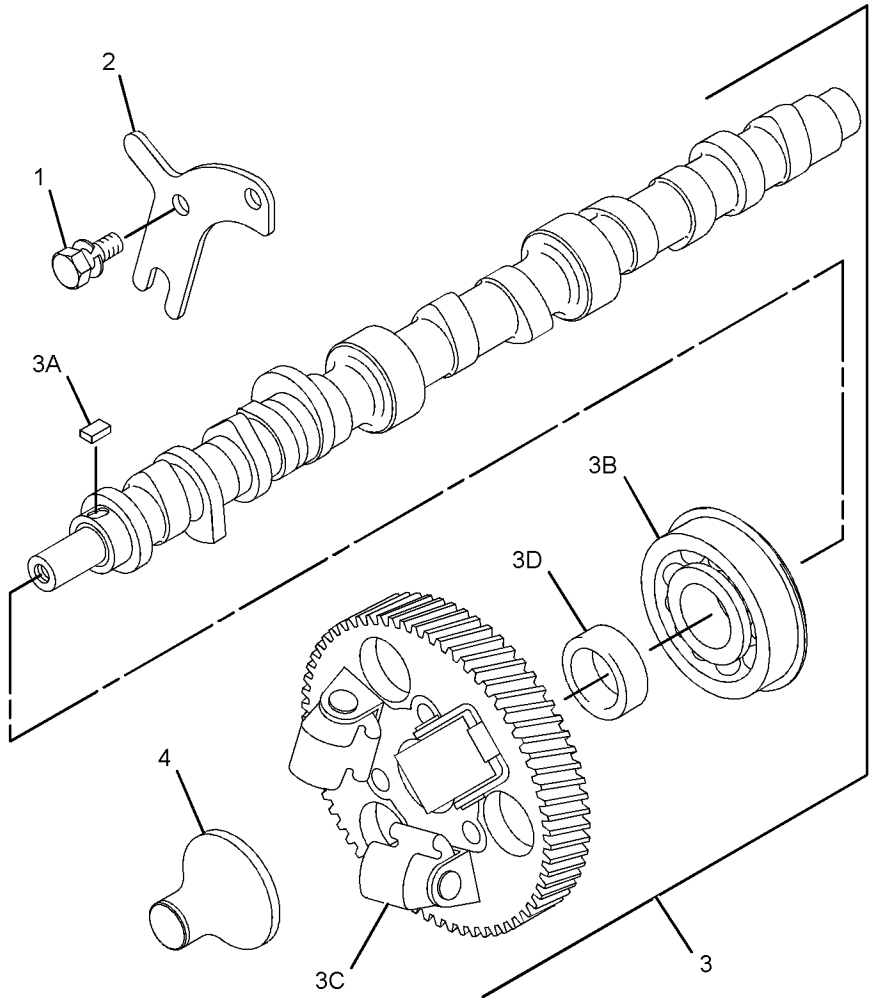

GRAPHIC #1 <END> g01629653

344-5472 CAMSHAFT GP

SMCS-1210 **i03582122**

NOTE	REF NO	GRAPHIC REF	PART NUMBER	QTY	PART NAME 1 2 3 4 5 6 (PRODUCT LEVEL)	SEE PAGE
	1	1	**153-6838**	2	BOLT AS	
	2	1	**154-1680**	1	PLATE	
	3	1	**308-1902**	1	CAMSHAFT AS	
	3A	1	**153-6492**	1	KEY-WOODRUFF	
	3B	1	**154-4505**	1	BEARING	
	3C	1	**308-1903**	1	GEAR-CAMSHAFT (66-TEETH)	
	3D	1	**313-9323**	1	SPACER (20.5X28X9.3-MM THK)	
	4	1	**308-1904**	1	SLIDER	

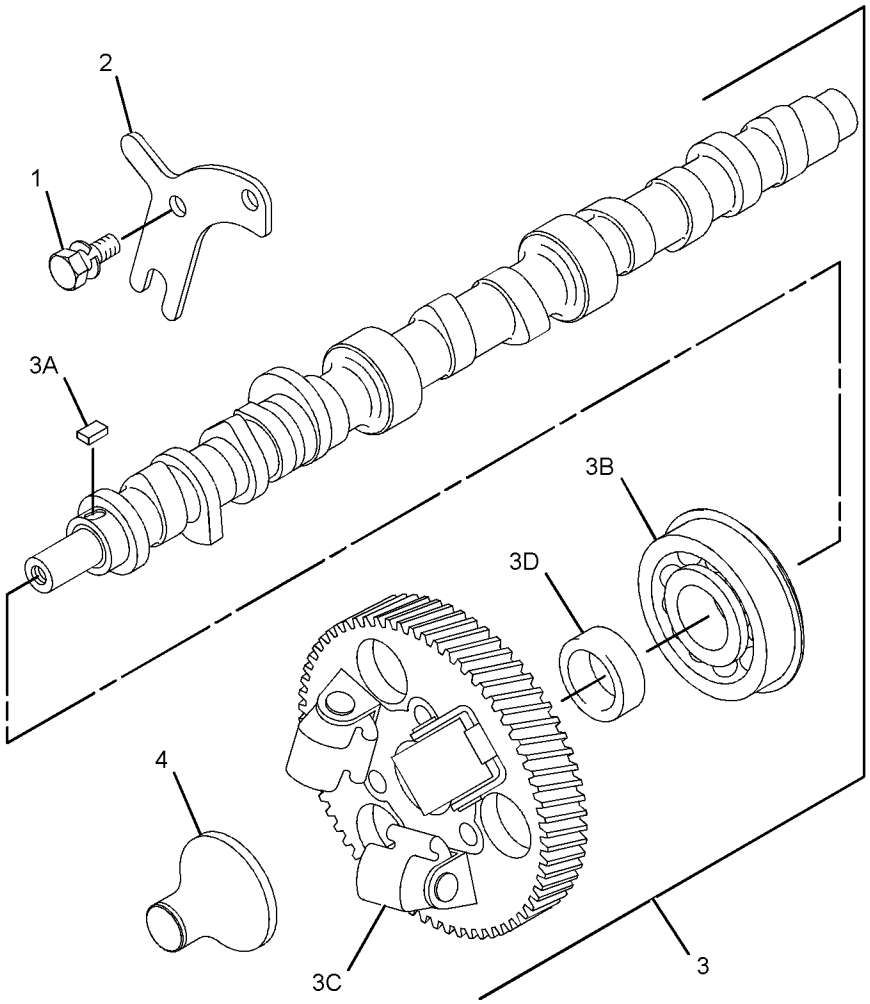

GRAPHIC #1 <END> g01629653

364-2522 CAMSHAFT GP

PART OF 435-1647 ENGINE AR-PRIMARY

SMCS-1210 **i07486506**

NOTE	REF NO	GRAPHIC REF	PART NUMBER	QTY	PART NAME 1 2 3 4 5 6 (PRODUCT LEVEL)	SEE PAGE
	1	1	**153-6838**	2	BOLT AS	
	2	1	**154-1680**	1	PLATE	
	3	1	**363-8409**	1	SLIDER	
Y	4	1	**343-2871**	1	CAMSHAFT AS	144
					PARTS SHOWN IN GRAPHIC(S) WITHOUT A REFERENCE NUMBER ARE NOT SERVICED SEPARATELY	

Y - SEPARATE ILLUSTRATION

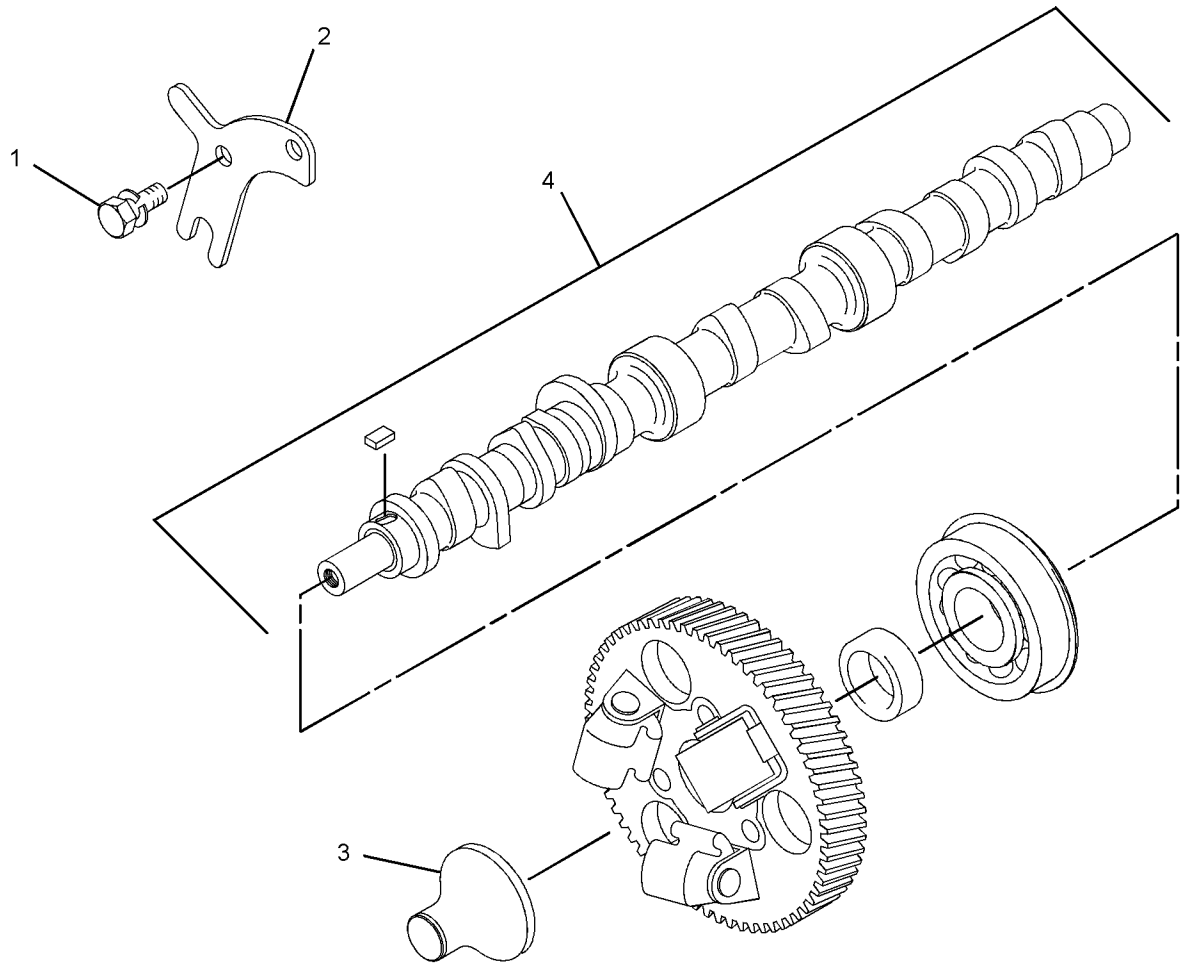

GRAPHIC #1 <END> g03333976

365-4284 CAMSHAFT GP

SMCS-1210 **i05810344**

NOTE	REF NO	GRAPHIC REF	PART NUMBER	QTY	PART NAME 1 2 3 4 5 6 (PRODUCT LEVEL)	SEE PAGE
	1	1	**153-6838**	2	BOLT AS	
	2	1	**154-1680**	1	PLATE	
	3	1	**321-4252**	1	SLIDER	
	4	1	**309-6733**	1	CAMSHAFT AS	
	4A	1	**153-6492**	1	KEY-WOODRUFF	
	4B	1	**154-4505**	1	BEARING	
	4C	1	**308-1903**	1	GEAR-CAMSHAFT (66-TEETH) (66-TEETH)	
	4D	1	**313-9323**	1	SPACER (20.5X28X9.3-MM THK)	

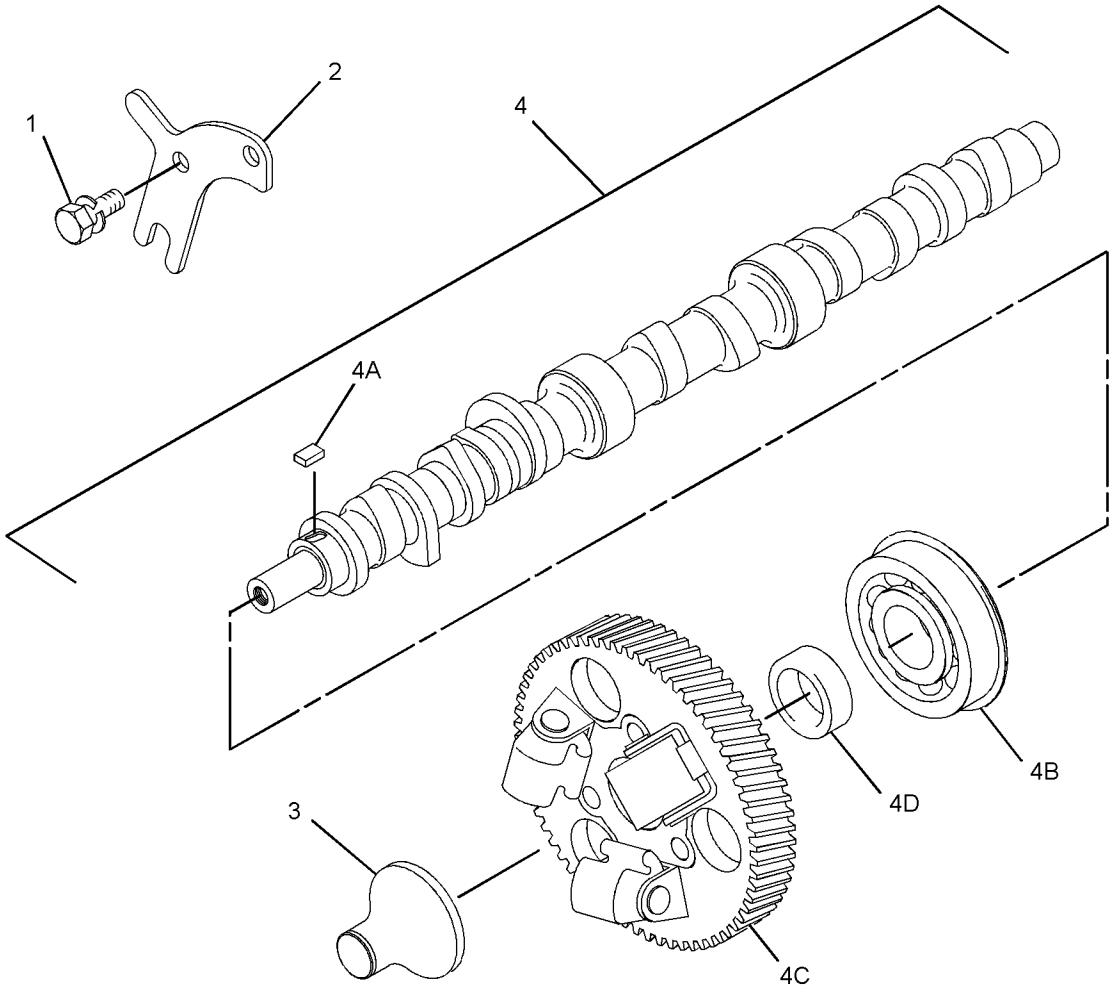

GRAPHIC #1 <END> g01418833

365-4292 CAMSHAFT GP

SMCS-1210 **i04117968**

NOTE	REF NO	GRAPHIC REF	PART NUMBER	QTY	PART NAME 1 2 3 4 5 6 (PRODUCT LEVEL)	SEE PAGE
	1	1	**153-6838**	2	BOLT AS	
	2	1	**154-1680**	1	PLATE	
	3	1	**308-1904**	1	SLIDER	
	4	1	**308-1902**	1	CAMSHAFT AS	
	4A	1	**153-6492**	1	KEY-WOODRUFF	
	4B	1	**154-4505**	1	BEARING	
	4C	1	**308-1903**	1	GEAR-CAMSHAFT (66-TEETH) (66-TEETH)	
	4D	1	**313-9323**	1	SPACER (20.5X28X9.3-MM THK)	

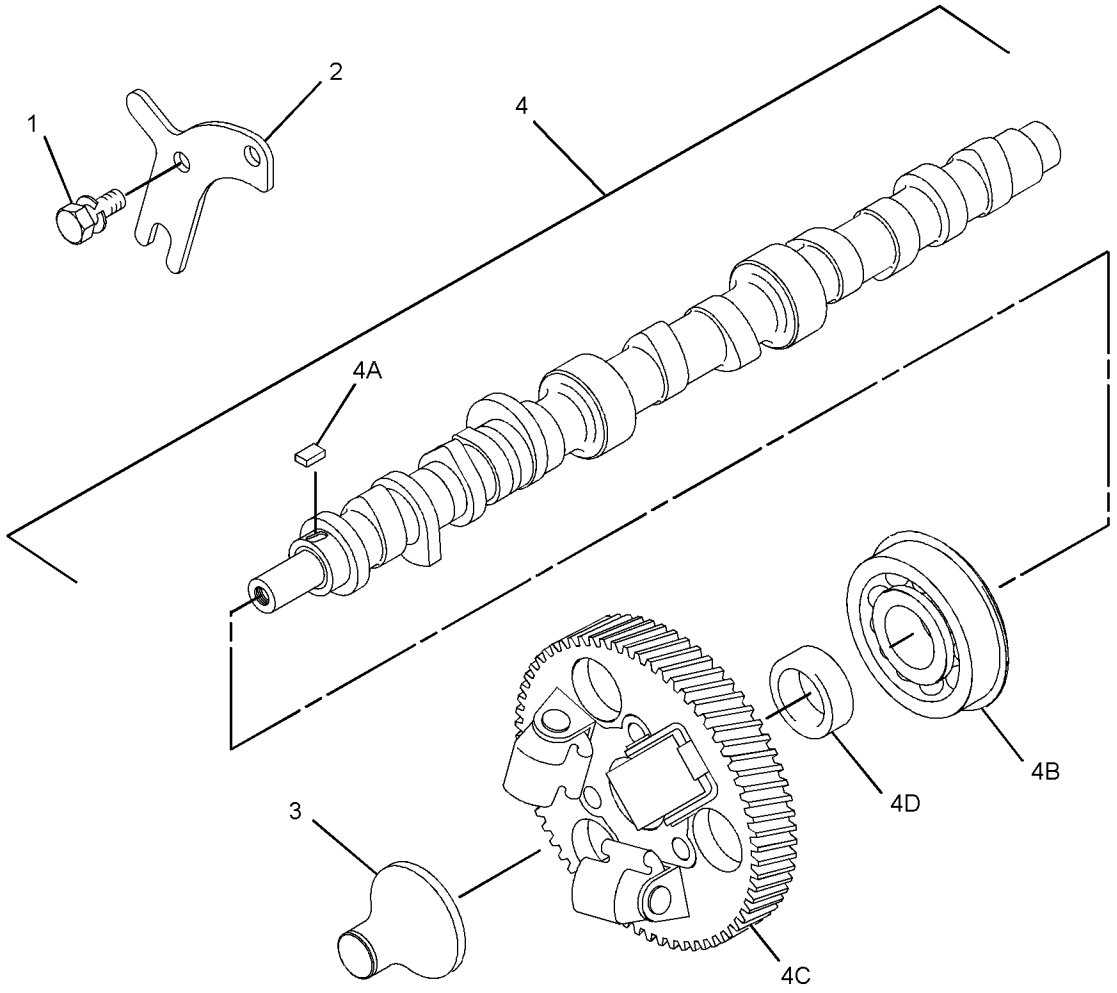

GRAPHIC #1 <END> g01418833

370-7834 CAMSHAFT GP

S/N: C6M746-UP

SMCS-1210 **i05274152**

NOTE	REF NO	GRAPHIC REF	PART NUMBER	QTY	PART NAME 1 2 3 4 5 6 (PRODUCT LEVEL)	SEE PAGE
	1	1	**153-6838**	2	BOLT AS	
	2	1	**154-1680**	1	PLATE	
	3	1	**308-1904**	1	SLIDER	
	4	1	**309-6733**	1	CAMSHAFT AS	
	4A	1	**153-6492**	1	KEY-WOODRUFF	
	4B	1	**154-4505**	1	BEARING	
	4C	1	**308-1903**	1	GEAR-CAMSHAFT (66-TEETH)	
	4D	1	**313-9323**	1	SPACER (20.5X28X9.3-MM THK)	

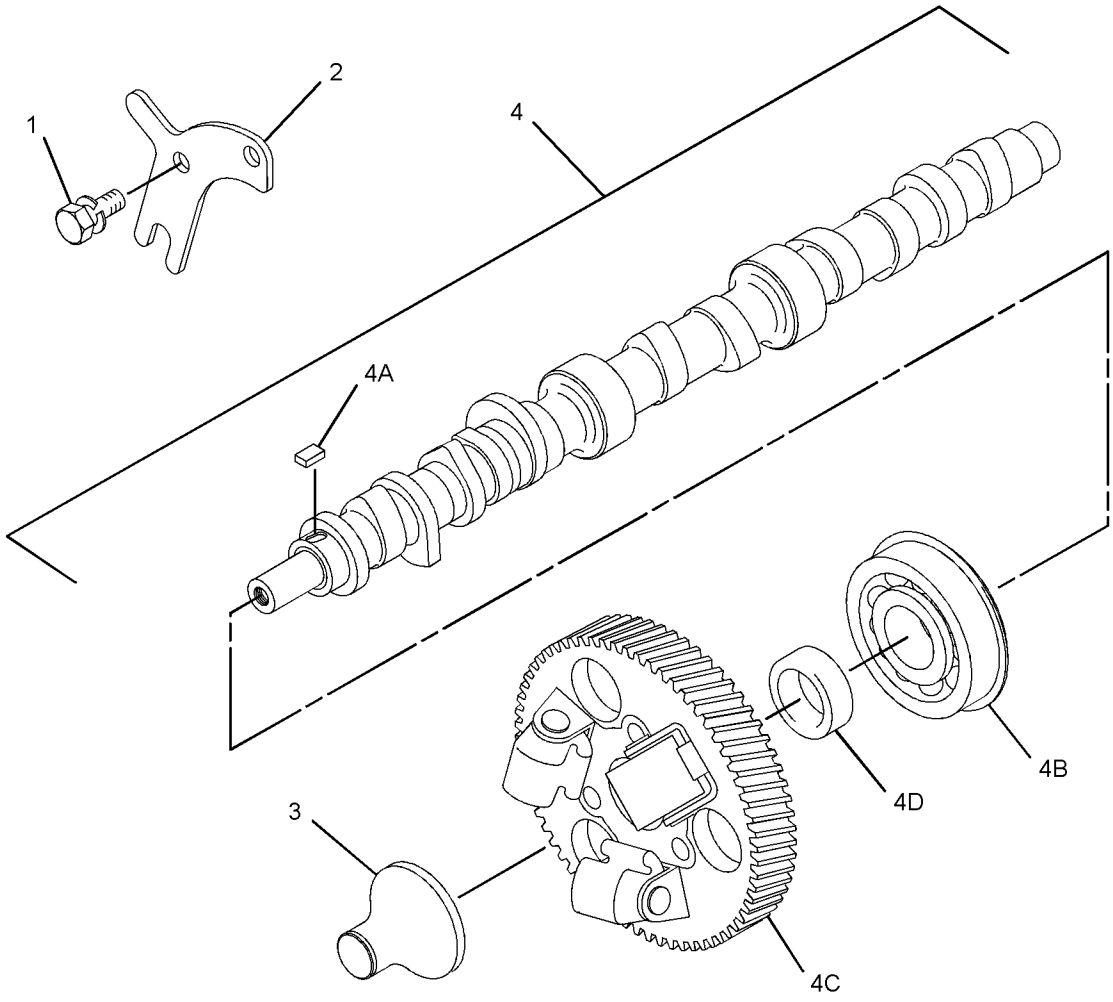

GRAPHIC #1 <END> g03361160

373-7284 CAMSHAFT GP

PART OF 435-1658 ENGINE AR-PRIMARY

TYPE 1

SMCS-1210 **i05090246**

NOTE	REF NO	GRAPHIC REF	PART NUMBER	QTY	PART NAME 1 2 3 4 5 6 (PRODUCT LEVEL)	SEE PAGE
M	1	1	**6I-0846**	1	BOLT (M6X1X14-MM)	
	2	1	**153-6415**	1	WASHER (SEAL)	
	3	1	**153-6838**	2	BOLT AS	
	4	1	**154-1680**	1	PLATE	
	5	1	**308-1902**	1	CAMSHAFT AS	
	5A	1	**153-6492**	1	KEY-WOODRUFF	
	5B	1	**154-4505**	1	BEARING	
	5C	1	**308-1903**	1	GEAR-CAMSHAFT (66-TEETH)	
	5D	1	**313-9323**	1	SPACER (20.5X28X9.3-MM THK)	
	6	1	**308-1904**	1	SLIDER	

M - METRIC PART

373-7284 **CAMSHAFT GP (**contd.**)** **i05090246**

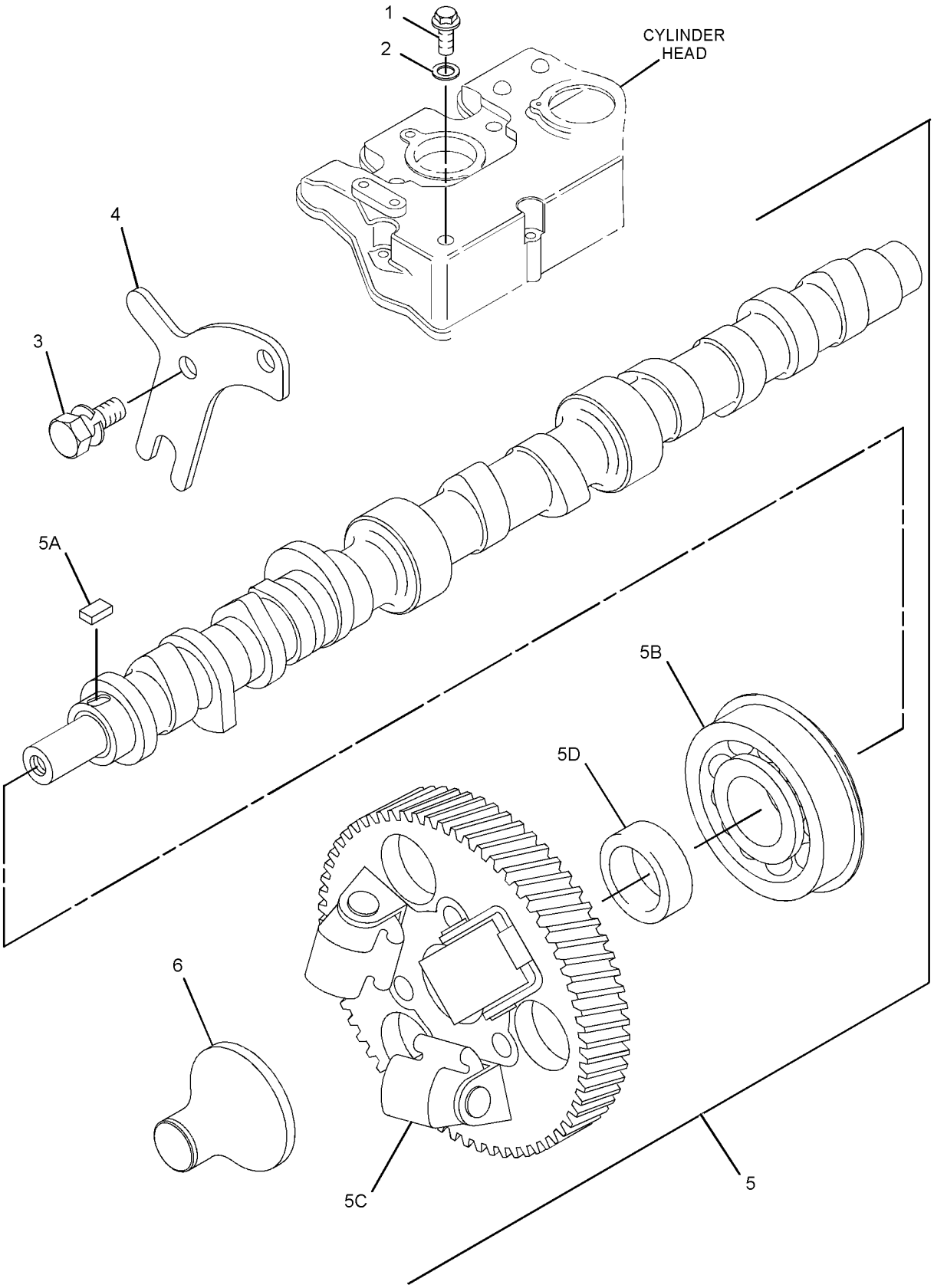

GRAPHIC #1 <END> g01616642

373-7284 CAMSHAFT GP

PART OF 435-1658 ENGINE AR-PRIMARY

TYPE 2

SMCS-1210 **i06842582**

NOTE	REF NO	GRAPHIC REF	PART NUMBER	QTY	PART NAME 1 2 3 4 5 6 (PRODUCT LEVEL)	SEE PAGE
	1	1	**308-1902**	1	CAMSHAFT AS	
	1A	1	**153-6492**	1	KEY-WOODRUFF	
	1B	1	**154-4505**	1	BEARING	
	1C	1	**308-1903**	1	GEAR-CAMSHAFT (66-TEETH)	
	1D	1	**313-9323**	1	SPACER (20.5X28X9.3-MM THK)	
	2	1	**308-1904**	1	SLIDER	
	3	1	**153-6838**	2	BOLT AS	
	4	1	**154-1680**	1	PLATE	

373-7284 **CAMSHAFT GP (**contd.**)** **i06842582**

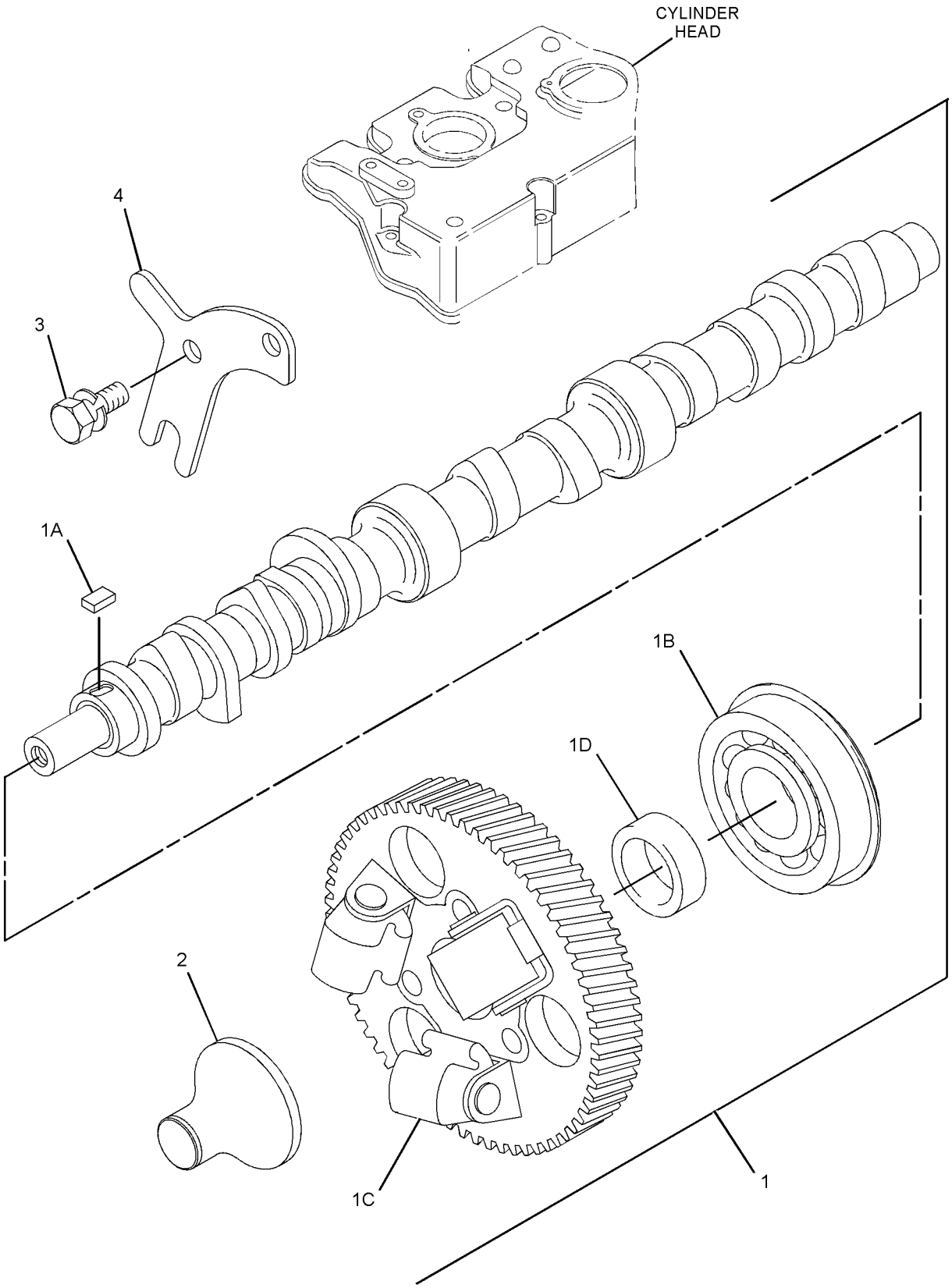

GRAPHIC #1 <END> g06139016

420-3212 CAMSHAFT GP

SMCS-1210 **i06512245**

NOTE	REF NO	GRAPHIC REF	PART NUMBER	QTY	PART NAME 1 2 3 4 5 6 (PRODUCT LEVEL)	SEE PAGE
	1	1	**153-6838**	2	BOLT AS	
	2	1	**154-1680**	1	PLATE	
	3	1	**309-6733**	1	CAMSHAFT AS	
	3A	1	**153-6492**	1	KEY-WOODRUFF	
	3B	1	**154-4505**	1	BEARING	
	3C	1	**308-1903**	1	GEAR-CAMSHAFT (66-TEETH)	
	3D	1	**313-9323**	1	SPACER (20.5X28X9.3-MM THK)	
	4	1	**321-4252**	1	SLIDER	

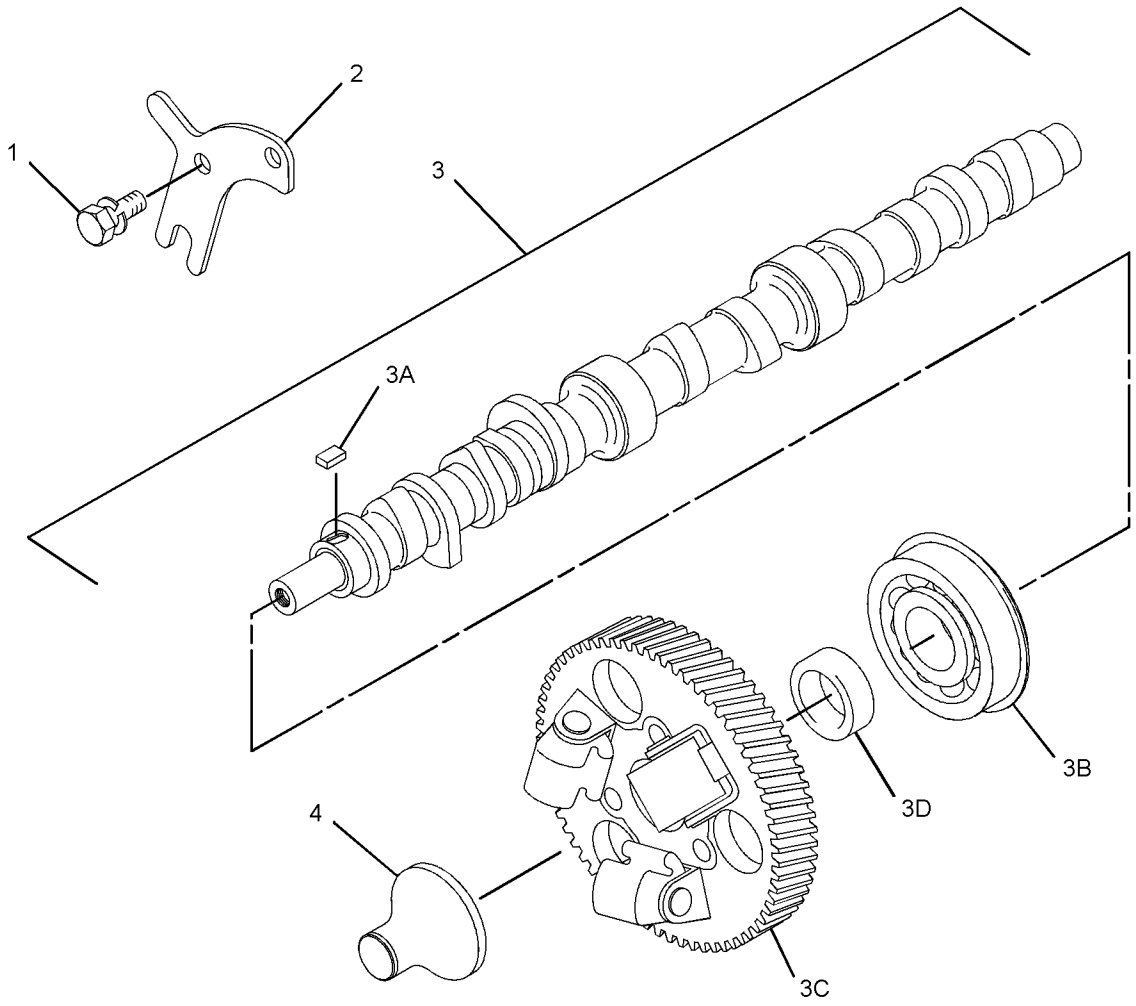

GRAPHIC #1 <END> g03326305

420-6419 CAMSHAFT GP

TYPE 1

SMCS-1210 **i05371688**

NOTE	REF NO	GRAPHIC REF	PART NUMBER	QTY	PART NAME 1 2 3 4 5 6 (PRODUCT LEVEL)	SEE PAGE
	1	1	**153-6838**	2	BOLT AS	
	2	1	**154-1680**	1	PLATE	
	3	1	**308-1904**	1	SLIDER	
	4	1	**308-1902**	1	CAMSHAFT AS	
	4A	1	**153-6492**	1	KEY-WOODRUFF	
	4B	1	**154-4505**	1	BEARING	
	4C	1	**308-1903**	1	GEAR-CAMSHAFT (66-TEETH) (66-TEETH)	
	4D	1	**313-9323**	1	SPACER (20.5X28X9.3-MM THK)	

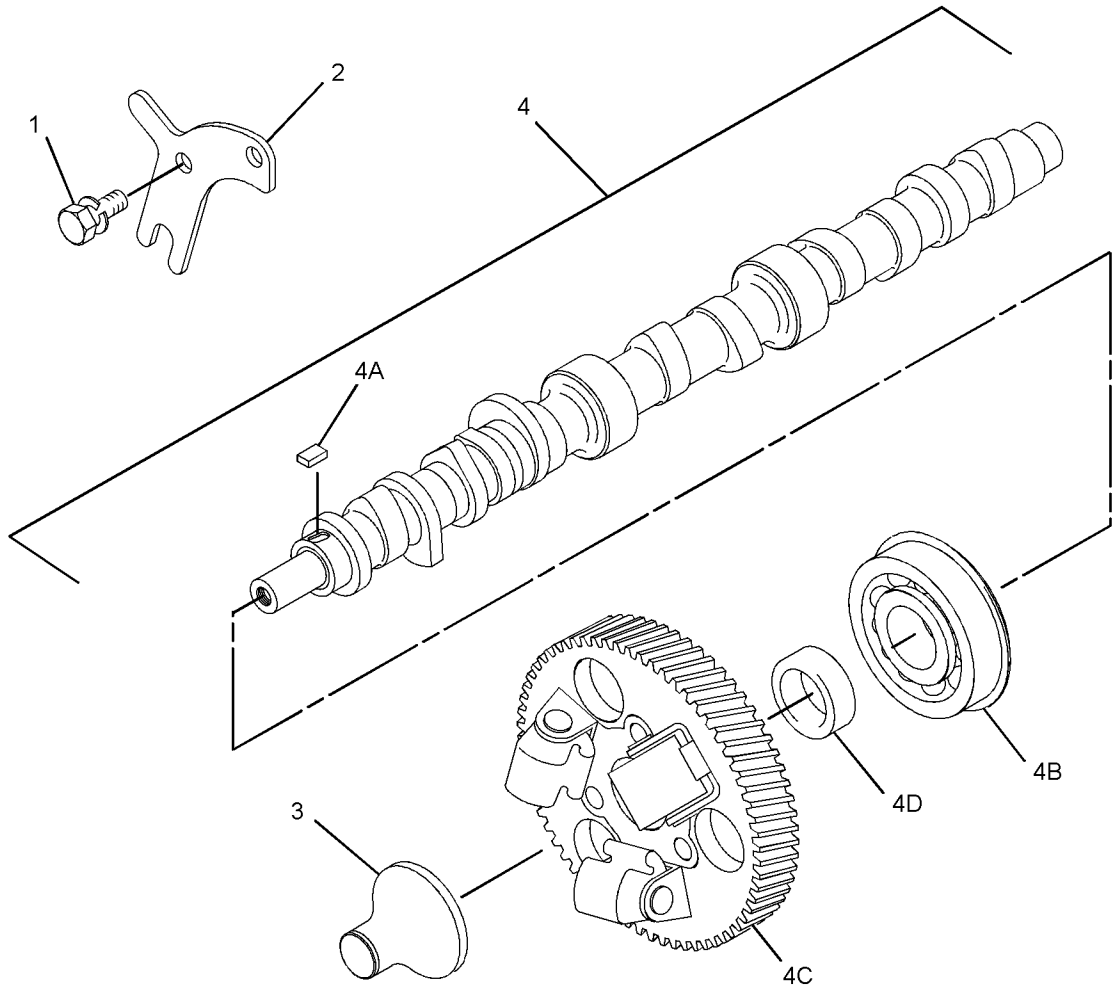

GRAPHIC #1 <END> g01418833

420-6419 CAMSHAFT GP

TYPE 2

SMCS-1210 **i06887085**

NOTE	REF NO	GRAPHIC REF	PART NUMBER	QTY	PART NAME 1 2 3 4 5 6 (PRODUCT LEVEL)	SEE PAGE
	1	1	**153-6838**	2	BOLT AS	
	2	1	**154-1680**	1	PLATE	
	3	1	**308-1904**	1	SLIDER	
	4	1	**308-1902**	1	CAMSHAFT AS	
	4A	1	**153-6492**	1	KEY-WOODRUFF	
	4B	1	**154-4505**	1	BEARING	
	4C	1	**308-1903**	1	GEAR-CAMSHAFT (66-TEETH)	
	4D	1	**313-9323**	1	SPACER (20.5X28X9.3-MM THK)	

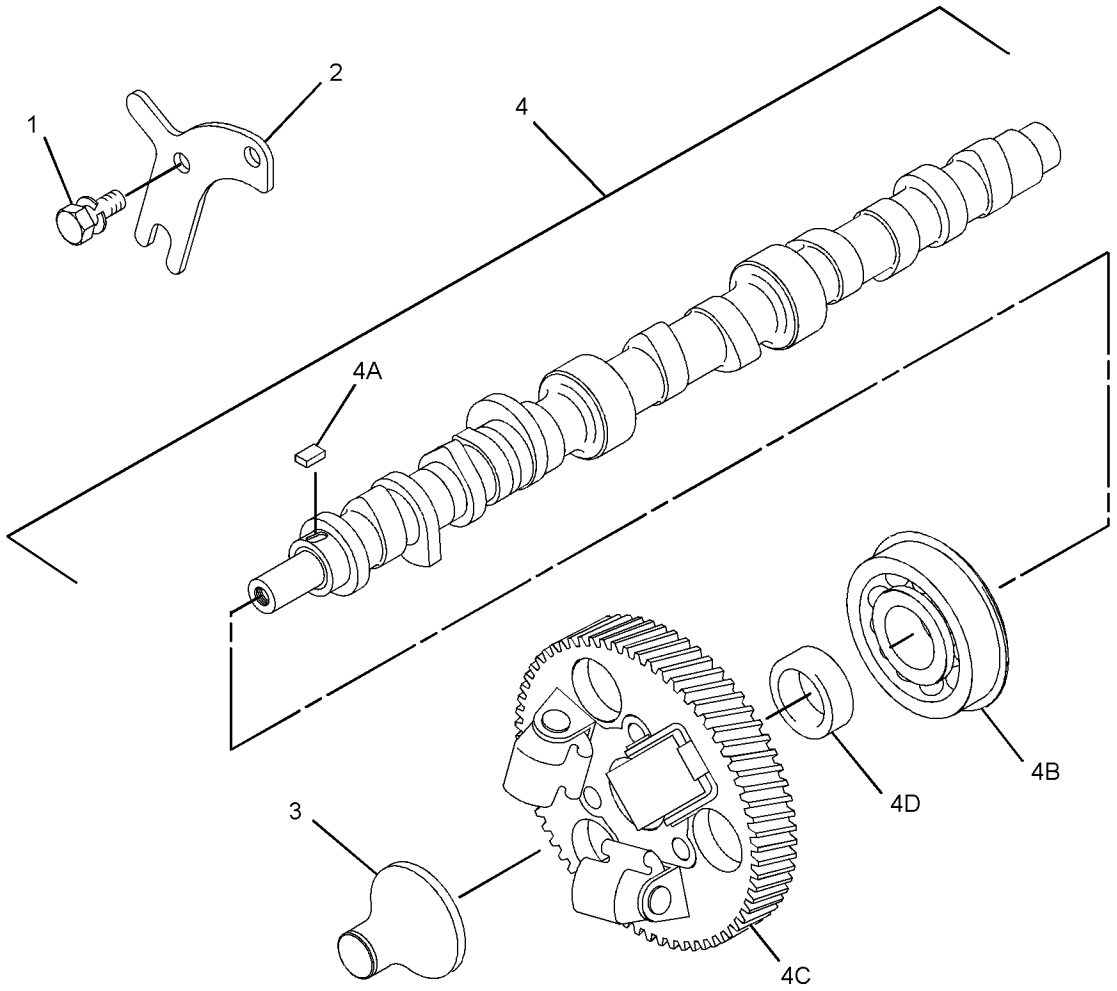

GRAPHIC #1 <END> g01418833

441-6514 CAMSHAFT GP

SMCS-1210 **i05445710**

NOTE	REF NO	GRAPHIC REF	PART NUMBER	QTY	PART NAME 1 2 3 4 5 6 (PRODUCT LEVEL)	SEE PAGE
	1	1	**153-6838**	2	BOLT AS	
	2	1	**154-1680**	1	PLATE	
	3	1	**309-6733**	1	CAMSHAFT AS	
	3A	1	**153-6492**	1	KEY-WOODRUFF	
	3B	1	**154-4505**	1	BEARING	
	3C	1	**308-1903**	1	GEAR-CAMSHAFT (66-TEETH)	
	3D	1	**313-9323**	1	SPACER (20.5X28X9.3-MM THK)	
	4	1	**321-4252**	1	SLIDER	

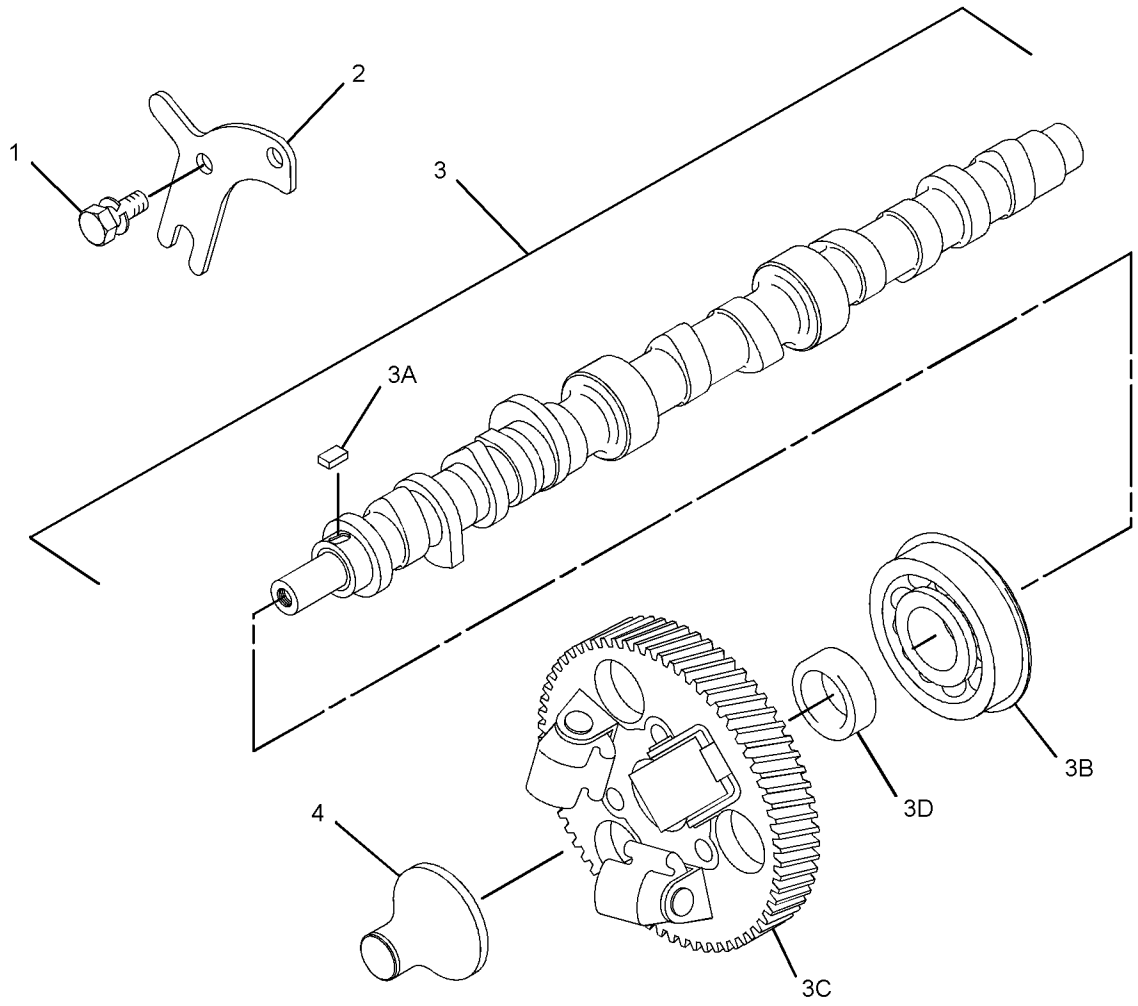

GRAPHIC #1 <END> g03326305

454-6144 CAMSHAFT GP

PART OF 417-7273, 435-1642, 489-4263, 506-0520, 513-2239, 557-7471 ENGINE AR-PRIMARY

SMCS-1210 **i06304434**

NOTE	REF NO	GRAPHIC REF	PART NUMBER	QTY	PART NAME 1 2 3 4 5 6 (PRODUCT LEVEL)	SEE PAGE
	1	1	**153-6838**	2	BOLT AS	
	2	1	**154-1680**	1	PLATE	
	3	1	**321-4252**	1	SLIDER	
	4	1	**309-6733**	1	CAMSHAFT AS	
	4A	1	**153-6492**	1	KEY-WOODRUFF	
	4B	1	**154-4505**	1	BEARING	
	4C	1	**308-1903**	1	GEAR-CAMSHAFT (66-TEETH)	
	4D	1	**313-9323**	1	SPACER (20.5X28X9.3-MM THK)	

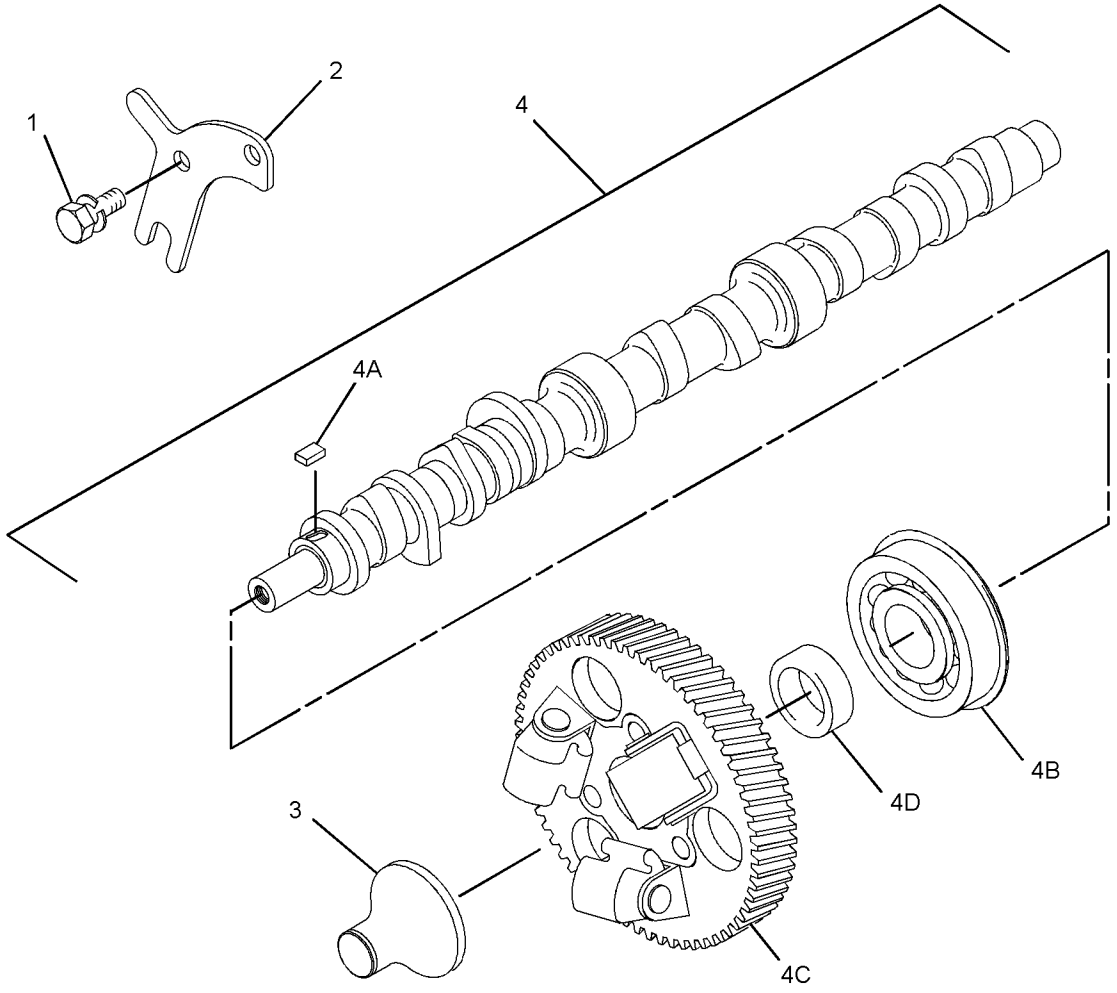

GRAPHIC #1 <END> g01418833

465-2209 CAMSHAFT GP

SMCS-1210 **i06304568**

NOTE	REF NO	GRAPHIC REF	PART NUMBER	QTY	PART NAME 1 2 3 4 5 6 (PRODUCT LEVEL)	SEE PAGE
	1	1	**153-6838**	2	BOLT AS	
	2	1	**154-1680**	1	PLATE	
	3	1	**309-6733**	1	CAMSHAFT AS	
	3A	1	**153-6492**	1	KEY-WOODRUFF	
	3B	1	**154-4505**	1	BEARING	
	3C	1	**308-1903**	1	GEAR-CAMSHAFT (66-TEETH)	
	3D	1	**313-9323**	1	SPACER (20.5X28X9.3-MM THK)	
	4	1	**321-4252**	1	SLIDER	

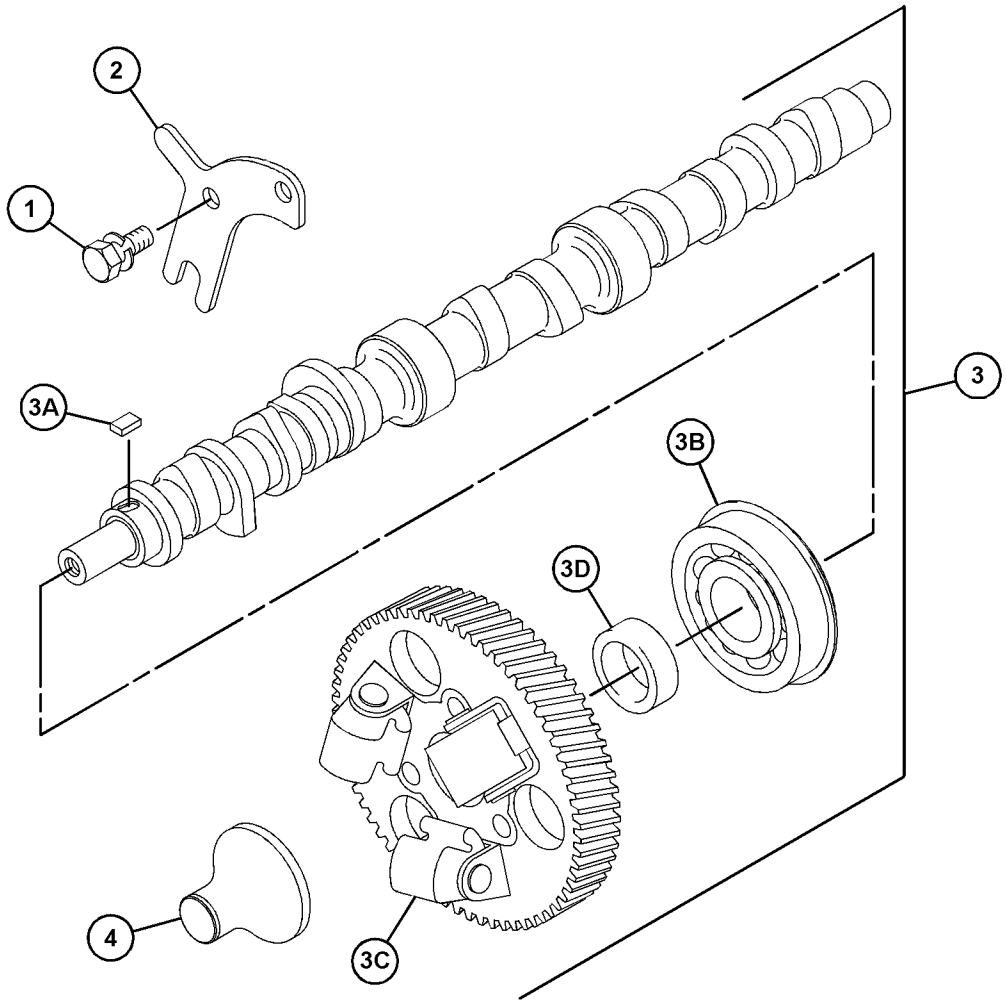

GRAPHIC #1 <END> g03856522

465-2494 CAMSHAFT GP

PART OF 417-7273, 435-1642, 489-4263 ENGINE AR-PRIMARY

SMCS-1210 **i06024429**

NOTE	REF NO	GRAPHIC REF	PART NUMBER	QTY	PART NAME 1 2 3 4 5 6 (PRODUCT LEVEL)	SEE PAGE
	1	1	**153-6838**	2	BOLT AS	
	2	1	**154-1680**	1	PLATE	
	3	1	**309-6733**	1	CAMSHAFT AS	
	3A	1	**153-6492**	1	KEY-WOODRUFF	
	3B	1	**154-4505**	1	BEARING	
	3C	1	**308-1903**	1	GEAR-CAMSHAFT (66-TEETH)	
	3D	1	**313-9323**	1	SPACER (20.5X28X9.3-MM THK)	
	4	1	**321-4252**	1	SLIDER	

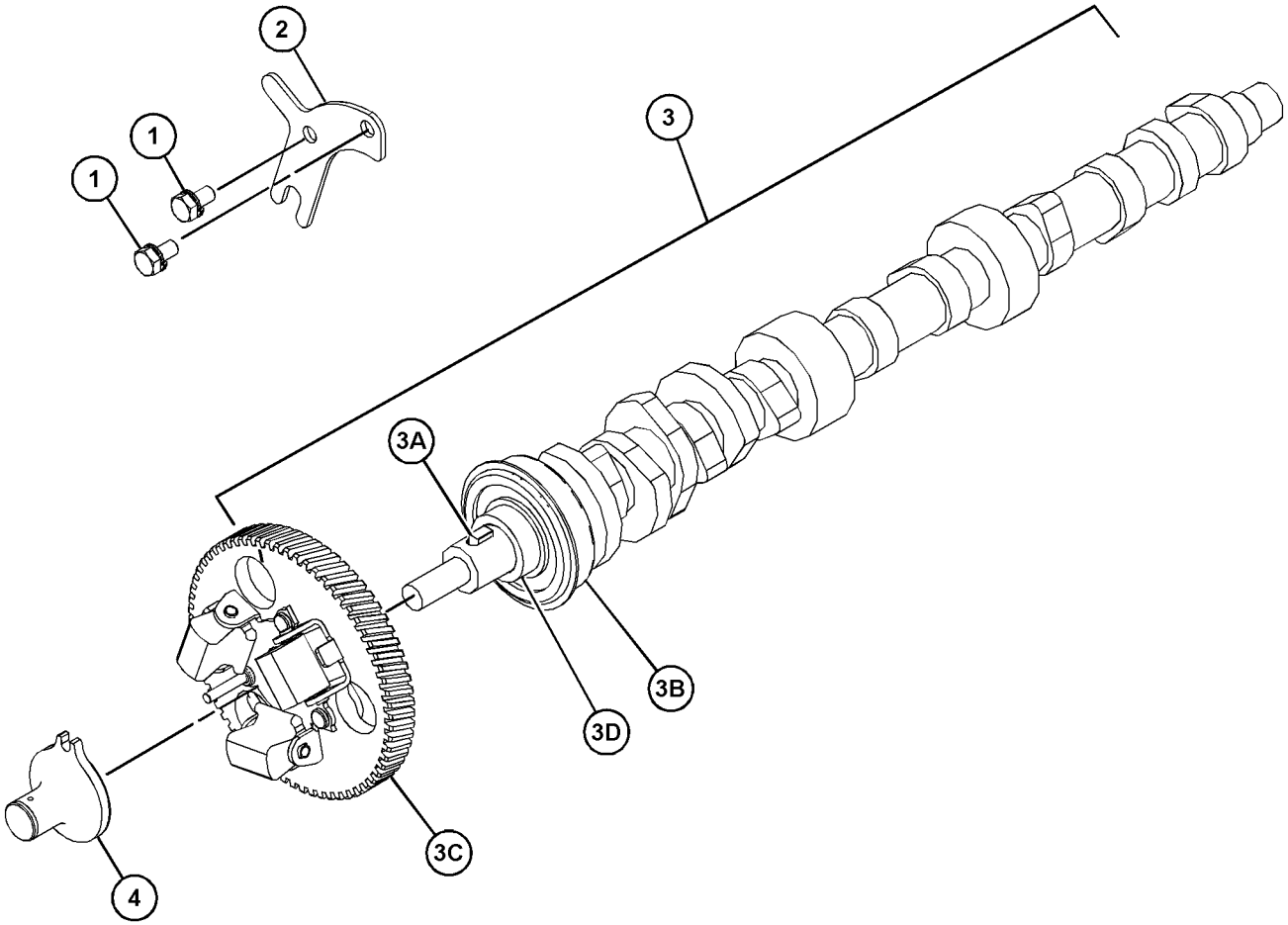

GRAPHIC #1 <END> g03723398

481-5624 CAMSHAFT GP

SMCS-1210 **i06943005**

NOTE	REF NO	GRAPHIC REF	PART NUMBER	QTY	PART NAME 1 2 3 4 5 6 (PRODUCT LEVEL)	SEE PAGE
	1	1	**153-6838**	2	BOLT AS	
	2	1	**154-1680**	1	PLATE	
	3	1	**308-1902**	1	CAMSHAFT AS	
	3A	1	**153-6492**	1	KEY-WOODRUFF	
	3B	1	**154-4505**	1	BEARING	
	3C	1	**308-1903**	1	GEAR-CAMSHAFT (66-TEETH)	
	3D	1	**313-9323**	1	SPACER (20.5X28X9.3-MM THK)	
	4	1	**308-1904**	1	SLIDER	

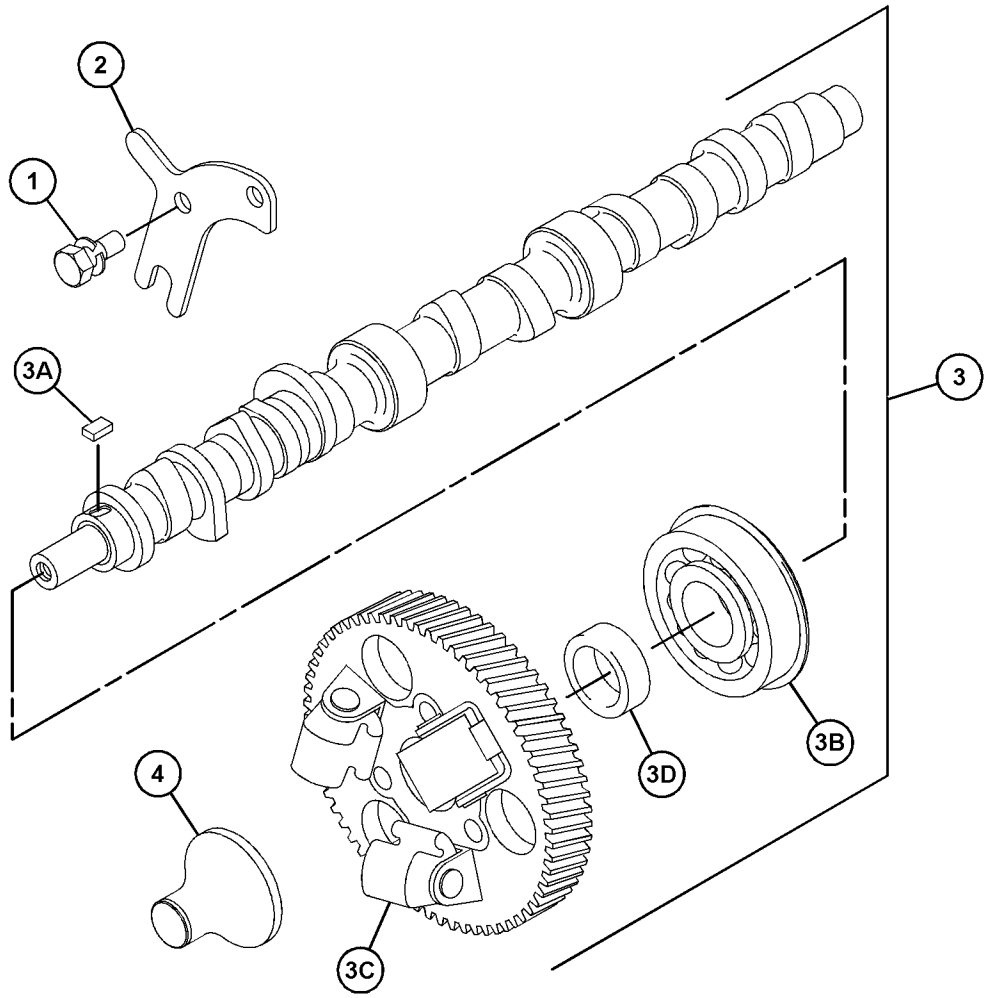

GRAPHIC #1 <END> g03812753

525-9936 CAMSHAFT GP

PART OF 518-0165 ENGINE AR-PRIMARY

SMCS-1210 **i07569337**

NOTE	REF NO	GRAPHIC REF	PART NUMBER	QTY	PART NAME 1 2 3 4 5 6 (PRODUCT LEVEL)	SEE PAGE
	1	1	**153-6838**	2	BOLT AS	
	2	1	**154-1680**	1	PLATE	
	3	1	**308-1904**	1	SLIDER	
	4	1	**309-6733**	1	CAMSHAFT AS	
	4A	1	**153-6492**	1	KEY-WOODRUFF	
	4B	1	**154-4505**	1	BEARING	
	4C	1	**308-1903**	1	GEAR-CAMSHAFT (66-TEETH)	
	4D	1	**313-9323**	1	SPACER (20.5X28X9.3-MM THK)	

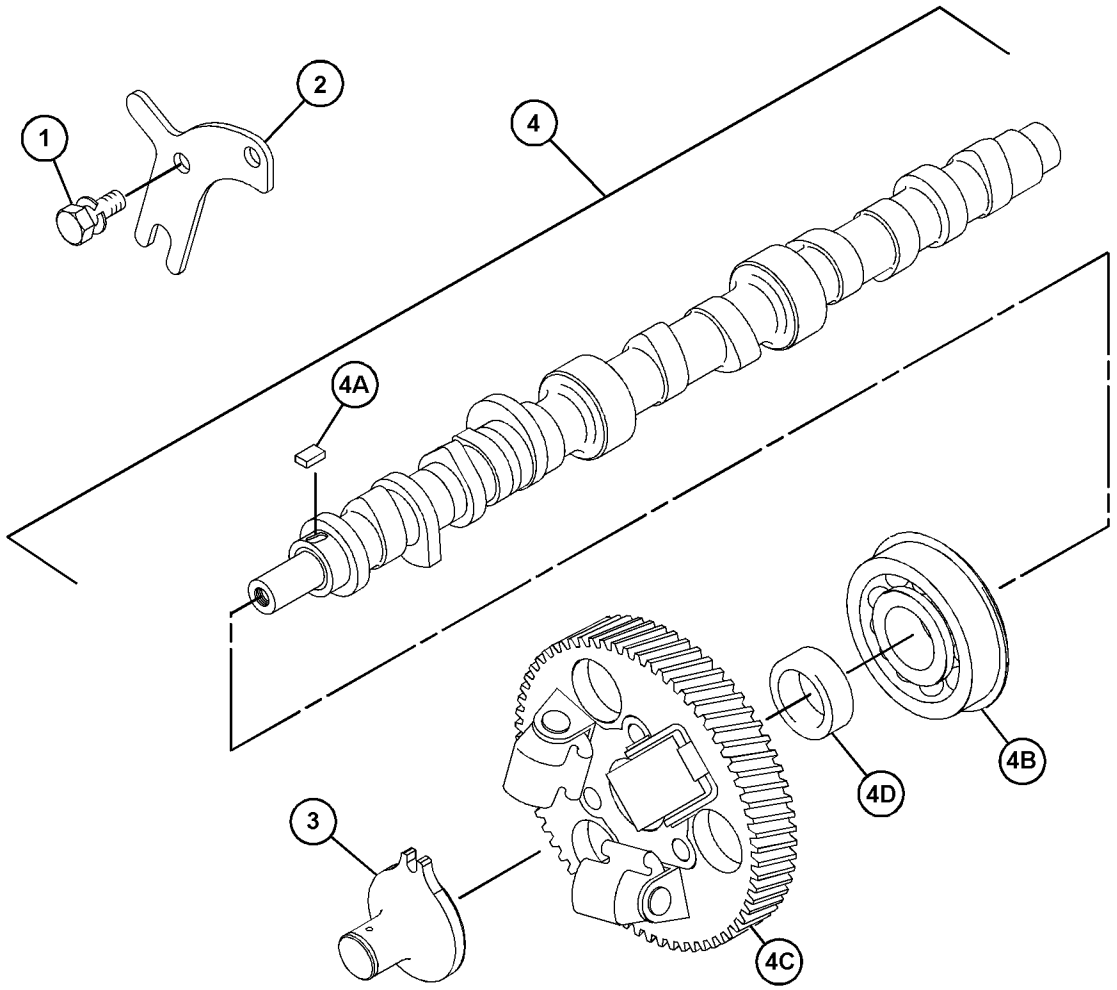

GRAPHIC #1 <END> g06354215

596-3428 CAMSHAFT GP

S/N: C6M10291-UP

PART OF 433-1379 ENGINE AR, 417-7273, 435-1641, 435-1642 ENGINE AR-PRIMARY

ALSO AN ATTACHMENT

SMCS-1210 **i08566613**

NOTE	REF NO	GRAPHIC REF	PART NUMBER	QTY	PART NAME 1 2 3 4 5 6 (PRODUCT LEVEL)	SEE PAGE
	1	1	**528-6882**	8	PUSHROD AS	
M	2	1	**100-4841**	2	BOLT (M6X1X10-MM)	
	3	1	**154-1680**	1	PLATE	
	4	2	**309-6733**	1	CAMSHAFT AS	
	4A	2	**154-4505**	1	BEARING	
	4B	2	**153-6492**	1	KEY-WOODRUFF	
	4C	2	**308-1903**	1	GEAR-CAMSHAFT (66-TEETH)	
	4D	2	**313-9323**	1	SPACER (20.5X28X9.3-MM THK)	
	5	1	**438-9109**	8	TAPPET	

M - METRIC PART

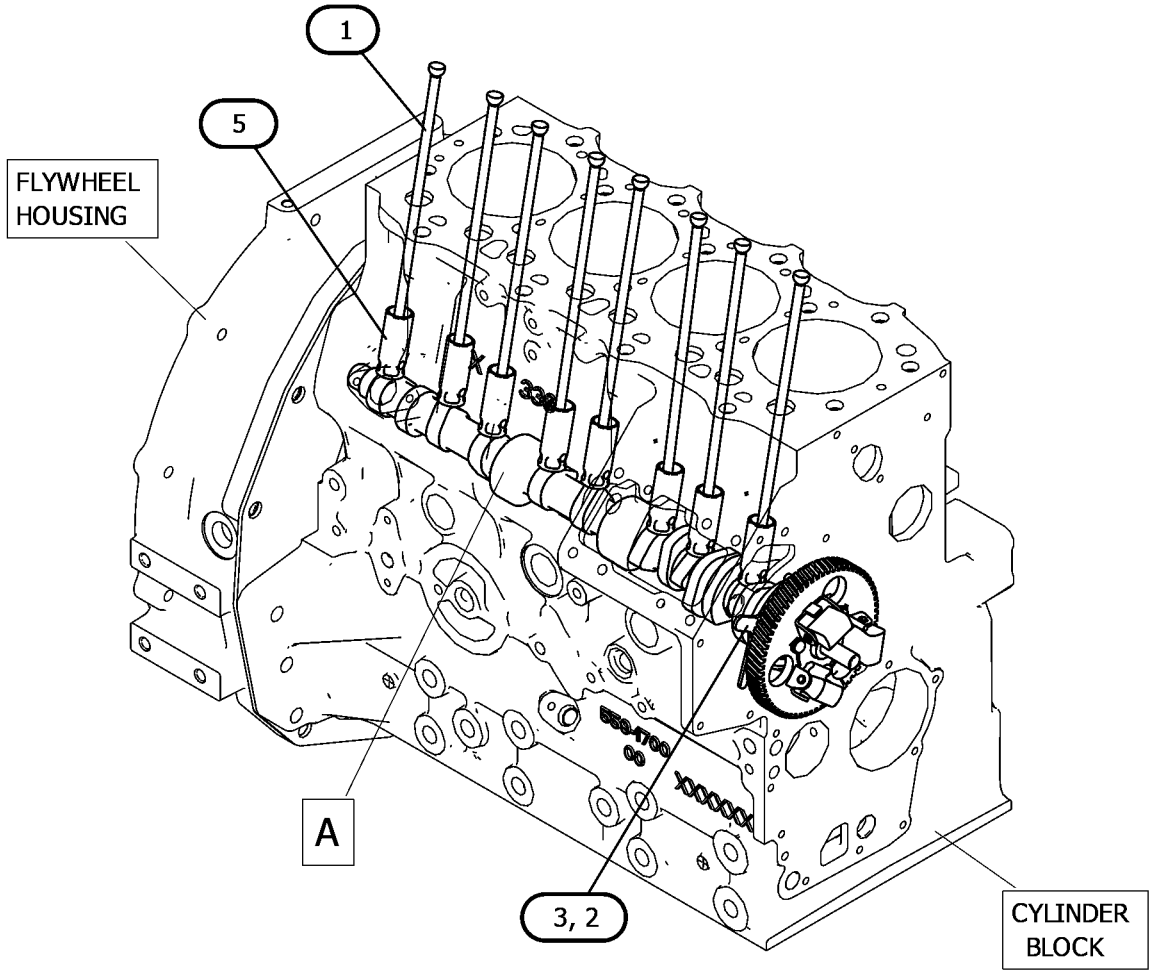

GRAPHIC #1 g07495457

596-3428 **CAMSHAFT GP (**contd.**)** **i08566613**

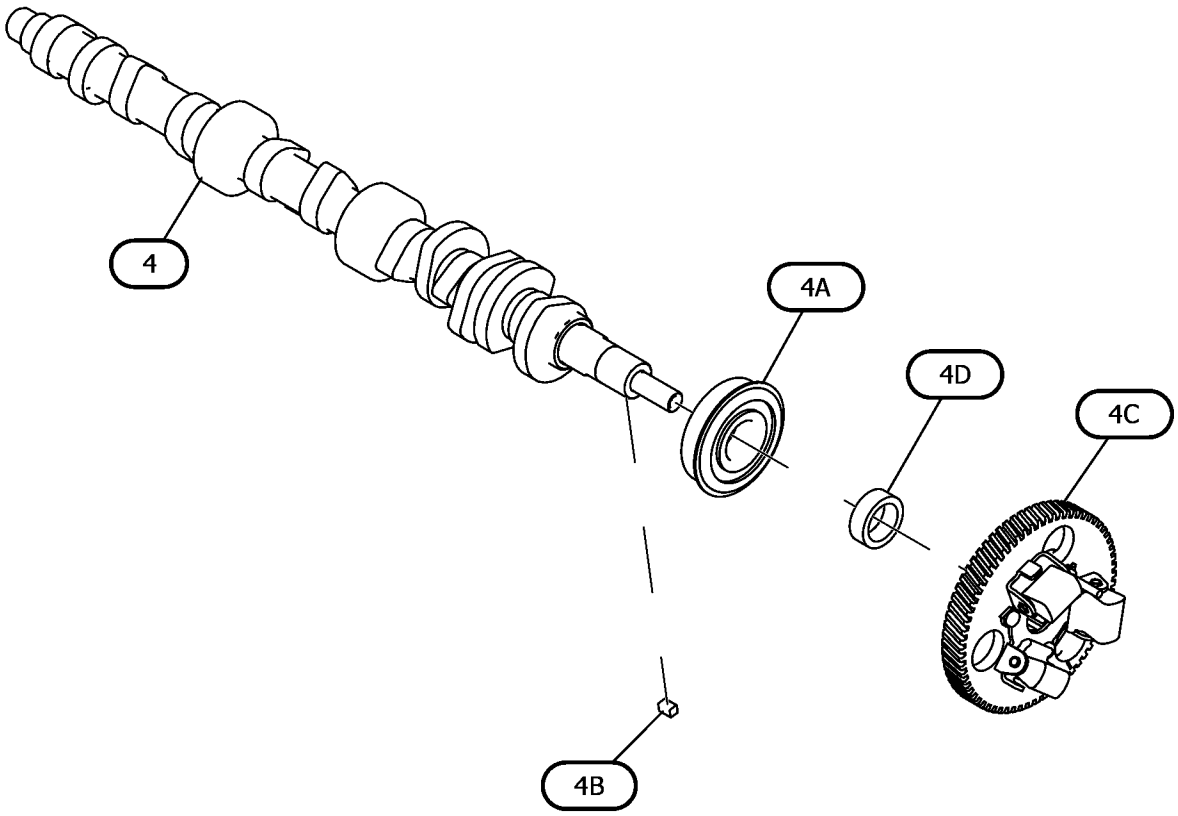

VIEW OF AREA A
(PARTS REMOVED FOR CLARITY)

GRAPHIC #2 <END> g07495457_01

596-3440 CAMSHAFT GP

S/N: C6M10549-UP

PART OF 435-1647 ENGINE AR-PRIMARY

SMCS-1210 **i09854293**

NOTE	REF NO	GRAPHIC REF	PART NUMBER	QTY	PART NAME 1 2 3 4 5 6 (PRODUCT LEVEL)	SEE PAGE
	1	1	**528-6882**	8	PUSHROD AS	
M	2	1	**100-4841**	2	BOLT (M6X1X10-MM)	
	3	1	**154-1680**	1	PLATE	
Y	4	1	**343-2871**	1	CAMSHAFT AS	144
	5	1	**438-9109**	8	TAPPET	

M - METRIC PART
Y - SEPARATE ILLUSTRATION

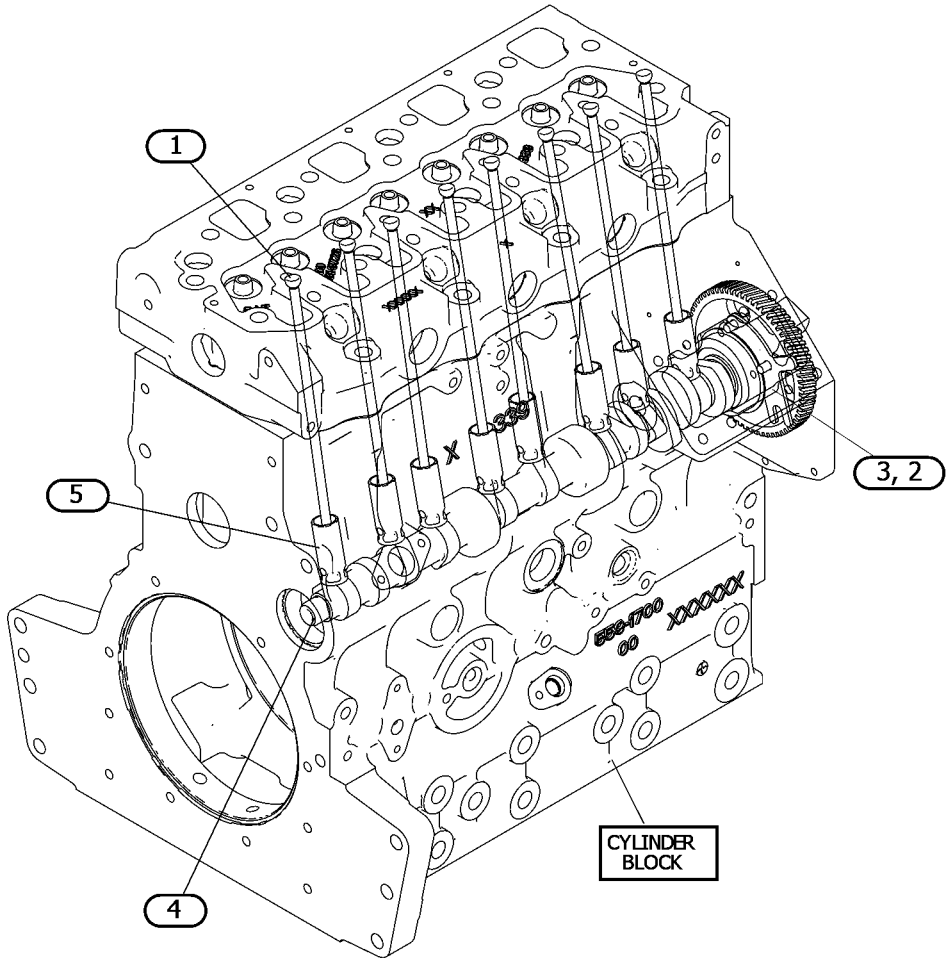

GRAPHIC #1 <END> g07555151

596-3442 CAMSHAFT GP

PART OF 435-1636, 514-6556 ENGINE AR-PRIMARY

SMCS-1210 **i08712041**

NOTE	REF NO	GRAPHIC REF	PART NUMBER	QTY	PART NAME 1 2 3 4 5 6 (PRODUCT LEVEL)	SEE PAGE
	1	1	**528-6882**	8	PUSHROD AS	
M	2	1	**100-4841**	2	BOLT (M6X1X10-MM)	
	3	1	**154-1680**	1	PLATE	
Y	4	1	**308-1902**	1	CAMSHAFT AS	143
	5	1	**438-9109**	8	TAPPET	

M - METRIC PART
Y - SEPARATE ILLUSTRATION

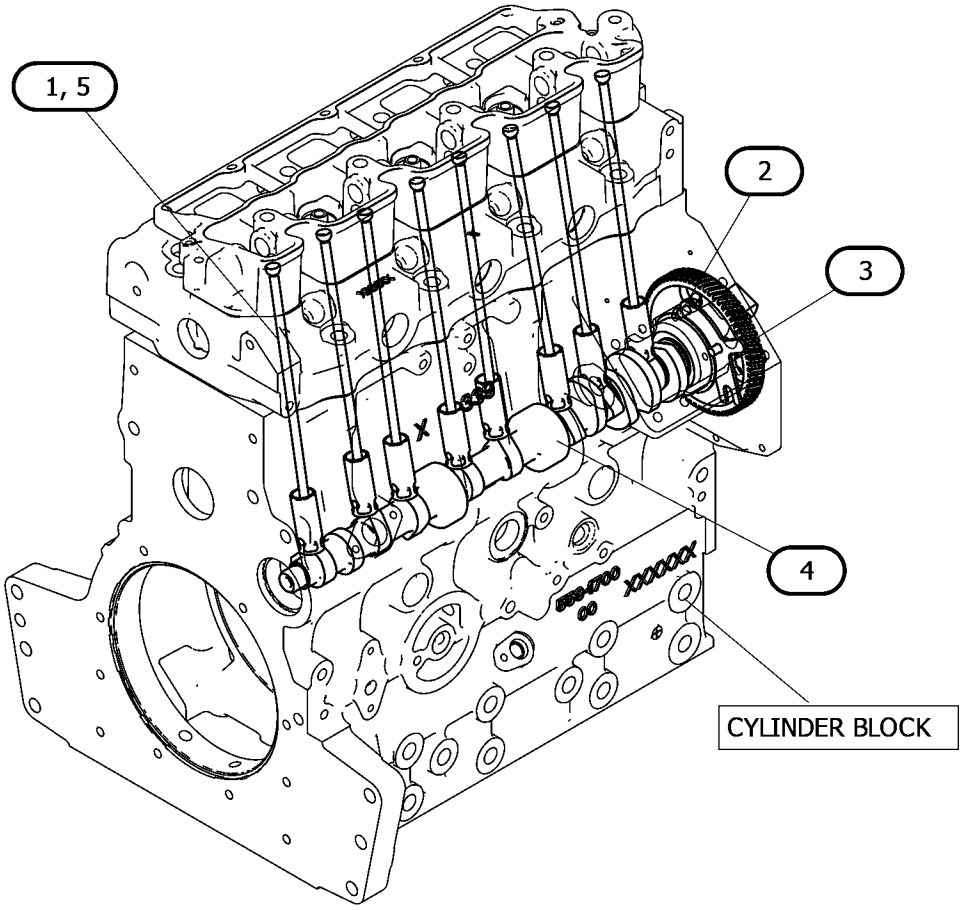

GRAPHIC #1 <END> g07515349

601-0474 COVER GP-CYLINDER HEAD

PART OF 600-5115, 600-5117 TURBOCHARGER GP

SMCS-1100 **i08717204**

NOTE	REF NO	GRAPHIC REF	PART NUMBER	QTY	PART NAME 1 2 3 4 5 6 (PRODUCT LEVEL)	SEE PAGE
	1	2	**153-5939**	1	STOPPER (OIL)	
	2	1	**153-7640**	2	BOLT AS	
	3	1	**217-5859**	1	VALVE-BREATHER (CRANKCASE)	
	4	2	**217-5862**	6	SCREW (SELF-TAPPING)	
	5	2	**233-0695**	1	SEAL-VALVE COVER	
M	6	1	**238-9295**	4	BOLT (M4X0.7X30-MM)	
	7	2	**320-8401**	1	PLATE-RETAINING	
	8	1	**365-4125**	1	ADAPTER	
	9	1	**366-3055**	1	ELBOW	
	10	1	**438-9362**	1	GASKET	
	11	1	**583-6088**	1	COVER-HEAD	
	12	2	**183-1165**	1	PLUG	
	13	1	**494-9569**	1	GASKET	

M - METRIC PART

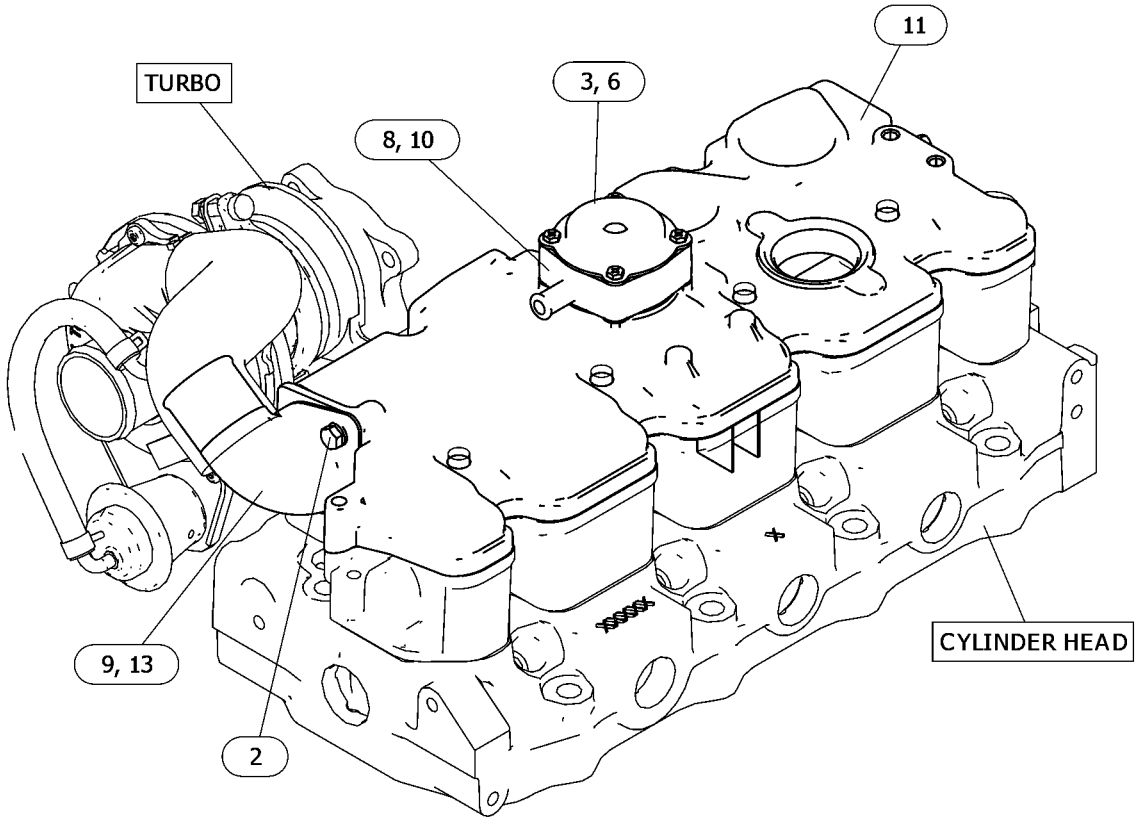

GRAPHIC #1 g06770097

601-0474 **COVER GP-CYLINDER HEAD (**contd.**)** **i08717204**

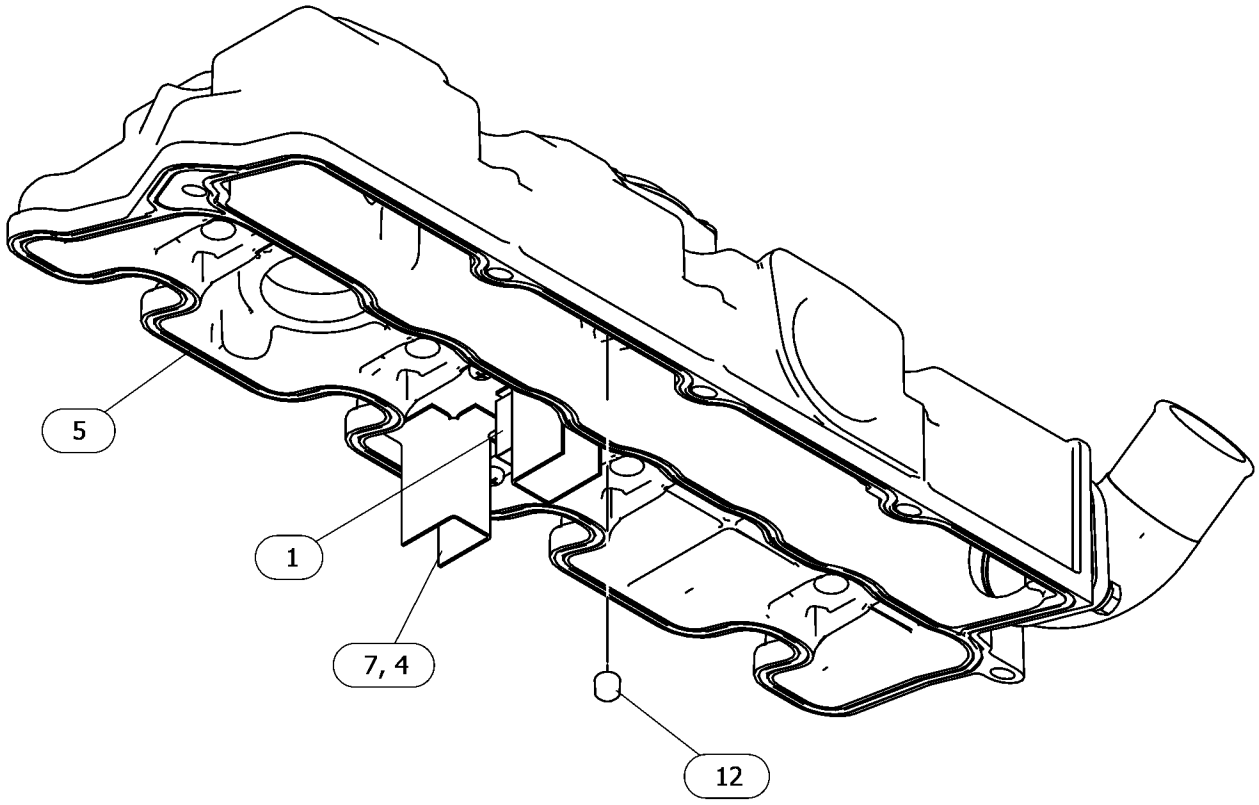

(VIEWED FROM BOTTOM)

GRAPHIC #2 <END> g06770097_01

601-0481 COVER GP-CYLINDER HEAD

S/N: C6M10494-UP

PART OF 600-5127 TURBOCHARGER GP

SMCS-1100 **i09001309**

NOTE	REF NO	GRAPHIC REF	PART NUMBER	QTY	PART NAME 1 2 3 4 5 6 (PRODUCT LEVEL)	SEE PAGE
	1	1	**153-5939**	1	STOPPER (OIL)	
	2	1	**153-7640**	2	BOLT AS	
	3	1	**217-5859**	1	VALVE-BREATHER (CRANKCASE)	
	4	1	**217-5862**	6	SCREW (SELF-TAPPING)	
	5	1	**233-0695**	1	SEAL-VALVE COVER	
M	6	1	**238-9295**	4	BOLT (M4X0.7X30-MM)	
	7	1	**320-8401**	1	PLATE-RETAINING	
	8	1	**365-4125**	1	ADAPTER	
	9	1	**438-9362**	1	GASKET	
	10	1	**458-6608**	1	PLUG-SEAL	
	11	1	**494-9569**	1	GASKET	
	12	1	**560-8837**	1	ADAPTER	
	13	1	**583-6089**	1	COVER-HEAD	

M - METRIC PART

601-0481 **COVER GP-CYLINDER HEAD (**contd.**)** **i09001309**

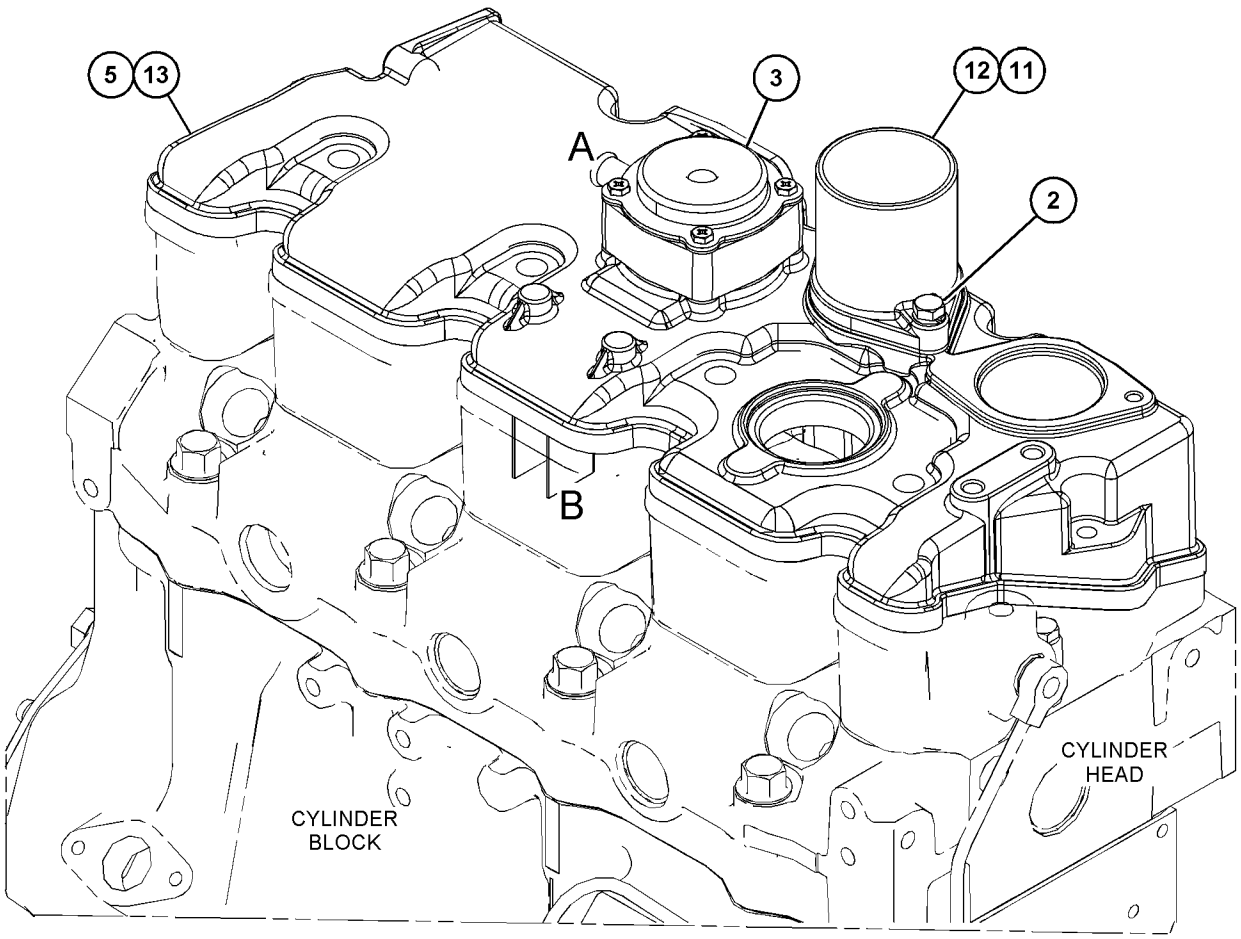

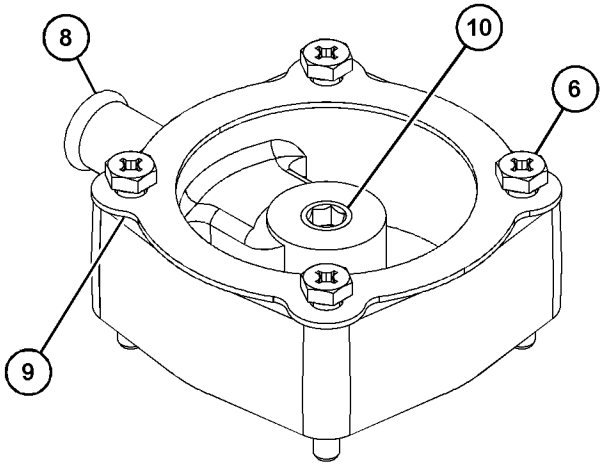

VIEW OF AREA A
(PARTS REMOVED FOR CLARITY)

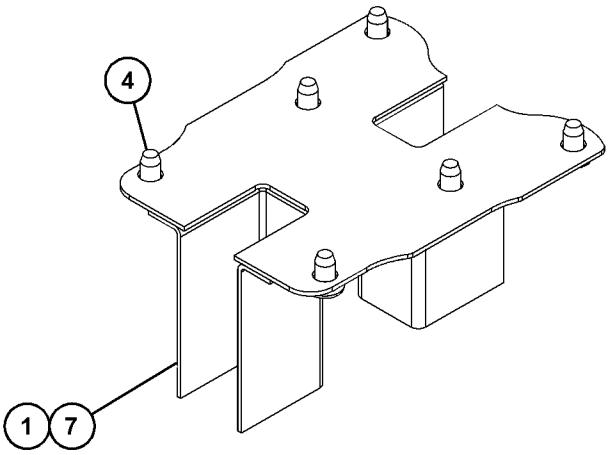

VIEW OF AREA B
(PARTS REMOVED FOR CLARITY)

GRAPHIC #1 <END> g06770034

329-8577 COVER GP-FRONT HOUSING

SMCS-1151, 1166 **i03085040**

NOTE	REF NO	GRAPHIC REF	PART NUMBER	QTY	PART NAME 1 2 3 4 5 6 (PRODUCT LEVEL)	SEE PAGE
M	1	1	**6I-0454**	2	BOLT (M10X1.5X70-MM)	
M	2	1	**6I-0594**	2	NUT (M10X1.5-THD)	
	3	1	**153-6497**	1	SEAL-O-RING	
	4	1	**311-5852**	1	PLATE	
	5	1	**311-5853**	1	SEAL-O-RING	
	6	1	**321-5906**	1	PLATE	
	7	1	**329-8576**	1	PLATE	

M - METRIC PART

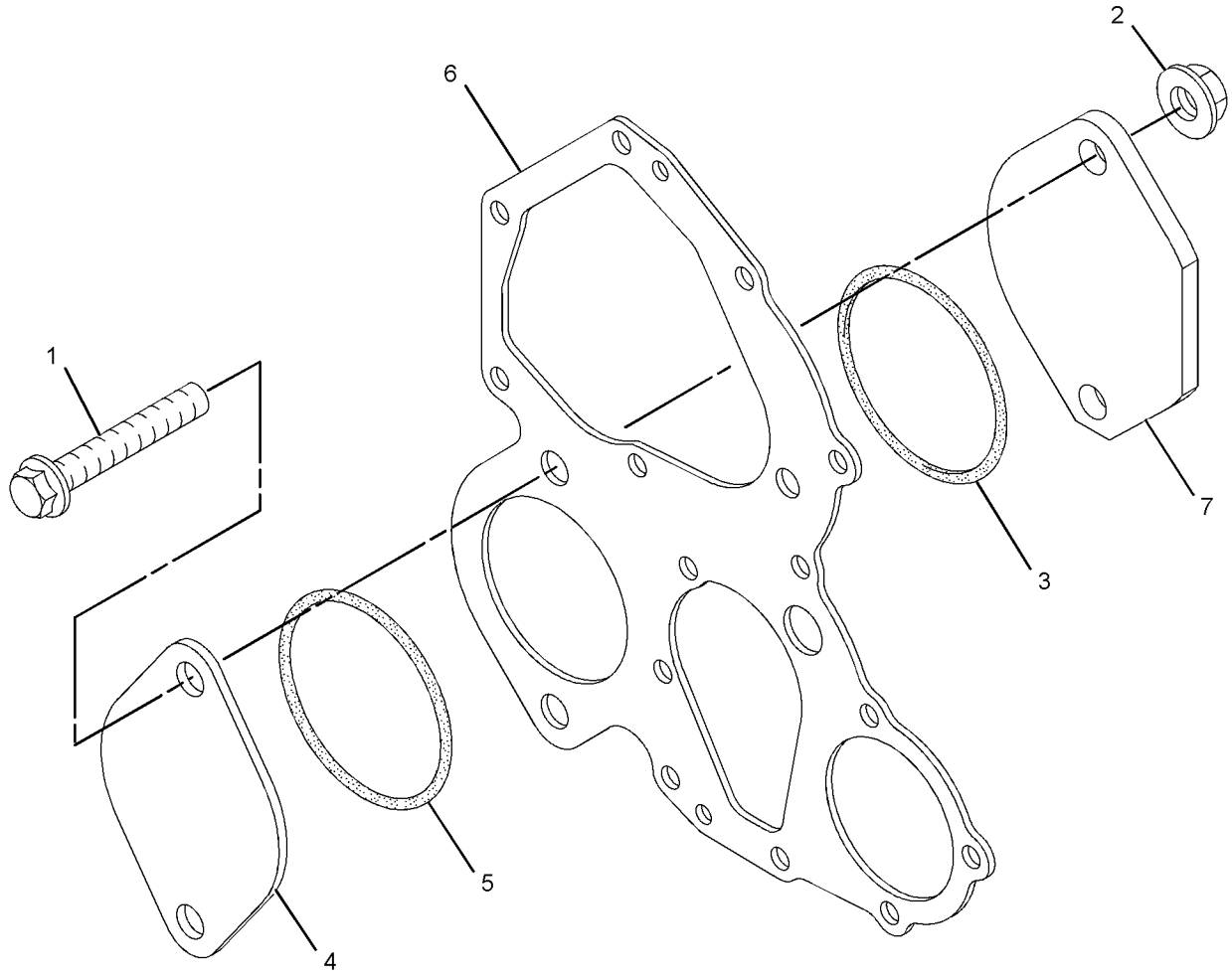

GRAPHIC #1 <END> g01614834

309-6722 COVER GP-VALVE MECHANISM

PART OF 435-1645, 435-1649 CYLINDER BLOCK GP-LONG, 433-1379 ENGINE AR, 435-1641, 435-1646, 435-1647 ENGINE AR-PRIMARY

SMCS-1107 **i03402101**

NOTE	REF NO	GRAPHIC REF	PART NUMBER	QTY	PART NAME 1 2 3 4 5 6 (PRODUCT LEVEL)	SEE PAGE
	1	2	**153-5939**	1	STOPPER (OIL)	
	2	2	**153-5962**	3	BOLT AS	
	3	2	**153-7640**	2	BOLT AS	
M	4	2	**154-1347**	4	NUT (M10X1.25-THD)	
M	5	1	**249-7263**	2	BOLT (M6X1X16-MM) (M6X1X16-MM)	
	6	2	**165-2140**	2	BOLT AS	
	7	2	**190-3762**	4	WASHER	
	8	2	**217-5859**	1	VALVE-BREATHER (CRANKCASE)	
M	9	2	**217-5860**	4	BOLT (M4X0.7X8-MM)	
	10	2	**320-8401**	1	PLATE-RETAINING	
	11	2	**217-5862**	6	SCREW (SELF-TAPPING)	
	12	2	**217-5864**	1	GASKET	
	13	1	**225-8533**	1	GASKET (TURBOCHARGER)	
	14	2	**233-0695**	1	SEAL-VALVE COVER	
	15	2	**233-7061**	1	COVER-VALVE	
	16	2	**309-6735**	1	TUBE-AIR	
	17	1	**309-6736**	1	COVER	

M - METRIC PART

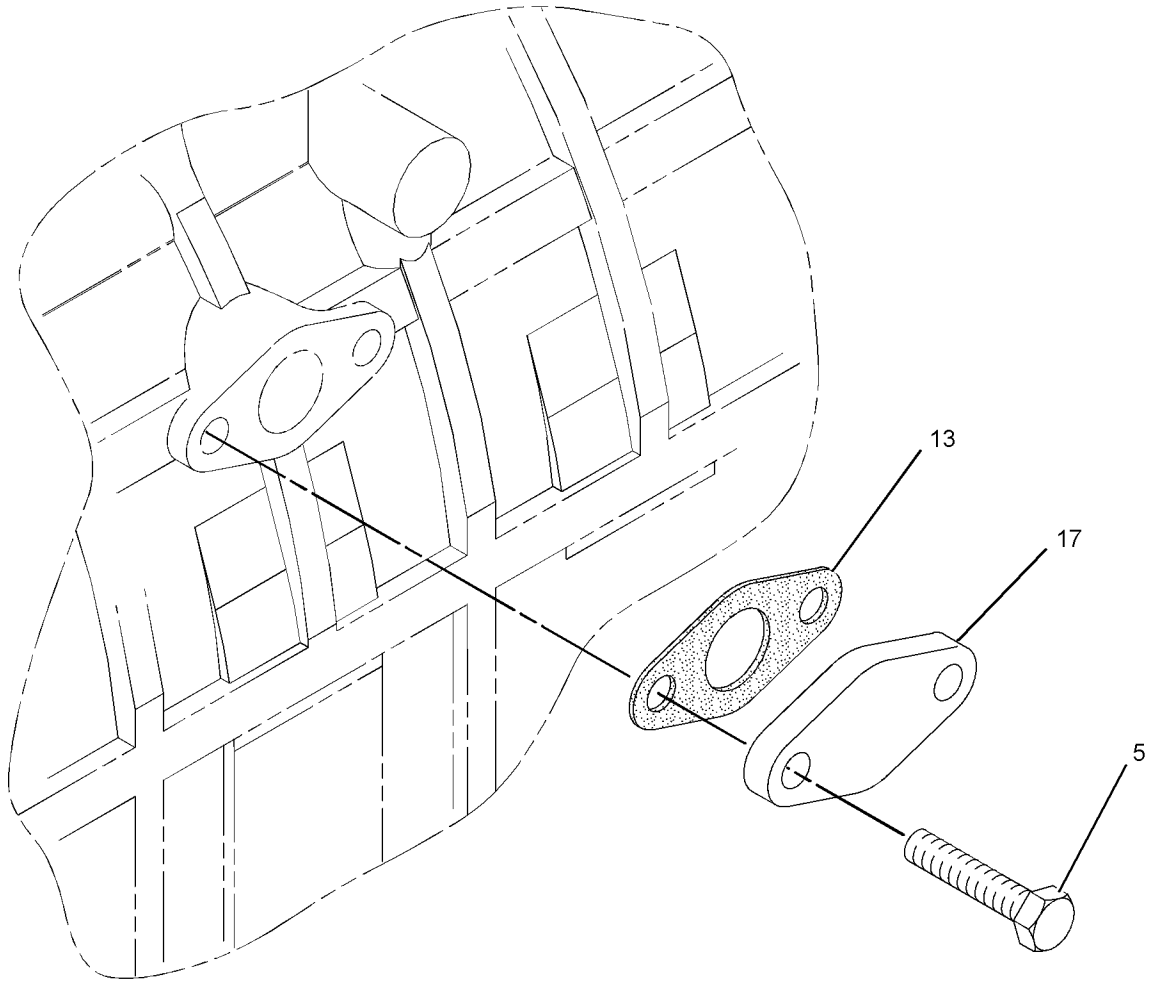

GRAPHIC #1 g01397234

309-6722 **COVER GP-VALVE MECHANISM (**contd.**)** **i03402101**

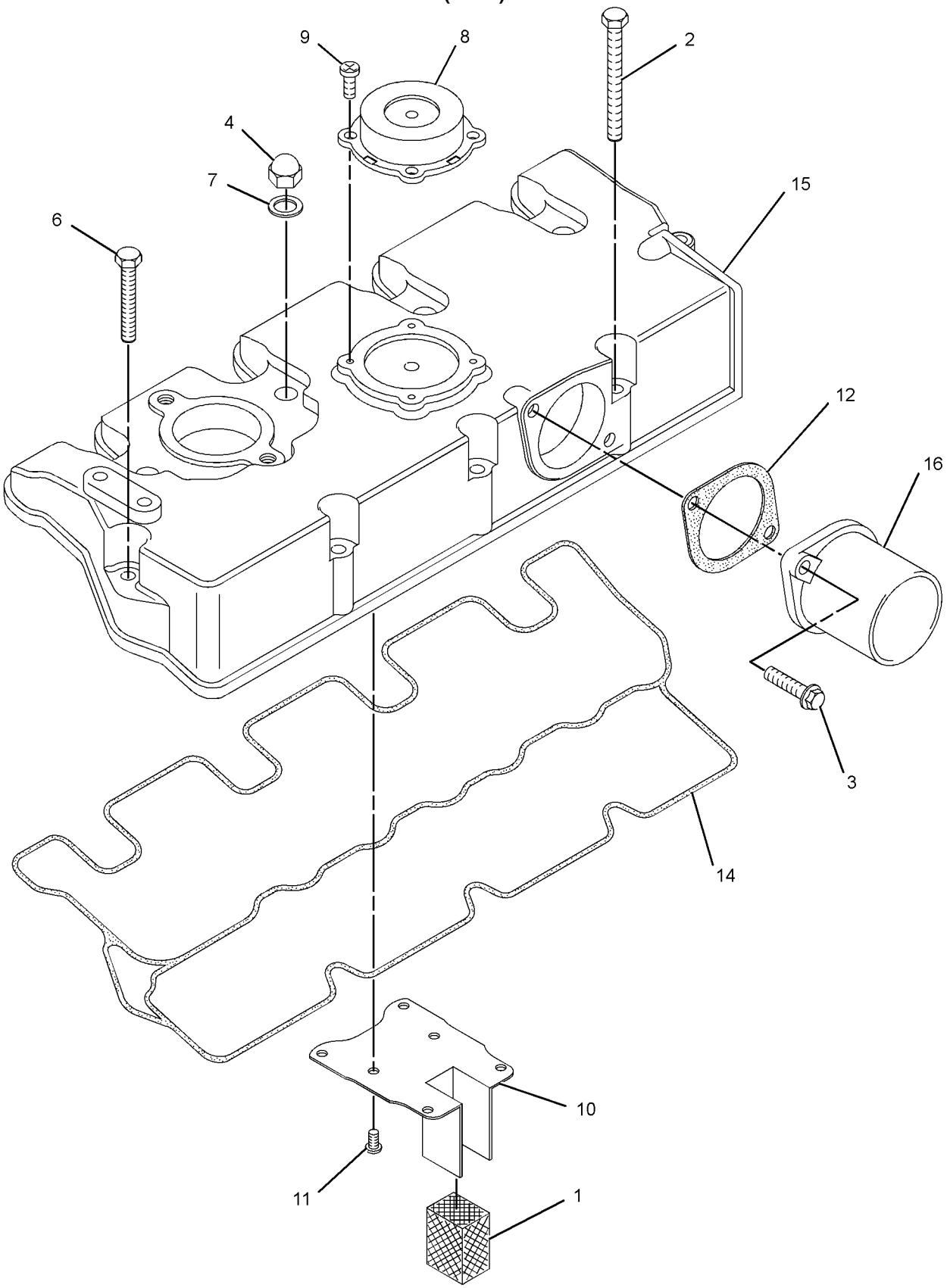

GRAPHIC #2 <END> g01397236

309-6722 COVER GP-VALVE MECHANISM

PART OF 435-1645, 435-1649 CYLINDER BLOCK GP-LONG, 433-1379 ENGINE AR, 435-1641, 435-1642, 435-1646, 435-1647, 489-4263, 506-0520, 513-2239, 557-7471 ENGINE AR-PRIMARY

ALSO AN ATTACHMENT

SMCS-1107 **i06828568**

NOTE	REF NO	GRAPHIC REF	PART NUMBER	QTY	PART NAME 1 2 3 4 5 6 (PRODUCT LEVEL)	SEE PAGE
	1	2	**153-5939**	1	STOPPER (OIL)	
	2	2	**153-5962**	3	BOLT AS	
	3	2	**153-7640**	2	BOLT AS	
M	4	2	**154-1347**	4	NUT (M10X1.25-THD)	
C	5	1	**288-6539**	1	CAP	
	6	2	**165-2140**	1	BOLT AS	
	7	2	**246-4361**	4	WASHER (10.5X14X1.5-MM THK)	
	8	2	**217-5859**	1	VALVE-BREATHER (CRANKCASE)	
M	9	2	**217-5860**	4	BOLT (M4X0.7X8-MM)	
	10	2	**320-8401**	1	PLATE-RETAINING	
	11	2	**217-5862**	6	SCREW (SELF-TAPPING)	
	12	2	**494-9569**	1	GASKET	
	13	2	**309-6735**	1	TUBE-AIR	
	14	2	**233-0695**	1	SEAL-VALVE COVER	
	15	2	**476-5582**	1	COVER-HEAD	
M	16	2	**153-5960**	1	NUT (M6X1-THD)	
M	17	2	**360-9545**	1	STUD (M6X1X48-MM)	

C - CHANGE FROM PREVIOUS TYPE
M - METRIC PART

309-6722 **COVER GP-VALVE MECHANISM (**contd.**)** **i06828568**

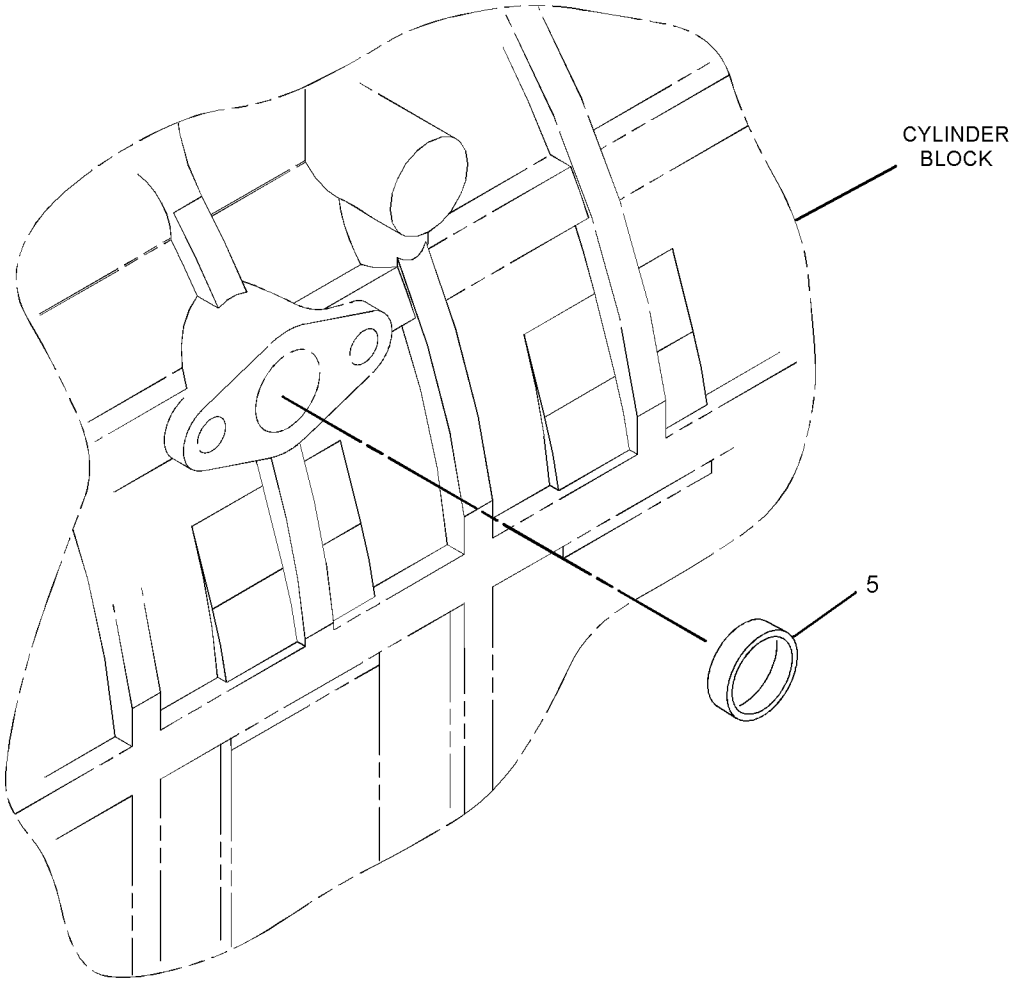

GRAPHIC #1 g02155789

309-6722 **COVER GP-VALVE MECHANISM (**contd.**)** **i06828568**

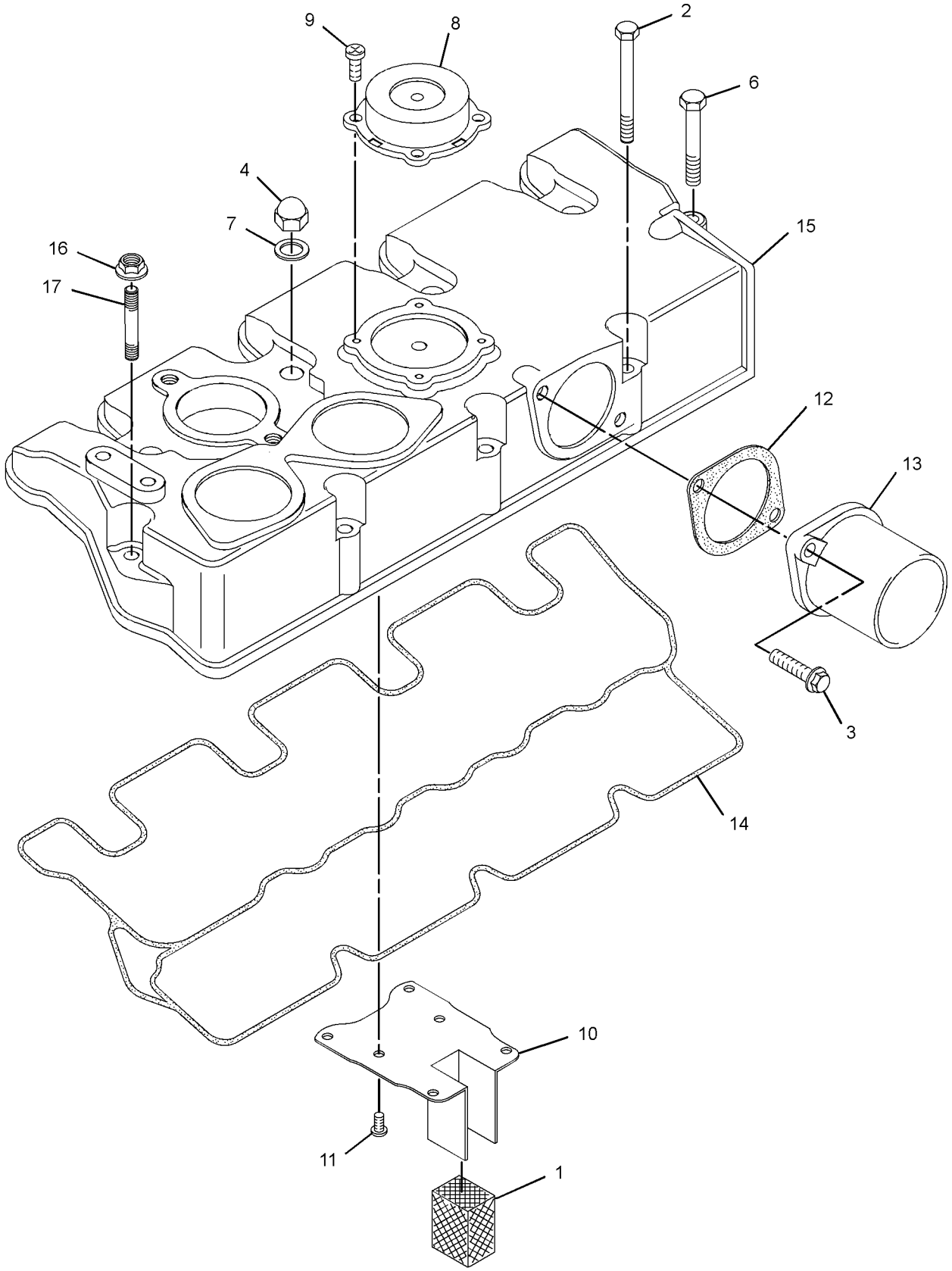

GRAPHIC #2 <END> g02626343

309-6722 COVER GP-VALVE MECHANISM

PART OF 435-1645, 435-1649 CYLINDER BLOCK GP-LONG, 433-1379 ENGINE AR, 417-7273, 435-1641, 435-1642, 435-1646, 435-1647, 489-4263, 506-0520, 513-2239, 557-7471 ENGINE AR-PRIMARY
ALSO AN ATTACHMENT

SMCS-1107 **i07701227**

NOTE	REF NO	GRAPHIC REF	PART NUMBER	QTY	PART NAME 1 2 3 4 5 6 (PRODUCT LEVEL)	SEE PAGE
	1	2	**153-5939**	1	STOPPER (OIL)	
	2	2	**153-5962**	3	BOLT AS	
	3	2	**153-7640**	2	BOLT AS	
CM	4	2	**539-0439**	4	NUT (M10X1.25-THD)	
	5	1	**288-6539**	1	CAP	
	6	2	**165-2140**	1	BOLT AS	
	7	2	**246-4361**	4	WASHER (10.5X14X1.5-MM THK)	
	8	2	**217-5859**	1	VALVE-BREATHER (CRANKCASE)	
M	9	2	**217-5860**	4	BOLT (M4X0.7X8-MM)	
	10	2	**320-8401**	1	PLATE-RETAINING	
	11	2	**217-5862**	6	SCREW (SELF-TAPPING)	
	12	2	**494-9569**	1	GASKET	
	13	2	**309-6735**	1	TUBE-AIR	
	14	2	**233-0695**	1	SEAL-VALVE COVER	
	15	2	**476-5582**	1	COVER-HEAD	
M	16	2	**153-5960**	1	NUT (M6X1-THD)	
M	17	2	**360-9545**	1	STUD (M6X1X48-MM)	

C - CHANGE FROM PREVIOUS TYPE
M - METRIC PART

309-6722 **COVER GP-VALVE MECHANISM (**contd.**)** **i07701227**

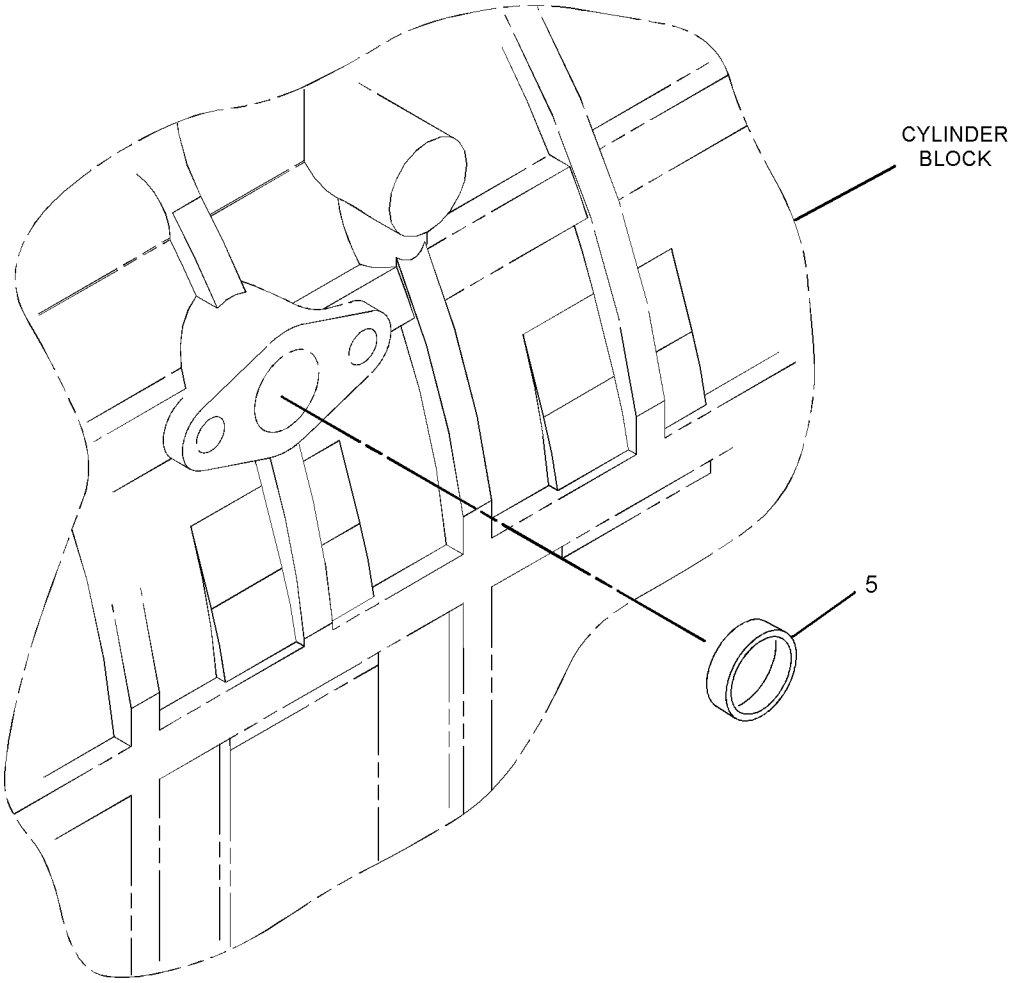

GRAPHIC #1 g02155789

309-6722 **COVER GP-VALVE MECHANISM (**contd.**)** **i07701227**

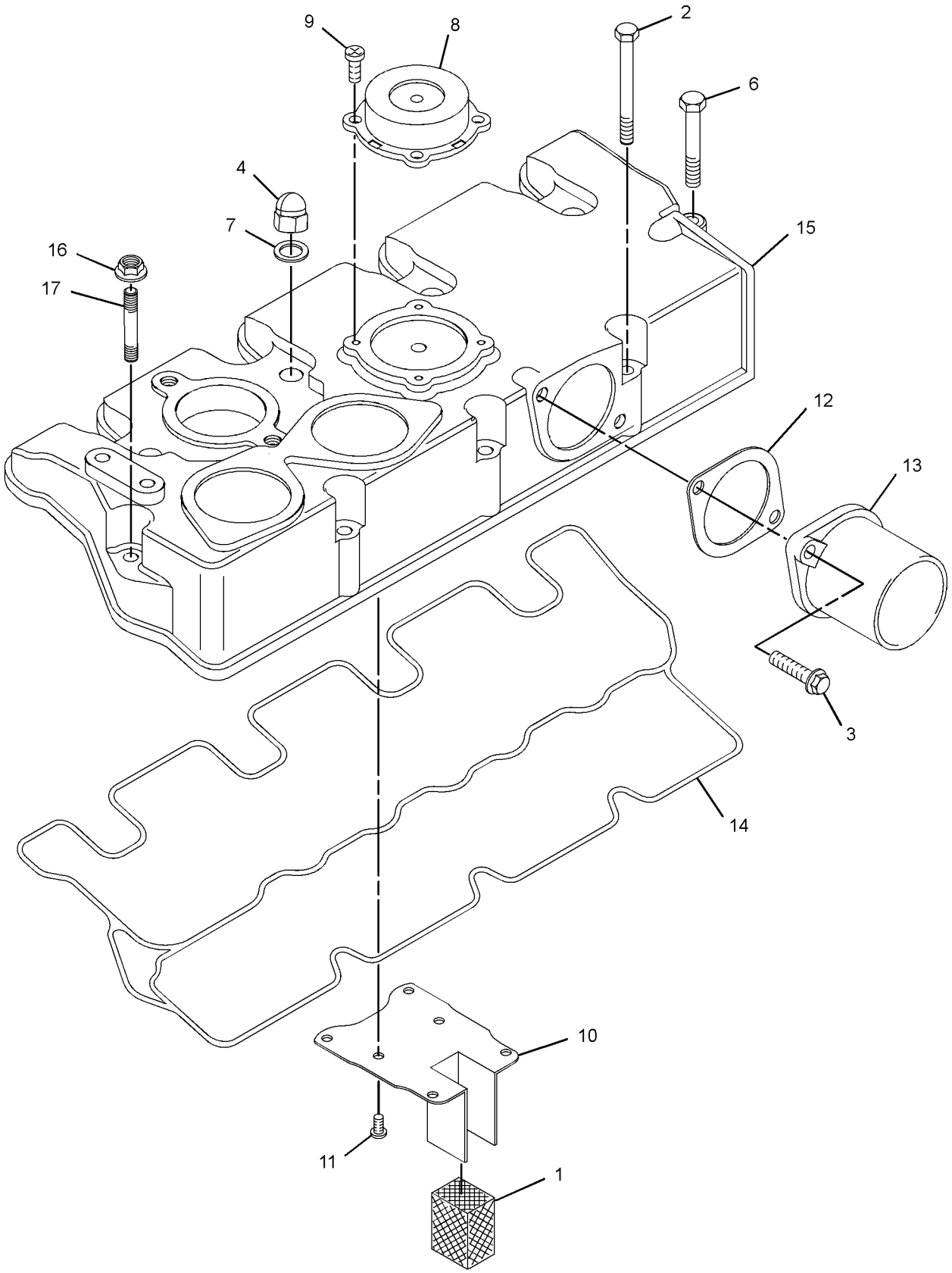

GRAPHIC #2 <END> g06473817

317-0590 COVER GP-VALVE MECHANISM

SMCS-1107 **i08532478**

NOTE	REF NO	GRAPHIC REF	PART NUMBER	QTY	PART NAME 1 2 3 4 5 6 (PRODUCT LEVEL)	SEE PAGE
	1	2	**153-5939**	1	STOPPER (OIL)	
	2	2	**153-5962**	3	BOLT AS	
	3	2	**153-7640**	2	BOLT AS	
M	4	2	**539-0439**	4	NUT (M10X1.25-THD)	
M	5	2	**153-5960**	1	NUT (M6X1-THD)	
	6	2	**165-2140**	1	BOLT AS	
	7	2	**246-4361**	4	WASHER (10.5X14X1.5-MM THK)	
	8	2	**217-5859**	1	VALVE-BREATHER (CRANKCASE)	
M	9	2	**217-5860**	4	BOLT (M4X0.7X8-MM)	
	10	2	**320-8401**	1	PLATE-RETAINING	
	11	2	**217-5862**	6	SCREW (SELF-TAPPING)	
	12	2	**494-9569**	1	GASKET	
M	13	2	**360-9545**	1	STUD (M6X1X48-MM)	
	14	2	**233-0695**	1	SEAL-VALVE COVER	
	15	2	**583-6831**	1	COVER-HEAD	
	16	2	**560-8837**	1	ADAPTER	
	17	1	**288-6539**	1	CAP	

M - METRIC PART

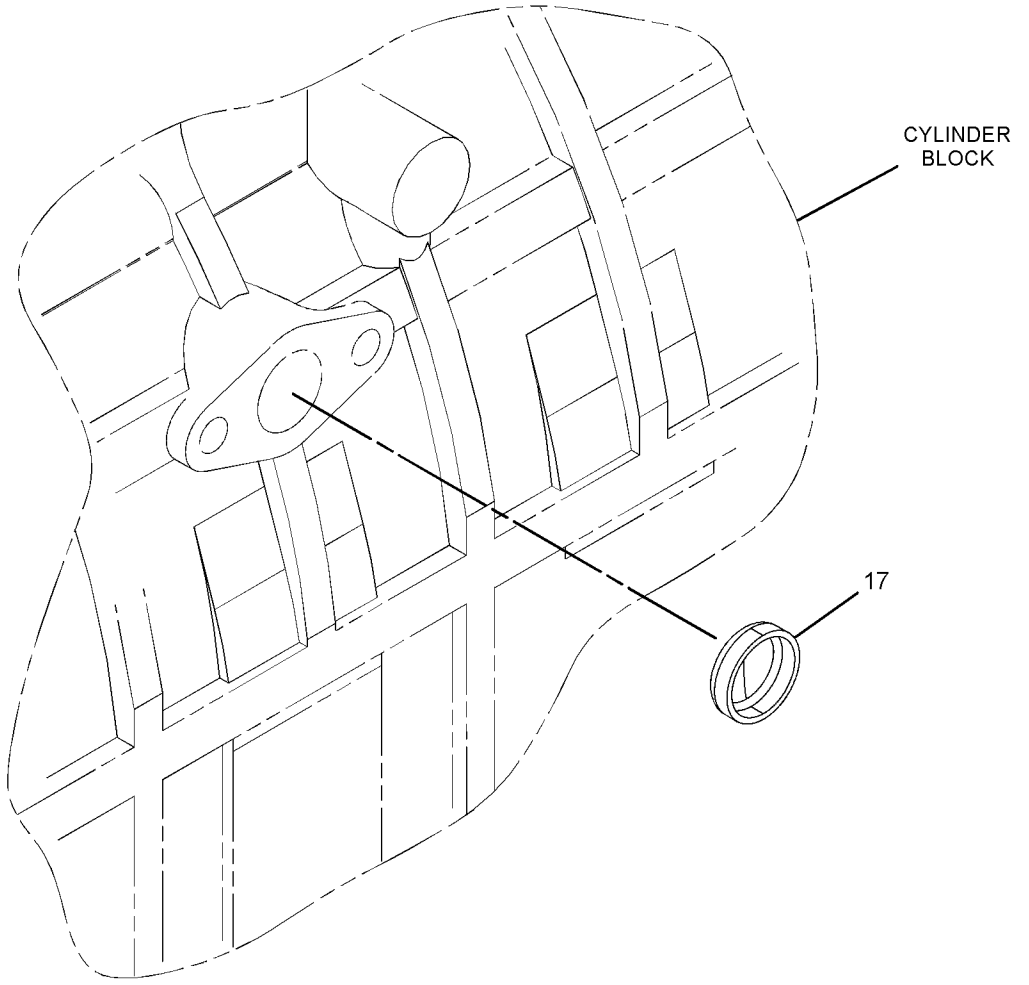

GRAPHIC #1 g07490340

317-0590 **COVER GP-VALVE MECHANISM (**contd.**)** **i08532478**

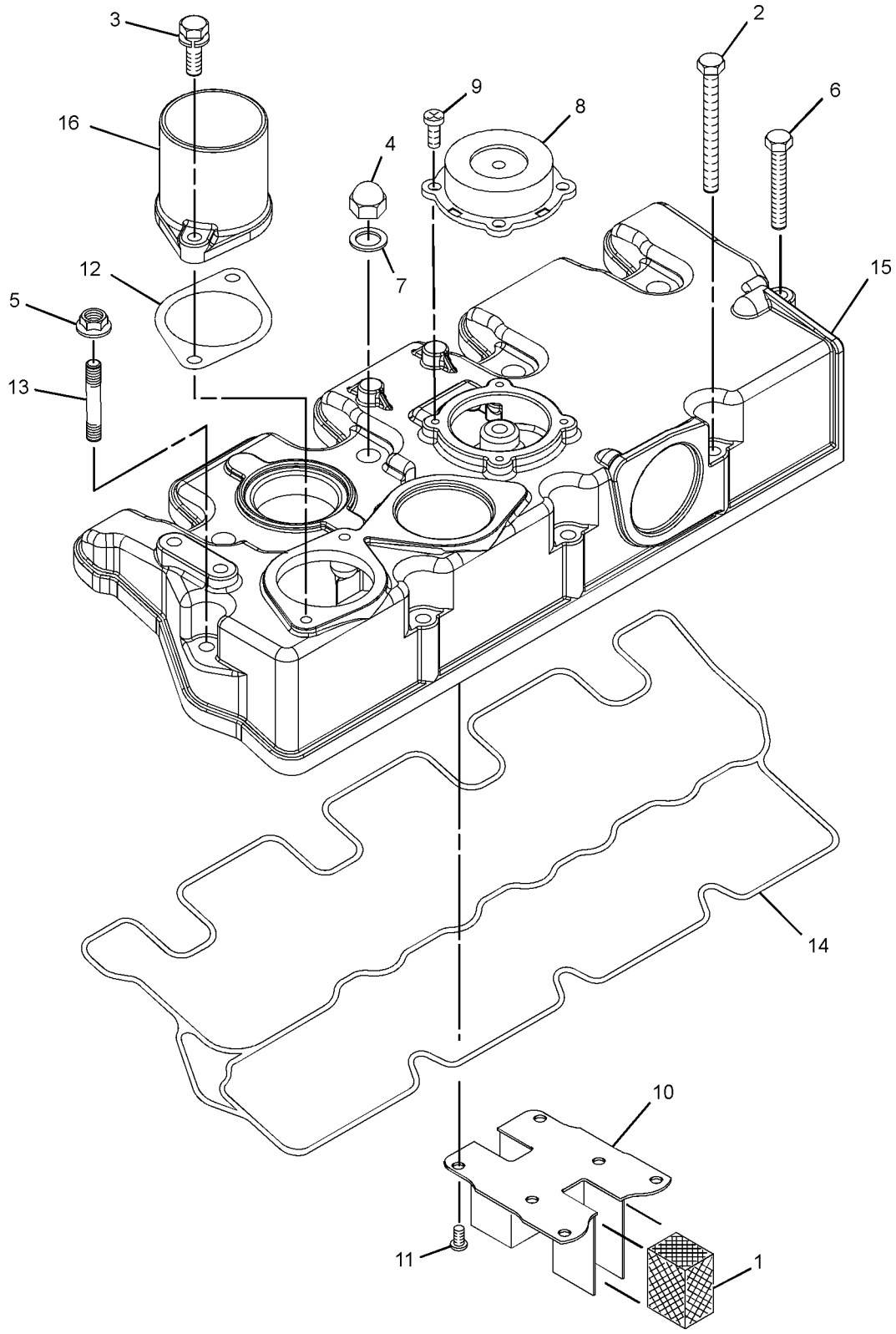

GRAPHIC #2 <END> g07490341

322-2424 COVER GP-VALVE MECHANISM

TYPE 1

SMCS-1107 **i02908406**

NOTE	REF NO	GRAPHIC REF	PART NUMBER	QTY	PART NAME 1 2 3 4 5 6 (PRODUCT LEVEL)	SEE PAGE
	1	2	**153-5939**	1	STOPPER (OIL)	
	2	2	**153-5962**	3	BOLT AS	
	3	2	**153-7640**	2	BOLT AS	
M	4	2	**154-1347**	4	NUT (M10X1.25-THD)	
	5	2	**165-2140**	2	BOLT AS	
	6	2	**190-3762**	4	WASHER	
	7	2	**217-5859**	1	VALVE-BREATHER (CRANKCASE)	
M	8	2	**217-5860**	4	BOLT (M4X0.7X8-MM)	
	9	2	**217-5861**	1	PLATE-RETAINING	
	10	2	**217-5862**	6	SCREW (SELF-TAPPING)	
	11	2	**217-5864**	1	GASKET	
	12	1	**225-8533**	1	GASKET	
	13	2	**233-0693**	1	COVER-VALVE	
	14	2	**233-0695**	1	SEAL-VALVE COVER	
M	15	1	**249-7263**	2	BOLT (M6X1X16-MM)	
	16	2	**309-6735**	1	TUBE-AIR	
	17	1	**309-6736**	1	COVER	

M - METRIC PART

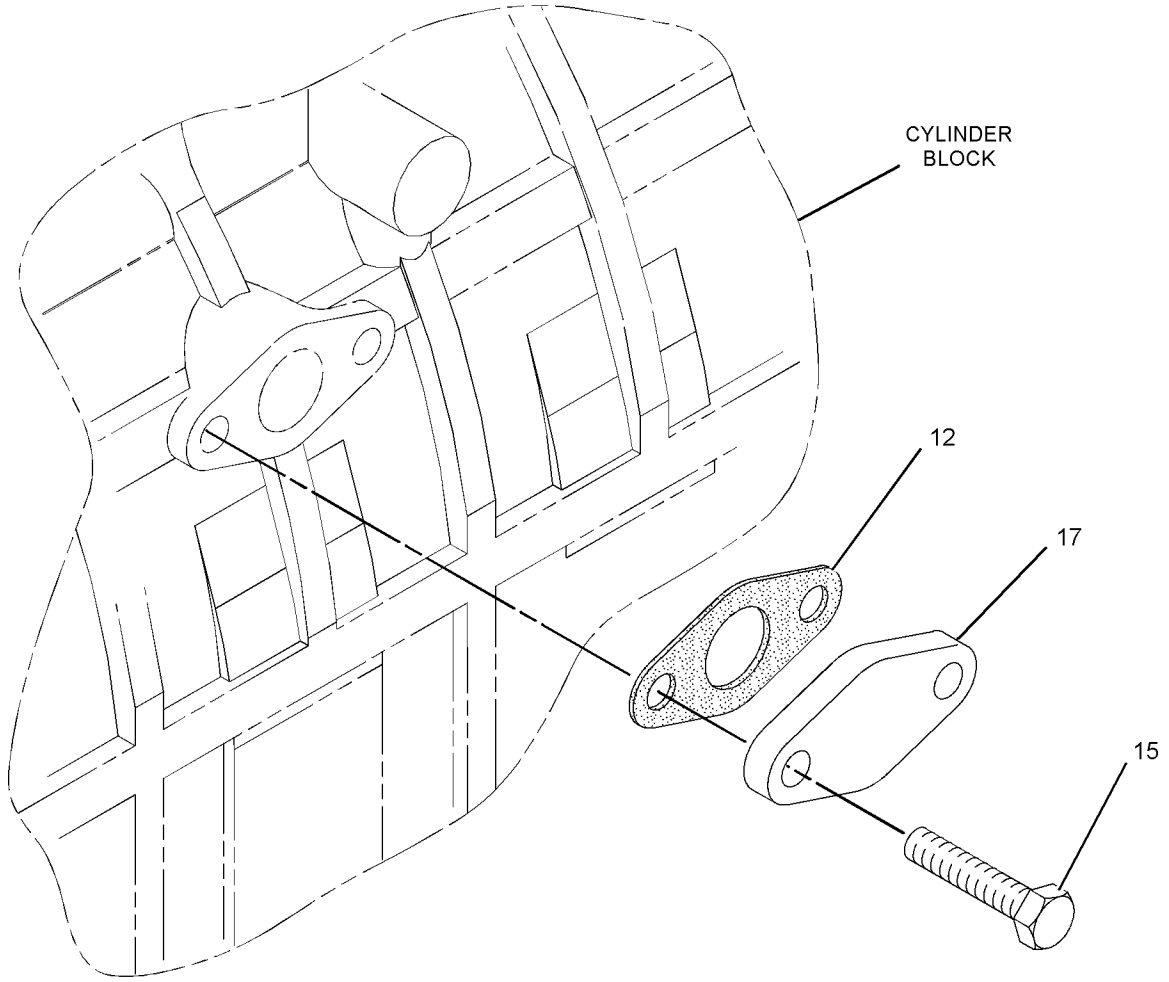

GRAPHIC #1 g01634256

322-2424 **COVER GP-VALVE MECHANISM (**contd.**)** **i02908406**

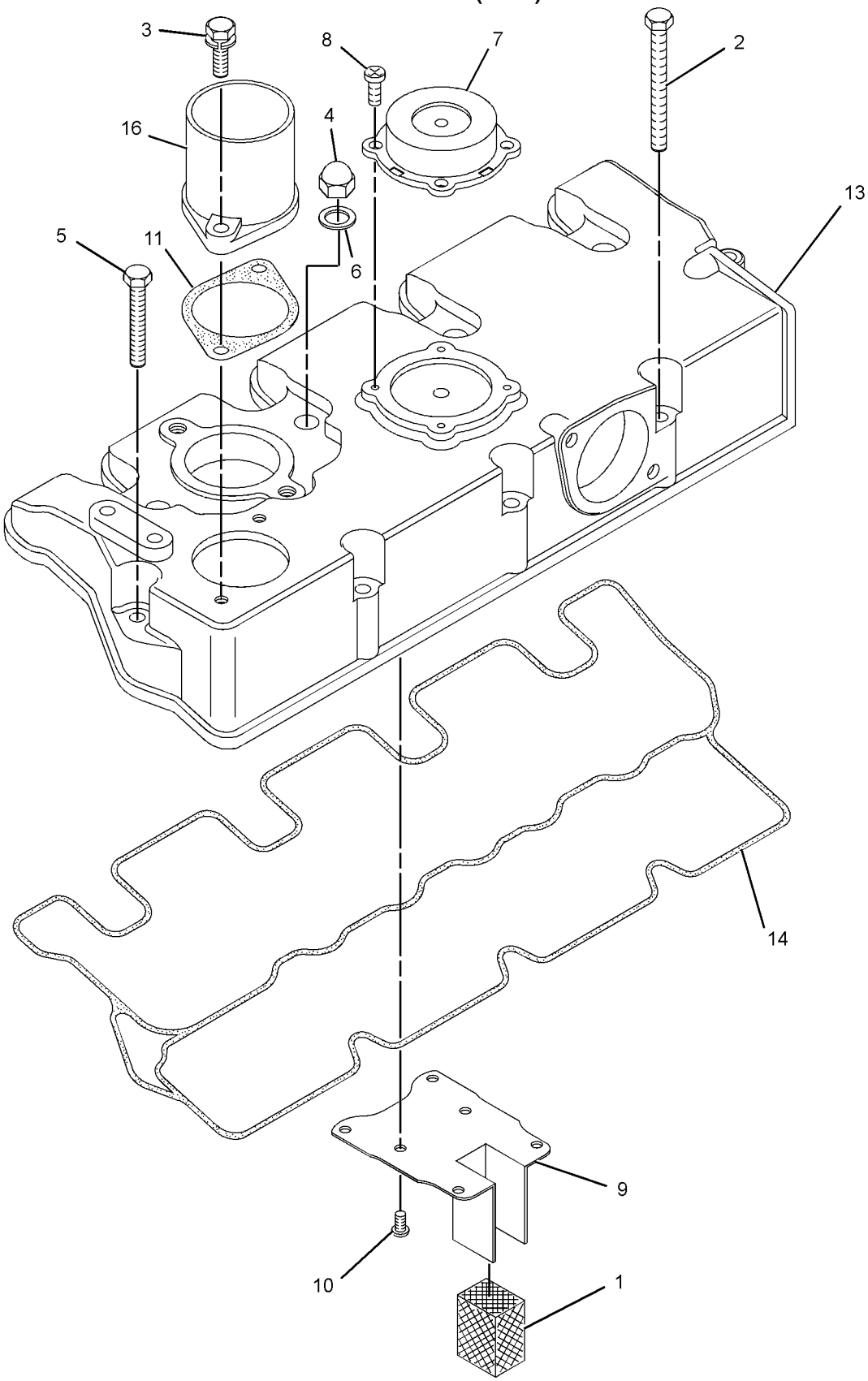

GRAPHIC #2 <END> g01634259

322-2424 COVER GP-VALVE MECHANISM

PART OF 499-6420 ENGINE AR-PRIMARY

TYPE 2

SMCS-1107 **i07769108**

NOTE	REF NO	GRAPHIC REF	PART NUMBER	QTY	PART NAME 1 2 3 4 5 6 (PRODUCT LEVEL)	SEE PAGE
	1	2	**153-5939**	1	STOPPER (OIL)	
	2	2	**153-5962**	3	BOLT AS	
	3	2	**153-7640**	2	BOLT AS	
M	4	2	**539-0439**	4	NUT (M10X1.25-THD)	
M	5	2	**360-9545**	1	STUD (M6X1X48-MM)	
	6	2	**246-4361**	4	WASHER (10.5X14X1.5-MM THK)	
	7	2	**217-5859**	1	VALVE-BREATHER (CRANKCASE)	
M	8	2	**217-5860**	4	BOLT (M4X0.7X8-MM)	
	9	2	**320-8401**	1	PLATE-RETAINING	
	10	2	**217-5862**	6	SCREW (SELF-TAPPING)	
	11	2	**494-9569**	1	GASKET	
	12	2	**165-2140**	1	BOLT AS	
	13	2	**476-5586**	1	COVER-HEAD	
	14	2	**233-0695**	1	SEAL-VALVE COVER	
	16	2	**309-6735**	1	TUBE-AIR	
M	17	2	**153-5960**	1	NUT (M6X1-THD)	
	18	1	**288-6539**	1	CAP	

M - METRIC PART

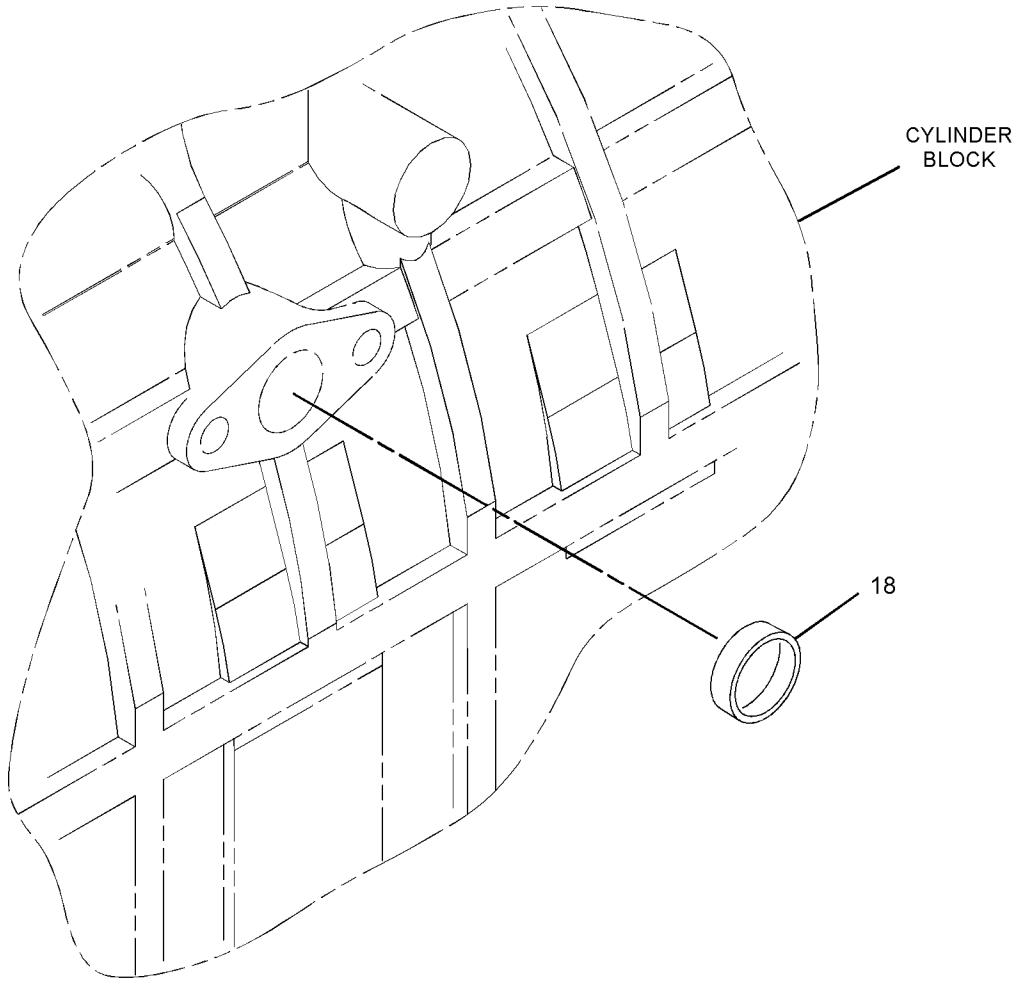

GRAPHIC #1 g01762195

322-2424 **COVER GP-VALVE MECHANISM (**contd.**)** **i07769108**

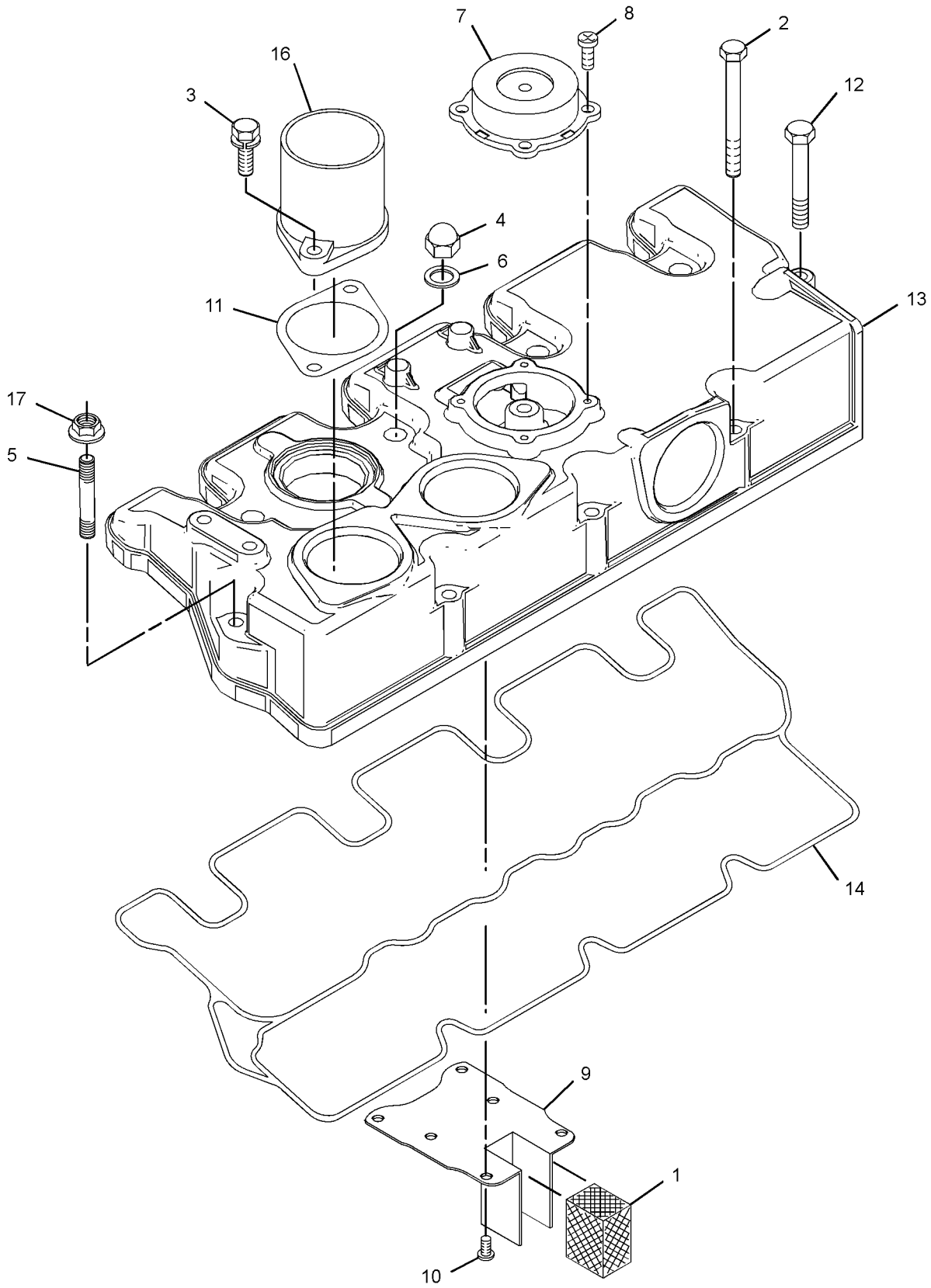

GRAPHIC #2 <END> g06105928

322-2424 COVER GP-VALVE MECHANISM

PART OF 499-6420 ENGINE AR-PRIMARY

TYPE 3

SMCS-1107 **i08612312**

NOTE	REF NO	GRAPHIC REF	PART NUMBER	QTY	PART NAME 1 2 3 4 5 6 (PRODUCT LEVEL)	SEE PAGE
	1	2	**153-5939**	1	STOPPER (OIL)	
	2	2	**153-5962**	3	BOLT AS	
	3	2	**153-7640**	2	BOLT AS	
M	4	2	**539-0439**	4	NUT (M10X1.25-THD)	
M	5	2	**360-9545**	1	STUD (M6X1X48-MM)	
	6	2	**246-4361**	4	WASHER (10.5X14X1.5-MM THK)	
	7	2	**217-5859**	1	VALVE-BREATHER (CRANKCASE)	
M	8	2	**217-5860**	4	BOLT (M4X0.7X8-MM)	
	9	2	**320-8401**	1	PLATE-RETAINING	
	10	2	**217-5862**	6	SCREW (SELF-TAPPING)	
	11	2	**494-9569**	1	GASKET	
	12	2	**165-2140**	1	BOLT AS	
C	13	2	**583-6832**	1	COVER-HEAD	
	14	2	**233-0695**	1	SEAL-VALVE COVER	
C	16	2	**560-8837**	1	ADAPTER	
M	17	2	**153-5960**	1	NUT (M6X1-THD)	
	18	1	**288-6539**	1	CAP	

C - CHANGE FROM PREVIOUS TYPE
M - METRIC PART

322-2424 **COVER GP-VALVE MECHANISM (**contd.**)** **i08612312**

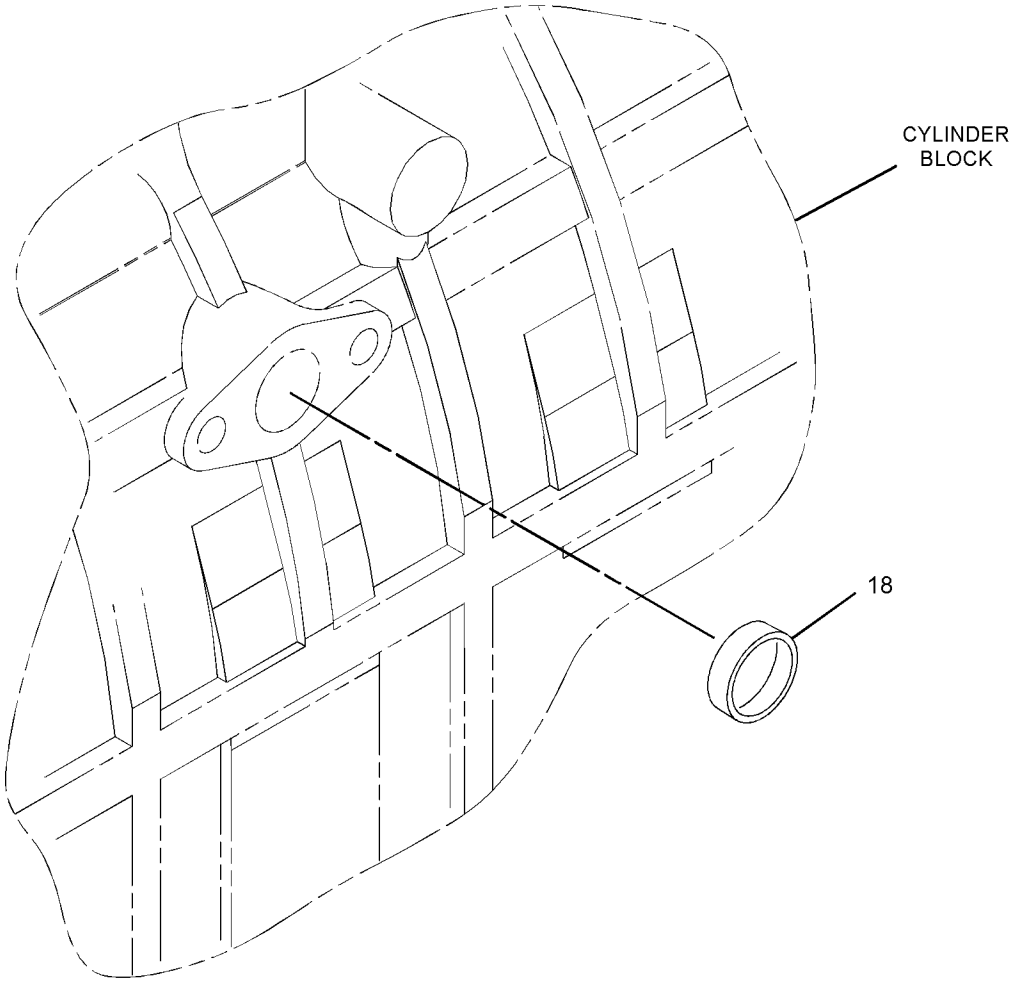

GRAPHIC #1 g01762195

322-2424 **COVER GP-VALVE MECHANISM (**contd.**)** **i08612312**

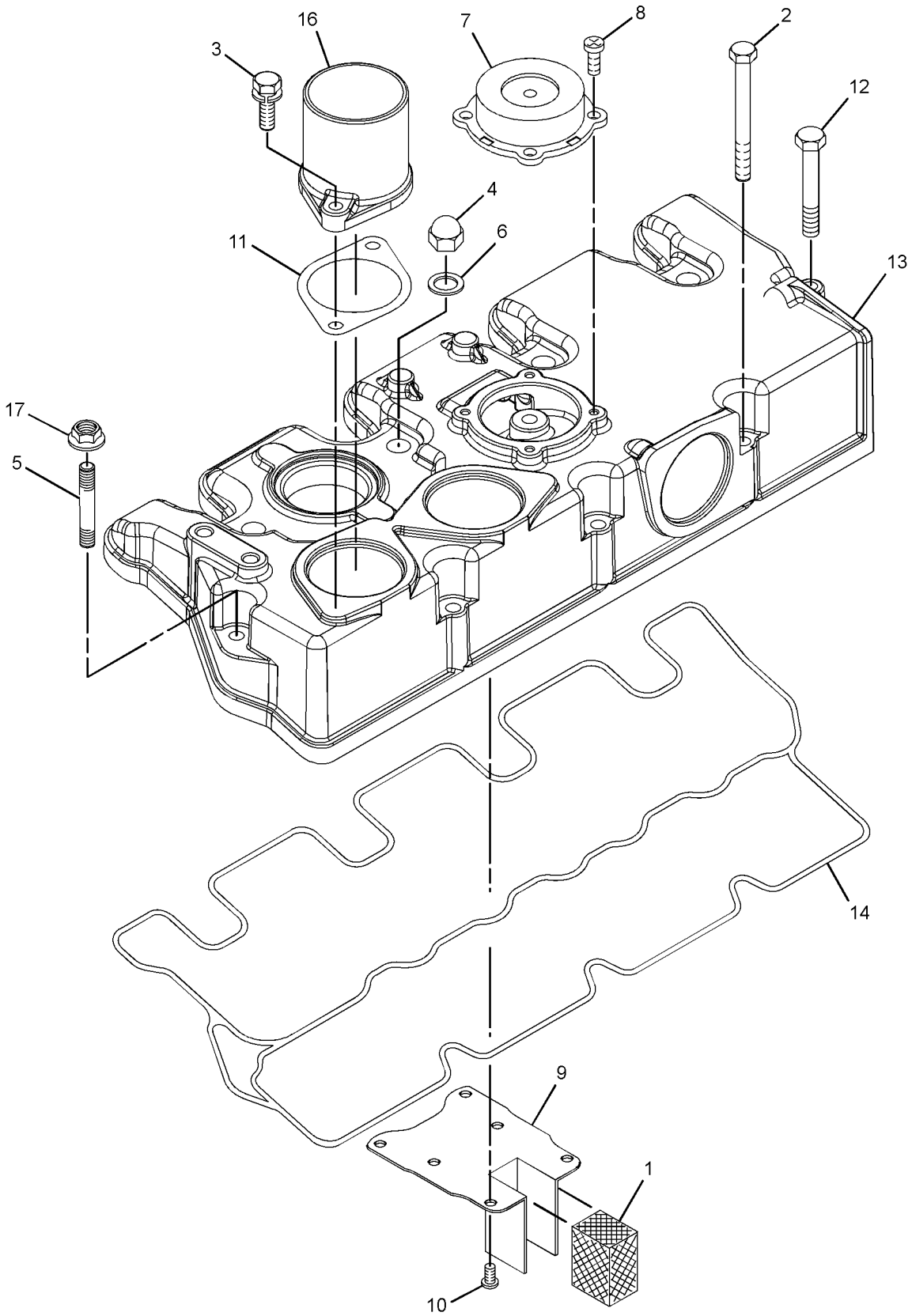

GRAPHIC #2 <END> g07548308

466-1519 COVER GP-VALVE MECHANISM

SMCS-1107 **i06790134**

NOTE	REF NO	GRAPHIC REF	PART NUMBER	QTY	PART NAME 1 2 3 4 5 6 (PRODUCT LEVEL)	SEE PAGE
M	1	1	**360-9545**	1	STUD (M6X1X48-MM)	
M	2	1	**153-5960**	1	NUT (M6X1-THD)	
	3	1	**153-5939**	1	STOPPER (OIL)	
	4	1	**153-5962**	3	BOLT AS	
					(EACH INCLUDES)	
		1	**3B-4504**	1	LOCKWASHER	
M		1	**7X-2535**	1	BOLT (M6X1X60-MM)	
	5	1	**476-5586**	1	COVER-HEAD	
	6	1	**233-0695**	1	SEAL-VALVE COVER	
	7	1	**153-7640**	2	BOLT AS	
					(EACH INCLUDES)	
		1	**3B-4504**	1	LOCKWASHER	
M		1	**8T-4138**	1	BOLT (M6X1X20-MM)	
M	8	1	**154-1347**	4	NUT (M10X1.25-THD)	
	9	1	**494-9569**	1	GASKET	
	10	1	**217-5862**	6	SCREW (SELF-TAPPING)	
	11	1	**320-8401**	1	PLATE-RETAINING	
	12	1	**165-2140**	1	BOLT AS	
		1	**3B-4504**	1	LOCKWASHER	
M		1	**8C-8451**	1	BOLT (M6X1X40-MM)	
	13	1	**217-5859**	1	VALVE-BREATHER (CRANKCASE)	
	14	1	**246-4361**	4	WASHER (10.5X14X1.5-MM THK)	
	15	1	**288-6539**	1	CAP	
	16	1	**309-6735**	1	TUBE-AIR	
M	17	1	**217-5860**	4	BOLT (M4X0.7X8-MM)	

M - METRIC PART

466-1519 **COVER GP-VALVE MECHANISM (**contd.**)** **i06790134**

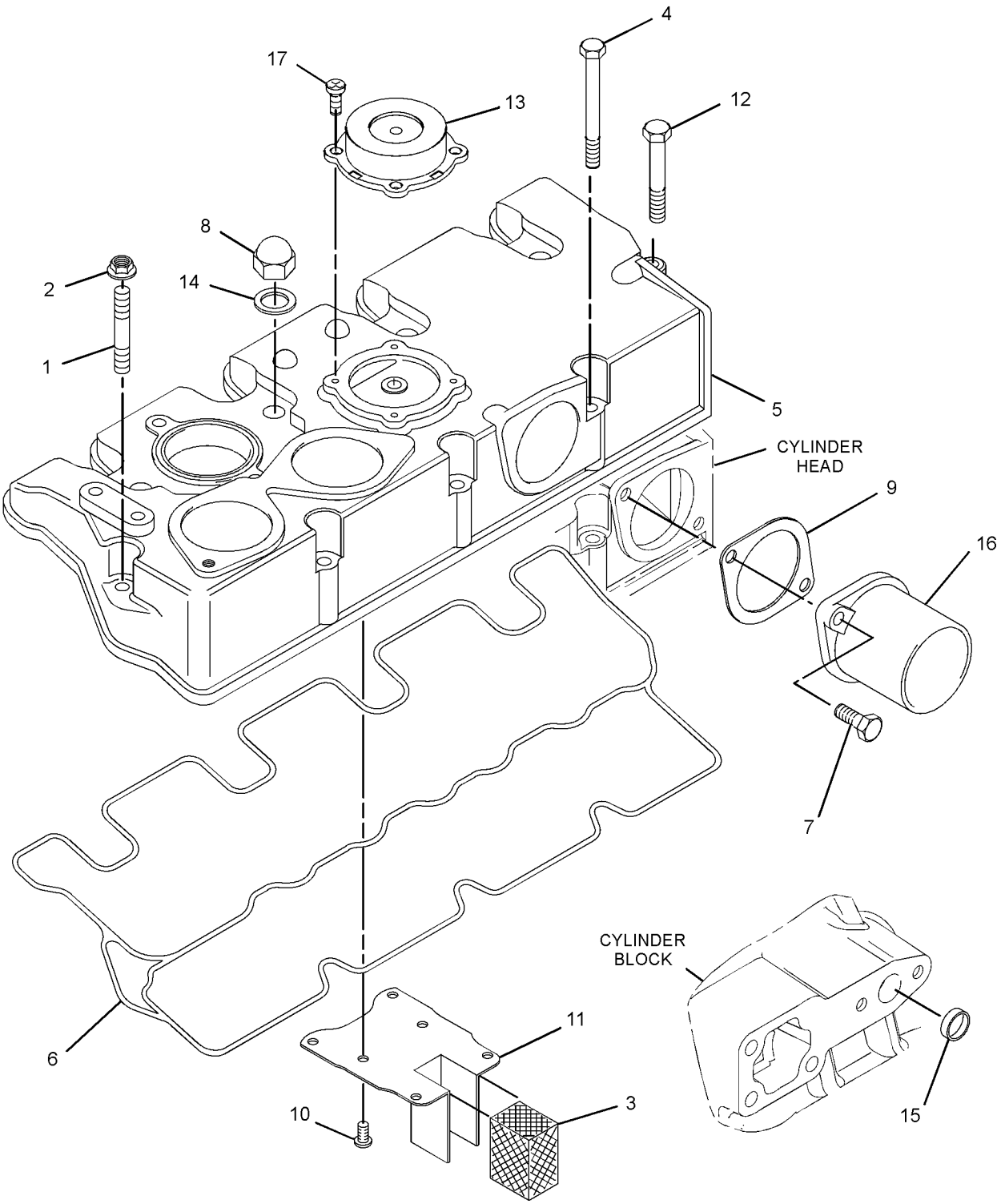

GRAPHIC #1 <END> g06194524

586-6654 COVER GP-VALVE MECHANISM

S/N: C6M10426-UP

PART OF 433-1379 ENGINE AR, 417-7273, 435-1641, 435-1642, 435-1647 ENGINE AR-PRIMARY

ALSO AN ATTACHMENT

SMCS-1107 **i08565780**

NOTE	REF NO	GRAPHIC REF	PART NUMBER	QTY	PART NAME 1 2 3 4 5 6 (PRODUCT LEVEL)	SEE PAGE
M	1	1	**153-5960**	1	NUT (M6X1-THD)	
	2	2	**153-5962**	3	BOLT AS	
	3	2	**153-7640**	2	BOLT AS	
	4	2	**165-2140**	1	BOLT AS	
	5	2	**217-5859**	1	VALVE-BREATHER (CRANKCASE)	
M	6	2	**217-5860**	4	BOLT (M4X0.7X8-MM)	
	7	1	**233-0695**	1	SEAL-VALVE COVER	
	8	1,2	**246-4361**	4	WASHER (10.5X14X1.5-MM THK)	
	9	2	**320-8401**	1	PLATE-RETAINING	
M	10	1	**360-9545**	1	STUD (M6X1X48-MM)	
	11	2	**494-9569**	1	GASKET	
M	12	1,2	**539-0439**	4	NUT (M10X1.25-THD)	
	13	2	**288-6539**	1	CAP	
	14	2	**153-5939**	1	STOPPER (OIL)	
	15	2	**217-5862**	6	SCREW (SELF-TAPPING)	
	16	2	**560-8837**	1	ADAPTER	
	17	1	**583-6830**	1	COVER-HEAD	
	18	1	**154-0175**	1	PLUG	

M - METRIC PART

586-6654 **COVER GP-VALVE MECHANISM (**contd.**)** **i08565780**

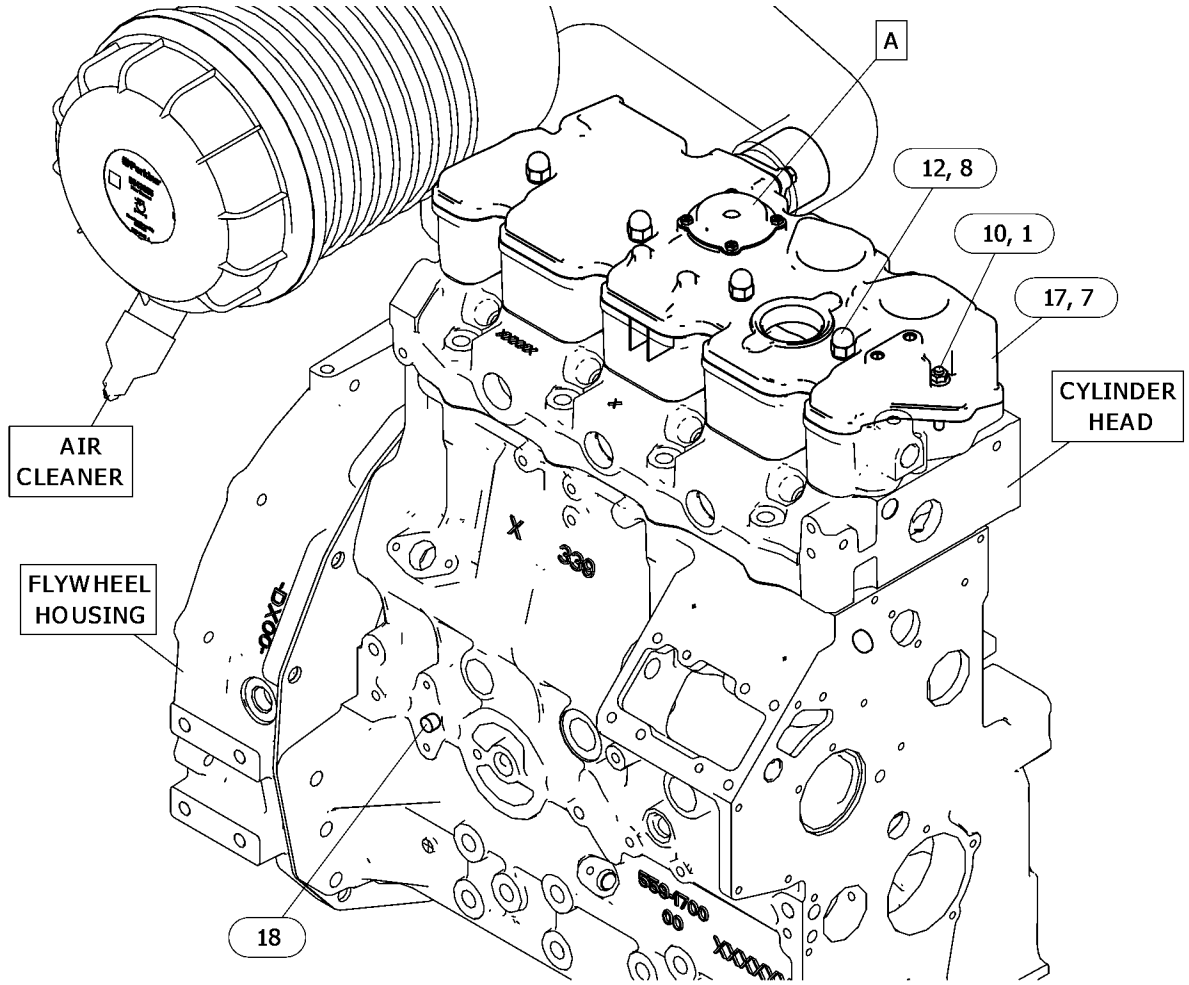

GRAPHIC #1 g06720818

586-6654 **COVER GP-VALVE MECHANISM (**contd.**)** **i08565780**

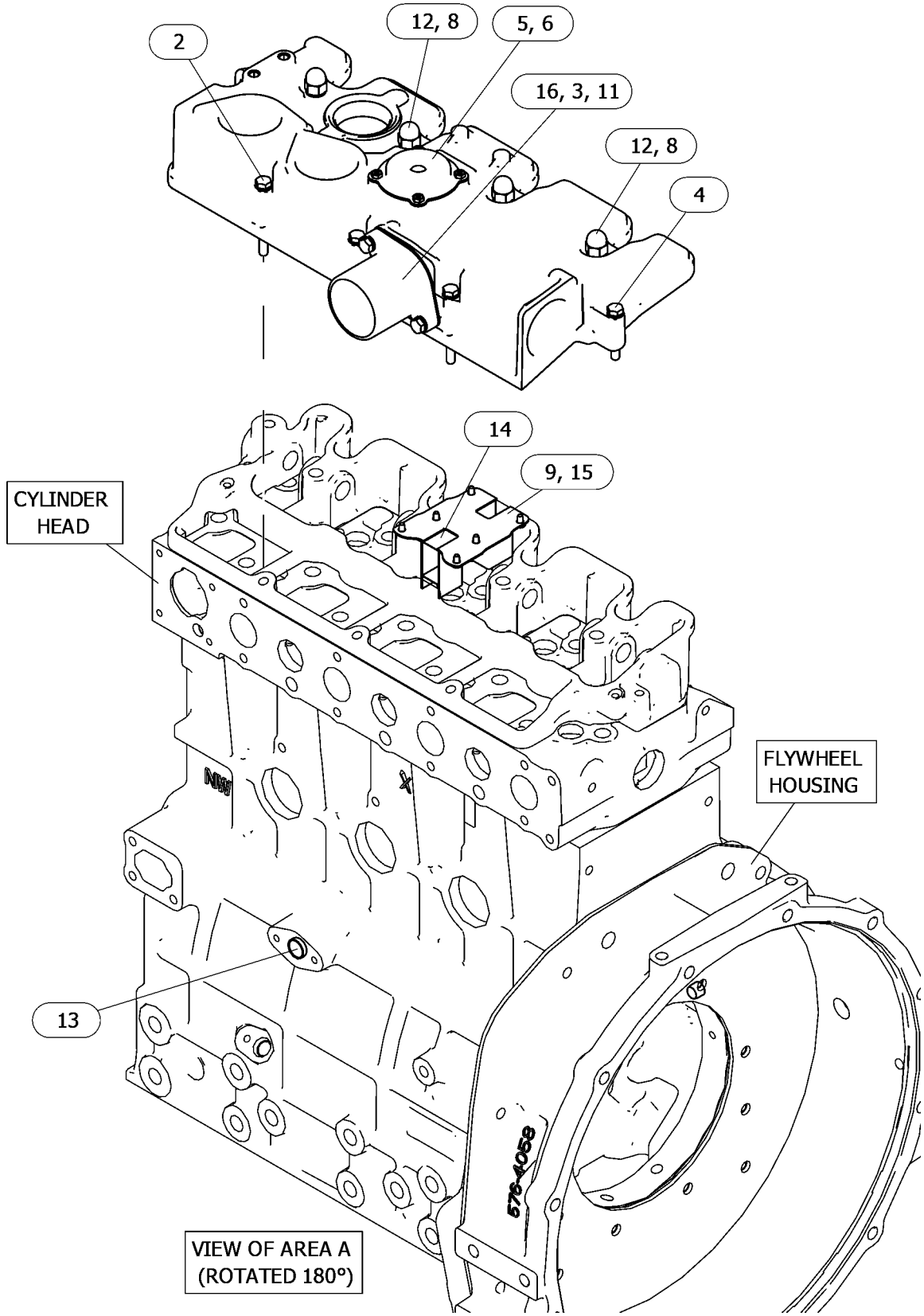

GRAPHIC #2 <END> g06720818_01

586-6656 COVER GP-VALVE MECHANISM

S/N: C6M10291-UP

SMCS-1107 **i08802835**

NOTE	REF NO	GRAPHIC REF	PART NUMBER	QTY	PART NAME 1 2 3 4 5 6 (PRODUCT LEVEL)	SEE PAGE
M	1	2	**153-5960**	1	NUT (M6X1-THD)	
	2	2	**153-5962**	3	BOLT AS	
	3	2	**153-7640**	2	BOLT AS	
	4	2	**165-2140**	1	BOLT AS	
	5	2	**217-5859**	1	VALVE-BREATHER (CRANKCASE)	
M	6	2	**217-5860**	4	BOLT (M4X0.7X8-MM)	
	7	1	**233-0695**	1	SEAL-VALVE COVER	
	8	2	**246-4361**	4	WASHER (10.5X14X1.5-MM THK)	
	9	2	**320-8401**	1	PLATE-RETAINING	
M	10	2	**360-9545**	1	STUD (M6X1X48-MM)	
	11	2	**494-9569**	1	GASKET	
M	12	2	**539-0439**	4	NUT (M10X1.25-THD)	
	13	1	**288-6539**	1	CAP	
	14	2	**153-5939**	1	STOPPER (OIL)	
	15	2	**217-5862**	6	SCREW (SELF-TAPPING)	
	16	2	**560-8837**	1	ADAPTER	
	17	1	**583-6831**	1	COVER-HEAD	
	18	1	**154-0175**	1	PLUG	

M - METRIC PART

586-6656 **COVER GP-VALVE MECHANISM (**contd.**)** **i08802835**

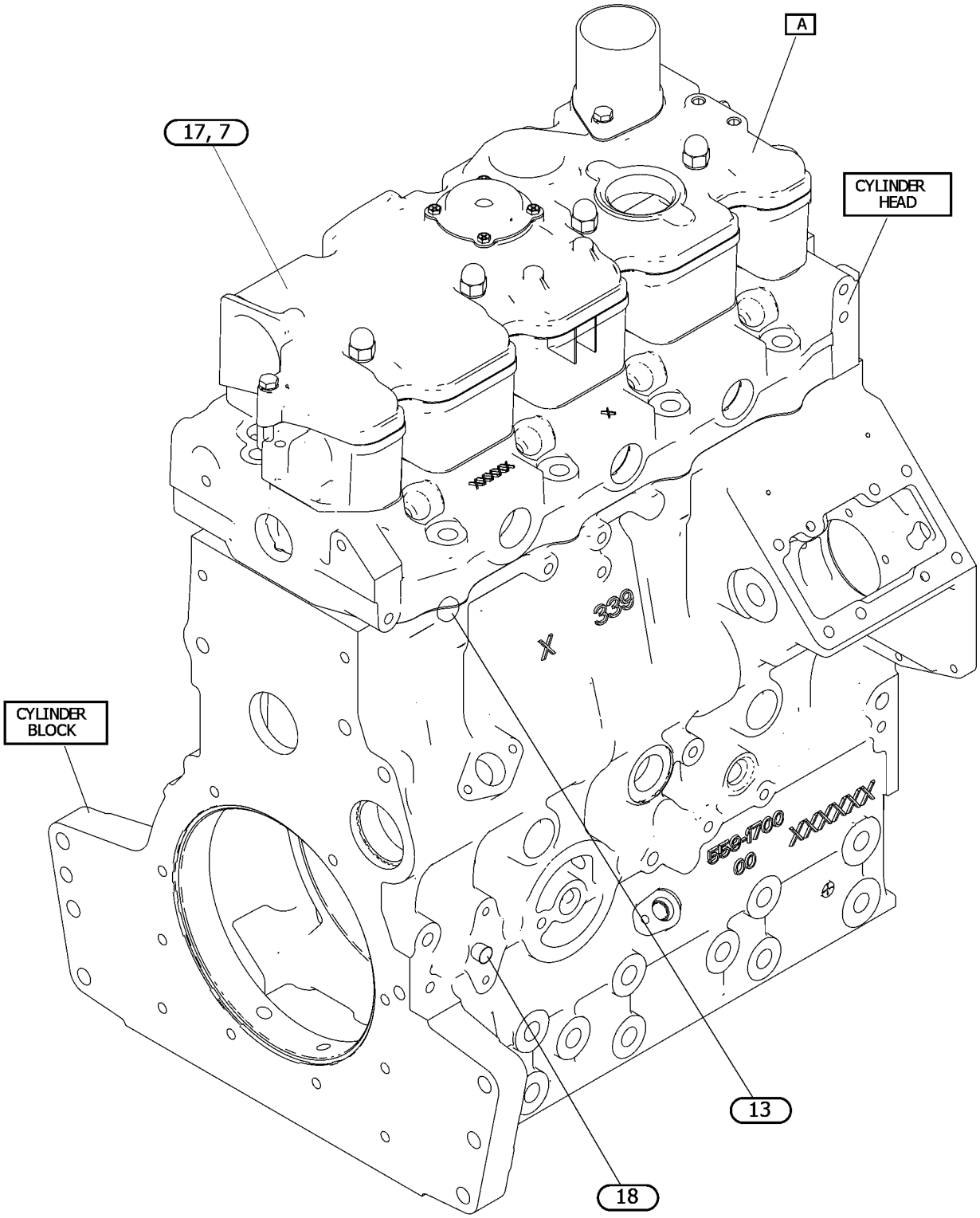

GRAPHIC #1 g07549795

586-6656 **COVER GP-VALVE MECHANISM (**contd.**)** **i08802835**

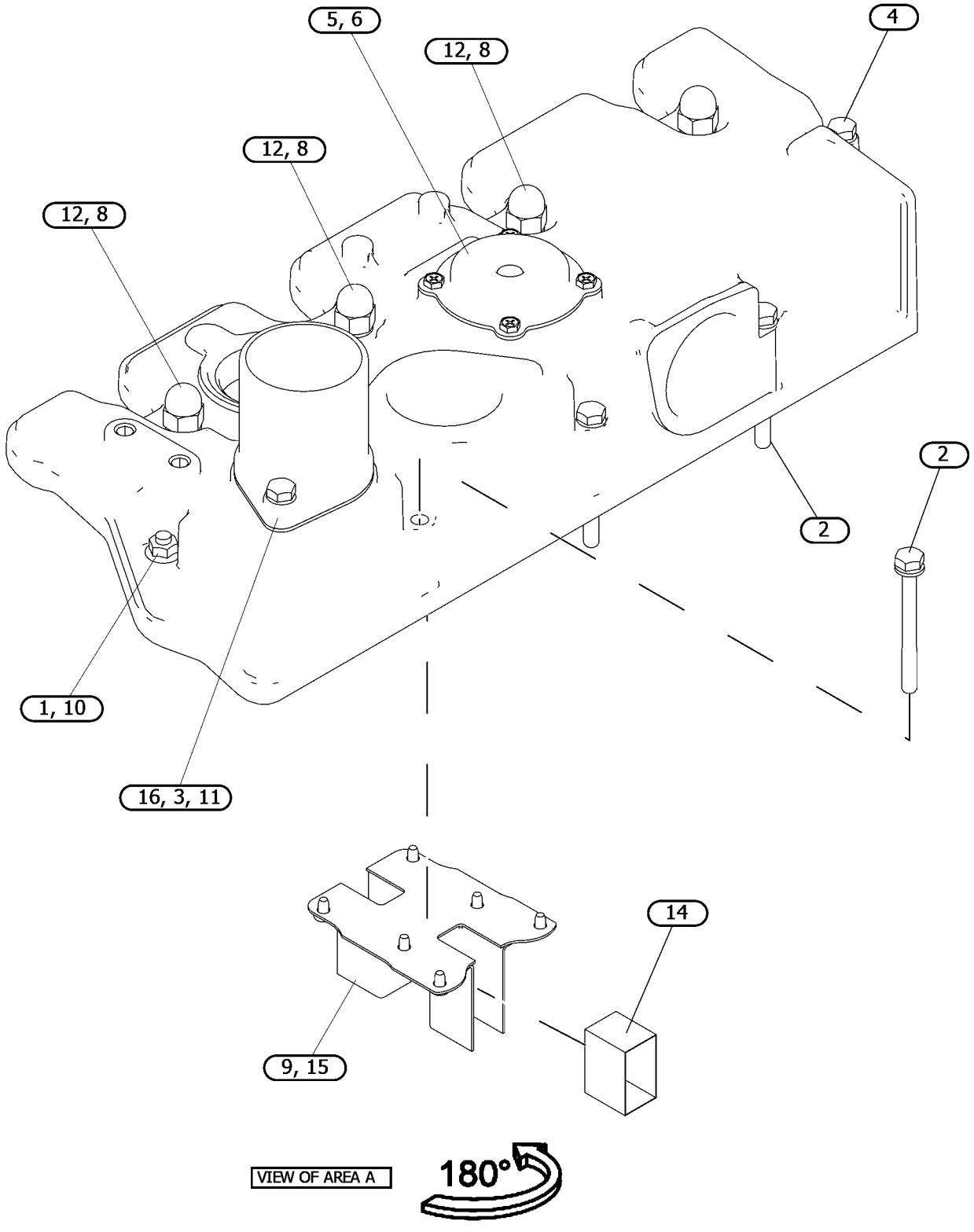

GRAPHIC #2 <END> g07549795_01

308-2283 CRANKSHAFT GP

PART OF 433-1380 ENGINE AR, 435-1636, 435-1658, 489-9224, 506-0518, 506-0519, 512-7969, 514-6556, 516-2639, 518-0165, 557-6086 ENGINE AR-PRIMARY
TYPE 1

SMCS-1202 **i09912064**

NOTE	REF NO	GRAPHIC REF	PART NUMBER	QTY	PART NAME 1 2 3 4 5 6 (PRODUCT LEVEL)	SEE PAGE
	1	1	**154-0181**	1	CAP AS-BEARING	
	1A	1	**153-5402**	2	DOWEL	
M	1B	1	**154-0385**	2	BOLT (M10X1.5X55-MM)	
	2	1	**154-0386**	1	CAP AS-BEARING	
	2A	1	**153-5402**	2	DOWEL	
M	2B	1	**154-0385**	2	BOLT (M10X1.5X55-MM)	
	3	1	**154-0388**	1	CAP AS-BEARING	
	3A	1	**153-5402**	2	DOWEL	
M	3B	1	**154-0385**	2	BOLT (M10X1.5X55-MM)	
	4	1	**154-0389**	1	CAP AS-BEARING	
	4A	1	**153-5402**	2	DOWEL	
M	4B	1	**154-0385**	2	BOLT (M10X1.5X55-MM)	
	5	1	**154-1230**	1	WASHER-THRUST	
	6	1	**154-1231**	2	WASHER-THRUST	
M	7	1	**6I-0650**	3	BOLT (M10X1.5X65-MM)	
M	8	1	**183-1336**	2	BOLT (M8X1.25X60-MM)	
	9	1	**308-1852**	1	CRANKSHAFT AS	
	9A	1	**153-5518**	1	KEY	
	9B	1	**308-1853**	1	GEAR-CRANKSHAFT (33-TEETH) (62-TEETH)	
	10	1	**599-8820**	1	KIT-BEARING	
AB		1	**599-8821**		KIT-BEARING (0.25-MM US)	
AB		1	**599-8823**		KIT-BEARING (0.50-MM US)	
	11	1	**599-8880**	1	KIT-BEARING	
AB		1	**599-8881**		KIT-BEARING (0.25-MM US)	
AB		1	**599-8882**		KIT-BEARING (0.50-MM US)	

A - NOT PART OF THIS GROUP
B - USE AS REQUIRED
M - METRIC PART

308-2283 **CRANKSHAFT GP** (contd.) **i09912064**

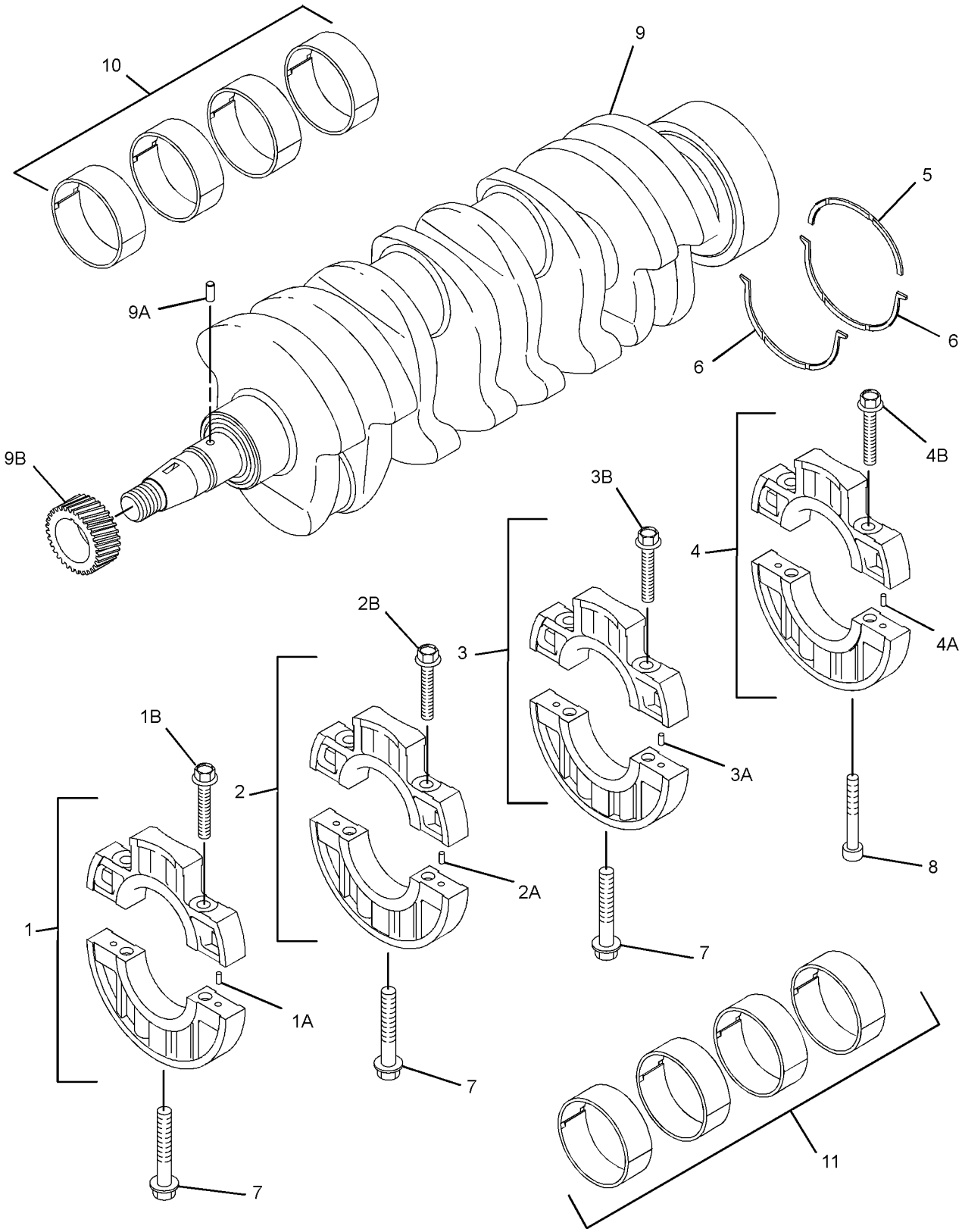

GRAPHIC #1 <END> g07612573

308-2283 CRANKSHAFT GP

PART OF 435-1636, 435-1658, 489-9224, 506-0518, 506-0519, 512-7969, 514-6556, 516-2639, 518-0165, 557-6086 ENGINE AR-PRIMARY

TYPE 2

SMCS-1202 **i09916247**

NOTE	REF NO	GRAPHIC REF	PART NUMBER	QTY	PART NAME 1 2 3 4 5 6 (PRODUCT LEVEL)	SEE PAGE
	1	1	**154-0181**	1	CAP AS-BEARING	
	1A	1	**153-5402**	2	DOWEL	
M	1B	1	**154-0385**	2	BOLT (M10X1.5X55-MM)	
	2	1	**154-0386**	1	CAP AS-BEARING	
	2A	1	**153-5402**	2	DOWEL	
M	2B	1	**154-0385**	2	BOLT (M10X1.5X55-MM)	
	3	1	**154-0388**	1	CAP AS-BEARING	
	3A	1	**153-5402**	2	DOWEL	
M	3B	1	**154-0385**	2	BOLT (M10X1.5X55-MM)	
	4	1	**154-0389**	1	CAP AS-BEARING	
	4A	1	**153-5402**	2	DOWEL	
M	4B	1	**154-0385**	2	BOLT (M10X1.5X55-MM)	
	5	1	**154-1230**	1	WASHER-THRUST	
	6	1	**154-1231**	2	WASHER-THRUST	
M	7	1	**6I-0650**	3	BOLT (M10X1.5X65-MM)	
M	8	1	**183-1336**	2	BOLT (M8X1.25X60-MM)	
	9	1	**308-1852**	1	CRANKSHAFT AS	
	9A	1	**153-5518**	1	KEY	
	9B	1	**308-1853**	1	GEAR-CRANKSHAFT (33-TEETH)	
CJ	10	1	**627-6877**	1	KIT-BEARING	
					—OR—	
AF			**636-6709**	1	KIT-BEARING (0.25-MM US)	
					—OR—	
AF			**636-6712**	1	KIT-BEARING (0.50-MM US)	
	11	1	**599-8880**	1	KIT-BEARING	
					—OR—	
AF			**599-8881**	1	KIT-BEARING (0.25-MM US)	
					—OR—	
AF			**599-8882**	1	KIT-BEARING (0.50-MM US)	

A - NOT PART OF THIS GROUP
C - CHANGE FROM PREVIOUS TYPE
F - NOT SHOWN
J - FOR USE WITH ROD AS 585-1921
M - METRIC PART

308-2283 **CRANKSHAFT GP** (contd.) **i09916247**

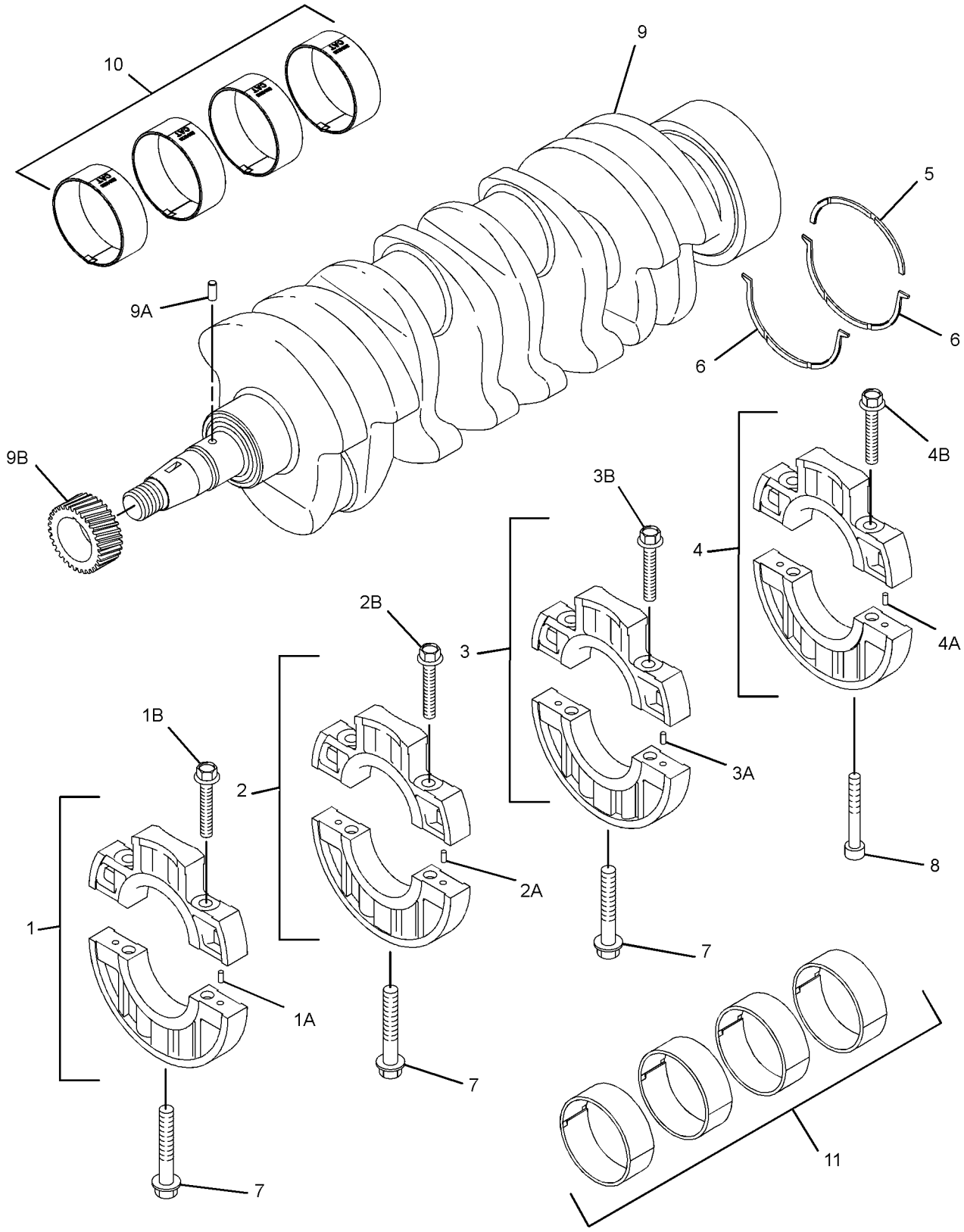

GRAPHIC #1 <END> g07637777

309-6713 CRANKSHAFT GP

PART OF 435-1645, 435-1649 CYLINDER BLOCK GP-LONG, 433-1379 ENGINE AR, 417-7273, 435-1641, 435-1642, 435-1646, 435-1647, 489-4263, 506-0520, 513-2239, 557-7471 ENGINE AR-PRIMARY
ALSO AN ATTACHMENT

SMCS-1202 **i09555930**

NOTE	REF NO	GRAPHIC REF	PART NUMBER	QTY	PART NAME 1 2 3 4 5 6 (PRODUCT LEVEL)	SEE PAGE
	1	1	**154-0181**	1	CAP AS-BEARING	
	1A	1	**153-5402**	2	DOWEL	
M	1B	1	**154-0385**	2	BOLT (M10X1.5X55-MM)	
	2	1	**154-0386**	1	CAP AS-BEARING	
	2A	1	**153-5402**	2	DOWEL	
M	2B	1	**154-0385**	2	BOLT (M10X1.5X55-MM)	
	3	1	**154-0388**	1	CAP AS-BEARING	
	3A	1	**153-5402**	2	DOWEL	
M	3B	1	**154-0385**	2	BOLT (M10X1.5X55-MM)	
	4	1	**154-0389**	1	CAP AS-BEARING	
	4A	1	**153-5402**	2	DOWEL	
M	4B	1	**154-0385**	2	BOLT (M10X1.5X55-MM)	
	5	1	**154-1230**	1	WASHER-THRUST	
	6	1	**154-1231**	2	WASHER-THRUST	
M	7	1	**6I-0650**	3	BOLT (M10X1.5X65-MM)	
M	8	1	**8T-9535**	2	BOLT-SOCKET HEAD (M8X1.25X60-MM)	
	9	1	**308-1852**	1	CRANKSHAFT AS	
	9A	1	**153-5518**	1	KEY	
	9B	1	**308-1853**	1	GEAR-CRANKSHAFT (33-TEETH) (62-TEETH)	
	10	1	**599-8820**	1	KIT-BEARING (STANDARD ROD)	
AB		1	**599-8821**		KIT-BEARING (0.25-MM US)	
AB		1	**599-8823**		KIT-BEARING (0.50-MM US)	
	11	1	**599-8880**	1	KIT-BEARING (STANDARD)	
AB		1	**599-8881**		KIT-BEARING (0.25-MM US)	
AB		1	**599-8882**		KIT-BEARING (0.50-MM US)	

A - NOT PART OF THIS GROUP
B - USE AS REQUIRED
M - METRIC PART

309-6713 **CRANKSHAFT GP** (contd.) **i09555930**

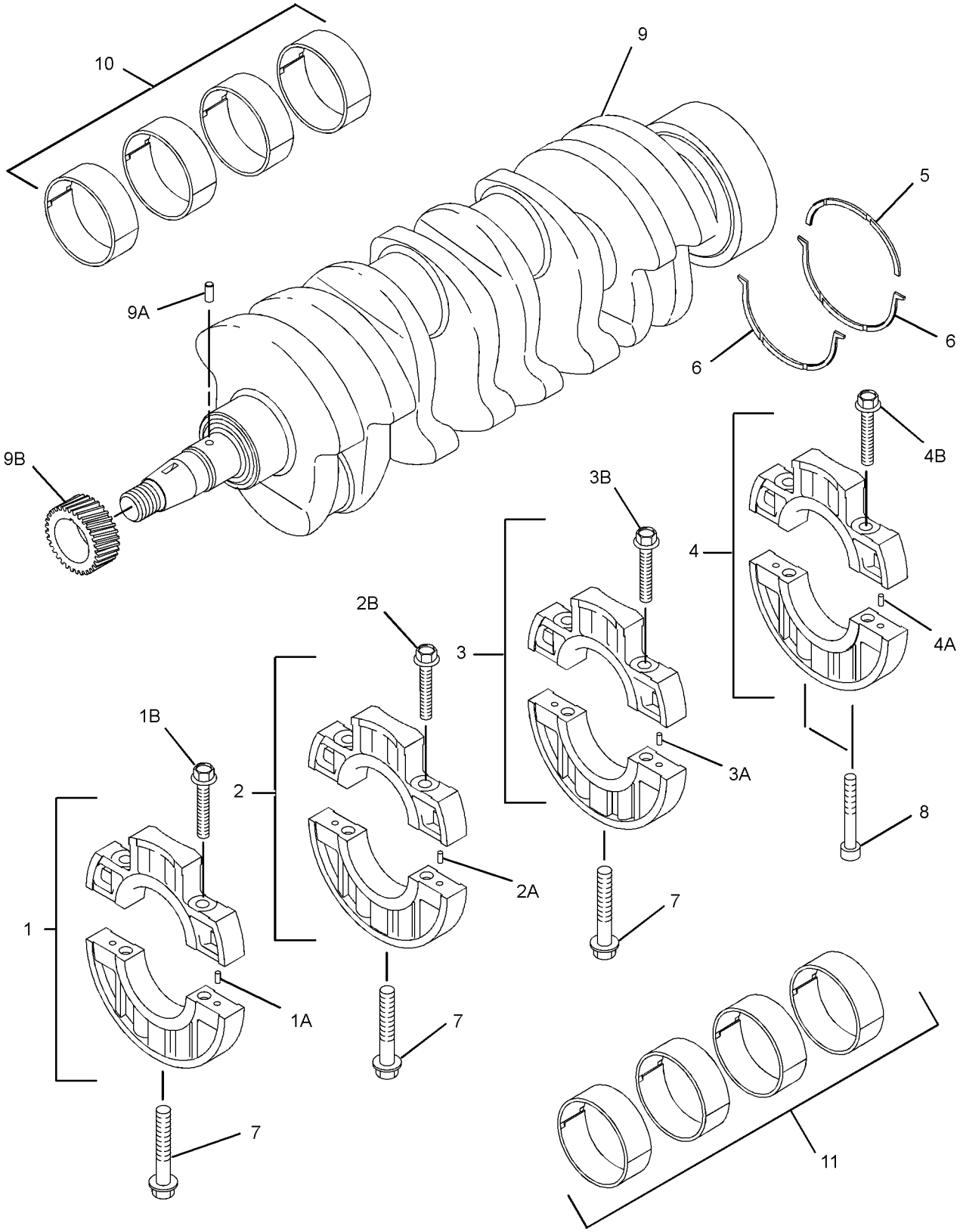

GRAPHIC #1 <END> g07587865

340-5782 CRANKSHAFT GP

PART OF 499-6420 ENGINE AR-PRIMARY

SMCS-1202 **i08810874**

NOTE	REF NO	GRAPHIC REF	PART NUMBER	QTY	PART NAME 1 2 3 4 5 6 (PRODUCT LEVEL)	SEE PAGE
	1	1	**154-0181**	1	CAP AS-BEARING	
	1A	1	**153-5402**	2	DOWEL	
M	1B	1	**154-0385**	2	BOLT (M10X1.5X55-MM)	
	2	1	**154-0386**	1	CAP AS-BEARING	
	2A	1	**153-5402**	2	DOWEL	
M	2B	1	**154-0385**	2	BOLT (M10X1.5X55-MM)	
	3	1	**154-0388**	1	CAP AS-BEARING	
	3A	1	**153-5402**	2	DOWEL	
M	3B	1	**154-0385**	2	BOLT (M10X1.5X55-MM)	
	4	1	**154-0389**	1	CAP AS-BEARING	
	4A	1	**153-5402**	2	DOWEL	
M	4B	1	**154-0385**	2	BOLT (M10X1.5X55-MM)	
	7	1	**154-1230**	1	WASHER-THRUST	
	8	1	**154-1231**	2	WASHER-THRUST	
M	9	1	**6I-0650**	3	BOLT (M10X1.5X65-MM)	
M	10	1	**8T-9535**	2	BOLT-SOCKET HEAD (M8X1.25X60-MM)	
	11	1	**308-1852**	1	CRANKSHAFT AS	
	11A	1	**153-5518**	1	KEY	
	11B	1	**308-1853**	1	GEAR-CRANKSHAFT (33-TEETH) (62-TEETH)	
	12	1	**599-8880**	1	KIT-BEARING (MAIN)	
AB		1	**599-8882**		KIT-BEARING (0.50-MM US)	
AB		1	**599-8881**		KIT-BEARING (0.25-MM US)	
	13	1	**599-8820**	1	KIT-BEARING (STANDARD ROD)	
AB		1	**599-8821**		KIT-BEARING (0.25-MM US)	
AB		1	**599-8823**		KIT-BEARING (0.50-MM US)	

A - NOT PART OF THIS GROUP
B - USE AS REQUIRED
M - METRIC PART

340-5782 **CRANKSHAFT GP** (contd.) **i08810874**

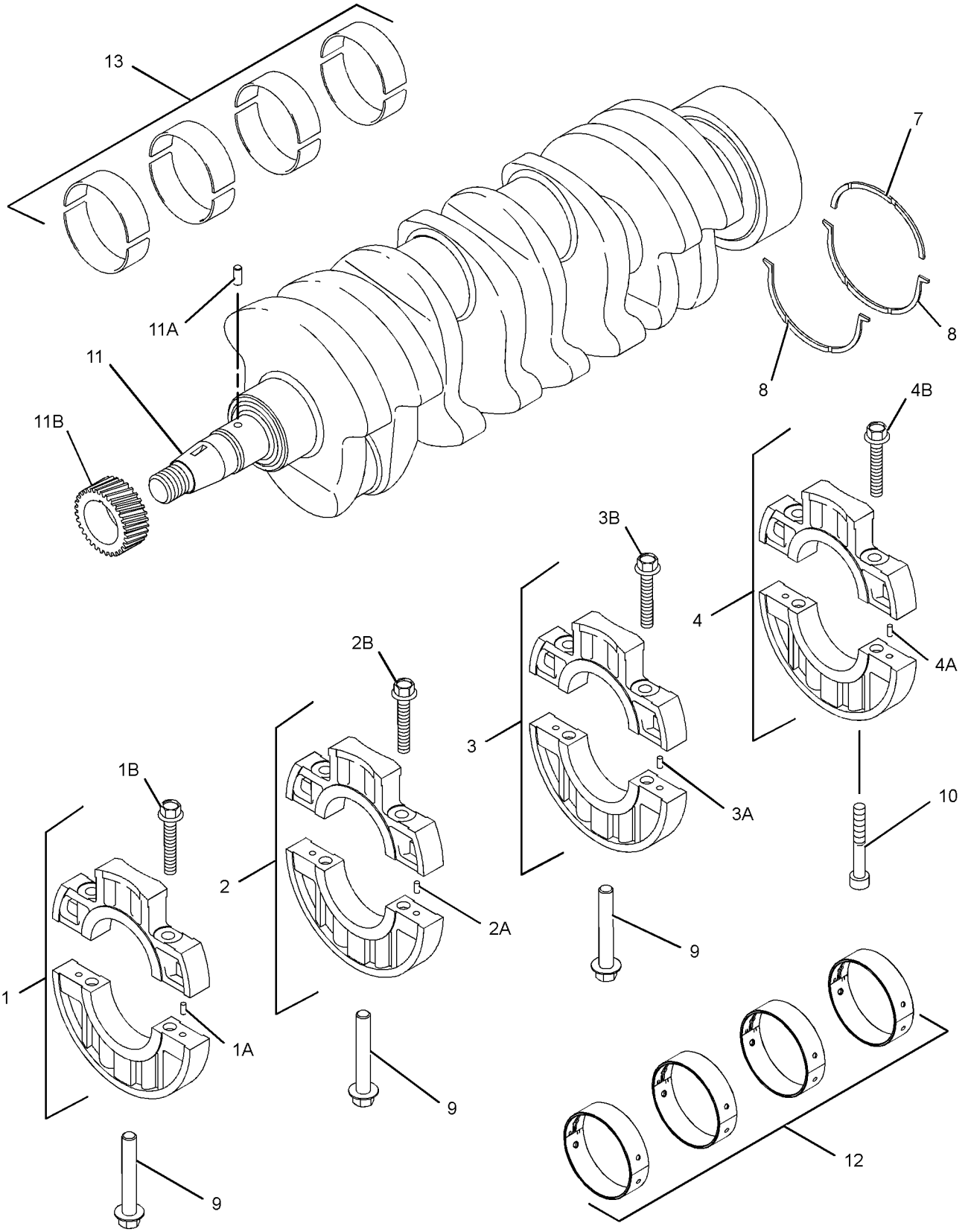

GRAPHIC #1 <END> g07616424

399-4716 CRANKSHAFT GP

PART OF 433-1379 ENGINE AR, 417-7273, 435-1636, 435-1641, 435-1642, 435-1647, 514-6556 ENGINE AR-PRIMARY
ALSO AN ATTACHMENT

SMCS-1202 **i08206499**

NOTE	REF NO	GRAPHIC REF	PART NUMBER	QTY	PART NAME 1 2 3 4 5 6 (PRODUCT LEVEL)	SEE PAGE
M	1	1	**6I-0650**	3	BOLT (M10X1.5X65-MM)	
	2	1	**154-0181**	1	CAP AS-BEARING	
	2A	1	**153-5402**	2	DOWEL	
M	2B	1	**154-0385**	2	BOLT (M10X1.5X55-MM) (M10X1.5X55-MM)	
	3	1	**154-0386**	1	CAP AS-BEARING	
	3A	1	**153-5402**	2	DOWEL	
M	3B	1	**154-0385**	2	BOLT (M10X1.5X55-MM) (M10X1.5X55-MM)	
	4	1	**154-0388**	1	CAP AS-BEARING	
	4A	1	**153-5402**	2	DOWEL	
M	4B	1	**154-0385**	2	BOLT (M10X1.5X55-MM) (M10X1.5X55-MM)	
	5	1	**154-0389**	1	CAP AS-BEARING	
	5A	1	**153-5402**	2	DOWEL	
M	5B	1	**154-0385**	2	BOLT (M10X1.5X55-MM) (M10X1.5X55-MM)	
	6	1	**154-1230**	1	WASHER-THRUST	
	7	1	**589-6469**	2	WASHER-THRUST	
M	8	1	**8T-9535**	2	BOLT-SOCKET HEAD (M8X1.25X60-MM)	
	9	1	**308-1852**	1	CRANKSHAFT AS	
	9A	1	**153-5518**	1	KEY	
	9B	1	**308-1853**	1	GEAR-CRANKSHAFT (33-TEETH)	
	10	1	*590-0696*	4	BEARING-LOWER	
	11	1	*590-0693*	4	BEARING-UPPER	
					AVAILABLE REPAIR KIT(S):	
			308-1854	1	KIT-BEARING (STANDARD)	
			308-2362	1	KIT-BEARING (0.25-MM US)	

M - METRIC PART

399-4716 **CRANKSHAFT GP** (contd.) **i08206499**

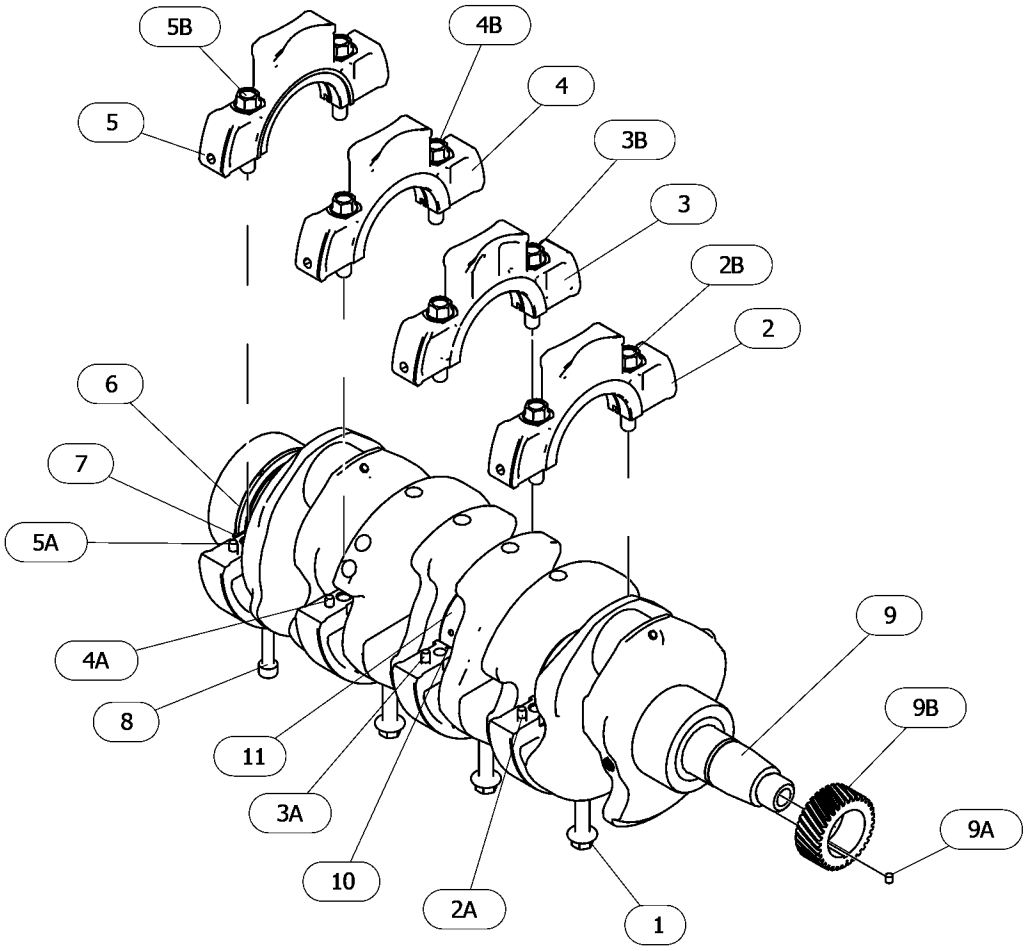

GRAPHIC #1 <END> g06586085

420-6408 CRANKSHAFT GP

PART OF 504-4602 ENGINE AR-PRIMARY

SMCS-1202 **i08810196**

NOTE	REF NO	GRAPHIC REF	PART NUMBER	QTY	PART NAME 1 2 3 4 5 6 (PRODUCT LEVEL)	SEE PAGE
	1	1	**154-0181**	1	CAP AS-BEARING	
	1A	1	**153-5402**	2	DOWEL	
M	1B	1	**154-0385**	2	BOLT (M10X1.5X55-MM)	
	2	1	**154-0386**	1	CAP AS-BEARING	
	2A	1	**153-5402**	2	DOWEL	
M	2B	1	**154-0385**	2	BOLT (M10X1.5X55-MM)	
	3	1	**154-0388**	1	CAP AS-BEARING	
	3A	1	**153-5402**	2	DOWEL	
M	3B	1	**154-0385**	2	BOLT (M10X1.5X55-MM)	
	4	1	**154-0389**	1	CAP AS-BEARING	
	4A	1	**153-5402**	2	DOWEL	
M	4B	1	**154-0385**	2	BOLT (M10X1.5X55-MM)	
	5	1	**154-1230**	1	WASHER-THRUST	
	6	1	**154-1231**	2	WASHER-THRUST	
M	7	1	**6I-0650**	3	BOLT (M10X1.5X65-MM)	
M	8	1	**8T-9535**	2	BOLT-SOCKET HEAD (M8X1.25X60-MM)	
	9	1	**308-1852**	1	CRANKSHAFT AS	
	9A	1	**153-5518**	1	KEY	
	9B	1	**308-1853**	1	GEAR-CRANKSHAFT (33-TEETH) (62-TEETH)	
	10	1	**599-8820**	1	KIT-BEARING (STANDARD)	
AB		1	**599-8821**		KIT-BEARING (0.25-MM US) (0.25-MM US)	
AB		1	**599-8823**		KIT-BEARING (0.50-MM US) (0.50-MM US)	
					(EACH KIT-BEARING INCLUDES BEARINGS)	
	11	1	**599-8880**	1	KIT-BEARING (STANDARD)	
AB		1	**599-8881**		KIT-BEARING (0.25-MM US) (0.25-MM US)	
AB		1	**599-8882**		KIT-BEARING (0.50-MM US) (0.50-MM US)	
					(EACH KIT-BEARING INCLUDES BEARINGS)	

A - NOT PART OF THIS GROUP
B - USE AS REQUIRED
M - METRIC PART

420-6408 **CRANKSHAFT GP** (contd.) **i08810196**

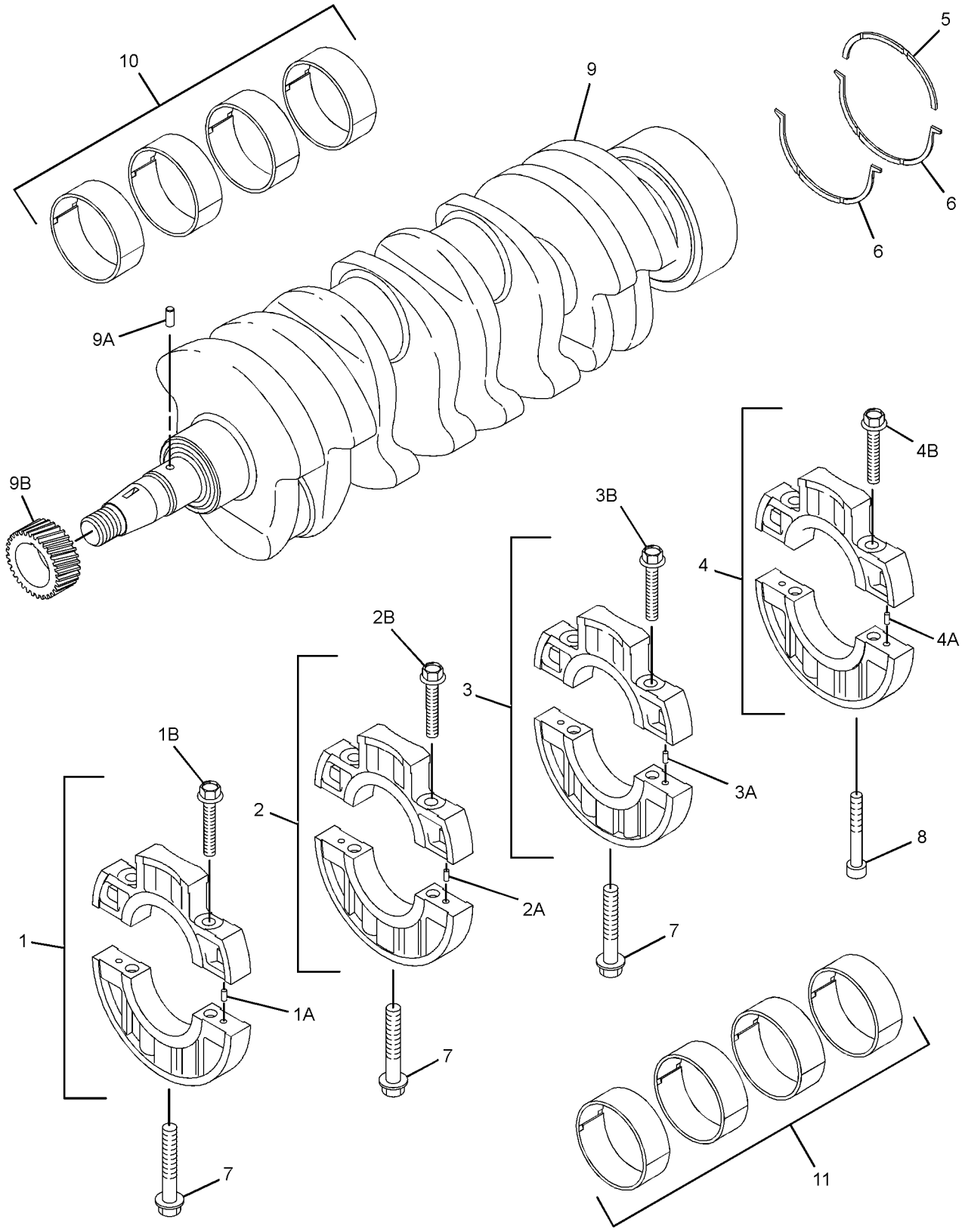

GRAPHIC #1 <END> g07617288

308-2281 CYLINDER BLOCK GP

PART OF 433-1380 ENGINE AR, 435-1636, 435-1658, 489-9224, 506-0518, 506-0519, 512-7969, 514-6556, 516-2639, 518-0165, 557-6086 ENGINE AR-PRIMARY
TYPE 1

SMCS-1201 **i08136359**

NOTE	REF NO	GRAPHIC REF	PART NUMBER	QTY	PART NAME 1 2 3 4 5 6 (PRODUCT LEVEL)	SEE PAGE
	1	1	**153-5387**	3	PLUG (BLANK)	
	2	1	**153-5390**	1	BALL BEARING	
	3	1	**153-5391**	1	PLUG (EXPANSION)	
	4	1	**153-5394**	2	DOWEL	
	5	1	**153-5395**	2	DOWEL	
	6	1	**487-0157**	2	PIN-SPRING	
	7	1	**153-5402**	2	DOWEL	
	8	1	**153-6838**	2	BOLT AS	
	9	1	**154-0175**	2	PLUG	
	10	1	**154-0176**	1	BEARING-NEEDLE	
	11	1	**154-0177**	1	BEARING-NEEDLE	
	12	1	**154-0178**	1	SEAL AS-OIL	
M	13	1	**154-0393**	3	STUD (M8X1.25X31-MM)	
M	14	1	**183-1163**	1	STUD (M6X1X43-MM)	
M	15	1	**183-1164**	1	STUD (M6X1X68-MM)	
	16	1	**215-2620**	1	GASKET	
	17	1	**217-5770**	2	PLUG (BLANKING)	
	18	1	**221-1136**	4	PLUG (BLANKING)	
	19	1	**237-9315**	2	PLUG (SEALING)	
	20	1	**366-4251**	5	PLUG-SEAL	
	21	1	**294-4916**	1	BUSHING (STANDARD)	
AB		1	**302-4181**		BUSHING (0.25-MM US)	
AB		1	**302-4182**		BUSHING (0.50-MM US)	
	22	1	**322-6874**	1	STUD	
	23	1	**536-9734**	1	SHAFT GP-IDLER	
M		1	**153-5592**	1	NUT (M8X1.25-THD)	

A - NOT PART OF THIS GROUP
B - USE AS REQUIRED
M - METRIC PART

308-2281 **CYLINDER BLOCK GP (**contd.**)** **i08136359**

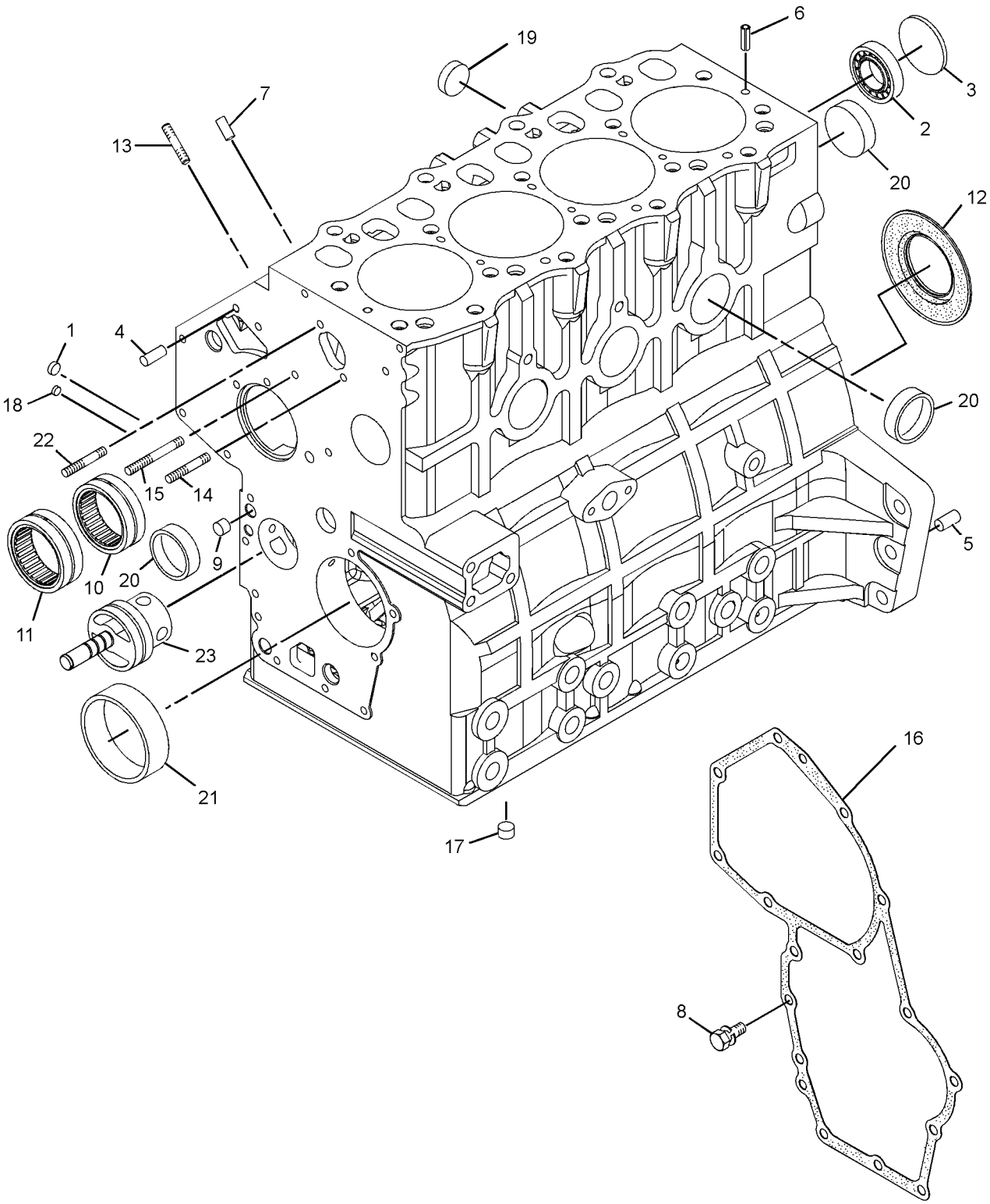

GRAPHIC #1 <END> g01996262

308-2281 CYLINDER BLOCK GP

PART OF 433-1380 ENGINE AR, 435-1636, 435-1658, 489-9224, 506-0518, 506-0519, 512-7969, 514-6556, 516-2639, 518-0165, 557-6086 ENGINE AR-PRIMARY
TYPE 2

SMCS-1201 **i10053707**

NOTE	REF NO	GRAPHIC REF	PART NUMBER	QTY	PART NAME 1 2 3 4 5 6 (PRODUCT LEVEL)	SEE PAGE
	1	1	**153-5387**	3	PLUG (BLANK)	
	2	1	**153-5390**	1	BALL BEARING	
	3	1	**153-5391**	1	PLUG (EXPANSION)	
	4	1	**153-5394**	2	DOWEL	
	5	1	**153-5395**	2	DOWEL	
	6	1	**487-0157**	2	PIN-SPRING	
	7	1	**153-5402**	2	DOWEL	
	8	1	**153-6838**	2	BOLT AS	
	9	1	**154-0175**	2	PLUG	
	10	1	**154-0176**	1	BEARING-NEEDLE	
	11	1	**154-0177**	1	BEARING-NEEDLE	
	12	1	**154-0178**	1	SEAL AS-OIL	
		1	**326-0081**	1	SLEEVE	
M	13	1	**319-6358**	3	STUD (M8X1.25X31-MM)	
M	14	1	**587-3846**	1	STUD (M6X1X43-MM)	
M	15	1	**587-3847**	1	STUD (M6X1X68-MM)	
	16	1	**592-3246**	1	GASKET	
	17	1	**217-5770**	2	PLUG (BLANKING)	
	18	1	**221-1136**	4	PLUG (BLANKING)	
	19	1	**237-9315**	2	PLUG (SEALING)	
	20	1	**366-4251**	5	PLUG-SEAL	
	21	1	**590-0692**	1	BEARING	
M	22	1	**587-3848**	1	STUD (M6X1X48-MM)	
CJY	23	1	*533-4971*	1	SHAFT GP-IDLER	442

C - CHANGE FROM PREVIOUS TYPE
J - KIT MARKED J SERVICES PART(S) MARKED J
M - METRIC PART
Y - SEPARATE ILLUSTRATION

308-2281 **CYLINDER BLOCK GP (**contd.**)** **i10053707**

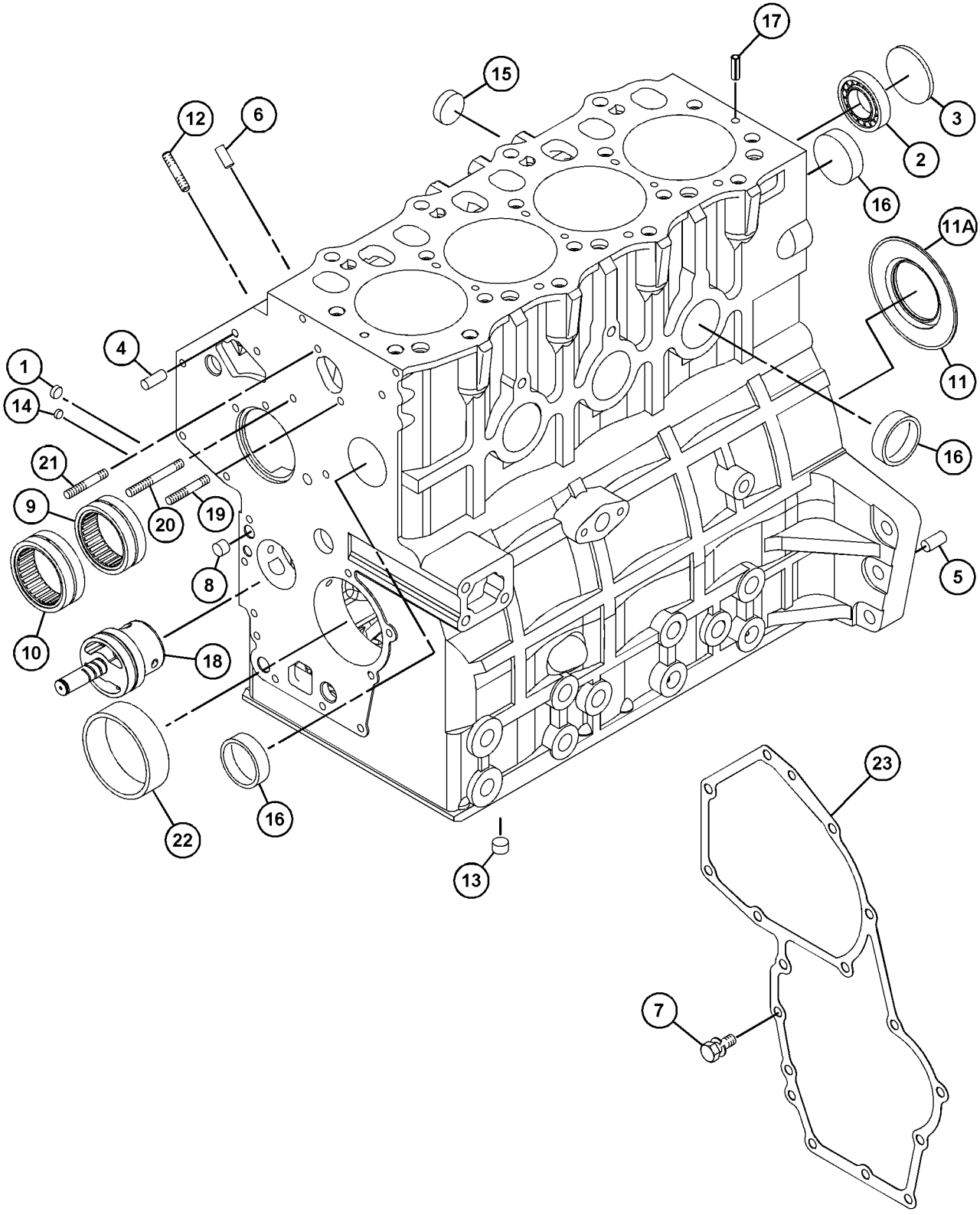

GRAPHIC #1 <END> g07627237

309-6712 CYLINDER BLOCK GP

PART OF 435-1645, 435-1649 CYLINDER BLOCK GP-LONG, 433-1379 ENGINE AR, 435-1641, 435-1642, 435-1646, 435-1647, 489-4263, 506-0520, 513-2239, 557-7471 ENGINE AR-PRIMARY
ALSO AN ATTACHMENT
TYPE 1

SMCS-1201 **i10069414**

NOTE	REF NO	GRAPHIC REF	PART NUMBER	QTY	PART NAME 1 2 3 4 5 6 (PRODUCT LEVEL)	SEE PAGE
	1	1	**153-5387**	3	PLUG	
	2	1	**153-5390**	1	BALL BEARING	
	3	1	**153-5391**	1	PLUG	
	4	1	**153-5394**	2	DOWEL	
	5	1	**153-5395**	2	DOWEL	
	6	1	**487-0157**	2	PIN-SPRING	
	7	1	**153-5402**	2	DOWEL	
	8	1	**153-6838**	2	BOLT AS	
	9	1	**154-0175**	3	PLUG	
	10	1	**154-0176**	1	BEARING-NEEDLE	
	11	1	**154-0177**	1	BEARING-NEEDLE	
	12	1	**154-0178**	1	SEAL AS-OIL	
M	13	1	**154-0393**	3	STUD (M8X1.25X31-MM)	
M	14	1	**183-1163**	1	STUD (M6X1X43-MM)	
M	15	1	**183-1164**	1	STUD (M6X1X68-MM)	
	16	1	**215-2620**	1	GASKET	
	17	1	**217-5770**	2	PLUG (BLANKING)	
	18	1	**221-1136**	4	PLUG (BLANKING)	
	19	1	**237-9315**	2	PLUG (SEALING)	
	20	1	**366-4251**	5	PLUG-SEAL	
	21	1	**294-4916**	1	BUSHING (STANDARD)	
AB		1	**302-4181**		BUSHING (0.25-MM US)	
AB		1	**302-4182**		BUSHING (0.50-MM US)	
	22	1	**322-6874**	1	STUD	

A - NOT PART OF THIS GROUP
B - USE AS REQUIRED
M - METRIC PART

309-6712 **CYLINDER BLOCK GP (**contd.**)** **i10069414**

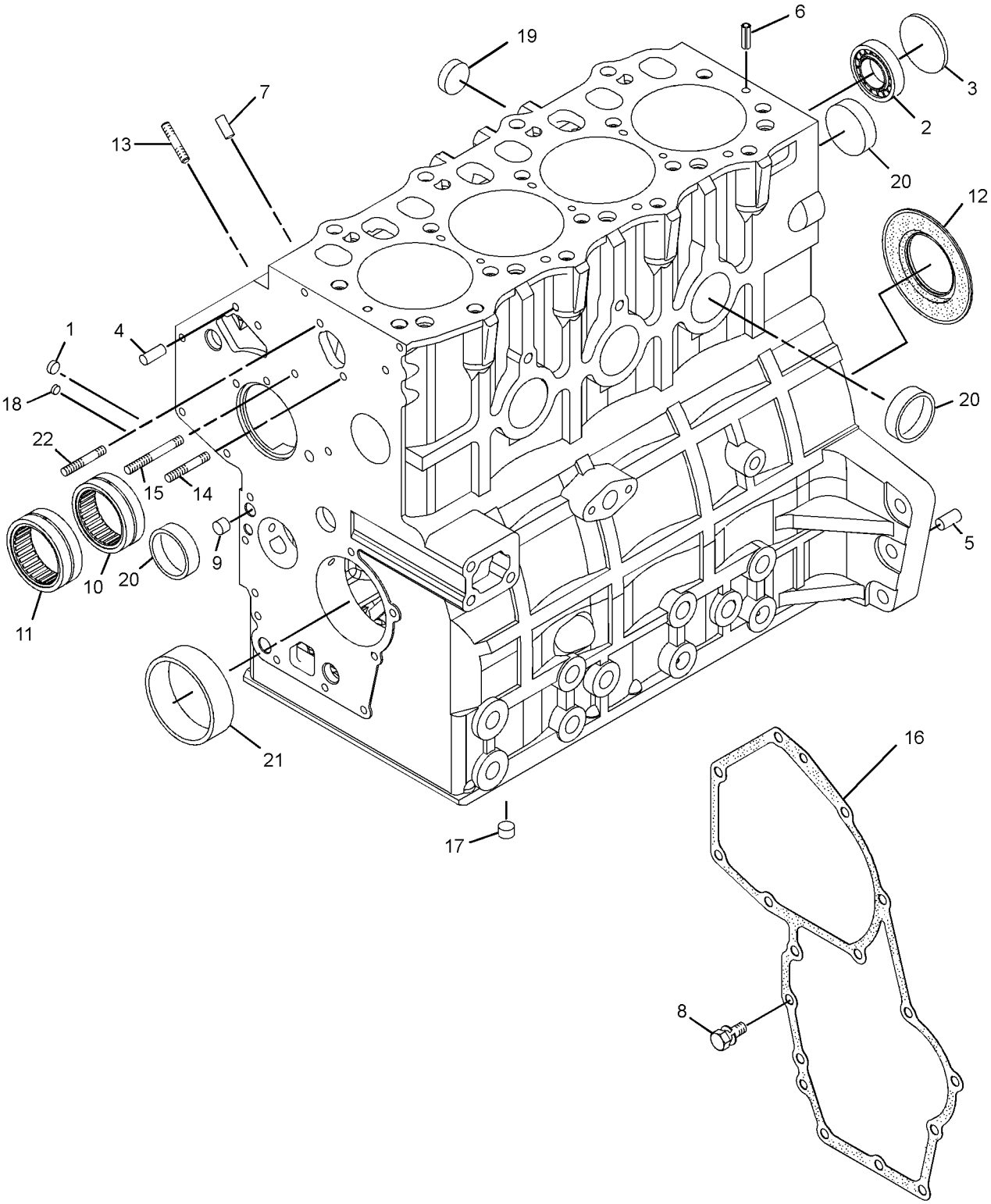

GRAPHIC #1 <END> g07720213

309-6712 CYLINDER BLOCK GP

PART OF 435-1645, 435-1649 CYLINDER BLOCK GP-LONG, 433-1379 ENGINE AR, 417-7273, 435-1641, 435-1642, 435-1646, 435-1647, 489-4263, 506-0520, 513-2239, 557-7471 ENGINE AR-PRIMARY
ALSO AN ATTACHMENT
TYPE 2

SMCS-1201 **i08137840**

NOTE	REF NO	GRAPHIC REF	PART NUMBER	QTY	PART NAME 1 2 3 4 5 6 (PRODUCT LEVEL)	SEE PAGE
	1	1	**153-5387**	3	PLUG	
	2	1	**153-5390**	1	BALL BEARING	
	3	1	**153-5391**	1	PLUG	
	4	1	**153-5394**	2	DOWEL	
	5	1	**153-5395**	2	DOWEL	
	6	1	**487-0157**	2	PIN-SPRING	
	7	1	**153-5402**	2	DOWEL	
	8	1	**153-6838**	2	BOLT AS	
	9	1	**154-0175**	3	PLUG	
	10	1	**154-0176**	1	BEARING-NEEDLE	
	11	1	**154-0177**	1	BEARING-NEEDLE	
	12	1	**154-0178**	1	SEAL AS-OIL	
M	13	1	**154-0393**	3	STUD (M8X1.25X31-MM)	
M	14	1	**183-1163**	1	STUD (M6X1X43-MM)	
M	15	1	**183-1164**	1	STUD (M6X1X68-MM)	
	16	1	**215-2620**	1	GASKET	
	17	1	**217-5770**	2	PLUG (BLANKING)	
	18	1	**221-1136**	4	PLUG (BLANKING)	
	19	1	**237-9315**	2	PLUG (SEALING)	
	20	1	**366-4251**	5	PLUG-SEAL	
	21	1	**294-4916**	1	BUSHING (STANDARD)	
AB		1	**302-4181**		BUSHING (0.25-MM US)	
AB		1	**302-4182**		BUSHING (0.50-MM US)	
	22	1	**322-6874**	1	STUD	
C	23	1	*536-9734*	1	SHAFT GP-IDLER	
M	23A	1	**153-5592**	1	NUT (M8X1.25-THD)	

A - NOT PART OF THIS GROUP
B - USE AS REQUIRED
C - CHANGE FROM PREVIOUS TYPE
M - METRIC PART

309-6712 **CYLINDER BLOCK GP (**contd.**)** **i08137840**

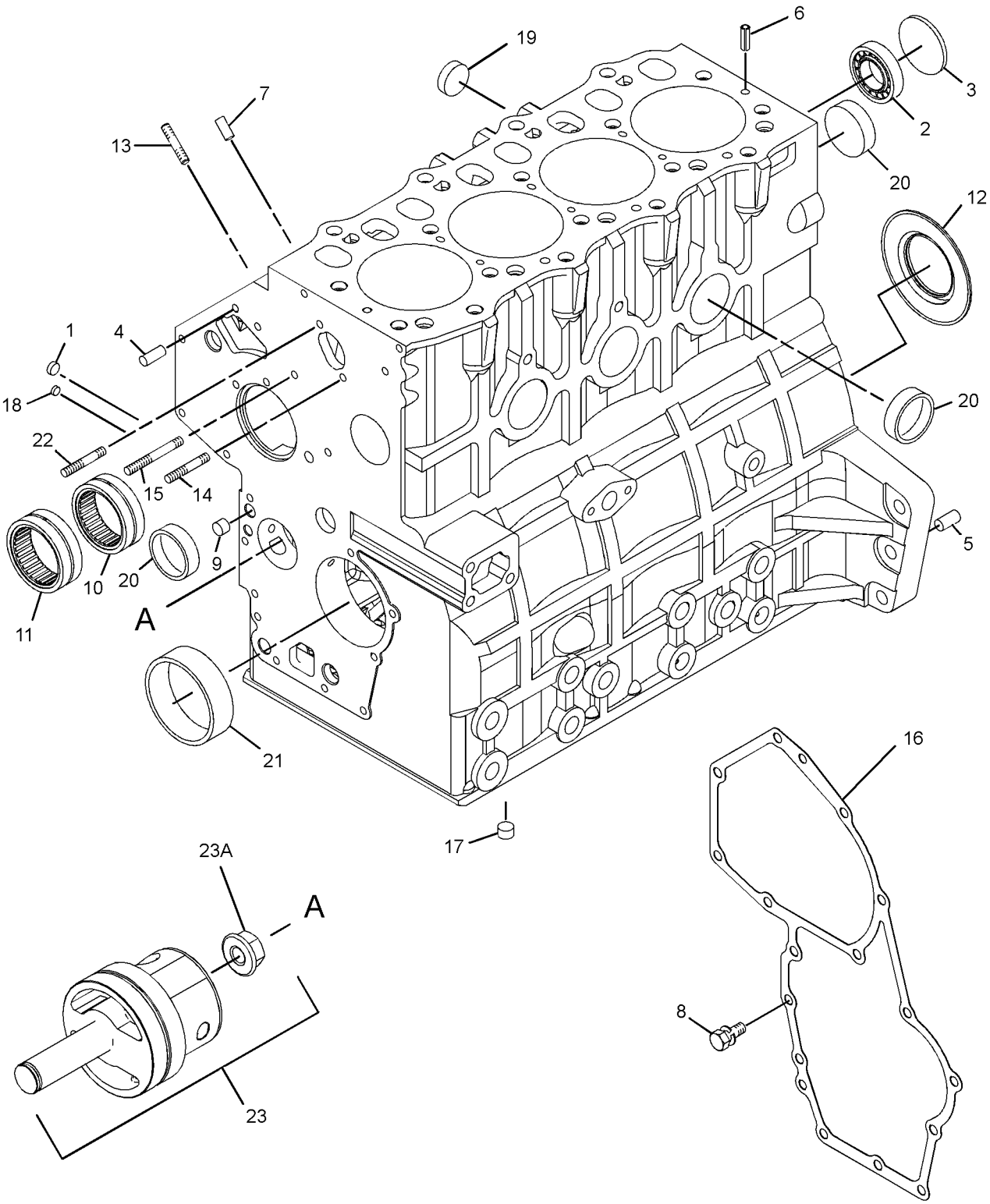

GRAPHIC #1 <END> g06430400

309-6712 CYLINDER BLOCK GP

PART OF 435-1645, 435-1649 CYLINDER BLOCK GP-LONG, 433-1379 ENGINE AR, 417-7273, 435-1641, 435-1642, 435-1646, 435-1647, 489-4263, 506-0520, 513-2239, 557-7471 ENGINE AR-PRIMARY
ALSO AN ATTACHMENT

SMCS-1201 **i08137853**

NOTE	REF NO	GRAPHIC REF	PART NUMBER	QTY	PART NAME 1 2 3 4 5 6 (PRODUCT LEVEL)	SEE PAGE
	1	1	**153-5387**	3	PLUG	
	2	1	**153-5390**	1	BALL BEARING	
	3	1	**153-5391**	1	PLUG	
	4	1	**153-5394**	2	DOWEL	
	5	1	**153-5395**	2	DOWEL	
	6	1	**487-0157**	2	PIN-SPRING	
	7	1	**153-5402**	2	DOWEL	
	8	1	**153-6838**	2	BOLT AS	
	9	1	**154-0175**	3	PLUG	
	10	1	**154-0176**	1	BEARING-NEEDLE	
	11	1	**154-0177**	1	BEARING-NEEDLE	
	12	1	**154-0178**	1	SEAL AS-OIL	
M	13	1	**154-0393**	3	STUD (M8X1.25X31-MM)	
M	14	1	**183-1163**	1	STUD (M6X1X43-MM)	
M	15	1	**183-1164**	1	STUD (M6X1X68-MM)	
	16	1	**215-2620**	1	GASKET	
	17	1	**217-5770**	2	PLUG (BLANKING)	
	18	1	**221-1136**	4	PLUG (BLANKING)	
	19	1	**237-9315**	2	PLUG (SEALING)	
	20	1	**366-4251**	5	PLUG-SEAL	
	21	1	**294-4916**	1	BUSHING (STANDARD)	
AB		1	**302-4181**		BUSHING (0.25-MM US)	
AB		1	**302-4182**		BUSHING (0.50-MM US)	
	22	1	**322-6874**	1	STUD	
C	23	1	*533-4971*	1	SHAFT GP-IDLER	
M	23A	1	**153-5592**	1	NUT (M8X1.25-THD)	

PARTS SHOWN IN GRAPHIC(S) WITHOUT A REFERENCE NUMBER ARE NOT SERVICED SEPARATELY

A - NOT PART OF THIS GROUP
B - USE AS REQUIRED
C - CHANGE FROM PREVIOUS TYPE
M - METRIC PART

309-6712 **CYLINDER BLOCK GP (**contd.**)** **i08137853**

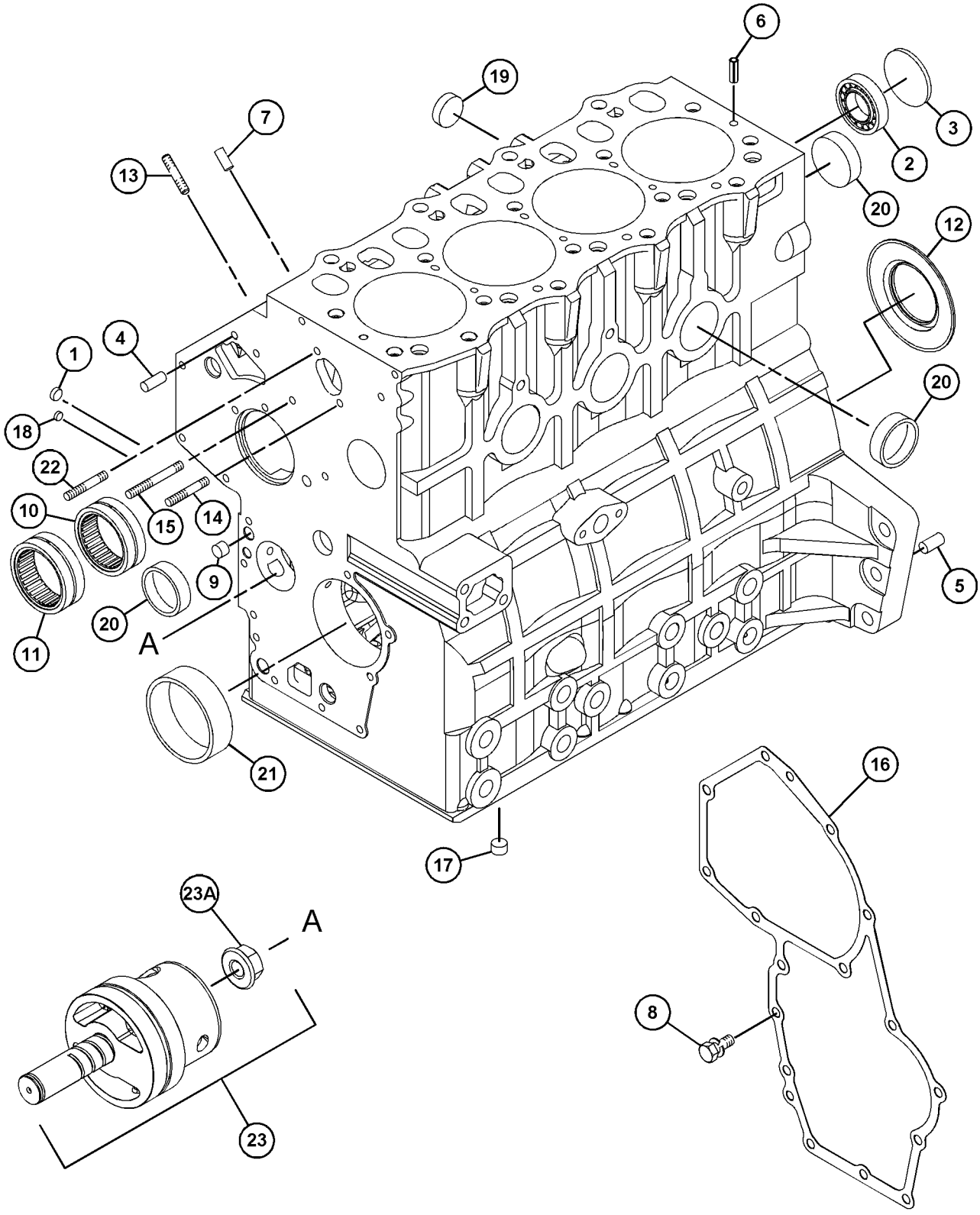

GRAPHIC #1 <END> g06559833

340-5781 CYLINDER BLOCK GP

PART OF 499-6420 ENGINE AR-PRIMARY

TYPE 1

SMCS-1201 **i07510602**

NOTE	REF NO	GRAPHIC REF	PART NUMBER	QTY	PART NAME 1 2 3 4 5 6 (PRODUCT LEVEL)	SEE PAGE
	1	1	**153-5387**	3	PLUG	
	2	1	**153-5390**	1	BALL BEARING	
	3	1	**153-5391**	1	PLUG	
	4	1	**153-5394**	2	DOWEL	
	5	1	**153-5395**	2	DOWEL	
	6	1	**487-0157**	2	PIN-SPRING	
	7	1	**153-5402**	2	DOWEL	
	8	1	**153-6838**	2	BOLT AS	
	9	1	**154-0175**	3	PLUG	
	10	1	**154-0176**	1	BEARING-NEEDLE	
	11	1	**154-0177**	1	BEARING-NEEDLE	
J	12	1	**154-0178**	1	SEAL AS-OIL	
M	13	1	**154-0393**	3	STUD (M8X1.25X31-MM)	
M	14	1	**183-1163**	1	STUD (M6X1X43-MM)	
M	15	1	**183-1164**	1	STUD (M6X1X68-MM)	
	16	1	**215-2620**	1	GASKET	
	17	1	**217-5770**	2	PLUG (BLANKING)	
	18	1	**221-1136**	4	PLUG (BLANKING)	
	19	1	**237-9315**	2	PLUG (SEALING)	
	20	1	**366-4251**	5	PLUG-SEAL	
	21	1	**294-4916**	1	BUSHING (STANDARD)	
AB		1	**302-4181**		BUSHING (0.25-MM US)	
AB		1	**302-4182**		BUSHING (0.50-MM US)	
	22	1	**322-6874**	1	STUD	
	23	1	*536-9734*	1	SHAFT GP-IDLER	
M	23A	1	**153-5592**	1	NUT (M8X1.25-THD)	

A - NOT PART OF THIS GROUP
B - USE AS REQUIRED
J - ALSO ORDER WEAR SLEEVE 326-0081
M - METRIC PART

340-5781 **CYLINDER BLOCK GP (**contd.**)** **i07510602**

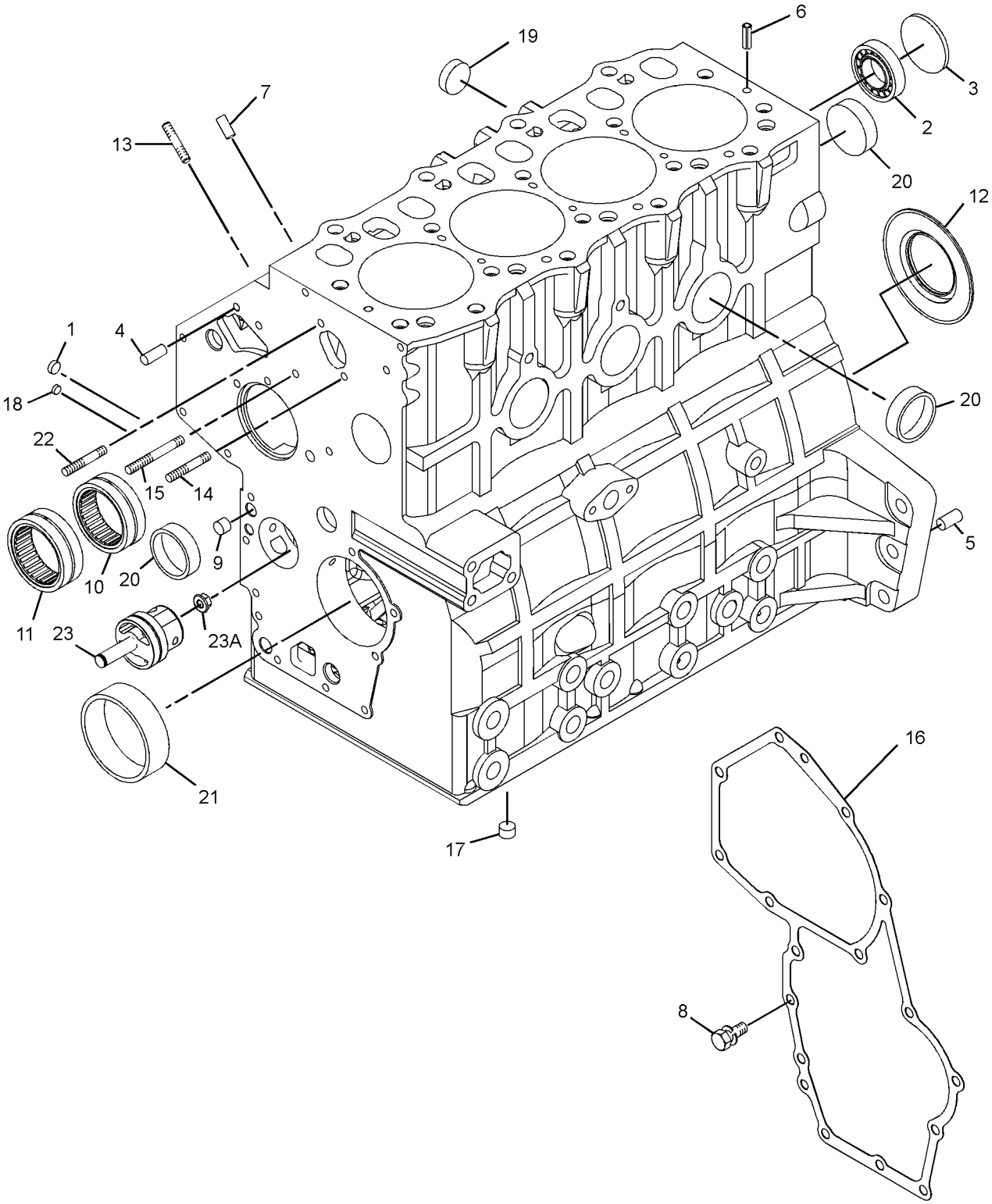

GRAPHIC #1 <END> g06385842

340-5781 CYLINDER BLOCK GP

PART OF 499-6420 ENGINE AR-PRIMARY

TYPE 2

SMCS-1201 **i08809349**

NOTE	REF NO	GRAPHIC REF	PART NUMBER	QTY	PART NAME 1 2 3 4 5 6 (PRODUCT LEVEL)	SEE PAGE
	1	1	**153-5387**	3	PLUG	
	2	1	**153-5390**	1	BALL BEARING	
	3	1	**153-5391**	1	PLUG	
	4	1	**153-5394**	2	DOWEL	
	5	1	**153-5395**	2	DOWEL	
	6	1	**487-0157**	2	PIN-SPRING	
	7	1	**153-5402**	2	DOWEL	
	8	1	**153-6838**	2	BOLT AS	
	9	1	**154-0175**	3	PLUG	
	10	1	**154-0176**	1	BEARING-NEEDLE	
	11	1	**154-0177**	1	BEARING-NEEDLE	
J	12	1	**154-0178**	1	SEAL AS-OIL	
	12A	1	**326-0081**	1	SLEEVE	
M	13	1	**319-6358**	3	STUD (M8X1.25X31-MM)	
M	14	1	**587-3846**	1	STUD (M6X1X43-MM)	
M	15	1	**587-3847**	1	STUD (M6X1X68-MM)	
	16	1	**215-2620**	1	GASKET	
	17	1	**217-5770**	2	PLUG (BLANKING)	
	18	1	**221-1136**	4	PLUG (BLANKING)	
	19	1	**237-9315**	2	PLUG (SEALING)	
	20	1	**366-4251**	5	PLUG-SEAL	
	21	1	**590-0692**	1	BEARING	
M	22	1	**587-3848**	1	STUD (M6X1X48-MM)	
CY	23	1	*533-4971*	1	SHAFT GP-IDLER	442

PARTS SHOWN IN GRAPHIC(S) WITHOUT A REFERENCE NUMBER ARE NOT SERVICED SEPARATELY

C - CHANGE FROM PREVIOUS TYPE
J - ALSO ORDER WEAR SLEEVE 326-0081
M - METRIC PART
Y - SEPARATE ILLUSTRATION

340-5781 **CYLINDER BLOCK GP (**contd.**)** **i08809349**

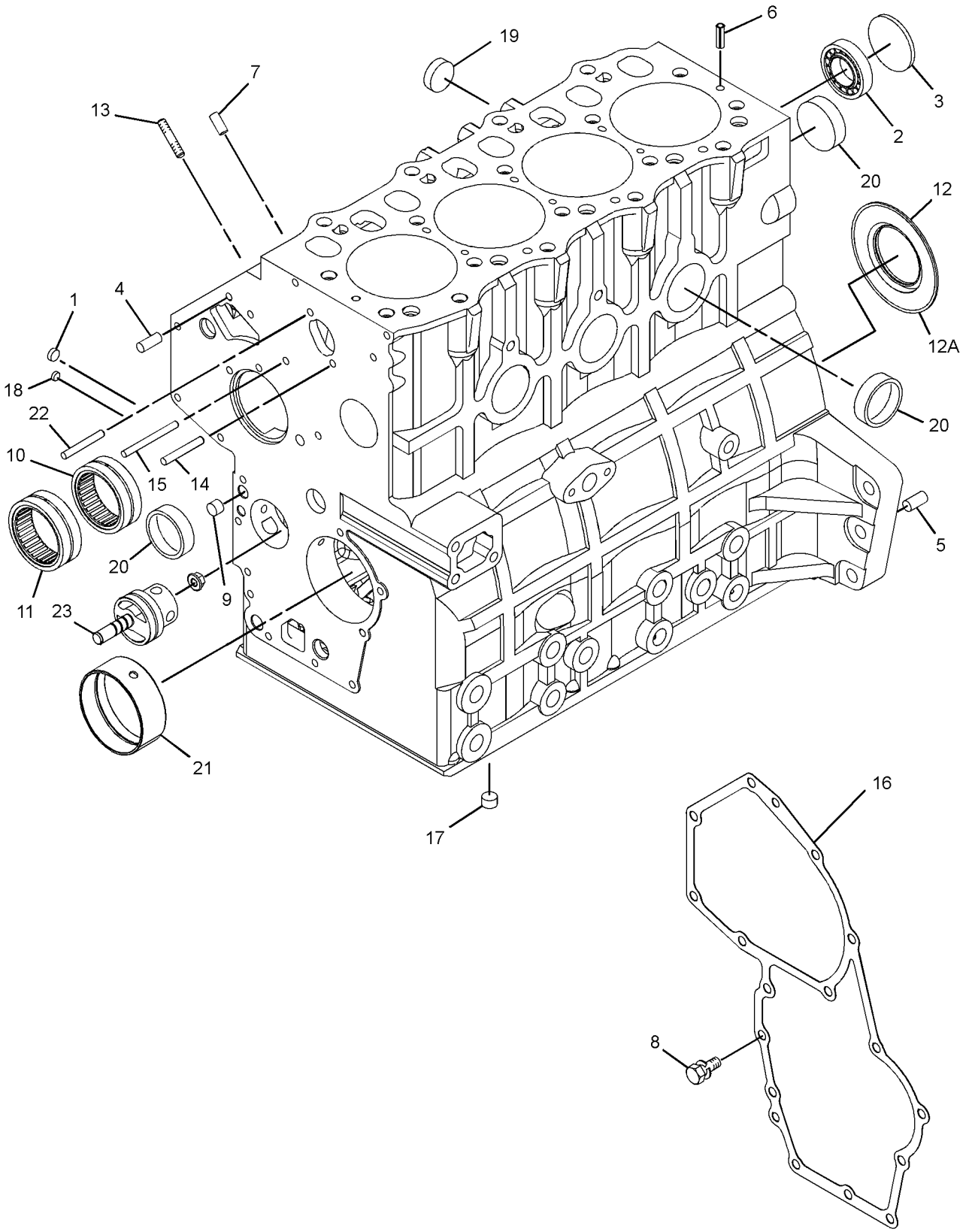

GRAPHIC #1 <END> g07621281

420-6407 CYLINDER BLOCK GP

PART OF 504-4602 ENGINE AR-PRIMARY

TYPE 1

SMCS-1201 **i08002947**

NOTE	REF NO	GRAPHIC REF	PART NUMBER	QTY	PART NAME 1 2 3 4 5 6 (PRODUCT LEVEL)	SEE PAGE
	1	1	**153-5387**	3	PLUG	
	2	1	**153-5390**	1	BALL BEARING	
	3	1	**153-5391**	1	PLUG	
	4	1	**153-5394**	2	DOWEL	
	5	1	**153-5395**	2	DOWEL	
	6	1	**487-0157**	2	PIN-SPRING	
	7	1	**153-5402**	2	DOWEL	
	8	1	**153-6838**	2	BOLT AS	
	9	1	**154-0175**	3	PLUG	
	10	1	**154-0176**	1	BEARING-NEEDLE	
	11	1	**154-0177**	1	BEARING-NEEDLE	
J	12	1	**154-0178**	1	SEAL AS-OIL	
M	13	1	**154-0393**	3	STUD (M8X1.25X31-MM)	
M	14	1	**183-1163**	1	STUD (M6X1X43-MM)	
M	15	1	**183-1164**	1	STUD (M6X1X68-MM)	
	16	1	**215-2620**	1	GASKET	
	17	1	**217-5770**	2	PLUG (BLANKING)	
	18	1	**221-1136**	4	PLUG (BLANKING)	
	19	1	**237-9315**	2	PLUG (SEALING)	
	20	1	**366-4251**	5	PLUG-SEAL	
	21	1	**294-4916**	1	BUSHING (STANDARD)	
AB		1	**302-4181**		BUSHING (0.25-MM US)	
AB		1	**302-4182**		BUSHING (0.50-MM US)	
	22	1	**322-6874**	1	STUD	
	23	1	*536-9734*	1	SHAFT GP-IDLER	
M		1	**153-5592**	1	NUT (M8X1.25-THD)	

A - NOT PART OF THIS GROUP
B - USE AS REQUIRED
J - WEAR SLEEVE 326-0081 IS AVAILABLE
M - METRIC PART

420-6407 **CYLINDER BLOCK GP (**contd.**)** **i08002947**

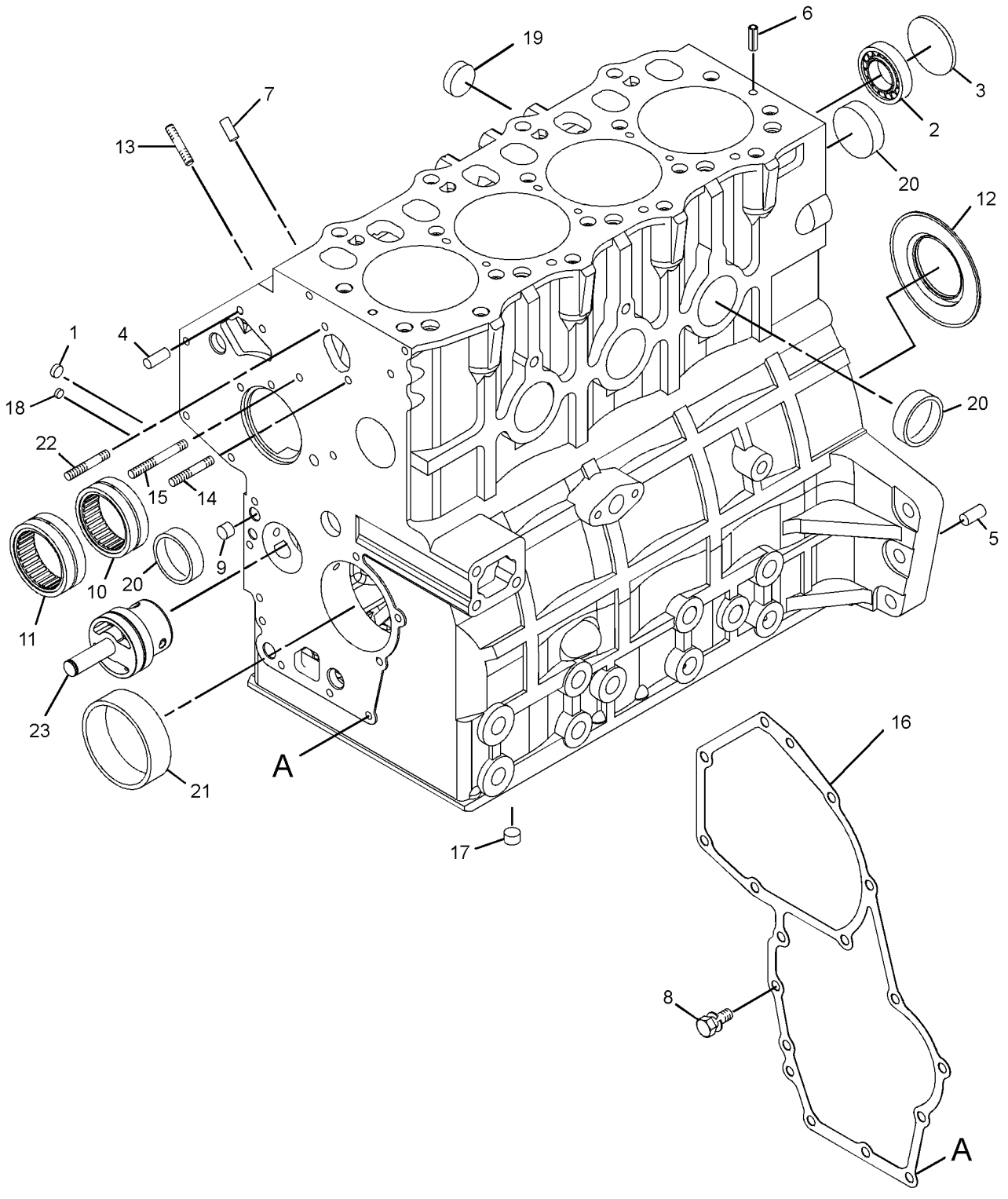

GRAPHIC #1 <END> g06473772

420-6407 CYLINDER BLOCK GP

PART OF 504-4602 ENGINE AR-PRIMARY

TYPE 2

SMCS-1201 **i08760567**

NOTE	REF NO	GRAPHIC REF	PART NUMBER	QTY	PART NAME 1 2 3 4 5 6 (PRODUCT LEVEL)	SEE PAGE
	1	1	**153-5387**	3	PLUG	
	2	1	**153-5390**	1	BALL BEARING	
	3	1	**153-5391**	1	PLUG	
	4	1	**153-5394**	2	DOWEL	
	5	1	**153-5395**	2	DOWEL	
	6	1	**487-0157**	2	PIN-SPRING	
	7	1	**153-5402**	2	DOWEL	
	8	1	**153-6838**	2	BOLT AS	
	9	1	**154-0175**	3	PLUG	
	10	1	**154-0176**	1	BEARING-NEEDLE	
	11	1	**154-0177**	1	BEARING-NEEDLE	
J	12	1	**154-0178**	1	SEAL AS-OIL	
M	13	1	**319-6358**	3	STUD (M8X1.25X31-MM)	
M	14	1	**587-3846**	1	STUD (M6X1X43-MM)	
M	15	1	**587-3847**	1	STUD (M6X1X68-MM)	
	16	1	**215-2620**	1	GASKET	
	17	1	**217-5770**	2	PLUG (BLANKING)	
	18	1	**221-1136**	4	PLUG (BLANKING)	
	19	1	**237-9315**	2	PLUG (SEALING)	
	20	1	**366-4251**	5	PLUG-SEAL	
	21	1	**590-0692**	1	BEARING (STANDARD)	
M	22	1	**587-3848**	1	STUD (M6X1X48-MM)	
CY	23	1	**533-4971**	1	SHAFT GP-IDLER	442

PARTS SHOWN IN GRAPHIC(S) WITHOUT A REFERENCE NUMBER ARE NOT SERVICED SEPARATELY

C - CHANGE FROM PREVIOUS TYPE
J - ALSO ORDER WEAR SLEEVE 326-0081
M - METRIC PART
Y - SEPARATE ILLUSTRATION

420-6407 **CYLINDER BLOCK GP (**contd.**)** **i08760567**

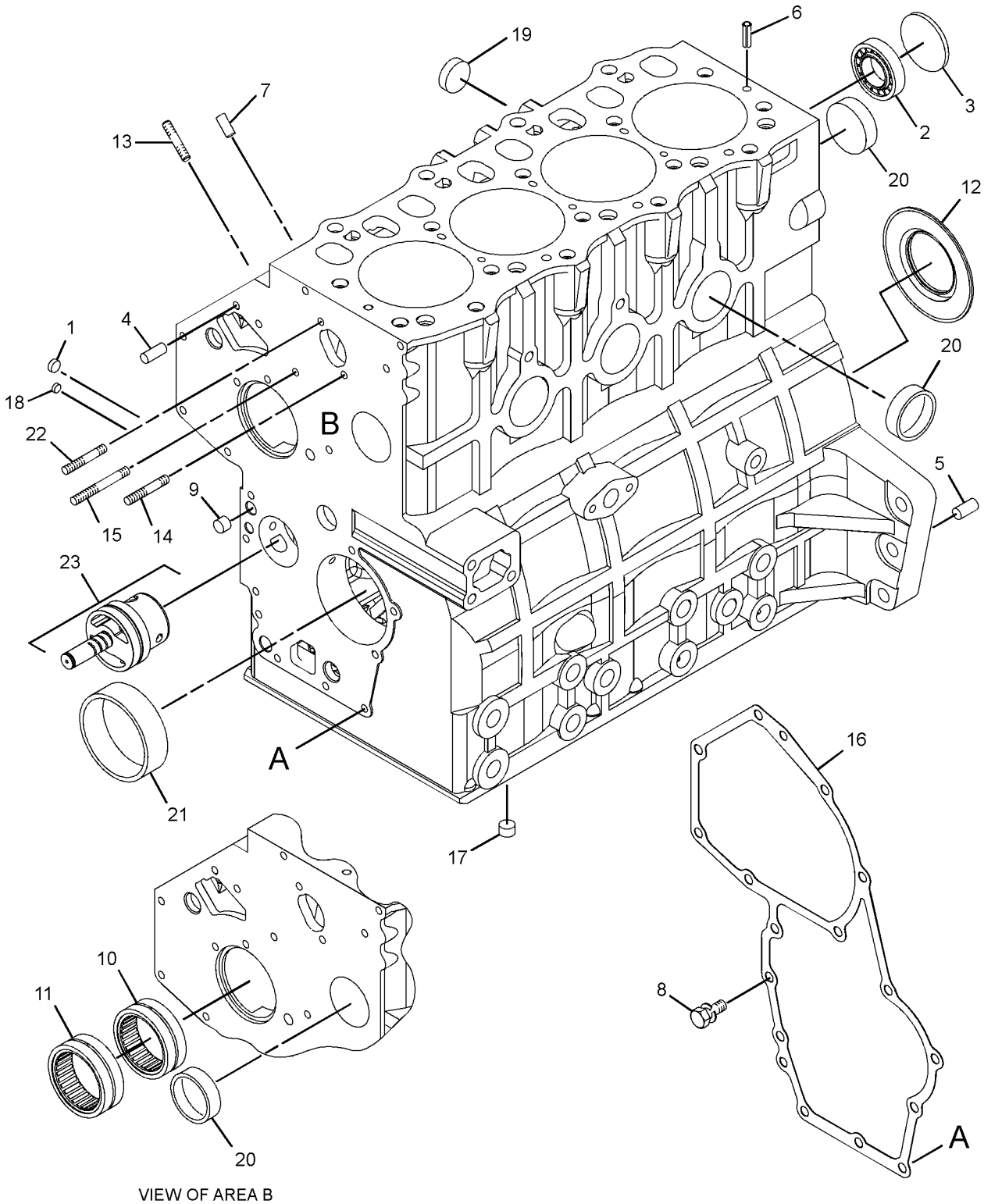

VIEW OF AREA B

GRAPHIC #1 <END> g07616603

584-3179 CYLINDER BLOCK GP

PART OF 433-1379 ENGINE AR, 417-7273, 435-1636, 435-1641, 435-1642, 435-1647, 514-6556 ENGINE AR-PRIMARY
ALSO AN ATTACHMENT

SMCS-1201 **i10079208**

NOTE	REF NO	GRAPHIC REF	PART NUMBER	QTY	PART NAME 1 2 3 4 5 6 (PRODUCT LEVEL)	SEE PAGE
	1	1	**153-6853**	1	SEAL-O-RING	
	2	2	**160-4150**	1	SHIM (0.1-MM THK)	
	3	2	**160-4151**	1	SHIM (0.15-MM THK)	
	4	2	**160-4152**	1	SHIM (0.2-MM THK)	
	5	2	**160-4153**	1	SHIM (0.5-MM THK)	
	6	3	**153-5387**	3	PLUG	
	7	3	**153-5390**	1	BALL BEARING	
	8	3	**153-5391**	1	PLUG	
	9	1,3	**153-5395**	2	DOWEL	
	10	1	**153-5402**	2	DOWEL	
J	11	2	**153-6849**	1	SPRING	
J	12	2	**153-6850**	1	COLLAR	
J	13	2	**153-6851**	1	CLIP	
	14	1	**153-6879**	1	STUD-HOLLOW	
	15	1,2	**154-0175**	2	PLUG	
	16	1	**154-0176**	1	BEARING-NEEDLE	
	17	1	**154-0177**	1	BEARING-NEEDLE	
	18	3	**154-0178**	1	SEAL AS-OIL	
A		3	**326-0081**	1	SLEEVE	
	19	1	**599-4589**	1	VALVE AS-RELIEF	
	20	1	**154-2353**	1	TUBE AS-OIL	
	21	1	**217-5770**	2	PLUG	
	22	1,3	**221-1136**	4	PLUG (BLANKING)	
	23	2	**590-0692**	1	BEARING	
J	24	2	**308-1867**	1	WASHER-THRUST	
J	25	2	**308-1869**	1	COVER	
	26	1	**472-2215**	1	PLUG	
	27	1	**487-0157**	2	PIN-SPRING	
J	28	2	*501-3944*	1	GEAR-IDLER (62-TEETH)	
J	29	2	*501-3945*	1	ROTOR	
J	30	2	*501-3946*	1	VANE	
JY	31	2	*533-4971*	1	SHAFT GP-IDLER	442
	32	1	*559-1702*	1	CYLINDER BLOCK AS	
	32A	3	**237-9315**	2	PLUG (SEALING)	
	32B	1	**366-4251**	5	PLUG-SEAL	

A - NOT PART OF THIS GROUP
J - KIT MARKED J SERVICES PART(S) MARKED J
Y - SEPARATE ILLUSTRATION

584-3179 **CYLINDER BLOCK GP (**contd.**)** **i10079208**

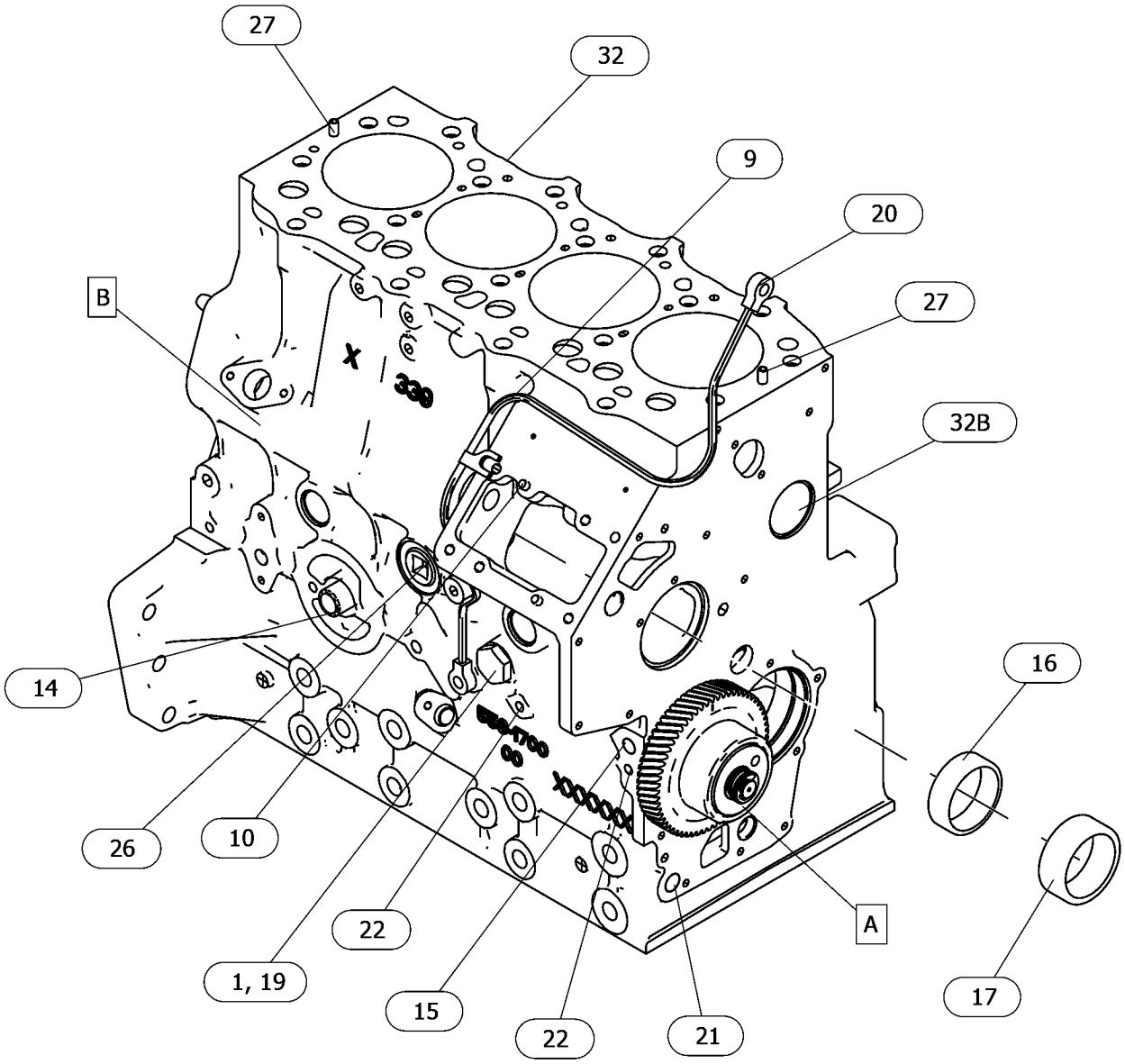

GRAPHIC #1 g06719553

584-3179 **CYLINDER BLOCK GP (**contd.**)** **i10079208**

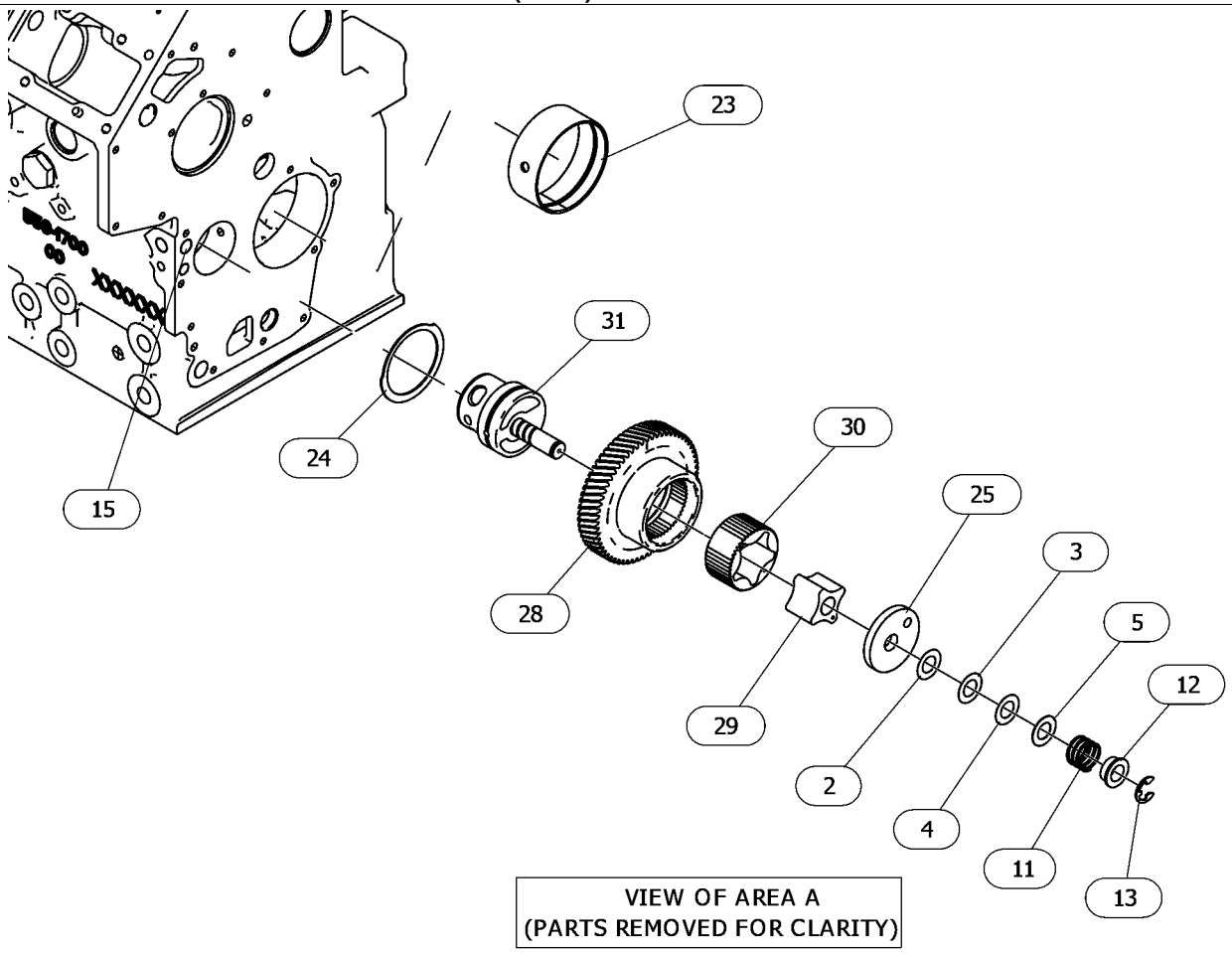

GRAPHIC #2 g06719553_01

584-3179 **CYLINDER BLOCK GP (**contd.**)** **i10079208**

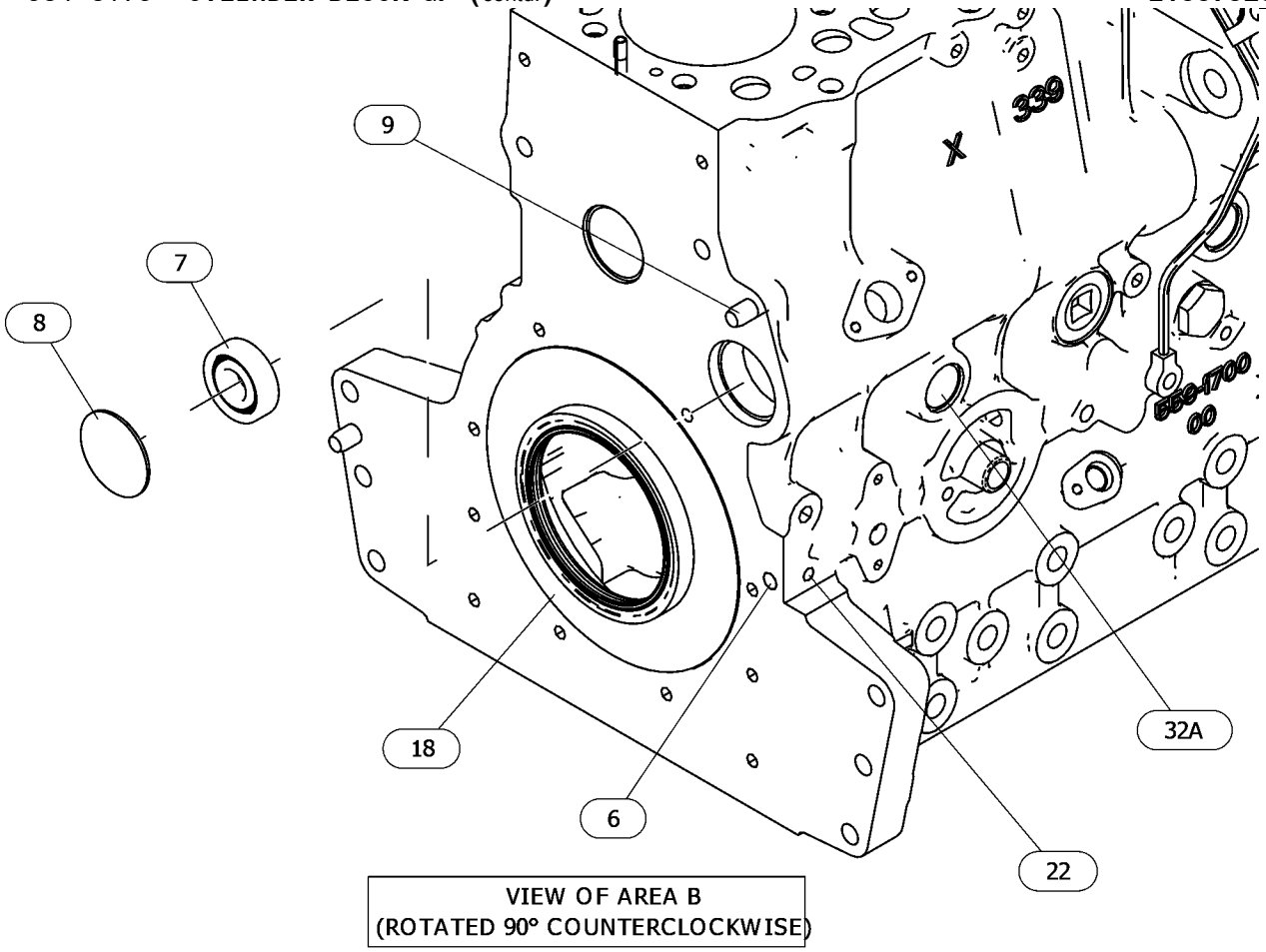

GRAPHIC #3 <END> g06719553_02

435-1645 CYLINDER BLOCK GP-LONG

37 BRAKE KW (50 BHP) AT 2800 RPM

FIELD REPLACEMENT FOR 311-3840—PAGE: 40

SMCS-1020 **i10081187**

NOTE	PART NUMBER	QTY	PART NAME 1 2 3 4 5 6 (PRODUCT LEVEL)	SEE PAGE
Y	*317-7188*	1	CAMSHAFT GP	147
Y	*308-2302*	1	CONNECTION GP-WATER	483
Y	*317-7187*	1	CONTROL GP-GOVERNOR	696
Y	*342-1268*	1	FASTENER GP-COVER	275
Y	*309-6722*	1	COVER GP-VALVE MECHANISM	184
Y	*309-6713*	1	CRANKSHAFT GP	213
Y	*309-6712*	1	CYLINDER BLOCK GP	225
Y	*309-6715*	1	CYLINDER HEAD GP	255
Y	*354-1245*	1	HOUSING GP-FRONT	340
Y	*308-2297*	1	FILLER GP-ENGINE OIL	466
Y	*308-2298*	1	FILTER GP-ENGINE OIL	474
Y	*322-2412*	1	FLYWHEEL GP	281
Y	*308-2311*	1	GLOW PLUG GP	881
Y	*342-9604*	1	HOUSING GP-FLYWHEEL	292
Y	*317-7186*	1	HOUSING GP-FRONT	316
Y	*309-6725*	1	LIFTING GP-ENGINE	376
Y	*308-4735*	1	MOUNTING GP-ENGINE OIL FILTER	482
Y	*308-2295*	1	PAN GP-OIL	385
Y	*342-9607*	1	PARTS GP-MISCELLANEOUS	924
Y	*309-6714*	1	PISTON & ROD GP	410
Y	*309-6720*	1	PLUG GP-OIL PAN	426
Y	*308-2300*	1	PULLEY GP-CRANKSHAFT	431
Y	*309-6717*	1	LINES GP-ENGINE OIL	481
Y	*317-7190*	1	PUMP GP-FUEL INJECTION	820
Y	*309-6721*	1	PUMP GP-WATER	509
Y	*308-2313*	1	SOLENOID GP-SHUTOFF (FUEL)	889
Y	*315-7819*	1	SWITCH GP-PRESSURE (ENGINE OIL)	908
Y	*308-2317*	1	SWITCH GP-TEMPERATURE (ENGINE COOLANT)	917
Y	*309-6716*	1	VALVE MECHANISM GP	458

Y - SEPARATE ILLUSTRATION

<END>

435-1649 CYLINDER BLOCK GP-LONG

FIELD REPLACEMENT FOR 318-1707—PAGE: 50

FIELD INSTALLATION

SMCS-1020 **i10081077**

NOTE	PART NUMBER	QTY	PART NAME 1 2 3 4 5 6 (PRODUCT LEVEL)	SEE PAGE
Y	*317-7188*	1	CAMSHAFT GP	147
Y	*308-2302*	1	CONNECTION GP-WATER	483
Y	*317-7187*	1	CONTROL GP-GOVERNOR	696
Y	*309-6722*	1	COVER GP-VALVE MECHANISM	184
Y	*309-6713*	1	CRANKSHAFT GP	213
Y	*309-6712*	1	CYLINDER BLOCK GP	225
Y	*309-6715*	1	CYLINDER HEAD GP	255
Y	*342-1268*	1	FASTENER GP-COVER	275
Y	*308-2297*	1	FILLER GP-ENGINE OIL	466
Y	*308-2298*	1	FILTER GP-ENGINE OIL	474
Y	*322-2412*	1	FLYWHEEL GP	281
Y	*308-2311*	1	GLOW PLUG GP	881
Y	*342-9604*	1	HOUSING GP-FLYWHEEL	292
Y	*354-1245*	1	HOUSING GP-FRONT	340
Y	*317-7186*	1	HOUSING GP-FRONT	316
Y	*309-6725*	1	LIFTING GP-ENGINE	376
Y	*309-6717*	1	LINES GP-ENGINE OIL	481
Y	*308-4735*	1	MOUNTING GP-ENGINE OIL FILTER	482
Y	*308-2295*	1	PAN GP-OIL	385
Y	*342-9607*	1	PARTS GP-MISCELLANEOUS	924
Y	*309-6714*	1	PISTON & ROD GP	410
Y	*309-6720*	1	PLUG GP-OIL PAN	426
Y	*308-2300*	1	PULLEY GP-CRANKSHAFT	431
Y	*317-7190*	1	PUMP GP-FUEL INJECTION	820
Y	*309-6721*	1	PUMP GP-WATER	509
Y	*308-2313*	1	SOLENOID GP-SHUTOFF (FUEL)	889
Y	*315-7819*	1	SWITCH GP-PRESSURE (ENGINE OIL)	908
Y	*308-2317*	1	SWITCH GP-TEMPERATURE (ENGINE COOLANT)	917
Y	*309-6716*	1	VALVE MECHANISM GP	458

Y - SEPARATE ILLUSTRATION

<END>

308-1859 CYLINDER HEAD AS

PART OF 308-2284, 420-6410 CYLINDER HEAD GP

TYPE 1

SMCS-1100, 1101 **i07678724**

NOTE	REF NO	GRAPHIC REF	PART NUMBER	QTY	PART NAME 1 2 3 4 5 6 (PRODUCT LEVEL)	SEE PAGE
	1	1	**153-5556**	16	RETAINER	
	2	1	**153-5557**	8	RETAINER	
Y	3	1	*426-3438*	1	CYLINDER HEAD AS	248
	4	1	**435-9544**	4	VALVE-INLET	
	5	1	**435-9546**	4	VALVE-EXHAUST	
	6	1	**440-5104**	8	SEAL	
	7	1	**477-8828**	8	SPRING	

Y - SEPARATE ILLUSTRATION

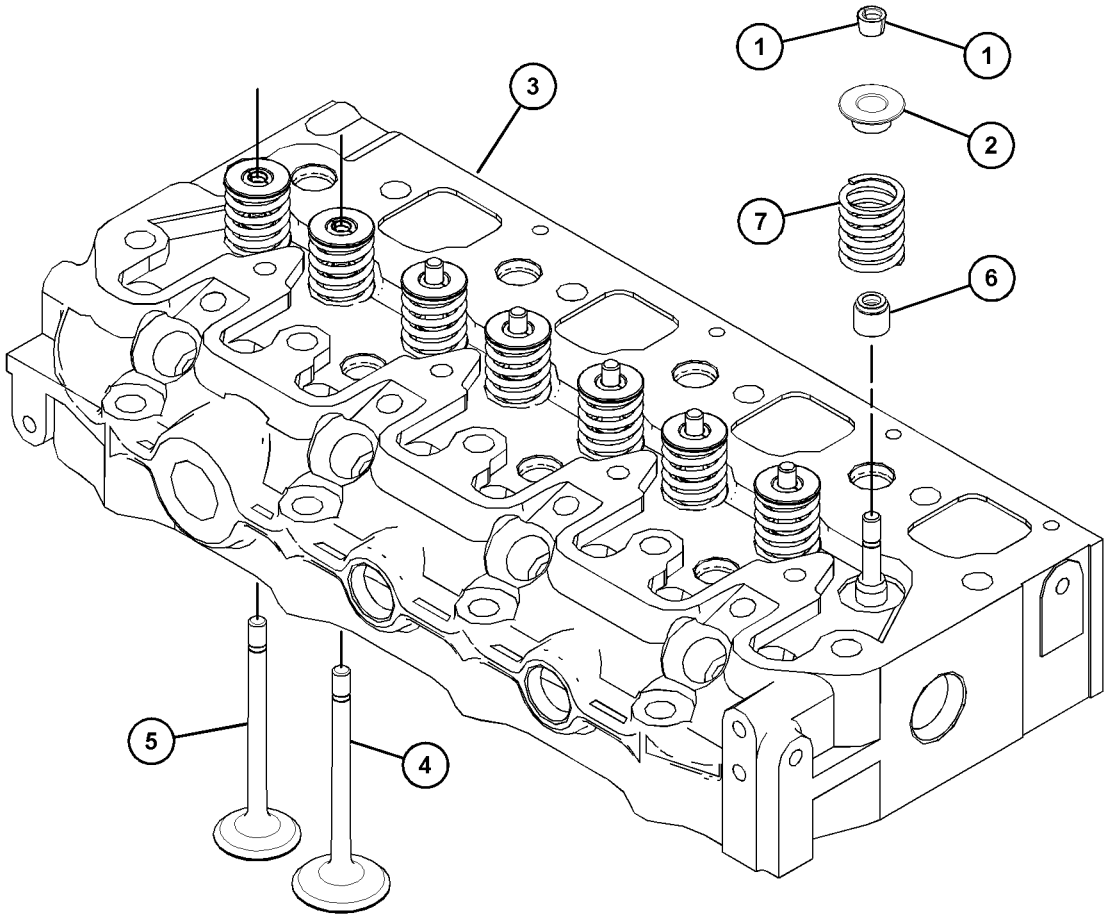

GRAPHIC #1 <END> g06205200

308-1859 CYLINDER HEAD AS

PART OF 308-2284, 420-6410 CYLINDER HEAD GP

TYPE 2

SMCS-1100, 1101 **i07793705**

NOTE	REF NO	GRAPHIC REF	PART NUMBER	QTY	PART NAME 1 2 3 4 5 6 (PRODUCT LEVEL)	SEE PAGE
	1	1	**153-5556**	16	RETAINER	
	2	1	**153-5557**	8	RETAINER	
Y	3	1	*521-2896*	1	CYLINDER HEAD AS	249
	4	1	**435-9544**	4	VALVE-INLET	
	5	1	**435-9546**	4	VALVE-EXHAUST	
	6	1	**440-5104**	8	SEAL	
	7	1	**477-8828**	8	SPRING	

Y - SEPARATE ILLUSTRATION

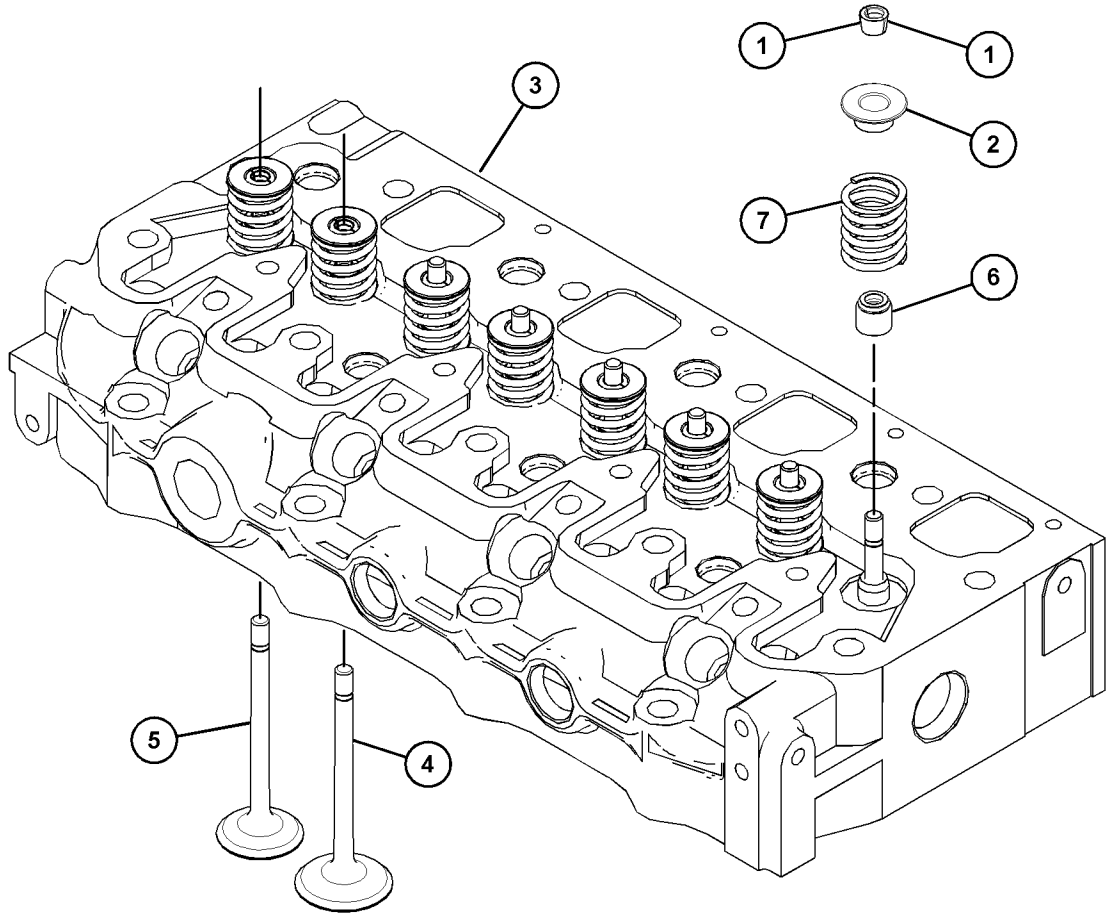

GRAPHIC #1 <END> g06205200

308-1859 CYLINDER HEAD AS

PART OF 308-2284, 420-6410, 596-2862 CYLINDER HEAD GP

TYPE 3

SMCS-1100, 1101 **i08586058**

NOTE	REF NO	GRAPHIC REF	PART NUMBER	QTY	PART NAME 1 2 3 4 5 6 (PRODUCT LEVEL)	SEE PAGE
	1	1	**153-5556**	16	RETAINER	
	2	1	**153-5557**	8	RETAINER	
CY	3	1	*581-9724*	1	CYLINDER HEAD AS	251
	4	1	**435-9544**	4	VALVE-INLET	
	5	1	**435-9547**	4	VALVE-EXHAUST	
	6	1	**440-5104**	8	SEAL	
	7	1	**477-8828**	8	SPRING	

C - CHANGE FROM PREVIOUS TYPE
Y - SEPARATE ILLUSTRATION

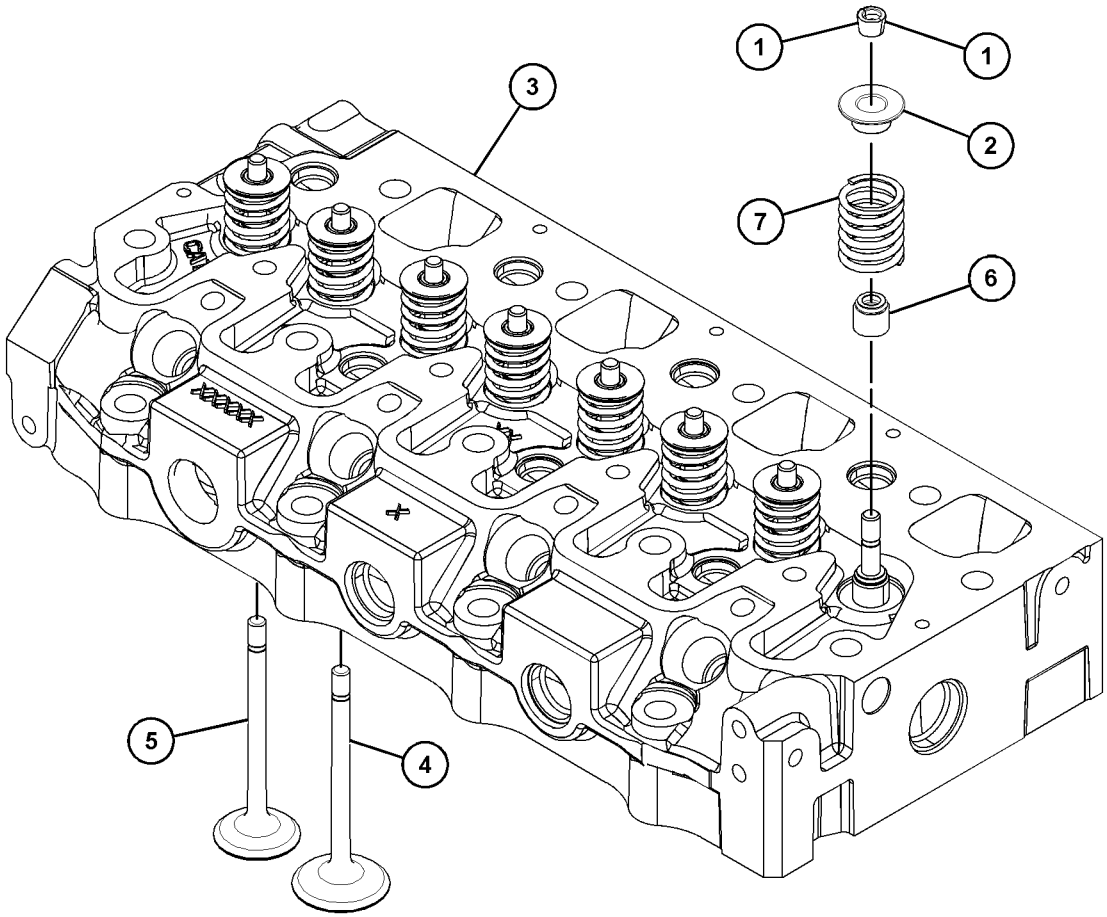

GRAPHIC #1 <END> g06770569

426-3438 CYLINDER HEAD AS

PART OF 308-1859 CYLINDER HEAD AS

SMCS-1100, 1101 **i08096609**

NOTE	REF NO	GRAPHIC REF	PART NUMBER	QTY	PART NAME 1 2 3 4 5 6 (PRODUCT LEVEL)	SEE PAGE
	1	1	**237-9315**	5	PLUG (SEALING)	
	2	1	**288-6537**	7	CAP	
	3	1	**291-1808**	2	CAP	
	4	1	**303-0338**	3	PLUG	
	5	1	*423-7666*	1	CYLINDER HEAD AS	
	5A	1	**256-2084**	4	INSERT-INLET VALVE	
	5B	1	**256-2085**	4	INSERT-VALVE SEAT	

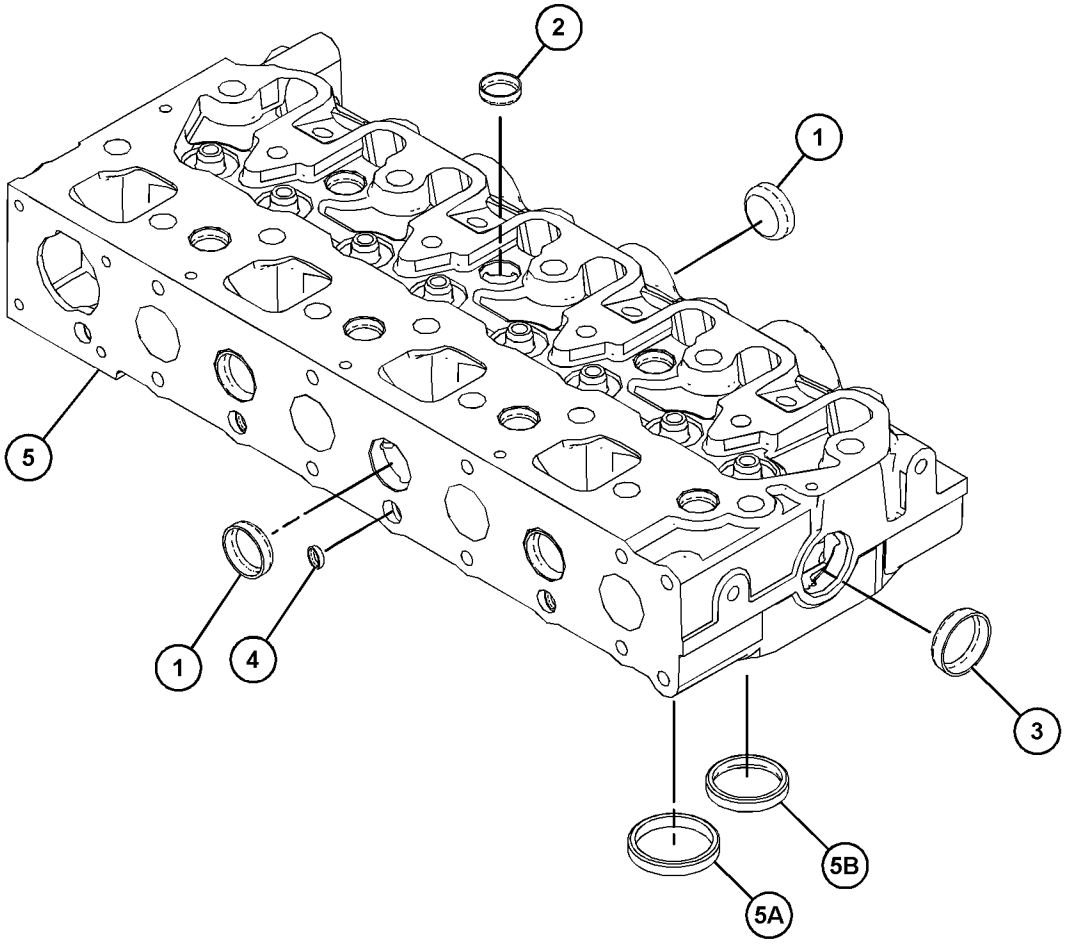

GRAPHIC #1 <END> g06543444

521-2896 CYLINDER HEAD AS

PART OF 308-1859 CYLINDER HEAD AS

SMCS-1100, 1101 **i08586068**

NOTE	REF NO	GRAPHIC REF	PART NUMBER	QTY	PART NAME 1 2 3 4 5 6 (PRODUCT LEVEL)	SEE PAGE
	1	1	*423-7666*	1	CYLINDER HEAD AS	
	1A	1	**256-2084**	4	INSERT-INLET VALVE	
	1B	1	**256-2085**	4	INSERT-VALVE SEAT	
	2	1	**504-9775**	3	PLUG	
	3	1	**504-9785**	7	PLUG	
	4	1	**504-9786**	5	PLUG	
	5	1	**504-9787**	2	PLUG	

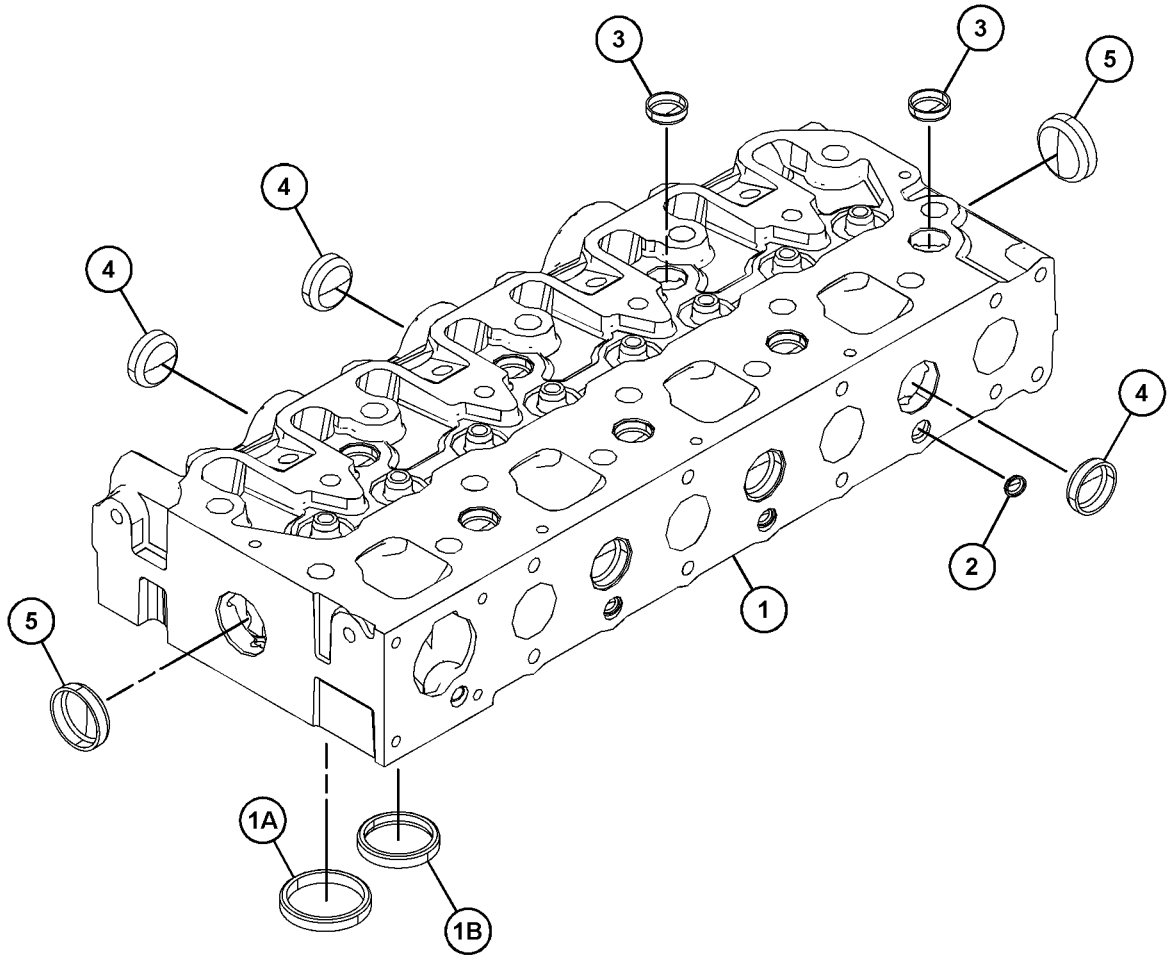

GRAPHIC #1 <END> g06691400

581-9723 CYLINDER HEAD AS

PART OF 321-4061 CYLINDER HEAD GP
ALSO AN ATTACHMENT

SMCS-1100, 1101 **i08582715**

NOTE	REF NO	GRAPHIC REF	PART NUMBER	QTY	PART NAME 1 2 3 4 5 6 (PRODUCT LEVEL)	SEE PAGE
	1	1	**504-9775**	3	PLUG	
	2	1	**504-9785**	7	PLUG	
	3	1	**504-9786**	5	PLUG	
	4	1	**504-9787**	2	PLUG	
	5	1	*595-7167*	1	CYLINDER HEAD AS	
		1	**256-2084**	4	INSERT-INLET VALVE	
		1	**256-2085**	4	INSERT-VALVE SEAT	

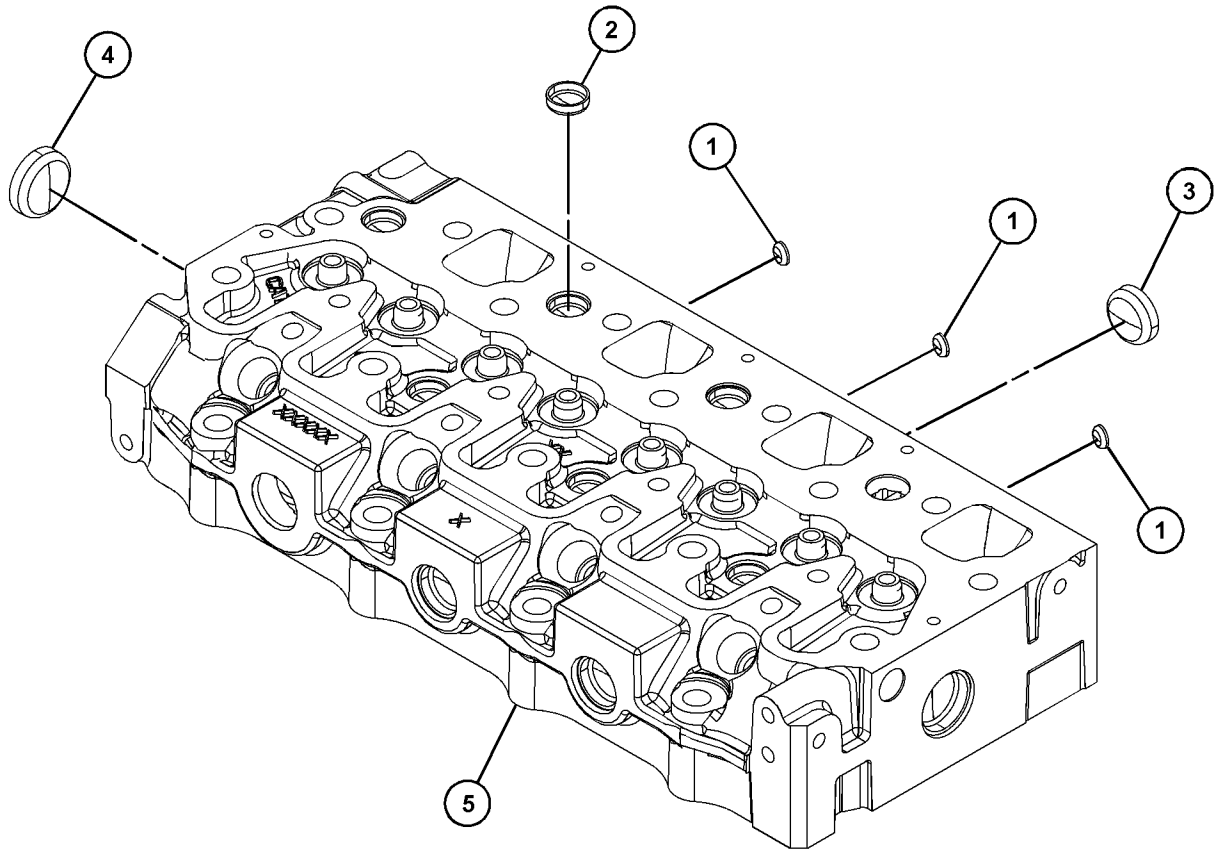

GRAPHIC #1 <END> g06673000

581-9724 CYLINDER HEAD AS

PART OF 308-1859 CYLINDER HEAD AS

SMCS-1100, 1101 **i08586079**

NOTE	REF NO	GRAPHIC REF	PART NUMBER	QTY	PART NAME 1 2 3 4 5 6 (PRODUCT LEVEL)	SEE PAGE
	1	1	**504-9775**	3	PLUG	
	2	1	**504-9785**	7	PLUG	
	3	1	**504-9786**	5	PLUG	
	4	1	**504-9787**	2	PLUG	
Y	5	1	*596-4237*	1	CYLINDER HEAD AS	252

Y - SEPARATE ILLUSTRATION

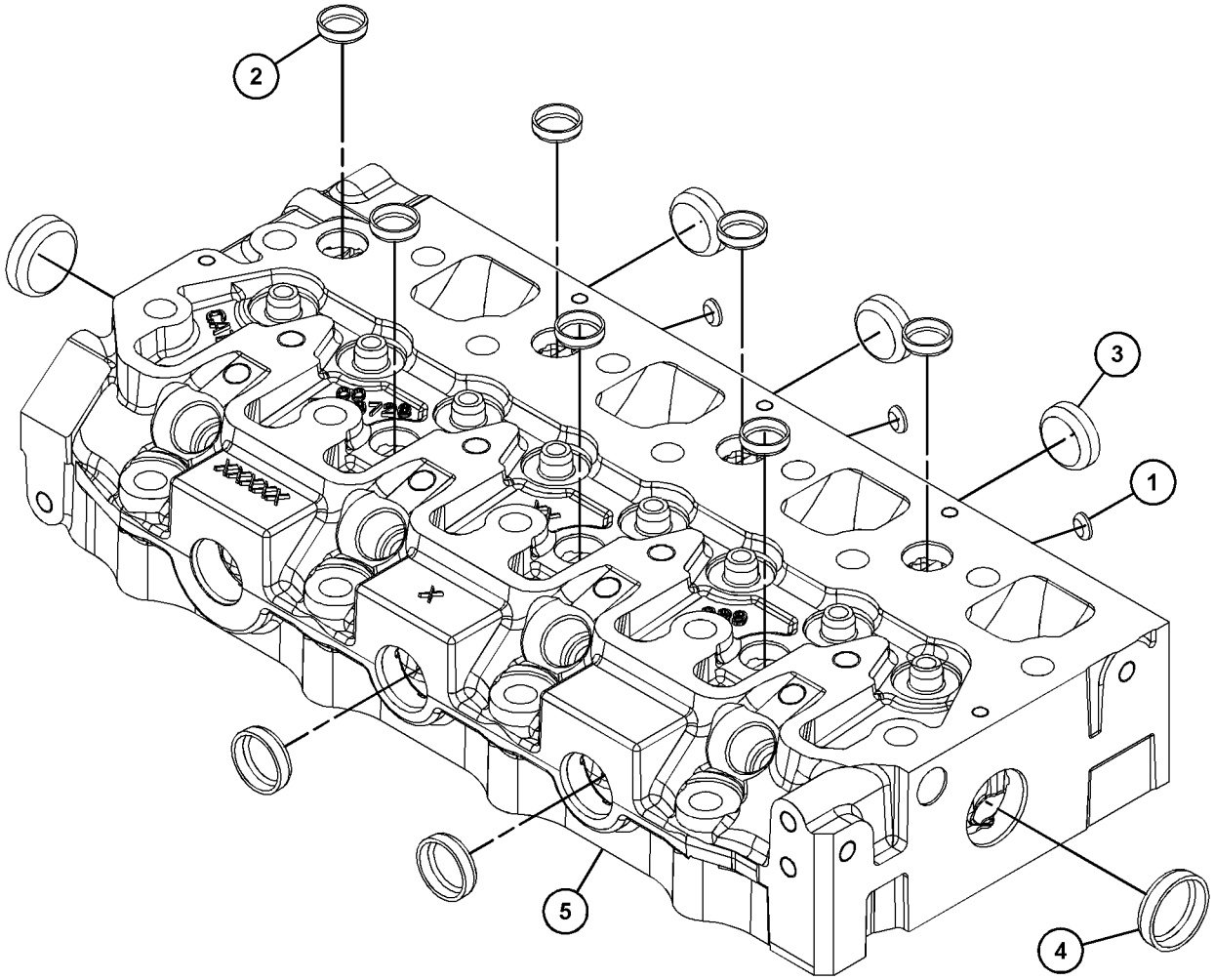

GRAPHIC #1 <END> g06773242

596-4237 CYLINDER HEAD AS

PART OF 581-9724 CYLINDER HEAD AS

SMCS-1100, 1101 **i08586128**

NOTE	REF NO	GRAPHIC REF	PART NUMBER	QTY	PART NAME 1 2 3 4 5 6 (PRODUCT LEVEL)	SEE PAGE
	1	1	**256-2084**	4	INSERT-INLET VALVE	
	2	1	**256-2085**	4	INSERT-VALVE SEAT	

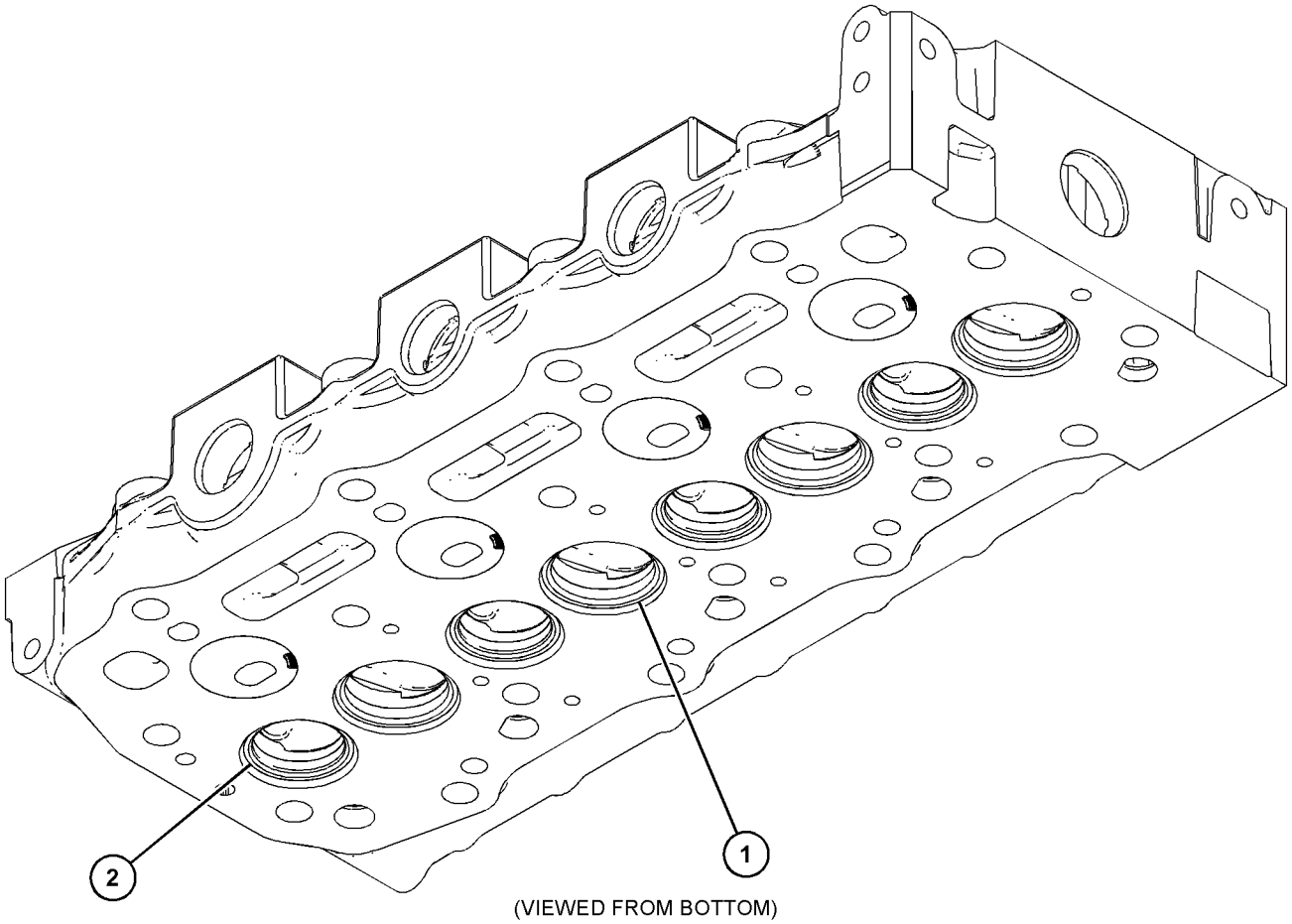

(VIEWED FROM BOTTOM)

GRAPHIC #1 <END> g06773250

308-2284 CYLINDER HEAD GP

PART OF 433-1380 ENGINE AR, 435-1636, 435-1658, 489-9224, 506-0518, 506-0519, 512-7969, 514-6556, 516-2639, 518-0165, 557-6086 ENGINE AR-PRIMARY

SMCS-1100 **i08883963**

NOTE	REF NO	GRAPHIC REF	PART NUMBER	QTY	PART NAME 1 2 3 4 5 6 (PRODUCT LEVEL)	SEE PAGE
	1	1	**504-3838**	8	CAP	
JM	2	1	*532-6842*	14	BOLT-FLANGE HEAD (M11X1.25X91-MM)	
JM	3	1	*532-6841*	4	BOLT-FLANGE HEAD (M11X1.25X72-MM)	
M	4	1	**183-3213**	4	STUD (M8X1.25X71-MM)	
Y	5	1	**308-1859**	1	CYLINDER HEAD AS	245
M	6	1	**587-3850**	2	STUD (M6X1X63-MM)	
B	7	1	**322-7488**	1	GASKET (1.1-MM THK)	
B		1	**322-7487**	1	GASKET (1.2-MM THK)	
B		1	**322-7486**	1	GASKET (1.3-MM THK)	
					AVAILABLE REPAIR KIT(S):	
J			**524-3347**	1	KIT-BOLT	
					(FOR USE WITH 4 CYLINDER CRDI ENGINE)	
J			**524-3348**	1	KIT-BOLT	
					(FOR USE WITH 3 CYLINDER CRDI ENGINE)	

B - USE AS REQUIRED
J - KIT MARKED J SERVICES PART(S) MARKED J
M - METRIC PART
Y - SEPARATE ILLUSTRATION

308-2284 **CYLINDER HEAD GP (**contd.**)** **i08883963**

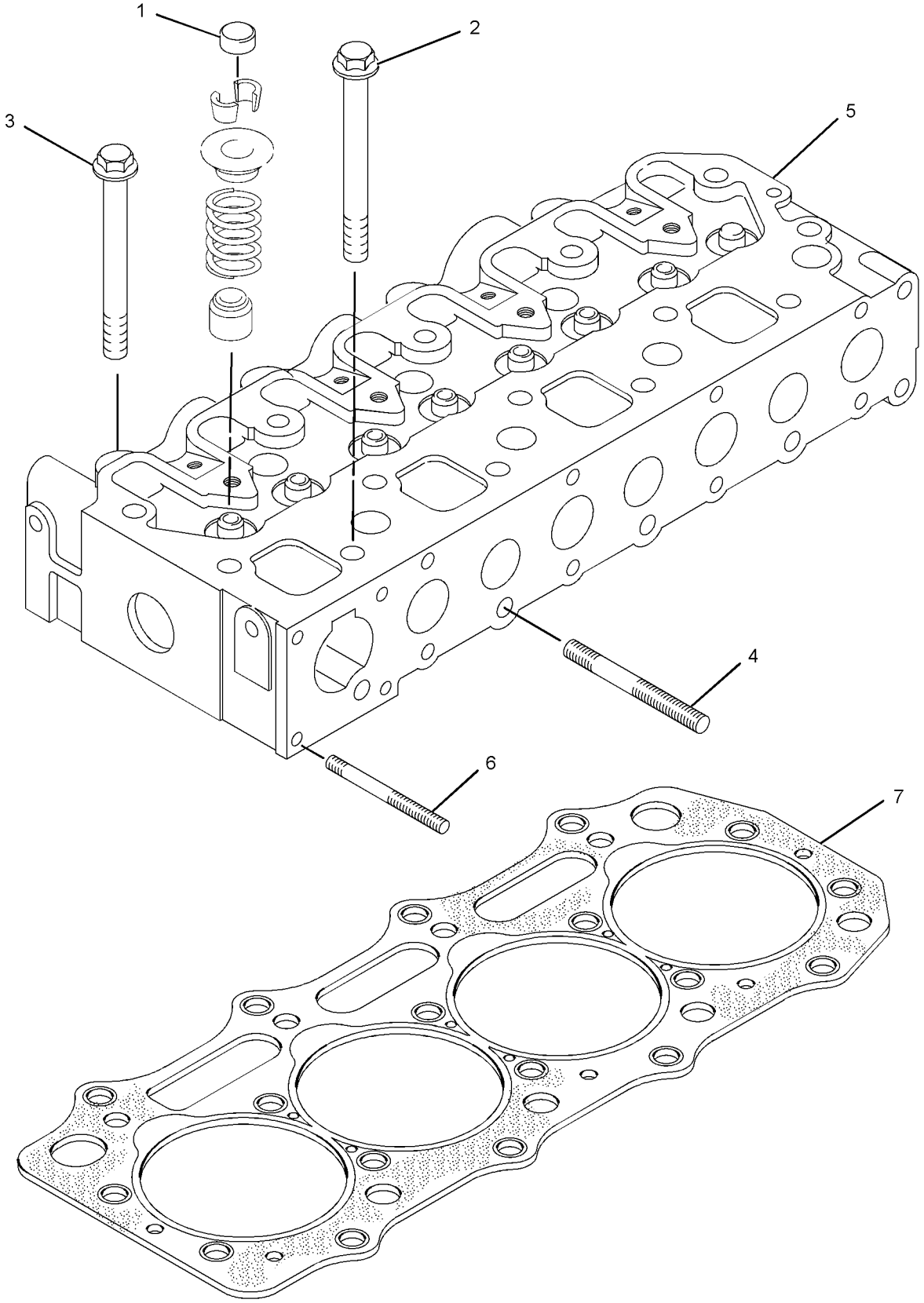

GRAPHIC #1 <END> g01409220

309-6715 CYLINDER HEAD GP

PART OF 435-1645, 435-1649 CYLINDER BLOCK GP-LONG, 433-1379 ENGINE AR, 417-7273, 435-1641, 435-1642, 435-1646, 435-1647, 489-4263, 506-0520, 513-2239, 557-7471 ENGINE AR-PRIMARY
ALSO AN ATTACHMENT

SMCS-1100 **i08826928**

NOTE	REF NO	GRAPHIC REF	PART NUMBER	QTY	PART NAME 1 2 3 4 5 6 (PRODUCT LEVEL)	SEE PAGE
	1	1	**504-3838**	8	CAP (VALVE)	
JLM	2	1	**532-6842**	14	BOLT-FLANGE HEAD (M11X1.25X91-MM)	
JLM	3	1	**532-6841**	4	BOLT-FLANGE HEAD (M11X1.25X72-MM)	
M	4	1	**183-3213**	2	STUD (M8X1.25X71-MM)	
M	5	1	**587-3850**	2	STUD (M6X1X63-MM)	
Y	6	1	**321-4061**	1	CYLINDER HEAD GP	257
B	7	1	**322-7488**	1	GASKET (1.1-MM THK)	
B		1	**322-7487**	1	GASKET (1.2-MM THK)	
B		1	**322-7486**	1	GASKET (1.3-MM THK)	
					AVAILABLE REPAIR KIT(S):	
J			**524-3347**	1	KIT-BOLT	
L			**524-3348**	1	KIT-BOLT	
					(EACH KIT-BOLT INCLUDES BOLTS)	

B - USE AS REQUIRED
J - KIT MARKED J SERVICES PART(S) MARKED J
L - KIT MARKED L SERVICES PART(S) MARKED L
M - METRIC PART
Y - SEPARATE ILLUSTRATION

309-6715 **CYLINDER HEAD GP (**contd.**)** **i08826928**

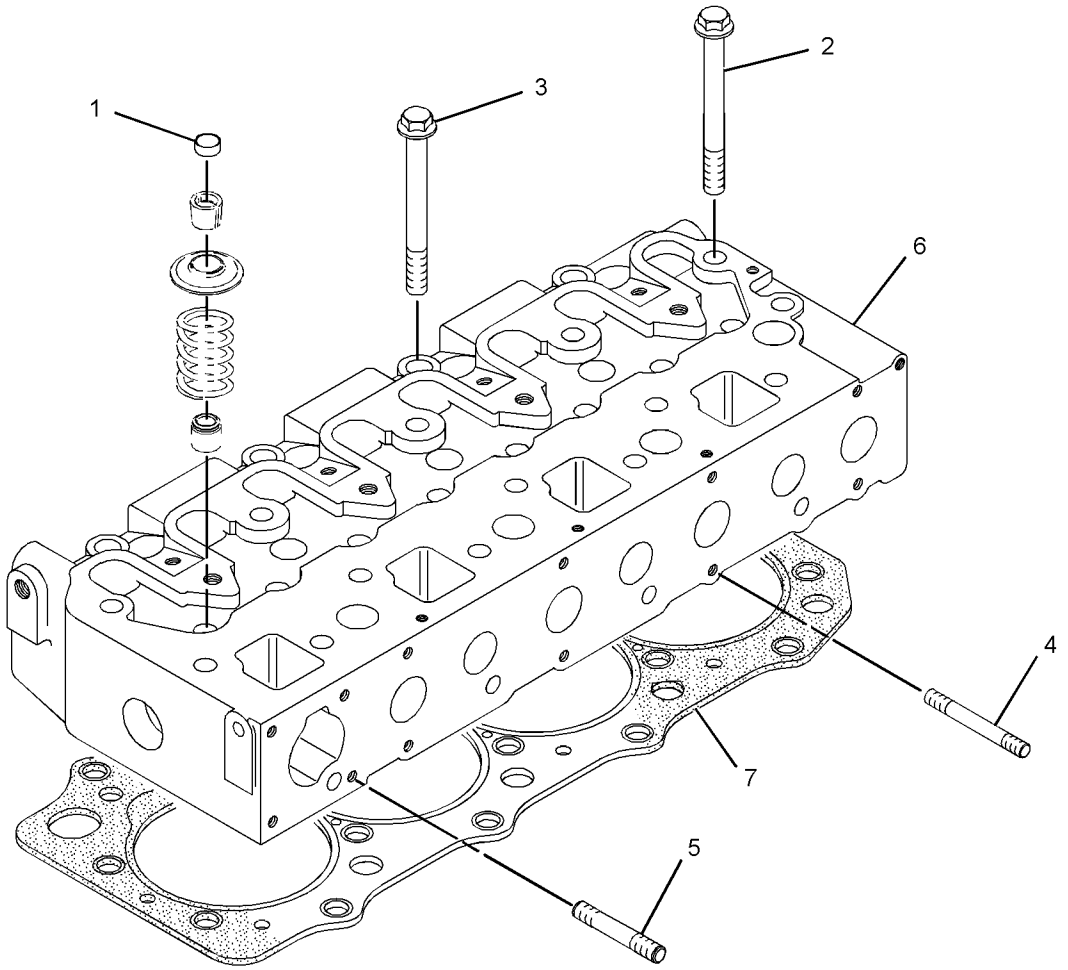

GRAPHIC #1 <END> g01394446

321-4061 CYLINDER HEAD GP

PART OF 309-6715, 340-5784, 596-2861 CYLINDER HEAD GP
ALSO AN ATTACHMENT

SMCS-1100 **i08671009**

NOTE	REF NO	GRAPHIC REF	PART NUMBER	QTY	PART NAME 1 2 3 4 5 6 (PRODUCT LEVEL)	SEE PAGE
	1	1	**435-9544**	4	VALVE-INLET	
	2	1	**435-9546**	4	VALVE-EXHAUST	
	3	1	**440-5104**	8	SEAL	
	4	1	**477-8828**	8	SPRING	
Y	5	1	*581-9723*	1	CYLINDER HEAD AS	250
	6	1	**153-5556**	16	RETAINER	
	7	1	**153-5557**	8	RETAINER	
F			**256-2084**	4	INSERT-INLET VALVE	
F			**256-2085**	4	INSERT-VALVE SEAT	

F - NOT SHOWN
Y - SEPARATE ILLUSTRATION

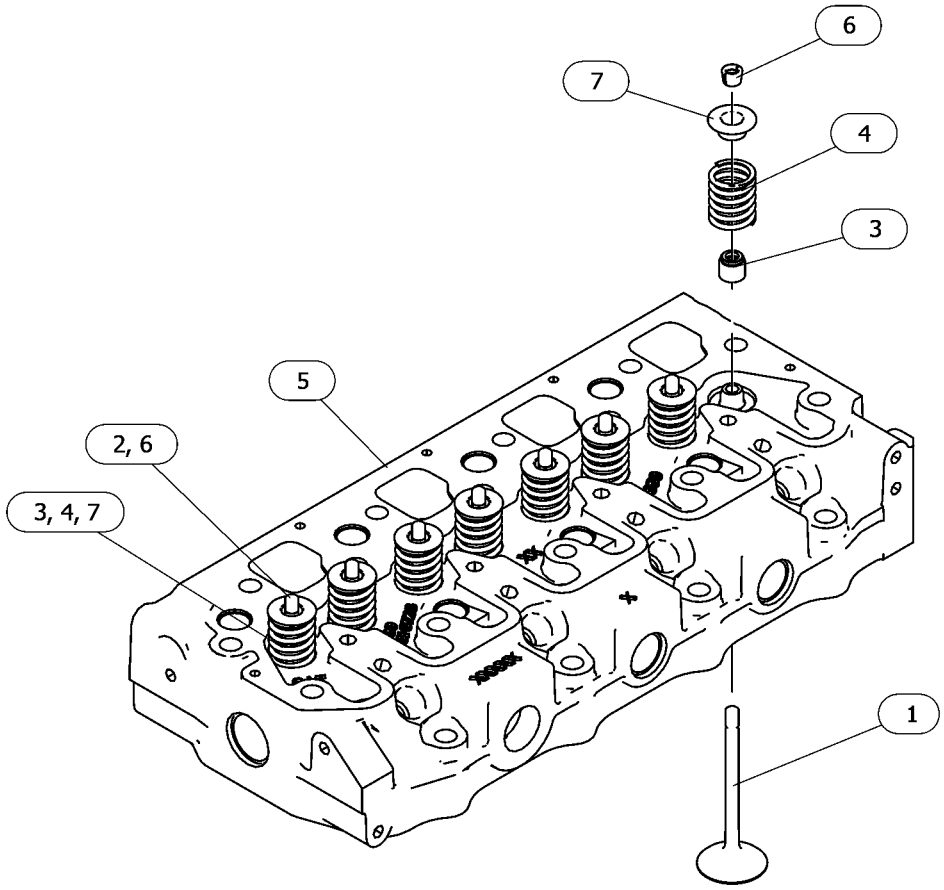

GRAPHIC #1 <END> g06722066

340-5784 CYLINDER HEAD GP

PART OF 499-6420 ENGINE AR-PRIMARY

SMCS-1100 **i08760549**

NOTE	REF NO	GRAPHIC REF	PART NUMBER	QTY	PART NAME 1 2 3 4 5 6 (PRODUCT LEVEL)	SEE PAGE
	1	1	**504-3838**	8	CAP	
M	2	1	**532-6842**	14	BOLT-FLANGE HEAD (M11X1.25X91-MM)	
					—OR—	
AFJ			**524-3347**	4	KIT-BOLT	
					(EACH INCLUDES)	
					—OR—	
AFM			**532-6841**	4	BOLT-FLANGE HEAD (M11X1.25X72-MM)	
AFM			**532-6842**	14	BOLT-FLANGE HEAD (M11X1.25X91-MM)	
AFH			**524-3348**	4	KIT-BOLT	
					(EACH INCLUDES)	
AFM			**532-6841**	3	BOLT-FLANGE HEAD (M11X1.25X72-MM)	
AFM			**532-6842**	11	BOLT-FLANGE HEAD (M11X1.25X91-MM)	
M	3	1	**532-6841**	4	BOLT-FLANGE HEAD (M11X1.25X72-MM)	
					—OR—	
AFJ			**524-3347**	4	KIT-BOLT	
					(EACH INCLUDES)	
					—OR—	
AFM			**532-6841**	4	BOLT-FLANGE HEAD (M11X1.25X72-MM)	
AFM			**532-6842**	14	BOLT-FLANGE HEAD (M11X1.25X91-MM)	
AFH			**524-3348**	4	KIT-BOLT	
					(EACH INCLUDES)	
AFM			**532-6841**	3	BOLT-FLANGE HEAD (M11X1.25X72-MM)	
AFM			**532-6842**	11	BOLT-FLANGE HEAD (M11X1.25X91-MM)	
M	4	1	**183-3213**	2	STUD (M8X1.25X71-MM)	
Y	5	1	**321-4061**	1	CYLINDER HEAD GP	257
M	6	1	**587-3850**	2	STUD (M6X1X63-MM)	
B	7	1	**322-7488**	1	GASKET (1.1-MM THK)	
B		1	**322-7487**	1	GASKET (1.2-MM THK)	
B		1	**322-7486**	1	GASKET (1.3-MM THK)	
					PARTS SHOWN IN GRAPHIC(S) WITHOUT A REFERENCE NUMBER ARE NOT SERVICED SEPARATELY	

A - NOT PART OF THIS GROUP
B - USE AS REQUIRED
F - NOT SHOWN
H - USED ON 3 CYLINDER ENGINES
J - USED ON 4 CYLINDER ENGINES
M - METRIC PART
Y - SEPARATE ILLUSTRATION

340-5784 **CYLINDER HEAD GP (**contd.**)** **i08760549**

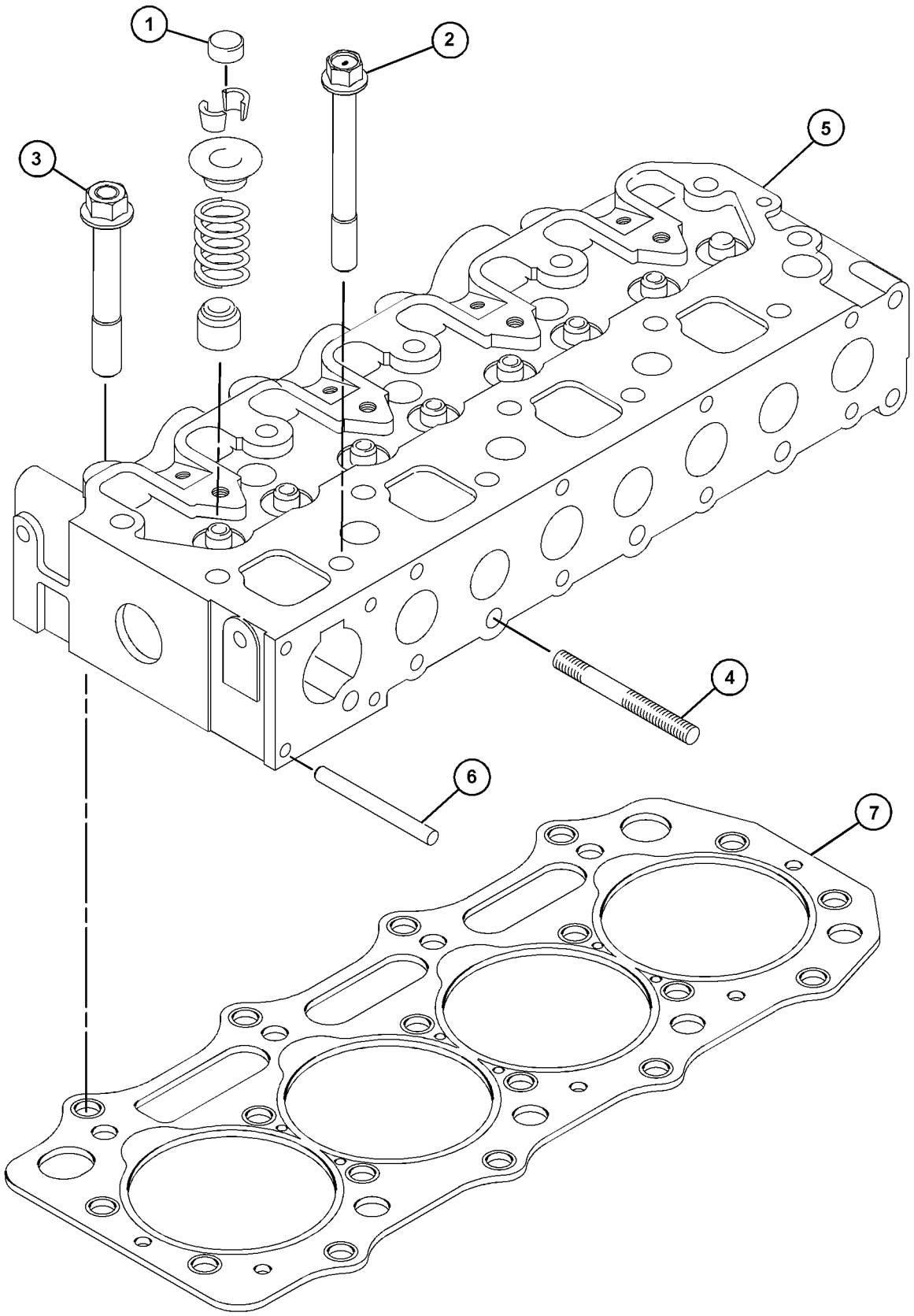

GRAPHIC #1 <END> g07641289

420-6410 CYLINDER HEAD GP

PART OF 504-4602 ENGINE AR-PRIMARY

SMCS-1100 **i08746507**

NOTE	REF NO	GRAPHIC REF	PART NUMBER	QTY	PART NAME 1 2 3 4 5 6 (PRODUCT LEVEL)	SEE PAGE
	1	1	**504-3838**	8	CAP	
M	2	1	**532-6842**	14	BOLT-FLANGE HEAD (M11X1.25X91-MM)	
M	3	1	**532-6841**	4	BOLT-FLANGE HEAD (M11X1.25X72-MM)	
M	4	1	**183-3213**	4	STUD (M8X1.25X71-MM)	
Y	5	1	**308-1859**	1	CYLINDER HEAD AS	245
M	6	1	**587-3850**	2	STUD (M6X1X63-MM)	
B	7	1	**322-7488**	1	GASKET (1.1-MM THK)	
BF			**322-7487**	1	GASKET (1.2-MM THK)	
BF			**322-7486**	1	GASKET (1.3-MM THK)	
BF			**420-6400**	1	GASKET-CYLINDER HEAD	

B - USE AS REQUIRED
F - NOT SHOWN
M - METRIC PART
Y - SEPARATE ILLUSTRATION

420-6410 **CYLINDER HEAD GP (**contd.**)** **i08746507**

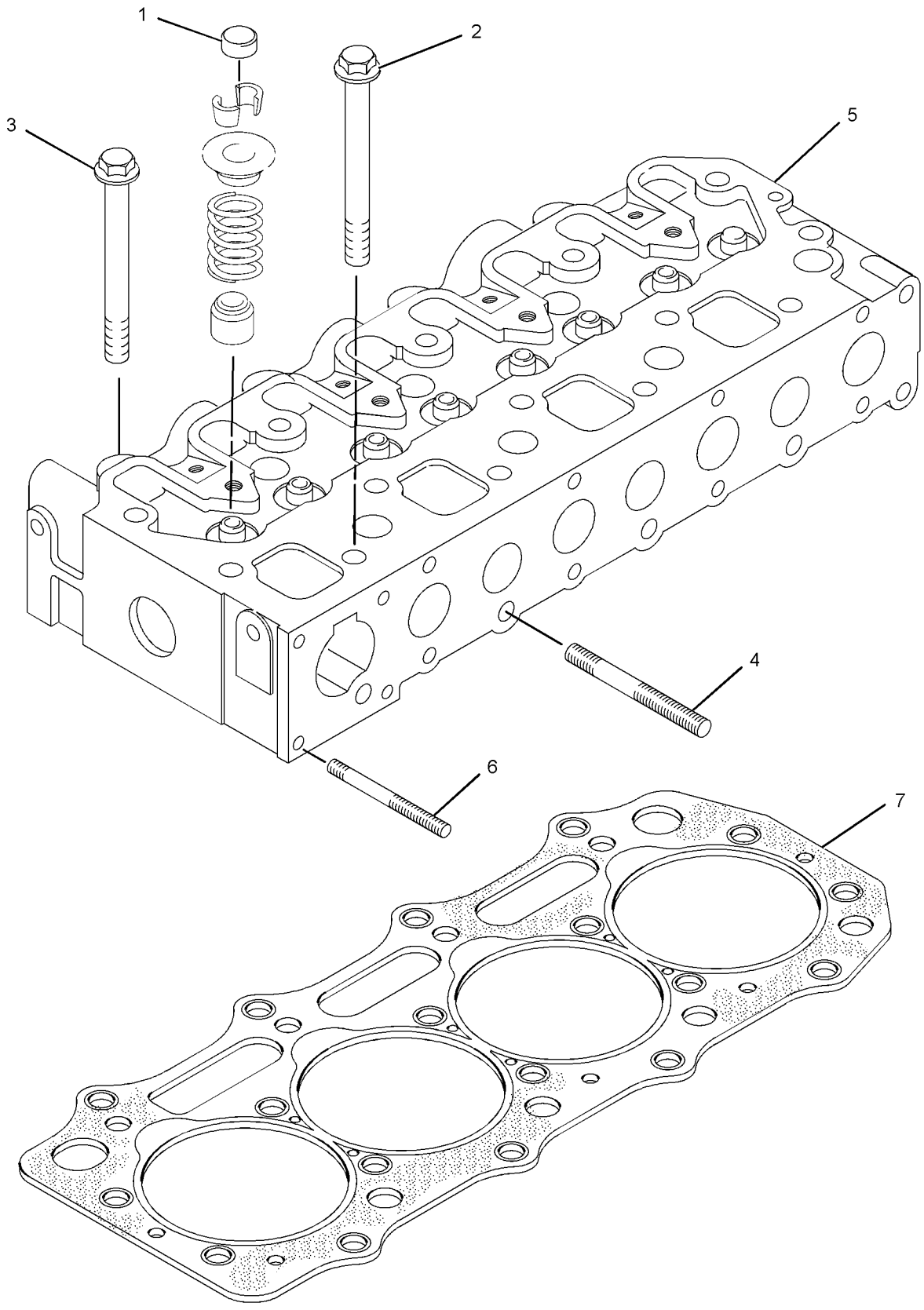

GRAPHIC #1 <END> g01409220

596-2861 CYLINDER HEAD GP

S/N: C6M10291-UP

PART OF 433-1379 ENGINE AR, 417-7273, 435-1641, 435-1642, 435-1647 ENGINE AR-PRIMARY

ALSO AN ATTACHMENT

SMCS-1100 **i08566311**

NOTE	REF NO	GRAPHIC REF	PART NUMBER	QTY	PART NAME 1 2 3 4 5 6 (PRODUCT LEVEL)	SEE PAGE
Y	1	1	**321-4061**	1	CYLINDER HEAD GP	257
M	2	1	**532-6841**	4	BOLT-FLANGE HEAD (M11X1.25X72-MM)	
M	3	1	**532-6842**	14	BOLT-FLANGE HEAD (M11X1.25X91-MM)	
	4	1	*595-5217*	1	GASKET AS-CYLINDER HEAD	
	4A	1	**322-7486**	1	GASKET (1.3-MM THK)	
	4B	1	**322-7487**	1	GASKET (1.2-MM THK)	
	4C	1	**322-7488**	1	GASKET (1.1-MM THK)	

M - METRIC PART
Y - SEPARATE ILLUSTRATION

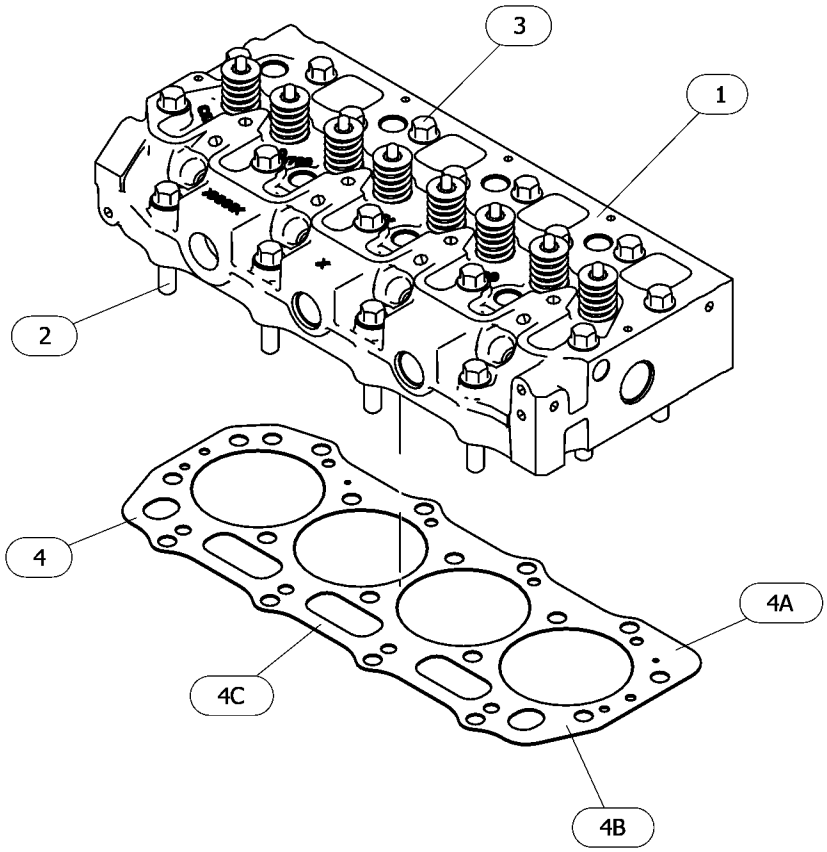

GRAPHIC #1 <END> g06719511

596-2862 CYLINDER HEAD GP

PART OF 435-1636, 514-6556 ENGINE AR-PRIMARY

SMCS-1100 **i08710134**

NOTE	REF NO	GRAPHIC REF	PART NUMBER	QTY	PART NAME 1 2 3 4 5 6 (PRODUCT LEVEL)	SEE PAGE
Y	1	1	**308-1859**	1	CYLINDER HEAD AS	245
JNM	2	1	**532-6841**	4	BOLT-FLANGE HEAD (M11X1.25X72-MM)	
JNM	3	1	**532-6842**	14	BOLT-FLANGE HEAD (M11X1.25X91-MM)	
	4	1	*595-5217*	1	GASKET AS-CYLINDER HEAD	
B		1	**322-7486**	1	GASKET (1.3-MM THK)	
B		1	**322-7487**	1	GASKET (1.2-MM THK)	
B		1	**322-7488**	1	GASKET (1.1-MM THK)	
					AVAILABLE REPAIR KIT(S):	
ABJ			**524-3347**		KIT-BOLT	
					(USED ON 4 CYLINDER ENGINES)	
ABN			**524-3348**		KIT-BOLT	
					(USED ON 3 CYLINDER ENGINES)	

A - NOT PART OF THIS GROUP
B - USE AS REQUIRED
J - KIT MARKED J SERVICES PART(S) MARKED J
M - METRIC PART
N - KIT MARKED N SERVICES PART(S) MARKED N
Y - SEPARATE ILLUSTRATION

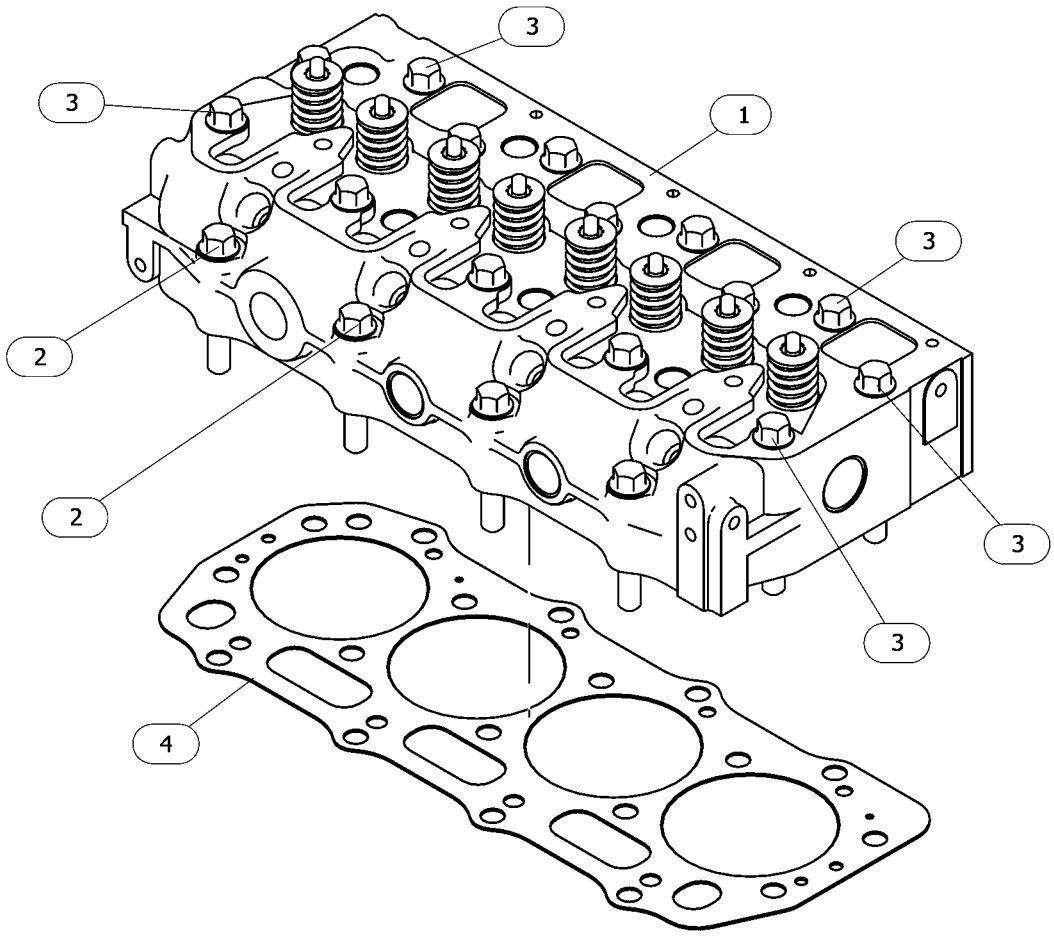

GRAPHIC #1 <END> g06769099

398-5866 DRAIN GP-ECOLOGY

PART OF 514-6556 ENGINE AR-PRIMARY

SMCS-1302 **i08776721**

NOTE	REF NO	GRAPHIC REF	PART NUMBER	QTY	PART NAME 1 2 3 4 5 6 (PRODUCT LEVEL)	SEE PAGE
	1	1	**153-6412**	2	WASHER	
	2	1	**312-4560**	1	VALVE-DRAIN (OIL)	
	3	1	**423-6224**	1	PLUG-DRAIN	
	4	1	**217-7352**	1	COVER-VALVE	

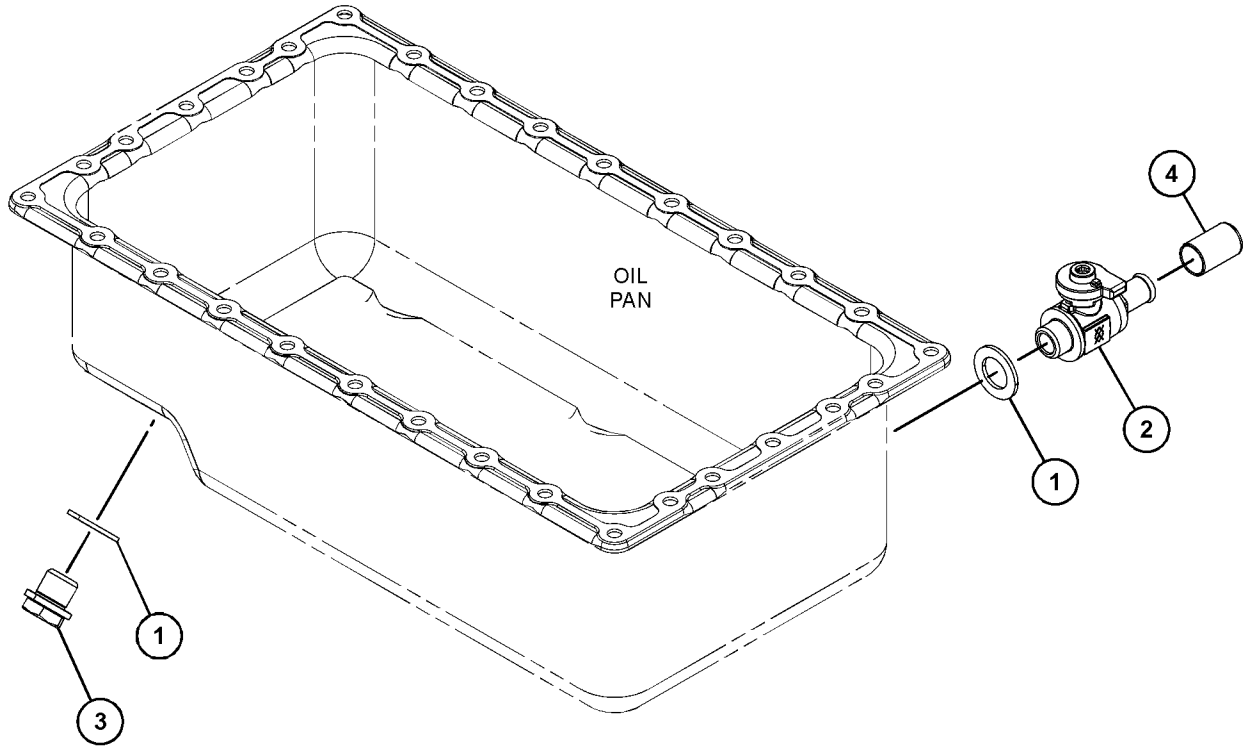

GRAPHIC #1 <END> g06764924

328-3296 DRIVE GP-AUXILIARY

SMCS-1207 **i07059667**

NOTE	REF NO	GRAPHIC REF	PART NUMBER	QTY	PART NAME 1 2 3 4 5 6 (PRODUCT LEVEL)	SEE PAGE
M	1	1	**6I-0594**	2	NUT (M10X1.5-THD)	
M	2	1	**164-7468**	2	BOLT (M10X1.5X95-MM)	
	3	1	**308-1874**	1	HOLDER	
	4	1	**308-1875**	3	SEAL-O-RING	
	5	1	**321-5907**	1	PLATE	
	6	1	**328-3229**	2	COVER	
	7	1	**328-3230**	2	BALL BEARING	
	8	1	**477-0679**	1	GEAR-DRIVE (48-TEETH)	

M - METRIC PART

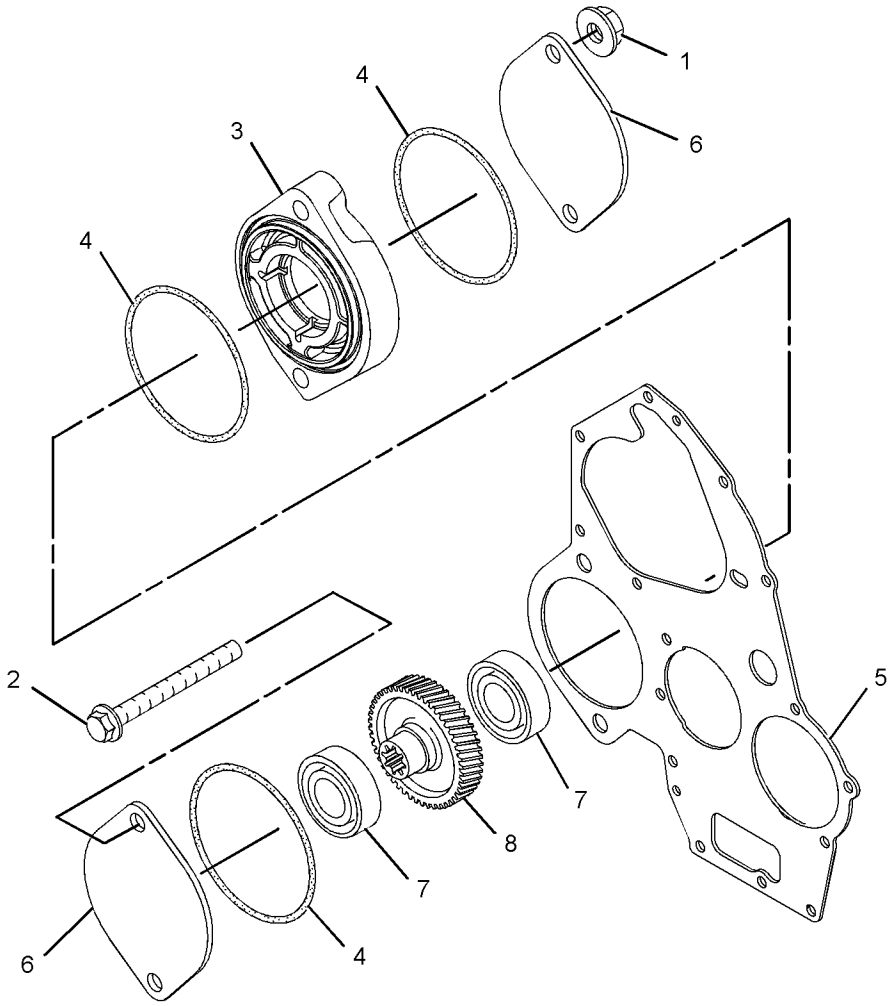

GRAPHIC #1 <END> g01644041

311-1119 DRIVE GP-FAN

SMCS-1359 **i07041835**

NOTE	REF NO	GRAPHIC REF	PART NUMBER	QTY	PART NAME 1 2 3 4 5 6 (PRODUCT LEVEL)	SEE PAGE
M	1	1	**6I-0917**	4	BOLT (M6X1X25-MM)	
	2	1	**161-8260**	1	PLATE	

M - METRIC PART

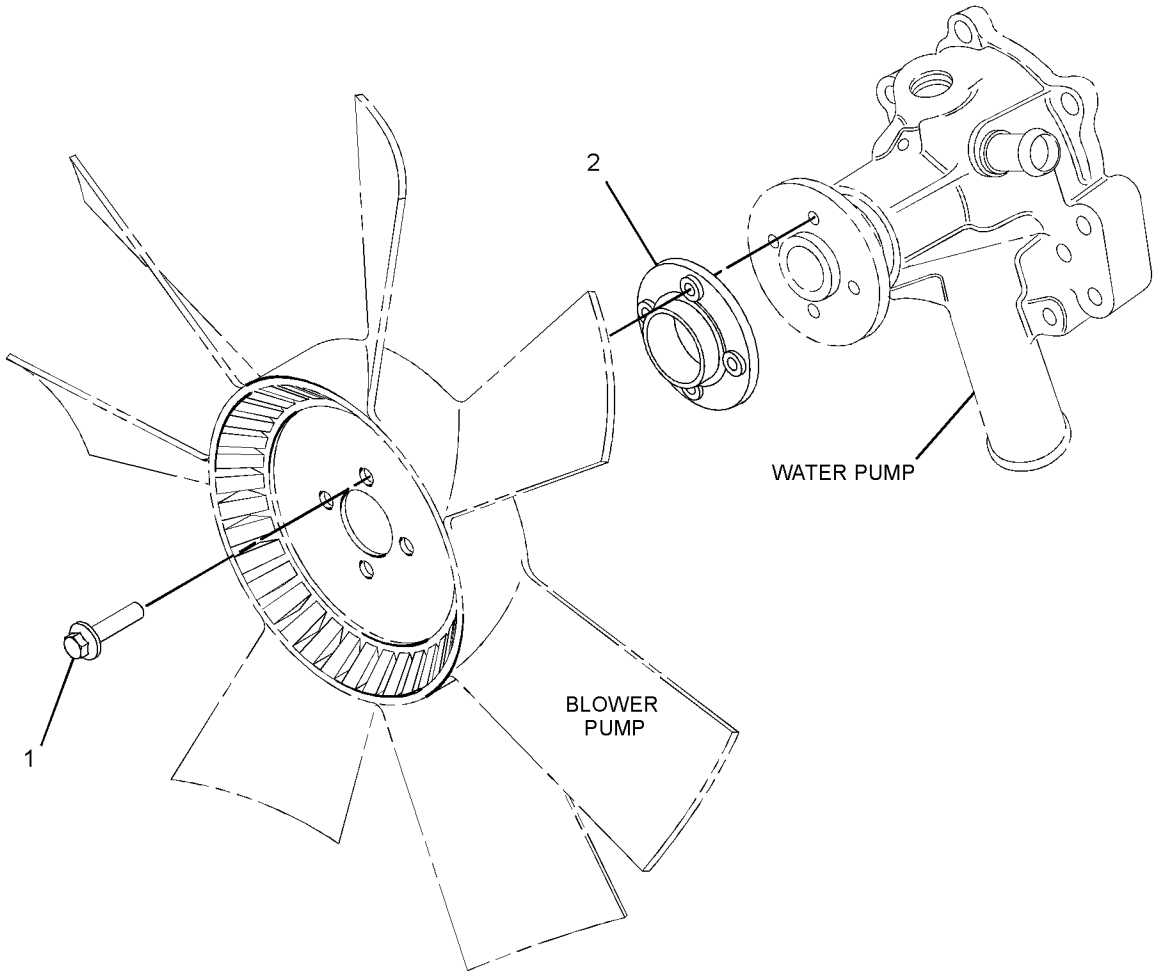

GRAPHIC #1 <END> g06200728

322-2423 DRIVE GP-FAN

PART OF 489-9224, 499-6420, 514-6556 ENGINE AR-PRIMARY

SMCS-1359 **i05416774**

NOTE	REF NO	GRAPHIC REF	PART NUMBER	QTY	PART NAME 1 2 3 4 5 6 (PRODUCT LEVEL)	SEE PAGE
	1	1	**424-9881**	1	HOLDER	
	2	1	**322-2430**	4	BOLT	

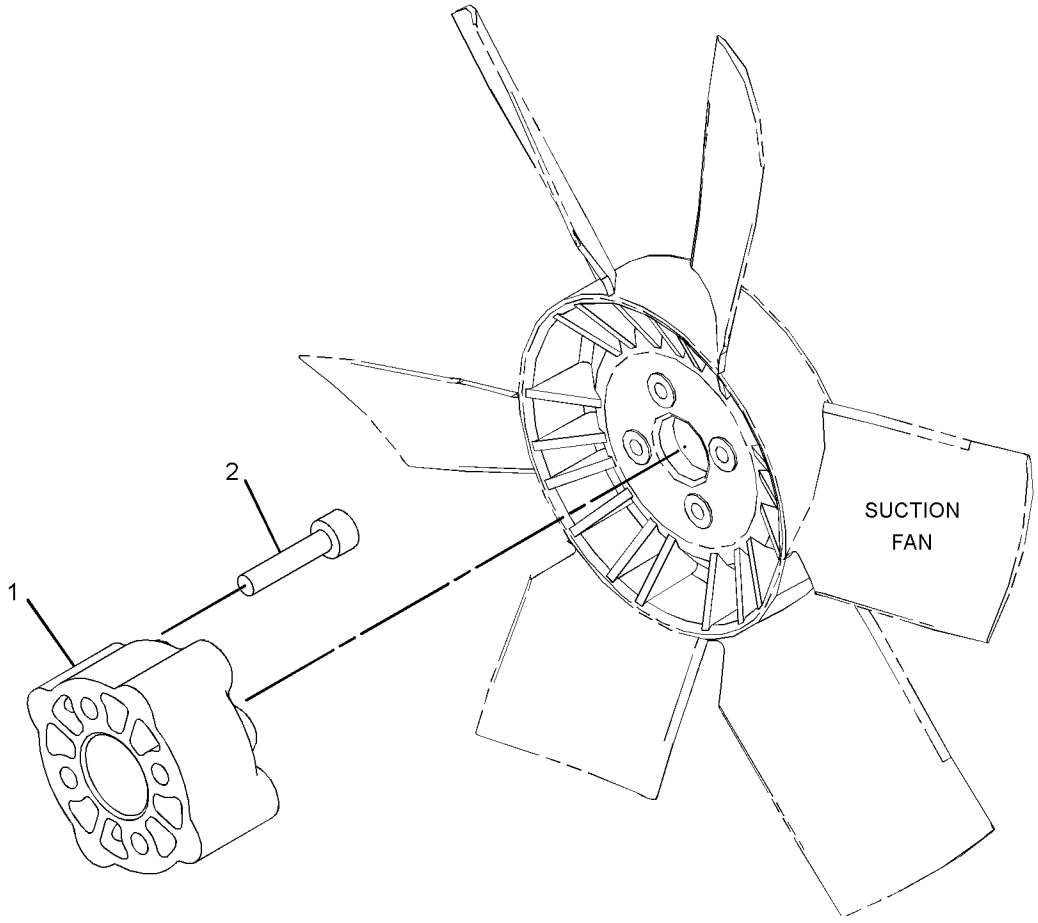

GRAPHIC #1 <END> g03429901

325-5669 DRIVE GP-FAN

SMCS-1359 **i07193054**

NOTE	REF NO	GRAPHIC REF	PART NUMBER	QTY	PART NAME 1 2 3 4 5 6 (PRODUCT LEVEL)	SEE PAGE
M	1	1	**178-2510**	4	BOLT (M6X1X45-MM)	
	2	1	**432-6548**	1	HOLDER	

M - METRIC PART

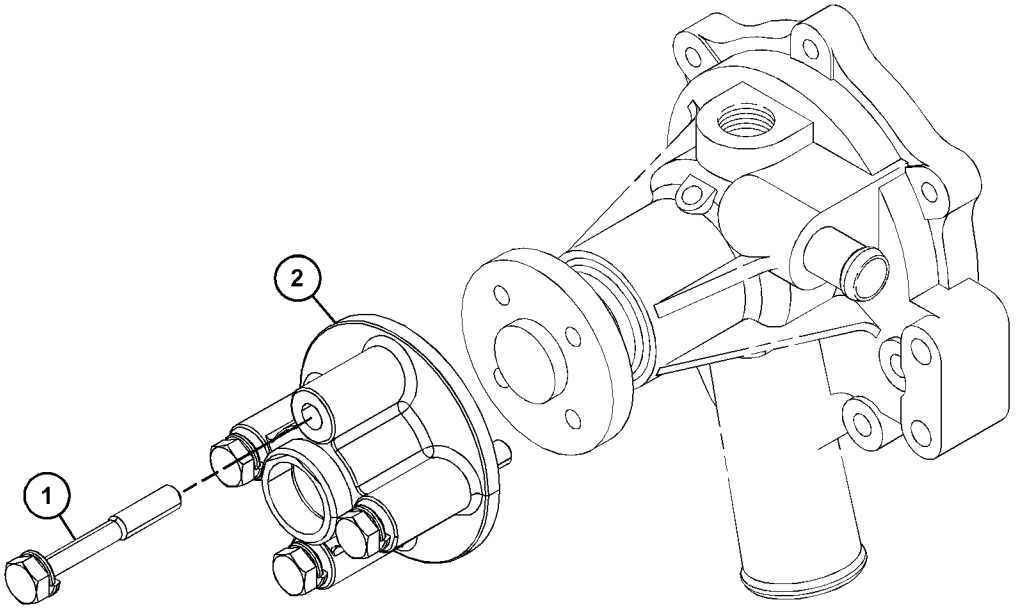

GRAPHIC #1 <END> g06202623

398-4899 DRIVE GP-FAN

AN ATTACHMENT

SMCS-1359 **i10052598**

NOTE	REF NO	GRAPHIC REF	PART NUMBER	QTY	PART NAME 1 2 3 4 5 6 (PRODUCT LEVEL)	SEE PAGE
	1	1	**483-3939**	1	PULLEY-FAN	

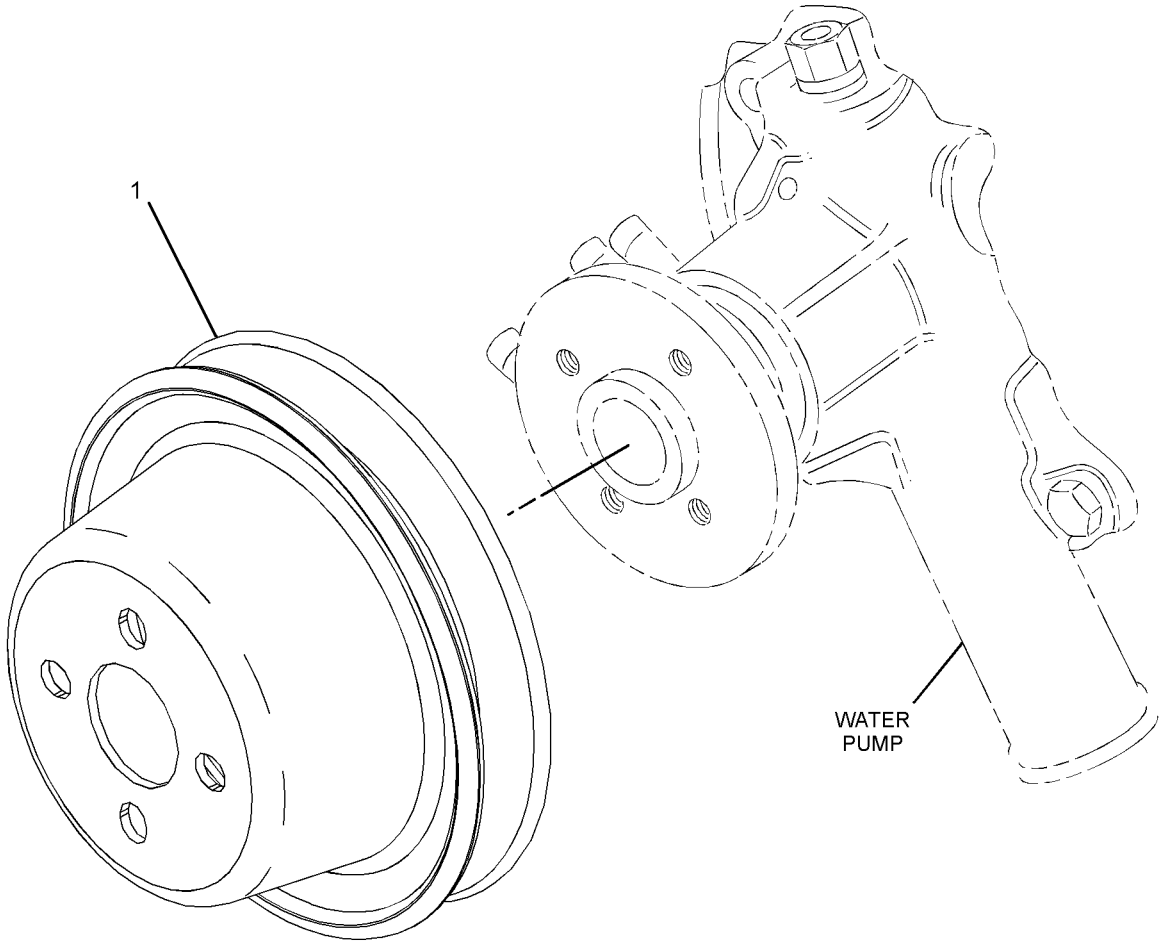

GRAPHIC #1 <END> g06343034

308-2304 EXTENSION GP-FAN

PART OF 512-7969 ENGINE AR-PRIMARY

SMCS-1359 **i05810283**

NOTE	REF NO	GRAPHIC REF	PART NUMBER	QTY	PART NAME 1 2 3 4 5 6 (PRODUCT LEVEL)	SEE PAGE
	1	1	**379-0870**	1	EXTENSION-FAN	
	2	1	**183-3547**	4	BOLT	

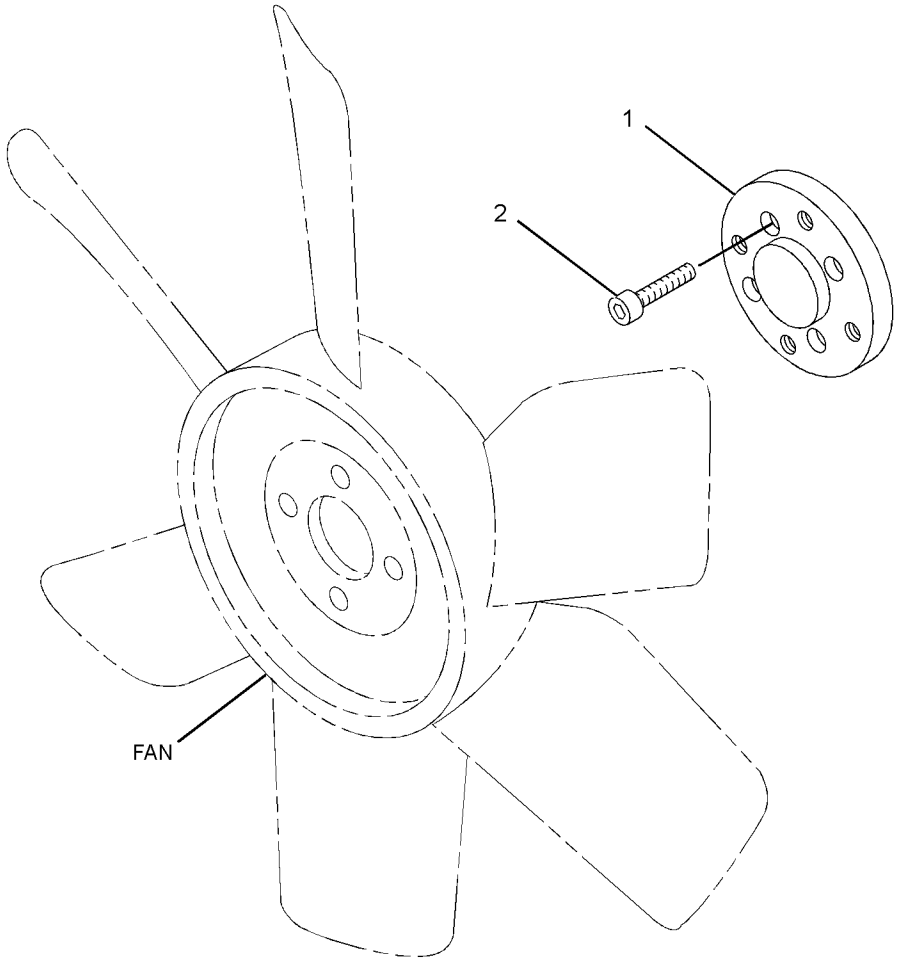

GRAPHIC #1 <END> g01419523

315-7813 EXTENSION GP-FAN

PART OF 516-2639 ENGINE AR-PRIMARY

SMCS-1359 **i07703305**

NOTE	REF NO	GRAPHIC REF	PART NUMBER	QTY	PART NAME 1 2 3 4 5 6 (PRODUCT LEVEL)	SEE PAGE
M	1	1	**106-8916**	4	BOLT (M6X1X16-MM)	
	2	1	**154-2433**	1	PLATE	

M - METRIC PART

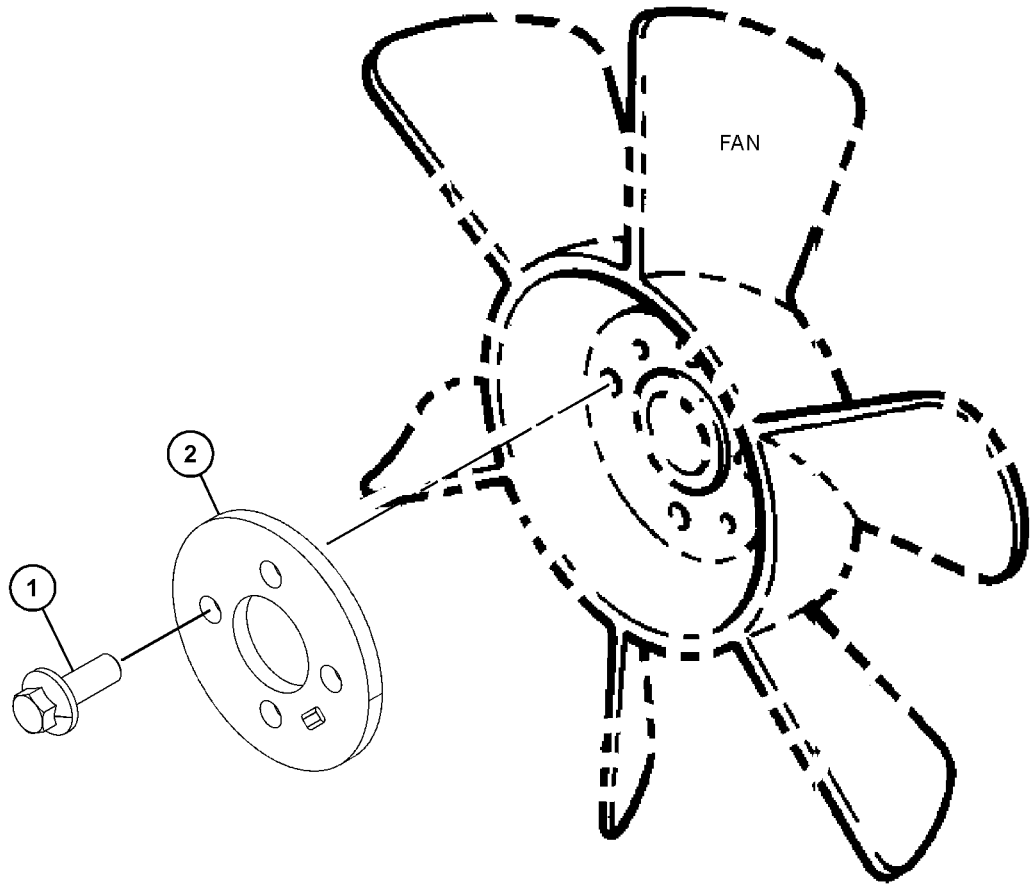

GRAPHIC #1 <END> g06414330

398-9092 EXTENSION GP-FAN

S/N: C6M10203-UP

SMCS-1359 **i08028067**

NOTE	REF NO	GRAPHIC REF	PART NUMBER	QTY	PART NAME 1 2 3 4 5 6 (PRODUCT LEVEL)	SEE PAGE
M	1	1	**106-8916**	4	BOLT (M6X1X16-MM)	
	2	1	**154-2433**	1	PLATE	

M - METRIC PART

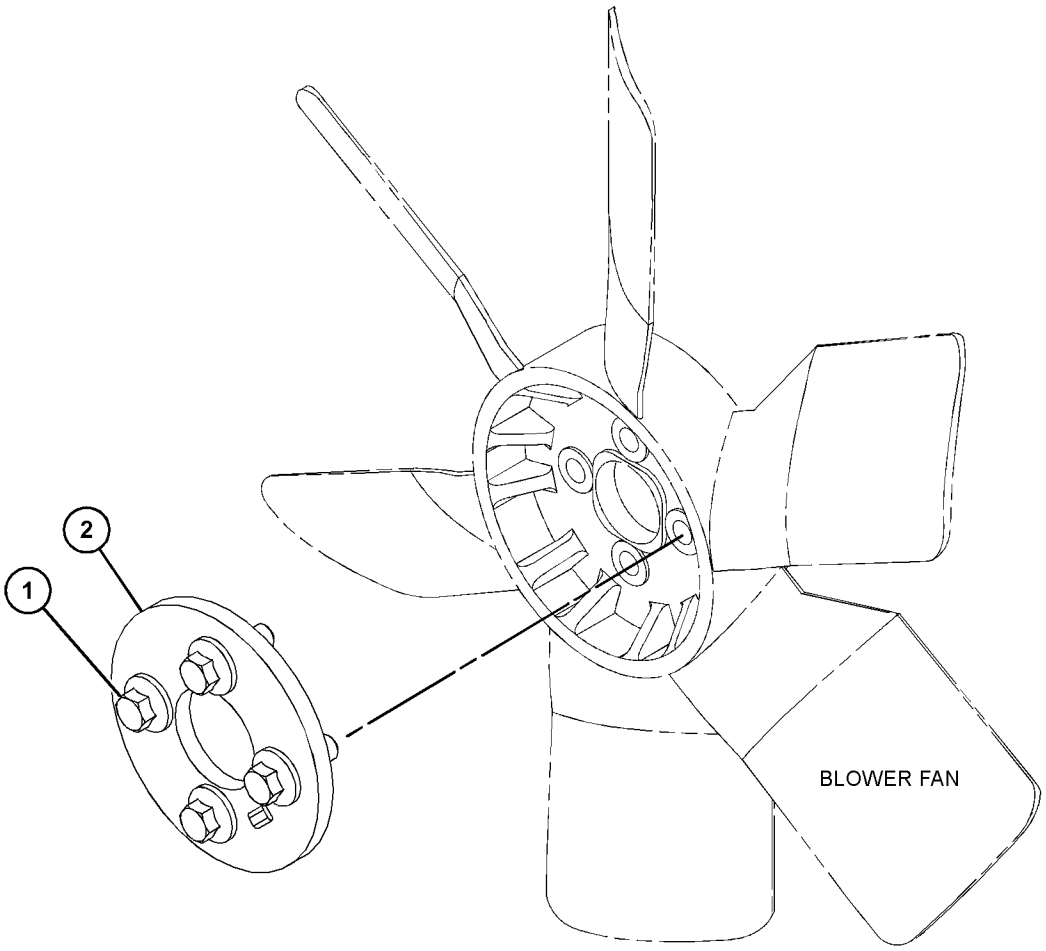

GRAPHIC #1 <END> g06192238

398-9095 EXTENSION GP-FAN

S/N: C6M10505-UP
EXTENSION
PART OF 417-7273 ENGINE AR-PRIMARY

SMCS-1359 **i08717892**

NOTE	REF NO	GRAPHIC REF	PART NUMBER	QTY	PART NAME 1 2 3 4 5 6 (PRODUCT LEVEL)	SEE PAGE
	1	1	**161-8260**	1	PLATE	
M	2	1	**6I-0917**	4	BOLT (M6X1X25-MM)	

M - METRIC PART

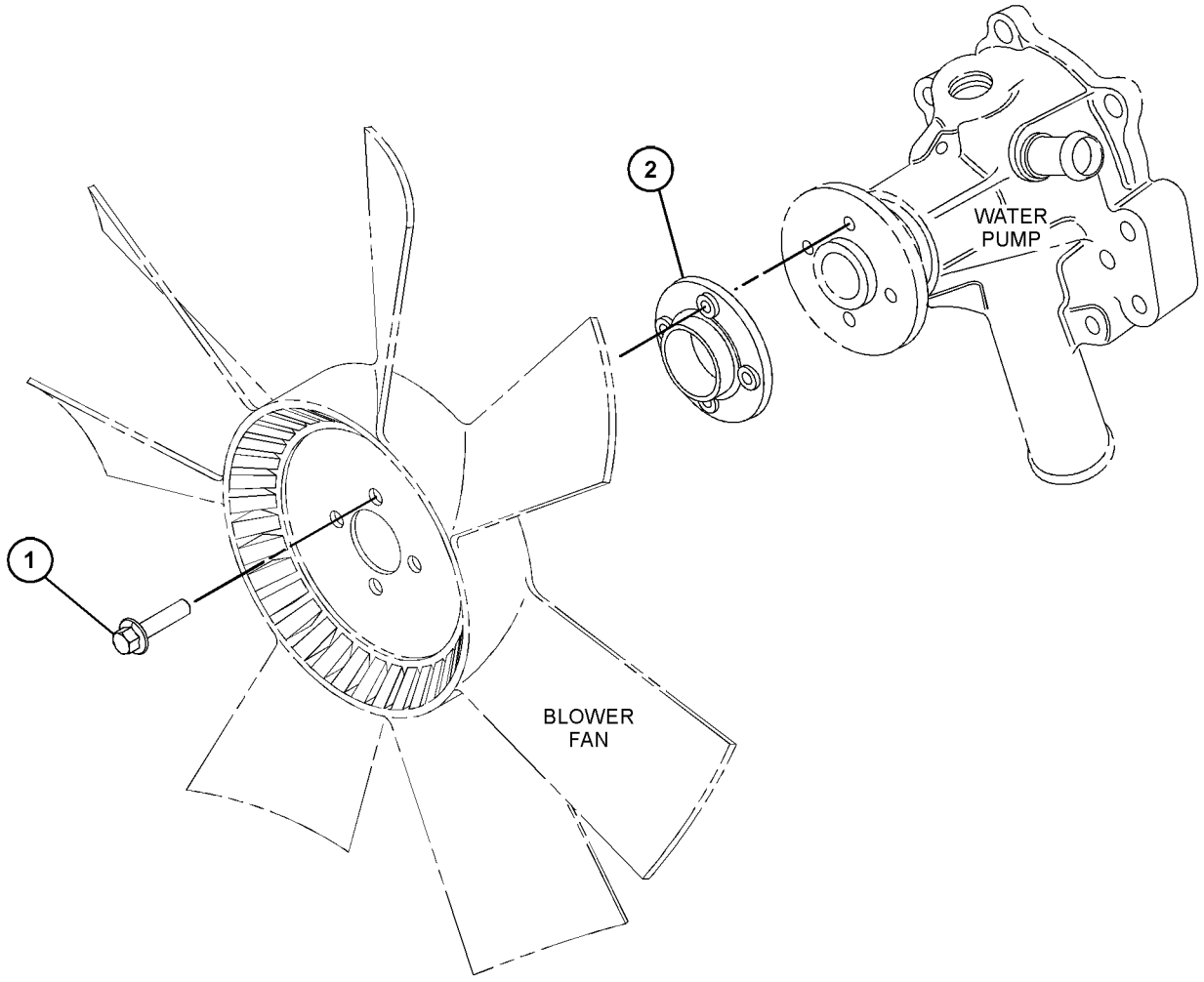

GRAPHIC #1 <END> g06115123

437-2623 EXTENSION GP-FAN

S/N: C6M10291-UP

SMCS-1359 **i08023365**

NOTE	REF NO	GRAPHIC REF	PART NUMBER	QTY	PART NAME 1 2 3 4 5 6 (PRODUCT LEVEL)	SEE PAGE
	1	1	**183-3547**	4	BOLT	
	2	1	**497-9115**	1	EXTENSION-FAN	

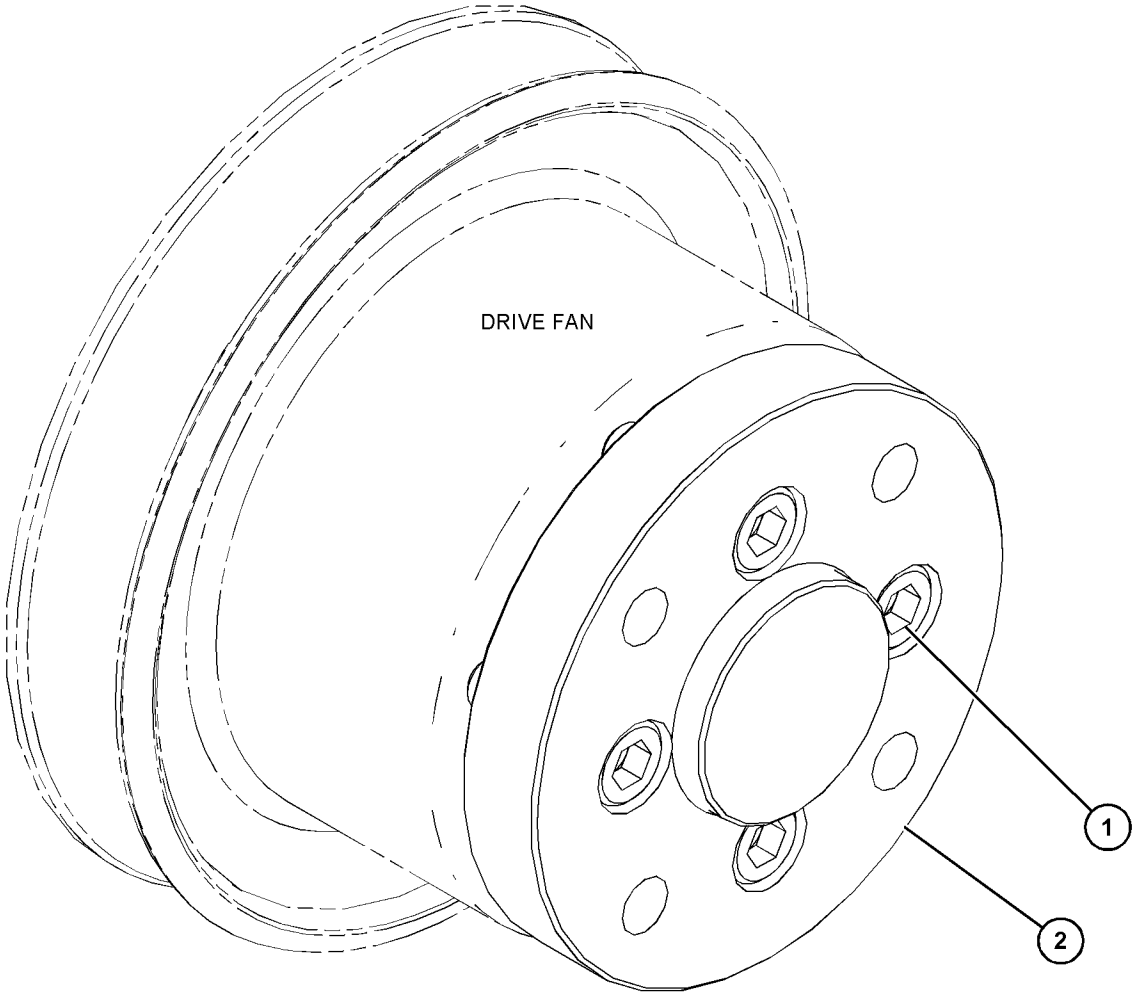

GRAPHIC #1 <END> g06081334

342-1268 FASTENER GP-COVER

PART OF 435-1645, 435-1649 CYLINDER BLOCK GP-LONG, 433-1379, 433-1380 ENGINE AR, 435-1636, 435-1641, 435-1642, 435-1646, 435-1647, 435-1658, 504-4602 ENGINE AR-PRIMARY
ALSO AN ATTACHMENT

SMCS-7553 **i07591021**

NOTE	REF NO	GRAPHIC REF	PART NUMBER	QTY	PART NAME 1 2 3 4 5 6 (PRODUCT LEVEL)	SEE PAGE
M	1	1	**124-3815**	1	BOLT (M8X1.25X16-MM)	

M - METRIC PART

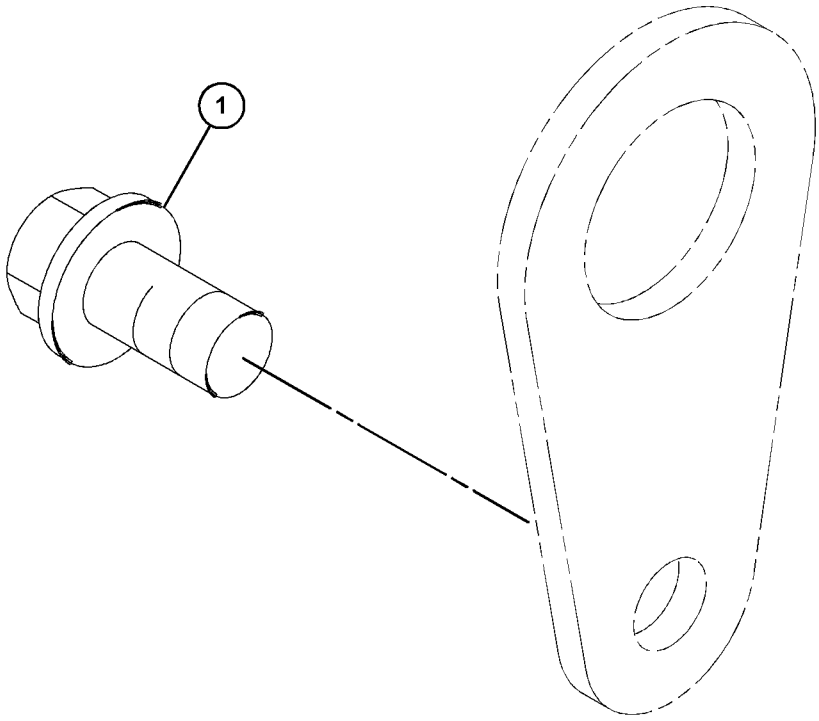

GRAPHIC #1 <END> g06393400

308-2288 FASTENER GP-FRONT HOUSING

PART OF 435-1636, 506-0518, 506-0519, 512-7969, 516-2639, 557-6086 ENGINE AR-PRIMARY

SMCS-1151, 1162 **i09569910**

NOTE	REF NO	GRAPHIC REF	PART NUMBER	QTY	PART NAME 1 2 3 4 5 6 (PRODUCT LEVEL)	SEE PAGE
M	1	1	**153-5960**	2	NUT (M6X1-THD)	
	2	1	**153-5962**	4	BOLT AS	
	3	1	**165-2140**	7	BOLT AS	
	4	1	**592-3241**	1	GASKET-GEAR CASE	

M - METRIC PART

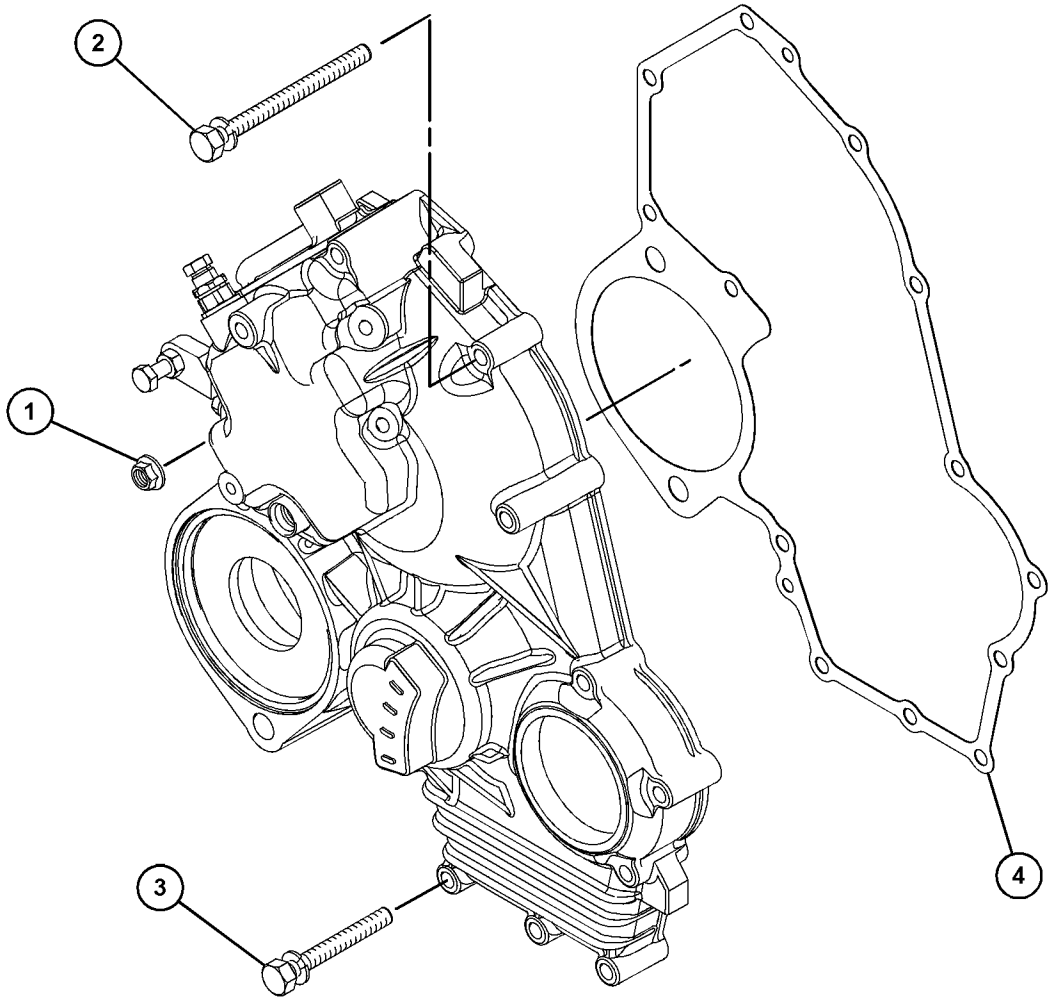

GRAPHIC #1 <END> g06009671

525-9934 FASTENER GP-FRONT HOUSING

PART OF 518-0165 ENGINE AR-PRIMARY

SMCS-1151, 1162 **i09547781**

NOTE	REF NO	GRAPHIC REF	PART NUMBER	QTY	PART NAME 1 2 3 4 5 6 (PRODUCT LEVEL)	SEE PAGE
M	1	1	**153-5960**	2	NUT (M6X1-THD)	
	2	1	**153-5962**	4	BOLT AS	
	3	1	**165-2140**	7	BOLT AS	
	4	1	**592-3241**	1	GASKET-GEAR CASE	

M - METRIC PART

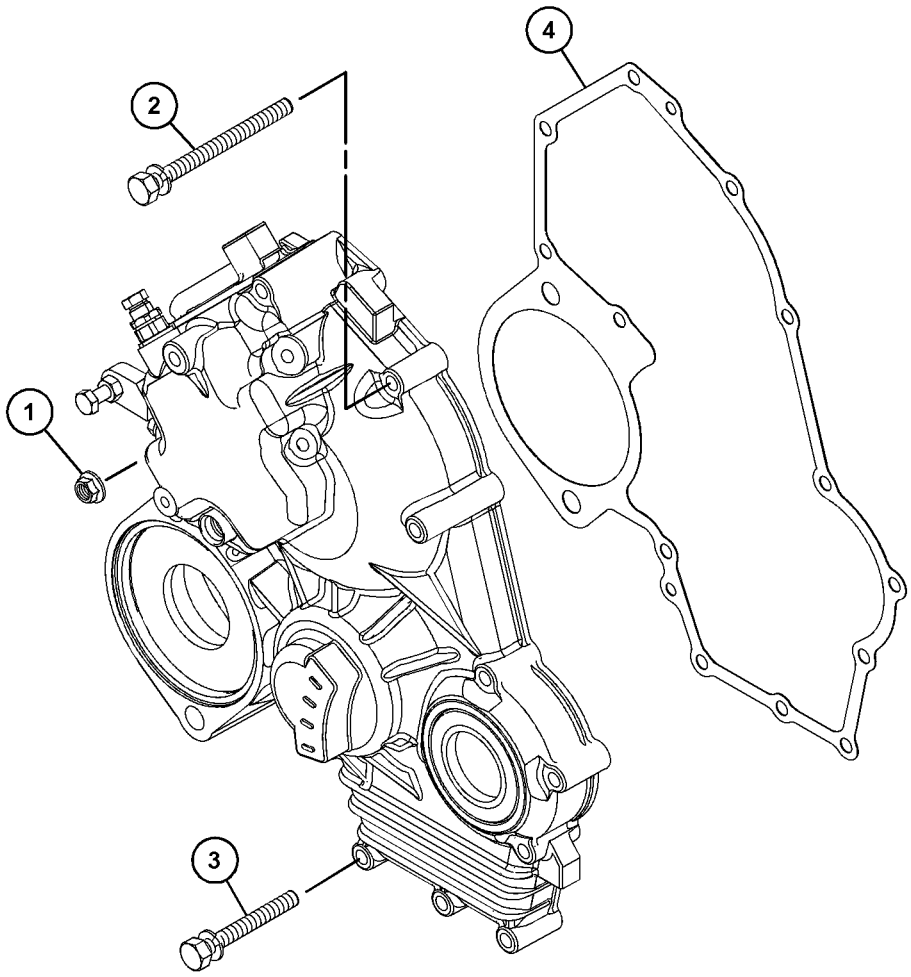

GRAPHIC #1 <END> g06387583

308-2291 FLYWHEEL GP

PART OF 417-7273, 489-4263, 489-9224, 499-6420, 506-0518, 506-0519, 506-0520, 512-7969, 513-2239, 514-6556, 516-2639, 518-0165, 557-6086, 557-7471 ENGINE AR-PRIMARY

SMCS-1156 **i02992342**

NOTE	REF NO	GRAPHIC REF	PART NUMBER	QTY	PART NAME 1 2 3 4 5 6 (PRODUCT LEVEL)	SEE PAGE
	1	1	**327-5154**	1	FLYWHEEL GP	
	1A	1	**154-2405**	1	GEAR-STARTER (126-TEETH)	
M	2	1	**154-2406**	6	BOLT (M10X1.25X34-MM)	

M - METRIC PART

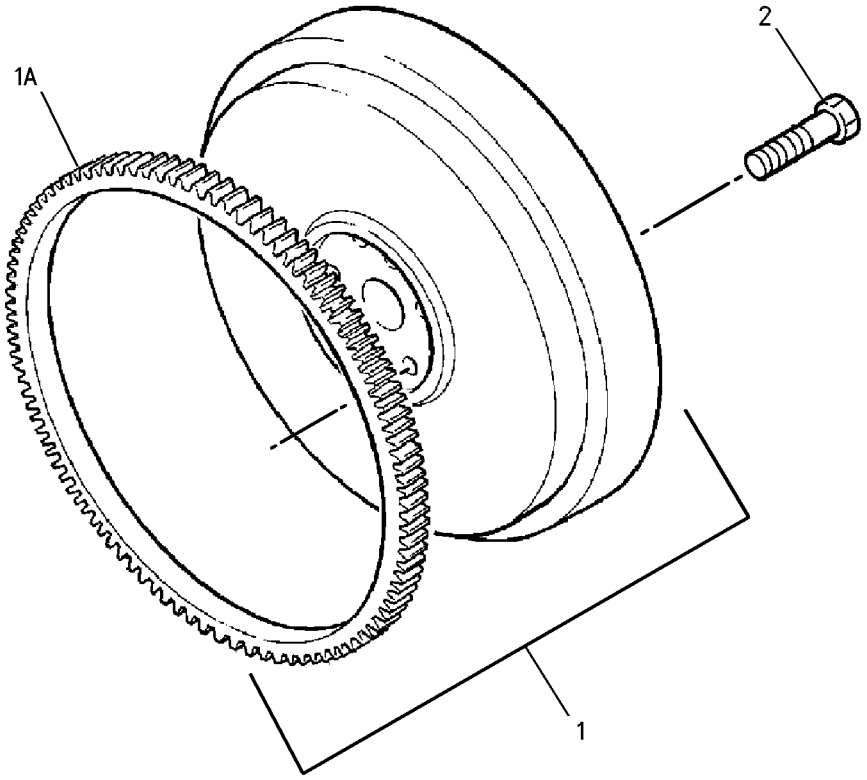

GRAPHIC #1 <END> g00640776

311-1884 FLYWHEEL GP

SMCS-1156 **i05810337**

NOTE	REF NO	GRAPHIC REF	PART NUMBER	QTY	PART NAME 1 2 3 4 5 6 (PRODUCT LEVEL)	SEE PAGE
	1	1	**326-5052**	1	FLYWHEEL GP	
	1A	1	**154-2405**	1	GEAR-STARTER (126-TEETH)	
M	2	1	**154-2406**	6	BOLT (M10X1.25X34-MM)	

M - METRIC PART

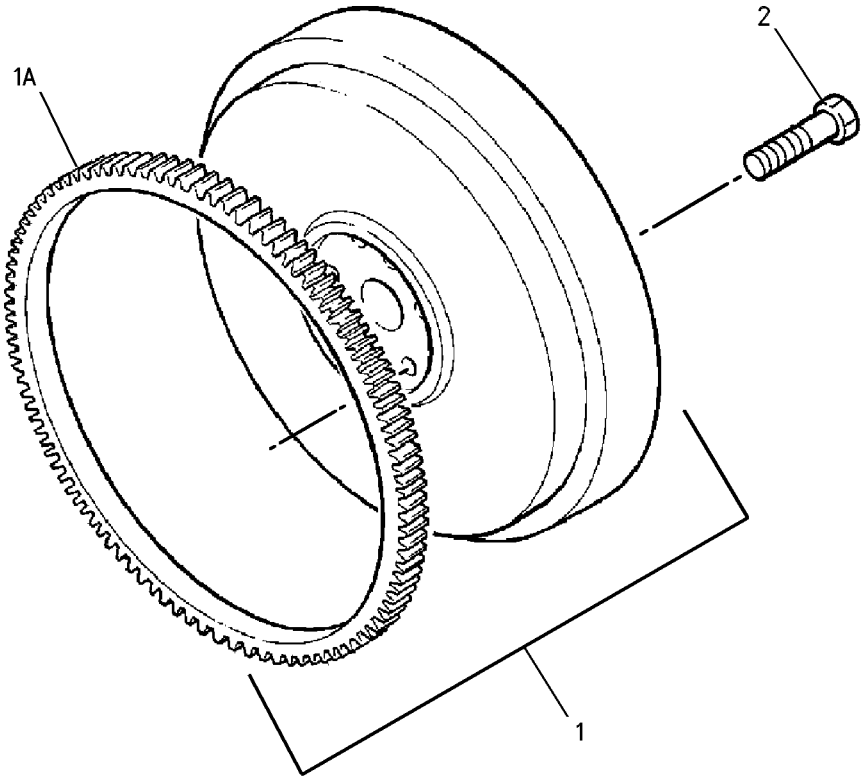

GRAPHIC #1 <END> g00640766

317-0586 FLYWHEEL GP

SMCS-1156 **i02996903**

NOTE	REF NO	GRAPHIC REF	PART NUMBER	QTY	PART NAME 1 2 3 4 5 6 (PRODUCT LEVEL)	SEE PAGE
	1	1	**327-5241**	1	FLYWHEEL GP	
	1A	1	**154-2405**	1	GEAR-STARTER (126-TEETH)	
M	2	1	**154-2406**	6	BOLT (M10X1.25X34-MM)	

M - METRIC PART

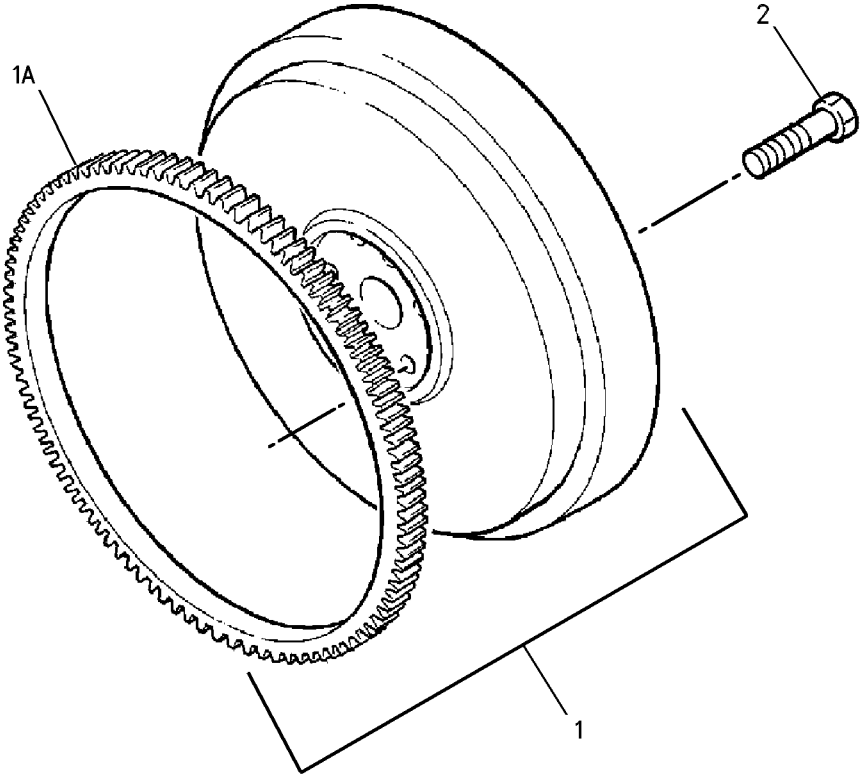

GRAPHIC #1 <END> g00640766

322-2412 FLYWHEEL GP

PART OF 435-1645, 435-1649 CYLINDER BLOCK GP-LONG, 433-1379, 433-1380 ENGINE AR, 435-1636, 435-1641, 435-1642, 435-1646, 435-1647, 435-1658, 504-4602 ENGINE AR-PRIMARY
ALSO AN ATTACHMENT

SMCS-1156 **i07377991**

NOTE	REF NO	GRAPHIC REF	PART NUMBER	QTY	PART NAME 1 2 3 4 5 6 (PRODUCT LEVEL)	SEE PAGE
M	1	1	**154-2406**	6	BOLT (M10X1.25X34-MM)	

M - METRIC PART

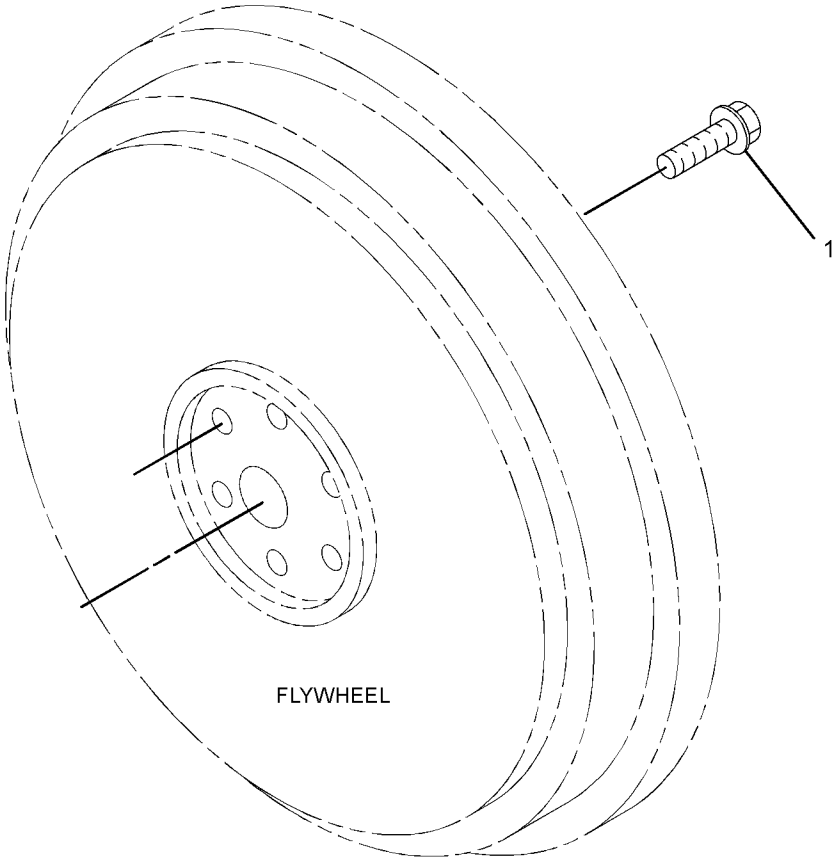

GRAPHIC #1 <END> g01640274

327-7632 FLYWHEEL GP

SMCS-1156 **i05810367**

NOTE	REF NO	GRAPHIC REF	PART NUMBER	QTY	PART NAME 1 2 3 4 5 6 (PRODUCT LEVEL)	SEE PAGE
	1	1	**327-5608**	1	FLYWHEEL GP	
	1A	1	**154-2405**	1	GEAR-STARTER (126-TEETH)	
M	2	1	**154-2406**	6	BOLT (M10X1.25X34-MM)	

M - METRIC PART

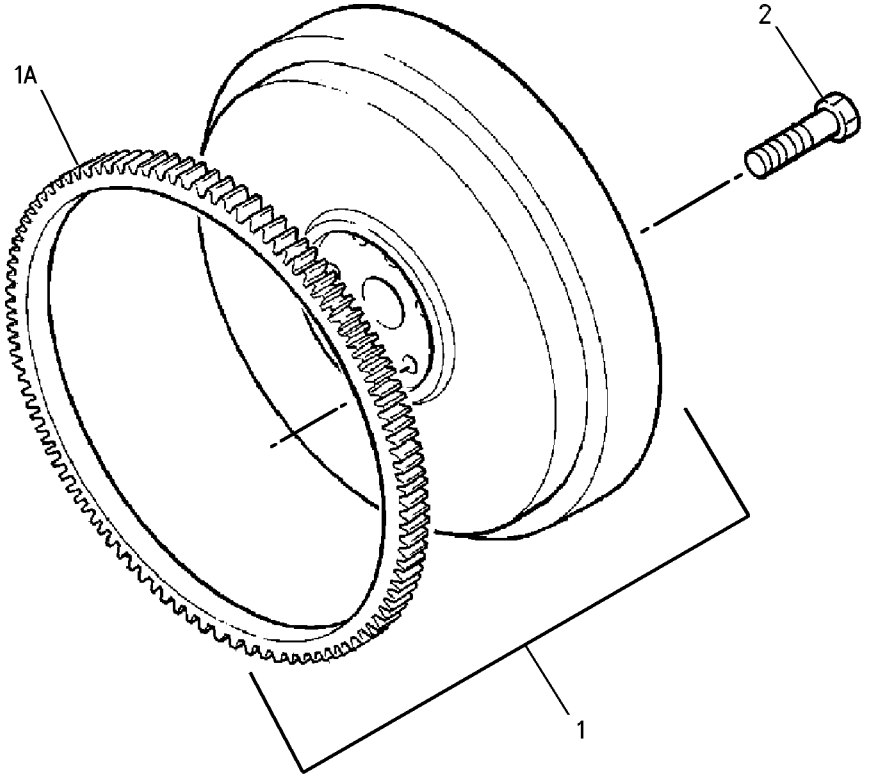

GRAPHIC #1 <END> g00640766

398-4803 FLYWHEEL GP

PART OF 417-7273, 514-6556 ENGINE AR-PRIMARY

SMCS-1156 **i08711961**

NOTE	REF NO	GRAPHIC REF	PART NUMBER	QTY	PART NAME 1 2 3 4 5 6 (PRODUCT LEVEL)	SEE PAGE
M	1	1	**154-2406**	6	BOLT (M10X1.25X34-MM)	
	2	1	**327-5154**	1	FLYWHEEL GP	
	2A	1	**154-2405**	1	GEAR-STARTER (126-TEETH)	

M - METRIC PART

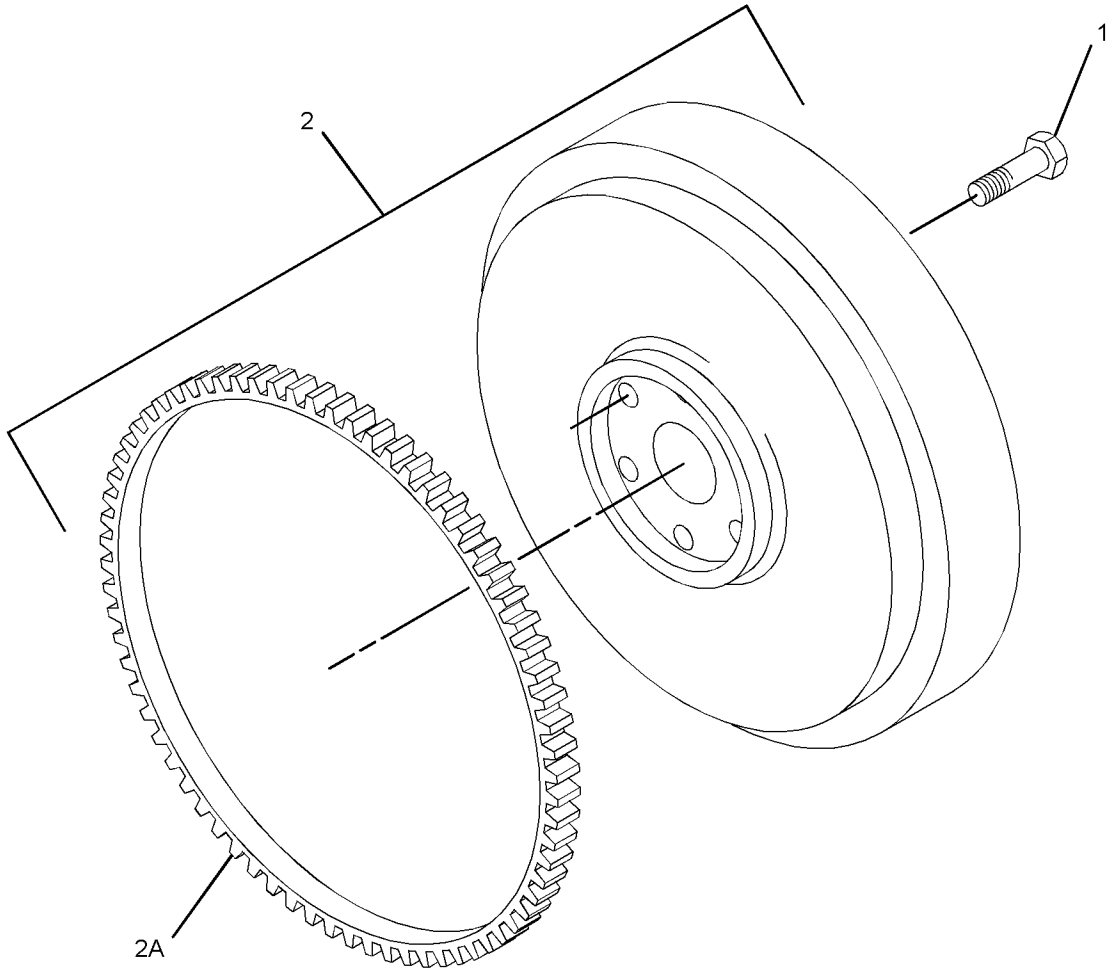

GRAPHIC #1 <END> g03397866

398-4807 FLYWHEEL GP

S/N: C6M10203-UP

SMCS-1156 **i08802996**

NOTE	REF NO	GRAPHIC REF	PART NUMBER	QTY	PART NAME 1 2 3 4 5 6 (PRODUCT LEVEL)	SEE PAGE
M	1	1	**154-2406**	6	BOLT (M10X1.25X34-MM)	
	2	1	**327-5241**	1	FLYWHEEL GP	
		1	**154-2405**	1	GEAR-STARTER (126-TEETH)	

M - METRIC PART

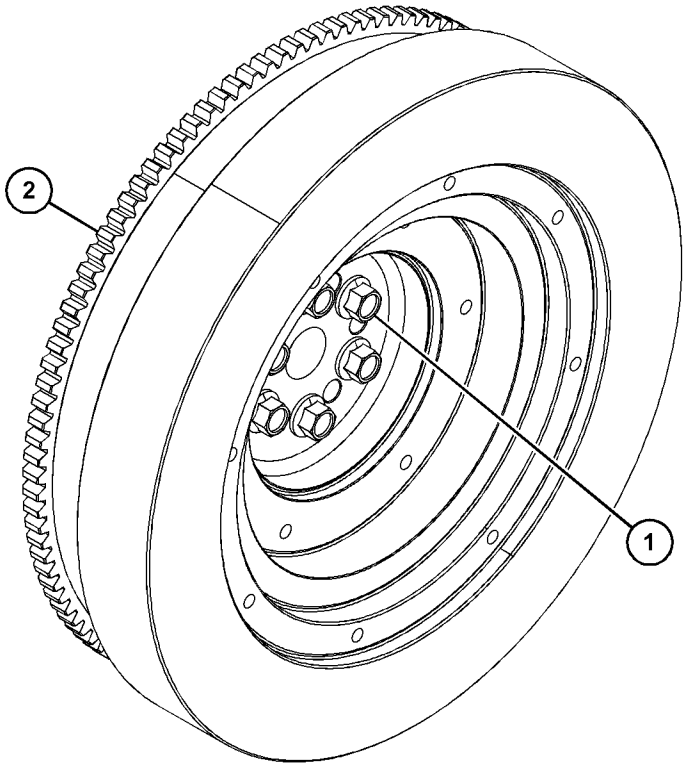

GRAPHIC #1 <END> g06770019

566-9450 FLYWHEEL GP

PART OF 433-1379 ENGINE AR, 435-1636, 435-1641, 435-1642, 435-1647 ENGINE AR-PRIMARY AN ATTACHMENT

SMCS-1156 **i08564718**

NOTE	REF NO	GRAPHIC REF	PART NUMBER	QTY	PART NAME 1 2 3 4 5 6 (PRODUCT LEVEL)	SEE PAGE
M	1	1	**154-2406**	6	BOLT (M10X1.25X34-MM)	

M - METRIC PART

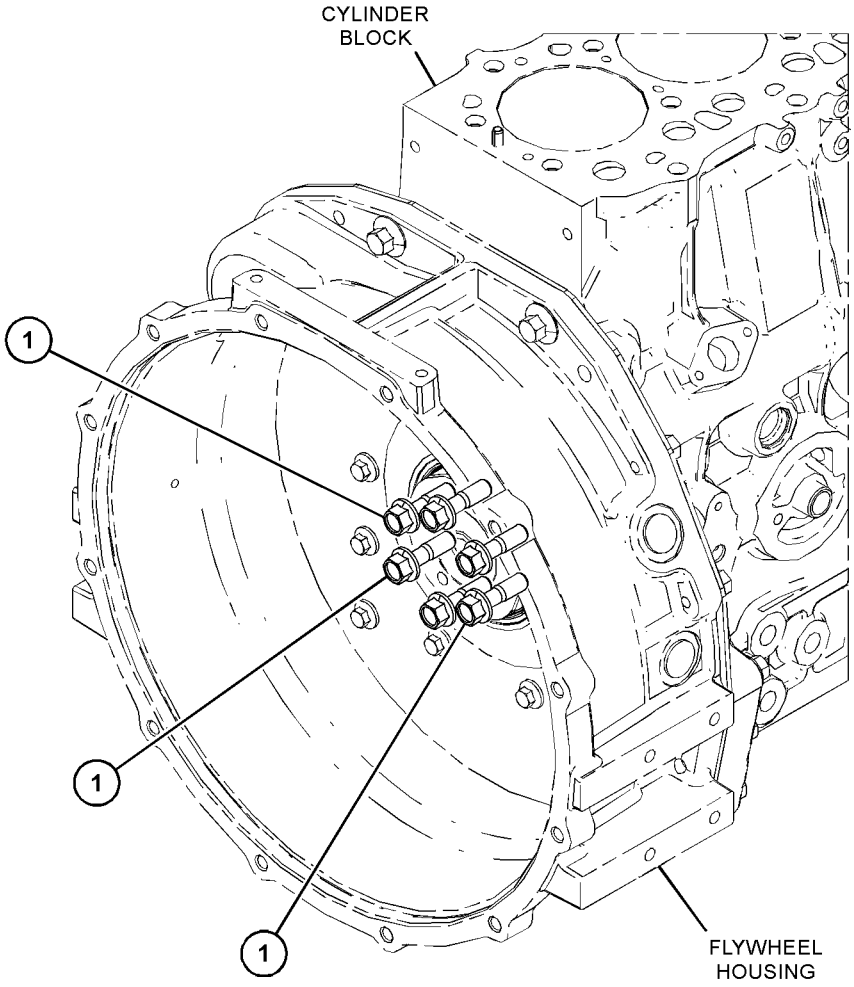

GRAPHIC #1 <END> g06708120

584-9457 FLYWHEEL GP

S/N: C6M10291-UP

SMCS-1156 **i08802823**

NOTE	REF NO	GRAPHIC REF	PART NUMBER	QTY	PART NAME 1 2 3 4 5 6 (PRODUCT LEVEL)	SEE PAGE
M	1	1	**154-2406**	6	BOLT (M10X1.25X34-MM)	
	2	1	**326-5052**	1	FLYWHEEL GP	
	2A	1	**154-2405**	1	GEAR-STARTER (126-TEETH)	

M - METRIC PART

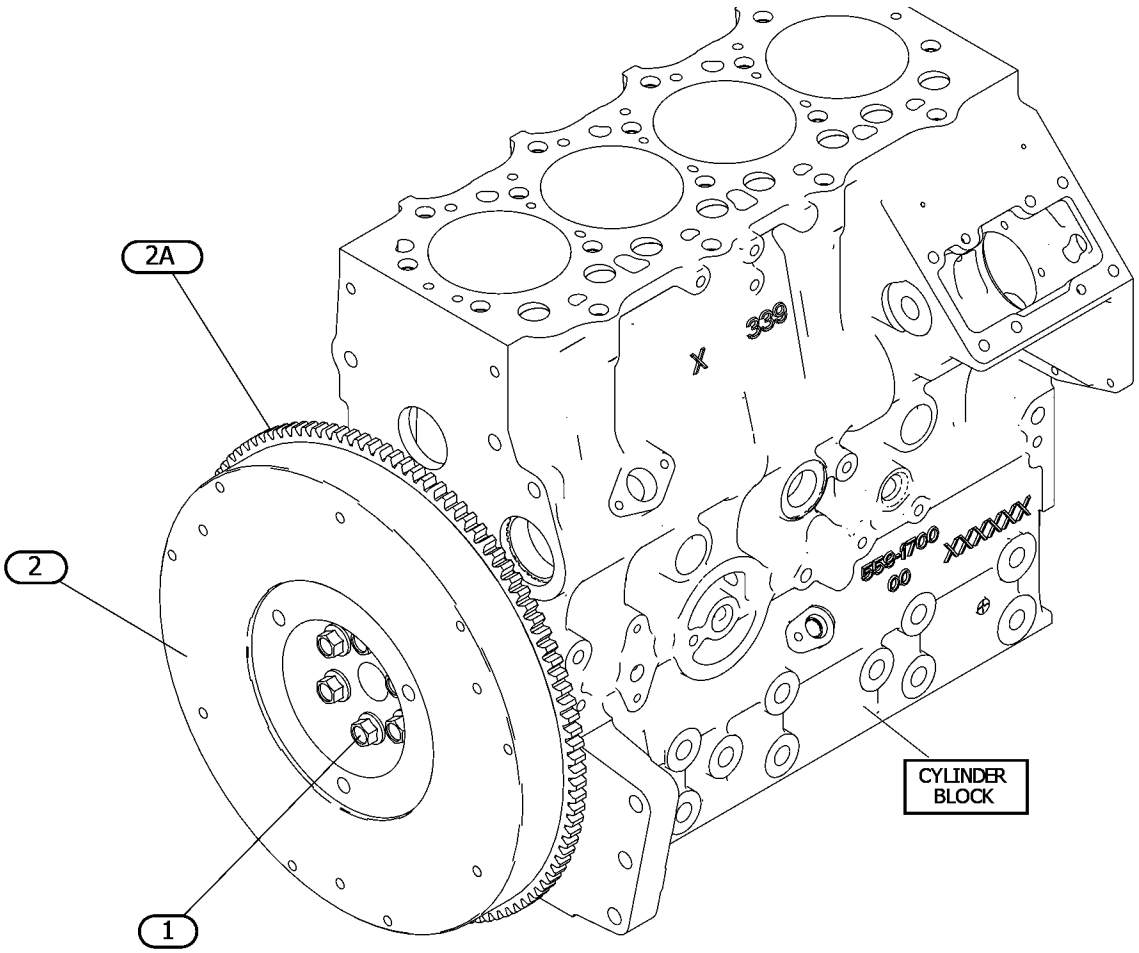

GRAPHIC #1 <END> g07549767

308-2290 HOUSING GP-FLYWHEEL

TYPE 1

SMCS-1157 **i04547782**

NOTE	REF NO	GRAPHIC REF	PART NUMBER	QTY	PART NAME 1 2 3 4 5 6 (PRODUCT LEVEL)	SEE PAGE
M	1	1	**138-7162**	6	BOLT (M10X1.5X30-MM)	
	2	1	**138-7401**	1	HOUSING-FLYWHEEL	
	3	1	**252-1802**	6	BOLT	
	4	1	**153-6375**	10	BOLT AS	
	5	1	**153-6868**	2	BOLT	
	6	1	**154-1399**	2	WASHER (10.5X18X1.6-MM THK)	
	7	1	**154-2394**	1	PLATE	
	8	1	**154-2395**	2	PLUG	
	9	1	**154-2403**	6	WASHER	
	10	1	**165-2142**	2	BOLT	
	11	1	**166-2338**	4	NUT	

M - METRIC PART

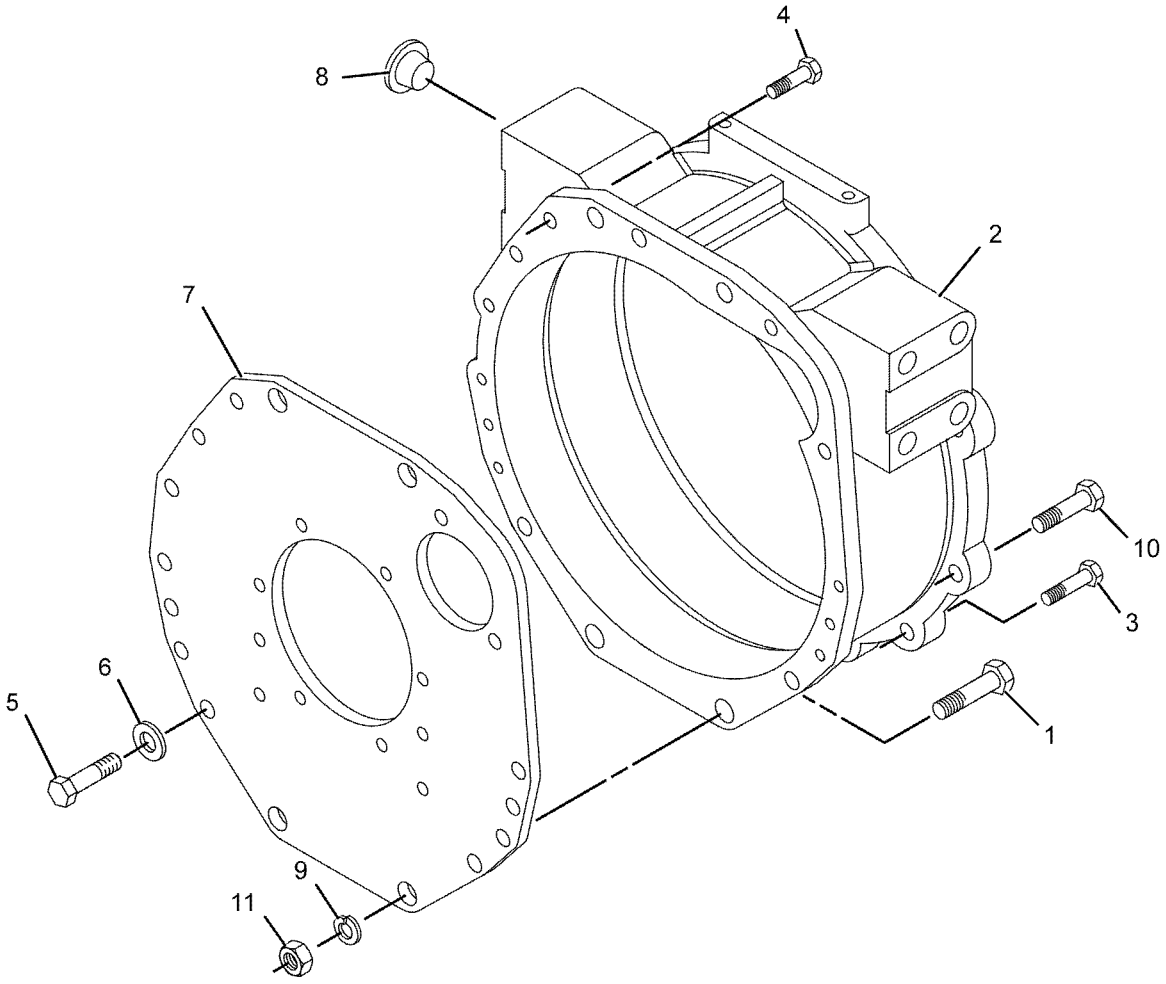

GRAPHIC #1 <END> g01140728

308-2290 HOUSING GP-FLYWHEEL

PART OF 417-7273, 489-4263, 489-9224, 499-6420, 506-0518, 506-0519, 506-0520, 512-7969, 513-2239, 514-6556, 516-2639, 518-0165, 557-6086, 557-7471 ENGINE AR-PRIMARY TYPE 2

SMCS-1157 **i06853183**

NOTE	REF NO	GRAPHIC REF	PART NUMBER	QTY	PART NAME 1 2 3 4 5 6 (PRODUCT LEVEL)	SEE PAGE
CM	1	1	**6I-0593**	6	BOLT (M10X1.5X30-MM)	
M	2	1	**106-8954**	2	BOLT (M12X1.75X35-MM)	
M	3	1	**123-2899**	6	BOLT (M10X1.5X40-MM)	
M	4	1	**114-4363**	10	BOLT (M8X1.25X12-MM)	
M	5	1	**6I-4200**	2	BOLT (M10X1.5X16-MM)	
M	6	1	**175-7141**	4	NUT-HEX FLANGE (M10X1.5-THD)	
	7	1	**154-2394**	1	PLATE	
	8	1	**364-8947**	1	PLUG	
	9	1	**448-8575**	1	HOUSING-FLYWHEEL	

C - CHANGE FROM PREVIOUS TYPE
M - METRIC PART

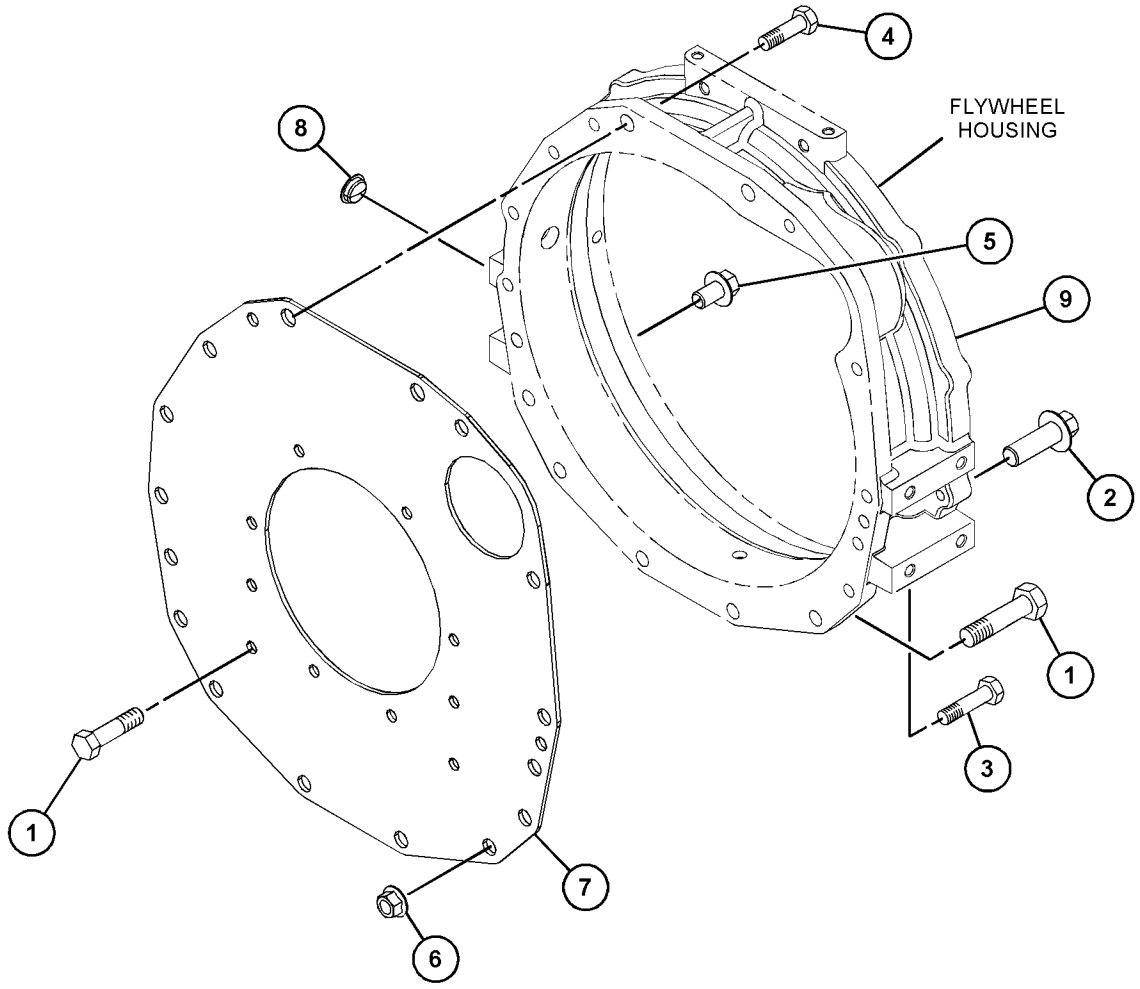

GRAPHIC #1 <END> g06178789

311-1883 HOUSING GP-FLYWHEEL

TYPE 1

SMCS-1157 **i02812352**

NOTE	REF NO	GRAPHIC REF	PART NUMBER	QTY	PART NAME 1 2 3 4 5 6 (PRODUCT LEVEL)	SEE PAGE
M	1	1	**138-7162**	2	BOLT (M10X1.5X30-MM)	
	2	1	**138-7171**	2	BOLT	
	3	1	**153-6375**	10	BOLT AS	
	4	1	**154-1399**	2	WASHER (10.5X18X1.6-MM THK)	
	5	1	**154-2394**	1	PLATE	
	6	1	**154-2403**	2	WASHER	
M	7	1	**155-8085**	2	NUT (M10X1.5-THD)	

M - METRIC PART

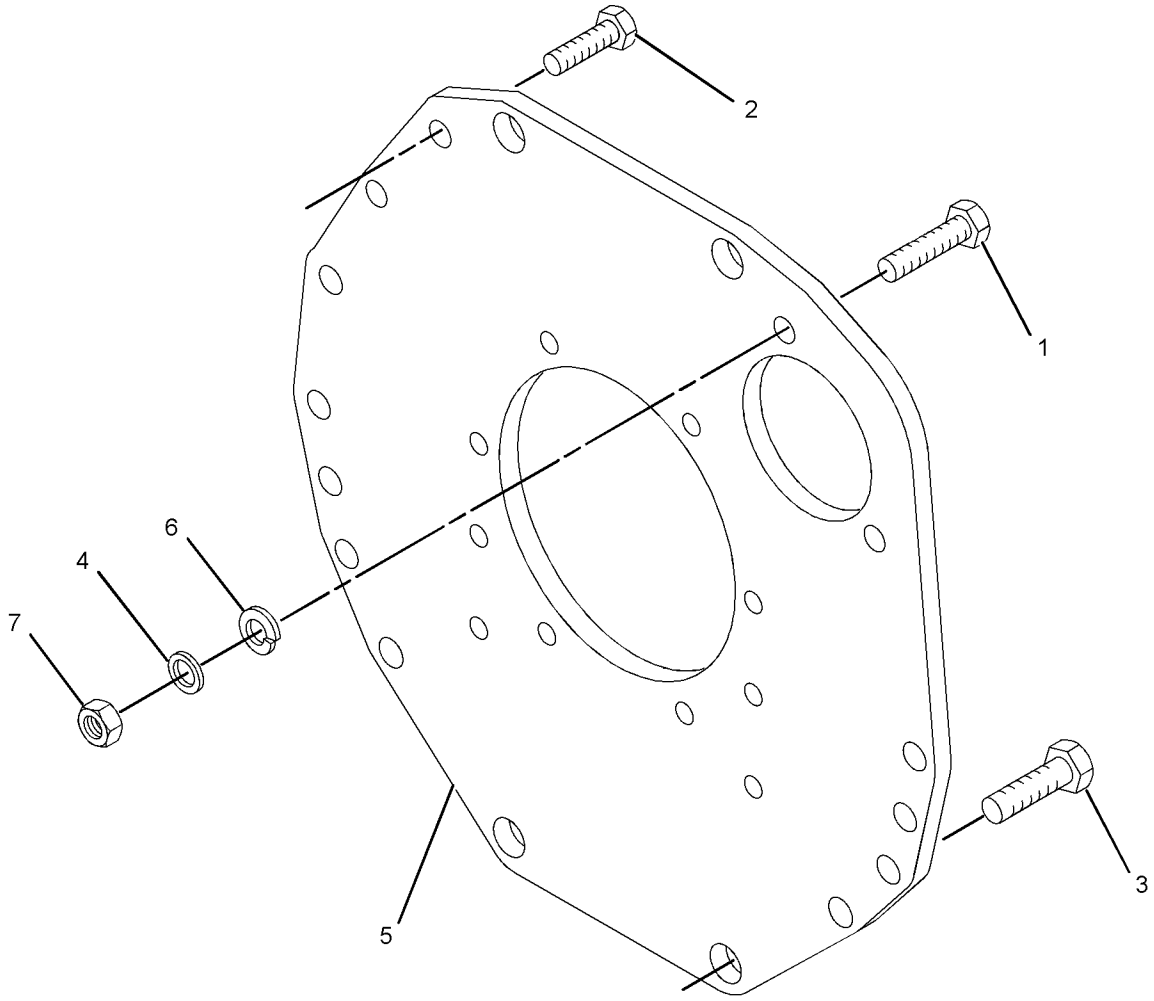

GRAPHIC #1 <END> g01414247

311-1883 HOUSING GP-FLYWHEEL

TYPE 2

SMCS-1157 **i07104571**

NOTE	REF NO	GRAPHIC REF	PART NUMBER	QTY	PART NAME 1 2 3 4 5 6 (PRODUCT LEVEL)	SEE PAGE
CM	1	1	**6I-0593**	2	BOLT (M10X1.5X30-MM)	
M	2	1	**306-2347**	2	BOLT (M12X1.75X14-MM)	
M	3	1	**114-4363**	10	BOLT (M8X1.25X12-MM)	
	5	1	**154-2394**	1	PLATE	
CM	7	1	**6I-0594**	2	NUT (M10X1.5-THD)	

C - CHANGE FROM PREVIOUS TYPE
M - METRIC PART

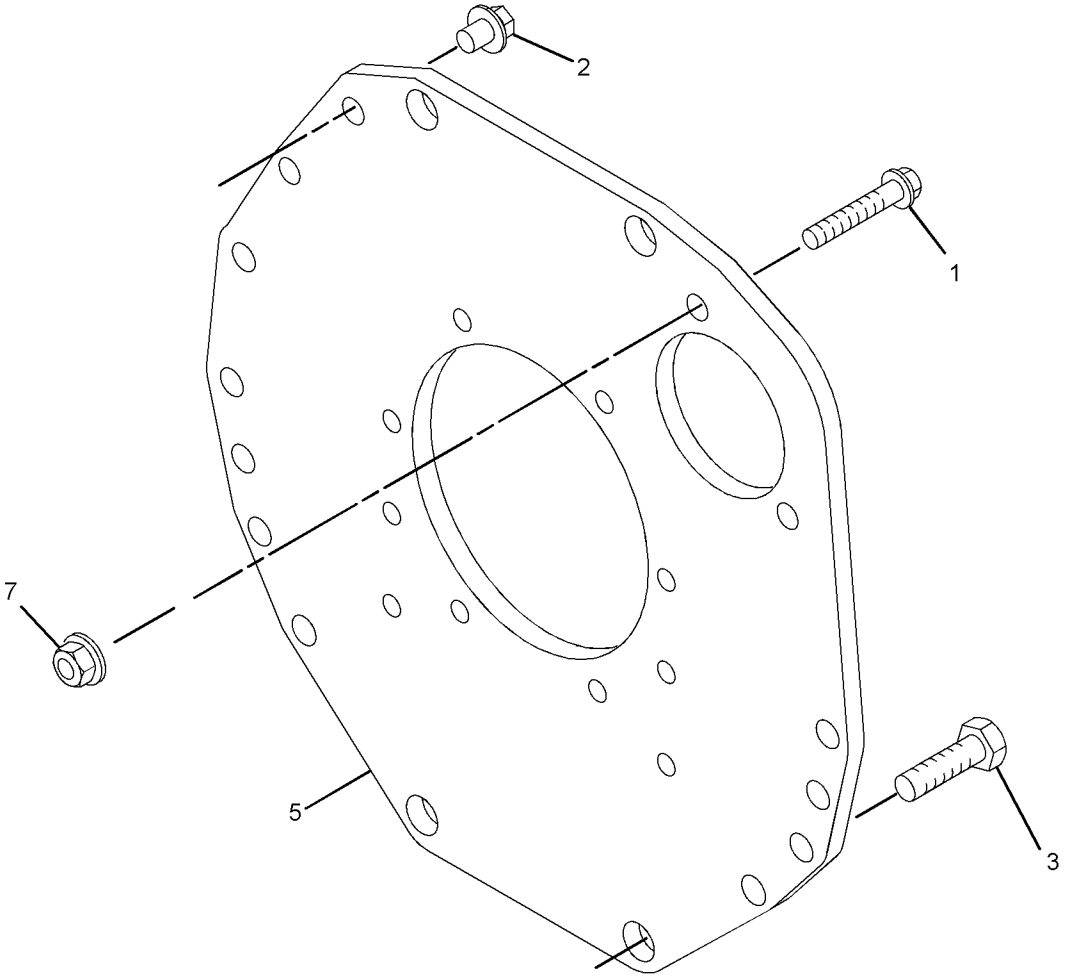

GRAPHIC #1 <END> g06224730

317-0588 HOUSING GP-FLYWHEEL

SMCS-1157 **i06853199**

NOTE	REF NO	GRAPHIC REF	PART NUMBER	QTY	PART NAME 1 2 3 4 5 6 (PRODUCT LEVEL)	SEE PAGE
M	1	1	**6I-0593**	6	BOLT (M10X1.5X30-MM)	
M	2	1	**123-2899**	6	BOLT (M10X1.5X40-MM)	
M	3	1	**114-4363**	10	BOLT (M8X1.25X12-MM)	
M	4	1	**6I-4200**	2	BOLT (M10X1.5X16-MM)	
	6	1	**154-2394**	1	PLATE	
	7	1	**358-4256**	2	PLUG	
	8	1	**423-7697**	1	COVER-FLYWHEEL	
M	9	1	**106-8954**	2	BOLT (M12X1.75X35-MM)	
M	10	1	**175-7141**	4	NUT-HEX FLANGE (M10X1.5-THD)	

M - METRIC PART

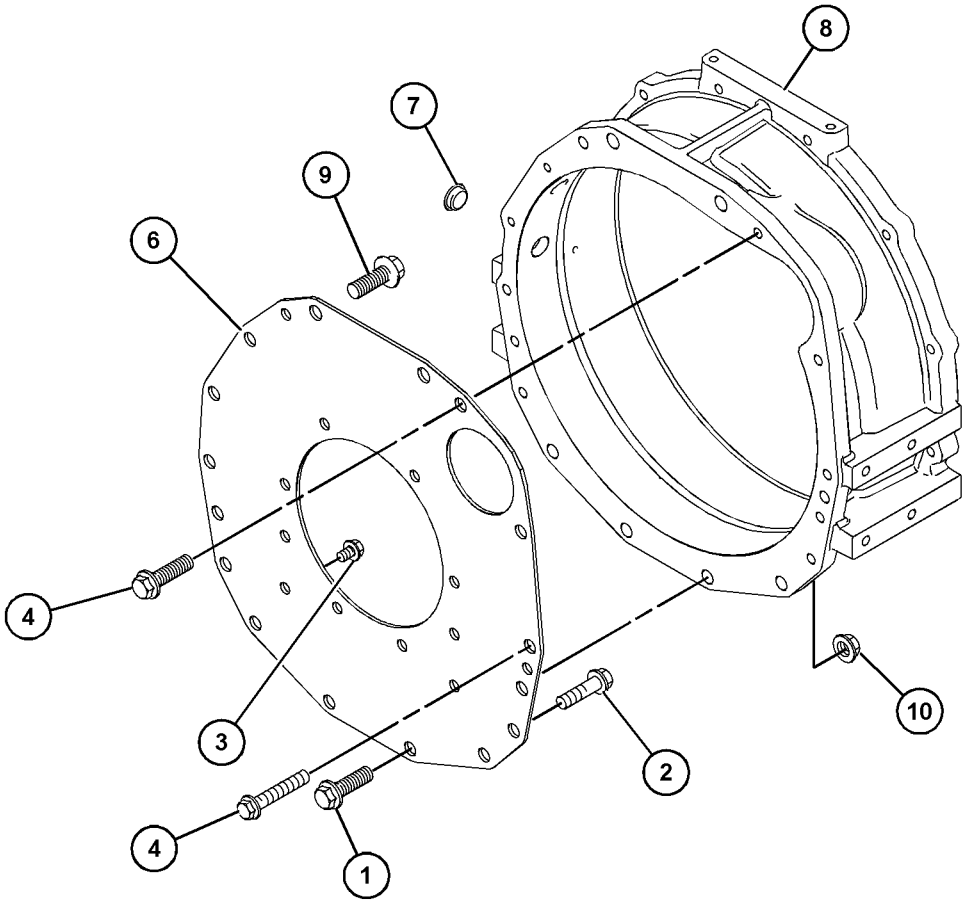

GRAPHIC #1 <END> g06150742

342-9604 HOUSING GP-FLYWHEEL

PART OF 435-1645, 435-1649 CYLINDER BLOCK GP-LONG, 433-1379, 433-1380 ENGINE AR, 435-1636, 435-1641, 435-1642, 435-1646, 435-1647, 435-1658, 504-4602 ENGINE AR-PRIMARY

ALSO AN ATTACHMENT

SMCS-1157 **i06227742**

NOTE	REF NO	GRAPHIC REF	PART NUMBER	QTY	PART NAME 1 2 3 4 5 6 (PRODUCT LEVEL)	SEE PAGE
	1	1	**138-7171**	2	BOLT	
M	2	1	**114-4363**	10	BOLT (M8X1.25X12-MM)	
	3	1	**154-2394**	1	PLATE	

M - METRIC PART

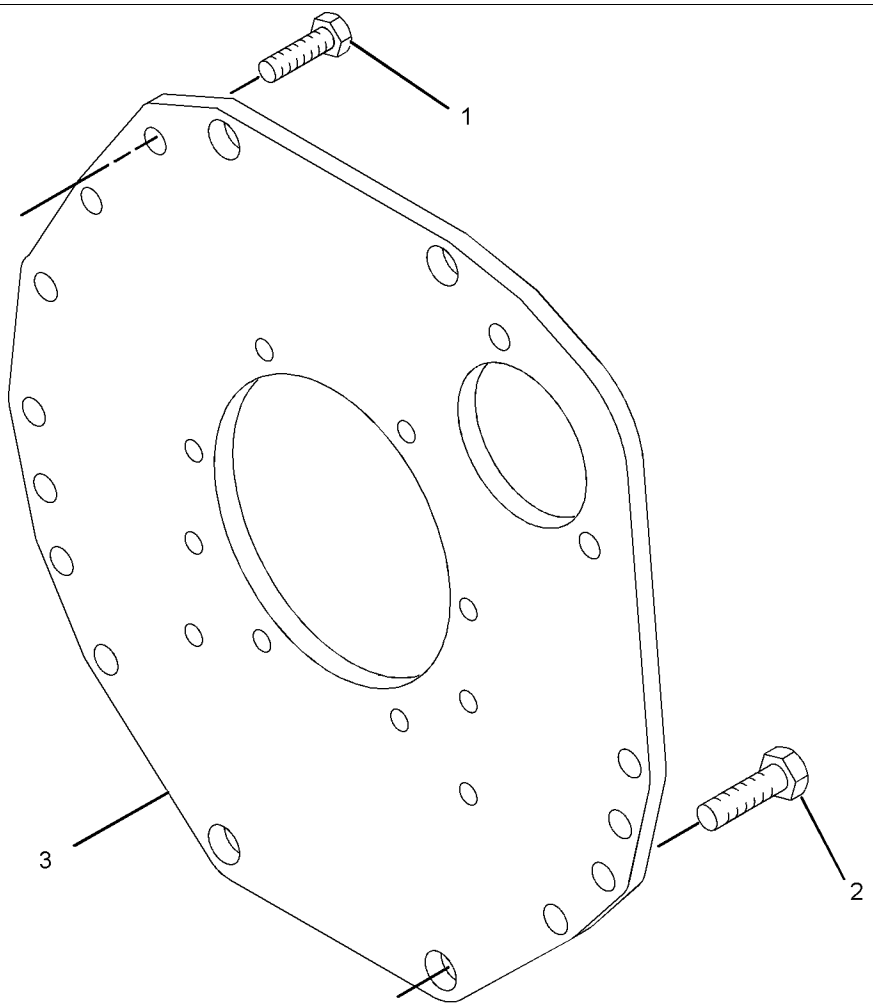

GRAPHIC #1 <END> g01969958

342-9604 HOUSING GP-FLYWHEEL

PART OF 435-1645, 435-1649 CYLINDER BLOCK GP-LONG, 433-1379, 433-1380 ENGINE AR, 435-1636, 435-1641, 435-1642, 435-1646, 435-1647, 435-1658, 504-4602 ENGINE AR-PRIMARY
ALSO AN ATTACHMENT

SMCS-1157 **i07174074**

NOTE	REF NO	GRAPHIC REF	PART NUMBER	QTY	PART NAME 1 2 3 4 5 6 (PRODUCT LEVEL)	SEE PAGE
CM	1	1	**306-2347**	2	BOLT (M12X1.75X14-MM)	
M	2	1	**114-4363**	10	BOLT (M8X1.25X12-MM)	
	3	1	**154-2394**	1	PLATE	

C - CHANGE FROM PREVIOUS TYPE
M - METRIC PART

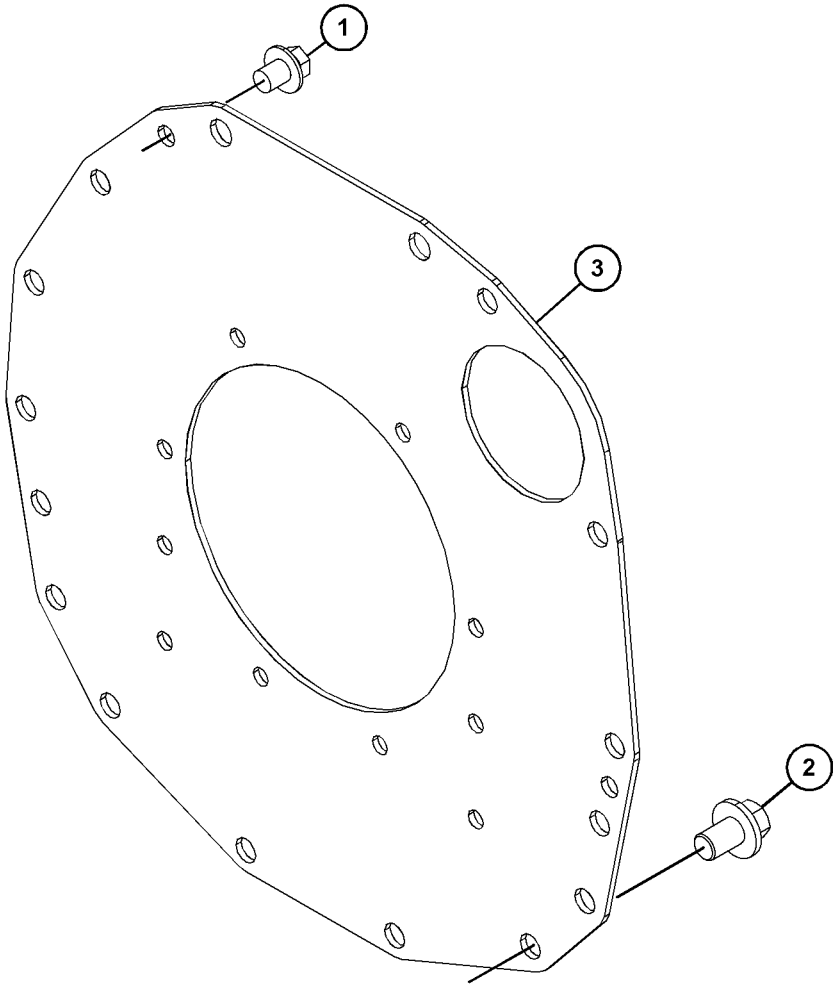

GRAPHIC #1 <END> g06243606

398-4795 HOUSING GP-FLYWHEEL

PART OF 433-1379 ENGINE AR, 435-1636, 435-1641, 435-1642, 435-1647 ENGINE AR-PRIMARY AN ATTACHMENT

SMCS-1157 **i08564714**

NOTE	REF NO	GRAPHIC REF	PART NUMBER	QTY	PART NAME 1 2 3 4 5 6 (PRODUCT LEVEL)	SEE PAGE
M	1	1	**114-4363**	10	BOLT (M8X1.25X12-MM)	
	2	1	**154-2394**	1	PLATE	
M	3	1	**306-2347**	2	BOLT (M12X1.75X14-MM)	

M - METRIC PART

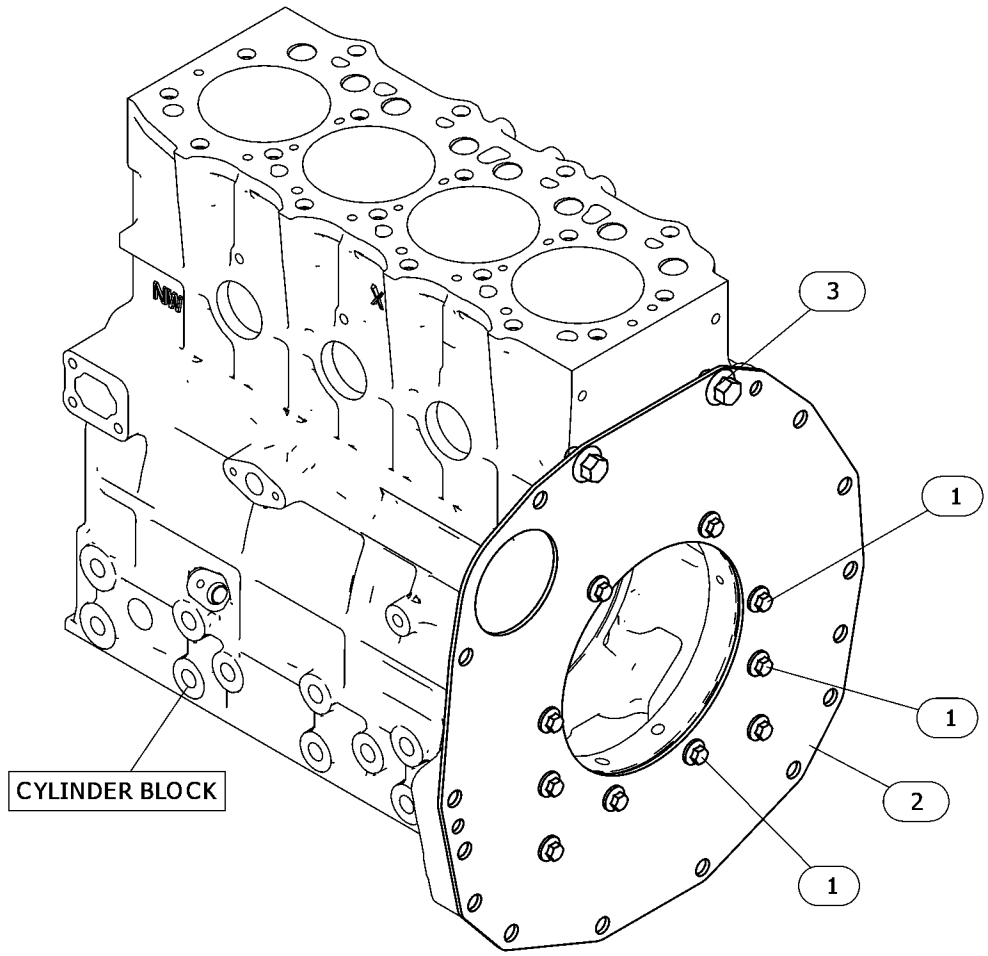

GRAPHIC #1 <END> g06718879

591-2135 HOUSING GP-FLYWHEEL

PART OF 417-7273, 514-6556 ENGINE AR-PRIMARY

SMCS-1157 **i08710176**

NOTE	REF NO	GRAPHIC REF	PART NUMBER	QTY	PART NAME 1 2 3 4 5 6 (PRODUCT LEVEL)	SEE PAGE
M	1	1	**6I-0593**	4	BOLT (M10X1.5X30-MM)	
M	2	1	**6I-0594**	4	NUT (M10X1.5-THD)	
M	3	1	**6I-4200**	2	BOLT (M10X1.5X16-MM)	
M	4	1	**114-4363**	10	BOLT (M8X1.25X12-MM)	
M	5	1	**123-2899**	6	BOLT (M10X1.5X40-MM)	
	6	1	**154-2394**	1	PLATE	
	7	1	**576-4060**	1	HOUSING-FLYWHEEL	
M	8	1	**106-8954**	2	BOLT (M12X1.75X35-MM)	
	9	1	**364-8947**	1	PLUG	

M - METRIC PART

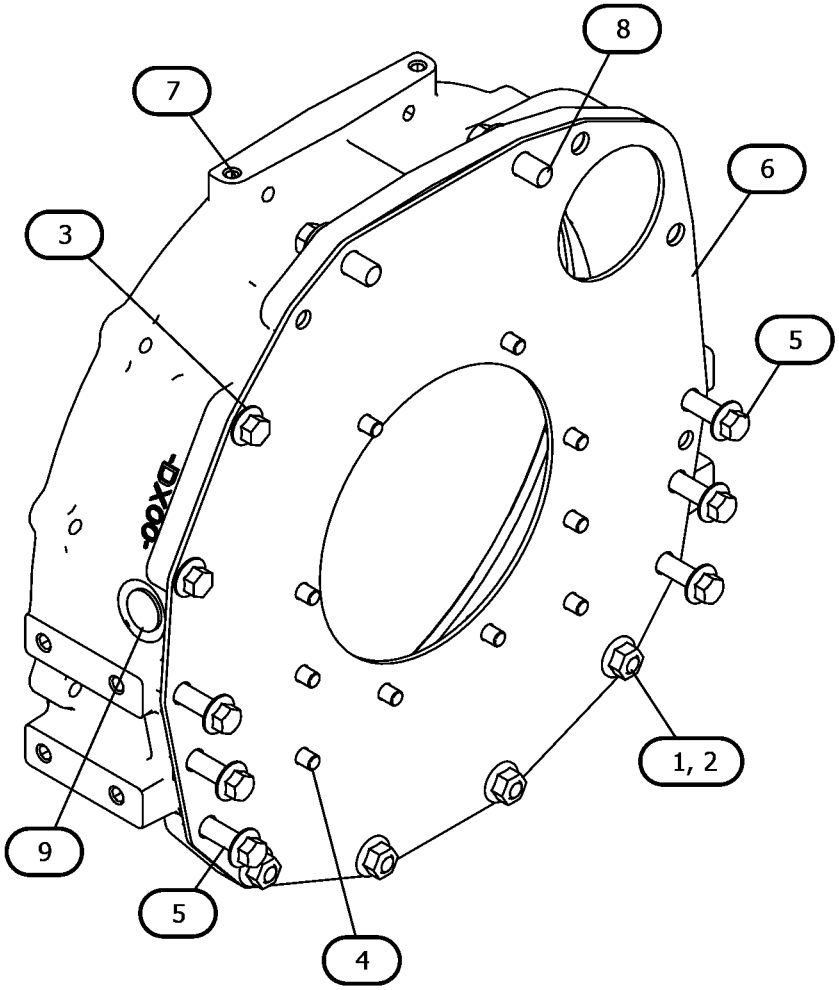

GRAPHIC #1 <END> g07515273

591-2138 HOUSING GP-FLYWHEEL

ALSO AN ATTACHMENT

SMCS-1157 **i08459390**

NOTE	REF NO	GRAPHIC REF	PART NUMBER	QTY	PART NAME 1 2 3 4 5 6 (PRODUCT LEVEL)	SEE PAGE
M	1	1	**6I-0593**	4	BOLT (M10X1.5X30-MM)	
M	2	1	**175-7141**	4	NUT-HEX FLANGE (M10X1.5-THD)	
M	3	1	**6I-4200**	2	BOLT (M10X1.5X16-MM)	
M	4	1	**114-4363**	10	BOLT (M8X1.25X12-MM)	
M	5	1	**123-2899**	6	BOLT (M10X1.5X40-MM)	
	6	1	**154-2394**	1	PLATE	
	7	1	**423-7697**	1	COVER-FLYWHEEL	
M	8	1	**106-8954**	2	BOLT (M12X1.75X35-MM)	
	9	1	**364-8947**	2	PLUG	

M - METRIC PART

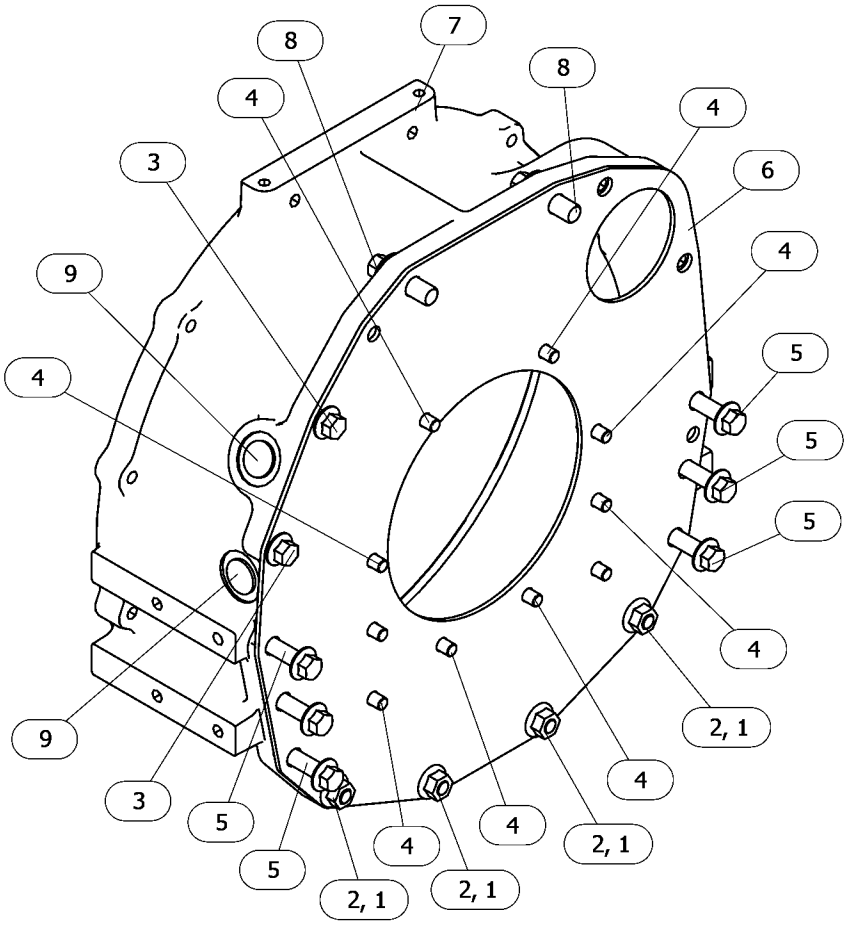

GRAPHIC #1 <END> g06755712

308-2307 HOUSING GP-FRONT

PART OF 417-7273, 435-1647, 489-4263, 489-9224, 506-0518, 506-0519, 506-0520, 513-2239, 514-6556, 516-2639, 557-6086, 557-7471 ENGINE AR-PRIMARY

SMCS-1151, 1162, 1206 **i05810284**

NOTE	REF NO	GRAPHIC REF	PART NUMBER	QTY	PART NAME 1 2 3 4 5 6 (PRODUCT LEVEL)	SEE PAGE
M	1	1	**6I-0594**	2	NUT (M10X1.5-THD)	
M	3	1	**164-7468**	2	BOLT (M10X1.5X95-MM)	
	4	1	**308-1874**	1	HOLDER	
	5	1	**308-1875**	2	SEAL-O-RING	
	6	1	**328-3229**	2	COVER	

M - METRIC PART

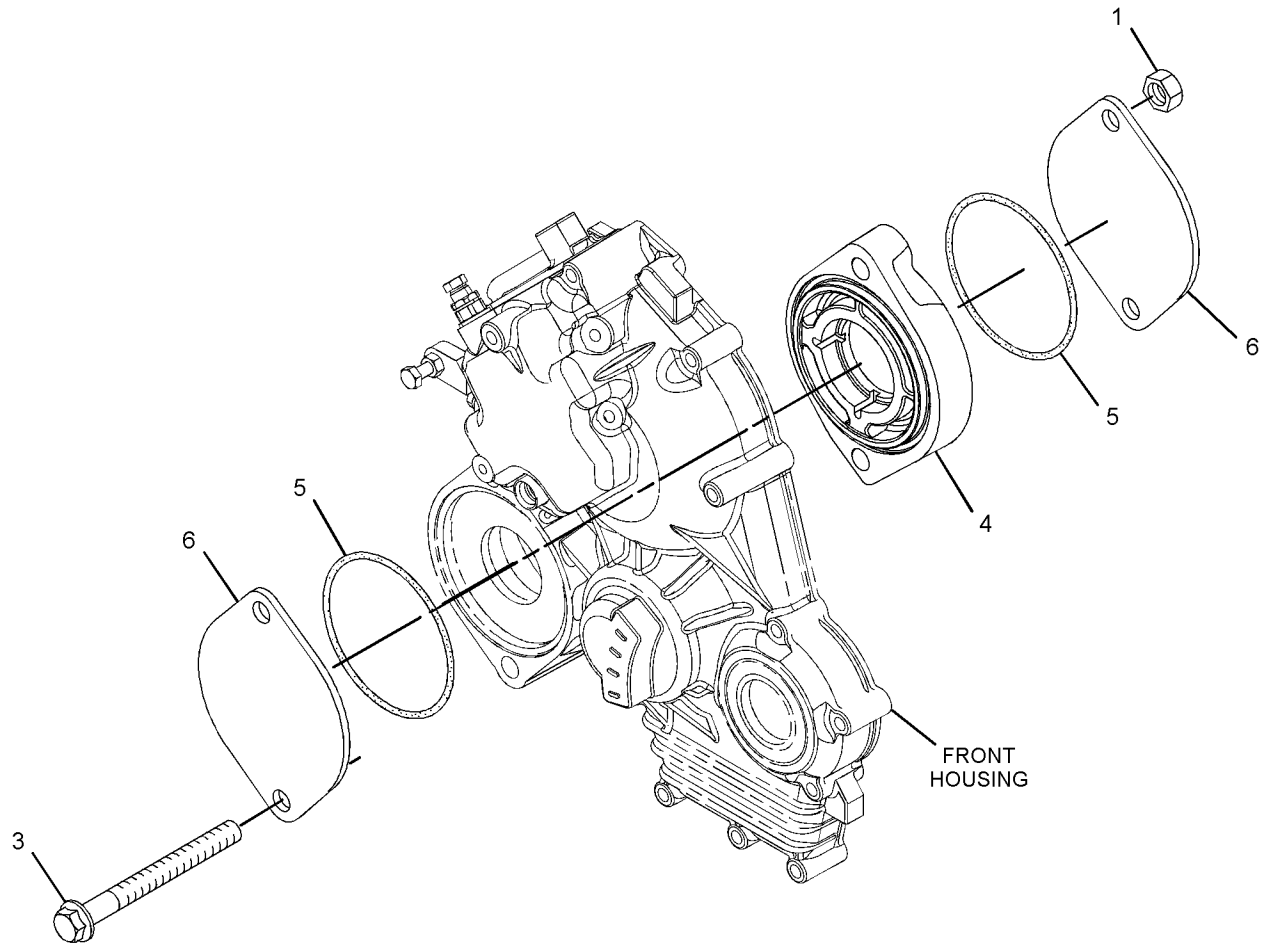

GRAPHIC #1 <END> g03033677

308-3329 HOUSING GP-FRONT

PART OF 435-1658 ENGINE AR-PRIMARY

SMCS-1151, 1162, 1206 **i06998767**

NOTE	REF NO	GRAPHIC REF	PART NUMBER	QTY	PART NAME 1 2 3 4 5 6 (PRODUCT LEVEL)	SEE PAGE
M	1	1	**153-5960**	2	NUT (M6X1-THD)	
	2	1	**153-5962**	4	BOLT AS	
	3	1	**464-2090**	1	HOUSING-FRONT	
	4	1	**5D-1319**	1	PIN-SPRING	
	5	1	**154-1675**	1	SEAL	
M	6	1	**495-0737**	1	BOLT (M6X0.5X19.5-MM)	
	7	1	**165-2140**	7	BOLT AS	
					(EACH INCLUDES)	
		1	**3B-4504**	1	LOCKWASHER	
M		1	**8C-8451**	1	BOLT (M6X1X40-MM)	
	8	1	**423-7723**	1	GASKET	
	9	1	**308-1874**	1	HOLDER	
	10	1	**308-1875**	1	SEAL-O-RING	
F			**154-1396**	1	CLIP	

F - NOT SHOWN
M - METRIC PART

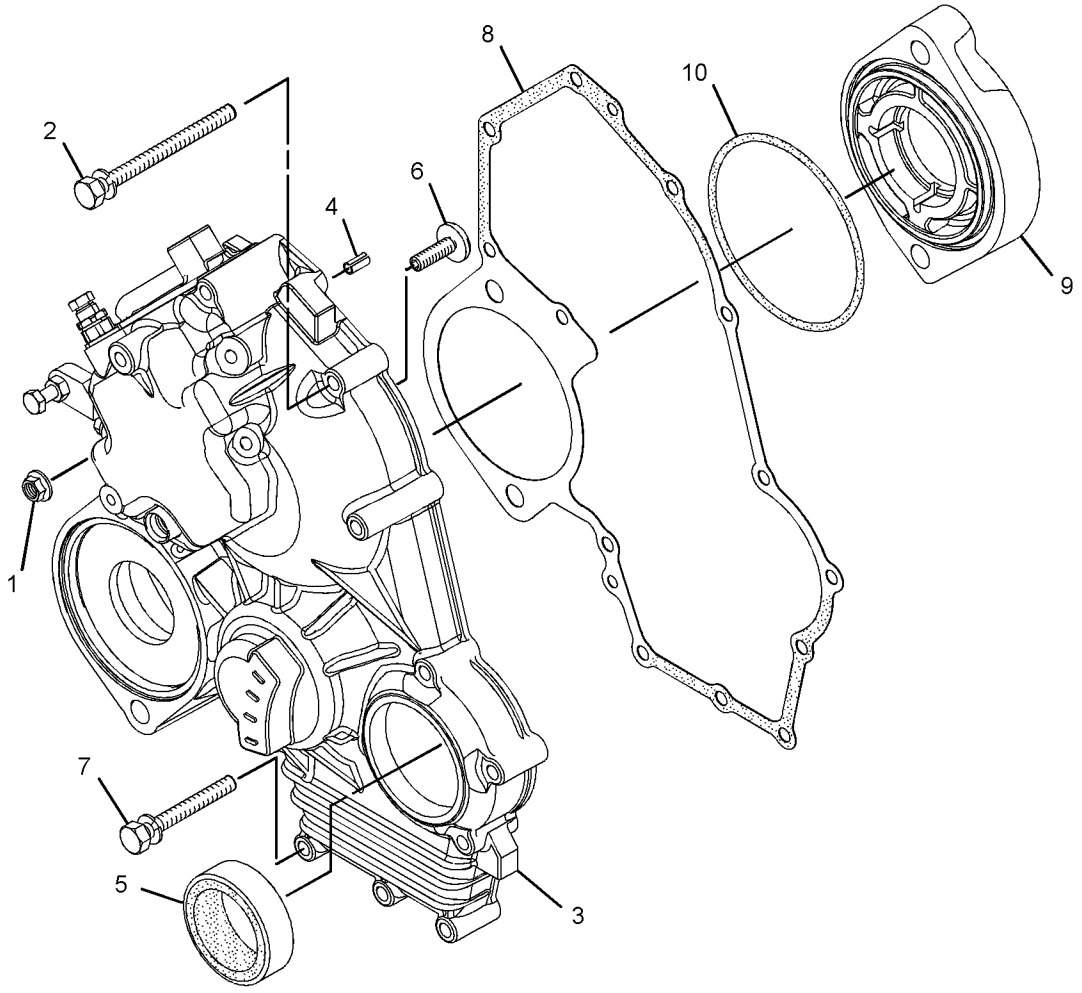

GRAPHIC #1 <END> g02651541

309-6718 HOUSING GP-FRONT

PART OF 435-1646 ENGINE AR-PRIMARY

TYPE 1

SMCS-1151, 1162, 1206 **i05875842**

NOTE	REF NO	GRAPHIC REF	PART NUMBER	QTY	PART NAME 1 2 3 4 5 6 (PRODUCT LEVEL)	SEE PAGE
M	1	2	**5C-2890**	1	NUT (M6X1-THD)	
	2	2	**139-5511**	1	CAP (TAMPER RESISTANT)	
M	3	2	**153-5592**	1	NUT (M8X1.25-THD)	
M	4	1	**153-5960**	3	NUT (M6X1-THD)	
	5	1	**153-5962**	4	BOLT AS	
	6	2	**153-6415**	2	WASHER (SEAL)	
	7	3	**153-6838**	2	BOLT AS	
	8	2	**153-7983**	1	PIN	
	10	2	**154-1403**	1	SEAL-O-RING	
	11	1	**154-1673**	1	PIN	
	12	1	**154-1675**	1	SEAL	
	13	3	**154-1680**	1	PLATE	
M	14	2	**8T-4971**	2	BOLT (M6X1X30-MM)	
M	15	2	**162-2207**	1	NUT (M6X1-THD)	
	16	1	**165-2140**	7	BOLT AS	
	17	2	**183-3538**	4	BOLT	
	18	2	**217-7115**	1	CAP (TAMPER RESISTANT)	
	19	1	**308-1871**	1	GASKET	
	20	1	**322-7490**	1	HOUSING-FRONT	
	21	1	**308-1874**	1	HOLDER	
	22	1	**308-1875**	3	SEAL-O-RING	
	23	2	**308-1877**	1	BRACKET	
	24	2	**308-1878**	1	GASKET	
	25	2	**322-7491**	1	ARM (FRONT HOUSING)	
	26	2	**317-7195**	1	SPRING	
	27	2	**308-1882**	1	SPRING	
	28	2	**322-7492**	1	LEVER-CONTROL	
M	29	2	**308-1889**	1	NUT (M10X1.25-THD)	
	30	2	**322-7493**	1	LEVER AS-CONTROL	
M	31	2	**308-1892**	1	NUT (M6X1-THD)	
	32	2	**311-0655**	1	SPRING	
	33	2	**308-1897**	1	RING	
	34	2	**332-1361**	1	CAP-PROTECTION	
	35	2	**321-4249**	1	NUT	
	36	2	**308-1901**	1	CAP	
	37	3	**308-1904**	1	SLIDER	
	38	2	**308-4266**	1	SHAFT	
	39	2	**309-6728**	1	SHAFT	
	40	2	**309-6729**	1	SEAL-O-RING	
	41	2	**319-3250**	1	CONTROL GP-GOVERNOR (ENGINE TIMING)	
	42	2	**313-5832**	1	BOLT AS	
	42A	2	**153-7987**	1	WASHER (9.2X17X1.8-MM THK)	
M	42B	2	**191-9297**	1	NUT (M10X1.25-THD)	
	42C	2	**313-5833**	1	SPRING	
	43	2	**309-6732**	1	BOLT	
	44	3	**309-6733**	1	CAMSHAFT AS	
	44A	3	**153-6492**	1	KEY-WOODRUFF	

309-6718 **HOUSING GP-FRONT (**contd.**)** **i05875842**

NOTE	REF NO	GRAPHIC REF	PART NUMBER	QTY	PART NAME 1 2 3 4 5 6 (PRODUCT LEVEL)	SEE PAGE
	44B	3	**154-4505**	1	BEARING	
	44C	3	**308-1903**	1	GEAR-CAMSHAFT (66-TEETH) (66-TEETH)	
	44D	3	**313-9323**	1	SPACER (20.5X28X9.3-MM THK)	
F			**154-1396**	1	CLIP	

F - NOT SHOWN
M - METRIC PART

309-6718 **HOUSING GP-FRONT (**contd.**)** **i05875842**

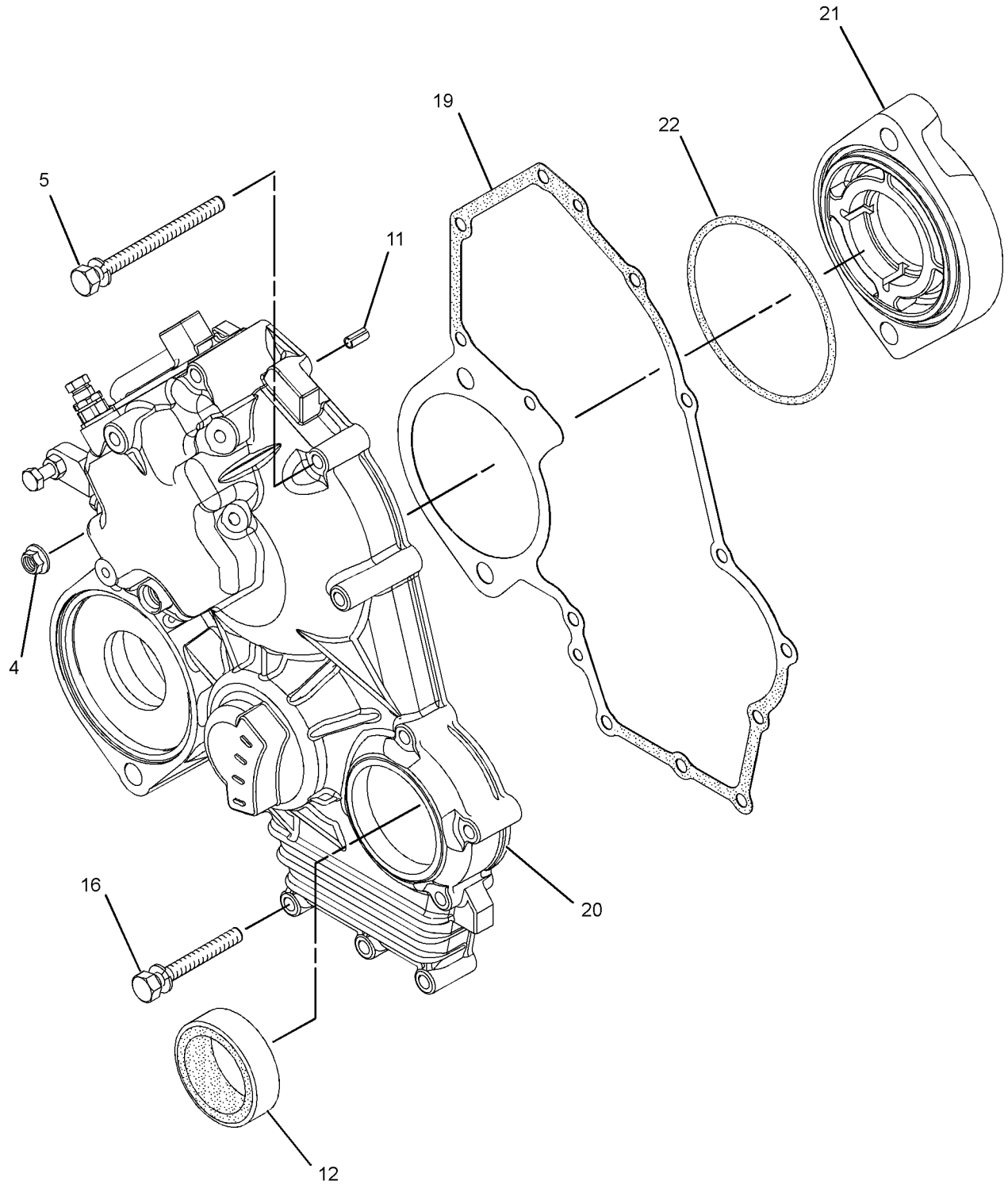

GRAPHIC #1 g01415338

309-6718 **HOUSING GP-FRONT (**contd.**)** **i05875842**

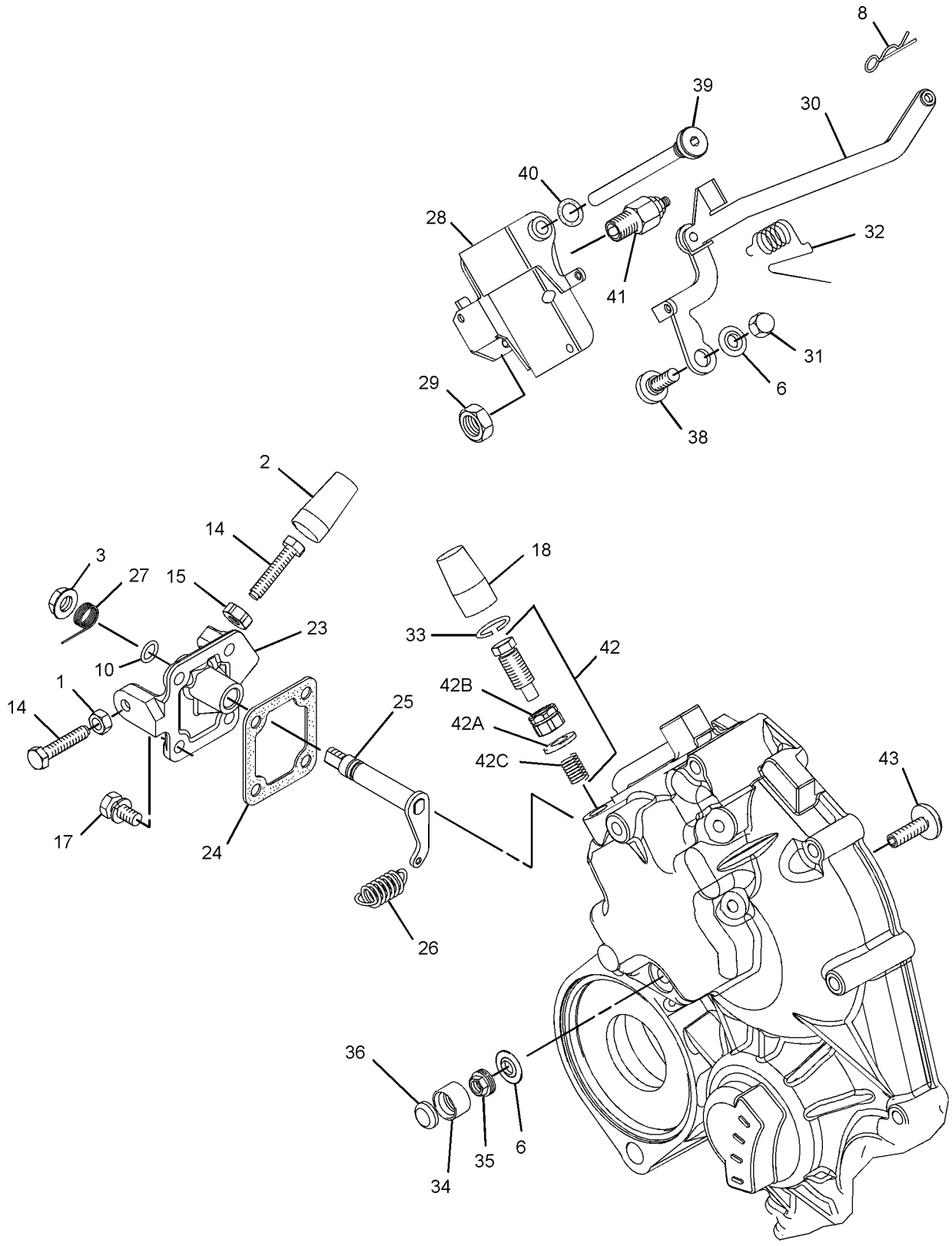

GRAPHIC #2 g01633334

309-6718 **HOUSING GP-FRONT (**contd.**)** **i05875842**

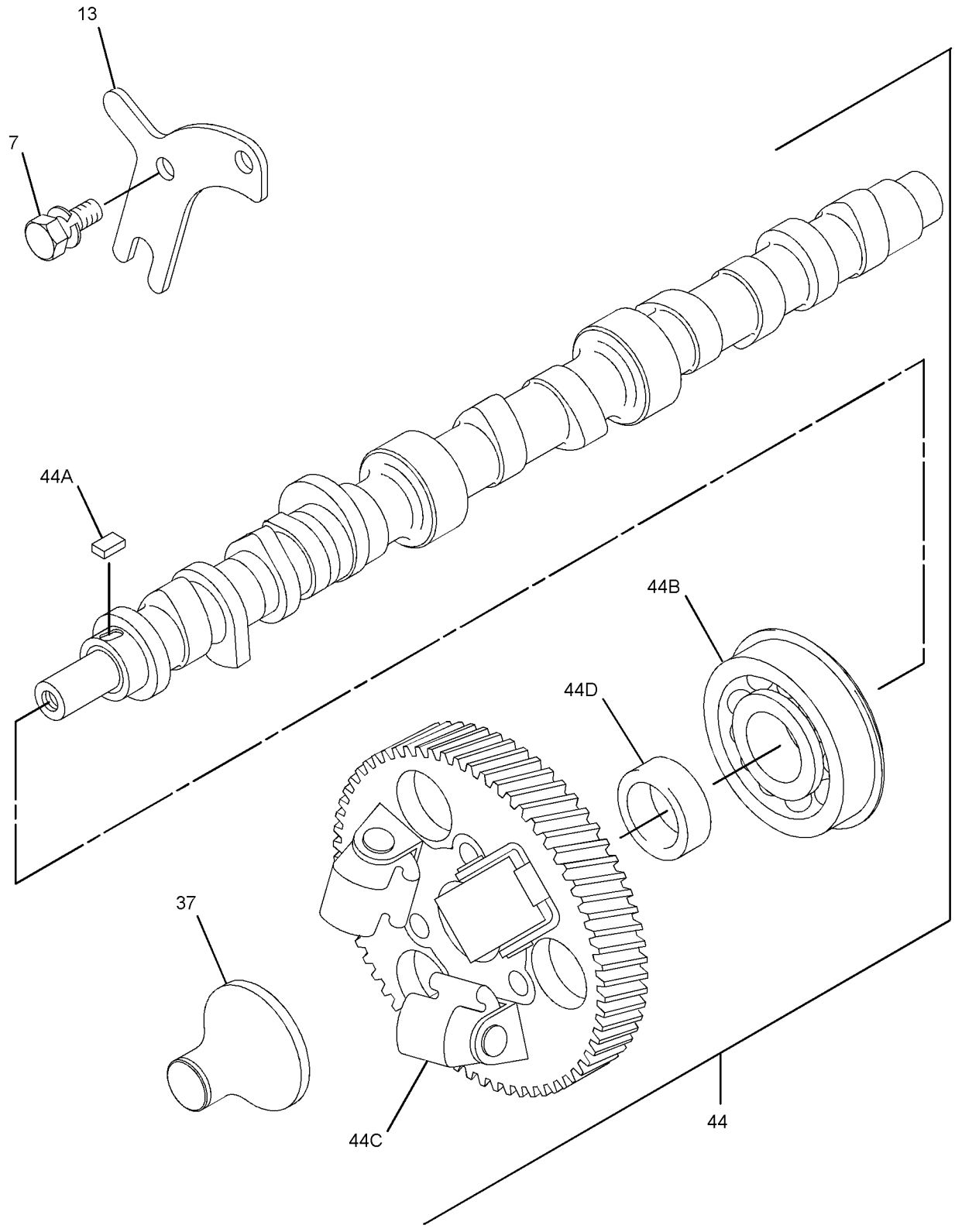

GRAPHIC #3 <END> g01415341

309-6718 HOUSING GP-FRONT

PART OF 435-1646, 499-6420 ENGINE AR-PRIMARY

TYPE 2

SMCS-1151, 1162, 1206 **i08562808**

NOTE	REF NO	GRAPHIC REF	PART NUMBER	QTY	PART NAME 1 2 3 4 5 6 (PRODUCT LEVEL)	SEE PAGE
M	1	2	**5C-2890**	1	NUT (M6X1-THD)	
	2	2	**139-5511**	1	CAP (TAMPER RESISTANT)	
M	3	2	**153-5592**	1	NUT (M8X1.25-THD)	
M	4	1	**153-5960**	3	NUT (M6X1-THD)	
	5	1	**153-5962**	4	BOLT AS	
	6	2	**153-6415**	2	WASHER (SEAL)	
	7	3	**153-6838**	2	BOLT AS	
	8	2	**153-7983**	1	PIN	
	10	2	**095-1574**	1	SEAL-O-RING	
	11	1	**5D-1319**	1	PIN-SPRING	
	12	1	**154-1675**	1	SEAL	
	13	3	**154-1680**	1	PLATE	
M	14	2	**7X-2533**	2	BOLT (M6X1X35-MM)	
M	15	2	**162-2207**	1	NUT (M6X1-THD)	
	16	1	**165-2140**	7	BOLT AS	
M	17	2	**106-8916**	4	BOLT (M6X1X16-MM)	
	18	2	**217-7115**	1	CAP (TAMPER RESISTANT)	
	19	1	**423-7723**	1	GASKET	
	20	1	**464-2090**	1	HOUSING-FRONT	
	23	2	**335-5578**	1	BRACKET	
	24	2	**423-7724**	1	GASKET	
	25	2	**334-0732**	1	ARM AS (FRONT HOUSING)	
	26	2	**317-7195**	1	SPRING	
	27	2	**308-1882**	1	SPRING	
	28	2	**580-0398**	1	LEVER AS-CONTROL	
M	29	2	**308-1889**	1	NUT (M10X1.25-THD)	
	30	2	**322-7493**	1	LEVER AS-CONTROL (FLOATING)	
	30A	2	**154-1400**	1	PIN	
M	31	2	**308-1892**	1	NUT (M6X1-THD)	
	32	2	**311-0655**	1	SPRING	
	33	2	**308-1897**	2	RING	
	34	2	**425-7065**	1	CAP-TAMPER PROOF	
	35	2	**321-4249**	1	NUT	
	36	2	**330-9189**	1	PLUG	
	37	3	**321-4252**	1	SLIDER	
	38	2	**308-4266**	1	SHAFT	
	39	2	**390-3731**	1	SHAFT	
	40	2	**309-6729**	1	SEAL-O-RING	
Y	41	2	**319-3250**	1	CONTROL GP-GOVERNOR	700
	42	2	**313-5832**	1	BOLT AS	
	42A	2	**153-7987**	1	WASHER (9.2X17X1.8-MM THK)	
M	42B	2	**191-9297**	1	NUT (M10X1.25-THD)	
	42C	2	**313-5833**	1	SPRING	
M	43	2	**495-0737**	1	BOLT (M6X0.5X19.5-MM)	
	44	3	**309-6733**	1	CAMSHAFT AS	
	44A	3	**153-6492**	1	KEY-WOODRUFF	
	44B	3	**154-4505**	1	BEARING	

309-6718 **HOUSING GP-FRONT (**contd.**)** **i08562808**

NOTE	REF NO	GRAPHIC REF	PART NUMBER	QTY	PART NAME 1 2 3 4 5 6 (PRODUCT LEVEL)	SEE PAGE
	44C	3	**308-1903**	1	GEAR-CAMSHAFT (66-TEETH)	
	44D	3	**313-9323**	1	SPACER (20.5X28X9.3-MM THK)	
	45	2	**336-2965**	1	SPRING	
C	46	1	**308-1875**	1	SEAL-O-RING	
F			**154-1396**	1	CLIP	

C - CHANGE FROM PREVIOUS TYPE
F - NOT SHOWN
M - METRIC PART
Y - SEPARATE ILLUSTRATION

309-6718 **HOUSING GP-FRONT (**contd.**)** **i08562808**

REFER TO ALL ILLUSTRATIONS OF
THIS GROUP FOR AUXILIARY VIEWS

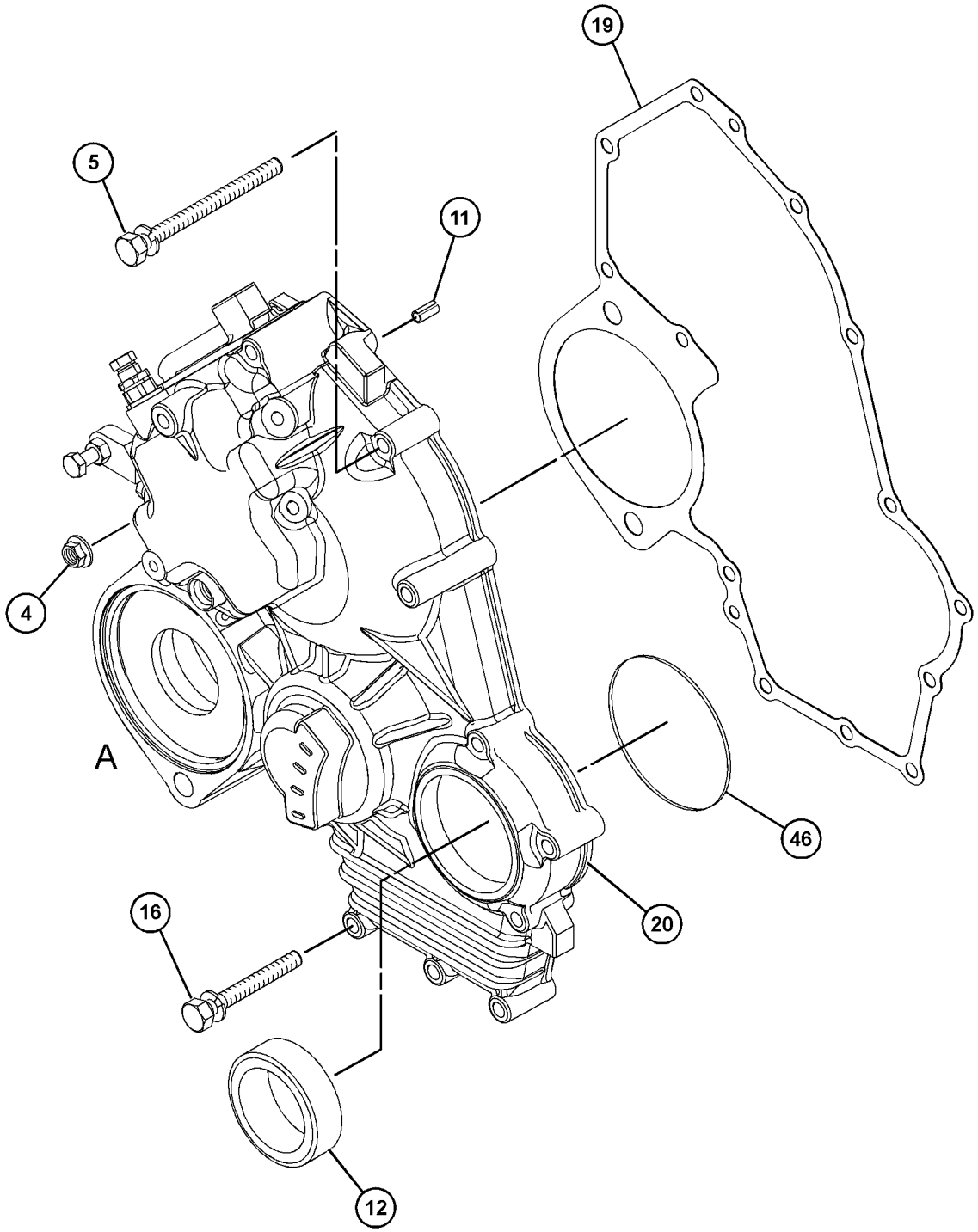

GRAPHIC #1 g07500709

309-6718 **HOUSING GP-FRONT (**contd.**)** **i08562808**

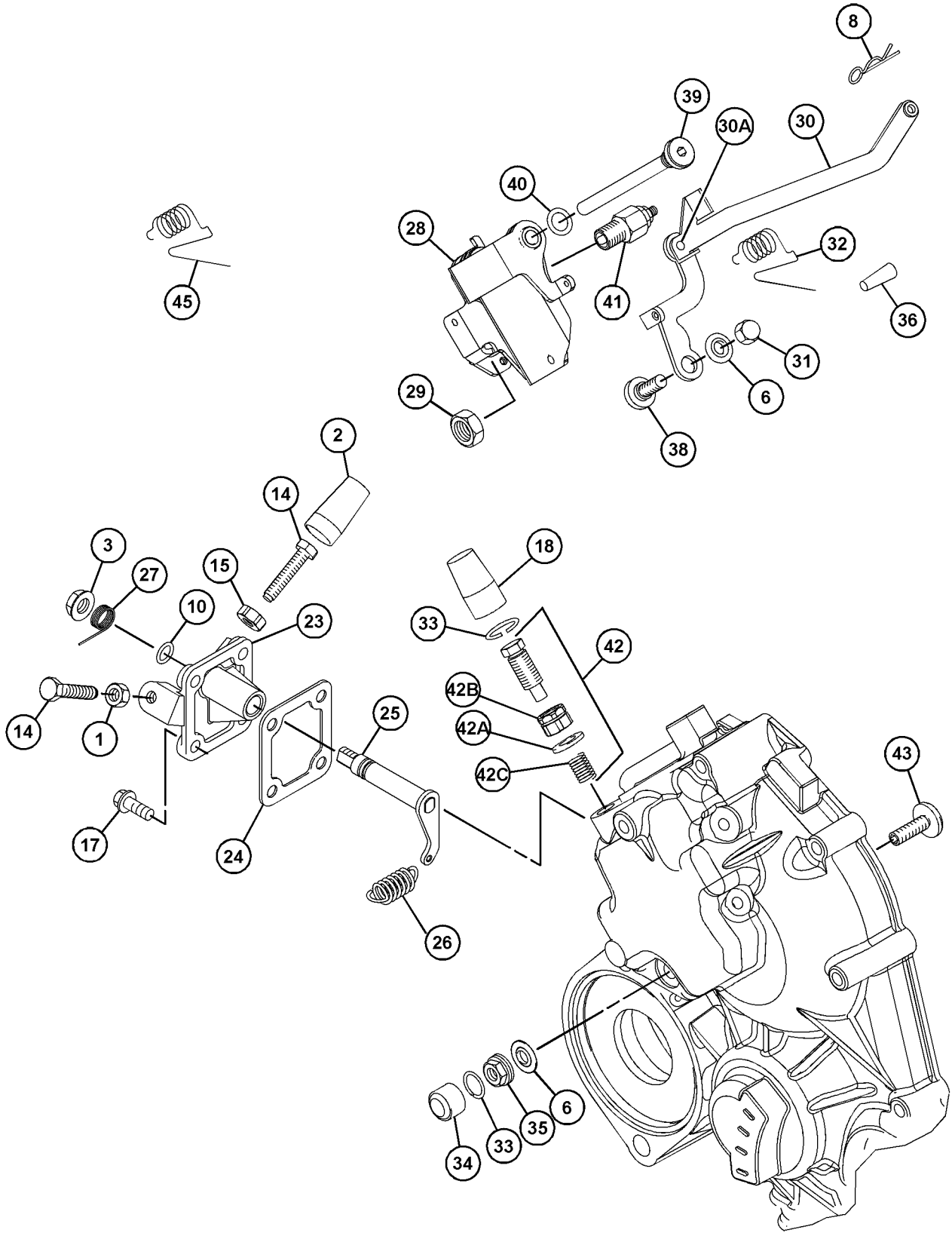

VIEW OF AREA A

GRAPHIC #2 g07500745

309-6718 **HOUSING GP-FRONT (**contd.**)** **i08562808**

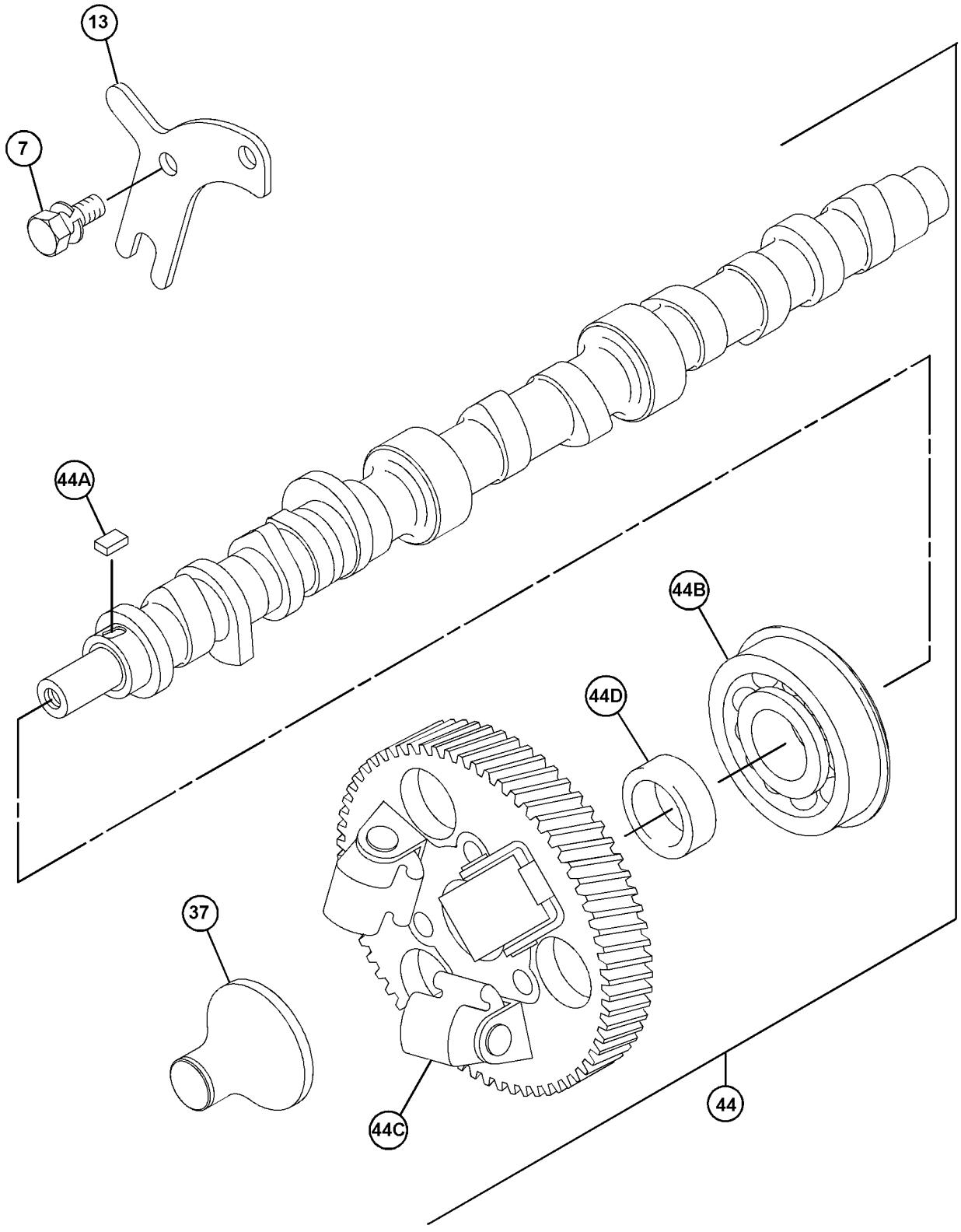

GRAPHIC #3 <END> g06208679

311-1682 HOUSING GP-FRONT

PART OF 433-1379 ENGINE AR
ALSO AN ATTACHMENT

SMCS-1151, 1162, 1206 **i09547511**

NOTE	REF NO	GRAPHIC REF	PART NUMBER	QTY	PART NAME 1 2 3 4 5 6 (PRODUCT LEVEL)	SEE PAGE
M	1	2	**153-5960**	2	NUT (M6X1-THD)	
	2	2	**153-5962**	4	BOLT AS	
	3	2	**5D-1319**	1	PIN-SPRING	
	4	2	**154-1675**	1	SEAL	
	5	2	**165-2140**	7	BOLT AS	
	6	1	**217-7115**	1	CAP (TAMPER RESISTANT)	
	7	2	**592-3241**	1	GASKET-GEAR CASE	
	8	1	**309-6729**	1	SEAL-O-RING	
	9	2	**464-2090**	1	HOUSING-FRONT	

M - METRIC PART

311-1682 **HOUSING GP-FRONT (**contd.**)** **i09547511**

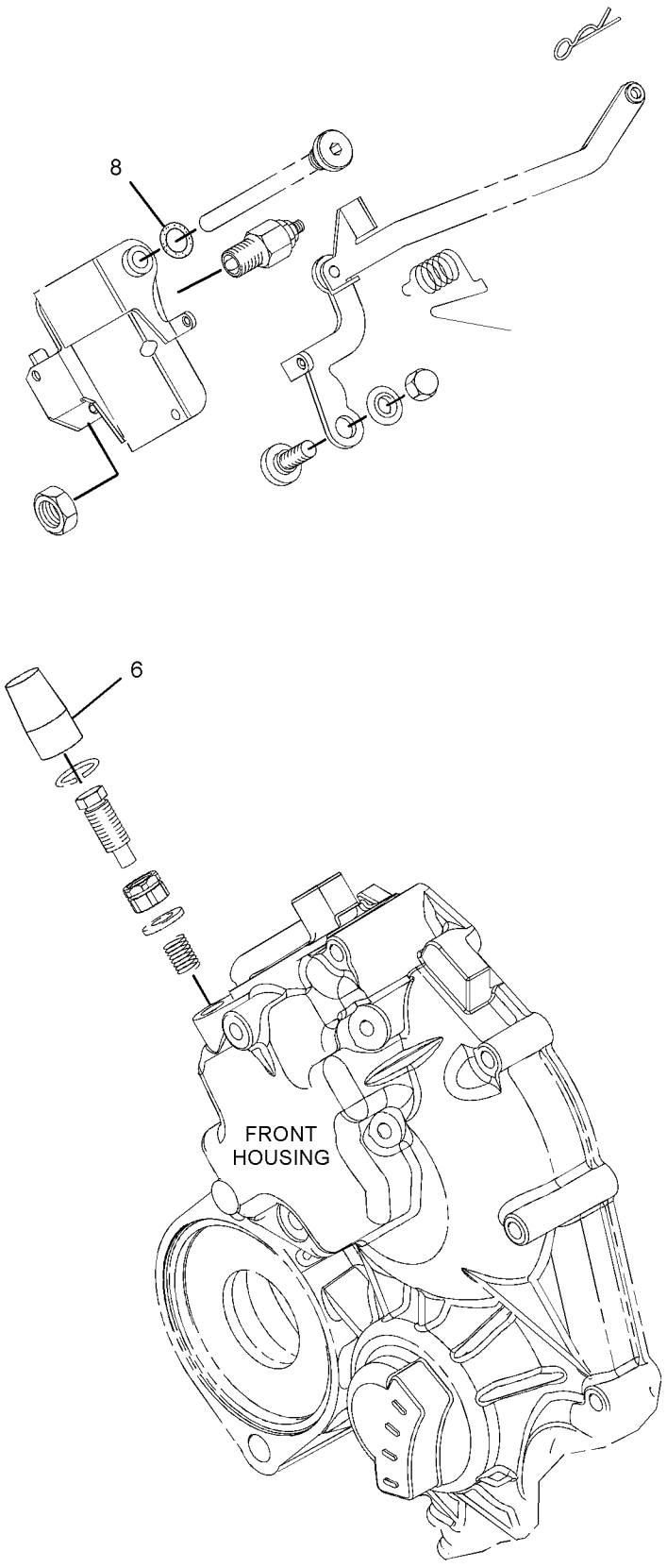

GRAPHIC #1 g03722727

311-1682 **HOUSING GP-FRONT (**contd.**)** **i09547511**

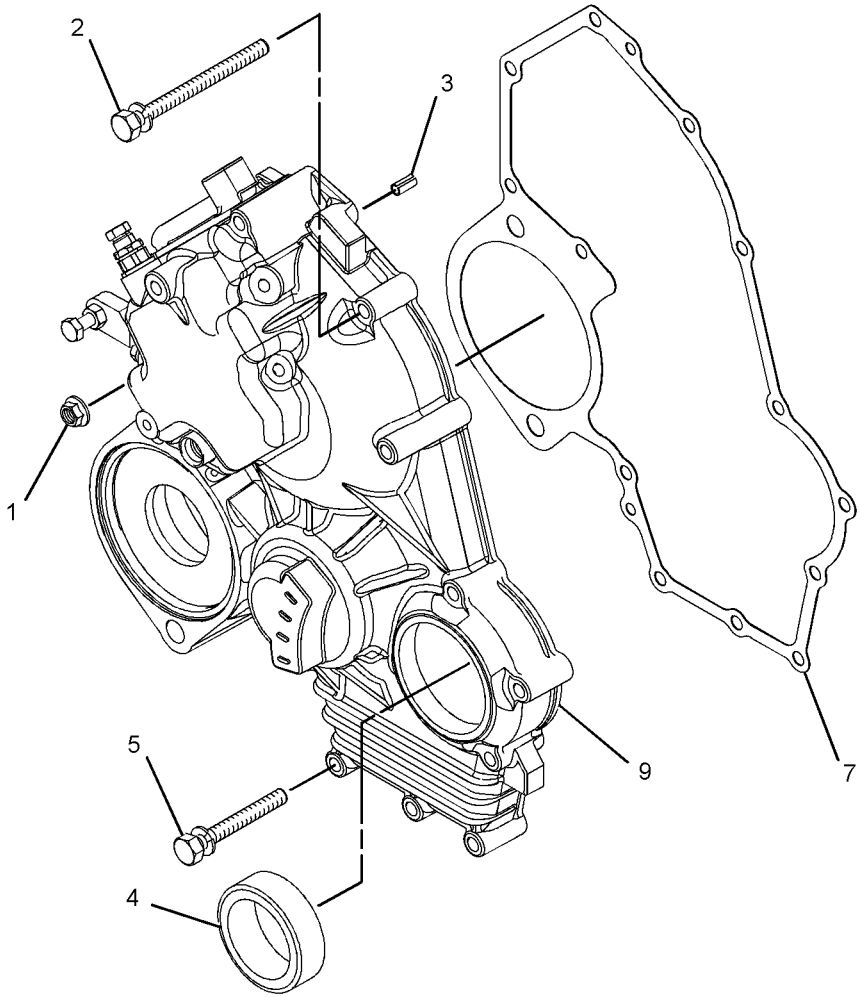

GRAPHIC #2 <END> g07626851

311-9023 HOUSING GP-FRONT

PART OF 435-1641 ENGINE AR-PRIMARY

SMCS-1151, 1162, 1206 **i06100997**

NOTE	REF NO	GRAPHIC REF	PART NUMBER	QTY	PART NAME 1 2 3 4 5 6 (PRODUCT LEVEL)	SEE PAGE
M	1	1	**153-5960**	2	NUT (M6X1-THD)	
	2	1	**153-5962**	4	BOLT AS	
	3	1	**5D-1319**	1	PIN-SPRING	
	4	1	**154-1675**	1	SEAL	
	5	1	**165-2140**	7	BOLT AS	
	6	1	**423-7723**	1	GASKET	
	7	1	**464-2090**	1	HOUSING-FRONT	
	8	1	**308-1875**	2	SEAL-O-RING	
F			**153-6415**	1	WASHER (SEAL)	

F - NOT SHOWN
M - METRIC PART

311-9023 **HOUSING GP-FRONT (**contd.**)** **i06100997**

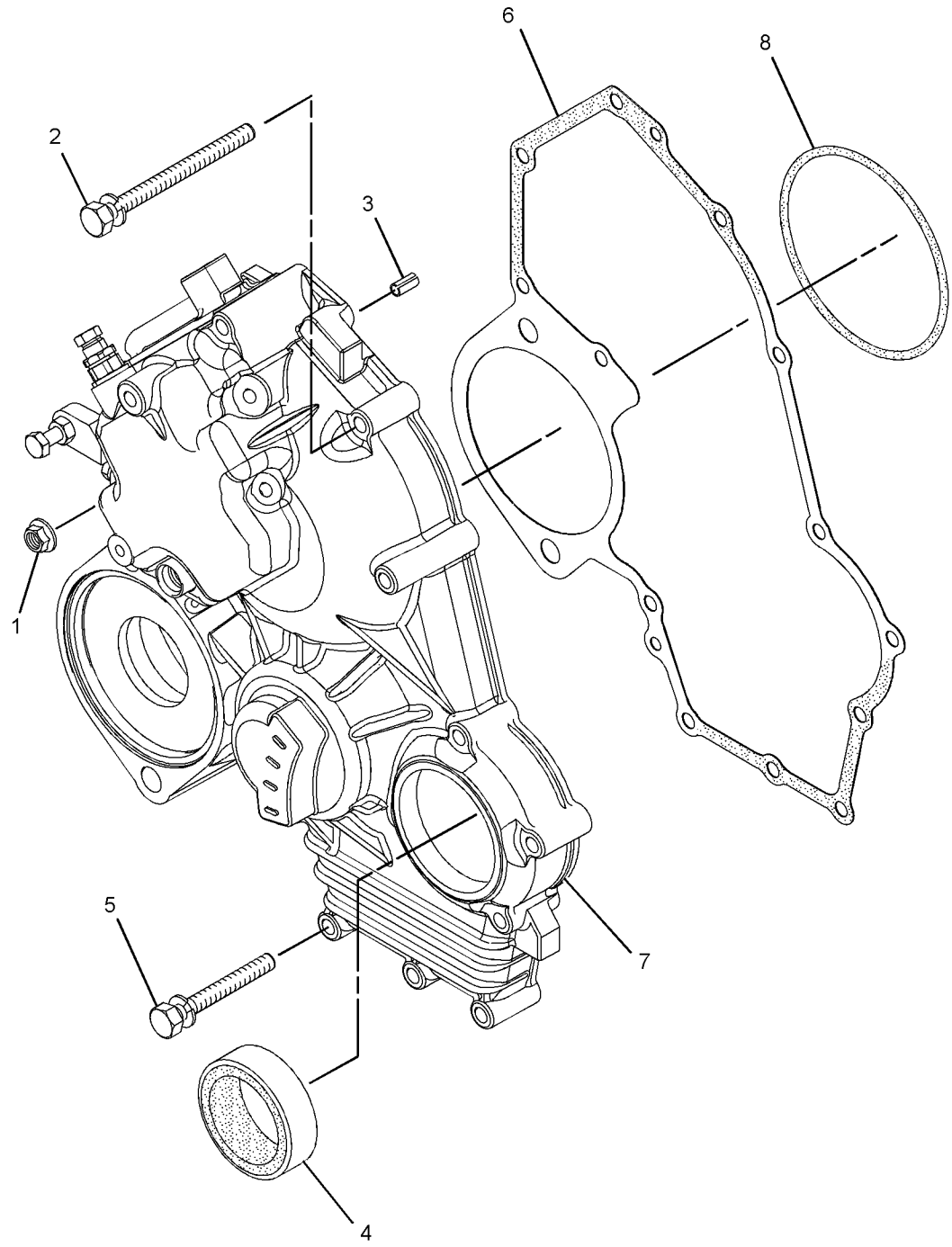

GRAPHIC #1 <END> g03725718

317-0965 HOUSING GP-FRONT

PART OF 433-1380 ENGINE AR, 489-9224 ENGINE AR-PRIMARY

TYPE 2

SMCS-1151, 1162, 1206 **i06217928**

NOTE	REF NO	GRAPHIC REF	PART NUMBER	QTY	PART NAME 1 2 3 4 5 6 (PRODUCT LEVEL)	SEE PAGE
M	1	1	**153-5960**	2	NUT (M6X1-THD)	
	2	1	**153-5962**	4	BOLT AS	
	3	1	**5D-1319**	1	PIN-SPRING	
	4	1	**154-1675**	1	SEAL	
	5	1	**165-2140**	7	BOLT AS	
	6	1	**423-7723**	1	GASKET	
M	7	1	**6I-0846**	1	BOLT (M6X1X14-MM)	
	8	1	**153-6415**	1	WASHER (SEAL)	
	9	1	**464-2090**	1	HOUSING-FRONT	

M - METRIC PART

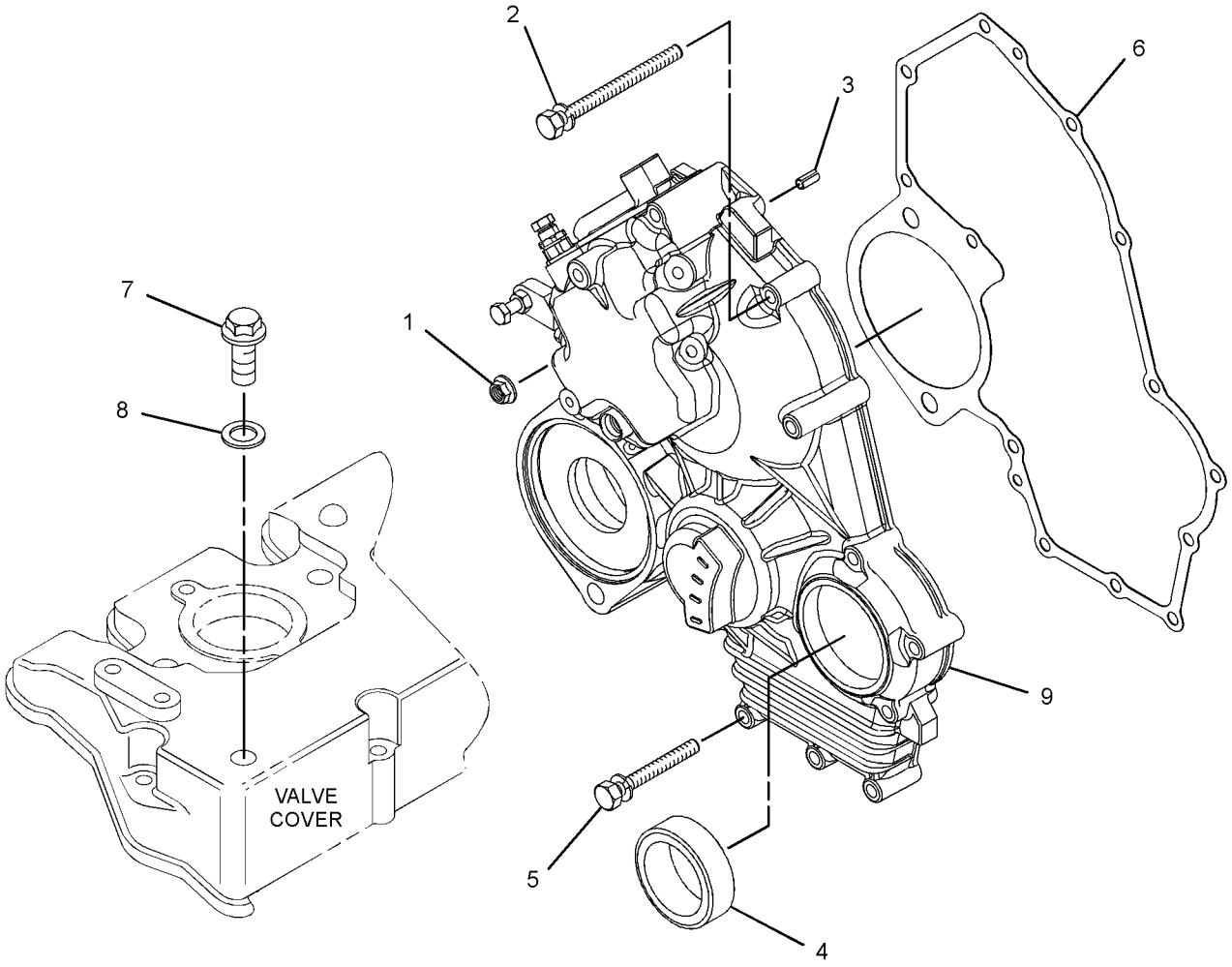

GRAPHIC #1 <END> g03374565

317-0965 HOUSING GP-FRONT

PART OF 433-1380 ENGINE AR, 489-9224, 504-4602 ENGINE AR-PRIMARY
TYPE 1

SMCS-1151, 1162, 1206 **i06919752**

NOTE	REF NO	GRAPHIC REF	PART NUMBER	QTY	PART NAME 1 2 3 4 5 6 (PRODUCT LEVEL)	SEE PAGE
M	1	1	**153-5960**	2	NUT (M6X1-THD)	
	2	1	**153-5962**	4	BOLT AS	
	3	1	**5D-1319**	1	PIN-SPRING	
	4	1	**154-1675**	1	SEAL	
	5	1	**165-2140**	7	BOLT AS	
	6	1	**423-7723**	1	GASKET	
	7	1	**464-2090**	1	HOUSING-FRONT	

M - METRIC PART

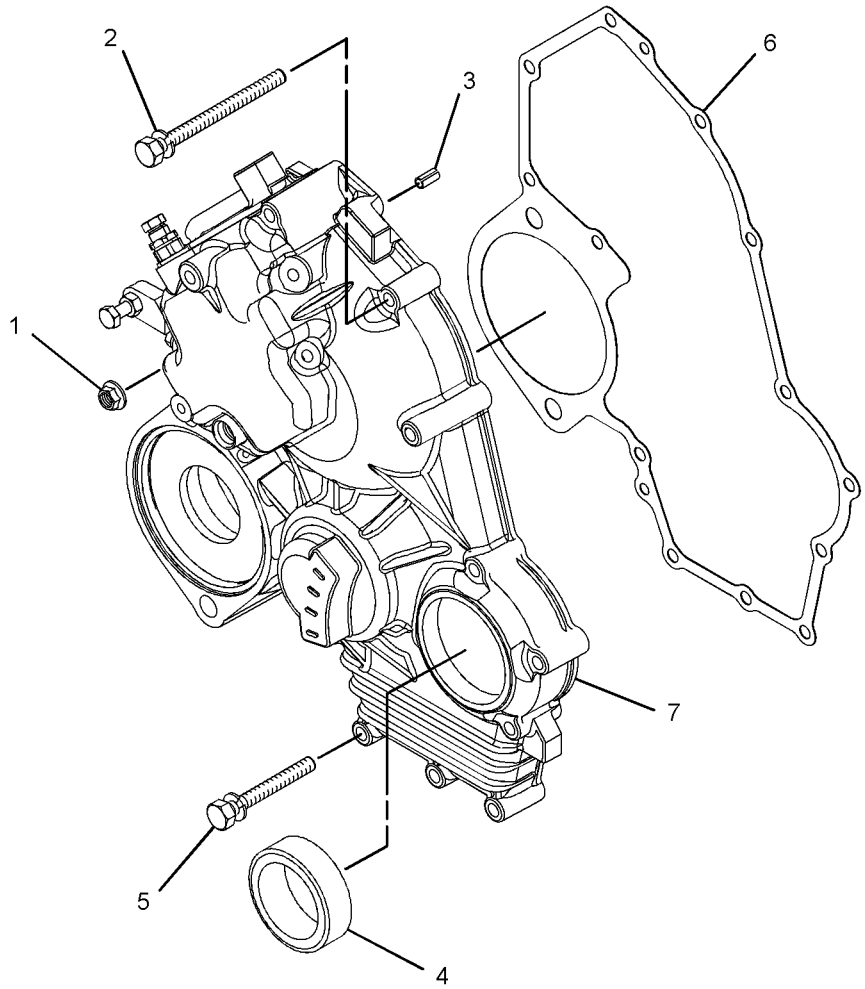

GRAPHIC #1 <END> g06209741

317-7186 HOUSING GP-FRONT

PART OF 435-1645, 435-1649 CYLINDER BLOCK GP-LONG

SMCS-1151, 1162, 1206 **i06236468**

NOTE	REF NO	GRAPHIC REF	PART NUMBER	QTY	PART NAME 1 2 3 4 5 6 (PRODUCT LEVEL)	SEE PAGE
M	1	1	**153-5960**	2	NUT (M6X1-THD)	
	2	1	**153-5962**	4	BOLT AS	
	3	1	**5D-1319**	1	PIN-SPRING	
	4	1	**154-1675**	1	SEAL	
	5	1	**165-2140**	6	BOLT AS	
	6	1	**423-7723**	1	GASKET	
	7	1	**464-2090**	1	HOUSING-FRONT	

M - METRIC PART

317-7186 **HOUSING GP-FRONT (**contd.**)** **i06236468**

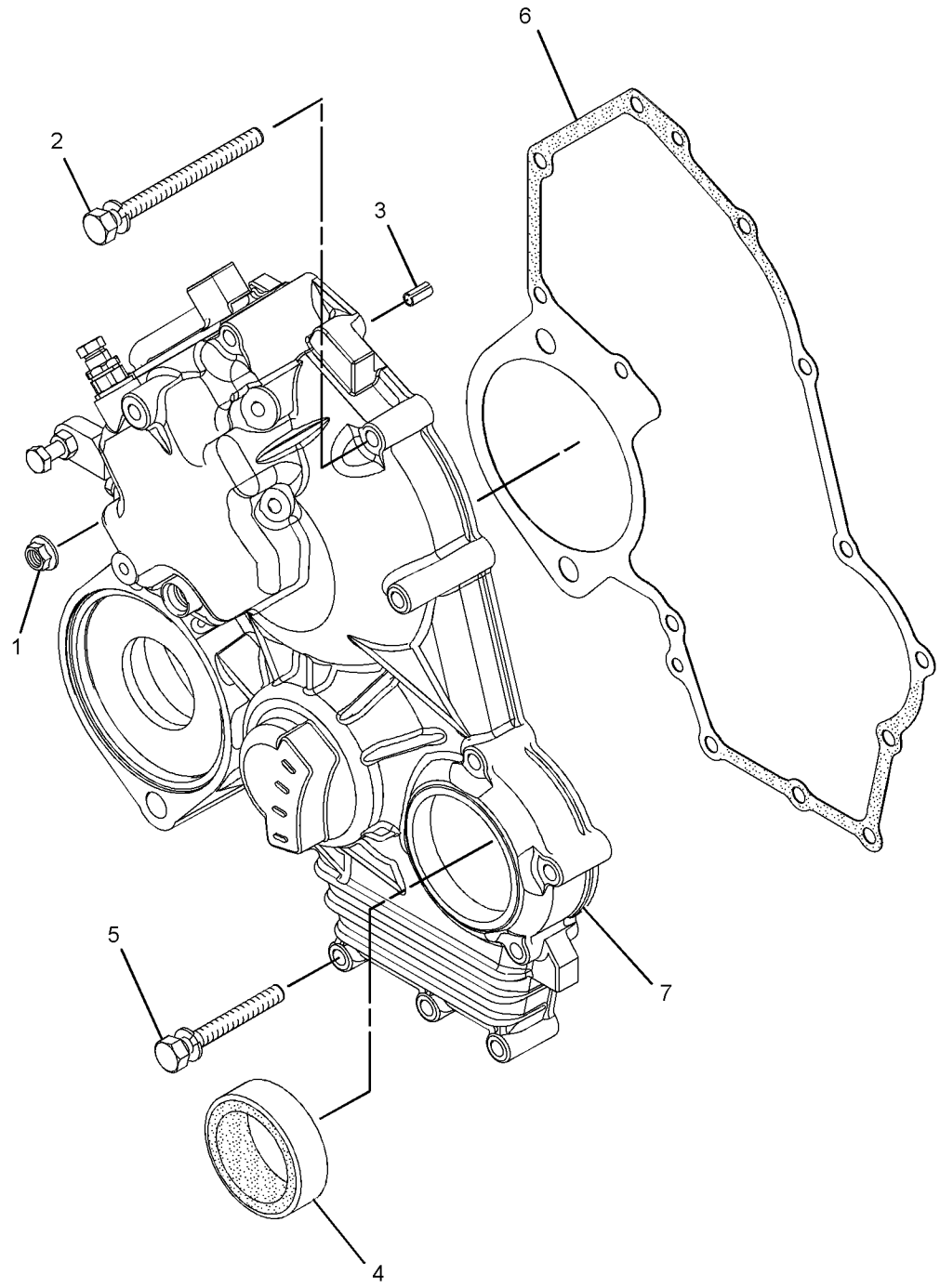

GRAPHIC #1 <END> g01624458

321-4257 HOUSING GP-FRONT

SMCS-1151, 1162, 1206 **i07682935**

NOTE	REF NO	GRAPHIC REF	PART NUMBER	QTY	PART NAME 1 2 3 4 5 6 (PRODUCT LEVEL)	SEE PAGE
M	1	2	**5C-2890**	1	NUT (M6X1-THD)	
	2	2	**139-5511**	1	CAP (TAMPER RESISTANT)	
M	3	2	**153-5592**	1	NUT (M8X1.25-THD)	
M	4	1	**153-5960**	2	NUT (M6X1-THD)	
	5	1	**153-5962**	4	BOLT AS	
	6	2	**153-6415**	2	WASHER (SEAL)	
	7	3	**153-6838**	1	BOLT AS	
	8	2	**153-7983**	1	PIN	
	9	2	**095-1574**	1	SEAL-O-RING	
M	10	2	**369-4486**	2	BOLT (M6X1X35-MM)	
	11	1	**5D-1319**	1	PIN-SPRING	
	12	1	**154-1675**	1	SEAL	
	13	3	**154-1680**	1	PLATE	
	14	2	**154-2715**	1	WASHER	
M	16	2	**162-2207**	1	NUT (M6X1-THD)	
	17	1	**165-2140**	6	BOLT AS	
M	18	2	**106-8916**	4	BOLT (M6X1X16-MM)	
	19	2	**217-7115**	1	CAP (TAMPER RESISTANT)	
	20	1	**423-7723**	1	GASKET	
	21	2	**335-5578**	1	BRACKET	
	22	2	**423-7724**	1	GASKET	
	23	2	**308-1882**	1	SPRING	
M	24	2	**308-1889**	1	NUT (M10X1.25-THD)	
M	25	2	**308-1892**	1	NUT (M6X1-THD)	
	26	2	**308-1897**	2	RING	
	28	2	**308-4266**	1	SHAFT	
	29	2	**390-3731**	1	SHAFT	
	30	2	**364-2755**	1	BOLT-SPECIAL	
	31	2	**311-0655**	1	SPRING	
M	32	2	**313-2025**	1	BOLT-SPECIAL (M10X1.25-MM THD)	
	33	2	**315-5236**	1	BOLT AS	
	33A	2	**153-7987**	1	WASHER (9.2X17X1.8-MM THK)	
M	33B	2	**191-9297**	1	NUT (M10X1.25-THD)	
	33C	2	**315-5235**	1	SPRING	
	34	2	**321-3145**	1	SPRING	
	35	2	**321-4249**	1	NUT	
Y	36	3	**343-2871**	1	CAMSHAFT AS	144
	37	3	**363-8409**	1	SLIDER	
	38	2	**425-7065**	1	CAP-TAMPER PROOF	
	39	1	**464-2090**	1	HOUSING-FRONT	
	40	2	**334-0732**	1	ARM AS (FRONT HOUSING)	
	41	2	**390-3729**	1	LEVER-CONTROL	
	42	2	**322-7493**	1	LEVER AS-CONTROL	
	43	2	**336-2965**	1	SPRING	
	44	2	**330-9189**	1	PLUG	

M - METRIC PART
Y - SEPARATE ILLUSTRATION

321-4257 **HOUSING GP-FRONT (**contd.**)** **i07682935**

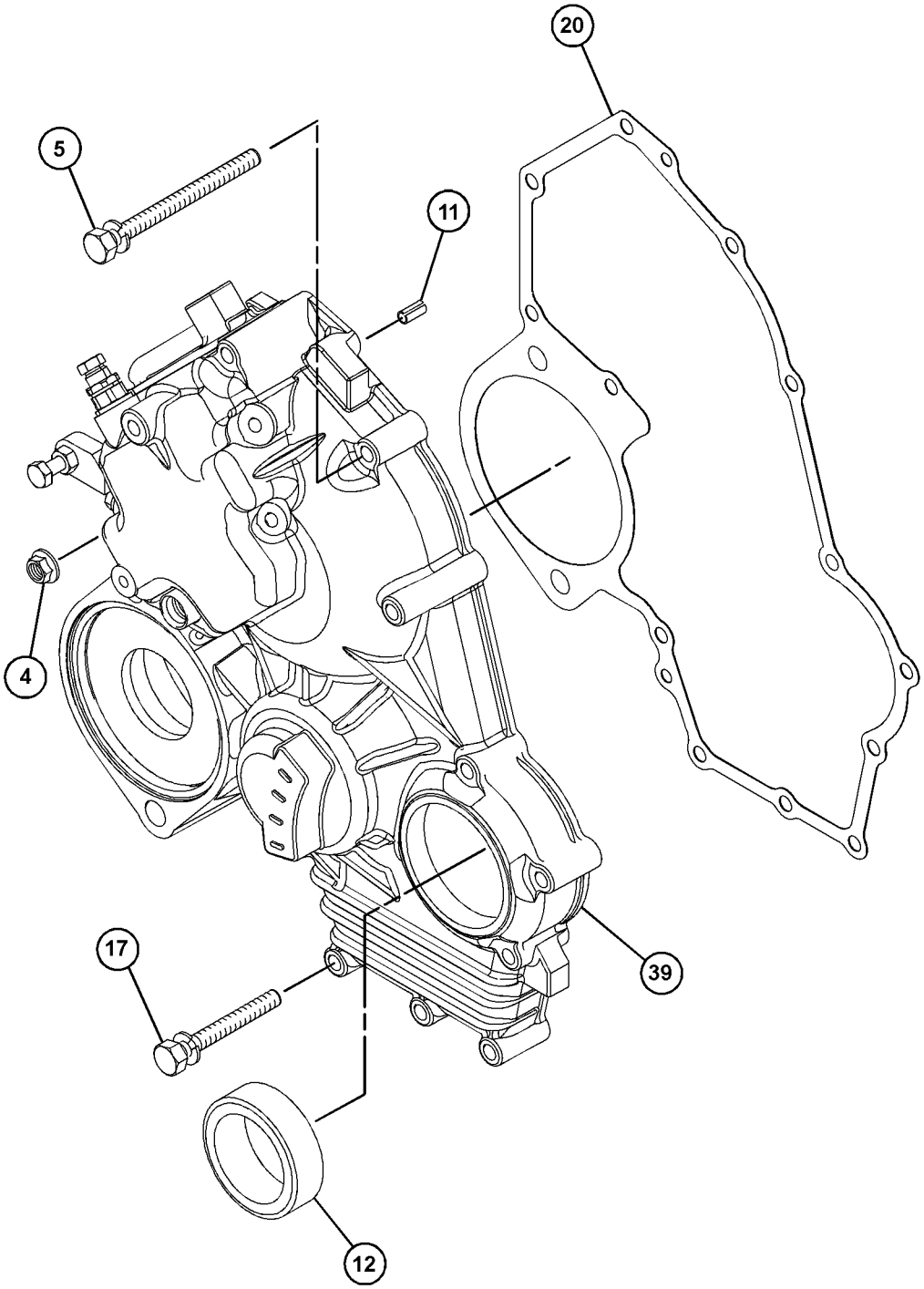

GRAPHIC #1 g06208649

321-4257 **HOUSING GP-FRONT (**contd.**)** **i07682935**

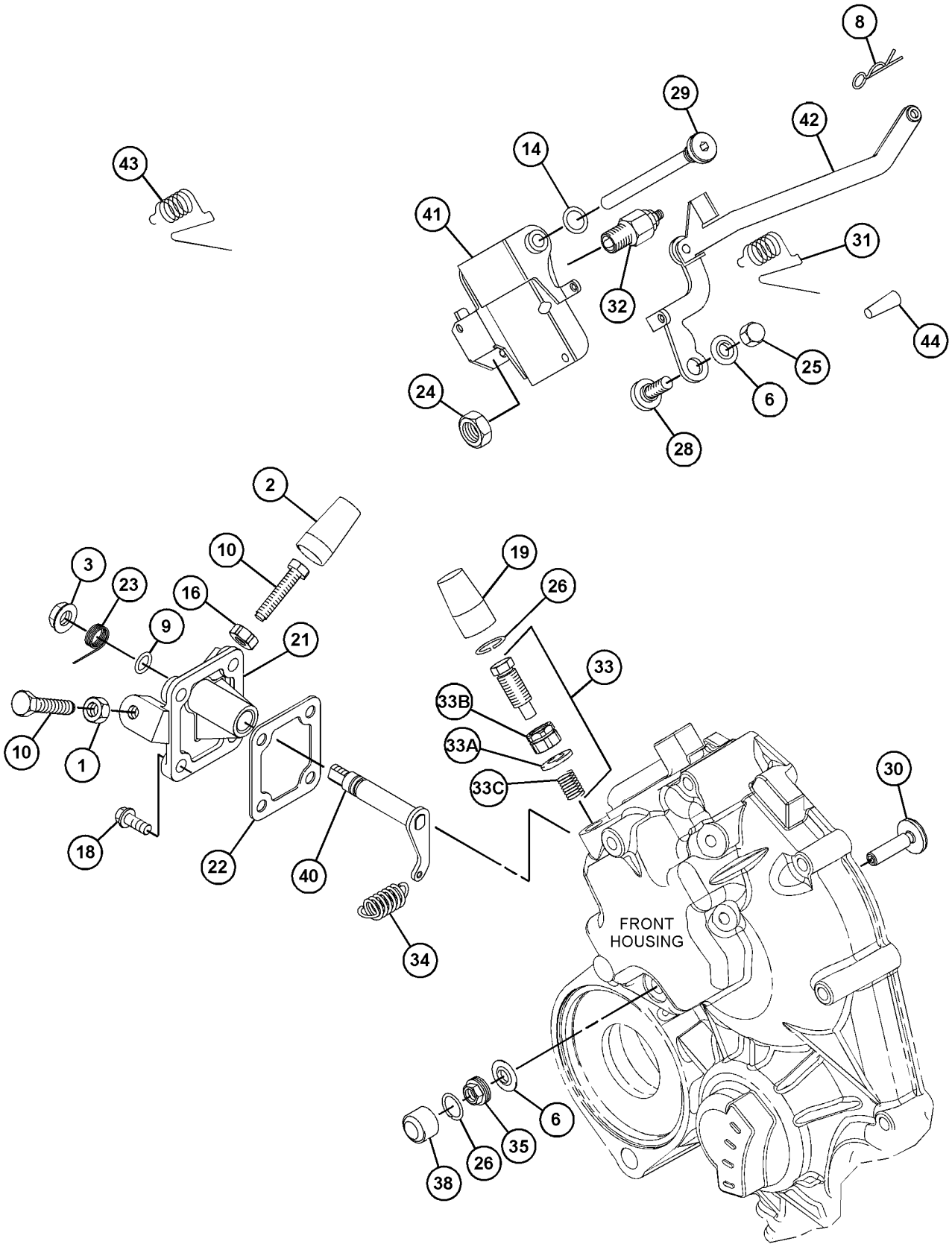

GRAPHIC #2 g06472230

321-4257 **HOUSING GP-FRONT (**contd.**)** **i07682935**

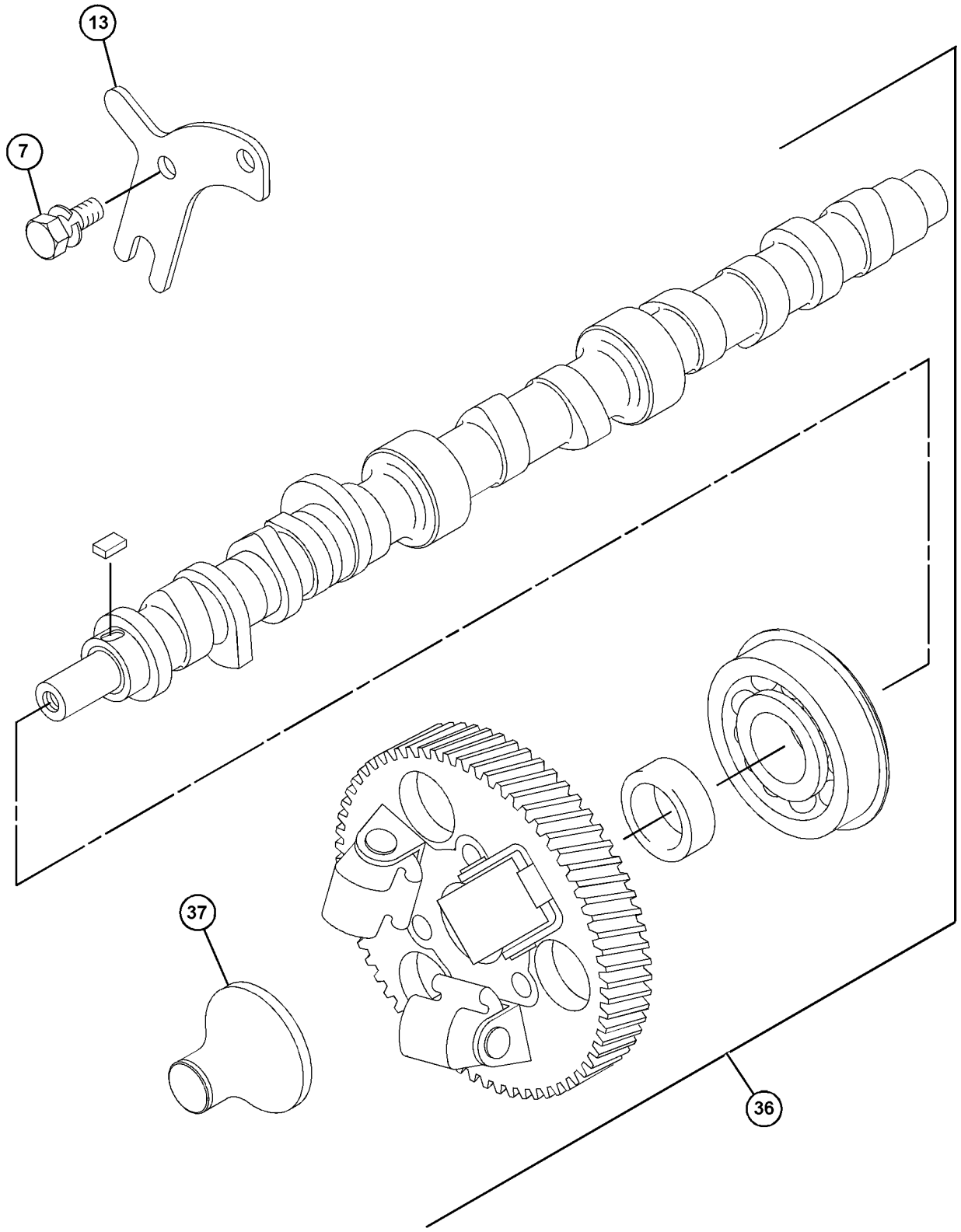

GRAPHIC #3 <END> g06475659

321-8207 HOUSING GP-FRONT

S/N: C6M1-2365

SMCS-1151, 1162, 1206 **i04403385**

NOTE	REF NO	GRAPHIC REF	PART NUMBER	QTY	PART NAME 1 2 3 4 5 6 (PRODUCT LEVEL)	SEE PAGE
M	1	2	**5C-2890**	1	NUT (M6X1-THD)	
	2	2	**139-5511**	1	CAP (TAMPER RESISTANT)	
M	3	2,4	**153-5592**	2	NUT (M8X1.25-THD)	
M	4	1	**153-5960**	3	NUT (M6X1-THD)	
	5	1	**153-5962**	4	BOLT AS	
	6	2,4	**153-6415**	5	WASHER (SEAL)	
	7	3	**153-6838**	2	BOLT AS	
	8	4	**153-6861**	1	BOLT AS	
	9	2	**153-7983**	1	PIN	
	10	2	**095-1574**	1	SEAL-O-RING	
	11	1	**5D-1319**	1	PIN-SPRING	
	12	1	**154-1675**	1	SEAL	
	13	3	**154-1680**	1	PLATE	
	14	2	**154-2715**	1	WASHER	
M	15	2	**369-4486**	2	BOLT (M6X1X35-MM)	
M	16	2	**162-2207**	1	NUT (M6X1-THD)	
	17	1	**165-2140**	6	BOLT AS	
M	18	2	**106-8916**	4	BOLT (M6X1X16-MM)	
M	19	4	**217-5860**	4	BOLT (M4X0.7X8-MM)	
	20	2	**217-7115**	1	CAP (TAMPER RESISTANT)	
	21	4	**232-0218**	2	CLAMP	
	22	4	**232-0290**	1	CONNECTOR	
	23	1	**308-1871**	1	GASKET	
	24	4	**321-8218**	1	HOSE	
	25	1	**308-1875**	2	SEAL-O-RING	
	26	2	**335-5578**	1	BRACKET	
	27	2	**308-1878**	1	GASKET	
	28	2	**334-0732**	1	ARM AS (FRONT HOUSING)	
	29	2	**308-1882**	1	SPRING	
M	30	2	**308-1889**	1	NUT (M10X1.25-THD)	
	31	2	**322-7493**	1	LEVER AS-CONTROL	
M	32	2	**308-1892**	1	NUT (M6X1-THD)	
	33	2	**308-1897**	2	RING	
	34	2	**308-1901**	1	CAP	
	35	3	**308-1902**	1	CAMSHAFT AS	
	35A	3	**153-6492**	1	KEY-WOODRUFF	
	35B	3	**154-4505**	1	BEARING	
	35C	3	**308-1903**	1	GEAR-CAMSHAFT (66-TEETH)	
	35D	3	**313-9323**	1	SPACER (20.5X28X9.3-MM THK)	
	36	3	**308-1904**	1	SLIDER	
	37	2	**308-4266**	1	SHAFT	
	38	2	**309-6728**	1	SHAFT	
	39	2	**364-2755**	1	BOLT-SPECIAL	
	40	2	**311-0655**	1	SPRING	
	41	2	**313-5832**	1	BOLT AS	
	41A	2	**153-7987**	1	WASHER (9.2X17X1.8-MM THK)	
M	41B	2	**191-9297**	1	NUT (M10X1.25-THD)	
	41C	2	**313-5833**	1	SPRING	

321-8207 **HOUSING GP-FRONT (**contd.**)** **i04403385**

NOTE	REF NO	GRAPHIC REF	PART NUMBER	QTY	PART NAME 1 2 3 4 5 6 (PRODUCT LEVEL)	SEE PAGE
	42	2	**322-7492**	1	LEVER-CONTROL	
	43	2	**317-7195**	1	SPRING	
	44	2,4	**321-4249**	2	NUT	
	45	1	**328-3226**	1	HOUSING-FRONT	
	46	2	**321-8209**	1	SENSOR AS-SPEED (ENGINE TIMING)	
	47	2	**332-1361**	1	CAP-PROTECTION	
	48	4	**321-8211**	1	DIAPHRAGM	
	49	4	**321-8212**	1	COVER	
	50	4	**321-8214**	1	BOLT	
	51	4	**328-5174**	1	LEVER-STOP	
	52	4	**321-8216**	1	TUBE	
	53	4	**321-8217**	1	BOLT	
	54	2	**336-2965**	1	SPRING	
	55	2	**330-9189**	1	PLUG	
	56	4	**285-3555**	1	CLIP	
	57	4	**153-6375**	1	BOLT AS	

M - METRIC PART

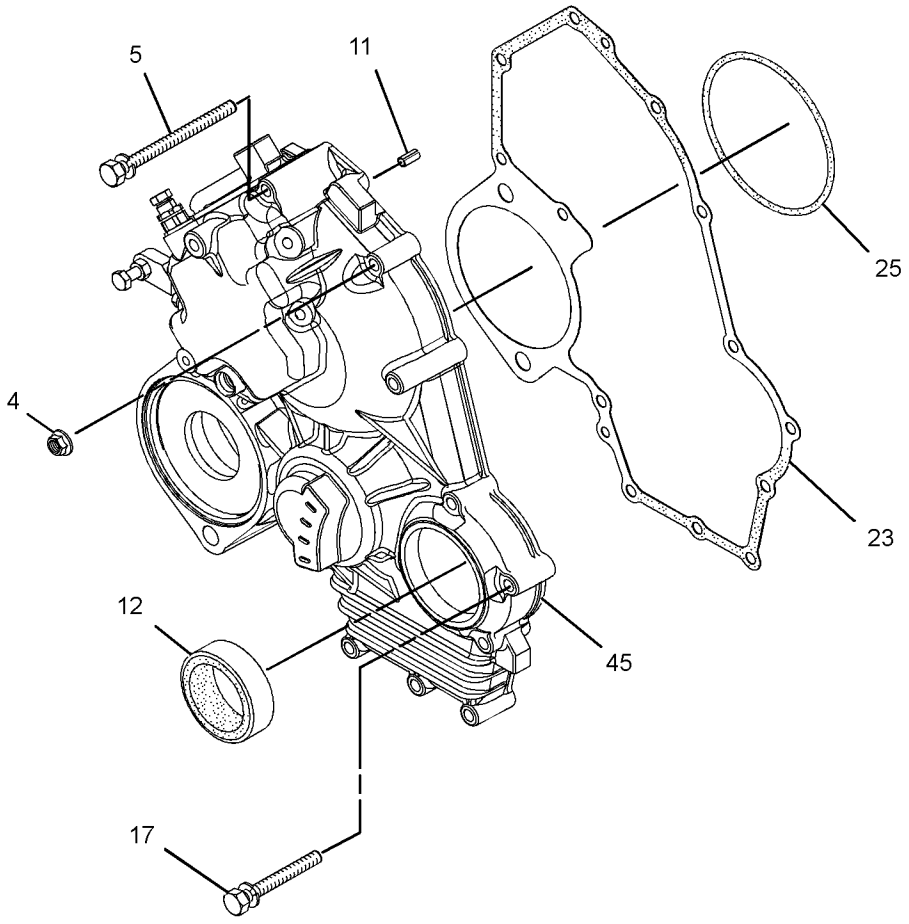

GRAPHIC #1 g01963369

321-8207 **HOUSING GP-FRONT (**contd.**)** **i04403385**

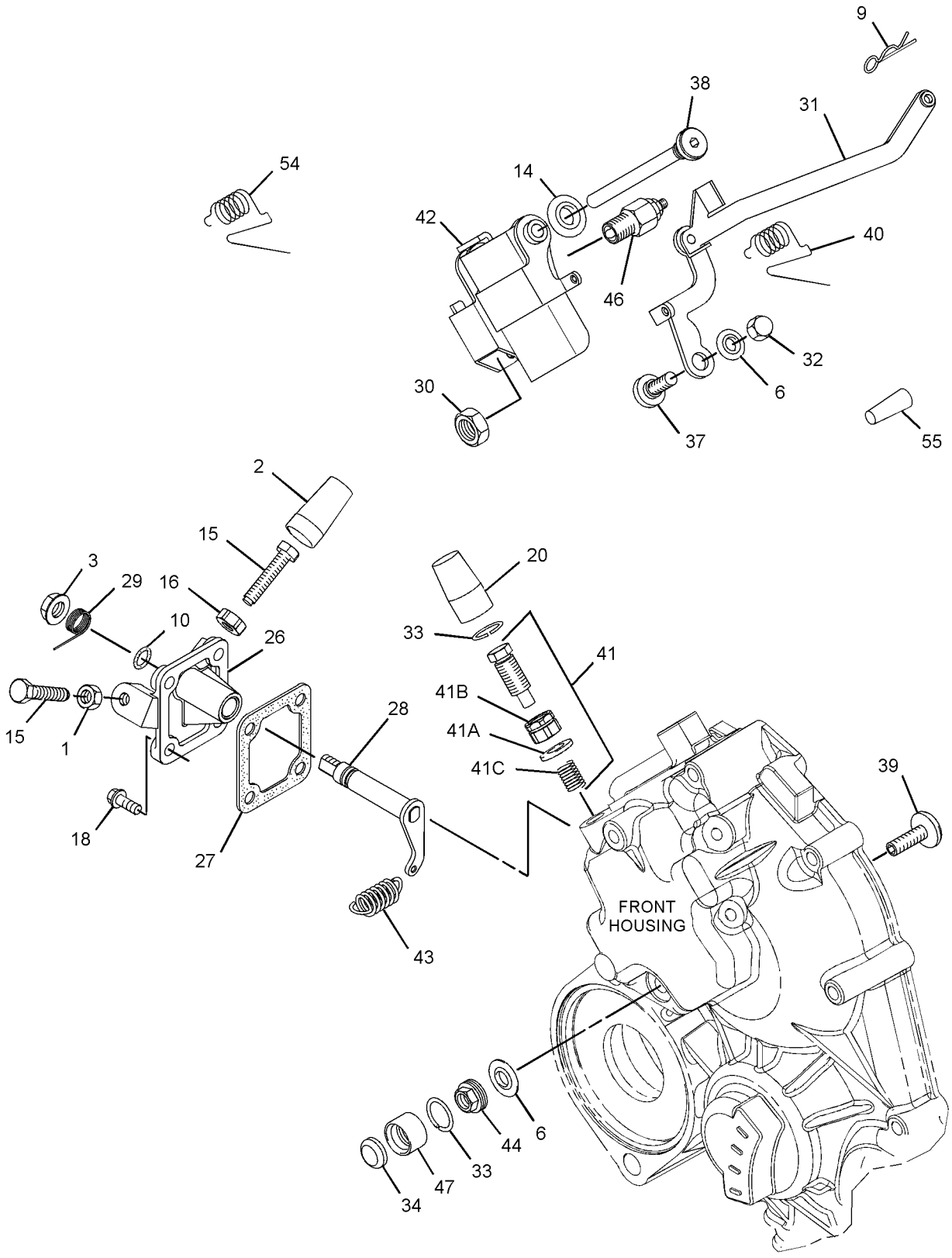

GRAPHIC #2 g02207654

321-8207 **HOUSING GP-FRONT (**contd.**)** **i04403385**

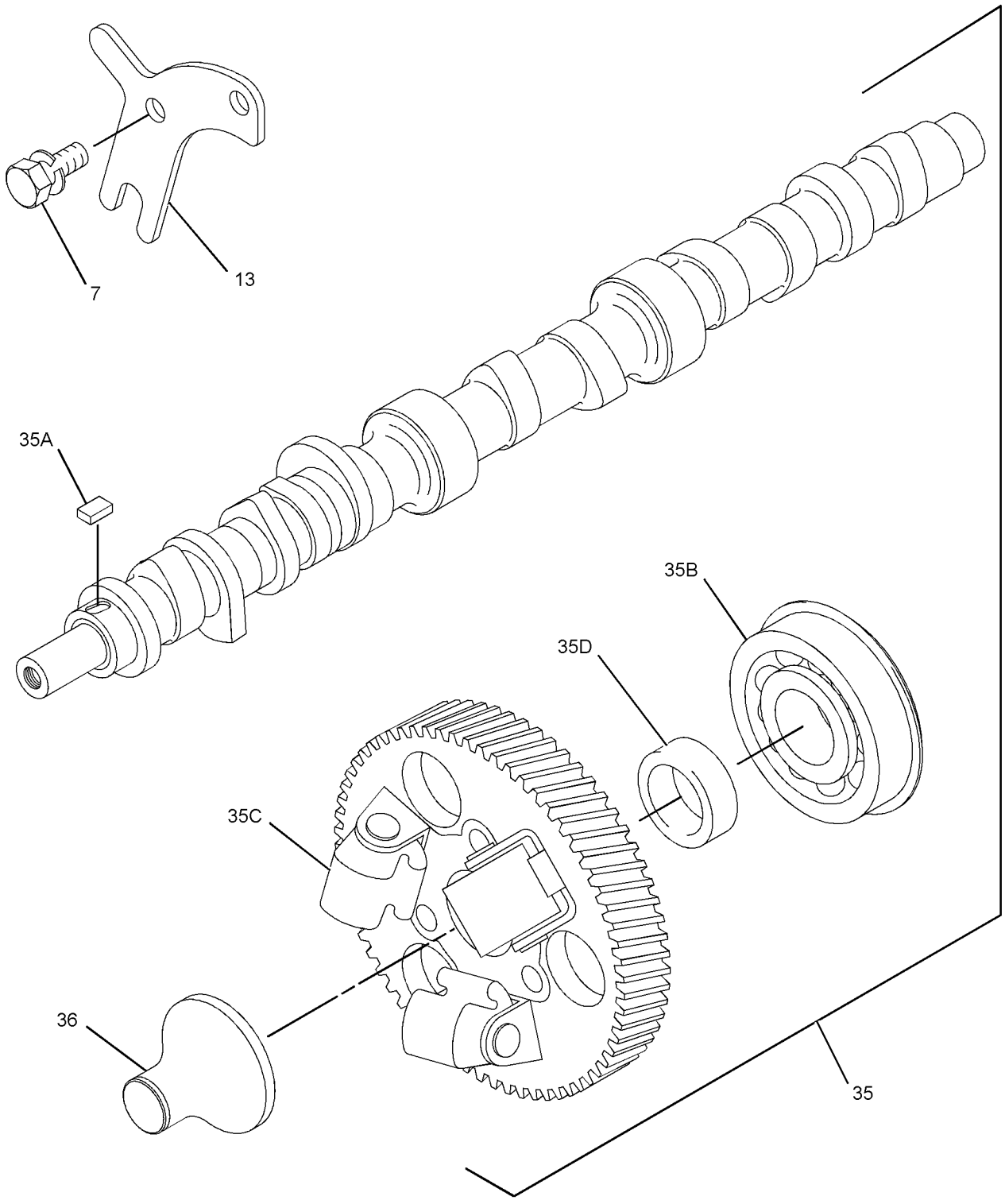

GRAPHIC #3 g01531411

321-8207 **HOUSING GP-FRONT (**contd.**)** **i04403385**

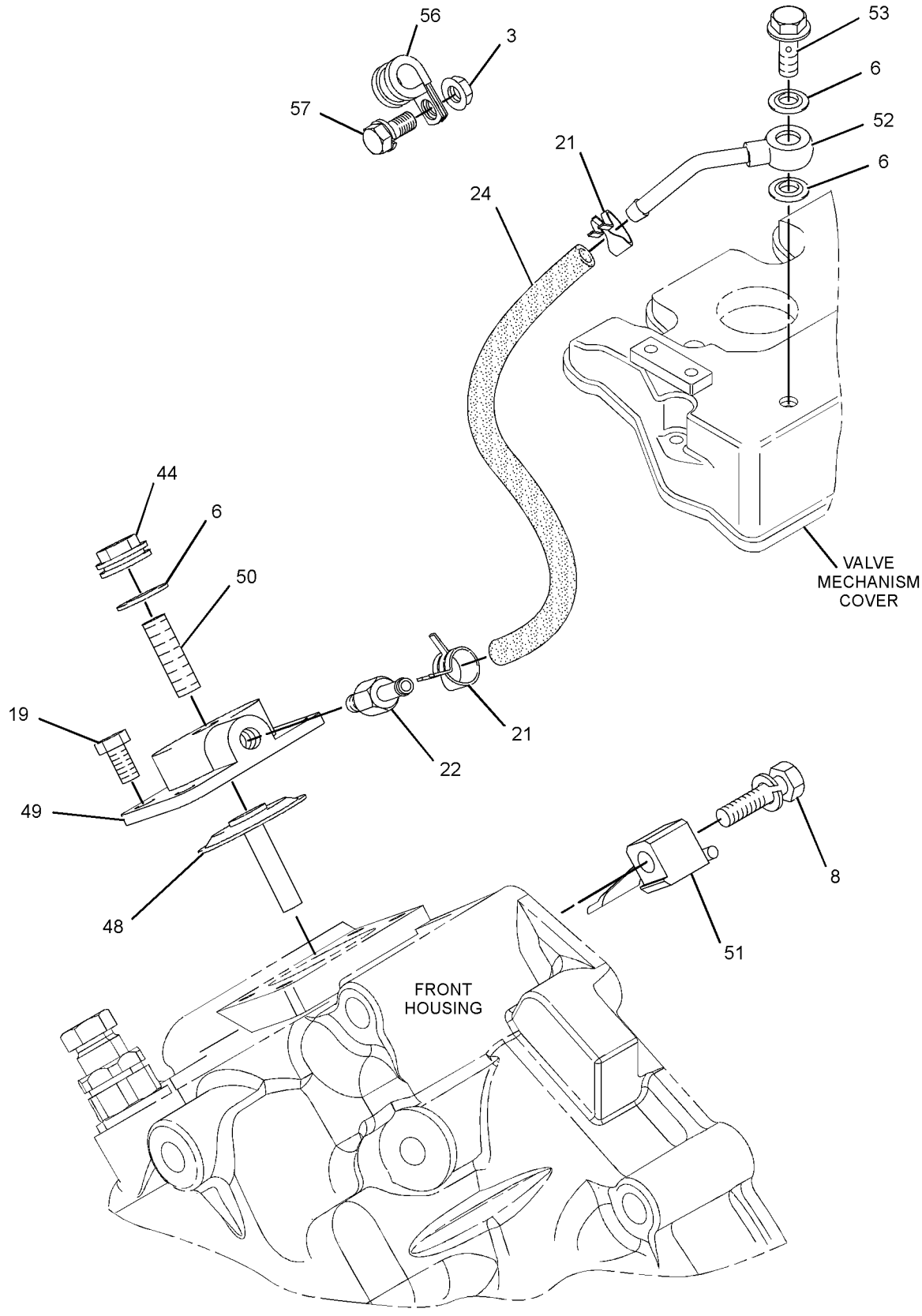

GRAPHIC #4 <END> g02133081

322-3074 HOUSING GP-FRONT

SMCS-1151, 1162, 1206 **i08308142**

NOTE	REF NO	GRAPHIC REF	PART NUMBER	QTY	PART NAME 1 2 3 4 5 6 (PRODUCT LEVEL)	SEE PAGE
M	1	2	**133-5512**	1	NUT (M6X1-THD)	
	2	2	**139-5511**	1	CAP (TAMPER RESISTANT)	
M	3	2	**153-5592**	1	NUT (M8X1.25-THD)	
M	4	1	**153-5960**	2	NUT (M6X1-THD)	
	5	1	**153-5962**	4	BOLT AS	
	6	2	**153-6415**	2	WASHER (SEAL)	
	7	3	**153-6838**	2	BOLT AS	
	8	2	**153-7983**	1	PIN	
	9	2	**154-1403**	1	SEAL-O-RING	
	10	1	**154-1673**	1	PIN	
	11	1	**154-1675**	1	SEAL	
	12	3	**154-1680**	1	PLATE	
M	13	2	**7X-2533**	2	BOLT (M6X1X35-MM)	
M	14	2	**162-2207**	1	NUT (M6X1-THD)	
	15	1	**165-2140**	6	BOLT AS	
M	16	2	**106-8916**	4	BOLT (M6X1X16-MM)	
	17	2	**217-7115**	1	CAP (TAMPER RESISTANT)	
	18	1	**423-7723**	1	GASKET	
	19	2	**335-5578**	1	BRACKET	
	20	2	**423-7724**	1	GASKET	
	21	2	**308-1882**	1	SPRING	
M	22	2	**308-1889**	1	NUT (M10X1.25-THD)	
M	23	2	**308-1892**	1	NUT (M6X1-THD)	
	24	2	**308-1897**	2	RING	
	25	2	**330-9189**	1	PLUG	
	26	3	**321-4252**	1	SLIDER	
	27	2	**308-4266**	1	SHAFT	
	28	2	**390-3731**	1	SHAFT	
	29	2	**309-6729**	1	SEAL-O-RING	
M	30	2	**495-0737**	1	BOLT (M6X0.5X19.5-MM)	
	31	3	**309-6733**	1	CAMSHAFT AS	
	31A	3	**153-6492**	1	KEY-WOODRUFF	
	31B	3	**154-4505**	1	BEARING	
	31C	3	**308-1903**	1	GEAR-CAMSHAFT (66-TEETH)	
	31D	3	**313-9323**	1	SPACER (20.5X28X9.3-MM THK)	
	32	2	**311-0655**	1	SPRING	
	33	2	**313-5832**	1	BOLT AS	
	33A	2	**153-7987**	1	WASHER (9.2X17X1.8-MM THK)	
M	33B	2	**191-9297**	1	NUT (M10X1.25-THD)	
	33C	2	**313-5833**	1	SPRING	
	34	2	**317-7195**	1	SPRING	
	35	2	**319-3252**	1	SENSOR AS-SPEED	
M	35A	2	**155-8076**	1	NUT (M4X0.4-THD)	
	36	2	**321-4249**	1	NUT	
	37	1	**464-2090**	1	HOUSING-FRONT	
	38	2	**580-0398**	1	LEVER AS-CONTROL	
	39	2	**322-7493**	1	LEVER AS-CONTROL	
	39A	2	**154-1400**	1	PIN	
	40	2	**425-7065**	1	CAP-TAMPER PROOF	

322-3074 **HOUSING GP-FRONT (**contd.**)** **i08308142**

NOTE	REF NO	GRAPHIC REF	PART NUMBER	QTY	PART NAME 1 2 3 4 5 6 (PRODUCT LEVEL)	SEE PAGE
	41	2	**334-0732**	1	ARM AS (FRONT HOUSING)	
	42	2	**336-2965**	1	SPRING	
F			**425-7065**	1	CAP-TAMPER PROOF	

F - NOT SHOWN
M - METRIC PART

322-3074 **HOUSING GP-FRONT (**contd.**)** **i08308142**

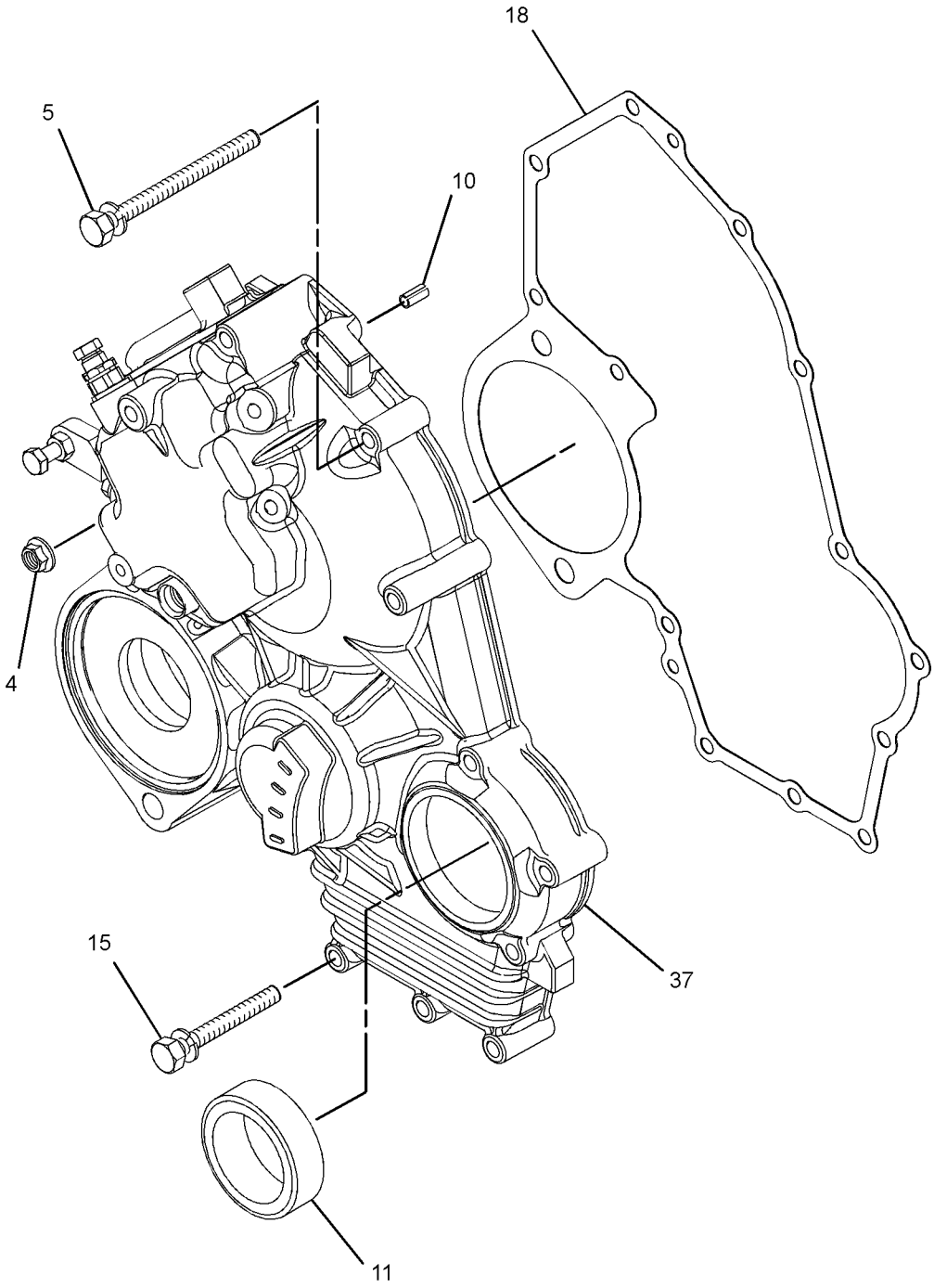

GRAPHIC #1 g06754503

322-3074 **HOUSING GP-FRONT (**contd.**)** **i08308142**

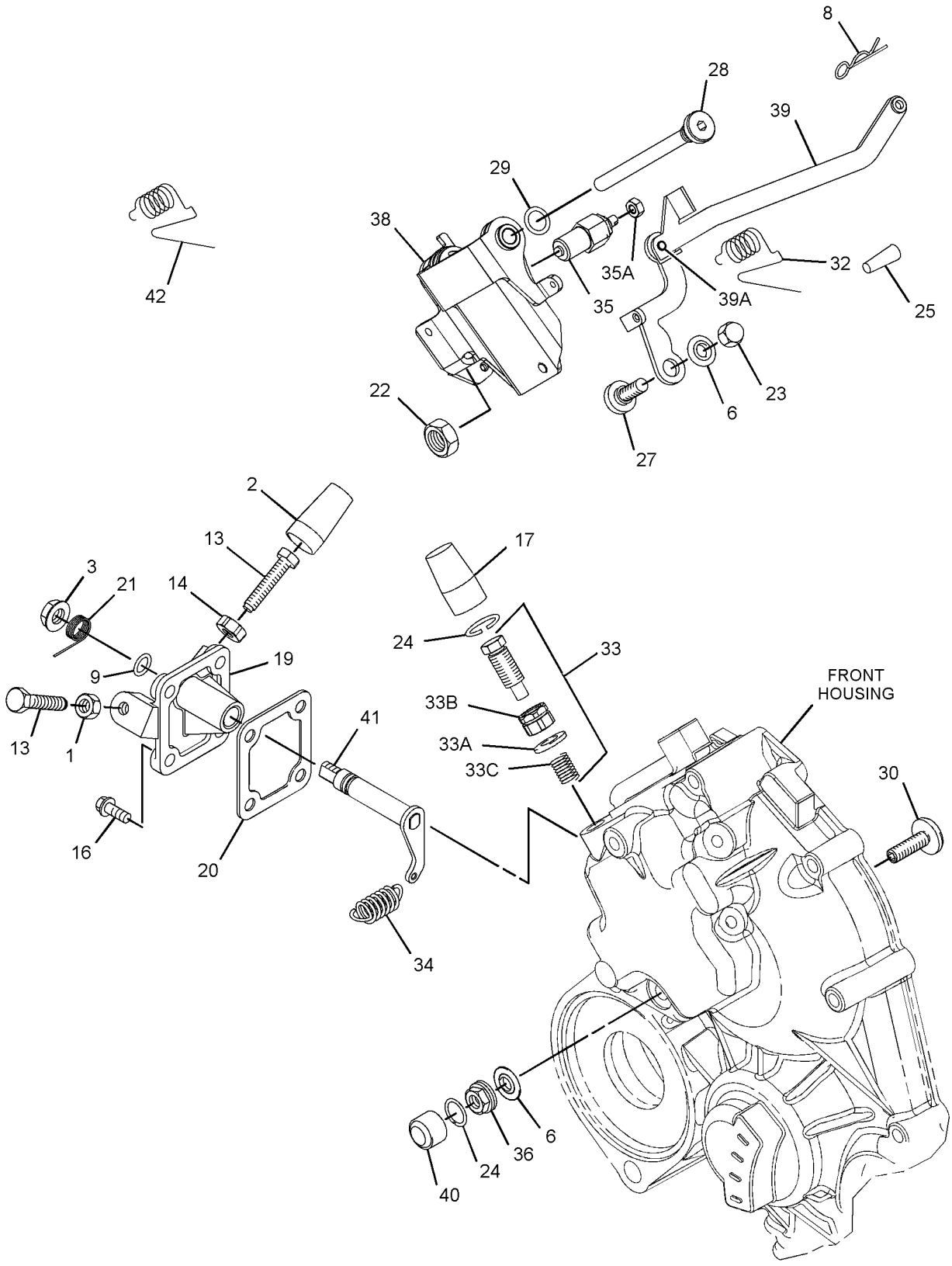

GRAPHIC #2 g06754504

322-3074 **HOUSING GP-FRONT (**contd.**)** **i08308142**

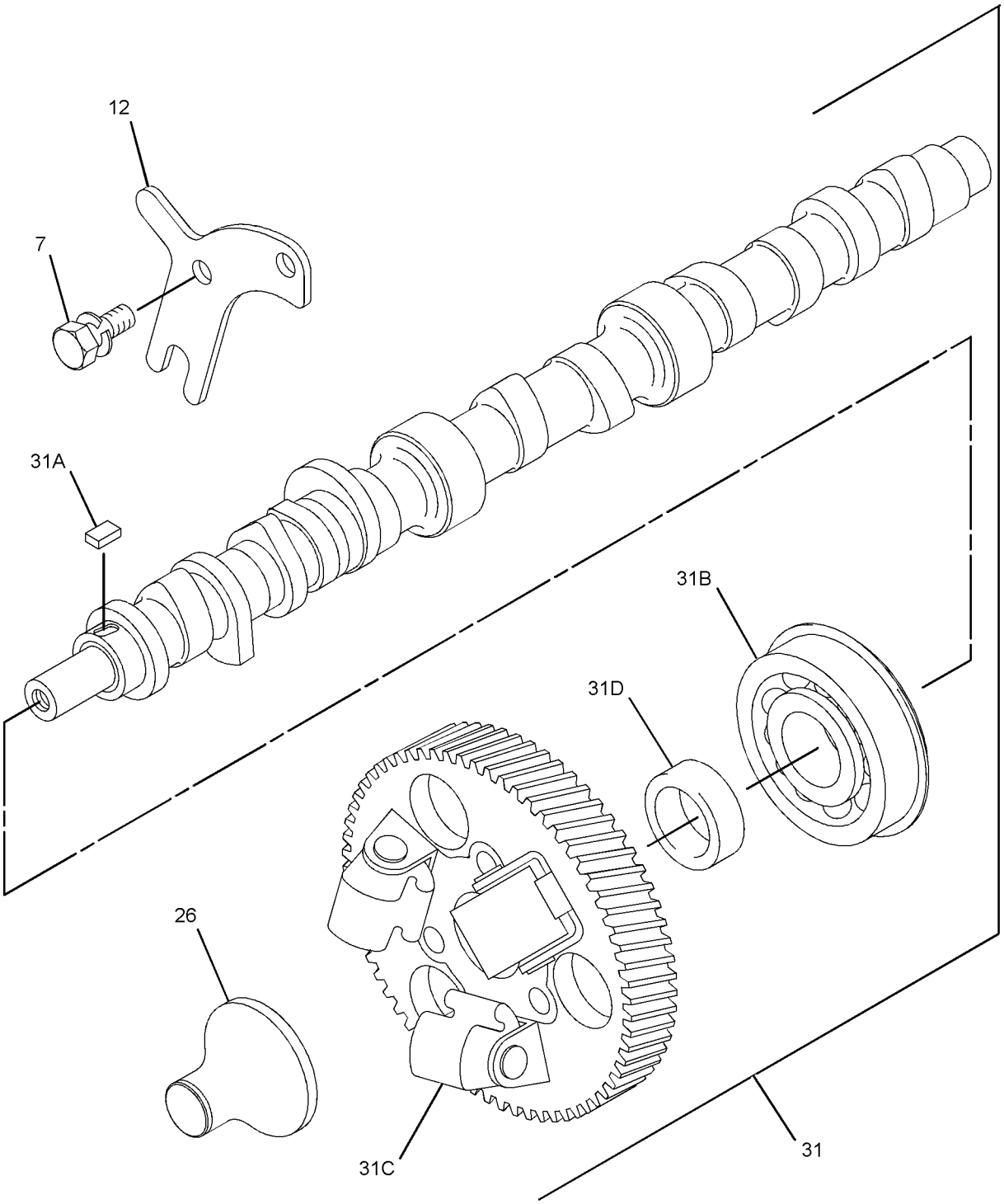

GRAPHIC #3 <END> g01635385

323-9145 HOUSING GP-FRONT

SMCS-1151, 1162, 1206 **i07322678**

NOTE	REF NO	GRAPHIC REF	PART NUMBER	QTY	PART NAME 1 2 3 4 5 6 (PRODUCT LEVEL)	SEE PAGE
M	1	1	**153-5960**	2	NUT (M6X1-THD)	
	2	1	**153-5962**	4	BOLT AS	
	3	1	**5D-1319**	1	PIN-SPRING	
	4	1	**154-1675**	1	SEAL	
	5	1	**165-2140**	7	BOLT AS	
	6	1	**423-7723**	1	GASKET	
	7	1	**328-3226**	1	HOUSING-FRONT	

M - METRIC PART

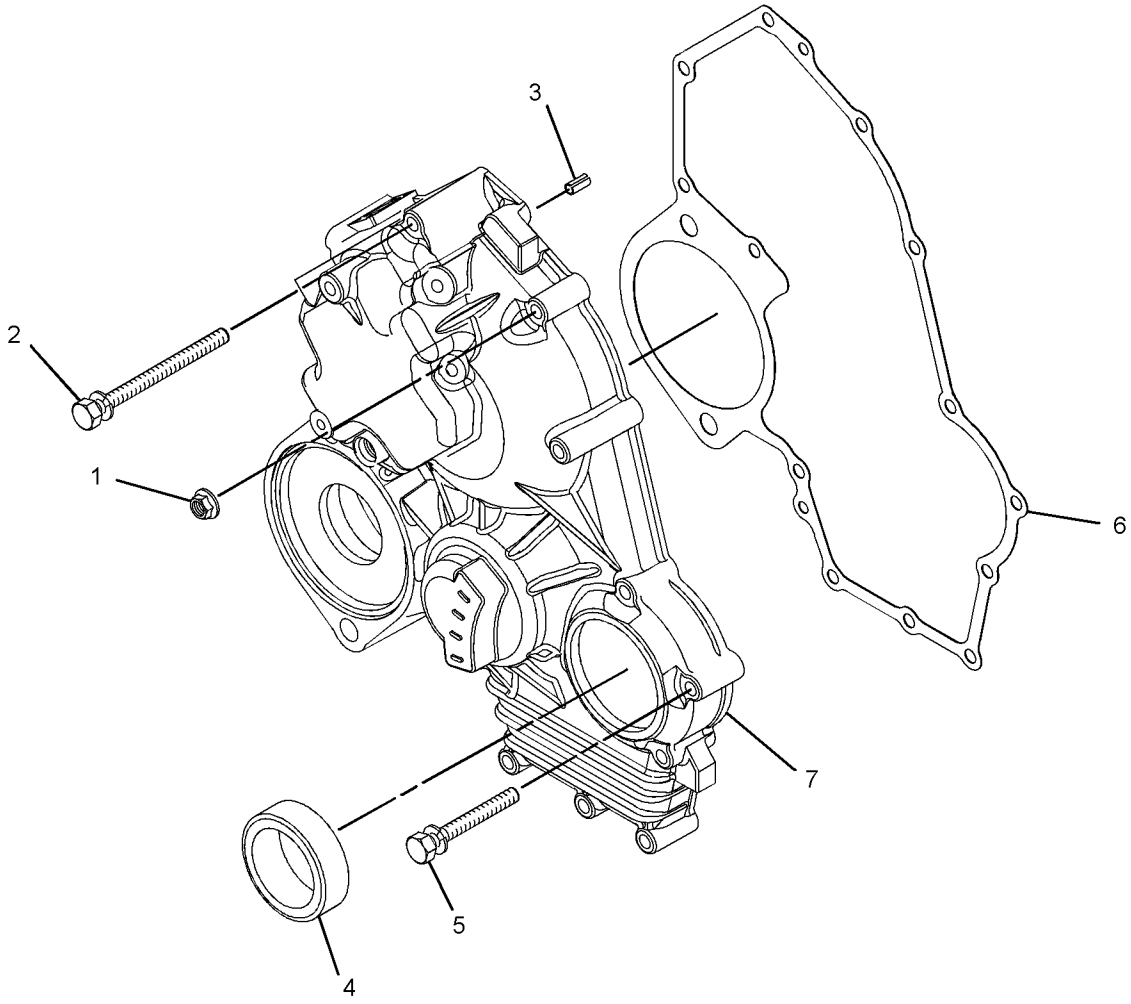

GRAPHIC #1 <END> g06281840

329-9277 HOUSING GP-FRONT

PART OF 435-1636, 506-0518, 506-0519, 512-7969 ENGINE AR-PRIMARY
TYPE 1

SMCS-1151, 1162, 1206 **i06909444**

NOTE	REF NO	GRAPHIC REF	PART NUMBER	QTY	PART NAME 1 2 3 4 5 6 (PRODUCT LEVEL)	SEE PAGE
Y	1	1	**483-1372**	1	HOUSING GP-FRONT	356
	2	1	**139-5511**	1	CAP (TAMPER RESISTANT)	
	3	1	**425-7065**	1	CAP-TAMPER PROOF	
	4	1	**390-3729**	1	LEVER-CONTROL	
	5	1	**153-7983**	1	PIN	
	6	1	**319-3253**	1	SENSOR AS-SPEED (TIMING)	
	7	1	**154-2715**	1	WASHER	
	8	1	**313-5832**	1	BOLT AS	
	8A	1	**153-7987**	1	WASHER (9.2X17X1.8-MM THK)	
M	8B	1	**191-9297**	1	NUT (M10X1.25-THD)	
	8C	1	**313-5833**	1	SPRING	
	9	1	**336-2965**	1	SPRING	
	10	1	**308-1897**	2	RING	
	11	1	**217-7115**	1	CAP (TAMPER RESISTANT)	
M	12	1	**308-1889**	1	NUT (M10X1.25-THD)	
	13	1	**308-1875**	1	SEAL-O-RING	

M - METRIC PART
Y - SEPARATE ILLUSTRATION

329-9277 **HOUSING GP-FRONT (**contd.**)** **i06909444**

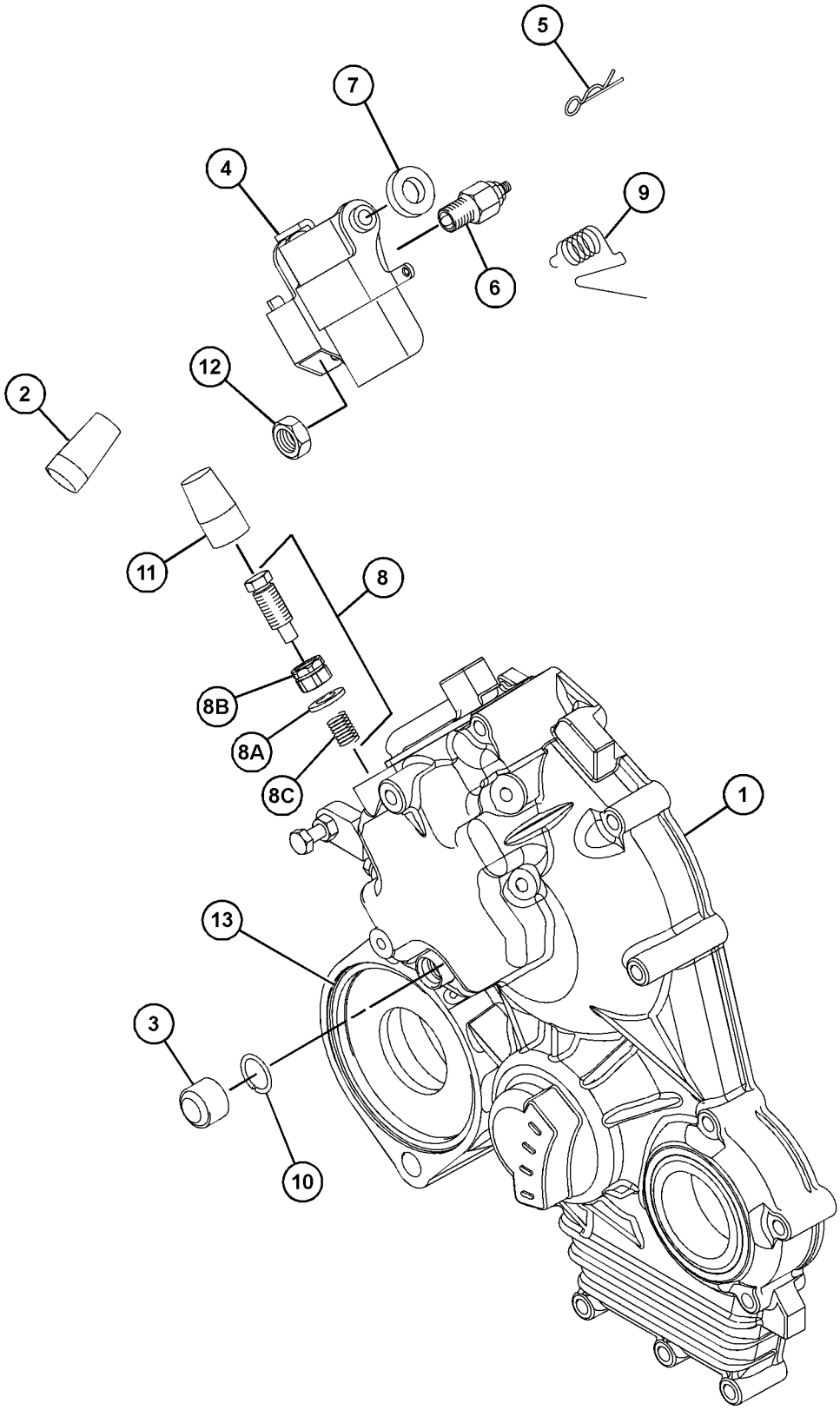

GRAPHIC #1 <END> g06160071

329-9277 HOUSING GP-FRONT

PART OF 435-1636, 506-0518, 506-0519, 512-7969, 516-2639, 557-6086 ENGINE AR-PRIMARY
TYPE 2

SMCS-1151, 1162, 1206

i08583677

NOTE	REF NO	GRAPHIC REF	PART NUMBER	QTY	PART NAME 1 2 3 4 5 6 (PRODUCT LEVEL)	SEE PAGE
Y	1	1	**483-1372**	1	HOUSING GP-FRONT	356
	2	1	**139-5511**	1	CAP (TAMPER RESISTANT)	
C	3	1	**503-9707**	1	CAP	
	4	1	**580-0398**	1	LEVER AS-CONTROL	
	5	1	**153-7983**	1	PIN	
	6	1	**319-3253**	1	SENSOR AS-SPEED (TIMING)	
M	6A	1	**5C-8312**	1	NUT (M4X0.7-THD)	
	7	1	**154-2715**	1	WASHER	
	8	1	**313-5832**	1	BOLT AS	
	8A	1	**153-7987**	1	WASHER (9.2X17X1.8-MM THK)	
M	8B	1	**191-9297**	1	NUT (M10X1.25-THD)	
	8C	1	**313-5833**	1	SPRING	
	9	1	**336-2965**	1	SPRING	
C	10	1	**308-1897**	1	RING	
	11	1	**217-7115**	1	CAP (TAMPER RESISTANT)	
M	12	1	**308-1889**	1	NUT (M10X1.25-THD)	
	13	1	**308-1875**	1	SEAL-O-RING	
C	14	1	**502-5421**	1	PIN	

C - CHANGE FROM PREVIOUS TYPE
M - METRIC PART
Y - SEPARATE ILLUSTRATION

329-9277 **HOUSING GP-FRONT (**contd.**)** **i08583677**

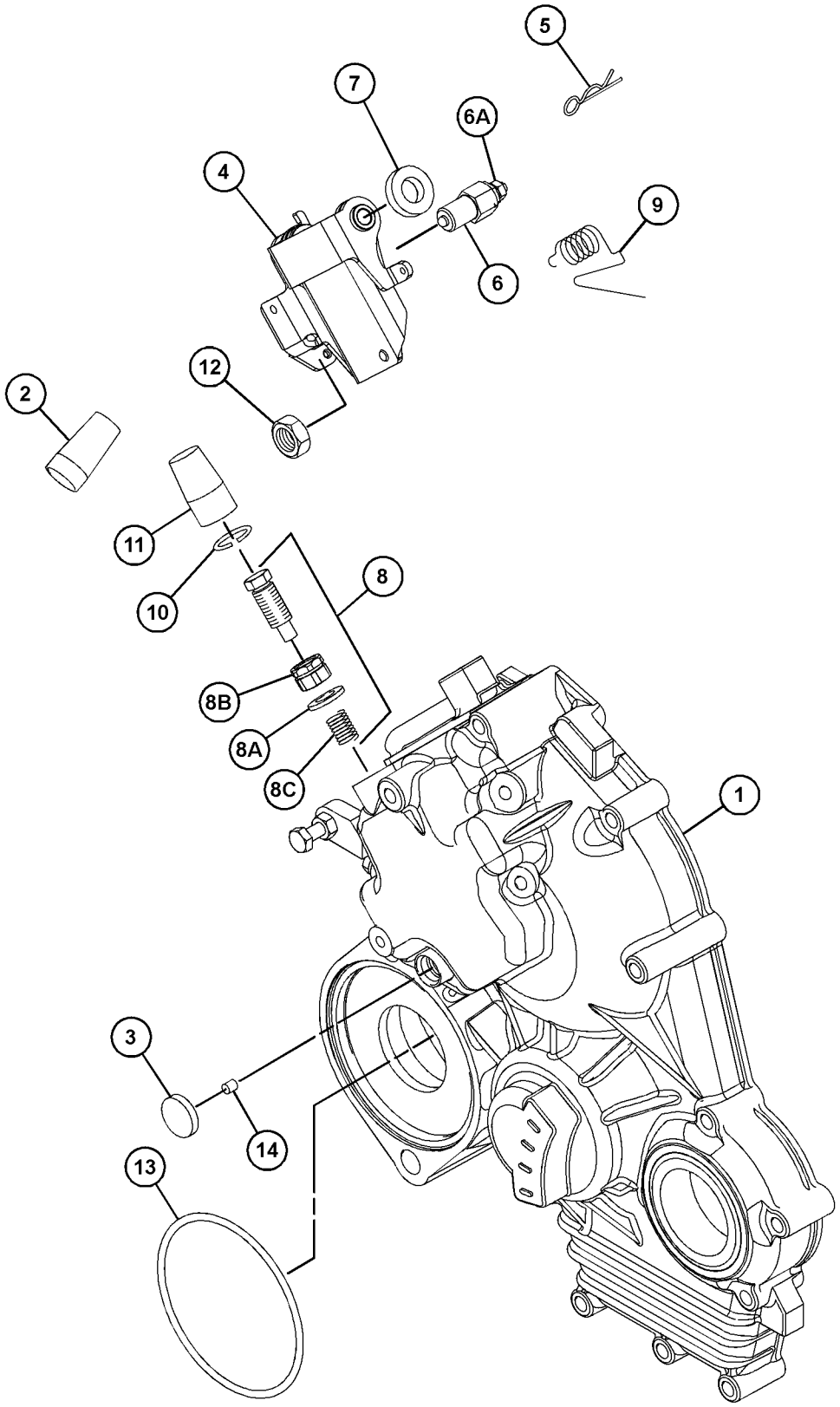

GRAPHIC #1 <END> g07501173

332-1362 HOUSING GP-FRONT

PART OF 514-6556 ENGINE AR-PRIMARY

SMCS-1151, 1162, 1206 **i09578121**

NOTE	REF NO	GRAPHIC REF	PART NUMBER	QTY	PART NAME 1 2 3 4 5 6 (PRODUCT LEVEL)	SEE PAGE
M	1	1	**153-5960**	1	NUT (M6X1-THD)	
	2	1	**153-5962**	4	BOLT AS	
	3	1	**5D-1319**	1	PIN-SPRING	
	4	1	**154-1675**	1	SEAL	
	5	1	**165-2140**	8	BOLT AS	
	6	1	**592-3241**	1	GASKET-GEAR CASE	
	7	1	**464-2090**	1	HOUSING-FRONT	

M - METRIC PART

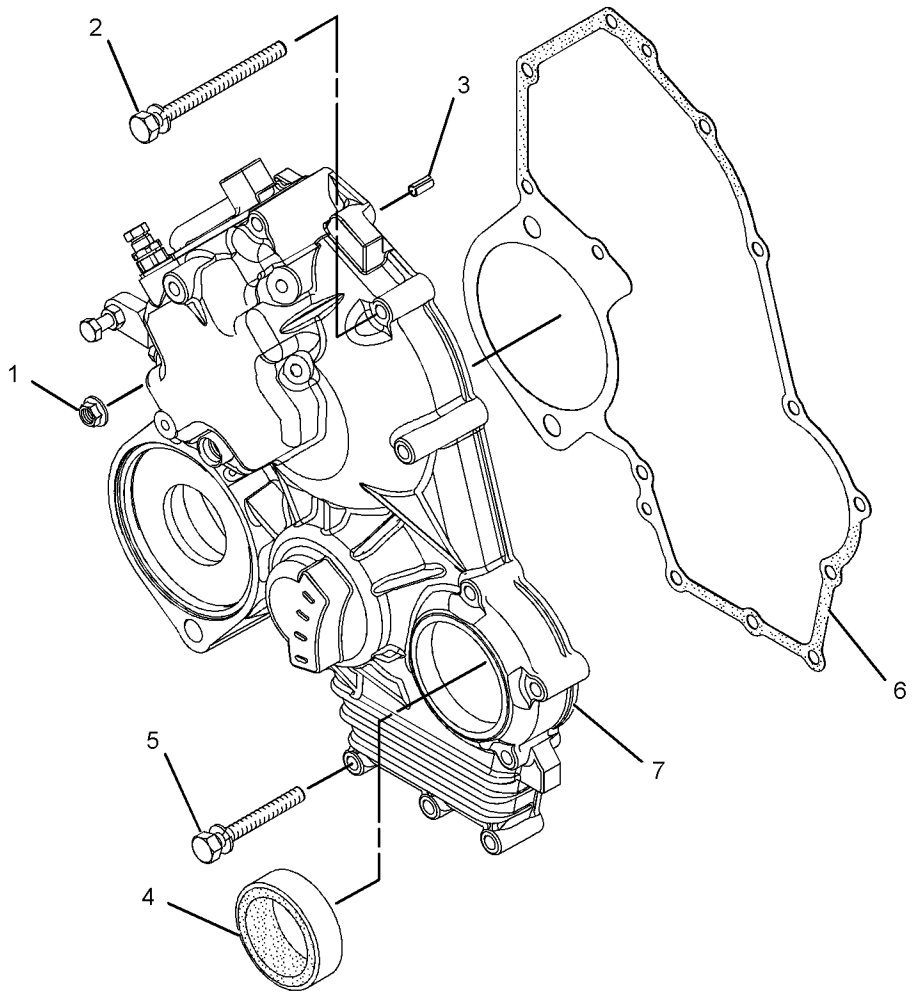

GRAPHIC #1 <END> g01542613

341-1357 HOUSING GP-FRONT

S/N: C6M961-UP

SMCS-1151, 1162, 1206 **i03900494**

NOTE	REF NO	GRAPHIC REF	PART NUMBER	QTY	PART NAME 1 2 3 4 5 6 (PRODUCT LEVEL)	SEE PAGE
M	1	1	**153-5960**	2	NUT (M6X1-THD)	
	2	1	**153-5962**	4	BOLT AS	
	3	1	**154-1673**	1	PIN	
	4	1	**154-1675**	1	SEAL	
	5	1	**165-2140**	7	BOLT AS	
	6	1	**308-1871**	1	GASKET	
	7	1	**322-7490**	1	HOUSING-FRONT	
M	8	1	**6I-0846**	1	BOLT (M6X1X14-MM)	
	9	1	**153-6415**	1	WASHER (SEAL)	

M - METRIC PART

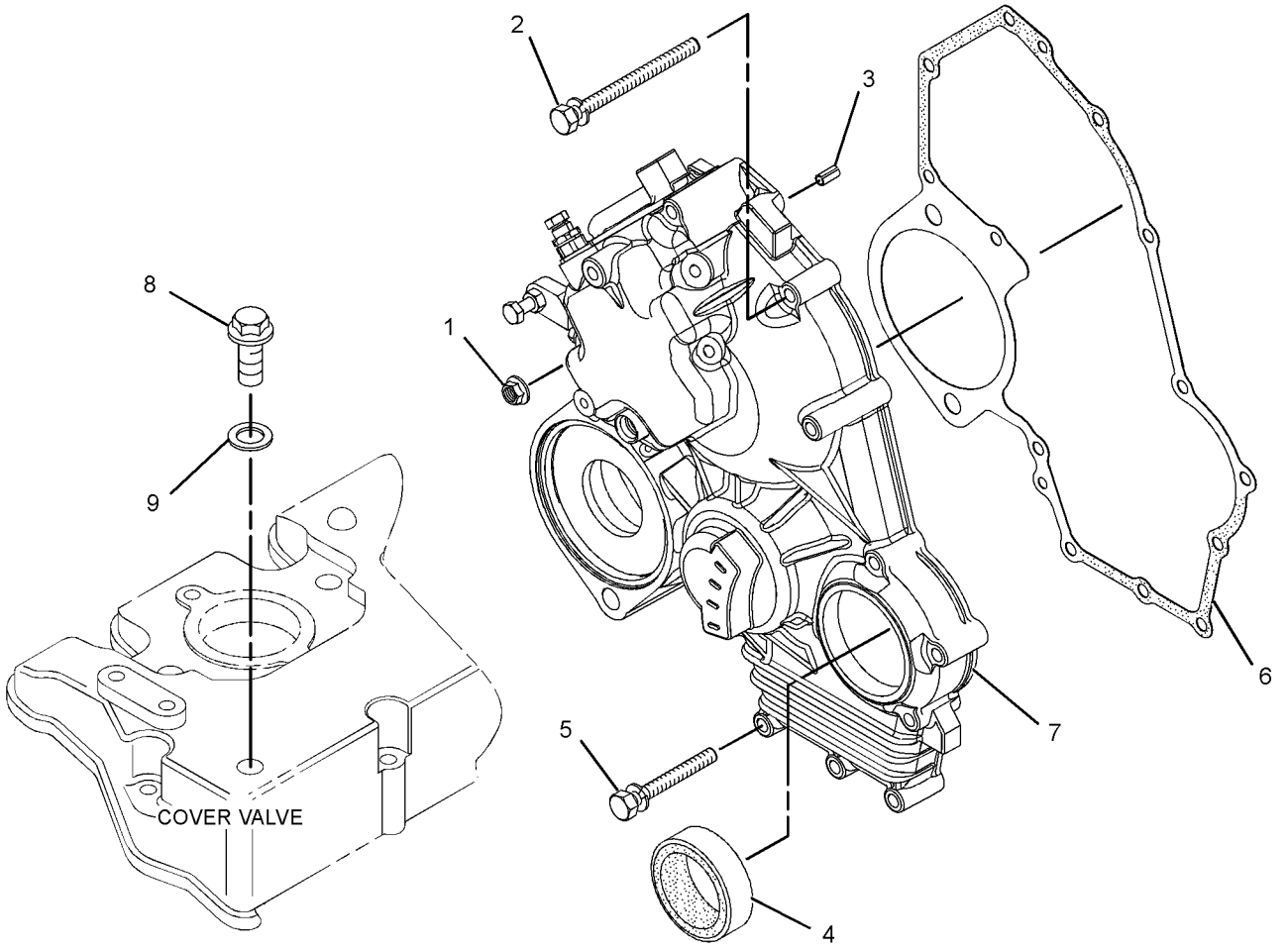

GRAPHIC #1 <END> g02154657

344-5469 HOUSING GP-FRONT

SMCS-1151, 1162, 1206 **i03577062**

NOTE	REF NO	GRAPHIC REF	PART NUMBER	QTY	PART NAME 1 2 3 4 5 6 (PRODUCT LEVEL)	SEE PAGE
M	1	1	**153-5960**	2	NUT (M6X1-THD)	
	2	1	**153-5962**	4	BOLT AS	
	3	1	**154-1673**	1	PIN	
	4	1	**154-1675**	1	SEAL	
	5	1	**165-2140**	7	BOLT AS	
	6	1	**308-1871**	1	GASKET	
	7	1	**328-3226**	1	HOUSING-FRONT	

M - METRIC PART

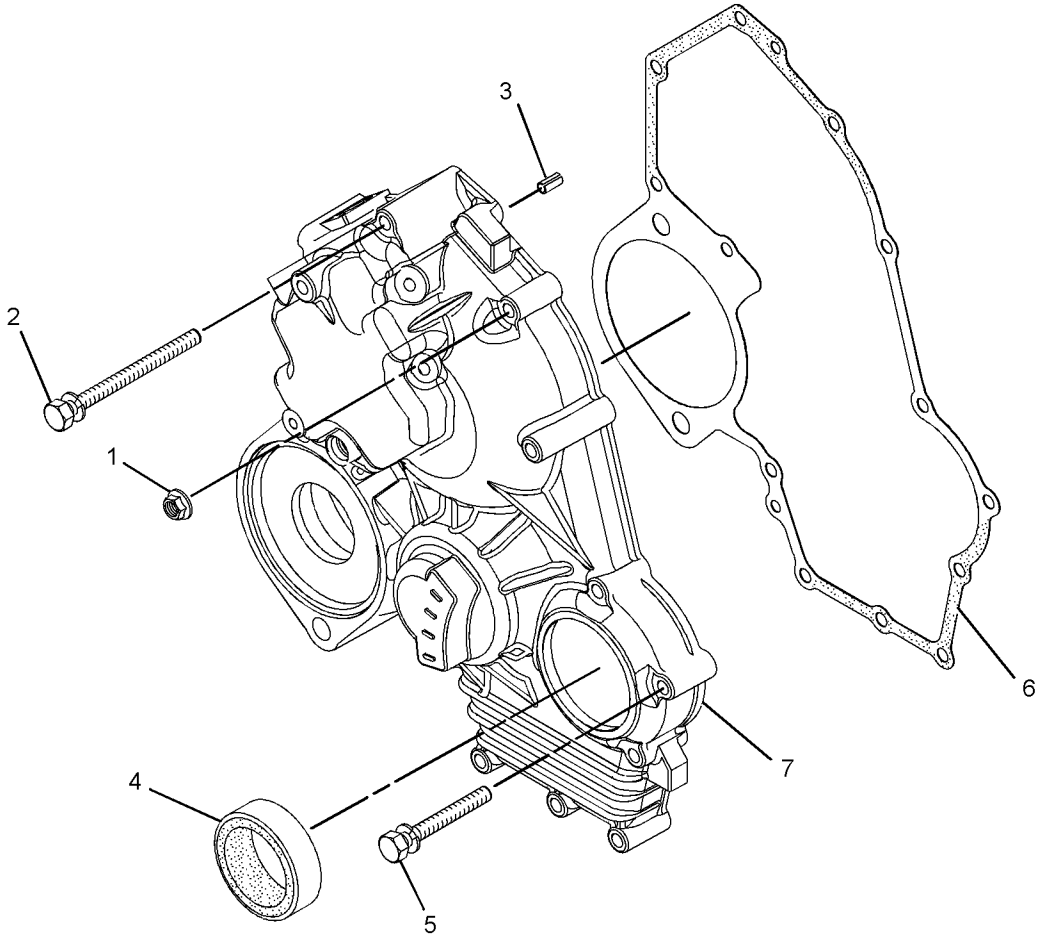

GRAPHIC #1 <END> g01646598

354-1245 HOUSING GP-FRONT

PART OF 435-1645, 435-1649 CYLINDER BLOCK GP-LONG, 433-1379, 433-1380 ENGINE AR, 435-1636, 435-1641, 435-1642, 435-1646, 435-1658, 499-6420, 504-4602, 512-7969, 518-0165 ENGINE AR-PRIMARY
ALSO AN ATTACHMENT

SMCS-1151, 1162, 1206 **i07474335**

NOTE	REF NO	GRAPHIC REF	PART NUMBER	QTY	PART NAME 1 2 3 4 5 6 (PRODUCT LEVEL)	SEE PAGE
M	1	1	**175-7141**	2	NUT-HEX FLANGE (M10X1.5-THD)	
M	2	1	**164-7468**	2	BOLT (M10X1.5X95-MM)	
	3	1	**308-1875**	3	SEAL-O-RING	
	4	1	**321-5907**	1	PLATE	
	5	1	**328-3229**	2	COVER	
	6	1	**328-3230**	2	BALL BEARING	
C	7	1	**488-0405**	1	GEAR-DRIVE (48-TEETH)	
	8	1	**308-1874**	1	HOLDER	

C - CHANGE FROM PREVIOUS TYPE
M - METRIC PART

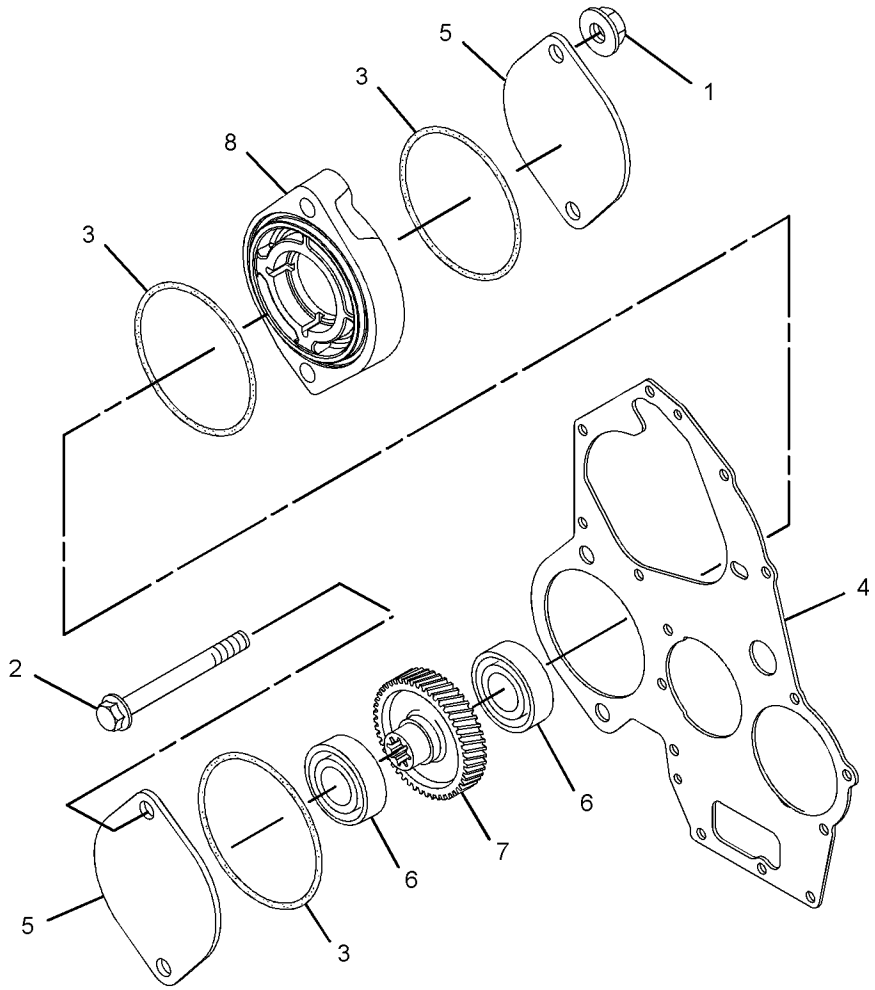

GRAPHIC #1 <END> g03336152

364-2520 HOUSING GP-FRONT

PART OF 435-1647 ENGINE AR-PRIMARY

SMCS-1151, 1162, 1206 **i09578151**

NOTE	REF NO	GRAPHIC REF	PART NUMBER	QTY	PART NAME 1 2 3 4 5 6 (PRODUCT LEVEL)	SEE PAGE
M	1	1	**153-5960**	2	NUT (M6X1-THD)	
	2	1	**153-5962**	4	BOLT AS	
	3	1	**5D-1319**	1	PIN-SPRING	
	4	1	**154-1675**	1	SEAL	
	5	1	**165-2140**	7	BOLT AS	
	6	1	**592-3241**	1	GASKET-GEAR CASE	
	7	1	**483-1210**	1	CASE-GEAR	

M - METRIC PART

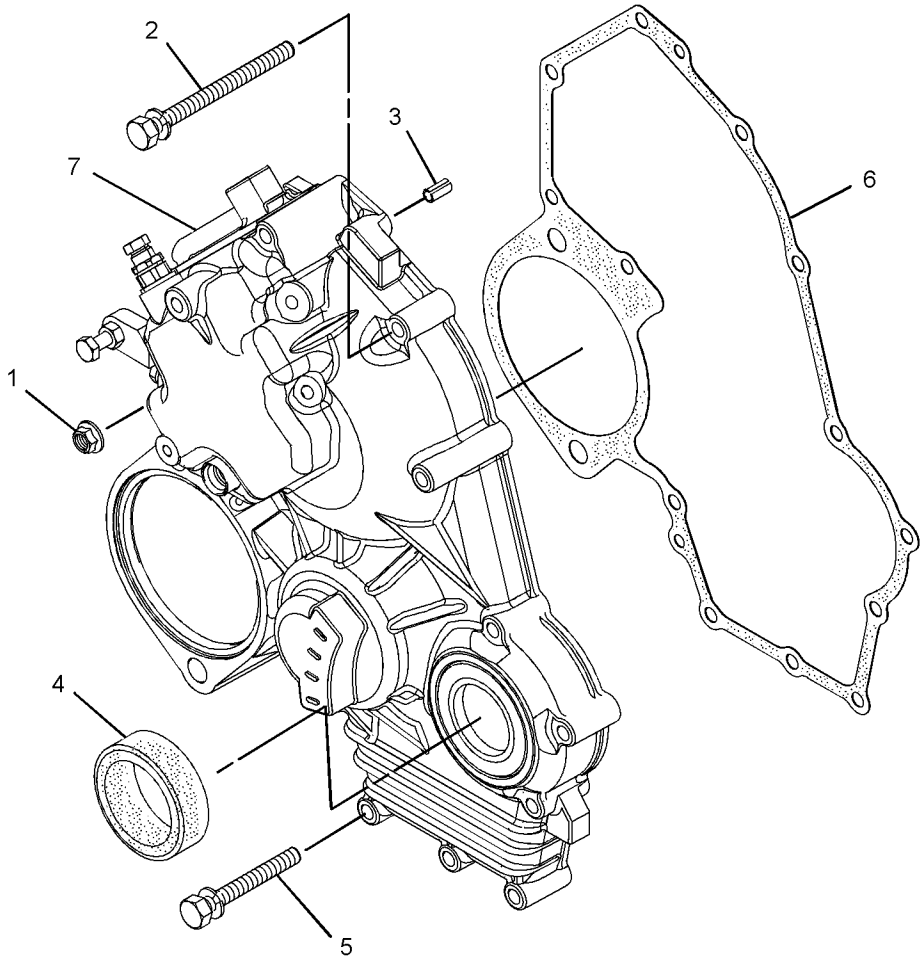

GRAPHIC #1 <END> g02334639

365-4282 HOUSING GP-FRONT

SMCS-1151, 1162, 1206 **i09600176**

NOTE	REF NO	GRAPHIC REF	PART NUMBER	QTY	PART NAME 1 2 3 4 5 6 (PRODUCT LEVEL)	SEE PAGE
M	1	1	**153-5960**	1	NUT (M6X1-THD)	
	2	1	**153-5962**	4	BOLT AS	
	3	1	**5D-1319**	1	PIN-SPRING	
	4	1	**154-1675**	1	SEAL	
	5	1	**165-2140**	7	BOLT AS	
	6	1	**592-3241**	1	GASKET-GEAR CASE	
	7	1	**483-1210**	1	CASE-GEAR	

M - METRIC PART

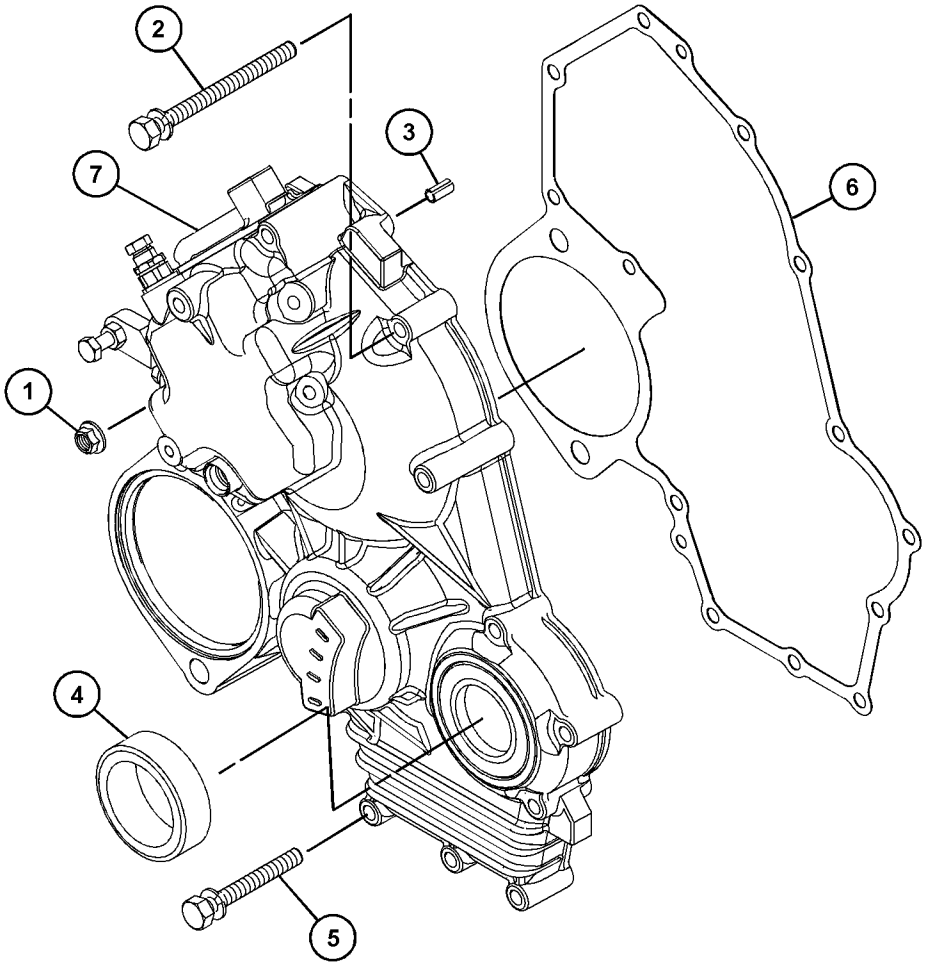

GRAPHIC #1 <END> g07646676

365-4288 HOUSING GP-FRONT

SMCS-1151, 1162, 1206 **i09596778**

NOTE	REF NO	GRAPHIC REF	PART NUMBER	QTY	PART NAME 1 2 3 4 5 6 (PRODUCT LEVEL)	SEE PAGE
M	1	1	**153-5960**	2	NUT (M6X1-THD)	
	2	1	**153-5962**	4	BOLT AS	
	3	1	**5D-1319**	1	PIN-SPRING	
	4	1	**154-1675**	1	SEAL	
	5	1	**165-2140**	7	BOLT AS	
	6	1	**592-3241**	1	GASKET-GEAR CASE	

M - METRIC PART

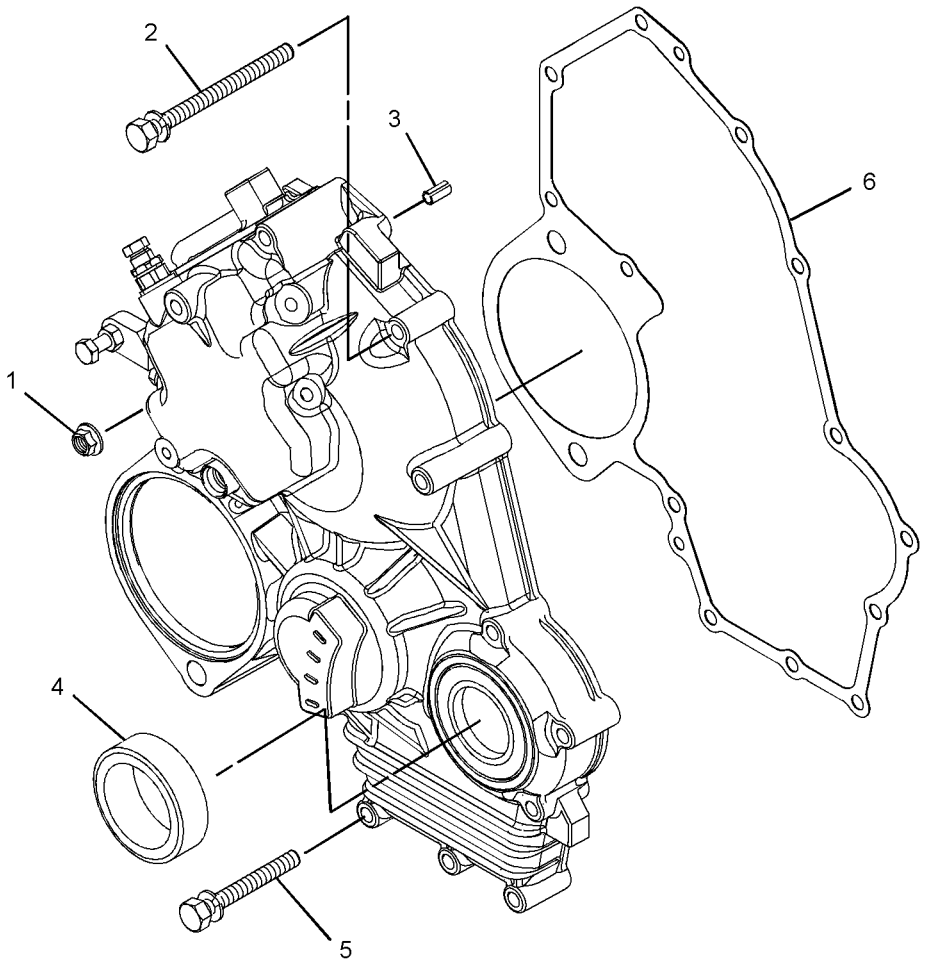

GRAPHIC #1 <END> g06051869

370-7831 HOUSING GP-FRONT

S/N: C6M746-UP

SMCS-1151, 1162, 1206 **i09575899**

NOTE	REF NO	GRAPHIC REF	PART NUMBER	QTY	PART NAME 1 2 3 4 5 6 (PRODUCT LEVEL)	SEE PAGE
M	1	1	**153-5960**	1	NUT (M6X1-THD)	
	2	1	**153-5962**	4	BOLT AS	
	3	1	**5D-1319**	1	PIN-SPRING	
	4	1	**154-1675**	1	SEAL	
	5	1	**165-2140**	7	BOLT AS	
	6	1	**592-3241**	1	GASKET-GEAR CASE	
	7	1	**483-1210**	1	CASE-GEAR	

M - METRIC PART

370-7831 **HOUSING GP-FRONT (**contd.**)** **i09575899**

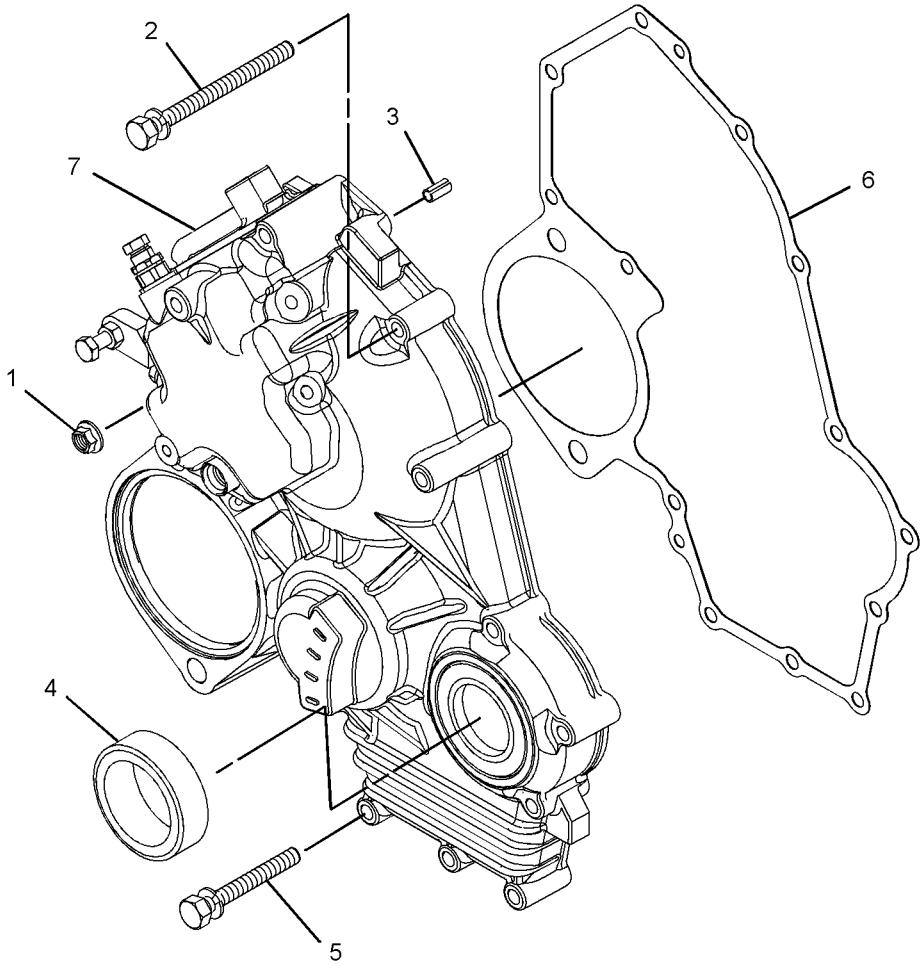

GRAPHIC #1 <END> g07623623

420-3210 HOUSING GP-FRONT

S/N: C6M2523-UP

SMCS-1151, 1162, 1206 **i09576095**

NOTE	REF NO	GRAPHIC REF	PART NUMBER	QTY	PART NAME 1 2 3 4 5 6 (PRODUCT LEVEL)	SEE PAGE
M	1	1	**153-5960**	2	NUT (M6X1-THD)	
	2	1	**153-5962**	4	BOLT AS	
	3	1	**5D-1319**	1	PIN-SPRING	
	4	1	**154-1675**	1	SEAL	
	5	1	**165-2140**	8	BOLT AS	
	6	1	**592-3241**	1	GASKET-GEAR CASE	
	7	1	**464-2090**	1	HOUSING-FRONT	

M - METRIC PART

420-3210 **HOUSING GP-FRONT (**contd.**)** **i09576095**

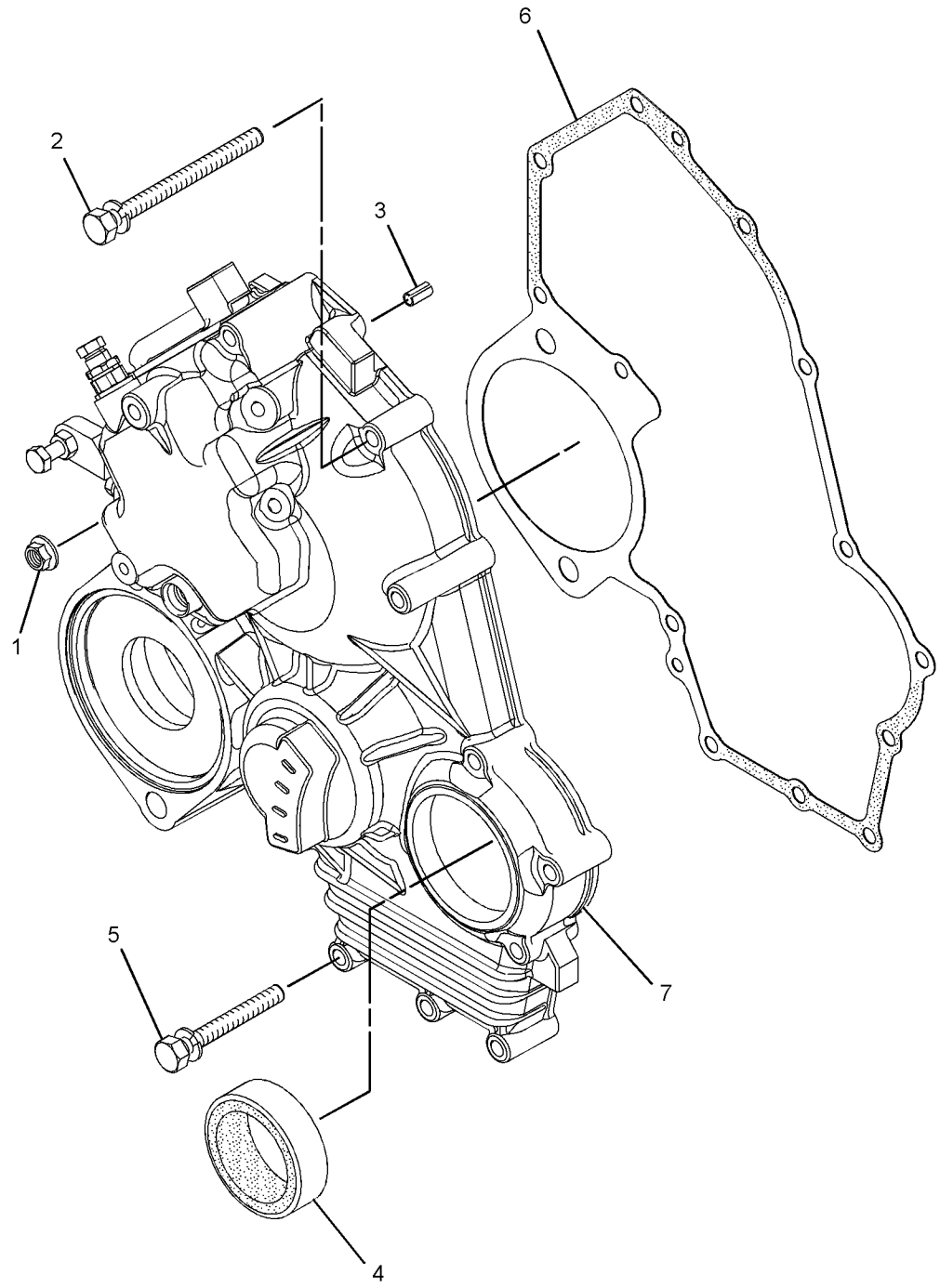

GRAPHIC #1 <END> g01624458

420-6417 HOUSING GP-FRONT

SMCS-1151, 1162, 1206 **i09596768**

NOTE	REF NO	GRAPHIC REF	PART NUMBER	QTY	PART NAME 1 2 3 4 5 6 (PRODUCT LEVEL)	SEE PAGE
M	1	1	**153-5960**	1	NUT (M6X1-THD)	
	2	1	**153-5962**	4	BOLT AS	
	3	1	**5D-1319**	1	PIN-SPRING	
	4	1	**154-1675**	1	SEAL	
	5	1	**165-2140**	7	BOLT AS	
	6	1	**592-3241**	1	GASKET-GEAR CASE	
	7	1	**464-2090**	1	HOUSING-FRONT	

M - METRIC PART

420-6417 **HOUSING GP-FRONT (**contd.**)** **i09596768**

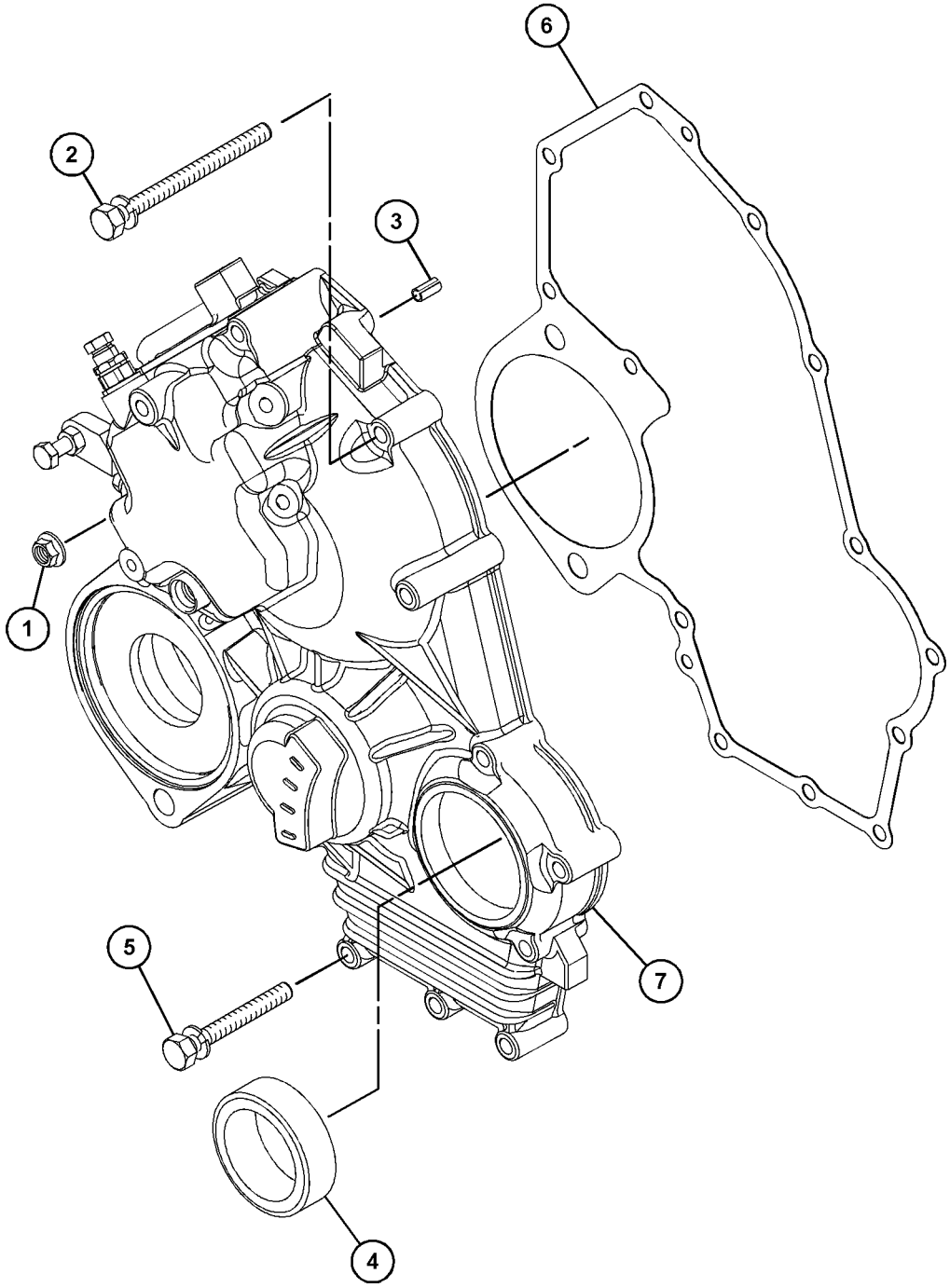

GRAPHIC #1 <END> g07561751

441-6512 HOUSING GP-FRONT

SMCS-1151, 1162, 1206 **i06217259**

NOTE	REF NO	GRAPHIC REF	PART NUMBER	QTY	PART NAME 1 2 3 4 5 6 (PRODUCT LEVEL)	SEE PAGE
M	1	1	**153-5960**	2	NUT (M6X1-THD)	
	2	1	**153-5962**	4	BOLT AS	
	3	1	**5D-1319**	1	PIN-SPRING	
	4	1	**154-1675**	1	SEAL	
	5	1	**165-2140**	7	BOLT AS	
	6	1	**423-7723**	1	GASKET	
	7	1	**464-2090**	1	HOUSING-FRONT	

M - METRIC PART

441-6512 **HOUSING GP-FRONT (**contd.**)** **i06217259**

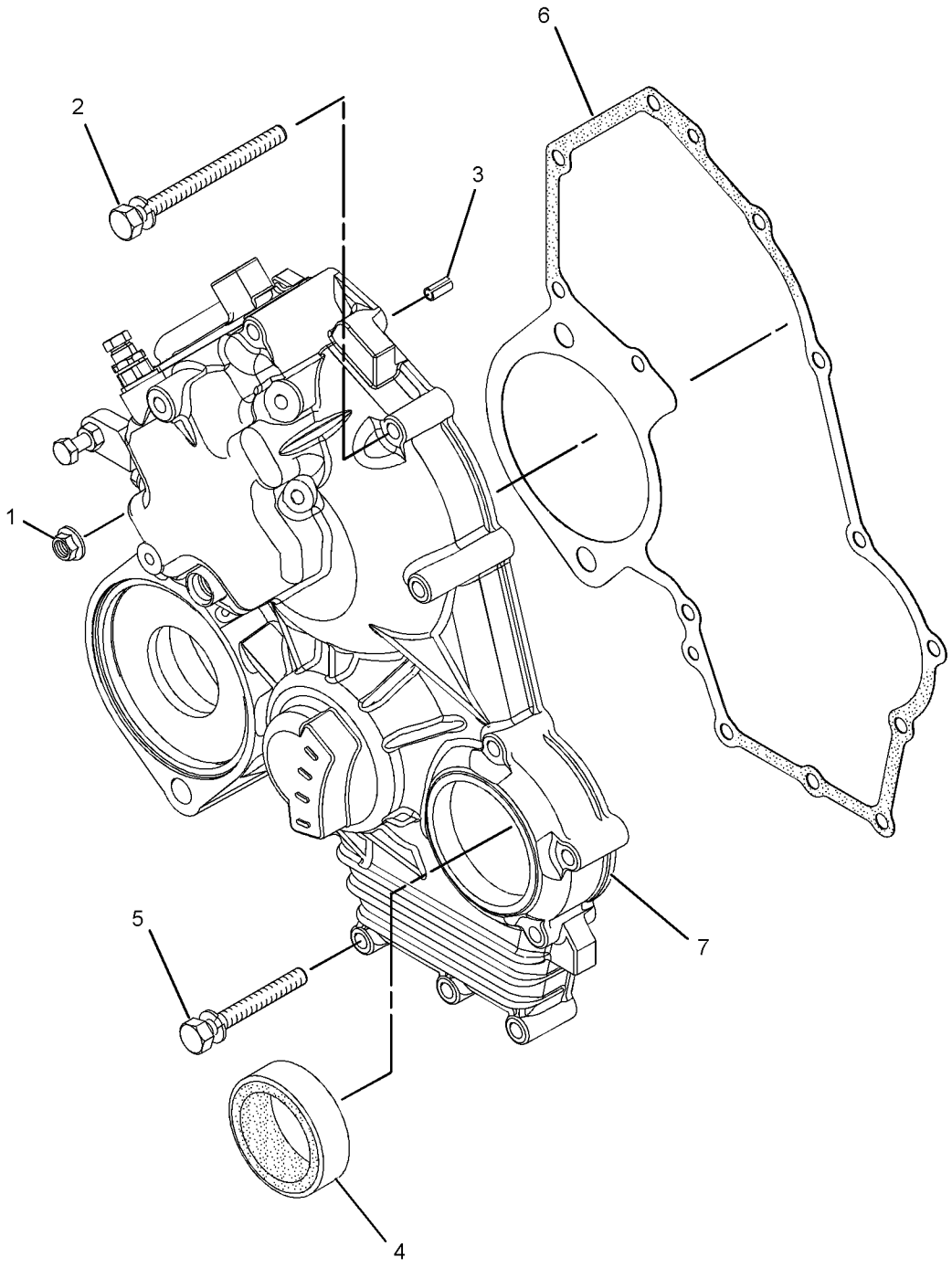

GRAPHIC #1 <END> g03734877

454-6141 HOUSING GP-FRONT

PART OF 417-7273, 435-1642, 489-4263, 506-0520, 513-2239, 557-7471 ENGINE AR-PRIMARY

SMCS-1151, 1162, 1206 **i09576123**

NOTE	REF NO	GRAPHIC REF	PART NUMBER	QTY	PART NAME 1 2 3 4 5 6 (PRODUCT LEVEL)	SEE PAGE
M	1	1	**153-5960**	2	NUT (M6X1-THD)	
	2	1	**153-5962**	4	BOLT AS	
	3	1	**5D-1319**	1	PIN-SPRING	
	4	1	**154-1675**	1	SEAL	
	5	1	**165-2140**	7	BOLT AS	
	6	1	**592-3241**	1	GASKET-GEAR CASE	
	7	1	**464-2090**	1	HOUSING-FRONT	

M - METRIC PART

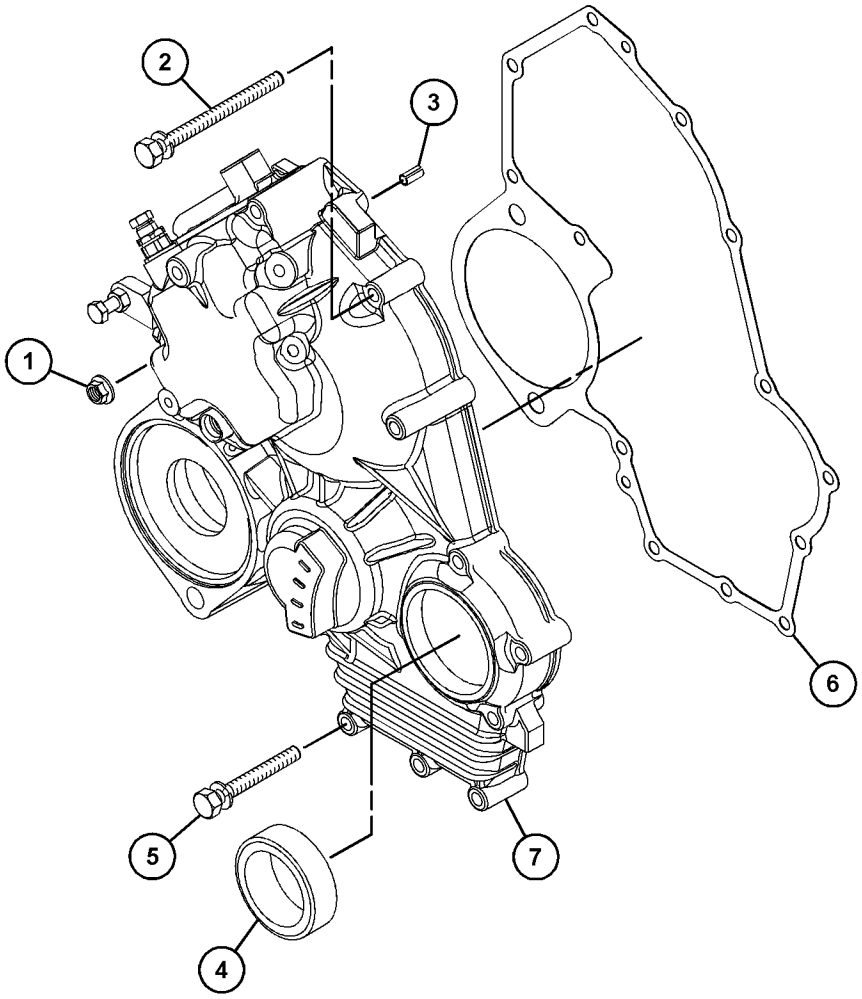

GRAPHIC #1 <END> g03844500

465-2205 HOUSING GP-FRONT

SMCS-1151, 1162, 1206 **i09605190**

NOTE	REF NO	GRAPHIC REF	PART NUMBER	QTY	PART NAME 1 2 3 4 5 6 (PRODUCT LEVEL)	SEE PAGE
M	1	1	**153-5960**	2	NUT (M6X1-THD)	
	2	1	**153-5962**	4	BOLT AS	
	3	1	**5D-1319**	1	PIN-SPRING	
	4	1	**154-1675**	1	SEAL	
	5	1	**165-2140**	7	BOLT AS	
	6	1	**592-3241**	1	GASKET-GEAR CASE	
	7	1	**483-1210**	1	CASE-GEAR	

M - METRIC PART

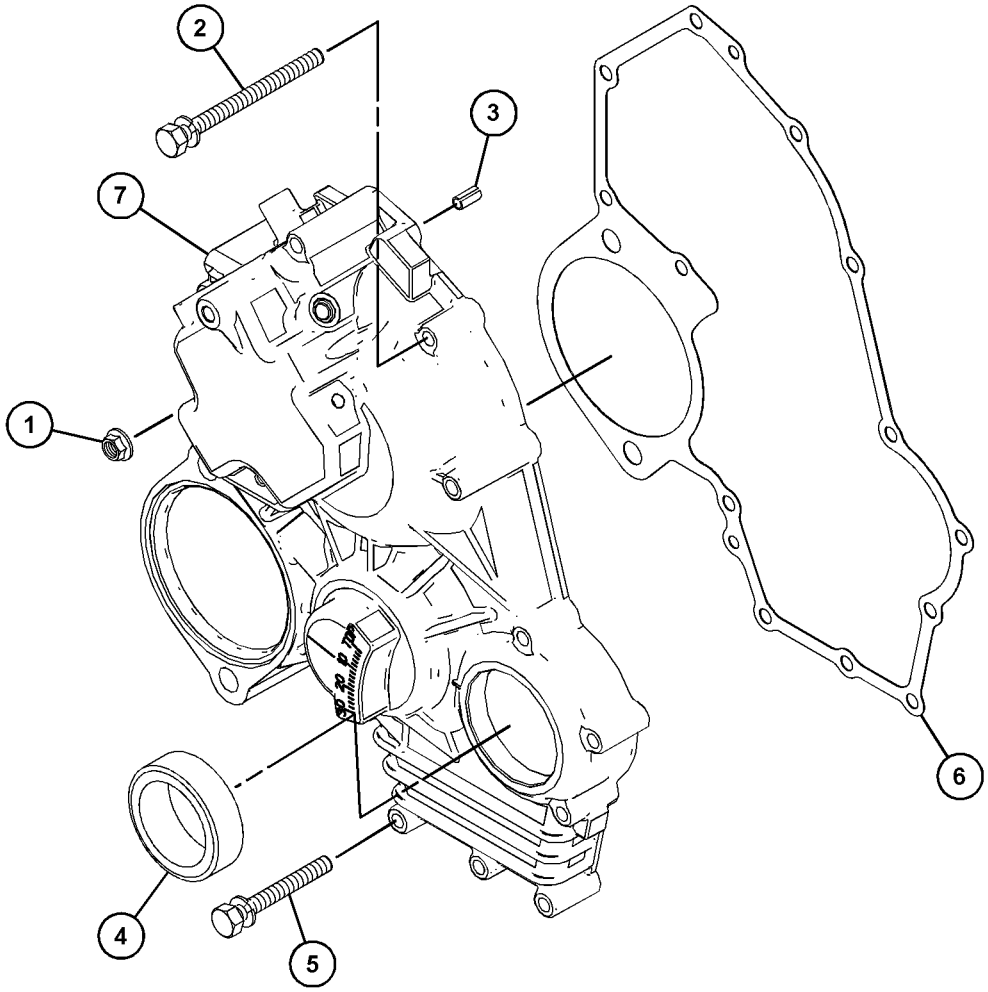

GRAPHIC #1 <END> g07597887

465-2492 HOUSING GP-FRONT

PART OF 417-7273, 435-1642, 489-4263 ENGINE AR-PRIMARY

SMCS-1151, 1162, 1206 **i06230200**

NOTE	REF NO	GRAPHIC REF	PART NUMBER	QTY	PART NAME 1 2 3 4 5 6 (PRODUCT LEVEL)	SEE PAGE
M	1	1	**153-5960**	1	NUT (M6X1-THD)	
	2	1	**153-5962**	4	BOLT AS	
	3	1	**5D-1319**	1	PIN-SPRING	
	4	1	**154-1675**	1	SEAL	
	5	1	**165-2140**	7	BOLT AS	
	6	1	**423-7723**	2	GASKET	
	7	1	**464-2090**	1	HOUSING-FRONT	

M - METRIC PART

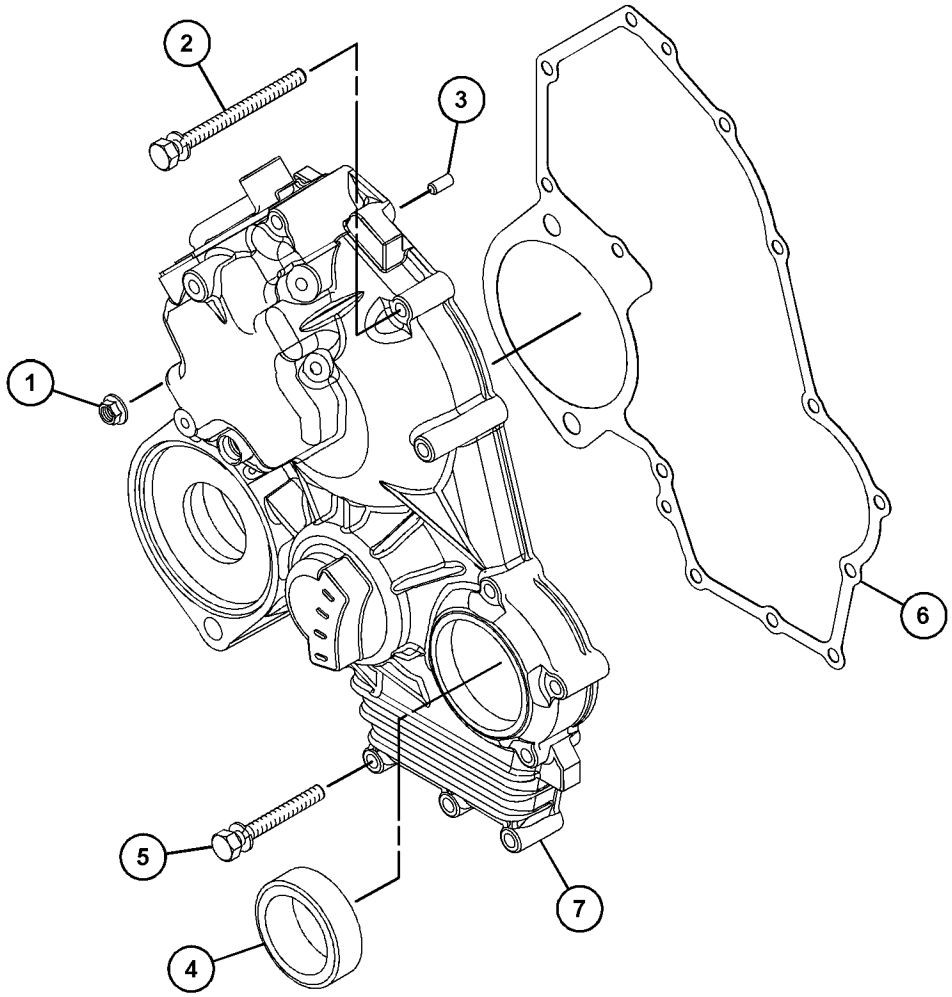

GRAPHIC #1 <END> g03721947

481-5621 HOUSING GP-FRONT

SMCS-1151, 1162, 1206 **i06943014**

NOTE	REF NO	GRAPHIC REF	PART NUMBER	QTY	PART NAME 1 2 3 4 5 6 (PRODUCT LEVEL)	SEE PAGE
M	1	1	**153-5960**	2	NUT (M6X1-THD)	
	2	1	**153-5962**	4	BOLT AS	
	3	1	**165-2140**	7	BOLT AS	
	4	1	**423-7723**	1	GASKET	

M - METRIC PART

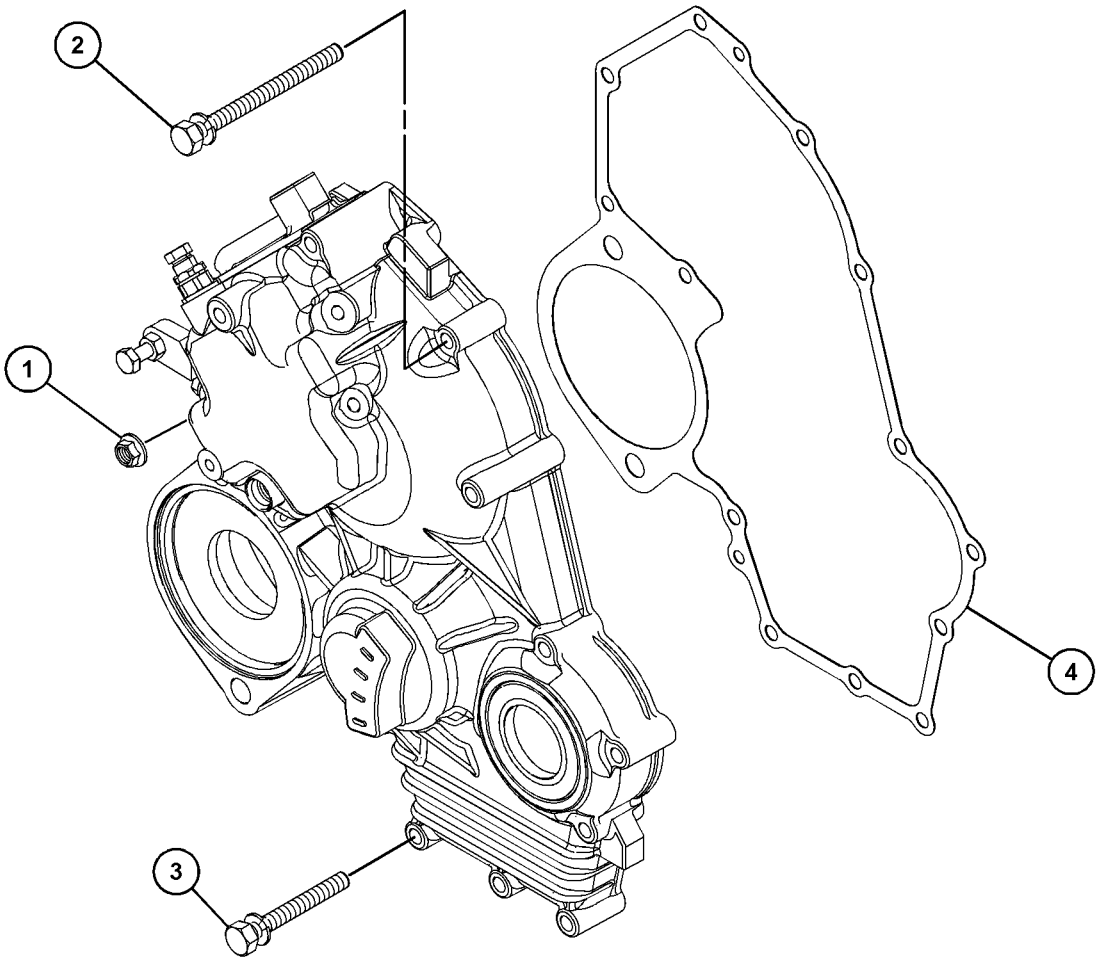

GRAPHIC #1 <END> g06206065

483-1372 HOUSING GP-FRONT

PART OF 329-9277 HOUSING GP-FRONT

SMCS-1151, 1162, 1206 **i06305640**

NOTE	REF NO	GRAPHIC REF	PART NUMBER	QTY	PART NAME 1 2 3 4 5 6 (PRODUCT LEVEL)	SEE PAGE
M	1	1	**106-8916**	4	BOLT (M6X1X16-MM)	
M	2	1	**5C-2890**	1	NUT (M6X1-THD)	
M	3	1	**153-5592**	1	NUT (M8X1.25-THD)	
	4	1	**153-6415**	2	WASHER (SEAL)	
	5	1	**095-1574**	1	SEAL-O-RING	
	6	1	**5D-1319**	1	PIN-SPRING	
	7	1	**154-1675**	1	SEAL	
M	8	1	**162-2207**	1	NUT (M6X1-THD)	
	9	1	**308-1882**	1	SPRING	
M	10	1	**308-1892**	1	NUT (M6X1-THD)	
	11	1	**308-4266**	1	SHAFT	
	12	1	**309-6729**	1	SEAL-O-RING	
	13	1	**311-0655**	1	SPRING	
	14	1	**317-7195**	1	SPRING	
	15	1	**321-4249**	1	NUT	
	16	1	**322-7493**	1	LEVER AS-CONTROL	
	17	1	**330-9189**	1	PLUG	
	18	1	**334-0732**	1	ARM AS (FRONT HOUSING)	
	19	1	**335-5578**	1	BRACKET	
	20	1	**364-2755**	1	BOLT-SPECIAL	
M	21	1	**369-4486**	2	BOLT (M6X1X35-MM)	
	22	1	**390-3731**	1	SHAFT	
	23	1	**423-7724**	1	GASKET	
	24	1	**464-2090**	1	HOUSING-FRONT	

PARTS SHOWN IN GRAPHIC(S) WITHOUT A REFERENCE NUMBER ARE NOT SERVICED SEPARATELY

M - METRIC PART

483-1372 **HOUSING GP-FRONT (**contd.**)** **i06305640**

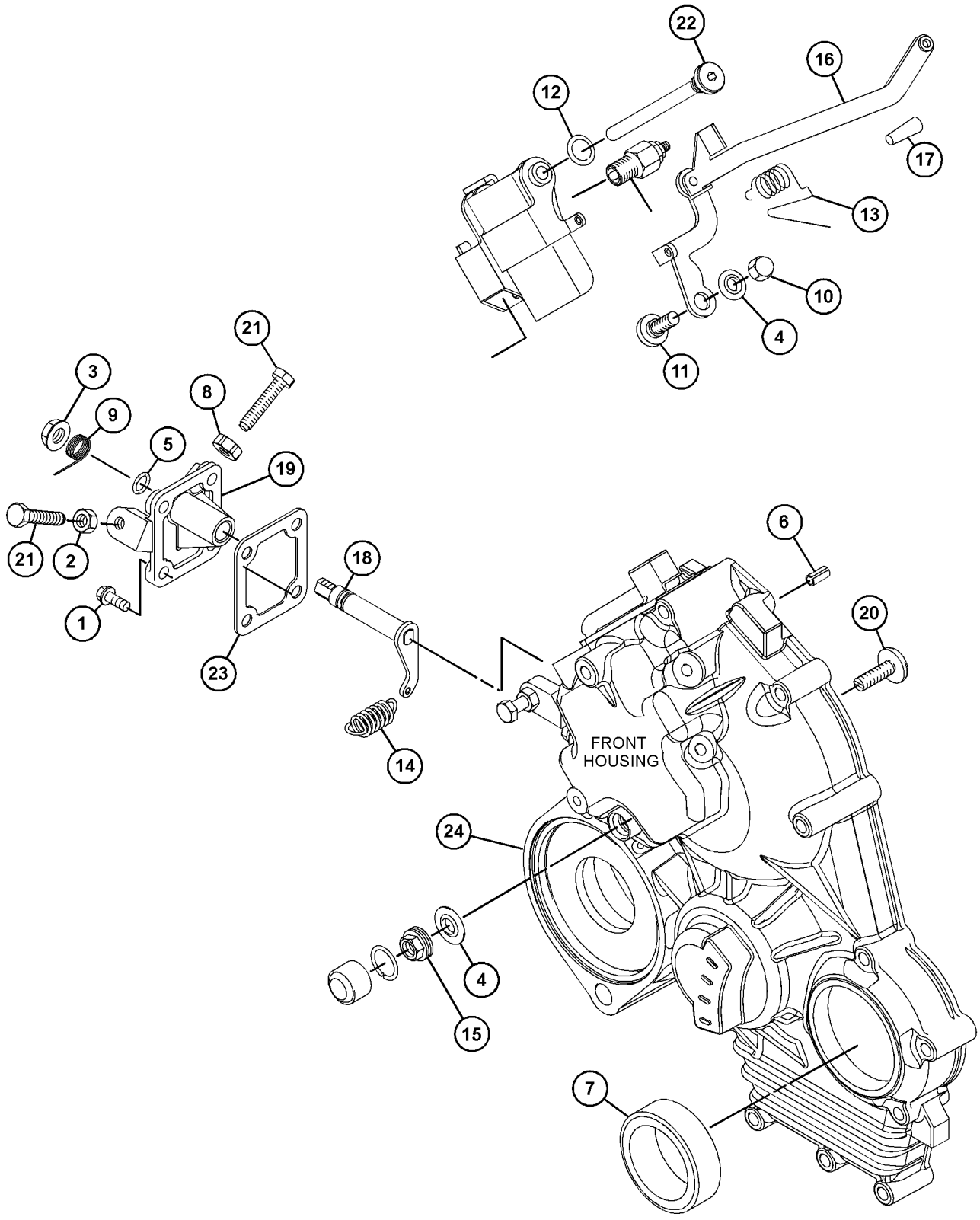

GRAPHIC #1 <END> g06101604

486-9344 HOUSING GP-FRONT

PART OF 365-4290 CONTROL GP-ENGINE SPEED

SMCS-1151, 1162, 1206 **i07384856**

NOTE	REF NO	GRAPHIC REF	PART NUMBER	QTY	PART NAME 1 2 3 4 5 6 (PRODUCT LEVEL)	SEE PAGE
M	1	1	**106-8916**	4	BOLT (M6X1X16-MM)	
M	2	1	**5C-2890**	1	NUT (M6X1-THD)	
M	3	1	**153-5592**	1	NUT (M8X1.25-THD)	
	4	1	**153-6415**	2	WASHER (SEAL) (SEAL)	
	5	1	**095-1574**	1	SEAL-O-RING	
	6	1	**5D-1319**	1	PIN-SPRING	
	7	1	**154-1675**	1	SEAL	
M	8	1	**162-2207**	1	NUT (M6X1-THD) (M6X1X13-MM)	
	9	1	**308-1882**	1	SPRING	
M	10	1	**308-1892**	1	NUT (M6X1-THD)	
	11	1	**308-4266**	1	SHAFT	
	12	1	**309-6729**	1	SEAL-O-RING	
	13	1	**311-0655**	1	SPRING	
	14	1	**317-7195**	1	SPRING	
	15	1	**502-9478**	1	NUT (TAMPER RESISTANT) (HEX)	
	16	1	**322-7493**	1	LEVER AS-CONTROL	
	17	1	**330-9189**	1	PLUG	
	18	1	**334-0732**	1	ARM AS (FRONT HOUSING)	
	19	1	**335-5578**	1	BRACKET	
	20	1	**483-1210**	1	CASE-GEAR	
	21	1	**364-2755**	1	BOLT-SPECIAL (ADJUSTING)	
M	22	1	**369-4486**	2	BOLT (M6X1X35-MM)	
	23	1	**390-3731**	1	SHAFT	
	24	1	**423-7724**	1	GASKET	
	25	1	**503-9731**	1	SHROUD	

M - METRIC PART

486-9344 **HOUSING GP-FRONT (**contd.**)** **i07384856**

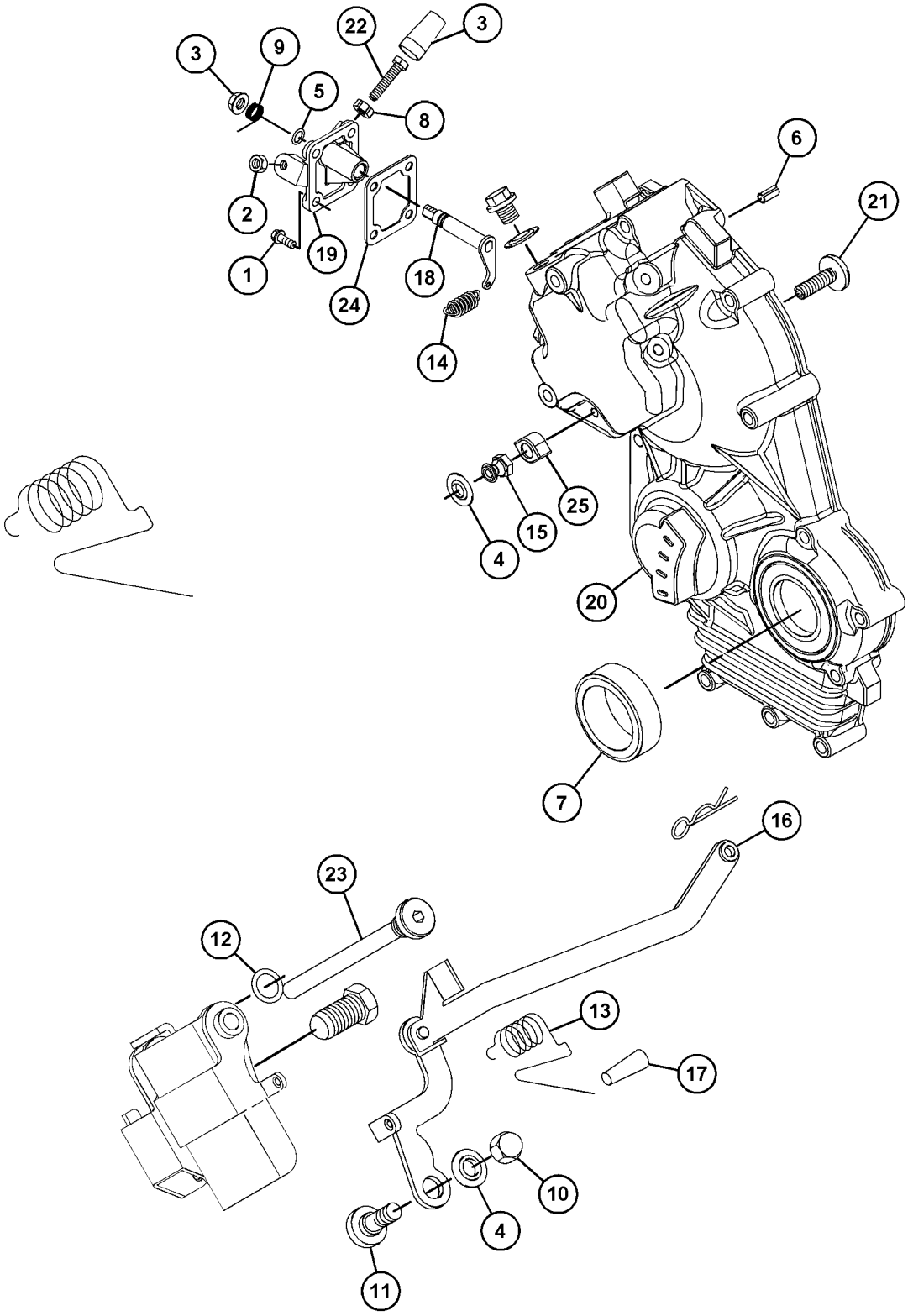

GRAPHIC #1 <END> g06315738

525-9935 HOUSING GP-FRONT

PART OF 518-0165 ENGINE AR-PRIMARY

SMCS-1151, 1162, 1206 **i08700079**

NOTE	REF NO	GRAPHIC REF	PART NUMBER	QTY	PART NAME 1 2 3 4 5 6 (PRODUCT LEVEL)	SEE PAGE
M	1	2	**106-8916**	4	BOLT (M6X1X16-MM)	
M	2	2	**5C-2890**	1	NUT (M6X1-THD)	
	3	2	**139-5511**	1	CAP (TAMPER RESISTANT)	
M	4	2	**153-5592**	1	NUT (M8X1.25-THD)	
	5	1	**153-6415**	2	WASHER (SEAL)	
	6	1	**153-7983**	1	PIN	
	7	1	**153-7987**	1	WASHER (9.2X17X1.8-MM THK)	
	8	2	**095-1574**	1	SEAL-O-RING	
	9	1	**5D-1319**	1	PIN-SPRING	
	10	1	**154-1675**	1	SEAL	
M	11	2	**162-2207**	1	NUT (M6X1-THD)	
	12	1	**308-1875**	1	SEAL-O-RING	
	13	2	**308-1882**	1	SPRING	
M	14	1	**308-1889**	1	NUT (M10X1.25-THD)	
M	15	1	**308-1892**	1	NUT (M6X1-THD)	
	16	1	**308-4266**	1	SHAFT	
	17	1	**309-6729**	1	SEAL-O-RING	
	18	1	**311-0655**	1	SPRING	
	19	1	**313-2037**	1	PLUG	
	20	2	**317-7195**	1	SPRING	
	21	1	**322-7493**	1	LEVER AS-CONTROL	
	21A	1	**154-1400**	1	PIN	
	22	1	**330-9189**	1	PLUG	
	23	2	**334-0732**	1	ARM AS	
	24	2	**335-5578**	1	BRACKET	
	25	1	**364-2755**	1	BOLT-SPECIAL	
M	26	2	**7X-2533**	2	BOLT (M6X1X35-MM)	
	27	1	**390-3731**	1	SHAFT	
	28	2	**423-7724**	1	GASKET	
	29	1	**464-2090**	1	HOUSING-FRONT	
	30	1	**502-5421**	1	PIN	
	31	1	**502-9478**	1	NUT (TAMPER RESISTANT)	
	32	1	**503-9707**	1	CAP	
	33	1	**503-9731**	1	SHROUD	
	34	1	**580-0398**	1	LEVER AS-CONTROL	
	35	2	**336-2965**	1	SPRING	

M - METRIC PART

525-9935 **HOUSING GP-FRONT (**contd.**)** **i08700079**

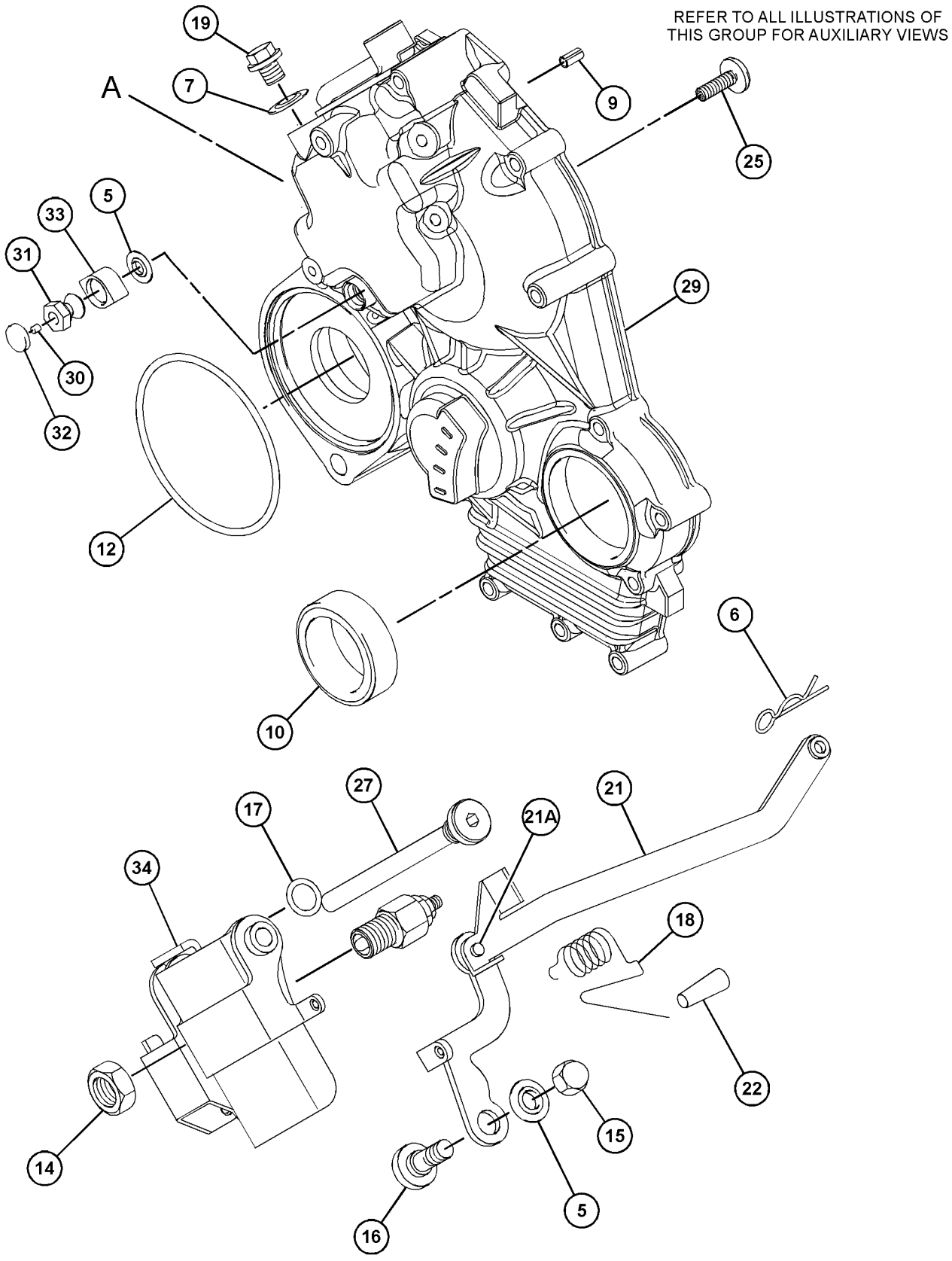

GRAPHIC #1 g06745416

525-9935 **HOUSING GP-FRONT (**contd.**)** **i08700079**

REFER TO ALL ILLUSTRATIONS OF
THIS GROUP FOR AUXILIARY VIEWS

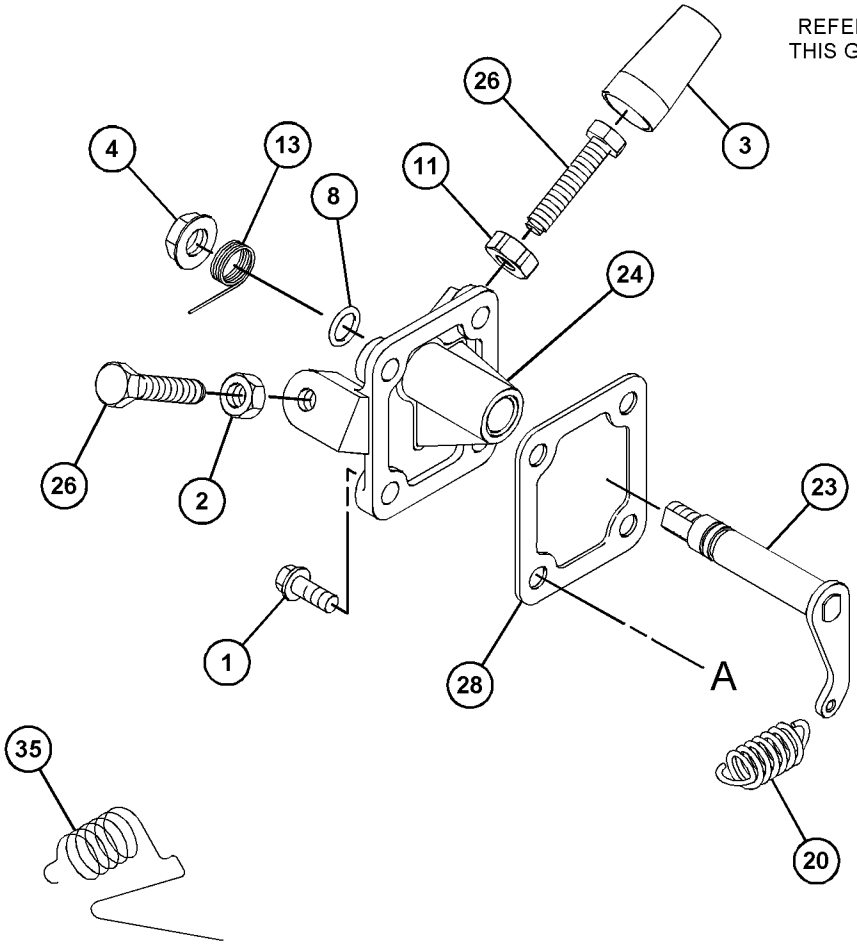

GRAPHIC #2 <END> g06745417

599-9816 HOUSING GP-FRONT

S/N: C6M10275-UP

PART OF 417-7273, 435-1647 ENGINE AR-PRIMARY

SMCS-1151, 1162, 1206 **i08711954**

NOTE	REF NO	GRAPHIC REF	PART NUMBER	QTY	PART NAME 1 2 3 4 5 6 (PRODUCT LEVEL)	SEE PAGE
	1	1	**553-4376**	1	SEAL-O-RING	
M	2	2	**106-8916**	4	BOLT (M6X1X16-MM)	
M	3	2	**5C-2890**	1	NUT (M6X1-THD)	
	4	3	**153-5394**	2	DOWEL	
	5	1	**153-5962**	4	BOLT AS	
	6	3	**153-6838**	2	BOLT AS	
M	7	1	**164-7468**	2	BOLT (M10X1.5X95-MM)	
	8	1	**165-2140**	7	BOLT AS	
M	9	1	**587-3847**	1	STUD (M6X1X68-MM)	
M	10	1	**587-3848**	1	STUD (M6X1X48-MM)	
M	11	2	**7X-2533**	2	BOLT (M6X1X35-MM)	
	12	3	**592-3241**	1	GASKET-GEAR CASE	
	13	2	**423-7724**	1	GASKET	
	14	1	**464-2090**	1	HOUSING-FRONT	
	15	2	**364-2755**	1	BOLT-SPECIAL	
M	16	2	**153-5592**	1	NUT (M8X1.25-THD)	
M	17	1	**153-5960**	2	NUT (M6X1-THD)	
	18	2	**153-6415**	1	WASHER (SEAL)	
	19	2	**095-1574**	1	SEAL-O-RING	
	20	1	**5D-1319**	1	PIN-SPRING	
	21	1	**154-1675**	1	SEAL	
M	22	2	**162-2207**	1	NUT (M6X1-THD)	
	23	2	**139-5511**	1	CAP (TAMPER RESISTANT)	
	24	3	**592-3246**	1	GASKET	
	25	3	**592-7636**	1	ADAPTER AS	
	25A	3	**365-5317**	2	SEAL	
	26	1	**308-1875**	1	SEAL-O-RING	
	27	2	**308-1882**	1	SPRING	
	28	3	**321-5907**	1	PLATE	
	29	1,3	**328-3229**	2	COVER	
	30	1	**330-9189**	1	PLUG	
	31	1	**334-0272**	1	PLUG-OIL FILLER	
	32	2	**334-0732**	1	ARM AS	
	33	2	**335-5578**	1	BRACKET	
	34	2	**502-5421**	1	PIN	
	35	2	**502-9478**	1	NUT (TAMPER RESISTANT)	
	36	2	**503-9707**	1	CAP	
	37	2	**503-9731**	1	SHROUD	
M	38	1	**175-7141**	2	NUT-HEX FLANGE (M10X1.5-THD)	
F			**609-9566**	1	CASE AS-GEAR	
F			**5D-1319**	1	PIN-SPRING	
F			**464-2090**	1	HOUSING-FRONT	

F - NOT SHOWN
M - METRIC PART

599-9816 **HOUSING GP-FRONT (**contd.**)** **i08711954**

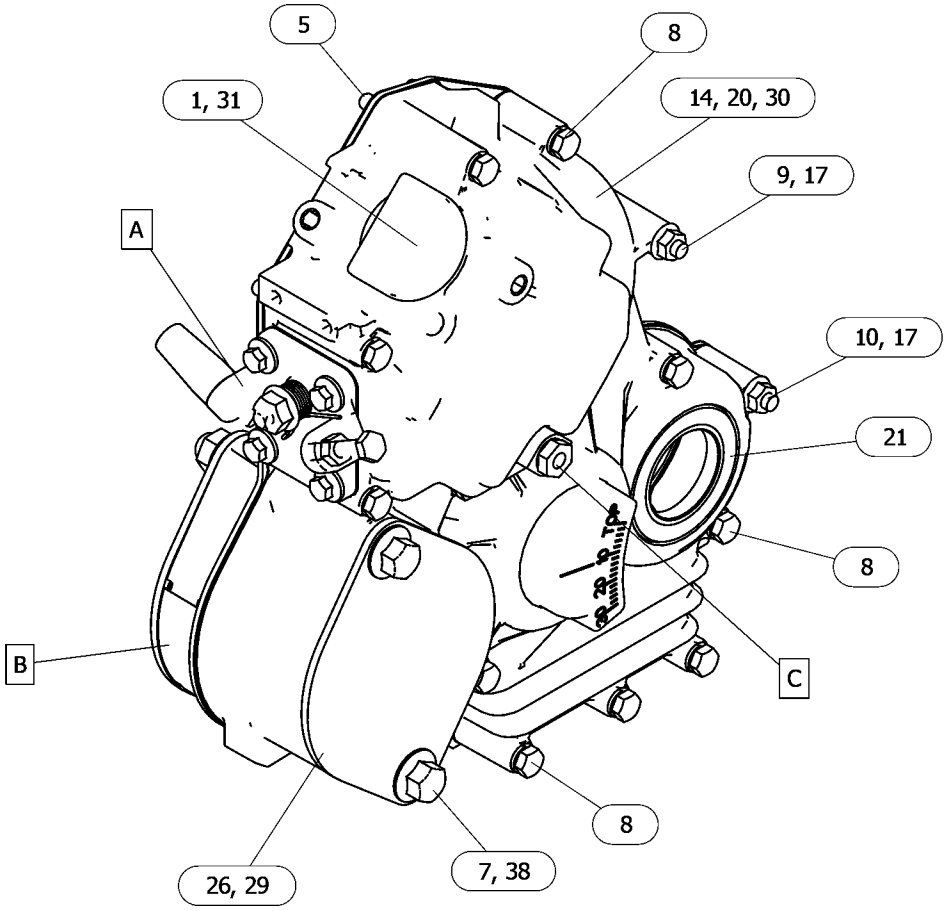

GRAPHIC #1 g06719106

599-9816 **HOUSING GP-FRONT (**contd.**)** **i08711954**

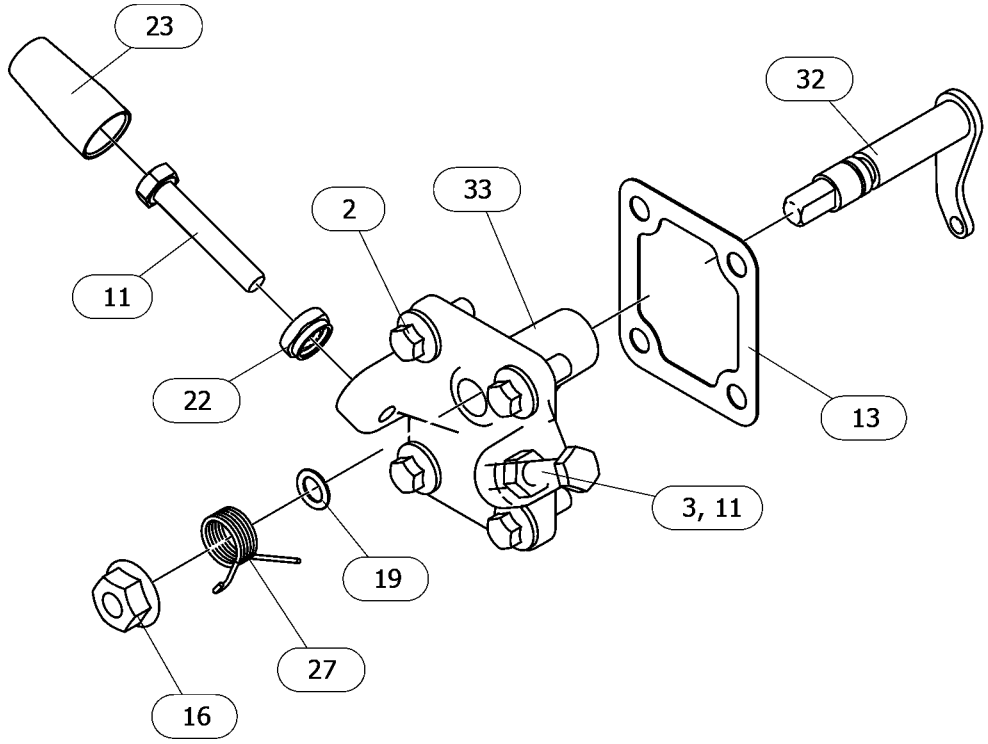

VIEW OF AREA A
(PARTS REMOVED FOR CLARITY)

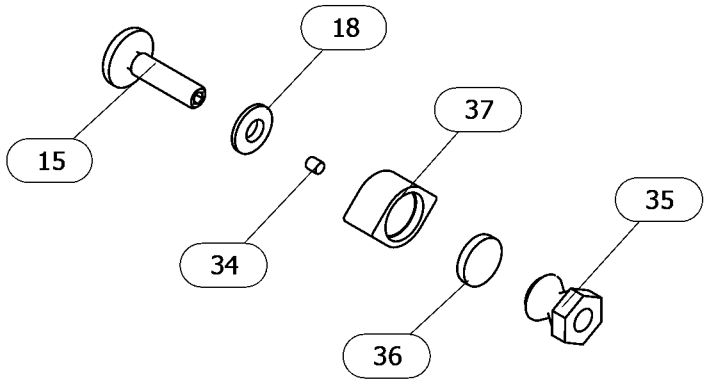

VIEW OF AREA C
(PARTS REMOVED FOR CLARITY)

GRAPHIC #2 g06719106_01

599-9816 **HOUSING GP-FRONT (**contd.**)** **i08711954**

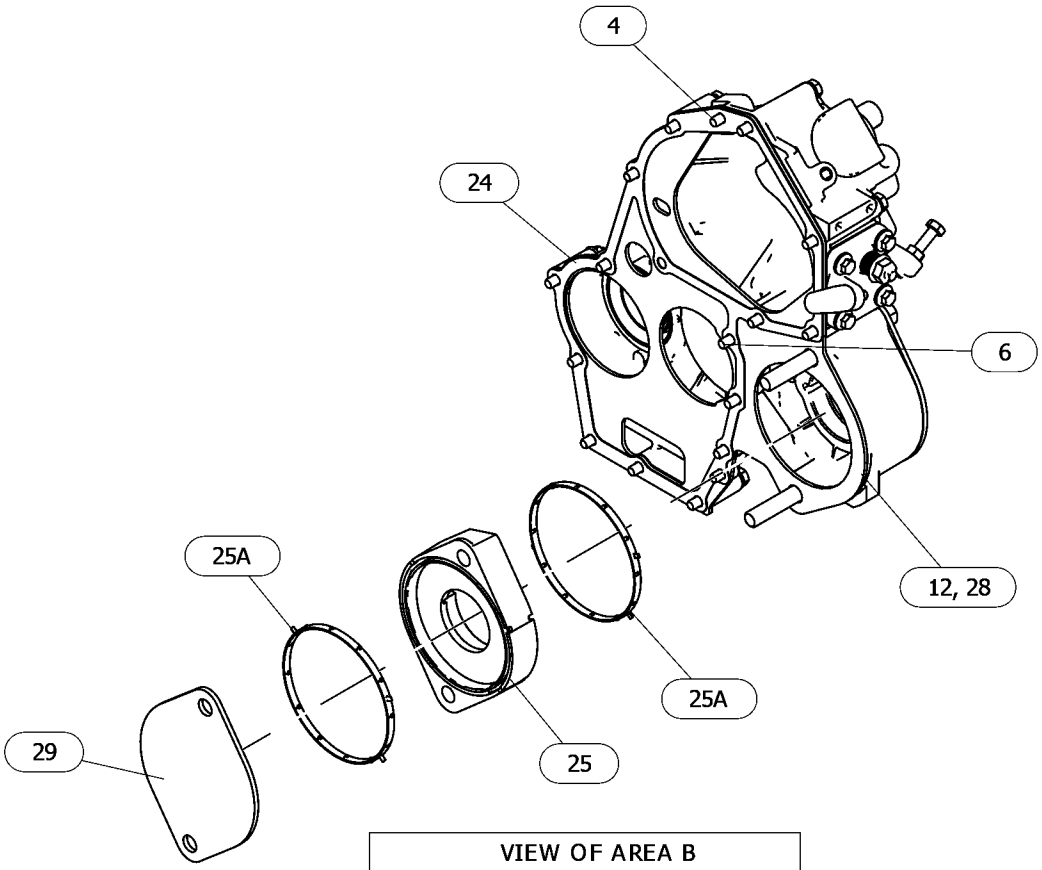

GRAPHIC #3 <END> g06719106_02

599-9816 HOUSING GP-FRONT

PART OF 417-7273, 435-1647, 514-6556 ENGINE AR-PRIMARY

SMCS-1151, 1162, 1206 **i09929036**

NOTE	REF NO	GRAPHIC REF	PART NUMBER	QTY	PART NAME 1 2 3 4 5 6 (PRODUCT LEVEL)	SEE PAGE
	1	1	**553-4376**	1	SEAL-O-RING	
M	2	2	**106-8916**	4	BOLT (M6X1X16-MM)	
M	3	2	**5C-2890**	1	NUT (M6X1-THD)	
	4	3	**153-5394**	2	DOWEL	
	5	1	**153-5962**	4	BOLT AS	
CM	6	3	**100-4841**	2	BOLT (M6X1X10-MM)	
M	7	1	**164-7468**	2	BOLT (M10X1.5X95-MM)	
	8	1	**165-2140**	7	BOLT AS	
M	9	1	**587-3847**	1	STUD (M6X1X68-MM)	
M	10	1	**587-3848**	1	STUD (M6X1X48-MM)	
M	11	2	**7X-2533**	2	BOLT (M6X1X35-MM)	
	12	3	**592-3241**	1	GASKET-GEAR CASE	
	13	2	**423-7724**	1	GASKET	
C	14	1	**609-9566**	1	CASE AS-GEAR	
		1	**5D-1319**	1	PIN-SPRING	
	15	2	**364-2755**	1	BOLT-SPECIAL	
M	16	2	**153-5592**	1	NUT (M8X1.25-THD)	
M	17	1	**153-5960**	2	NUT (M6X1-THD)	
	18	2	**153-6415**	1	WASHER (SEAL)	
	19	2	**095-1574**	1	SEAL-O-RING	
	20	1	**5D-1319**	1	PIN-SPRING	
	21	1	**154-1675**	1	SEAL	
M	22	2	**162-2207**	1	NUT (M6X1-THD)	
	23	2	**139-5511**	1	CAP (TAMPER RESISTANT)	
	24	3	**592-3246**	1	GASKET	
	25	3	**592-7636**	1	ADAPTER AS	
	25A	3	**365-5317**	2	SEAL	
	26	1	**308-1875**	1	SEAL-O-RING	
	27	2	**308-1882**	1	SPRING	
	28	3	**321-5907**	1	PLATE	
	29	1,3	**328-3229**	2	COVER	
	30	1	**330-9189**	1	PLUG	
C	31	1	**612-7549**	1	CAP (OIL FILL)	
	32	2	**334-0732**	1	ARM AS	
	33	2	**335-5578**	1	BRACKET	
	34	2	**502-5421**	1	PIN	
	35	2	**502-9478**	1	NUT (TAMPER RESISTANT)	
C	36	2	**575-5055**	1	CAP	
M	38	1	**175-7141**	2	NUT-HEX FLANGE (M10X1.5-THD)	

C - CHANGE FROM PREVIOUS TYPE
M - METRIC PART

599-9816 **HOUSING GP-FRONT (**contd.**)** **i09929036**

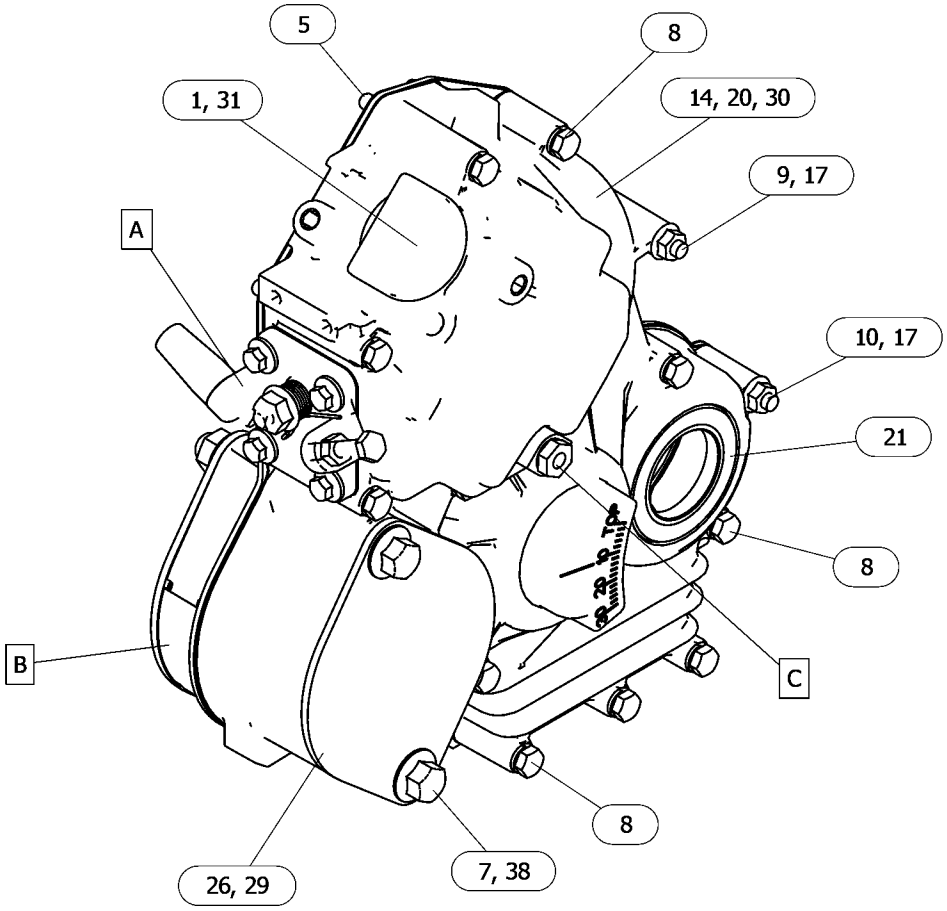

GRAPHIC #1 g06719106

599-9816 **HOUSING GP-FRONT (**contd.**)** **i09929036**

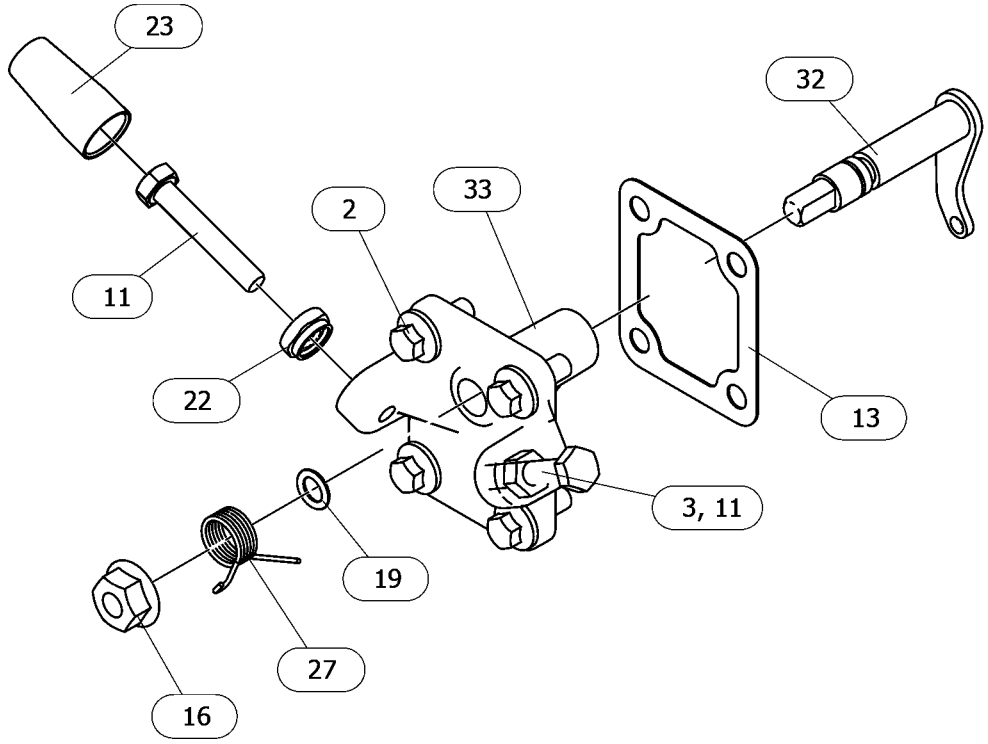

VIEW OF AREA A
(PARTS REMOVED FOR CLARITY)

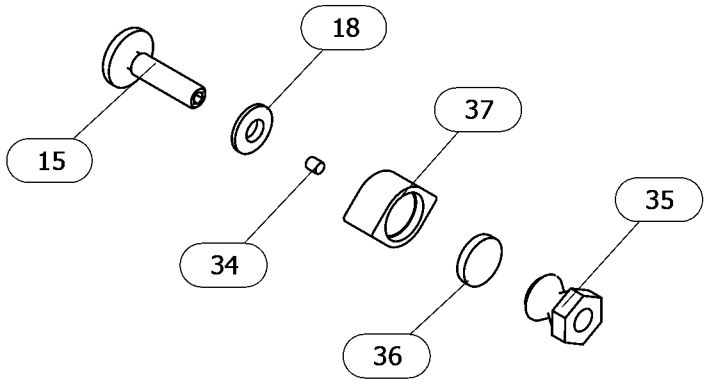

VIEW OF AREA C
(PARTS REMOVED FOR CLARITY)

GRAPHIC #2 g06719106_01

599-9816 **HOUSING GP-FRONT (**contd.**)** **i09929036**

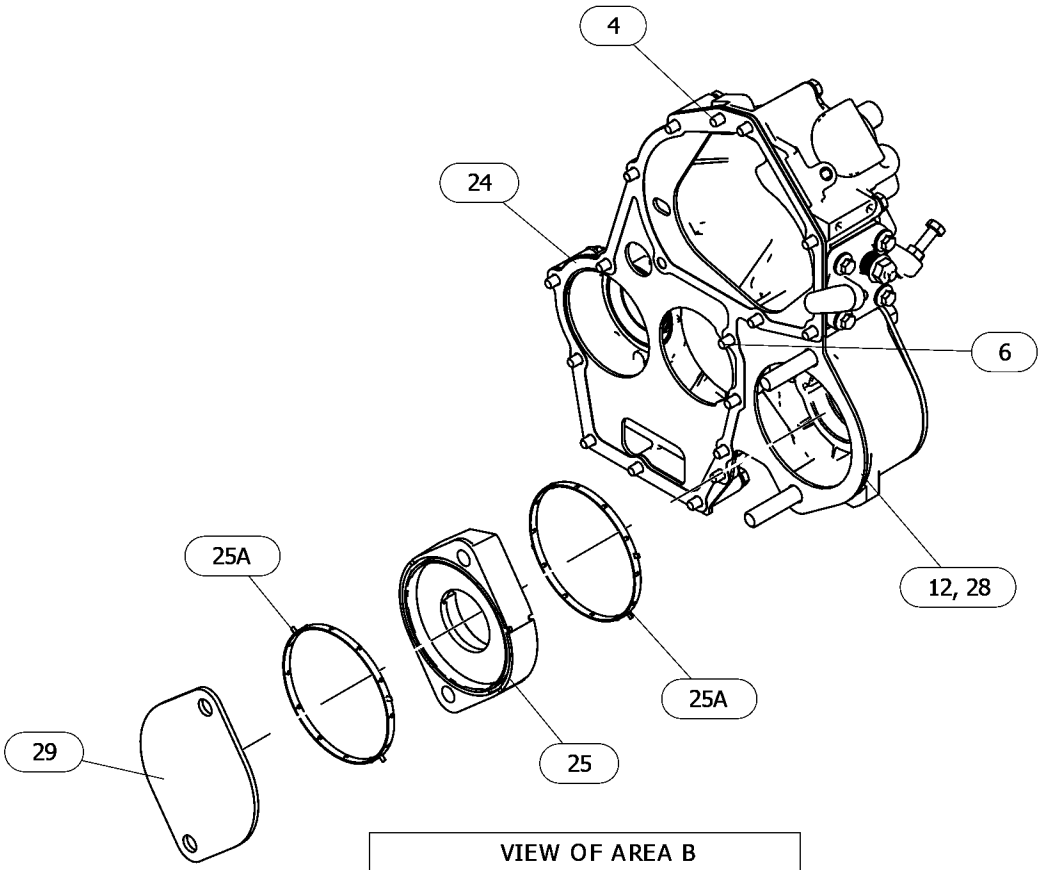

GRAPHIC #3 <END> g06719106_02

599-9836 HOUSING GP-FRONT

PART OF 433-1379 ENGINE AR, 435-1636, 435-1641, 435-1642 ENGINE AR-PRIMARY
ALSO AN ATTACHMENT

SMCS-1151, 1162, 1206 **i08568070**

NOTE	REF NO	GRAPHIC REF	PART NUMBER	QTY	PART NAME 1 2 3 4 5 6 (PRODUCT LEVEL)	SEE PAGE
	1	1	**553-4376**	1	SEAL-O-RING	
M	2	3	**106-8916**	4	BOLT (M6X1X16-MM)	
M	3	3	**5C-2890**	1	NUT (M6X1-THD)	
	4	1	**153-5394**	2	DOWEL	
	5	2	**153-5962**	4	BOLT AS	
	6	1	**153-6838**	2	BOLT AS	
M	7	2	**164-7468**	2	BOLT (M10X1.5X95-MM)	
	8	2	**165-2140**	7	BOLT AS	
M	9	2	**587-3847**	1	STUD (M6X1X68-MM)	
M	10	2	**587-3848**	1	STUD (M6X1X48-MM)	
M	11	3	**7X-2533**	2	BOLT (M6X1X35-MM)	
	12	1	**592-3241**	1	GASKET-GEAR CASE	
	13	3	**423-7724**	1	GASKET	
	14	1	**464-2090**	1	HOUSING-FRONT	
	15	1	**488-0405**	1	GEAR-DRIVE (48-TEETH)	
	16	3	**364-2755**	1	BOLT-SPECIAL	
M	17	3	**153-5592**	1	NUT (M8X1.25-THD)	
M	18	2	**153-5960**	2	NUT (M6X1-THD)	
	19	3	**153-6415**	1	WASHER (SEAL)	
	20	3	**095-1574**	1	SEAL-O-RING	
	21	1	**5D-1319**	1	PIN-SPRING	
	22	2	**154-1675**	1	SEAL	
M	23	3	**162-2207**	1	NUT (M6X1-THD)	
	24	2	**139-5511**	1	CAP (TAMPER RESISTANT)	
	25	1	**592-3246**	1	GASKET	
	26	1	**592-7636**	1	ADAPTER AS	
		1	**592-2979**	1	ADAPTER	
		1	**365-5317**	2	SEAL	
	27	2	**308-1875**	1	SEAL-O-RING	
	28	3	**308-1882**	1	SPRING	
	29	1	**321-5907**	1	PLATE	
	30	1,2	**328-3229**	2	COVER	
	31	1	**328-3230**	2	BALL BEARING	
	32	2	**330-9189**	1	PLUG	
	33	1	**334-0272**	1	PLUG-OIL FILLER	
	34	3	**334-0732**	1	ARM AS	
	35	3	**335-5578**	1	BRACKET	
	36	3	**502-5421**	1	PIN	
	37	3	**502-9478**	1	NUT (TAMPER RESISTANT)	
	38	3	**503-9707**	1	CAP	
	39	3	**503-9731**	1	SHROUD	
M	40	1	**6I-0594**	2	NUT (M10X1.5-THD)	
F			**609-9566**	1	CASE AS-GEAR	
F			**5D-1319**	1	PIN-SPRING	
F			**464-2090**	1	HOUSING-FRONT	

F - NOT SHOWN
M - METRIC PART

599-9836 **HOUSING GP-FRONT (**contd.**)** **i08568070**

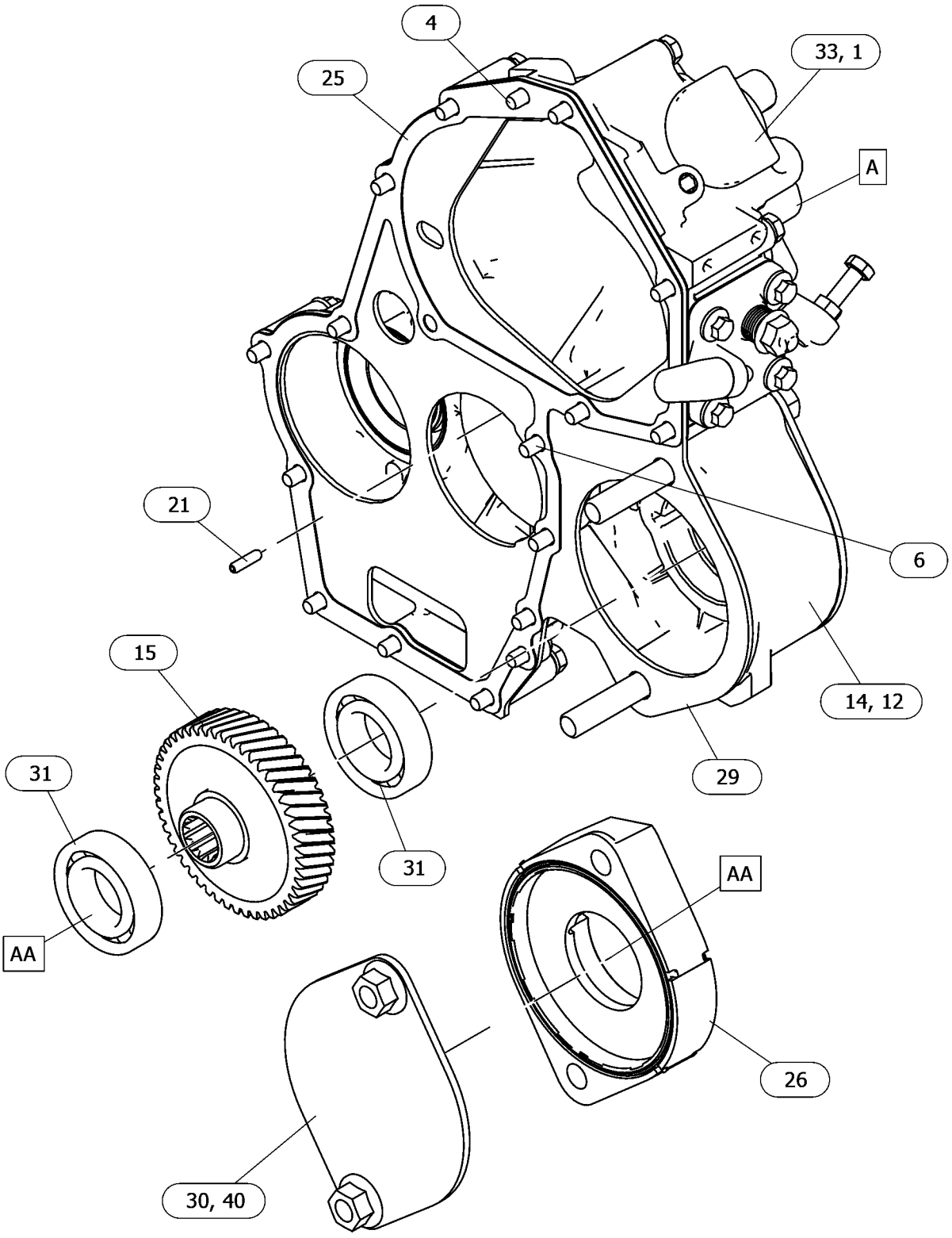

GRAPHIC #1 g06758992

599-9836 **HOUSING GP-FRONT (**contd.**)** **i08568070**

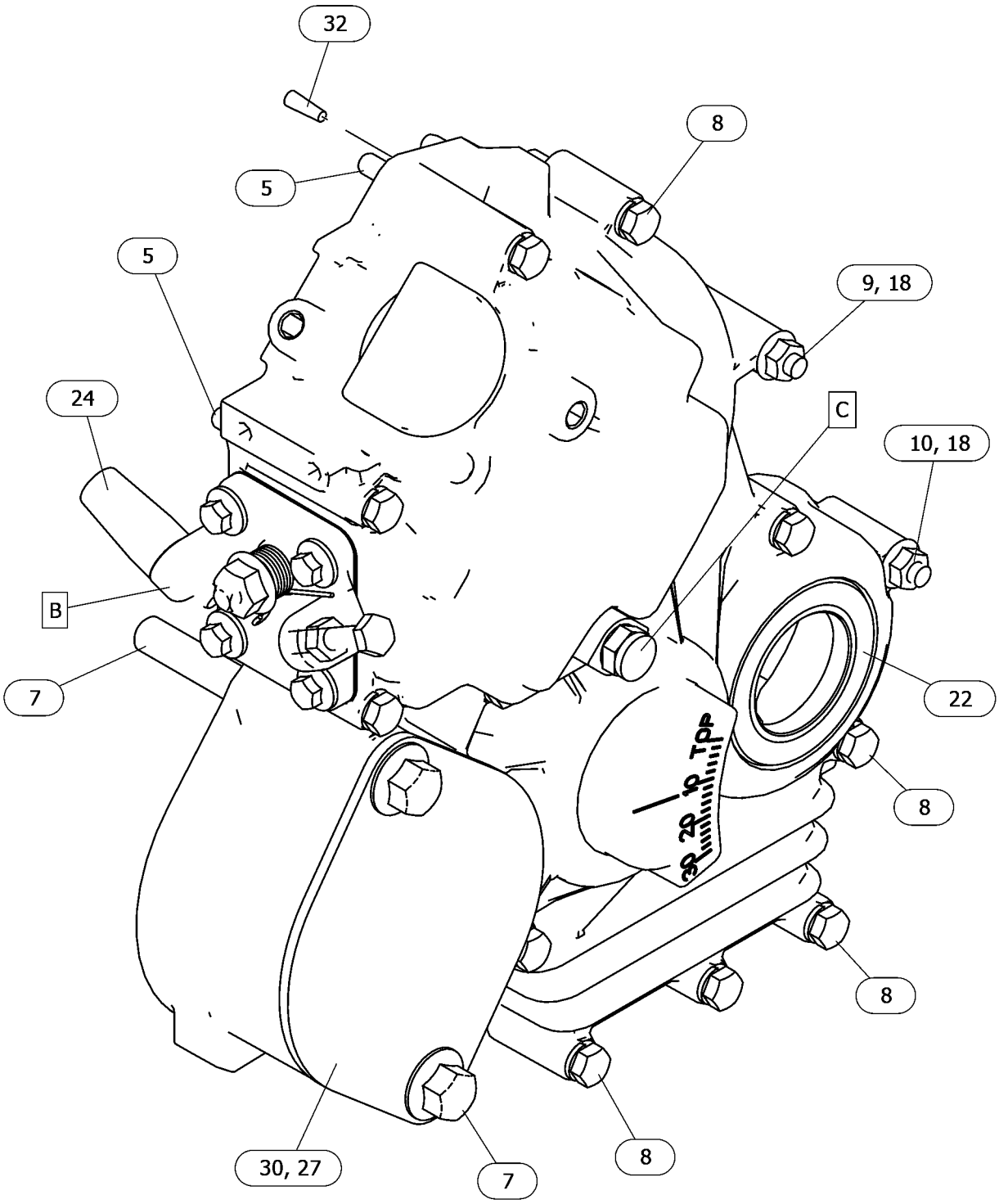

VIEW OF AREA A
(ROTATED 90° CLOCKWISE)
(PARTS REMOVED FOR CLARITY)

GRAPHIC #2 g06758992_01

599-9836 **HOUSING GP-FRONT (**contd.**)** **i08568070**

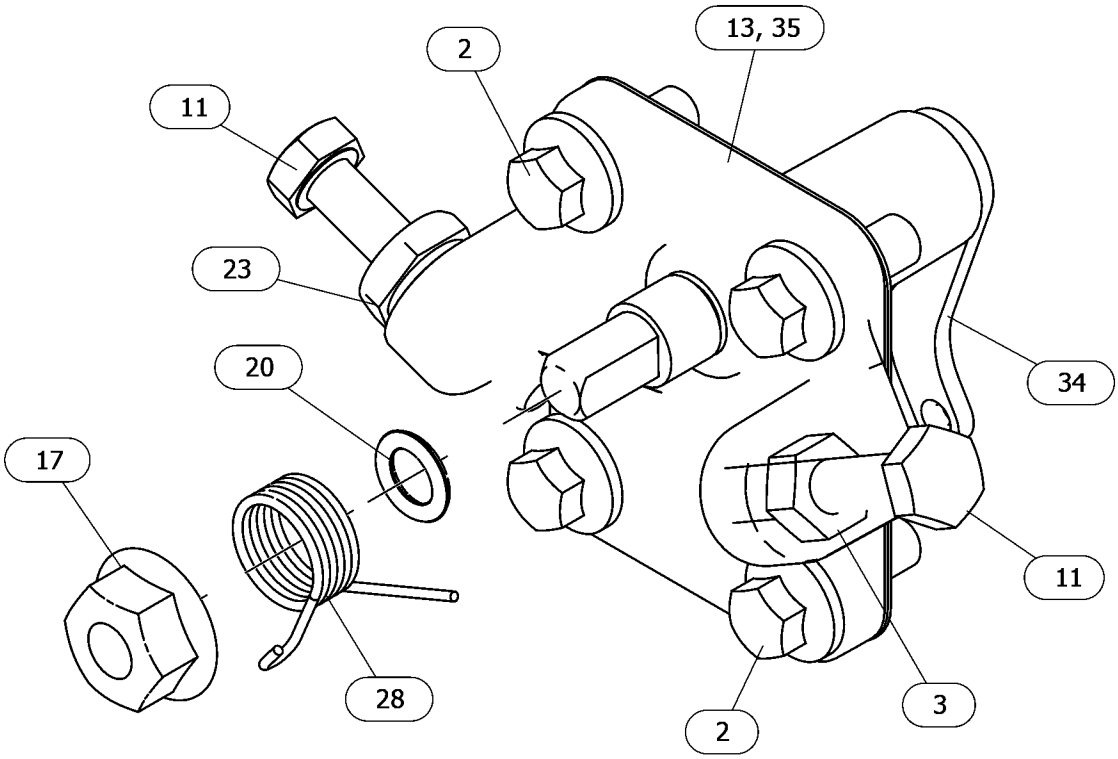

VIEW OF AREA B
(PARTS REMOVED FOR CLARITY)

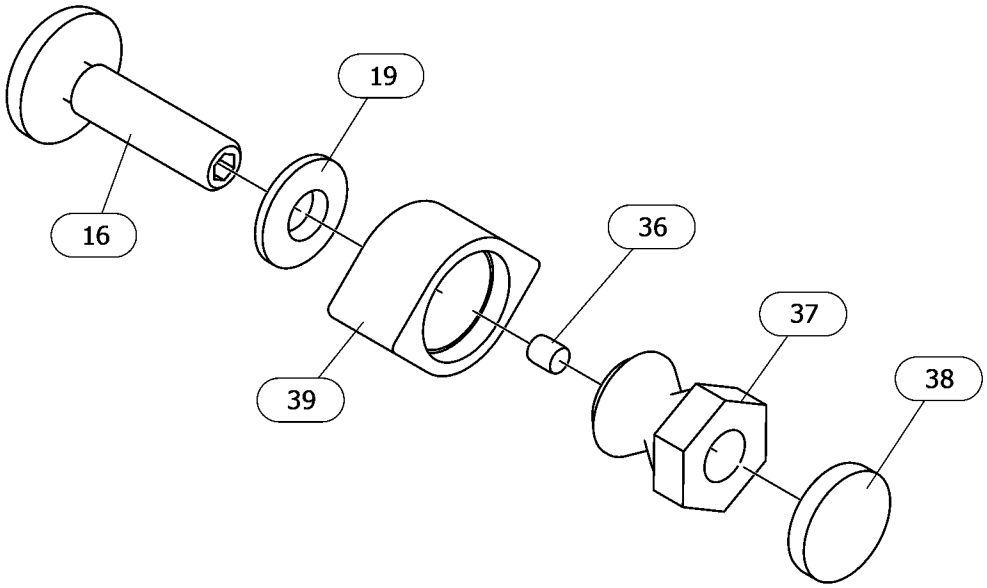

VIEW OF AREA C
(PARTS REMOVED FOR CLARITY)

GRAPHIC #3 <END> g06758992_02

308-2315 LIFTING GP-ENGINE

PART OF 499-6420 ENGINE AR-PRIMARY

SMCS-1122 **i06547674**

NOTE	REF NO	GRAPHIC REF	PART NUMBER	QTY	PART NAME 1 2 3 4 5 6 (PRODUCT LEVEL)	SEE PAGE
	1	1	**155-7984**	1	WASHER (8.4X16X1.6-MM THK)	
M	2	1	**124-3815**	1	BOLT (M8X1.25X16-MM)	
	3	1	**168-9001**	1	BOLT AS	
	4	1	**370-6544**	2	PLATE-LIFTING	

M - METRIC PART

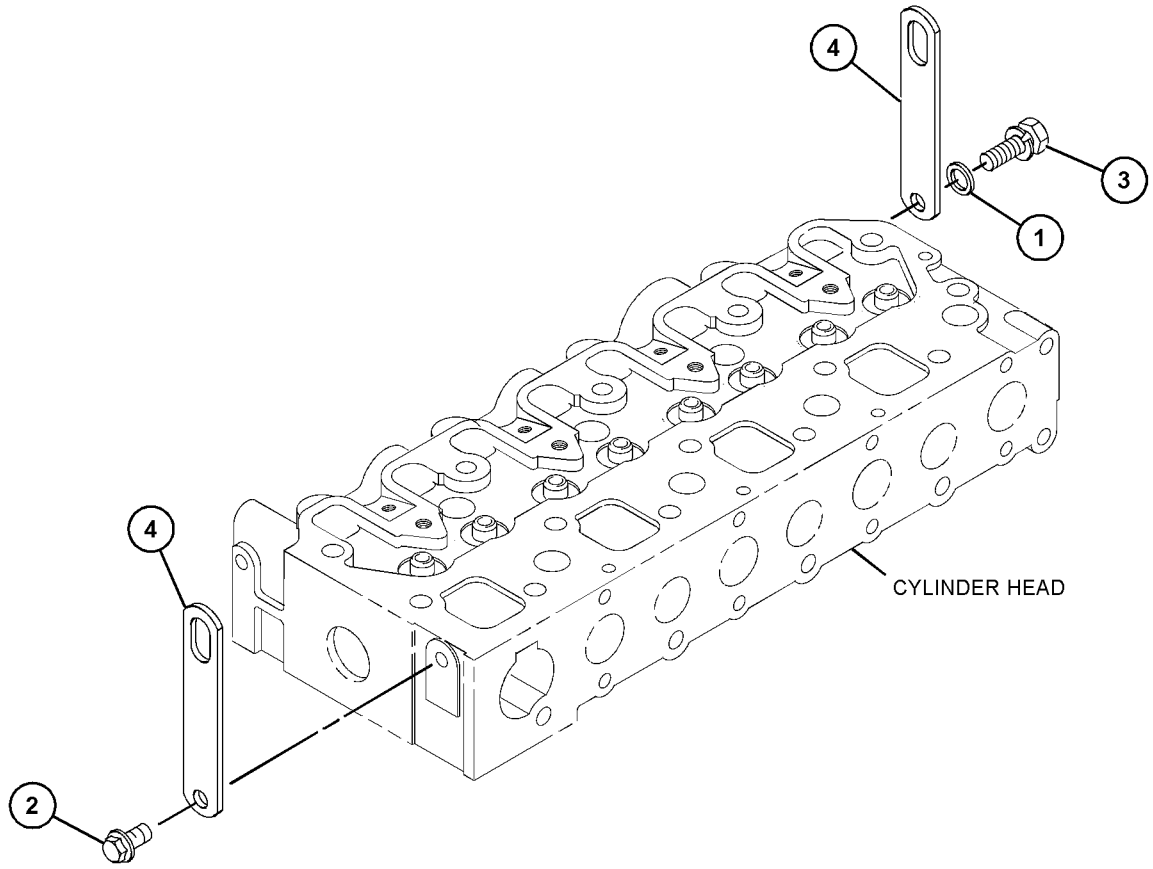

GRAPHIC #1 <END> g06107090

309-6725 LIFTING GP-ENGINE

PART OF 435-1645 CYLINDER BLOCK GP-LONG, 433-1379 ENGINE AR, 435-1636, 435-1641, 435-1646 ENGINE AR-PRIMARY

SMCS-1122 **i02859882**

NOTE	REF NO	GRAPHIC REF	PART NUMBER	QTY	PART NAME 1 2 3 4 5 6 (PRODUCT LEVEL)	SEE PAGE
	1	1	**153-6375**	3	BOLT AS	
	2	1	**309-6737**	1	EYE-LIFTING	
	3	1	**153-6374**	1	PLATE	

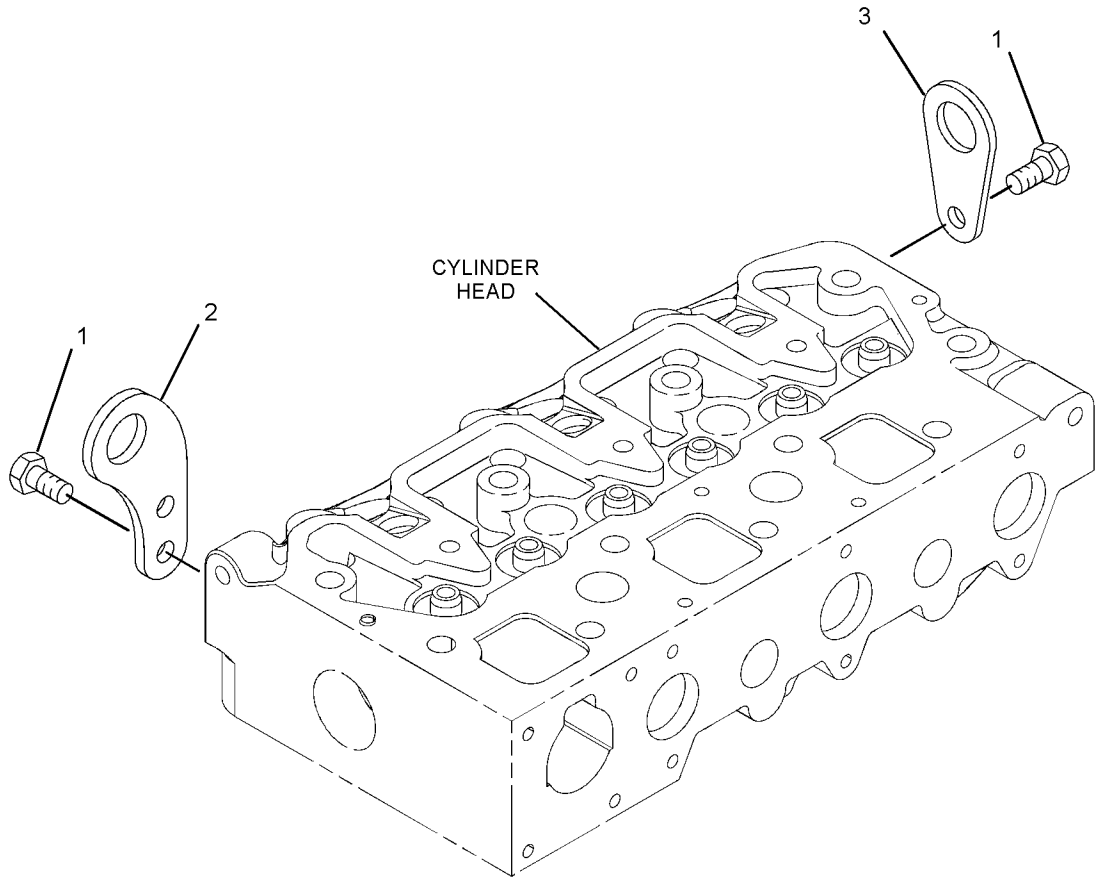

GRAPHIC #1 <END> g01389556

309-6725 LIFTING GP-ENGINE

PART OF 435-1645, 435-1649 CYLINDER BLOCK GP-LONG, 433-1379, 433-1380 ENGINE AR, 417-7273, 435-1636, 435-1641, 435-1642, 435-1646, 435-1647, 435-1658, 489-4263, 489-9224, 504-4602, 506-0518, 506-0519, 506-0520, 512-7969, 513-2239, 514-6556, 516-2639, 518-0165, 557-6086, 557-7471 ENGINE AR-PRIMARY
ALSO AN ATTACHMENT

SMCS-1122 **i06628472**

NOTE	REF NO	GRAPHIC REF	PART NUMBER	QTY	PART NAME 1 2 3 4 5 6 (PRODUCT LEVEL)	SEE PAGE
M	1	1	**124-3815**	1	BOLT (M8X1.25X16-MM)	
	2	1	**370-6544**	2	PLATE-LIFTING	

M - METRIC PART

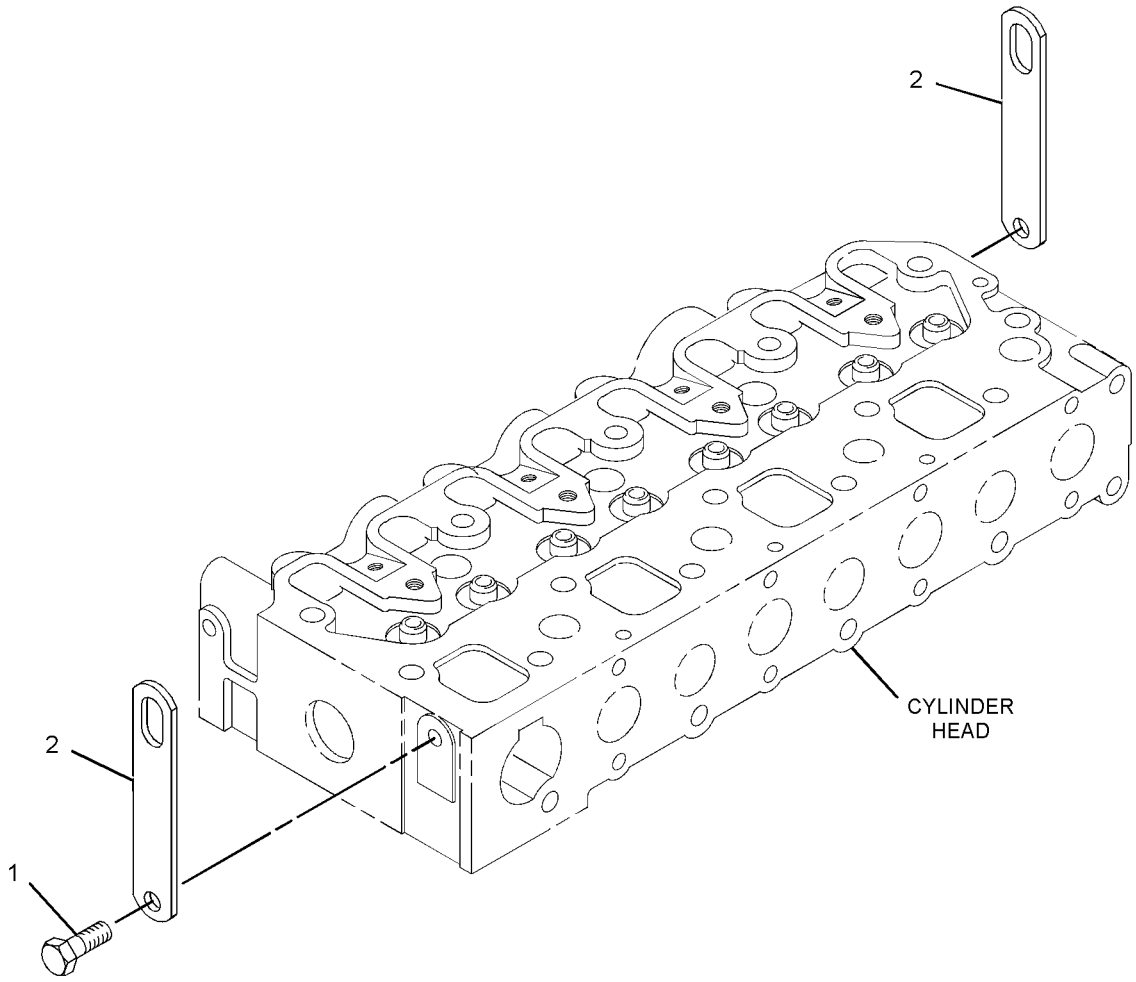

GRAPHIC #1 <END> g06099954

584-9814 LIFTING GP-ENGINE

PART OF 417-7273, 514-6556 ENGINE AR-PRIMARY

SMCS-1122 **i09817669**

NOTE	REF NO	GRAPHIC REF	PART NUMBER	QTY	PART NAME 1 2 3 4 5 6 (PRODUCT LEVEL)	SEE PAGE
M	1	1	**124-3815**	1	BOLT (M8X1.25X16-MM)	
	2	1	**370-6544**	2	PLATE-LIFTING	
M	3	1	**6I-0217**	1	BOLT (M8X1.25X20-MM)	

M - METRIC PART

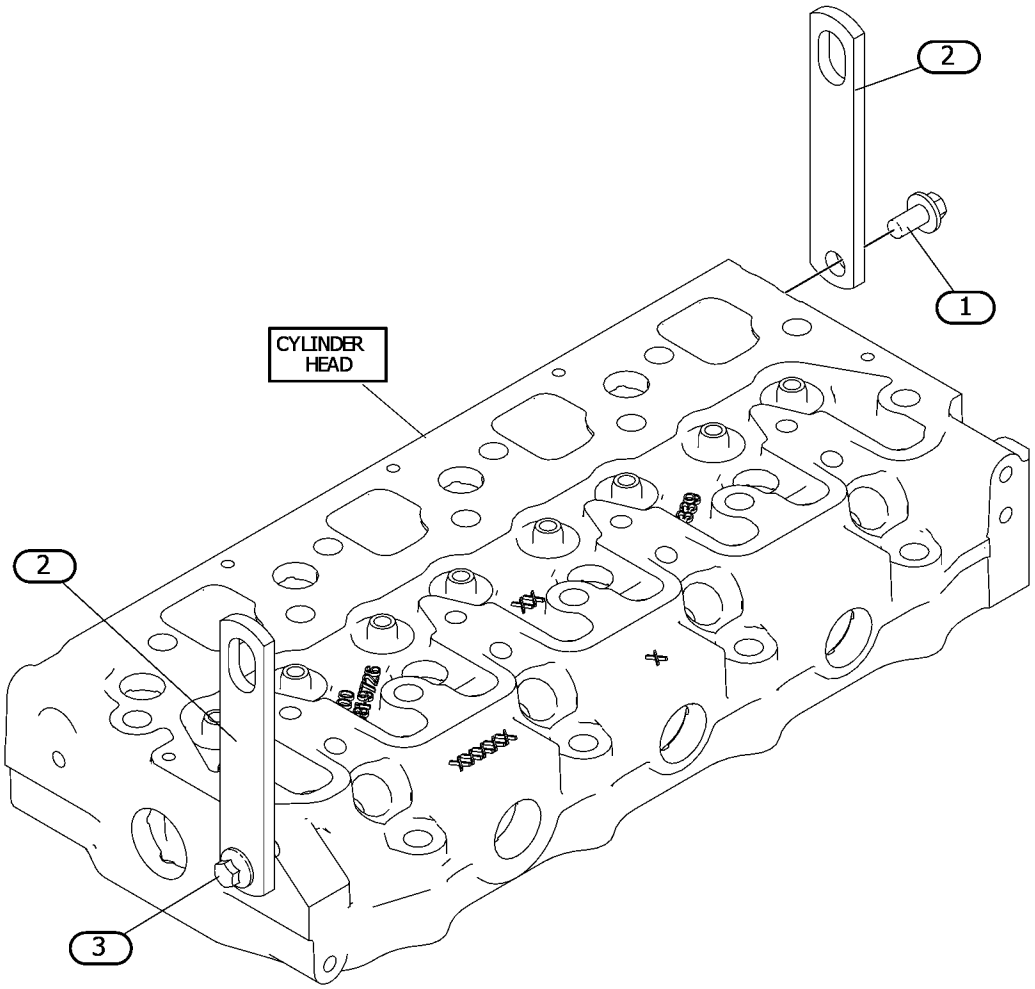

GRAPHIC #1 <END> g07605212

598-3706 LIFTING GP-ENGINE

AN ATTACHMENT

SMCS-1122 **i09513880**

NOTE	REF NO	GRAPHIC REF	PART NUMBER	QTY	PART NAME 1 2 3 4 5 6 (PRODUCT LEVEL)	SEE PAGE
	1	1	**606-2238**	2	PLATE-LIFTING	
M	2	1	**6I-0302**	2	BOLT (M10X1.5X25-MM)	

M - METRIC PART

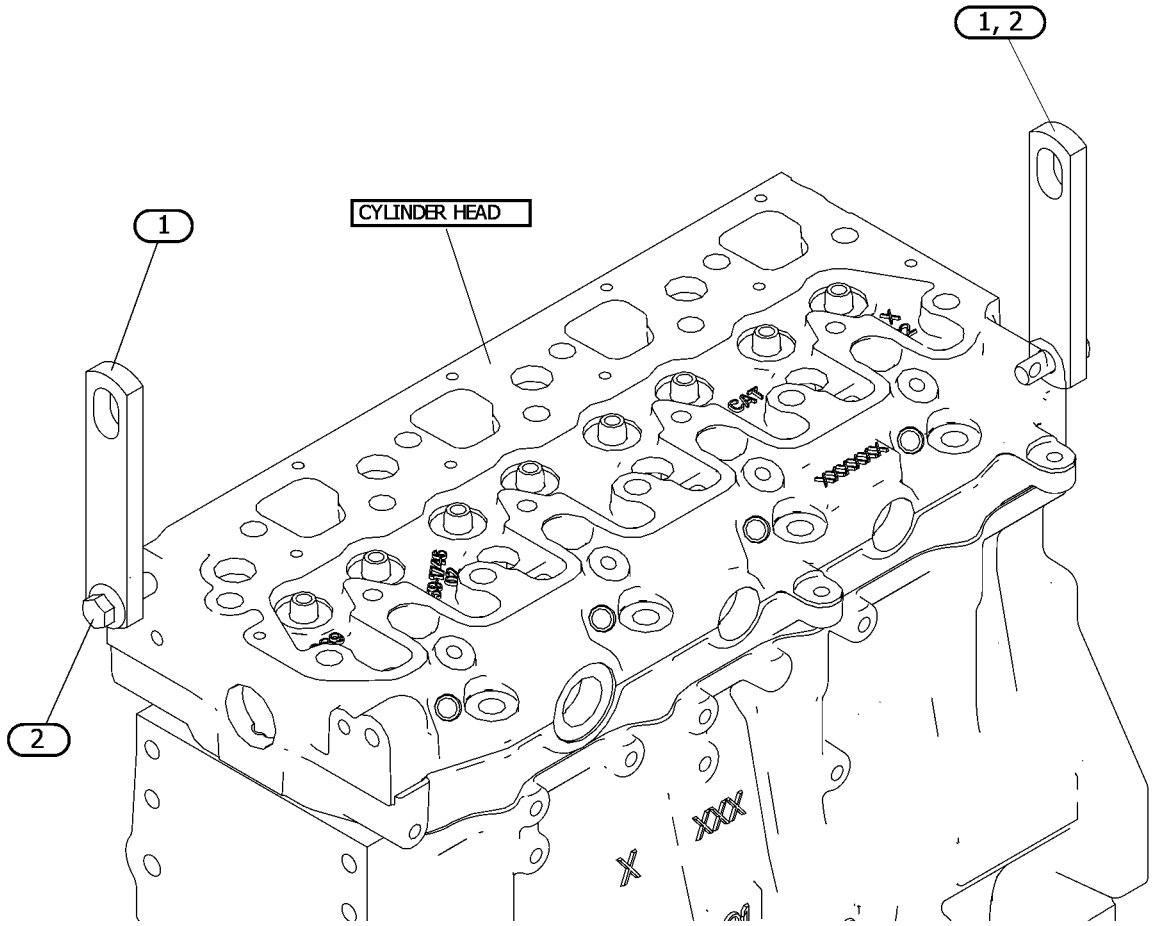

GRAPHIC #1 <END> g07579369

603-1463 LIFTING GP-ENGINE

PART OF 433-1379 ENGINE AR, 435-1636, 435-1641, 435-1642, 435-1647 ENGINE AR-PRIMARY AN ATTACHMENT

SMCS-1122 **i08567948**

NOTE	REF NO	GRAPHIC REF	PART NUMBER	QTY	PART NAME 1 2 3 4 5 6 (PRODUCT LEVEL)	SEE PAGE
M	1	1	**124-3815**	2	BOLT (M8X1.25X16-MM)	
	2	1	**370-6544**	2	PLATE-LIFTING	

M - METRIC PART

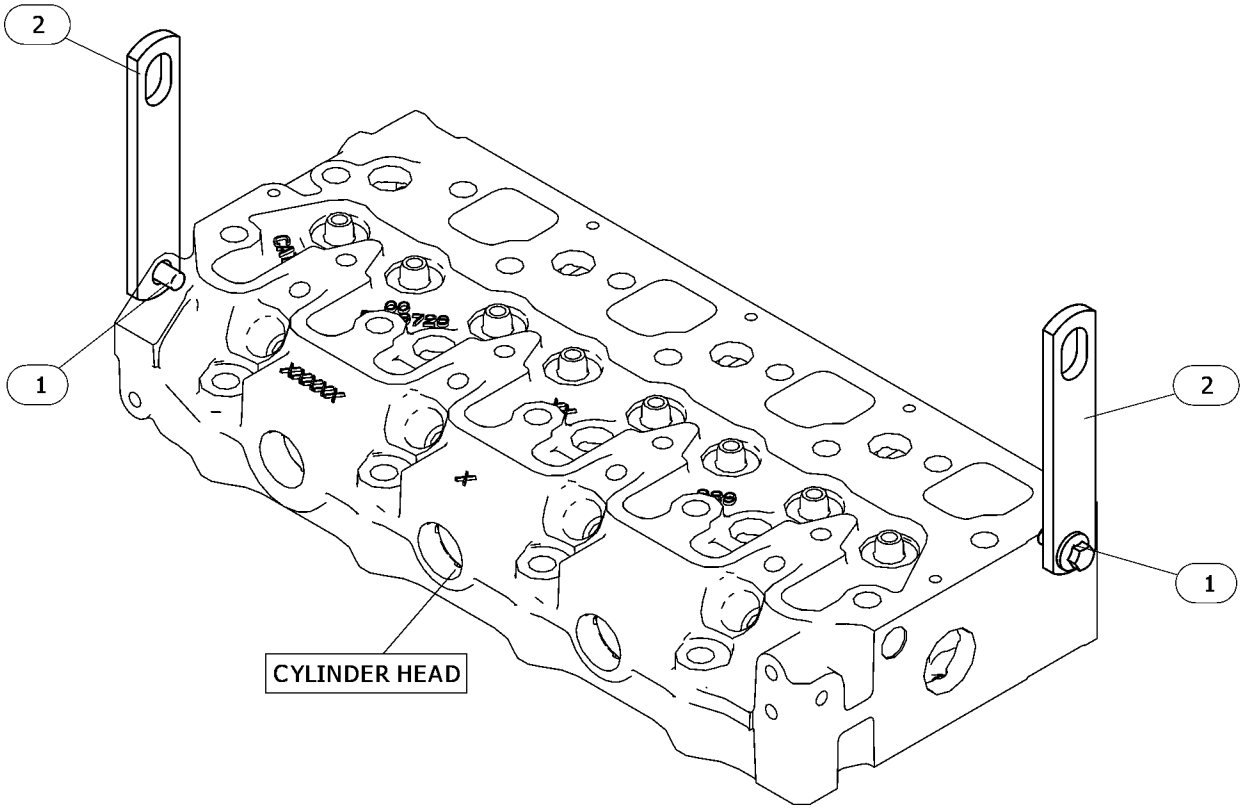

GRAPHIC #1 <END> g06719920

420-6411 MECHANISM GP-FUEL PUMP & VALVE

PART OF 504-4602 ENGINE AR-PRIMARY

SMCS-1102, 1123 **i06224875**

NOTE	REF NO	GRAPHIC REF	PART NUMBER	QTY	PART NAME 1 2 3 4 5 6 (PRODUCT LEVEL)	SEE PAGE
	1	1	**153-5961**	2	BOLT AS	
M	2	1	**153-7988**	4	NUT (M10X1.25-THD)	
M	3	1	**154-1246**	4	STUD (M10X1.5X95-MM)	
	4	1	**154-1248**	8	ROD	
	5	1	**438-9109**	8	TAPPET	
	6	1	**217-2752**	1	GASKET (VALVE BRACKET)	
Y	7	1	**365-5278**	1	VALVE MECHANISM GP	464

M - METRIC PART
Y - SEPARATE ILLUSTRATION

420-6411 **MECHANISM GP-FUEL PUMP & VALVE (**contd.**)** **i06224875**

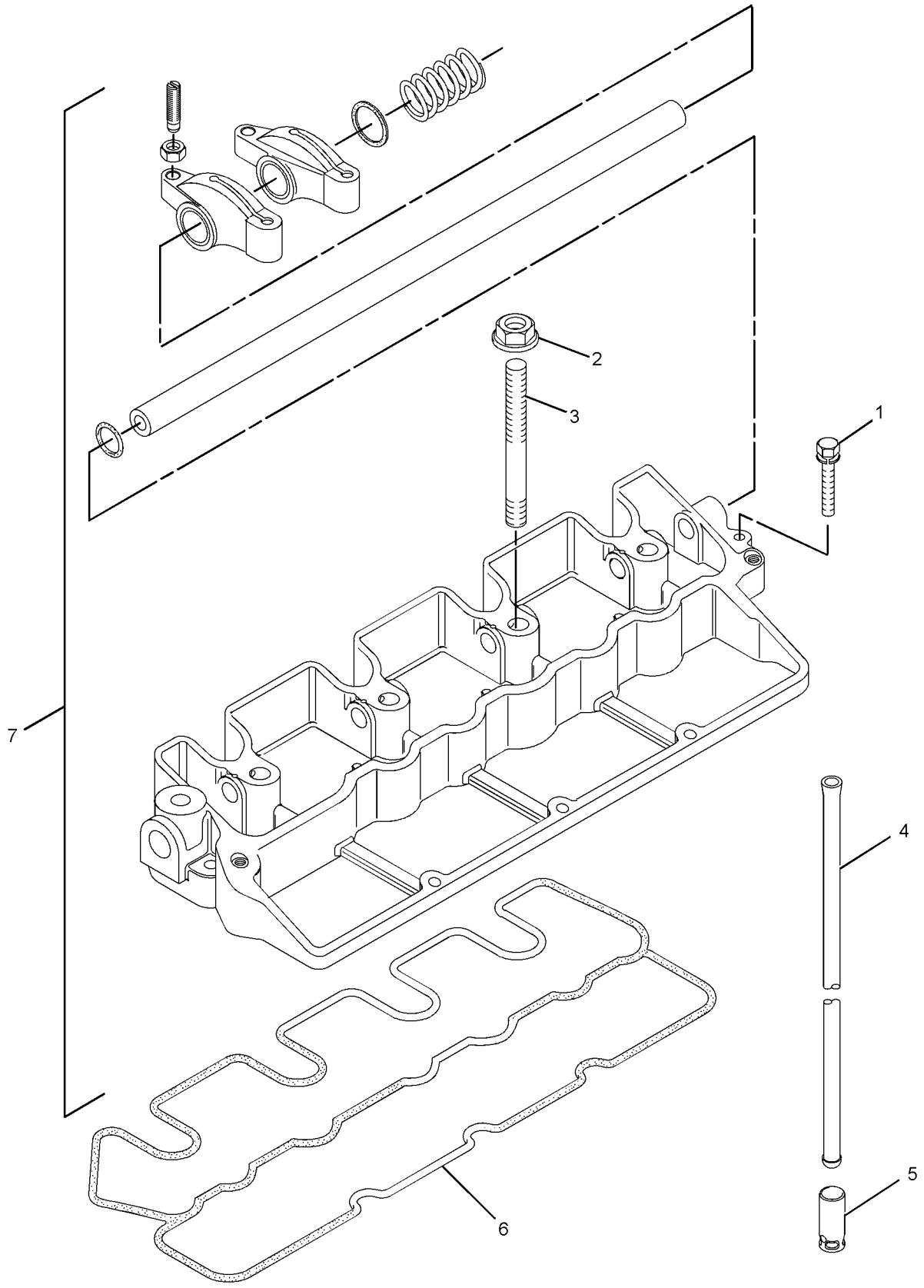

GRAPHIC #1 <END> g01419056

368-4112 MOUNTING GP-ENGINE

PART OF 489-9224, 514-6556 ENGINE AR-PRIMARY

SMCS-1152, 1153, 1154 **i05203372**

NOTE	REF NO	GRAPHIC REF	PART NUMBER	QTY	PART NAME 1 2 3 4 5 6 (PRODUCT LEVEL)	SEE PAGE
	1	1	**290-8043**	8	BOLT	
	2	1	**154-2403**	8	WASHER	
M	3	1	**198-2663**	8	BOLT (M14X1.5X30-MM)	
	4	1	**271-2877**	2	BRACKET-MOUNTING	
	5	1	**238-9628**	2	BRACKET-MOUNTING	

M - METRIC PART

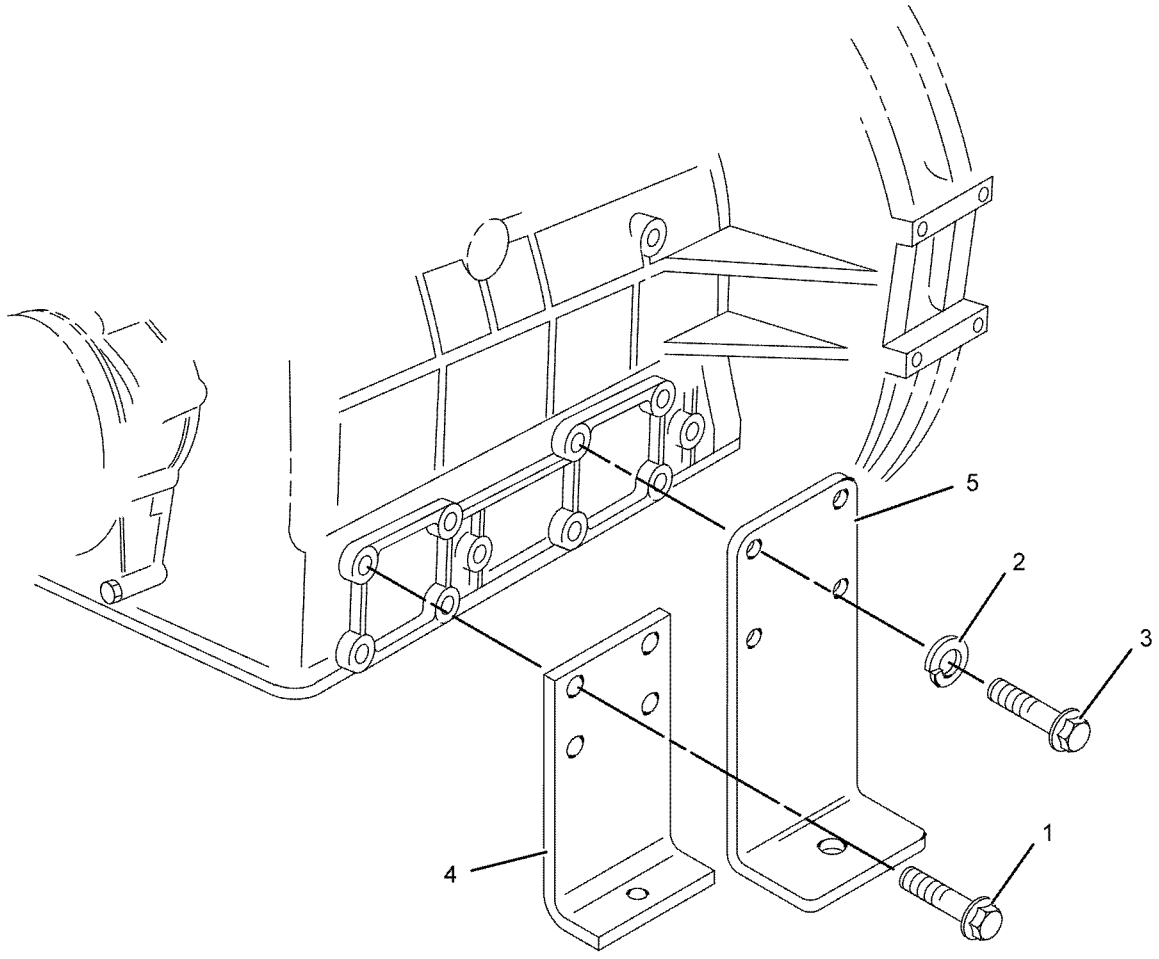

GRAPHIC #1 <END> g01085947

600-5739 MOUNTING GP-ENGINE

PART OF 514-6556 ENGINE AR-PRIMARY

SMCS-1152, 1153, 1154 **i09966061**

NOTE	REF NO	GRAPHIC REF	PART NUMBER	QTY	PART NAME 1 2 3 4 5 6 (PRODUCT LEVEL)	SEE PAGE
	1	1	**7X-0796**	8	LOCKWASHER (10.2X18.4X2.5-MM THK)	
M	2	1	**141-5453**	8	BOLT (M14X1.5X30-MM)	
	3	1	**238-9628**	2	BRACKET-MOUNTING	
	4	1	**271-2877**	2	BRACKET-MOUNTING	
	5	1	**290-8043**	8	BOLT	

M - METRIC PART

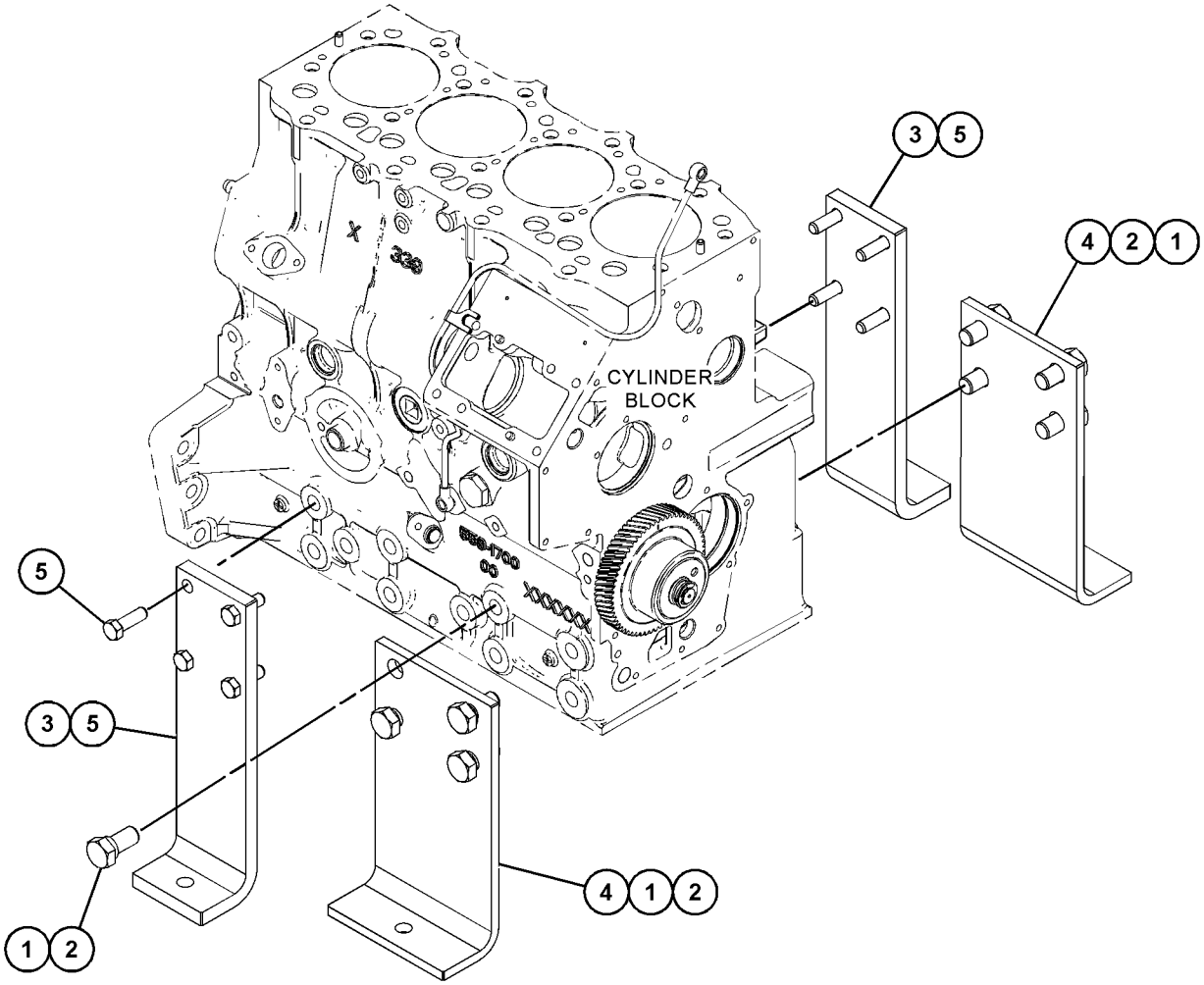

GRAPHIC #1 <END> g07694880

308-2295 PAN GP-OIL

PART OF 435-1645, 435-1649 CYLINDER BLOCK GP-LONG, 433-1379 ENGINE AR, 435-1636, 435-1641, 435-1646, 435-1647 ENGINE AR-PRIMARY
TYPE 1

SMCS-1302 **i03200747**

NOTE	REF NO	GRAPHIC REF	PART NUMBER	QTY	PART NAME 1 2 3 4 5 6 (PRODUCT LEVEL)	SEE PAGE
M	1	1	**153-6833**	31	BOLT (M6X1X13-MM)	
	2	1	**153-6835**	1	SEAL-O-RING	
	3	1	**153-6838**	3	BOLT AS	
	4	1	**153-6841**	4	SEAL-O-RING	
	5	1	**154-1947**	1	PIPE-OIL	
	6	1	**154-1948**	1	STRAINER (OIL PAN) (ENGINE)	
	7	1	**215-2605**	1	GASKET	
	8	1	**218-2333**	1	PAN-OIL	
	9	1	**229-5150**	1	GUIDE AS-GAUGE	
	10	1	**229-5151**	1	GAUGE-OIL LEVEL (DIPSTICK) (ENGINE)	
	11	1	**319-7366**	1	PLUG	

M - METRIC PART

308-2295 **PAN GP-OIL (**contd.**)** **i03200747**

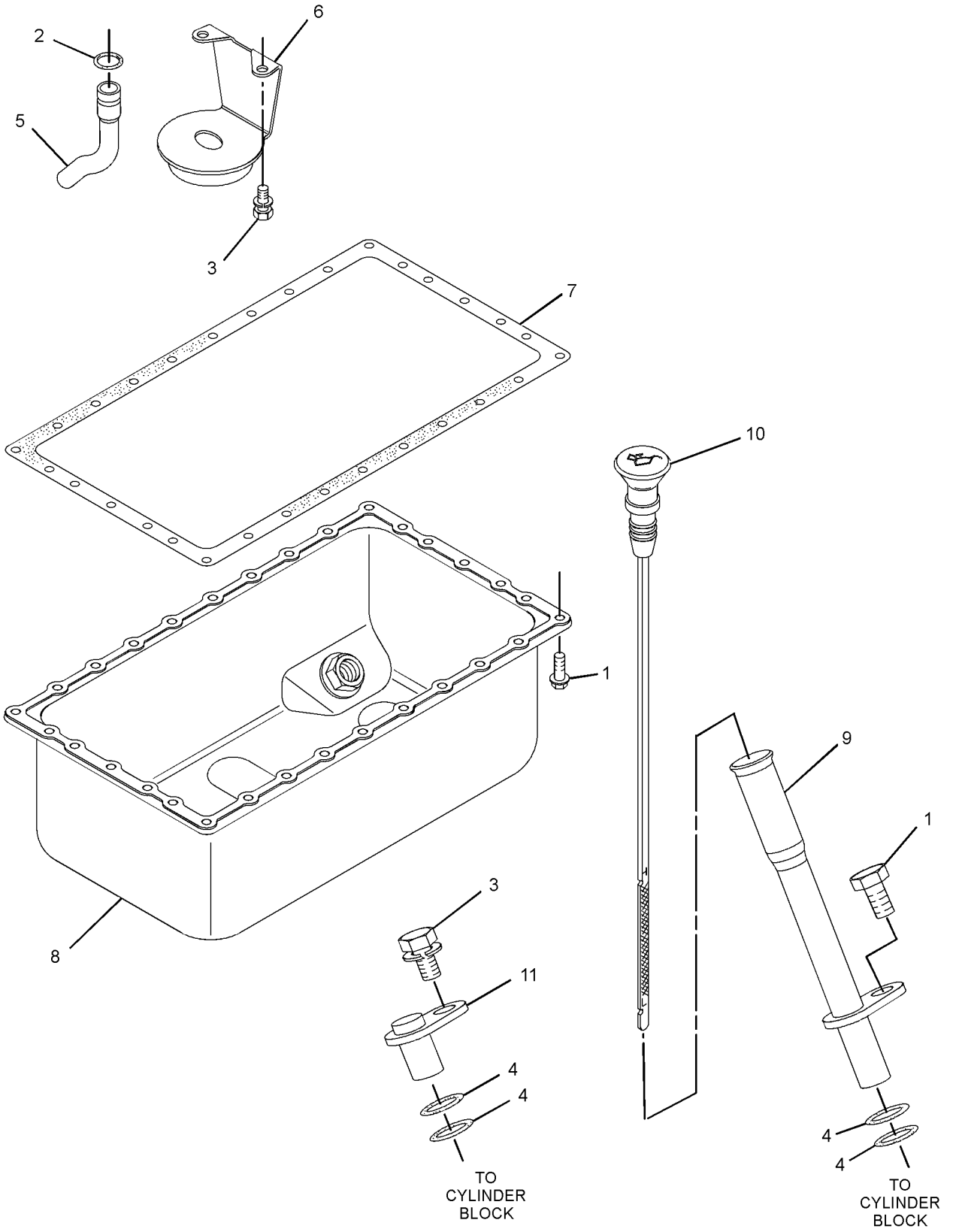

GRAPHIC #1 <END> g01528313

308-2295 PAN GP-OIL

PART OF 435-1645, 435-1649 CYLINDER BLOCK GP-LONG, 433-1379 ENGINE AR, 435-1641, 435-1646, 435-1647 ENGINE AR-PRIMARY
TYPE 2

SMCS-1302 **i03398587**

NOTE	REF NO	GRAPHIC REF	PART NUMBER	QTY	PART NAME 1 2 3 4 5 6 (PRODUCT LEVEL)	SEE PAGE
M	1	1	**153-6833**	31	BOLT (M6X1X13-MM)	
	2	1	**153-6835**	1	SEAL-O-RING	
	3	1	**153-6838**	3	BOLT AS	
	4	1	**153-6841**	4	SEAL-O-RING	
C	5	1	**316-1016**	1	PIPE-SUCTION	
C	6	1	**305-0584**	1	STRAINER (ENGINE OIL)	
	7	1	**215-2605**	1	GASKET	
	8	1	**218-2333**	1	PAN-OIL	
	9	1	**229-5150**	1	GUIDE AS-GAUGE	
	10	1	**229-5151**	1	GAUGE-OIL LEVEL (DIPSTICK) (ENGINE)	
	11	1	**319-7366**	1	PLUG	

C - CHANGE FROM PREVIOUS TYPE
M - METRIC PART

308-2295 **PAN GP-OIL (**contd.**)** **i03398587**

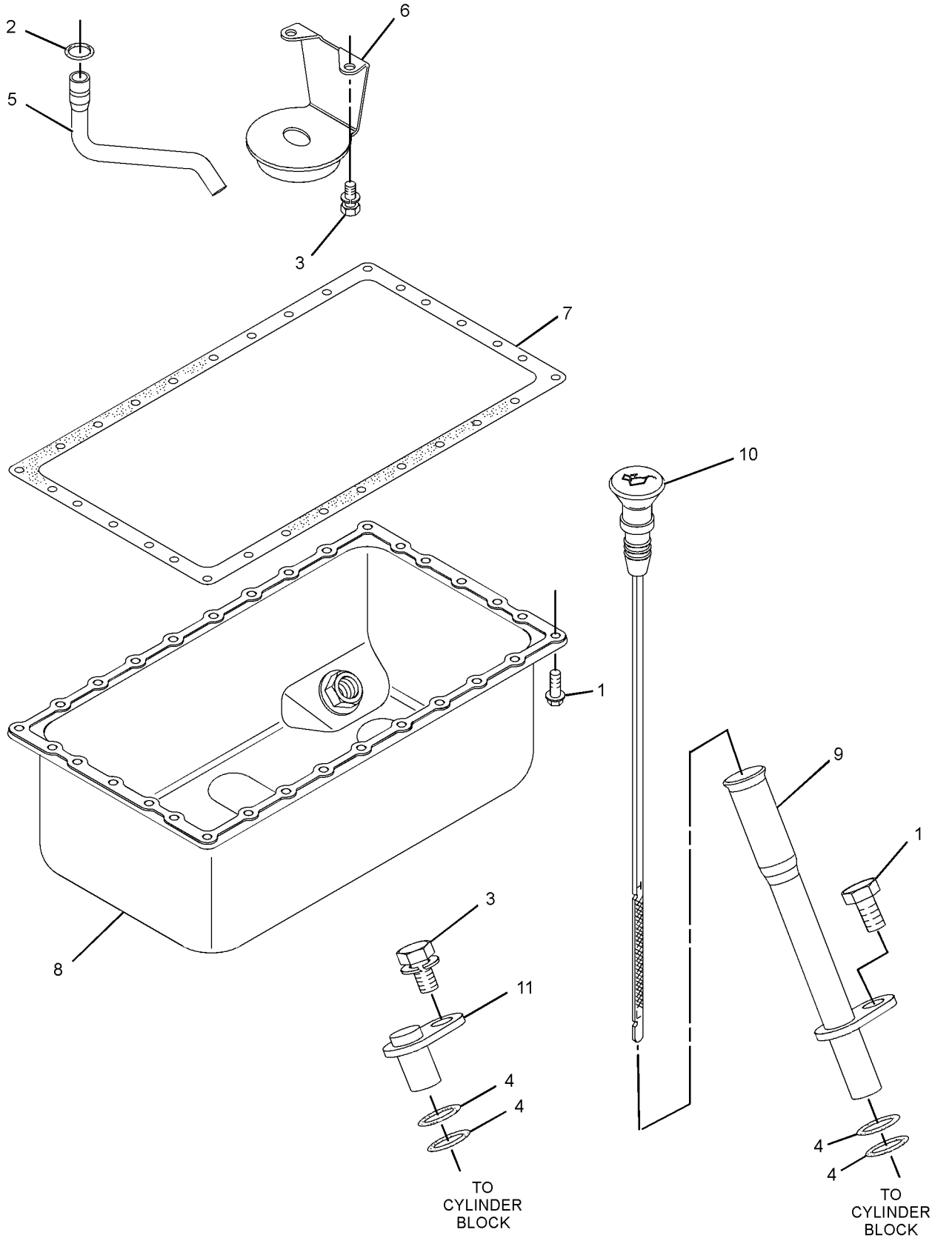

GRAPHIC #1 <END> g01762175

308-2295 PAN GP-OIL

PART OF 435-1645, 435-1649 CYLINDER BLOCK GP-LONG, 433-1379 ENGINE AR, 435-1636, 435-1641, 435-1646, 435-1647 ENGINE AR-PRIMARY
TYPE 3

SMCS-1302 **i03400583**

NOTE	REF NO	GRAPHIC REF	PART NUMBER	QTY	PART NAME 1 2 3 4 5 6 (PRODUCT LEVEL)	SEE PAGE
M	1	1	**153-6833**	31	BOLT (M6X1X13-MM)	
	2	1	**153-6835**	1	SEAL-O-RING	
	3	1	**153-6838**	3	BOLT AS	
	4	1	**153-6841**	4	SEAL-O-RING	
C	5	1	**316-2275**	1	TUBE-OIL SUCTION	
	6	1	**305-0584**	1	STRAINER (ENGINE OIL)	
	7	1	**215-2605**	1	GASKET	
	8	1	**218-2333**	1	PAN-OIL	
	9	1	**229-5150**	1	GUIDE AS-GAUGE (GAUGE)	
	10	1	**229-5151**	1	GAUGE-OIL LEVEL (DIPSTICK) (ENGINE)	
	11	1	**319-7366**	1	PLUG	

C - CHANGE FROM PREVIOUS TYPE
M - METRIC PART

308-2295 **PAN GP-OIL (**contd.**)** **i03400583**

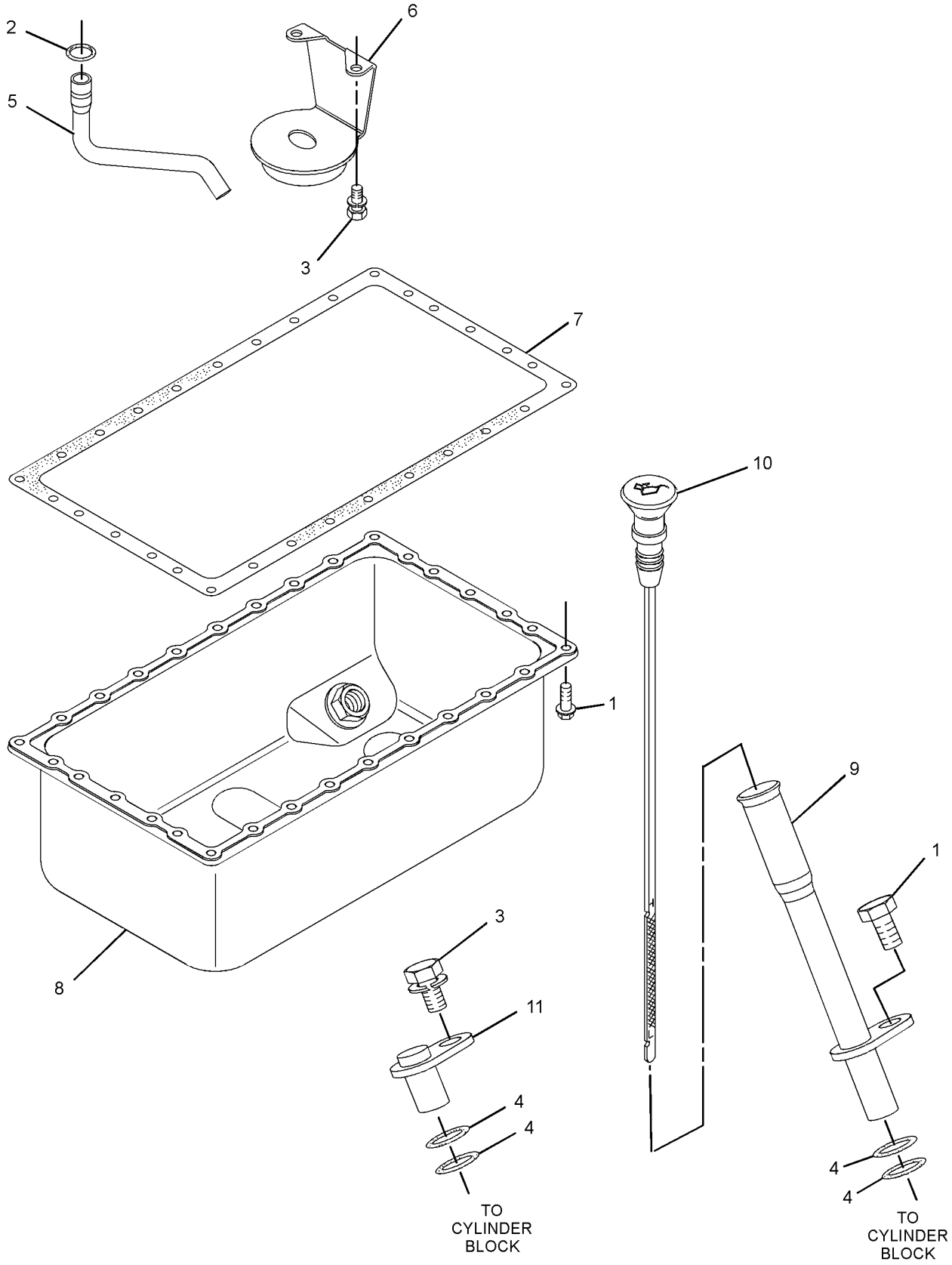

GRAPHIC #1 <END> g01762175

308-2295 PAN GP-OIL

PART OF 435-1645, 435-1649 CYLINDER BLOCK GP-LONG, 433-1379, 433-1380 ENGINE AR, 417-7273, 435-1636, 435-1641, 435-1642, 435-1646, 435-1647, 435-1658, 489-4263, 504-4602, 506-0518, 506-0519, 506-0520, 512-7969, 513-2239, 516-2639, 518-0165, 557-6086, 557-7471 ENGINE AR-PRIMARY
ALSO AN ATTACHMENT

SMCS-1302 **i08185850**

NOTE	REF NO	GRAPHIC REF	PART NUMBER	QTY	PART NAME 1 2 3 4 5 6 (PRODUCT LEVEL)	SEE PAGE
M	1	1	**100-4841**	2	BOLT (M6X1X10-MM)	
	2	1	**153-6835**	1	SEAL-O-RING	
	3	1	**153-6838**	2	BOLT AS	
	4	1	**189-9763**	4	SEAL-O-RING	
C	5	1	**325-9415**	1	TUBE-OIL SUCTION	
C	6	1	**425-6360**	1	STRAINER (ENGINE OIL)	
	7	1	**423-5607**	1	GASKET	
	8	1	**232-7823**	1	PAN-OIL	
	9	1	**229-5150**	1	GUIDE AS-GAUGE (ENGINE)	
	10	1	**229-5151**	1	GAUGE-OIL LEVEL (DIPSTICK)	
	11	1	**369-8010**	1	PLUG	
M	12	1	**454-6672**	30	BOLT-FLANGE HEAD (M6X1X10-MM)	

C - CHANGE FROM PREVIOUS TYPE
M - METRIC PART

308-2295 **PAN GP-OIL (**contd.**)** **i08185850**

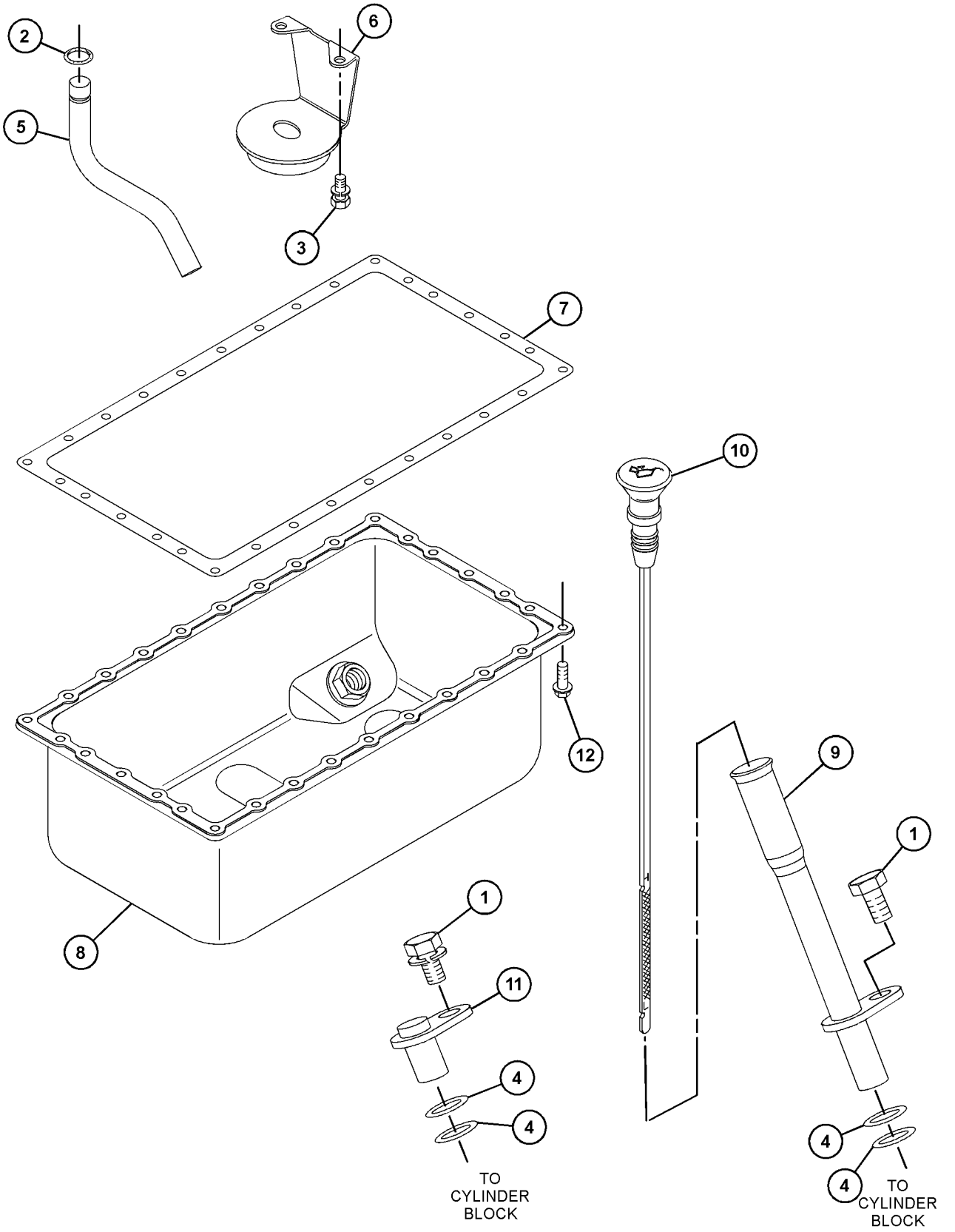

GRAPHIC #1 <END> g06198768

311-1886 PAN GP-OIL

TYPE 1

SMCS-1302 **i03104791**

NOTE	REF NO	GRAPHIC REF	PART NUMBER	QTY	PART NAME 1 2 3 4 5 6 (PRODUCT LEVEL)	SEE PAGE
M	1	1,2	**153-6833**	31	BOLT (M6X1X13-MM)	
	2	2	**153-6835**	1	SEAL-O-RING	
	3	2	**153-6838**	3	BOLT AS	
	4	1,2	**153-6841**	4	SEAL-O-RING	
	5	1	**209-7084**	1	TUBE AS-OIL GAUGE	
	6	2	**215-2605**	1	GASKET	
	7	2	**218-2333**	1	PAN-OIL	
	8	1	**236-3983**	1	GAUGE-OIL LEVEL (DIPSTICK) (ENGINE)	
	9	2	**305-0584**	1	STRAINER (ENGINE OIL)	
	10	2	**316-2275**	1	TUBE-OIL SUCTION	
	11	2	**319-7366**	1	PLUG	

M - METRIC PART

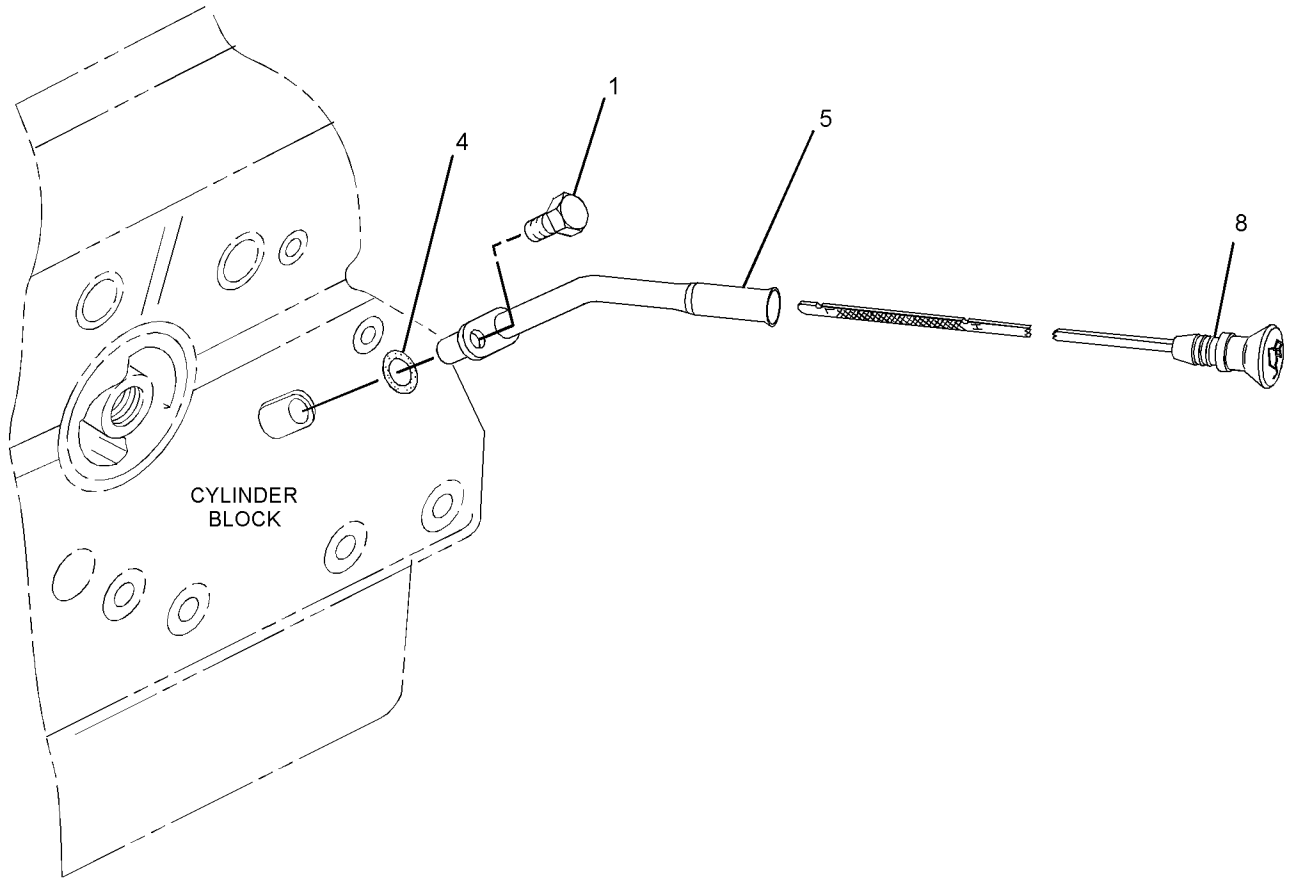

GRAPHIC #1 g01636233

311-1886 **PAN GP-OIL (**contd.**)** **i03104791**

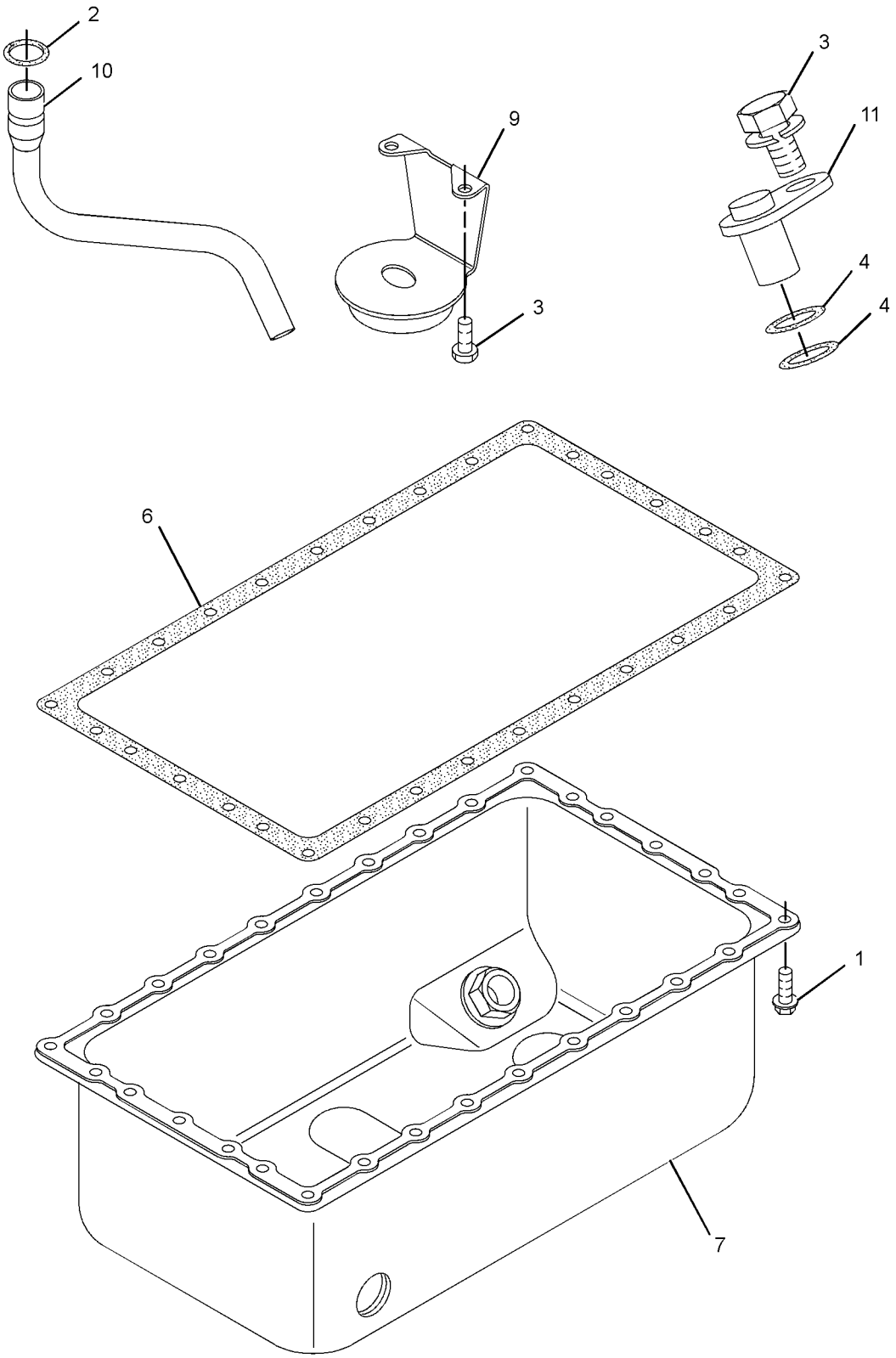

GRAPHIC #2 <END> g01636234

311-1886 PAN GP-OIL

TYPE 2

SMCS-1302 **i08205396**

NOTE	REF NO	GRAPHIC REF	PART NUMBER	QTY	PART NAME 1 2 3 4 5 6 (PRODUCT LEVEL)	SEE PAGE
M	1	1,2	**100-4841**	2	BOLT (M6X1X10-MM)	
	2	2	**153-6835**	1	SEAL-O-RING	
	3	2	**153-6838**	2	BOLT AS	
	4	1,2	**189-9763**	4	SEAL-O-RING	
	5	1	**236-3983**	1	GAUGE-OIL LEVEL (DIPSTICK) (ENGINE)	
C	6	2	**325-9415**	1	TUBE-OIL SUCTION	
	7	2	**369-8010**	1	PLUG	
	8	2	**423-5607**	1	GASKET	
C	9	2	**425-6360**	1	STRAINER (ENGINE OIL)	
	10	1	**439-0282**	1	TUBE AS	
M	11	2	**454-6672**	30	BOLT-FLANGE HEAD (M6X1X10-MM)	
	12	2	**232-7823**	1	PAN-OIL	

C - CHANGE FROM PREVIOUS TYPE
M - METRIC PART

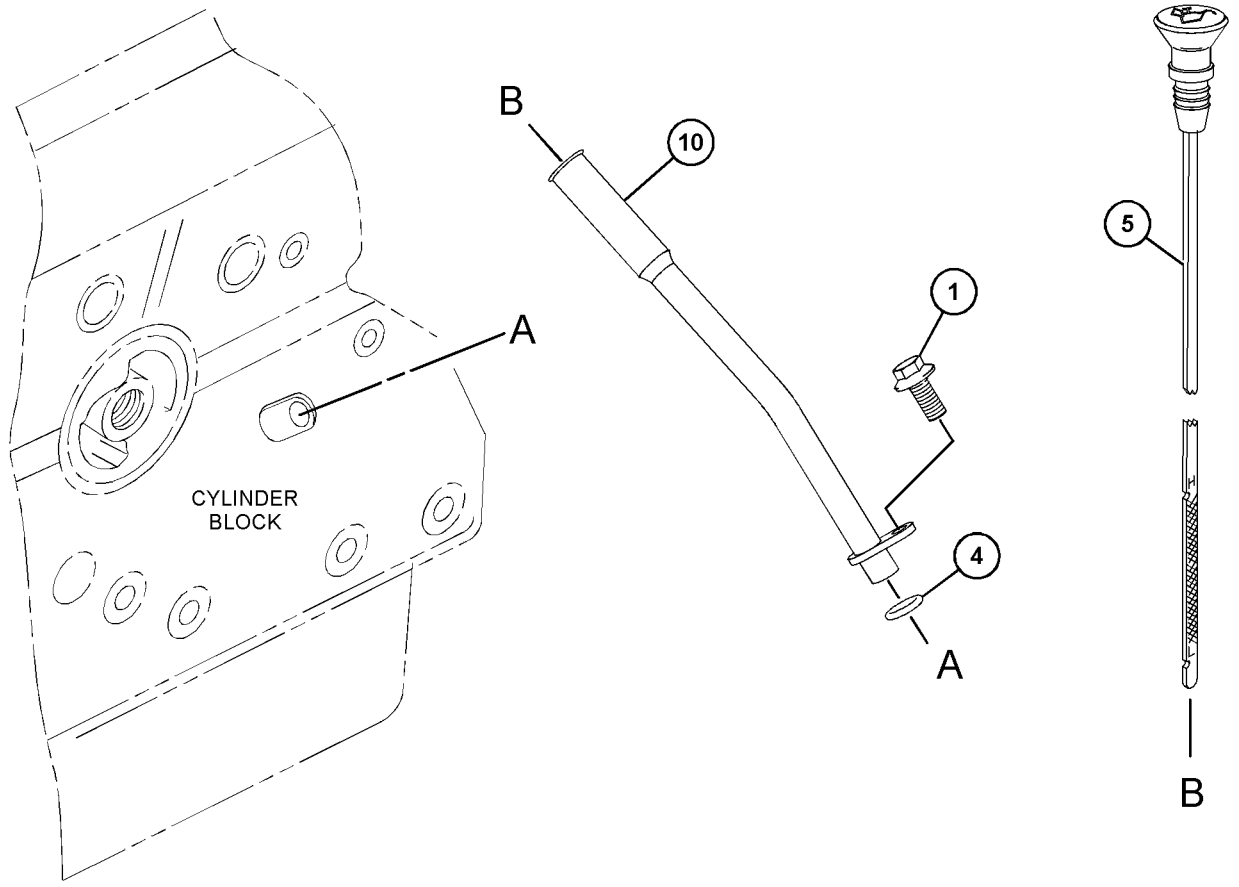

GRAPHIC #1 g06214411

311-1886 **PAN GP-OIL (**contd.**)** **i08205396**

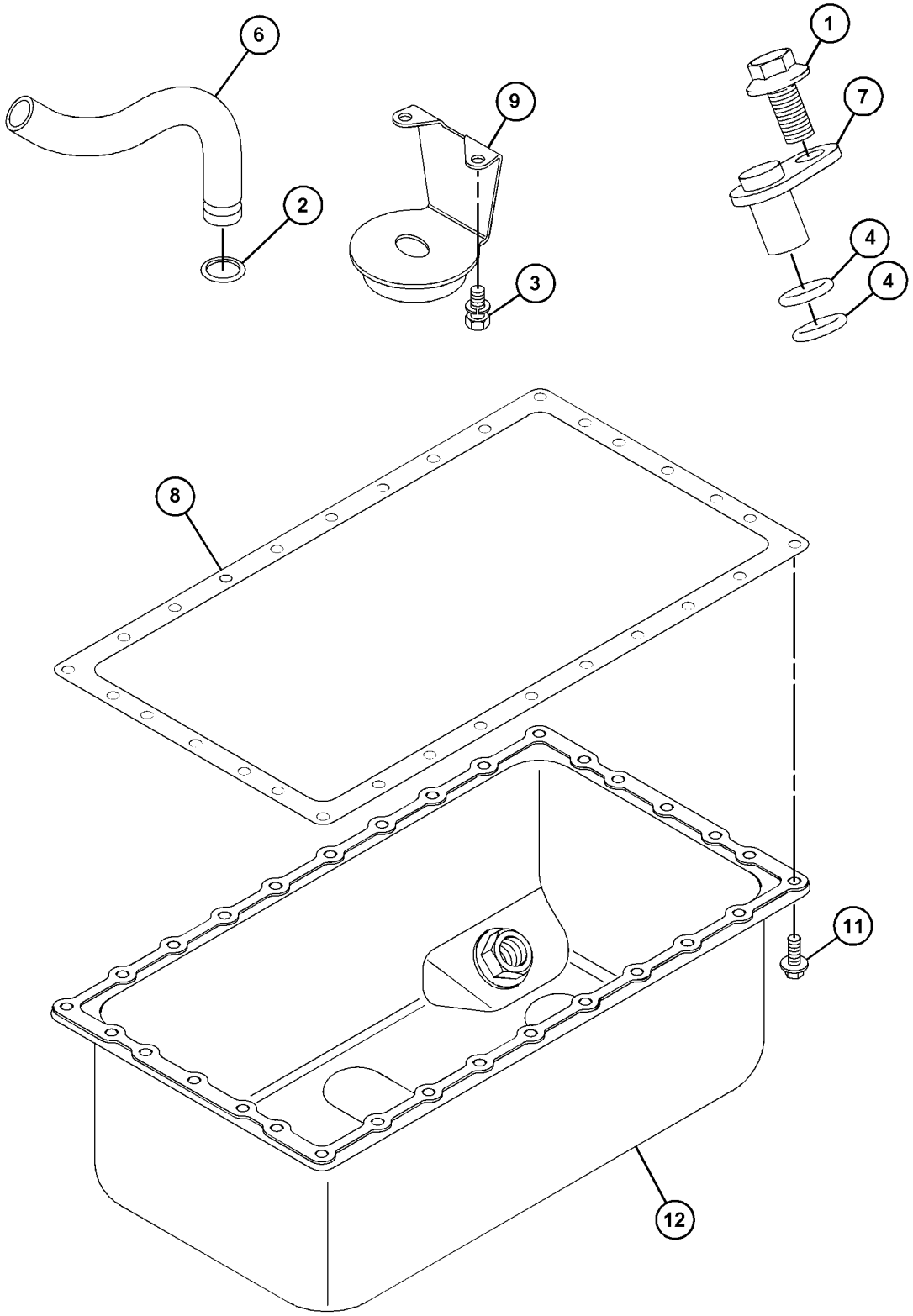

GRAPHIC #2 <END> g06581237

317-3037 PAN GP-OIL

TYPE 1

SMCS-1302 **i02888559**

NOTE	REF NO	GRAPHIC REF	PART NUMBER	QTY	PART NAME 1 2 3 4 5 6 (PRODUCT LEVEL)	SEE PAGE
M	1	1,2	**153-6833**	31	BOLT (M6X1X13-MM)	
	2	2	**153-6835**	1	SEAL-O-RING	
	3	1,2	**153-6838**	3	BOLT AS	
	4	1	**153-6841**	4	SEAL-O-RING	
M	5	1	**180-6118**	1	BOLT AS (M8X1.25X12-MM)	
	6	1	**209-7088**	1	TUBE AS-OIL GAUGE	
	7	2	**215-2605**	1	GASKET	
	8	2	**218-2333**	1	PAN-OIL	
	9	1	**228-7472**	1	GAUGE AS-OIL LEVEL (DIPSTICK) (ENGINE)	
	10	2	**305-0584**	1	STRAINER (ENGINE OIL)	
	11	2	**316-2275**	1	TUBE-OIL SUCTION	
	12	1	**319-7366**	1	PLUG	

M - METRIC PART

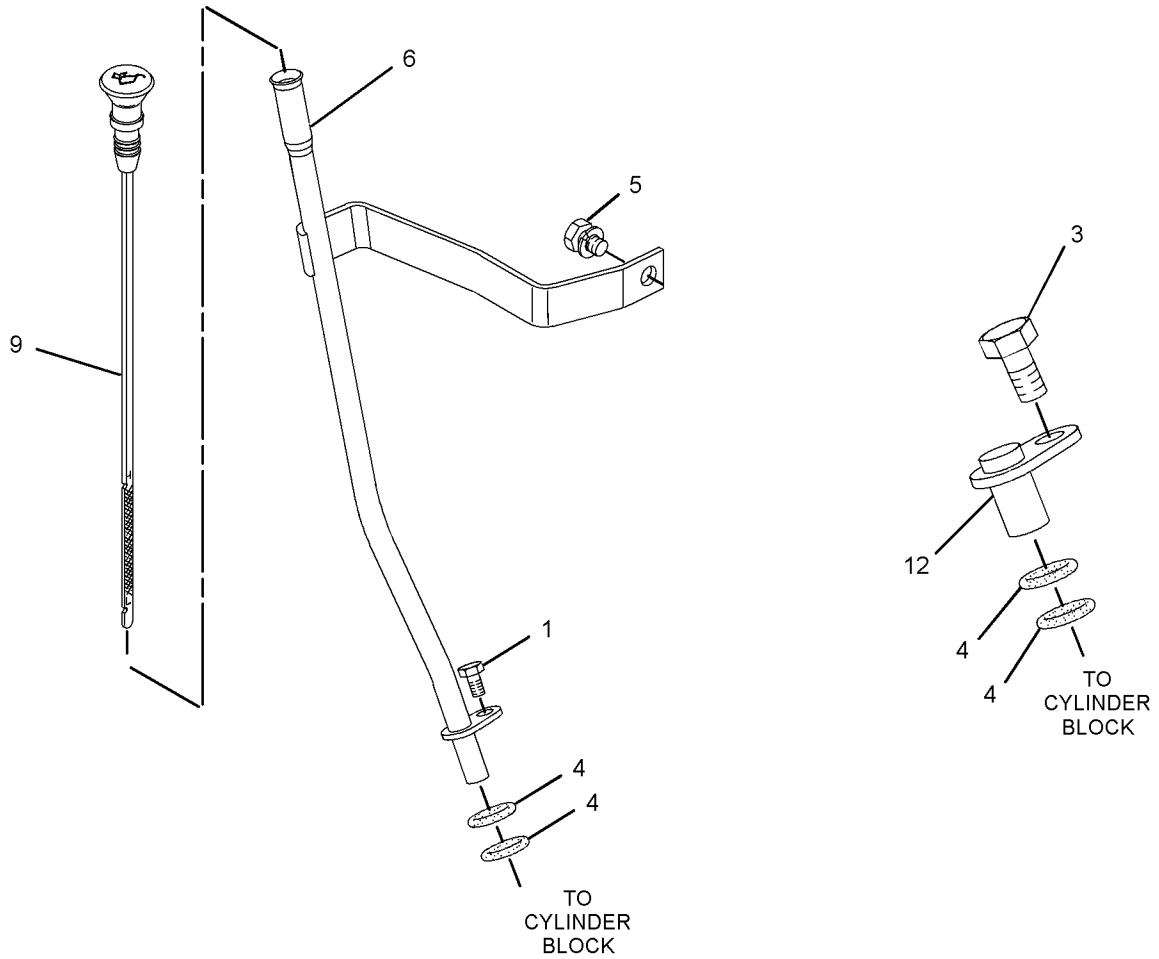

GRAPHIC #1 g01639954

317-3037 **PAN GP-OIL (**contd.**)** **i02888559**

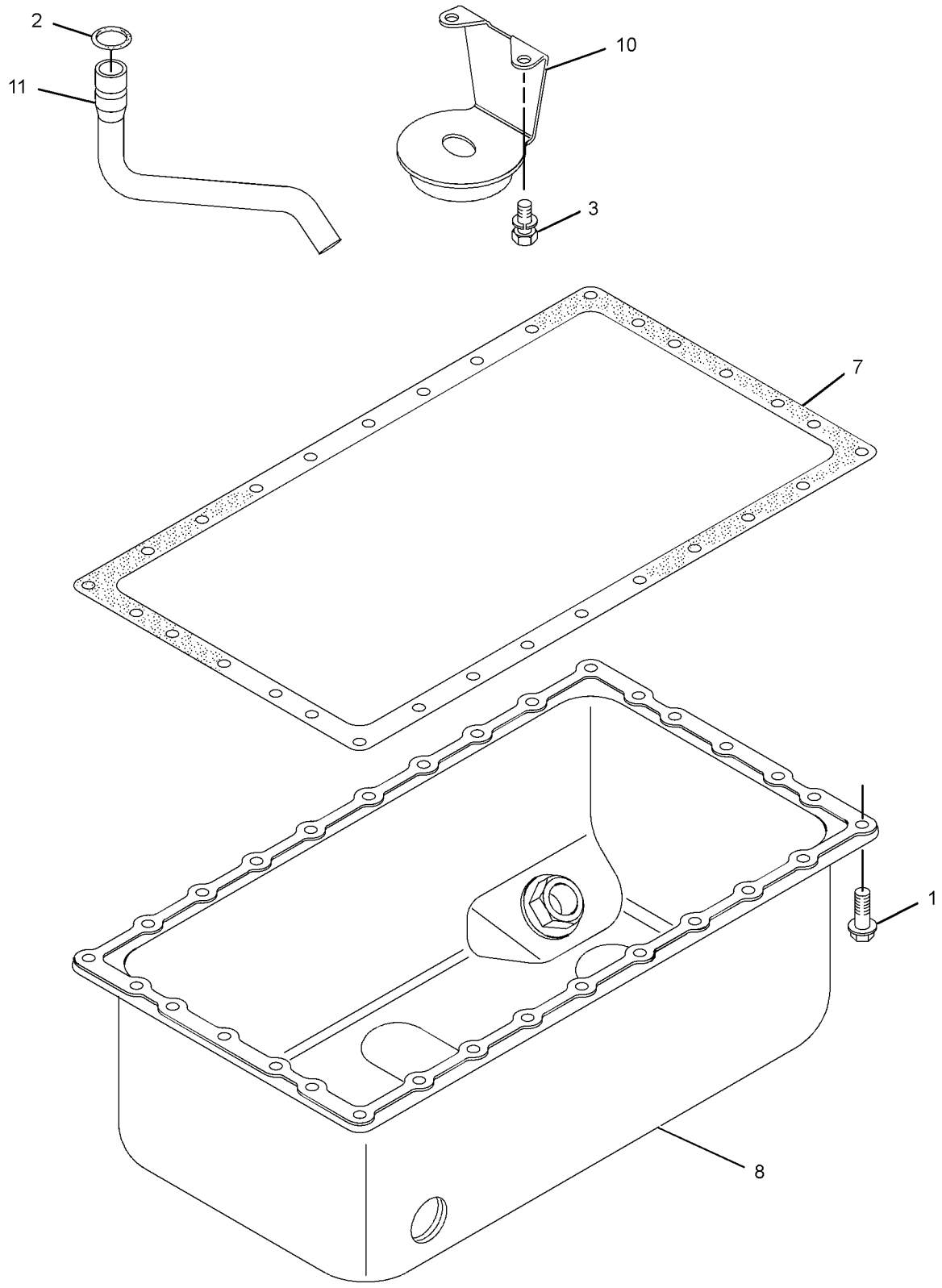

GRAPHIC #2 <END> g01639955

317-3037 PAN GP-OIL

PART OF 489-9224, 514-6556 ENGINE AR-PRIMARY
TYPE 2

SMCS-1302 **i08206124**

NOTE	REF NO	GRAPHIC REF	PART NUMBER	QTY	PART NAME 1 2 3 4 5 6 (PRODUCT LEVEL)	SEE PAGE
M	1	1	**100-4841**	2	BOLT (M6X1X10-MM)	
	2	2	**153-6835**	1	SEAL-O-RING	
	3	2	**153-6838**	2	BOLT AS	
	4	1	**189-9763**	4	SEAL-O-RING	
M	5	1	**180-6118**	1	BOLT AS (M8X1.25X12-MM)	
	6	1	**209-7088**	1	TUBE AS-OIL GAUGE	
	7	1	**228-7472**	1	GAUGE AS-OIL LEVEL (DIPSTICK) (ENGINE)	
C	8	2	**325-9415**	1	TUBE-OIL SUCTION	
	9	1	**369-8010**	1	PLUG	
	10	2	**423-5607**	1	GASKET	
C	11	2	**425-6360**	1	STRAINER (ENGINE OIL)	
M	12	2	**454-6672**	30	BOLT-FLANGE HEAD (M6X1X10-MM)	
	13	2	**232-7823**	1	PAN-OIL	

C - CHANGE FROM PREVIOUS TYPE
M - METRIC PART

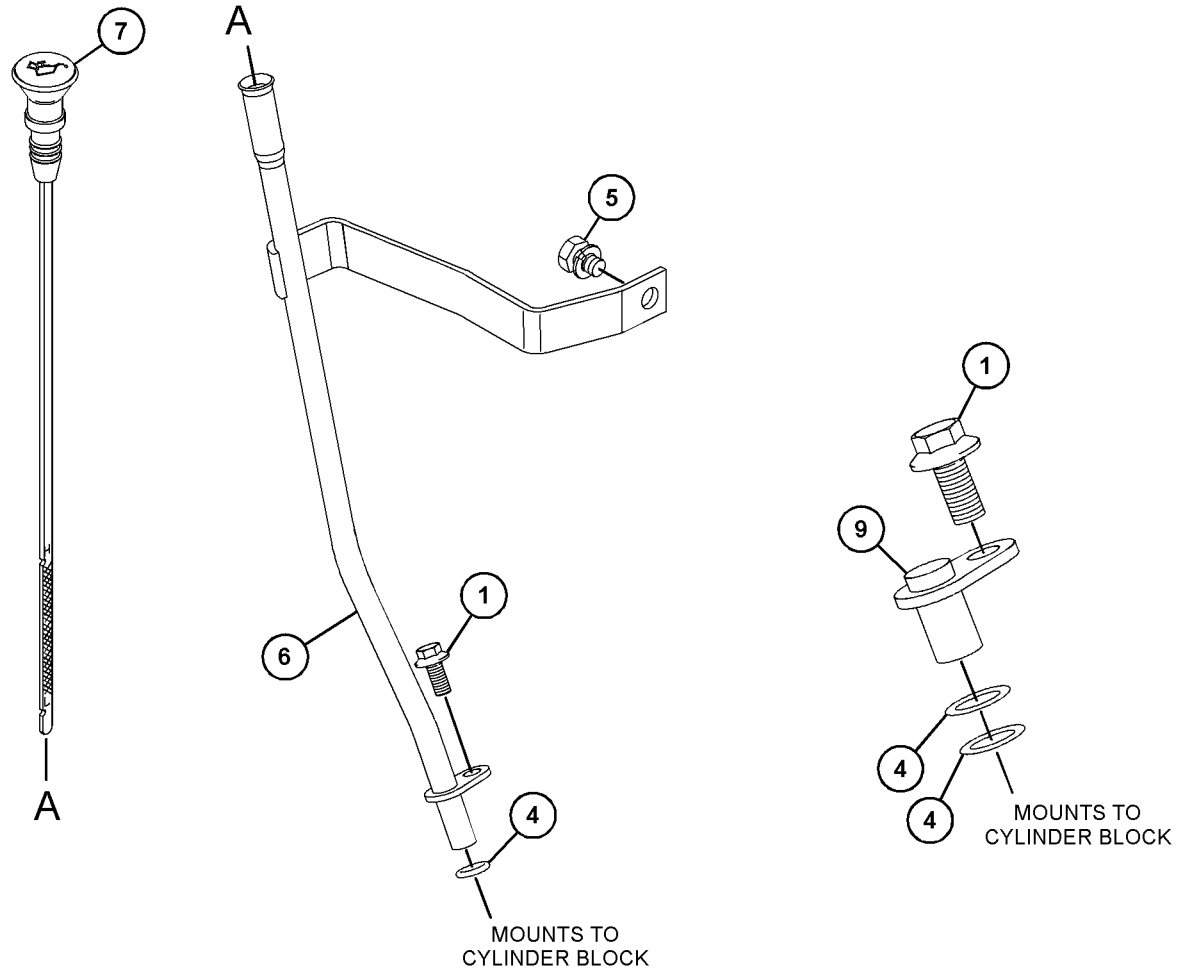

GRAPHIC #1 g06199989

317-3037 **PAN GP-OIL (**contd.**)** **i08206124**

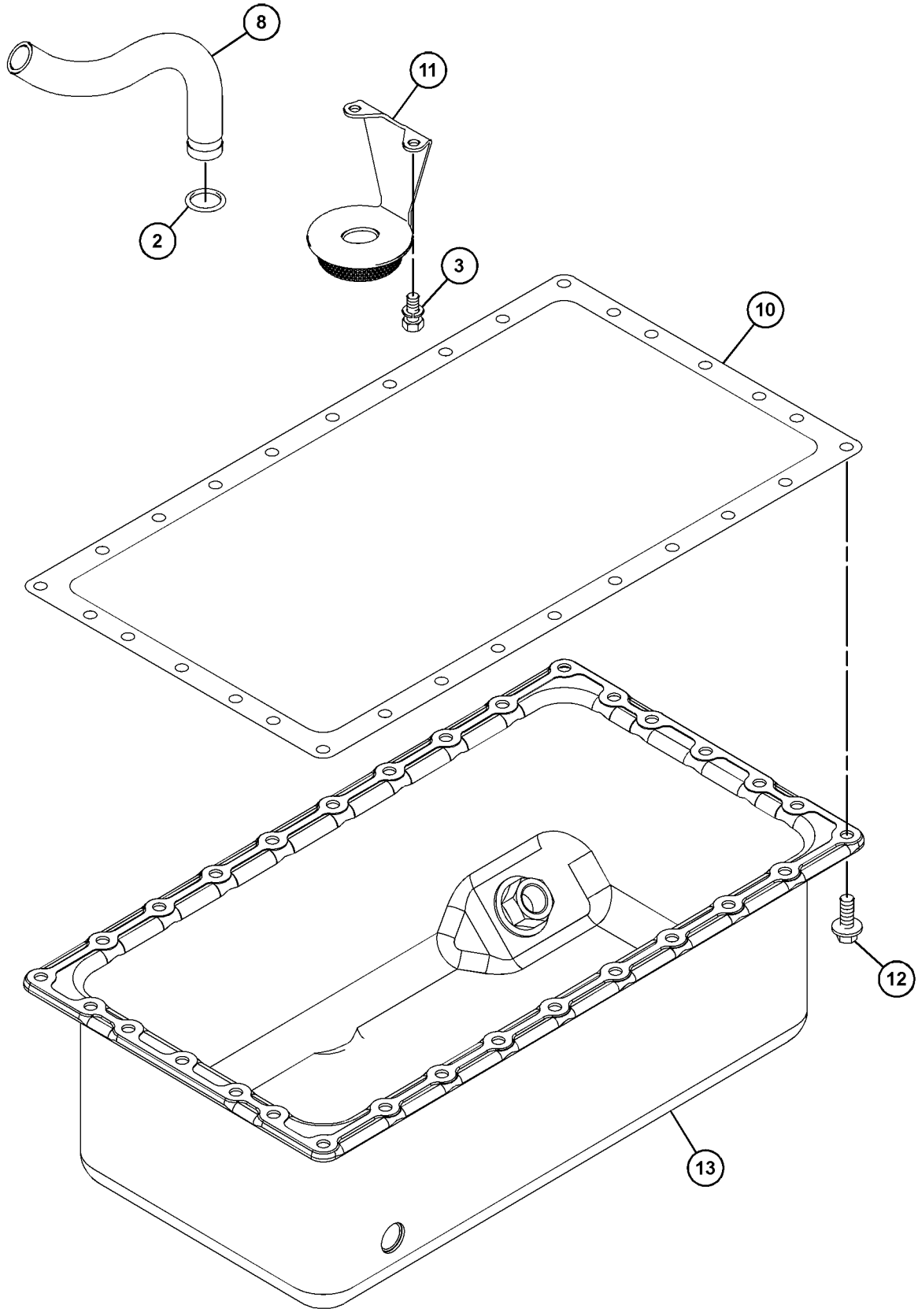

GRAPHIC #2 <END> g06199990

322-2416 PAN GP-OIL

SMCS-1302 **i08462296**

NOTE	REF NO	GRAPHIC REF	PART NUMBER	QTY	PART NAME 1 2 3 4 5 6 (PRODUCT LEVEL)	SEE PAGE
M	1	1,2	**100-4841**	32	BOLT (M6X1X10-MM)	
	2	2	**153-6835**	1	SEAL-O-RING	
	3	1,2	**153-6838**	2	BOLT AS	
	4	1	**189-9763**	4	SEAL-O-RING	
	5	2	**288-8814**	1	PIPE-OIL	
	6	2	**288-8813**	1	STRAINER (OIL PAN)	
	7	2	**423-5607**	1	GASKET	
	8	1	**229-5150**	1	GUIDE AS-GAUGE	
	9	1	**229-5151**	1	GAUGE-OIL LEVEL (DIPSTICK) (ENGINE)	
	10	2	**557-8814**	1	PAN AS-OIL	
	11	1	**369-8010**	1	PLUG	

M - METRIC PART

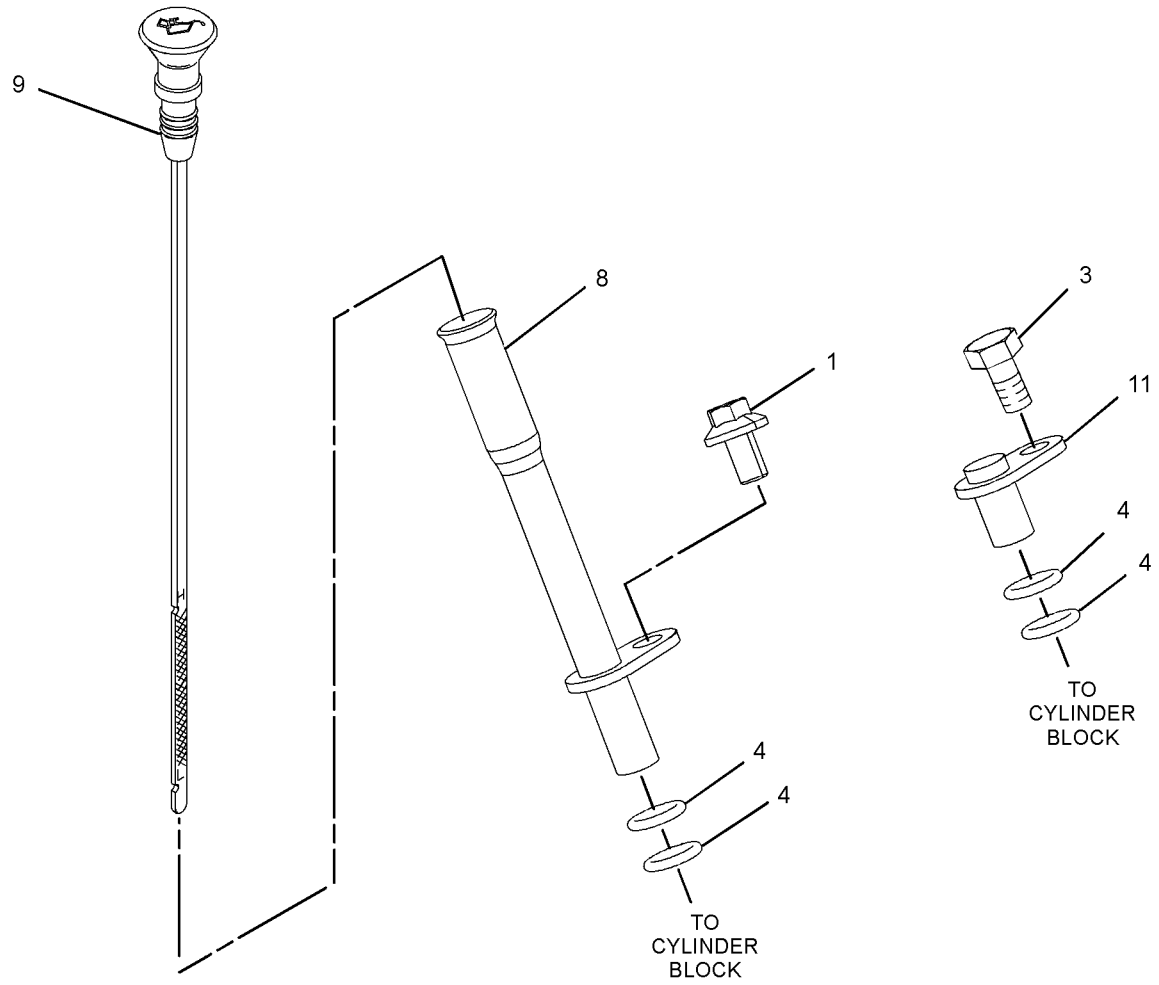

GRAPHIC #1 g06104545

322-2416 **PAN GP-OIL (**contd.**)** **i08462296**

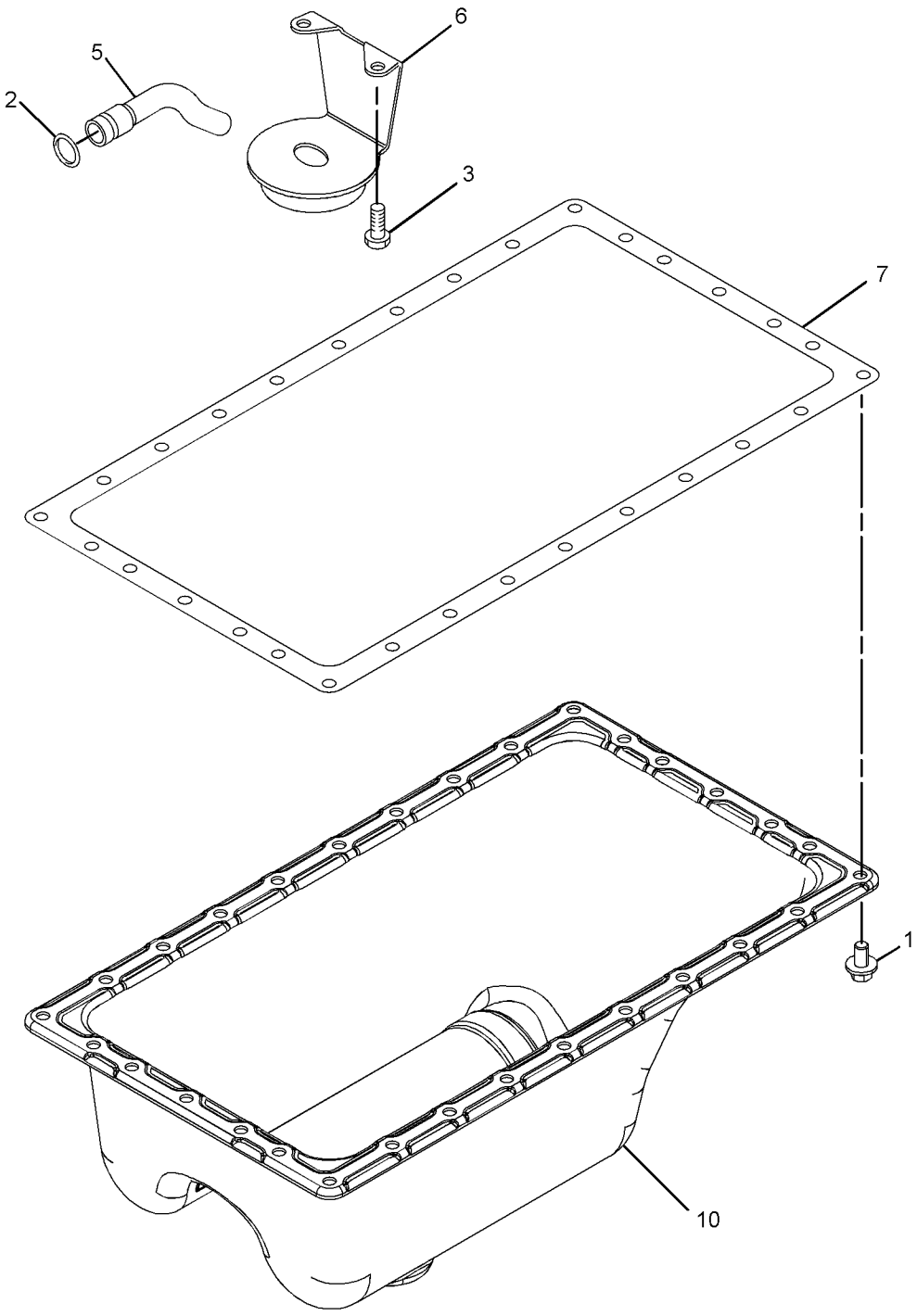

GRAPHIC #2 <END> g07349712

363-3164 PAN GP-OIL

PART OF 499-6420 ENGINE AR-PRIMARY

SMCS-1302 **i08058502**

NOTE	REF NO	GRAPHIC REF	PART NUMBER	QTY	PART NAME 1 2 3 4 5 6 (PRODUCT LEVEL)	SEE PAGE
M	1	1	**100-4841**	32	BOLT (M6X1X10-MM)	
	2	1	**153-6835**	1	SEAL-O-RING	
	3	1	**153-6838**	2	BOLT AS	
	4	1	**189-9763**	4	SEAL-O-RING	
M	5	1	**114-4363**	1	BOLT (M8X1.25X12-MM)	
	6	1	**209-7088**	1	TUBE AS-OIL GAUGE	
	7	1	**423-5607**	1	GASKET	
	8	1	**228-7472**	1	GAUGE AS-OIL LEVEL (DIPSTICK) (ENGINE)	
	9	1	**312-4554**	1	PAN-OIL	
	10	1	**325-9415**	1	TUBE-OIL SUCTION	
	11	1	**425-6360**	1	STRAINER (ENGINE)	
	12	1	**369-8010**	1	PLUG	

M - METRIC PART

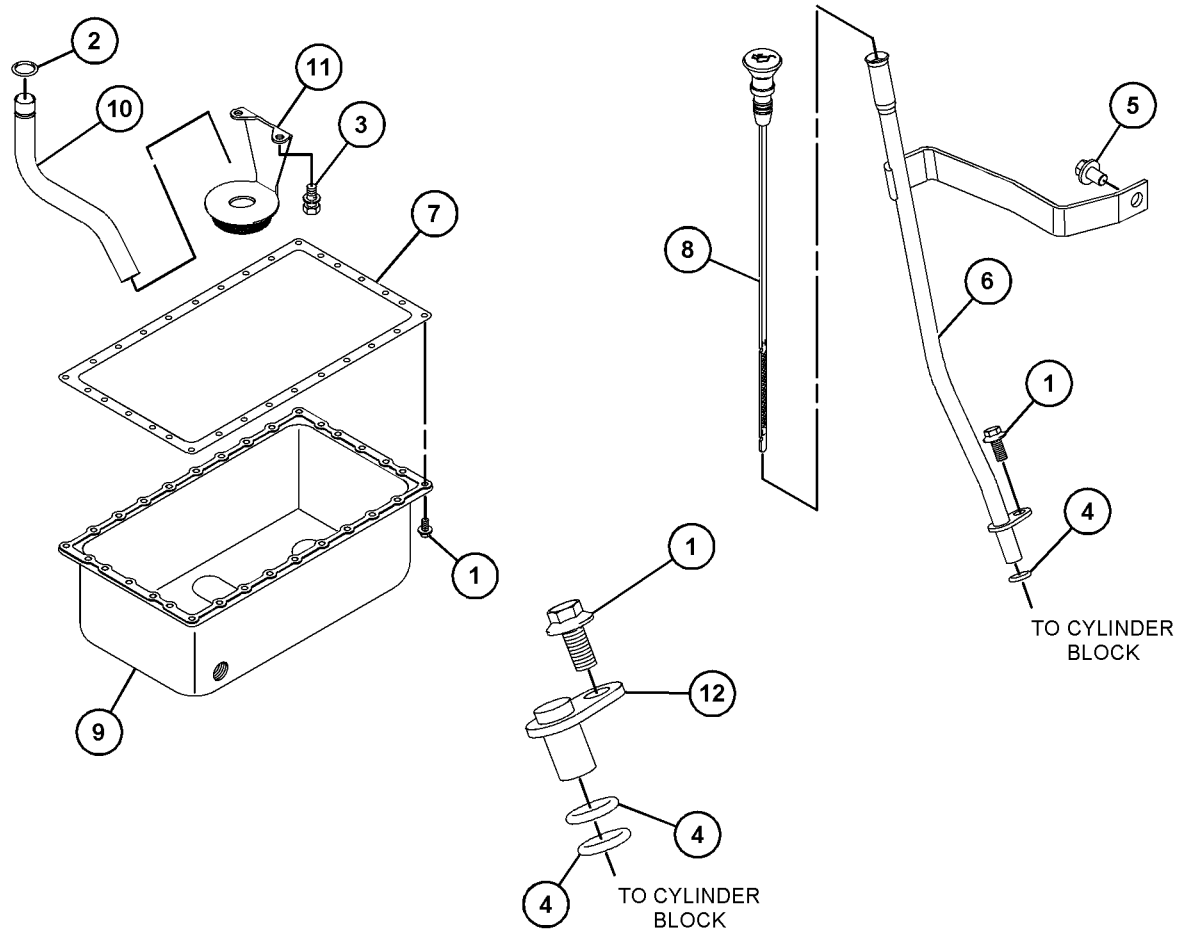

GRAPHIC #1 <END> g06581600

588-9925 PAN GP-OIL

PART OF 433-1379 ENGINE AR, 417-7273, 435-1636, 435-1641, 435-1642, 435-1647 ENGINE AR-PRIMARY
ALSO AN ATTACHMENT

SMCS-1302 **i09694026**

NOTE	REF NO	GRAPHIC REF	PART NUMBER	QTY	PART NAME 1 2 3 4 5 6 (PRODUCT LEVEL)	SEE PAGE
M	1	1	**100-4841**	2	BOLT (M6X1X10-MM)	
	2	1	**153-6835**	1	SEAL-O-RING	
					—OR—	
AF			**095-1515**	1	SEAL-O-RING	
					—OR—	
AF			**206-9292**	1	SEAL-O-RING	
	3	1	**153-6838**	2	BOLT AS	
	4	1	**189-9763**	4	SEAL-O-RING	
	5	1	**423-5607**	1	GASKET	
	6	1	**229-5150**	1	GUIDE AS-GAUGE	
	7	1	**229-5151**	1	GAUGE-OIL LEVEL (DIPSTICK)	
	8	1	**325-9415**	1	TUBE-OIL SUCTION	
	9	1	**369-8010**	1	PLUG	
	10	1	**425-6360**	1	STRAINER	
M	11	1	**454-6672**	30	BOLT-FLANGE HEAD (M6X1X10-MM)	
	12	1	**232-7823**	1	PAN-OIL	

A - NOT PART OF THIS GROUP
F - NOT SHOWN
M - METRIC PART

588-9925 **PAN GP-OIL (**contd.**)** **i09694026**

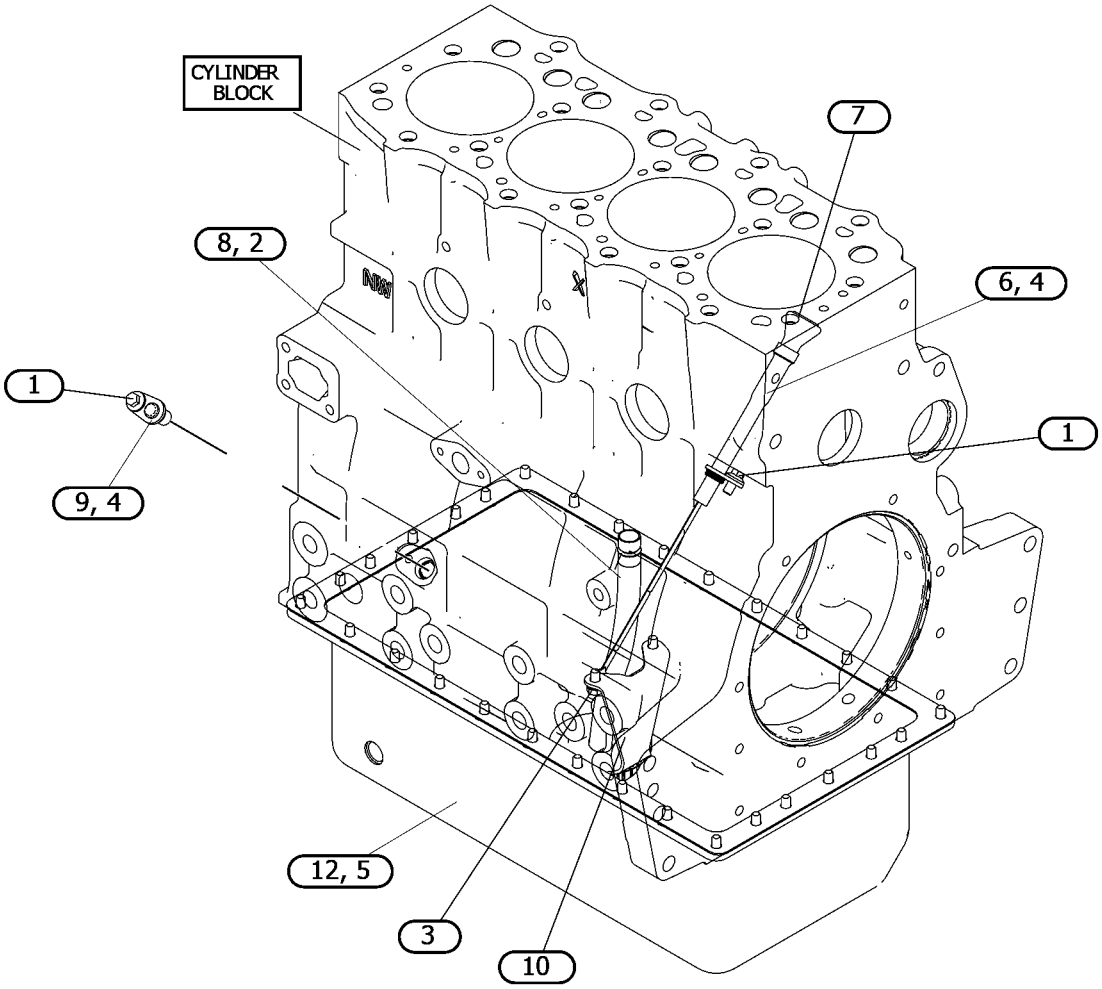

GRAPHIC #1 <END> g07554176

598-5067 PAN GP-OIL

PART OF 514-6556 ENGINE AR-PRIMARY

SMCS-1302 **i08802984**

NOTE	REF NO	GRAPHIC REF	PART NUMBER	QTY	PART NAME 1 2 3 4 5 6 (PRODUCT LEVEL)	SEE PAGE
M	1	1	**100-4841**	2	BOLT (M6X1X10-MM)	
M	2	1	**114-4363**	1	BOLT (M8X1.25X12-MM)	
	3	1	**153-6835**	1	SEAL-O-RING	
					—OR—	
AF			**095-1515**	1	SEAL-O-RING	
					—OR—	
AF			**206-9292**	1	SEAL-O-RING	
	4	1	**153-6838**	2	BOLT AS	
	5	1	**423-5607**	1	GASKET	
	6	1	**189-9763**	4	SEAL-O-RING	
	7	1	**209-7088**	1	TUBE AS-OIL GAUGE	
	8	1	**228-7472**	1	GAUGE AS-OIL LEVEL (DIPSTICK)	
	9	1	**325-9415**	1	TUBE-OIL SUCTION	
	10	1	**369-8010**	1	PLUG	
	11	1	**425-6360**	1	STRAINER (SUCTION)	
M	12	1	**454-6672**	30	BOLT-FLANGE HEAD (M6X1X10-MM)	
	13	1	**232-7823**	1	PAN-OIL	

A - NOT PART OF THIS GROUP
F - NOT SHOWN
M - METRIC PART

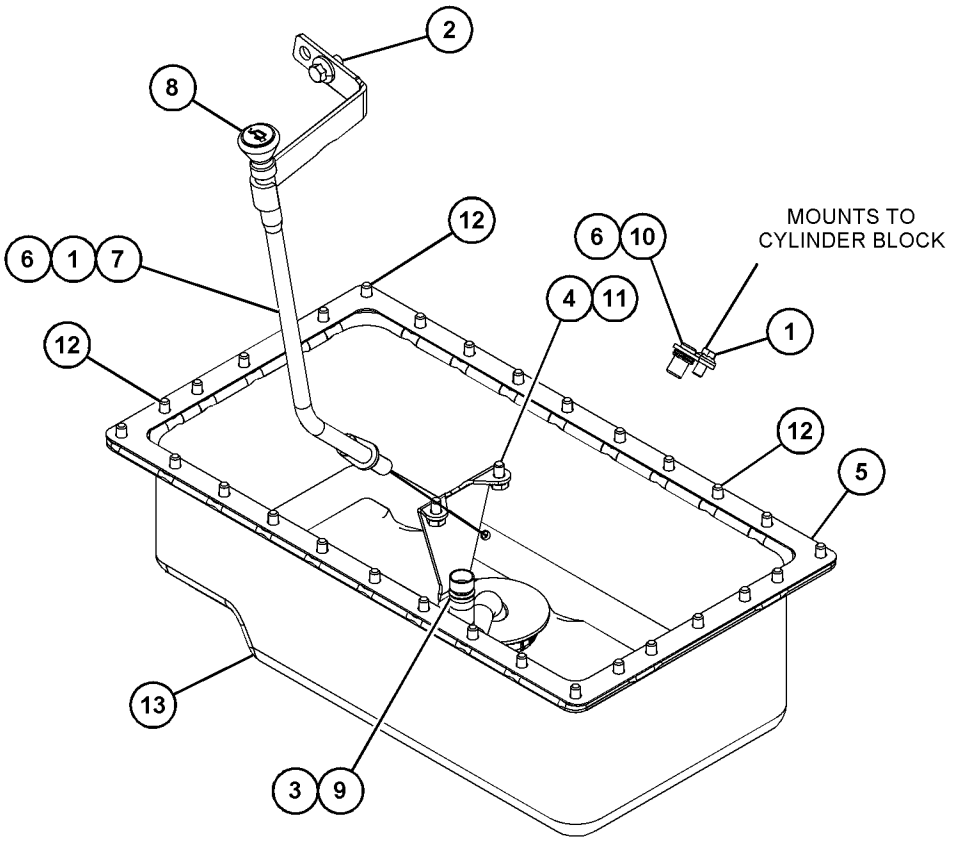

GRAPHIC #1 <END> g07547316

600-9206 PAN GP-OIL

S/N: C6M10203-UP

SMCS-1302 **i08803135**

NOTE	REF NO	GRAPHIC REF	PART NUMBER	QTY	PART NAME 1 2 3 4 5 6 (PRODUCT LEVEL)	SEE PAGE
M	1	1	**100-4841**	32	BOLT (M6X1X10-MM)	
M	2	1	**114-4363**	1	BOLT (M8X1.25X12-MM)	
	3	1	**153-6835**	1	SEAL-O-RING	
	4	1	**153-6838**	2	BOLT AS	
	5	1	**189-9763**	4	SEAL-O-RING	
	6	1	**209-7088**	1	TUBE AS-OIL GAUGE	
	7	1	**228-7472**	1	GAUGE AS-OIL LEVEL (DIPSTICK)	
	8	1	**312-4554**	1	PAN-OIL	
	9	1	**325-9415**	1	TUBE-OIL SUCTION	
	10	1	**369-8010**	1	PLUG	
	11	1	**423-5607**	1	GASKET	
	12	1	**425-6360**	1	STRAINER	

M - METRIC PART

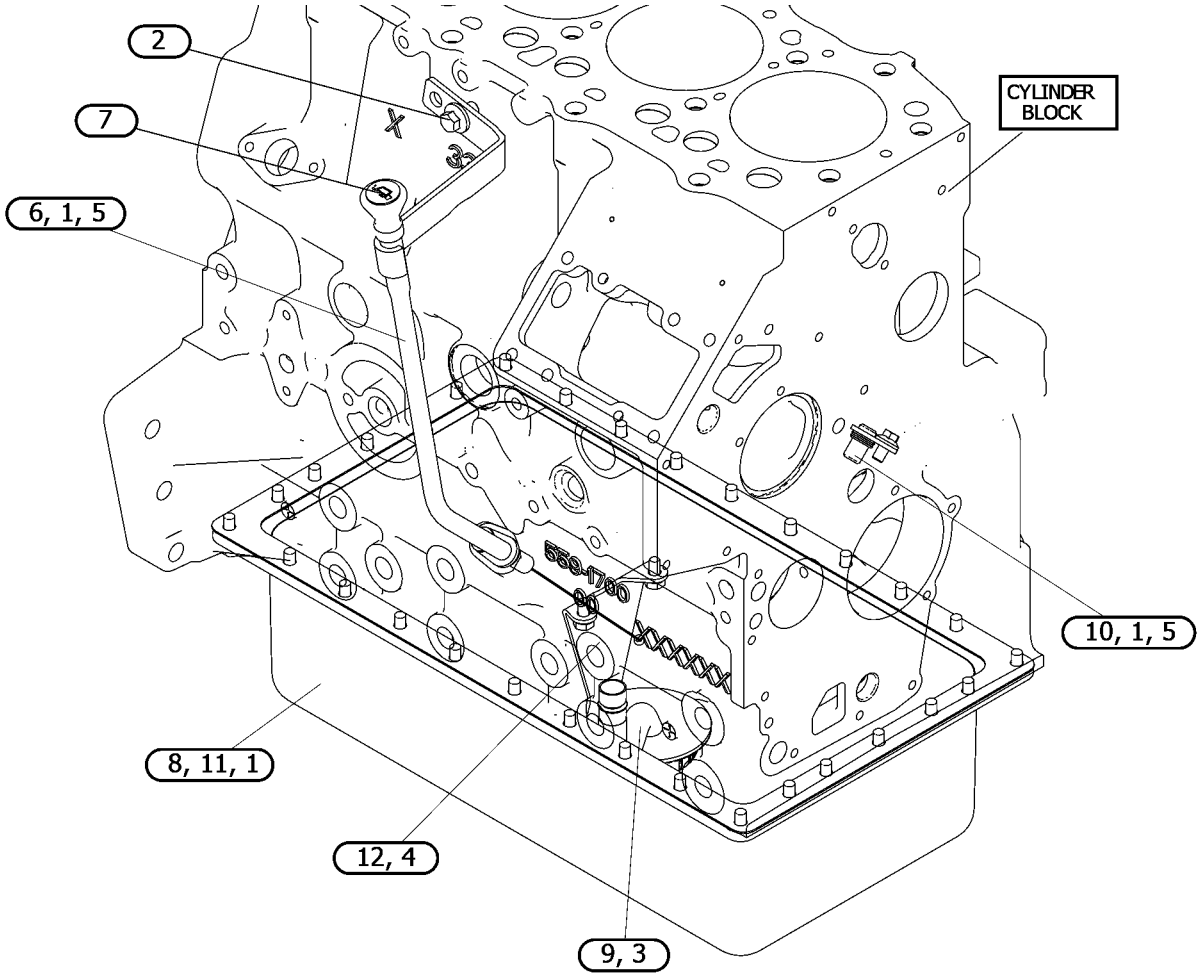

GRAPHIC #1 <END> g07548388

308-2286 PISTON & ROD GP

PART OF 433-1380 ENGINE AR, 435-1636, 435-1658, 489-9224, 506-0518, 506-0519, 512-7969, 514-6556, 516-2639, 518-0165 ENGINE AR-PRIMARY

TYPE 1

SMCS-1225 **i05810354**

NOTE	REF NO	GRAPHIC REF	PART NUMBER	QTY	PART NAME 1 2 3 4 5 6 (PRODUCT LEVEL)	SEE PAGE
	1	1	**154-0867**	4	ROD AS-CONNECTING	
					(EACH INCLUDES)	
	1A	1	**154-0869**	1	BUSHING	
M	1B	1	**154-0870**	2	BOLT (M10X1.25X57.5-MM)	
M	1C	1	**154-0871**	2	NUT (M10X1.25X10-MM)	
	2	1	**154-0873**	4	PIN	
	3	1	**154-0874**	8	RING-RETAINING (INTERNAL)	
	4	1	**270-6968**	4	PISTON AS	
					(EACH INCLUDES)	
	4A	1	**270-6970**	1	KIT-PISTON RING	

M - METRIC PART

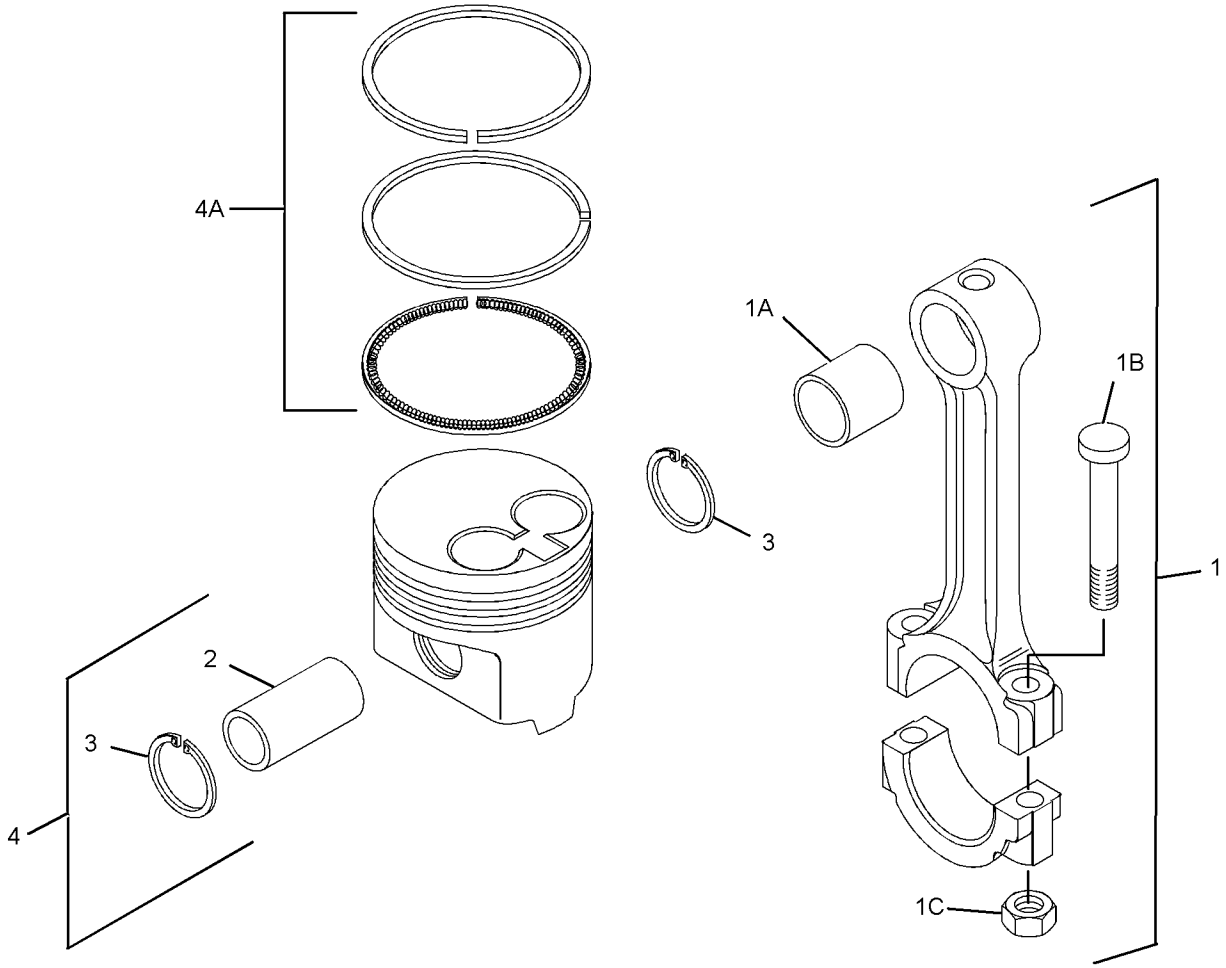

GRAPHIC #1 <END> g01410074

308-2286 PISTON & ROD GP

PART OF 433-1380 ENGINE AR, 435-1636, 435-1658, 489-9224, 506-0518, 506-0519, 512-7969, 514-6556, 516-2639, 518-0165, 557-6086 ENGINE AR-PRIMARY
TYPE 2

SMCS-1225 **i08779292**

NOTE	REF NO	GRAPHIC REF	PART NUMBER	QTY	PART NAME 1 2 3 4 5 6 (PRODUCT LEVEL)	SEE PAGE
C	1	1	**585-1921**	4	ROD AS	
					(EACH INCLUDES)	
M	1A	1	**154-0871**	2	NUT (M10X1.25X10-MM)	
M	1B	1	**154-0870**	2	BOLT (M10X1.25X57.5-MM)	
J	2	1	**154-0873**	1	PIN	
J	3	1	**154-0874**	2	RING-RETAINING (INTERNAL)	
J	4	1	**270-6968**	4	PISTON AS	
					(EACH INCLUDES)	
	4A	1	**270-6970**	1	KIT-PISTON RING	
					(INCLUDES RINGS)	
					AVAILABLE REPAIR KIT(S):	
ABJ			**485-0005**		KIT-PISTON & RING (0.25-MM OS)	
					(ALSO INCLUDES KIT-RING)	

A - NOT PART OF THIS GROUP
B - USE AS REQUIRED
C - CHANGE FROM PREVIOUS TYPE
J - KIT MARKED J SERVICES PART(S) MARKED J
M - METRIC PART

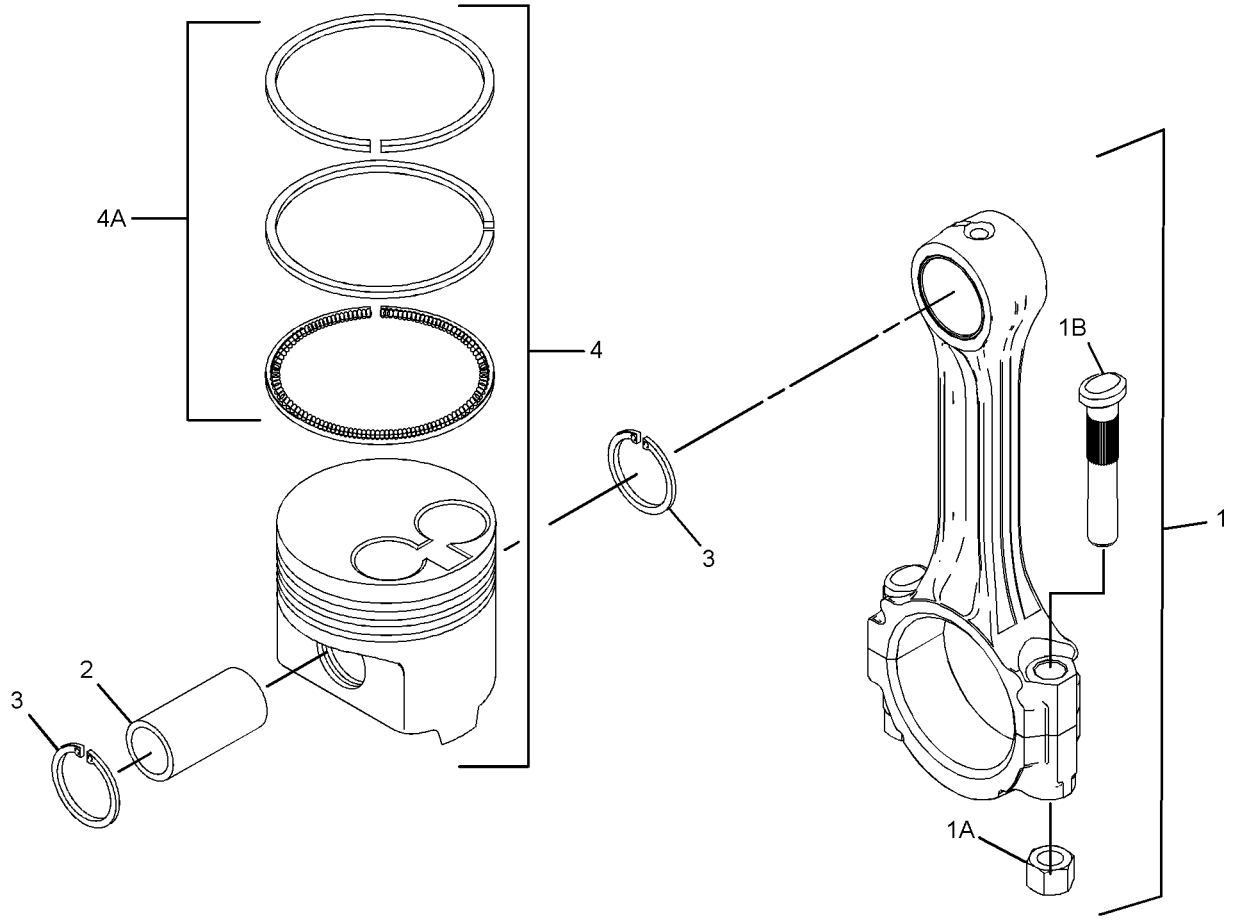

GRAPHIC #1 <END> g07612923

309-6714 PISTON & ROD GP

PART OF 435-1645, 435-1649 CYLINDER BLOCK GP-LONG, 433-1379 ENGINE AR, 435-1641, 435-1642, 435-1646, 435-1647, 489-4263, 506-0520, 513-2239, 557-7471 ENGINE AR-PRIMARY
ALSO AN ATTACHMENT

SMCS-1225 **i05810312**

NOTE	REF NO	GRAPHIC REF	PART NUMBER	QTY	PART NAME 1 2 3 4 5 6 (PRODUCT LEVEL)	SEE PAGE
	1	1	**154-0867**	4	ROD AS-CONNECTING	
					(EACH INCLUDES)	
	1A	1	**154-0869**	1	BUSHING	
M	1B	1	**154-0870**	2	BOLT (M10X1.25X57.5-MM)	
M	1C	1	**154-0871**	2	NUT (M10X1.25X10-MM)	
	2	1	**154-0873**	4	PIN	
	3	1	**154-0874**	8	RING-RETAINING (INTERNAL)	
	4	1	**297-3080**	4	PISTON AS	
					(EACH INCLUDES)	
	4A	1	**217-1456**	1	KIT-PISTON RING	

M - METRIC PART

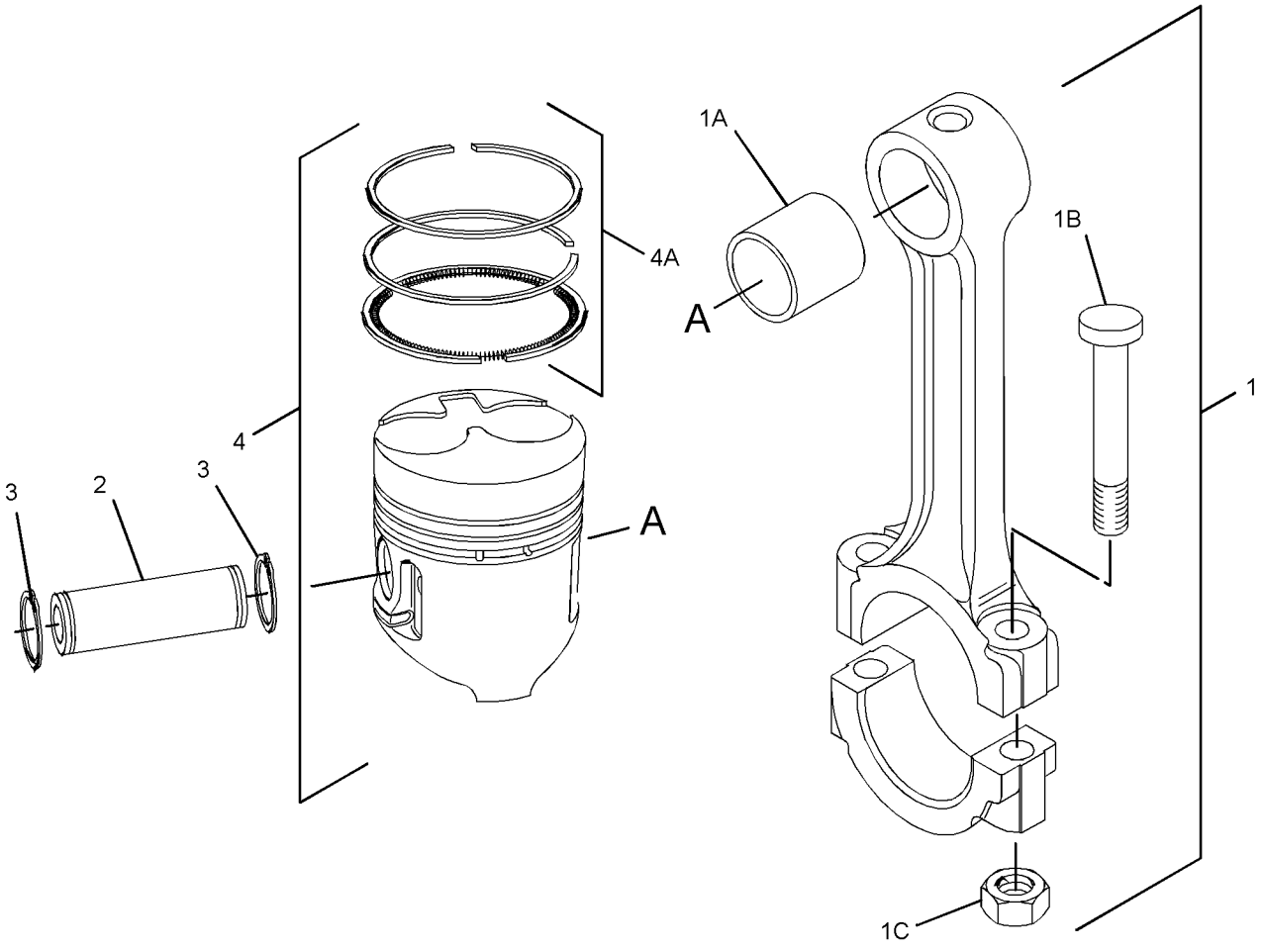

GRAPHIC #1 <END> g01415430

309-6714 PISTON & ROD GP

PART OF 435-1645, 435-1649 CYLINDER BLOCK GP-LONG, 433-1379 ENGINE AR, 417-7273, 435-1641, 435-1642, 435-1646, 435-1647, 489-4263, 506-0520, 513-2239, 557-7471 ENGINE AR-PRIMARY
ALSO AN ATTACHMENT

SMCS-1225 **i08788258**

NOTE	REF NO	GRAPHIC REF	PART NUMBER	QTY	PART NAME 1 2 3 4 5 6 (PRODUCT LEVEL)	SEE PAGE
C	1	1	**585-1921**	4	ROD AS	
					(EACH INCLUDES)	
M	1A	1	**154-0871**	2	NUT (M10X1.25X10-MM)	
M	1B	1	**154-0870**	2	BOLT (M10X1.25X57.5-MM)	
L	2	1	**154-0873**	4	PIN	
L	3	1	**154-0874**	8	RING-RETAINING (INTERNAL)	
J	4	1	**297-3080**	4	PISTON AS	
					(EACH INCLUDES)	
LNP	4A	1	**217-1456**	1	KIT-PISTON RING	
					(INCLUDES RING, PISTON RING & RING AS)	
					AVAILABLE REPAIR KIT(S):	
ABL			**484-9910**		KIT-PISTON (0.25-MM OS)	
					(INCLUDES PIN, RETAINING RINGS & KIT-PISTON RING)	
ABJ			**484-9911**		KIT-PISTON RING (0.25-MM OS)	
P			**439-3372**	1	KIT-PISTON RING	
					(INCLUDES RINGS & RING AS)	
N			**615-3292**	1	KIT-PISTON RING	
					(INCLUDES RINGS & RING AS)	

A - NOT PART OF THIS GROUP
B - USE AS REQUIRED
C - CHANGE FROM PREVIOUS TYPE
J - KIT MARKED J SERVICES PART(S) MARKED J
L - KIT MARKED L SERVICES PART(S) MARKED L
M - METRIC PART
N - KIT MARKED N SERVICES PART(S) MARKED N
P - KIT MARKED P SERVICES PART(S) MARKED P

309-6714 **PISTON & ROD GP** (contd.) **i08788258**

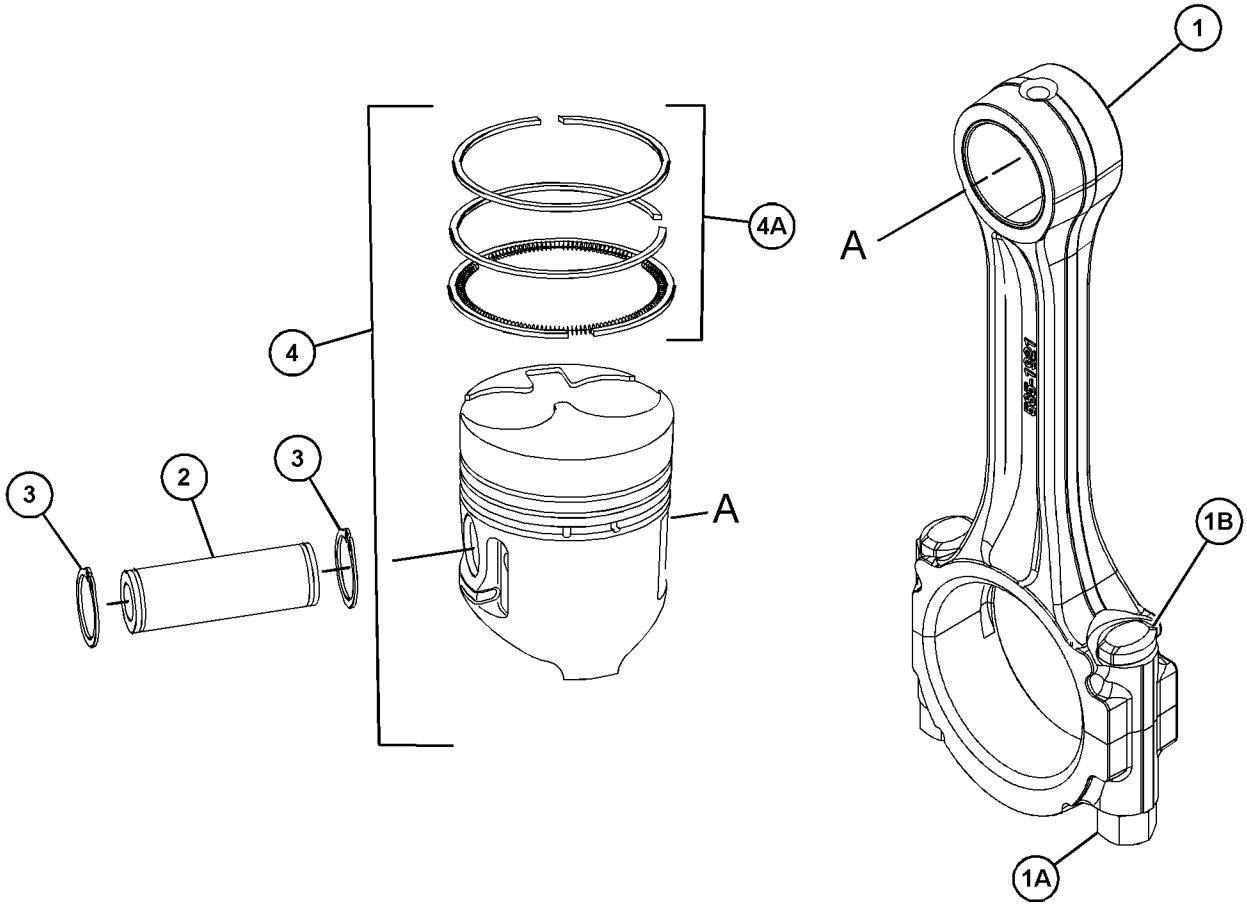

GRAPHIC #1 <END> g07583593

340-5783 PISTON & ROD GP

PART OF 499-6420 ENGINE AR-PRIMARY

TYPE 1

SMCS-1225 **i05371251**

NOTE	REF NO	GRAPHIC REF	PART NUMBER	QTY	PART NAME 1 2 3 4 5 6 (PRODUCT LEVEL)	SEE PAGE
	1	1	**154-0867**	4	ROD AS-CONNECTING	
					(EACH INCLUDES)	
	1A	1	**154-0869**	1	BUSHING	
M	1B	1	**154-0870**	2	BOLT (M10X1.25X57.5-MM)	
M	1C	1	**154-0871**	2	NUT (M10X1.25X10-MM)	
	2	1	**154-0873**	4	PIN	
	3	1	**154-0874**	8	RING-RETAINING (INTERNAL)	
	4	1	**297-3080**	4	PISTON AS	
					(EACH INCLUDES)	
	4A	1	**217-1456**	1	KIT-PISTON RING	

M - METRIC PART

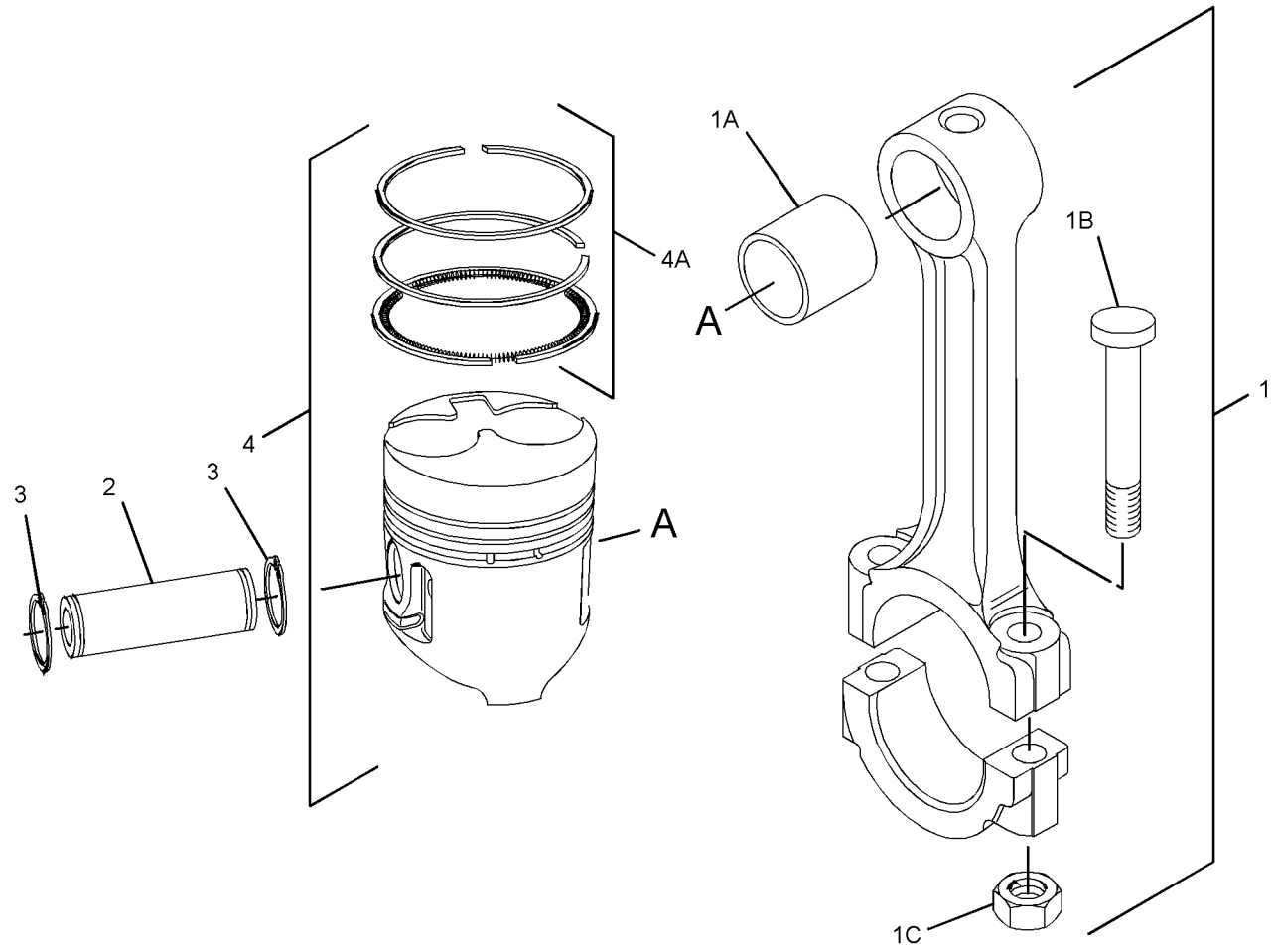

GRAPHIC #1 <END> g01415430

340-5783 PISTON & ROD GP

PART OF 499-6420 ENGINE AR-PRIMARY

TYPE 2

SMCS-1225 **i08779663**

NOTE	REF NO	GRAPHIC REF	PART NUMBER	QTY	PART NAME 1 2 3 4 5 6 (PRODUCT LEVEL)	SEE PAGE
C	1	1	**514-7719**	4	ROD AS-CONNECTING	
					(EACH INCLUDES)	
J	1A	1	**587-8006**	1	BUSHING	
M	1B	1	**154-0870**	2	BOLT (M10X1.25X57.5-MM)	
M	1C	1	**154-0871**	2	NUT (M10X1.25X10-MM)	
	2	1	**154-0873**	4	PIN	
	3	1	**154-0874**	8	RING-RETAINING (INTERNAL)	
	4	1	**297-3080**	4	PISTON AS	
					(EACH INCLUDES)	
	4A	1	**217-1456**	1	KIT-PISTON RING	
					(INCLUDES RINGS)	
BFJ			**463-1972**	1	BUSHING	
					AVAILABLE REPAIR KIT(S):	
AB			**484-9910**		KIT-PISTON (0.25-MM OS)	
					(INCLUDES PIN, CLIPS, & PISTON RING)	

A - NOT PART OF THIS GROUP
B - USE AS REQUIRED
C - CHANGE FROM PREVIOUS TYPE
F - NOT SHOWN
J - PART MARKED J SERVICES PART(S) MARKED J
M - METRIC PART

340-5783 **PISTON & ROD GP (**contd.**)** **i08779663**

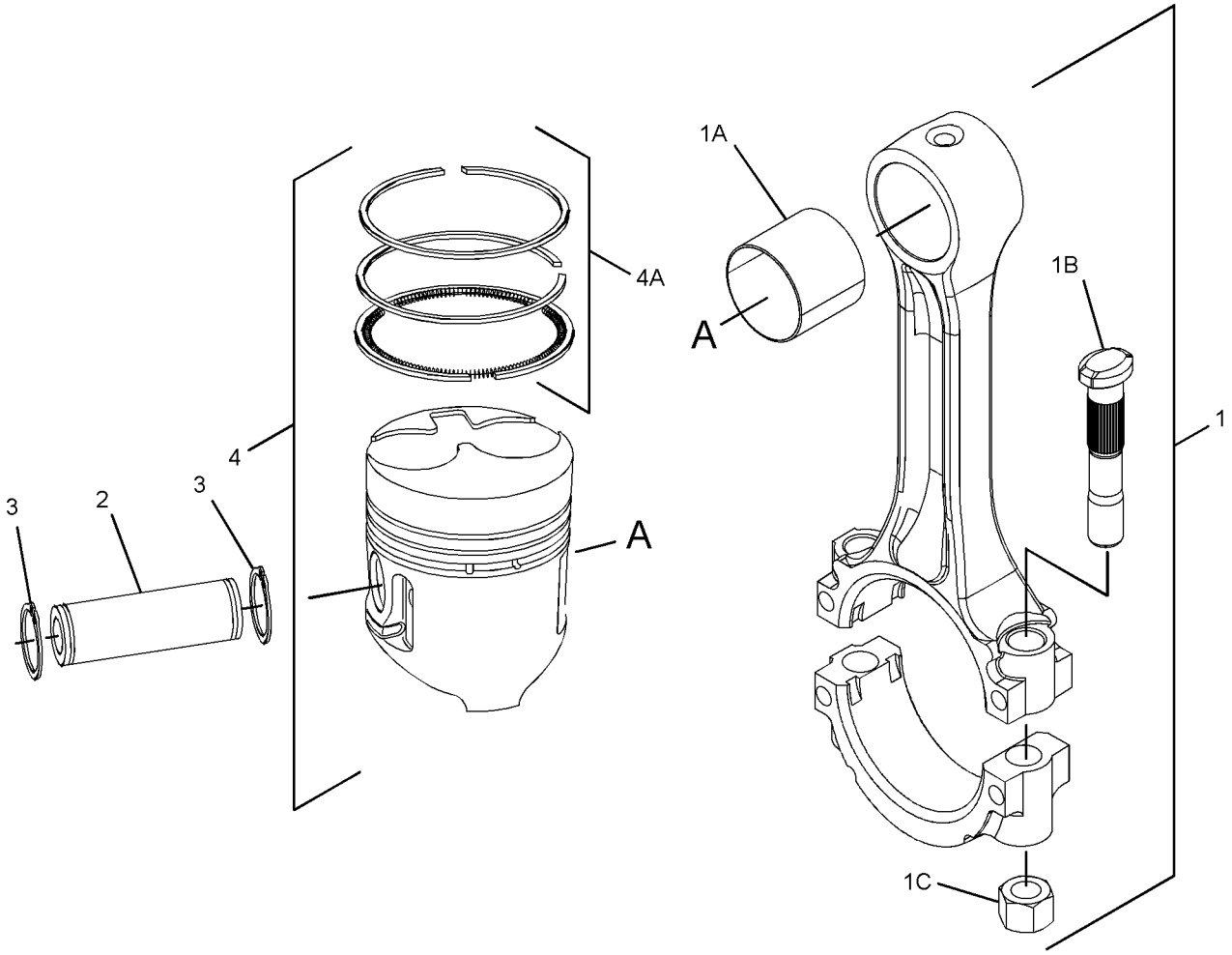

GRAPHIC #1 <END> g06389600

420-6409 PISTON & ROD GP

PART OF 504-4602 ENGINE AR-PRIMARY

TYPE 1

SMCS-1225 **i05371921**

NOTE	REF NO	GRAPHIC REF	PART NUMBER	QTY	PART NAME 1 2 3 4 5 6 (PRODUCT LEVEL)	SEE PAGE
	1	1	**154-0867**	4	ROD AS-CONNECTING	
					(EACH INCLUDES)	
	1A	1	**154-0869**	1	BUSHING	
M	1B	1	**154-0870**	2	BOLT (M10X1.25X57.5-MM)	
M	1C	1	**154-0871**	2	NUT (M10X1.25X10-MM)	
	2	1	**154-0873**	4	PIN	
	3	1	**154-0874**	8	RING-RETAINING (INTERNAL)	
	4	1	**270-6968**	4	PISTON AS	
					(EACH INCLUDES)	
	4A	1	**270-6970**	1	KIT-PISTON RING	

M - METRIC PART

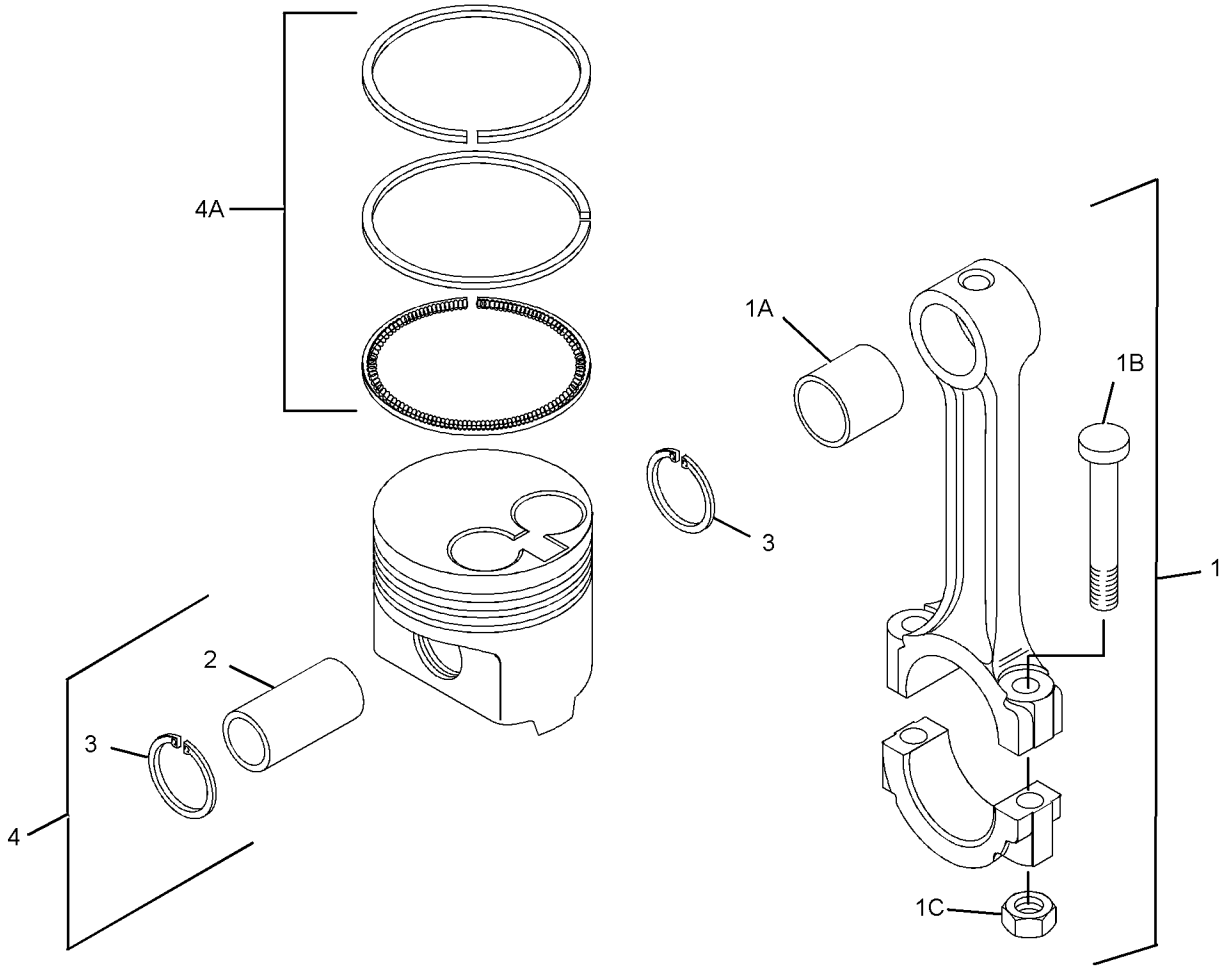

GRAPHIC #1 <END> g01410074

420-6409 PISTON & ROD GP

PART OF 504-4602 ENGINE AR-PRIMARY

TYPE 2

SMCS-1225 **i08779671**

NOTE	REF NO	GRAPHIC REF	PART NUMBER	QTY	PART NAME 1 2 3 4 5 6 (PRODUCT LEVEL)	SEE PAGE
C	1	1	**585-1921**	4	ROD AS	
					(EACH INCLUDES)	
	1A	1	**587-8006**	1	BUSHING	
M	1B	1	**154-0870**	2	BOLT (M10X1.25X57.5-MM)	
M	1C	1	**154-0871**	2	NUT (M10X1.25X10-MM)	
	2	1	**154-0873**	4	PIN	
	3	1	**154-0874**	8	RING-RETAINING (INTERNAL)	
L	4	1	**270-6968**	4	PISTON AS	
					(EACH INCLUDES)	
	4A	1	**270-6970**	1	KIT-PISTON RING	
					(INCLUDES COMPRESSION RING, PISTON RING & OIL RING)	
					AVAILABLE REPAIR KIT(S):	
ABL			**485-0005**	1	KIT-PISTON & RING	
					(INCLUDES PIN, PISTON RING KIT & RETAINING RINGS)	

A - NOT PART OF THIS GROUP
B - USE AS REQUIRED
C - CHANGE FROM PREVIOUS TYPE
L - KIT MARKED L SERVICES PART(S) MARKED L
M - METRIC PART

420-6409 **PISTON & ROD GP (**contd.**)** **i08779671**

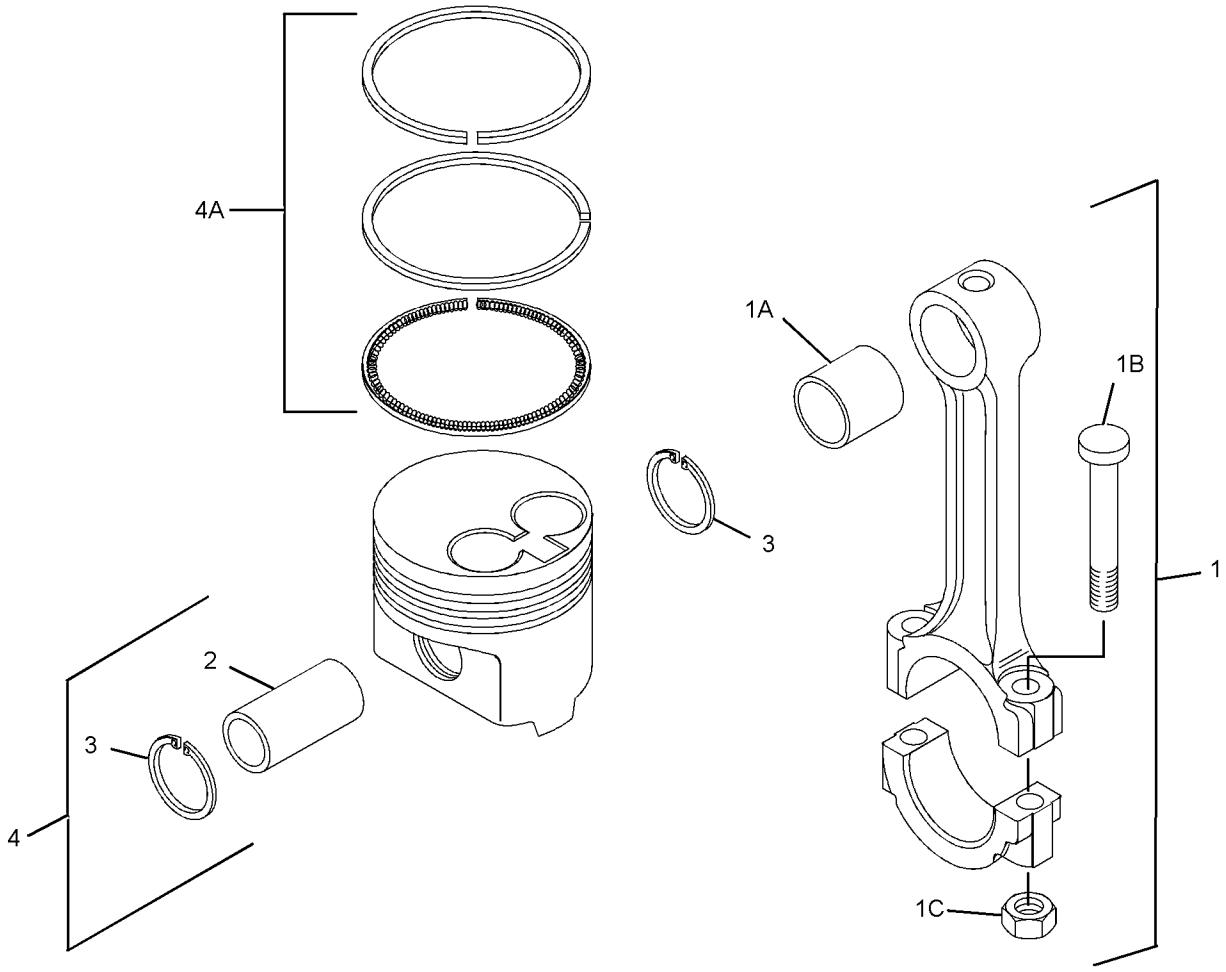

GRAPHIC #1 <END> g01410074

596-2865 PISTON & ROD GP

PART OF 435-1636, 514-6556 ENGINE AR-PRIMARY

SMCS-1225 **i09634832**

NOTE	REF NO	GRAPHIC REF	PART NUMBER	QTY	PART NAME 1 2 3 4 5 6 (PRODUCT LEVEL)	SEE PAGE
Y	1	1	*596-4180*	4	PISTON & ROD GP	421
					AVAILABLE REPAIR KIT(S):	
			599-8820	1	KIT-BEARING (STANDARD)	
					(INCLUDES BEARINGS)	
AB			**599-8821**		KIT-BEARING (0.25-MM US)	
					(INCLUDES BEARINGS)	
AB			**599-8823**		KIT-BEARING (0.50-MM US)	
					(INCLUDES BEARINGS)	

A - NOT PART OF THIS GROUP
B - USE AS REQUIRED
Y - SEPARATE ILLUSTRATION

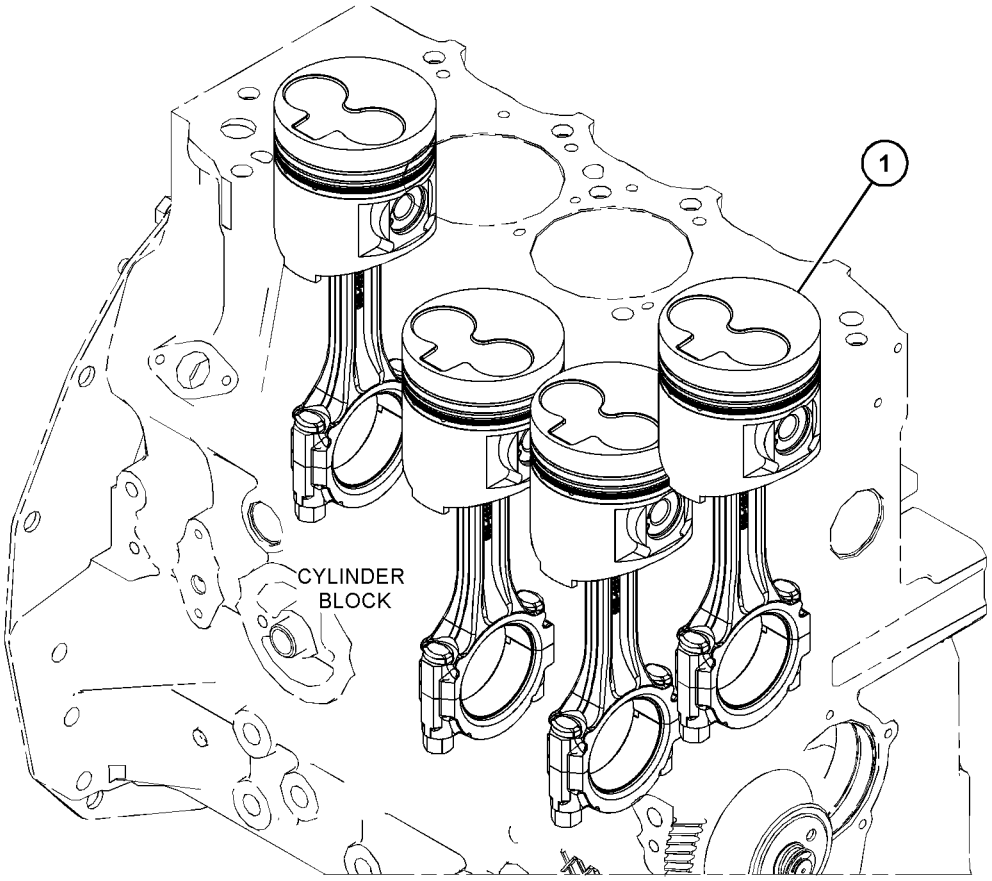

GRAPHIC #1 <END> g06770041

596-2866 PISTON & ROD GP

S/N: C6M10291-UP

PART OF 433-1379 ENGINE AR, 417-7273, 435-1641, 435-1642, 435-1647 ENGINE AR-PRIMARY

ALSO AN ATTACHMENT

SMCS-1225 **i08716631**

NOTE	REF NO	GRAPHIC REF	PART NUMBER	QTY	PART NAME 1 2 3 4 5 6 (PRODUCT LEVEL)	SEE PAGE
Y	1	1	*596-4181*	4	PISTON & ROD GP	422
					AVAILABLE REPAIR KIT(S):	
			599-8820	1	KIT-BEARING	
					(INCLUDES BEARINGS)	
AB			**599-8821**		KIT-BEARING (0.25-MM US) (0.25-MM US)	
					(INCLUDES BEARINGS)	
AB			**599-8823**		KIT-BEARING (0.50-MM US) (0.50-MM US)	
					(INCLUDES BEARINGS)	

A - NOT PART OF THIS GROUP
B - USE AS REQUIRED
Y - SEPARATE ILLUSTRATION

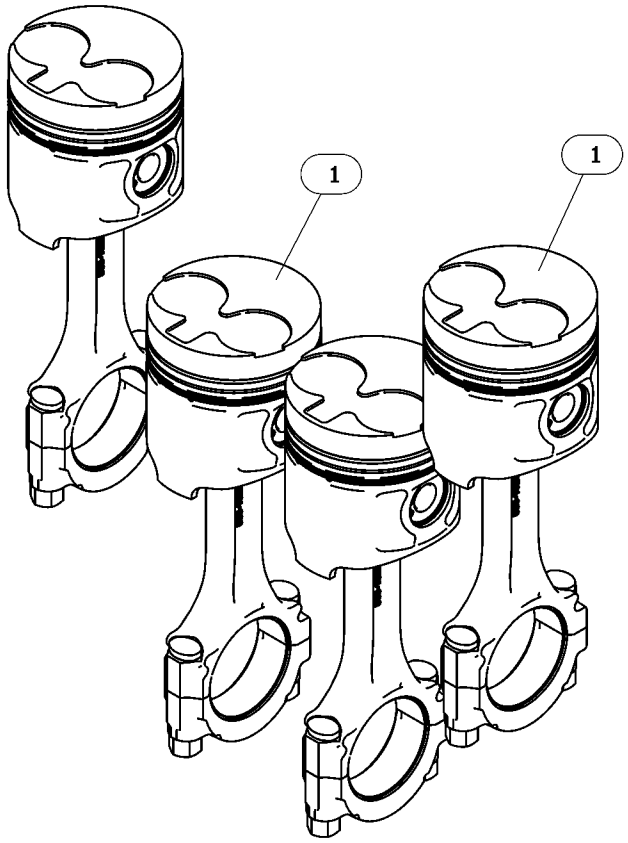

GRAPHIC #1 <END> g06759076

596-4180 PISTON & ROD GP

PART OF 596-2865 PISTON & ROD GP

SMCS-1225 **i08764526**

NOTE	REF NO	GRAPHIC REF	PART NUMBER	QTY	PART NAME 1 2 3 4 5 6 (PRODUCT LEVEL)	SEE PAGE
	1	1	**585-1921**	1	ROD AS	
M		1	**154-0870**	2	BOLT (M10X1.25X57.5-MM)	
M		1	**154-0871**	2	NUT (M10X1.25X10-MM)	
	2	1	**154-0874**	2	RING-RETAINING (INTERNAL)	
	3	1	**154-0873**	1	PIN	

M - METRIC PART

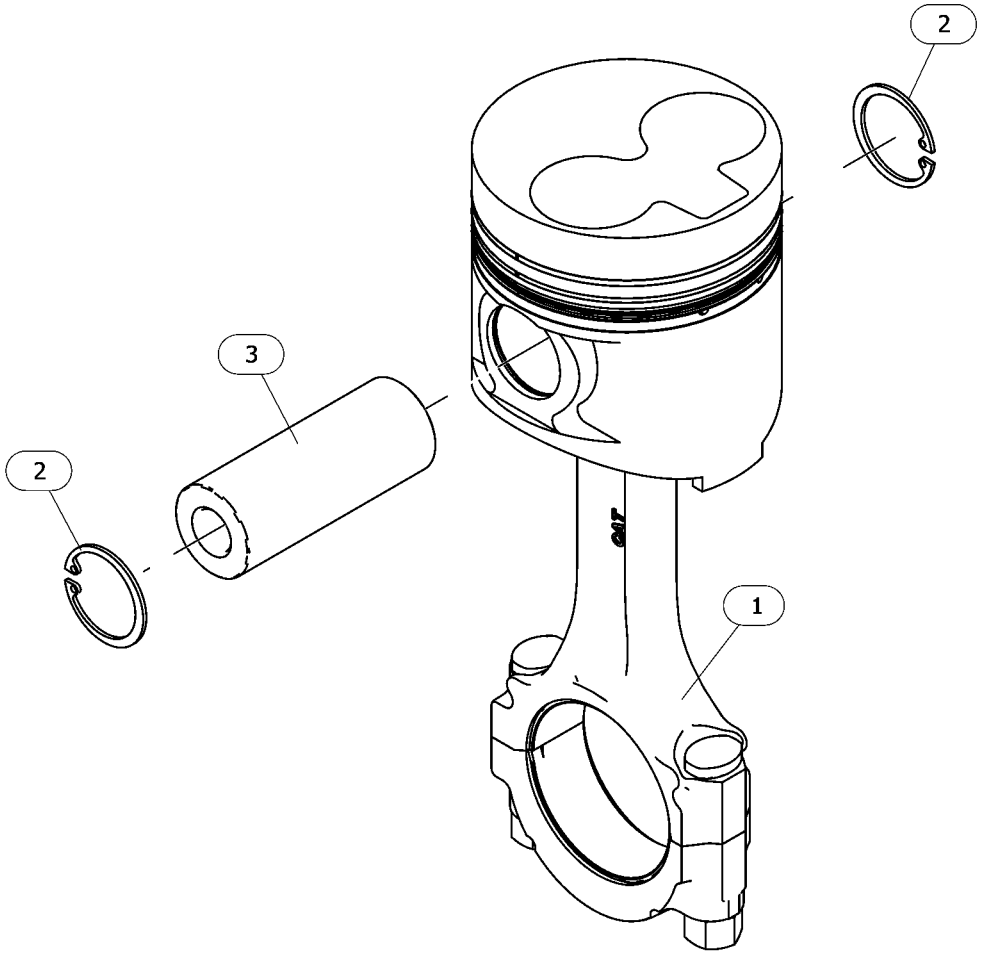

GRAPHIC #1 <END> g06769903

596-4181 PISTON & ROD GP

S/N: C6M10543-UP
PART OF 596-2866 PISTON & ROD GP
ALSO AN ATTACHMENT

SMCS-1225 **i08827679**

NOTE	REF NO	GRAPHIC REF	PART NUMBER	QTY	PART NAME 1 2 3 4 5 6 (PRODUCT LEVEL)	SEE PAGE
	1	1	**154-0873**	1	PIN	
	2	1	**154-0874**	2	RING-RETAINING (INTERNAL)	
	3	1	*297-3121*	1	PISTON	
	4	1	*423-8330*	1	RING	
JN	5	1	*423-8335*	1	RING	
	6	1	*424-3213*	1	RING-OIL	
	7	1	**585-1921**	1	ROD AS	
M	7A	1	**154-0870**	2	BOLT (M10X1.25X57.5-MM)	
M	7B	1	**154-0871**	2	NUT (M10X1.25X10-MM)	
	8	1	*586-4228*	1	SHELL-BEARING	
	9	1	*590-0697*	1	BEARING-LOWER	
					AVAILABLE REPAIR KIT(S):	
J			**439-3372**	1	KIT-PISTON RING	
					(INCLUDES OIL RING ASSEMBLY & PISTON RING)	
N			**615-3292**	1	KIT-PISTON RING	
					(INCLUDES OIL RING ASSEMBLY & PISTON RING)	

J - KIT MARKED J SERVICES PART(S) MARKED J
M - METRIC PART
N - KIT MARKED N SERVICES PART(S) MARKED N

596-4181 **PISTON & ROD GP** (contd.) **i08827679**

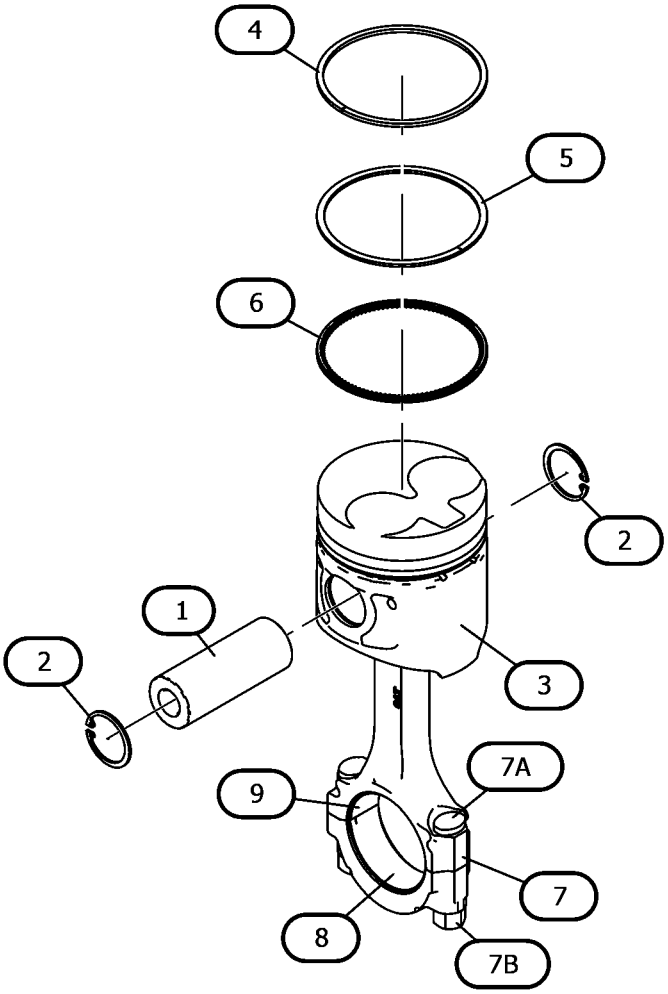

GRAPHIC #1 <END> g06954716

322-2426 PLUG GP-ENGINE

PART OF 499-6420 ENGINE AR-PRIMARY

SMCS-1100, 1201 **i02959112**

NOTE	REF NO	GRAPHIC REF	PART NUMBER	QTY	PART NAME 1 2 3 4 5 6 (PRODUCT LEVEL)	SEE PAGE
	1	1	**153-6835**	1	SEAL-O-RING	
	2	1	**161-8273**	1	PLUG	

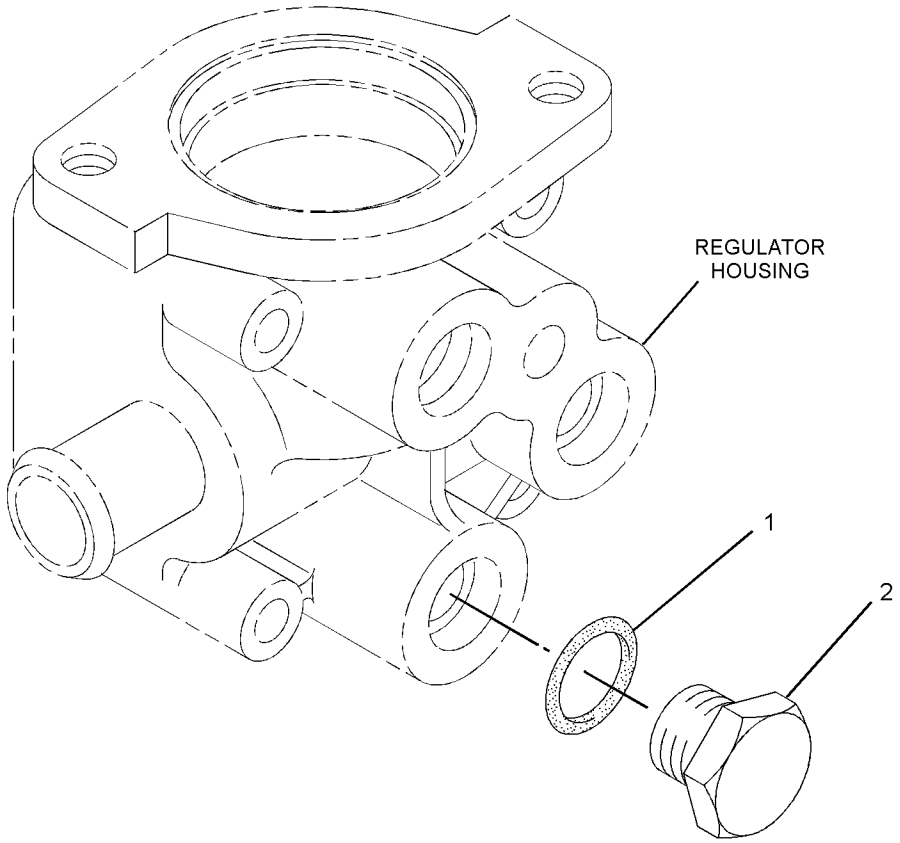

GRAPHIC #1 <END> g01514601

323-9157 PLUG GP-ENGINE

SMCS-1100, 1201 **i05533438**

NOTE	REF NO	GRAPHIC REF	PART NUMBER	QTY	PART NAME 1 2 3 4 5 6 (PRODUCT LEVEL)	SEE PAGE
	1	1	**153-5936**	2	WASHER (8.2X14.5X1-MM)	
	2	1	**183-1165**	1	PLUG	
	3	1	**438-1431**	1	ADAPTER	
M	4	1	**153-6881**	1	BOLT (M8X1.25X18-MM)	

M - METRIC PART

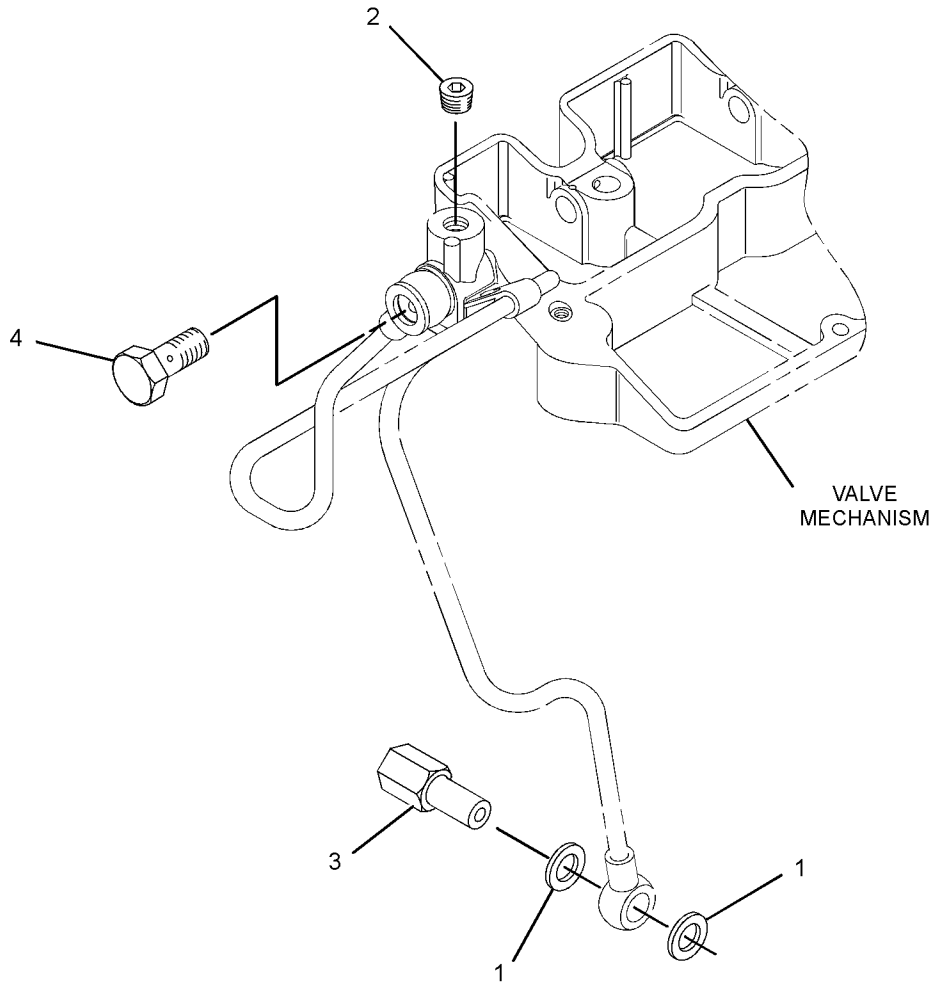

GRAPHIC #1 <END> g03505981

309-6720 PLUG GP-OIL PAN–DRAIN

PART OF 435-1645, 435-1649 CYLINDER BLOCK GP-LONG, 433-1379, 433-1380 ENGINE AR, 417-7273, 435-1636, 435-1641, 435-1642, 435-1646, 435-1647, 435-1658, 489-4263, 499-6420, 504-4602, 506-0519, 506-0520, 512-7969, 513-2239, 516-2639, 518-0165, 557-6086, 557-7471 ENGINE AR-PRIMARY
ALSO AN ATTACHMENT

SMCS-1302 **i05810323**

NOTE	REF NO	GRAPHIC REF	PART NUMBER	QTY	PART NAME 1 2 3 4 5 6 (PRODUCT LEVEL)	SEE PAGE
	1	1	**153-6412**	2	WASHER	
	2	1	**423-6224**	2	PLUG-DRAIN (ENGINE OIL PAN)	

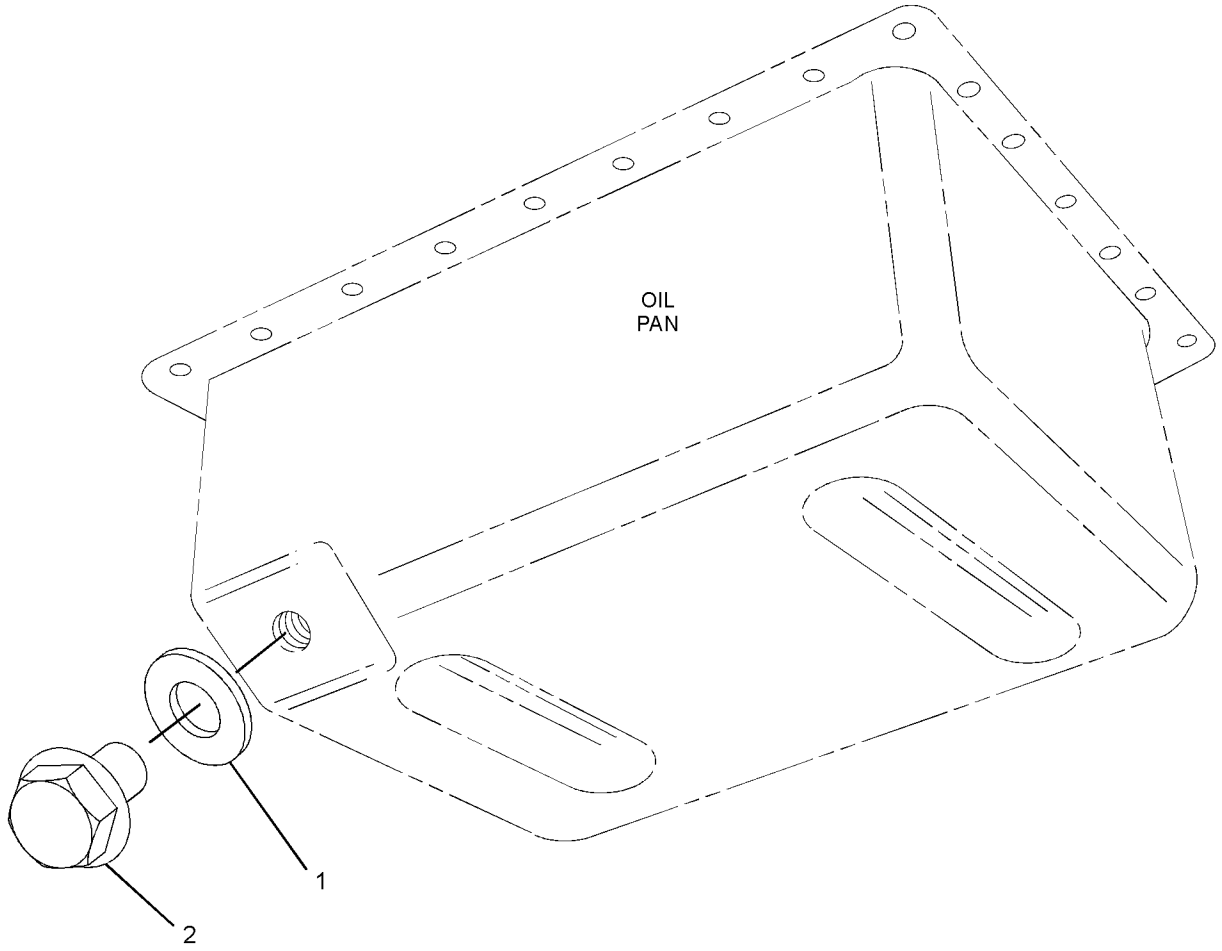

GRAPHIC #1 <END> g03428832

322-2420 PLUG GP-OIL PAN

SMCS-1302 **i02936698**

NOTE	REF NO	GRAPHIC REF	PART NUMBER	QTY	PART NAME 1 2 3 4 5 6 (PRODUCT LEVEL)	SEE PAGE
	1	1	**153-6832**	2	WASHER	
	2	1	**165-3605**	2	PLUG-DRAIN (ENGINE OIL DRAIN)	

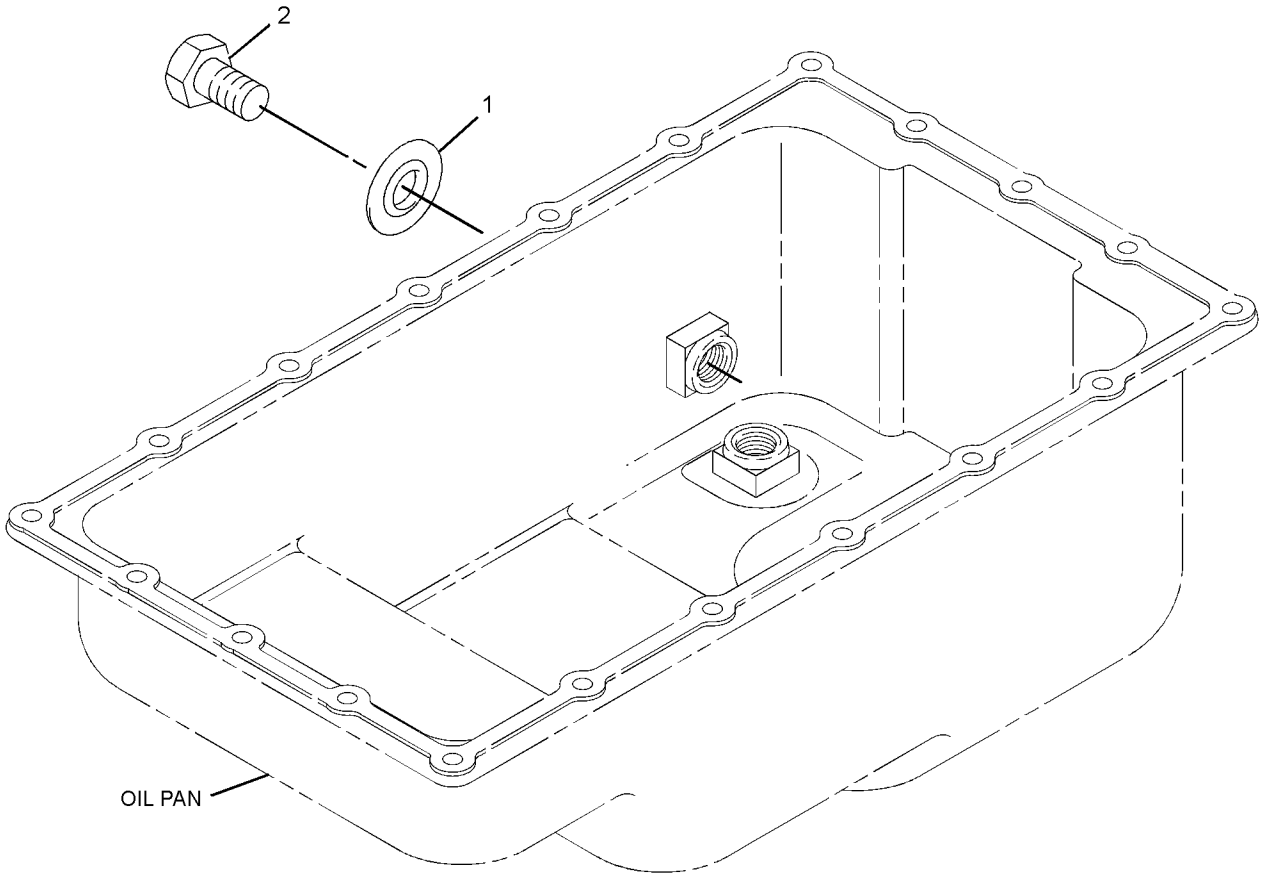

GRAPHIC #1 <END> g01513429

398-5865 PLUG GP-OIL PAN

PLUGS

PART OF 433-1379 ENGINE AR, 417-7273, 435-1636, 435-1641, 435-1642, 435-1647 ENGINE AR-PRIMARY

ALSO AN ATTACHMENT

SMCS-1302 **i08023373**

NOTE	REF NO	GRAPHIC REF	PART NUMBER	QTY	PART NAME 1 2 3 4 5 6 (PRODUCT LEVEL)	SEE PAGE
	1	1	**153-6412**	2	WASHER	
	2	1	**423-6224**	2	PLUG-DRAIN	

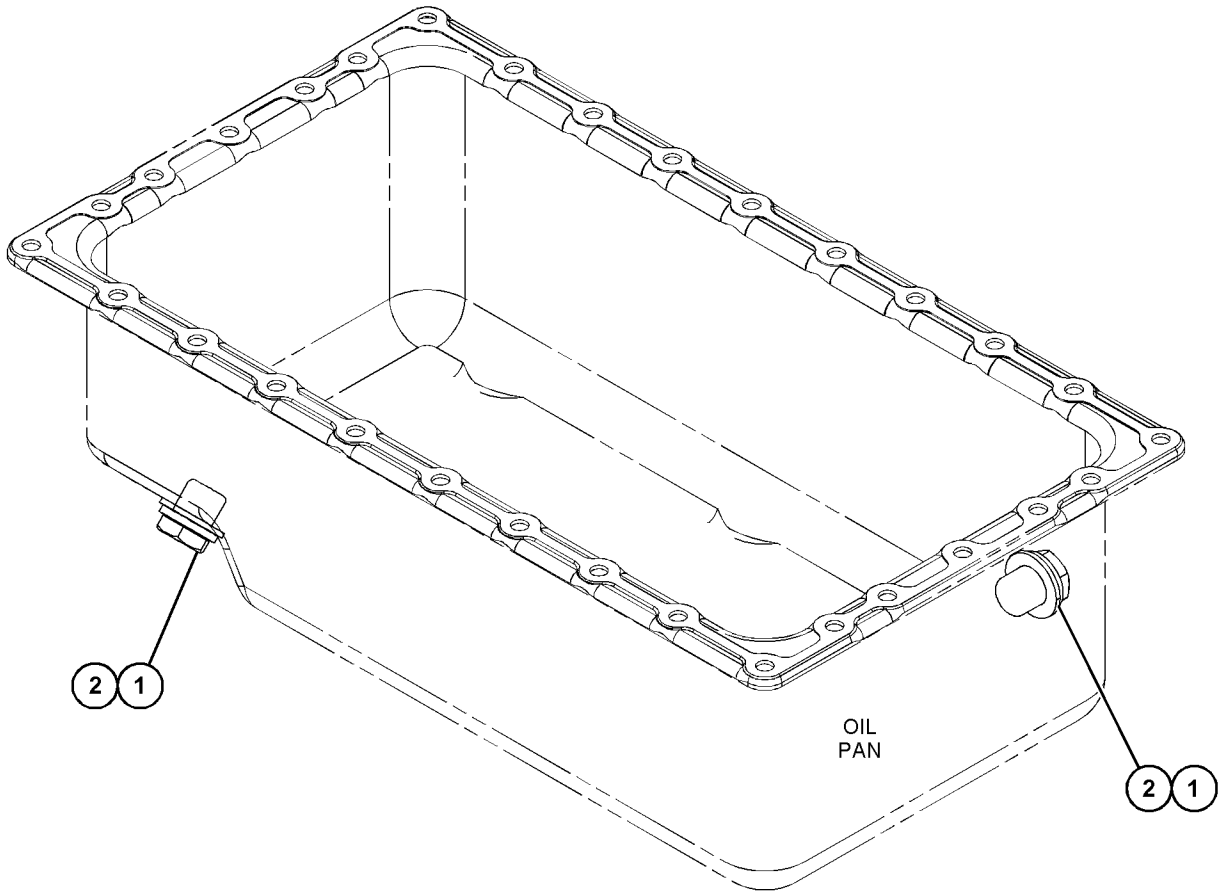

GRAPHIC #1 <END> g03643353

398-5881 PULLEY AS-IDLER

PART OF 514-6556 ENGINE AR-PRIMARY

SMCS-1358 **i08028508**

NOTE	REF NO	GRAPHIC REF	PART NUMBER	QTY	PART NAME 1 2 3 4 5 6 (PRODUCT LEVEL)	SEE PAGE
	1	1	**165-2142**	3	BOLT	
	2	1	**238-9621**	1	PULLEY	

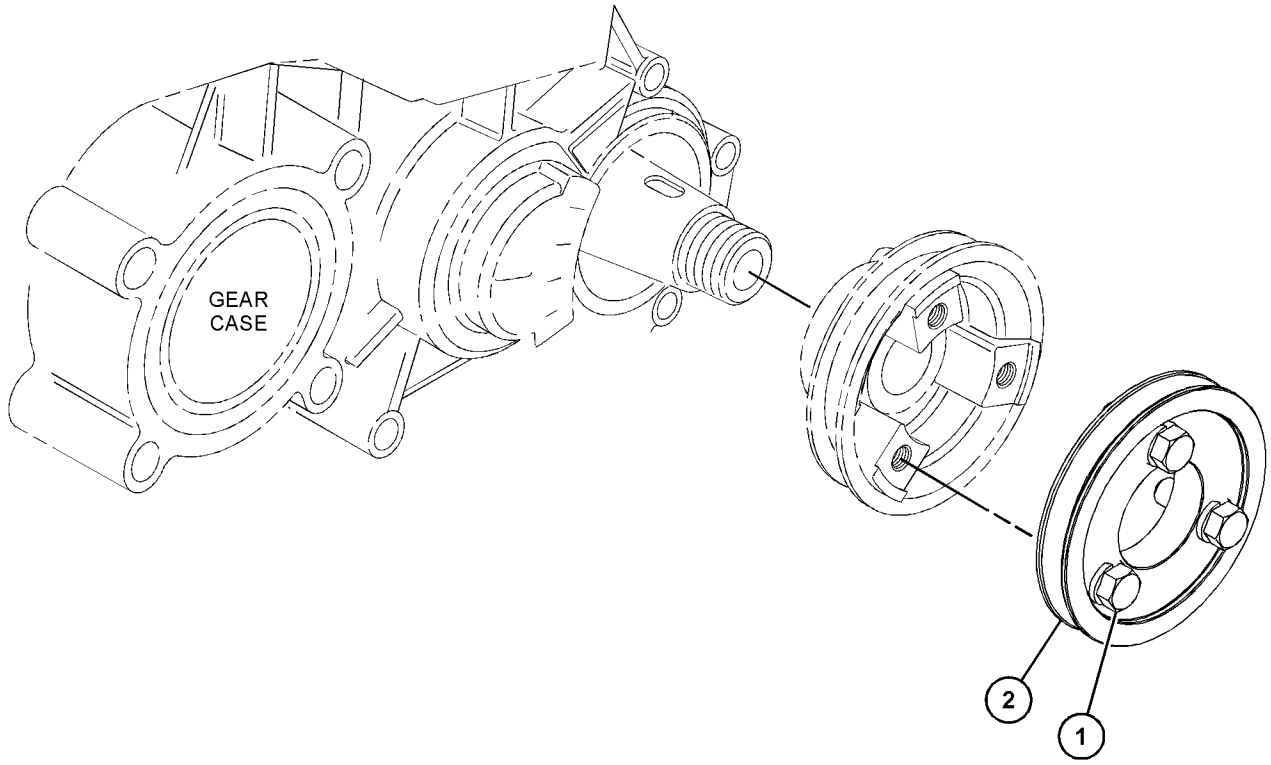

GRAPHIC #1 <END> g03851461

322-2422 PULLEY GP-AUXILIARY DRIVE

PART OF 489-9224, 499-6420, 514-6556 ENGINE AR-PRIMARY

SMCS-1205, 1207 **i06922467**

NOTE	REF NO	GRAPHIC REF	PART NUMBER	QTY	PART NAME 1 2 3 4 5 6 (PRODUCT LEVEL)	SEE PAGE
M	1	1	**106-8954**	3	BOLT (M12X1.75X35-MM)	
	2	1	**238-9621**	1	PULLEY	

M - METRIC PART

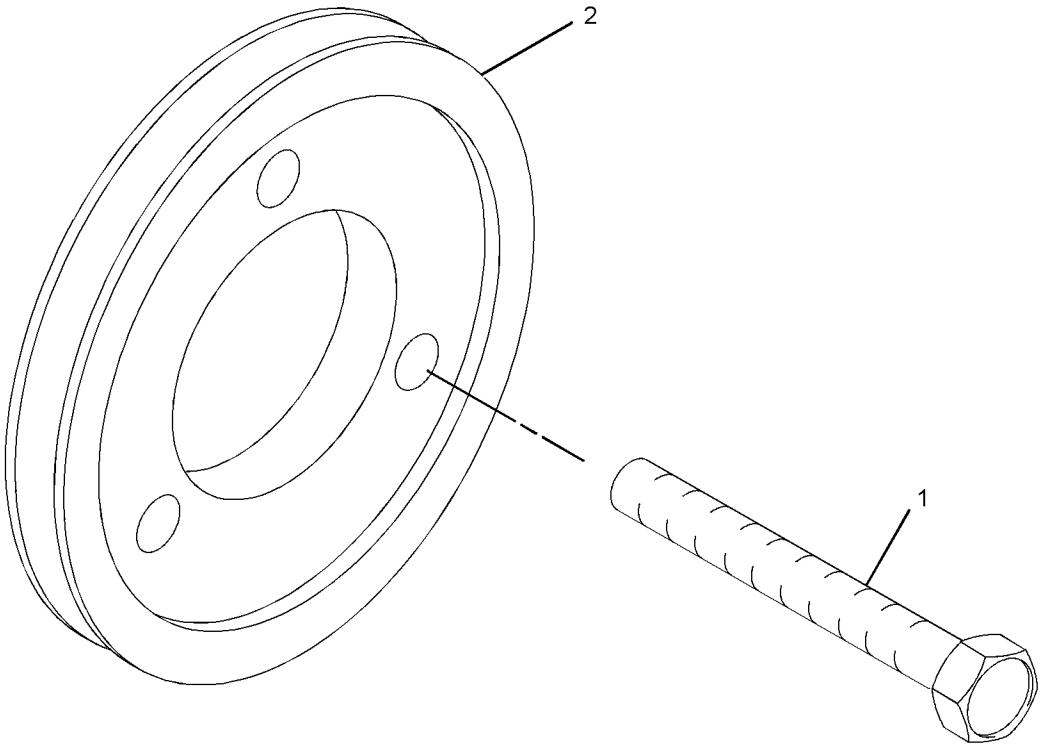

GRAPHIC #1 <END> g01636445

308-2300 PULLEY GP-CRANKSHAFT

PART OF 435-1645, 435-1649 CYLINDER BLOCK GP-LONG, 433-1379 ENGINE AR, 417-7273, 435-1641, 435-1642, 435-1646, 435-1647, 489-4263, 499-6420, 506-0520, 513-2239, 557-7471 ENGINE AR-PRIMARY
ALSO AN ATTACHMENT

SMCS-1205 **i05810281**

NOTE	REF NO	GRAPHIC REF	PART NUMBER	QTY	PART NAME 1 2 3 4 5 6 (PRODUCT LEVEL)	SEE PAGE
	1	1	**153-6492**	1	KEY-WOODRUFF	
M	2	1	**154-1880**	1	NUT (M24X1.5-THD)	
	3	1	**321-6738**	1	PULLEY-CRANKSHAFT	

M - METRIC PART

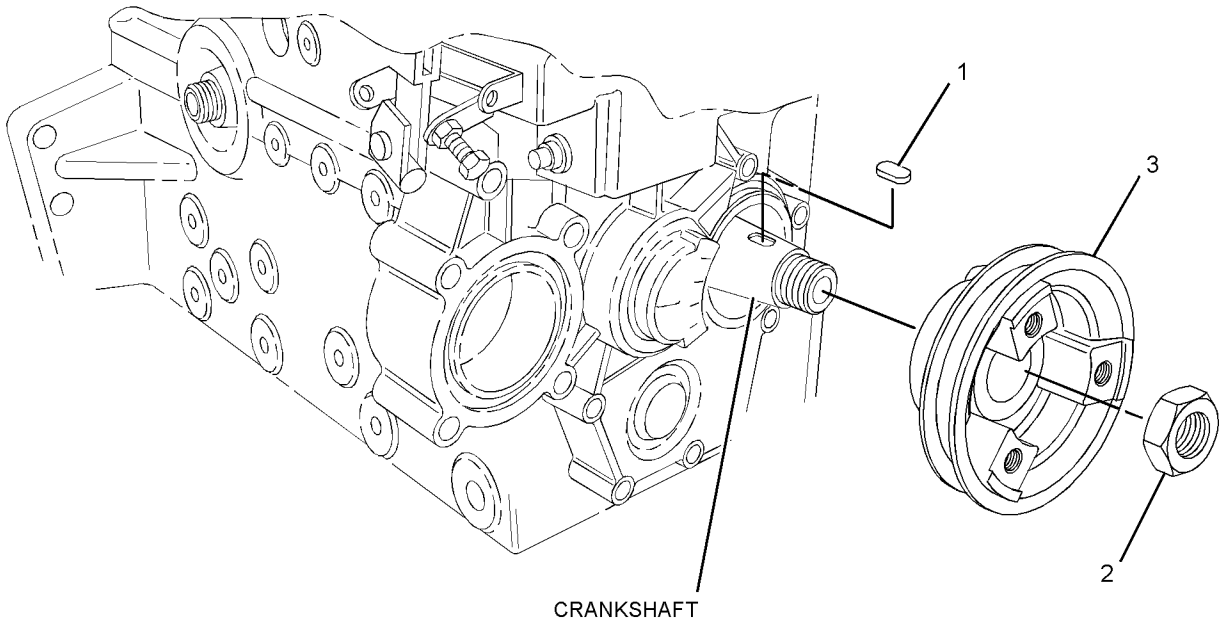

GRAPHIC #1 <END> g01390599

321-6740 PULLEY GP-CRANKSHAFT

PART OF 433-1380 ENGINE AR, 435-1636, 435-1658, 489-9224, 504-4602, 506-0518, 506-0519, 512-7969, 514-6556, 516-2639, 518-0165, 557-6086 ENGINE AR-PRIMARY

SMCS-1205 **i05810366**

NOTE	REF NO	GRAPHIC REF	PART NUMBER	QTY	PART NAME 1 2 3 4 5 6 (PRODUCT LEVEL)	SEE PAGE
	1	1	**153-6492**	1	KEY-WOODRUFF	
M	2	1	**154-1880**	1	NUT (M24X1.5-THD)	
	3	1	**321-6738**	1	PULLEY-CRANKSHAFT	

M - METRIC PART

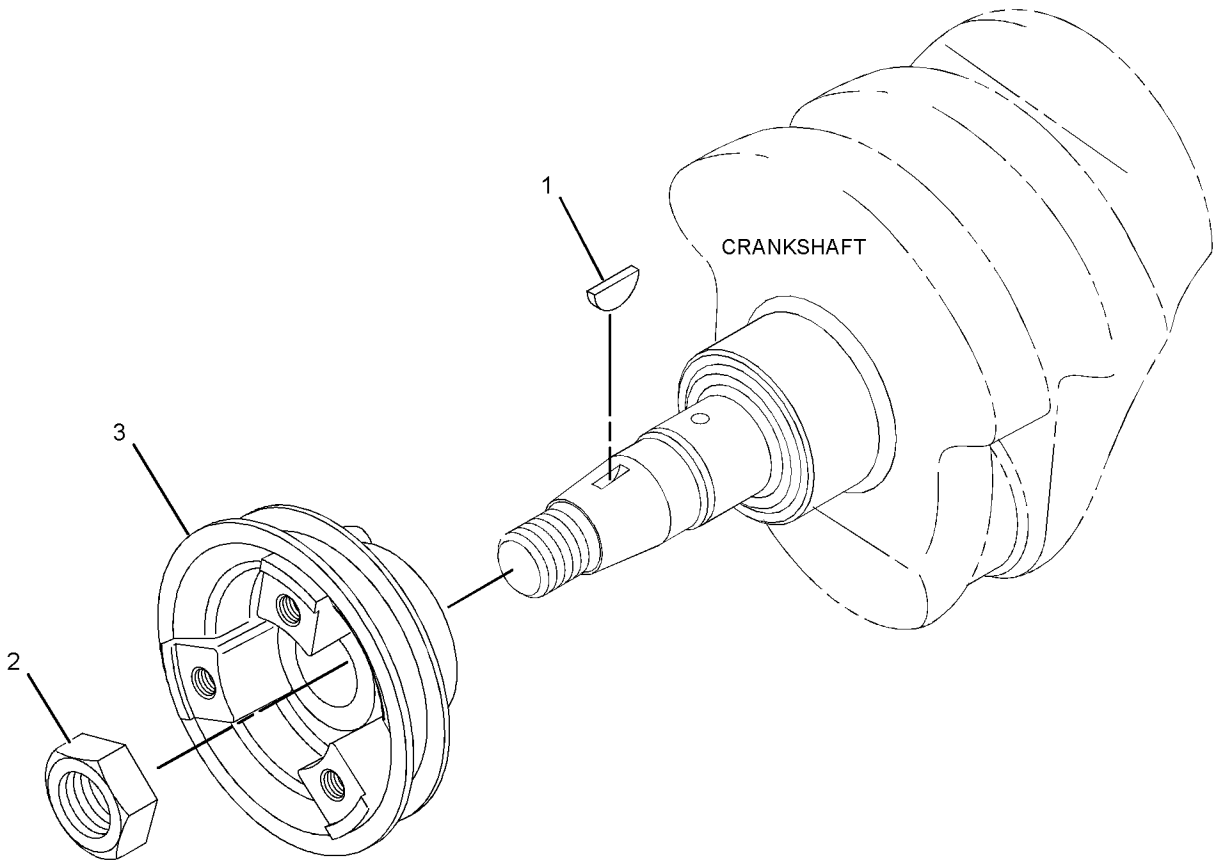

GRAPHIC #1 <END> g01622072

445-9988 PULLEY GP-CRANKSHAFT

PART OF 433-1379 ENGINE AR, 417-7273, 435-1636, 435-1641, 435-1642, 435-1647, 514-6556 ENGINE AR-PRIMARY
ALSO AN ATTACHMENT

SMCS-1205 **i08023374**

NOTE	REF NO	GRAPHIC REF	PART NUMBER	QTY	PART NAME 1 2 3 4 5 6 (PRODUCT LEVEL)	SEE PAGE
	1	1	**153-6492**	1	KEY-WOODRUFF	
M	2	1	**154-1880**	1	NUT (M24X1.5-THD)	
	3	1	**321-6738**	1	PULLEY-CRANKSHAFT	

M - METRIC PART

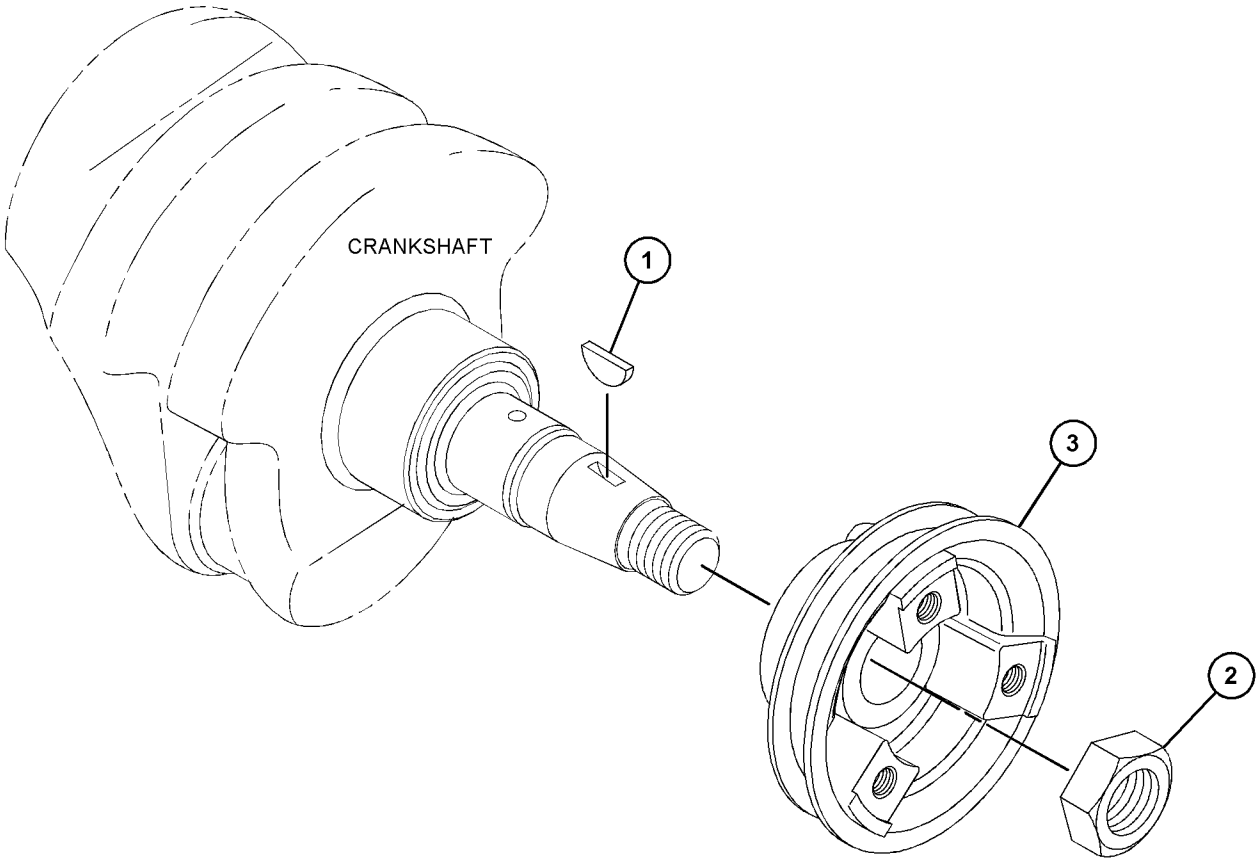

GRAPHIC #1 <END> g03850967

308-2294 PULLEY GP-FAN

PART OF 417-7273, 489-4263, 489-9224, 499-6420, 506-0518, 506-0519, 506-0520, 512-7969, 513-2239, 514-6556, 516-2639, 518-0165, 557-6086, 557-7471 ENGINE AR-PRIMARY

SMCS-1359 **i07573831**

NOTE	REF NO	GRAPHIC REF	PART NUMBER	QTY	PART NAME 1 2 3 4 5 6 (PRODUCT LEVEL)	SEE PAGE
	1	1	**483-3937**	1	PULLEY-FAN	

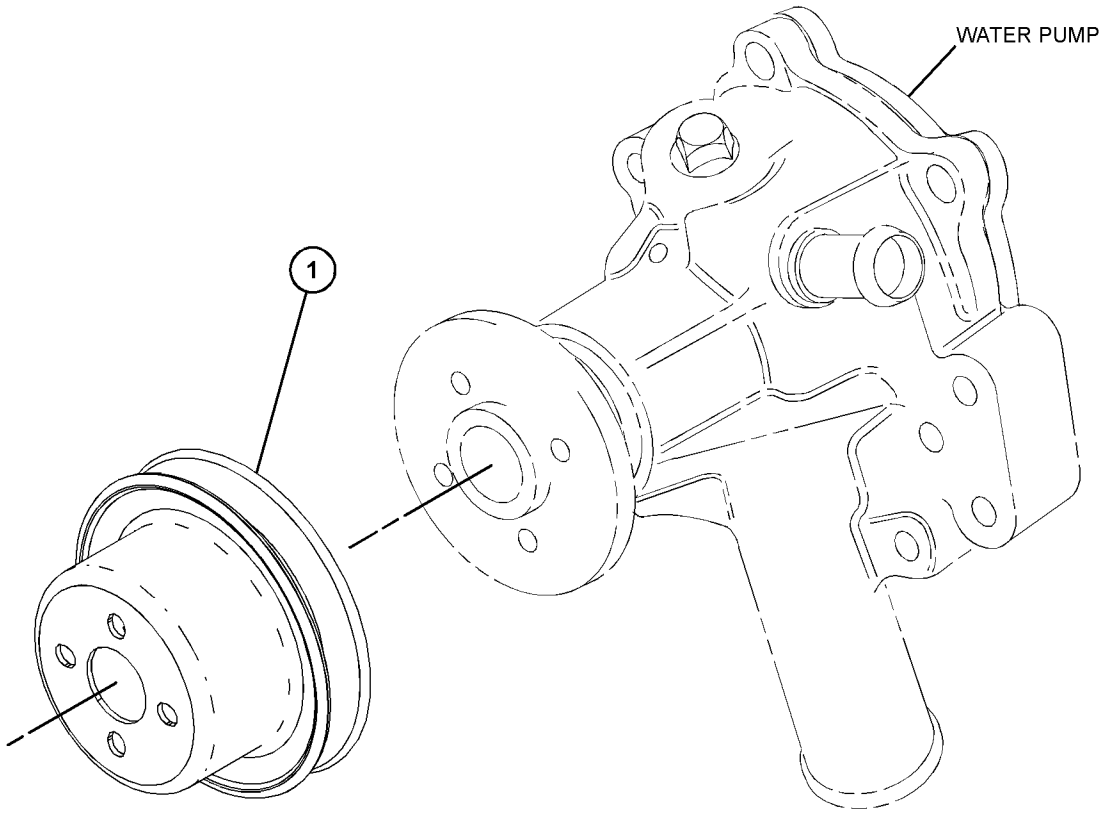

GRAPHIC #1 <END> g06386762

398-4866 PULLEY GP-FAN

PART OF 417-7273, 514-6556 ENGINE AR-PRIMARY

SMCS-1359 **i08023364**

NOTE	REF NO	GRAPHIC REF	PART NUMBER	QTY	PART NAME 1 2 3 4 5 6 (PRODUCT LEVEL)	SEE PAGE
	1	1	**483-3937**	1	PULLEY-FAN	

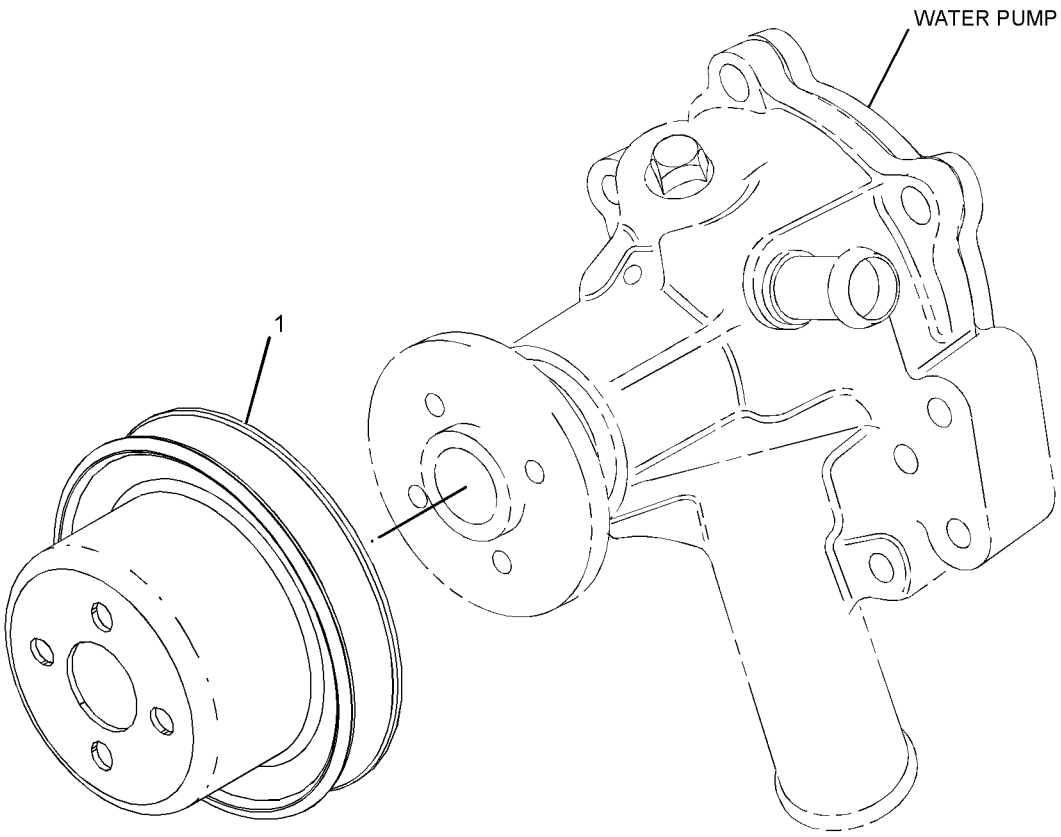

GRAPHIC #1 <END> g06069093

398-4900 PULLEY GP-FAN

S/N: C6M10494-UP

SMCS-1359 **i08028523**

NOTE	REF NO	GRAPHIC REF	PART NUMBER	QTY	PART NAME 1 2 3 4 5 6 (PRODUCT LEVEL)	SEE PAGE
	1	1	**483-3938**	1	PULLEY-FAN	

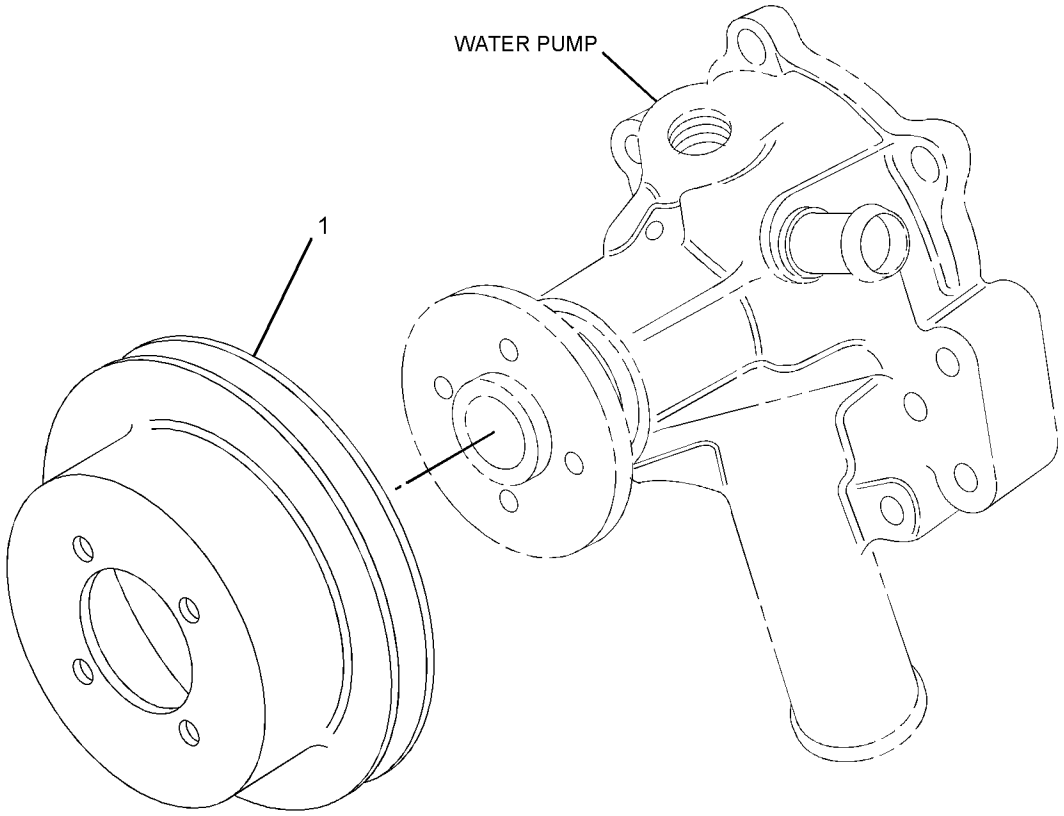

GRAPHIC #1 <END> g03398287

311-9027 PULLEY GP-WATER PUMP

SMCS-1384 **i07742966**

NOTE	REF NO	GRAPHIC REF	PART NUMBER	QTY	PART NAME 1 2 3 4 5 6 (PRODUCT LEVEL)	SEE PAGE
	1	1	**483-3938**	1	PULLEY-FAN	

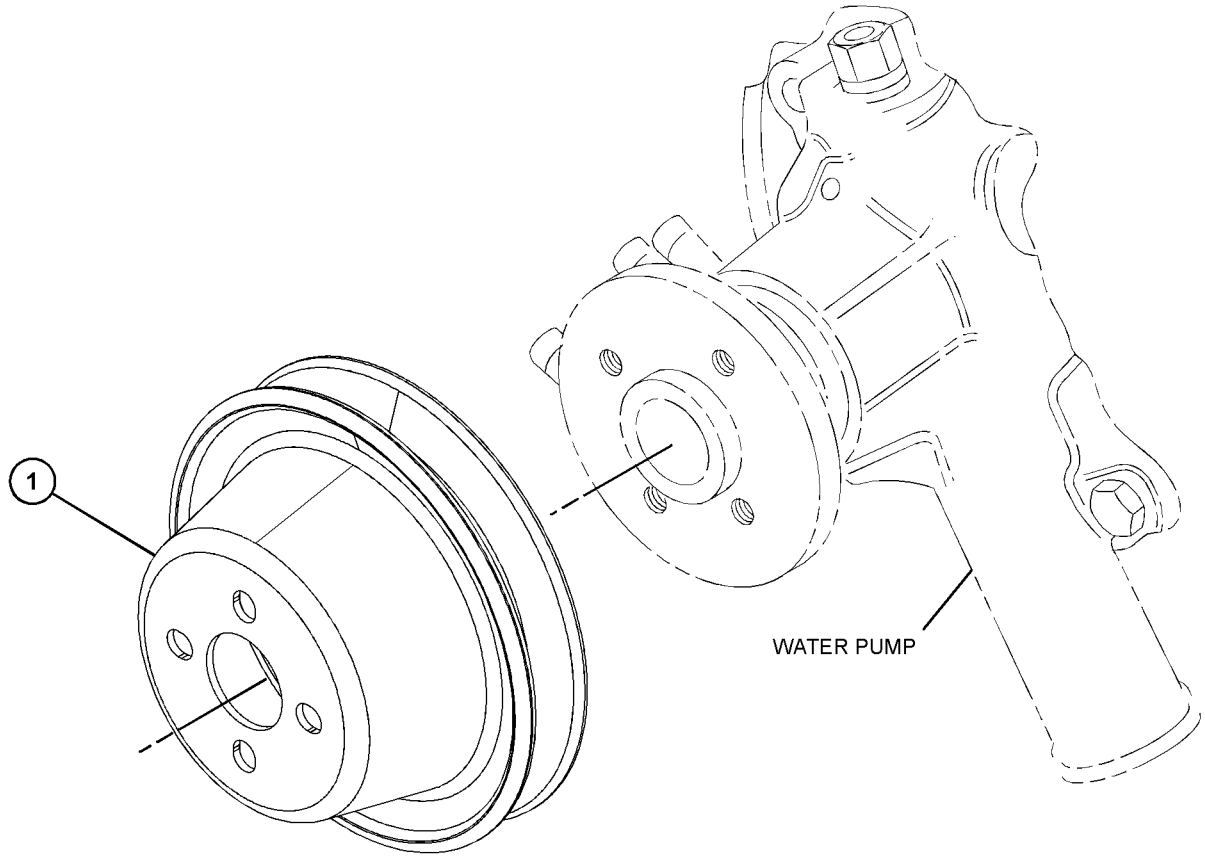

GRAPHIC #1 <END> g06472411

328-2488 PULLEY GP-WATER PUMP

SMCS-1384 **i07592160**

NOTE	REF NO	GRAPHIC REF	PART NUMBER	QTY	PART NAME 1 2 3 4 5 6 (PRODUCT LEVEL)	SEE PAGE
	1	1	**483-3939**	1	PULLEY-FAN	

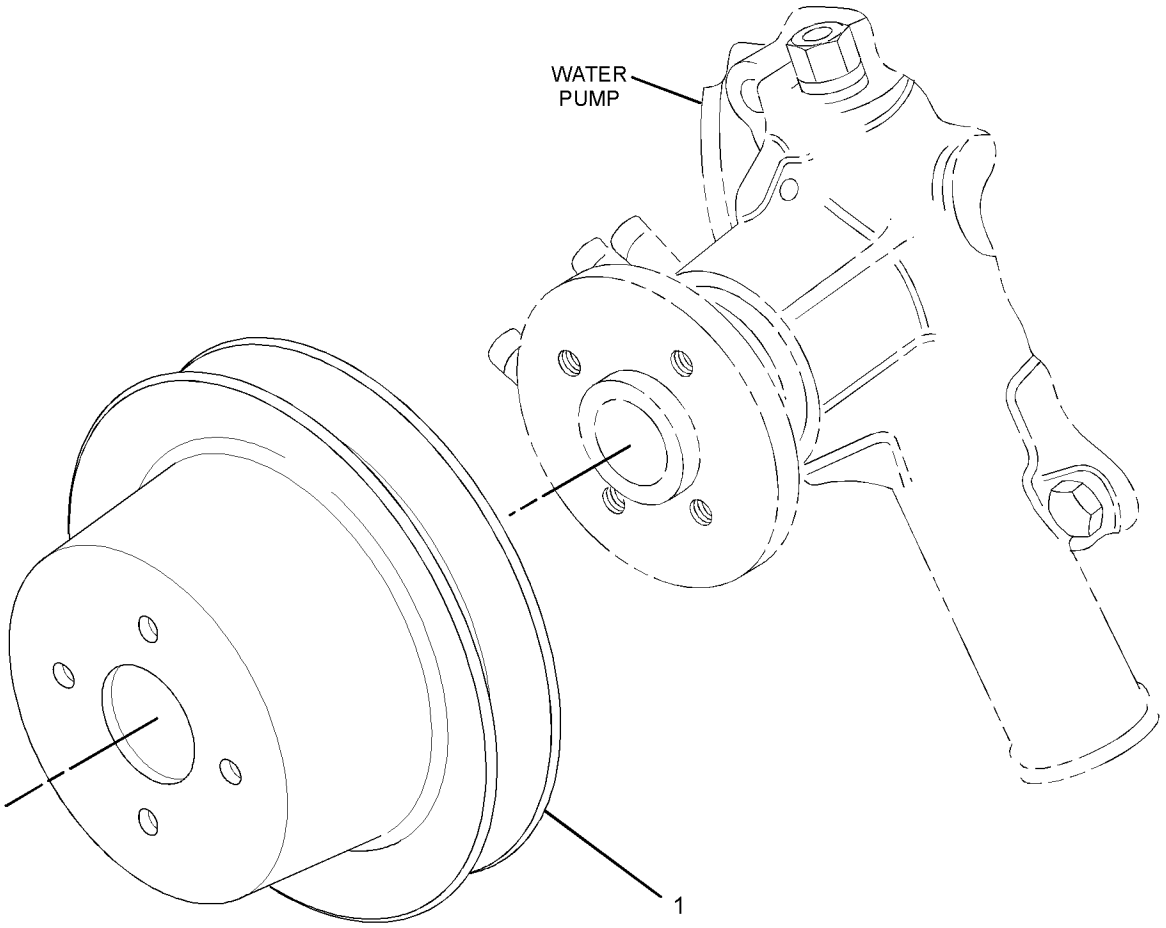

GRAPHIC #1 <END> g01622233

557-7240 ROCKER ARM AS

PART OF 584-3189 ROCKER ARM GP, 308-2285, 309-6716 VALVE MECHANISM GP
ALSO AN ATTACHMENT

SMCS-1123 **i08578753**

NOTE	REF NO	GRAPHIC REF	PART NUMBER	QTY	PART NAME 1 2 3 4 5 6 (PRODUCT LEVEL)	SEE PAGE
M	1	2	**153-5590**	8	NUT (M7X1-THD)	
	2	2	**154-1243**	6	WASHER (15.2X21X0.5-MM THK)	
	3	2	**557-7242**	1	SEAL-O-RING	
	4	2	**557-7246**	3	SPRING	
	5	2	**557-7247**	1	SHAFT	
	6	1,2	**557-7254**	4	ROCKER ARM AS (INLET)	
	7	2	**557-7249**	8	SCREW-ADJUSTING	
	8	1,2	**557-7250**	4	ROCKER ARM AS (EXHAUST)	

M - METRIC PART

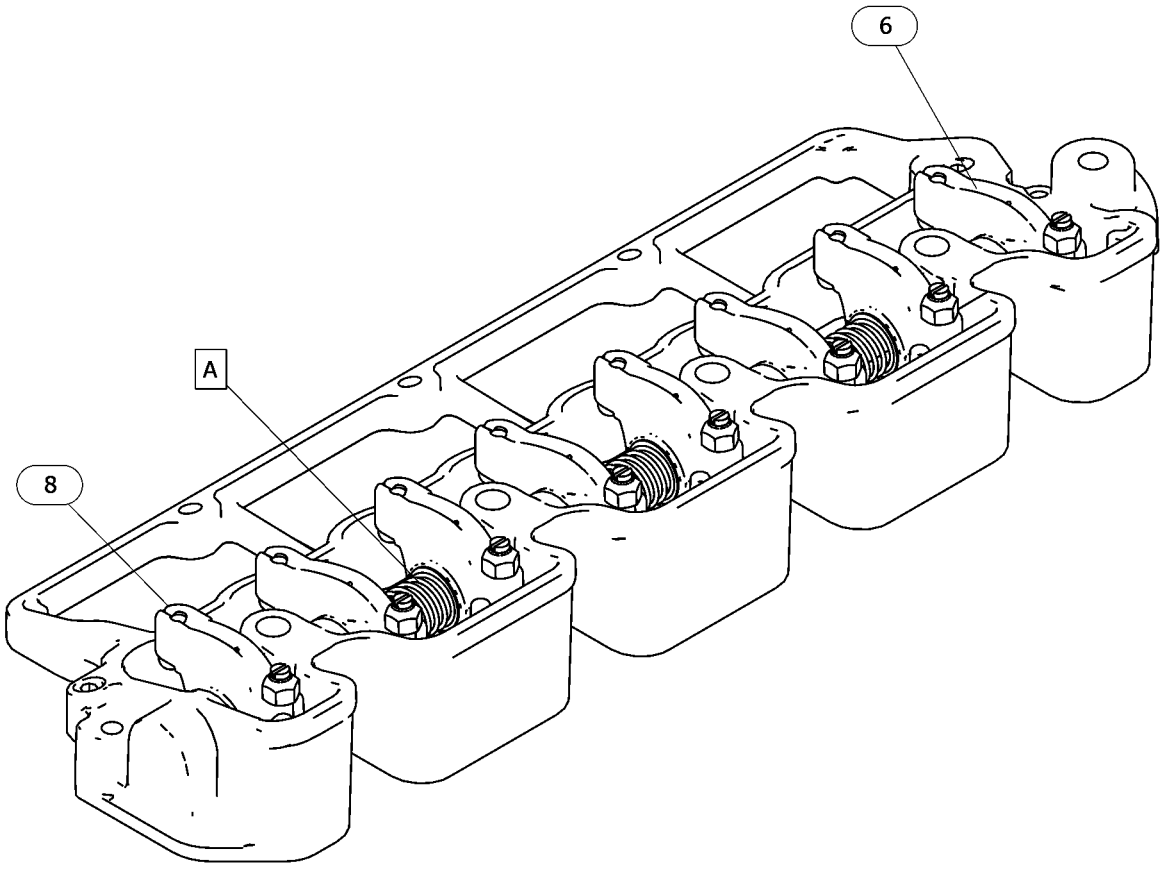

GRAPHIC #1 g06712443

557-7240 **ROCKER ARM AS (**contd.**)** **i08578753**

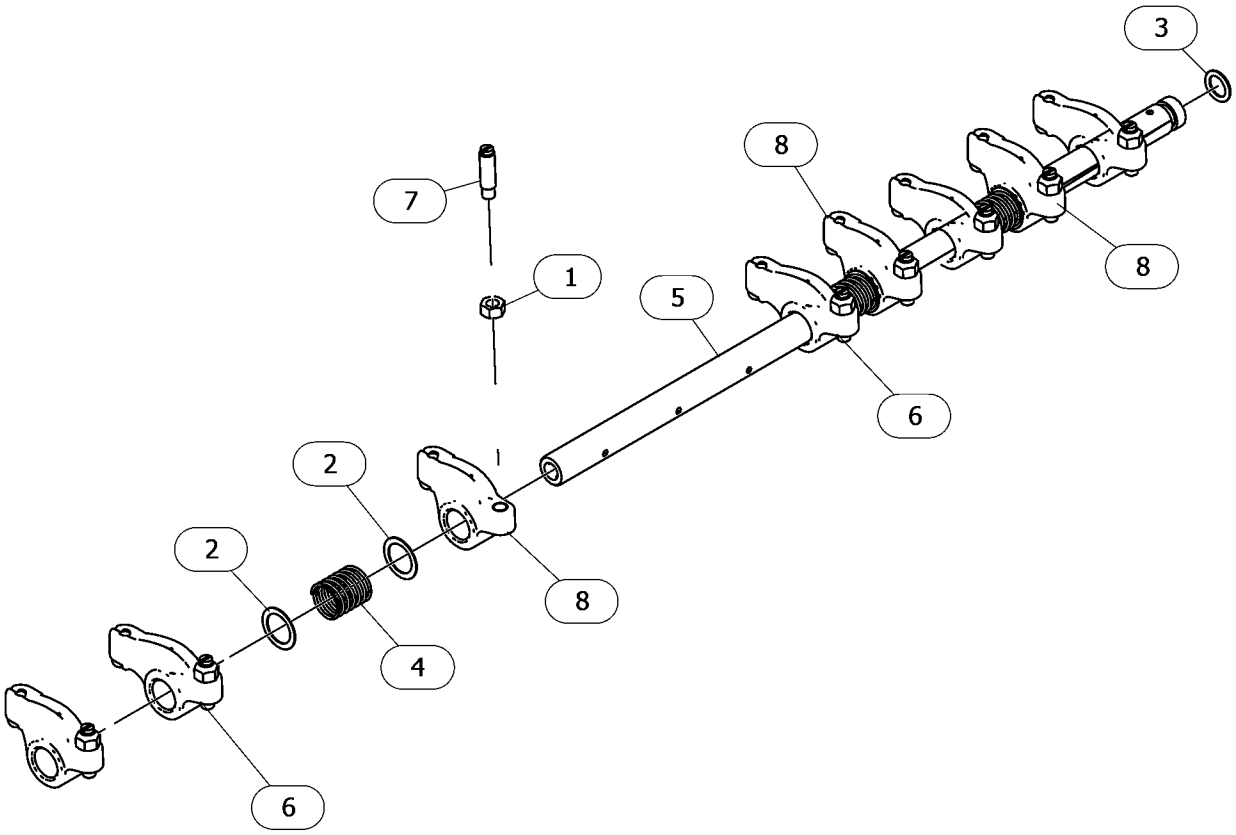

VIEW OF AREA A
(PARTS REMOVED FOR CLARITY)

GRAPHIC #2 <END> g06712443_01

584-3189 ROCKER ARM GP

PART OF 433-1379 ENGINE AR, 417-7273, 435-1636, 435-1641, 435-1642, 435-1647, 514-6556 ENGINE AR-PRIMARY
ALSO AN ATTACHMENT

SMCS-1123 **i09817656**

NOTE	REF NO	GRAPHIC REF	PART NUMBER	QTY	PART NAME 1 2 3 4 5 6 (PRODUCT LEVEL)	SEE PAGE
	1	1	**153-5961**	2	BOLT AS	
M	2	1	**153-7988**	4	NUT (M10X1.25-THD)	
M	3	1	**154-1246**	4	STUD (M10X1.5X95-MM)	
	4	1	**438-1393**	1	GASKET	
	5	1	**504-3838**	8	CAP	
Y	6	1	**557-7240**	1	ROCKER ARM AS	439

M - METRIC PART
Y - SEPARATE ILLUSTRATION

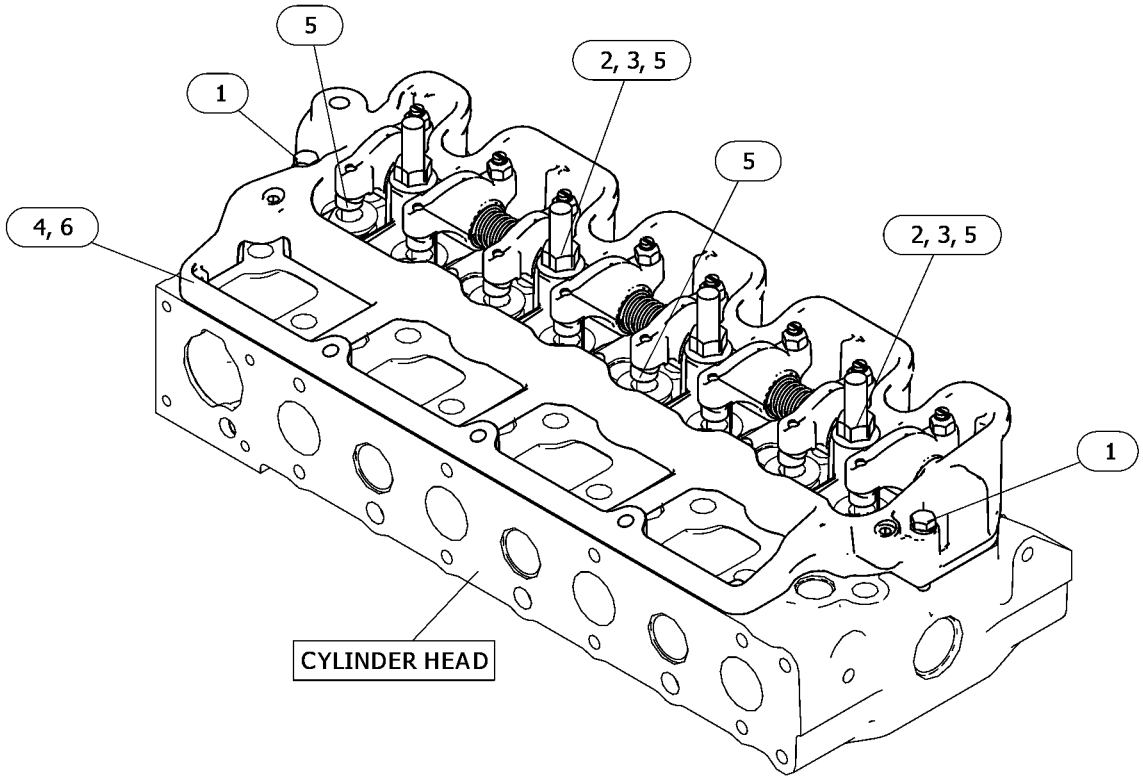

GRAPHIC #1 <END> g06719844

533-4971 SHAFT GP-IDLER

PART OF 308-2281, 340-5781, 420-6407, 584-3179 CYLINDER BLOCK GP
ALSO AN ATTACHMENT

SMCS-1206 **i08134058**

NOTE	REF NO	GRAPHIC REF	PART NUMBER	QTY	PART NAME 1 2 3 4 5 6 (PRODUCT LEVEL)	SEE PAGE
M	1	1	**153-5592**	1	NUT (M8X1.25-THD)	

M - METRIC PART

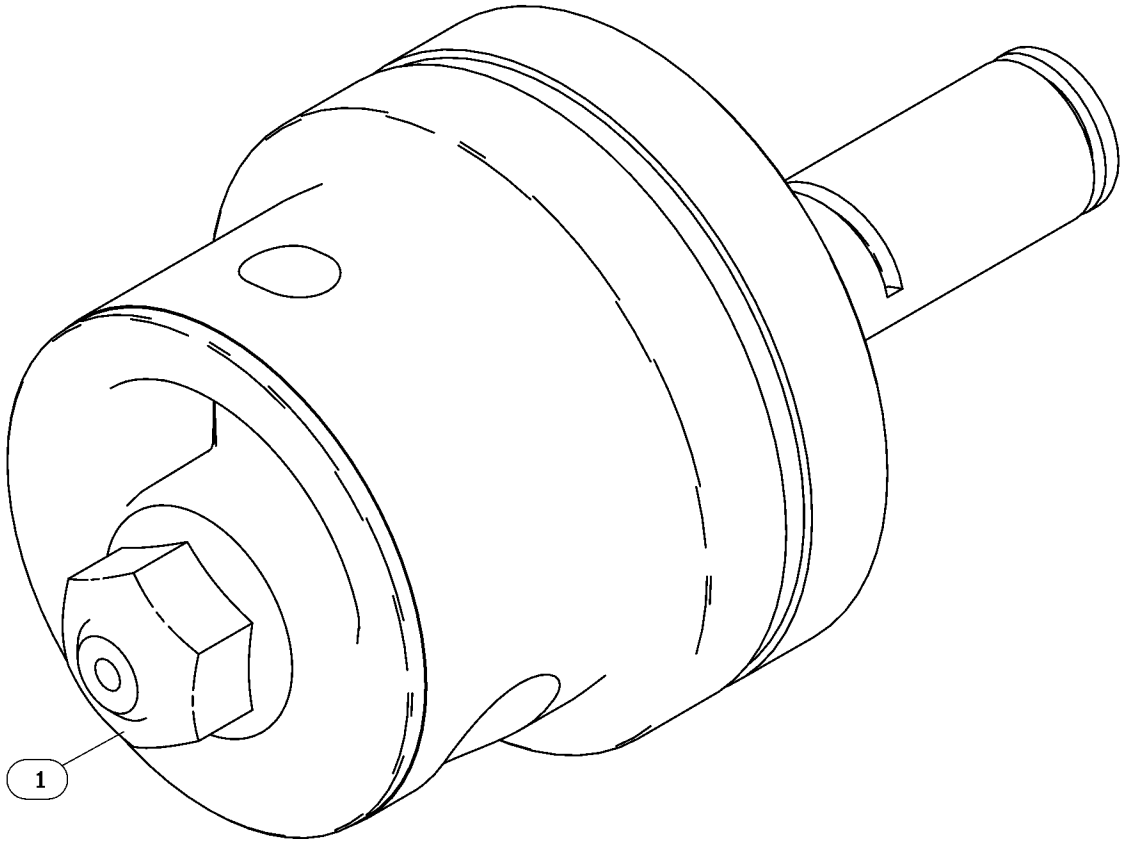

GRAPHIC #1 <END> g06589182

308-2306 V-BELT GP—WATER PUMP

PART OF 417-7273, 489-4263, 506-0518, 506-0519, 506-0520, 512-7969, 513-2239, 516-2639, 518-0165, 557-6086, 557-7471 ENGINE AR-PRIMARY

SMCS-1357 **i05985134**

NOTE	REF NO	GRAPHIC REF	PART NUMBER	QTY	PART NAME 1 2 3 4 5 6 (PRODUCT LEVEL)	SEE PAGE
	1	1	**438-1597**	1	V-BELT (ALTERNATOR)	

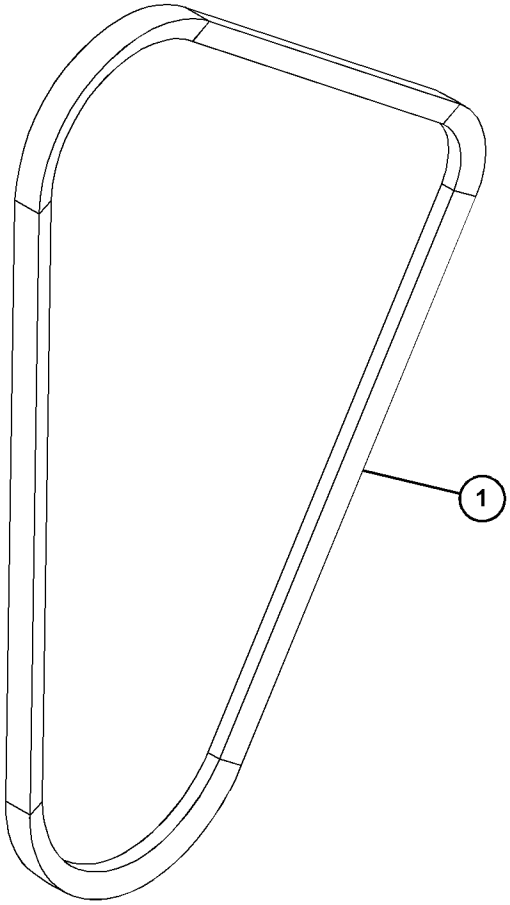

GRAPHIC #1 <END> g03749774

311-9029 V-BELT GP

SMCS-1357 **i06249578**

NOTE	REF NO	GRAPHIC REF	PART NUMBER	QTY	PART NAME 1 2 3 4 5 6 (PRODUCT LEVEL)	SEE PAGE
	1	1	**424-8611**	1	V-BELT (WATER PUMP)	

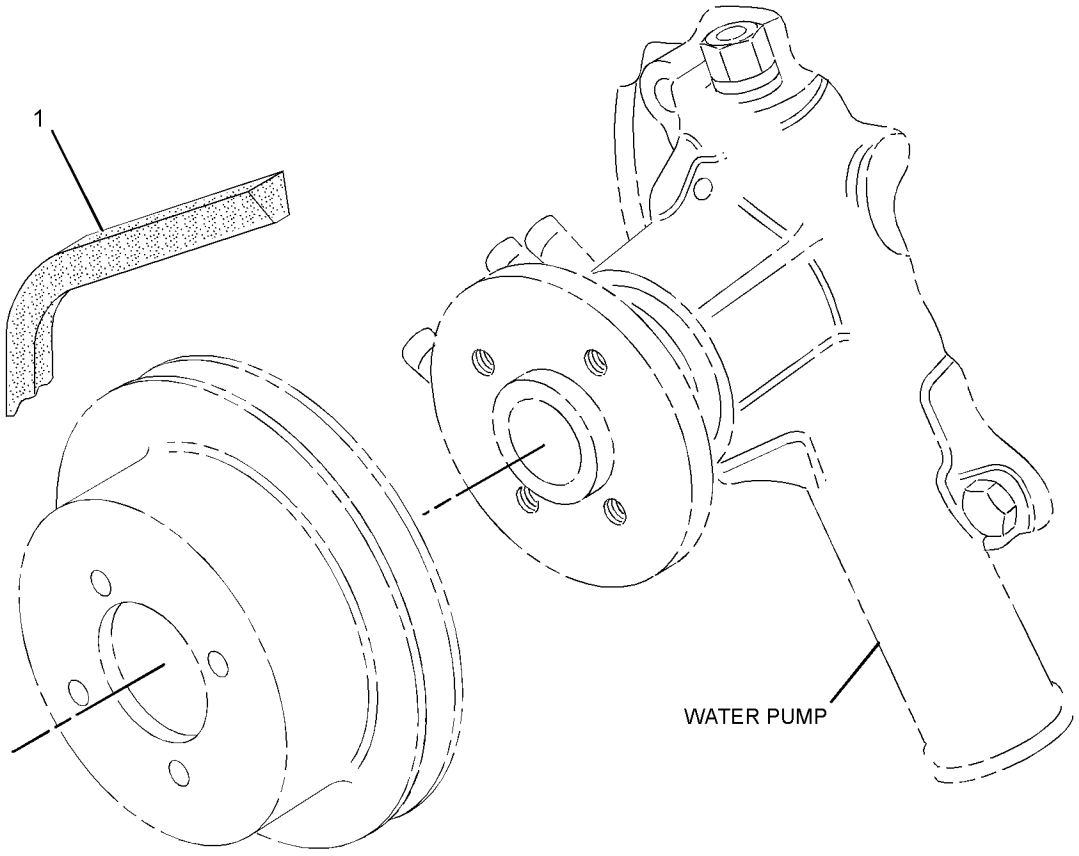

GRAPHIC #1 <END> g01418782

317-3039 V-BELT GP

PART OF 489-9224, 514-6556 ENGINE AR-PRIMARY

SMCS-1357 **i03202154**

NOTE	REF NO	GRAPHIC REF	PART NUMBER	QTY	PART NAME 1 2 3 4 5 6 (PRODUCT LEVEL)	SEE PAGE
	1	1	**295-0887**	1	V-BELT (WATER PUMP)	

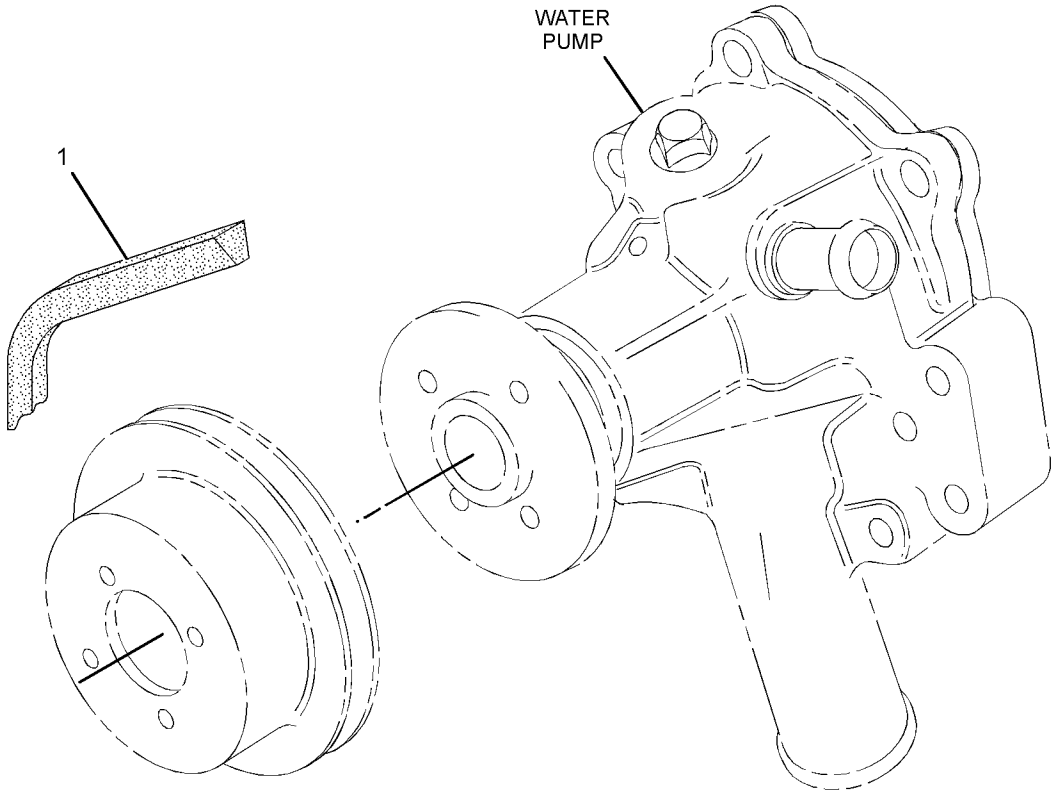

GRAPHIC #1 <END> g01421607

340-5966 V-BELT GP

PART OF 499-6420 ENGINE AR-PRIMARY

SMCS-1357 **i05371260**

NOTE	REF NO	GRAPHIC REF	PART NUMBER	QTY	PART NAME 1 2 3 4 5 6 (PRODUCT LEVEL)	SEE PAGE
	1	1	**338-3398**	1	V-BELT	

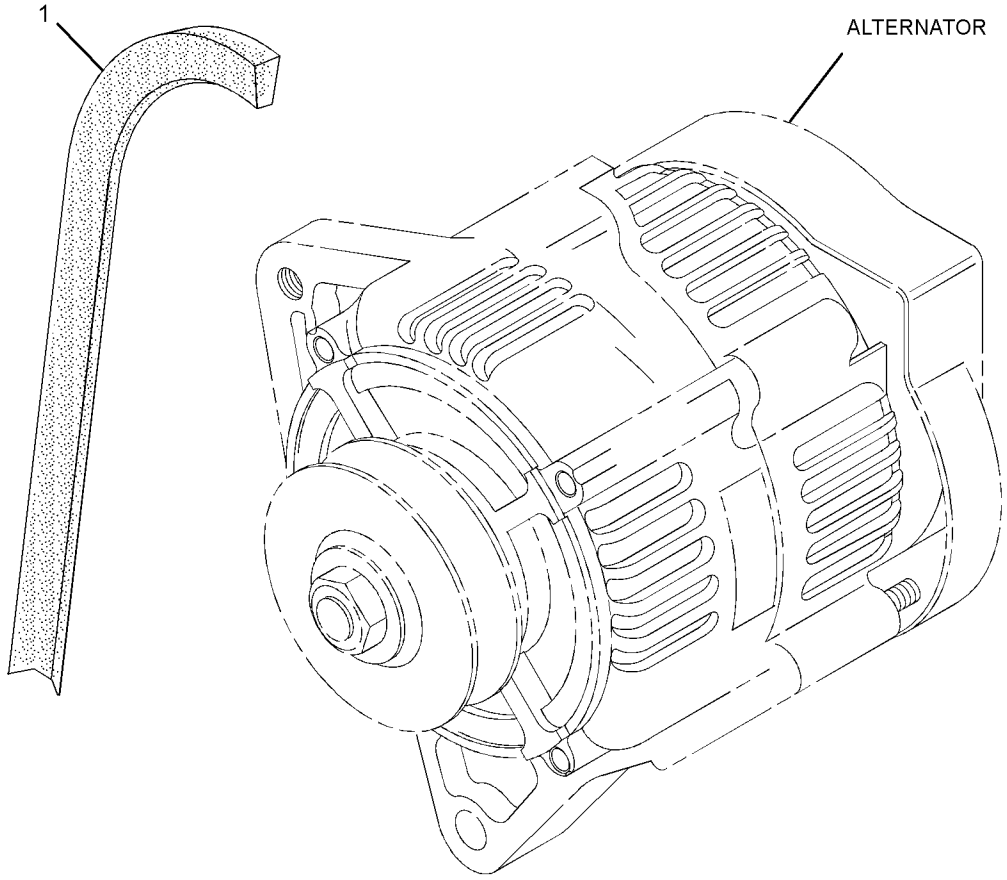

GRAPHIC #1 <END> g01982537

341-6637 V-BELT GP

SMCS-1357 **i07460007**

NOTE	REF NO	GRAPHIC REF	PART NUMBER	QTY	PART NAME 1 2 3 4 5 6 (PRODUCT LEVEL)	SEE PAGE
	1	1	**438-1597**	1	V-BELT (WATER PUMP)	

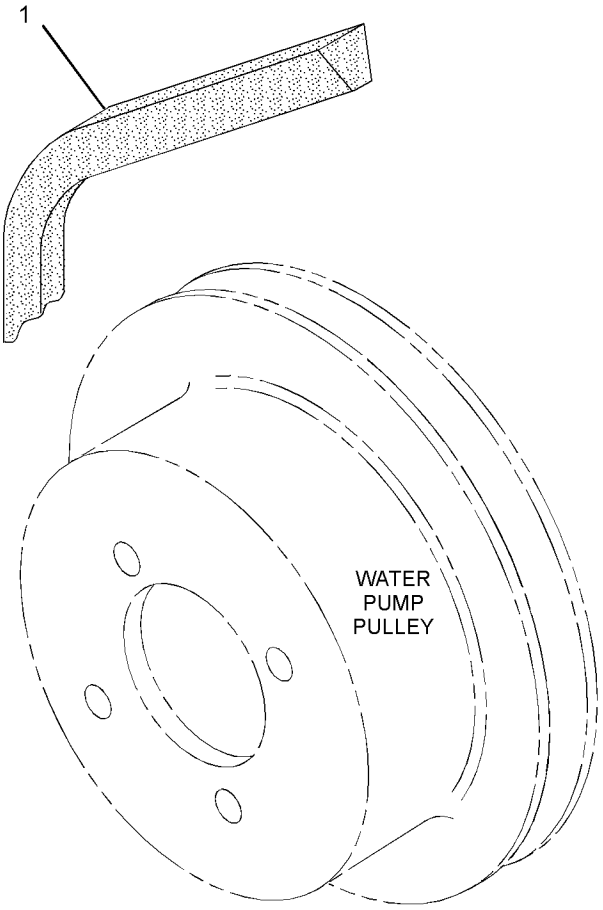

GRAPHIC #1 <END> g01407842

428-5948 V-BELT GP

S/N: C6M10426-UP

PART OF 417-7273 ENGINE AR-PRIMARY

SMCS-1357 **i08710173**

NOTE	REF NO	GRAPHIC REF	PART NUMBER	QTY	PART NAME 1 2 3 4 5 6 (PRODUCT LEVEL)	SEE PAGE
	1	1	**438-1597**	1	V-BELT (ALTERNATOR)	

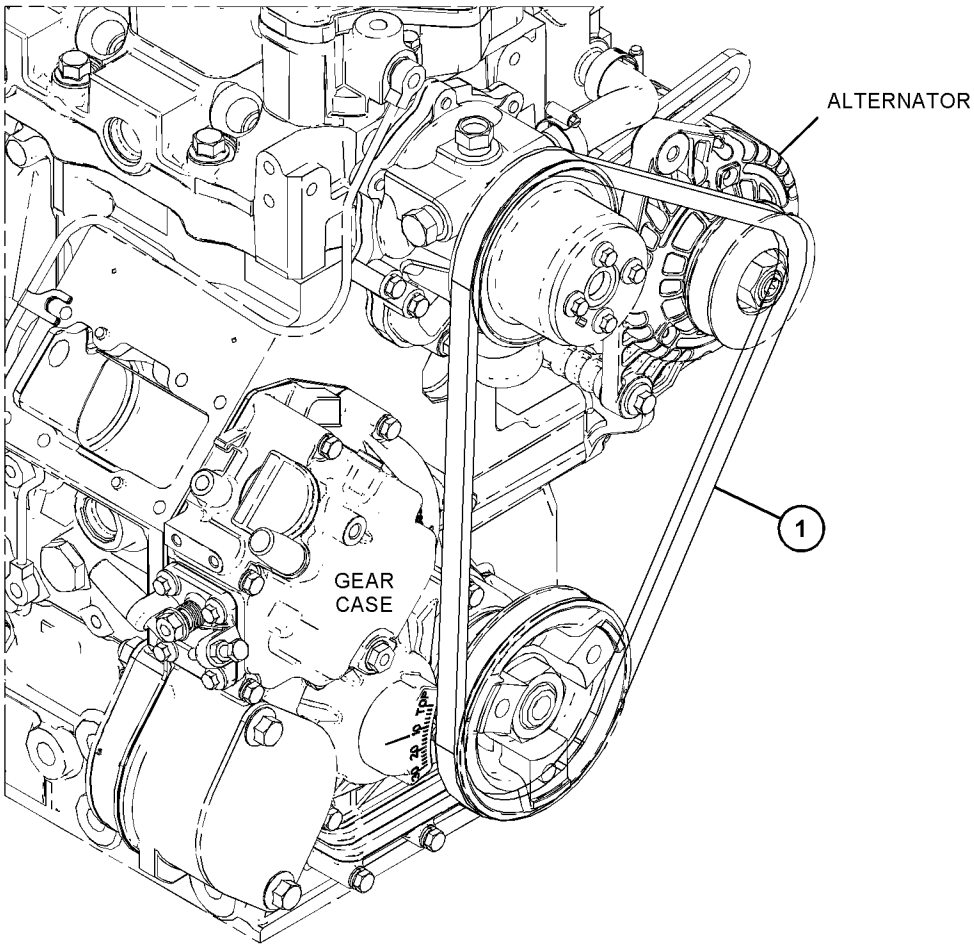

GRAPHIC #1 <END> g06770758

428-5949 V-BELT GP

S/N: C6M10494-UP

SMCS-1357 **i08779174**

NOTE	REF NO	GRAPHIC REF	PART NUMBER	QTY	PART NAME 1 2 3 4 5 6 (PRODUCT LEVEL)	SEE PAGE
	1	1	**424-8611**	1	V-BELT (ALTERNATOR)	

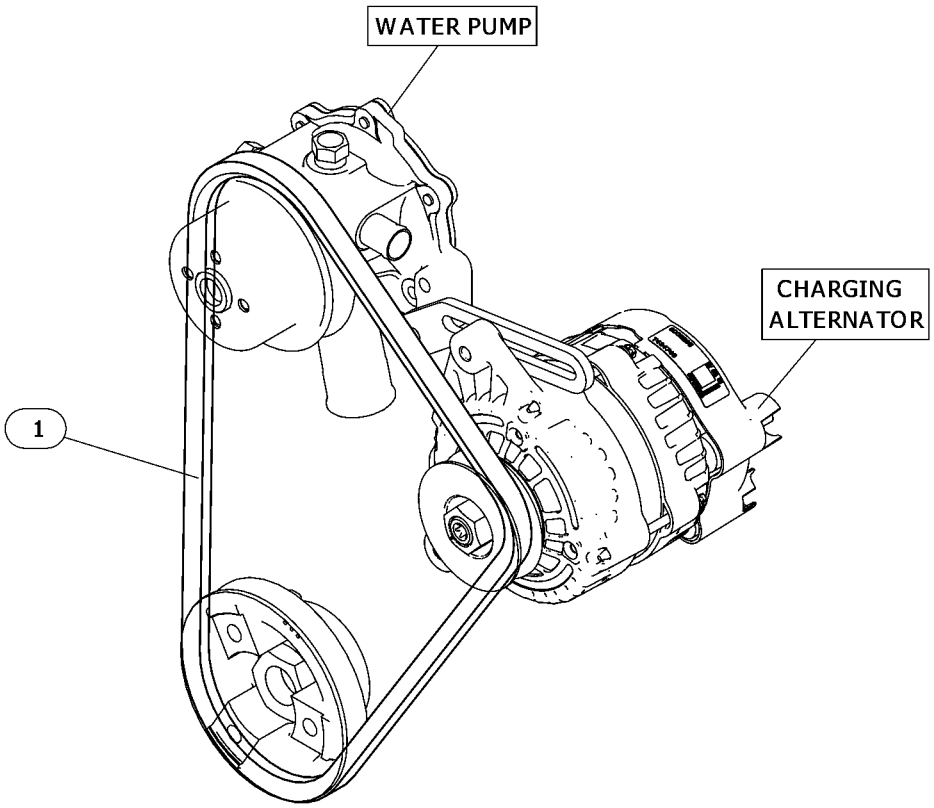

GRAPHIC #1 <END> g06769252

598-5753 V-BELT GP

PART OF 514-6556 ENGINE AR-PRIMARY

SMCS-1357 **i08802989**

NOTE	REF NO	GRAPHIC REF	PART NUMBER	QTY	PART NAME 1 2 3 4 5 6 (PRODUCT LEVEL)	SEE PAGE
	1	1	**448-3118**	1	BELT (ALTERNATOR)	

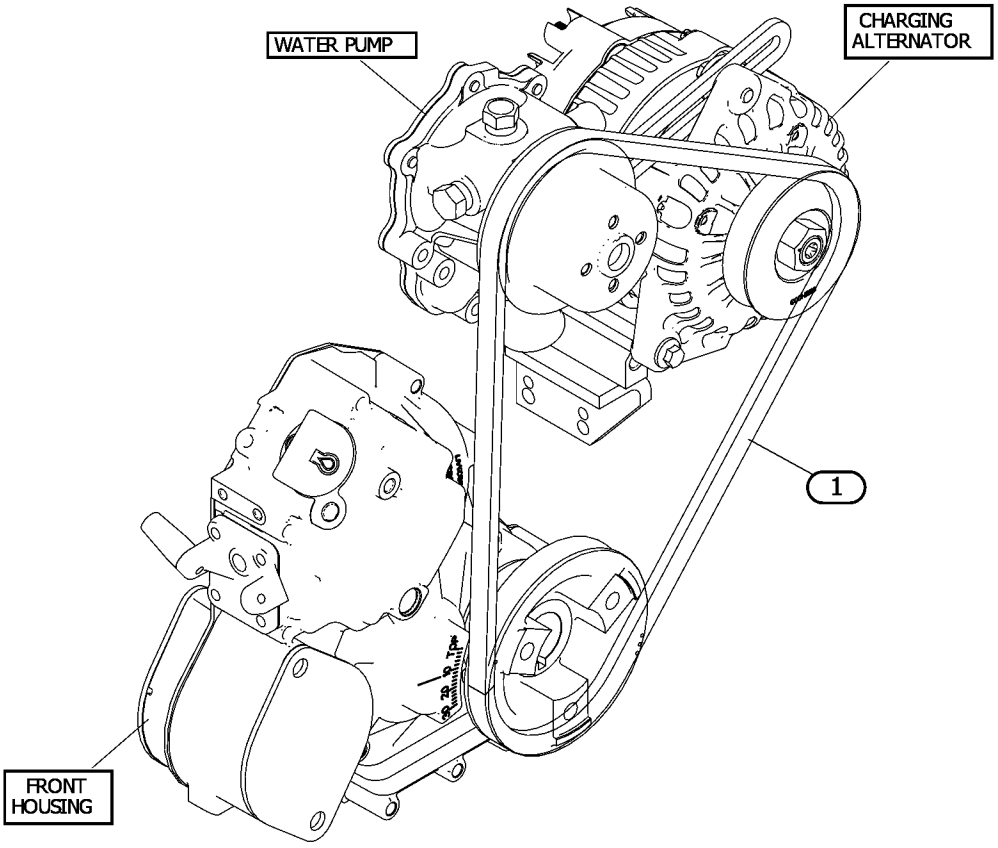

GRAPHIC #1 <END> g07547993

315-5252 VALVE & PLUG GP-OIL PAN DRAIN

PART OF 489-9224, 514-6556 ENGINE AR-PRIMARY

SMCS-1302 **i05416976**

NOTE	REF NO	GRAPHIC REF	PART NUMBER	QTY	PART NAME 1 2 3 4 5 6 (PRODUCT LEVEL)	SEE PAGE
	1	1	**153-6412**	2	WASHER	
	2	1	**423-6224**	1	PLUG-DRAIN (ENGINE OIL PAN)	
	3	1	**312-4560**	1	VALVE-DRAIN	

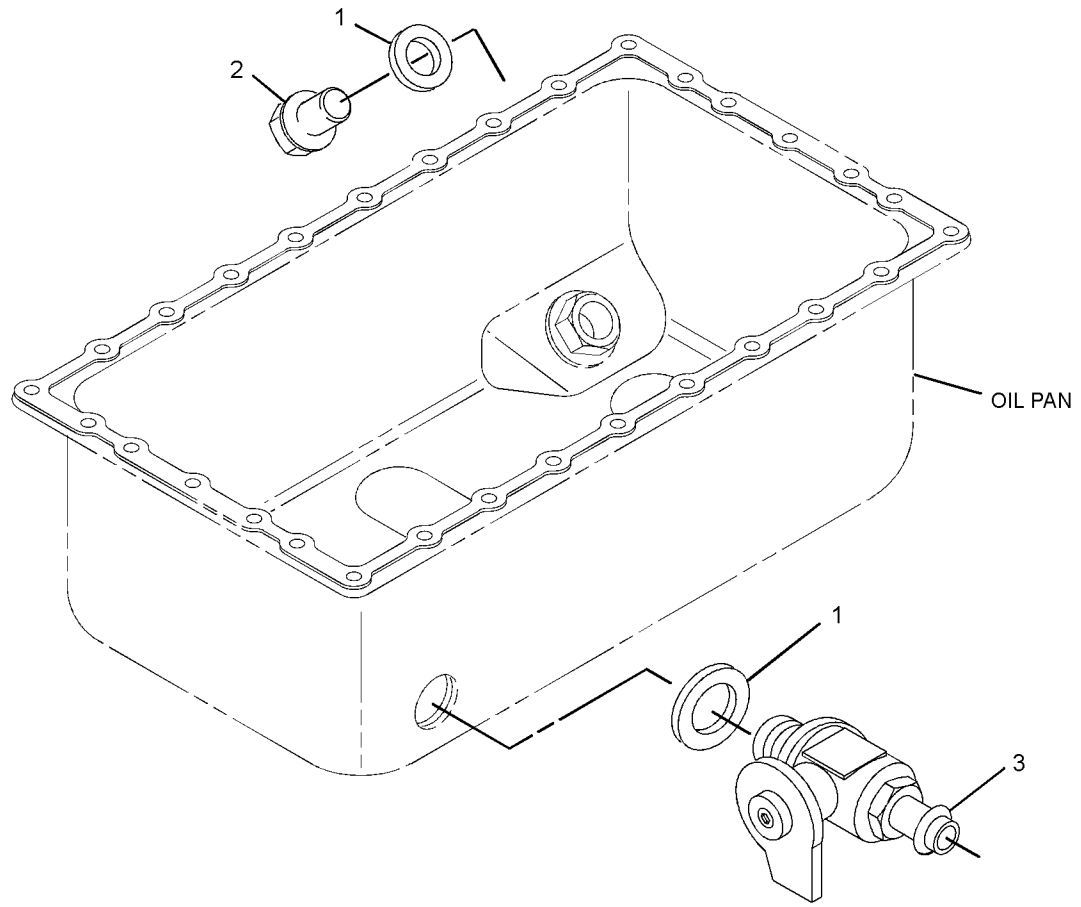

GRAPHIC #1 <END> g03423457

308-2285 VALVE MECHANISM GP

PART OF 433-1380 ENGINE AR, 435-1636, 435-1658, 489-9224, 506-0518, 506-0519, 512-7969, 514-6556, 516-2639, 518-0165 ENGINE AR-PRIMARY

TYPE 1

SMCS-1102, 1121, 1123, 1209 **i09627738**

NOTE	REF NO	GRAPHIC REF	PART NUMBER	QTY	PART NAME 1 2 3 4 5 6 (PRODUCT LEVEL)	SEE PAGE
	1	1	**153-5961**	2	BOLT AS	
M	2	1	**153-7988**	4	NUT (M10X1.25-THD)	
M	3	1	**154-1246**	4	STUD (M10X1.5X95-MM)	
	4	1	**528-6882**	8	PUSHROD AS	
	5	1	**438-9109**	8	TAPPET	
	6	1	**438-1393**	1	GASKET	
Y	7	1	**365-5278**	1	VALVE MECHANISM GP	464

M - METRIC PART
Y - SEPARATE ILLUSTRATION

308-2285 **VALVE MECHANISM GP (**contd.**)** **i09627738**

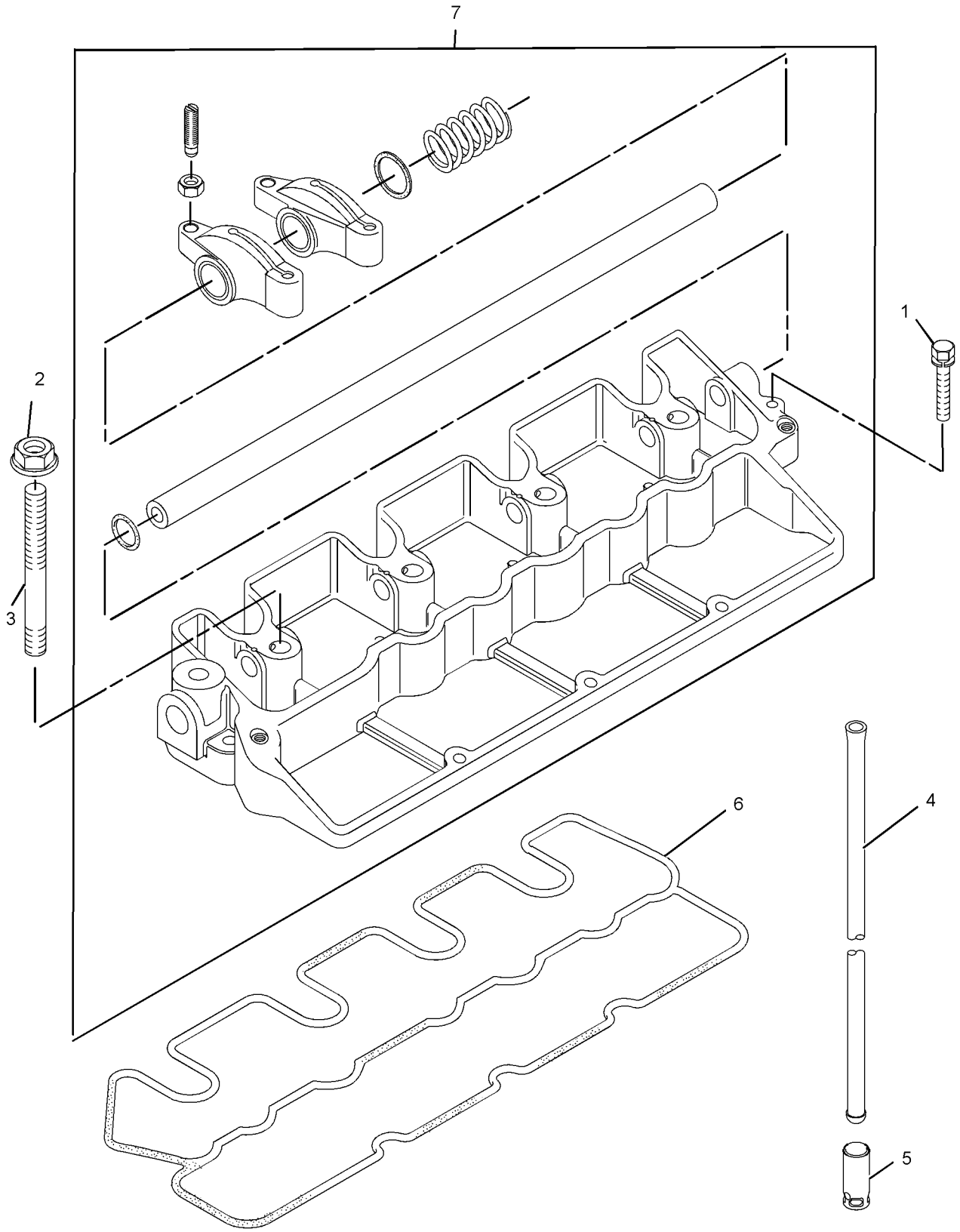

GRAPHIC #1 <END> g01409366

308-2285 VALVE MECHANISM GP

PART OF 433-1380 ENGINE AR, 435-1636, 435-1658, 489-9224, 506-0518, 506-0519, 512-7969, 514-6556, 516-2639, 518-0165, 557-6086 ENGINE AR-PRIMARY
TYPE 2

SMCS-1102, 1121, 1123, 1209 **i09944543**

NOTE	REF NO	GRAPHIC REF	PART NUMBER	QTY	PART NAME 1 2 3 4 5 6 (PRODUCT LEVEL)	SEE PAGE
	1	1	**153-5961**	2	BOLT AS	
M	2	1	**153-7988**	4	NUT (M10X1.25-THD)	
M	3	1	**154-1246**	4	STUD (M10X1.5X95-MM)	
C	4	1	**528-6882**	8	PUSHROD AS	
	5	1	**438-9109**	8	TAPPET	
	6	1	**438-1393**	1	GASKET (BRACKET)	
Y	7	1	**365-5278**	1	VALVE MECHANISM GP	464

C - CHANGE FROM PREVIOUS TYPE
M - METRIC PART
Y - SEPARATE ILLUSTRATION

308-2285 **VALVE MECHANISM GP (**contd.**)** **i09944543**

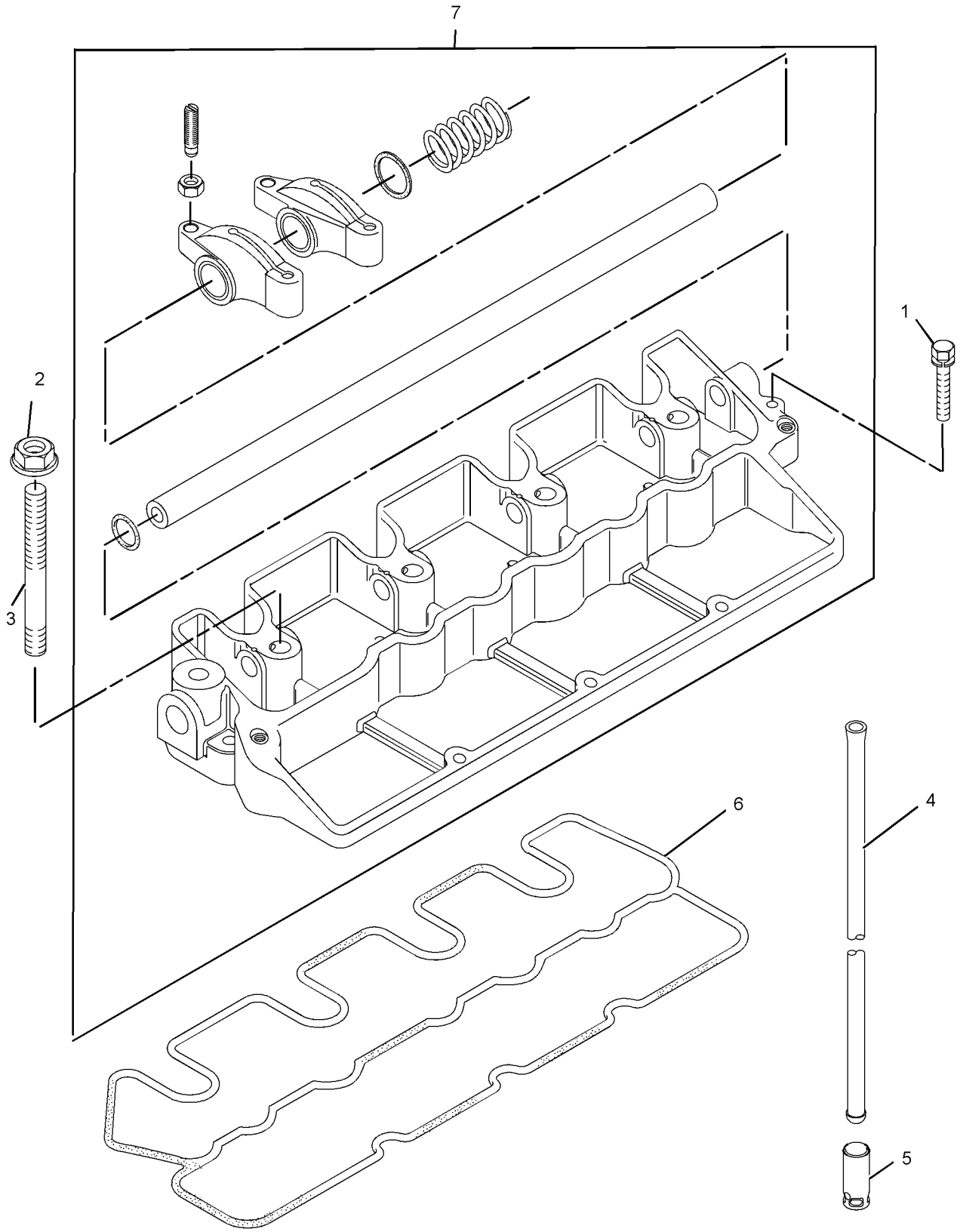

GRAPHIC #1 <END> g01409366

308-2285 VALVE MECHANISM GP

PART OF 435-1658, 489-9224, 506-0518, 506-0519, 512-7969, 514-6556, 516-2639, 518-0165, 557-6086 ENGINE AR-PRIMARY

TYPE 3

SMCS-1102, 1121, 1123, 1209

i09944506

NOTE	REF NO	GRAPHIC REF	PART NUMBER	QTY	PART NAME 1 2 3 4 5 6 (PRODUCT LEVEL)	SEE PAGE
	1	1	**153-5961**	2	BOLT AS	
M	2	1	**153-7988**	4	NUT (M10X1.25-THD)	
M	3	1	**154-1246**	4	STUD (M10X1.5X95-MM)	
	4	1	**528-6882**	8	PUSHROD AS	
	5	1	**438-9109**	8	TAPPET	
	6	1	**438-1393**	1	GASKET	
CY	7	1	**557-7240**	1	ROCKER ARM AS	439

C - CHANGE FROM PREVIOUS TYPE
M - METRIC PART
Y - SEPARATE ILLUSTRATION

308-2285 **VALVE MECHANISM GP (**contd.**)** **i09944506**

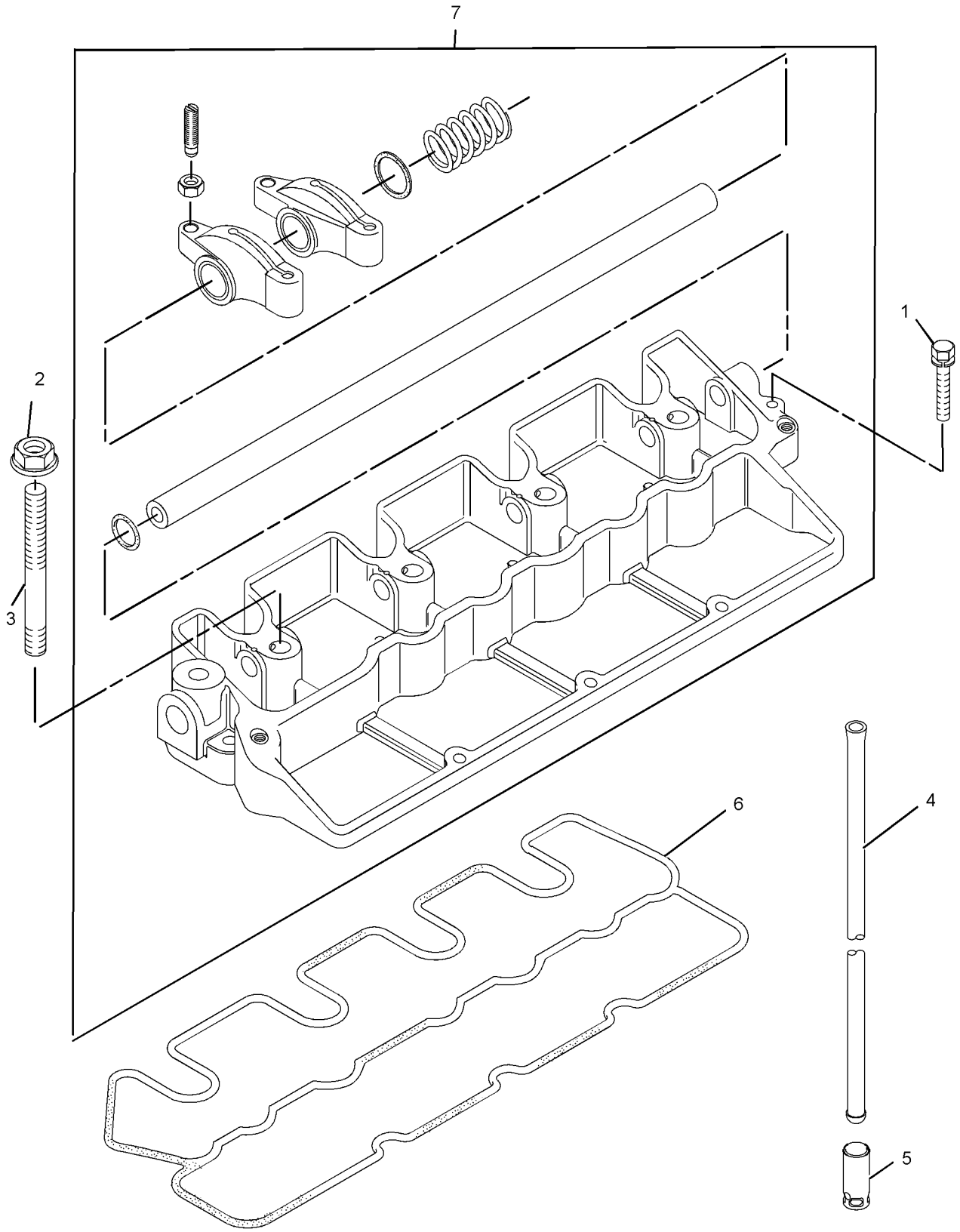

GRAPHIC #1 <END> g01409366

309-6716 VALVE MECHANISM GP

PART OF 435-1645, 435-1649 CYLINDER BLOCK GP-LONG, 433-1379 ENGINE AR, 417-7273, 435-1641, 435-1642, 435-1646, 435-1647, 489-4263, 506-0520, 513-2239, 557-7471 ENGINE AR-PRIMARY
ALSO AN ATTACHMENT

SMCS-1102, 1121, 1123, 1209 **i08509939**

NOTE	REF NO	GRAPHIC REF	PART NUMBER	QTY	PART NAME 1 2 3 4 5 6 (PRODUCT LEVEL)	SEE PAGE
	1	1	**153-5961**	2	BOLT AS	
M	2	1	**153-7988**	4	NUT (M10X1.25-THD)	
M	3	1	**154-1246**	4	STUD (M10X1.5X95-MM)	
	4	1	**528-6882**	8	PUSHROD AS	
	5	1	**438-9109**	8	TAPPET	
	6	1	**438-1393**	1	GASKET	
Y	7	1	**365-5278**	1	VALVE MECHANISM GP	464

M - METRIC PART
Y - SEPARATE ILLUSTRATION

309-6716 **VALVE MECHANISM GP (**contd.**)** **i08509939**

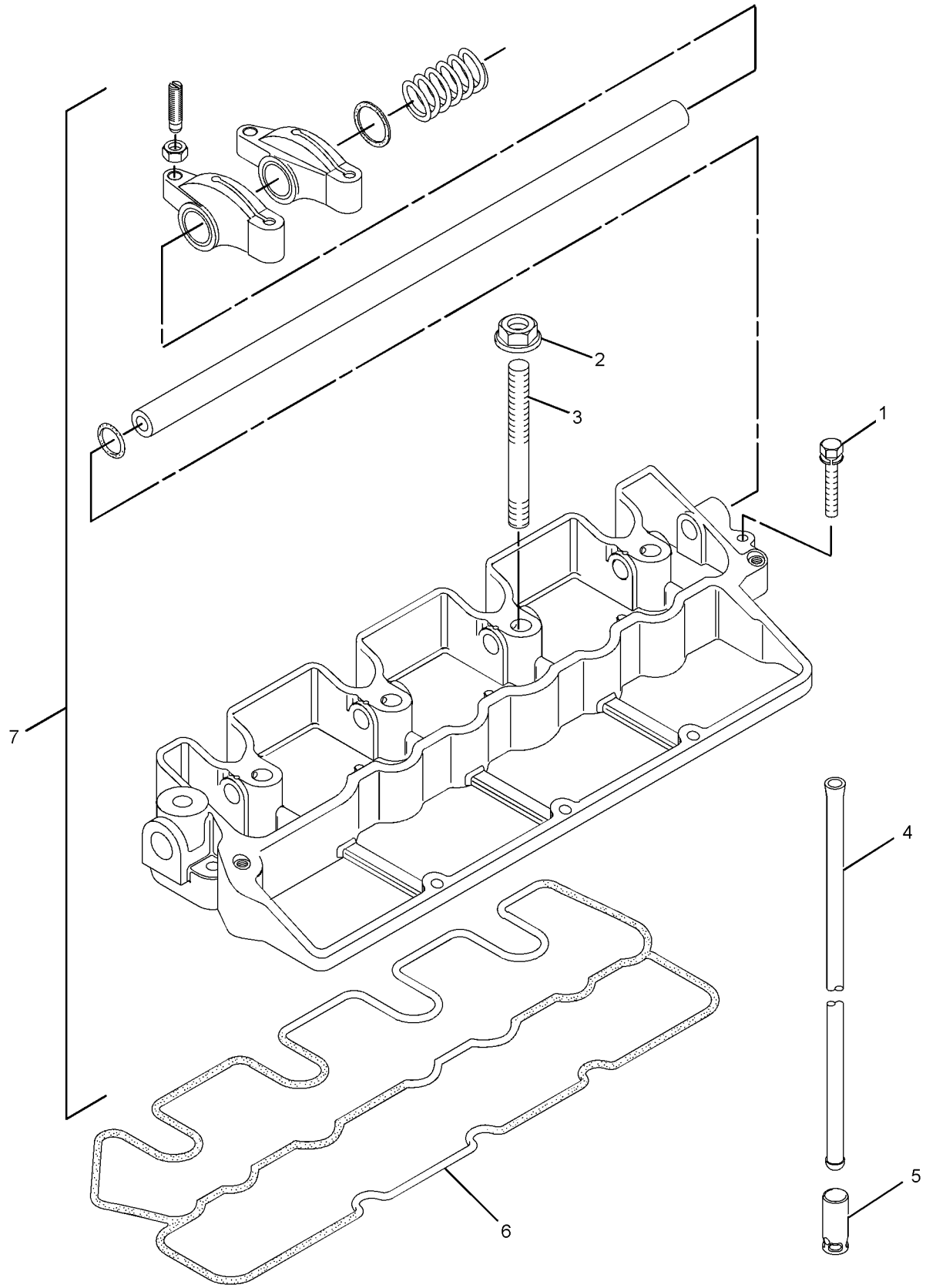

GRAPHIC #1 <END> g01419056

309-6716 VALVE MECHANISM GP

PART OF 435-1649 CYLINDER BLOCK GP-LONG, 435-1646, 489-4263, 506-0520, 513-2239, 557-7471 ENGINE AR-PRIMARY

SMCS-1102, 1121, 1123, 1209 **i09929569**

NOTE	REF NO	GRAPHIC REF	PART NUMBER	QTY	PART NAME 1 2 3 4 5 6 (PRODUCT LEVEL)	SEE PAGE
	1	1	**153-5961**	2	BOLT AS	
M	2	1	**153-7988**	4	NUT (M10X1.25-THD)	
M	3	1	**154-1246**	4	STUD (M10X1.5X95-MM)	
	4	1	**528-6882**	8	PUSHROD AS	
	5	1	**438-9109**	8	TAPPET	
C	6	1	**438-1393**	1	GASKET	
CY	7	1	**557-7240**	1	ROCKER ARM AS	439

C - CHANGE FROM PREVIOUS TYPE
M - METRIC PART
Y - SEPARATE ILLUSTRATION

309-6716 **VALVE MECHANISM GP (**contd.**)** **i09929569**

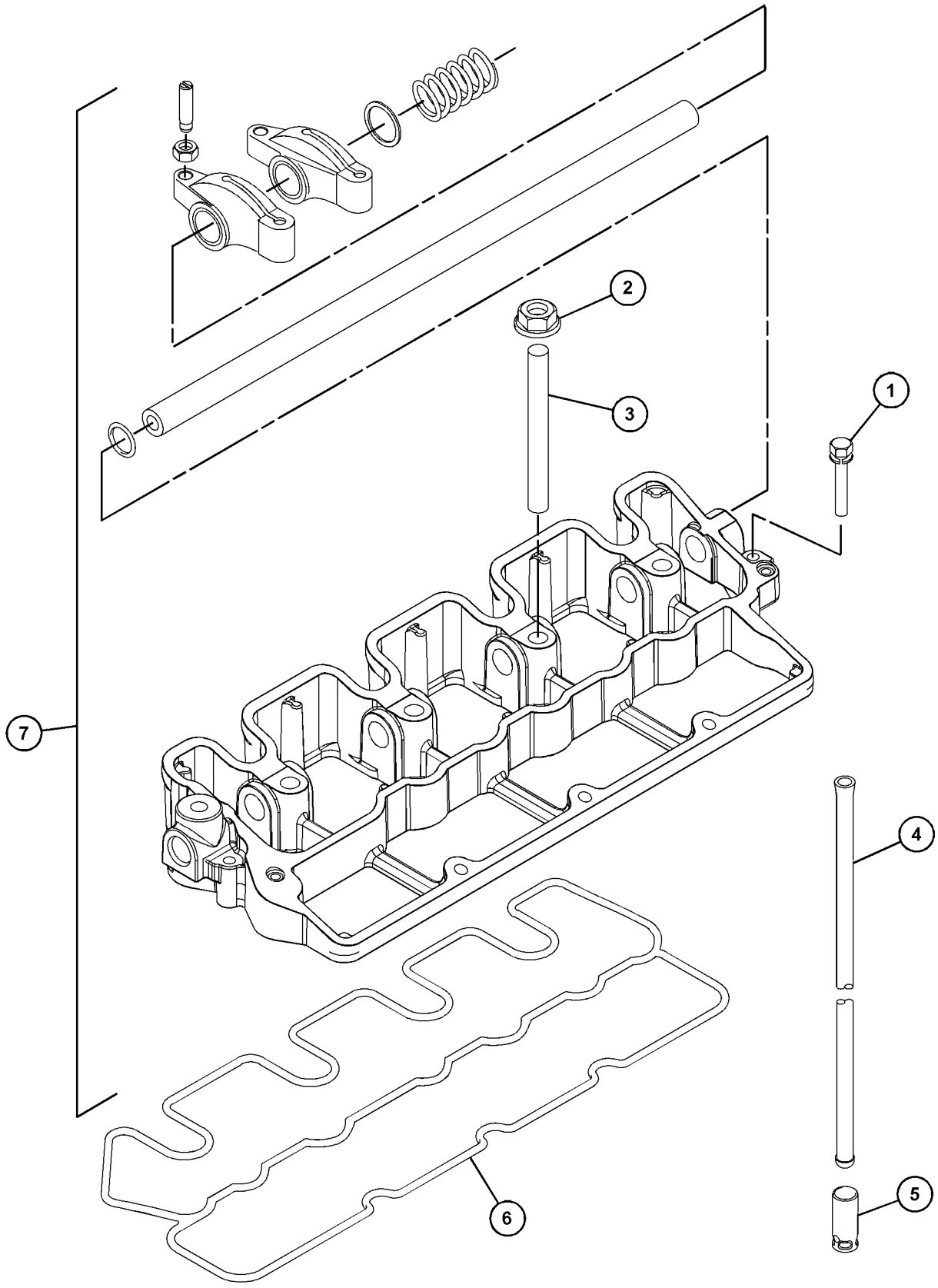

GRAPHIC #1 <END> g07671090

340-5785 VALVE MECHANISM GP

PART OF 499-6420 ENGINE AR-PRIMARY

SMCS-1102, 1121, 1123, 1209 **i06224840**

NOTE	REF NO	GRAPHIC REF	PART NUMBER	QTY	PART NAME 1 2 3 4 5 6 (PRODUCT LEVEL)	SEE PAGE
	1	1	**153-5961**	2	BOLT AS	
M	2	1	**153-7988**	4	NUT (M10X1.25-THD)	
M	3	1	**154-1246**	4	STUD (M10X1.5X95-MM)	
	4	1	**154-1248**	8	ROD	
	5	1	**438-9109**	8	TAPPET	
	6	1	**217-2752**	1	GASKET (VALVE BRACKET)	
Y	7	1	**365-5278**	1	VALVE MECHANISM GP	464

M - METRIC PART
Y - SEPARATE ILLUSTRATION

340-5785 **VALVE MECHANISM GP (**contd.**)** **i06224840**

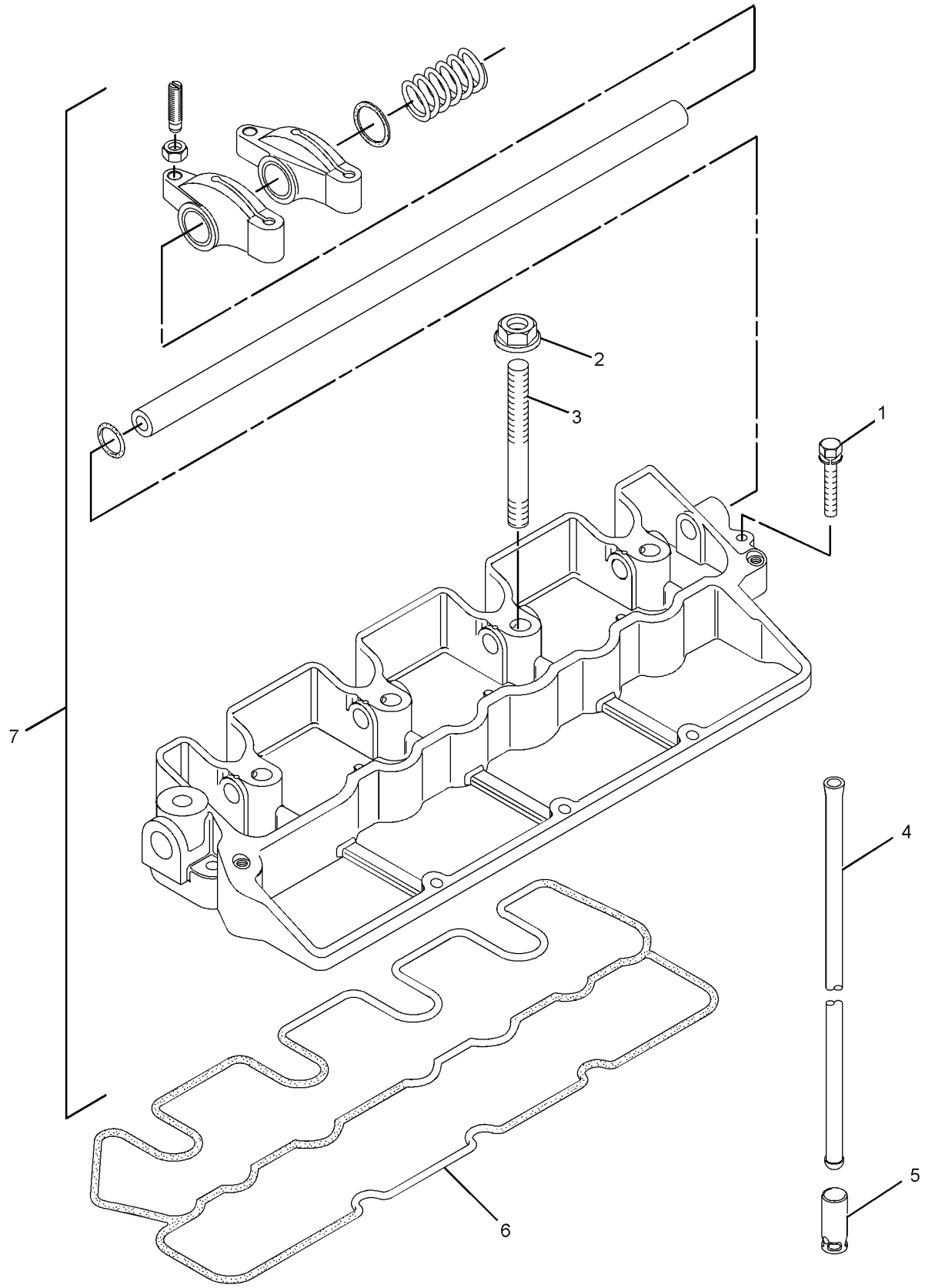

GRAPHIC #1 <END> g01419056

365-5278 VALVE MECHANISM GP

PART OF 420-6411 MECHANISM GP-FUEL PUMP & VALVE, 308-2285, 309-6716, 340-5785 VALVE MECHANISM GP
ALSO AN ATTACHMENT

SMCS-1102, 1121, 1123, 1209 **i07831130**

NOTE	REF NO	GRAPHIC REF	PART NUMBER	QTY	PART NAME 1 2 3 4 5 6 (PRODUCT LEVEL)	SEE PAGE
	1	1	**154-1243**	6	WASHER (15.2X21X0.5-MM THK)	
	2	1	**153-5587**	8	SCREW-ADJUSTMENT	
M	3	1	**153-5590**	8	NUT (M7X1-THD)	
	4	1	**153-6835**	1	SEAL-O-RING	
	5	1	**206-3499**	1	SHAFT-ROCKER ARM	
	7	1	**154-1240**	4	LEVER (RH)	
	8	1	**154-1241**	4	LEVER (LH)	
	9	1	**154-1242**	3	SPRING	

M - METRIC PART

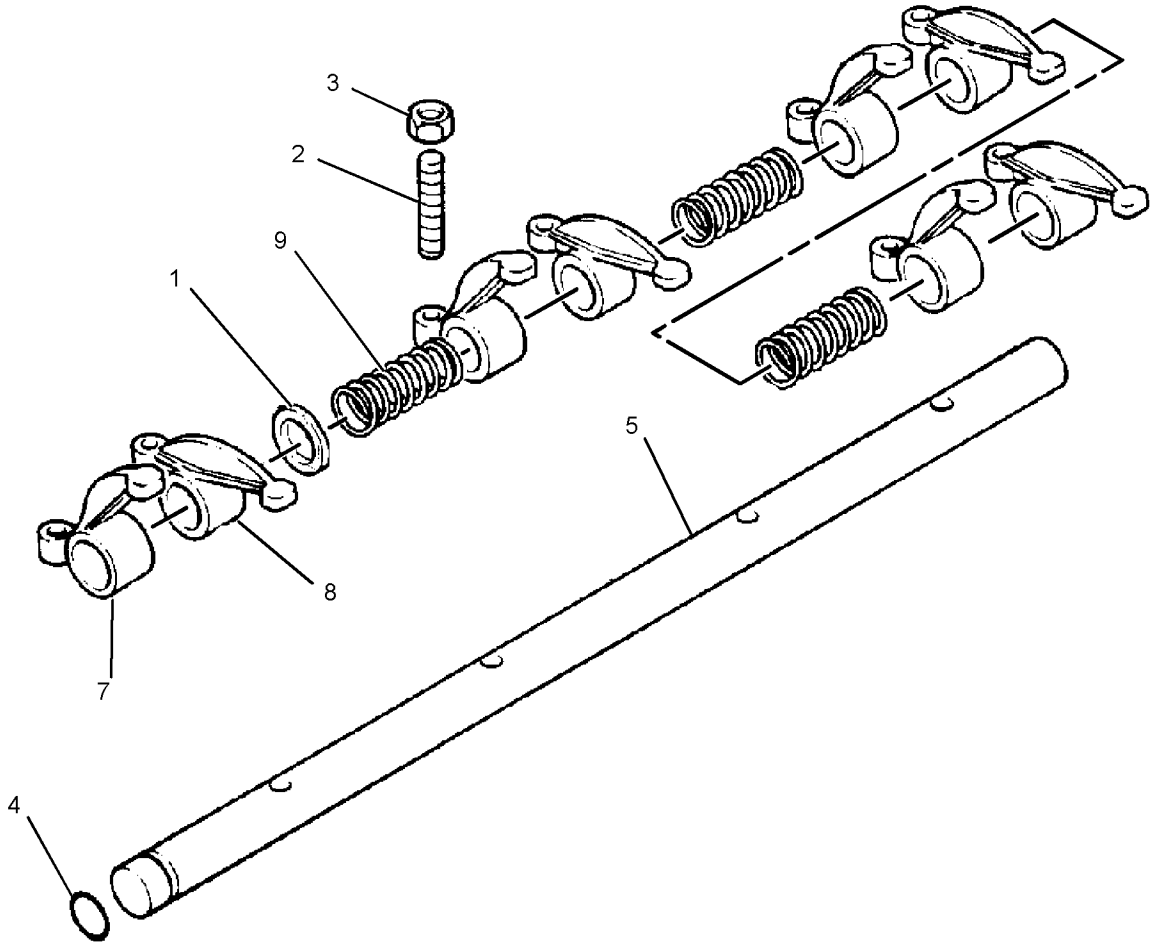

GRAPHIC #1 <END> g01395519

610-3545 FASTENER GP-ENGINE OIL LINES

S/N: C6M10203-UP

SMCS-7553 **i09855827**

NOTE	REF NO	GRAPHIC REF	PART NUMBER	QTY	PART NAME 1 2 3 4 5 6 (PRODUCT LEVEL)	SEE PAGE
	1	1	**153-5936**	4	WASHER (8.2X14.5X1-MM)	
M	2	1	**153-6881**	2	BOLT (M8X1.25X18-MM)	
	3	1	**458-6608**	1	PLUG-SEAL	

M - METRIC PART

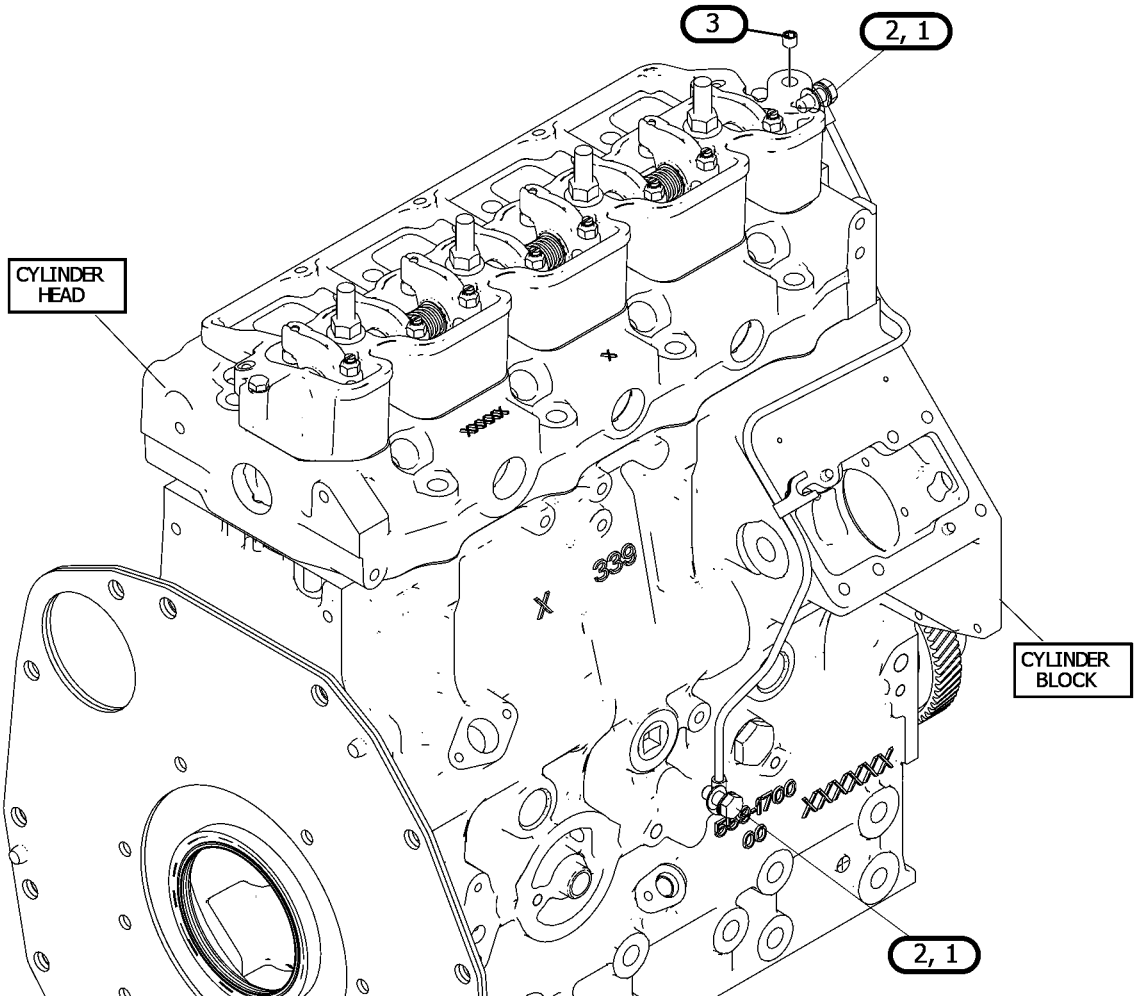

GRAPHIC #1 <END> g07710777

308-2297 FILLER GP-ENGINE OIL

PART OF 435-1645, 435-1649 CYLINDER BLOCK GP-LONG, 433-1379, 433-1380 ENGINE AR, 435-1636, 435-1641, 435-1642, 435-1646, 435-1647, 435-1658, 499-6420, 504-4602 ENGINE AR-PRIMARY
ALSO AN ATTACHMENT

SMCS-1316 **i07748755**

NOTE	REF NO	GRAPHIC REF	PART NUMBER	QTY	PART NAME 1 2 3 4 5 6 (PRODUCT LEVEL)	SEE PAGE
	1	1	**553-4377**	1	SEAL-O-RING (ENGINE OIL FILL CAP)	
	2	1	**217-7358**	1	CAP-OIL FILLER (ENGINE)	
	3	1	**553-4376**	1	SEAL-O-RING (ENGINE OIL FILL CAP)	
	4	1	**334-0272**	1	PLUG-OIL FILLER (ENGINE OIL)	
	5	1	**481-1650**	1	GASKET	
	6	1	**183-4323**	1	COVER	
	7	1	**153-6838**	2	BOLT AS	

308-2297 **FILLER GP-ENGINE OIL (**contd.**)** **i07748755**

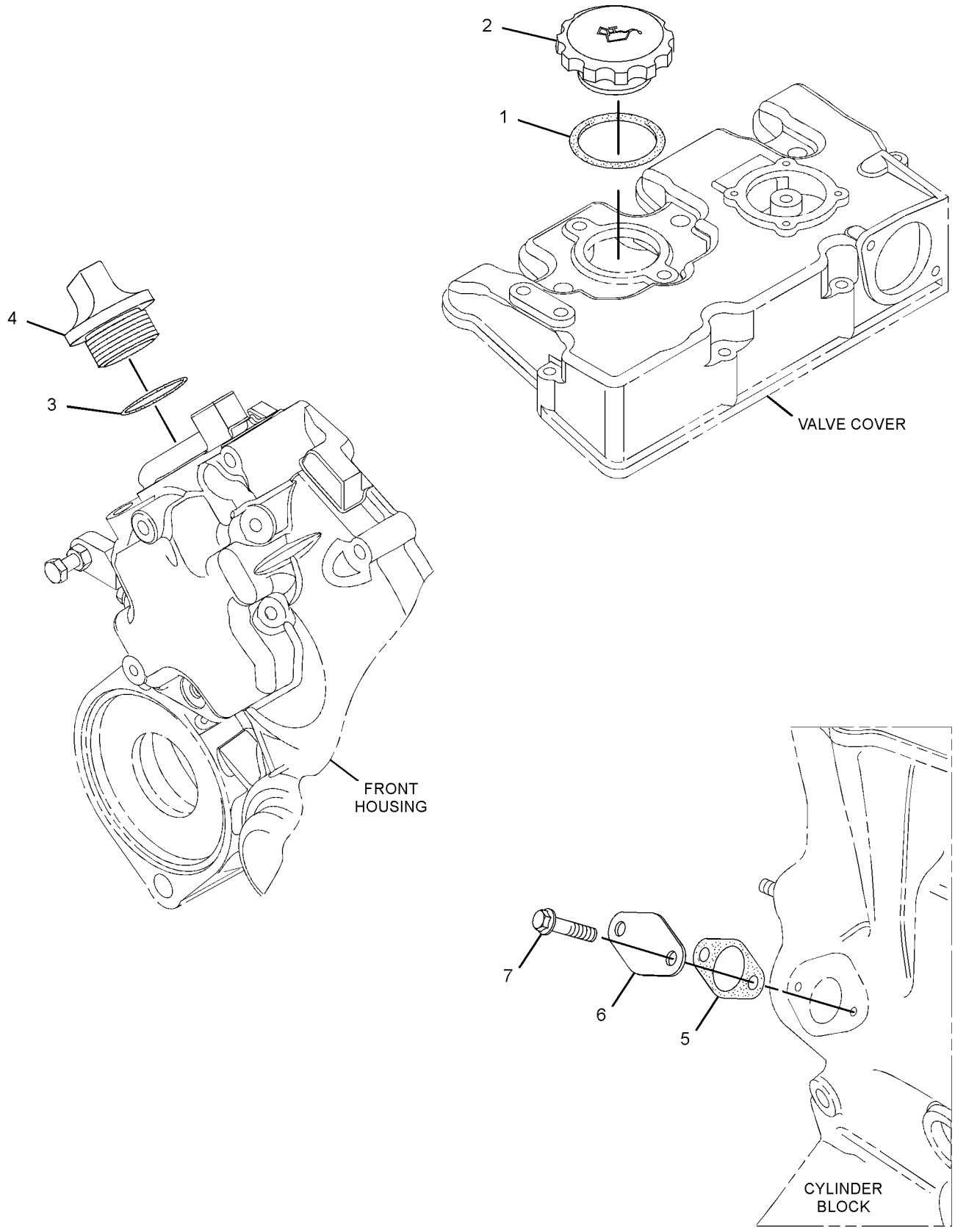

GRAPHIC #1 <END> g02712709

322-2421 FILLER GP-ENGINE OIL

SMCS-1316 **i07748004**

NOTE	REF NO	GRAPHIC REF	PART NUMBER	QTY	PART NAME 1 2 3 4 5 6 (PRODUCT LEVEL)	SEE PAGE
	1	1	**553-4377**	2	SEAL-O-RING (ENGINE OIL FILLER)	
	2	1	**153-7640**	2	BOLT AS	
	3	1	**209-1355**	1	FILLER-OIL	
	4	1	**9X-8256**	2	WASHER (6.6X12X2-MM THK)	
	5	1	**211-8559**	1	SEAL-O-RING	
	6	1	**217-7358**	2	CAP-OIL FILLER (ENGINE)	
	7	1	**553-4376**	1	SEAL-O-RING (ENGINE OIL FILLER)	
	8	1	**334-0272**	1	PLUG-OIL FILLER (ENGINE OIL)	

322-2421 **FILLER GP-ENGINE OIL (**contd.**)** **i07748004**

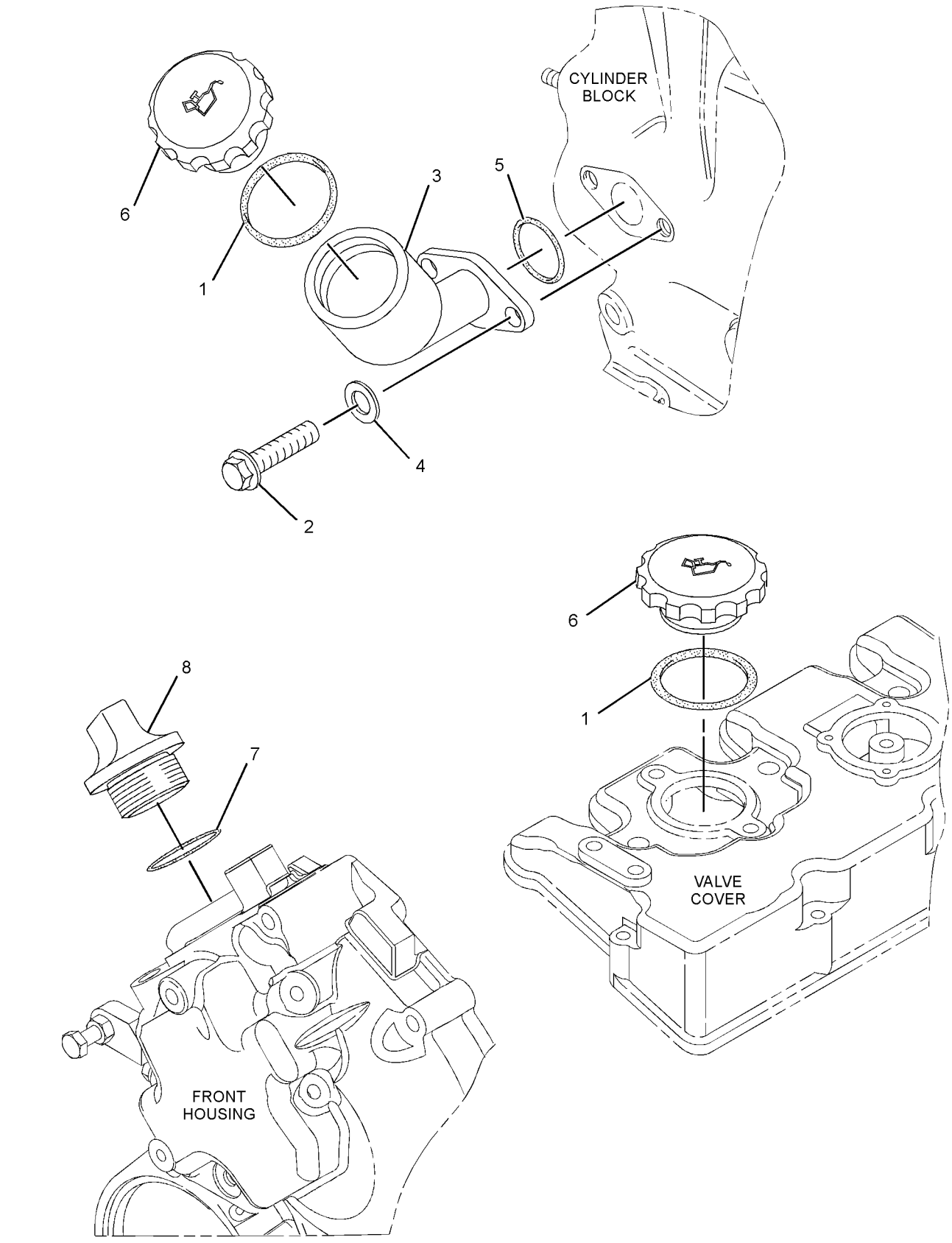

GRAPHIC #1 <END> g01660474

363-3165 FILLER GP-ENGINE OIL

PART OF 417-7273, 489-4263, 489-9224, 506-0518, 506-0519, 506-0520, 512-7969, 513-2239, 514-6556, 516-2639, 518-0165, 557-6086, 557-7471 ENGINE AR-PRIMARY

SMCS-1316 **i07748015**

NOTE	REF NO	GRAPHIC REF	PART NUMBER	QTY	PART NAME 1 2 3 4 5 6 (PRODUCT LEVEL)	SEE PAGE
	1	1	**553-4377**	1	SEAL-O-RING (ENGINE OIL FILL CAP)	
	2	1	**217-7358**	1	CAP-OIL FILLER (ENGINE)	
	3	1	**553-4376**	1	SEAL-O-RING (ENGINE OIL FILL CAP)	
	4	1	**334-0272**	1	PLUG-OIL FILLER (ENGINE OIL)	

363-3165 **FILLER GP-ENGINE OIL (**contd.**)** **i07748015**

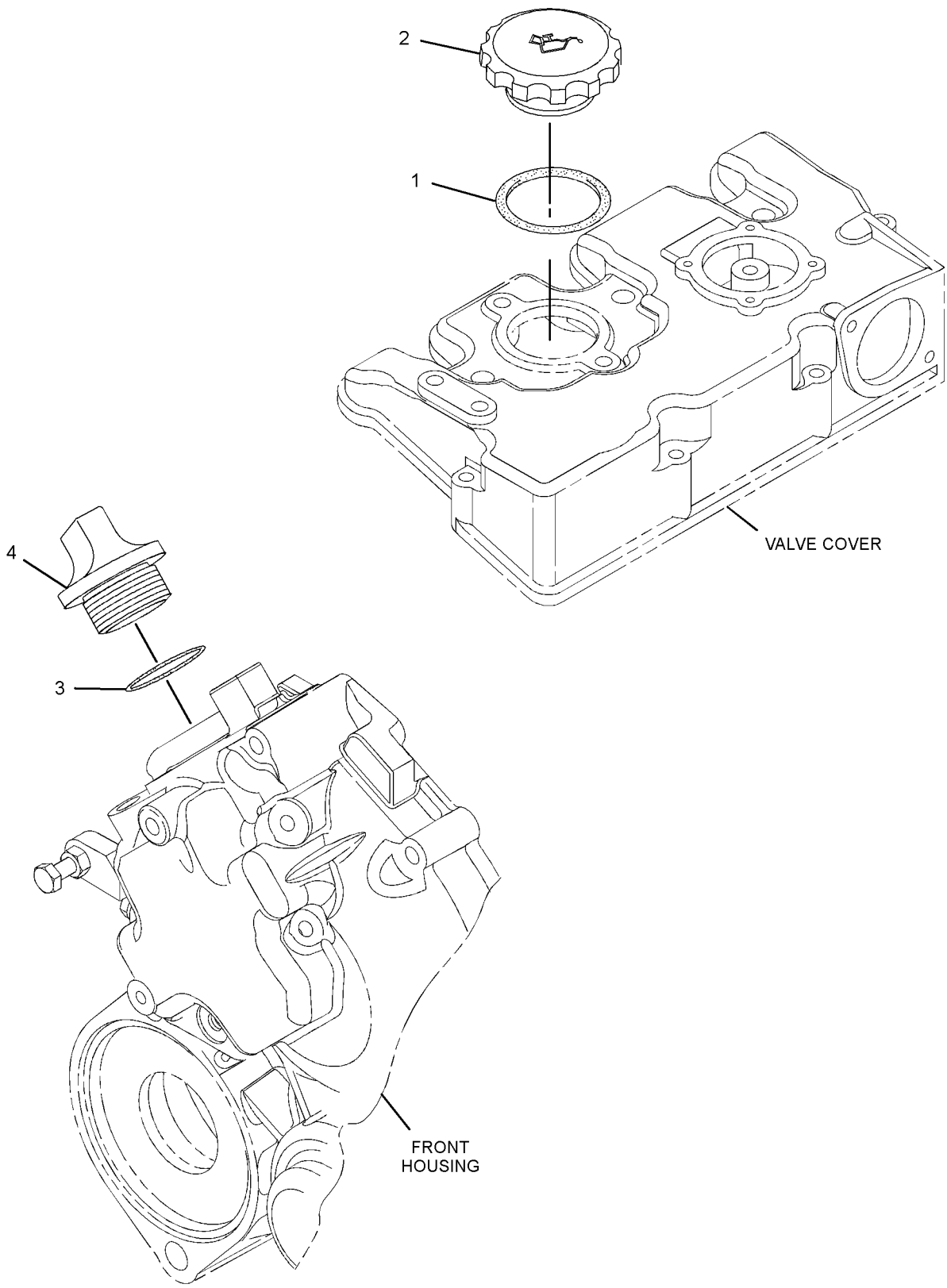

GRAPHIC #1 <END> g01412730

532-8293 FILLER GP-ENGINE OIL

PART OF 433-1379 ENGINE AR, 435-1636, 435-1641, 435-1642, 435-1647 ENGINE AR-PRIMARY AN ATTACHMENT

SMCS-1316 **i08564717**

NOTE	REF NO	GRAPHIC REF	PART NUMBER	QTY	PART NAME 1 2 3 4 5 6 (PRODUCT LEVEL)	SEE PAGE
	1	1	**553-4377**	1	SEAL-O-RING	
	2	1	**481-1650**	1	GASKET	
	3	1	**153-6838**	2	BOLT AS	
	4	1	**183-4323**	1	COVER	
	5	1	**217-7358**	1	CAP-OIL FILLER	

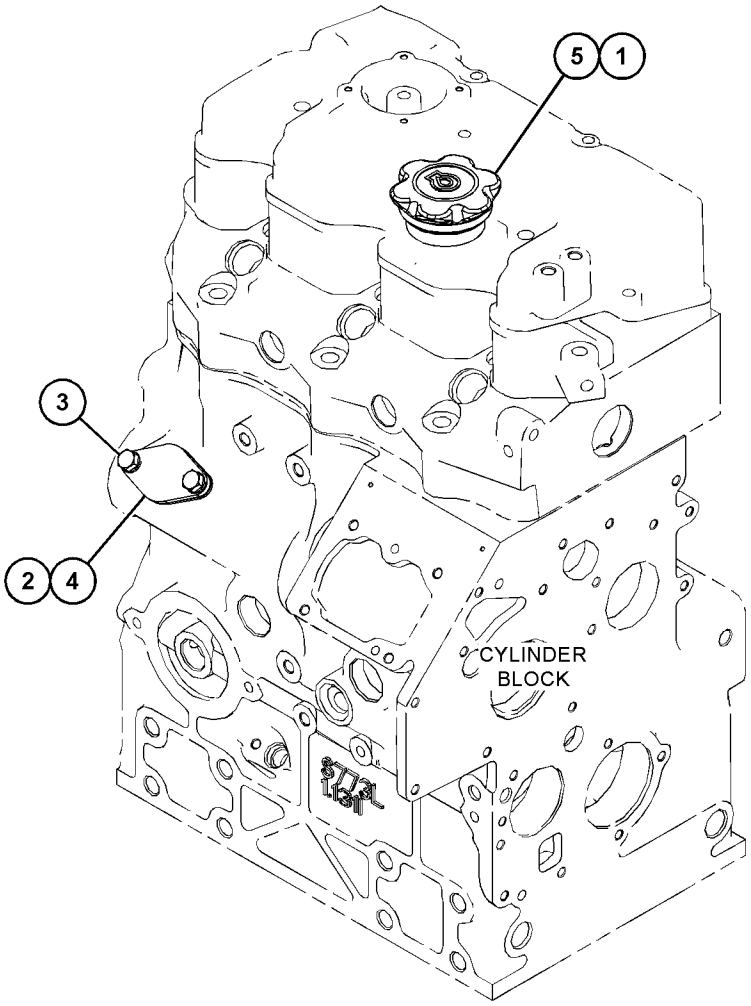

GRAPHIC #1 <END> g06314487

533-3936 FILLER GP-ENGINE OIL

PART OF 417-7273, 514-6556 ENGINE AR-PRIMARY

SMCS-1316 **i08005233**

NOTE	REF NO	GRAPHIC REF	PART NUMBER	QTY	PART NAME 1 2 3 4 5 6 (PRODUCT LEVEL)	SEE PAGE
	1	1	**553-4377**	1	SEAL-O-RING	
	2	1	**217-7358**	1	CAP-OIL FILLER	

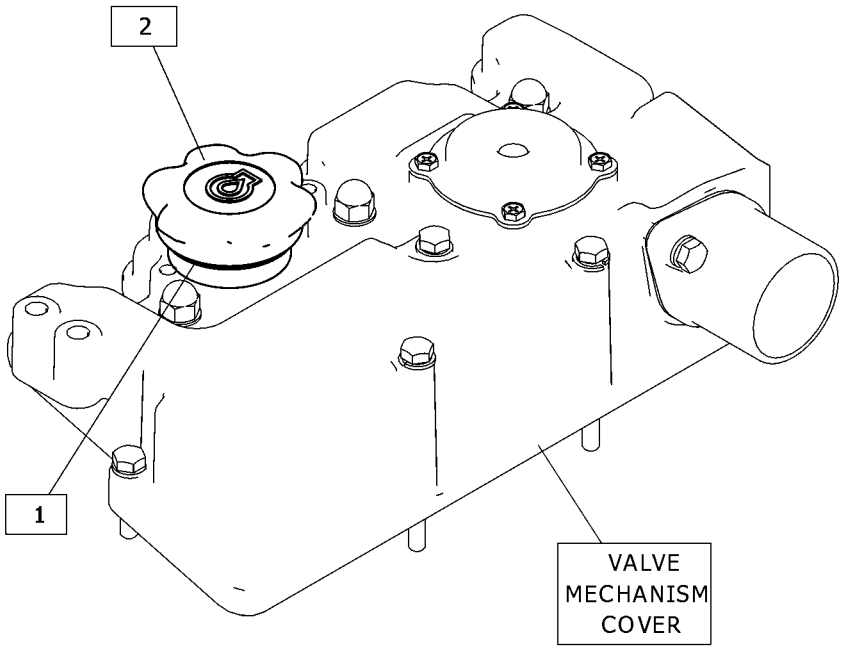

GRAPHIC #1 <END> g06386433

308-2298 FILTER GP-ENGINE OIL

PART OF 435-1645, 435-1649 CYLINDER BLOCK GP-LONG, 433-1379, 433-1380 ENGINE AR, 417-7273, 435-1636, 435-1641, 435-1642, 435-1646, 435-1647, 435-1658, 489-4263, 489-9224, 499-6420, 504-4602, 506-0518, 506-0519, 506-0520, 512-7969, 513-2239, 514-6556, 516-2639, 518-0165, 557-6086 ENGINE AR-PRIMARY
ALSO AN ATTACHMENT

SMCS-1306, 1308 **i05810275**

NOTE	REF NO	GRAPHIC REF	PART NUMBER	QTY	PART NAME 1 2 3 4 5 6 (PRODUCT LEVEL)	SEE PAGE
	1	1	**220-1523**	1	FILTER AS-ENGINE OIL	

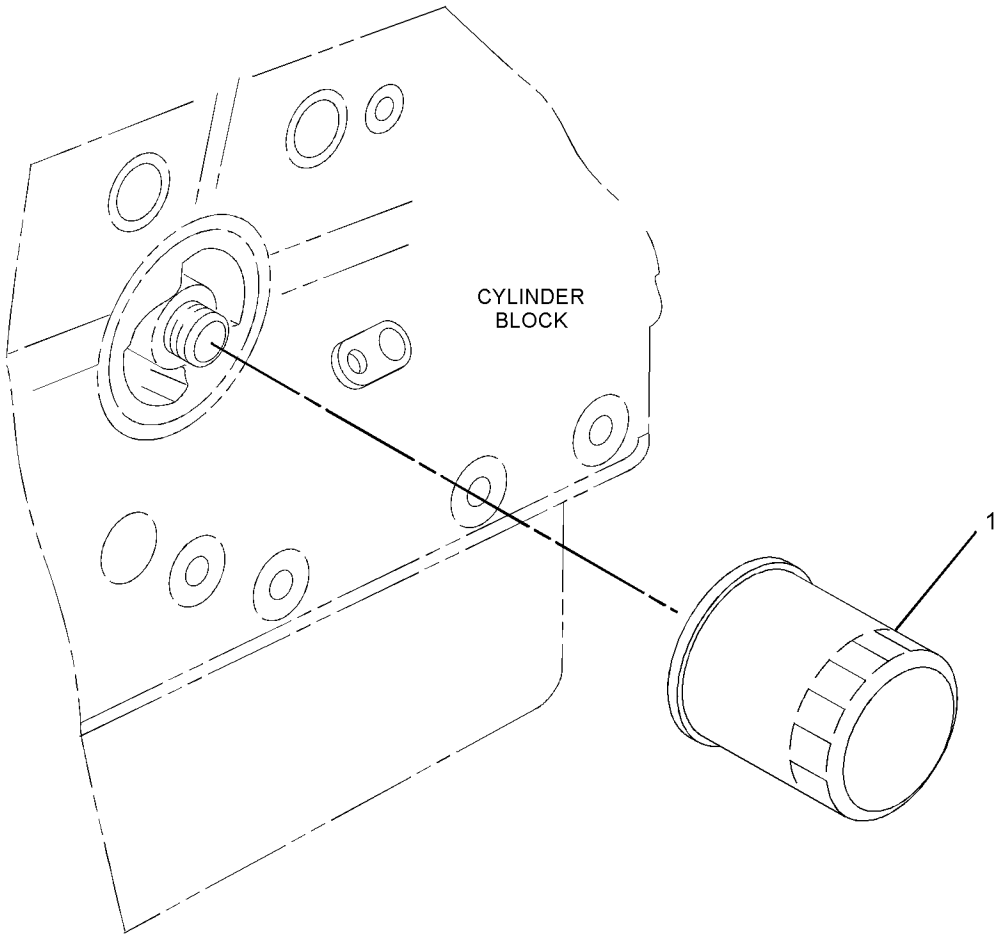

GRAPHIC #1 <END> g01389723

317-0974 FILTER GP-ENGINE OIL

PART OF 489-9224, 514-6556 ENGINE AR-PRIMARY

SMCS-1306, 1308 **i07568381**

NOTE	REF NO	GRAPHIC REF	PART NUMBER	QTY	PART NAME 1 2 3 4 5 6 (PRODUCT LEVEL)	SEE PAGE
	1	1	**6I-1201**	1	SEAL-O-RING	
	2	1	**118-9145**	1	CONNECTOR	
	3	1	**153-6879**	1	STUD-HOLLOW	
	4	2	**160-4826**	4	CLAMP-HOSE	
	5	1	**164-7619**	1	SEAL-O-RING	
M	6	1	**198-2663**	1	BOLT (M14X1.5X30-MM)	
	7	1	**231-8920**	1	BOLT	
	8	2	**246-3470**	1	HOSE	
	9	2	**246-3471**	1	HOSE	
	10	1	**252-0787**	1	SEAL-O-RING	
	11	1	**464-2086**	1	FILTER-HEAD	
	12	1	**311-2349**	1	WASHER (15X28X2.5-MM THK)	
	13	2	**425-2286**	1	CLAMP	
M	14	2	**114-4363**	1	BOLT (M8X1.25X12-MM)	

M - METRIC PART

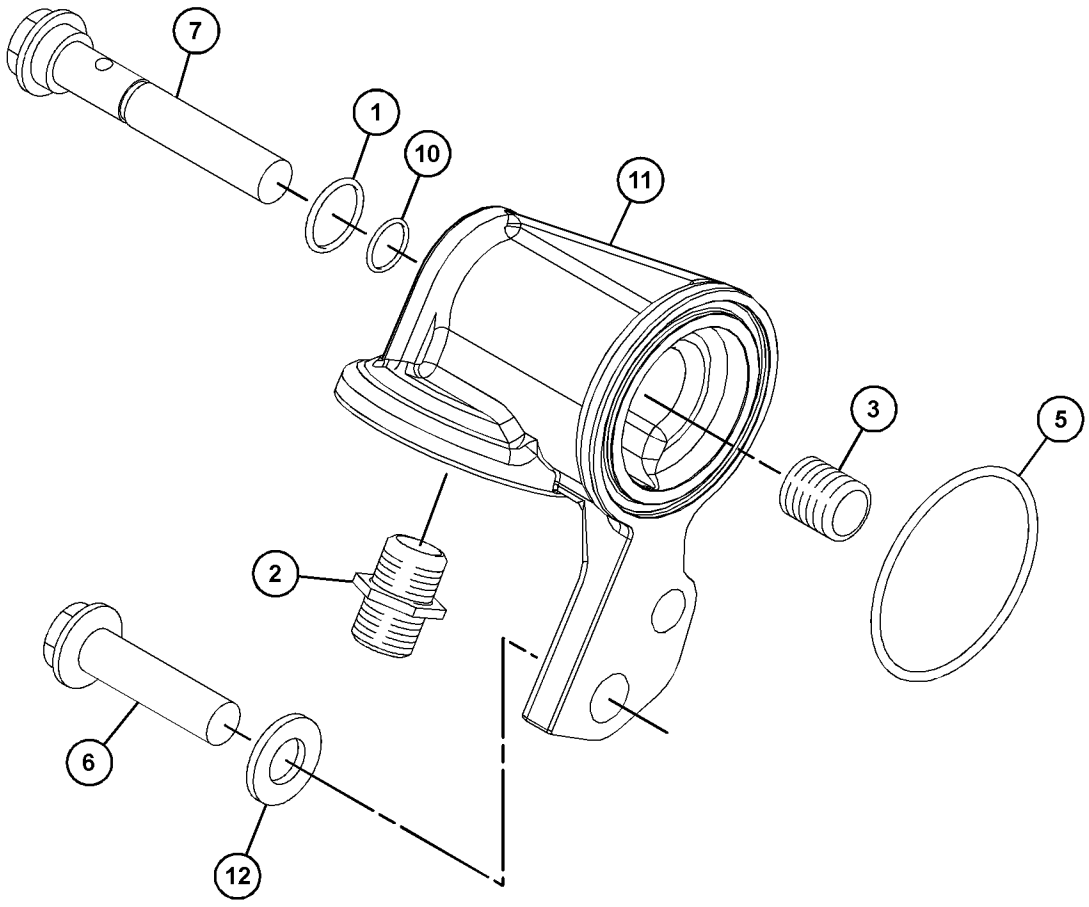

GRAPHIC #1 g03817583

317-0974 **FILTER GP-ENGINE OIL (**contd.**)** **i07568381**

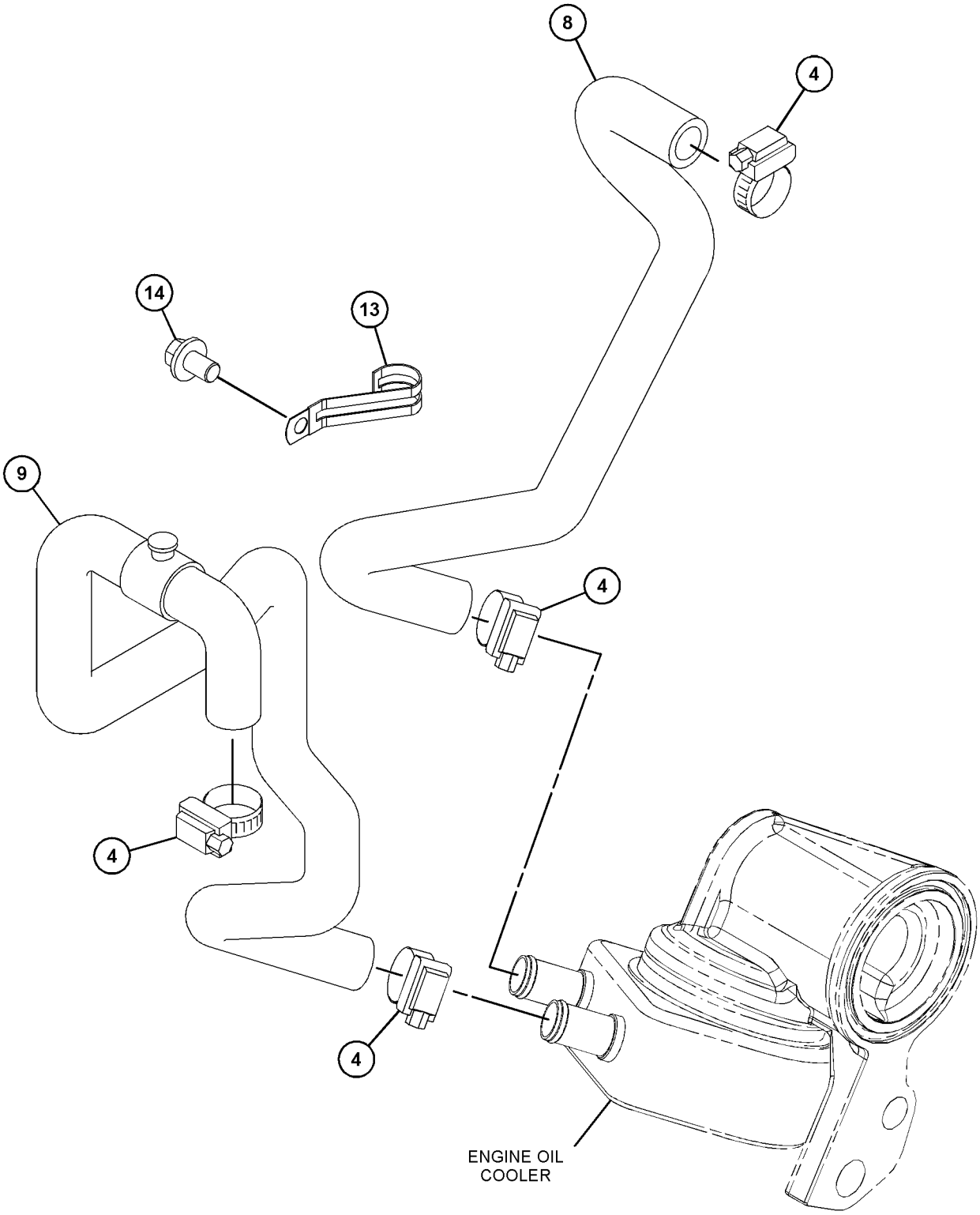

GRAPHIC #2 <END> g06396333

398-8178 FILTER GP-ENGINE OIL

PART OF 433-1379 ENGINE AR, 417-7273, 435-1636, 435-1641, 435-1642, 435-1647, 514-6556 ENGINE AR-PRIMARY
ALSO AN ATTACHMENT

SMCS-1306, 1308

i08023369

NOTE	REF NO	GRAPHIC REF	PART NUMBER	QTY	PART NAME 1 2 3 4 5 6 (PRODUCT LEVEL)	SEE PAGE
	1	1	**220-1523**	1	FILTER AS-ENGINE OIL	

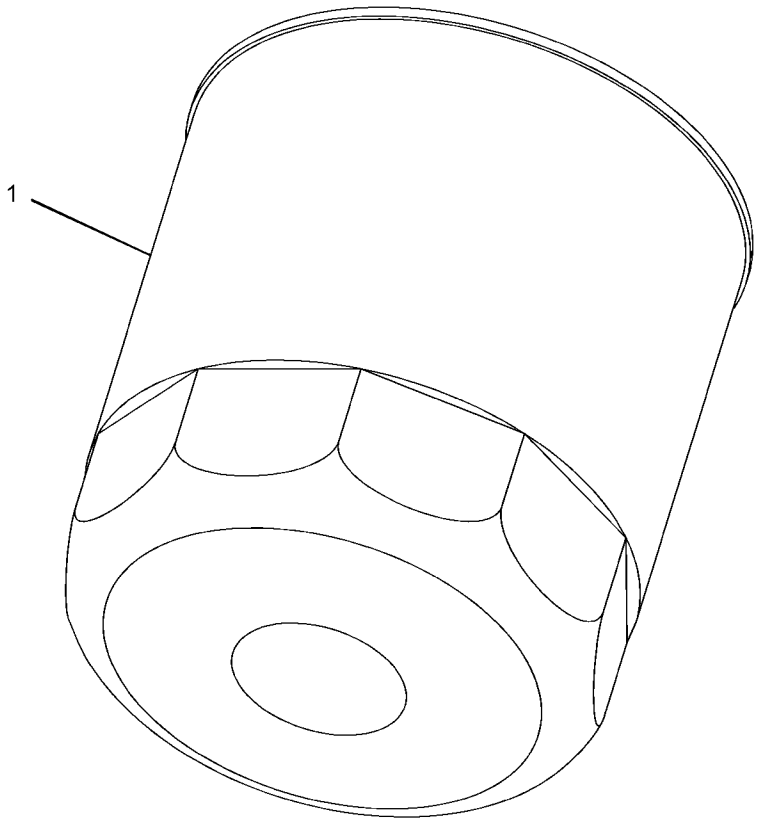

GRAPHIC #1 <END> g03396700

420-6416 FILTER GP-ENGINE OIL

PART OF 504-4602 ENGINE AR-PRIMARY

SMCS-1306, 1308 **i07249800**

NOTE	REF NO	GRAPHIC REF	PART NUMBER	QTY	PART NAME 1 2 3 4 5 6 (PRODUCT LEVEL)	SEE PAGE
	1	1	**153-6879**	1	STUD-HOLLOW	
	2	1	**160-4826**	4	CLAMP-HOSE	
	3	1	**238-9145**	1	HOSE	
	4	1	**331-2590**	1	HOSE	
	5	1	**425-2286**	1	CLAMP	

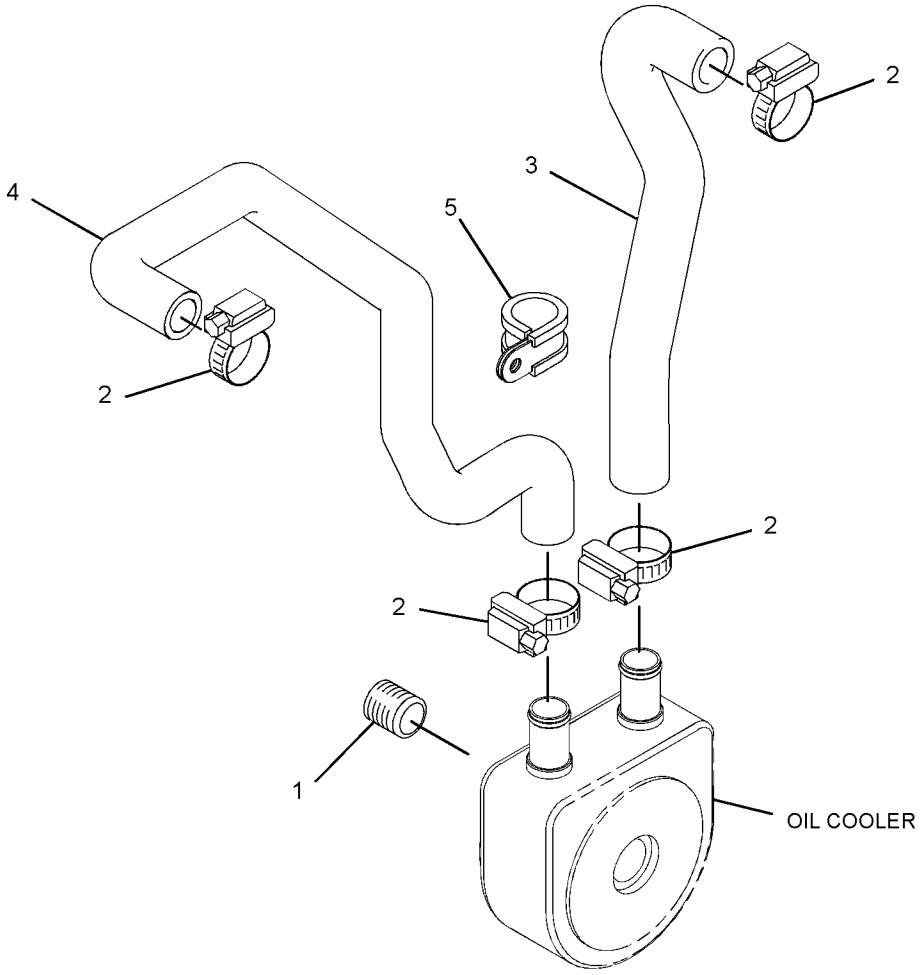

GRAPHIC #1 <END> g06202665

598-5721 FILTER GP-ENGINE OIL

PART OF 514-6556 ENGINE AR-PRIMARY

SMCS-1306, 1308 **i10018001**

NOTE	REF NO	GRAPHIC REF	PART NUMBER	QTY	PART NAME 1 2 3 4 5 6 (PRODUCT LEVEL)	SEE PAGE
	1	1	**164-7619**	1	SEAL-O-RING	
M	2	1	**141-5453**	1	BOLT (M14X1.5X30-MM)	
	3	1	**252-0787**	1	SEAL-O-RING	
	4	1	**464-2086**	1	FILTER-HEAD	
	5	1	**118-9145**	1	CONNECTOR	
	6	1	**311-2349**	1	WASHER (15X28X2.5-MM THK)	
	7	1	**6I-1201**	1	SEAL-O-RING	

M - METRIC PART

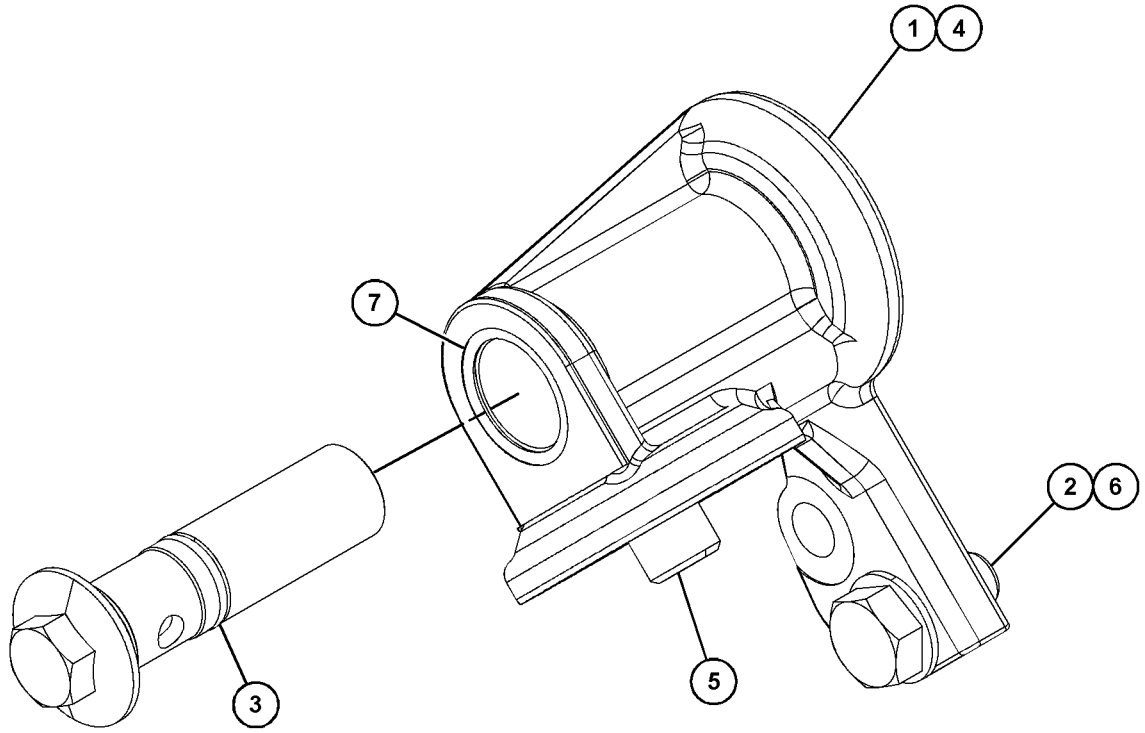

GRAPHIC #1 <END> g07711634

308-2287 LINES GP-ENGINE OIL

PART OF 433-1380 ENGINE AR, 435-1636, 435-1658, 489-9224, 506-0518, 506-0519, 512-7969, 514-6556, 516-2639, 518-0165, 557-6086 ENGINE AR-PRIMARY

SMCS-1307 **i05810355**

NOTE	REF NO	GRAPHIC REF	PART NUMBER	QTY	PART NAME 1 2 3 4 5 6 (PRODUCT LEVEL)	SEE PAGE
	1	1	**153-5936**	2	WASHER (8.2X14.5X1-MM)	
	2	1	**153-6853**	1	SEAL-O-RING	
M	3	1	**153-6881**	1	BOLT (M8X1.25X18-MM)	
	4	1	**154-1942**	1	VALVE-RELIEF (ENGINE OIL PRESSURE)	
	5	1	**154-2353**	1	TUBE AS-OIL	

M - METRIC PART

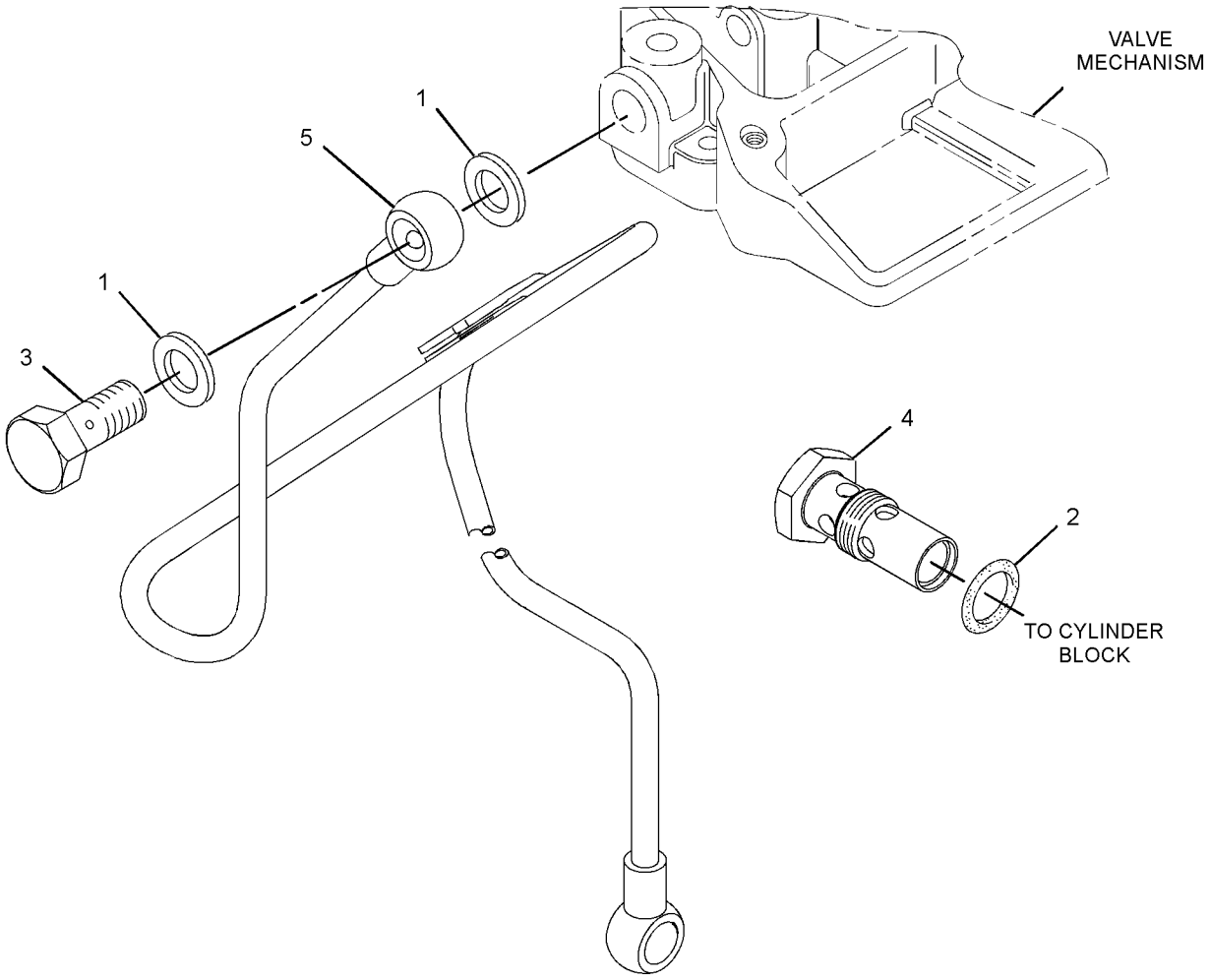

GRAPHIC #1 <END> g01996978

309-6717 LINES GP-ENGINE OIL

PART OF 435-1645, 435-1649 CYLINDER BLOCK GP-LONG, 433-1379 ENGINE AR, 417-7273, 435-1641, 435-1642, 435-1646, 435-1647, 489-4263, 506-0520, 513-2239, 557-7471 ENGINE AR-PRIMARY
ALSO AN ATTACHMENT

SMCS-1307 **i05810317**

NOTE	REF NO	GRAPHIC REF	PART NUMBER	QTY	PART NAME 1 2 3 4 5 6 (PRODUCT LEVEL)	SEE PAGE
	1	1	**153-5936**	2	WASHER (8.2X14.5X1-MM)	
	2	1	**153-6853**	1	SEAL-O-RING	
M	3	1	**153-6881**	1	BOLT (M8X1.25X18-MM)	
	4	1	**154-1942**	1	VALVE-RELIEF (ENGINE OIL PRESSURE)	
	5	1	**154-2353**	1	TUBE AS-OIL	

M - METRIC PART

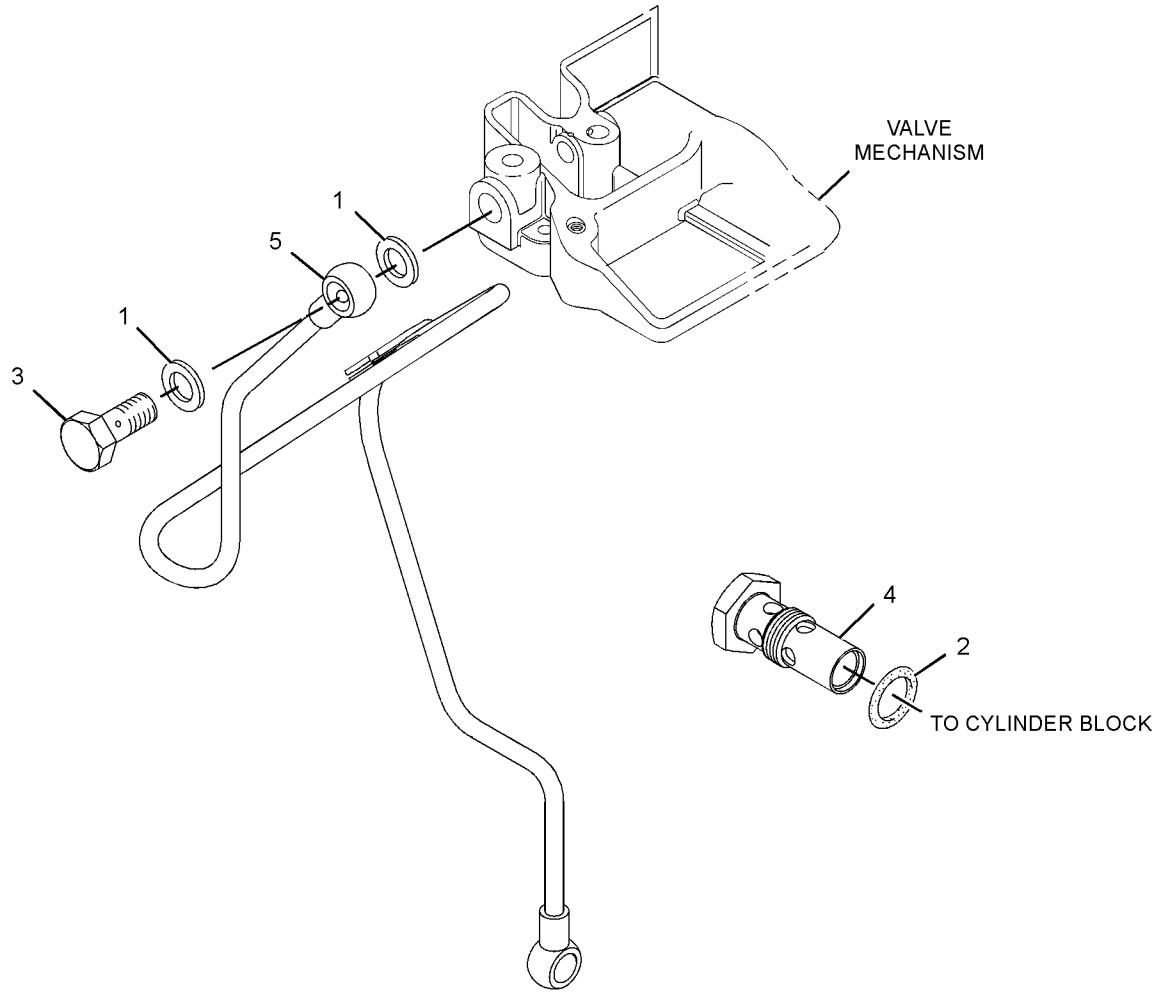

GRAPHIC #1 <END> g01992176

308-4735 MOUNTING GP-ENGINE OIL FILTER

PART OF 435-1645, 435-1649 CYLINDER BLOCK GP-LONG, 433-1379 ENGINE AR, 435-1641, 435-1642, 435-1646, 435-1647, 499-6420 ENGINE AR-PRIMARY
ALSO AN ATTACHMENT

SMCS-1306, 1308 **i05810308**

NOTE	REF NO	GRAPHIC REF	PART NUMBER	QTY	PART NAME 1 2 3 4 5 6 (PRODUCT LEVEL)	SEE PAGE
	1	1	**153-6879**	1	STUD-HOLLOW	

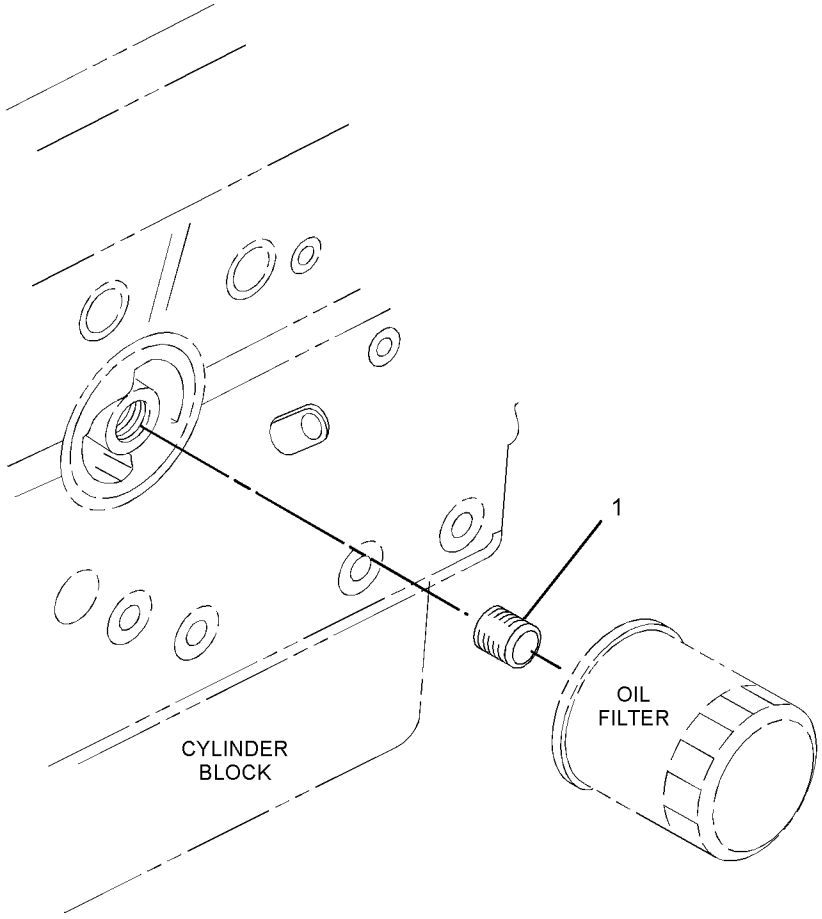

GRAPHIC #1 <END> g01355707

308-2302 CONNECTION GP-WATER

PART OF 435-1645, 435-1649 CYLINDER BLOCK GP-LONG, 433-1379, 433-1380 ENGINE AR, 417-7273, 435-1636, 435-1641, 435-1642, 435-1646, 435-1647, 435-1658, 489-4263, 489-9224, 499-6420, 504-4602, 506-0518, 506-0519, 506-0520, 512-7969, 513-2239, 514-6556, 516-2639, 518-0165, 557-6086, 557-7471 ENGINE AR-PRIMARY ALSO AN ATTACHMENT

SMCS-1380 **i05350785**

NOTE	REF NO	GRAPHIC REF	PART NUMBER	QTY	PART NAME 1 2 3 4 5 6 (PRODUCT LEVEL)	SEE PAGE
	1	1	**439-0945**	1	GASKET (WATER TEMPERATURE REGULATOR)	
	2	1	**168-9001**	2	BOLT AS	
	3	1	**297-2996**	1	COVER-HOUSING	

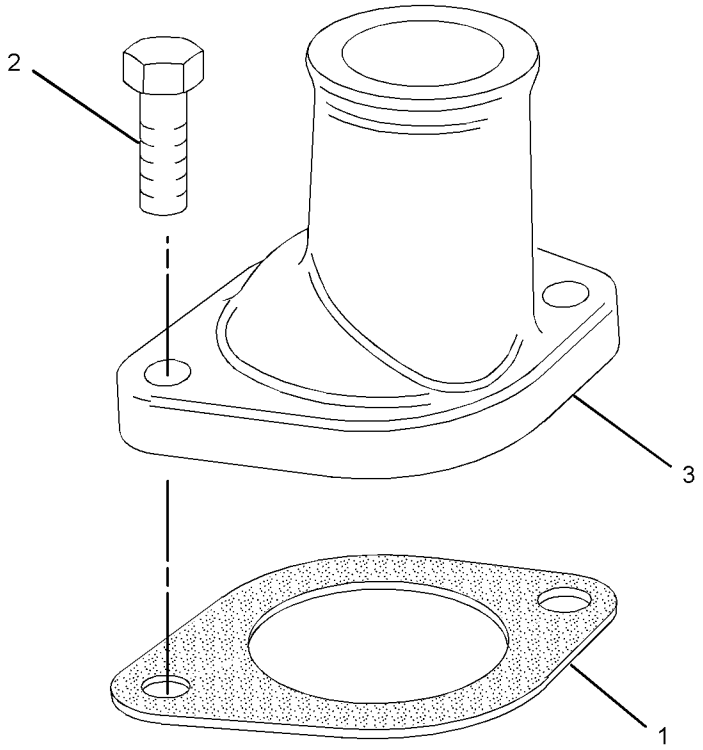

GRAPHIC #1 <END> g01419372

398-3408 CONNECTION GP-WATER

S/N: C6M10203-UP

SMCS-1380 **i08802998**

NOTE	REF NO	GRAPHIC REF	PART NUMBER	QTY	PART NAME 1 2 3 4 5 6 (PRODUCT LEVEL)	SEE PAGE
	1	1	**168-9001**	2	BOLT AS	
	2	1	**439-0945**	1	GASKET	
	3	1	**246-9218**	1	COVER-HOUSING	

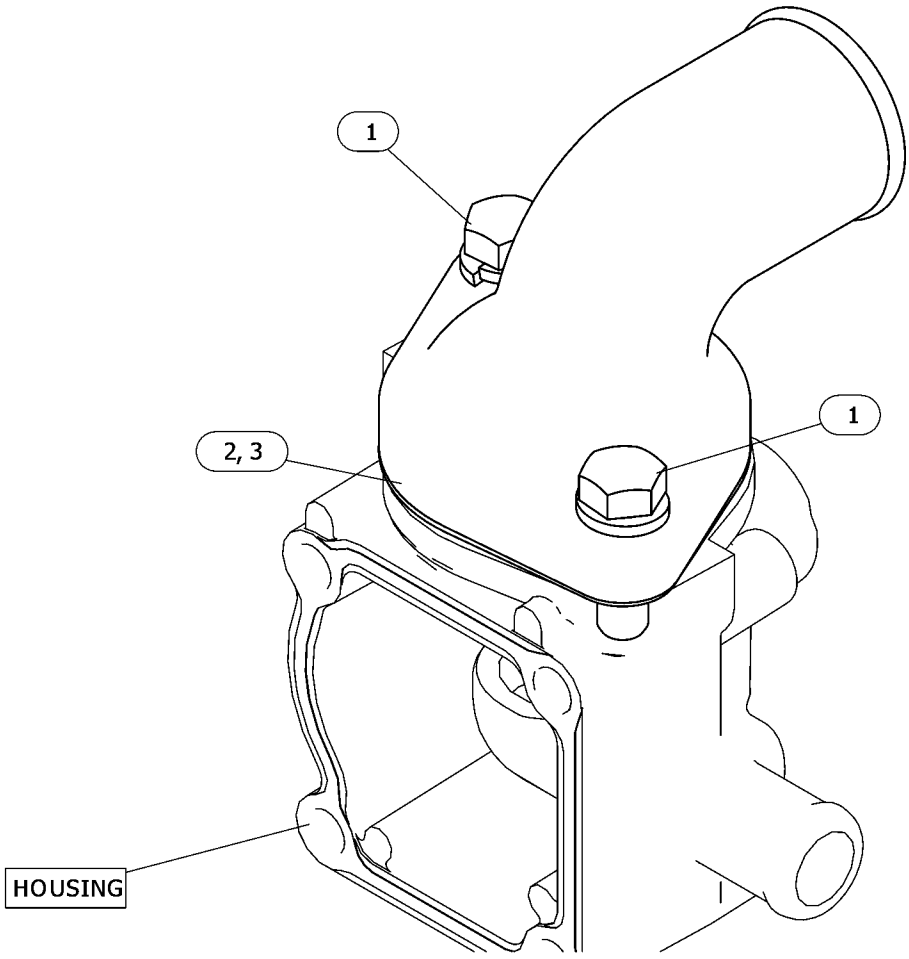

GRAPHIC #1 <END> g06643123

398-5884 CONNECTION GP-WATER

PART OF 433-1379 ENGINE AR, 417-7273, 435-1636, 435-1641, 435-1642, 435-1647, 514-6556 ENGINE AR-PRIMARY
ALSO AN ATTACHMENT

SMCS-1380 **i08287179**

NOTE	REF NO	GRAPHIC REF	PART NUMBER	QTY	PART NAME 1 2 3 4 5 6 (PRODUCT LEVEL)	SEE PAGE
	1	1	**168-9001**	2	BOLT AS	
	2	1	**439-0945**	1	GASKET	
C	3	1	**560-8843**	1	COVER-THERMOSTAT	

C - CHANGE FROM PREVIOUS TYPE

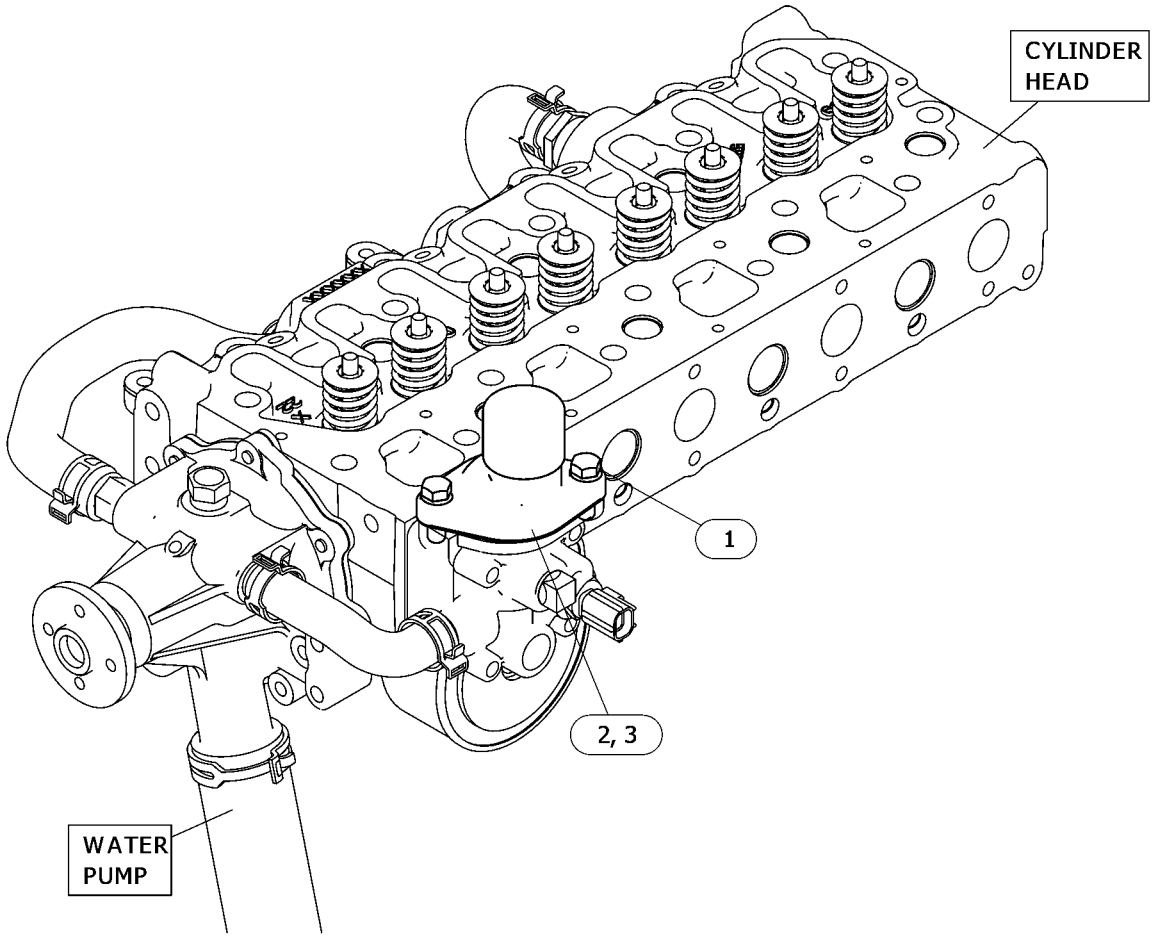

GRAPHIC #1 <END> g06604203

317-7194 CONNECTOR GP-CAB HEATER LINES

SMCS-1380 **i07287900**

NOTE	REF NO	GRAPHIC REF	PART NUMBER	QTY	PART NAME 1 2 3 4 5 6 (PRODUCT LEVEL)	SEE PAGE
	1	1	**238-9137**	1	CONNECTOR	
	2	1	**472-2214**	1	CONNECTOR	

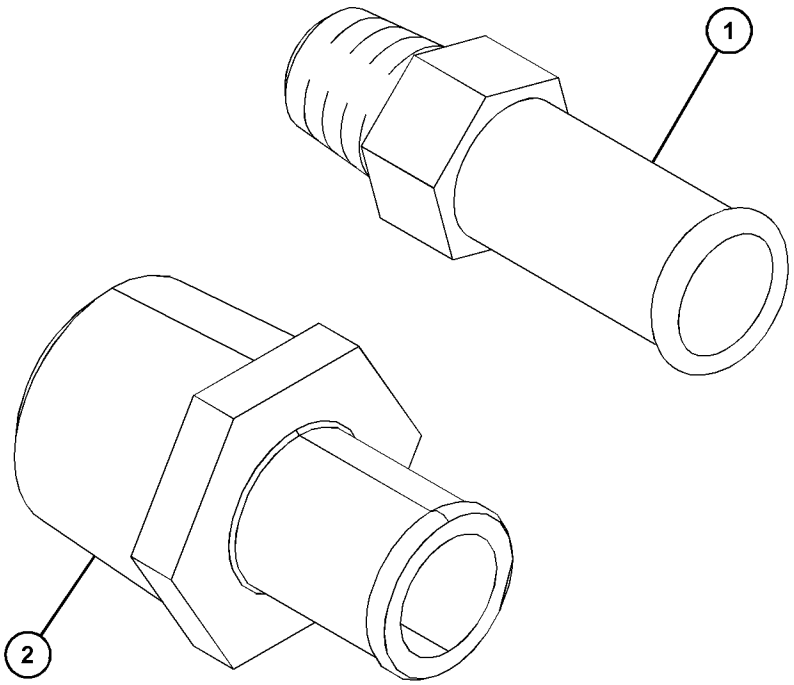

GRAPHIC #1 <END> g06298889

322-2427 CONNECTOR GP-CAB HEATER LINES

SMCS-1380 **i07244148**

NOTE	REF NO	GRAPHIC REF	PART NUMBER	QTY	PART NAME 1 2 3 4 5 6 (PRODUCT LEVEL)	SEE PAGE
	1	1	**472-2214**	1	CONNECTOR	

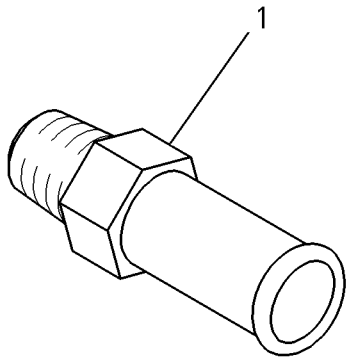

GRAPHIC #1 <END> g00785852

398-6016 FAN GP

EXTENSION

PART OF 514-6556 ENGINE AR-PRIMARY

SMCS-1356 **i08028642**

NOTE	REF NO	GRAPHIC REF	PART NUMBER	QTY	PART NAME 1 2 3 4 5 6 (PRODUCT LEVEL)	SEE PAGE
	1	1	**424-9881**	1	HOLDER	
	2	1	**322-2430**	4	BOLT	

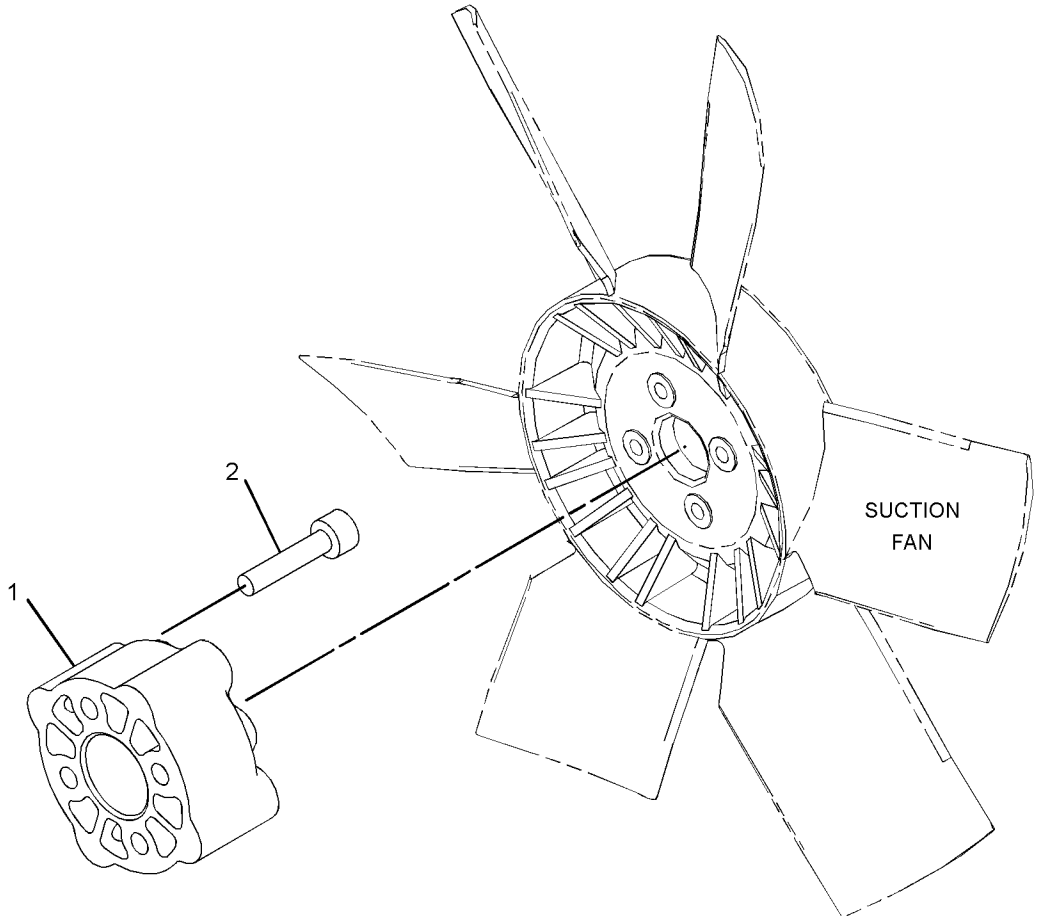

GRAPHIC #1 <END> g03429901

437-2624 FAN GP

S/N: C6M10494-UP

SMCS-1356 **i08028558**

NOTE	REF NO	GRAPHIC REF	PART NUMBER	QTY	PART NAME 1 2 3 4 5 6 (PRODUCT LEVEL)	SEE PAGE
	1	1	**255-1297**	1	PLATE	
M	2	1	**273-9253**	4	BOLT (M6X1X35-MM)	

M - METRIC PART

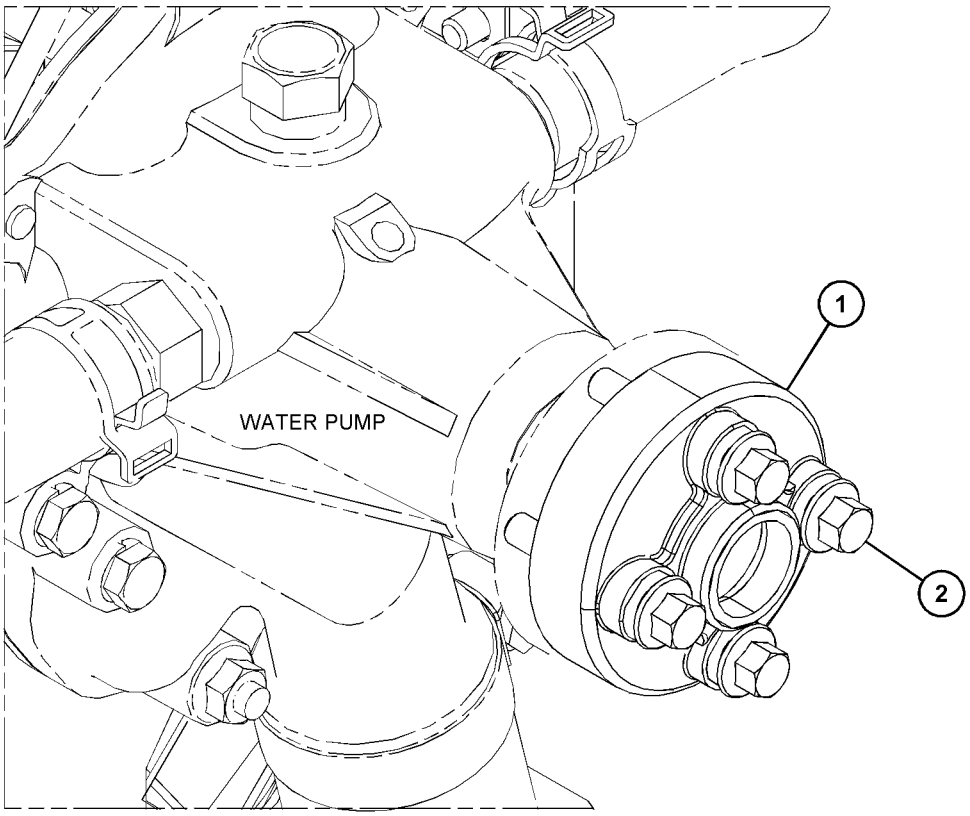

GRAPHIC #1 <END> g06243263

319-1623 FAN GP-BLOWER

SMCS-1356, 1360 **i02980190**

NOTE	REF NO	GRAPHIC REF	PART NUMBER	QTY	PART NAME 1 2 3 4 5 6 (PRODUCT LEVEL)	SEE PAGE
	1	1	**183-3552**	1	FAN-BLOWER	

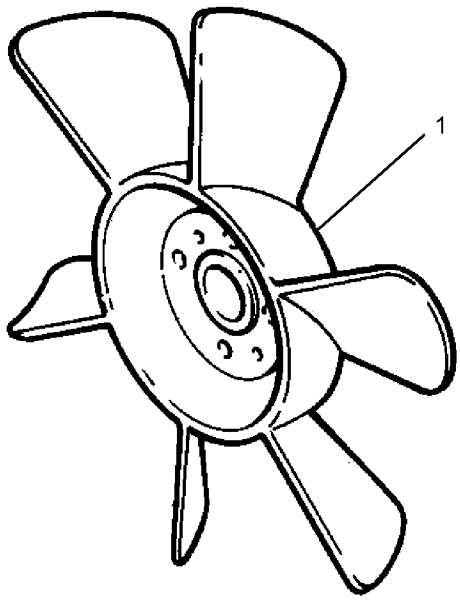

GRAPHIC #1 <END> g01640094

308-2303 FAN GP-SUCTION

PART OF 512-7969 ENGINE AR-PRIMARY

SMCS-1356 **i07021507**

NOTE	REF NO	GRAPHIC REF	PART NUMBER	QTY	PART NAME 1 2 3 4 5 6 (PRODUCT LEVEL)	SEE PAGE
M	1	1	**6I-0217**	4	BOLT (M8X1.25X20-MM)	
	2	1	**183-3551**	1	FAN-SUCTION	

M - METRIC PART

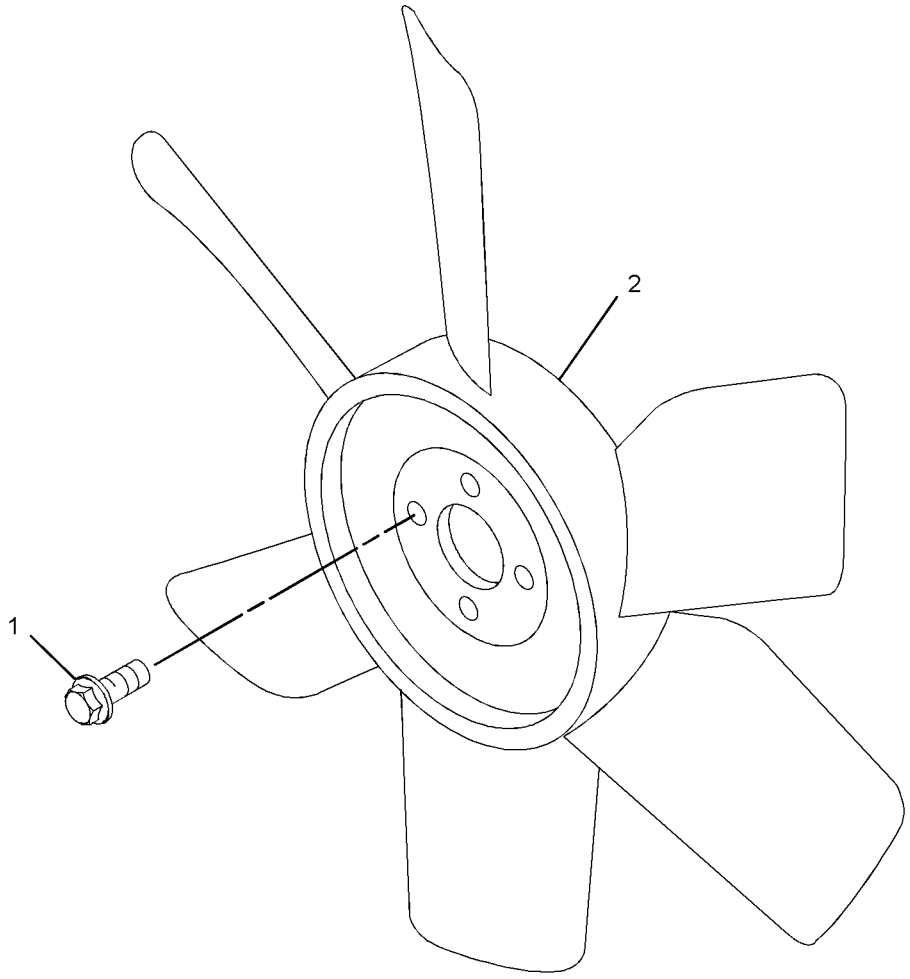

GRAPHIC #1 <END> g06196802

322-2425 FAN GP-SUCTION

SMCS-1356 **i07176218**

NOTE	REF NO	GRAPHIC REF	PART NUMBER	QTY	PART NAME 1 2 3 4 5 6 (PRODUCT LEVEL)	SEE PAGE
	1	1	**435-0208**	1	GASKET	
	2	1	**095-1708**	1	SEAL-O-RING	
	3	1	**183-3551**	1	FAN-SUCTION (6-BLADE)	

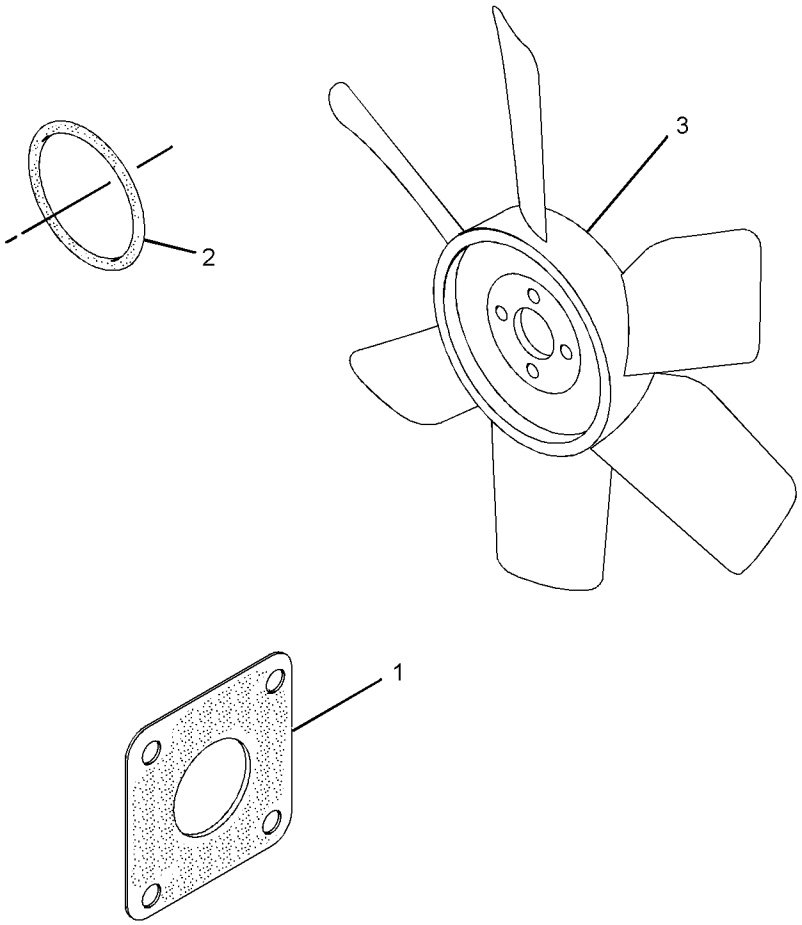

GRAPHIC #1 <END> g01627829

423-6874 FAN GP-SUCTION–6-BLADE

S/N: C6M10558-UP

SMCS-1356 **i08711958**

NOTE	REF NO	GRAPHIC REF	PART NUMBER	QTY	PART NAME 1 2 3 4 5 6 (PRODUCT LEVEL)	SEE PAGE
	1	1	**447-7691**	1	FAN AS (6-BLADE)	

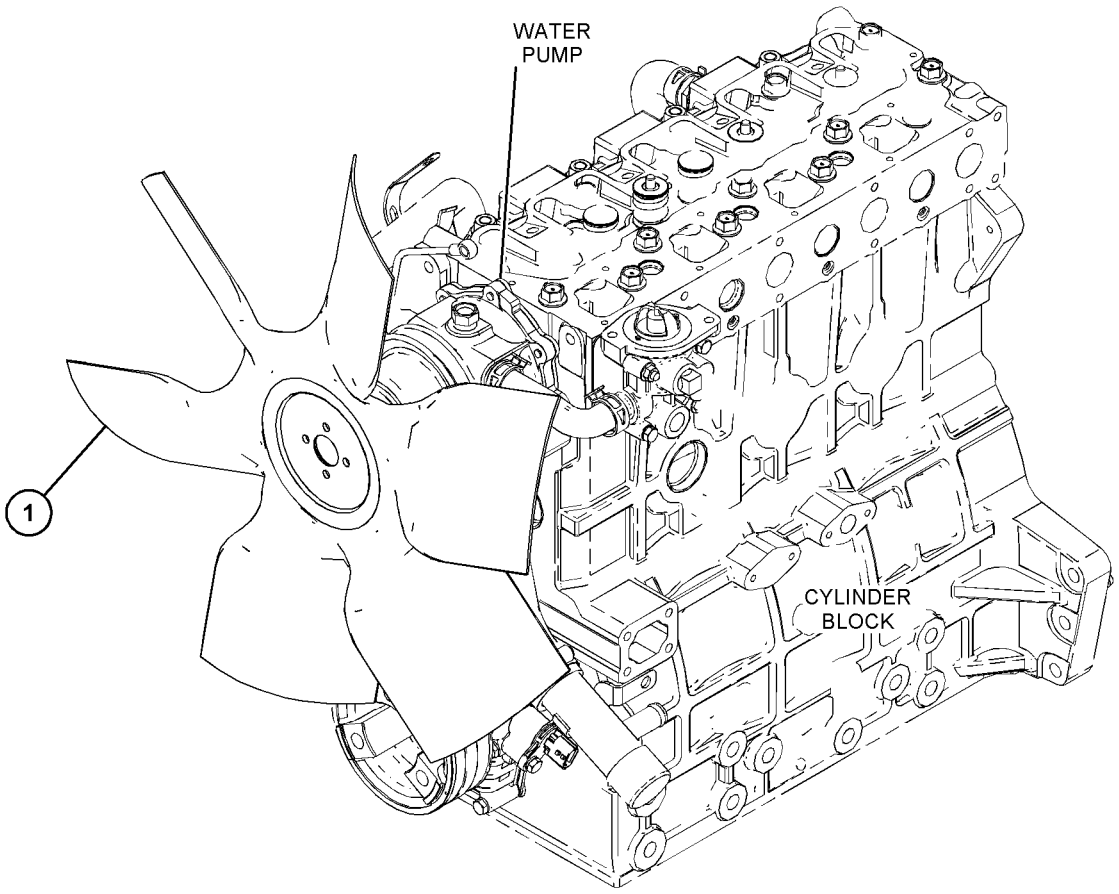

GRAPHIC #1 <END> g06189140

437-2599 FAN GP-SUCTION

S/N: C6M10291-UP

EXTENSION

SMCS-1356 **i08023366**

NOTE	REF NO	GRAPHIC REF	PART NUMBER	QTY	PART NAME 1 2 3 4 5 6 (PRODUCT LEVEL)	SEE PAGE
M	1	1	**6I-0217**	4	BOLT (M8X1.25X20-MM)	
	2	1	**183-3551**	1	FAN-SUCTION	

M - METRIC PART

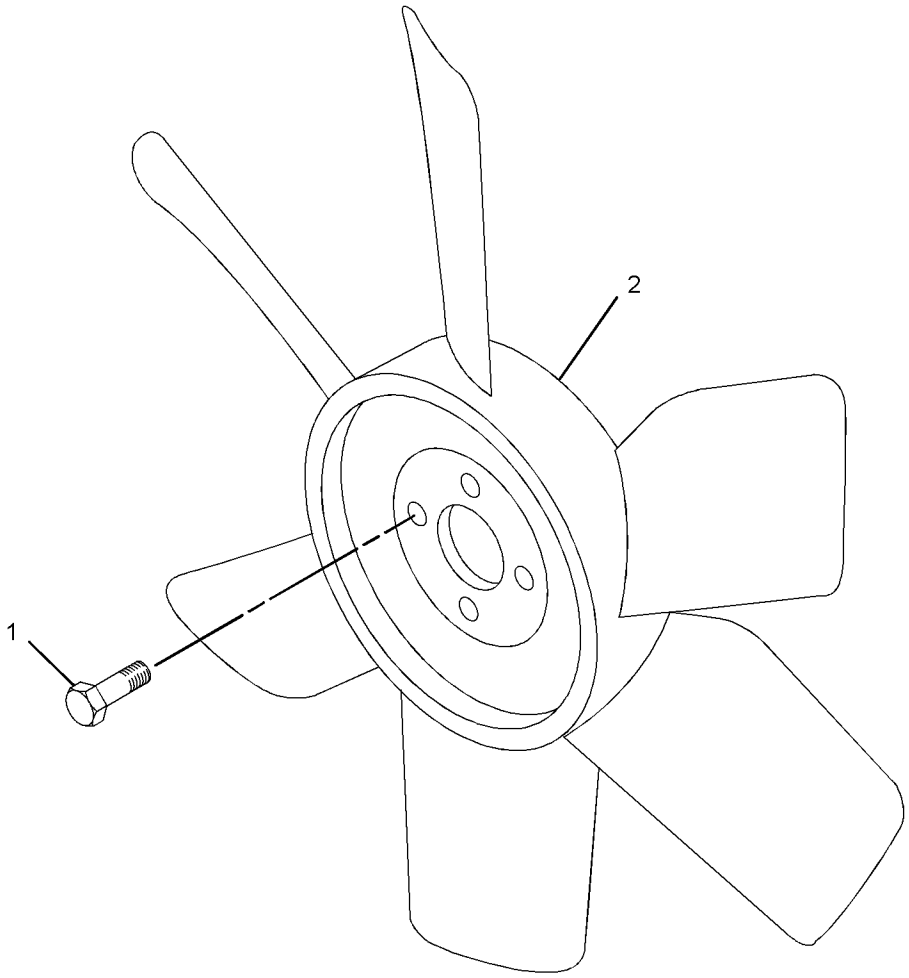

GRAPHIC #1 <END> g01415664

456-7945 FAN GP-SUCTION

PART OF 514-6556 ENGINE AR-PRIMARY

SMCS-1356 **i09966049**

NOTE	REF NO	GRAPHIC REF	PART NUMBER	QTY	PART NAME 1 2 3 4 5 6 (PRODUCT LEVEL)	SEE PAGE
	1	1	**183-3551**	1	FAN-SUCTION	
M	2	1	**6I-0260**	4	BOLT (M8X1.25X25-MM)	

M - METRIC PART

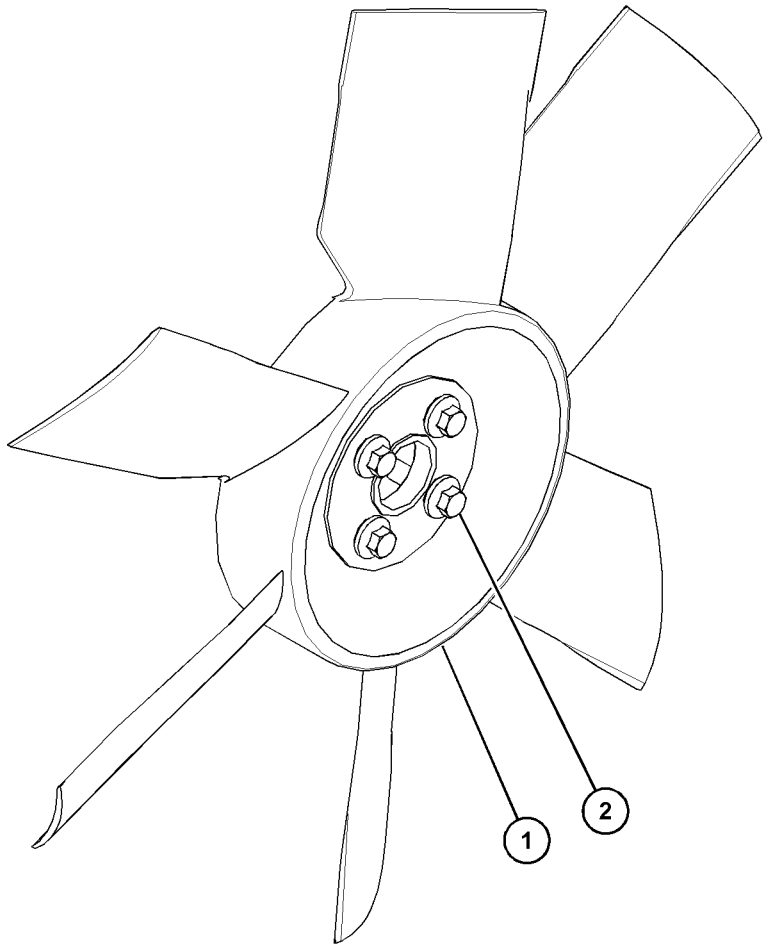

GRAPHIC #1 <END> g06209133

499-5184 FAN GP-SUCTION

PART OF 489-9224, 514-6556 ENGINE AR-PRIMARY

TYPE 1

SMCS-1356 **i06614267**

NOTE	REF NO	GRAPHIC REF	PART NUMBER	QTY	PART NAME 1 2 3 4 5 6 (PRODUCT LEVEL)	SEE PAGE
	1	1	**168-9001**	4	BOLT AS	
	2	1	**183-3551**	1	FAN-SUCTION	

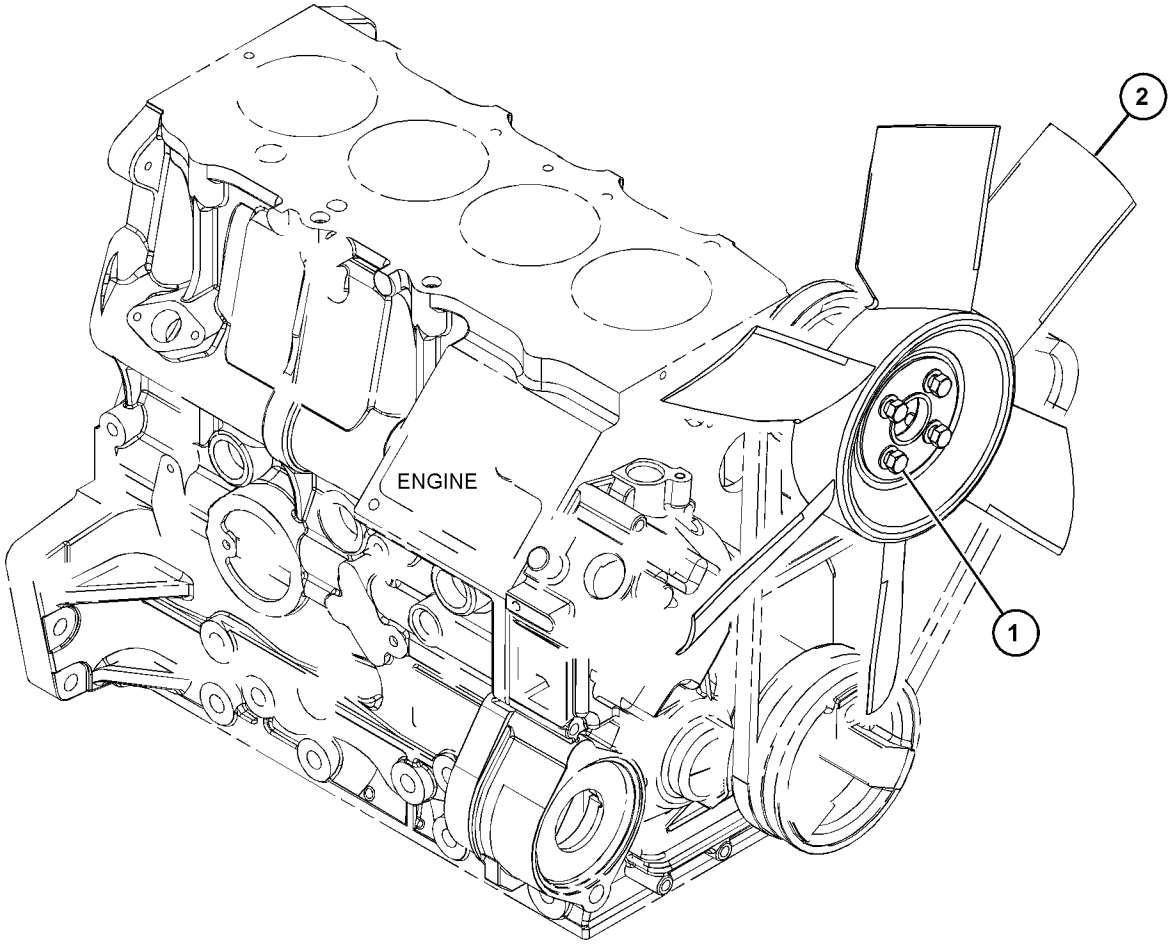

GRAPHIC #1 <END> g06118309

499-5184 FAN GP-SUCTION

PART OF 489-9224, 514-6556 ENGINE AR-PRIMARY
TYPE 2

SMCS-1356 **i07091012**

NOTE	REF NO	GRAPHIC REF	PART NUMBER	QTY	PART NAME 1 2 3 4 5 6 (PRODUCT LEVEL)	SEE PAGE
CM	1	1	**6I-0217**	4	BOLT (M8X1.25X20-MM)	
	2	1	**183-3551**	1	FAN-SUCTION (6-BLADE)	

C - CHANGE FROM PREVIOUS TYPE
M - METRIC PART

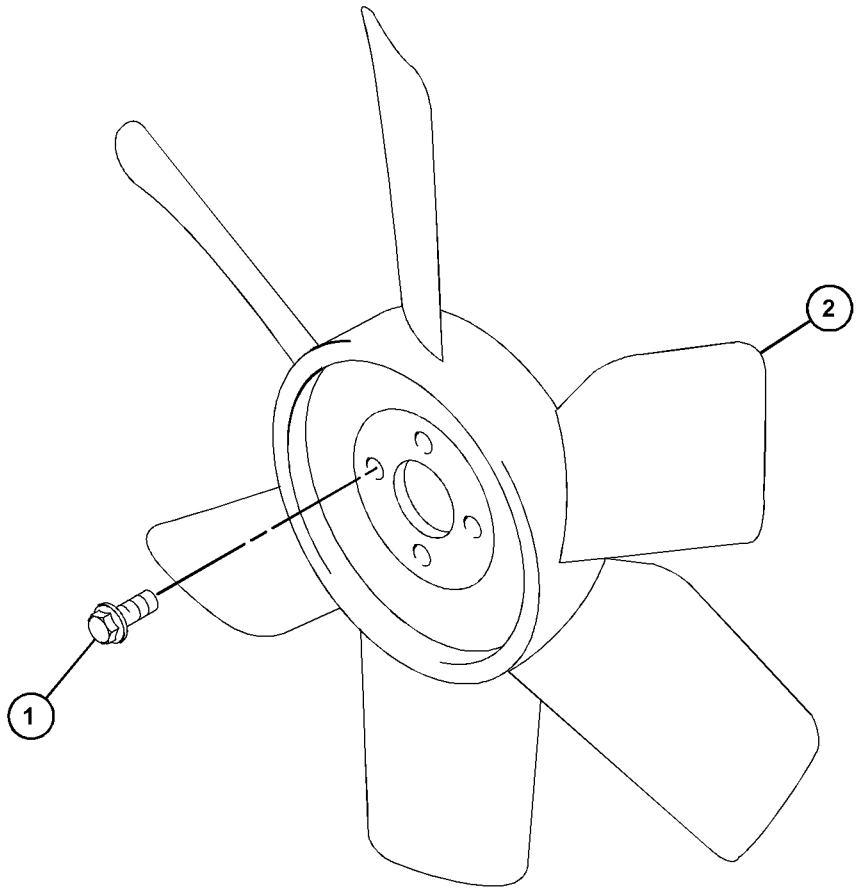

GRAPHIC #1 <END> g06224881

521-8165 FAN GP-SUCTION–7-BLADE

S/N: C6M10520-UP

SMCS-1356 **i08776727**

NOTE	REF NO	GRAPHIC REF	PART NUMBER	QTY	PART NAME 1 2 3 4 5 6 (PRODUCT LEVEL)	SEE PAGE
	1	1	**568-8664**	1	FAN-SUCTION (7-BLADE)	

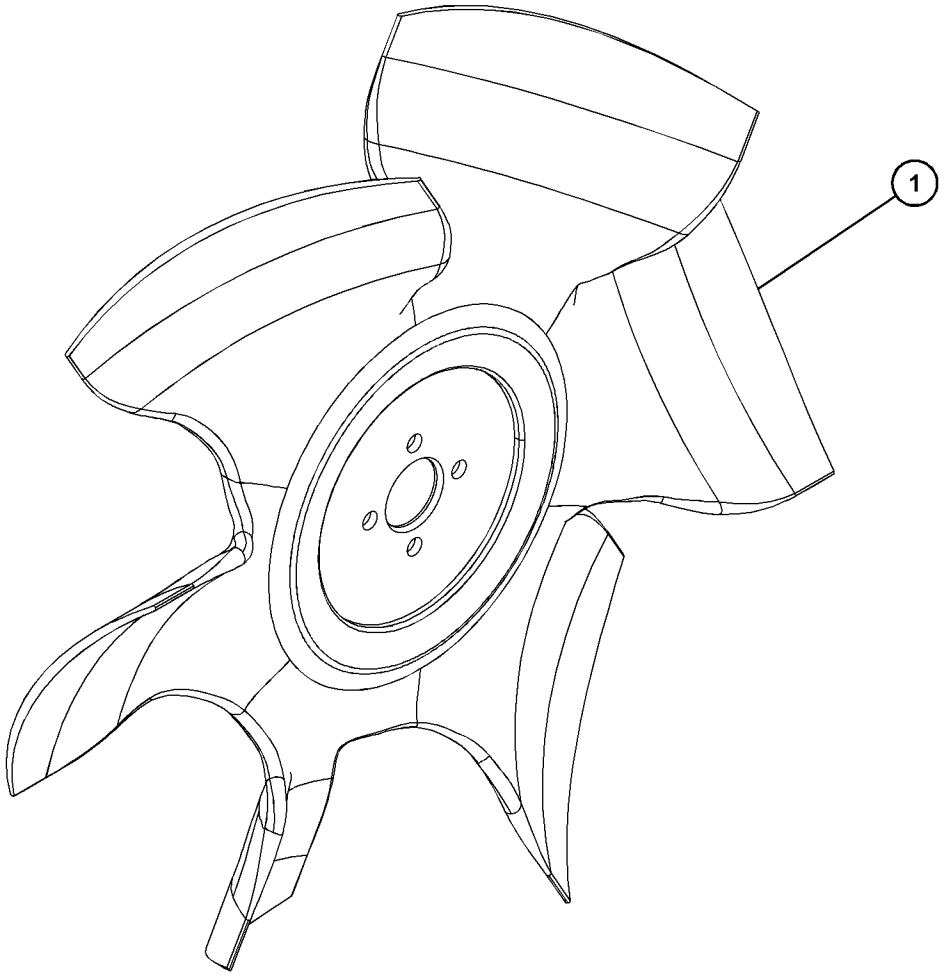

GRAPHIC #1 <END> g06212474

544-4891 FAN GP-SUCTION

S/N: C6M10505-UP

PART OF 417-7273 ENGINE AR-PRIMARY

SMCS-1356 **i08525790**

NOTE	REF NO	GRAPHIC REF	PART NUMBER	QTY	PART NAME 1 2 3 4 5 6 (PRODUCT LEVEL)	SEE PAGE
C	1	1	**568-8661**	1	FAN (7-BLADE)	

C - CHANGE FROM PREVIOUS TYPE

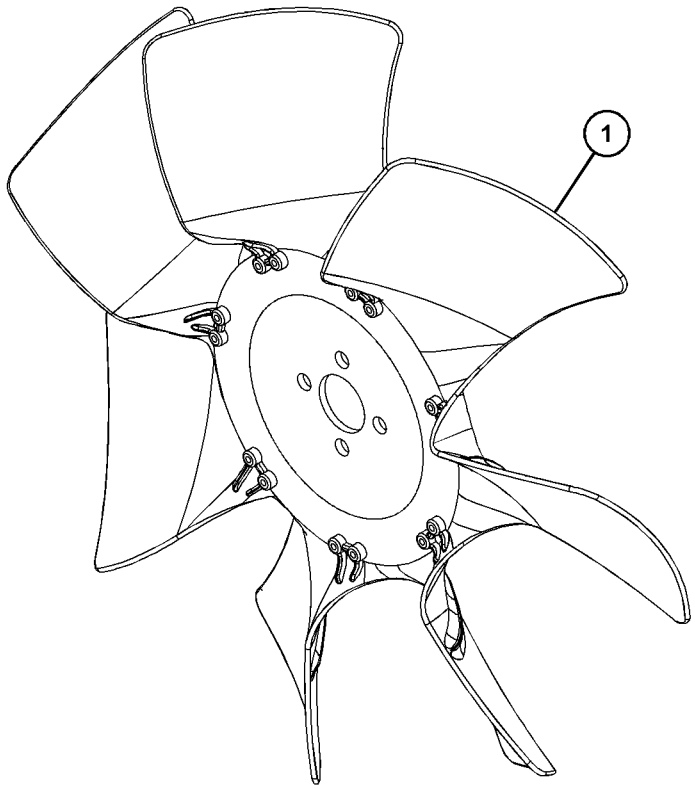

GRAPHIC #1 <END> g06770106

608-8936 FAN GP-SUCTION

S/N: C6M10494-UP

SMCS-1356 **i08825854**

NOTE	REF NO	GRAPHIC REF	PART NUMBER	QTY	PART NAME 1 2 3 4 5 6 (PRODUCT LEVEL)	SEE PAGE
	1	1	**568-8653**	1	FAN-SUCTION (7-BLADE)	

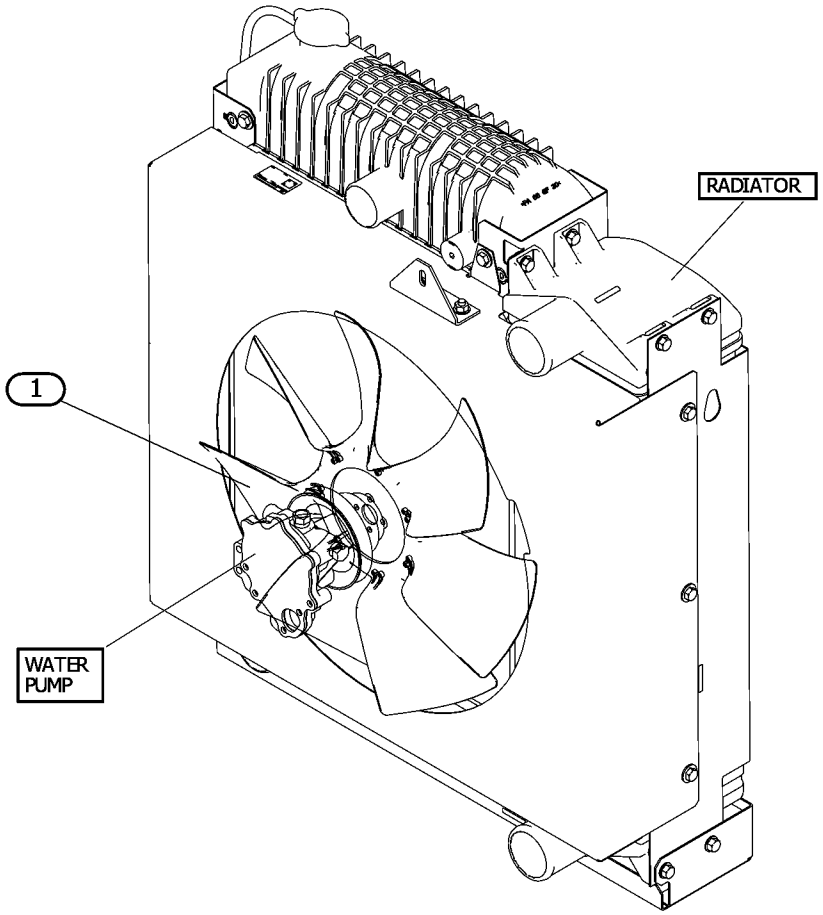

GRAPHIC #1 <END> g07550647

317-0980 HOUSING GP-WATER REGULATOR

SMCS-1393 **i05810340**

NOTE	REF NO	GRAPHIC REF	PART NUMBER	QTY	PART NAME 1 2 3 4 5 6 (PRODUCT LEVEL)	SEE PAGE
	1	1	**439-0945**	1	GASKET (TEMPERATURE REGULATOR)	
	2	1	**168-9001**	2	BOLT AS	
	3	1	**420-8944**	1	HOUSING	

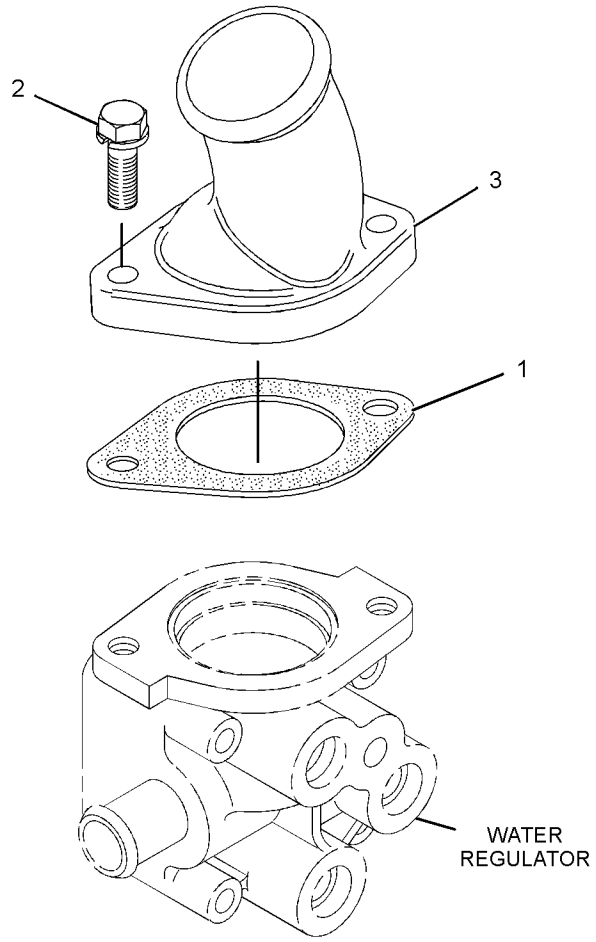

GRAPHIC #1 <END> g01439312

317-7191 HOUSING GP-WATER REGULATOR

SMCS-1393 **i05425302**

NOTE	REF NO	GRAPHIC REF	PART NUMBER	QTY	PART NAME 1 2 3 4 5 6 (PRODUCT LEVEL)	SEE PAGE
	1	1	**439-0945**	1	GASKET	
	2	1	**168-9001**	2	BOLT AS	
	3	1	**246-9218**	1	COVER-HOUSING	

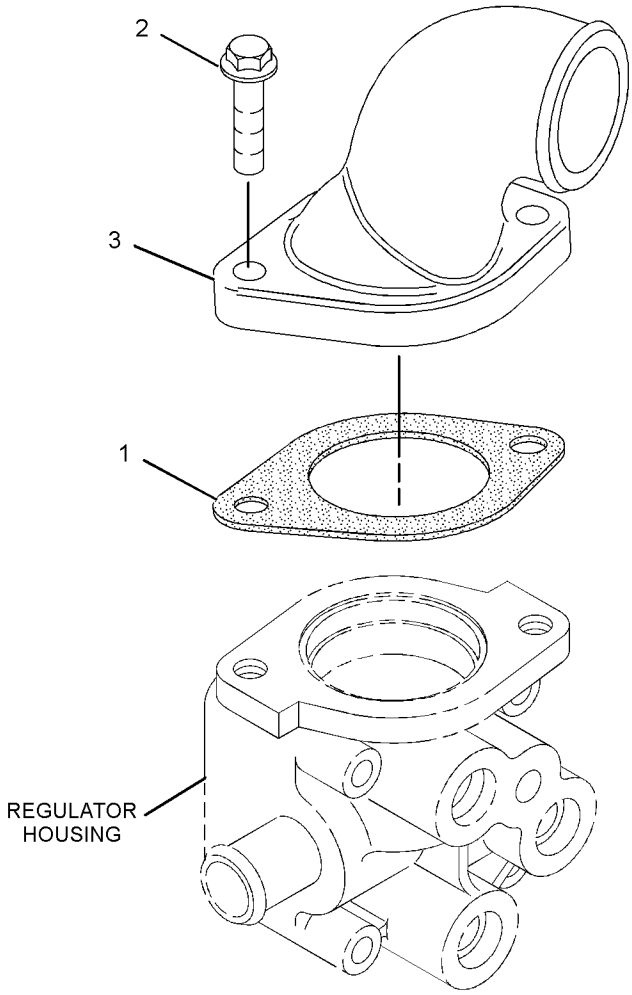

GRAPHIC #1 <END> g01635136

329-8514 HOUSING GP-WATER REGULATOR

PART OF 504-4602 ENGINE AR-PRIMARY

SMCS-1393 **i06236261**

NOTE	REF NO	GRAPHIC REF	PART NUMBER	QTY	PART NAME 1 2 3 4 5 6 (PRODUCT LEVEL)	SEE PAGE
M	1	1	**153-5960**	1	NUT (M6X1-THD)	
	2	1	**153-7640**	2	BOLT AS	
	3	1	**476-5578**	1	GASKET (TEMPERATURE REGULATOR)	
	4	1	**267-0022**	1	COVER-HOUSING	

M - METRIC PART

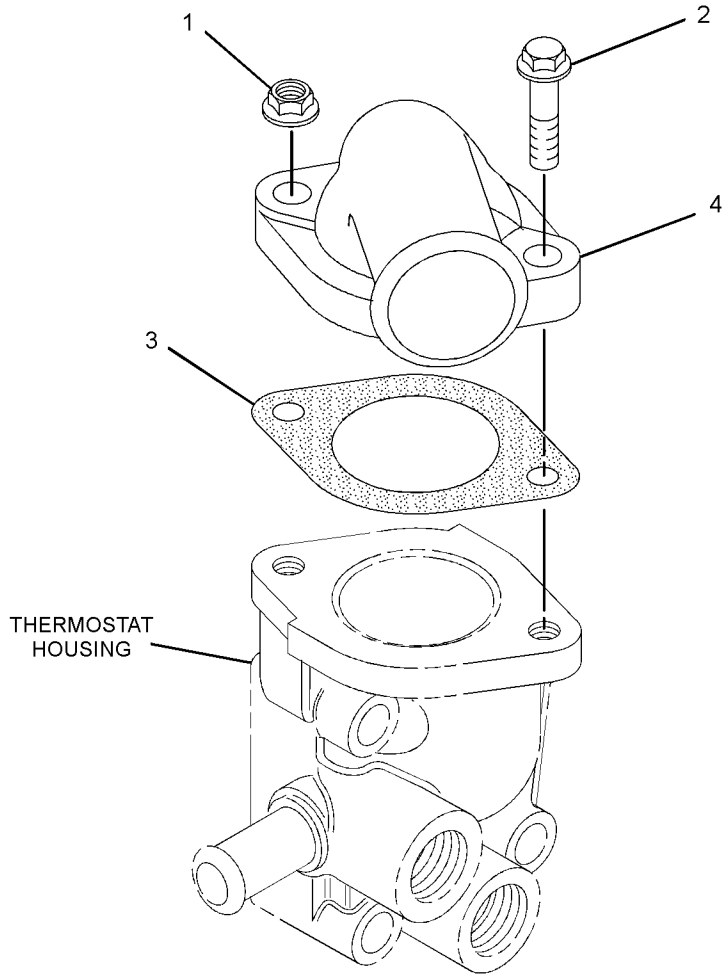

GRAPHIC #1 <END> g01716416

308-2299 LINES GP-COOLANT–ENGINE

PART OF 433-1380 ENGINE AR, 435-1636 ENGINE AR-PRIMARY

SMCS-1380 **i07307706**

NOTE	REF NO	GRAPHIC REF	PART NUMBER	QTY	PART NAME 1 2 3 4 5 6 (PRODUCT LEVEL)	SEE PAGE
	1	1	**153-6879**	1	STUD-HOLLOW	
	2	1	**160-4826**	4	CLAMP-HOSE	
	3	1	**238-9145**	1	HOSE	
	4	1	**331-2590**	1	HOSE	
	5	1	**423-8282**	1	CLIP	

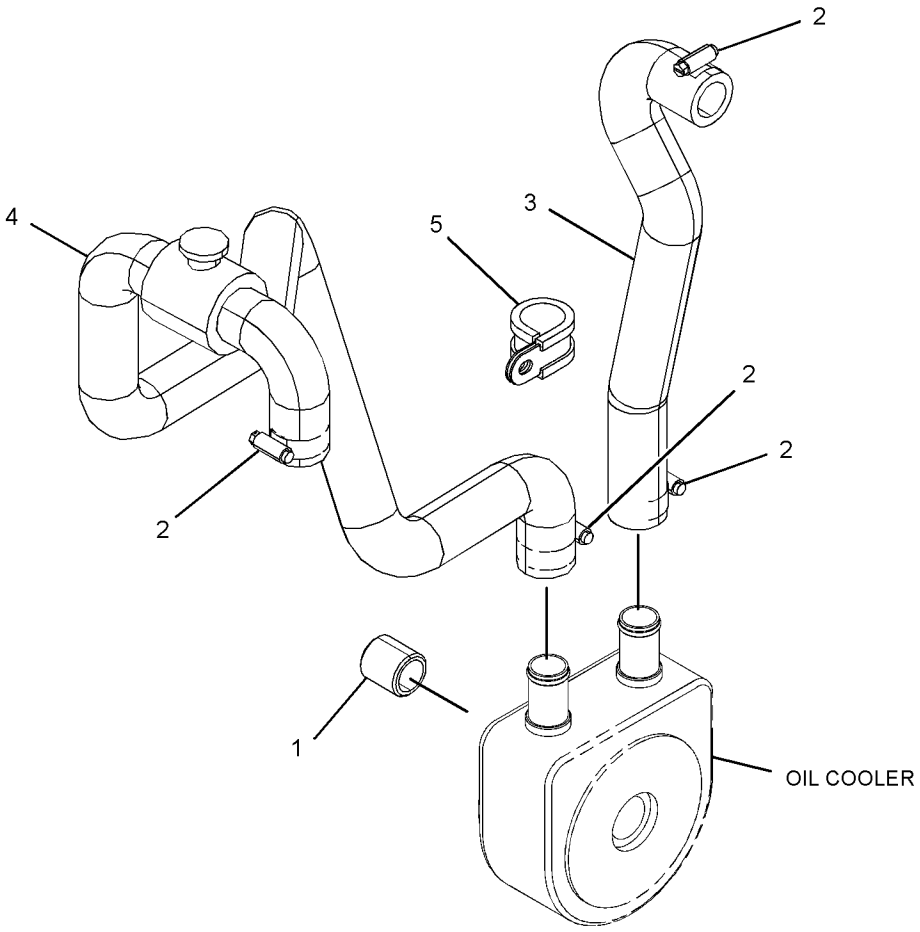

GRAPHIC #1 <END> g06221464

331-2589 LINES GP-COOLANT

PART OF 433-1380 ENGINE AR, 417-7273, 435-1636, 435-1658, 489-4263, 506-0518, 506-0519, 506-0520, 512-7969, 513-2239, 516-2639, 518-0165, 557-6086, 557-7471 ENGINE AR-PRIMARY

SMCS-1380 **i07307705**

NOTE	REF NO	GRAPHIC REF	PART NUMBER	QTY	PART NAME 1 2 3 4 5 6 (PRODUCT LEVEL)	SEE PAGE
	1	1	**153-6879**	1	STUD-HOLLOW	
	2	1	**160-4826**	4	CLAMP-HOSE	
	3	1	**238-9145**	1	HOSE (OIL COOLER)	
	4	1	**331-2590**	1	HOSE	
	5	1	**423-8282**	1	CLIP	

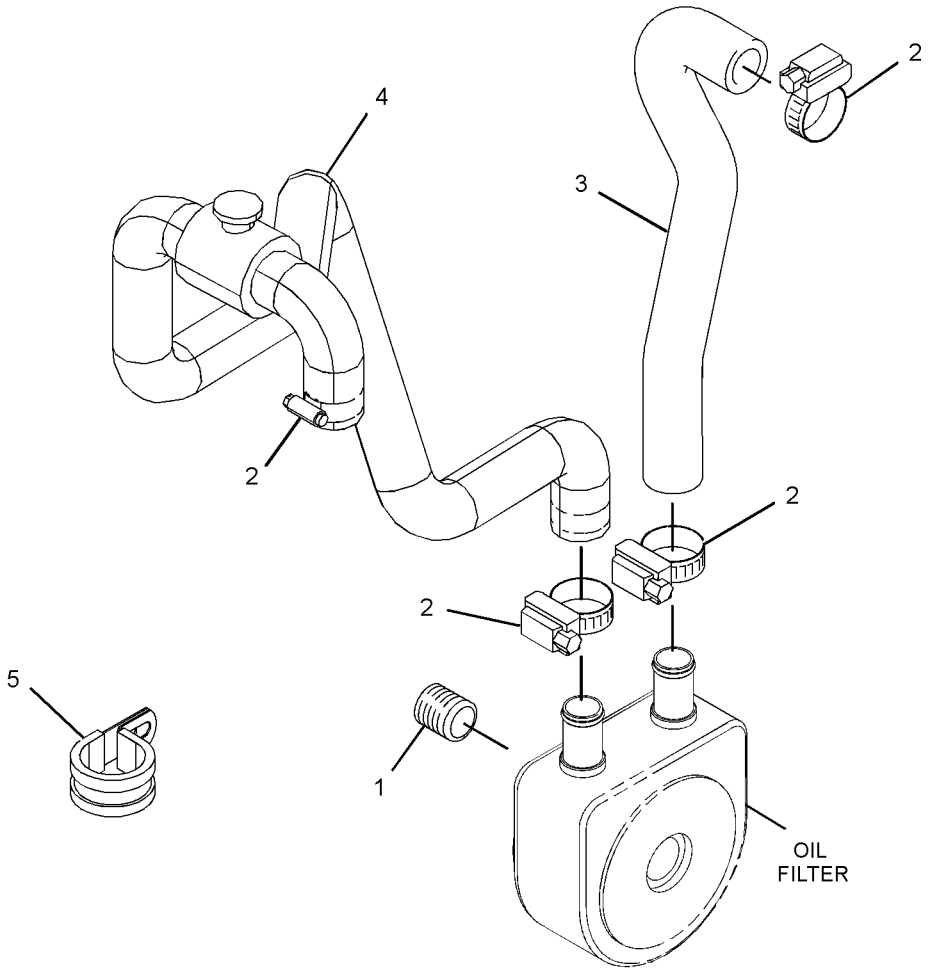

GRAPHIC #1 <END> g06278559

308-2301 PUMP GP-WATER

PART OF 417-7273, 489-4263, 506-0520, 513-2239, 557-7471 ENGINE AR-PRIMARY

SMCS-1361 **i09930071**

NOTE	REF NO	GRAPHIC REF	PART NUMBER	QTY	PART NAME 1 2 3 4 5 6 (PRODUCT LEVEL)	SEE PAGE
M	1	2	**152-6581**	2	BOLT (M6X1X55-MM)	
M	2	2	**153-5960**	3	NUT (M6X1-THD)	
	3	2	**153-5961**	4	BOLT AS	
	4	2	**154-1817**	2	PLUG	
	5	2	**472-2215**	1	PLUG	
	6	2	**423-5611**	1	GASKET	
	7	2	**032-9020**	2	CLIP	
	8	2	**425-6407**	1	GASKET	
	9	2	**439-4992**	1	PUMP AS-WATER	
	10	1	**472-2214**	1	CONNECTOR	
	11	1	**245-1361**	1	COOLER AS-OIL	
	11A	1	**245-1362**	1	CONNECTOR	
	11B	1	**245-1364**	1	SEAL	
	12	2	**249-5541**	1	REGULATOR-TEMPERATURE (82-DEG C)	
	13	2	**585-0737**	1	HOUSING AS-THERMOSTAT	
	14	2	**286-7496**	1	HOSE-WATER	
	15	2	**238-9137**	1	CONNECTOR	

M - METRIC PART

308-2301 **PUMP GP-WATER (**contd.**)** **i09930071**

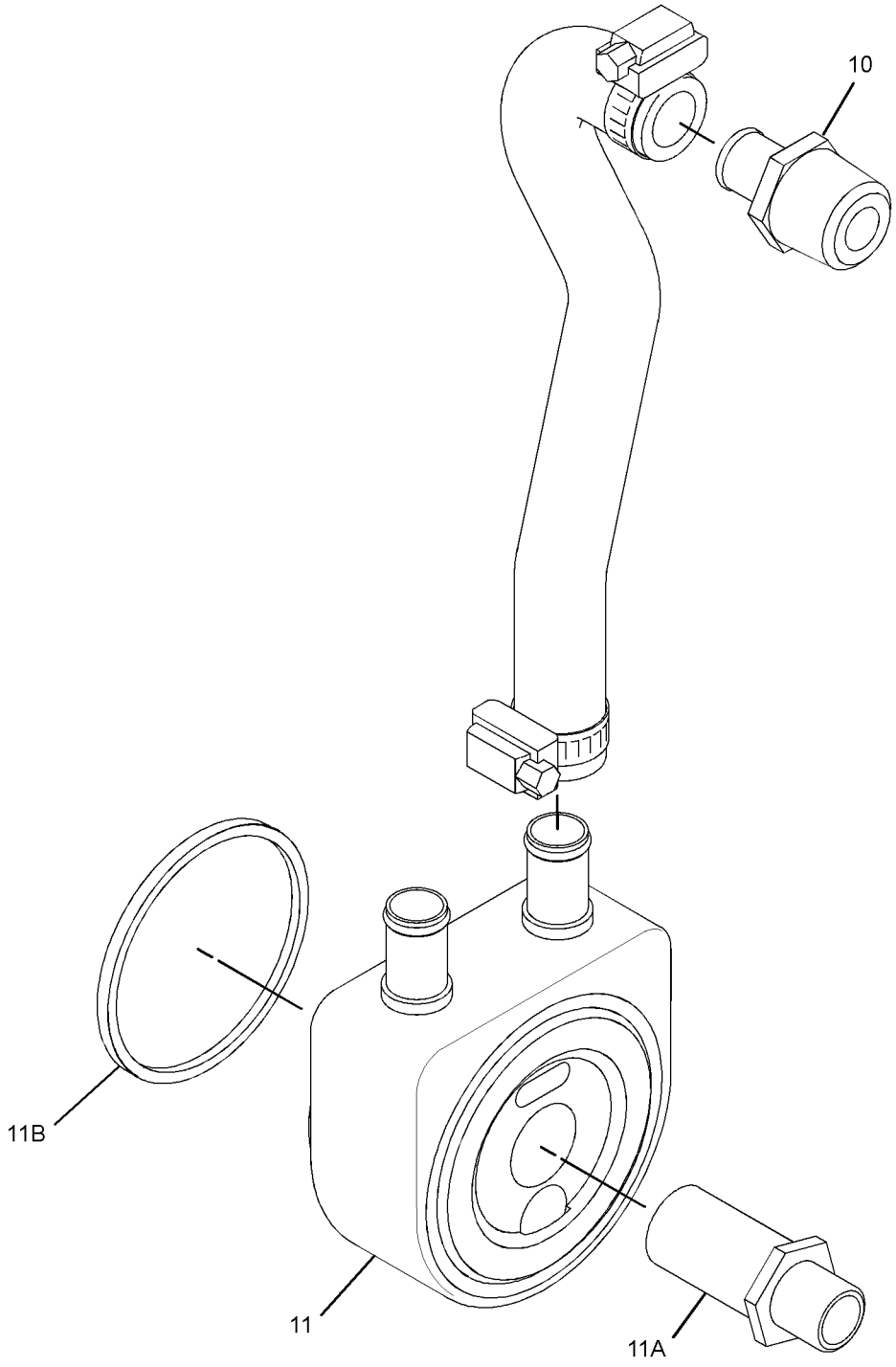

GRAPHIC #1 g06229707

308-2301 **PUMP GP-WATER (**contd.**)** **i09930071**

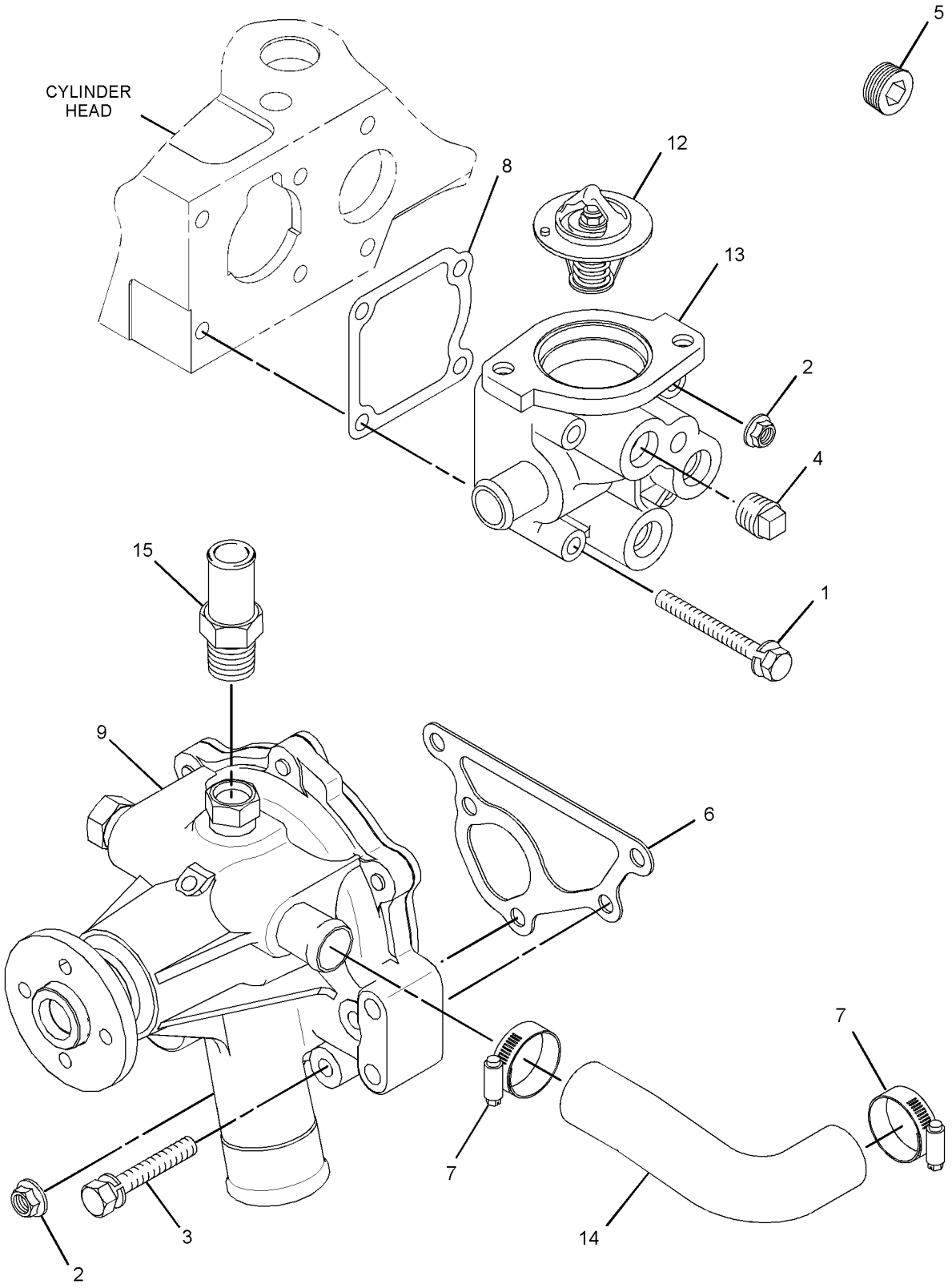

GRAPHIC #2 <END> g06237402

309-6721 PUMP GP-WATER

PART OF 435-1645, 435-1649 CYLINDER BLOCK GP-LONG, 433-1379 ENGINE AR, 435-1641, 435-1646, 435-1647 ENGINE AR-PRIMARY

SMCS-1361 **i03859299**

NOTE	REF NO	GRAPHIC REF	PART NUMBER	QTY	PART NAME 1 2 3 4 5 6 (PRODUCT LEVEL)	SEE PAGE
M	1	1	**153-5960**	3	NUT (M6X1-THD)	
	2	1	**153-5961**	4	BOLT AS	
	3	1	**154-1817**	1	PLUG	
	4	1	**154-1831**	2	PLUG	
	5	1	**215-2617**	1	GASKET (HOUSING)	
	6	1	**249-5541**	1	REGULATOR-TEMPERATURE (82-DEG C)	
	7	1	**286-7495**	1	HOUSING-THERMOSTAT	
	8	1	**286-7496**	1	HOSE-WATER	
	9	1	**311-0023**	1	PUMP-WATER	
	10	1	**303-0307**	1	GASKET (WATER PUMP)	
	11	1	**308-1907**	2	BOLT AS	
	12	1	**5D-1026**	2	CLAMP-BAND	

M - METRIC PART

309-6721 **PUMP GP-WATER (**contd.**)** **i03859299**

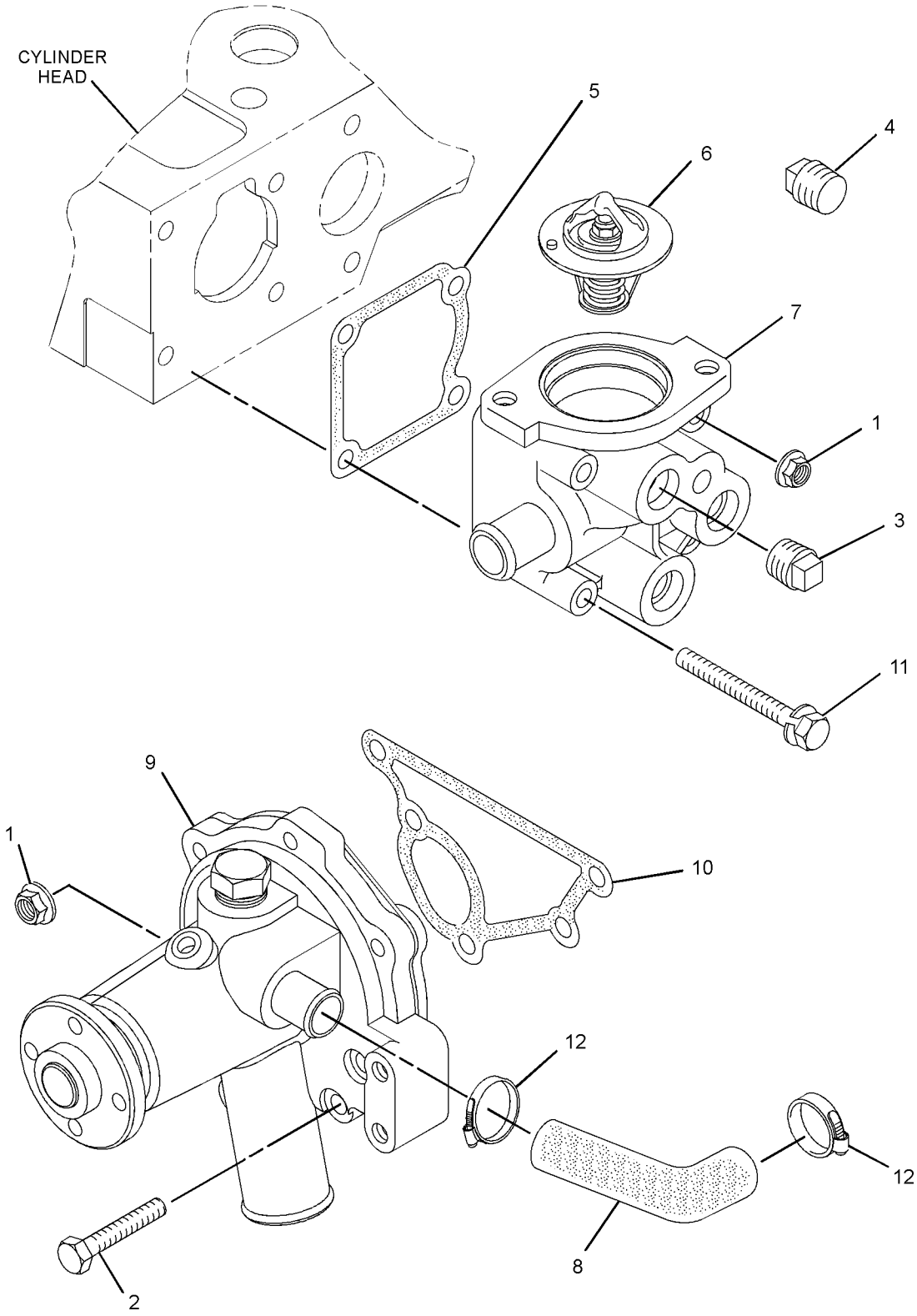

GRAPHIC #1 <END> g01699713

309-6721 PUMP GP-WATER

PART OF 435-1645, 435-1649 CYLINDER BLOCK GP-LONG, 433-1379 ENGINE AR, 435-1641, 435-1642, 435-1646, 435-1647 ENGINE AR-PRIMARY
ALSO AN ATTACHMENT

SMCS-1361 **i09870100**

NOTE	REF NO	GRAPHIC REF	PART NUMBER	QTY	PART NAME 1 2 3 4 5 6 (PRODUCT LEVEL)	SEE PAGE
M	1	1	**153-5960**	3	NUT (M6X1-THD)	
	2	1	**153-5961**	4	BOLT AS	
	3	1	**154-1817**	1	PLUG	
	4	1	**472-2215**	2	PLUG	
	5	1	**425-6407**	1	GASKET (HOUSING)	
	6	1	**249-5541**	1	REGULATOR-TEMPERATURE (82-DEG C)	
C	7	1	**585-0737**	1	HOUSING AS-THERMOSTAT (THERMOSTAT)	
	8	1	**286-7496**	1	HOSE-WATER	
	9	1	**439-4992**	1	PUMP AS-WATER	
	10	1	**423-5611**	1	GASKET (WATER PUMP)	
M	11	1	**152-6581**	2	BOLT (M6X1X55-MM)	
	12	1	**032-9020**	2	CLIP	

C - CHANGE FROM PREVIOUS TYPE
M - METRIC PART

309-6721 **PUMP GP-WATER (**contd.**)** **i09870100**

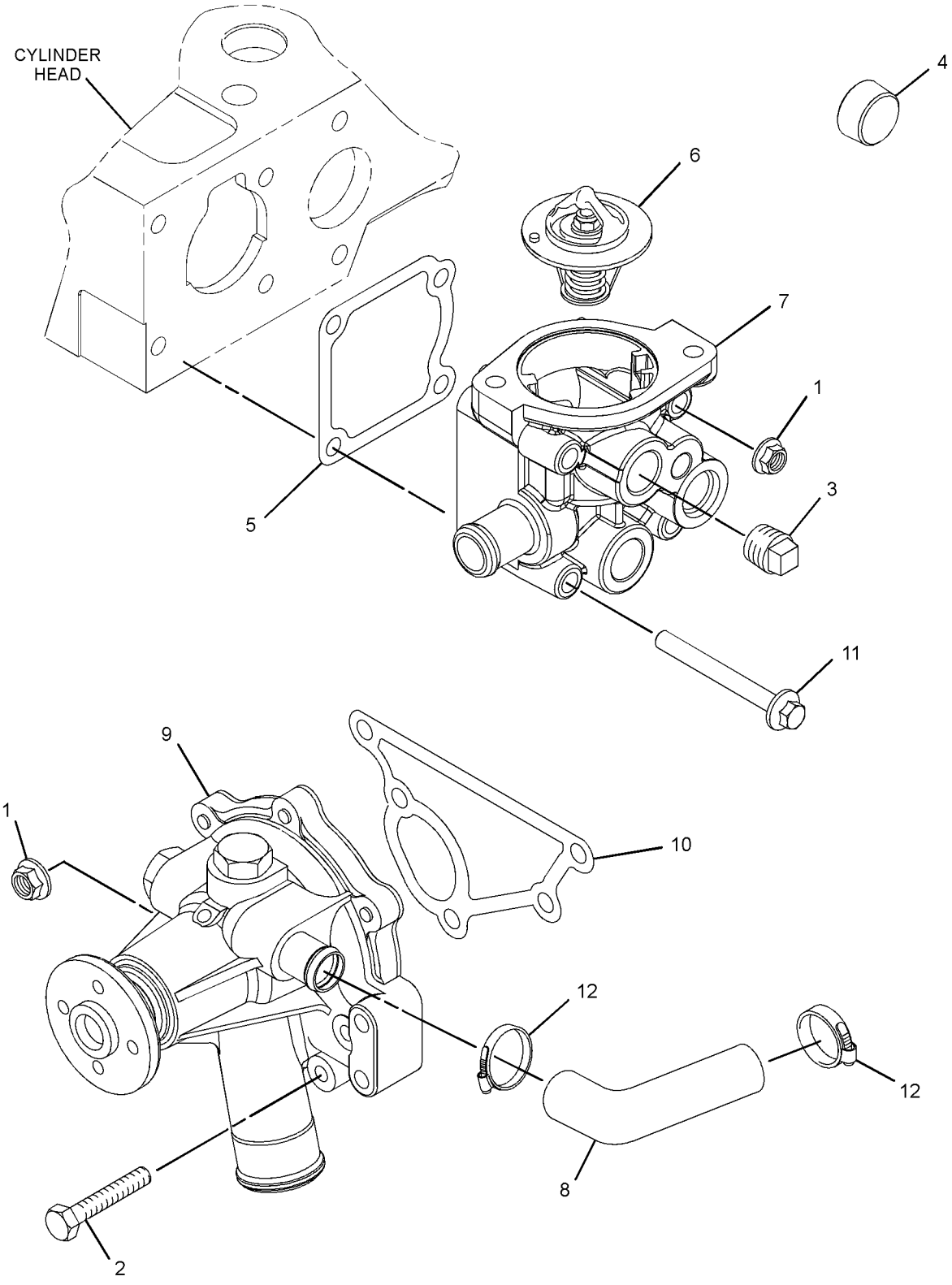

GRAPHIC #1 <END> g07664737

317-0979 PUMP GP-WATER

PART OF 433-1380 ENGINE AR, 435-1636, 435-1658, 489-9224, 512-7969, 514-6556 ENGINE AR-PRIMARY
TYPE 1

SMCS-1361 **i07187829**

NOTE	REF NO	GRAPHIC REF	PART NUMBER	QTY	PART NAME 1 2 3 4 5 6 (PRODUCT LEVEL)	SEE PAGE
	1	1	**5D-1026**	2	CLAMP-BAND	
	2	2	**127-8281**	1	CLIP	
M	3	1	**153-5960**	3	NUT (M6X1-THD)	
	4	1	**153-5961**	4	BOLT AS	
	5	1	**154-1817**	1	PLUG	
	6	1	**439-4993**	1	PLUG	
	7	2	**155-7984**	1	WASHER (8.4X16X1.6-MM THK)	
M	8	2	**180-6118**	1	BOLT AS (M8X1.25X12-MM)	
	9	1	**425-6407**	1	GASKET	
	10	1	**238-9137**	1	CONNECTOR	
	11	2	**472-2214**	1	CONNECTOR	
	12	2	**245-1361**	1	COOLER AS-OIL (ENGINE)	
	12A	2	**245-1362**	1	CONNECTOR	
	12B	2	**245-1364**	1	SEAL	
	13	1	**249-5541**	1	REGULATOR-TEMPERATURE (82-DEG C)	
	14	1	**477-8793**	1	HOUSING (THERMOSTAT)	
	15	1	**286-7496**	1	HOSE-WATER	
	16	1	**308-1907**	2	BOLT AS	
	17	1	**423-5611**	1	GASKET	
	18	1	**371-0183**	1	PUMP-WATER	

M - METRIC PART

317-0979 **PUMP GP-WATER (**contd.**)** **i07187829**

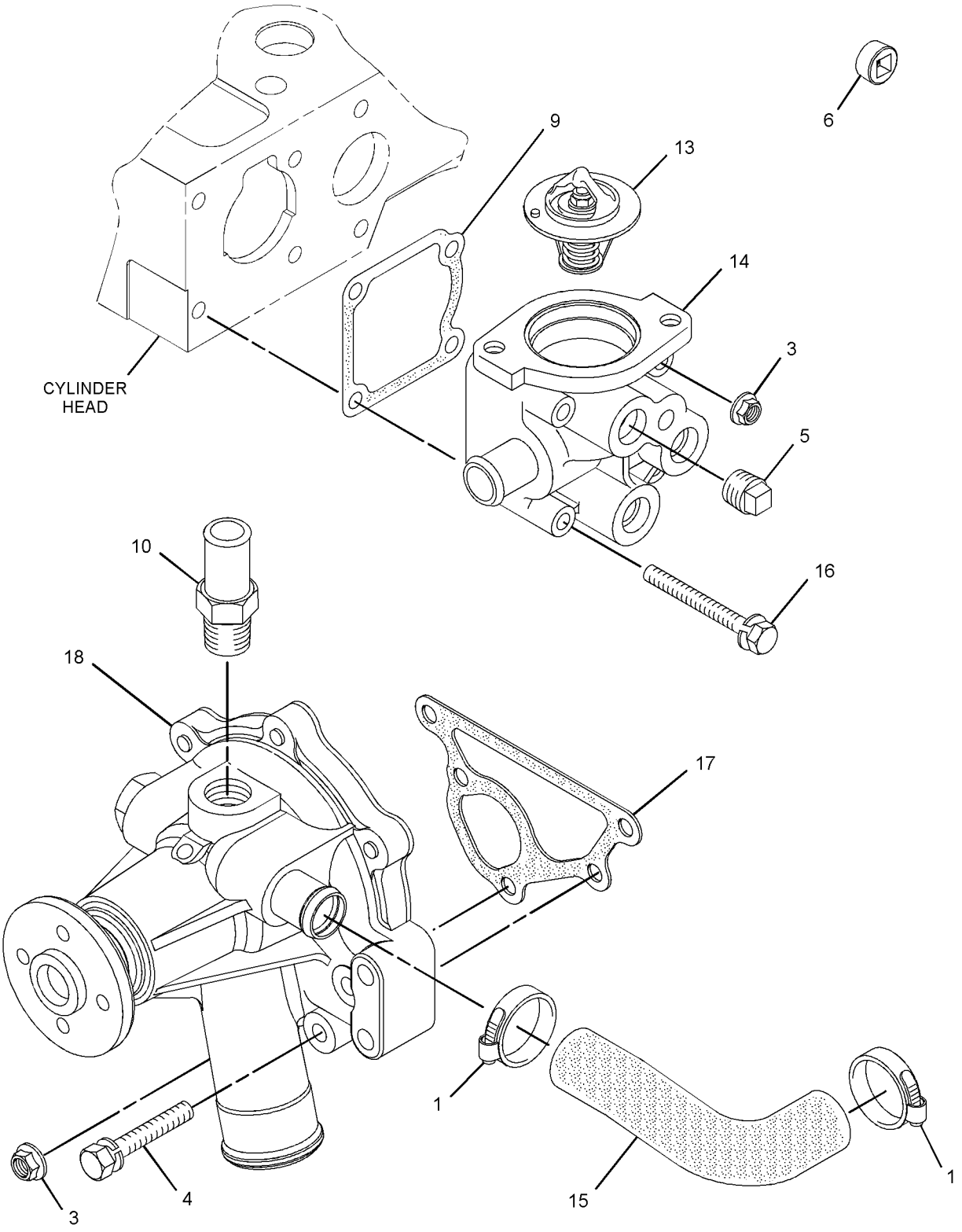

GRAPHIC #1 g03541666

317-0979 **PUMP GP-WATER (**contd.**)** **i07187829**

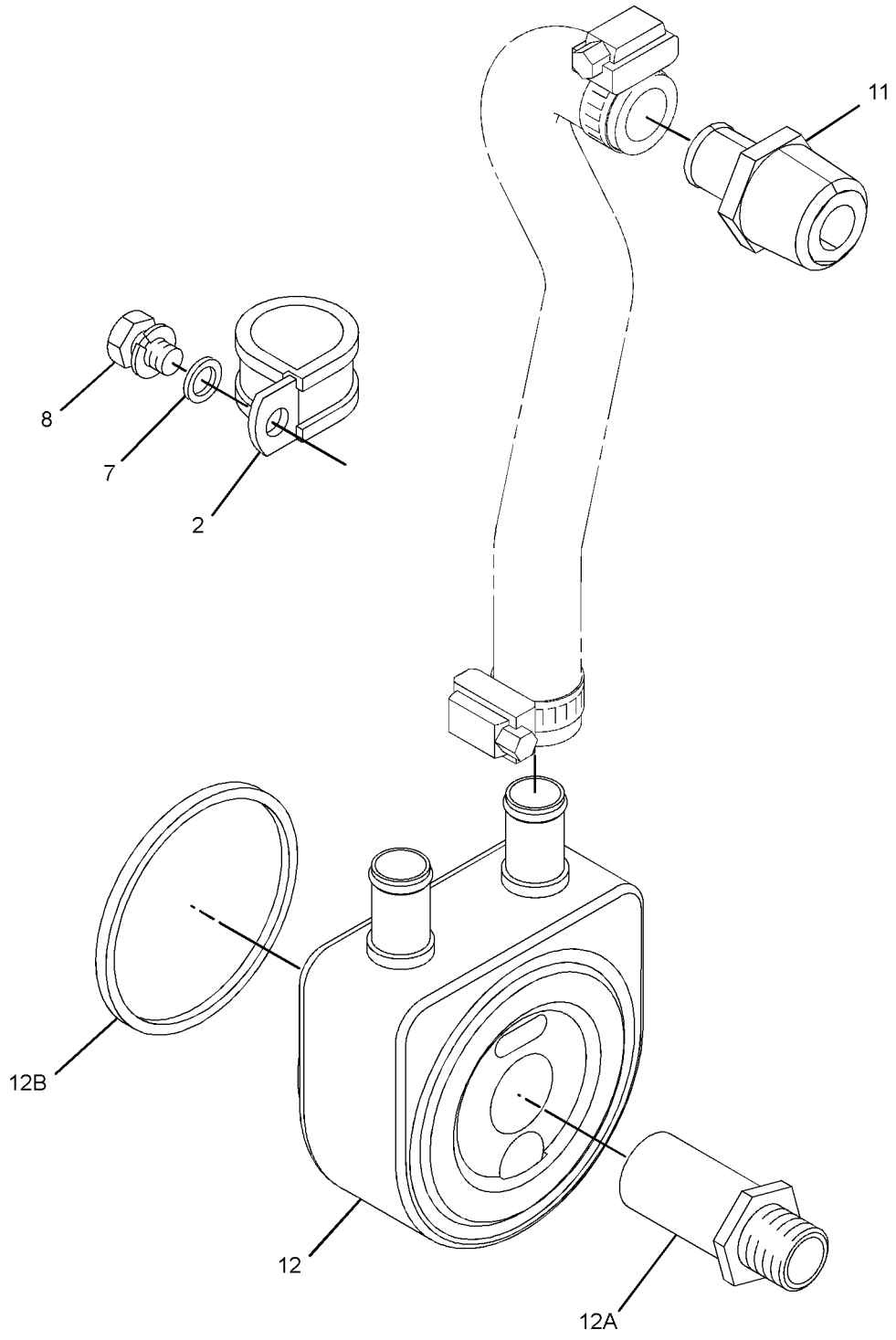

GRAPHIC #2 <END> g06194672

317-0979 PUMP GP-WATER

PART OF 433-1380 ENGINE AR, 435-1636, 435-1658, 489-9224, 506-0518, 506-0519, 512-7969, 514-6556 ENGINE AR-PRIMARY

TYPE 2

SMCS-1361 **i07187907**

NOTE	REF NO	GRAPHIC REF	PART NUMBER	QTY	PART NAME 1 2 3 4 5 6 (PRODUCT LEVEL)	SEE PAGE
	1	1	**5D-1026**	2	CLAMP-BAND	
M	3	1	**153-5960**	3	NUT (M6X1-THD)	
	4	1	**153-5961**	4	BOLT AS	
	5	1	**154-1817**	1	PLUG	
	6	1	**439-4993**	1	PLUG	
	7	2	**155-7984**	1	WASHER (8.4X16X1.6-MM THK)	
M	8	2	**180-6118**	1	BOLT AS (M8X1.25X12-MM)	
	9	1	**425-6407**	1	GASKET	
	10	1	**238-9137**	1	CONNECTOR	
	11	2	**472-2214**	1	CONNECTOR	
	12	2	**245-1361**	1	COOLER AS-OIL (ENGINE)	
	12A	2	**245-1362**	1	CONNECTOR	
	12B	2	**245-1364**	1	SEAL	
	13	1	**249-5541**	1	REGULATOR-TEMPERATURE (82-DEG C)	
	14	1	**477-8793**	1	HOUSING (THERMOSTAT)	
	15	1	**286-7496**	1	HOSE-WATER	
	16	1	**308-1907**	2	BOLT AS	
	17	1	**423-5611**	1	GASKET	
	18	1	**371-0183**	1	PUMP-WATER	

M - METRIC PART

317-0979 **PUMP GP-WATER (**contd.**)** **i07187907**

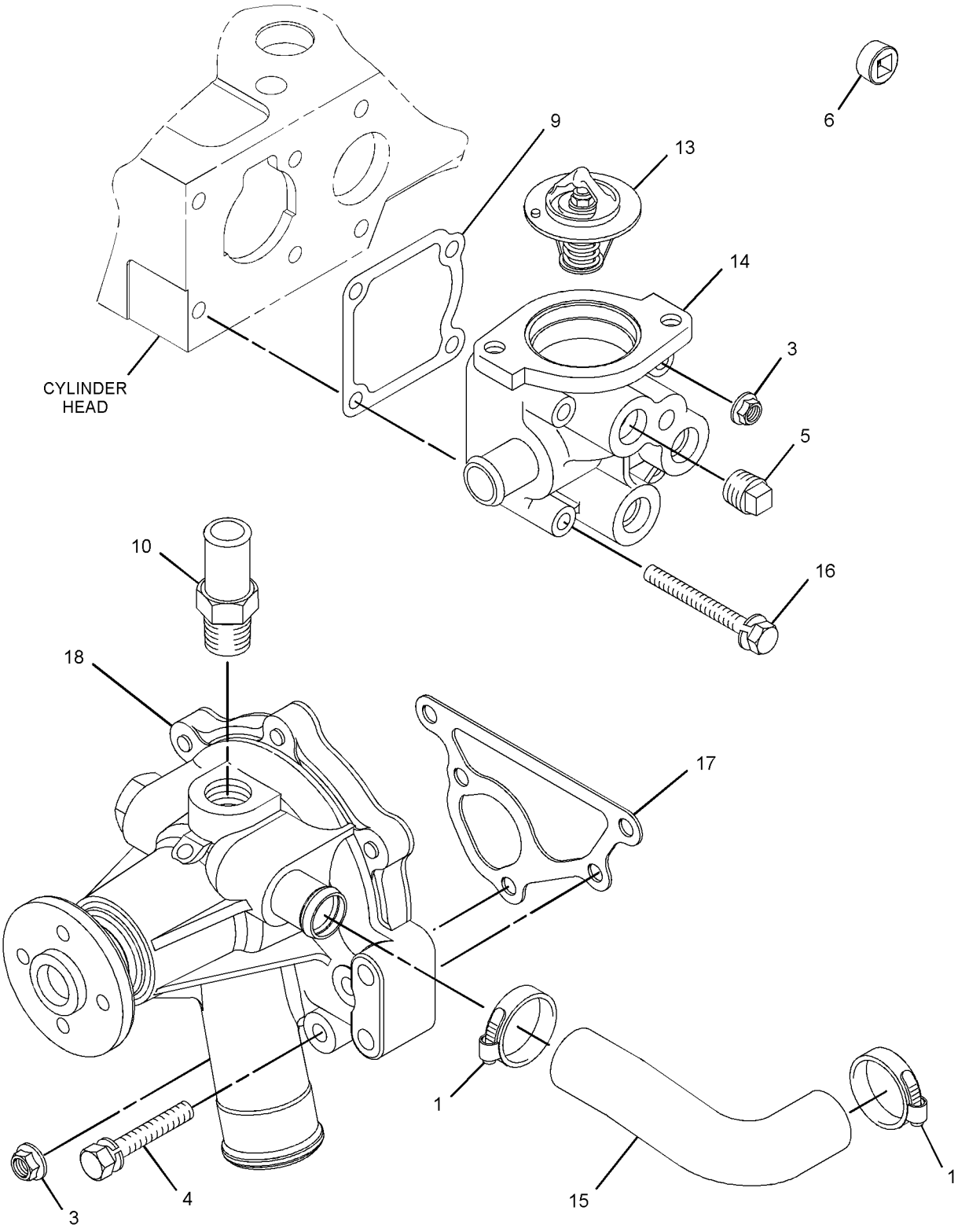

GRAPHIC #1 g06254232

317-0979 **PUMP GP-WATER (**contd.**)** **i07187907**

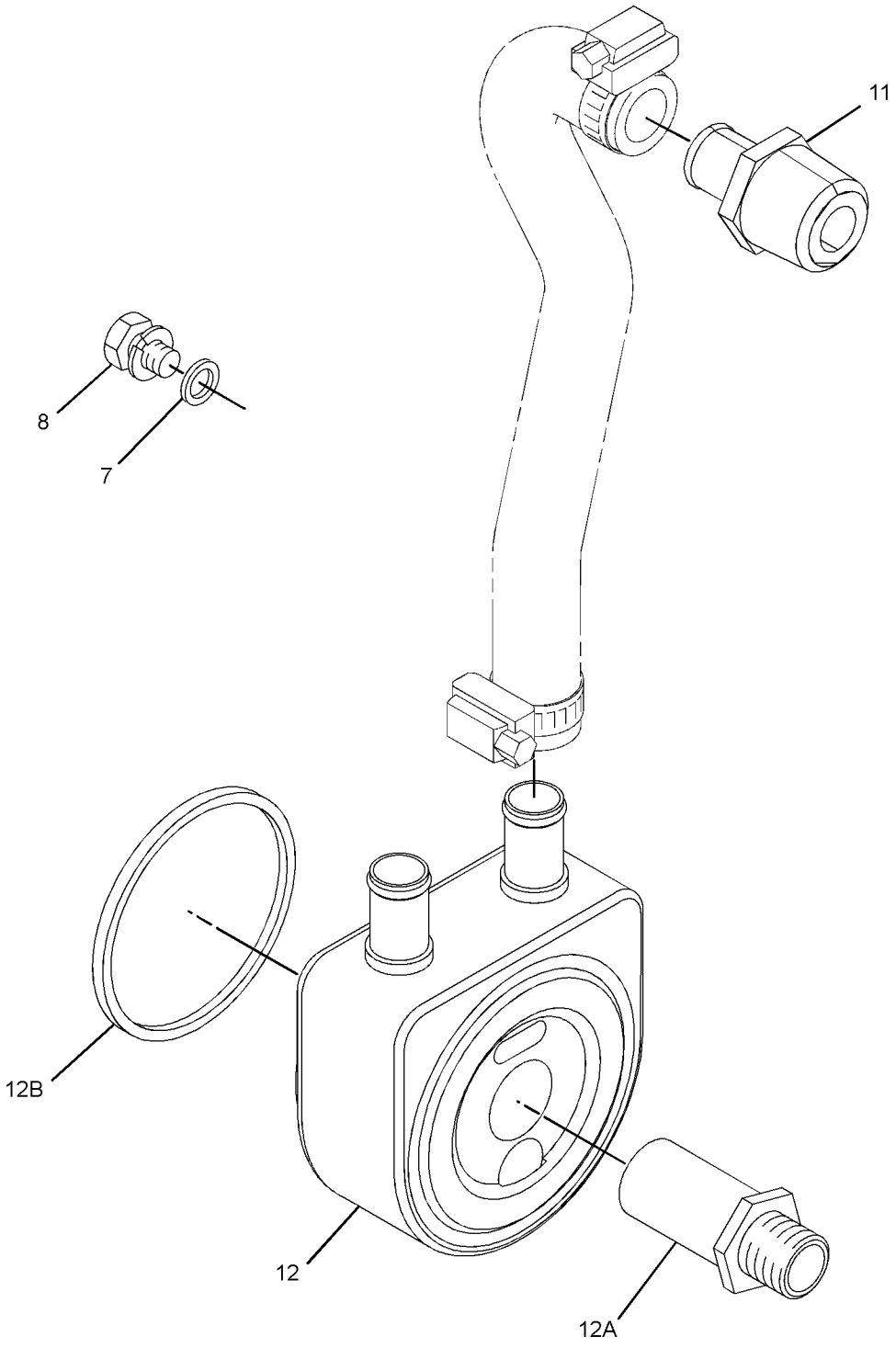

GRAPHIC #2 <END> g06254233

317-0979 PUMP GP-WATER

PART OF 433-1380 ENGINE AR, 435-1636, 435-1658, 489-9224, 506-0518, 506-0519, 512-7969, 514-6556, 516-2639, 518-0165, 557-6086 ENGINE AR-PRIMARY
TYPE 3

SMCS-1361 **i09929056**

NOTE	REF NO	GRAPHIC REF	PART NUMBER	QTY	PART NAME 1 2 3 4 5 6 (PRODUCT LEVEL)	SEE PAGE
	1	1	**032-9020**	2	CLIP	
C	2	1	**472-2215**	1	PLUG	
M	3	1	**153-5960**	1	NUT (M6X1-THD)	
	4	1	**153-5961**	4	BOLT AS	
	5	1	**154-1817**	1	PLUG	
	6	1	**423-5611**	1	GASKET	
	7	2	**155-7984**	1	WASHER (8.4X16X1.6-MM THK)	
M	8	2	**180-6118**	1	BOLT AS (M8X1.25X12-MM)	
	9	1	**425-6407**	1	GASKET	
	10	1	**439-4992**	1	PUMP AS-WATER	
	11	2	**472-2214**	1	CONNECTOR	
	12	2	**245-1361**	1	COOLER AS-OIL	
	12A	2	**245-1362**	1	CONNECTOR	
	12B	2	**245-1364**	1	SEAL	
	13	1	**249-5541**	1	REGULATOR-TEMPERATURE (82-DEG C)	
	14	1	**585-0737**	1	HOUSING AS-THERMOSTAT	
	15	1	**286-7496**	1	HOSE-WATER	
M	16	1	**152-6581**	2	BOLT (M6X1X55-MM)	
	17	1	**238-9137**	1	CONNECTOR	

C - CHANGE FROM PREVIOUS TYPE
M - METRIC PART

317-0979 **PUMP GP-WATER (**contd.**)** **i09929056**

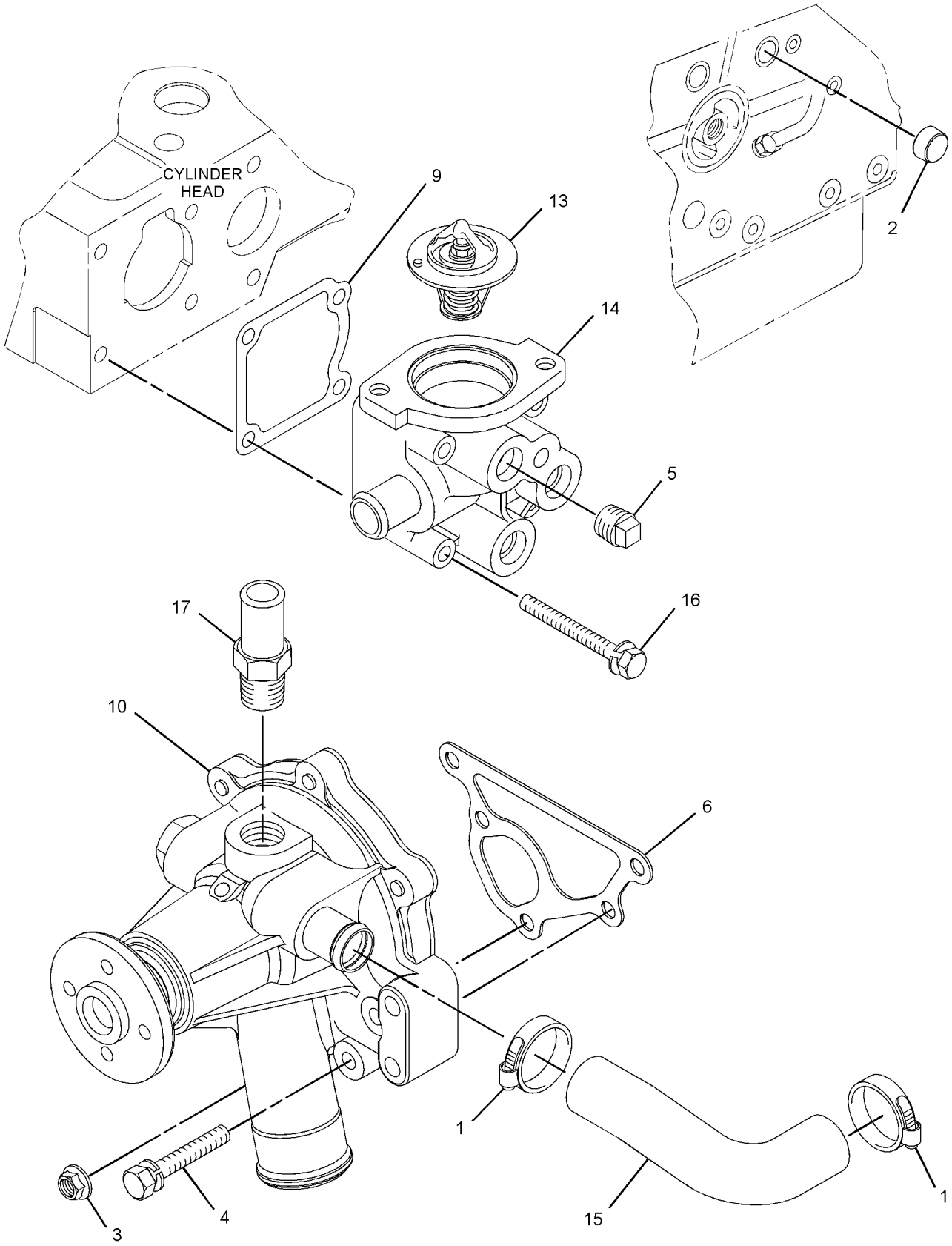

GRAPHIC #1 g06270207

317-0979 **PUMP GP-WATER (**contd.**)** **i09929056**

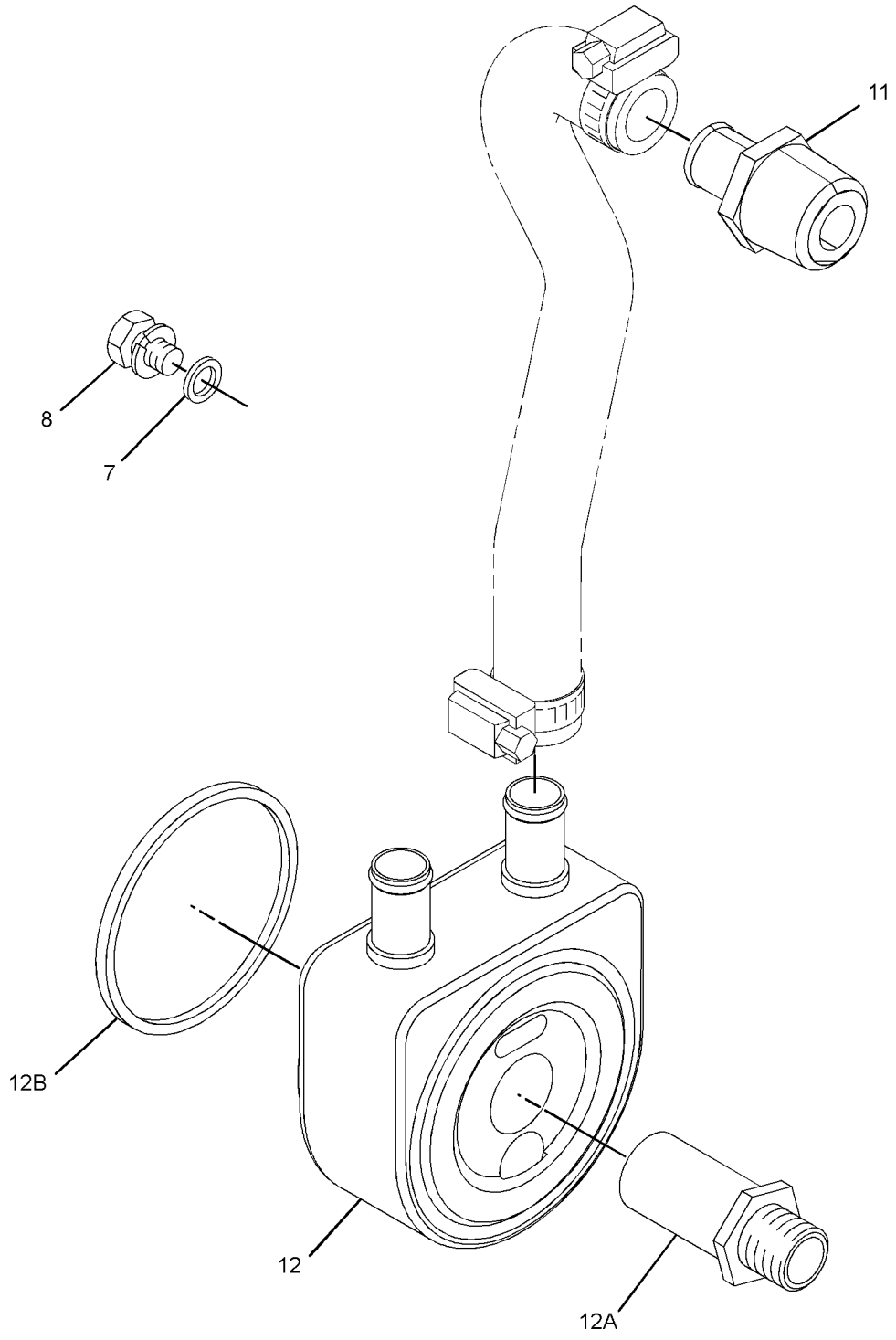

GRAPHIC #2 <END> g06254233

340-5886 PUMP GP-WATER

PART OF 499-6420 ENGINE AR-PRIMARY

SMCS-1361 **i07188004**

NOTE	REF NO	GRAPHIC REF	PART NUMBER	QTY	PART NAME 1 2 3 4 5 6 (PRODUCT LEVEL)	SEE PAGE
M	1	1	**153-5960**	4	NUT (M6X1-THD)	
	2	1	**153-5961**	4	BOLT AS	
	3	1	**154-1817**	1	PLUG	
	4	1	**472-2215**	2	PLUG	
	5	1	**032-9020**	2	CLIP	
	6	1	**425-6407**	1	GASKET	
	7	1	**249-5541**	1	REGULATOR-TEMPERATURE (82-DEG C)	
	8	1	**477-8793**	1	HOUSING (THERMOSTAT)	
	9	1	**308-1907**	2	BOLT AS	
	10	1	**423-5611**	1	GASKET	
	11	1	**439-4992**	1	PUMP AS-WATER	
	12	1	**338-3397**	1	HOSE-WATER	

M - METRIC PART

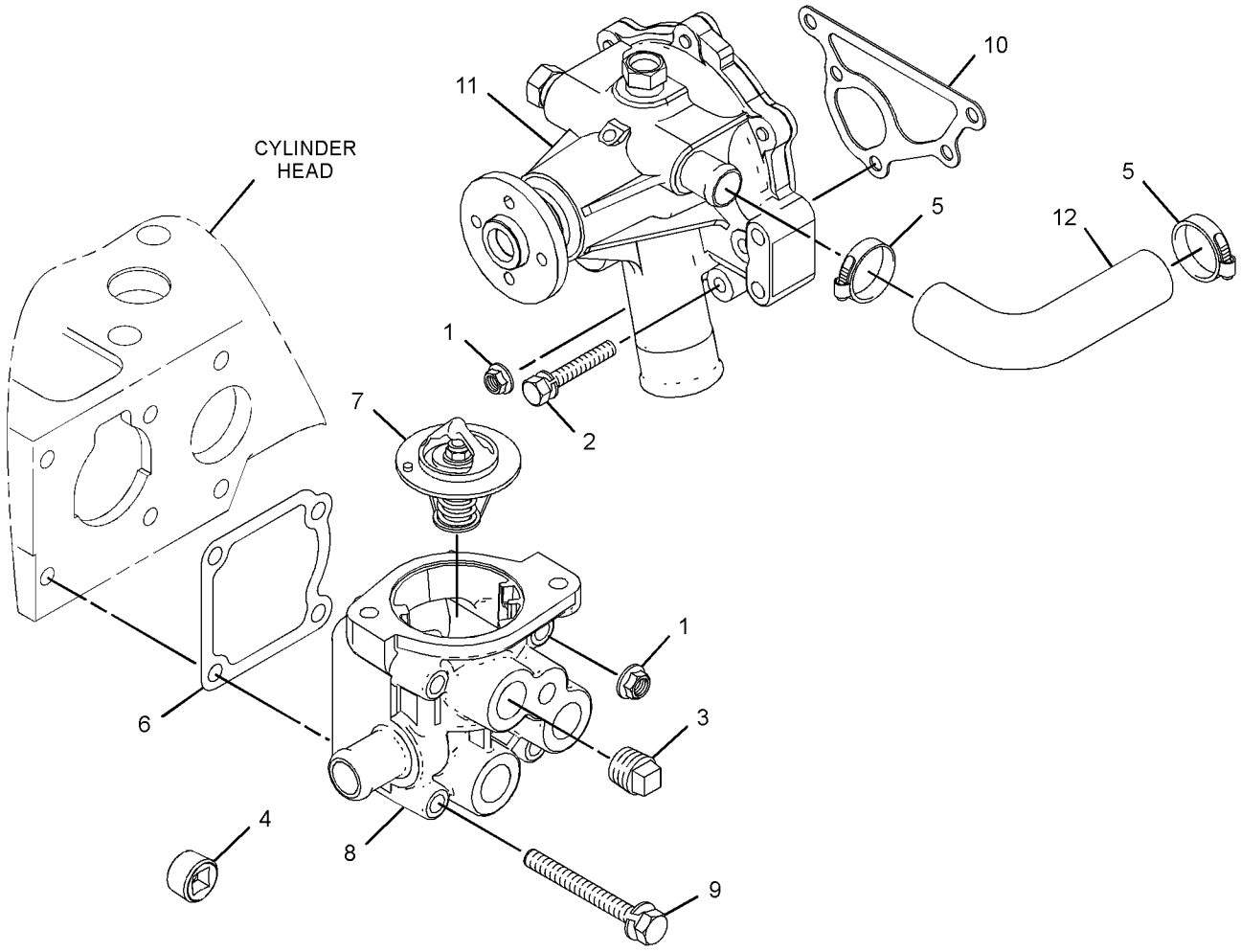

GRAPHIC #1 <END> g06210742

365-6506 PUMP GP-WATER

S/N: C6M1997-UP

SMCS-1361 **i05574943**

NOTE	REF NO	GRAPHIC REF	PART NUMBER	QTY	PART NAME 1 2 3 4 5 6 (PRODUCT LEVEL)	SEE PAGE
	1	1	**5D-1026**	2	CLAMP-BAND	
	2	1	**439-4993**	2	PLUG	
	3	1	**153-5961**	3	BOLT AS	
	4	1	**154-1817**	1	PLUG	
	5	1	**215-2617**	1	GASKET	
	6	1	**249-5541**	1	REGULATOR-TEMPERATURE (82-DEG C)	
	7	1	**286-7495**	1	HOUSING-THERMOSTAT	
	8	1	**286-7496**	1	HOSE-WATER	
	9	1	**308-1907**	2	BOLT AS	
	10	1	**308-1908**	1	GASKET-WATER PUMP	
	11	1	**371-0183**	1	PUMP-WATER	

365-6506 **PUMP GP-WATER (**contd.**)** **i05574943**

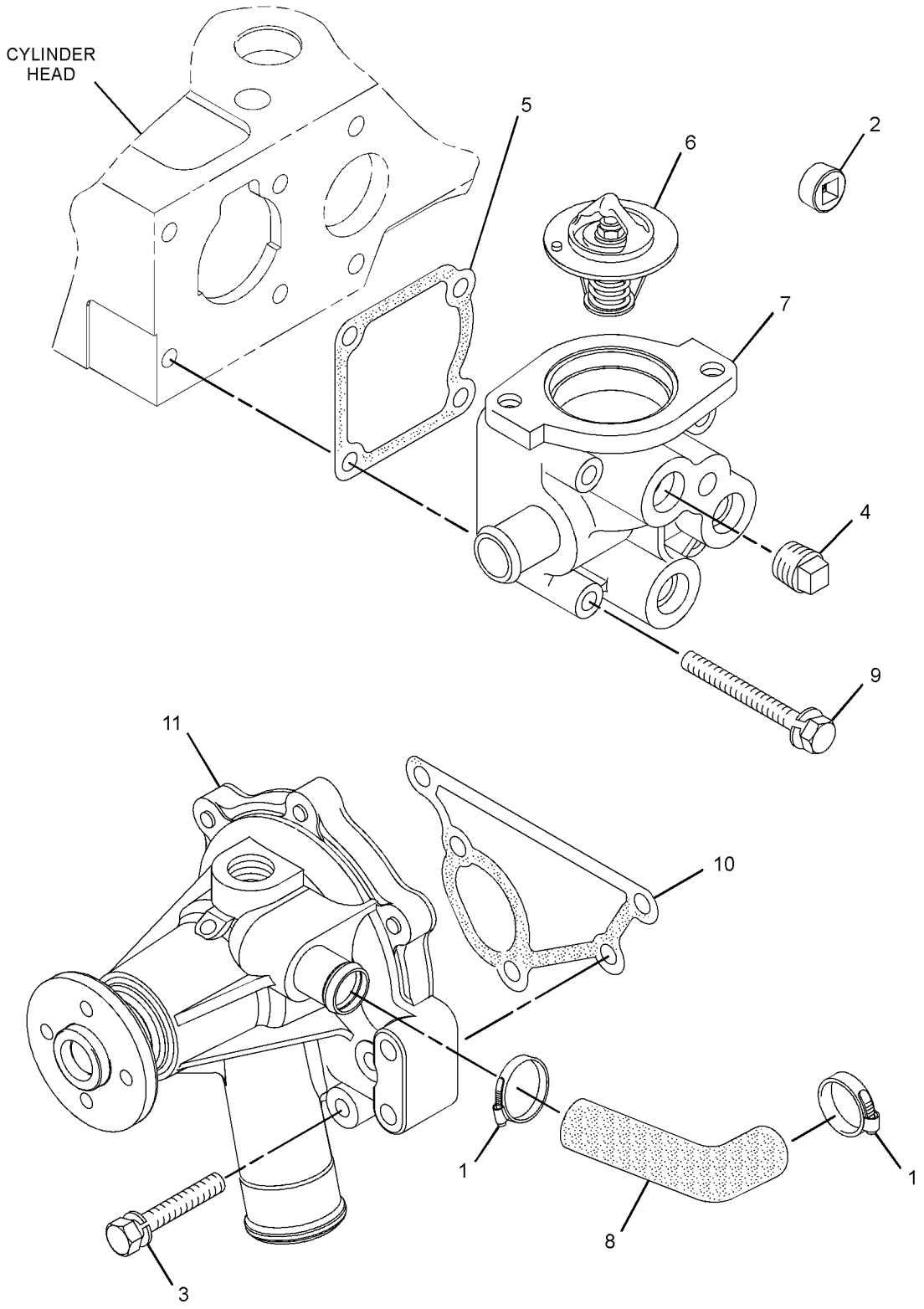

GRAPHIC #1 <END> g03558216

420-6415 PUMP GP-WATER

TYPE 1

SMCS-1361 **i07026828**

NOTE	REF NO	GRAPHIC REF	PART NUMBER	QTY	PART NAME 1 2 3 4 5 6 (PRODUCT LEVEL)	SEE PAGE
	1	1	**127-8281**	1	CLIP	
M	2	2	**153-5960**	4	NUT (M6X1-THD)	
	3	2	**153-5961**	4	BOLT AS	
	4	1	**153-6375**	1	BOLT AS	
	5	2	**154-1817**	1	PLUG	
	6	1	**155-7984**	1	WASHER (8.4X16X1.6-MM THK)	
	7	2	**5D-1026**	2	CLAMP-BAND	
	8	2	**236-9986**	1	REGULATOR-WATER TEMPERATURE	
	9	1	**238-9137**	1	CONNECTOR	
	10	1	**472-2214**	1	CONNECTOR	
	11	1	**245-1361**	1	COOLER AS-OIL	
	11A	1	**245-1362**	1	CONNECTOR	
	11B	1	**245-1364**	1	SEAL	
	12	2	**308-1907**	2	BOLT AS	
	13	2	**338-3397**	1	HOSE-WATER	
	14	2	**477-8793**	1	HOUSING	
	15	2	**371-0183**	1	PUMP-WATER	
	16	2	**423-5611**	1	GASKET (WATER PUMP)	
	17	2	**425-6407**	1	GASKET	
	18	2	**439-4993**	1	PLUG	

M - METRIC PART

420-6415 **PUMP GP-WATER (**contd.**)** **i07026828**

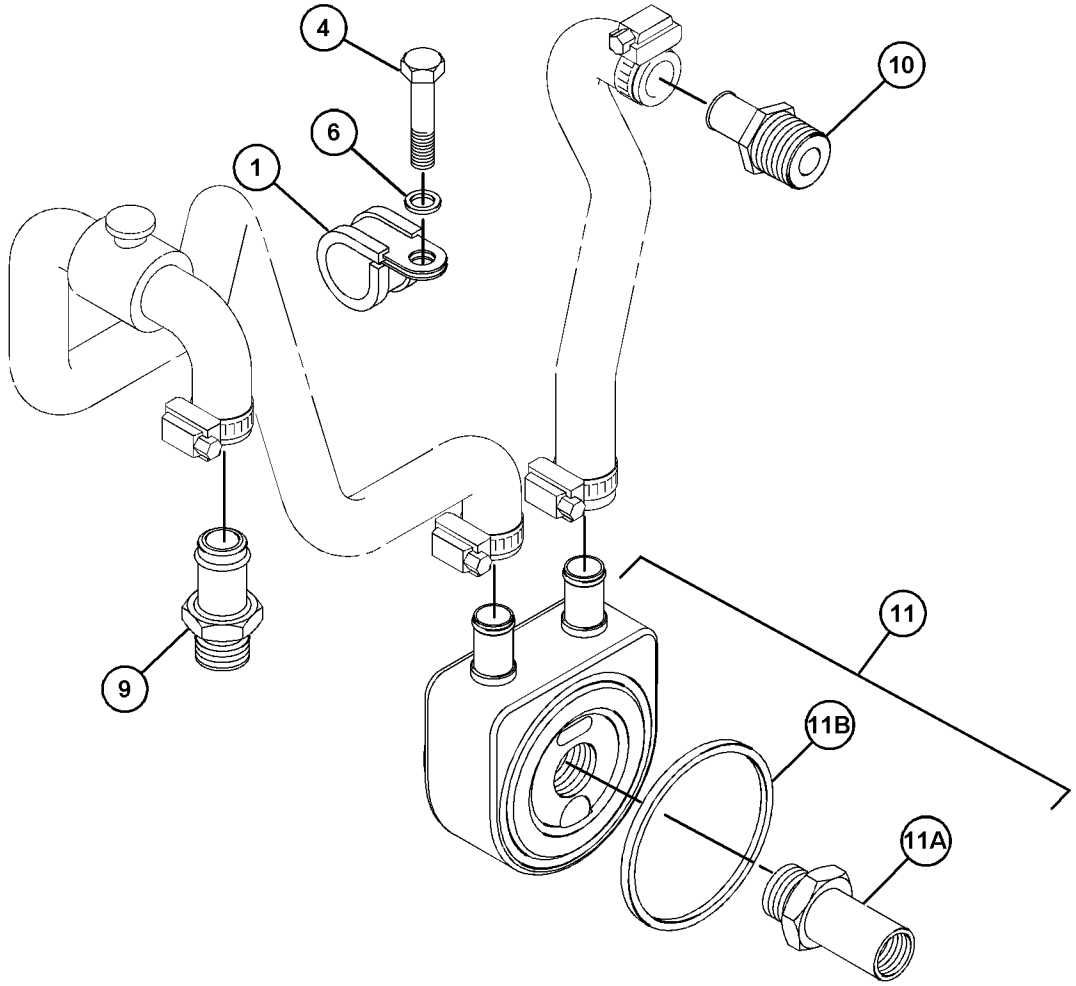

GRAPHIC #1 g03666915

420-6415 **PUMP GP-WATER (**contd.**)** **i07026828**

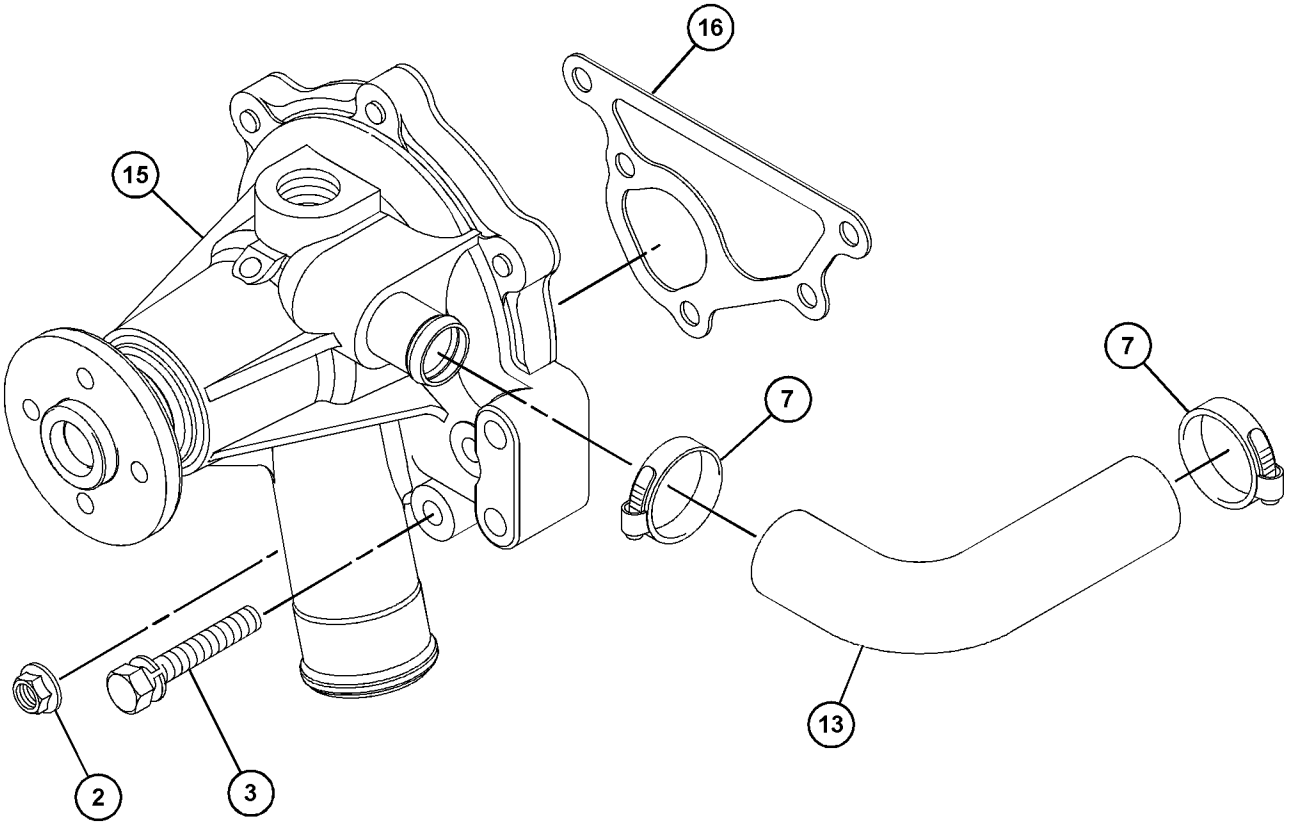

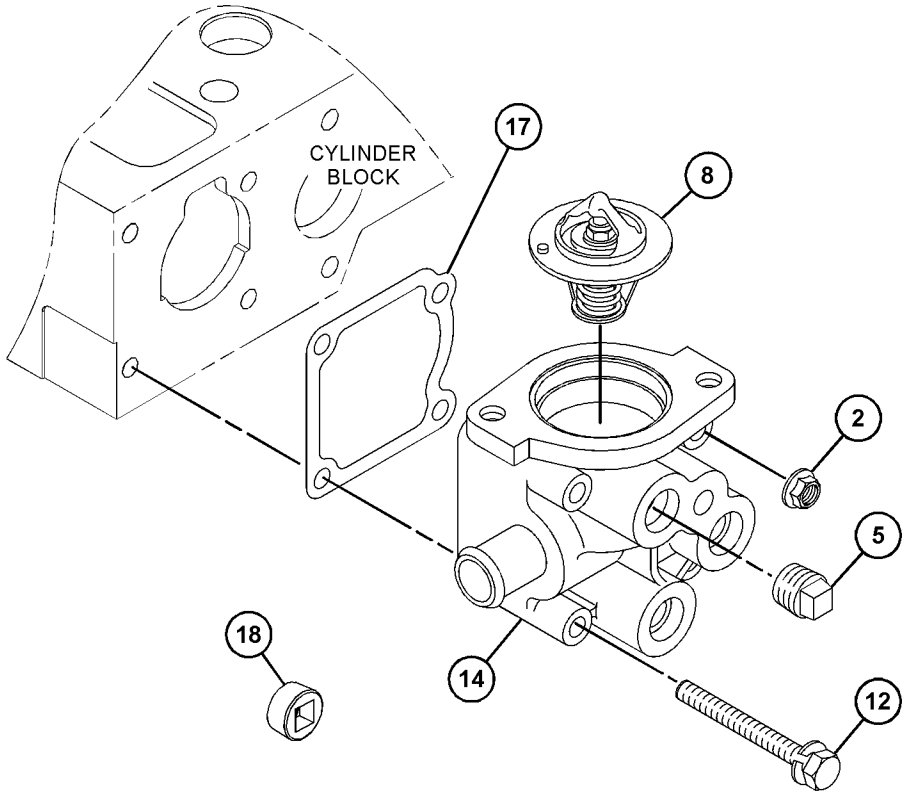

GRAPHIC #2 <END> g03666916

420-6415 PUMP GP-WATER

PART OF 504-4602 ENGINE AR-PRIMARY

TYPE 2

SMCS-1361 **i07073166**

NOTE	REF NO	GRAPHIC REF	PART NUMBER	QTY	PART NAME 1 2 3 4 5 6 (PRODUCT LEVEL)	SEE PAGE
	1	2	**472-2215**	1	PLUG	
M	2	2	**153-5960**	2	NUT (M6X1-THD)	
	3	2	**153-5961**	4	BOLT AS	
	4	1	**153-6375**	1	BOLT AS	
	5	2	**154-1817**	1	PLUG	
	6	1	**155-7984**	1	WASHER (8.4X16X1.6-MM THK)	
	7	2	**5D-1026**	2	CLAMP-BAND	
	8	2	**236-9986**	1	REGULATOR-WATER TEMPERATURE	
	9	2	**425-6407**	1	GASKET	
	10	1	**472-2214**	1	CONNECTOR	
	11	1	**245-1361**	1	COOLER AS-OIL	
	11A	1	**245-1362**	1	CONNECTOR	
	11B	1	**245-1364**	1	SEAL	
	12	2	**308-1907**	2	BOLT AS	
	13	2	**338-3397**	1	HOSE-WATER	
	14	2	**477-8793**	1	HOUSING	
	15	2	**439-4992**	1	PUMP AS-WATER	
	16	2	**423-5611**	1	GASKET (WATER PUMP)	

M - METRIC PART

420-6415 **PUMP GP-WATER (**contd.**)** **i07073166**

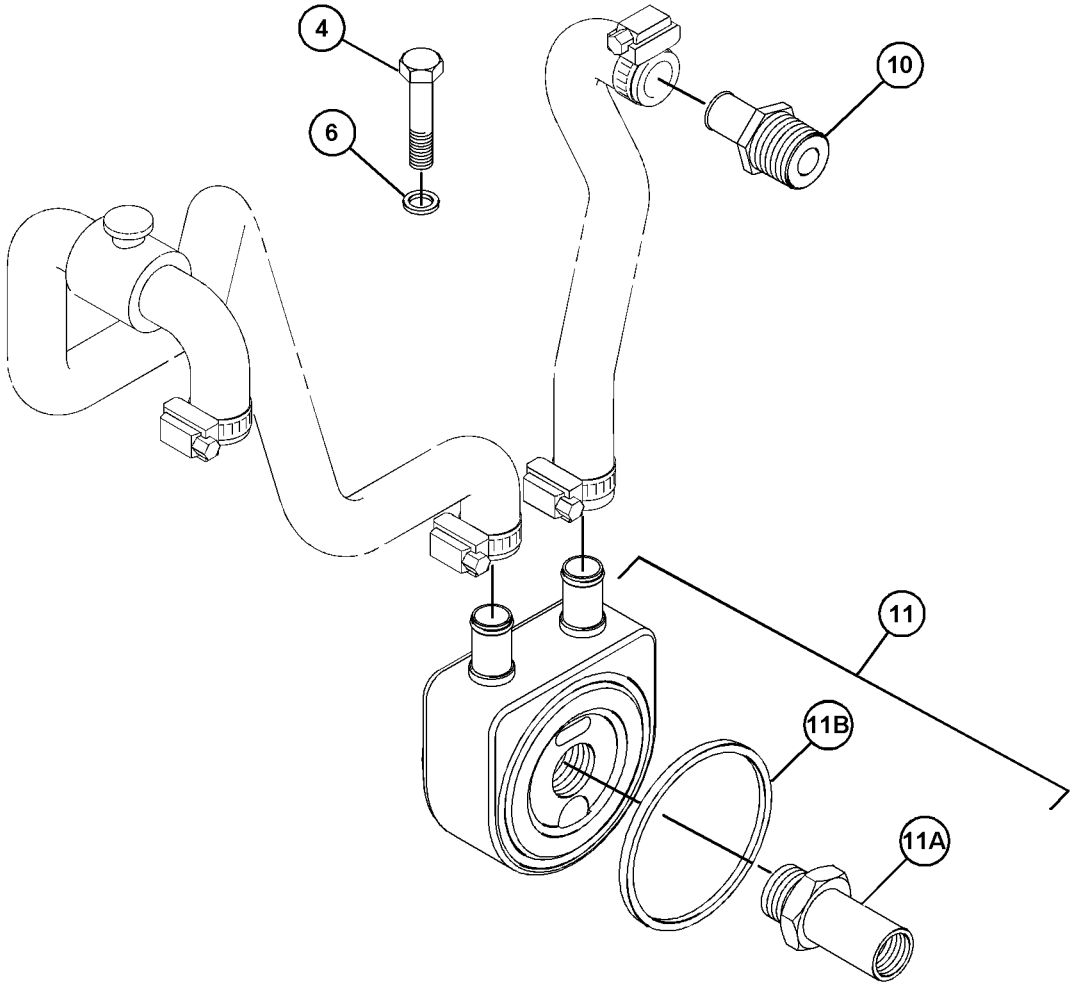

GRAPHIC #1 g06211407

420-6415 **PUMP GP-WATER (**contd.**)** **i07073166**

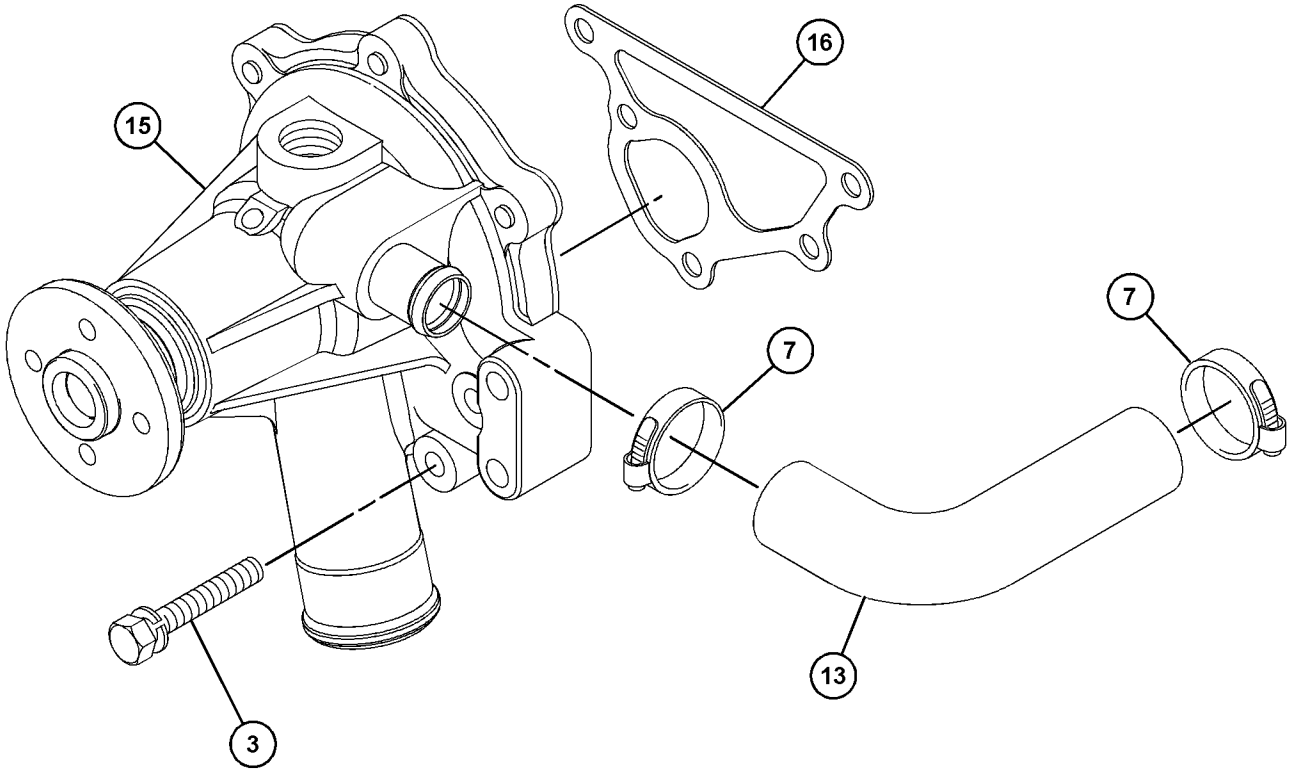

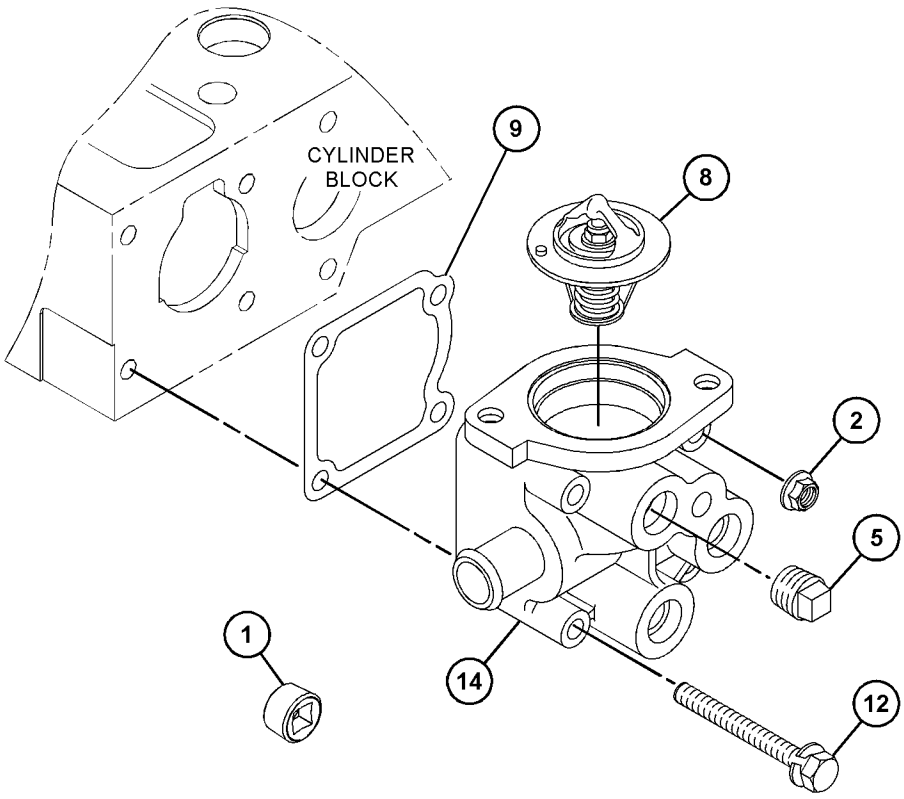

GRAPHIC #2 <END> g06236032

442-7729 PUMP GP-WATER

TYPE 1

SMCS-1361 **i06882822**

NOTE	REF NO	GRAPHIC REF	PART NUMBER	QTY	PART NAME 1 2 3 4 5 6 (PRODUCT LEVEL)	SEE PAGE
	1	1	**5D-1026**	2	CLAMP-BAND	
	2	1	**371-0183**	1	PUMP-WATER	
M	3	1	**153-5960**	3	NUT (M6X1-THD)	
	4	1	**153-5961**	4	BOLT AS	
	5	1	**154-1817**	1	PLUG	
	6	1	**439-4993**	1	PLUG	
	7	1	**423-5611**	1	GASKET	
	8	1	**308-1907**	2	BOLT AS	
	9	1	**425-6407**	1	GASKET	
	10	1	**238-9137**	1	CONNECTOR	
	11	2	**472-2214**	1	CONNECTOR	
	12	2	**245-1361**	1	COOLER AS-OIL (ENGINE)	
	12A	2	**245-1362**	1	CONNECTOR	
	12B	2	**245-1364**	1	SEAL	
	13	1	**249-5541**	1	REGULATOR-TEMPERATURE (82-DEG C)	
	14	1	**477-8793**	1	HOUSING (THERMOSTAT)	
	15	1	**286-7496**	1	HOSE-WATER	

M - METRIC PART

442-7729 **PUMP GP-WATER (**contd.**)** **i06882822**

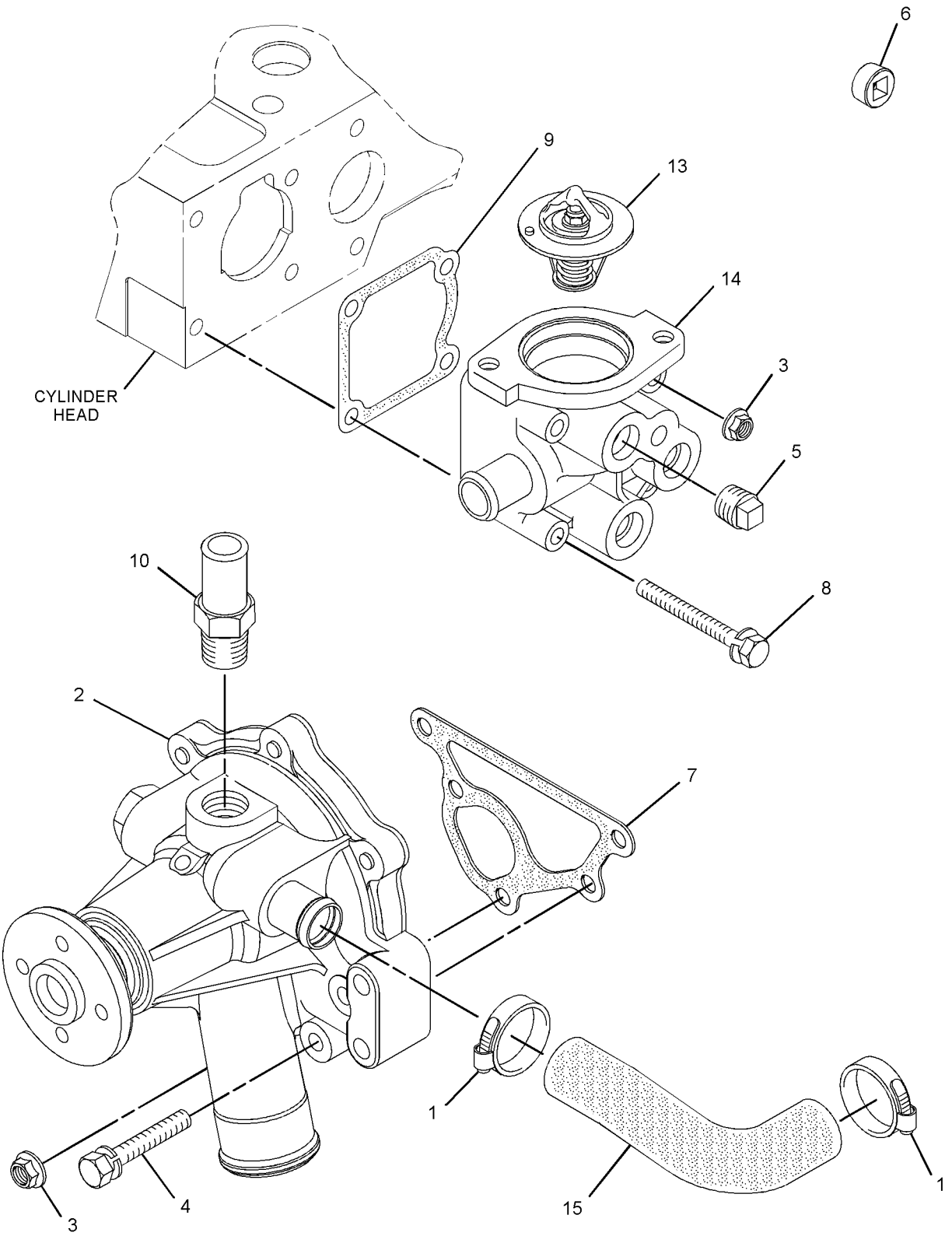

GRAPHIC #1 g03669931

442-7729 **PUMP GP-WATER (**contd.**)** **i06882822**

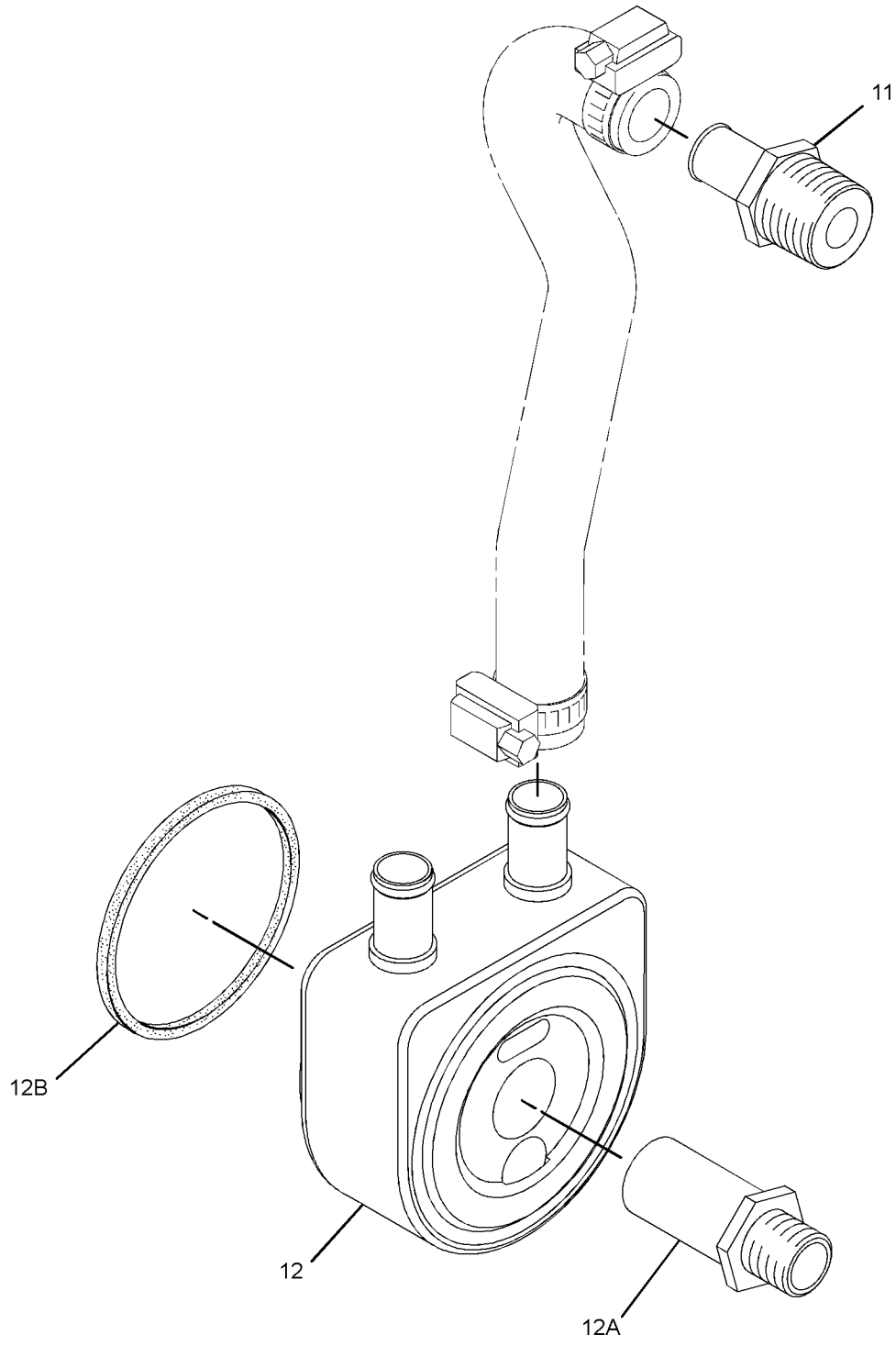

GRAPHIC #2 <END> g03516077

442-7729 PUMP GP-WATER

TYPE 2

SMCS-1361 **i06882924**

NOTE	REF NO	GRAPHIC REF	PART NUMBER	QTY	PART NAME 1 2 3 4 5 6 (PRODUCT LEVEL)	SEE PAGE
	1	1	**032-9020**	2	CLIP	
	2	1	**439-4992**	1	PUMP AS-WATER	
M	3	1	**153-5960**	3	NUT (M6X1-THD)	
	4	1	**153-5961**	4	BOLT AS	
	5	1	**154-1817**	1	PLUG	
C	6	1	**472-2215**	1	PLUG	
	7	1	**423-5611**	1	GASKET	
	8	1	**308-1907**	2	BOLT AS	
	9	1	**425-6407**	1	GASKET	
	10	1	**286-7496**	1	HOSE-WATER	
	11	2	**472-2214**	1	CONNECTOR	
	12	2	**245-1361**	1	COOLER AS-OIL (ENGINE)	
	12A	2	**245-1362**	1	CONNECTOR	
	12B	2	**245-1364**	1	SEAL	
	13	1	**249-5541**	1	REGULATOR-TEMPERATURE (82-DEG C)	
	14	1	**477-8793**	1	HOUSING (THERMOSTAT)	

C - CHANGE FROM PREVIOUS TYPE
M - METRIC PART

442-7729 **PUMP GP-WATER (**contd.**)** **i06882924**

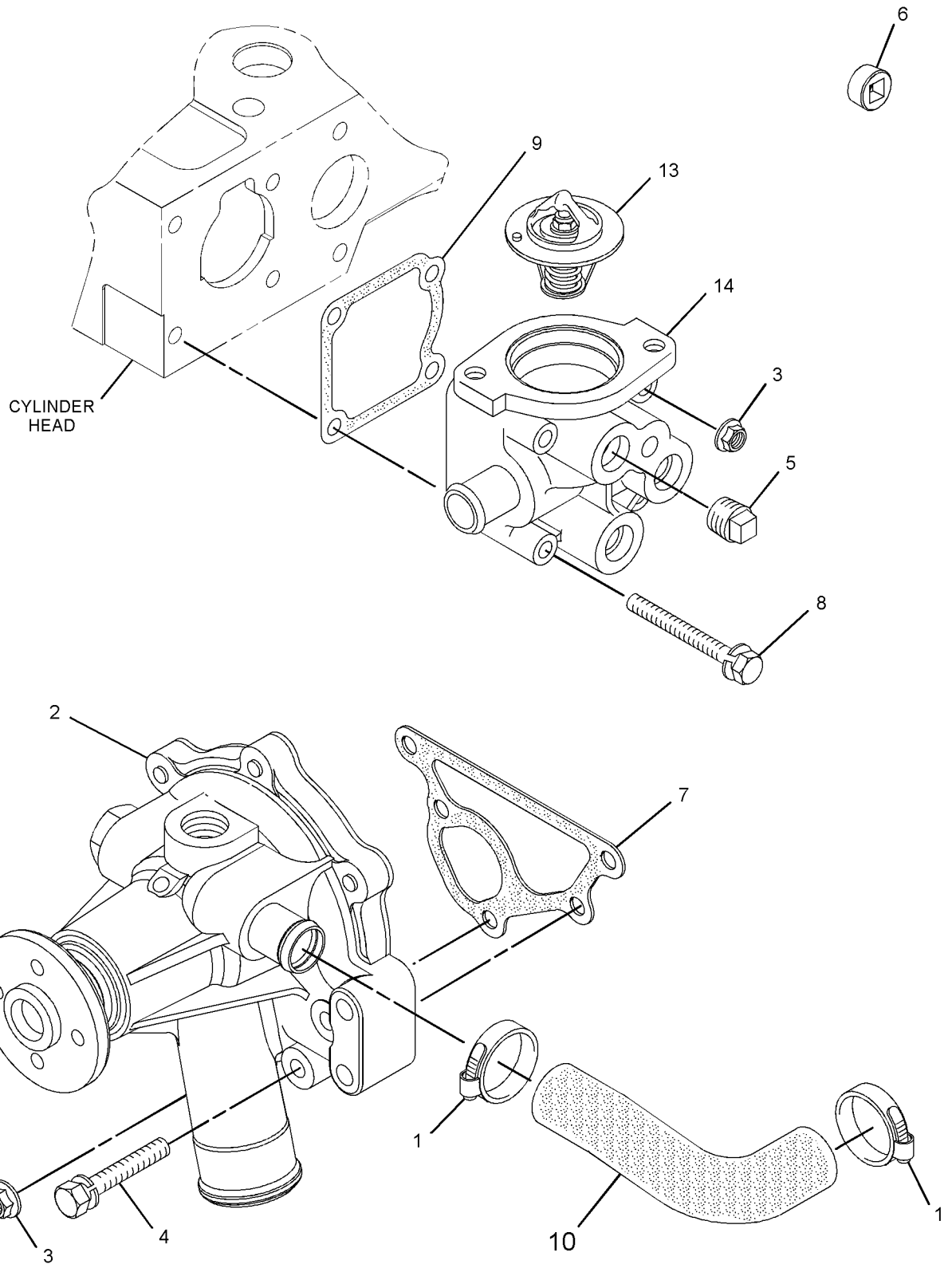

GRAPHIC #1 g06152398

442-7729 **PUMP GP-WATER (**contd.**)** **i06882924**

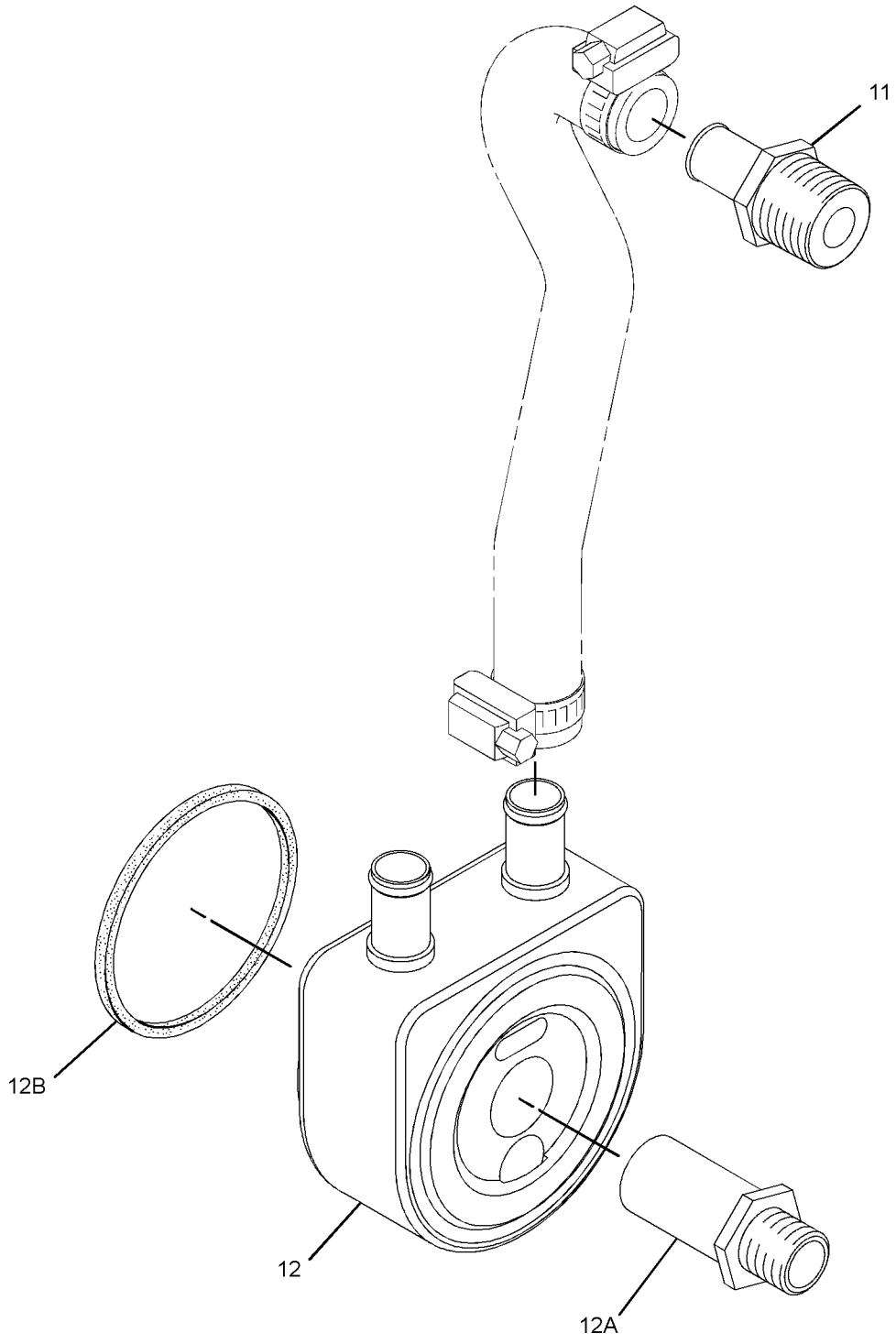

GRAPHIC #2 <END> g03516077

598-5724 PUMP GP-WATER

PART OF 417-7273, 435-1636 ENGINE AR-PRIMARY

SMCS-1361 **i08762692**

NOTE	REF NO	GRAPHIC REF	PART NUMBER	QTY	PART NAME 1 2 3 4 5 6 (PRODUCT LEVEL)	SEE PAGE
M	1	2	**153-5960**	3	NUT (M6X1-THD)	
	2	2	**153-5961**	4	BOLT AS	
	3	1	**155-7984**	1	WASHER (8.4X16X1.6-MM THK)	
M	4	2	**587-3846**	1	STUD (M6X1X43-MM)	
	5	2	**238-9137**	1	CONNECTOR	
	6	1	**238-9145**	1	HOSE	
	7	1	**245-1361**	1	COOLER AS-OIL	
		1	**245-1362**	1	CONNECTOR	
		1	**245-1364**	1	SEAL	
	8	2	**249-5541**	1	REGULATOR-TEMPERATURE (82-DEG C)	
	9	2	**286-7496**	1	HOSE-WATER	
	10	2	**153-5962**	2	BOLT AS	
	11	1	**331-2590**	1	HOSE	
	12	2	**423-5611**	1	GASKET	
	13	1	**425-2286**	1	CLAMP	
	14	2	**425-6407**	1	GASKET	
	15	2	**439-4992**	1	PUMP AS-WATER	
	16	1	**472-2214**	1	CONNECTOR	
	17	1	**160-4826**	4	CLAMP-HOSE	
	18	2	**032-9020**	2	CLIP	
	19	2	**585-0737**	1	HOUSING AS-THERMOSTAT	
M	20	2	**587-3850**	2	STUD (M6X1X63-MM)	

M - METRIC PART

598-5724 **PUMP GP-WATER (**contd.**)** **i08762692**

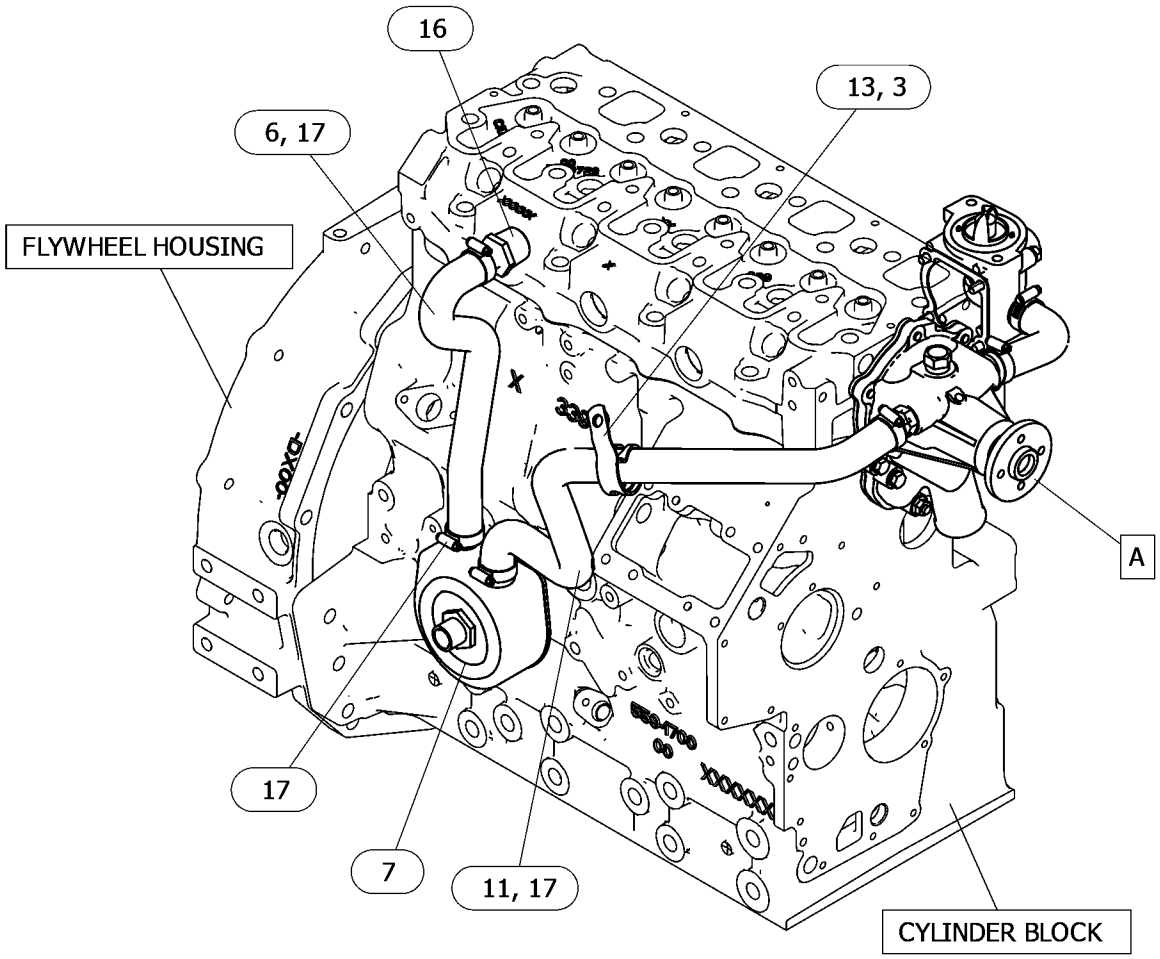

GRAPHIC #1 g06771409

598-5724 **PUMP GP-WATER (**contd.**)** **i08762692**

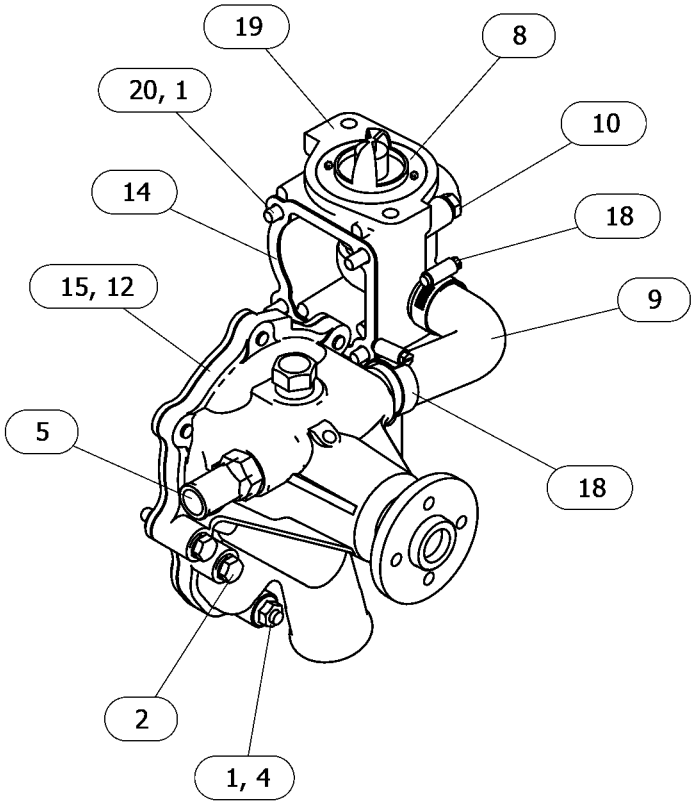

VIEW OF AREA A
(PARTS REMOVED FOR CLARITY)

GRAPHIC #2 <END> g06771409_01

598-5725 PUMP GP-WATER

S/N: C6M10275-UP

SMCS-1361 **i08832905**

NOTE	REF NO	GRAPHIC REF	PART NUMBER	QTY	PART NAME 1 2 3 4 5 6 (PRODUCT LEVEL)	SEE PAGE
M	1	1	**114-4363**	1	BOLT (M8X1.25X12-MM)	
M	2	1	**153-5960**	3	NUT (M6X1-THD)	
	3	1	**153-5961**	4	BOLT AS	
	4	1	**155-7984**	1	WASHER (8.4X16X1.6-MM THK)	
M	5	1	**587-3846**	1	STUD (M6X1X43-MM)	
	6	1	**238-9137**	1	CONNECTOR	
	7	1	**245-1361**	1	COOLER AS-OIL	
		1	**245-1362**	1	CONNECTOR	
		1	**245-1364**	1	SEAL	
	8	1	**246-3470**	1	HOSE	
	9	1	**246-3471**	1	HOSE	
	10	1	**249-5541**	1	REGULATOR-TEMPERATURE (82-DEG C)	
	11	1	**286-7496**	1	HOSE-WATER	
M	12	1	**152-6581**	2	BOLT (M6X1X55-MM)	
	13	1	**423-5611**	1	GASKET	
	14	1	**425-2286**	1	CLAMP	
	15	1	**425-6407**	1	GASKET	
	16	1	**439-4992**	1	PUMP AS-WATER	
	17	1	**472-2214**	1	CONNECTOR	
	18	1	**585-0737**	1	HOUSING AS-THERMOSTAT	
	19	1	**160-4826**	4	CLAMP-HOSE	
	20	1	**032-9020**	2	CLIP	
M	21	1	**587-3850**	2	STUD (M6X1X63-MM)	

M - METRIC PART

598-5725 **PUMP GP-WATER (**contd.**)** **i08832905**

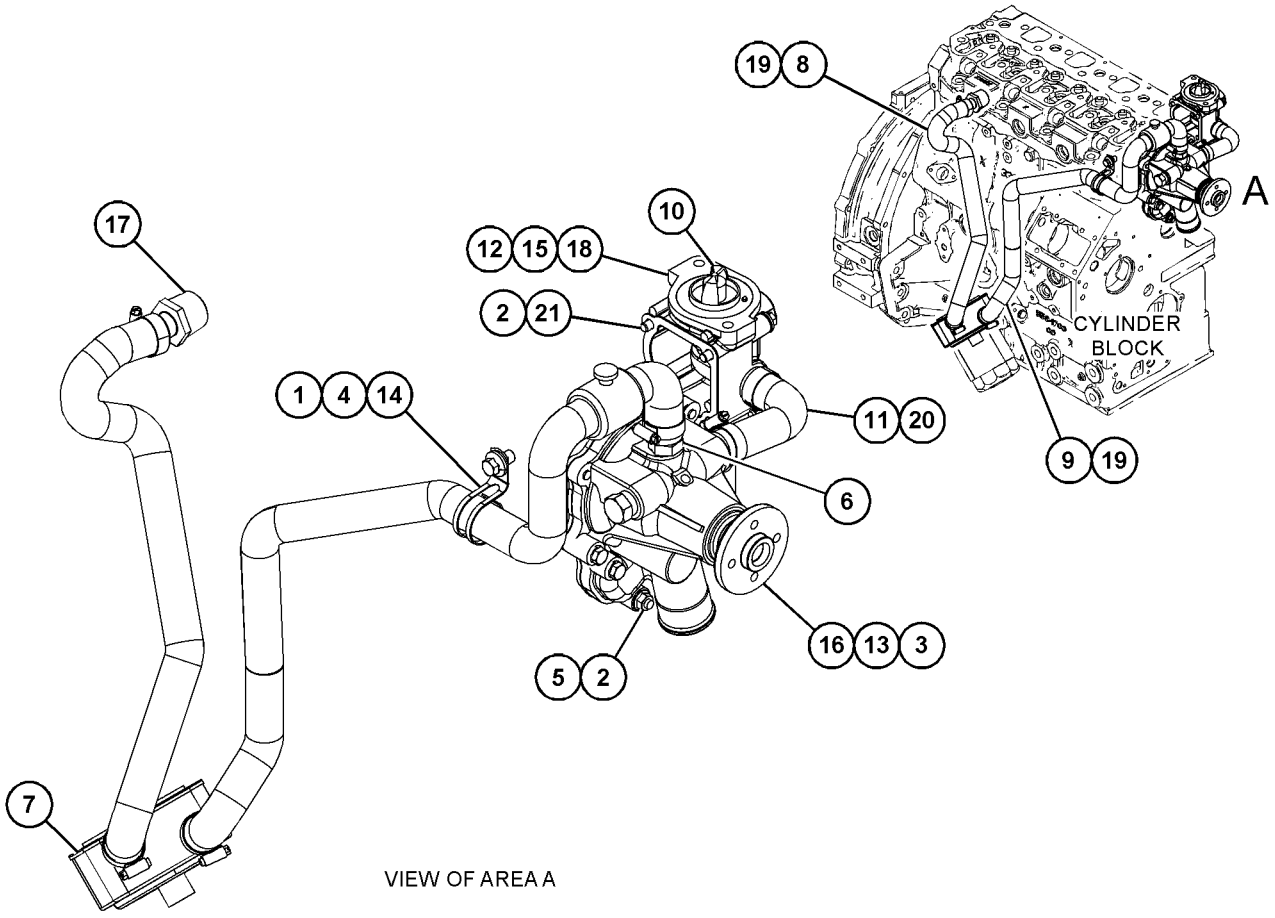

GRAPHIC #1 <END> g07547990

598-5725 PUMP GP-WATER

PART OF 514-6556 ENGINE AR-PRIMARY

SMCS-1361 **i08776827**

NOTE	REF NO	GRAPHIC REF	PART NUMBER	QTY	PART NAME 1 2 3 4 5 6 (PRODUCT LEVEL)	SEE PAGE
M	1	1	**114-4363**	1	BOLT (M8X1.25X12-MM)	
M	2	1	**153-5960**	3	NUT (M6X1-THD)	
	3	1	**153-5961**	4	BOLT AS	
	4	1	**155-7984**	1	WASHER (8.4X16X1.6-MM THK)	
M	5	1	**587-3846**	1	STUD (M6X1X43-MM)	
	6	1	**238-9137**	1	CONNECTOR	
	7	1	**245-1361**	1	COOLER AS-OIL	
		1	**245-1362**	1	CONNECTOR	
		1	**245-1364**	1	SEAL	
	8	1	**246-3470**	1	HOSE	
	9	1	**246-3471**	1	HOSE	
	10	1	**249-5541**	1	REGULATOR-TEMPERATURE (82-DEG C)	
	11	1	**286-7496**	1	HOSE-WATER	
C	12	1	**153-5962**	2	BOLT AS	
	13	1	**423-5611**	1	GASKET	
	14	1	**425-2286**	1	CLAMP	
	15	1	**425-6407**	1	GASKET	
	16	1	**439-4992**	1	PUMP AS-WATER	
	17	1	**472-2214**	1	CONNECTOR	
	18	1	**585-0737**	1	HOUSING AS-THERMOSTAT	
	19	1	**160-4826**	4	CLAMP-HOSE	
	20	1	**032-9020**	2	CLIP	
M	21	1	**587-3850**	2	STUD (M6X1X63-MM)	

C - CHANGE FROM PREVIOUS TYPE
M - METRIC PART

598-5725 **PUMP GP-WATER (**contd.**)** **i08776827**

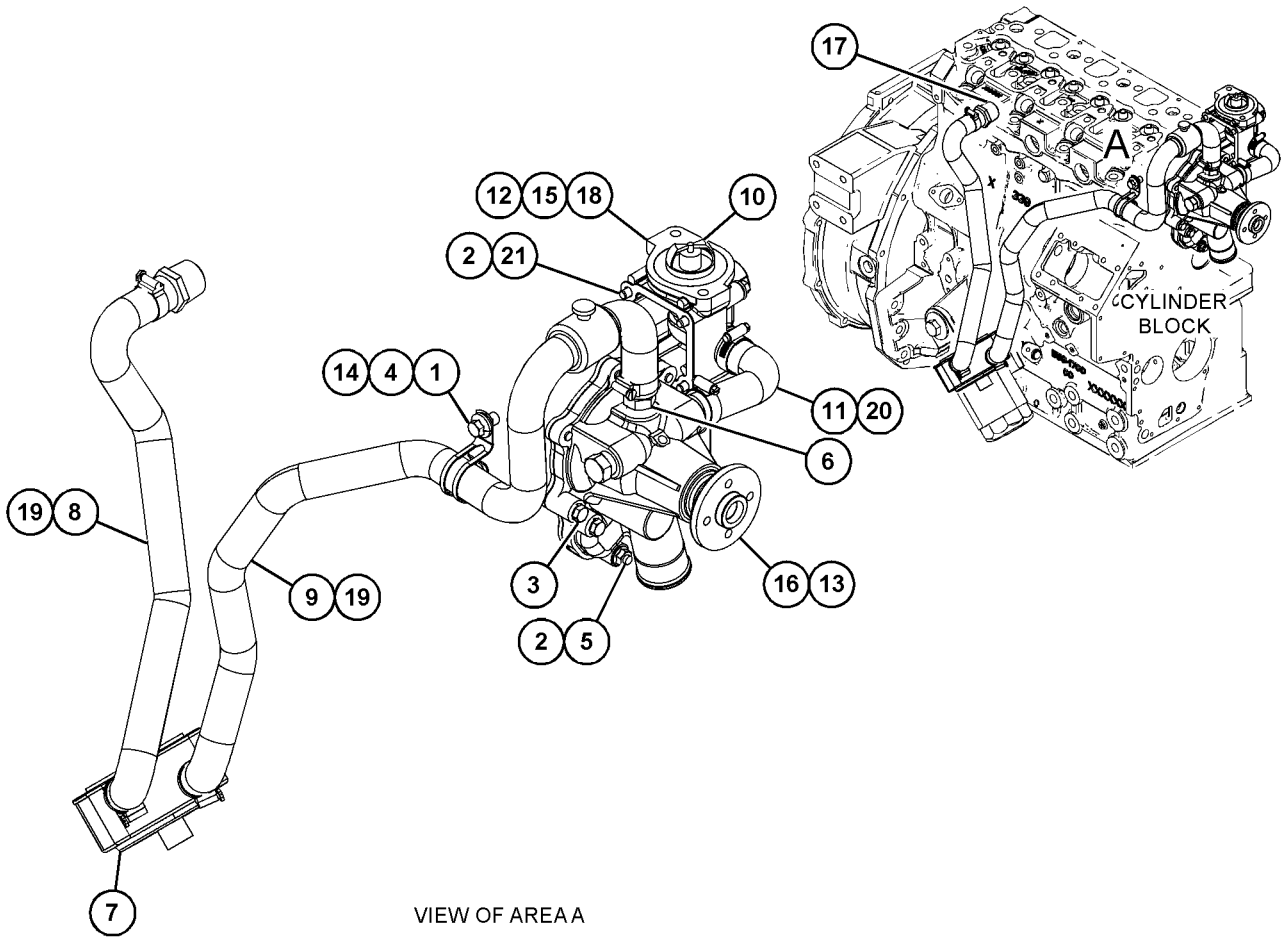

VIEW OF AREA A

GRAPHIC #1 <END> g07612620

598-5726 PUMP GP-WATER

S/N: C6M10291-UP

PART OF 433-1379 ENGINE AR, 435-1641, 435-1642, 435-1647 ENGINE AR-PRIMARY

ALSO AN ATTACHMENT

SMCS-1361 **i08760795**

NOTE	REF NO	GRAPHIC REF	PART NUMBER	QTY	PART NAME 1 2 3 4 5 6 (PRODUCT LEVEL)	SEE PAGE
M	1	1	**153-5960**	3	NUT (M6X1-THD)	
	2	1	**153-5961**	4	BOLT AS	
M	3	1	**587-3846**	1	STUD (M6X1X43-MM)	
	4	1	**249-5541**	1	REGULATOR-TEMPERATURE (82-DEG C)	
	5	1	**286-7496**	1	HOSE-WATER	
M	6	1	**587-3850**	2	STUD (M6X1X63-MM)	
	7	1	**153-5962**	2	BOLT AS	
	8	1	**423-5611**	1	GASKET	
	9	1	**425-6407**	1	GASKET	
	10	1	**439-4992**	1	PUMP AS-WATER	
	11	1	**472-2215**	1	PLUG	
	12	1	**585-0737**	1	HOUSING AS-THERMOSTAT	
	13	1	**032-9020**	2	CLIP	

M - METRIC PART

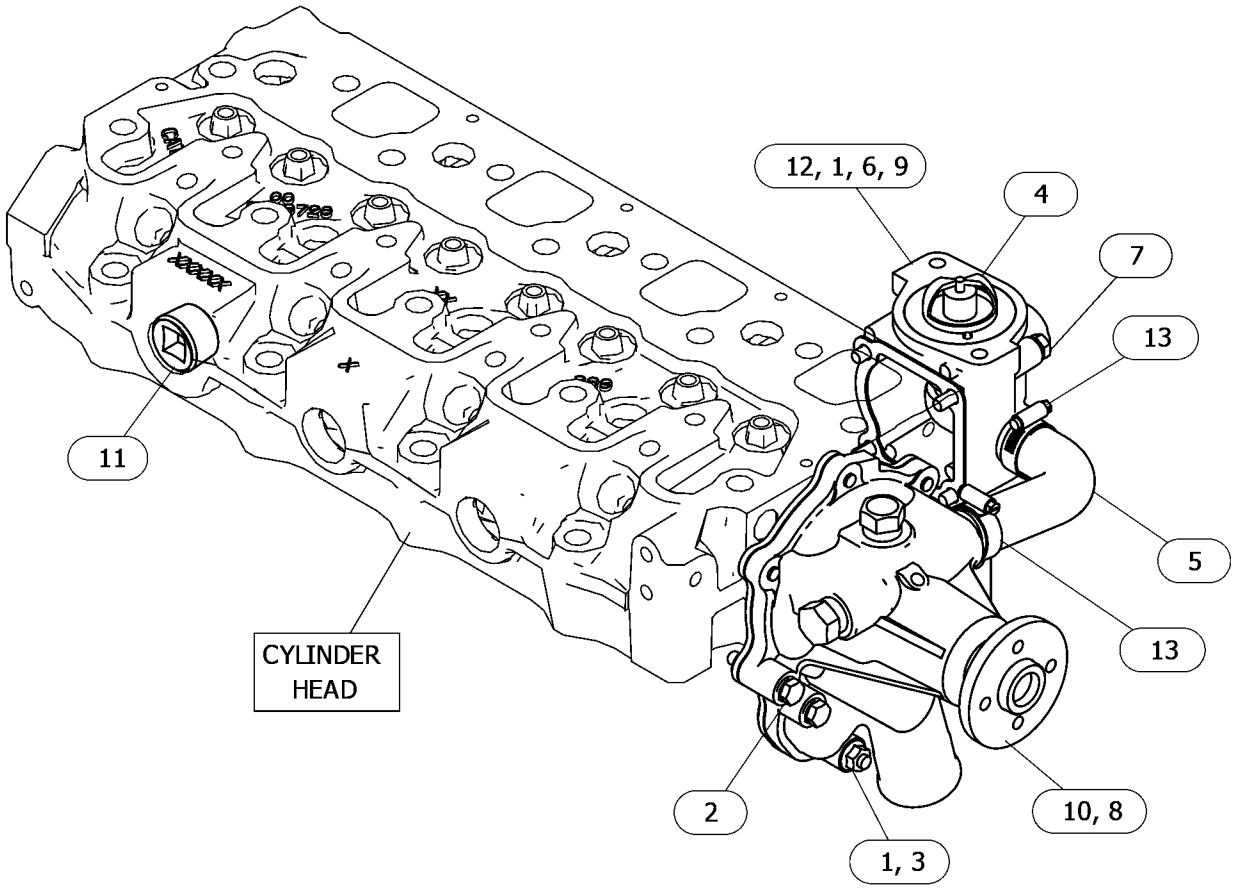

GRAPHIC #1 <END> g06770373

331-2552 RADIATOR & FAN GP

PART OF 417-7273 ENGINE AR-PRIMARY

SMCS-1353, 1356 **i07489931**

NOTE	REF NO	GRAPHIC REF	PART NUMBER	QTY	PART NAME 1 2 3 4 5 6 (PRODUCT LEVEL)	SEE PAGE
M	1	1,2	**6I-0217**	6	BOLT (M8X1.25X20-MM)	
M	2	1,2	**6I-0917**	6	BOLT (M6X1X25-MM)	
M	3	2	**124-3815**	2	BOLT (M8X1.25X16-MM)	
M	4	2	**153-5592**	2	NUT (M8X1.25-THD)	
M	5	2	**114-4363**	10	BOLT (M8X1.25X12-MM)	
M	6	1	**198-2664**	15	BOLT-HEAD (M14X1.5X25-MM)	
	7	2	**344-5868**	1	MOUNT	
	8	2	**423-5640**	1	FAN (6-BLADE) (7-BLADE)	
	9	1	**238-0265**	1	HOSE-RADIATOR (LOWER)	
	10	1	**238-0266**	1	HOSE-RADIATOR (UPPER)	
	11	1	**238-0271**	1	RADIATOR AS	
	11A	1	**202-6616**	1	CAP-RADIATOR	
	11B	1	**295-5876**	1	SHROUD	
	12	1	**438-8534**	1	BRACKET AS	
M	13	1	**123-2899**	2	BOLT (M10X1.5X40-MM)	
	15	2	**328-6607**	1	GUARD	
	16	1	**363-5813**	4	CLAMP-HOSE	
	17	2	**366-2656**	1	GUARD AS-FAN	
M	17A	2	**6I-0254**	2	BOLT (M8X1.25X30-MM)	
M	17B	2	**362-8050**	2	NUT (M8X1.25-THD)	
	18	2	**366-2658**	1	GUARD-ALTERNATOR	
	19	2	**487-9902**	1	BRACKET (TOP)	
	20	2	**334-7437**	1	BRACKET	
	21	1	**325-5944**	1	BRACKET (LH)	
	22	1	**430-5926**	1	BRACKET-MOUNTING (RH)	
	23	1	**325-5948**	2	BRACKET (REAR RH)	
	24	2	**469-4427**	1	GUARD AS	
	25	2	**244-3259**	2	CLIP	
	26	2	**161-8260**	1	PLATE	

M - METRIC PART

331-2552 **RADIATOR & FAN GP (**contd.**)** **i07489931**

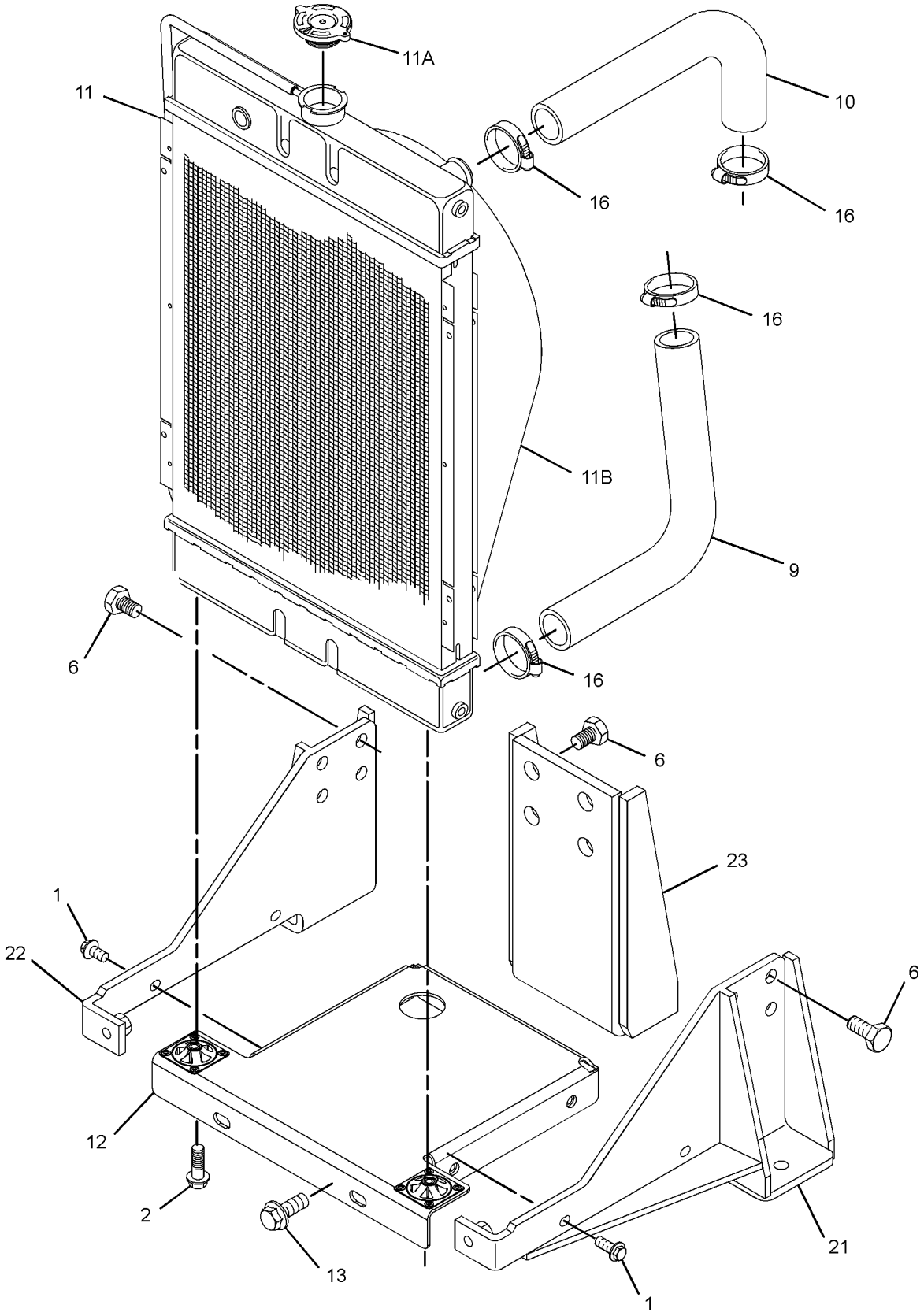

GRAPHIC #1 g06313557

331-2552 **RADIATOR & FAN GP (**contd.**)** **i07489931**

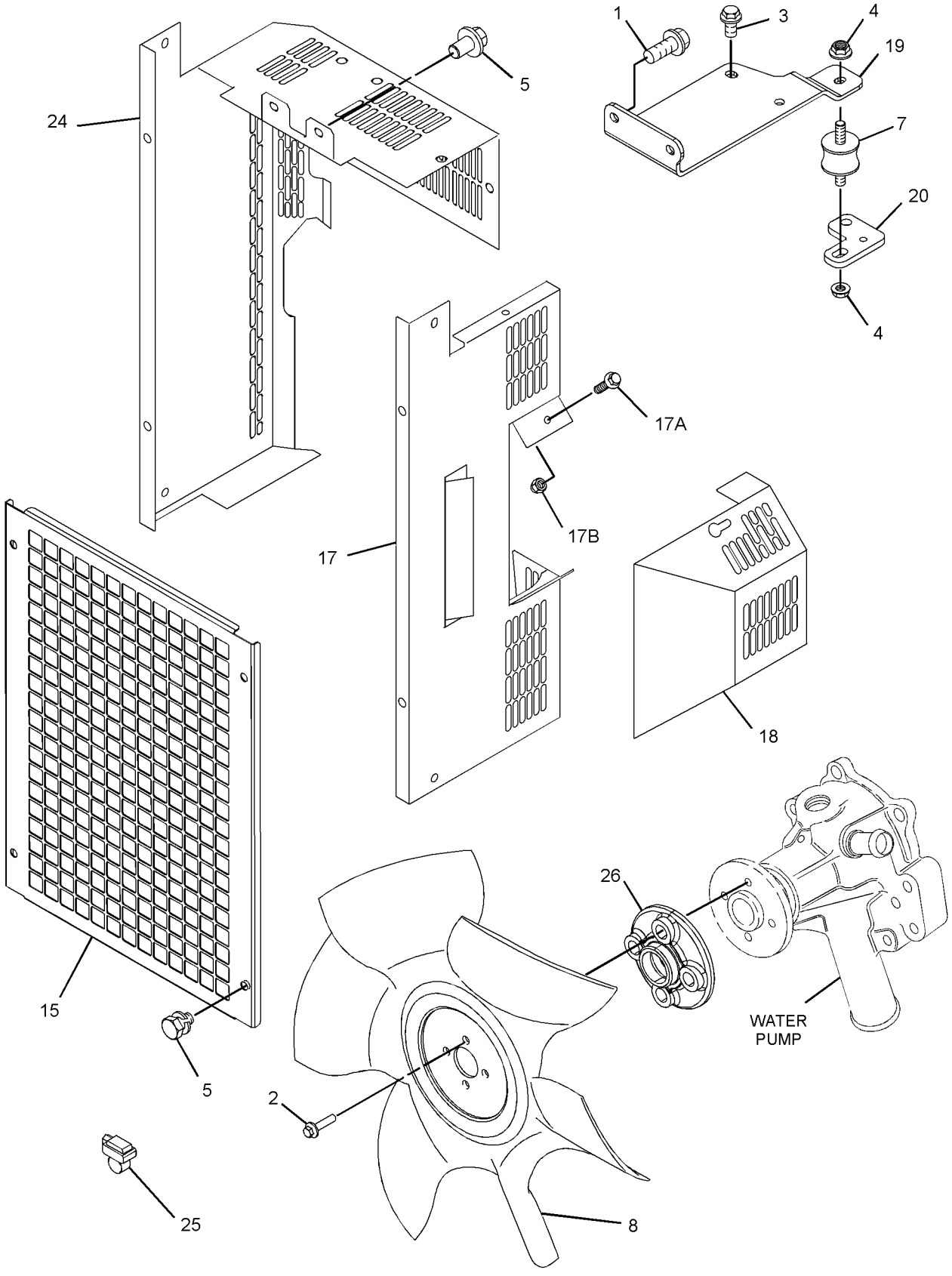

GRAPHIC #2 <END> g06313558

341-6658 RADIATOR & FAN GP

TYPE 1

SMCS-1353, 1356 **i05426290**

NOTE	REF NO	GRAPHIC REF	PART NUMBER	QTY	PART NAME 1 2 3 4 5 6 (PRODUCT LEVEL)	SEE PAGE
M	1	1,2	**6I-0217**	6	BOLT (M8X1.25X20-MM)	
	2	1	**363-5813**	2	CLAMP-HOSE	
M	3	2	**101-7178**	2	BOLT (M10X1.5X55-MM)	
M	4	2	**101-7541**	4	SCREW-FLAT HEAD (M8X1.25X25-MM)	
M	5	3	**124-3815**	10	BOLT (M8X1.25X16-MM)	
M	6	1	**153-5592**	2	NUT (M8X1.25-THD)	
	7	2	**153-5961**	4	BOLT AS	
M	8	3	**180-6118**	10	BOLT AS (M8X1.25X12-MM)	
M	9	2	**198-2664**	15	BOLT-HEAD (M14X1.5X25-MM)	
	10	1	**244-3259**	2	CLIP	
	11	2	**255-1297**	1	PLATE	
	12	2	**326-8559**	2	MOUNT-VIBRATION	
	13	2	**325-5944**	1	BRACKET	
	14	2	**325-5946**	1	BRACKET	
	15	2	**325-5948**	2	BRACKET	
	16	1	**326-8551**	1	RADIATOR GP	
	16A	1	**326-8552**	1	CAP-RADIATOR	
	16B	1	**326-8553**	1	PLUG-DRAIN	
	16C	1	**326-8554**	1	WASHER	
	17	1	**326-8555**	1	HOSE-RADIATOR (UPPER)	
	18	1	**326-8556**	1	HOSE-RADIATOR (LOWER)	
	19	1	**326-8557**	2	CLIP-HOSE	
	20	3	**326-8561**	1	GUARD-RADIATOR (LH)	
	21	3	**326-8562**	1	GUARD-RADIATOR (RH)	
	22	1	**326-8564**	1	ARM (RADIATOR)	
	23	1	**334-7437**	1	BRACKET	
	24	3	**341-6649**	1	GUARD	
	25	2	**341-6653**	1	FAN	
	26	2	**363-7274**	1	BRACKET	
	27	3	**342-4422**	1	GUARD-ALTERNATOR	
	28	2	**364-8947**	1	PLUG	

M - METRIC PART

341-6658 **RADIATOR & FAN GP (**contd.**)** **i05426290**

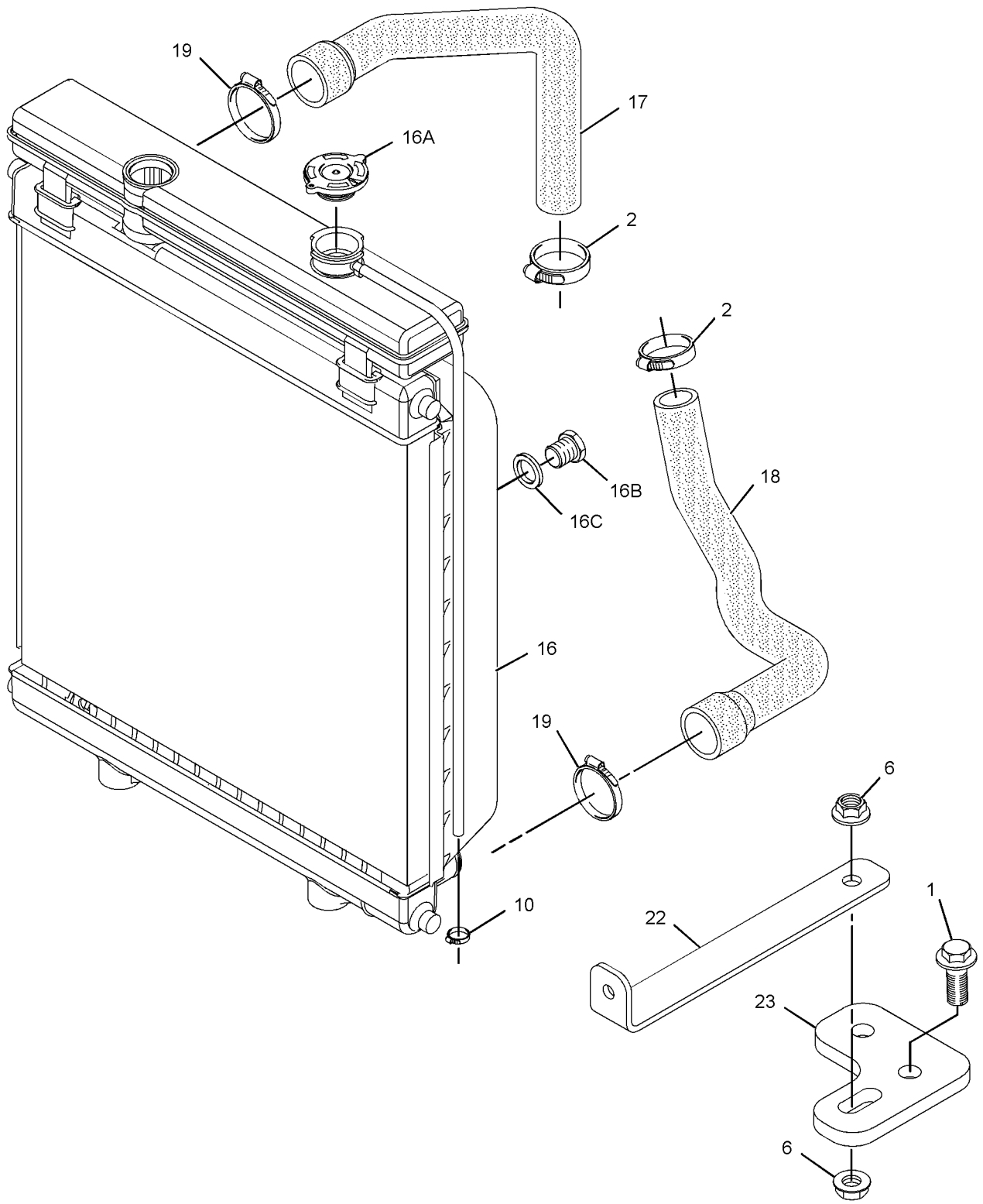

GRAPHIC #1 g03282857

341-6658 **RADIATOR & FAN GP (**contd.**)** **i05426290**

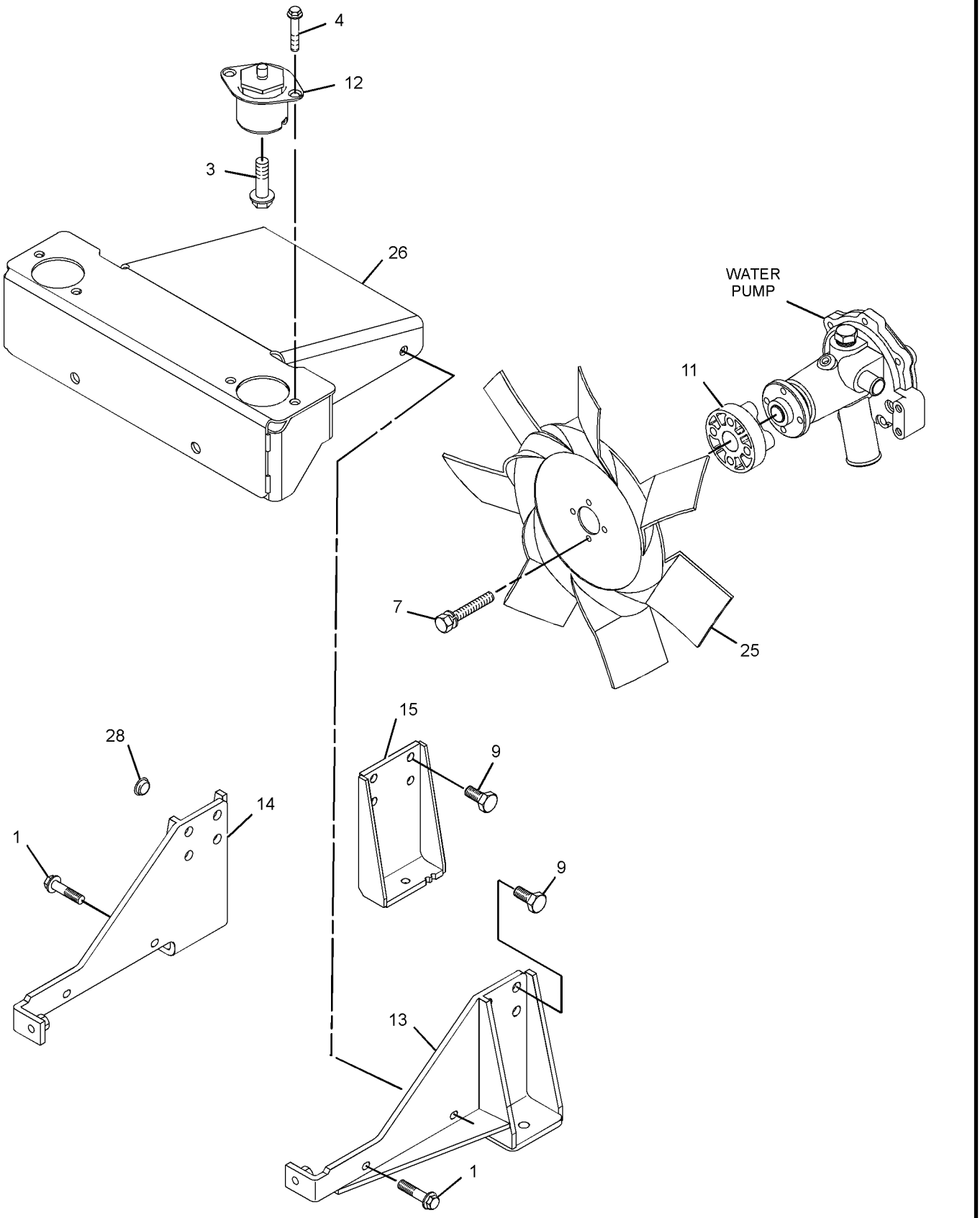

GRAPHIC #2 g03425678

341-6658 **RADIATOR & FAN GP (**contd.**)** **i05426290**

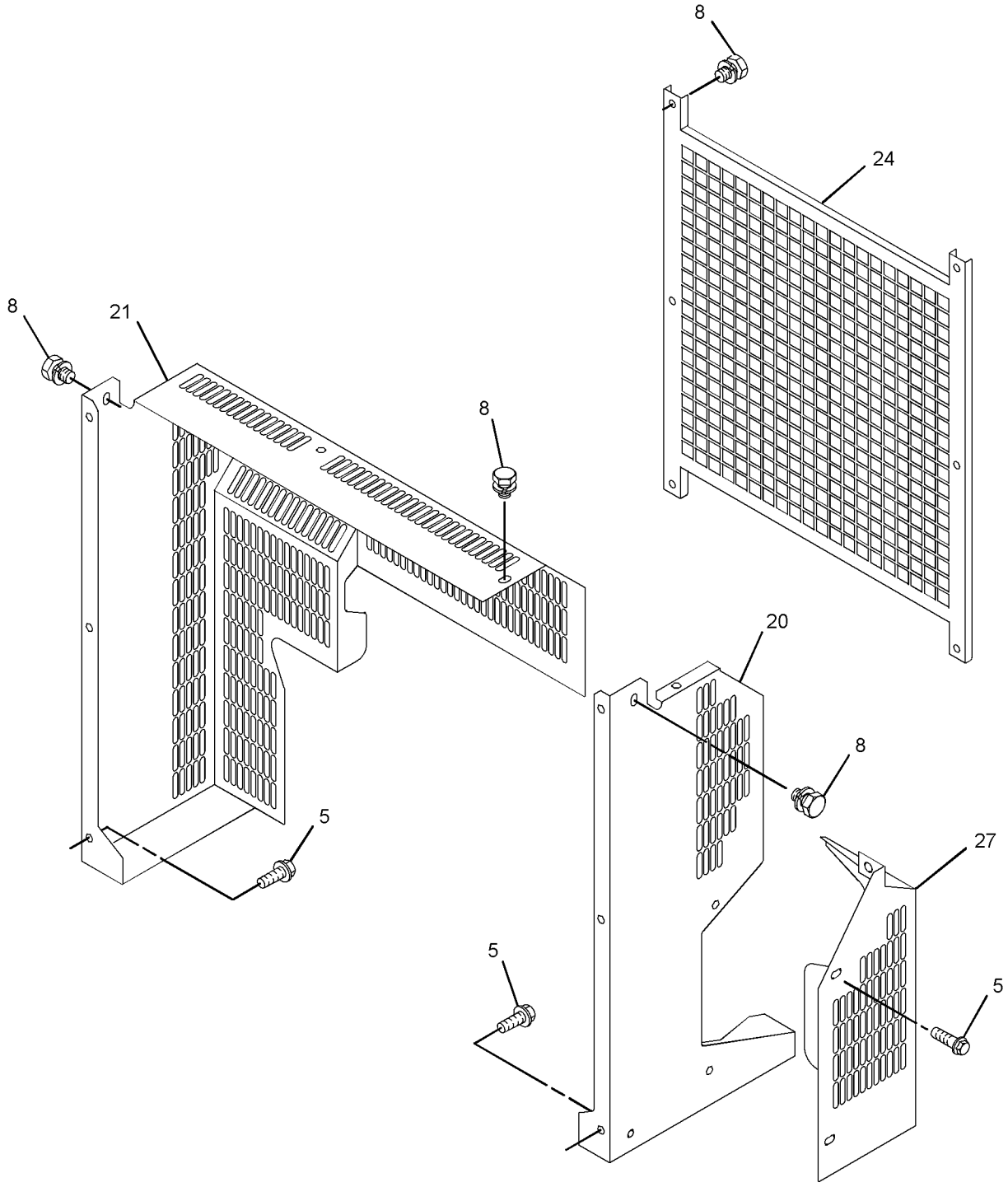

GRAPHIC #3 <END> g03282459

341-6658 RADIATOR & FAN GP

PART OF 506-0518, 506-0519, 518-0165, 557-6086 ENGINE AR-PRIMARY
TYPE 2

SMCS-1353, 1356 **i07867143**

NOTE	REF NO	GRAPHIC REF	PART NUMBER	QTY	PART NAME 1 2 3 4 5 6 (PRODUCT LEVEL)	SEE PAGE
M	1	1,2	**6I-0217**	6	BOLT (M8X1.25X20-MM)	
	2	1	**363-5813**	2	CLAMP-HOSE	
M	3	2	**101-7178**	2	BOLT (M10X1.5X55-MM)	
M	4	2	**101-7541**	4	SCREW-FLAT HEAD (M8X1.25X25-MM)	
M	5	3	**124-3815**	5	BOLT (M8X1.25X16-MM)	
M	6	1	**153-5592**	2	NUT (M8X1.25-THD)	
M	7	2	**273-9253**	4	BOLT (M6X1X35-MM)	
M	8	3	**114-4363**	10	BOLT (M8X1.25X12-MM)	
M	9	2	**198-2664**	15	BOLT-HEAD (M14X1.5X25-MM)	
	10	1	**244-3259**	2	CLIP	
	11	2	**255-1297**	1	PLATE	
	12	2	**326-8559**	2	MOUNT-VIBRATION	
	13	2	**325-5944**	1	BRACKET	
C	14	2	**430-5926**	1	BRACKET-MOUNTING	
	15	2	**325-5948**	2	BRACKET	
Y	16	1	**326-8551**	1	RADIATOR GP	564
	17	1	**326-8555**	1	HOSE-RADIATOR (UPPER)	
	18	1	**326-8556**	1	HOSE-RADIATOR (LOWER)	
	19	1	**103-1067**	2	CLAMP-HOSE	
	20	3	**510-1244**	1	GUARD GP-FAN (LH)	
M		3	**6I-0254**	4	BOLT (M8X1.25X30-MM)	
M		3	**362-8050**	4	NUT (M8X1.25-THD)	
		3	**431-7089**	1	GUARD AS-FAN	
	21	3	**326-8562**	1	GUARD-RADIATOR (RH)	
	22	1	**326-8564**	1	ARM (RADIATOR)	
	23	1	**334-7437**	1	BRACKET	
	24	3	**341-6649**	1	GUARD	
	25	2	**447-7691**	1	FAN AS (6-BLADE)	
	26	2	**527-9209**	1	PLATE AS-BASE	
	27	3	**426-5345**	1	GUARD (ALTERNATOR)	
	28	3	**505-8353**	1	BOLT-FLANGE HEAD	

C - CHANGE FROM PREVIOUS TYPE
M - METRIC PART
Y - SEPARATE ILLUSTRATION

341-6658 **RADIATOR & FAN GP** (contd.) **i07867143**

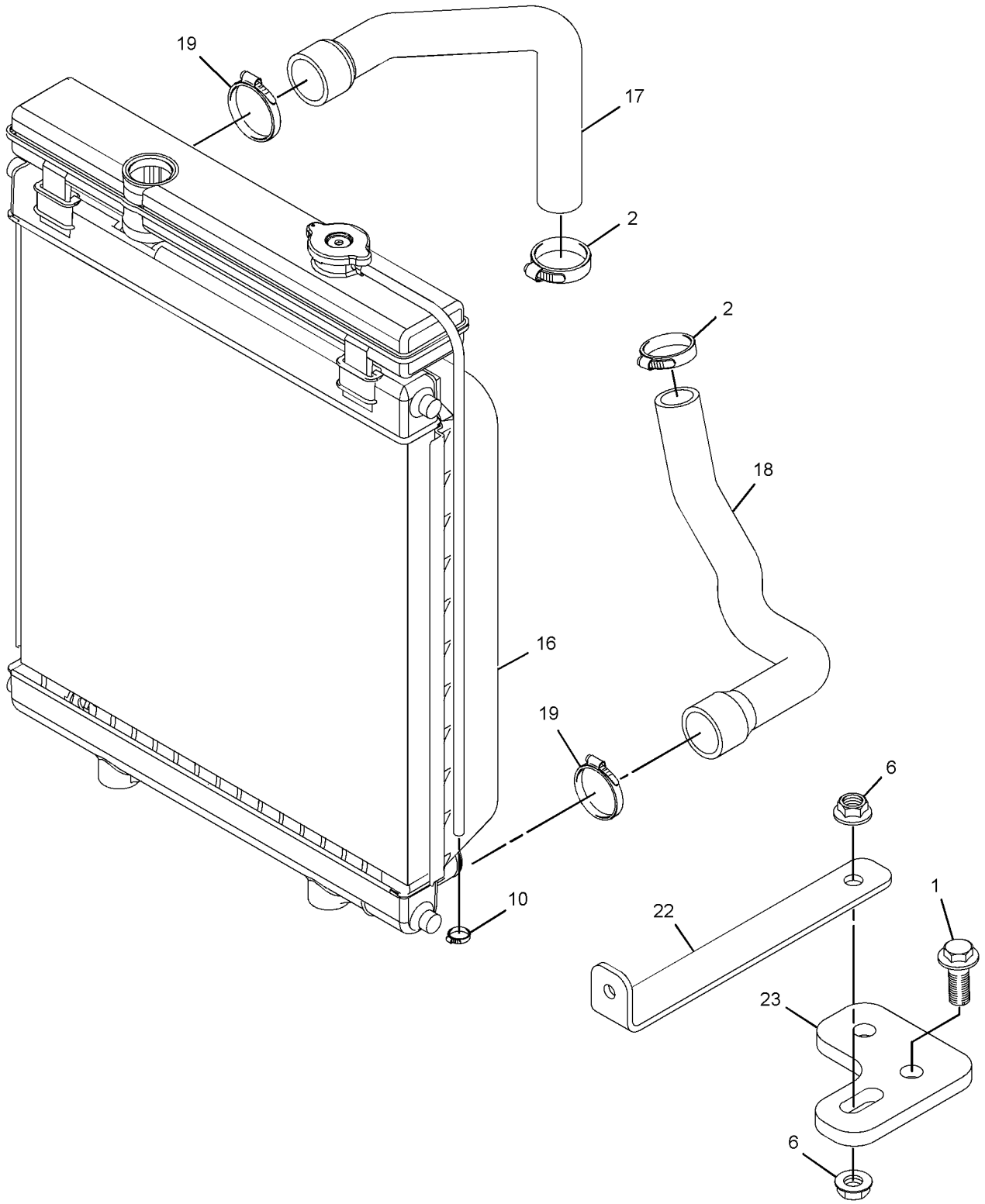

GRAPHIC #1 g06385814

341-6658 **RADIATOR & FAN GP (**contd.**)** **i07867143**

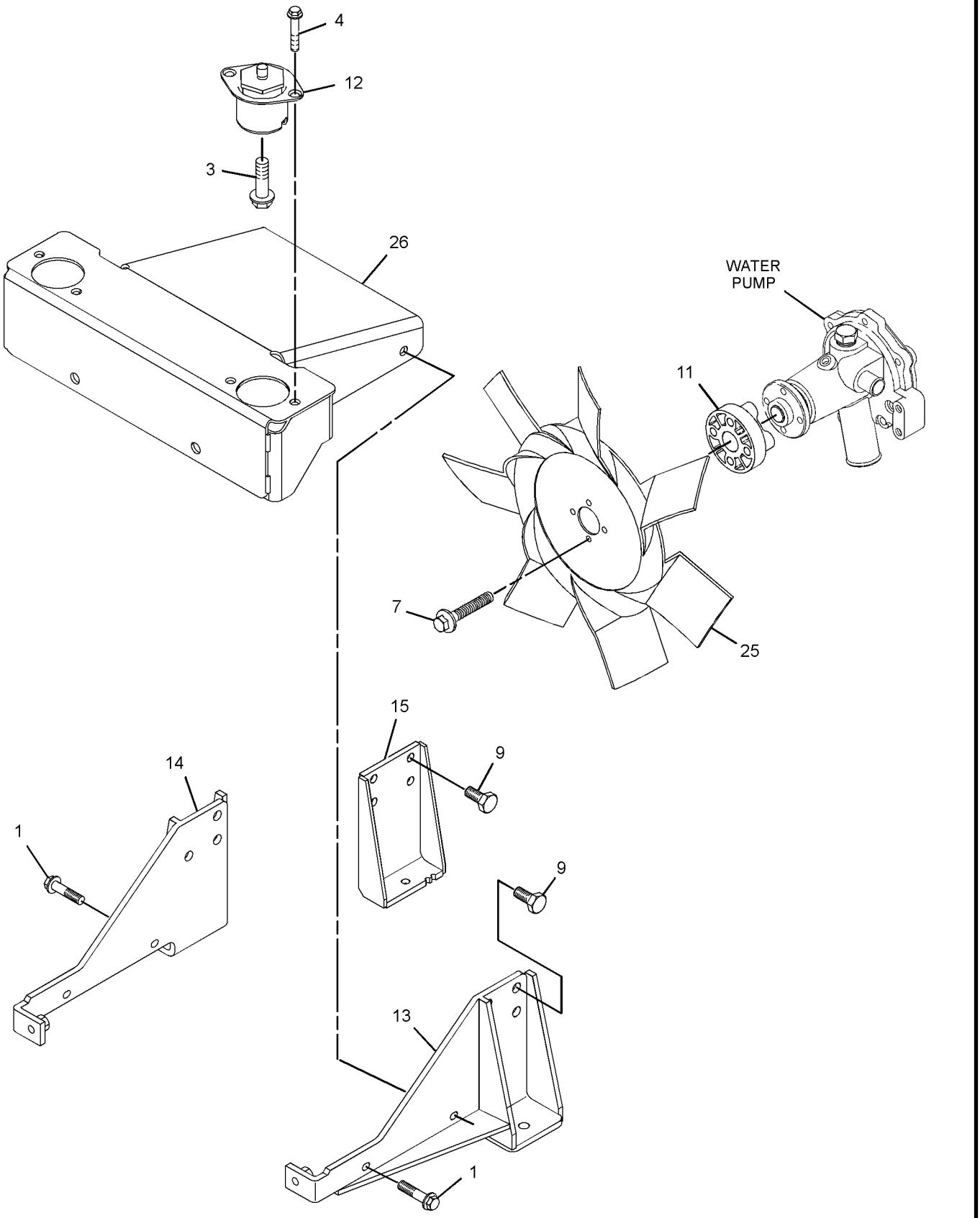

GRAPHIC #2 g06206037

341-6658 **RADIATOR & FAN GP (**contd.**)** **i07867143**

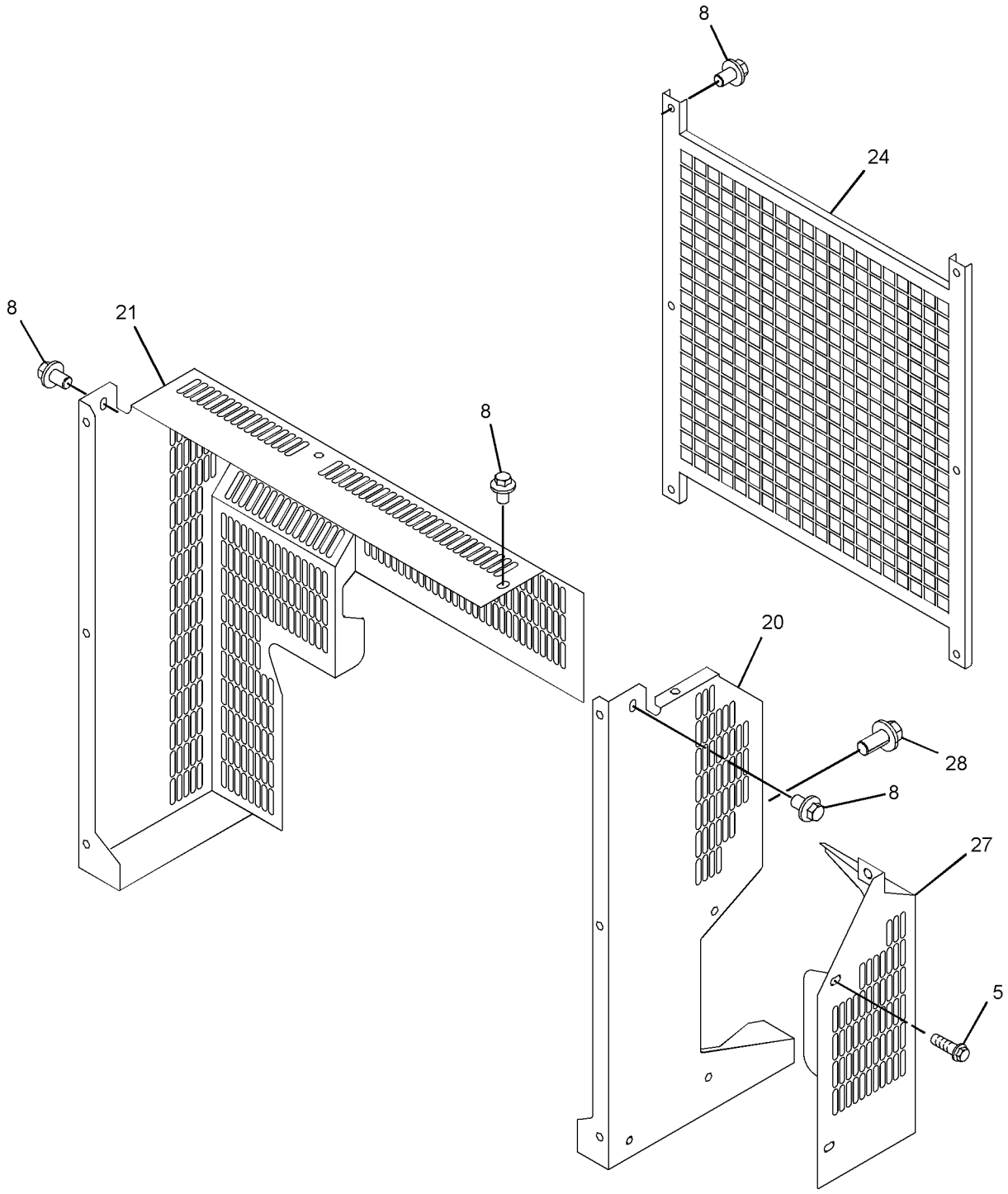

GRAPHIC #3 <END> g06385431

344-5881 RADIATOR & FAN GP

TYPE 1

SMCS-1353, 1356 **i07700446**

NOTE	REF NO	GRAPHIC REF	PART NUMBER	QTY	PART NAME 1 2 3 4 5 6 (PRODUCT LEVEL)	SEE PAGE
M	1	2	**6I-0254**	2	BOLT (M8X1.25X30-MM)	
M	2	2	**6I-0846**	1	BOLT (M6X1X14-MM)	
	3	1	**7W-2601**	2	SPACER (10.3X19X3.2-MM THK)	
	4	1	**9M-7959**	5	CLAMP-HOSE	
	5	1	**363-5813**	3	CLAMP-HOSE	
M	6	1	**101-7178**	2	BOLT (M10X1.5X55-MM)	
	7	1	**101-7540**	2	WASHER (11.9X38.2X1.6-MM THK)	
M	8	1	**101-7541**	4	SCREW-FLAT HEAD (M8X1.25X25-MM)	
M	9	2	**124-3815**	6	BOLT (M8X1.25X16-MM)	
M	10	2	**153-5592**	3	NUT (M8X1.25-THD)	
M	11	2	**153-5960**	1	NUT (M6X1-THD)	
	12	2	**153-5961**	4	BOLT AS	
	13	1	**357-9895**	1	BRACKET-MOUNTING	
M	14	1,2	**198-2664**	14	BOLT-HEAD (M14X1.5X25-MM)	
M	15	1	**6I-0654**	6	BOLT (M10X1.5X25-MM)	
	16	1	**244-3259**	2	CLIP	
	17	2	**255-1297**	1	PLATE	
	19	2	**325-5948**	2	BRACKET	
	20	2	**334-7437**	1	BRACKET	
	21	2	**341-6653**	1	FAN	
	22	1	**342-4356**	1	RADIATOR AS	
		1	**422-6385**	1	PLUG	
		1	**422-6388**	1	WASHER	
	23	1	**342-4357**	1	HOSE-RADIATOR (LOWER)	
	24	1	**342-4358**	1	HOSE-RADIATOR (UPPER)	
	25	1	**342-4362**	1	TUBE AS	
	25A	1	**236-7734**	1	HOSE	
	25B	1	**236-7735**	1	HOSE	
	25C	1	**342-4359**	1	PLUG	
	25D	1	**342-4360**	2	CLIP-HOSE	
	26	2	**476-5579**	1	BRACKET	
	27	2	**342-4364**	1	CLIP	
	28	1	**342-4367**	1	TUBE AS	
	28A	1	**363-5813**	2	CLAMP-HOSE	
	28B	1	**342-4359**	1	PLUG	
	28C	1	**342-4365**	1	HOSE	
	28D	1	**342-4366**	1	HOSE	
	29	2	**342-4368**	1	GUARD-FAN	
	30	2	**469-4426**	1	GUARD AS-FAN	
	31	2	**342-4370**	1	BRACKET	
	32	1	**366-0164**	2	MOUNTING	
	33	1	**357-9897**	1	PLATE	
	34	1	**357-9896**	1	BRACKET-MOUNTING	
	35	2	**292-1992**	2	SPACER	
	36	2	**344-5868**	1	MOUNT	
	37	2	**344-5880**	1	GUARD-RADIATOR	
	38	1	**364-8947**	1	PLUG	
M	39	2	**114-4363**	14	BOLT (M8X1.25X12-MM)	

M - METRIC PART

344-5881 **RADIATOR & FAN GP** (contd.) **i07700446**

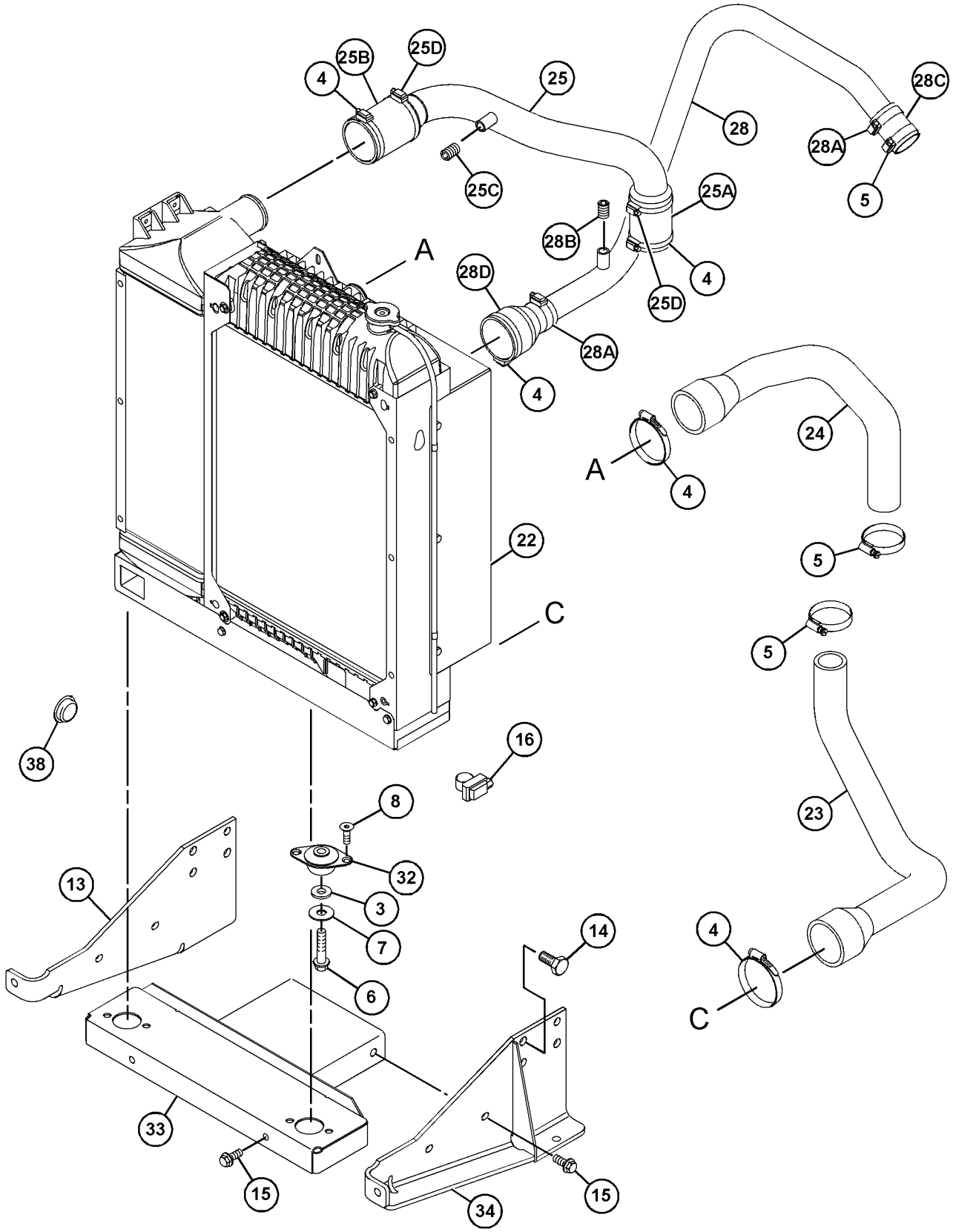

GRAPHIC #1 g06403074

344-5881 **RADIATOR & FAN GP (**contd.**)** **i07700446**

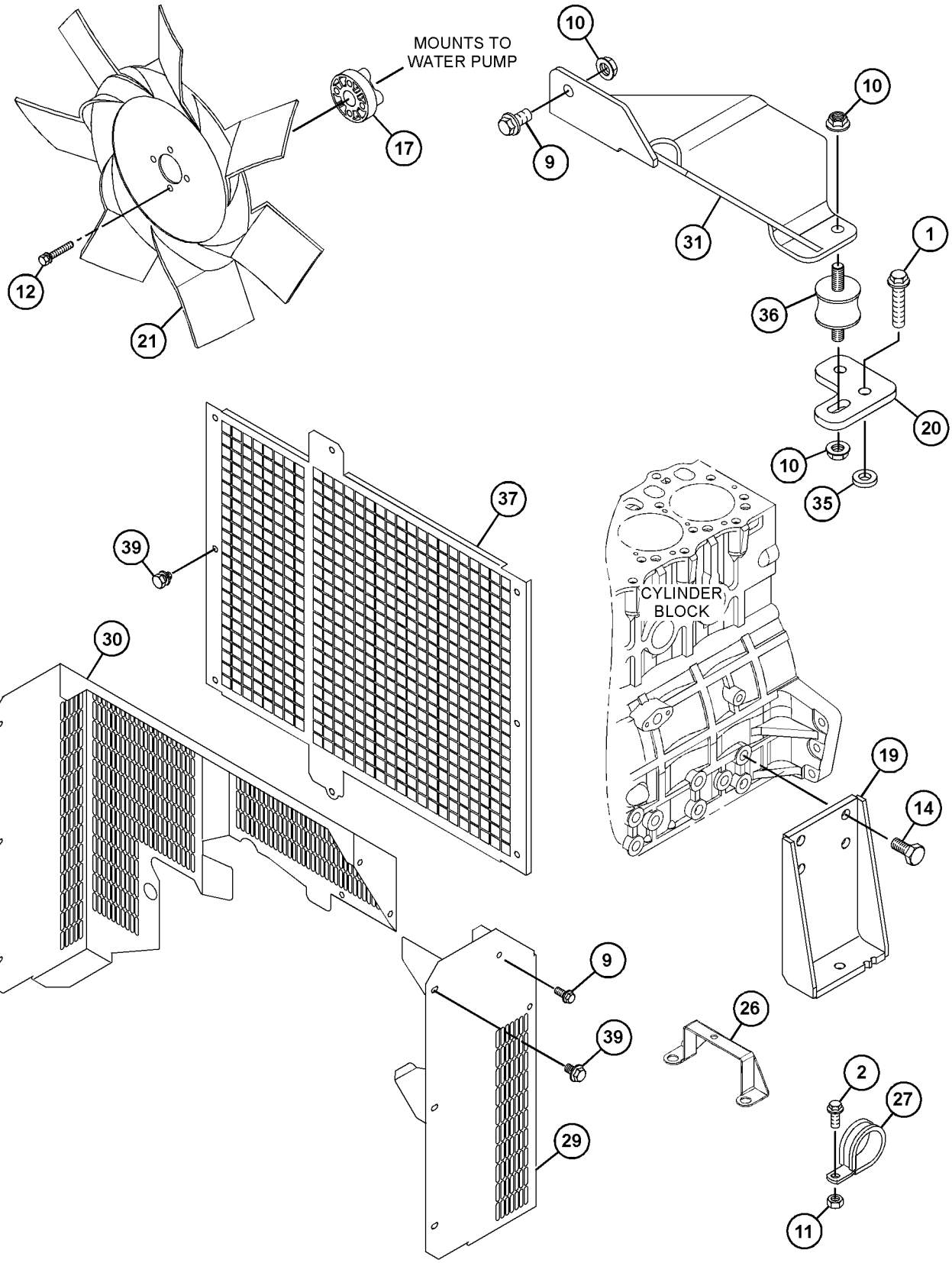

GRAPHIC #2 <END> g06403075

344-5881 RADIATOR & FAN GP

TYPE 2

SMCS-1353, 1356 **i09872593**

NOTE	REF NO	GRAPHIC REF	PART NUMBER	QTY	PART NAME 1 2 3 4 5 6 (PRODUCT LEVEL)	SEE PAGE
M	1	2	**6I-0254**	2	BOLT (M8X1.25X30-MM)	
M	2	2	**6I-0846**	1	BOLT (M6X1X14-MM)	
	3	1	**7W-2601**	2	SPACER (10.3X19X3.2-MM THK)	
	4	1	**562-7847**	5	CLAMP-HOSE	
	5	1	**363-5813**	3	CLAMP-HOSE	
M	6	1	**101-7178**	2	BOLT (M10X1.5X55-MM)	
	7	1	**101-7540**	2	WASHER (11.9X38.2X1.6-MM THK)	
M	8	1	**188-9644**	4	SCREW-FLAT HEAD (M8X1.25X25-MM)	
M	9	2	**124-3815**	6	BOLT (M8X1.25X16-MM)	
M	10	2	**153-5592**	3	NUT (M8X1.25-THD)	
M	11	2	**153-5960**	1	NUT (M6X1-THD)	
M	12	2	**273-9253**	4	BOLT (M6X1X35-MM)	
C	13	1	**483-1365**	1	BRACKET AS	
M	14	1,2	**174-3877**	14	BOLT (M14X1.5X25-MM)	
M	15	1	**208-9295**	6	BOLT-FLANGE HEAD (M10X1.5X40-MM)	
	16	1	**244-3259**	2	CLIP	
	17	2	**255-1297**	1	PLATE	
	19	2	**325-5948**	2	BRACKET	
	20	2	**334-7437**	1	BRACKET	
	21	2	**447-7691**	1	FAN AS	
	22	1	**342-4356**	1	RADIATOR AS	
		1	**422-6385**	1	PLUG	
		1	**422-6388**	1	WASHER	
	23	1	**342-4357**	1	HOSE-RADIATOR (LOWER)	
	24	1	**342-4358**	1	HOSE-RADIATOR (UPPER)	
	25	1	**342-4362**	1	TUBE AS	
	26	2	**476-5579**	1	BRACKET	
	27	2	**193-5151**	1	CLIP	
	28	1	**342-4367**	1	TUBE AS	
	29	2	**342-4368**	1	GUARD-FAN	
	30	2	**469-4426**	1	GUARD AS-FAN	
	31	2	**342-4370**	1	BRACKET	
	32	1	**366-0164**	2	MOUNTING	
	33	1	**357-9897**	1	PLATE	
	34	1	**357-9896**	1	BRACKET-MOUNTING	
	35	2	**468-7382**	2	SPACER (8.8X25.4X6-MM THK)	
	36	2	**344-5868**	1	MOUNT	
	37	2	**344-5880**	1	GUARD-RADIATOR	
M	39	2	**114-4363**	14	BOLT (M8X1.25X12-MM)	
	40	2	**8T-4224**	8	WASHER-HARD (8.8X16X2-MM THK)	

C - CHANGE FROM PREVIOUS TYPE
M - METRIC PART

344-5881 **RADIATOR & FAN GP (**contd.**)** **i09872593**

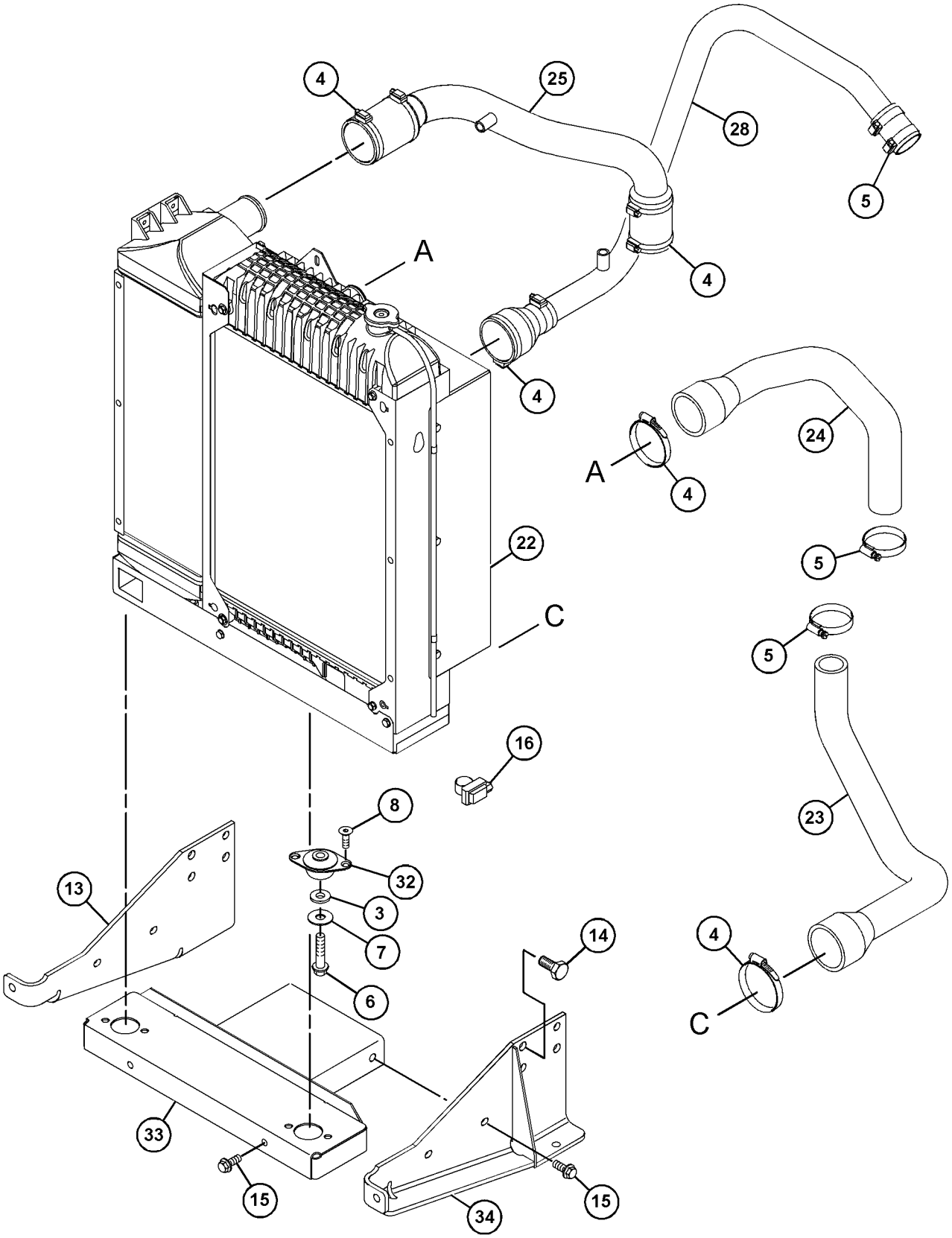

GRAPHIC #1 g07601187

344-5881 **RADIATOR & FAN GP (**contd.**)** **i09872593**

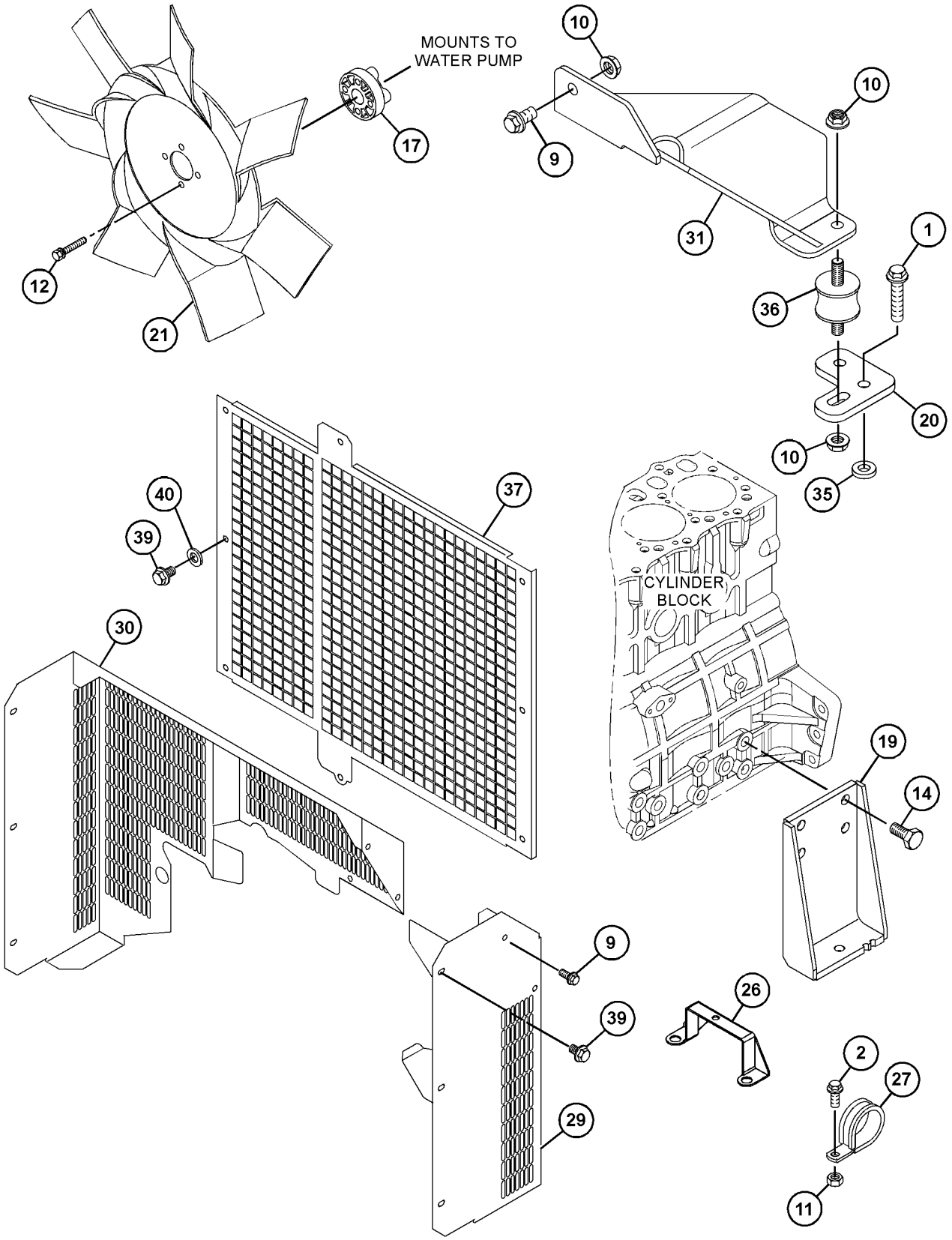

GRAPHIC #2 <END> g07601186

505-6230 RADIATOR & FAN GP

SMCS-1353, 1356 **i08744363**

NOTE	REF NO	GRAPHIC REF	PART NUMBER	QTY	PART NAME 1 2 3 4 5 6 (PRODUCT LEVEL)	SEE PAGE
M	1	1	**6I-0254**	2	BOLT (M8X1.25X30-MM)	
M	2	1	**6I-0846**	2	BOLT (M6X1X14-MM)	
	3	1	**7W-2601**	2	SPACER (10.3X19X3.2-MM THK)	
	4	1	**9M-7959**	4	CLAMP-HOSE	
M	5	1	**101-7178**	2	BOLT (M10X1.5X55-MM)	
	6	1	**101-7540**	2	WASHER (11.9X38.2X1.6-MM THK)	
M	7	1	**188-9644**	4	SCREW-FLAT HEAD (M8X1.25X25-MM)	
M	8	1	**114-4363**	14	BOLT (M8X1.25X12-MM)	
M	9	1	**124-3815**	6	BOLT (M8X1.25X16-MM)	
M	10	1	**153-5592**	2	NUT (M8X1.25-THD)	
M	11	1	**153-5960**	2	NUT (M6X1-THD)	
M	12	1	**174-3877**	14	BOLT (M14X1.5X25-MM)	
M	13	1	**208-9295**	6	BOLT-FLANGE HEAD (M10X1.5X40-MM)	
	14	1	**244-3259**	1	CLIP	
	15	1	**255-1297**	1	PLATE	
M	16	1	**273-9253**	4	BOLT (M6X1X35-MM)	
	17	1	**325-5948**	2	BRACKET	
	18	1	**334-7437**	1	BRACKET	
	19	1	**342-4356**	1	RADIATOR AS	
	19A	1	**422-6385**	1	PLUG	
	19B	1	**422-6388**	1	WASHER	
	20	1	**342-4357**	1	HOSE-RADIATOR	
	21	1	**342-4358**	1	HOSE-RADIATOR	
	22	1	**342-4362**	1	TUBE AS	
	23	1	**193-5151**	1	CLIP	
	24	1	**342-4367**	1	TUBE AS	
	25	1	**342-4368**	1	GUARD-FAN	
	26	1	**342-4370**	1	BRACKET	
	27	1	**344-5868**	1	MOUNT	
	28	1	**344-5880**	1	GUARD-RADIATOR	
	29	1	**357-9896**	1	BRACKET-MOUNTING	
	30	1	**357-9897**	1	PLATE	
	31	1	**363-5813**	3	CLAMP-HOSE	
	32	1	**366-0164**	2	MOUNTING	
	33	1	**447-7690**	1	FAN AS (BLOWER)	
	34	1	**468-7382**	2	SPACER (8.8X25.4X6-MM THK)	
	35	1	**469-4426**	1	GUARD AS-FAN	
	36	1	**476-5579**	1	BRACKET	
	37	1	**483-1365**	1	BRACKET AS	
	38	1	**562-7847**	1	CLAMP-HOSE	
	39	1	**8T-4224**	8	WASHER-HARD (8.8X16X2-MM THK)	

M - METRIC PART

505-6230 **RADIATOR & FAN GP** (contd.) **i08744363**

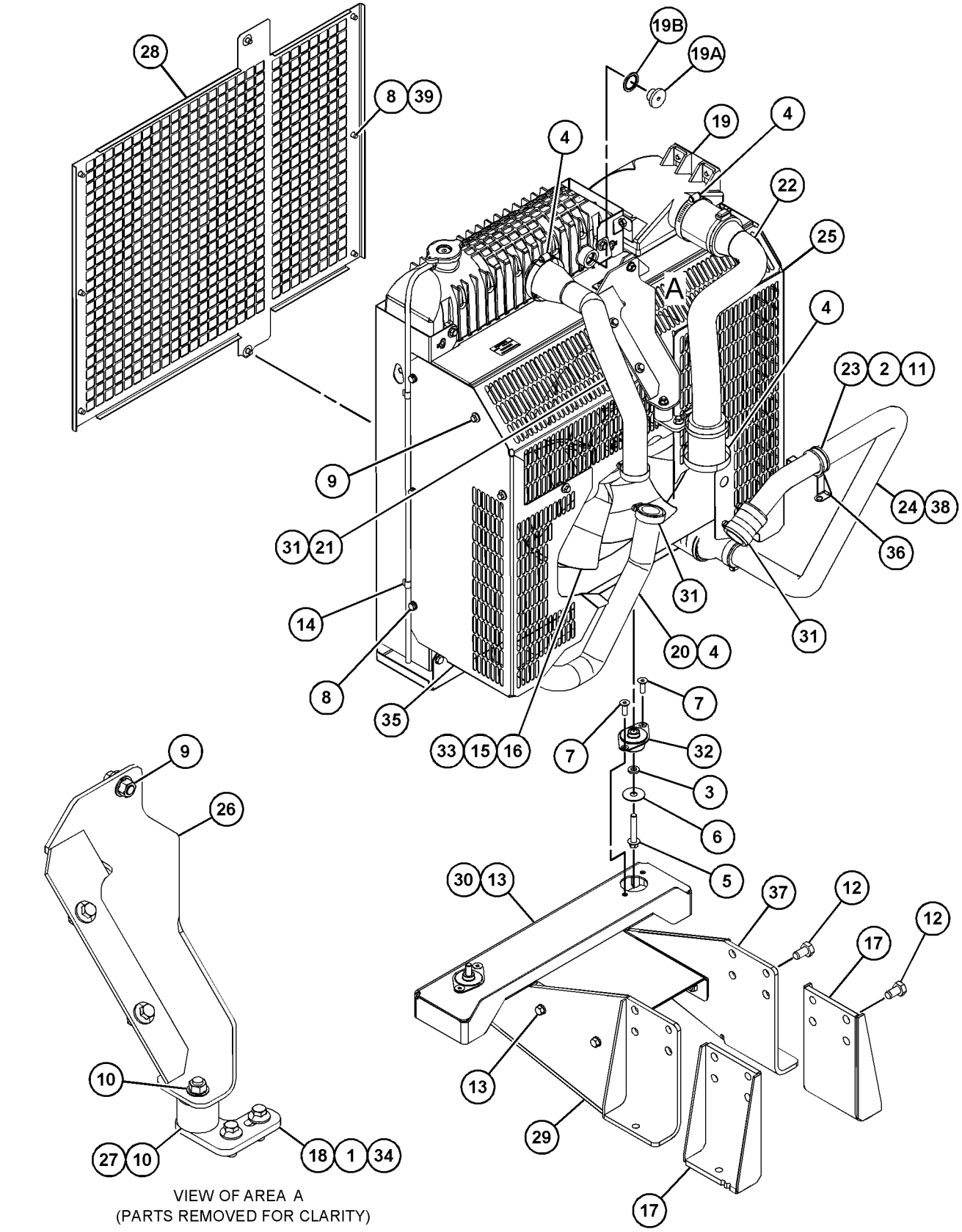

VIEW OF AREA A
(PARTS REMOVED FOR CLARITY)

GRAPHIC #1 <END> g07609775

326-8551 RADIATOR GP

PART OF 341-6658 RADIATOR & FAN GP, 600-6119 RADIATOR GP

SMCS-1353 **i09834809**

NOTE	REF NO	GRAPHIC REF	PART NUMBER	QTY	PART NAME 1 2 3 4 5 6 (PRODUCT LEVEL)	SEE PAGE
	1	1	**211-6574**	1	CAP-RADIATOR (16-PSI)	
	2	1	**422-6430**	1	KIT-PLUG	
		1	**422-6389**	1	WASHER	
	3	1	**326-8554**	1	WASHER	
	4	1	**526-2333**	1	HEADER	
	5	1	**526-2334**	1	COWLING	

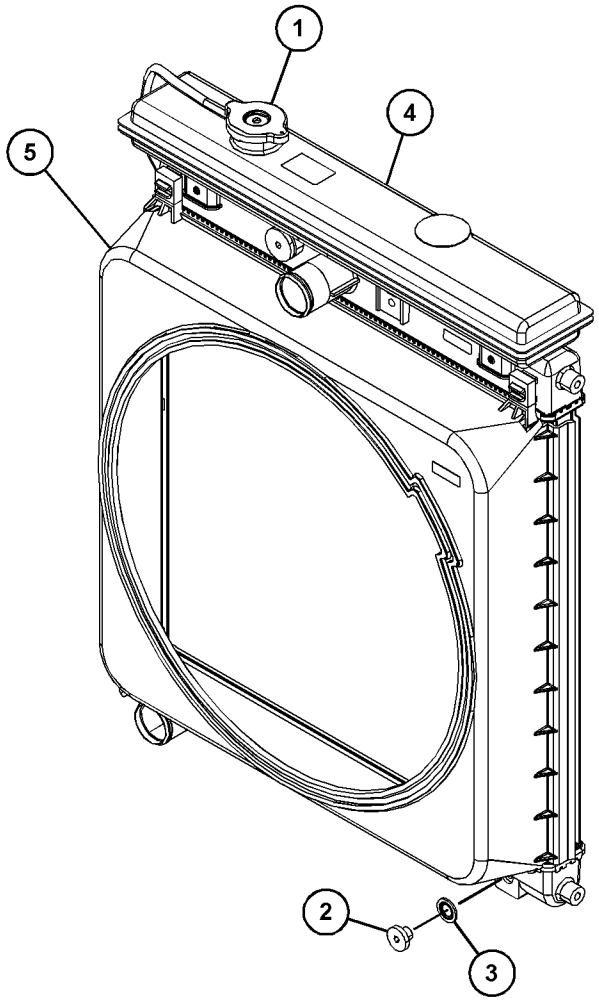

GRAPHIC #1 <END> g07659407

331-3270 RADIATOR GP

S/N: C6M1-2537

SMCS-1353 **i07060584**

NOTE	REF NO	GRAPHIC REF	PART NUMBER	QTY	PART NAME 1 2 3 4 5 6 (PRODUCT LEVEL)	SEE PAGE
M	1	1,2	**6I-0217**	6	BOLT (M8X1.25X20-MM)	
M	2	1	**6I-0917**	2	BOLT (M6X1X25-MM)	
M	3	2	**124-3815**	6	BOLT (M8X1.25X16-MM)	
M	4	2	**153-5592**	2	NUT (M8X1.25-THD)	
	5	2	**153-6861**	4	BOLT AS	
	6	2	**161-8260**	1	PLATE	
M	7	2	**180-6118**	10	BOLT AS (M8X1.25X12-MM)	
M	8	1	**198-2664**	15	BOLT-HEAD (M14X1.5X25-MM)	
	9	2	**344-5868**	1	MOUNT	
	10	1	**238-0265**	1	HOSE-RADIATOR (LOWER)	
	11	1	**238-0266**	1	HOSE-RADIATOR (UPPER)	
	12	1	**238-0271**	1	RADIATOR AS	
	12A	1	**202-6616**	1	CAP-RADIATOR	
	12B	1	**295-5876**	1	SHROUD	
	13	1	**239-0743**	1	SUPPORT	
M	14	1	**6I-0654**	2	BOLT (M10X1.5X25-MM)	
	15	2	**328-6606**	1	FAN (7-BLADE)	
	16	1	**363-5813**	4	CLAMP-HOSE	
C	17	2	**334-7304**	1	GUARD-FAN	
C	18	2	**334-7306**	1	GUARD-ALTERNATOR	
C	19	2	**334-7436**	1	BRACKET	
	20	2	**334-7437**	1	BRACKET	
	21	1	**325-5944**	1	BRACKET (LH)	
	22	1	**325-5946**	1	BRACKET (RH)	
	23	1	**325-5948**	2	BRACKET (REAR RH)	
	24	2	**328-6607**	1	GUARD	
	25	2	**331-2553**	1	GUARD-FAN	
	26	2	**244-3259**	2	CLIP	
	27	1	**364-8947**	1	PLUG	

C - CHANGE FROM PREVIOUS TYPE
M - METRIC PART

331-3270 **RADIATOR GP (**contd.**)** **i07060584**

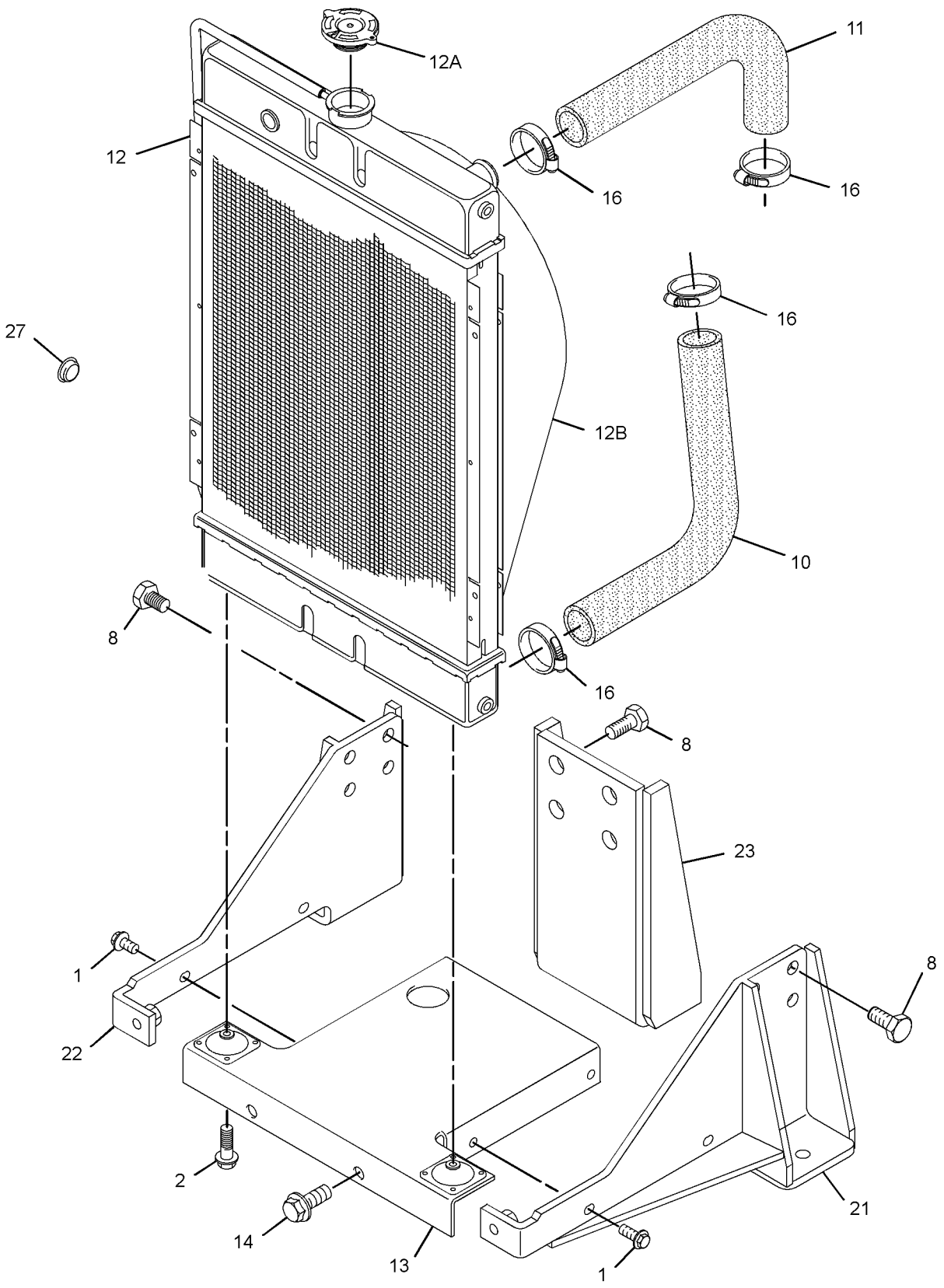

GRAPHIC #1 g02614759

331-3270 **RADIATOR GP (**contd.**)** **i07060584**

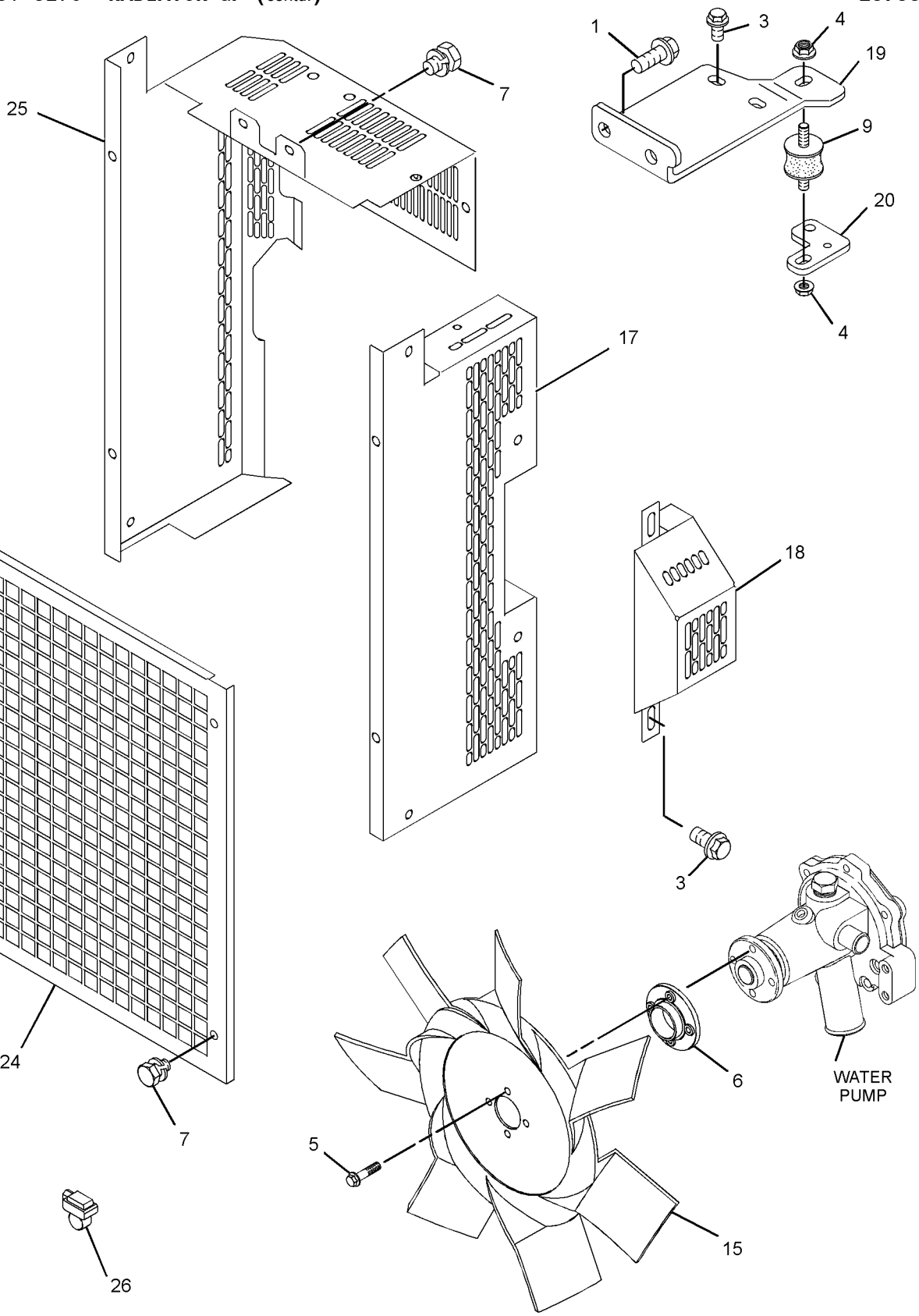

GRAPHIC #2 <END> g02213933

331-3270 RADIATOR GP

TYPE 1

SMCS-1353 **i07060585**

NOTE	REF NO	GRAPHIC REF	PART NUMBER	QTY	PART NAME 1 2 3 4 5 6 (PRODUCT LEVEL)	SEE PAGE
M	1	1,2	**6I-0217**	6	BOLT (M8X1.25X20-MM)	
M	2	1	**6I-0917**	2	BOLT (M6X1X25-MM)	
M	3	2	**124-3815**	2	BOLT (M8X1.25X16-MM)	
M	4	2	**153-5592**	2	NUT (M8X1.25-THD)	
	5	2	**153-6861**	4	BOLT AS	
	6	2	**161-8260**	1	PLATE	
M	7	2	**180-6118**	10	BOLT AS (M8X1.25X12-MM)	
M	8	1	**198-2664**	15	BOLT-HEAD (M14X1.5X25-MM)	
	9	2	**344-5868**	1	MOUNT	
	10	1	**238-0265**	1	HOSE-RADIATOR (LOWER)	
	11	1	**238-0266**	1	HOSE-RADIATOR (UPPER)	
	12	1	**238-0271**	1	RADIATOR AS	
	12A	1	**202-6616**	1	CAP-RADIATOR	
	12B	1	**295-5876**	1	SHROUD	
	13	1	**239-0743**	1	SUPPORT	
M	14	1	**6I-0654**	2	BOLT (M10X1.5X25-MM)	
	15	2	**328-6606**	1	FAN (7-BLADE)	
	16	1	**363-5813**	4	CLAMP-HOSE	
C	17	2	**366-2656**	1	GUARD AS-FAN	
M	17A	2	**6I-0254**	2	BOLT (M8X1.25X30-MM)	
M	17B	2	**362-8050**	2	NUT (M8X1.25-THD)	
C	18	2	**366-2658**	1	GUARD-ALTERNATOR	
	19	2	**334-7436**	1	BRACKET	
	20	2	**334-7437**	1	BRACKET	
	21	1	**325-5944**	1	BRACKET (LH)	
	22	1	**325-5946**	1	BRACKET (RH)	
	23	1	**325-5948**	2	BRACKET (REAR RH)	
	24	2	**328-6607**	1	GUARD	
	25	2	**331-2553**	1	GUARD-FAN	
	26	2	**244-3259**	2	CLIP	
	27	1	**364-8947**	1	PLUG	

C - CHANGE FROM PREVIOUS TYPE
M - METRIC PART

331-3270 **RADIATOR GP (**contd.**)** **i07060585**

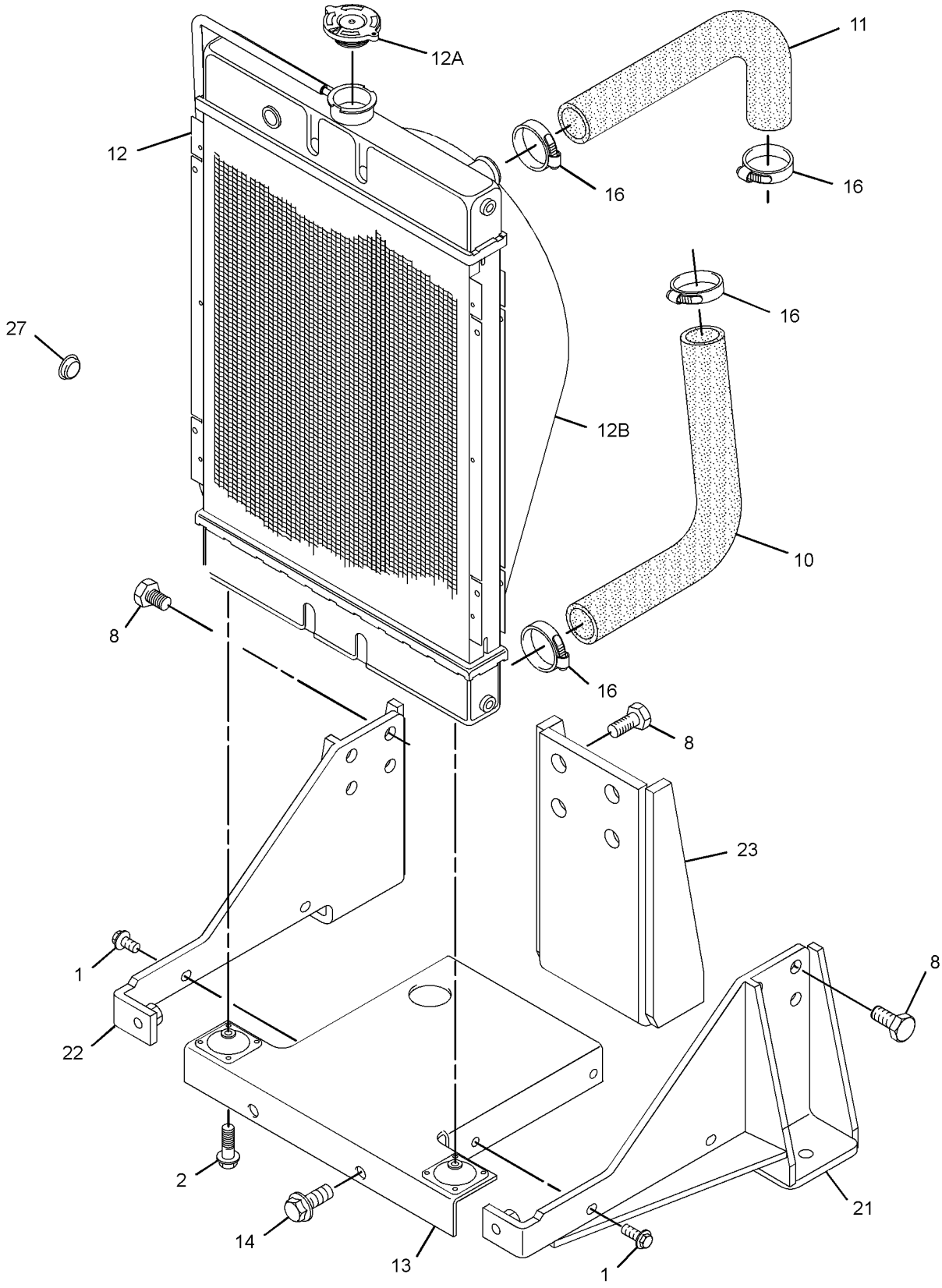

GRAPHIC #1 g02614759

331-3270 **RADIATOR GP (**contd.**)** **i07060585**

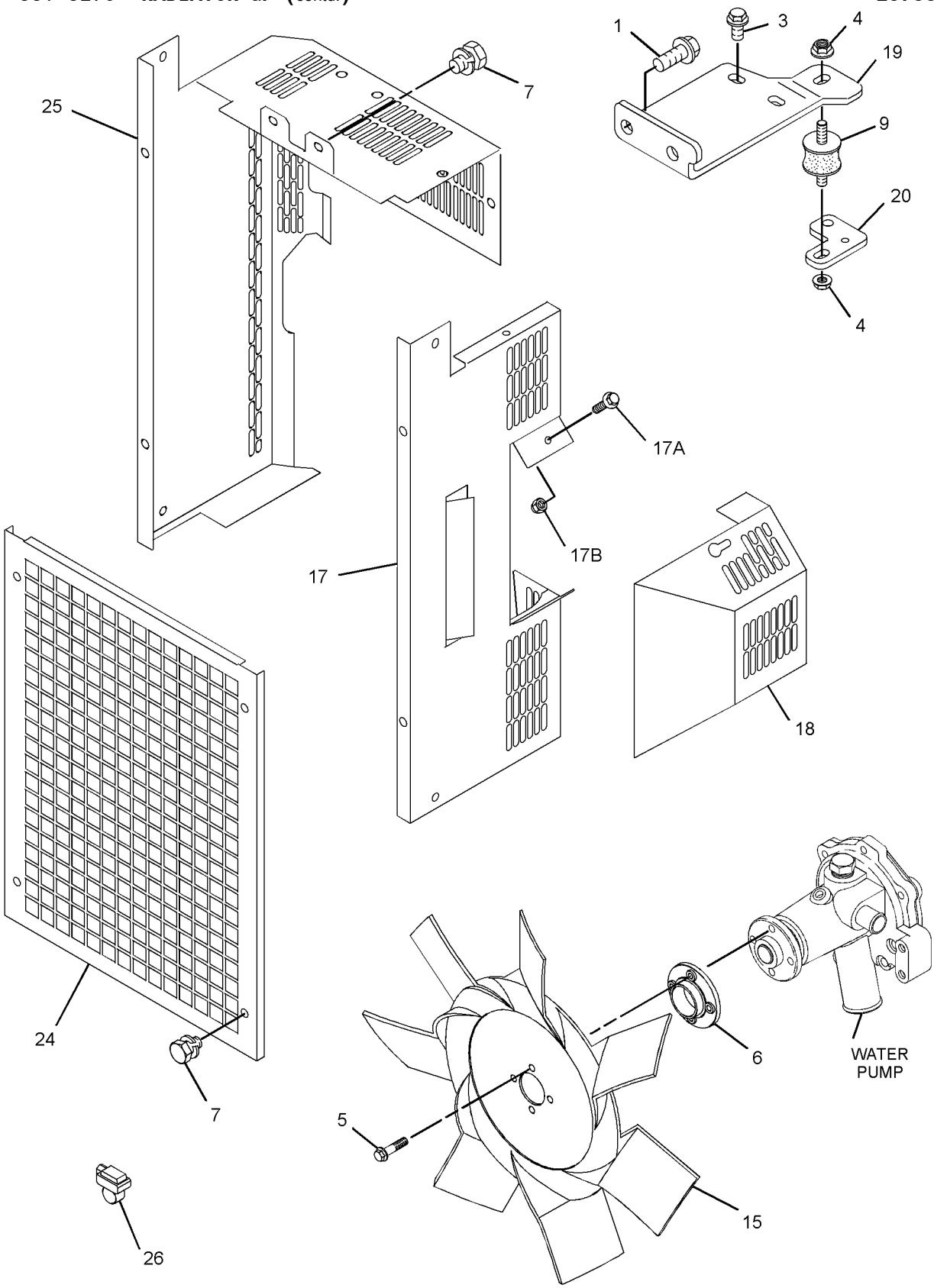

GRAPHIC #2 <END> g03337585

331-3270 RADIATOR GP

PART OF 489-4263, 506-0520, 513-2239 ENGINE AR-PRIMARY
TYPE 2

SMCS-1353 **i07060537**

NOTE	REF NO	GRAPHIC REF	PART NUMBER	QTY	PART NAME 1 2 3 4 5 6 (PRODUCT LEVEL)	SEE PAGE
M	1	1,2	**6I-0217**	6	BOLT (M8X1.25X20-MM)	
M	2	1	**6I-0917**	2	BOLT (M6X1X25-MM)	
M	3	2	**124-3815**	2	BOLT (M8X1.25X16-MM)	
M	4	2	**153-5592**	2	NUT (M8X1.25-THD)	
	5	2	**153-6861**	4	BOLT AS	
	6	2	**161-8260**	1	PLATE	
M	7	2	**180-6118**	10	BOLT AS (M8X1.25X12-MM)	
M	8	1	**198-2664**	15	BOLT-HEAD (M14X1.5X25-MM)	
	9	2	**344-5868**	1	MOUNT	
	10	1	**238-0265**	1	HOSE-RADIATOR (LOWER)	
	11	1	**238-0266**	1	HOSE-RADIATOR (UPPER)	
	12	1	**238-0271**	1	RADIATOR AS	
	12A	1	**202-6616**	1	CAP-RADIATOR	
	12B	1	**295-5876**	1	SHROUD	
	13	1	**239-0743**	1	SUPPORT	
M	14	1	**6I-0654**	2	BOLT (M10X1.5X25-MM)	
	15	2	**444-7301**	1	FAN-SUCTION (6-BLADE)	
	16	1	**363-5813**	4	CLAMP-HOSE	
	17	2	**366-2656**	1	GUARD AS-FAN	
M	17A	2	**6I-0254**	2	BOLT (M8X1.25X30-MM)	
M	17B	2	**362-8050**	2	NUT (M8X1.25-THD)	
	18	2	**366-2658**	1	GUARD-ALTERNATOR	
	19	2	**487-9902**	1	BRACKET	
	20	2	**334-7437**	1	BRACKET	
	21	1	**325-5944**	1	BRACKET (LH)	
C	22	1	**430-5926**	1	BRACKET-MOUNTING (RH)	
	23	1	**325-5948**	2	BRACKET (REAR RH)	
	24	2	**328-6607**	1	GUARD	
	25	2	**469-4427**	1	GUARD AS	
	26	2	**244-3259**	2	CLIP	

C - CHANGE FROM PREVIOUS TYPE
M - METRIC PART

331-3270 **RADIATOR GP (**contd.**)** **i07060537**

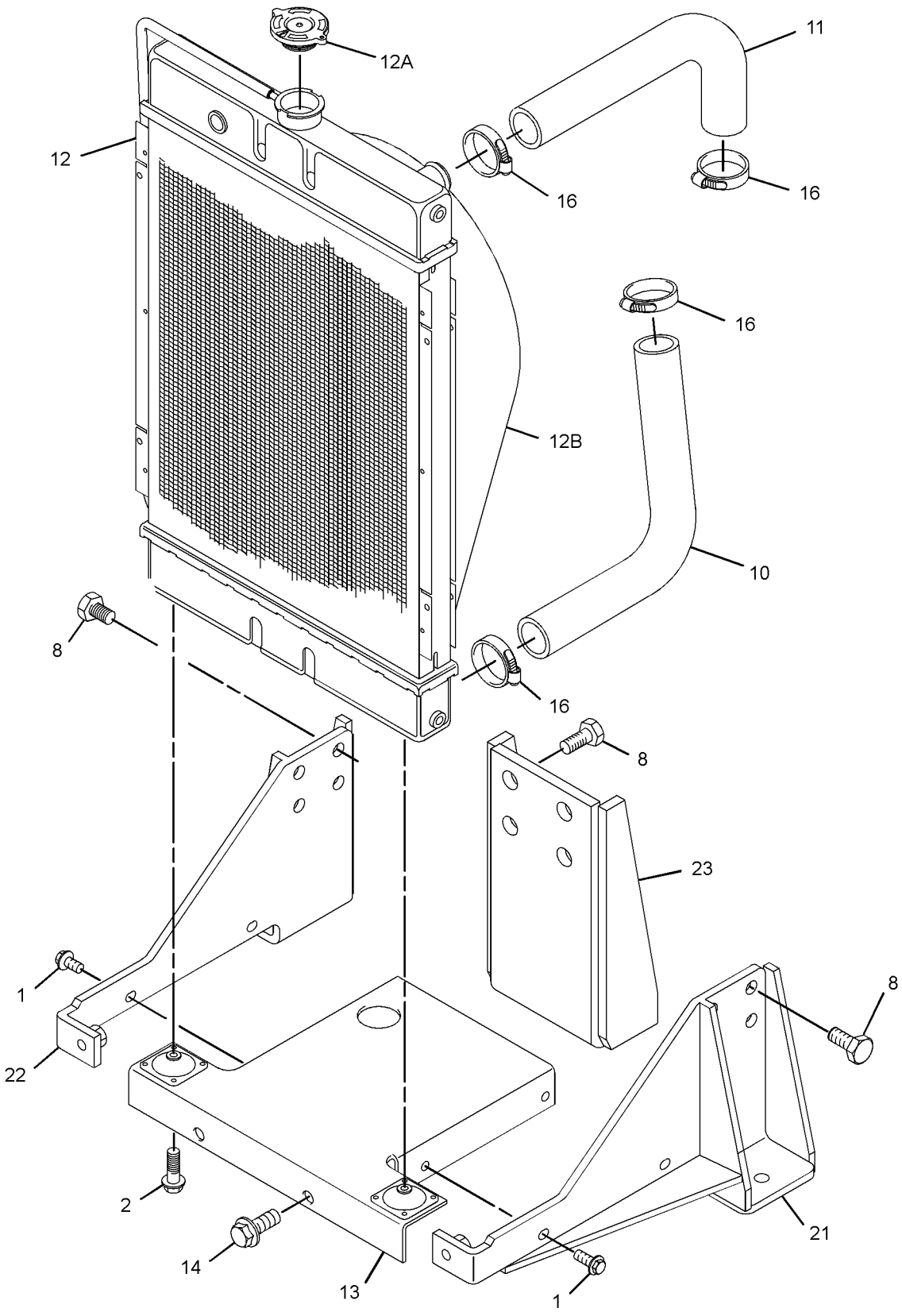

GRAPHIC #1 g06200171

331-3270 **RADIATOR GP (**contd.**)** **i07060537**

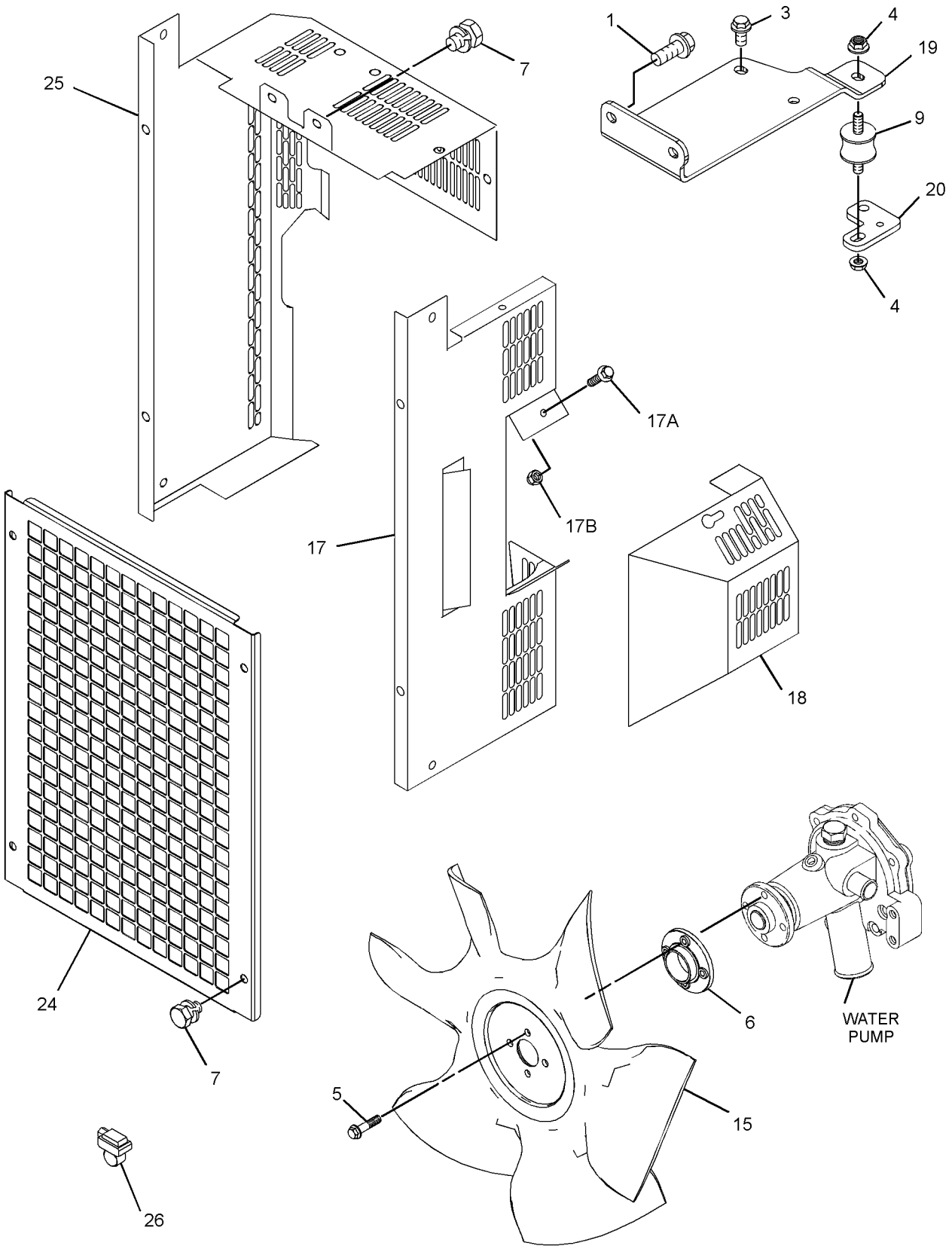

GRAPHIC #2 <END> g06210207

331-3270 RADIATOR GP

PART OF 489-4263, 506-0520, 513-2239, 557-7471 ENGINE AR-PRIMARY
TYPE 3

SMCS-1353 **i07489921**

NOTE	REF NO	GRAPHIC REF	PART NUMBER	QTY	PART NAME 1 2 3 4 5 6 (PRODUCT LEVEL)	SEE PAGE
M	1	1,2	**6I-0217**	6	BOLT (M8X1.25X20-MM)	
CM	2	1,2	**6I-0917**	6	BOLT (M6X1X25-MM)	
M	3	2	**124-3815**	2	BOLT (M8X1.25X16-MM)	
M	4	2	**178-3336**	2	NUT-HEX FLANGE (M8X1.25-THD)	
	5	2	**244-3259**	2	CLIP	
	6	2	**161-8260**	1	PLATE	
M	7	2	**114-4363**	10	BOLT (M8X1.25X12-MM)	
M	8	1	**198-2664**	15	BOLT-HEAD (M14X1.5X25-MM)	
	9	2	**344-5868**	1	MOUNT	
	10	1	**238-0265**	1	HOSE-RADIATOR (LOWER)	
	11	1	**238-0266**	1	HOSE-RADIATOR (UPPER)	
	12	1	**238-0271**	1	RADIATOR AS	
	12A	1	**202-6616**	1	CAP-RADIATOR	
	12B	1	**295-5876**	1	SHROUD	
	13	1	**438-8534**	1	BRACKET AS	
M	14	1	**123-2899**	2	BOLT (M10X1.5X40-MM)	
	15	2	**444-7301**	1	FAN-SUCTION (6-BLADE)	
	16	1	**363-5813**	4	CLAMP-HOSE	
	17	2	**366-2656**	1	GUARD AS-FAN	
M	17A	2	**6I-0254**	2	BOLT (M8X1.25X30-MM)	
M	17B	2	**362-8050**	2	NUT (M8X1.25-THD)	
	18	2	**366-2658**	1	GUARD-ALTERNATOR	
	19	2	**487-9902**	1	BRACKET	
	20	2	**334-7437**	1	BRACKET	
	21	1	**325-5944**	1	BRACKET (LH)	
	22	1	**430-5926**	1	BRACKET-MOUNTING (RH)	
	23	1	**325-5948**	2	BRACKET (REAR RH)	
	24	2	**328-6607**	1	GUARD	
	25	2	**469-4427**	1	GUARD AS	

C - CHANGE FROM PREVIOUS TYPE
M - METRIC PART

331-3270 **RADIATOR GP (**contd.**)** **i07489921**

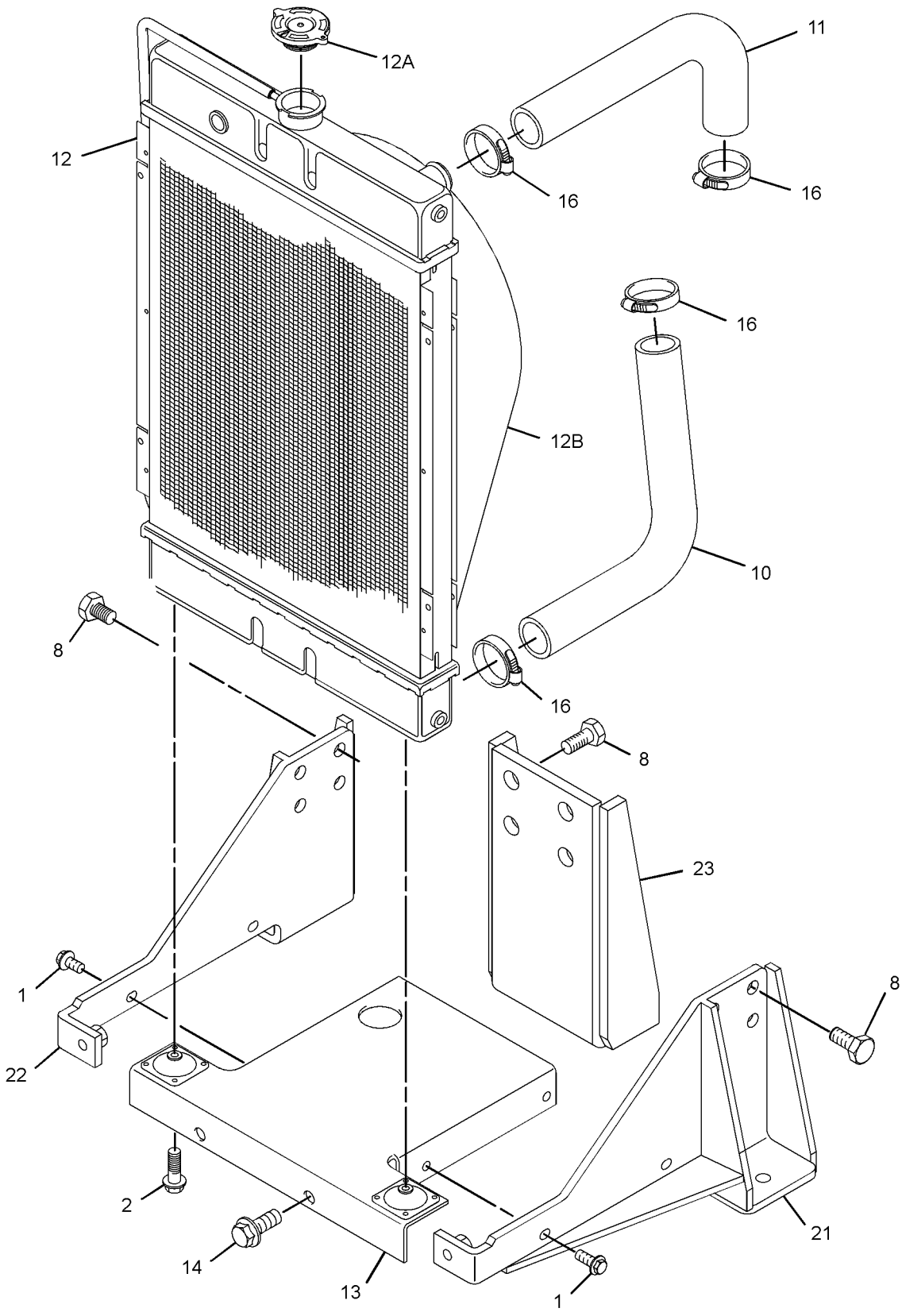

GRAPHIC #1 g06200171

331-3270 **RADIATOR GP (**contd.**)** **i07489921**

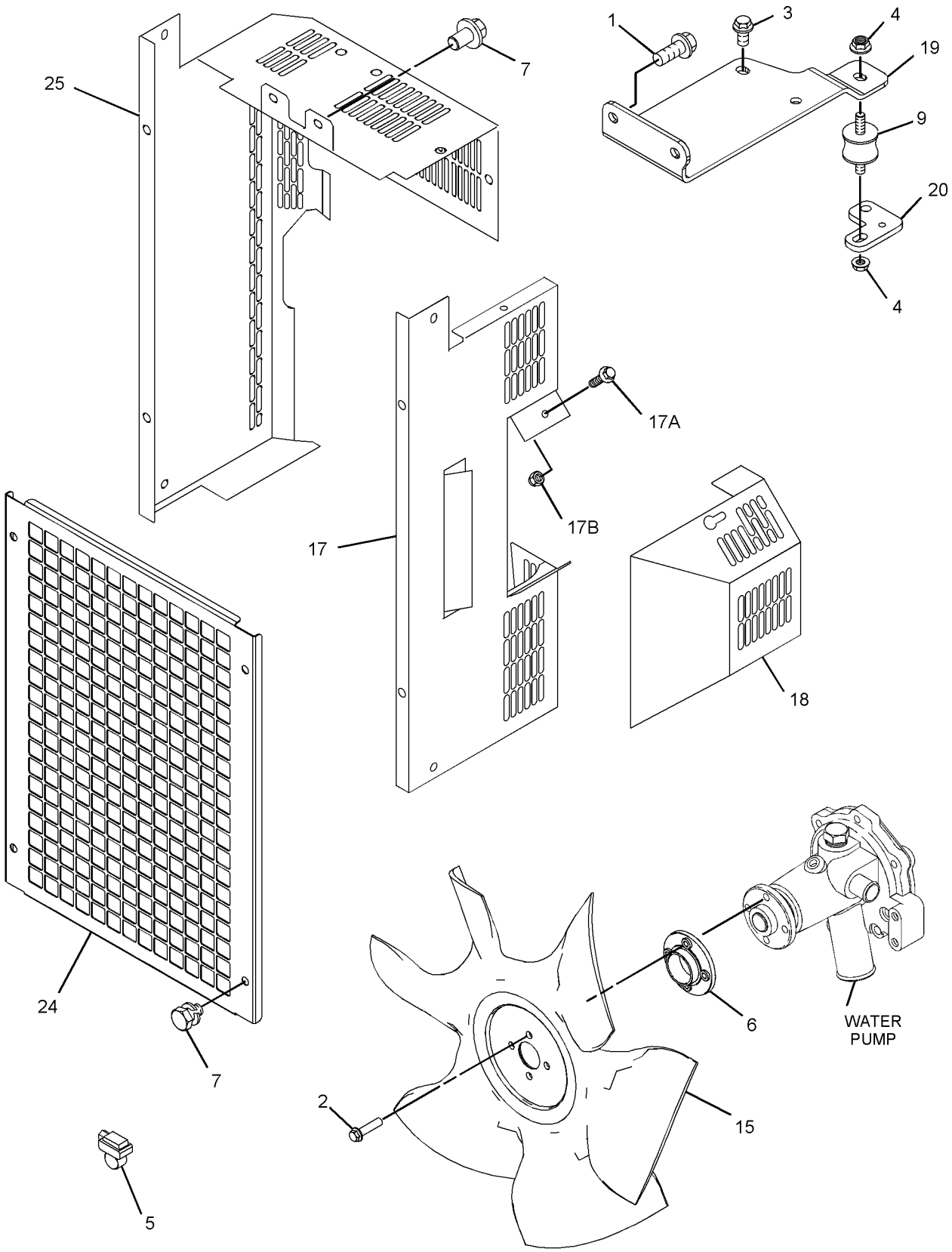

GRAPHIC #2 <END> g06313578

584-9829 RADIATOR GP

S/N: C6M10505-UP

PART OF 417-7273 ENGINE AR-PRIMARY

SMCS-1353 **i08718358**

NOTE	REF NO	GRAPHIC REF	PART NUMBER	QTY	PART NAME 1 2 3 4 5 6 (PRODUCT LEVEL)	SEE PAGE
	1	1,2	**363-5813**	4	CLAMP-HOSE	
M	2	1,2,3	**114-4363**	10	BOLT (M8X1.25X12-MM)	
M	3	1	**124-3815**	4	BOLT (M8X1.25X16-MM)	
M	4	2	**153-5592**	2	NUT (M8X1.25-THD)	
M	5	1,2	**174-3877**	15	BOLT (M14X1.5X25-MM)	
M	6	3	**208-9295**	2	BOLT-FLANGE HEAD (M10X1.5X40-MM)	
	7	2	**238-0265**	1	HOSE-RADIATOR	
	8	1	**238-0266**	1	HOSE-RADIATOR	
	9	1	**607-4843**	1	RADIATOR AS	
		1	**202-6616**	1	CAP-RADIATOR	
		1	**295-5876**	1	SHROUD	
		1	**451-7225**	1	FILM-IDENTIFICATION (CAT)	
	10	3	**244-3259**	2	CLIP	
	11	2	**325-5944**	1	BRACKET	
	12	1	**325-5948**	2	BRACKET	
	13	3	**328-6607**	1	GUARD	
	14	1	**334-7437**	1	BRACKET	
	15	2	**344-5868**	1	MOUNT	
	16	2	**423-6339**	1	GUARD-ALTERNATOR	
	17	2	**423-6342**	1	GUARD AS-FAN	
M		2	**6I-0254**	2	BOLT (M8X1.25X30-MM)	
		2	**423-6343**	1	GUARD-FAN	
	18	1	**430-5926**	1	BRACKET-MOUNTING	
	19	3	**438-8534**	1	BRACKET AS	
	20	1	**469-4427**	1	GUARD AS	
	21	1	**487-9902**	1	BRACKET	
M	22	1,2	**6I-0217**	6	BOLT (M8X1.25X20-MM)	
M	23	3	**6I-0917**	2	BOLT (M6X1X25-MM)	

M - METRIC PART

584-9829 **RADIATOR GP** (contd.) **i08718358**

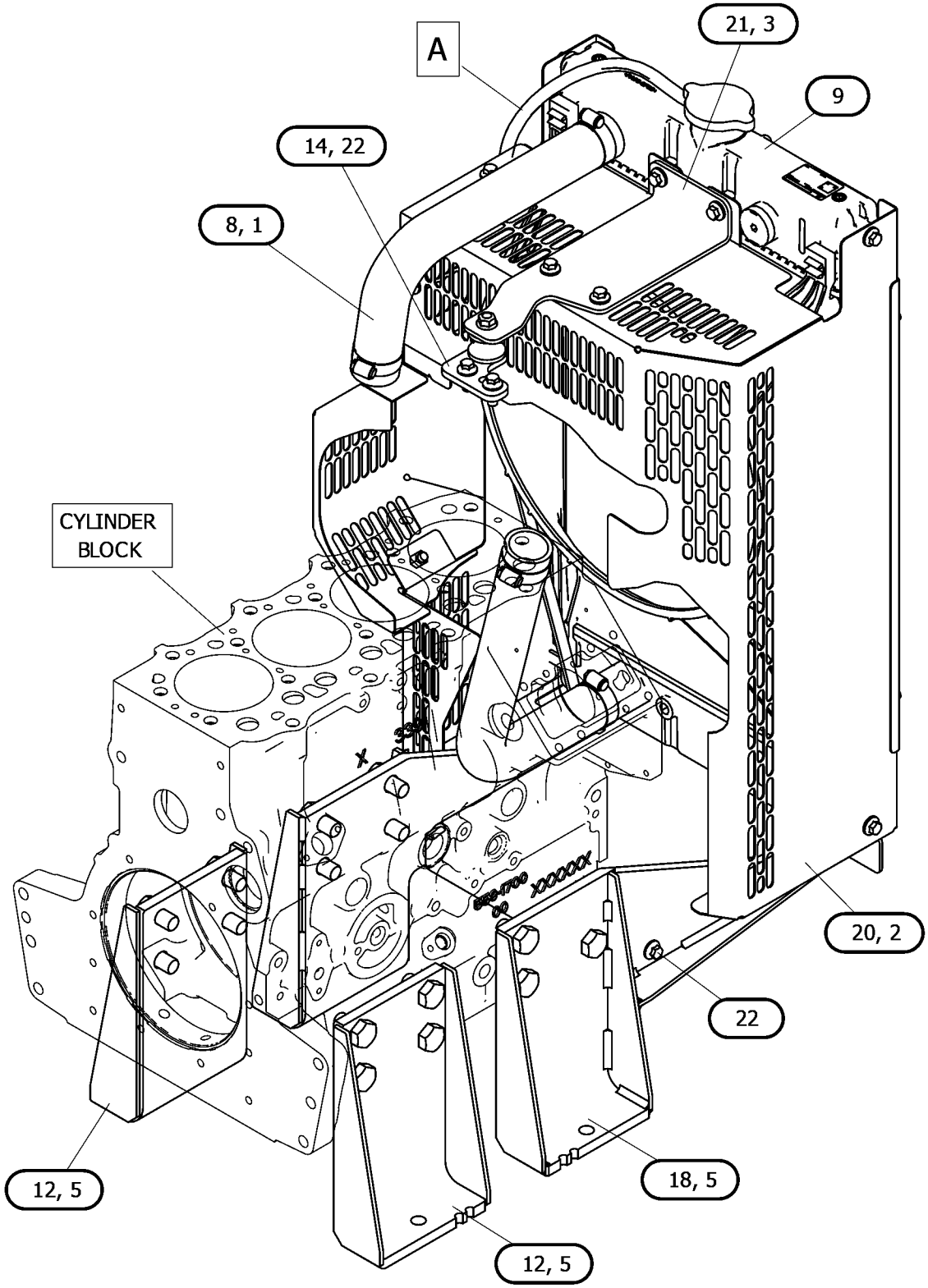

GRAPHIC #1 g07515791

584-9829 **RADIATOR GP (**contd.**)** **i08718358**

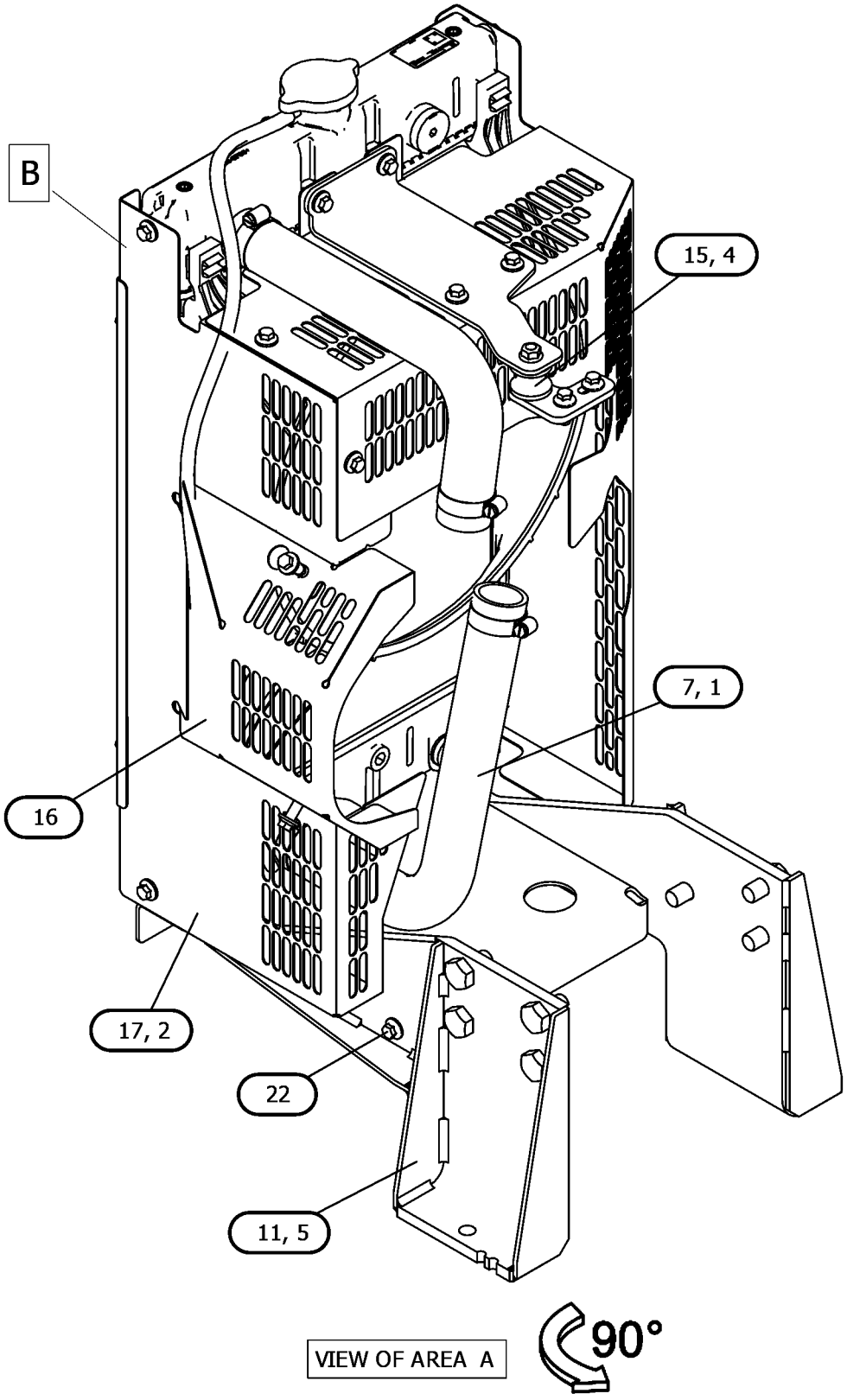

GRAPHIC #2 g07515791_01

584-9829 **RADIATOR GP (**contd.**)** **i08718358**

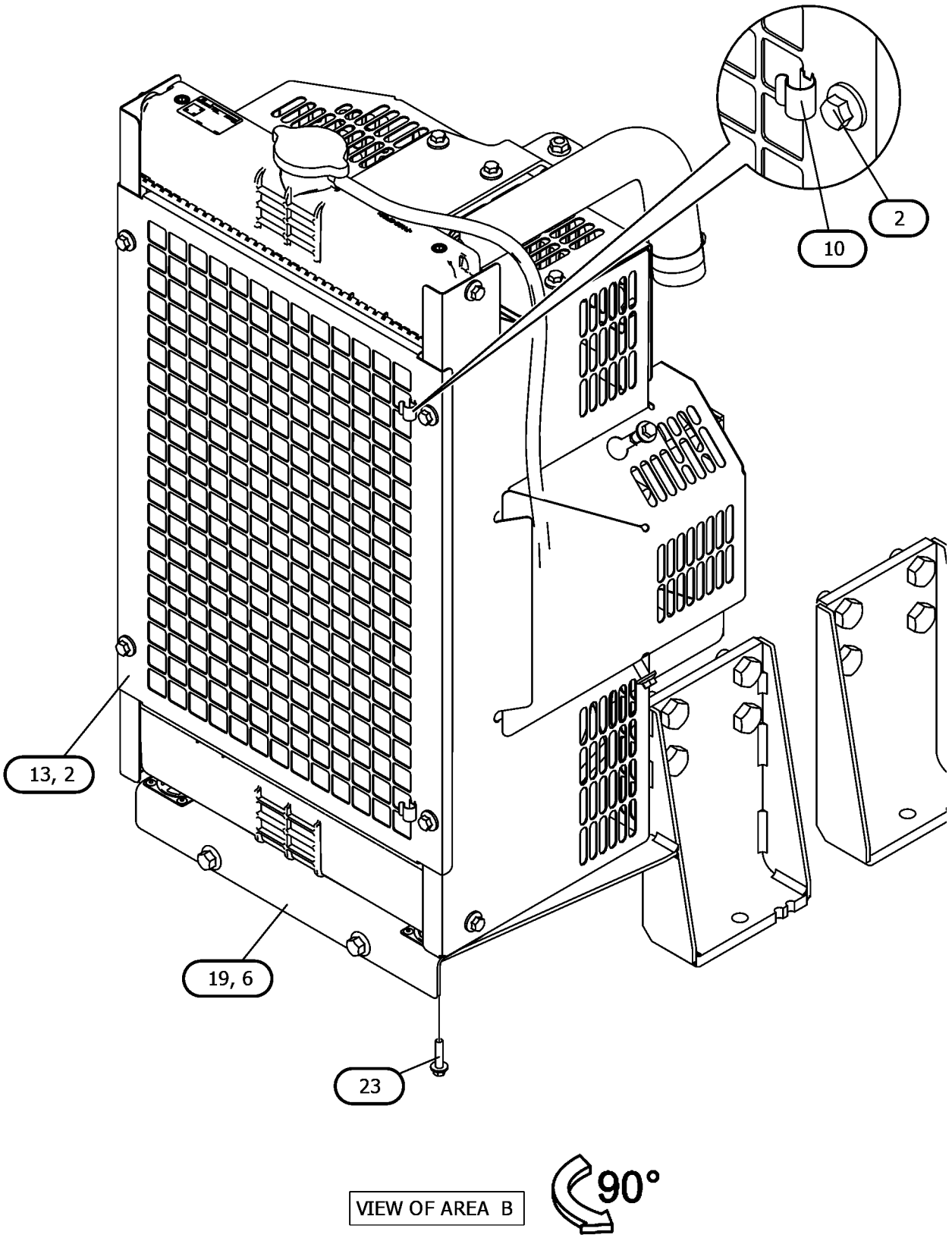

GRAPHIC #3 <END> g07515791_02

600-6119 RADIATOR GP

S/N: C6M10558-UP

SMCS-1353 **i08810149**

NOTE	REF NO	GRAPHIC REF	PART NUMBER	QTY	PART NAME 1 2 3 4 5 6 (PRODUCT LEVEL)	SEE PAGE
M	1	1	**101-7178**	2	BOLT (M10X1.5X55-MM)	
M	2	1	**114-4363**	10	BOLT (M8X1.25X12-MM)	
M	3	1	**188-9644**	4	SCREW-FLAT HEAD (M8X1.25X25-MM)	
	4	1	**103-1067**	2	CLAMP-HOSE	
M	5	1	**174-3877**	15	BOLT (M14X1.5X25-MM)	
	6	1	**363-5813**	2	CLAMP-HOSE	
	7	1	**426-5345**	1	GUARD	
	8	1	**510-1244**	1	GUARD GP-FAN	
M		1	**195-3699**	4	NUT (M8X1.25-THD)	
M		1	**6I-0254**	4	BOLT (M8X1.25X30-MM)	
M	9	1	**124-3815**	5	BOLT (M8X1.25X16-MM)	
M	10	1	**153-5592**	2	NUT (M8X1.25-THD)	
	11	1	**325-5944**	1	BRACKET	
	12	1	**325-5948**	2	BRACKET	
Y	13	1	**326-8551**	1	RADIATOR GP	564
	14	1	**326-8555**	1	HOSE-RADIATOR	
	15	1	**326-8556**	1	HOSE-RADIATOR	
	16	1	**326-8559**	2	MOUNT-VIBRATION	
	17	1	**326-8562**	1	GUARD-RADIATOR	
	18	1	**326-8564**	1	ARM	
	19	1	**334-7437**	1	BRACKET	
	20	1	**341-6649**	1	GUARD	
	21	1	**344-5868**	1	MOUNT	
	22	1	**430-5926**	1	BRACKET-MOUNTING	
M	23	1	**111-8222**	1	BOLT (M8X1.25X16-MM)	
	24	1	**527-9209**	1	PLATE AS-BASE	
M	25	1	**6I-0217**	6	BOLT (M8X1.25X20-MM)	

M - METRIC PART
Y - SEPARATE ILLUSTRATION

600-6119 **RADIATOR GP (**contd.**)** **i08810149**

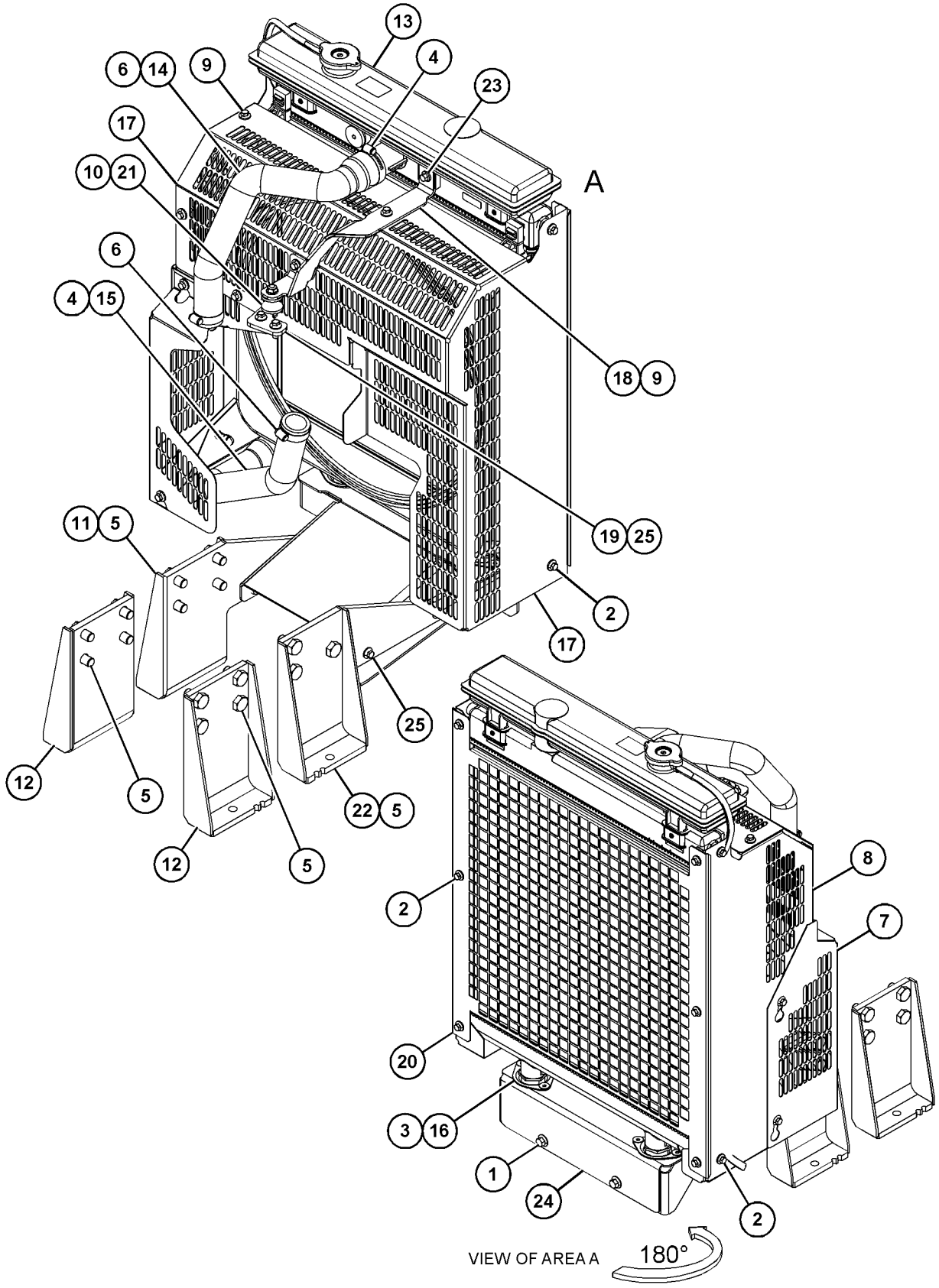

GRAPHIC #1 <END> g07550157

600-6121 RADIATOR GP

S/N: C6M10494-UP

SMCS-1353 **i08883990**

NOTE	REF NO	GRAPHIC REF	PART NUMBER	QTY	PART NAME 1 2 3 4 5 6 (PRODUCT LEVEL)	SEE PAGE
M	1	1	**101-7178**	2	BOLT (M10X1.5X55-MM)	
M	2	1,2	**114-4363**	14	BOLT (M8X1.25X12-MM)	
M	3	2	**174-3877**	14	BOLT (M14X1.5X25-MM)	
M	4	1	**273-9253**	4	BOLT (M6X1X35-MM)	
	5	2	*561-9492*	1	RADIATOR AS	
	5A	2	**422-6385**	1	PLUG	
	5B	2	**422-6388**	1	WASHER	
	6	1,2	**363-5813**	3	CLAMP-HOSE	
	7	2	**469-4426**	1	GUARD AS-FAN	
	8	1	**476-5579**	1	BRACKET	
	9	1	**101-7540**	2	WASHER (11.9X38.2X1.6-MM THK)	
M	10	1	**6I-0846**	1	BOLT (M6X1X14-MM)	
M	11	2	**124-3815**	6	BOLT (M8X1.25X16-MM)	
M	12	2	**153-5592**	3	NUT (M8X1.25-THD)	
M	13	1	**153-5960**	1	NUT (M6X1-THD)	
M	14	1,2	**208-9295**	6	BOLT-FLANGE HEAD (M10X1.5X40-MM)	
	15	2	**244-3259**	2	CLIP	
	16	2	**325-5948**	2	BRACKET	
	17	2	**334-7437**	1	BRACKET	
	18	2	**342-4357**	1	HOSE-RADIATOR	
	19	1	**342-4358**	1	HOSE-RADIATOR	
	20	1	**342-4362**	1	TUBE AS	
	21	1	**193-5151**	1	CLIP	
	22	1	**342-4367**	1	TUBE AS	
	23	2	**342-4368**	1	GUARD-FAN	
	24	2	**342-4370**	1	BRACKET	
	25	2	**344-5868**	1	MOUNT	
	26	1	**344-5880**	1	GUARD-RADIATOR	
	27	1	**8T-4224**	8	WASHER-HARD (8.8X16X2-MM THK)	
	28	1	**357-9897**	1	PLATE	
	29	1	**366-0164**	2	MOUNTING	
	30	2	**468-7382**	2	SPACER (8.8X25.4X6-MM THK)	
	31	2	**593-9273**	1	MOUNTING AS	
	32	1,2	**562-7847**	5	CLAMP-HOSE	
	33	1	**7W-2601**	2	SPACER (10.3X19X3.2-MM THK)	
	34	2	**593-9274**	1	MOUNTING AS-ENGINE	
M	35	2	**6I-0254**	2	BOLT (M8X1.25X30-MM)	

M - METRIC PART

600-6121 **RADIATOR GP (**contd.**)** **i08883990**

REFER TO ALL ILLUSTRATIONS OF
THIS GROUP FOR AUXILIARY VIEWS

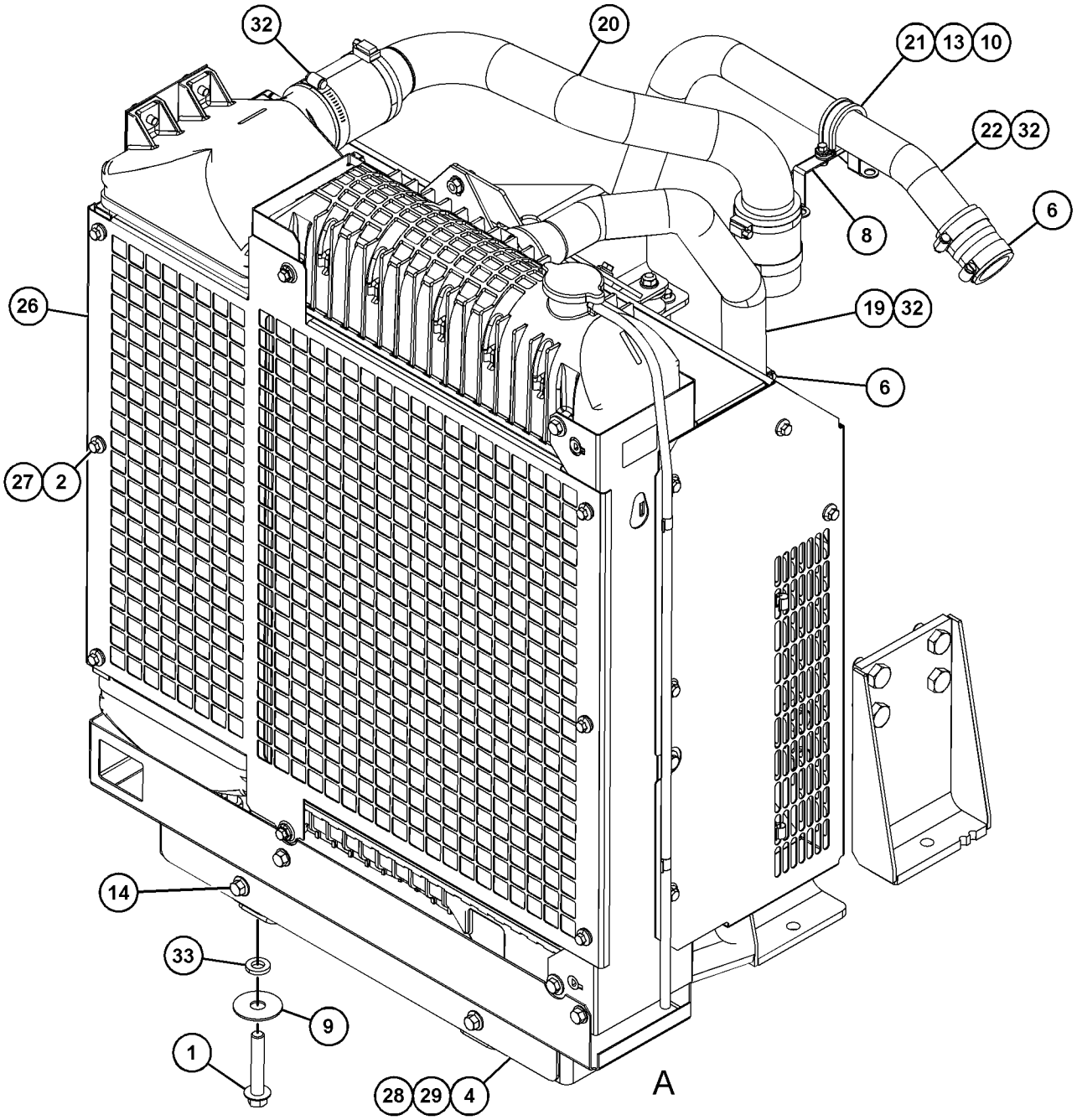

GRAPHIC #1 g07554189

600-6121 **RADIATOR GP (**contd.**)** **i08883990**

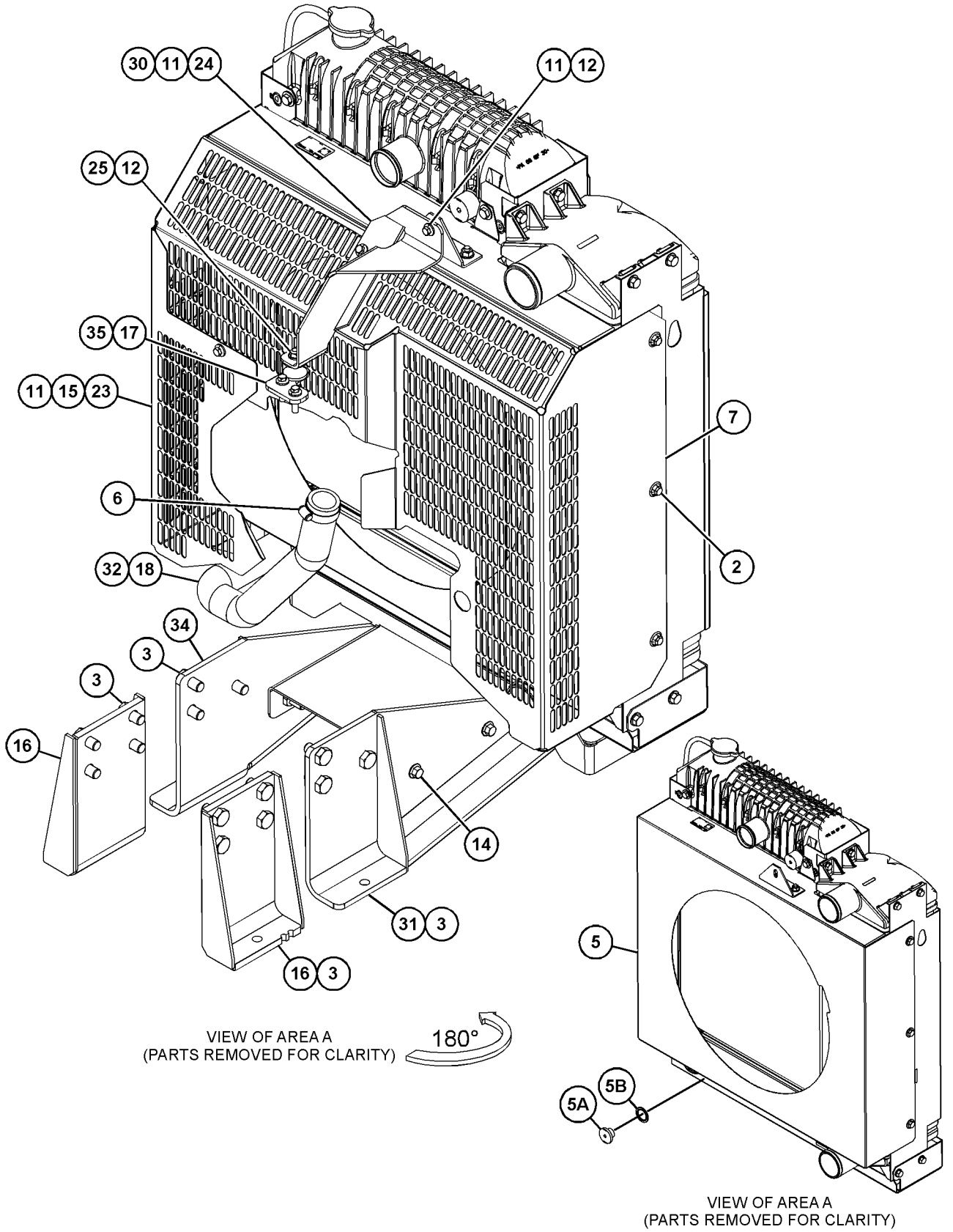

GRAPHIC #2 <END> g07554190

317-0649 AIR CLEANER GP

TYPE 1

SMCS-1051, 1054 **i04490336**

NOTE	REF NO	GRAPHIC REF	PART NUMBER	QTY	PART NAME 1 2 3 4 5 6 (PRODUCT LEVEL)	SEE PAGE
M	1	2	**6I-0217**	2	BOLT (M8X1.25X20-MM)	
M	2	2	**6I-0254**	2	BOLT (M8X1.25X30-MM)	
	3	2	**9M-7959**	1	CLAMP-HOSE	
	4	2	**103-6714**	1	CLIP	
M	5	2	**153-5592**	2	NUT (M8X1.25-THD)	
	6	2	**238-0245**	1	HOSE-AIR CLEANER	
	7	2	**326-8547**	1	BRACKET	
	8	1	**247-1378**	1	FILTER ELEMENT AS-AIR (TURBOCHARGER)	
	8A	1	**247-1380**	1	FILTER ELEMENT-AIR	
	8B	1	**271-5059**	1	INDICATOR (AIR FILTER SERVICE)	
	8C	1	**271-5062**	1	VALVE-DUST	
	8D	1	**321-7701**	1	BRACKET	
	9	2	**336-4079**	1	CAP-RAIN	
	10	2	**292-1992**	1	SPACER	

M - METRIC PART

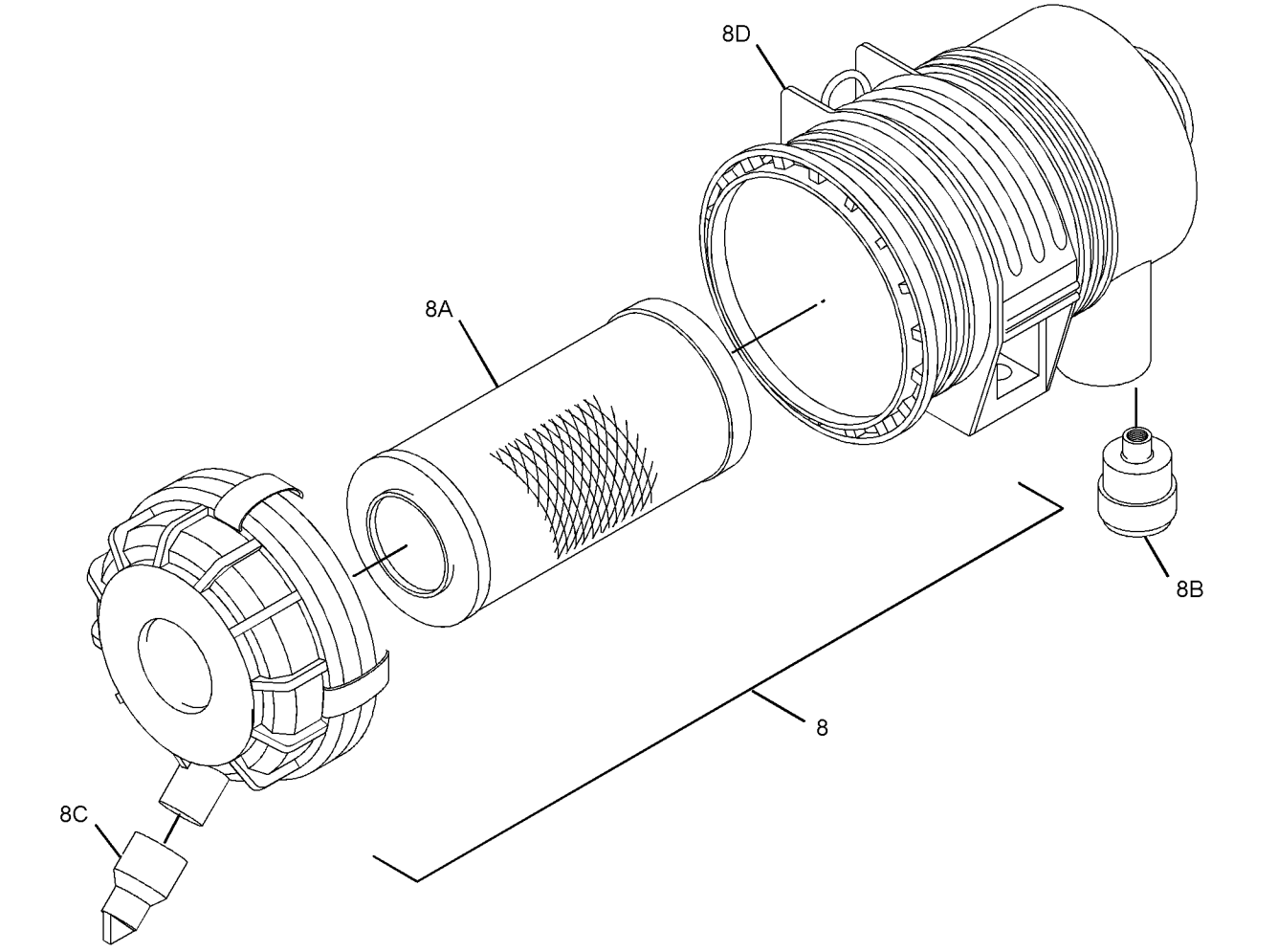

GRAPHIC #1 g01953439

317-0649 **AIR CLEANER GP (**contd.**)** **i04490336**

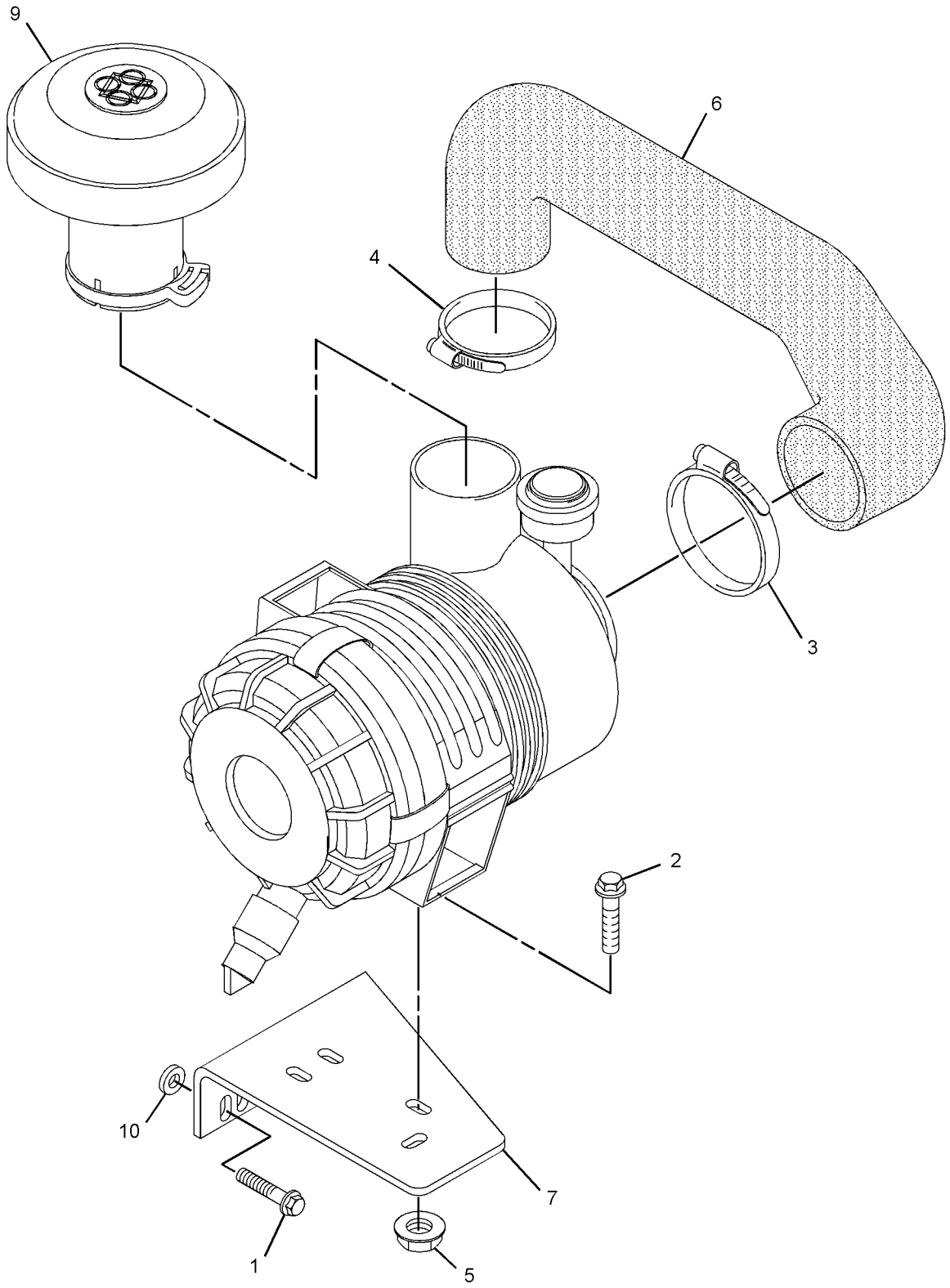

GRAPHIC #2 <END> g02682819

317-0649 AIR CLEANER GP

PART OF 417-7273, 489-4263, 506-0520, 513-2239, 557-7471 ENGINE AR-PRIMARY
TYPE 2

SMCS-1051, 1054 **i06831575**

NOTE	REF NO	GRAPHIC REF	PART NUMBER	QTY	PART NAME 1 2 3 4 5 6 (PRODUCT LEVEL)	SEE PAGE
M	1	2	**6I-0217**	2	BOLT (M8X1.25X20-MM)	
M	2	2	**6I-0254**	2	BOLT (M8X1.25X30-MM)	
	3	2	**9M-7959**	1	CLAMP-HOSE	
	4	2	**103-1067**	1	CLAMP-HOSE	
M	5	2	**153-5592**	2	NUT (M8X1.25-THD)	
	6	2	**238-0245**	1	HOSE-AIR CLEANER	
	7	2	**326-8547**	1	BRACKET	
	8	1	**247-1378**	1	FILTER ELEMENT AS-AIR (TURBOCHARGER)	
	8A	1	**247-1380**	1	FILTER ELEMENT-AIR	
	8B	1	**271-5059**	1	INDICATOR (AIR FILTER SERVICE)	
	8C	1	**271-5062**	1	VALVE-DUST	
	8D	1	**321-7701**	1	BRACKET	
	9	2	**468-7382**	1	SPACER (8.8X25.4X6-MM THK)	
	10	2	**326-9052**	1	FILM-WARNING (DO NOT SPRAY, READ OMM)	

M - METRIC PART

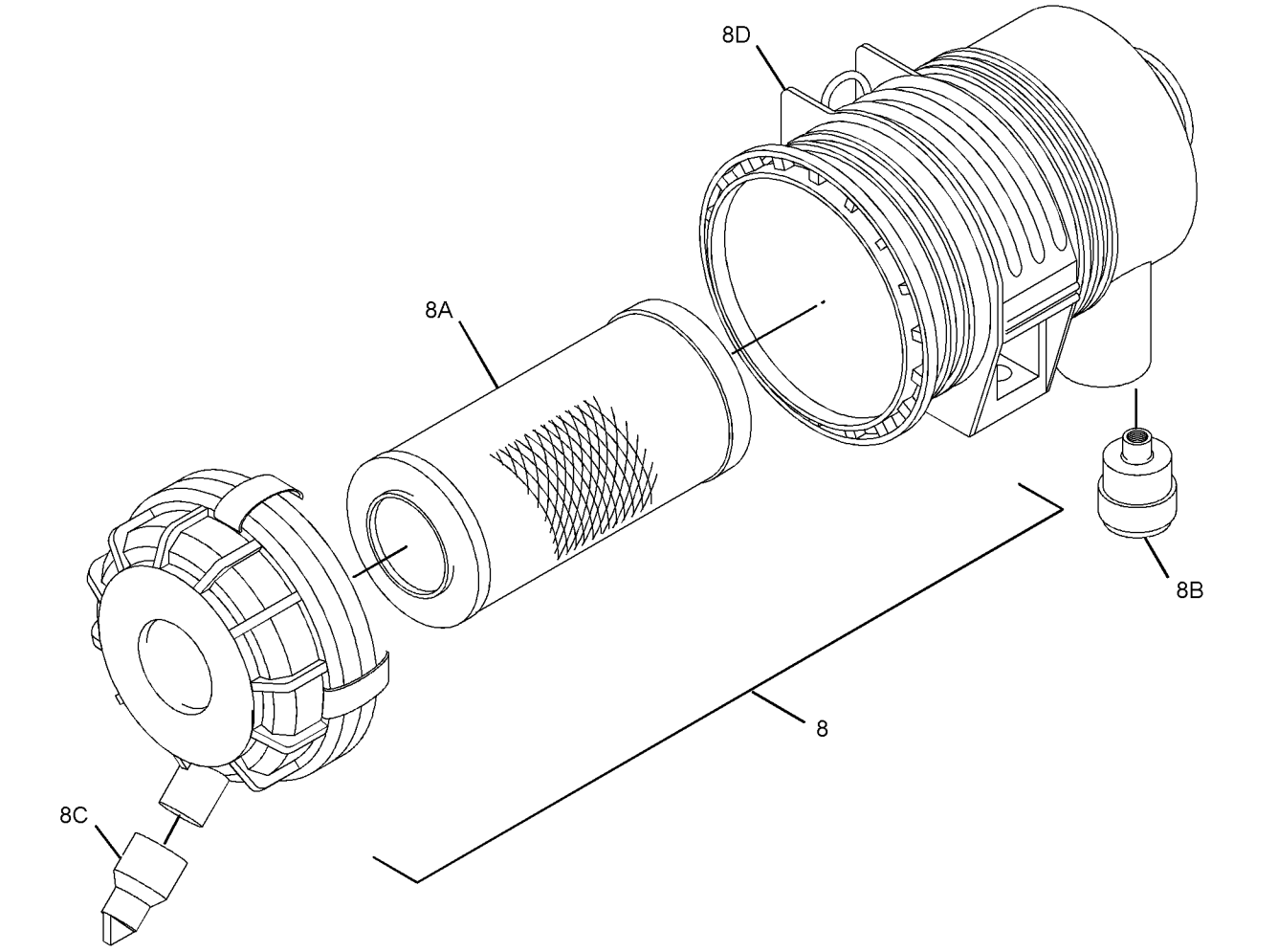

GRAPHIC #1 g01953439

317-0649 **AIR CLEANER GP (**contd.**)** **i06831575**

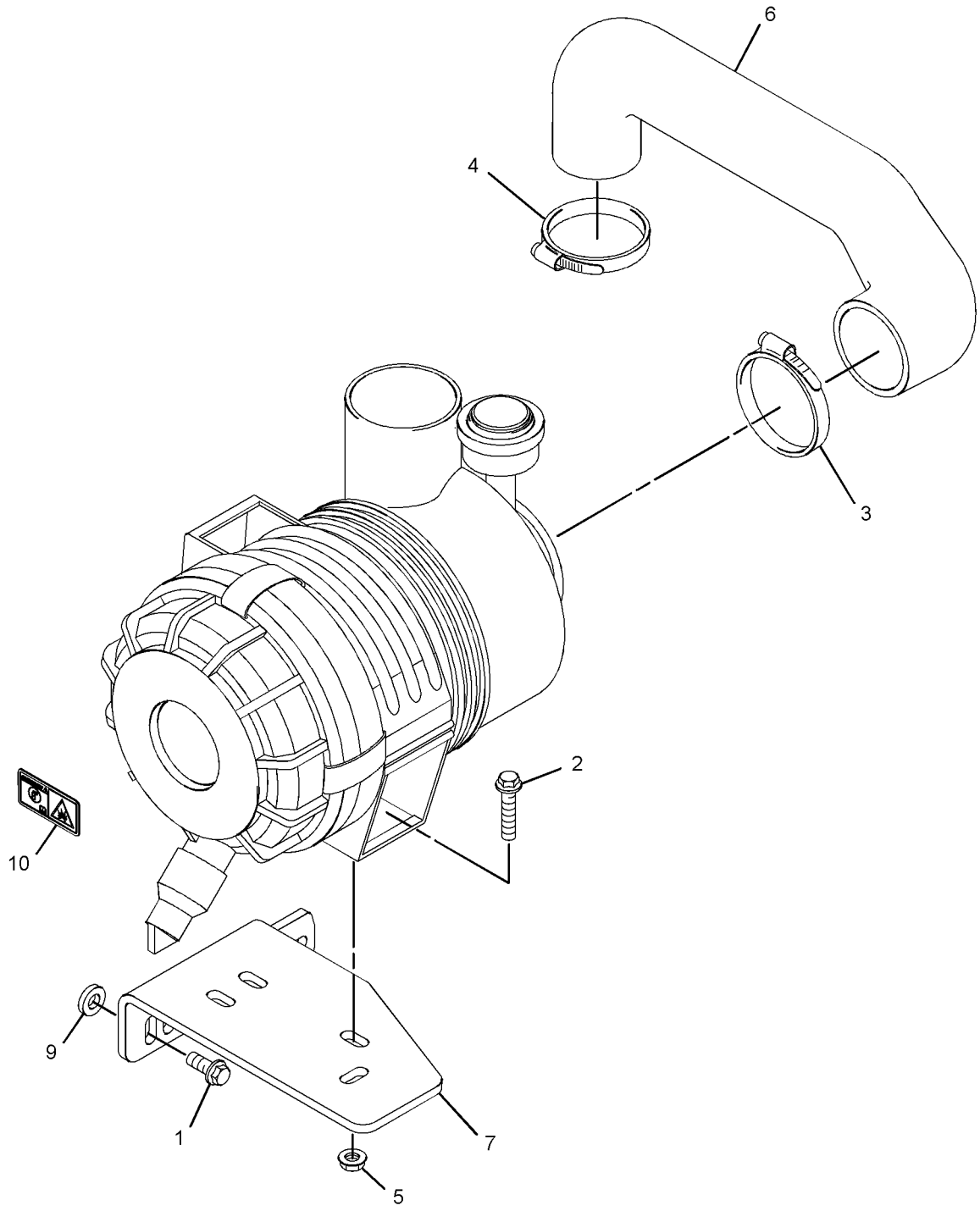

GRAPHIC #2 <END> g06157989

317-0649 AIR CLEANER GP

PART OF 417-7273, 489-4263, 506-0520, 513-2239, 557-7471 ENGINE AR-PRIMARY
TYPE 3

SMCS-1051, 1054

i08043707

NOTE	REF NO	GRAPHIC REF	PART NUMBER	QTY	PART NAME 1 2 3 4 5 6 (PRODUCT LEVEL)	SEE PAGE
M	1	1	**6I-0217**	2	BOLT (M8X1.25X20-MM)	
M	2	1	**6I-0254**	2	BOLT (M8X1.25X30-MM)	
	3	1	**9M-7959**	1	CLAMP-HOSE	
	4	1	**103-1067**	1	CLAMP-HOSE	
M	5	1	**153-5592**	2	NUT (M8X1.25-THD)	
	6	1	**238-0245**	1	HOSE-AIR CLEANER	
	7	1	**326-8547**	1	BRACKET	
CY	8	1	*554-3084*	1	AIR CLEANER GP (TURBOCHARGER)	598
	9	1	**468-7382**	1	SPACER (8.8X25.4X6-MM THK)	
	10	1	**326-9052**	1	FILM-WARNING (DO NOT SPRAY, READ OMM)	

C - CHANGE FROM PREVIOUS TYPE
M - METRIC PART
Y - SEPARATE ILLUSTRATION

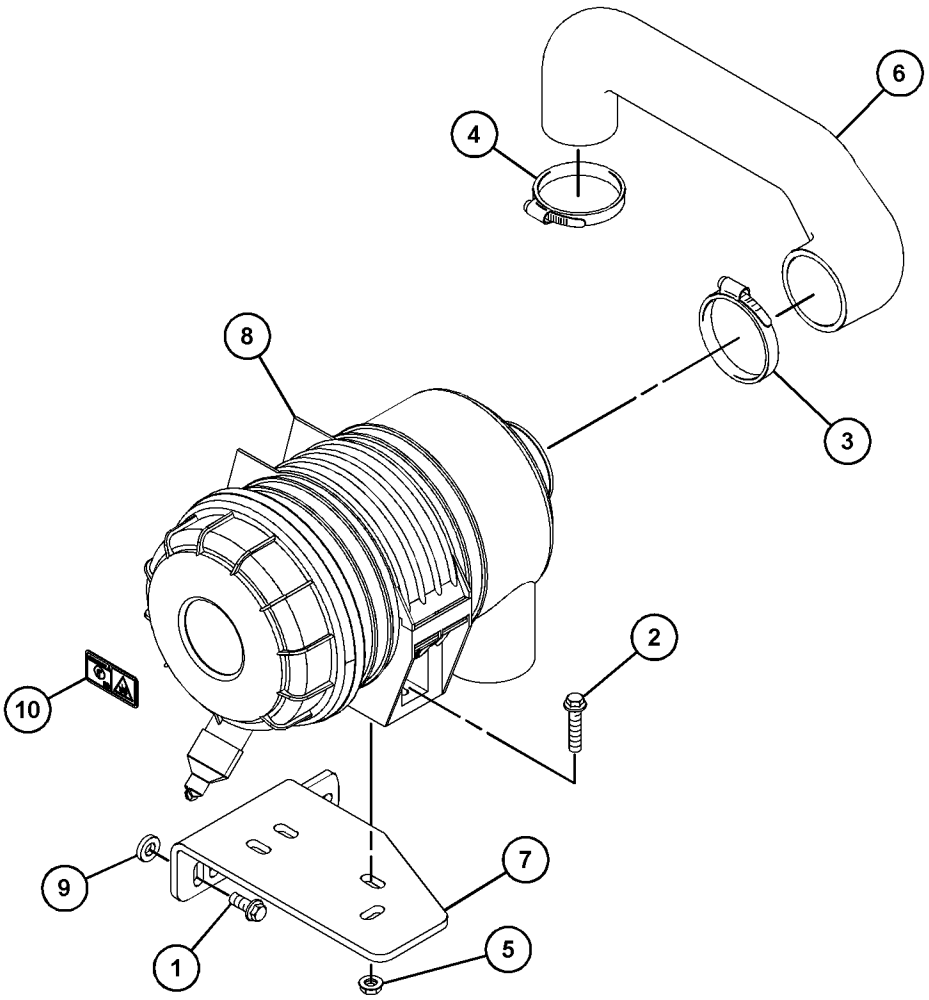

GRAPHIC #1 <END> g06516760

326-8543 AIR CLEANER GP

TYPE 1

SMCS-1051, 1054 **i04891422**

NOTE	REF NO	GRAPHIC REF	PART NUMBER	QTY	PART NAME 1 2 3 4 5 6 (PRODUCT LEVEL)	SEE PAGE
M	1	2	**6I-0217**	2	BOLT (M8X1.25X20-MM)	
M	2	2	**6I-0254**	2	BOLT (M8X1.25X30-MM)	
	3	2	**103-6714**	1	CLIP	
M	4	2	**153-5592**	2	NUT (M8X1.25-THD)	
	5	1	**247-1378**	1	FILTER ELEMENT AS-AIR (TURBOCHARGER)	
	5A	1	**247-1380**	1	FILTER ELEMENT-AIR	
	5B	1	**271-5059**	1	INDICATOR (AIR FILTER SERVICE)	
	5C	1	**271-5062**	1	VALVE-DUST	
	5D	1	**321-7701**	1	BRACKET	
	6	2	**292-1992**	1	SPACER	
	7	2	**326-1010**	1	CLAMP-HOSE	
	8	2	**326-8547**	1	BRACKET	
	9	2	**365-5515**	1	HOSE-AIR	
	10	2	**329-1292**	1	CLIP-HOSE	
	11	2	**336-4079**	1	CAP-RAIN	

M - METRIC PART

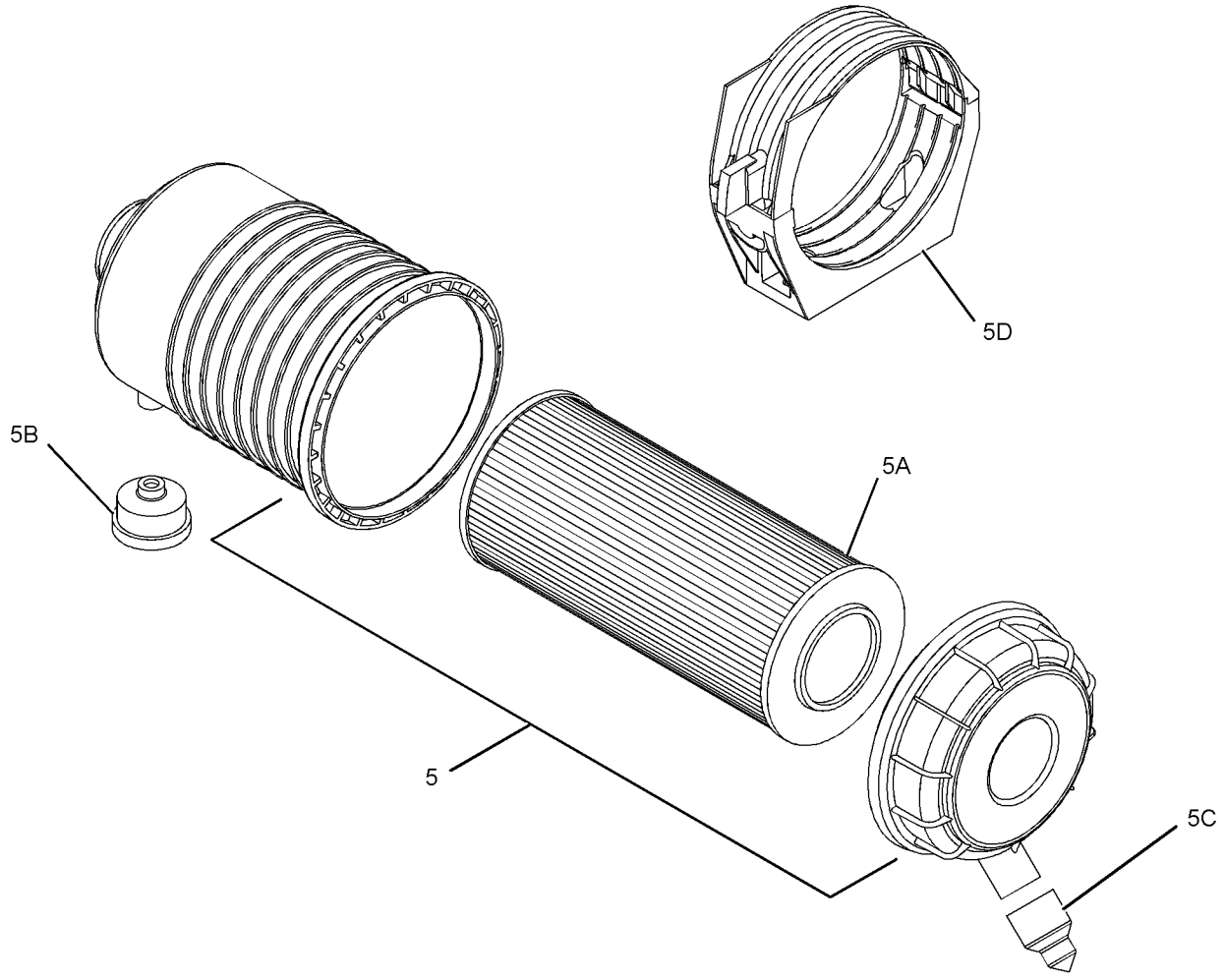

GRAPHIC #1 g01618583

326-8543 **AIR CLEANER GP (**contd.**)** **i04891422**

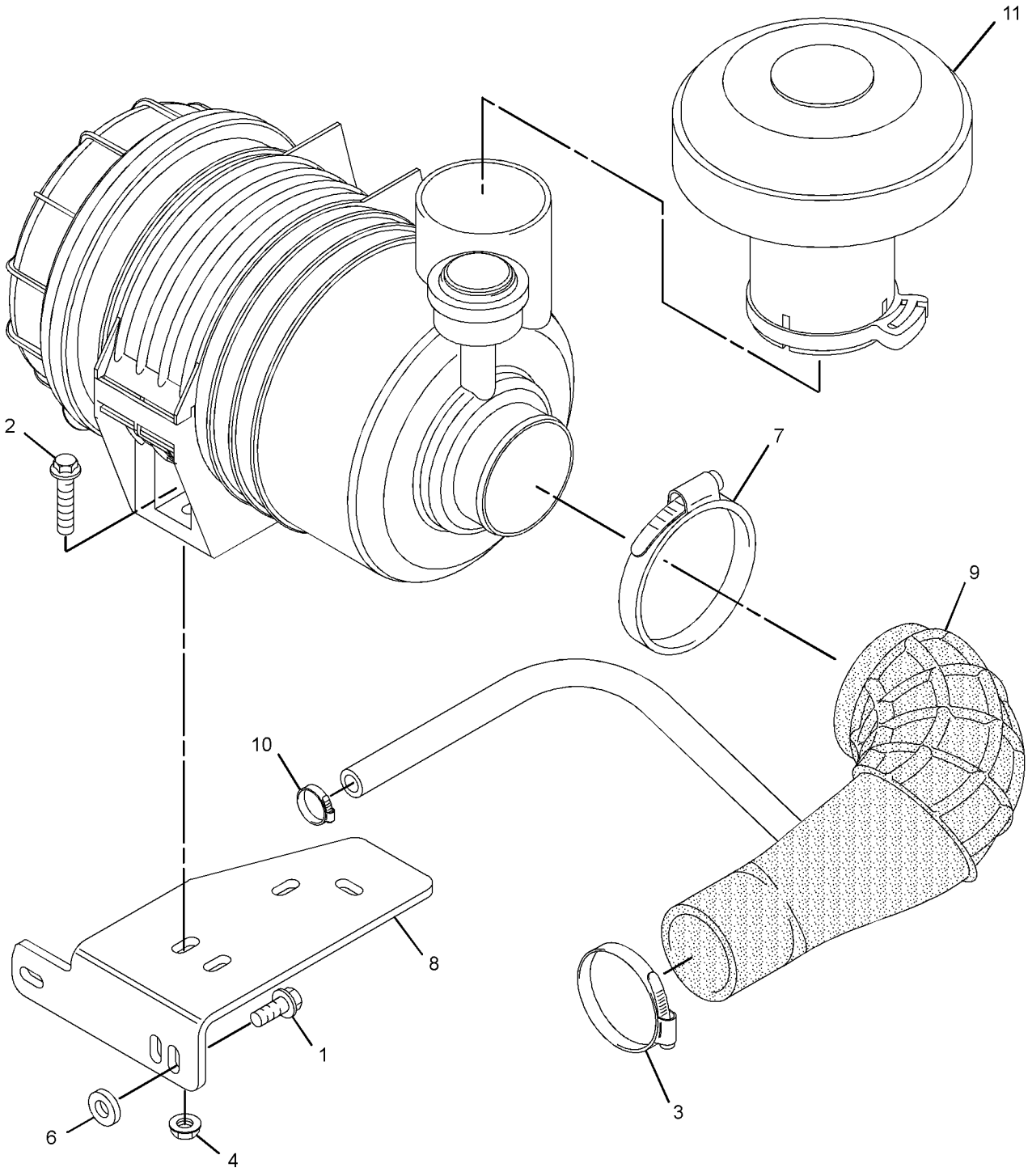

GRAPHIC #2 <END> g03033736

326-8543 AIR CLEANER GP

PART OF 506-0518, 506-0519, 516-2639, 518-0165 ENGINE AR-PRIMARY
TYPE 2

SMCS-1051, 1054 **i06831573**

NOTE	REF NO	GRAPHIC REF	PART NUMBER	QTY	PART NAME 1 2 3 4 5 6 (PRODUCT LEVEL)	SEE PAGE
M	1	2	**6I-0217**	2	BOLT (M8X1.25X20-MM)	
M	2	2	**6I-0254**	2	BOLT (M8X1.25X30-MM)	
	3	2	**103-1067**	1	CLAMP-HOSE	
M	4	2	**153-5592**	2	NUT (M8X1.25-THD)	
	5	1	**247-1378**	1	FILTER ELEMENT AS-AIR (TURBOCHARGER)	
	5A	1	**247-1380**	1	FILTER ELEMENT-AIR	
	5B	1	**271-5059**	1	INDICATOR (AIR FILTER SERVICE)	
	5C	1	**271-5062**	1	VALVE-DUST	
	5D	1	**321-7701**	1	BRACKET	
	6	2	**468-7382**	1	SPACER (8.8X25.4X6-MM THK)	
	7	2	**326-1010**	1	CLAMP-HOSE	
	8	2	**326-8547**	1	BRACKET	
	9	2	**365-5515**	1	HOSE-AIR	
	10	2	**329-1292**	1	CLIP-HOSE	
	11	2	**326-9052**	1	FILM-WARNING (DO NOT SPRAY, READ OMM)	

M - METRIC PART

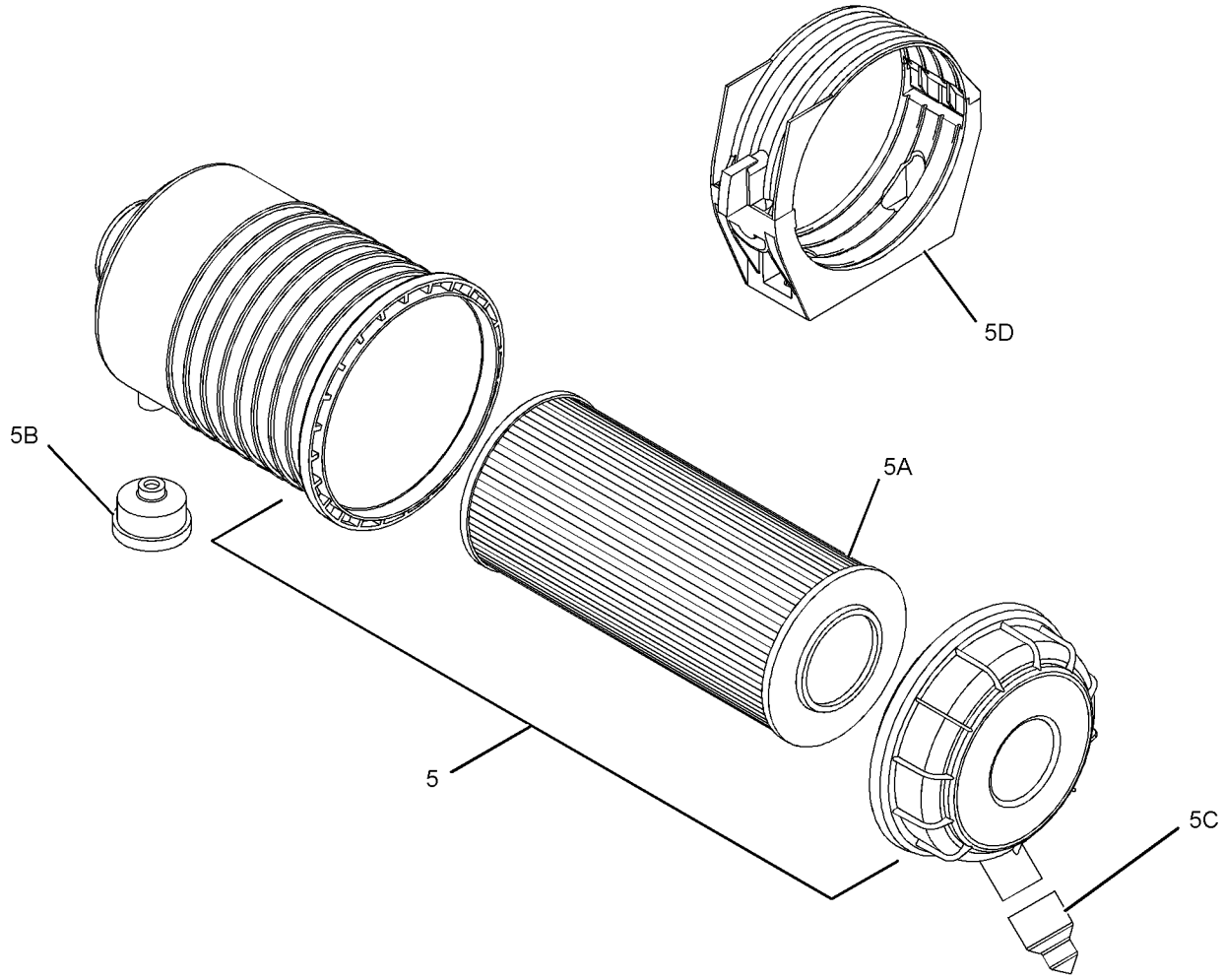

GRAPHIC #1 g01618583

326-8543 **AIR CLEANER GP (**contd.**)** **i06831573**

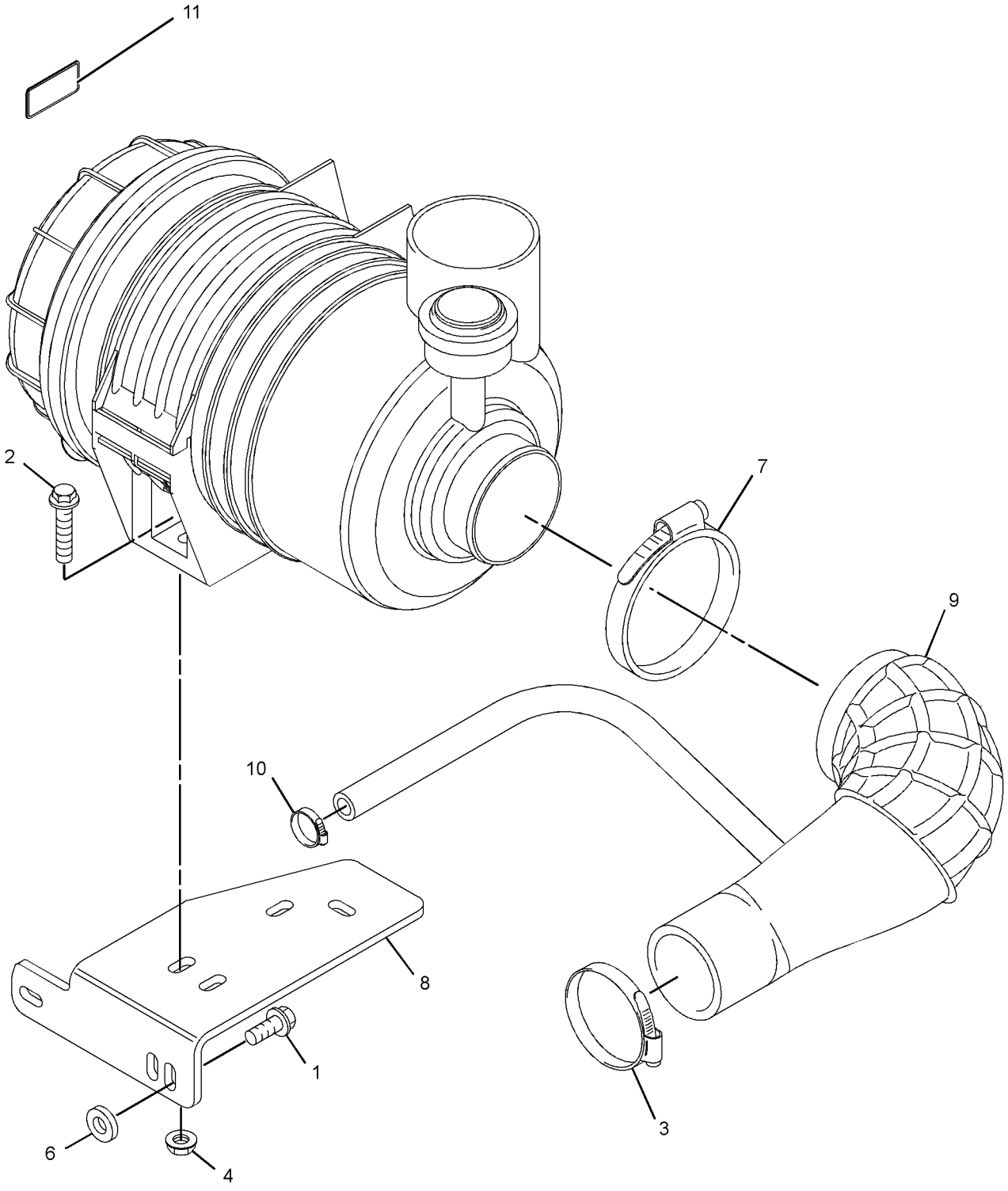

GRAPHIC #2 <END> g03869648

326-8543 AIR CLEANER GP

PART OF 506-0518, 506-0519, 516-2639, 518-0165, 557-6086 ENGINE AR-PRIMARY
TYPE 3

SMCS-1051, 1054

i07776764

NOTE	REF NO	GRAPHIC REF	PART NUMBER	QTY	PART NAME 1 2 3 4 5 6 (PRODUCT LEVEL)	SEE PAGE
M	1	1	**6I-0217**	2	BOLT (M8X1.25X20-MM)	
M	2	1	**6I-0254**	2	BOLT (M8X1.25X30-MM)	
	3	1	**103-1067**	1	CLAMP-HOSE	
M	4	1	**153-5592**	2	NUT (M8X1.25-THD)	
CY	5	1	*554-3084*	1	AIR CLEANER GP	598
	6	1	**468-7382**	1	SPACER (8.8X25.4X6-MM THK)	
	7	1	**326-1010**	1	CLAMP-HOSE	
	8	1	**326-8547**	1	BRACKET	
	9	1	**365-5515**	1	HOSE-AIR	
	10	1	**329-1292**	1	CLIP-HOSE	
	11	1	**326-9052**	1	FILM-WARNING (DO NOT SPRAY, READ OMM)	

C - CHANGE FROM PREVIOUS TYPE
M - METRIC PART
Y - SEPARATE ILLUSTRATION

326-8543 **AIR CLEANER GP (**contd.**)** **i07776764**

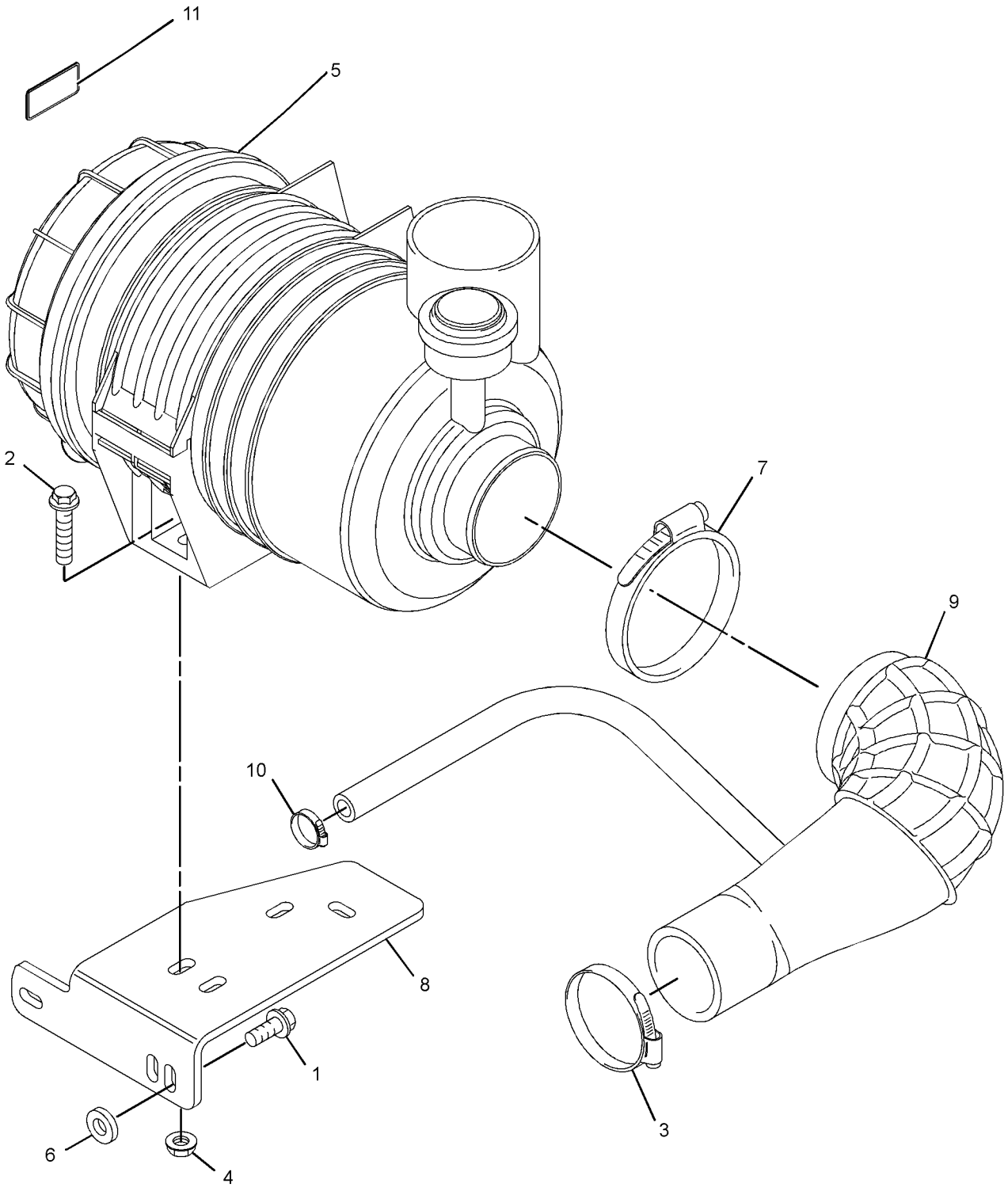

GRAPHIC #1 <END> g06480134

551-6187 AIR CLEANER GP

7-IN

FIELD REPLACEMENT FOR 554-3084—PAGE: 598

PART OF 611-6891 AIR CLEANER GP

SMCS-1051, 1054

i07878211

NOTE	REF NO	GRAPHIC REF	PART NUMBER	QTY	PART NAME 1 2 3 4 5 6 (PRODUCT LEVEL)	SEE PAGE
	1	1	**271-5059**	1	INDICATOR (AIR FILTER SERVICE)	
	2	1	**271-5062**	1	VALVE-DUST	
	3	1	**321-7701**	1	BRACKET	
	4	1	**551-6183**	1	FILTER ELEMENT-AIR	

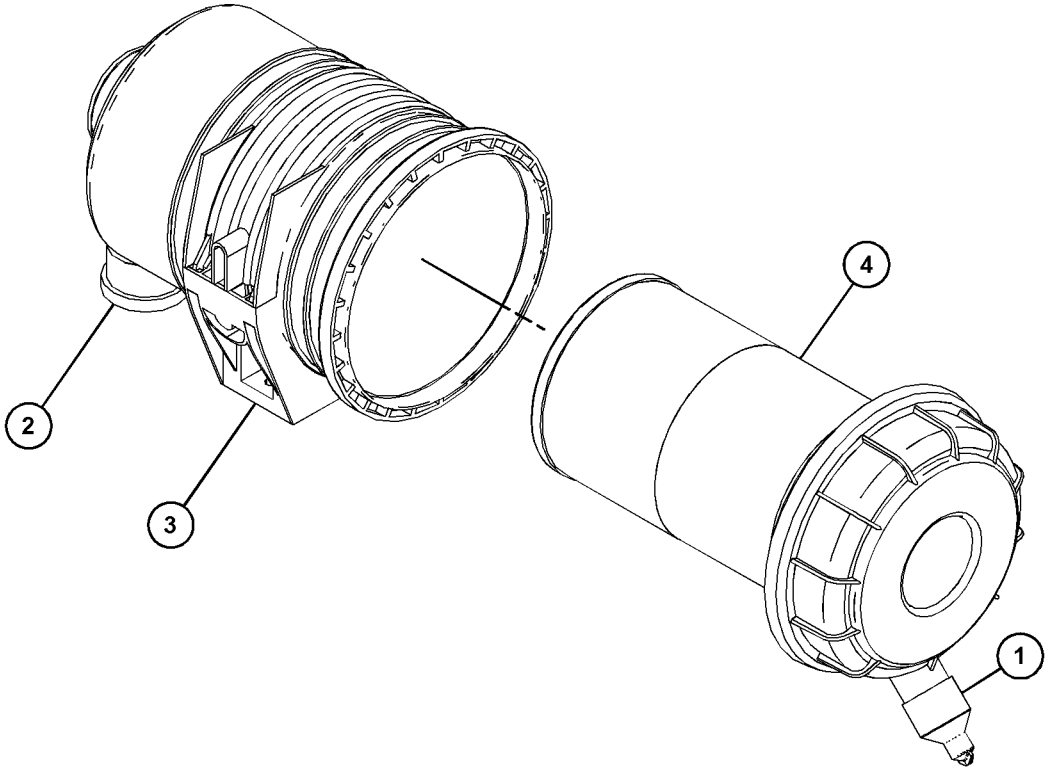

GRAPHIC #1 <END> g06451612

554-3084 AIR CLEANER GP

7-IN

FIELD REPLACEMENT ORDER 551-6187—PAGE: 597

PART OF 317-0649, 326-8543, 600-1135, 600-5149, 600-5153 AIR CLEANER GP

SMCS-1051, 1054

i08424961

NOTE	REF NO	GRAPHIC REF	PART NUMBER	QTY	PART NAME 1 2 3 4 5 6 (PRODUCT LEVEL)	SEE PAGE
	1	1	**271-5059**	1	INDICATOR (AIR FILTER SERVICE)	
	2	1	**271-5062**	1	VALVE-DUST	
	3	1	**321-7701**	1	BRACKET	
	4	1	**551-6183**	1	FILTER ELEMENT-AIR	

554-3084 **AIR CLEANER GP** (contd.) **i08424961**

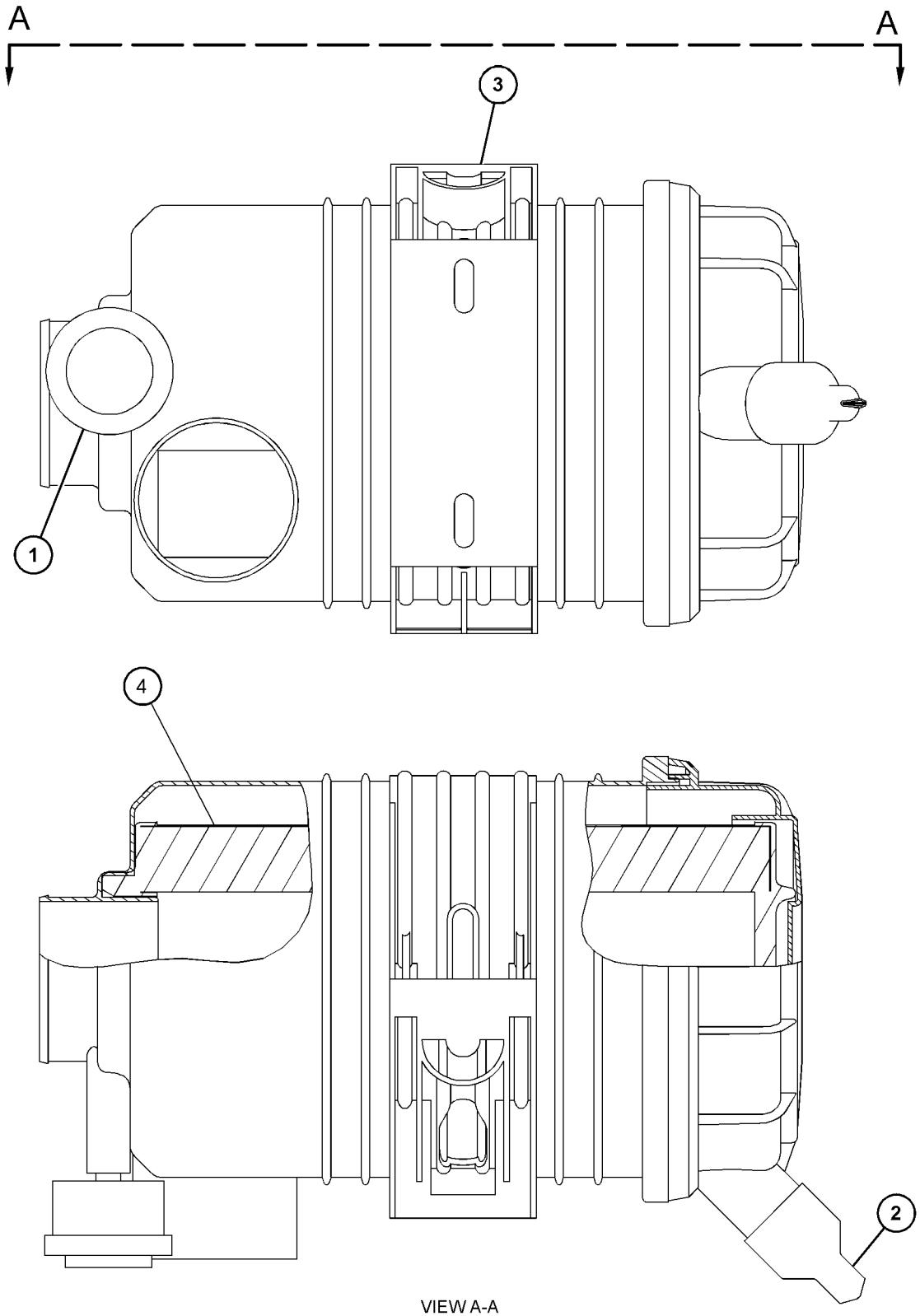

VIEW A-A

GRAPHIC #1 <END> g06659172

600-1135 AIR CLEANER GP

PART OF 516-2639 ENGINE AR-PRIMARY

SMCS-1051, 1054 **i09819734**

NOTE	REF NO	GRAPHIC REF	PART NUMBER	QTY	PART NAME 1 2 3 4 5 6 (PRODUCT LEVEL)	SEE PAGE
M	1	1	**6I-0217**	2	BOLT (M8X1.25X20-MM)	
M	2	1	**6I-0254**	2	BOLT (M8X1.25X30-MM)	
M	3	1	**153-5592**	2	NUT (M8X1.25-THD)	
	4	1	**103-1067**	1	CLAMP-HOSE	
	5	1	**326-1010**	1	CLAMP-HOSE	
	6	1	**326-8547**	1	BRACKET	
	7	1	**329-1292**	1	CLIP-HOSE	
	8	1	**365-5515**	1	HOSE-AIR	
	9	1	**468-7382**	1	SPACER (8.8X25.4X6-MM THK)	
Y	10	1	*554-3084*	1	AIR CLEANER GP (TURBOCHARGER)	598
	11	1	**326-9052**	1	FILM-WARNING (DO NOT SPRAY, READ OMM)	
					(EXPLOSION HAZARD. COULD CAUSE PERSONAL INJURY OR DEATH. DO NOT USE ETHER. READ THE OPERATOR'S MANUAL.)	
F			**555-8348**	1	FILM-IDENTIFICATION (AIR FILTER)	

F - NOT SHOWN
M - METRIC PART
Y - SEPARATE ILLUSTRATION

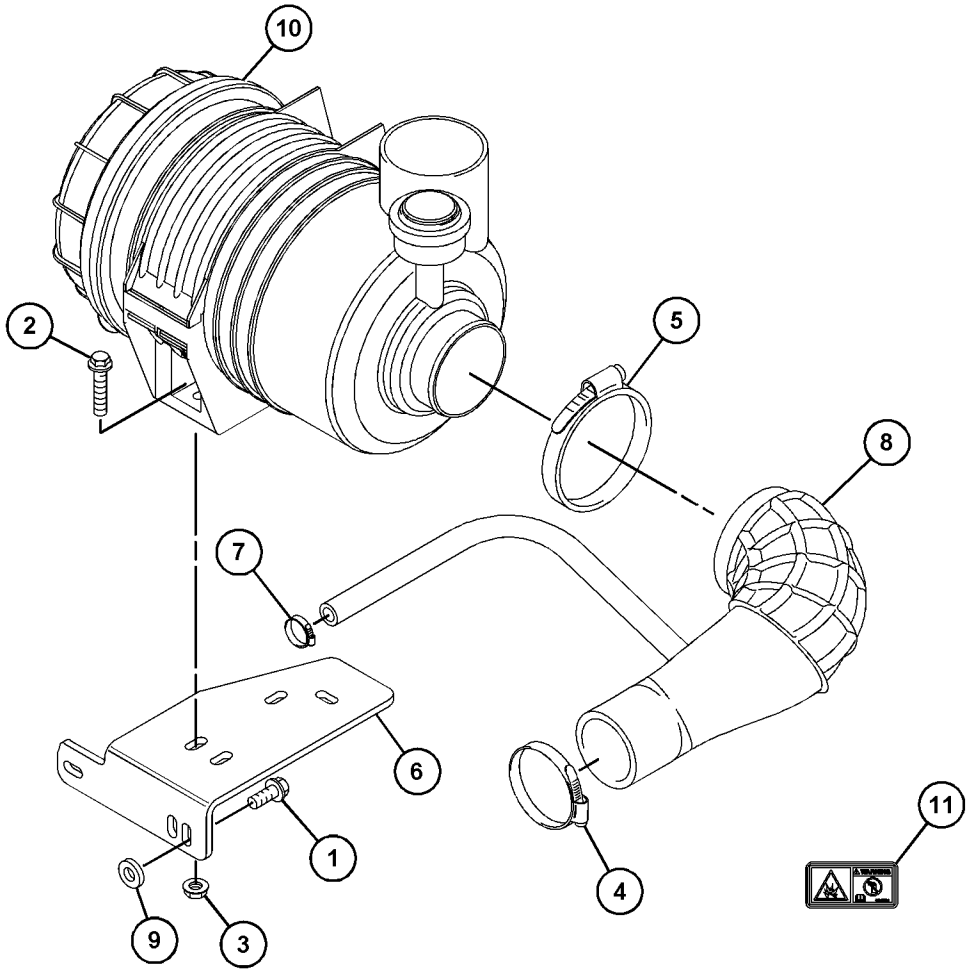

GRAPHIC #1 <END> g07606998

600-5149 AIR CLEANER GP

S/N: C6M10505-UP

PART OF 417-7273 ENGINE AR-PRIMARY

SMCS-1051, 1054 **i09841857**

NOTE	REF NO	GRAPHIC REF	PART NUMBER	QTY	PART NAME 1 2 3 4 5 6 (PRODUCT LEVEL)	SEE PAGE
	1	1	**103-1067**	1	CLAMP-HOSE	
M	2	2	**153-5592**	2	NUT (M8X1.25-THD)	
	3	1	**238-0245**	1	HOSE-AIR CLEANER	
	4	1	**326-1010**	1	CLAMP-HOSE	
	5	2	**326-8547**	1	BRACKET	
	6	1	**326-9052**	1	FILM-WARNING (DO NOT SPRAY, READ OMM)	
					(EXPLOSION HAZARD. COULD CAUSE PERSONAL INJURY OR DEATH. DO NOT USE ETHER. READ THE OPERATORS MANUAL.)	
	7	2	**468-7382**	1	SPACER (8.8X25.4X6-MM THK)	
Y	8	1	*554-3084*	1	AIR CLEANER GP	598
	9	1	**555-8348**	1	FILM-IDENTIFICATION (AIR FILTER)	
M	10	2	**6I-0217**	2	BOLT (M8X1.25X20-MM)	
M	11	2	**6I-0254**	2	BOLT (M8X1.25X30-MM)	
	12	2	**217-0099**	2	SPACER (8.2X25X2-MM THK)	

M - METRIC PART
Y - SEPARATE ILLUSTRATION

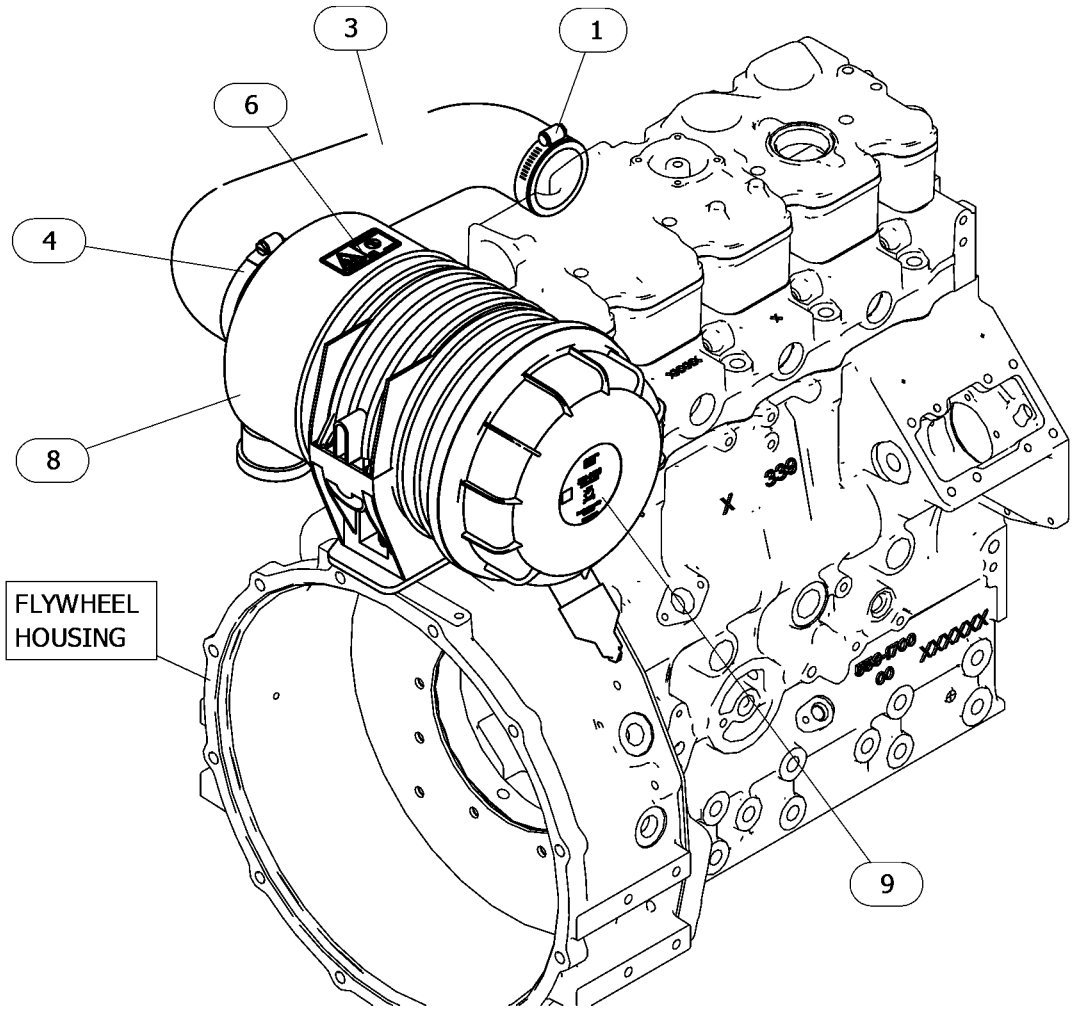

GRAPHIC #1 g06770831

600-5149 **AIR CLEANER GP (**contd.**)** **i09841857**

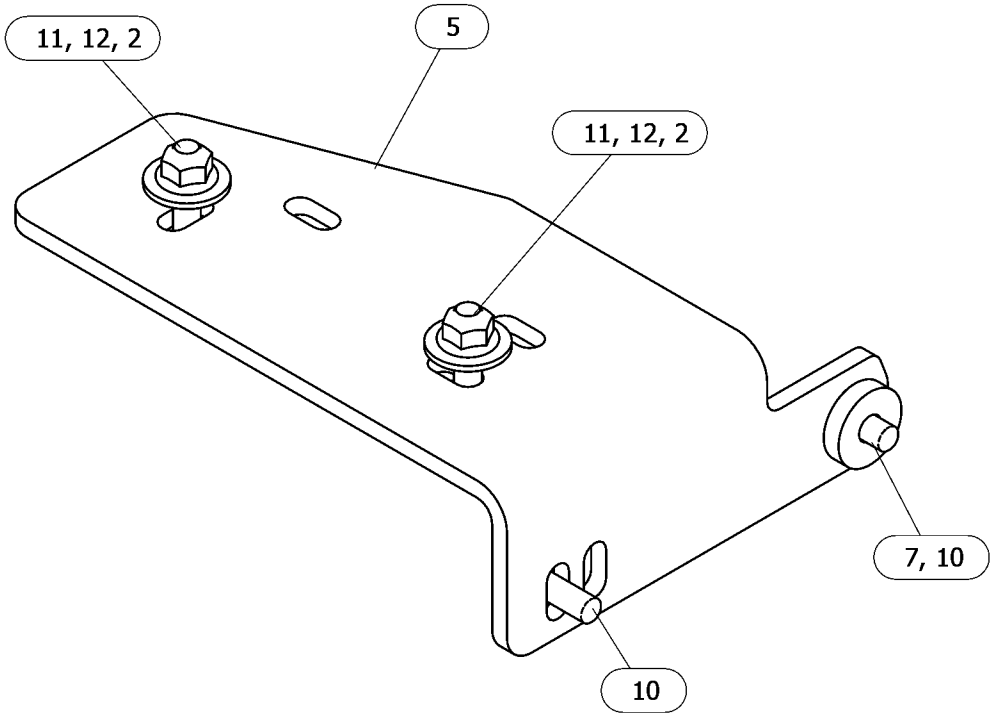

VIEW OF AREA A
(PARTS REMOVED FOR CLARITY)
(ROTATED 90° CLOCKWISE)

GRAPHIC #2 <END> g06770831_01

600-5153 AIR CLEANER GP

S/N: C6M10494-UP

SMCS-1051, 1054 **i08712045**

NOTE	REF NO	GRAPHIC REF	PART NUMBER	QTY	PART NAME 1 2 3 4 5 6 (PRODUCT LEVEL)	SEE PAGE
	1	2	**103-1067**	1	CLAMP-HOSE	
M	2	2	**153-5592**	2	NUT (M8X1.25-THD)	
	3	1	**326-1010**	1	CLAMP-HOSE	
	4	2	**326-8547**	1	BRACKET	
	5	1	**326-9052**	1	FILM-WARNING (DO NOT SPRAY, READ OMM)	
					(EXPLOSION HAZARD. COULD CAUSE PERSONAL INJURY OR DEATH. DO NOT USE ETHER. READ THE OPERATOR'S MANUAL.)	
	6	1	**329-1292**	1	CLIP-HOSE	
	7	2	**365-5515**	1	HOSE-AIR	
	8	2	**468-7382**	1	SPACER (8.8X25.4X6-MM THK)	
Y	9	1	*554-3084*	1	AIR CLEANER GP	598
	10	2	**555-8348**	1	FILM-IDENTIFICATION (AIR FILTER)	
M	11	2	**6I-0217**	2	BOLT (M8X1.25X20-MM)	
M	12	2	**6I-0254**	2	BOLT (M8X1.25X30-MM)	
	13	2	**217-0099**	2	SPACER (8.2X25X2-MM THK)	

M - METRIC PART
Y - SEPARATE ILLUSTRATION

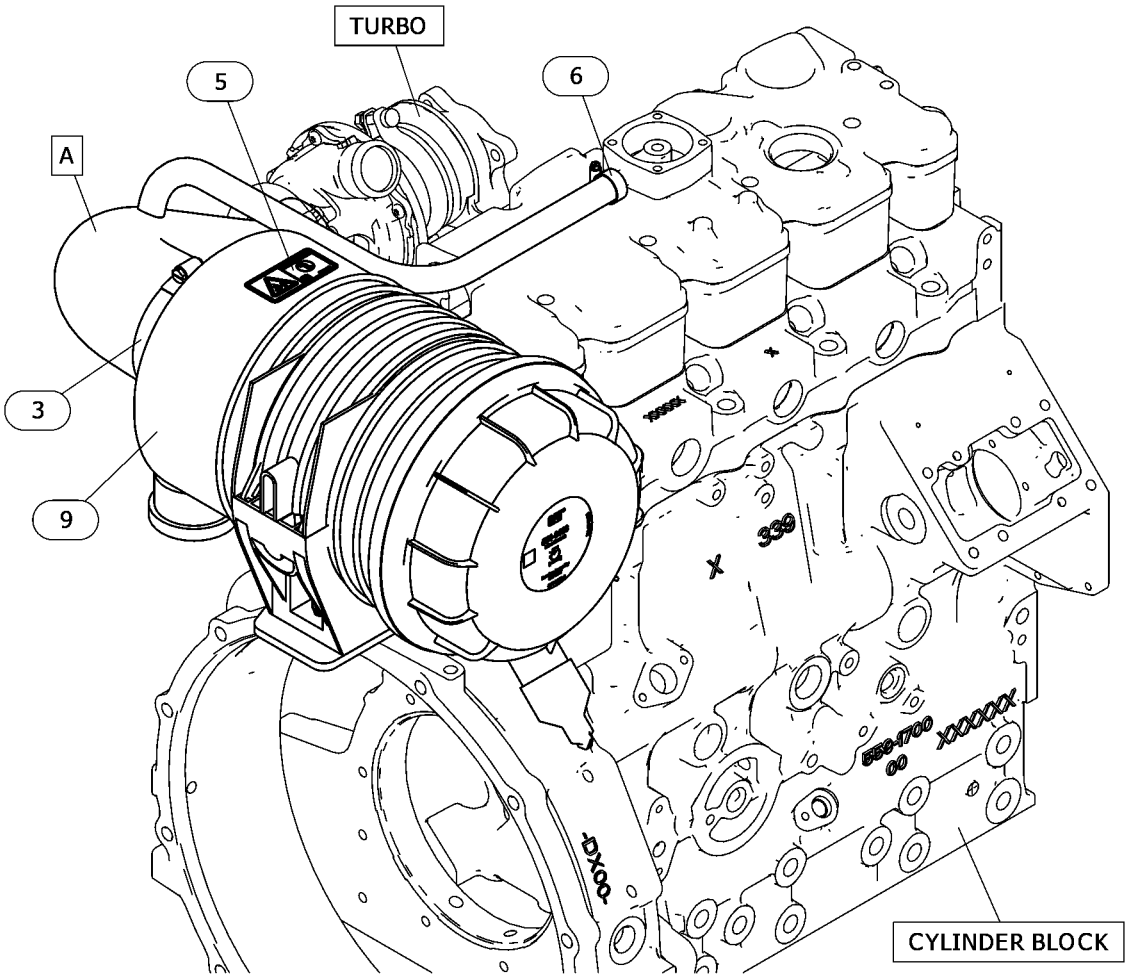

GRAPHIC #1 g06769900

600-5153 **AIR CLEANER GP (**contd.**)** **i08712045**

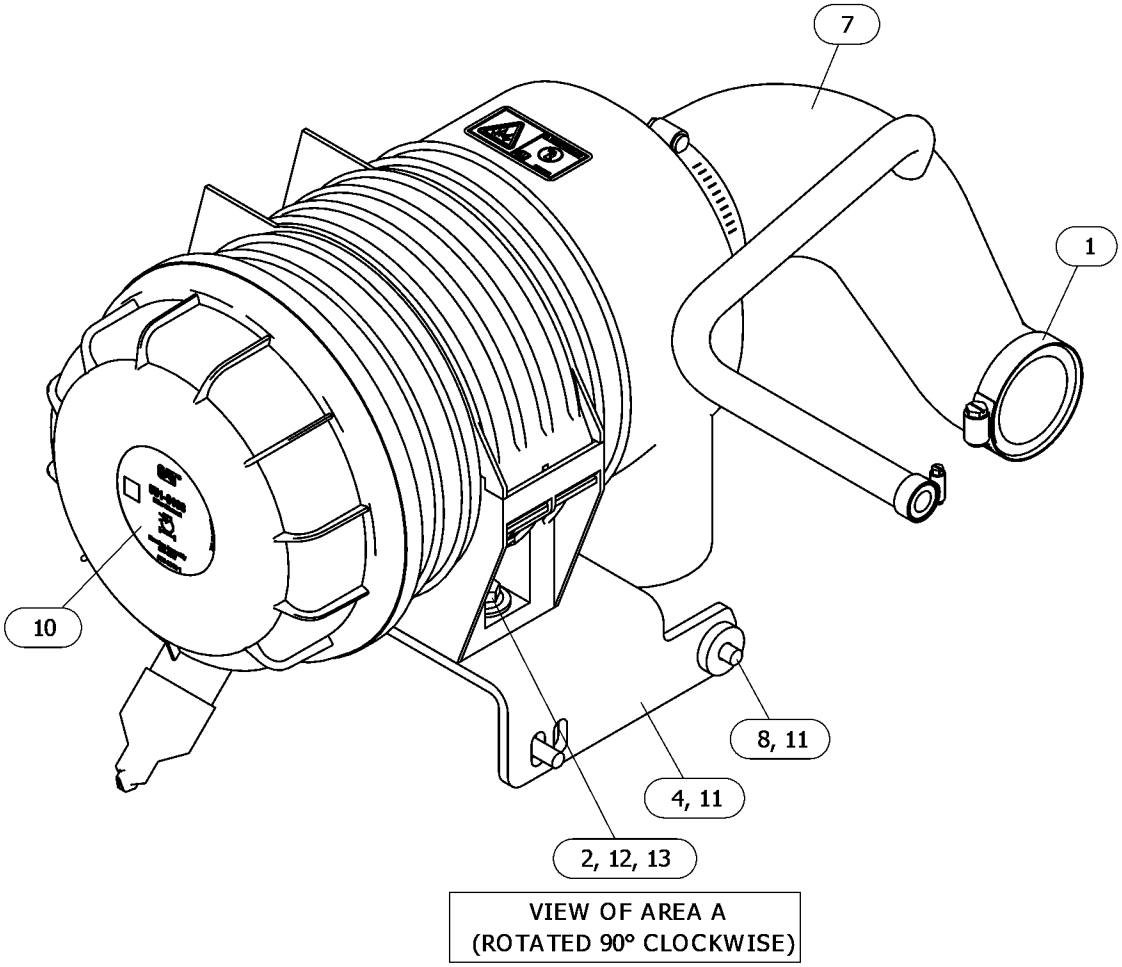

GRAPHIC #2 <END> g06769900_01

611-6891 AIR CLEANER GP

PART OF 417-7273, 557-7471 ENGINE AR-PRIMARY

SMCS-1051, 1054 **i08610611**

NOTE	REF NO	GRAPHIC REF	PART NUMBER	QTY	PART NAME 1 2 3 4 5 6 (PRODUCT LEVEL)	SEE PAGE
M	1	1	**6I-0217**	2	BOLT (M8X1.25X20-MM)	
M	2	1	**6I-0254**	2	BOLT (M8X1.25X30-MM)	
	3	1	**103-1067**	1	CLAMP-HOSE	
M	4	1	**153-5592**	2	NUT (M8X1.25-THD)	
	5	1	**238-0245**	1	HOSE-AIR CLEANER	
	6	1	**326-1010**	1	CLAMP-HOSE	
	7	1	**326-8547**	1	BRACKET	
	8	1	**326-9052**	1	FILM-WARNING (DO NOT SPRAY, READ OMM)	
					(EXPLOSION HAZARD. COULD CAUSE PERSONAL INJURY OR DEATH. DO NOT USE ETHER. READ THE OPERATORS MANUAL.)	
	9	1	**468-7382**	1	SPACER (8.8X25.4X6-MM THK)	
Y	10	1	**551-6187**	1	AIR CLEANER GP	597

M - METRIC PART
Y - SEPARATE ILLUSTRATION

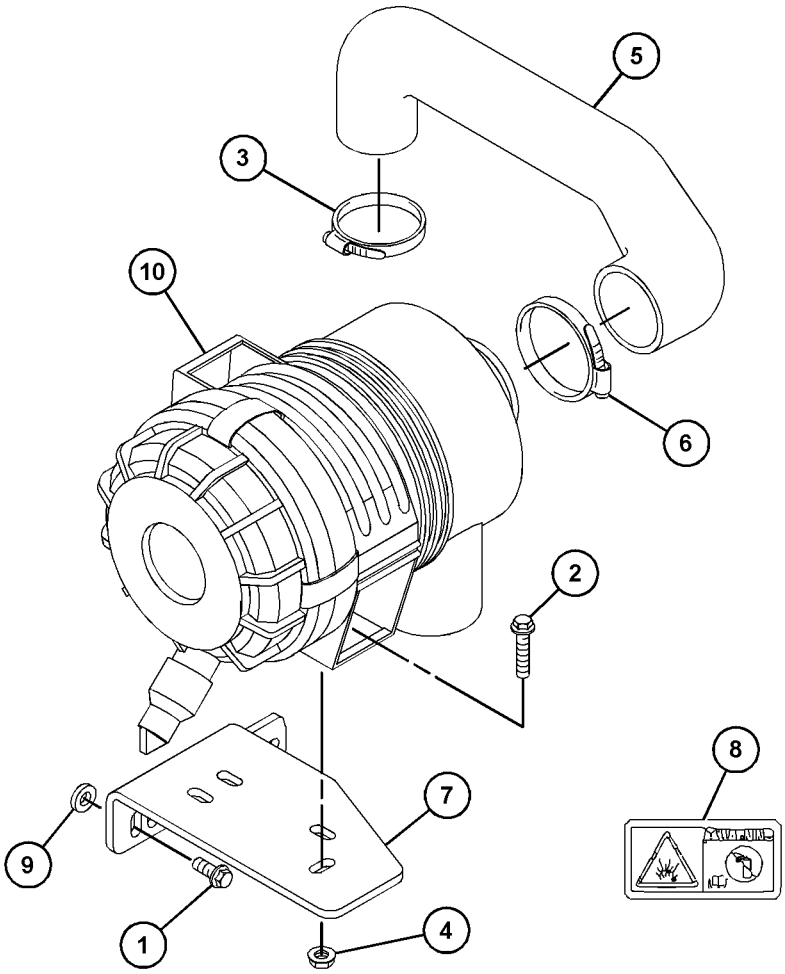

GRAPHIC #1 <END> g06666809

308-2309 CONNECTION GP-EXHAUST

PART OF 417-7273, 489-4263, 506-0518, 506-0519, 506-0520, 512-7969, 513-2239, 516-2639, 518-0165, 557-6086, 557-7471 ENGINE AR-PRIMARY

SMCS-1061 **i07176210**

NOTE	REF NO	GRAPHIC REF	PART NUMBER	QTY	PART NAME 1 2 3 4 5 6 (PRODUCT LEVEL)	SEE PAGE
	1	1	**435-0208**	2	GASKET	
	2	1	**168-9001**	8	BOLT AS	
	3	1	**366-3065**	2	FLANGE	

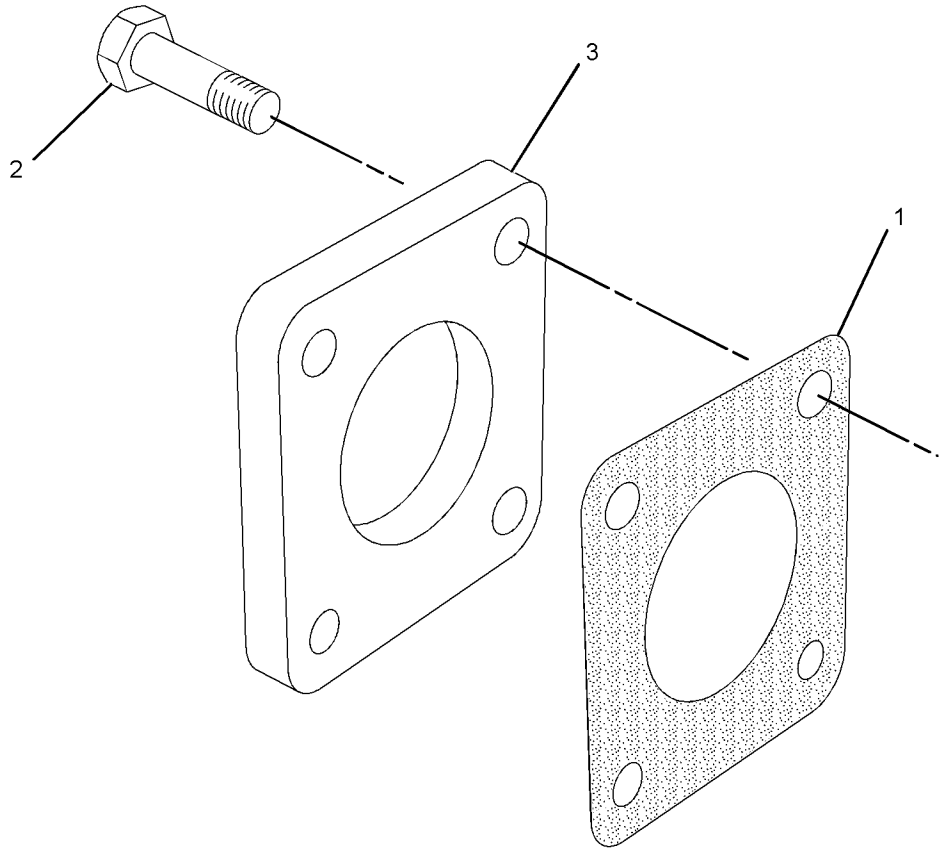

GRAPHIC #1 <END> g01388832

308-5610 CONNECTION GP-EXHAUST

PART OF 489-9224, 514-6556 ENGINE AR-PRIMARY

SMCS-1061 **i07075824**

NOTE	REF NO	GRAPHIC REF	PART NUMBER	QTY	PART NAME 1 2 3 4 5 6 (PRODUCT LEVEL)	SEE PAGE
	1	1	**168-9001**	1	BOLT AS	
	2	1	**252-8372**	1	ELBOW AS-EXHAUST	
	2A	1	**163-5372**	4	WASHER (8X15.4X4-MM THK)	
	2B	1	**435-0208**	1	GASKET	
	2C	1	**191-0563**	1	ELBOW-EXHAUST	
	2D	1	**183-4335**	4	BOLT	
	3	1	**366-3065**	1	FLANGE	
	4	1	**435-0208**	1	GASKET	

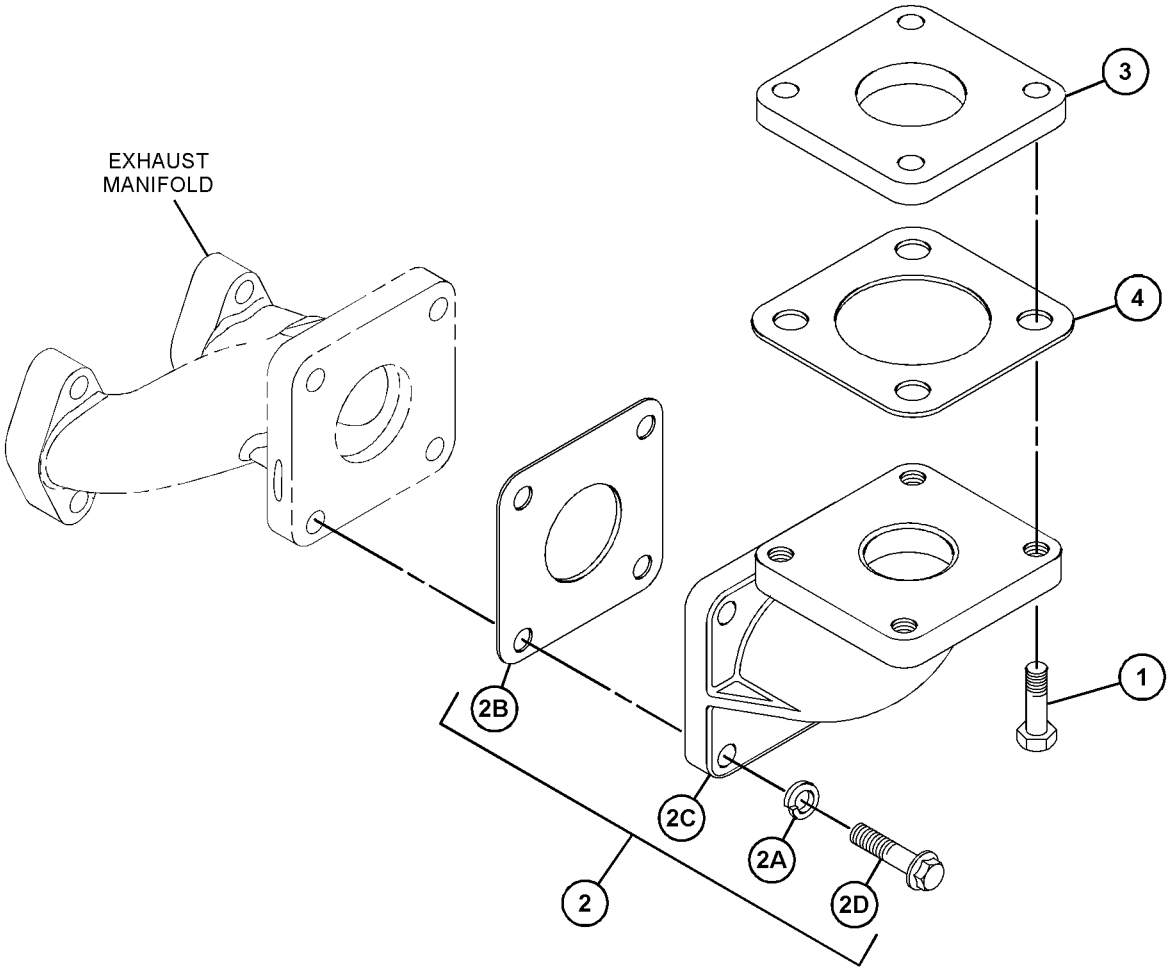

GRAPHIC #1 <END> g06220272

532-9705 CONNECTION GP-EXHAUST

S/N: C6M10203-UP

PART OF 417-7273 ENGINE AR-PRIMARY

SMCS-1061 **i07819872**

NOTE	REF NO	GRAPHIC REF	PART NUMBER	QTY	PART NAME 1 2 3 4 5 6 (PRODUCT LEVEL)	SEE PAGE
	1	1	**168-9001**	4	BOLT AS	
	2	1	**366-3065**	1	FLANGE	
	3	1	**435-0208**	1	GASKET	

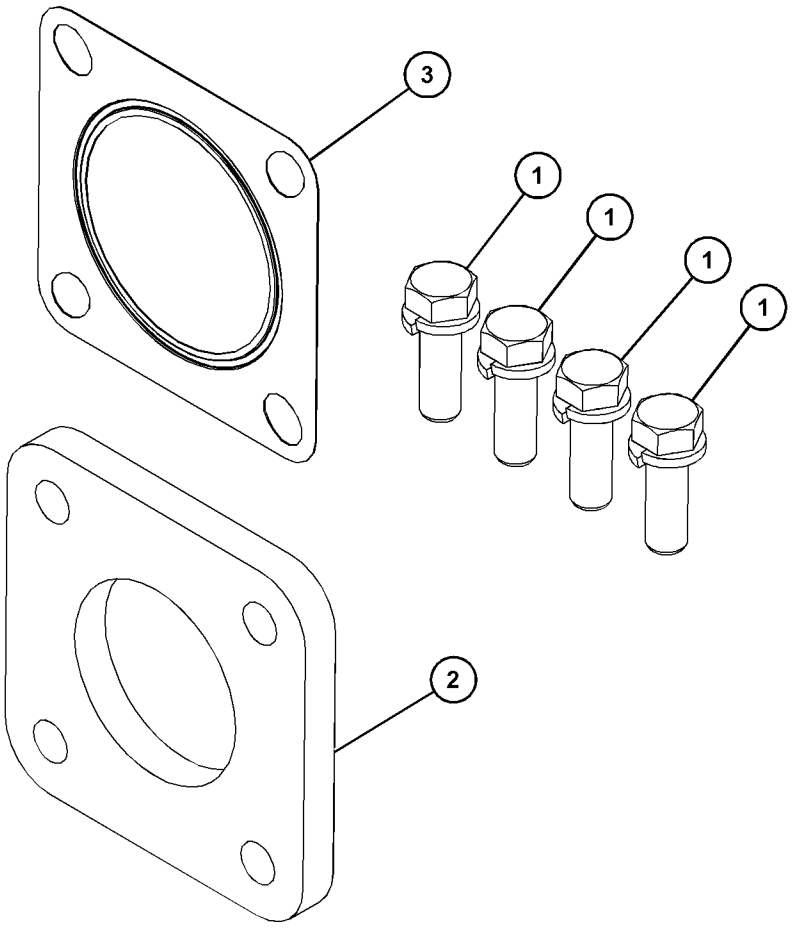

GRAPHIC #1 <END> g06447406

532-9707 CONNECTION GP-EXHAUST

PART OF 514-6556 ENGINE AR-PRIMARY

SMCS-1061 **i08810176**

NOTE	REF NO	GRAPHIC REF	PART NUMBER	QTY	PART NAME 1 2 3 4 5 6 (PRODUCT LEVEL)	SEE PAGE
	1	1	**168-9001**	4	BOLT AS	
	2	1	**252-8372**	1	ELBOW AS-EXHAUST	
		1	**163-5372**	4	WASHER (8X15.4X4-MM THK)	
		1	**183-4335**	4	BOLT	
		1	**191-0563**	1	ELBOW-EXHAUST	
		1	**435-0208**	1	GASKET	
	3	1	**366-3065**	1	FLANGE	
	4	1	**435-0208**	1	GASKET	

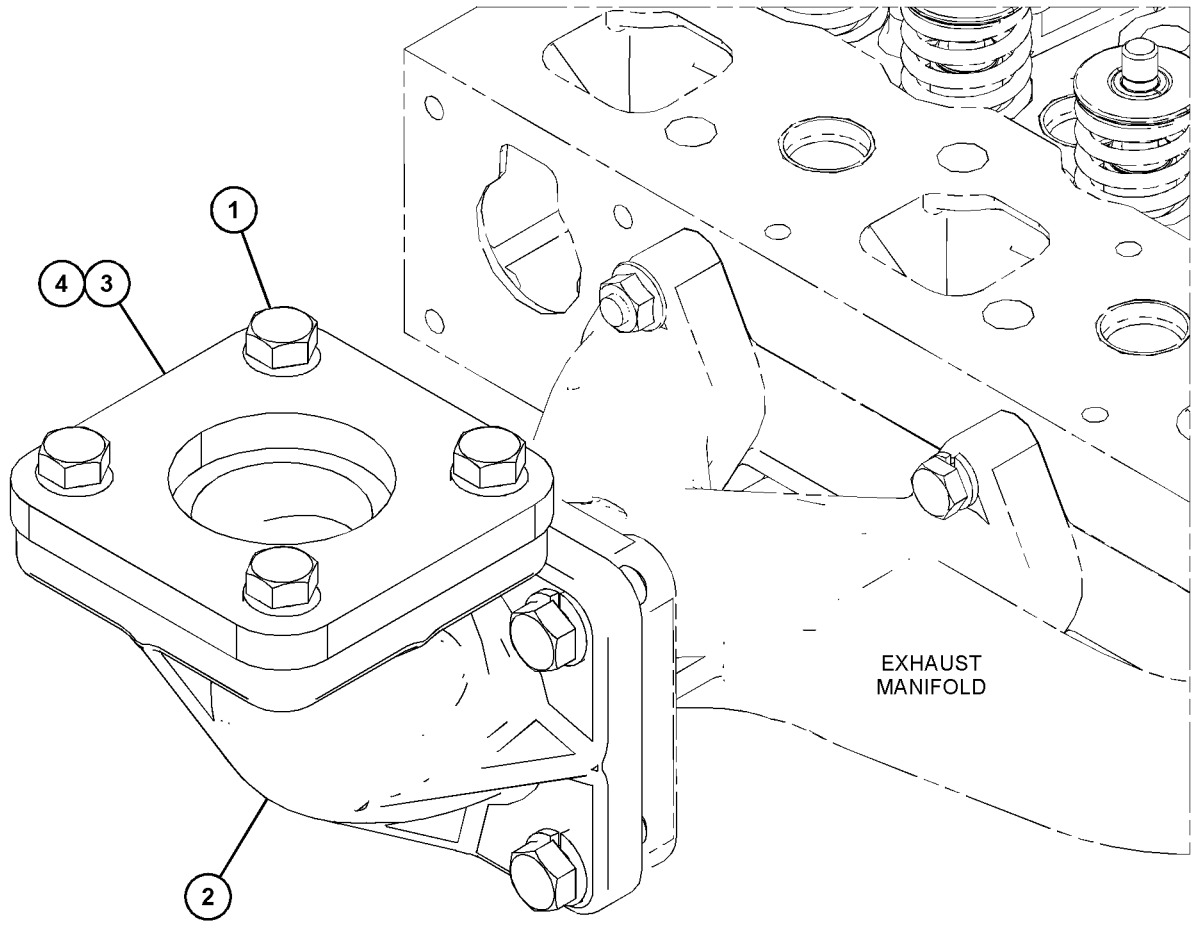

GRAPHIC #1 <END> g07533903

600-5135 COVER GP-EXHAUST

PART OF 435-1636 ENGINE AR-PRIMARY

TYPE 1

SMCS-1062, 1091 **i10053159**

NOTE	REF NO	GRAPHIC REF	PART NUMBER	QTY	PART NAME 1 2 3 4 5 6 (PRODUCT LEVEL)	SEE PAGE
M	1	1	**148-7140**	5	STUD (M8X1.25X37-MM)	
M	2	1	**153-5592**	5	NUT (M8X1.25-THD)	
	3	1	**8F-7242**	5	WASHER (8.7X15.9X1.6-MM THK)	
	4	1	**163-5372**	5	WASHER (8X15.4X4-MM THK)	

M - METRIC PART

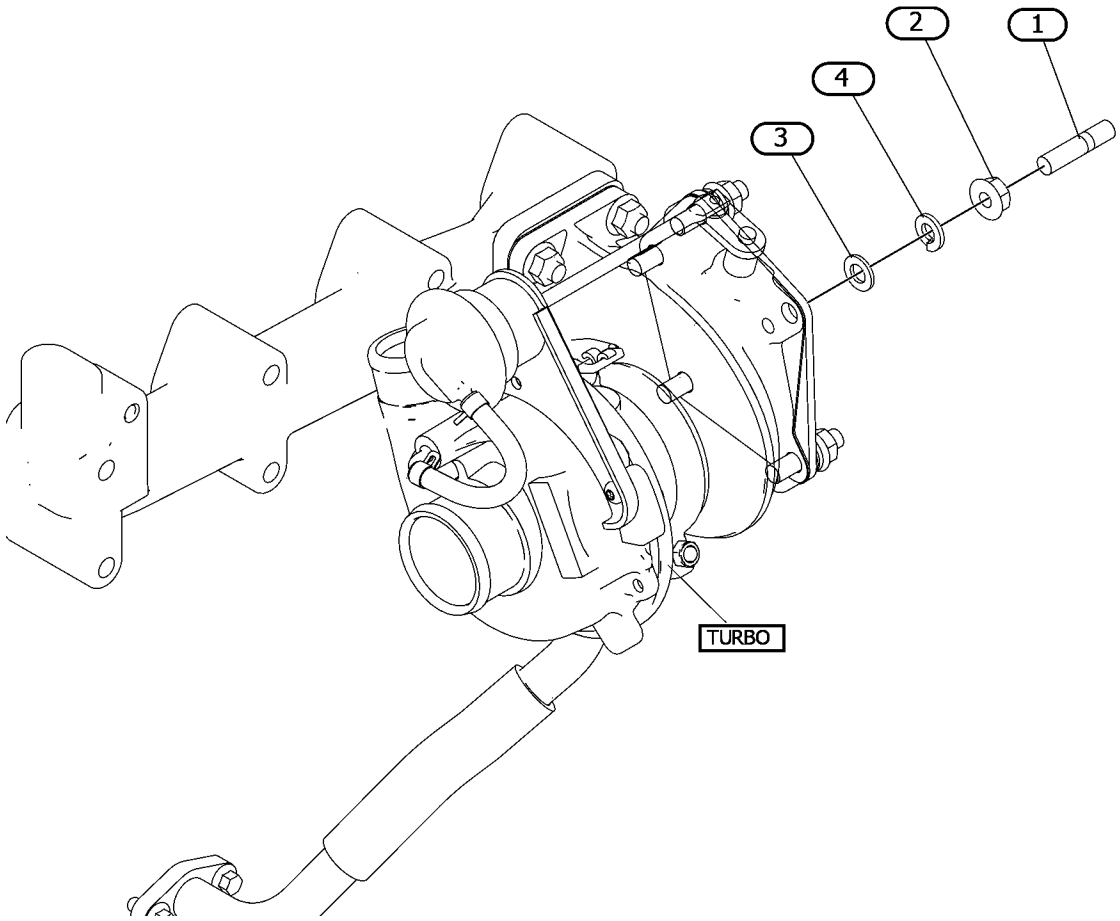

GRAPHIC #1 <END> g07556209

600-5135 COVER GP-EXHAUST

PART OF 435-1636 ENGINE AR-PRIMARY

TYPE 2

SMCS-1062, 1091 **i10053154**

NOTE	REF NO	GRAPHIC REF	PART NUMBER	QTY	PART NAME 1 2 3 4 5 6 (PRODUCT LEVEL)	SEE PAGE
M	1	1	**148-7140**	5	STUD (M8X1.25X37-MM)	
M	2	1	**153-5592**	5	NUT (M8X1.25-THD)	

M - METRIC PART

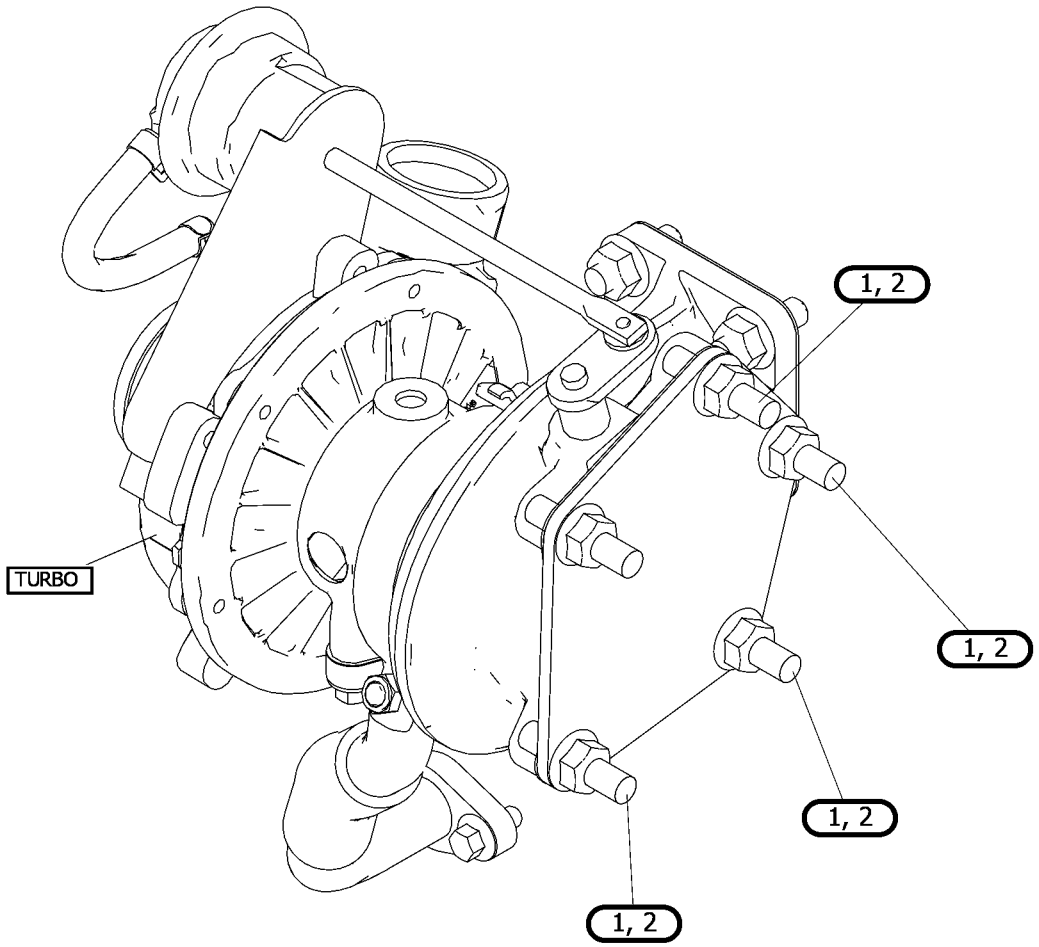

GRAPHIC #1 <END> g07712194

629-5293 FASTENER GP-FILTER

S/N: C6M10291-UP

SMCS-7553 **i10053748**

NOTE	REF NO	GRAPHIC REF	PART NUMBER	QTY	PART NAME 1 2 3 4 5 6 (PRODUCT LEVEL)	SEE PAGE
M	1	1	**124-3815**	1	BOLT (M8X1.25X16-MM)	
	2	1	**326-9052**	1	FILM-WARNING (DO NOT SPRAY, READ OMM)	
					(EXPLOSION HAZARD. COULD CAUSE PERSONAL INJURY OR DEATH. DO NOT USE ETHER. READ THE OPERATOR'S MANUAL.)	

M - METRIC PART

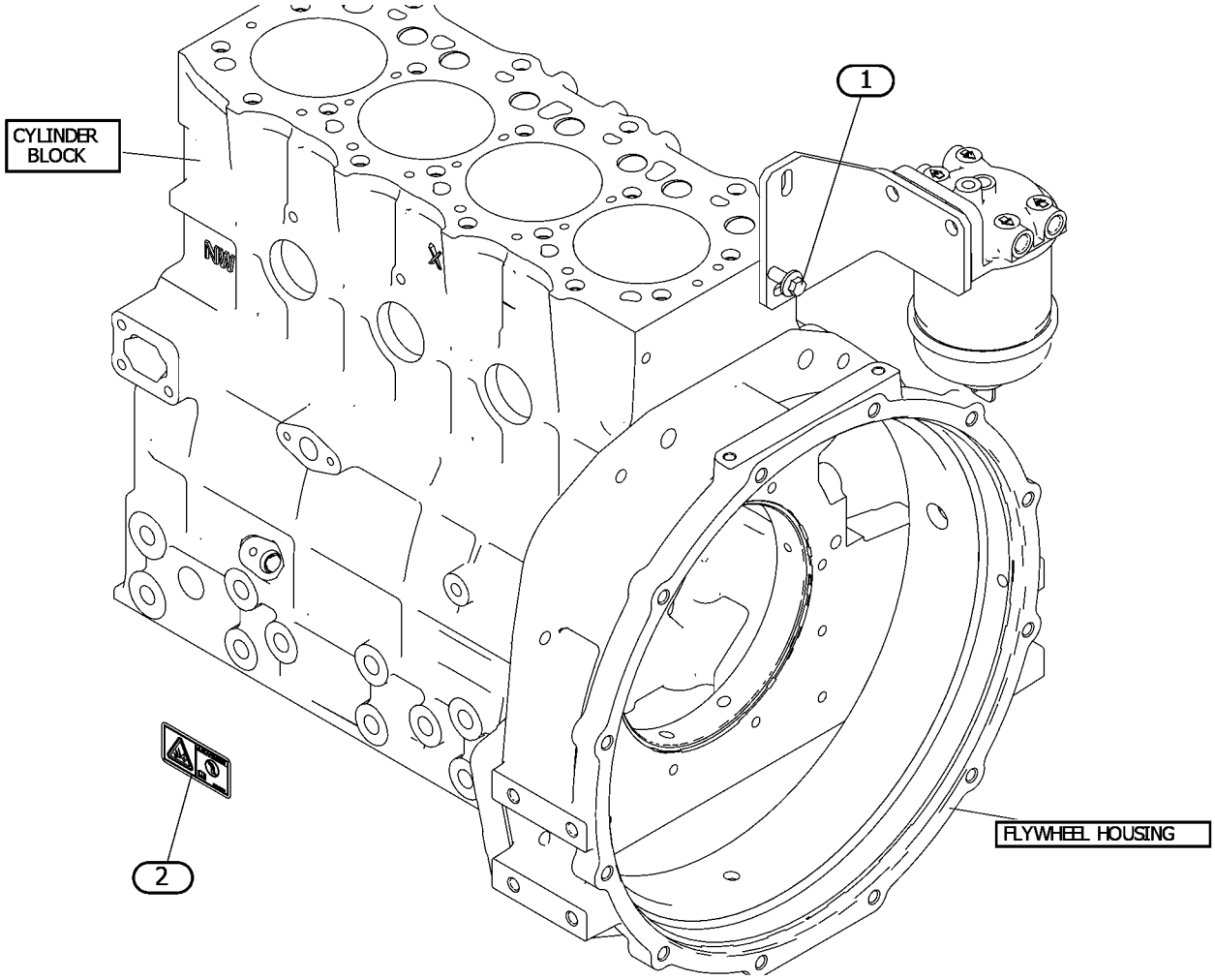

GRAPHIC #1 <END> g07592968

315-5256 GASKET GP-EXHAUST MANIFOLD

SMCS-1059 **i07077243**

NOTE	REF NO	GRAPHIC REF	PART NUMBER	QTY	PART NAME 1 2 3 4 5 6 (PRODUCT LEVEL)	SEE PAGE
	1	1	**435-0208**	1	GASKET	

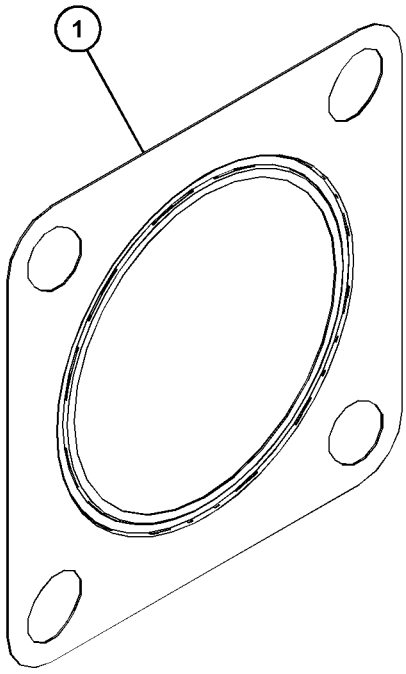

GRAPHIC #1 <END> g06220000

309-6724 MANIFOLD GP-EXHAUST

PART OF 417-7273, 489-4263, 506-0520, 513-2239, 557-7471 ENGINE AR-PRIMARY

SMCS-1059 **i05810328**

NOTE	REF NO	GRAPHIC REF	PART NUMBER	QTY	PART NAME 1 2 3 4 5 6 (PRODUCT LEVEL)	SEE PAGE
M	1	1	**153-5592**	2	NUT (M8X1.25-THD)	
	2	1	**154-2426**	1	MANIFOLD-EXHAUST	
	3	1	**154-2427**	1	GASKET-EXHAUST MANIFOLD	
	4	1	**154-2428**	6	BOLT AS	

M - METRIC PART

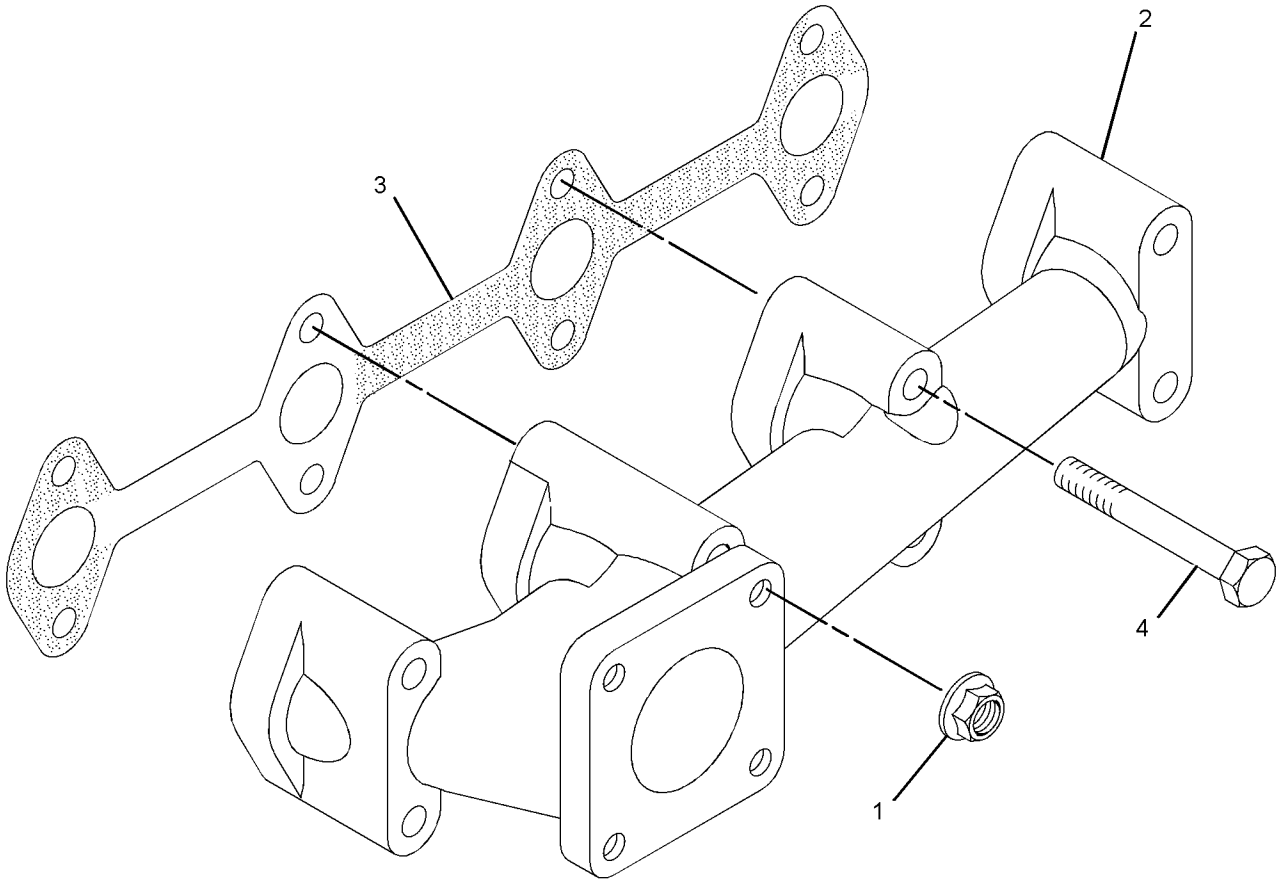

GRAPHIC #1 <END> g01419140

317-7192 MANIFOLD GP-EXHAUST

PART OF 499-6420 ENGINE AR-PRIMARY

SMCS-1059 **i02853765**

NOTE	REF NO	GRAPHIC REF	PART NUMBER	QTY	PART NAME 1 2 3 4 5 6 (PRODUCT LEVEL)	SEE PAGE
M	1	1	**153-5592**	2	NUT (M8X1.25-THD)	
	2	1	**154-2427**	1	GASKET-EXHAUST MANIFOLD	
	3	1	**154-2428**	4	BOLT AS	
	4	1	**163-5371**	2	BOLT	
	5	1	**163-5372**	2	WASHER (8X15.4X4-MM THK)	
	6	1	**205-7709**	1	MANIFOLD-EXHAUST	

M - METRIC PART

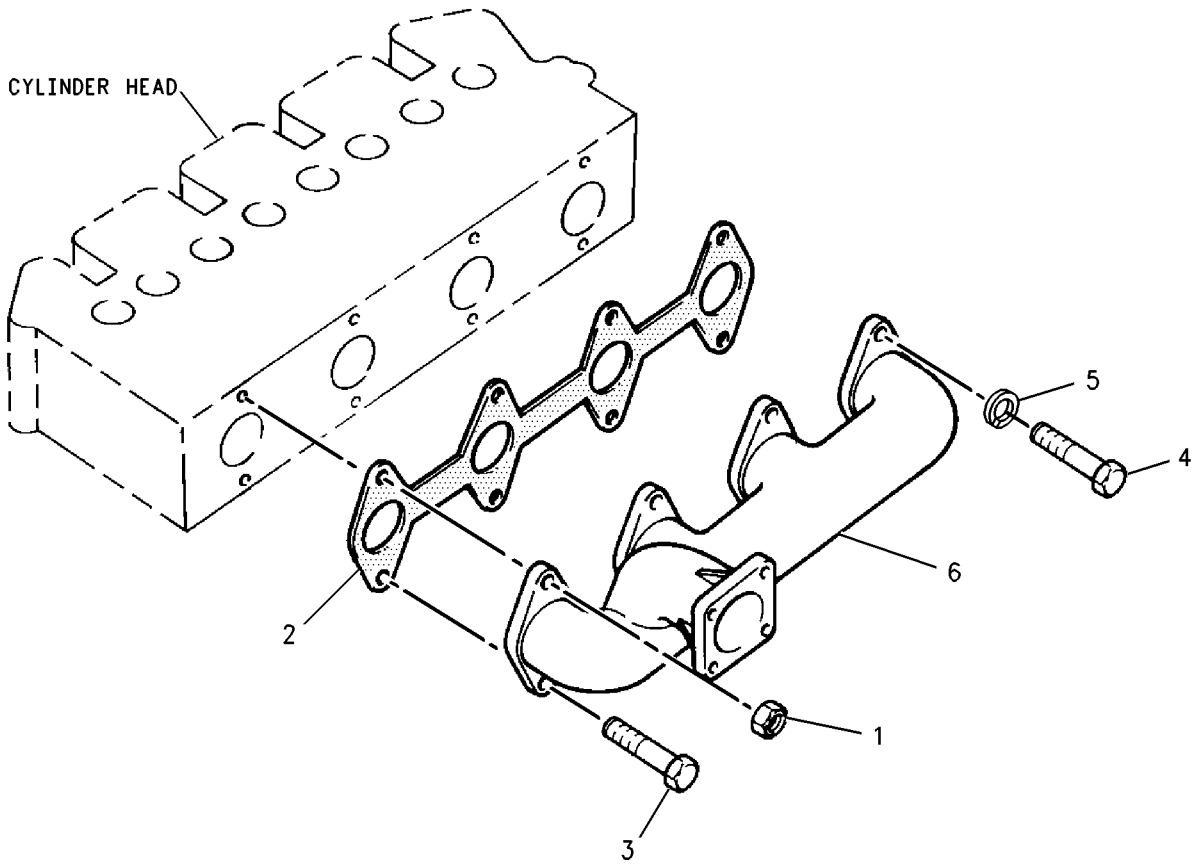

GRAPHIC #1 <END> g00812497

329-4424 MANIFOLD GP-EXHAUST

PART OF 499-6420 ENGINE AR-PRIMARY

SMCS-1059 **i07075835**

NOTE	REF NO	GRAPHIC REF	PART NUMBER	QTY	PART NAME 1 2 3 4 5 6 (PRODUCT LEVEL)	SEE PAGE
	1	1	**168-9001**	1	BOLT AS	
	2	1	**435-0208**	1	GASKET	

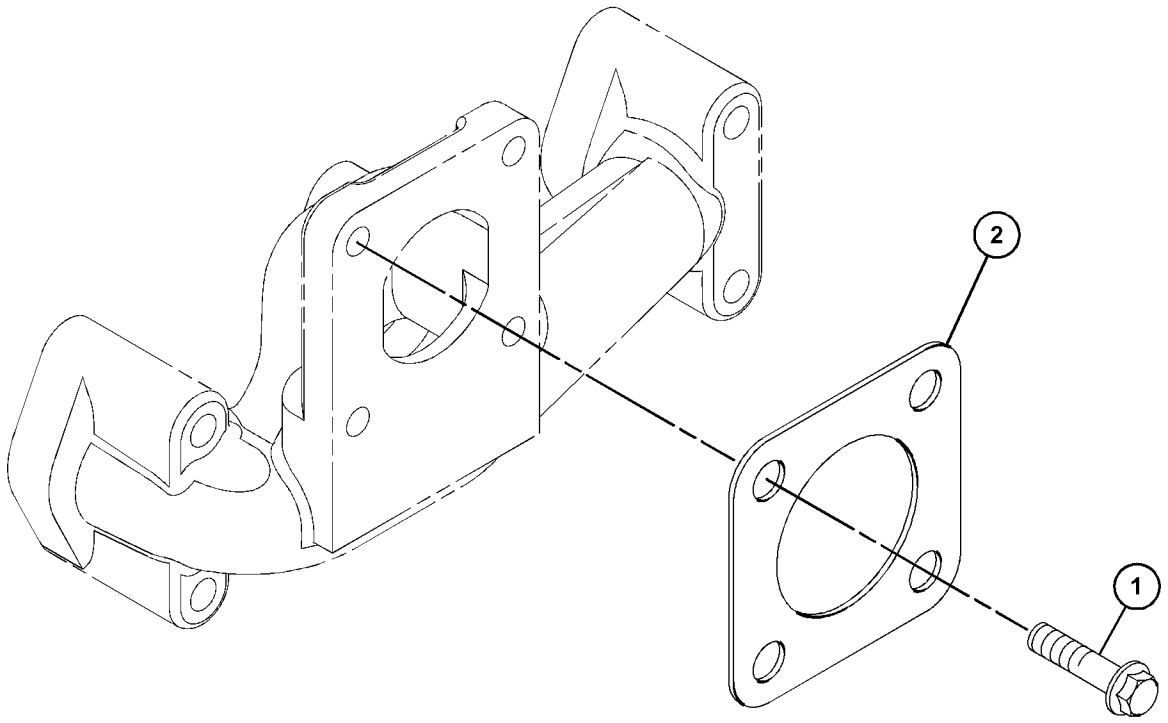

GRAPHIC #1 <END> g06220261

584-9800 MANIFOLD GP-EXHAUST

S/N: C6M10543-UP

PART OF 433-1379 ENGINE AR, 435-1641, 435-1642, 435-1647 ENGINE AR-PRIMARY

AN ATTACHMENT

SMCS-1059 **i08565272**

NOTE	REF NO	GRAPHIC REF	PART NUMBER	QTY	PART NAME 1 2 3 4 5 6 (PRODUCT LEVEL)	SEE PAGE
M	1	1	**599-4957**	2	STUD (M8X1.25X71-MM)	
	2	1	**563-0444**	4	PLUG	

M - METRIC PART

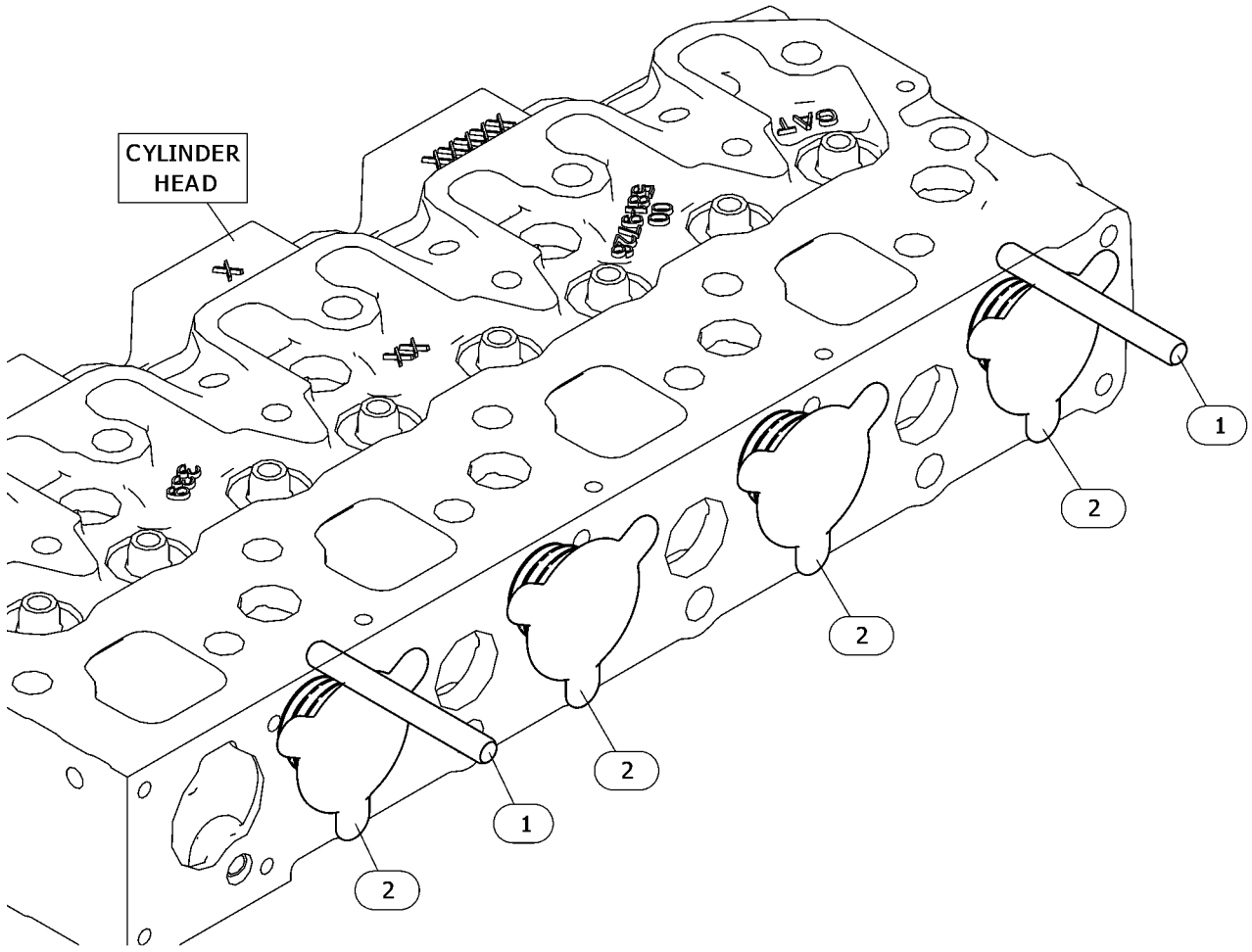

GRAPHIC #1 <END> g06720821

584-9801 MANIFOLD GP-EXHAUST

S/N: C6M10291-UP

PART OF 417-7273 ENGINE AR-PRIMARY

SMCS-1059 **i09813969**

NOTE	REF NO	GRAPHIC REF	PART NUMBER	QTY	PART NAME 1 2 3 4 5 6 (PRODUCT LEVEL)	SEE PAGE
	1	1	**154-2427**	1	GASKET-EXHAUST MANIFOLD	
	2	1	**154-2428**	6	BOLT AS	
M	3	1	**599-4957**	2	STUD (M8X1.25X71-MM)	
	4	1	**202-0528**	1	MANIFOLD-EXHAUST	
M	5	1	**153-5592**	2	NUT (M8X1.25-THD)	

M - METRIC PART

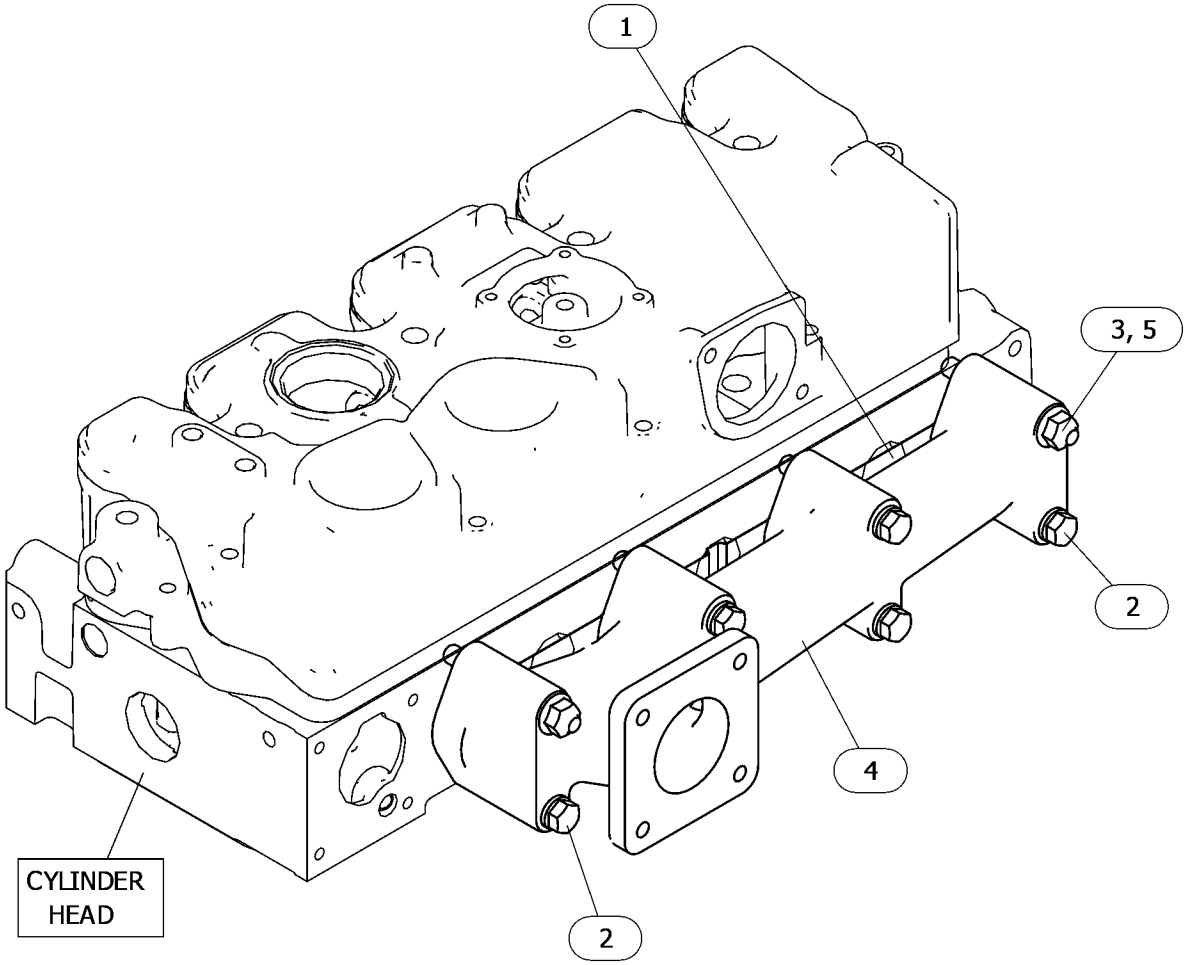

GRAPHIC #1 <END> g06770825

600-5139 MOUNTING GP-EXHAUST

S/N: C6M10203-UP

SMCS-1061 **i08803133**

NOTE	REF NO	GRAPHIC REF	PART NUMBER	QTY	PART NAME 1 2 3 4 5 6 (PRODUCT LEVEL)	SEE PAGE
M	1	1	**124-3815**	2	BOLT (M8X1.25X16-MM)	
	2	1	**155-7984**	1	WASHER (8.4X16X1.6-MM THK)	
	3	1	**163-5372**	5	WASHER (8X15.4X4-MM THK)	
	4	1	**238-9198**	1	ELBOW-EXHAUST	
M	5	1	**5A-3604**	5	BOLT-SOCKET HEAD (M8X1.25X25-MM)	
	6	1	**239-0187**	1	BRACKET	

M - METRIC PART

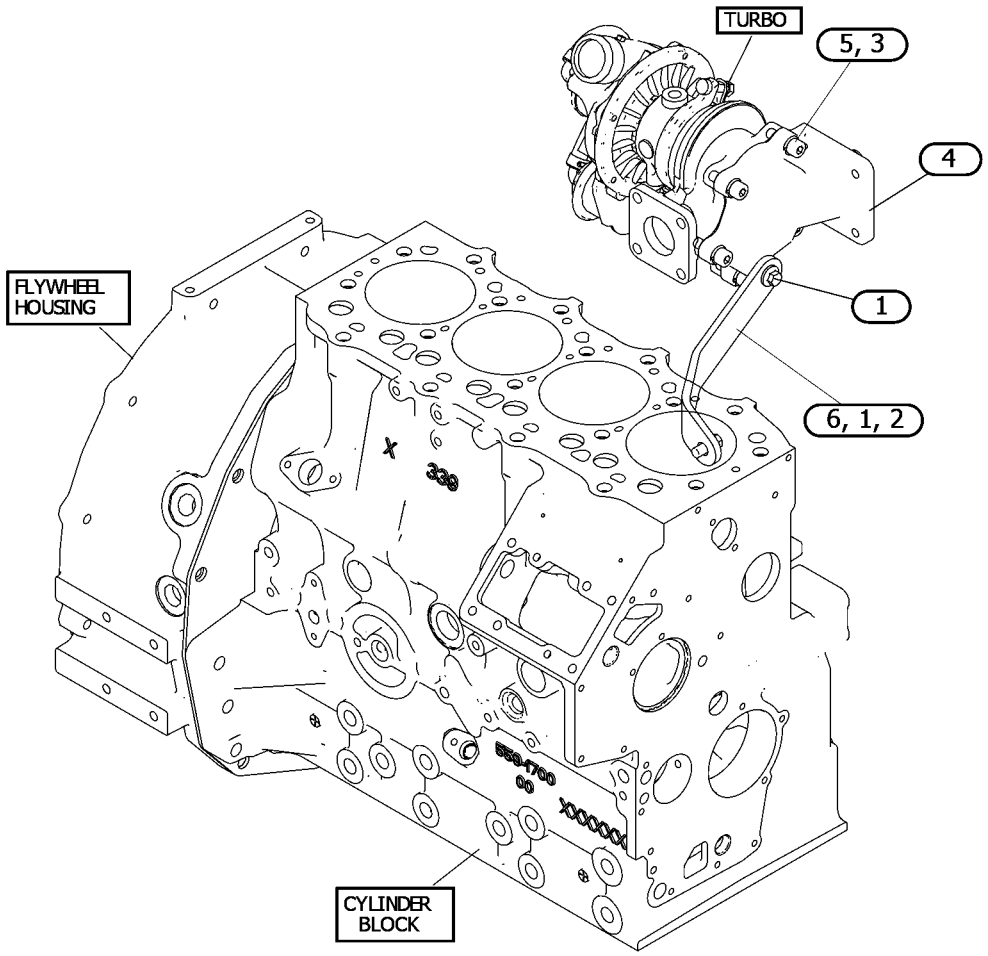

GRAPHIC #1 <END> g07548067

600-5140 MOUNTING GP-EXHAUST

S/N: C6M10275-UP

SMCS-1061 **i08712000**

NOTE	REF NO	GRAPHIC REF	PART NUMBER	QTY	PART NAME 1 2 3 4 5 6 (PRODUCT LEVEL)	SEE PAGE
M	1	1	**124-3815**	2	BOLT (M8X1.25X16-MM)	
	2	1	**155-7984**	1	WASHER (8.4X16X1.6-MM THK)	
	3	1	**163-5372**	5	WASHER (8X15.4X4-MM THK)	
M	4	1	**5A-3604**	5	BOLT-SOCKET HEAD (M8X1.25X25-MM)	
	5	1	**239-0187**	1	BRACKET	
	6	1	**594-3935**	1	ELBOW AS-EXHAUST	

M - METRIC PART

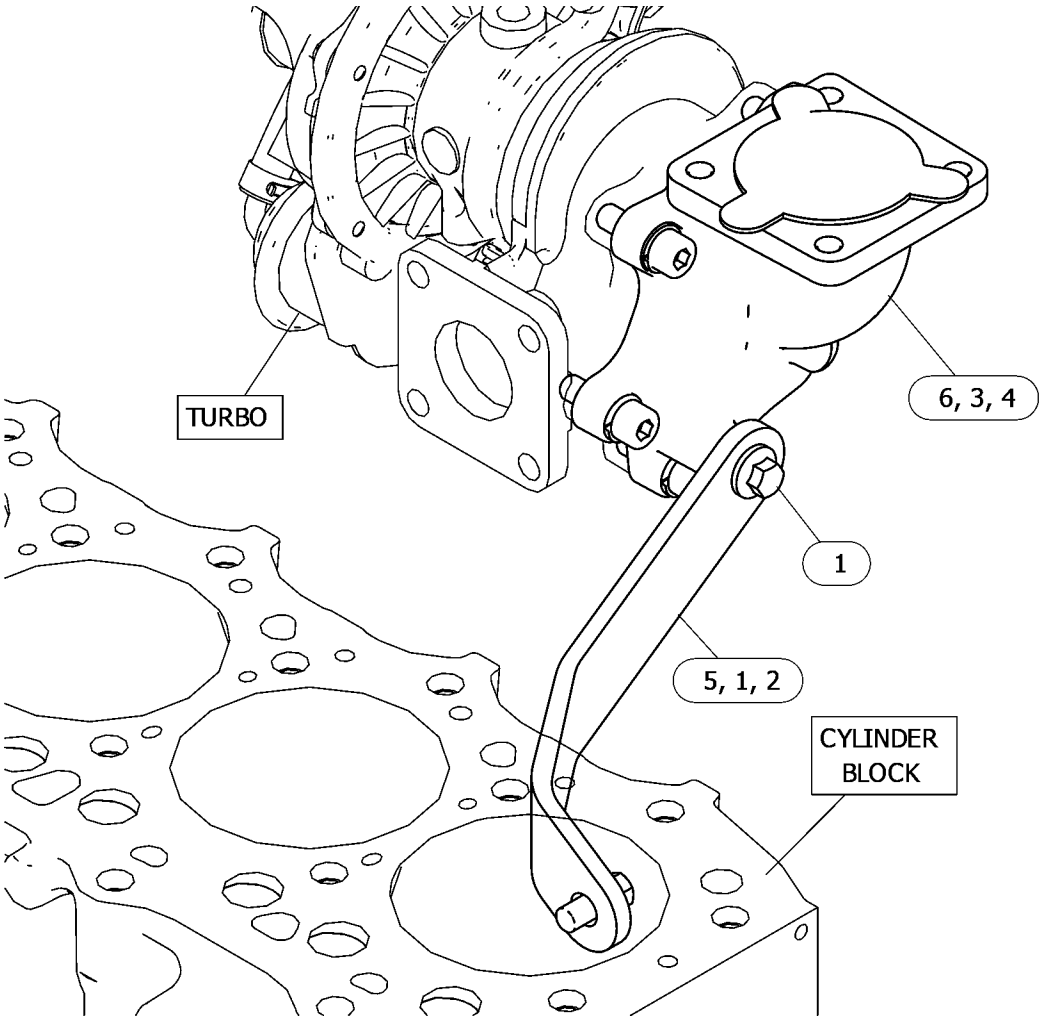

GRAPHIC #1 <END> g06769423

600-5140 MOUNTING GP-EXHAUST

PART OF 514-6556 ENGINE AR-PRIMARY

SMCS-1061 **i09814006**

NOTE	REF NO	GRAPHIC REF	PART NUMBER	QTY	PART NAME 1 2 3 4 5 6 (PRODUCT LEVEL)	SEE PAGE
M	1	1	**124-3815**	2	BOLT (M8X1.25X16-MM)	
	2	1	**594-3935**	1	ELBOW AS-EXHAUST	
	3	1	**163-5372**	5	WASHER (8X15.4X4-MM THK)	
M	4	1	**5A-3604**	5	BOLT-SOCKET HEAD (M8X1.25X25-MM)	
	5	1	**239-0187**	1	BRACKET	

M - METRIC PART

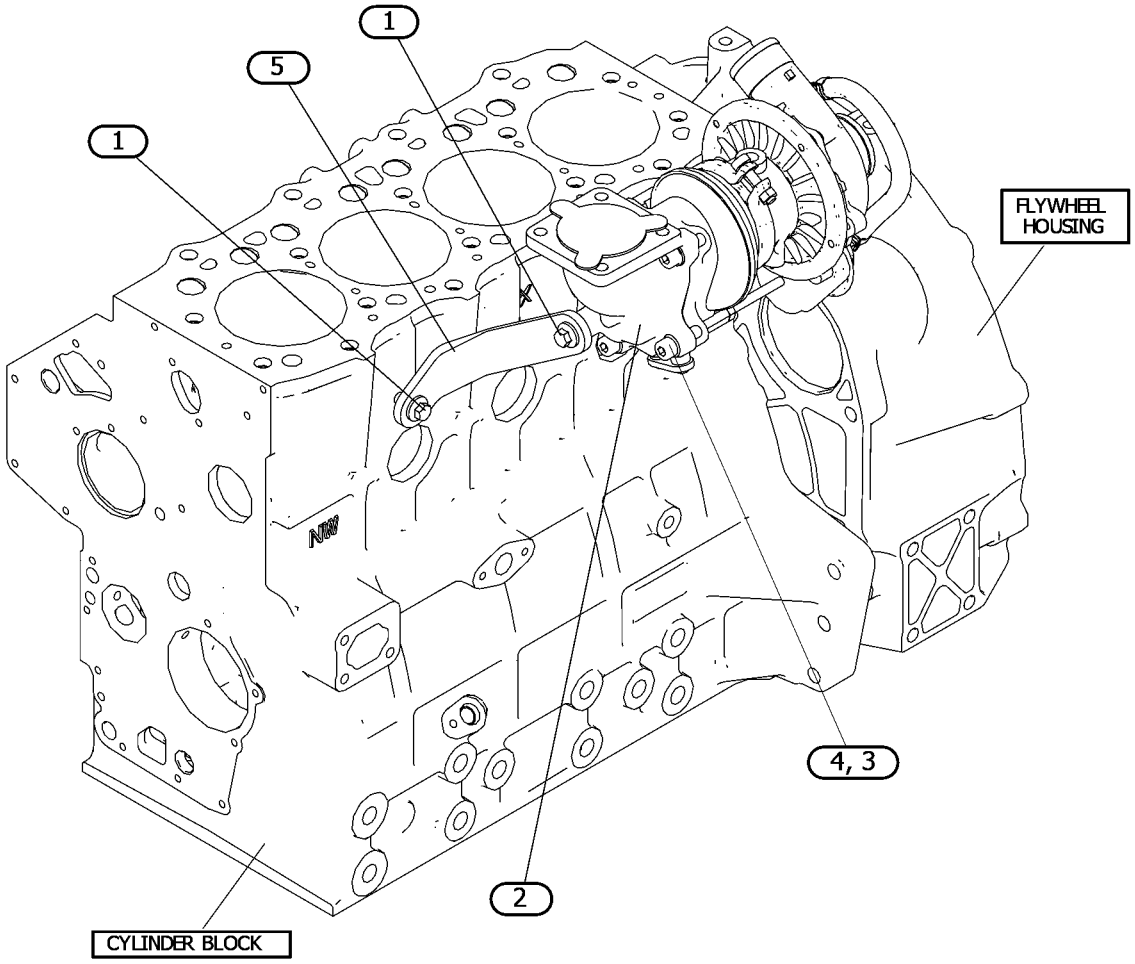

GRAPHIC #1 <END> g07701429

317-7193 MUFFLER GP

SMCS-1062 **i02853769**

NOTE	REF NO	GRAPHIC REF	PART NUMBER	QTY	PART NAME 1 2 3 4 5 6 (PRODUCT LEVEL)	SEE PAGE
	1	1	**168-9001**	4	BOLT AS	
	2	1	**226-4918**	1	MUFFLER AS	
		1	**226-4922**	1	MUFFLER	
M	2A	1	**5P-7970**	1	NUT (M8X1.25-THD)	
M	2B	1	**6V-5221**	1	BOLT (M8X1.25X80-MM)	
	2C	1	**155-7984**	1	WASHER (8.4X16X1.6-MM THK)	
	2D	1	**226-4919**	1	PIPE-EXHAUST	
	2E	1	**226-4923**	1	CLAMP	

M - METRIC PART

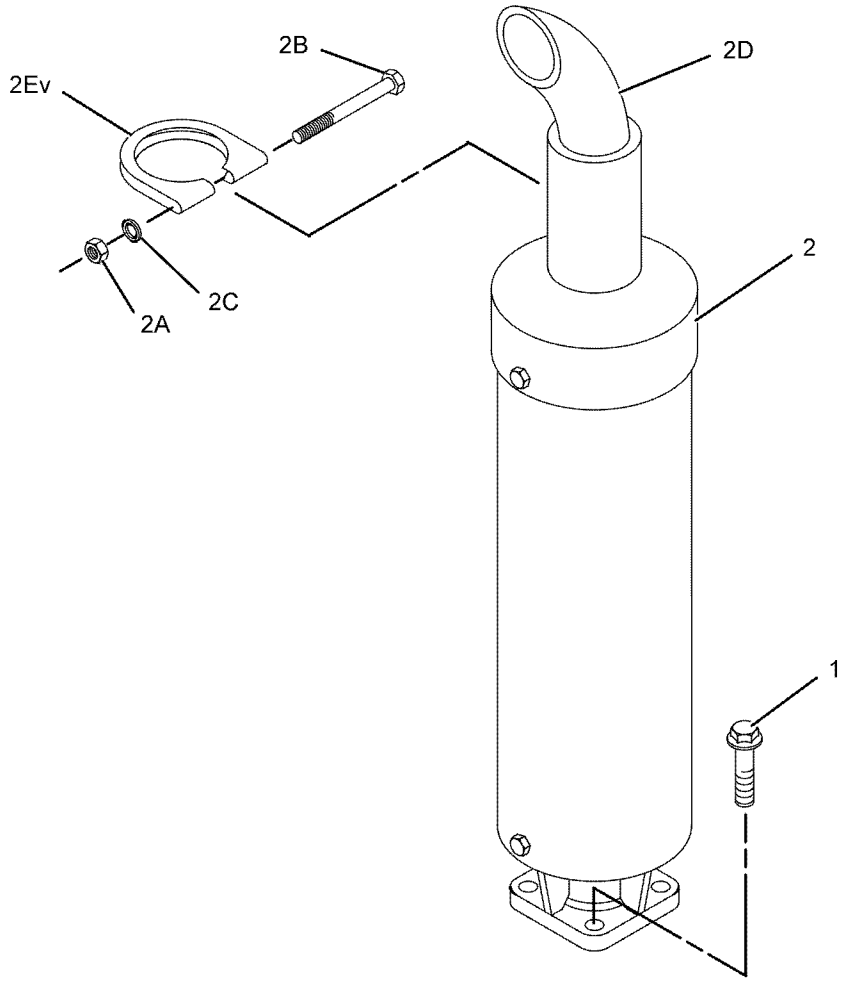

GRAPHIC #1 <END> g01038464

308-2308 TURBOCHARGER GP

TYPE 1

SMCS-1052, 1053 **i06919029**

NOTE	REF NO	GRAPHIC REF	PART NUMBER	QTY	PART NAME 1 2 3 4 5 6 (PRODUCT LEVEL)	SEE PAGE
	1	2	**363-5813**	2	CLAMP-HOSE	
M	2	2	**153-5592**	8	NUT (M8X1.25-THD)	
	3	3	**153-5939**	1	STOPPER (OIL)	
	4	3	**153-5962**	3	BOLT AS	
M	5	1	**124-3815**	2	BOLT (M8X1.25X16-MM)	
	6	1	**153-6853**	1	SEAL-O-RING	
M	7	1,2	**6I-0846**	6	BOLT (M6X1X14-MM)	
M	8	3	**154-1347**	4	NUT (M10X1.25-THD)	
	9	2	**154-2427**	1	GASKET-EXHAUST MANIFOLD	
	10	2	**154-2428**	4	BOLT AS	
	11	2	**155-7984**	1	WASHER (8.4X16X1.6-MM THK)	
	13	1	**163-5372**	5	WASHER (8X15.4X4-MM THK)	
	14	3	**165-2140**	1	BOLT AS	
M	16	1	**6I-0217**	4	BOLT (M8X1.25X20-MM)	
	17	3	**183-1165**	1	PLUG	
	18	3	**246-4361**	4	WASHER (10.5X14X1.5-MM THK)	
	19	3	**217-5859**	1	VALVE-BREATHER (CRANKCASE)	
	20	3	**320-8401**	1	PLATE-RETAINING	
	21	3	**217-5862**	6	SCREW (SELF-TAPPING)	
	22	2	**494-9569**	1	GASKET	
	23	1	**225-8533**	2	GASKET (TURBOCHARGER)	
	24	3	**233-0695**	1	SEAL-VALVE COVER	
	25	2	**236-9987**	1	MANIFOLD-EXHAUST	
	26	3	**365-4125**	1	ADAPTER	
	27	2	**238-9196**	1	GASKET-TURBOCHARGER	
	28	1	**238-9198**	1	ELBOW-EXHAUST	
M	29	1	**5A-3604**	5	BOLT-SOCKET HEAD (M8X1.25X25-MM)	
	30	3	**423-8167**	1	COVER-CYLINDER HEAD	
M	31	3	**238-9295**	4	BOLT (M4X0.7X30-MM)	
R	32	2	**238-9349**	1	TURBOCHARGER GP	
	33	1	**317-0962**	1	TUBE-TURBOCHARGER OIL	
	34	1	**239-0187**	1	BRACKET	
	35	1	**239-0228**	1	TUBE AS	
	35A	1	**225-8526**	2	WASHER (10.4X13.75X1.37-MM THK)	
	35B	1	**239-0169**	1	BOLT-SPECIAL (BANJO)	
	35C	1	**239-0227**	2	CLIP	
	36	1	**039-2281**	1	SPACER (9X16X25-MM THK)	
M	37	2	**239-0232**	4	STUD (M8X1.25X31-MM)	
	38	2	**366-3055**	1	ELBOW	
	39	2	**249-1532**	1	HOSE-AIR INLET	
	40	3	**438-9362**	1	GASKET	
	41	1	**304-5061**	1	GASKET (ELBOW)	
M	42	3	**360-9545**	1	STUD (M6X1X48-MM)	
M	43	3	**153-5960**	1	NUT (M6X1-THD)	

M - METRIC PART
R - REMANUFACTURED PART MAY BE AVAILABLE

308-2308 **TURBOCHARGER GP (**contd.**)** **i06919029**

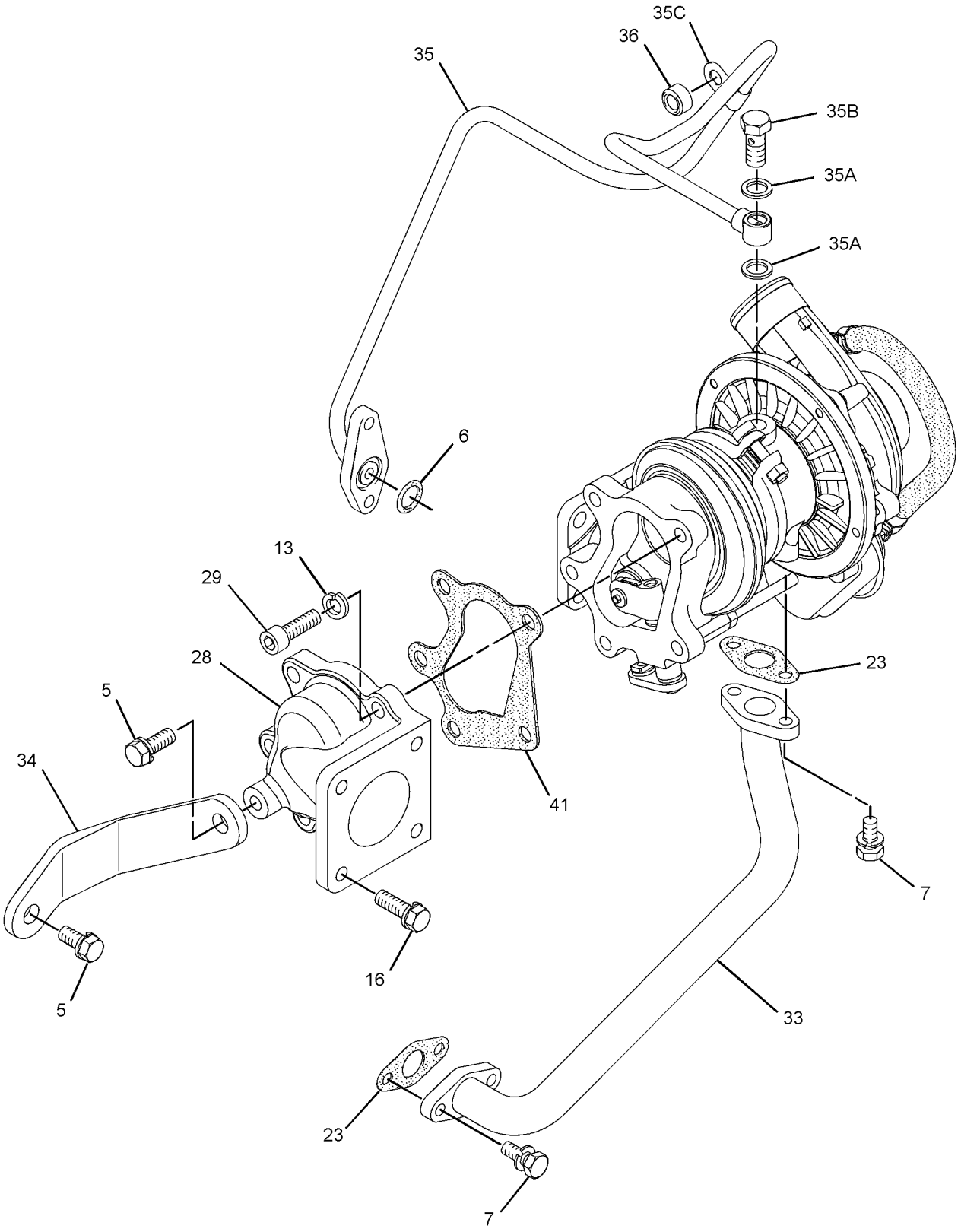

GRAPHIC #1 g06080164

308-2308 **TURBOCHARGER GP (**contd.**)** **i06919029**

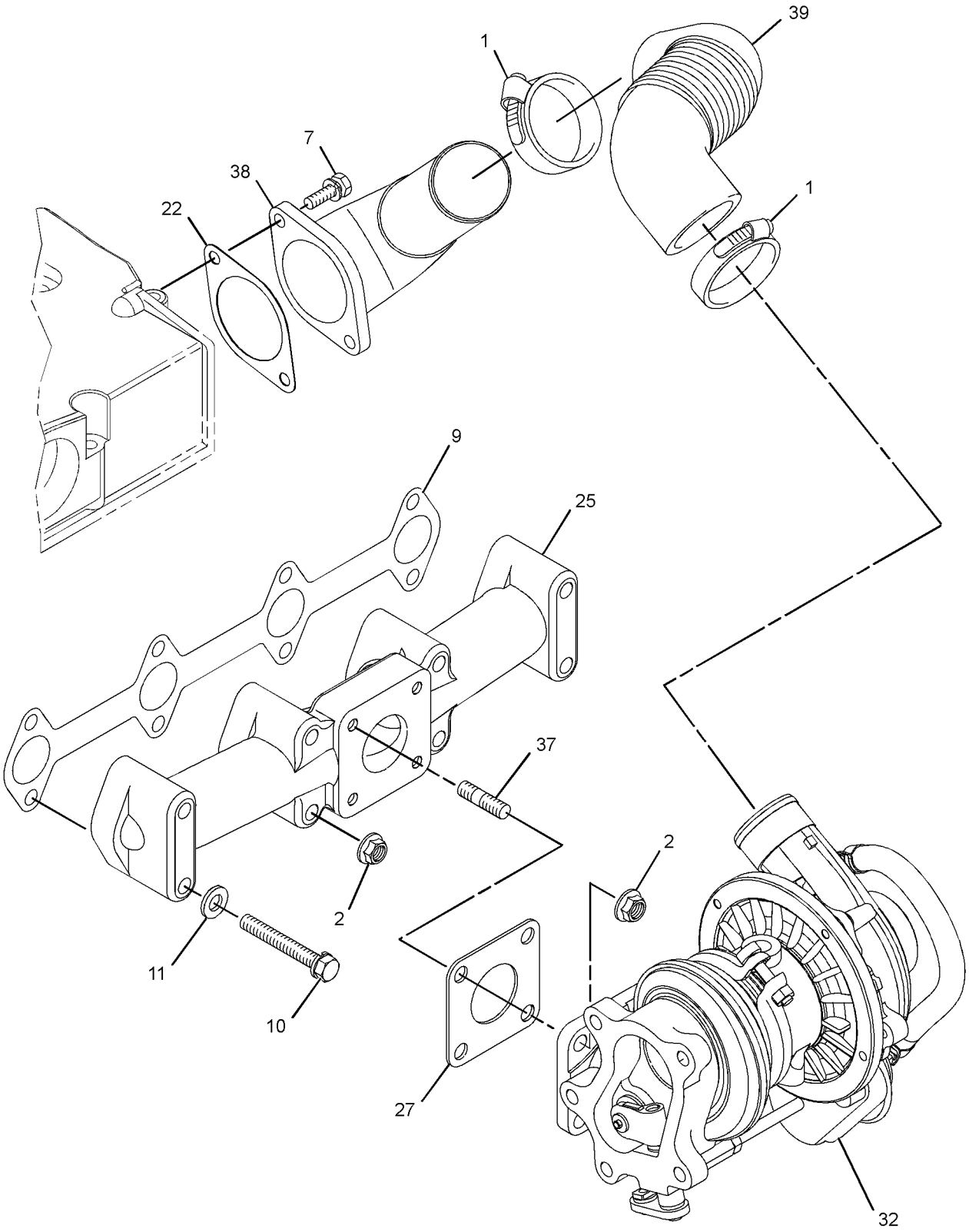

GRAPHIC #2 g06048946

308-2308 **TURBOCHARGER GP (**contd.**)** **i06919029**

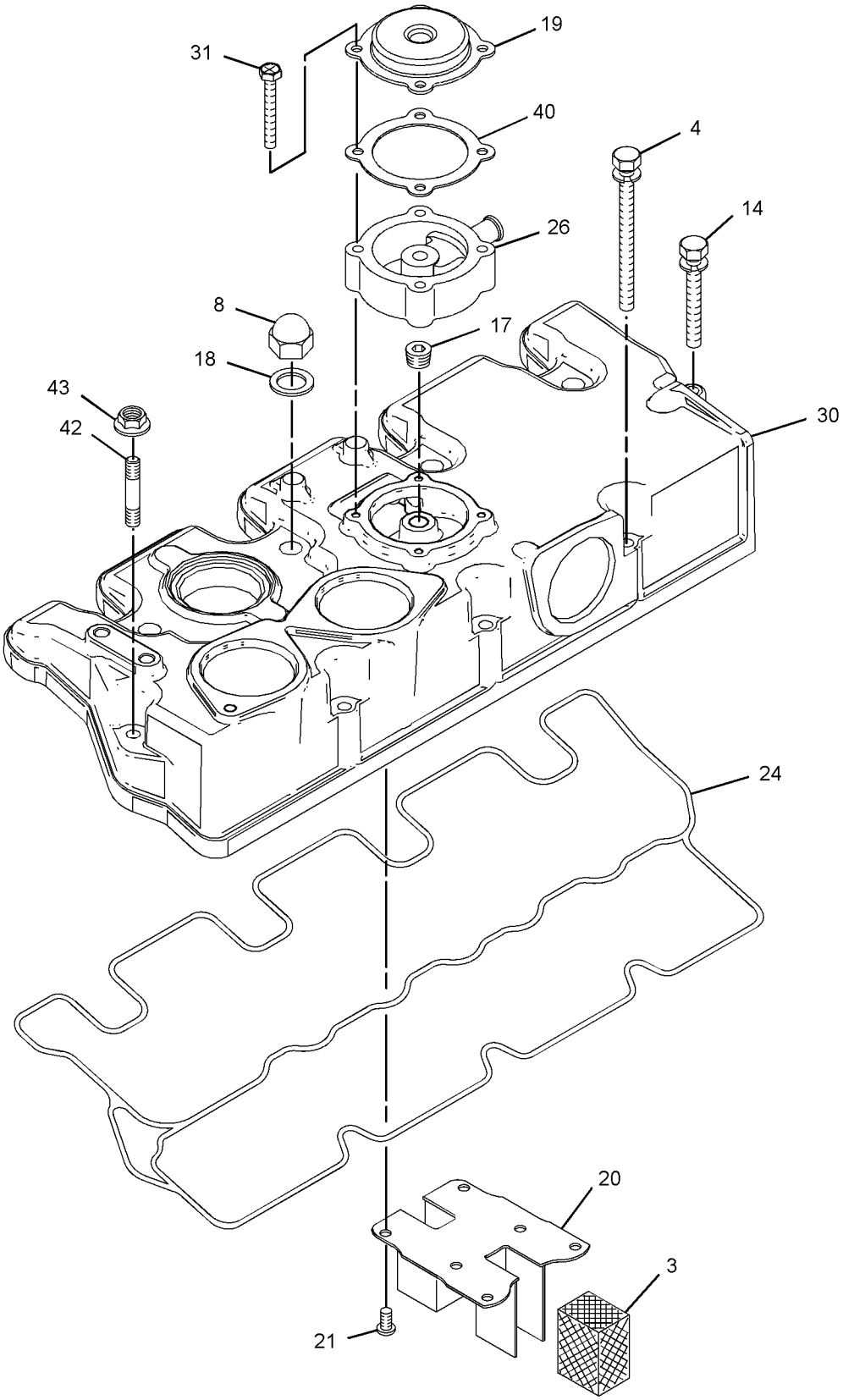

GRAPHIC #3 <END> g06048947

308-2308 TURBOCHARGER GP
TYPE 2

SMCS-1052, 1053 **i08197271**

NOTE	REF NO	GRAPHIC REF	PART NUMBER	QTY	PART NAME 1 2 3 4 5 6 (PRODUCT LEVEL)	SEE PAGE
	1	2	**363-5813**	2	CLAMP-HOSE	
M	2	2	**153-5592**	8	NUT (M8X1.25-THD)	
	3	3	**153-5939**	1	STOPPER (OIL)	
	4	3	**153-5962**	3	BOLT AS	
M	5	1	**124-3815**	2	BOLT (M8X1.25X16-MM)	
	6	1	**153-6853**	1	SEAL-O-RING	
M	7	1,2	**6I-0846**	6	BOLT (M6X1X14-MM)	
M	8	3	**539-0439**	4	NUT (M10X1.25-THD)	
	9	2	**154-2427**	1	GASKET-EXHAUST MANIFOLD	
	10	2	**154-2428**	4	BOLT AS	
	11	2	**155-7984**	1	WASHER (8.4X16X1.6-MM THK)	
	13	1	**163-5372**	5	WASHER (8X15.4X4-MM THK)	
	14	3	**165-2140**	1	BOLT AS	
M	16	1	**6I-0217**	1	BOLT (M8X1.25X20-MM)	
	17	3	**183-1165**	1	PLUG	
	18	3	**246-4361**	4	WASHER (10.5X14X1.5-MM THK)	
	19	3	**217-5859**	1	VALVE-BREATHER (CRANKCASE)	
	20	3	**320-8401**	1	PLATE-RETAINING	
	21	3	**217-5862**	6	SCREW (SELF-TAPPING)	
	22	2	**494-9569**	1	GASKET	
	23	1	**225-8533**	2	GASKET (TURBOCHARGER)	
	24	3	**233-0695**	1	SEAL-VALVE COVER	
	25	2	**236-9987**	1	MANIFOLD-EXHAUST	
	26	3	**365-4125**	1	ADAPTER	
	27	2	**238-9196**	1	GASKET-TURBOCHARGER	
	28	1	**238-9198**	1	ELBOW-EXHAUST	
M	29	1	**5A-3604**	5	BOLT-SOCKET HEAD (M8X1.25X25-MM)	
	30	3	**583-6090**	1	COVER-HEAD	
M	31	3	**238-9295**	4	BOLT (M4X0.7X30-MM)	
CR	32	2	**513-6823**	1	TURBOCHARGER AS	
	33	1	**317-0962**	1	TUBE-TURBOCHARGER OIL	
	34	1	**239-0187**	1	BRACKET	
	35	1	**239-0228**	1	TUBE AS	
	35A	1	**225-8526**	2	WASHER (10.4X13.75X1.37-MM THK)	
	35B	1	**239-0169**	1	BOLT-SPECIAL (BANJO)	
	35C	1	**239-0227**	2	CLIP	
	36	1	**239-0229**	1	SPACER (8.4X15X9-MM THK)	
M	37	2	**239-0232**	4	STUD (M8X1.25X31-MM)	
	38	2	**366-3055**	1	ELBOW	
	39	2	**249-1532**	1	HOSE-AIR INLET	
	40	3	**438-9362**	1	GASKET	
	41	1	**304-5061**	1	GASKET (ELBOW)	
M	42	3	**360-9545**	1	STUD (M6X1X48-MM)	
M	43	3	**153-5960**	1	NUT (M6X1-THD)	

C - CHANGE FROM PREVIOUS TYPE
M - METRIC PART
R - REMANUFACTURED PART MAY BE AVAILABLE

308-2308 **TURBOCHARGER GP (**contd.**)** **i08197271**

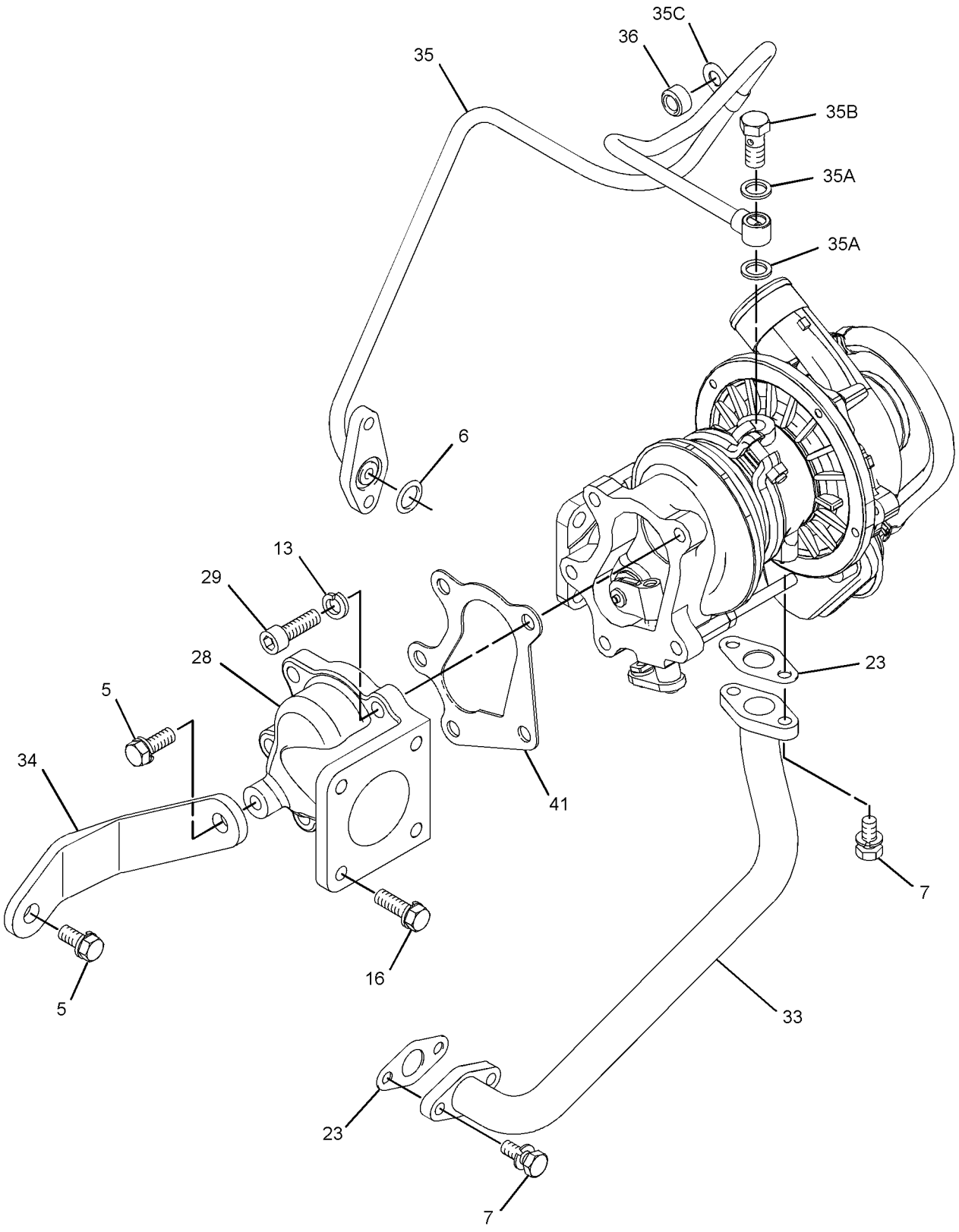

GRAPHIC #1 g06311469

308-2308 **TURBOCHARGER GP (**contd.**)** **i08197271**

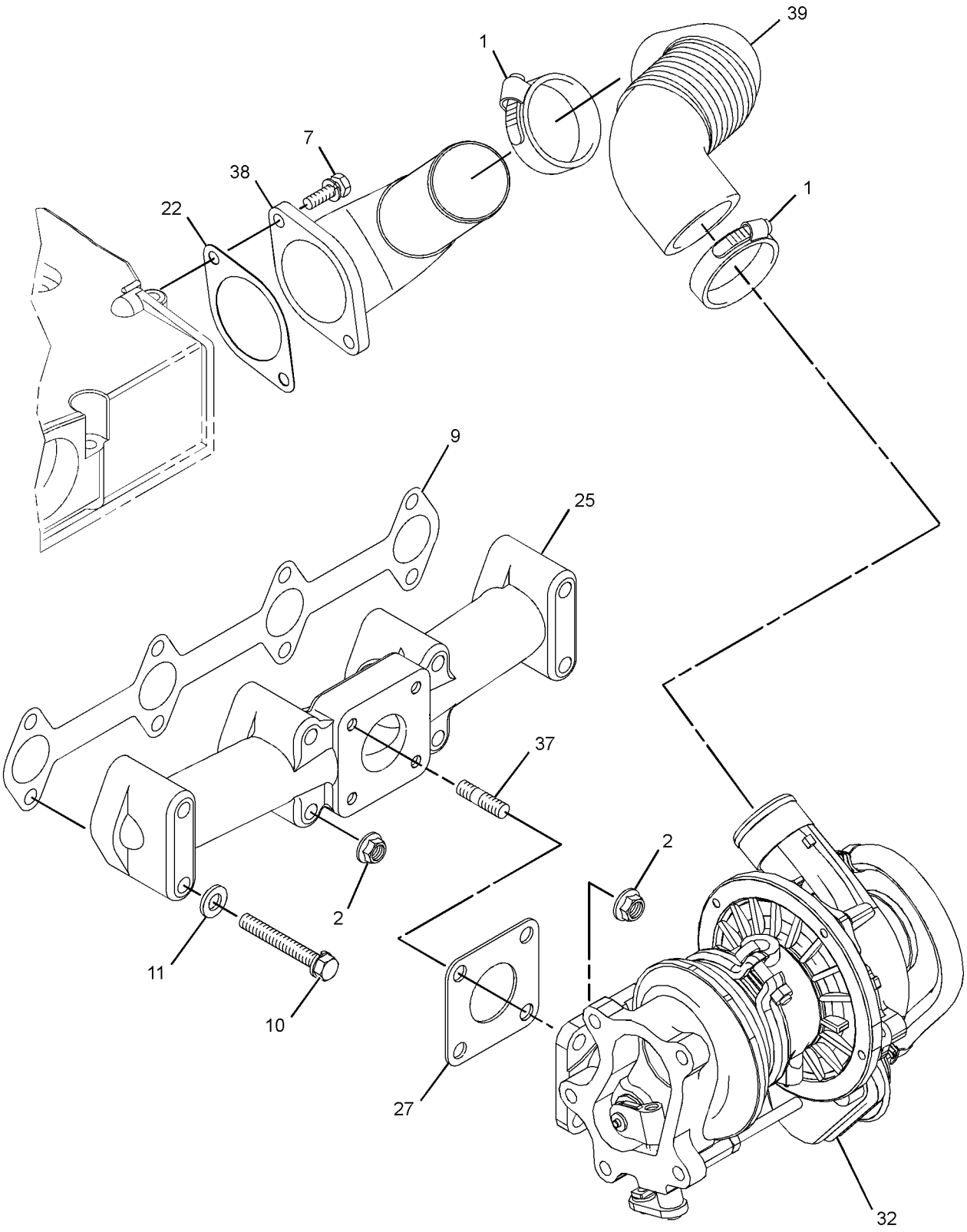

GRAPHIC #2 g06661045

308-2308 **TURBOCHARGER GP (**contd.**)** **i08197271**

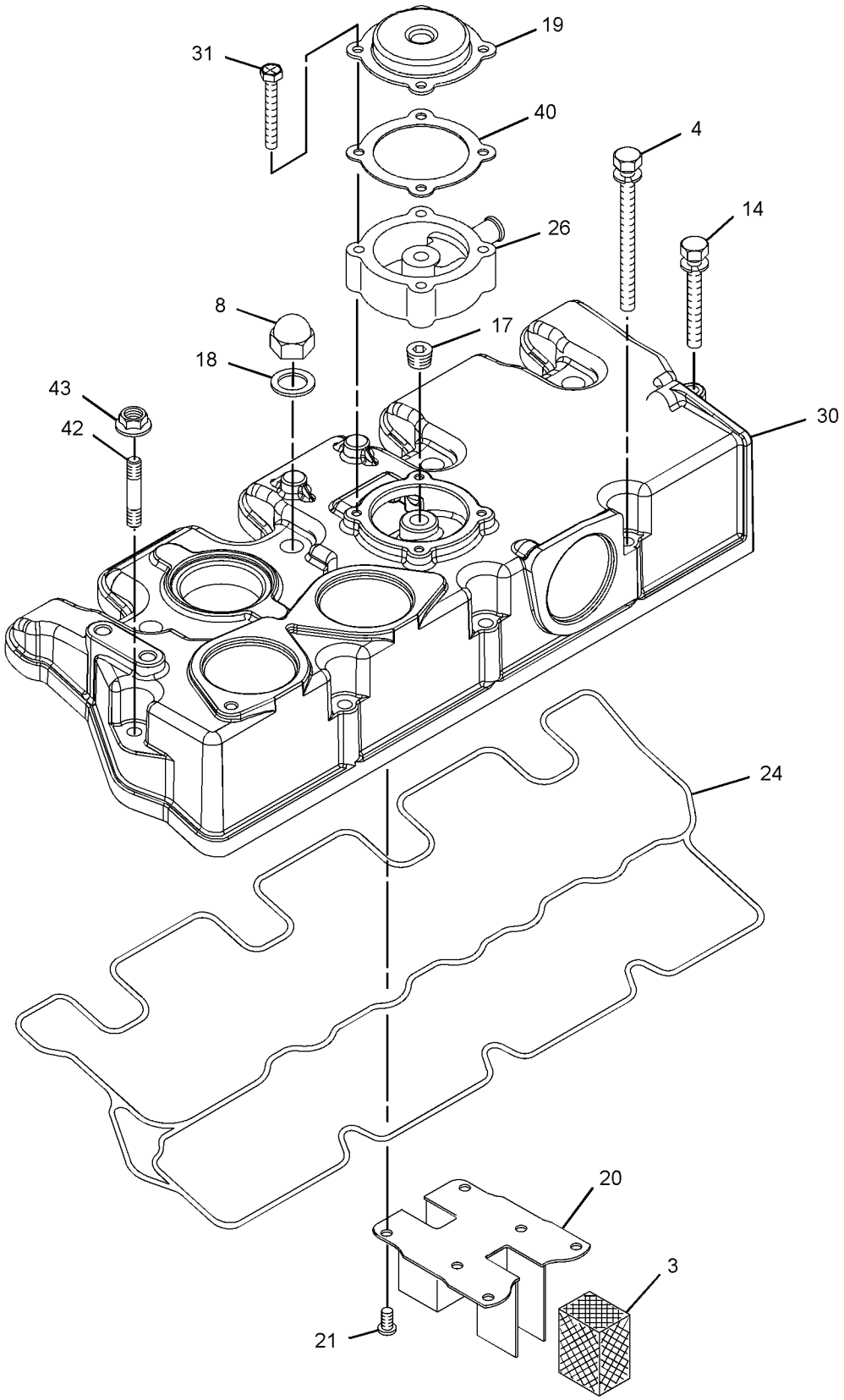

GRAPHIC #3 <END> g06661044

326-8542 TURBOCHARGER GP

SMCS-1052, 1053 **i08197256**

NOTE	REF NO	GRAPHIC REF	PART NUMBER	QTY	PART NAME 1 2 3 4 5 6 (PRODUCT LEVEL)	SEE PAGE
	1	2	**363-5813**	2	CLAMP-HOSE	
M	2	1	**153-5592**	8	NUT (M8X1.25-THD)	
	3	2	**153-5939**	1	STOPPER (OIL)	
	4	2	**153-5962**	3	BOLT AS	
M	5	1	**124-3815**	2	BOLT (M8X1.25X16-MM)	
	6	1	**153-6853**	1	SEAL-O-RING	
M	7	1,2	**6I-0846**	6	BOLT (M6X1X14-MM)	
M	8	2	**539-0439**	4	NUT (M10X1.25-THD)	
	9	1	**154-2427**	1	GASKET-EXHAUST MANIFOLD	
	10	1	**154-2428**	4	BOLT AS	
	11	1	**163-5372**	5	WASHER (8X15.4X4-MM THK)	
	12	2	**165-2140**	1	BOLT AS	
M	14	1	**6I-0217**	1	BOLT (M8X1.25X20-MM)	
	15	2	**183-1165**	1	PLUG (SEALING)	
	16	2	**246-4361**	4	WASHER (10.5X14X1.5-MM THK)	
	17	2	**217-5859**	1	VALVE-BREATHER (CRANKCASE)	
	18	2	**320-8401**	1	PLATE-RETAINING	
	19	2	**217-5862**	6	SCREW (SELF-TAPPING)	
	20	2	**494-9569**	1	GASKET	
	21	1	**225-8533**	2	GASKET (TURBOCHARGER)	
	22	2	**233-0695**	1	SEAL-VALVE COVER	
	23	1	**236-9987**	1	MANIFOLD-EXHAUST	
	24	2	**365-4125**	1	ADAPTER	
	25	1	**238-9196**	1	GASKET-TURBOCHARGER	
M	26	1	**5A-3604**	5	BOLT-SOCKET HEAD (M8X1.25X25-MM)	
M	27	2	**238-9295**	4	BOLT (M4X0.7X30-MM)	
R	28	1	**513-6823**	1	TURBOCHARGER AS	
	29	1	**239-0187**	1	BRACKET	
	30	1	**239-0228**	1	TUBE AS	
	30A	1	**225-8526**	2	WASHER (10.4X13.75X1.37-MM THK)	
	30B	1	**239-0169**	1	BOLT-SPECIAL (BANJO)	
	30C	1	**239-0227**	2	CLIP	
	31	1	**239-0229**	1	SPACER (8.4X15X9-MM THK)	
M	32	1	**239-0232**	4	STUD (M8X1.25X31-MM)	
	33	2	**366-3055**	1	ELBOW	
	34	2	**249-1532**	1	HOSE-AIR INLET	
	36	2	**438-9362**	1	GASKET	
	37	1	**268-3421**	1	ELBOW-EXHAUST	
	38	1	**304-5061**	1	GASKET	
	39	1	**317-0962**	1	TUBE-TURBOCHARGER OIL	
	40	2	**583-6090**	1	COVER-HEAD	
M	41	2	**153-5960**	1	NUT (M6X1-THD)	
M	42	2	**360-9545**	1	STUD (M6X1X48-MM)	

M - METRIC PART
R - REMANUFACTURED PART MAY BE AVAILABLE

326-8542 **TURBOCHARGER GP (**contd.**)** **i08197256**

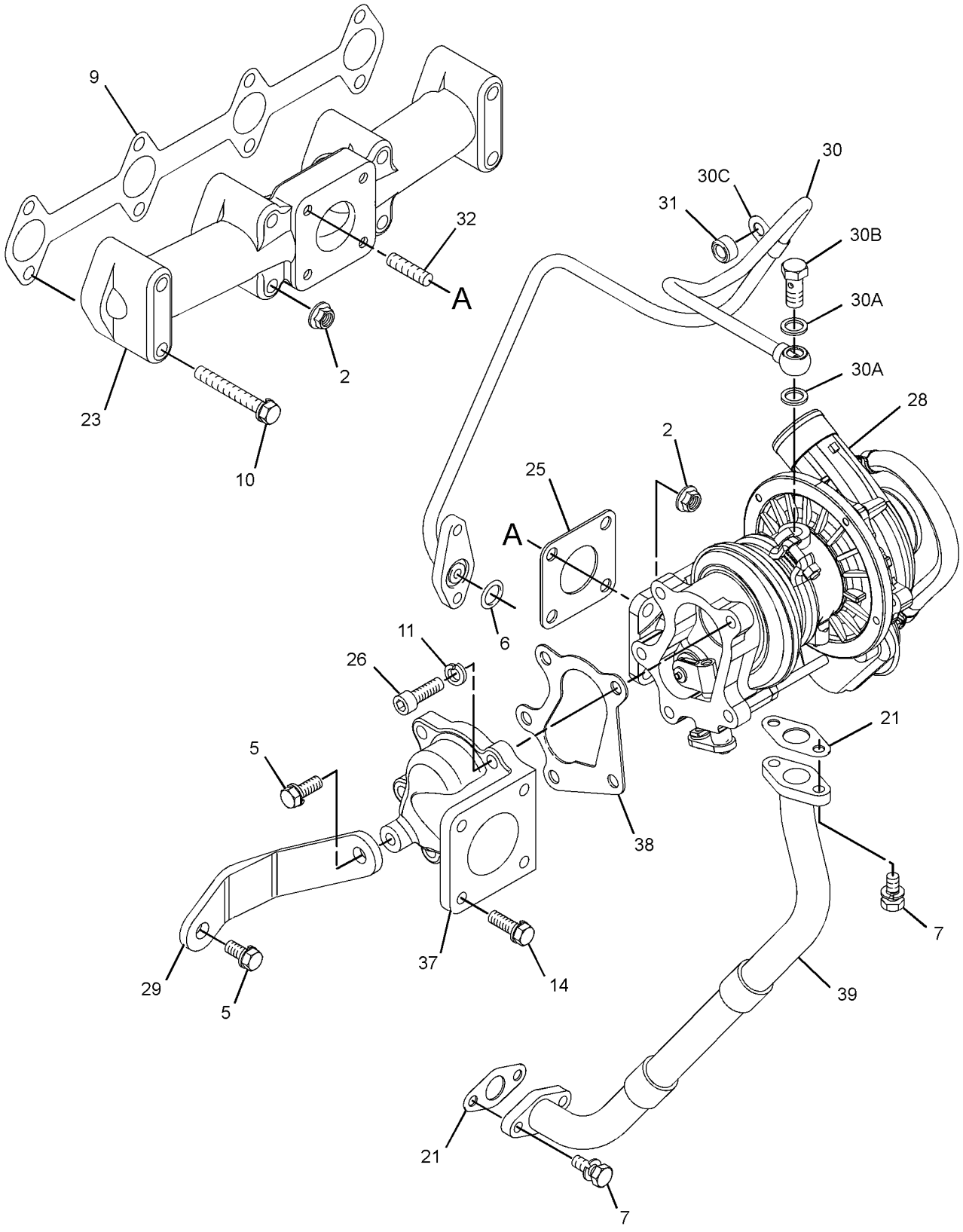

GRAPHIC #1 g06318412

326-8542 **TURBOCHARGER GP (**contd.**)** **i08197256**

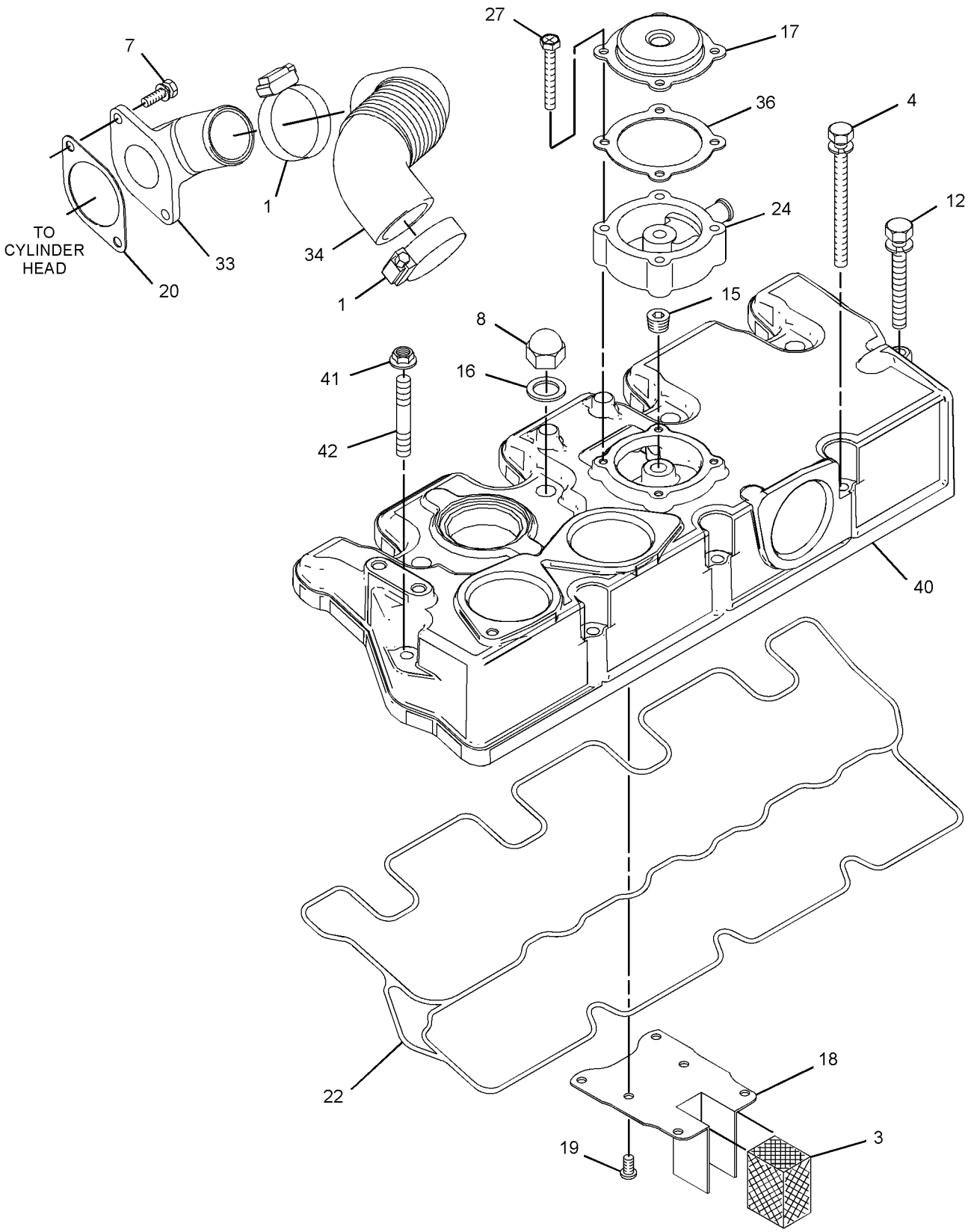

GRAPHIC #2 <END> g06658786

341-6642 TURBOCHARGER GP

SMCS-1052, 1053 **i07684149**

NOTE	REF NO	GRAPHIC REF	PART NUMBER	QTY	PART NAME 1 2 3 4 5 6 (PRODUCT LEVEL)	SEE PAGE
M	1	1	**6I-0254**	1	BOLT (M8X1.25X30-MM)	
	2	2	**363-5813**	2	CLAMP-HOSE	
M	3	1	**153-5592**	8	NUT (M8X1.25-THD)	
	4	2	**153-5939**	1	STOPPER (OIL)	
	5	2	**153-5962**	3	BOLT AS	
M	6	1	**124-3815**	2	BOLT (M8X1.25X16-MM)	
M	7	1,2	**6I-0846**	6	BOLT (M6X1X14-MM)	
M	8	2	**539-0439**	4	NUT (M10X1.25-THD)	
	9	1	**154-2427**	1	GASKET-EXHAUST MANIFOLD	
	10	1	**154-2428**	4	BOLT AS	
	11	1	**163-5372**	5	WASHER (8X15.4X4-MM THK)	
	12	2	**165-2140**	2	BOLT AS	
	14	1	**168-9001**	4	BOLT AS	
	15	2	**183-1165**	1	PLUG	
	16	2	**246-4361**	4	WASHER (10.5X14X1.5-MM THK)	
	17	2	**217-5859**	1	VALVE-BREATHER (CRANKCASE)	
	18	2	**320-8401**	1	PLATE-RETAINING	
	19	2	**217-5862**	6	SCREW (SELF-TAPPING)	
	20	2	**494-9569**	1	GASKET	
	21	1	**225-8533**	2	GASKET	
	22	2	**233-0695**	1	SEAL-VALVE COVER	
	23	1	**236-9987**	1	MANIFOLD-EXHAUST	
	24	2	**365-4125**	1	ADAPTER	
	25	1	**238-9196**	1	GASKET-TURBOCHARGER	
M	26	1	**5A-3604**	5	BOLT-SOCKET HEAD (M8X1.25X25-MM)	
M	27	2	**238-9295**	4	BOLT (M4X0.7X30-MM)	
R	28	1	**513-6823**	1	TURBOCHARGER AS	
	29	1	**239-0187**	1	BRACKET	
	30	1	**039-2281**	1	SPACER (9X16X25-MM THK)	
M	31	1	**239-0232**	4	STUD (M8X1.25X31-MM)	
	32	2	**366-3055**	1	ELBOW	
	33	2	**249-1532**	1	HOSE-AIR INLET	
	35	2	**438-9362**	1	GASKET	
	36	1	**268-3421**	1	ELBOW-EXHAUST	
	37	1	**304-5061**	1	GASKET	
	38	1	**317-0962**	1	TUBE-TURBOCHARGER OIL	
	39	2	**423-8167**	1	COVER-CYLINDER HEAD	
	40	1	**153-6853**	1	SEAL-O-RING	
	41	1	**341-6641**	1	CONNECTION GP-OIL	
	41A	1	**225-8526**	2	WASHER (10.4X13.75X1.37-MM THK)	
	41B	1	**317-0960**	1	BOLT-SPECIAL (BANJO)	
	41C	1	**317-0961**	1	CLIP	

M - METRIC PART
R - REMANUFACTURED PART MAY BE AVAILABLE

341-6642 **TURBOCHARGER GP (**contd.**)** **i07684149**

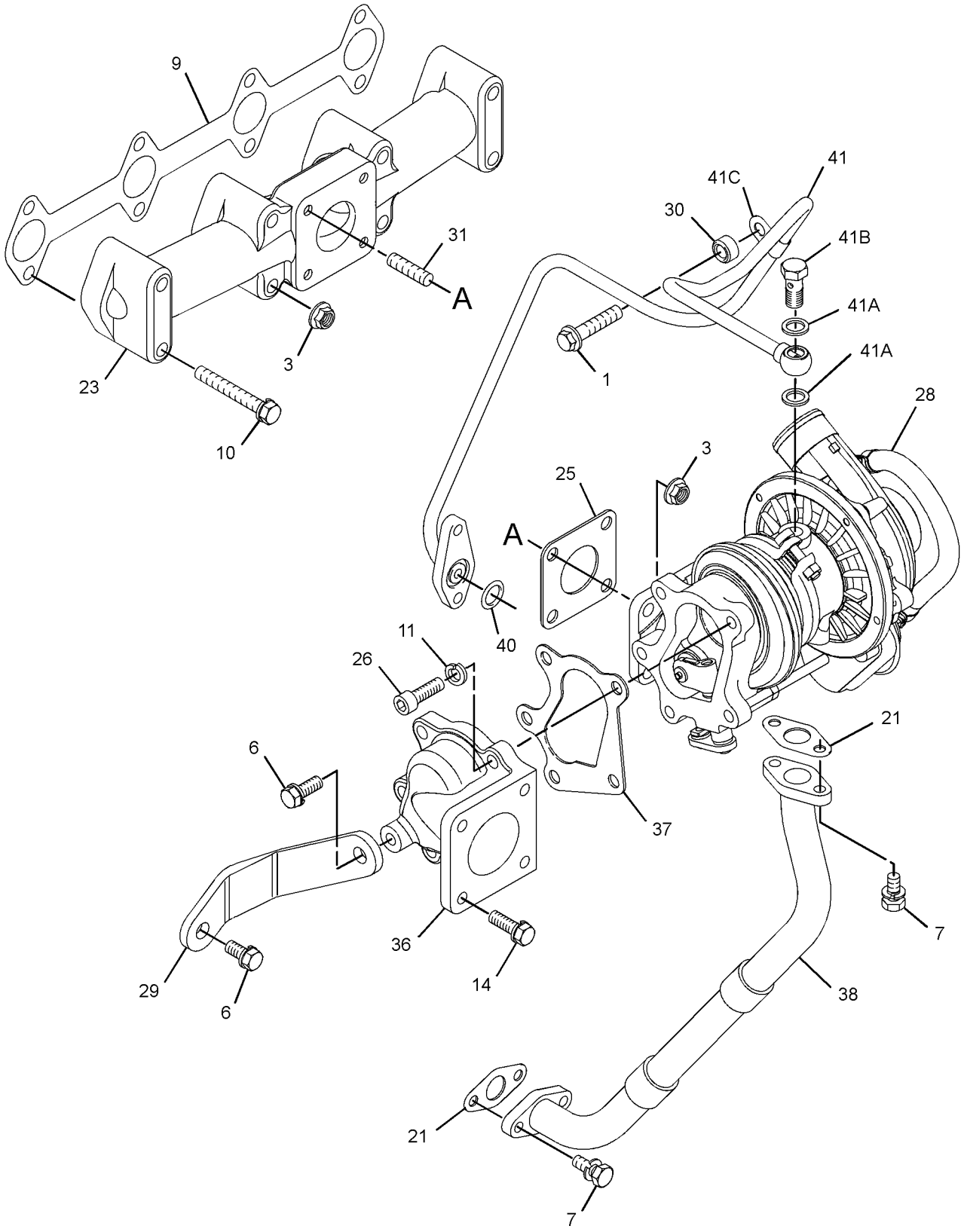

GRAPHIC #1 g06342763

341-6642 **TURBOCHARGER GP (**contd.**)** **i07684149**

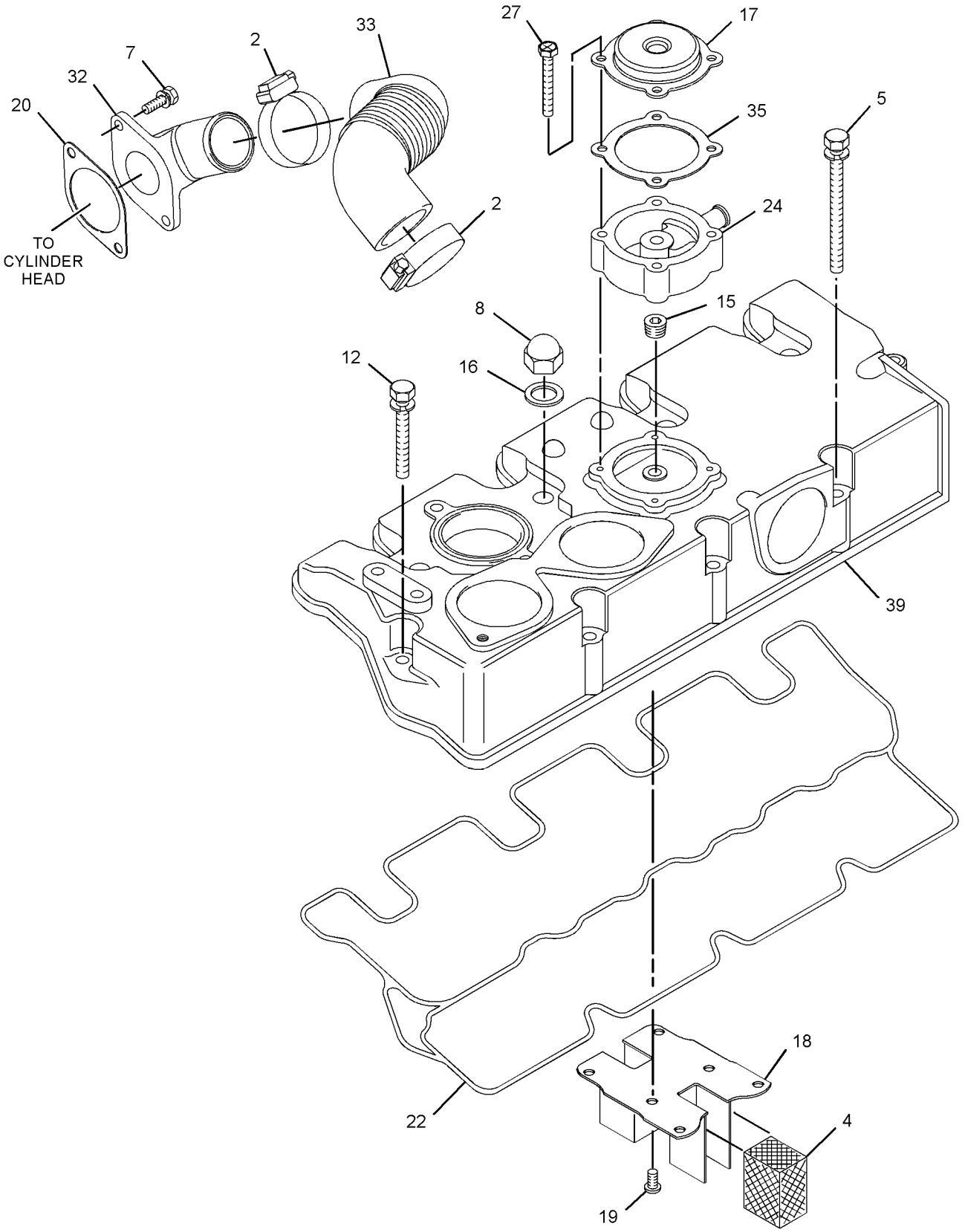

GRAPHIC #2 <END> g06342762

344-5515 TURBOCHARGER GP

SMCS-1052, 1053 **i08698086**

NOTE	REF NO	GRAPHIC REF	PART NUMBER	QTY	PART NAME 1 2 3 4 5 6 (PRODUCT LEVEL)	SEE PAGE
M	1	1	**6I-0254**	1	BOLT (M8X1.25X30-MM)	
M	2	1	**153-5592**	8	NUT (M8X1.25-THD)	
	3	2	**153-5939**	1	STOPPER (OIL)	
	4	2	**153-5962**	3	BOLT AS	
M	5	1	**124-3815**	2	BOLT (M8X1.25X16-MM)	
	6	1	**153-6853**	1	SEAL-O-RING	
M	8	2	**539-0439**	4	NUT (M10X1.25-THD)	
	9	1	**154-2427**	1	GASKET-EXHAUST MANIFOLD	
	10	1	**154-2428**	4	BOLT AS	
	12	1	**163-5372**	5	WASHER (8X15.4X4-MM THK)	
	13	2	**165-2140**	2	BOLT AS	
	15	2	**183-1165**	1	PLUG	
	16	2	**246-4361**	4	WASHER (10.5X14X1.5-MM THK)	
	17	2	**217-5859**	1	VALVE-BREATHER (CRANKCASE)	
	18	2	**217-5862**	6	SCREW (SELF-TAPPING)	
	19	2	**494-9569**	1	GASKET (AIR INTAKE)	
	20	1	**225-8533**	2	GASKET	
	21	2	**233-0695**	1	SEAL-VALVE COVER	
	22	1	**236-9987**	1	MANIFOLD-EXHAUST	
	23	2	**365-4125**	1	ADAPTER	
	24	1	**238-9196**	1	GASKET-TURBOCHARGER	
M	25	1	**5A-3604**	5	BOLT-SOCKET HEAD (M8X1.25X25-MM)	
M	26	2	**238-9295**	4	BOLT (M4X0.7X30-MM)	
	27	1	**239-0187**	1	BRACKET	
	28	1	**039-2281**	1	SPACER (9X16X25-MM THK)	
M	29	1	**239-0232**	4	STUD (M8X1.25X31-MM)	
M	30	1,2	**6I-0846**	7	BOLT (M6X1X14-MM)	
	31	2	**438-9362**	1	GASKET	
	32	1	**268-3421**	1	ELBOW-EXHAUST	
	33	1	**304-5061**	1	GASKET	
	34	2	**560-8837**	1	ADAPTER	
	35	1	**317-0962**	1	TUBE-TURBOCHARGER OIL	
	36	2	**320-8401**	1	PLATE-RETAINING	
	37	2	**583-6089**	1	COVER-HEAD	
	38	1	**341-6641**	1	CONNECTION GP-OIL	
	38A	1	**225-8526**	2	WASHER (10.4X13.75X1.37-MM THK)	
	38B	1	**317-0960**	1	BOLT-SPECIAL (BANJO)	
	38C	1	**317-0961**	1	CLIP	
	39	1	**513-6822**	1	TURBOCHARGER AS	
	40	2	**153-6415**	1	WASHER (SEAL)	

M - METRIC PART

344-5515 **TURBOCHARGER GP (**contd.**)** **i08698086**

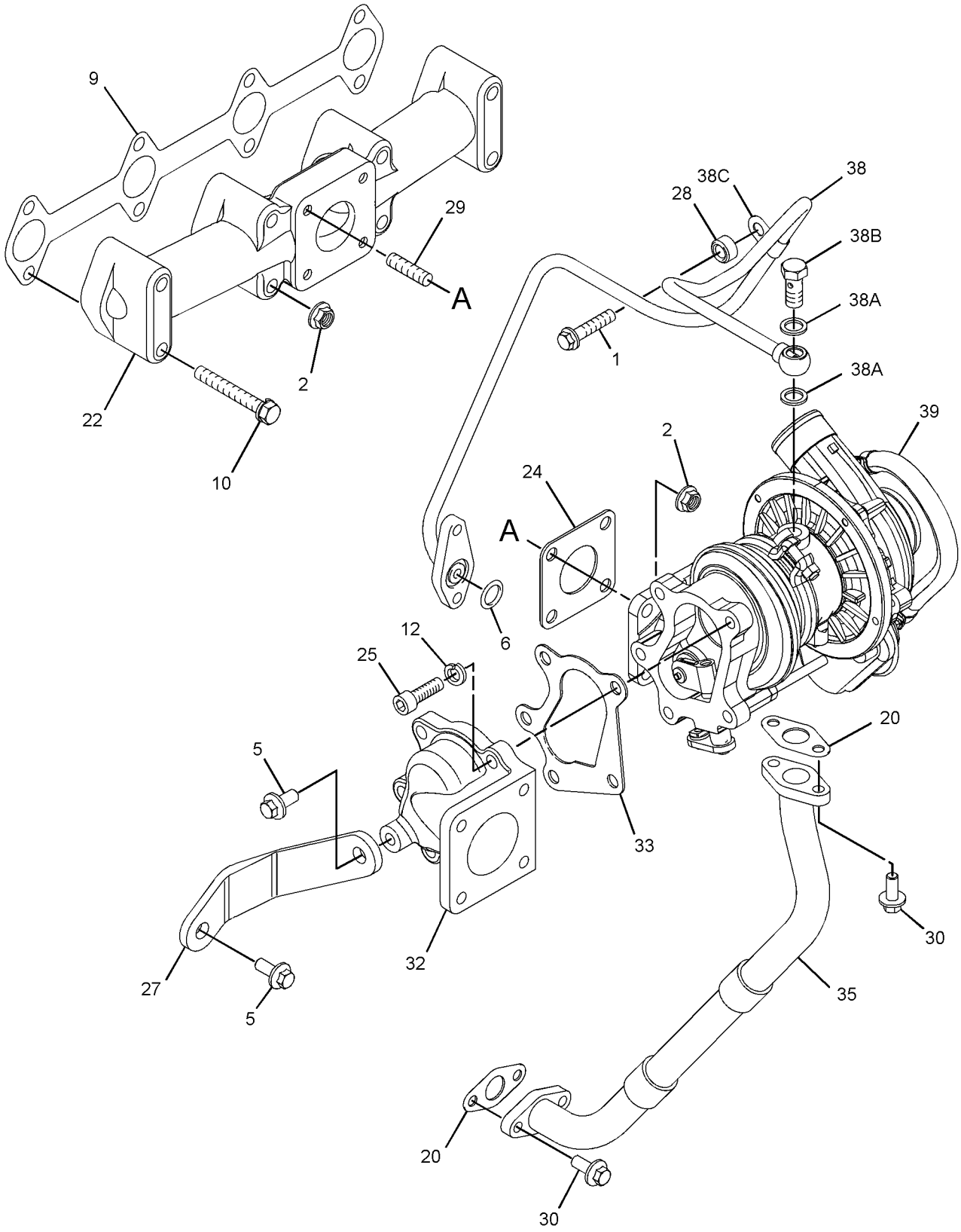

GRAPHIC #1 g06212967

344-5515 **TURBOCHARGER GP (**contd.**)** **i08698086**

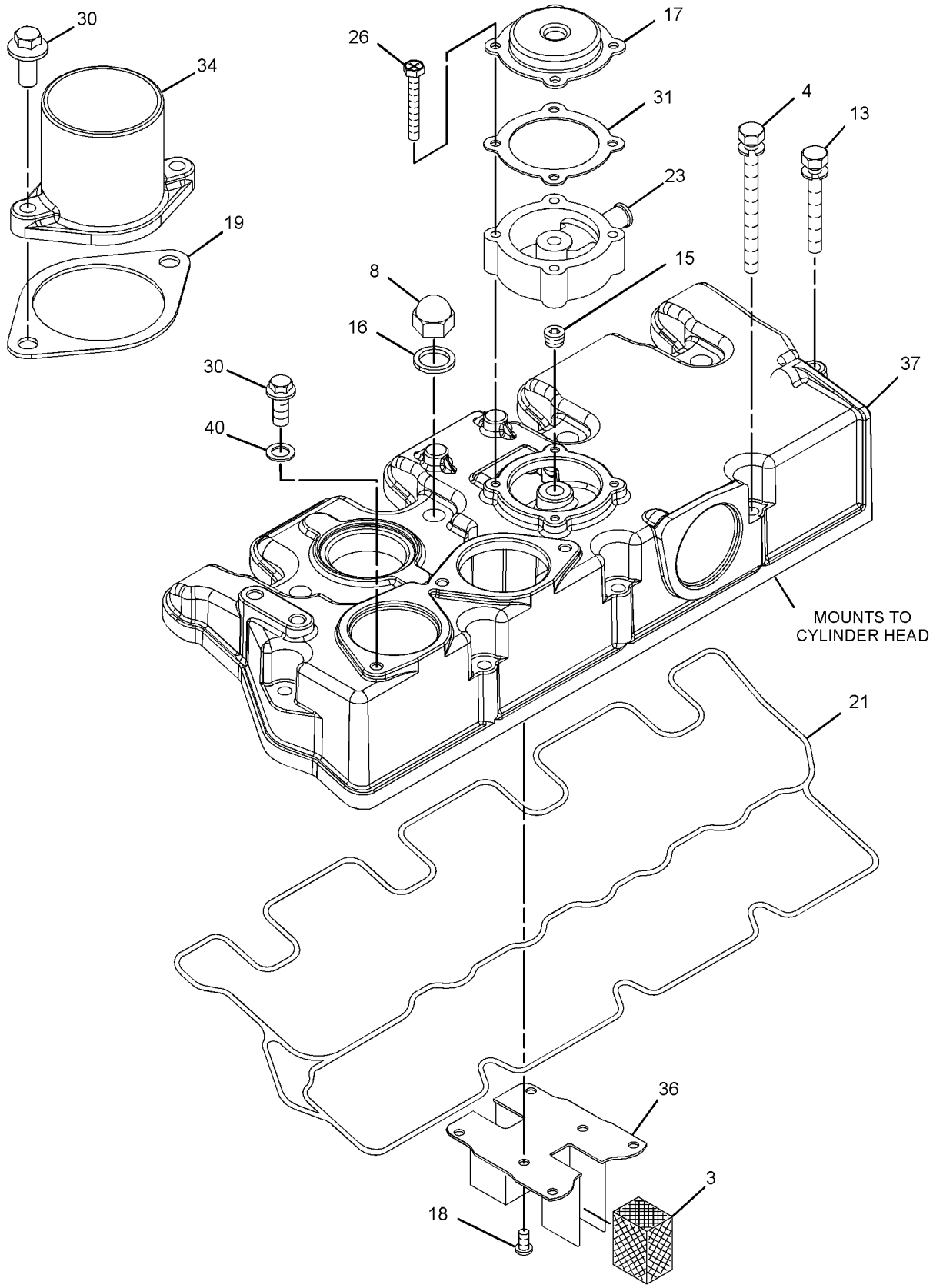

GRAPHIC #2 <END> g07518260

365-4126 TURBOCHARGER GP

TYPE 1

SMCS-1052, 1053 **i06674455**

NOTE	REF NO	GRAPHIC REF	PART NUMBER	QTY	PART NAME 1 2 3 4 5 6 (PRODUCT LEVEL)	SEE PAGE
M	1	1	**6I-0254**	1	BOLT (M8X1.25X30-MM)	
M	2	1	**153-5592**	8	NUT (M8X1.25-THD)	
	3	2	**153-5962**	3	BOLT AS	
M	4	1	**124-3815**	1	BOLT (M8X1.25X16-MM)	
	5	1	**153-6853**	1	SEAL-O-RING	
M	6	1,2	**6I-0846**	6	BOLT (M6X1X14-MM)	
M	7	2	**154-1347**	4	NUT (M10X1.25-THD)	
	8	1	**154-2427**	1	GASKET-EXHAUST MANIFOLD	
	9	1	**154-2428**	4	BOLT AS	
	10	1	**155-7984**	2	WASHER (8.4X16X1.6-MM THK)	
	11	1	**163-5372**	5	WASHER (8X15.4X4-MM THK)	
	12	2	**165-2140**	2	BOLT AS	
	13	1	**165-2141**	1	BOLT AS	
	14	2	**190-3762**	4	WASHER	
	15	2	**217-5862**	6	SCREW (SELF-TAPPING)	
	16	2	**494-9569**	1	GASKET	
	17	1	**225-8533**	2	GASKET	
	18	2	**233-0695**	1	SEAL-VALVE COVER	
	19	1	**236-9987**	1	MANIFOLD-EXHAUST	
	20	1	**238-9196**	1	GASKET-TURBOCHARGER	
	21	1	**238-9198**	1	ELBOW-EXHAUST	
M	22	1	**5A-3604**	5	BOLT-SOCKET HEAD (M8X1.25X25-MM)	
	23	1	**239-0187**	1	BRACKET	
	24	1	**039-2281**	1	SPACER (9X16X25-MM THK)	
M	25	1	**239-0232**	4	STUD (M8X1.25X31-MM)	
	27	1	**304-5061**	1	GASKET	
	28	2	**309-6735**	1	TUBE-AIR	
	29	1	**317-0962**	1	TUBE-TURBOCHARGER OIL	
	30	2	**320-8401**	1	PLATE-RETAINING	
	31	2	**450-0914**	1	COVER-HEAD	
	32	1	**341-6641**	1	CONNECTION GP-OIL	
	32A	1	**225-8526**	2	WASHER (10.4X13.75X1.37-MM THK)	
	32B	1	**317-0960**	1	BOLT-SPECIAL (BANJO)	
	32C	1	**317-0961**	1	CLIP	
	33	1	**344-5517**	1	TURBOCHARGER GP	

M - METRIC PART

365-4126 **TURBOCHARGER GP (**contd.**)** **i06674455**

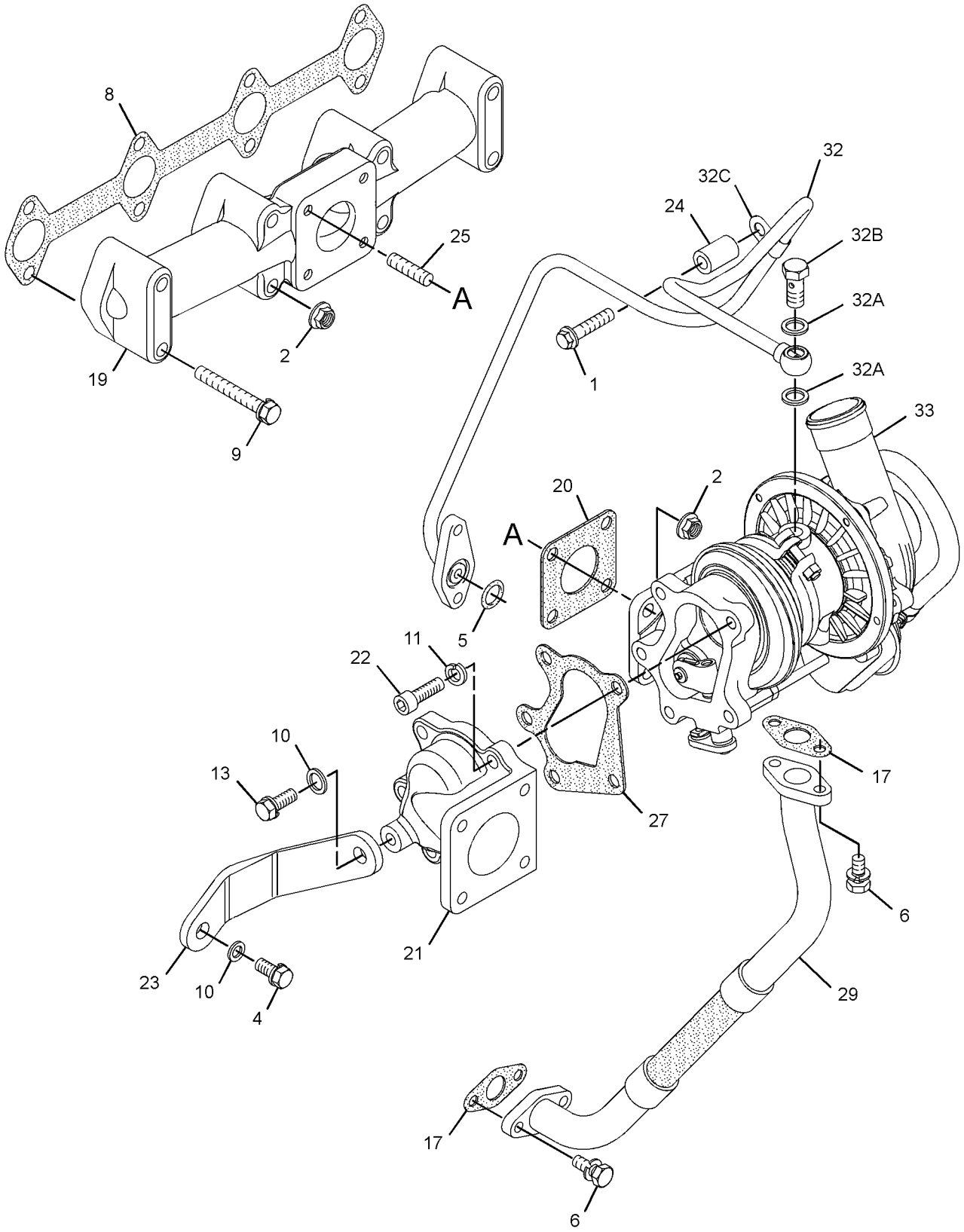

GRAPHIC #1 g06086734

365-4126 **TURBOCHARGER GP (**contd.**)** **i06674455**

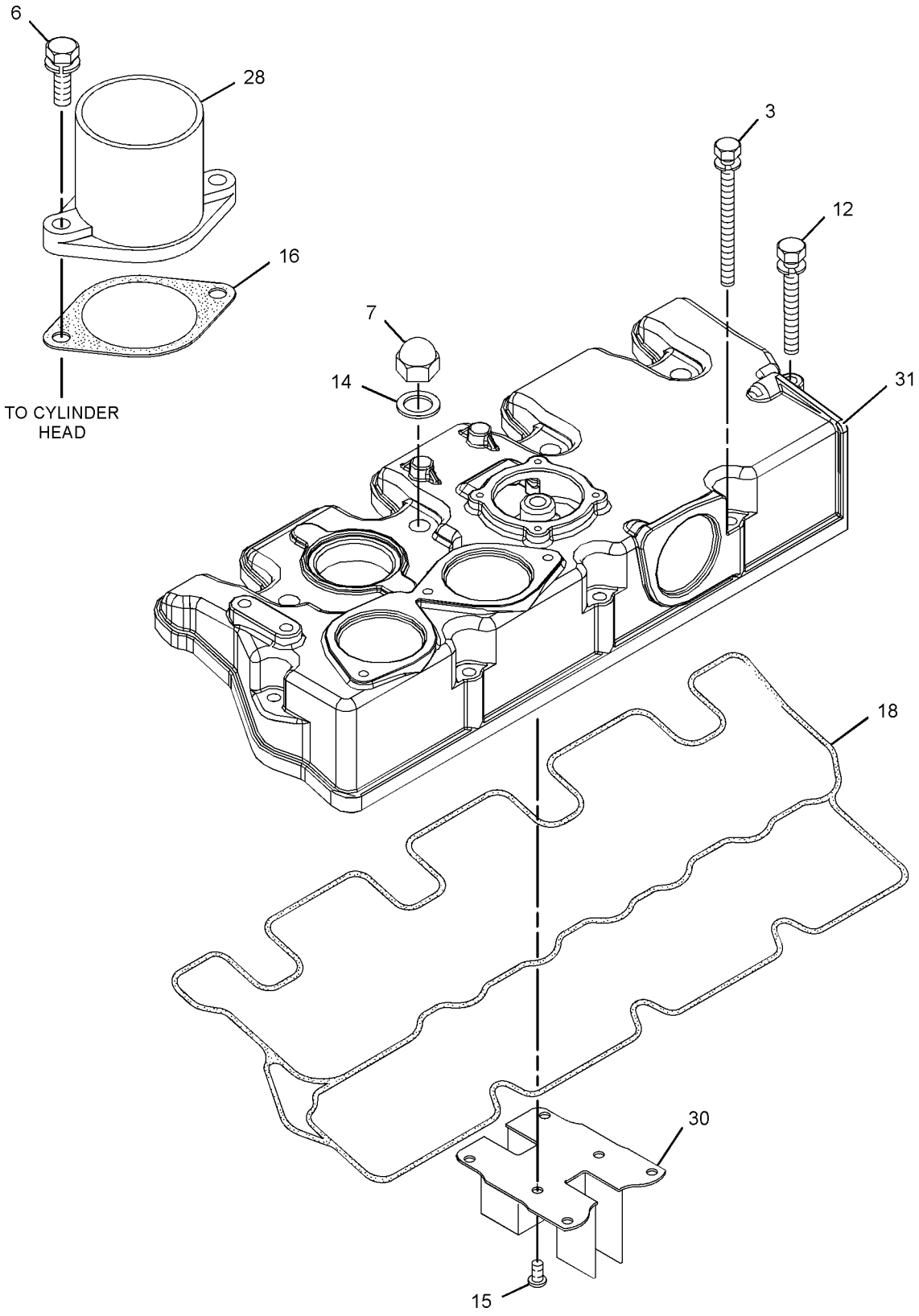

GRAPHIC #2 <END> g03666177

365-4126 TURBOCHARGER GP

TYPE 2

SMCS-1052, 1053 **i08525784**

NOTE	REF NO	GRAPHIC REF	PART NUMBER	QTY	PART NAME 1 2 3 4 5 6 (PRODUCT LEVEL)	SEE PAGE
M	1	1	**6I-0254**	1	BOLT (M8X1.25X30-MM)	
M	2	1	**153-5592**	8	NUT (M8X1.25-THD)	
	3	2	**153-5962**	3	BOLT AS	
CM	4	1	**124-3815**	2	BOLT (M8X1.25X16-MM)	
	5	1	**153-6853**	1	SEAL-O-RING	
M	6	1,2	**6I-0846**	7	BOLT (M6X1X14-MM)	
M	7	2	**539-0439**	4	NUT (M10X1.25-THD)	
	8	1	**154-2427**	1	GASKET-EXHAUST MANIFOLD	
	9	1	**154-2428**	4	BOLT AS	
	11	1	**163-5372**	5	WASHER (8X15.4X4-MM THK)	
	12	2	**165-2140**	2	BOLT AS	
	14	2	**246-4361**	4	WASHER (10.5X14X1.5-MM THK)	
	15	2	**217-5862**	6	SCREW (SELF-TAPPING)	
	16	2	**494-9569**	1	GASKET	
	17	1	**225-8533**	2	GASKET	
	18	2	**233-0695**	1	SEAL-VALVE COVER	
	19	1	**236-9987**	1	MANIFOLD-EXHAUST	
	20	1	**238-9196**	1	GASKET-TURBOCHARGER	
	21	1	**238-9198**	1	ELBOW-EXHAUST	
M	22	1	**5A-3604**	5	BOLT-SOCKET HEAD (M8X1.25X25-MM)	
	23	1	**239-0187**	1	BRACKET	
	24	1	**239-0229**	1	SPACER (8.4X15X9-MM THK)	
M	25	1	**239-0232**	4	STUD (M8X1.25X31-MM)	
	27	1	**304-5061**	1	GASKET	
	28	2	**560-8837**	1	ADAPTER	
	29	1	**317-0962**	1	TUBE-TURBOCHARGER OIL	
	30	2	**320-8401**	1	PLATE-RETAINING	
	31	2	**583-6089**	1	COVER-HEAD	
	32	1	**341-6641**	1	CONNECTION GP-OIL	
	32A	1	**225-8526**	2	WASHER (10.4X13.75X1.37-MM THK)	
	32B	1	**317-0960**	1	BOLT-SPECIAL (BANJO)	
	32C	1	**317-0961**	1	CLIP	
	32D	1	**596-4209**	1	EYE	
	33	1	**513-6822**	1	TURBOCHARGER AS	
	34	2	**153-6415**	1	WASHER (SEAL)	

C - CHANGE FROM PREVIOUS TYPE
M - METRIC PART

365-4126 **TURBOCHARGER GP (**contd.**)** **i08525784**

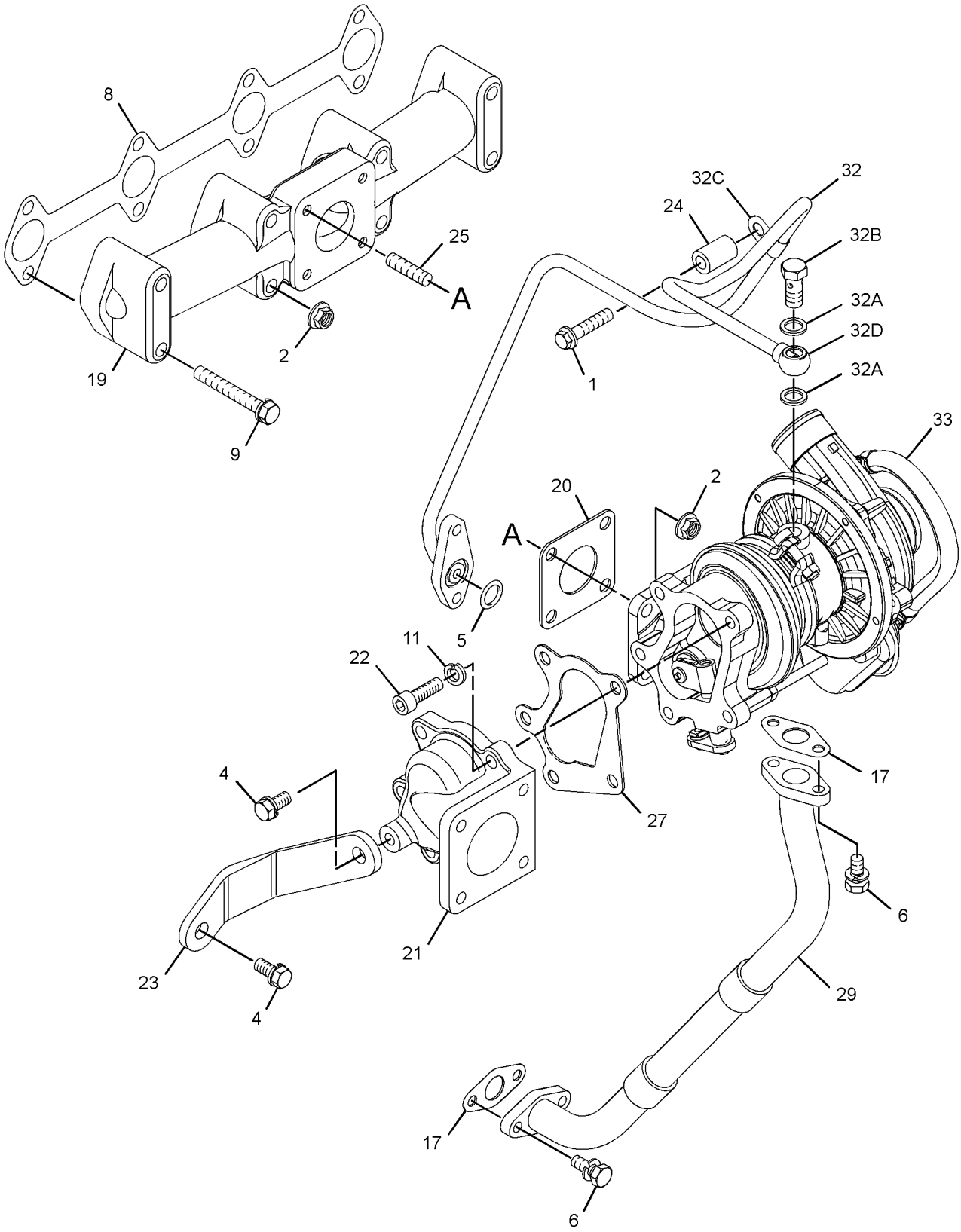

GRAPHIC #1 g07488812

365-4126 **TURBOCHARGER GP (**contd.**)** **i08525784**

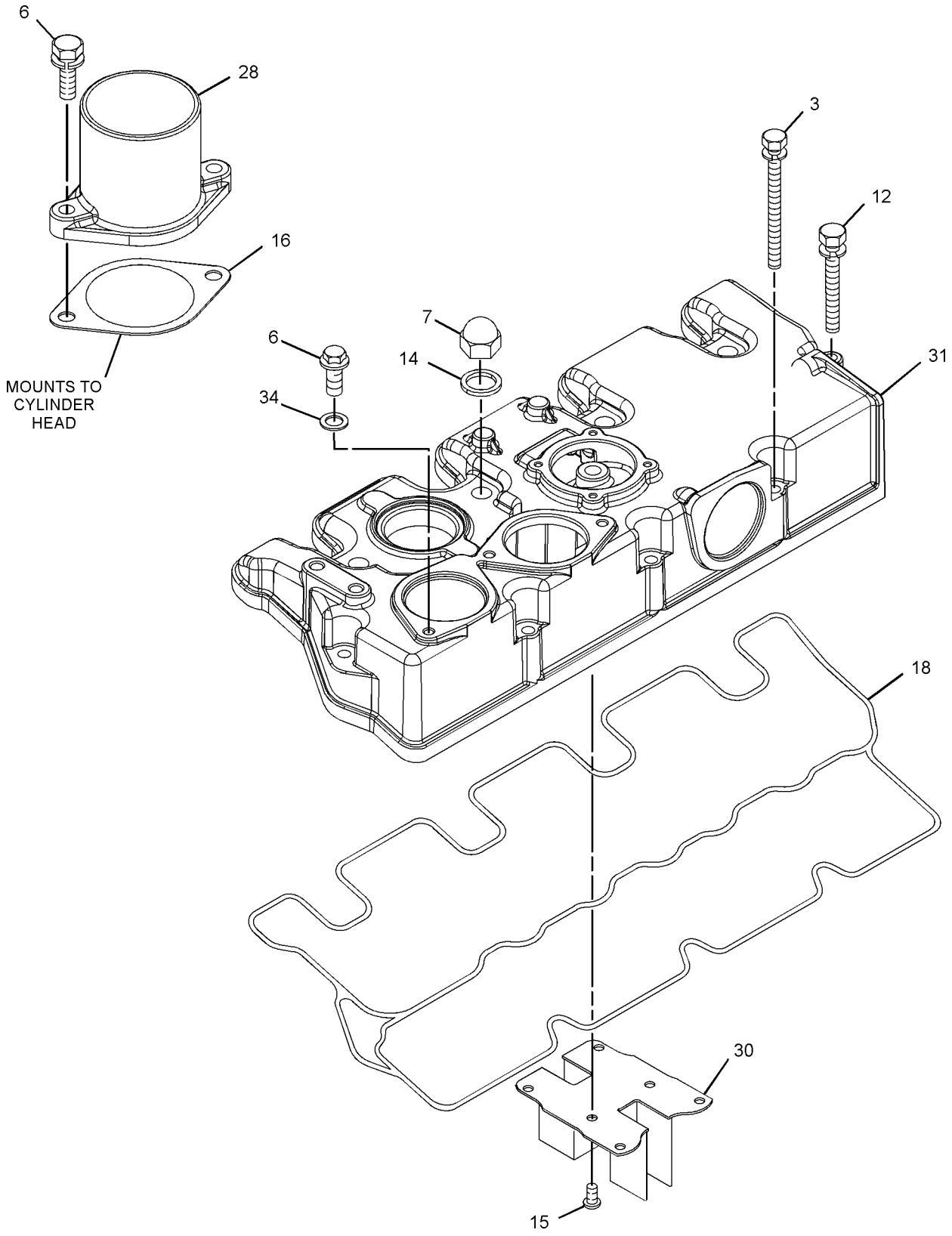

GRAPHIC #2 <END> g07488813

AIR INLET AND EXHAUST SYSTEM

368-4106 TURBOCHARGER GP

SMCS-1052, 1053 **i08776294**

NOTE	REF NO	GRAPHIC REF	PART NUMBER	QTY	PART NAME 1 2 3 4 5 6 (PRODUCT LEVEL)	SEE PAGE
M	1	1	**6I-0254**	1	BOLT (M8X1.25X30-MM)	
M	2	1	**6I-0846**	6	BOLT (M6X1X14-MM)	
M	3	1	**124-3815**	2	BOLT (M8X1.25X16-MM)	
M	4	1	**153-5592**	8	NUT (M8X1.25-THD)	
	5	2	**153-5939**	1	STOPPER (OIL)	
M	6	2	**153-5960**	1	NUT (M6X1-THD)	
	7	2	**153-5962**	3	BOLT AS	
	8	1	**153-6853**	1	SEAL-O-RING	
	9	2	**153-7640**	2	BOLT AS	
	10	1	**154-2427**	1	GASKET-EXHAUST MANIFOLD	
	11	1	**154-2428**	4	BOLT AS	
	12	1	**155-7984**	1	WASHER (8.4X16X1.6-MM THK)	
	13	1	**163-5372**	5	WASHER (8X15.4X4-MM THK)	
	14	2	**165-2140**	1	BOLT AS	
	15	2	**183-1165**	1	PLUG	
	16	2	**217-5859**	1	VALVE-BREATHER (CRANKCASE)	
	17	2	**217-5862**	6	SCREW (SELF-TAPPING)	
	18	1	**225-8533**	2	GASKET	
	19	2	**233-0695**	1	SEAL-VALVE COVER	
	20	1	**236-9987**	1	MANIFOLD-EXHAUST	
	21	1	**238-9196**	1	GASKET-TURBOCHARGER	
	22	1	**238-9198**	1	ELBOW-EXHAUST	
M	23	1	**5A-3604**	5	BOLT-SOCKET HEAD (M8X1.25X25-MM)	
M	24	2	**238-9295**	4	BOLT (M4X0.7X30-MM)	
	25	1	**239-0187**	1	BRACKET	
	26	1	**239-0229**	2	SPACER (8.4X15X9-MM THK)	
M	27	1	**239-0232**	4	STUD (M8X1.25X31-MM)	
	28	2	**246-4361**	4	WASHER (10.5X14X1.5-MM THK)	
	29	2	**249-1532**	1	HOSE-AIR INLET	
	30	1	**304-5061**	1	GASKET	
	31	1	**317-0962**	1	TUBE-TURBOCHARGER OIL	
	32	2	**320-8401**	1	PLATE-RETAINING	
	33	1	**341-6641**	1	CONNECTION GP-OIL	
	33A	1	**596-4209**	1	EYE	
	33B	1	**225-8526**	2	WASHER (10.4X13.75X1.37-MM THK)	
	33C	1	**317-0960**	1	BOLT-SPECIAL (BANJO)	
	33D	1	**317-0961**	1	CLIP	
M	34	2	**360-9545**	1	STUD (M6X1X48-MM)	
	35	2	**363-5813**	2	CLAMP-HOSE	
	36	2	**365-4125**	1	ADAPTER	
	37	2	**366-3055**	1	ELBOW	
	38	2	**438-9362**	1	GASKET	
	39	2	**494-9569**	1	GASKET	
R	40	1	**513-6823**	1	TURBOCHARGER AS	
M	41	2	**539-0439**	4	NUT (M10X1.25-THD)	
	42	2	**583-6090**	1	COVER-HEAD	

M - METRIC PART
R - REMANUFACTURED PART MAY BE AVAILABLE

368-4106 **TURBOCHARGER GP (**contd.**)** **i08776294**

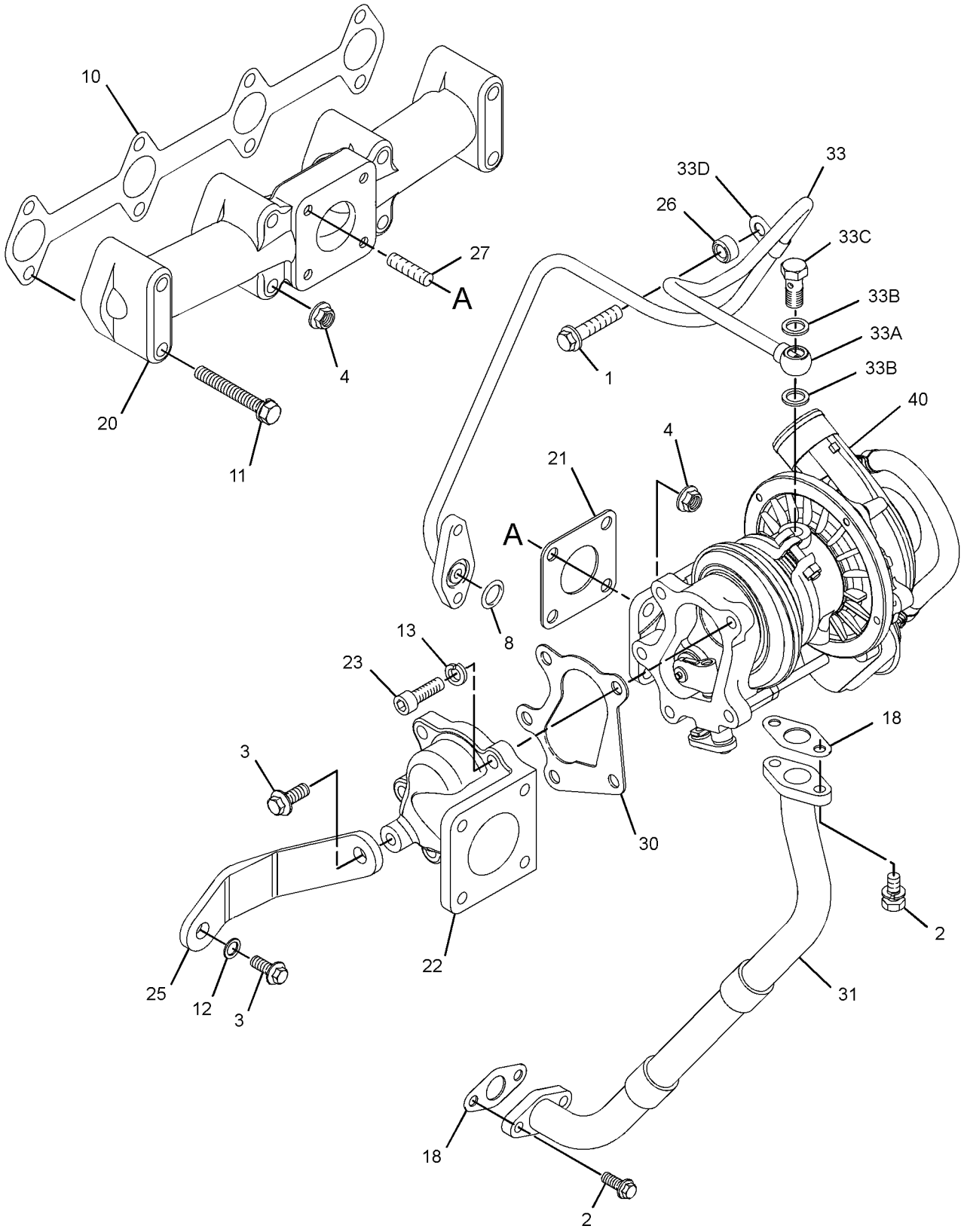

GRAPHIC #1 g07613611

368-4106 **TURBOCHARGER GP** (contd.) **i08776294**

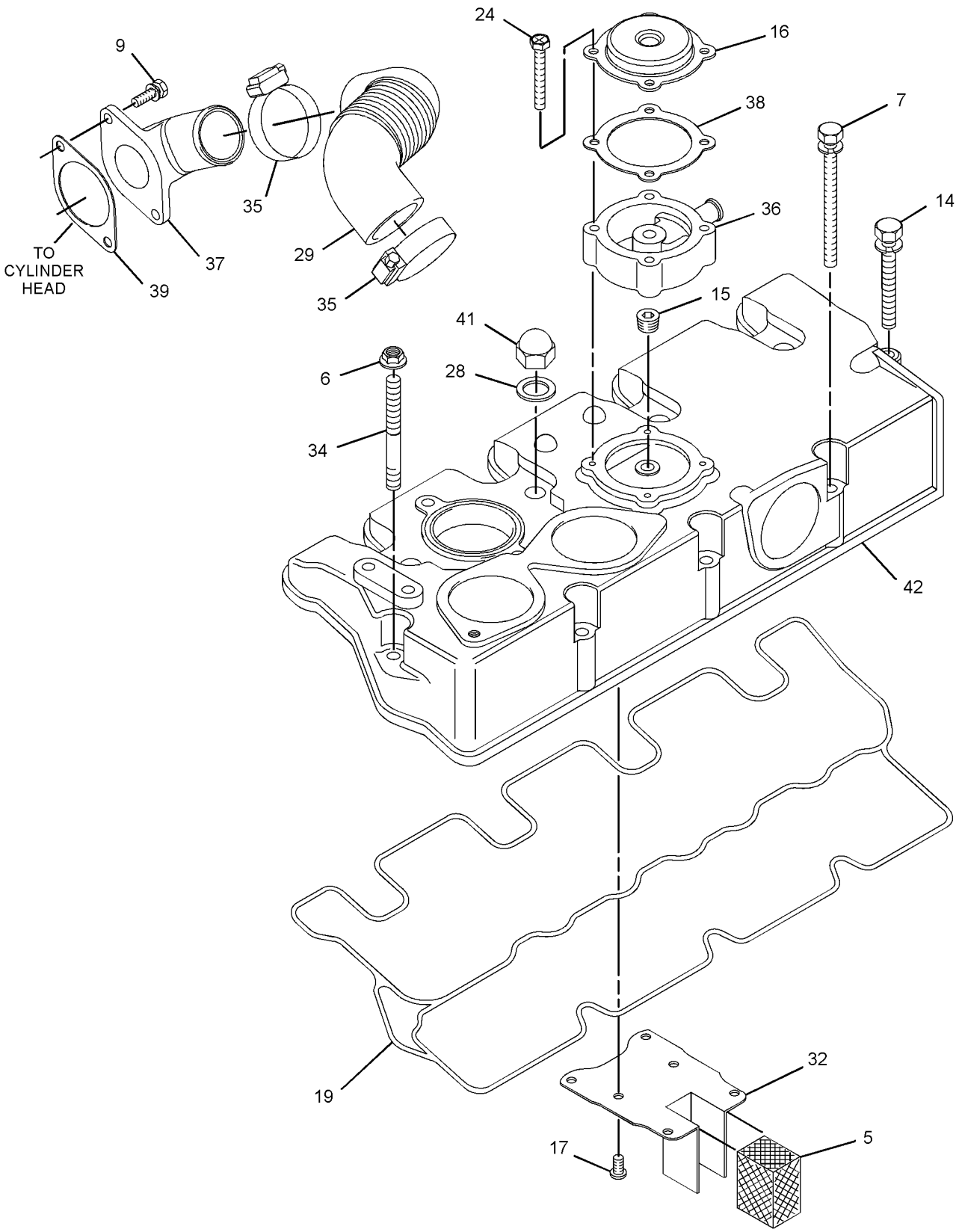

GRAPHIC #2 <END> g07613612

441-8101 TURBOCHARGER GP

PART OF 506-0518, 506-0519, 516-2639, 557-6086 ENGINE AR-PRIMARY

TYPE 1

SMCS-1052, 1053 **i07684156**

NOTE	REF NO	GRAPHIC REF	PART NUMBER	QTY	PART NAME 1 2 3 4 5 6 (PRODUCT LEVEL)	SEE PAGE
	1	3	**365-4125**	1	ADAPTER	
M	2	2	**6I-0254**	1	BOLT (M8X1.25X30-MM)	
	3	3	**153-5962**	3	BOLT AS	
M	4	1	**124-3815**	2	BOLT (M8X1.25X16-MM)	
	6	4	**154-2428**	4	BOLT AS	
	7	3	**165-2140**	2	BOLT AS	
	9	1	**168-9001**	4	BOLT AS	
	10	3	**217-5862**	6	SCREW (SELF-TAPPING) (SELF-TAPPING)	
M	11	1	**5A-3604**	5	BOLT-SOCKET HEAD (M8X1.25X25-MM)	
M	12	3	**238-9295**	4	BOLT (M4X0.7X30-MM) (HEX)	
M	13	2,4	**6I-0846**	6	BOLT (M6X1X14-MM)	
	14	1	**239-0187**	1	BRACKET	
	15	4	**363-5813**	2	CLAMP-HOSE	
	16	2	**341-6641**	1	CONNECTION GP-OIL	
	16A	2	**225-8526**	2	WASHER (10.4X13.75X1.37-MM THK)	
	16B	2	**317-0960**	1	BOLT-SPECIAL (BANJO)	
	16C	2	**317-0961**	1	CLIP	
	17	3	**383-9577**	1	COVER-VALVE	
	18	4	**366-3055**	1	ELBOW	
	19	1	**268-3421**	1	ELBOW-EXHAUST	
	20	3	**153-5939**	1	STOPPER (OIL)	
	21	3	**438-9362**	1	GASKET	
	22	1	**304-5061**	1	GASKET	
	23	4	**494-9569**	1	GASKET	
	24	4	**154-2427**	1	GASKET-EXHAUST MANIFOLD	
	25	1	**238-9196**	1	GASKET-TURBOCHARGER	
	26	2	**353-3477**	2	GASKET-TURBOCHARGER	
	27	4	**249-1532**	1	HOSE-AIR INLET	
	28	4	**236-9987**	1	MANIFOLD-EXHAUST	
M	29	1,4	**153-5592**	8	NUT (M8X1.25-THD)	
M	30	3	**539-0439**	4	NUT (M10X1.25-THD)	
	31	3	**320-8401**	1	PLATE-RETAINING	
	32	3	**183-1165**	1	PLUG (SEALING)	
	33	2	**153-6853**	1	SEAL-O-RING	
	34	3	**233-0695**	1	SEAL-VALVE COVER	
	35	2	**039-2281**	1	SPACER (9X16X25-MM THK)	
M	36	4	**239-0232**	4	STUD (M8X1.25X31-MM)	
	37	2	**317-0962**	1	TUBE-TURBOCHARGER OIL	
R	38	1	**513-6823**	1	TURBOCHARGER AS	
	39	3	**217-5859**	1	VALVE-BREATHER (CRANKCASE)	
	41	1	**163-5372**	5	WASHER (8X15.4X4-MM THK)	
	42	3	**246-4361**	4	WASHER (10.5X14X1.5-MM THK) (SEALING)	

M - METRIC PART
R - REMANUFACTURED PART MAY BE AVAILABLE

441-8101 **TURBOCHARGER GP (**contd.**)** **i07684156**

REFER TO ALL ILLUSTRATIONS OF
THIS GROUP FOR AUXILIARY VIEWS

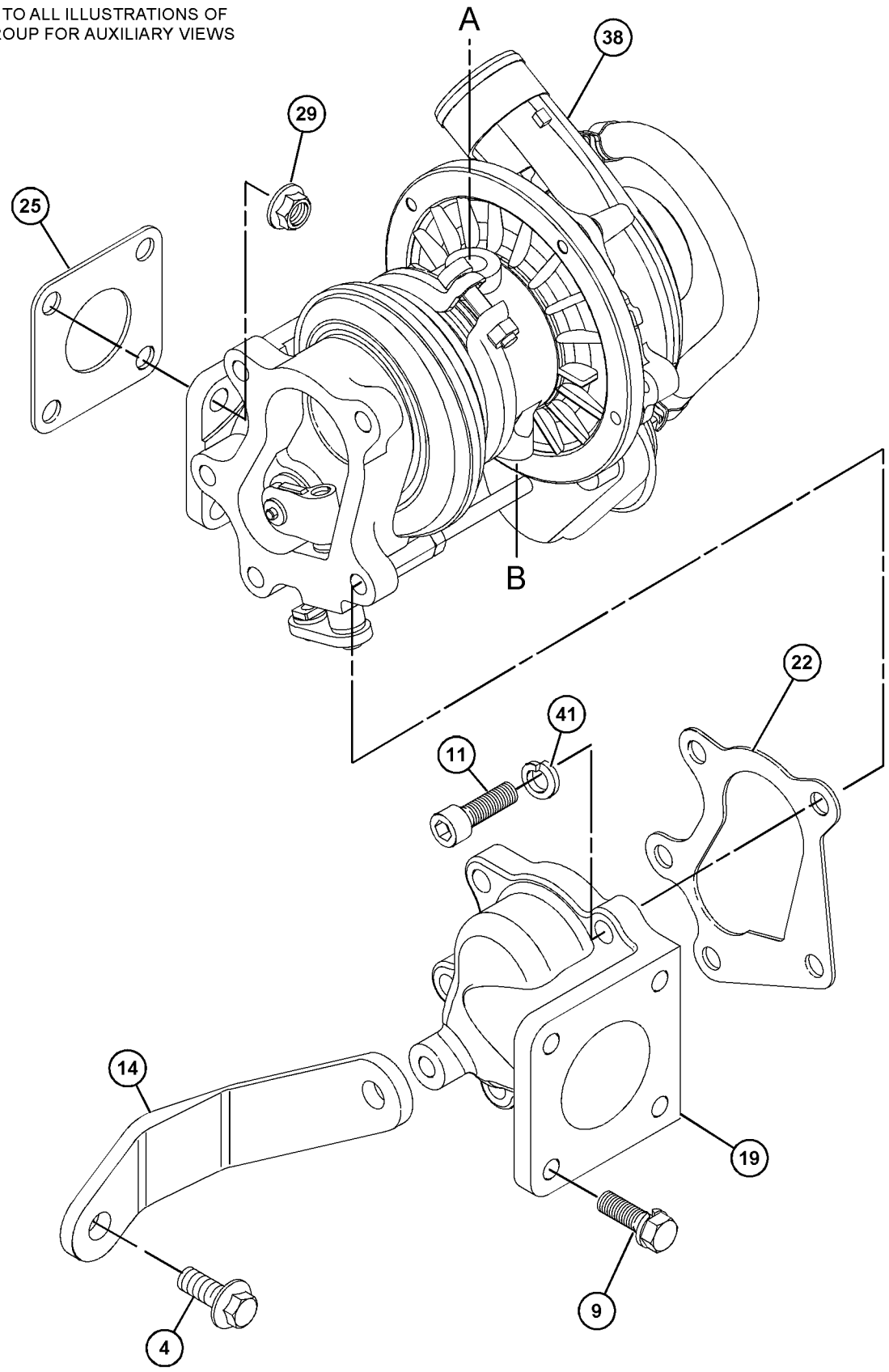

GRAPHIC #1 g06082132

441-8101 **TURBOCHARGER GP (**contd.**)** **i07684156**

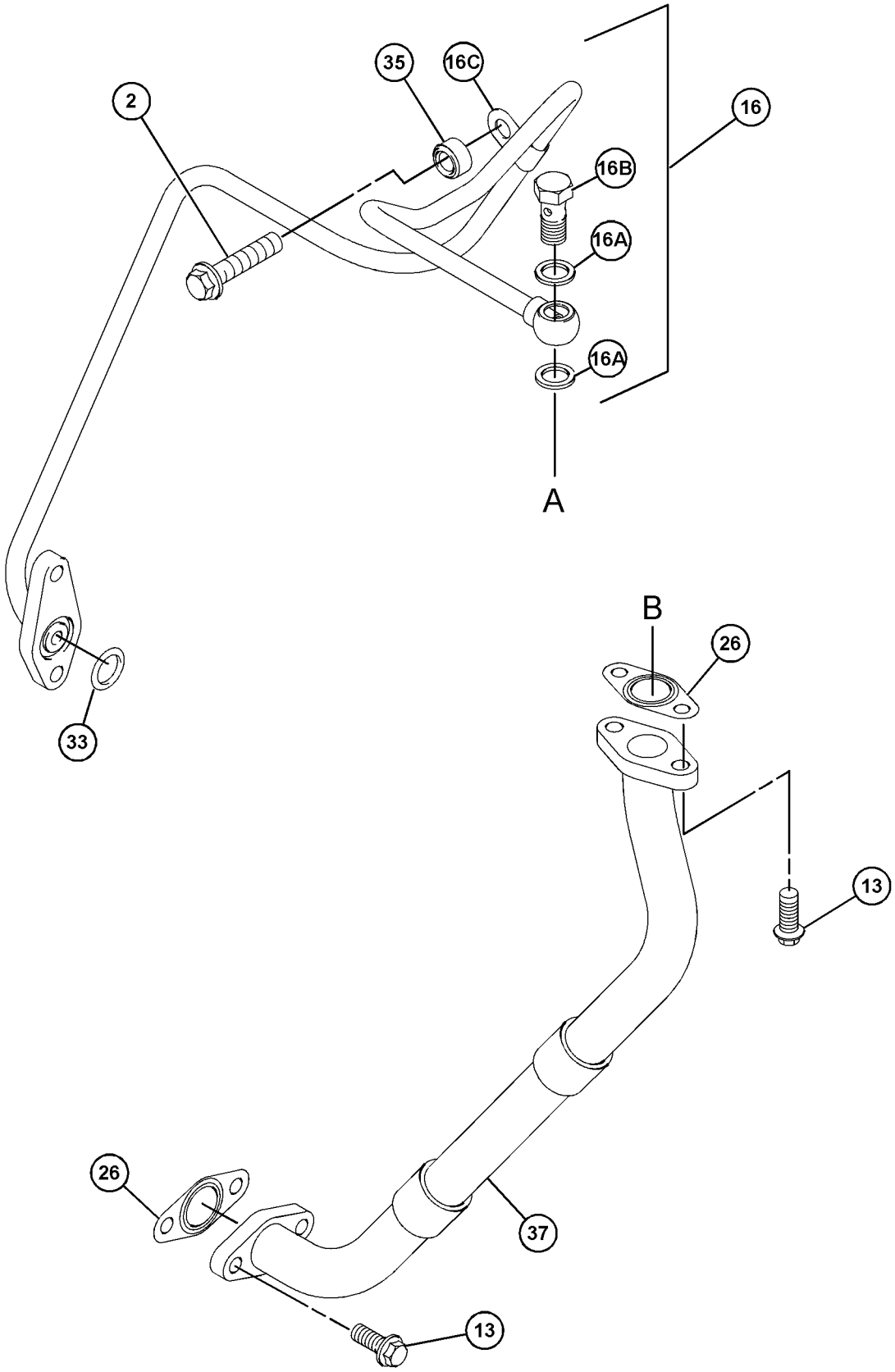

GRAPHIC #2 g06049389

441-8101 **TURBOCHARGER GP (**contd.**)** **i07684156**

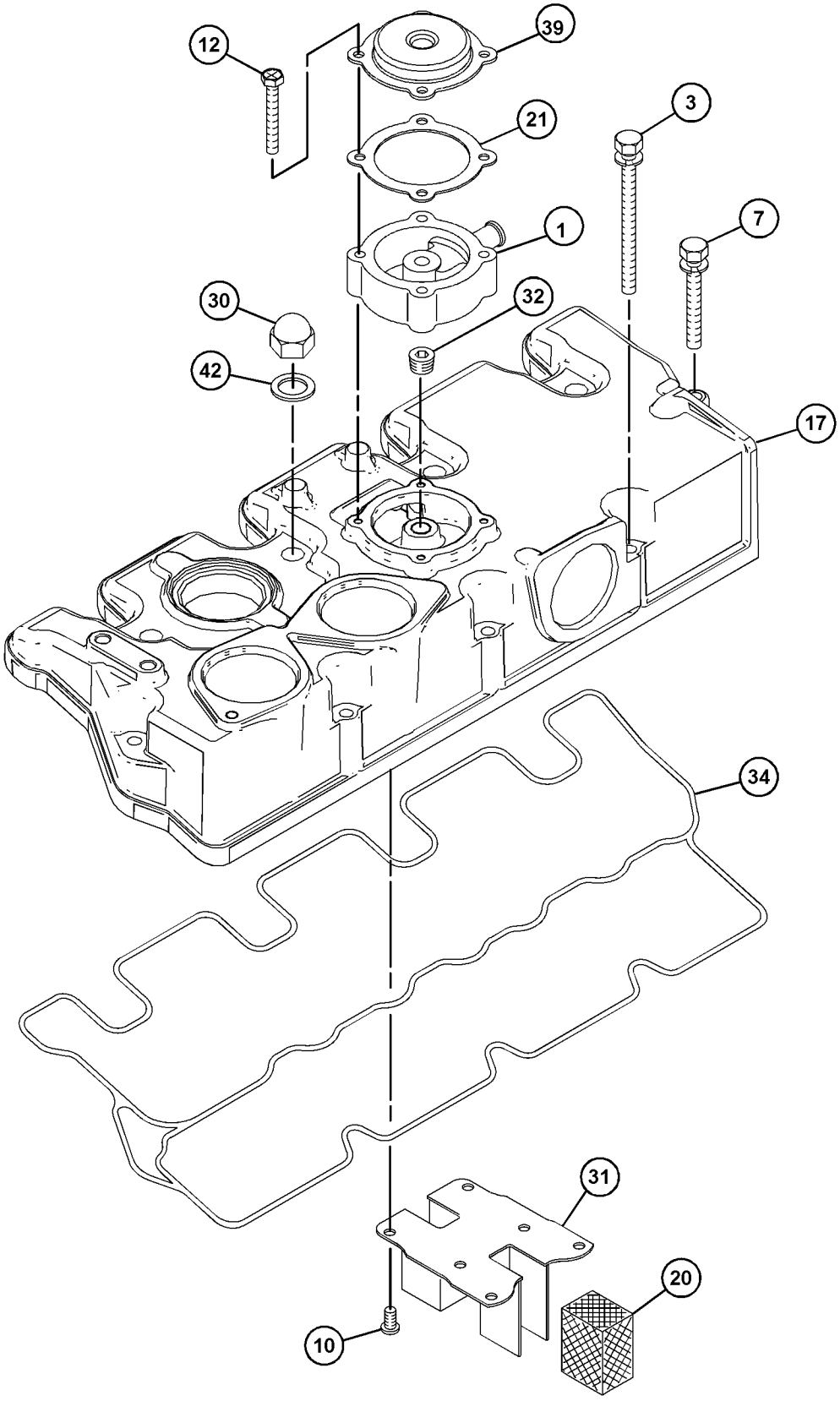

GRAPHIC #3 g06049451

441-8101 **TURBOCHARGER GP (**contd.**)** **i07684156**

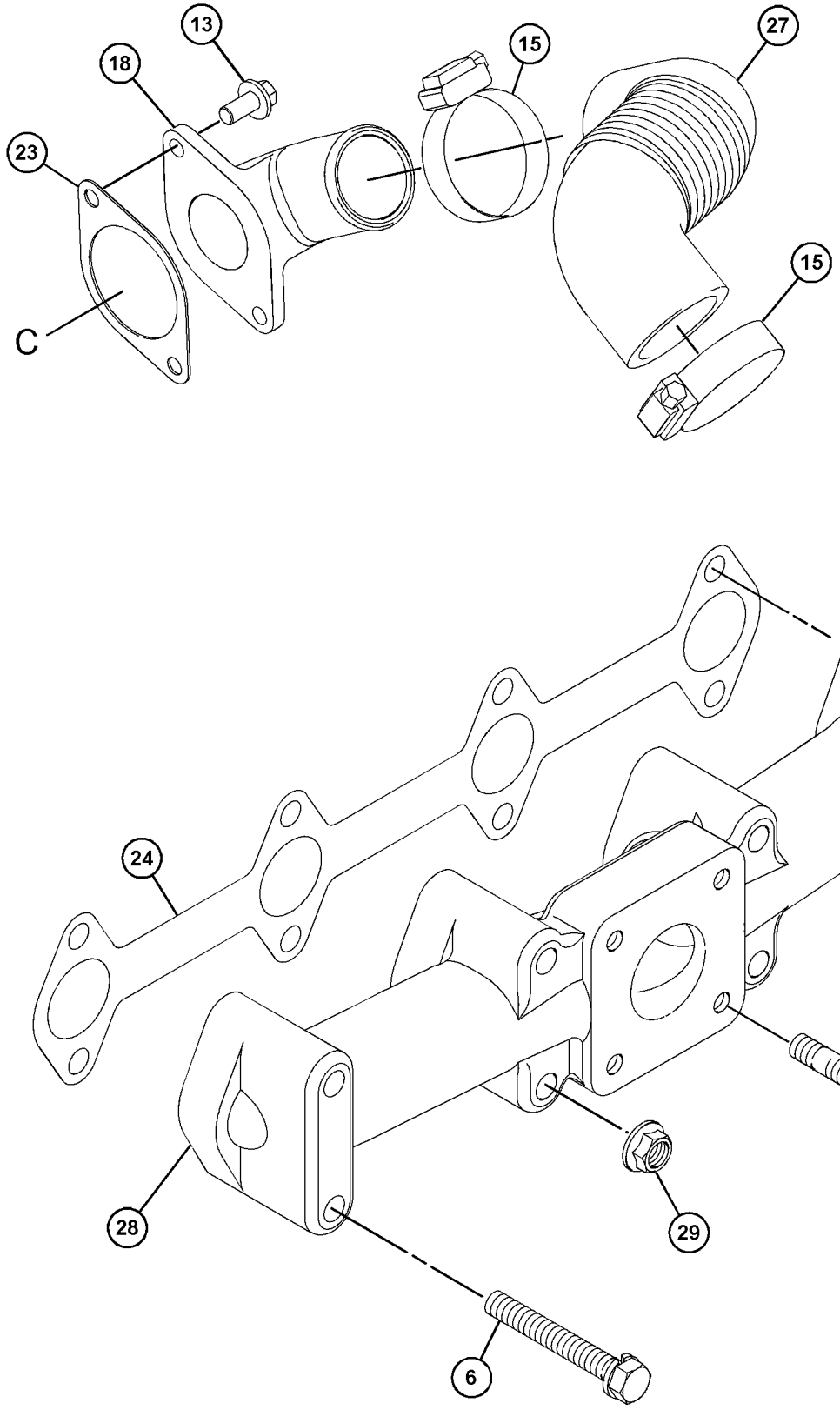

GRAPHIC #4 <END> g06049446

441-8101 TURBOCHARGER GP

PART OF 506-0518, 506-0519, 516-2639, 557-6086 ENGINE AR-PRIMARY

TYPE 2

SMCS-1052, 1053 **i08811911**

NOTE	REF NO	GRAPHIC REF	PART NUMBER	QTY	PART NAME 1 2 3 4 5 6 (PRODUCT LEVEL)	SEE PAGE
	1	3	**365-4125**	1	ADAPTER	
M	2	2	**6I-0254**	1	BOLT (M8X1.25X30-MM)	
	3	3	**153-5962**	3	BOLT AS	
M	4	1	**124-3815**	2	BOLT (M8X1.25X16-MM)	
	6	4	**154-2428**	4	BOLT AS	
	7	3	**165-2140**	2	BOLT AS	
	9	1	**168-9001**	4	BOLT AS	
	10	3	**217-5862**	6	SCREW (SELF-TAPPING)	
M	11	1	**5A-3604**	5	BOLT-SOCKET HEAD (M8X1.25X25-MM)	
M	12	3	**238-9295**	4	BOLT (M4X0.7X30-MM) (HEX)	
M	13	2,4	**6I-0846**	6	BOLT (M6X1X14-MM)	
	14	1	**239-0187**	1	BRACKET	
	15	4	**363-5813**	2	CLAMP-HOSE	
	16	2	**341-6641**	1	CONNECTION GP-OIL	
	16A	2	**225-8526**	2	WASHER (10.4X13.75X1.37-MM THK)	
	16B	2	**317-0960**	1	BOLT-SPECIAL (BANJO)	
	16C	2	**317-0961**	1	CLIP	
	16D	2	**596-4209**	1	EYE	
	18	4	**366-3055**	1	ELBOW	
	19	1	**594-3935**	1	ELBOW AS-EXHAUST	
	20	3	**153-5939**	1	STOPPER (OIL)	
	21	3	**438-9362**	1	GASKET	
	22	1	**304-5061**	1	GASKET	
	23	4	**494-9569**	1	GASKET	
	24	4	**154-2427**	1	GASKET-EXHAUST MANIFOLD	
	25	1	**238-9196**	1	GASKET-TURBOCHARGER	
	26	2	**353-3477**	2	GASKET-TURBOCHARGER	
	27	4	**249-1532**	1	HOSE-AIR INLET	
	28	4	**236-9987**	1	MANIFOLD-EXHAUST	
M	29	1,4	**153-5592**	8	NUT (M8X1.25-THD)	
M	30	3	**539-0439**	4	NUT (M10X1.25-THD)	
	31	3	**320-8401**	1	PLATE-RETAINING	
	32	3	**458-6608**	1	PLUG-SEAL	
	33	2	**153-6853**	1	SEAL-O-RING	
	34	3	**233-0695**	1	SEAL-VALVE COVER	
	35	2	**039-2281**	1	SPACER (9X16X25-MM THK)	
M	36	4	**239-0232**	4	STUD (M8X1.25X31-MM)	
	37	2	**317-0962**	1	TUBE-TURBOCHARGER OIL	
R	38	1	**513-6823**	1	TURBOCHARGER AS	
	39	3	**217-5859**	1	VALVE-BREATHER (CRANKCASE)	
	41	1	**163-5372**	5	WASHER (8X15.4X4-MM THK)	
	42	3	**246-4361**	4	WASHER (10.5X14X1.5-MM THK) (SEALING)	
C	43	3	**583-6088**	1	COVER-HEAD	

C - CHANGE FROM PREVIOUS TYPE
M - METRIC PART
R - REMANUFACTURED PART MAY BE AVAILABLE

441-8101 **TURBOCHARGER GP (**contd.**)** **i08811911**

REFER TO ALL ILLUSTRATIONS OF
THIS GROUP FOR AUXILIARY VIEWS

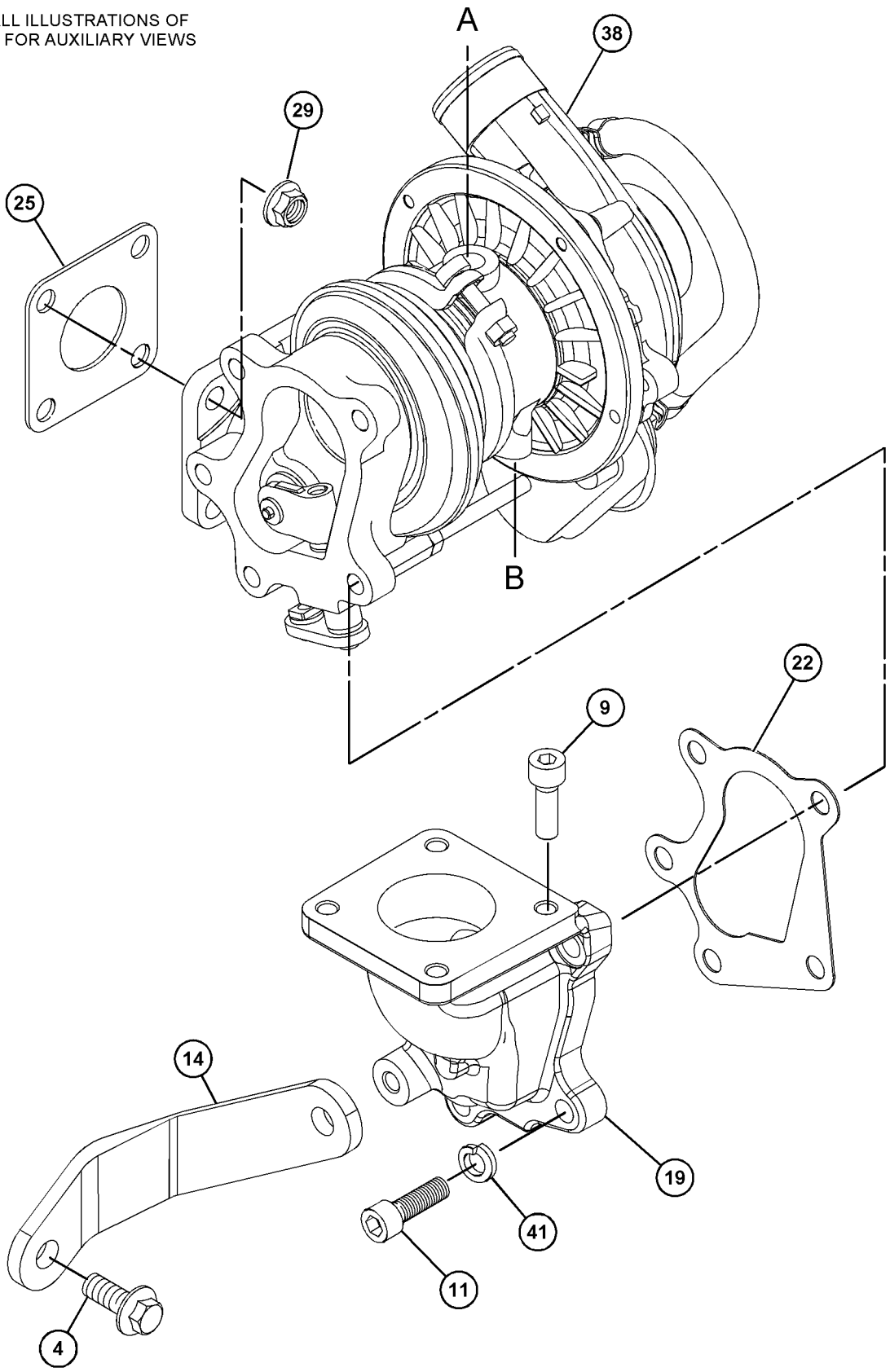

GRAPHIC #1 g07511949

441-8101 **TURBOCHARGER GP** (contd.) **i08811911**

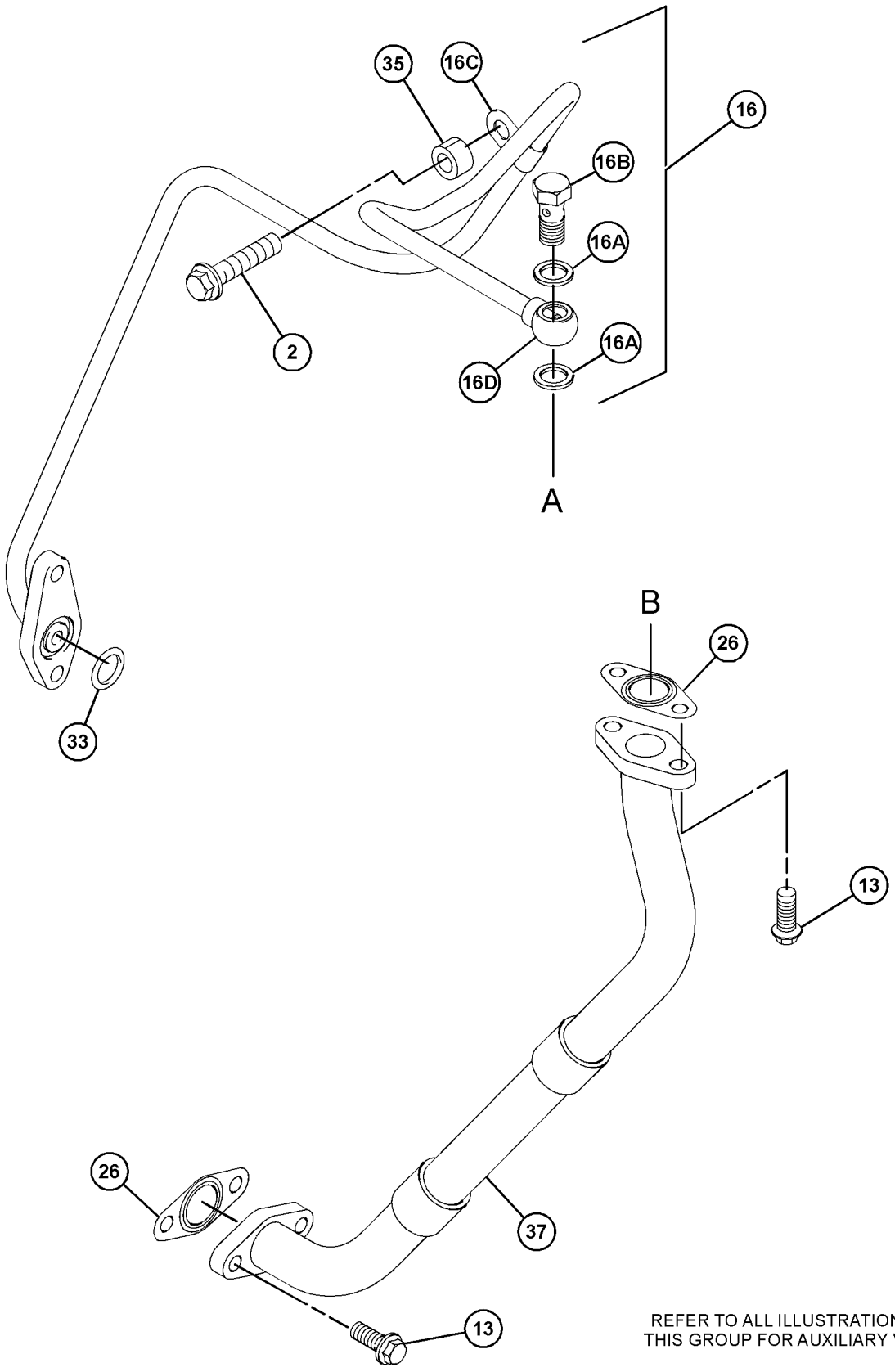

REFER TO ALL ILLUSTRATIONS OF THIS GROUP FOR AUXILIARY VIEWS

GRAPHIC #2

g07511950

441-8101 **TURBOCHARGER GP (**contd.**)** **i08811911**

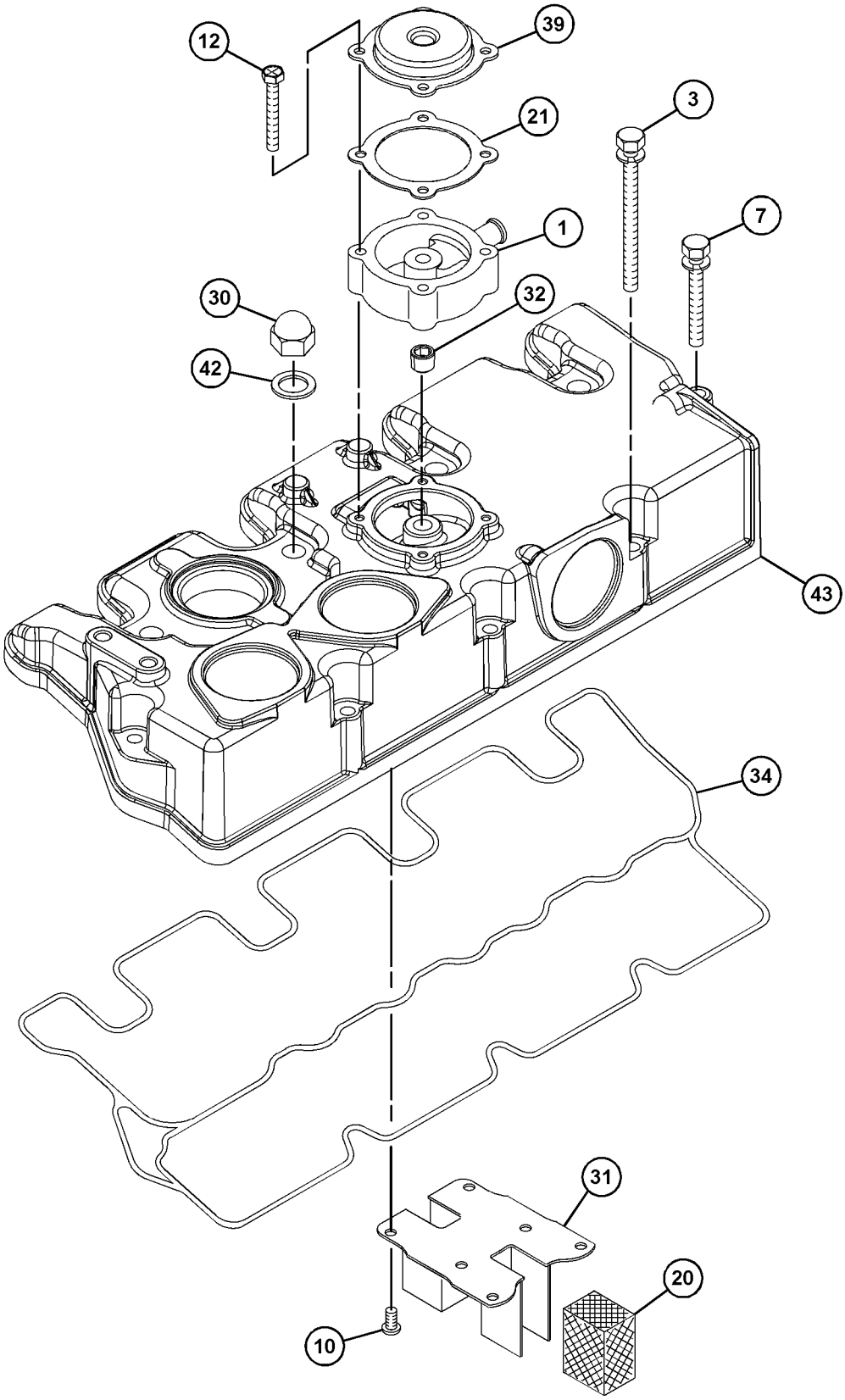

GRAPHIC #3 g07511951

441-8101 **TURBOCHARGER GP (**contd.**)** **i08811911**

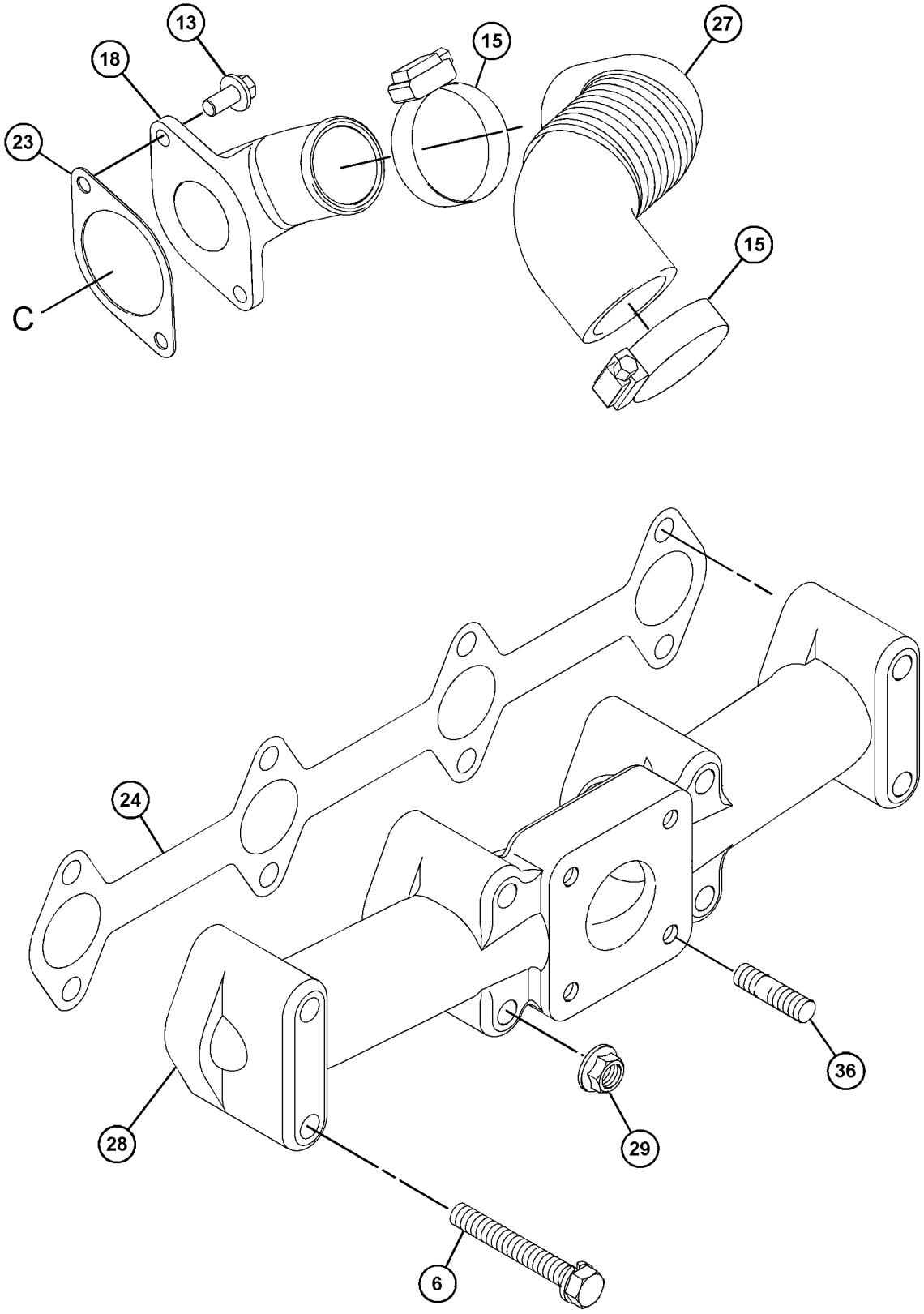

GRAPHIC #4 <END> g06049446

442-6206 TURBOCHARGER GP

PART OF 489-9224, 514-6556 ENGINE AR-PRIMARY

TYPE 1

SMCS-1052, 1053 **i07050397**

NOTE	REF NO	GRAPHIC REF	PART NUMBER	QTY	PART NAME 1 2 3 4 5 6 (PRODUCT LEVEL)	SEE PAGE
M	1	2	**153-5592**	8	NUT (M8X1.25-THD)	
	2	1	**153-5939**	1	STOPPER (OIL)	
M	3	1	**153-5960**	1	NUT (M6X1-THD)	
	4	1	**153-5962**	3	BOLT AS	
M	5	2	**124-3815**	2	BOLT (M8X1.25X16-MM)	
	6	2	**153-6853**	1	SEAL-O-RING	
M	7	1,2	**6I-0846**	6	BOLT (M6X1X14-MM)	
M	8	1	**154-1347**	4	NUT (M10X1.25-THD)	
	9	2	**154-2427**	1	GASKET-EXHAUST MANIFOLD	
	10	2	**154-2428**	4	BOLT AS	
	12	2	**163-5372**	5	WASHER (8X15.4X4-MM THK)	
	13	1	**165-2140**	2	BOLT AS	
M	15	2	**6I-0217**	1	BOLT (M8X1.25X20-MM)	
	16	1	**183-1165**	1	PLUG	
	17	1	**246-4361**	4	WASHER (10.5X14X1.5-MM THK)	
	18	1	**217-5859**	1	VALVE-BREATHER (CRANKCASE)	
	19	1	**217-5862**	6	SCREW (SELF-TAPPING)	
	20	1	**233-0695**	1	SEAL-VALVE COVER	
	21	2	**236-9987**	1	MANIFOLD-EXHAUST	
	22	2	**238-9196**	1	GASKET-TURBOCHARGER	
M	23	2	**5A-3604**	5	BOLT-SOCKET HEAD (M8X1.25X25-MM)	
M	24	1	**238-9295**	4	BOLT (M4X0.7X30-MM)	
R	25	2	**513-6823**	1	TURBOCHARGER AS	
	26	2	**239-0187**	1	BRACKET	
	27	2	**239-0228**	1	TUBE AS	
	27A	2	**225-8526**	2	WASHER (10.4X13.75X1.37-MM THK)	
	27B	2	**239-0169**	1	BOLT-SPECIAL (BANJO)	
	27C	2	**317-0961**	2	CLIP	
	28	2	**039-2281**	1	SPACER (9X16X25-MM THK)	
M	29	2	**239-0232**	4	STUD (M8X1.25X31-MM)	
	30	1	**249-1532**	1	HOSE-AIR INLET	
	32	2	**268-3421**	1	ELBOW-EXHAUST	
	33	2	**304-5061**	1	GASKET	
	34	2	**317-0962**	1	TUBE-TURBOCHARGER OIL	
	35	1	**320-8401**	1	PLATE-RETAINING	
	36	2	**353-3477**	2	GASKET-TURBOCHARGER	
M	37	1	**360-9545**	1	STUD (M6X1X48-MM)	
	38	1	**363-5813**	2	CLAMP-HOSE	
	39	1	**365-4125**	1	ADAPTER	
	40	1	**366-3055**	1	ELBOW	
	41	1	**383-9577**	1	COVER-VALVE	
	42	1	**494-9569**	1	GASKET	
	43	1	**438-9362**	1	GASKET	

M - METRIC PART
R - REMANUFACTURED PART MAY BE AVAILABLE

442-6206 **TURBOCHARGER GP** (contd.) **i07050397**

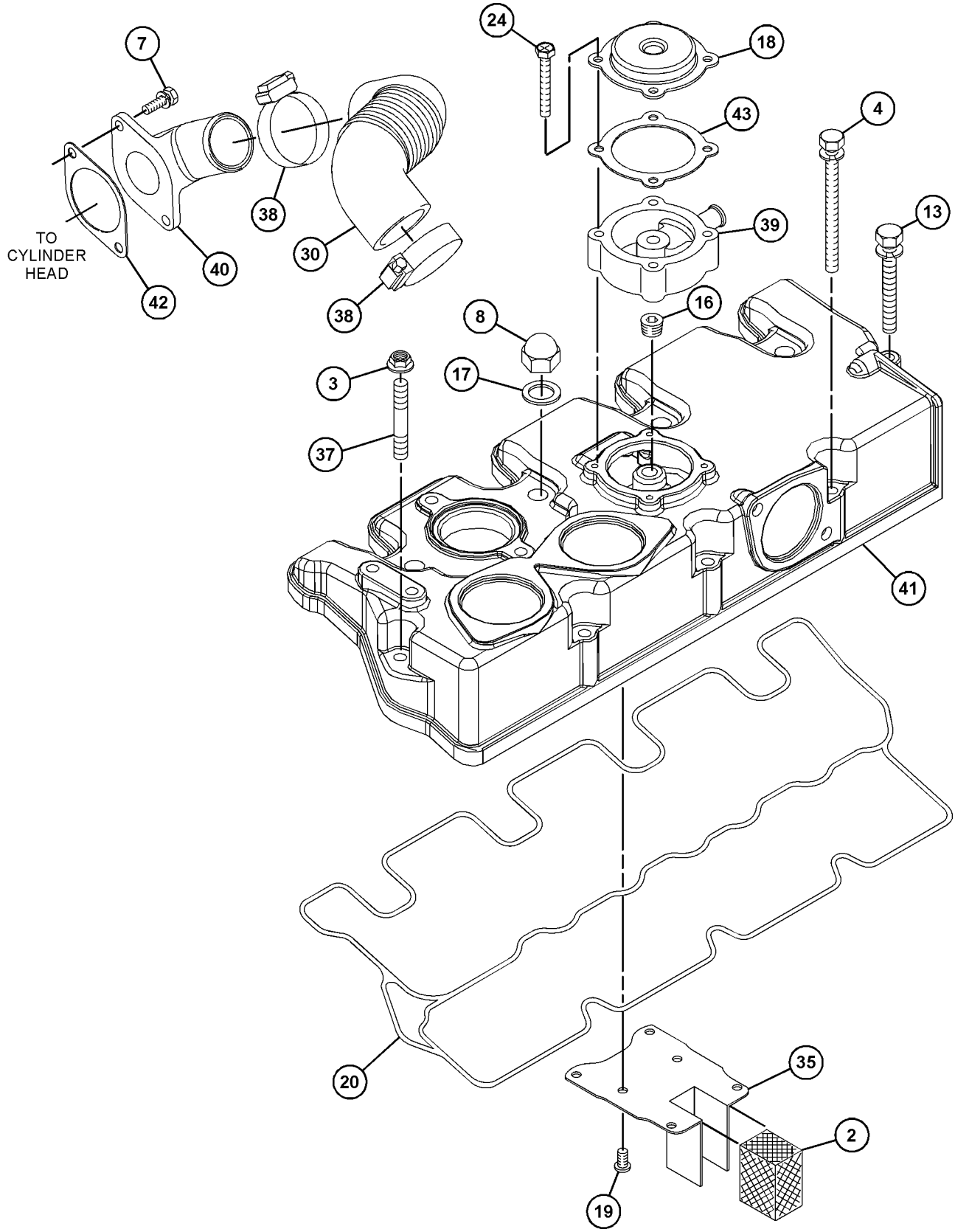

GRAPHIC #1 g06209705

442-6206 **TURBOCHARGER GP (**contd.**)** **i07050397**

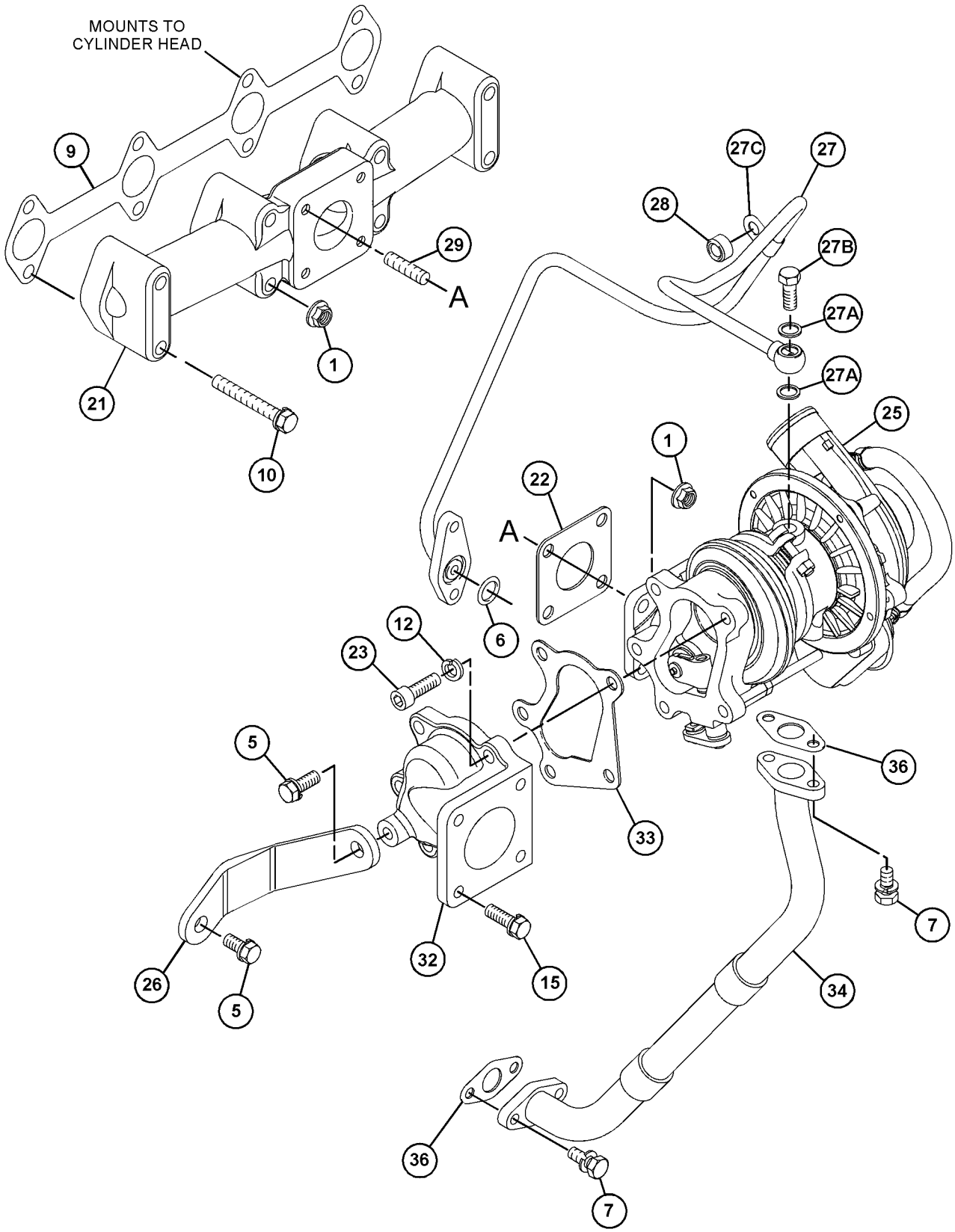

GRAPHIC #2 <END> g06209706

442-6206 TURBOCHARGER GP

PART OF 489-9224, 514-6556 ENGINE AR-PRIMARY

TYPE 2

SMCS-1052, 1053

i08197259

NOTE	REF NO	GRAPHIC REF	PART NUMBER	QTY	PART NAME 1 2 3 4 5 6 (PRODUCT LEVEL)	SEE PAGE
M	1	2	**153-5592**	8	NUT (M8X1.25-THD)	
	2	1	**153-5939**	1	STOPPER (OIL)	
M	3	1	**153-5960**	1	NUT (M6X1-THD)	
	4	1	**153-5962**	3	BOLT AS	
M	5	2	**124-3815**	2	BOLT (M8X1.25X16-MM)	
	6	2	**153-6853**	1	SEAL-O-RING	
M	7	1,2	**6I-0846**	6	BOLT (M6X1X14-MM)	
M	8	1	**539-0439**	4	NUT (M10X1.25-THD)	
	9	2	**154-2427**	1	GASKET-EXHAUST MANIFOLD	
	10	2	**154-2428**	4	BOLT AS	
	12	2	**163-5372**	5	WASHER (8X15.4X4-MM THK)	
	13	1	**165-2140**	2	BOLT AS	
M	15	2	**6I-0217**	1	BOLT (M8X1.25X20-MM)	
	16	1	**183-1165**	1	PLUG (SEALING)	
	17	1	**246-4361**	4	WASHER (10.5X14X1.5-MM THK)	
	18	1	**217-5859**	1	VALVE-BREATHER (CRANKCASE)	
	19	1	**217-5862**	6	SCREW (SELF-TAPPING)	
	20	1	**233-0695**	1	SEAL-VALVE COVER	
	21	2	**236-9987**	1	MANIFOLD-EXHAUST	
	22	2	**238-9196**	1	GASKET-TURBOCHARGER	
M	23	2	**5A-3604**	5	BOLT-SOCKET HEAD (M8X1.25X25-MM)	
M	24	1	**238-9295**	4	BOLT (M4X0.7X30-MM) (HEX)	
CR	25	2	**513-6823**	1	TURBOCHARGER AS	
	26	2	**239-0187**	1	BRACKET	
	27	2	**239-0228**	1	TUBE AS	
	28	2	**239-0229**	1	SPACER (8.4X15X9-MM THK)	
M	29	2	**239-0232**	4	STUD (M8X1.25X31-MM)	
	30	1	**249-1532**	1	HOSE-AIR INLET	
	32	2	**268-3421**	1	ELBOW-EXHAUST	
	33	2	**304-5061**	1	GASKET	
	34	2	**317-0962**	1	TUBE-TURBOCHARGER OIL	
	35	1	**320-8401**	1	PLATE-RETAINING	
	36	2	**353-3477**	2	GASKET-TURBOCHARGER	
M	37	1	**360-9545**	1	STUD (M6X1X48-MM)	
	38	1	**363-5813**	2	CLAMP-HOSE	
	39	1	**365-4125**	1	ADAPTER	
	40	1	**366-3055**	1	ELBOW	
	41	1	**583-6088**	1	COVER-HEAD	
	42	1	**494-9569**	1	GASKET	
	43	1	**438-9362**	1	GASKET	

C - CHANGE FROM PREVIOUS TYPE
M - METRIC PART
R - REMANUFACTURED PART MAY BE AVAILABLE

442-6206 **TURBOCHARGER GP** (contd.) **i08197259**

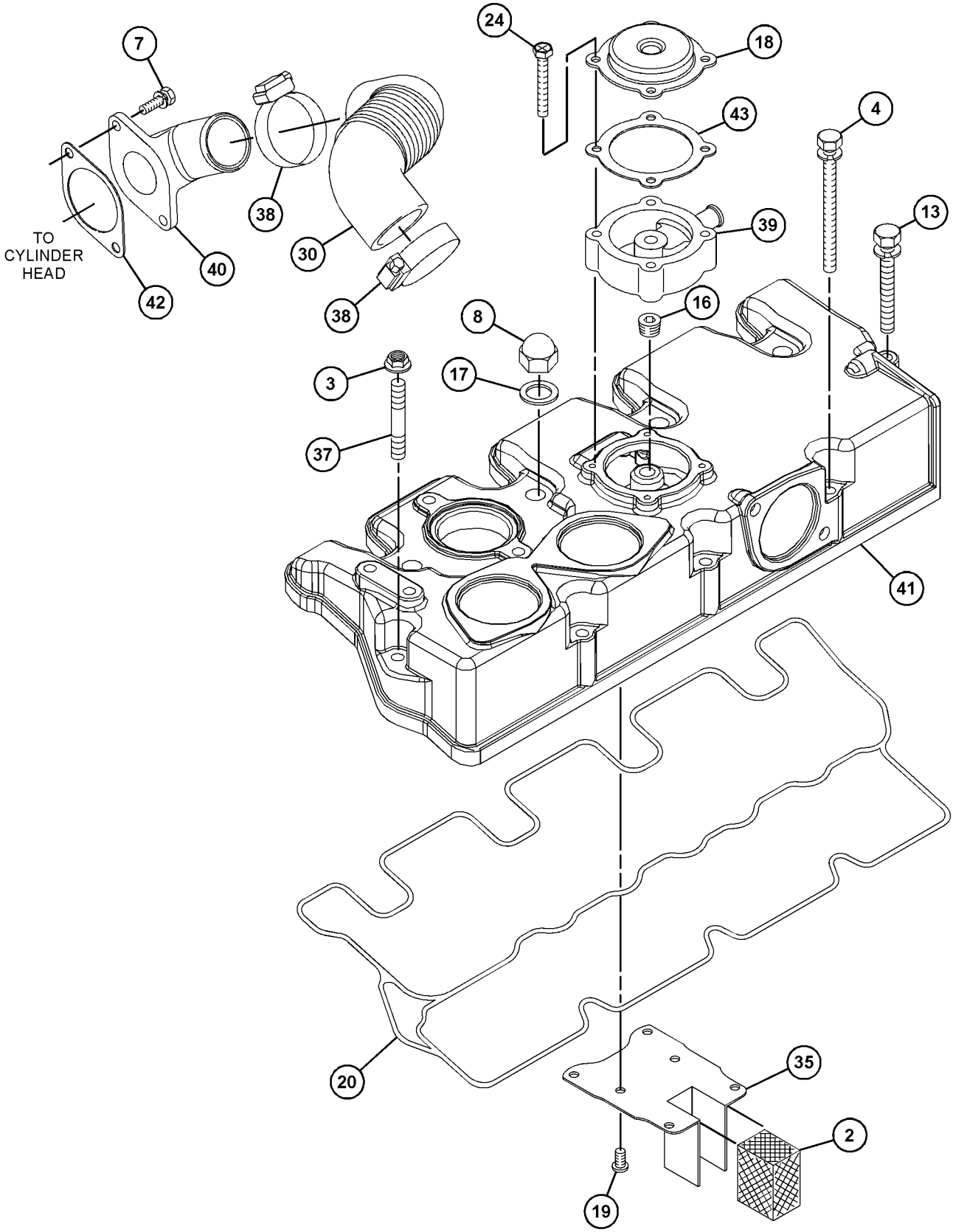

GRAPHIC #1 g06209705

442-6206 **TURBOCHARGER GP (**contd.**)** **i08197259**

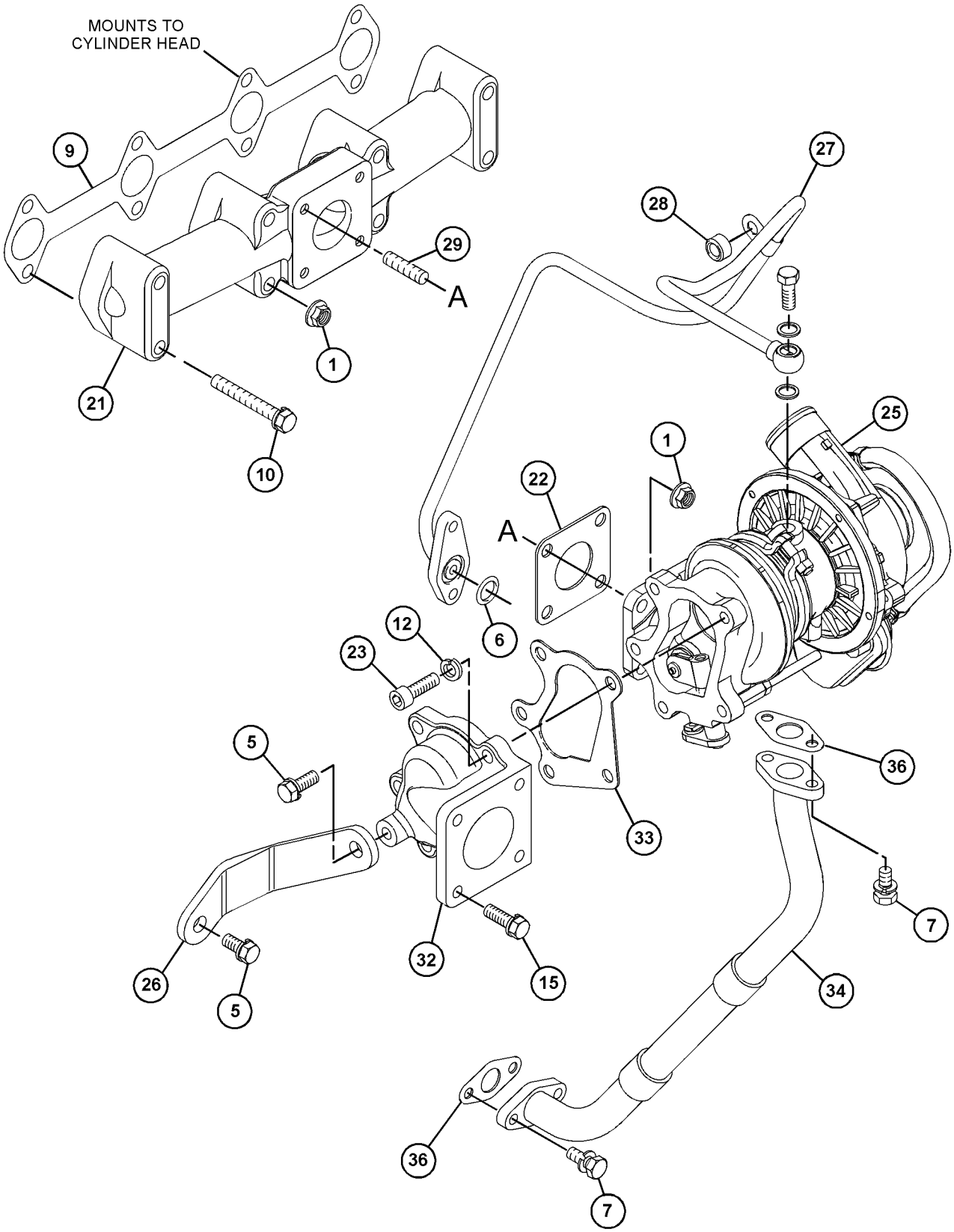

GRAPHIC #2 <END> g06660602

442-7759 TURBOCHARGER GP

PART OF 512-7969 ENGINE AR-PRIMARY

TYPE 1

SMCS-1052, 1053 **i08437314**

NOTE	REF NO	GRAPHIC REF	PART NUMBER	QTY	PART NAME 1 2 3 4 5 6 (PRODUCT LEVEL)	SEE PAGE
M	1	2	**153-5592**	4	NUT (M8X1.25-THD)	
	2	1	**153-5939**	1	STOPPER (OIL)	
M	3	1	**153-5960**	1	NUT (M6X1-THD)	
	4	1	**153-5962**	3	BOLT AS	
M	5	2	**124-3815**	2	BOLT (M8X1.25X16-MM)	
	6	2	**153-6853**	1	SEAL-O-RING	
M	8	1	**539-0439**	4	NUT (M10X1.25-THD)	
	9	2	**154-2427**	1	GASKET-EXHAUST MANIFOLD	
	10	2	**154-2428**	4	BOLT AS	
	11	2	**163-5372**	5	WASHER (8X15.4X4-MM THK)	
	12	1	**165-2140**	2	BOLT AS	
	15	1	**183-1165**	1	PLUG	
	16	1	**246-4361**	4	WASHER (10.5X14X1.5-MM THK)	
	17	1	**217-5859**	1	VALVE-BREATHER (CRANKCASE)	
	18	1	**217-5862**	6	SCREW (SELF-TAPPING)	
	19	1	**233-0695**	1	SEAL-VALVE COVER	
	20	2	**236-9987**	1	MANIFOLD-EXHAUST	
	21	2	**238-9196**	1	GASKET-TURBOCHARGER	
	22	2	**238-9198**	1	ELBOW-EXHAUST	
M	23	2	**5A-3604**	5	BOLT-SOCKET HEAD (M8X1.25X25-MM)	
M	24	1	**238-9295**	4	BOLT (M4X0.7X30-MM)	
R	25	2	**513-6823**	1	TURBOCHARGER AS	
	26	2	**239-0187**	1	BRACKET	
	27	2	**239-0228**	1	TUBE AS	
	27A	2	**225-8526**	2	WASHER (10.4X13.75X1.37-MM THK)	
	27B	2	**298-4543**	1	BOLT	
	27C	2	**317-0961**	2	CLIP	
	29	2	**239-0229**	1	SPACER (8.4X15X9-MM THK)	
M	30	2	**239-0232**	4	STUD (M8X1.25X31-MM)	
	31	1	**249-1532**	1	HOSE-AIR INLET	
	33	2	**304-5061**	1	GASKET	
	34	2	**317-0962**	1	TUBE-TURBOCHARGER OIL	
	35	1	**320-8401**	1	PLATE-RETAINING	
	36	2	**353-3477**	2	GASKET-TURBOCHARGER	
M	37	1	**360-9545**	1	STUD (M6X1X48-MM)	
	38	1	**363-5813**	2	CLAMP-HOSE	
	39	1	**365-4125**	1	ADAPTER	
	40	1	**366-3055**	1	ELBOW	
	41	1	**583-6088**	1	COVER-HEAD	
	42	1	**494-9569**	1	GASKET	
	43	1	**438-9362**	1	GASKET	
M	44	2	**6I-0217**	1	BOLT (M8X1.25X20-MM)	
M	45	1,2	**6I-0846**	6	BOLT (M6X1X14-MM)	

M - METRIC PART
R - REMANUFACTURED PART MAY BE AVAILABLE

442-7759 **TURBOCHARGER GP** (contd.) **i08437314**

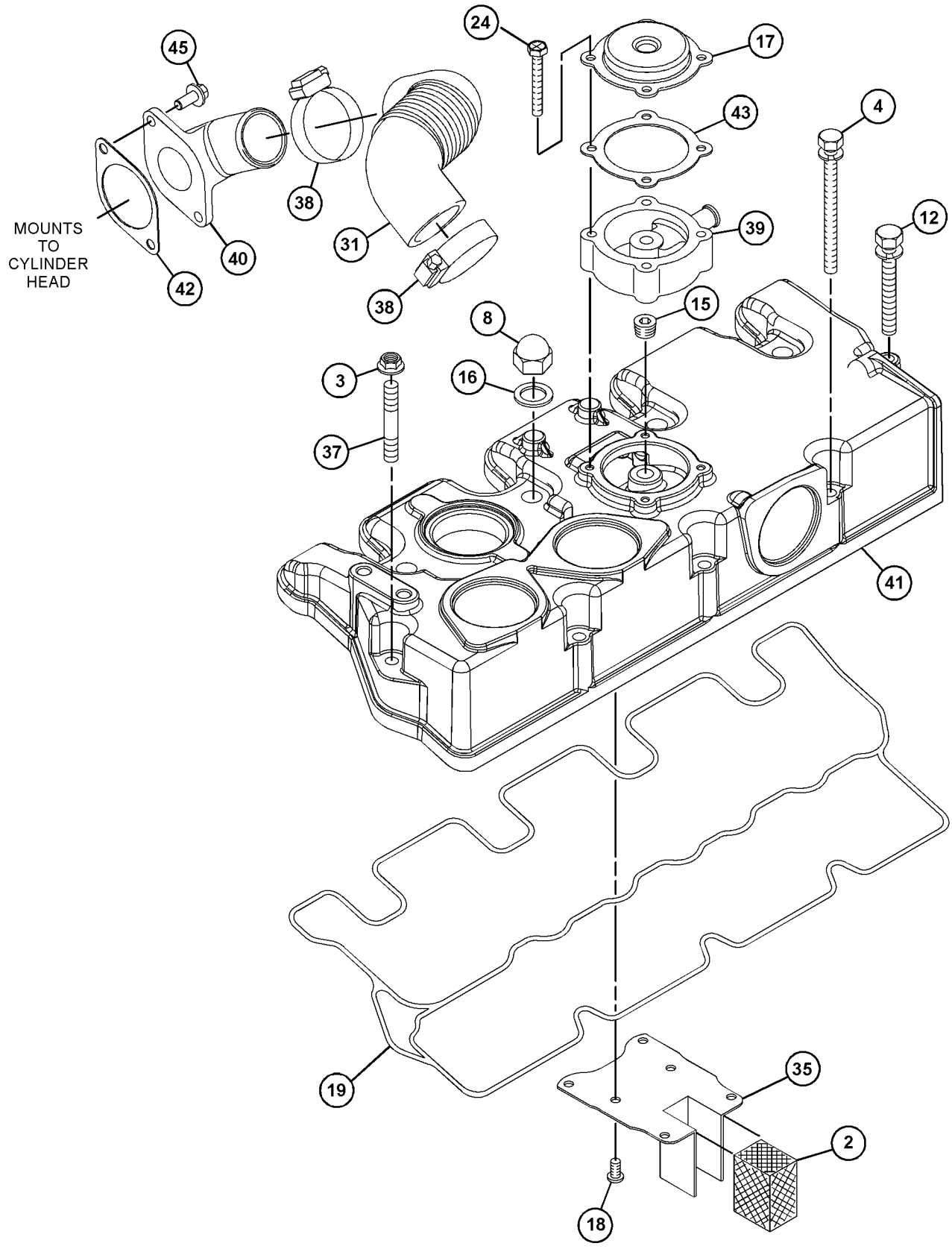

GRAPHIC #1 g06652454

442-7759 **TURBOCHARGER GP (**contd.**)** **i08437314**

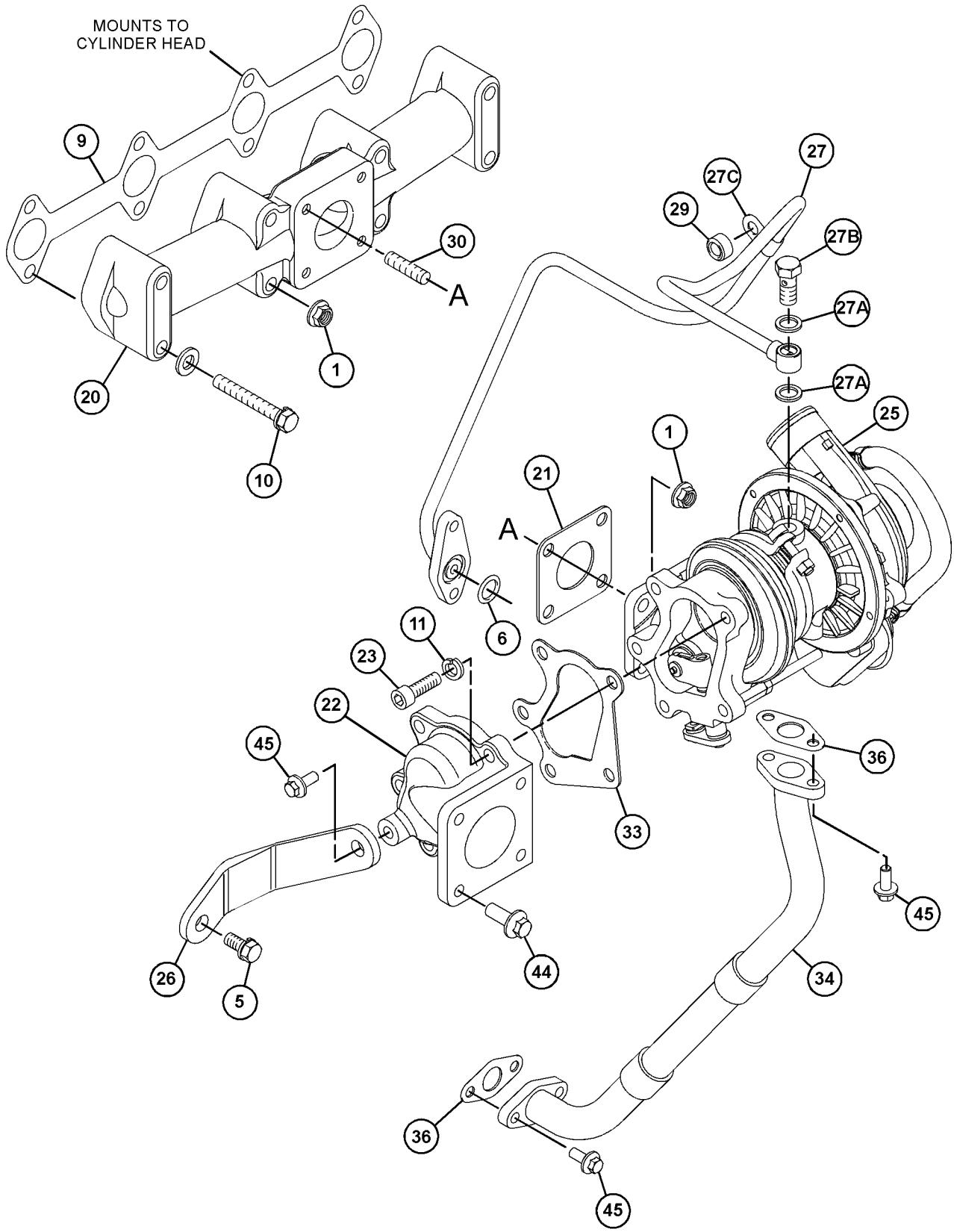

GRAPHIC #2 <END> g06205570

442-7759 TURBOCHARGER GP

PART OF 512-7969 ENGINE AR-PRIMARY

TYPE 2

SMCS-1052, 1053 **i09603570**

NOTE	REF NO	GRAPHIC REF	PART NUMBER	QTY	PART NAME 1 2 3 4 5 6 (PRODUCT LEVEL)	SEE PAGE
M	1	2	**153-5592**	4	NUT (M8X1.25-THD)	
	2	1	**153-5939**	1	STOPPER (OIL)	
M	3	1	**153-5960**	1	NUT (M6X1-THD)	
	4	1	**153-5962**	3	BOLT AS	
M	5	2	**124-3815**	2	BOLT (M8X1.25X16-MM)	
	6	2	**153-6853**	1	SEAL-O-RING	
M	8	1	**539-0439**	4	NUT (M10X1.25-THD)	
	9	2	**154-2427**	1	GASKET-EXHAUST MANIFOLD	
	10	2	**154-2428**	4	BOLT AS	
	11	2	**163-5372**	5	WASHER (8X15.4X4-MM THK)	
	12	1	**165-2140**	2	BOLT AS	
C	15	1	**458-6608**	1	PLUG-SEAL	
	16	1	**246-4361**	4	WASHER (10.5X14X1.5-MM THK)	
	17	1	**217-5859**	1	VALVE-BREATHER (CRANKCASE)	
	18	1	**217-5862**	6	SCREW (SELF-TAPPING)	
	19	1	**233-0695**	1	SEAL-VALVE COVER	
	20	2	**236-9987**	1	MANIFOLD-EXHAUST	
	21	2	**238-9196**	1	GASKET-TURBOCHARGER	
	22	2	**238-9198**	1	ELBOW-EXHAUST	
M	23	2	**5A-3604**	5	BOLT-SOCKET HEAD (M8X1.25X25-MM)	
M	24	1	**238-9295**	4	BOLT (M4X0.7X30-MM)	
R	25	2	**513-6823**	1	TURBOCHARGER AS	
	26	2	**239-0187**	1	BRACKET	
	27	2	**239-0228**	1	TUBE AS	
	29	2	**239-0229**	1	SPACER (8.4X15X9-MM THK)	
M	30	2	**239-0232**	4	STUD (M8X1.25X31-MM)	
	31	1	**249-1532**	1	HOSE-AIR INLET	
	33	2	**304-5061**	1	GASKET	
	34	2	**317-0962**	1	TUBE-TURBOCHARGER OIL	
	35	1	**320-8401**	1	PLATE-RETAINING	
	36	2	**353-3477**	2	GASKET-TURBOCHARGER	
M	37	1	**360-9545**	1	STUD (M6X1X48-MM)	
	38	1	**363-5813**	2	CLAMP-HOSE	
	39	1	**365-4125**	1	ADAPTER	
	40	1	**366-3055**	1	ELBOW	
	41	1	**583-6088**	1	COVER-HEAD	
	42	1	**494-9569**	1	GASKET	
	43	1	**438-9362**	1	GASKET	
M	44	2	**6I-0217**	1	BOLT (M8X1.25X20-MM)	
M	45	1,2	**6I-0846**	6	BOLT (M6X1X14-MM)	

C - CHANGE FROM PREVIOUS TYPE
M - METRIC PART
R - REMANUFACTURED PART MAY BE AVAILABLE

442-7759 **TURBOCHARGER GP (**contd.**)** **i09603570**

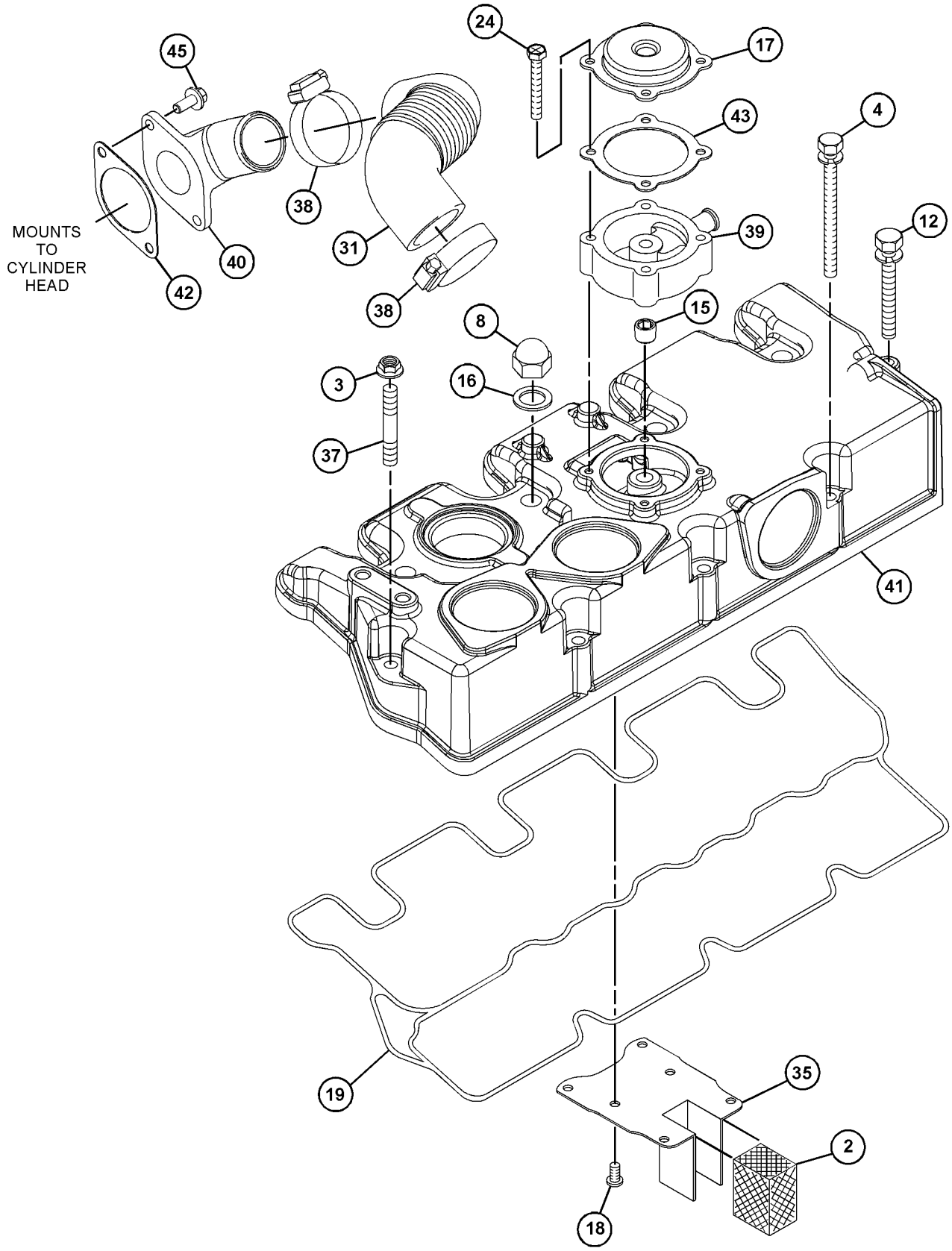

GRAPHIC #1 g07630933

442-7759 **TURBOCHARGER GP (**contd.**)** **i09603570**

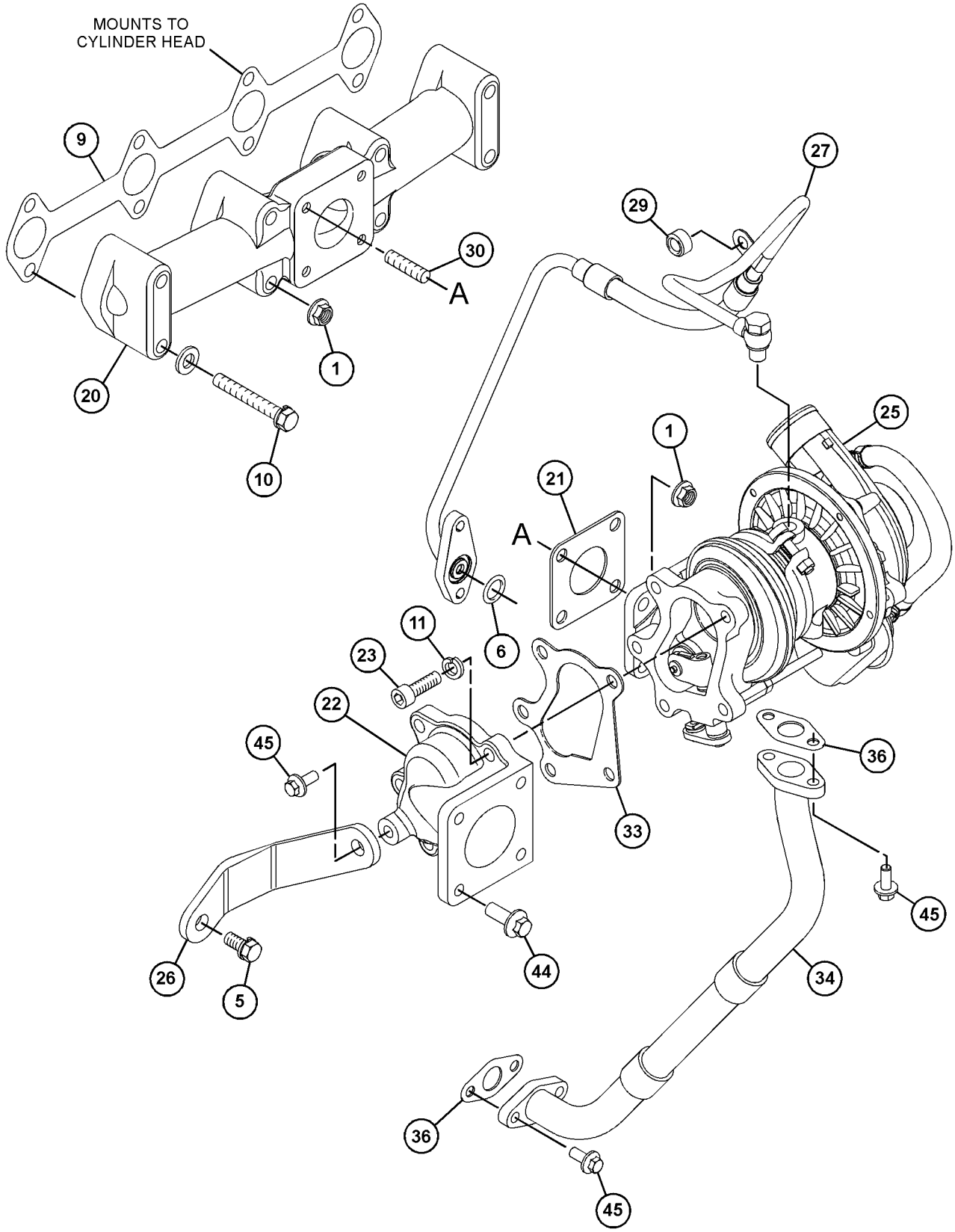

GRAPHIC #2 <END> g07630934

442-9826 TURBOCHARGER GP

PART OF 433-1380 ENGINE AR, 435-1636 ENGINE AR-PRIMARY

SMCS-1052, 1053 **i08699627**

NOTE	REF NO	GRAPHIC REF	PART NUMBER	QTY	PART NAME 1 2 3 4 5 6 (PRODUCT LEVEL)	SEE PAGE
M	1	2	**153-5592**	8	NUT (M8X1.25-THD)	
	2	1	**153-5939**	1	STOPPER (OIL)	
M	3	1	**153-5960**	1	NUT (M6X1-THD)	
	5	1	**153-5962**	3	BOLT AS	
	7	2	**153-6853**	1	SEAL-O-RING	
M	8	1,2	**6I-0846**	6	BOLT (M6X1X14-MM)	
M	9	1	**539-0439**	4	NUT (M10X1.25-THD)	
	10	2	**154-2427**	1	GASKET-EXHAUST MANIFOLD	
	11	2	**154-2428**	4	BOLT AS	
	12	2	**163-5372**	5	WASHER (8X15.4X4-MM THK)	
	13	1	**165-2140**	1	BOLT AS	
M	15	2	**6I-0217**	1	BOLT (M8X1.25X20-MM)	
	16	1	**183-1165**	1	PLUG	
	17	1	**246-4361**	4	WASHER (10.5X14X1.5-MM THK)	
	18	1	**217-5859**	1	VALVE-BREATHER (CRANKCASE)	
	19	1	**217-5862**	6	SCREW (SELF-TAPPING)	
	20	1	**494-9569**	1	GASKET	
	21	2	**225-8533**	2	GASKET	
	22	1	**233-0695**	1	SEAL-VALVE COVER	
	23	2	**236-9987**	1	MANIFOLD-EXHAUST	
	24	2	**238-9196**	1	GASKET-TURBOCHARGER	
M	25	2	**5A-3604**	5	BOLT-SOCKET HEAD (M8X1.25X25-MM)	
M	26	1	**238-9295**	4	BOLT (M4X0.7X30-MM)	
R	27	2	**513-6823**	1	TURBOCHARGER AS	
	29	2	**239-0228**	1	TUBE AS	
	30	2	**039-2281**	1	SPACER (9X16X25-MM THK)	
M	31	2	**239-0232**	4	STUD (M8X1.25X31-MM)	
	32	1	**249-1532**	1	HOSE-AIR INLET	
	34	1	**438-9362**	1	GASKET	
	35	2	**304-5061**	1	GASKET	
	36	2	**317-0962**	1	TUBE-TURBOCHARGER OIL	
	37	1	**320-8401**	1	PLATE-RETAINING	
M	38	1	**360-9545**	1	STUD (M6X1X48-MM)	
	39	1	**363-5813**	2	CLAMP-HOSE	
	40	1	**365-4125**	1	ADAPTER	
	41	1	**366-3055**	1	ELBOW	
	42	1	**583-6090**	1	COVER-HEAD	

M - METRIC PART
R - REMANUFACTURED PART MAY BE AVAILABLE

442-9826 **TURBOCHARGER GP (**contd.**)** **i08699627**

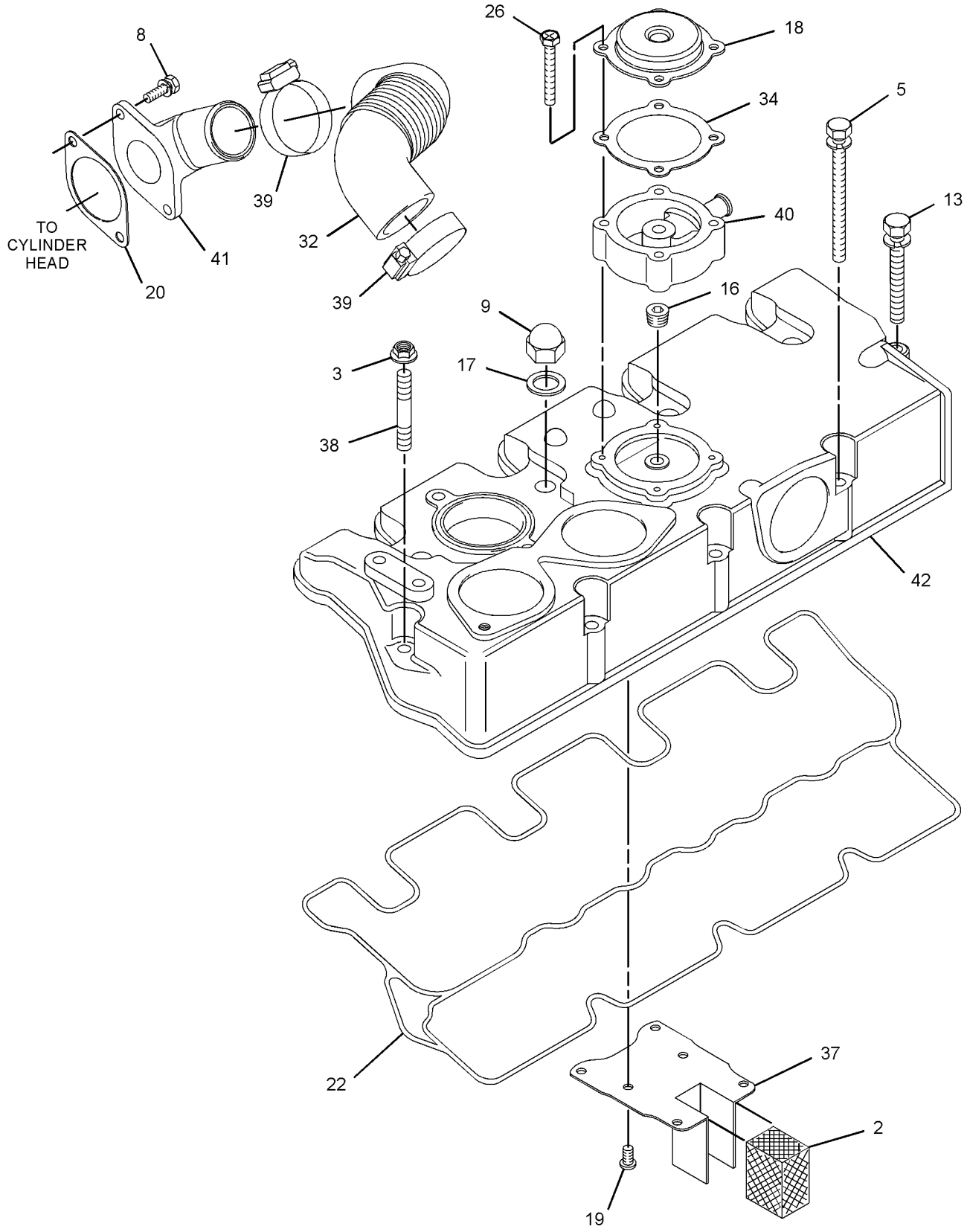

GRAPHIC #1 g07521188

442-9826 **TURBOCHARGER GP (**contd.**)** **i08699627**

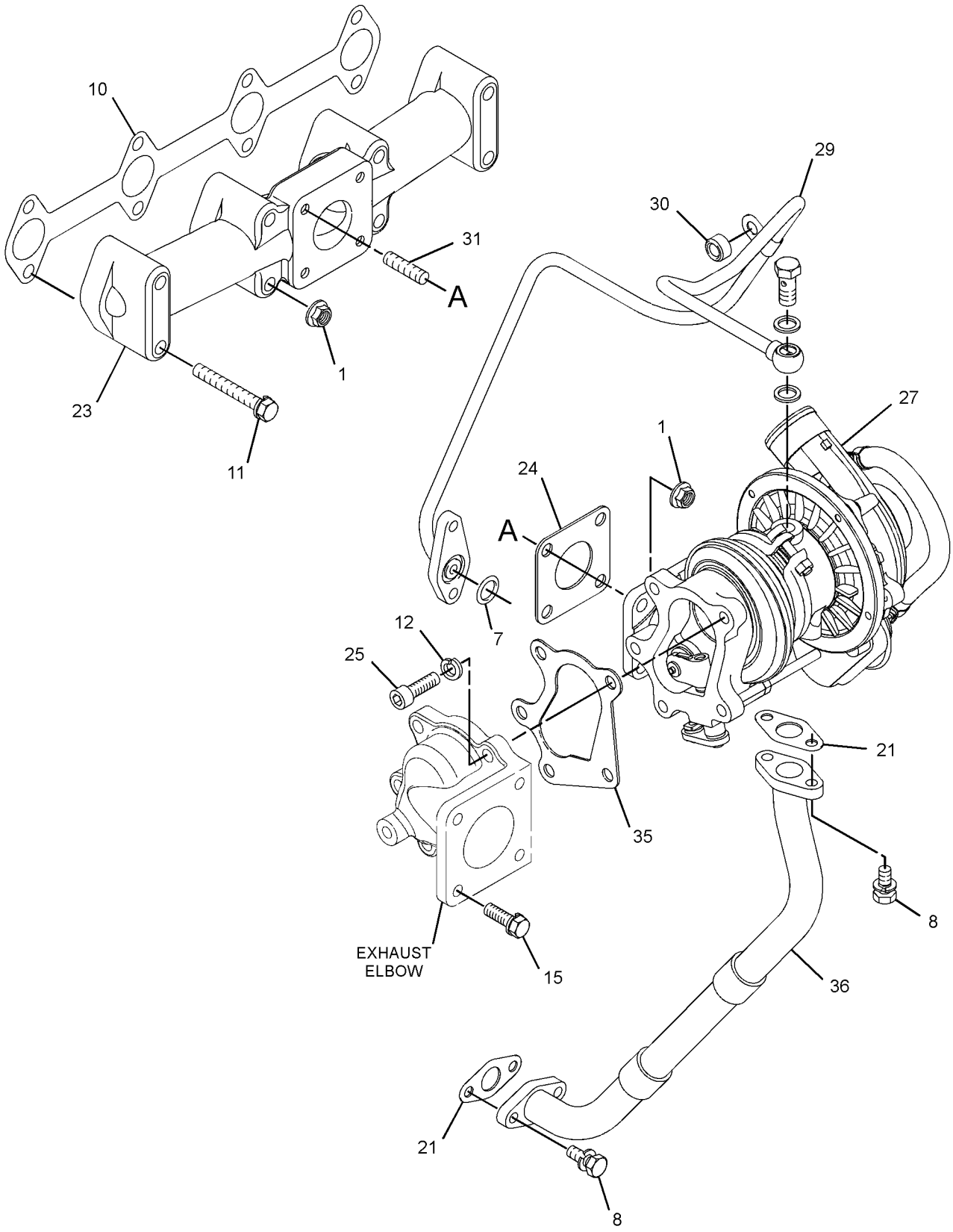

GRAPHIC #2 <END> g07521205

450-7277 TURBOCHARGER GP

PART OF 435-1658 ENGINE AR-PRIMARY

SMCS-1052, 1053 **i08269255**

NOTE	REF NO	GRAPHIC REF	PART NUMBER	QTY	PART NAME 1 2 3 4 5 6 (PRODUCT LEVEL)	SEE PAGE
M	1	1	**148-7140**	5	STUD (M8X1.25X37-MM)	
M	2	1,3	**153-5592**	14	NUT (M8X1.25-THD)	
	3	2	**153-5939**	1	STOPPER (OIL) (CRANKCASE)	
M	4	2	**153-5960**	1	NUT (M6X1-THD)	
	5	2	**153-5962**	3	BOLT AS	
	7	1	**153-6853**	1	SEAL-O-RING	
M	9	2	**539-0439**	4	NUT (M10X1.25-THD)	
	10	1	**8F-7242**	5	WASHER (8.7X15.9X1.6-MM THK)	
	11	3	**154-2427**	1	GASKET-EXHAUST MANIFOLD	
	12	3	**154-2428**	4	BOLT AS	
	13	1	**163-5372**	5	WASHER (8X15.4X4-MM THK)	
	14	2	**165-2140**	1	BOLT AS	
	16	2	**183-1165**	1	PLUG	
	17	2	**246-4361**	4	WASHER (10.5X14X1.5-MM THK)	
	18	2	**217-5859**	1	VALVE-BREATHER (CRANKCASE)	
	19	2	**217-5861**	1	PLATE-RETAINING	
	20	2	**217-5862**	6	SCREW (SELF-TAPPING)	
	21	2	**233-0695**	1	SEAL-VALVE COVER	
	22	3	**236-9987**	1	MANIFOLD-EXHAUST	
	23	1	**238-9196**	1	GASKET-TURBOCHARGER	
M	24	2	**238-9295**	4	BOLT (M4X0.7X30-MM)	
	25	1	**239-0187**	1	BRACKET	
	26	1	**239-0228**	1	TUBE AS	
	27	1	**239-0229**	1	SPACER (8.4X15X9-MM THK)	
M	28	3	**239-0232**	4	STUD (M8X1.25X31-MM)	
M	29	1,2	**6I-0846**	6	BOLT (M6X1X14-MM)	
	30	1	**304-5061**	1	GASKET	
	31	1	**317-0962**	1	TUBE-TURBOCHARGER OIL	
	32	1	**513-6822**	1	TURBOCHARGER AS	
	33	1	**353-3477**	2	GASKET-TURBOCHARGER	
M	34	2	**360-9545**	1	STUD (M6X1X48-MM)	
	35	2	**365-4125**	1	ADAPTER	
	36	2	**366-3055**	1	ELBOW	
	37	2	**583-6090**	1	COVER-HEAD	
	38	2	**494-9569**	1	GASKET	
	39	2	**438-9362**	1	GASKET	
M	40	1	**6I-0217**	1	BOLT (M8X1.25X20-MM)	

M - METRIC PART

450-7277 **TURBOCHARGER GP (**contd.**)** **i08269255**

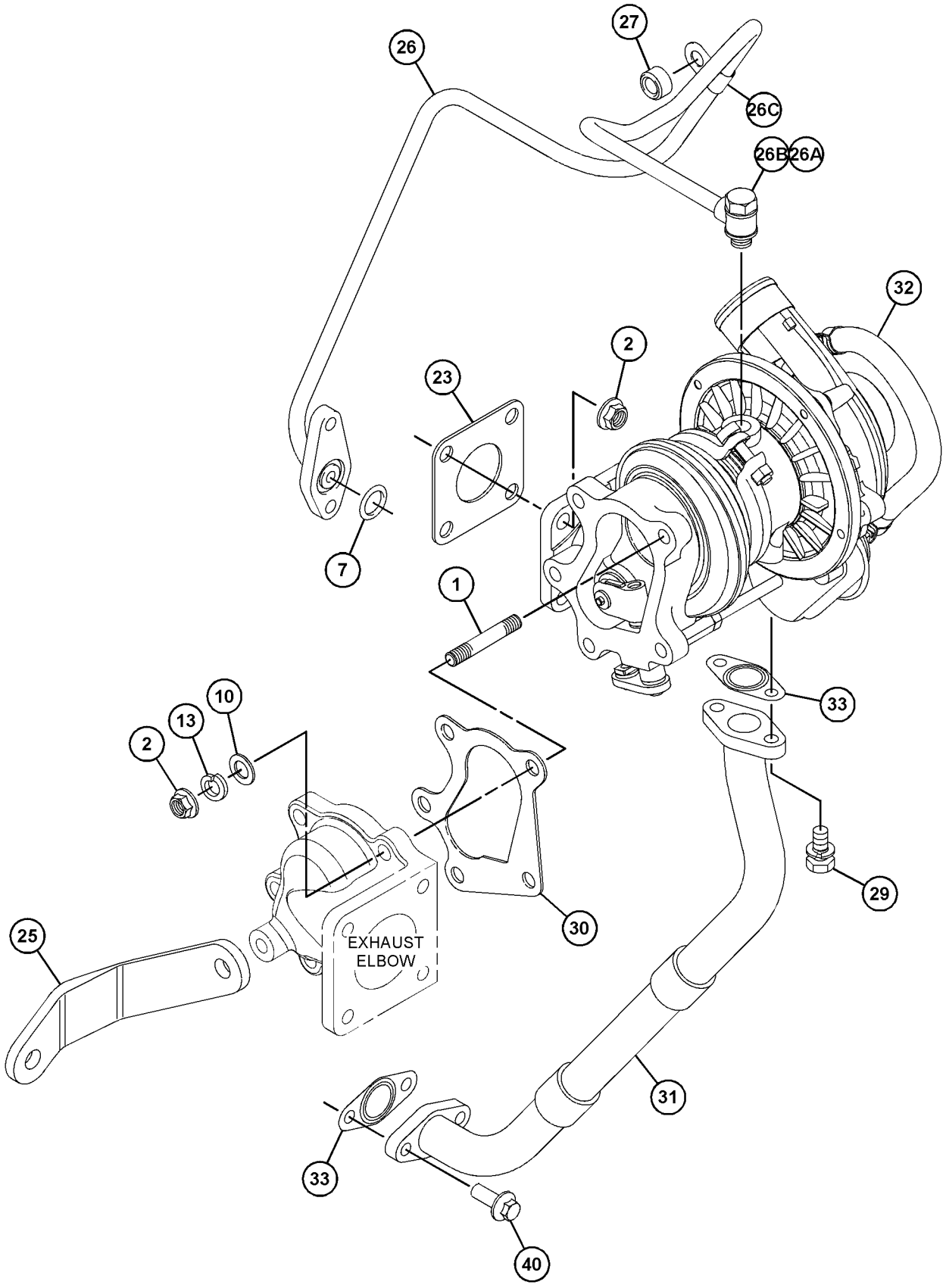

GRAPHIC #1 g06168944

450-7277 **TURBOCHARGER GP** (contd.) **i08269255**

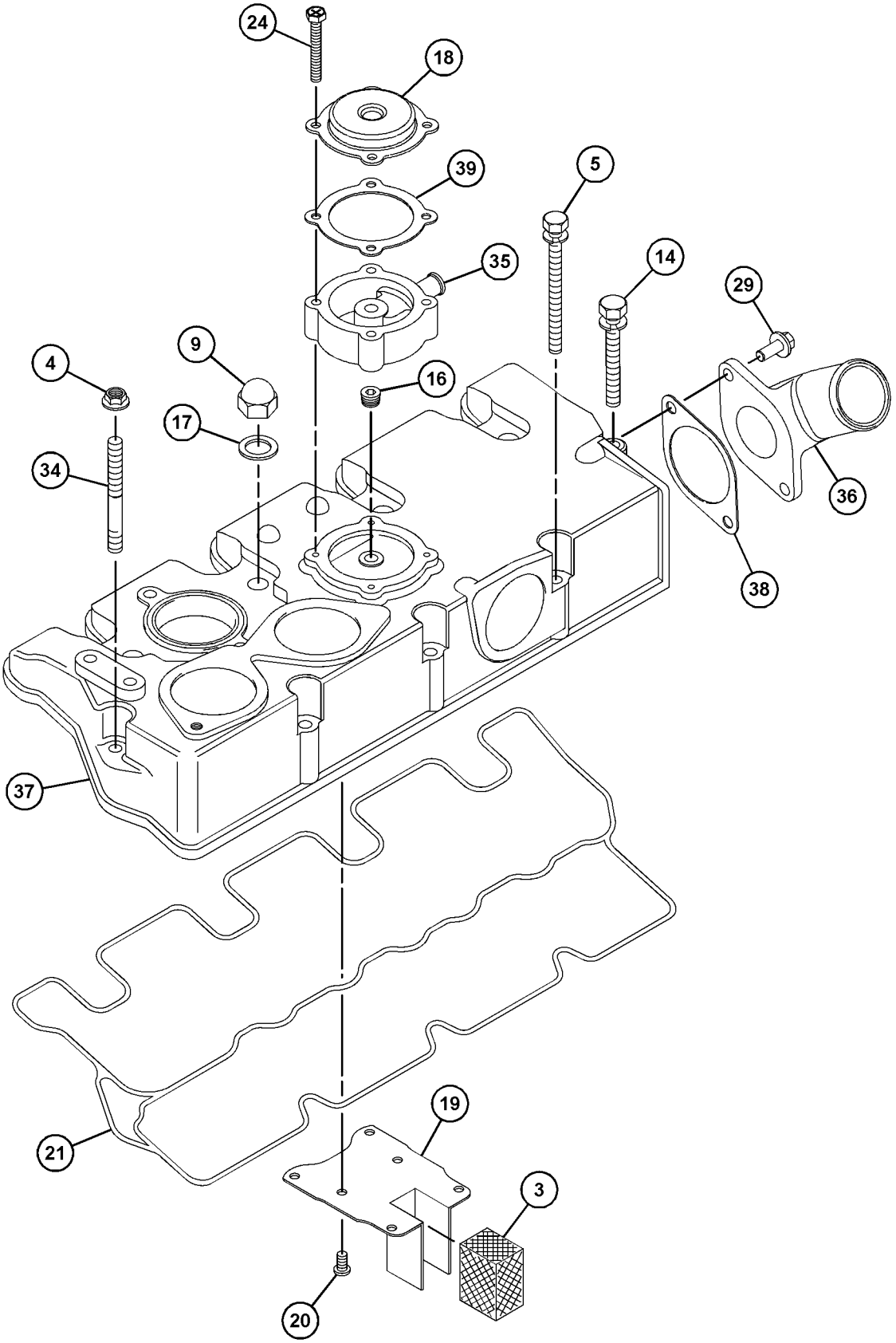

GRAPHIC #2 g06114623

450-7277 **TURBOCHARGER GP (**contd.**)** **i08269255**

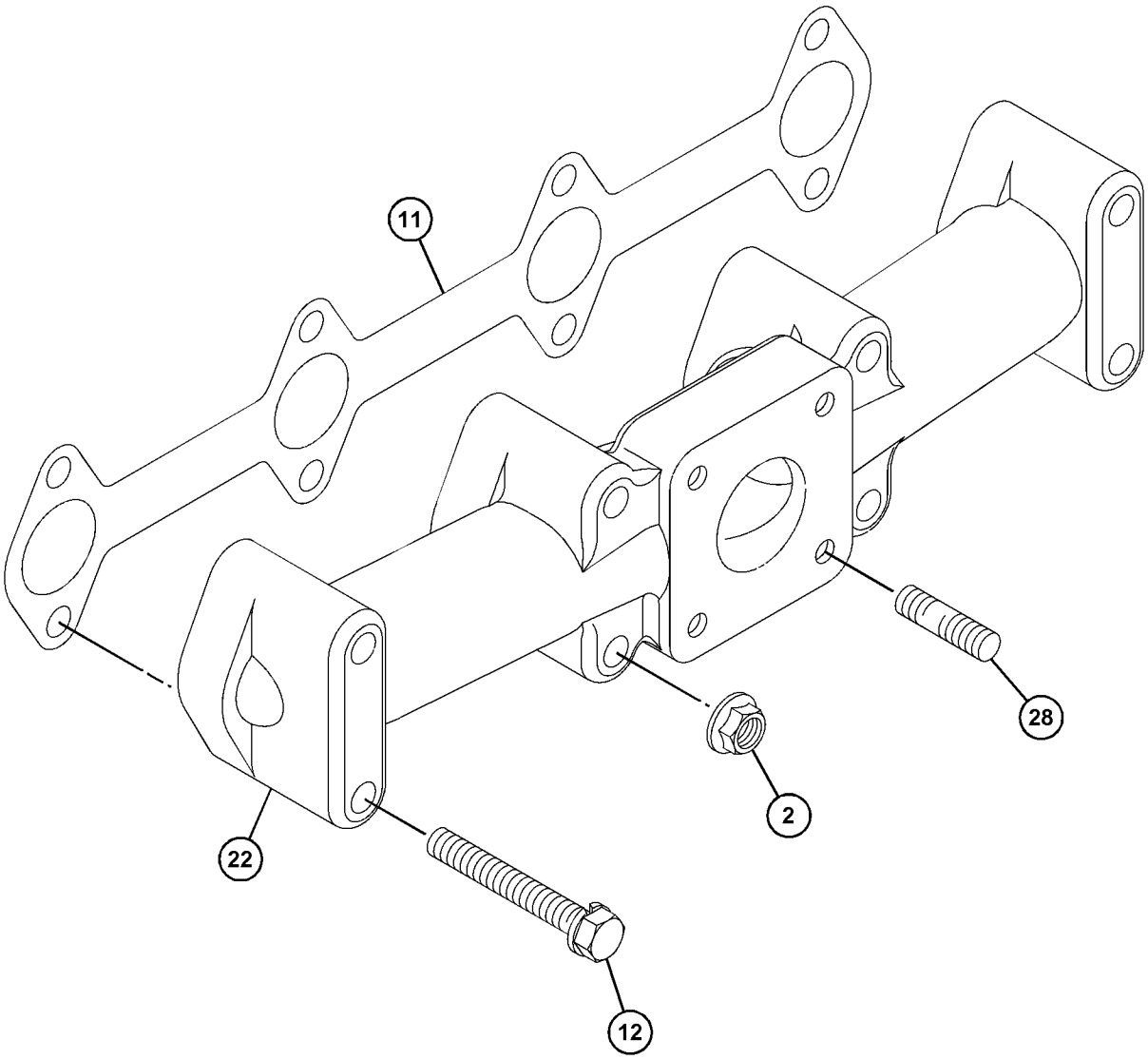

GRAPHIC #3 <END> g03681477

477-6922 TURBOCHARGER GP

PART OF 518-0165 ENGINE AR-PRIMARY

SMCS-1052, 1053 **i08194936**

NOTE	REF NO	GRAPHIC REF	PART NUMBER	QTY	PART NAME 1 2 3 4 5 6 (PRODUCT LEVEL)	SEE PAGE
M	1	1	**6I-0254**	1	BOLT (M8X1.25X30-MM)	
M	2	1	**153-5592**	8	NUT (M8X1.25-THD)	
	3	2	**153-5939**	1	STOPPER (OIL)	
M	4	2	**153-5960**	1	NUT (M6X1-THD)	
	5	2	**153-5962**	3	BOLT AS	
M	6	1	**124-3815**	2	BOLT (M8X1.25X16-MM)	
	7	1	**153-6853**	1	SEAL-O-RING	
	8	2	**153-7640**	2	BOLT AS	
M	9	2	**539-0439**	4	NUT (M10X1.25-THD)	
	10	1	**154-2427**	1	GASKET-EXHAUST MANIFOLD	
	11	1	**154-2428**	4	BOLT AS	
	12	1	**163-5372**	5	WASHER (8X15.4X4-MM THK)	
	13	2	**165-2140**	2	BOLT AS	
	15	1	**168-9001**	4	BOLT AS	
	16	2	**183-1165**	1	PLUG	
	17	2	**246-4361**	4	WASHER (10.5X14X1.5-MM THK)	
	18	2	**217-5859**	1	VALVE-BREATHER (CRANKCASE)	
	19	2	**217-5862**	6	SCREW (SELF-TAPPING)	
	20	1	**225-8533**	2	GASKET	
	21	2	**233-0695**	1	SEAL-VALVE COVER	
	22	1	**236-9987**	1	MANIFOLD-EXHAUST	
	23	1	**238-9196**	1	GASKET-TURBOCHARGER	
	24	1	**238-9198**	1	ELBOW-EXHAUST	
M	25	1	**5A-3604**	5	BOLT-SOCKET HEAD (M8X1.25X25-MM)	
M	26	2	**238-9295**	4	BOLT (M4X0.7X30-MM)	
R	27	1	**513-6823**	1	TURBOCHARGER AS	
	28	1	**239-0187**	1	BRACKET	
	29	1	**239-0229**	1	SPACER (8.4X15X9-MM THK)	
M	30	1	**239-0232**	4	STUD (M8X1.25X31-MM)	
	31	2	**249-1532**	1	HOSE-AIR INLET	
M	32	1	**6I-0846**	4	BOLT (M6X1X14-MM)	
	33	1	**304-5061**	1	GASKET	
	34	1	**317-0962**	1	TUBE-TURBOCHARGER OIL	
	35	2	**320-8401**	1	PLATE-RETAINING	
	36	1	**341-6641**	1	CONNECTION GP-OIL	
	36A	1	**225-8526**	2	WASHER (10.4X13.75X1.37-MM THK)	
	36B	1	**317-0960**	1	BOLT-SPECIAL (BANJO)	
	36C	1	**317-0961**	1	CLIP	
	36D	1	**596-4209**	1	EYE	
M	37	2	**360-9545**	1	STUD (M6X1X48-MM)	
	38	2	**363-5813**	2	CLAMP-HOSE	
	39	2	**365-4125**	1	ADAPTER	
	40	2	**366-3055**	1	ELBOW	
	41	2	**494-9569**	1	GASKET	
	42	2	**438-9362**	1	GASKET	
	45	2	**583-6088**	1	COVER-HEAD	
F			**383-9577**	1	COVER-VALVE	

477-6922 **TURBOCHARGER GP (**contd.**)** **i08194936**

NOTE	REF NO	GRAPHIC REF	PART NUMBER	QTY	PART NAME 1 2 3 4 5 6 (PRODUCT LEVEL)	SEE PAGE

F - NOT SHOWN
M - METRIC PART
R - REMANUFACTURED PART MAY BE AVAILABLE

477-6922 **TURBOCHARGER GP (**contd.**)** **i08194936**

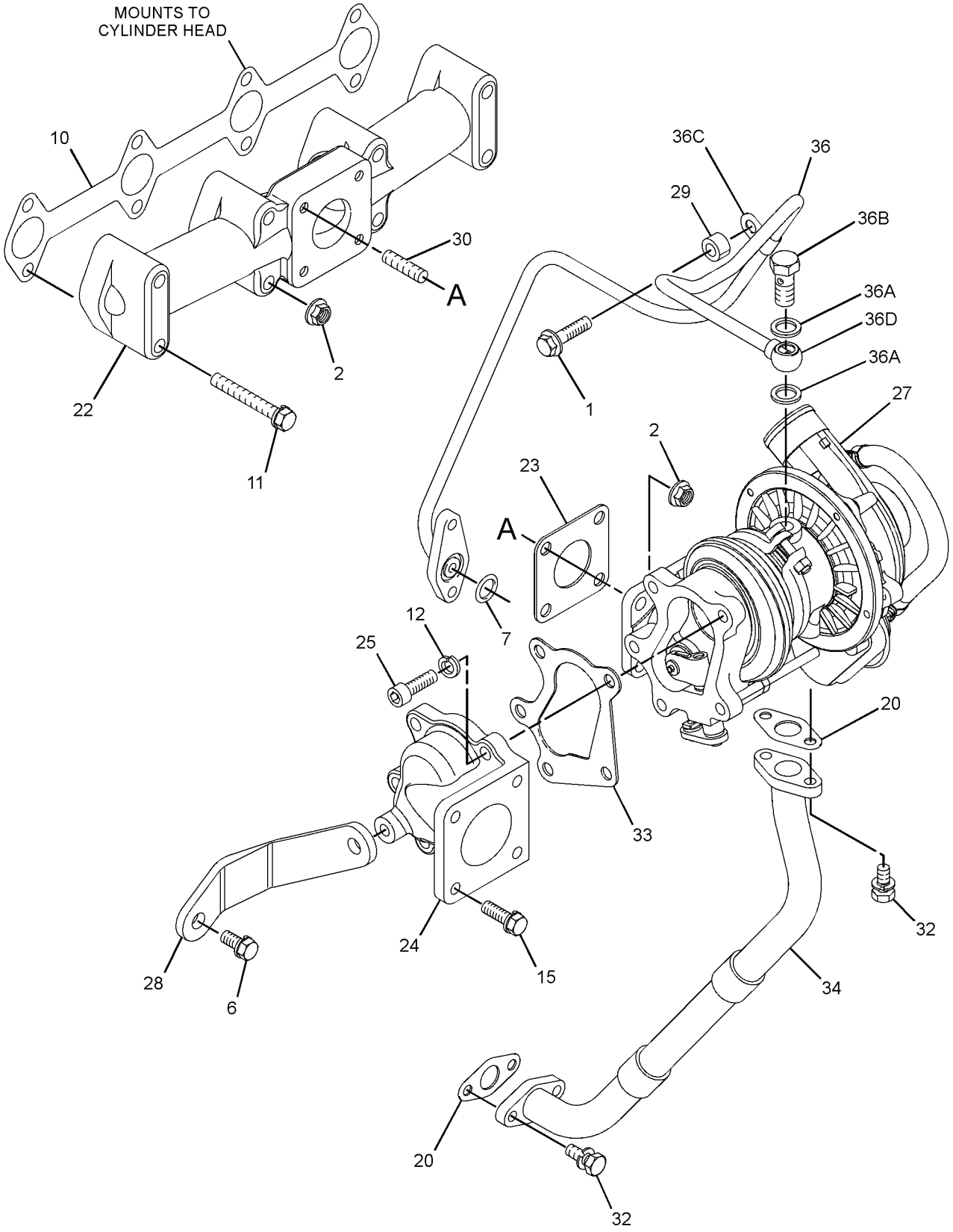

GRAPHIC #1 g06742451

477-6922 **TURBOCHARGER GP (**contd.**)** **i08194936**

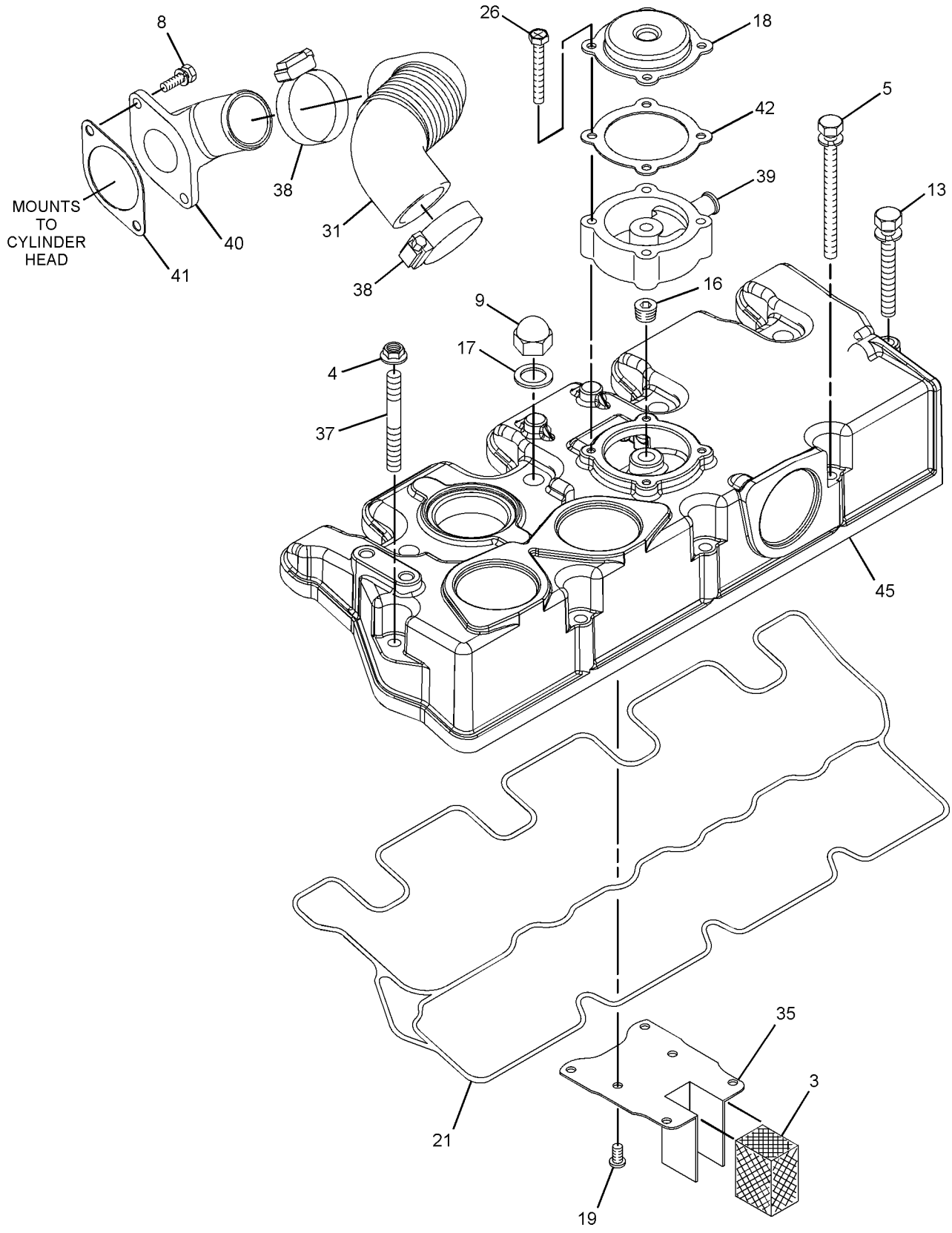

GRAPHIC #2 <END> g06742452

508-8740 TURBOCHARGER GP

PART OF 433-1380 ENGINE AR, 435-1636, 504-4602 ENGINE AR-PRIMARY

SMCS-1052, 1053 **i08217830**

NOTE	REF NO	GRAPHIC REF	PART NUMBER	QTY	PART NAME 1 2 3 4 5 6 (PRODUCT LEVEL)	SEE PAGE
M	1	1	**6I-0217**	1	BOLT (M8X1.25X20-MM)	
M	2	1	**6I-0846**	6	BOLT (M6X1X14-MM)	
M	3	1	**100-4458**	1	BOLT (M8X1.25X14-MM)	
M	4	1	**148-7140**	5	STUD (M8X1.25X37-MM)	
M	5	1	**153-5592**	13	NUT (M8X1.25-THD)	
	6	2	**153-5939**	1	STOPPER (OIL)	
M	7	2	**153-5960**	1	NUT (M6X1-THD)	
	8	2	**153-5962**	3	BOLT AS	
	9	1	**153-6853**	1	SEAL-O-RING	
	10	2	**153-7640**	2	BOLT AS	
M	11	2	**539-0439**	4	NUT (M10X1.25-THD)	
	12	1	**8F-7242**	5	WASHER (8.7X15.9X1.6-MM THK)	
	13	1	**154-2427**	1	GASKET-EXHAUST MANIFOLD	
	14	1	**154-2428**	4	BOLT AS	
	15	1	**155-7984**	3	WASHER (8.4X16X1.6-MM THK)	
	16	1	**163-5372**	5	WASHER (8X15.4X4-MM THK)	
	17	2	**165-2140**	1	BOLT AS	
	18	2	**183-1165**	1	PLUG	
	19	2	**217-5859**	1	VALVE-BREATHER (CRANKCASE)	
	20	2	**217-5862**	6	SCREW (SELF-TAPPING)	
	21	1	**225-8533**	2	GASKET	
	22	2	**233-0695**	1	SEAL-VALVE COVER	
	23	1	**236-9987**	1	MANIFOLD-EXHAUST	
	24	1	**238-9196**	1	GASKET-TURBOCHARGER	
M	25	2	**238-9295**	4	BOLT (M4X0.7X30-MM)	
	26	1	**239-0228**	1	TUBE AS	
	26A	1	**225-8526**	2	WASHER (10.4X13.75X1.37-MM THK)	
	26B	1	**239-0169**	1	BOLT-SPECIAL (BANJO)	
	26C	1	**317-0961**	2	CLIP	
	27	1	**239-0229**	1	SPACER (8.4X15X9-MM THK)	
M	28	1	**239-0232**	4	STUD (M8X1.25X31-MM)	
	29	2	**246-4361**	4	WASHER (10.5X14X1.5-MM THK)	
	30	2	**249-1532**	1	HOSE-AIR INLET	
	31	1	**304-5061**	1	GASKET	
	32	1	**317-0962**	1	TUBE-TURBOCHARGER OIL	
	33	2	**320-8401**	1	PLATE-RETAINING	
M	34	2	**360-9545**	1	STUD (M6X1X48-MM)	
	35	2	**363-5813**	2	CLAMP-HOSE	
	36	2	**365-4125**	1	ADAPTER	
	37	2	**366-3055**	1	ELBOW	
	38	2	**438-9362**	1	GASKET	
	39	2	**583-6088**	1	COVER-HEAD	
	41	2	**494-9569**	1	GASKET	
R	42	1	**513-6823**	1	TURBOCHARGER AS	

M - METRIC PART
R - REMANUFACTURED PART MAY BE AVAILABLE

508-8740 **TURBOCHARGER GP (**contd.**)** **i08217830**

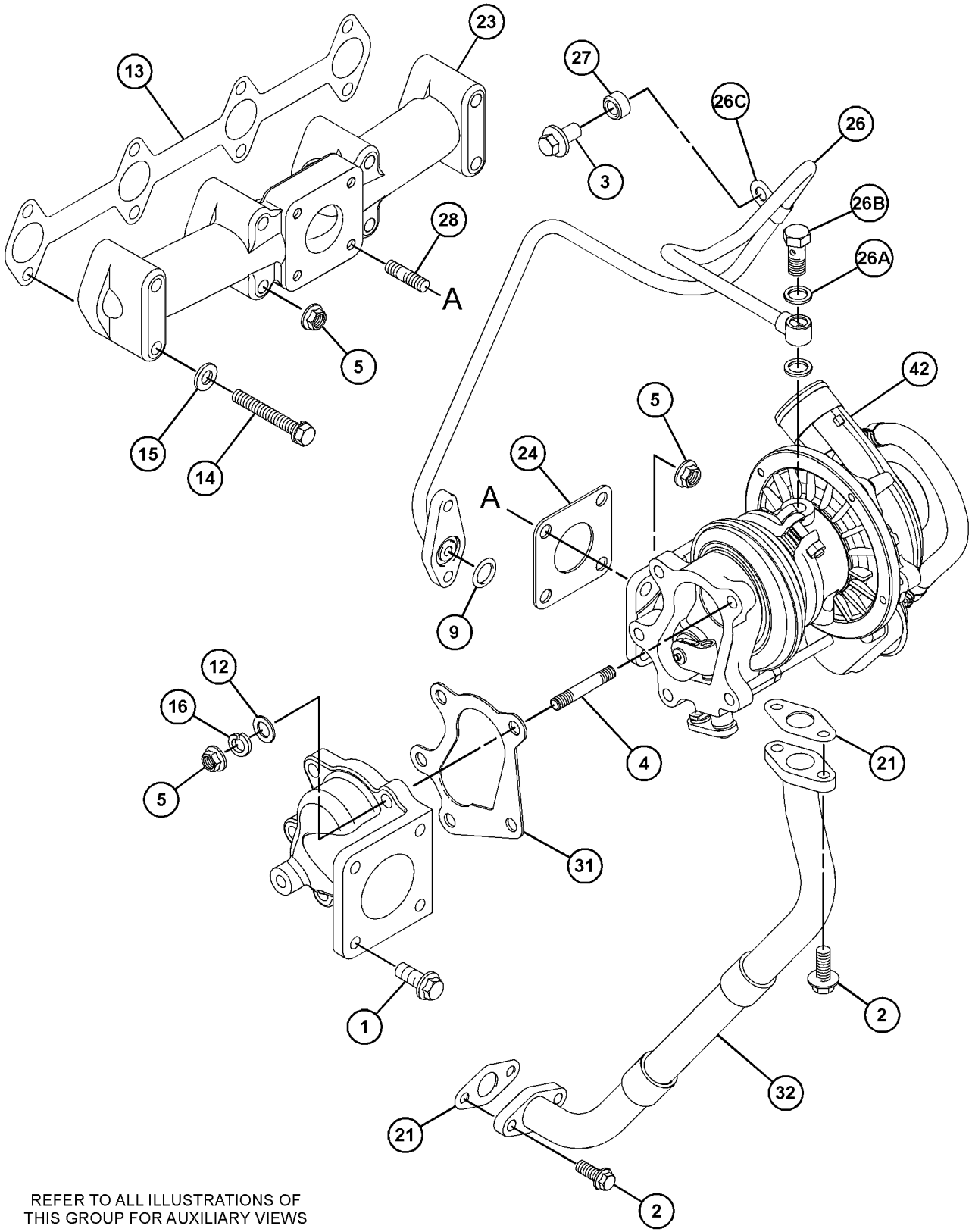

REFER TO ALL ILLUSTRATIONS OF
THIS GROUP FOR AUXILIARY VIEWS

GRAPHIC #1 g06209533

508-8740 **TURBOCHARGER GP (**contd.**)** **i08217830**

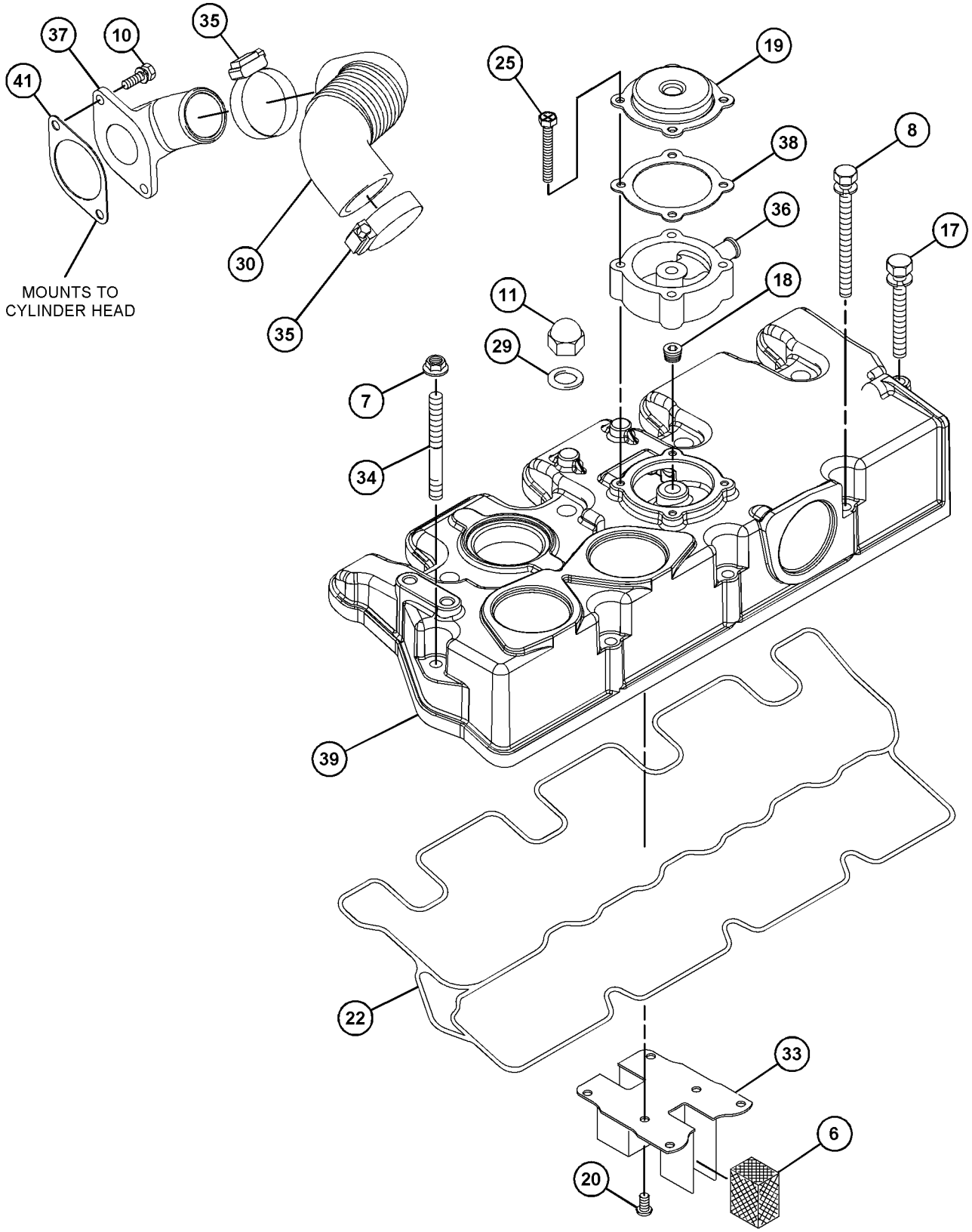

GRAPHIC #2 <END> g06690723

600-5115 TURBOCHARGER GP

PART OF 435-1636, 514-6556 ENGINE AR-PRIMARY

SMCS-1052, 1053 **i08810761**

NOTE	REF NO	GRAPHIC REF	PART NUMBER	QTY	PART NAME 1 2 3 4 5 6 (PRODUCT LEVEL)	SEE PAGE
	1	1	**246-4361**	4	WASHER (10.5X14X1.5-MM THK)	
	2	1	**363-5813**	2	CLAMP-HOSE	
M	3	1	**153-5592**	4	NUT (M8X1.25-THD)	
M	4	1	**153-5960**	1	NUT (M6X1-THD)	
	5	1	**153-5962**	3	BOLT AS	
	6	1	**153-6853**	1	SEAL-O-RING	
	7	1	**154-2427**	1	GASKET-EXHAUST MANIFOLD	
	8	1	**154-2428**	4	BOLT AS	
	9	1	**165-2140**	1	BOLT AS	
M	10	1	**183-3213**	4	STUD (M8X1.25X71-MM)	
	11	1	**225-8533**	1	GASKET	
	12	1	**239-0228**	1	TUBE AS	
	12A	1	**225-8526**	2	WASHER (10.4X13.75X1.37-MM THK)	
	12B	1	**298-4543**	1	BOLT	
	12C	1	**317-0961**	2	CLIP	
	13	1	**239-0229**	1	SPACER (8.4X15X9-MM THK)	
	14	1	**249-1532**	1	HOSE-AIR INLET	
M	15	1	**360-9545**	1	STUD (M6X1X48-MM)	
M	16	1	**539-0439**	4	NUT (M10X1.25-THD)	
Y	17	1	*601-0472*	1	TURBOCHARGER GP	692
Y	18	1	*601-0474*	1	COVER GP-CYLINDER HEAD	179
M	19	1	**6I-0217**	1	BOLT (M8X1.25X20-MM)	
M	20	1	**6I-0846**	2	BOLT (M6X1X14-MM)	

M - METRIC PART
Y - SEPARATE ILLUSTRATION

600-5115 **TURBOCHARGER GP (**contd.**)** **i08810761**

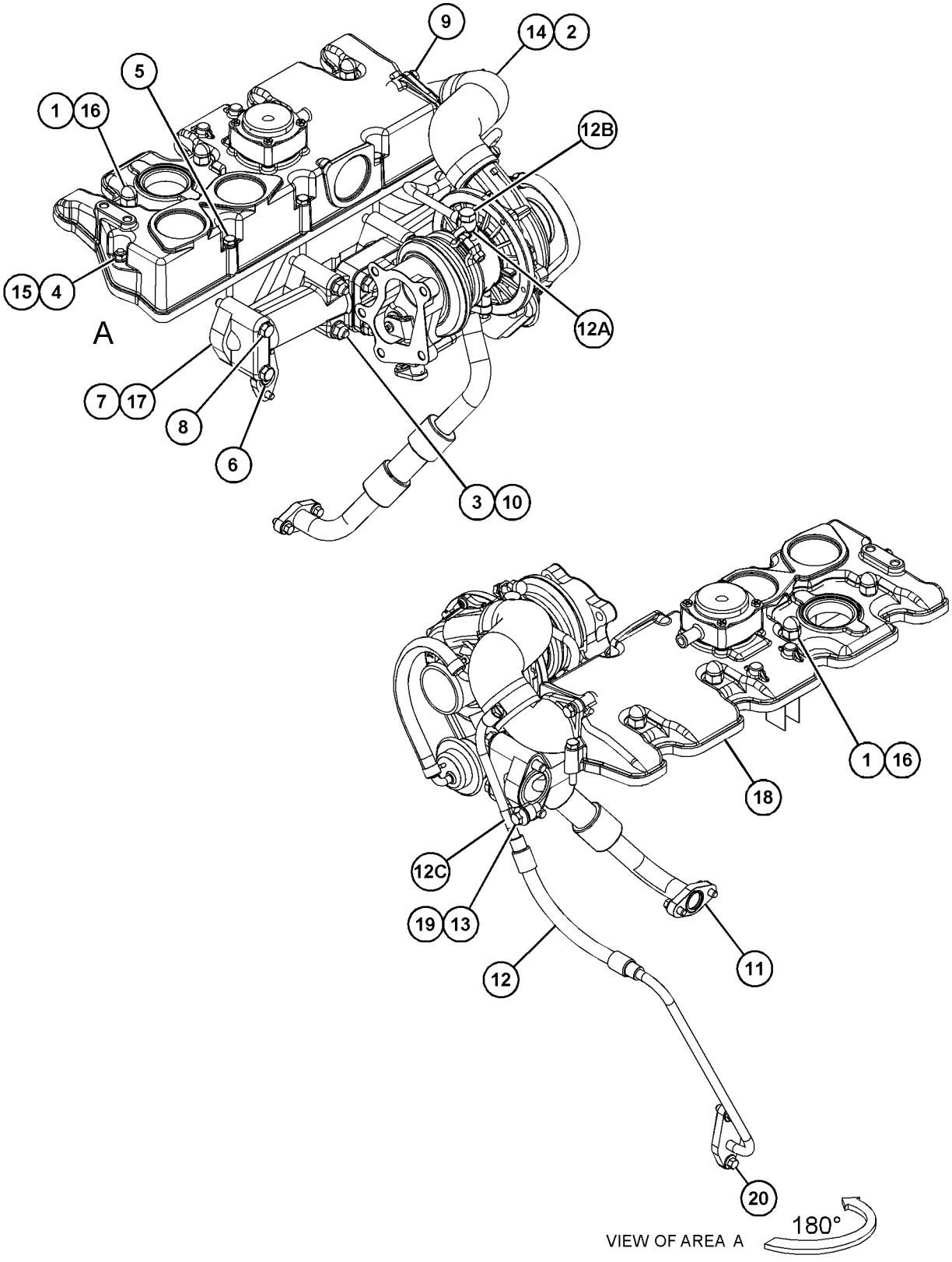

GRAPHIC #1 <END> g06789924

600-5117 TURBOCHARGER GP

S/N: C6M10558-UP

SMCS-1052, 1053 **i08711963**

NOTE	REF NO	GRAPHIC REF	PART NUMBER	QTY	PART NAME 1 2 3 4 5 6 (PRODUCT LEVEL)	SEE PAGE
	1	1	**246-4361**	4	WASHER (10.5X14X1.5-MM THK)	
	2	1	**363-5813**	2	CLAMP-HOSE	
M	3	1	**178-3336**	4	NUT-HEX FLANGE (M8X1.25-THD)	
M	4	1	**099-6418**	1	NUT (M6X1-THD)	
	5	1	**153-5962**	3	BOLT AS	
	6	1	**153-6853**	1	SEAL-O-RING	
	7	1	**154-2427**	1	GASKET-EXHAUST MANIFOLD	
	8	1	**154-2428**	4	BOLT AS	
	9	1	**165-2140**	1	BOLT AS	
M	10	1	**183-3213**	4	STUD (M8X1.25X71-MM)	
	11	1	**225-8533**	1	GASKET	
	12	1	**239-0229**	2	SPACER (8.4X15X9-MM THK)	
	13	1	**249-1532**	1	HOSE-AIR INLET	
	14	1	**341-6641**	1	CONNECTION GP-OIL	
	14A	1	**225-8526**	2	WASHER (10.4X13.75X1.37-MM THK)	
	14B	1	**317-0960**	1	BOLT-SPECIAL (BANJO)	
	14C	1	**317-0961**	1	CLIP	
	14D	1	**596-4209**	1	EYE	
M	15	1	**360-9545**	1	STUD (M6X1X48-MM)	
M	16	1	**539-0439**	4	NUT (M10X1.25-THD)	
Y	17	1	*601-0474*	1	COVER GP-CYLINDER HEAD	179
Y	18	1	*601-0476*	1	TURBOCHARGER GP	693
M	19	1	**6I-0254**	1	BOLT (M8X1.25X30-MM)	
M	20	1	**6I-0846**	2	BOLT (M6X1X14-MM)	

M - METRIC PART
Y - SEPARATE ILLUSTRATION

600-5117 **TURBOCHARGER GP** (contd.) **i08711963**

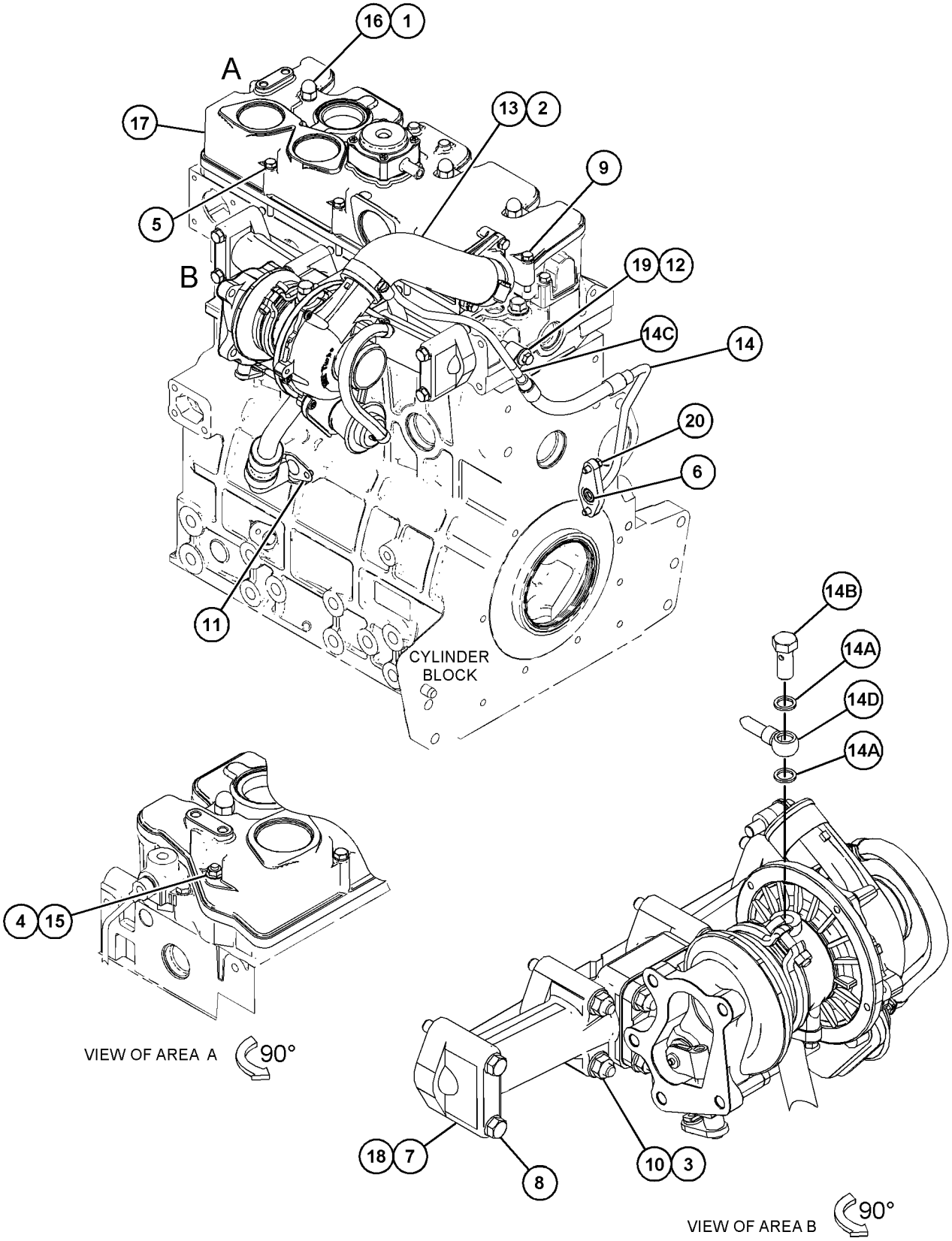

GRAPHIC #1 <END> g07519464

600-5127 TURBOCHARGER GP

S/N: C6M10494-UP

SMCS-1052, 1053 **i08883992**

NOTE	REF NO	GRAPHIC REF	PART NUMBER	QTY	PART NAME 1 2 3 4 5 6 (PRODUCT LEVEL)	SEE PAGE
	1	1	**246-4361**	4	WASHER (10.5X14X1.5-MM THK)	
M	2	2	**153-5592**	4	NUT (M8X1.25-THD)	
M	3	1	**153-5960**	1	NUT (M6X1-THD)	
	4	1	**153-5962**	3	BOLT AS	
	5	1	**153-6415**	1	WASHER (SEAL)	
	6	1	**153-6853**	1	SEAL-O-RING	
	7	2	**154-2427**	1	GASKET-EXHAUST MANIFOLD	
	8	2	**154-2428**	4	BOLT AS	
	9	1	**165-2140**	1	BOLT AS	
M	10	2	**599-4957**	4	STUD (M8X1.25X71-MM)	
	11	2	**225-8533**	1	GASKET	
	12	2	**239-0229**	2	SPACER (8.4X15X9-MM THK)	
	13	1	**341-6641**	1	CONNECTION GP-OIL	
	13A	2	**225-8526**	2	WASHER (10.4X13.75X1.37-MM THK)	
	13B	2	**317-0960**	1	BOLT-SPECIAL (BANJO)	
	13C	2	**317-0961**	1	CLIP	
	13D	2	**596-4209**	1	EYE	
M	14	1	**360-9545**	1	STUD (M6X1X48-MM)	
M	15	1	**539-0439**	4	NUT (M10X1.25-THD)	
Y	16	1	*601-0481*	1	COVER GP-CYLINDER HEAD	181
Y	17	2	*601-0484*	1	TURBOCHARGER GP	695
M	18	2	**6I-0254**	1	BOLT (M8X1.25X30-MM)	
M	19	1	**6I-0846**	3	BOLT (M6X1X14-MM)	

M - METRIC PART
Y - SEPARATE ILLUSTRATION

600-5127 **TURBOCHARGER GP (**contd.**)** **i08883992**

REFER TO ALL ILLUSTRATIONS OF
THIS GROUP FOR AUXILIARY VIEWS

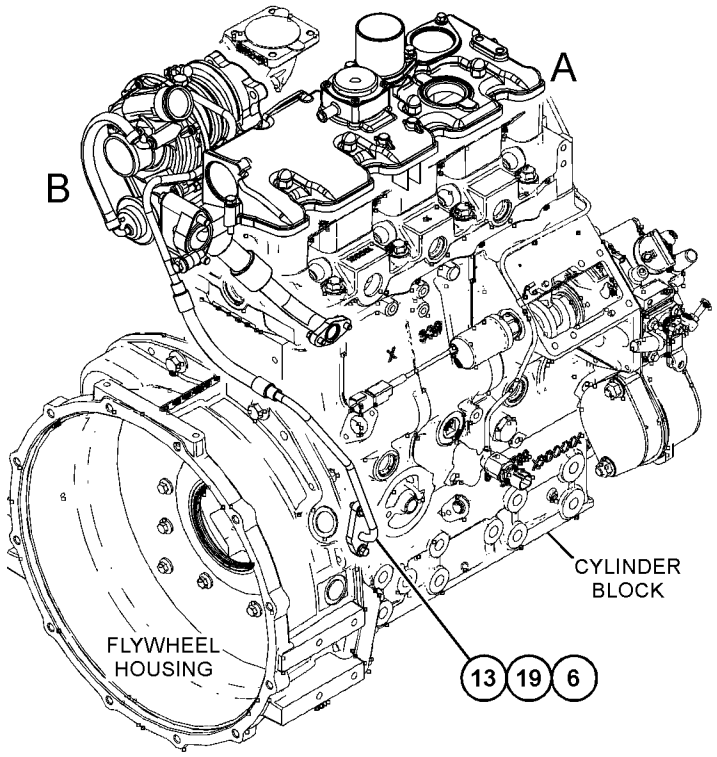

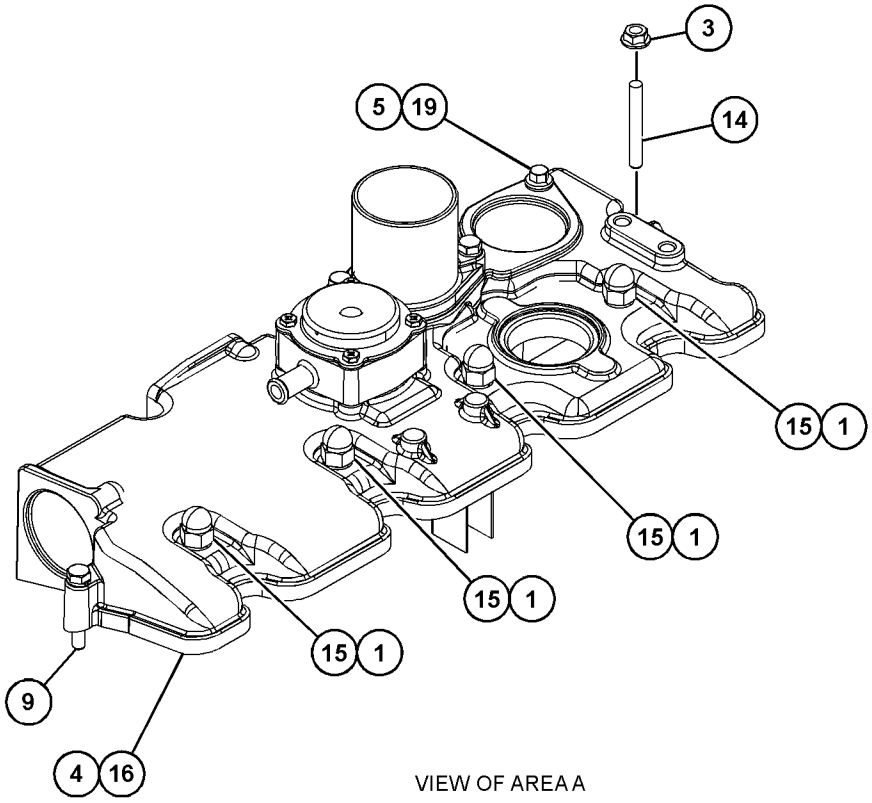

VIEW OF AREA A

GRAPHIC #1 g07553772

600-5127 **TURBOCHARGER GP (**contd.**)** **i08883992**

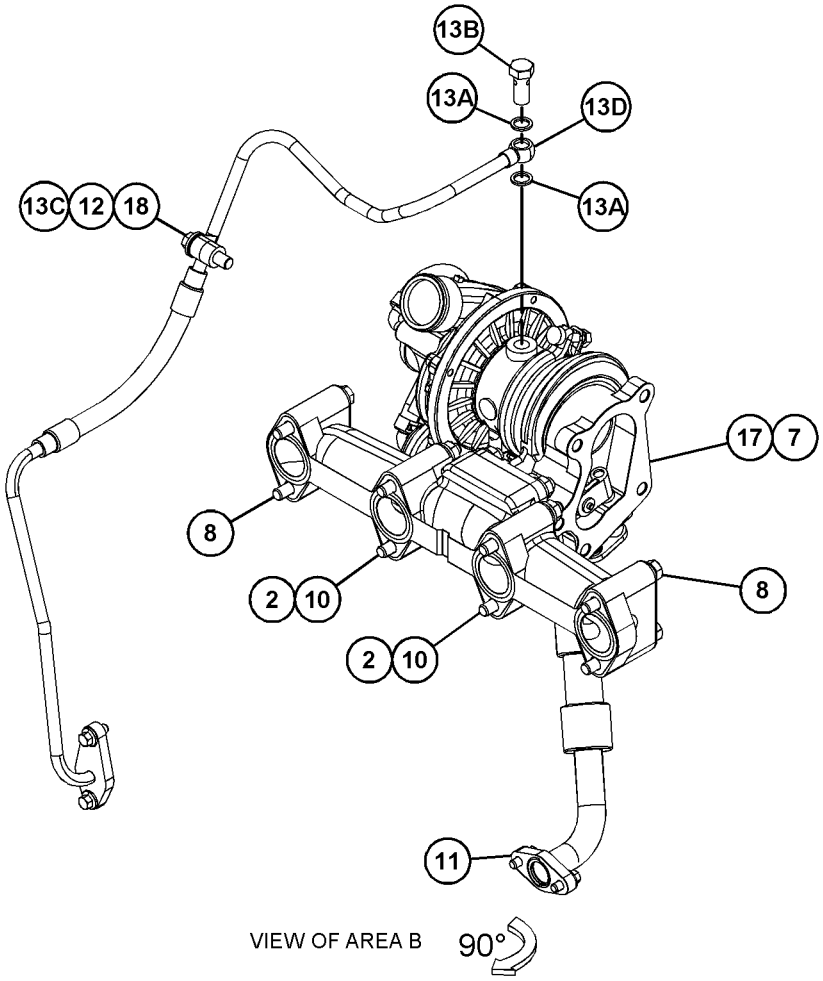

GRAPHIC #2 <END> g07553780

601-0472 TURBOCHARGER GP

PART OF 600-5115 TURBOCHARGER GP

SMCS-1052, 1053 **i09548793**

NOTE	REF NO	GRAPHIC REF	PART NUMBER	QTY	PART NAME 1 2 3 4 5 6 (PRODUCT LEVEL)	SEE PAGE
M	1	1	**153-5592**	4	NUT (M8X1.25-THD)	
	2	1	**225-8533**	1	GASKET	
	3	1	**236-9987**	1	MANIFOLD-EXHAUST	
	4	1	**238-9196**	1	GASKET-TURBOCHARGER	
M	5	1	**239-0232**	4	STUD (M8X1.25X31-MM)	
	6	1	**304-5061**	1	GASKET	
	7	1	**317-0962**	1	TUBE-TURBOCHARGER OIL	
R	8	1	**513-6823**	1	TURBOCHARGER AS	
M	9	1	**6I-0846**	4	BOLT (M6X1X14-MM)	

M - METRIC PART
R - REMANUFACTURED PART MAY BE AVAILABLE

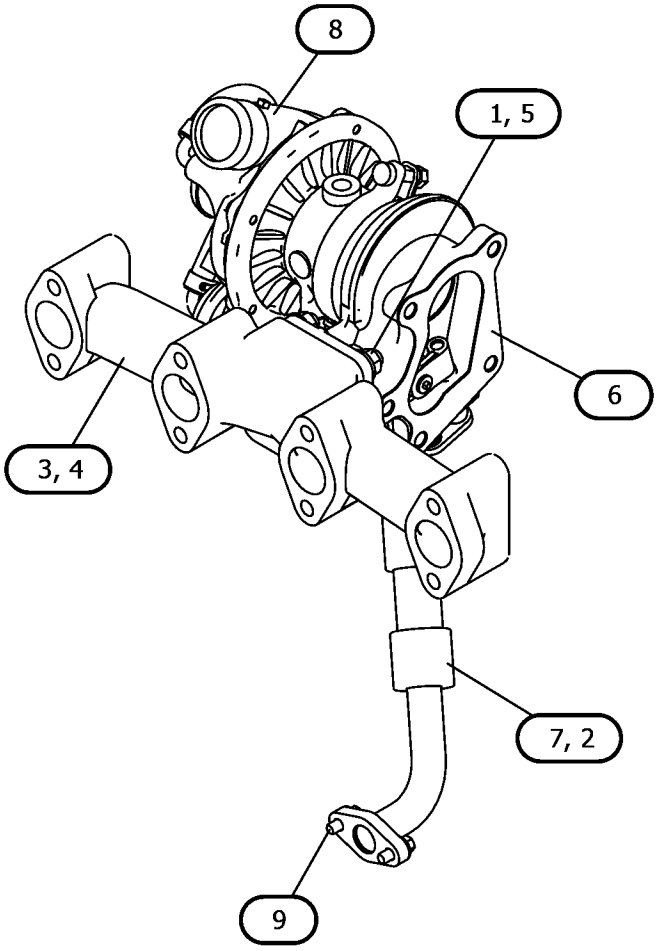

GRAPHIC #1 <END> g07499029

601-0476 TURBOCHARGER GP

S/N: C6M10558-UP

PART OF 600-5117 TURBOCHARGER GP

SMCS-1052, 1053

i08711990

NOTE	REF NO	GRAPHIC REF	PART NUMBER	QTY	PART NAME 1 2 3 4 5 6 (PRODUCT LEVEL)	SEE PAGE
M	1	1	**153-5592**	4	NUT (M8X1.25-THD)	
	2	1	**225-8533**	1	GASKET	
	3	1	**236-9987**	1	MANIFOLD-EXHAUST	
	4	1	**238-9196**	1	GASKET-TURBOCHARGER	
M	5	1	**239-0232**	4	STUD (M8X1.25X31-MM)	
	6	1	**304-5061**	1	GASKET	
	7	1	**317-0962**	1	TUBE-TURBOCHARGER OIL	
R	8	1	**513-6823**	1	TURBOCHARGER AS	
M	9	1	**6I-0846**	4	BOLT (M6X1X14-MM)	

M - METRIC PART
R - REMANUFACTURED PART MAY BE AVAILABLE

601-0476 **TURBOCHARGER GP (**contd.**)** **i08711990**

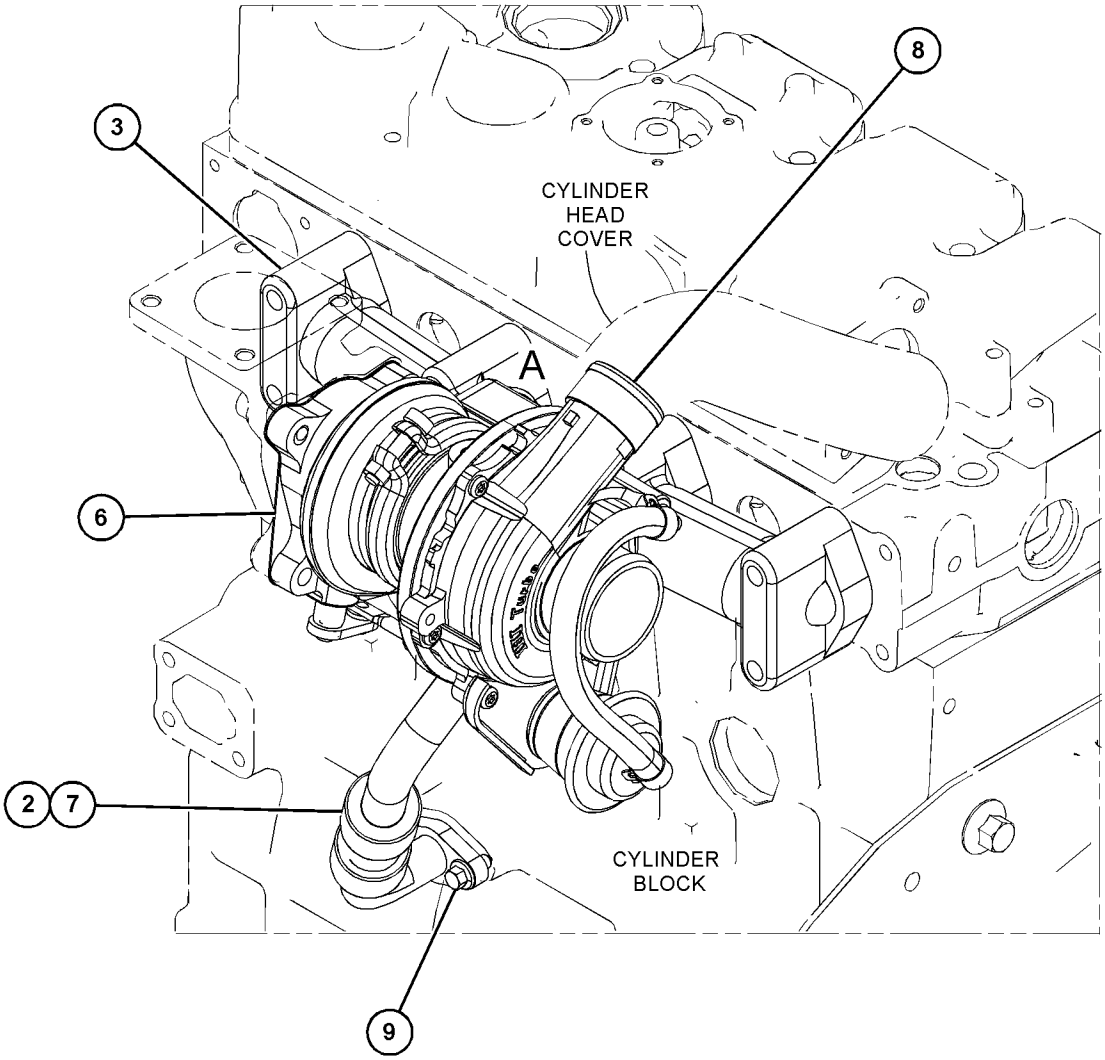

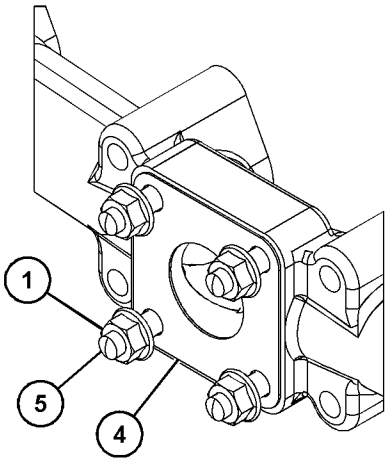

VIEW OF AREA A
(PARTS REMOVED FOR CLARITY)

GRAPHIC #1 <END> g06770000

601-0484 TURBOCHARGER GP

S/N: C6M10494-UP

PART OF 600-5127 TURBOCHARGER GP

SMCS-1052, 1053 **i09001312**

NOTE	REF NO	GRAPHIC REF	PART NUMBER	QTY	PART NAME 1 2 3 4 5 6 (PRODUCT LEVEL)	SEE PAGE
M	1	1	**153-5592**	4	NUT (M8X1.25-THD)	
	2	1	**225-8533**	1	GASKET (TURBOCHARGER)	
	3	1	**236-9987**	1	MANIFOLD-EXHAUST	
	4	1	**238-9196**	1	GASKET-TURBOCHARGER	
M	5	1	**239-0232**	4	STUD (M8X1.25X31-MM)	
	6	1	**304-5061**	1	GASKET (ELBOW)	
	7	1	**317-0962**	1	TUBE-TURBOCHARGER OIL	
	8	1	**513-6822**	1	TURBOCHARGER AS	
M	9	1	**6I-0846**	4	BOLT (M6X1X14-MM)	

M - METRIC PART

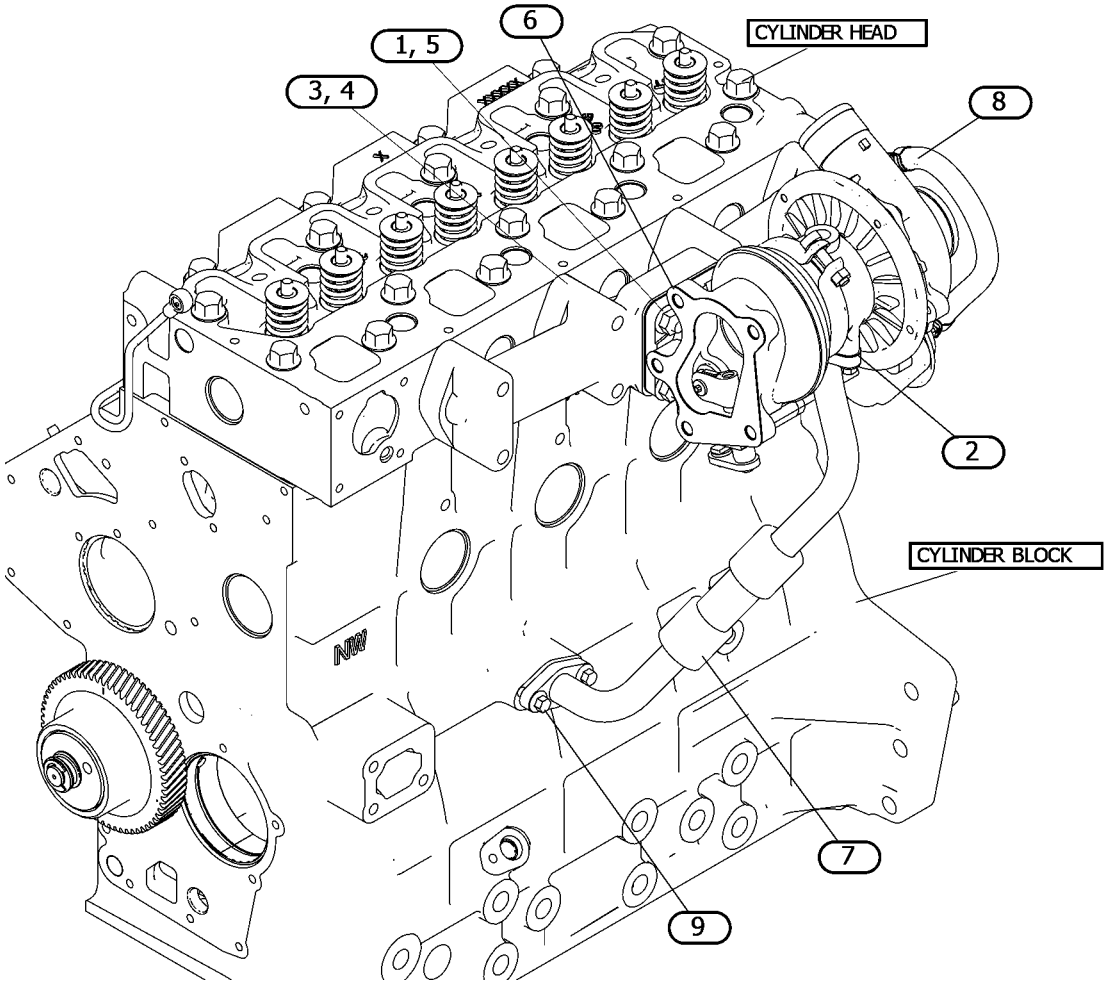

GRAPHIC #1 <END> g07557983

317-7187 CONTROL GP-GOVERNOR

PART OF 435-1645, 435-1649 CYLINDER BLOCK GP-LONG

SMCS-1265, 1276 **i07005640**

NOTE	REF NO	GRAPHIC REF	PART NUMBER	QTY	PART NAME 1 2 3 4 5 6 (PRODUCT LEVEL)	SEE PAGE
M	1	1	**5C-2890**	1	NUT (M6X1-THD)	
	2	1	**139-5511**	1	CAP (TAMPER RESISTANT)	
M	3	1	**153-5592**	1	NUT (M8X1.25-THD)	
	4	1	**153-6415**	2	WASHER (SEAL)	
	5	1	**153-7983**	1	PIN	
	6	1	**095-1574**	1	SEAL-O-RING	
	7	1	**154-2715**	1	WASHER	
M	8	1	**369-4486**	2	BOLT (M6X1X35-MM)	
M	9	1	**162-2207**	1	NUT (M6X1-THD)	
M	10	1	**106-8916**	4	BOLT (M6X1X16-MM)	
	11	1	**217-7115**	1	CAP (TAMPER RESISTANT)	
	12	1	**335-5578**	1	BRACKET	
	13	1	**423-7724**	1	GASKET	
	14	1	**308-1882**	1	SPRING	
M	15	1	**308-1889**	1	NUT (M10X1.25-THD)	
M	16	1	**308-1892**	1	NUT (M6X1-THD)	
	17	1	**308-1897**	2	RING	
	18	1	**330-9189**	1	PLUG	
	19	1	**308-4266**	1	SHAFT	
	20	1	**390-3731**	1	SHAFT	
M	21	1	**495-0737**	1	BOLT (M6X0.5X19.5-MM)	
	22	1	**311-0655**	1	SPRING	
	23	1	**313-5832**	1	BOLT AS	
	23A	1	**153-7987**	1	WASHER (9.2X17X1.8-MM THK)	
M	23B	1	**191-9297**	1	NUT (M10X1.25-THD)	
	23C	1	**313-5833**	1	SPRING	
	24	1	**317-7195**	1	SPRING	
	25	1	**319-3252**	1	SENSOR AS-SPEED (ENGINE TIMING)	
	26	1	**321-4249**	1	NUT	
	27	1	**425-7065**	1	CAP-TAMPER PROOF	
	28	1	**334-0732**	1	ARM AS (FRONT HOUSING)	
	29	1	**390-3729**	1	LEVER-CONTROL	
	30	1	**322-7493**	1	LEVER AS-CONTROL	
	31	1	**336-2965**	1	SPRING	
	32	1	**308-1875**	1	SEAL-O-RING	

M - METRIC PART

317-7187 **CONTROL GP-GOVERNOR (**contd.**)** **i07005640**

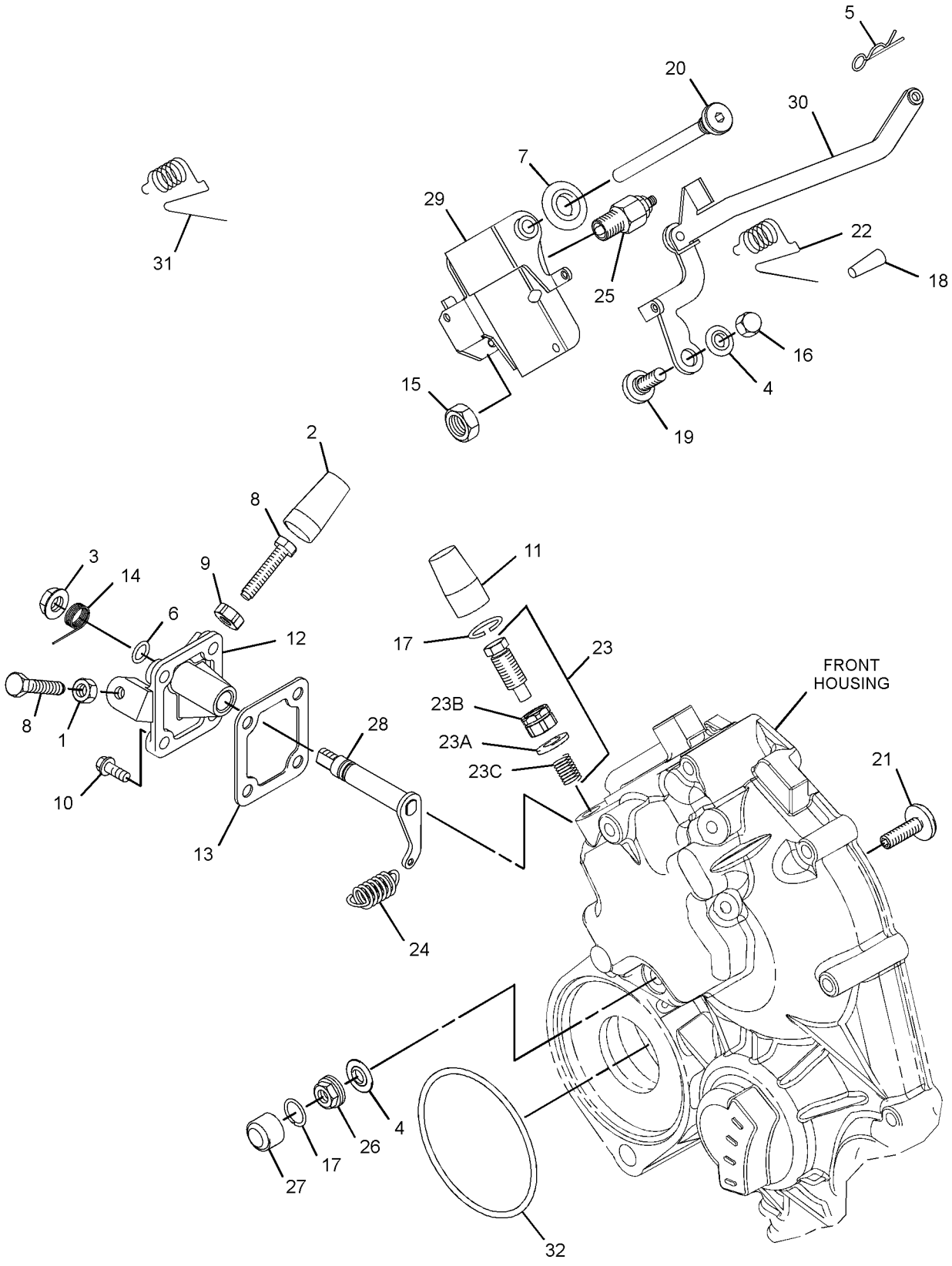

GRAPHIC #1 <END> g06214767

317-7187 CONTROL GP-GOVERNOR

PART OF 435-1645, 435-1649 CYLINDER BLOCK GP-LONG

SMCS-1265, 1276 **i08312600**

NOTE	REF NO	GRAPHIC REF	PART NUMBER	QTY	PART NAME 1 2 3 4 5 6 (PRODUCT LEVEL)	SEE PAGE
M	1	1	**5C-2890**	1	NUT (M6X1-THD)	
	2	1	**139-5511**	1	CAP (TAMPER RESISTANT)	
M	3	1	**153-5592**	1	NUT (M8X1.25-THD)	
	4	1	**153-6415**	2	WASHER (SEAL)	
	5	1	**153-7983**	1	PIN	
	6	1	**095-1574**	1	SEAL-O-RING	
	7	1	**154-2715**	1	WASHER	
M	8	1	**7X-2533**	2	BOLT (M6X1X35-MM)	
M	9	1	**162-2207**	1	NUT (M6X1-THD)	
M	10	1	**106-8916**	4	BOLT (M6X1X16-MM)	
	11	1	**217-7115**	1	CAP (TAMPER RESISTANT)	
	12	1	**335-5578**	1	BRACKET	
	13	1	**423-7724**	1	GASKET	
	14	1	**308-1882**	1	SPRING	
M	15	1	**308-1889**	1	NUT (M10X1.25-THD)	
M	16	1	**308-1892**	1	NUT (M6X1-THD)	
C	17	1	**308-1897**	1	RING	
	18	1	**330-9189**	1	PLUG	
	19	1	**308-4266**	1	SHAFT	
	20	1	**390-3731**	1	SHAFT	
M	21	1	**495-0737**	1	BOLT (M6X0.5X19.5-MM)	
	22	1	**311-0655**	1	SPRING	
	23	1	**313-5832**	1	BOLT AS	
	23A	1	**153-7987**	1	WASHER (9.2X17X1.8-MM THK)	
M	23B	1	**191-9297**	1	NUT (M10X1.25-THD)	
	23C	1	**313-5833**	1	SPRING	
	24	1	**317-7195**	1	SPRING	
	25	1	**319-3252**	1	SENSOR AS-SPEED (ENGINE TIMING)	
M		1	**155-8076**	1	NUT (M4X0.4-THD)	
C	26	1	**502-9478**	1	NUT (TAMPER RESISTANT)	
C	27	1	**503-9707**	1	CAP	
	28	1	**334-0732**	1	ARM AS (FRONT HOUSING)	
	29	1	**580-0398**	1	LEVER AS-CONTROL	
	30	1	**322-7493**	1	LEVER AS-CONTROL	
		1	**154-1400**	1	PIN	
	31	1	**336-2965**	1	SPRING	
	32	1	**308-1875**	1	SEAL-O-RING	
C	33	1	**503-9731**	1	SHROUD	
C	34	1	**502-5421**	1	PIN	

C - CHANGE FROM PREVIOUS TYPE
M - METRIC PART

317-7187 **CONTROL GP-GOVERNOR (**contd.**)** **i08312600**

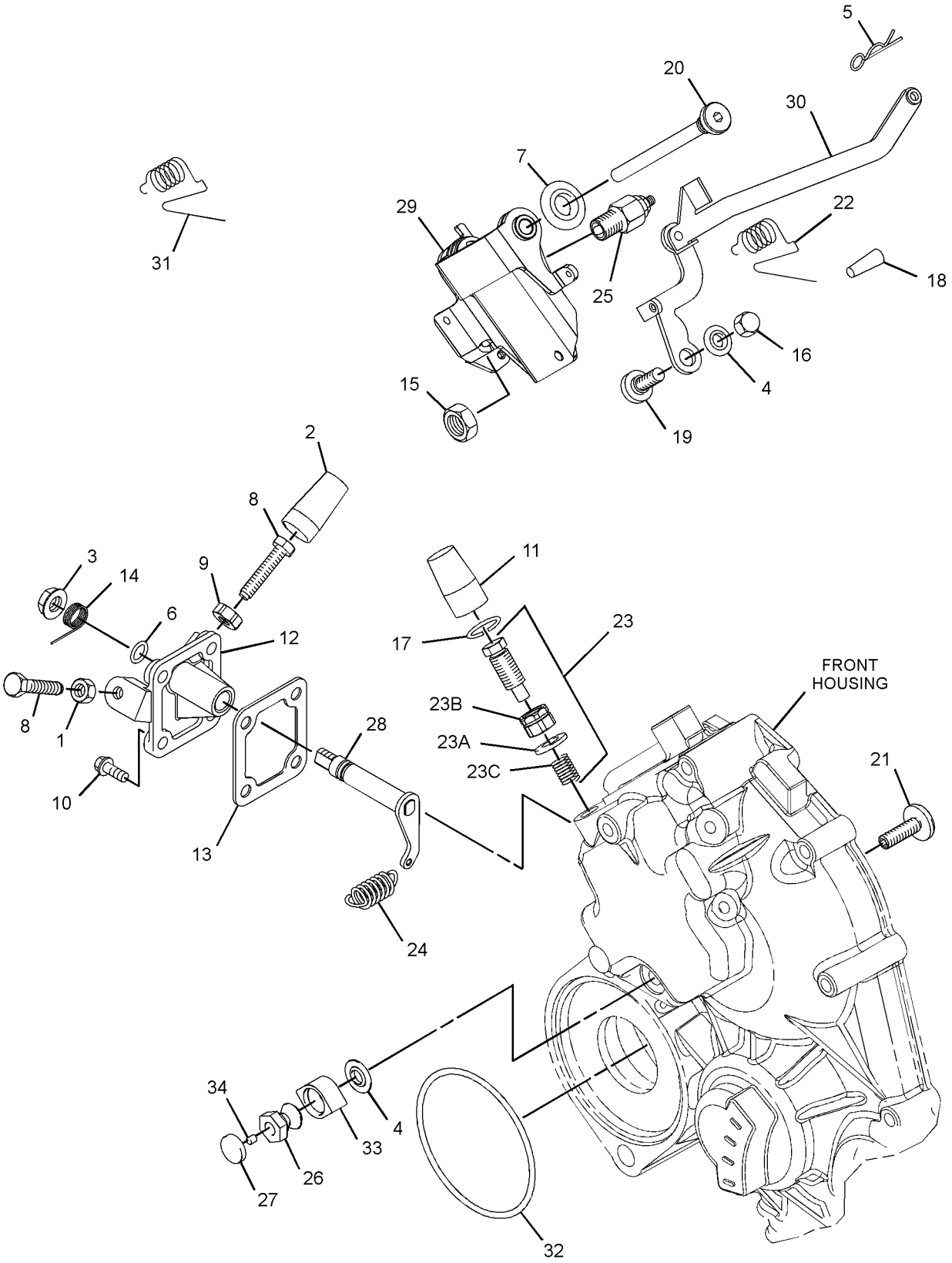

GRAPHIC #1 <END> g06754782

319-3250 CONTROL GP-GOVERNOR

PART OF 325-9475, 332-1363, 365-4283, 370-7833, 465-2207 CONTROL GP-GOVERNOR, 309-6718 HOUSING GP-FRONT, 598-5603 LEVER GP-CONTROL
ALSO AN ATTACHMENT

SMCS-1265, 1276 **i08589057**

NOTE	REF NO	GRAPHIC REF	PART NUMBER	QTY	PART NAME 1 2 3 4 5 6 (PRODUCT LEVEL)	SEE PAGE
M	1	1	**5C-8312**	1	NUT (M4X0.7-THD)	

M - METRIC PART

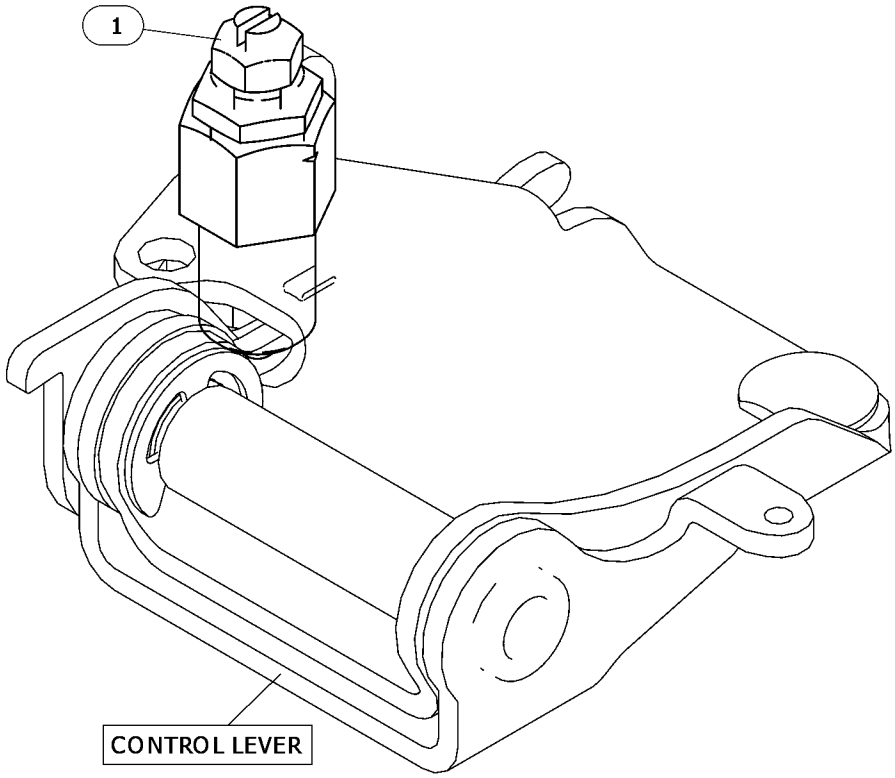

GRAPHIC #1 <END> g06637155

325-9475 CONTROL GP-GOVERNOR

PART OF 433-1379 ENGINE AR
ALSO AN ATTACHMENT

SMCS-1265, 1276 **i07030479**

NOTE	REF NO	GRAPHIC REF	PART NUMBER	QTY	PART NAME 1 2 3 4 5 6 (PRODUCT LEVEL)	SEE PAGE
M	1	1	**5C-2890**	1	NUT (M6X1-THD)	
	2	1	**139-5511**	1	CAP (TAMPER RESISTANT)	
M	3	1	**153-5592**	1	NUT (M8X1.25-THD)	
	4	1	**153-6415**	2	WASHER (SEAL)	
	5	1	**153-7983**	1	PIN	
	6	1	**095-1574**	1	SEAL-O-RING	
	7	1	**154-2715**	1	WASHER	
M	8	1	**369-4486**	2	BOLT (M6X1X35-MM)	
M	9	1	**162-2207**	1	NUT (M6X1-THD)	
M	10	1	**106-8916**	4	BOLT (M6X1X16-MM)	
	11	1	**217-7115**	1	CAP (TAMPER RESISTANT)	
	12	1	**335-5578**	1	BRACKET	
	13	1	**423-7724**	1	GASKET	
	14	1	**308-1882**	1	SPRING	
M	15	1	**308-1889**	1	NUT (M10X1.25-THD)	
M	16	1	**308-1892**	1	NUT (M6X1-THD)	
	17	1	**308-1897**	2	RING	
	18	1	**425-7065**	1	CAP-TAMPER PROOF	
	19	1	**321-4249**	1	NUT	
	21	1	**308-4266**	1	SHAFT	
	22	1	**390-3731**	1	SHAFT	
M	23	1	**495-0737**	1	BOLT (M6X0.5X19.5-MM)	
	24	1	**311-0655**	1	SPRING	
	25	1	**313-5832**	1	BOLT AS	
	25A	1	**153-7987**	1	WASHER (9.2X17X1.8-MM THK)	
M	25B	1	**191-9297**	1	NUT (M10X1.25-THD)	
	25C	1	**313-5833**	1	SPRING	
	26	1	**317-7195**	1	SPRING	
	27	1	**319-3250**	1	CONTROL GP-GOVERNOR (TIMING)	
	28	1	**334-0732**	1	ARM AS (FRONT HOUSING)	
	29	1	**390-3729**	1	LEVER-CONTROL	
	30	1	**322-7493**	1	LEVER AS-CONTROL	
	31	1	**336-2965**	1	SPRING	
	32	1	**330-9189**	1	PLUG	
	33	1	**308-1875**	1	SEAL-O-RING	

M - METRIC PART

325-9475 **CONTROL GP-GOVERNOR (**contd.**)** **i07030479**

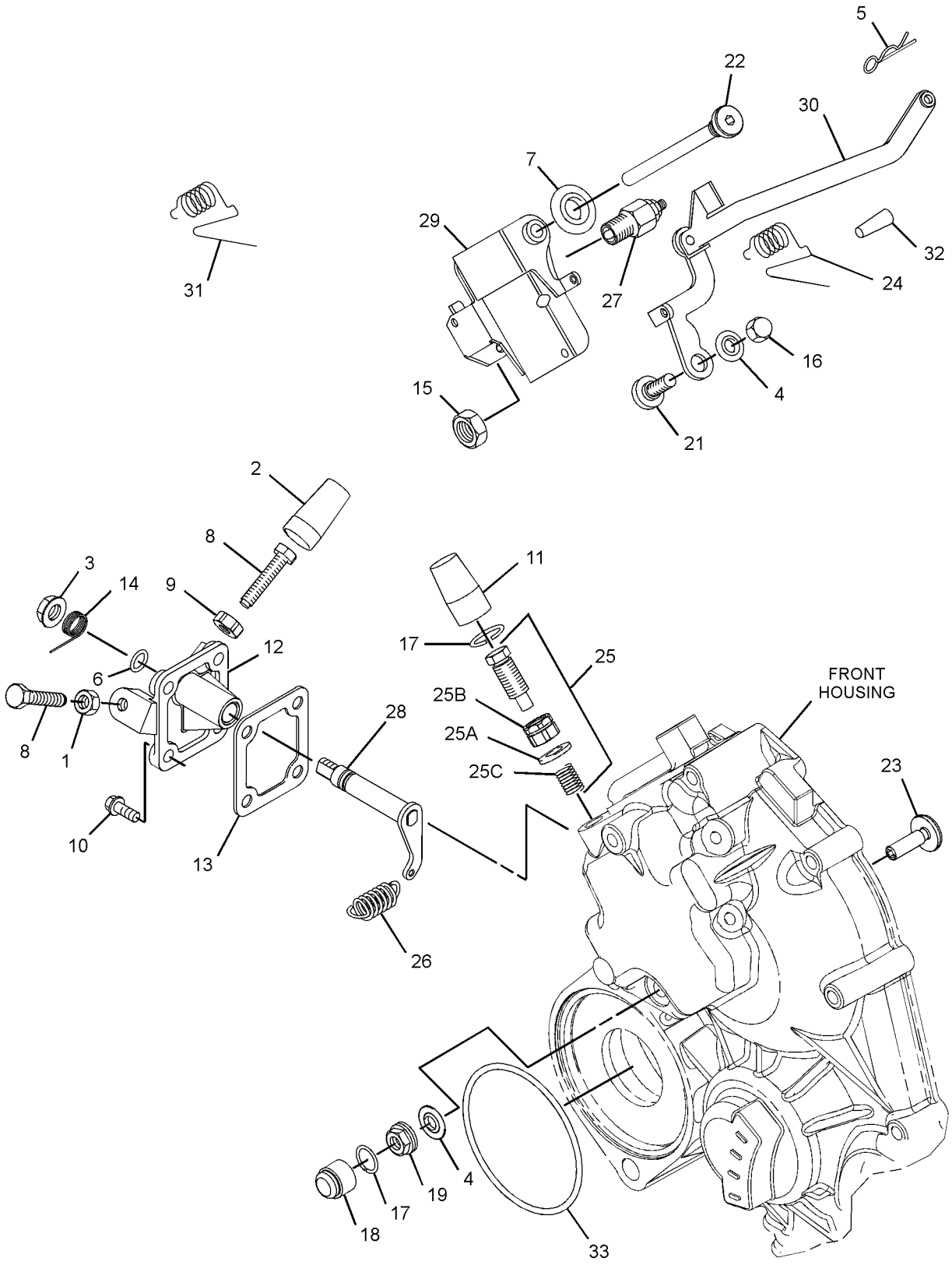

GRAPHIC #1 <END> g06197591

325-9475 CONTROL GP-GOVERNOR

PART OF 433-1379 ENGINE AR
ALSO AN ATTACHMENT

SMCS-1265, 1276 **i08302855**

NOTE	REF NO	GRAPHIC REF	PART NUMBER	QTY	PART NAME 1 2 3 4 5 6 (PRODUCT LEVEL)	SEE PAGE
M	1	1	**5C-2890**	1	NUT (M6X1-THD)	
	2	1	**139-5511**	1	CAP (TAMPER RESISTANT)	
M	3	1	**153-5592**	1	NUT (M8X1.25-THD)	
	4	1	**153-6415**	2	WASHER (SEAL)	
	5	1	**153-7983**	1	PIN	
	6	1	**095-1574**	1	SEAL-O-RING	
	7	1	**154-2715**	1	WASHER	
M	8	1	**7X-2533**	2	BOLT (M6X1X35-MM)	
M	9	1	**162-2207**	1	NUT (M6X1-THD)	
M	10	1	**106-8916**	4	BOLT (M6X1X16-MM)	
	11	1	**217-7115**	1	CAP (TAMPER RESISTANT)	
	12	1	**335-5578**	1	BRACKET	
	13	1	**423-7724**	1	GASKET	
	14	1	**308-1882**	1	SPRING	
M	15	1	**308-1889**	1	NUT (M10X1.25-THD)	
M	16	1	**308-1892**	1	NUT (M6X1-THD)	
C	17	1	**308-1897**	1	RING	
C	18	1	**503-9707**	1	CAP	
C	19	1	**502-9478**	1	NUT (TAMPER RESISTANT)	
	21	1	**308-4266**	1	SHAFT	
	22	1	**390-3731**	1	SHAFT	
M	23	1	**495-0737**	1	BOLT (M6X0.5X19.5-MM)	
	24	1	**311-0655**	1	SPRING	
	25	1	**313-5832**	1	BOLT AS	
	25A	1	**153-7987**	1	WASHER (9.2X17X1.8-MM THK)	
M	25B	1	**191-9297**	1	NUT (M10X1.25-THD)	
	25C	1	**313-5833**	1	SPRING	
	26	1	**317-7195**	1	SPRING	
Y	27	1	**319-3250**	1	CONTROL GP-GOVERNOR (TIMING)	700
	28	1	**334-0732**	1	ARM AS (FRONT HOUSING)	
	29	1	**580-0398**	1	LEVER AS-CONTROL	
	30	1	**322-7493**	1	LEVER AS-CONTROL	
	31	1	**336-2965**	1	SPRING	
	32	1	**330-9189**	1	PLUG	
	33	1	**308-1875**	1	SEAL-O-RING	
C	34	1	**503-9731**	1	SHROUD	
C	35	1	**502-5421**	1	PIN	

C - CHANGE FROM PREVIOUS TYPE
M - METRIC PART
Y - SEPARATE ILLUSTRATION

325-9475 **CONTROL GP-GOVERNOR (**contd.**)** **i08302855**

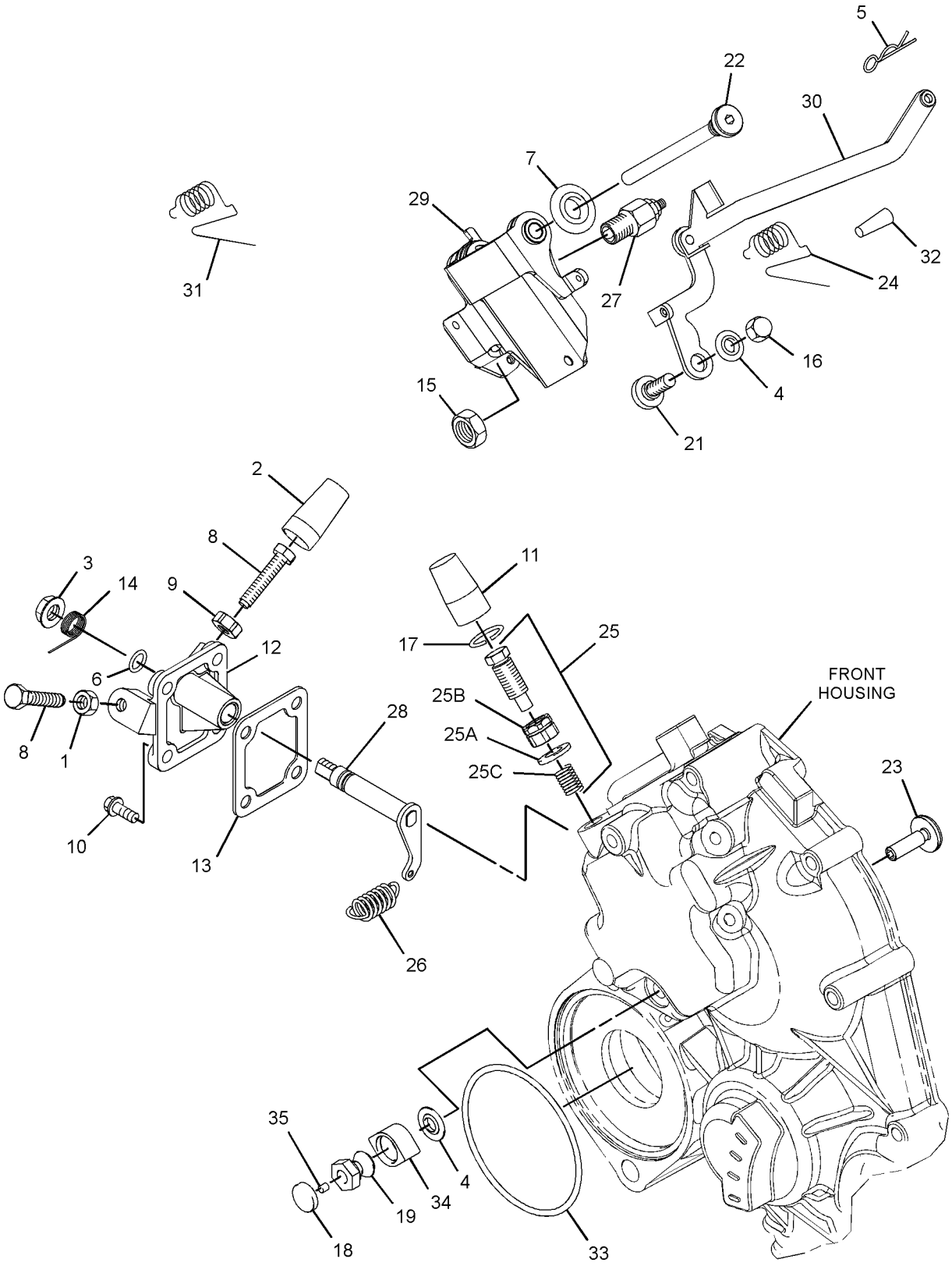

GRAPHIC #1 <END> g06753258

332-1363 CONTROL GP-GOVERNOR

PART OF 514-6556 ENGINE AR-PRIMARY

TYPE 1

SMCS-1265, 1276 **i07021616**

NOTE	REF NO	GRAPHIC REF	PART NUMBER	QTY	PART NAME 1 2 3 4 5 6 (PRODUCT LEVEL)	SEE PAGE
M	1	1	**5C-2890**	1	NUT (M6X1-THD)	
	2	1	**139-5511**	1	CAP (TAMPER RESISTANT)	
M	3	1	**153-5592**	1	NUT (M8X1.25-THD)	
	4	1	**153-6415**	2	WASHER (SEAL)	
	5	1	**153-7983**	1	PIN	
	6	1	**095-1574**	1	SEAL-O-RING	
M	7	1	**369-4486**	2	BOLT (M6X1X35-MM)	
M	8	1	**162-2207**	1	NUT (M6X1-THD)	
M	9	1	**106-8916**	4	BOLT (M6X1X16-MM)	
	10	1	**217-7115**	1	CAP (TAMPER RESISTANT)	
	11	1	**423-7724**	1	GASKET	
	12	1	**308-1882**	1	SPRING	
M	13	1	**308-1889**	1	NUT (M10X1.25-THD)	
M	14	1	**308-1892**	1	NUT (M6X1-THD)	
	15	1	**308-1897**	2	RING	
	16	1	**336-2965**	1	SPRING	
	17	1	**308-4266**	1	SHAFT	
	18	1	**390-3731**	1	SHAFT	
	19	1	**309-6729**	1	SEAL-O-RING	
	20	1	**364-2755**	1	BOLT-SPECIAL	
	21	1	**311-0655**	1	SPRING	
	22	1	**313-5832**	1	BOLT AS	
	22A	1	**153-7987**	1	WASHER (9.2X17X1.8-MM THK)	
M	22B	1	**191-9297**	1	NUT (M10X1.25-THD)	
	22C	1	**313-5833**	1	SPRING	
	23	1	**317-7195**	1	SPRING	
	24	1	**319-3250**	1	CONTROL GP-GOVERNOR (TIMING)	
	25	1	**321-4249**	1	NUT	
	26	1	**390-3729**	1	LEVER-CONTROL	
	27	1	**322-7493**	1	LEVER AS-CONTROL	
	28	1	**330-9189**	1	PLUG	
	29	1	**425-7065**	1	CAP-TAMPER PROOF	
	30	1	**334-0732**	1	ARM AS (FRONT HOUSING)	
	31	1	**335-5578**	1	BRACKET	
	32	1	**308-1875**	1	SEAL-O-RING	

M - METRIC PART

332-1363 **CONTROL GP-GOVERNOR (**contd.**)** **i07021616**

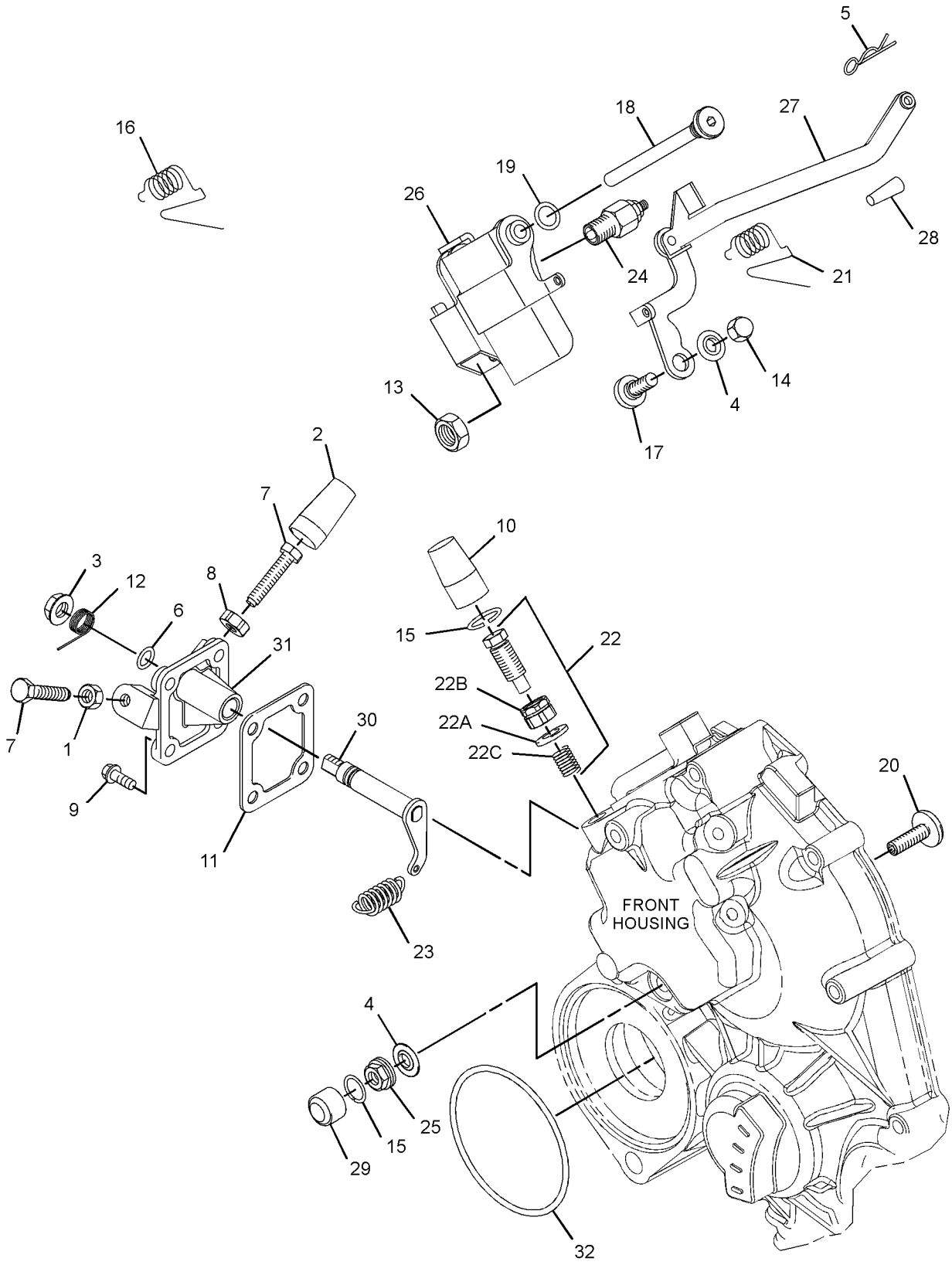

GRAPHIC #1 <END> g06197394

332-1363 CONTROL GP-GOVERNOR

PART OF 514-6556 ENGINE AR-PRIMARY

TYPE 2

SMCS-1265, 1276 **i08303111**

NOTE	REF NO	GRAPHIC REF	PART NUMBER	QTY	PART NAME 1 2 3 4 5 6 (PRODUCT LEVEL)	SEE PAGE
M	1	1	**5C-2890**	1	NUT (M6X1-THD)	
	2	1	**139-5511**	1	CAP (TAMPER RESISTANT)	
M	3	1	**153-5592**	1	NUT (M8X1.25-THD)	
	4	1	**153-6415**	2	WASHER (SEAL)	
	5	1	**153-7983**	1	PIN	
	6	1	**095-1574**	1	SEAL-O-RING	
M	7	1	**7X-2533**	2	BOLT (M6X1X35-MM)	
M	8	1	**162-2207**	1	NUT (M6X1-THD)	
M	9	1	**106-8916**	4	BOLT (M6X1X16-MM)	
	10	1	**217-7115**	1	CAP (TAMPER RESISTANT)	
	11	1	**423-7724**	1	GASKET	
	12	1	**308-1882**	1	SPRING	
M	13	1	**308-1889**	1	NUT (M10X1.25-THD)	
M	14	1	**308-1892**	1	NUT (M6X1-THD)	
C	15	1	**308-1897**	1	RING	
	16	1	**336-2965**	1	SPRING	
	17	1	**308-4266**	1	SHAFT	
	18	1	**390-3731**	1	SHAFT	
	19	1	**309-6729**	1	SEAL-O-RING	
	20	1	**364-2755**	1	BOLT-SPECIAL	
	21	1	**311-0655**	1	SPRING	
	22	1	**313-5832**	1	BOLT AS	
	22A	1	**153-7987**	1	WASHER (9.2X17X1.8-MM THK)	
M	22B	1	**191-9297**	1	NUT (M10X1.25-THD)	
	22C	1	**313-5833**	1	SPRING	
	23	1	**317-7195**	1	SPRING	
Y	24	1	**319-3250**	1	CONTROL GP-GOVERNOR (TIMING)	700
C	25	1	**502-9478**	1	NUT (TAMPER RESISTANT)	
	26	1	**580-0398**	1	LEVER AS-CONTROL	
	27	1	**322-7493**	1	LEVER AS-CONTROL	
	28	1	**330-9189**	1	PLUG	
C	29	1	**503-9707**	1	CAP	
	30	1	**334-0732**	1	ARM AS (FRONT HOUSING)	
	31	1	**335-5578**	1	BRACKET	
	32	1	**308-1875**	1	SEAL-O-RING	
C	33	1	**503-9731**	1	SHROUD	
C	34	1	**502-5421**	1	PIN	

C - CHANGE FROM PREVIOUS TYPE
M - METRIC PART
Y - SEPARATE ILLUSTRATION

332-1363 **CONTROL GP-GOVERNOR (**contd.**)** **i08303111**

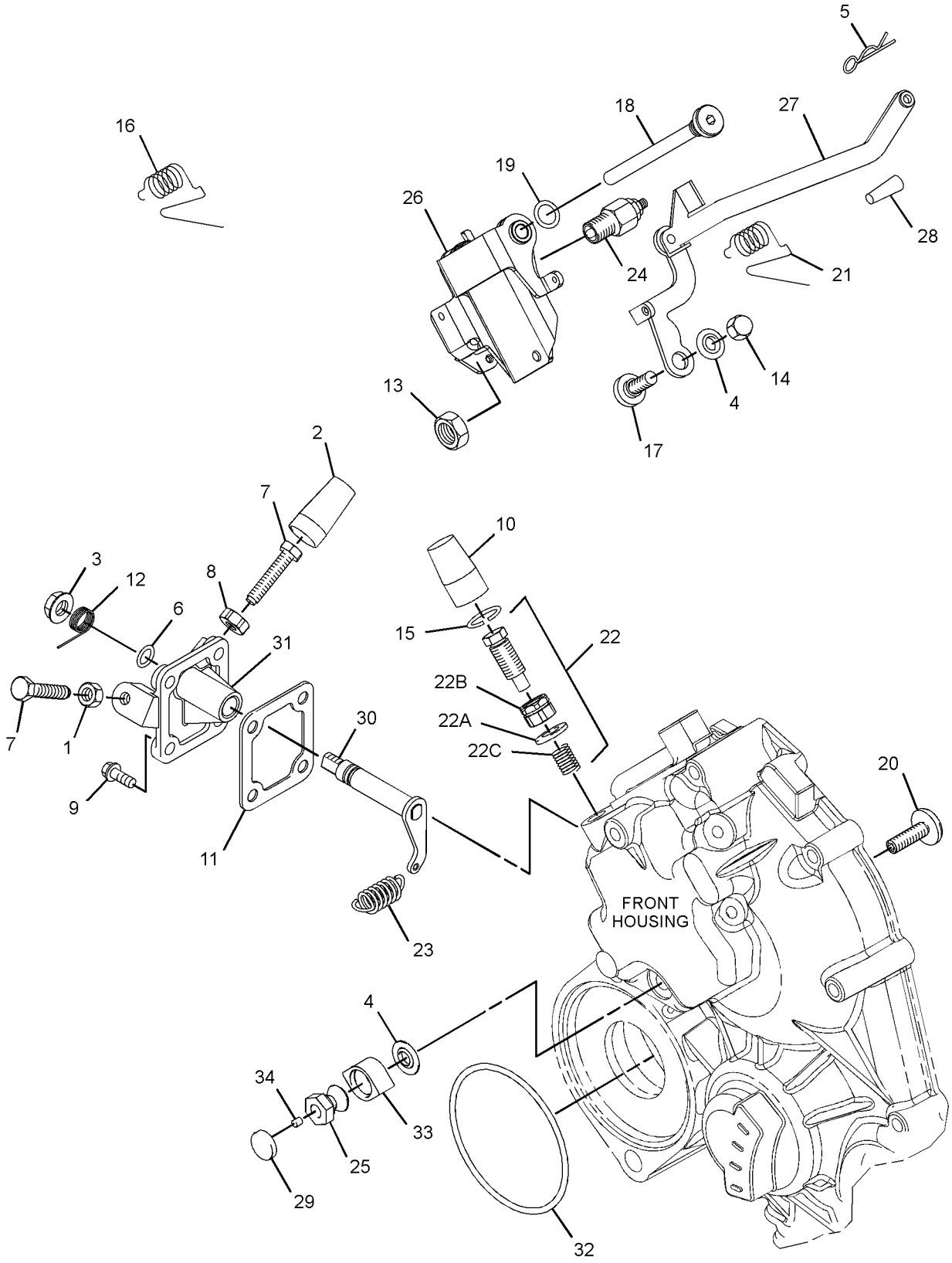

GRAPHIC #1 <END> g06753271

341-1358 CONTROL GP-GOVERNOR

PART OF 433-1380 ENGINE AR, 504-4602 ENGINE AR-PRIMARY

SMCS-1265, 1276 **i07032127**

NOTE	REF NO	GRAPHIC REF	PART NUMBER	QTY	PART NAME 1 2 3 4 5 6 (PRODUCT LEVEL)	SEE PAGE
	1	1	**336-2965**	1	SPRING	
M	2	1	**5C-2890**	1	NUT (M6X1-THD)	
	3	1	**139-5511**	1	CAP (TAMPER RESISTANT)	
M	4	1	**153-5592**	1	NUT (M8X1.25-THD)	
	5	1	**153-6415**	2	WASHER (SEAL)	
	6	1	**153-7983**	1	PIN	
	7	1	**095-1574**	1	SEAL-O-RING	
M	8	1	**8T-4971**	2	BOLT (M6X1X30-MM)	
M	9	1	**162-2207**	1	NUT (M6X1-THD)	
M	10	1	**106-8916**	4	BOLT (M6X1X16-MM)	
	11	1	**217-7115**	1	CAP (TAMPER RESISTANT)	
	12	1	**423-7724**	1	GASKET	
	13	1	**308-1882**	1	SPRING	
M	14	1	**308-1889**	1	NUT (M10X1.25-THD)	
M	15	1	**308-1892**	1	NUT (M6X1-THD)	
	16	1	**308-1897**	2	RING	
	17	1	**335-5578**	1	BRACKET	
	18	1	**308-4266**	1	SHAFT	
	19	1	**390-3731**	1	SHAFT	
	20	1	**309-6729**	1	SEAL-O-RING	
M	21	1	**495-0737**	1	BOLT (M6X0.5X19.5-MM)	
	22	1	**311-0655**	1	SPRING	
	23	1	**313-5832**	1	BOLT AS	
	23A	1	**153-7987**	1	WASHER (9.2X17X1.8-MM THK)	
M	23B	1	**191-9297**	1	NUT (M10X1.25-THD)	
	23C	1	**313-5833**	1	SPRING	
	24	1	**317-7195**	1	SPRING	
	25	1	**319-3251**	1	GOVERNOR GP	
	26	1	**321-4249**	1	NUT	
	27	1	**390-3729**	1	LEVER-CONTROL	
	28	1	**322-7493**	1	LEVER AS-CONTROL	
	29	1	**330-9189**	1	PLUG	
	30	1	**425-7065**	1	CAP-TAMPER PROOF	
	31	1	**334-0732**	1	ARM AS (FRONT HOUSING)	
	32	1	**308-1875**	1	SEAL-O-RING	

M - METRIC PART

341-1358 **CONTROL GP-GOVERNOR (**contd.**)** **i07032127**

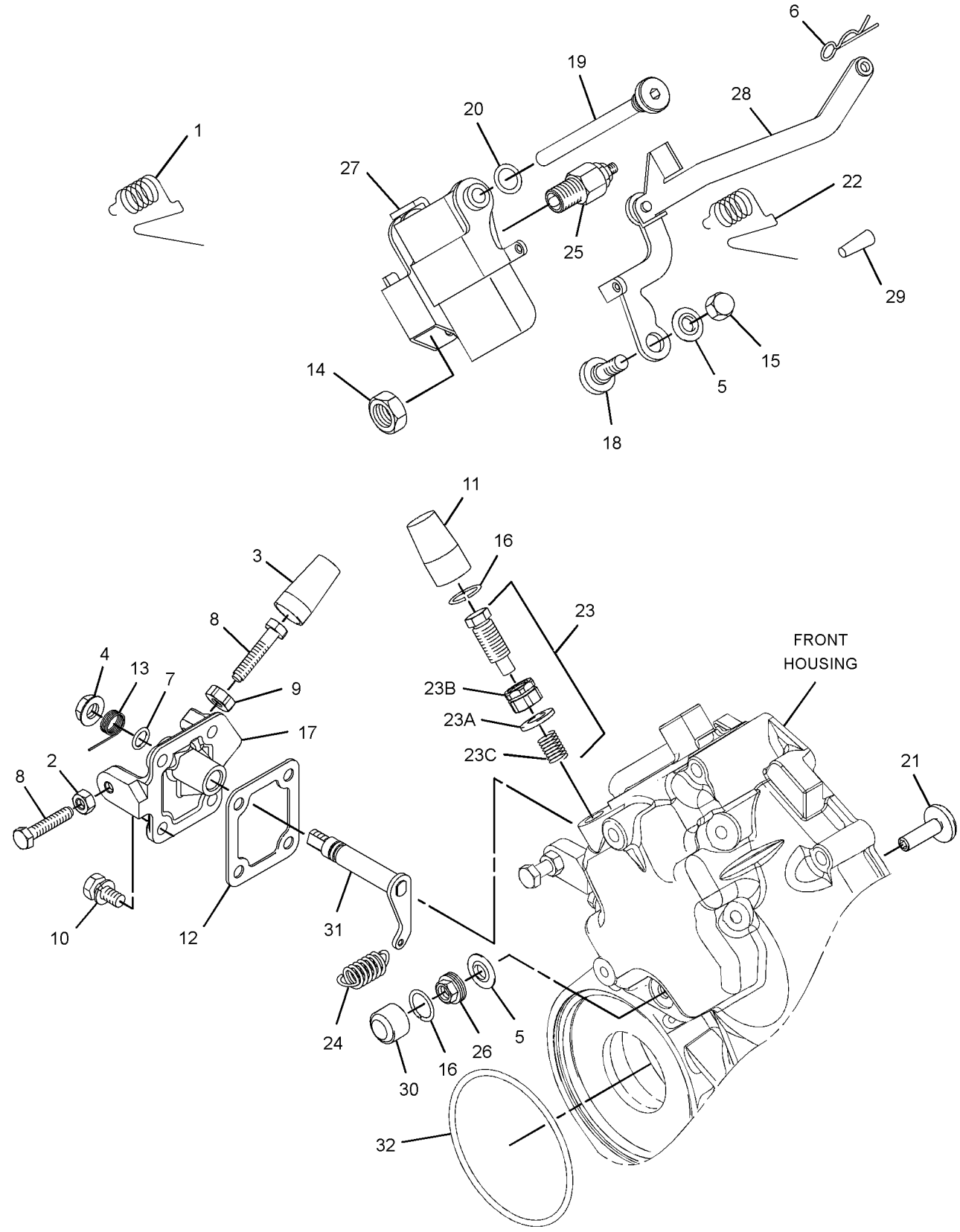

GRAPHIC #1 <END> g06198713

365-4283 CONTROL GP-GOVERNOR

TYPE 1

SMCS-1265, 1276 **i06907844**

NOTE	REF NO	GRAPHIC REF	PART NUMBER	QTY	PART NAME 1 2 3 4 5 6 (PRODUCT LEVEL)	SEE PAGE
M	1	1	**5C-2890**	1	NUT (M6X1-THD)	
	2	1	**330-9189**	1	PLUG	
M	3	1	**153-5592**	1	NUT (M8X1.25-THD)	
	4	1	**153-6415**	2	WASHER (SEAL)	
	5	1	**153-7983**	1	PIN	
	6	1	**095-1574**	1	SEAL-O-RING	
M	7	1	**369-4486**	2	BOLT (M6X1X35-MM)	
M	8	1	**162-2207**	1	NUT (M6X1-THD)	
M	9	1	**106-8916**	4	BOLT (M6X1X16-MM)	
	10	1	**217-7115**	1	CAP (TAMPER RESISTANT)	
	11	1	**423-7724**	1	GASKET	
	12	1	**308-1882**	1	SPRING	
M	13	1	**308-1889**	1	NUT (M10X1.25-THD)	
M	14	1	**308-1892**	1	NUT (M6X1-THD)	
	15	1	**308-1897**	2	RING	
	17	1	**308-4266**	1	SHAFT	
	18	1	**390-3731**	1	SHAFT	
	19	1	**309-6729**	1	SEAL-O-RING	
M	20	1	**495-0737**	1	BOLT (M6X0.5X19.5-MM)	
	21	1	**311-0655**	1	SPRING	
	22	1	**313-5832**	1	BOLT AS	
	22A	1	**153-7987**	1	WASHER (9.2X17X1.8-MM THK)	
M	22B	1	**191-9297**	1	NUT (M10X1.25-THD)	
	22C	1	**313-5833**	1	SPRING	
	23	1	**317-7195**	1	SPRING	
	24	1	**319-3250**	1	CONTROL GP-GOVERNOR	
	25	1	**321-4249**	1	NUT	
	26	1	**390-3729**	1	LEVER-CONTROL	
	27	1	**322-7493**	1	LEVER AS-CONTROL	
	28	1	**139-5511**	1	CAP (TAMPER RESISTANT)	
	29	1	**425-7065**	1	CAP-TAMPER PROOF	
	30	1	**334-0732**	1	ARM AS (FRONT HOUSING)	
	31	1	**335-5578**	1	BRACKET	
	32	1	**336-2965**	1	SPRING	

M - METRIC PART

365-4283 **CONTROL GP-GOVERNOR (**contd.**)** **i06907844**

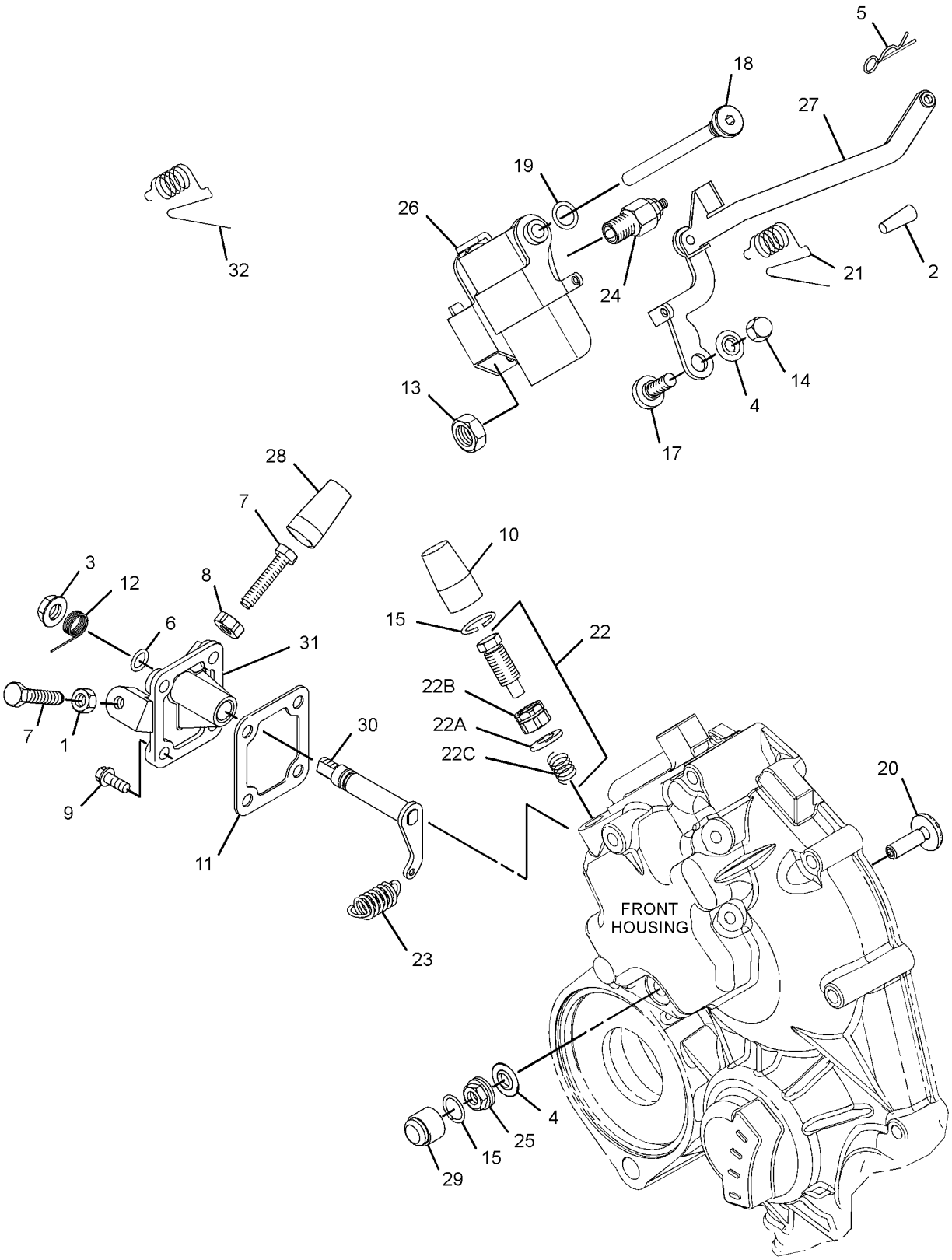

GRAPHIC #1 <END> g06204963

365-4283 CONTROL GP-GOVERNOR

TYPE 2

SMCS-1265, 1276 **i08583458**

NOTE	REF NO	GRAPHIC REF	PART NUMBER	QTY	PART NAME 1 2 3 4 5 6 (PRODUCT LEVEL)	SEE PAGE
M	1	1	**5C-2890**	1	NUT (M6X1-THD)	
	2	1	**330-9189**	1	PLUG	
M	3	1	**153-5592**	1	NUT (M8X1.25-THD)	
	4	1	**153-6415**	2	WASHER (SEAL)	
	5	1	**153-7983**	1	PIN	
	6	1	**095-1574**	1	SEAL-O-RING	
M	7	1	**7X-2533**	2	BOLT (M6X1X35-MM)	
M	8	1	**162-2207**	1	NUT (M6X1-THD)	
M	9	1	**106-8916**	4	BOLT (M6X1X16-MM)	
	10	1	**217-7115**	1	CAP (TAMPER RESISTANT)	
	11	1	**423-7724**	1	GASKET	
	12	1	**308-1882**	1	SPRING	
M	13	1	**308-1889**	1	NUT (M10X1.25-THD)	
M	14	1	**308-1892**	1	NUT (M6X1-THD)	
C	15	1	**308-1897**	1	RING	
	17	1	**308-4266**	1	SHAFT	
	18	1	**390-3731**	1	SHAFT	
	19	1	**309-6729**	1	SEAL-O-RING	
M	20	1	**495-0737**	1	BOLT (M6X0.5X19.5-MM)	
	21	1	**311-0655**	1	SPRING	
	22	1	**313-5832**	1	BOLT AS	
	22A	1	**153-7987**	1	WASHER (9.2X17X1.8-MM THK)	
M	22B	1	**191-9297**	1	NUT (M10X1.25-THD)	
	22C	1	**313-5833**	1	SPRING	
	23	1	**317-7195**	1	SPRING	
Y	24	1	**319-3250**	1	CONTROL GP-GOVERNOR (TIMING)	700
C	25	1	**502-9478**	1	NUT (TAMPER RESISTANT)	
	26	1	**580-0398**	1	LEVER AS-CONTROL	
	27	1	**322-7493**	1	LEVER AS-CONTROL	
	28	1	**139-5511**	1	CAP (TAMPER RESISTANT)	
	30	1	**334-0732**	1	ARM AS (FRONT HOUSING)	
	31	1	**335-5578**	1	BRACKET	
	32	1	**336-2965**	1	SPRING	
C	33	1	**502-5421**	1	PIN	
C	34	1	**503-9707**	1	CAP	
C	35	1	**503-9731**	1	SHROUD	

C - CHANGE FROM PREVIOUS TYPE
M - METRIC PART
Y - SEPARATE ILLUSTRATION

365-4283 **CONTROL GP-GOVERNOR (**contd.**)** **i08583458**

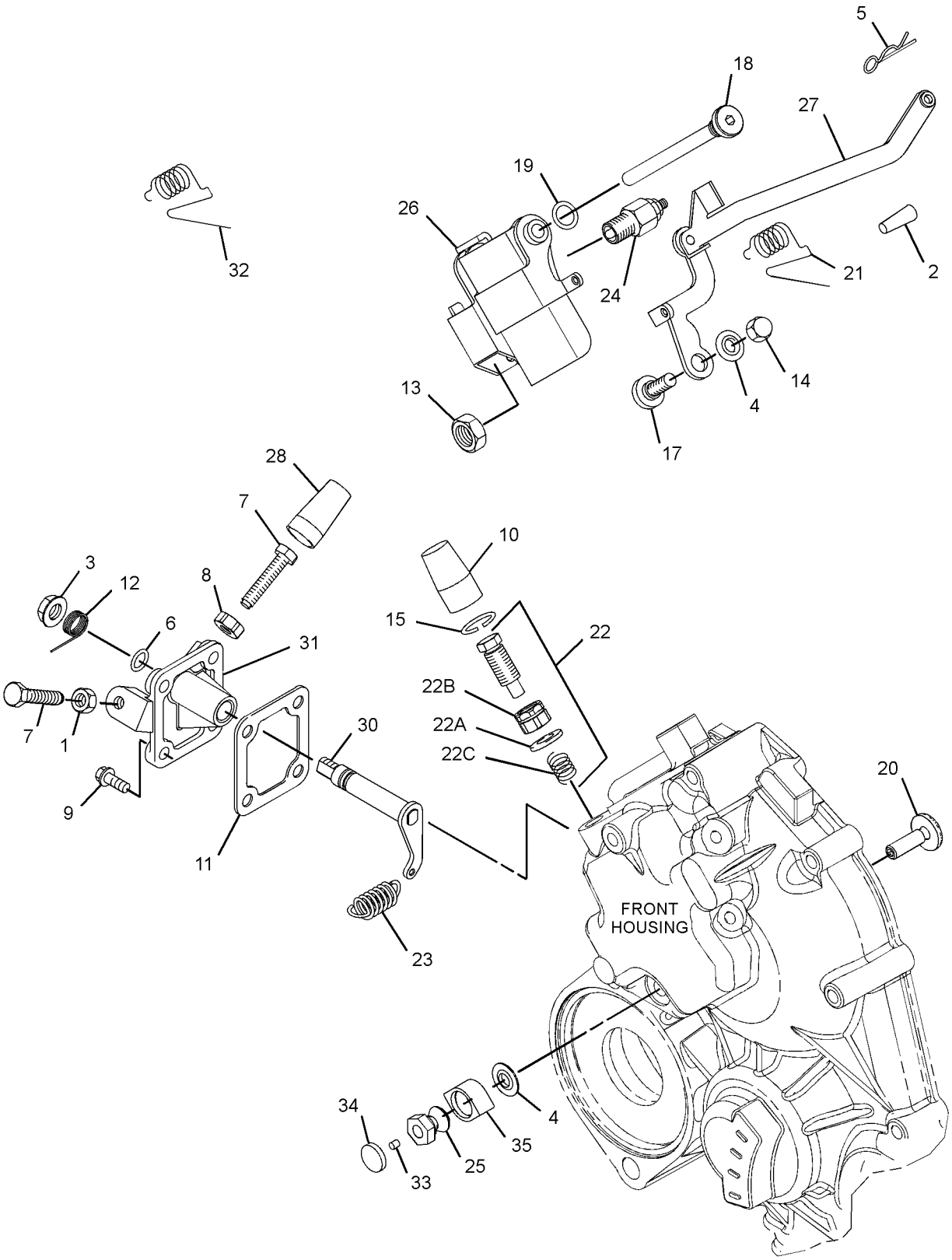

GRAPHIC #1 <END> g06306383

370-7833 CONTROL GP-GOVERNOR

S/N: C6M746-UP

TYPE 1

SMCS-1265, 1276 **i06907896**

NOTE	REF NO	GRAPHIC REF	PART NUMBER	QTY	PART NAME 1 2 3 4 5 6 (PRODUCT LEVEL)	SEE PAGE
M	1	1	**5C-2890**	1	NUT (M6X1-THD)	
	2	1	**139-5511**	1	CAP (TAMPER RESISTANT)	
M	3	1	**153-5592**	1	NUT (M8X1.25-THD)	
	4	1	**153-6415**	2	WASHER (SEAL)	
	5	1	**153-7983**	1	PIN	
	6	1	**095-1574**	1	SEAL-O-RING	
M	7	1	**369-4486**	2	BOLT (M6X1X35-MM)	
M	8	1	**162-2207**	1	NUT (M6X1-THD)	
M	9	1	**106-8916**	4	BOLT (M6X1X16-MM)	
	10	1	**217-7115**	1	CAP (TAMPER RESISTANT)	
	11	1	**423-7724**	1	GASKET	
	12	1	**308-1882**	1	SPRING	
M	13	1	**308-1889**	1	NUT (M10X1.25-THD)	
M	14	1	**308-1892**	1	NUT (M6X1-THD)	
	15	1	**308-1897**	2	RING	
	17	1	**308-4266**	1	SHAFT	
	18	1	**390-3731**	1	SHAFT	
	19	1	**309-6729**	1	SEAL-O-RING	
M	20	1	**495-0737**	1	BOLT (M6X0.5X19.5-MM)	
	21	1	**311-0655**	1	SPRING	
	22	1	**313-5832**	1	BOLT AS	
	22A	1	**153-7987**	1	WASHER (9.2X17X1.8-MM THK)	
M	22B	1	**191-9297**	1	NUT (M10X1.25-THD)	
	22C	1	**313-5833**	1	SPRING	
	23	1	**317-7195**	1	SPRING	
	24	1	**319-3250**	1	CONTROL GP-GOVERNOR	
	25	1	**321-4249**	1	NUT	
	26	1	**390-3729**	1	LEVER-CONTROL	
	27	1	**322-7493**	1	LEVER AS-CONTROL	
	28	1	**330-9189**	1	PLUG	
	29	1	**425-7065**	1	CAP-TAMPER PROOF	
	30	1	**334-0732**	1	ARM AS (FRONT HOUSING)	
	31	1	**335-5578**	1	BRACKET	
	32	1	**336-2965**	1	SPRING	

M - METRIC PART

370-7833 **CONTROL GP-GOVERNOR (**contd.**)** **i06907896**

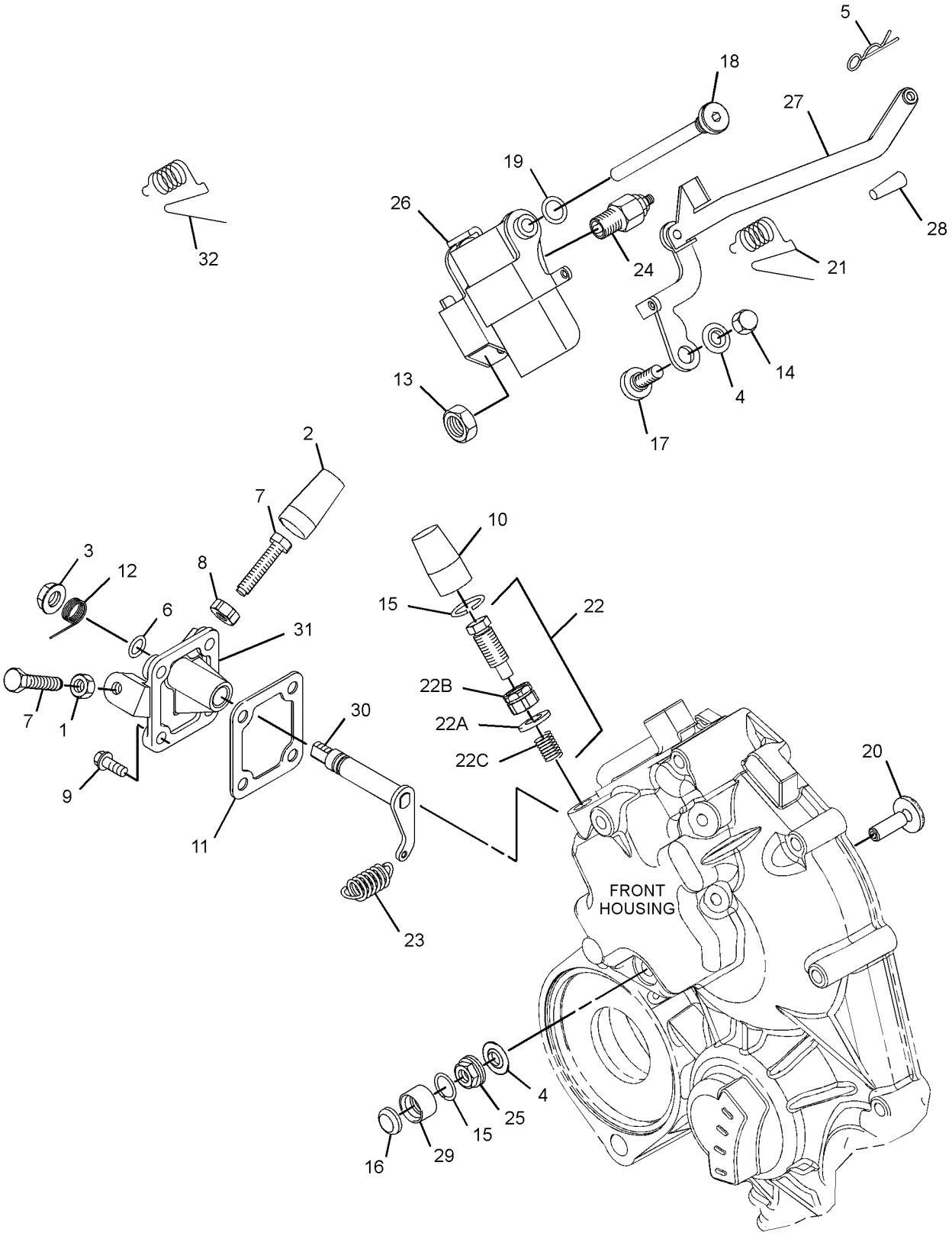

GRAPHIC #1 <END> g06204969

370-7833 CONTROL GP-GOVERNOR

S/N: C6M746-UP

TYPE 2

SMCS-1265, 1276 **i08301339**

NOTE	REF NO	GRAPHIC REF	PART NUMBER	QTY	PART NAME 1 2 3 4 5 6 (PRODUCT LEVEL)	SEE PAGE
M	1	1	**5C-2890**	1	NUT (M6X1-THD)	
	2	1	**139-5511**	1	CAP (TAMPER RESISTANT)	
M	3	1	**153-5592**	1	NUT (M8X1.25-THD)	
	4	1	**153-6415**	2	WASHER (SEAL)	
	5	1	**153-7983**	1	PIN	
	6	1	**095-1574**	1	SEAL-O-RING	
M	7	1	**7X-2533**	2	BOLT (M6X1X35-MM)	
M	8	1	**162-2207**	1	NUT (M6X1-THD)	
M	9	1	**106-8916**	4	BOLT (M6X1X16-MM)	
	10	1	**217-7115**	1	CAP (TAMPER RESISTANT)	
	11	1	**423-7724**	1	GASKET	
	12	1	**308-1882**	1	SPRING	
M	13	1	**308-1889**	1	NUT (M10X1.25-THD)	
M	14	1	**308-1892**	1	NUT (M6X1-THD)	
	15	1	**308-4266**	1	SHAFT	
	16	1	**390-3731**	1	SHAFT	
	17	1	**309-6729**	1	SEAL-O-RING	
M	18	1	**495-0737**	1	BOLT (M6X0.5X19.5-MM)	
	19	1	**311-0655**	1	SPRING	
	20	1	**313-5832**	1	BOLT AS	
		1	**153-7987**	1	WASHER (9.2X17X1.8-MM THK)	
M		1	**191-9297**	1	NUT (M10X1.25-THD)	
		1	**313-5833**	1	SPRING	
	21	1	**317-7195**	1	SPRING	
Y	22	1	**319-3250**	1	CONTROL GP-GOVERNOR	700
C	23	1	**502-9478**	1	NUT (TAMPER RESISTANT)	
	24	1	**580-0398**	1	LEVER AS-CONTROL	
	25	1	**322-7493**	1	LEVER AS-CONTROL	
	26	1	**330-9189**	1	PLUG	
	27	1	**334-0732**	1	ARM AS (FRONT HOUSING)	
	28	1	**335-5578**	1	BRACKET	
	29	1	**336-2965**	1	SPRING	
C	30	1	**502-5421**	1	PIN	
C	31	1	**503-9707**	1	CAP	
C	32	1	**503-9731**	1	SHROUD	
C	33	1	**308-1897**	1	RING	

C - CHANGE FROM PREVIOUS TYPE
M - METRIC PART
Y - SEPARATE ILLUSTRATION

370-7833 **CONTROL GP-GOVERNOR (**contd.**)** **i08301339**

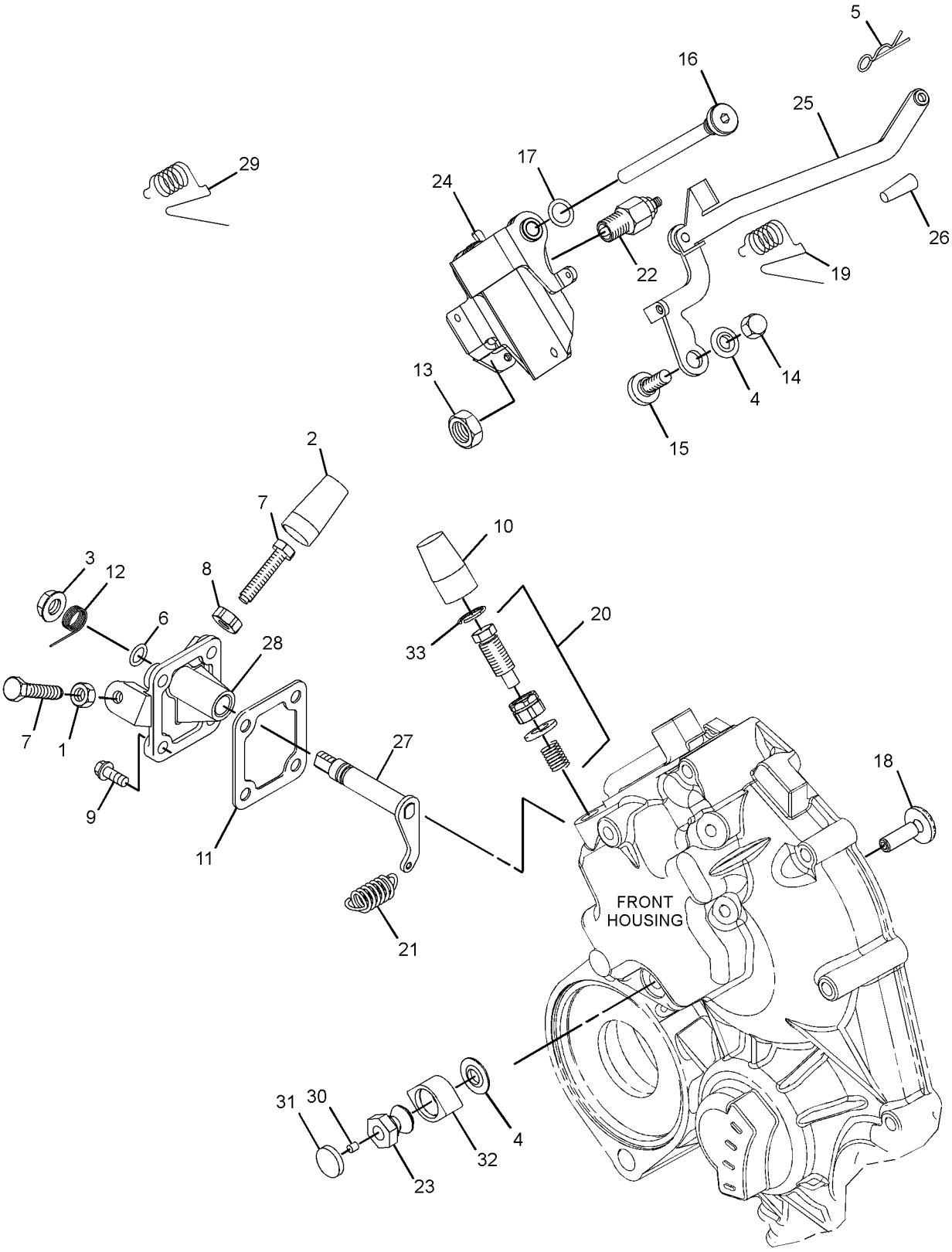

GRAPHIC #1 <END> g06756196

420-3211 CONTROL GP-GOVERNOR

S/N: C6M2523-UP

TYPE 1

SMCS-1265, 1276 **i07021617**

NOTE	REF NO	GRAPHIC REF	PART NUMBER	QTY	PART NAME 1 2 3 4 5 6 (PRODUCT LEVEL)	SEE PAGE
M	1	1	**5C-2890**	1	NUT (M6X1-THD)	
	2	1	**139-5511**	1	CAP (TAMPER RESISTANT)	
M	3	1	**153-5592**	1	NUT (M8X1.25-THD)	
	4	1	**153-6415**	2	WASHER (SEAL)	
	5	1	**153-7983**	1	PIN	
	6	1	**095-1574**	1	SEAL-O-RING	
M	7	1	**369-4486**	2	BOLT (M6X1X35-MM)	
M	8	1	**162-2207**	1	NUT (M6X1-THD)	
M	9	1	**106-8916**	4	BOLT (M6X1X16-MM)	
	10	1	**217-7115**	1	CAP (TAMPER RESISTANT)	
	11	1	**423-7724**	1	GASKET	
	12	1	**308-1882**	1	SPRING	
M	13	1	**308-1889**	1	NUT (M10X1.25-THD)	
M	14	1	**308-1892**	1	NUT (M6X1-THD)	
	15	1	**308-1897**	2	RING	
	16	1	**336-2965**	1	SPRING	
	17	1	**308-4266**	1	SHAFT	
	18	1	**390-3731**	1	SHAFT	
	19	1	**309-6729**	1	SEAL-O-RING	
M	20	1	**495-0737**	1	BOLT (M6X0.5X19.5-MM)	
	21	1	**311-0655**	1	SPRING	
	22	1	**313-5832**	1	BOLT AS	
	22A	1	**153-7987**	1	WASHER (9.2X17X1.8-MM THK)	
M	22B	1	**191-9297**	1	NUT (M10X1.25-THD)	
	22C	1	**313-5833**	1	SPRING	
	23	1	**317-7195**	1	SPRING	
	24	1	**319-3252**	1	SENSOR AS-SPEED	
	25	1	**321-4249**	1	NUT	
	26	1	**390-3729**	1	LEVER-CONTROL	
	27	1	**322-7493**	1	LEVER AS-CONTROL	
	28	1	**330-9189**	1	PLUG	
	29	1	**425-7065**	1	CAP-TAMPER PROOF	
	30	1	**334-0732**	1	ARM AS (FRONT HOUSING)	
	31	1	**335-5578**	1	BRACKET	
	32	1	**308-1875**	1	SEAL-O-RING	

M - METRIC PART

420-3211 **CONTROL GP-GOVERNOR (**contd.**)** **i07021617**

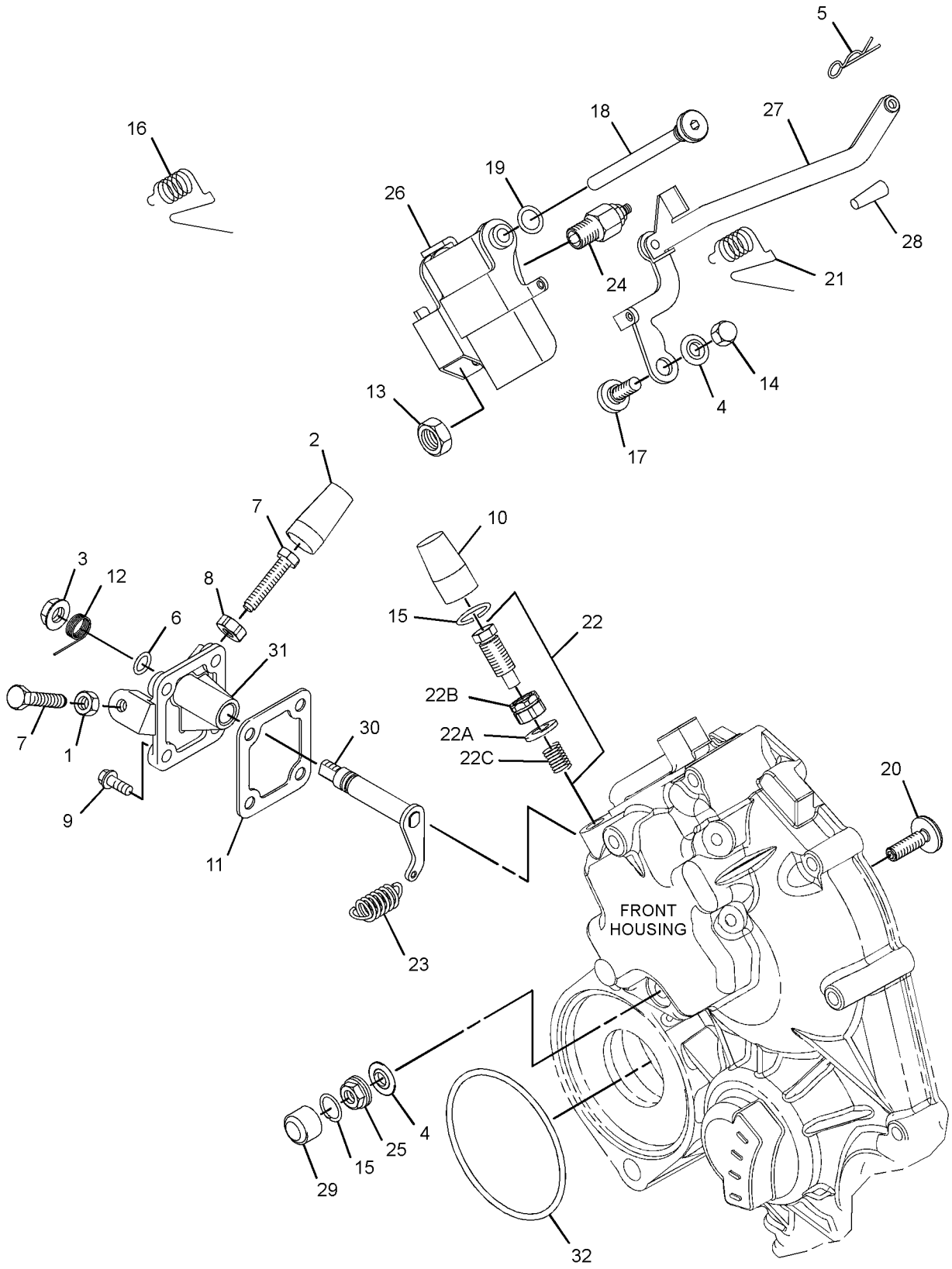

GRAPHIC #1 <END> g06197380

420-3211 CONTROL GP-GOVERNOR

S/N: C6M2523-UP

TYPE 2

SMCS-1265, 1276 **i08315035**

NOTE	REF NO	GRAPHIC REF	PART NUMBER	QTY	PART NAME 1 2 3 4 5 6 (PRODUCT LEVEL)	SEE PAGE
M	1	1	**133-5512**	1	NUT (M6X1-THD)	
	2	1	**139-5511**	1	CAP (TAMPER RESISTANT)	
M	3	1	**153-5592**	1	NUT (M8X1.25-THD)	
	4	1	**153-6415**	2	WASHER (SEAL)	
	5	1	**153-7983**	1	PIN	
	6	1	**154-1403**	1	SEAL-O-RING	
M	7	1	**7X-2533**	2	BOLT (M6X1X35-MM)	
M	8	1	**162-2207**	1	NUT (M6X1-THD)	
M	9	1	**106-8916**	4	BOLT (M6X1X16-MM)	
	10	1	**217-7115**	1	CAP (TAMPER RESISTANT)	
	11	1	**423-7724**	1	GASKET	
	12	1	**308-1882**	1	SPRING	
M	13	1	**308-1889**	1	NUT (M10X1.25-THD)	
M	14	1	**308-1892**	1	NUT (M6X1-THD)	
C	15	1	**308-1897**	1	RING	
	16	1	**336-2965**	1	SPRING	
	17	1	**308-4266**	1	SHAFT	
	18	1	**390-3731**	1	SHAFT	
	19	1	**309-6729**	1	SEAL-O-RING	
M	20	1	**495-0737**	1	BOLT (M6X0.5X19.5-MM)	
	21	1	**311-0655**	1	SPRING	
	22	1	**313-5832**	1	BOLT AS	
	22A	1	**153-7987**	1	WASHER (9.2X17X1.8-MM THK)	
M	22B	1	**191-9297**	1	NUT (M10X1.25-THD)	
	22C	1	**313-5833**	1	SPRING	
	23	1	**317-7195**	1	SPRING	
	24	1	**319-3252**	1	SENSOR AS-SPEED (ENGINE TIMING)	
M	24A	1	**155-8076**	1	NUT (M4X0.4-THD)	
C	25	1	**502-9478**	1	NUT (TAMPER RESISTANT)	
	26	1	**580-0398**	1	LEVER AS-CONTROL	
	27	1	**322-7493**	1	LEVER AS-CONTROL	
	27A	1	**154-1400**	1	PIN	
	28	1	**330-9189**	1	PLUG	
C	29	1	**503-9707**	1	CAP	
	30	1	**334-0732**	1	ARM AS (FRONT HOUSING)	
	31	1	**335-5578**	1	BRACKET	
	32	1	**308-1875**	1	SEAL-O-RING	
C	33	1	**503-9731**	1	SHROUD	
C	34	1	**502-5421**	1	PIN	

C - CHANGE FROM PREVIOUS TYPE
M - METRIC PART

420-3211 **CONTROL GP-GOVERNOR (**contd.**)** **i08315035**

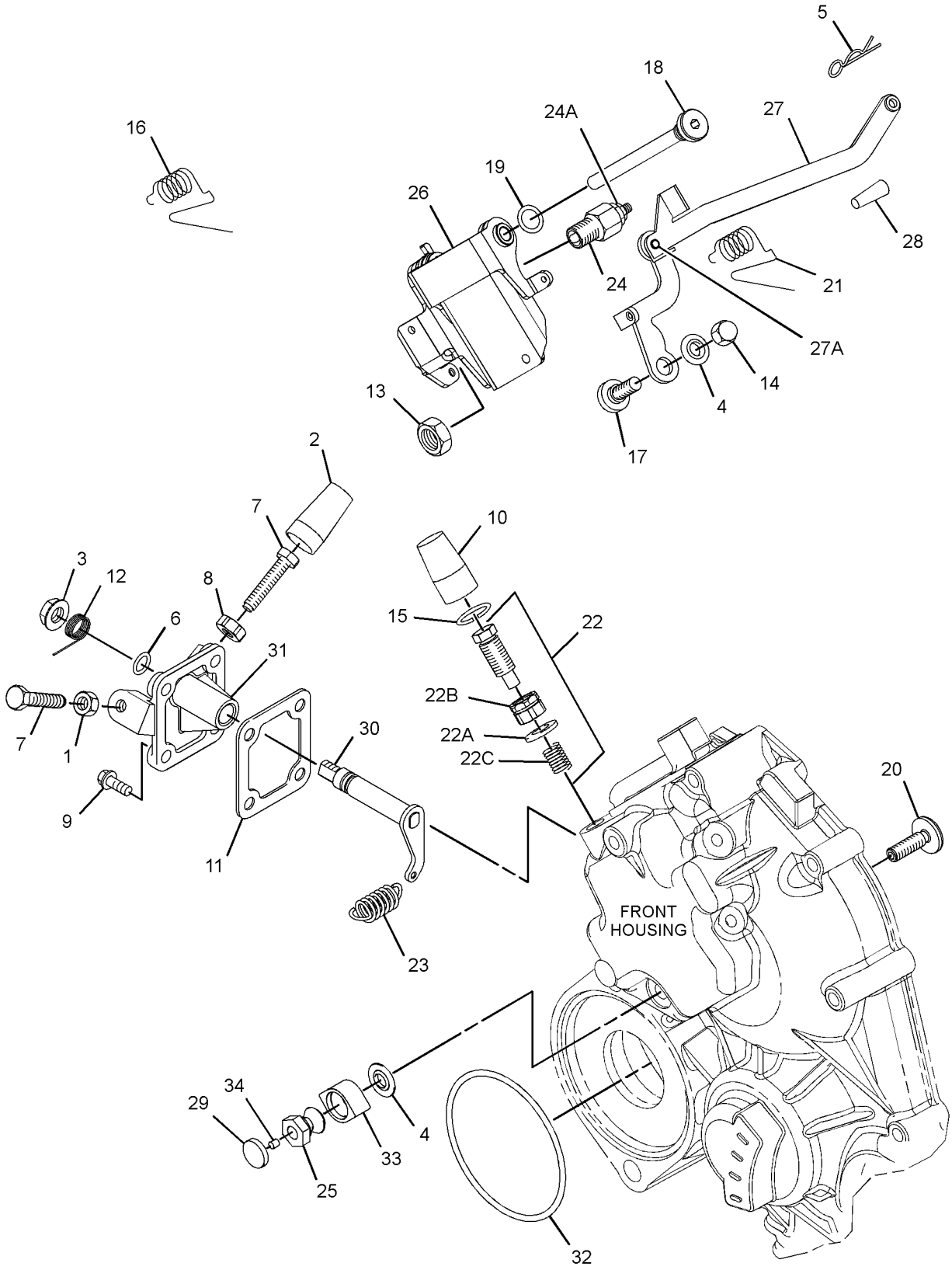

GRAPHIC #1 <END> g06755205

420-6418 CONTROL GP-GOVERNOR

TYPE 1

SMCS-1265, 1276 **i06841108**

NOTE	REF NO	GRAPHIC REF	PART NUMBER	QTY	PART NAME 1 2 3 4 5 6 (PRODUCT LEVEL)	SEE PAGE
	1	1	**335-5578**	1	BRACKET	
M	2	1	**5C-2890**	1	NUT (M6X1-THD)	
	3	1	**139-5511**	1	CAP (TAMPER RESISTANT)	
M	4	1	**153-5592**	1	NUT (M8X1.25-THD)	
	5	1	**153-6415**	2	WASHER (SEAL)	
	6	1	**153-7983**	1	PIN	
	7	1	**095-1574**	1	SEAL-O-RING	
M	8	1	**369-4486**	2	BOLT (M6X1X35-MM)	
M	9	1	**162-2207**	1	NUT (M6X1-THD)	
	10	1	**217-7115**	1	CAP (TAMPER RESISTANT)	
M	11	1	**106-8916**	4	BOLT (M6X1X16-MM)	
	12	1	**423-7724**	1	GASKET	
	13	1	**308-1882**	1	SPRING	
M	14	1	**308-1889**	1	NUT (M10X1.25-THD)	
M	15	1	**308-1892**	1	NUT (M6X1-THD)	
	16	1	**308-1897**	2	RING	
	17	1	**336-2965**	1	SPRING	
	18	1	**308-4266**	1	SHAFT	
	19	1	**390-3731**	1	SHAFT	
	20	1	**309-6729**	1	SEAL-O-RING	
	21	1	**364-2755**	1	BOLT-SPECIAL	
	22	1	**311-0655**	1	SPRING	
	23	1	**313-5832**	1	BOLT AS	
	23A	1	**153-7987**	1	WASHER (9.2X17X1.8-MM THK)	
M	23B	1	**191-9297**	1	NUT (M10X1.25-THD)	
	23C	1	**313-5833**	1	SPRING	
	24	1	**317-7195**	1	SPRING	
	25	1	**321-8209**	1	SENSOR AS-SPEED (ENGINE TIMING)	
	26	1	**321-4249**	1	NUT	
	27	1	**390-3729**	1	LEVER-CONTROL	
	28	1	**322-7493**	1	LEVER AS-CONTROL	
	29	1	**330-9189**	1	PLUG	
	30	1	**425-7065**	1	CAP-TAMPER PROOF	
	31	1	**334-0732**	1	ARM AS (FRONT HOUSING)	
	32	1	**308-1875**	1	SEAL-O-RING	

M - METRIC PART

420-6418 **CONTROL GP-GOVERNOR (**contd.**)** **i06841108**

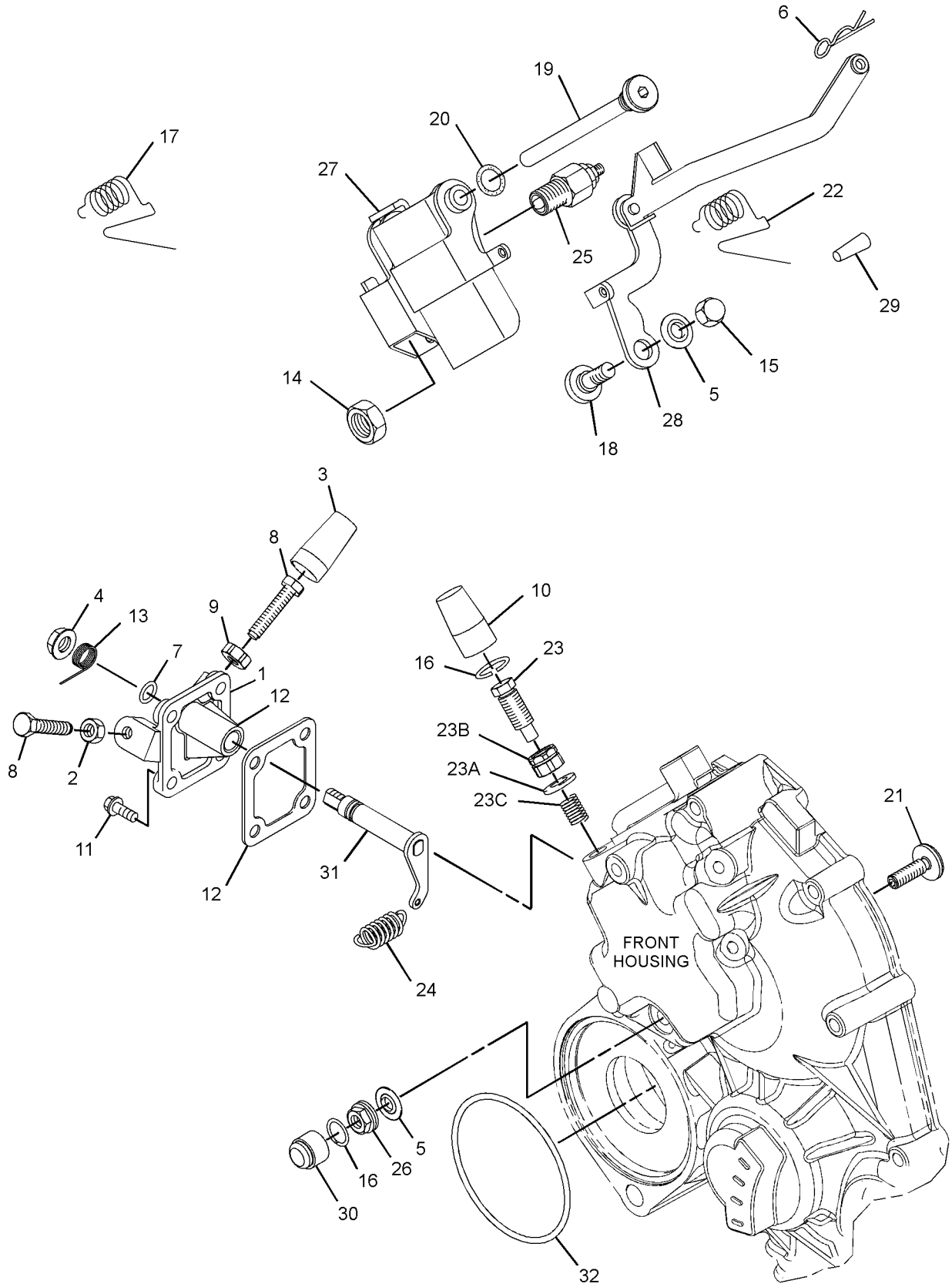

GRAPHIC #1 <END> g06197483

420-6418 CONTROL GP-GOVERNOR

TYPE 2

SMCS-1265, 1276 **i08303090**

NOTE	REF NO	GRAPHIC REF	PART NUMBER	QTY	PART NAME 1 2 3 4 5 6 (PRODUCT LEVEL)	SEE PAGE
	1	1	**335-5578**	1	BRACKET	
M	2	1	**5C-2890**	1	NUT (M6X1-THD)	
	3	1	**139-5511**	1	CAP (TAMPER RESISTANT)	
M	4	1	**153-5592**	1	NUT (M8X1.25-THD)	
	5	1	**153-6415**	2	WASHER (SEAL)	
	6	1	**153-7983**	1	PIN	
	7	1	**095-1574**	1	SEAL-O-RING	
M	8	1	**7X-2533**	2	BOLT (M6X1X35-MM)	
M	9	1	**162-2207**	1	NUT (M6X1-THD)	
	10	1	**217-7115**	1	CAP (TAMPER RESISTANT)	
M	11	1	**106-8916**	4	BOLT (M6X1X16-MM)	
	12	1	**423-7724**	1	GASKET	
	13	1	**308-1882**	1	SPRING	
M	14	1	**308-1889**	1	NUT (M10X1.25-THD)	
M	15	1	**308-1892**	1	NUT (M6X1-THD)	
C	16	1	**308-1897**	1	RING	
	17	1	**336-2965**	1	SPRING	
	18	1	**308-4266**	1	SHAFT	
	19	1	**390-3731**	1	SHAFT	
	20	1	**309-6729**	1	SEAL-O-RING	
	21	1	**364-2755**	1	BOLT-SPECIAL	
	22	1	**311-0655**	1	SPRING	
	23	1	**313-5832**	1	BOLT AS	
	23A	1	**153-7987**	1	WASHER (9.2X17X1.8-MM THK)	
M	23B	1	**191-9297**	1	NUT (M10X1.25-THD)	
	23C	1	**313-5833**	1	SPRING	
	24	1	**317-7195**	1	SPRING	
	25	1	**321-8209**	1	SENSOR AS-SPEED (ENGINE TIMING)	
M		1	**155-8076**	1	NUT (M4X0.4-THD)	
C	26	1	**502-9478**	1	NUT (TAMPER RESISTANT)	
	27	1	**580-0398**	1	LEVER AS-CONTROL	
	28	1	**322-7493**	1	LEVER AS-CONTROL	
	29	1	**330-9189**	1	PLUG	
C	30	1	**503-9707**	1	CAP	
	31	1	**334-0732**	1	ARM AS (FRONT HOUSING)	
	32	1	**308-1875**	1	SEAL-O-RING	
C	33	1	**503-9731**	1	SHROUD	
C	34	1	**502-5421**	1	PIN	

C - CHANGE FROM PREVIOUS TYPE
M - METRIC PART

420-6418 **CONTROL GP-GOVERNOR (**contd.**)** **i08303090**

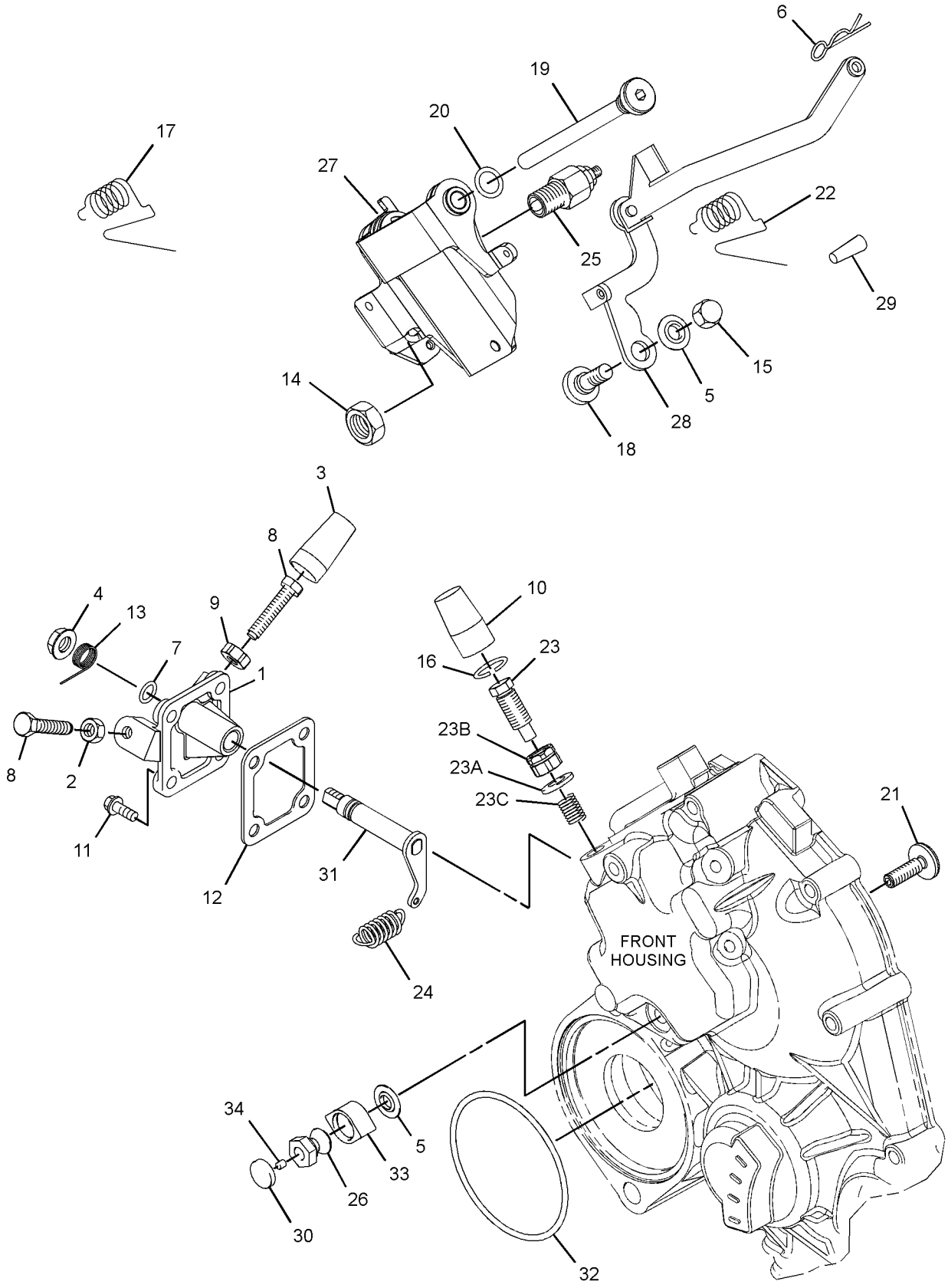

GRAPHIC #1 <END> g06753222

441-6513 CONTROL GP-GOVERNOR

TYPE 1

SMCS-1265, 1276 **i06930287**

NOTE	REF NO	GRAPHIC REF	PART NUMBER	QTY	PART NAME 1 2 3 4 5 6 (PRODUCT LEVEL)	SEE PAGE
M	1	1	**106-8916**	4	BOLT (M6X1X16-MM)	
M	2	1	**5C-2890**	1	NUT (M6X1-THD)	
	3	1	**139-5511**	1	CAP (TAMPER RESISTANT)	
M	4	1	**153-5592**	1	NUT (M8X1.25-THD)	
	5	1	**153-6415**	2	WASHER (SEAL)	
	6	1	**153-7983**	1	PIN	
	7	1	**095-1574**	1	SEAL-O-RING	
M	8	1	**162-2207**	1	NUT (M6X1-THD)	
	9	1	**217-7115**	1	CAP (TAMPER RESISTANT)	
	10	1	**308-1882**	1	SPRING	
M	11	1	**308-1889**	1	NUT (M10X1.25-THD)	
M	12	1	**308-1892**	1	NUT (M6X1-THD)	
	13	1	**308-1897**	2	RING	
	14	1	**308-4266**	1	SHAFT	
	15	1	**309-6729**	1	SEAL-O-RING	
M	16	1	**495-0737**	1	BOLT (M6X0.5X19.5-MM)	
	17	1	**311-0655**	1	SPRING	
	18	1	**313-5832**	1	BOLT AS	
	18A	1	**153-7987**	1	WASHER (9.2X17X1.8-MM THK)	
M	18B	1	**191-9297**	1	NUT (M10X1.25-THD)	
	19	1	**317-7195**	1	SPRING	
	20	1	**319-3252**	1	SENSOR AS-SPEED	
	21	1	**321-4249**	1	NUT	
	22	1	**322-7493**	1	LEVER AS-CONTROL	
	23	1	**330-9189**	1	PLUG	
	24	1	**334-0732**	1	ARM AS	
	25	1	**335-5578**	1	BRACKET	
M	26	1	**369-4486**	2	BOLT (M6X1X35-MM)	
	27	1	**390-3729**	1	LEVER-CONTROL	
	28	1	**390-3731**	1	SHAFT	
	29	1	**423-7724**	1	GASKET	
	30	1	**425-7065**	1	CAP-TAMPER PROOF	
	31	1	**336-2965**	1	SPRING	
	32	1	**308-1875**	1	SEAL-O-RING	

M - METRIC PART

441-6513 **CONTROL GP-GOVERNOR (**contd.**)** **i06930287**

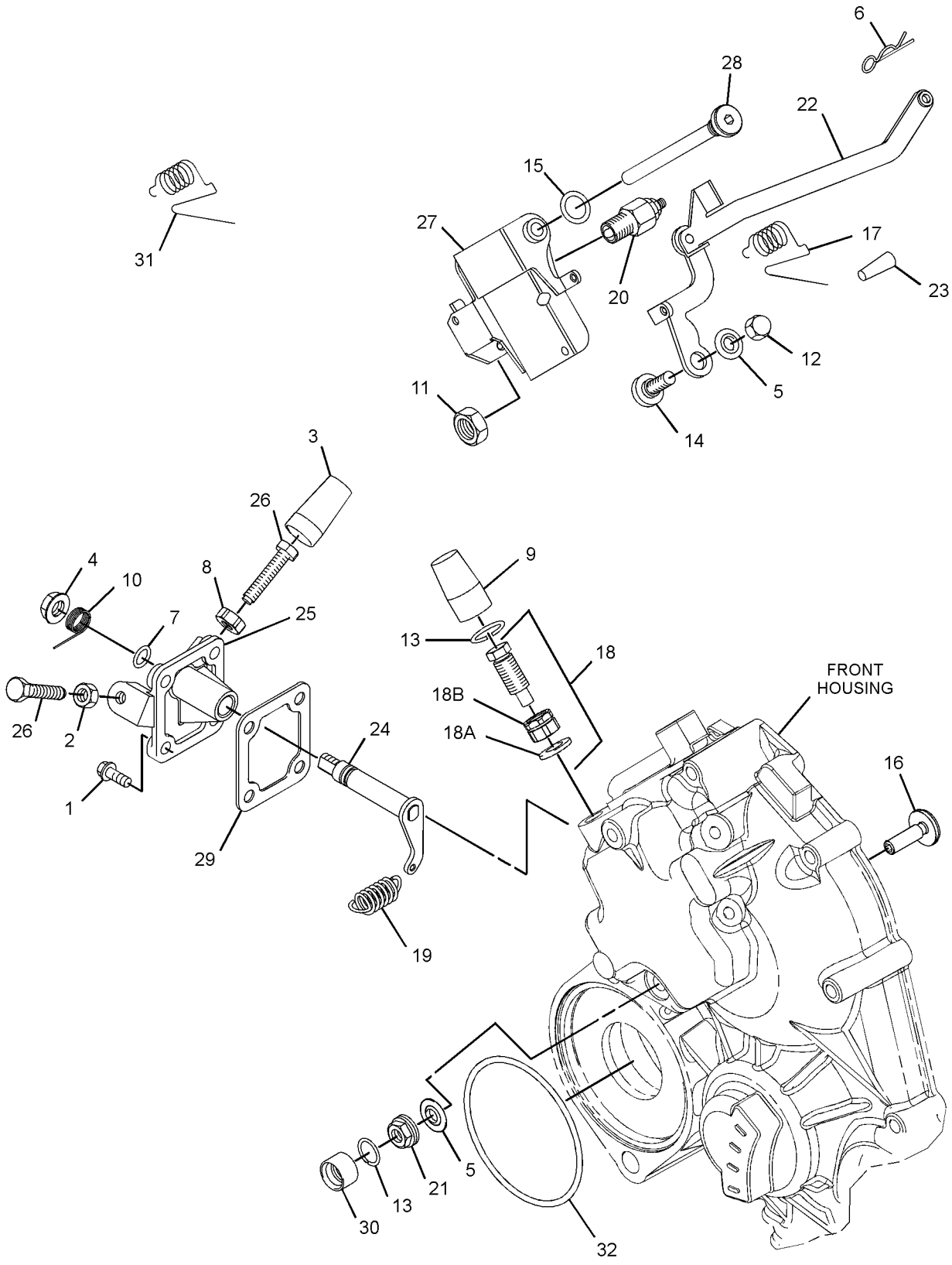

GRAPHIC #1 <END> g06203885

441-6513 CONTROL GP-GOVERNOR

TYPE 2

SMCS-1265, 1276 **i08296264**

NOTE	REF NO	GRAPHIC REF	PART NUMBER	QTY	PART NAME 1 2 3 4 5 6 (PRODUCT LEVEL)	SEE PAGE
M	1	1	**106-8916**	4	BOLT (M6X1X16-MM)	
M	2	1	**5C-2890**	1	NUT (M6X1-THD)	
	3	1	**139-5511**	1	CAP (TAMPER RESISTANT)	
M	4	1	**153-5592**	1	NUT (M8X1.25-THD)	
	5	1	**153-6415**	2	WASHER (SEAL)	
	6	1	**153-7983**	1	PIN	
	7	1	**095-1574**	1	SEAL-O-RING	
M	8	1	**162-2207**	1	NUT (M6X1-THD)	
	9	1	**217-7115**	1	CAP (TAMPER RESISTANT)	
	10	1	**308-1882**	1	SPRING	
M	11	1	**308-1889**	1	NUT (M10X1.25-THD)	
M	12	1	**308-1892**	1	NUT (M6X1-THD)	
C	13	1	**308-1897**	1	RING	
	14	1	**308-4266**	1	SHAFT	
	15	1	**309-6729**	1	SEAL-O-RING	
	16	1	**364-2755**	1	BOLT-SPECIAL	
	17	1	**311-0655**	1	SPRING	
	18	1	**313-5832**	1	BOLT AS	
	18A	1	**153-7987**	1	WASHER (9.2X17X1.8-MM THK)	
M	18B	1	**191-9297**	1	NUT (M10X1.25-THD)	
	18C	1	**313-5833**	1	SPRING	
	19	1	**317-7195**	1	SPRING	
	20	1	**319-3252**	1	SENSOR AS-SPEED (ENGINE TIMING)	
M	20A	1	**155-8076**	1	NUT (M4X0.4-THD)	
C	21	1	**502-9478**	1	NUT (TAMPER RESISTANT)	
	22	1	**322-7493**	1	LEVER AS-CONTROL	
	22A	1	**154-1400**	1	PIN	
	23	1	**330-9189**	1	PLUG	
	24	1	**334-0732**	1	ARM AS (FRONT HOUSING)	
	25	1	**335-5578**	1	BRACKET	
M	26	1	**7X-2533**	2	BOLT (M6X1X35-MM)	
	27	1	**580-0398**	1	LEVER AS-CONTROL	
	28	1	**390-3731**	1	SHAFT	
	29	1	**423-7724**	1	GASKET	
C	30	1	**503-9707**	1	CAP	
	31	1	**336-2965**	1	SPRING	
	32	1	**308-1875**	1	SEAL-O-RING	
C	33	1	**503-9731**	1	SHROUD	
C	34	1	**502-5421**	1	PIN	

C - CHANGE FROM PREVIOUS TYPE
M - METRIC PART

441-6513 **CONTROL GP-GOVERNOR (**contd.**)** **i08296264**

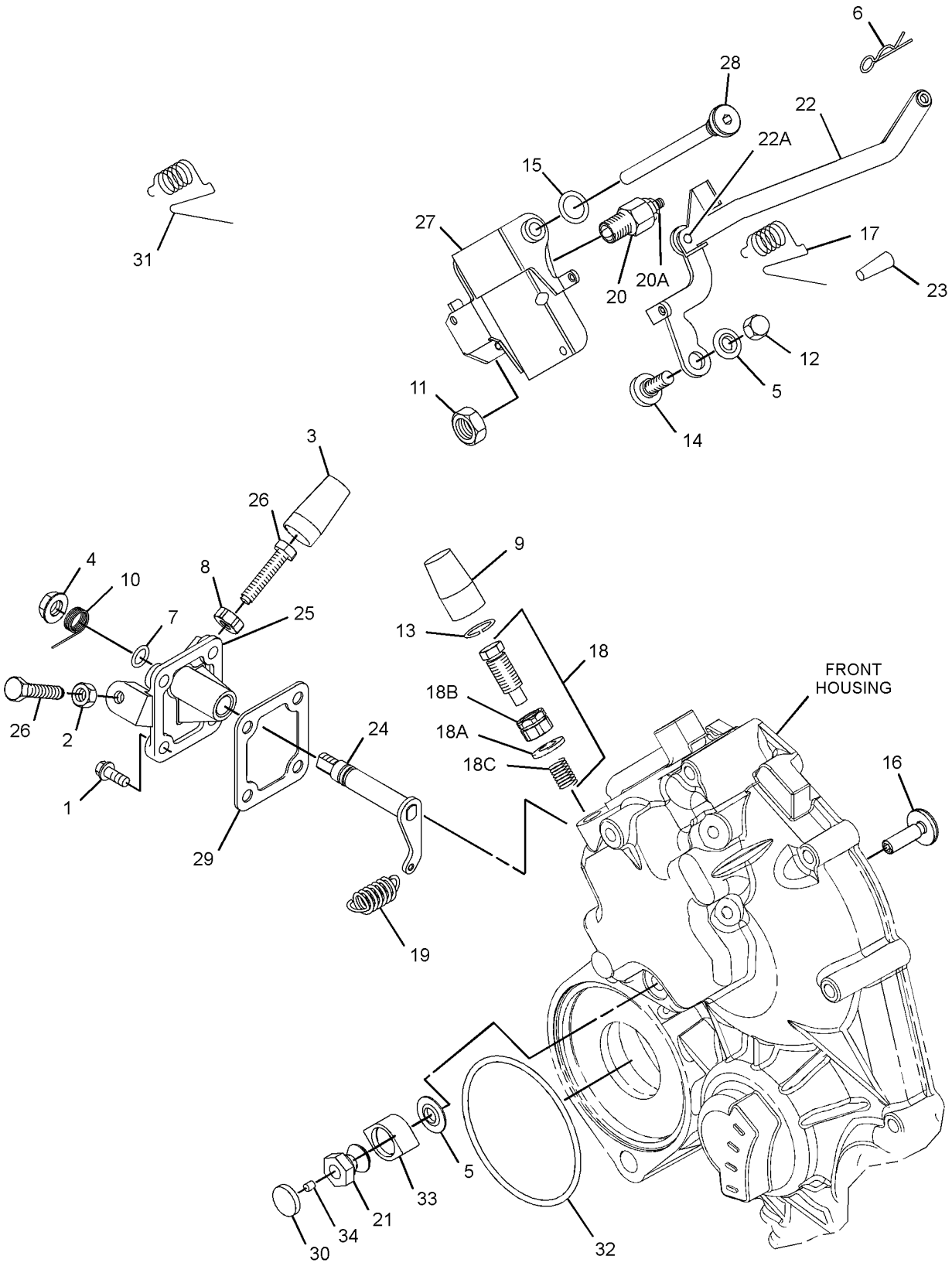

GRAPHIC #1 <END> g06792867

454-4365 CONTROL GP-GOVERNOR

SMCS-1265, 1276 **i08521872**

NOTE	REF NO	GRAPHIC REF	PART NUMBER	QTY	PART NAME 1 2 3 4 5 6 (PRODUCT LEVEL)	SEE PAGE
	1	1	**153-6375**	1	BOLT AS	
	2	1	**153-6415**	2	WASHER (SEAL)	
	3	1	**153-6838**	2	BOLT AS	
	4	1	**285-3555**	2	CLIP	
	5	1	**288-6575**	2	CLAMP-SPRING	
	6	1	**315-5237**	1	LEVER-CONTROL	
	7	1	**321-8217**	1	BOLT	
	8	1	**380-2674**	1	BRACKET	
	9	1	**380-2675**	1	SENSOR-PRESSURE (BOOSTER PRESSURE)	
	10	1	**380-2676**	1	CONNECTOR	
	11	1	**550-9113**	1	ACTUATOR AS	
	12	1	**380-2680**	1	WASHER	
	13	1	**538-6264**	1	HARNESS AS-ENGINE	
	14	1	**380-2682**	1	HARNESS	
	15	1	**390-3733**	1	TUBE	
	16	1	**474-9668**	1	CONTROLLER	
M	17	1	**199-1187**	1	NUT (M5X0.8-THD)	
M	18	1	**153-5960**	1	NUT (M6X1-THD)	

M - METRIC PART

454-4365 **CONTROL GP-GOVERNOR (**contd.**)** **i08521872**

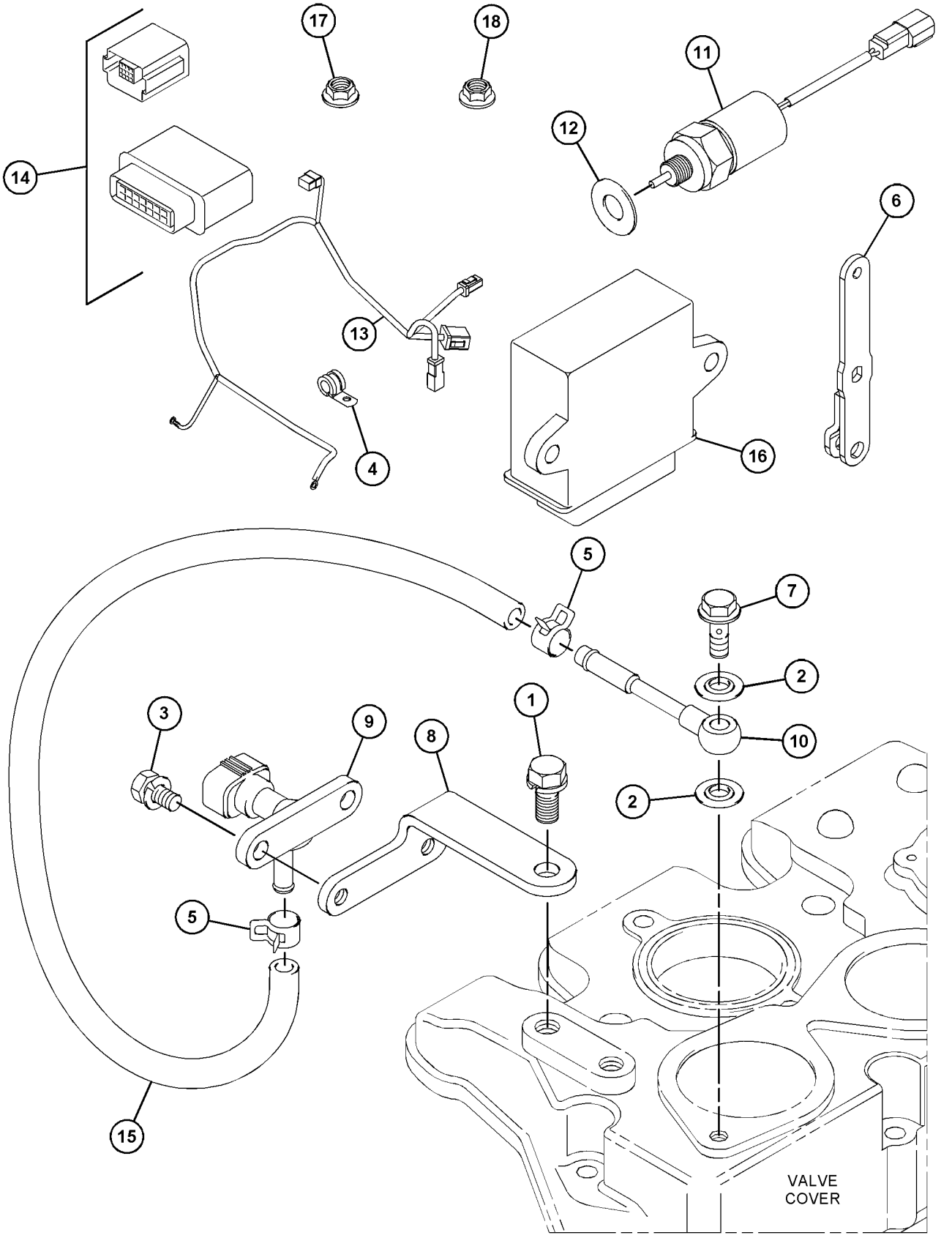

GRAPHIC #1 <END> g06369916

454-6143 CONTROL GP-GOVERNOR

PART OF 435-1642, 489-4263, 506-0520, 513-2239 ENGINE AR-PRIMARY
TYPE 1

SMCS-1265, 1276 **i07032132**

NOTE	REF NO	GRAPHIC REF	PART NUMBER	QTY	PART NAME 1 2 3 4 5 6 (PRODUCT LEVEL)	SEE PAGE
M	1	1	**106-8916**	4	BOLT (M6X1X16-MM)	
M	2	1	**5C-2890**	1	NUT (M6X1-THD)	
	3	1	**139-5511**	1	CAP (TAMPER RESISTANT)	
M	4	1	**153-5592**	1	NUT (M8X1.25-THD)	
	5	1	**153-6415**	2	WASHER (SEAL)	
	6	1	**153-7983**	1	PIN	
	7	1	**095-1574**	1	SEAL-O-RING	
M	8	1	**162-2207**	1	NUT (M6X1-THD)	
	9	1	**217-7115**	1	CAP (TAMPER RESISTANT)	
	10	1	**308-1882**	1	SPRING	
M	11	1	**308-1889**	1	NUT (M10X1.25-THD)	
M	12	1	**308-1892**	1	NUT (M6X1-THD)	
	13	1	**308-1897**	2	RING	
	14	1	**308-4266**	1	SHAFT	
	15	1	**309-6729**	1	SEAL-O-RING	
M	16	1	**495-0737**	1	BOLT (M6X0.5X19.5-MM)	
	17	1	**311-0655**	1	SPRING	
	18	1	**313-5832**	1	BOLT AS	
	18A	1	**153-7987**	1	WASHER (9.2X17X1.8-MM THK)	
M	18B	1	**191-9297**	1	NUT (M10X1.25-THD)	
	18C	1	**313-5833**	1	SPRING	
	19	1	**317-7195**	1	SPRING	
	20	1	**319-3252**	1	SENSOR AS-SPEED	
	21	1	**321-4249**	1	NUT	
	22	1	**322-7493**	1	LEVER AS-CONTROL	
	23	1	**330-9189**	1	PLUG	
	24	1	**334-0732**	1	ARM AS (FRONT HOUSING)	
	25	1	**335-5578**	1	BRACKET	
M	26	1	**369-4486**	2	BOLT (M6X1X35-MM)	
	27	1	**390-3729**	1	LEVER-CONTROL	
	28	1	**390-3731**	1	SHAFT	
	29	1	**423-7724**	1	GASKET	
	30	1	**425-7065**	1	CAP-TAMPER PROOF	
	31	1	**336-2965**	1	SPRING	
	32	1	**308-1875**	1	SEAL-O-RING	

M - METRIC PART

454-6143 **CONTROL GP-GOVERNOR (**contd.**)** **i07032132**

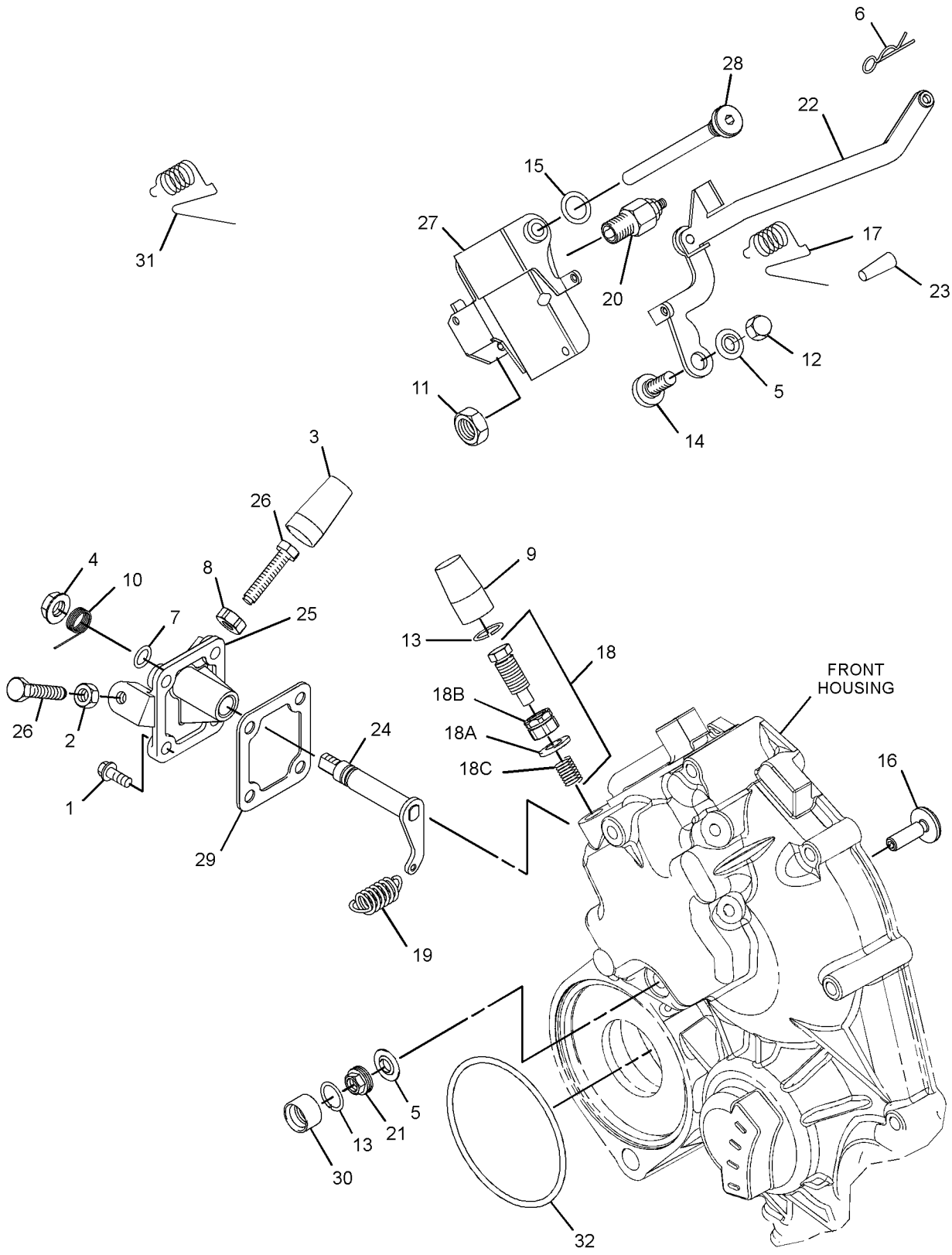

GRAPHIC #1 <END> g06197905

454-6143 CONTROL GP-GOVERNOR

PART OF 417-7273, 435-1642, 489-4263, 506-0520, 513-2239, 557-7471 ENGINE AR-PRIMARY
TYPE 2

SMCS-1265, 1276 **i08293699**

NOTE	REF NO	GRAPHIC REF	PART NUMBER	QTY	PART NAME 1 2 3 4 5 6 (PRODUCT LEVEL)	SEE PAGE
M	1	1	**106-8916**	4	BOLT (M6X1X16-MM)	
M	2	1	**5C-2890**	1	NUT (M6X1-THD)	
	3	1	**139-5511**	1	CAP (TAMPER RESISTANT)	
M	4	1	**153-5592**	1	NUT (M8X1.25-THD)	
	5	1	**153-6415**	2	WASHER (SEAL)	
	6	1	**153-7983**	1	PIN	
	7	1	**095-1574**	1	SEAL-O-RING	
M	8	1	**162-2207**	1	NUT (M6X1-THD)	
	9	1	**217-7115**	1	CAP (TAMPER RESISTANT)	
	10	1	**308-1882**	1	SPRING	
M	11	1	**308-1889**	1	NUT (M10X1.25-THD)	
M	12	1	**308-1892**	1	NUT (M6X1-THD)	
C	13	1	**308-1897**	1	RING	
	14	1	**308-4266**	1	SHAFT	
	15	1	**309-6729**	1	SEAL-O-RING	
	16	1	**364-2755**	1	BOLT-SPECIAL	
	17	1	**311-0655**	1	SPRING	
	18	1	**313-5832**	1	BOLT AS	
	18A	1	**153-7987**	1	WASHER (9.2X17X1.8-MM THK)	
M	18B	1	**191-9297**	1	NUT (M10X1.25-THD)	
	18C	1	**313-5833**	1	SPRING	
	19	1	**317-7195**	1	SPRING	
	20	1	**319-3252**	1	SENSOR AS-SPEED (ENGINE TIMING)	
M	20A	1	**155-8076**	1	NUT (M4X0.4-THD)	
C	21	1	**502-9478**	1	NUT (TAMPER RESISTANT)	
	22	1	**322-7493**	1	LEVER AS-CONTROL	
	22A	1	**154-1400**	1	PIN	
	23	1	**330-9189**	1	PLUG	
	24	1	**334-0732**	1	ARM AS (FRONT HOUSING)	
	25	1	**335-5578**	1	BRACKET	
M	26	1	**7X-2533**	2	BOLT (M6X1X35-MM)	
	27	1	**580-0398**	1	LEVER AS-CONTROL	
	28	1	**390-3731**	1	SHAFT	
	29	1	**423-7724**	1	GASKET	
C	30	1	**503-9707**	1	CAP	
	31	1	**336-2965**	1	SPRING	
	32	1	**308-1875**	1	SEAL-O-RING	
C	33	1	**503-9731**	1	SHROUD	
C	34	1	**502-5421**	1	PIN	

C - CHANGE FROM PREVIOUS TYPE
M - METRIC PART

454-6143 **CONTROL GP-GOVERNOR (**contd.**)** **i08293699**

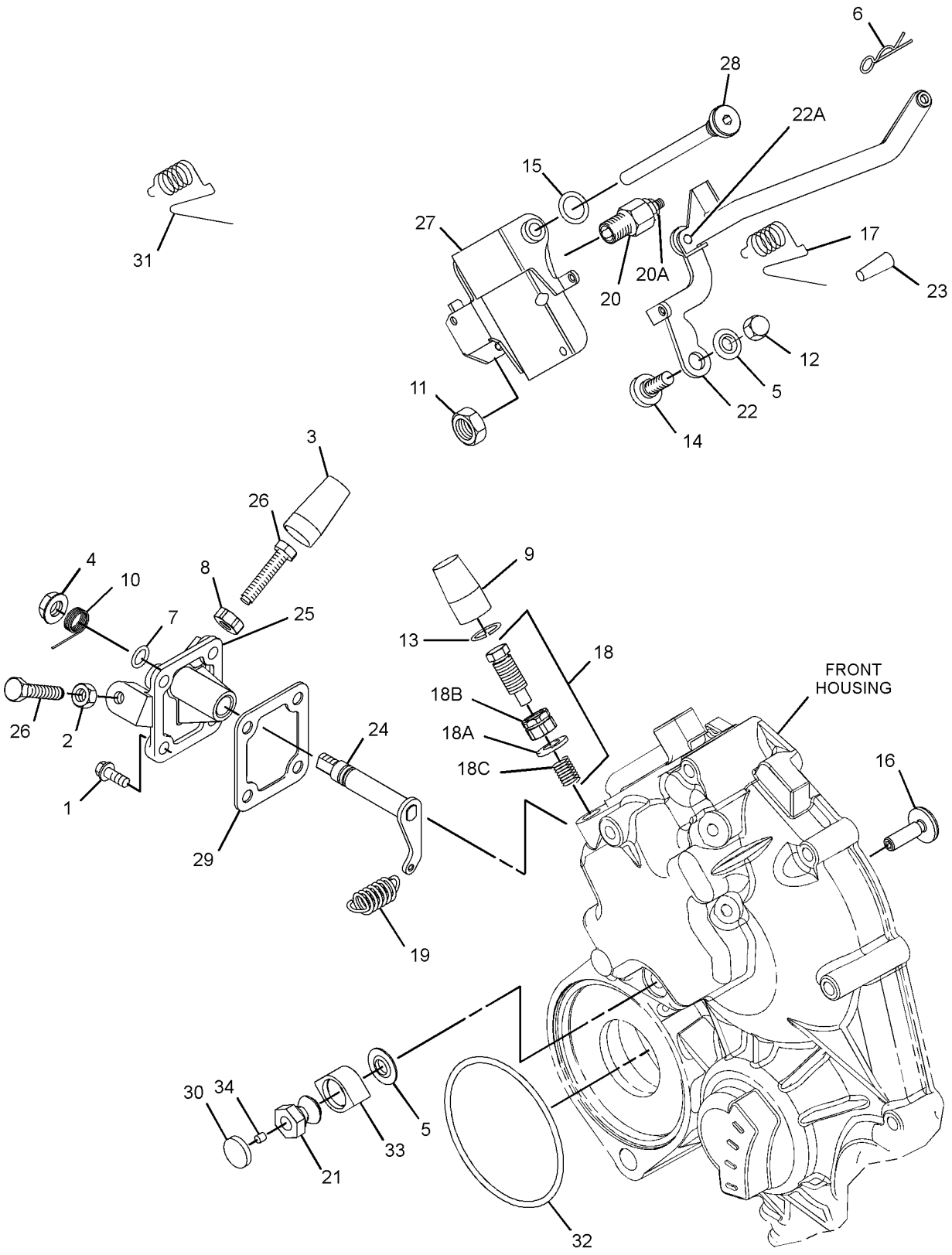

GRAPHIC #1 <END> g06791995

465-2207 CONTROL GP-GOVERNOR

TYPE 1

SMCS-1265, 1276 **i06930259**

NOTE	REF NO	GRAPHIC REF	PART NUMBER	QTY	PART NAME 1 2 3 4 5 6 (PRODUCT LEVEL)	SEE PAGE
M	1	1	**106-8916**	4	BOLT (M6X1X16-MM)	
M	2	1	**5C-2890**	1	NUT (M6X1-THD)	
	3	1	**139-5511**	1	CAP (TAMPER RESISTANT)	
M	4	1	**153-5592**	1	NUT (M8X1.25-THD)	
	5	1	**153-6415**	2	WASHER (SEAL)	
	6	1	**153-7983**	1	PIN	
	7	1	**095-1574**	1	SEAL-O-RING	
M	8	1	**162-2207**	1	NUT (M6X1-THD)	
	9	1	**217-7115**	1	CAP (TAMPER RESISTANT)	
	10	1	**308-1882**	1	SPRING	
M	11	1	**308-1889**	1	NUT (M10X1.25-THD)	
M	12	1	**308-1892**	1	NUT (M6X1-THD)	
	13	1	**308-1897**	2	RING	
	14	1	**308-4266**	1	SHAFT	
	15	1	**309-6728**	1	SHAFT	
	16	1	**309-6729**	1	SEAL-O-RING	
	17	1	**364-2755**	1	BOLT-SPECIAL	
	18	1	**311-0655**	1	SPRING	
	19	1	**313-5832**	1	BOLT AS	
	19A	1	**153-7987**	1	WASHER (9.2X17X1.8-MM THK)	
M	19B	1	**191-9297**	1	NUT (M10X1.25-THD)	
	19C	1	**313-5833**	1	SPRING	
	20	1	**317-7195**	1	SPRING	
	21	1	**319-3250**	1	CONTROL GP-GOVERNOR	
	22	1	**321-4249**	1	NUT	
	23	1	**322-7492**	1	LEVER-CONTROL	
	24	1	**322-7493**	1	LEVER AS-CONTROL	
	25	1	**330-9189**	1	PLUG	
	26	1	**334-0732**	1	ARM AS	
	27	1	**335-5578**	1	BRACKET	
	28	1	**336-2965**	1	SPRING	
M	29	1	**369-4486**	2	BOLT (M6X1X35-MM)	
	30	1	**423-7724**	1	GASKET	
	31	1	**425-7065**	1	CAP-TAMPER PROOF	

M - METRIC PART

465-2207 **CONTROL GP-GOVERNOR (**contd.**)** **i06930259**

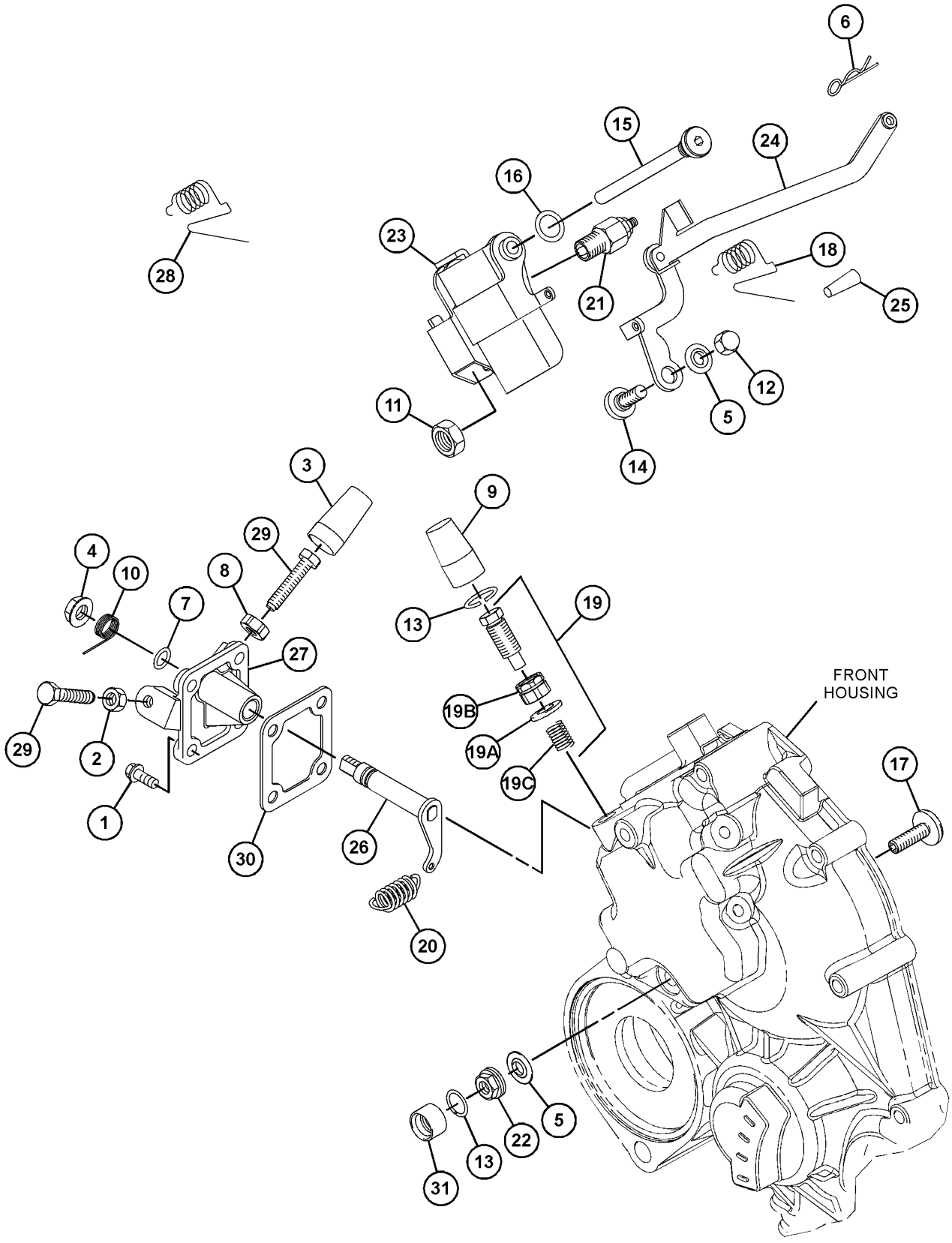

GRAPHIC #1 <END> g06202463

465-2207 CONTROL GP-GOVERNOR

TYPE 2

SMCS-1265, 1276 **i08511659**

NOTE	REF NO	GRAPHIC REF	PART NUMBER	QTY	PART NAME 1 2 3 4 5 6 (PRODUCT LEVEL)	SEE PAGE
M	1	1	**106-8916**	4	BOLT (M6X1X16-MM)	
M	2	1	**5C-2890**	1	NUT (M6X1-THD)	
	3	1	**139-5511**	1	CAP (TAMPER RESISTANT)	
M	4	1	**153-5592**	1	NUT (M8X1.25-THD)	
	5	1	**153-6415**	2	WASHER (SEAL)	
	6	1	**153-7983**	1	PIN	
	7	1	**095-1574**	1	SEAL-O-RING	
M	8	1	**162-2207**	1	NUT (M6X1-THD)	
	9	1	**217-7115**	1	CAP (TAMPER RESISTANT)	
	10	1	**308-1882**	1	SPRING	
M	11	1	**308-1889**	1	NUT (M10X1.25-THD)	
M	12	1	**308-1892**	1	NUT (M6X1-THD)	
C	13	1	**308-1897**	1	RING	
	14	1	**308-4266**	1	SHAFT	
	15	1	**390-3731**	1	SHAFT	
	16	1	**309-6729**	1	SEAL-O-RING	
	17	1	**364-2755**	1	BOLT-SPECIAL	
	18	1	**311-0655**	1	SPRING	
	19	1	**313-5832**	1	BOLT AS	
	19A	1	**153-7987**	1	WASHER (9.2X17X1.8-MM THK)	
M	19B	1	**191-9297**	1	NUT (M10X1.25-THD)	
	19C	1	**313-5833**	1	SPRING	
	20	1	**317-7195**	1	SPRING	
Y	21	1	**319-3250**	1	CONTROL GP-GOVERNOR	700
C	22	1	**502-9478**	1	NUT (TAMPER RESISTANT)	
	23	1	**580-0398**	1	LEVER AS-CONTROL	
	24	1	**322-7493**	1	LEVER AS-CONTROL	
	24A	1	**154-1400**	1	PIN	
	25	1	**330-9189**	1	PLUG	
	26	1	**334-0732**	1	ARM AS (FRONT HOUSING)	
	27	1	**335-5578**	1	BRACKET	
	28	1	**336-2965**	1	SPRING	
M	29	1	**7X-2533**	2	BOLT (M6X1X35-MM)	
	30	1	**423-7724**	1	GASKET	
C	32	1	**503-9707**	1	CAP	
C	33	1	**503-9731**	1	SHROUD	
C	34	1	**502-5421**	1	PIN	

C - CHANGE FROM PREVIOUS TYPE
M - METRIC PART
Y - SEPARATE ILLUSTRATION

465-2207 **CONTROL GP-GOVERNOR (**contd.**)** **i08511659**

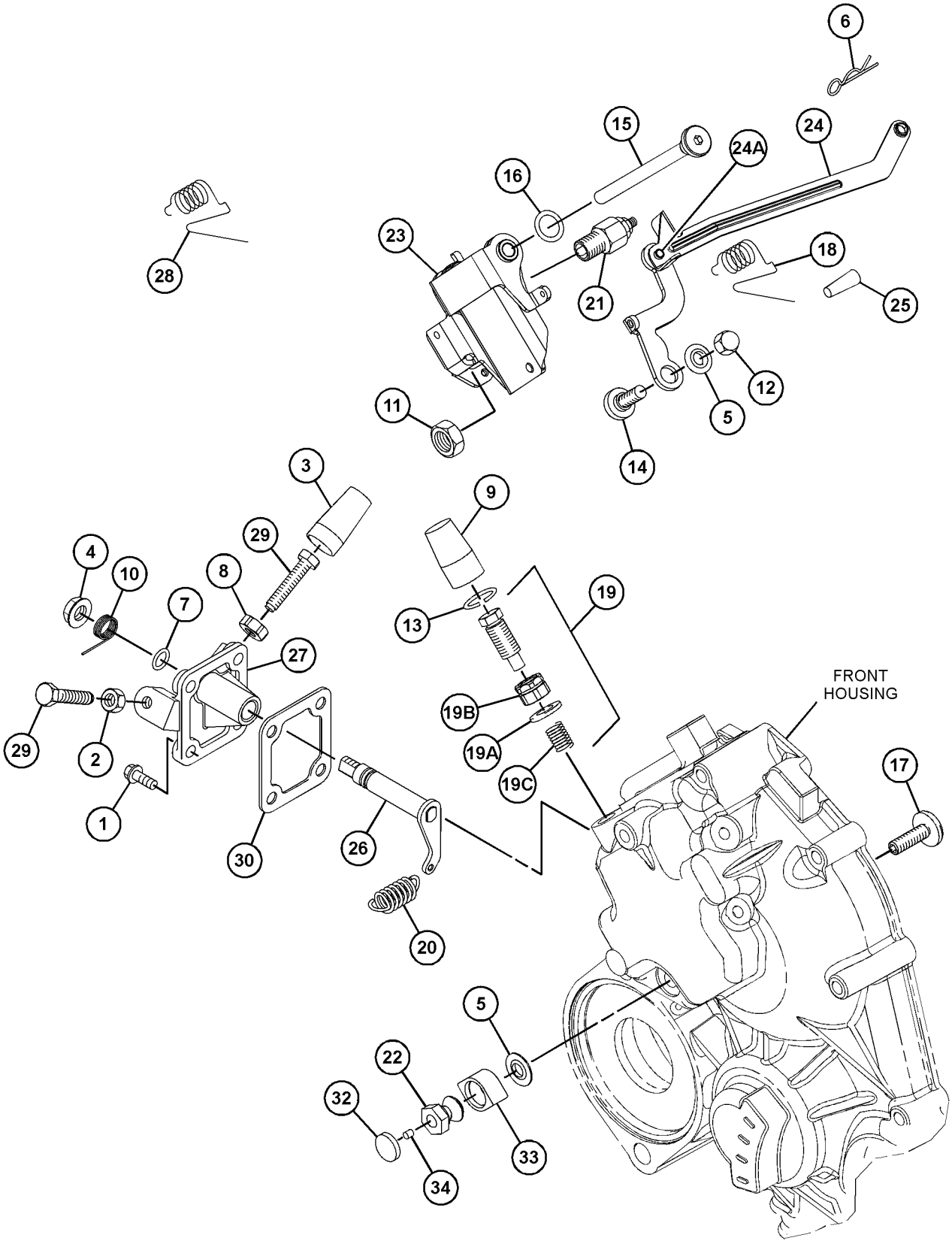

GRAPHIC #1 <END> g07487887

465-2493 CONTROL GP-GOVERNOR

PART OF 435-1642, 489-4263 ENGINE AR-PRIMARY

SMCS-1265, 1276 **i06930260**

NOTE	REF NO	GRAPHIC REF	PART NUMBER	QTY	PART NAME 1 2 3 4 5 6 (PRODUCT LEVEL)	SEE PAGE
M	1	1	**106-8916**	4	BOLT (M6X1X16-MM)	
M	2	1	**5C-2890**	1	NUT (M6X1-THD)	
	3	1	**139-5511**	1	CAP (TAMPER RESISTANT)	
M	4	1	**153-5592**	1	NUT (M8X1.25-THD)	
	5	1	**153-6415**	2	WASHER (SEAL)	
	6	1	**153-7983**	1	PIN	
	7	1	**095-1574**	1	SEAL-O-RING	
M	8	1	**162-2207**	1	NUT (M6X1-THD)	
	9	1	**217-7115**	1	CAP (TAMPER RESISTANT)	
	10	1	**308-1882**	1	SPRING	
M	11	1	**308-1889**	1	NUT (M10X1.25-THD)	
M	12	1	**308-1892**	1	NUT (M6X1-THD)	
	13	1	**308-1897**	2	RING	
	14	1	**308-4266**	1	SHAFT	
	15	1	**309-6729**	1	SEAL-O-RING	
M	16	1	**495-0737**	1	BOLT (M6X0.5X19.5-MM)	
	17	1	**311-0655**	1	SPRING	
	18	1	**313-5832**	1	BOLT AS	
	18A	1	**153-7987**	1	WASHER (9.2X17X1.8-MM THK)	
M	18B	1	**191-9297**	1	NUT (M10X1.25-THD)	
	18C	1	**313-5833**	1	SPRING	
	19	1	**317-7195**	1	SPRING	
	20	1	**319-3252**	1	SENSOR AS-SPEED (ENGINE TIMING)	
	21	1	**321-4249**	1	NUT	
	22	1	**322-7493**	1	LEVER AS-CONTROL	
	23	1	**330-9189**	1	PLUG	
	24	1	**334-0732**	1	ARM AS (FRONT HOUSING)	
	25	1	**335-5578**	1	BRACKET	
M	26	1	**369-4486**	2	BOLT (M6X1X35-MM)	
	27	1	**390-3729**	1	LEVER-CONTROL	
	28	1	**390-3731**	1	SHAFT	
	29	1	**423-7724**	1	GASKET	
	30	1	**425-7065**	1	CAP-TAMPER PROOF	
	31	1	**336-2965**	1	SPRING	
	32	1	**308-1875**	1	SEAL-O-RING	

M - METRIC PART

465-2493 **CONTROL GP-GOVERNOR (**contd.**)** **i06930260**

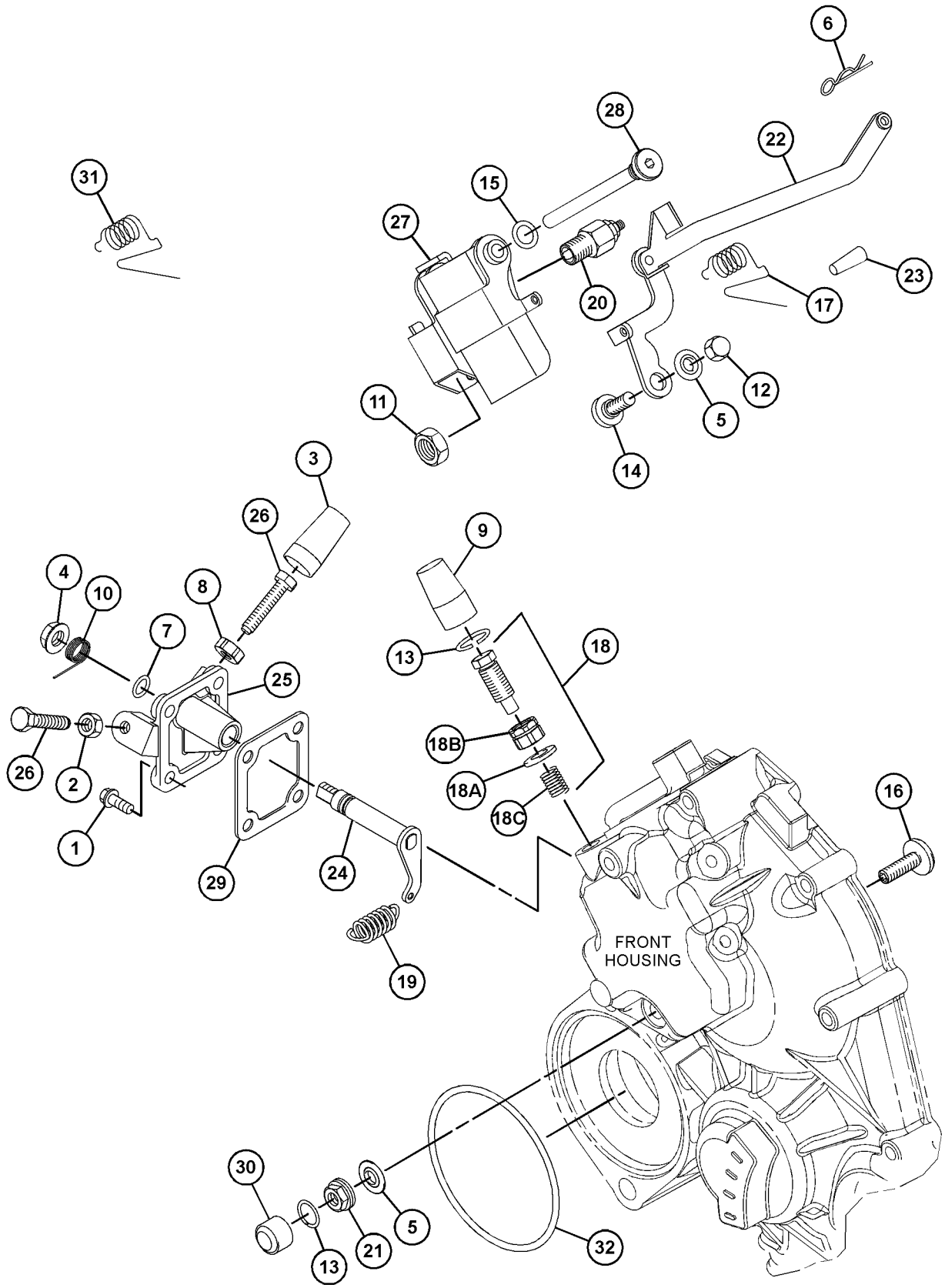

GRAPHIC #1 <END> g06202501

465-2493 CONTROL GP-GOVERNOR

PART OF 417-7273 ENGINE AR-PRIMARY

SMCS-1265, 1276 **i08295485**

NOTE	REF NO	GRAPHIC REF	PART NUMBER	QTY	PART NAME 1 2 3 4 5 6 (PRODUCT LEVEL)	SEE PAGE
M	1	1	**106-8916**	4	BOLT (M6X1X16-MM)	
M	2	1	**5C-2890**	1	NUT (M6X1-THD)	
	3	1	**139-5511**	1	CAP (TAMPER RESISTANT)	
M	4	1	**153-5592**	1	NUT (M8X1.25-THD)	
	5	1	**153-6415**	2	WASHER (SEAL)	
	6	1	**153-7983**	1	PIN	
	7	1	**095-1574**	1	SEAL-O-RING	
M	8	1	**162-2207**	1	NUT (M6X1-THD)	
	9	1	**217-7115**	1	CAP (TAMPER RESISTANT)	
	10	1	**308-1882**	1	SPRING	
M	11	1	**308-1889**	1	NUT (M10X1.25-THD)	
M	12	1	**308-1892**	1	NUT (M6X1-THD)	
C	13	1	**308-1897**	1	RING	
	14	1	**308-4266**	1	SHAFT	
	15	1	**309-6729**	1	SEAL-O-RING	
M	16	1	**495-0737**	1	BOLT (M6X0.5X19.5-MM)	
	17	1	**311-0655**	1	SPRING	
	18	1	**313-5832**	1	BOLT AS	
	18A	1	**153-7987**	1	WASHER (9.2X17X1.8-MM THK)	
M	18B	1	**191-9297**	1	NUT (M10X1.25-THD)	
	18C	1	**313-5833**	1	SPRING	
	19	1	**317-7195**	1	SPRING	
	20	1	**319-3252**	1	SENSOR AS-SPEED (ENGINE TIMING)	
M	20A	1	**155-8076**	1	NUT (M4X0.4-THD)	
C	21	1	**502-9478**	1	NUT (TAMPER RESISTANT)	
	22	1	**322-7493**	1	LEVER AS-CONTROL	
	22A	1	**154-1400**	1	PIN	
	23	1	**330-9189**	1	PLUG	
	24	1	**334-0732**	1	ARM AS (FRONT HOUSING)	
	25	1	**335-5578**	1	BRACKET	
M	26	1	**7X-2533**	2	BOLT (M6X1X35-MM)	
	27	1	**580-0398**	1	LEVER AS-CONTROL	
	28	1	**390-3731**	1	SHAFT	
	29	1	**423-7724**	1	GASKET	
C	30	1	**503-9707**	1	CAP	
	31	1	**336-2965**	1	SPRING	
C	32	1	**503-9731**	1	SHROUD	
C	33	1	**502-5421**	1	PIN	
	34	1	**308-1875**	1	SEAL-O-RING	

C - CHANGE FROM PREVIOUS TYPE
M - METRIC PART

465-2493 **CONTROL GP-GOVERNOR (**contd.**)** **i08295485**

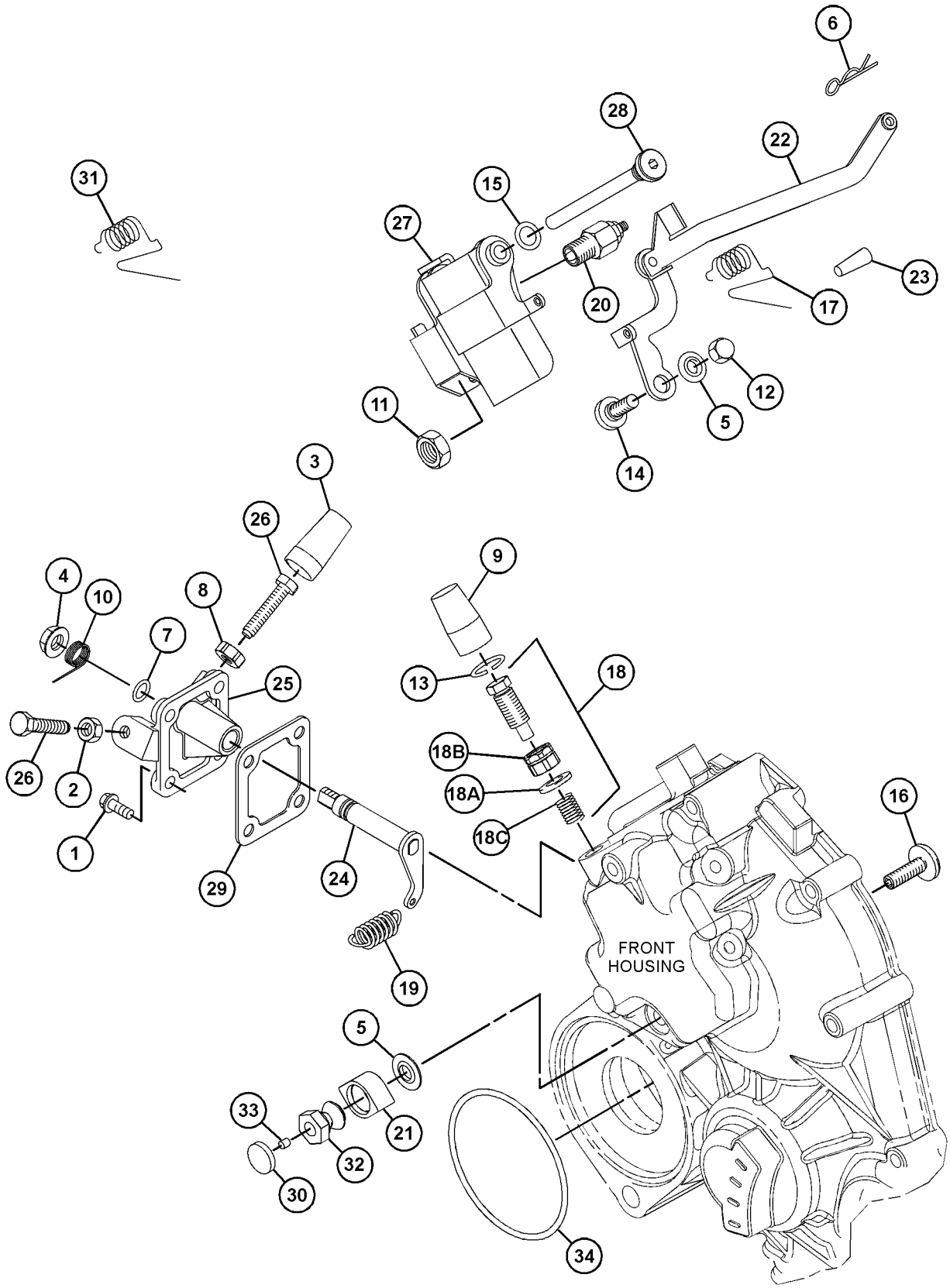

GRAPHIC #1 <END> g06243575

580-6290 CONTROL GP-GOVERNOR

S/N: C6M10275-UP

PART OF 596-3472 GOVERNOR GP

SMCS-1265, 1276

i10053393

NOTE	REF NO	GRAPHIC REF	PART NUMBER	QTY	PART NAME 1 2 3 4 5 6 (PRODUCT LEVEL)	SEE PAGE
M	1	1	**308-1889**	1	NUT (M10X1.25-THD)	
	2	1	**319-3251**	1	GOVERNOR GP	
M	2A	1	**155-8076**	1	NUT (M4X0.4-THD)	
	3	1	**580-0398**	1	LEVER AS-CONTROL	

M - METRIC PART

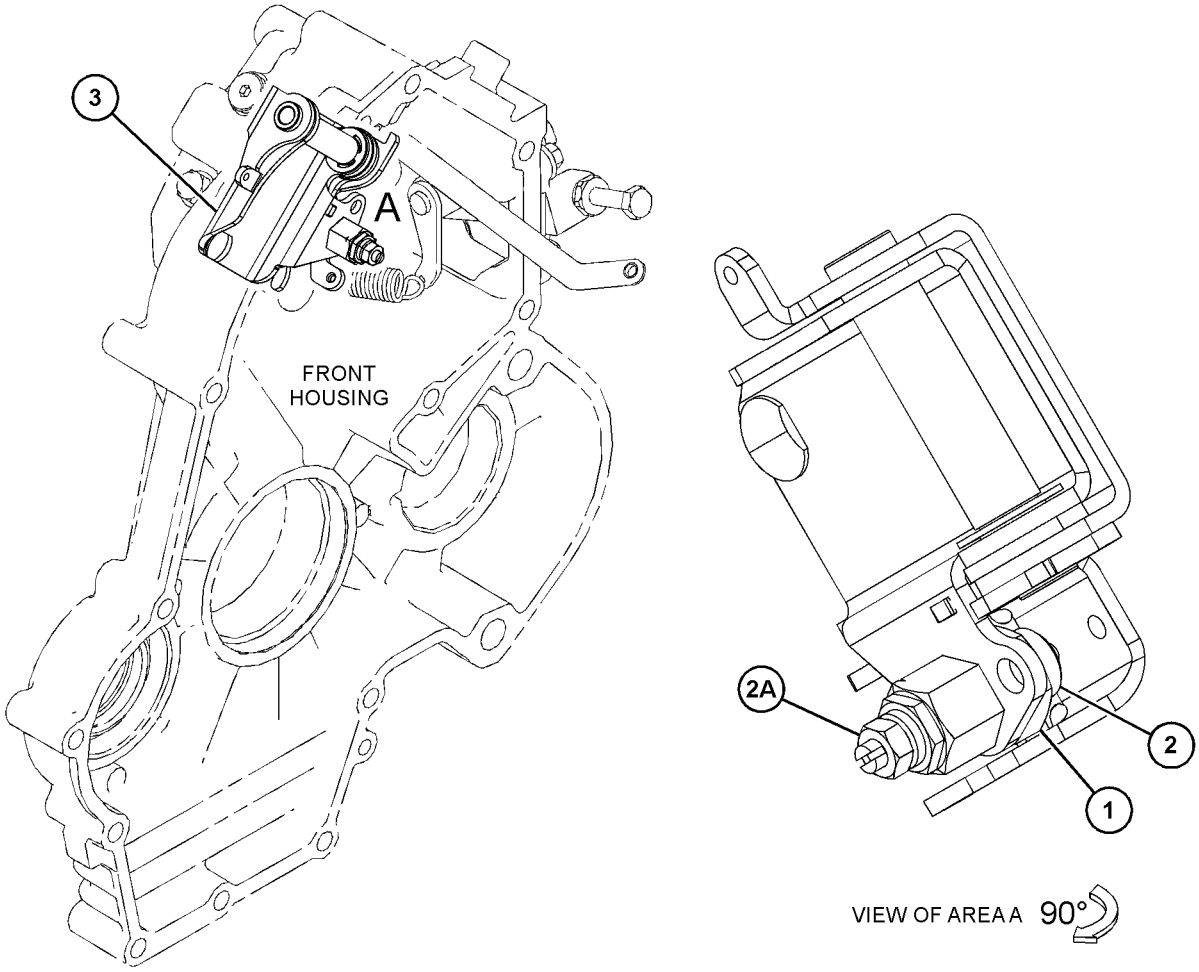

GRAPHIC #1

<END>

g06754671

589-8341 CONTROL GP-GOVERNOR

S/N: C6M10721-UP

PART OF 596-3470 CONTROL GP-GOVERNOR

SMCS-1265, 1276 **i09576151**

NOTE	REF NO	GRAPHIC REF	PART NUMBER	QTY	PART NAME 1 2 3 4 5 6 (PRODUCT LEVEL)	SEE PAGE
M	1	1	**308-1889**	1	NUT (M10X1.25-THD)	
	2	1	**342-9621**	1	GOVERNOR GP-ANGLEICH	
M	2A	1	**5C-8312**	1	NUT (M4X0.7-THD)	
	3	1	**580-0398**	1	LEVER AS-CONTROL	

M - METRIC PART

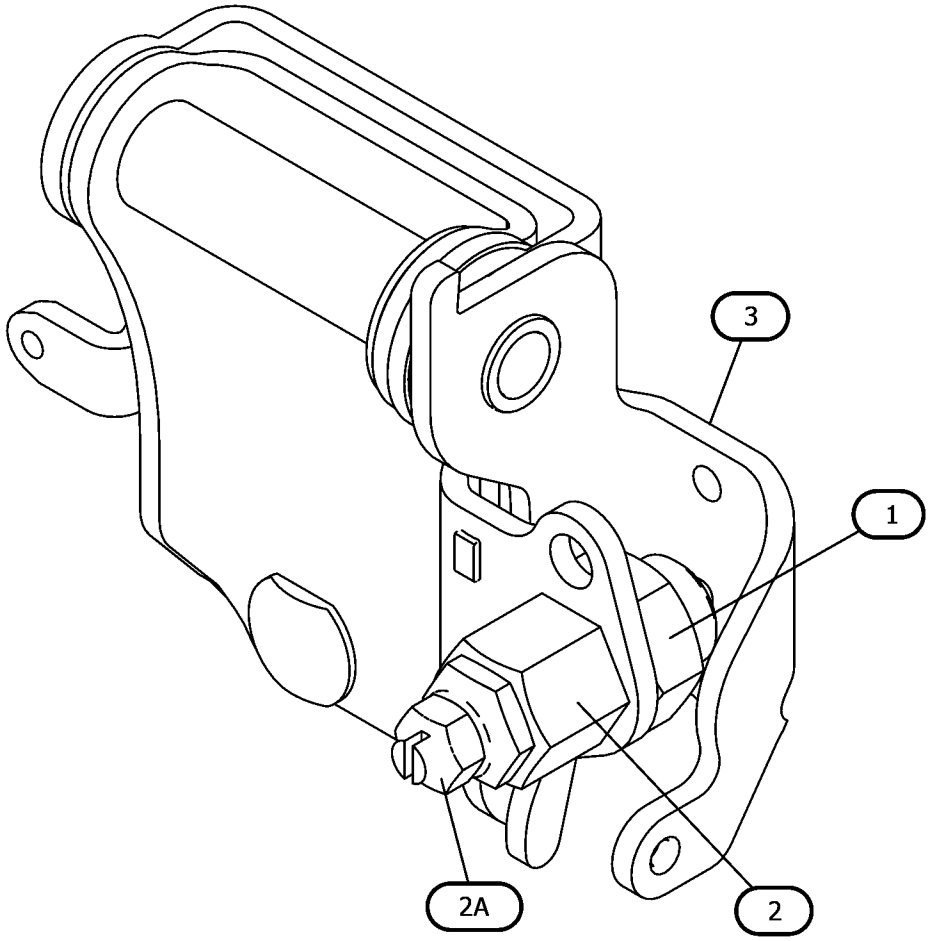

GRAPHIC #1 <END> g07503093

596-3463 CONTROL GP-GOVERNOR

S/N: C6M10549-UP

PART OF 435-1647 ENGINE AR-PRIMARY

SMCS-1265, 1276 **i08776751**

NOTE	REF NO	GRAPHIC REF	PART NUMBER	QTY	PART NAME 1 2 3 4 5 6 (PRODUCT LEVEL)	SEE PAGE
	1	2	**153-6415**	1	WASHER (SEAL)	
	2	2	**153-7983**	1	PIN	
M	3	2	**308-1892**	1	NUT (M6X1-THD)	
	4	2	**308-4266**	1	SHAFT	
	5	2	**309-6729**	1	SEAL-O-RING	
	6	2	**309-6728**	1	SHAFT	
	7	2	**311-0655**	1	SPRING	
	8	2	**322-7493**	1	LEVER AS-CONTROL	
	8A	2	**154-1400**	1	PIN	
	9	1	**315-5236**	1	BOLT AS	
	9A	1	**153-7987**	1	WASHER (9.2X17X1.8-MM THK)	
M	9B	1	**191-9297**	1	NUT (M10X1.25-THD)	
	9C	1	**315-5235**	1	SPRING	
	10	2	**321-3145**	1	SPRING	
	11	1	**363-8409**	1	SLIDER	
	12	1	**217-7115**	1	CAP (TAMPER RESISTANT)	
Y	13	2	*560-7819*	1	LEVER GP-GOVERNOR CONTROL	794

M - METRIC PART
Y - SEPARATE ILLUSTRATION

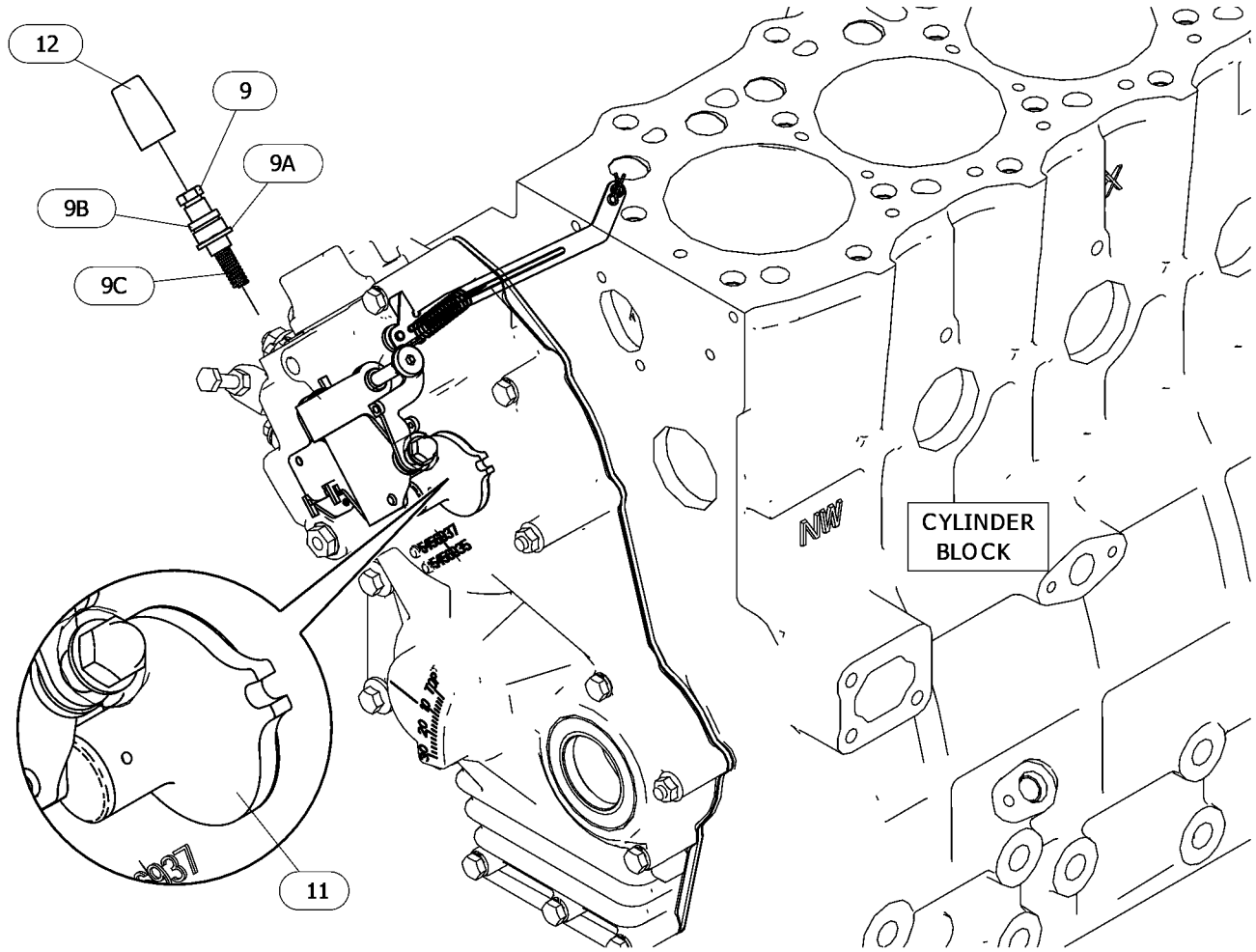

GRAPHIC #1 g06721514

596-3463 **CONTROL GP-GOVERNOR (**contd.**)** **i08776751**

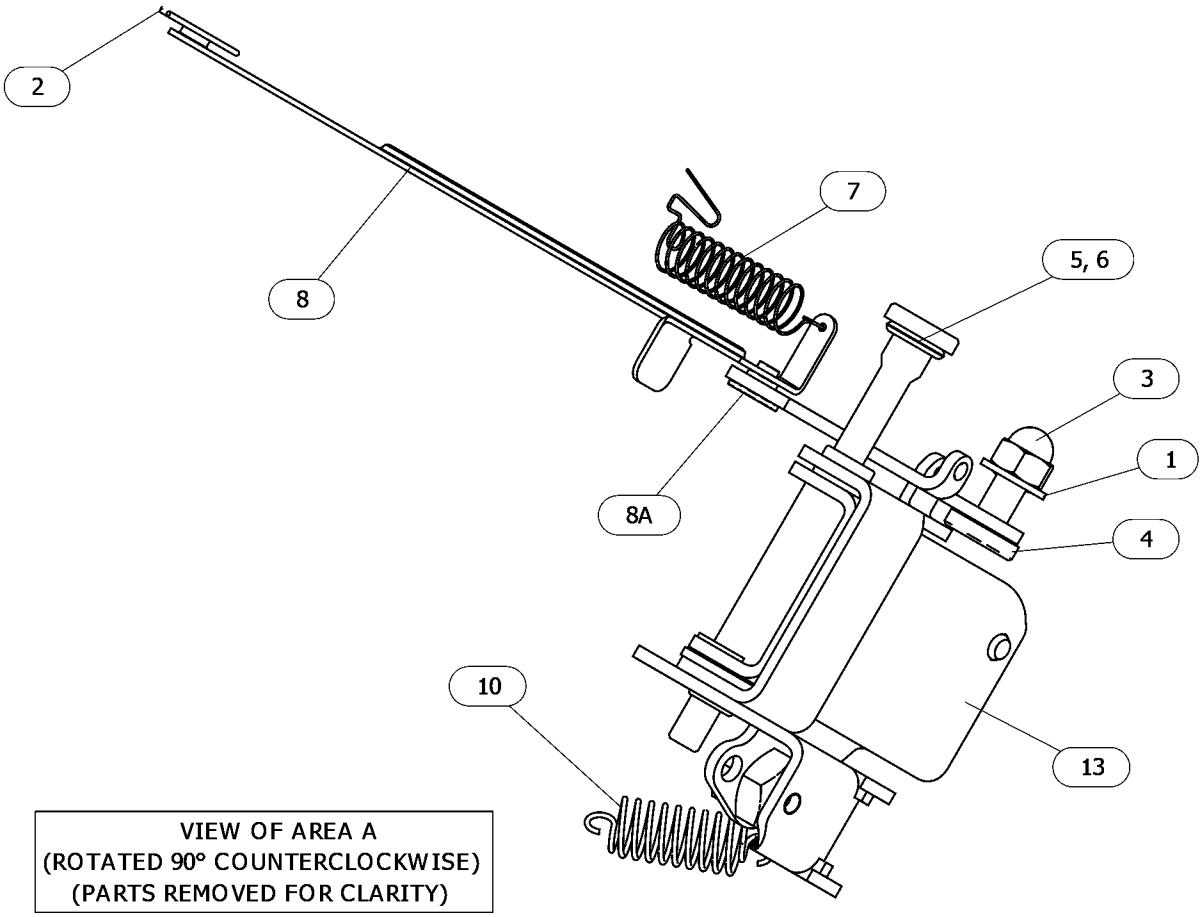

GRAPHIC #2 <END> g06721514_01

596-3466 CONTROL GP-GOVERNOR

S/N: C6M10291-UP

PART OF 417-7273, 435-1642 ENGINE AR-PRIMARY

SMCS-1265, 1276

i08612266

NOTE	REF NO	GRAPHIC REF	PART NUMBER	QTY	PART NAME 1 2 3 4 5 6 (PRODUCT LEVEL)	SEE PAGE
M	1	1	**308-1892**	1	NUT (M6X1-THD)	
	2	1	**153-6415**	1	WASHER (SEAL)	
	3	1	**153-7983**	1	PIN	
	4	1	**308-4266**	1	SHAFT	
	5	1	**309-6729**	1	SEAL-O-RING	
	6	2	**311-0655**	1	SPRING	
	7	2	**313-5832**	1	BOLT AS	
	7A	2	**153-7987**	1	WASHER (9.2X17X1.8-MM THK)	
M	7B	2	**191-9297**	1	NUT (M10X1.25-THD)	
	7C	2	**313-5833**	1	SPRING	
	8	2	**317-7195**	1	SPRING	
	9	2	**322-7493**	1	LEVER AS-CONTROL	
	9A	2	**154-1400**	1	PIN	
	10	1	**363-8409**	1	SLIDER	
	11	1	**390-3731**	1	SHAFT	
	12	2	**217-7115**	1	CAP (TAMPER RESISTANT)	
	13	2	*573-6681*	1	CONTROL GP-GOVERNOR	
M	13A	2	**308-1889**	1	NUT (M10X1.25-THD)	
	13B	2	**319-3252**	1	SENSOR AS-SPEED	
M	13C	2	**5C-8312**	1	NUT (M4X0.7-THD)	
	13D	2	**580-0398**	1	LEVER AS-CONTROL	

M - METRIC PART

596-3466 **CONTROL GP-GOVERNOR (**contd.**)** **i08612266**

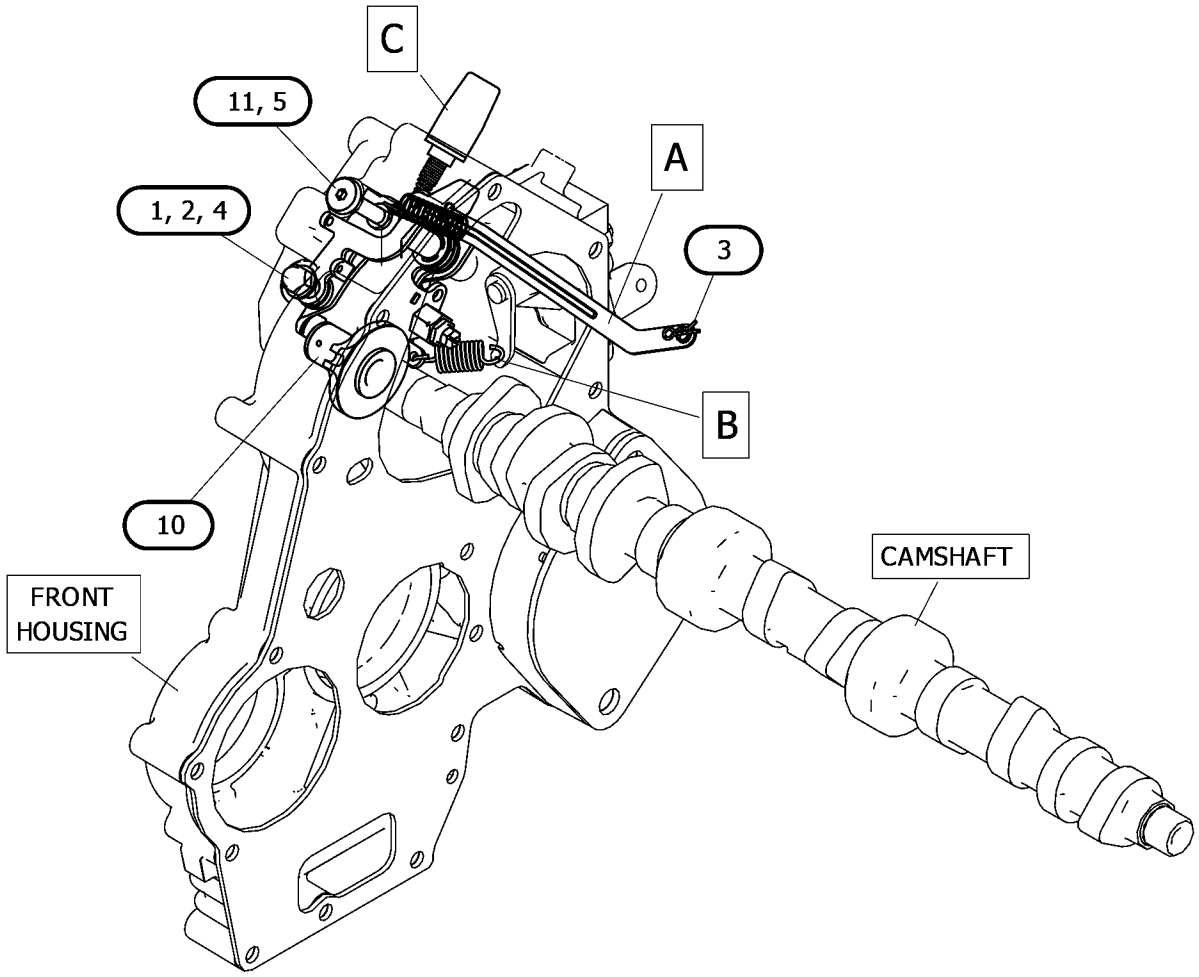

GRAPHIC #1 g07506613

596-3466 **CONTROL GP-GOVERNOR (**contd.**)** **i08612266**

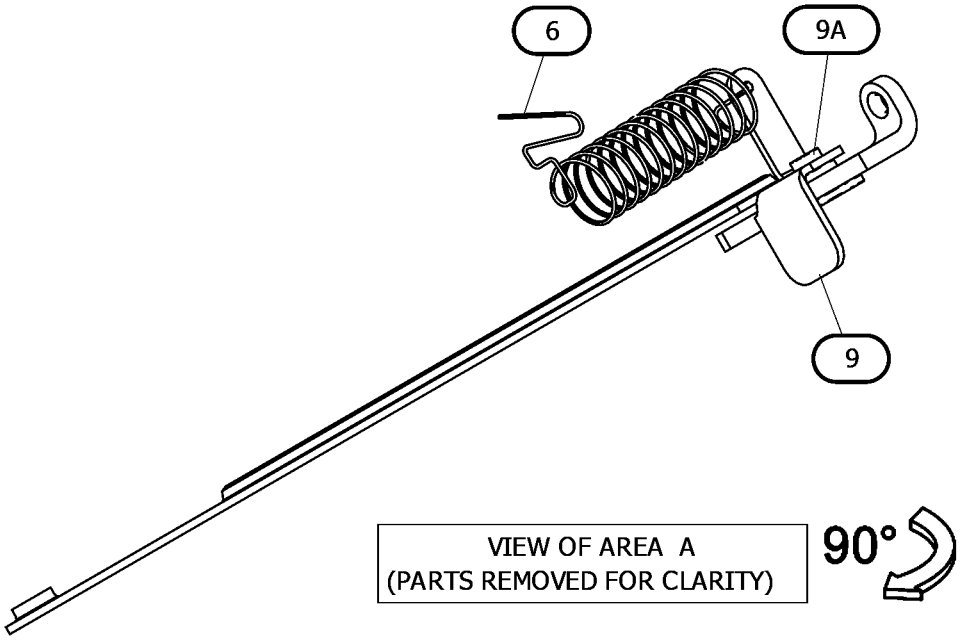

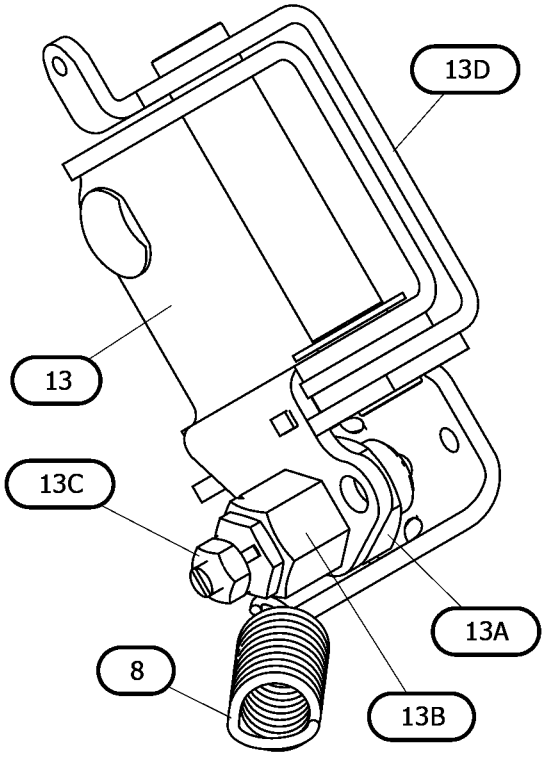

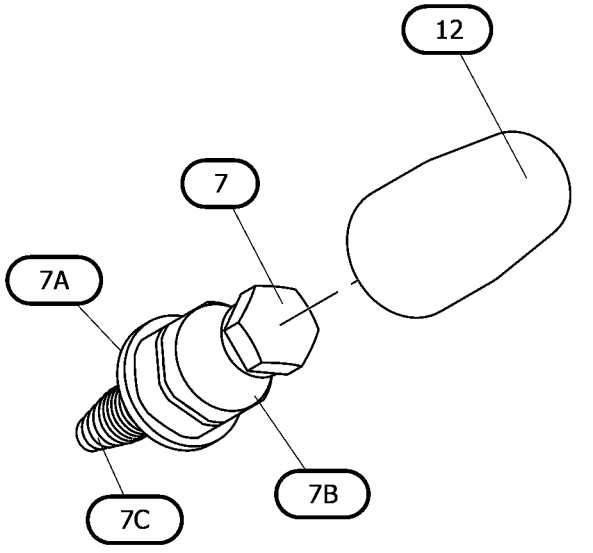

GRAPHIC #2 <END> g07506613_01

596-3470 CONTROL GP-GOVERNOR

S/N: C6M10721-UP

PART OF 435-1641 ENGINE AR-PRIMARY

SMCS-1265, 1276

i09576147

NOTE	REF NO	GRAPHIC REF	PART NUMBER	QTY	PART NAME 1 2 3 4 5 6 (PRODUCT LEVEL)	SEE PAGE
M	1	3	**308-1892**	1	NUT (M6X1-THD)	
	2	3	**153-6415**	1	WASHER (SEAL)	
	3	3	**153-7983**	1	PIN	
	4	2	**308-1904**	1	SLIDER	
	5	3	**308-4266**	1	SHAFT	
	6	3	**309-6729**	1	SEAL-O-RING	
	7	3	**311-0655**	1	SPRING	
	8	3	**322-7493**	1	LEVER AS-CONTROL	
	8A	3	**154-1400**	1	PIN	
	9	2	**340-4756**	1	BOLT AS	
	9A	2	**153-7987**	1	WASHER (9.2X17X1.8-MM THK)	
M	9B	2	**191-9297**	1	NUT (M10X1.25-THD)	
	9C	2	**340-4755**	1	SPRING	
	10	3	**342-9620**	1	SPRING	
	11	3	**390-3731**	1	SHAFT	
	12	1	**217-7115**	1	CAP (TAMPER RESISTANT)	
Y	13	3	*589-8341*	1	CONTROL GP-GOVERNOR	746

M - METRIC PART
Y - SEPARATE ILLUSTRATION

596-3470 **CONTROL GP-GOVERNOR (**contd.**)** **i09576147**

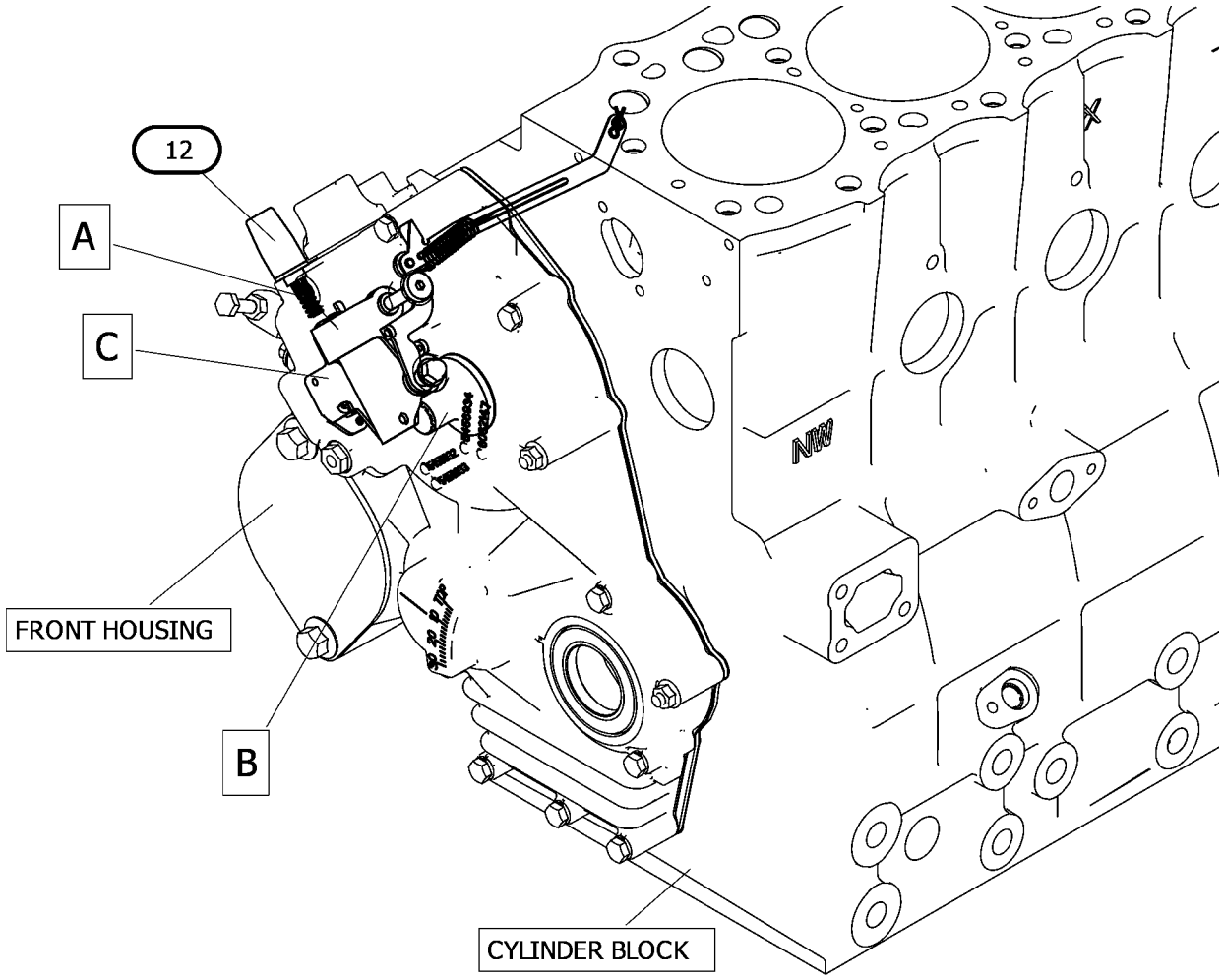

GRAPHIC #1 g07499871

596-3470 **CONTROL GP-GOVERNOR (**contd.**)** **i09576147**

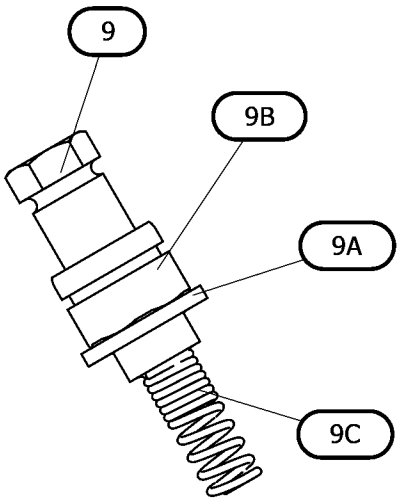

VIEW OF AREA A
(PARTS REMOVED FOR CLARITY)

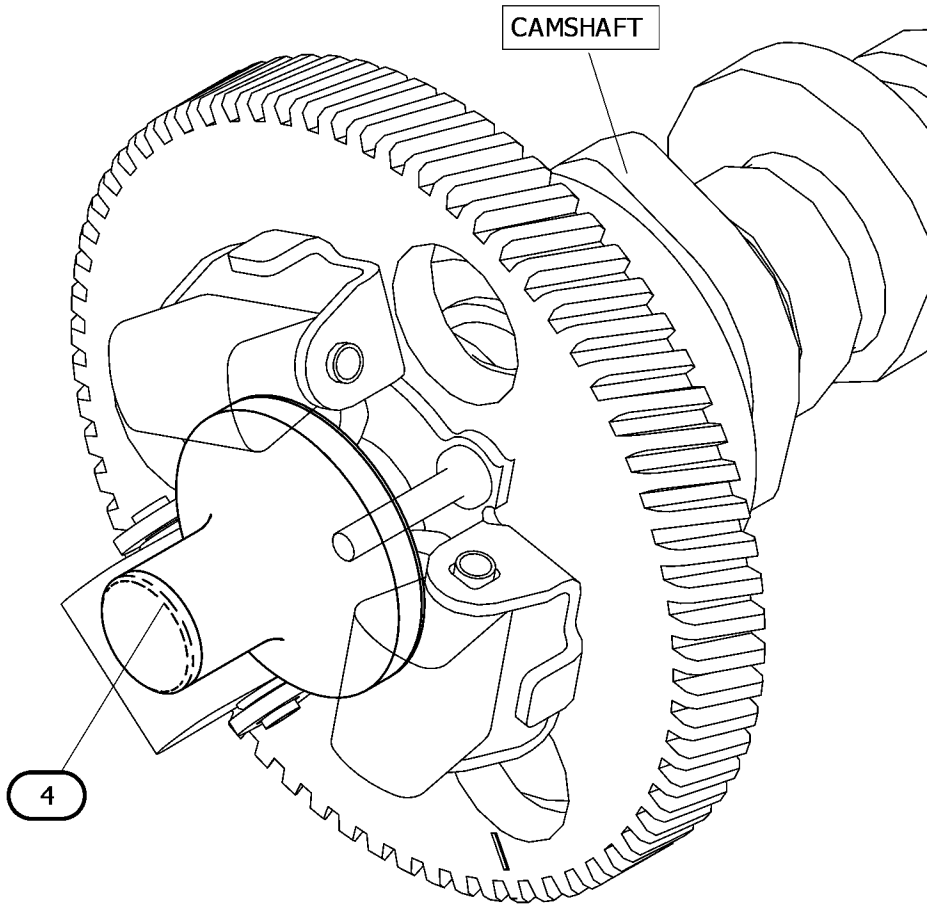

VIEW OF AREA B

GRAPHIC #2 g07499871_01

596-3470 **CONTROL GP-GOVERNOR (**contd.**)** **i09576147**

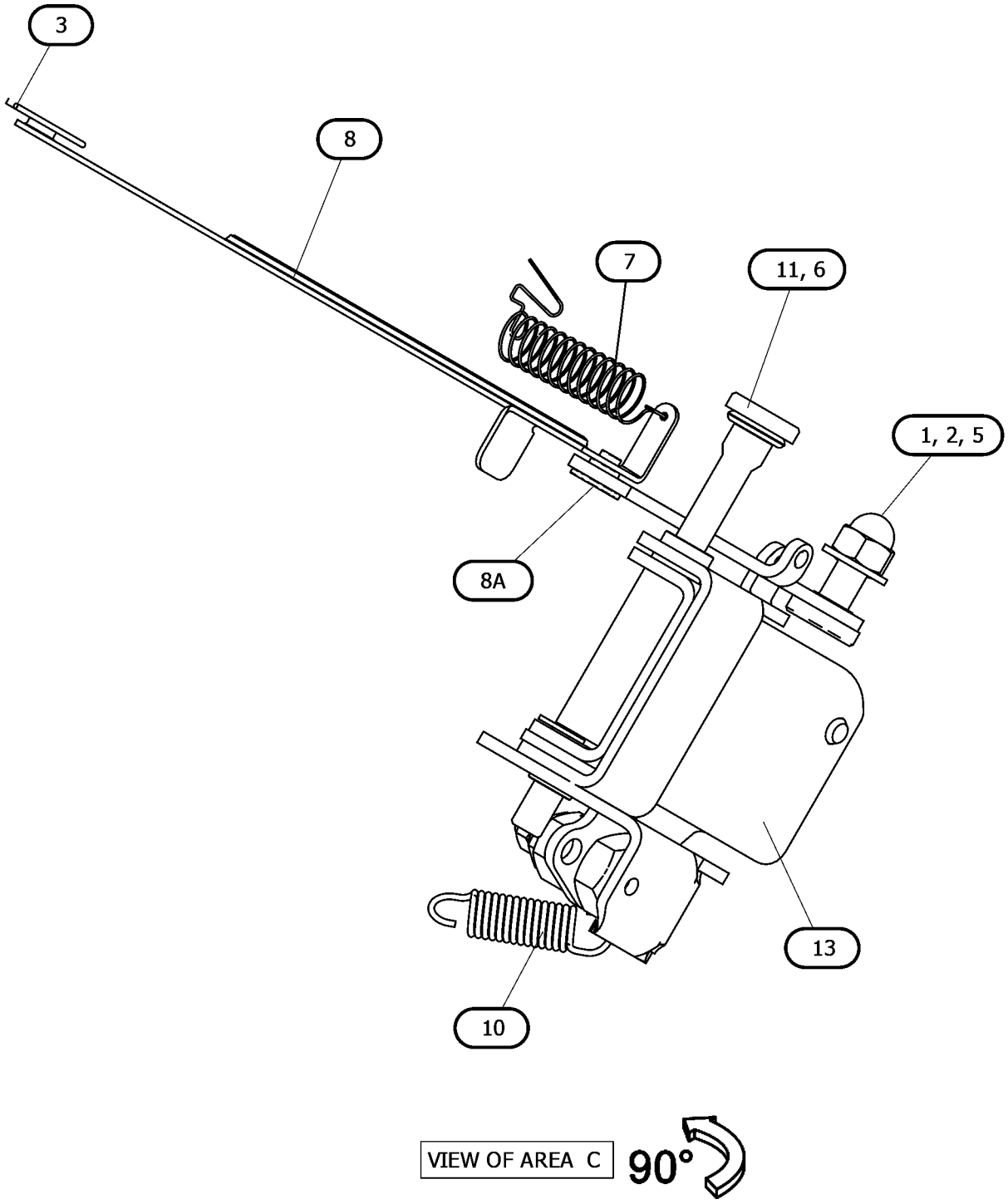

GRAPHIC #3 <END> g07499871_02

390-3725 CONTROL GP-THROTTLE

SMCS-1269 **i08675039**

NOTE	REF NO	GRAPHIC REF	PART NUMBER	QTY	PART NAME 1 2 3 4 5 6 (PRODUCT LEVEL)	SEE PAGE
	1	1	**153-6375**	1	BOLT AS	
	2	1	**153-6415**	2	WASHER (SEAL)	
	3	1	**153-6838**	2	BOLT AS	
	4	1	**285-3555**	2	CLIP	
	5	1	**196-8356**	2	CLIP	
	6	1	**308-1914**	1	LEVER-CONTROL	
	7	1	**321-8217**	1	BOLT	
	8	1	**380-2674**	1	BRACKET	
	9	1	**380-2675**	1	SENSOR-PRESSURE	
	10	1	**380-2676**	1	CONNECTOR	
	11	1	**550-9113**	1	ACTUATOR AS	
	12	1	**380-2680**	1	WASHER	
	13	1	**538-6264**	1	HARNESS AS-ENGINE	
	14	1	**380-2682**	1	HARNESS	
	15	1	**390-3733**	1	TUBE	
C	16	1	**474-9668**	1	CONTROLLER	
M	17	1	**199-1187**	1	NUT (M5X0.8-THD)	
M	18	1	**153-5960**	1	NUT (M6X1-THD)	

C - CHANGE FROM PREVIOUS TYPE
M - METRIC PART

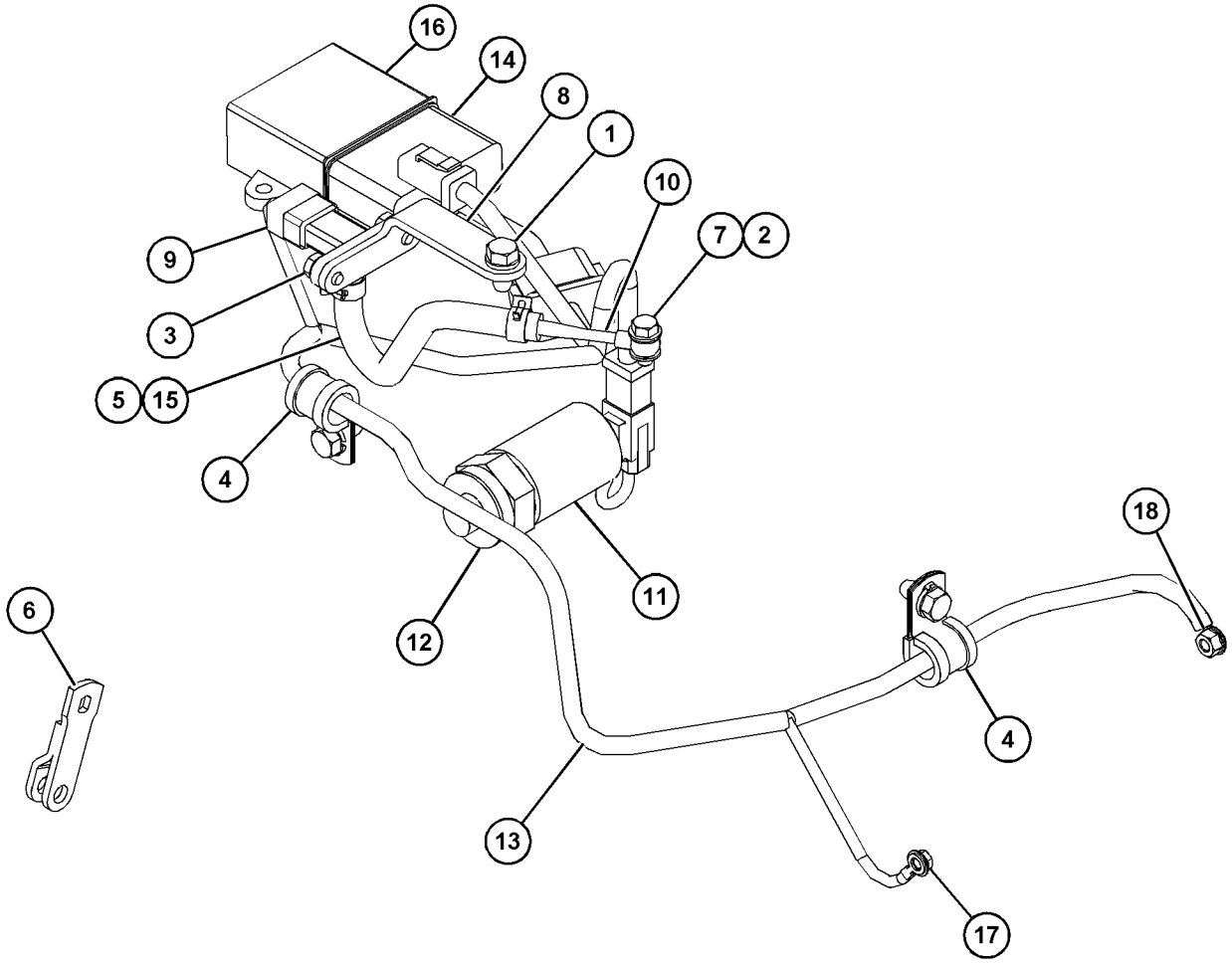

GRAPHIC #1 <END> g03711644

442-9881 CONTROL GP-THROTTLE

PART OF 433-1380 ENGINE AR, 435-1636 ENGINE AR-PRIMARY

SMCS-1269 **i06944059**

NOTE	REF NO	GRAPHIC REF	PART NUMBER	QTY	PART NAME 1 2 3 4 5 6 (PRODUCT LEVEL)	SEE PAGE
	1	1	**153-6412**	1	WASHER	
	2	1	**308-1914**	1	LEVER-CONTROL	

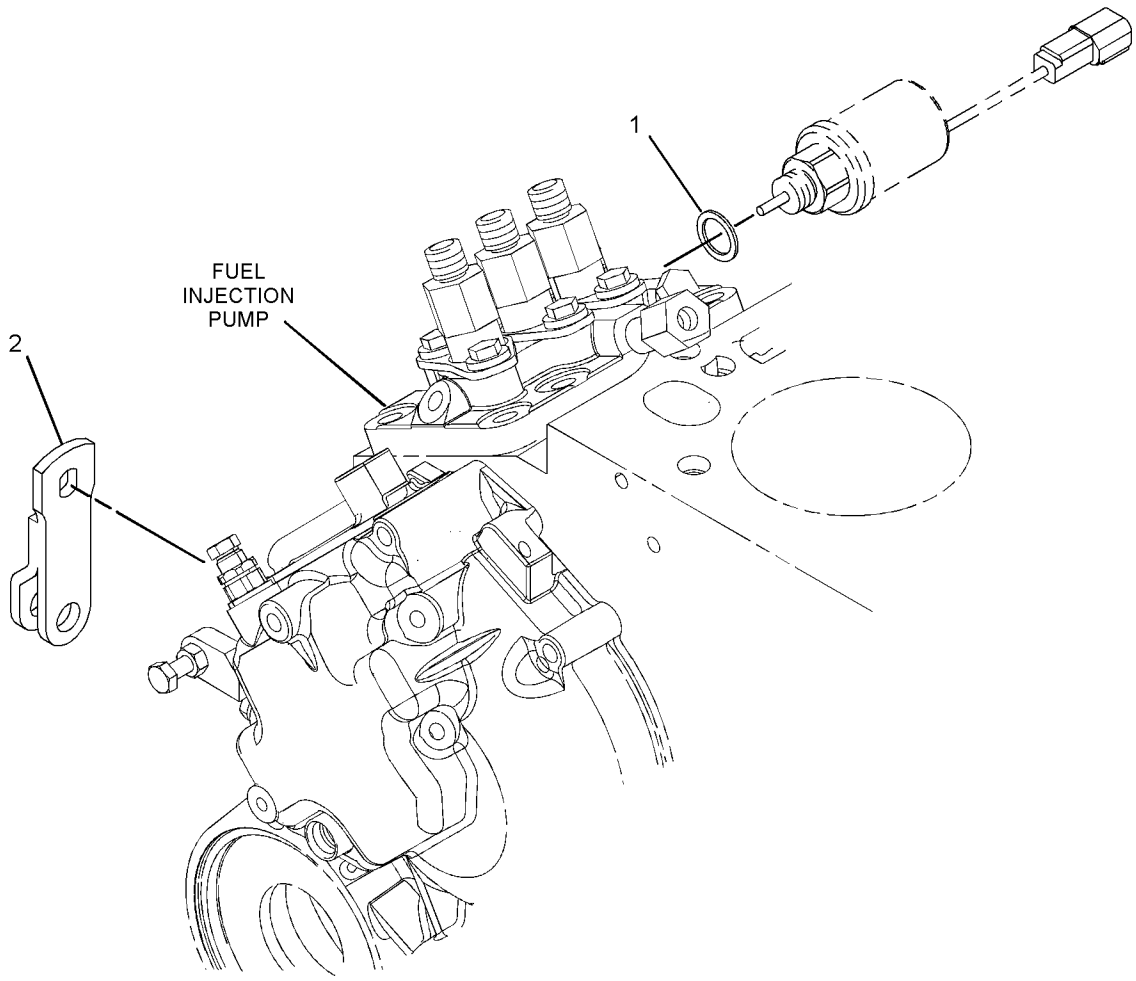

GRAPHIC #1 <END> g03427672

481-2063 FILTER AS-FUEL

PART OF 599-9665 FILTER GP-FUEL

SMCS-1261 **i09705915**

NOTE	REF NO	GRAPHIC REF	PART NUMBER	QTY	PART NAME 1 2 3 4 5 6 (PRODUCT LEVEL)	SEE PAGE
	1	1	**484-9225**	1	SEAL	
	2	1	**432-6658**	1	FILTER-FUEL	
	3	1	**484-9224**	1	SEAL	
	4	1	**484-9222**	1	SEAL	
	5	1	**484-9223**	1	SEAL	

PARTS SHOWN IN GRAPHIC(S) WITHOUT A REFERENCE NUMBER ARE NOT SERVICED SEPARATELY

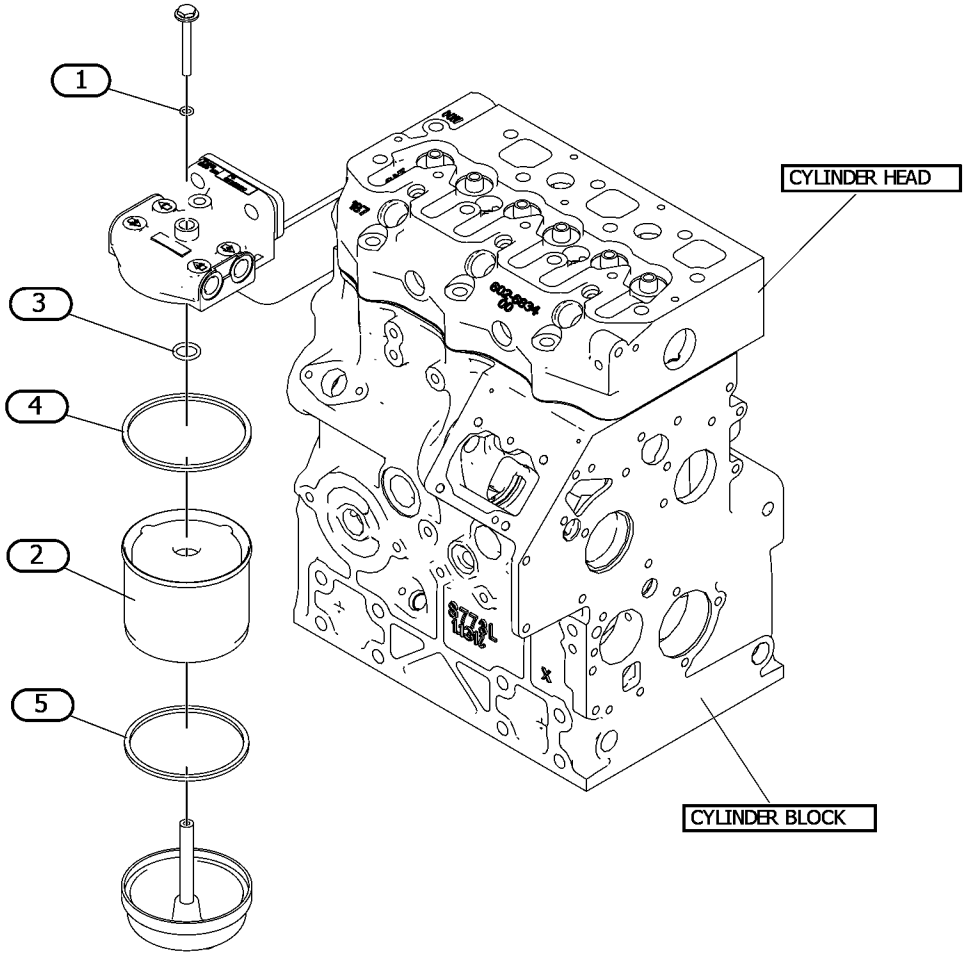

GRAPHIC #1 <END> g07557191

276-1804 FILTER GP-FUEL

PART OF 565-2286, 579-9465 PUMP GP-FUEL PRM & PRIM FILTER

SMCS-1261 **i05980137**

NOTE	REF NO	GRAPHIC REF	PART NUMBER	QTY	PART NAME 1 2 3 4 5 6 (PRODUCT LEVEL)	SEE PAGE
	1	1	**276-1806**	1	FILTER ELEMENT-FUEL	
	2	1	**302-7776**	1	BOWL-FUEL FILTER	
	3	1	**302-7777**	3	PLUG-DRAIN (WATER SEPARATOR)	
	4	1	**302-7778**	1	SEAL	

276-1804 **FILTER GP-FUEL (**contd.**)** **i05980137**

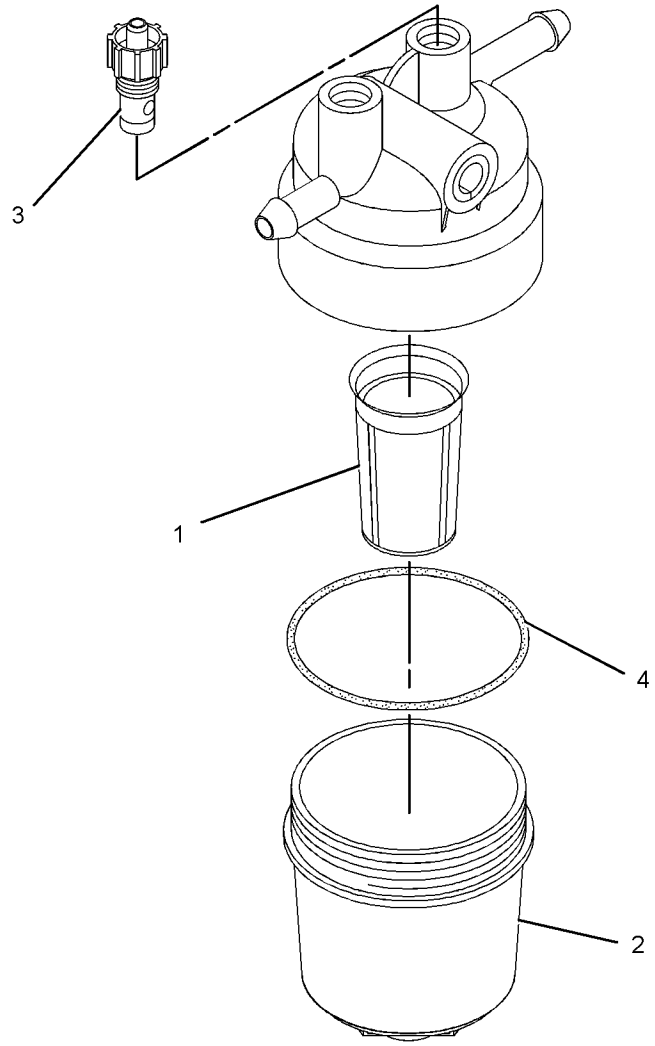

GRAPHIC #1 <END> g01625379

308-5704 FILTER GP-FUEL

SMCS-1261 **i02979431**

NOTE	REF NO	GRAPHIC REF	PART NUMBER	QTY	PART NAME 1 2 3 4 5 6 (PRODUCT LEVEL)	SEE PAGE
	1	1	**276-1804**	1	FILTER GP-FUEL	
	1A	1	**276-1806**	1	FILTER ELEMENT-FUEL (FILTER)	
	1B	1	**302-7776**	1	BOWL-FUEL FILTER	
	1C	1	**302-7777**	3	PLUG-DRAIN (FUEL FILTER)	
	1D	1	**302-7778**	1	SEAL	

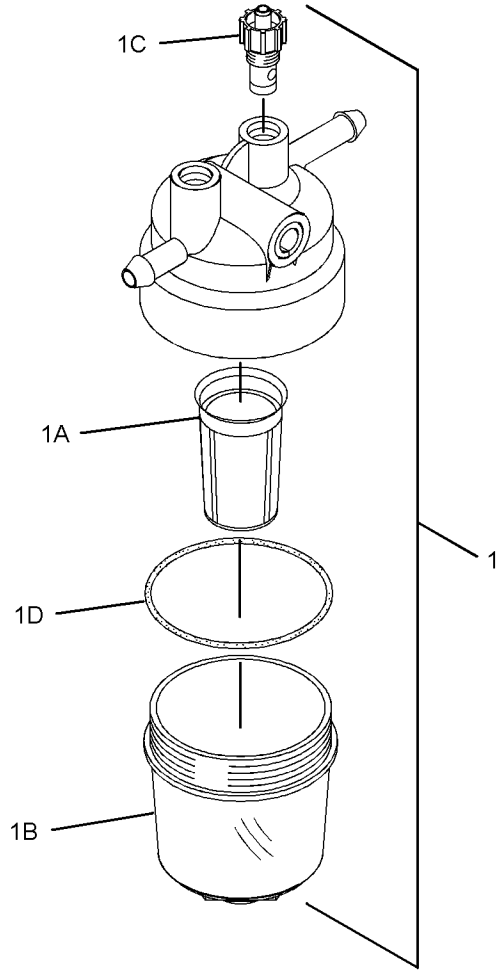

GRAPHIC #1 <END> g01363080

599-9665 FILTER GP-FUEL

PART OF 599-9741 FILTER GP-FUEL, 599-9752 PUMP GP-FILTER & FUEL TRANSFER

SMCS-1261 **i09318858**

NOTE	REF NO	GRAPHIC REF	PART NUMBER	QTY	PART NAME 1 2 3 4 5 6 (PRODUCT LEVEL)	SEE PAGE
	1	1	**7W-4694**	1	PLUG	
	2	1	**067-6269**	2	FERRULE	
	3	1	**246-4361**	1	WASHER (10.5X14X1.5-MM THK)	
	4	1	**033-7849**	2	PLUG	
	5	1	**7X-0796**	2	LOCKWASHER (10.2X18.4X2.5-MM THK)	
M	6	1	**155-8085**	2	NUT (M10X1.5-THD)	
	7	1	**302-4187**	2	TUBE	
	8	1	**311-9048**	2	WASHER	
Y	9	1	*481-2063*	1	FILTER AS-FUEL	758
	10	1	**311-1174**	1	BRACKET	
M	11	1	**6I-0593**	2	BOLT (M10X1.5X30-MM)	

M - METRIC PART
Y - SEPARATE ILLUSTRATION

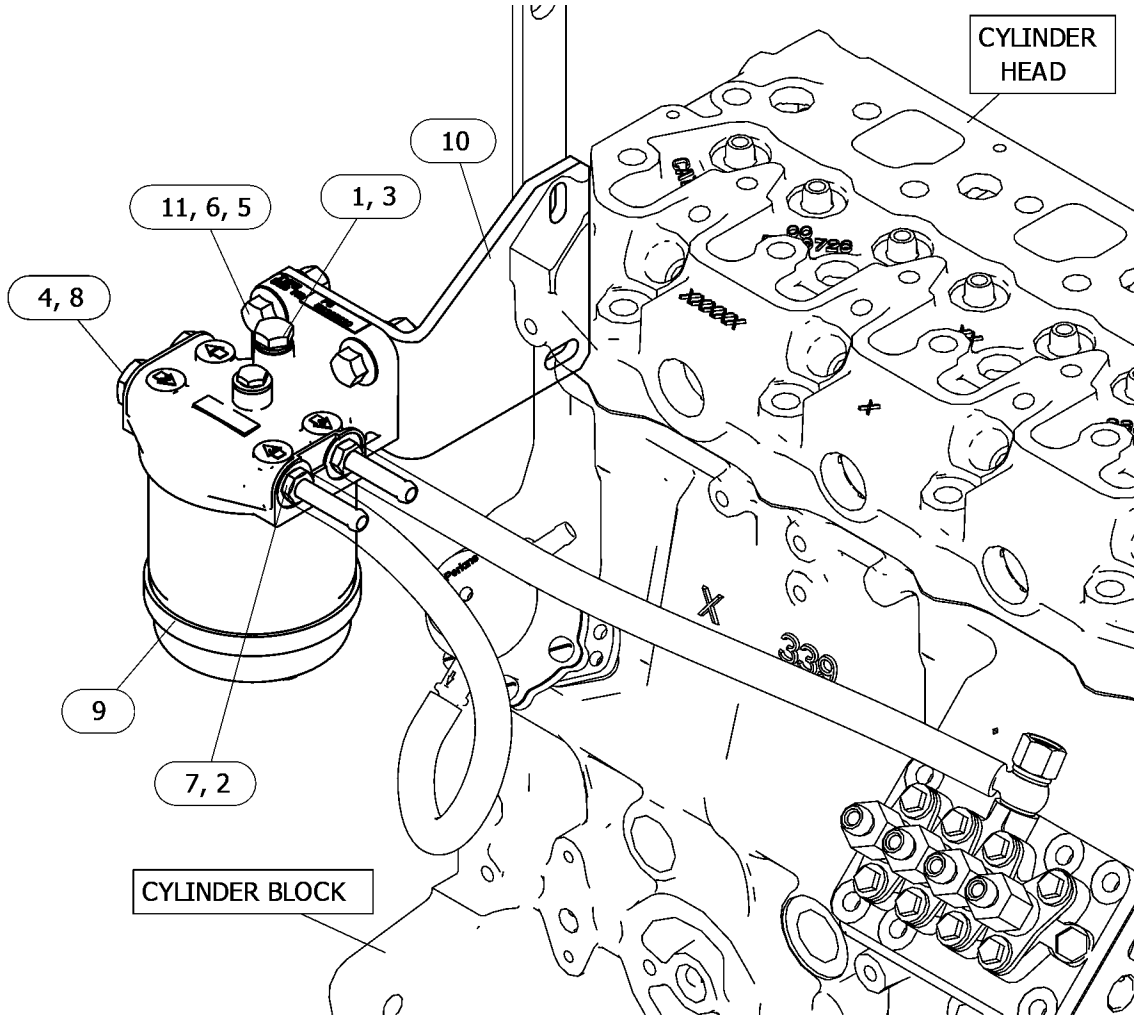

GRAPHIC #1 <END> g06769553

599-9741 FILTER GP-FUEL

PART OF 514-6556 ENGINE AR-PRIMARY

SMCS-1261 **i08803000**

NOTE	REF NO	GRAPHIC REF	PART NUMBER	QTY	PART NAME 1 2 3 4 5 6 (PRODUCT LEVEL)	SEE PAGE
M	1	1	**6I-0846**	2	BOLT (M6X1X14-MM)	
	2	1	**295-4070**	1	PUMP AS-FUEL TRANSFER	
M	3	1	**124-3815**	1	BOLT (M8X1.25X16-MM)	
	4	1	**329-1292**	4	CLIP-HOSE	
M	5	1	**6I-0217**	1	BOLT (M8X1.25X20-MM)	
	6	1	**423-5661**	1	HOSE	
	7	1	**423-5665**	1	HOSE	
Y	8	1	*599-9665*	1	FILTER GP-FUEL	762

M - METRIC PART
Y - SEPARATE ILLUSTRATION

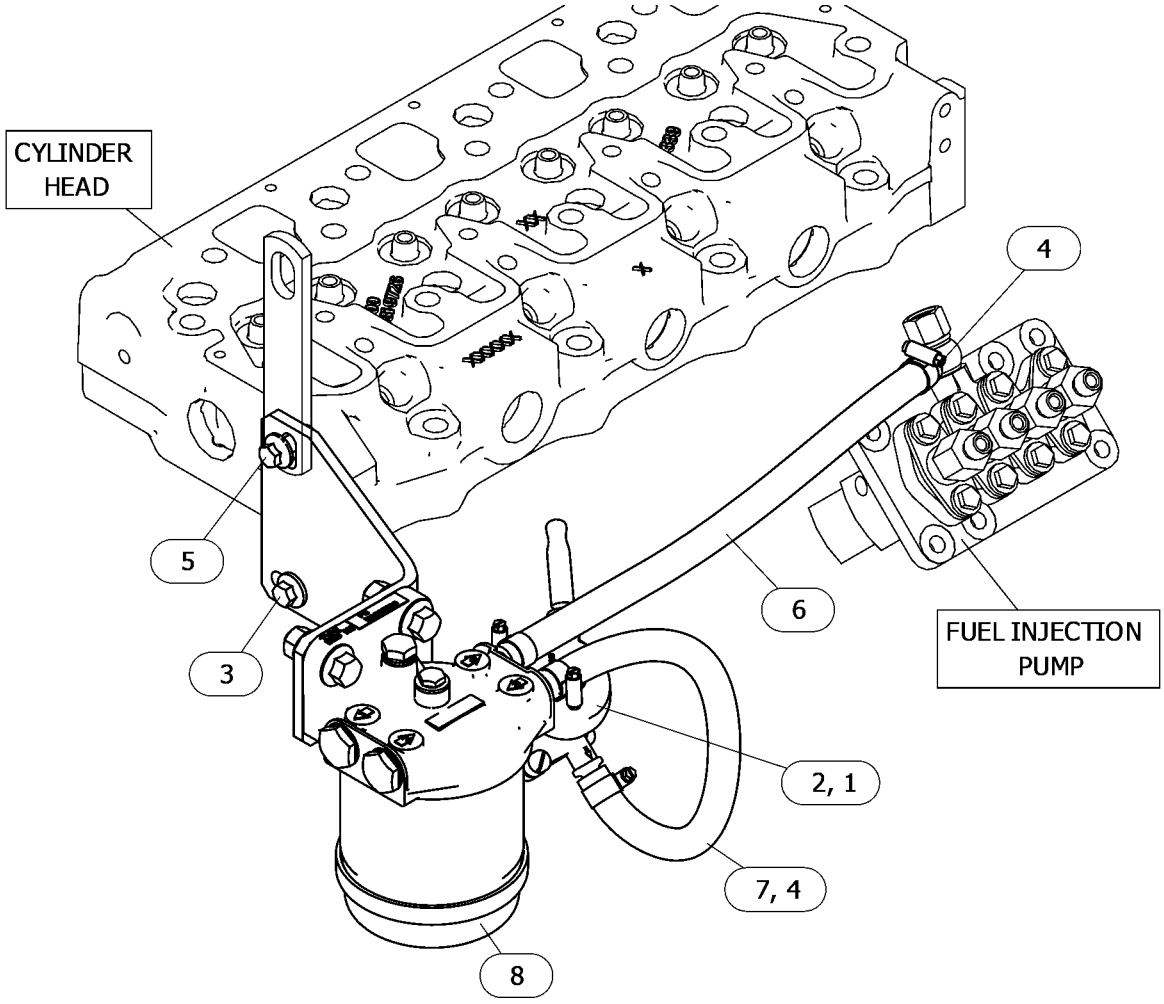

GRAPHIC #1 <END> g06770824

311-9024 GOVERNOR GP

PART OF 435-1641 ENGINE AR-PRIMARY

TYPE 1

SMCS-1264, 1908 **i06930281**

NOTE	REF NO	GRAPHIC REF	PART NUMBER	QTY	PART NAME 1 2 3 4 5 6 (PRODUCT LEVEL)	SEE PAGE
M	1	1	**5C-2890**	1	NUT (M6X1-THD)	
	2	1	**139-5511**	1	CAP (TAMPER RESISTANT)	
M	3	1	**153-5592**	1	NUT (M8X1.25-THD)	
	4	1	**153-6415**	2	WASHER (SEAL)	
	5	1	**153-7983**	1	PIN	
	6	1	**095-1574**	1	SEAL-O-RING	
M	7	1	**369-4486**	2	BOLT (M6X1X35-MM)	
M	8	1	**162-2207**	1	NUT (M6X1-THD)	
M	9	1	**106-8916**	4	BOLT (M6X1X16-MM)	
	10	1	**217-7115**	1	CAP (TAMPER RESISTANT)	
	11	1	**335-5578**	1	BRACKET	
	12	1	**423-7724**	1	GASKET	
	13	1	**334-0732**	1	ARM AS (FRONT HOUSING)	
	14	1	**308-1882**	1	SPRING	
	15	1	**390-3729**	1	LEVER-CONTROL	
M	16	1	**308-1889**	1	NUT (M10X1.25-THD)	
	17	1	**322-7493**	1	LEVER AS-CONTROL	
M	18	1	**308-1892**	1	NUT (M6X1-THD)	
	19	1	**308-1897**	2	RING	
	20	1	**425-7065**	1	CAP-TAMPER PROOF	
	21	1	**321-4249**	1	NUT	
	22	1	**330-9189**	1	PLUG	
	23	1	**308-4266**	1	SHAFT	
	24	1	**390-3731**	1	SHAFT	
	25	1	**309-6729**	1	SEAL-O-RING	
	26	1	**319-3252**	1	SENSOR AS-SPEED (ENGINE TIMING)	
	27	1	**340-4756**	1	BOLT AS	
	27A	1	**153-7987**	1	WASHER (9.2X17X1.8-MM THK)	
M	27B	1	**191-9297**	1	NUT (M10X1.25-THD)	
	27C	1	**340-4755**	1	SPRING	
M	28	1	**495-0737**	1	BOLT (M6X0.5X19.5-MM)	
	29	1	**317-7195**	1	SPRING	
	30	1	**311-0655**	1	SPRING	
	31	1	**336-2965**	1	SPRING	
	32	1	**308-1875**	1	SEAL-O-RING	

M - METRIC PART

311-9024 **GOVERNOR GP (**contd.**)** **i06930281**

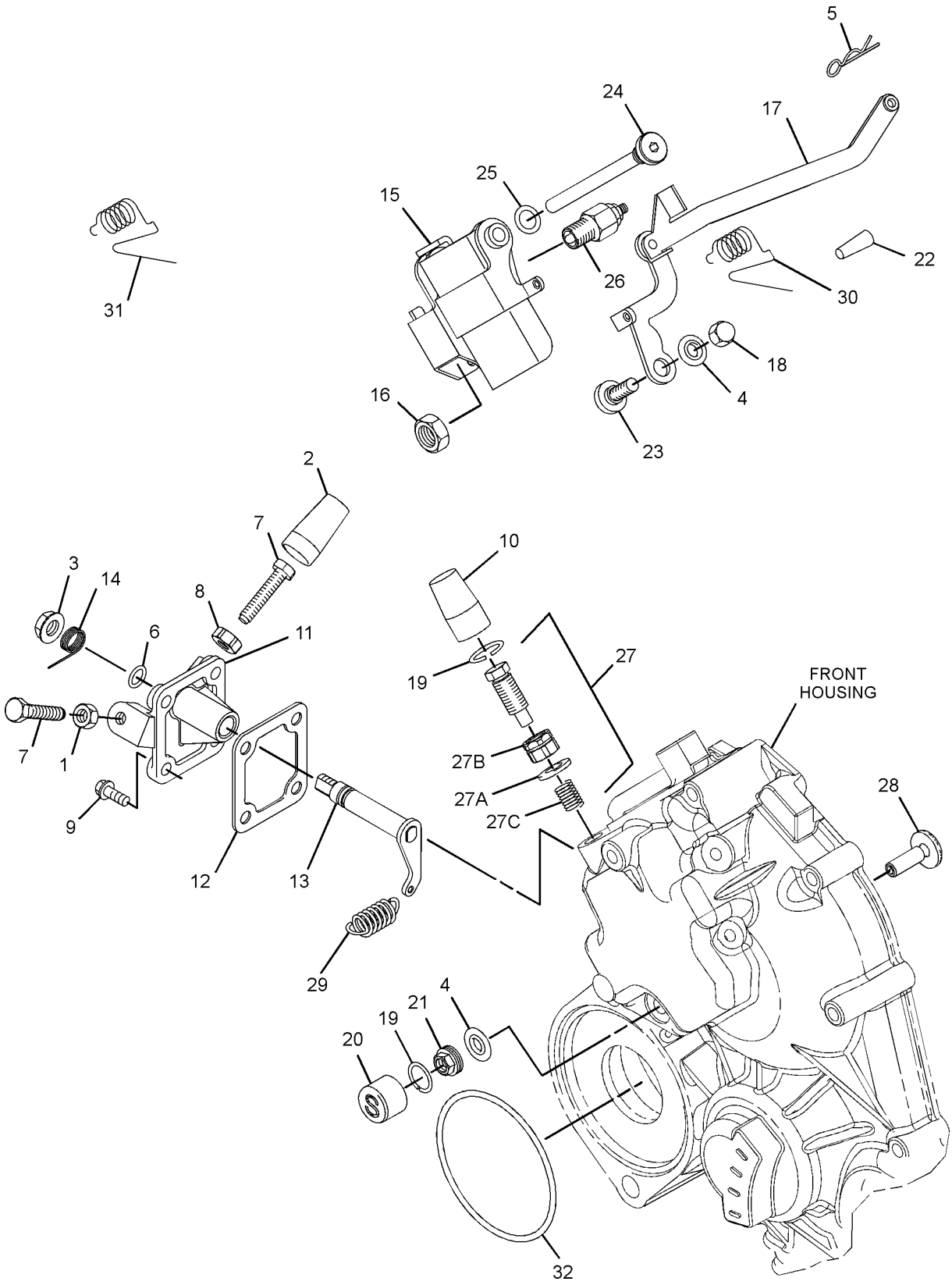

GRAPHIC #1 <END> g06175107

311-9024 GOVERNOR GP

PART OF 435-1641 ENGINE AR-PRIMARY

TYPE 2

SMCS-1264, 1908 **i08611892**

NOTE	REF NO	GRAPHIC REF	PART NUMBER	QTY	PART NAME 1 2 3 4 5 6 (PRODUCT LEVEL)	SEE PAGE
M	1	1	**5C-2890**	1	NUT (M6X1-THD)	
	2	1	**139-5511**	1	CAP (TAMPER RESISTANT)	
M	3	1	**153-5592**	1	NUT (M8X1.25-THD)	
	4	1	**153-6415**	2	WASHER (SEAL)	
	5	1	**153-7983**	1	PIN	
	6	1	**095-1574**	1	SEAL-O-RING	
M	7	1	**7X-2533**	2	BOLT (M6X1X35-MM)	
M	8	1	**162-2207**	1	NUT (M6X1-THD)	
M	9	1	**106-8916**	4	BOLT (M6X1X16-MM)	
	10	1	**217-7115**	1	CAP (TAMPER RESISTANT)	
	11	1	**335-5578**	1	BRACKET	
	12	1	**423-7724**	1	GASKET	
	13	1	**334-0732**	1	ARM AS (FRONT HOUSING)	
	14	1	**308-1882**	1	SPRING	
	15	1	**580-0398**	1	LEVER AS-CONTROL	
M	16	1	**308-1889**	1	NUT (M10X1.25-THD)	
	17	1	**322-7493**	1	LEVER AS-CONTROL	
		1	**154-1400**	1	PIN	
M	18	1	**308-1892**	1	NUT (M6X1-THD)	
C	19	1	**308-1897**	1	RING	
C	21	1	**502-9478**	1	NUT (TAMPER RESISTANT)	
	22	1	**330-9189**	1	PLUG	
	23	1	**308-4266**	1	SHAFT	
	24	1	**390-3731**	1	SHAFT	
	25	1	**309-6729**	1	SEAL-O-RING	
	26	1	**319-3252**	1	SENSOR AS-SPEED (ENGINE TIMING)	
M	26A	1	**5C-8312**	1	NUT (M4X0.7-THD)	
	27	1	**340-4756**	1	BOLT AS	
	27A	1	**153-7987**	1	WASHER (9.2X17X1.8-MM THK)	
M	27B	1	**191-9297**	1	NUT (M10X1.25-THD)	
	27C	1	**340-4755**	1	SPRING	
M	28	1	**495-0737**	1	BOLT (M6X0.5X19.5-MM)	
	29	1	**317-7195**	1	SPRING	
	30	1	**311-0655**	1	SPRING	
	31	1	**336-2965**	1	SPRING	
	32	1	**308-1875**	1	SEAL-O-RING	
C	33	1	**502-5421**	1	PIN	
C	34	1	**503-9707**	1	CAP	
C	35	1	**503-9731**	1	SHROUD	

C - CHANGE FROM PREVIOUS TYPE
M - METRIC PART

311-9024 **GOVERNOR GP (**contd.**)** **i08611892**

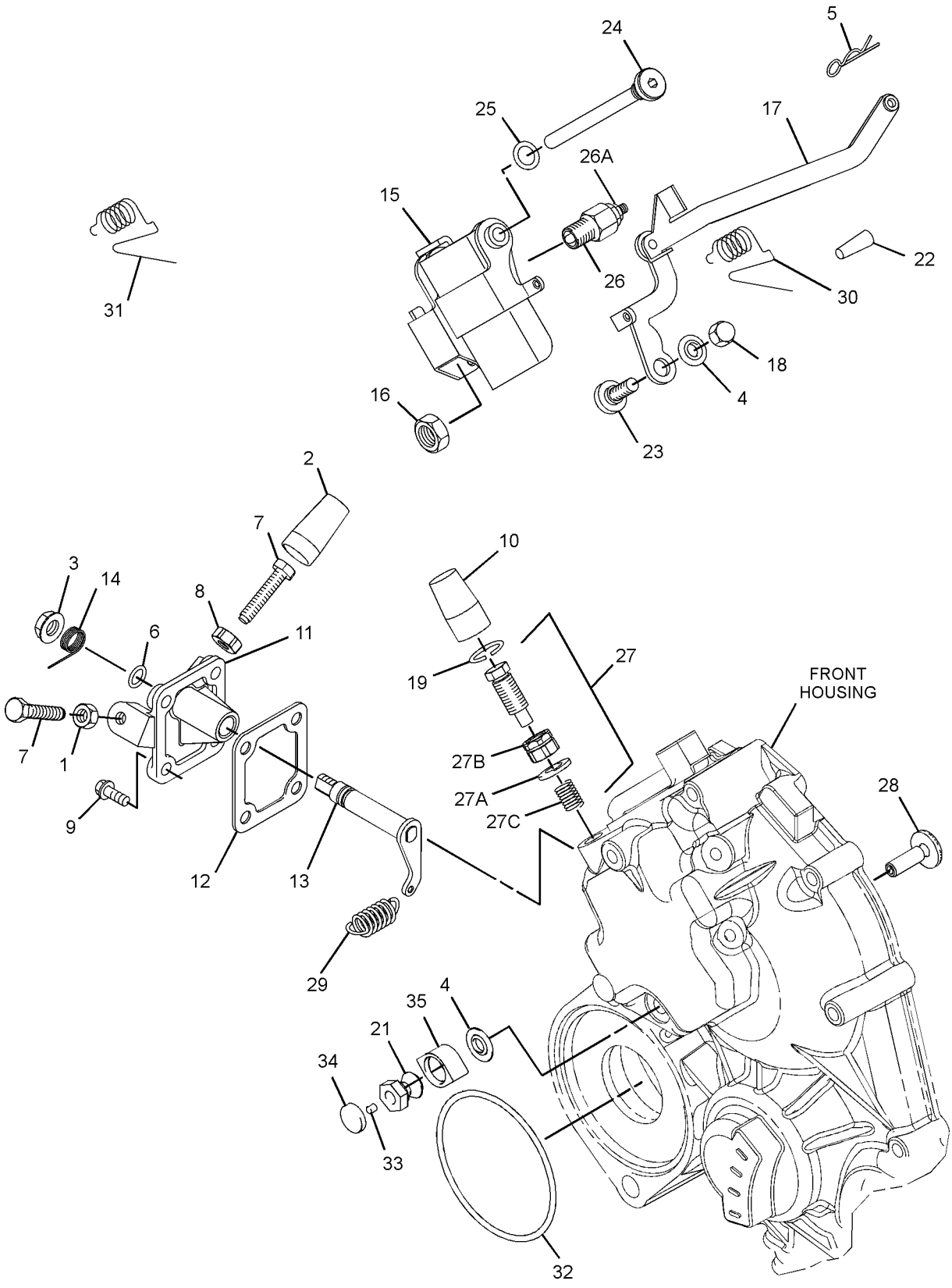

GRAPHIC #1 <END> g07539577

317-0967 GOVERNOR GP

PART OF 489-9224 ENGINE AR-PRIMARY
TYPE 2

SMCS-1264, 1908 **i06880988**

NOTE	REF NO	GRAPHIC REF	PART NUMBER	QTY	PART NAME 1 2 3 4 5 6 (PRODUCT LEVEL)	SEE PAGE
M	1	1	**5C-2890**	1	NUT (M6X1-THD)	
	2	1	**139-5511**	1	CAP (TAMPER RESISTANT)	
M	3	1	**153-5592**	1	NUT (M8X1.25-THD)	
	4	1	**153-6415**	2	WASHER (SEAL)	
	5	1	**153-7983**	1	PIN	
	6	1	**095-1574**	1	SEAL-O-RING	
	7	1	**309-6729**	1	SEAL-O-RING	
M	8	1	**369-4486**	2	BOLT (M6X1X35-MM)	
M	9	1	**162-2207**	1	NUT (M6X1-THD)	
M	10	1	**249-7263**	4	BOLT (M6X1X16-MM)	
	11	1	**217-7115**	1	CAP (TAMPER RESISTANT)	
	12	1	**335-5578**	1	BRACKET	
	13	1	**423-7724**	1	GASKET	
C	14	1	**334-0732**	1	ARM AS (FRONT HOUSING)	
	15	1	**308-1882**	1	SPRING	
M	16	1	**308-1889**	1	NUT (M10X1.25-THD)	
C	17	1	**322-7493**	1	LEVER AS-CONTROL	
M	18	1	**308-1892**	1	NUT (M6X1-THD)	
	19	1	**308-1897**	1	RING	
	20	1	**425-7065**	1	CAP-TAMPER PROOF	
	21	1	**321-4249**	1	NUT	
	22	1	**330-9189**	1	PLUG	
	23	1	**308-4266**	1	SHAFT	
	24	1	**309-6728**	1	SHAFT	
	25	1	**364-2755**	1	BOLT-SPECIAL	
	26	1	**317-7195**	1	SPRING	
	27	1	**311-0655**	1	SPRING	
	28	1	**313-5832**	1	BOLT AS	
	28A	1	**153-7987**	1	WASHER (9.2X17X1.8-MM THK)	
M	28B	1	**191-9297**	1	NUT (M10X1.25-THD)	
	28C	1	**313-5833**	1	SPRING	
	29	1	**336-2965**	1	SPRING	
	30	1	**319-3251**	1	GOVERNOR GP (ENGINE TIMING)	
	31	1	**322-7492**	1	LEVER-CONTROL	

C - CHANGE FROM PREVIOUS TYPE
M - METRIC PART

317-0967 **GOVERNOR GP (**contd.**)** **i06880988**

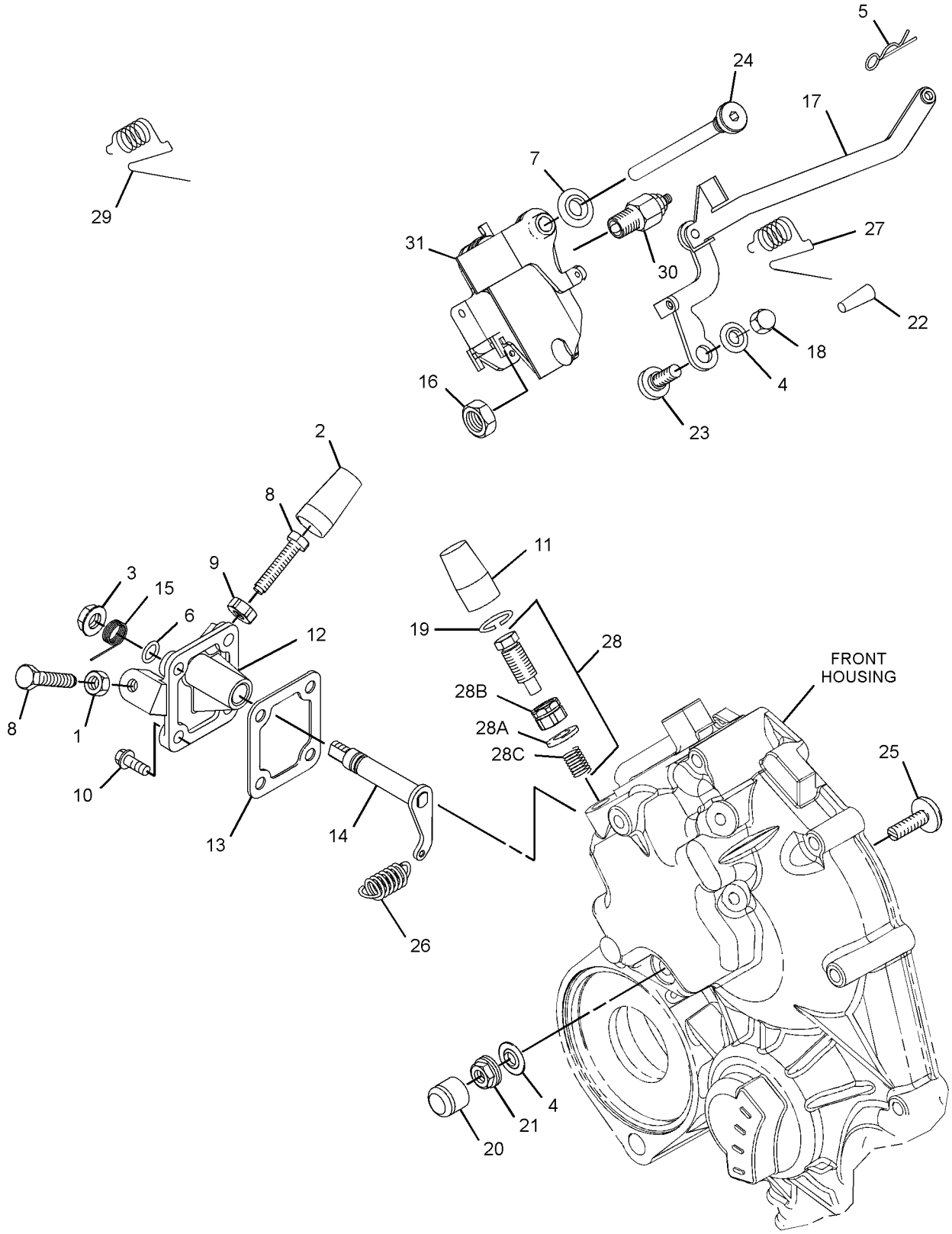

GRAPHIC #1 <END> g06113605

317-0967 GOVERNOR GP

PART OF 489-9224 ENGINE AR-PRIMARY

TYPE 1

SMCS-1264, 1908 **i08309083**

NOTE	REF NO	GRAPHIC REF	PART NUMBER	QTY	PART NAME 1 2 3 4 5 6 (PRODUCT LEVEL)	SEE PAGE
M	1	1	**5C-2890**	1	NUT (M6X1-THD)	
	2	1	**139-5511**	1	CAP (TAMPER RESISTANT)	
M	3	1	**153-5592**	1	NUT (M8X1.25-THD)	
	4	1	**153-6415**	2	WASHER (SEAL)	
	5	1	**153-7983**	1	PIN	
	6	1	**095-1574**	1	SEAL-O-RING	
	7	1	**309-6729**	1	SEAL-O-RING	
M	8	1	**7X-2533**	2	BOLT (M6X1X35-MM)	
M	9	1	**162-2207**	1	NUT (M6X1-THD)	
M	10	1	**249-7263**	4	BOLT (M6X1X16-MM)	
	11	1	**217-7115**	1	CAP (TAMPER RESISTANT)	
	12	1	**335-5578**	1	BRACKET	
	13	1	**423-7724**	1	GASKET	
	14	1	**334-0732**	1	ARM AS (FRONT HOUSING)	
	15	1	**308-1882**	1	SPRING	
M	16	1	**308-1889**	1	NUT (M10X1.25-THD)	
	17	1	**322-7493**	1	LEVER AS-CONTROL	
M	18	1	**308-1892**	1	NUT (M6X1-THD)	
C	20	1	**503-9707**	1	CAP	
C	21	1	**502-9478**	1	NUT (TAMPER RESISTANT)	
	22	1	**330-9189**	1	PLUG	
	23	1	**308-4266**	1	SHAFT	
	24	1	**390-3731**	1	SHAFT	
	25	1	**364-2755**	1	BOLT-SPECIAL	
	26	1	**317-7195**	1	SPRING	
	27	1	**311-0655**	1	SPRING	
	28	1	**313-5832**	1	BOLT AS	
	28A	1	**153-7987**	1	WASHER (9.2X17X1.8-MM THK)	
M	28B	1	**191-9297**	1	NUT (M10X1.25-THD)	
	28C	1	**313-5833**	1	SPRING	
	29	1	**336-2965**	1	SPRING	
	30	1	**319-3251**	1	GOVERNOR GP (ENGINE TIMING)	
M		1	**155-8076**	1	NUT (M4X0.4-THD)	
	31	1	**580-0398**	1	LEVER AS-CONTROL	
C	32	1	**503-9731**	1	SHROUD	
C	33	1	**502-5421**	1	PIN	

C - CHANGE FROM PREVIOUS TYPE
M - METRIC PART

317-0967 **GOVERNOR GP (**contd.**)** **i08309083**

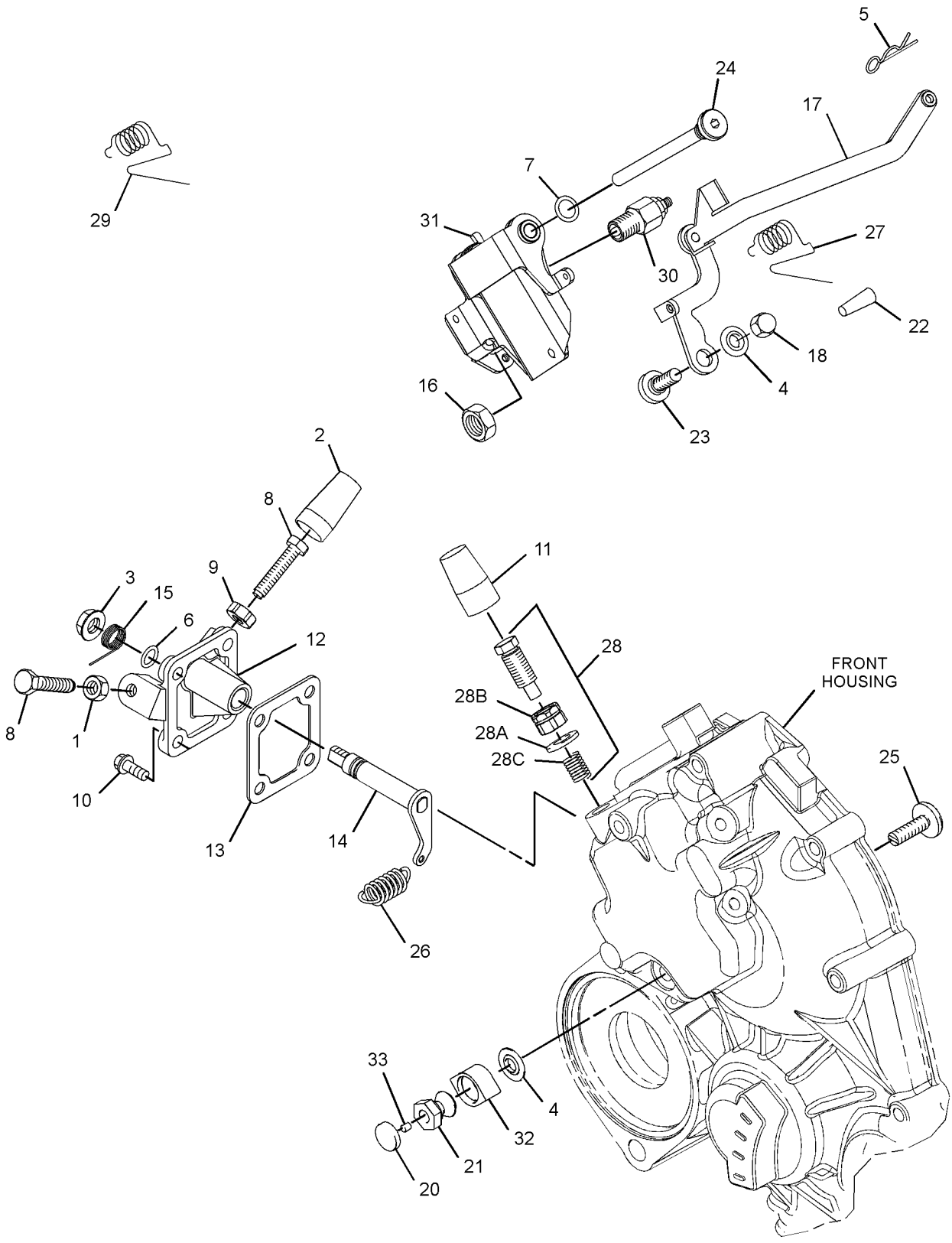

GRAPHIC #1 <END> g06756199

323-9146 GOVERNOR GP

SMCS-1264, 1908 **i05877888**

NOTE	REF NO	GRAPHIC REF	PART NUMBER	QTY	PART NAME 1 2 3 4 5 6 (PRODUCT LEVEL)	SEE PAGE
M	1	1	**5C-2890**	1	NUT (M6X1-THD)	
	2	1	**139-5511**	1	CAP (TAMPER RESISTANT)	
M	3	1	**153-5592**	2	NUT (M8X1.25-THD)	
	4	1	**153-6415**	5	WASHER (SEAL)	
	5	1	**153-6861**	1	BOLT AS	
	6	1	**153-7983**	1	PIN	
	7	1	**095-1574**	1	SEAL-O-RING	
	8	1	**154-2715**	1	WASHER	
M	9	1	**369-4486**	2	BOLT (M6X1X35-MM)	
M	10	1	**162-2207**	1	NUT (M6X1-THD)	
BJM	11	1	**106-8916**	4	BOLT (M6X1X16-MM)	
					—OR—	
BLM		1	**183-3572**	4	BOLT (M6X1X16-MM)	
M	12	1	**217-5860**	4	BOLT (M4XO.7X8-MM)	
	13	1	**217-7115**	1	CAP (TAMPER RESISTANT)	
	14	1	**232-0218**	2	CLAMP	
	15	1	**232-0290**	1	CONNECTOR	
	16	1	**335-5578**	1	BRACKET	
	17	1	**423-7724**	1	GASKET	
	18	1	**334-0732**	1	ARM AS (FRONT HOUSING)	
	19	1	**308-1882**	1	SPRING	
M	20	1	**308-1889**	1	NUT (M10X1.25-THD)	
	21	1	**322-7493**	1	LEVER AS-CONTROL	
M	22	1	**308-1892**	1	NUT (M6X1-THD)	
	23	1	**308-1897**	2	RING	
	25	1	**377-2885**	1	SHAFT	
	26	1	**390-3731**	1	SHAFT	
	27	1	**364-2755**	1	BOLT-SPECIAL	
	28	1	**311-0655**	1	SPRING	
	29	1	**313-5832**	1	BOLT AS	
	29A	1	**153-7987**	1	WASHER (9.2X17X1.8-MM THK)	
M	29B	1	**191-9297**	1	NUT (M10X1.25-THD)	
	29C	1	**313-5833**	1	SPRING	
	30	1	**390-3729**	1	LEVER-CONTROL	
	31	1	**317-7195**	1	SPRING	
	32	1	**321-4249**	2	NUT	
	33	1	**321-8209**	1	SENSOR AS-SPEED (ENGINE TIMING)	
	34	1	**425-7065**	1	CAP-TAMPER PROOF	
	35	1	**321-8211**	1	DIAPHRAGM	
	36	1	**321-8212**	1	COVER	
	37	1	**321-8214**	1	BOLT	
	38	1	**328-5174**	1	LEVER-STOP	
	39	1	**321-8216**	1	TUBE	
	40	1	**321-8217**	1	BOLT	
	41	1	**321-8218**	1	HOSE	
	42	1	**336-2965**	1	SPRING	
	43	1	**330-9189**	1	PLUG	
	44	1	**285-3555**	1	CLIP	
	45	1	**153-6375**	1	BOLT AS	

323-9146 **GOVERNOR GP (**contd.**)** **i05877888**

NOTE	REF NO	GRAPHIC REF	PART NUMBER	QTY	PART NAME 1 2 3 4 5 6 (PRODUCT LEVEL)	SEE PAGE
	46	1	**380-3717**	1	SHIM (0.1-MM THK)	
	47	1	**380-3716**	1	SHIM (0.15-MM THK)	
	48	1	**380-3715**	1	SHIM (0.2-MM THK)	

B - USE AS REQUIRED
J - FOR USE WITH PSEL & PSEA BUILT ENGINES ONLY
L - FOR USE WITH ISM BUILT ENGINES ONLY
M - METRIC PART

323-9146 **GOVERNOR GP** (contd.) **i05877888**

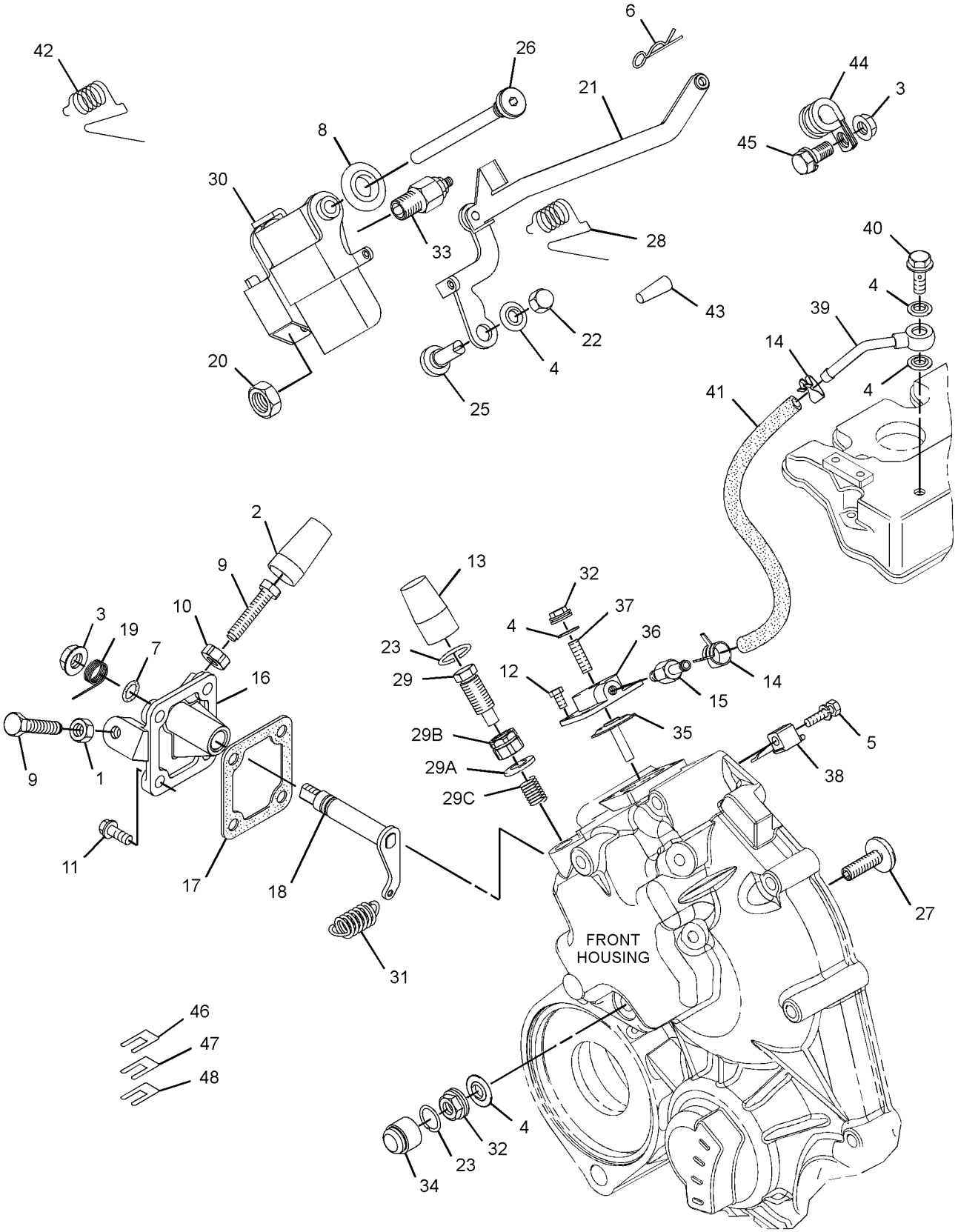

GRAPHIC #1 <END> g03808216

344-5470 GOVERNOR GP

SMCS-1264, 1908 **i05249409**

NOTE	REF NO	GRAPHIC REF	PART NUMBER	QTY	PART NAME 1 2 3 4 5 6 (PRODUCT LEVEL)	SEE PAGE
M	1	1	**5C-2890**	1	NUT (M6X1-THD)	
	2	1	**139-5511**	1	CAP (TAMPER RESISTANT)	
M	3	1	**153-5592**	2	NUT (M8X1.25-THD)	
	4	1	**153-6375**	1	BOLT AS	
	5	1	**153-6415**	5	WASHER (SEAL)	
	6	1	**153-6861**	1	BOLT AS	
	7	1	**153-7983**	1	PIN	
	8	1	**095-1574**	1	SEAL-O-RING	
M	9	1	**369-4486**	2	BOLT (M6X1X35-MM)	
M	10	1	**162-2207**	1	NUT (M6X1-THD)	
M	11	1	**217-5860**	4	BOLT (M4X0.7X8-MM)	
	12	1	**217-7115**	1	CAP (TAMPER RESISTANT)	
	13	1	**232-0218**	2	CLAMP	
	14	1	**232-0290**	1	CONNECTOR	
M	15	1	**106-8916**	4	BOLT (M6X1X16-MM)	
	16	1	**308-1878**	1	GASKET	
	17	1	**308-1882**	1	SPRING	
M	18	1	**308-1889**	1	NUT (M10X1.25-THD)	
M	19	1	**308-1892**	1	NUT (M6X1-THD)	
	20	1	**308-1897**	1	RING	
	21	1	**308-1901**	1	CAP	
	22	1	**308-4266**	1	SHAFT	
	23	1	**309-6728**	1	SHAFT	
	24	1	**309-6729**	1	SEAL-O-RING	
	25	1	**364-2755**	1	BOLT-SPECIAL	
	26	1	**311-0655**	1	SPRING	
	27	1	**313-5832**	1	BOLT AS	
	27A	1	**153-7987**	1	WASHER (9.2X17X1.8-MM THK)	
M	27B	1	**191-9297**	1	NUT (M10X1.25-THD)	
	27C	1	**313-5833**	1	SPRING	
	28	1	**317-7195**	1	SPRING	
	29	1	**321-4249**	2	NUT	
	30	1	**321-8209**	1	SENSOR AS-SPEED (ENGINE TIMING)	
	31	1	**321-8211**	1	DIAPHRAGM	
	32	1	**321-8212**	1	COVER	
	33	1	**321-8214**	1	BOLT	
	34	1	**321-8216**	1	TUBE	
	35	1	**321-8217**	1	BOLT	
	36	1	**321-8218**	1	HOSE	
	37	1	**322-7492**	1	LEVER-CONTROL	
	38	1	**322-7493**	1	LEVER AS-CONTROL	
	39	1	**328-5174**	1	LEVER-STOP	
	40	1	**330-9189**	1	PLUG	
	41	1	**332-1361**	1	CAP-PROTECTION	
	42	1	**334-0732**	1	ARM AS (FRONT HOUSING)	
	43	1	**335-5578**	1	BRACKET	
	44	1	**285-3555**	1	CLIP	
	45	1	**336-2965**	1	SPRING	
B	46	1	**380-3715**	1	SHIM (0.2-MM THK)	

344-5470 **GOVERNOR GP** (contd.) **i05249409**

NOTE	REF NO	GRAPHIC REF	PART NUMBER	QTY	PART NAME 1 2 3 4 5 6 (PRODUCT LEVEL)	SEE PAGE
B		1	**380-3716**	1	SHIM (0.15-MM THK)	
B		1	**380-3717**	1	SHIM (0.1-MM THK)	

B - USE AS REQUIRED
M - METRIC PART

344-5470 **GOVERNOR GP (**contd.**)** **i05249409**

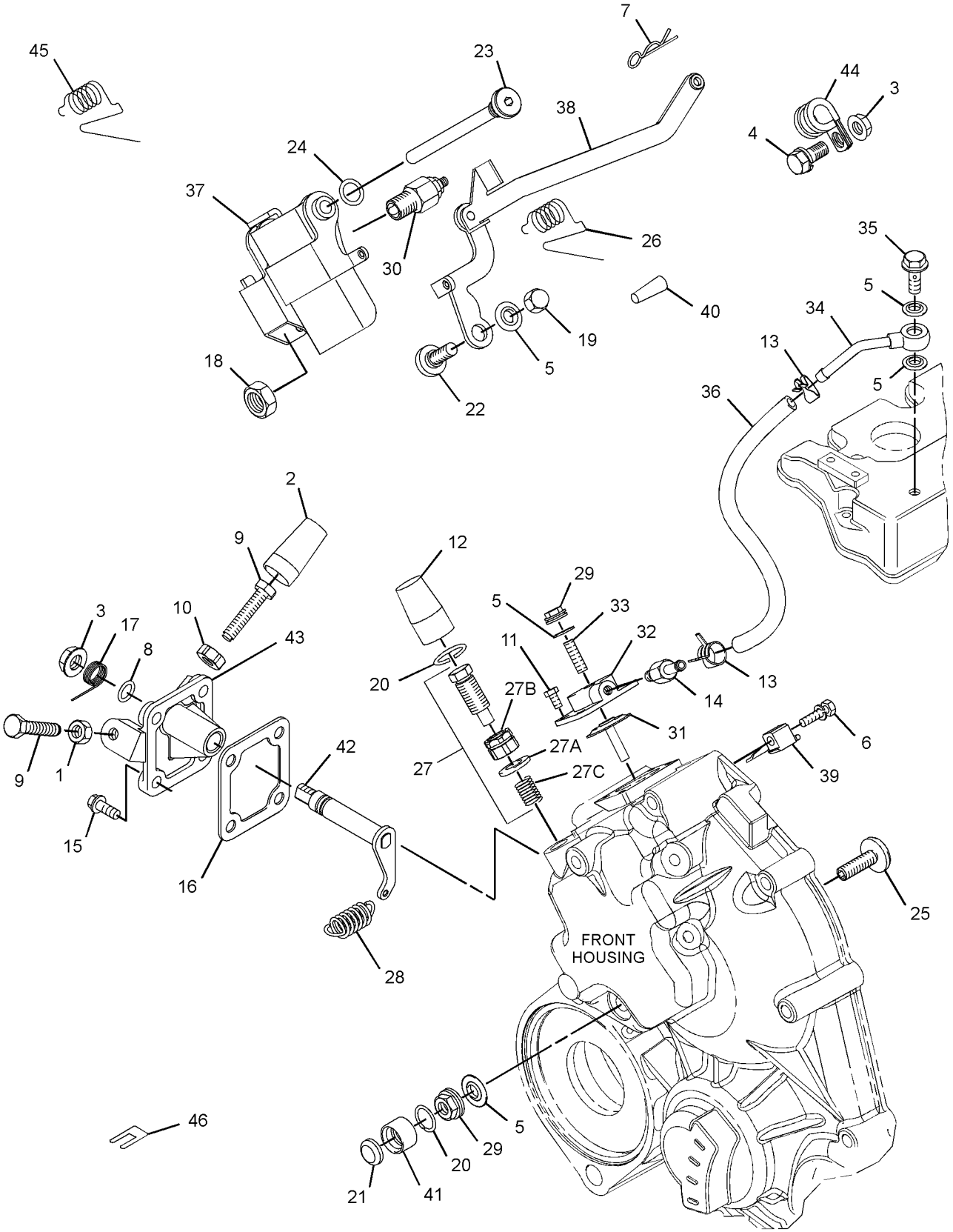

GRAPHIC #1 <END> g03702905

373-7283 GOVERNOR GP

PART OF 435-1658 ENGINE AR-PRIMARY

TYPE 1

SMCS-1264, 1908 **i06880210**

NOTE	REF NO	GRAPHIC REF	PART NUMBER	QTY	PART NAME 1 2 3 4 5 6 (PRODUCT LEVEL)	SEE PAGE
M	1	1	**5C-2890**	1	NUT (M6X1-THD)	
	2	1	**095-1574**	1	SEAL-O-RING	
M	3	1	**106-8916**	4	BOLT (M6X1X16-MM)	
	4	1	**139-5511**	1	CAP (TAMPER RESISTANT)	
M	5	1	**153-5592**	1	NUT (M8X1.25-THD)	
	6	1	**153-6415**	2	WASHER (SEAL)	
	7	1	**153-7983**	1	PIN	
M	8	1	**162-2207**	1	NUT (M6X1-THD)	
	9	1	**217-7115**	1	CAP (TAMPER RESISTANT)	
	10	1	**423-7724**	1	GASKET	
	11	1	**308-1882**	1	SPRING	
M	12	1	**308-1889**	1	NUT (M10X1.25-THD)	
M	13	1	**308-1892**	1	NUT (M6X1-THD)	
	14	1	**308-1897**	2	RING	
	16	1	**308-4266**	1	SHAFT	
	17	1	**390-3731**	1	SHAFT	
	18	1	**311-0655**	1	SPRING	
	19	1	**313-5832**	1	BOLT AS	
	19A	1	**153-7987**	1	WASHER (9.2X17X1.8-MM THK)	
M	19B	1	**191-9297**	1	NUT (M10X1.25-THD)	
	19C	1	**313-5833**	1	SPRING	
	20	1	**317-7195**	1	SPRING	
	21	1	**319-3253**	1	SENSOR AS-SPEED (TIMING)	
	22	1	**321-4249**	1	NUT	
	23	1	**390-3729**	1	LEVER-CONTROL	
	24	1	**322-7493**	1	LEVER AS-CONTROL	
	25	1	**330-9189**	1	PLUG	
	26	1	**425-7065**	1	CAP-TAMPER PROOF	
	27	1	**334-0732**	1	ARM AS (FRONT HOUSING)	
	28	1	**335-5578**	1	BRACKET	
	29	1	**336-2965**	1	SPRING	
	30	1	**364-2755**	1	BOLT-SPECIAL	
M	31	1	**369-4486**	2	BOLT (M6X1X35-MM)	
	32	1	**308-1875**	1	SEAL-O-RING	

M - METRIC PART

373-7283 **GOVERNOR GP (**contd.**)** **i06880210**

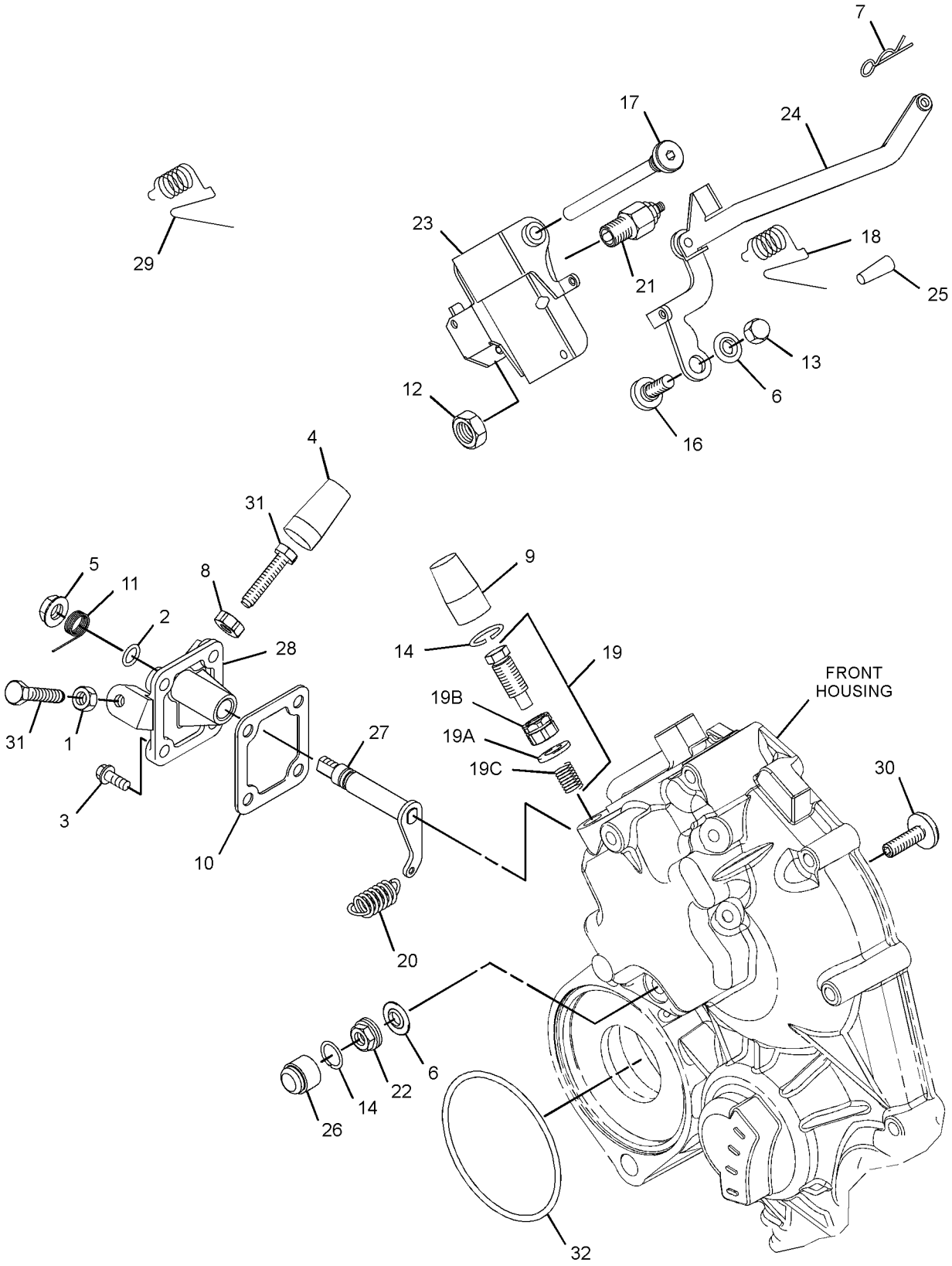

GRAPHIC #1 <END> g06200094

373-7283 GOVERNOR GP

PART OF 435-1658 ENGINE AR-PRIMARY

TYPE 2

SMCS-1264, 1908 **i08301362**

NOTE	REF NO	GRAPHIC REF	PART NUMBER	QTY	PART NAME 1 2 3 4 5 6 (PRODUCT LEVEL)	SEE PAGE
M	1	1	**5C-2890**	1	NUT (M6X1-THD)	
	2	1	**095-1574**	1	SEAL-O-RING	
M	3	1	**106-8916**	4	BOLT (M6X1X16-MM)	
	4	1	**139-5511**	1	CAP (TAMPER RESISTANT)	
M	5	1	**153-5592**	1	NUT (M8X1.25-THD)	
	6	1	**153-6415**	2	WASHER (SEAL)	
	7	1	**153-7983**	1	PIN	
M	8	1	**162-2207**	1	NUT (M6X1-THD)	
	9	1	**217-7115**	1	CAP (TAMPER RESISTANT)	
	10	1	**423-7724**	1	GASKET	
	11	1	**308-1882**	1	SPRING	
M	12	1	**308-1889**	1	NUT (M10X1.25-THD)	
M	13	1	**308-1892**	1	NUT (M6X1-THD)	
C	14	1	**308-1897**	1	RING	
	16	1	**308-4266**	1	SHAFT	
	17	1	**390-3731**	1	SHAFT	
	18	1	**311-0655**	1	SPRING	
	19	1	**313-5832**	1	BOLT AS	
	19A	1	**153-7987**	1	WASHER (9.2X17X1.8-MM THK)	
M	19B	1	**191-9297**	1	NUT (M10X1.25-THD)	
	19C	1	**313-5833**	1	SPRING	
	20	1	**317-7195**	1	SPRING	
	21	1	**319-3253**	1	SENSOR AS-SPEED (TIMING)	
M		1	**155-8076**	1	NUT (M4X0.4-THD)	
C	22	1	**502-9478**	1	NUT (TAMPER RESISTANT)	
	23	1	**580-0398**	1	LEVER AS-CONTROL	
	24	1	**322-7493**	1	LEVER AS-CONTROL	
	25	1	**330-9189**	1	PLUG	
C	26	1	**503-9707**	1	CAP	
	27	1	**334-0732**	1	ARM AS (FRONT HOUSING)	
	28	1	**335-5578**	1	BRACKET	
	29	1	**336-2965**	1	SPRING	
	30	1	**364-2755**	1	BOLT-SPECIAL	
M	31	1	**7X-2533**	2	BOLT (M6X1X35-MM)	
	32	1	**308-1875**	1	SEAL-O-RING	
C	33	1	**503-9731**	1	SHROUD	
C	34	1	**502-5421**	1	PIN	

C - CHANGE FROM PREVIOUS TYPE
M - METRIC PART

373-7283 **GOVERNOR GP (**contd.**)** **i08301362**

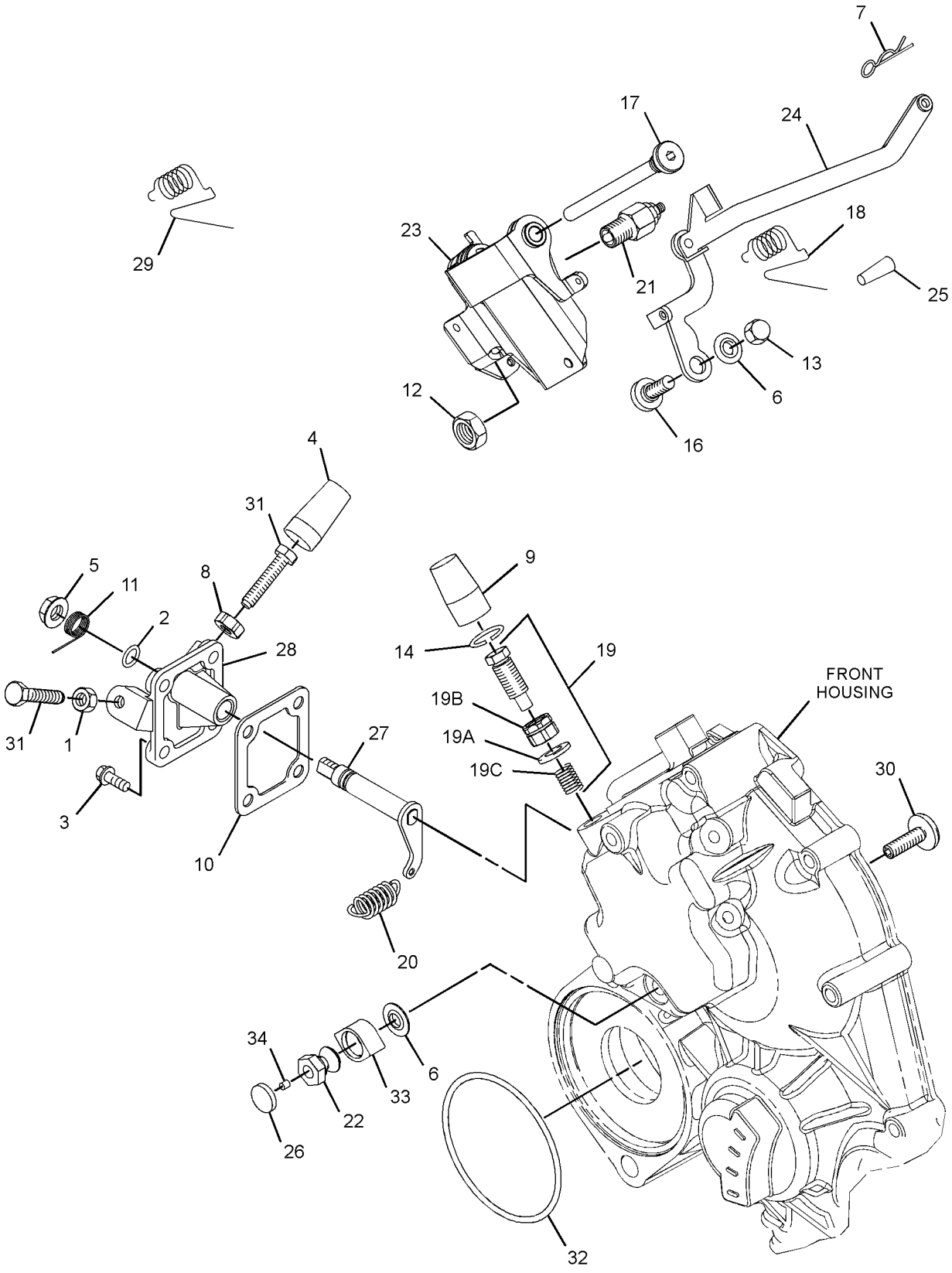

GRAPHIC #1 <END> g06751827

481-5623 GOVERNOR GP

SMCS-1264, 1908 **i06943007**

NOTE	REF NO	GRAPHIC REF	PART NUMBER	QTY	PART NAME 1 2 3 4 5 6 (PRODUCT LEVEL)	SEE PAGE
M	1	1	**6I-0846**	1	BOLT (M6X1X14-MM)	
M	2	1	**106-8916**	4	BOLT (M6X1X16-MM)	
M	3	1	**5C-2890**	1	NUT (M6X1-THD)	
	4	1	**139-5511**	1	CAP (TAMPER RESISTANT)	
M	5	1	**153-5592**	1	NUT (M8X1.25-THD)	
	6	1	**153-6415**	3	WASHER (SEAL)	
	7	1	**153-7983**	1	PIN	
	8	1	**095-1574**	1	SEAL-O-RING	
M	9	1	**162-2207**	1	NUT (M6X1-THD)	
	10	1	**217-7115**	1	CAP (TAMPER RESISTANT)	
	11	1	**308-1882**	1	SPRING	
M	12	1	**308-1889**	1	NUT (M10X1.25-THD)	
M	13	1	**308-1892**	1	NUT (M6X1-THD)	
	14	1	**308-1897**	2	RING	
	15	1	**308-4266**	1	SHAFT	
	16	1	**309-6729**	1	SEAL-O-RING	
	17	1	**311-0655**	1	SPRING	
	18	1	**313-5832**	1	BOLT AS	
		1	**153-7987**	1	WASHER (9.2X17X1.8-MM THK)	
M		1	**191-9297**	1	NUT (M10X1.25-THD)	
		1	**313-5833**	1	SPRING	
	19	1	**317-7195**	1	SPRING	
	20	1	**319-3253**	1	SENSOR AS-SPEED	
	21	1	**321-4249**	1	NUT	
	22	1	**322-7493**	1	LEVER AS-CONTROL	
	23	1	**330-9189**	1	PLUG	
	24	1	**334-0732**	1	ARM AS (FRONT HOUSING)	
	25	1	**335-5578**	1	BRACKET	
	26	1	**336-2965**	1	SPRING	
	27	1	**364-2755**	1	BOLT-SPECIAL	
M	28	1	**369-4486**	2	BOLT (M6X1X35-MM)	
	29	1	**390-3729**	1	LEVER-CONTROL	
	30	1	**390-3731**	1	SHAFT	
	31	1	**423-7724**	1	GASKET	
	32	1	**425-7065**	1	CAP-TAMPER PROOF	

M - METRIC PART

481-5623 **GOVERNOR GP (**contd.**)** **i06943007**

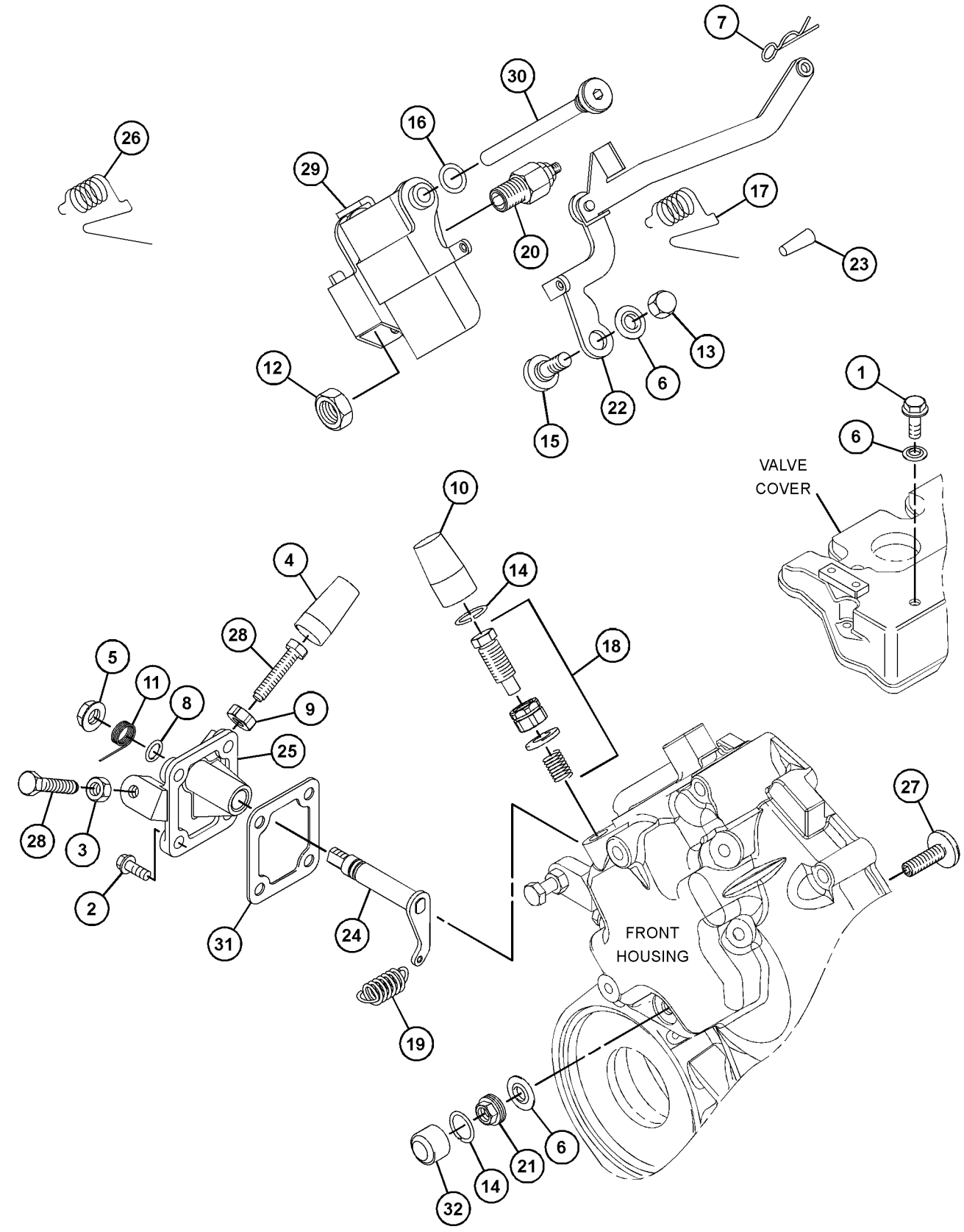

GRAPHIC #1 <END> g03812905

492-4881 GOVERNOR GP

PART OF 516-2639 ENGINE AR-PRIMARY

SMCS-1264, 1908 **i08521875**

NOTE	REF NO	GRAPHIC REF	PART NUMBER	QTY	PART NAME 1 2 3 4 5 6 (PRODUCT LEVEL)	SEE PAGE
	1	1	**308-1914**	1	LEVER-CONTROL	
	2	1	**357-3053**	1	SENSOR GP-SPEED (MAGNETIC, HIGH OUTPUT) (GOVERNOR)	
	2A	1	**171-5349**	1	STRAP-MARKER	
	2B	1	**102-8802**	1	KIT-RECEPTACLE (2-PIN)	
					(INCLUDES RECEPTACLE AS & WEDGE)	
	2C	1	**8T-8729**	2	PIN-CONNECTOR (16-GA TO 20-GA)	
E	2D	1	**9X-1813**		SLEEVE (14-CM)	
	3	1	**380-2680**	1	WASHER	
	4	1	**550-9113**	1	ACTUATOR AS	

E - ORDER BY THE CENTIMETER

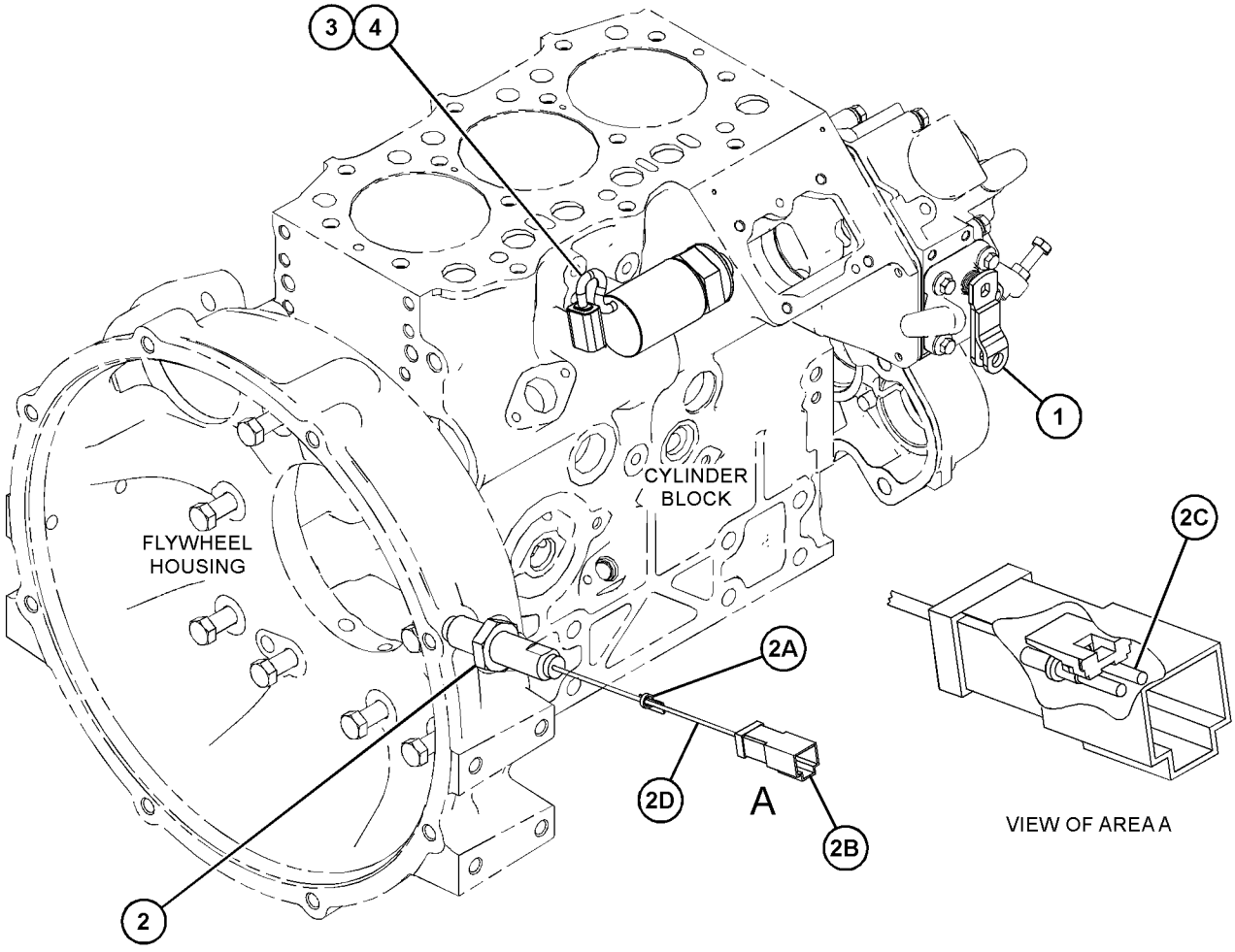

GRAPHIC #1 <END> g07487542

492-4924 GOVERNOR GP

SMCS-1264, 1908 **i08521873**

NOTE	REF NO	GRAPHIC REF	PART NUMBER	QTY	PART NAME 1 2 3 4 5 6 (PRODUCT LEVEL)	SEE PAGE
	1	1	**308-1914**	1	LEVER-CONTROL	
	2	1	**357-3053**	1	SENSOR GP-SPEED (MAGNETIC, HIGH OUTPUT) (GOVERNOR)	
	2A	1	**171-5349**	1	STRAP-MARKER	
	2B	1	**102-8802**	1	KIT-RECEPTACLE (2-PIN)	
					(INCLUDES RECEPTACLE AS & WEDGE)	
	2C	1	**8T-8729**	2	PIN-CONNECTOR (16-GA TO 20-GA)	
E	2D	1	**9X-1813**		SLEEVE (14-CM)	
	3	1	**380-2680**	1	WASHER	
	4	1	**550-9113**	1	ACTUATOR AS	

E - ORDER BY THE CENTIMETER

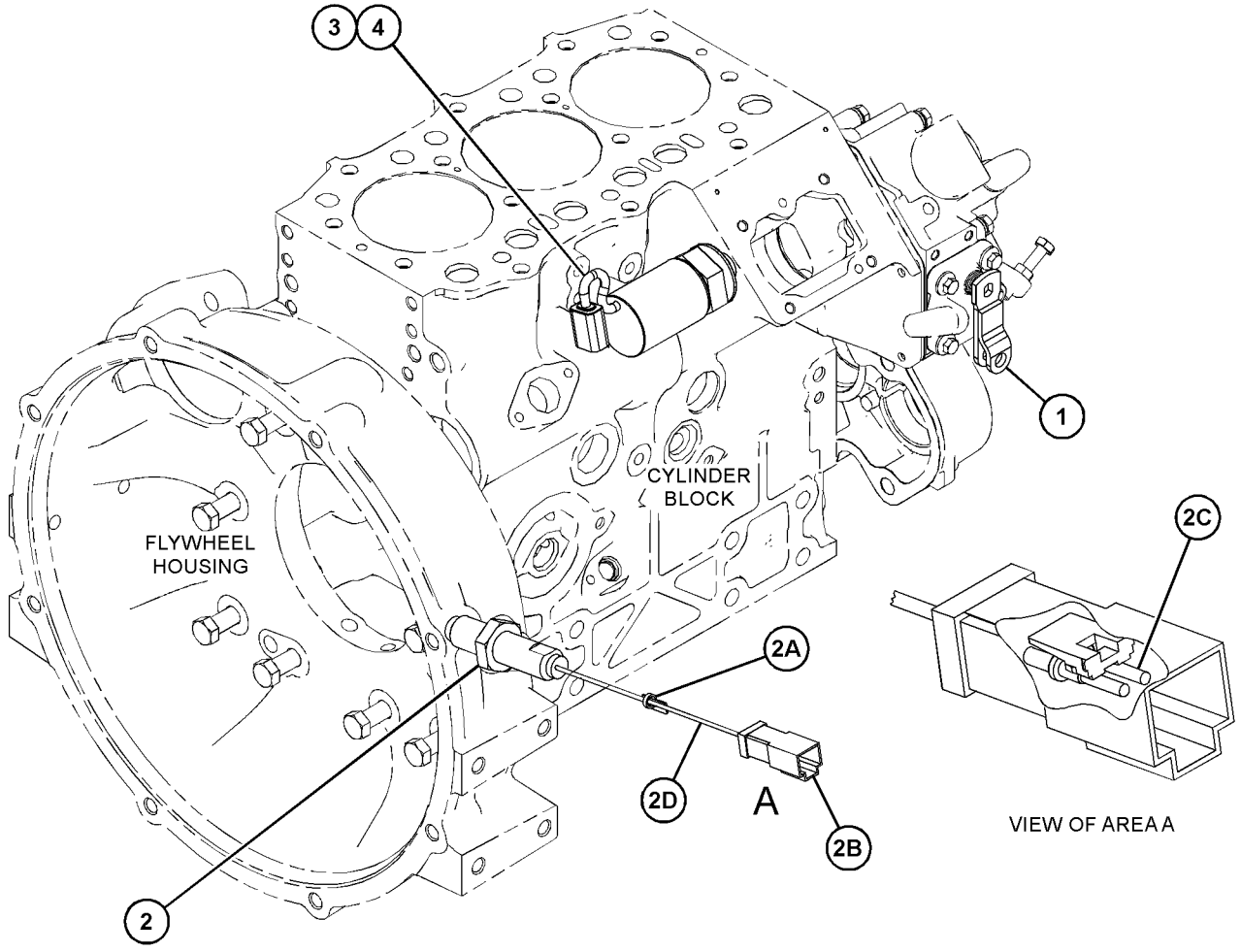

GRAPHIC #1 <END> g07487532

596-3460 GOVERNOR GP

PART OF 435-1636, 514-6556 ENGINE AR-PRIMARY

SMCS-1264, 1908 **i08710157**

NOTE	REF NO	GRAPHIC REF	PART NUMBER	QTY	PART NAME 1 2 3 4 5 6 (PRODUCT LEVEL)	SEE PAGE
	1	1	**153-6415**	1	WASHER (SEAL)	
	2	1	**153-7983**	1	PIN	
M	3	1	**308-1892**	1	NUT (M6X1-THD)	
	4	1	**308-4266**	1	SHAFT	
	5	1	**309-6729**	1	SEAL-O-RING	
	6	1	**308-1904**	1	SLIDER	
	7	1	**311-0655**	1	SPRING	
	8	1	**322-7493**	1	LEVER AS-CONTROL	
	8A	1	**154-1400**	1	PIN	
	9	1	**390-3731**	1	SHAFT	
	10	1	**313-5832**	1	BOLT AS	
M	10A	1	**191-9297**	1	NUT (M10X1.25-THD)	
	10B	1	**313-5833**	1	SPRING	
	10C	1	**153-7987**	1	WASHER (9.2X17X1.8-MM THK)	
	11	1	**317-7195**	1	SPRING	
	12	1	**217-7115**	1	CAP (TAMPER RESISTANT)	
	13	1	*580-6241*	1	LEVER GP-GOVERNOR	
	13A	1	**319-3253**	1	SENSOR AS-SPEED	
M	13B	1	**5C-8312**	1	NUT (M4X0.7-THD)	
	13C	1	**580-0398**	1	LEVER AS-CONTROL	
M	13D	1	**308-1889**	1	NUT (M10X1.25-THD)	

M - METRIC PART

596-3460 **GOVERNOR GP** (contd.) **i08710157**

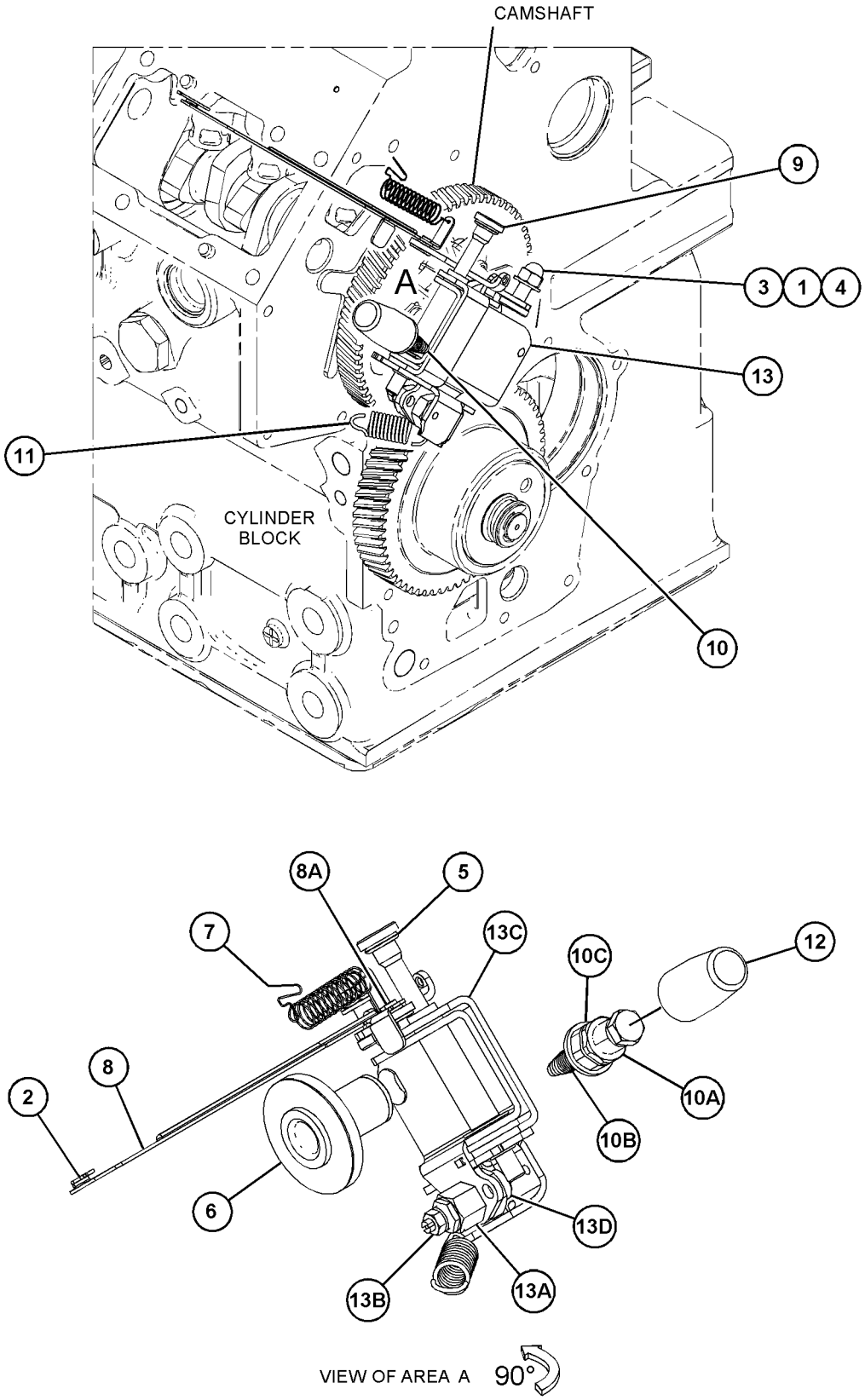

GRAPHIC #1 <END> g07516037

596-3462 GOVERNOR GP

S/N: C6M10886-UP
PART OF 433-1379 ENGINE AR
ALSO AN ATTACHMENT

SMCS-1264, 1908

i08566624

NOTE	REF NO	GRAPHIC REF	PART NUMBER	QTY	PART NAME 1 2 3 4 5 6 (PRODUCT LEVEL)	SEE PAGE
	1	1	**153-6415**	1	WASHER (SEAL)	
	2	2	**153-7983**	1	PIN	
M	3	1	**308-1892**	1	NUT (M6X1-THD)	
	4	1	**308-4266**	1	SHAFT	
	5	1	**309-6729**	1	SEAL-O-RING	
	6	2	**308-1904**	1	SLIDER	
	7	2	**311-0655**	1	SPRING	
	8	2	**322-7493**	1	LEVER AS-CONTROL	
	8A	2	**154-1400**	1	PIN	
	9	1	**390-3731**	1	SHAFT	
	10	1	**313-5832**	1	BOLT AS	
		1	**153-7987**	1	WASHER (9.2X17X1.8-MM THK)	
M		1	**191-9297**	1	NUT (M10X1.25-THD)	
		1	**313-5833**	1	SPRING	
	11	1	**317-7195**	1	SPRING	
	12	1	**423-7554**	1	CAP	
Y	13	2	**598-5603**	1	LEVER GP-CONTROL	793

M - METRIC PART
Y - SEPARATE ILLUSTRATION

596-3462 **GOVERNOR GP** (contd.) **i08566624**

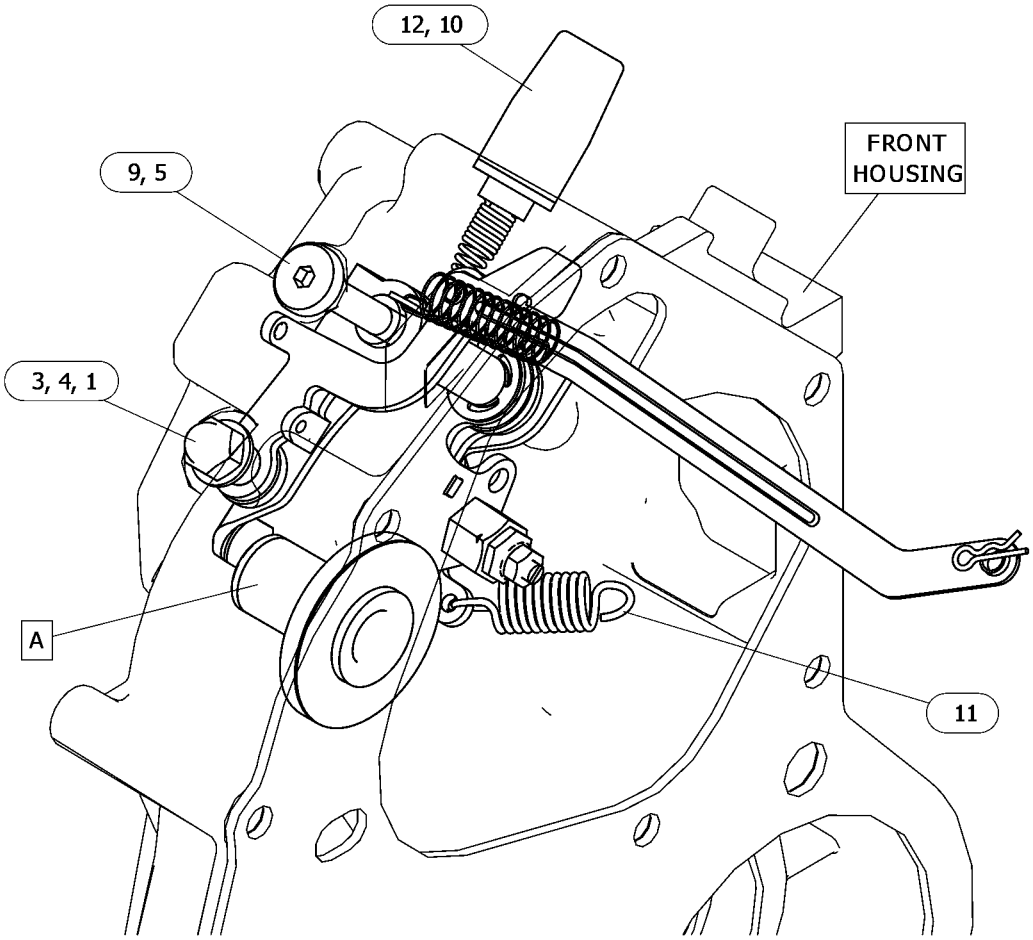

GRAPHIC #1 g06758932

596-3462 **GOVERNOR GP (**contd.**)** **i08566624**

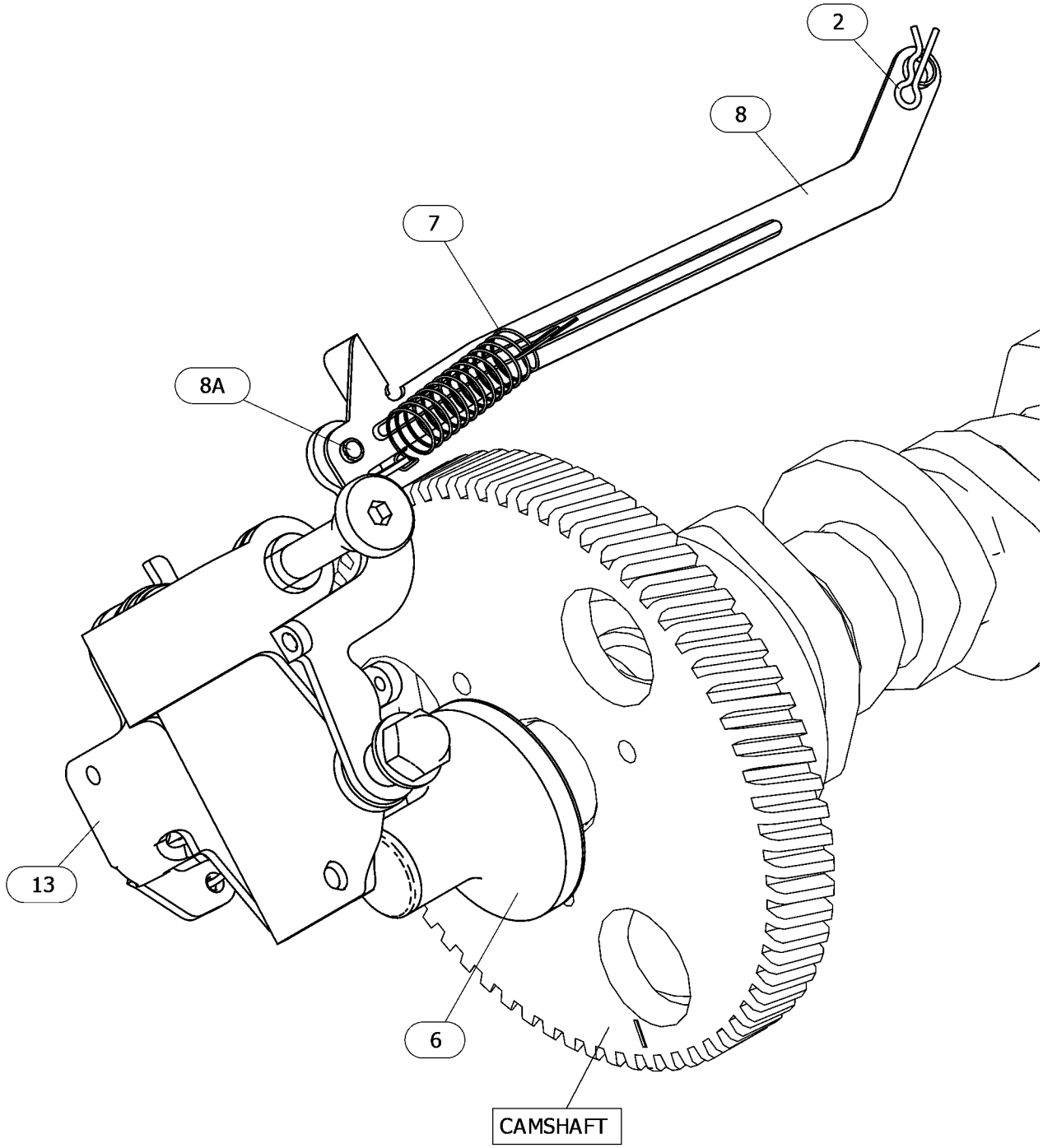

VIEW OF AREA A
(ROTATED 90° COUNTERCLOCKWISE)

GRAPHIC #2 <END> g06758932_01

596-3472 GOVERNOR GP

S/N: C6M10275-UP

SMCS-1264, 1908 **i10053391**

NOTE	REF NO	GRAPHIC REF	PART NUMBER	QTY	PART NAME 1 2 3 4 5 6 (PRODUCT LEVEL)	SEE PAGE
	1	2	**153-6415**	1	WASHER (SEAL)	
	2	1	**153-7983**	1	PIN	
M	3	2	**308-1892**	1	NUT (M6X1-THD)	
	4	2	**308-4266**	1	SHAFT	
	5	2	**309-6729**	1	SEAL-O-RING	
	6	2	**308-1904**	1	SLIDER	
	7	2	**311-0655**	1	SPRING	
	8	2	**322-7493**	1	LEVER AS-CONTROL	
	8A	2	**154-1400**	1	PIN	
	9	2	**390-3731**	1	SHAFT	
	10	2	**313-5832**	1	BOLT AS	
	10A	2	**153-7987**	1	WASHER (9.2X17X1.8-MM THK)	
M	10B	2	**191-9297**	1	NUT (M10X1.25-THD)	
	10C	2	**313-5833**	1	SPRING	
	11	2	**317-7195**	1	SPRING	
	12	2	**217-7115**	1	CAP (TAMPER RESISTANT)	
Y	13	1	*580-6290*	1	CONTROL GP-GOVERNOR	745

M - METRIC PART
Y - SEPARATE ILLUSTRATION

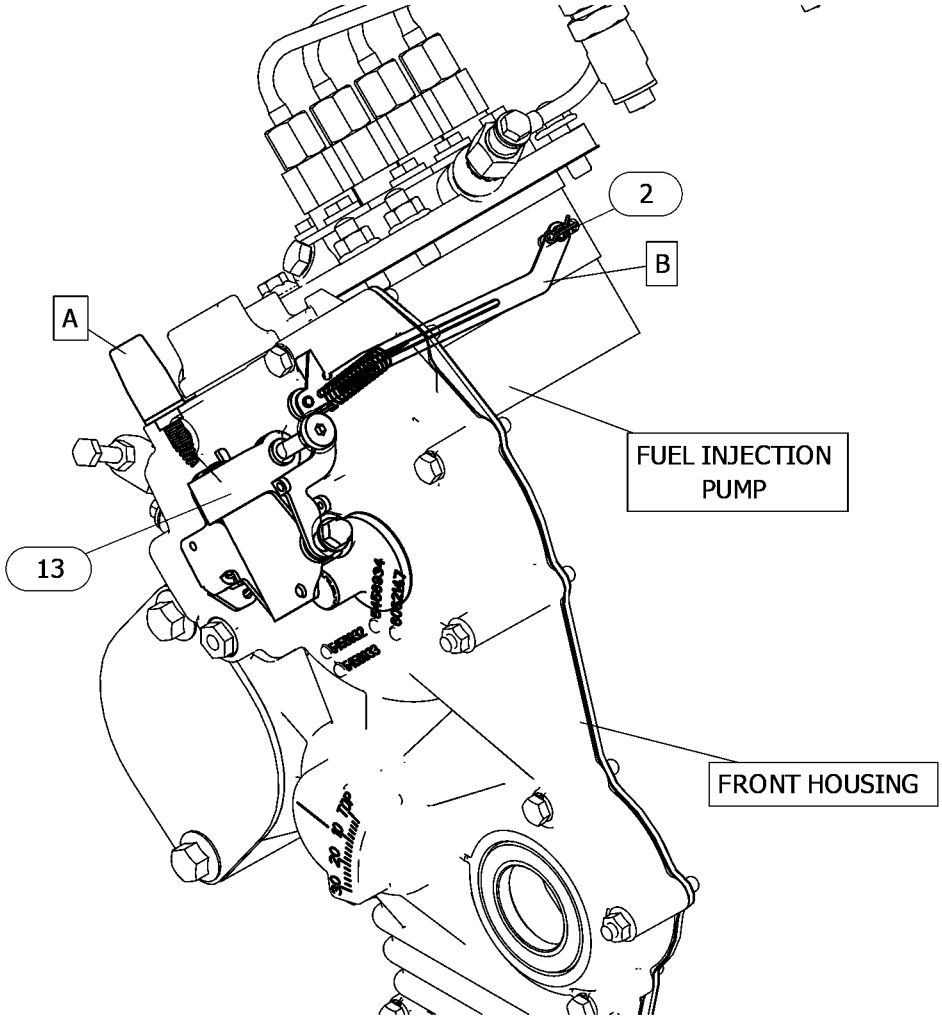

GRAPHIC #1 g07492574

596-3472 **GOVERNOR GP** (contd.) **i10053391**

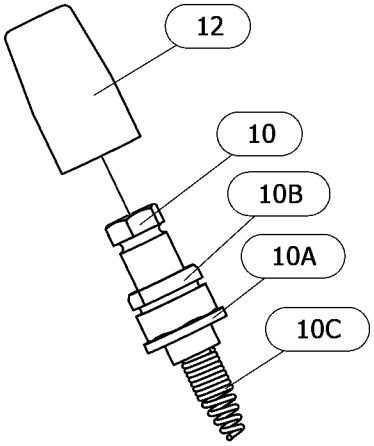

VIEW AREA OF A

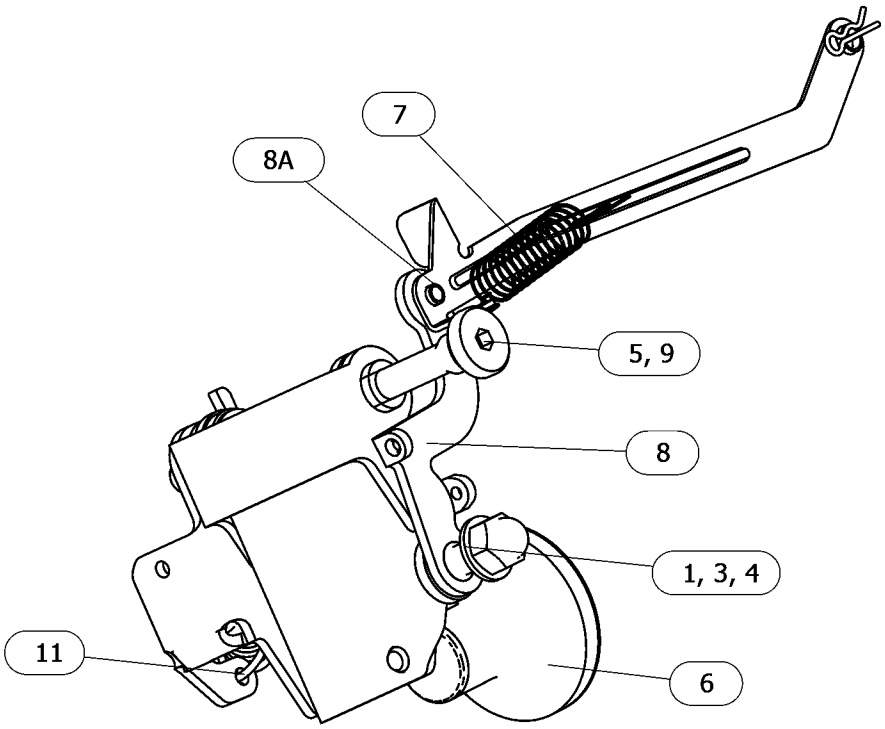

VIEW AREA OF B

GRAPHIC #2 <END> g07492574_01

598-5603 LEVER GP-CONTROL

S/N: C6M11110-UP
PART OF 596-3462 GOVERNOR GP
ALSO AN ATTACHMENT

SMCS-1264 **i08568541**

NOTE	REF NO	GRAPHIC REF	PART NUMBER	QTY	PART NAME 1 2 3 4 5 6 (PRODUCT LEVEL)	SEE PAGE
M	1	1	**308-1889**	1	NUT (M10X1.25-THD)	
Y	2	1	**319-3250**	1	CONTROL GP-GOVERNOR	700
	3	1	**580-0398**	1	LEVER AS-CONTROL	

M - METRIC PART
Y - SEPARATE ILLUSTRATION

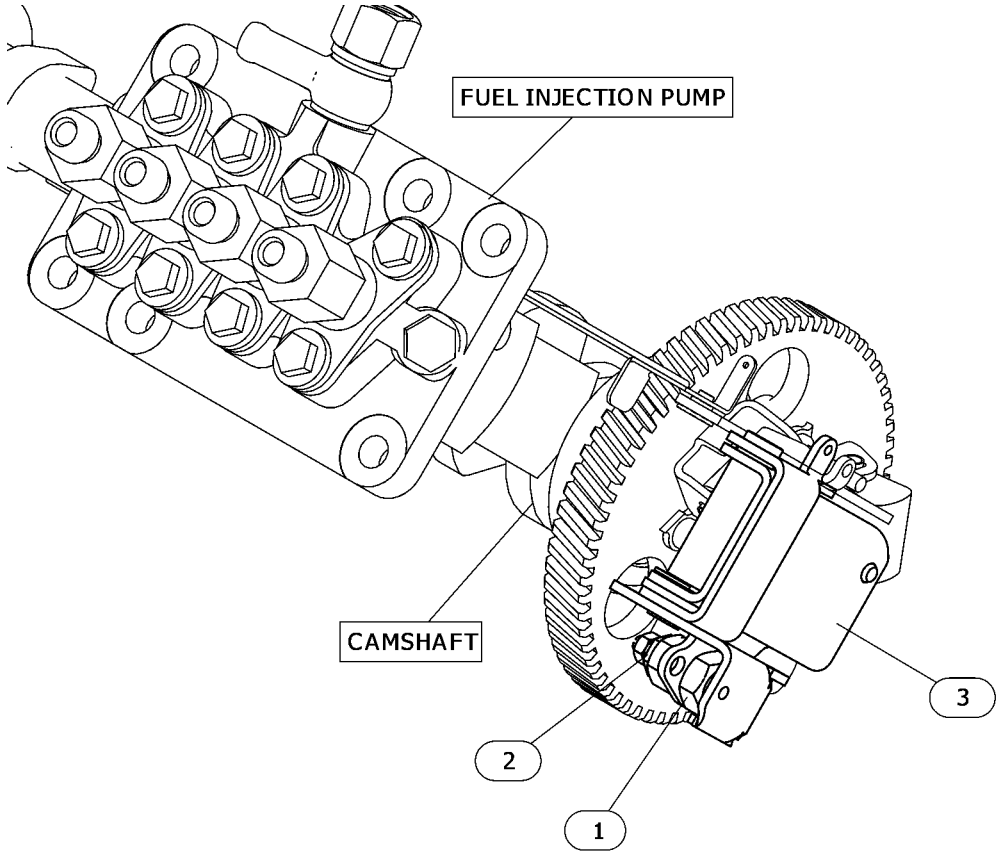

GRAPHIC #1 <END> g06761102

560-7819 LEVER GP-GOVERNOR CONTROL

S/N: C6M10549-UP

PART OF 596-3463 CONTROL GP-GOVERNOR

SMCS-1265 **i08693546**

NOTE	REF NO	GRAPHIC REF	PART NUMBER	QTY	PART NAME 1 2 3 4 5 6 (PRODUCT LEVEL)	SEE PAGE
M	1	1	**308-1889**	1	NUT (M10X1.25-THD)	
	2	1	**523-5815**	1	LEVER AS	
	2A	1	**154-1396**	1	CLIP	
	2B	1	**154-1399**	1	WASHER (10.5X18X1.6-MM THK)	
M	3	1	**313-2025**	1	BOLT-SPECIAL (M10X1.25-MM THD)	

M - METRIC PART

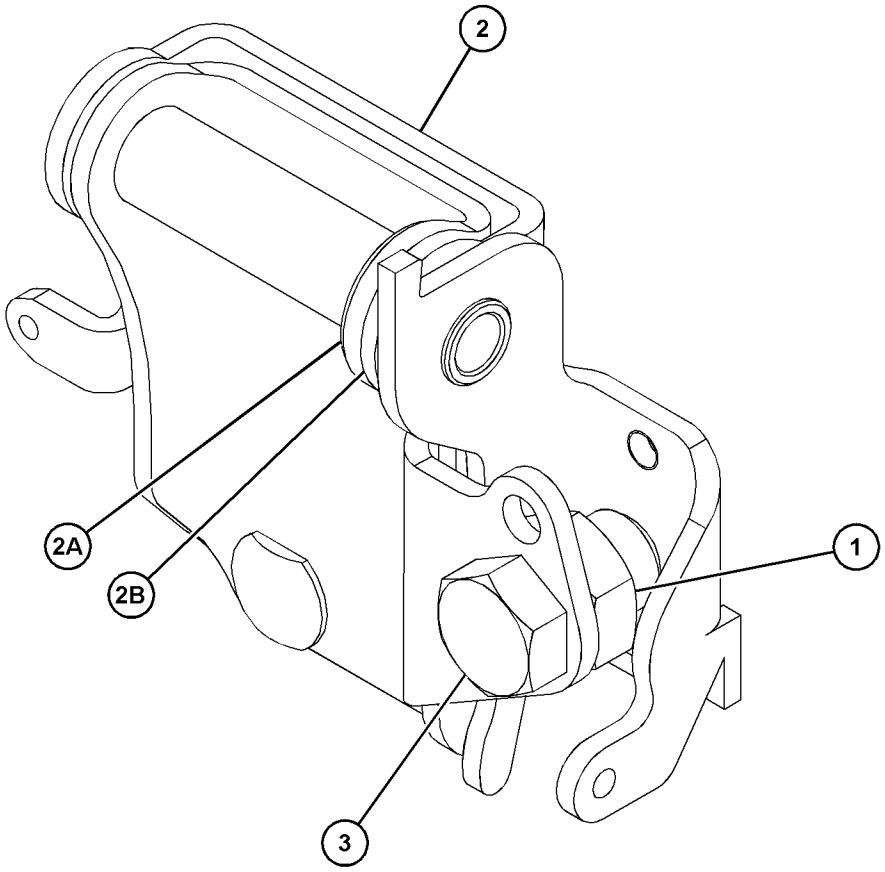

GRAPHIC #1 <END> g06718281

315-7814 PUMP & MTG GP-FUEL TRANSFER

SMCS-1256 **i06642322**

NOTE	REF NO	GRAPHIC REF	PART NUMBER	QTY	PART NAME 1 2 3 4 5 6 (PRODUCT LEVEL)	SEE PAGE
M	1	1	**6I-0846**	2	BOLT (M6X1X14-MM)	
	2	1	**295-4070**	1	PUMP AS-FUEL TRANSFER	
	3	1	**176-7719**	1	SEAL-O-RING	
M	4	1	**124-3815**	1	BOLT (M8X1.25X16-MM)	

M - METRIC PART

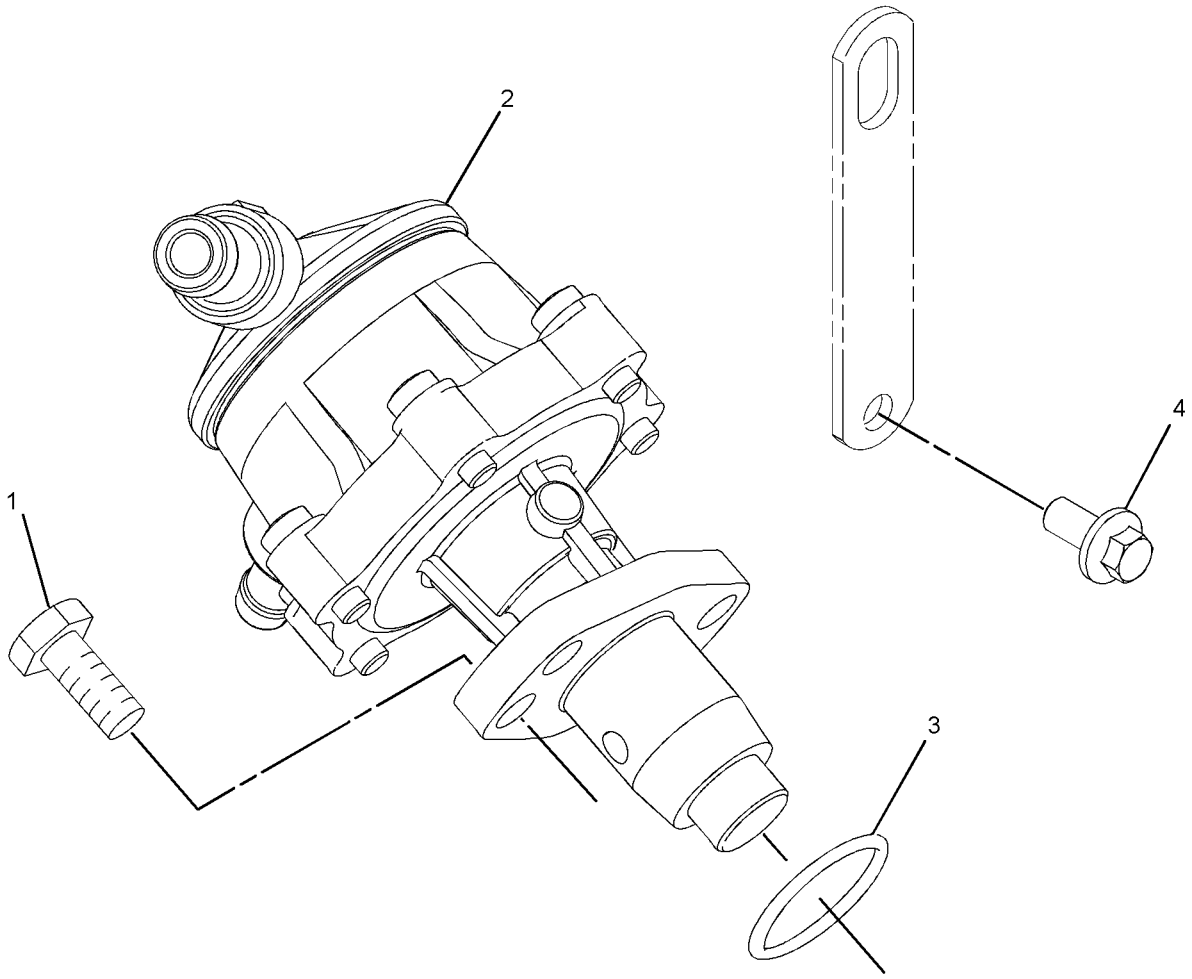

GRAPHIC #1 <END> g06068950

308-2310 PUMP GP-FILTER & FUEL TRANSFER

PART OF 489-9224 ENGINE AR-PRIMARY

TYPE 1

SMCS-1256, 1261 **i06545705**

NOTE	REF NO	GRAPHIC REF	PART NUMBER	QTY	PART NAME 1 2 3 4 5 6 (PRODUCT LEVEL)	SEE PAGE
M	1	2	**6I-0846**	2	BOLT (M6X1X14-MM)	
	2	1	**7W-4694**	1	PLUG	
	3	1	**032-8100**	2	WASHER (0.531X0.718X0.064-IN THK)	
	4	1	**033-7849**	2	PLUG	
	5	1	**358-9226**	1	FILTER AS-FUEL	
	5A	1	**067-6987**	1	FILTER-FUEL	
	5B	1	**069-2922**	2	GASKET (FUEL FILTER)	
	5C	1	**6F-4855**	2	SEAL-O-RING	
	6	1	**067-6269**	2	FERRULE	
	7	1	**067-6317**	1	WASHER (0.4X0.566X0.04-IN THK)	
	8	1	**302-4187**	2	TUBE	
M	9	1	**138-7162**	2	BOLT (M10X1.5X30-MM)	
	10	1	**154-1399**	2	WASHER (10.5X18X1.6-MM THK)	
	11	1	**154-2403**	2	WASHER	
	12	1	**423-5665**	1	HOSE	
	13	1	**155-7984**	2	WASHER (8.4X16X1.6-MM THK)	
M	14	1	**155-8085**	2	NUT (M10X1.5-THD)	
	16	1	**165-2141**	1	BOLT AS	
	17	2	**176-7719**	1	SEAL-O-RING	
	18	1	**168-9001**	1	BOLT AS	
	19	1	**311-1174**	1	BRACKET	
	20	1	**423-5661**	1	HOSE	
	21	2	**295-4070**	1	PUMP AS-FUEL TRANSFER	
	22	1	**329-1292**	4	CLIP-HOSE	

M - METRIC PART

308-2310 **PUMP GP-FILTER & FUEL TRANSFER (**contd.**)** **i06545705**

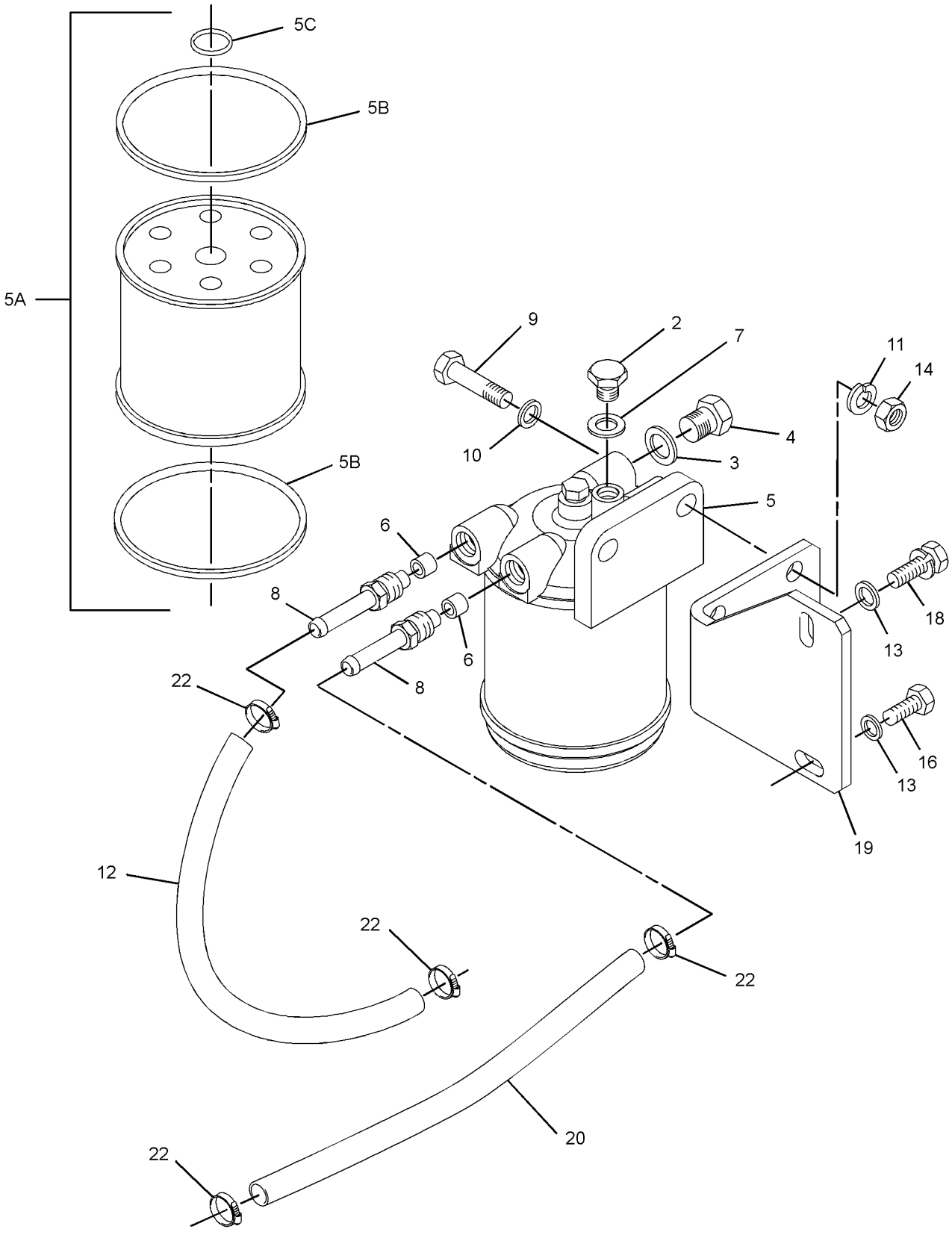

GRAPHIC #1 g06101917

308-2310 **PUMP GP-FILTER & FUEL TRANSFER (**contd.**)** **i06545705**

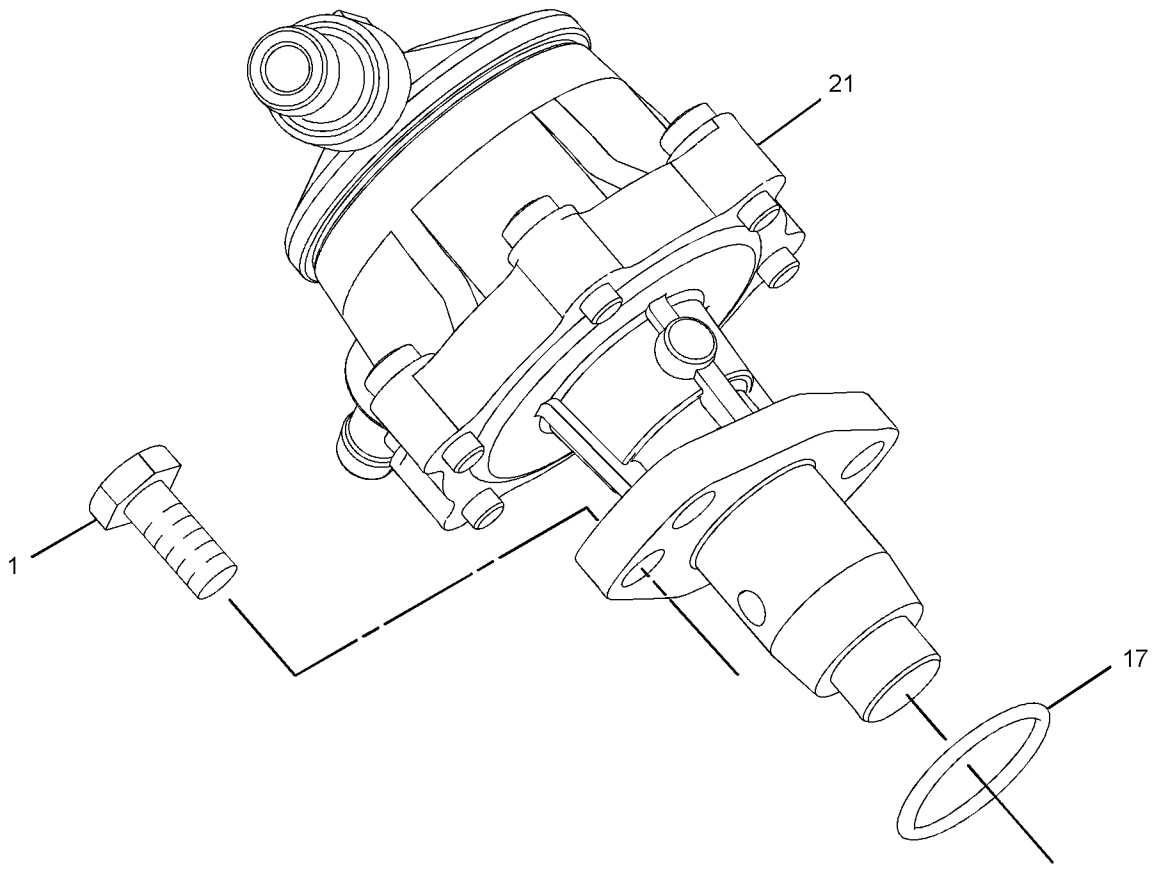

GRAPHIC #2 <END> g06101929

308-2310 PUMP GP-FILTER & FUEL TRANSFER

PART OF 417-7273, 489-4263, 489-9224, 506-0518, 506-0519, 506-0520, 512-7969, 513-2239, 514-6556, 516-2639, 518-0165, 557-6086, 557-7471 ENGINE AR-PRIMARY
TYPE 2

SMCS-1256, 1261 **i07184392**

NOTE	REF NO	GRAPHIC REF	PART NUMBER	QTY	PART NAME 1 2 3 4 5 6 (PRODUCT LEVEL)	SEE PAGE
M	1	2	**6I-0846**	2	BOLT (M6X1X14-MM)	
	2	1	**7W-4694**	1	PLUG	
	3	1	**032-8100**	2	WASHER (0.531X0.718X0.064-IN THK)	
	4	1	**033-7849**	2	PLUG	
	5	1	**358-9226**	1	FILTER AS-FUEL	
	5A	1	**067-6987**	1	FILTER-FUEL	
	6	1	**067-6269**	2	FERRULE	
	7	1	**067-6317**	1	WASHER (0.4X0.566X0.04-IN THK)	
	8	1	**302-4187**	2	TUBE	
M	9	1	**138-7162**	2	BOLT (M10X1.5X30-MM)	
	10	1	**154-1399**	2	WASHER (10.5X18X1.6-MM THK)	
	11	1	**154-2403**	2	WASHER	
	12	1	**423-5665**	1	HOSE	
C	13	1	**155-7984**	1	WASHER (8.4X16X1.6-MM THK)	
M	14	1	**155-8085**	2	NUT (M10X1.5-THD)	
	16	1	**165-2141**	1	BOLT AS	
	17	2	**176-7719**	1	SEAL-O-RING	
CM	18	1	**6I-0217**	1	BOLT (M8X1.25X20-MM)	
	19	1	**311-1174**	1	BRACKET	
	20	1	**423-5661**	1	HOSE	
	21	2	**295-4070**	1	PUMP AS-FUEL TRANSFER	
	22	1	**329-1292**	4	CLIP-HOSE	

C - CHANGE FROM PREVIOUS TYPE
M - METRIC PART

308-2310 **PUMP GP-FILTER & FUEL TRANSFER (**contd.**)** **i07184392**

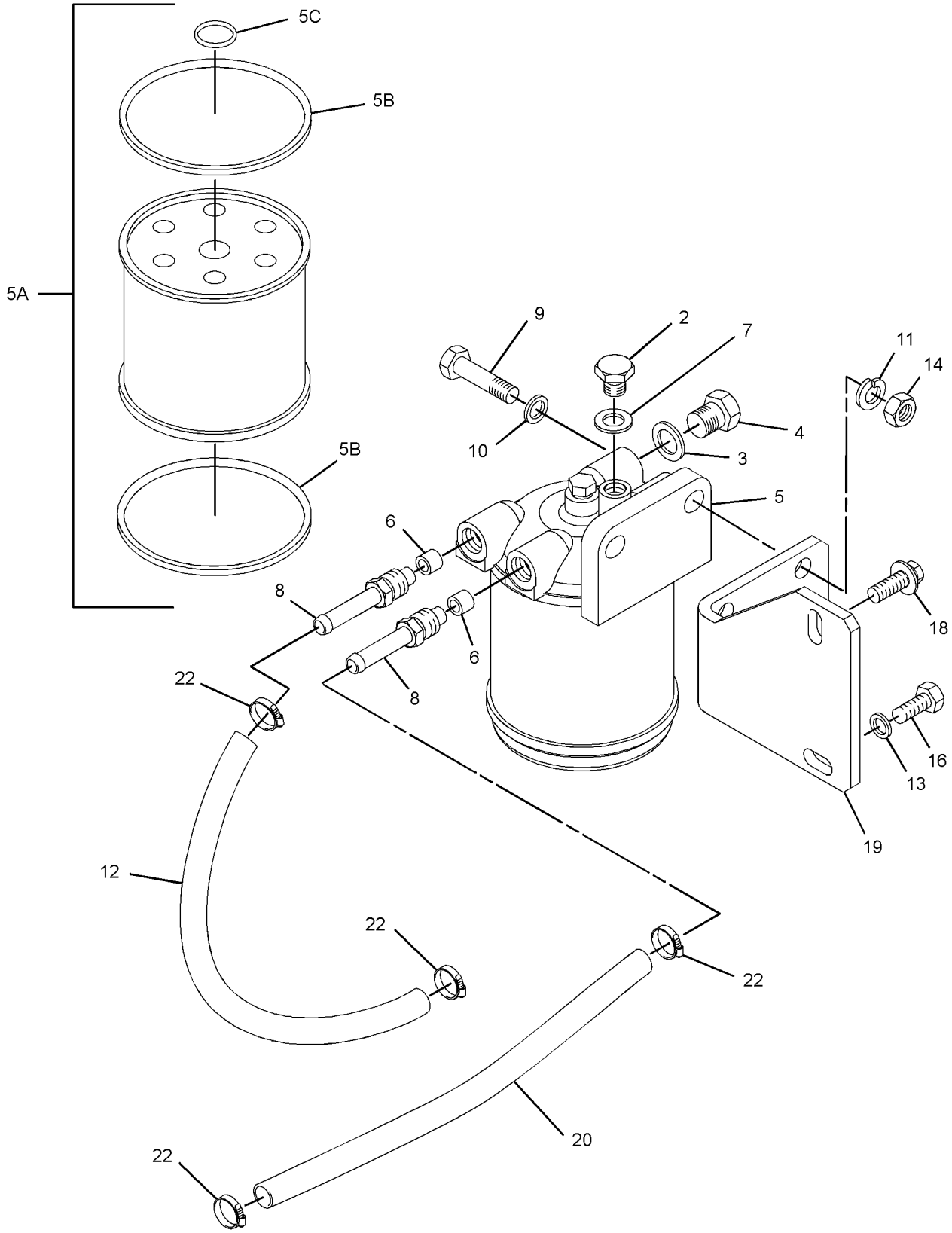

GRAPHIC #1 g06200147

308-2310 **PUMP GP-FILTER & FUEL TRANSFER (**contd.**)** **i07184392**

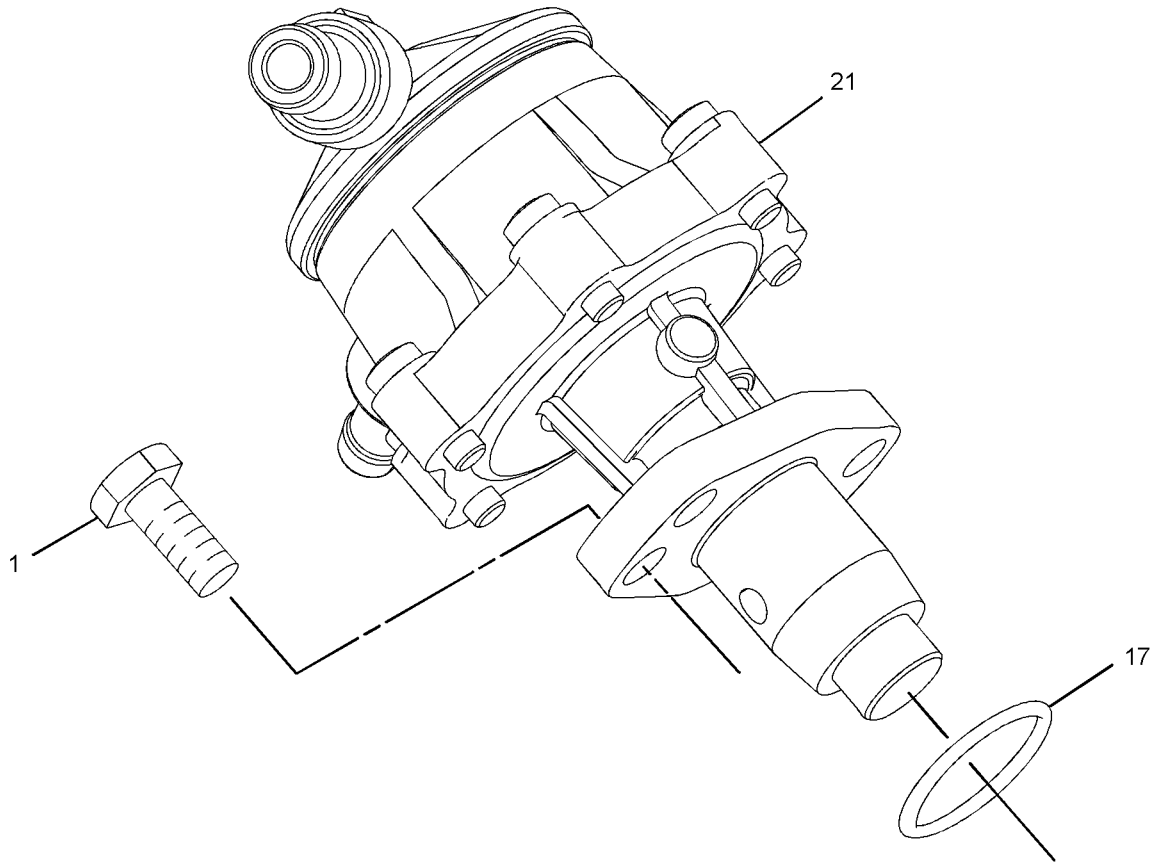

GRAPHIC #2 <END> g06101929

308-2310 PUMP GP-FILTER & FUEL TRANSFER

PART OF 417-7273, 489-4263, 489-9224, 506-0518, 506-0519, 506-0520, 512-7969, 513-2239, 514-6556, 516-2639, 518-0165, 557-6086, 557-7471 ENGINE AR-PRIMARY
TYPE 3

SMCS-1256, 1261

i08067387

NOTE	REF NO	GRAPHIC REF	PART NUMBER	QTY	PART NAME 1 2 3 4 5 6 (PRODUCT LEVEL)	SEE PAGE
M	1	2	**6I-0846**	2	BOLT (M6X1X14-MM)	
	2	1	**7W-4694**	1	PLUG	
	3	1	**311-9048**	2	WASHER	
	4	1	**033-7849**	2	PLUG	
	5	1	**358-9226**	1	FILTER AS-FUEL	
	5A	1	**067-6987**	1	FILTER-FUEL	
	5B	1	**484-9224**	1	SEAL	
	5C	1	**484-9225**	1	SEAL	
	6	1	**067-6269**	2	FERRULE	
	7	1	**067-6317**	1	WASHER (0.4X0.566X0.04-IN THK)	
	8	1	**302-4187**	2	TUBE	
M	9	1	**6I-0593**	2	BOLT (M10X1.5X30-MM)	
	10	1	**423-5661**	1	HOSE	
	11	1	**7X-0796**	2	LOCKWASHER (10.2X18.4X2.5-MM THK)	
	12	1	**423-5665**	1	HOSE	
	13	1	**329-1292**	4	CLIP-HOSE	
M	14	1	**155-8085**	2	NUT (M10X1.5-THD)	
	15	2	**295-4070**	1	PUMP AS-FUEL TRANSFER	
CM	16	1	**124-3815**	1	BOLT (M8X1.25X16-MM)	
	17	2	**176-7719**	1	SEAL-O-RING	
M	18	1	**6I-0217**	1	BOLT (M8X1.25X20-MM)	
	19	1	**311-1174**	1	BRACKET	

C - CHANGE FROM PREVIOUS TYPE
M - METRIC PART

308-2310 **PUMP GP-FILTER & FUEL TRANSFER (**contd.**)** **i08067387**

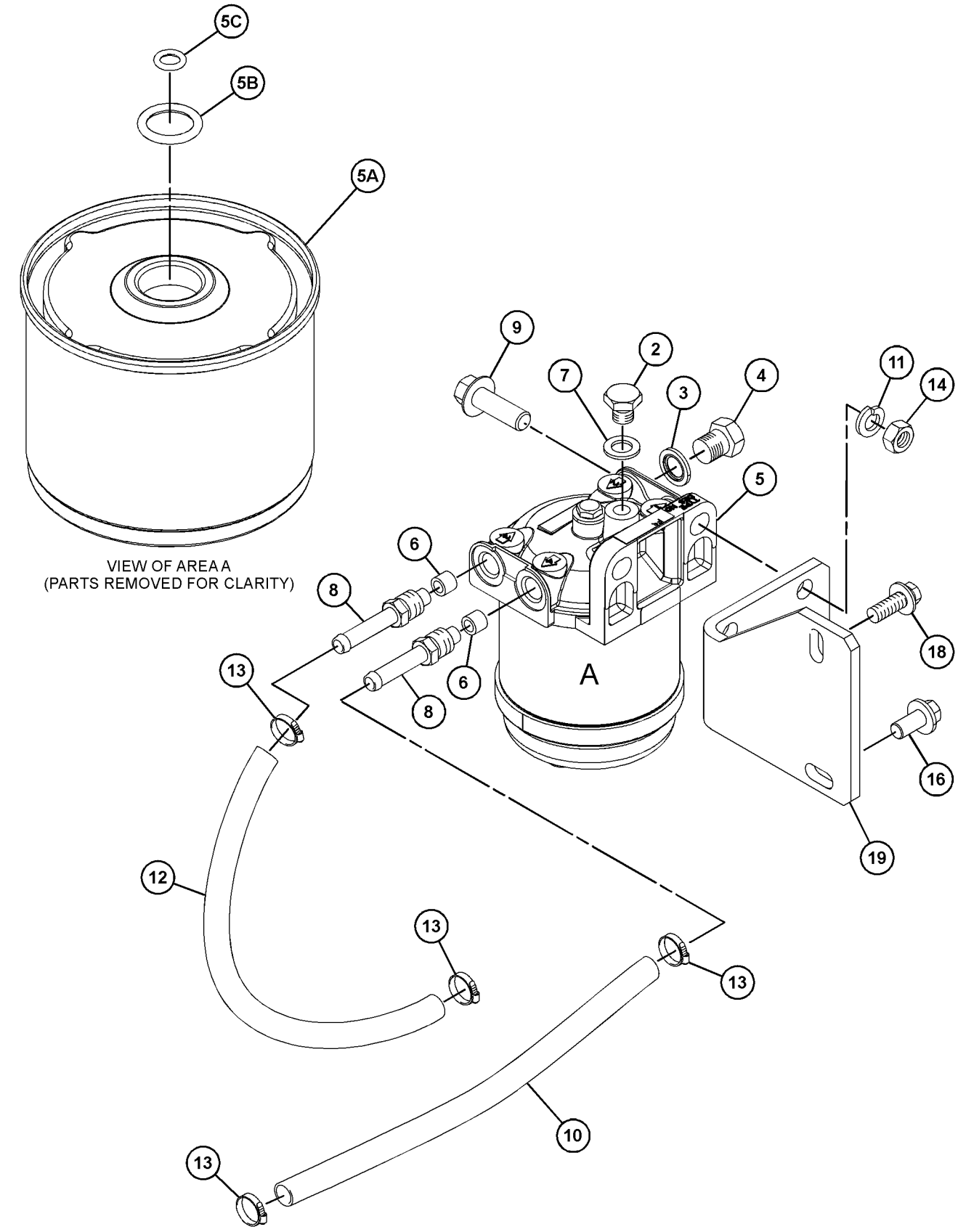

GRAPHIC #1 g06582947

308-2310 **PUMP GP-FILTER & FUEL TRANSFER (**contd.**)** **i08067387**

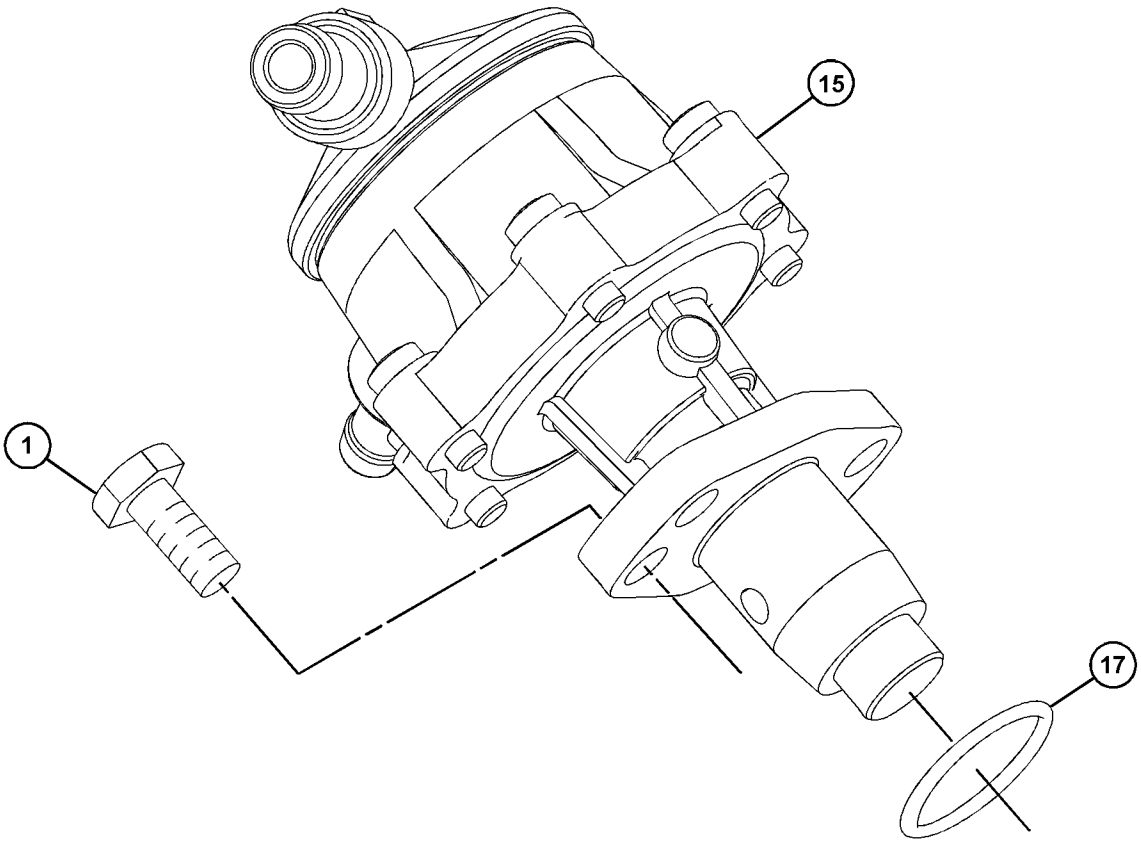

GRAPHIC #2 <END> g06582948

599-9752 PUMP GP-FILTER & FUEL TRANSFER

S/N: C6M10275-UP

PART OF 417-7273 ENGINE AR-PRIMARY

SMCS-1256, 1261 **i08712048**

NOTE	REF NO	GRAPHIC REF	PART NUMBER	QTY	PART NAME 1 2 3 4 5 6 (PRODUCT LEVEL)	SEE PAGE
M	1	1	**6I-0217**	1	BOLT (M8X1.25X20-MM)	
M	2	1	**6I-0846**	2	BOLT (M6X1X14-MM)	
M	3	1	**124-3815**	1	BOLT (M8X1.25X16-MM)	
	4	1	**295-4070**	1	PUMP AS-FUEL TRANSFER	
	5	1	**329-1292**	4	CLIP-HOSE	
Y	6	1	*599-9665*	1	FILTER GP-FUEL	762
	7	1	**423-5661**	1	HOSE	
	8	1	**423-5665**	1	HOSE	

M - METRIC PART
Y - SEPARATE ILLUSTRATION

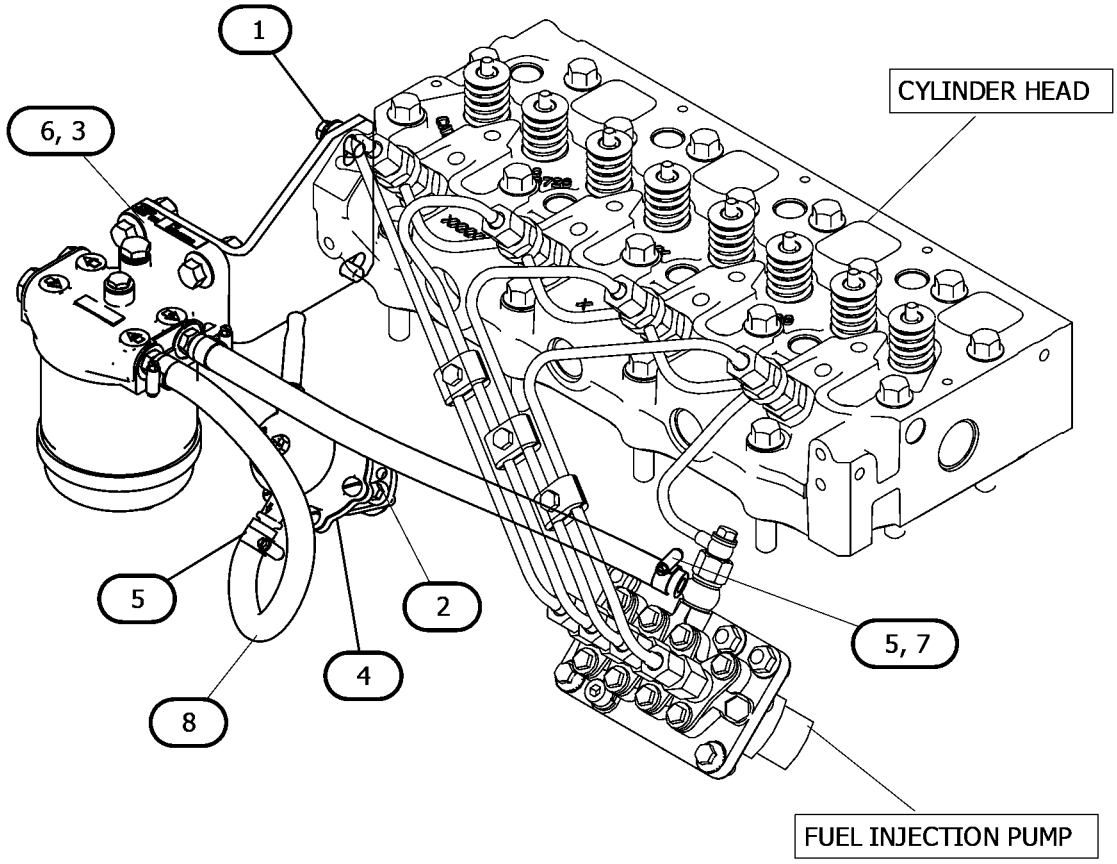

GRAPHIC #1 <END> g07515348

302-7821 PUMP GP-FUEL INJECTION

PART OF 526-0230 PUMP GP-FUEL INJECTION

SMCS-1251, 1290 **i03548840**

NOTE	REF NO	GRAPHIC REF	PART NUMBER	QTY	PART NAME 1 2 3 4 5 6 (PRODUCT LEVEL)	SEE PAGE
	1	1	**205-4726**	1	BOLT-SPECIAL (BANJO)	
	2	1	**205-4727**	2	WASHER	
	3	1	**205-4728**	1	CONNECTOR	

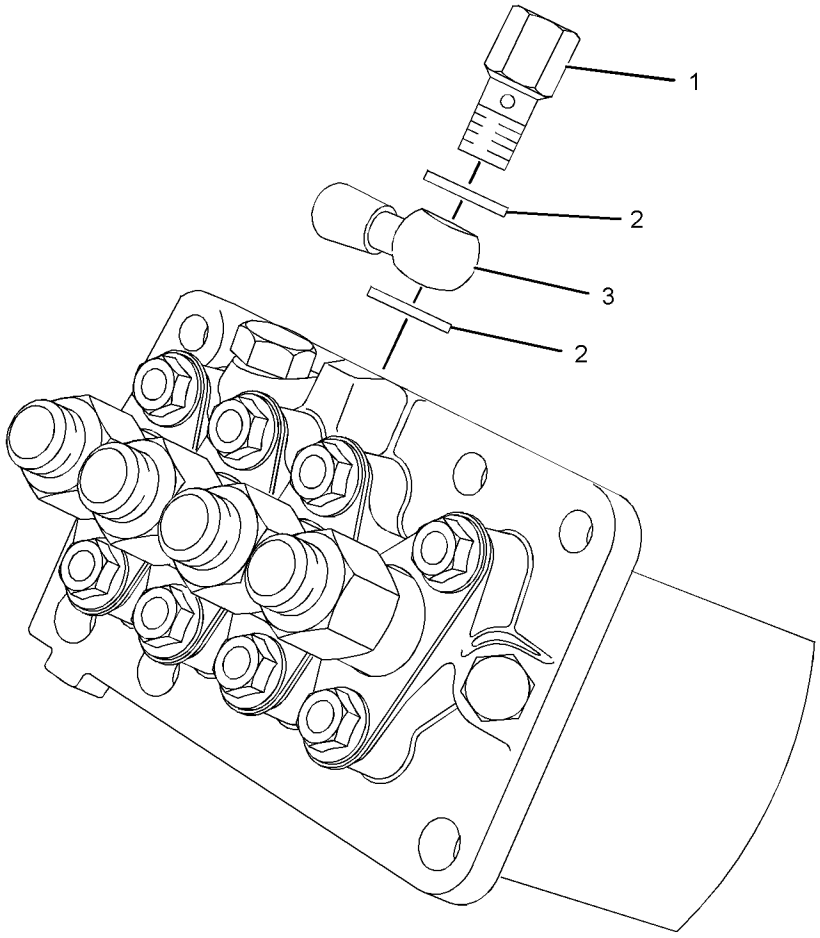

GRAPHIC #1 <END> g01281336

306-6346 PUMP GP-FUEL INJECTION

PART OF 321-4258, 596-2826 PUMP GP-FUEL INJECTION

SMCS-1251, 1290 **i03188105**

NOTE	REF NO	GRAPHIC REF	PART NUMBER	QTY	PART NAME 1 2 3 4 5 6 (PRODUCT LEVEL)	SEE PAGE
	1	1	**205-4726**	1	BOLT-SPECIAL (BANJO)	
	2	1	**205-4727**	2	WASHER	
	3	1	**205-4728**	1	CONNECTOR	

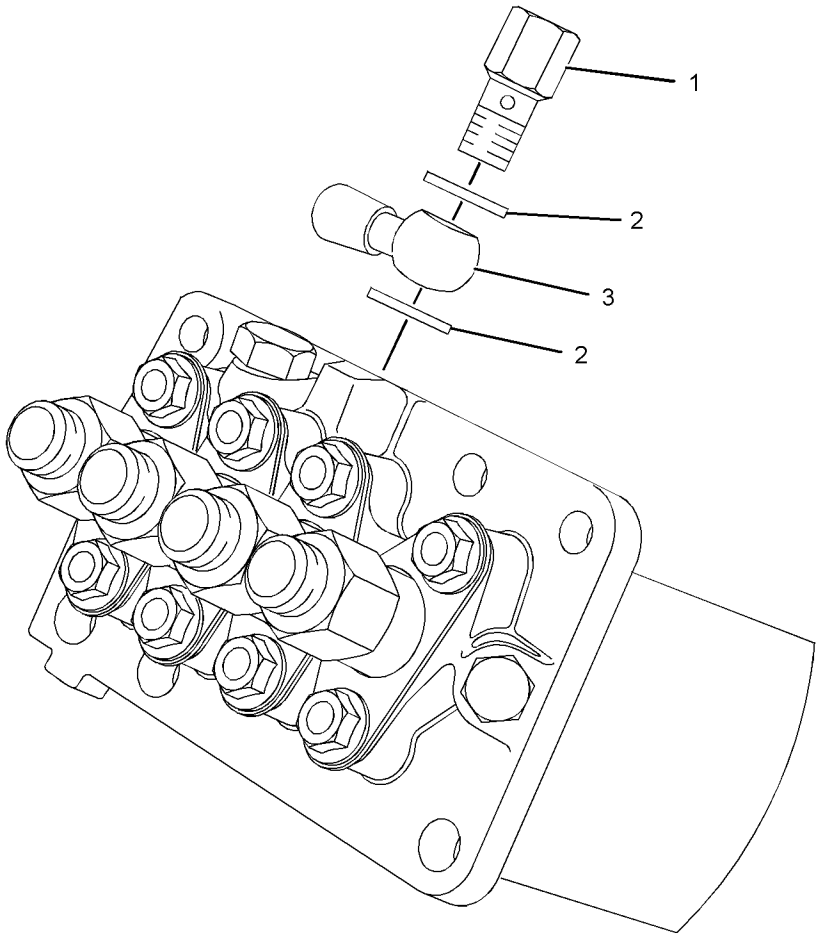

GRAPHIC #1 <END> g01281336

308-2289 PUMP GP-FUEL INJECTION

PART OF 435-1636, 506-0518, 506-0519, 512-7969, 514-6556, 516-2639, 557-6086 ENGINE
AR-PRIMARY

SMCS-1251, 1290 **i06702989**

NOTE	REF NO	GRAPHIC REF	PART NUMBER	QTY	PART NAME 1 2 3 4 5 6 (PRODUCT LEVEL)	SEE PAGE
M	1	1	**102-2079**	1	BOLT (M8X1.25X20-MM)	
M	2	1	**153-5592**	3	NUT (M8X1.25-THD)	
M	3	1	**153-5960**	3	NUT (M6X1-THD)	
M	4	1	**154-0393**	3	STUD (M8X1.25X31-MM)	
M	5	1	**154-2713**	2	BOLT (M8X1.25X20-MM)	
	6	1	**154-2715**	2	WASHER	
	7	1	**163-5372**	1	WASHER (8X15.4X4-MM THK)	
M	8	1	**183-3353**	3	BOLT (M6X1X25-MM)	
M	9	1	**190-3803**	1	BOLT (M8X1X20-MM)	
	10	1	**217-2760**	1	TUBE AS (CYL NO. 1)	
	11	1	**217-2761**	1	TUBE AS (CYL NO. 2)	
	12	1	**217-2762**	1	TUBE AS (CYL NO. 3)	
	13	1	**217-2763**	1	TUBE AS (CYL NO. 4)	
	14	1	**290-8014**	6	CLAMP	
	15	1	**308-1905**	1	PUMP-FUEL INJECTION	
	16	1	**308-1906**	4	INJECTOR AS-FUEL	
					(EACH INCLUDES)	
	16A	1	**202-1196**	1	WASHER-SPECIAL	
B	17	1	**351-2617**	1	SHIM (0.25-MM THK, BEADED)	
B		1	**351-2618**	1	SHIM (0.50-MM THK, BEADED)	
B		1	**351-2619**	1	SHIM (0.50-MM THK, BEADED)	
B		1	**351-2620**	1	SHIM (0.40-MM THK, BEADED)	
B		1	**351-2621**	1	SHIM (0.30-MM THK, BEADED)	
B		1	**351-2622**	1	SHIM (0.20-MM THK, BEADED)	
B		1	**351-3132**	1	SHIM (0.35-MM THK, BEADED)	
	18	1	**426-4357**	4	GASKET	
	19	1	**486-8879**	1	PIPE-FUEL	

B - USE AS REQUIRED
M - METRIC PART

308-2289 **PUMP GP-FUEL INJECTION (**contd.**)** **i06702989**

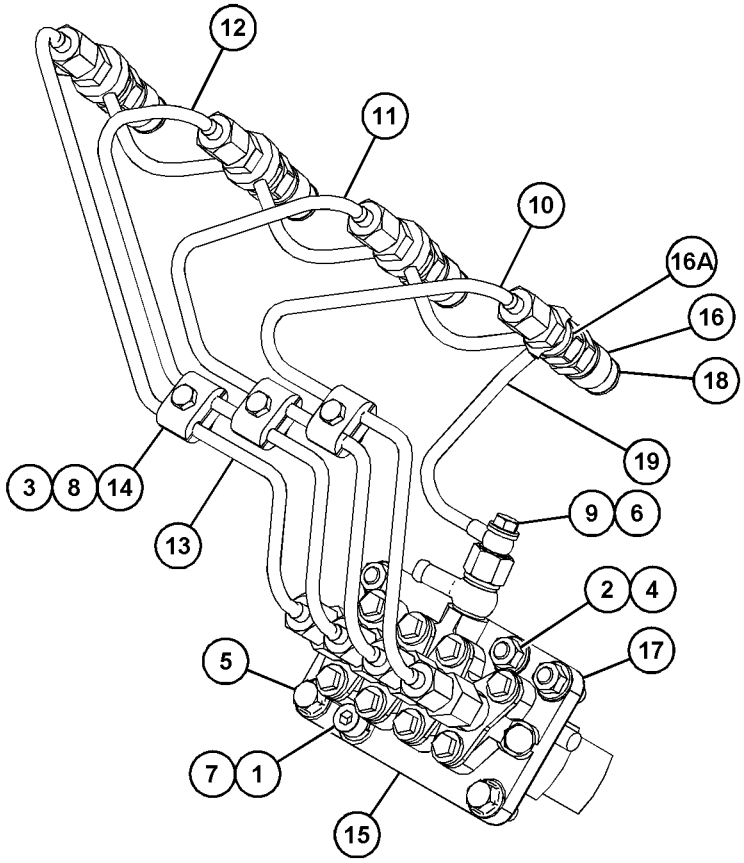

GRAPHIC #1 <END> g06171010

308-3330 PUMP GP-FUEL INJECTION

PART OF 435-1658 ENGINE AR-PRIMARY

SMCS-1251, 1290 **i06557199**

NOTE	REF NO	GRAPHIC REF	PART NUMBER	QTY	PART NAME 1 2 3 4 5 6 (PRODUCT LEVEL)	SEE PAGE
M	1	1	**153-5592**	3	NUT (M8X1.25-THD)	
M	2	1	**153-5960**	3	NUT (M6X1-THD)	
M	3	1	**154-2713**	2	BOLT (M8X1.25X20-MM)	
	4	1	**154-2715**	2	WASHER	
	5	1	**426-4357**	4	GASKET	
B	6	1	**351-2622**	1	SHIM (0.20-MM THK, BEADED)	
B		1	**351-2617**	1	SHIM (0.25-MM THK, BEADED)	
B		1	**351-2621**	1	SHIM (0.30-MM THK, BEADED)	
B		1	**351-3132**	1	SHIM (0.35-MM THK, BEADED)	
B		1	**351-2620**	1	SHIM (0.40-MM THK, BEADED)	
B		1	**351-2619**	1	SHIM (0.50-MM THK, BEADED)	
B		1	**351-2618**	1	SHIM (0.50-MM THK, BEADED)	
	7	1	**163-5372**	1	WASHER (8X15.4X4-MM THK)	
M	8	1	**183-3353**	3	BOLT (M6X1X25-MM)	
M	9	1	**190-3803**	1	BOLT (M8X1X20-MM)	
	10	1	**217-2760**	1	TUBE AS (CYL NO. 1)	
	11	1	**217-2761**	1	TUBE AS (CYL NO. 2)	
	12	1	**217-2762**	1	TUBE AS (CYL NO. 3)	
	13	1	**217-2763**	1	TUBE AS (CYL NO. 4)	
M	14	1	**102-2079**	1	BOLT (M8X1.25X20-MM)	
	15	1	**290-8014**	6	CLAMP	
	16	1	**308-1905**	1	PUMP-FUEL INJECTION	
	17	1	**308-1906**	4	INJECTOR AS-FUEL	
					(EACH INCLUDES)	
	17A	1	**202-1196**	1	WASHER-SPECIAL	
	18	1	**311-7561**	1	TUBE	
M	19	1	**154-0393**	3	STUD (M8X1.25X31-MM)	

B - USE AS REQUIRED
M - METRIC PART

308-3330 **PUMP GP-FUEL INJECTION (**contd.**)** **i06557199**

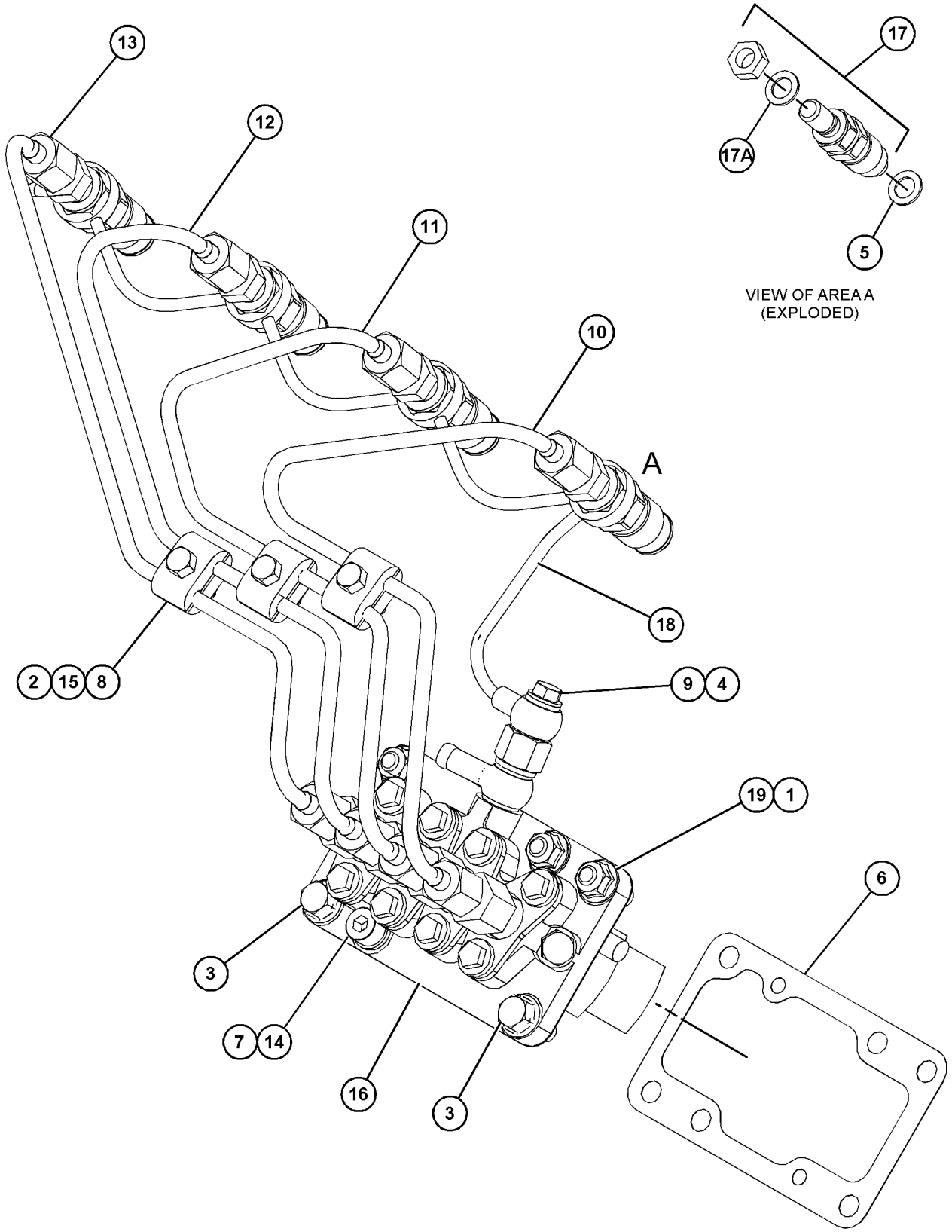

GRAPHIC #1 <END> g06040951

309-6719 PUMP GP-FUEL INJECTION

PART OF 417-7273, 435-1642, 435-1646, 489-4263, 499-6420, 506-0520, 513-2239, 557-7471 ENGINE AR-PRIMARY

SMCS-1251, 1290 **i06691263**

NOTE	REF NO	GRAPHIC REF	PART NUMBER	QTY	PART NAME 1 2 3 4 5 6 (PRODUCT LEVEL)	SEE PAGE
M	1	1	**102-2079**	1	BOLT (M8X1.25X20-MM)	
M	2	1	**153-5592**	3	NUT (M8X1.25-THD)	
M	3	1	**153-5960**	3	NUT (M6X1-THD)	
M	4	1	**154-0393**	3	STUD (M8X1.25X31-MM)	
M	5	1	**154-2713**	2	BOLT (M8X1.25X20-MM)	
	6	1	**154-2715**	2	WASHER	
	7	1	**163-5372**	1	WASHER (8X15.4X4-MM THK)	
M	8	1	**183-3353**	3	BOLT (M6X1X25-MM)	
M	9	1	**190-3803**	1	BOLT (M8X1X20-MM)	
	10	1	**252-1446**	4	INJECTOR AS-FUEL	
					(EACH INCLUDES)	
	10A	1	**202-1196**	1	WASHER-SPECIAL	
	10B	1	**205-4731**	1	NUT	
	11	1	**290-8014**	6	CLAMP	
	12	1	**342-4187**	1	PUMP AS-FUEL INJECTION	
B	13	1	**351-2622**	1	SHIM (0.20-MM THK, BEADED)	
B		1	**351-2617**	1	SHIM (0.25-MM THK, BEADED)	
B		1	**351-2621**	1	SHIM (0.30-MM THK, BEADED)	
B		1	**351-3132**	1	SHIM (0.35-MM THK, BEADED)	
B		1	**351-2620**	1	SHIM (0.40-MM THK, BEADED)	
B		1	**351-2619**	1	SHIM (0.50-MM THK, BEADED)	
B		1	**351-2618**	1	SHIM (0.50-MM THK, BEADED)	
	14	1	**486-8879**	1	PIPE-FUEL	
	15	1	**426-4357**	4	GASKET	
	16	1	**383-4113**	1	TUBE AS (CYL NO. 4)	
	17	1	**383-4112**	1	TUBE AS (CYL NO. 3)	
	18	1	**383-4111**	1	TUBE AS (CYL NO. 2)	
	19	1	**383-4110**	1	TUBE AS (CYL NO. 1)	

B - USE AS REQUIRED
M - METRIC PART

309-6719 **PUMP GP-FUEL INJECTION (**contd.**)** **i06691263**

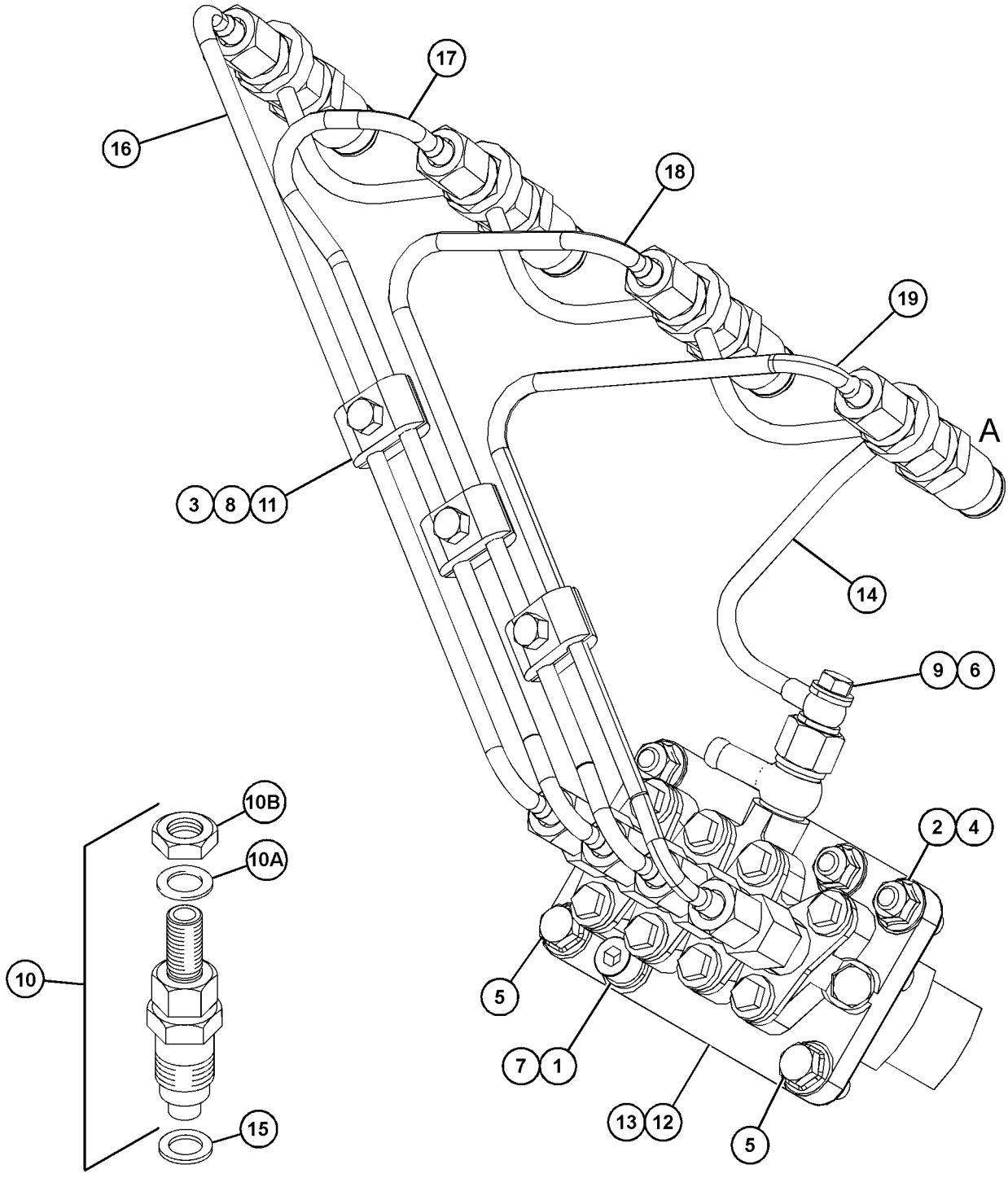

VIEW OF AREA A
(EXPLODED)

GRAPHIC #1 <END> g06102313

311-1683 PUMP GP-FUEL INJECTION

PART OF 433-1379 ENGINE AR
ALSO AN ATTACHMENT

SMCS-1251, 1290 **i07031035**

NOTE	REF NO	GRAPHIC REF	PART NUMBER	QTY	PART NAME 1 2 3 4 5 6 (PRODUCT LEVEL)	SEE PAGE
M	1	1	**153-5592**	3	NUT (M8X1.25-THD)	
M	2	1	**153-5960**	3	NUT (M6X1-THD)	
M	3	1	**154-2713**	2	BOLT (M8X1.25X20-MM)	
	4	1	**154-2715**	2	WASHER	
	5	1	**426-4357**	4	GASKET	
	6	1	**252-1446**	4	INJECTOR AS-FUEL	
					(EACH INCLUDES)	
	6A	1	**202-1196**	1	WASHER-SPECIAL	
	6B	1	**205-4731**	1	NUT	
B	7	1	**351-2622**	1	SHIM (0.20-MM THK, BEADED)	
B		1	**351-2617**	1	SHIM (0.25-MM THK, BEADED)	
B		1	**351-2621**	1	SHIM (0.30-MM THK, BEADED)	
B		1	**351-3132**	1	SHIM (0.35-MM THK, BEADED)	
B		1	**351-2620**	1	SHIM (0.40-MM THK, BEADED)	
B		1	**351-2619**	1	SHIM (0.50-MM THK, BEADED)	
B		1	**351-2618**	1	SHIM (0.50-MM THK, BEADED)	
	8	1	**163-5372**	1	WASHER (8X15.4X4-MM THK)	
M	9	1	**183-3353**	3	BOLT (M6X1X25-MM)	
M	10	1	**190-3803**	1	BOLT (M8X1X20-MM)	
	11	1	**383-4110**	1	TUBE AS (CYL NO. 1)	
	12	1	**383-4111**	1	TUBE AS (CYL NO. 2)	
	13	1	**383-4112**	1	TUBE AS (CYL NO. 3)	
	14	1	**383-4113**	1	TUBE AS (CYL NO. 4)	
	15	1	**486-8879**	1	PIPE-FUEL	
M	16	1	**102-2079**	1	BOLT (M8X1.25X20-MM)	
	17	1	**290-8014**	6	CLAMP	
	18	1	**342-4187**	1	PUMP AS-FUEL INJECTION	
M	19	1	**154-0393**	3	STUD (M8X1.25X31-MM)	

B - USE AS REQUIRED
M - METRIC PART

311-1683 **PUMP GP-FUEL INJECTION (**contd.**)** **i07031035**

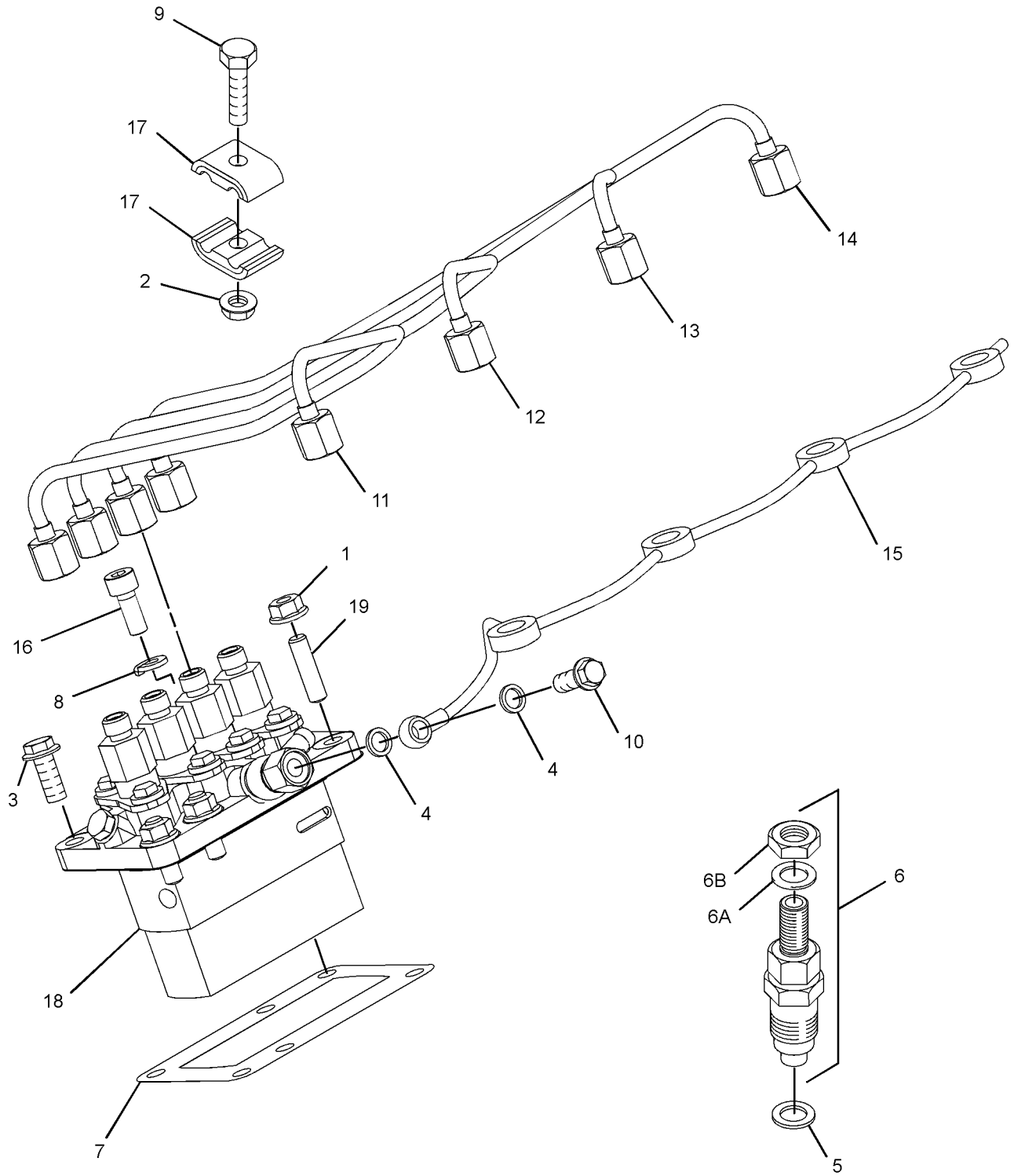

GRAPHIC #1 <END> g06196133

311-9026 PUMP GP-FUEL INJECTION

PART OF 435-1641 ENGINE AR-PRIMARY

SMCS-1251, 1290 **i07035287**

NOTE	REF NO	GRAPHIC REF	PART NUMBER	QTY	PART NAME 1 2 3 4 5 6 (PRODUCT LEVEL)	SEE PAGE
M	1	1	**153-5592**	3	NUT (M8X1.25-THD)	
M	2	1	**153-5960**	3	NUT (M6X1-THD)	
M	3	1	**154-2713**	2	BOLT (M8X1.25X20-MM)	
	4	1	**154-2715**	2	WASHER	
	5	1	**426-4357**	4	GASKET	
	6	1	**252-1446**	4	INJECTOR AS-FUEL	
					(EACH INCLUDES)	
	6A	1	**202-1196**	1	WASHER-SPECIAL	
	6B	1	**205-4731**	1	NUT	
B	7	1	**351-2622**	1	SHIM (0.20-MM THK, BEADED)	
B		1	**351-2617**	1	SHIM (0.25-MM THK, BEADED)	
B		1	**351-2621**	1	SHIM (0.30-MM THK, BEADED)	
B		1	**351-3132**	1	SHIM (0.35-MM THK, BEADED)	
B		1	**351-2620**	1	SHIM (0.40-MM THK, BEADED)	
B		1	**351-2619**	1	SHIM (0.50-MM THK, BEADED)	
B		1	**351-2618**	1	SHIM (0.50-MM THK, BEADED)	
	8	1	**163-5372**	1	WASHER (8X15.4X4-MM THK)	
M	9	1	**183-3353**	3	BOLT (M6X1X25-MM)	
M	10	1	**190-3803**	1	BOLT (M8X1X20-MM)	
	11	1	**383-4110**	1	TUBE AS (CYL NO. 1)	
	12	1	**383-4111**	1	TUBE AS (CYL NO. 2)	
	13	1	**383-4112**	1	TUBE AS (CYL NO. 3)	
	14	1	**383-4113**	1	TUBE AS (CYL NO. 4)	
	15	1	**486-8879**	1	PIPE-FUEL	
M	16	1	**102-2079**	1	BOLT (M8X1.25X20-MM)	
	17	1	**290-8014**	6	CLAMP	
	18	1	**342-4187**	1	PUMP AS-FUEL INJECTION	
M	19	1	**154-0393**	3	STUD (M8X1.25X31-MM)	

B - USE AS REQUIRED
M - METRIC PART

311-9026 **PUMP GP-FUEL INJECTION (**contd.**)** **i07035287**

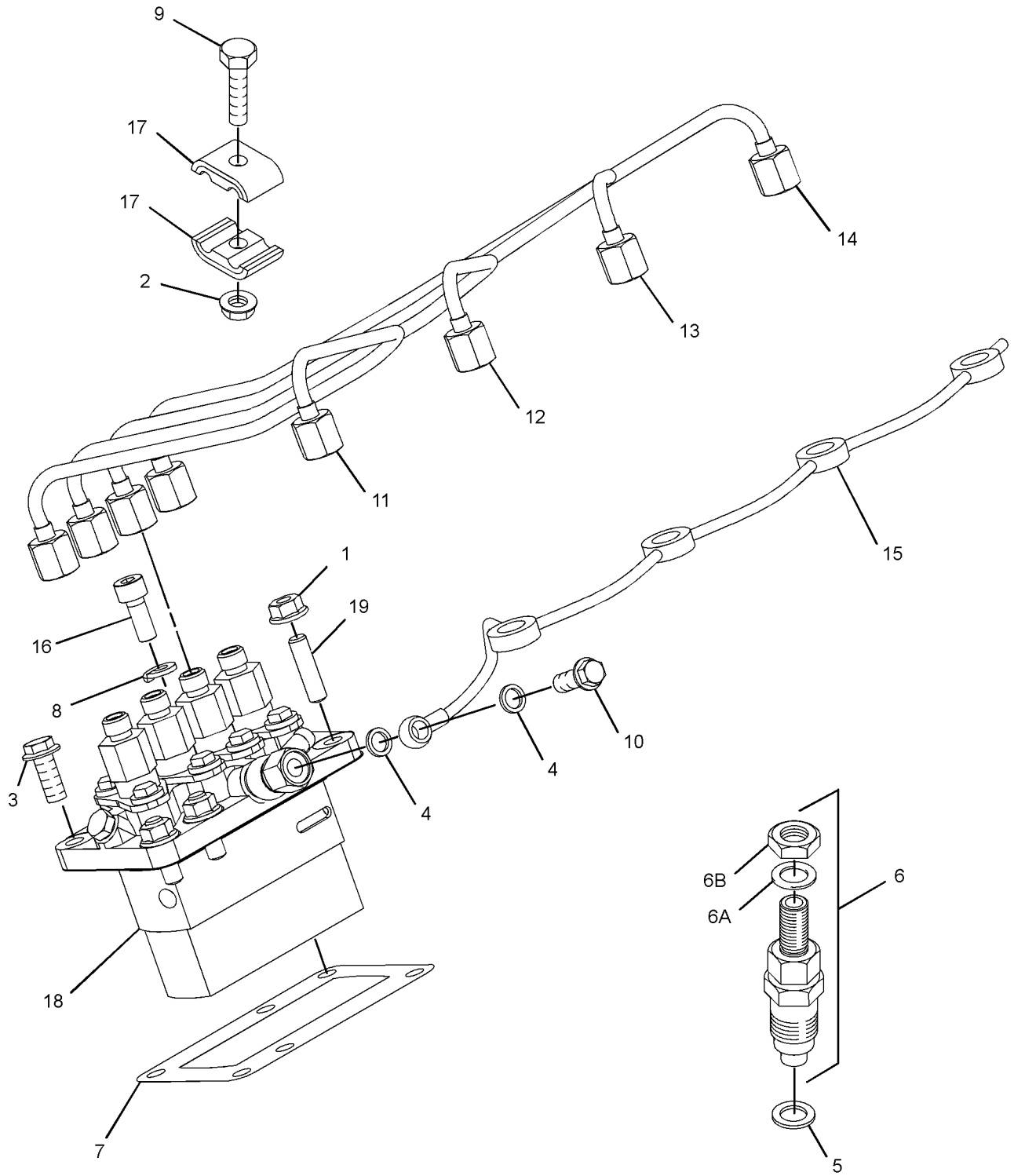

GRAPHIC #1 <END> g06201414

317-0977 PUMP GP-FUEL INJECTION

PART OF 433-1380 ENGINE AR, 489-9224, 504-4602 ENGINE AR-PRIMARY

SMCS-1251, 1290 **i06547051**

NOTE	REF NO	GRAPHIC REF	PART NUMBER	QTY	PART NAME 1 2 3 4 5 6 (PRODUCT LEVEL)	SEE PAGE
M	1	1	**153-5592**	3	NUT (M8X1.25-THD)	
M	2	1	**153-5960**	3	NUT (M6X1-THD)	
M	3	1	**154-2713**	2	BOLT (M8X1.25X20-MM)	
	4	1	**154-2715**	2	WASHER	
	5	1	**426-4357**	4	GASKET	
B	6	1	**351-2622**	1	SHIM (0.20-MM THK, BEADED)	
B		1	**351-2617**	1	SHIM (0.25-MM THK, BEADED) (0.25-MM THK)	
B		1	**351-2621**	1	SHIM (0.30-MM THK, BEADED)	
B		1	**351-3132**	1	SHIM (0.35-MM THK, BEADED) (0.35-MM THK)	
B		1	**351-2620**	1	SHIM (0.40-MM THK, BEADED)	
B		1	**351-2619**	1	SHIM (0.50-MM THK, BEADED)	
B		1	**351-2618**	1	SHIM (0.50-MM THK, BEADED)	
	7	1	**163-5372**	1	WASHER (8X15.4X4-MM THK)	
M	8	1	**183-3353**	3	BOLT (M6X1X25-MM)	
M	9	1	**190-3803**	1	BOLT (M8X1X20-MM)	
	10	1	**217-2760**	1	TUBE AS (CYL NO. 1)	
	11	1	**217-2761**	1	TUBE AS (CYL NO. 2)	
	12	1	**217-2762**	1	TUBE AS (CYL NO. 3)	
	13	1	**217-2763**	1	TUBE AS (CYL NO. 4)	
M	14	1	**102-2079**	1	BOLT (M8X1.25X20-MM)	
	15	1	**290-8014**	6	CLAMP	
	16	1	**308-1905**	1	PUMP-FUEL INJECTION	
	17	1	**308-1906**	4	INJECTOR AS-FUEL	
					(EACH INCLUDES)	
	17A	1	**202-1196**	1	WASHER-SPECIAL	
	18	1	**311-7561**	1	TUBE	
M	19	1	**154-0393**	3	STUD (M8X1.25X31-MM)	

B - USE AS REQUIRED
M - METRIC PART

317-0977 **PUMP GP-FUEL INJECTION (**contd.**)** **i06547051**

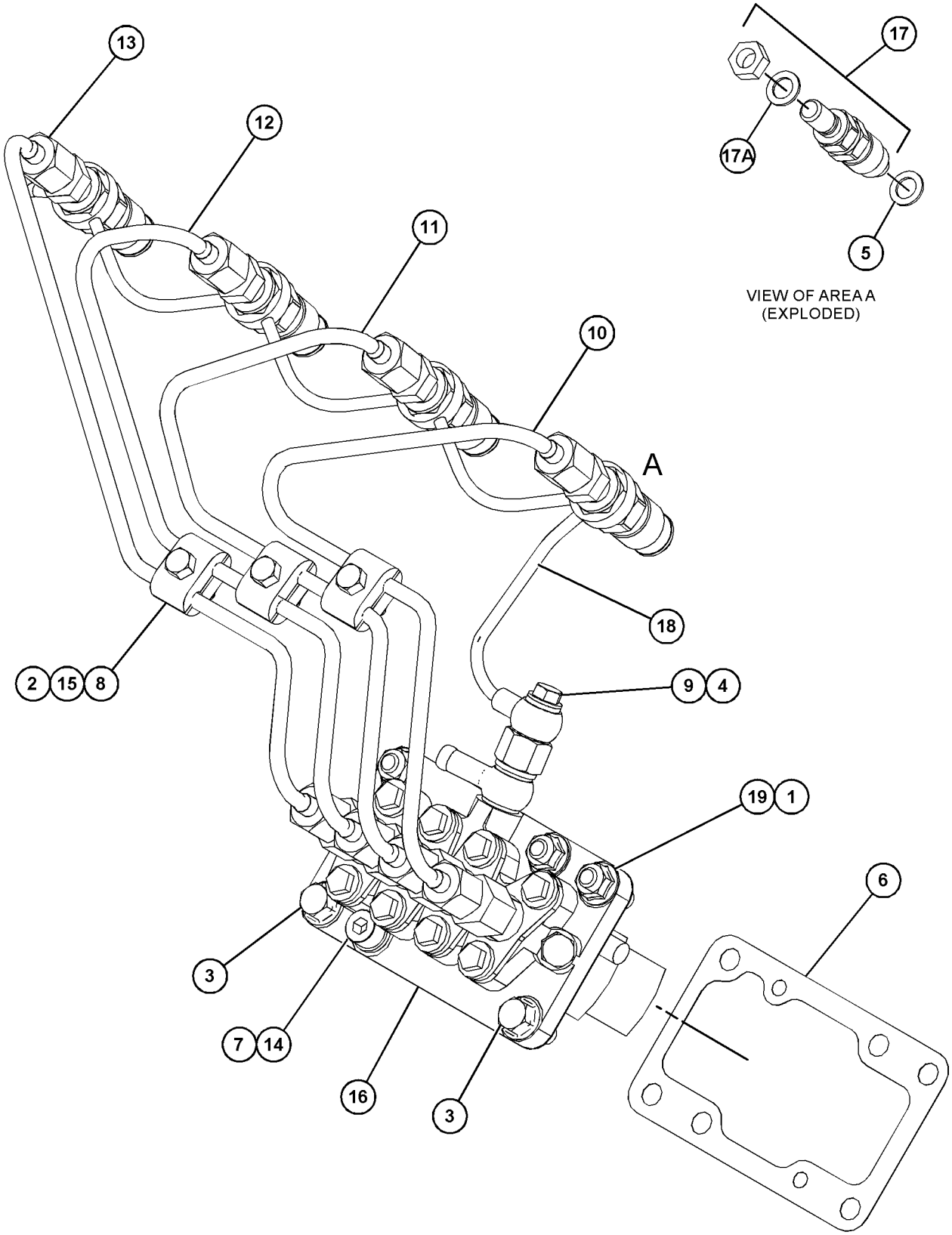

GRAPHIC #1 <END> g06041166

317-7190 PUMP GP-FUEL INJECTION

PART OF 435-1645, 435-1649 CYLINDER BLOCK GP-LONG

SMCS-1251, 1290 **i07037490**

NOTE	REF NO	GRAPHIC REF	PART NUMBER	QTY	PART NAME 1 2 3 4 5 6 (PRODUCT LEVEL)	SEE PAGE
M	1	1	**153-5592**	3	NUT (M8X1.25-THD)	
M	2	1	**153-5960**	3	NUT (M6X1-THD)	
M	3	1	**154-2713**	1	BOLT (M8X1.25X20-MM)	
	4	1	**154-2715**	2	WASHER	
	5	1	**426-4357**	4	GASKET	
	6	1	**252-1446**	4	INJECTOR AS-FUEL	
					(EACH INCLUDES)	
	6A	1	**202-1196**	1	WASHER-SPECIAL	
	6B	1	**205-4731**	1	NUT	
B	7	1	**351-2622**	1	SHIM (0.20-MM THK, BEADED)	
B		1	**351-2617**	1	SHIM (0.25-MM THK, BEADED)	
B		1	**351-2621**	1	SHIM (0.30-MM THK, BEADED)	
B		1	**351-3132**	1	SHIM (0.35-MM THK, BEADED)	
B		1	**351-2620**	1	SHIM (0.40-MM THK, BEADED)	
B		1	**351-2619**	1	SHIM (0.50-MM THK, BEADED)	
B		1	**351-2618**	1	SHIM (0.50-MM THK, BEADED)	
	8	1	**163-5372**	2	WASHER (8X15.4X4-MM THK)	
M	9	1	**183-3353**	3	BOLT (M6X1X25-MM)	
M	10	1	**190-3803**	1	BOLT (M8X1X20-MM)	
	11	1	**383-4110**	1	TUBE AS (CYL NO. 1)	
	12	1	**383-4111**	1	TUBE AS (CYL NO. 2)	
	13	1	**383-4112**	1	TUBE AS (CYL NO. 3)	
	14	1	**383-4113**	1	TUBE AS (CYL NO. 4)	
	15	1	**486-8879**	1	PIPE-FUEL	
M	16	1	**102-2079**	2	BOLT (M8X1.25X20-MM)	
	17	1	**290-8014**	6	CLAMP	
	18	1	**342-4187**	1	PUMP AS-FUEL INJECTION	
M	19	1	**154-0393**	3	STUD (M8X1.25X31-MM)	

B - USE AS REQUIRED
M - METRIC PART

317-7190 **PUMP GP-FUEL INJECTION (**contd.**)** **i07037490**

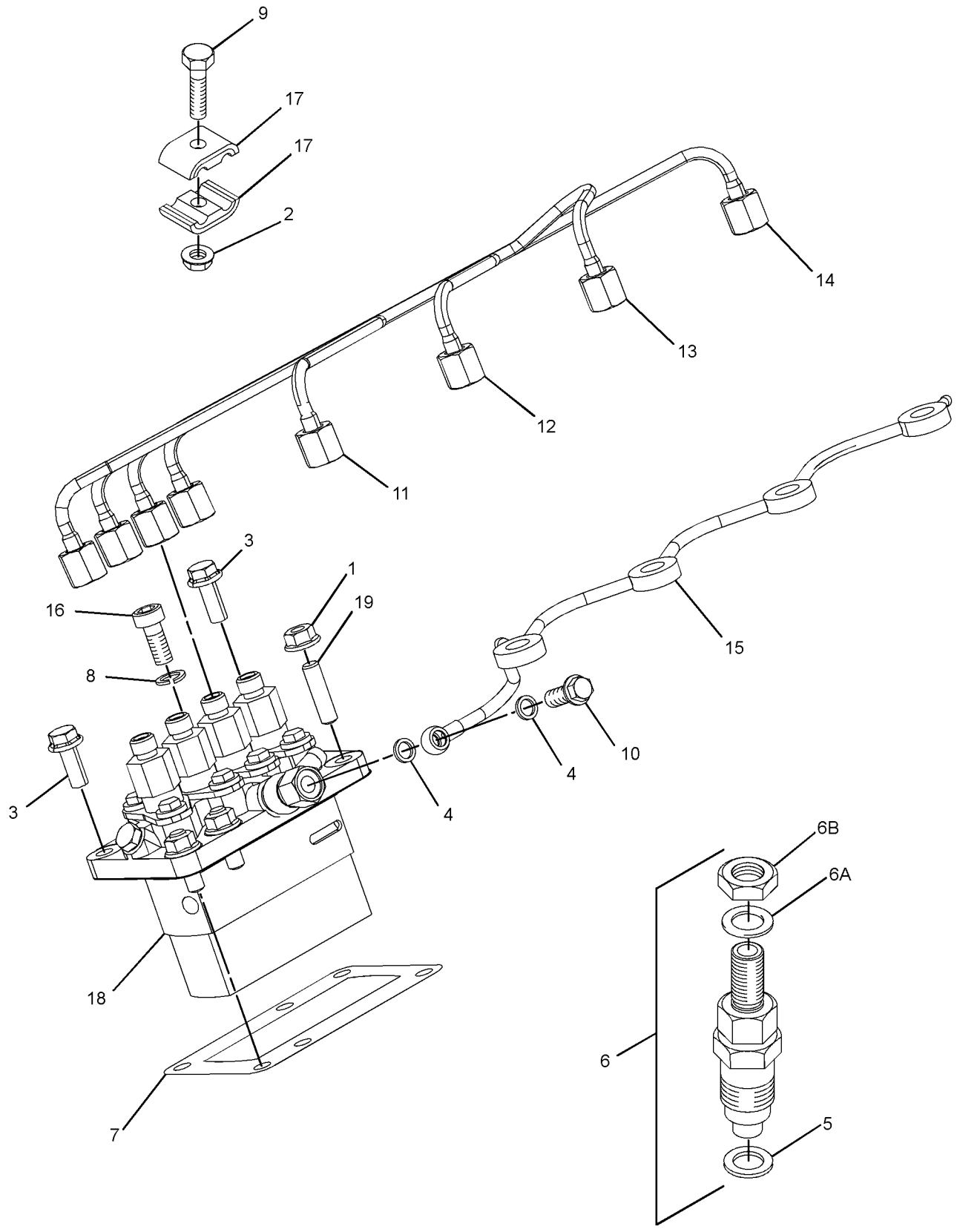

GRAPHIC #1 <END> g06203514

321-4258 PUMP GP-FUEL INJECTION

PART OF 435-1647 ENGINE AR-PRIMARY

SMCS-1251, 1290 **i07030577**

NOTE	REF NO	GRAPHIC REF	PART NUMBER	QTY	PART NAME 1 2 3 4 5 6 (PRODUCT LEVEL)	SEE PAGE
M	1	1	**153-5592**	3	NUT (M8X1.25-THD)	
M	2	1	**153-5960**	3	NUT (M6X1-THD)	
	3	1	**290-8014**	6	CLAMP	
	4	1	**252-1466**	4	INJECTOR AS-FUEL	
					(EACH INCLUDES)	
	4A	1	**202-1196**	1	WASHER-SPECIAL	
M	5	1	**154-2713**	2	BOLT (M8X1.25X20-MM)	
	6	1	**154-2715**	2	WASHER	
	7	1	**426-4357**	4	GASKET	
	8	1	**154-2722**	1	LINE AS-FUEL INJECTION (CYL NO. 1)	
	9	1	**154-2723**	1	LINE AS-FUEL INJECTION (CYL NO. 2)	
	10	1	**154-2724**	1	LINE AS-FUEL INJECTION (CYL NO. 3)	
	11	1	**154-2725**	1	LINE AS-FUEL INJECTION (CYL NO. 4)	
	12	1	**351-2622**	1	SHIM (0.20-MM THK, BEADED)	
B		1	**351-2617**	1	SHIM (0.25-MM THK, BEADED)	
B		1	**351-2621**	1	SHIM (0.30-MM THK, BEADED)	
B		1	**351-3132**	1	SHIM (0.35-MM THK, BEADED)	
B		1	**351-2620**	1	SHIM (0.40-MM THK, BEADED)	
B		1	**351-2618**	1	SHIM (0.50-MM THK, BEADED)	
B		1	**351-2619**	1	SHIM (0.50-MM THK, BEADED)	
	13	1	**163-5372**	1	WASHER (8X15.4X4-MM THK)	
M	14	1	**183-3353**	3	BOLT (M6X1X25-MM)	
M	15	1	**190-3803**	1	BOLT (M8X1X20-MM)	
	16	1	**486-8879**	1	PIPE-FUEL	
Y	17	1	**306-6346**	1	PUMP GP-FUEL INJECTION	807
M	18	1	**102-2079**	1	BOLT (M8X1.25X20-MM)	
M	19	1	**154-0393**	3	STUD (M8X1.25X31-MM)	

B - USE AS REQUIRED
M - METRIC PART
Y - SEPARATE ILLUSTRATION

321-4258 **PUMP GP-FUEL INJECTION (**contd.**)** **i07030577**

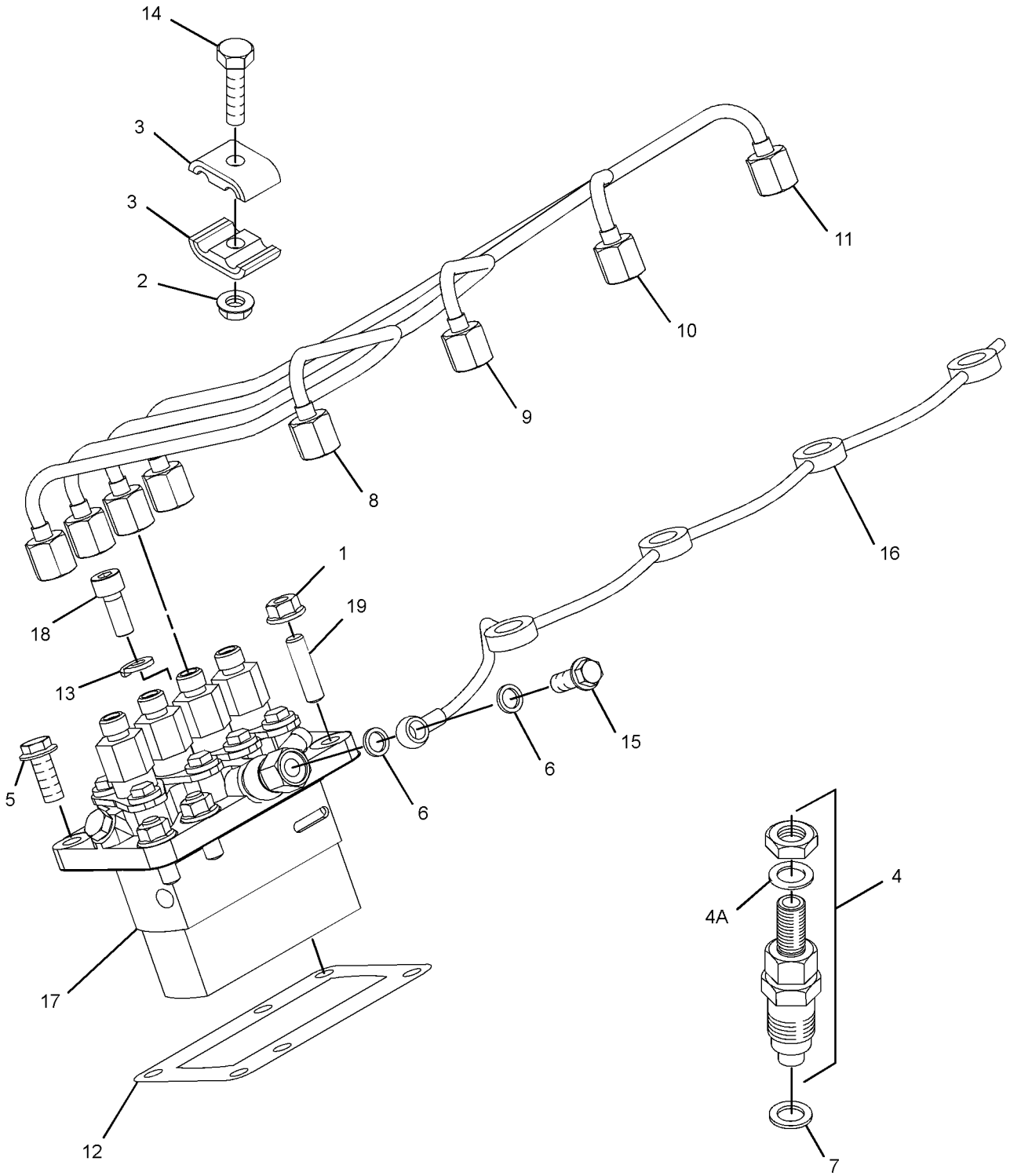

GRAPHIC #1 <END> g06196085

322-3075 PUMP GP-FUEL INJECTION

SMCS-1251, 1290 **i07041807**

NOTE	REF NO	GRAPHIC REF	PART NUMBER	QTY	PART NAME 1 2 3 4 5 6 (PRODUCT LEVEL)	SEE PAGE
M	1	1	**153-5592**	3	NUT (M8X1.25-THD)	
M	2	1	**153-5960**	3	NUT (M6X1-THD)	
M	3	1	**154-2713**	2	BOLT (M8X1.25X20-MM)	
	4	1	**154-2715**	2	WASHER	
	5	1	**426-4357**	4	GASKET	
B	6	1	**351-2622**	1	SHIM (0.20-MM THK, BEADED)	
B		1	**351-2617**	1	SHIM (0.25-MM THK, BEADED)	
B		1	**351-2621**	1	SHIM (0.30-MM THK, BEADED)	
B		1	**351-3132**	1	SHIM (0.35-MM THK, BEADED)	
B		1	**351-2620**	1	SHIM (0.40-MM THK, BEADED)	
B		1	**351-2619**	1	SHIM (0.50-MM THK, BEADED)	
B		1	**351-2618**	1	SHIM (0.50-MM THK, BEADED)	
	7	1	**163-5372**	1	WASHER (8X15.4X4-MM THK)	
M	8	1	**183-3353**	3	BOLT (M6X1X25-MM)	
M	9	1	**190-3803**	1	BOLT (M8X1X20-MM)	
	10	1	**383-4110**	1	TUBE AS (CYL NO. 1)	
	11	1	**383-4111**	1	TUBE AS (CYL NO. 2)	
	12	1	**383-4112**	1	TUBE AS (CYL NO. 3)	
	13	1	**383-4113**	1	TUBE AS (CYL NO. 4)	
M	14	1	**102-2079**	1	BOLT (M8X1.25X20-MM)	
	15	1	**290-8014**	6	CLAMP	
	16	1	**342-4187**	1	PUMP AS-FUEL INJECTION	
	17	1	**252-1446**	4	INJECTOR AS-FUEL	
					(EACH INCLUDES)	
	17A	1	**202-1196**	1	WASHER-SPECIAL	
	17B	1	**205-4731**	1	NUT	
	18	1	**486-8879**	1	PIPE-FUEL	
M	19	1	**154-0393**	3	STUD (M8X1.25X31-MM)	

B - USE AS REQUIRED
M - METRIC PART

322-3075 **PUMP GP-FUEL INJECTION (**contd.**)** **i07041807**

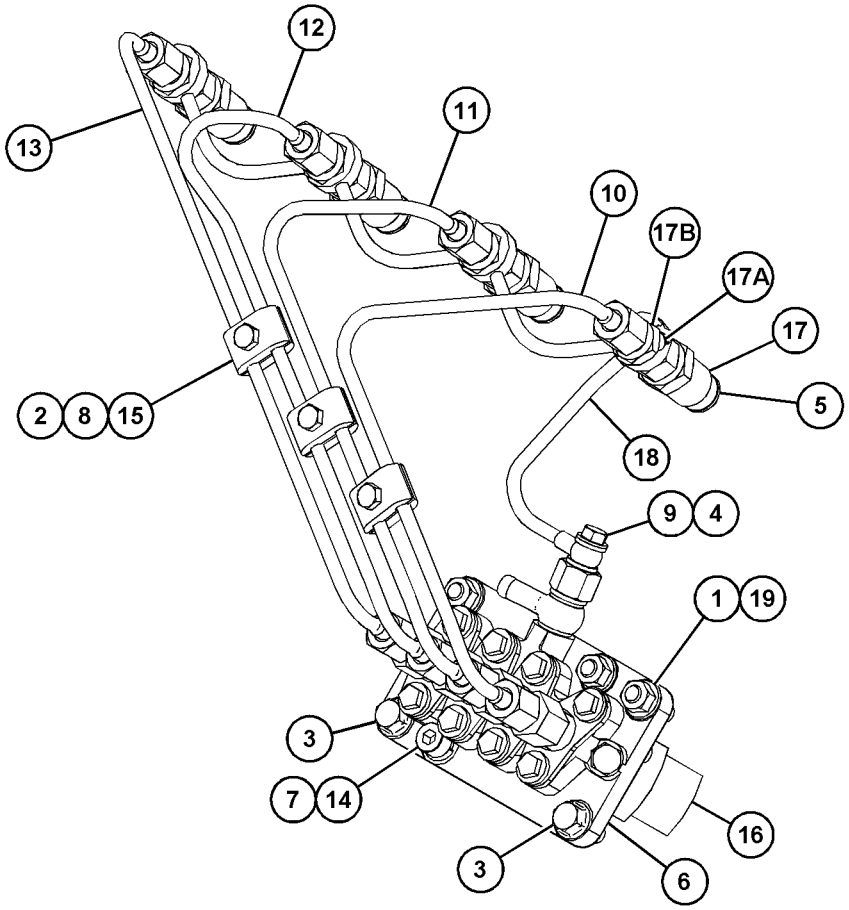

GRAPHIC #1 <END> g06200248

526-0230 PUMP GP-FUEL INJECTION

PART OF 518-0165 ENGINE AR-PRIMARY

SMCS-1251, 1290 **i07569341**

NOTE	REF NO	GRAPHIC REF	PART NUMBER	QTY	PART NAME 1 2 3 4 5 6 (PRODUCT LEVEL)	SEE PAGE
M	1	1	**102-2079**	1	BOLT (M8X1.25X20-MM)	
M	2	1	**153-5592**	1	NUT (M8X1.25-THD)	
M	3	2	**153-5960**	3	NUT (M6X1-THD)	
M	4	1	**154-2713**	2	BOLT (M8X1.25X20-MM)	
	5	2	**154-2715**	2	WASHER	
	6	1	**163-5372**	1	WASHER (8X15.4X4-MM THK)	
M	7	2	**183-3353**	3	BOLT (M6X1X25-MM)	
M	8	2	**190-3803**	1	BOLT (M8X1X20-MM)	
	9	2	**217-2760**	1	TUBE AS (CYL NO. 1)	
	10	2	**217-2761**	1	TUBE AS (CYL NO. 2)	
	11	2	**217-2762**	1	TUBE AS (CYL NO. 3)	
	12	2	**217-2763**	1	TUBE AS (CYL NO. 4)	
	13	1	**252-1446**	4	INJECTOR AS-FUEL	
					(EACH INCLUDES)	
	13A	1	**202-1196**	1	WASHER-SPECIAL	
	13B	1	**205-4731**	1	NUT	
	14	2	**290-8014**	6	CLAMP	
Y	15	1	**302-7821**	1	PUMP GP-FUEL INJECTION	806
	16	1	**426-4357**	4	GASKET	
	17	2	**486-8879**	1	PIPE-FUEL	
B	18	1	**351-2618**	1	SHIM (0.50-MM THK, BEADED)	
B		1	**351-2617**	1	SHIM (0.25-MM THK, BEADED)	
B		1	**351-2619**	1	SHIM (0.50-MM THK, BEADED)	
B		1	**351-2620**	1	SHIM (0.40-MM THK, BEADED)	
B		1	**351-2621**	1	SHIM (0.30-MM THK, BEADED)	
B		1	**351-2622**	1	SHIM (0.20-MM THK, BEADED)	
B		1	**351-3132**	1	SHIM (0.35-MM THK, BEADED)	

B - USE AS REQUIRED
M - METRIC PART
Y - SEPARATE ILLUSTRATION

526-0230 **PUMP GP-FUEL INJECTION (**contd.**)** **i07569341**

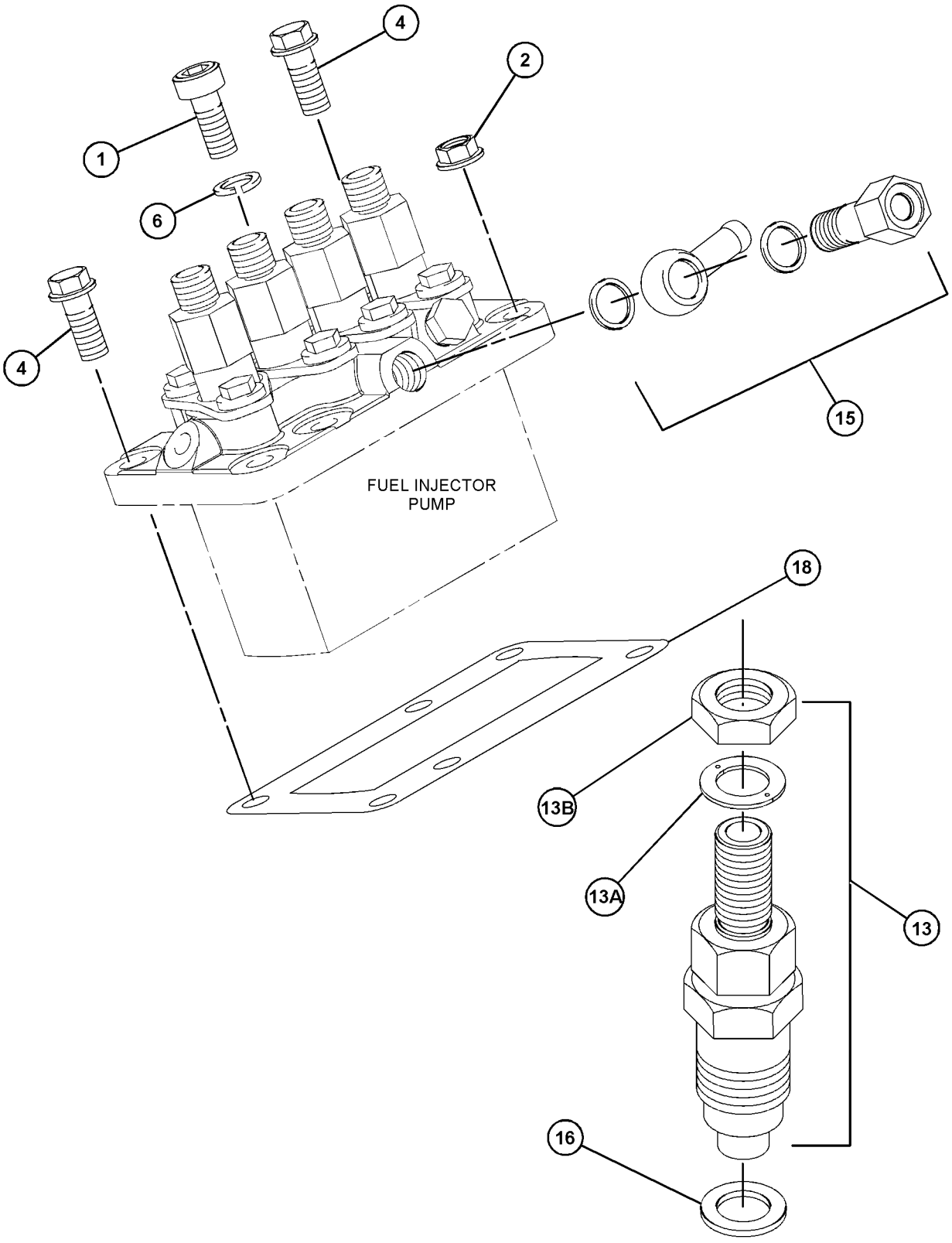

GRAPHIC #1 g06391867

526-0230 **PUMP GP-FUEL INJECTION (**contd.**)** **i07569341**

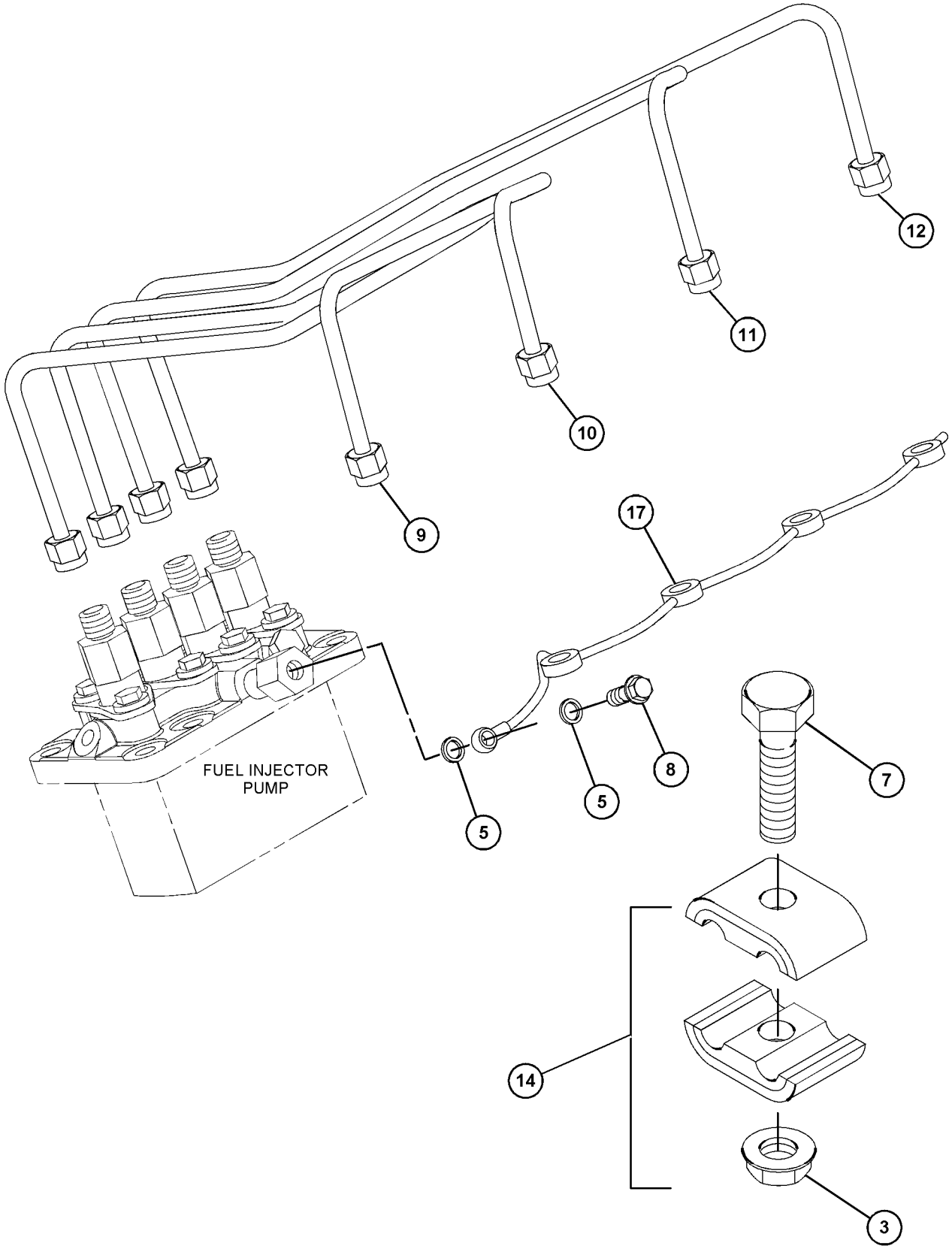

GRAPHIC #2 <END> g06391868

596-2825 PUMP GP-FUEL INJECTION

S/N: C6M10291-UP

PART OF 433-1379 ENGINE AR, 417-7273, 435-1641, 435-1642 ENGINE AR-PRIMARY

ALSO AN ATTACHMENT

SMCS-1251, 1290

i09950341

NOTE	REF NO	GRAPHIC REF	PART NUMBER	QTY	PART NAME 1 2 3 4 5 6 (PRODUCT LEVEL)	SEE PAGE
M	1	1	**8T-1158**	1	BOLT-SOCKET HEAD (M8X1.25X20-MM)	
M	2	1	**178-3336**	3	NUT-HEX FLANGE (M8X1.25-THD)	
M	3	1	**099-6418**	3	NUT (M6X1-THD)	
M	4	1	**319-6358**	3	STUD (M8X1.25X31-MM)	
	5	1	**154-2715**	2	WASHER	
M	6	1	**6I-0217**	2	BOLT (M8X1.25X20-MM)	
	7	1	**3B-4505**	1	LOCKWASHER	
M	8	1	**6V-7357**	3	BOLT (M6X1X25-MM)	
M	9	1	**190-3803**	1	BOLT (M8X1X20-MM)	
	10	1	**252-1446**	4	INJECTOR AS-FUEL	
					(EACH INCLUDES)	
	10A	1	**202-1196**	1	WASHER-SPECIAL	
	10B	1	**205-4731**	1	NUT	
	11	1	**290-8014**	6	CLAMP	
	12	1	**342-4187**	1	PUMP AS-FUEL INJECTION	
	12A	1	**205-4726**	1	BOLT-SPECIAL (BANJO)	
	12B	1	**205-4727**	2	WASHER	
	12C	1	**205-4728**	1	CONNECTOR	
B	13	1	**351-2617**	1	SHIM (0.25-MM THK, BEADED)	
B	14	1	**351-2618**	1	SHIM (0.50-MM THK, BEADED)	
B	15	1	**351-2619**	1	SHIM (0.50-MM THK, BEADED)	
B	16	1	**351-2620**	1	SHIM (0.40-MM THK, BEADED)	
B	17	1	**351-2621**	1	SHIM (0.30-MM THK, BEADED)	
B	18	1	**351-2622**	1	SHIM (0.20-MM THK, BEADED)	
B	19	1	**351-3132**	1	SHIM (0.35-MM THK, BEADED)	
	21	1	**383-4110**	1	TUBE AS (CYL NO. 1)	
	22	1	**383-4111**	1	TUBE AS (CYL NO. 2)	
	23	1	**383-4112**	1	TUBE AS (CYL NO. 3)	
	24	1	**383-4113**	1	TUBE AS (CYL NO. 4)	
	25	1	**426-4357**	4	GASKET	
	26	1	**486-8879**	1	PIPE-FUEL	

B - USE AS REQUIRED
M - METRIC PART

596-2825 **PUMP GP-FUEL INJECTION (**contd.**)** **i09950341**

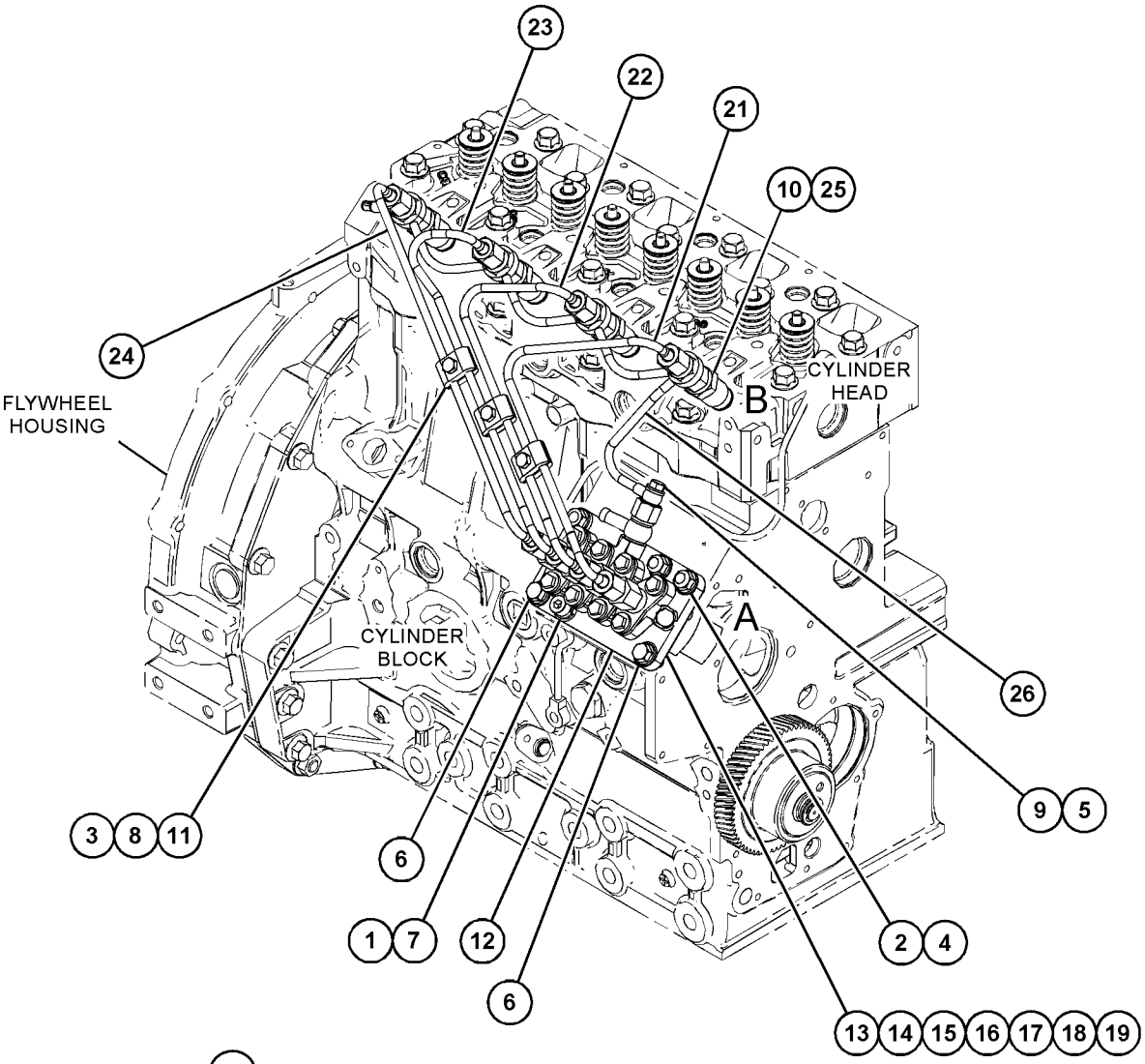

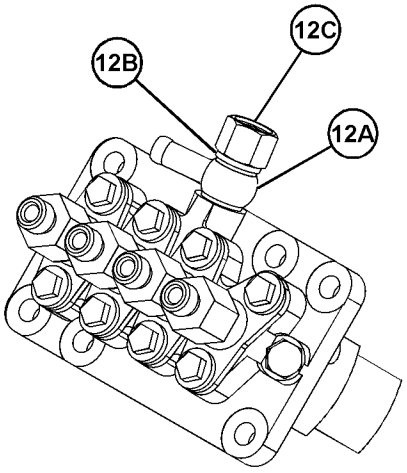

VIEW OF AREA A
(PARTS REMOVED FOR CLARITY)

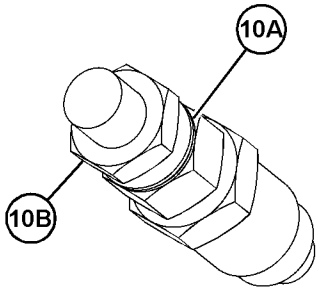

VIEW OF AREA B
(PARTS REMOVED FOR CLARITY)

GRAPHIC #1 <END> g06759175

596-2826 PUMP GP-FUEL INJECTION

S/N: C6M10549-UP

PART OF 435-1647 ENGINE AR-PRIMARY

SMCS-1251, 1290 **i09854286**

NOTE	REF NO	GRAPHIC REF	PART NUMBER	QTY	PART NAME 1 2 3 4 5 6 (PRODUCT LEVEL)	SEE PAGE
M	1	2	**102-2079**	1	BOLT (M8X1.25X20-MM)	
M	2	2	**153-5592**	3	NUT (M8X1.25-THD)	
M	3	2	**153-5960**	3	NUT (M6X1-THD)	
M	4	2	**319-6358**	3	STUD (M8X1.25X31-MM)	
	5	2	**154-2715**	2	WASHER	
	6	2	**154-2722**	1	LINE AS-FUEL INJECTION (CYL NO. 1)	
	7	2	**163-5372**	1	WASHER (8X15.4X4-MM THK)	
M	8	2	**183-3353**	3	BOLT (M6X1X25-MM)	
M	9	2	**190-3803**	1	BOLT (M8X1X20-MM)	
	10	2	**154-2723**	1	LINE AS-FUEL INJECTION (CYL NO. 2)	
	11	2	**290-8014**	6	CLAMP	
	12	2	**154-2724**	1	LINE AS-FUEL INJECTION (CYL NO. 3)	
	13	3	**351-2617**	1	SHIM (0.25-MM THK, BEADED)	
	14	3	**351-2618**	1	SHIM (0.50-MM THK, BEADED)	
	15	3	**351-2619**	1	SHIM (0.50-MM THK, BEADED)	
	16	3	**351-2620**	1	SHIM (0.40-MM THK, BEADED)	
	17	3	**351-2621**	1	SHIM (0.30-MM THK, BEADED)	
	18	3	**351-2622**	1	SHIM (0.20-MM THK, BEADED)	
	19	3	**351-3132**	1	SHIM (0.35-MM THK, BEADED)	
	21	2	**154-2725**	1	LINE AS-FUEL INJECTION (CYL NO. 4)	
	22	2	**252-1466**	4	INJECTOR AS-FUEL	
					(EACH INCLUDES)	
	22A	2	**202-1196**	1	WASHER-SPECIAL	
Y	23	2	**306-6346**	1	PUMP GP-FUEL INJECTION	807
	25	2	**426-4357**	4	GASKET	
	26	1	**486-8879**	1	PIPE-FUEL	
M	27	2	**6I-0217**	2	BOLT (M8X1.25X20-MM)	

M - METRIC PART
Y - SEPARATE ILLUSTRATION

596-2826 **PUMP GP-FUEL INJECTION (**contd.**)** **i09854286**

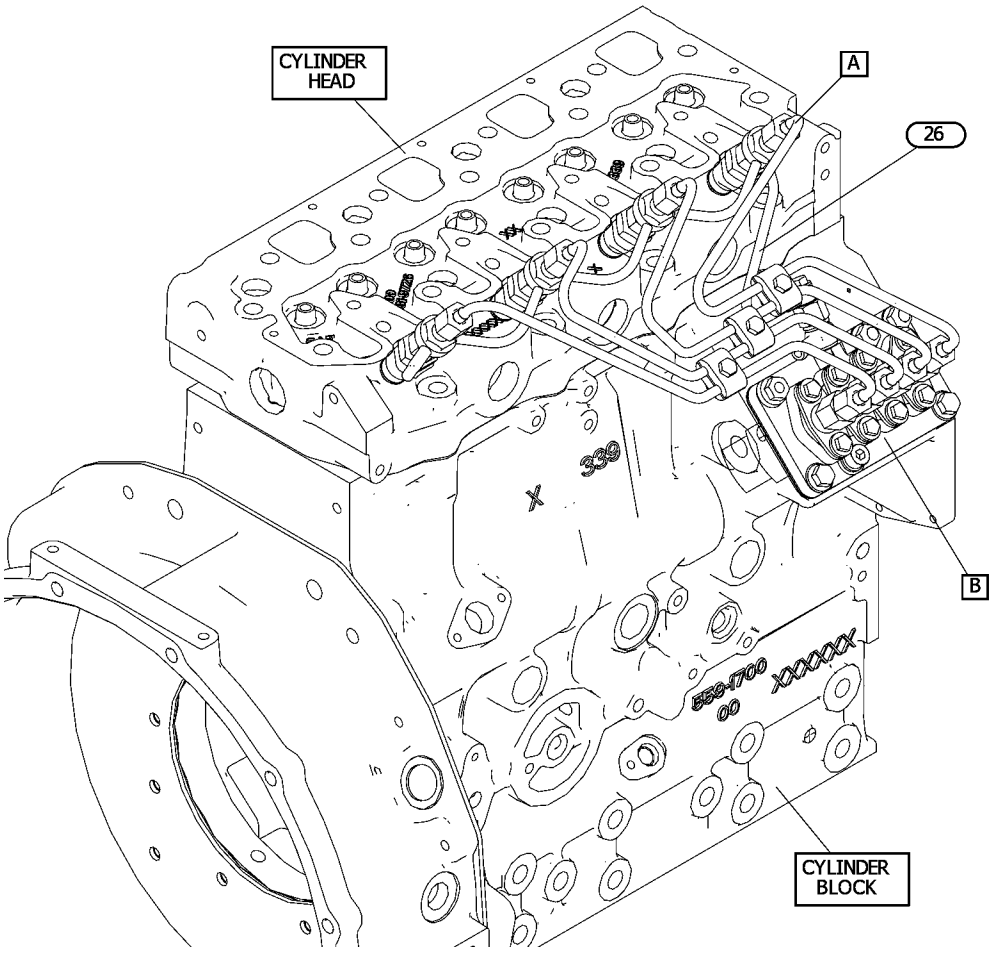

GRAPHIC #1 g07607718

596-2826 **PUMP GP-FUEL INJECTION (**contd.**)** **i09854286**

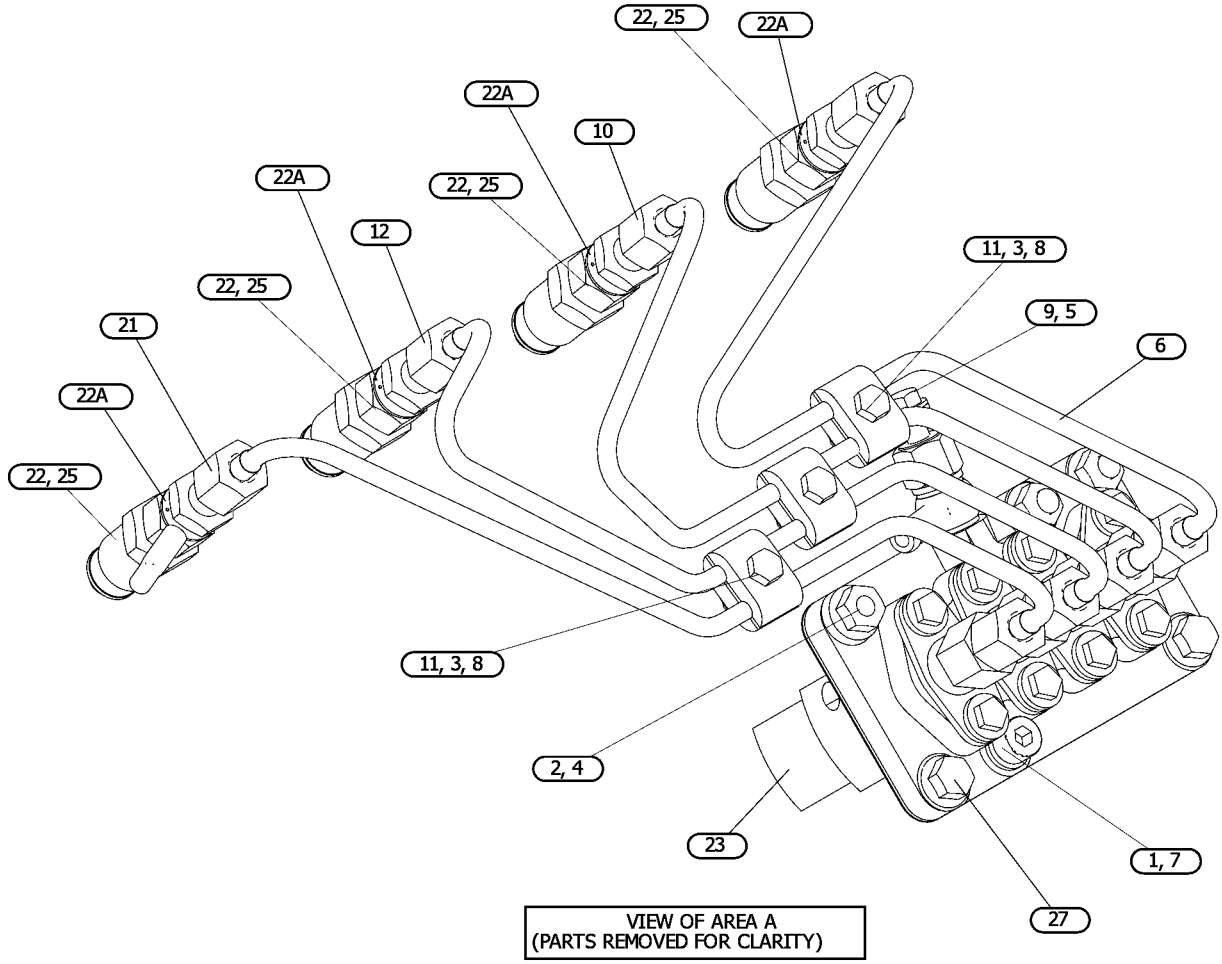

GRAPHIC #2 g07607718_01

596-2826 **PUMP GP-FUEL INJECTION (**contd.**)** **i09854286**

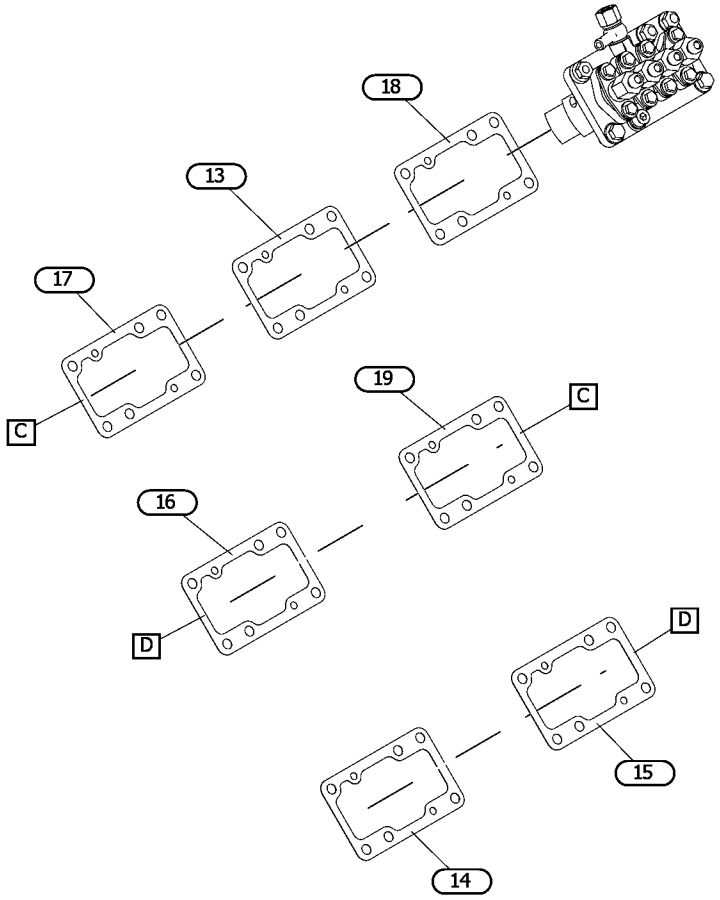

VIEW OF AREA B
(PARTS REMOVED FOR CLARITY)

GRAPHIC #3 <END> g07607718_02

596-2828 PUMP GP-FUEL INJECTION

PART OF 435-1636, 514-6556 ENGINE AR-PRIMARY

SMCS-1251, 1290 **i08671116**

NOTE	REF NO	GRAPHIC REF	PART NUMBER	QTY	PART NAME 1 2 3 4 5 6 (PRODUCT LEVEL)	SEE PAGE
M	1	2	**102-2079**	1	BOLT (M8X1.25X20-MM)	
M	2	2	**178-3336**	3	NUT-HEX FLANGE (M8X1.25-THD)	
M	3	1	**099-6418**	3	NUT (M6X1-THD)	
M	4	2	**319-6358**	3	STUD (M8X1.25X31-MM)	
	5	1	**154-2715**	2	WASHER	
	6	2	**163-5372**	1	WASHER (8X15.4X4-MM THK)	
M	7	1	**183-3353**	3	BOLT (M6X1X25-MM)	
M	8	1	**190-3803**	1	BOLT (M8X1X20-MM)	
	9	1	**217-2760**	1	TUBE AS (CYL NO. 1)	
	10	1	**217-2761**	1	TUBE AS (CYL NO. 2)	
	11	1	**217-2762**	1	TUBE AS (CYL NO. 3)	
	12	1	**217-2763**	1	TUBE AS (CYL NO. 4)	
	13	1	**290-8014**	6	CLAMP	
	14	1	**308-1905**	1	PUMP-FUEL INJECTION	
	15	1	**308-1906**	4	INJECTOR AS-FUEL	
					(EACH INCLUDES)	
		1	**202-1196**	1	WASHER-SPECIAL	
	16	2	**351-2617**	1	SHIM (0.25-MM THK, BEADED)	
	17	2	**351-2618**	1	SHIM (0.50-MM THK, BEADED)	
	18	2	**351-2619**	1	SHIM (0.50-MM THK, BEADED)	
	19	2	**351-2620**	1	SHIM (0.40-MM THK, BEADED)	
	20	2	**351-2621**	1	SHIM (0.30-MM THK, BEADED)	
	21	2	**351-2622**	1	SHIM (0.20-MM THK, BEADED)	
	22	2	**351-3132**	1	SHIM (0.35-MM THK, BEADED)	
	23	1	**486-8879**	1	PIPE-FUEL	
M	24	2	**154-2713**	2	BOLT (M8X1.25X20-MM)	
	25	1	**426-4357**	4	GASKET	

M - METRIC PART

596-2828 **PUMP GP-FUEL INJECTION** (contd.) **i08671116**

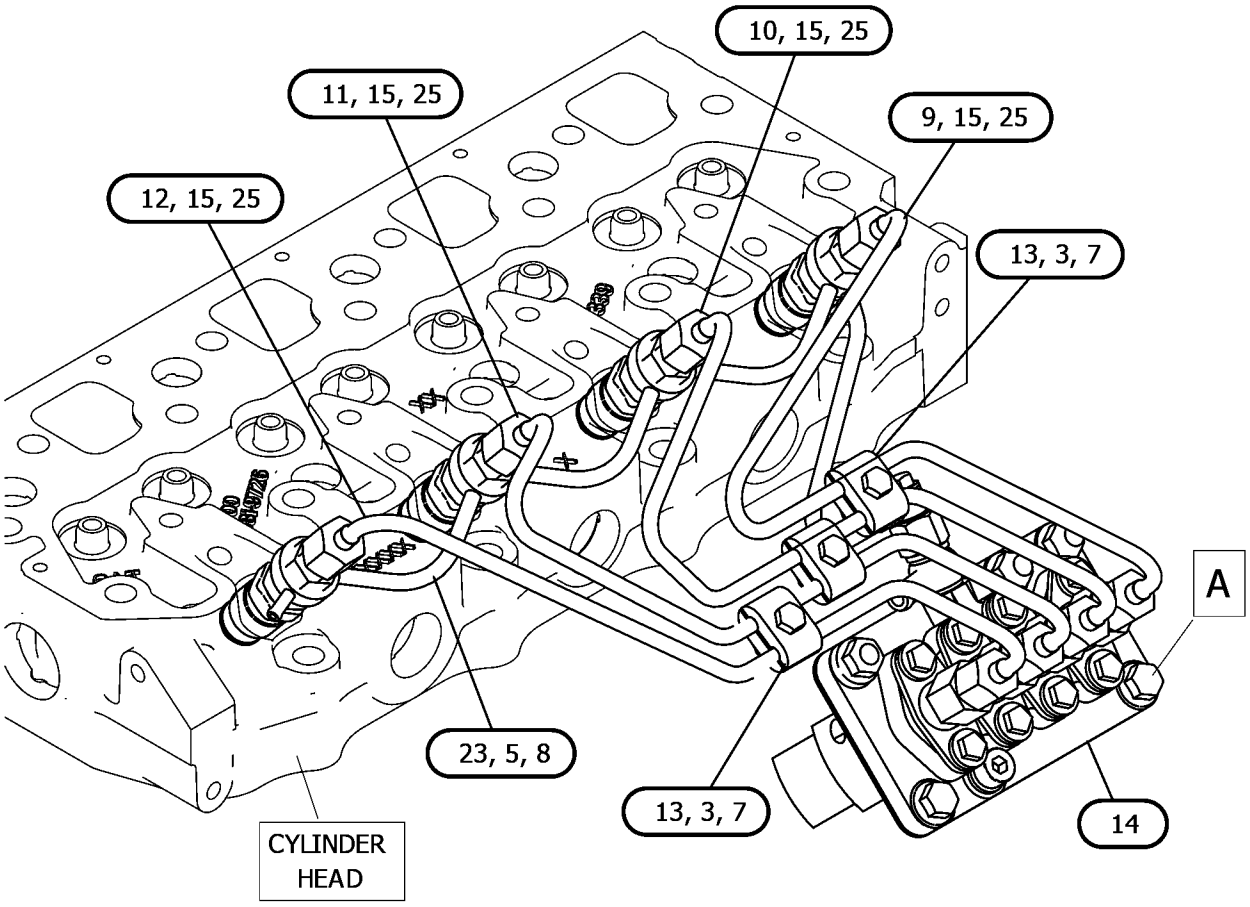

GRAPHIC #1 g07507777

596-2828 **PUMP GP-FUEL INJECTION (**contd.**)** **i08671116**

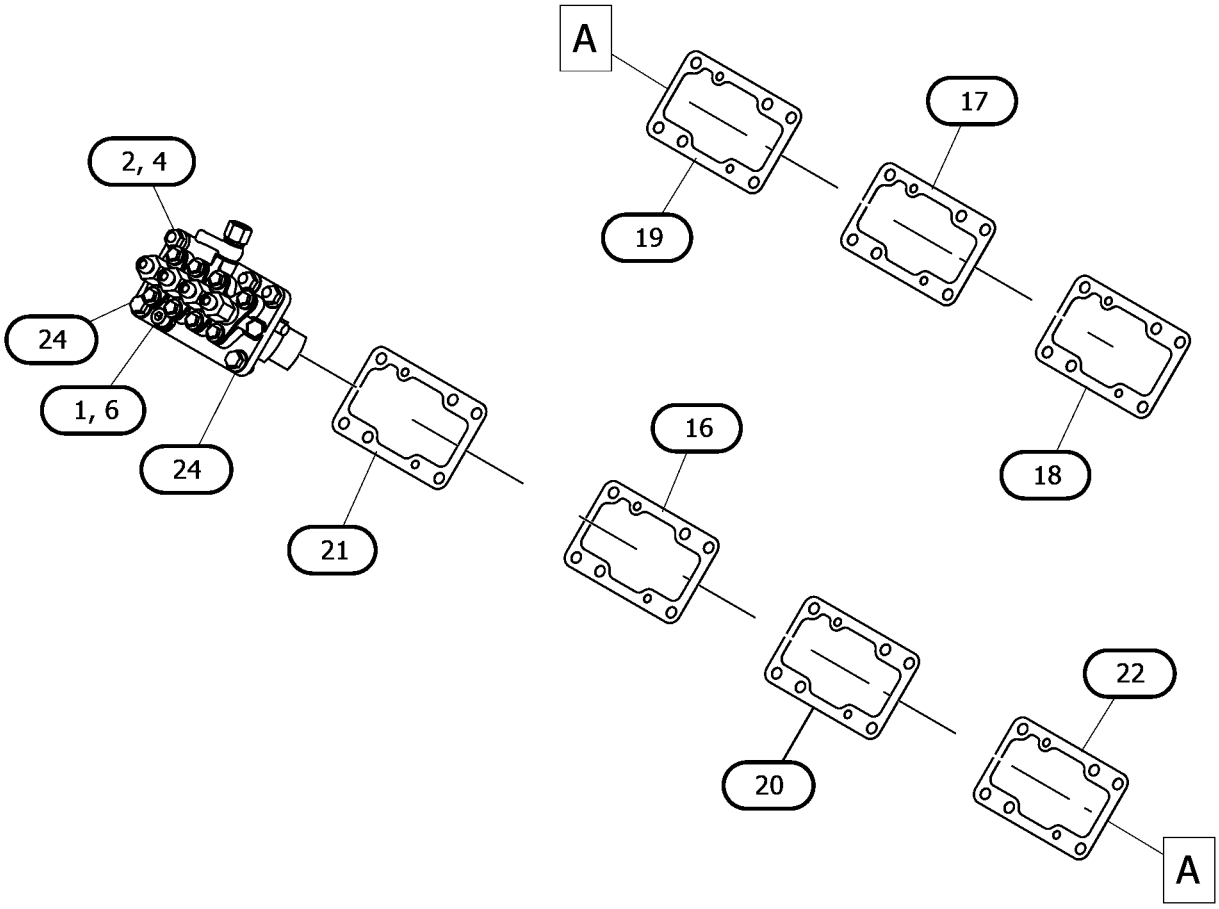

VIEW OF AREA A
(PARTS REMOVED FOR CLARITY)



GRAPHIC #2 <END> g07507777_01

596-2833 PUMP GP-FUEL INJECTION

S/N: C6M10494-UP

SMCS-1251, 1290 **i08883982**

NOTE	REF NO	GRAPHIC REF	PART NUMBER	QTY	PART NAME 1 2 3 4 5 6 (PRODUCT LEVEL)	SEE PAGE
M	1	1	**102-2079**	1	BOLT (M8X1.25X20-MM)	
M	2	1	**153-5592**	3	NUT (M8X1.25-THD)	
M	3	1	**153-5960**	3	NUT (M6X1-THD)	
M	4	1	**319-6358**	3	STUD (M8X1.25X31-MM)	
	5	1	**154-2715**	2	WASHER	
	6	1	**217-2760**	1	TUBE AS (CYL NO. 1)	
	7	1	**163-5372**	1	WASHER (8X15.4X4-MM THK)	
M	8	1	**183-3353**	3	BOLT (M6X1X25-MM)	
M	9	1	**190-3803**	1	BOLT (M8X1X20-MM)	
	10	1	**217-2761**	1	TUBE AS (CYL NO. 2)	
	11	1	**290-8014**	6	CLAMP	
	12	1	**217-2762**	1	TUBE AS (CYL NO. 3)	
	13	1	**351-2617**	1	SHIM (0.25-MM THK, BEADED)	
B		1	**351-2618**	1	SHIM (0.50-MM THK, BEADED)	
B		1	**351-2619**	1	SHIM (0.50-MM THK, BEADED)	
B		1	**351-2620**	1	SHIM (0.40-MM THK, BEADED)	
B		1	**351-2621**	1	SHIM (0.30-MM THK, BEADED)	
B		1	**351-2622**	1	SHIM (0.20-MM THK, BEADED)	
B		1	**351-3132**	1	SHIM (0.35-MM THK, BEADED)	
M	14	1	**154-2713**	2	BOLT (M8X1.25X20-MM)	
	15	1	**426-4357**	4	GASKET	
	16	1	**311-7561**	1	TUBE	
	17	1	**308-1906**	4	INJECTOR AS-FUEL	
					(EACH INCLUDES)	
		1	**202-1196**	1	WASHER-SPECIAL	
	18	1	**308-1905**	1	PUMP-FUEL INJECTION	
	19	1	**217-2763**	1	TUBE AS (CYL NO. 4)	

B - USE AS REQUIRED
M - METRIC PART

596-2833 **PUMP GP-FUEL INJECTION (**contd.**)** **i08883982**

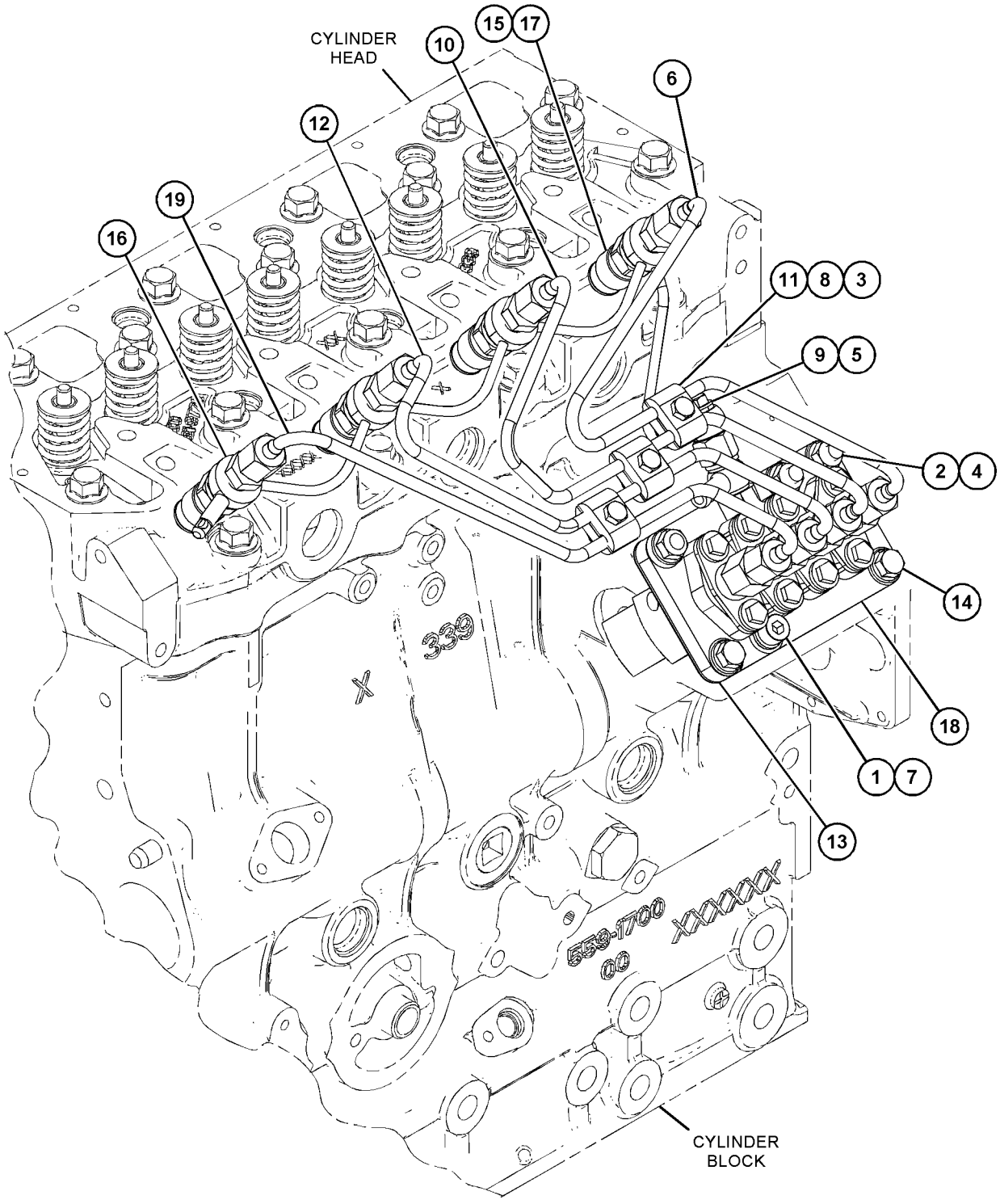

GRAPHIC #1 <END> g07553713

308-2320 PUMP GP-FUEL PRIMING

PART OF 417-7273, 489-4263, 506-0520, 512-7969, 513-2239, 518-0165, 557-7471 ENGINE
AR-PRIMARY
TYPE 1

SMCS-1258 **i05810306**

NOTE	REF NO	GRAPHIC REF	PART NUMBER	QTY	PART NAME 1 2 3 4 5 6 (PRODUCT LEVEL)	SEE PAGE
	1	1	**197-8540**	1	PUMP GP-FUEL PRIMING	

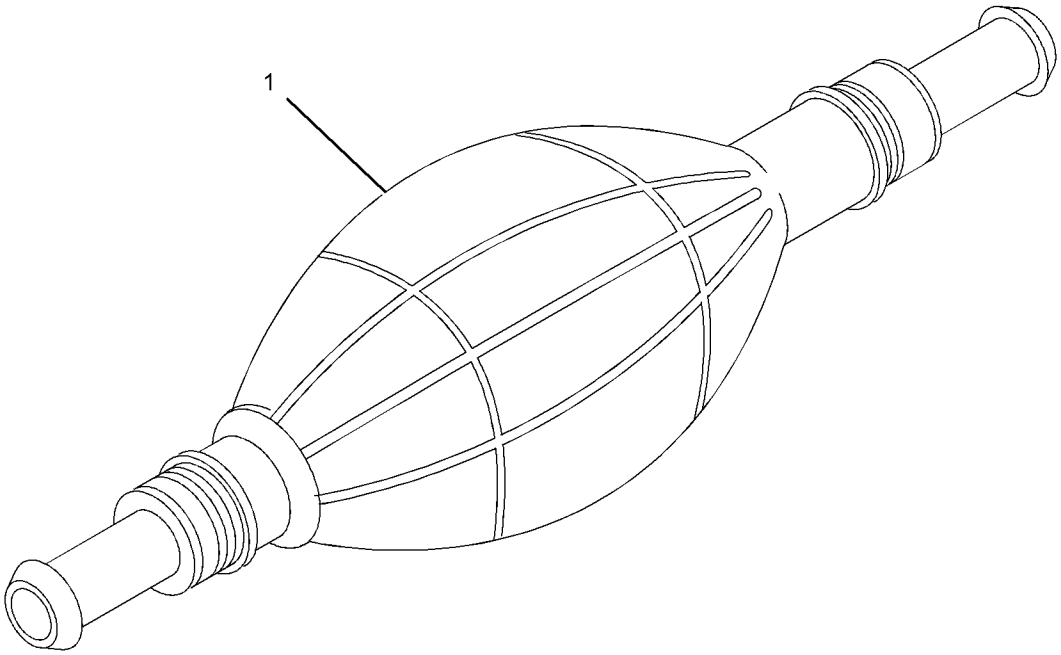

GRAPHIC #1 <END> g01912002

308-2320 PUMP GP-FUEL PRIMING

PART OF 417-7273, 518-0165 ENGINE AR-PRIMARY

TYPE 2

SMCS-1258 **i07769315**

NOTE	REF NO	GRAPHIC REF	PART NUMBER	QTY	PART NAME 1 2 3 4 5 6 (PRODUCT LEVEL)	SEE PAGE
C	1	1	**559-0028**	1	PUMP AS-FUEL PRIMING	

C - CHANGE FROM PREVIOUS TYPE

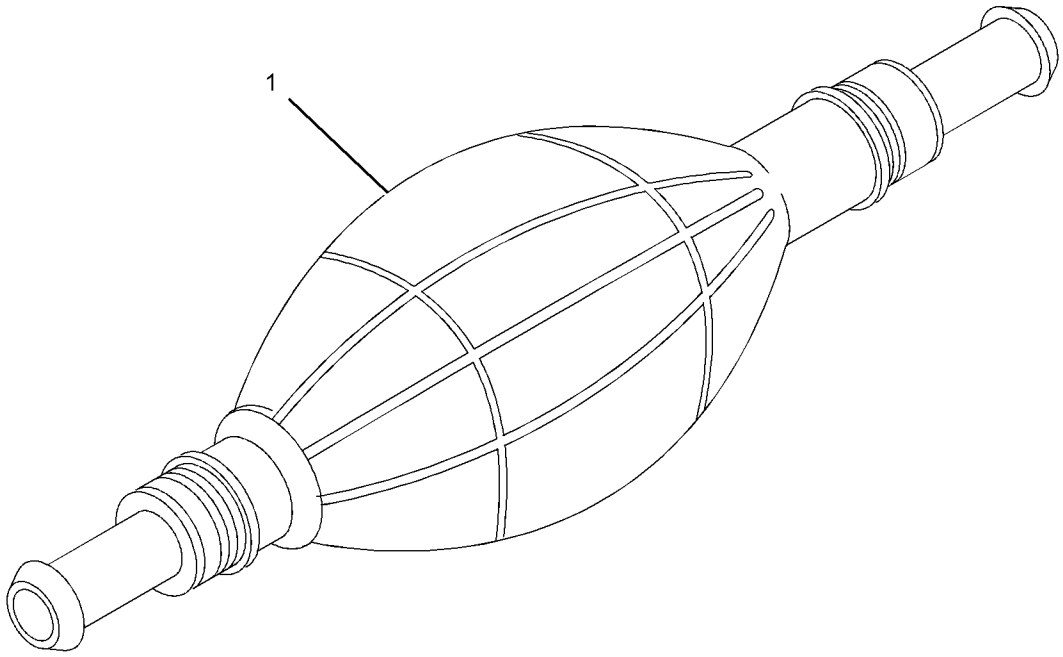

GRAPHIC #1 <END> g01912002

565-2285 PUMP GP-FUEL PRIMING

S/N: C6M10291-UP

PART OF 417-7273 ENGINE AR-PRIMARY

SMCS-1258 **i07819864**

NOTE	REF NO	GRAPHIC REF	PART NUMBER	QTY	PART NAME 1 2 3 4 5 6 (PRODUCT LEVEL)	SEE PAGE
	1	1	**526-5212**	1	PUMP AS-HAND	

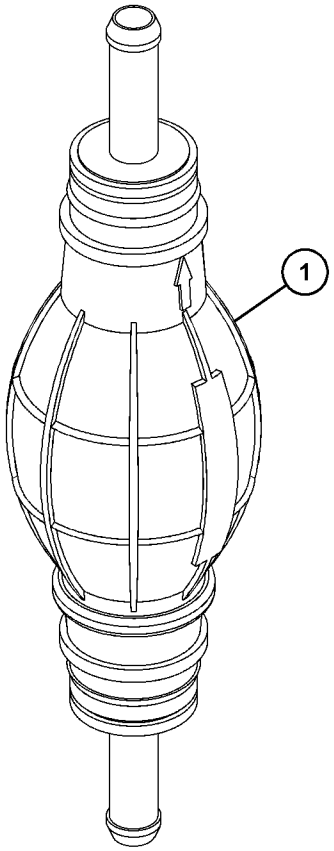

GRAPHIC #1 <END> g06406016

579-9444 PUMP GP-FUEL PRIMING

PART OF 417-7273, 489-4263, 506-0520, 512-7969, 513-2239, 557-7471 ENGINE AR-PRIMARY

SMCS-1258 **i07769416**

NOTE	REF NO	GRAPHIC REF	PART NUMBER	QTY	PART NAME 1 2 3 4 5 6 (PRODUCT LEVEL)	SEE PAGE
	1	1	**526-5212**	1	PUMP AS-HAND	

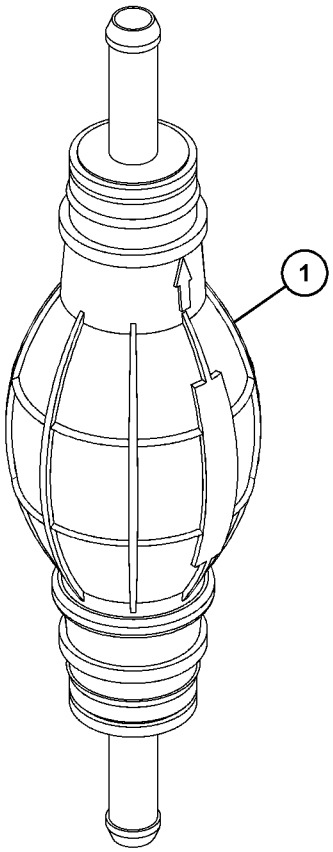

GRAPHIC #1 <END> g06406016

317-6706 PUMP GP-FUEL PRM & PRIM FILTER

PART OF 506-0518, 506-0519, 516-2639 ENGINE AR-PRIMARY

SMCS-1256, 1258, 1260 **i07767906**

NOTE	REF NO	GRAPHIC REF	PART NUMBER	QTY	PART NAME 1 2 3 4 5 6 (PRODUCT LEVEL)	SEE PAGE
	1	1	**276-1804**	1	FILTER GP-FUEL (WATER SEPARATOR)	
	1A	1	**276-1806**	1	FILTER ELEMENT-FUEL	
	1B	1	**302-7776**	1	BOWL-FUEL FILTER	
	1C	1	**302-7777**	3	PLUG-DRAIN (WATER SEPARATOR)	
	1D	1	**302-7778**	1	SEAL (WATER SEPARATOR)	
	2	1	**559-0028**	1	PUMP AS-FUEL PRIMING	

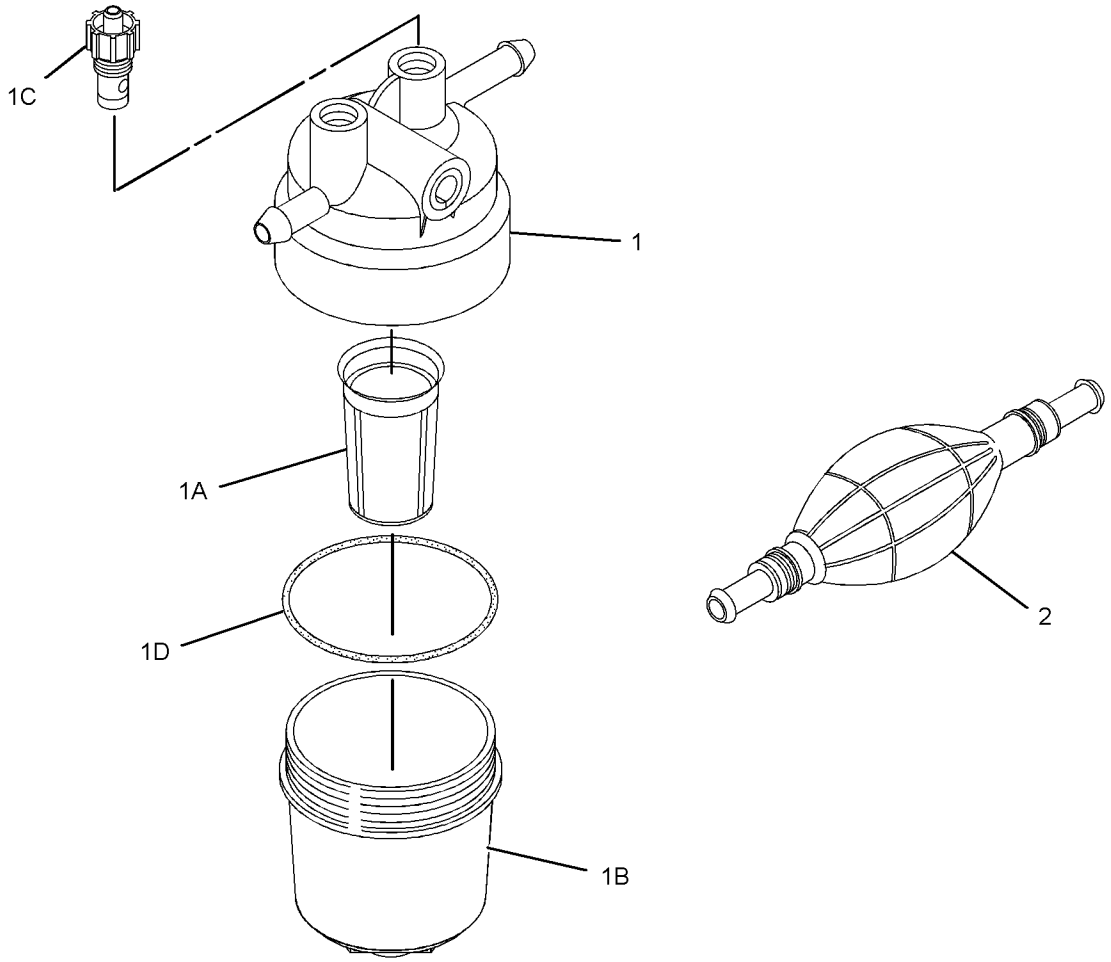

GRAPHIC #1 <END> g01915154

565-2286 PUMP GP-FUEL PRM & PRIM FILTER

S/N: C6M10426-UP

SMCS-1256, 1258, 1260 **i08773707**

NOTE	REF NO	GRAPHIC REF	PART NUMBER	QTY	PART NAME 1 2 3 4 5 6 (PRODUCT LEVEL)	SEE PAGE
	1	1	**526-5212**	1	PUMP AS-HAND	
Y	2	1	**276-1804**	1	FILTER GP-FUEL (WATER SEPARATOR)	759

Y - SEPARATE ILLUSTRATION

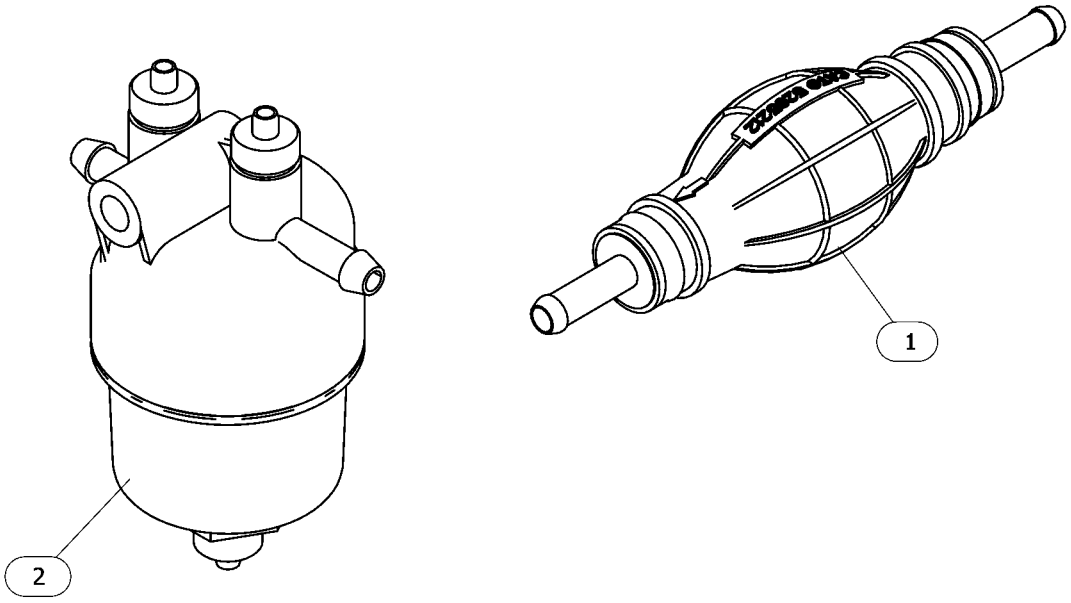

GRAPHIC #1 <END> g06626585

579-9465 PUMP GP-FUEL PRM & PRIM FILTER

PART OF 506-0518, 506-0519, 516-2639, 557-6086 ENGINE AR-PRIMARY

SMCS-1256, 1258, 1260 **i07772649**

NOTE	REF NO	GRAPHIC REF	PART NUMBER	QTY	PART NAME 1 2 3 4 5 6 (PRODUCT LEVEL)	SEE PAGE
Y	1	1	**276-1804**	1	FILTER GP-FUEL (WATER SEPARATOR)	759
	2	1	**526-5212**	1	PUMP AS-HAND (PRIMER)	

Y - SEPARATE ILLUSTRATION

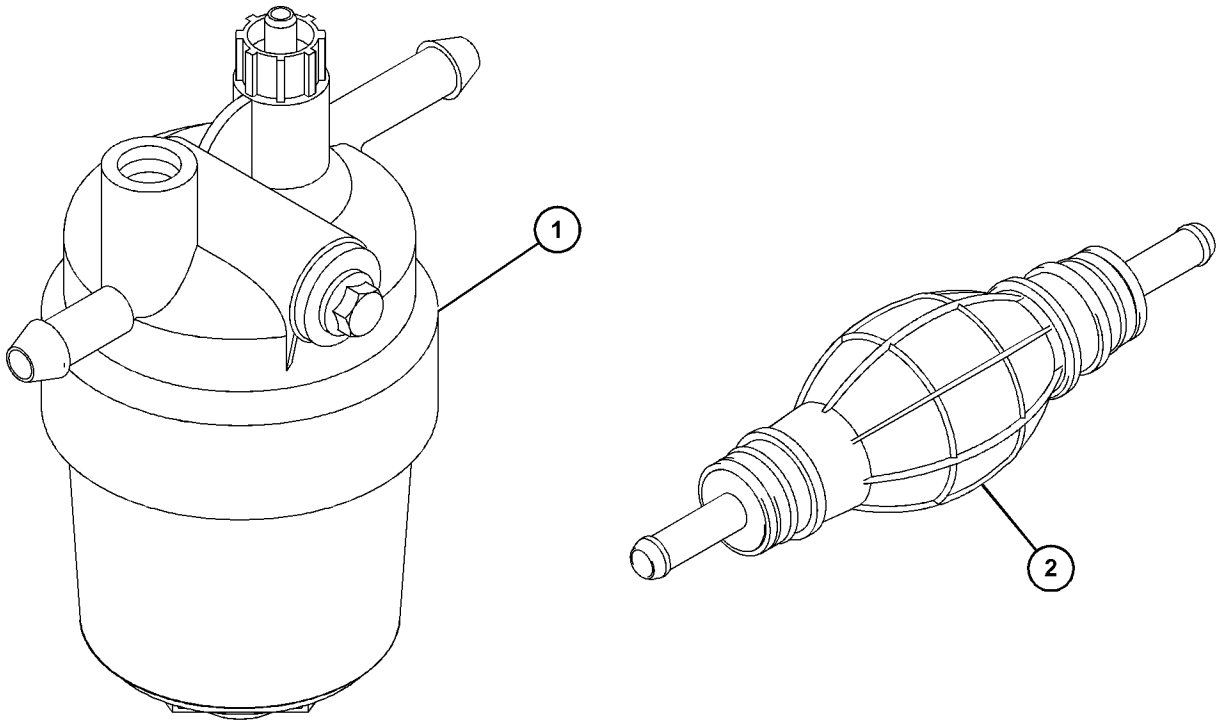

GRAPHIC #1 <END> g06484996

311-9028 PUMP GP-FUEL TRANSFER

PART OF 499-6420 ENGINE AR-PRIMARY

SMCS-1256 **i06987987**

NOTE	REF NO	GRAPHIC REF	PART NUMBER	QTY	PART NAME 1 2 3 4 5 6 (PRODUCT LEVEL)	SEE PAGE
	1	1	**7W-4694**	1	PLUG	
	2	1	**033-7849**	2	PLUG	
	3	1	**358-9226**	1	FILTER AS-FUEL	
	3A	1	**067-6987**	1	FILTER-FUEL	
					(INCLUDES FLAT CUT SEALS & SEAL-O-RING)	
	4	1	**067-6269**	3	FERRULE	
	5	1	**067-6317**	1	WASHER (0.4X0.566X0.04-IN THK)	
M	6	1,2	**124-3815**	2	BOLT (M8X1.25X16-MM)	
M	7	1	**6I-0593**	2	BOLT (M10X1.5X30-MM)	
M	8	2	**153-5592**	1	NUT (M8X1.25-THD)	
	11	1	**154-2403**	2	WASHER	
M	13	1	**155-8085**	2	NUT (M10X1.5-THD)	
	14	1	**329-1292**	2	CLIP-HOSE	
	16	2	**183-4036**	1	CONNECTOR	
	17	2	**183-4320**	1	PUMP AS-FUEL TRANSFER	
	18	2	**476-2680**	1	BRACKET	
	21	1	**311-9048**	1	WASHER	
	22	1	**423-5661**	1	HOSE	
	23	2	**243-6411**	1	FILTER AS-FUEL	
	24	1	**302-4187**	2	TUBE	
	25	1	**311-1174**	1	BRACKET	
M	26	1	**6I-0217**	1	BOLT (M8X1.25X20-MM)	

M - METRIC PART

311-9028 **PUMP GP-FUEL TRANSFER (**contd.**)** **i06987987**

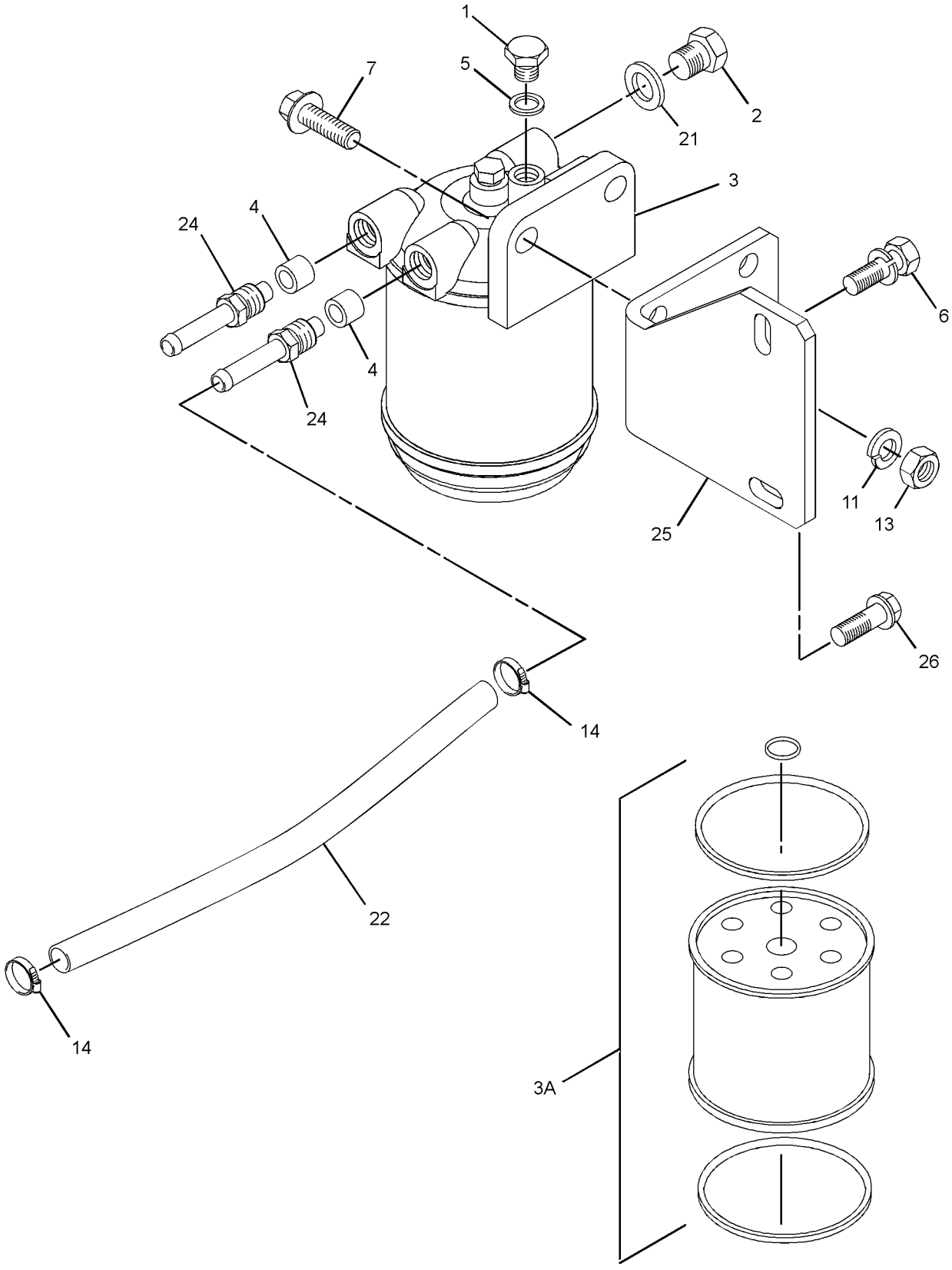

GRAPHIC #1 g06206376

311-9028 **PUMP GP-FUEL TRANSFER (**contd.**)** **i06987987**

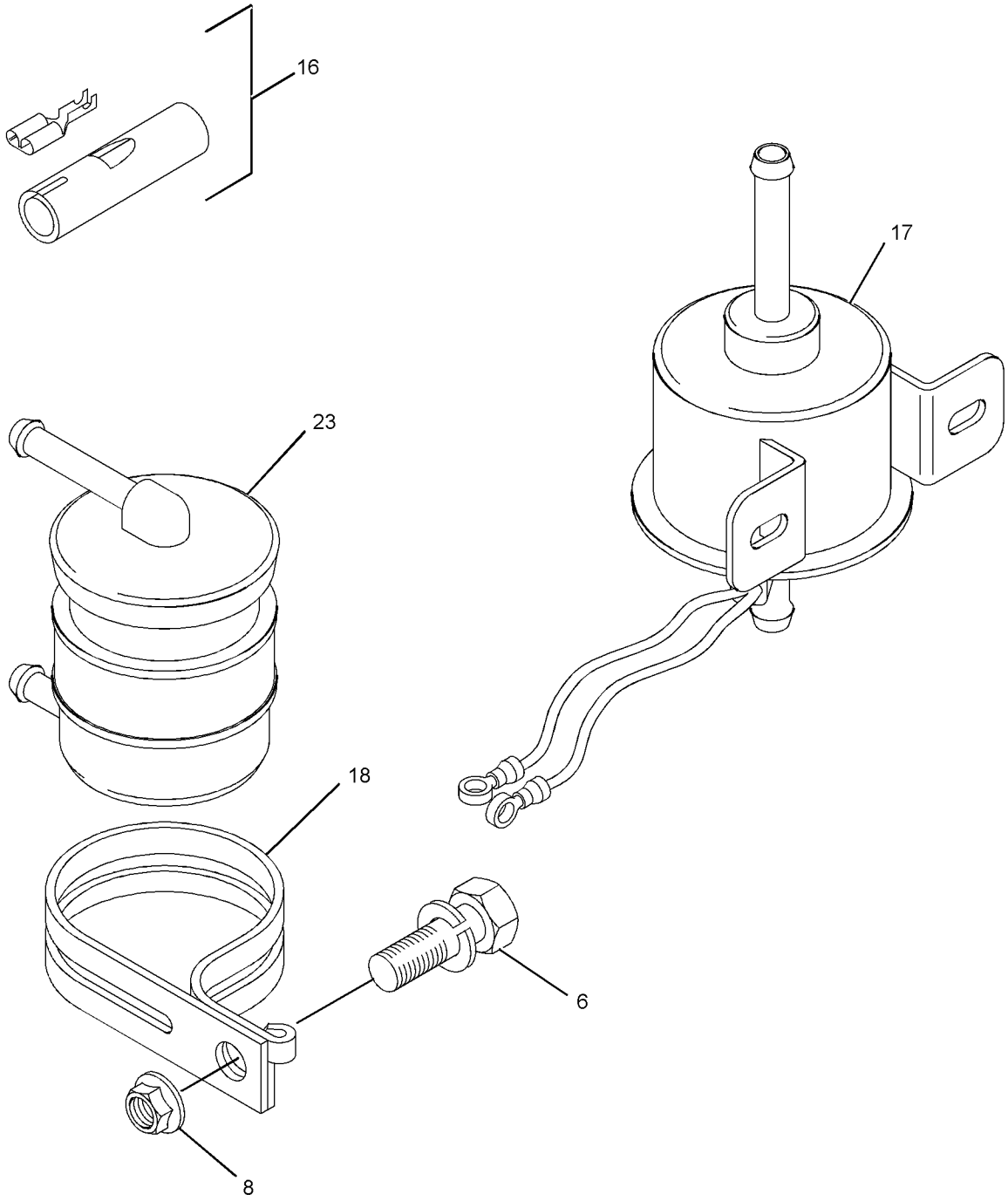

GRAPHIC #2 <END> g03877455

327-7633 PUMP GP-FUEL TRANSFER

SMCS-1256 **i06692735**

NOTE	REF NO	GRAPHIC REF	PART NUMBER	QTY	PART NAME 1 2 3 4 5 6 (PRODUCT LEVEL)	SEE PAGE
M	1	1	**6I-0846**	2	BOLT (M6X1X14-MM)	
	2	1	**7W-4694**	1	PLUG	
	3	1	**033-7849**	2	PLUG	
	4	1	**358-9226**	1	FILTER AS-FUEL	
	4A	1	**067-6987**	1	FILTER-FUEL	
	5	1	**067-6269**	2	FERRULE	
	6	1	**067-6317**	1	WASHER (0.4X0.566X0.04-IN THK)	
	7	1	**302-4187**	2	TUBE	
M	8	1	**138-7162**	2	BOLT (M10X1.5X30-MM)	
	9	1	**154-1399**	2	WASHER (10.5X18X1.6-MM THK)	
	10	1	**154-2403**	2	WASHER	
M	11	1	**155-8085**	2	NUT (M10X1.5-THD)	
	12	1	**176-7719**	1	SEAL-O-RING	
	13	1	**311-9048**	1	WASHER	
	14	1	**223-8182**	1	BRACKET	
	15	1	**295-4070**	1	PUMP AS-FUEL TRANSFER	
M	16	1	**124-3815**	1	BOLT (M8X1.25X16-MM)	

M - METRIC PART

327-7633 **PUMP GP-FUEL TRANSFER (**contd.**)** **i06692735**

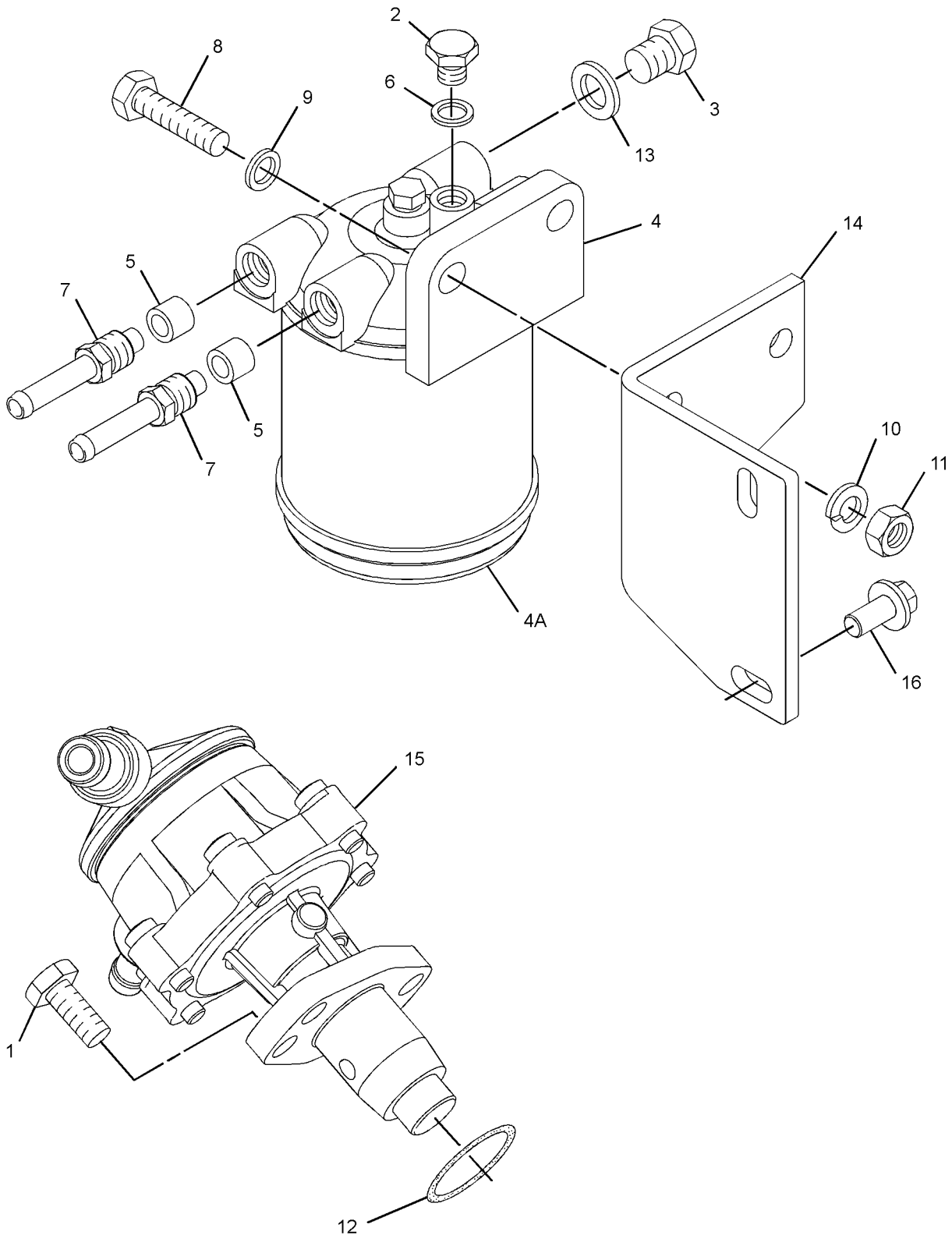

GRAPHIC #1 <END> g06110324

328-1882 PUMP GP-FUEL TRANSFER

TYPE 1

SMCS-1256 **i06716016**

NOTE	REF NO	GRAPHIC REF	PART NUMBER	QTY	PART NAME 1 2 3 4 5 6 (PRODUCT LEVEL)	SEE PAGE
	1	1	**7W-4694**	1	PLUG	
	2	1	**033-7849**	2	PLUG	
	3	1	**358-9226**	1	FILTER AS-FUEL	
	3A	1	**067-6987**	1	FILTER-FUEL	
	4	1	**067-6269**	2	FERRULE	
	5	1	**067-6317**	1	WASHER (0.4X0.566X0.04-IN THK)	
M	7	1	**138-7162**	2	BOLT (M10X1.5X30-MM)	
M	8	1	**153-5592**	1	NUT (M8X1.25-THD)	
	9	1	**154-1399**	2	WASHER (10.5X18X1.6-MM THK)	
	10	1	**154-2403**	2	WASHER	
M	12	1	**155-8085**	2	NUT (M10X1.5-THD)	
	13	1	**329-1292**	2	CLIP-HOSE	
M	14	1	**124-3815**	2	BOLT (M8X1.25X16-MM)	
	16	1	**183-4320**	1	PUMP AS-FUEL TRANSFER	
	17	1	**476-2680**	1	BRACKET	
	18	1	**223-8182**	1	BRACKET	
	19	1	**423-5661**	1	HOSE	
	20	1	**243-6411**	1	FILTER AS-FUEL	
	21	1	**302-4187**	2	TUBE	
	22	1	**311-9048**	1	WASHER	
	23	1	**183-4036**	1	CONNECTOR	
FM		1	**6I-0217**	1	BOLT (M8X1.25X20-MM)	

F - NOT SHOWN
M - METRIC PART

328-1882 **PUMP GP-FUEL TRANSFER (**contd.**)** **i06716016**

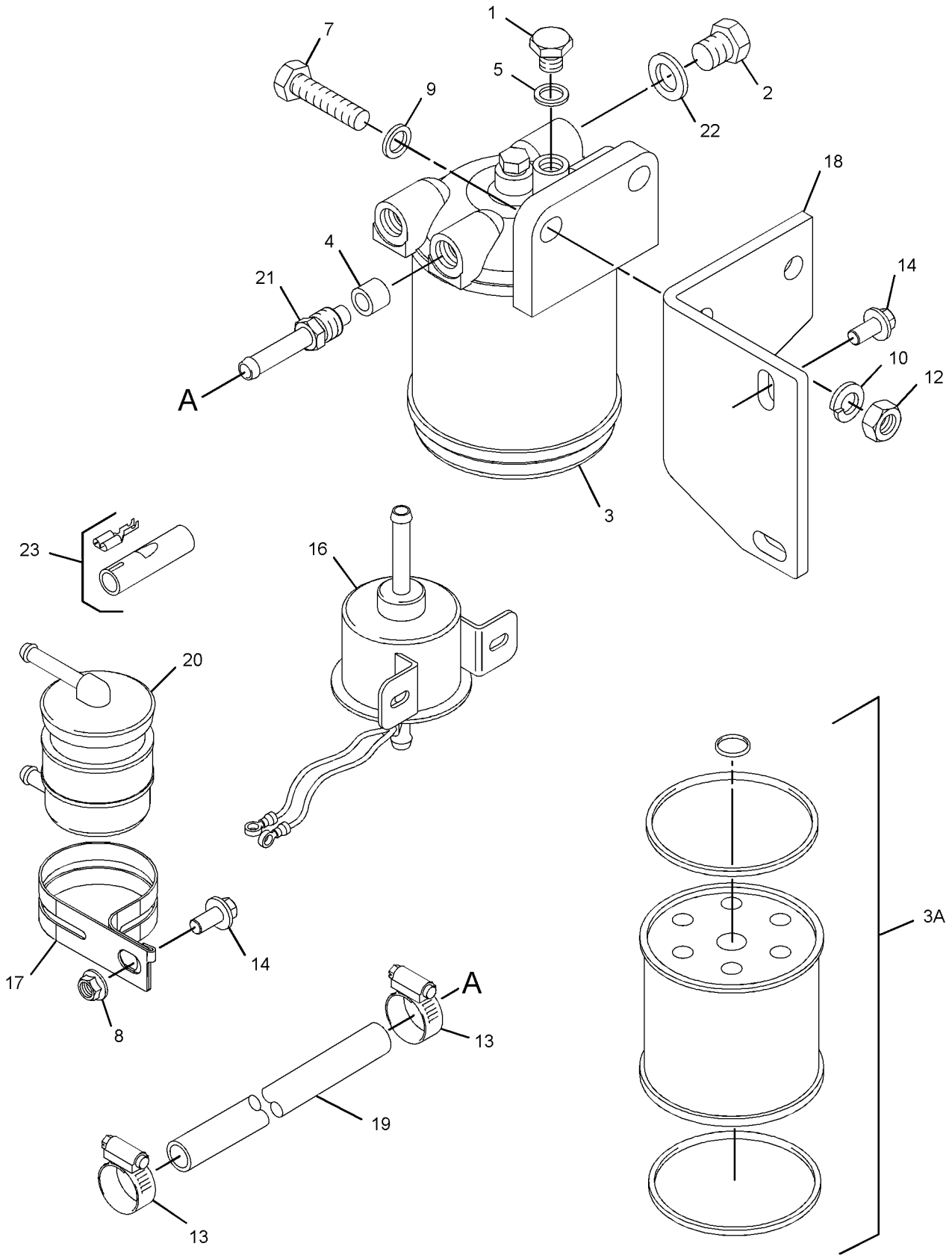

GRAPHIC #1 <END> g06088354

328-1882 PUMP GP-FUEL TRANSFER

TYPE 2

SMCS-1256 **i08063400**

NOTE	REF NO	GRAPHIC REF	PART NUMBER	QTY	PART NAME 1 2 3 4 5 6 (PRODUCT LEVEL)	SEE PAGE
	1	1	**7W-4694**	1	PLUG (M10X1.5-MM THD)	
	2	1	**033-7849**	2	PLUG (DRAIN)	
	3	1	**358-9226**	1	FILTER AS-FUEL	
	3A	1	**067-6987**	1	FILTER-FUEL	
		1	**484-9224**	1	SEAL	
		1	**484-9225**	1	SEAL	
	4	1	**067-6269**	2	FERRULE	
	5	1	**067-6317**	1	WASHER (0.4X0.566X0.04-IN THK)	
CM	7	1	**6I-0593**	2	BOLT (M10X1.5X30-MM)	
M	8	1	**153-5592**	1	NUT (M8X1.25-THD)	
	10	1	**7X-0796**	2	LOCKWASHER (10.2X18.4X2.5-MM THK)	
M	12	1	**155-8085**	2	NUT (M10X1.5-THD)	
	13	1	**329-1292**	2	CLIP-HOSE	
M	14	1	**124-3815**	2	BOLT (M8X1.25X16-MM)	
	16	1	**183-4320**	1	PUMP AS-FUEL TRANSFER	
	17	1	**476-2680**	1	BRACKET	
	18	1	**223-8182**	1	BRACKET	
	19	1	**423-5661**	1	HOSE	
	20	1	**243-6411**	1	FILTER AS-FUEL	
	21	1	**302-4187**	2	TUBE	
	22	1	**311-9048**	1	WASHER (20.6-MM THK)	
	23	1	**183-4036**	1	CONNECTOR	
M	24	1	**6I-0217**	1	BOLT (M8X1.25X20-MM)	

C - CHANGE FROM PREVIOUS TYPE
M - METRIC PART

328-1882 **PUMP GP-FUEL TRANSFER (**contd.**)** **i08063400**

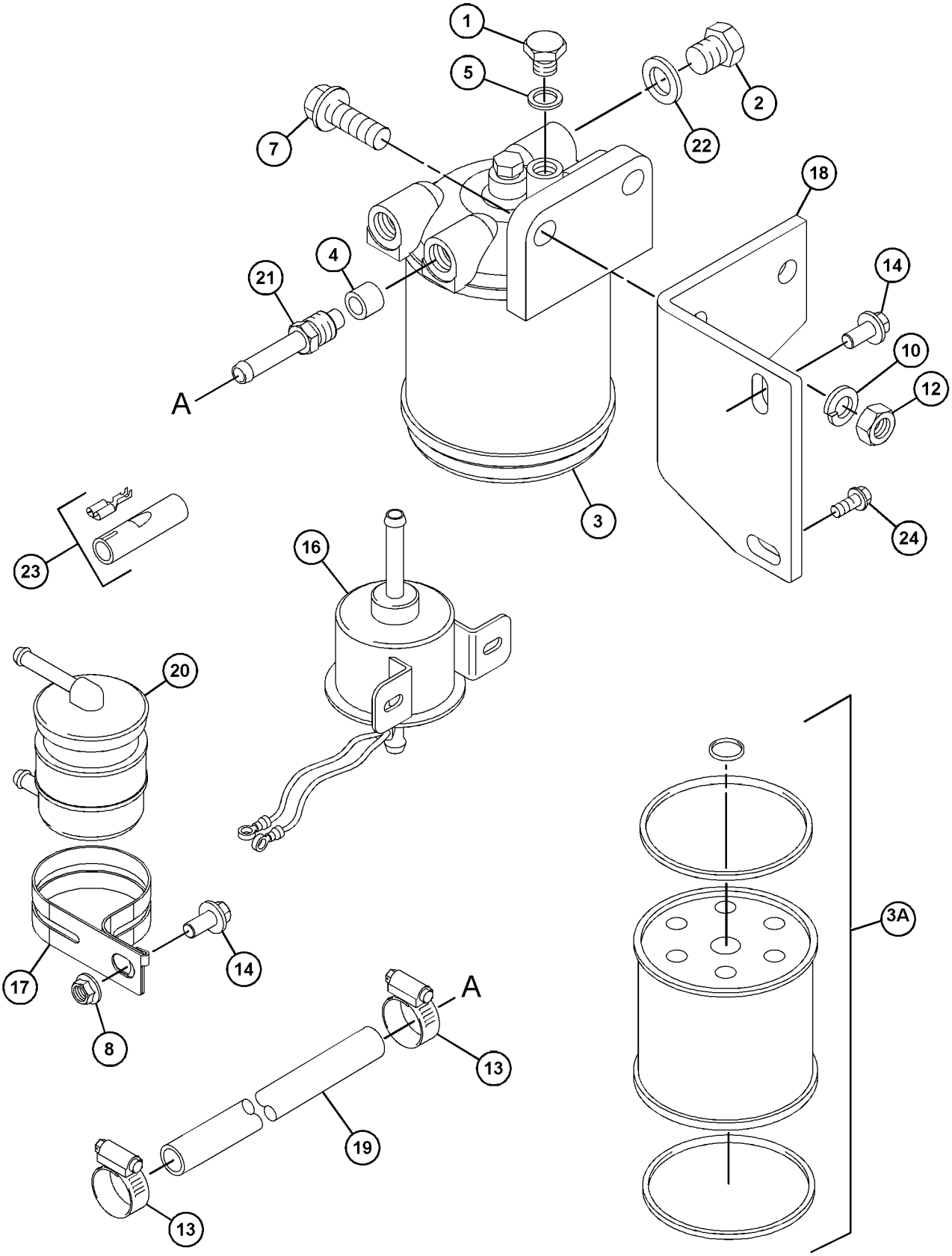

GRAPHIC #1 <END> g06582207

340-5786 VALVE GP-PRESSURE CONTROL

PART OF 499-6420 ENGINE AR-PRIMARY

SMCS-1715 **i05371256**

NOTE	REF NO	GRAPHIC REF	PART NUMBER	QTY	PART NAME 1 2 3 4 5 6 (PRODUCT LEVEL)	SEE PAGE
	1	1	**153-5936**	2	WASHER (8.2X14.5X1-MM)	
	2	1	**153-6853**	1	SEAL-O-RING	
M	3	1	**153-6881**	1	BOLT (M8X1.25X18-MM)	
	4	1	**154-1942**	1	VALVE-RELIEF (ENGINE OIL PRESSURE)	
	5	1	**154-2353**	1	TUBE AS-OIL	

M - METRIC PART

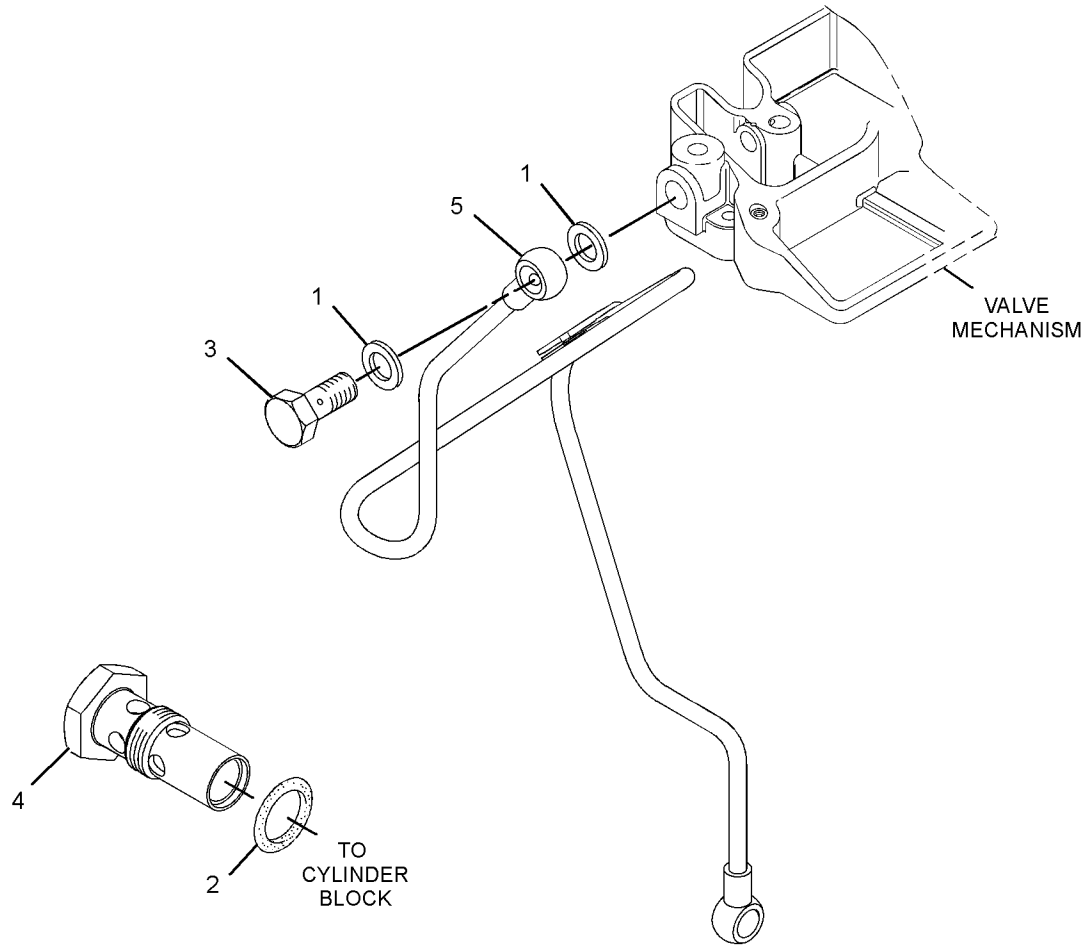

GRAPHIC #1 <END> g02044113

420-6414 VALVE GP-RELIEF

SMCS-1274, 5117, 5453 **i05372008**

NOTE	REF NO	GRAPHIC REF	PART NUMBER	QTY	PART NAME 1 2 3 4 5 6 (PRODUCT LEVEL)	SEE PAGE
	1	1	**153-5936**	2	WASHER (8.2X14.5X1-MM)	
	2	1	**153-6853**	1	SEAL-O-RING	
M	3	1	**153-6881**	1	BOLT (M8X1.25X18-MM)	
	4	1	**154-1942**	1	VALVE-RELIEF (ENGINE OIL PRESSURE)	
	5	1	**154-2353**	1	TUBE AS-OIL	

M - METRIC PART

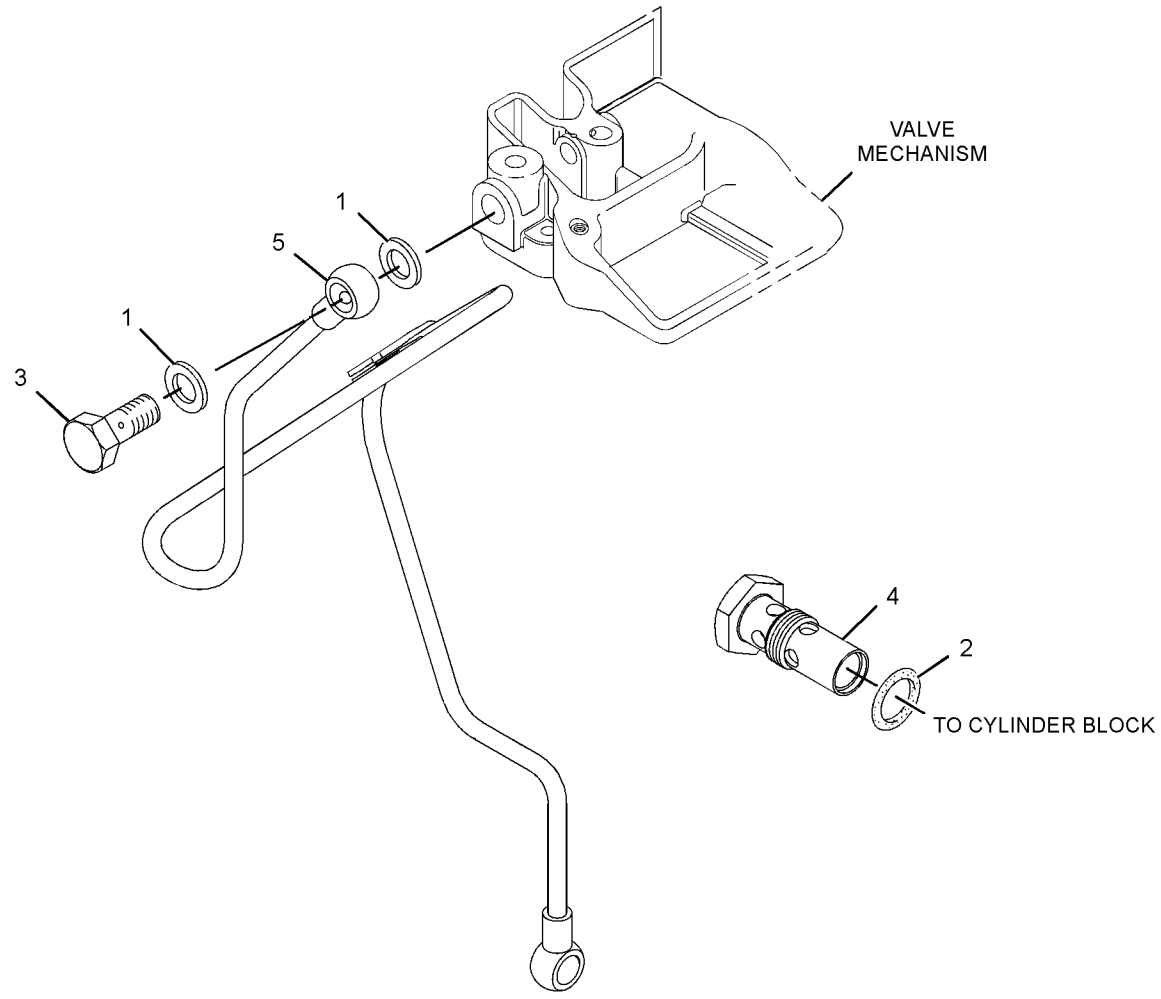

GRAPHIC #1 <END> g01992176

308-2305 ALTERNATOR GP-CHARGING

TYPE 1

SMCS-1405 **i04390366**

NOTE	REF NO	GRAPHIC REF	PART NUMBER	QTY	PART NAME 1 2 3 4 5 6 (PRODUCT LEVEL)	SEE PAGE
M	1	1	**359-9666**	1	BOLT-FLANGE HEAD (M8X1.25X130-MM)	
M	2	1	**180-8579**	1	NUT (M8X1.25-MM THD)	
	3	1	**155-7984**	1	WASHER (8.4X16X1.6-MM THK)	
	4	1	**165-2141**	3	BOLT AS	
	5	1	**168-8999**	1	LEVER	
	6	1	**168-9001**	2	BOLT AS	
	7	1	**168-9002**	1	WASHER (8.4X26X3.2-MM THK)	
	8	1	**246-4267**	1	BRACKET	
	9	1	**349-1368**	1	ALTERNATOR GP-CHARGING	
	10	1	**163-5372**	1	WASHER (8X15.4X4-MM THK)	

M - METRIC PART

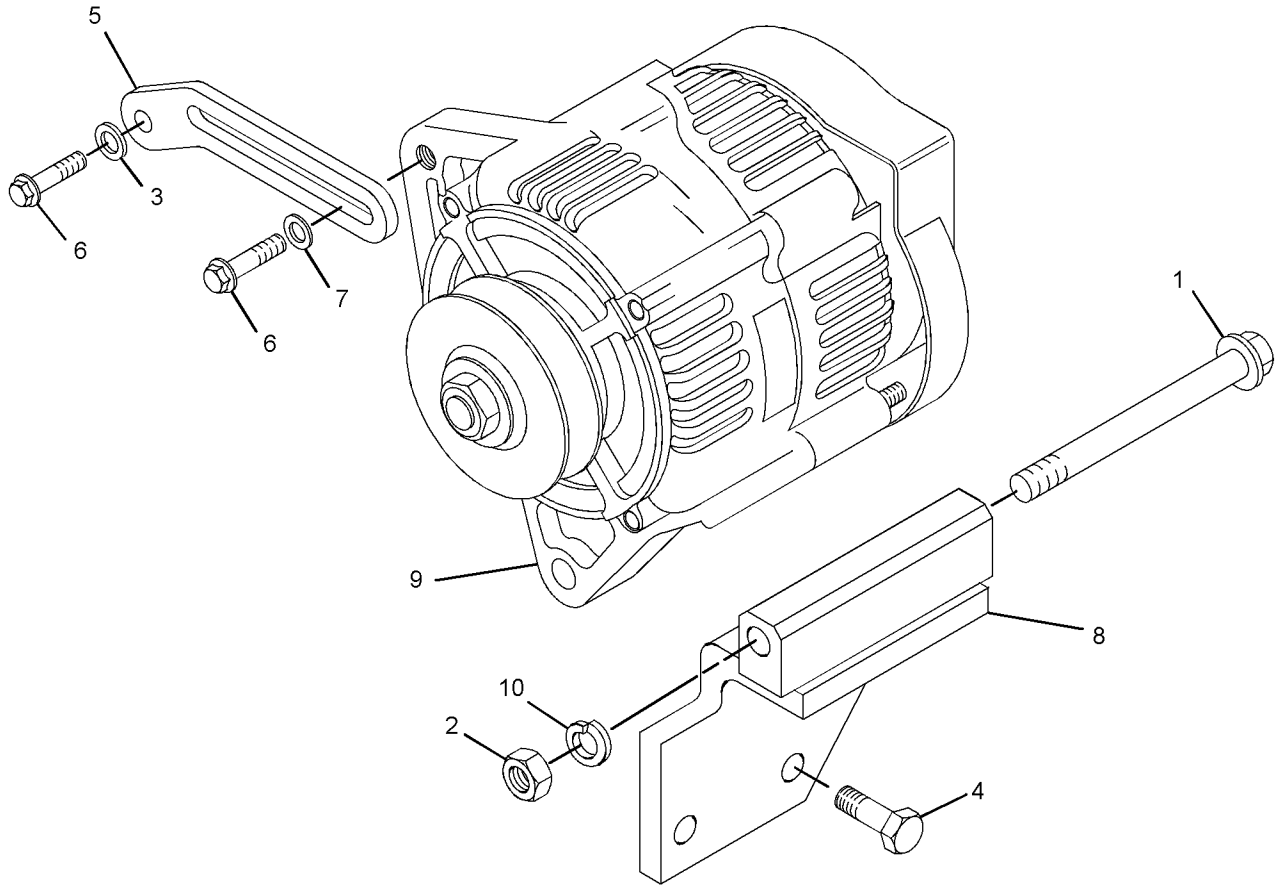

GRAPHIC #1 <END> g02153167

308-2305 ALTERNATOR GP-CHARGING

PART OF 417-7273, 489-4263, 506-0518, 506-0519, 506-0520, 512-7969, 513-2239, 516-2639, 518-0165, 557-6086, 557-7471 ENGINE AR-PRIMARY
TYPE 2

SMCS-1405 **i07583023**

NOTE	REF NO	GRAPHIC REF	PART NUMBER	QTY	PART NAME 1 2 3 4 5 6 (PRODUCT LEVEL)	SEE PAGE
M	1	1	**359-9666**	1	BOLT-FLANGE HEAD (M8X1.25X130-MM)	
M	2	1	**180-8579**	1	NUT (M8X1.25-MM THD)	
	3	1	**155-7984**	1	WASHER (8.4X16X1.6-MM THK)	
M	4	1	**6I-0217**	3	BOLT (M8X1.25X20-MM)	
	5	1	**168-8999**	1	LEVER	
M	6	1	**6I-0260**	2	BOLT (M8X1.25X25-MM)	
	7	1	**168-9002**	1	WASHER (8.4X26X3.2-MM THK)	
	8	1	**540-4157**	1	BRACKET	
C	9	1	**394-3494**	1	ALTERNATOR AS (12-VOLT, 65-AMPERE)	
	10	1	**163-5372**	1	WASHER (8X15.4X4-MM THK)	

C - CHANGE FROM PREVIOUS TYPE
M - METRIC PART

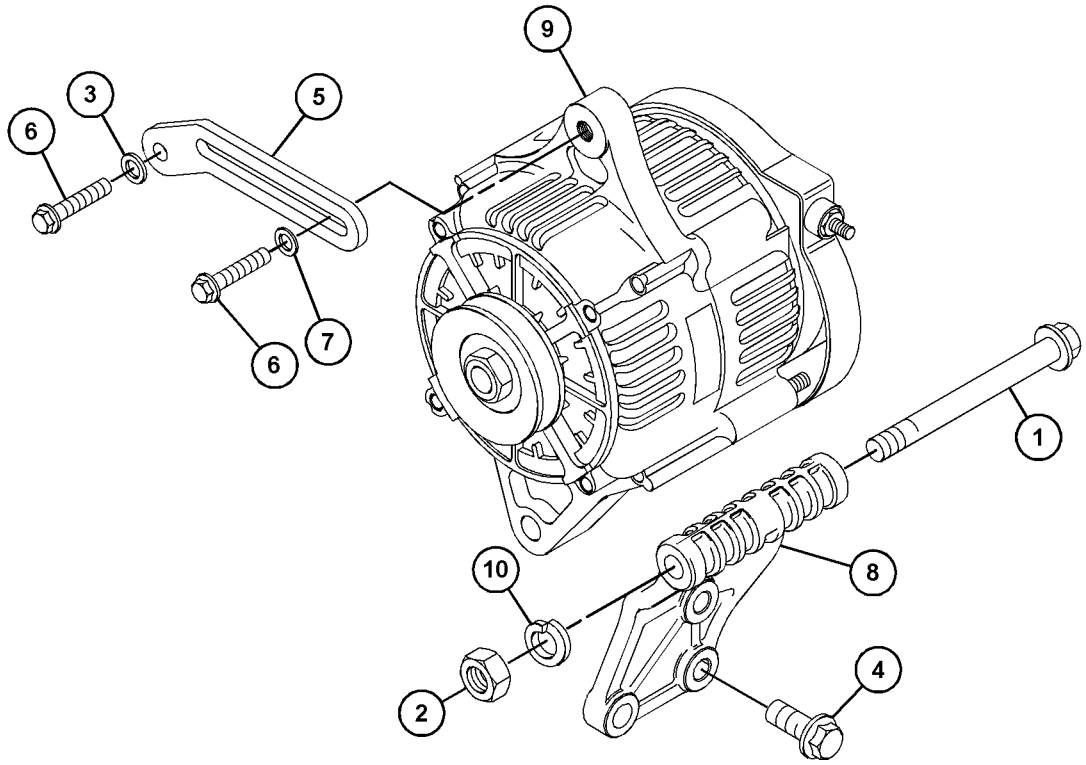

GRAPHIC #1 <END> g06233271

317-3038 ALTERNATOR GP-CHARGING

TYPE 1

SMCS-1405 **i03948362**

NOTE	REF NO	GRAPHIC REF	PART NUMBER	QTY	PART NAME 1 2 3 4 5 6 (PRODUCT LEVEL)	SEE PAGE
M	1	1	**359-9666**	1	BOLT-FLANGE HEAD (M8X1.25X130-MM)	
M	2	1	**153-5592**	1	NUT (M8X1.25-THD)	
	3	1	**155-7984**	1	WASHER (8.4X16X1.6-MM THK)	
	4	1	**165-2141**	3	BOLT AS	
	5	1	**168-9001**	2	BOLT AS	
	6	1	**168-9002**	1	WASHER (8.4X26X3.2-MM THK)	
	7	1	**346-9826**	1	ALTERNATOR GP-CHARGING	
	8	1	**233-9531**	1	LEVER	
	9	1	**243-4300**	1	PULLEY-ALTERNATOR	
	10	1	**283-4816**	1	BRACKET	

M - METRIC PART

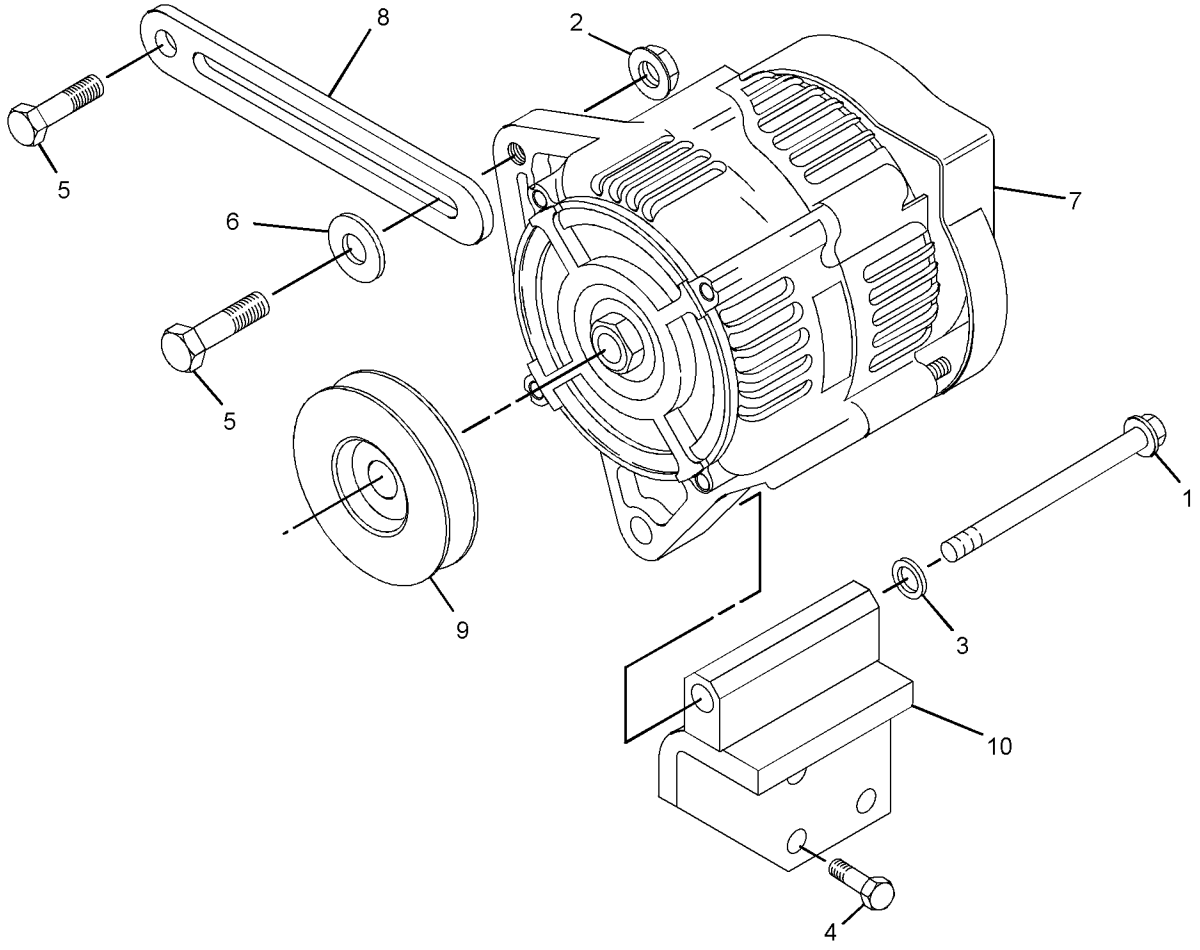

GRAPHIC #1 <END> g01958014

317-3038 ALTERNATOR GP-CHARGING

PART OF 489-9224, 514-6556 ENGINE AR-PRIMARY

TYPE 2

SMCS-1405 **i06615550**

NOTE	REF NO	GRAPHIC REF	PART NUMBER	QTY	PART NAME 1 2 3 4 5 6 (PRODUCT LEVEL)	SEE PAGE
M	1	1	**359-9666**	1	BOLT-FLANGE HEAD (M8X1.25X130-MM)	
M	2	1	**153-5592**	1	NUT (M8X1.25-THD)	
	3	1	**155-7984**	1	WASHER (8.4X16X1.6-MM THK)	
M	4	1	**124-3815**	3	BOLT (M8X1.25X16-MM)	
M	5	1	**6I-0260**	2	BOLT (M8X1.25X25-MM)	
	6	1	**168-9002**	1	WASHER (8.4X26X3.2-MM THK)	
CR	7	1	**424-6821**	1	ALTERNATOR (24-VOLT, 55-AMPERE)	
	8	1	**233-9531**	1	LEVER	
	9	1	**283-4816**	1	BRACKET	

C - CHANGE FROM PREVIOUS TYPE
M - METRIC PART
R - REMANUFACTURED PART MAY BE AVAILABLE

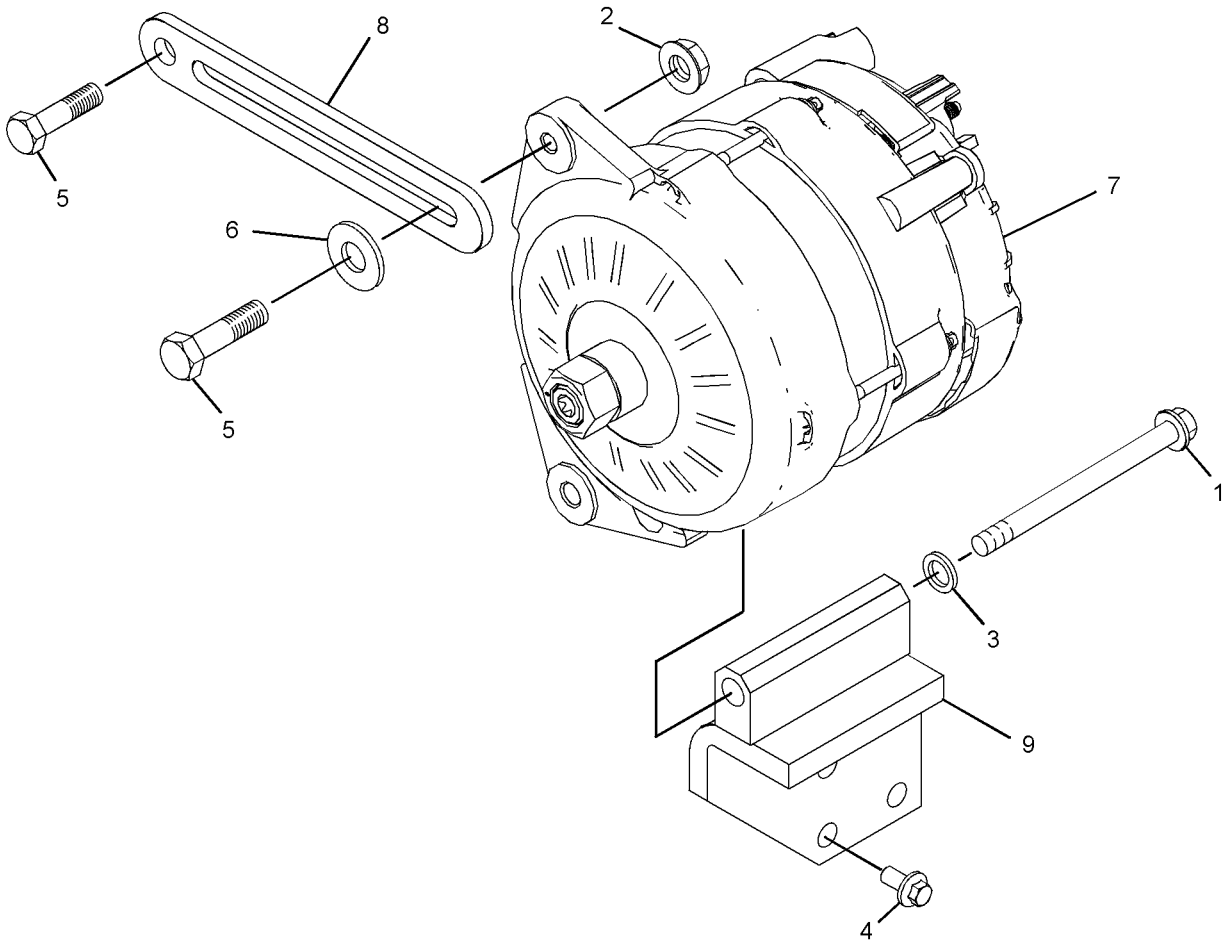

GRAPHIC #1 <END> g06111520

340-5947 ALTERNATOR GP-CHARGING

PART OF 499-6420 ENGINE AR-PRIMARY

SMCS-1405 **i08468472**

NOTE	REF NO	GRAPHIC REF	PART NUMBER	QTY	PART NAME 1 2 3 4 5 6 (PRODUCT LEVEL)	SEE PAGE
M	1	1	**100-8451**	1	BOLT (M8X1.25X130-MM)	
M	2	1	**153-5592**	1	NUT (M8X1.25-THD)	
	3	1	**168-8999**	1	LEVER	
M	4	1	**6I-0260**	5	BOLT (M8X1.25X25-MM)	
	5	1	**168-9002**	1	WASHER (8.4X26X3.2-MM THK)	
	6	1	**338-3396**	1	BRACKET-ALTERNATOR	
	7	1	**394-3496**	1	ALTERNATOR AS (12-VOLT, 85-AMPERE)	

M - METRIC PART

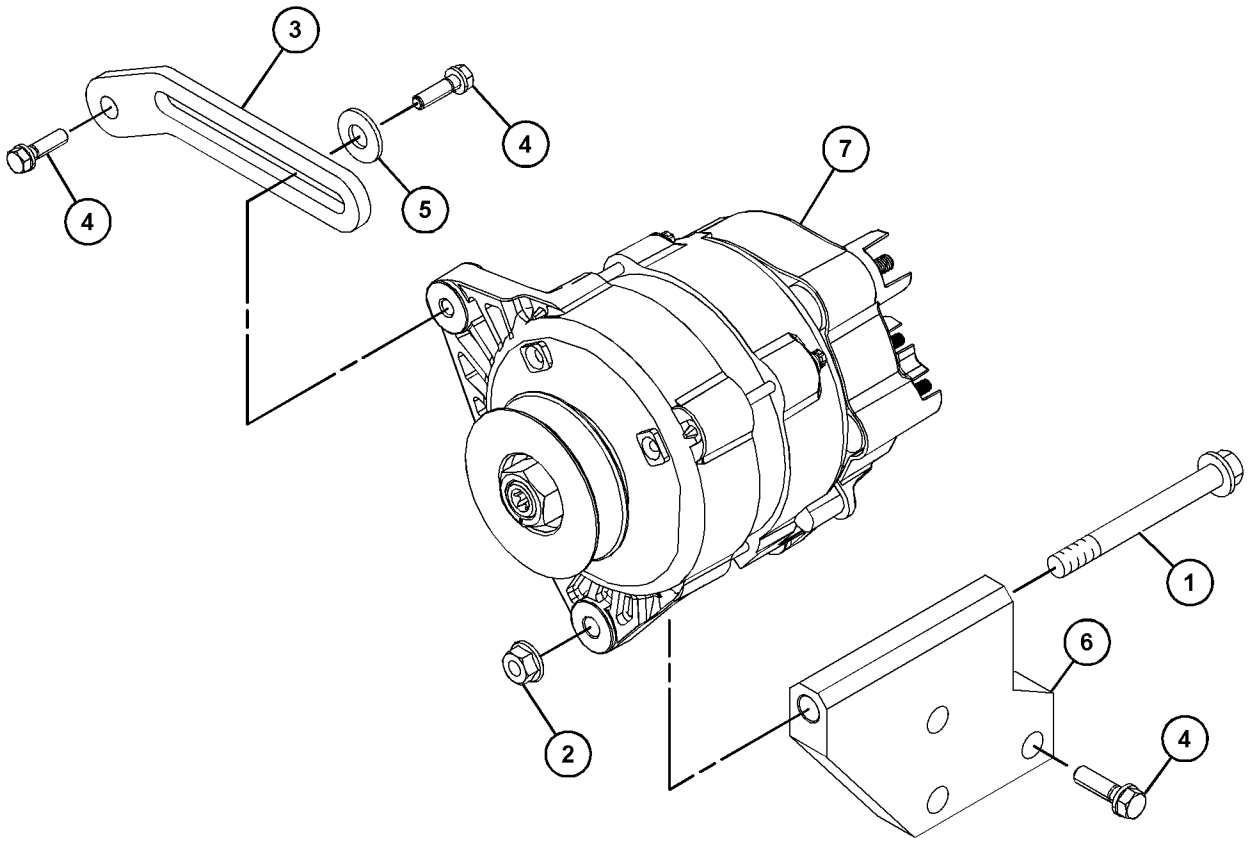

GRAPHIC #1 <END> g07280947

399-2625 ALTERNATOR GP-CHARGING

12 VOLTS, 85 AMPERES

SMCS-1405 **i07462647**

NOTE	REF NO	GRAPHIC REF	PART NUMBER	QTY	PART NAME 1 2 3 4 5 6 (PRODUCT LEVEL)	SEE PAGE
	1	1	**155-7984**	1	WASHER (8.4X16X1.6-MM THK)	
	2	1	**163-5372**	1	WASHER (8X15.4X4-MM THK)	
M	3	1	**6I-0217**	3	BOLT (M8X1.25X20-MM)	
	4	1	**168-8999**	1	LEVER	
M	5	1	**6I-0260**	2	BOLT (M8X1.25X25-MM)	
	6	1	**168-9002**	1	WASHER (8.4X26X3.2-MM THK)	
M	7	1	**180-8579**	1	NUT (M8X1.25-MM THD)	
	8	1	**540-4157**	1	BRACKET	
	9	1	**394-3496**	1	ALTERNATOR AS (12-VOLT, 85-AMPERE)	
M	10	1	**359-9666**	1	BOLT-FLANGE HEAD (M8X1.25X130-MM)	

M - METRIC PART

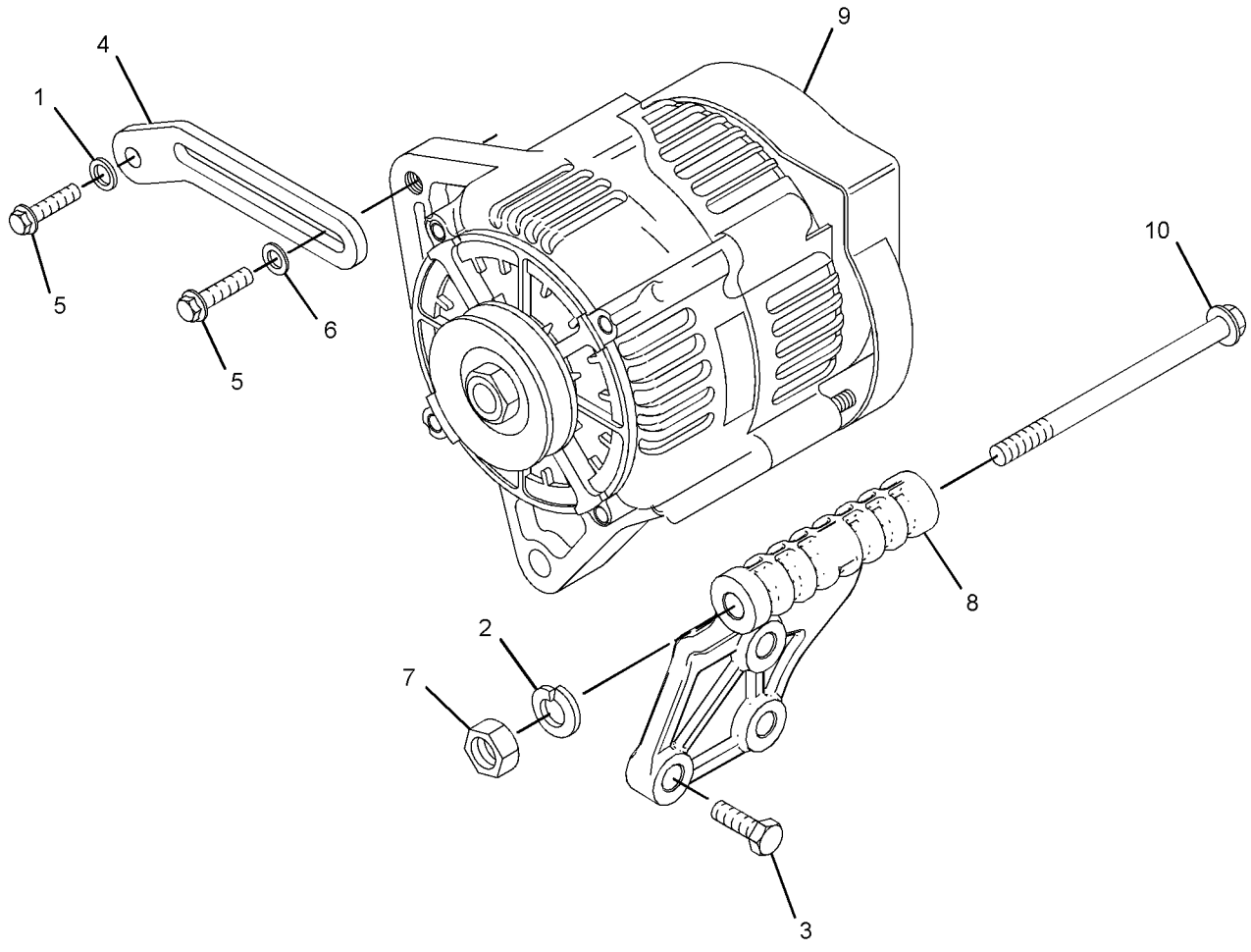

GRAPHIC #1 <END> g06348957

458-3287 ALTERNATOR GP-CHARGING

SMCS-1405 **i08482914**

NOTE	REF NO	GRAPHIC REF	PART NUMBER	QTY	PART NAME 1 2 3 4 5 6 (PRODUCT LEVEL)	SEE PAGE
M	1	1	**153-5592**	1	NUT (M8X1.25-THD)	
	2	1	**394-3492**	1	ALTERNATOR AS (12-VOLT, 40-AMPERE)	
M	3	1	**6I-0217**	3	BOLT (M8X1.25X20-MM)	
	4	1	**168-8999**	1	LEVER	
	5	1	**168-9001**	2	BOLT AS	
	6	1	**168-9002**	1	WASHER (8.4X26X3.2-MM THK)	
M	7	1	**359-9666**	1	BOLT-FLANGE HEAD (M8X1.25X130-MM)	
	8	1	**540-4157**	1	BRACKET	

M - METRIC PART

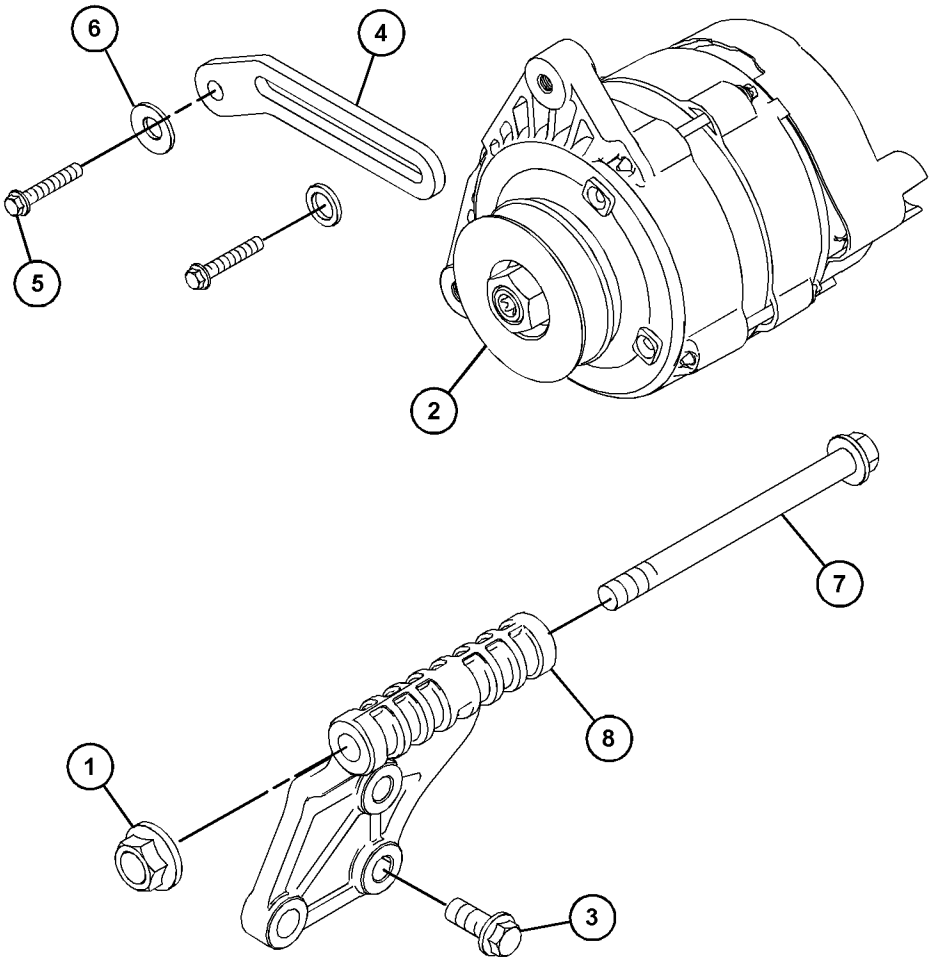

GRAPHIC #1 <END> g06719790

518-9064 ALTERNATOR GP-CHARGING

S/N: C6M10426-UP

PART OF 417-7273 ENGINE AR-PRIMARY

SMCS-1405 **i08718346**

NOTE	REF NO	GRAPHIC REF	PART NUMBER	QTY	PART NAME 1 2 3 4 5 6 (PRODUCT LEVEL)	SEE PAGE
M	1	1	**6I-0217**	3	BOLT (M8X1.25X20-MM)	
M	2	1	**6I-0260**	2	BOLT (M8X1.25X25-MM)	
	3	1	**168-8999**	1	LEVER	
M	4	1	**153-5592**	1	NUT (M8X1.25-THD)	
M	5	1	**359-9666**	1	BOLT-FLANGE HEAD (M8X1.25X130-MM)	
	6	1	**394-3494**	1	ALTERNATOR AS (12-VOLT, 65-AMPERE)	
	7	1	**155-7984**	1	WASHER (8.4X16X1.6-MM THK)	
	8	1	**163-5372**	1	WASHER (8X15.4X4-MM THK)	
	9	1	**168-9002**	1	WASHER (8.4X26X3.2-MM THK)	
	10	1	**540-4157**	1	BRACKET	

M - METRIC PART

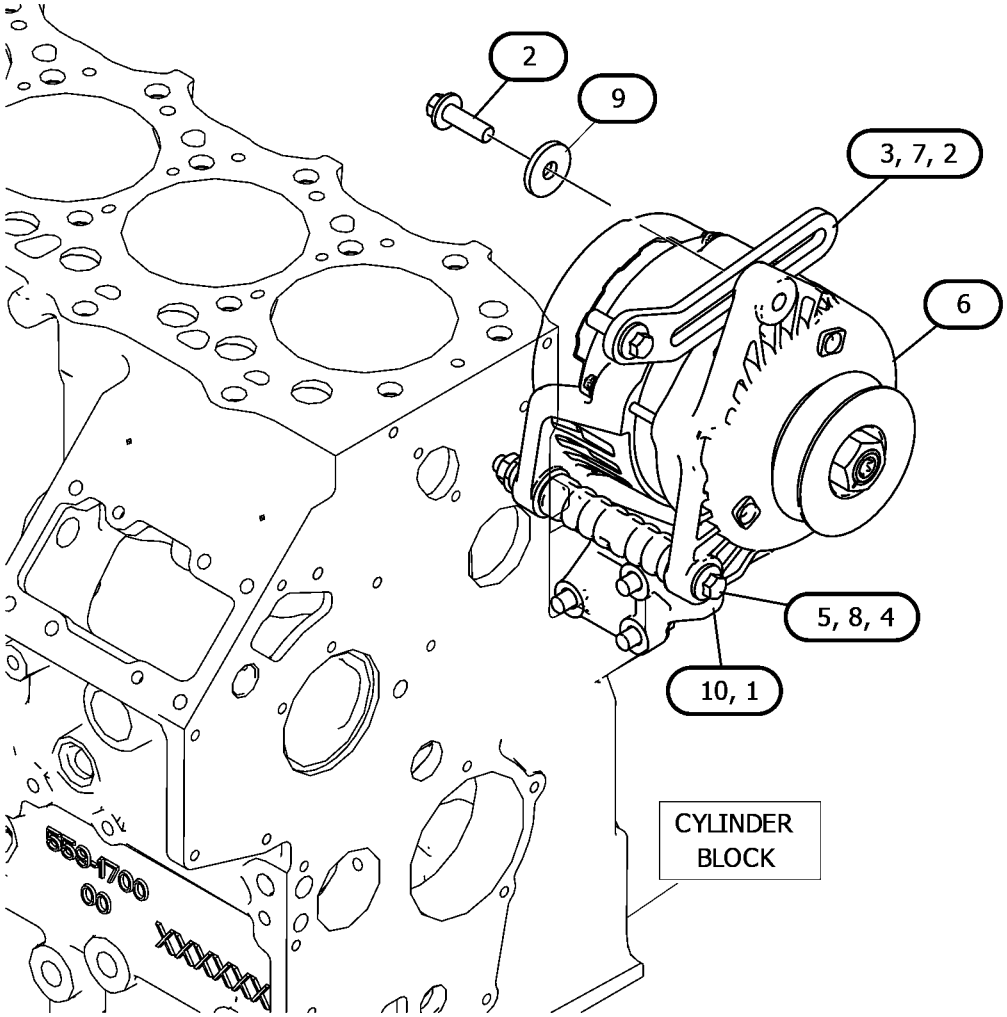

GRAPHIC #1 <END> g06785974

598-5745 ALTERNATOR GP-CHARGING

PART OF 514-6556 ENGINE AR-PRIMARY

SMCS-1405 **i08802986**

NOTE	REF NO	GRAPHIC REF	PART NUMBER	QTY	PART NAME 1 2 3 4 5 6 (PRODUCT LEVEL)	SEE PAGE
M	1	1	**124-3815**	3	BOLT (M8X1.25X16-MM)	
M	2	1	**153-5592**	1	NUT (M8X1.25-THD)	
	3	1	**155-7984**	1	WASHER (8.4X16X1.6-MM THK)	
	4	1	**168-9002**	1	WASHER (8.4X26X3.2-MM THK)	
	5	1	**233-9531**	1	LEVER	
	6	1	**243-4300**	1	PULLEY-ALTERNATOR	
	7	1	**283-4816**	1	BRACKET	
M	8	1	**359-9666**	1	BOLT-FLANGE HEAD (M8X1.25X130-MM)	
R	9	1	**424-6821**	1	ALTERNATOR (24-VOLT, 55-AMPERE)	
M	10	1	**6I-0260**	2	BOLT (M8X1.25X25-MM)	

M - METRIC PART
R - REMANUFACTURED PART MAY BE AVAILABLE

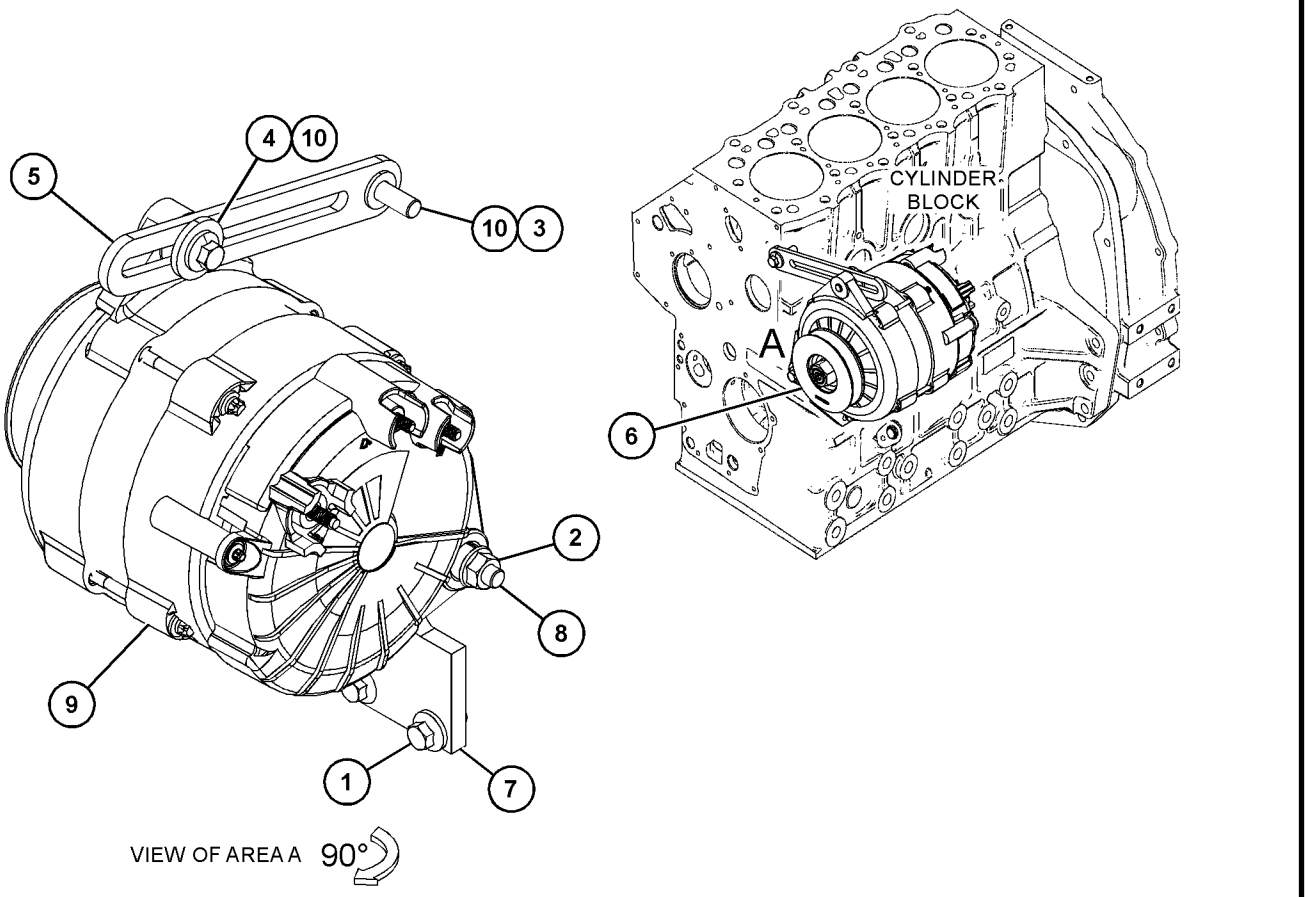

GRAPHIC #1 <END> g07547601

308-2319 CONNECTION GP-ELECTRICAL

SMCS-1408 **i02752317**

NOTE	REF NO	GRAPHIC REF	PART NUMBER	QTY	PART NAME 1 2 3 4 5 6 (PRODUCT LEVEL)	SEE PAGE
	1	1	**254-5541**	1	CONNECTION AS	
	2	1	**197-8555**	1	CONNECTION	

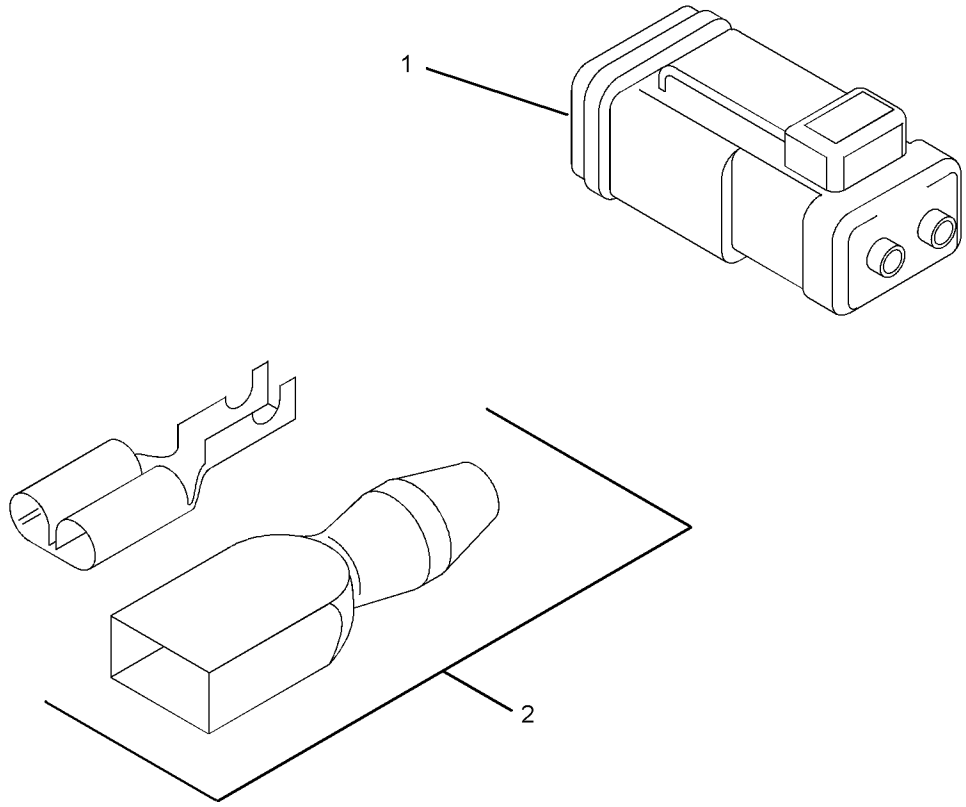

GRAPHIC #1 <END> g01389483

321-6741 CONNECTION GP-ELECTRICAL

PART OF 417-7273, 489-4263, 499-6420, 506-0518, 506-0519, 506-0520, 512-7969, 513-2239, 516-2639, 518-0165, 557-6086, 557-7471 ENGINE AR-PRIMARY

SMCS-1408 **i02926669**

NOTE	REF NO	GRAPHIC REF	PART NUMBER	QTY	PART NAME 1 2 3 4 5 6 (PRODUCT LEVEL)	SEE PAGE
	1	1	**254-5541**	1	CONNECTION AS	

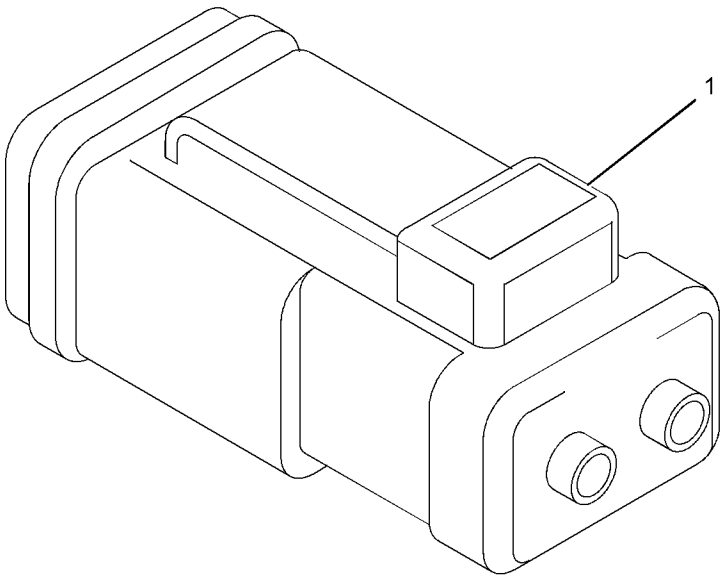

GRAPHIC #1 <END> g01513229

392-8657 CONNECTION GP-ELECTRICAL

SMCS-1408 **i06256630**

NOTE	REF NO	GRAPHIC REF	PART NUMBER	QTY	PART NAME 1 2 3 4 5 6 (PRODUCT LEVEL)	SEE PAGE
	1	1	**183-4037**	1	CONNECTOR AS	
	2	1	**238-0265**	1	HOSE-RADIATOR	

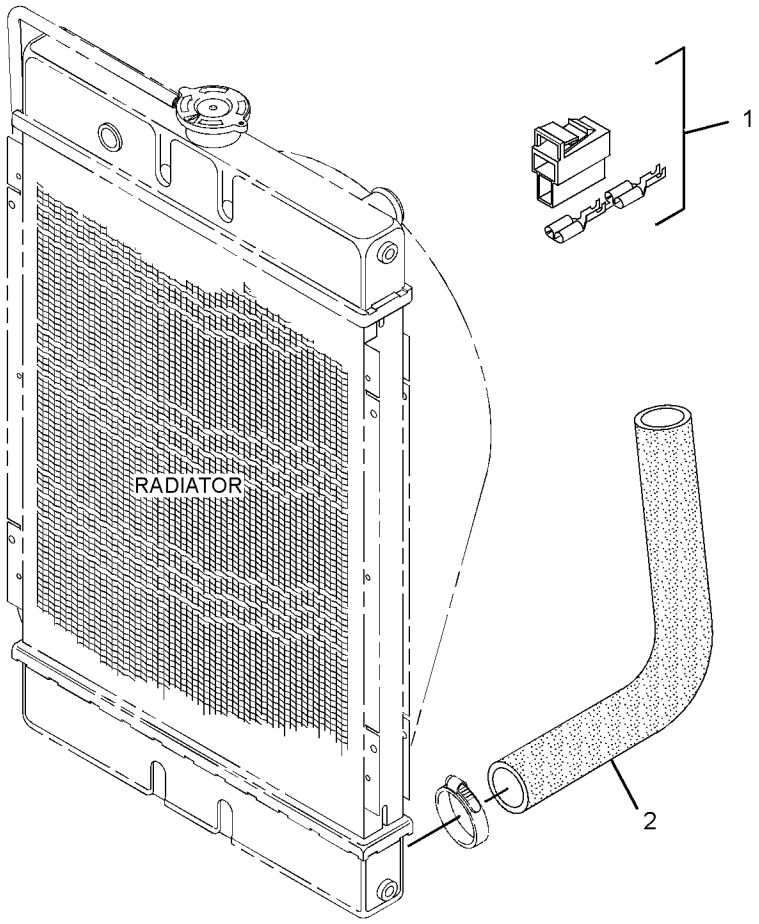

GRAPHIC #1 <END> g03325897

541-6343 CONNECTION GP-ELECTRICAL

S/N: C6M10426-UP

PART OF 417-7273 ENGINE AR-PRIMARY

SMCS-1408 **i07819857**

NOTE	REF NO	GRAPHIC REF	PART NUMBER	QTY	PART NAME 1 2 3 4 5 6 (PRODUCT LEVEL)	SEE PAGE
	1	1	**254-5541**	1	CONNECTION AS	
		1	**9X-3402**	6	SOCKET-CONNECTOR (16-GA TO 18-GA)	
		1	**331-4226**	3	KIT-CONNECTING PLUG (2-PIN)	
					(INCLUDES PLUG AS, WEDGE, & INTERFACE SEAL)	

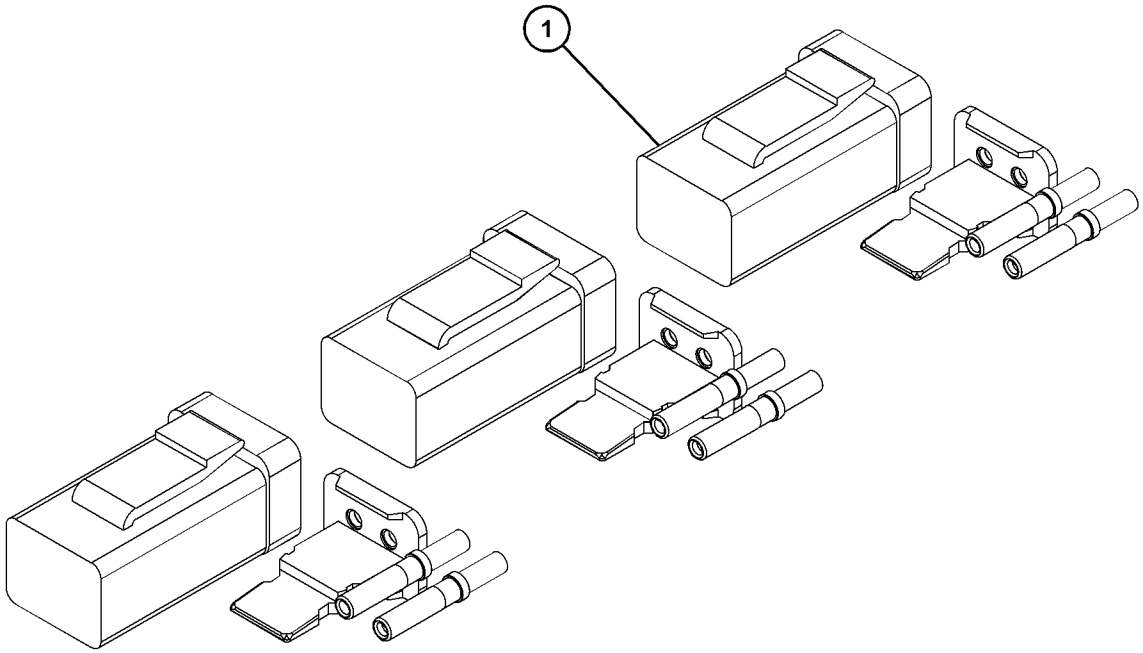

GRAPHIC #1 <END> g06403237

502-4820 CONTROL GP-ELECTRONIC

SMCS-1410, 1917, 1924, 4490 **i07322129**

NOTE	REF NO	GRAPHIC REF	PART NUMBER	QTY	PART NAME 1 2 3 4 5 6 (PRODUCT LEVEL)	SEE PAGE
	1	1	**502-3824**	1	CONTROL GP-ELECTRONIC	
		1	**479-5943**	1	CONTROLLER	

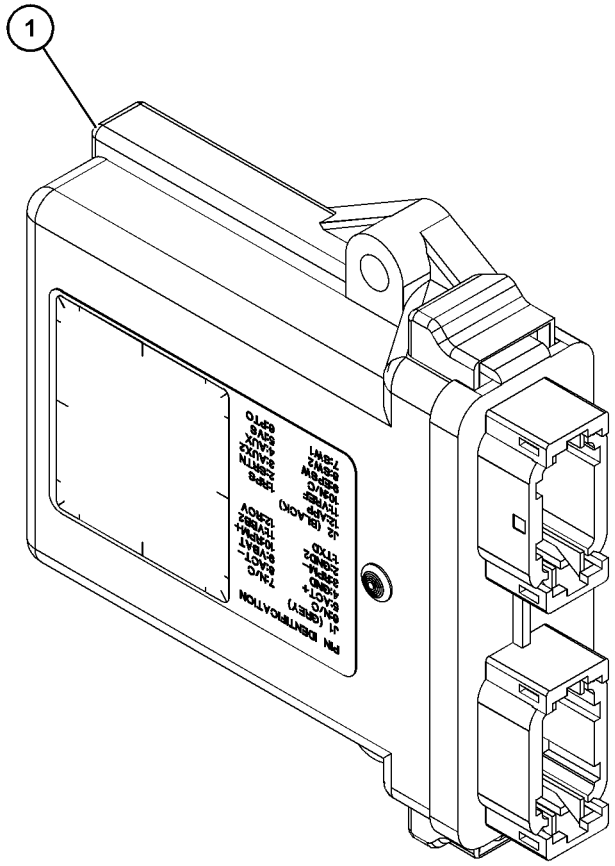

GRAPHIC #1 <END> g06299129

364-2521 CONTROL GP-ENGINE ELECTRONIC

PART OF 435-1647 ENGINE AR-PRIMARY

TYPE 1

SMCS-1901 **i06907866**

NOTE	REF NO	GRAPHIC REF	PART NUMBER	QTY	PART NAME 1 2 3 4 5 6 (PRODUCT LEVEL)	SEE PAGE
	1	1	**095-1574**	1	SEAL-O-RING	
M	2	1	**106-8916**	4	BOLT (M6X1X16-MM)	
M	3	1	**5C-2890**	1	NUT (M6X1-THD)	
	4	1	**139-5511**	1	CAP (TAMPER RESISTANT)	
M	5	1	**153-5592**	1	NUT (M8X1.25-THD)	
	6	1	**153-6415**	2	WASHER (SEAL)	
	7	1	**153-7983**	1	PIN	
M	8	1	**162-2207**	1	NUT (M6X1-THD)	
	9	1	**217-7115**	1	CAP (TAMPER RESISTANT)	
	10	1	**423-7724**	1	GASKET	
	11	1	**308-1882**	1	SPRING	
M	12	1	**308-1889**	1	NUT (M10X1.25-THD)	
M	13	1	**308-1892**	1	NUT (M6X1-THD)	
	14	1	**308-1897**	2	RING	
M	15	1	**369-4486**	2	BOLT (M6X1X35-MM)	
	16	1	**308-4266**	1	SHAFT	
	17	1	**390-3731**	1	SHAFT	
	18	1	**309-6729**	1	SEAL-O-RING	
M	19	1	**495-0737**	1	BOLT (M6X0.5X19.5-MM)	
	20	1	**311-0655**	1	SPRING	
M	21	1	**313-2025**	1	BOLT-SPECIAL (M10X1.25-MM THD)	
	22	1	**315-5236**	1	BOLT AS	
	22A	1	**153-7987**	1	WASHER (9.2X17X1.8-MM THK)	
M	22B	1	**191-9297**	1	NUT (M10X1.25-THD)	
	22C	1	**315-5235**	1	SPRING	
	23	1	**321-3145**	1	SPRING	
	24	1	**321-4249**	1	NUT	
	25	1	**390-3729**	1	LEVER-CONTROL	
	26	1	**322-7493**	1	LEVER AS-CONTROL	
	27	1	**330-9189**	1	PLUG	
	28	1	**425-7065**	1	CAP-TAMPER PROOF	
	29	1	**334-0732**	1	ARM AS (FRONT HOUSING)	
	30	1	**335-5578**	1	BRACKET	
	31	1	**336-2965**	1	SPRING	

M - METRIC PART

364-2521 **CONTROL GP-ENGINE ELECTRONIC (**contd.**)** **i06907866**

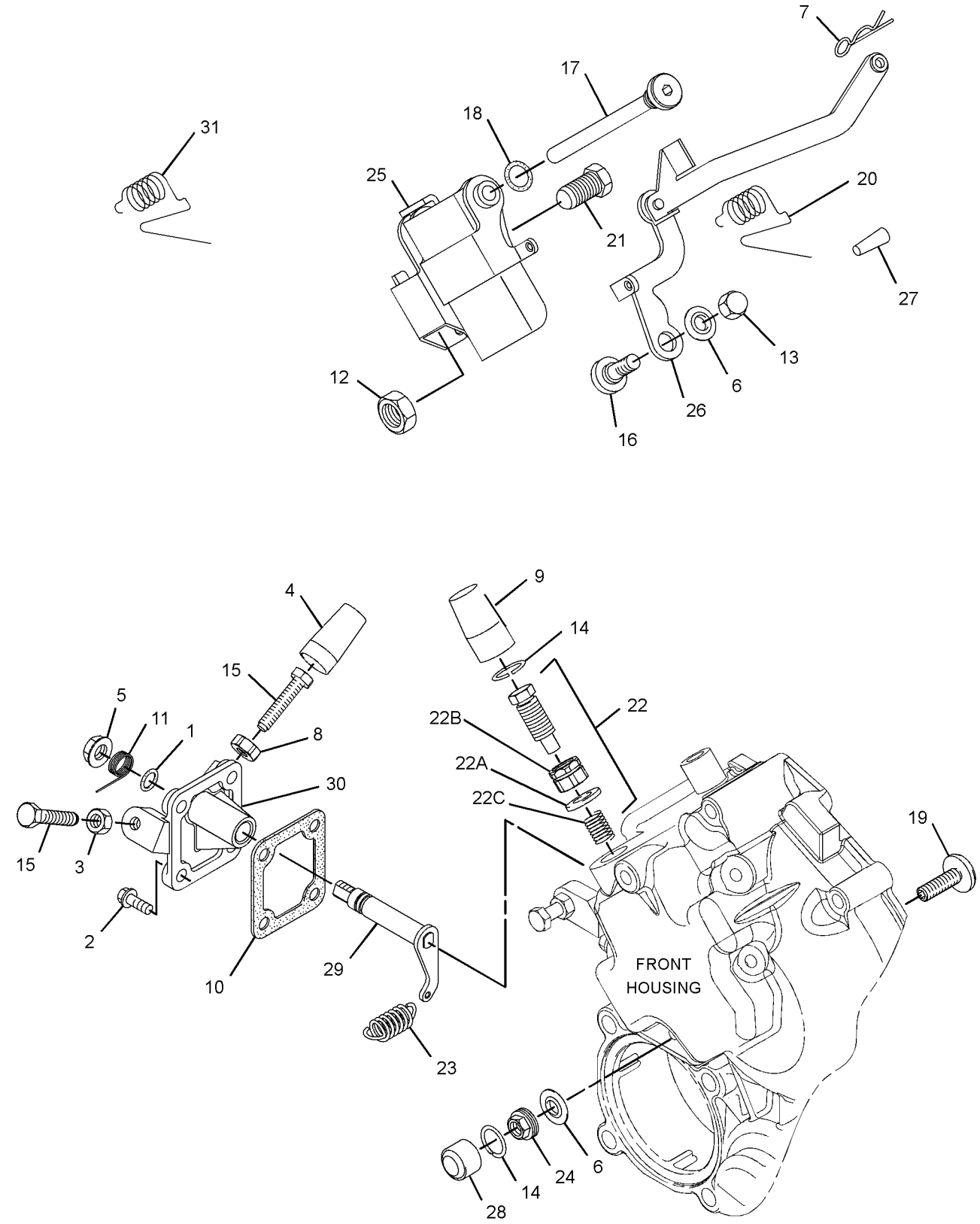

GRAPHIC #1 <END> g06163960

364-2521 CONTROL GP-ENGINE ELECTRONIC

PART OF 435-1647 ENGINE AR-PRIMARY

TYPE 2

SMCS-1901 **i07160675**

NOTE	REF NO	GRAPHIC REF	PART NUMBER	QTY	PART NAME 1 2 3 4 5 6 (PRODUCT LEVEL)	SEE PAGE
	1	1	**095-1574**	1	SEAL-O-RING	
M	2	1	**106-8916**	4	BOLT (M6X1X16-MM)	
M	3	1	**5C-2890**	1	NUT (M6X1-THD)	
	4	1	**139-5511**	1	CAP (TAMPER RESISTANT)	
M	5	1	**153-5592**	1	NUT (M8X1.25-THD)	
	6	1	**153-6415**	2	WASHER (SEAL)	
	7	1	**153-7983**	1	PIN	
M	8	1	**162-2207**	1	NUT (M6X1-THD)	
	9	1	**217-7115**	1	CAP (TAMPER RESISTANT)	
	10	1	**423-7724**	1	GASKET	
	11	1	**308-1882**	1	SPRING	
M	12	1	**308-1889**	1	NUT (M10X1.25-THD)	
M	13	1	**308-1892**	1	NUT (M6X1-THD)	
C	14	1	**308-1897**	1	RING	
M	15	1	**369-4486**	2	BOLT (M6X1X35-MM)	
	16	1	**308-4266**	1	SHAFT	
	17	1	**390-3731**	1	SHAFT	
	18	1	**309-6729**	1	SEAL-O-RING	
M	19	1	**495-0737**	1	BOLT (M6X0.5X19.5-MM)	
	20	1	**311-0655**	1	SPRING	
M	21	1	**313-2025**	1	BOLT-SPECIAL (M10X1.25-MM THD)	
	22	1	**315-5236**	1	BOLT AS	
	22A	1	**153-7987**	1	WASHER (9.2X17X1.8-MM THK)	
M	22B	1	**191-9297**	1	NUT (M10X1.25-THD)	
	22C	1	**315-5235**	1	SPRING	
	23	1	**321-3145**	1	SPRING	
C	24	1	**502-9478**	1	NUT (TAMPER RESISTANT)	
	25	1	**390-3729**	1	LEVER-CONTROL	
	26	1	**322-7493**	1	LEVER AS-CONTROL	
	27	1	**330-9189**	1	PLUG	
C	28	1	**503-9707**	1	CAP	
	29	1	**334-0732**	1	ARM AS (FRONT HOUSING)	
	30	1	**335-5578**	1	BRACKET	
	31	1	**336-2965**	1	SPRING	
C	32	1	**502-5421**	1	PIN	
C	33	1	**503-9731**	1	SHROUD	

C - CHANGE FROM PREVIOUS TYPE
M - METRIC PART

364-2521 **CONTROL GP-ENGINE ELECTRONIC (**contd.**)** **i07160675**

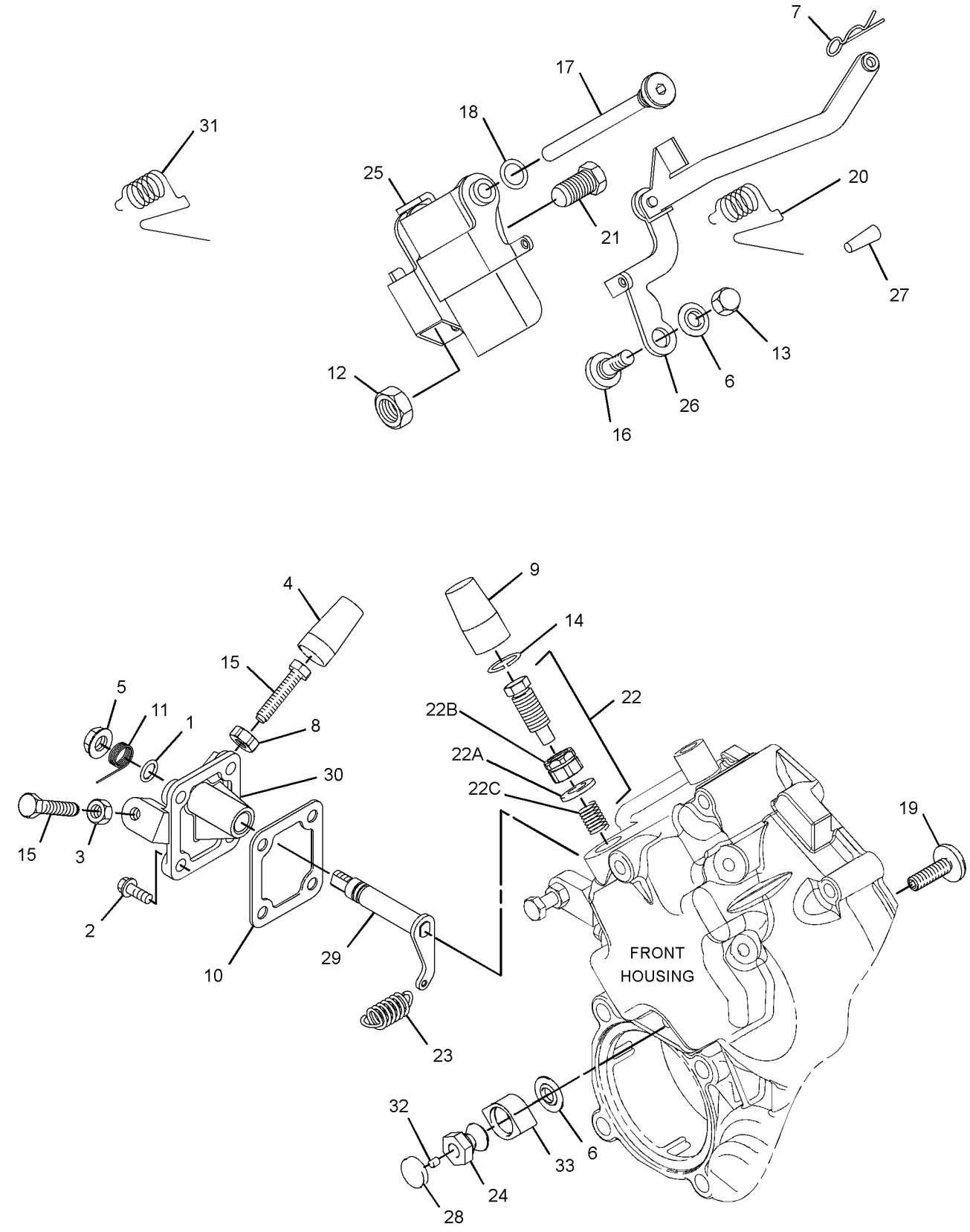

GRAPHIC #1 <END> g06239341

365-4290 CONTROL GP-ENGINE SPEED

SMCS-1901 **i08583462**

NOTE	REF NO	GRAPHIC REF	PART NUMBER	QTY	PART NAME 1 2 3 4 5 6 (PRODUCT LEVEL)	SEE PAGE
	1	1	**502-5421**	1	PIN	
	2	1	**139-5511**	1	CAP (TAMPER RESISTANT)	
M	3	1	**308-1889**	1	NUT (M10X1.25-THD)	
	4	1	**153-7983**	1	PIN	
	5	1	**217-7115**	1	CAP (TAMPER RESISTANT)	
	6	1	**319-3253**	1	SENSOR AS-SPEED (TIMING)	
M	6A	1	**5C-8312**	1	NUT (M4X0.7-THD)	
	7	1	**580-0398**	1	LEVER AS-CONTROL	
	8	1	**313-5832**	1	BOLT AS	
	8A	1	**153-7987**	1	WASHER (9.2X17X1.8-MM THK)	
M	8B	1	**191-9297**	1	NUT (M10X1.25-THD)	
	8C	1	**313-5833**	1	SPRING	
Y	9	1	*486-9344*	1	HOUSING GP-FRONT	358
	10	1	**336-2965**	1	SPRING	
	11	1	**503-9707**	1	CAP	
	12	1	**308-1897**	1	RING	
					PARTS SHOWN IN GRAPHIC(S) WITHOUT A REFERENCE NUMBER ARE NOT SERVICED SEPARATELY	

M - METRIC PART
Y - SEPARATE ILLUSTRATION

365-4290 **CONTROL GP-ENGINE SPEED (**contd.**)** **i08583462**

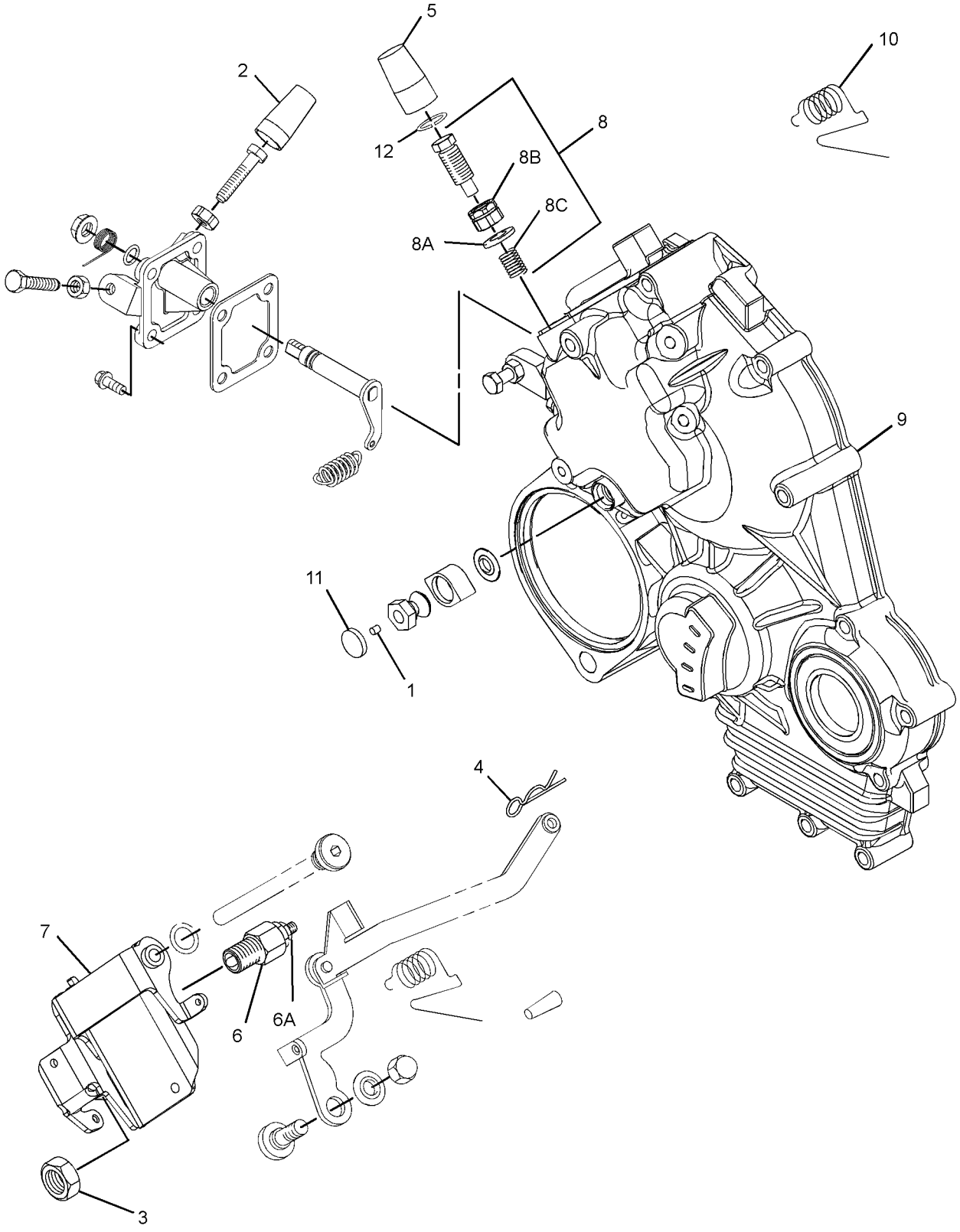

GRAPHIC #1 <END> g07505151

317-3041 CONTROL GP-MANUAL START/STOP

SMCS-1426, 7418 **i02851944**

NOTE	REF NO	GRAPHIC REF	PART NUMBER	QTY	PART NAME 1 2 3 4 5 6 (PRODUCT LEVEL)	SEE PAGE
	1	1	**153-6412**	1	WASHER	
	2	1	**275-0493**	1	SOLENOID (24-VOLT) (FUEL SHUTOFF)	
	3	1	**315-5237**	1	LEVER-CONTROL	

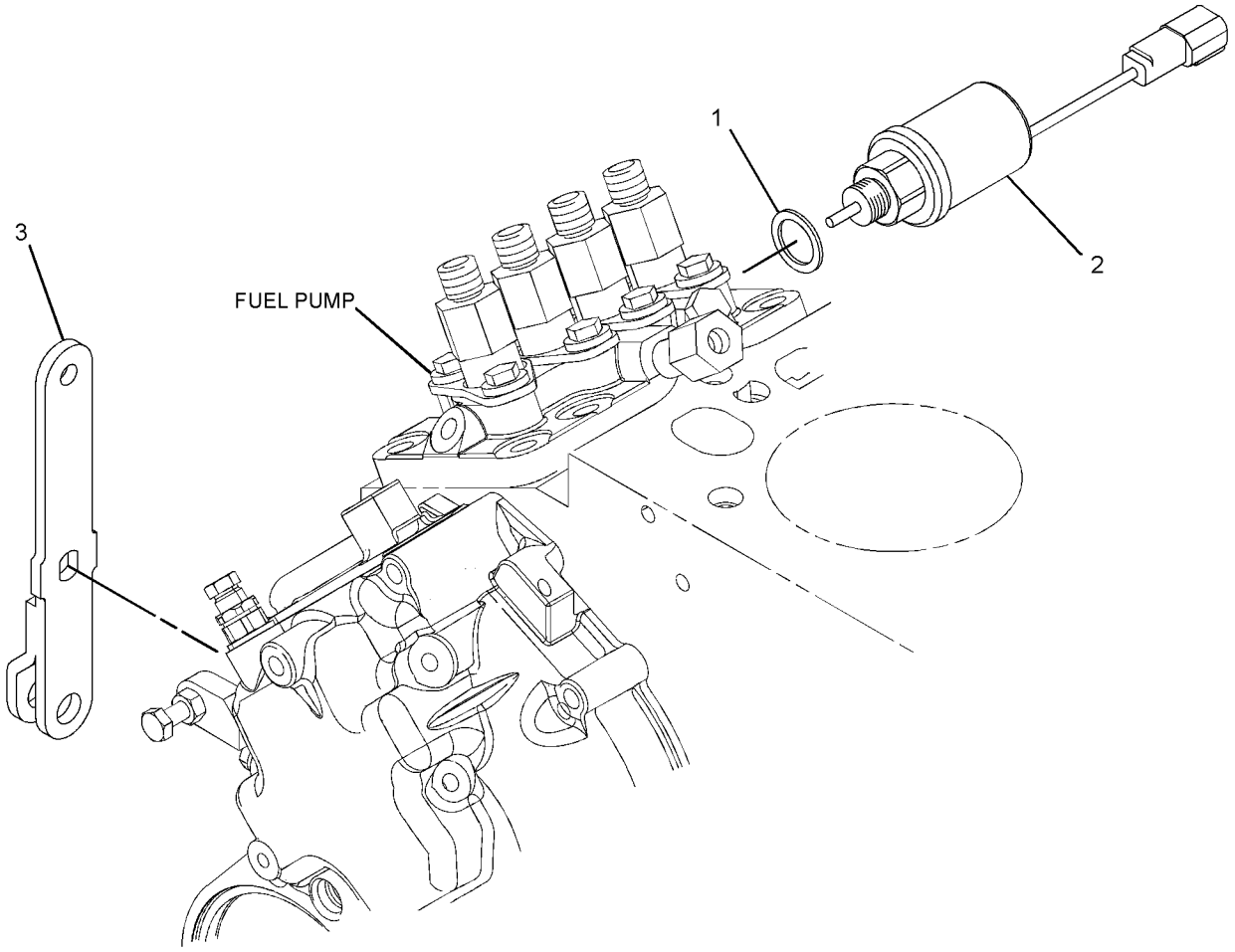

GRAPHIC #1 <END> g01421434

331-9611 CONTROL GP-MANUAL START/STOP

SMCS-1426, 7418 **i04316483**

NOTE	REF NO	GRAPHIC REF	PART NUMBER	QTY	PART NAME 1 2 3 4 5 6 (PRODUCT LEVEL)	SEE PAGE
	1	1	**153-6412**	1	WASHER	
	2	1	**275-0493**	1	SOLENOID (24-VOLT)	
	3	1	**308-1914**	1	LEVER-CONTROL	

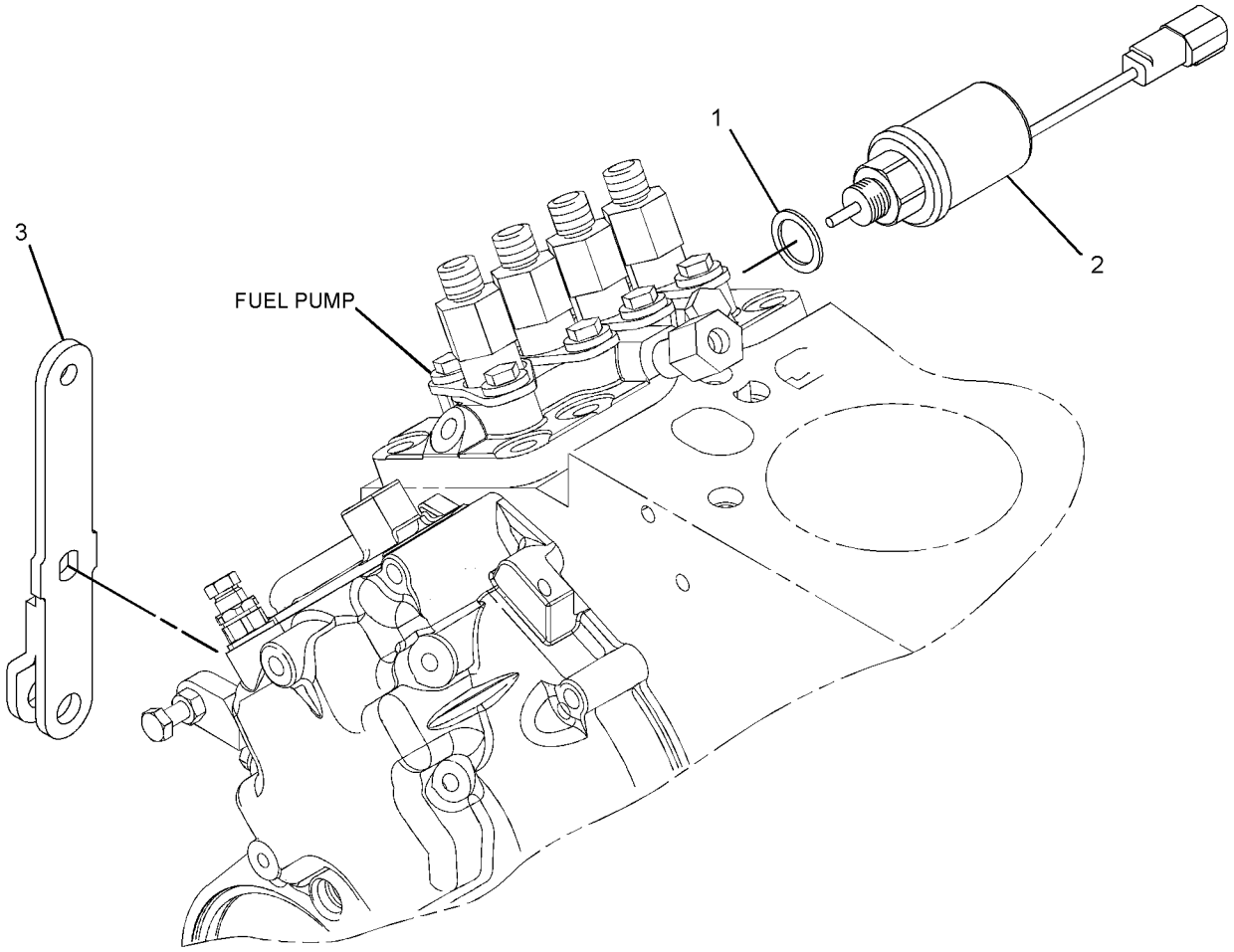

GRAPHIC #1 <END> g01641376

600-5177 CONTROL GP-MANUAL START/STOP

S/N: C6M10291-UP

SMCS-1426, 7418 **i08802991**

NOTE	REF NO	GRAPHIC REF	PART NUMBER	QTY	PART NAME 1 2 3 4 5 6 (PRODUCT LEVEL)	SEE PAGE
	1	1	**153-6412**	1	WASHER	
	2	1	**275-0493**	1	SOLENOID (24-VOLT)	
	3	1	**315-5237**	1	LEVER-CONTROL	

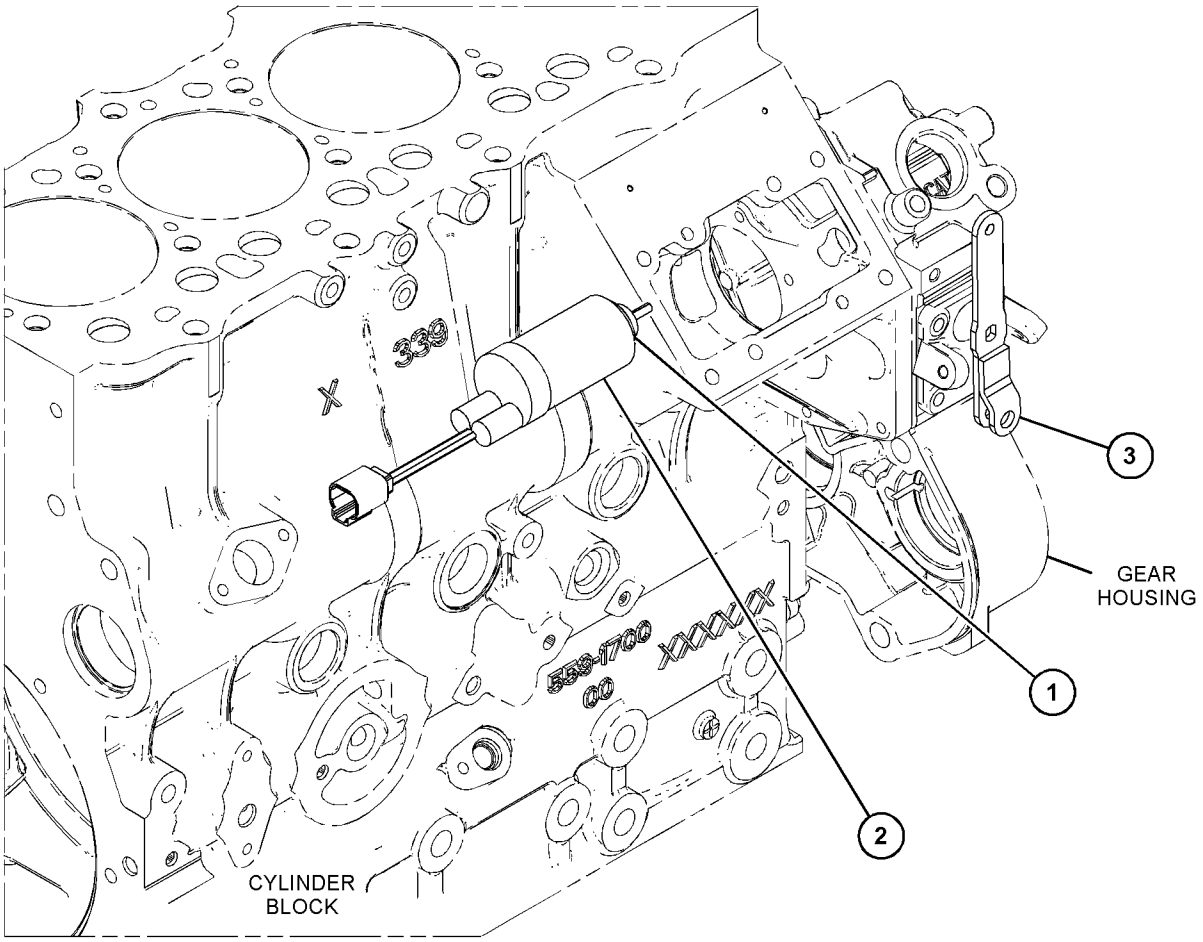

GRAPHIC #1 <END> g07614931

308-2311 GLOW PLUG GP

PART OF 435-1645, 435-1649 CYLINDER BLOCK GP-LONG, 433-1379, 433-1380 ENGINE AR, 417-7273, 435-1636, 435-1641, 435-1642, 435-1646, 435-1647, 435-1658, 489-4263, 499-6420, 504-4602, 506-0518, 506-0519, 506-0520, 512-7969, 513-2239, 516-2639, 518-0165, 557-6086, 557-7471 ENGINE AR-PRIMARY
ALSO AN ATTACHMENT

SMCS-1412 **i07495631**

NOTE	REF NO	GRAPHIC REF	PART NUMBER	QTY	PART NAME 1 2 3 4 5 6 (PRODUCT LEVEL)	SEE PAGE
	1	1	**172-4585**	4	GLOW PLUG	
	2	1	**154-1935**	1	BUS BAR AS	
M	3	1	**231-2839**	1	NUT-FLANGE (M4X0.7-THD)	
	4	1	**096-6166**	1	WASHER-HARD (4.5X9X1-MM THK)	

M - METRIC PART

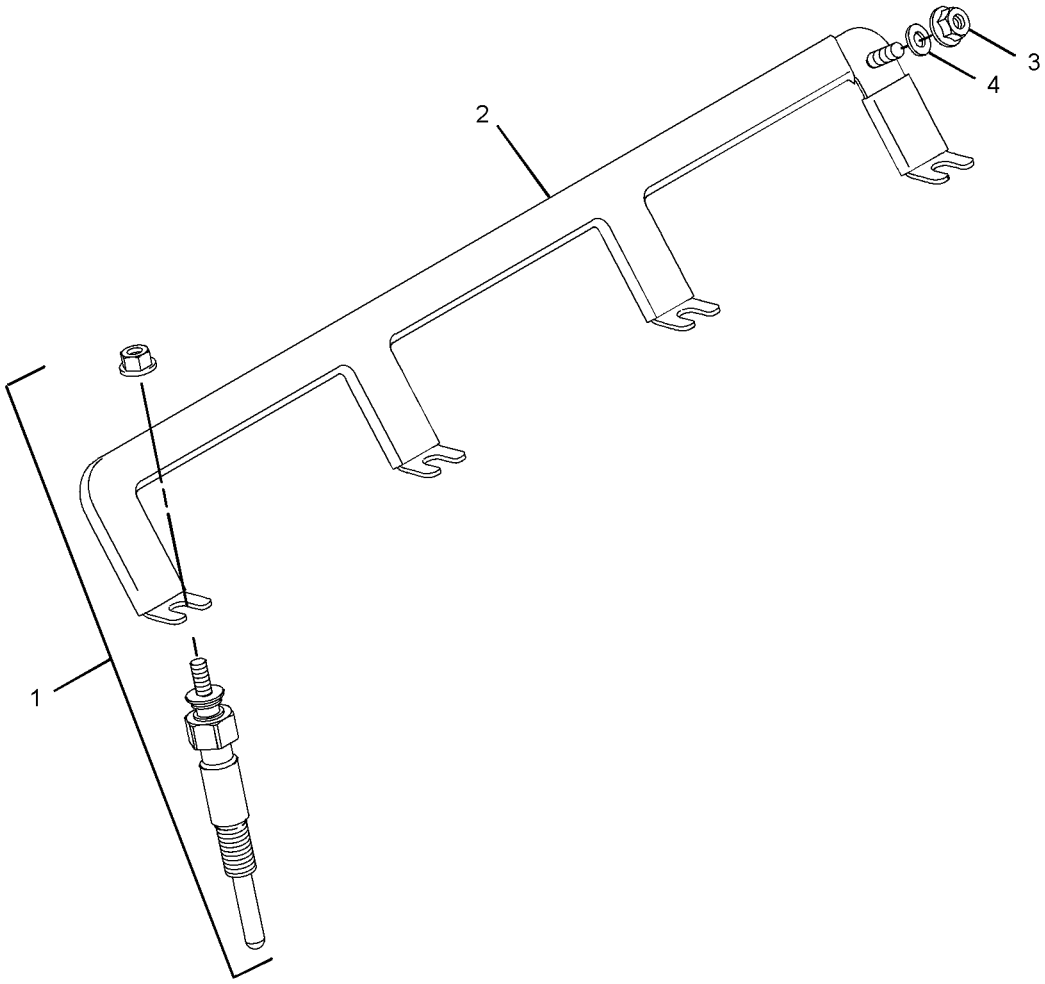

GRAPHIC #1 <END> g06357543

317-3040 GLOW PLUG GP

PART OF 489-9224, 514-6556 ENGINE AR-PRIMARY

SMCS-1412 **i07419383**

NOTE	REF NO	GRAPHIC REF	PART NUMBER	QTY	PART NAME 1 2 3 4 5 6 (PRODUCT LEVEL)	SEE PAGE
M	1	1	**231-2839**	1	NUT-FLANGE (M4X0.7-THD)	
	2	1	**154-1935**	1	BUS BAR AS	
	3	1	**243-4402**	4	GLOW PLUG	
	4	1	**096-6166**	1	WASHER-HARD (4.5X9X1-MM THK)	

M - METRIC PART

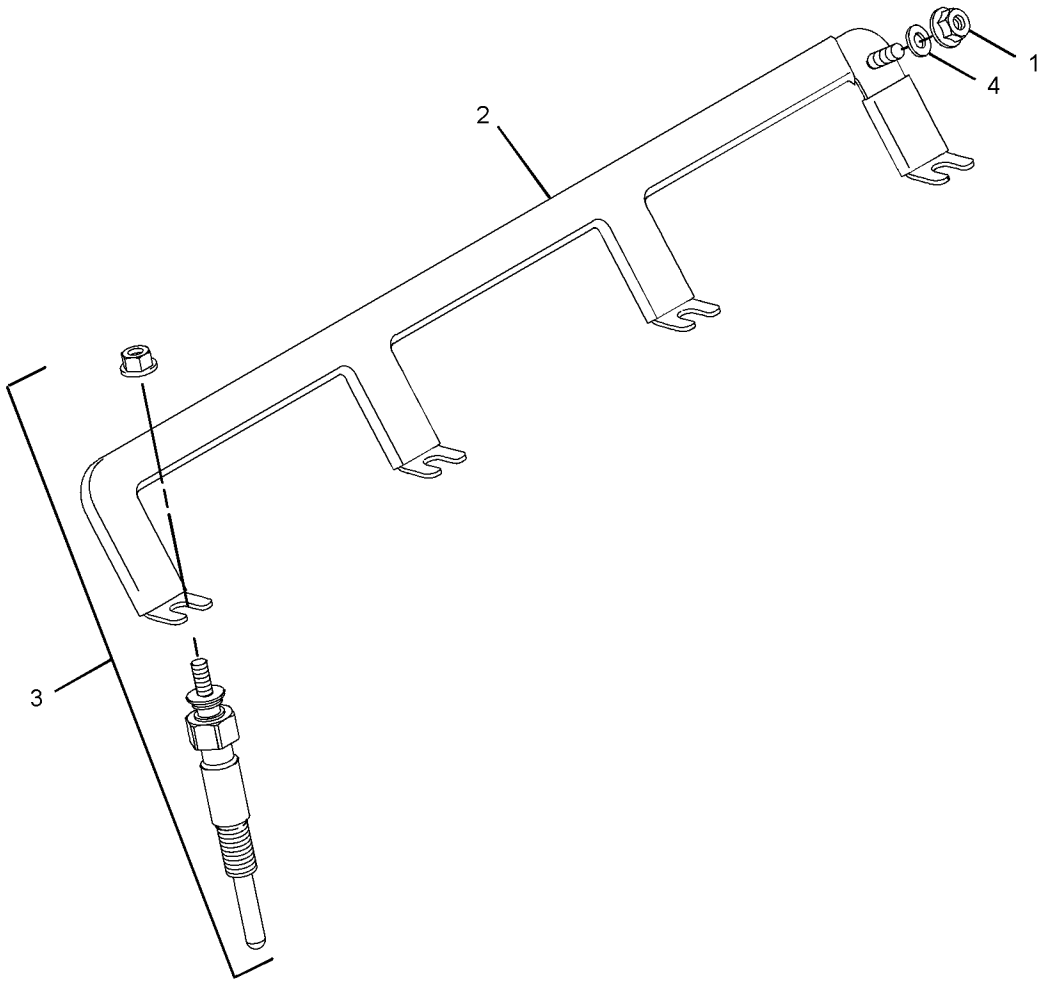

GRAPHIC #1 <END> g06321799

587-0270 GLOW PLUG GP

PART OF 433-1379 ENGINE AR, 417-7273, 435-1636, 435-1641, 435-1642, 435-1647 ENGINE AR-PRIMARY
ALSO AN ATTACHMENT

SMCS-1412 **i08565872**

NOTE	REF NO	GRAPHIC REF	PART NUMBER	QTY	PART NAME 1 2 3 4 5 6 (PRODUCT LEVEL)	SEE PAGE
M	1	1	**291-1744**	1	NUT (M4X0.7-THD)	
	2	1	**154-1935**	1	BUS BAR AS	
	3	1	**172-4585**	4	GLOW PLUG	

M - METRIC PART

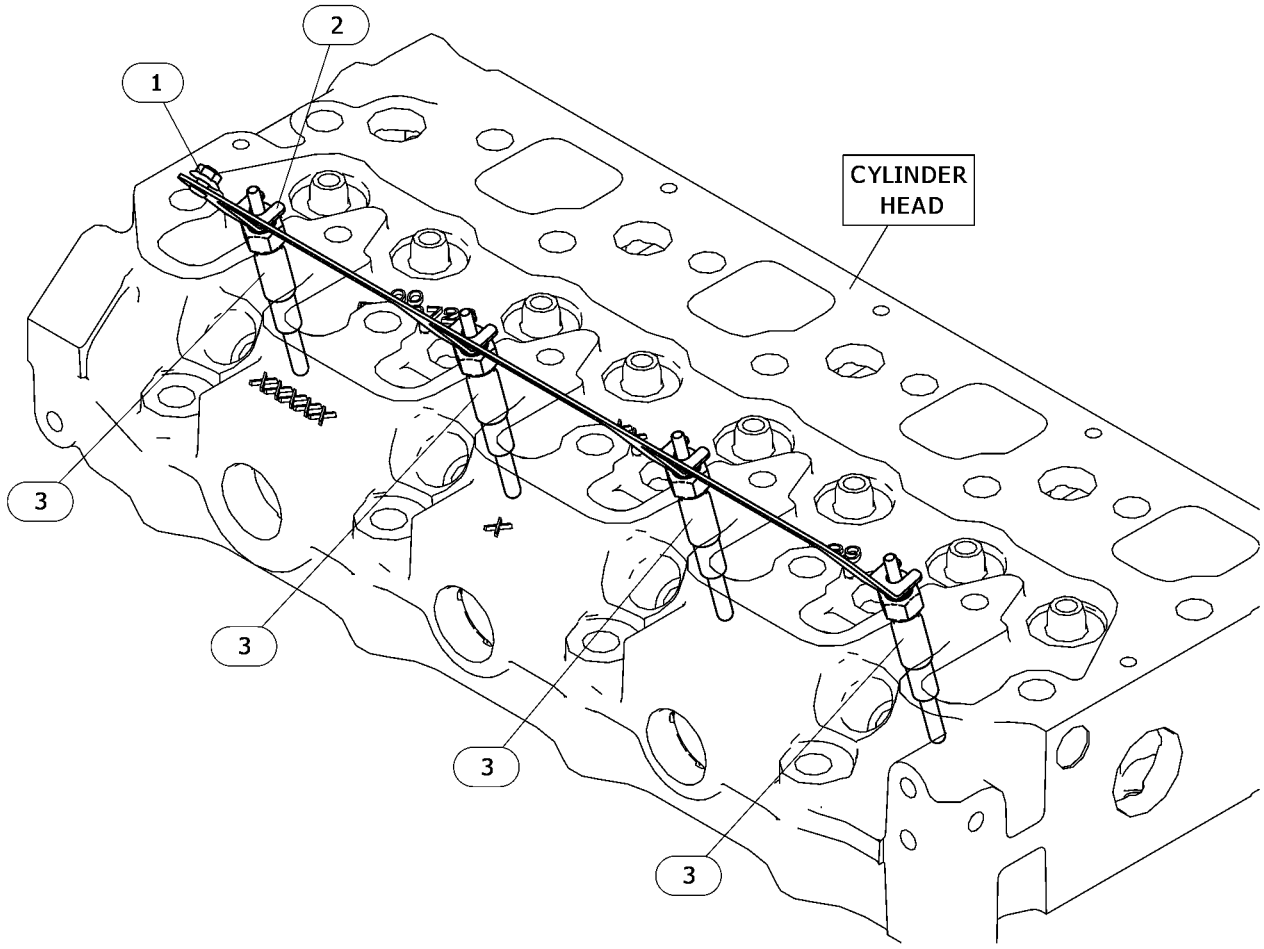

GRAPHIC #1 <END> g06720822

600-5159 GLOW PLUG GP

PART OF 514-6556 ENGINE AR-PRIMARY

SMCS-1412 **i08526373**

NOTE	REF NO	GRAPHIC REF	PART NUMBER	QTY	PART NAME 1 2 3 4 5 6 (PRODUCT LEVEL)	SEE PAGE
	1	1	**154-1935**	1	BUS BAR AS	
M	2	1	**291-1744**	1	NUT (M4X0.7-THD)	
	3	1	**243-4402**	4	GLOW PLUG	

M - METRIC PART

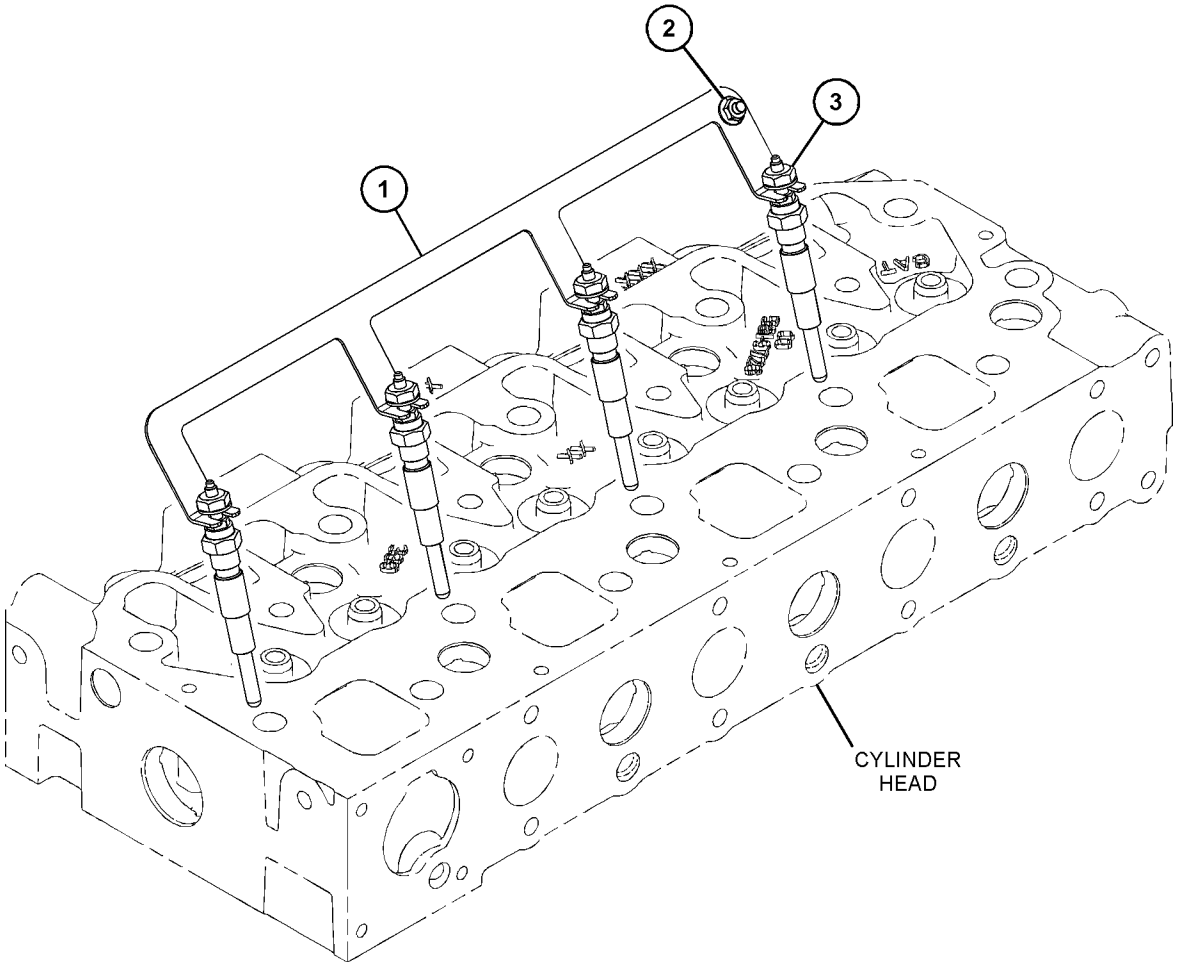

GRAPHIC #1 <END> g07488889

311-9030 SENSOR GP-TEMPERATURE

SMCS-1906, 1919, 1921, 1922, 1928, 1929 **i02770524**

NOTE	REF NO	GRAPHIC REF	PART NUMBER	QTY	PART NAME 1 2 3 4 5 6 (PRODUCT LEVEL)	SEE PAGE
	1	1	**271-6700**	1	SWITCH-TEMPERATURE (ENGINE COOLANT)	

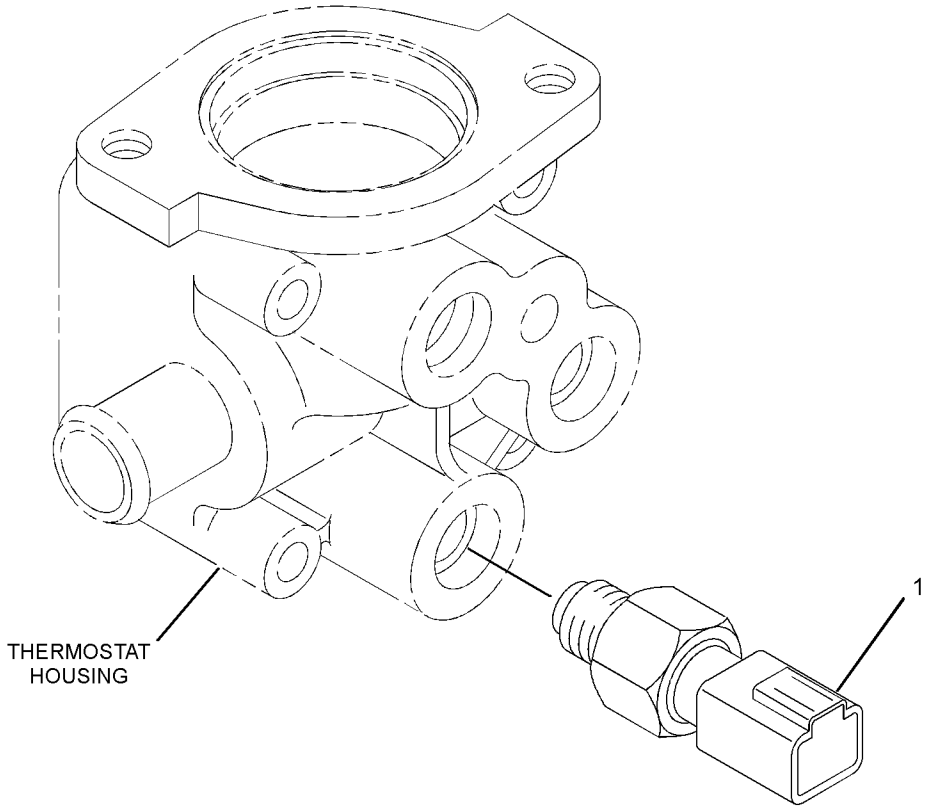

GRAPHIC #1 <END> g01416429

601-4322 SENSOR GP-TEMPERATURE

PART OF 433-1379 ENGINE AR, 417-7273, 435-1636, 435-1641, 435-1642, 435-1647, 514-6556 ENGINE AR-PRIMARY
ALSO AN ATTACHMENT

SMCS-1906, 1919, 1921, 1922, 1928, 1929 **i08617096**

NOTE	REF NO	GRAPHIC REF	PART NUMBER	QTY	PART NAME 1 2 3 4 5 6 (PRODUCT LEVEL)	SEE PAGE
	1	1	**154-1817**	2	PLUG	
	2	1	**341-3600**	1	SWITCH-TEMPERATURE (12-VOLT) (WATER)	

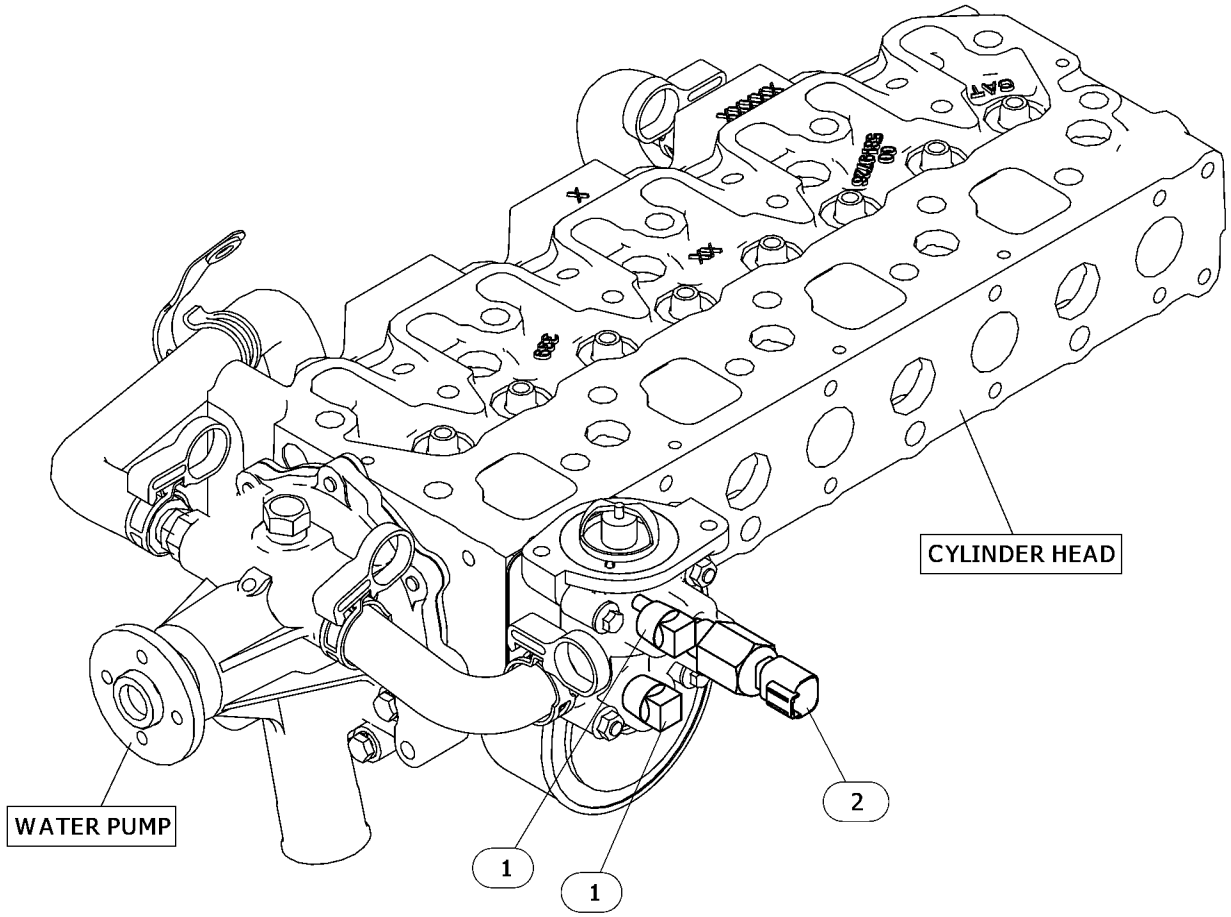

GRAPHIC #1 <END> g06720979

320-9114 SHUTOFF GP-ELECTRICAL

SMCS-7418 **i03384230**

NOTE	REF NO	GRAPHIC REF	PART NUMBER	QTY	PART NAME 1 2 3 4 5 6 (PRODUCT LEVEL)	SEE PAGE
	1	1	**340-0199**	1	SHUTOFF GP-ELECTRICAL	
	1A	1	**234-8762**	1	CONNECTOR	
	1B	1	**318-5038**	1	BOX	

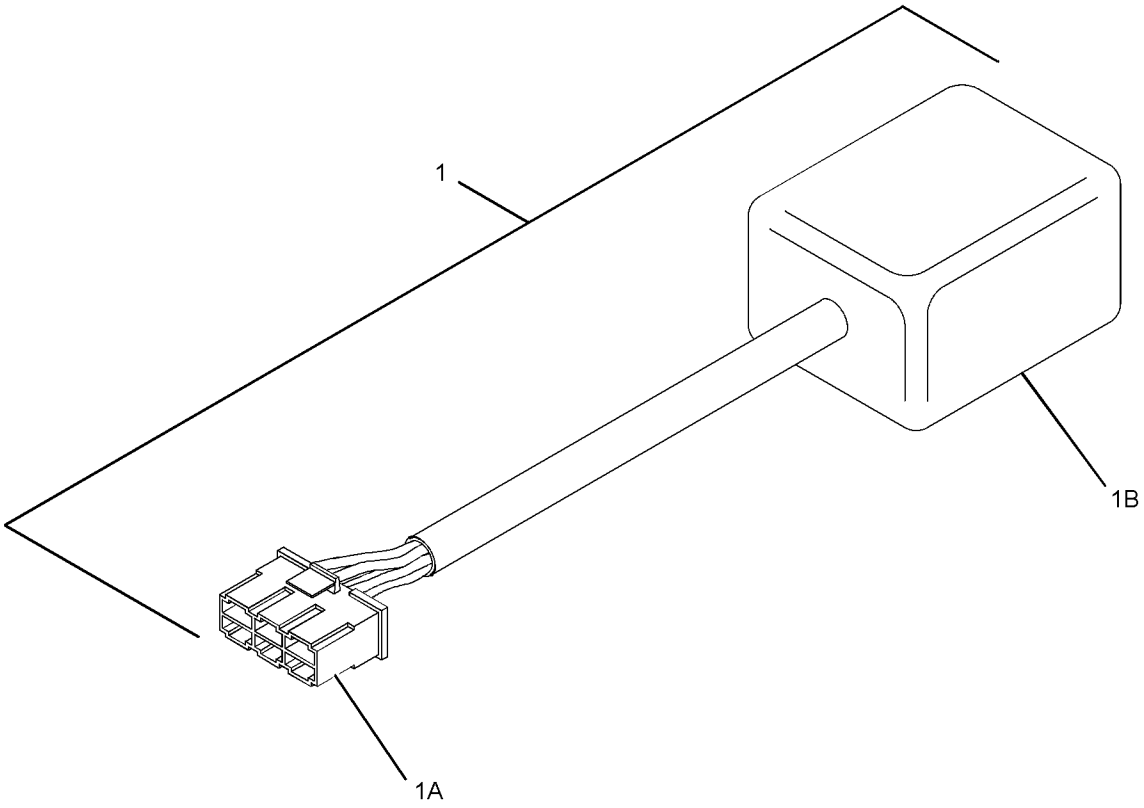

GRAPHIC #1 <END> g01504753

522-0710 SOLENOID GP-CONTROL

PART OF 514-6556 ENGINE AR-PRIMARY

SMCS-1268, 1400 **i06928213**

NOTE	REF NO	GRAPHIC REF	PART NUMBER	QTY	PART NAME 1 2 3 4 5 6 (PRODUCT LEVEL)	SEE PAGE
	1	1	**153-6412**	1	WASHER	
	2	1	**275-0493**	1	SOLENOID (24-VOLT) (24-VOLT)	
	3	1	**308-1914**	1	LEVER-CONTROL	

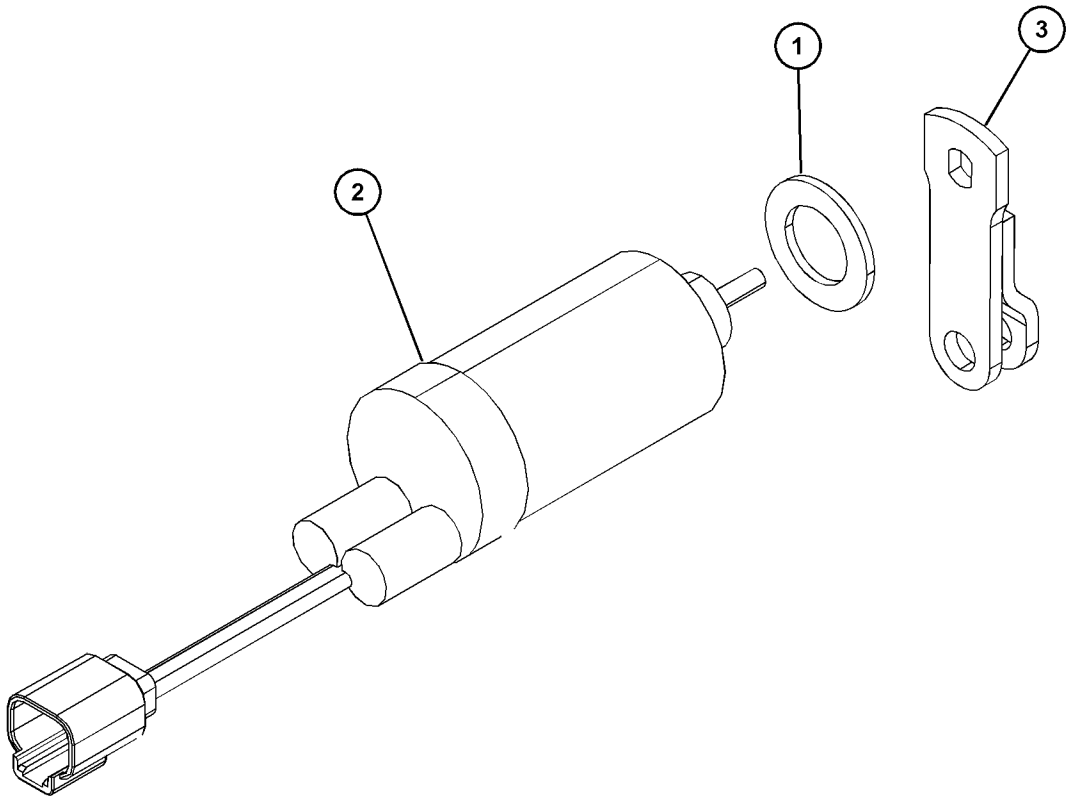

GRAPHIC #1 <END> g06202936

308-2313 SOLENOID GP-SHUTOFF

PART OF 435-1645, 435-1649 CYLINDER BLOCK GP-LONG, 433-1379, 433-1380 ENGINE AR, 417-7273, 435-1636, 435-1641, 435-1642, 435-1646, 435-1647, 435-1658, 489-4263, 489-9224, 504-4602, 506-0518, 506-0519, 506-0520, 512-7969, 513-2239, 518-0165, 557-6086, 557-7471 ENGINE AR-PRIMARY
ALSO AN ATTACHMENT

SMCS-1259 **i06915787**

NOTE	REF NO	GRAPHIC REF	PART NUMBER	QTY	PART NAME 1 2 3 4 5 6 (PRODUCT LEVEL)	SEE PAGE
	1	1	**153-6412**	1	WASHER	
	2	1	**419-7640**	1	SOLENOID AS (12-VOLT) (FUEL SHUTOFF)	
	3	1	**308-1914**	1	LEVER-CONTROL	

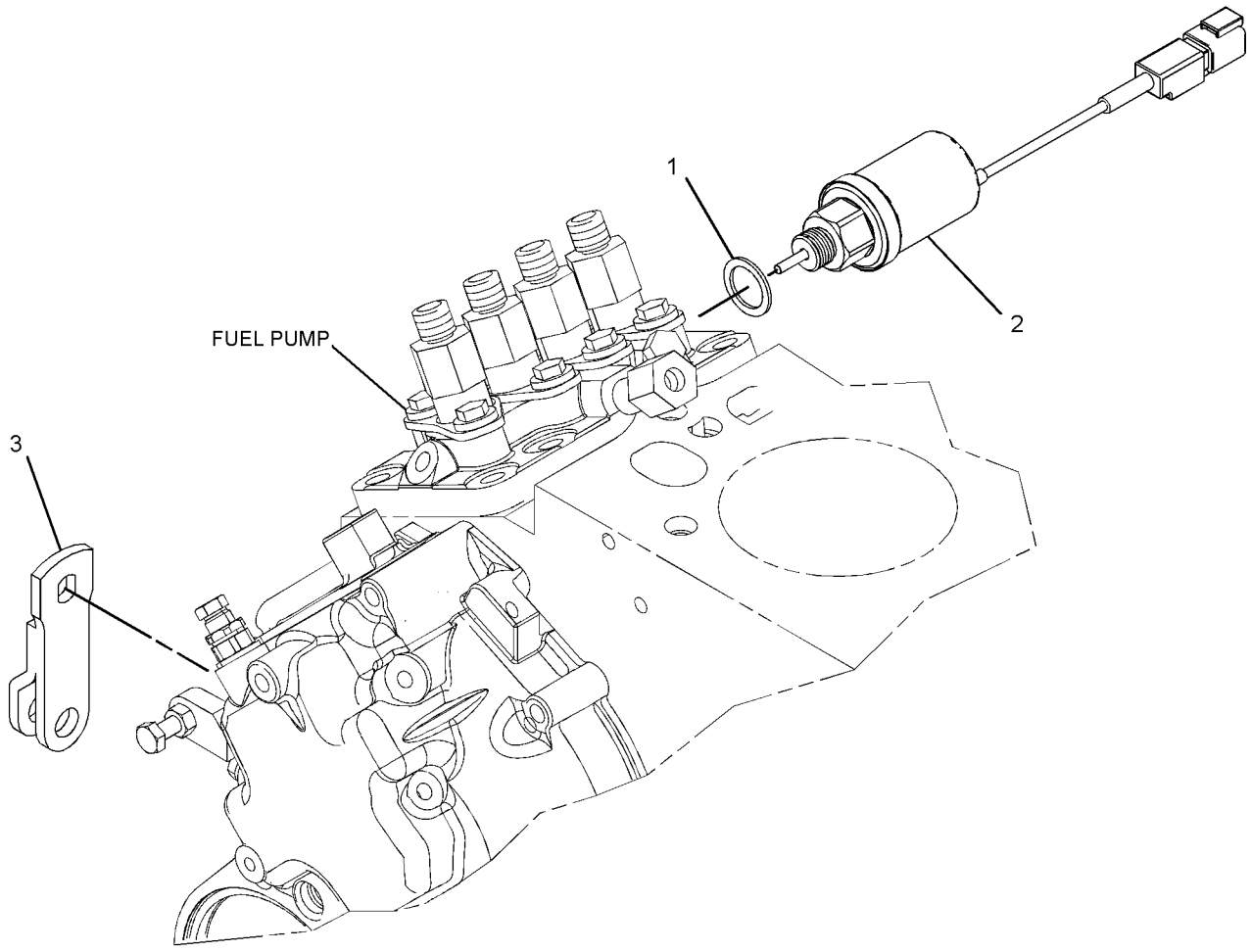

GRAPHIC #1 <END> g06160711

315-7817 SOLENOID GP-SHUTOFF

PART OF 499-6420 ENGINE AR-PRIMARY

SMCS-1259 **i06915703**

NOTE	REF NO	GRAPHIC REF	PART NUMBER	QTY	PART NAME 1 2 3 4 5 6 (PRODUCT LEVEL)	SEE PAGE
	1	1	**153-6412**	1	WASHER	
	2	1	**419-7640**	1	SOLENOID AS (12-VOLT) (FUEL SHUTOFF)	
	3	1	**315-5237**	1	LEVER-CONTROL	

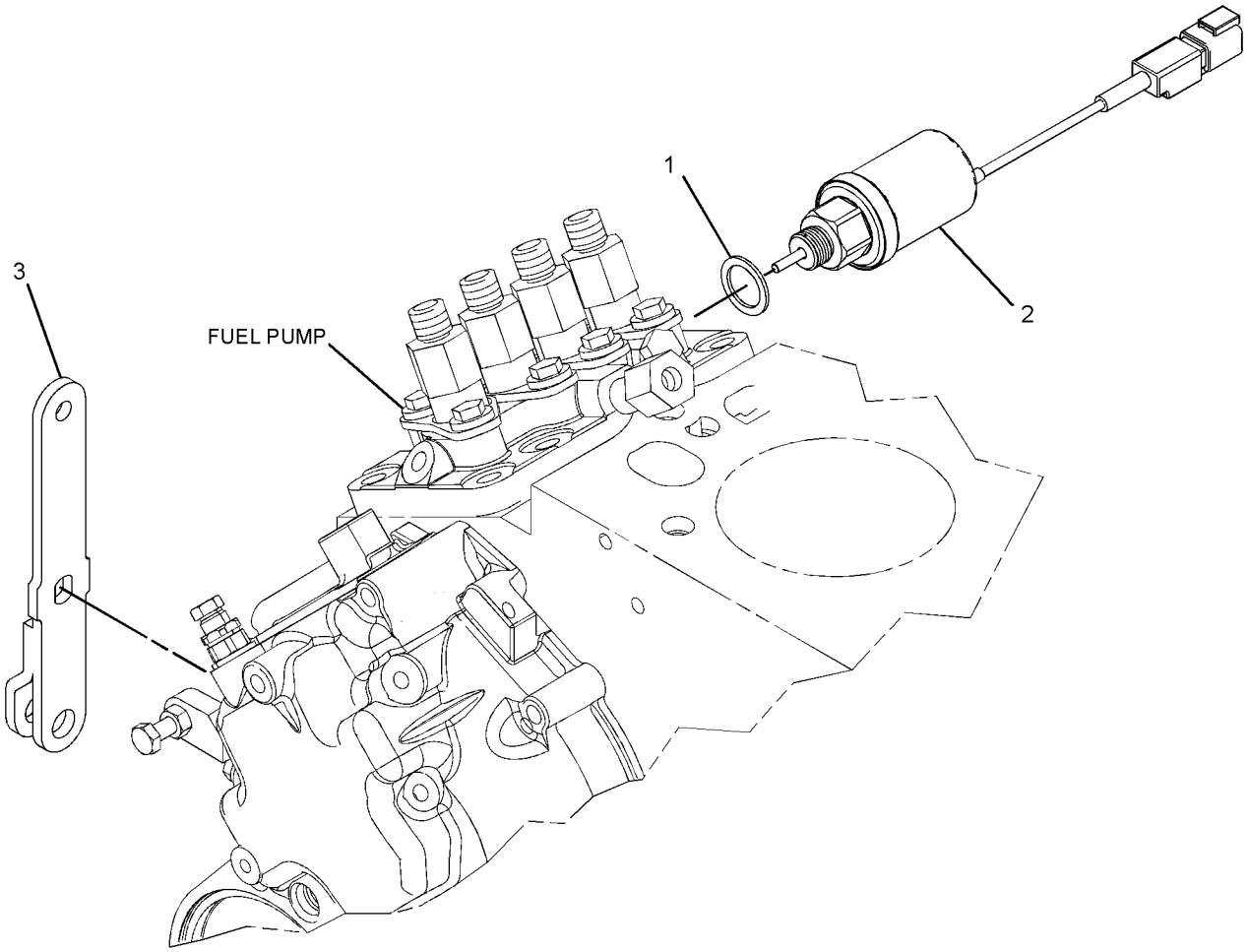

GRAPHIC #1 <END> g06160695

519-4412 SOLENOID GP-SHUTOFF

PART OF 433-1379 ENGINE AR, 417-7273, 435-1636, 435-1641, 435-1642, 435-1647 ENGINE AR-PRIMARY
ALSO AN ATTACHMENT

SMCS-1259 **i08292051**

NOTE	REF NO	GRAPHIC REF	PART NUMBER	QTY	PART NAME 1 2 3 4 5 6 (PRODUCT LEVEL)	SEE PAGE
	1	1	**153-6412**	1	WASHER	
	2	1	**308-1914**	1	LEVER-CONTROL	
	3	1	**419-7640**	1	SOLENOID AS (12-VOLT) (FUEL SHUTOFF)	

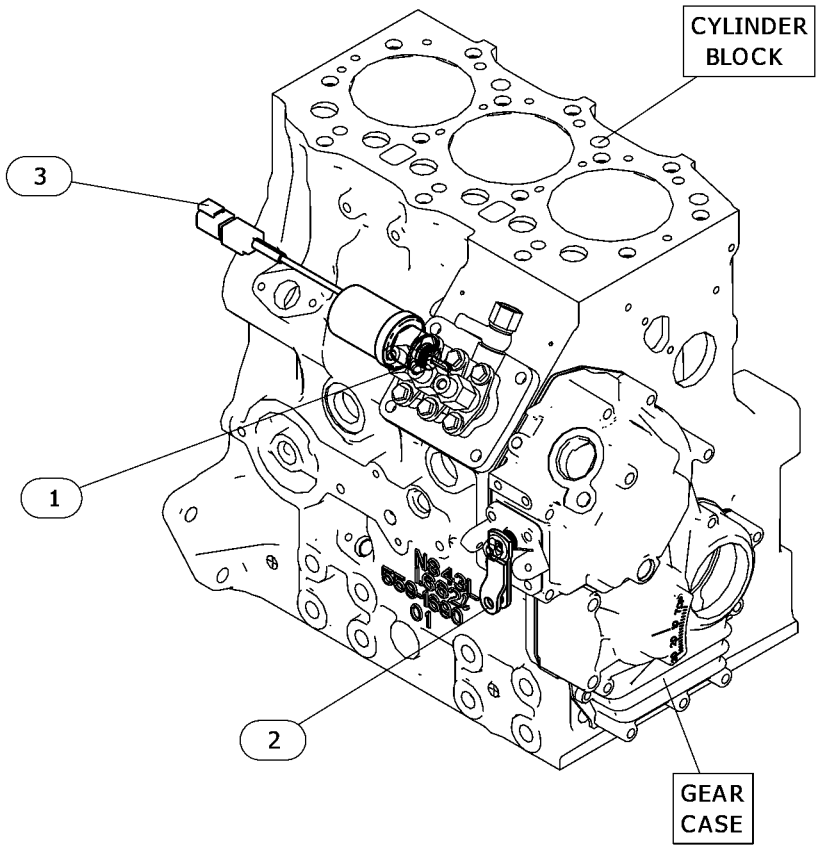

GRAPHIC #1 <END> g06616079

600-5174 SOLENOID GP-SHUTOFF

PART OF 514-6556 ENGINE AR-PRIMARY

SMCS-1259 **i08803132**

NOTE	REF NO	GRAPHIC REF	PART NUMBER	QTY	PART NAME 1 2 3 4 5 6 (PRODUCT LEVEL)	SEE PAGE
	1	1	**153-6412**	1	WASHER	
	2	1	**275-0493**	1	SOLENOID (24-VOLT)	
	3	1	**308-1914**	1	LEVER-CONTROL	

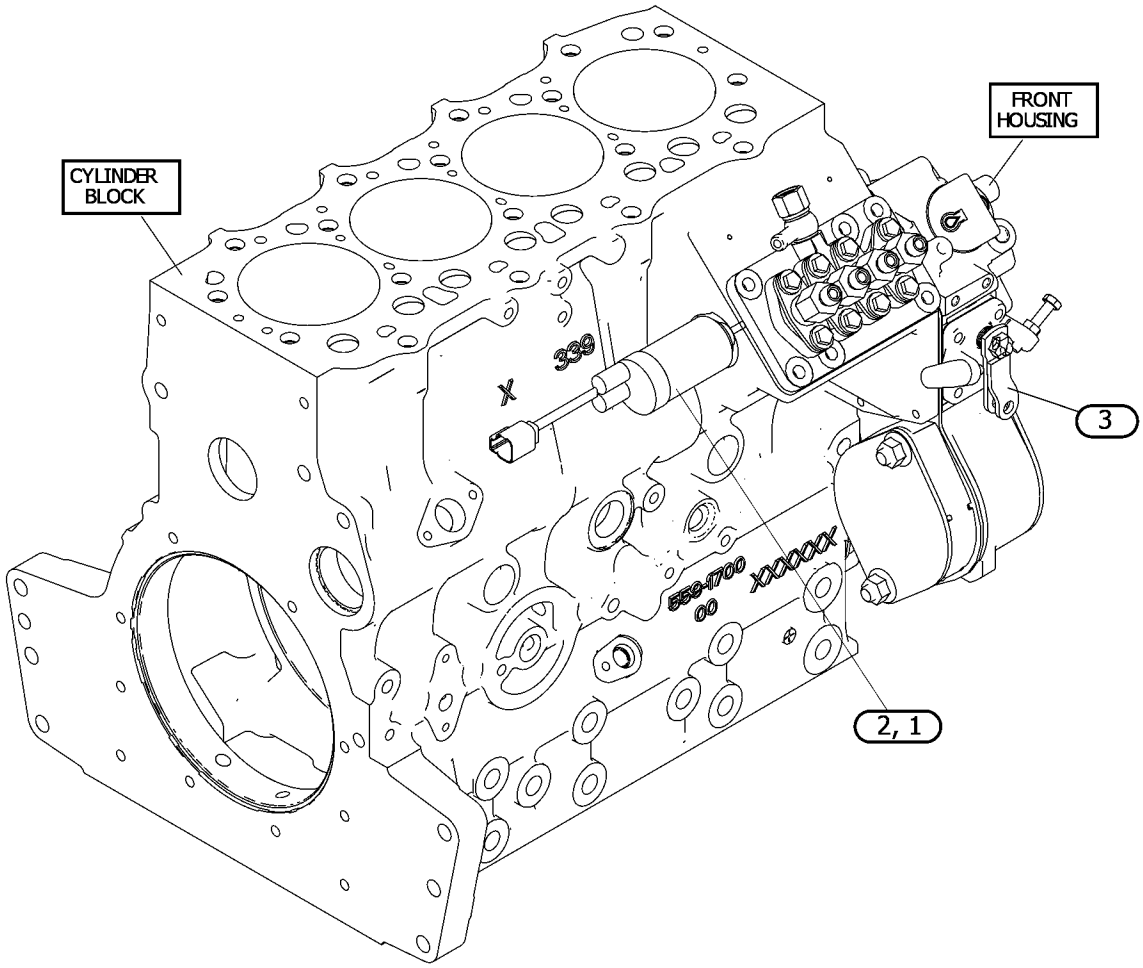

GRAPHIC #1 <END> g07548070

163-3361 STARTING MOTOR GP-ELECTRIC

FIELD REPLACEMENT ORDER 339-2900—PAGE: 901, 333-5930—PAGE: 900

PART OF 308-2293 STARTING MOTOR GP-ELECTRIC

SMCS-1453 **i02855315**

NOTE	REF NO	GRAPHIC REF	PART NUMBER	QTY	PART NAME 1 2 3 4 5 6 (PRODUCT LEVEL)	SEE PAGE
	1	1	**242-7070**	1	BUSHING	
	2	1	**242-7071**	1	SOLENOID (STARTING MOTOR)	
	3	1	**242-7073**	1	BUSHING	
	4	1	**242-7074**	1	DRIVE-MOTOR	
	5	1	**242-7075**	1	HOLDER	
	6	1	**242-7076**	1	BUSHING	
	7	1	**242-7077**	1	KIT-STARTING MOTOR	
	8	1	**242-7078**	1	ARMATURE	

163-3361 **STARTING MOTOR GP-ELECTRIC (**contd.**)** **i02855315**

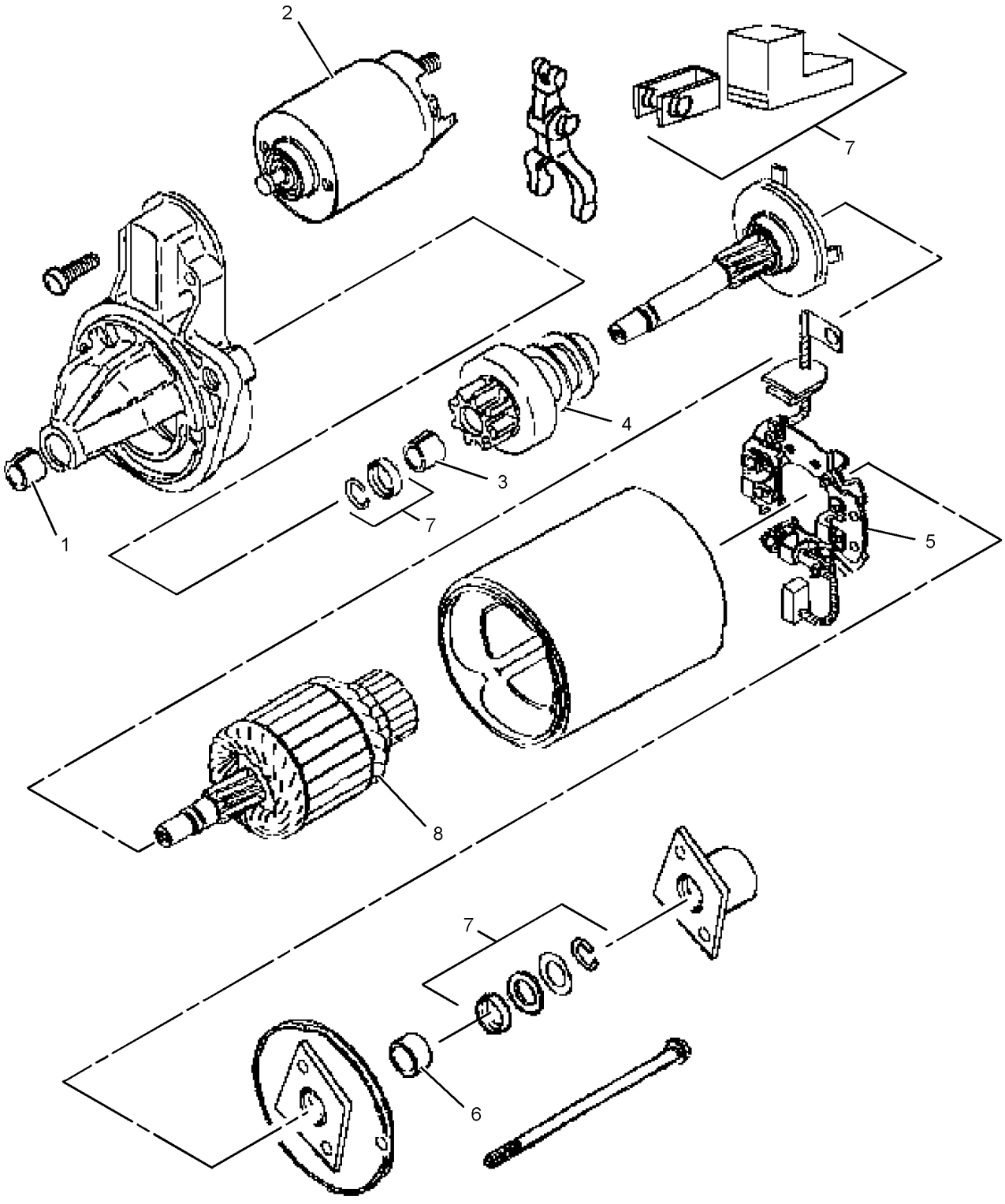

GRAPHIC #1 <END> g01158306

308-2293 STARTING MOTOR GP-ELECTRIC

TYPE 1

SMCS-1453 **i02743451**

NOTE	REF NO	GRAPHIC REF	PART NUMBER	QTY	PART NAME 1 2 3 4 5 6 (PRODUCT LEVEL)	SEE PAGE
Y	1	1	**163-3361**	1	STARTING MOTOR GP-ELECTRIC	893

Y - SEPARATE ILLUSTRATION

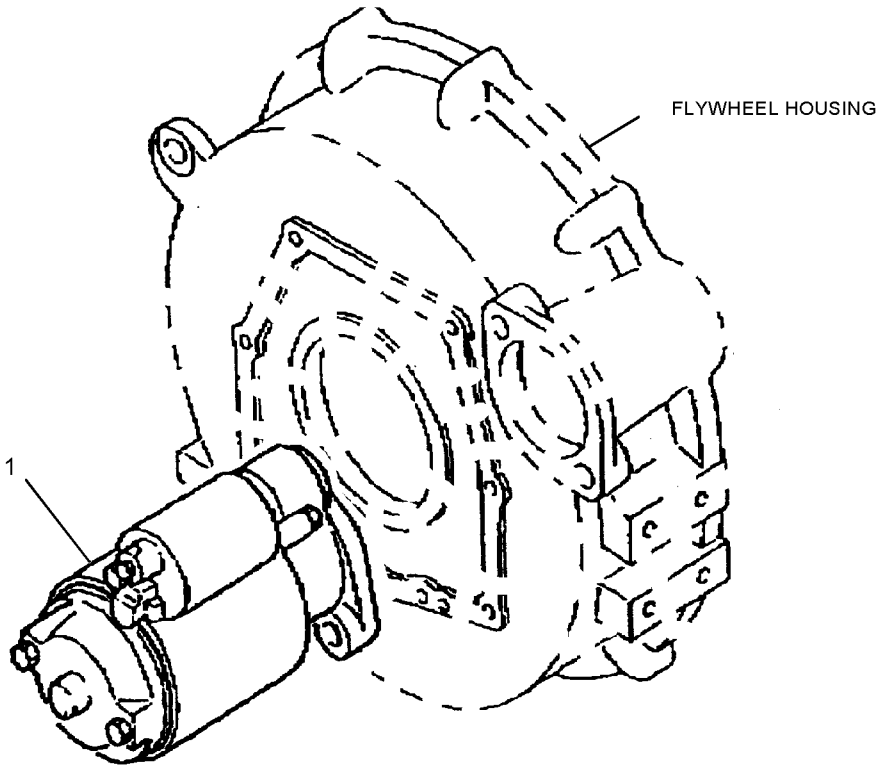

GRAPHIC #1 <END> g01140591

308-2293 STARTING MOTOR GP-ELECTRIC

TYPE 2

SMCS-1453 **i03395526**

NOTE	REF NO	GRAPHIC REF	PART NUMBER	QTY	PART NAME 1 2 3 4 5 6 (PRODUCT LEVEL)	SEE PAGE
CY	1	1	**333-5930**	1	STARTING MOTOR GP-ELECTRIC (12-VOLT)	900

C - CHANGE FROM PREVIOUS TYPE
Y - SEPARATE ILLUSTRATION

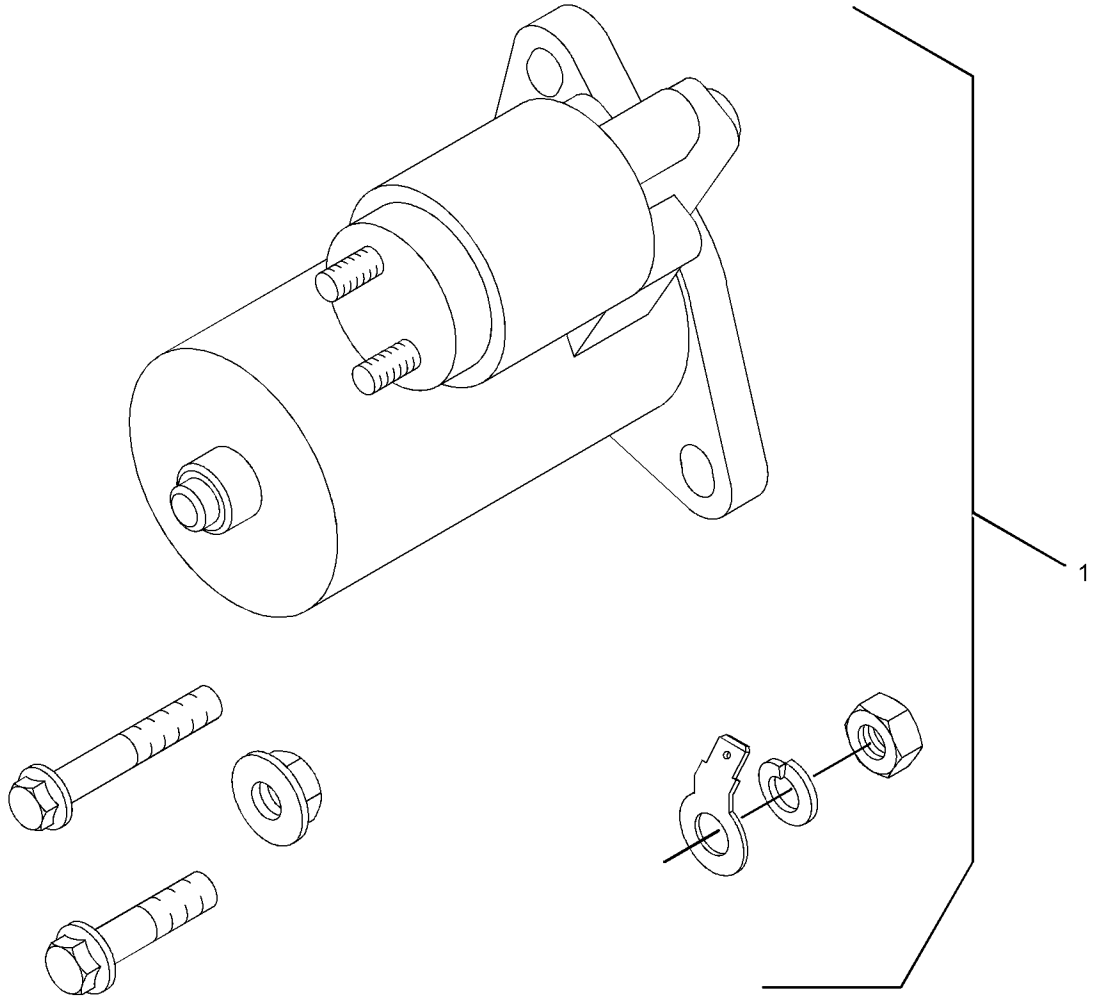

GRAPHIC #1 <END> g01762613

308-2293 STARTING MOTOR GP-ELECTRIC

TYPE 3

SMCS-1453 **i05810357**

NOTE	REF NO	GRAPHIC REF	PART NUMBER	QTY	PART NAME 1 2 3 4 5 6 (PRODUCT LEVEL)	SEE PAGE
CY	1	1	*383-2725*	1	STARTING MOTOR GP-ELECTRIC	902

C - CHANGE FROM PREVIOUS TYPE
Y - SEPARATE ILLUSTRATION

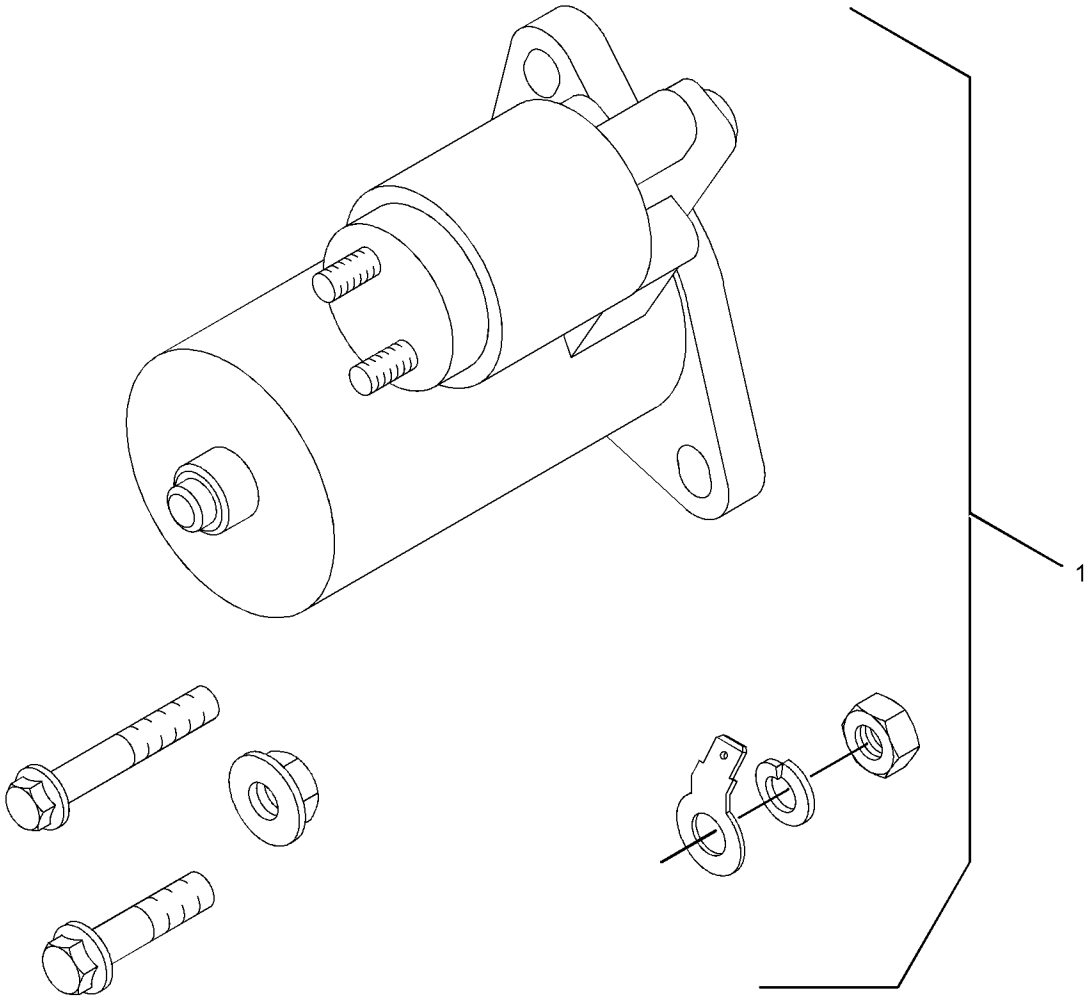

GRAPHIC #1 <END> g01762613

308-2293 STARTING MOTOR GP-ELECTRIC

PART OF 417-7273, 489-4263, 499-6420, 506-0518, 506-0519, 506-0520, 512-7969, 513-2239, 516-2639, 518-0165, 557-6086, 557-7471 ENGINE AR-PRIMARY

TYPE 4

SMCS-1453 **i07668678**

NOTE	REF NO	GRAPHIC REF	PART NUMBER	QTY	PART NAME 1 2 3 4 5 6 (PRODUCT LEVEL)	SEE PAGE
C	1	1	**461-8764**	1	STARTING MOTOR-ELECTRIC (12-VOLT)	

C - CHANGE FROM PREVIOUS TYPE

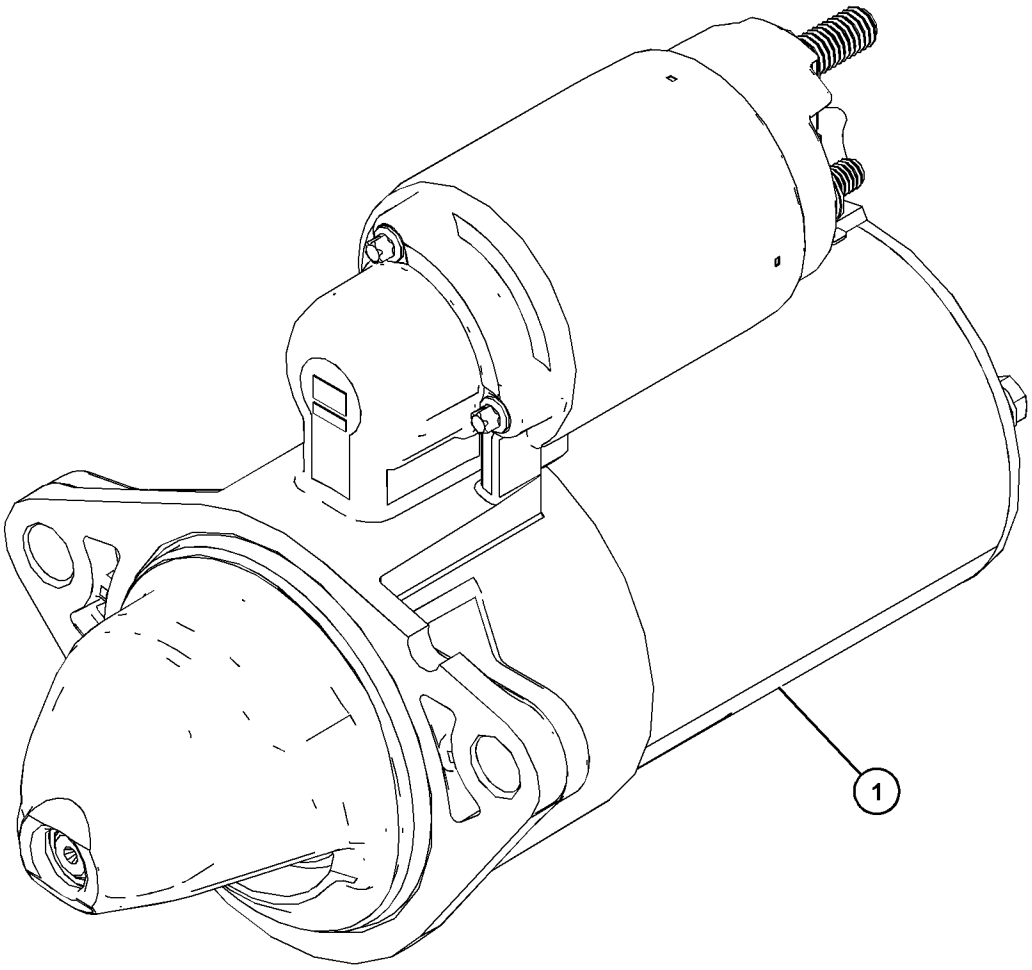

GRAPHIC #1 <END> g06390694

317-3036 STARTING MOTOR GP-ELECTRIC

SMCS-1453 **i06944132**

NOTE	REF NO	GRAPHIC REF	PART NUMBER	QTY	PART NAME 1 2 3 4 5 6 (PRODUCT LEVEL)	SEE PAGE
	1	1	**283-4752**	1	MOTOR AS-ELECTRIC (24-VOLT, 2.5-KW)	

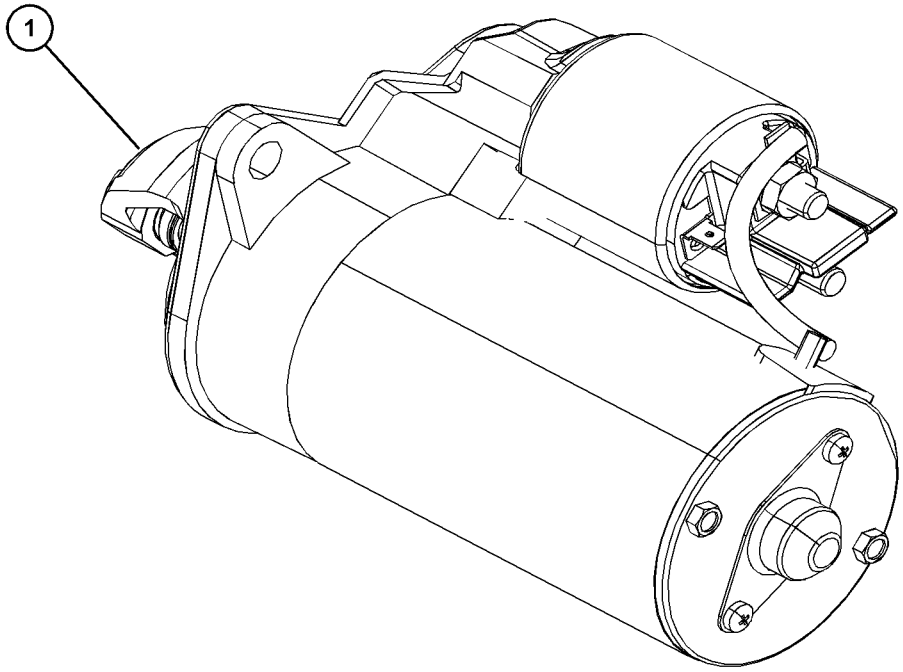

GRAPHIC #1 <END> g06207393

333-5930 STARTING MOTOR GP-ELECTRIC–12-VOLT

PART OF 308-2293 STARTING MOTOR GP-ELECTRIC

SMCS-1453 **i07788404**

NOTE	REF NO	GRAPHIC REF	PART NUMBER	QTY	PART NAME 1 2 3 4 5 6 (PRODUCT LEVEL)	SEE PAGE
M	1	1	**6I-0593**	2	BOLT (M10X1.5X30-MM)	
M	2	1	**6I-0594**	2	NUT (M10X1.5-THD)	
M	3	1	**140-8783**	2	BOLT (M10X1.5X45-MM)	
	4	1	**461-8764**	1	STARTING MOTOR-ELECTRIC (12-VOLT)	
					AVAILABLE REPAIR KIT(S):	
			333-7903	1	KIT-TERMINAL	
					(INCLUDES PARTS MARKED "J" IN THE GRAPHIC)	

M - METRIC PART

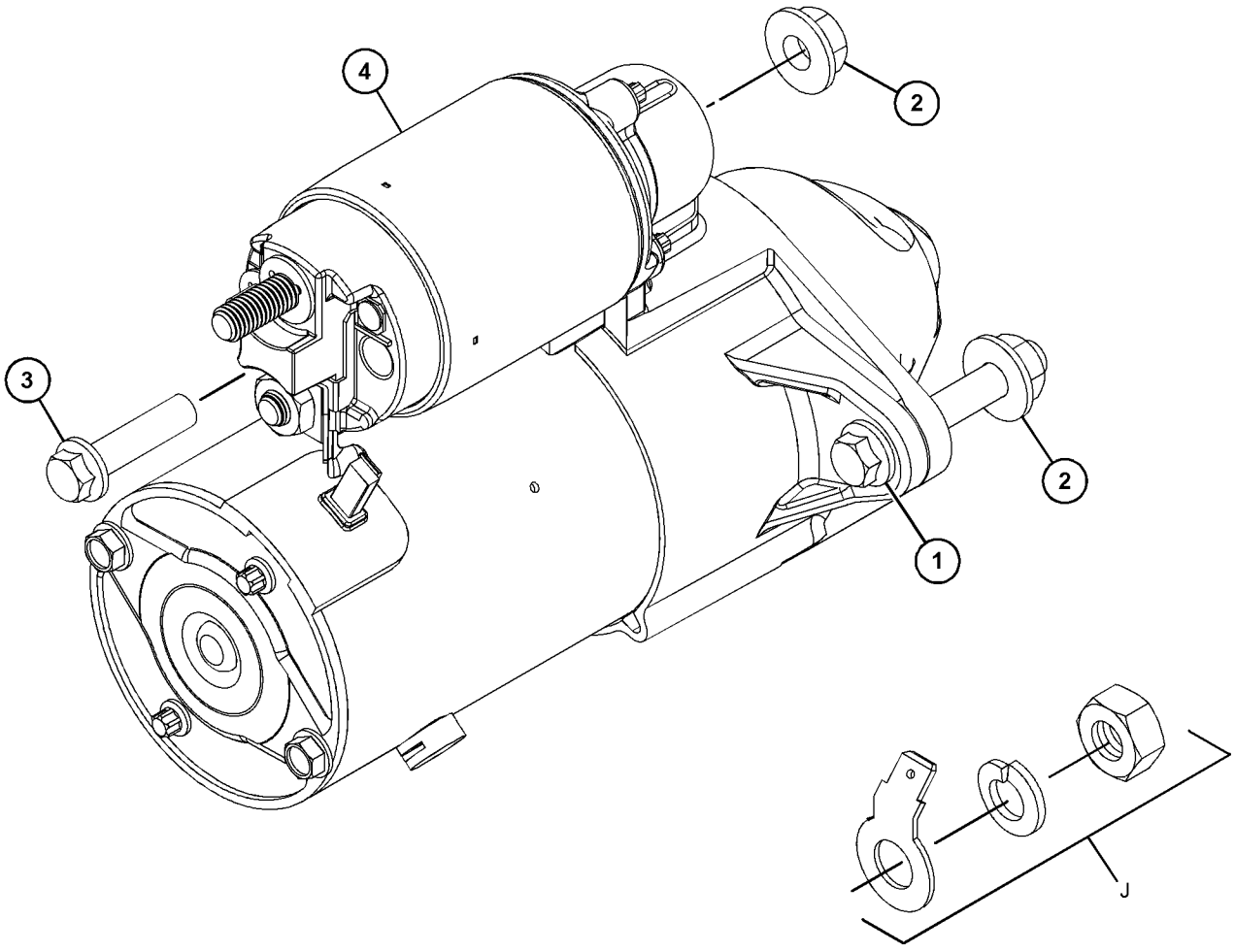

GRAPHIC #1 <END> g06442085

339-2900 STARTING MOTOR GP-ELECTRIC

SMCS-1453 **i07710275**

NOTE	REF NO	GRAPHIC REF	PART NUMBER	QTY	PART NAME 1 2 3 4 5 6 (PRODUCT LEVEL)	SEE PAGE
M	1	1	**6I-0593**	2	BOLT (M10X1.5X30-MM)	
M	2	1	**175-7141**	2	NUT-HEX FLANGE (M10X1.5-THD)	
M	3	1	**140-8783**	2	BOLT (M10X1.5X45-MM)	
	4	1	**333-7903**	1	KIT-TERMINAL	
					(INCLUDES TERMINAL, NUT & WASHER SPRING)	
	5	1	**461-8765**	1	STARTING MOTOR-ELECTRIC (12-VOLT)	

M - METRIC PART

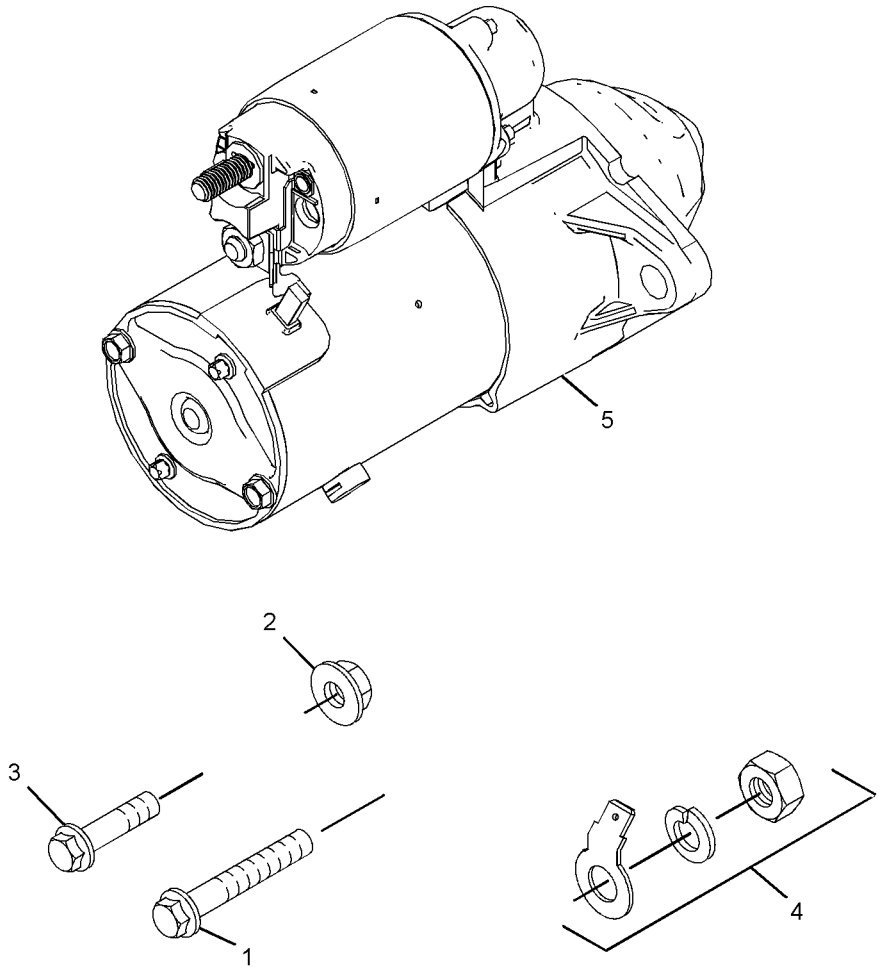

GRAPHIC #1 <END> g06419377

383-2725 STARTING MOTOR GP-ELECTRIC

FIELD REPLACEMENT ORDER 333-5930—PAGE: 900

PART OF 308-2293 STARTING MOTOR GP-ELECTRIC

SMCS-1453 **i04593130**

NOTE	REF NO	GRAPHIC REF	PART NUMBER	QTY	PART NAME 1 2 3 4 5 6 (PRODUCT LEVEL)	SEE PAGE
					(NO SERVICED PARTS)	

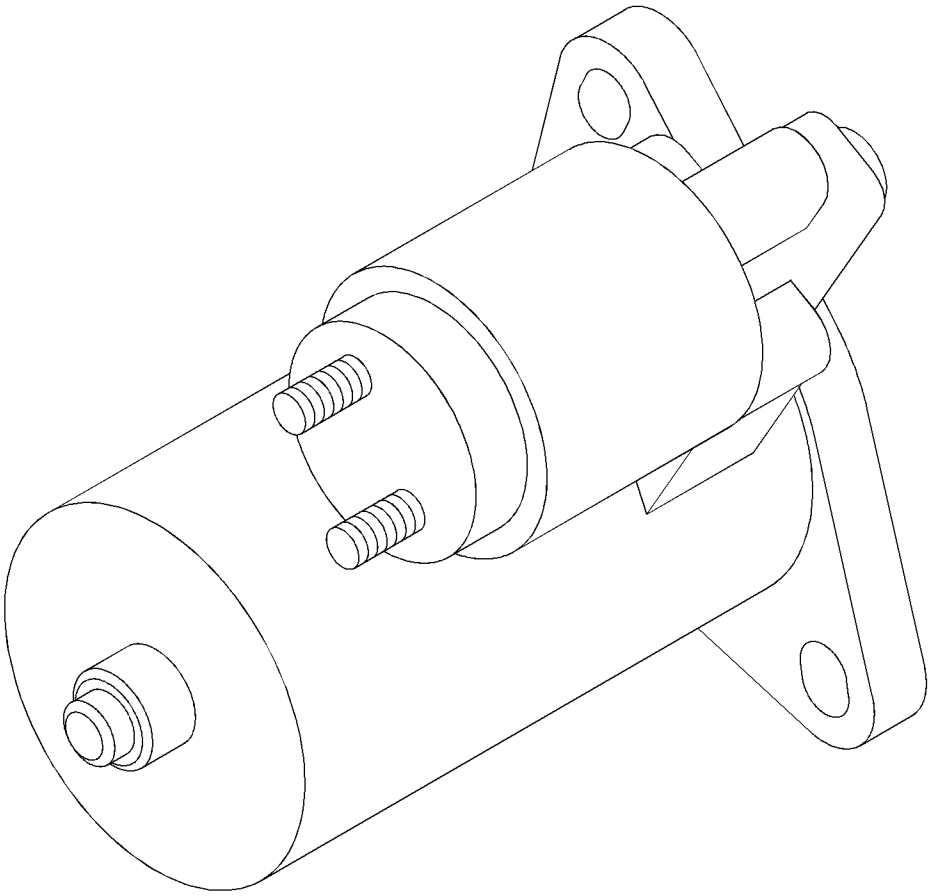

GRAPHIC #1 <END> g02157919

398-4818 STARTING MOTOR GP-ELECTRIC

S/N: C6M10426-UP

PART OF 417-7273 ENGINE AR-PRIMARY

SMCS-1453 **i08023378**

NOTE	REF NO	GRAPHIC REF	PART NUMBER	QTY	PART NAME 1 2 3 4 5 6 (PRODUCT LEVEL)	SEE PAGE
M	1	1	**6I-0593**	2	BOLT (M10X1.5X30-MM)	
	2	1	**461-8764**	1	STARTING MOTOR-ELECTRIC (12-VOLT)	

M - METRIC PART

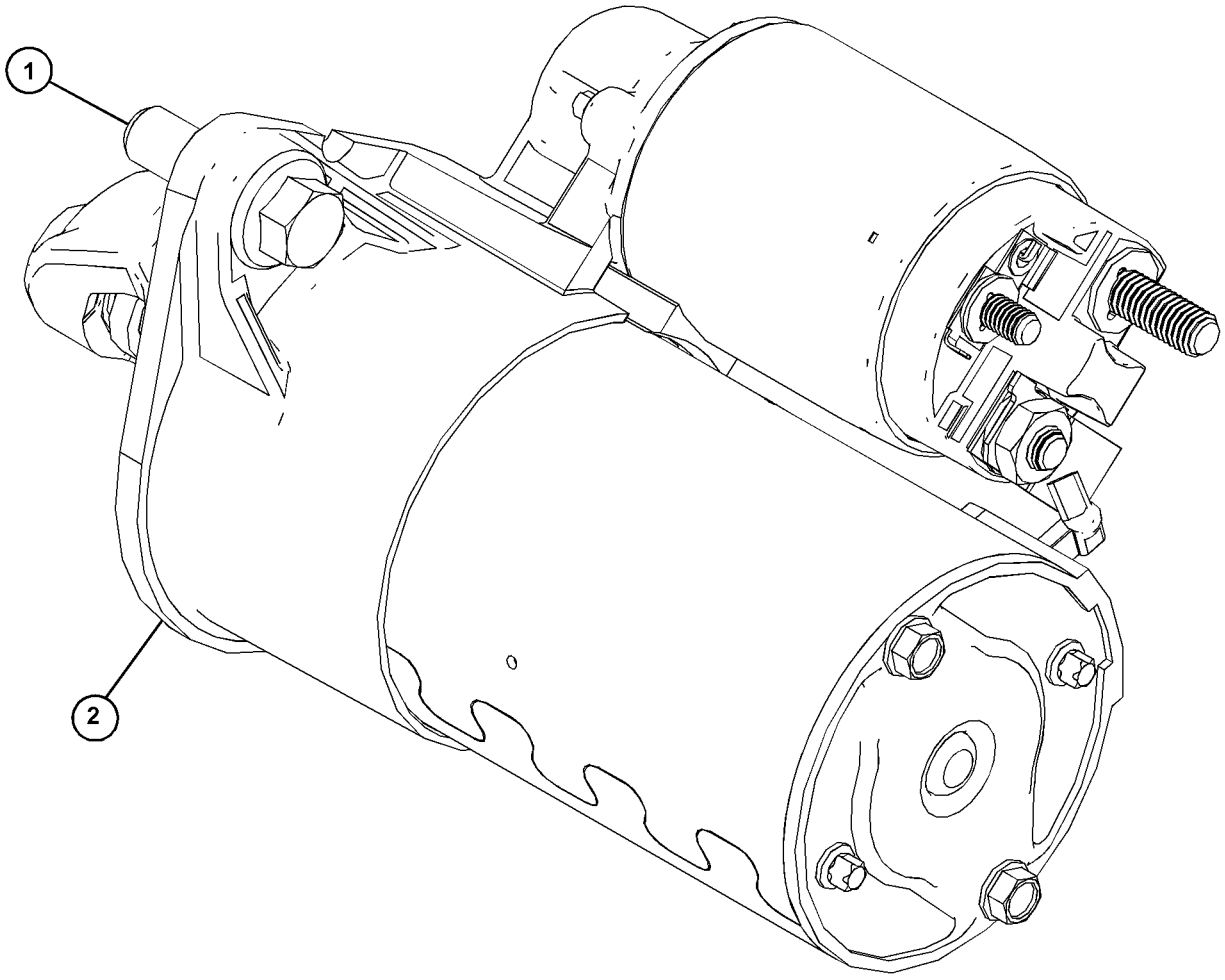

GRAPHIC #1 <END> g06392376

499-5166 STARTING MOTOR GP-ELECTRIC

24-VOLT, 2.5-KW

PART OF 489-9224, 514-6556 ENGINE AR-PRIMARY

SMCS-1453 **i06944150**

NOTE	REF NO	GRAPHIC REF	PART NUMBER	QTY	PART NAME 1 2 3 4 5 6 (PRODUCT LEVEL)	SEE PAGE
	1	1	**283-4752**	1	MOTOR AS-ELECTRIC (24-VOLT, 2.5-KW)	
	2	1	**434-1868**	1	FILM-IDENTIFICATION (CAT)	

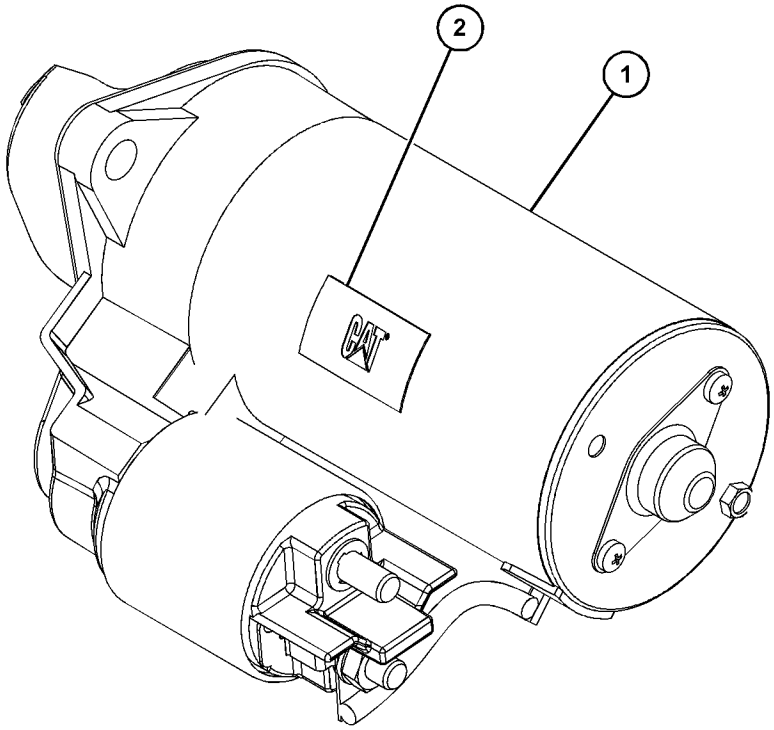

GRAPHIC #1 <END> g06206134

587-7902 STARTING MOTOR GP-ELECTRIC

PART OF 514-6556 ENGINE AR-PRIMARY

SMCS-1453 **i08802838**

NOTE	REF NO	GRAPHIC REF	PART NUMBER	QTY	PART NAME 1 2 3 4 5 6 (PRODUCT LEVEL)	SEE PAGE
M	1	1	**6I-0593**	2	BOLT (M10X1.5X30-MM)	
	2	1	**283-4752**	1	MOTOR AS-ELECTRIC	
	3	1	**434-1868**	1	FILM-IDENTIFICATION (CAT)	

M - METRIC PART

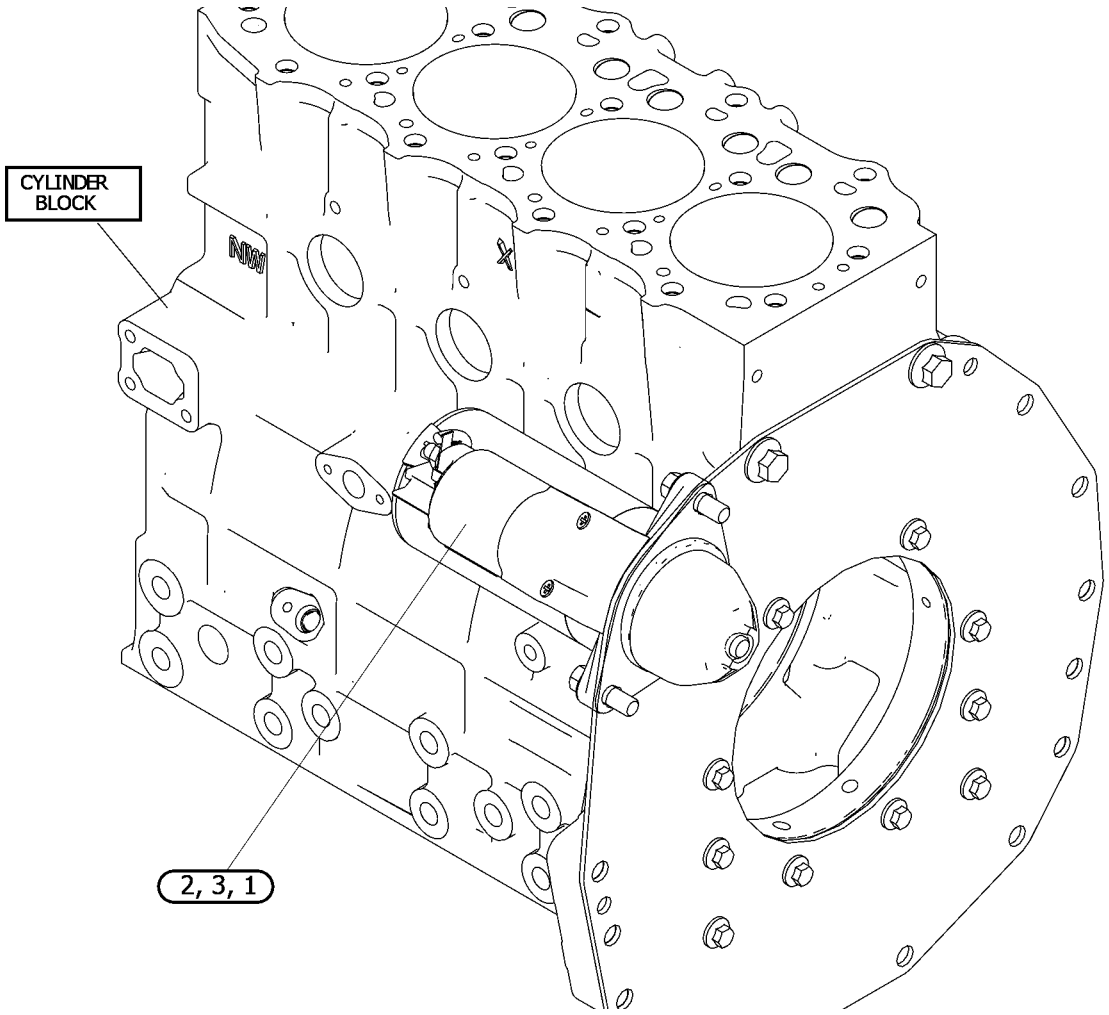

GRAPHIC #1 <END> g07549794

308-2312 SWITCH GP-PRESSURE

PART OF 489-9224, 499-6420, 512-7969, 514-6556, 518-0165 ENGINE AR-PRIMARY

SMCS-7400, 7421 **i05735780**

NOTE	REF NO	GRAPHIC REF	PART NUMBER	QTY	PART NAME 1 2 3 4 5 6 (PRODUCT LEVEL)	SEE PAGE
	1	1	**153-5936**	2	WASHER (8.2X14.5X1-MM)	
M	2	1	**153-6881**	1	BOLT (M8X1.25X18-MM)	
	3	1	**452-3668**	1	SWITCH-PRESSURE (ENGINE OIL)	

M - METRIC PART

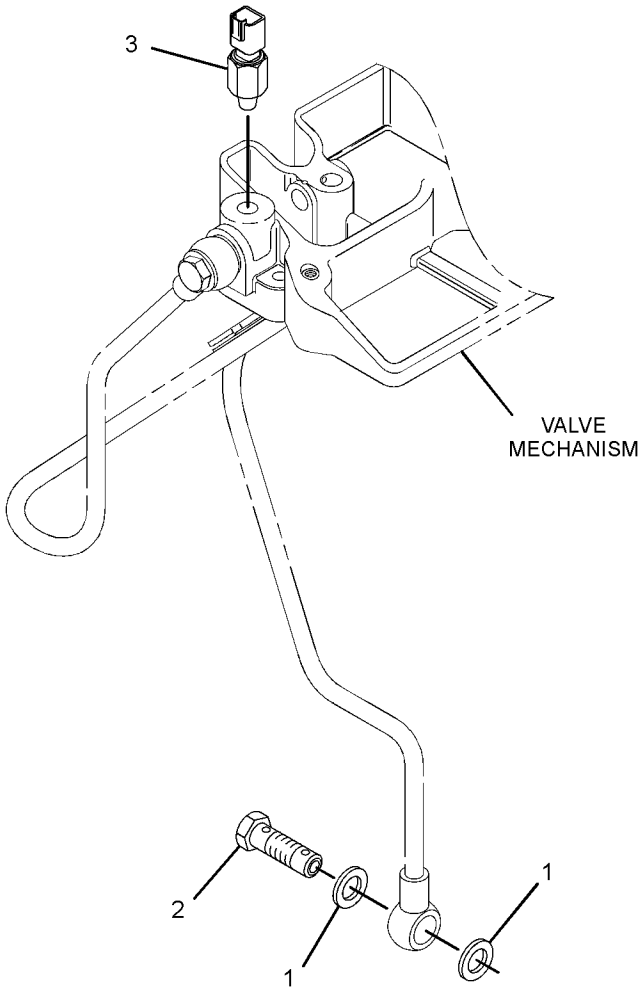

GRAPHIC #1 <END> g03651562

315-6638 SWITCH GP-PRESSURE—ENGINE OIL

PART OF 504-4602 ENGINE AR-PRIMARY

SMCS-7400, 7421 **i07026290**

NOTE	REF NO	GRAPHIC REF	PART NUMBER	QTY	PART NAME 1 2 3 4 5 6 (PRODUCT LEVEL)	SEE PAGE
	1	1	**153-5936**	2	WASHER (8.2X14.5X1-MM)	
	2	1	**183-1165**	1	PLUG	
C	3	1	**484-0882**	1	SWITCH-OIL PRESSURE (ENGINE OIL)	

C - CHANGE FROM PREVIOUS TYPE

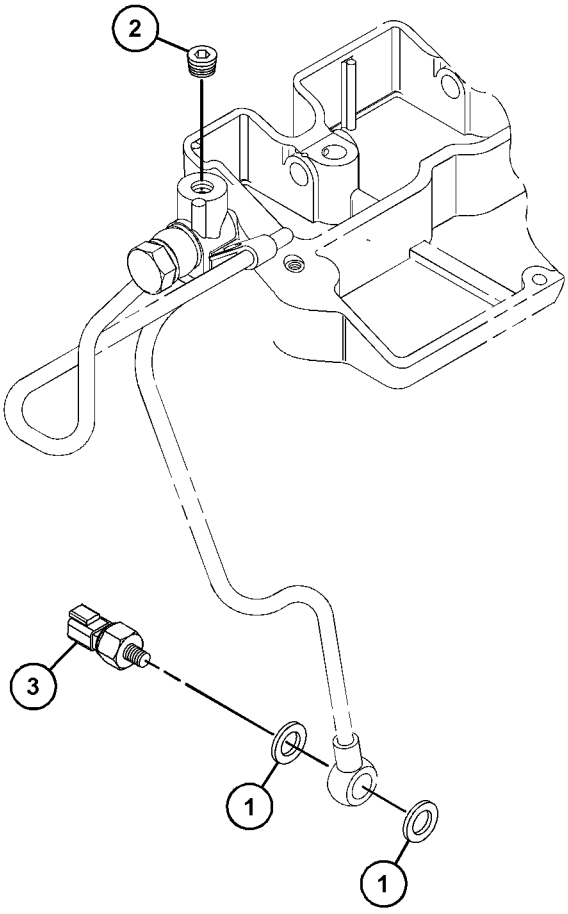

GRAPHIC #1 <END> g06199983

315-7819 SWITCH GP-PRESSURE—ENGINE OIL

PART OF 435-1645, 435-1649 CYLINDER BLOCK GP-LONG, 433-1379, 433-1380 ENGINE AR, 435-1636, 435-1641, 435-1642, 435-1646, 435-1647, 435-1658, 489-4263, 506-0520, 513-2239 ENGINE AR-PRIMARY
ALSO AN ATTACHMENT

SMCS-7400, 7421 **i06299943**

NOTE	REF NO	GRAPHIC REF	PART NUMBER	QTY	PART NAME 1 2 3 4 5 6 (PRODUCT LEVEL)	SEE PAGE
	1	1	**153-5936**	2	WASHER (8.2X14.5X1-MM)	
	2	1	**183-1165**	1	PLUG	
	3	1	**456-7377**	1	SWITCH (OIL PRESSURE) (ENGINE OIL)	
	4	1	**438-1431**	1	ADAPTER	

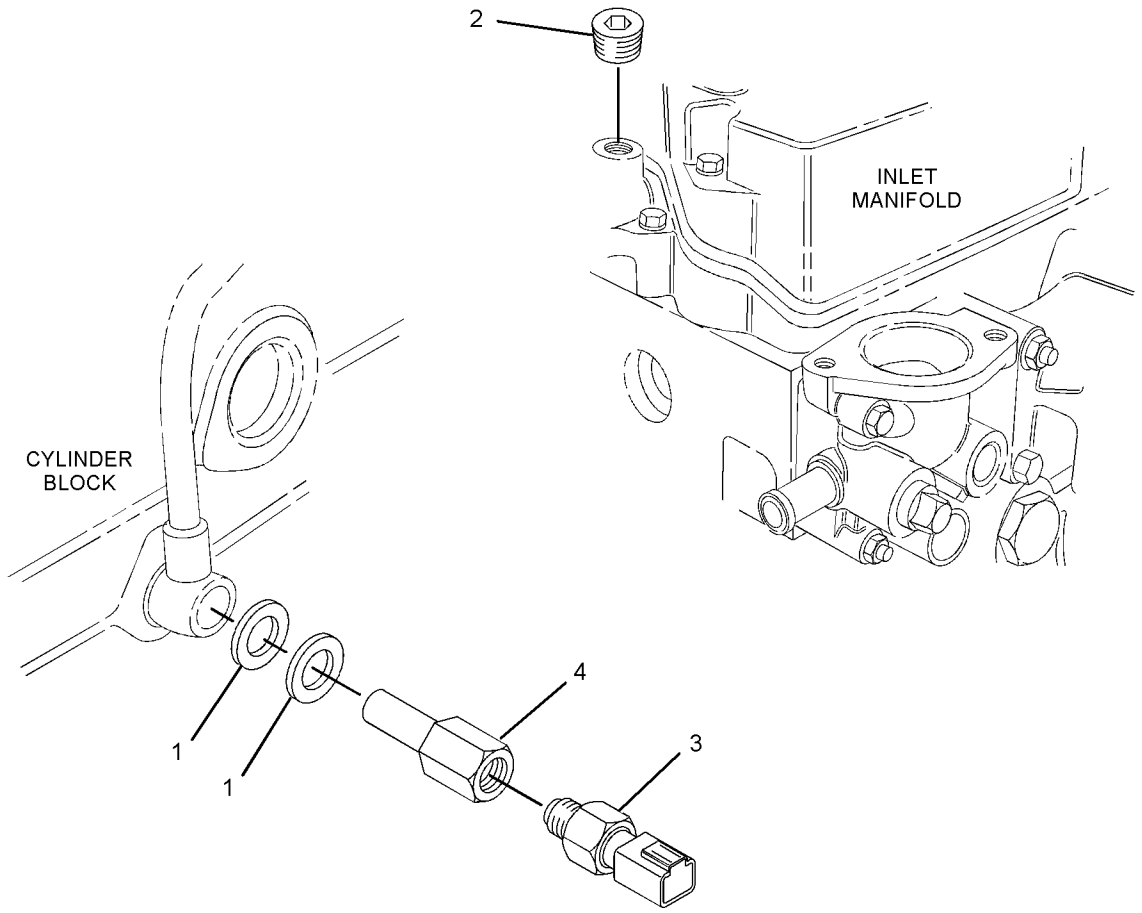

GRAPHIC #1 <END> g03505824

315-7819 SWITCH GP-PRESSURE–ENGINE OIL

PART OF 435-1645, 435-1649 CYLINDER BLOCK GP-LONG, 433-1379, 433-1380 ENGINE AR, 417-7273, 435-1636, 435-1641, 435-1642, 435-1646, 435-1647, 435-1658, 489-4263, 499-6420, 506-0518, 506-0519, 506-0520, 513-2239, 516-2639, 557-6086, 557-7471 ENGINE AR-PRIMARY
ALSO AN ATTACHMENT

SMCS-7400, 7421 **i06880722**

NOTE	REF NO	GRAPHIC REF	PART NUMBER	QTY	PART NAME 1 2 3 4 5 6 (PRODUCT LEVEL)	SEE PAGE
	1	1	**153-5936**	2	WASHER (8.2X14.5X1-MM)	
	2	1	**183-1165**	1	PLUG	
C	3	1	**484-0882**	1	SWITCH-OIL PRESSURE (ENGINE OIL)	

C - CHANGE FROM PREVIOUS TYPE

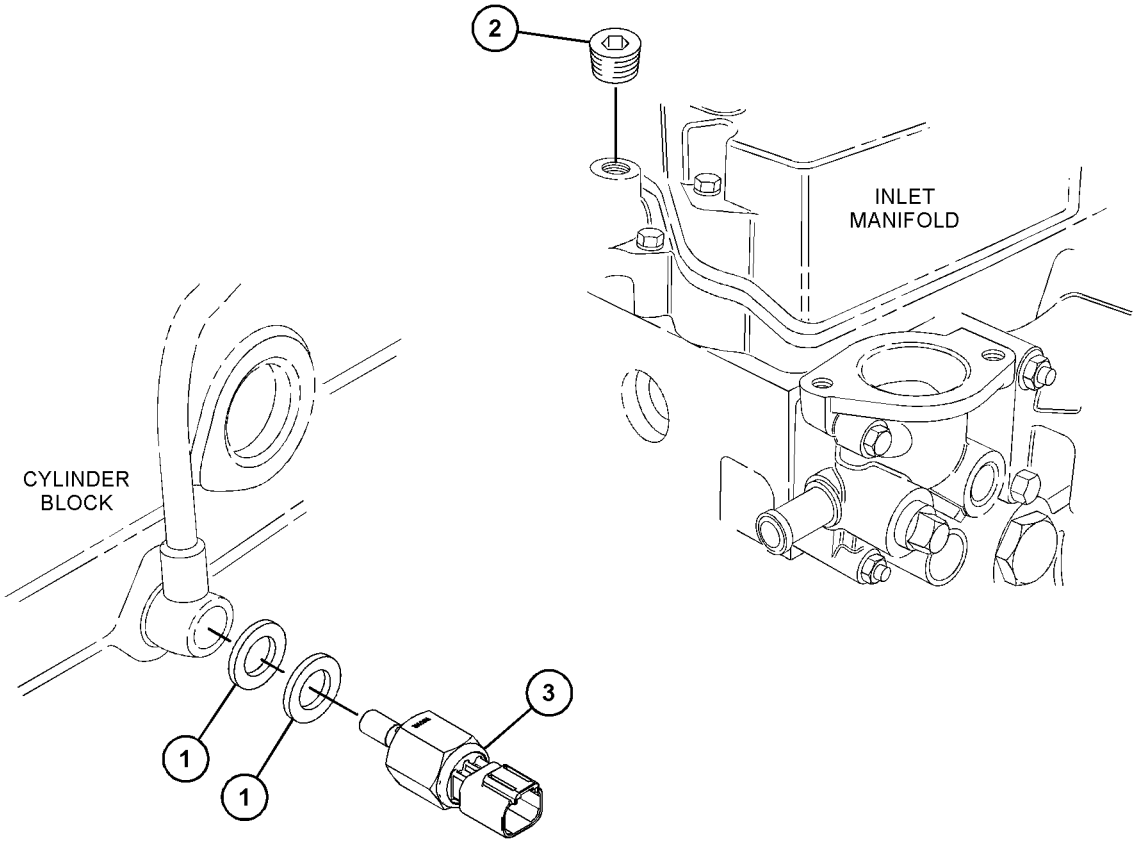

GRAPHIC #1 <END> g06150309

321-4261 SWITCH GP-PRESSURE

TYPE 1

SMCS-7400, 7421 **i06586166**

NOTE	REF NO	GRAPHIC REF	PART NUMBER	QTY	PART NAME 1 2 3 4 5 6 (PRODUCT LEVEL)	SEE PAGE
	1	1	**153-5936**	2	WASHER (8.2X14.5X1-MM)	
	2	1	**183-1165**	1	PLUG	
	3	1	**271-5018**	1	SWITCH-PRESSURE (ENGINE OIL)	
	4	1	**308-1222**	1	ADAPTER	

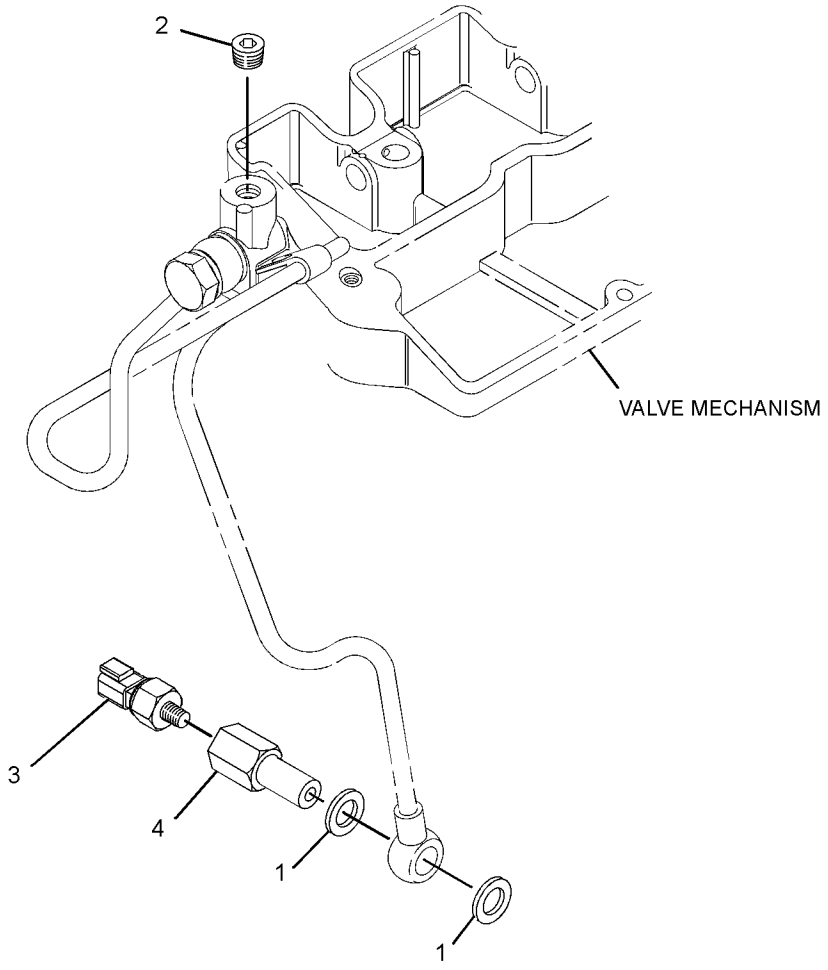

GRAPHIC #1 <END> g03505978

321-4261 SWITCH GP-PRESSURE

TYPE 2

SMCS-7400, 7421 **i06991816**

NOTE	REF NO	GRAPHIC REF	PART NUMBER	QTY	PART NAME 1 2 3 4 5 6 (PRODUCT LEVEL)	SEE PAGE
	1	1	**153-5936**	2	WASHER (8.2X14.5X1-MM)	
	2	1	**183-1165**	1	PLUG	
C	3	1	**484-0884**	1	SWITCH-OIL PRESSURE	

C - CHANGE FROM PREVIOUS TYPE

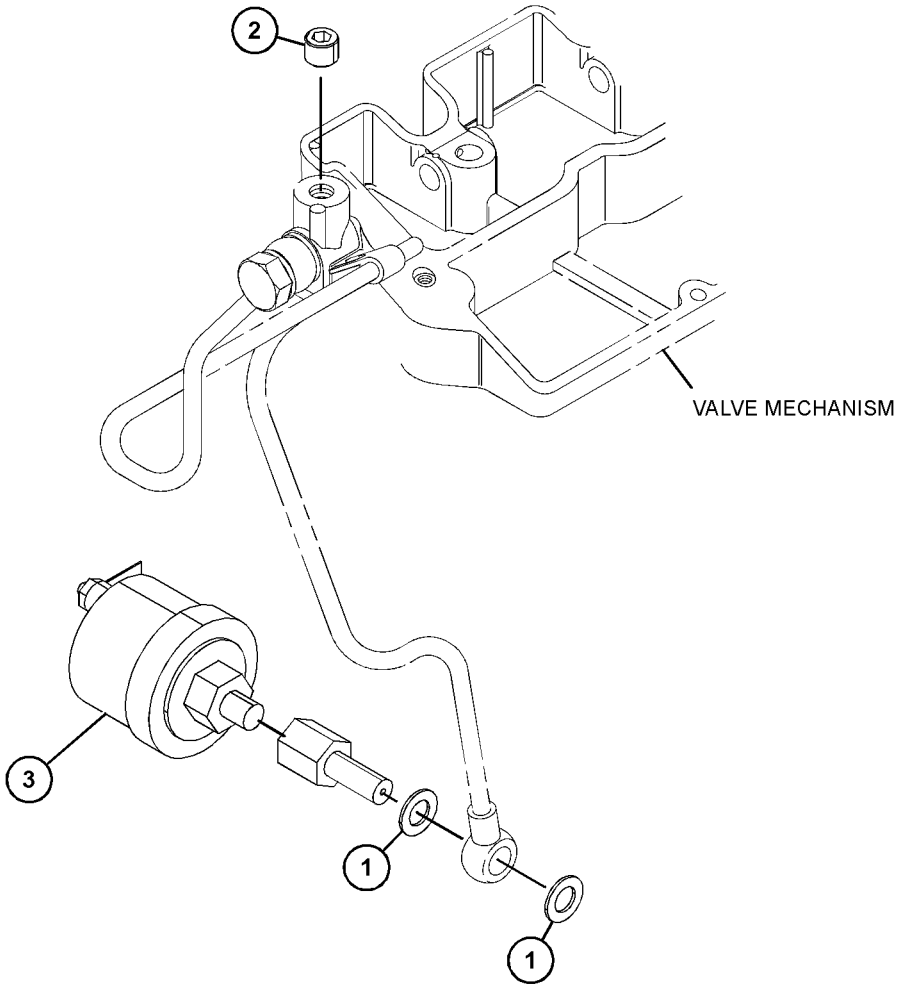

GRAPHIC #1 <END> g06206662

334-0268 SWITCH GP-PRESSURE

SMCS-7400, 7421 **i03179926**

NOTE	REF NO	GRAPHIC REF	PART NUMBER	QTY	PART NAME 1 2 3 4 5 6 (PRODUCT LEVEL)	SEE PAGE
	1	1	**153-5936**	2	WASHER (8.2X14.5X1-MM)	
M	2	1	**153-6881**	1	BOLT (M8X1.25X18-MM)	
	3	1	**252-1747**	1	SWITCH-PRESSURE (ENGINE OIL)	

M - METRIC PART

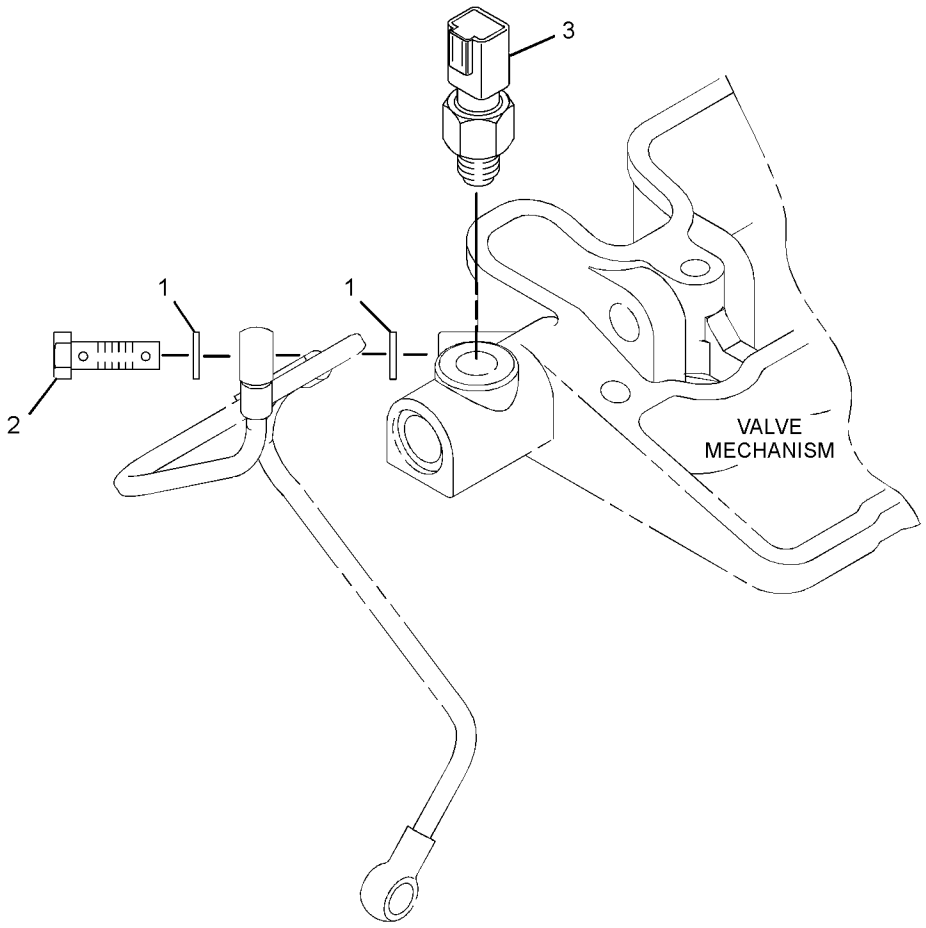

GRAPHIC #1 <END> g01650813

532-8314 SWITCH GP-PRESSURE

PART OF 514-6556 ENGINE AR-PRIMARY

SMCS-7400, 7421 **i08802812**

NOTE	REF NO	GRAPHIC REF	PART NUMBER	QTY	PART NAME 1 2 3 4 5 6 (PRODUCT LEVEL)	SEE PAGE
	1	1	**153-5936**	4	WASHER (8.2X14.5X1-MM)	
M	2	1	**153-6881**	2	BOLT (M8X1.25X18-MM)	
	3	1	**452-3668**	1	SWITCH-PRESSURE (OIL PRESSURE)	

M - METRIC PART

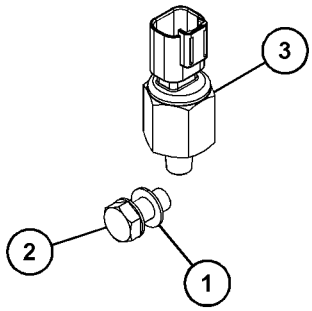

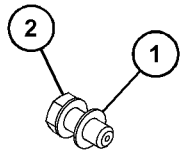

GRAPHIC #1 <END> g06315249

584-9822 SWITCH GP-PRESSURE–ALARM

PART OF 433-1379 ENGINE AR, 417-7273, 435-1636, 435-1641, 435-1642, 435-1647 ENGINE AR-PRIMARY
ALSO AN ATTACHMENT

SMCS-7400, 7421 **i09694010**

NOTE	REF NO	GRAPHIC REF	PART NUMBER	QTY	PART NAME 1 2 3 4 5 6 (PRODUCT LEVEL)	SEE PAGE
	1	1	**153-5936**	4	WASHER (8.2X14.5X1-MM)	
M	2	1	**153-6881**	1	BOLT (M8X1.25X18-MM)	
	3	1	**458-6608**	1	PLUG-SEAL	
	4	1	**484-0882**	1	SWITCH-OIL PRESSURE	

M - METRIC PART

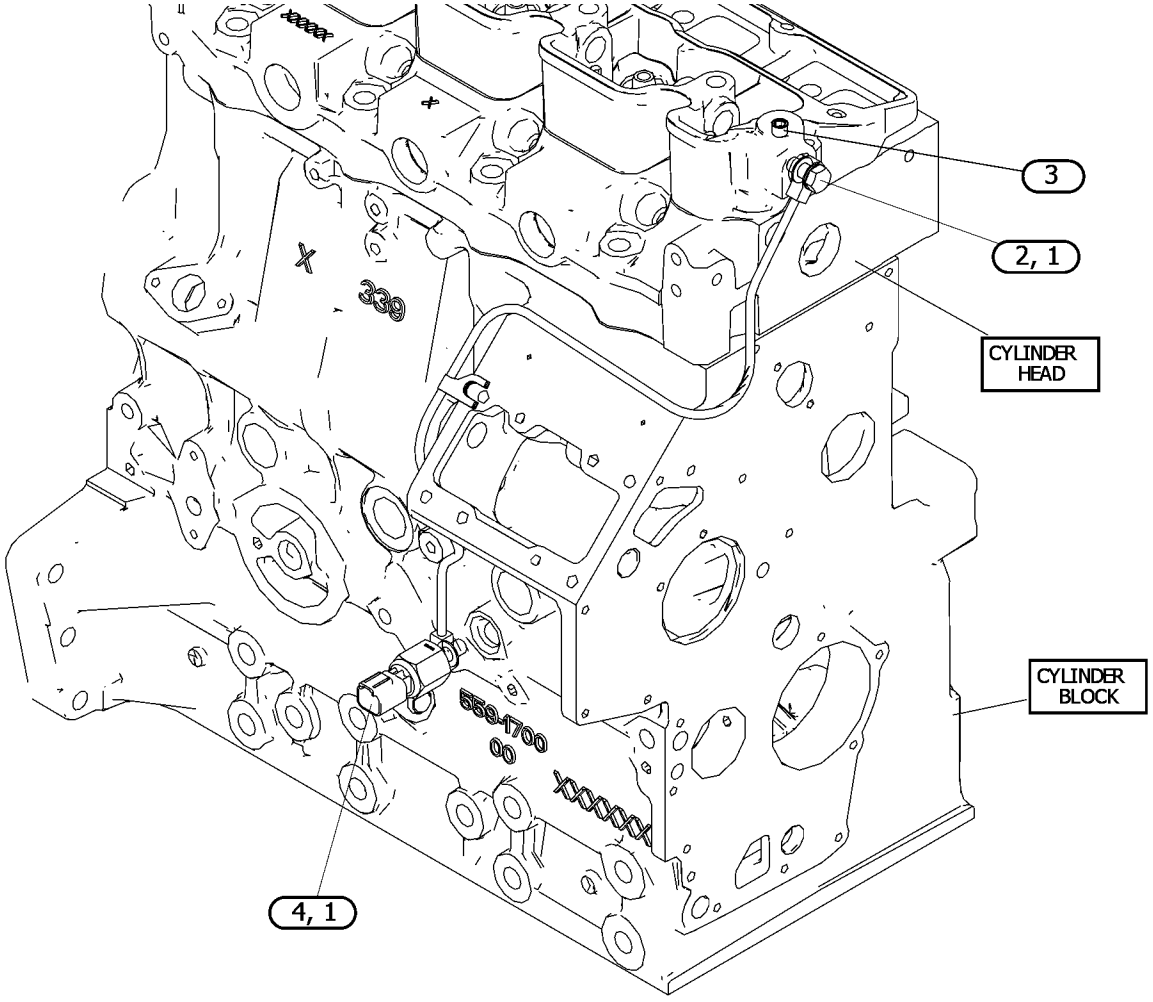

GRAPHIC #1 <END> g07554174

308-2314 SWITCH GP-START

PART OF 417-7273, 489-4263, 506-0518, 506-0519, 506-0520, 512-7969, 513-2239, 516-2639 ENGINE AR-PRIMARY

SMCS-1416 **i05810290**

NOTE	REF NO	GRAPHIC REF	PART NUMBER	QTY	PART NAME 1 2 3 4 5 6 (PRODUCT LEVEL)	SEE PAGE
	1	1	**183-5460**	1	PLATE	
	2	1	**359-6000**	1	SWITCH AS-START	
	2A	1	**183-5458**	1	CAP	
	2B	1	**361-3925**	1	KEY-IGNITION	

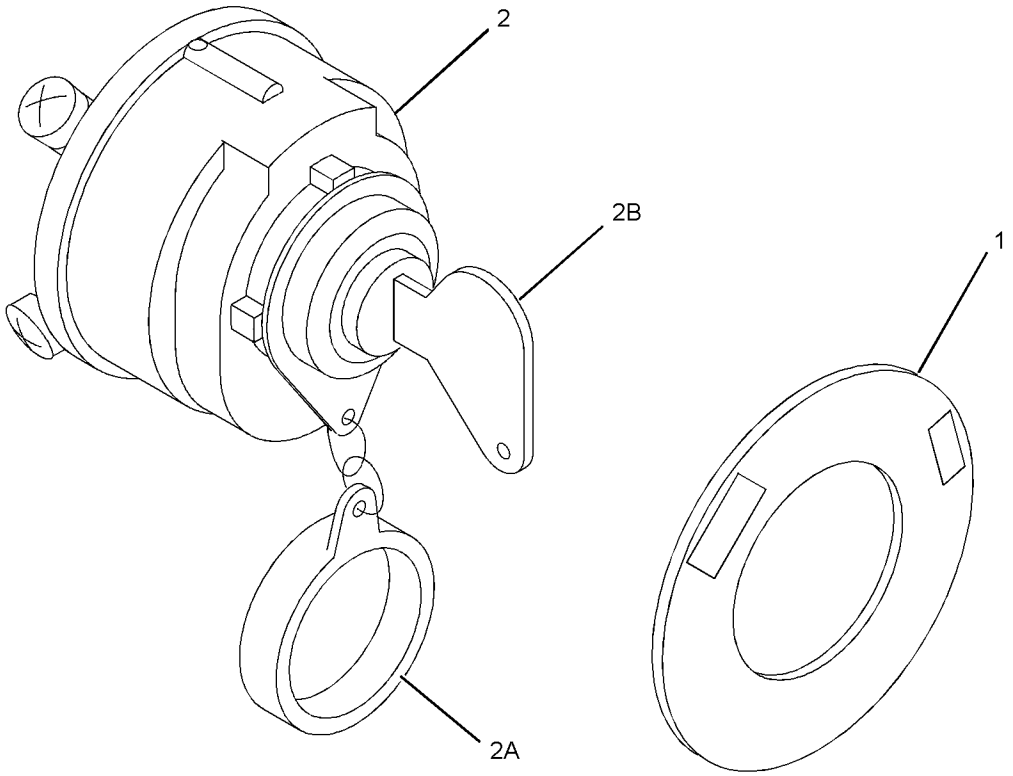

GRAPHIC #1 <END> g01389581

399-1115 SWITCH GP-START

S/N: C6M11110-UP

SMCS-1416 **i09861977**

NOTE	REF NO	GRAPHIC REF	PART NUMBER	QTY	PART NAME 1 2 3 4 5 6 (PRODUCT LEVEL)	SEE PAGE
	1	1	**183-5460**	1	PLATE	
	2	1	**423-5663**	1	KEY AS	

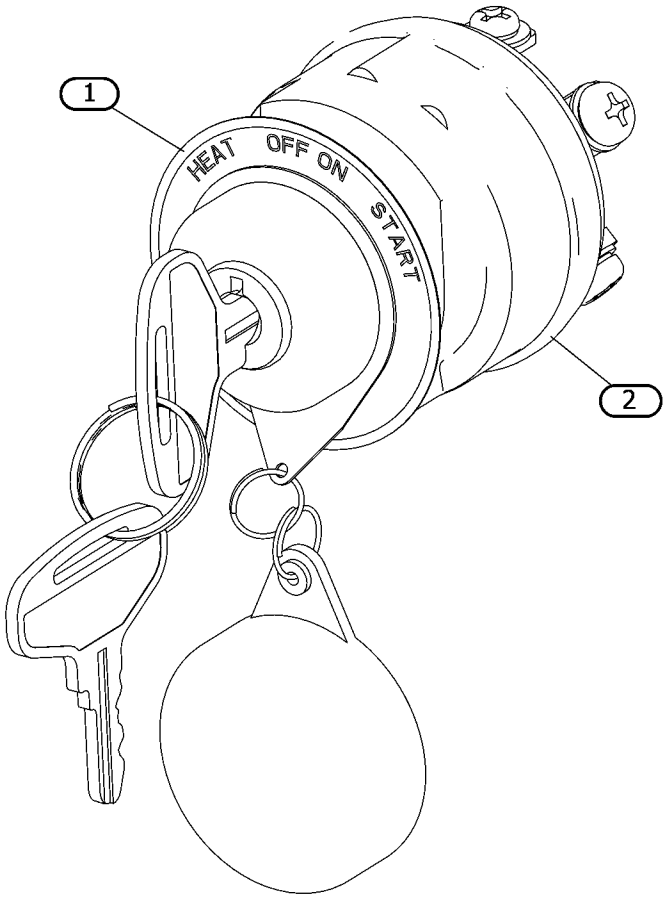

GRAPHIC #1 <END> g07714111

308-2317 SWITCH GP-TEMPERATURE

PART OF 435-1645, 435-1649 CYLINDER BLOCK GP-LONG, 433-1379, 433-1380 ENGINE AR, 417-7273, 435-1636, 435-1641, 435-1642, 435-1646, 435-1647, 435-1658, 489-4263, 489-9224, 504-4602, 506-0518, 506-0519, 506-0520, 512-7969, 513-2239, 514-6556, 516-2639, 518-0165, 557-6086, 557-7471 ENGINE AR-PRIMARY
ALSO AN ATTACHMENT

SMCS-7400 **i05810305**

NOTE	REF NO	GRAPHIC REF	PART NUMBER	QTY	PART NAME 1 2 3 4 5 6 (PRODUCT LEVEL)	SEE PAGE
	1	1	**341-3600**	1	SWITCH-TEMPERATURE (12-VOLT) (ENGINE COOLANT)	

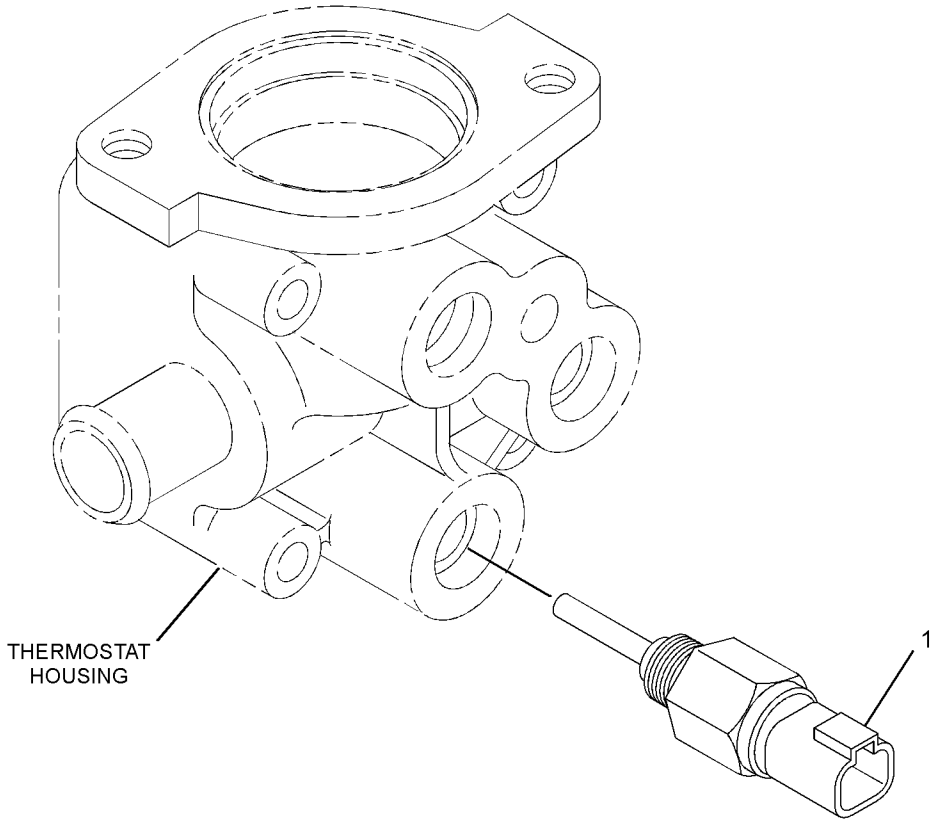

GRAPHIC #1 <END> g03076259

OPERATOR STATION

308-2321 LAMP GP

SMCS-4490, 7451 **i02752321**

NOTE	REF NO	GRAPHIC REF	PART NUMBER	QTY	PART NAME 1 2 3 4 5 6 (PRODUCT LEVEL)	SEE PAGE
	1	1	**198-5310**	1	LAMP (INDICATORS)	

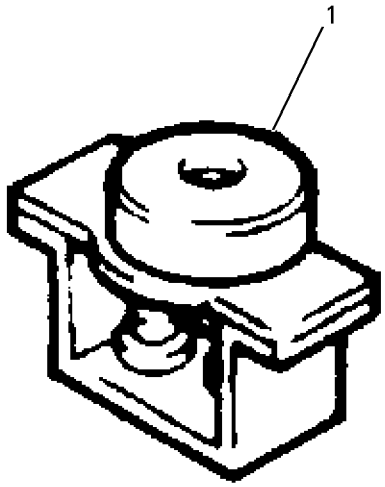

GRAPHIC #1 <END> g00768663

559-9084 CAP GP-PROTECTION

PART OF 433-1379 ENGINE AR, 435-1636, 435-1641 ENGINE AR-PRIMARY
AN ATTACHMENT

SMCS-0663 **i09612960**

NOTE	REF NO	GRAPHIC REF	PART NUMBER	QTY	PART NAME 1 2 3 4 5 6 (PRODUCT LEVEL)	SEE PAGE
	1	1	**370-7052**	1	CAP	

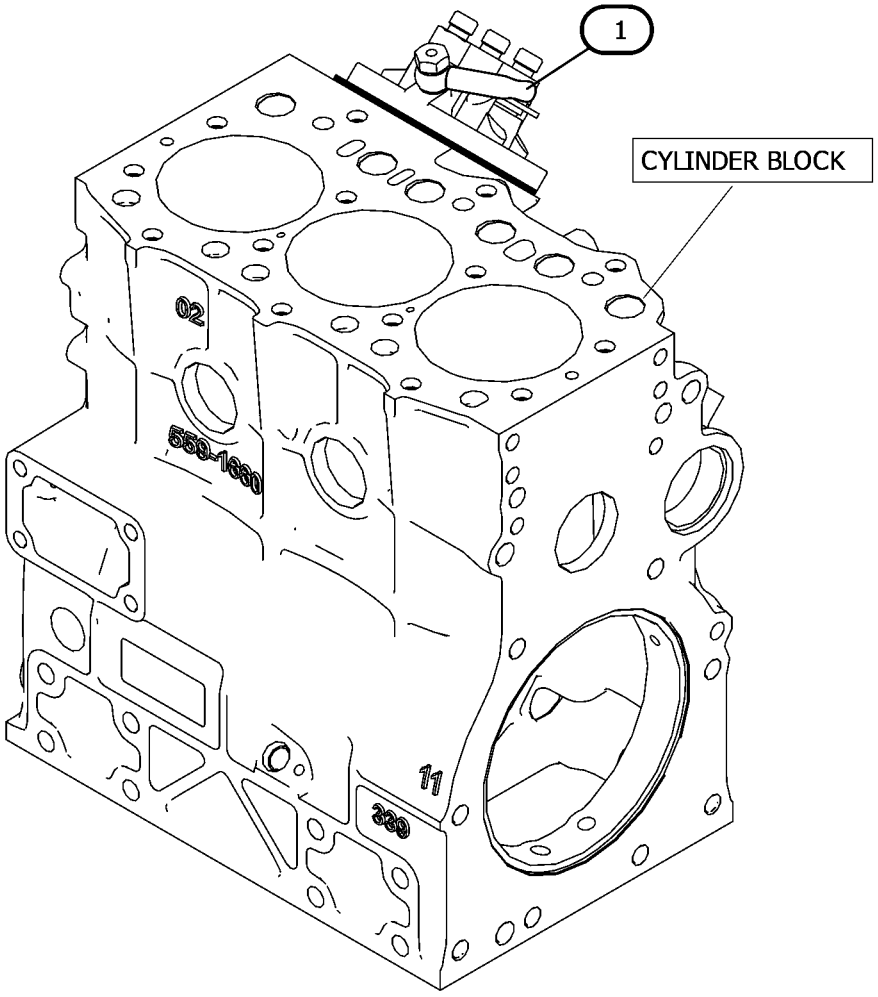

GRAPHIC #1 <END> g07515170

398-4274 FILM GP

PART OF 433-1379 ENGINE AR, 435-1636, 435-1641, 435-1642, 435-1647, 514-6556 ENGINE AR-PRIMARY
ALSO AN ATTACHMENT

SMCS-7405, 7557

i09646819

NOTE	REF NO	GRAPHIC REF	PART NUMBER	QTY	PART NAME 1 2 3 4 5 6 (PRODUCT LEVEL)	SEE PAGE
	1	1	**326-9052**	1	FILM-WARNING (DO NOT SPRAY, READ OMM)	
					(EXPLOSION HAZARD. COULD CAUSE PERSONAL INJURY OR DEATH. DO NOT USE ETHER READ THE OPERATOR'S MANUAL.)	
	2	1	**317-6164**	1	CAP	

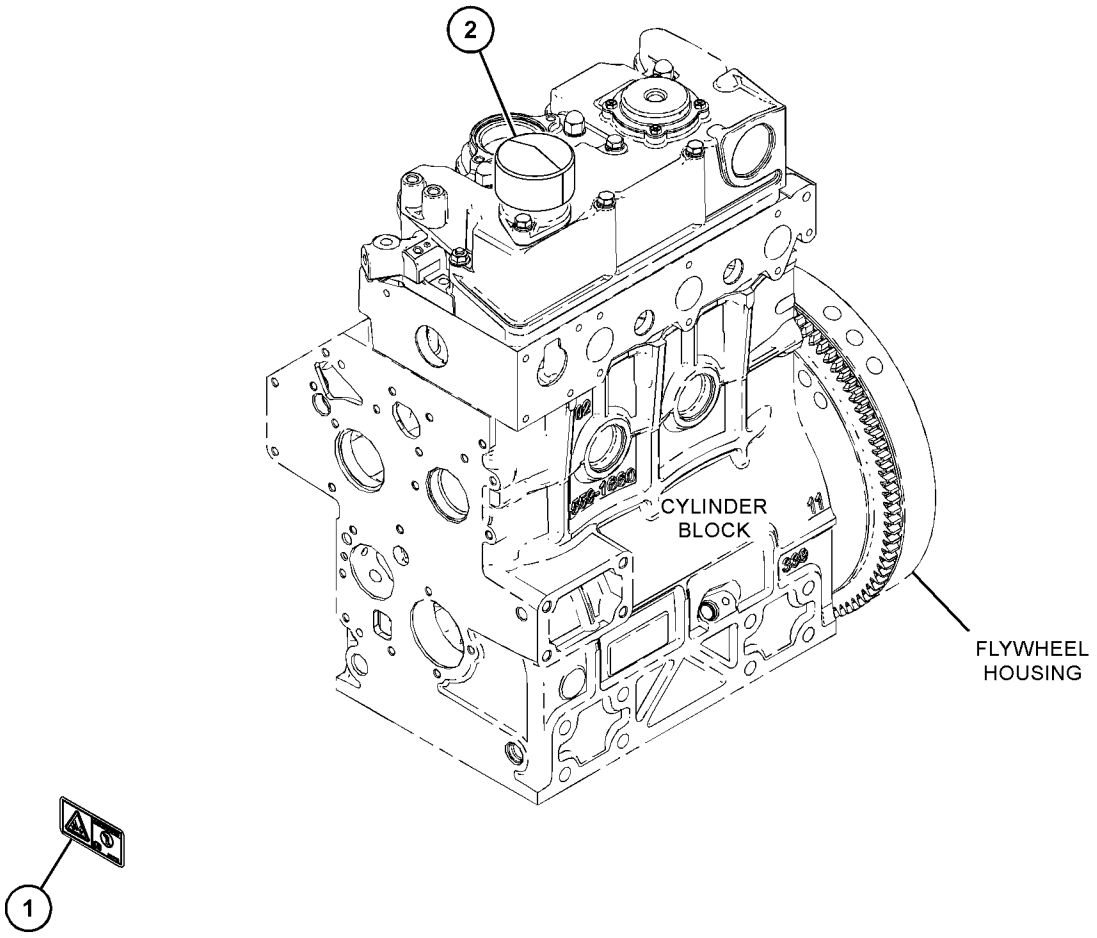

GRAPHIC #1 <END> g07528290

516-8900 FILM GP

PART OF 504-4602, 514-6556 ENGINE AR-PRIMARY

SMCS-7405, 7557

i06928201

NOTE	REF NO	GRAPHIC REF	PART NUMBER	QTY	PART NAME 1 2 3 4 5 6 (PRODUCT LEVEL)	SEE PAGE
	1	1	**326-9052**	1	FILM-WARNING (DO NOT SPRAY, READ OMM)	

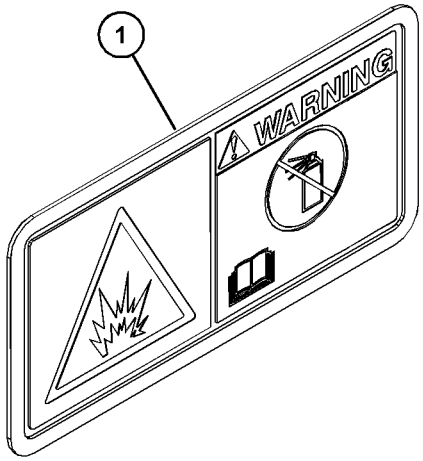

GRAPHIC #1

<END>

g06201827

604-4574 FILM GP–ALTERNATOR

S/N: C6M10291-UP

SMCS-7405, 7557 **i09664417**

NOTE	REF NO	GRAPHIC REF	PART NUMBER	QTY	PART NAME 1 2 3 4 5 6 (PRODUCT LEVEL)	SEE PAGE
	1	1	**451-7225**	1	FILM-IDENTIFICATION (CAT)	

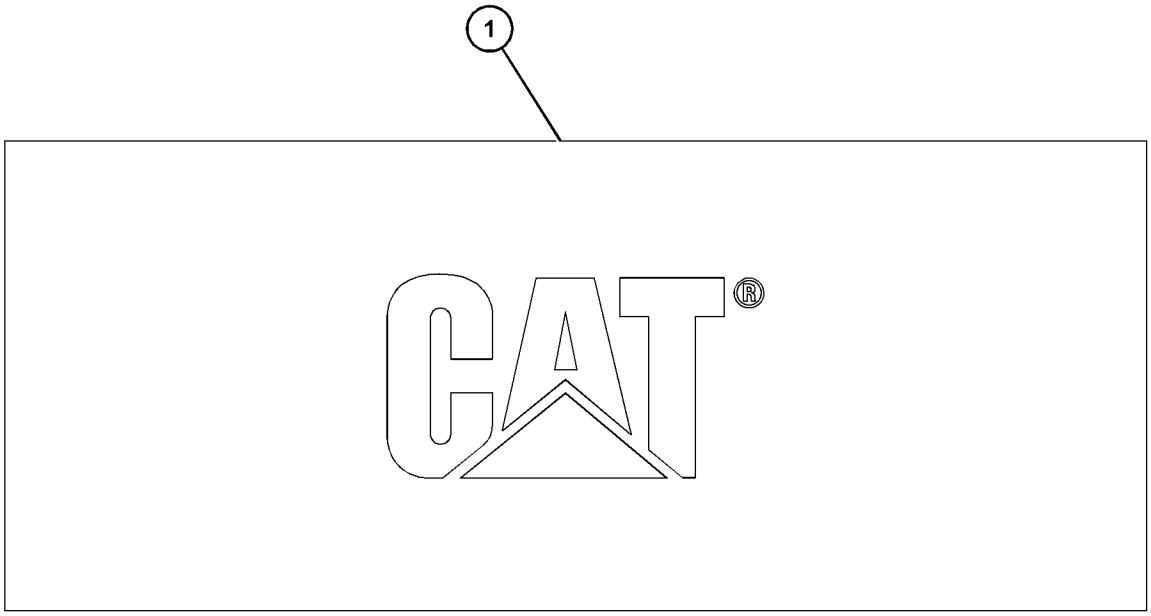

GRAPHIC #1 <END> g07541758

607-7117 FILM GP–RADIATOR

PART OF 417-7273 ENGINE AR-PRIMARY

SMCS-7405, 7557 **i08718742**

NOTE	REF NO	GRAPHIC REF	PART NUMBER	QTY	PART NAME 1 2 3 4 5 6 (PRODUCT LEVEL)	SEE PAGE
	1	1	**451-7225**	1	FILM-IDENTIFICATION (CAT)	

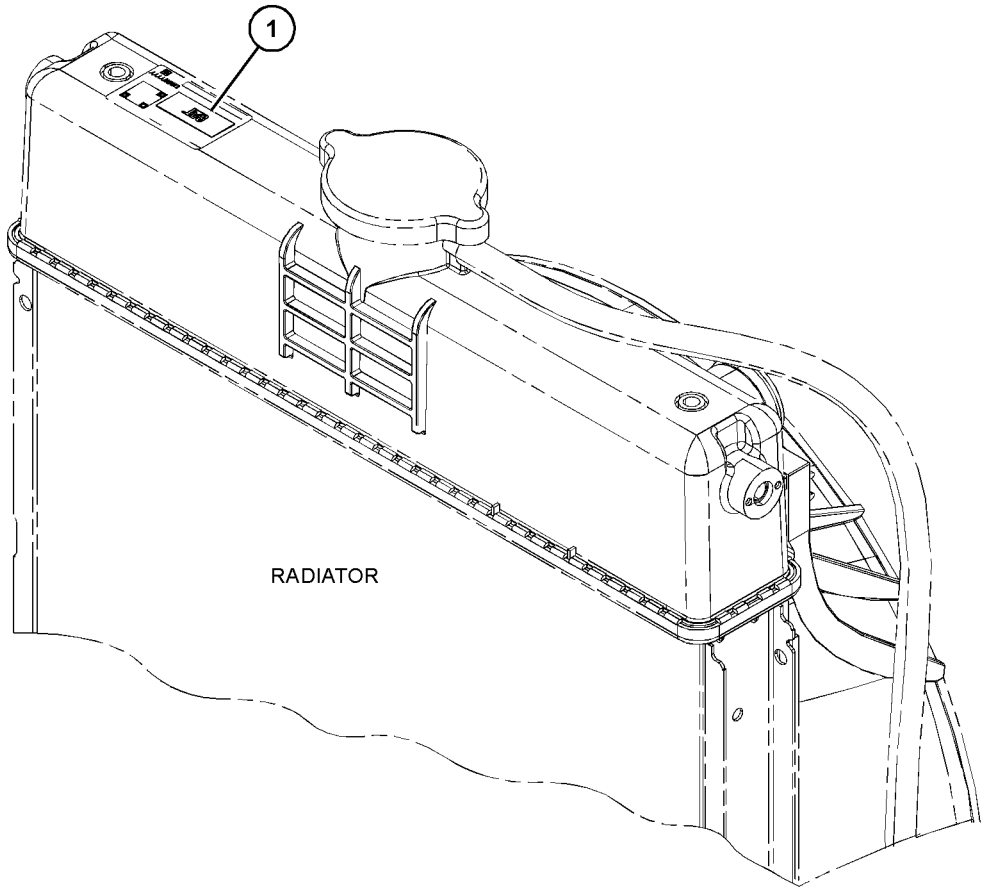

GRAPHIC #1 <END> g06769118

342-9607 PARTS GP-MISCELLANEOUS

PART OF 435-1645, 435-1649 CYLINDER BLOCK GP-LONG, 433-1379, 433-1380 ENGINE AR, 435-1636, 435-1641, 435-1642, 435-1646, 435-1647, 435-1658, 504-4602 ENGINE AR-PRIMARY
ALSO AN ATTACHMENT

SMCS-1000, 7950 **i05361752**

NOTE	REF NO	GRAPHIC REF	PART NUMBER	QTY	PART NAME 1 2 3 4 5 6 (PRODUCT LEVEL)	SEE PAGE
	1	1	**154-2427**	1	GASKET-EXHAUST MANIFOLD	
	2	1	**183-1165**	1	PLUG	
	3	1	**233-0695**	1	SEAL-VALVE COVER	

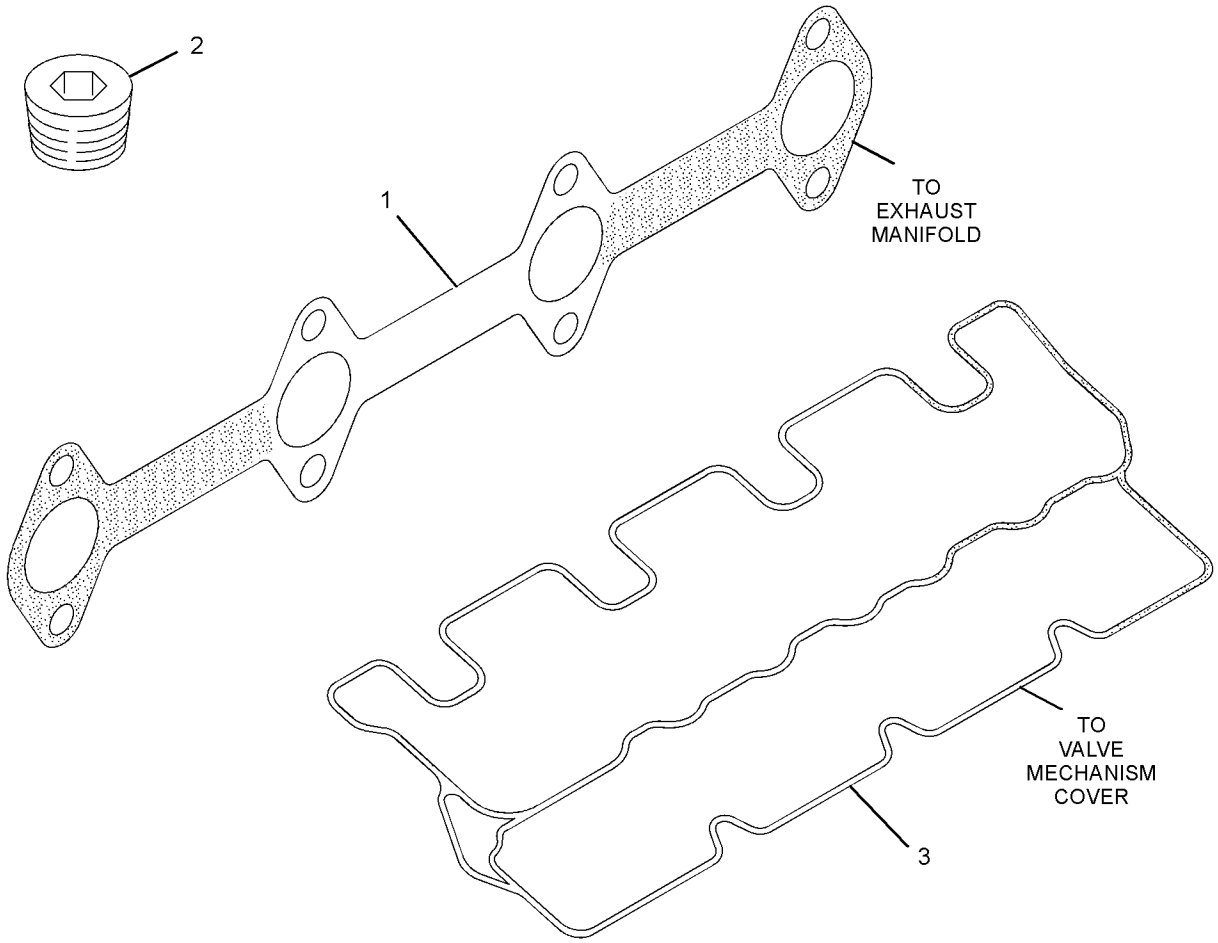

GRAPHIC #1 <END> g01954568

518-9053 PLATE & FILM GP

S/N: C6M10203-UP

PART OF 417-7273 ENGINE AR-PRIMARY

SMCS-7405, 7557

i09240147

NOTE	REF NO	GRAPHIC REF	PART NUMBER	QTY	PART NAME 1 2 3 4 5 6 (PRODUCT LEVEL)	SEE PAGE
	1	1	**346-8219**	2	FILM-WARNING (UNIVERSAL WARNING)	
					(COULD CAUSE SERIOUS INJURY OR DEATH. DO NOT OPERATE OR WORK ON THIS EQUIPMENT UNLESS YOU HAVE READ AND UNDERSTAND THE OPERATION AND MAINTENANCE MANUALS)	
	2	1	**419-0074**	2	SCREW-DRIVE (NO 2X0.16-IN)	
	3	1	**576-1156**	1	FILM-IDENTIFICATION (CAT)	
	4	1	**246-4291**	1	PLATE-SERIAL NUMBER (ENGINE)	
	5	1	**153-8532**	1	FILM-INFORMATION (FUEL FILTER)	

518-9053 **PLATE & FILM GP** (contd.) **i09240147**

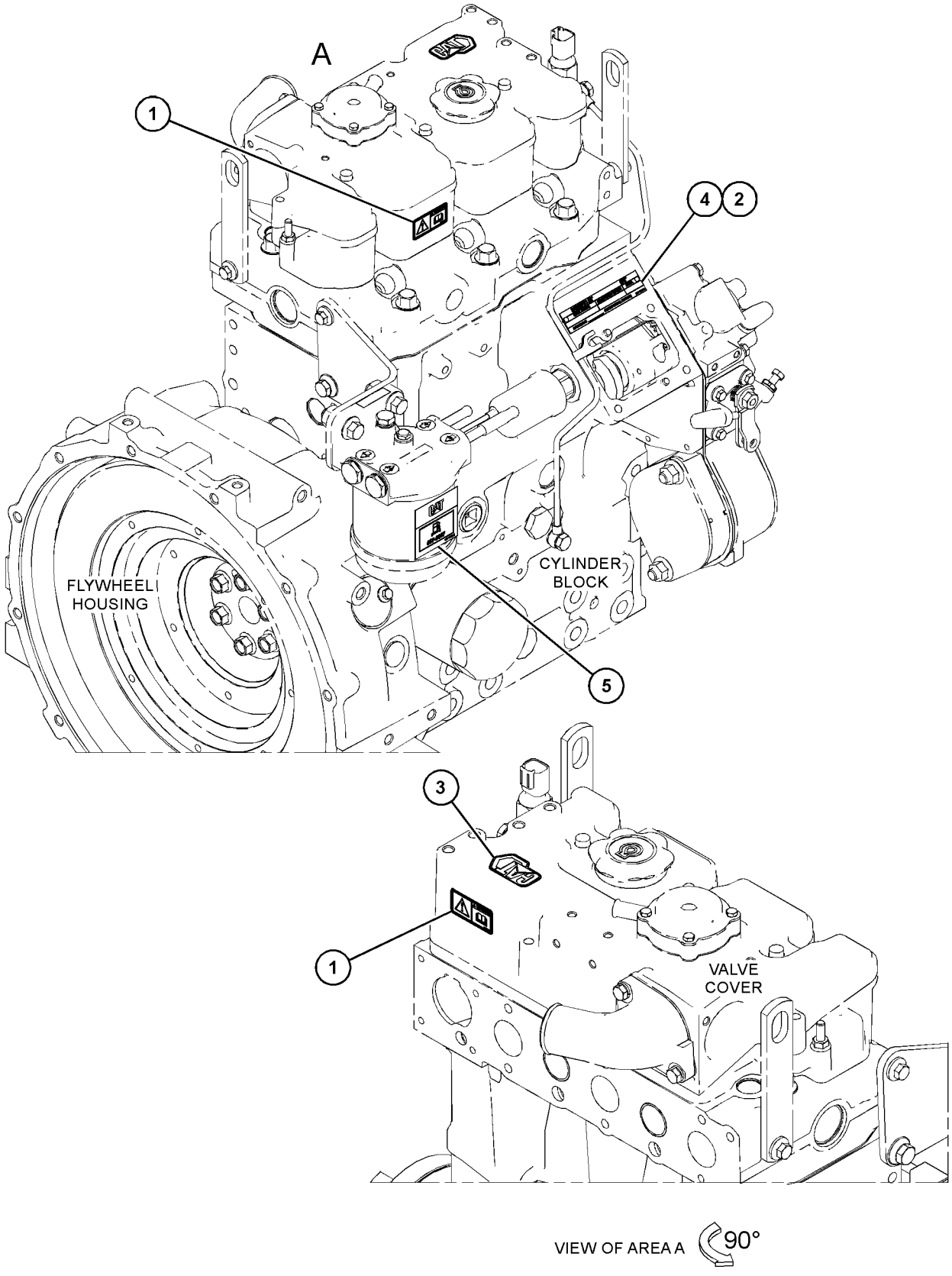

GRAPHIC #1 <END> g07253218

612-8795 PLATE & FILM GP

PART OF 433-1379 ENGINE AR, 435-1636, 435-1641, 435-1642, 435-1647 ENGINE AR-PRIMARY AN ATTACHMENT

SMCS-7405, 7557 **i08568335**

NOTE	REF NO	GRAPHIC REF	PART NUMBER	QTY	PART NAME 1 2 3 4 5 6 (PRODUCT LEVEL)	SEE PAGE
	1	1	**246-4291**	1	PLATE-SERIAL NUMBER (ENGINE)	
	2	1	**346-8219**	2	FILM-WARNING (UNIVERSAL WARNING)	
					(COULD CAUSE SERIOUS INJURY OR DEATH. DO NOT OPERATE OR WORK ON THIS EQUIPMENT UNLESS YOU HAVE READ AND UNDERSTAND THE OPERATION & MAINTENANCE MANUALS.)	
	3	1	**419-0074**	2	SCREW-DRIVE (NO 2X0.16-IN)	
	4	1	**576-1156**	1	FILM-IDENTIFICATION (CAT)	

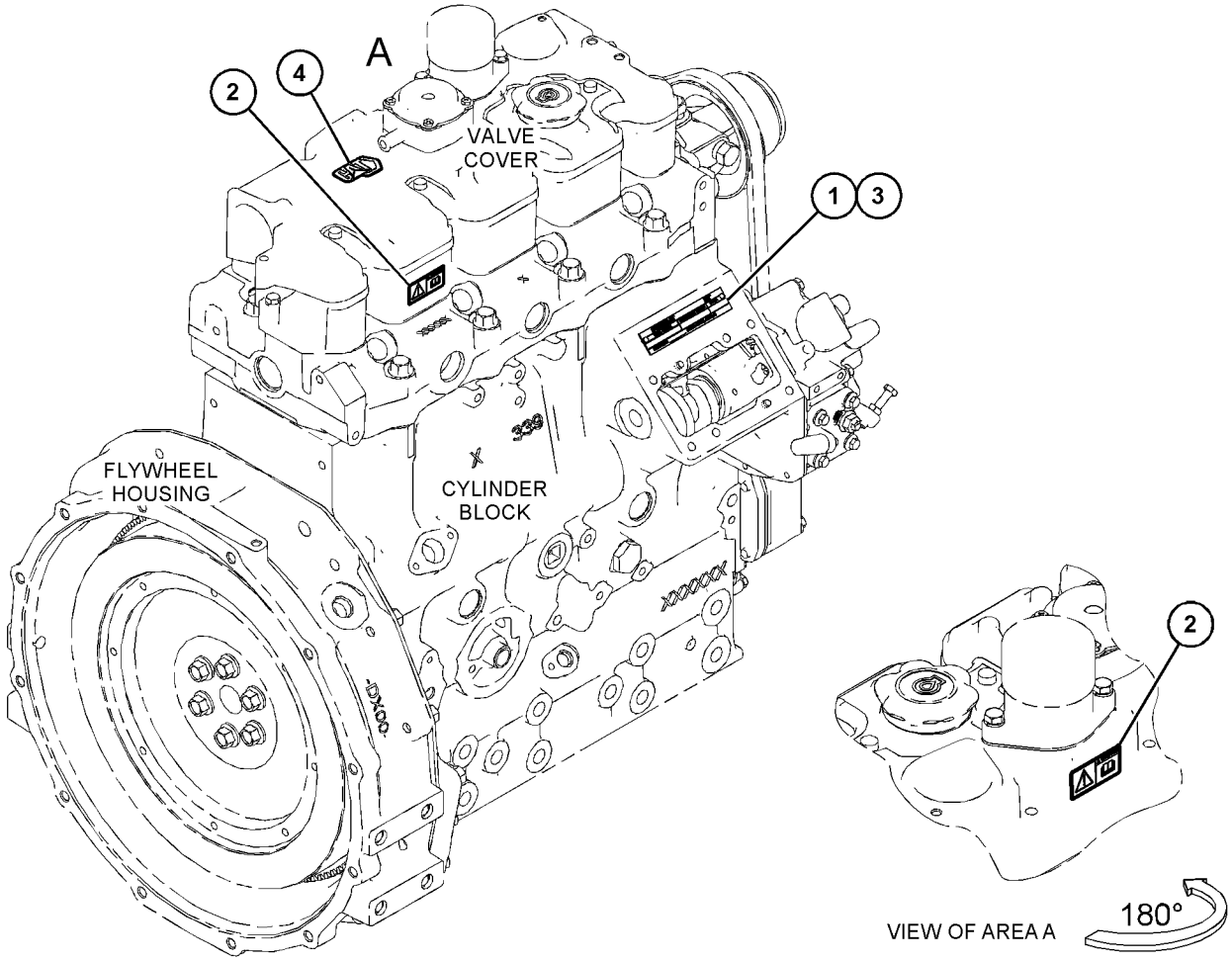

GRAPHIC #1 <END> g06683916

PART NUMBER INDEX

Part	Page
3	
3B-4504	154
	201
	298
3B-4505	829
5	
5A-3604	619
	620
	621
	623
	627
	631
	634
	637
	640
	643
	646
	649
	654
	659
	662
	665
	668
	671
	678
5C-2890	299
	304
	318
	322
	356
	358
	360
	363
	367
	371
	696
	698
	701
	703
	705
	707
	709
	711
	713
	715
	717
	719
	723
	725
	727
	729
	733
	735
	737
	739
	741
	743
	764
	766
	768
	770
	772
	775
	778
	780
	782
	872
	874
5C-8312	335
	700
	746
	749
	766
	786
	876
5D-1026	509
	513
	516
	523
	525
	528
	531
5D-1319	298
	304
	309
	312
	314
	315
	316
	318
	322
	332
	337
	341
	342
	343
	344
	346
	348
	350
	352
	353
	354
	356
	358
	360
	363
	367
	371
5P-7970	622
6	
6F-4855	796
6I-0217	378
	491
	494
	497
	545
	548
	552
	565
	568
	571
	574
	577
	581
	586
	588
	590
	591
	593
	595
	600
	601
	603
	605
	623
	627
	631
	659
	662
	665
	668
	671
	674
	682
	685
	763
	799
	802
	805
	829
	831
	847
	852
	854
	859
	863
	864
	865
6I-0254	545
	552
	556
	559
	562
	568
	571
	574
	577
	581
	583
	586
	588
	590
	591
	593
	595
	600
	601
	603
	605
	634
	637
	640
	643
	646
	649
	654
	678
	687
	689
6I-0260	495
	859
	861
	862
	863
	865
	866
6I-0302	379
6I-0454	183
6I-0593	288
	290
	291
	295
	296
	762
	802
	847
	854
	900
	901
	903
	905
6I-0594	183
	265
	290
	295
	297
	371
	900
6I-0650	209
	211
	213
	215
	217
	219
6I-0654	556
	565
	568
	571
6I-0846	150
	162
	314
	338
	556
	559
	562
	583
	623
	627
	631
	634
	637
	640
	643
	646
	649
	654
	659
	662
	665
	668
	671
	674
	678
	682
	685
	687
	689
	692
	693
	695
	763
	782
	795
	796
	799
	802
	805
	850
6I-0917	266
	273
	545
	565
	568
	571
	574
	577
6I-1201	475
	479
6I-4200	288
	291
	295
	296
6V-5221	622
6V-7357	829

► PRIMARY REFERENCE

PART NUMBER INDEX

Part Page

7

7W-2601 556
559
562
583
7W-4694 762
796
799
802
847
850
852
854
7X-0796 384
762
802
854
7X-2533 304
327
360
363
367
371
698
703
707
713
717
721
725
729
735
739
743
766
770
780
7X-2535 201

8

8C-8451 201
298
8F-7242 610
674
682
8T-1158 829
8T-4138 201
8T-4171 154
8T-4224 559
562
583
8T-4971 299
709
8T-8729 784
785
8T-9535 213
215
217
219

9

9M-7959 556
562
586
588
590
9X-1813 784
785
9X-3402 870
9X-8256 468

0

032-8100 796
799
032-9020 506
511
519
522
534
537
540
542
544
033-7849 762
796
799
802
847
850
852
854
039-2281 623
634
637
640
649
654
659
671
067-6269 762
796
799
802
847
850
852
854
067-6317 796
799
802
847
850
852
854
067-6987 796
799
802
847
850
852
854
069-2922 796
095-1515 404
406
095-1574 304
318
322
356
358
360
363
367
371
696
698
701
703
705
707
709
711
713
715
717
719
723
725
727
729
733
735
737
739
741
743
764
766
768
770
772
775
778
780
782
872
874
095-1708 492
096-6166 881
882
099-6418 687
829
835

1

100-4458 682
100-4841 175
177
178
367
391
395
399
401
403
404
406
407
100-8451 862
101-7178 548
552
556
559
562
581
583
101-7540 556
559
562
583
101-7541 548
552
556
102-2079 808
810
812
814
816
818
820
822
824
826
831
835
838
102-8802 784
785
103-1067 552
581
588
590
593
595
600
601
603
605
103-6714 586
591
106-8916 271
272
304
318
322
327
356
358
360
363
367
371
696
698
701
703
705
707
709
711
713
715
717
719
721
723
725
727
729
733
735
737
739
741
743
764
766
772
775
778
780
782
872
874
106-8954 288
291
295
296
430
111-8222 581
114-4363 288
290
291
292
293

PART NUMBER INDEX

Part	Page
	294
	295
	296
	403
	406
	407
	475
	540
	542
	545
	552
	556
	559
	562
	574
	577
	581
	583
118-9145	475
	479
123-2899	288
	291
	295
	296
	545
	574
124-3815	275
	375
	377
	378
	380
	545
	548
	552
	556
	559
	562
	565
	568
	571
	574
	577
	581
	583
	612
	619
	620
	621
	623
	627
	631
	634
	637
	640
	643
	646
	649
	654
	659
	662
	665
	668
	678
	763
	795
	802
	805
	847
	850
	852
	854
	861
	866
127-8281	513
	525
133-5512	327
	721
138-7162	287
	289
	796
	799
	850
	852
138-7171	289
	292
138-7401	287
139-5511	299
	304
	318
	322
	327
	333
	335
	360
	363
	367
	371
	696
	698
	701
	703
	705
	707
	709
	711
	713
	715
	717
	719
	721
	723
	725
	727
	729
	733
	735
	737
	739
	741
	743
	764
	766
	768
	770
	772
	775
	778
	780
	782
	872
	874
	876
140-8783	900
	901
141-5453	384
	479
148-7140	610
	611
	674
	682
152-6581	506
	511
	519
	540
153-5387	221
	223
	225
	227
	229
	231
	233
	235
	237
	239
153-5390	221
	223
	225
	227
	229
	231
	233
	235
	237
	239
153-5391	221
	223
	225
	227
	229
	231
	233
	235
	237
	239
153-5394	221
	223
	225
	227
	229
	231
	233
	235
	237
	363
	367
	371
153-5395	221
	223
	225
	227
	229
	231
	233
	235
	237
	239
153-5402	209
	211
	213
	215
	217
	219
	221
	223
	225
	227
	229
	231
	233
	235
	237
	239
153-5518	209
	211
	213
	215
	217
	219
153-5556	245
	246
	247
	257
153-5557	245
	246
	247
	257
153-5587	464
153-5590	439
	464
153-5592	221
	227
	229
	231
	235
	299
	304
	318
	322
	327
	356
	358
	360
	363
	367
	371
	442
	545
	548
	552
	556
	559
	562
	565
	568
	571
	577
	581
	583
	586
	588
	590
	591
	593
	595
	600
	601
	603
	605
	610
	611
	614
	615
	618
	623
	627
	631
	634
	637
	640
	643
	646
	649
	654
	659
	662
	665
	668
	671
	674
	678
	682
	685
	689
	692
	693
	695

► PRIMARY REFERENCE

PART NUMBER INDEX

Part	Page
	696
	698
	701
	703
	705
	707
	709
	711
	713
	715
	717
	719
	721
	723
	725
	727
	729
	733
	735
	737
	739
	741
	743
	764
	766
	768
	770
	772
	775
	778
	780
	782
	808
	810
	812
	814
	816
	818
	820
	822
	824
	826
	831
	838
	847
	852
	854
	860
	861
	862
	864
	865
	866
	872
	874
153-5936	425
	465
	480
	481
	856
	857
	906
	907
	908
	909
	910
	911
	912
	913
	914
153-5939	179
	181
	184
	186
	189
	192
	194
	196
	198
	201
	203
	206
	623
	627
	631
	634
	637
	646
	649
	654
	659
	662
	665
	668
	671
	674
	678
	682
153-5960	186
	189
	192
	196
	198
	201
	203
	206
	276
	277
	298
	299
	304
	309
	312
	314
	315
	316
	318
	322
	327
	332
	337
	338
	339
	341
	342
	343
	344
	346
	348
	350
	352
	353
	354
	355
	363
	367
	371
	503
	506
	509
	511
	513
	516
	519
	522
	525
	528
	531
	534
	537
	540
	542
	544
	556
	559
	562
	583
	623
	627
	631
	646
	659
	662
	665
	668
	671
	674
	678
	682
	685
	689
	731
	756
	808
	810
	812
	814
	816
	818
	820
	822
	824
	826
	831
	838
153-5961	381
	441
	452
	454
	456
	458
	460
	462
	506
	509
	511
	513
	516
	519
	522
	523
	525
	528
	531
	534
	537
	540
	542
	544
	548
	556
153-5962	184
	186
	189
	192
	194
	196
	198
	201
	203
	206
	276
	277
	298
	299
	304
	309
	312
	314
	315
	316
	318
	322
	327
	332
	337
	338
	339
	341
	342
	343
	344
	346
	348
	350
	352
	353
	354
	355
	363
	367
	371
	503
	506
	509
	511
	513
	516
	519
	522
	523
	525
	528
153-6374	376
153-6375	287
	289
	323
	376
	525
	528
	731
	756
	772
	775
153-6412	264
	426
	428
	451
	757
	878
	879
	880
	888

PART NUMBER INDEX

Part	Page
	889
	890
	891
	892
153-6415	150
	162
	299
	304
	312
	314
	318
	322
	327
	338
	356
	358
	360
	363
	367
	371
	637
	643
	689
	696
	698
	701
	703
	705
	707
	709
	711
	713
	715
	717
	719
	721
	723
	725
	727
	729
	731
	733
	735
	737
	739
	741
	743
	747
	749
	752
	756
	764
	766
	768
	770
	772
	775
	778
	780
	782
	786
	788
	791
	872
	874
153-6492	143
	144
	145
	146
	147
	148
	149
	150
	152
	154
	156
	157
	159
	160
	161
	162
	164
	166
	167
	168
	169
	170
	171
	172
	173
	174
	175
	299
	304
	322
	327
	431
	432
	433
153-6497	183
153-6832	427
153-6833	385
	387
	389
	393
	397
153-6835	385
	387
	389
	391
	393
	395
	397
	399
	401
	403
	404
	406
	407
	424
	464
153-6838	145
	146
	147
	148
	149
	150
	152
	154
	156
	157
	158
	159
	160
	161
	162
	164
	166
	167
	168
	169
	170
	171
	172
	173
	174
	221
	223
	225
	227
	229
	231
	233
	235
	237
	299
	304
	318
	322
	327
	363
	371
	385
	387
	389
	391
	393
	395
	397
	399
	401
	403
	404
	406
	407
	466
	472
	731
	756
153-6841	385
	387
	389
	393
	397
153-6849	239
153-6850	239
153-6851	239
153-6853	239
	480
	481
	623
	627
	631
	634
	637
	640
	643
	646
	649
	654
	659
	662
	665
	668
	671
	674
	678
	682
	685
	687
	689
	856
	857
153-6861	322
	565
	568
	571
	772
	775
153-6868	287
153-6879	239
	475
	478
	482
	504
	505
153-6881	425
	465
	480
	481
	856
	857
	906
	912
	913
	914
153-7640	179
	181
	184
	186
	189
	192
	194
	196
	198
	201
	203
	206
	468
	503
	646
	678
	682
153-7983	299
	304
	318
	322
	327
	333
	335
	360
	696
	698
	701
	703
	705
	707
	709
	711
	713
	715
	717
	719
	721
	723
	725
	727
	729
	733
	735
	737
	739
	741
	743
	747
	749
	752
	764
	766
	768
	770
	772
	775
	778
	780
	782

► PRIMARY REFERENCE

PART NUMBER INDEX

Part	Page
	786
	788
	791
	872
	874
	876
153-7987	299
	304
	318
	322
	327
	333
	335
	360
	696
	698
	701
	703
	705
	707
	709
	711
	713
	715
	717
	719
	721
	723
	725
	727
	729
	733
	735
	737
	739
	741
	743
	747
	749
	752
	764
	766
	768
	770
	772
	775
	778
	780
	782
	786
	788
	791
	872
	874
	876
153-7988	381
	441
	452
	454
	456
	458
	460
	462
153-8532	925
154-0175	203
	206
	221
	223
	225
	227
	229
	231
	233
	235
	237
	239
154-0176	221
	223
	225
	227
	229
	231
	233
	235
	237
	239
154-0177	221
	223
	225
	227
	229
	231
	233
	235
	237
	239
154-0178	221
	223
	225
	227
	229
	231
	233
	235
	237
	239
154-0181	209
	211
	213
	215
	217
	219
154-0385	209
	211
	213
	215
	217
	219
154-0386	209
	211
	213
	215
	217
	219
154-0388	209
	211
	213
	215
	217
	219
154-0389	209
	211
	213
	215
	217
	219
154-0393	221
	225
	227
	229
	231
	233
	235
	808
	810
	812
	814
	816
	818
	820
	822
	824
154-0867	408
	410
	413
	416
154-0869	408
	410
	413
	416
154-0870	408
	409
	410
	411
	413
	414
	416
	417
	421
	422
154-0871	408
	409
	410
	411
	413
	414
	416
	417
	421
	422
154-0873	408
	409
	410
	411
	413
	414
	416
	417
	421
	422
154-0874	408
	409
	410
	411
	413
	414
	416
	417
	421
	422
154-1230	209
	211
	213
	215
	217
	219
154-1231	209
	211
	213
	215
	219
154-1240	464
154-1241	464
154-1242	464
154-1243	439
	464
154-1246	381
	441
	452
	454
	456
	458
	460
	462
154-1248	381
	462
154-1347	184
	186
	194
	201
	623
	640
	659
154-1396	298
	300
	305
	794
154-1399	287
	289
	794
	796
	799
	850
	852
154-1400	304
	327
	360
	698
	721
	729
	735
	739
	743
	747
	749
	752
	766
	786
	788
	791
154-1403	299
	327
	721
154-1673	299
	327
	338
	339
154-1675	298
	299
	304
	309
	312
	314
	315
	316
	318
	322
	327
	332
	337
	338
	339
	341
	342
	343
	344
	346
	348
	350
	352
	353
	354
	356
	358
	360
	363
	367

PART NUMBER INDEX

Part	Page
	371
154-1680	145
	146
	147
	148
	149
	150
	152
	154
	156
	157
	158
	159
	160
	161
	162
	164
	166
	167
	168
	169
	170
	171
	172
	173
	174
	175
	177
	178
	299
	304
	318
	322
	327
154-1817	506
	509
	511
	513
	516
	519
	522
	523
	525
	528
	531
	534
	886
154-1831	509
154-1880	431
	432
	433
154-1935	881
	882
	883
	884
154-1942	480
	481
	856
	857
154-1947	385
154-1948	385
154-2353	239
	480
	481
	856
	857
154-2394	287
	288
	289
	290
	291
	292
	293
	294
	295
	296
154-2395	287
154-2403	287
	289
	383
	796
	799
	847
	850
	852
154-2405	278
	279
	280
	282
	283
	284
	286
154-2406	278
	279
	280
	281
	282
	283
	284
	285
	286
154-2426	614
154-2427	142
	614
	615
	618
	623
	627
	631
	634
	637
	640
	643
	646
	649
	654
	659
	662
	665
	668
	671
	674
	678
	682
	685
	687
	689
	924
154-2428	614
	615
	618
	623
	627
	631
	634
	637
	640
	643
	646
	649
	654
	659
	662
	665
	668
	671
	674
	678
	682
	685
	687
	689
154-2433	271
	272
154-2713	808
	810
	812
	814
	816
	818
	820
	822
	824
	826
	835
	838
154-2715	318
	322
	333
	335
	696
	698
	701
	703
	772
	808
	810
	812
	814
	816
	818
	820
	822
	824
	826
	829
	831
	835
	838
154-2722	822
	831
154-2723	822
	831
154-2724	822
	831
154-2725	822
	831
154-4505	143
	144
	145
	146
	147
	148
	149
	150
	152
	154
	156
	157
	159
	160
	161
	162
	164
	166
	167
	168
	169
	170
	171
	172
	173
	174
	175
	300
	304
	322
	327
155-7984	375
	513
	516
	519
	525
	528
	537
	540
	542
	619
	620
	622
	623
	627
	640
	646
	682
	796
	799
	858
	859
	860
	861
	863
	865
	866
155-8076	327
	698
	721
	725
	729
	735
	743
	745
	770
	780
155-8085	289
	762
	796
	799
	802
	847
	850
	852
	854
160-4150	239
160-4151	239
160-4152	239
160-4153	239
160-4826	475
	478
	504
	505
	537
	540
	542
161-8260	266
	273
	545
	565
	568
	571
	574
161-8273	424
162-2207	299
	304
	318
	322

► PRIMARY REFERENCE

PART NUMBER INDEX

Part	Page
	327
	356
	358
	360
	363
	367
	371
	696
	698
	701
	703
	705
	707
	709
	711
	713
	715
	717
	719
	721
	723
	725
	727
	729
	733
	735
	737
	739
	741
	743
	764
	766
	768
	770
	772
	775
	778
	780
	782
	872
	874
163-3361	▶893
	▶895
163-5371	615
163-5372	607
	609
	610
	615
	619
	620
	621
	623
	627
	631
	634
	637
	640
	643
	646
	649
	654
	659
	662
	665
	668
	671
	674
	678
	682
	808
	810
	812
	814
	816
	818
	820
	822
	824
	826
	831
	835
	838
	858
	859
	863
	865
164-7468	265
	297
	340
	363
	367
	371
164-7619	475
	479
165-2140	184
	186
	189
	192
	194
	196
	198
	201
	203
	206
	276
	277
	298
	299
	304
	309
	312
	314
	315
	316
	318
	322
	327
	332
	337
	338
	339
	341
	342
	343
	344
	346
	348
	350
	352
	353
	354
	355
	363
	367
	371
	623
	627
	631
	634
	637
	640
	643
	646
	649
	654
	659
	662
	665
	668
	671
	674
	678
	682
	685
	687
	689
165-2141	640
	796
	799
	858
	860
165-2142	287
	429
165-3605	427
166-2338	287
168-8999	858
	859
	862
	863
	864
	865
168-9001	375
	483
	484
	485
	496
	501
	502
	606
	607
	608
	609
	616
	622
	634
	649
	654
	678
	796
	858
	860
	864
168-9002	858
	859
	860
	861
	862
	863
	864
	865
	866
171-5349	784
	785
172-4585	881
	883
174-3877	559
	562
	577
	581
	583
175-7141	288
	291
	296
	340
	363
	367
	901
176-7719	795
	796
	799
	802
	850
	668
	671
	674
	678
	682
	685
	687
	689
178-2510	268
178-3336	574
	687
	829
	835
180-6118	397
	399
	513
	516
	519
	548
	565
	568
	571
180-8579	858
	859
	863
183-1163	221
	225
	227
	229
	231
	235
183-1164	221
	225
	227
	229
	231
	235
183-1165	179
	425
	623
	627
	631
	634
	637
	646
	649
	659
	662
	665
	671
	674
	678
	682
	685
183-1336	209
	211
183-3213	253
	255
	258
	260
	685
	687
183-3353	808
	810
	812
	814
	816
	818
	820
	822
	824
	826
	831
	835
	838
183-3538	299
183-3547	270

▶ PRIMARY REFERENCE

PART NUMBER INDEX

Part	Page
	274
183-3551	491
	492
	494
	495
	496
	497
183-3552	490
183-3572	772
183-4036	847
	852
	854
183-4037	869
183-4320	847
	852
	854
183-4323	466
	472
183-4335	607
	609
183-5458	915
183-5460	915
	916
188-9644	559
	562
	581
189-9763	391
	395
	399
	401
	403
	404
	406
	407
190-3762	184
	194
	640
190-3803	808
	810
	812
	814
	816
	818
	820
	822
	824
	826
	829
	831
	835
	838
191-0563	607
	609
191-9297	299
	304
	318
	322
	327
	333
	335
	696
	698
	701
	703
	705
	707
	709
	711
	713
	715
	717
	719
	721
	723
	725
	727
	729
	733
	735
	737
	739
	741
	743
	747
	749
	752
	764
	766
	768
	770
	772
	775
	778
	780
	782
	786
	788
	791
	872
	874
	876
193-5151	559
	562
	583
195-3699	581
196-8356	756
197-8540	840
197-8555	867
198-2663	383
	475
198-2664	545
	548
	552
	556
	565
	568
	571
	574
198-5310	918
199-1187	731
	756
2	
202-0528	618
202-1196	808
	810
	812
	814
	816
	818
	820
	822
	824
	826
	829
	831
	835
	838
202-6616	545
	565
	568
	571
	574
	577
205-4726	806
	807
	829
205-4727	806
	807
	829
205-4728	806
	807
	829
205-4731	812
	814
	816
	820
	824
	826
	829
205-7709	615
206-3499	464
206-9292	404
	406
208-9295	559
	562
	577
	583
209-1355	468
209-7084	393
209-7088	397
	399
	403
	406
	407
211-6574	564
211-8559	468
215-2605	385
	387
	389
	393
	397
215-2617	509
	523
215-2620	221
	225
	227
	229
	231
	233
	235
	237
217-0099	601
	603
217-1456	410
	411
	413
	414
217-2752	381
	462
217-2760	808
	810
	818
	826
	835
	838
217-2761	808
	810
	818
	826
	835
	838
217-2762	808
	810
	818
	826
	835
	838
217-2763	808
	810
	818
	826
	835
	838
217-5770	221
	223
	225
	227
	229
	231
	233
	235
	237
	239
217-5859	179
	181
	184
	186
	189
	192
	194
	196
	198
	201
	203
	206
	623
	627
	631
	634
	637
	646
	649
	654
	659
	662
	665
	668
	671
	674
	678
	682
217-5860	184
	186
	189
	192
	194
	196
	198
	201
	203
	206
	322
	772
	775
217-5861	194
	674
217-5862	179
	181
	184
	186
	189
	192
	194
	196
	198
	201
	203
	206
	623
	627
	631
	634

PART NUMBER INDEX

Part	Page
	637
	640
	643
	646
	649
	654
	659
	662
	665
	668
	671
	674
	678
	682
217-5864	184
	194
217-7115	299
	304
	309
	318
	322
	327
	333
	335
	696
	698
	701
	703
	705
	707
	709
	711
	713
	715
	717
	719
	721
	723
	725
	727
	729
	733
	735
	737
	739
	741
	743
	747
	749
	752
	764
	766
	768
	770
	772
	775
	778
	780
	782
	786
	791
	872
	874
	876
217-7352	264
217-7358	466
	468
	470
	472
	473
218-2333	385
	387
	389
	393
	397
220-1523	474
	477
221-1136	221
	223
	225
	227
	229
	231
	233
	235
	237
	239
223-8182	850
	852
	854
225-8526	623
	627
	631
	634
	637
	640
	643
	646
	649
	654
	659
	665
	678
	682
	685
	687
	689
225-8533	184
	194
	623
	627
	631
	634
	637
	640
	643
	646
	671
	678
	682
	685
	687
	689
	692
	693
	695
226-4918	622
226-4919	622
226-4922	622
226-4923	622
228-7472	397
	399
	403
	406
	407
229-5150	385
	387
	389
	391
	401
	404
229-5151	385
	387
	389
	391
	401
	404
231-2839	881
	882
231-8920	475
232-0218	322
	772
	775
232-0290	322
	772
	775
232-7823	391
	395
	399
	404
	406
233-0693	194
233-0695	142
	179
	181
	184
	186
	189
	192
	194
	196
	198
	201
	203
	206
	623
	627
	631
	634
	637
	640
	643
	646
	649
	654
	659
	662
	665
	668
	671
	674
	678
	682
	924
233-7061	184
233-9531	860
	861
	866
234-8762	887
236-3983	393
	395
236-7734	556
236-7735	556
236-9986	525
	528
236-9987	623
	627
	631
	634
	637
	640
	643
	646
	649
	654
	659
	662
	665
	668
	671
	674
	678
	682
	692
	693
	695
238-9198	619
	682
	692
	693
	695
237-9315	221
	223
	225
	227
	229
	231
	233
	235
	237
	239
	248
238-0245	586
	588
	590
	601
	605
238-0265	545
	565
	568
	571
	574
	577
	869
238-0266	545
	565
	568
	571
	574
	577
238-0271	545
	565
	568
	571
	574
238-9137	486
	506
	513
	516
	519
	525
	531
	537
	540
	542
238-9145	478
	504
	505
	537
238-9196	623
	627
	631
	634
	637
	640
	643
	646
	649
	654
	659
	662
	665
	668
	671
	674
	678

PART NUMBER INDEX

Part	Page
	623
	627
	640
	643
	646
	665
	668
	678
238-9295	179
	181
	623
	627
	631
	634
	637
	646
	649
	654
	659
	662
	665
	668
	671
	674
	678
	682
238-9349	623
238-9621	429
	430
238-9628	383
	384
239-0169	623
	627
	631
	659
	682
239-0187	619
	620
	621
	623
	627
	631
	634
	637
	640
	643
	646
	649
	654
	659
	662
	665
	668
	674
	678
239-0227	623
	627
	631
239-0228	623
	627
	631
	659
	662
	665
	668
	671
	674
	682
	685
239-0229	627
	631
	643
	646
	662
	665
239-0232	623
	627
	631
	634
	637
	640
	643
	646
	649
	654
	659
	662
	665
	668
	671
	674
	678
	682
	692
	693
	695
239-0743	565
	568
	571
242-7070	893
242-7071	893
242-7073	893
242-7074	893
242-7075	893
242-7076	893
242-7077	893
242-7078	893
243-4300	860
	866
243-4402	882
	884
243-6411	847
	852
	854
244-3259	545
	548
	552
	556
	559
	562
	565
	568
	571
	574
	577
	583
245-1361	506
	513
	516
	519
	525
	528
	531
	534
	537
	540
	542
245-1362	506
	513
	516
	519
	525
	528
	531
	534
	537
	540
	542
245-1364	506
	513
	516
	519
	525
	528
	531
	534
	537
	540
	542
246-3470	475
	540
	542
246-3471	475
	540
	542
246-4267	858
246-4291	925
	927
246-4361	186
	189
	192
	196
	198
	201
	203
	206
	623
	627
	631
	634
	637
	643
	646
	649
	654
	659
	662
	665
	668
	671
	674
	678
	682
	685
	687
	689
	762
246-9218	484
	502
247-1378	586
	588
	591
	593
247-1380	586
	588
	591
	593
249-1532	623
	627
	631
	634
	646
	649
	654
	659
	662
	665
	668
	671
	674
	678
	682
	685
	687
249-5541	506
	509
	511
	513
	516
	519
	522
	523
	531
	534
	537
	540
	542
	544
249-7263	184
	194
	768
	770
252-0787	475
	479
252-1446	812
	814
	816
	820
	824
	826
	829
252-1466	822
	831
252-1747	912
252-1802	287
252-8372	607
	609
254-5541	867
	868
	870
255-1297	489
	548
	552
	556
	559
	562
256-2084	248
	249
	250
	252
	257
256-2085	248
	249
	250
	252
	257
267-0022	503
268-3421	631
	634
	637
	649
	659
	662
270-6968	408
	409
	416
	417
270-6970	408
	409
	416

► PRIMARY REFERENCE

PART NUMBER INDEX

Part	Page
	417
271-2877	383
	384
271-5018	910
271-5059	586
	588
	591
	593
	597
	598
271-5062	586
	588
	591
	593
	597
	598
271-6700	885
273-9253	489
	552
	559
	562
	583
275-0493	878
	879
	880
	888
	892
276-1804	▶759
	▶761
	▶844
	845
	846
276-1806	759
	761
	844
283-4752	899
	904
	905
283-4816	860
	861
	866
285-3555	323
	731
	756
	772
	775
286-7495	509
	523
286-7496	506
	509
	511
	513
	516
	519
	523
	531
	534
	537
	540
	542
	544
288-6537	248
288-6539	186
	189
	192
	196
	198
	201
	203
	206
288-6575	731
288-8813	401
288-8814	401
290-8014	808
	810
	812
	814
	816
	818
	820
	822
	824
	826
	829
	831
	835
	838
290-8043	383
	384
291-1744	883
	884
291-1808	248
292-1992	556
	586
	591
294-4916	221
	225
	227
	229
	231
	235
295-0887	445
295-4070	763
	795
	796
	799
	802
	805
	850
295-5876	545
	565
	568
	571
	574
	577
297-2996	483
297-3080	410
	411
	413
	414
297-3121	422
298-4543	665
	685

3

Part	Page
301-2946	▶9
302-1819	▶1
302-1820	▶10
302-4181	221
	225
	227
	229
	231
	235
302-4182	221
	225
	227
	229
	231
	235
302-4187	762
	796
	799
	802
	847
	850
	852
	854
302-7776	759
	761
	844
302-7777	759
	761
	844
302-7778	759
	761
	844
302-7821	▶806
	▶826
302-8138	▶12
303-0307	509
303-0338	248
303-4098	▶13
303-4099	▶16
303-4225	▶19
303-4226	▶21
304-5061	623
	627
	631
	634
	637
	640
	643
	646
	649
	654
	659
	662
	665
	668
	671
	674
	678
	682
	692
	693
	695
305-0584	387
	389
	393
	397
306-2347	290
	293
	294
306-6346	▶807
	▶822
	▶831
307-9834	▶23
307-9835	▶25
308-1222	910
308-1852	209
	211
	213
	215
	217
	219
308-1853	209
	211
	213
	215
	217
	219
308-1854	217
308-1859	▶245
	246
	247
	▶253
	▶260
	▶263
308-1867	239
308-1869	239
308-1871	299
	322
	338
	339
308-1874	265
	297
	298
	299
	340
308-1875	265
	297
	298
	299
	305
	312
	322
	333
	335
	340
	360
	363
	367
	371
	696
	698
	701
	703
	705
	707
	709
	719
	721
	723
	725
	727
	729
	733
	735
	741
	743
	764
	766
	778
	780
308-1877	299
308-1878	299
	322
	775
308-1882	299
	304
	318
	322
	327
	356
	358
	360
	363
	367
	371
	696
	698
	701
	703
	705
	707
	709
	711
	713
	715
	717
	719
	721

PART NUMBER INDEX

Part	Page
	723
	725
	727
	729
	733
	735
	737
	739
	741
	743
	764
	766
	768
	770
	772
	775
	778
	780
	782
	872
	874
308-1889	299
	304
	318
	322
	327
	333
	335
	360
	696
	698
	701
	703
	705
	707
	709
	711
	713
	715
	717
	719
	721
	723
	725
	727
	729
	733
	735
	737
	739
	741
	743
	745
	746
	749
	764
	766
	768
	770
	772
	775
	778
	780
	782
	786
	793
	794
	872
	874
	876
308-1892	299
	304
	318
	322
	327
	356
	358
	360
	696
	698
	701
	703
	705
	707
	709
	711
	713
	715
	717
	719
	721
	723
	725
	727
	729
	733
	735
	737
	739
	741
	743
	747
	749
	752
	764
	766
	768
	770
	772
	775
	778
	780
	782
	786
	788
	791
	872
	874
308-1897	299
	304
	318
	322
	327
	333
	335
	696
	698
	701
	703
	705
	707
	709
	711
	713
	715
	717
	719
	721
	723
	725
	727
	729
	733
	735
	737
	739
	741
	743
	764
	766
	768
	772
	775
	778
	780
	782
	872
	874
308-1901	299
	322
	775
308-1902	▶143
	▶146
	▶148
	▶150
	▶152
	▶154
	▶156
	▶157
	▶160
	▶162
	▶164
	▶167
	▶168
	▶173
	▶178
	▶322
308-1903	143
	145
	146
	147
	148
	149
	150
	152
	154
	156
	157
	159
	160
	161
	162
	164
	166
	167
	168
	169
	170
	171
	172
	173
	174
	175
	300
	305
	322
	327
308-1904	145
	146
	148
	149
	150
	152
	154
	156
	157
	160
	161
	162
	164
	167
	168
	173
	299
	322
	752
308-1905	808
	810
	818
	835
	838
308-1906	808
	810
	818
	835
	838
308-1907	509
	513
	516
	522
	523
	525
	528
	531
	534
308-1908	523
308-1914	756
	757
	784
	785
	879
	888
	889
	891
	892
308-2281	8
	25
	28
	30
	35
	38
	46
	51
	53
	56
	59
	60
	62
	68
	72
	75
	79
	91
	101
	104
	105
	115
	116
	119
	121
	122
	123
	125
	127
	130
	131
	133
	135
	138
	139
	140

▶ PRIMARY REFERENCE

PART NUMBER INDEX

Part	Page
	221
	223
308-2283	8
	25
	28
	30
	35
	38
	46
	51
	53
	56
	59
	60
	62
	68
	72
	75
	79
	91
	101
	104
	105
	115
	116
	119
	121
	122
	123
	125
	127
	130
	131
	133
	135
	138
	139
	140
	209
	211
308-2284	8
	25
	28
	30
	35
	38
	46
	51
	53
	56
	59
	60
	62
	68
	72
	75
	79
	91
	101
	104
	105
	115
	116
	119
	121
	122
	123
	125
	127
	130
	131
	133
	135
	138
	139
	140
	253
308-2285	8
	25
	29
	31
	37
	39
	47
	52
	55
	58
	59
	61
	64
	69
	72
	77
	79
	93
	101
	104
	107
	115
	116
	119
	121
	122
	123
	125
	127
	130
	131
	133
	136
	138
	139
	140
	452
	454
	456
308-2286	8
	25
	28
	30
	36
	38
	46
	51
	54
	57
	59
	61
	63
	68
	72
	76
	79
	92
	101
	104
	106
	115
	116
	119
	121
	122
	123
	125
	127
	130
	131
	133
	135
	136
	138
	139
	140
	408
	409
308-2287	8
	25
	28
	30
	36
	38
	46
	51
	54
	57
	59
	61
	63
	68
	79
	92
	101
	104
	106
	115
	116
	119
	121
	122
	123
	125
	127
	130
	131
	133
	136
	138
	139
	140
	480
308-2288	25
	28
	36
	38
	46
	51
	54
	57
	68
	76
	101
	104
	106
	119
	123
	125
	130
	131
	133
	138
	140
	276
308-2289	25
	36
	38
	46
	51
	54
	57
	68
	76
	101
	104
	106
	119
	123
	125
	130
	131
	133
	136
	138
	139
	140
	808
308-2290	5
	9
	10
	12
	13
	17
	19
	27
	28
	33
	36
	40
	42
	44
	46
	54
	60
	79
	80
	81
	82
	89
	92
	95
	98
	101
	102
	103
	117
	120
	124
	125
	126
	127
	128
	130
	131
	132
	133
	134
	135
	138
	139
	140
	141
	287
	288
308-2291	5
	9
	10
	12
	13
	16
	19
	27
	28
	40
	42
	44
	46
	53
	60
	65

PART NUMBER INDEX

Part	Page
	79
	80
	81
	82
	89
	91
	94
	101
	102
	103
	120
	124
	125
	126
	127
	128
	130
	131
	132
	133
	134
	135
	138
	139
	140
	141
	278
308-2293	1
	3
	5
	9
	10
	12
	15
	18
	20
	21
	27
	29
	30
	38
	40
	42
	44
	46
	49
	50
	51
	55
	58
	59
	61
	64
	65
	67
	68
	71
	72
	73
	79
	80
	81
	84
	86
	90
	96
	101
	102
	103
	116
	119
	120
	121
	122
	123
	124
	125
	126
	128
	130
	131
	132
	133
	134
	138
	139
	140
	141
	895
	896
	897
	898
308-2294	1
	3
	5
	9
	10
	12
	14
	17
	19
	21
	23
	25
	33
	36
	40
	42
	44
	46
	48
	50
	51
	54
	57
	59
	61
	63
	65
	67
	68
	70
	72
	73
	76
	79
	80
	81
	83
	86
	89
	92
	95
	98
	101
	102
	103
	116
	117
	119
	120
	121
	122
	123
	125
	126
	127
	128
	130
	131
	132
	133
	134
	136
	138
	139
	140
	141
	434
308-2295	1
	5
	7
	8
	9
	10
	12
	14
	17
	19
	21
	27
	28
	40
	51
	54
	57
	59
	61
	63
	67
	68
	70
	72
	73
	83
	86
	89
	101
	104
	106
	109
	111
	112
	113
	115
	116
	119
	120
	121
	122
	123
	125
	126
	129
	130
	131
	132
	133
	134
	138
	139
	140
	141
	243
	244
	385
	387
	389
	391
308-2297	1
	3
	5
	6
	8
	10
	12
	13
	16
	19
	21
	23
	27
	28
	30
	32
	38
	42
	44
	46
	53
	56
	65
	67
	70
	80
	81
	102
	103
	104
	105
	108
	110
	112
	113
	115
	124
	128
	129
	243
	244
	466
308-2298	1
	3
	5
	6
	8
	9
	10
	12
	13
	16
	19
	21
	23
	25
	27
	28
	30
	33
	35
	38
	40
	42
	44
	46
	48
	50
	51
	53
	56
	59
	60
	62
	65
	67
	68

► PRIMARY REFERENCE

PART NUMBER INDEX

Part	Page
	70
	72
	73
	75
	79
	80
	81
	82
	85
	89
	91
	94
	97
	101
	102
	103
	104
	105
	108
	110
	112
	113
	115
	116
	117
	119
	120
	121
	122
	123
	124
	125
	126
	127
	128
	129
	130
	131
	132
	133
	134
	135
	138
	139
	140
	243
	244
	474
308-2299	8
	25
	28
	30
	35
	38
	46
	72
	76
	106
	504
308-2300	1
	3
	5
	7
	9
	10
	12
	14
	17
	19
	21
	23
	27
	33
	40
	42
	44
	48
	50
	65
	67
	70
	73
	81
	83
	86
	89
	95
	98
	102
	109
	111
	112
	114
	117
	120
	124
	126
	128
	132
	134
	141
	243
	244
	431
308-2301	14
	17
	19
	21
	67
	71
	83
	86
	90
	120
	126
	132
	134
	141
	506
308-2302	1
	3
	5
	6
	8
	9
	10
	12
	13
	16
	19
	21
	25
	27
	28
	30
	32
	35
	38
	42
	44
	46
	48
	50
	51
	53
	56
	59
	60
	62
	65
	67
	68
	70
	72
	73
	79
	80
	81
	82
	85
	88
	91
	94
	97
	101
	102
	103
	104
	105
	108
	110
	112
	113
	115
	116
	117
	119
	120
	121
	122
	123
	124
	125
	126
	127
	128
	129
	130
	131
	132
	133
	134
	135
	138
	139
	140
	141
	243
	244
	483
308-2303	1
	3
	5
	9
	10
	23
	27
	28
	32
	35
	40
	42
	91
	94
	117
	124
	125
	133
	491
308-2304	1
	3
	5
	9
	10
	23
	28
	32
	35
	40
	42
	79
	94
	97
	117
	124
	125
	133
	270
308-2305	1
	3
	5
	9
	10
	12
	13
	16
	19
	21
	28
	30
	38
	40
	42
	44
	46
	48
	50
	51
	53
	56
	59
	60
	62
	65
	67
	68
	70
	72
	73
	82
	85
	88
	94
	101
	116
	119
	120
	121
	122
	123
	124
	125
	126
	130
	131
	132
	133
	134
	138
	139
	140
	141
	858
	859
308-2306	2
	4

PART NUMBER INDEX

Part	Page
	5
	9
	11
	12
	15
	18
	20
	22
	27
	29
	31
	41
	43
	44
	47
	49
	50
	52
	55
	58
	59
	61
	64
	65
	67
	69
	71
	72
	73
	79
	84
	87
	90
	96
	101
	116
	119
	120
	121
	122
	123
	125
	126
	130
	131
	132
	133
	134
	138
	139
	140
	141
	443
308-2307	1
	3
	5
	9
	10
	12
	16
	21
	23
	25
	27
	28
	30
	33
	35
	38
	40
	42
	44
	46
	51
	53
	56
	59
	60
	62
	65
	67
	68
	70
	72
	73
	82
	85
	88
	91
	94
	97
	101
	113
	116
	117
	119
	120
	121
	122
	123
	124
	125
	126
	127
	130
	131
	132
	134
	135
	138
	140
	141
	297
308-2308	25
	29
	31
	37
	39
	46
	77
	623
	627
308-2309	3
	5
	10
	16
	19
	27
	28
	30
	32
	38
	51
	53
	56
	59
	60
	62
	67
	68
	70
	72
	73
	75
	82
	85
	88
	97
	101
	116
	117
	119
	120
	121
	122
	123
	125
	126
	127
	130
	131
	132
	133
	134
308-2310	1
	3
	5
	9
	10
	14
	17
	19
	21
	23
	25
	27
	28
	33
	36
	40
	42
	44
	46
	51
	54
	57
	59
	61
	63
	67
	68
	70
	72
	73
	76
	79
	83
	86
	89
	92
	95
	98
	101
	116
	117
	119
	120
	121
	122
	123
	125
	126
	127
	130
	131
	132
	133
	134
	136
	138
	139
	140
	141
	796
	799
	802
308-2311	1
	3
	5
	6
	8
	9
	10
	12
	13
	17
	19
	21
	23
	25
	27
	28
	30
	38
	40
	42
	44
	46
	48
	50
	51
	54
	56
	59
	60
	63
	65
	67
	68
	70
	72
	73
	79
	80
	81
	82
	85
	89
	95
	101
	102
	103
	104
	106
	108
	110
	112
	113
	115
	116
	119
	120
	121
	122
	123
	124
	125
	126
	128
	129
	130
	131

► PRIMARY REFERENCE

PART NUMBER INDEX

Part	Page
	132
	133
	134
	138
	139
	140
	141
	243
	244
	881
308-2312	1
	4
	5
	9
	10
	27
	29
	34
	37
	43
	44
	46
	49
	50
	92
	96
	117
	124
	125
	127
	128
	133
	137
	139
	906
308-2313	1
	3
	5
	7
	8
	9
	10
	15
	18
	20
	21
	23
	25
	27
	29
	38
	42
	44
	49
	50
	51
	55
	58
	59
	61
	64
	67
	68
	71
	72
	73
	81
	83
	86
	90
	96
	101
	104
	105
	109
	111
	112
	114
	115
	116
	119
	120
	121
	122
	123
	124
	125
	126
	127
	129
	130
	131
	132
	133
	134
	139
	140
	141
	243
	244
	889
308-2314	1
	4
	5
	9
	11
	15
	20
	21
	23
	25
	27
	29
	51
	58
	59
	61
	64
	67
	69
	71
	72
	73
	77
	84
	87
	90
	92
	96
	99
	101
	104
	106
	109
	111
	112
	114
	115
	116
	118
	119
	120
	121
	122
	123
	125
	126
	127
	129
	130
	131
	132
	133
	134
	136
	138
	139
	140
	141
	243
	244
	917
308-2319	1
	3
	5
	9
	10
	13
	16
	19
	21
	27
	28
	42
	44
	46
	51
	53
	56
	59
	60
	62
	67
	68
	70
	72
	73
	79
	80
	81
	94
	102
	103
	119
	867
308-2320	1
	3
	5
	9
	10
	14
	17
	19
	21
	23
	25
	27
	28
	34
	36
	67
	70
	73
	83
	86
	89
	98
	117
	120
	125
	126
	132
	133
	134
	139
	141
	840
	841
308-2321	1
	3
	5
	10
	14
	17
	19
	21
	23
	27
	28
	51
	54

PART NUMBER INDEX

Part	Page
	57
	59
	60
	63
	67
	68
	70
	918
308-2362	217
308-2868	►26
308-3329	59
	60
	63
	72
	115
	116
	121
	122
	298
308-3330	59
	61
	63
	72
	115
	116
	121
	122
	810
308-4266	299
	304
	318
	322
	327
	356
	358
	360
	696
	698
	701
	703
	705
	707
	709
	711
	713
	715
	717
	719
	721
	723
	725
	727
	729
	733
	735
	737
	739
	741
	743
	747
	749
	752
	764
	766
	768
	770
	775
	778
	780
	782
	786
	788
	791
	872
	874
308-4735	1
	3
	5
	7
	9
	10
	12
	23
	27
	33
	40
	42
	44
	48
	50
	65
	73
	81
	95
	98
	102
	109
	111
	112
	113
	117
	124
	128
	243
	244
	482
308-5610	42
	44
	46
	91
	94
	127
	135
	607
308-5704	124
	761
308-6560	►3
308-6561	►27
308-6562	►5
308-6563	►28
309-1463	►30
309-6712	1
	3
	5
	6
	9
	10
	12
	13
	16
	19
	21
	23
	27
	32
	40
	42
	44
	48
	50
	65
	67
	70
	73
	82
	88
	94
	97
	108
	110
	112
	113
	117
	120
	124
	126
	132
	134
	141
	225
	227
	229
	243
	244
309-6713	1
	3
	5
	6
	9
	10
	12
	13
	16
	19
	21
	23
	27
	32
	40
	42
	44
	48
	50
	65
	67
	70
	73
	82
	88
	94
	97
	108
	110
	112
	113
	117
	120
	124
	126
	132
	134
	141
	213
	243
	244
309-6714	1
	3
	5
	7
	9
	10
	12
	14
	17
	19
	21
	23
	27
	33
	40
	42
	44
	48
	50
	65
	67
	70
	73
	82
	85
	88
	94
	97
	98
	109
	111
	112
	114
	117
	120
	124
	126
	132
	134
	141
	243
	244
	410
	411
309-6715	1
	3
	5
	6
	9
	10
	12
	13
	16
	19
	21
	23
	27
	32
	40
	42
	44
	48
	50
	65
	67
	70
	73
	82
	88
	94
	97
	108
	110
	112
	113
	117
	120
	124
	126
	132
	134
	141
	243
	244
	255
309-6716	2
	4
	5
	7
	9
	11
	12

► PRIMARY REFERENCE

PART NUMBER INDEX

Part	Page
	15
	20
	22
	23
	27
	34
	41
	43
	44
	49
	50
	65
	67
	71
	73
	84
	88
	96
	99
	109
	111
	112
	114
	118
	120
	124
	126
	132
	134
	141
	243
	244
	458
	460
309-6717	1
	3
	5
	7
	9
	10
	12
	14
	17
	19
	21
	23
	27
	33
	40
	42
	44
	48
	50
	65
	67
	70
	73
	83
	88
	95
	98
	108
	111
	112
	114
	117
	120
	124
	126
	132
	134
	141
	243
	244
	481
309-6718	1
	3
	9
	10
	19
	21
	23
	27
	33
	48
	65
	67
	70
	89
	95
	112
	128
	299
	304
309-6719	1
	3
	9
	10
	19
	21
	23
	33
	48
	65
	67
	70
	83
	86
	89
	95
	98
	111
	112
	117
	120
	126
	128
	132
	134
	141
	812
309-6720	1
	3
	5
	7
	8
	9
	10
	14
	17
	19
	21
	23
	25
	27
	28
	30
	33
	36
	38
	40
	42
	44
	46
	51
	54
	57
	59
	61
	65
	67
	68
	70
	72
	76
	79
	80
	81
	83
	86
	89
	95
	98
	101
	102
	103
	104
	106
	109
	111
	112
	114
	115
	116
	117
	119
	120
	121
	122
	123
	124
	125
	126
	128
	129
	131
	132
	133
	134
	138
	139
	140
	141
	243
	244
	426
309-6721	1
	3
	5
	7
	9
	10
	12
	23
	27
	34
	40
	42
	44
	49
	50
	65
	73
	96
	98
	109
	111
	112
	114
	117
	124
	243
	244
	509
	511
309-6722	3
	5
	6
	9
	12
	13
	16
	19
	21
	27
	40
	42
	44
	67
	70
	82
	85
	88
	94
	108
	110
	112
	113
	120
	124
	126
	132
	134
	141
	184
	186
	189
	243
	244
309-6724	1
	3
	5
	9
	10
	12
	14
	17
	19
	21
	23
	27
	40
	42
	44
	48
	50
	65
	67
	70
	73
	83
	86
	89
	95
	98
	117
	120
	124
	126
	132
	134
	141
	614
309-6725	1
	3
	5

PART NUMBER INDEX

Part	Page	Part	Page	Part	Page	Part	Page
	7		141	309-6736	184		309
	8		243		194	311-1683	5
	9		244	309-6737	376		7
	10		376	310-0598	▶32		14
	12		377	310-1532	▶35		17
	14	309-6728	299	310-7852	▶38		42
	17		322	311-0023	509		44
	19		737	311-0655	299		81
	21		747		304		102
	23		768		318		814
	25		775		322	311-1883	3
	27	309-6729	299		327		23
	28		304		356		25
	30		309		358		48
	33		327		360		50
	36		356		696		51
	38		358		698		59
	40		360		701		65
	42		705		703		289
	44		707		705		290
	46		709		707	311-1884	3
	48		711		709		23
	50		713		711		33
	51		715		713		36
	54		717		715		51
	57		719		717		59
	59		721		719		98
	60		723		721		117
	63		725		723		279
	65		727		725	311-1886	3
	67		729		727		23
	68		733		729		25
	70		735		733		42
	72		737		735		44
	73		739		737		46
	76		741		739		124
	79		743		741		393
	80		747		743		395
	83		749		747	311-2349	475
	86		752		749		479
	89		764		752	311-3840	▶40
	92		766		764	311-5852	183
	95		768		766	311-5853	183
	98		770		768	311-7561	810
	101		775		770		818
	103		782		772		838
	104		786		775	311-9023	12
	106		788		778		108
	108		791		780		124
	111		872		782		312
	112		874		786	311-9024	12
	113	309-6732	299		788		108
	115	309-6733	145		791		124
	116		147		872		764
	117		149		874		766
	119		159	311-1119	30	311-9025	12
	120		161		40		108
	121		166		44		124
	122		169		46		145
	123		170		73	311-9026	12
	124		171		266		109
	125		172	311-1174	762		124
	126		174		796		816
	127		175		799	311-9027	38
	129		299		802		124
	130		304		847		437
	131		327	311-1682	5	311-9028	30
	132	309-6735	184		6		48
	133		186		14		50
	134		189		17		80
	136		194		42		81
	138		196		44		102
	139		201		81		103
	140		640		102		124

▶ PRIMARY REFERENCE

PART NUMBER INDEX

Part	Page
	128
	847
311-9029	39
	124
	444
311-9030	30
	68
	71
	124
	885
311-9048	762
	802
	847
	850
	852
	854
312-4554	403
	407
312-4560	264
	451
313-2025	318
	794
	872
	874
313-2037	360
313-5832	299
	304
	322
	327
	333
	335
	696
	698
	701
	703
	705
	707
	709
	711
	713
	715
	717
	719
	721
	723
	725
	727
	729
	733
	735
	737
	739
	741
	743
	749
	768
	770
	772
	775
	778
	780
	782
	786
	788
	791
	876
313-5833	299
	304
	322
	327
	333
	335
	696
	698
	701
	703
	705
	707
	709
	711
	713
	715
	717
	719
	721
	723
	725
	729
	733
	735
	737
	739
	741
	743
	749
	768
	770
	772
	775
	778
	780
	782
	786
	788
	791
	876
313-9323	143
	144
	145
	146
	147
	148
	149
	150
	152
	154
	156
	157
	159
	160
	161
	162
	164
	166
	167
	168
	169
	170
	171
	172
	173
	174
	175
	300
	305
	322
	327
315-5235	318
	747
	872
	874
315-5236	318
	747
	872
	874
315-5237	731
	878
	880
	890
315-5252	12
	62
	73
	91
	127
	135
	451
315-5256	12
	48
	50
	613
315-6638	129
	907
315-7813	12
	25
	30
	38
	40
	65
	76
	101
	138
	271
315-7814	12
	65
	795
315-7817	12
	30
	40
	65
	81
	102
	128
	890
315-7819	7
	8
	12
	15
	18
	20
	21
	23
	25
	38
	40
	51
	55
	58
	59
	61
	64
	67
	68
	71
	72
	73
	79
	80
	81
	84
	86
	90
	101
	102
	103
	104
	106
	109
	111
	112
	114
	115
	116
	119
	120
	121
	122
	123
	126
	128
	130
	131
	132
	134
	138
	140
	141
	243
	244
	908
	909
316-1016	387
316-2275	389
	393
	397
316-5690	▶42
316-5692	▶44
316-5693	▶46
317-0586	1
	21
	56
	63
	67
	73
	75
	85
	116
	119
	122
	123
	280
317-0588	1
	21
	30
	38
	57
	63
	67
	68
	70
	72
	73
	75
	86
	116
	119
	121
	122
	123
	291
317-0590	1
	10
	23
	32
	65
	97
	117
	192
317-0649	13
	16
	19
	21
	67
	70
	82
	85
	88

▶ PRIMARY REFERENCE

PART NUMBER INDEX

Part	Page
	120
	126
	132
	134
	141
	586
	588
	590
317-0960	634
	637
	640
	643
	646
	649
	654
	678
	687
	689
317-0961	634
	637
	640
	643
	646
	649
	654
	659
	665
	678
	682
	685
	687
	689
317-0962	623
	627
	631
	634
	637
	640
	643
	646
	649
	654
	659
	662
	665
	668
	671
	674
	678
	682
	692
	693
	695
317-0965	8
	92
	127
	129
	314
	315
317-0967	92
	127
	768
	770
317-0971	8
	91
	127
	129
	146
317-0974	91
	127
	135
	475
317-0977	8
	30
	79
	80
	92
	103
	127
	129
	818
317-0979	8
	25
	28
	30
	37
	38
	46
	51
	55
	57
	59
	61
	63
	68
	72
	76
	92
	101
	104
	106
	115
	116
	119
	121
	122
	123
	127
	130
	131
	133
	136
	138
	139
	140
	513
	516
	519
317-0980	23
	501
317-3036	34
	37
	77
	92
	99
	117
	899
317-3037	30
	33
	36
	38
	42
	65
	92
	95
	98
	117
	127
	136
	397
	399
317-3038	32
	35
	75
	91
	97
	117
	127
	135
	860
	861
317-3039	34
	37
	77
	93
	99
	118
	127
	136
	445
317-3040	33
	36
	75
	91
	98
	117
	127
	135
	882
317-3041	32
	35
	97
	117
	878
317-6164	920
317-6706	40
	42
	44
	46
	51
	54
	57
	59
	61
	63
	68
	72
	95
	101
	116
	119
	121
	122
	123
	130
	131
	138
	844
317-7186	243
	244
	316
317-7187	243
	244
	696
	698
317-7188	▶147
	▶243
	▶244
317-7190	40
	50
	243
	244
	820
317-7191	40
	51
	76
	502
317-7192	40
	70
	81
	102
	128
	615
317-7193	40
	622
317-7194	40
	50
	486
317-7195	299
	304
	323
	327
	356
	358
	360
	696
	698
	701
	703
	705
	707
	709
	711
	713
	715
	717
	719
	721
	723
	725
	727
	729
	733
	735
	737
	739
	741
	743
	749
	764
	766
	768
	770
	772
	775
	778
	780
	782
	786
	788
	791
318-1706	▶48
318-1707	▶50
318-5038	887
319-1623	40
	44
	46
	73
	490
319-3250	299
	304
	700
	701
	703
	705
	707
	711
	713
	715
	717
	737
	739
	793
319-3251	709
	745
	768

▶ PRIMARY REFERENCE

PART NUMBER INDEX

Part	Page
	770
319-3252	327
	696
	698
	719
	721
	727
	729
	733
	735
	741
	743
	749
	764
	766
319-3253	333
	335
	778
	780
	782
	786
	876
319-6358	223
	233
	237
	829
	831
	835
	838
319-7216	▶51
319-7366	385
	387
	389
	393
	397
320-0290	▶53
320-0291	▶56
320-0335	▶59
320-0336	▶60
320-0337	▶62
320-8401	179
	181
	184
	186
	189
	192
	196
	198
	201
	203
	206
	623
	627
	631
	634
	637
	640
	643
	646
	649
	654
	659
	662
	665
	668
	671
	678
	682
320-9114	73
	887
321-3145	318
	747
	872
	874
321-4061	255
	257
	258
	262
321-4249	299
	304
	318
	323
	327
	356
	696
	701
	705
	709
	711
	715
	719
	723
	727
	733
	737
	741
	764
	768
	772
	775
	778
	782
	872
321-4252	147
	159
	166
	169
	170
	171
	172
	304
	327
321-4257	73
	318
321-4258	73
	114
	822
321-4261	30
	68
	71
	910
	911
321-5906	183
321-5907	265
	340
	363
	367
	371
321-6738	431
	432
	433
321-6740	8
	25
	28
	30
	36
	38
	46
	51
	54
	57
	59
	61
	63
	68
	72
	76
	79
	80
	92
	101
	103
	104
	106
	115
	116
	119
	121
	122
	123
	125
	127
	129
	130
	131
	133
	136
	138
	139
	140
	432
321-6741	3
	9
	10
	16
	19
	21
	28
	38
	42
	44
	46
	48
	50
	51
	53
	56
	60
	62
	67
	68
	70
	72
	73
	79
	80
	81
	82
	85
	88
	94
	101
	102
	103
	116
	119
	120
	121
	122
	123
	125
	126
	128
	130
	131
	132
	133
	134
	138
	139
	140
	141
	868
321-7701	586
	588
	591
	593
	597
	598
321-8207	30
	322
321-8209	323
	723
	725
	772
	775
321-8211	323
	772
	775
321-8212	323
	772
	775
321-8214	323
	772
	775
321-8216	323
	772
	775
321-8217	323
	731
	756
	772
	775
321-8218	322
	772
	775
322-2412	6
	8
	25
	48
	50
	104
	106
	108
	110
	112
	113
	115
	129
	243
	244
	281
322-2416	48
	50
	401
322-2420	48
	50
	427
322-2421	48
	50
	468
322-2422	48
	50
	79
	80
	81
	92
	102
	103
	127
	128
	136
	430
322-2423	80
	81
	91

▶ PRIMARY REFERENCE

PART NUMBER INDEX

Part	Page
	102
	103
	127
	128
	135
	267
322-2424	48
	50
	73
	81
	102
	128
	194
	196
	198
322-2425	48
	50
	492
322-2426	48
	50
	65
	79
	80
	81
	102
	103
	128
	424
322-2427	48
	487
322-2430	267
	488
322-3074	50
	327
322-3075	50
	824
322-6874	221
	225
	227
	229
	231
	235
322-7486	253
	255
	258
	260
	262
	263
322-7487	253
	255
	258
	260
	262
	263
322-7488	253
	255
	258
	260
	262
	263
322-7490	299
	338
322-7491	299
322-7492	299
	323
	737
	768
	775
322-7493	299
	304
	318
	322
	327
	356
	358
	360
	696
	698
	701
	703
	705
	707
	709
	711
	713
	715
	717
	719
	721
	723
	725
	727
	729
	733
	735
	737
	739
	741
	743
	747
	749
	752
	764
	766
	768
	770
	772
	775
	778
	780
	782
	786
	788
	791
	872
	874
323-9145	28
	38
	51
	54
	57
	68
	75
	332
323-9146	28
	38
	51
	54
	57
	68
	75
	772
323-9147	28
	38
	51
	53
	56
	68
	75
	148
323-9157	76
	425
325-5669	48
	50
	268
325-5944	545
	548
	552
	565
	568
	571
	574
	577
	581
325-5946	548
	565
	568
325-5948	545
	548
	552
	556
	559
	562
	565
	568
	571
	574
	577
	581
	583
325-9415	391
	395
	399
	403
	404
	406
	407
325-9475	5
	6
	13
	16
	42
	44
	81
	102
	701
	703
325-9476	5
	6
	13
	16
	42
	44
	81
	102
	149
326-0081	223
	233
	239
326-1010	591
	593
	595
	600
	601
	603
	605
326-1872	►65
326-5052	279
	286
326-8542	79
	80
	92
	103
	631
326-8543	51
	53
	56
	59
	60
	62
	68
	72
	101
	116
	119
	121
	122
	123
	130
	131
	138
	139
	140
	591
	593
	595
326-8547	586
	588
	590
	591
	593
	595
	600
	601
	603
	605
326-8551	548
	552
	564
	581
326-8552	548
326-8553	548
326-8554	548
	564
326-8555	548
	552
	581
326-8556	548
	552
	581
326-8557	548
326-8559	548
	552
	581
326-8561	548
326-8562	548
	552
	581
326-8564	548
	552
	581
326-9052	588
	590
	593
	595
	600
	601
	603
	605
	612
	920
	921
327-5154	278
	283
327-5241	280
	284
327-5608	282
327-7632	30
	38
	68
	70
	72
	121
	122
	282
327-7633	38

► PRIMARY REFERENCE

PART NUMBER INDEX

Part	Page
	850
328-1882	48
	50
	852
	854
328-2488	30
	438
328-3226	323
	332
	339
328-3229	265
	297
	340
	363
	367
	371
328-3230	265
	340
	371
328-3296	48
	50
	265
328-5174	323
	772
	775
328-6606	565
	568
328-6607	545
	565
	568
	571
	574
	577
329-1292	591
	593
	595
	600
	603
	763
	796
	799
	802
	805
	847
	852
	854
329-2158	▶65
329-2160	▶66
329-4424	79
	80
	81
	102
	103
	128
	616
329-8514	129
	503
329-8576	183
329-8577	13
	19
	183
329-9277	25
	28
	35
	38
	46
	51
	54
	57
	68
	75
	101
	104
	106
	119
	123
	125
	130
	131
	133
	138
	140
	333
	335
329-9278	25
	28
	35
	38
	46
	51
	53
	56
	68
	75
	101
	104
	105
	119
	123
	125
	130
	131
	133
	138
	140
	150
	152
330-9189	304
	318
	323
	327
	356
	358
	360
	363
	367
	371
	696
	698
	701
	703
	705
	707
	709
	711
	713
	715
	717
	719
	721
	723
	725
	727
	729
	733
	735
	737
	739
	741
	743
	764
	766
	768
	770
	772
	775
	778
	780
	782
	872
	874
331-2552	14
	83
	545
331-2553	565
	568
331-2589	8
	14
	17
	19
	21
	28
	30
	35
	38
	46
	51
	54
	57
	59
	61
	63
	67
	68
	70
	72
	76
	79
	83
	86
	88
	101
	104
	106
	115
	116
	119
	120
	121
	122
	123
	125
	126
	130
	131
	132
	133
	134
	138
	139
	140
	141
	505
331-2590	478
	504
	505
	537
331-3270	17
	20
	21
	67
	71
	86
	90
	120
	126
	132
	134
	141
	565
	568
	571
	574
331-4226	870
331-9611	75
	91
	879
332-1361	299
	323
	775
332-1362	104
	135
	337
332-1363	104
	135
	705
	707
332-1364	104
	135
	154
333-5930	896
	900
333-7903	900
	901
334-0267	▶67
334-0268	65
	912
334-0272	363
	371
	466
	468
	470
334-0732	304
	318
	322
	328
	356
	358
	360
	363
	367
	371
	696
	698
	701
	703
	705
	707
	709
	711
	713
	715
	717
	719
	721
	723
	725
	727
	729
	733
	735
	737
	739
	741
	743
	764
	766
	768
	770
	772
	775
	778
	780
	782
	872
	874

▶ PRIMARY REFERENCE

PART NUMBER INDEX

Part	Page
334-7304	565
334-7306	565
334-7436	565
	568
334-7437	545
	548
	552
	556
	559
	562
	565
	568
	571
	574
	577
	581
	583
335-5578	304
	318
	322
	327
	356
	358
	360
	363
	367
	371
	696
	698
	701
	703
	705
	707
	709
	711
	713
	715
	717
	719
	721
	723
	725
	727
	729
	733
	735
	737
	739
	741
	743
	764
	766
	768
	770
	772
	775
	778
	780
	782
	872
	874
	876
336-4079	586
	591
338-3396	862
338-3397	522
	525
	528
338-3398	446
339-2900	▶901
340-0199	887
340-4755	752
	764
	766
340-4756	752
	764
	766
340-5781	81
	102
	128
	231
	233
340-5782	81
	102
	128
	215
340-5783	81
	102
	128
	413
	414
340-5784	81
	102
	128
	258
340-5785	81
	102
	128
	462
340-5786	81
	102
	128
	856
340-5886	81
	102
	128
	522
340-5947	80
	81
	102
	103
	128
	862
340-5966	80
	102
	103
	128
	446
341-1357	30
	338
341-1358	8
	30
	129
	709
341-1359	30
	156
341-3600	886
	917
341-6637	52
	447
341-6641	634
	637
	640
	643
	646
	649
	654
	678
	687
	689
341-6642	51
	55
	58
	634
341-6649	548
	552
	581
341-6653	548
	556
341-6658	51
	55
	58
	68
	101
	119
	123
	130
	131
	139
	140
	548
	552
342-1268	6
	8
	104
	105
	108
	110
	112
	113
	115
	116
	275
342-4187	812
	814
	816
	820
	824
	829
342-4356	556
	559
	562
342-4357	556
	559
	562
	583
342-4358	556
	559
	562
	583
342-4359	556
342-4360	556
342-4362	556
	559
	562
	583
342-4364	556
342-4365	556
342-4366	556
342-4367	556
	559
	562
	583
342-4368	556
	559
	562
	583
342-4370	556
	559
	562
	583
342-4422	548
342-8499	144
342-9604	6
	8
	48
	50
	104
	106
	108
	110
	112
	113
	115
	129
	243
	244
	292
	293
342-9607	7
	8
	104
	106
	109
	111
	112
	114
	115
	129
	243
	244
	924
342-9620	752
342-9621	746
343-2871	▶144
	▶158
	▶177
	▶318
344-5469	59
	60
	63
	339
344-5470	59

▶ PRIMARY REFERENCE

PART NUMBER INDEX

Part	Page
	60
	63
	775
344-5472	59
	60
	62
	157
344-5515	59
	61
	64
	116
	121
	122
	637
344-5517	640
344-5868	545
	556
	559
	562
	565
	568
	571
	574
	577
	581
	583
344-5880	556
	559
	562
	583
344-5881	59
	61
	64
	72
	116
	121
	122
	556
	559
344-8934	▶68
345-0355	▶70
345-0356	▶72
345-4149	▶73
345-9771	▶74
346-8219	925
	927
346-9826	860
348-8504	▶74
349-1368	858
351-2617	808
	810
	812
	814
	816
	818
	820
	822
	824
	826
	829
	831
	835
	838
351-2618	808
	810
	812
	814
	816
	818
	820
	822
	824
	826
	829
	831
	835
	838
351-2619	808
	810
	812
	814
	816
	818
	820
	822
	824
	826
	829
	831
	835
	838
351-2620	808
	810
	812
	814
	816
	818
	820
	822
	824
	826
	829
	831
	835
	838
351-2621	808
	810
	812
	814
	816
	818
	820
	822
	824
	826
	829
	831
	835
	838
351-2622	808
	810
	812
	814
	816
	818
	820
	822
	824
	826
	829
	831
	835
	838
351-3132	808
	810
	812
	814
	816
	818
	820
	822
	824
	826
	829
	831
	835
	838
353-3477	649
	654
	659
	662
	665
	668
	674
354-1245	6
	8
	76
	79
	80
	81
	97
	102
	103
	104
	105
	108
	110
	112
	115
	117
	128
	129
	133
	139
	243
	244
	340
354-8330	▶75
357-3053	784
	785
357-9895	556
357-9896	556
	559
	562
357-9897	556
	559
	562
	583
358-1410	▶78
358-4256	291
358-9226	796
	799
	802
	847
	850
	852
	854
359-6000	915
359-9666	858
	859
	860
	861
	863
	864
	865
	866
360-9545	186
	189
	192
	196
	198
	201
	203
	206
	623
	627
	631
	646
	659
	662
	665
	668
	671
	674
	678
	682
	685
	687
	689
361-3925	915
362-8050	545
	552
	568
	571
	574
363-3164	76
	79
	80
	81
	102
	103
	128
	403
363-3165	1
	3
	5
	9
	10
	12
	13
	16
	19
	21
	23
	25
	27
	28
	30
	32
	35
	38
	40
	42
	44
	46
	51
	53
	56
	59
	60
	62
	67
	68
	70
	72
	73
	75
	79
	82
	85
	88
	91
	94
	97
	101
	116
	117
	119
	120
	121
	122
	123
	125
	126
	127
	130

▶ PRIMARY REFERENCE

PART NUMBER INDEX

Part	Page
	131
	132
	133
	134
	135
	138
	139
	140
	141
	470
363-5813	545
	548
	552
	556
	559
	562
	565
	568
	571
	574
	577
	581
	583
	623
	627
	631
	634
	646
	649
	654
	659
	662
	665
	668
	671
	678
	682
	685
	687
363-7274	548
363-8409	158
	318
	747
	749
364-2520	113
	341
364-2521	113
	872
	874
364-2522	113
	158
364-2755	318
	322
	356
	358
	360
	363
	367
	371
	705
	707
	723
	725
	729
	735
	737
	739
	768
	770
	772
	775
	778
	780
	782
364-8947	288
	295
	296
	548
	556
	565
	568
365-4125	179
	181
	623
	627
	631
	634
	637
	646
	649
	654
	659
	662
	665
	668
	671
	674
	678
	682
365-4126	72
	640
	643
365-4282	23
	65
	342
365-4283	23
	65
	711
	713
365-4284	23
	65
	159
365-4288	25
	36
	38
	46
	343
365-4290	25
	35
	38
	46
	876
365-4292	25
	35
	38
	46
	160
365-5278	381
	452
	454
	458
	462
	464
365-5317	363
	367
	371
365-5515	591
	593
	595
	600
	603
365-6506	48
	523
366-0164	556
	559
	562
	583
366-2656	545
	568
	571
	574
366-2658	545
	568
	571
	574
366-3055	179
	623
	627
	631
	634
	646
	649
	654
	659
	662
	665
	668
	671
	674
	678
	682
366-3065	606
	607
	608
	609
366-4251	221
	223
	225
	227
	229
	231
	233
	235
	237
	239
368-4106	69
	646
368-4112	92
	127
	136
	383
369-4486	318
	322
	356
	358
	696
	701
	705
	711
	715
	719
	723
	727
	733
	737
	741
	764
	768
	772
	775
	778
	782
	872
	874
369-8010	391
	395
	399
	401
	403
	404
	406
	407
370-6544	375
	377
	378
	380
370-7052	919
370-7831	42
	44
	344
370-7833	42
	44
	715
	717
370-7834	42
	44
	161
371-0183	513
	516
	523
	525
	531
373-7283	59
	60
	63
	115
	116
	121
	122
	778
	780
373-7284	59
	60
	62
	115
	116
	121
	122
	162
	164
377-2885	772
379-0870	270
380-2674	731
	756
380-2675	731
	756
380-2676	731
	756
380-2680	731
	756
	784
	785
380-2682	731
	756
380-3715	773
	775
380-3716	773
	776
380-3717	773
	776
383-2725	897
	902
383-4110	812
	814
	816
	820
	824
	829
383-4111	812
	814
	816
	820
	824
	829
383-4112	812
	814

► PRIMARY REFERENCE

PART NUMBER INDEX

Part	Page
	816
	820
	824
	829
383-4113	812
	814
	816
	820
	824
	829
383-9577	649
	659
	678
389-9258	▶79
390-3725	79
	80
	756
390-3729	318
	333
	696
	701
	705
	709
	711
	715
	719
	723
	727
	733
	741
	764
	772
	778
	782
	872
	874
390-3731	304
	318
	327
	356
	358
	360
	696
	698
	701
	703
	705
	707
	709
	711
	713
	715
	717
	719
	721
	723
	725
	727
	729
	733
	735
	739
	741
	743
	749
	752
	764
	766
	770
	772
	778
	780
	782
	786
	788
	791
	872
	874
390-3733	731
	756
392-8657	73
	869
393-7230	▶80
394-3492	864
394-3494	859
	865
394-3496	862
	863
396-3725	▶81
398-3408	76
	484
398-4274	6
	32
	36
	75
	93
	94
	97
	105
	108
	110
	113
	136
	920
398-4795	6
	106
	108
	110
	113
	294
398-4803	13
	17
	53
	60
	82
	89
	91
	94
	135
	283
398-4807	56
	63
	75
	85
	284
398-4818	15
	18
	55
	58
	61
	64
	84
	86
	90
	96
	903
398-4866	14
	17
	33
	35
	36
	53
	57
	63
	76
	83
	86
	89
	92
	95
	98
	135
	435
398-4899	▶269
398-4900	54
	57
	61
	63
	436
398-5865	7
	14
	17
	33
	36
	54
	57
	61
	62
	76
	83
	86
	89
	95
	98
	106
	109
	111
	114
	428
398-5866	93
	135
	264
398-5881	92
	136
	429
398-5884	6
	13
	16
	32
	35
	53
	56
	60
	62
	82
	85
	88
	93
	94
	97
	105
	108
	110
	113
	135
	485
398-6016	91
	135
	488
398-8178	6
	13
	16
	36
	53
	56
	60
	62
	75
	82
	85
	89
	91
	94
	98
	106
	108
	110
	113
	135
	136
	477
398-9092	76
	272
398-9095	13
	16
	82
	85
	88
	273
399-1115	15
	916
399-2625	79
	863
399-4716	6
	13
	16
	32
	35
	53
	56
	60
	62
	75
	82
	85
	88
	91
	94
	97
	105
	108
	110
	113
	135
	217

4

Part	Page
417-7273	▶82
417-7274	▶85
417-7275	▶88
417-8393	▶91
419-0074	925
	927
419-7640	889
	890
	891
420-3210	40
	346
420-3211	40
	719
	721
420-3212	40
	166
420-4312	▶94
420-6400	260
420-6407	80
	103
	129
	235
	237
420-6408	80
	103
	129
	219

PART NUMBER INDEX

Part	Page
420-6409	80
	103
	129
	416
	417
420-6410	80
	103
	129
	260
420-6411	80
	103
	129
	381
420-6414	80
	103
	857
420-6415	80
	103
	129
	525
	528
420-6416	80
	103
	129
	478
420-6417	79
	80
	103
	348
420-6418	79
	80
	103
	723
	725
420-6419	79
	80
	103
	167
	168
420-8944	501
422-6385	556
	559
	562
	583
422-6388	556
	559
	562
	583
422-6389	564
422-6430	564
423-5607	391
	395
	399
	401
	403
	404
	406
	407
423-5611	506
	511
	513
	516
	519
	522
	525
	528
	531
	534
	537
	540
	542
	544
423-5640	545
423-5661	763
	796
	799
	802
	805
	847
	852
	854
423-5663	916
423-5665	763
	796
	799
	802
	805
423-6224	264
	426
	428
	451
423-6339	577
423-6342	577
423-6343	577
423-6874	53
	56
	62
	493
423-7554	788
423-7666	248
	249
423-7697	291
	296
423-7723	298
	304
	312
	314
	315
	316
	318
	327
	332
	350
	354
	355
423-7724	304
	318
	327
	356
	358
	360
	363
	367
	371
	696
	698
	701
	703
	705
	707
	709
	711
	713
	715
	717
	719
	721
	723
	725
	727
	729
	733
	735
	737
	739
	741
423-8167	743
	764
	766
	768
	770
	772
	778
	780
	782
	872
	874
423-8282	504
	505
423-8330	422
423-8335	422
424-3213	422
424-4164	►97
424-6821	861
	866
424-8611	444
	449
424-9881	267
	488
425-2286	475
	478
	537
	540
	542
425-6360	391
	395
	399
	403
	404
	406
	407
425-6407	506
	511
	513
	516
	519
	522
	525
	528
	531
	534
	537
	540
	542
	544
425-7065	304
	318
	327
	328
	333
	696
	701
	705
	709
	711
	715
	719
	723
	727
	733
	737
	741
	764
	768
	772
	778
	782
	872
426-3438	245
	248
426-4357	808
	810
	812
	814
	816
	818
	820
	822
	824
	826
	829
	831
	835
	838
426-5345	552
	581
428-5948	15
	18
	55
	58
	64
	84
	87
	90
	96
	448
428-5949	55
	58
	61
	64
	449
430-5926	545
	552
	571
	574
	577
	581
431-1760	►100
431-1761	►101
431-7089	552
432-6548	268
432-6658	758
433-1379	►6
	►65
433-1380	►8
434-1868	904
	905
434-2173	►102
434-2174	►103
435-0208	492
	606
	607
	608
	609
	613
	616
435-1634	►104
435-1636	66
	105
435-1641	►108
435-1642	►110
435-1645	►243
435-1646	26
	112
435-1647	►113
435-1649	►244
435-1658	►115
435-9544	245
	246
	247
	257
435-9546	245
	246
	257

► PRIMARY REFERENCE

PART NUMBER INDEX

Part	Page
435-9547	247
436-6743	▶116
437-2599	32
	35
	94
	494
437-2623	32
	35
	94
	97
	274
437-2624	53
	56
	60
	62
	489
438-1393	441
	452
	454
	456
	458
	460
438-1431	425
	908
438-1597	443
	447
	448
438-7874	▶117
438-8534	545
	574
	577
438-9109	175
	177
	178
	381
	452
	454
	456
	458
	460
	462
438-9362	179
	181
	623
	627
	631
	634
	637
	646
	649
	654
	659
	662
	665
	668
	671
	674
	678
	682
439-0282	395
439-0945	483
	484
	485
	501
	502
439-3372	411
	422
439-4992	506
	511
	519
	522
	528
	534
	537
	540
	542
	544
439-4993	513
	516
	523
	525
	531
440-5104	245
	246
	247
	257
441-6512	1
	3
	10
	21
	33
	48
	70
	98
	117
	350
441-6513	1
	3
	10
	21
	32
	48
	70
	97
	117
	727
	729
441-6514	1
	3
	10
	21
	32
	48
	70
	97
	117
	169
441-8101	51
	55
	58
	69
	101
	119
	123
	130
	131
	138
	140
	649
	654
442-6206	92
	127
	136
	659
	662
442-7729	28
	30
	37
	38
	46
	72
	76
	79
	125
	531
	534
442-7759	25
	29
	31
	37
	47
	77
	125
	133
	665
	668
442-9826	8
	104
	106
	671
442-9881	8
	104
	105
	757
444-7301	571
	574
445-9988	7
	14
	17
	33
	36
	54
	57
	61
	63
	76
	83
	86
	89
	92
	95
	98
	106
	109
	111
	114
	136
	433
446-7443	▶119
447-7690	562
447-7691	493
	552
	559
448-3118	450
448-8575	288
450-0914	640
450-7277	115
	674
451-7225	577
	922
	923
452-3668	906
	913
454-4365	80
	103
	731
454-6141	1
	3
	10
	19
	21
	33
	48
	70
	83
	86
	89
	95
	98
	111
	117
	120
	126
	132
	134
	141
	352
454-6143	1
	3
	10
	19
	21
	32
	48
	70
	82
	85
	88
	95
	97
	110
	117
	120
	126
	132
	134
	141
	733
	735
454-6144	1
	3
	10
	19
	21
	32
	48
	70
	82
	85
	88
	94
	97
	110
	117
	120
	126
	132
	134
	141
	170
454-6672	391
	395
	399
	404
	406
456-7377	908
456-7945	91
	135
	495
457-3739	▶120
458-3287	73
	864
458-6608	142
	181
	465
	654
	668
	914
458-9832	▶121
461-8764	898
	900
	903
461-8765	901
463-1972	414
464-2086	475
	479

PART NUMBER INDEX

Part	Page
464-2090	298
	304
	309
	312
	314
	315
	316
	318
	327
	337
	346
	348
	350
	352
	354
	356
	360
	363
	371
465-2205	23
	353
465-2207	23
	737
	739
465-2209	23
	171
465-2492	19
	83
	89
	95
	111
	120
	126
	354
465-2493	19
	82
	88
	94
	110
	120
	126
	741
	743
465-2494	19
	82
	88
	94
	110
	120
	126
	172
466-1519	73
	201
468-7382	559
	562
	583
	588
	590
	593
	595
	600
	601
	603
	605
469-4426	556
	559
	562
	583
469-4427	545
	571
	574
	577
471-7111	▶122
471-9551	▶123
472-2214	486
	487
	506
	513
	516
	519
	525
	528
	531
	534
	537
	540
	542
472-2215	239
	506
	511
	519
	522
	528
	534
	544
474-9668	731
	756
475-2473	▶124
476-2680	847
	852
	854
476-5578	503
476-5579	556
	559
	562
	583
476-5582	186
	189
476-5586	196
	201
477-0679	265
477-6922	69
	139
	678
477-8793	513
	516
	522
	525
	528
	531
	534
477-8828	245
	246
	247
	257
478-7866	▶125
479-5943	871
481-1650	466
	472
481-2063	▶758
	▶762
481-5621	25
	355
481-5623	25
	782
481-5624	25
	173
483-1210	341
	342
	344
	353
	358
483-1365	559
	562
483-1372	333
	335
	356
483-3937	434
	435
483-3938	436
	437
483-3939	269
	438
484-0882	907
	909
	914
484-0884	911
484-9222	758
484-9223	758
484-9224	758
	802
	854
484-9225	758
	802
	854
484-9910	411
	414
484-9911	411
485-0005	409
	417
486-8879	808
	812
	814
	816
	820
	822
	824
	826
	829
	831
	835
486-9344	▶358
	▶876
487-0157	221
	223
	225
	227
	229
	231
	233
	235
	237
	239
487-9902	545
	571
	574
	577
488-0405	340
	371
489-4263	▶126
489-9224	▶127
492-4881	138
	784
492-4924	40
	785
494-9569	179
	181
	186
	189
	192
	196
	198
	201
	203
	206
	623
	627
	631
	634
	637
	640
	643
	646
	649
	654
	659
	662
	665
	668
	671
	674
	678
	682
495-0737	298
	304
	327
	696
	698
	701
	703
	709
	711
	713
	715
	717
	719
	721
	727
	733
	741
	743
	764
	766
	872
	874
497-9115	274
499-5166	34
	37
	77
	92
	99
	117
	127
	136
	904
499-5184	91
	127
	135
	496
	497
499-6420	▶128
5	
501-3944	239
501-3945	239
501-3946	239
502-3824	871
502-4820	40
	871
502-5421	335
	360
	363
	367
	371
	698
	703
	707
	713
	717
	721
	725
	729
	735

PART NUMBER INDEX

Part	Page
	739
	743
	766
	770
	780
	874
	876
502-9478	358
	360
	363
	367
	371
	698
	703
	707
	713
	717
	721
	725
	729
	735
	739
	743
	766
	770
	780
	874
503-9707	335
	360
	363
	371
	698
	703
	707
	713
	717
	721
	725
	729
	735
	739
	743
	766
	770
	780
	874
	876
503-9731	358
	360
	363
	371
	698
	703
	707
	713
	717
	721
	725
	729
	735
	739
	743
	766
	770
	780
	874
504-3838	253
	255
	258
	260
	441
504-4602	▶129
504-9775	249
	250
	251
504-9785	249
	250
	251
504-9786	249
	250
	251
504-9787	249
	250
	251
505-6230	122
	562
505-8353	552
506-0518	▶130
506-0519	▶131
506-0520	▶132
508-8740	8
	104
	106
	129
	682
510-1244	552
	581
512-7969	▶133
513-2239	▶134
513-6822	637
	643
	674
	695
513-6823	627
	631
	634
	646
	649
	654
	659
	662
	665
	668
	671
	678
	682
	692
	693
514-6556	▶135
514-7719	414
516-2639	▶138
516-8900	129
	135
	921
518-0165	▶139
518-9053	14
	17
	36
	54
	57
	61
	63
	76
	83
	86
	89
	93
	95
	98
	107
	925
518-9064	13
	16
	53
	56
	60
	62
	82
	85
	88
	94
	865
519-4412	7
	15
	18
	55
	58
	61
	64
	84
	86
	90
	96
	105
	109
	111
	114
	891
521-2896	246
	249
521-8165	16
	85
	88
	498
522-0710	136
	888
523-5815	794
524-3347	253
	255
	258
	263
524-3348	253
	255
	258
	263
525-9934	139
	277
525-9935	139
	360
525-9936	139
	174
526-0230	139
	826
526-2333	564
526-2334	564
526-5212	842
	843
	845
	846
527-9209	552
	581
528-6882	175
	177
	178
	452
	454
	456
	458
	460
532-6841	253
	255
	258
	260
	262
	263
532-6842	253
	255
	258
	260
	262
	263
532-8293	6
	105
	108
	110
	113
	472
532-8314	34
	37
	93
	96
	99
	136
	913
532-9705	14
	16
	32
	54
	57
	60
	75
	83
	85
	88
	97
	608
532-9707	91
	94
	136
	609
533-3936	13
	16
	33
	35
	53
	56
	60
	62
	75
	82
	85
	89
	91
	94
	97
	135
	473
533-4971	223
	229
	233
	237
	239
	442
536-9734	221
	227
	231
	235
538-6264	731
	756
538-6939	138
539-0439	189
	192
	196
	198
	203
	206
	627
	631
	634
	637
	643
	646
	649
	654
	662
	665

▶ PRIMARY REFERENCE

PART NUMBER INDEX

Part	Page
	668
	671
	674
	678
	682
	685
	687
	689
540-4157	859
	863
	864
	865
541-6343	13
	16
	53
	56
	60
	62
	82
	85
	88
	94
	870
544-4891	13
	82
	499
550-9113	731
	756
	784
	785
551-6183	597
	598
551-6187	▶597
	▶605
553-4376	363
	367
	371
	466
	468
	470
553-4377	466
	468
	470
	472
	473
554-3084	590
	595
	598
	600
	601
	603
555-8348	600
	601
	603
557-6086	▶140
557-7240	▶439
	▶441
	▶456
	▶460
557-7242	439
557-7246	439
557-7247	439
557-7249	439
557-7250	439
557-7254	439
557-7471	▶141
557-8814	401
559-0028	841
	844
559-1702	239
559-9084	6
	105
	108
	919
560-7819	747
	794
560-8837	181
	192
	198
	203
	206
	637
	643
560-8843	485
561-9492	583
562-7847	559
	562
	583
563-0444	617
565-2285	14
	17
	34
	37
	83
	86
	90
	98
	842
565-2286	54
	57
	61
	63
	95
	845
566-9450	6
	106
	108
	110
	113
	285
568-8653	500
568-8661	499
568-8664	498
573-6681	749
575-5055	367
576-1156	925
	927
576-4060	295
579-9444	14
	17
	19
	23
	25
	34
	37
	71
	73
	83
	86
	90
	98
	117
	120
	126
	132
	133
	134
	141
	843
579-9465	40
	42
	54
	57
	61
	63
	68
	95
	116
	119
	122
	130
	131
	138
	140
	846
580-0398	304
	327
	335
	360
	698
	703
	707
	713
	717
	721
	725
	729
	735
	739
	743
	745
	746
	749
	766
	770
	780
	786
	793
	876
580-6241	786
580-6290	▶745
	▶791
581-9723	▶250
	▶257
581-9724	247
	251
583-6088	179
	654
	662
	665
	668
	678
	682
583-6089	181
	637
	643
583-6090	627
	631
	646
	671
	674
583-6830	203
583-6831	192
	206
583-6832	198
584-3179	7
	14
	16
	32
	35
	36
	37
	53
	56
	60
	62
	75
	82
	85
	88
	91
	94
	97
	105
	108
	111
	113
	135
	239
584-3189	6
	15
	18
	34
	37
	55
	58
	61
	64
	76
	83
	86
	90
	93
	96
	98
	106
	109
	110
	114
	136
	441
584-9457	33
	36
	98
	286
584-9800	6
	109
	110
	113
	617
584-9801	14
	17
	33
	83
	86
	89
	95
	98
	618
584-9814	14
	17
	33
	36
	54
	57
	60
	63
	76
	83
	86
	89
	92
	95
	98
	136
	378
584-9822	7
	15
	18
	55
	58
	61
	64
	84
	87
	90

▶ PRIMARY REFERENCE

PART NUMBER INDEX

Part	Page
	106
	109
	111
	114
	914
584-9829	14
	18
	83
	86
	90
	577
585-0737	506
	511
	519
	537
	540
	542
	544
585-1921	409
	411
	417
	421
	422
586-4228	422
586-6654	6
	13
	16
	83
	85
	88
	95
	108
	110
	113
	203
586-6656	32
	97
	206
587-0270	6
	13
	17
	54
	57
	60
	63
	82
	85
	89
	95
	106
	108
	110
	113
	883
587-3846	223
	233
	237
	537
	540
	542
	544
587-3847	223
	233
	237
	363
	367
	371
587-3848	223
	233
	237
	363
	367
	371
587-3850	253
	255
	258
	260
	537
	540
	542
	544
587-7902	34
	37
	75
	77
	92
	99
	136
	905
587-8006	414
	417
588-9925	7
	14
	17
	54
	57
	61
	63
	83
	86
	89
	106
	109
	111
	114
	404
589-6469	217
589-8341	▶746
	▶752
590-0692	223
	233
	237
	239
590-0693	217
590-0696	217
590-0697	422
591-2135	14
	17
	33
	36
	54
	60
	83
	89
	92
	95
	98
	135
	295
591-2138	57
	63
	75
	86
	296
592-2979	371
592-3241	276
	277
	309
	337
	341
	342
	343
	344
	346
	348
	352
	353
	363
	367
	371
592-3246	223
	363
	367
	371
592-7636	363
	367
	371
593-9273	583
593-9274	583
594-3935	620
	621
	654
595-5217	262
	263
595-7167	250
596-2825	7
	14
	17
	34
	83
	86
	89
	95
	98
	109
	111
	829
596-2826	114
	831
596-2828	36
	54
	57
	76
	92
	106
	136
	835
596-2833	61
	63
	838
596-2861	6
	13
	16
	32
	82
	85
	88
	94
	97
	108
	110
	113
	262
596-2862	35
	53
	56
	60
	62
	75
	91
	106
	135
	263
596-2865	36
	54
	57
	61
	63
	76
	92
	105
	136
	419
596-2866	7
	14
	17
	33
	83
	86
	89
	95
	98
	109
	111
	114
	420
596-3428	6
	13
	16
	32
	82
	85
	88
	94
	97
	108
	110
	175
596-3440	113
	177
596-3442	35
	53
	56
	60
	62
	75
	91
	105
	135
	178
596-3460	35
	36
	54
	57
	60
	63
	75
	76
	105
	136
	786
596-3462	6
	14
	17
	788
596-3463	113
	747
596-3466	32
	33
	82
	85
	90
	95
	97
	110
	749
596-3470	108
	752
596-3472	91
	791
596-4180	419
	421
596-4181	420
	422
596-4209	643
	646

▶ PRIMARY REFERENCE

PART NUMBER INDEX

Part	Page
	654
	678
	687
	689
596-4237	251
	252
598-3706	▶379
598-5067	33
	36
	92
	95
	98
	136
	406
598-5603	788
	793
598-5721	93
	135
	479
598-5724	14
	17
	37
	55
	58
	61
	64
	76
	83
	86
	90
	106
	537
598-5725	92
	136
	540
	542
598-5726	7
	32
	34
	96
	99
	109
	111
	114
	544
598-5745	32
	35
	75
	91
	97
	135
	866
598-5753	34
	37
	77
	93
	99
	136
	450
599-4589	239
599-4957	617
	618
	689
599-8820	209
	213
	215
	219
	419
	420
599-8821	209
	213
	215
	219
	419
	420
599-8823	209
	213
	215
	219
	419
	420
599-8880	209
	211
	213
	215
	219
599-8881	209
	211
	213
	215
	219
599-8882	209
	211
	213
	215
	219
599-9665	▶762
	▶763
	▶805
599-9741	33
	76
	136
	763
599-9752	14
	17
	33
	36
	54
	57
	61
	63
	83
	86
	89
	92
	95
	98
	805
599-9816	14
	16
	33
	35
	54
	56
	60
	62
	83
	85
	89
	91
	94
	113
	136
	363
	367
599-9836	7
	76
	97
	105
	108
	110
	371
600-1135	53
	60
	62
	68
	122
	138
	600
600-5115	37
	77
	93
	107
	136
	685
600-5117	55
	58
	687
600-5127	61
	64
	689
600-5135	106
	610
	611
600-5139	36
	76
	619
600-5140	54
	57
	61
	63
	93
	137
	620
	621
600-5149	13
	16
	82
	85
	88
	601
600-5153	53
	56
	60
	62
	603
600-5159	33
	36
	75
	92
	98
	135
	884
600-5174	75
	91
	136
	892
600-5177	32
	35
	97
	880
600-5739	92
	137
	384
600-6119	55
	58
	581
600-6121	61
	64
	583
600-6923	7
	106
	108
	111
	114
	142
600-9206	76
	407
601-0472	685
	692
601-0474	▶179
	▶685
	▶687
601-0476	687
	693
601-0481	▶181
	▶689
601-0484	689
	695
601-4322	7
	15
	18
	34
	37
	55
	58
	61
	64
	77
	84
	87
	90
	92
	96
	99
	106
	109
	110
	114
	136
	886
603-1463	7
	106
	108
	111
	113
	380
604-4574	32
	36
	922
606-2238	379
607-4843	577
607-7117	13
	16
	53
	56
	62
	82
	85
	89
	122
	923
608-8936	53
	56
	60
	62
	500
609-9566	363
	367
	371
610-3545	76
	465
611-6891	13
	16
	19
	70
	82
	85
	88
	141
	605

6

► PRIMARY REFERENCE

PART NUMBER INDEX

Part	Page	Part	Page	Part	Page	Part	Page
612-7549	367						
612-8795	6						
	107						
	109						
	111						
	114						
	927						
615-3292	411						
	422						
627-6877	211						
629-5293	32						
	36						
	612						
636-6709	211						
636-6712	211						

©2024 Caterpillar
All Rights Reserved

CAT, CATERPILLAR, LET'S DO THE WORK, their respective logos, “Caterpillar Corporate Yellow”, the "Power Edge" and Cat "Modern Hex" trade dress as well as corporate and product identity used herein, are trademarks of Caterpillar and may not be used without permission.