SEBP4545-23 (en-us)
December 2018

Parts Manual

C1.5 Industrial Engine

C6N1-UP (Engine)

Scan to find and purchase genuine Cat® parts and related service information.

Product and Dealer Information

Note: For product identification plate locations, see the section “Product Identification Information” in the Operation and Maintenance Manual.

Delivery Date: _____

Product Information

Model: _____

Product Identification Number: _____

Engine Serial Number: _____

Transmission Serial Number: _____

Generator Serial Number: _____

Attachment Serial Numbers: _____

Attachment Information: _____

Customer Equipment Number: _____

Dealer Equipment Number: _____

Dealer Information

Name: _____ Branch: _____

Address: _____

_____

_____

	Dealer Contact	Phone Number	Hours
Sales:	_____	_____	_____
Parts:	_____	_____	_____
Service:	_____	_____	_____

MEMORANDA

TABLE OF CONTENTS

NAME	PAGE
GENERAL INFORMATION	A3
REPAIR ALTERNATIVES	A5
SUPPLEMENTAL COOLANT ADDITIVES	A6
MAINTENANCE PARTS	A7
INDEX	A9
ENGINE ARRANGEMENT	1
ENGINE AR-PRIMARY	1
ENGINE AR	2
ENGINE AR-PRIMARY	3
ENGINE AR	5
ENGINE AR-PRIMARY	8
ENGINE AR	9
ENGINE AR-PRIMARY	10
BASIC ENGINE	21
CAMSHAFT AS	21
CAMSHAFT GP	22
COVER GP-CYLINDER HEAD	33
FASTENER GP-COVER	35
COVER GP-FRONT HOUSING	36
HOUSING GP-FRONT	37
COVER GP-FRONT HOUSING	39
COVER GP-VALVE MECHANISM	41
CRANKSHAFT GP	45
CYLINDER BLOCK GP	51
ENGINE AR-PRIMARY	55
CYLINDER HEAD AS	56
CYLINDER HEAD GP	59
HOUSING GP-FRONT	63
EXTENSION GP-FAN	65
DRIVE GP-FAN	66
FASTENER GP-FRONT COVER	69
FASTENER GP-FRONT HOUSING	70
FLYWHEEL GP	71
HOUSING GP-FLYWHEEL	75
HOUSING GP-FRONT	83
KIT-FRONT GEAR	113
LIFTING GP-ENGINE	114
PAN GP-OIL	118
PISTON & ROD GP	126
PLUG GP-ENGINE	130
PLUG GP-OIL PAN	132
PULLEY GP-CRANKSHAFT	133
PULLEY GP-FAN	134
ROCKER ARM GP	136
V-BELT GP	137
VALVE MECHANISM GP	139
LUBRICATION SYSTEM	143
FILLER GP-ENGINE OIL	143
FILTER GP-ENGINE OIL	147
LINES GP-ENGINE OIL	148
MOUNTING GP-ENGINE OIL FILTER	150
PUMP GP-ENGINE OIL	151
KIT-ENGINE OIL PUMP	153
COOLING SYSTEM	154
HOUSING GP-WATER REGULATOR	154
FAN GP	155
FAN GP-BLOWER	158
KIT-COOLING SYSTEM PARTS	159
PUMP GP-WATER	163
RADIATOR & FAN GP	180
RADIATOR GP	196
AIR INLET AND EXHAUST SYSTEM	232
AIR CLEANER GP	232
CONNECTION GP-EXHAUST	242
FILTER ELEMENT AS-AIR	244
MANIFOLD GP-EXHAUST	245
MUFFLER GP	246
TURBOCHARGER GP	247
FUEL SYSTEM	251
CONTROL GP-GOVERNOR	251
FILTER GP-FUEL	265
GOVERNOR GP	266
PUMP GP-FUEL INJECTION	274
PUMP GP-FUEL PRIMING	285
PUMP GP-FUEL PRM & PRIM FILTER	286
PUMP GP-FILTER & FUEL TRANSFER	287
PUMP GP-FUEL TRANSFER	290
ELECTRICAL AND STARTING SYSTEM	292
ALTERNATOR GP-CHARGING	292
CONNECTION GP-ELECTRICAL	295
GLOW PLUG GP	297
SHUTOFF GP-ELECTRICAL	299
SOLENOID GP-SHUTOFF	300
STARTING MOTOR GP-ELECTRIC	301
SWITCH GP-PRESSURE	310
SWITCH GP-START	313
SWITCH GP-TEMPERATURE	314
OPERATOR STATION	315
LAMP GP	315
SERVICE EQUIPMENT AND SUPPLIES	316
CHART-PLATE & FILM	316
PARTS GP-MISCELLANEOUS	317

TABLE OF CONTENTS

NAME	PAGE	NAME	PAGE
PART NUMBER INDEX	B1		

1. ENGINE IDENTIFICATION

Cat engines are identified with Serial Numbers and Arrangement Numbers. In some cases, Modification Numbers are also used. The serial number plate which shows these numbers is mounted on the engine.

Cat dealers need this information to determine which components were included on the engine when it was assembled at the factory. This permits accurate identification of replacement part numbers.

2. ORDERING PARTS

⚠ WARNING

When replacement parts are required for this product Caterpillar recommends using Caterpillar replacement parts or parts with equivalent specifications including, but not limited to, physical dimensions, type, strength and material.

Failure to heed this warning can lead to premature failures, product damage, personal injury or death.

Quality Cat replacement parts are available from Cat dealers throughout the world. Their parts inventories are up to date and include all parts normally required to protect your investment in Cat Engines. Dealers may offer repair kits or remanufactured parts to allow selection of the most effective repair alternative for a particular situation. When ordering parts, your order should specify the quantity, part number, part name, and the serial number/product identification number of the engine for which the parts are needed.

3. PARTS MANUAL ORGANIZATION

Product information in this manual is presented as "information elements" that represent all of the components for the specific model. An Engine Arrangement is an example of an information element. The information elements are organized alphabetically by part name and secondarily by part number within each major section of the manual.

4. TABLE OF CONTENTS

A table of contents (TOC) is found at the beginning of the manual. The TOC lists each section of the manual with a complete list of all information elements organized as they appear in the manual. Page numbers are provided for quick reference to detailed parts identification illustrations and serviceable consist lists.

5. MAINTENANCE PARTS INDEX

The Maintenance Parts Index, located near the beginning of the manual, references most frequently used maintenance part numbers, providing description, quantity, usage and page number. This information is organized alphabetically by part description.

6. INDEX

The index located near the front of the manual is an alphabetical listing of all information elements included in the manual. Page numbers are provided for quick reference to detailed parts identification illustrations and serviceable consist lists.

7. PART NUMBER INDEX

A numerical index listing all part numbers and the corresponding page number(s) appears at the back of the manual.

8. CAPTIONS

Captions located at the beginning each information element identify the part number and part name along with additional descriptive information. S/N information found in each caption should be used to select correct information for a specific engine. Field replacement options, identification of optional attachment components, and where used ("part of") information is also provided.

The first line of a caption is shown in larger type font to indicate the beginning of an information element. Captions for additional pages that may be required to illustrate an information element will be shown in standard type font and will include the term (contd.) .

9. NON-SERVICED PARTS

In some instances it is necessary to display non-serviced parts that are a link to lower level serviceable consist lists. These non-serviced part numbers are shown in italic type indicating that they are not available. All consist lists have not been converted to reflect this enhancement.

10. PARTS LIST REFERENCE NUMBERS

Numbers shown in the Ref No column correspond to numbers used in the associated graphic(s). An alphabetic suffix may be added to a reference number to identify lower level consist items. Numbers shown in the Graphic Ref column refer to the graphic number identifier displayed in the lower left corner of each illustration. The Graphic Ref number may be used in combination with the item Ref No to determine the correct part number. There may be intentional omission of a Ref No in a consist list as information is updated to reflect the latest serviceable part numbers.

11. INDENTED PART NAMES

When a part name is indented in a parts list, it is part of (included in) the group or assembly under which it is indented.

12. ILLUSTRATION REFERENCE LETTERS

When necessary, illustrations contain reference letters (A, B, C etc.) that are intended to track lines and harnesses from one point to another. They are also used to show where to reconnect illustrations that have been separated.

13. ABBREVIATIONS AND SYMBOLS

O.D. – Outside Diameter
I.D. – Inside Diameter
A – Not Part Of This Group
B – Use As Required
C – Change From Previous Type
D – Order By The Meter
E – Order By The Centimeter
F – Not Shown
G – Order By The Inch
I – Refer To Hydraulic Information System
M – Metric Part
R – Remfg Part May Be Available
Y – Separate Illustration
Z – Not Serviced Separately

14. DESCRIPTION OF TYPE CHANGES

Type - A type is defined as any configuration change that requires an additional Information Element for an Arrangement, Group, or Assembly. If serial number breaks for types are not available, a type # (Type 1, Type 2, etc.) will be displayed in the caption. These "type" changes are identified with a "C" note (change from previous type) in the Parts List. Only the "types" that apply to this Parts Manual will be included. Additional types may exist causing "C" notes to appear on an Information Element when no other types are shown.

15. <END>

This symbol indicates the end of an information element.

NOTE:

Continuing improvement and advancement of product design may cause changes to your engine which may not be included in this publication. Whenever a question arises regarding your Cat product or this publication, please consult your Cat dealer for the latest available information.

REMANUFACTURED COMPONENTS

As an option when making repairs consider Cat Remanufactured Components. Components that are available through the Cat Remanufactured Program are identified three ways in the parts book:

- with the letter R in the note field of the parts list
- with an R* at the beginning of the first line of the caption
- with an *R at the end of the first line of the caption

Typical components included in the Remanufacturing Program include:

ALTERNATORS
CONNECTING RODS
CRANKSHAFTS - UNDERSIZE
CRANKSHAFTS - UPGRADE TO NEW
CYLINDER HEADS
ELECTRONIC CONTROL MODULES (ECM)
ELECTRONIC SENSORS
FUEL INJECTORS
FUEL NOZZLES
FUEL PUMPS
GOVERNORS
OIL PUMPS
PISTONS
SHORT BLOCKS
STARTERS
TURBOCHARGERS - COMPLETE
TURBOCHARGER CARTRIDGES
WATER PUMPS

Cat Remanufactured engines for many engine arrangements are also available.

SUPPLEMENTAL COOLANT ADDITIVES

CUSTOMER BENEFITS:

Protects against cavitation, foam, erosion, corrosion, and scale buildup in cooling systems.

- Provides measured coolant conditioner.

DESCRIPTION:

Additives deplete from the coolant with normal operation. For this reason, Supplemental Coolant Additives (SCA) must be added to all heavy duty coolants at regular intervals. In addition, when not using a fully formulated, pre-charged antifreeze, like Cat DEAC, an initial charge of SCA must be added to the cooling system. The amount of SCA added to the system is dependent on the capacity of the system.

The SCA for initial fill is provided as a liquid. SCA's for maintenance intervals are available in liquid form and as a spin-on element. (No Spin-on available for 3600 Family of Engines)

NOTE:

The amount of SCA added at initial fill is not the same as the amount added at maintenance intervals.

The coolant additive elements can be used with any ethylene or propylene glycol type antifreeze which meets ASTM D4985 or ASTM D5345 Specifications.

NOTE:

For use with standard heavy duty coolant only, not for use with Extended Life Coolant.

PARTS NEEDED:

Cooling System Capacity		Liquid SCA at Initial Fill	Liquid SCA at Maintenance*	Spin-on SCA Maintenance Element*
Liters	Gallons			
22-30	(6-8)	3P-2044 (1)	6V-3542 (1)	111-2370 (1)
30-38	(8-10)	3P-2044 (1) 6V-3542 (1)	111-2372 (1)	111-2369 (1)
38-49	(10-13)	3P-2044 (1) 8T-1589 (1)	111-2372 (1)	111-2369 (1)
49-64	(13-17)	3P-2044 (2)	8T-1589 (1)	9N-3368 (1)
64-83	(17-22)	3P-2044 (2) 8T-1589 (1)	111-2372 (1) 6V-3542 (1)	111-2371 (1)
83-114	(22-30)	3P-2044 (3) 8T-1589 (1)	3P-2044 (1)	9N-3718 (1)
114-163	(30-43)	3P-2044 (5)	3P-2044 (1) 6V-3542 (1)	111-2371 (2)
163-242	(43-64)	3P-2044 (8)	3P-2044 (2)	9N-3718 (2)

* Normal maintenance period is 250 hrs. See your Operation and Maintenance Manual for complete coolant maintenance instructions.

( ) Indicates quantity required.

MAINTENANCE PARTS

DESCRIPTION	PART NUMBER	QTY	WHERE USED	PAGE
AIR INLET AND EXHAUST SYSTEM				
FILTER ELEMENT AS-AIR	244-0514	1	AIR CLEANER GP	232
FILTER ELEMENT AS-AIR (TERMINAL)	244-0514	1	AIR CLEANER GP	240
FILTER ELEMENT-AIR	246-5011	1	FILTER ELEMENT AS-AIR	244
BASIC ENGINE				
KEY	153-5518	1	CRANKSHAFT GP	45
PLUG-DRAIN (ENGINE OIL PAN)	423-6224	2	PLUG GP-OIL PAN	132
SEAL-VALVE COVER	235-5531	1	COVER GP-CYLINDER HEAD	33
		1	COVER GP-VALVE MECHANISM	41
STRAINER	325-9416	1	PAN GP-OIL	124
STRAINER (ENGINE OIL PAN)	316-2273	1	PAN GP-OIL	118
STRAINER (ENGINE OIL)	325-9416	1	PAN GP-OIL	122
	425-6360	1	PAN GP-OIL	120
V-BELT (WATER PUMP)	162-2468	1	V-BELT GP	137
	292-9620	1	V-BELT GP	138
COOLING SYSTEM				
CAP-RADIATOR	202-6616	1	KIT-COOLING SYSTEM PARTS	159
		1	RADIATOR & FAN GP	1801-8418-8192
		1	RADIATOR GP	1962-0020-4208
HOSE-RADIATOR	238-0265	1	RADIATOR & FAN GP	188
		1	RADIATOR GP	228
	238-0266	1	RADIATOR & FAN GP	188
		1	RADIATOR GP	228
HOSE-RADIATOR (LOWER)	238-0265	1	RADIATOR & FAN GP	180
		1	RADIATOR GP	1962-0020-4208
	258-4520	1	KIT-COOLING SYSTEM PARTS	159
HOSE-RADIATOR (UPPER)	238-0266	1	RADIATOR & FAN GP	180
		1	RADIATOR GP	1962-0020-4208
	244-0503	1	KIT-COOLING SYSTEM PARTS	159
REGULATOR-TEMPERATURE (82-DEG C)	249-5541	1	PUMP GP-WATER	163
ELECTRICAL AND STARTING SYSTEM				
GLOW PLUG	172-4585	3	GLOW PLUG GP	297
KEY-IGNITION	361-3925	1	SWITCH GP-START	313
FUEL SYSTEM				
FILTER AS-FUEL	243-6411	1	PUMP GP-FUEL TRANSFER	291
	358-9226	1	PUMP GP-FILTER & FUEL TRANSFER	287
FILTER ELEMENT-FUEL	276-1806	1	PUMP GP-FUEL PRM & PRIM FILTER	286
FILTER ELEMENT-FUEL (FILTER)	276-1806	1	FILTER GP-FUEL	265

MAINTENANCE PARTS

DESCRIPTION	PART NUMBER	QTY	WHERE USED	PAGE
FILTER-FUEL	067-6987	1	PUMP GP-FILTER & FUEL TRANSFER	287
PLUG-DRAIN (FUEL FILTER)	302-7777	3	FILTER GP-FUEL	265
PLUG-DRAIN (WATER SEPARATOR)	302-7777	3	PUMP GP-FUEL PRM & PRIM FILTER	286
LUBRICATION SYSTEM				
CAP-OIL FILLER (ENGINE)	217-7358	1	FILLER GP-ENGINE OIL	143
FILTER AS-ENGINE OIL	220-1523	1	FILTER GP-ENGINE OIL	147
SEAL (ENGINE OIL FILL CAP)	153-5933	1	FILLER GP-ENGINE OIL	143
OPERATOR STATION				
LAMP (GLOW PLUG INDICATOR)	197-8547	1	LAMP GP	315
SERVICE EQUIPMENT AND SUPPLIES				
SEAL-VALVE COVER	235-5531	1	PARTS GP-MISCELLANEOUS	317

INDEX

NAME PAGE

A

AIR CLEANER GP 232
234
236
238
240
ALTERNATOR GP-CHARGING 292
293
294

C

CAMSHAFT AS 21
CAMSHAFT GP 22
23
24
26
27
29
30
31
32
CAP-OIL FILLER (ENGINE) 143
145
CAP-RADIATOR 159
180
184
188
192
196
200
204
208
212
216
220
224
228
CHART-PLATE & FILM 316
CONNECTION GP-ELECTRICAL 295
296
CONNECTION GP-EXHAUST 242
243
CONTROL GP-GOVERNOR 251
253
255
257
259
261
263
CONTROL GP-GOVERNOR (ENGINE TIMING) 270
272
COVER GP-CYLINDER HEAD 33
COVER GP-FRONT HOUSING 36
39
40
COVER GP-VALVE MECHANISM 41
43

NAME PAGE

CRANKSHAFT GP 45
47
49
CYLINDER BLOCK GP 51
53
CYLINDER HEAD AS 56
58
CYLINDER HEAD GP 59
60
61
62

D

DRIVE GP-FAN 66
67
68

E

ENGINE AR 2
5
7
9
ENGINE AR-PRIMARY 1
3
8
10
11
12
13
14
16
17
19
20
55
EXTENSION GP-FAN 65

F

FAN GP 155
156
157
FAN GP-BLOWER 158
FASTENER GP-COVER 35
FASTENER GP-FRONT COVER 69
FASTENER GP-FRONT HOUSING 70
FILLER GP-ENGINE OIL 143
145
146
FILM-WARNING (DO NOT SPRAY, READ OMM) 234
240
FILTER AS-ENGINE OIL 147
FILTER AS-FUEL 287
291

INDEX

NAME PAGE

FILTER ELEMENT AS-AIR 232
234
236
238
244
FILTER ELEMENT AS-AIR (TERMINAL) 240
FILTER ELEMENT-AIR 244
FILTER ELEMENT-FUEL 286
FILTER ELEMENT-FUEL (FILTER) 265
FILTER GP-ENGINE OIL 147
FILTER GP-FUEL 265
FILTER GP-FUEL (WATER SEPARATOR) 286
FILTER-FUEL 287
FLYWHEEL GP 71
72
73
74

G

GAUGE AS 118
120
GAUGE AS-OIL LEVEL (DIPSTICK) (ENGINE) 118
120
122
124
GLOW PLUG 297
298
GLOW PLUG GP 297
298
GOVERNOR GP 266
268
270
272
GOVERNOR GP-ANGLEICH (TIMING) 266
268

H

HOSE-RADIATOR 188
192
228
HOSE-RADIATOR (LOWER) 159
180
184
196
200
204
208
212
216
220
224

NAME PAGE

HOSE-RADIATOR (UPPER) 159
180
184
196
200
204
208
212
216
220
224
HOUSING GP-FLYWHEEL 75
76
77
78
79
80
81
82
HOUSING GP-FRONT 37
38
63
64
83
88
90
91
95
96
97
98
99
100
101
104
107
110
HOUSING GP-WATER REGULATOR 154

I

INDICATOR (AIR FILTER SERVICE) 244

K

KEY 45
47
49
KEY-IGNITION 313
KIT-COOLING SYSTEM PARTS 159
KIT-ENGINE OIL PUMP 153
KIT-FRONT GEAR 113

L

LAMP (GLOW PLUG INDICATOR) 315
LAMP GP 315

INDEX

NAME PAGE

LIFTING GP-ENGINE 114
115
116
117
LINES GP-ENGINE OIL 148
149

M

MANIFOLD GP-EXHAUST 245
MOUNTING GP-ENGINE OIL FILTER 150
MUFFLER GP 246

P

PAN GP-OIL 122
124
PAN GP-OIL–ENGINE 118
120
PARTS GP-MISCELLANEOUS 317
318
PISTON & ROD GP 126
127
128
129
PLUG GP-ENGINE 130
131
PLUG GP-OIL PAN–DRAIN 132
PLUG-DRAIN (ENGINE OIL PAN) 132
PLUG-DRAIN (FUEL FILTER) 265
PLUG-DRAIN (WATER SEPARATOR) 286
PULLEY GP-CRANKSHAFT 133
PULLEY GP-FAN 134
135
PUMP GP-ENGINE OIL 151
152
PUMP GP-FILTER & FUEL TRANSFER 287
PUMP GP-FUEL INJECTION 274
275
277
279
281
283
PUMP GP-FUEL PRIMING 285
286
PUMP GP-FUEL PRM & PRIM FILTER 286
PUMP GP-FUEL TRANSFER 290
291
PUMP GP-WATER 163
165
167
170
173
175
178

NAME PAGE

R

RADIATOR & FAN GP 180
184
188
192
RADIATOR GP 196
200
204
208
212
216
220
224
228
REGULATOR-TEMPERATURE (82-DEG C) 163
167
170
173
175
178
ROCKER ARM GP 136

S

SEAL (ENGINE OIL FILL CAP) 143
SEAL-VALVE COVER 33
41
317
SENSOR AS-SPEED (ENGINE TIMING) 83
SHUTOFF GP-ELECTRICAL 299
SOLENOID (STARTING MOTOR) 301
SOLENOID AS (12-VOLT) (FUEL SHUTOFF) . . . 274
300
SOLENOID GP-SHUTOFF 300
STARTING MOTOR GP-ELECTRIC 301
303
304
305
306
308
309
STARTING MOTOR GP-ELECTRIC–12-VOLT . . . 307
STRAINER 124
STRAINER (ENGINE OIL PAN) 118
STRAINER (ENGINE OIL) 120
122
SWITCH (OIL PRESSURE) (ENGINE OIL) 311
SWITCH AS-START 313
SWITCH GP-PRESSURE 2
10
17
SWITCH GP-PRESSURE–ENGINE OIL 310
311
312

INDEX

NAME PAGE

SWITCH GP-START 2
4
6
10
14
313
SWITCH GP-START (HEATER). 11
12
13
SWITCH GP-TEMPERATURE. 1
2
4
6
7
8
9
10
14
17
19
20
SWITCH GP-TEMPERATURE (COOLANT). 11
12
13
55
SWITCH GP-TEMPERATURE–COOLANT 314
SWITCH-OIL PRESSURE (ENGINE OIL) 312
SWITCH-PRESSURE (ENGINE OIL) 310
SWITCH-TEMPERATURE (ENGINE COOLANT). 314

T

TURBOCHARGER GP 247

V

V-BELT (WATER PUMP). 137
138
V-BELT GP 138
V-BELT GP–WATER PUMP 137
VALVE MECHANISM GP. 139
141

435-1657 ENGINE AR-PRIMARY

30 BRAKE KW (40 BHP) AT 3000 RPM

FIELD REPLACEMENT FOR 315-0451—PAGE: 16: FOR 322-4991—PAGE: 17: FOR 351-6854—PAGE: 20

SMCS-1000 **i05370372**

NOTE	PART NUMBER	QTY	PART NAME 1 2 3 4 5 6 (PRODUCT LEVEL)	SEE PAGE
Y	*331-4507*	1	CAMSHAFT GP	27
Y	*311-1116*	1	HOUSING GP-WATER REGULATOR	154
Y	*331-4506*	1	CONTROL GP-GOVERNOR	253
Y	*342-1268*	1	FASTENER GP-COVER	35
Y	*311-1123*	1	COVER GP-VALVE MECHANISM	41
Y	*331-4500*	1	CRANKSHAFT GP	49
Y	*331-4499*	1	CYLINDER BLOCK GP	53
Y	*331-4502*	1	CYLINDER HEAD GP	60
Y	*354-1245*	1	HOUSING GP-FRONT	63
Y	*311-1113*	1	FILLER GP-ENGINE OIL	143
Y	*308-2298*	1	FILTER GP-ENGINE OIL	147
Y	*327-0061*	1	FLYWHEEL GP	74
Y	*311-1127*	1	GLOW PLUG GP	297
Y	*342-1226*	1	HOUSING GP-FLYWHEEL	82
Y	*331-4505*	1	HOUSING GP-FRONT	96
Y	**339-3017**	1	KIT-ENGINE OIL PUMP	153
Y	*442-8532*	1	LIFTING GP-ENGINE	117
Y	*334-7293*	1	LINES GP-ENGINE OIL	149
Y	*311-1112*	1	PAN GP-OIL	118
Y	*342-1324*	1	PARTS GP-MISCELLANEOUS	317
Y	*331-4501*	1	PISTON & ROD GP	129
Y	*309-6720*	1	PLUG GP-OIL PAN	132
Y	*311-1114*	1	PULLEY GP-CRANKSHAFT	133
Y	*331-4504*	1	PUMP GP-ENGINE OIL	152
Y	*331-4508*	1	PUMP GP-FUEL INJECTION	283
Y	*331-4510*	1	PUMP GP-WATER	167
Y	*311-1128*	1	SOLENOID GP-SHUTOFF	300
Y	*311-1130*	1	SWITCH GP-TEMPERATURE	314
Y	*331-4503*	1	VALVE MECHANISM GP	141

Y - SEPARATE ILLUSTRATION

<END>

ENGINE ARRANGEMENT

308-6556 ENGINE AR

8 BRAKE KW (11 BHP) AT 2800 RPM. TIER III
FIELD REPLACEMENT ORDER 435-1631—PAGE: 7

SMCS-1000 **i05313569**

NOTE	PART NUMBER	QTY	PART NAME 1 2 3 4 5 6 (PRODUCT LEVEL)	SEE PAGE
Y	*311-1120*	1	ALTERNATOR GP-CHARGING	292
Y	*308-2319*	1	CONNECTION GP-ELECTRICAL	295
Y	*308-2309*	1	CONNECTION GP-EXHAUST	242
Y	*308-4735*	1	MOUNTING GP-ENGINE OIL FILTER	150
Y	*311-1128*	1	SOLENOID GP-SHUTOFF	300
Y	*311-1123*	1	COVER GP-VALVE MECHANISM	41
Y	*311-1122*	1	COVER GP-FRONT HOUSING	36
Y	*311-1105*	1	HOUSING GP-FRONT	83
Y	*311-1116*	1	HOUSING GP-WATER REGULATOR	154
Y	*311-1100*	1	CRANKSHAFT GP	47
Y	*311-1099*	1	CYLINDER BLOCK GP	51
Y	*311-1102*	1	CYLINDER HEAD GP	59
Y	*311-1119*	1	DRIVE GP-FAN	66
Y	*311-1114*	1	PULLEY GP-CRANKSHAFT	133
Y	*311-1118*	1	FAN GP	155
Y	*311-1113*	1	FILLER GP-ENGINE OIL	143
			S/N: C6N1-142	
Y	*365-0485*	1	FILLER GP-ENGINE OIL	145
			S/N: C6N143-UP	
Y	*308-2298*	1	FILTER GP-ENGINE OIL	147
Y	*311-1754*	1	FLYWHEEL GP	72
Y	*311-1127*	1	GLOW PLUG GP	297
Y	*311-1753*	1	HOUSING GP-FLYWHEEL	77
Y	**339-3017**	1	KIT-ENGINE OIL PUMP	153
Y	*311-1131*	1	LAMP GP	315
Y	*309-6725*	1	LIFTING GP-ENGINE	114
			—OR—	
Y	*320-9110*	1	LIFTING GP-ENGINE	116
Y	*311-1124*	1	MANIFOLD GP-EXHAUST	245
Y	*311-1112*	1	PAN GP-OIL	118
Y	*311-1101*	1	PISTON & ROD GP	128
Y	*309-6720*	1	PLUG GP-OIL PAN	132
Y	*311-1111*	1	PULLEY GP-FAN	134
Y	*311-1104*	1	PUMP GP-ENGINE OIL	151
Y	*311-1106*	1	PUMP GP-FUEL INJECTION	275
Y	*308-2320*	1	PUMP GP-FUEL PRIMING	285
Y	*311-1125*	1	PUMP GP-FILTER & FUEL TRANSFER	287
Y	*311-1115*	1	PUMP GP-WATER	163
Y	*311-1109*	1	STARTING MOTOR GP-ELECTRIC	303
Y	*311-1129*	1	SWITCH GP-PRESSURE	310
Y	*308-2314*	1	SWITCH GP-START	313
Y	*311-1130*	1	SWITCH GP-TEMPERATURE	314
Y	*311-1121*	1	V-BELT GP (WATER PUMP)	137
Y	*311-1103*	1	VALVE MECHANISM GP	139

Y - SEPARATE ILLUSTRATION

<END>

318-1671 ENGINE AR-PRIMARY

14 BRAKE KW (18 BHP) AT 1500 RPM

FIELD REPLACEMENT ORDER 435-1640—PAGE: 9

SMCS-1000 **i06999595**

NOTE	PART NUMBER	QTY	PART NAME 1 2 3 4 5 6 (PRODUCT LEVEL)	SEE PAGE
Y	*316-9664*	1	AIR CLEANER GP	232
Y	*311-1120*	1	ALTERNATOR GP-CHARGING	292
			—OR—	
Y	*486-3293*	1	ALTERNATOR GP-CHARGING	294
Y	*364-2721*	1	CAMSHAFT GP	29
			—OR—	
Y	*508-6674*	1	CAMSHAFT GP	32
Y	*308-2319*	1	CONNECTION GP-ELECTRICAL	295
			—OR—	
Y	*321-6741*	1	CONNECTION GP-ELECTRICAL	296
Y	*308-2309*	1	CONNECTION GP-EXHAUST	242
Y	*311-1116*	1	HOUSING GP-WATER REGULATOR	154
Y	*364-2720*	1	CONTROL GP-GOVERNOR	257
Y	*329-3696*	1	HOUSING GP-FRONT	38
			—OR—	
Y	*465-7011*	1	COVER GP-FRONT HOUSING	40
Y	*311-1123*	1	COVER GP-VALVE MECHANISM	41
			—OR—	
Y	*419-6642*	1	COVER GP-CYLINDER HEAD	33
Y	*308-2283*	1	CRANKSHAFT GP	45
Y	*311-1099*	1	CYLINDER BLOCK GP	51
Y	*311-1102*	1	CYLINDER HEAD GP	59
Y	*508-6672*	1	FASTENER GP-FRONT HOUSING	70
Y	*311-1113*	1	FILLER GP-ENGINE OIL	143
			—OR—	
Y	*365-0485*	1	FILLER GP-ENGINE OIL	145
			—OR—	
Y	*419-6687*	1	FILLER GP-ENGINE OIL	146
Y	*308-2298*	1	FILTER GP-ENGINE OIL	147
Y	*308-5704*	1	FILTER GP-FUEL	265
Y	*316-9548*	1	FLYWHEEL GP	73
Y	*311-1127*	1	GLOW PLUG GP	297
Y	*311-1107*	1	HOUSING GP-FLYWHEEL	75
Y	*322-1390*	1	HOUSING GP-FRONT	91
			—OR—	
Y	*364-2719*	1	HOUSING GP-FRONT	97
			—OR—	
Y	*508-6673*	1	HOUSING GP-FRONT	107
Y	**339-3017**	1	KIT-ENGINE OIL PUMP	153
Y	*311-1131*	1	LAMP GP	315
Y	*320-9110*	1	LIFTING GP-ENGINE	116
Y	*311-1124*	1	MANIFOLD GP-EXHAUST	245
Y	*308-4735*	1	MOUNTING GP-ENGINE OIL FILTER	150
Y	*311-1112*	1	PAN GP-OIL	118
Y	*308-2286*	1	PISTON & ROD GP	126
Y	*309-6720*	1	PLUG GP-OIL PAN	132
Y	*311-1114*	1	PULLEY GP-CRANKSHAFT	133
Y	*322-1392*	1	PULLEY GP-FAN	135

318-1671 **ENGINE AR-PRIMARY (**contd.**)** **i06999595**

NOTE	PART NUMBER	QTY	PART NAME 1 2 3 4 5 6 (PRODUCT LEVEL)	SEE PAGE
Y	*311-1104*	1	PUMP GP-ENGINE OIL	151
Y	*322-1391*	1	PUMP GP-FUEL INJECTION	279
Y	*311-1125*	1	PUMP GP-FILTER & FUEL TRANSFER	287
Y	*311-1115*	1	PUMP GP-WATER	163
Y	*316-9713*	1	RADIATOR GP	196
Y	*320-9114*	1	SHUTOFF GP-ELECTRICAL	299
Y	*311-1128*	1	SOLENOID GP-SHUTOFF	300
Y	*311-1109*	1	STARTING MOTOR GP-ELECTRIC	303
Y	*315-6638*	1	SWITCH GP-PRESSURE (ENGINE OIL)	311
Y	*308-2314*	1	SWITCH GP-START	313
Y	*311-1130*	1	SWITCH GP-TEMPERATURE	314
Y	*322-0886*	1	V-BELT GP (WATER PUMP)	138
Y	*311-1103*	1	VALVE MECHANISM GP	139

Y - SEPARATE ILLUSTRATION

<END>

318-1672 ENGINE AR

16 BRAKE KW (22 BHP) AT 1800 RPM

FIELD REPLACEMENT ORDER 435-1633—PAGE: 8

SMCS-1000 **i06998610**

NOTE	PART NUMBER	QTY	PART NAME 1 2 3 4 5 6 (PRODUCT LEVEL)	SEE PAGE
Y	*316-9664*	1	AIR CLEANER GP	232
Y	*311-1120*	1	ALTERNATOR GP-CHARGING	292
			—OR—	
Y	*486-3293*	1	ALTERNATOR GP-CHARGING	294
Y	*330-3010*	1	CAMSHAFT GP	26
			—OR—	
Y	*364-2743*	1	CAMSHAFT GP	30
			—OR—	
Y	*508-5629*	1	CAMSHAFT GP	31
Y	*308-2319*	1	CONNECTION GP-ELECTRICAL	295
			—OR—	
Y	*321-6741*	1	CONNECTION GP-ELECTRICAL	296
Y	*308-2309*	1	CONNECTION GP-EXHAUST	242
Y	*311-1116*	1	HOUSING GP-WATER REGULATOR	154
Y	*330-3011*	1	CONTROL GP-GOVERNOR	251
			—OR—	
Y	*364-2742*	1	CONTROL GP-GOVERNOR	261
			—OR—	
Y	*465-7011*	1	COVER GP-FRONT HOUSING	40
Y	*329-3696*	1	HOUSING GP-FRONT	38
Y	*311-1123*	1	COVER GP-VALVE MECHANISM	41
			—OR—	
Y	*419-6642*	1	COVER GP-CYLINDER HEAD	33
Y	*311-1100*	1	CRANKSHAFT GP	47
Y	*311-1099*	1	CYLINDER BLOCK GP	51
Y	*311-1102*	1	CYLINDER HEAD GP	59
Y	*508-5627*	1	FASTENER GP-FRONT COVER	69
Y	*311-1113*	1	FILLER GP-ENGINE OIL	143
			—OR—	
Y	*365-0485*	1	FILLER GP-ENGINE OIL	145
			—OR—	
Y	*419-6687*	1	FILLER GP-ENGINE OIL	146
Y	*308-2298*	1	FILTER GP-ENGINE OIL	147
Y	*316-9548*	1	FLYWHEEL GP	73
Y	*311-1127*	1	GLOW PLUG GP	297
Y	*311-1107*	1	HOUSING GP-FLYWHEEL	75
Y	*322-3102*	1	HOUSING GP-FRONT	95
			—OR—	
Y	*364-2741*	1	HOUSING GP-FRONT	100
			—OR—	
Y	*508-5628*	1	HOUSING GP-FRONT	101
Y	*311-1131*	1	LAMP GP	315
Y	*320-9110*	1	LIFTING GP-ENGINE	116
Y	*311-1124*	1	MANIFOLD GP-EXHAUST	245
Y	*308-4735*	1	MOUNTING GP-ENGINE OIL FILTER	150
Y	*311-1112*	1	PAN GP-OIL	118
Y	*311-1101*	1	PISTON & ROD GP	128
Y	*309-6720*	1	PLUG GP-OIL PAN	132

318-1672 **ENGINE AR (**contd.**)** **i06998610**

NOTE	PART NUMBER	QTY	PART NAME 1 2 3 4 5 6 (PRODUCT LEVEL)	SEE PAGE
Y	*311-1114*	1	PULLEY GP-CRANKSHAFT	133
Y	*322-1392*	1	PULLEY GP-FAN	135
Y	**339-3017**	1	KIT-ENGINE OIL PUMP (IDLER)	153
Y	*311-1104*	1	PUMP GP-ENGINE OIL	151
Y	*322-3103*	1	PUMP GP-FUEL INJECTION	281
Y	*317-6706*	1	PUMP GP-FUEL PRM & PRIM FILTER	286
Y	*311-1125*	1	PUMP GP-FILTER & FUEL TRANSFER	287
Y	*311-1115*	1	PUMP GP-WATER	163
Y	*316-9713*	1	RADIATOR GP	196
Y	*320-9114*	1	SHUTOFF GP-ELECTRICAL	299
Y	*311-1128*	1	SOLENOID GP-SHUTOFF	300
Y	*311-1109*	1	STARTING MOTOR GP-ELECTRIC	303
Y	*315-6638*	1	SWITCH GP-PRESSURE (ENGINE OIL)	311
Y	*308-2314*	1	SWITCH GP-START	313
Y	*311-1130*	1	SWITCH GP-TEMPERATURE	314
Y	*322-0886*	1	V-BELT GP (WATER PUMP)	138
Y	*311-1103*	1	VALVE MECHANISM GP	139

Y - SEPARATE ILLUSTRATION

<END>

435-1631 ENGINE AR

24 BRAKE KW (33 BHP) AT 2800 RPM

FIELD REPLACEMENT FOR 302-1818—PAGE: 10: FOR 303-4102—PAGE: 13: FOR 303-4101—PAGE: 12: FOR 303-4103—PAGE: 14

SMCS-1000 **i05342102**

NOTE	PART NUMBER	QTY	PART NAME 1 2 3 4 5 6 (PRODUCT LEVEL)	SEE PAGE
Y	*311-5815*	1	CAMSHAFT GP	22
Y	*311-1116*	1	HOUSING GP-WATER REGULATOR	154
Y	*342-1268*	1	FASTENER GP-COVER	35
Y	*311-1123*	1	COVER GP-VALVE MECHANISM	41
Y	*311-1100*	1	CRANKSHAFT GP	47
Y	*311-1099*	1	CYLINDER BLOCK GP	51
Y	*311-1102*	1	CYLINDER HEAD GP	59
Y	*354-1245*	1	HOUSING GP-FRONT	63
Y	*311-1113*	1	FILLER GP-ENGINE OIL	143
Y	*308-2298*	1	FILTER GP-ENGINE OIL	147
Y	*327-0061*	1	FLYWHEEL GP	74
Y	*311-1127*	1	GLOW PLUG GP	297
Y	*311-5814*	1	GOVERNOR GP	266
Y	*342-1226*	1	HOUSING GP-FLYWHEEL	82
Y	*311-5813*	1	HOUSING GP-FRONT	88
Y	**339-3017**	1	KIT-ENGINE OIL PUMP	153
Y	*442-8532*	1	LIFTING GP-ENGINE	117
Y	*308-4735*	1	MOUNTING GP-ENGINE OIL FILTER	150
Y	*311-1112*	1	PAN GP-OIL	118
Y	*342-1324*	1	PARTS GP-MISCELLANEOUS	317
Y	*311-1101*	1	PISTON & ROD GP	128
Y	*309-6720*	1	PLUG GP-OIL PAN	132
Y	*311-1114*	1	PULLEY GP-CRANKSHAFT	133
Y	*311-1104*	1	PUMP GP-ENGINE OIL	151
Y	*311-1106*	1	PUMP GP-FUEL INJECTION	275
Y	*311-1115*	1	PUMP GP-WATER	163
Y	*311-1128*	1	SOLENOID GP-SHUTOFF	300
Y	*315-6638*	1	SWITCH GP-PRESSURE (ENGINE OIL)	311
Y	*311-1130*	1	SWITCH GP-TEMPERATURE	314
Y	*311-1103*	1	VALVE MECHANISM GP	139

Y - SEPARATE ILLUSTRATION

<END>

435-1633 ENGINE AR-PRIMARY

16 BRAKE KW (22 BHP) AT 1800 RPM

SMCS-1000 **i06151733**

NOTE	PART NUMBER	QTY	PART NAME 1 2 3 4 5 6 (PRODUCT LEVEL)	SEE PAGE
Y	*364-2743*	1	CAMSHAFT GP	30
Y	*311-1116*	1	HOUSING GP-WATER REGULATOR	154
Y	*364-2742*	1	CONTROL GP-GOVERNOR	261
Y	*342-1268*	1	FASTENER GP-COVER	35
Y	*311-1122*	1	COVER GP-FRONT HOUSING	36
Y	*311-1123*	1	COVER GP-VALVE MECHANISM	41
Y	*311-1100*	1	CRANKSHAFT GP	47
Y	*311-1099*	1	CYLINDER BLOCK GP	51
Y	*311-1102*	1	CYLINDER HEAD GP	59
Y	*311-1113*	1	FILLER GP-ENGINE OIL	143
Y	*308-2298*	1	FILTER GP-ENGINE OIL	147
Y	*327-0061*	1	FLYWHEEL GP	74
Y	*311-1127*	1	GLOW PLUG GP	297
Y	*342-1226*	1	HOUSING GP-FLYWHEEL	82
Y	*364-2741*	1	HOUSING GP-FRONT	100
Y	**339-3017**	1	KIT-ENGINE OIL PUMP	153
Y	*442-8532*	1	LIFTING GP-ENGINE	117
Y	*308-4735*	1	MOUNTING GP-ENGINE OIL FILTER	150
Y	*311-1112*	1	PAN GP-OIL	118
Y	*342-1324*	1	PARTS GP-MISCELLANEOUS	317
Y	*311-1101*	1	PISTON & ROD GP	128
Y	*309-6720*	1	PLUG GP-OIL PAN	132
Y	*311-1114*	1	PULLEY GP-CRANKSHAFT	133
Y	*311-1104*	1	PUMP GP-ENGINE OIL	151
Y	*322-3103*	1	PUMP GP-FUEL INJECTION	281
Y	*311-1115*	1	PUMP GP-WATER	163
Y	*311-1128*	1	SOLENOID GP-SHUTOFF	300
Y	*315-6638*	1	SWITCH GP-PRESSURE (ENGINE OIL)	311
Y	*311-1130*	1	SWITCH GP-TEMPERATURE	314
Y	*311-1103*	1	VALVE MECHANISM GP	139

Y - SEPARATE ILLUSTRATION

<END>

435-1640 ENGINE AR

14 BRAKE KW (18 BHP) AT 1500 RPM

FIELD REPLACEMENT FOR 318-1671—PAGE: 3

SMCS-1000 **i06151735**

NOTE	PART NUMBER	QTY	PART NAME 1 2 3 4 5 6 (PRODUCT LEVEL)	SEE PAGE
Y	*364-2721*	1	CAMSHAFT GP	29
Y	*364-2720*	1	CONTROL GP-GOVERNOR	257
Y	*342-1268*	1	FASTENER GP-COVER	35
Y	*311-1122*	1	COVER GP-FRONT HOUSING	36
Y	*311-1123*	1	COVER GP-VALVE MECHANISM	41
Y	*311-1100*	1	CRANKSHAFT GP	47
Y	*311-1099*	1	CYLINDER BLOCK GP	51
Y	*311-1102*	1	CYLINDER HEAD GP	59
Y	*311-1113*	1	FILLER GP-ENGINE OIL	143
Y	*308-2298*	1	FILTER GP-ENGINE OIL	147
Y	*327-0061*	1	FLYWHEEL GP	74
Y	*311-1127*	1	GLOW PLUG GP	297
Y	*342-1226*	1	HOUSING GP-FLYWHEEL	82
Y	*364-2719*	1	HOUSING GP-FRONT	97
Y	**339-3017**	1	KIT-ENGINE OIL PUMP	153
Y	*442-8532*	1	LIFTING GP-ENGINE	117
Y	*308-4735*	1	MOUNTING GP-ENGINE OIL FILTER	150
Y	*311-1112*	1	PAN GP-OIL	118
Y	*342-1324*	1	PARTS GP-MISCELLANEOUS	317
Y	*311-1101*	1	PISTON & ROD GP	128
Y	*309-6720*	1	PLUG GP-OIL PAN	132
Y	*311-1114*	1	PULLEY GP-CRANKSHAFT	133
Y	*311-1104*	1	PUMP GP-ENGINE OIL	151
Y	*322-1391*	1	PUMP GP-FUEL INJECTION	279
Y	*311-1115*	1	PUMP GP-WATER	163
Y	*311-5826*	1	PUMP GP-WATER	165
Y	*311-1128*	1	SOLENOID GP-SHUTOFF	300
Y	*315-6638*	1	SWITCH GP-PRESSURE (ENGINE OIL)	311
Y	*311-1130*	1	SWITCH GP-TEMPERATURE	314
Y	*311-1103*	1	VALVE MECHANISM GP	139

Y - SEPARATE ILLUSTRATION

<END>

302-1818 ENGINE AR-PRIMARY

24 BRAKE KW (33 BHP) AT 2800 RPM

FIELD REPLACEMENT ORDER 435-1631—PAGE: 7

SMCS-1000 **i05272396**

NOTE	PART NUMBER	QTY	PART NAME 1 2 3 4 5 6 (PRODUCT LEVEL)	SEE PAGE
Y	*311-1120*	1	ALTERNATOR GP-CHARGING	292
Y	*308-2319*	1	CONNECTION GP-ELECTRICAL	295
Y	*308-2309*	1	CONNECTION GP-EXHAUST	242
Y	*308-4735*	1	MOUNTING GP-ENGINE OIL FILTER	150
Y	*311-1128*	1	SOLENOID GP-SHUTOFF	300
Y	*311-1122*	1	COVER GP-FRONT HOUSING	36
Y	*311-1105*	1	HOUSING GP-FRONT	83
Y	*311-1116*	1	HOUSING GP-WATER REGULATOR	154
Y	*311-1123*	1	COVER GP-VALVE MECHANISM	41
Y	*311-1100*	1	CRANKSHAFT GP	47
Y	*311-1099*	1	CYLINDER BLOCK GP	51
Y	*311-1102*	1	CYLINDER HEAD GP	59
Y	*311-1119*	1	DRIVE GP-FAN	66
Y	*311-1118*	1	FAN GP	155
Y	*311-1113*	1	FILLER GP-ENGINE OIL	143
			—OR—	
Y	*365-0485*	1	FILLER GP-ENGINE OIL	145
Y	*308-2298*	1	FILTER GP-ENGINE OIL	147
Y	*316-9548*	1	FLYWHEEL GP	73
Y	*311-1127*	1	GLOW PLUG GP	297
Y	*311-1107*	1	HOUSING GP-FLYWHEEL	75
Y	**339-3017**	1	KIT-ENGINE OIL PUMP	153
Y	*311-1131*	1	LAMP GP	315
Y	*309-6725*	1	LIFTING GP-ENGINE	114
			—OR—	
Y	*320-9110*	1	LIFTING GP-ENGINE	116
Y	*311-1124*	1	MANIFOLD GP-EXHAUST	245
Y	*311-1112*	1	PAN GP-OIL	118
Y	*311-1101*	1	PISTON & ROD GP	128
Y	*309-6720*	1	PLUG GP-OIL PAN	132
Y	*311-1114*	1	PULLEY GP-CRANKSHAFT	133
Y	*311-1111*	1	PULLEY GP-FAN	134
Y	*311-1104*	1	PUMP GP-ENGINE OIL	151
Y	*311-1106*	1	PUMP GP-FUEL INJECTION	275
Y	*308-2320*	1	PUMP GP-FUEL PRIMING	285
Y	*311-1125*	1	PUMP GP-FILTER & FUEL TRANSFER	287
Y	*311-1115*	1	PUMP GP-WATER	163
Y	*311-1109*	1	STARTING MOTOR GP-ELECTRIC	303
Y	*311-1129*	1	SWITCH GP-PRESSURE	310
Y	*308-2314*	1	SWITCH GP-START	313
Y	*311-1130*	1	SWITCH GP-TEMPERATURE	314
Y	*311-1103*	1	VALVE MECHANISM GP	139
Y	*311-1121*	1	V-BELT GP (WATER PUMP)	137

Y - SEPARATE ILLUSTRATION

<END>

303-4100 ENGINE AR-PRIMARY

25 BRAKE KW (34 BHP) AT 3000 RPM

FIELD REPLACEMENT ORDER 435-1654—PAGE: 55

SMCS-1000 **i07139773**

NOTE	PART NUMBER	QTY	PART NAME 1 2 3 4 5 6 (PRODUCT LEVEL)	SEE PAGE
Y	*316-9664*	1	AIR CLEANER GP	232
Y	*311-1120*	1	ALTERNATOR GP-CHARGING	292
Y	*322-0563*	1	CAMSHAFT GP	24
Y	*308-2319*	1	CONNECTION GP-ELECTRICAL	295
			—OR—	
Y	*321-6741*	1	CONNECTION GP-ELECTRICAL	296
Y	*308-2309*	1	CONNECTION GP-EXHAUST	242
Y	*311-1116*	1	HOUSING GP-WATER REGULATOR	154
Y	*311-1122*	1	COVER GP-FRONT HOUSING	36
Y	*311-1123*	1	COVER GP-VALVE MECHANISM	41
Y	*311-1100*	1	CRANKSHAFT GP	47
Y	*311-1099*	1	CYLINDER BLOCK GP	51
Y	*311-1102*	1	CYLINDER HEAD GP	59
Y	*365-0485*	1	FILLER GP-ENGINE OIL	145
Y	*308-2298*	1	FILTER GP-ENGINE OIL	147
Y	*316-9548*	1	FLYWHEEL GP	73
Y	*311-1127*	1	GLOW PLUG GP	297
Y	*322-0562*	1	GOVERNOR GP	270
Y	*311-1107*	1	HOUSING GP-FLYWHEEL	75
Y	*322-0561*	1	HOUSING GP-FRONT	90
Y	*311-1131*	1	LAMP GP	315
Y	*320-9110*	1	LIFTING GP-ENGINE	116
Y	*334-7293*	1	LINES GP-ENGINE OIL	149
Y	*311-1124*	1	MANIFOLD GP-EXHAUST	245
Y	*311-1112*	1	PAN GP-OIL	118
Y	*311-1101*	1	PISTON & ROD GP	128
Y	*309-6720*	1	PLUG GP-OIL PAN	132
Y	*311-1114*	1	PULLEY GP-CRANKSHAFT	133
Y	*311-1111*	1	PULLEY GP-FAN	134
Y	**339-3017**	1	KIT-ENGINE OIL PUMP	153
Y	*311-1104*	1	PUMP GP-ENGINE OIL	151
Y	*322-0564*	1	PUMP GP-FUEL INJECTION	277
Y	*308-2320*	1	PUMP GP-FUEL PRIMING	285
Y	*311-1125*	1	PUMP GP-FILTER & FUEL TRANSFER	287
Y	*334-7294*	1	PUMP GP-WATER	173
Y	*336-5517*	1	RADIATOR GP	216
Y	*311-1128*	1	SOLENOID GP-SHUTOFF	300
Y	*311-1109*	1	STARTING MOTOR GP-ELECTRIC	303
Y	*315-6638*	1	SWITCH GP-PRESSURE (ENGINE OIL)	311
Y	*308-2314*	1	SWITCH GP-START (HEATER)	313
Y	*311-1130*	1	SWITCH GP-TEMPERATURE (COOLANT)	314
Y	*311-1121*	1	V-BELT GP (WATER PUMP)	137
Y	*311-1103*	1	VALVE MECHANISM GP	139

Y - SEPARATE ILLUSTRATION

<END>

303-4101 ENGINE AR-PRIMARY

25 BRAKE KW (33 BHP) AT 2800 RPM

FIELD REPLACEMENT ORDER 435-1631—PAGE: 7

SMCS-1000 **i06999583**

NOTE	PART NUMBER	QTY	PART NAME 1 2 3 4 5 6 (PRODUCT LEVEL)	SEE PAGE
Y	*316-9664*	1	AIR CLEANER GP	232
Y	*311-1120*	1	ALTERNATOR GP-CHARGING	292
Y	*308-2319*	1	CONNECTION GP-ELECTRICAL	295
			—OR—	
Y	*321-6741*	1	CONNECTION GP-ELECTRICAL	296
Y	*308-2309*	1	CONNECTION GP-EXHAUST	242
Y	*311-1116*	1	HOUSING GP-WATER REGULATOR	154
Y	*311-1122*	1	COVER GP-FRONT HOUSING	36
Y	*311-1123*	1	COVER GP-VALVE MECHANISM	41
Y	*311-1100*	1	CRANKSHAFT GP	47
Y	*311-1099*	1	CYLINDER BLOCK GP	51
Y	*311-1102*	1	CYLINDER HEAD GP	59
Y	*435-1631*	1	ENGINE AR	7
Y	*311-1113*	1	FILLER GP-ENGINE OIL	143
			—OR—	
Y	*365-0485*	1	FILLER GP-ENGINE OIL	145
Y	*308-2298*	1	FILTER GP-ENGINE OIL	147
Y	*316-9548*	1	FLYWHEEL GP	73
Y	*311-1127*	1	GLOW PLUG GP	297
Y	*311-1107*	1	HOUSING GP-FLYWHEEL	75
Y	*311-1105*	1	HOUSING GP-FRONT	83
Y	*311-1131*	1	LAMP GP	315
Y	*320-9110*	1	LIFTING GP-ENGINE	116
Y	*334-7293*	1	LINES GP-ENGINE OIL	149
Y	*311-1124*	1	MANIFOLD GP-EXHAUST	245
Y	*311-1112*	1	PAN GP-OIL	118
Y	*311-1101*	1	PISTON & ROD GP	128
Y	*309-6720*	1	PLUG GP-OIL PAN	132
Y	*311-1114*	1	PULLEY GP-CRANKSHAFT	133
Y	*311-1111*	1	PULLEY GP-FAN	134
Y	**339-3017**	1	KIT-ENGINE OIL PUMP	153
Y	*311-1104*	1	PUMP GP-ENGINE OIL	151
Y	*311-1106*	1	PUMP GP-FUEL INJECTION	275
Y	*308-2320*	1	PUMP GP-FUEL PRIMING	285
Y	*311-1125*	1	PUMP GP-FILTER & FUEL TRANSFER	287
Y	*334-7294*	1	PUMP GP-WATER	173
Y	*336-5517*	1	RADIATOR GP	216
Y	*311-1128*	1	SOLENOID GP-SHUTOFF	300
Y	*311-1109*	1	STARTING MOTOR GP-ELECTRIC	303
Y	*315-6638*	1	SWITCH GP-PRESSURE (ENGINE OIL)	311
Y	*308-2314*	1	SWITCH GP-START (HEATER)	313
Y	*311-1130*	1	SWITCH GP-TEMPERATURE (COOLANT)	314
Y	*311-1121*	1	V-BELT GP (WATER PUMP)	137
Y	*311-1103*	1	VALVE MECHANISM GP	139

Y - SEPARATE ILLUSTRATION

<END>

303-4102 ENGINE AR-PRIMARY

25 BRAKE KW (33 BHP) AT 2800 RPM

FIELD REPLACEMENT ORDER 435-1631—PAGE: 7

SMCS-1000 **i04606510**

NOTE	PART NUMBER	QTY	PART NAME 1 2 3 4 5 6 (PRODUCT LEVEL)	SEE PAGE
Y	*316-9664*	1	AIR CLEANER GP	232
Y	*311-1120*	1	ALTERNATOR GP-CHARGING	292
Y	*308-2319*	1	CONNECTION GP-ELECTRICAL	295
Y	*308-2309*	1	CONNECTION GP-EXHAUST	242
Y	*311-1116*	1	HOUSING GP-WATER REGULATOR	154
Y	*329-8577*	1	COVER GP-FRONT HOUSING	39
Y	*311-1123*	1	COVER GP-VALVE MECHANISM	41
Y	*311-1100*	1	CRANKSHAFT GP	47
Y	*311-1099*	1	CYLINDER BLOCK GP	51
Y	*311-1102*	1	CYLINDER HEAD GP	59
Y	*365-0485*	1	FILLER GP-ENGINE OIL	145
Y	*308-2298*	1	FILTER GP-ENGINE OIL	147
Y	*311-1108*	1	FLYWHEEL GP	71
Y	*311-1127*	1	GLOW PLUG GP	297
Y	*315-6636*	1	HOUSING GP-FLYWHEEL	79
Y	*311-1105*	1	HOUSING GP-FRONT	83
Y	**339-3017**	1	KIT-ENGINE OIL PUMP	153
Y	*320-9110*	1	LIFTING GP-ENGINE	116
Y	*334-7293*	1	LINES GP-ENGINE OIL	149
Y	*311-1124*	1	MANIFOLD GP-EXHAUST	245
Y	*311-1112*	1	PAN GP-OIL	118
Y	*311-1101*	1	PISTON & ROD GP	128
Y	*309-6720*	1	PLUG GP-OIL PAN (ENGINE)	132
Y	*311-1114*	1	PULLEY GP-CRANKSHAFT	133
Y	*311-1111*	1	PULLEY GP-FAN	134
Y	*311-1104*	1	PUMP GP-ENGINE OIL	151
Y	*311-1106*	1	PUMP GP-FUEL INJECTION	275
Y	*308-2320*	1	PUMP GP-FUEL PRIMING	285
Y	*311-1125*	1	PUMP GP-FILTER & FUEL TRANSFER	287
Y	*334-7294*	1	PUMP GP-WATER	173
Y	*334-7307*	1	RADIATOR & FAN GP	180
Y	*311-1128*	1	SOLENOID GP-SHUTOFF	300
Y	*311-1109*	1	STARTING MOTOR GP-ELECTRIC	303
Y	*315-6638*	1	SWITCH GP-PRESSURE (ENGINE OIL)	311
Y	*308-2314*	1	SWITCH GP-START (HEATER)	313
Y	*311-1130*	1	SWITCH GP-TEMPERATURE (COOLANT)	314
Y	*311-1121*	1	V-BELT GP (WATER PUMP)	137
Y	*311-1103*	1	VALVE MECHANISM GP	139

Y - SEPARATE ILLUSTRATION

<END>

303-4103 ENGINE AR-PRIMARY

25 BRAKE KW (33 BHP) AT 2800 RPM

FIELD REPLACEMENT ORDER 435-1631—PAGE: 7

SMCS-1000 **i07571162**

NOTE	PART NUMBER	QTY	PART NAME 1 2 3 4 5 6 (PRODUCT LEVEL)	SEE PAGE
Y	*316-9664*	1	AIR CLEANER GP	232
			—OR—	
Y	*477-2865*	1	AIR CLEANER GP	240
Y	*311-1120*	1	ALTERNATOR GP-CHARGING	292
Y	*308-2319*	1	CONNECTION GP-ELECTRICAL	295
			—OR—	
Y	*321-6741*	1	CONNECTION GP-ELECTRICAL	296
Y	*308-2309*	1	CONNECTION GP-EXHAUST	242
Y	*311-1116*	1	HOUSING GP-WATER REGULATOR	154
Y	*311-1122*	1	COVER GP-FRONT HOUSING	36
Y	*311-1123*	1	COVER GP-VALVE MECHANISM	41
Y	*311-1100*	1	CRANKSHAFT GP	47
Y	*311-1099*	1	CYLINDER BLOCK GP	51
Y	*311-1102*	1	CYLINDER HEAD GP	59
Y	*311-1113*	1	FILLER GP-ENGINE OIL	143
Y	*308-2298*	1	FILTER GP-ENGINE OIL	147
Y	*311-1108*	1	FLYWHEEL GP	71
Y	*311-1127*	1	GLOW PLUG GP	297
Y	*315-6636*	1	HOUSING GP-FLYWHEEL	79
Y	*311-1105*	1	HOUSING GP-FRONT	83
Y	*311-1131*	1	LAMP GP	315
Y	*309-6725*	1	LIFTING GP-ENGINE	114
			—OR—	
Y	*320-9110*	1	LIFTING GP-ENGINE	116
Y	*334-7293*	1	LINES GP-ENGINE OIL	149
Y	*311-1124*	1	MANIFOLD GP-EXHAUST	245
Y	*311-1112*	1	PAN GP-OIL	118
Y	*311-1101*	1	PISTON & ROD GP	128
Y	*309-6720*	1	PLUG GP-OIL PAN	132
Y	**339-3017**	1	KIT-ENGINE OIL PUMP	153
Y	*311-1114*	1	PULLEY GP-CRANKSHAFT	133
Y	*311-1111*	1	PULLEY GP-FAN	134
Y	*311-1104*	1	PUMP GP-ENGINE OIL	151
Y	*311-1106*	1	PUMP GP-FUEL INJECTION	275
Y	*308-2320*	1	PUMP GP-FUEL PRIMING	285
Y	*317-0566*	1	PUMP GP-FUEL TRANSFER	291
Y	*334-7294*	1	PUMP GP-WATER	173
Y	*336-5517*	1	RADIATOR GP	216
Y	*311-1128*	1	SOLENOID GP-SHUTOFF	300
Y	*311-1109*	1	STARTING MOTOR GP-ELECTRIC	303
Y	*315-6638*	1	SWITCH GP-PRESSURE (ENGINE OIL)	311
Y	*308-2314*	1	SWITCH GP-START	313
			S/N: C6N1-1857	
Y	*311-1130*	1	SWITCH GP-TEMPERATURE	314
Y	*311-1121*	1	V-BELT GP (WATER PUMP)	137
Y	*311-1103*	1	VALVE MECHANISM GP	139

303-4103 **ENGINE AR-PRIMARY (**contd.**)** **i07571162**

NOTE	PART NUMBER	QTY	PART NAME 1 2 3 4 5 6 (PRODUCT LEVEL)	SEE PAGE
Y - SEPARATE ILLUSTRATION				

<END>

315-0451 ENGINE AR-PRIMARY

30 BRAKE KW (40 BHP) AT 3000 RPM

FIELD REPLACEMENT ORDER 435-1657—PAGE: 1

SMCS-1000 **i05395000**

NOTE	PART NUMBER	QTY	PART NAME 1 2 3 4 5 6 (PRODUCT LEVEL)	SEE PAGE
Y	*311-1120*	1	ALTERNATOR GP-CHARGING	292
Y	*331-4507*	1	CAMSHAFT GP	27
Y	*308-5610*	1	CONNECTION GP-EXHAUST	243
Y	*311-1116*	1	HOUSING GP-WATER REGULATOR	154
Y	*331-4506*	1	CONTROL GP-GOVERNOR	253
Y	*311-1122*	1	COVER GP-FRONT HOUSING	36
Y	*331-4500*	1	CRANKSHAFT GP	49
Y	*331-4499*	1	CYLINDER BLOCK GP	53
Y	*331-4502*	1	CYLINDER HEAD GP	60
Y	*315-5253*	1	FAN GP	156
Y	*311-1113*	1	FILLER GP-ENGINE OIL	143
			—OR—	
Y	*365-0485*	1	FILLER GP-ENGINE OIL	145
Y	*308-2298*	1	FILTER GP-ENGINE OIL	147
Y	*311-1108*	1	FLYWHEEL GP	71
Y	*311-1127*	1	GLOW PLUG GP	297
Y	*315-6636*	1	HOUSING GP-FLYWHEEL	79
Y	*331-4505*	1	HOUSING GP-FRONT	96
Y	**339-3017**	1	KIT-ENGINE OIL PUMP	153
Y	*311-1131*	1	LAMP GP	315
Y	*320-9110*	1	LIFTING GP-ENGINE	116
Y	*331-4509*	1	LINES GP-ENGINE OIL	148
			—OR—	
Y	*334-7293*	1	LINES GP-ENGINE OIL	149
Y	*343-4578*	1	MUFFLER GP	246
Y	*311-1112*	1	PAN GP-OIL	118
Y	*331-4501*	1	PISTON & ROD GP	129
Y	*322-2426*	1	PLUG GP-ENGINE	130
Y	*323-9157*	1	PLUG GP-ENGINE	131
Y	*311-1114*	1	PULLEY GP-CRANKSHAFT	133
Y	*311-1111*	1	PULLEY GP-FAN	134
Y	*331-4504*	1	PUMP GP-ENGINE OIL	152
Y	*331-4508*	1	PUMP GP-FUEL INJECTION	283
Y	*317-6706*	1	PUMP GP-FUEL PRM & PRIM FILTER	286
Y	*311-1125*	1	PUMP GP-FILTER & FUEL TRANSFER	287
Y	*331-4510*	1	PUMP GP-WATER	167
			—OR—	
Y	*365-6508*	1	PUMP GP-WATER	178
Y	*311-1128*	1	SOLENOID GP-SHUTOFF	300
Y	*311-1109*	1	STARTING MOTOR GP-ELECTRIC	303
Y	*331-4511*	1	TURBOCHARGER GP	247
Y	*311-1121*	1	V-BELT GP (WATER PUMP)	137
Y	*331-4503*	1	VALVE MECHANISM GP	141

Y - SEPARATE ILLUSTRATION

<END>

322-4991 ENGINE AR-PRIMARY

30 BRAKE KW (40 BHP) AT 3000 RPM

FIELD REPLACEMENT ORDER 435-1657—PAGE: 1

SMCS-1000 **i06999584**

NOTE	PART NUMBER	QTY	PART NAME 1 2 3 4 5 6 (PRODUCT LEVEL)	SEE PAGE
Y	*311-1120*	1	ALTERNATOR GP-CHARGING	292
Y	*331-4507*	1	CAMSHAFT GP	27
Y	*308-2319*	1	CONNECTION GP-ELECTRICAL	295
			—OR—	
Y	*321-6741*	1	CONNECTION GP-ELECTRICAL	296
Y	*308-5610*	1	CONNECTION GP-EXHAUST	243
Y	*311-1116*	1	HOUSING GP-WATER REGULATOR	154
Y	*331-4506*	1	CONTROL GP-GOVERNOR	253
Y	*311-1122*	1	COVER GP-FRONT HOUSING	36
Y	*331-4500*	1	CRANKSHAFT GP	49
Y	*331-4499*	1	CYLINDER BLOCK GP	53
Y	*331-4502*	1	CYLINDER HEAD GP	60
Y	*308-2304*	1	EXTENSION GP-FAN	65
Y	*322-0629*	1	FAN GP	157
Y	*311-1113*	1	FILLER GP-ENGINE OIL	143
			—OR—	
Y	*365-0485*	1	FILLER GP-ENGINE OIL	145
Y	*308-2298*	1	FILTER GP-ENGINE OIL	147
Y	*311-1108*	1	FLYWHEEL GP	71
Y	*311-1127*	1	GLOW PLUG GP	297
Y	*315-6636*	1	HOUSING GP-FLYWHEEL	79
Y	*331-4505*	1	HOUSING GP-FRONT	96
Y	**339-3017**	1	KIT-ENGINE OIL PUMP	153
Y	*320-9110*	1	LIFTING GP-ENGINE	116
Y	*331-4509*	1	LINES GP-ENGINE OIL	148
			—OR—	
Y	*334-7293*	1	LINES GP-ENGINE OIL	149
Y	*322-0630*	1	PAN GP-OIL	124
			—OR—	
Y	*315-5250*	1	PAN GP-OIL	122
Y	*331-4501*	1	PISTON & ROD GP	129
Y	*309-6720*	1	PLUG GP-OIL PAN	132
Y	*311-1114*	1	PULLEY GP-CRANKSHAFT	133
Y	*311-1111*	1	PULLEY GP-FAN	134
Y	*331-4504*	1	PUMP GP-ENGINE OIL	152
Y	*331-4508*	1	PUMP GP-FUEL INJECTION	283
Y	*317-6706*	1	PUMP GP-FUEL PRM & PRIM FILTER	286
Y	*311-1125*	1	PUMP GP-FILTER & FUEL TRANSFER	287
Y	*365-6508*	1	PUMP GP-WATER	178
			—OR—	
Y	*331-4510*	1	PUMP GP-WATER	167
Y	*311-1128*	1	SOLENOID GP-SHUTOFF	300
Y	*311-1109*	1	STARTING MOTOR GP-ELECTRIC	303
Y	*311-1129*	1	SWITCH GP-PRESSURE	310
Y	*311-1130*	1	SWITCH GP-TEMPERATURE	314
Y	*331-4511*	1	TURBOCHARGER GP	247
Y	*311-1121*	1	V-BELT GP (WATER PUMP)	137
Y	*331-4503*	1	VALVE MECHANISM GP	141

322-4991 **ENGINE AR-PRIMARY (**contd.**)** **i06999584**

NOTE	PART NUMBER	QTY	PART NAME 1 2 3 4 5 6 (PRODUCT LEVEL)	SEE PAGE
Y - SEPARATE ILLUSTRATION				

<END>

331-5411 ENGINE AR-PRIMARY

24 BRAKE KW (33 BHP) AT 2800 RPM

SMCS-1000 **i06995206**

NOTE	PART NUMBER	QTY	PART NAME 1 2 3 4 5 6 (PRODUCT LEVEL)	SEE PAGE
Y	*334-7296*	1	AIR CLEANER GP	236
			—OR—	
Y	*316-9664*	1	AIR CLEANER GP	232
Y	*311-1120*	1	ALTERNATOR GP-CHARGING	292
Y	*308-2309*	1	CONNECTION GP-EXHAUST	242
Y	*308-2319*	1	CONNECTION GP-ELECTRICAL	295
			—OR—	
Y	*321-6741*	1	CONNECTION GP-ELECTRICAL	296
Y	*311-1116*	1	HOUSING GP-WATER REGULATOR	154
Y	*329-3696*	1	HOUSING GP-FRONT	38
			—OR—	
Y	*311-1122*	1	COVER GP-FRONT HOUSING	36
Y	*311-1123*	1	COVER GP-VALVE MECHANISM	41
Y	*311-1100*	1	CRANKSHAFT GP	47
Y	*311-1099*	1	CYLINDER BLOCK GP	51
Y	*311-1102*	1	CYLINDER HEAD GP	59
Y	*311-1113*	1	FILLER GP-ENGINE OIL	143
			—OR—	
Y	*365-0485*	1	FILLER GP-ENGINE OIL	145
Y	*308-2298*	1	FILTER GP-ENGINE OIL	147
Y	*311-1108*	1	FLYWHEEL GP	71
Y	*311-1127*	1	GLOW PLUG GP	297
Y	*315-6636*	1	HOUSING GP-FLYWHEEL	79
Y	*311-1105*	1	HOUSING GP-FRONT	83
Y	**339-3017**	1	KIT-ENGINE OIL PUMP	153
Y	*311-1131*	1	LAMP GP	315
Y	*320-9110*	1	LIFTING GP-ENGINE	116
Y	*334-7293*	1	LINES GP-ENGINE OIL	149
Y	*311-1124*	1	MANIFOLD GP-EXHAUST	245
Y	*311-1112*	1	PAN GP-OIL	118
Y	*311-1101*	1	PISTON & ROD GP	128
Y	*309-6720*	1	PLUG GP-OIL PAN	132
Y	*311-1114*	1	PULLEY GP-CRANKSHAFT	133
Y	*311-1111*	1	PULLEY GP-FAN	134
Y	*311-1104*	1	PUMP GP-ENGINE OIL	151
Y	*311-1106*	1	PUMP GP-FUEL INJECTION	275
Y	*308-2320*	1	PUMP GP-FUEL PRIMING	285
Y	*311-1125*	1	PUMP GP-FILTER & FUEL TRANSFER	287
Y	*334-7294*	1	PUMP GP-WATER	173
Y	*334-7307*	1	RADIATOR & FAN GP	180
Y	*311-1128*	1	SOLENOID GP-SHUTOFF	300
Y	*311-1109*	1	STARTING MOTOR GP-ELECTRIC	303
Y	*315-6638*	1	SWITCH GP-PRESSURE (ENGINE OIL)	311
Y	*311-1130*	1	SWITCH GP-TEMPERATURE	314
Y	*311-1121*	1	V-BELT GP	137
Y	*311-1103*	1	VALVE MECHANISM GP	139

Y - SEPARATE ILLUSTRATION

<END>

351-6854 ENGINE AR-PRIMARY

30 BRAKE KW (40 BHP) AT 3000 RPM

FIELD REPLACEMENT ORDER 435-1657—PAGE: 1

SMCS-1000 **i05906187**

NOTE	PART NUMBER	QTY	PART NAME 1 2 3 4 5 6 (PRODUCT LEVEL)	SEE PAGE
Y	*311-1120*	1	ALTERNATOR GP-CHARGING	292
Y	*331-4507*	1	CAMSHAFT GP	27
Y	*311-1116*	1	HOUSING GP-WATER REGULATOR	154
Y	*331-4506*	1	CONTROL GP-GOVERNOR	253
Y	*331-4500*	1	CRANKSHAFT GP	49
Y	*331-4499*	1	CYLINDER BLOCK GP	53
Y	*331-4502*	1	CYLINDER HEAD GP	60
Y	*354-1245*	1	HOUSING GP-FRONT	63
Y	*322-3808*	1	DRIVE GP-FAN	67
Y	*463-8238*	1	FAN GP-BLOWER	158
Y	*365-0485*	1	FILLER GP-ENGINE OIL	145
Y	*308-2298*	1	FILTER GP-ENGINE OIL	147
Y	*311-1108*	1	FLYWHEEL GP	71
Y	*311-1127*	1	GLOW PLUG GP	297
Y	*323-2543*	1	HOUSING GP-FLYWHEEL	81
Y	*331-4505*	1	HOUSING GP-FRONT	96
Y	*320-9110*	1	LIFTING GP-ENGINE	116
Y	*334-7293*	1	LINES GP-ENGINE OIL	149
Y	*315-5250*	1	PAN GP-OIL	122
Y	*331-4501*	1	PISTON & ROD GP	129
Y	*323-9157*	1	PLUG GP-ENGINE	131
Y	*309-6720*	1	PLUG GP-OIL PAN	132
Y	*311-1114*	1	PULLEY GP-CRANKSHAFT	133
Y	*311-1111*	1	PULLEY GP-FAN	134
Y	*331-4504*	1	PUMP GP-ENGINE OIL	152
Y	*331-4508*	1	PUMP GP-FUEL INJECTION	283
Y	*315-5266*	1	PUMP GP-FUEL TRANSFER	290
Y	*365-6508*	1	PUMP GP-WATER	178
Y	*311-1128*	1	SOLENOID GP-SHUTOFF	300
Y	*311-1109*	1	STARTING MOTOR GP-ELECTRIC	303
Y	*311-1130*	1	SWITCH GP-TEMPERATURE	314
Y	*331-4511*	1	TURBOCHARGER GP	247
Y	*311-1121*	1	V-BELT GP (WATER PUMP)	137
Y	*331-4503*	1	VALVE MECHANISM GP	141
			AVAILABLE REPAIR KIT(S):	
Y	**339-3017**	1	KIT-ENGINE OIL PUMP	153

Y - SEPARATE ILLUSTRATION

<END>

342-8500 CAMSHAFT AS

PART OF 322-1390 HOUSING GP-FRONT

SMCS-1210 **i04023386**

NOTE	REF NO	GRAPHIC REF	PART NUMBER	QTY	PART NAME 1 2 3 4 5 6 (PRODUCT LEVEL)	SEE PAGE
	1	1	**153-6492**	1	KEY-WOODRUFF	
	2	1	**156-6997**	1	BEARING	
	3	1	**313-9323**	1	SPACER (20.5X28X9.3-MM THK)	
	4	1	**342-8499**	1	GEAR-CAMSHAFT (62-TEETH)	

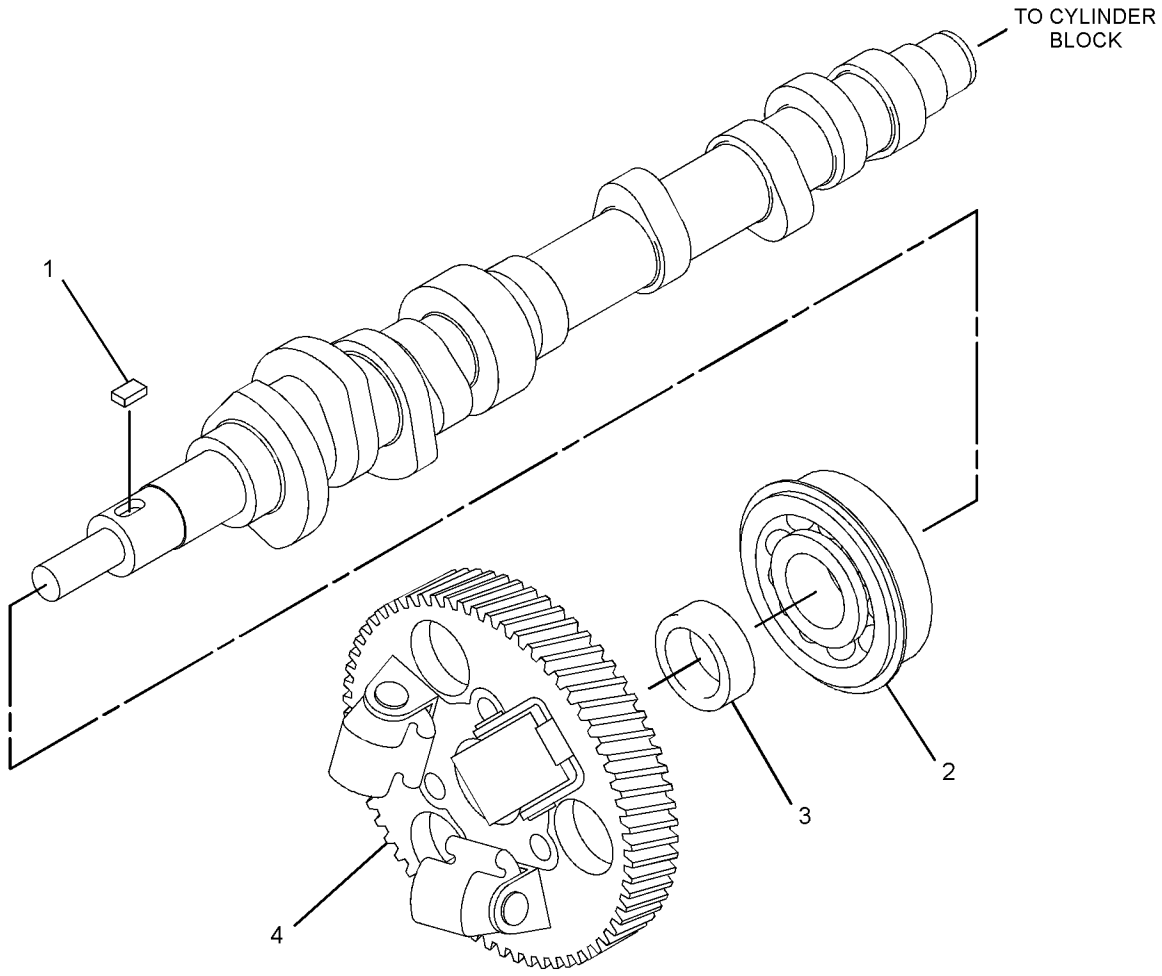

GRAPHIC #1 <END> g02218713

311-5815 CAMSHAFT GP

PART OF 435-1631 ENGINE AR

SMCS-1210 **i06646821**

NOTE	REF NO	GRAPHIC REF	PART NUMBER	QTY	PART NAME 1 2 3 4 5 6 (PRODUCT LEVEL)	SEE PAGE
	1	1	**153-6838**	1	BOLT AS	
	2	1	**490-0367**	1	PLATE	
M	3	1	**9X-6153**	1	BOLT (M6X1X10-MM)	
	4	1	**308-1904**	1	SLIDER	
Y	5	1	**311-5846**	1	CAMSHAFT GP	23

M - METRIC PART
Y - SEPARATE ILLUSTRATION

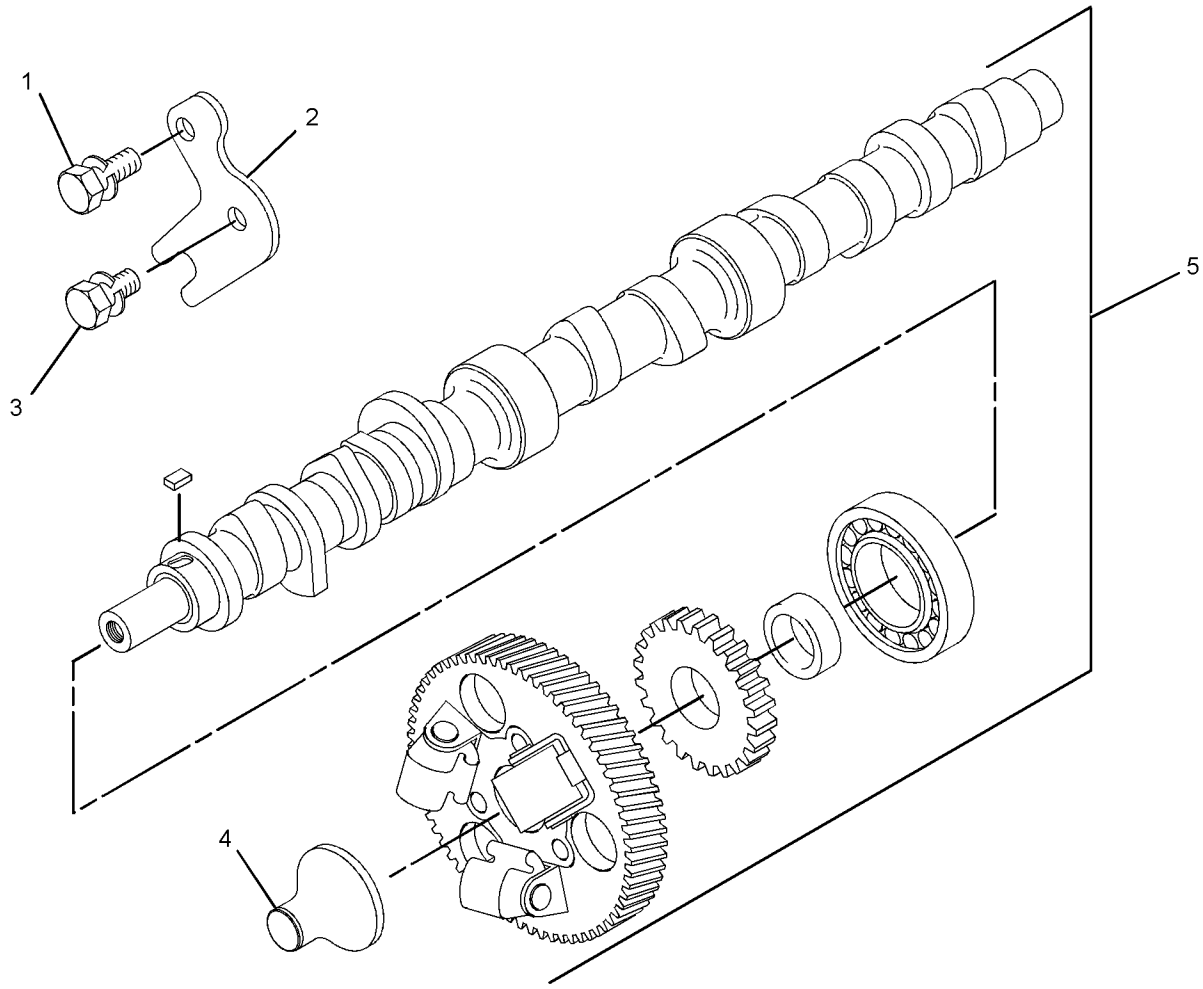

GRAPHIC #1 <END> g02019933

311-5846 CAMSHAFT GP

PART OF 311-5815 CAMSHAFT GP

SMCS-1210 **i03721581**

NOTE	REF NO	GRAPHIC REF	PART NUMBER	QTY	PART NAME 1 2 3 4 5 6 (PRODUCT LEVEL)	SEE PAGE
	1	1	**153-6492**	1	KEY-WOODRUFF	
	2	1	**154-4506**	3	SPACER	
	3	1	**154-4507**	1	GEAR-CAMSHAFT (22-TEETH)	
	4	1	**290-8472**	1	BEARING	
	5	1	**311-5847**	1	GEAR-CAMSHAFT (52-TEETH)	

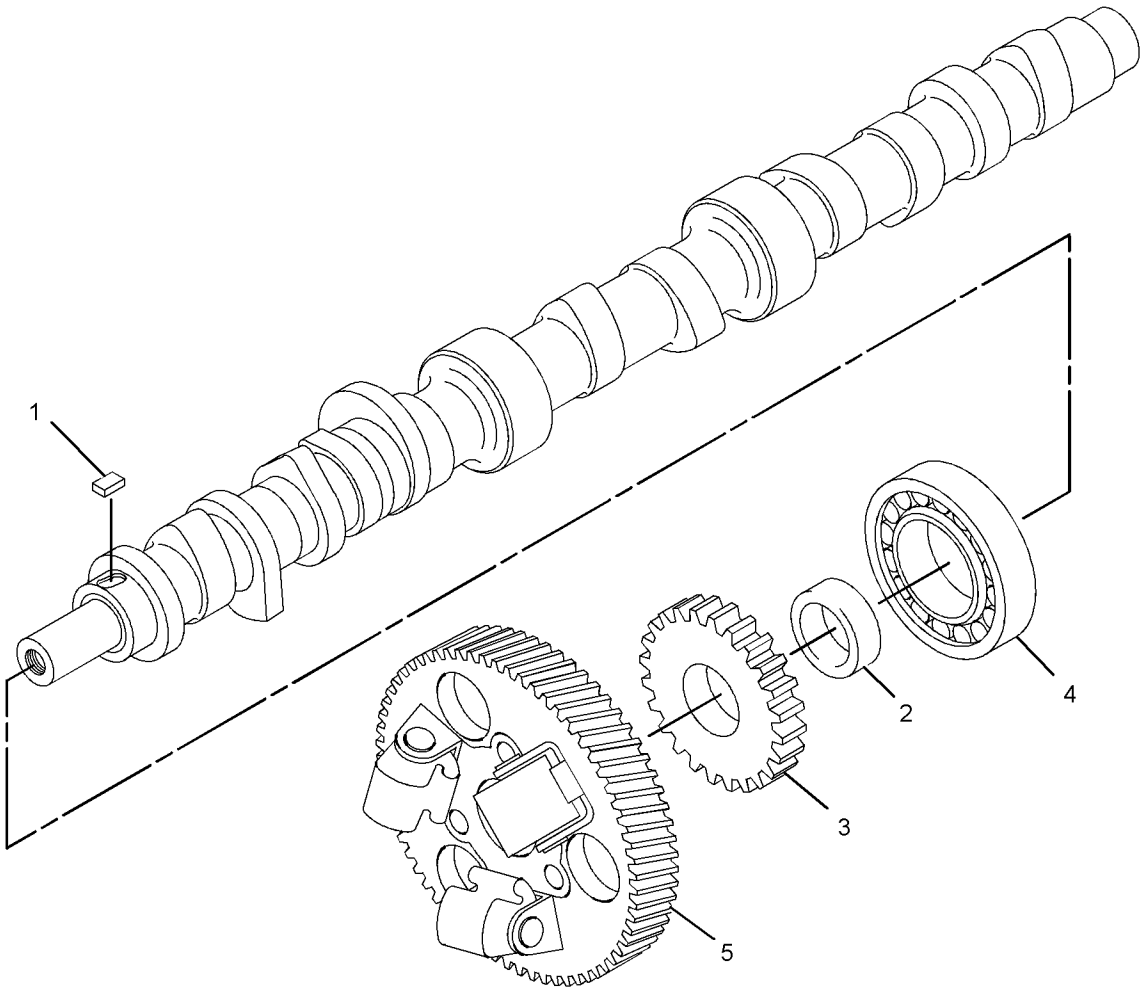

GRAPHIC #1 <END> g02016495

322-0563 CAMSHAFT GP

PART OF 435-1654 ENGINE AR-PRIMARY

SMCS-1210 **i06619082**

NOTE	REF NO	GRAPHIC REF	PART NUMBER	QTY	PART NAME 1 2 3 4 5 6 (PRODUCT LEVEL)	SEE PAGE
	1	1	**153-6838**	2	BOLT AS	
	2	1	**490-0367**	1	PLATE	
	3	1	**308-1904**	1	SLIDER	
	4	1	**311-1165**	1	CAMSHAFT AS	
	4A	1	**153-6492**	1	KEY-WOODRUFF	
	4B	1	**156-6997**	1	BEARING	
	4C	1	**308-1903**	1	GEAR-CAMSHAFT (66-TEETH)	
	4D	1	**313-9323**	1	SPACER (20.5X28X9.3-MM THK)	

322-0563 **CAMSHAFT GP (**contd.**)** **i06619082**

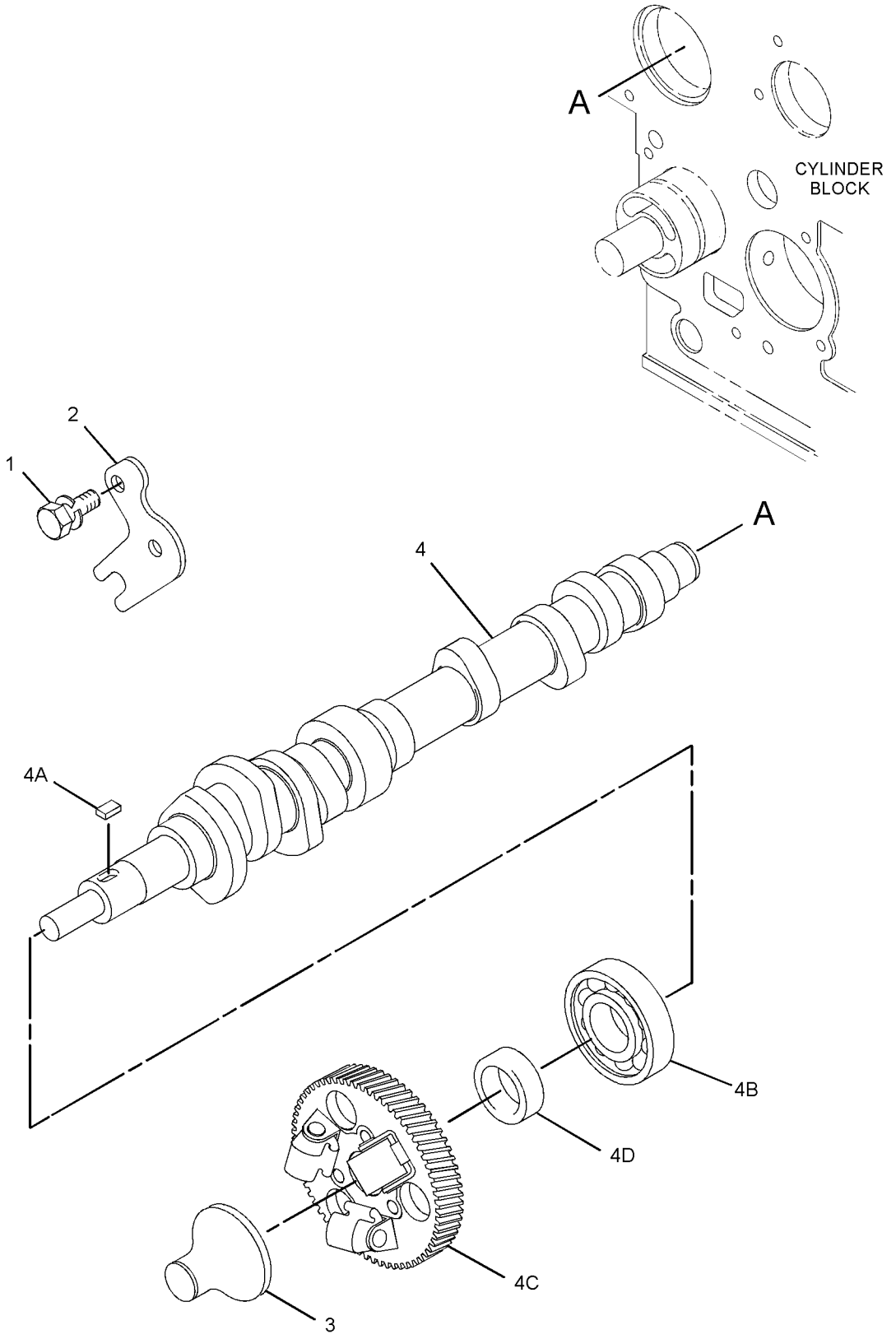

GRAPHIC #1 <END> g01516086

330-3010 CAMSHAFT GP

SMCS-1210 **i04404758**

NOTE	REF NO	GRAPHIC REF	PART NUMBER	QTY	PART NAME 1 2 3 4 5 6 (PRODUCT LEVEL)	SEE PAGE
	1	1	**153-7990**	1	PLATE	
	2	1	**363-8409**	1	SLIDER	
	3	1	**342-8500**	1	CAMSHAFT AS	
	3A	1	**153-6492**	1	KEY-WOODRUFF	
	3B	1	**156-6997**	1	BEARING	
	3C	1	**313-9323**	1	SPACER (20.5X28X9.3-MM THK)	
	3D	1	**342-8499**	1	GEAR-CAMSHAFT (62-TEETH)	
	4	1	**153-6838**	2	BOLT AS	

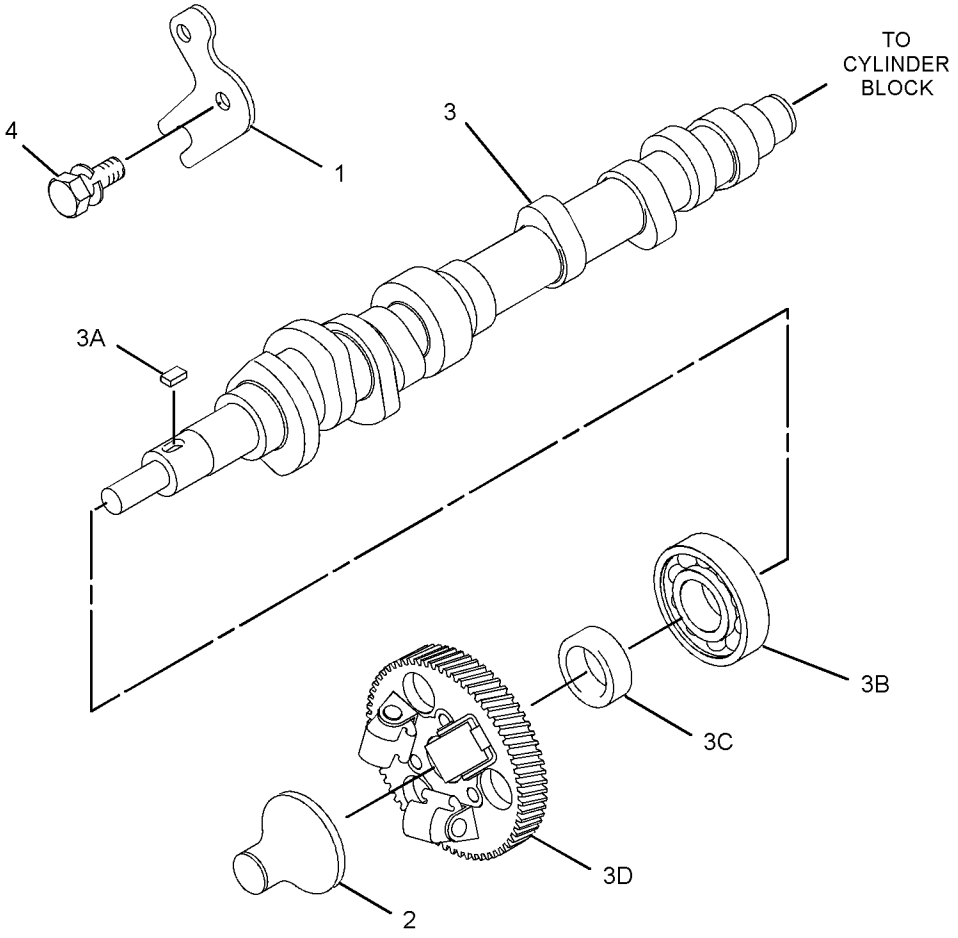

GRAPHIC #1 <END> g02046155

331-4507 CAMSHAFT GP

PART OF 435-1657 ENGINE AR-PRIMARY

SMCS-1210 **i06737962**

NOTE	REF NO	GRAPHIC REF	PART NUMBER	QTY	PART NAME 1 2 3 4 5 6 (PRODUCT LEVEL)	SEE PAGE
	1	1	**153-6838**	2	BOLT AS	
	2	1	**490-0367**	1	PLATE	
	3	1	**308-1904**	1	SLIDER	
	4	1	**311-1165**	1	CAMSHAFT AS	
	4A	1	**153-6492**	1	KEY-WOODRUFF	
	4B	1	**156-6997**	1	BEARING	
	4C	1	**308-1903**	1	GEAR-CAMSHAFT (66-TEETH)	
	4D	1	**313-9323**	1	SPACER (20.5X28X9.3-MM THK)	

331-4507 **CAMSHAFT GP** (contd.) **i06737962**

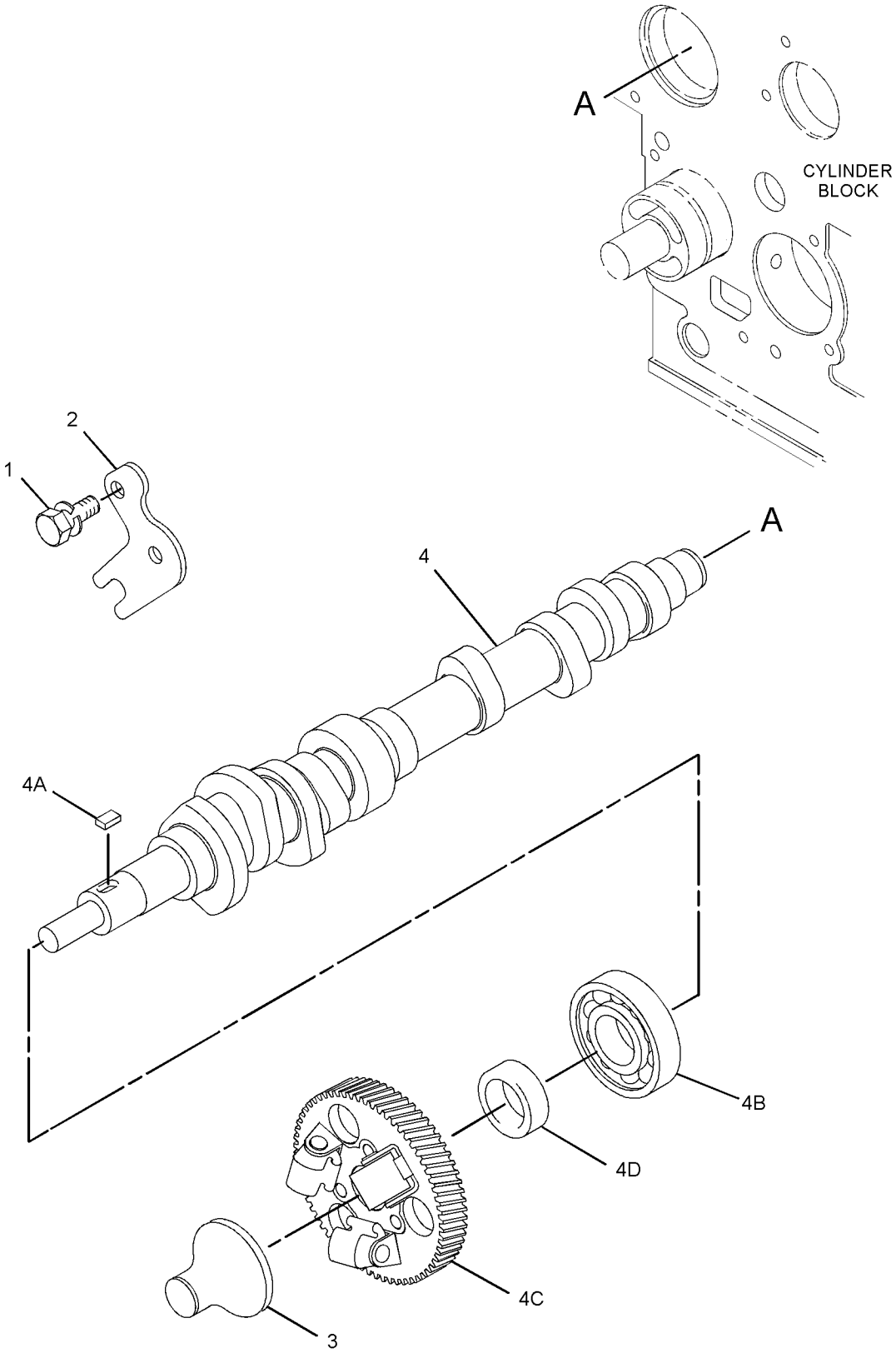

GRAPHIC #1 <END> g01516086

364-2721 CAMSHAFT GP

SMCS-1210 **i06619111**

NOTE	REF NO	GRAPHIC REF	PART NUMBER	QTY	PART NAME 1 2 3 4 5 6 (PRODUCT LEVEL)	SEE PAGE
	1	1	**490-0367**	1	PLATE	
	2	1	**363-8409**	1	SLIDER	
	3	1	**342-8500**	1	CAMSHAFT AS	
	3A	1	**153-6492**	1	KEY-WOODRUFF	
	3B	1	**156-6997**	1	BEARING	
	3C	1	**313-9323**	1	SPACER (20.5X28X9.3-MM THK)	
	3D	1	**342-8499**	1	GEAR-CAMSHAFT (62-TEETH)	
	4	1	**153-6838**	2	BOLT AS	

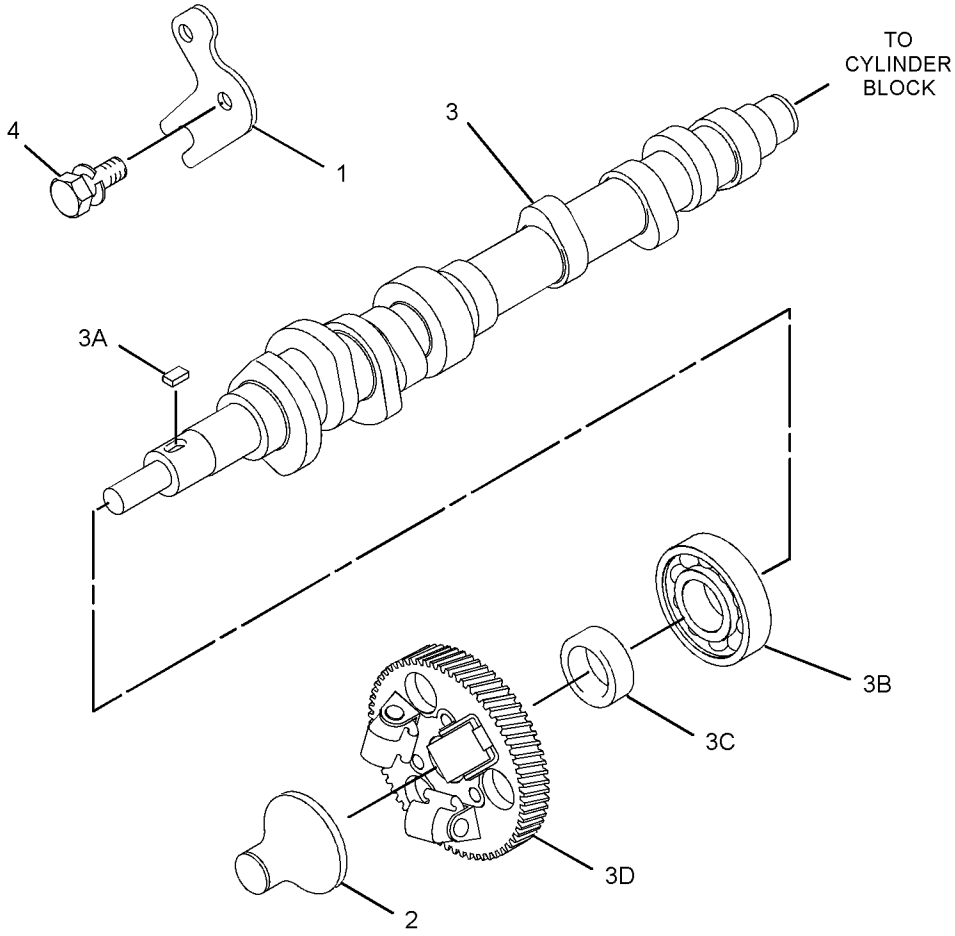

GRAPHIC #1 <END> g02046155

364-2743 CAMSHAFT GP

SMCS-1210 **i06619098**

NOTE	REF NO	GRAPHIC REF	PART NUMBER	QTY	PART NAME 1 2 3 4 5 6 (PRODUCT LEVEL)	SEE PAGE
	1	1	**490-0367**	1	PLATE	
	2	1	**363-8409**	1	SLIDER	
	3	1	**342-8500**	1	CAMSHAFT AS	
	3A	1	**153-6492**	1	KEY-WOODRUFF	
	3B	1	**156-6997**	1	BEARING	
	3C	1	**313-9323**	1	SPACER (20.5X28X9.3-MM THK)	
	3D	1	**342-8499**	1	GEAR-CAMSHAFT (62-TEETH)	
	4	1	**153-6838**	2	BOLT AS	

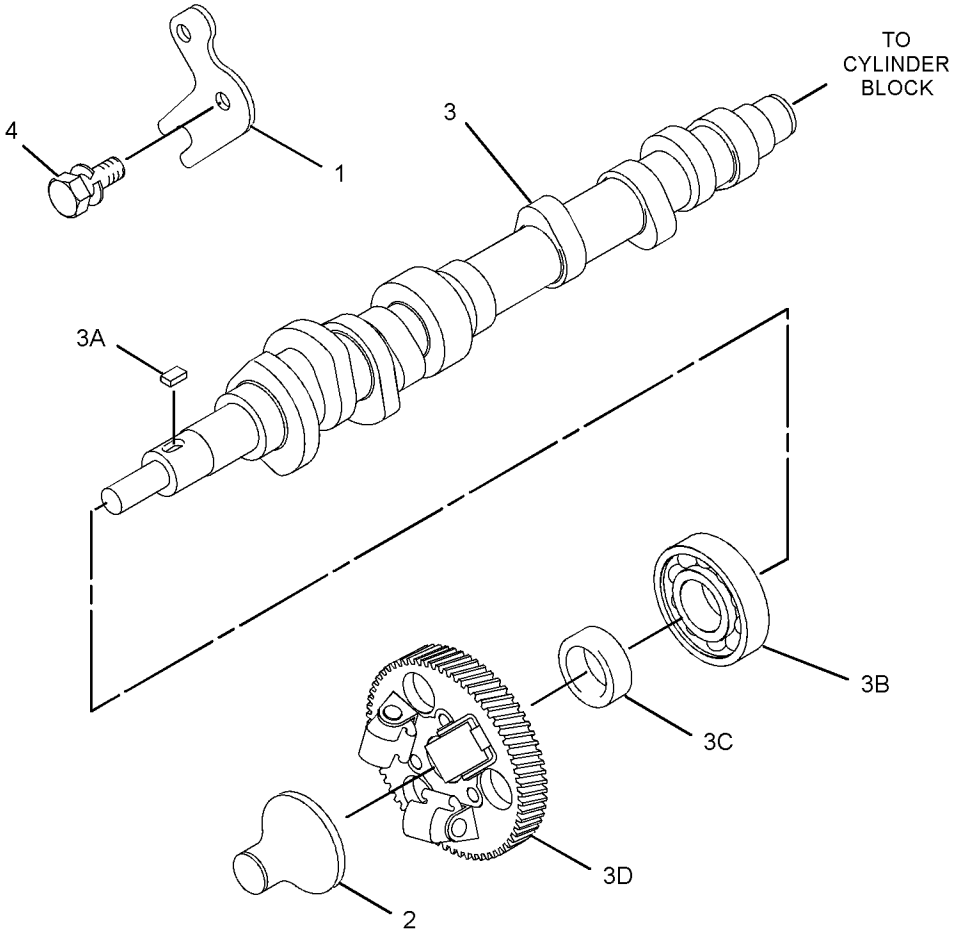

GRAPHIC #1 <END> g02046155

508-5629 CAMSHAFT GP

SMCS-1210 **i06926322**

NOTE	REF NO	GRAPHIC REF	PART NUMBER	QTY	PART NAME 1 2 3 4 5 6 (PRODUCT LEVEL)	SEE PAGE
	1	1	**153-6838**	2	BOLT AS	
	2	1	**490-0367**	1	PLATE	
	3	1	**363-8409**	1	SLIDER	
	4	1	**342-8500**	1	CAMSHAFT AS	
	4A	1	**153-6492**	1	KEY-WOODRUFF	
	4B	1	**156-6997**	1	BEARING	
	4C	1	**313-9323**	1	SPACER (20.5X28X9.3-MM THK)	
	4D	1	**342-8499**	1	GEAR-CAMSHAFT (62-TEETH)	

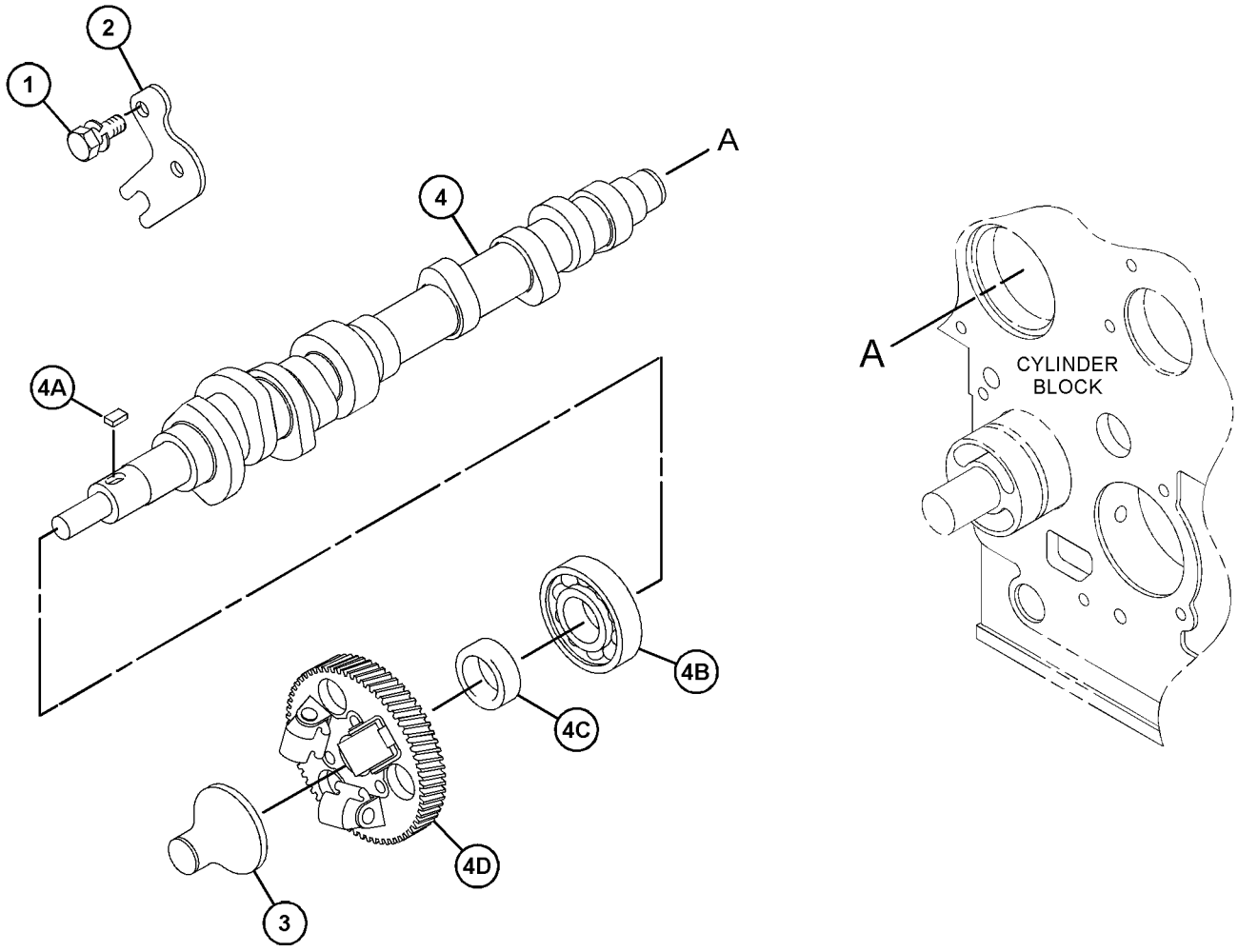

GRAPHIC #1 <END> g06125348

508-6674 CAMSHAFT GP

SMCS-1210 **i06917018**

NOTE	REF NO	GRAPHIC REF	PART NUMBER	QTY	PART NAME 1 2 3 4 5 6 (PRODUCT LEVEL)	SEE PAGE
	1	1	**153-6838**	2	BOLT AS	
	2	1	**342-8500**	1	CAMSHAFT AS	
	2A	1	**153-6492**	1	KEY-WOODRUFF	
	2B	1	**156-6997**	1	BEARING	
	2C	1	**313-9323**	1	SPACER (20.5X28X9.3-MM THK)	
	2D	1	**342-8499**	1	GEAR-CAMSHAFT (62-TEETH)	
	3	1	**363-8409**	1	SLIDER	
	4	1	**490-0367**	1	PLATE	

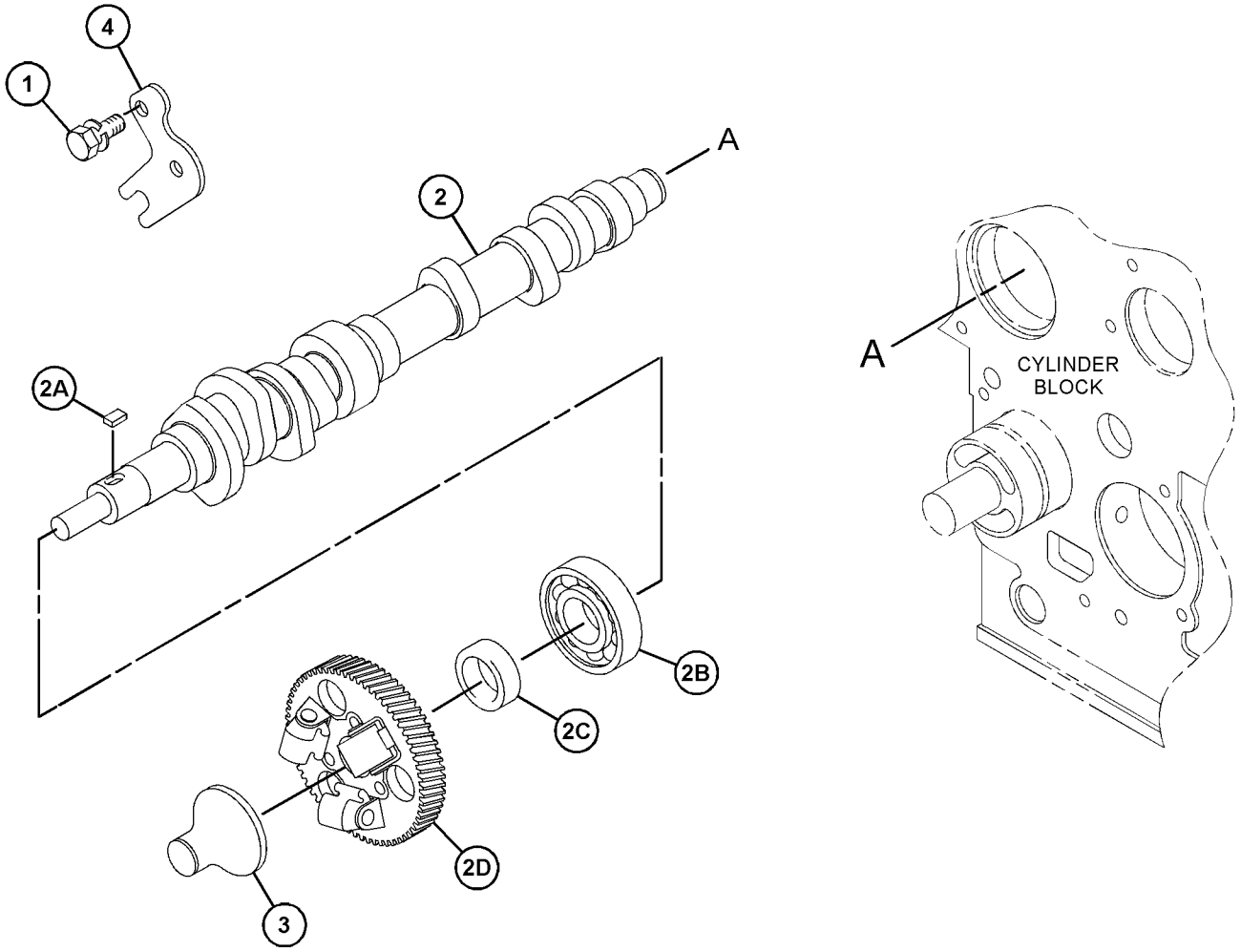

GRAPHIC #1 <END> g06125376

419-6642 COVER GP-CYLINDER HEAD

SMCS-1100 **i06515179**

NOTE	REF NO	GRAPHIC REF	PART NUMBER	QTY	PART NAME 1 2 3 4 5 6 (PRODUCT LEVEL)	SEE PAGE
	1	1	**153-5939**	1	STOPPER (OIL)	
	2	1	**153-5962**	2	BOLT AS	
	3	1	**153-7640**	2	BOLT AS	
M	4	1	**154-1347**	3	NUT (M10X1.25-THD)	
	5	1	**165-2140**	2	BOLT AS	
	6	1	**190-3762**	3	WASHER	
	7	1	**217-5859**	1	VALVE-BREATHER (CRANKCASE)	
M	8	1	**217-5860**	4	BOLT (M4X0.7X8-MM)	
	9	1	**217-5861**	1	PLATE-RETAINING	
	10	1	**217-5862**	6	SCREW (SELF-TAPPING)	
	11	1	**288-6539**	1	CAP	
	12	1	**309-6735**	1	TUBE-AIR	
	13	1	**396-6868**	1	GASKET	
	14	1	**419-6641**	1	COVER-CYLINDER HEAD	
	15	1	**235-5531**	1	SEAL-VALVE COVER	

M - METRIC PART

419-6642 **COVER GP-CYLINDER HEAD (**contd.**)** **i06515179**

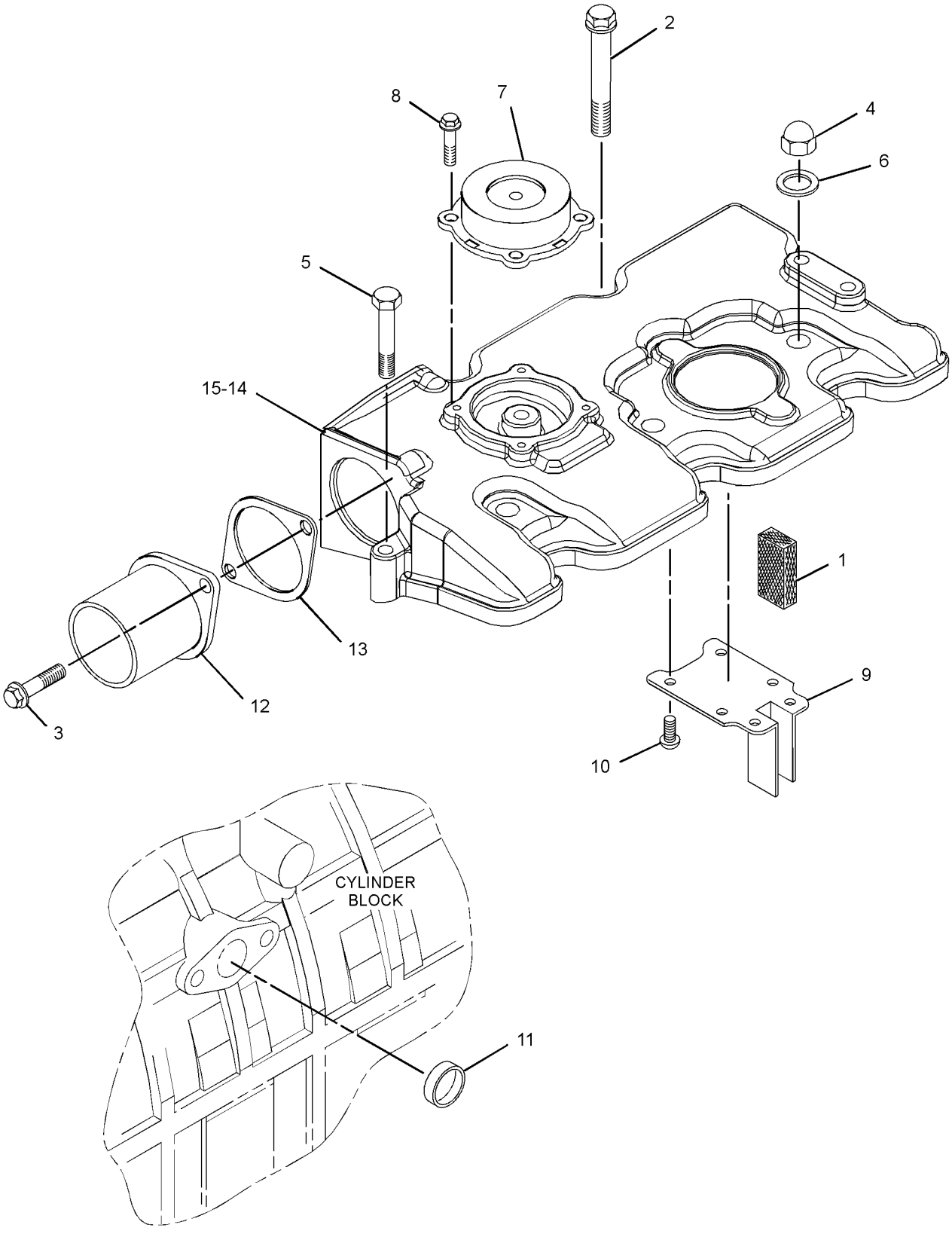

GRAPHIC #1 <END> g03702188

342-1268 FASTENER GP-COVER

PART OF 435-1631 ENGINE AR, 435-1654, 435-1657 ENGINE AR-PRIMARY

SMCS-795C **i05361770**

NOTE	REF NO	GRAPHIC REF	PART NUMBER	QTY	PART NAME 1 2 3 4 5 6 (PRODUCT LEVEL)	SEE PAGE
	1	1	**165-2141**	1	BOLT AS	
	2	1	**215-2606**	1	GASKET	

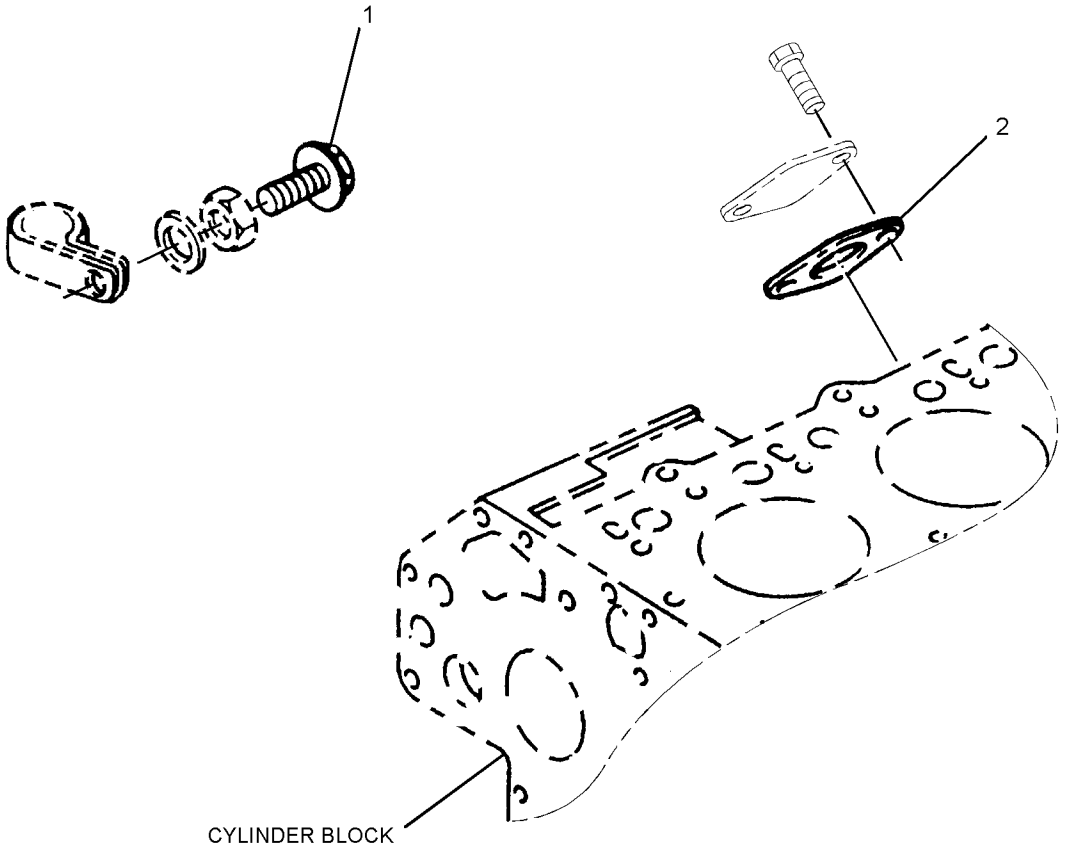

GRAPHIC #1 <END> g03375158

311-1122 COVER GP-FRONT HOUSING

PART OF 435-1654 ENGINE AR-PRIMARY

SMCS-1151, 1166 **i05262320**

NOTE	REF NO	GRAPHIC REF	PART NUMBER	QTY	PART NAME 1 2 3 4 5 6 (PRODUCT LEVEL)	SEE PAGE
M	1	1	**6I-0594**	2	NUT (M10X1.5-THD)	
M	2	1	**164-7468**	2	BOLT (M10X1.5X95-MM)	
	3	1	**308-1874**	1	HOLDER (BEARING)	
	4	1	**308-1875**	2	SEAL-O-RING	
	5	1	**328-3229**	2	COVER	

M - METRIC PART

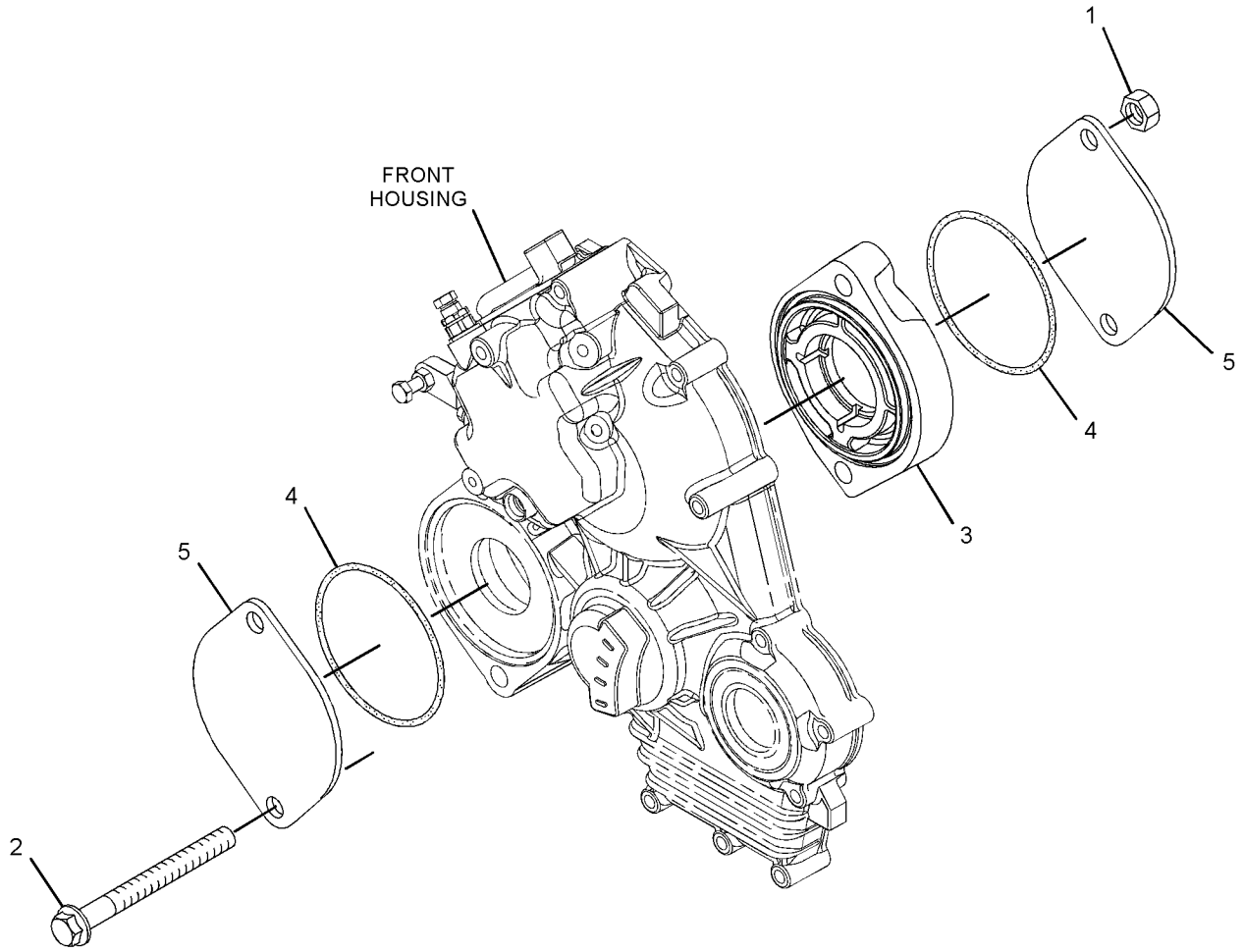

GRAPHIC #1 <END> g03352869

329-3696 HOUSING GP-FRONT

TYPE 1

SMCS-1151, 1166 **i05414116**

NOTE	REF NO	GRAPHIC REF	PART NUMBER	QTY	PART NAME 1 2 3 4 5 6 (PRODUCT LEVEL)	SEE PAGE
M	1	1	**6I-0594**	2	NUT (M10X1.5-THD)	
M	2	1	**100-4463**	2	BOLT (M10X1.5X80-MM)	
	3	1	**308-1875**	1	SEAL-O-RING	
	4	1	**329-3694**	1	PLATE	
	5	1	**329-3695**	1	COVER	

M - METRIC PART

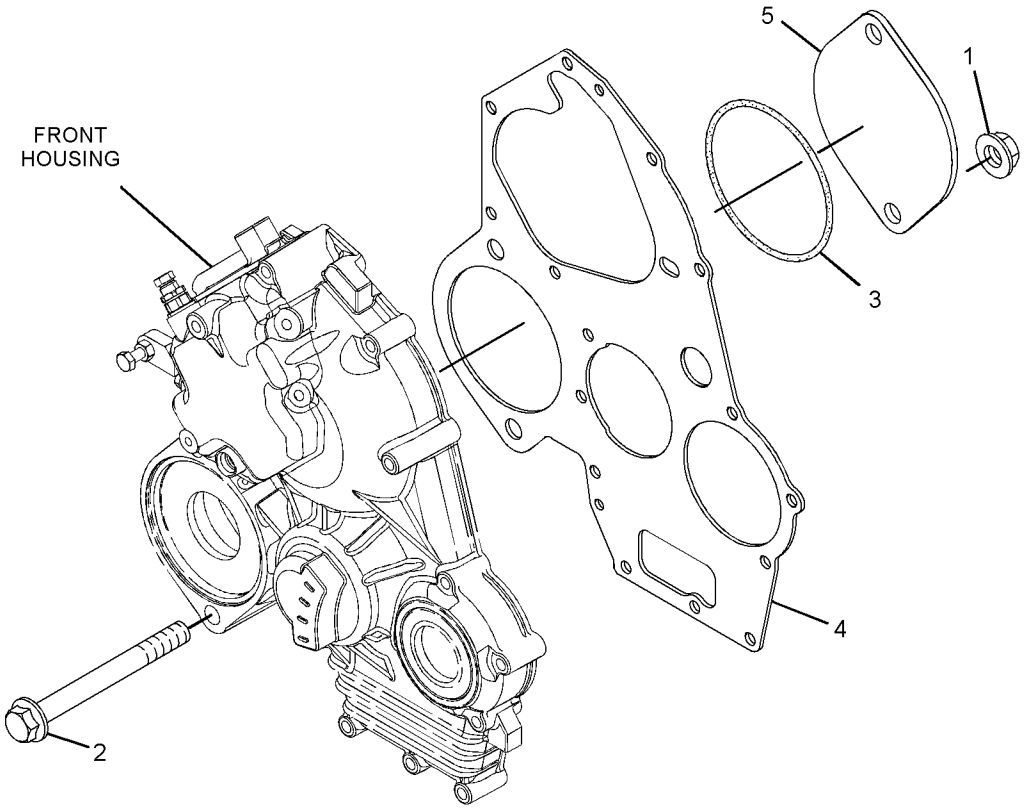

GRAPHIC #1 <END> g03417853

329-3696 HOUSING GP-FRONT

TYPE 2

SMCS-1151, 1166 **i05031429**

NOTE	REF NO	GRAPHIC REF	PART NUMBER	QTY	PART NAME 1 2 3 4 5 6 (PRODUCT LEVEL)	SEE PAGE
M	1	1	**6I-0594**	2	NUT (M10X1.5-THD)	
M	2	1	**100-4463**	2	BOLT (M10X1.5X80-MM)	
	3	1	**308-1875**	1	SEAL-O-RING	
	4	1	**328-3229**	1	COVER	
	5	1	**329-3694**	1	PLATE	
	6	1	**329-3695**	1	COVER	

M - METRIC PART

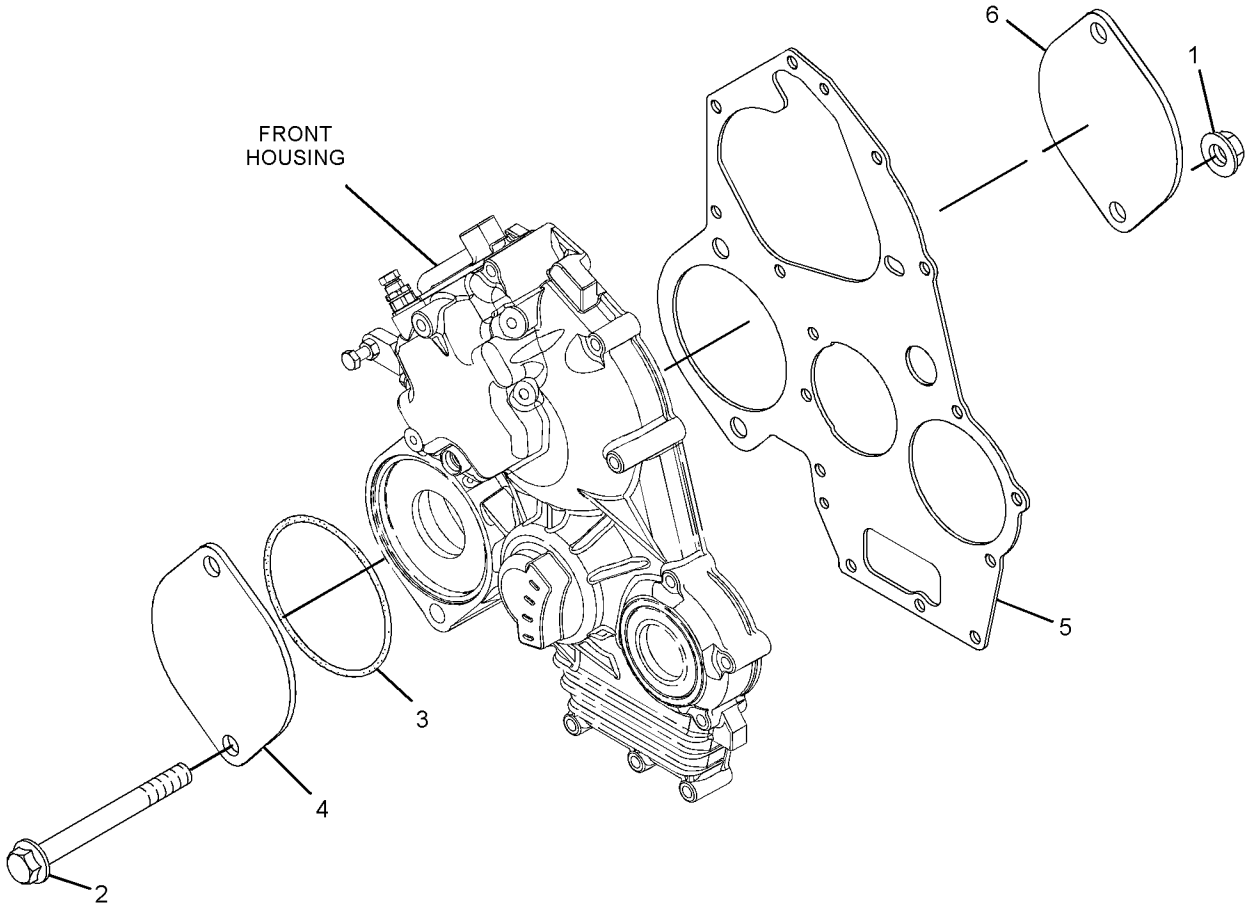

GRAPHIC #1 <END> g03202837

329-8577 COVER GP-FRONT HOUSING

SMCS-1151, 1166 **i03085040**

NOTE	REF NO	GRAPHIC REF	PART NUMBER	QTY	PART NAME 1 2 3 4 5 6 (PRODUCT LEVEL)	SEE PAGE
M	1	1	**6I-0454**	2	BOLT (M10X1.5X70-MM)	
M	2	1	**6I-0594**	2	NUT (M10X1.5-THD)	
	3	1	**153-6497**	1	SEAL-O-RING	
	4	1	**311-5852**	1	PLATE	
	5	1	**311-5853**	1	SEAL-O-RING	
	6	1	**321-5906**	1	PLATE	
	7	1	**329-8576**	1	PLATE	

M - METRIC PART

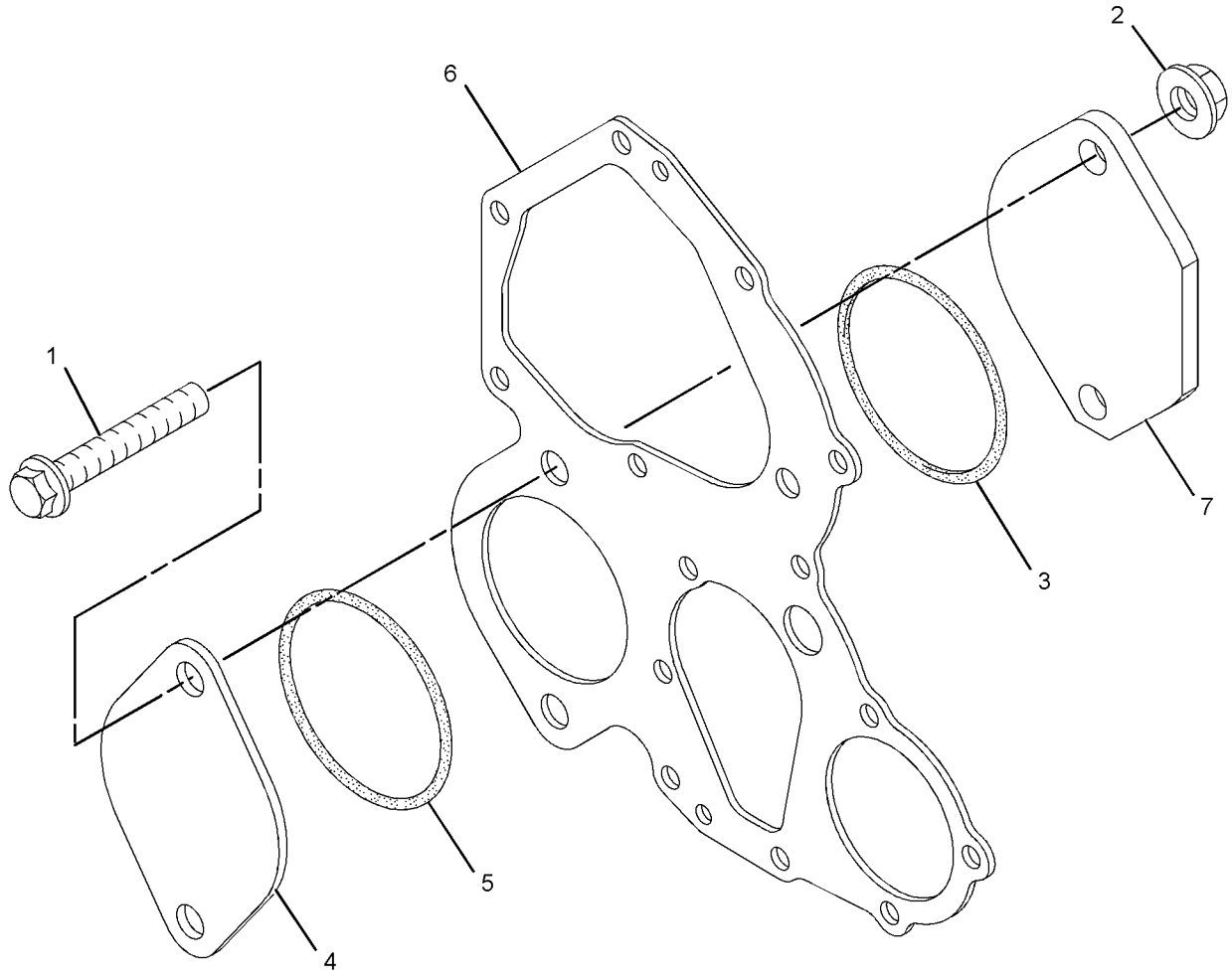

GRAPHIC #1 <END> g01614834

465-7011 COVER GP-FRONT HOUSING

SMCS-1151, 1166 **i06908044**

NOTE	REF NO	GRAPHIC REF	PART NUMBER	QTY	PART NAME 1 2 3 4 5 6 (PRODUCT LEVEL)	SEE PAGE
M	1	1	**6I-0455**	2	BOLT (M8X1.25X55-MM)	
	2	1	**423-7720**	1	PLATE-FRONT	
	3	1	**423-8370**	1	PLATE-THREADED	

M - METRIC PART

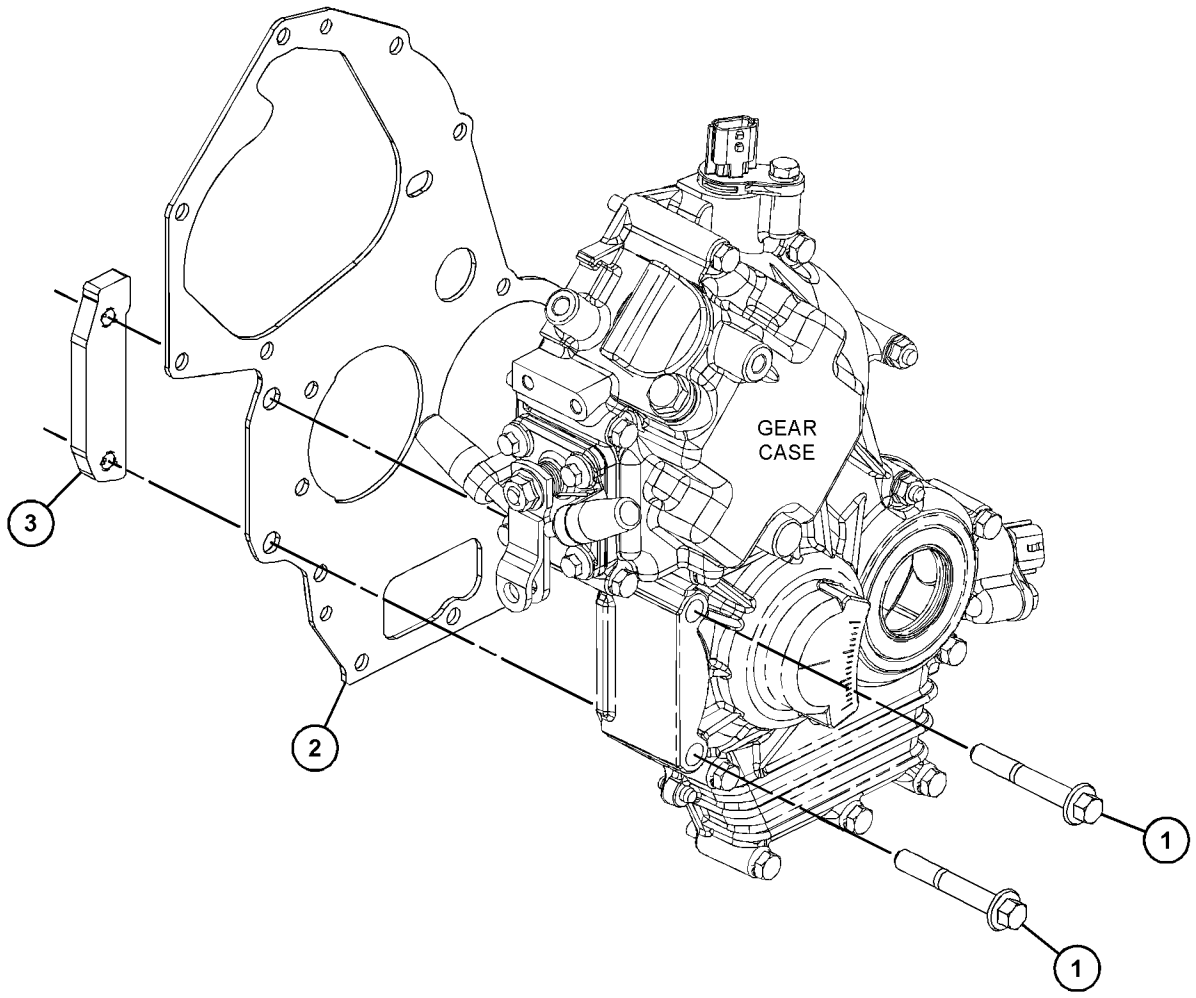

GRAPHIC #1 <END> g03852348

311-1123 COVER GP-VALVE MECHANISM

PART OF 435-1631 ENGINE AR, 435-1657 ENGINE AR-PRIMARY

TYPE 1

SMCS-1107 **i03401084**

NOTE	REF NO	GRAPHIC REF	PART NUMBER	QTY	PART NAME 1 2 3 4 5 6 (PRODUCT LEVEL)	SEE PAGE
	1	2	**153-5939**	1	STOPPER (OIL)	
	2	2	**153-5962**	2	BOLT AS	
	3	2	**153-7640**	2	BOLT AS	
M	4	2	**154-1347**	3	NUT (M10X1.25-THD)	
M	5	1	**249-7263**	2	BOLT (M6X1X16-MM)	
	6	2	**165-2140**	2	BOLT AS	
	7	2	**190-3762**	3	WASHER	
	8	2	**217-5859**	1	VALVE-BREATHER (CRANKCASE)	
M	9	2	**217-5860**	4	BOLT (M4X0.7X8-MM)	
	10	2	**217-5861**	1	PLATE-RETAINING	
	11	2	**217-5862**	6	SCREW (SELF-TAPPING)	
	12	2	**217-5864**	1	GASKET	
	13	1	**225-8533**	1	GASKET	
	14	2	**235-5531**	1	SEAL-VALVE COVER	
	15	2	**239-9987**	1	COVER-VALVE	
	16	2	**309-6735**	1	TUBE-AIR	
	17	1	**309-6736**	1	COVER	

M - METRIC PART

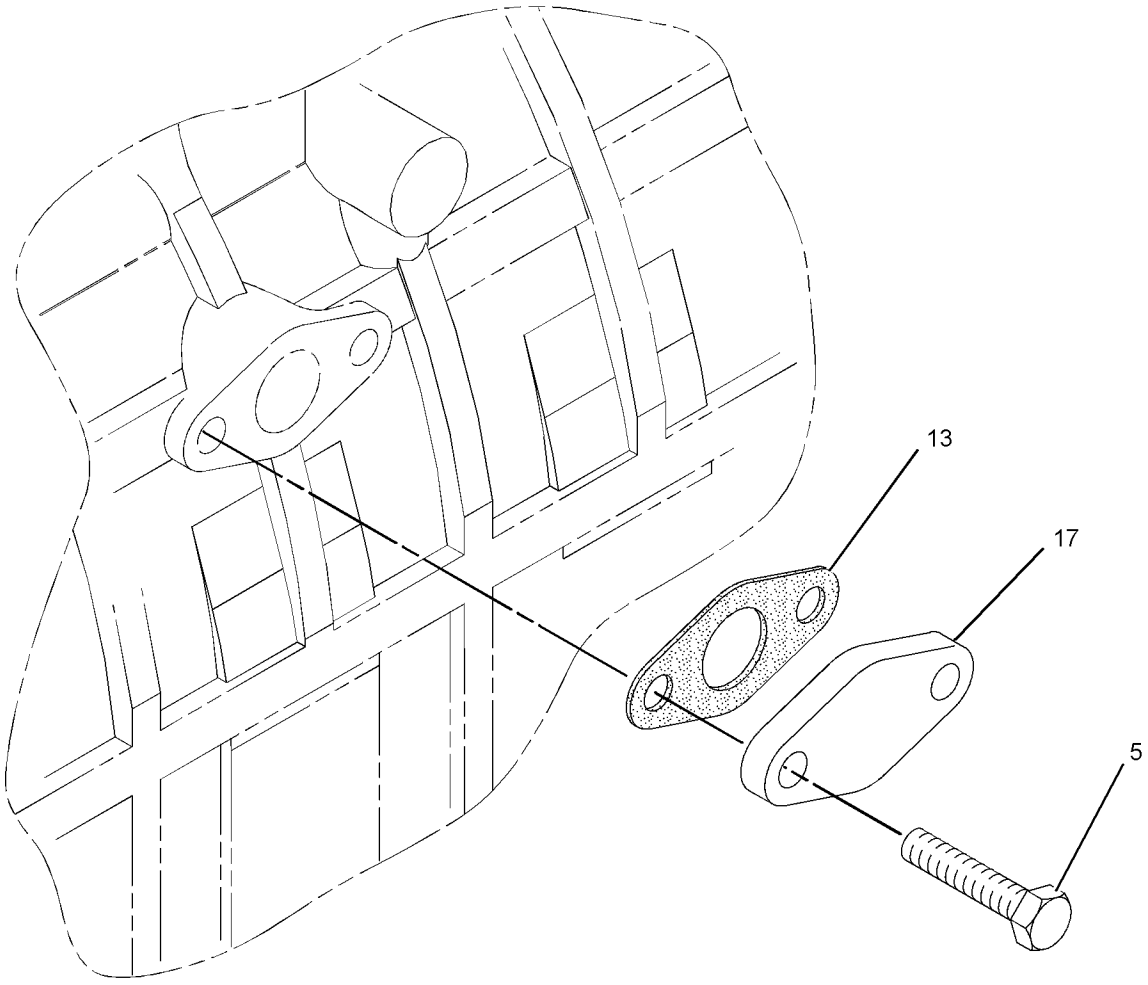

GRAPHIC #1 g01408255

311-1123 **COVER GP-VALVE MECHANISM (**contd.**)** **i03401084**

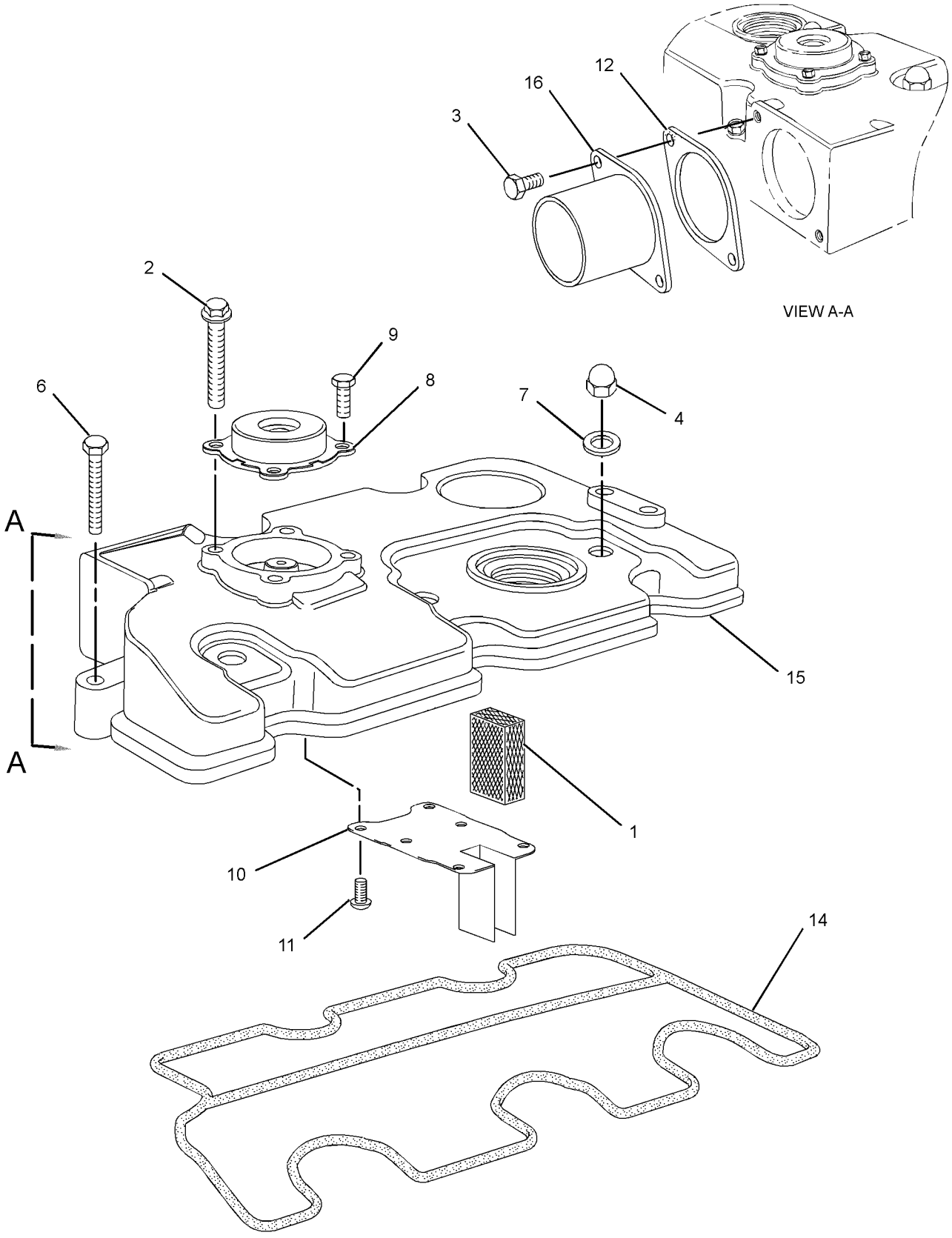

GRAPHIC #2 <END> g01408256

311-1123 COVER GP-VALVE MECHANISM

PART OF 435-1631 ENGINE AR, 435-1654, 435-1657 ENGINE AR-PRIMARY
TYPE 2

SMCS-1107 **i06720372**

NOTE	REF NO	GRAPHIC REF	PART NUMBER	QTY	PART NAME 1 2 3 4 5 6 (PRODUCT LEVEL)	SEE PAGE
	1	2	**153-5939**	1	STOPPER (OIL)	
	2	2	**153-5962**	2	BOLT AS	
	3	1	**153-7640**	2	BOLT AS	
M	4	2	**154-1347**	3	NUT (M10X1.25-THD)	
	6	2	**165-2140**	2	BOLT AS	
	7	2	**246-4361**	3	WASHER (10.5X14X1.5-MM THK)	
	8	2	**217-5859**	1	VALVE-BREATHER (CRANKCASE)	
M	9	2	**217-5860**	4	BOLT (M4X0.7X8-MM)	
	10	2	**217-5861**	1	PLATE-RETAINING	
	11	2	**217-5862**	6	SCREW (SELF-TAPPING)	
	12	1	**494-9569**	1	GASKET	
	14	2	**447-3735**	1	GASKET-COVER	
	15	2	**422-4226**	1	COVER-VALVE	
	16	1	**309-6735**	1	TUBE-AIR	
	18	1	**288-6539**	1	CAP	

M - METRIC PART

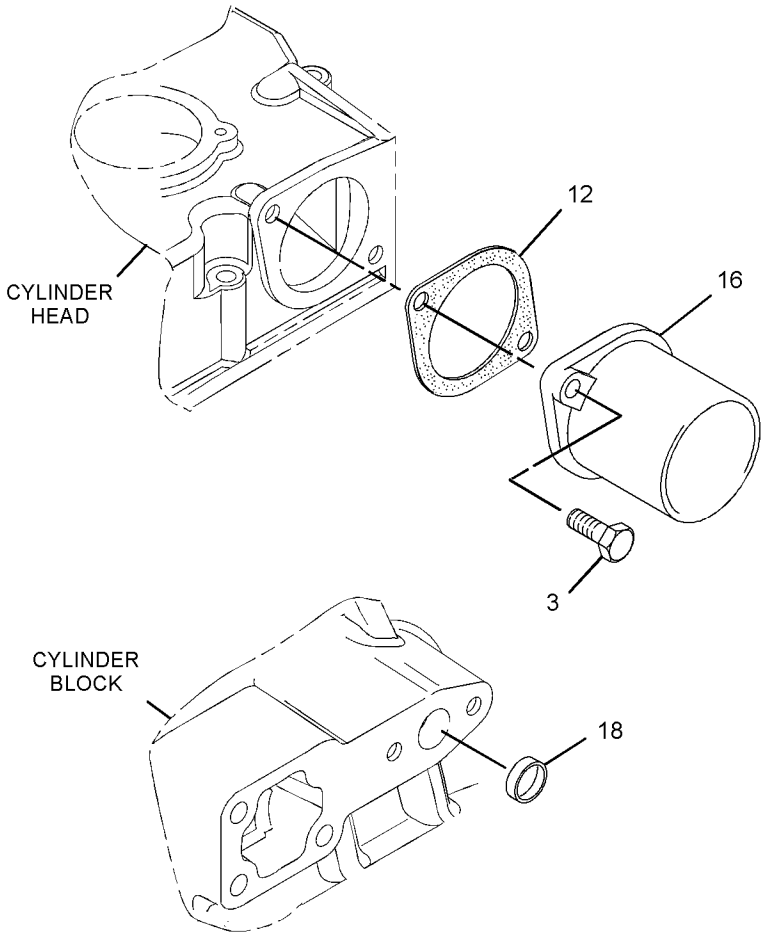

GRAPHIC #1 g01758394

311-1123 **COVER GP-VALVE MECHANISM (**contd.**)** **i06720372**

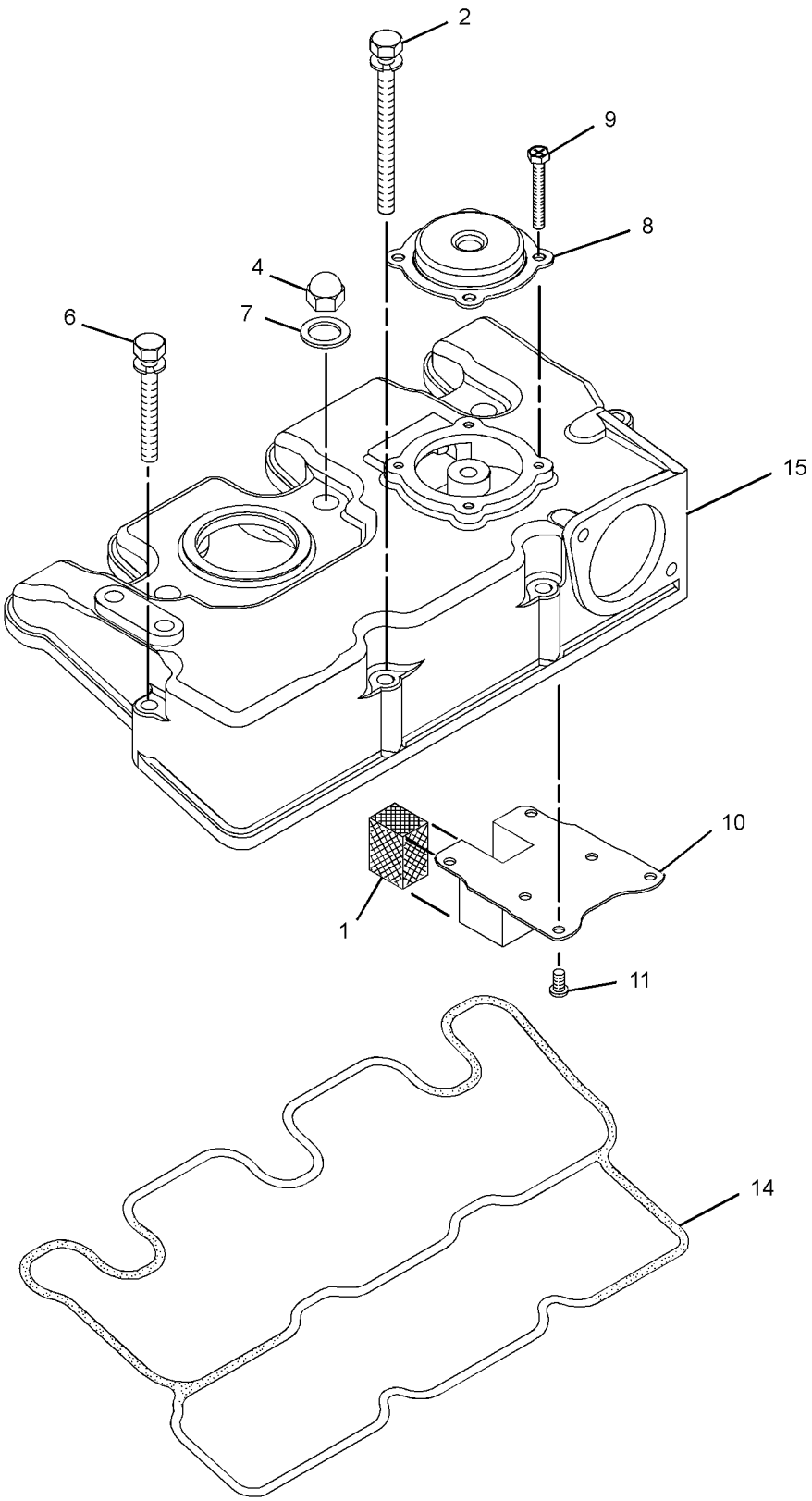

GRAPHIC #2 <END> g01758413

308-2283 CRANKSHAFT GP

SMCS-1202 **i07264413**

NOTE	REF NO	GRAPHIC REF	PART NUMBER	QTY	PART NAME 1 2 3 4 5 6 (PRODUCT LEVEL)	SEE PAGE
	1	1	**154-0181**	1	CAP AS-BEARING	
	1A	1	**153-5402**	2	DOWEL	
M	1B	1	**154-0385**	2	BOLT (M10X1.5X55-MM)	
	2	1	**154-0386**	1	CAP AS-BEARING	
	2A	1	**153-5402**	2	DOWEL	
M	2B	1	**154-0385**	2	BOLT (M10X1.5X55-MM)	
	3	1	**154-0388**	1	CAP AS-BEARING	
	3A	1	**153-5402**	2	DOWEL	
M	3B	1	**154-0385**	2	BOLT (M10X1.5X55-MM)	
	4	1	**154-0389**	1	CAP AS-BEARING	
	4A	1	**153-5402**	2	DOWEL	
M	4B	1	**154-0385**	2	BOLT (M10X1.5X55-MM)	
	5	1	**154-1230**	1	WASHER-THRUST	
	6	1	**154-1231**	2	WASHER-THRUST	
M	7	1	**6I-0650**	3	BOLT (M10X1.5X65-MM)	
	8	1	**183-1336**	2	BOLT	
	9	1	**308-1852**	1	CRANKSHAFT AS	
	9A	1	**153-5518**	1	KEY	
	9B	1	**308-1853**	1	GEAR-CRANKSHAFT (33-TEETH) (62-TEETH)	
	10	1	**525-7106**	1	KIT-BEARING (STANDARD) (STANDARD ROD)	
AB		1	**439-3373**		KIT-BEARING (0.25-MM US)	
AB		1	**525-8939**		KIT-CRANKSHAFT BEARING	
	11	1	**308-1854**	1	KIT-BEARING (STANDARD)	
AB		1	**308-2362**		KIT-BEARING (0.25-MM US)	

A - NOT PART OF THIS GROUP
B - USE AS REQUIRED
M - METRIC PART

308-2283 **CRANKSHAFT GP** (contd.) **i07264413**

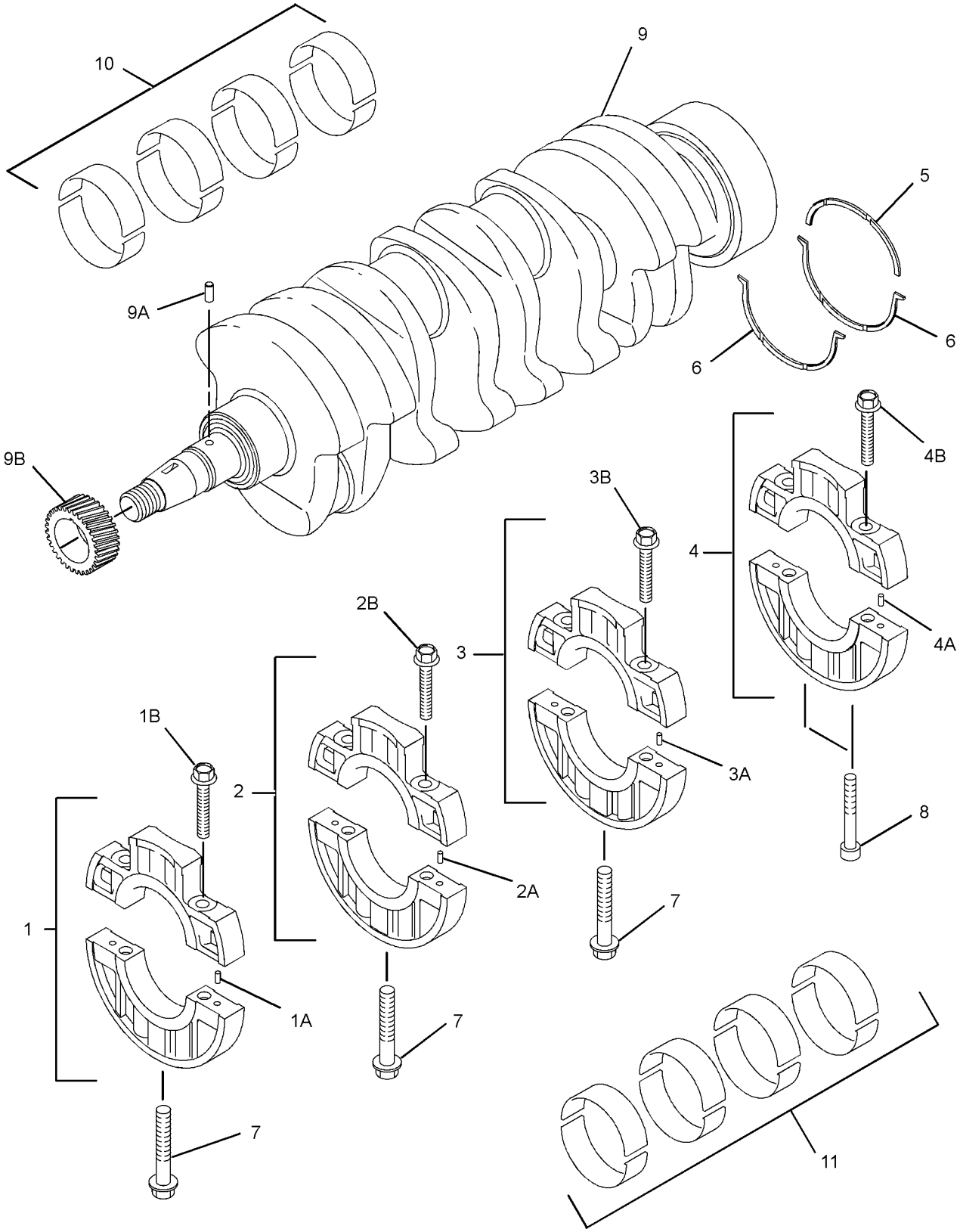

GRAPHIC #1 <END> g01406829

311-1100 CRANKSHAFT GP

PART OF 435-1631 ENGINE AR, 435-1654 ENGINE AR-PRIMARY

SMCS-1202 **i07236319**

NOTE	REF NO	GRAPHIC REF	PART NUMBER	QTY	PART NAME 1 2 3 4 5 6 (PRODUCT LEVEL)	SEE PAGE
M	1	1	**154-0390**	2	BOLT (M8X1.25X65-MM)	
	2	1	**154-1231**	2	WASHER-THRUST	
	3	1	**156-6967**	1	BEARING AS	
	3A	1	**153-5402**	2	DOWEL	
M	3B	1	**154-0385**	2	BOLT (M10X1.5X55-MM)	
	4	1	**156-6968**	1	BEARING AS	
	4A	1	**153-5402**	2	DOWEL	
M	4B	1	**154-0385**	2	BOLT (M10X1.5X55-MM)	
	5	1	**156-6970**	1	BEARING AS	
	5A	1	**153-5402**	2	DOWEL	
M	5B	1	**154-0385**	2	BOLT (M10X1.5X55-MM)	
M	6	1	**6I-0650**	2	BOLT (M10X1.5X65-MM)	
	7	1	**156-6977**	1	KIT-CRANKSHAFT BEARING (MAIN)	
AB		1	**161-2628**	1	KIT-CRANKSHAFT BEARING (0.25-MM)	
AB		1	**161-2629**	1	KIT-CRANKSHAFT BEARING (0.5-MM)	
	8	1	**524-3340**	1	KIT-BEARING (STANDARD) (ROD)	
AB		1	**161-2630**	1	KIT-CRANKSHAFT BEARING (0.25-MM US) (0.25-MM)	
AB		1	**161-2631**	1	KIT-CRANKSHAFT BEARING (0.5-MM US) (0.5-MM)	
	9	1	**311-1157**	1	CRANKSHAFT AS	
	9A	1	**153-5518**	1	KEY	
	9B	1	**153-5519**	1	PIN	
	9C	1	**308-1853**	1	GEAR-CRANKSHAFT (33-TEETH)	

A - NOT PART OF THIS GROUP
B - USE AS REQUIRED
M - METRIC PART

311-1100 **CRANKSHAFT GP (**contd.**)** **i07236319**

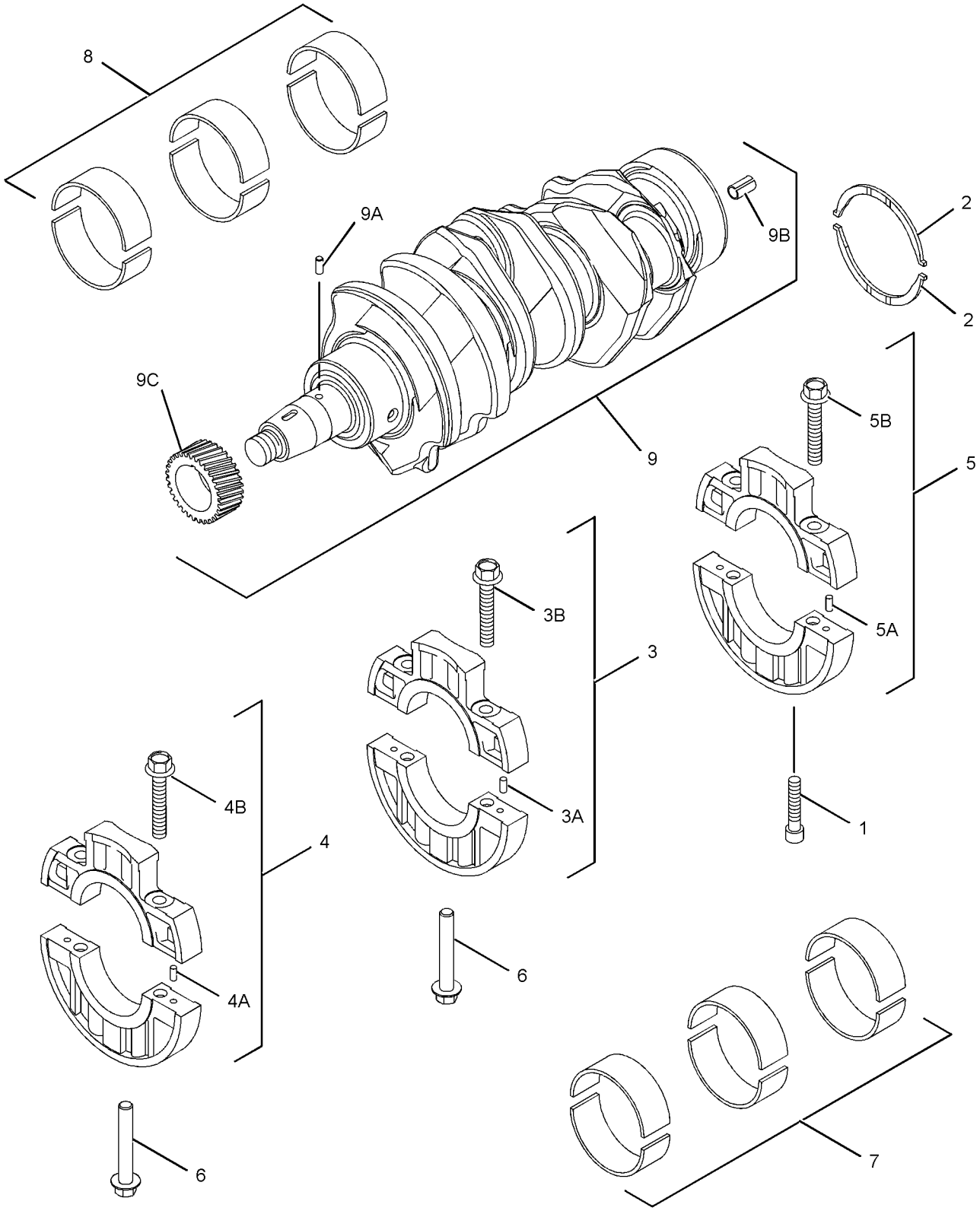

GRAPHIC #1 <END> g06035388

331-4500 CRANKSHAFT GP

PART OF 435-1657 ENGINE AR-PRIMARY

SMCS-1202 **i07264449**

NOTE	REF NO	GRAPHIC REF	PART NUMBER	QTY	PART NAME 1 2 3 4 5 6 (PRODUCT LEVEL)	SEE PAGE
M	1	1	**154-0390**	2	BOLT (M8X1.25X65-MM)	
	2	1	**154-1231**	2	WASHER-THRUST	
	3	1	**156-6967**	1	BEARING AS	
	3A	1	**153-5402**	2	DOWEL	
M	3B	1	**154-0385**	2	BOLT (M10X1.5X55-MM)	
	4	1	**156-6968**	1	BEARING AS	
	4A	1	**153-5402**	2	DOWEL	
M	4B	1	**154-0385**	2	BOLT (M10X1.5X55-MM)	
	5	1	**156-6970**	1	BEARING AS	
	5A	1	**153-5402**	2	DOWEL	
M	5B	1	**154-0385**	2	BOLT (M10X1.5X55-MM)	
M	6	1	**6I-0650**	2	BOLT (M10X1.5X65-MM)	
	7	1	**156-6977**	1	KIT-CRANKSHAFT BEARING (MAIN)	
AB		1	**161-2628**		KIT-CRANKSHAFT BEARING (0.25-MM)	
AB		1	**161-2629**		KIT-CRANKSHAFT BEARING (0.5-MM)	
	8	1	**524-3340**	1	KIT-BEARING (STANDARD) (ROD)	
AB		1	**161-2630**		KIT-CRANKSHAFT BEARING (0.25-MM US) (0.25-MM)	
AB		1	**161-2631**		KIT-CRANKSHAFT BEARING (0.5-MM US) (0.5-MM)	
	9	1	**311-1157**	1	CRANKSHAFT AS	
	9A	1	**153-5518**	1	KEY	
	9B	1	**153-5519**	1	PIN	
	9C	1	**308-1853**	1	GEAR-CRANKSHAFT (33-TEETH)	

A - NOT PART OF THIS GROUP
B - USE AS REQUIRED
M - METRIC PART

331-4500 **CRANKSHAFT GP (**contd.**)** **i07264449**

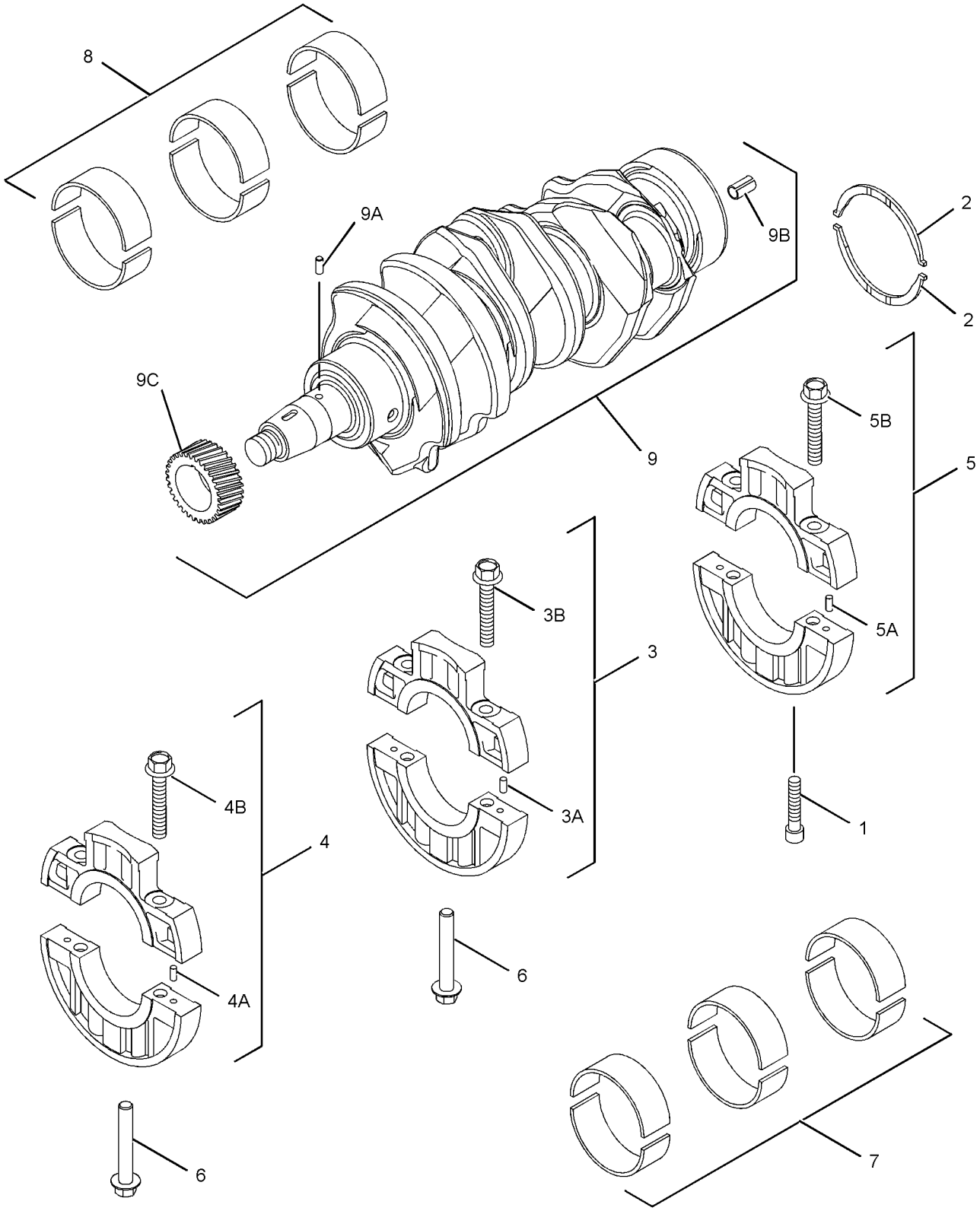

GRAPHIC #1 <END> g06035388

311-1099 CYLINDER BLOCK GP

PART OF 435-1631 ENGINE AR, 435-1654 ENGINE AR-PRIMARY

SMCS-1201 **i06618043**

NOTE	REF NO	GRAPHIC REF	PART NUMBER	QTY	PART NAME 1 2 3 4 5 6 (PRODUCT LEVEL)	SEE PAGE
	1	1	**153-5387**	2	PLUG	
	2	1	**6B-0924**	1	BALL BEARING	
	3	1	**153-5391**	1	PLUG	
	4	1	**153-5394**	2	DOWEL	
	5	1	**153-5395**	2	DOWEL	
	6	1	**487-0157**	2	PIN-SPRING	
	7	1	**153-5402**	2	DOWEL	
	8	1	**153-6838**	2	BOLT AS	
	9	1	**154-0175**	5	PLUG	
M	10	1	**154-0393**	2	STUD (M8X1.25X31-MM)	
	11	1	**156-6969**	1	BEARING	
J	12	1	**156-6973**	1	SEAL AS	
M	13	1	**183-1163**	1	STUD (M6X1X43-MM)	
M	14	1	**183-1164**	1	STUD (M6X1X68-MM)	
	15	1	**215-2620**	1	GASKET	
	16	1	**221-1136**	4	PLUG (BLANKING)	
	17	1	**237-9315**	1	PLUG (SEALING)	
	18	1	**366-4251**	4	PLUG-SEAL	
	19	1	**294-4916**	1	BUSHING (STANDARD) (STANDARD)	
AB		1	**302-4181**	1	BUSHING (0.25-MM US)	
AB		1	**302-4182**	1	BUSHING (0.50-MM US)	
	20	1	**338-3403**	1	SHAFT	
	21	1	**322-6874**	1	STUD	

A - NOT PART OF THIS GROUP
B - USE AS REQUIRED
J - ALSO ORDER WEAR SLEEVE 326-0081
M - METRIC PART

311-1099 **CYLINDER BLOCK GP (**contd.**)** **i06618043**

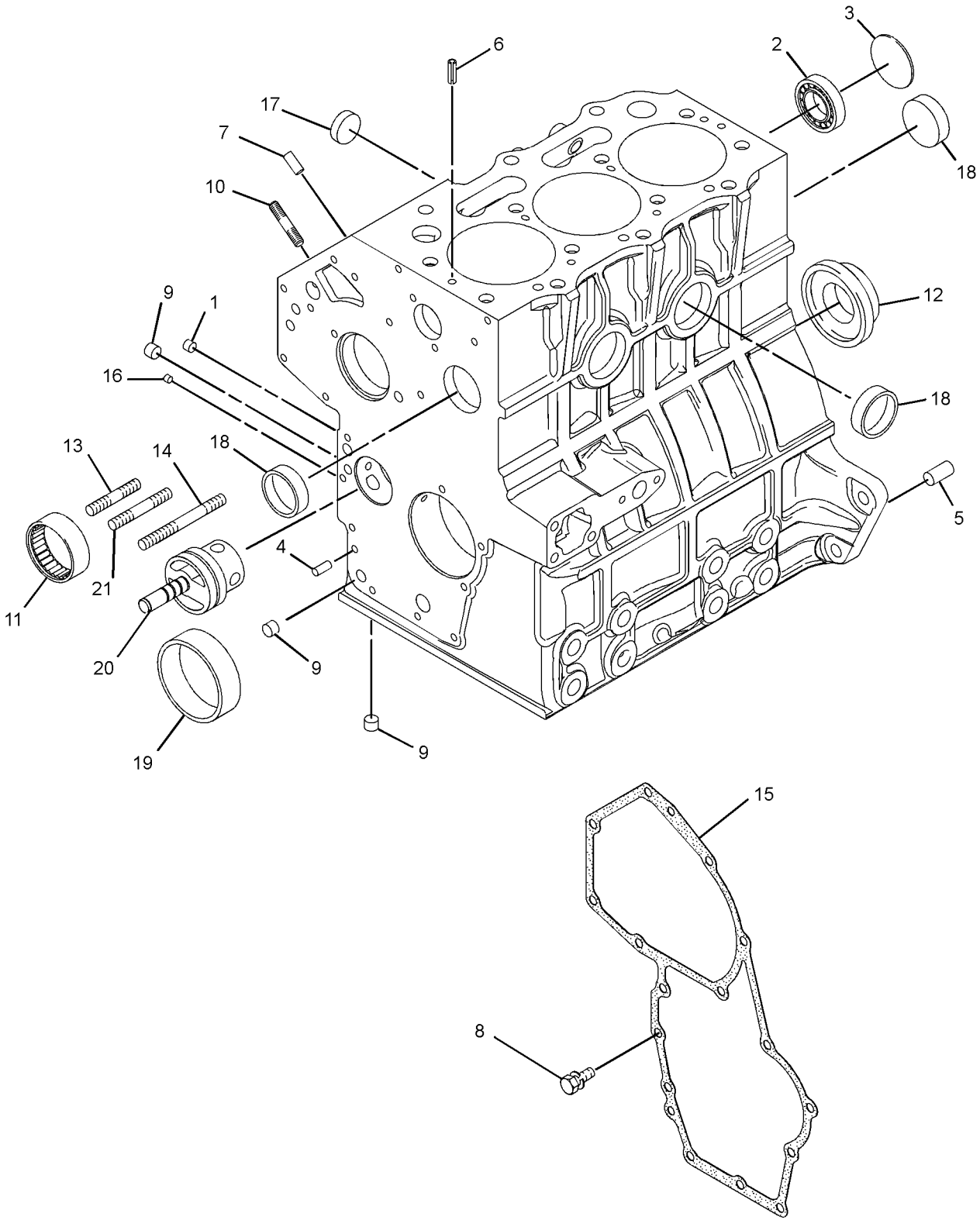

GRAPHIC #1 <END> g02037373

331-4499 CYLINDER BLOCK GP

PART OF 435-1657 ENGINE AR-PRIMARY

SMCS-1201 **i06689566**

NOTE	REF NO	GRAPHIC REF	PART NUMBER	QTY	PART NAME 1 2 3 4 5 6 (PRODUCT LEVEL)	SEE PAGE
	1	1	**153-5387**	2	PLUG	
	2	1	**6B-0924**	1	BALL BEARING	
	3	1	**153-5391**	1	PLUG	
	4	1	**153-5394**	2	DOWEL	
	5	1	**153-5395**	2	DOWEL	
	6	1	**487-0157**	2	PIN-SPRING	
	7	1	**153-5402**	2	DOWEL	
	8	1	**153-6838**	2	BOLT AS	
	9	1	**154-0175**	5	PLUG	
M	10	1	**154-0393**	2	STUD (M8X1.25X31-MM)	
	11	1	**156-6969**	1	BEARING	
M	12	1	**183-1163**	1	STUD (M6X1X43-MM)	
M	13	1	**183-1164**	1	STUD (M6X1X68-MM)	
	14	1	**215-2620**	1	GASKET	
	15	1	**221-1136**	4	PLUG (BLANKING)	
	16	1	**237-9315**	1	PLUG (SEALING)	
	17	1	**366-4251**	4	PLUG-SEAL	
	18	1	**294-4916**	1	BUSHING (STANDARD)	
AB		1	**302-4181**		BUSHING (0.25-MM US)	
AB		1	**302-4182**		BUSHING (0.50-MM US)	
	19	1	**338-3403**	1	SHAFT	
J	20	1	**156-6973**	1	SEAL AS	
					(ALSO ORDER WEAR SLEEVE 326-0081)	

A - NOT PART OF THIS GROUP
B - USE AS REQUIRED
J - ALSO ORDER WEAR SLEEVE 326-0081
M - METRIC PART

331-4499 **CYLINDER BLOCK GP (**contd.**)** **i06689566**

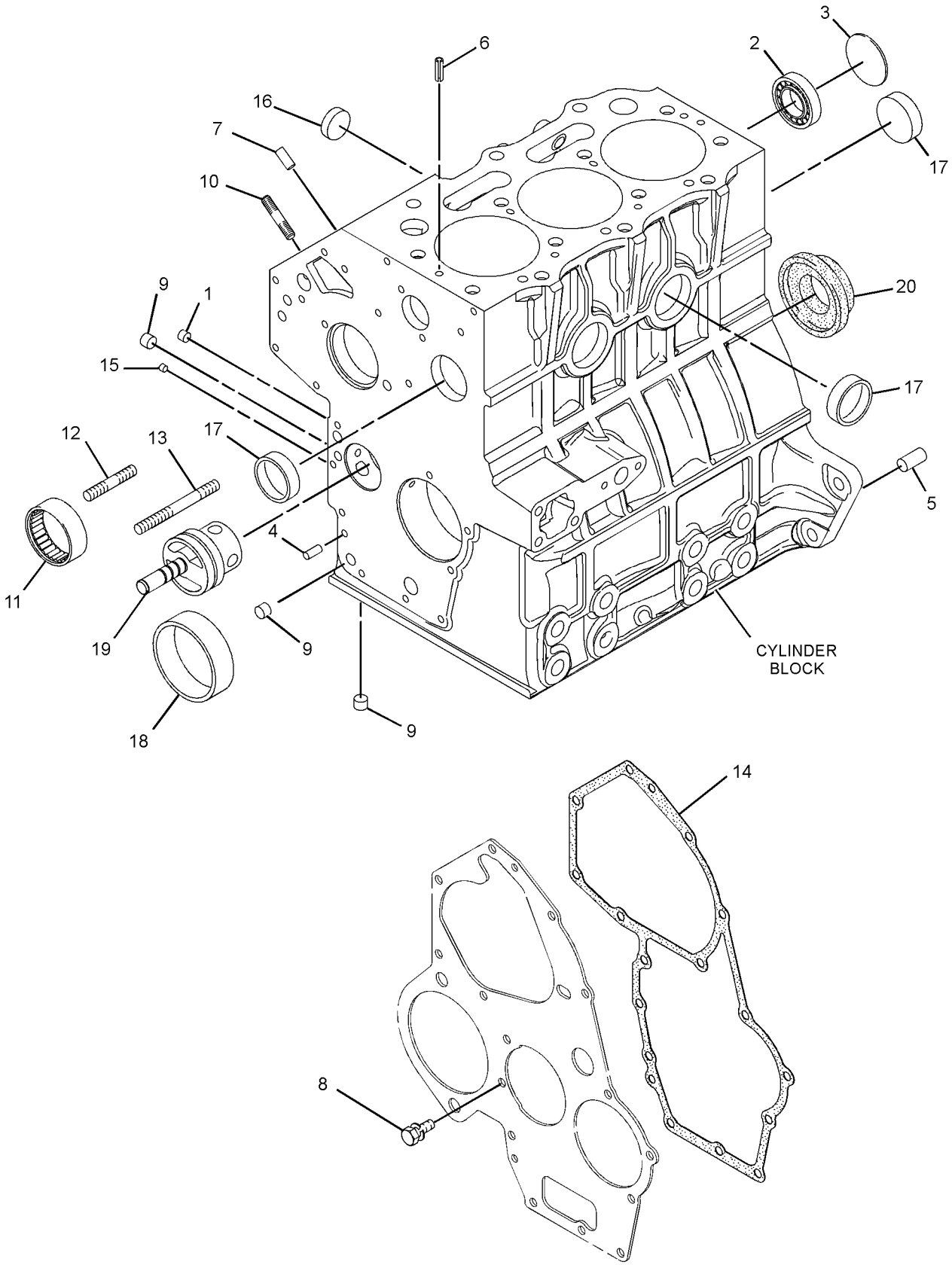

GRAPHIC #1 <END> g02037474

435-1654 ENGINE AR-PRIMARY

25 BRAKE KW (34 BHP) AT 3000 RPM

FIELD REPLACEMENT FOR 303-4100—PAGE: 11

SMCS-1020 **i05537865**

NOTE	PART NUMBER	QTY	PART NAME 1 2 3 4 5 6 (PRODUCT LEVEL)	SEE PAGE
Y	*322-0563*	1	CAMSHAFT GP	24
Y	*311-1116*	1	HOUSING GP-WATER REGULATOR	154
Y	*342-1268*	1	FASTENER GP-COVER	35
Y	*311-1122*	1	COVER GP-FRONT HOUSING	36
Y	*311-1123*	1	COVER GP-VALVE MECHANISM	41
Y	*311-1100*	1	CRANKSHAFT GP	47
Y	*311-1099*	1	CYLINDER BLOCK GP	51
Y	*311-1102*	1	CYLINDER HEAD GP	59
Y	*311-1113*	1	FILLER GP-ENGINE OIL	143
Y	*308-2298*	1	FILTER GP-ENGINE OIL	147
Y	*327-0061*	1	FLYWHEEL GP	74
Y	*311-1127*	1	GLOW PLUG GP	297
Y	*322-0562*	1	GOVERNOR GP	270
Y	*342-1226*	1	HOUSING GP-FLYWHEEL	82
Y	*322-0561*	1	HOUSING GP-FRONT	90
Y	**339-3017**	1	KIT-ENGINE OIL PUMP	153
Y	*442-8532*	1	LIFTING GP-ENGINE	117
Y	*308-4735*	1	MOUNTING GP-ENGINE OIL FILTER	150
Y	*311-1112*	1	PAN GP-OIL	118
Y	*342-1324*	1	PARTS GP-MISCELLANEOUS	317
Y	*311-1101*	1	PISTON & ROD GP	128
Y	*309-6720*	1	PLUG GP-OIL PAN	132
Y	*311-1114*	1	PULLEY GP-CRANKSHAFT	133
Y	*311-1104*	1	PUMP GP-ENGINE OIL	151
Y	*322-0564*	1	PUMP GP-FUEL INJECTION	277
Y	*311-1115*	1	PUMP GP-WATER	163
Y	*311-1128*	1	SOLENOID GP-SHUTOFF	300
Y	*315-6638*	1	SWITCH GP-PRESSURE (ENGINE OIL) (ENGINE OIL)	311
Y	*311-1130*	1	SWITCH GP-TEMPERATURE (COOLANT)	314
Y	*311-1103*	1	VALVE MECHANISM GP	139

Y - SEPARATE ILLUSTRATION

<END>

311-1158 CYLINDER HEAD AS

PART OF 311-1102, 331-4502 CYLINDER HEAD GP

SMCS-1100, 1101

i07504166

NOTE	REF NO	GRAPHIC REF	PART NUMBER	QTY	PART NAME 1 2 3 4 5 6 (PRODUCT LEVEL)	SEE PAGE
	1	1	**308-1861**	3	VALVE-EXHAUST	
	2	1	**153-5556**	12	RETAINER	
	3	1	**153-5557**	6	RETAINER	
	4	1	**440-5104**	6	SEAL	
	5	1	**477-8828**	6	SPRING	
	6	1	**237-9315**	3	PLUG (SEALING)	
	7	1	**256-2084**	3	INSERT-INLET VALVE	
	8	1	**256-2085**	3	INSERT-VALVE SEAT	
	9	1	**288-6537**	5	CAP	
	10	1	**291-1808**	2	CAP	
	11	1	**303-0338**	2	PLUG	
	12	1	**435-9544**	3	VALVE-INLET	

311-1158 **CYLINDER HEAD AS (**contd.**)** **i07504166**

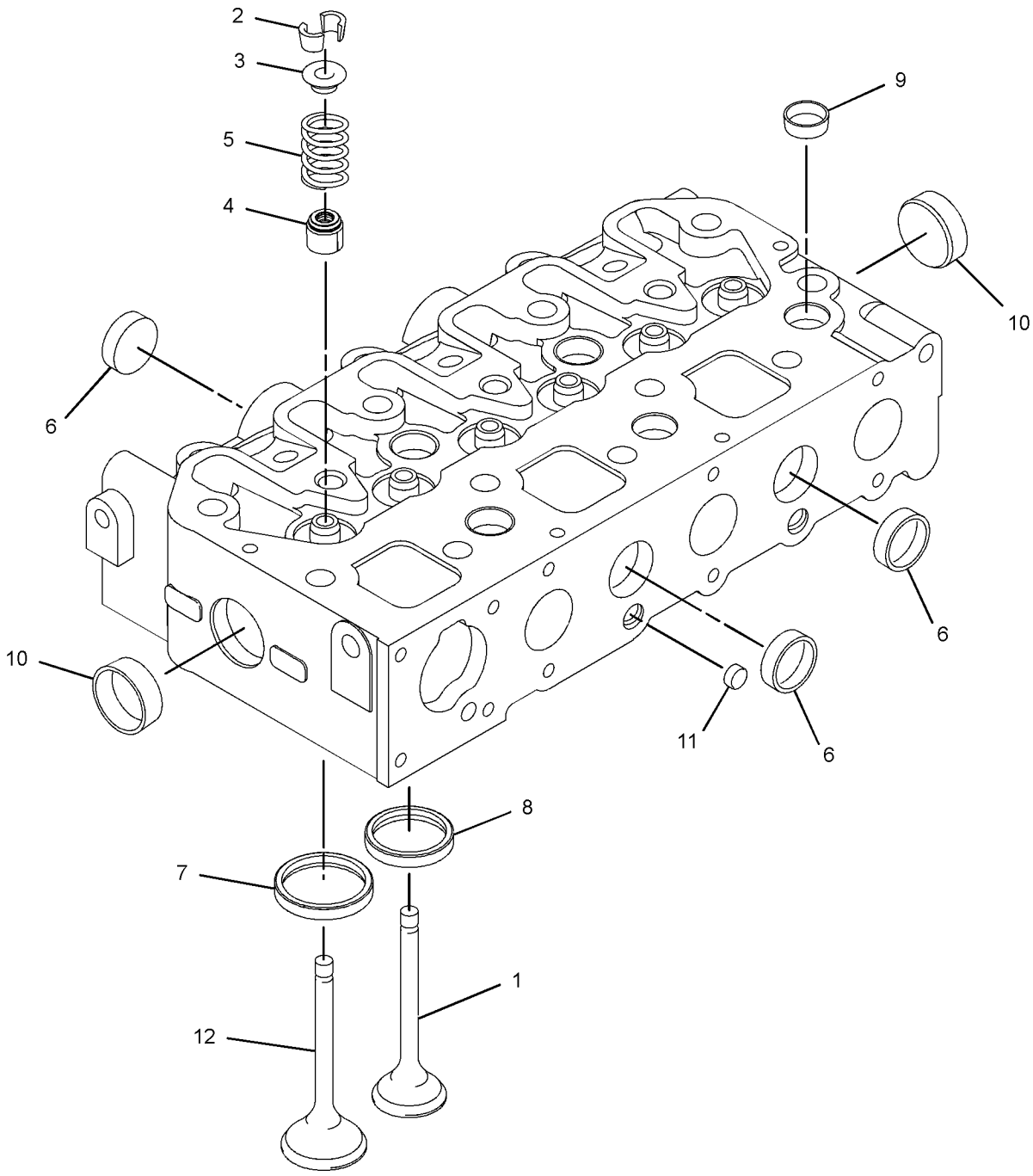

GRAPHIC #1 <END> g03653429

540-0594 CYLINDER HEAD AS

PART OF 540-0595 CYLINDER HEAD GP

SMCS-1100, 1101 **i07522115**

NOTE	REF NO	GRAPHIC REF	PART NUMBER	QTY	PART NAME 1 2 3 4 5 6 (PRODUCT LEVEL)	SEE PAGE
	1	1	**237-9315**	3	PLUG (SEALING)	
	2	1	**288-6537**	5	CAP	
	3	1	**291-1808**	2	CAP	
	4	1	**303-0338**	2	PLUG	
	5	1	*423-7663*	1	CYLINDER HEAD AS	
		1	**256-2084**	3	INSERT-INLET VALVE	
		1	**256-2085**	3	INSERT-VALVE SEAT	

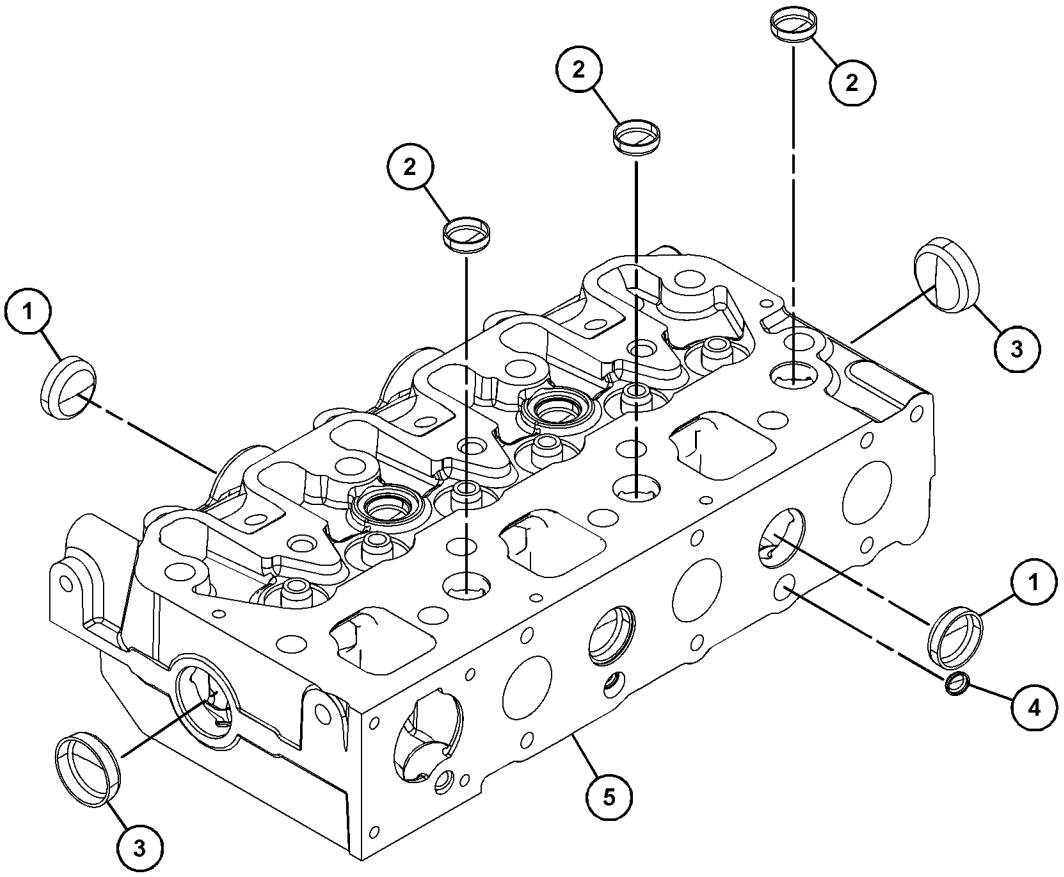

GRAPHIC #1 <END> g06371345

311-1102 CYLINDER HEAD GP

PART OF 435-1631 ENGINE AR, 435-1654 ENGINE AR-PRIMARY

SMCS-1100 **i07496425**

NOTE	REF NO	GRAPHIC REF	PART NUMBER	QTY	PART NAME 1 2 3 4 5 6 (PRODUCT LEVEL)	SEE PAGE
	1	1	**504-3838**	6	CAP	
M	2	1	**457-5872**	11	BOLT (M11X1.25X91-MM)	
M	3	1	**457-5876**	3	BOLT (M11X1.25X72-MM)	
M	4	1	**183-3213**	2	STUD (M8X1.25X71-MM)	
B	5	1	**218-8533**	1	GASKET (1.3-MM THK)	
B		1	**218-8537**	1	GASKET (1.4-MM THK)	
M	7	1	**308-1862**	2	STUD (M6X1X63-MM)	
Y	8	1	*311-1158*	1	CYLINDER HEAD AS	56

B - USE AS REQUIRED
M - METRIC PART
Y - SEPARATE ILLUSTRATION

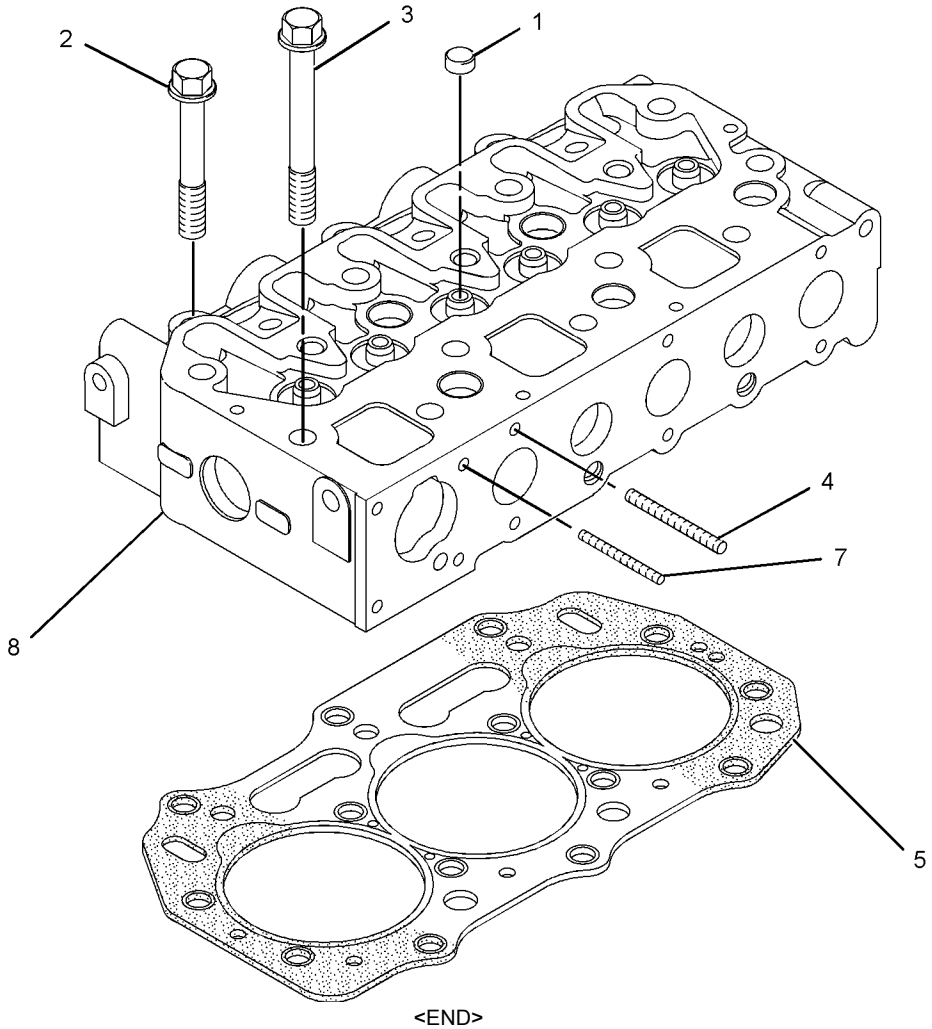

GRAPHIC #1 <END> g01412519

331-4502 CYLINDER HEAD GP

PART OF 435-1657 ENGINE AR-PRIMARY

TYPE 1

SMCS-1100 **i07414789**

NOTE	REF NO	GRAPHIC REF	PART NUMBER	QTY	PART NAME 1 2 3 4 5 6 (PRODUCT LEVEL)	SEE PAGE
	1	1	**504-3838**	6	CAP	
M	2	1	**457-5872**	11	BOLT (M11X1.25X91-MM)	
M	3	1	**457-5876**	3	BOLT (M11X1.25X72-MM)	
M	4	1	**183-3213**	2	STUD (M8X1.25X71-MM)	
	5	1	**218-8533**	1	GASKET (1.3-MM THK)	
	6	1	**218-8537**	1	GASKET (1.4-MM THK)	
M	7	1	**308-1862**	2	STUD (M6X1X63-MM)	
Y	8	1	**311-1158**	1	CYLINDER HEAD AS	56

M - METRIC PART
Y - SEPARATE ILLUSTRATION

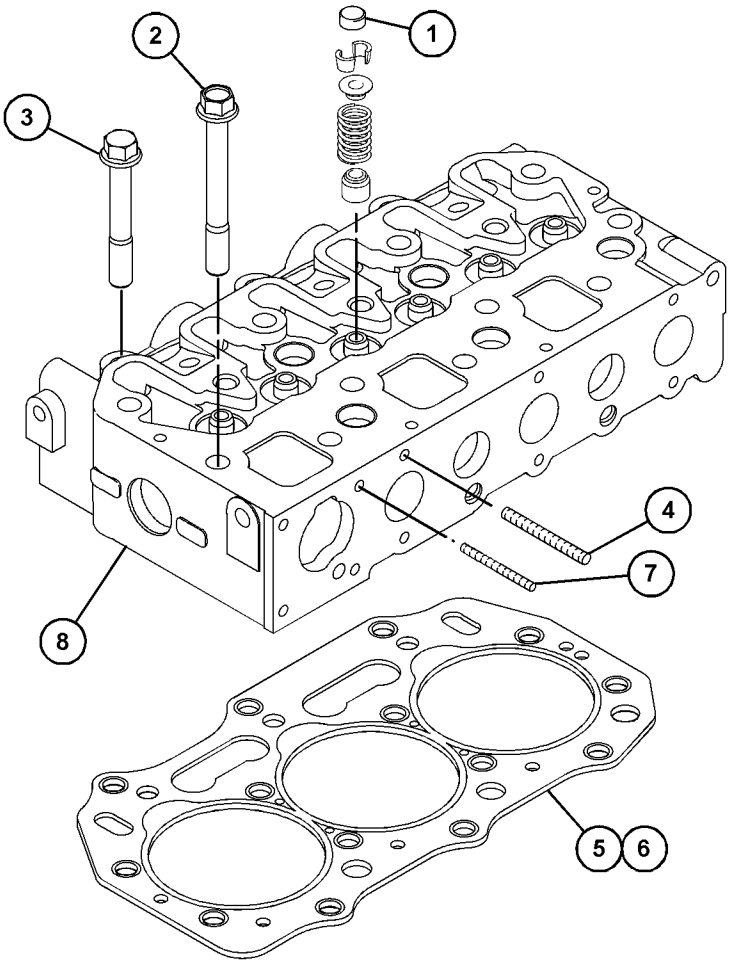

GRAPHIC #1 <END> g06342591

331-4502 CYLINDER HEAD GP

PART OF 435-1657 ENGINE AR-PRIMARY

TYPE 2

SMCS-1100 **i07506634**

NOTE	REF NO	GRAPHIC REF	PART NUMBER	QTY	PART NAME 1 2 3 4 5 6 (PRODUCT LEVEL)	SEE PAGE
	1	1	**504-3838**	6	CAP	
M	2	1	**457-5872**	11	BOLT (M11X1.25X91-MM)	
M	3	1	**457-5876**	3	BOLT (M11X1.25X72-MM)	
M	4	1	**183-3213**	2	STUD (M8X1.25X71-MM)	
	5	1	**218-8533**	1	GASKET (1.3-MM THK)	
	6	1	**218-8537**	1	GASKET (1.4-MM THK)	
M	7	1	**308-1862**	2	STUD (M6X1X63-MM)	
CY	8	1	**540-0595**	1	CYLINDER HEAD GP	62

C - CHANGE FROM PREVIOUS TYPE
M - METRIC PART
Y - SEPARATE ILLUSTRATION

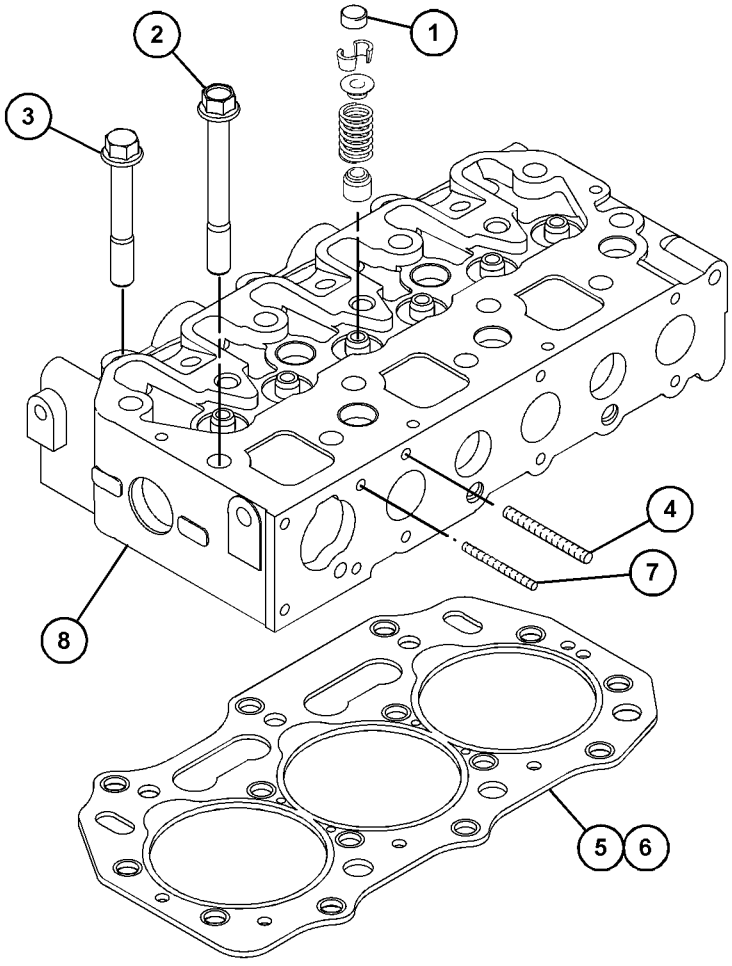

GRAPHIC #1 <END> g06342591

540-0595 CYLINDER HEAD GP

PART OF 331-4502 CYLINDER HEAD GP

SMCS-1100 **i07417309**

NOTE	REF NO	GRAPHIC REF	PART NUMBER	QTY	PART NAME 1 2 3 4 5 6 (PRODUCT LEVEL)	SEE PAGE
	1	1	**153-5557**	6	RETAINER	
	2	1	**435-9544**	3	VALVE-INLET	
	3	1	**435-9546**	3	VALVE-EXHAUST	
	4	1	**477-8828**	6	SPRING	
Y	5	1	**540-0594**	1	CYLINDER HEAD AS	58
	6	1	**153-5556**	12	RETAINER	
	7	1	**440-5104**	6	SEAL	

Y - SEPARATE ILLUSTRATION

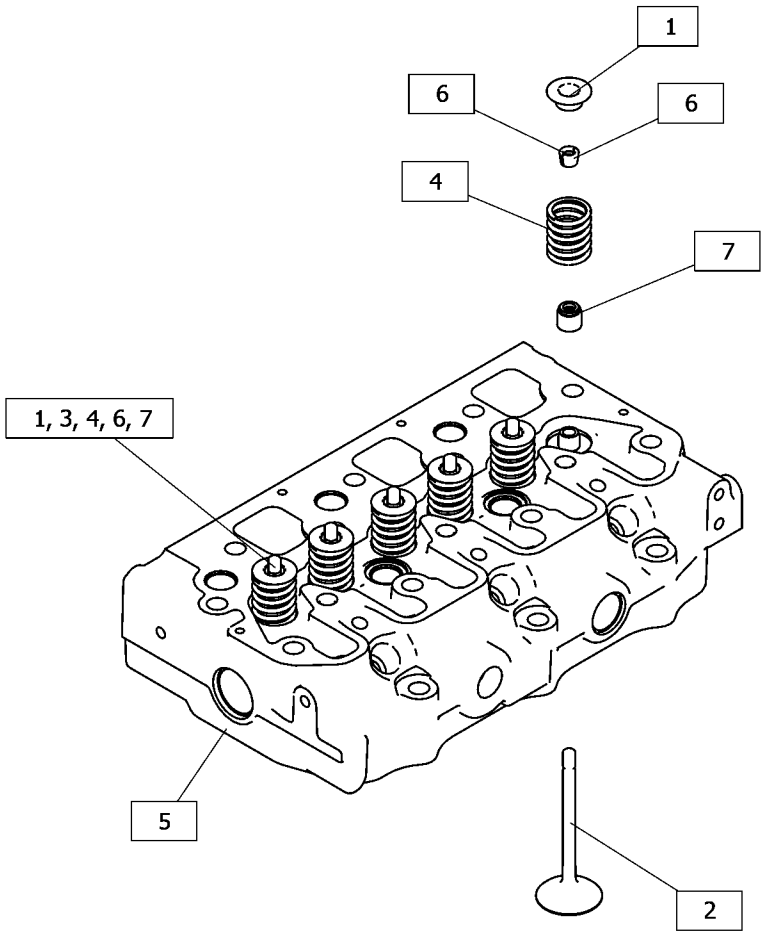

GRAPHIC #1 <END> g06348225

354-1245 HOUSING GP-FRONT

PART OF 435-1631 ENGINE AR, 435-1657 ENGINE AR-PRIMARY

TYPE 1

SMCS-1207 **i05078215**

NOTE	REF NO	GRAPHIC REF	PART NUMBER	QTY	PART NAME 1 2 3 4 5 6 (PRODUCT LEVEL)	SEE PAGE
M	1	1	**6I-0594**	2	NUT (M10X1.5-THD)	
M	2	1	**164-7468**	2	BOLT (M10X1.5X95-MM)	
	3	1	**308-1875**	3	SEAL-O-RING	
	4	1	**321-5907**	1	PLATE	
	5	1	**328-3229**	2	COVER	
	6	1	**328-3230**	2	BALL BEARING	
	7	1	**335-8325**	1	GEAR (48-TEETH)	
	8	1	**308-1874**	1	HOLDER	

M - METRIC PART

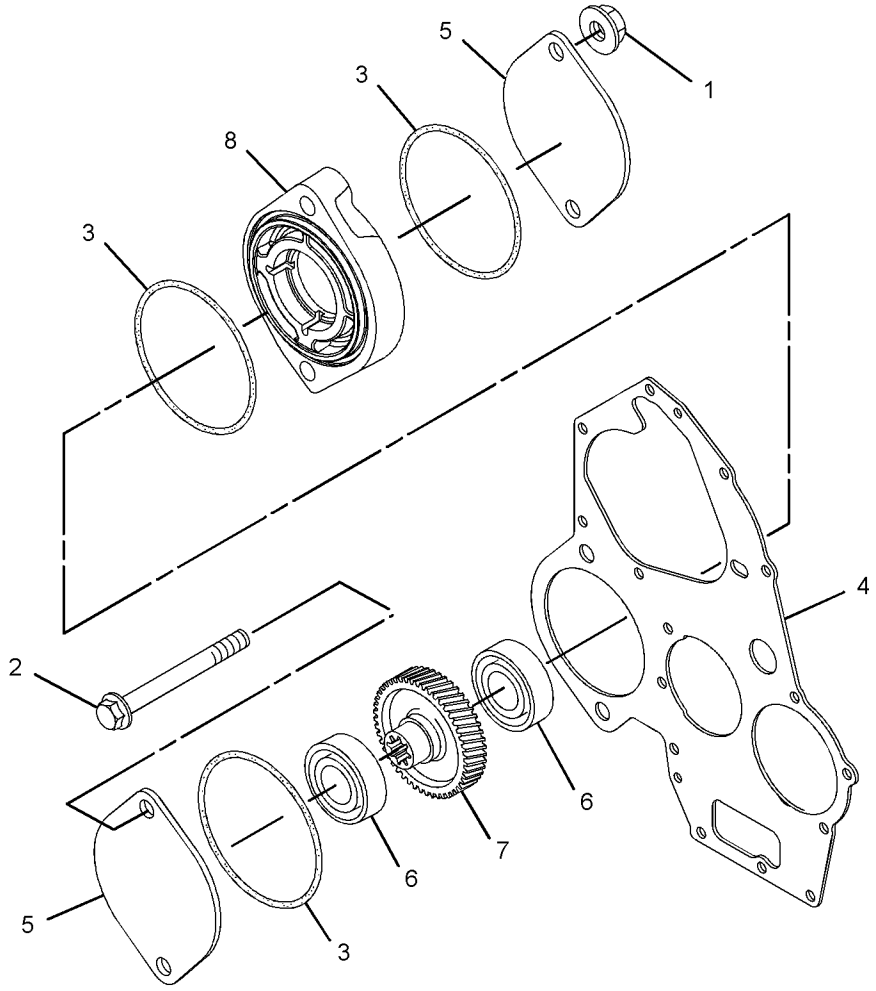

GRAPHIC #1 <END> g03336152

354-1245 HOUSING GP-FRONT

PART OF 435-1631 ENGINE AR, 435-1657 ENGINE AR-PRIMARY

TYPE 2

SMCS-1207 **i07474335**

NOTE	REF NO	GRAPHIC REF	PART NUMBER	QTY	PART NAME 1 2 3 4 5 6 (PRODUCT LEVEL)	SEE PAGE
M	1	1	**175-7141**	2	NUT-HEX FLANGE (M10X1.5-THD)	
M	2	1	**164-7468**	2	BOLT (M10X1.5X95-MM)	
	3	1	**308-1875**	3	SEAL-O-RING	
	4	1	**321-5907**	1	PLATE	
	5	1	**328-3229**	2	COVER	
	6	1	**328-3230**	2	BALL BEARING	
C	7	1	**488-0405**	1	GEAR-DRIVE (48-TEETH)	
	8	1	**308-1874**	1	HOLDER	

C - CHANGE FROM PREVIOUS TYPE
M - METRIC PART

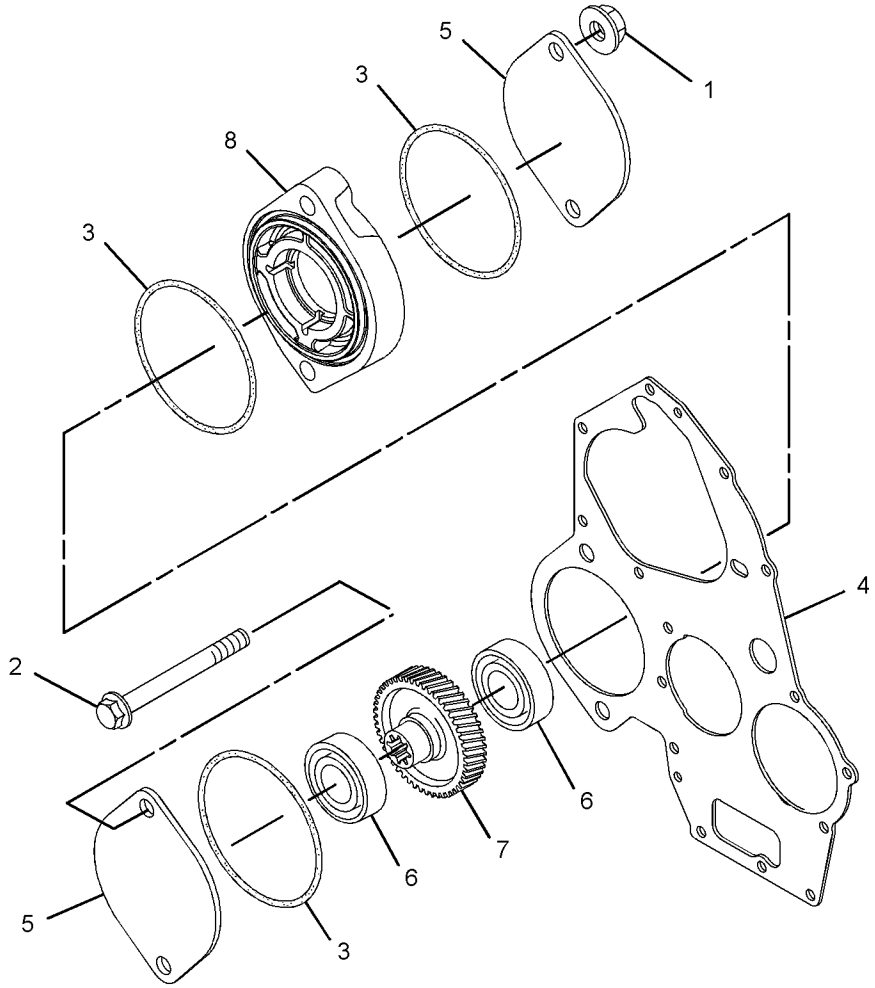

GRAPHIC #1 <END> g03336152

308-2304 EXTENSION GP-FAN

SMCS-1359 **i05810283**

NOTE	REF NO	GRAPHIC REF	PART NUMBER	QTY	PART NAME 1 2 3 4 5 6 (PRODUCT LEVEL)	SEE PAGE
	1	1	**379-0870**	1	EXTENSION-FAN	
	2	1	**183-3547**	4	BOLT	

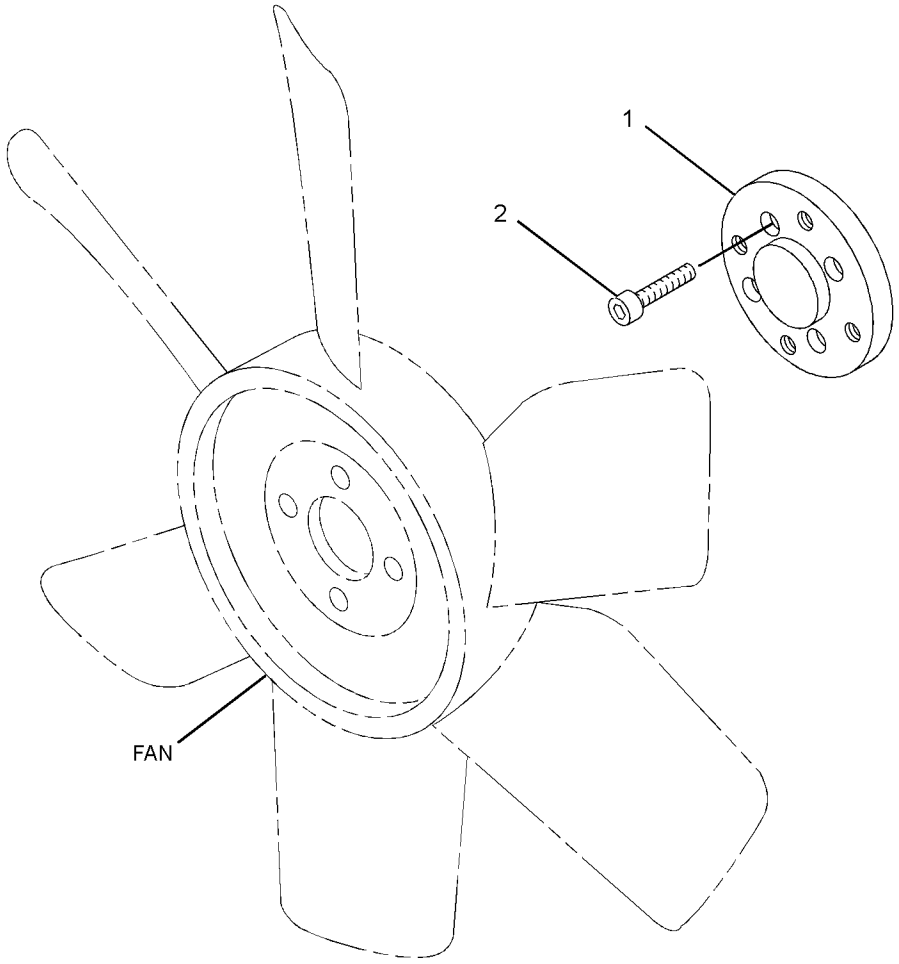

GRAPHIC #1 <END> g01419523

311-1119 DRIVE GP-FAN

SMCS-1359 **i07041835**

NOTE	REF NO	GRAPHIC REF	PART NUMBER	QTY	PART NAME 1 2 3 4 5 6 (PRODUCT LEVEL)	SEE PAGE
M	1	1	**6I-0917**	4	BOLT (M6X1X25-MM)	
	2	1	**161-8260**	1	PLATE	

M - METRIC PART

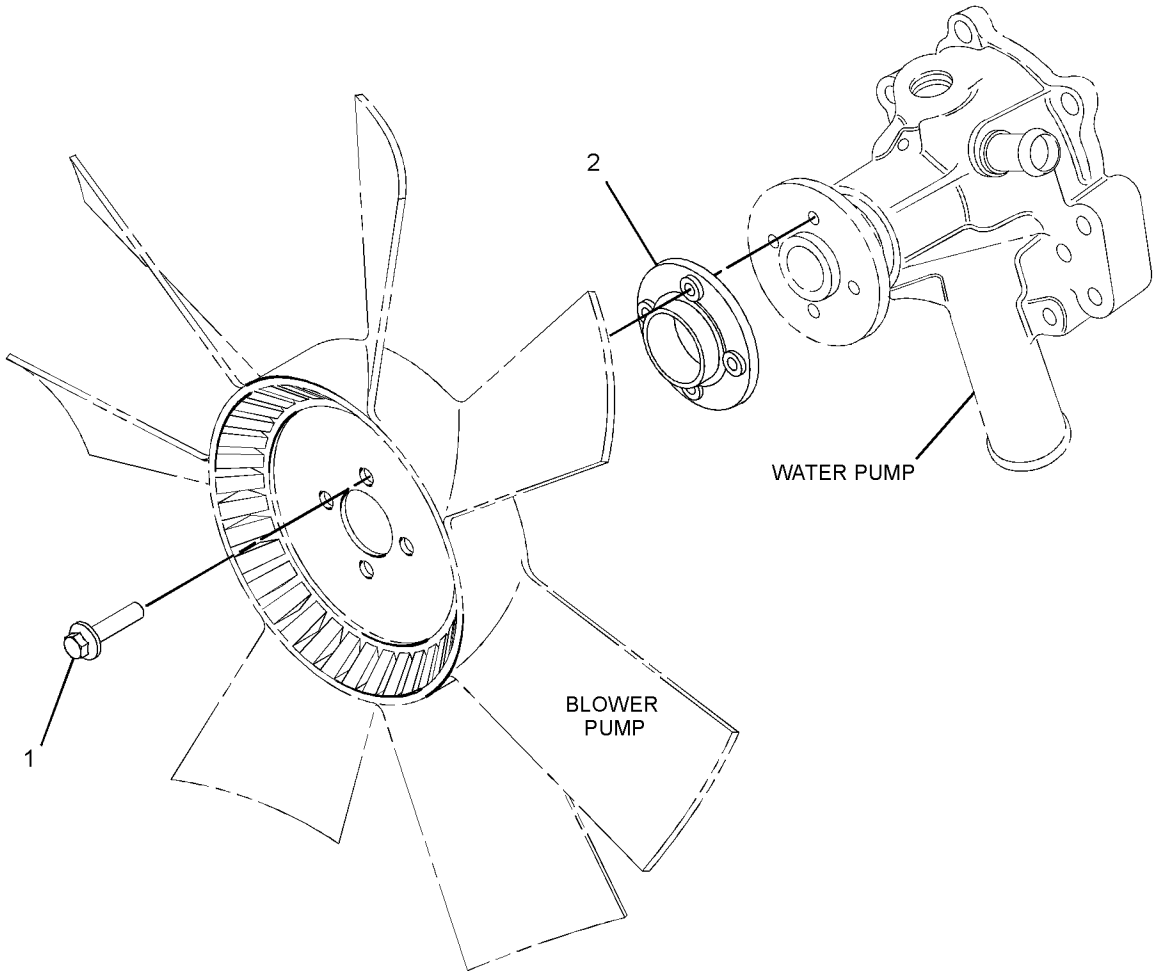

GRAPHIC #1 <END> g06200728

322-3808 DRIVE GP-FAN

TYPE 1

SMCS-1359 **i03116002**

NOTE	REF NO	GRAPHIC REF	PART NUMBER	QTY	PART NAME 1 2 3 4 5 6 (PRODUCT LEVEL)	SEE PAGE
M	1	1	**249-7263**	4	BOLT (M6X1X16-MM)	

M - METRIC PART

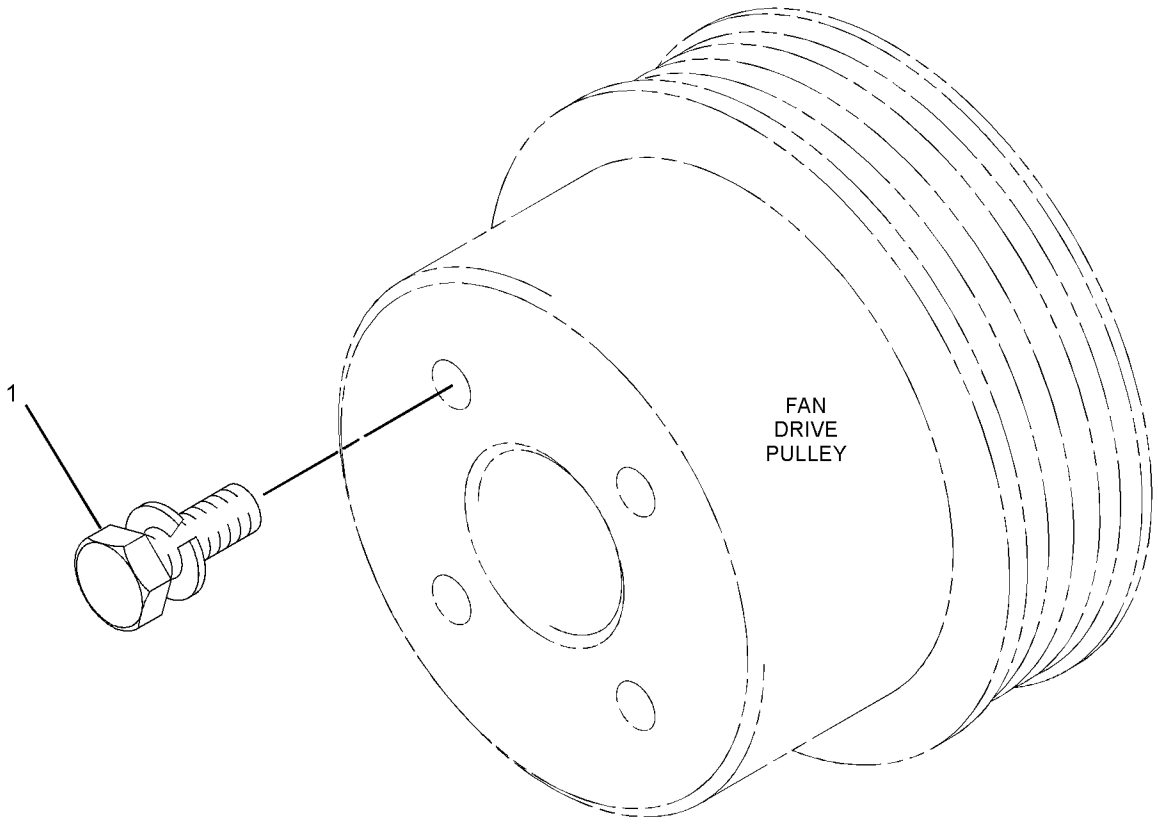

GRAPHIC #1 <END> g01514615

322-3808 DRIVE GP-FAN

TYPE 2

SMCS-1359 **i07091008**

NOTE	REF NO	GRAPHIC REF	PART NUMBER	QTY	PART NAME 1 2 3 4 5 6 (PRODUCT LEVEL)	SEE PAGE
CM	1	1	**6I-0846**	4	BOLT (M6X1X14-MM)	

C - CHANGE FROM PREVIOUS TYPE
M - METRIC PART

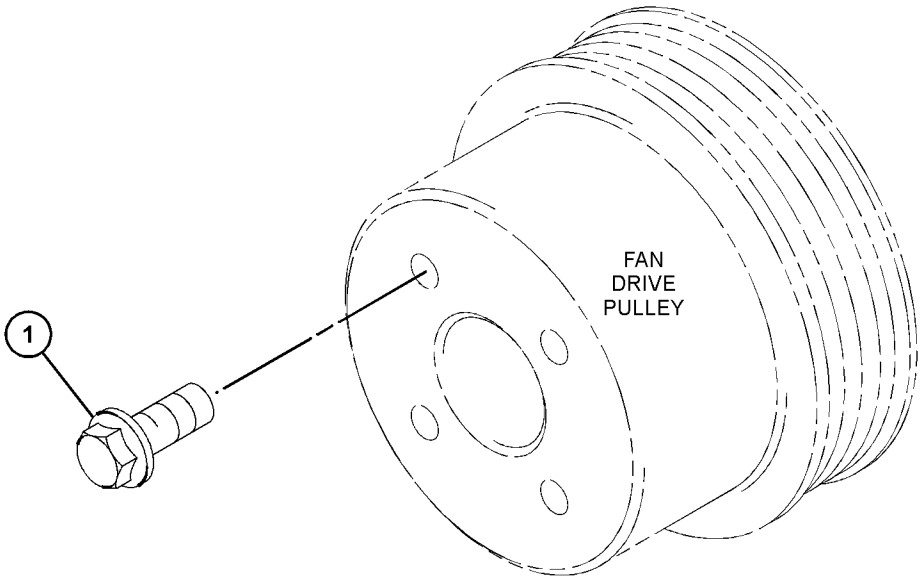

GRAPHIC #1 <END> g06224605

508-5627 FASTENER GP-FRONT COVER

SMCS-1151 **i06926340**

NOTE	REF NO	GRAPHIC REF	PART NUMBER	QTY	PART NAME 1 2 3 4 5 6 (PRODUCT LEVEL)	SEE PAGE
M	1	1	**153-5960**	2	NUT (M6X1-THD)	
	2	1	**153-5962**	4	BOLT AS	
	3	1	**165-2140**	7	BOLT AS	
	4	1	**425-6417**	1	GASKET	

M - METRIC PART

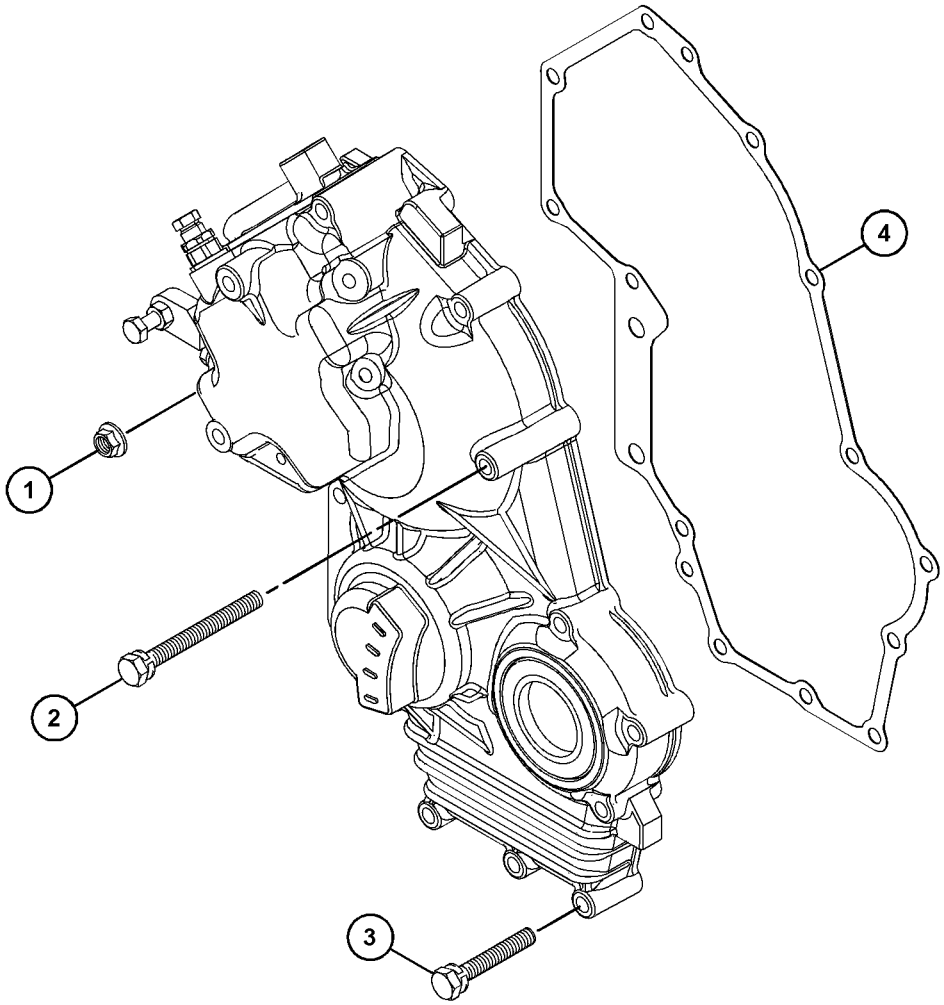

GRAPHIC #1 <END> g06122334

508-6672 FASTENER GP-FRONT HOUSING

SMCS-1151, 1162 **i06917053**

NOTE	REF NO	GRAPHIC REF	PART NUMBER	QTY	PART NAME 1 2 3 4 5 6 (PRODUCT LEVEL)	SEE PAGE
M	1	1	**153-5960**	2	NUT (M6X1-THD)	
	2	1	**153-5962**	4	BOLT AS	
	3	1	**165-2140**	7	BOLT AS	
	4	1	**425-6417**	1	GASKET	

M - METRIC PART

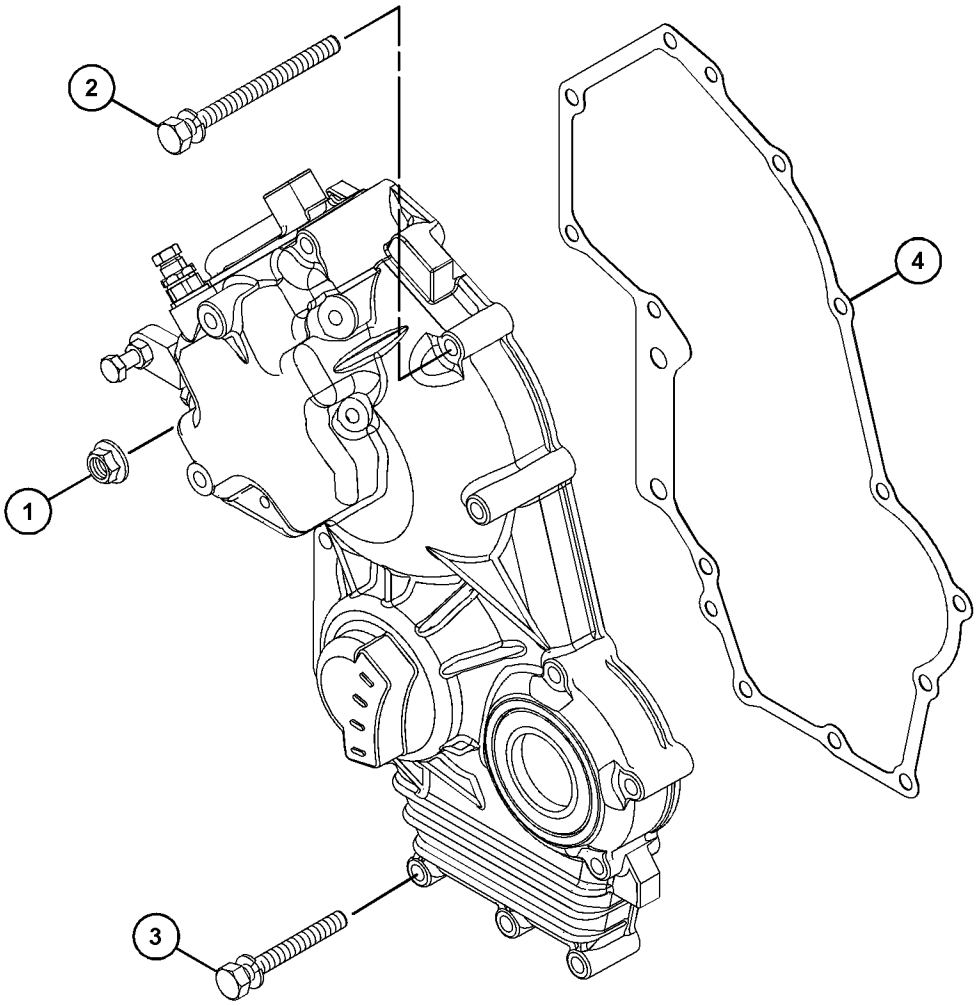

GRAPHIC #1 <END> g06122317

311-1108 FLYWHEEL GP

SMCS-1156 **i02843888**

NOTE	REF NO	GRAPHIC REF	PART NUMBER	QTY	PART NAME 1 2 3 4 5 6 (PRODUCT LEVEL)	SEE PAGE
M	1	1	**154-2406**	6	BOLT (M10X1.25X34-MM)	
	2	1	**156-6959**	1	FLYWHEEL AS	
	2A	1	**156-6960**	1	GEAR-STARTING MOTOR (109-TEETH)	

M - METRIC PART

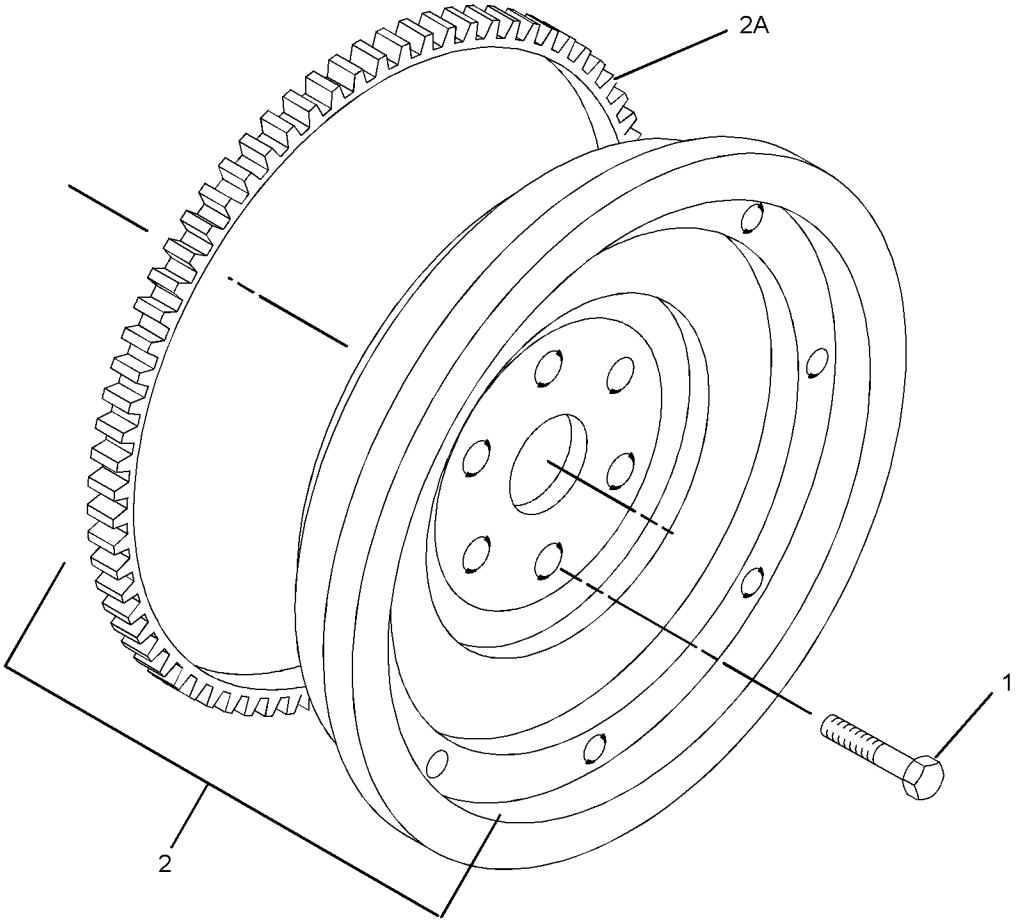

GRAPHIC #1 <END> g01161248

311-1754 FLYWHEEL GP

SMCS-1156 **i05320062**

NOTE	REF NO	GRAPHIC REF	PART NUMBER	QTY	PART NAME 1 2 3 4 5 6 (PRODUCT LEVEL)	SEE PAGE
	1	1	**363-8894**	1	FLYWHEEL AS	
	1A	1	**156-6960**	1	GEAR-STARTING MOTOR (109-TEETH)	
M	2	1	**154-2406**	6	BOLT (M10X1.25X34-MM)	

M - METRIC PART

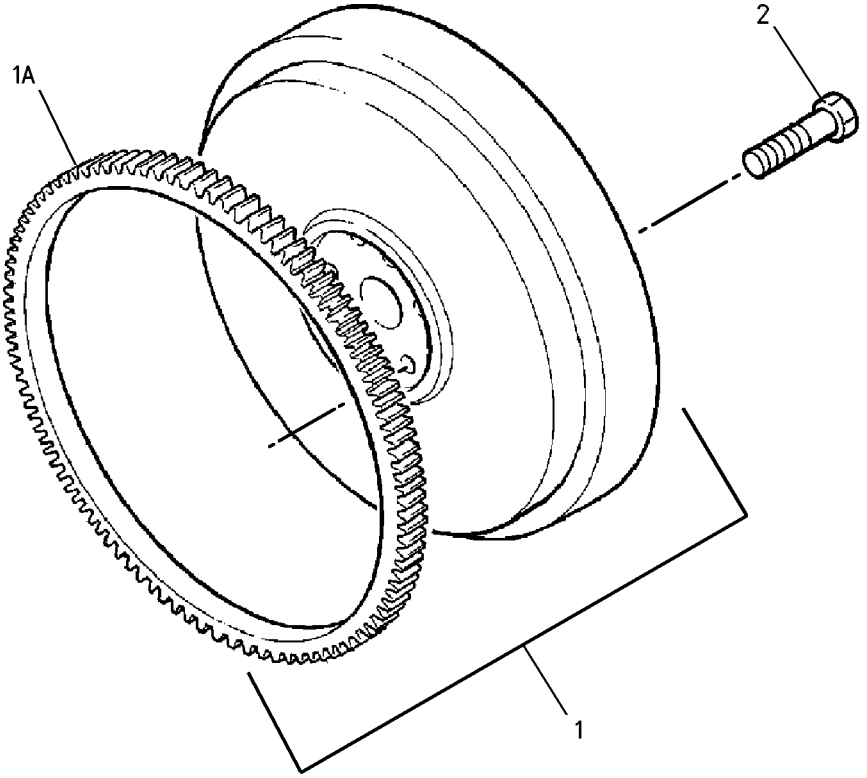

GRAPHIC #1 <END> g00640610

316-9548 FLYWHEEL GP

SMCS-1156 **i02854677**

NOTE	REF NO	GRAPHIC REF	PART NUMBER	QTY	PART NAME 1 2 3 4 5 6 (PRODUCT LEVEL)	SEE PAGE
M	1	1	**154-2406**	6	BOLT (M10X1.25X34-MM)	
	2	1	**138-7421**	1	FLYWHEEL AS	
	2A	1	**156-6960**	1	GEAR-STARTING MOTOR (109-TEETH)	

M - METRIC PART

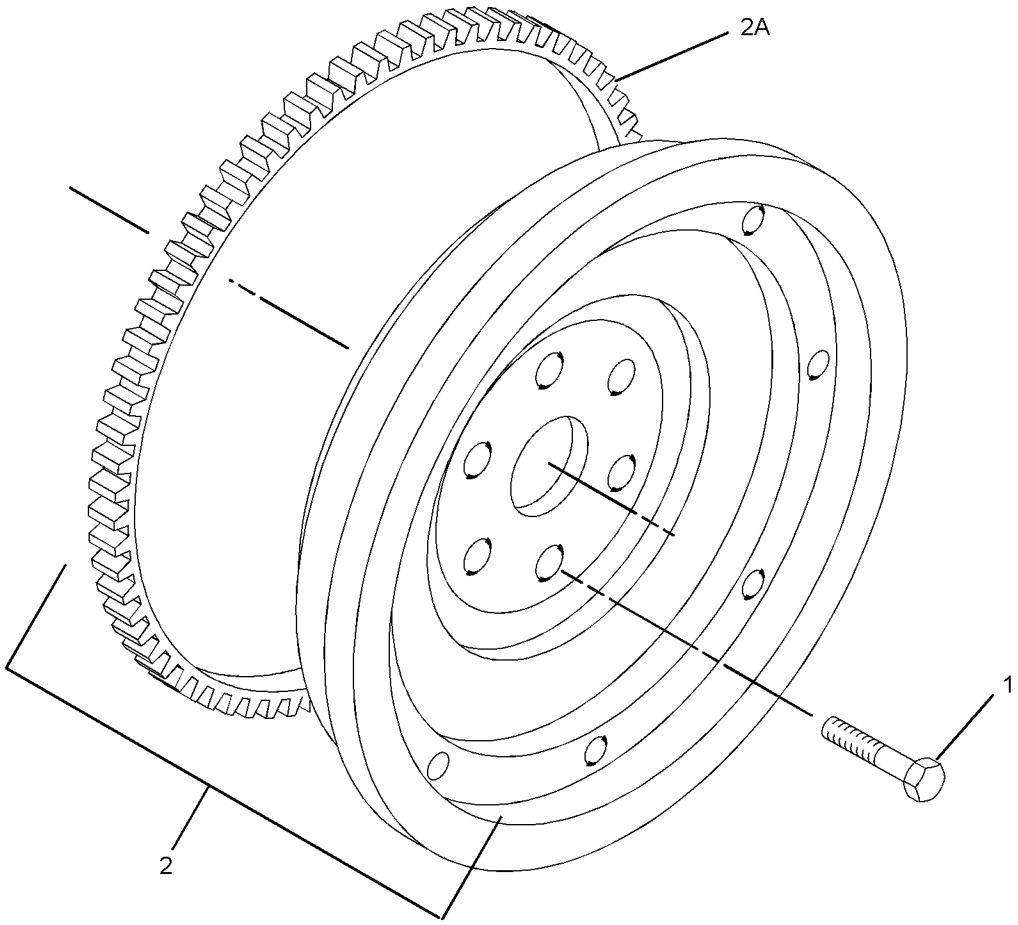

GRAPHIC #1 <END> g01161248

327-0061 FLYWHEEL GP

PART OF 435-1631 ENGINE AR, 435-1654, 435-1657 ENGINE AR-PRIMARY

SMCS-1156 **i02959227**

NOTE	REF NO	GRAPHIC REF	PART NUMBER	QTY	PART NAME 1 2 3 4 5 6 (PRODUCT LEVEL)	SEE PAGE
M	1	1	**154-2406**	6	BOLT (M10X1.25X34-MM)	

M - METRIC PART

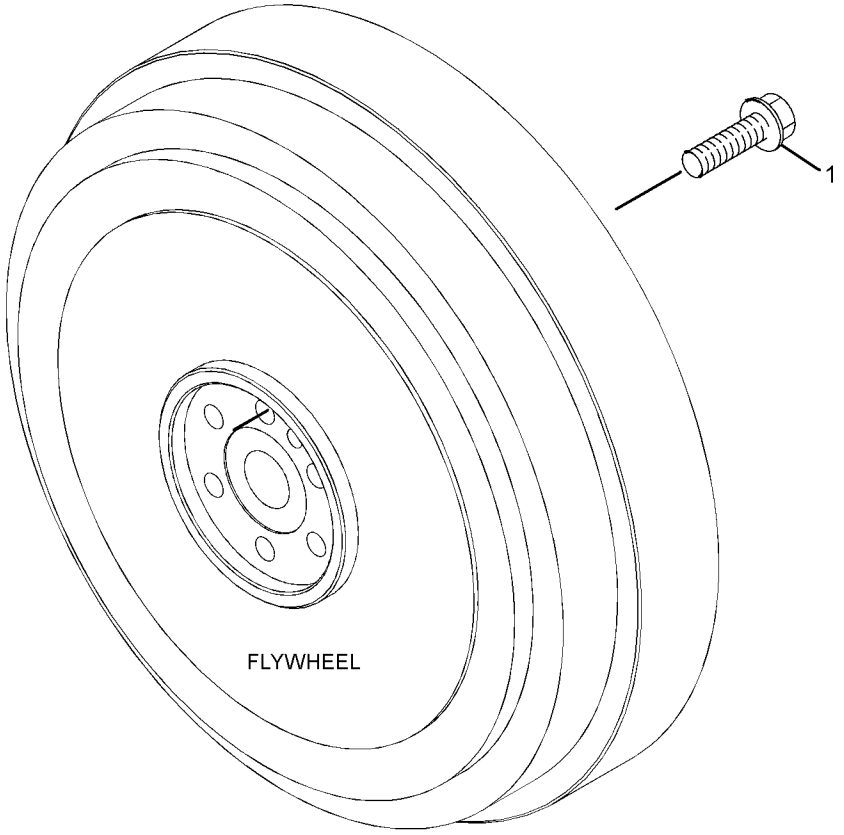

GRAPHIC #1 <END> g01517266

311-1107 HOUSING GP-FLYWHEEL

TYPE 1

SMCS-1157 **i04547847**

NOTE	REF NO	GRAPHIC REF	PART NUMBER	QTY	PART NAME 1 2 3 4 5 6 (PRODUCT LEVEL)	SEE PAGE
M	1	1	**138-7162**	2	BOLT (M10X1.5X30-MM)	
	2	1	**138-7172**	1	HOUSING-FLYWHEEL	
	3	1	**154-1399**	2	WASHER (10.5X18X1.6-MM THK)	
	4	1	**154-2395**	2	PLUG	
	5	1	**154-2403**	2	WASHER	
	6	1	**165-2141**	10	BOLT AS	

M - METRIC PART

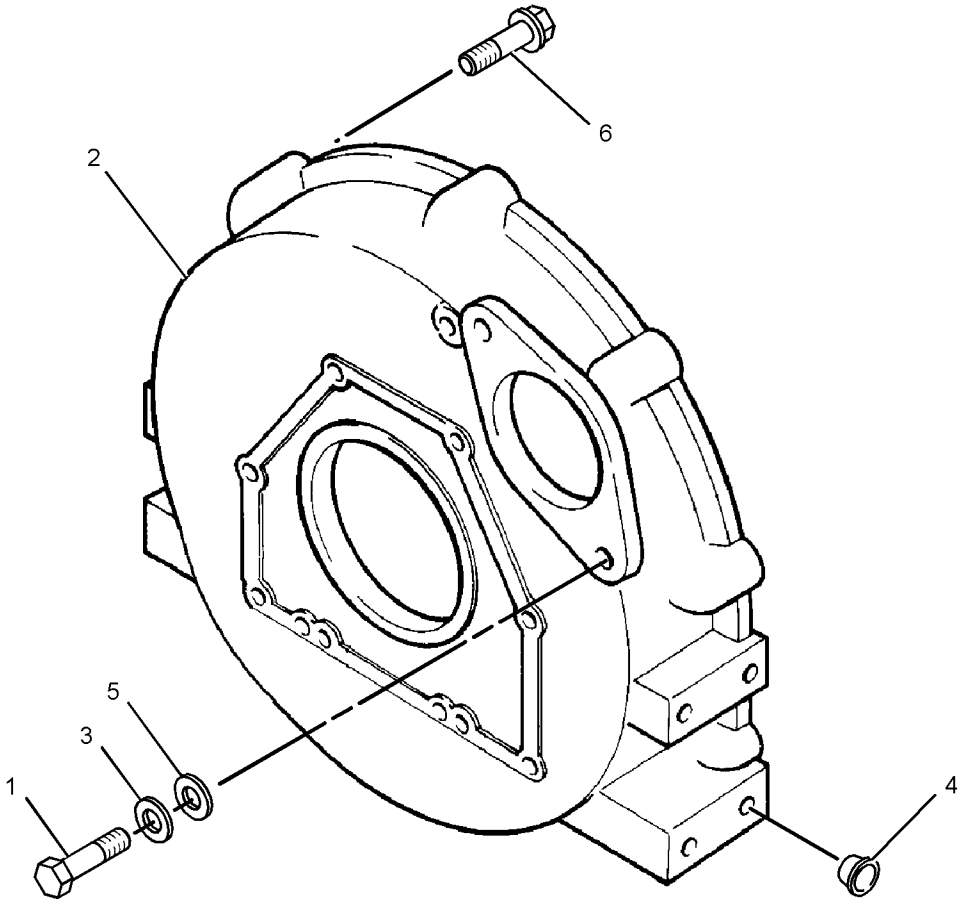

GRAPHIC #1 <END> g01421877

311-1107 HOUSING GP-FLYWHEEL

TYPE 2

SMCS-1157 **i04898727**

NOTE	REF NO	GRAPHIC REF	PART NUMBER	QTY	PART NAME 1 2 3 4 5 6 (PRODUCT LEVEL)	SEE PAGE
CM	1	1	**6I-0593**	2	BOLT (M10X1.5X30-MM)	
	2	1	**383-1331**	1	HOUSING-FLYWHEEL	
	3	1	**165-2141**	10	BOLT AS	
	4	1	**358-4256**	2	PLUG	

C - CHANGE FROM PREVIOUS TYPE
M - METRIC PART

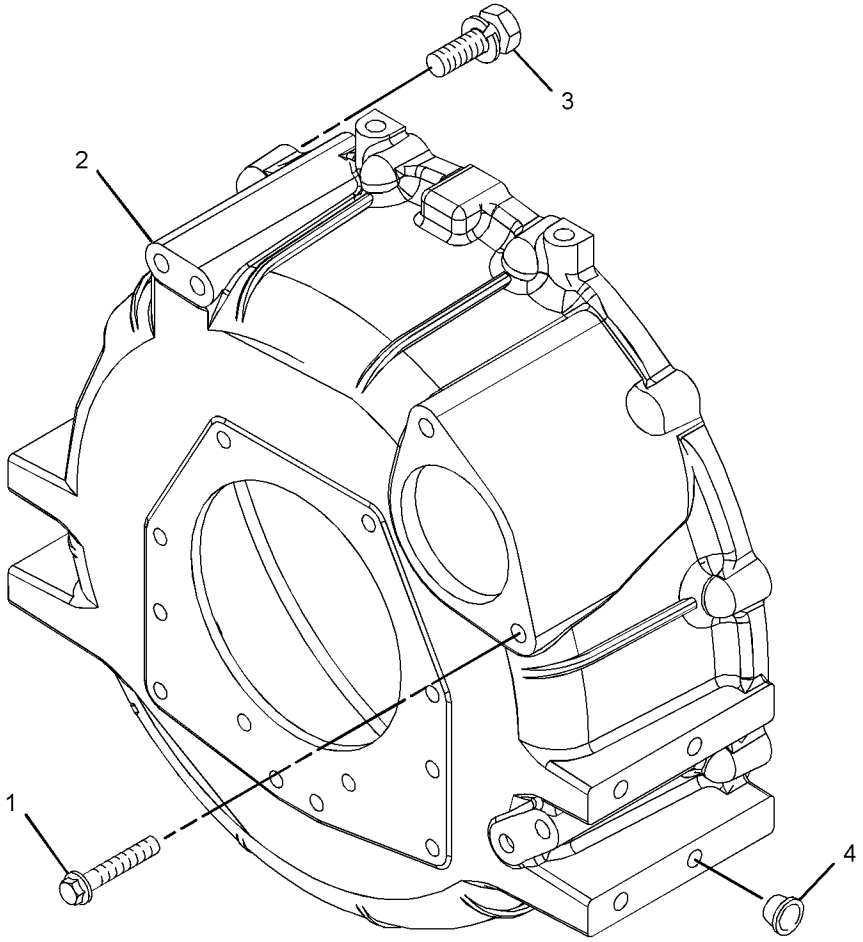

GRAPHIC #1 <END> g03056796

311-1753 HOUSING GP-FLYWHEEL

TYPE 1

SMCS-1157 **i02844848**

NOTE	REF NO	GRAPHIC REF	PART NUMBER	QTY	PART NAME 1 2 3 4 5 6 (PRODUCT LEVEL)	SEE PAGE
M	1	1	**138-7162**	2	BOLT (M10X1.5X30-MM)	
	2	1	**138-7171**	2	BOLT	
	3	1	**153-6375**	10	BOLT AS	
	4	1	**154-1399**	2	WASHER (10.5X18X1.6-MM THK)	
	5	1	**154-2403**	2	WASHER	
M	6	1	**155-8085**	2	NUT (M10X1.5-THD)	
	7	1	**226-7902**	1	PLATE	

M - METRIC PART

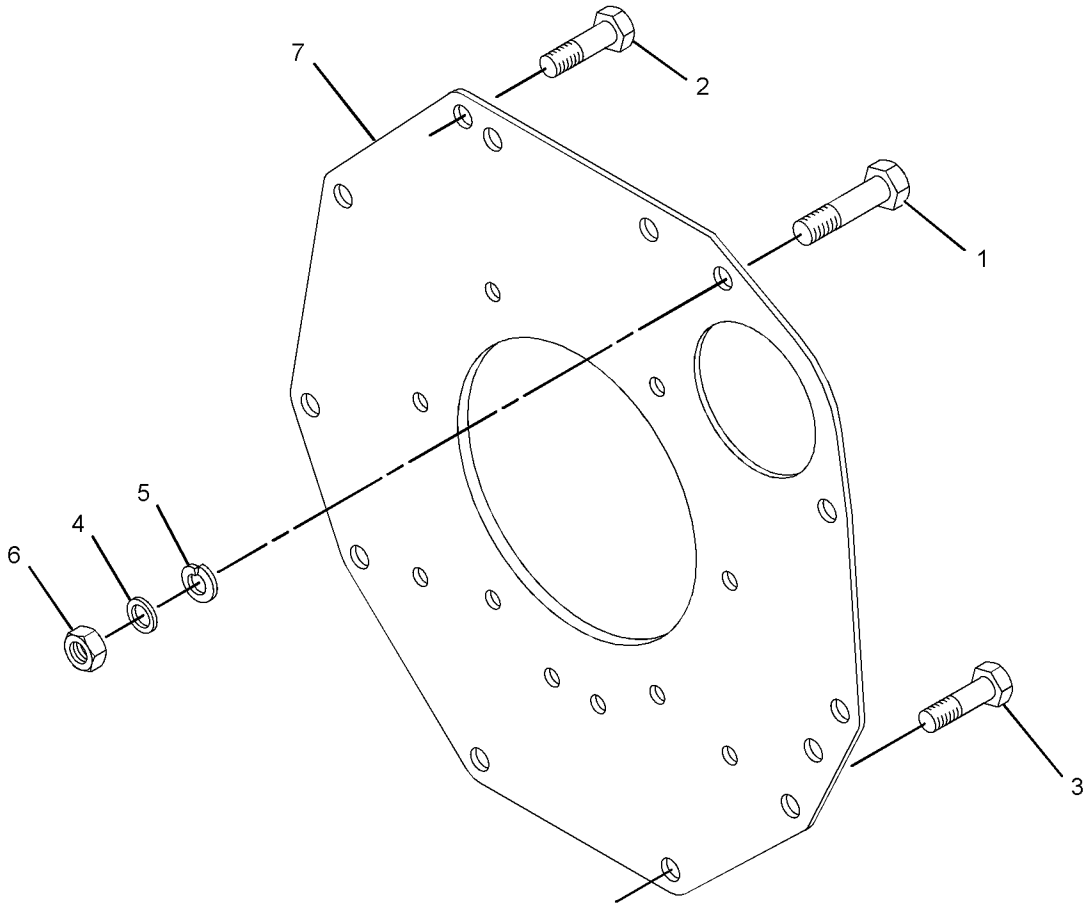

GRAPHIC #1 <END> g01420877

311-1753 HOUSING GP-FLYWHEEL

TYPE 2

SMCS-1157 **i06944096**

NOTE	REF NO	GRAPHIC REF	PART NUMBER	QTY	PART NAME 1 2 3 4 5 6 (PRODUCT LEVEL)	SEE PAGE
CM	1	1	**6I-0593**	2	BOLT (M10X1.5X30-MM)	
CM	2	1	**175-7141**	2	NUT-HEX FLANGE (M10X1.5-THD)	
M	3	1	**6I-4200**	2	BOLT (M10X1.5X16-MM)	
M	4	1	**114-4363**	10	BOLT (M8X1.25X12-MM)	
	5	1	**138-7171**	2	BOLT	
	6	1	**226-7902**	1	PLATE	

C - CHANGE FROM PREVIOUS TYPE
M - METRIC PART

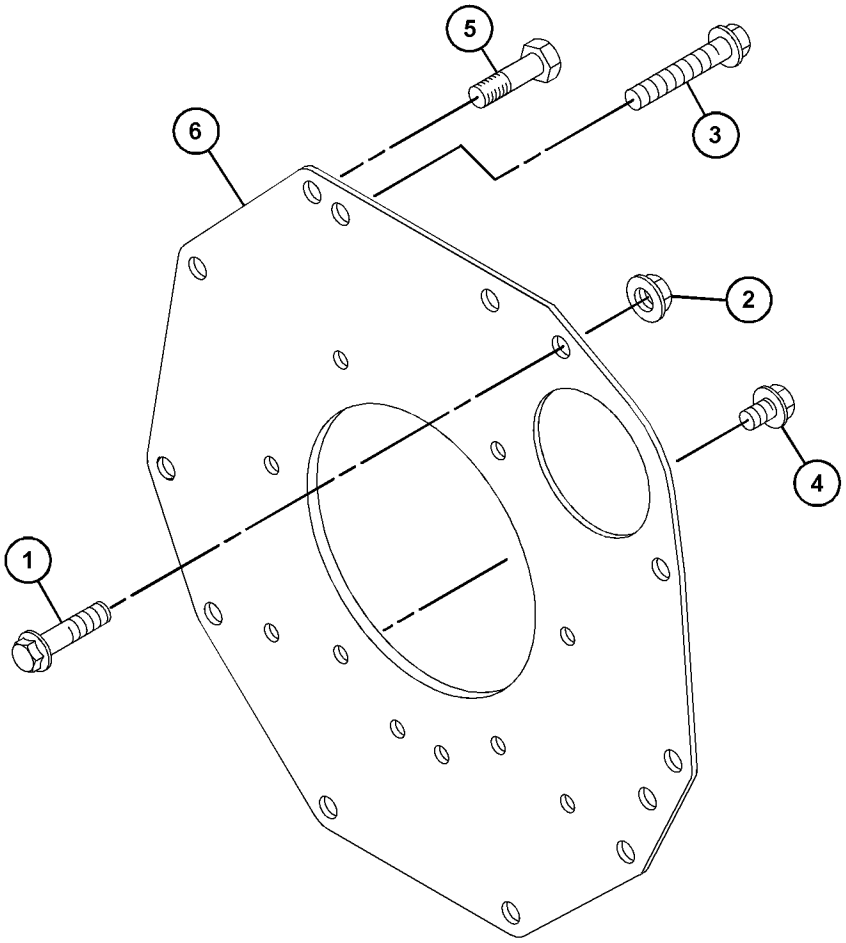

GRAPHIC #1 <END> g06216984

315-6636 HOUSING GP-FLYWHEEL

TYPE 1

SMCS-1157 **i02843859**

NOTE	REF NO	GRAPHIC REF	PART NUMBER	QTY	PART NAME 1 2 3 4 5 6 (PRODUCT LEVEL)	SEE PAGE
M	1	1	**138-7162**	2	BOLT (M10X1.5X30-MM)	
	2	1	**154-1399**	2	WASHER (10.5X18X1.6-MM THK)	
	3	1	**154-2395**	1	PLUG	
	4	1	**154-2403**	2	WASHER	
	5	1	**156-6961**	1	HOUSING-FLYWHEEL	
	6	1	**165-2141**	10	BOLT AS	

M - METRIC PART

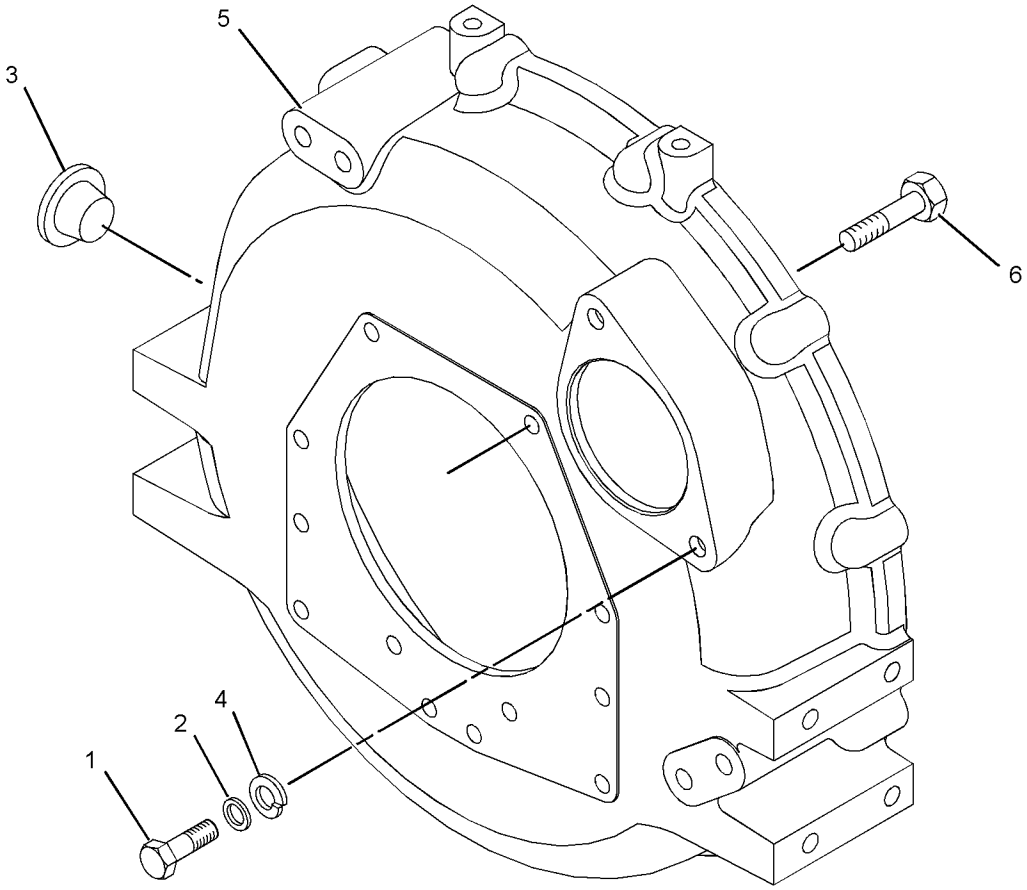

GRAPHIC #1 <END> g01161853

315-6636 HOUSING GP-FLYWHEEL

TYPE 2

SMCS-1157 **i04011980**

NOTE	REF NO	GRAPHIC REF	PART NUMBER	QTY	PART NAME 1 2 3 4 5 6 (PRODUCT LEVEL)	SEE PAGE
CM	1	1	**6I-0593**	2	BOLT (M10X1.5X30-MM)	
	2	1	**156-6961**	1	HOUSING-FLYWHEEL	
	3	1	**358-4256**	1	PLUG	
	4	1	**165-2141**	10	BOLT AS	

C - CHANGE FROM PREVIOUS TYPE
M - METRIC PART

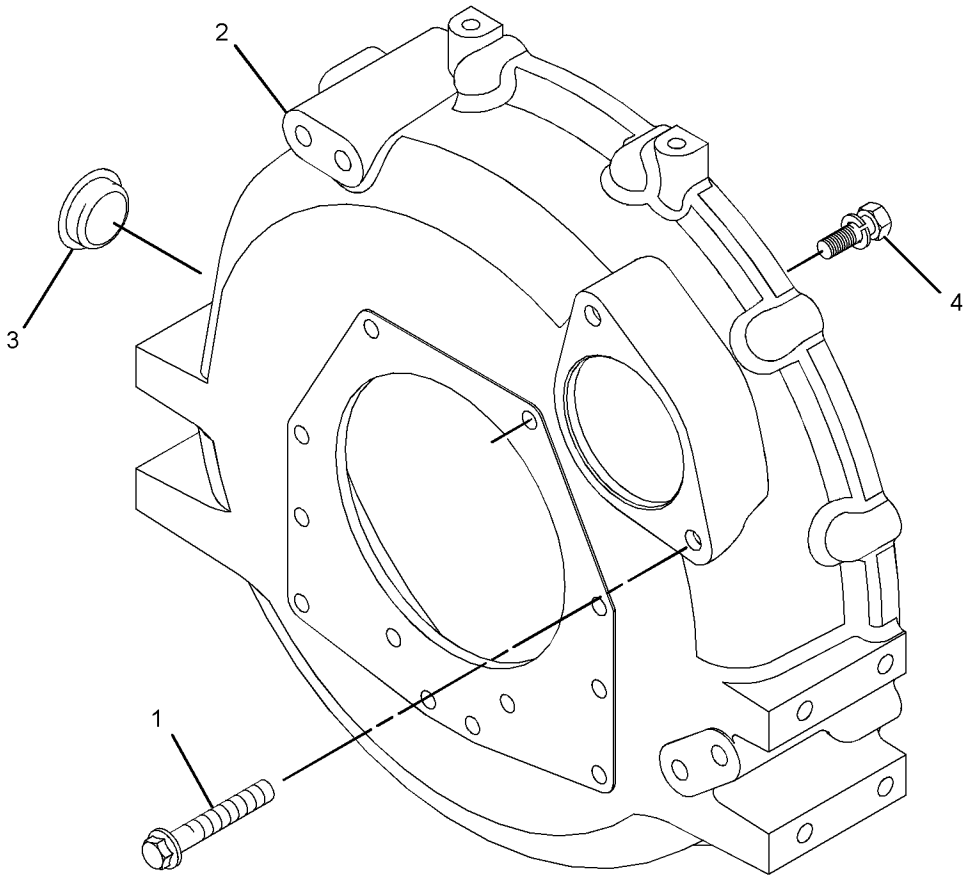

GRAPHIC #1 <END> g02210935

323-2543 HOUSING GP-FLYWHEEL

SMCS-1157 **i05906213**

NOTE	REF NO	GRAPHIC REF	PART NUMBER	QTY	PART NAME 1 2 3 4 5 6 (PRODUCT LEVEL)	SEE PAGE
M	1	1	**6I-0593**	2	BOLT (M10X1.5X30-MM)	
	2	1	**153-6868**	2	BOLT	
	3	1	**165-2141**	10	BOLT AS	
	4	1	**226-7902**	2	PLATE	
	5	1	**155-7984**	10	WASHER (8.4X16X1.6-MM THK)	
M	6	1	**6I-0594**	2	NUT (M10X1.5-THD)	

M - METRIC PART

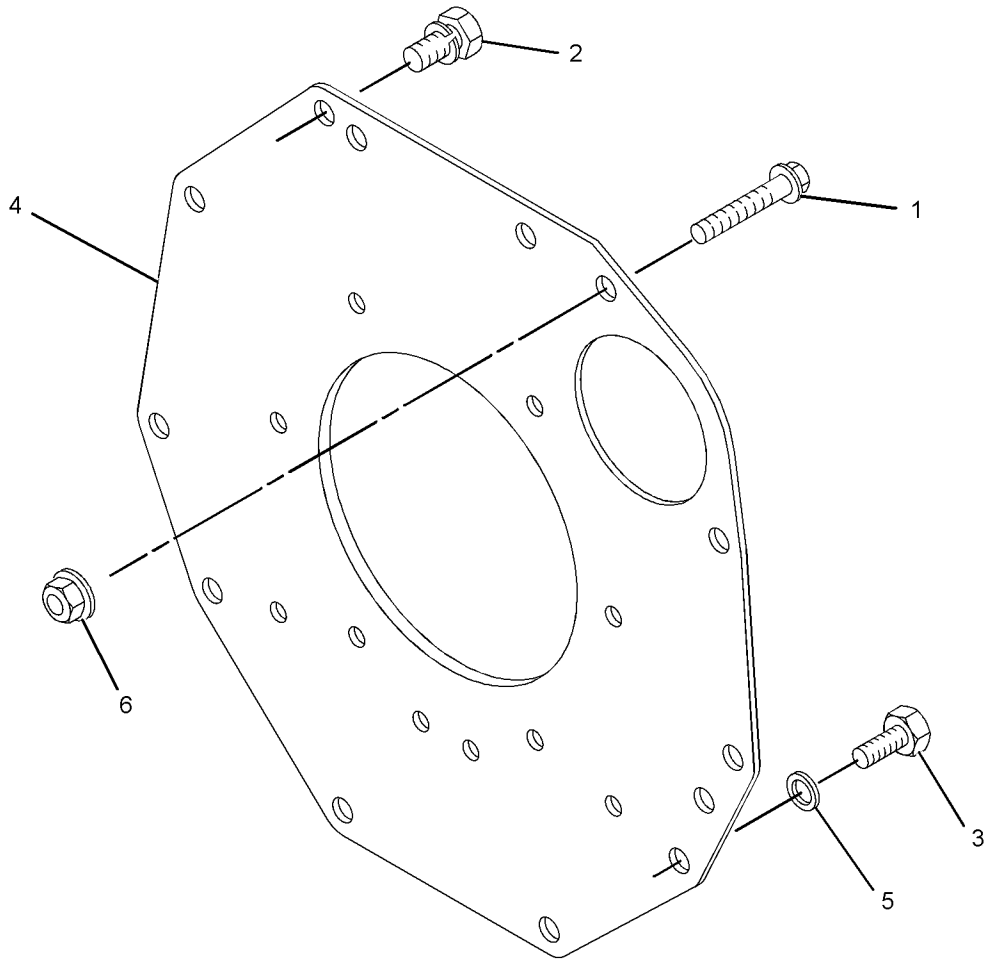

GRAPHIC #1 <END> g02207761

342-1226 HOUSING GP-FLYWHEEL

PART OF 435-1631 ENGINE AR, 435-1654, 435-1657 ENGINE AR-PRIMARY

SMCS-1157 **i07164117**

NOTE	REF NO	GRAPHIC REF	PART NUMBER	QTY	PART NAME 1 2 3 4 5 6 (PRODUCT LEVEL)	SEE PAGE
M	1	1	**114-4363**	10	BOLT (M8X1.25X12-MM)	
M	2	1	**6I-4200**	2	BOLT (M10X1.5X16-MM)	
	3	1	**226-7902**	1	PLATE	

M - METRIC PART

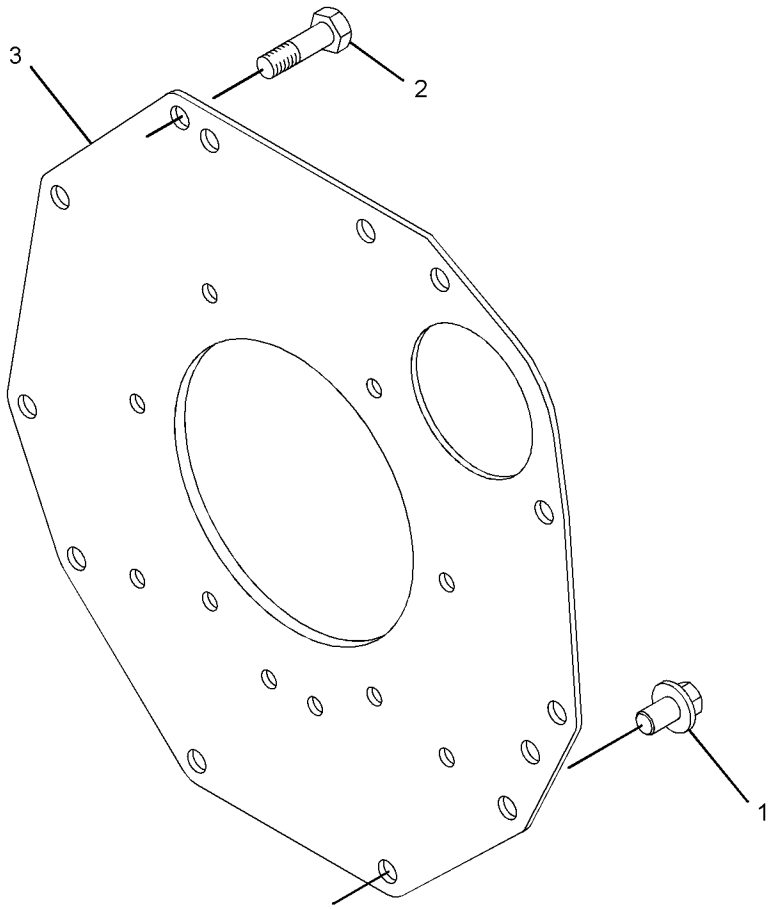

GRAPHIC #1 <END> g06243462

311-1105 HOUSING GP-FRONT

SMCS-1151, 1162, 1206 **i06998764**

NOTE	REF NO	GRAPHIC REF	PART NUMBER	QTY	PART NAME 1 2 3 4 5 6 (PRODUCT LEVEL)	SEE PAGE
M	1	2	**5C-2890**	1	NUT (M6X1-THD)	
	2	2	**139-5511**	1	CAP (TAMPER RESISTANT)	
M	3	2	**153-5592**	1	NUT (M8X1.25-THD)	
M	4	1	**153-5960**	2	NUT (M6X1-THD)	
	5	1	**153-5962**	4	BOLT AS	
	6	2	**153-6415**	2	WASHER (SEAL)	
	7	3	**153-6838**	2	BOLT AS	
	8	2	**153-7983**	1	PIN	
	9	3	**153-7990**	1	PLATE	
	10	2	**095-1574**	1	SEAL-O-RING	
	11	1	**5D-1319**	1	PIN-SPRING	
	12	1	**154-1675**	1	SEAL	
M	13	2	**369-4486**	2	BOLT (M6X1X35-MM)	
M	14	2	**162-2207**	1	NUT (M6X1-THD)	
	15	1	**165-2140**	7	BOLT AS	
M	16	2	**106-8916**	4	BOLT (M6X1X16-MM)	
	17	2	**217-7115**	1	CAP (TAMPER RESISTANT)	
	18	1	**308-1871**	1	GASKET	
	21	2	**335-5578**	1	BRACKET	
	22	2	**308-1878**	1	GASKET	
	23	2	**334-0732**	1	ARM (FRONT HOUSING)	
	24	2	**308-1882**	1	SPRING	
	25	2	**390-3729**	1	LEVER-CONTROL	
M	26	2	**308-1889**	1	NUT (M10X1.25-THD)	
M	27	2	**308-1892**	1	NUT (M6X1-THD)	
	28	2	**308-1897**	2	RING	
	29	2	**425-7065**	1	CAP-TAMPER PROOF	
	30	2	**321-4249**	1	NUT	
	31	2	**308-1901**	1	CAP	
	32	3	**308-1904**	1	SLIDER	
	33	2	**308-4266**	1	SHAFT	
	34	2	**390-3731**	1	SHAFT	
	35	2	**309-6729**	1	SEAL-O-RING	
	36	2	**309-6732**	1	BOLT	
	37	2	**317-7195**	1	SPRING	
	38	2	**311-0655**	1	SPRING	
	39	1	**322-7490**	1	HOUSING-FRONT	
	40	2	**319-3252**	1	SENSOR AS-SPEED (ENGINE TIMING)	
	41	2	**324-3400**	1	LEVER AS-CONTROL	
	42	2	**315-5236**	1	BOLT AS	
	42A	2	**153-7987**	1	WASHER (9.2X17X1.8-MM THK)	
M	42B	2	**191-9297**	1	NUT (M10X1.25-THD)	
	42C	2	**315-5235**	1	SPRING	
	43	3	**311-1165**	1	CAMSHAFT AS	
	43A	3	**153-6492**	1	KEY-WOODRUFF	
	43B	3	**156-6997**	1	BEARING	
	43C	3	**308-1903**	1	GEAR-CAMSHAFT (66-TEETH)	
	43D	3	**313-9323**	1	SPACER (20.5X28X9.3-MM THK)	

311-1105 **HOUSING GP-FRONT (**contd.**)** **i06998764**

NOTE	REF NO	GRAPHIC REF	PART NUMBER	QTY	PART NAME 1 2 3 4 5 6 (PRODUCT LEVEL)	SEE PAGE
	44	2	**336-2965**	1	SPRING	
	45	2	**330-9189**	1	PLUG	

M - METRIC PART

311-1105 **HOUSING GP-FRONT (**contd.**)** **i06998764**

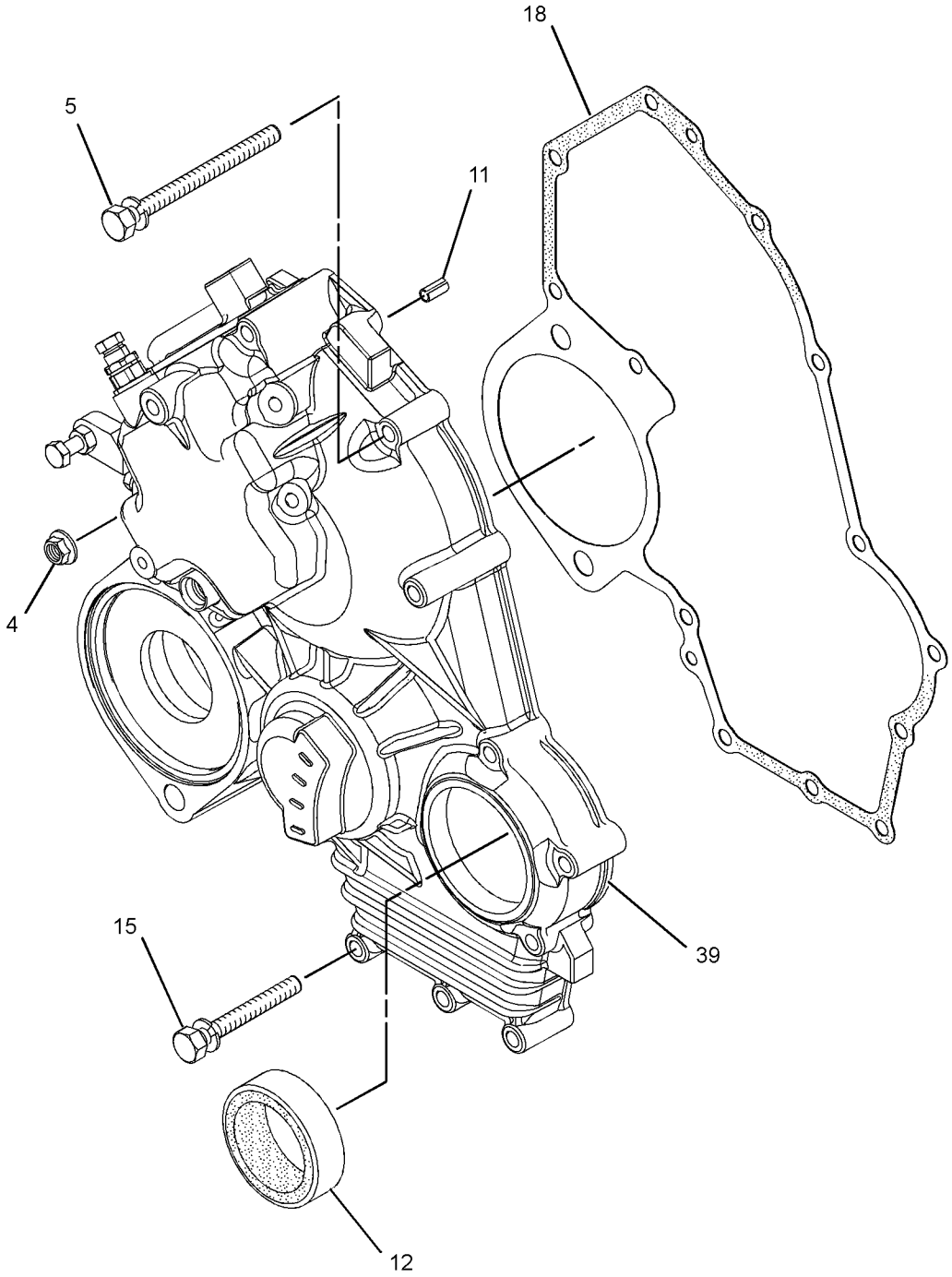

GRAPHIC #1 g01625620

311-1105 **HOUSING GP-FRONT (**contd.**)** **i06998764**

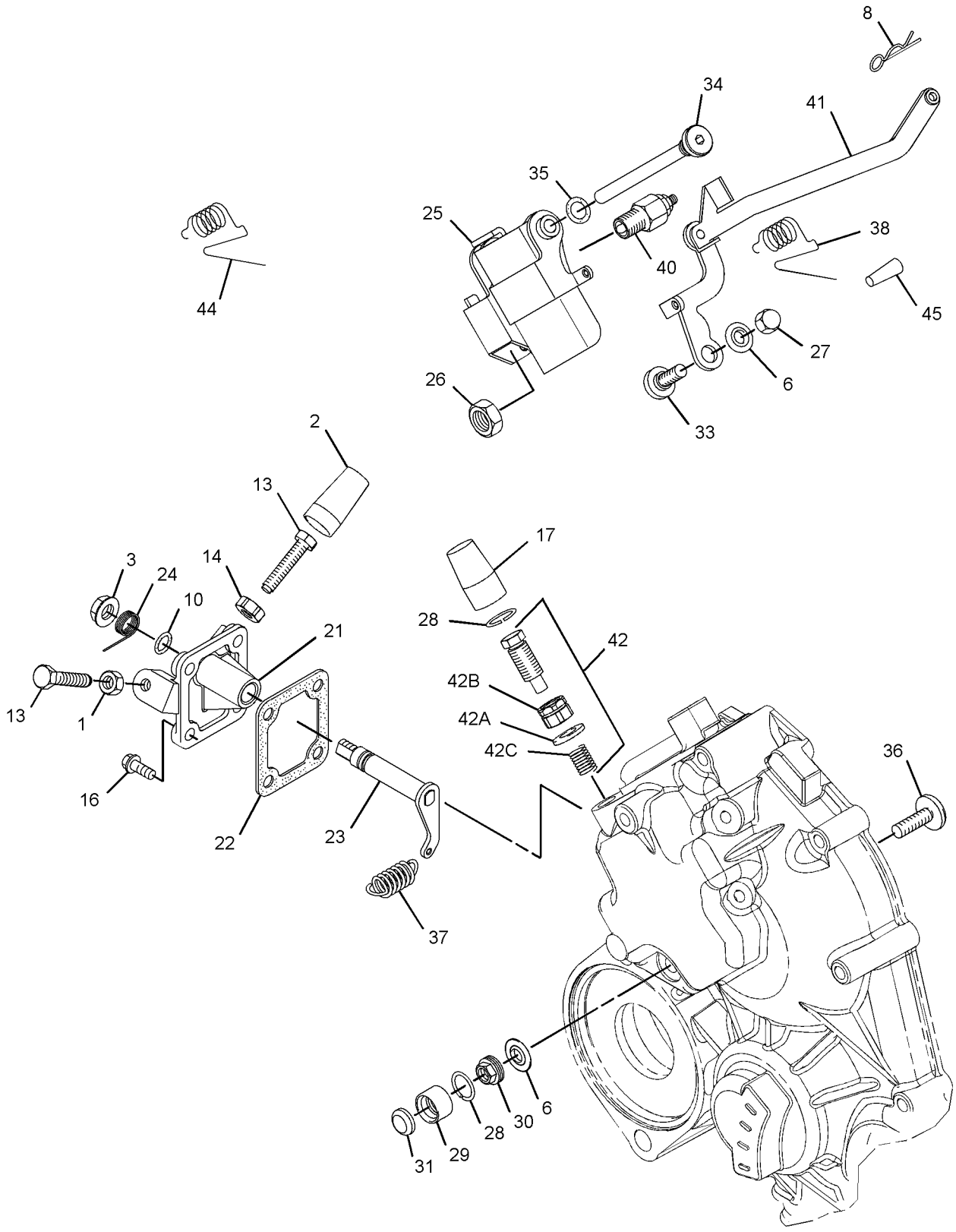

GRAPHIC #2 g02598217

311-1105 **HOUSING GP-FRONT (**contd.**)** **i06998764**

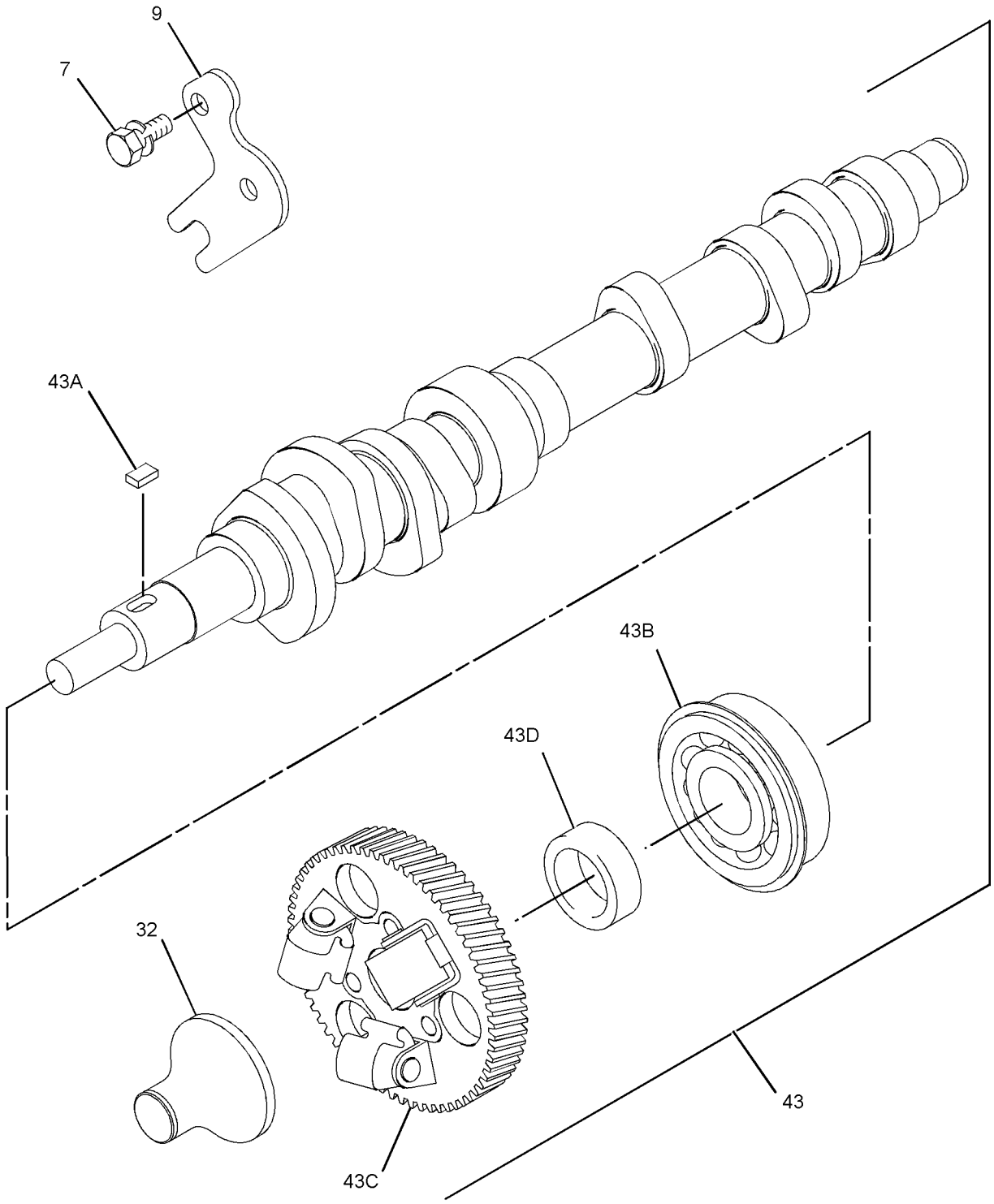

GRAPHIC #3 <END> g01625623

311-5813 HOUSING GP-FRONT

PART OF 435-1631 ENGINE AR

SMCS-1151, 1162, 1206 **i05921395**

NOTE	REF NO	GRAPHIC REF	PART NUMBER	QTY	PART NAME 1 2 3 4 5 6 (PRODUCT LEVEL)	SEE PAGE
M	1	1	**153-5960**	1	NUT (M6X1-THD)	
	2	1	**153-5962**	5	BOLT AS	
	3	1	**153-7978**	1	SEAL	
	4	1	**5D-1319**	1	PIN-SPRING	
	5	1	**165-2140**	5	BOLT AS	
	6	1	**454-7980**	1	GASKET	
	7	1	**359-5135**	1	HOUSING-FRONT	
	8	2	**153-6415**	1	WASHER (SEAL)	
	9	2	**425-7065**	1	CAP-TAMPER PROOF	
	10	2	**139-5511**	1	CAP (TAMPER RESISTANT)	
	11	2	**217-7115**	1	CAP (TAMPER RESISTANT)	

M - METRIC PART

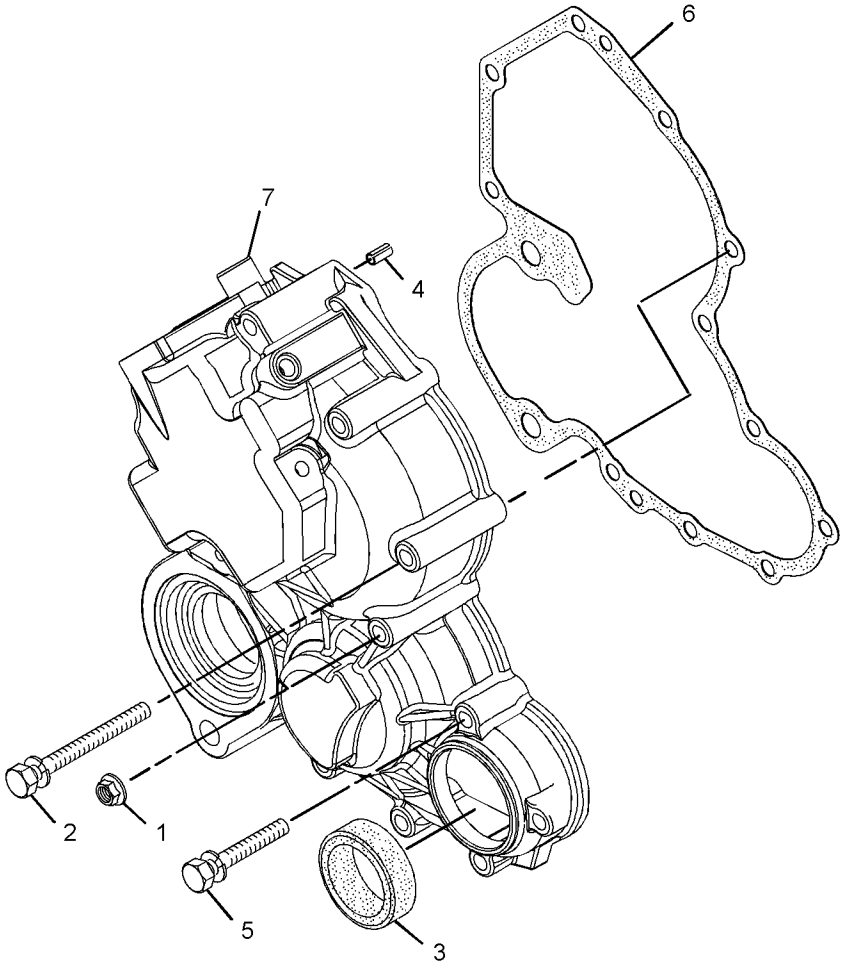

GRAPHIC #1 g01639013

311-5813 **HOUSING GP-FRONT (**contd.**)** **i05921395**

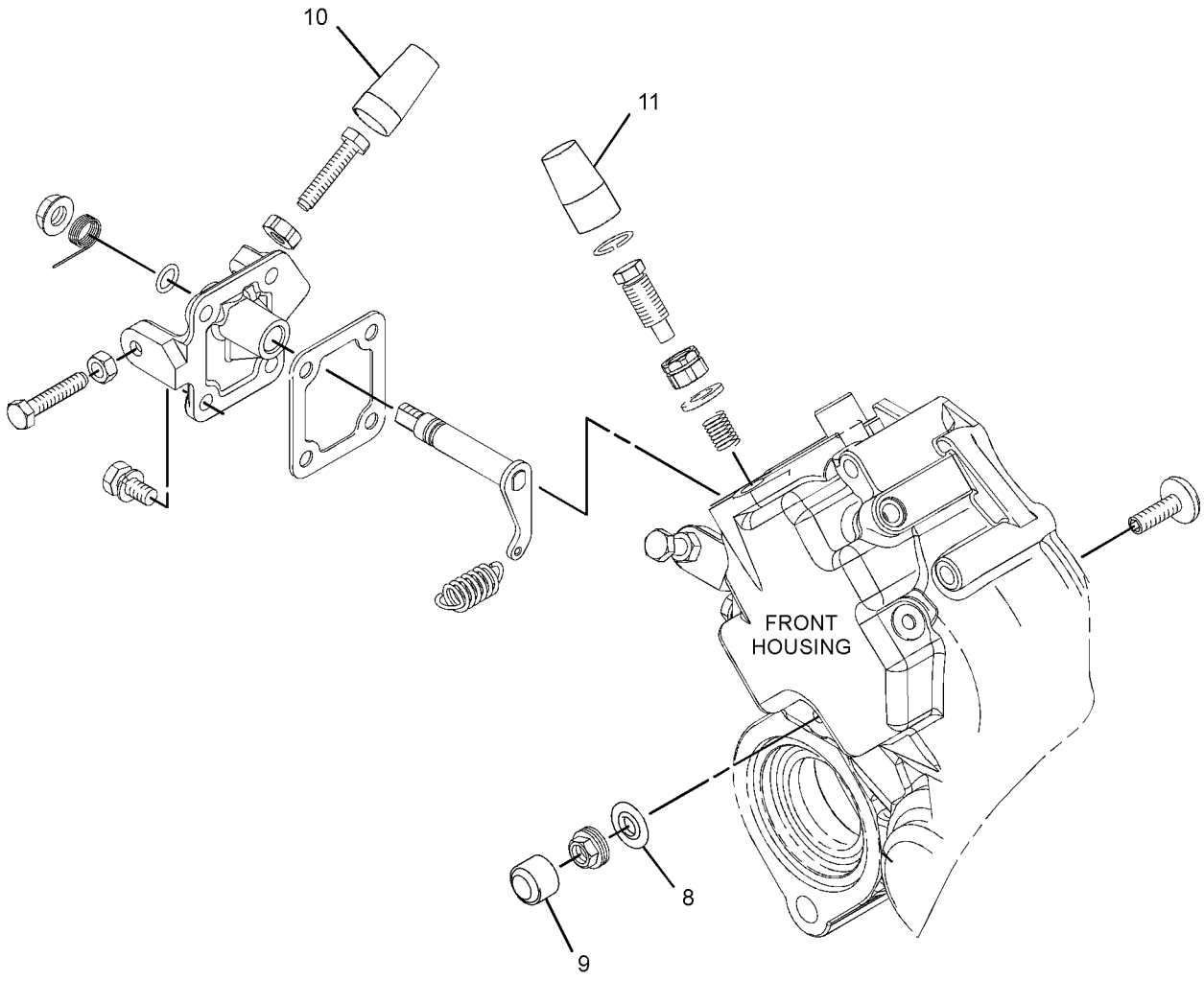

GRAPHIC #2 <END> g03710972

322-0561 HOUSING GP-FRONT

PART OF 435-1654 ENGINE AR-PRIMARY

SMCS-1151, 1162, 1206 **i06217395**

NOTE	REF NO	GRAPHIC REF	PART NUMBER	QTY	PART NAME 1 2 3 4 5 6 (PRODUCT LEVEL)	SEE PAGE
M	1	1	**153-5960**	2	NUT (M6X1-THD)	
	2	1	**153-5962**	4	BOLT AS	
	3	1	**5D-1319**	1	PIN-SPRING	
	4	1	**154-1675**	1	SEAL	
	5	1	**165-2140**	7	BOLT AS	
	6	1	**423-7723**	1	GASKET	
	7	1	**464-2090**	1	HOUSING-FRONT	
	8	1	**336-2965**	1	SPRING	

M - METRIC PART

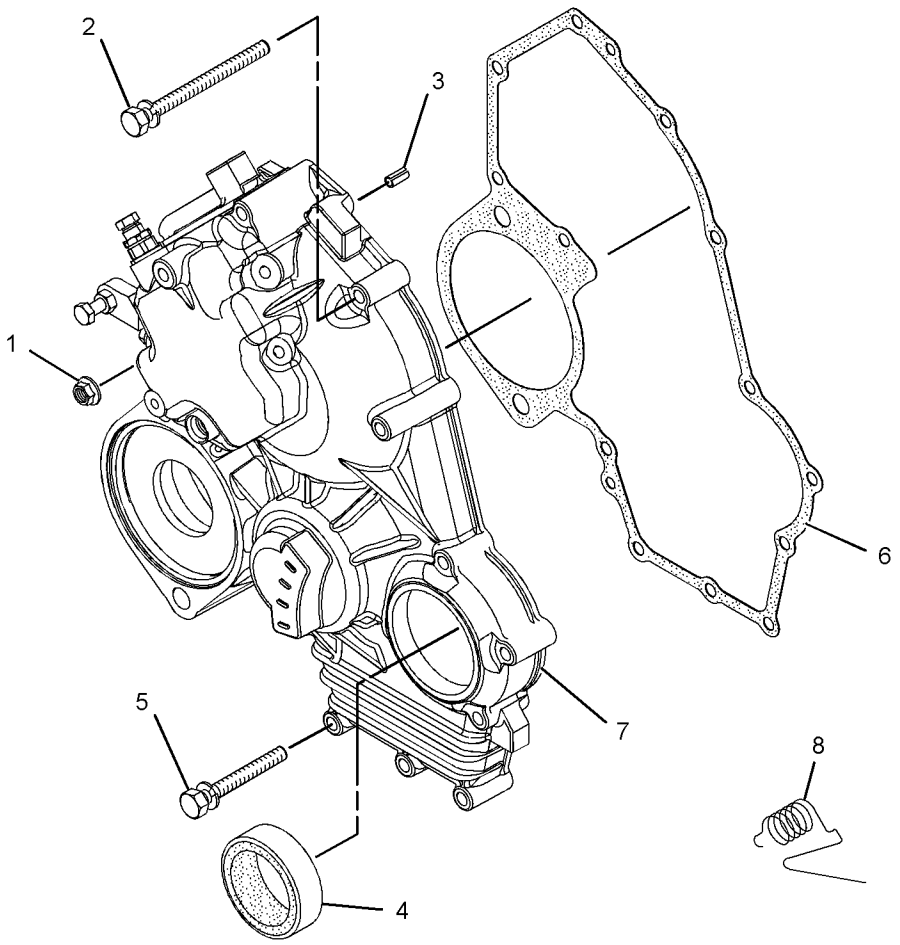

GRAPHIC #1 <END> g01701620

322-1390 HOUSING GP-FRONT

SMCS-1151, 1162, 1206 **i06998751**

NOTE	REF NO	GRAPHIC REF	PART NUMBER	QTY	PART NAME 1 2 3 4 5 6 (PRODUCT LEVEL)	SEE PAGE
M	1	2	**5C-2890**	1	NUT (M6X1-THD)	
	2	2	**139-5511**	1	CAP (TAMPER RESISTANT)	
M	3	2	**153-5592**	1	NUT (M8X1.25-THD)	
M	4	1	**153-5960**	2	NUT (M6X1-THD)	
	5	1	**153-5962**	4	BOLT AS	
	6	3	**153-6838**	2	BOLT AS	
	7	2	**153-7983**	1	PIN	
	8	3	**490-0367**	1	PLATE	
	9	2	**095-1574**	1	SEAL-O-RING	
	10	1	**5D-1319**	1	PIN-SPRING	
	11	1	**154-1675**	1	SEAL	
	12	2	**154-2715**	1	WASHER	
M	13	2	**369-4486**	2	BOLT (M6X1X35-MM)	
M	14	2	**162-2207**	1	NUT (M6X1-THD)	
	15	1	**165-2140**	7	BOLT AS	
M	16	2	**106-8916**	4	BOLT (M6X1X16-MM)	
	17	2	**217-7115**	1	CAP (TAMPER RESISTANT)	
	18	1	**423-7723**	1	GASKET	
	19	2	**153-6415**	2	WASHER (SEAL)	
	20	2	**330-9189**	1	PLUG	
	21	2	**335-5578**	1	BRACKET	
	22	2	**423-7724**	1	GASKET	
	23	2	**334-0732**	1	ARM (FRONT HOUSING)	
	24	2	**308-1882**	1	SPRING	
M	25	2	**308-1892**	1	NUT (M6X1-THD)	
	26	2	**308-1897**	2	RING	
	27	2	**425-7065**	1	CAP-TAMPER PROOF	
	28	2	**321-4249**	1	NUT	
	29	2	**336-2965**	1	SPRING	
	30	2	**308-4266**	1	SHAFT	
	31	2	**309-6728**	1	SHAFT	
	32	2	**311-0655**	1	SPRING	
	33	1	**464-2090**	1	HOUSING-FRONT	
	34	2	**324-3400**	1	LEVER AS-CONTROL	
	35	2	**322-7492**	1	LEVER-CONTROL	
	36	2	**315-5236**	1	BOLT AS	
	36A	2	**153-7987**	1	WASHER (9.2X17X1.8-MM THK)	
M	36B	2	**191-9297**	1	NUT (M10X1.25-THD)	
	36C	2	**315-5235**	1	SPRING	
	37	2	**364-7487**	1	SPRING	
	38	3	**363-8409**	1	SLIDER	
M	39	2	**308-1889**	1	NUT (M10X1.25-THD)	
Y	40	3	**342-8500**	1	CAMSHAFT AS	21
M	41	2	**313-2025**	1	BOLT-SPECIAL (M10X1.25-MM THD)	
M	42	2	**495-0737**	1	BOLT (M6X0.5X19.5-MM)	

M - METRIC PART
Y - SEPARATE ILLUSTRATION

322-1390 **HOUSING GP-FRONT (**contd.**)** **i06998751**

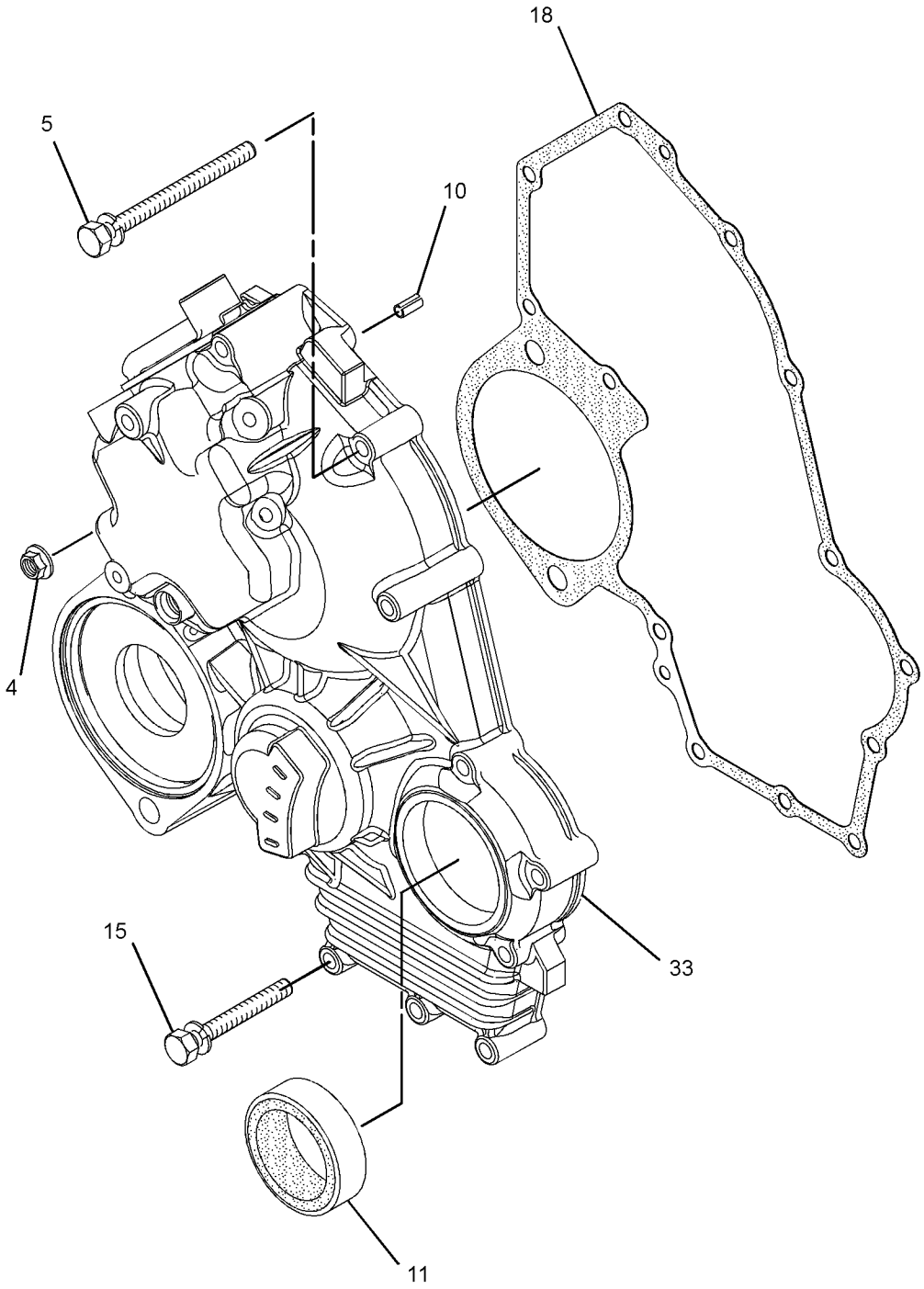

GRAPHIC #1 g01705033

322-1390 **HOUSING GP-FRONT (**contd.**)** **i06998751**

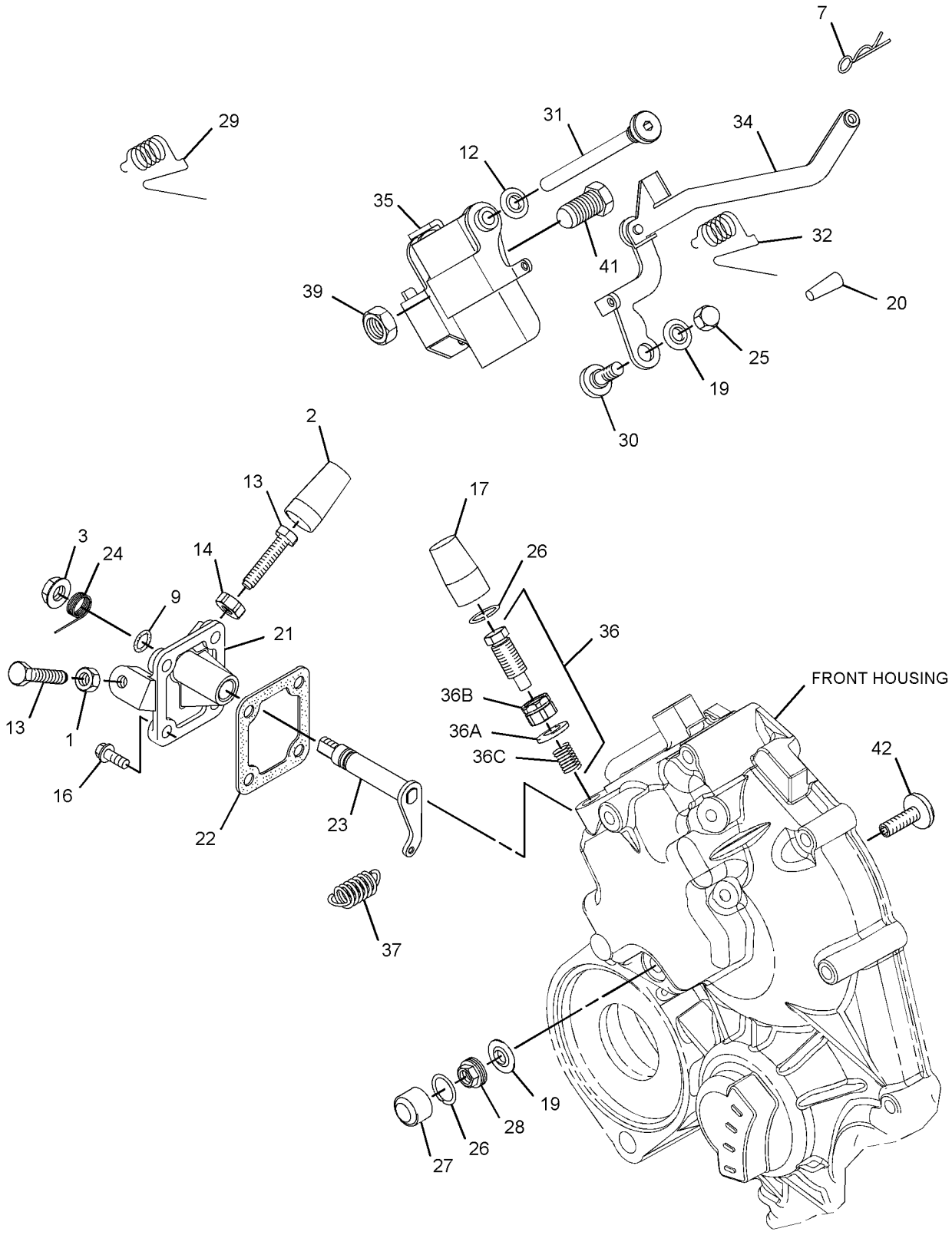

GRAPHIC #2 g03730473

322-1390 **HOUSING GP-FRONT (**contd.**)** **i06998751**

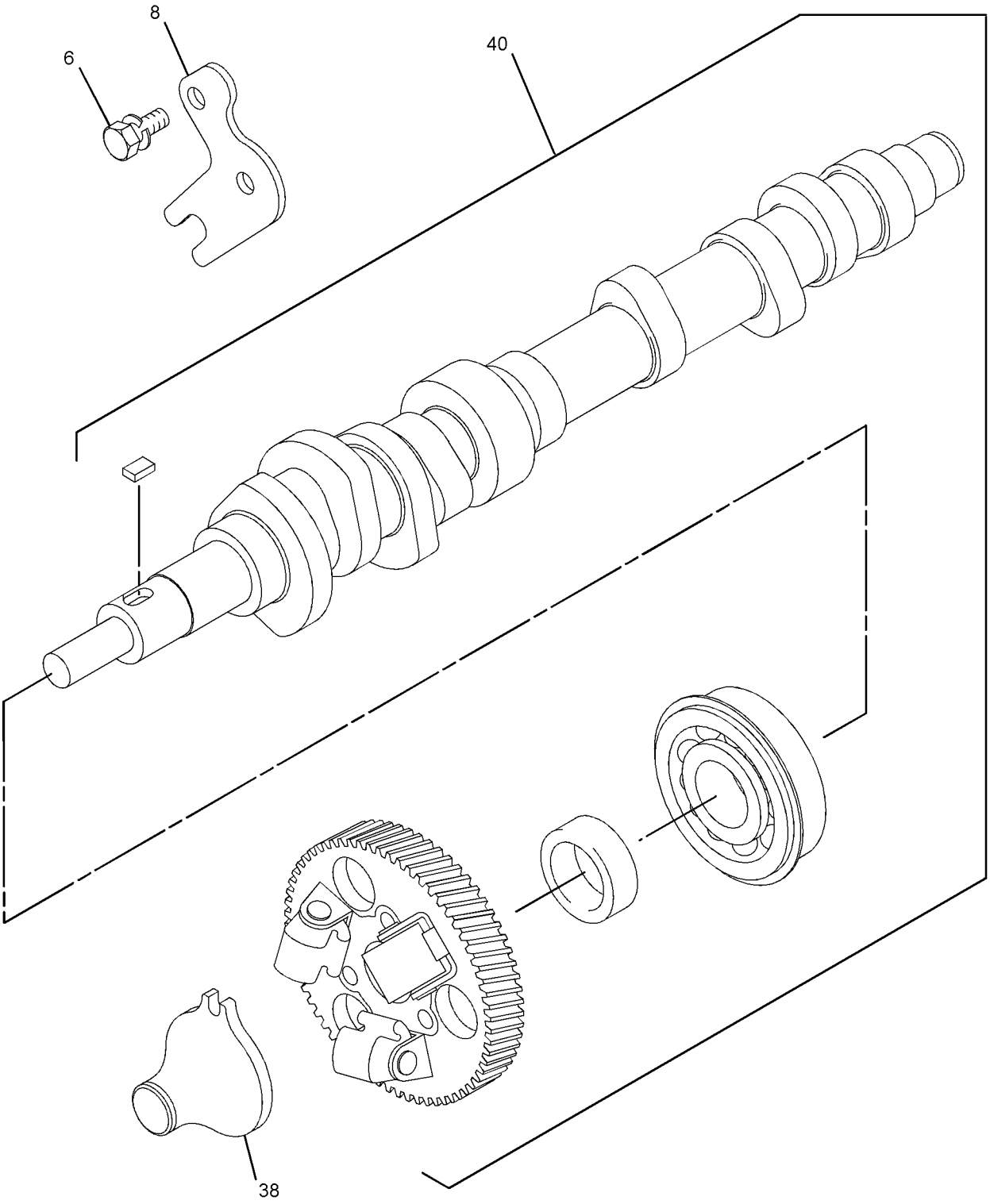

GRAPHIC #3 <END> g02615347

322-3102 HOUSING GP-FRONT

SMCS-1151, 1162, 1206 **i03489636**

NOTE	REF NO	GRAPHIC REF	PART NUMBER	QTY	PART NAME 1 2 3 4 5 6 (PRODUCT LEVEL)	SEE PAGE
M	1	1	**153-5960**	2	NUT (M6X1-THD)	
	2	1	**153-5962**	4	BOLT AS	
	3	1	**154-1673**	1	PIN	
	4	1	**154-1675**	1	SEAL	
	5	1	**165-2140**	7	BOLT AS	
	6	1	**308-1871**	1	GASKET	
	7	1	**322-7490**	1	HOUSING-FRONT	

M - METRIC PART

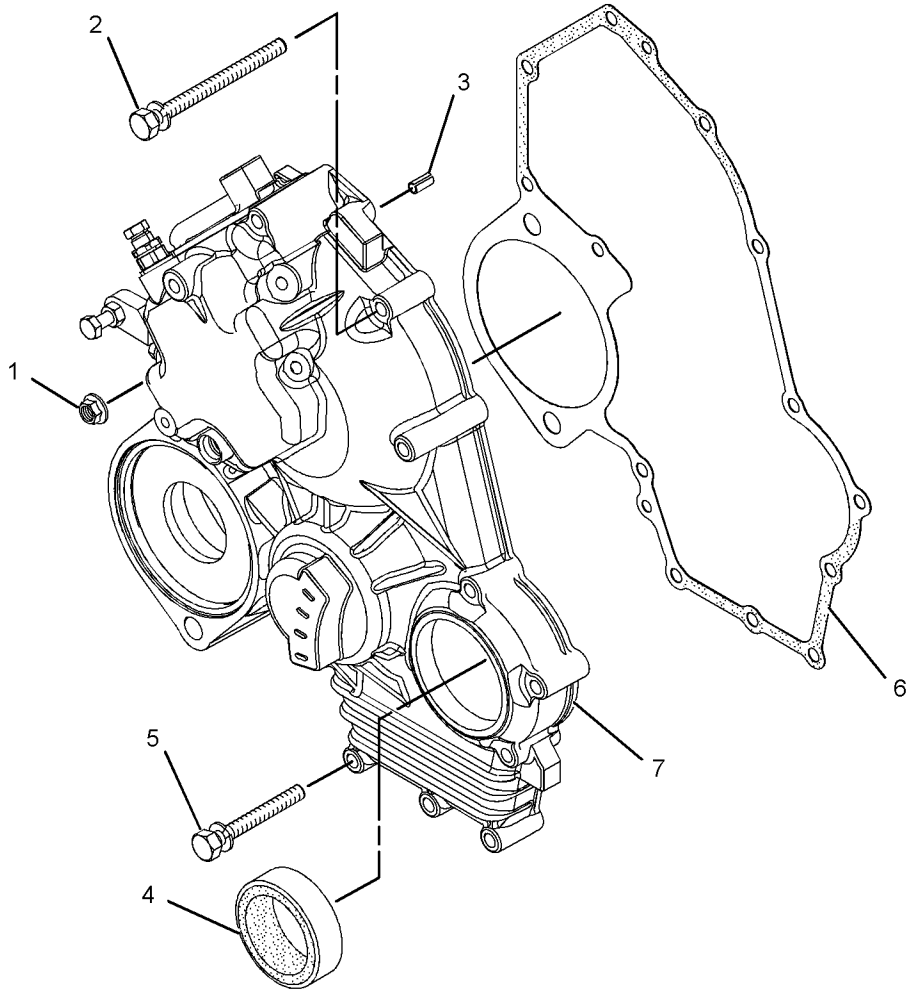

GRAPHIC #1 <END> g01542613

331-4505 HOUSING GP-FRONT

PART OF 435-1657 ENGINE AR-PRIMARY

SMCS-1151, 1162, 1206 **i06240312**

NOTE	REF NO	GRAPHIC REF	PART NUMBER	QTY	PART NAME 1 2 3 4 5 6 (PRODUCT LEVEL)	SEE PAGE
M	1	1	**153-5960**	1	NUT (M6X1-THD)	
	2	1	**153-5962**	4	BOLT AS	
	3	1	**5D-1319**	1	PIN-SPRING	
	4	1	**154-1675**	1	SEAL	
	5	1	**165-2140**	8	BOLT AS	
	6	1	**423-7723**	1	GASKET	
	7	1	**464-2090**	1	HOUSING-FRONT	

M - METRIC PART

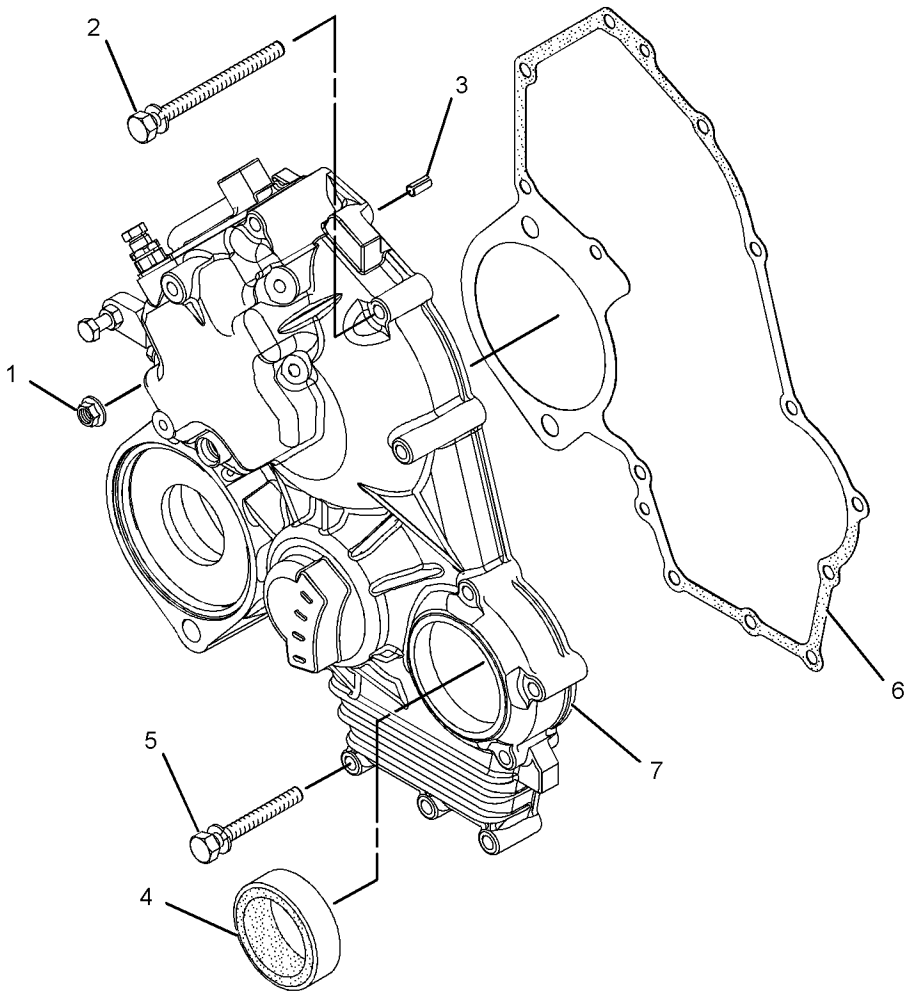

GRAPHIC #1 <END> g01542613

364-2719 HOUSING GP-FRONT

SMCS-1151, 1162, 1206 **i06909476**

NOTE	REF NO	GRAPHIC REF	PART NUMBER	QTY	PART NAME 1 2 3 4 5 6 (PRODUCT LEVEL)	SEE PAGE
M	1	1	**153-5960**	2	NUT (M6X1-THD)	
	2	1	**153-5962**	4	BOLT AS	
	3	1	**5D-1319**	1	PIN-SPRING	
	4	1	**154-1675**	1	SEAL	
	5	1	**165-2140**	7	BOLT AS	
	6	1	**423-7723**	1	GASKET	
	7	1	**483-1210**	1	CASE-GEAR	

M - METRIC PART

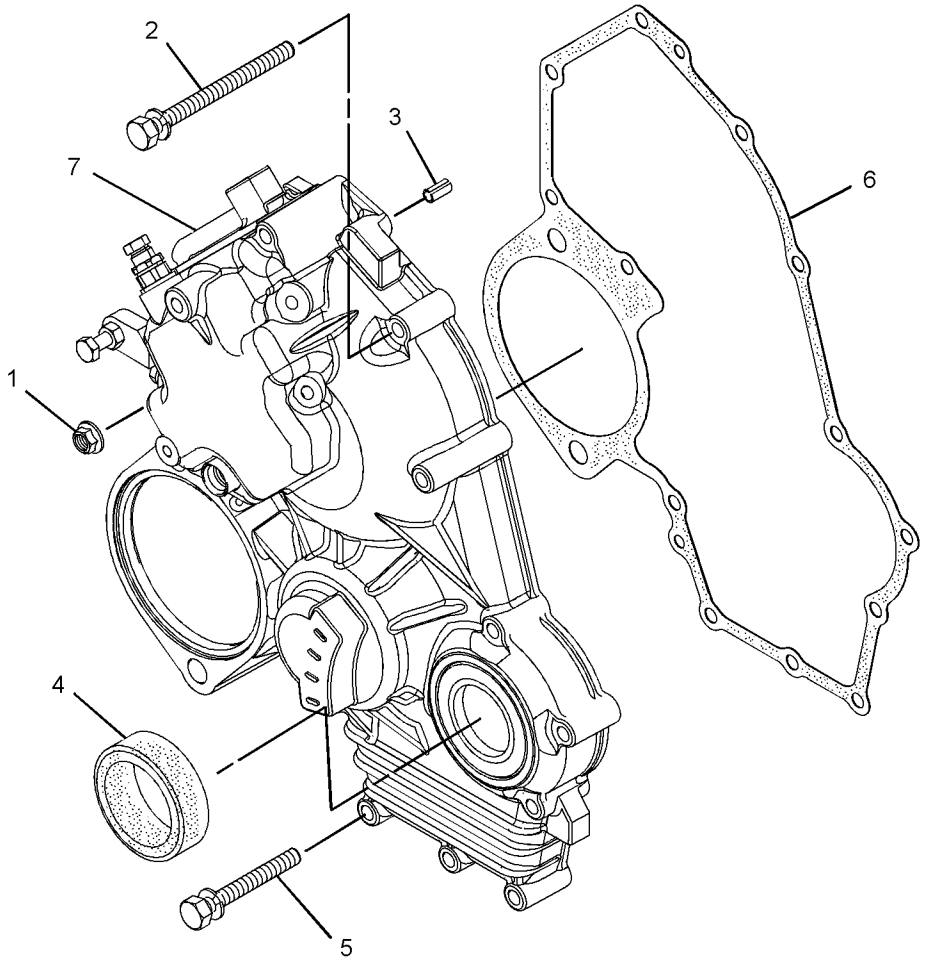

GRAPHIC #1 <END> g02334639

364-2719 HOUSING GP-FRONT

SMCS-1151, 1162, 1206 **i06999557**

NOTE	REF NO	GRAPHIC REF	PART NUMBER	QTY	PART NAME 1 2 3 4 5 6 (PRODUCT LEVEL)	SEE PAGE
M	1	1	**153-5960**	2	NUT (M6X1-THD)	
	2	1	**153-5962**	4	BOLT AS	
	3	1	**5D-1319**	1	PIN-SPRING	
	4	1	**154-1675**	1	SEAL	
	5	1	**165-2140**	7	BOLT AS	
	6	1	**423-7723**	1	GASKET	
	7	1	**483-1210**	1	CASE-GEAR	

M - METRIC PART

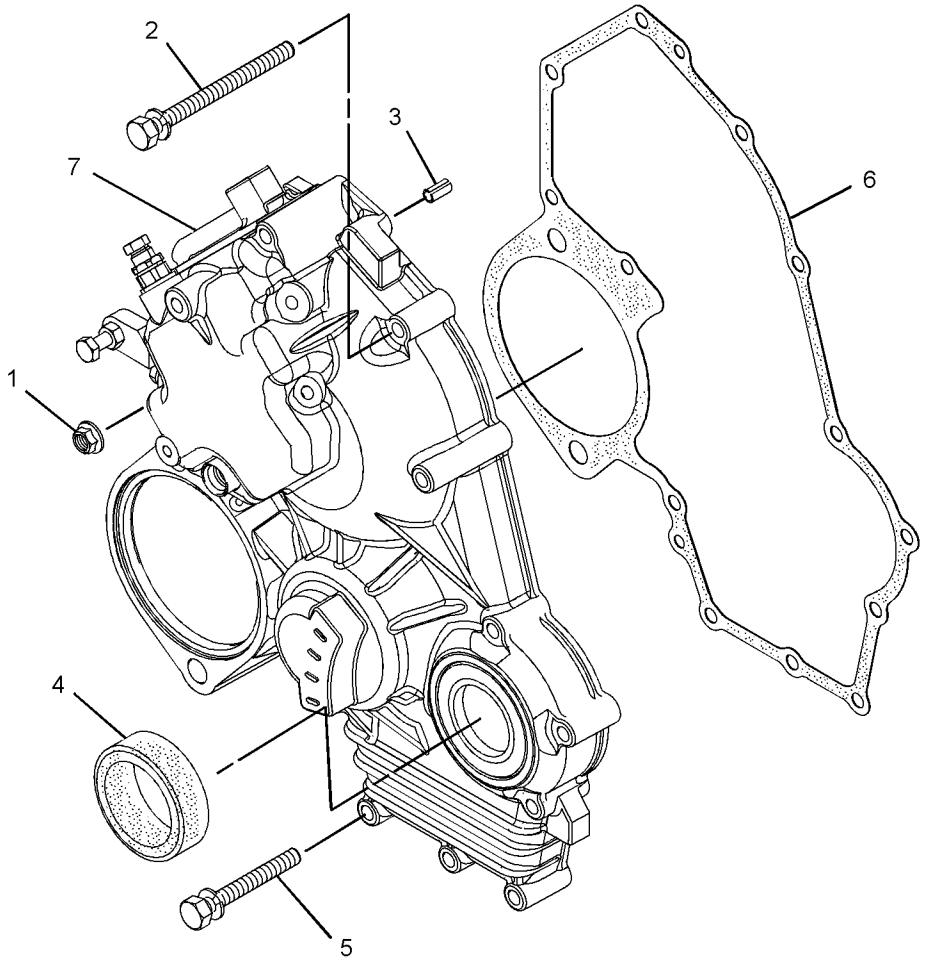

GRAPHIC #1 <END> g02334639

364-2741 HOUSING GP-FRONT

SMCS-1151, 1162, 1206 **i06909403**

NOTE	REF NO	GRAPHIC REF	PART NUMBER	QTY	PART NAME 1 2 3 4 5 6 (PRODUCT LEVEL)	SEE PAGE
M	1	1	**153-5960**	2	NUT (M6X1-THD)	
	2	1	**153-5962**	4	BOLT AS	
	3	1	**5D-1319**	1	PIN-SPRING	
	4	1	**154-1675**	1	SEAL	
	5	1	**165-2140**	7	BOLT AS	
	6	1	**423-7723**	1	GASKET	
	7	1	**483-1210**	1	CASE-GEAR	

M - METRIC PART

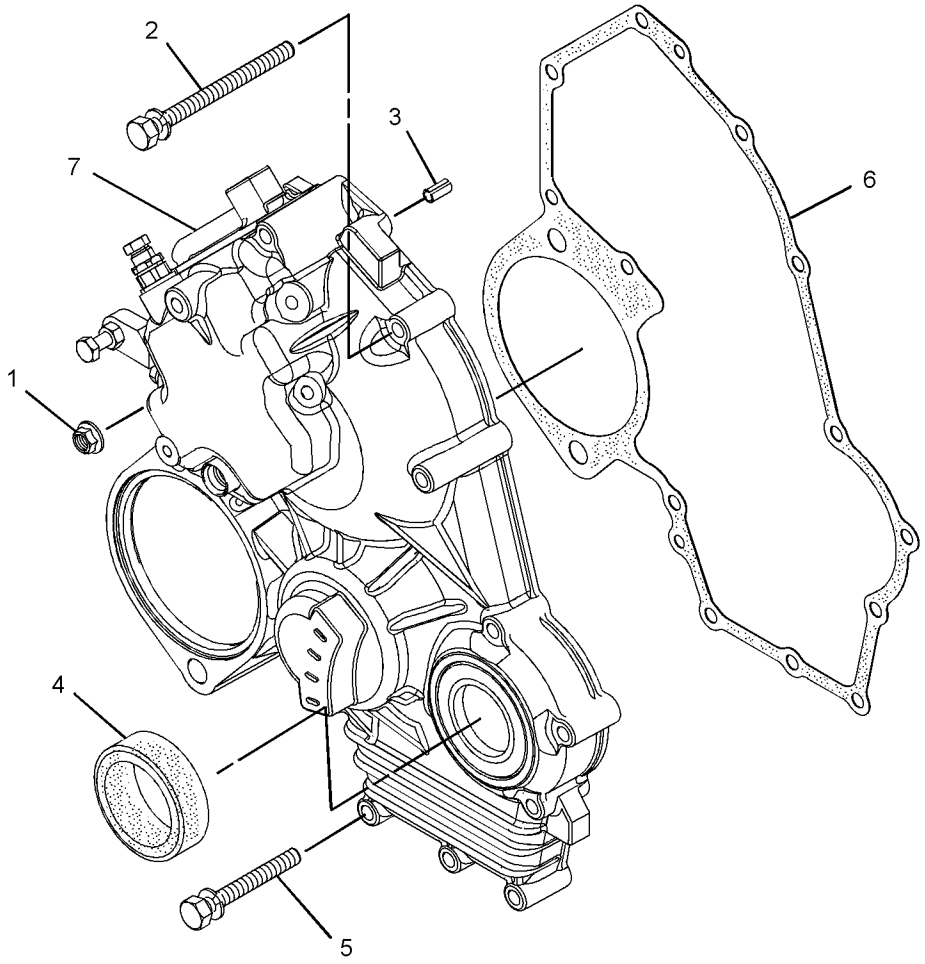

GRAPHIC #1 <END> g02334639

364-2741 HOUSING GP-FRONT

SMCS-1151, 1162, 1206 **i06999556**

NOTE	REF NO	GRAPHIC REF	PART NUMBER	QTY	PART NAME 1 2 3 4 5 6 (PRODUCT LEVEL)	SEE PAGE
M	1	1	**153-5960**	2	NUT (M6X1-THD)	
	2	1	**153-5962**	4	BOLT AS	
	3	1	**5D-1319**	1	PIN-SPRING	
	4	1	**154-1675**	1	SEAL	
	5	1	**165-2140**	7	BOLT AS	
	6	1	**423-7723**	1	GASKET	
	7	1	**483-1210**	1	CASE-GEAR	

M - METRIC PART

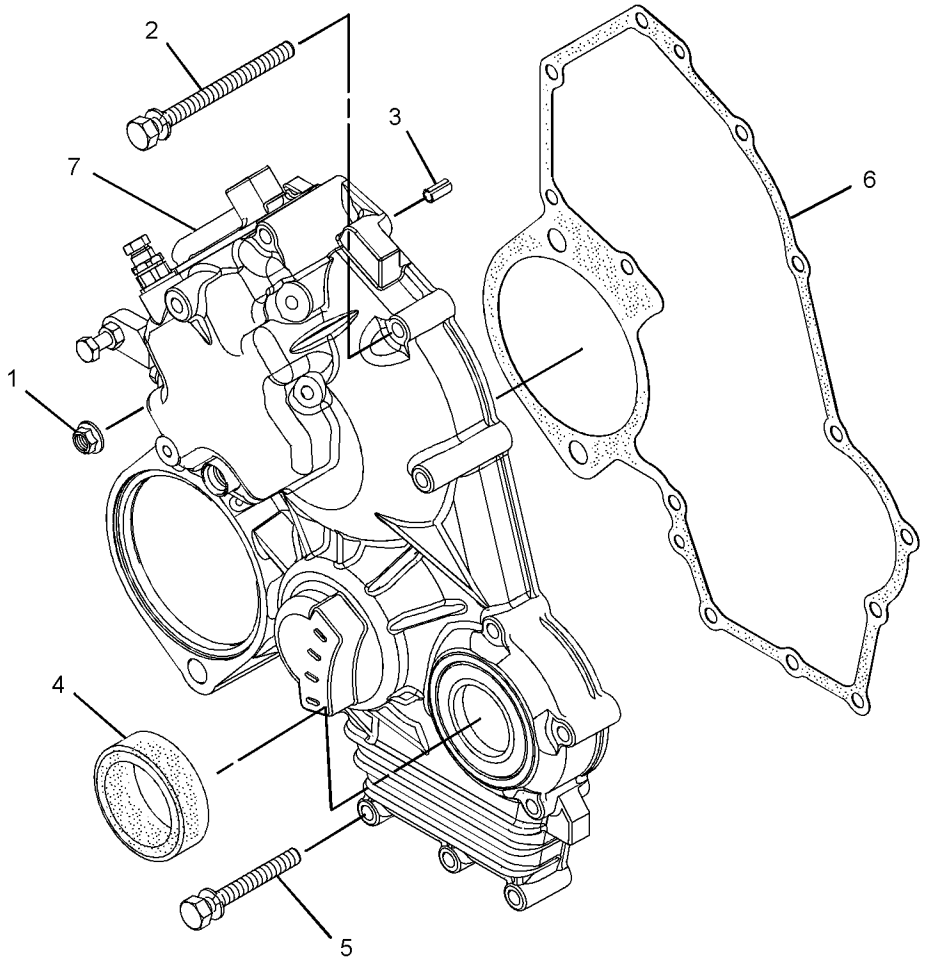

GRAPHIC #1 <END> g02334639

508-5628 HOUSING GP-FRONT

TYPE 1

SMCS-1151, 1162, 1206 **i06926326**

NOTE	REF NO	GRAPHIC REF	PART NUMBER	QTY	PART NAME 1 2 3 4 5 6 (PRODUCT LEVEL)	SEE PAGE
M	1	2	**106-8916**	4	BOLT (M6X1X16-MM)	
M	2	2	**5C-2890**	1	NUT (M6X1-THD)	
	3	2	**139-5511**	1	CAP (TAMPER RESISTANT)	
M	4	2	**153-5592**	1	NUT (M8X1.25-THD)	
	5	2	**153-6415**	2	WASHER (SEAL)	
	6	2	**153-7983**	1	PIN	
	7	2	**095-1574**	1	SEAL-O-RING	
	8	1	**5D-1319**	1	PIN-SPRING	
	9	1	**154-1675**	1	SEAL	
M	10	2	**162-2207**	1	NUT (M6X1-THD)	
	11	2	**217-7115**	1	CAP (TAMPER RESISTANT)	
	12	2	**308-1882**	1	SPRING	
M	13	2	**308-1889**	1	NUT (M10X1.25-THD)	
M	14	2	**308-1892**	1	NUT (M6X1-THD)	
	15	2	**308-1897**	2	RING	
	16	2	**308-4266**	1	SHAFT	
	17	2	**309-6729**	1	SEAL-O-RING	
	18	2	**309-6732**	1	BOLT	
	19	2	**311-0655**	1	SPRING	
M	20	2	**313-2025**	1	BOLT-SPECIAL (M10X1.25-MM THD)	
	21	2	**315-5236**	1	BOLT AS	
	21A	2	**153-7987**	1	WASHER (9.2X17X1.8-MM THK)	
M	21B	2	**191-9297**	1	NUT (M10X1.25-THD)	
	21C	2	**315-5235**	1	SPRING	
	22	2	**321-4249**	1	NUT	
	23	2	**324-3400**	1	LEVER AS-CONTROL	
	24	2	**330-9189**	1	PLUG	
	25	2	**334-0732**	1	ARM (FRONT HOUSING)	
	26	2	**335-5578**	1	BRACKET	
	27	2	**364-7487**	1	SPRING	
M	28	2	**369-4486**	2	BOLT (M6X1X35-MM)	
	29	2	**390-3729**	1	LEVER-CONTROL	
	30	2	**390-3731**	1	SHAFT	
	31	2	**423-7724**	1	GASKET	
	32	2	**425-7065**	1	CAP-TAMPER PROOF	
	33	1	**465-6710**	1	HOUSING	
	34	2	**336-2965**	1	SPRING	

M - METRIC PART

508-5628 **HOUSING GP-FRONT (**contd.**)** **i06926326**

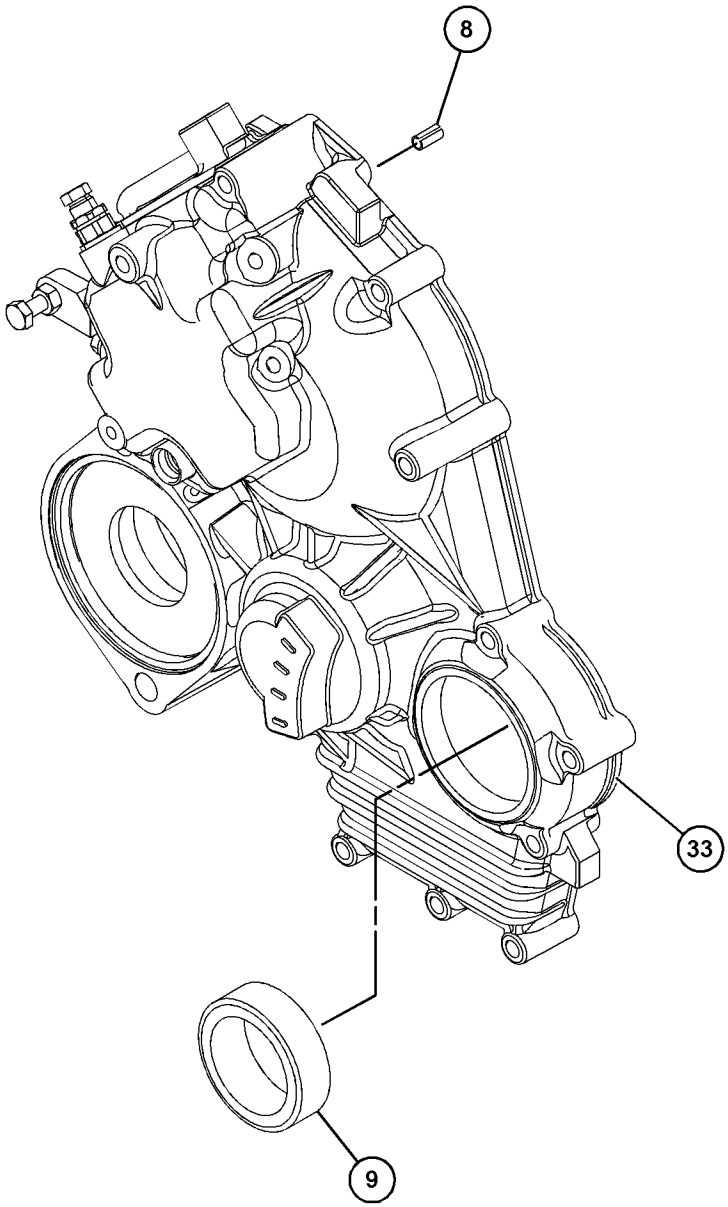

GRAPHIC #1 g06125416

508-5628 **HOUSING GP-FRONT (**contd.**)** **i06926326**

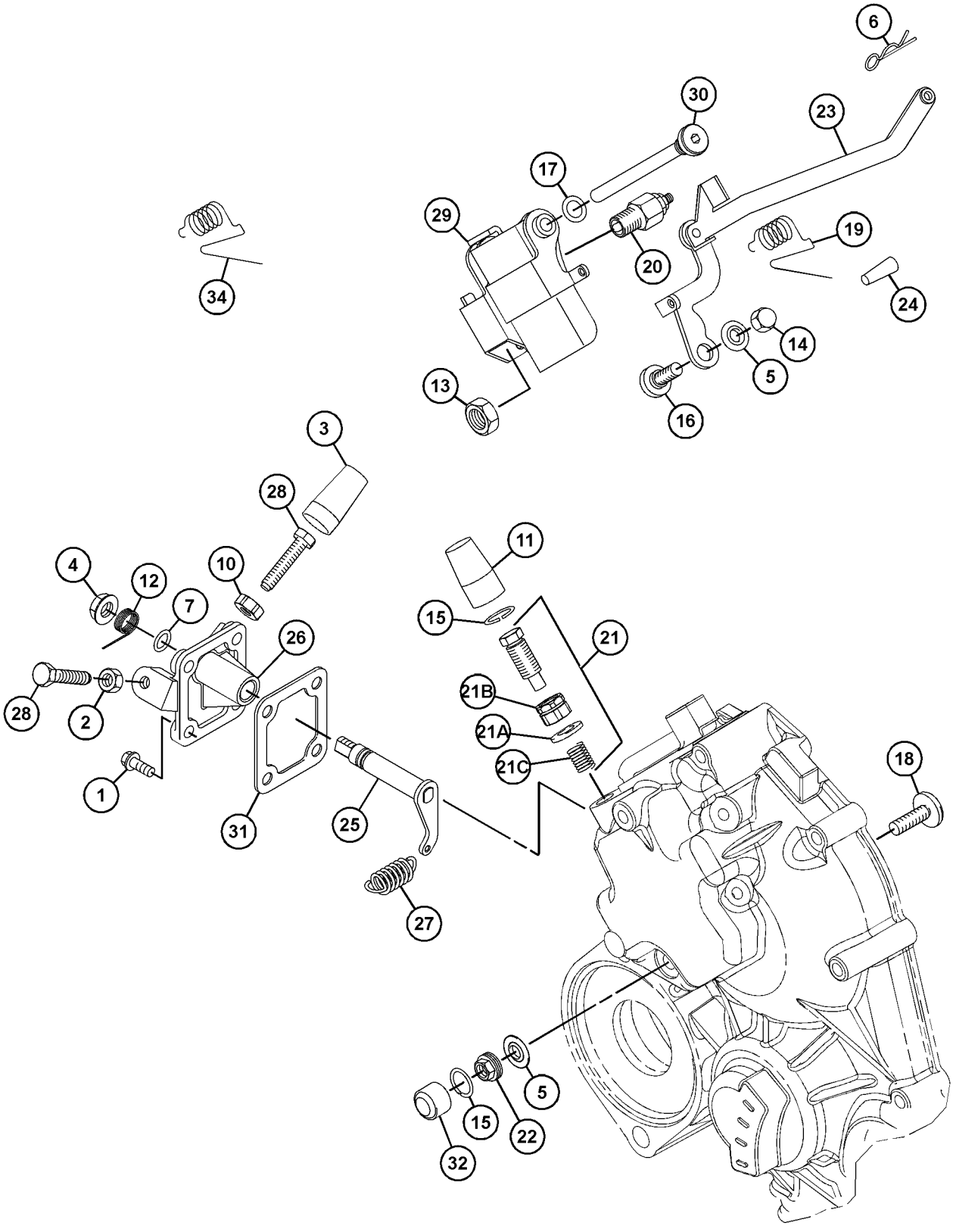

GRAPHIC #2 <END> g06125417

508-5628 HOUSING GP-FRONT

TYPE 2

SMCS-1151, 1162, 1206 **i07445397**

NOTE	REF NO	GRAPHIC REF	PART NUMBER	QTY	PART NAME 1 2 3 4 5 6 (PRODUCT LEVEL)	SEE PAGE
M	1	2	**106-8916**	4	BOLT (M6X1X16-MM)	
M	2	2	**5C-2890**	1	NUT (M6X1-THD)	
	3	2	**139-5511**	1	CAP (TAMPER RESISTANT)	
M	4	2	**153-5592**	1	NUT (M8X1.25-THD)	
	5	2	**153-6415**	2	WASHER (SEAL)	
	6	2	**153-7983**	1	PIN	
	7	2	**095-1574**	1	SEAL-O-RING	
	8	1	**5D-1319**	1	PIN-SPRING	
	9	1	**154-1675**	1	SEAL	
M	10	2	**162-2207**	1	NUT (M6X1-THD)	
	11	2	**217-7115**	1	CAP (TAMPER RESISTANT)	
	12	2	**308-1882**	1	SPRING	
M	13	2	**308-1889**	1	NUT (M10X1.25-THD)	
M	14	2	**308-1892**	1	NUT (M6X1-THD)	
C	15	2	**308-1897**	1	RING	
	16	2	**308-4266**	1	SHAFT	
	17	2	**309-6729**	1	SEAL-O-RING	
	18	2	**364-2755**	1	BOLT-SPECIAL	
	19	2	**311-0655**	1	SPRING	
M	20	2	**313-2025**	1	BOLT-SPECIAL (M10X1.25-MM THD)	
	21	2	**315-5236**	1	BOLT AS	
	21A	2	**153-7987**	1	WASHER (9.2X17X1.8-MM THK)	
M	21B	2	**191-9297**	1	NUT (M10X1.25-THD)	
	21C	2	**315-5235**	1	SPRING	
C	22	2	**502-9478**	1	NUT (TAMPER RESISTANT)	
	23	2	**324-3400**	1	LEVER AS-CONTROL	
	24	2	**330-9189**	1	PLUG	
	25	2	**334-0732**	1	ARM (FRONT HOUSING)	
	26	2	**335-5578**	1	BRACKET	
	27	2	**364-7487**	1	SPRING	
M	28	2	**369-4486**	2	BOLT (M6X1X35-MM)	
	29	2	**390-3729**	1	LEVER-CONTROL	
	30	2	**390-3731**	1	SHAFT	
	31	2	**423-7724**	1	GASKET	
C	32	2	**503-9707**	1	CAP	
	33	1	**465-6710**	1	HOUSING	
	34	2	**336-2965**	1	SPRING	
C	35	2	**503-9731**	1	SHROUD	
C	36	2	**502-5421**	1	PIN	

C - CHANGE FROM PREVIOUS TYPE
M - METRIC PART

508-5628 **HOUSING GP-FRONT (**contd.**)** **i07445397**

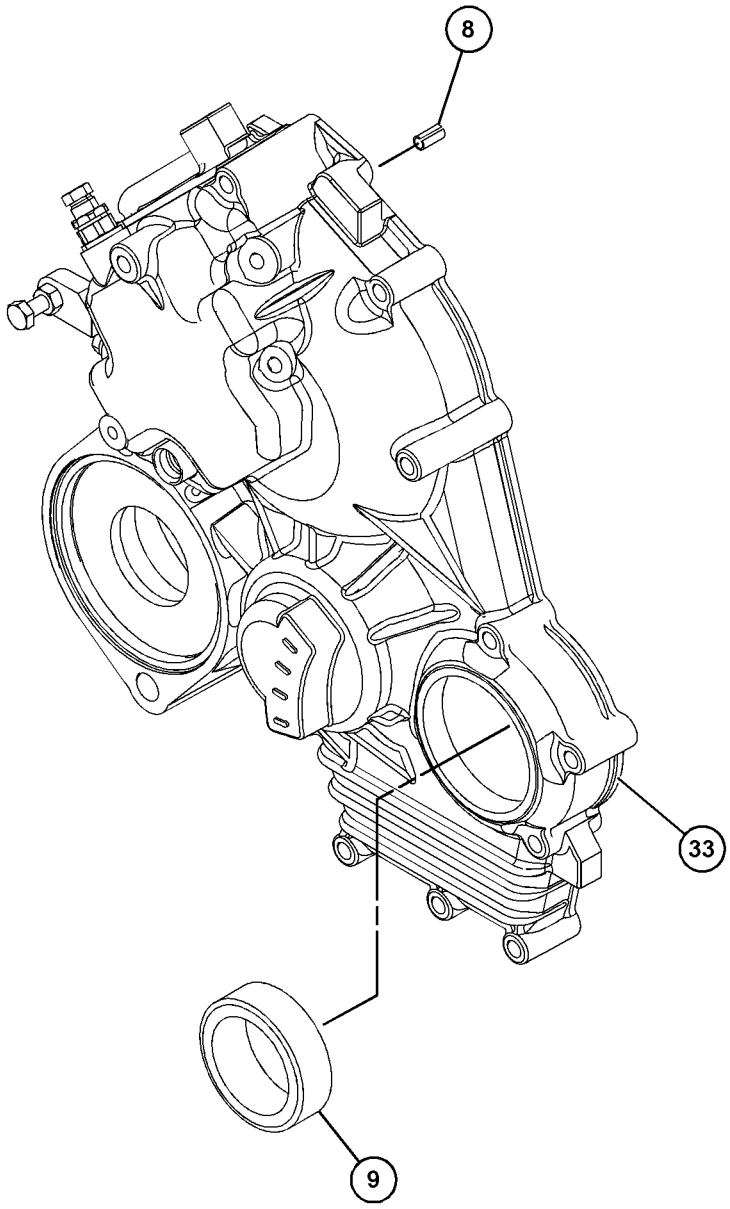

GRAPHIC #1 g06125416

508-5628 **HOUSING GP-FRONT (**contd.**)** **i07445397**

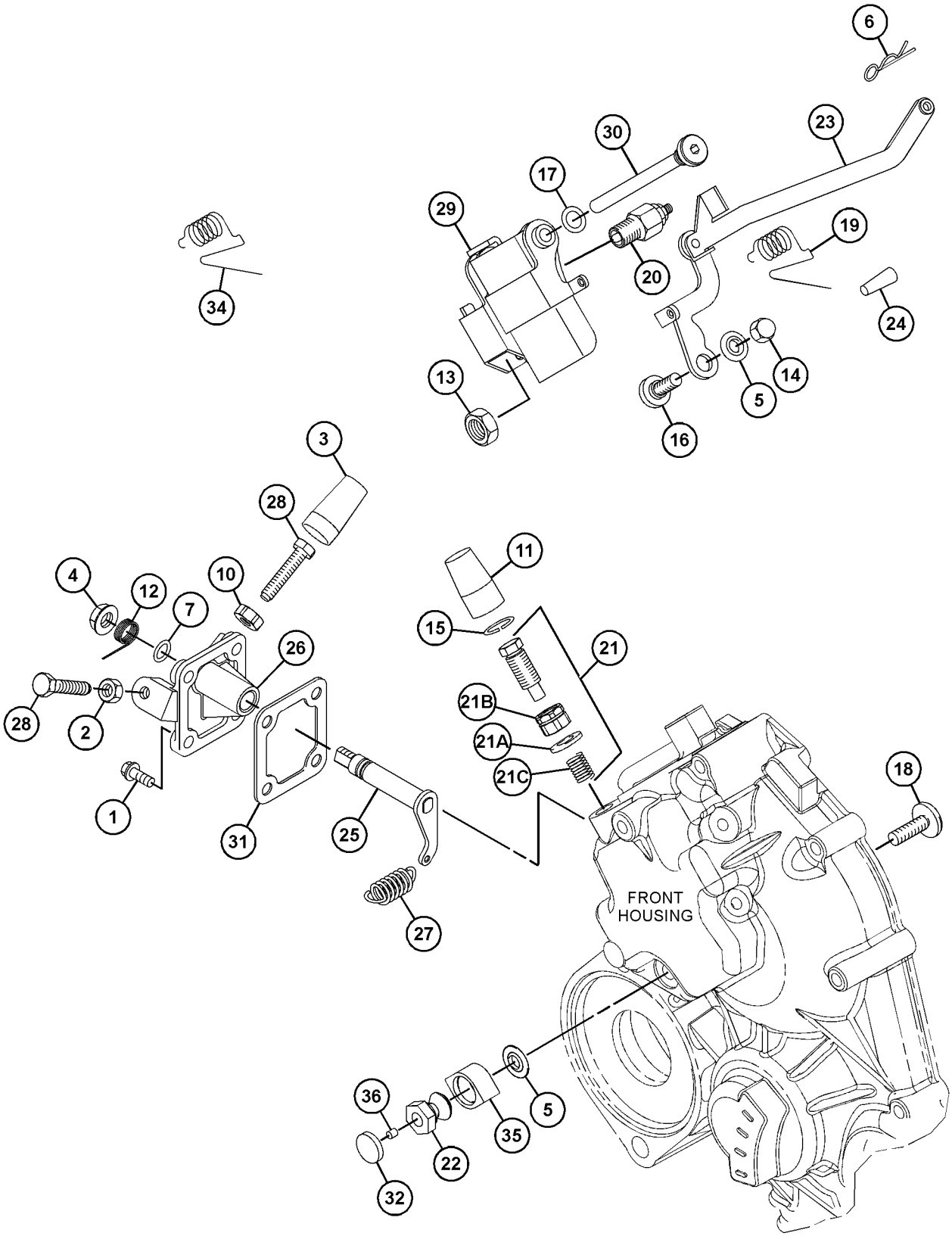

GRAPHIC #2 <END> g06243619

508-6673 HOUSING GP-FRONT

TYPE 1

SMCS-1151, 1162, 1206 **i06917022**

NOTE	REF NO	GRAPHIC REF	PART NUMBER	QTY	PART NAME 1 2 3 4 5 6 (PRODUCT LEVEL)	SEE PAGE
M	1	2	**106-8916**	4	BOLT (M6X1X16-MM)	
M	2	2	**5C-2890**	1	NUT (M6X1-THD)	
	3	2	**139-5511**	1	CAP (TAMPER RESISTANT)	
M	4	2	**153-5592**	1	NUT (M8X1.25-THD)	
	5	2	**153-6415**	2	WASHER (SEAL)	
	6	2	**153-7983**	1	PIN	
	7	2	**095-1574**	1	SEAL-O-RING	
	8	1	**5D-1319**	1	PIN-SPRING	
	9	1	**154-1675**	1	SEAL	
M	10	2	**162-2207**	1	NUT (M6X1-THD)	
	11	2	**217-7115**	1	CAP (TAMPER RESISTANT)	
	12	2	**308-1882**	1	SPRING	
M	13	2	**308-1889**	1	NUT (M10X1.25-THD)	
M	14	2	**308-1892**	1	NUT (M6X1-THD)	
	15	2	**308-1897**	2	RING	
	16	2	**308-4266**	1	SHAFT	
	17	2	**309-6729**	1	SEAL-O-RING	
	18	2	**309-6732**	1	BOLT	
	19	2	**311-0655**	1	SPRING	
M	20	2	**313-2025**	1	BOLT-SPECIAL (M10X1.25-MM THD)	
	21	2	**315-5236**	1	BOLT AS	
	21A	2	**153-7987**	1	WASHER (9.2X17X1.8-MM THK)	
M	21B	2	**191-9297**	1	NUT (M10X1.25-THD)	
	21C	2	**315-5235**	1	SPRING	
	22	2	**321-4249**	1	NUT	
	23	2	**324-3400**	1	LEVER AS-CONTROL	
	24	2	**330-9189**	1	PLUG	
	25	2	**334-0732**	1	ARM (FRONT HOUSING)	
	26	2	**335-5578**	1	BRACKET	
	27	2	**364-7487**	1	SPRING	
M	28	2	**369-4486**	2	BOLT (M6X1X35-MM)	
	29	2	**390-3729**	1	LEVER-CONTROL	
	30	2	**390-3731**	1	SHAFT	
	31	2	**423-7724**	1	GASKET	
	32	2	**425-7065**	1	CAP-TAMPER PROOF	
	33	1	**465-6710**	1	HOUSING	
	34	2	**336-2965**	1	SPRING	

M - METRIC PART

508-6673 **HOUSING GP-FRONT (**contd.**)** **i06917022**

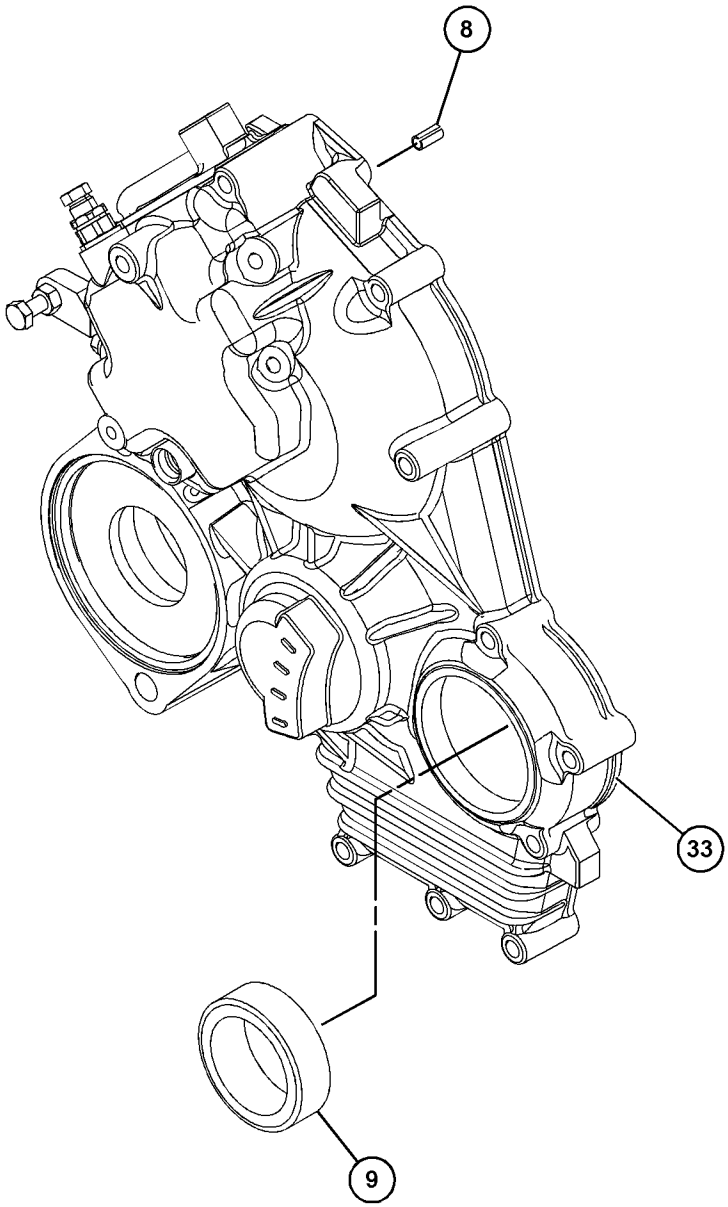

GRAPHIC #1 g06125416

508-6673 **HOUSING GP-FRONT (**contd.**)** **i06917022**

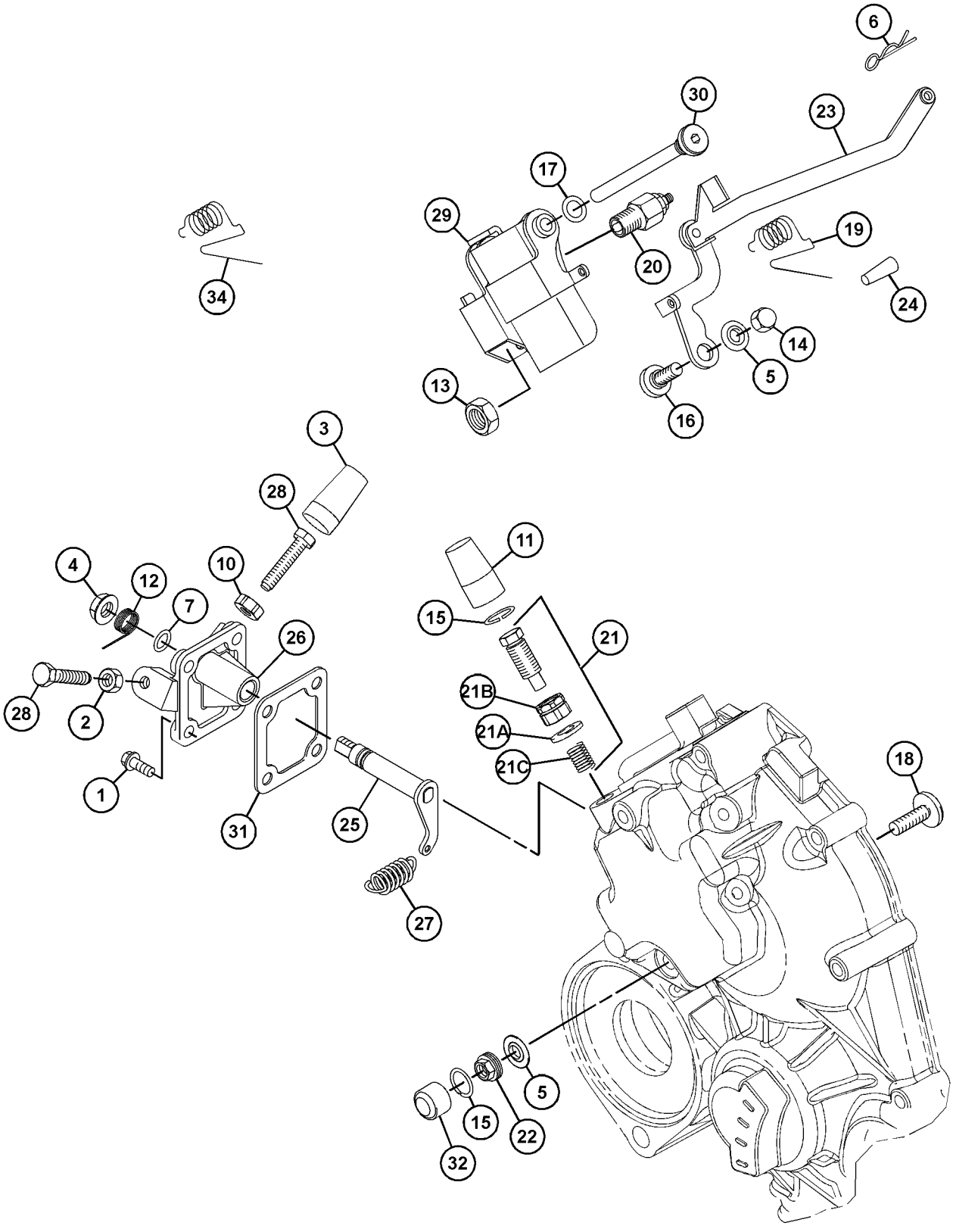

GRAPHIC #2 <END> g06125417

508-6673 HOUSING GP-FRONT

TYPE 2

SMCS-1151, 1162, 1206 **i07445395**

NOTE	REF NO	GRAPHIC REF	PART NUMBER	QTY	PART NAME 1 2 3 4 5 6 (PRODUCT LEVEL)	SEE PAGE
M	1	2	**106-8916**	4	BOLT (M6X1X16-MM)	
M	2	2	**5C-2890**	1	NUT (M6X1-THD)	
	3	2	**139-5511**	1	CAP (TAMPER RESISTANT)	
M	4	2	**153-5592**	1	NUT (M8X1.25-THD)	
	5	2	**153-6415**	2	WASHER (SEAL)	
	6	2	**153-7983**	1	PIN	
	7	2	**095-1574**	1	SEAL-O-RING	
	8	1	**5D-1319**	1	PIN-SPRING	
	9	1	**154-1675**	1	SEAL	
M	10	2	**162-2207**	1	NUT (M6X1-THD)	
	11	2	**217-7115**	1	CAP (TAMPER RESISTANT)	
	12	2	**308-1882**	1	SPRING	
M	13	2	**308-1889**	1	NUT (M10X1.25-THD) (M10X1.25X64-MM)	
M	14	2	**308-1892**	1	NUT (M6X1-THD)	
C	15	2	**308-1897**	1	RING	
	16	2	**308-4266**	1	SHAFT	
	17	2	**309-6729**	1	SEAL-O-RING	
	18	2	**364-2755**	1	BOLT-SPECIAL (ADJUSTING)	
	19	2	**311-0655**	1	SPRING (START)	
M	20	2	**313-2025**	1	BOLT-SPECIAL (M10X1.25-MM THD) (M10X1.25-MM THD)	
	21	2	**315-5236**	1	BOLT AS	
	21A	2	**153-7987**	1	WASHER (9.2X17X1.8-MM THK)	
M	21B	2	**191-9297**	1	NUT (M10X1.25-THD)	
	21C	2	**315-5235**	1	SPRING	
C	22	2	**502-9478**	1	NUT (TAMPER RESISTANT) (HEX)	
	23	2	**324-3400**	1	LEVER AS-CONTROL	
	24	2	**330-9189**	1	PLUG	
	25	2	**334-0732**	1	ARM (FRONT HOUSING)	
	26	2	**335-5578**	1	BRACKET	
	27	2	**364-7487**	1	SPRING	
M	28	2	**369-4486**	2	BOLT (M6X1X35-MM)	
	29	2	**390-3729**	1	LEVER-CONTROL	
	30	2	**390-3731**	1	SHAFT	
	31	2	**423-7724**	1	GASKET	
C	32	2	**503-9707**	1	CAP	
	33	1	**465-6710**	1	HOUSING	
	34	2	**336-2965**	1	SPRING	
C	35	2	**503-9731**	1	SHROUD	
C	36	2	**502-5421**	1	PIN	

C - CHANGE FROM PREVIOUS TYPE
M - METRIC PART

508-6673 **HOUSING GP-FRONT (**contd.**)** **i07445395**

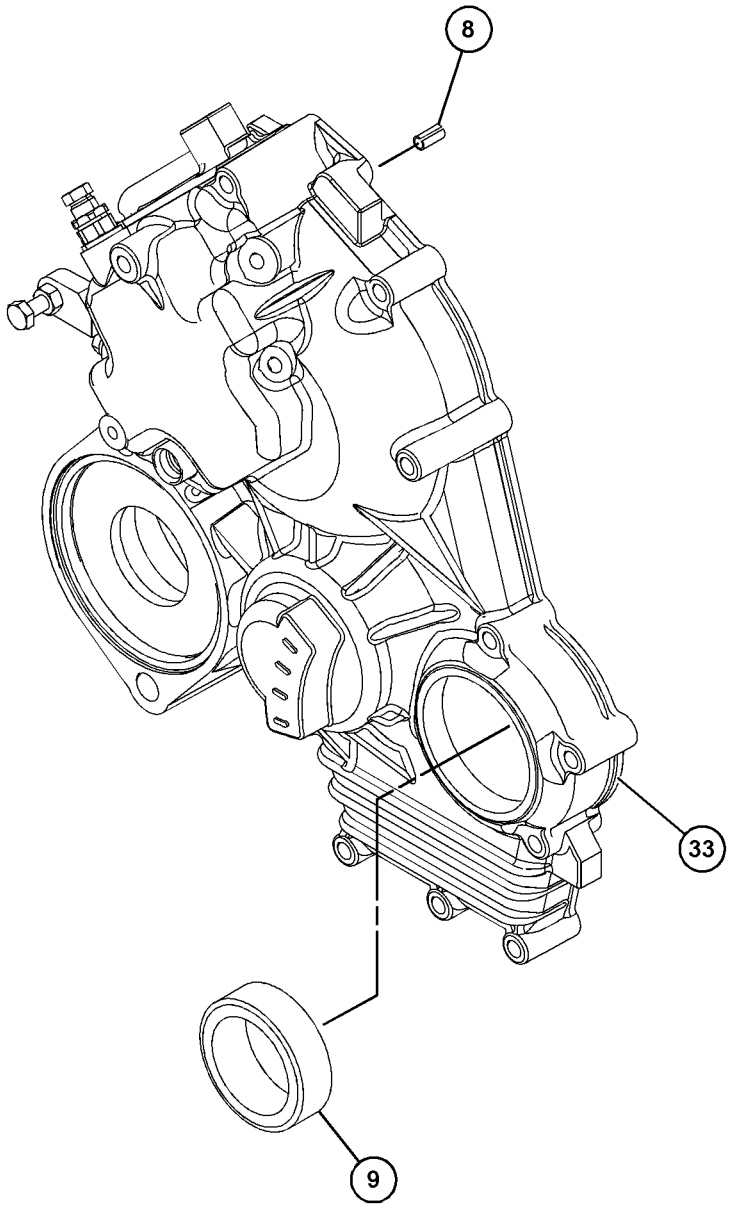

GRAPHIC #1 g06125416

508-6673 **HOUSING GP-FRONT (**contd.**)** **i07445395**

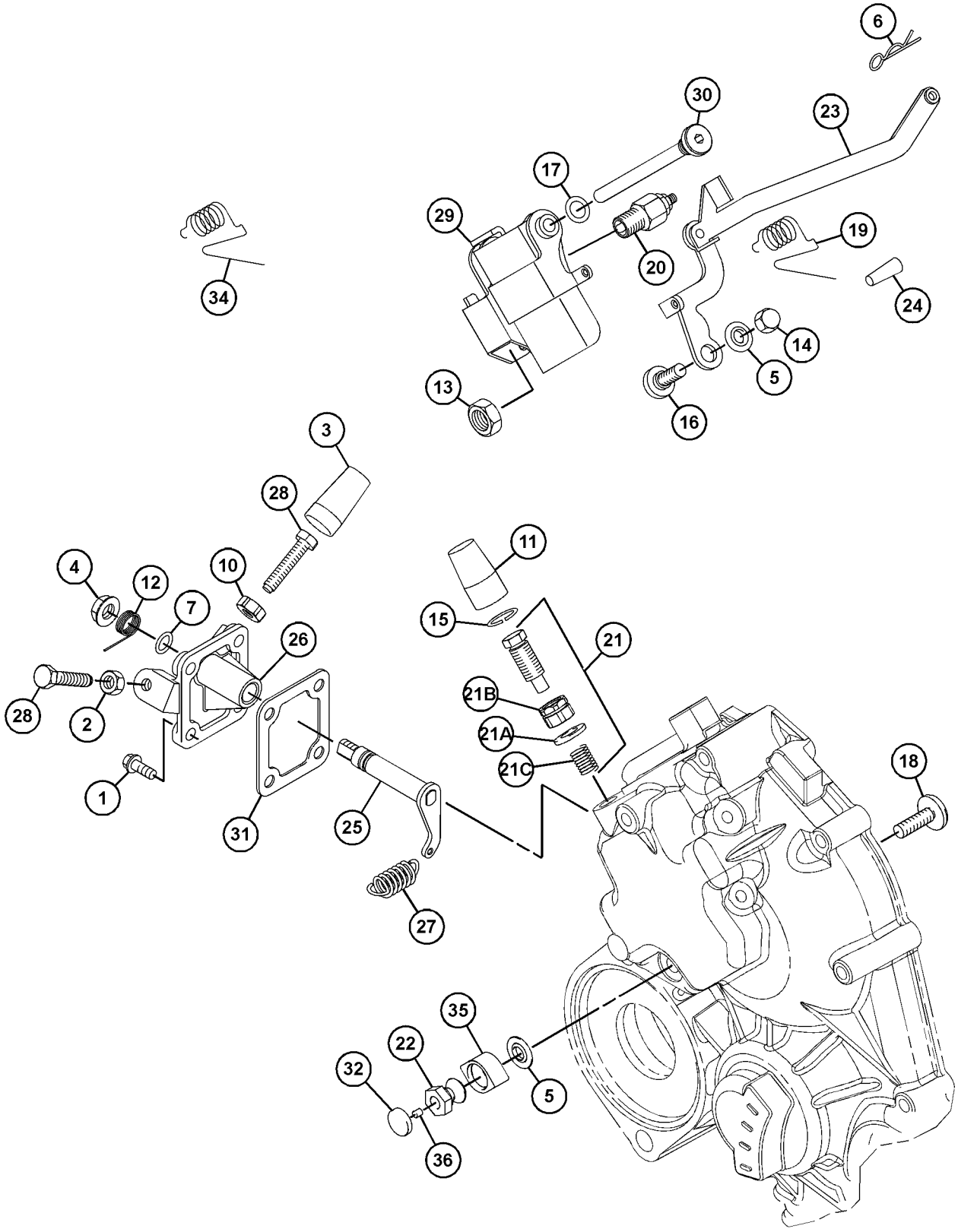

GRAPHIC #2 <END> g06245091

355-1393 KIT-FRONT GEAR

SMCS-1204, 1212, 1234 **i03770610**

NOTE	REF NO	GRAPHIC REF	PART NUMBER	QTY	PART NAME 1 2 3 4 5 6 (PRODUCT LEVEL)	SEE PAGE
	1	1	**160-4150**	1	SHIM (0.1-MM THK)	
B		1	**160-4151**	1	SHIM (0.15-MM THK)	
B		1	**160-4152**	1	SHIM (0.2-MM THK)	
B		1	**160-4153**	1	SHIM (0.5-MM THK)	
	2	1	**308-1871**	1	GASKET	

B - USE AS REQUIRED

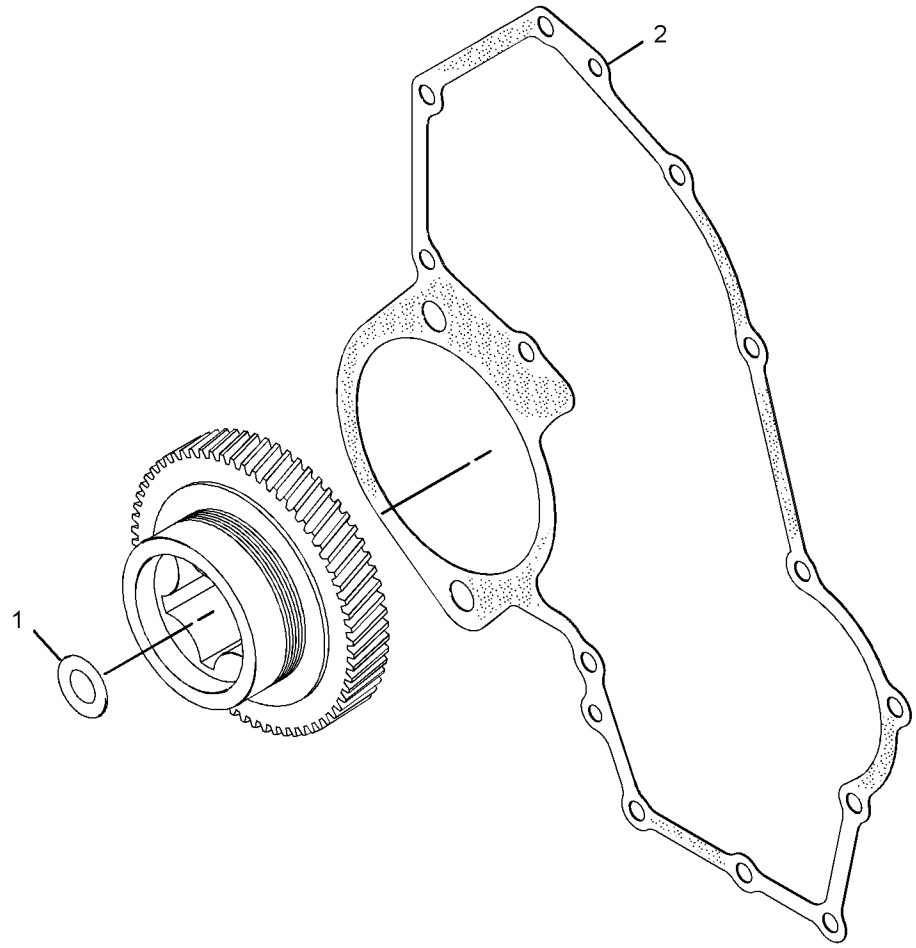

GRAPHIC #1 <END> g02038118

309-6725 LIFTING GP-ENGINE

TYPE 1

SMCS-1122 **i02859882**

NOTE	REF NO	GRAPHIC REF	PART NUMBER	QTY	PART NAME 1 2 3 4 5 6 (PRODUCT LEVEL)	SEE PAGE
	1	1	**153-6375**	3	BOLT AS	
	2	1	**309-6737**	1	EYE-LIFTING	
	3	1	**153-6374**	1	PLATE	

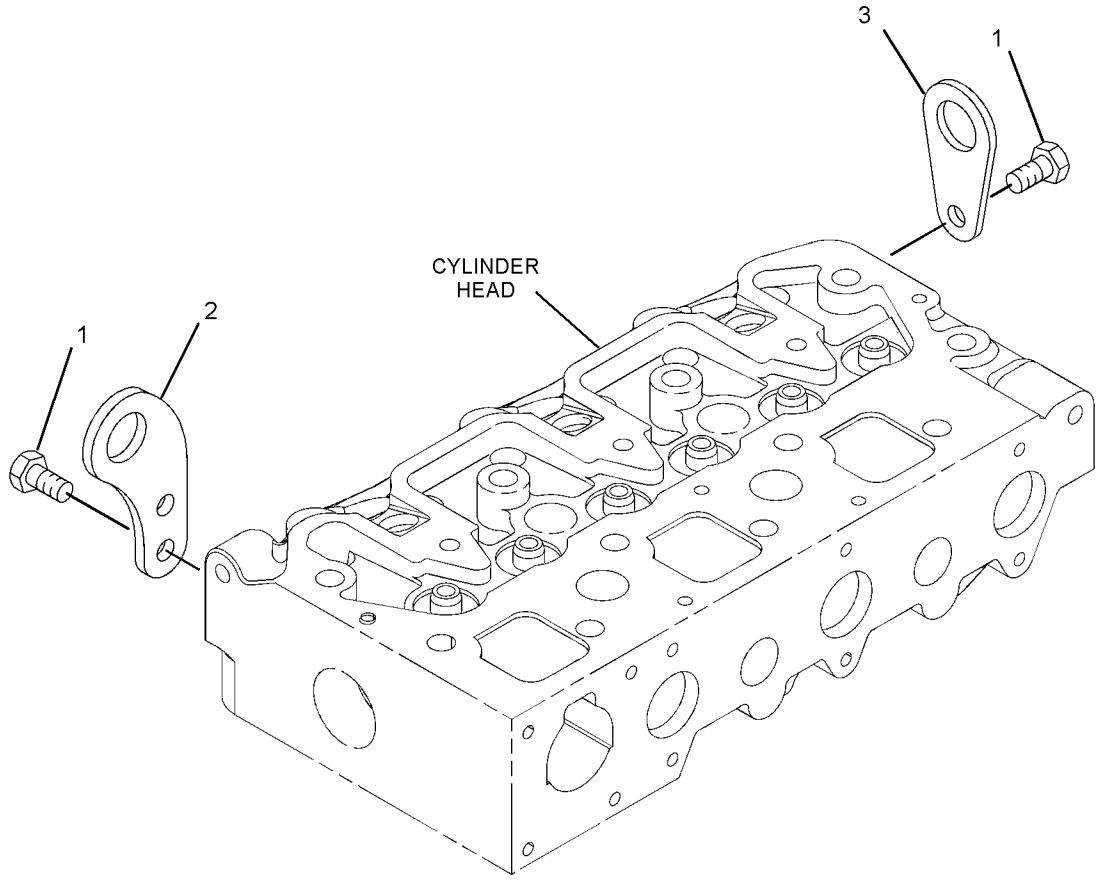

GRAPHIC #1 <END> g01389556

309-6725 LIFTING GP-ENGINE

TYPE 2

SMCS-1122 **i06628472**

NOTE	REF NO	GRAPHIC REF	PART NUMBER	QTY	PART NAME 1 2 3 4 5 6 (PRODUCT LEVEL)	SEE PAGE
M	1	1	**124-3815**	1	BOLT (M8X1.25X16-MM)	
	2	1	**370-6544**	2	PLATE-LIFTING	

M - METRIC PART

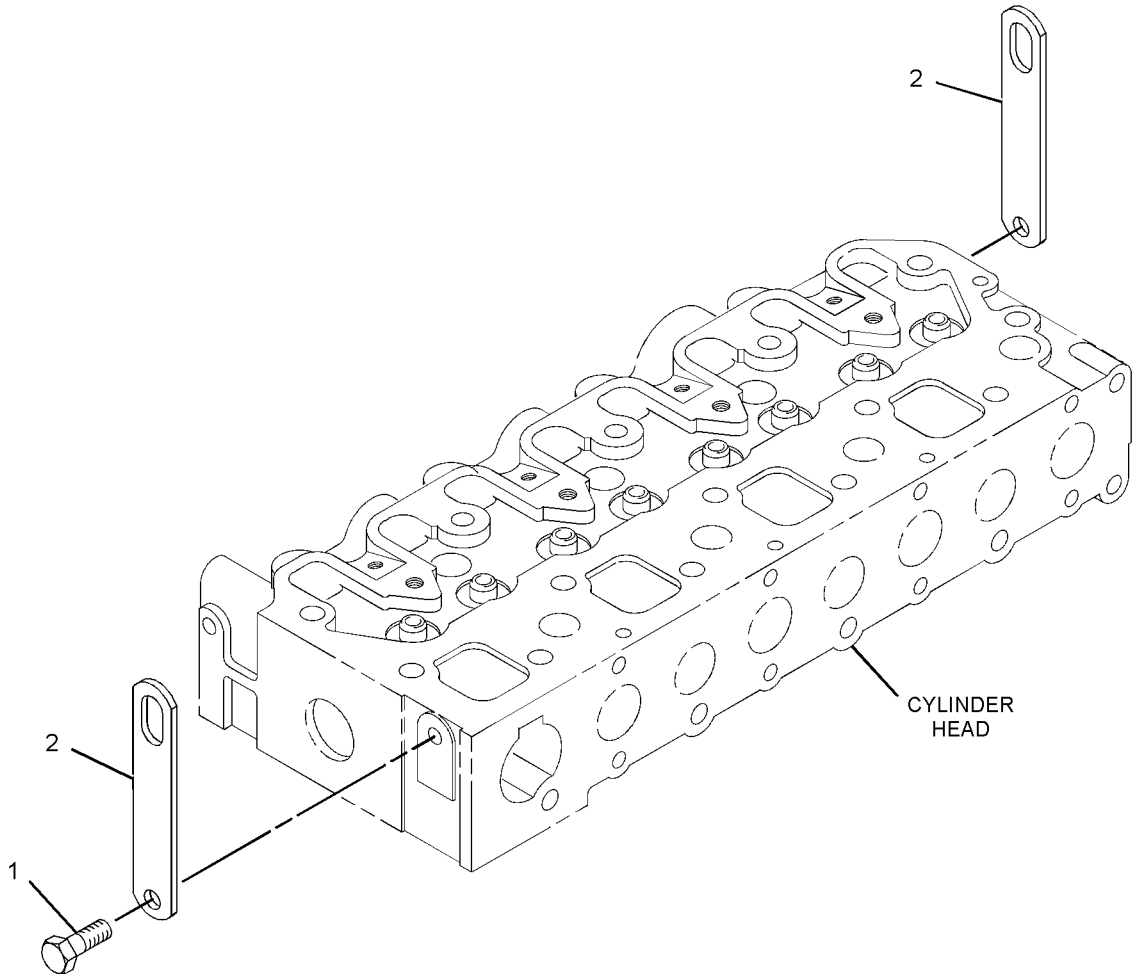

GRAPHIC #1 <END> g06099954

320-9110 LIFTING GP-ENGINE

SMCS-1122 **i06919744**

NOTE	REF NO	GRAPHIC REF	PART NUMBER	QTY	PART NAME 1 2 3 4 5 6 (PRODUCT LEVEL)	SEE PAGE
M	1	1	**6I-4200**	1	BOLT (M10X1.5X16-MM)	
	2	1	**370-6544**	2	PLATE-LIFTING	

M - METRIC PART

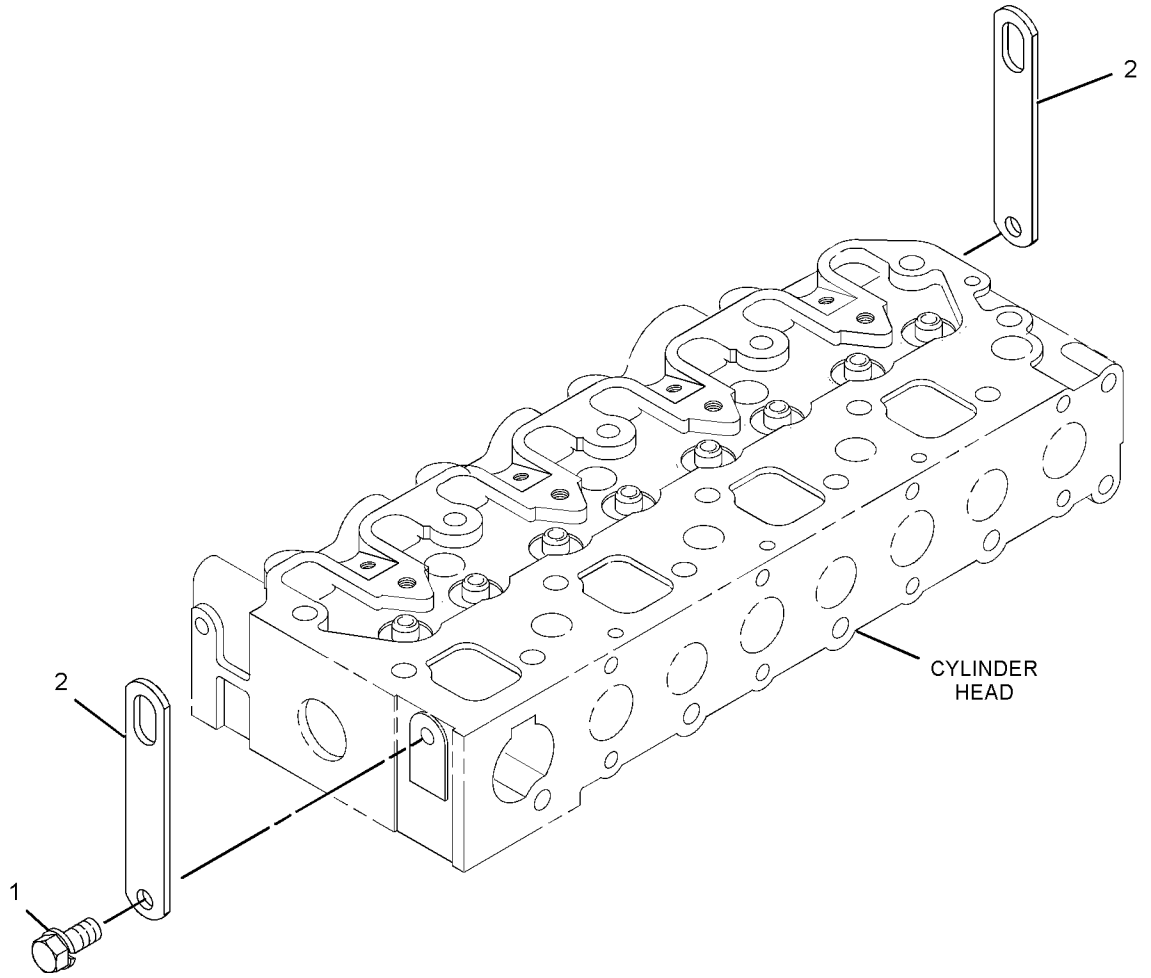

GRAPHIC #1 <END> g01513351

442-8532 LIFTING GP-ENGINE

PART OF 435-1631 ENGINE AR, 435-1654, 435-1657 ENGINE AR-PRIMARY

SMCS-1122 **i07425066**

NOTE	REF NO	GRAPHIC REF	PART NUMBER	QTY	PART NAME 1 2 3 4 5 6 (PRODUCT LEVEL)	SEE PAGE
M	1	1	**124-3815**	1	BOLT (M8X1.25X16-MM)	
	2	1	**370-6544**	2	PLATE-LIFTING	
BM	3	1	**6I-4200**	1	BOLT (M10X1.5X16-MM)	
BM	4	1	**515-3138**	1	BOLT-FLANGE HEAD (M10X1.5X20-MM)	

B - USE AS REQUIRED
M - METRIC PART

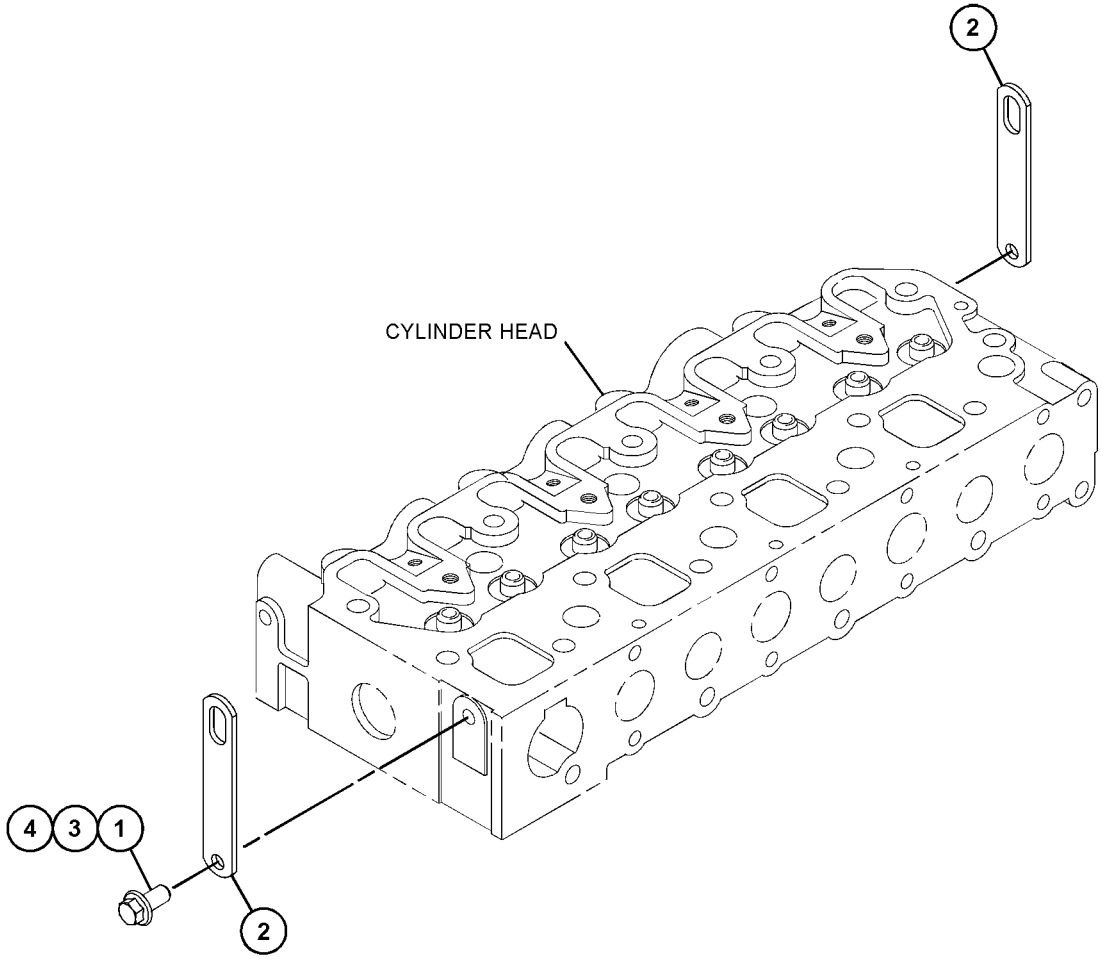

GRAPHIC #1 <END> g06345899

311-1112 PAN GP-OIL—ENGINE

PART OF 435-1631 ENGINE AR, 435-1657 ENGINE AR-PRIMARY

TYPE 1

SMCS-1302 **i03254269**

NOTE	REF NO	GRAPHIC REF	PART NUMBER	QTY	PART NAME 1 2 3 4 5 6 (PRODUCT LEVEL)	SEE PAGE
M	1	1,2	**153-6833**	27	BOLT (M6X1X13-MM)	
	2	2	**153-6835**	1	SEAL-O-RING	
	3	1,2	**153-6838**	3	BOLT AS	
	4	1	**153-6841**	4	SEAL-O-RING	
	5	2	**316-2273**	1	STRAINER (ENGINE OIL PAN)	
	6	2	**215-2604**	1	GASKET	
	7	1	**229-5150**	1	GAUGE AS	
	8	1	**235-7123**	1	GAUGE AS-OIL LEVEL (DIPSTICK) (ENGINE)	
	9	2	**310-7063**	1	PAN-OIL	
	10	2	**316-2275**	1	TUBE-OIL SUCTION	
	11	1	**319-7366**	1	PLUG	

M - METRIC PART

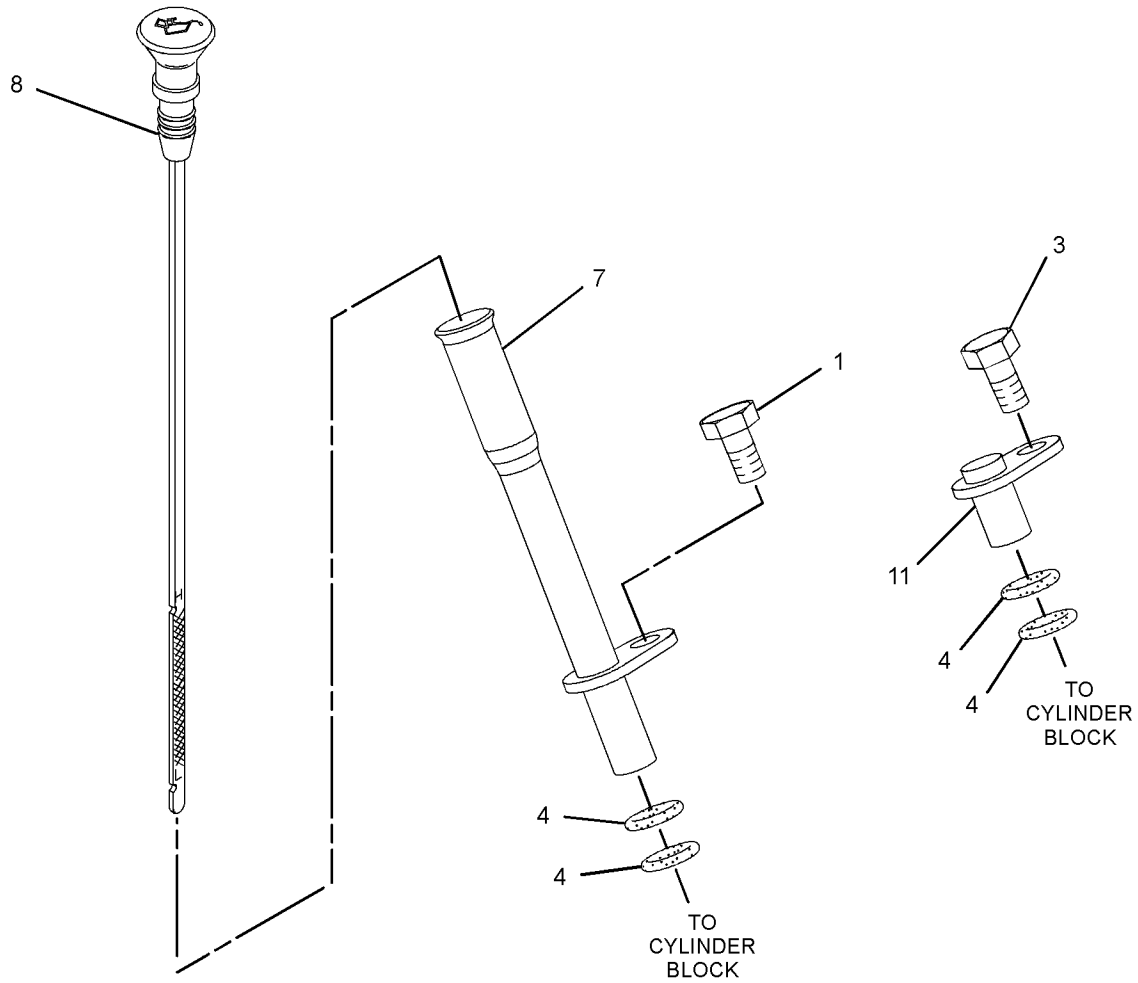

GRAPHIC #1 g01514089

311-1112 **PAN GP-OIL (**contd.**)** **i03254269**

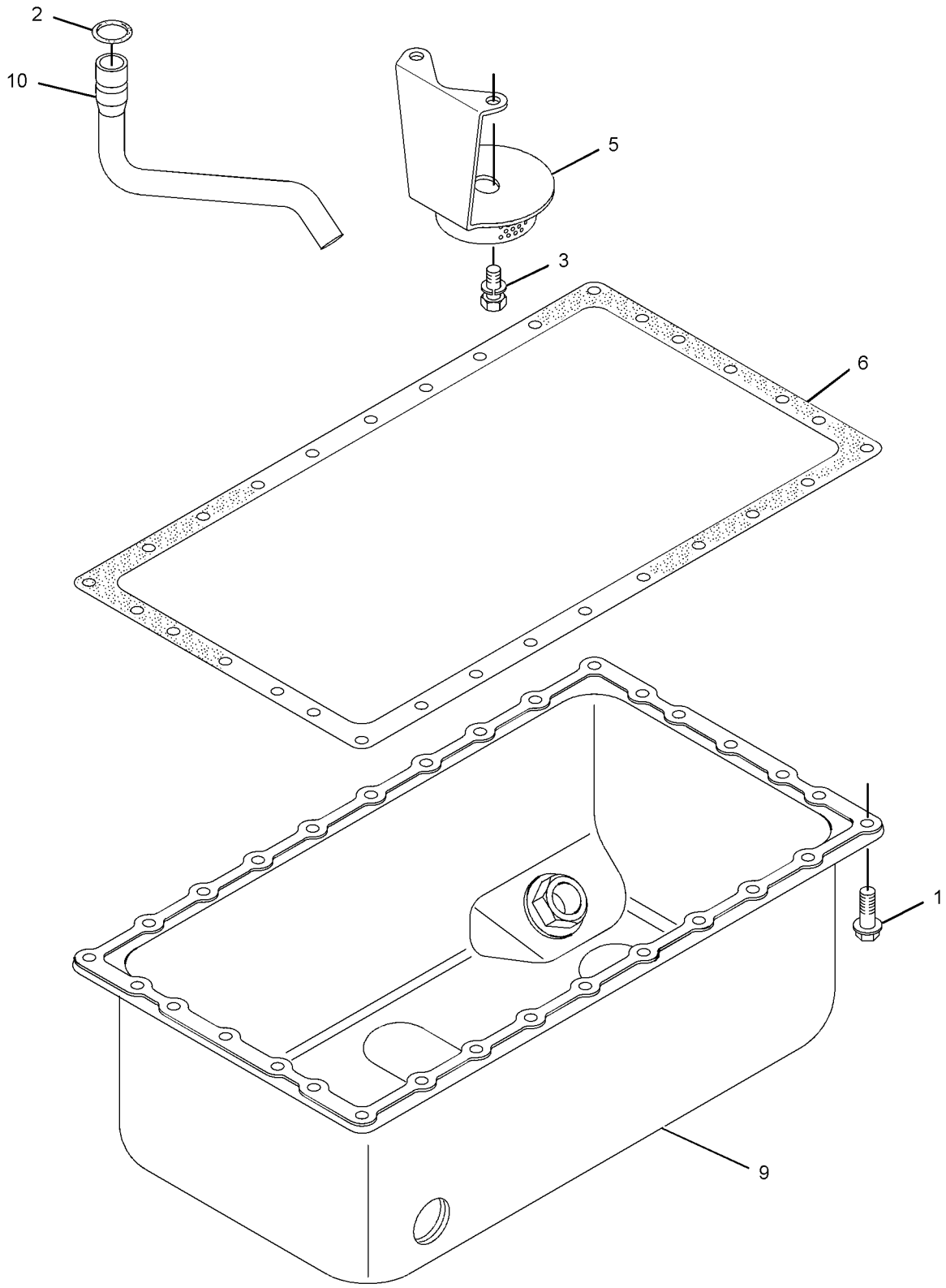

GRAPHIC #2 <END> g01412927

311-1112 PAN GP-OIL—ENGINE

PART OF 435-1631 ENGINE AR, 435-1654, 435-1657 ENGINE AR-PRIMARY
TYPE 2

SMCS-1302 **i07519390**

NOTE	REF NO	GRAPHIC REF	PART NUMBER	QTY	PART NAME 1 2 3 4 5 6 (PRODUCT LEVEL)	SEE PAGE
M	1	1,2	**100-4841**	28	BOLT (M6X1X10-MM)	
	2	2	**153-6835**	1	SEAL-O-RING	
	3	1,2	**153-6838**	2	BOLT AS	
	4	1	**153-6841**	4	SEAL-O-RING	
CP	5	2	**425-6360**	1	STRAINER (ENGINE OIL)	
	6	2	**423-7722**	1	GASKET-OIL PAN	
	7	1	**229-5150**	1	GAUGE AS	
	8	1	**235-7123**	1	GAUGE AS-OIL LEVEL (DIPSTICK) (ENGINE)	
	9	2	**310-7063**	1	PAN-OIL	
CL	10	2	**325-9415**	1	TUBE-OIL SUCTION	
	11	1	**369-8010**	1	PLUG	

C - CHANGE FROM PREVIOUS TYPE
L - USED ONLY WITH 325-9416
M - METRIC PART
P - USED ONLY WITH 325-9415

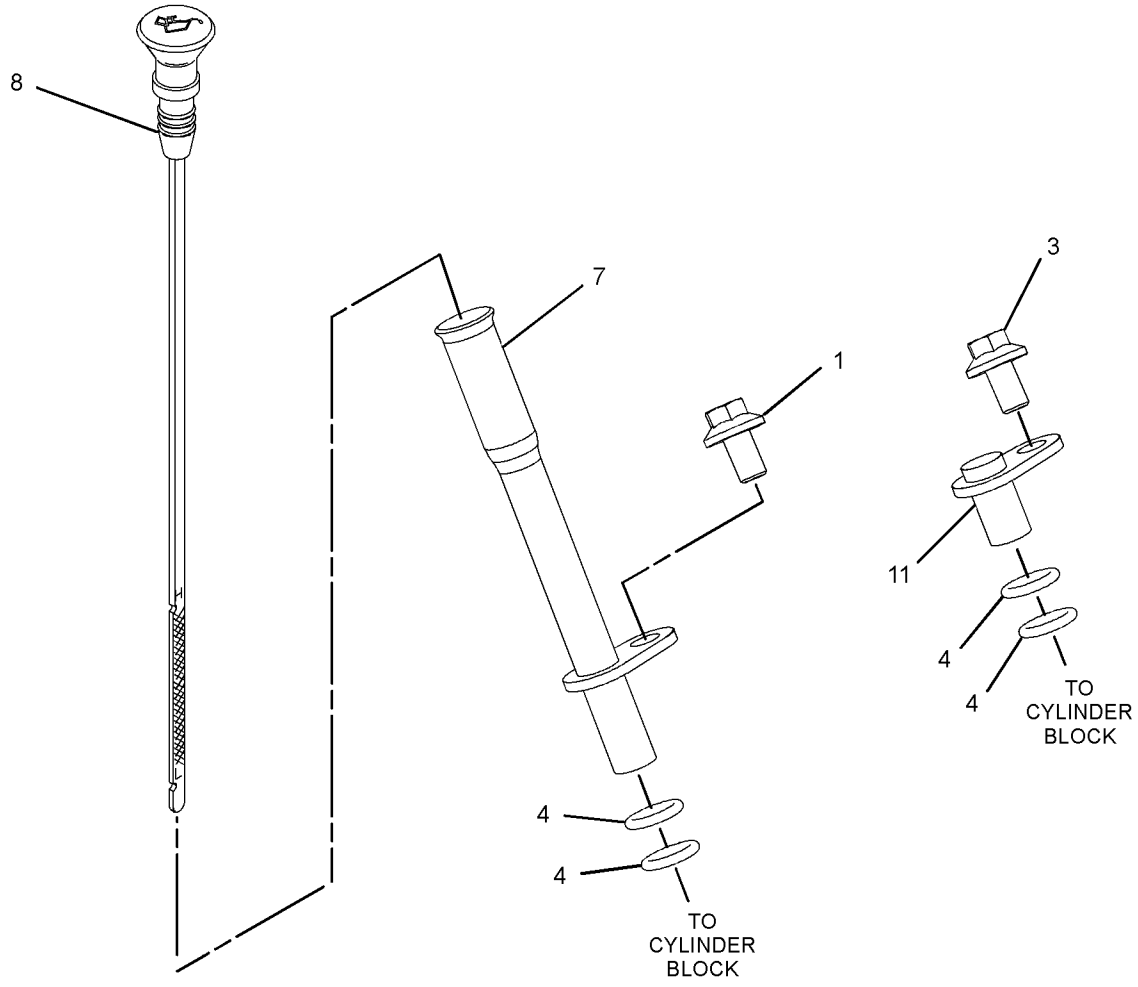

GRAPHIC #1 g06128478

311-1112 **PAN GP-OIL (**contd.**)** **i07519390**

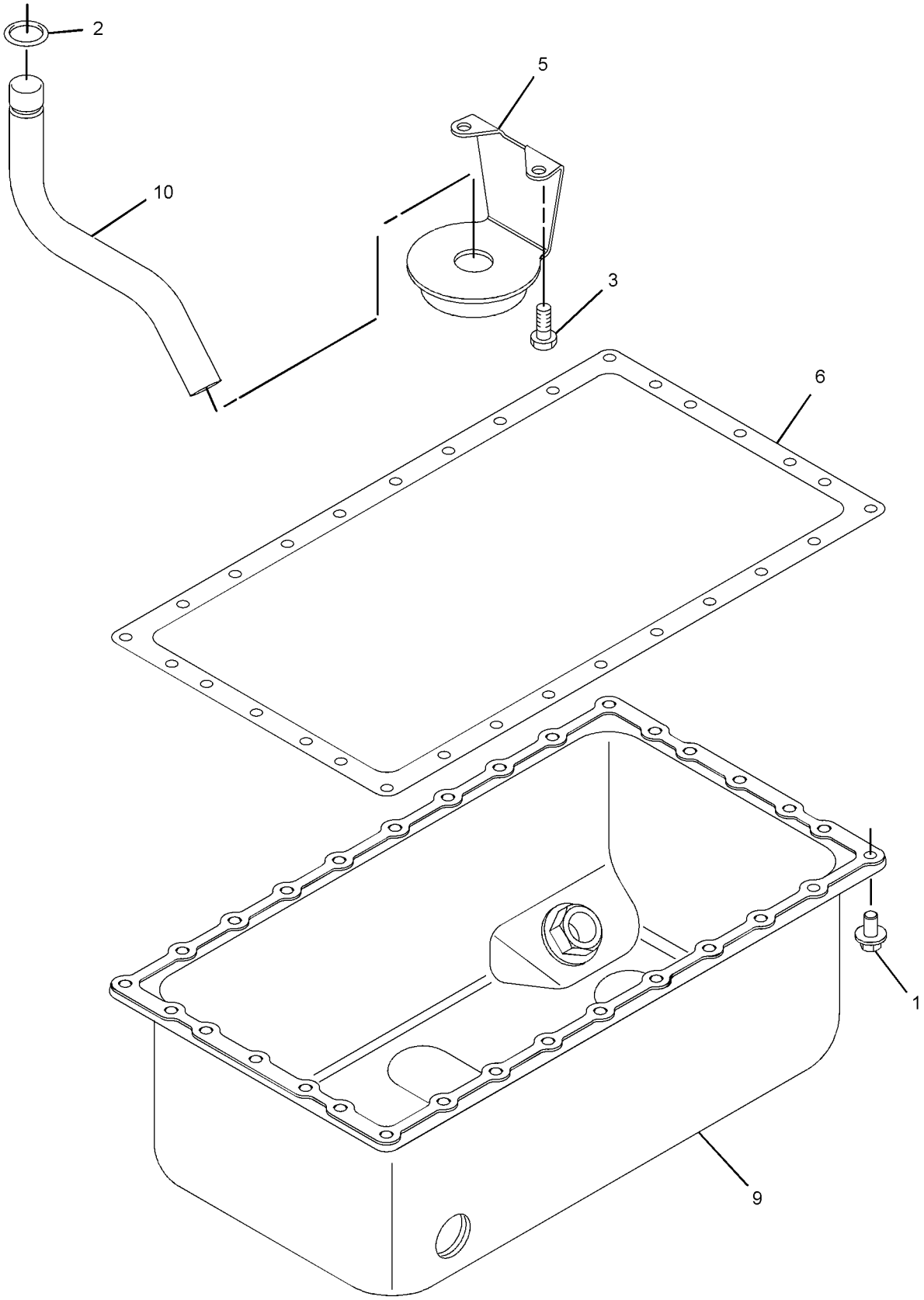

GRAPHIC #2 <END> g06128479

315-5250 PAN GP-OIL

SMCS-1302 **i06859030**

NOTE	REF NO	GRAPHIC REF	PART NUMBER	QTY	PART NAME 1 2 3 4 5 6 (PRODUCT LEVEL)	SEE PAGE
M	1	2	**100-4841**	28	BOLT (M6X1X10-MM)	
	2	2	**153-6835**	1	SEAL-O-RING	
	3	1,2	**153-6838**	2	BOLT AS	
	4	1	**153-6841**	4	SEAL-O-RING	
M	5	1	**180-6118**	1	BOLT (M8X1.25X12-MM)	
	6	1	**209-7087**	1	TUBE AS-OIL GAUGE	
	7	1	**209-7091**	1	GAUGE AS-OIL LEVEL (DIPSTICK) (ENGINE)	
	8	2	**423-7722**	1	GASKET-OIL PAN	
	9	2	**310-7063**	1	PAN-OIL	
CHL	10	2	**325-9416**	1	STRAINER (ENGINE OIL)	
CJL	11	2	**325-9415**	1	TUBE-OIL SUCTION	
	12	1	**369-8010**	1	PLUG	

C - CHANGE FROM PREVIOUS TYPE
H - USED ONLY WITH 325-9415
J - USED ONLY WITH 325-9416
L - PARTS ARE ONLY INTERCHANGEABLE AS A PAIR
M - METRIC PART

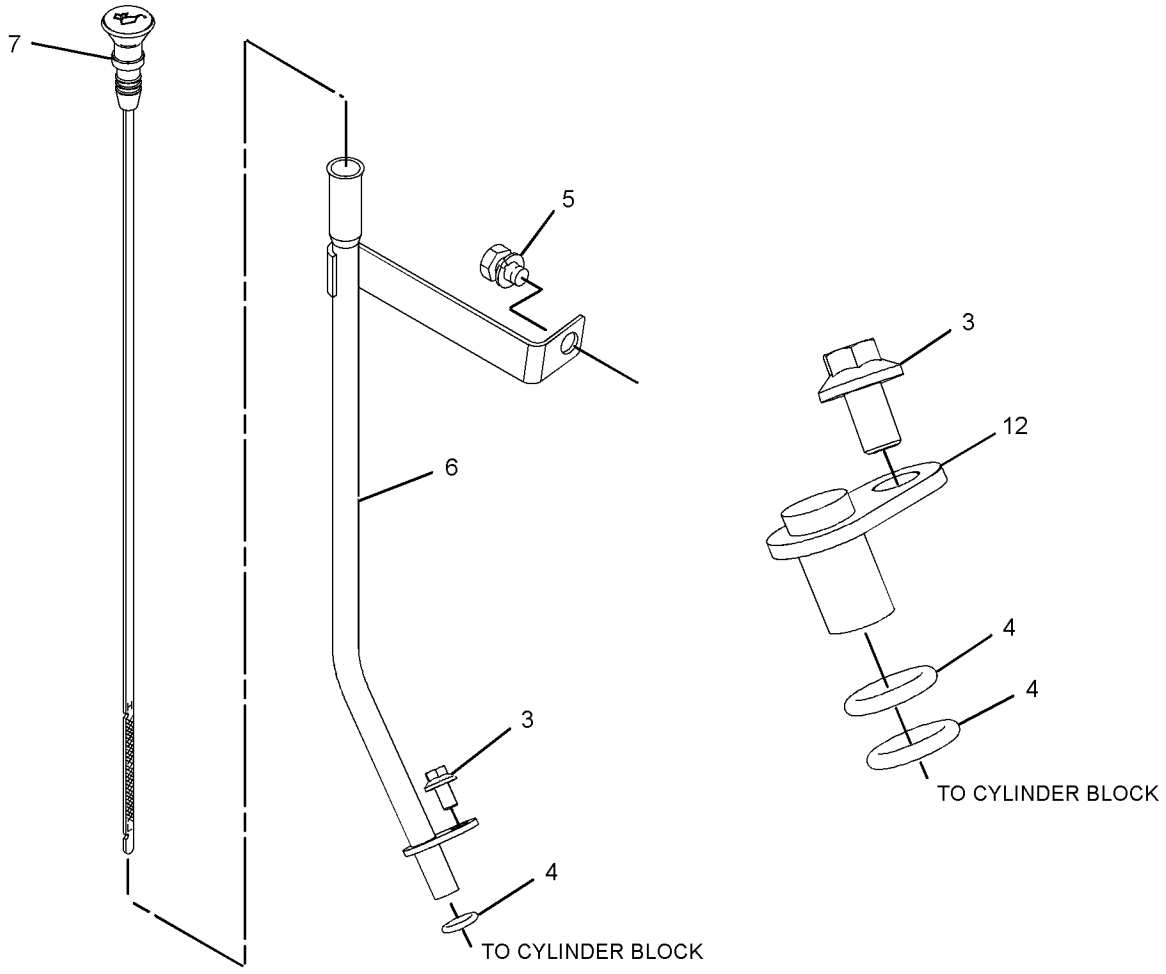

GRAPHIC #1 g06128468

315-5250 **PAN GP-OIL (**contd.**)** **i06859030**

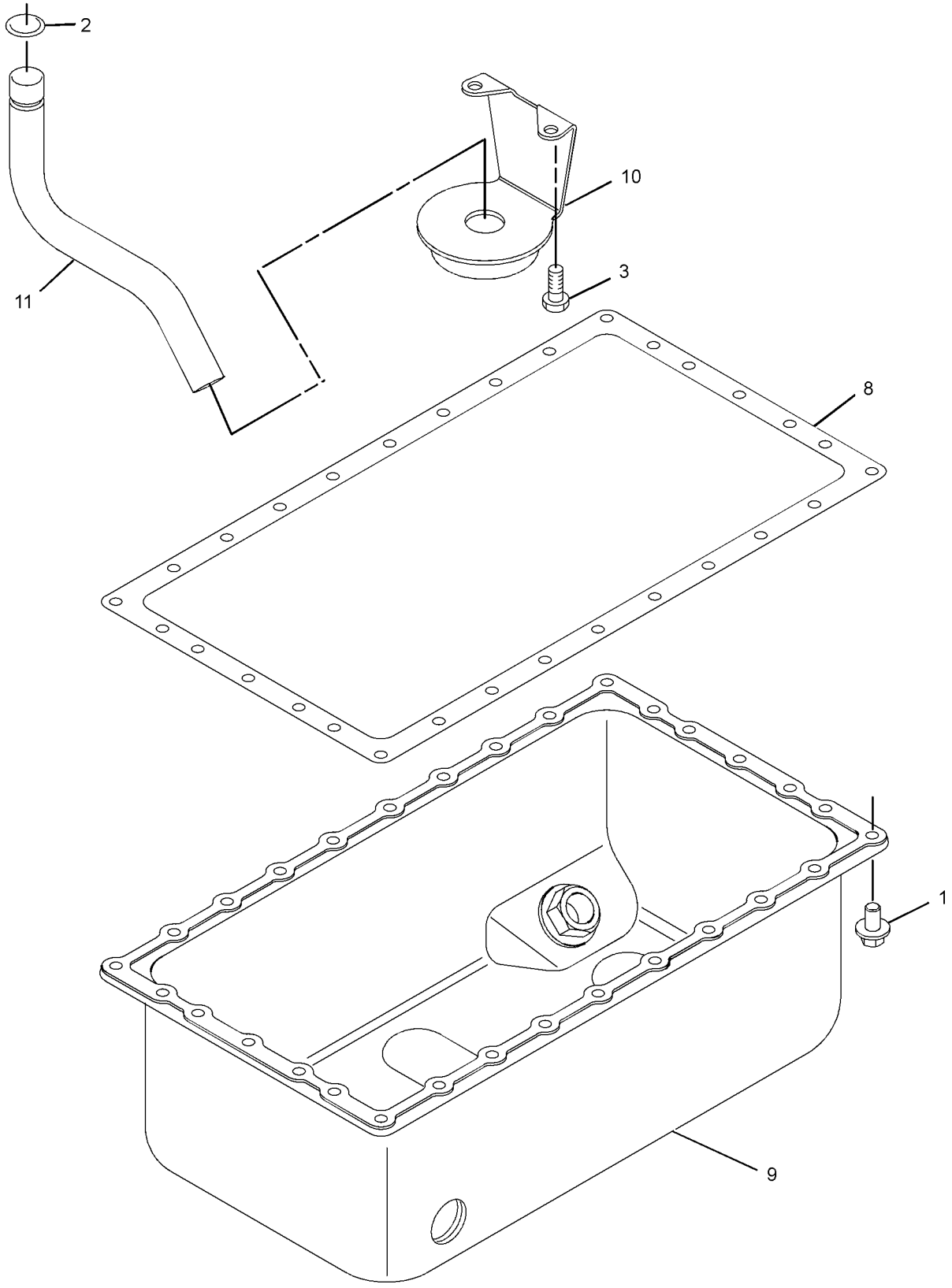

GRAPHIC #2 <END> g06128469

322-0630 PAN GP-OIL

SMCS-1302 **i06231319**

NOTE	REF NO	GRAPHIC REF	PART NUMBER	QTY	PART NAME 1 2 3 4 5 6 (PRODUCT LEVEL)	SEE PAGE
M	1	1,2	**6I-0631**	26	BOLT (M6X1X12-MM)	
	2	2	**153-6835**	1	SEAL-O-RING	
	3	1,2	**153-6838**	4	BOLT AS	
	4	1	**153-6841**	4	SEAL-O-RING	
	5	1	**209-7085**	1	TUBE AS-OIL GAUGE	
	6	1	**209-7090**	1	GAUGE AS-OIL LEVEL (DIPSTICK) (ENGINE)	
	7	2	**215-2604**	1	GASKET	
	8	2	**310-7063**	1	PAN-OIL	
CHL	9	2	**325-9416**	1	STRAINER	
CJL	10	2	**325-9415**	1	TUBE-OIL SUCTION	
	11	1	**369-8010**	1	PLUG	

C - CHANGE FROM PREVIOUS TYPE
H - USED ONLY WITH 325-9415
J - USED ONLY WITH 325-9416
L - PARTS ARE ONLY INTERCHANGEABLE AS A PAIR
M - METRIC PART

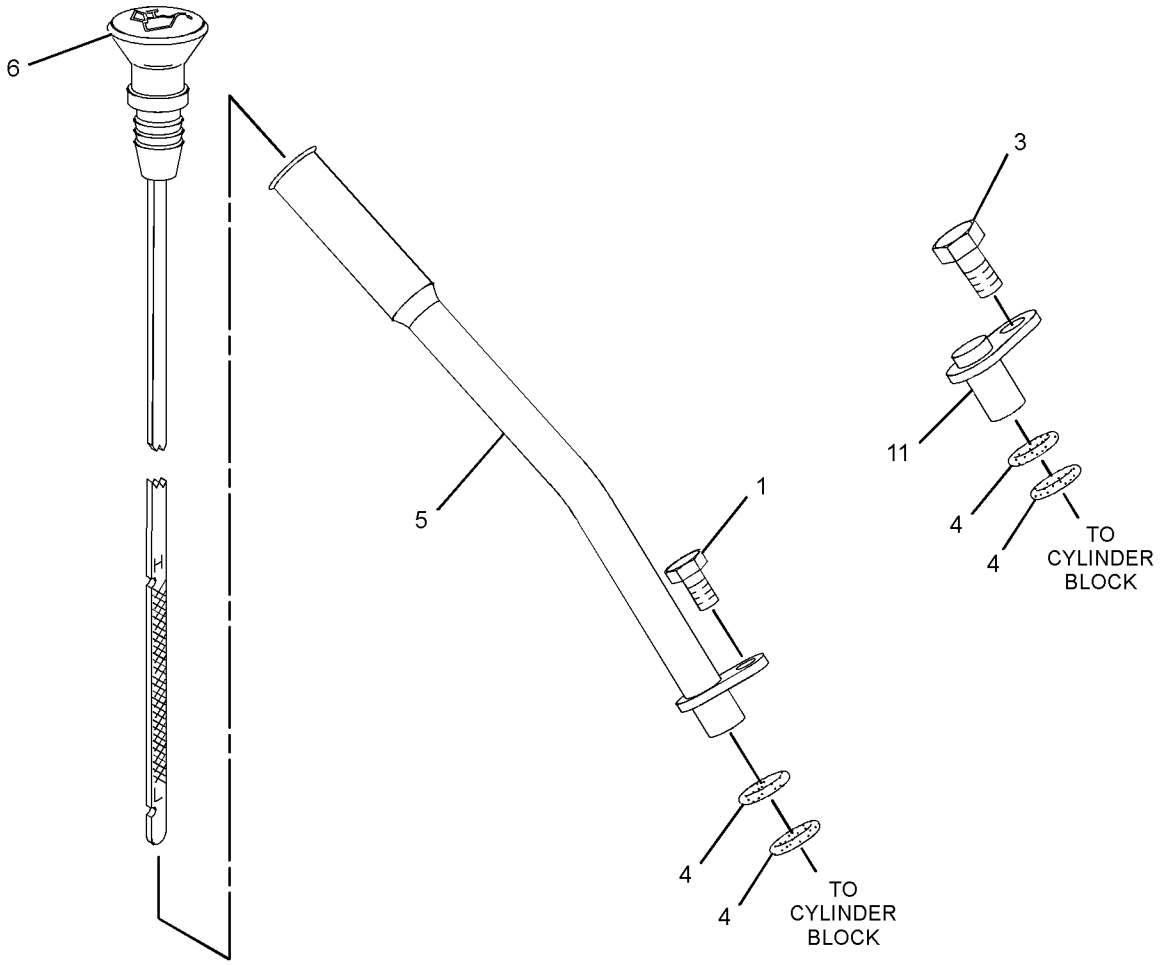

GRAPHIC #1 g01514024

322-0630 **PAN GP-OIL (**contd.**)** **i06231319**

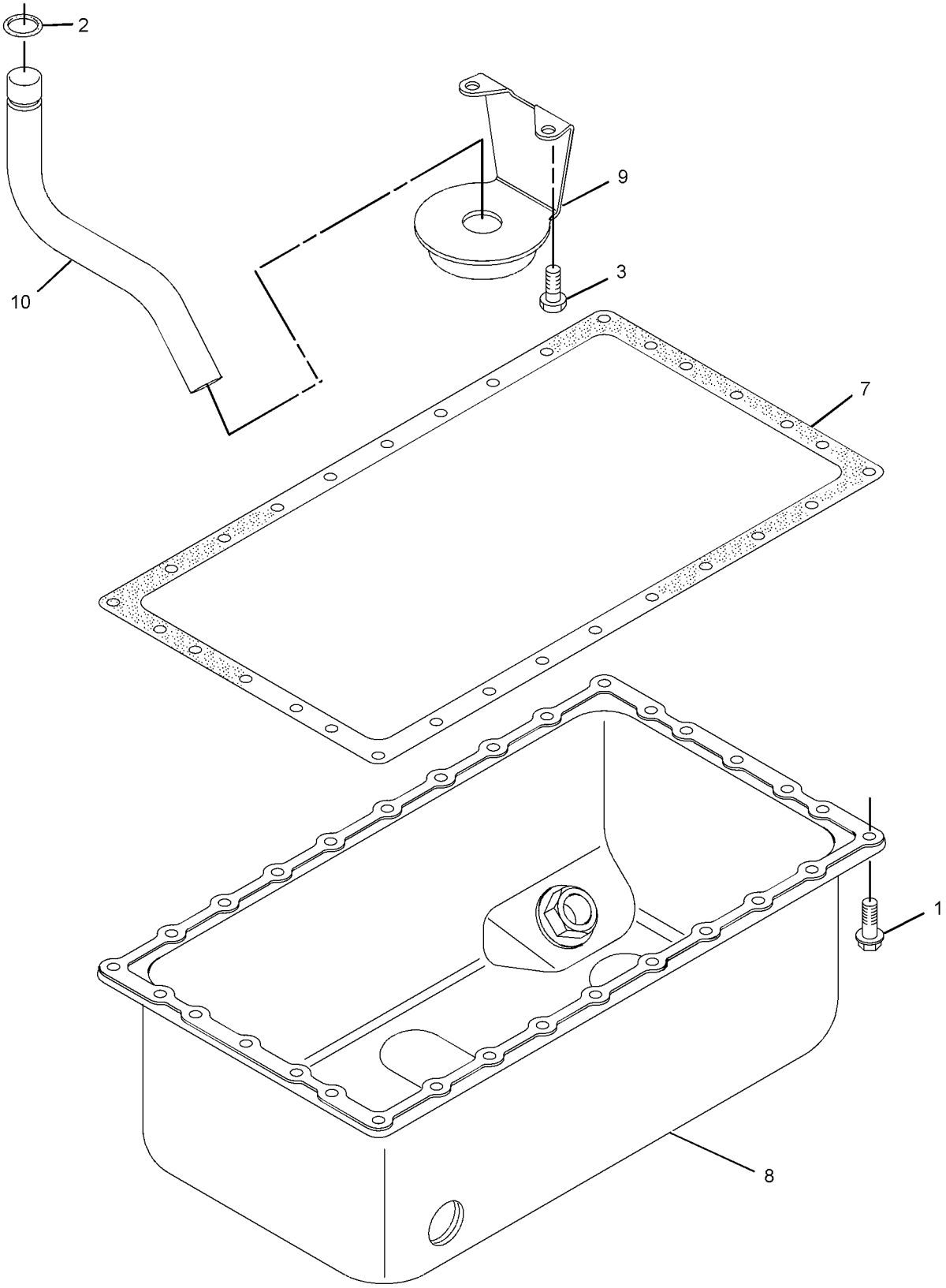

GRAPHIC #2 <END> g01880612

308-2286 PISTON & ROD GP

TYPE 1

SMCS-1225 **i05810354**

NOTE	REF NO	GRAPHIC REF	PART NUMBER	QTY	PART NAME 1 2 3 4 5 6 (PRODUCT LEVEL)	SEE PAGE
	1	1	**154-0867**	4	ROD AS-CONNECTING	
					(EACH INCLUDES)	
	1A	1	**154-0869**	1	BUSHING	
M	1B	1	**154-0870**	2	BOLT (M10X1.25X57.5-MM)	
M	1C	1	**154-0871**	2	NUT (M10X1.25X10-MM)	
	2	1	**154-0873**	4	PIN	
	3	1	**154-0874**	8	RING-RETAINING (INTERNAL)	
	4	1	**270-6968**	4	PISTON AS	
					(EACH INCLUDES)	
	4A	1	**270-6970**	1	KIT-PISTON RING	

M - METRIC PART

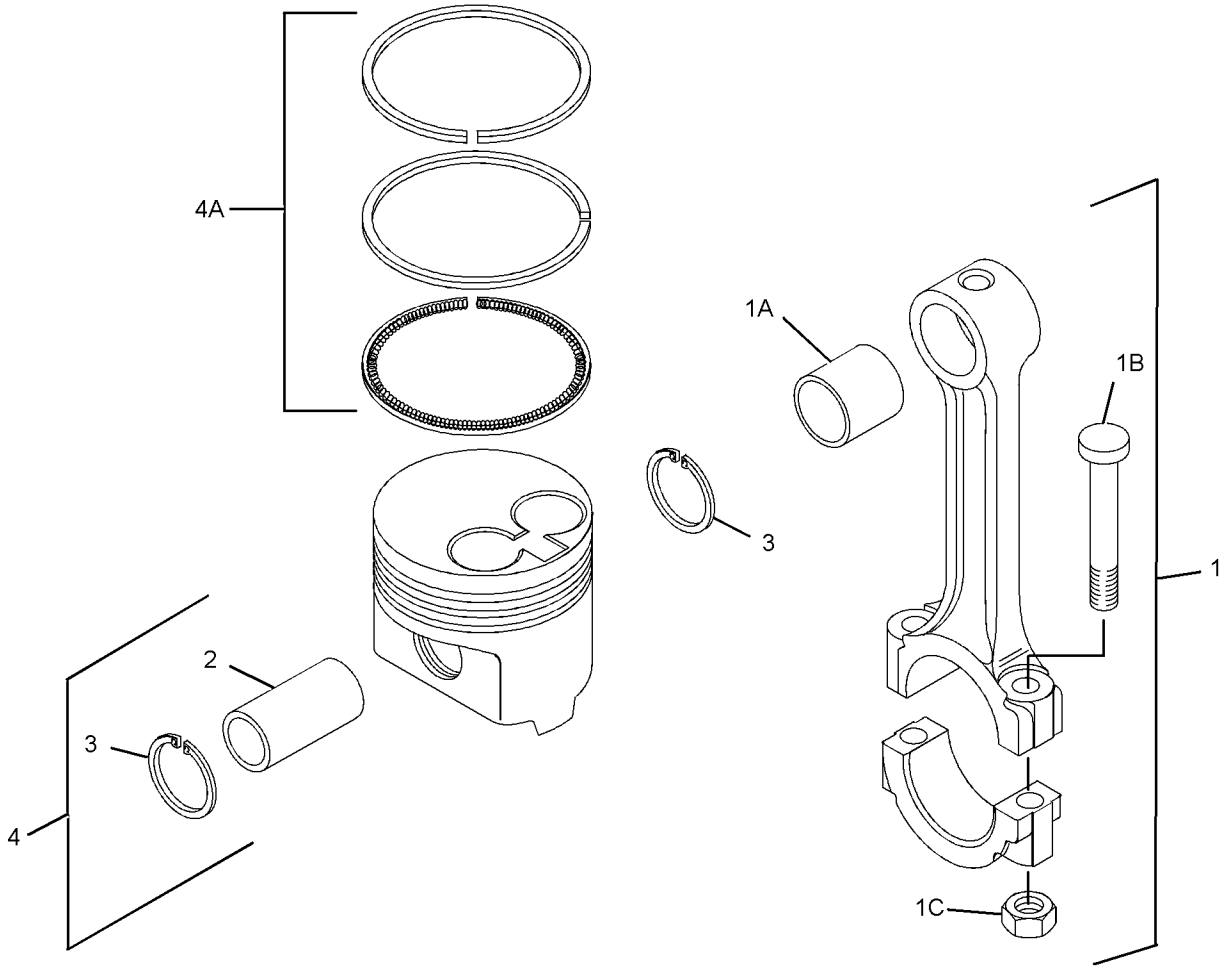

GRAPHIC #1 <END> g01410074

308-2286 PISTON & ROD GP

TYPE 2

SMCS-1225 **i07568650**

NOTE	REF NO	GRAPHIC REF	PART NUMBER	QTY	PART NAME 1 2 3 4 5 6 (PRODUCT LEVEL)	SEE PAGE
C	1	1	**514-7719**	4	ROD AS-CONNECTING	
					(EACH INCLUDES)	
	1A	1	**456-5315**	1	BUSHING	
M	1B	1	**154-0870**	2	BOLT (M10X1.25X57.5-MM)	
M	1C	1	**154-0871**	2	NUT (M10X1.25X10-MM)	
B		1	**463-1972**	1	BUSHING	
	2	1	**154-0873**	4	PIN	
	3	1	**154-0874**	8	RING-RETAINING (INTERNAL)	
	4	1	**270-6968**	4	PISTON AS	
					(EACH INCLUDES)	
	4A	1	**270-6970**	1	KIT-PISTON RING	

B - USE AS REQUIRED
C - CHANGE FROM PREVIOUS TYPE
M - METRIC PART

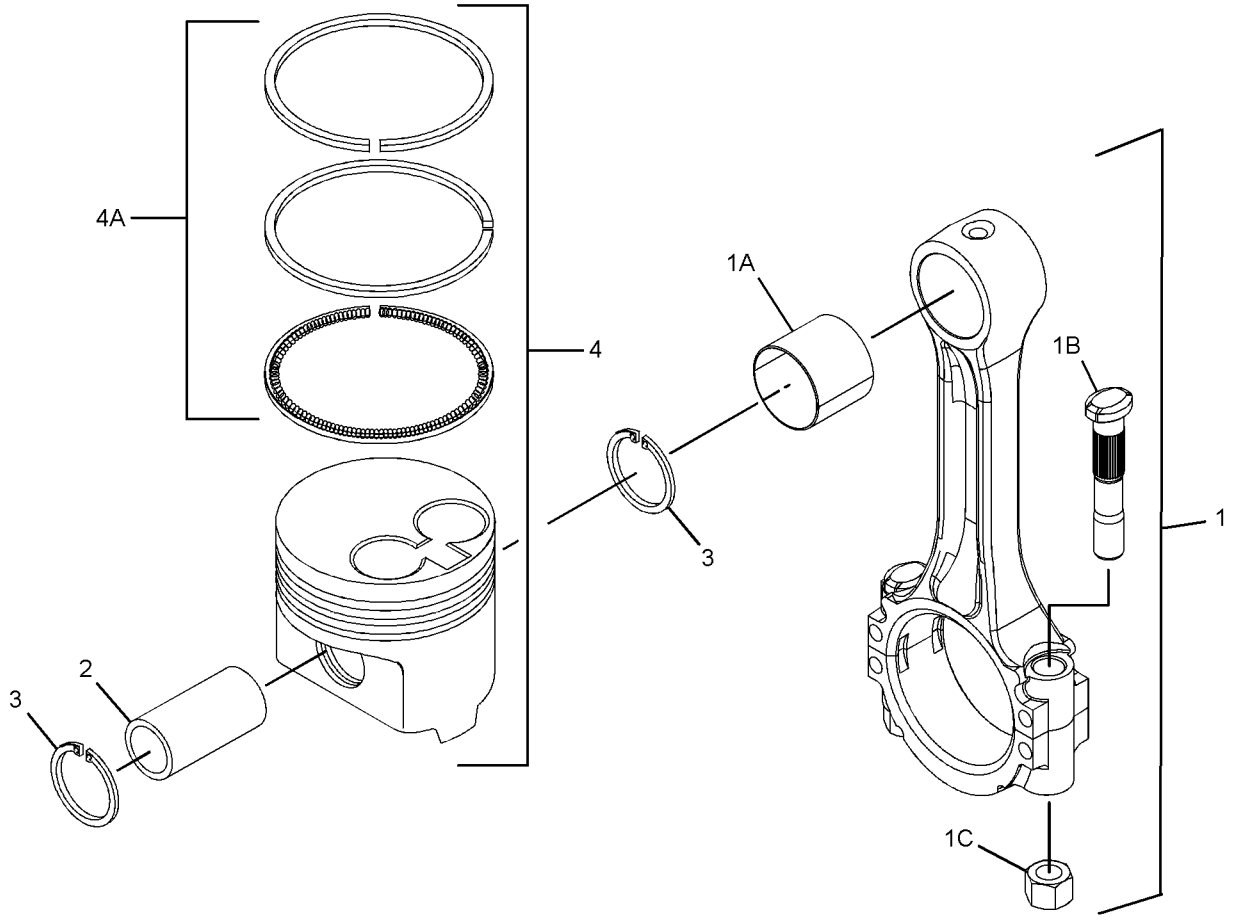

GRAPHIC #1 <END> g06362272

311-1101 PISTON & ROD GP

PART OF 435-1631 ENGINE AR, 435-1654 ENGINE AR-PRIMARY

SMCS-1225 **i07134254**

NOTE	REF NO	GRAPHIC REF	PART NUMBER	QTY	PART NAME 1 2 3 4 5 6 (PRODUCT LEVEL)	SEE PAGE
	1	1	**154-0873**	3	PIN	
	2	1	**154-0874**	6	RING-RETAINING (INTERNAL)	
	3	1	**156-6980**	3	ROD AS-CONNECTING	
					(EACH INCLUDES)	
	3A	1	**154-0869**	1	BUSHING	
M	3B	1	**154-0870**	2	BOLT (M10X1.25X57.5-MM)	
M	3C	1	**154-0871**	2	NUT (M10X1.25X10-MM)	
	4	1	**515-3484**	3	PISTON AS	
					(EACH INCLUDES)	
	4A	1	**217-1456**	1	KIT-PISTON RING	

M - METRIC PART

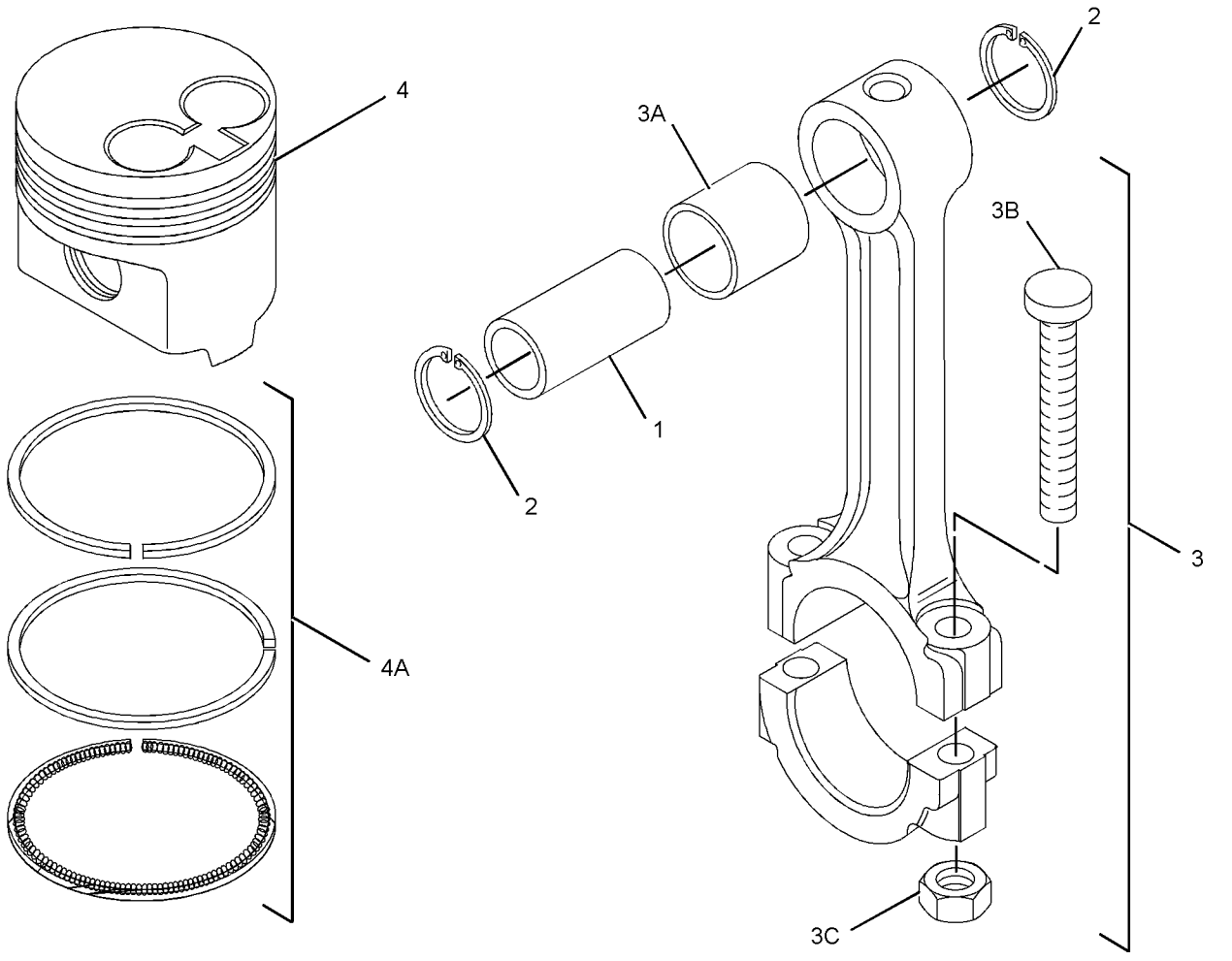

GRAPHIC #1 <END> g01412457

331-4501 PISTON & ROD GP

PART OF 435-1657 ENGINE AR-PRIMARY

SMCS-1225 **i03675210**

NOTE	REF NO	GRAPHIC REF	PART NUMBER	QTY	PART NAME 1 2 3 4 5 6 (PRODUCT LEVEL)	SEE PAGE
	1	1	**154-0873**	3	PIN	
	2	1	**154-0874**	6	RING-RETAINING (INTERNAL)	
	3	1	**156-6980**	3	ROD AS-CONNECTING	
					(EACH INCLUDES)	
	3A	1	**154-0869**	1	BUSHING	
M	3B	1	**154-0870**	2	BOLT (M10X1.25X57.5-MM)	
M	3C	1	**154-0871**	2	NUT (M10X1.25X10-MM)	
	4	1	**331-3870**	3	KIT-PISTON	
					(EACH INCLUDES)	
	4A	1	**217-1456**	1	KIT-PISTON RING	

M - METRIC PART

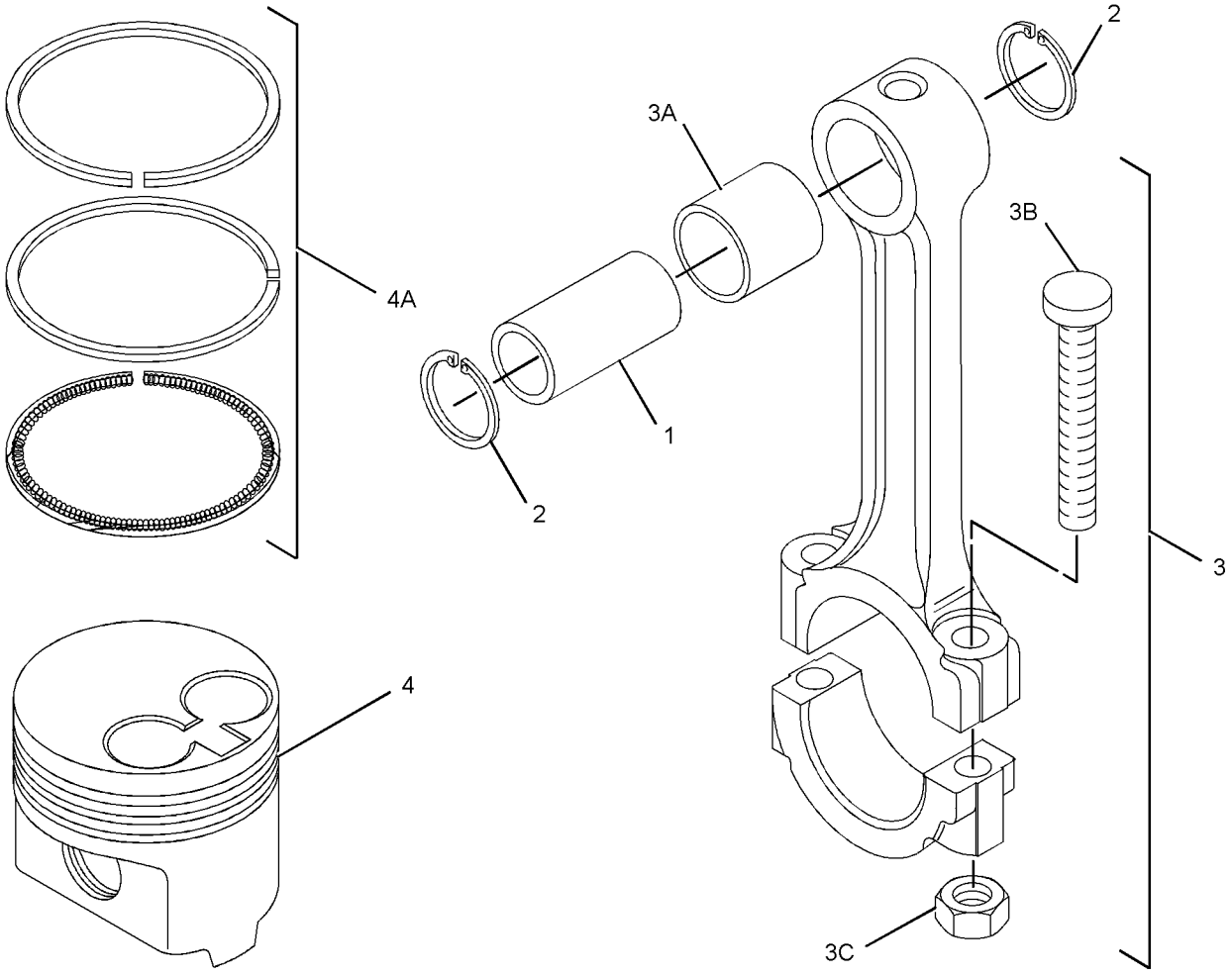

GRAPHIC #1 <END> g01609073

322-2426 PLUG GP-ENGINE

SMCS-1100, 1201 **i02959112**

NOTE	REF NO	GRAPHIC REF	PART NUMBER	QTY	PART NAME 1 2 3 4 5 6 (PRODUCT LEVEL)	SEE PAGE
	1	1	**153-6835**	1	SEAL-O-RING	
	2	1	**161-8273**	1	PLUG	

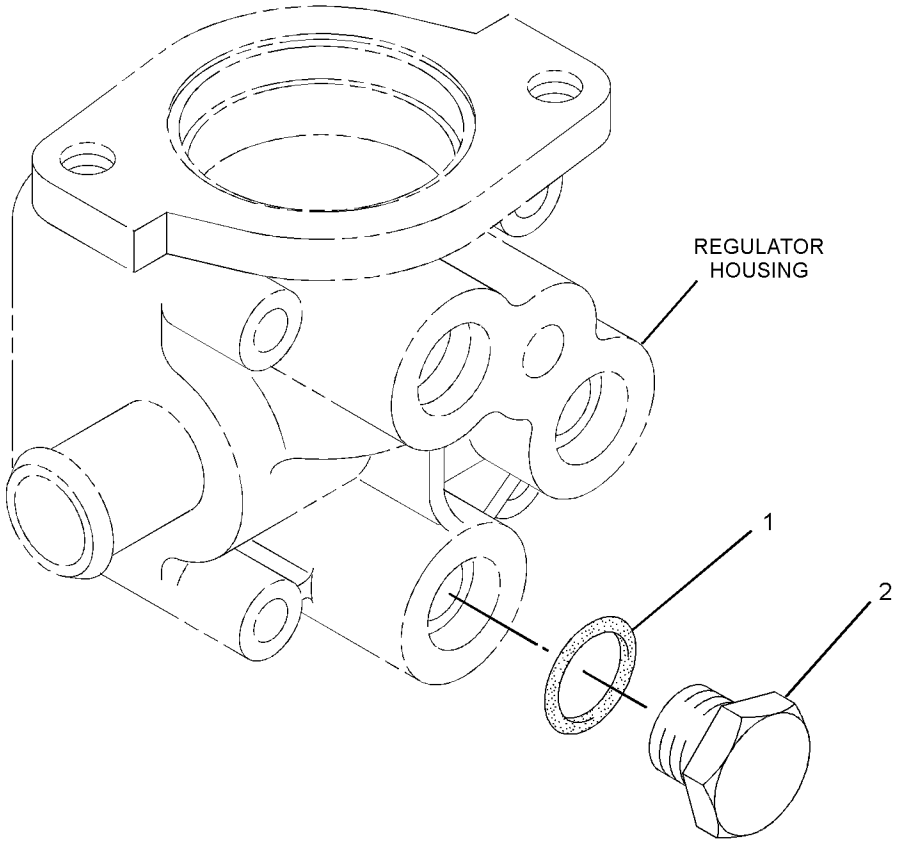

GRAPHIC #1 <END> g01514601

323-9157 PLUG GP-ENGINE

SMCS-1100, 1201 **i05533438**

NOTE	REF NO	GRAPHIC REF	PART NUMBER	QTY	PART NAME 1 2 3 4 5 6 (PRODUCT LEVEL)	SEE PAGE
	1	1	**153-5936**	2	WASHER (8.2X14.5X1-MM)	
	2	1	**183-1165**	1	PLUG	
	3	1	**438-1431**	1	ADAPTER	
M	4	1	**153-6881**	1	BOLT (M8X1.25X18-MM)	

M - METRIC PART

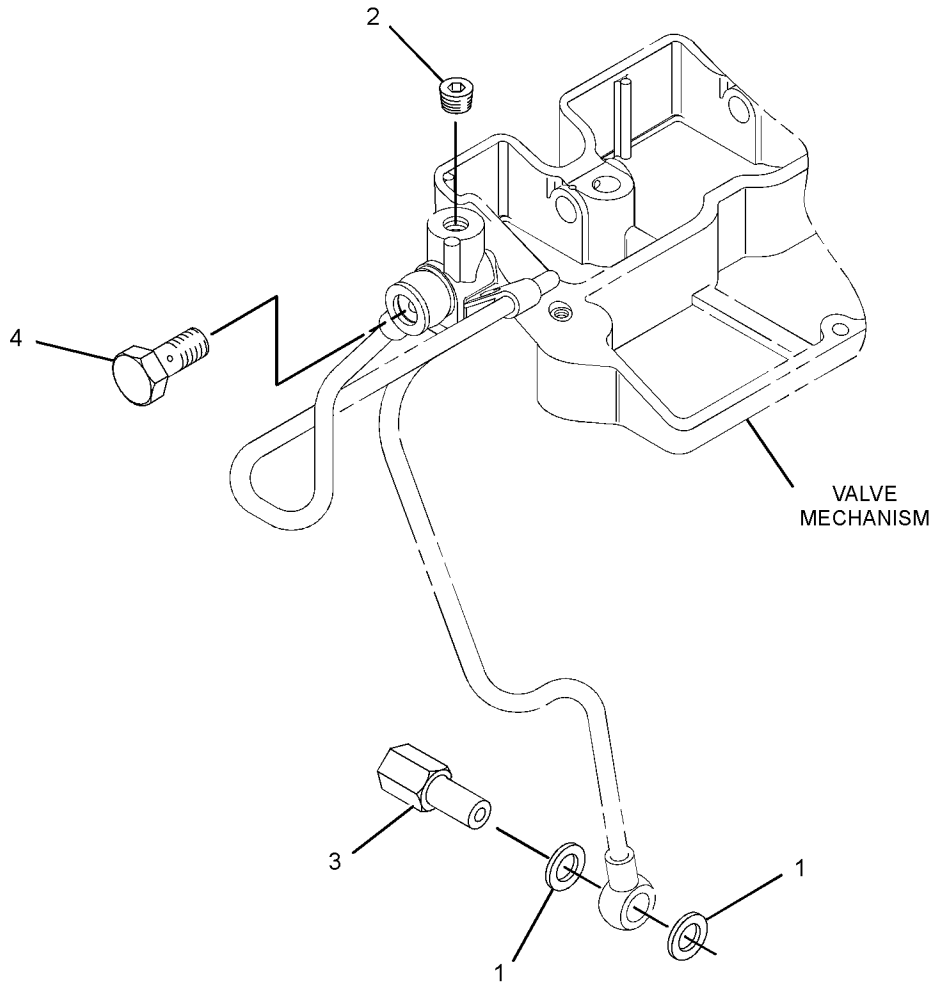

GRAPHIC #1 <END> g03505981

309-6720 PLUG GP-OIL PAN—DRAIN

PART OF 435-1631 ENGINE AR, 435-1654, 435-1657 ENGINE AR-PRIMARY

SMCS-1302 **i05810323**

NOTE	REF NO	GRAPHIC REF	PART NUMBER	QTY	PART NAME 1 2 3 4 5 6 (PRODUCT LEVEL)	SEE PAGE
	1	1	**153-6412**	2	WASHER	
	2	1	**423-6224**	2	PLUG-DRAIN (ENGINE OIL PAN)	

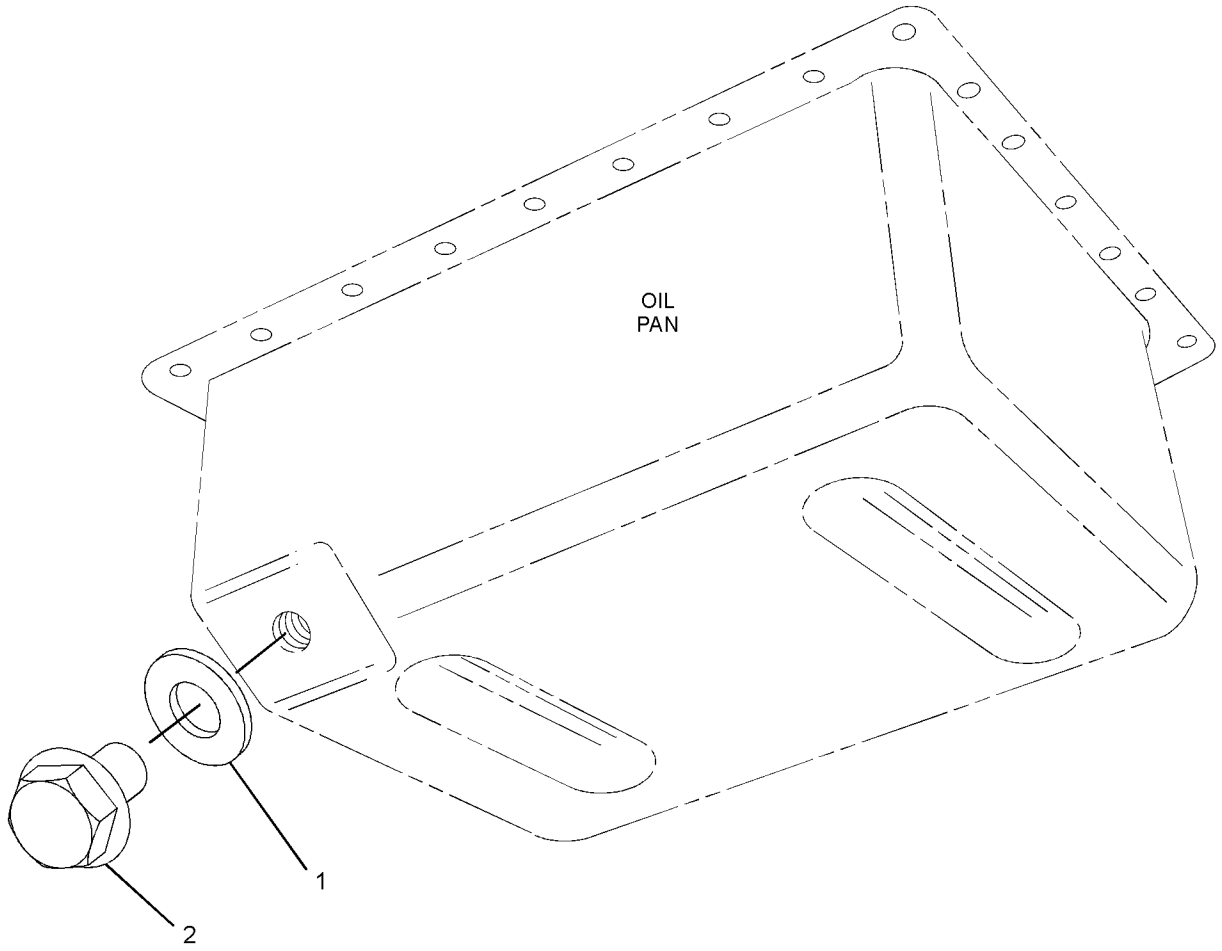

GRAPHIC #1 <END> g03428832

311-1114 PULLEY GP-CRANKSHAFT

PART OF 435-1631 ENGINE AR, 435-1654, 435-1657 ENGINE AR-PRIMARY

SMCS-1205 **i06097141**

NOTE	REF NO	GRAPHIC REF	PART NUMBER	QTY	PART NAME 1 2 3 4 5 6 (PRODUCT LEVEL)	SEE PAGE
	1	1	**153-6492**	1	KEY-WOODRUFF	
M	2	1	**154-1880**	1	NUT (M24X1.5-THD)	
	3	1	**324-7849**	1	PULLEY-CRANKSHAFT	

M - METRIC PART

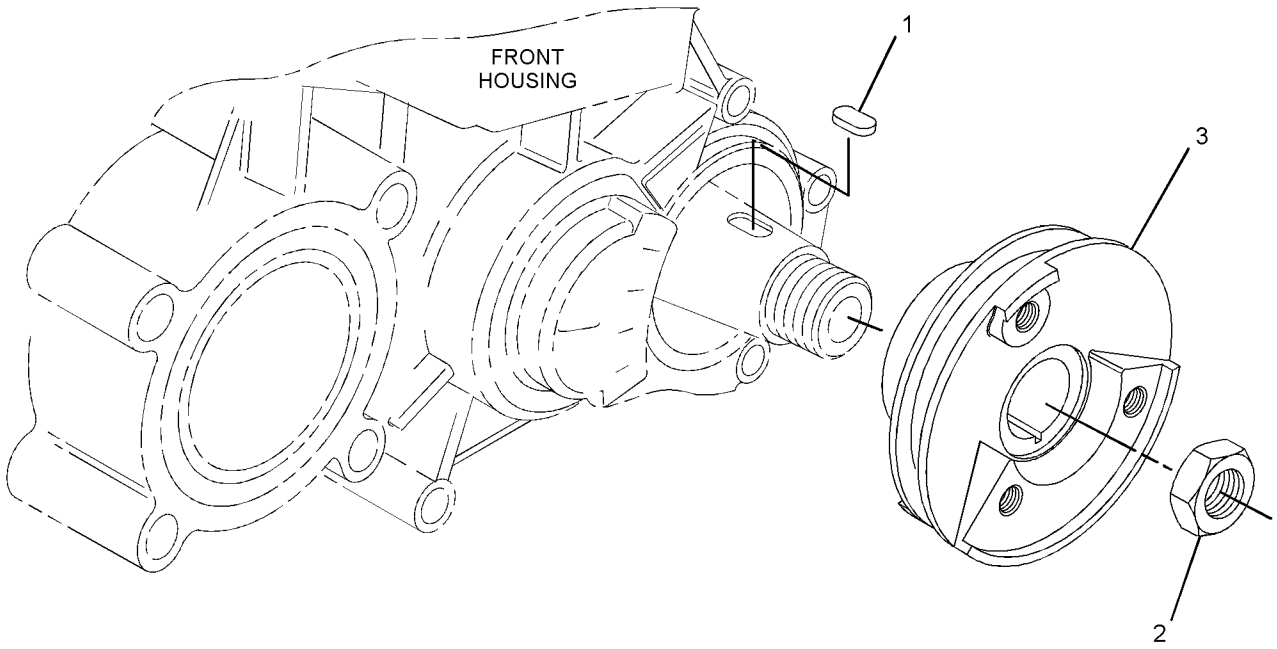

GRAPHIC #1 <END> g01725155

311-1111 PULLEY GP-FAN

SMCS-1384 **i07577297**

NOTE	REF NO	GRAPHIC REF	PART NUMBER	QTY	PART NAME 1 2 3 4 5 6 (PRODUCT LEVEL)	SEE PAGE
	1	1	**483-3937**	1	PULLEY-FAN	

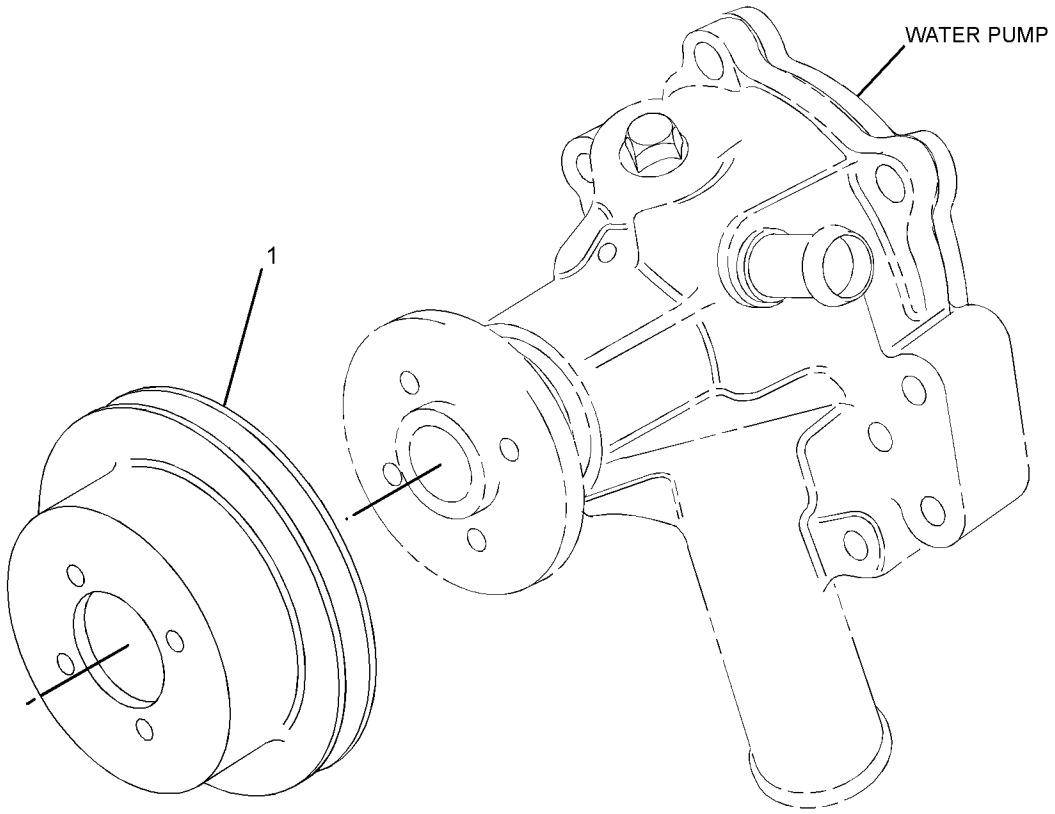

GRAPHIC #1 <END> g01412305

322-1392 PULLEY GP-FAN

SMCS-1384 **i03489514**

NOTE	REF NO	GRAPHIC REF	PART NUMBER	QTY	PART NAME 1 2 3 4 5 6 (PRODUCT LEVEL)	SEE PAGE
	1	1	**191-9342**	1	PULLEY-WATER PUMP	

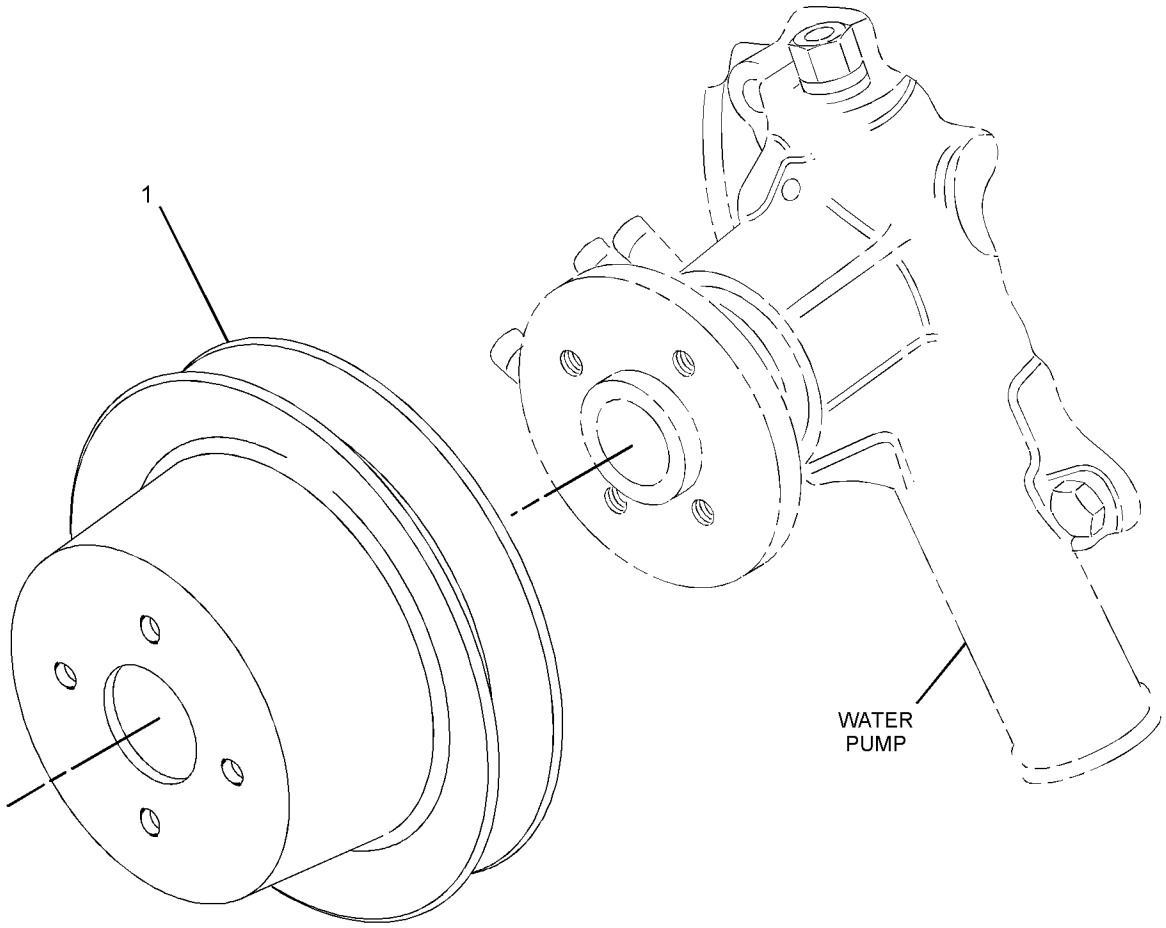

GRAPHIC #1 <END> g01453721

311-1160 ROCKER ARM GP

PART OF 311-1103, 331-4503 VALVE MECHANISM GP

SMCS-1123 **i02844838**

NOTE	REF NO	GRAPHIC REF	PART NUMBER	QTY	PART NAME 1 2 3 4 5 6 (PRODUCT LEVEL)	SEE PAGE
	1	1	**153-5587**	6	SCREW-ADJUSTMENT	
M	2	1	**153-5590**	6	NUT (M7X1-THD)	
	3	1	**153-6835**	1	SEAL-O-RING	
	4	1	**154-1240**	3	LEVER (RH)	
	5	1	**154-1241**	3	LEVER (LH)	
	6	1	**154-1242**	2	SPRING	
	7	1	**154-1243**	4	WASHER (15.2X21X0.5-MM THK)	
	8	1	**235-6984**	1	SHAFT-ROCKER ARM	

M - METRIC PART

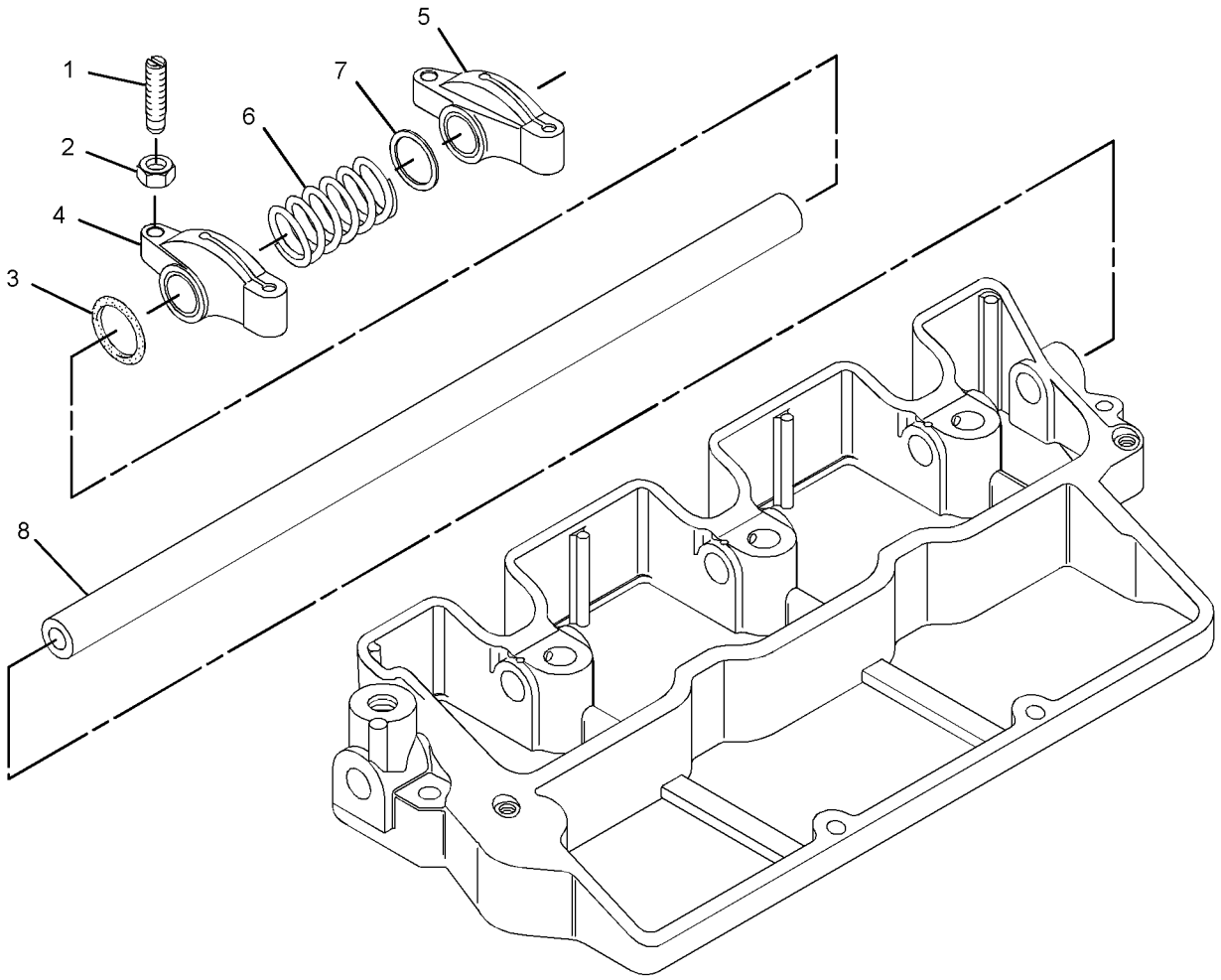

GRAPHIC #1 <END> g01413170

311-1121 V-BELT GP–WATER PUMP

SMCS-1357 **i02855314**

NOTE	REF NO	GRAPHIC REF	PART NUMBER	QTY	PART NAME 1 2 3 4 5 6 (PRODUCT LEVEL)	SEE PAGE
	1	1	**162-2468**	1	V-BELT (WATER PUMP)	

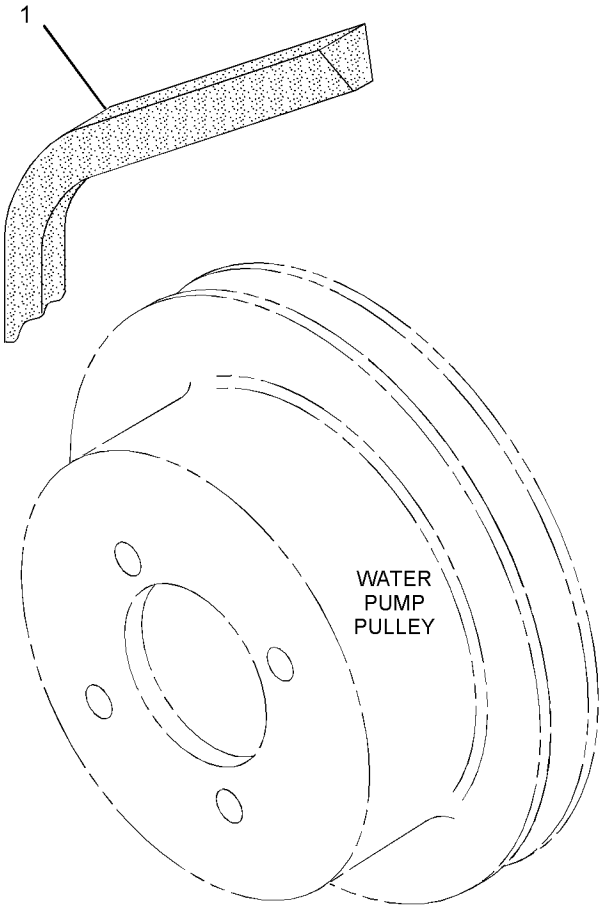

GRAPHIC #1 <END> g01407842

322-0886 V-BELT GP

SMCS-1357 **i03489521**

NOTE	REF NO	GRAPHIC REF	PART NUMBER	QTY	PART NAME 1 2 3 4 5 6 (PRODUCT LEVEL)	SEE PAGE
	1	1	**292-9620**	1	V-BELT (WATER PUMP)	

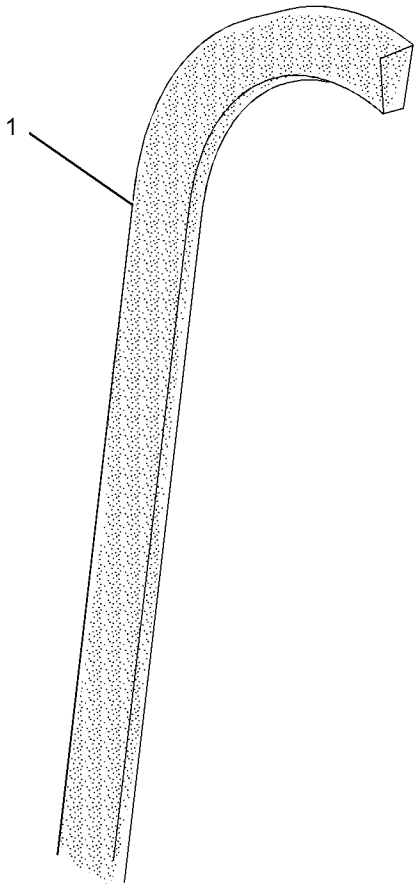

GRAPHIC #1 <END> g01448298

311-1103 VALVE MECHANISM GP

PART OF 435-1631 ENGINE AR, 435-1654 ENGINE AR-PRIMARY

SMCS-1102, 1121, 1123, 1209 **i07561689**

NOTE	REF NO	GRAPHIC REF	PART NUMBER	QTY	PART NAME 1 2 3 4 5 6 (PRODUCT LEVEL)	SEE PAGE
	1	1	**153-5961**	2	BOLT AS	
M	2	1	**153-7988**	3	NUT (M10X1.25-THD)	
M	3	1	**154-1246**	3	STUD (M10X1.5X95-MM)	
	4	1	**438-9109**	6	TAPPET	
	5	1	**528-6883**	6	PUSHROD AS	
	6	1	**447-5255**	1	SEAL	
Y	7	1	**311-1160**	1	ROCKER ARM GP	136

M - METRIC PART
Y - SEPARATE ILLUSTRATION

311-1103 **VALVE MECHANISM GP (**contd.**)** **i07561689**

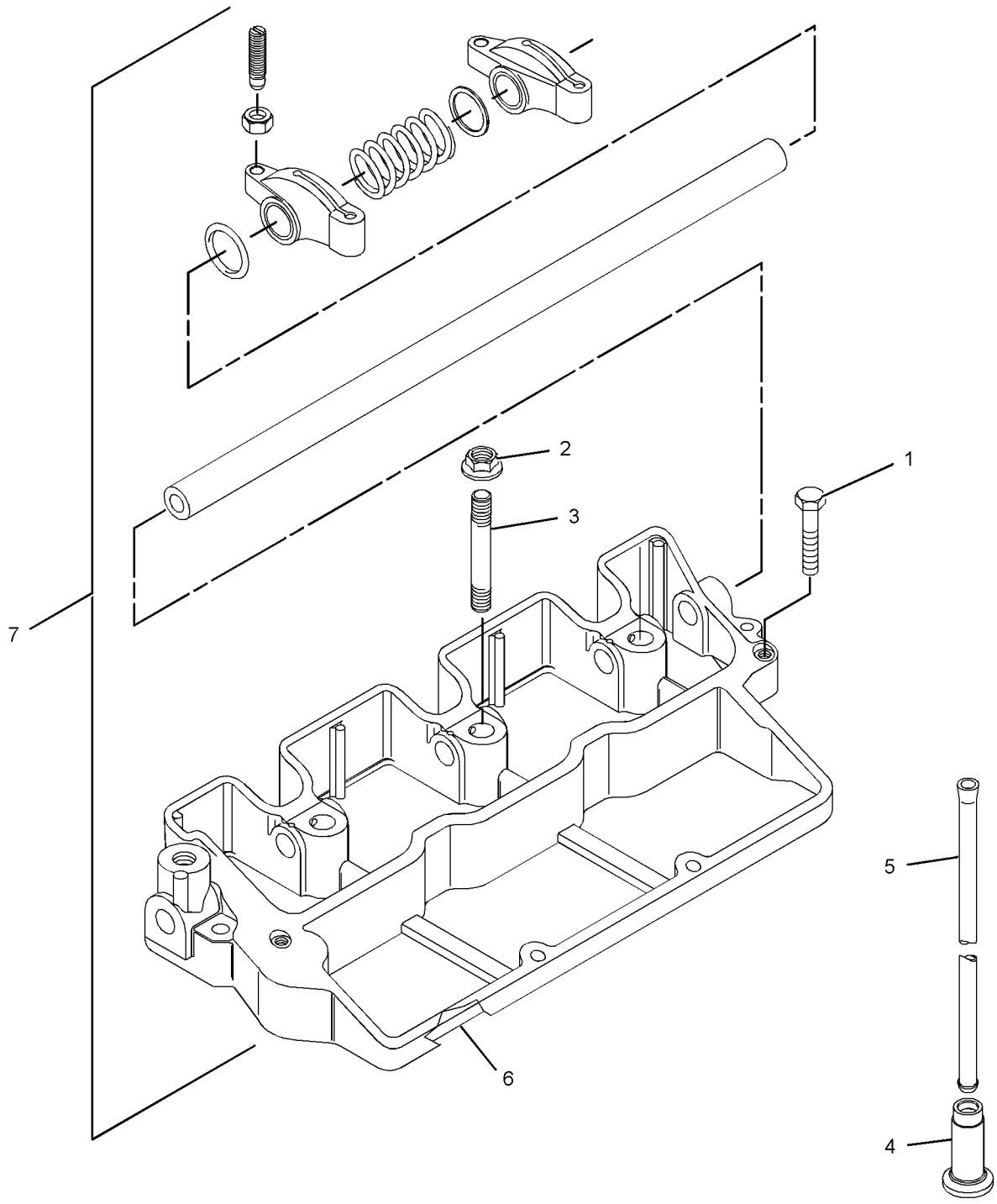

GRAPHIC #1 <END> g03415927

331-4503 VALVE MECHANISM GP

PART OF 435-1657 ENGINE AR-PRIMARY

SMCS-1102, 1121, 1123, 1209 **i06224881**

NOTE	REF NO	GRAPHIC REF	PART NUMBER	QTY	PART NAME 1 2 3 4 5 6 (PRODUCT LEVEL)	SEE PAGE
	1	1	**153-5961**	2	BOLT AS	
M	2	1	**153-7988**	3	NUT (M10X1.25-THD)	
M	3	1	**154-1246**	3	STUD (M10X1.5X95-MM)	
	4	1	**438-9109**	6	TAPPET	
	5	1	**160-3534**	6	PUSHROD	
	6	1	**447-5255**	1	SEAL	
Y	7	1	**311-1160**	1	ROCKER ARM GP	136

M - METRIC PART
Y - SEPARATE ILLUSTRATION

331-4503 **VALVE MECHANISM GP (**contd.**)** **i06224881**

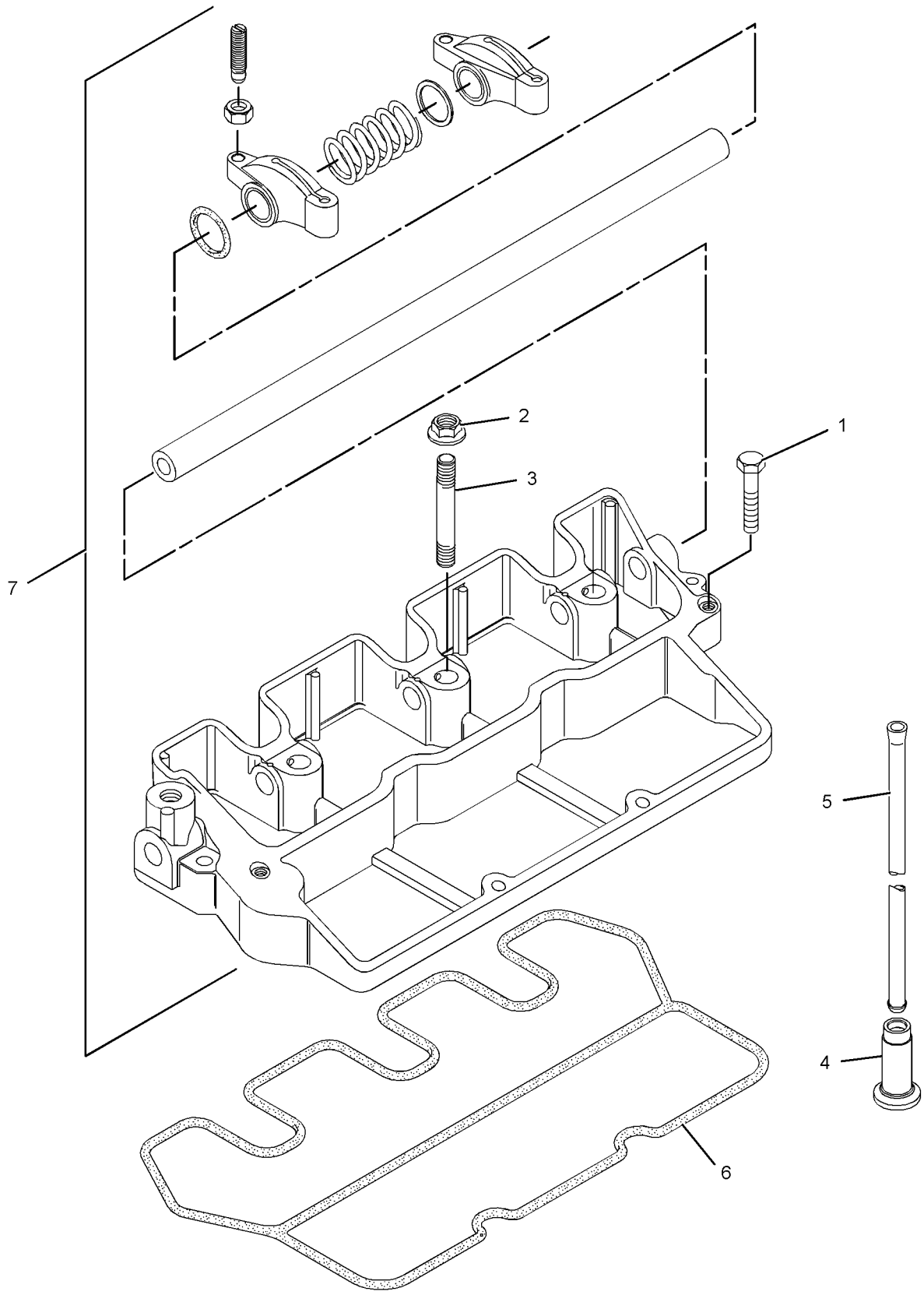

GRAPHIC #1 <END> g01412998

311-1113 FILLER GP-ENGINE OIL

PART OF 435-1631 ENGINE AR, 435-1654, 435-1657 ENGINE AR-PRIMARY

SMCS-1316 **i06683914**

NOTE	REF NO	GRAPHIC REF	PART NUMBER	QTY	PART NAME 1 2 3 4 5 6 (PRODUCT LEVEL)	SEE PAGE
	1	1	**153-5933**	1	SEAL (ENGINE OIL FILL CAP)	
	2	1	**217-7358**	1	CAP-OIL FILLER (ENGINE)	
	3	1	**288-6593**	1	SEAL (ENGINE OIL FILL CAP)	
	4	1	**334-0272**	1	PLUG-OIL FILLER (ENGINE)	
	5	1	**481-1650**	1	GASKET	
	6	1	**183-4323**	1	COVER	
	7	1	**153-6838**	2	BOLT AS	

311-1113 **FILLER GP-ENGINE OIL (**contd.**)** **i06683914**

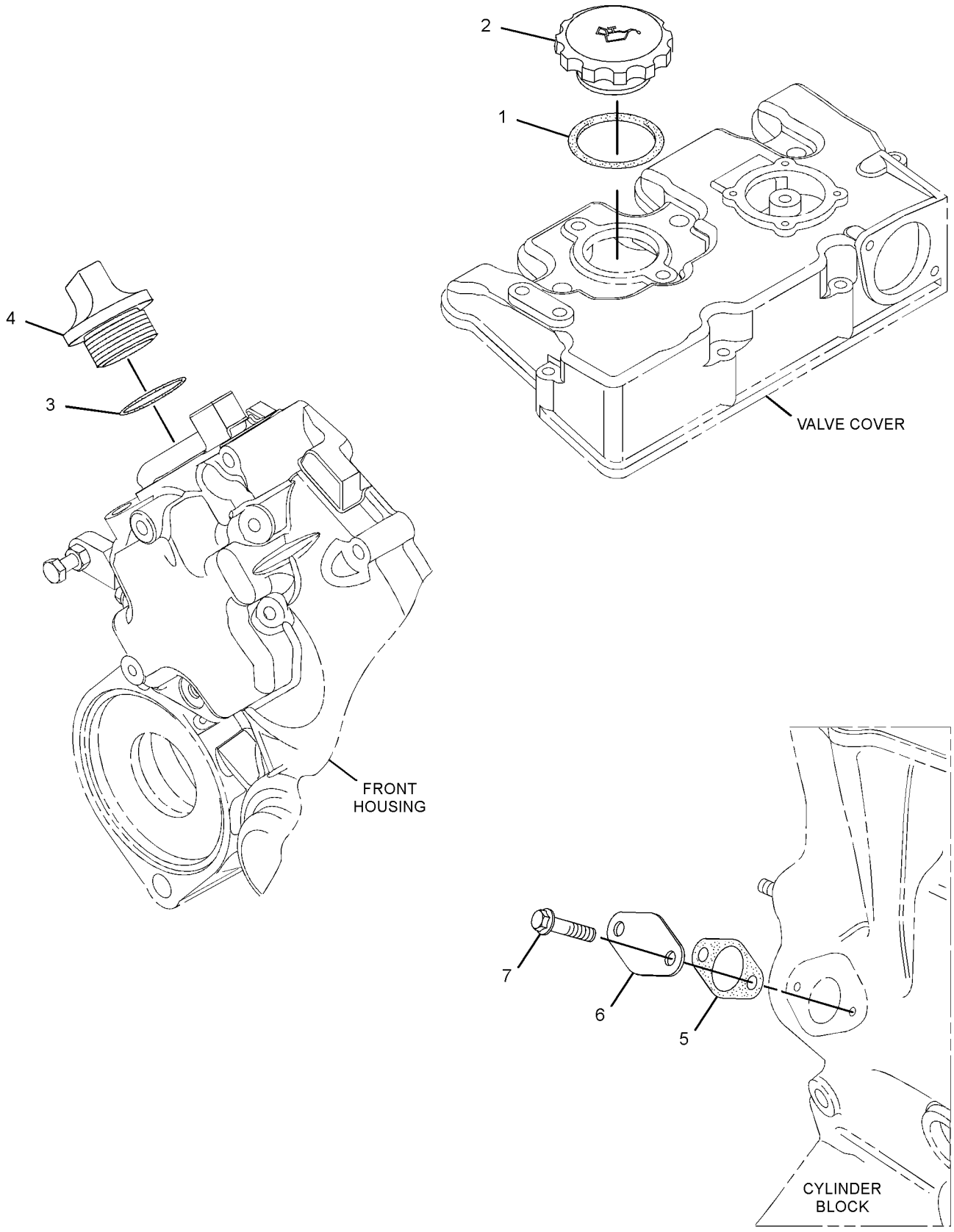

GRAPHIC #1 <END> g02712709

365-0485 FILLER GP-ENGINE OIL

SMCS-1316 **i04099793**

NOTE	REF NO	GRAPHIC REF	PART NUMBER	QTY	PART NAME 1 2 3 4 5 6 (PRODUCT LEVEL)	SEE PAGE
	1	1	**095-1604**	1	SEAL-O-RING	
	2	1	**217-7358**	1	CAP-OIL FILLER (ENGINE)	
	3	1	**288-6593**	1	SEAL (ENGINE OIL FILLER)	
	4	1	**334-0272**	1	PLUG-OIL FILLER (ENGINE OIL)	

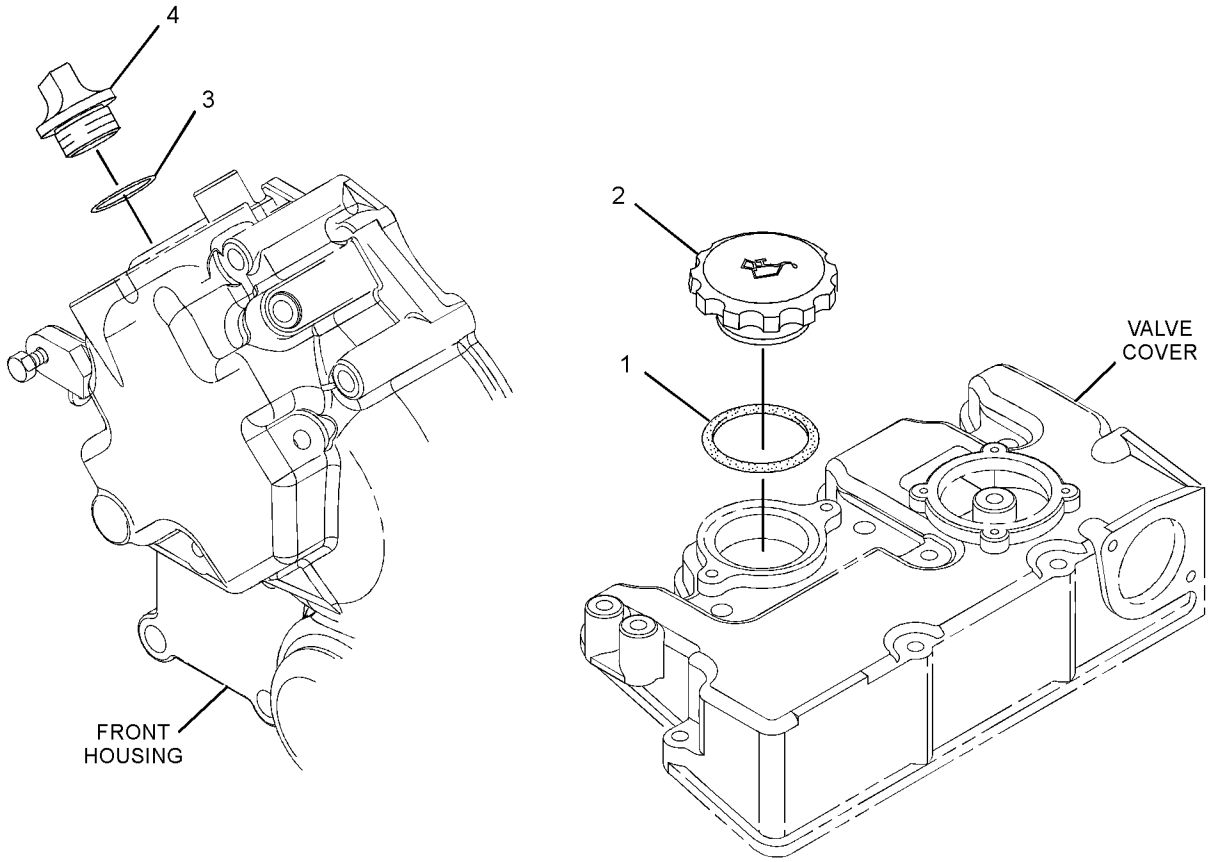

GRAPHIC #1 <END> g01388692

419-6687 FILLER GP-ENGINE OIL

SMCS-1316 **i06559520**

NOTE	REF NO	GRAPHIC REF	PART NUMBER	QTY	PART NAME 1 2 3 4 5 6 (PRODUCT LEVEL)	SEE PAGE
	1	1	**288-6593**	1	SEAL (ENGINE OIL FILLER)	
	2	1	**334-0272**	1	PLUG-OIL FILLER (ENGINE OIL)	

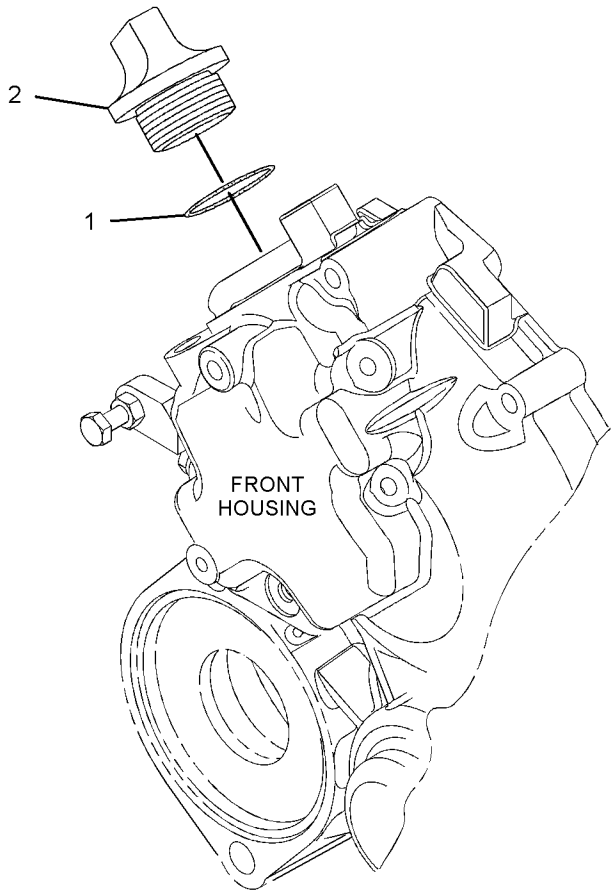

GRAPHIC #1 <END> g03644808

308-2298 FILTER GP-ENGINE OIL

PART OF 435-1631 ENGINE AR, 435-1654, 435-1657 ENGINE AR-PRIMARY

SMCS-1306, 1308 **i05810275**

NOTE	REF NO	GRAPHIC REF	PART NUMBER	QTY	PART NAME 1 2 3 4 5 6 (PRODUCT LEVEL)	SEE PAGE
	1	1	**220-1523**	1	FILTER AS-ENGINE OIL	

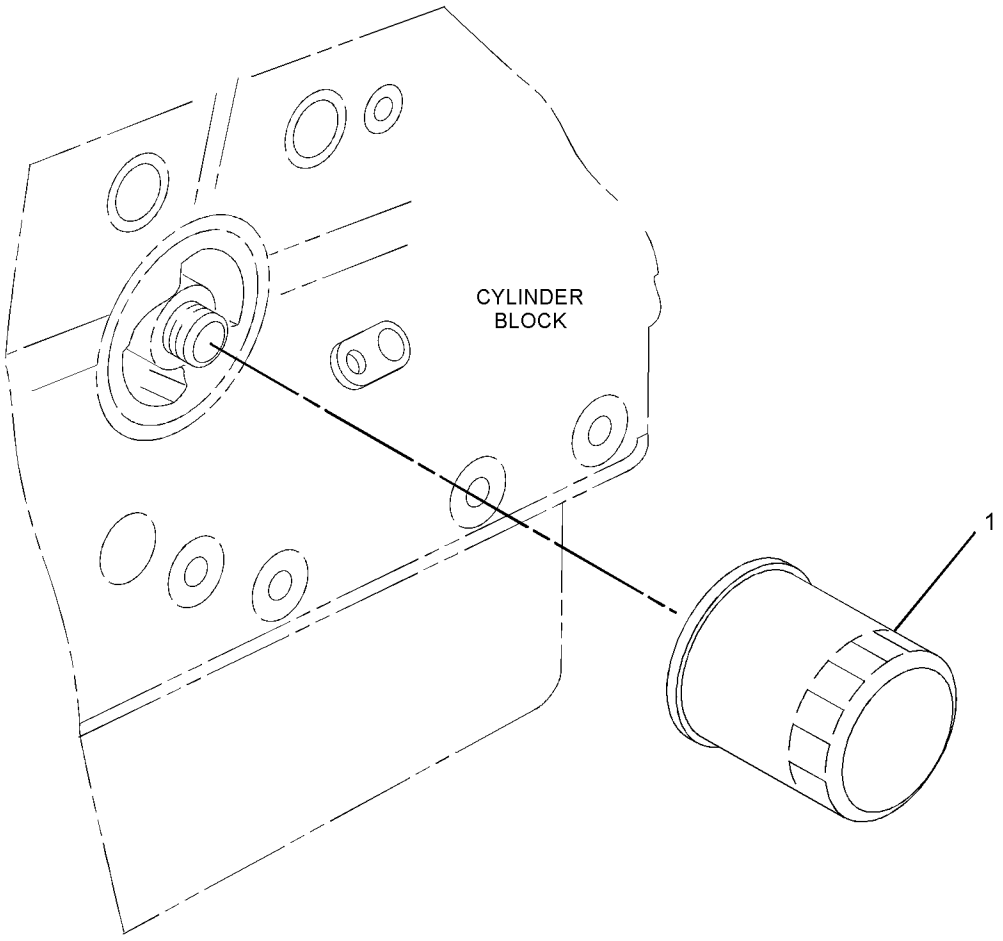

GRAPHIC #1 <END> g01389723

331-4509 LINES GP-ENGINE OIL

SMCS-1307 **i05324751**

NOTE	REF NO	GRAPHIC REF	PART NUMBER	QTY	PART NAME 1 2 3 4 5 6 (PRODUCT LEVEL)	SEE PAGE
	1	1	**153-6879**	1	STUD-HOLLOW	
	2	1	**160-4826**	4	CLAMP-HOSE	
	3	1	**331-3872**	1	HOSE	
	4	1	**331-3873**	1	HOSE	
	5	1	**155-7984**	1	WASHER (8.4X16X1.6-MM THK)	
	6	1	**153-6375**	1	BOLT AS	
	7	1	**127-8281**	1	CLIP	

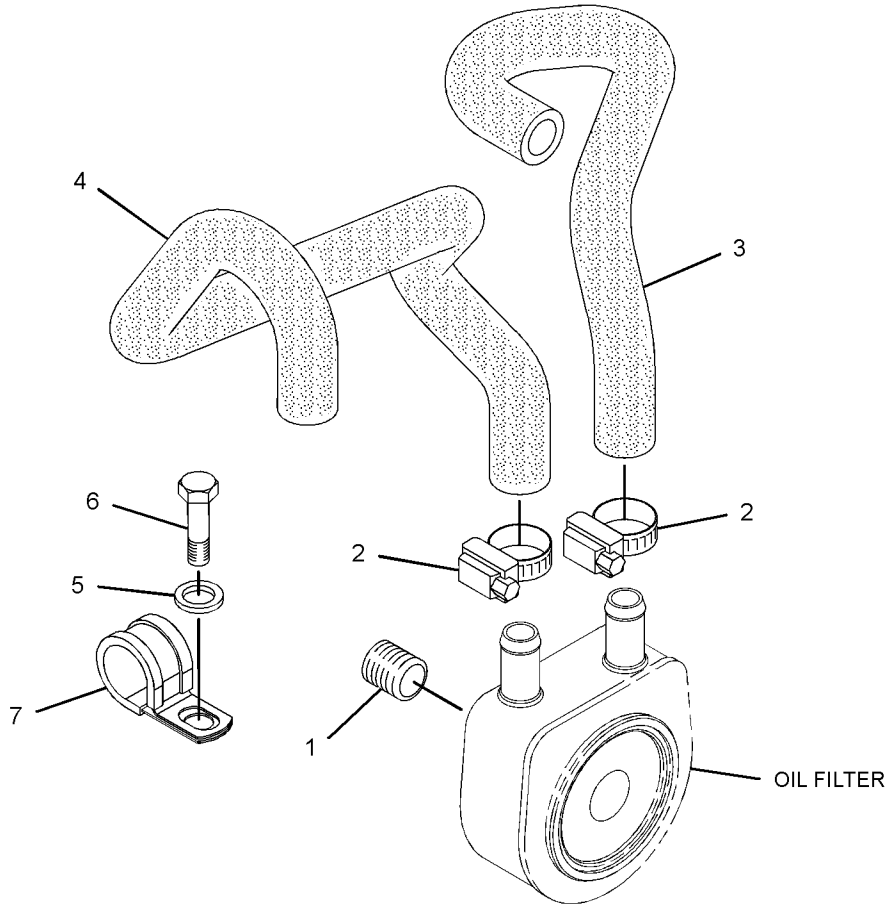

GRAPHIC #1 <END> g03745022

334-7293 LINES GP-ENGINE OIL

PART OF 435-1657 ENGINE AR-PRIMARY

SMCS-1307 **i03349036**

NOTE	REF NO	GRAPHIC REF	PART NUMBER	QTY	PART NAME 1 2 3 4 5 6 (PRODUCT LEVEL)	SEE PAGE
	1	1	**127-8281**	1	CLIP	
	2	1	**334-7291**	1	CLIP-HOSE	
	3	1	**153-6879**	1	STUD-HOLLOW	
	4	1	**331-3872**	1	HOSE	
	5	1	**160-4826**	4	CLAMP-HOSE	
	6	1	**331-2590**	1	HOSE	

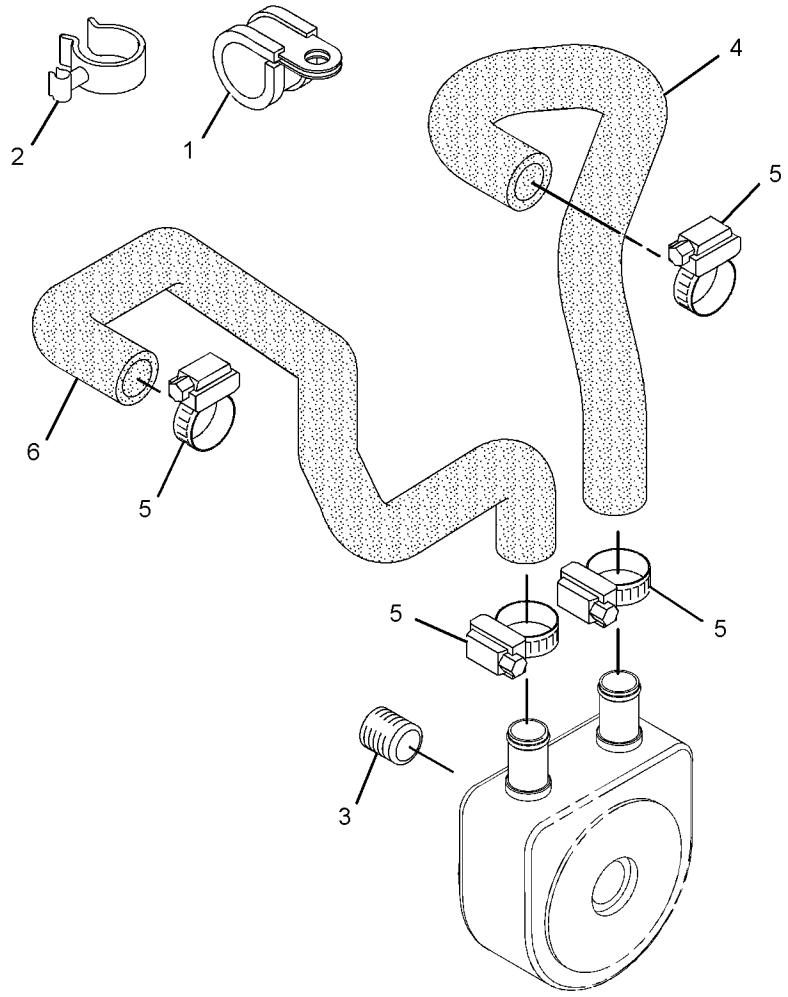

GRAPHIC #1 <END> g01964537

308-4735 MOUNTING GP-ENGINE OIL FILTER

PART OF 435-1631 ENGINE AR, 435-1654 ENGINE AR-PRIMARY

SMCS-1306, 1308 **i05810308**

NOTE	REF NO	GRAPHIC REF	PART NUMBER	QTY	PART NAME 1 2 3 4 5 6 (PRODUCT LEVEL)	SEE PAGE
	1	1	**153-6879**	1	STUD-HOLLOW	

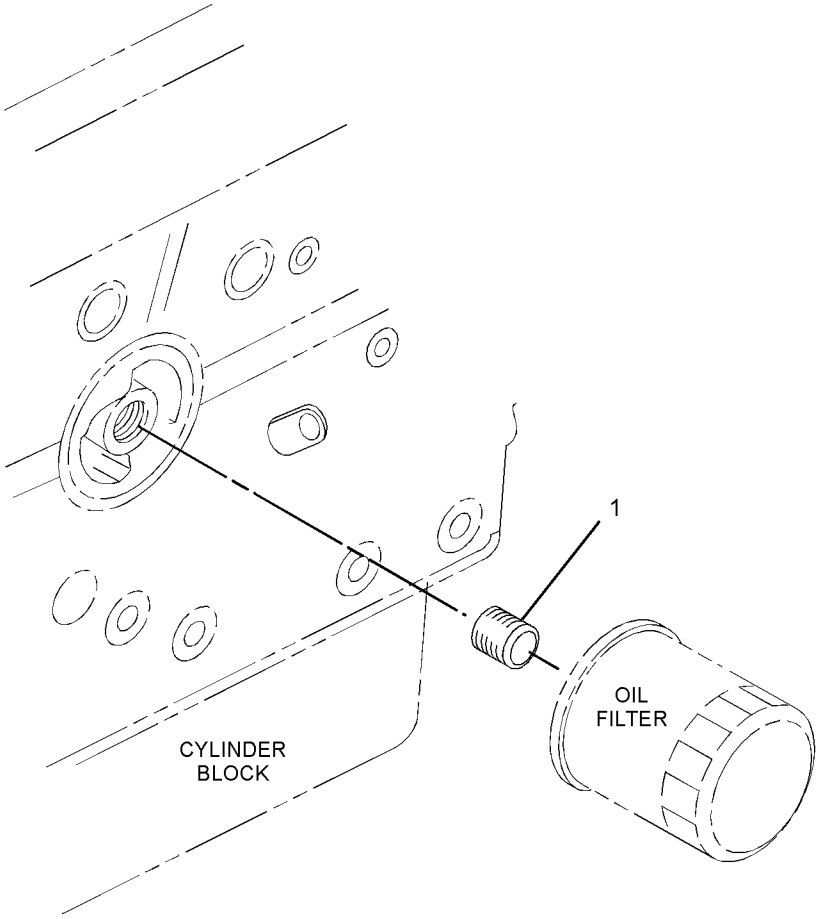

GRAPHIC #1 <END> g01355707

311-1104 PUMP GP-ENGINE OIL

PART OF 435-1631 ENGINE AR, 435-1654 ENGINE AR-PRIMARY

SMCS-1304, 1315 **i03691409**

NOTE	REF NO	GRAPHIC REF	PART NUMBER	QTY	PART NAME 1 2 3 4 5 6 (PRODUCT LEVEL)	SEE PAGE
	1	1	**153-5936**	2	WASHER (8.2X14.5X1-MM)	
	2	1	**153-6853**	1	SEAL-O-RING	
M	3	1	**153-6881**	1	BOLT (M8X1.25X18-MM)	
	4	1	**154-1942**	1	VALVE-RELIEF (ENGINE OIL PRESSURE)	
	5	1	**190-3828**	1	TUBE AS-OIL	

M - METRIC PART

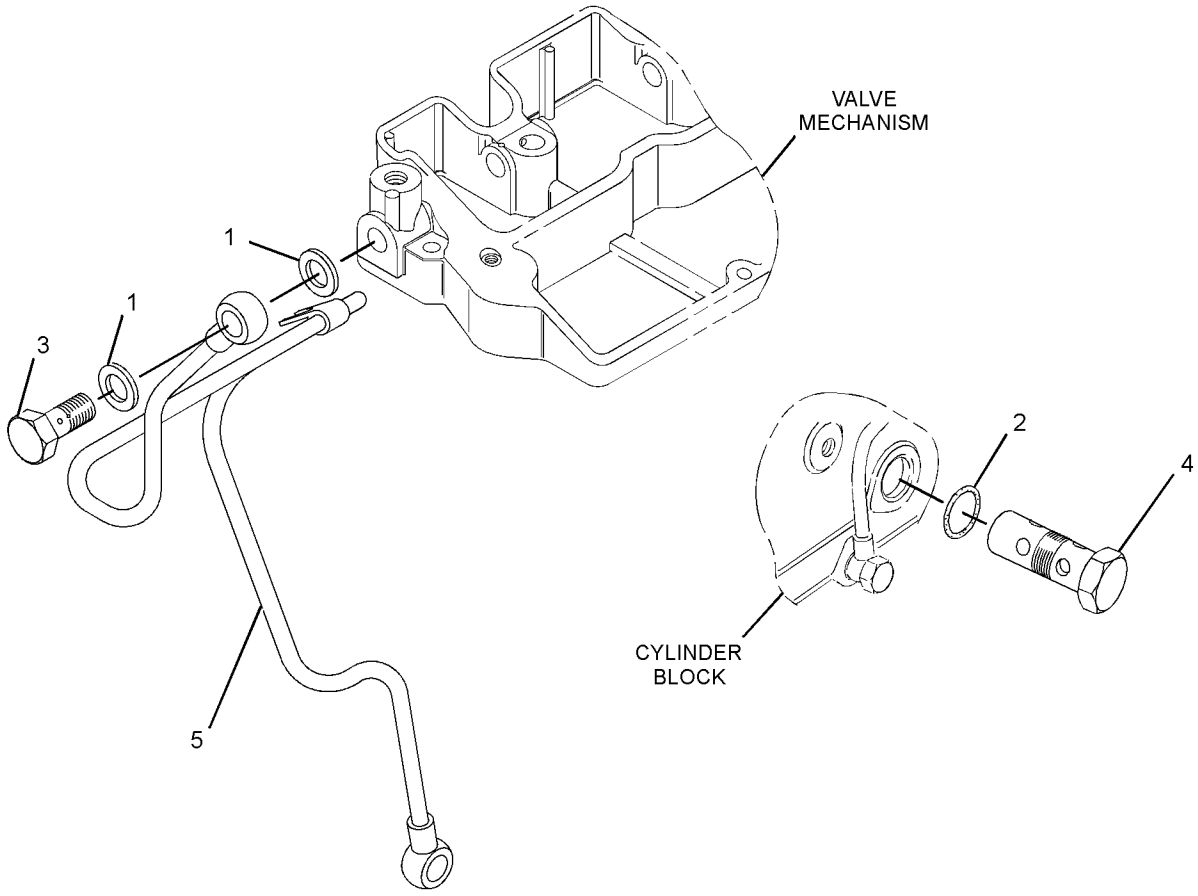

GRAPHIC #1 <END> g01992093

331-4504 PUMP GP-ENGINE OIL

PART OF 435-1657 ENGINE AR-PRIMARY

SMCS-1304, 1315 **i03769431**

NOTE	REF NO	GRAPHIC REF	PART NUMBER	QTY	PART NAME 1 2 3 4 5 6 (PRODUCT LEVEL)	SEE PAGE
	1	1	**153-5936**	2	WASHER (8.2X14.5X1-MM)	
	2	1	**153-6853**	1	SEAL-O-RING	
M	3	1	**153-6881**	1	BOLT (M8X1.25X18-MM)	
	4	1	**154-1942**	1	VALVE-RELIEF (ENGINE OIL PRESSURE)	
	5	1	**190-3828**	1	TUBE AS-OIL	

M - METRIC PART

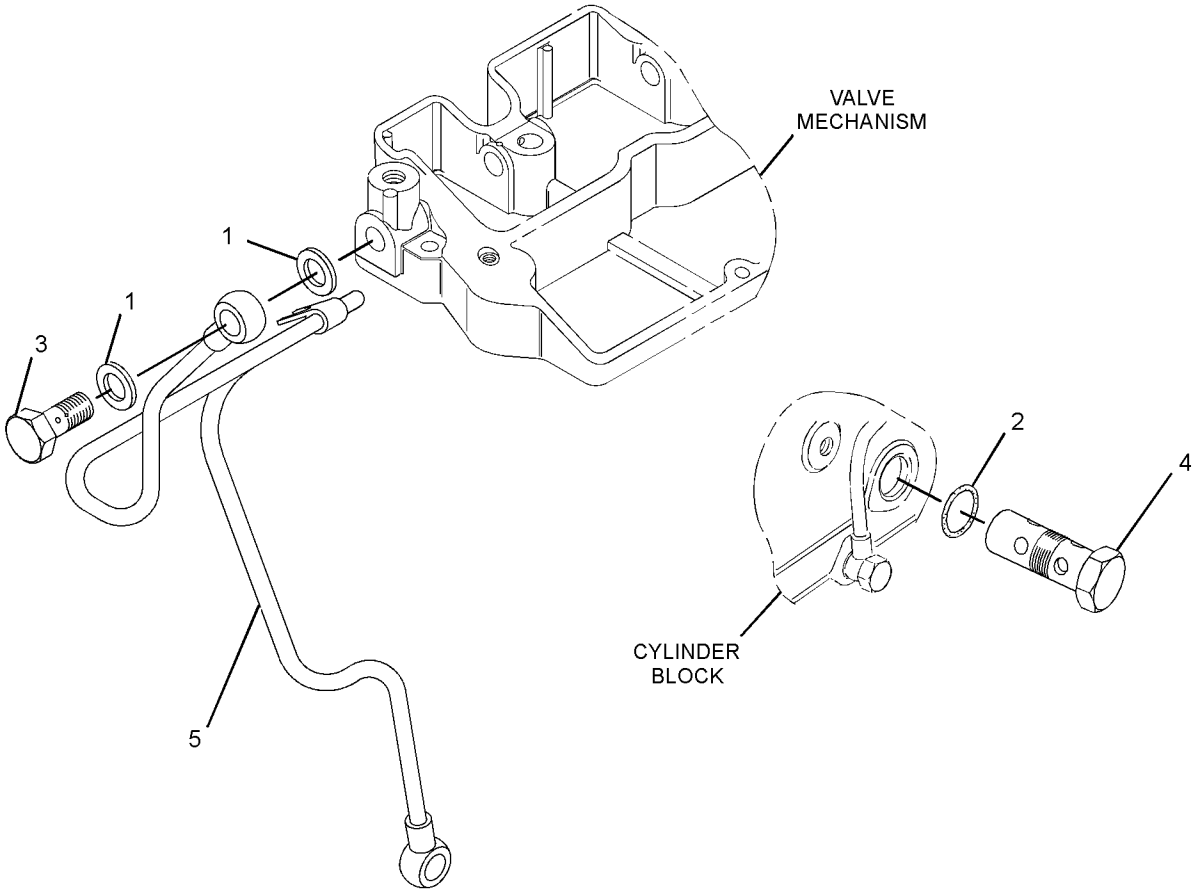

GRAPHIC #1 <END> g01992093

339-3017 KIT-ENGINE OIL PUMP

OIL PUMP

PART OF 435-1631 ENGINE AR, 435-1654, 435-1657 ENGINE AR-PRIMARY

ALSO AN ATTACHMENT

SMCS-1304, 1315 **i07408994**

NOTE	REF NO	GRAPHIC REF	PART NUMBER	QTY	PART NAME 1 2 3 4 5 6 (PRODUCT LEVEL)	SEE PAGE
	1	1	**153-6849**	1	SPRING	
	2	1	**153-6850**	1	COLLAR	
	3	1	**153-6851**	1	CLIP	
B	4	1	**160-4150**	1	SHIM (0.1-MM THK)	
B		1	**160-4151**	1	SHIM (0.15-MM THK)	
B		1	**160-4152**	1	SHIM (0.2-MM THK)	
B		1	**160-4153**	1	SHIM (0.5-MM THK)	
	5	1	**308-1867**	1	WASHER-THRUST	
	6	1	**308-1869**	1	COVER	

B - USE AS REQUIRED

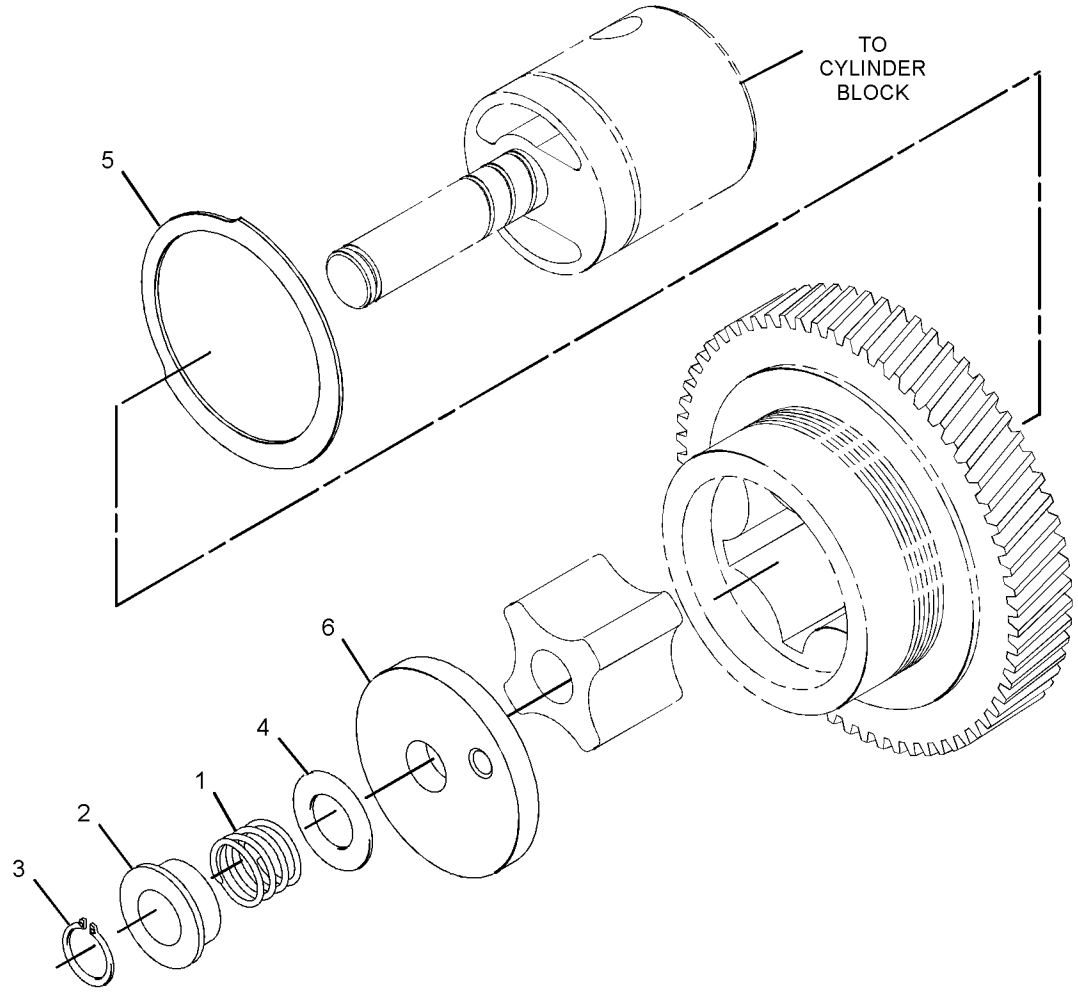

GRAPHIC #1 <END> g02013953

311-1116 HOUSING GP-WATER REGULATOR

PART OF 435-1631 ENGINE AR, 435-1654, 435-1657 ENGINE AR-PRIMARY

SMCS-1380 **i05425289**

NOTE	REF NO	GRAPHIC REF	PART NUMBER	QTY	PART NAME 1 2 3 4 5 6 (PRODUCT LEVEL)	SEE PAGE
	1	1	**439-0945**	1	GASKET (WATER TEMPERATURE REGULATOR)	
	2	1	**168-9001**	2	BOLT AS	
	3	1	**297-2996**	1	COVER-HOUSING	

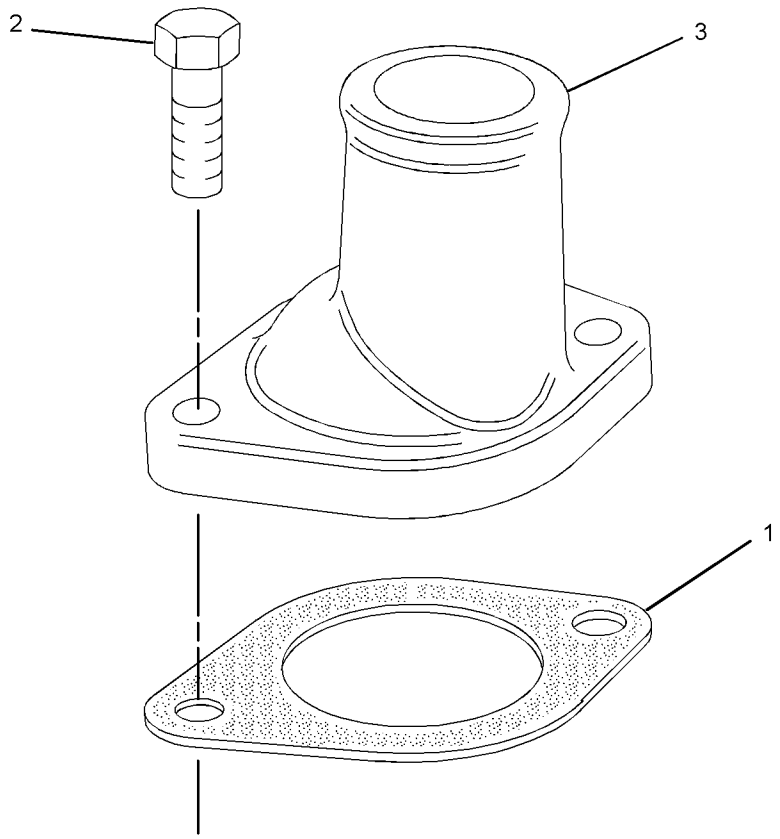

GRAPHIC #1 <END> g01407997

311-1118 FAN GP

SMCS-1356 **i07006400**

NOTE	REF NO	GRAPHIC REF	PART NUMBER	QTY	PART NAME 1 2 3 4 5 6 (PRODUCT LEVEL)	SEE PAGE
	1	1	**161-8259**	1	FAN (7-BLADE)	

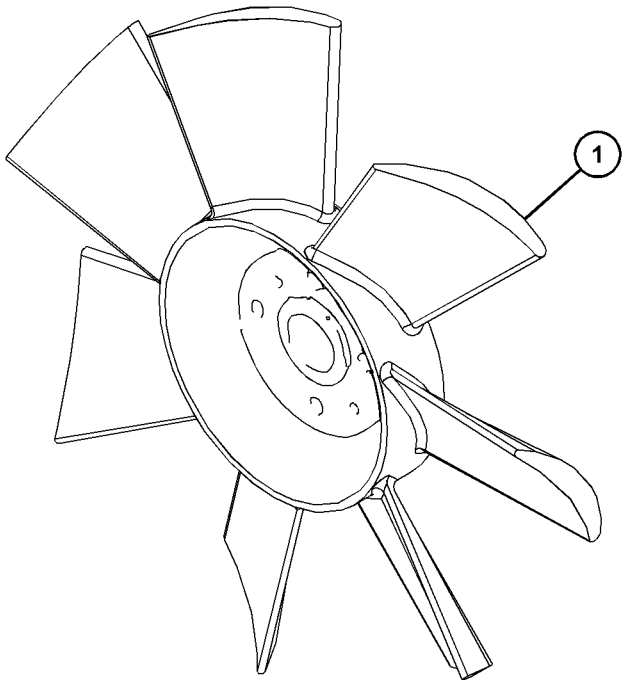

GRAPHIC #1 <END> g06196105

315-5253 FAN GP

SMCS-1356 **i03675205**

NOTE	REF NO	GRAPHIC REF	PART NUMBER	QTY	PART NAME 1 2 3 4 5 6 (PRODUCT LEVEL)	SEE PAGE
	1	1	**153-7640**	4	BOLT AS	
	2	1	**154-2433**	1	PLATE	

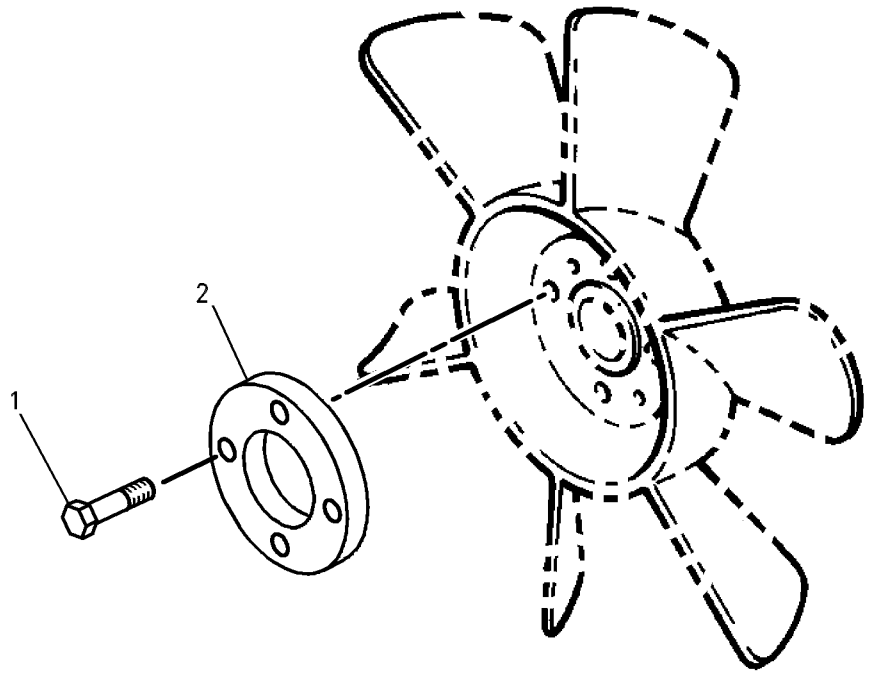

GRAPHIC #1 <END> g00485543

322-0629 FAN GP

SMCS-1356 **i06804682**

NOTE	REF NO	GRAPHIC REF	PART NUMBER	QTY	PART NAME 1 2 3 4 5 6 (PRODUCT LEVEL)	SEE PAGE
M	1	1	**6I-0217**	4	BOLT (M8X1.25X20-MM)	
	2	1	**183-3551**	1	FAN-SUCTION	

M - METRIC PART

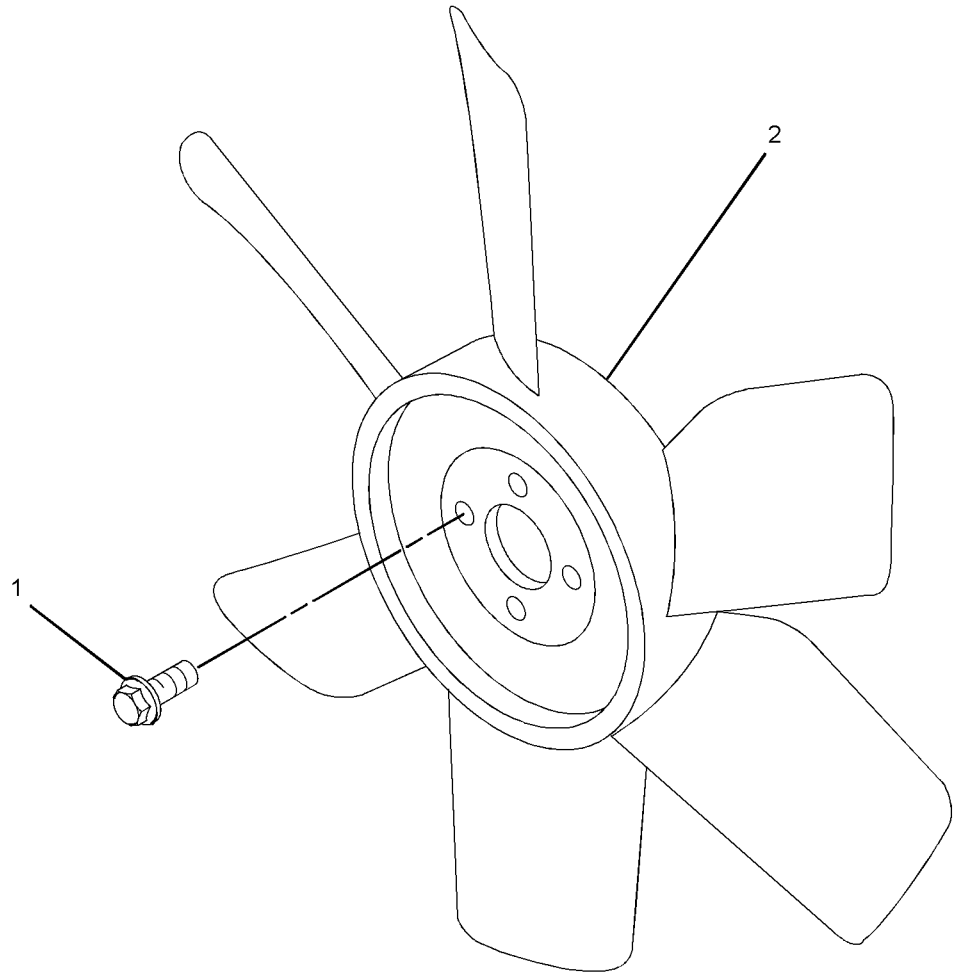

GRAPHIC #1 <END> g06194499

463-8238 FAN GP-BLOWER

SMCS-1356, 1360 **i05906233**

NOTE	REF NO	GRAPHIC REF	PART NUMBER	QTY	PART NAME 1 2 3 4 5 6 (PRODUCT LEVEL)	SEE PAGE
	1	1	**183-3543**	1	FAN-BLOWER	

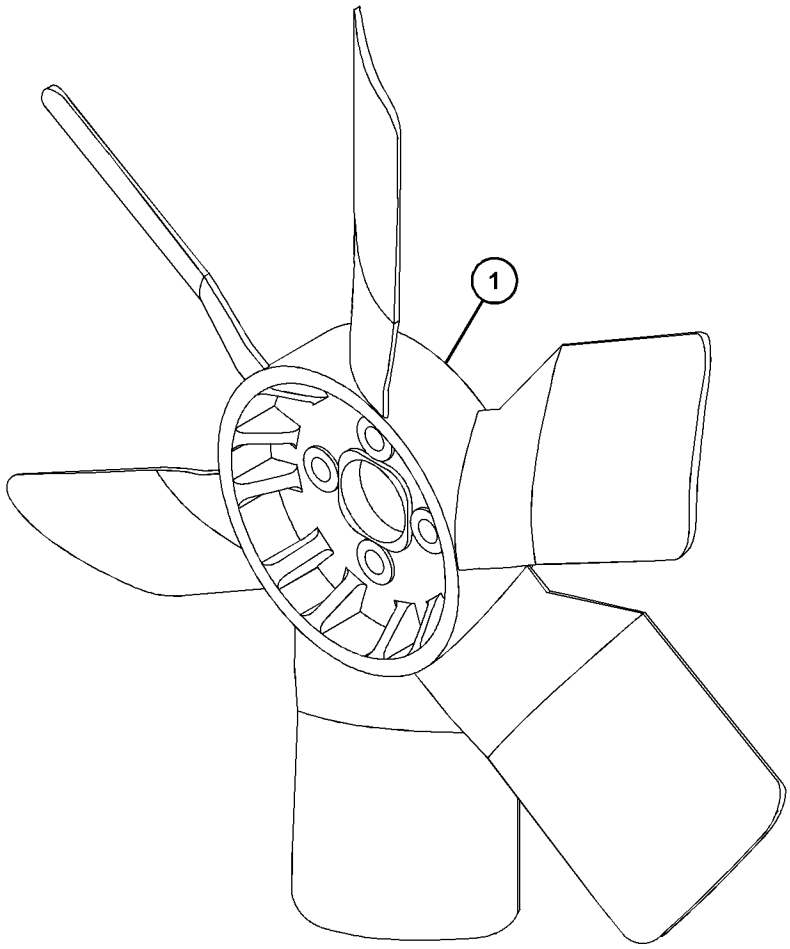

GRAPHIC #1 <END> g03819324

360-7332 KIT-COOLING SYSTEM PARTS

AN ATTACHMENT

SMCS-1350 **i05166478**

NOTE	REF NO	GRAPHIC REF	PART NUMBER	QTY	PART NAME 1 2 3 4 5 6 (PRODUCT LEVEL)	SEE PAGE
M	1	1	**6I-0217**	4	BOLT (M8X1.25X20-MM)	
M	2	1	**6I-0917**	2	BOLT (M6X1X25-MM)	
	3	1	**9M-7958**	4	CLAMP-HOSE	
M	4	2	**124-3815**	8	BOLT (M8X1.25X16-MM)	
M	5	2	**153-5592**	2	NUT (M8X1.25-THD)	
	6	3	**153-6861**	4	BOLT AS	
	7	3	**161-8260**	1	PLATE	
M	8	2	**180-6118**	10	BOLT (M8X1.25X12-MM)	
	9	1,3	**197-8448**	16	BOLT	
	10	2	**344-5868**	1	MOUNT	
	11	3	**238-0128**	1	FAN-BLOWER (7-BLADE)	
M	12	1	**239-1137**	2	BOLT (M10X1.25X25-MM)	
	13	1	**244-0494**	1	RADIATOR AS	
	13A	1	**202-6616**	1	CAP-RADIATOR	
	14	1	**244-0495**	1	SUPPORT	
	15	1	**244-0503**	1	HOSE-RADIATOR (UPPER)	
	16	2	**244-0509**	1	GUARD	
	17	2	**244-3259**	1	CLIP	
	18	1	**258-4520**	1	HOSE-RADIATOR (LOWER)	
	19	2	**325-5924**	1	GUARD-FAN (RH)	
	20	2	**325-5927**	1	GUARD	
	21	2	**325-5932**	1	BRACKET	
	22	1	**325-5938**	1	BRACKET	
	23	1	**325-5939**	1	BRACKET	
	24	3	**325-5940**	2	BRACKET	
	25	2	**334-7437**	1	BRACKET	
	26	2	**341-2961**	1	GUARD-FAN (LH)	

M - METRIC PART

360-7332 **KIT-COOLING SYSTEM PARTS (**contd.**)** **i05166478**

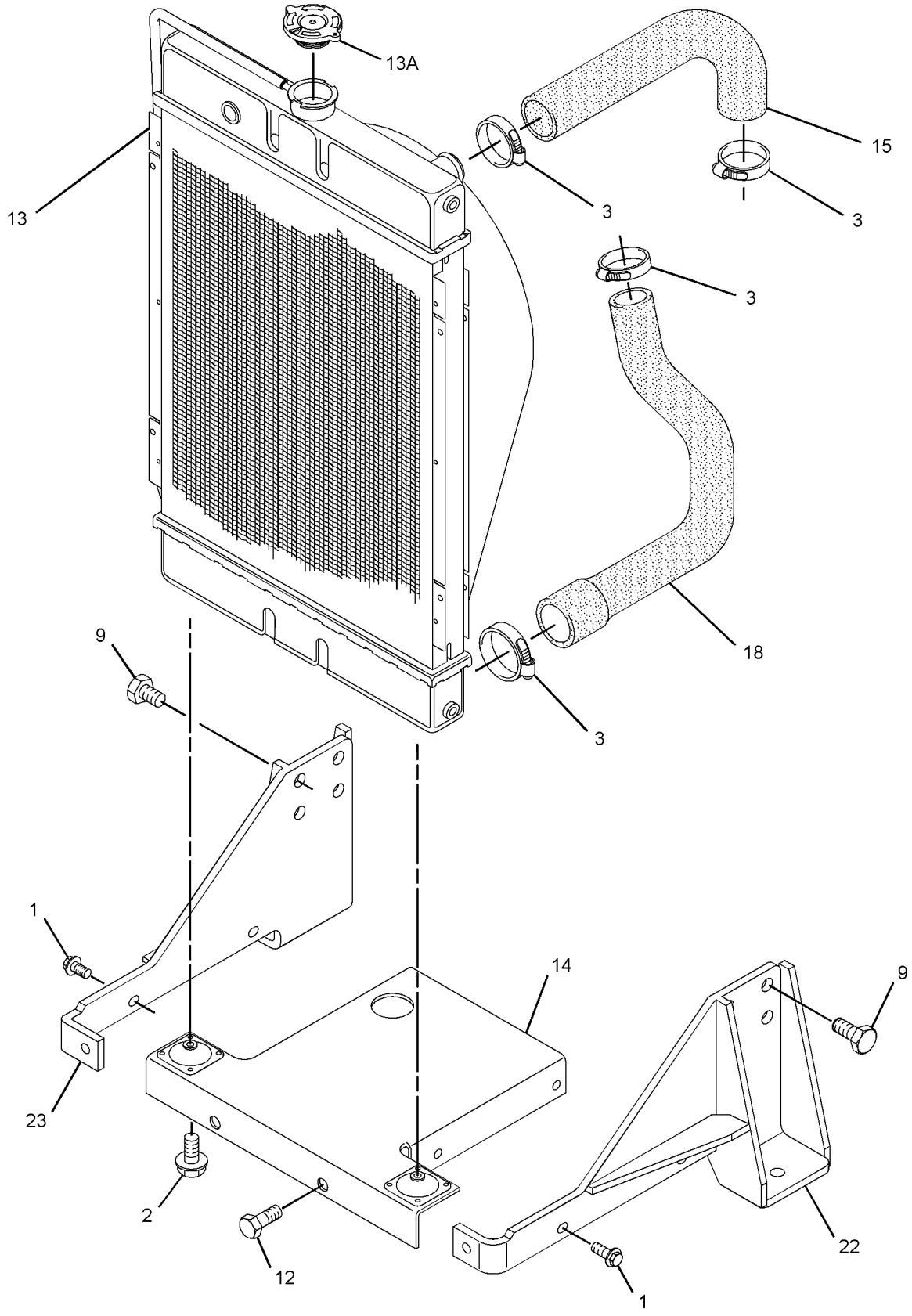

GRAPHIC #1 g02268333

360-7332 **KIT-COOLING SYSTEM PARTS (**contd.**)** **i05166478**

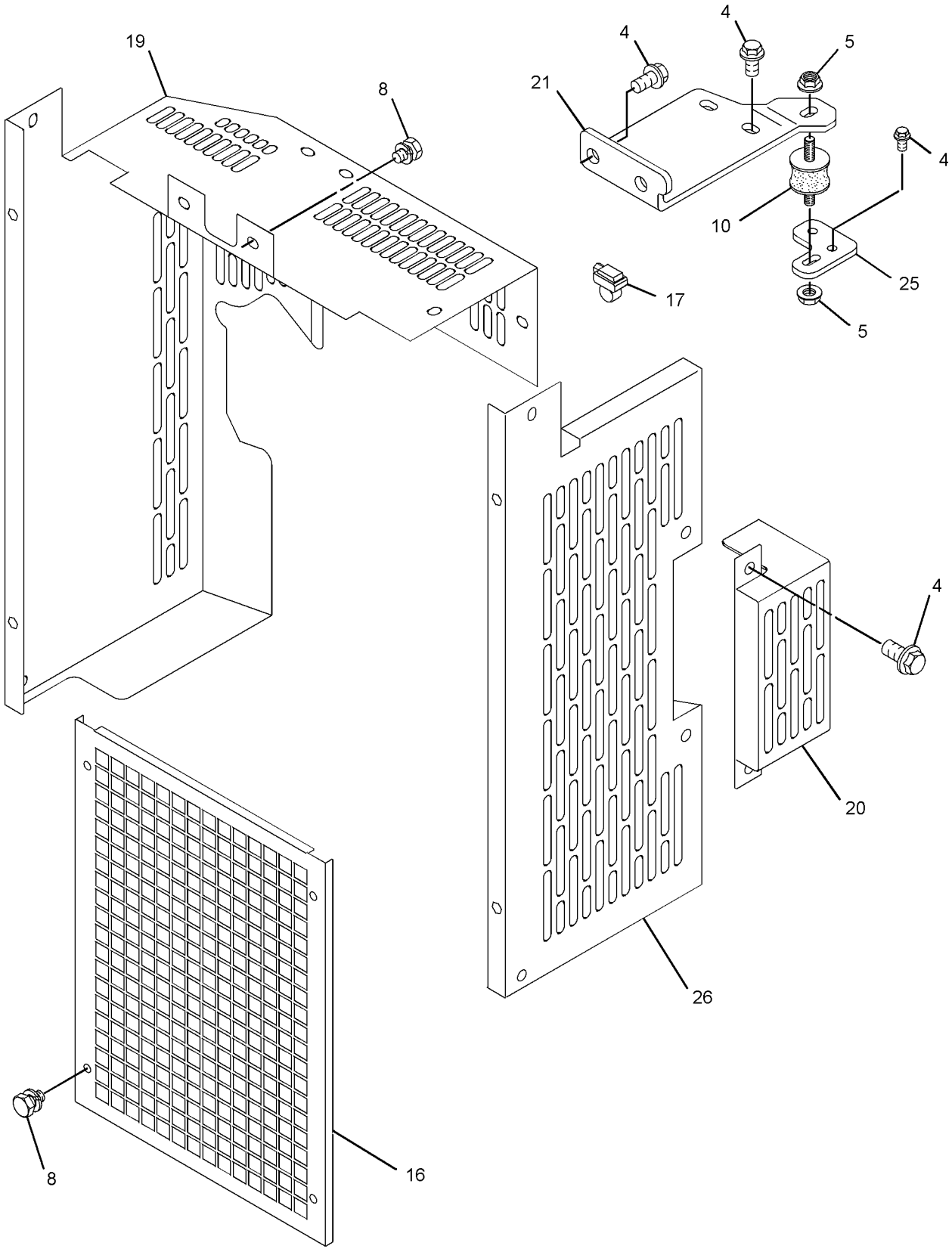

GRAPHIC #2 g02268353

360-7332 **KIT-COOLING SYSTEM PARTS (**contd.**)** **i05166478**

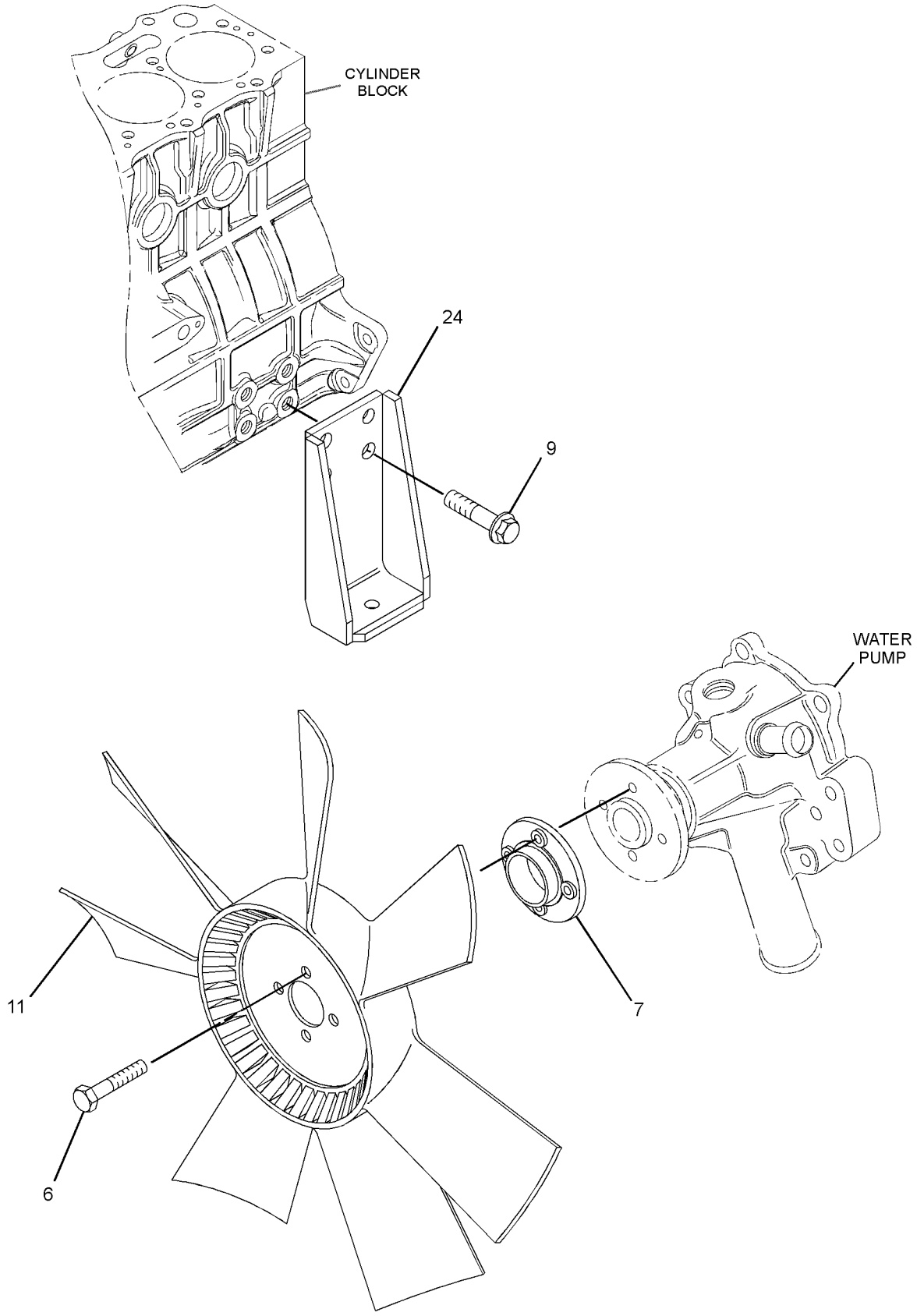

GRAPHIC #3 <END> g02268375

311-1115 PUMP GP-WATER

PART OF 435-1631 ENGINE AR, 435-1654 ENGINE AR-PRIMARY

SMCS-1361 **i06999639**

NOTE	REF NO	GRAPHIC REF	PART NUMBER	QTY	PART NAME 1 2 3 4 5 6 (PRODUCT LEVEL)	SEE PAGE
M	1	1	**153-5960**	3	NUT (M6X1-THD)	
	2	1	**153-5961**	4	BOLT AS	
	3	1	**154-1817**	1	PLUG	
	4	1	**472-2215**	2	PLUG	
	5	1	**425-6407**	1	GASKET (HOUSING)	
	6	1	**249-5541**	1	REGULATOR-TEMPERATURE (82-DEG C)	
	7	1	**477-8793**	1	HOUSING (THERMOSTAT)	
	8	1	**286-7496**	1	HOSE-WATER	
	9	1	**308-1907**	2	BOLT AS	
	10	1	**423-5611**	1	GASKET	
	11	1	**032-9020**	2	CLIP	
	12	1	**439-4992**	1	PUMP AS-WATER	

M - METRIC PART

311-1115 **PUMP GP-WATER (**contd.**)** **i06999639**

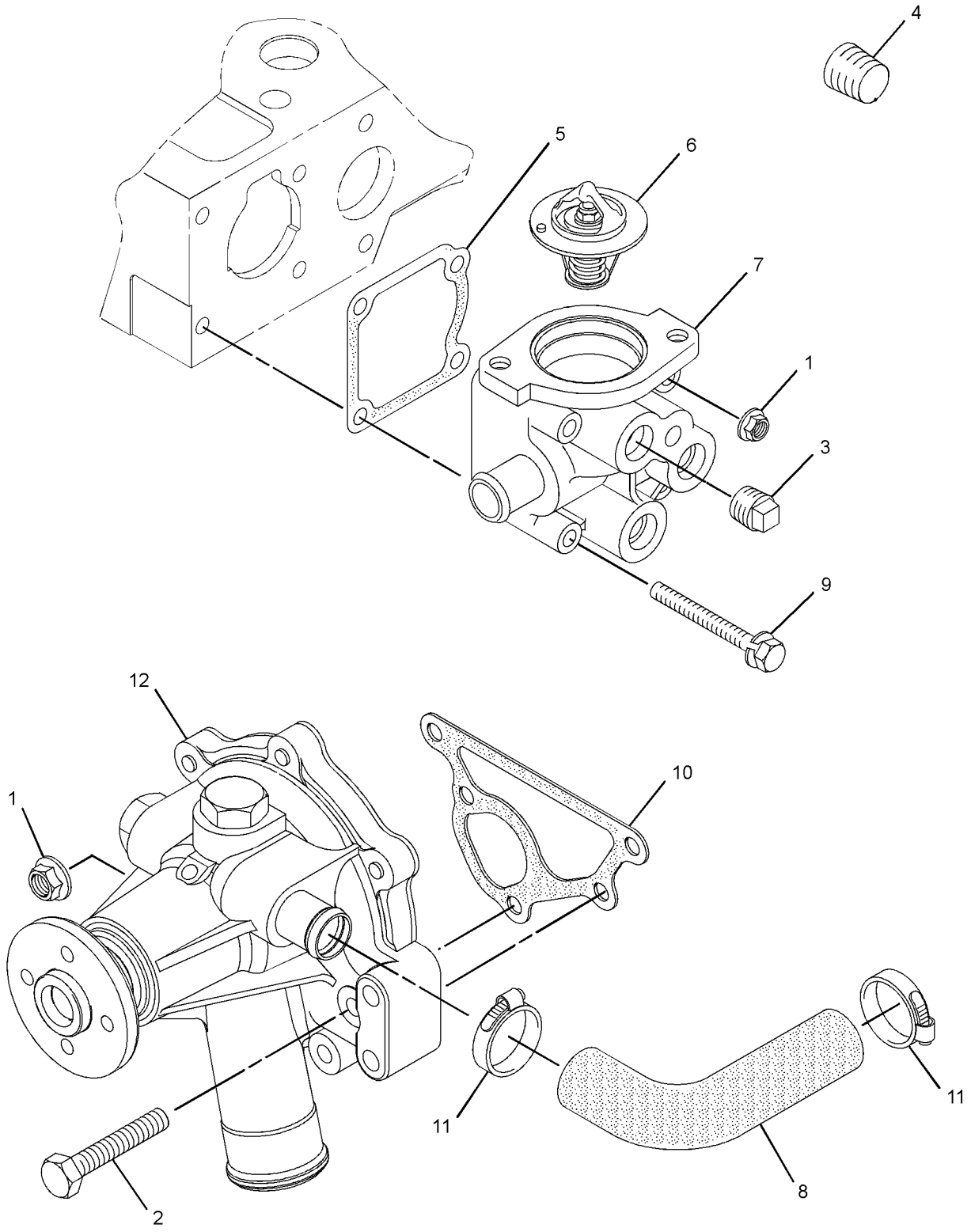

GRAPHIC #1 <END> g02683118

311-5826 PUMP GP-WATER

SMCS-1361 **i07167281**

NOTE	REF NO	GRAPHIC REF	PART NUMBER	QTY	PART NAME 1 2 3 4 5 6 (PRODUCT LEVEL)	SEE PAGE
M	1	1	**153-5960**	1	NUT (M6X1-THD)	
	2	1	**153-5961**	3	BOLT AS	
	3	1	**153-5962**	4	BOLT AS	
	4	1	**154-1817**	3	PLUG	
	5	1	**154-1824**	2	CLAMP-HOSE	
	6	1	**154-1831**	1	PLUG	
	7	1	**500-3814**	1	GASKET	
	8	1	**494-9566**	1	CASE (WATER TEMPERATURE)	
	9	1	**508-6591**	1	THERMOSTAT (75-DEG C) (CASE)	
	10	1	**486-8880**	1	GASKET	
	11	1	**231-8186**	1	STUD	
	12	1	**267-0328**	1	HOSE	
	13	1	**500-8345**	1	PUMP AS-WATER	

M - METRIC PART

311-5826 **PUMP GP-WATER (**contd.**)** **i07167281**

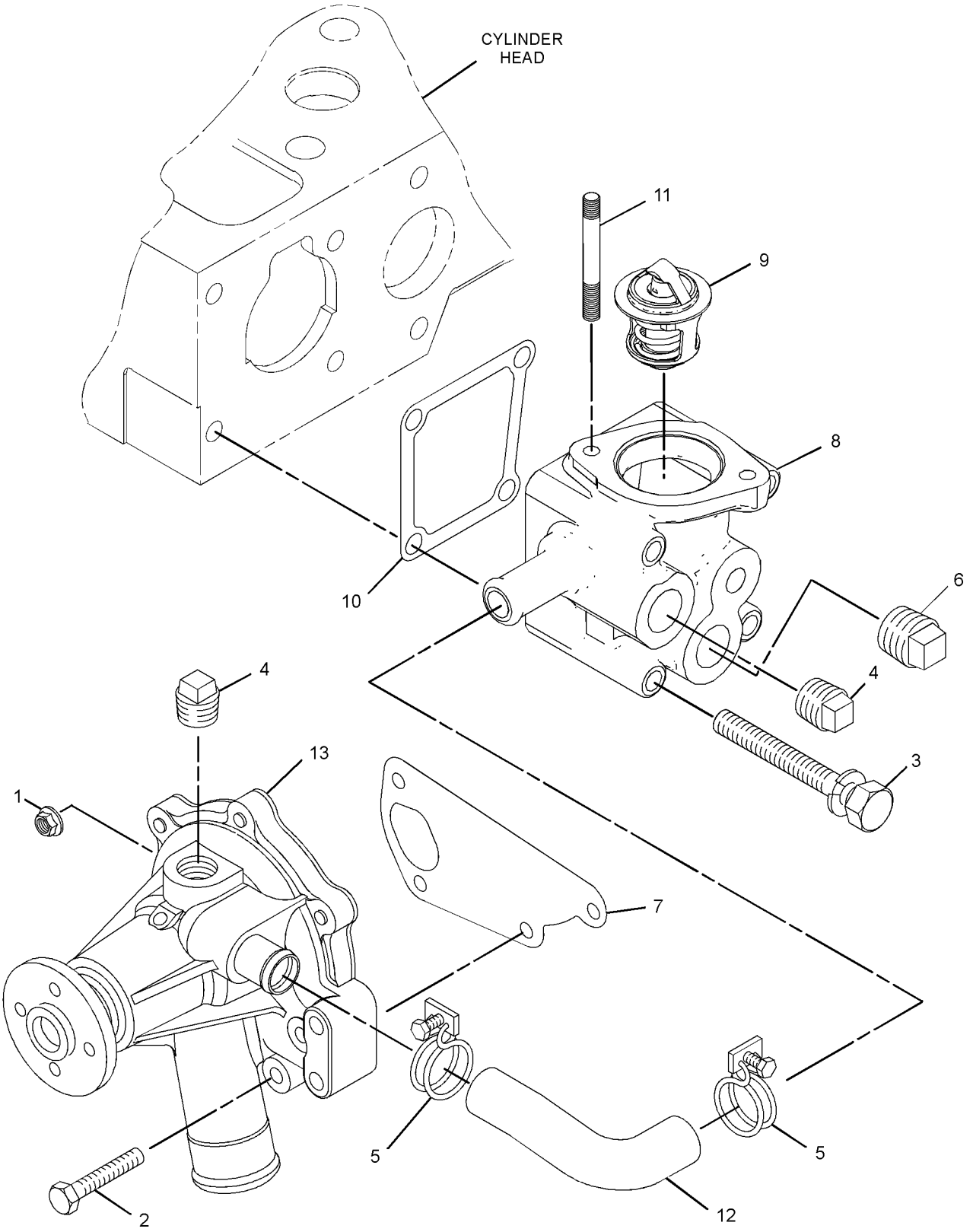

GRAPHIC #1 <END> g06243289

331-4510 PUMP GP-WATER

PART OF 435-1657 ENGINE AR-PRIMARY

TYPE 1

SMCS-1361 **i06952387**

NOTE	REF NO	GRAPHIC REF	PART NUMBER	QTY	PART NAME 1 2 3 4 5 6 (PRODUCT LEVEL)	SEE PAGE
M	1	1,2	**153-5960**	4	NUT (M6X1-THD)	
	2	1	**153-5961**	3	BOLT AS	
	3	2	**154-1817**	1	PLUG	
	4	2	**439-4993**	1	PLUG	
	5	1	**5D-1026**	2	CLAMP-BAND	
	6	2	**425-6407**	1	GASKET	
	7	2	**384-8063**	1	PLUG	
	8	1	**472-2214**	1	CONNECTOR	
	9	2	**245-1361**	1	COOLER AS-OIL	
	9A	2	**245-1362**	1	CONNECTOR	
	9B	2	**245-1364**	1	SEAL	
	10	2	**249-5541**	1	REGULATOR-TEMPERATURE (82-DEG C)	
	11	2	**481-4144**	1	HOUSING (THERMOSTAT)	
	12	1	**286-7496**	1	HOSE-WATER	
	13	1	**423-5611**	1	GASKET	
	14	2	**308-1907**	2	BOLT AS	
	15	1	**439-4992**	1	PUMP AS-WATER	
F			**238-9137**	1	CONNECTION	

F - NOT SHOWN
M - METRIC PART

331-4510 **PUMP GP-WATER (**contd.**)** **i06952387**

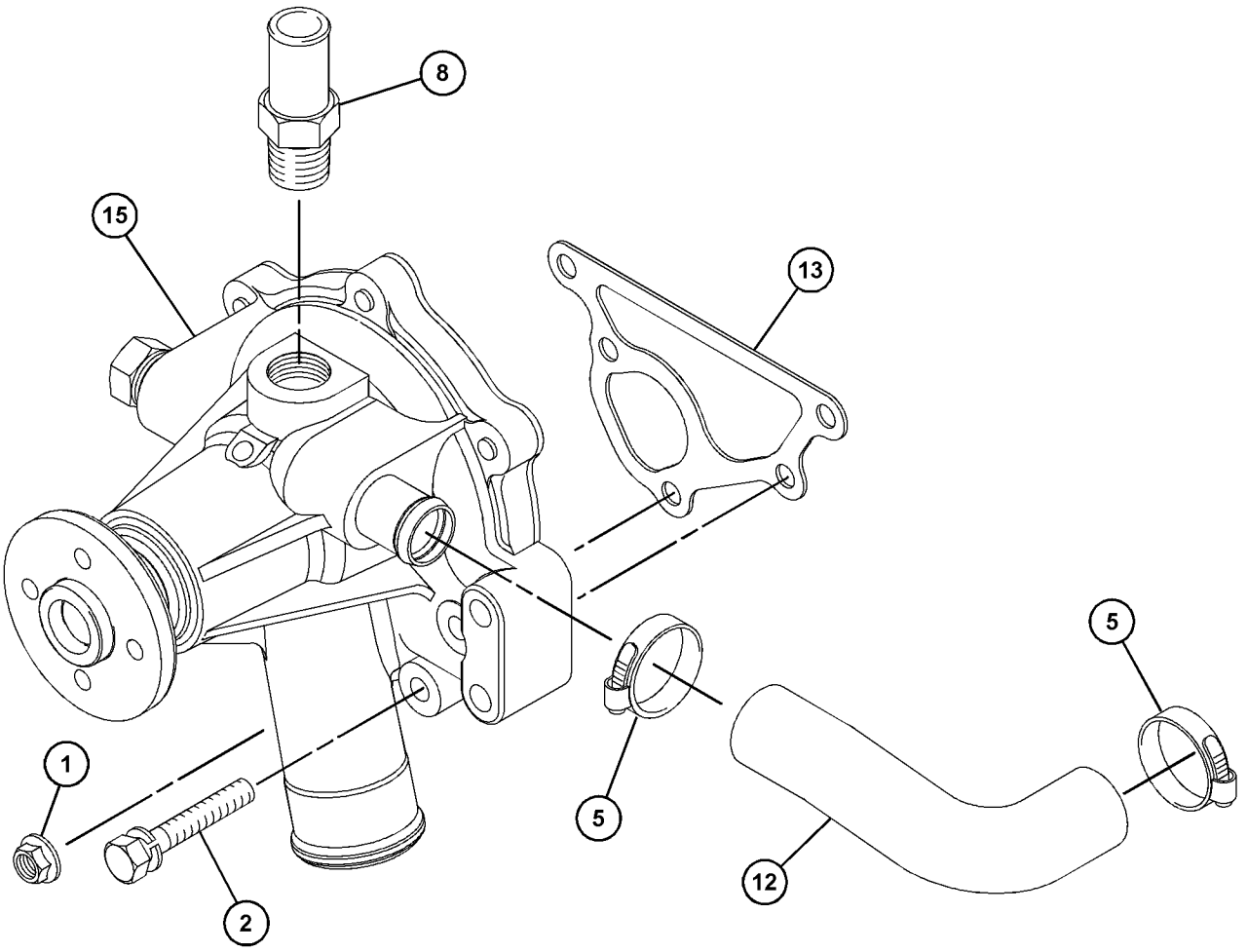

GRAPHIC #1 g06206646

331-4510 **PUMP GP-WATER (**contd.**)** **i06952387**

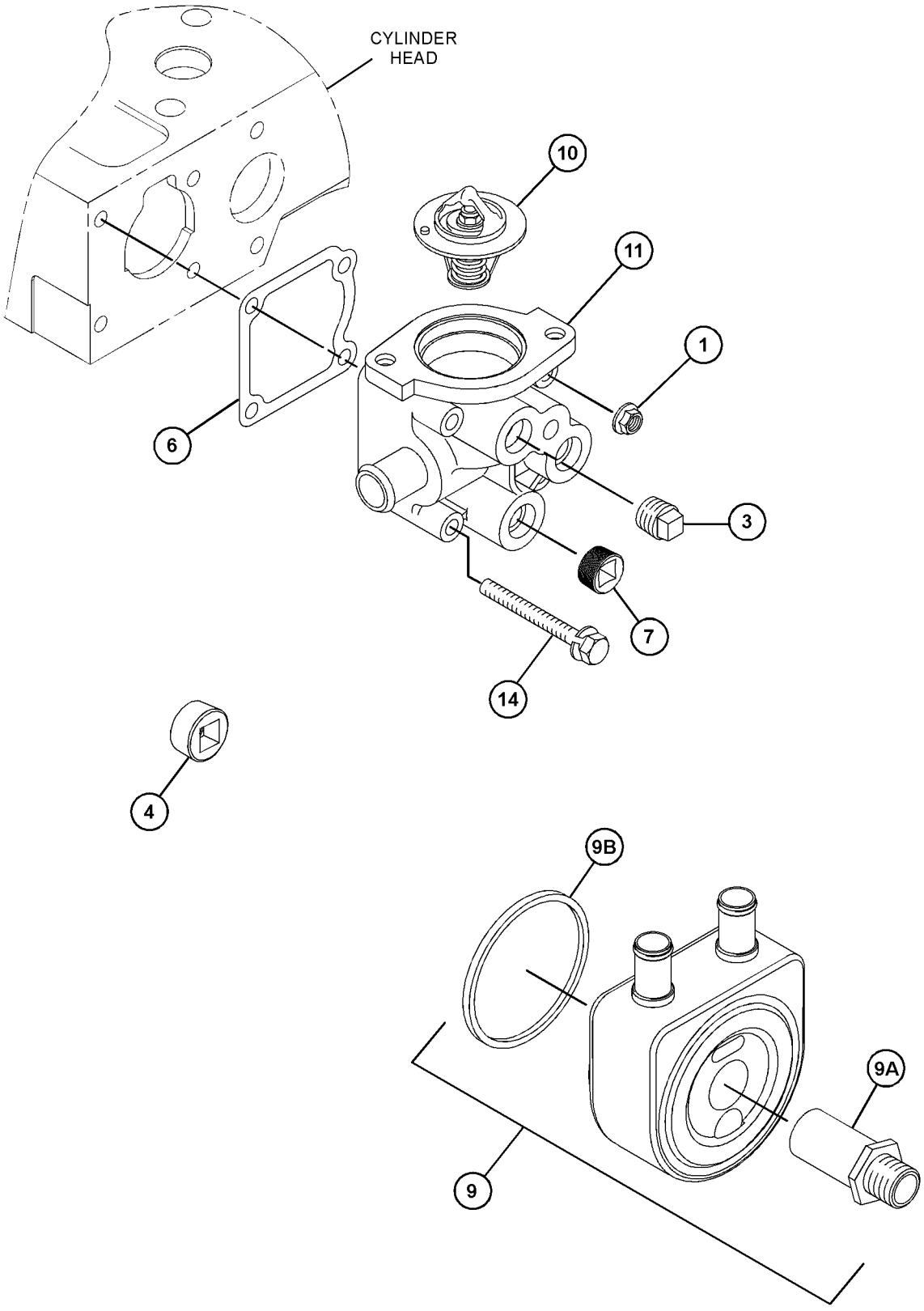

GRAPHIC #2 <END> g06206647

331-4510 PUMP GP-WATER

PART OF 435-1657 ENGINE AR-PRIMARY

TYPE 2

SMCS-1361 **i07235677**

NOTE	REF NO	GRAPHIC REF	PART NUMBER	QTY	PART NAME 1 2 3 4 5 6 (PRODUCT LEVEL)	SEE PAGE
M	1	1,2	**153-5960**	3	NUT (M6X1-THD)	
	2	1	**153-5961**	3	BOLT AS	
	3	2	**154-1817**	1	PLUG	
C	4	2	**472-2215**	1	PLUG	
	5	1	**032-9020**	2	CLIP	
	6	2	**425-6407**	1	GASKET	
	7	1	**384-8063**	1	PLUG	
	8	1	**472-2214**	1	CONNECTOR	
	9	2	**245-1361**	1	COOLER AS-OIL	
	9A	2	**245-1362**	1	CONNECTOR	
	9B	2	**245-1364**	1	SEAL	
	10	2	**249-5541**	1	REGULATOR-TEMPERATURE (82-DEG C)	
	11	2	**481-4144**	1	HOUSING (THERMOSTAT)	
	12	1	**286-7496**	1	HOSE-WATER	
	13	1	**423-5611**	1	GASKET	
	14	2	**308-1907**	2	BOLT AS	
	15	1	**439-4992**	1	PUMP AS-WATER	

C - CHANGE FROM PREVIOUS TYPE
M - METRIC PART

331-4510 **PUMP GP-WATER (**contd.**)** **i07235677**

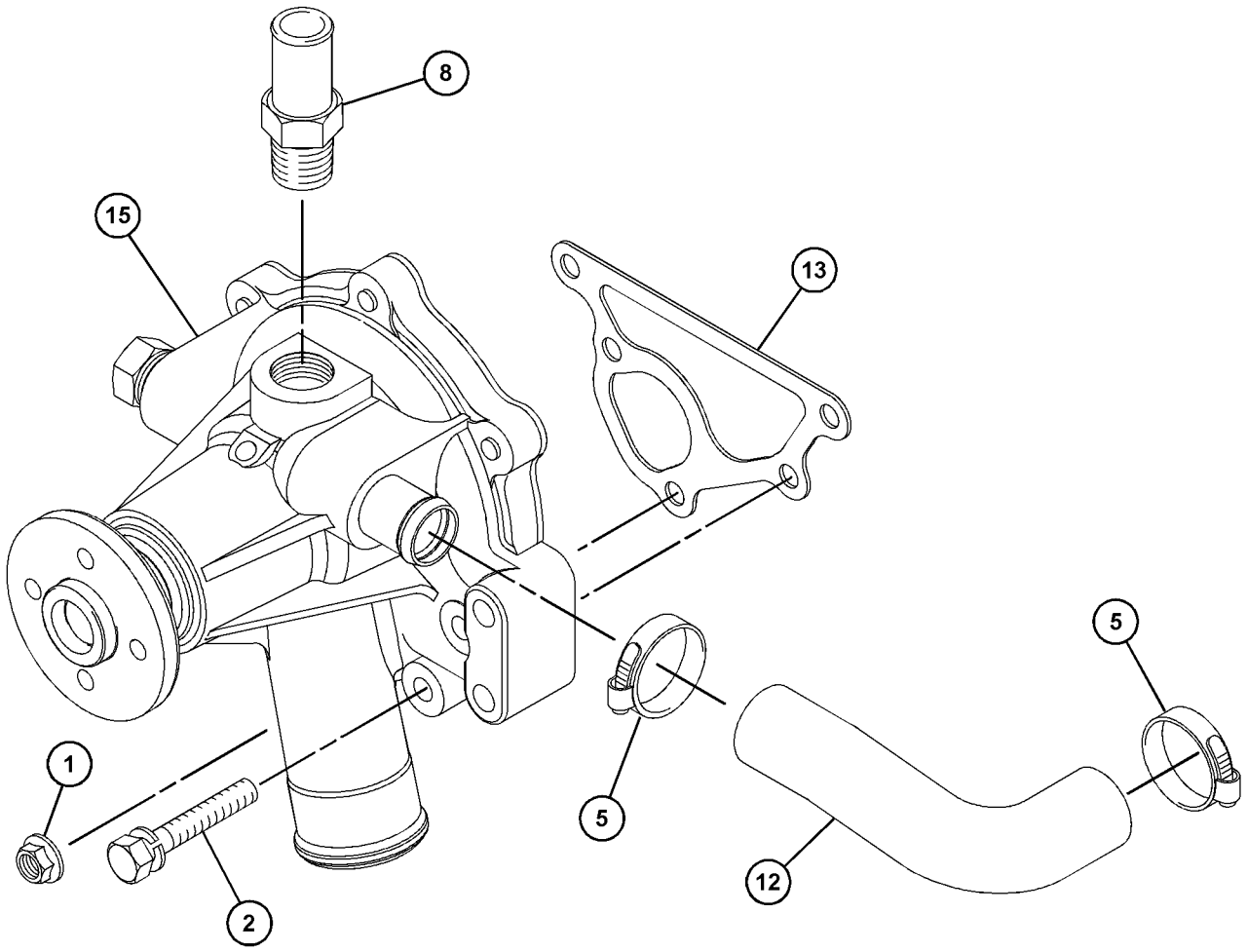

GRAPHIC #1 g06206646

331-4510 **PUMP GP-WATER (**contd.**)** **i07235677**

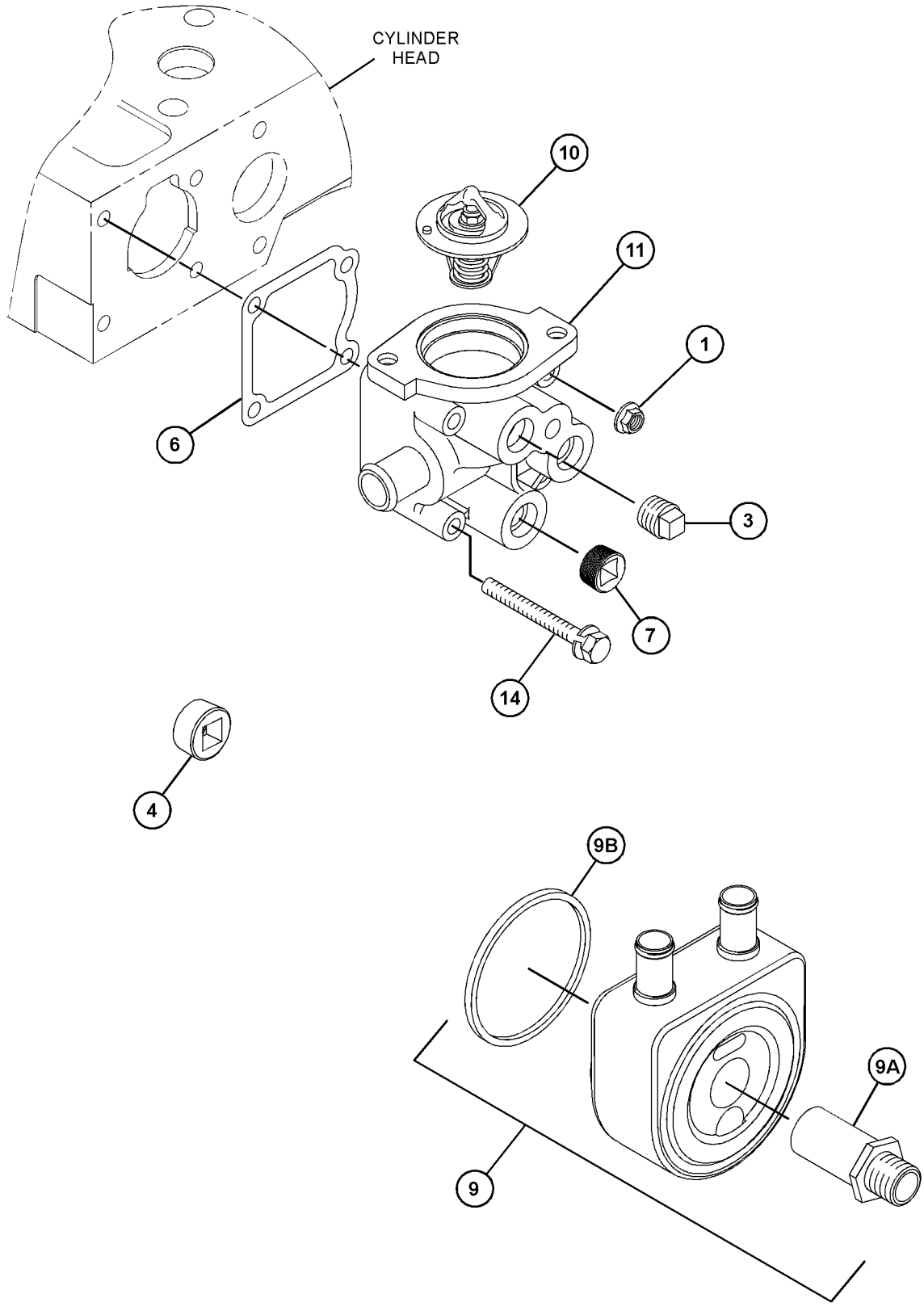

GRAPHIC #2 <END> g06206647

334-7294 PUMP GP-WATER

TYPE 1

SMCS-1361 **i06924967**

NOTE	REF NO	GRAPHIC REF	PART NUMBER	QTY	PART NAME 1 2 3 4 5 6 (PRODUCT LEVEL)	SEE PAGE
M	1	1,2	**153-5960**	3	NUT (M6X1-THD)	
	2	1	**153-5961**	4	BOLT AS	
	3	2	**154-1817**	1	PLUG	
	4	2	**439-4993**	1	PLUG	
	5	1	**5D-1026**	2	CLAMP-BAND	
	6	2	**425-6407**	1	GASKET	
	7	1	**238-9137**	1	CONNECTION	
	8	2	**472-2214**	1	CONNECTOR	
	9	2	**245-1361**	1	COOLER AS-OIL	
	9A	2	**245-1362**	1	CONNECTOR	
	9B	2	**245-1364**	1	SEAL	
	10	2	**249-5541**	1	REGULATOR-TEMPERATURE (82-DEG C)	
	11	2	**477-8793**	1	HOUSING (THERMOSTAT)	
	12	1	**286-7496**	1	HOSE-WATER	
	13	1	**423-5611**	1	GASKET	
	14	2	**308-1907**	2	BOLT AS	
	15	1	**439-4992**	1	PUMP AS-WATER	

M - METRIC PART

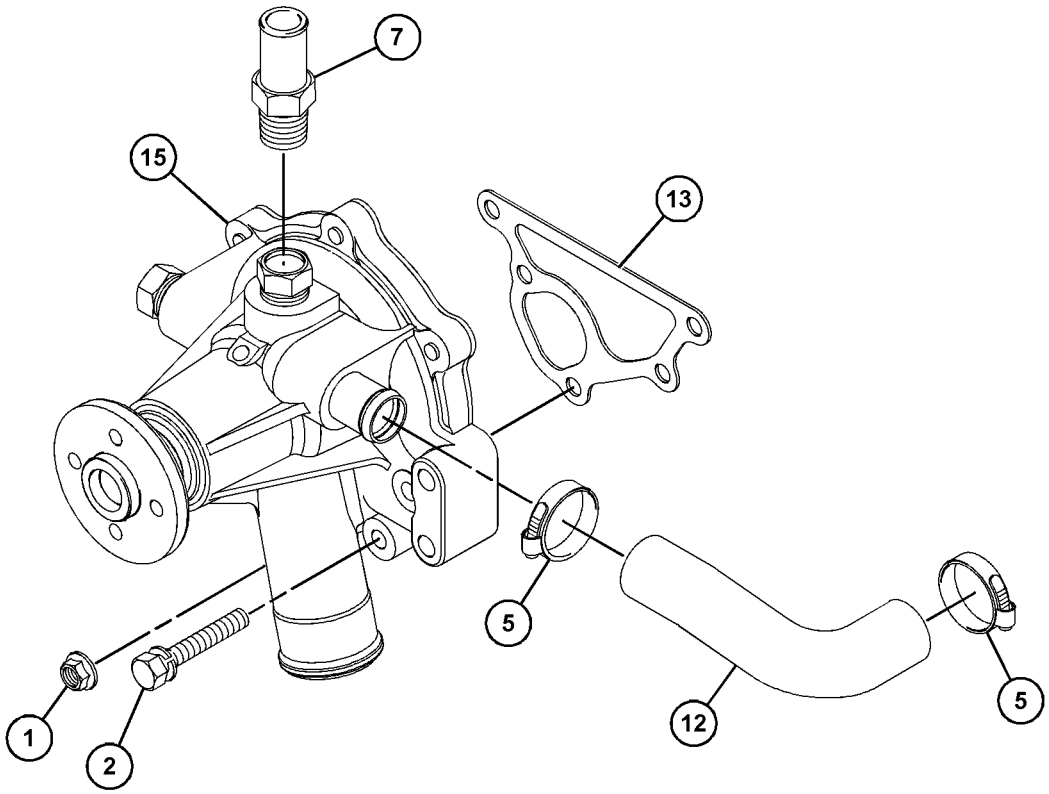

GRAPHIC #1 g06142249

334-7294 **PUMP GP-WATER (**contd.**)** **i06924967**

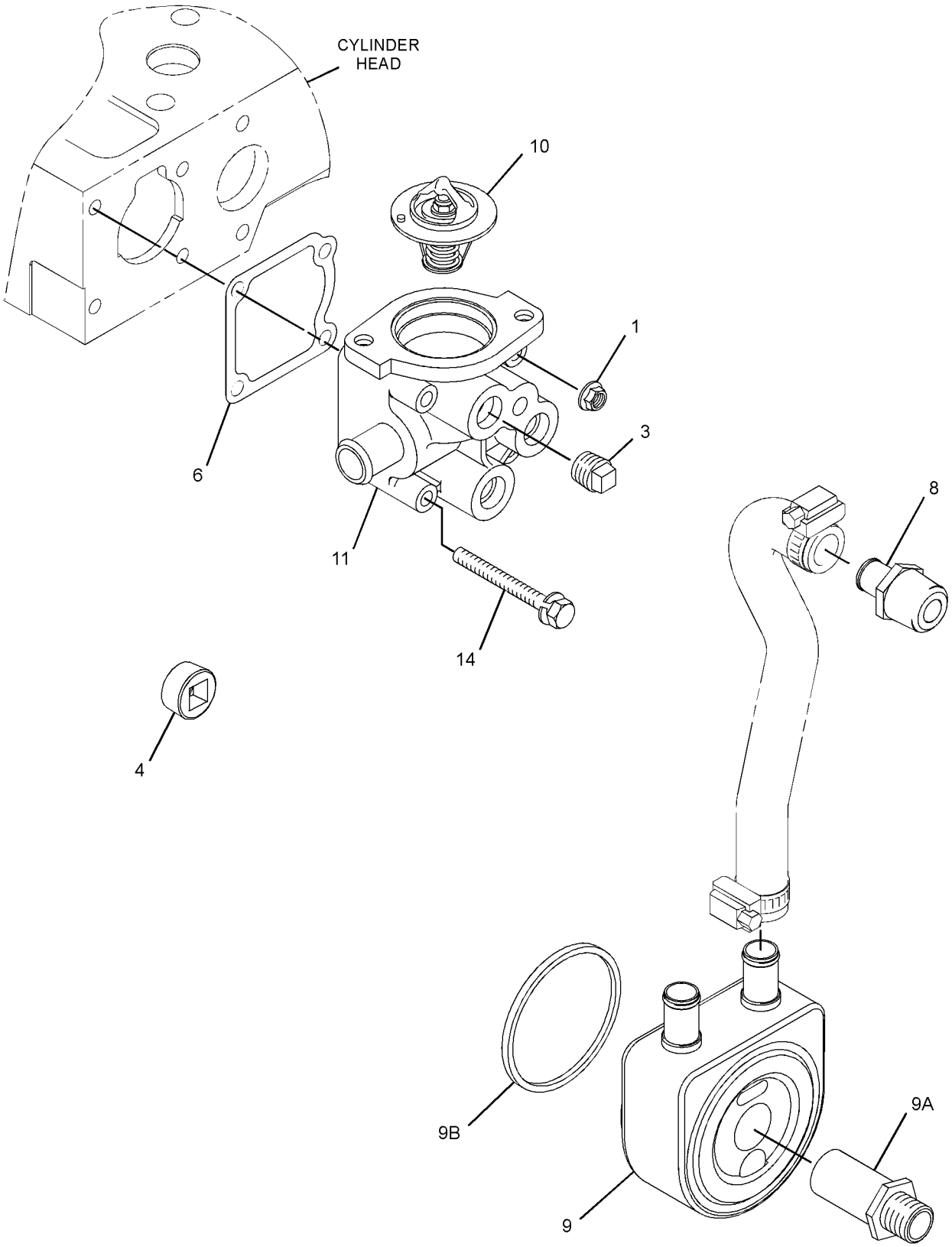

GRAPHIC #2 <END> g06142258

334-7294 PUMP GP-WATER

TYPE 2

SMCS-1361 **i06996147**

NOTE	REF NO	GRAPHIC REF	PART NUMBER	QTY	PART NAME 1 2 3 4 5 6 (PRODUCT LEVEL)	SEE PAGE
	1	2	**032-9020**	2	CLIP	
M	2	1,2	**153-5960**	3	NUT (M6X1-THD)	
	3	2	**153-5961**	4	BOLT AS	
	4	1	**154-1817**	1	PLUG	
	5	1	**245-1361**	1	COOLER AS-OIL	
		1	**245-1362**	1	CONNECTOR	
		1	**245-1364**	1	SEAL	
	6	1	**249-5541**	1	REGULATOR-TEMPERATURE (82-DEG C)	
	7	2	**286-7496**	1	HOSE-WATER	
	8	1	**308-1907**	2	BOLT AS	
	9	2	**423-5611**	1	GASKET	
	10	1	**425-6407**	1	GASKET	
	11	2	**439-4992**	1	PUMP AS-WATER	
	12	1	**472-2214**	1	CONNECTOR	
	13	1	**472-2215**	1	PLUG	
	14	1	**477-8793**	1	HOUSING	

M - METRIC PART

334-7294 **PUMP GP-WATER (**contd.**)** **i06996147**

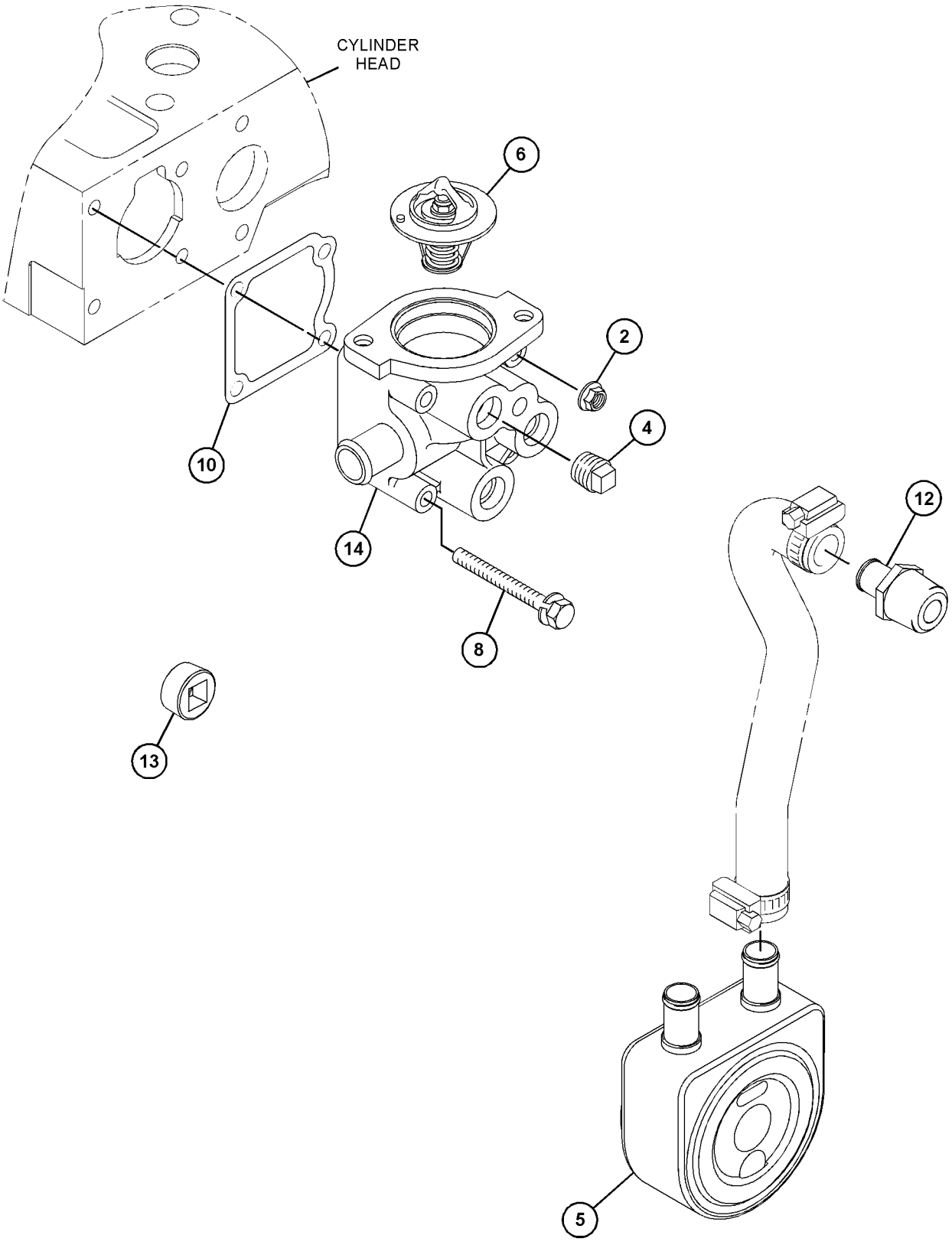

GRAPHIC #1 g06208572

334-7294 **PUMP GP-WATER (**contd.**)** **i06996147**

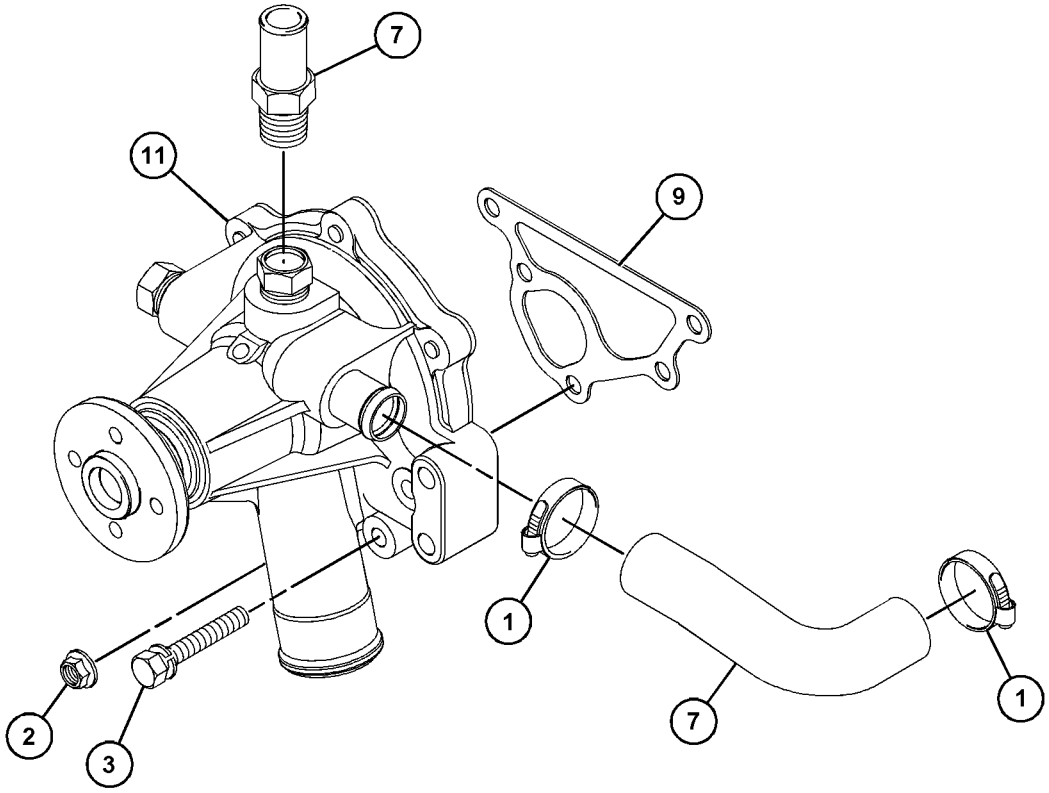

GRAPHIC #2 <END> g06208571

365-6508 PUMP GP-WATER

SMCS-1361 **i06926819**

NOTE	REF NO	GRAPHIC REF	PART NUMBER	QTY	PART NAME 1 2 3 4 5 6 (PRODUCT LEVEL)	SEE PAGE
M	1	1	**153-5960**	3	NUT (M6X1-THD)	
	2	1	**153-5961**	3	BOLT AS	
	3	1	**154-1817**	1	PLUG	
	4	1	**5D-1026**	2	CLAMP-BAND	
	5	1	**245-1361**	1	COOLER AS-OIL	
		1	**245-1362**	1	CONNECTOR	
		1	**245-1364**	1	SEAL	
	6	1	**249-5541**	1	REGULATOR-TEMPERATURE (82-DEG C)	
	7	1	**286-7496**	1	HOSE-WATER	
	8	1	**308-1907**	2	BOLT AS	
	9	1	**384-8063**	1	PLUG	
	10	1	**423-5611**	1	GASKET	
	11	1	**425-6407**	1	GASKET	
	12	1	**439-4992**	1	PUMP AS-WATER	
	13	1	**472-2214**	1	CONNECTOR	
	14	1	**472-2215**	1	PLUG	
	15	1	**481-4144**	1	HOUSING	

M - METRIC PART

365-6508 **PUMP GP-WATER (**contd.**)** **i06926819**

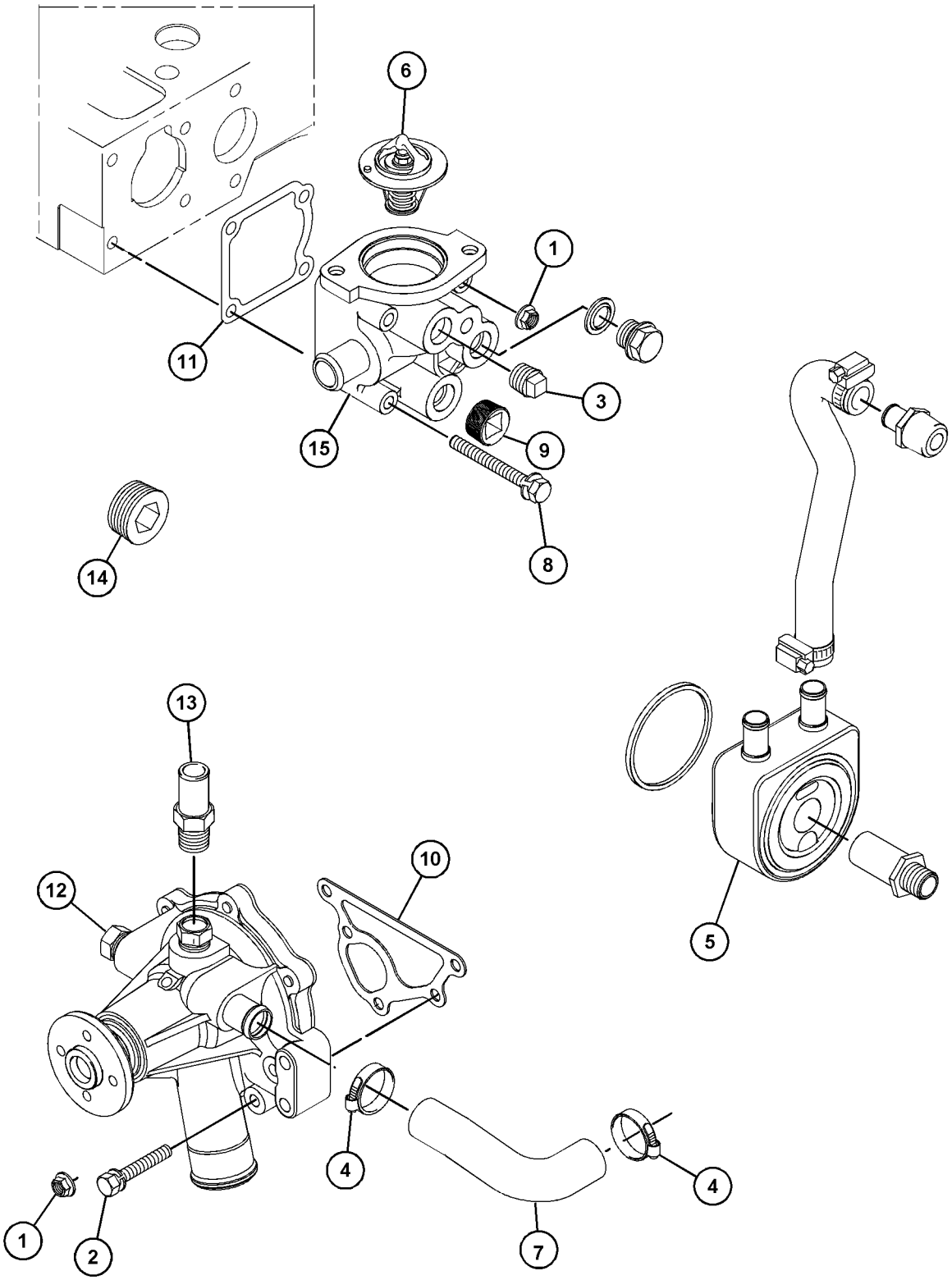

GRAPHIC #1 <END> g06204441

334-7307 RADIATOR & FAN GP

TYPE 1

SMCS-1353, 1356 **i06976638**

NOTE	REF NO	GRAPHIC REF	PART NUMBER	QTY	PART NAME 1 2 3 4 5 6 (PRODUCT LEVEL)	SEE PAGE
M	1	1,2	**6I-0217**	10	BOLT (M8X1.25X20-MM)	
	2	1	**363-5813**	4	CLAMP-HOSE	
M	3	2	**124-3815**	4	BOLT (M8X1.25X16-MM)	
M	4	2	**153-5592**	2	NUT (M8X1.25-THD)	
M	5	2	**180-6118**	10	BOLT (M8X1.25X12-MM)	
M	6	1,3	**198-2664**	15	BOLT-HEAD (M14X1.5X25-MM)	
	7	2	**344-5868**	1	MOUNT	
	8	3	**238-0128**	1	FAN-BLOWER	
	9	1	**238-0265**	1	HOSE-RADIATOR (LOWER)	
	10	1	**238-0266**	1	HOSE-RADIATOR (UPPER)	
	11	1	**238-0271**	1	RADIATOR AS	
	11A	1	**202-6616**	1	CAP-RADIATOR	
	11B	1	**295-5876**	1	SHROUD	
M	12	1	**6I-0654**	2	BOLT (M10X1.5X25-MM)	
	13	2	**244-3259**	2	CLIP	
M	14	3	**249-7263**	4	BOLT (M6X1X16-MM)	
	15	2	**328-6607**	1	GUARD	
	16	1	**325-5941**	1	BRACKET AS	
	17	1	**325-5942**	1	BRACKET	
	18	3	**325-5943**	2	BRACKET	
	19	1	**334-7297**	1	BRACKET-SUPPORT	
	20	1	**334-7299**	2	MOUNT	
M	21	1	**334-7300**	4	BOLT (M6X1X20-MM)	
	22	2	**334-7304**	1	GUARD-FAN	
	23	2	**334-7305**	1	GUARD-FAN	
	24	2	**334-7306**	1	GUARD-ALTERNATOR	
	25	2	**334-7436**	1	BRACKET	
	26	2	**334-7437**	1	BRACKET	
	27	1	**364-8947**	1	PLUG	

M - METRIC PART

334-7307 **RADIATOR & FAN GP** (contd.) **i06976638**

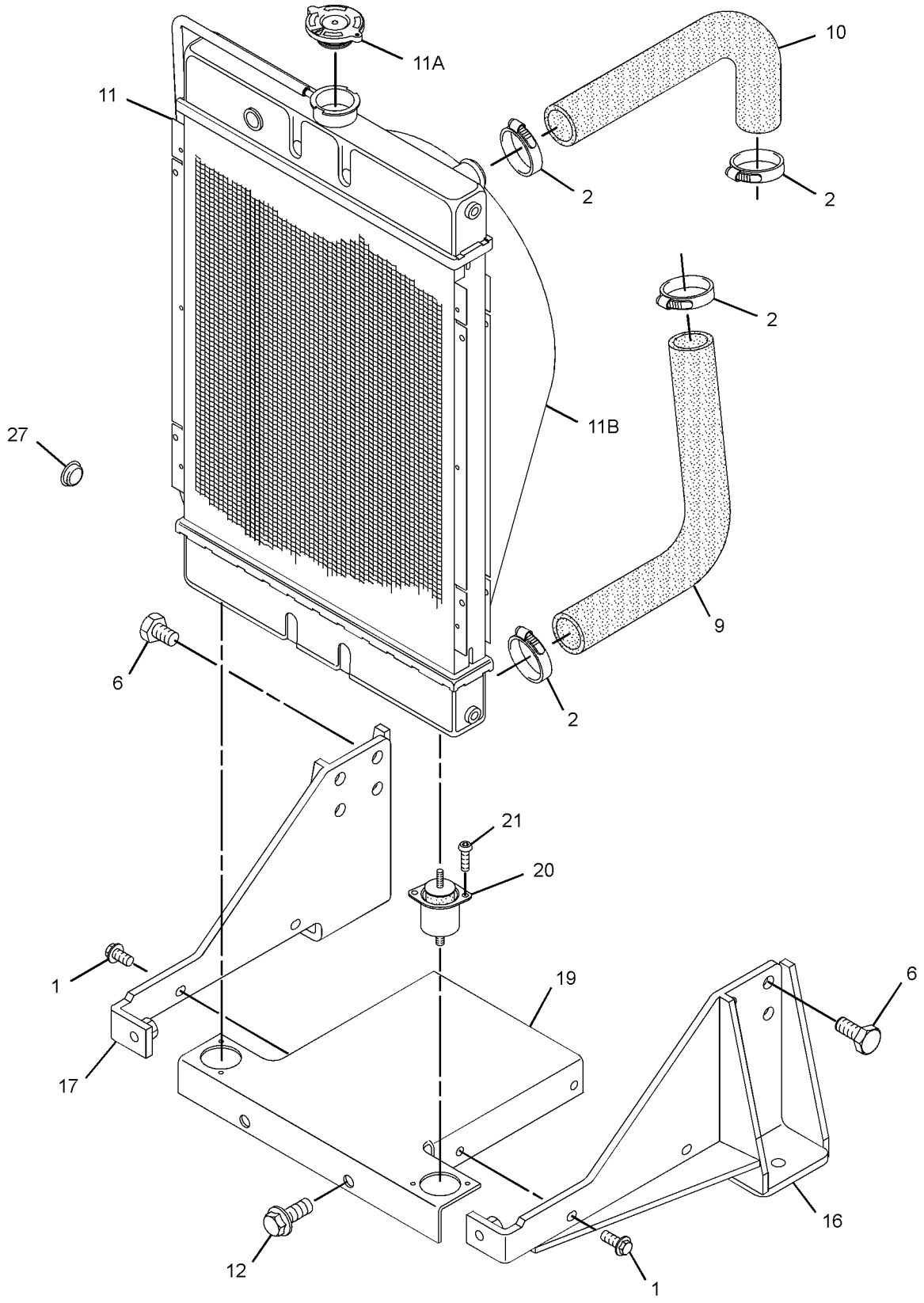

GRAPHIC #1 g02614839

334-7307 **RADIATOR & FAN GP (**contd.**)** **i06976638**

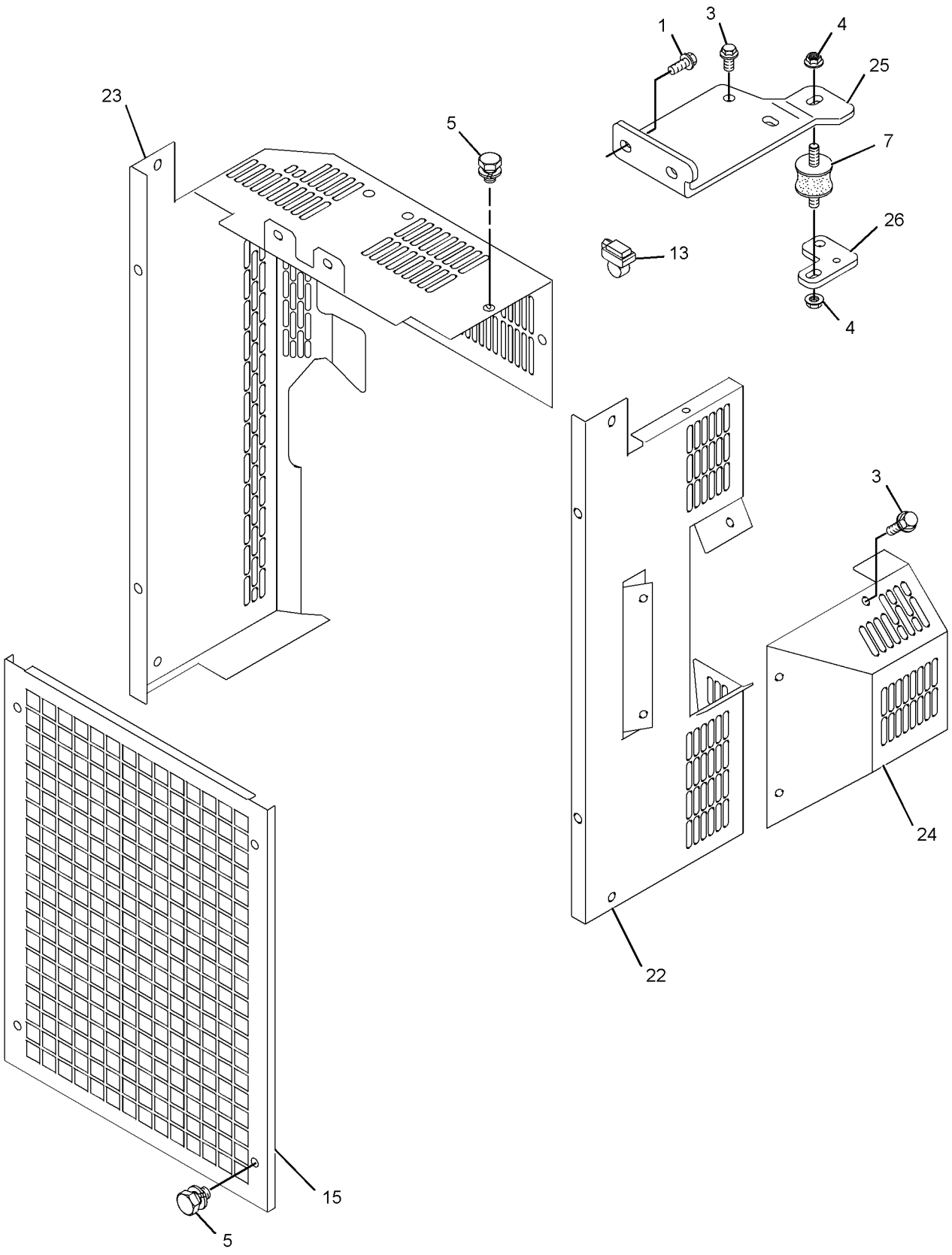

GRAPHIC #2 g01954505

334-7307 **RADIATOR & FAN GP (**contd.**)** **i06976638**

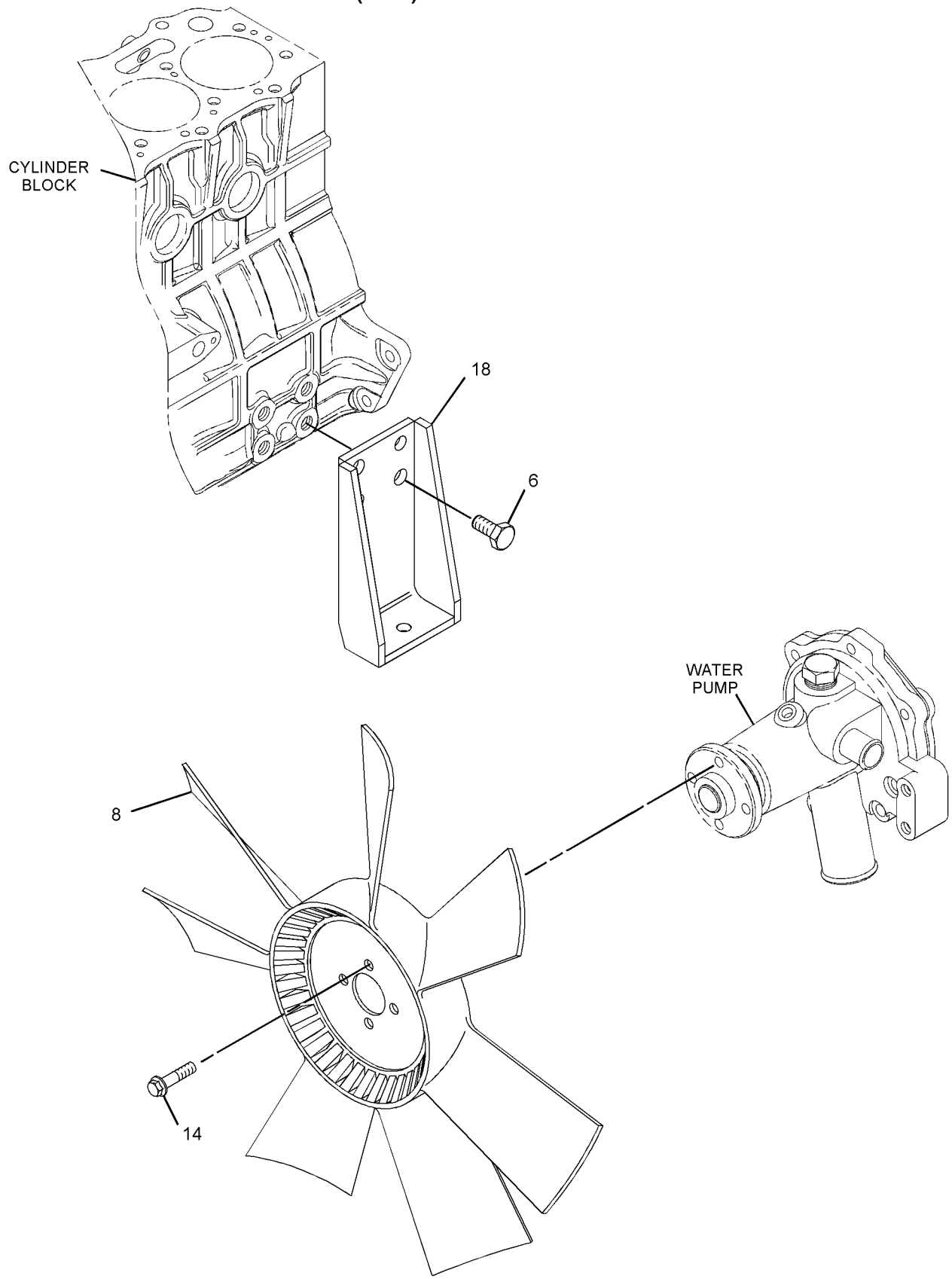

GRAPHIC #3 <END> g02614857

334-7307 RADIATOR & FAN GP

TYPE 2

SMCS-1353, 1356 **i06976643**

NOTE	REF NO	GRAPHIC REF	PART NUMBER	QTY	PART NAME 1 2 3 4 5 6 (PRODUCT LEVEL)	SEE PAGE
M	1	1,2	**6I-0217**	10	BOLT (M8X1.25X20-MM)	
C	2	1	**363-5813**	4	CLAMP-HOSE	
M	4	2	**153-5592**	2	NUT (M8X1.25-THD)	
M	5	2	**180-6118**	10	BOLT (M8X1.25X12-MM)	
M	6	1,3	**198-2664**	15	BOLT-HEAD (M14X1.5X25-MM)	
	7	2	**344-5868**	1	MOUNT	
	8	3	**238-0128**	1	FAN-BLOWER	
	9	1	**238-0265**	1	HOSE-RADIATOR (LOWER)	
	10	1	**238-0266**	1	HOSE-RADIATOR (UPPER)	
	11	1	**238-0271**	1	RADIATOR AS	
	11A	1	**202-6616**	1	CAP-RADIATOR	
	11B	1	**295-5876**	1	SHROUD	
M	12	1	**6I-0654**	2	BOLT (M10X1.5X25-MM)	
	13	2	**244-3259**	2	CLIP	
M	14	3	**249-7263**	4	BOLT (M6X1X16-MM)	
	15	2	**328-6607**	1	GUARD	
	16	1	**325-5941**	1	BRACKET AS	
	17	1	**325-5942**	1	BRACKET	
	18	3	**325-5943**	2	BRACKET	
	19	1	**334-7297**	1	BRACKET-SUPPORT	
	20	1	**334-7299**	2	MOUNT	
M	21	1	**334-7300**	4	BOLT (M6X1X20-MM)	
C	22	2	**366-2656**	1	GUARD AS-FAN	
M	22A	2	**6I-0254**	2	BOLT (M8X1.25X30-MM)	
M	22B	2	**362-8050**	2	NUT (M8X1.25-THD)	
	23	2	**334-7305**	1	GUARD-FAN	
C	24	2	**366-2658**	1	GUARD-ALTERNATOR	
	25	2	**423-6334**	1	BRACKET	
	26	2	**334-7437**	1	BRACKET	
	27	1	**364-8947**	1	PLUG	

C - CHANGE FROM PREVIOUS TYPE
M - METRIC PART

334-7307 **RADIATOR & FAN GP** (contd.) **i06976643**

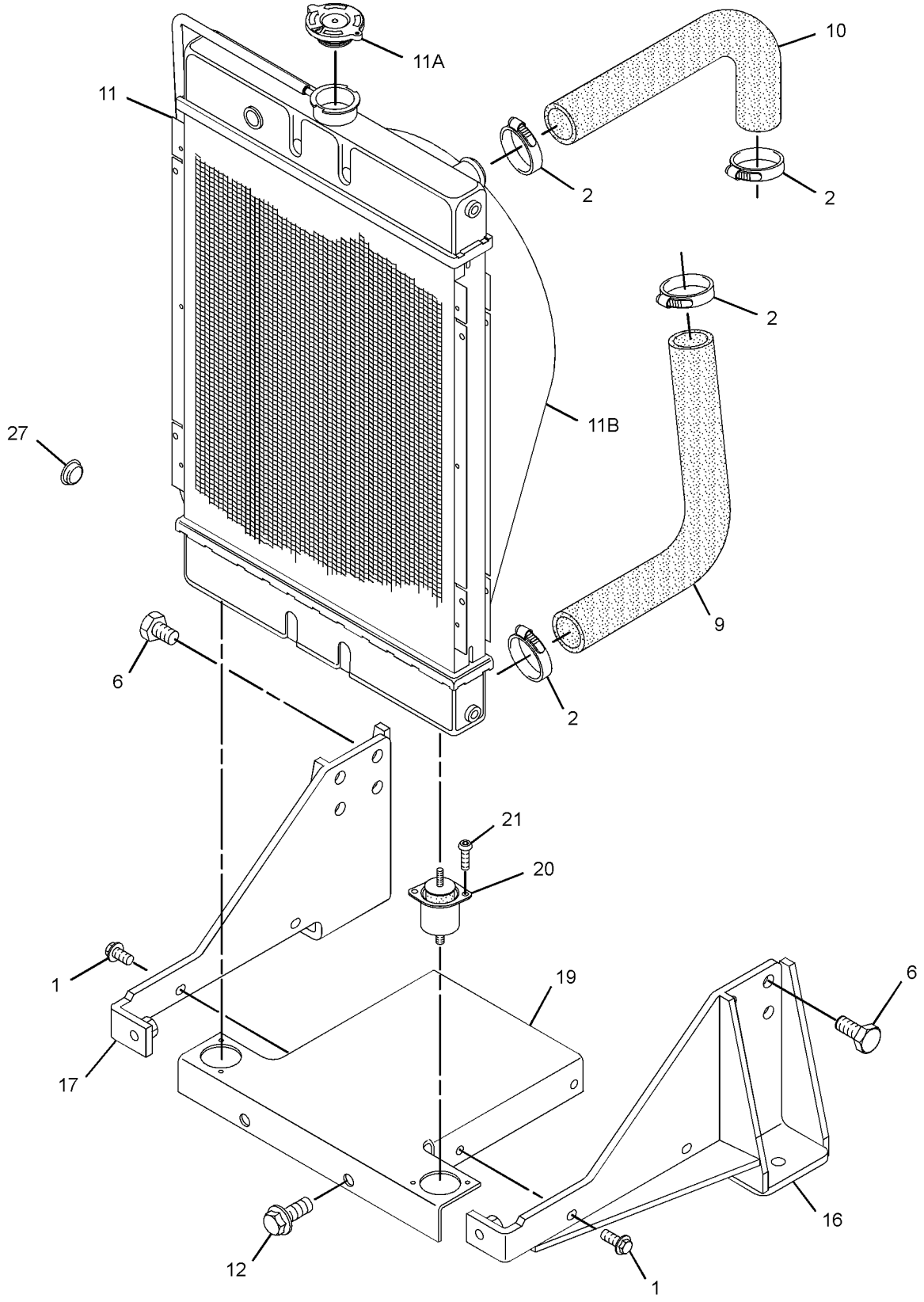

GRAPHIC #1 g02614839

334-7307 **RADIATOR & FAN GP (**contd.**)** **i06976643**

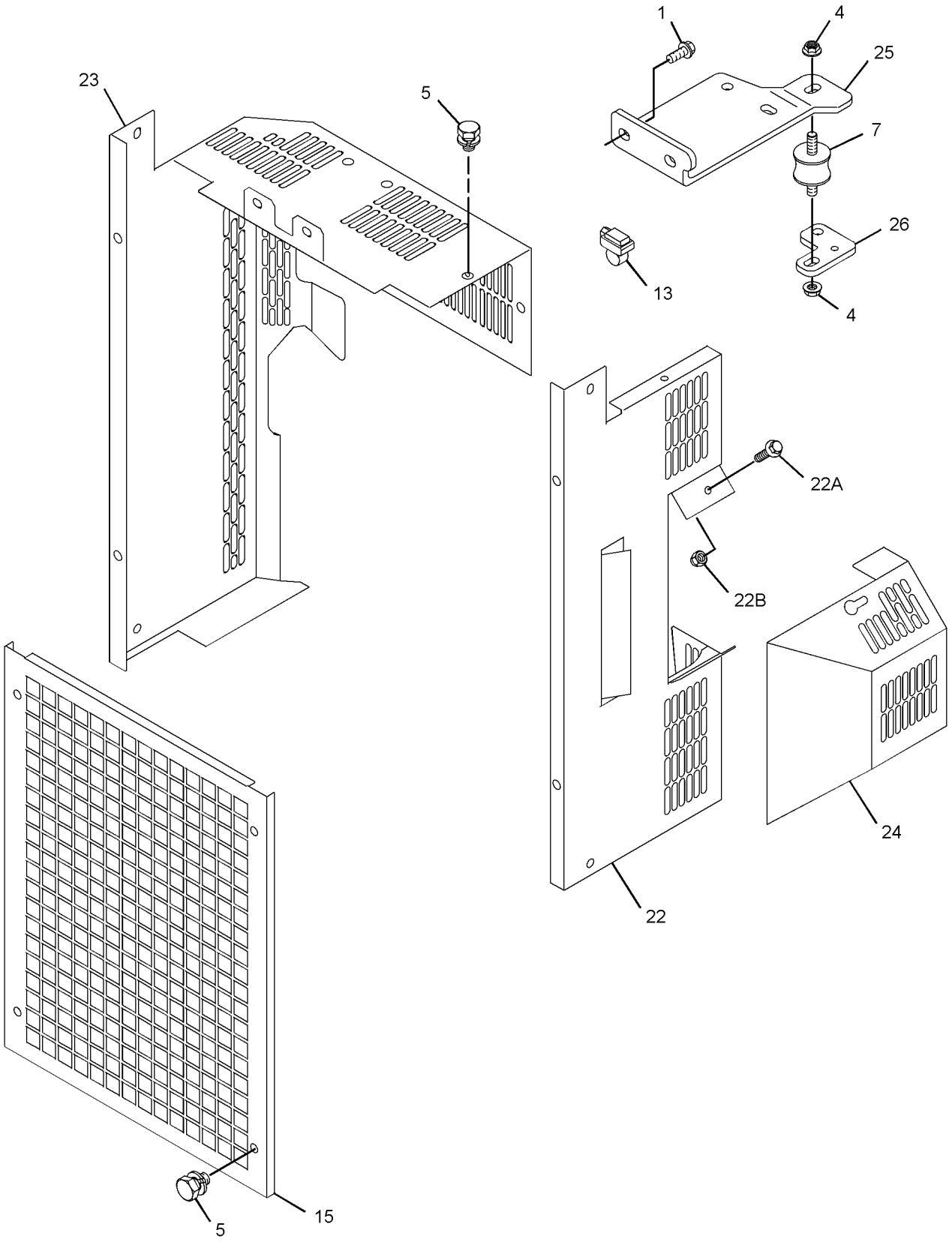

GRAPHIC #2 g03338036

334-7307 **RADIATOR & FAN GP (**contd.**)** **i06976643**

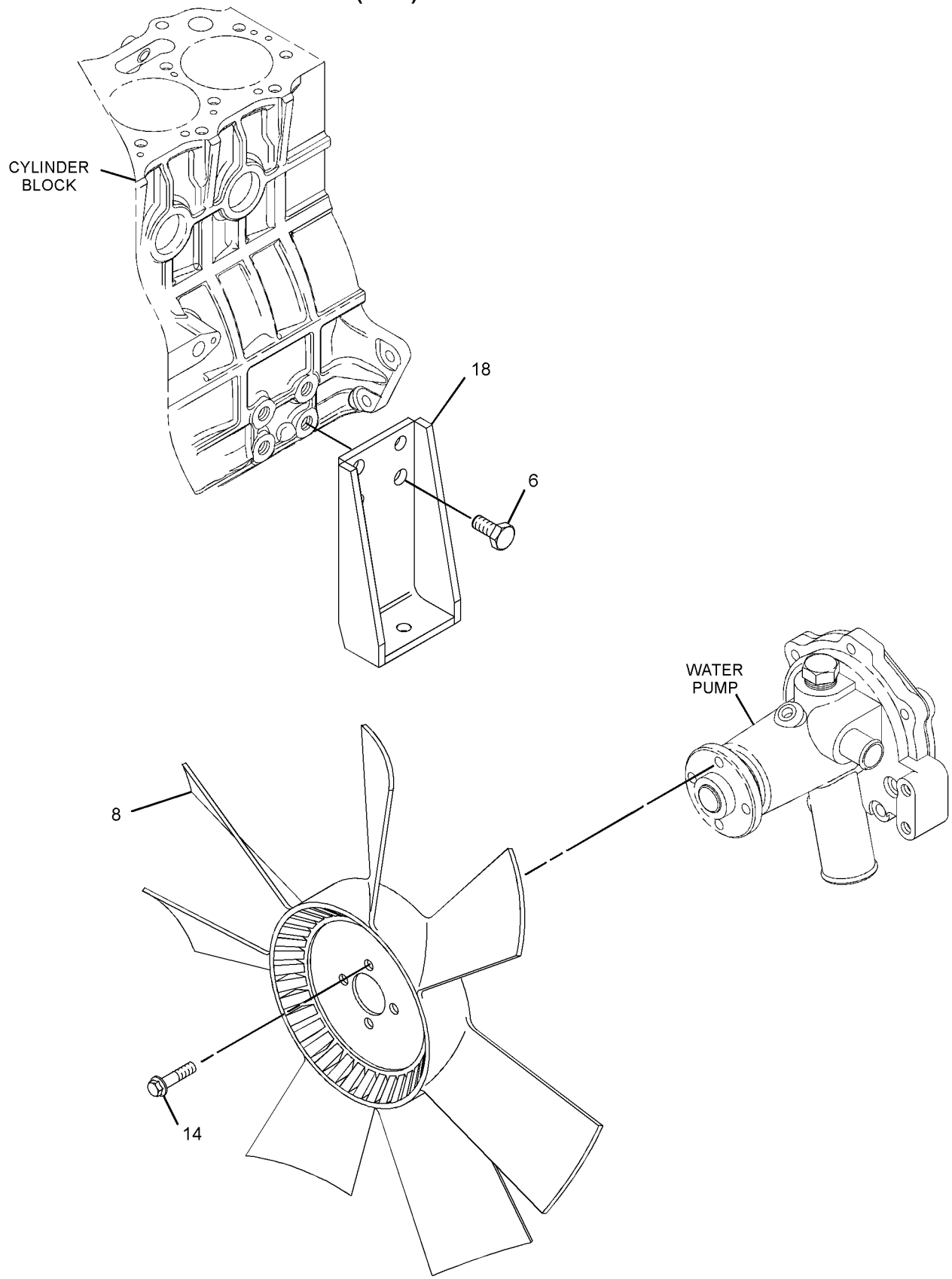

GRAPHIC #3 <END> g02614857

334-7307 RADIATOR & FAN GP

TYPE 3

SMCS-1353, 1356 **i07236346**

NOTE	REF NO	GRAPHIC REF	PART NUMBER	QTY	PART NAME 1 2 3 4 5 6 (PRODUCT LEVEL)	SEE PAGE
M	1	1,2	**6I-0217**	10	BOLT (M8X1.25X20-MM)	
M	2	1	**6I-0654**	2	BOLT (M10X1.5X25-MM)	
M	3	3	**6I-0917**	4	BOLT (M6X1X25-MM)	
M	4	2	**153-5592**	2	NUT (M8X1.25-THD)	
	5	3	**161-8260**	1	PLATE	
M	6	2	**180-6118**	10	BOLT (M8X1.25X12-MM)	
M	7	1,3	**198-2664**	15	BOLT-HEAD (M14X1.5X25-MM)	
	8	1	**238-0265**	1	HOSE-RADIATOR	
	9	1	**238-0266**	1	HOSE-RADIATOR	
	10	1	**238-0271**	1	RADIATOR AS	
	10A	1	**202-6616**	1	CAP-RADIATOR	
	10B	1	**295-5876**	1	SHROUD	
	11	2	**244-3259**	2	CLIP	
	12	1	**325-5941**	1	BRACKET AS	
	13	3	**325-5943**	2	BRACKET	
	14	2	**328-6607**	1	GUARD	
	15	1	**439-2614**	1	BRACKET AS (SUPPORT)	
	16	1	**334-7299**	2	MOUNT	
M	17	1	**334-7300**	4	BOLT (M6X1X20-MM)	
C	18	1	**476-5581**	1	BRACKET AS	
	19	2	**334-7437**	1	BRACKET	
	20	2	**344-5868**	1	MOUNT	
	21	1	**363-5813**	4	CLAMP-HOSE	
	22	2	**366-2656**	1	GUARD AS-FAN	
M	22A	2	**6I-0254**	2	BOLT (M8X1.25X30-MM)	
M	22B	2	**362-8050**	2	NUT (M8X1.25-THD)	
	23	2	**366-2658**	1	GUARD-ALTERNATOR	
	24	3	**423-5640**	1	FAN (6-BLADE)	
	25	2	**487-9902**	1	BRACKET	
	26	2	**469-4428**	1	GUARD AS-FAN	

C - CHANGE FROM PREVIOUS TYPE
M - METRIC PART

334-7307 **RADIATOR & FAN GP** (contd.) **i07236346**

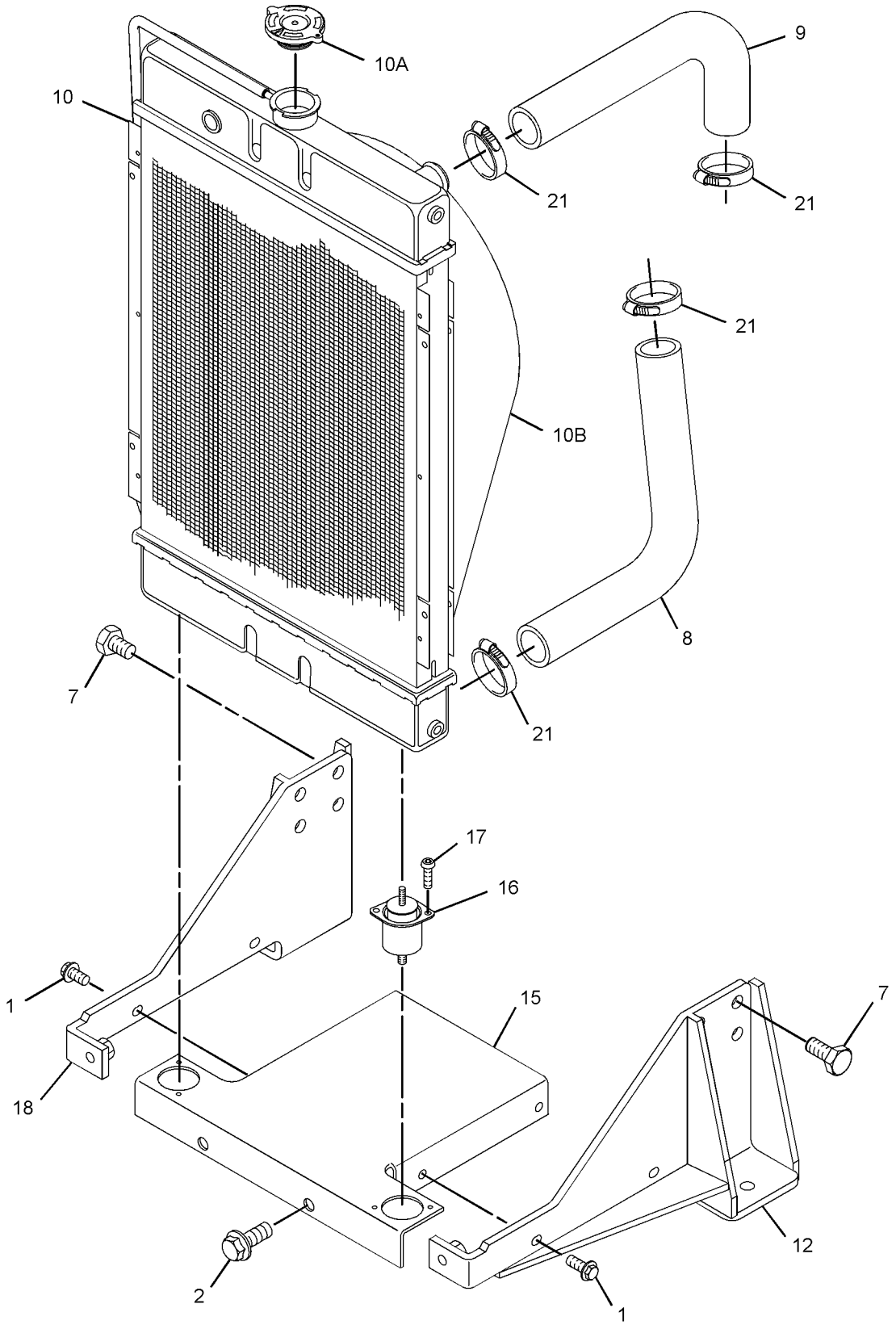

GRAPHIC #1 g06183972

334-7307 **RADIATOR & FAN GP (**contd.**)** **i07236346**

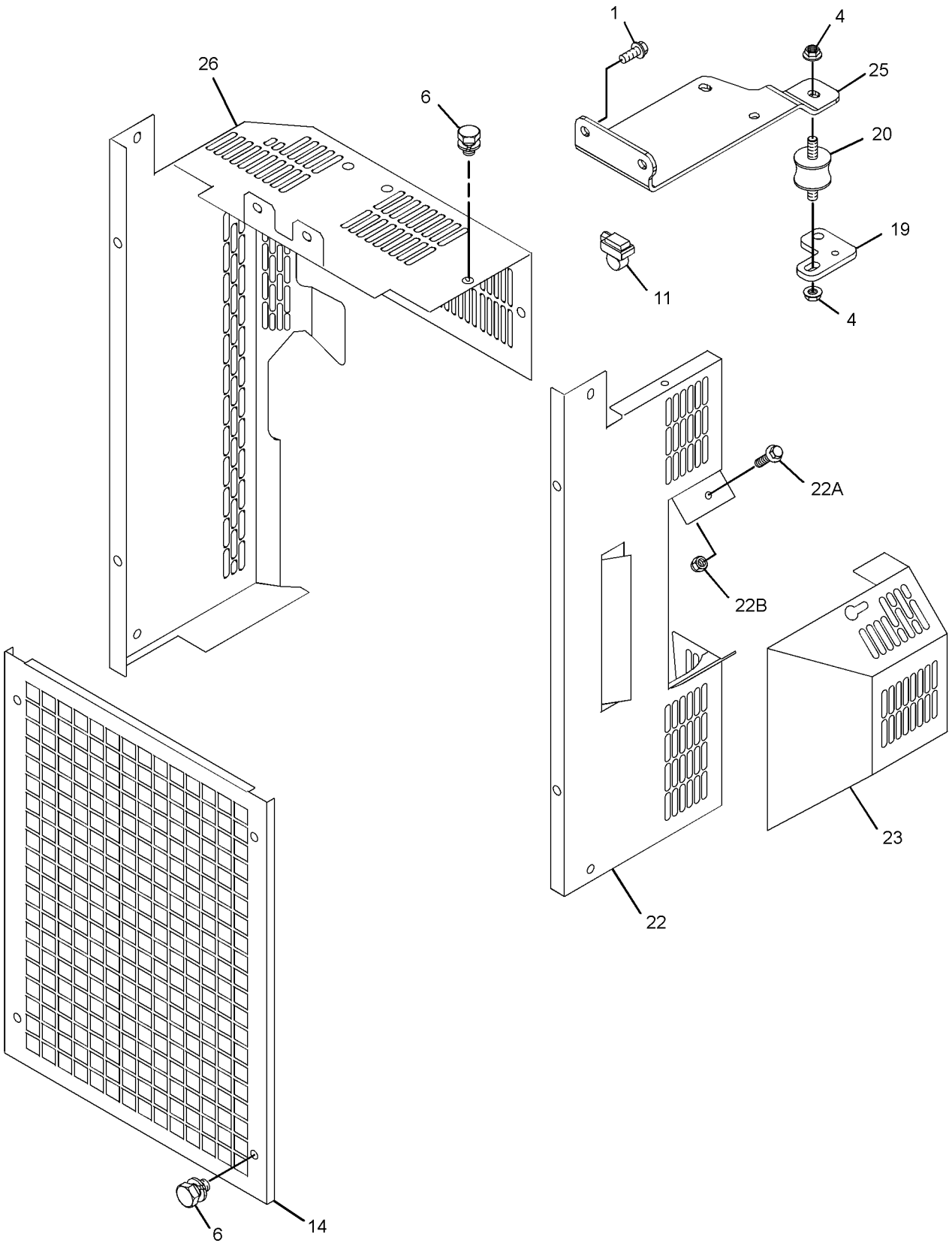

GRAPHIC #2 g06206477

334-7307 **RADIATOR & FAN GP (**contd.**)** **i07236346**

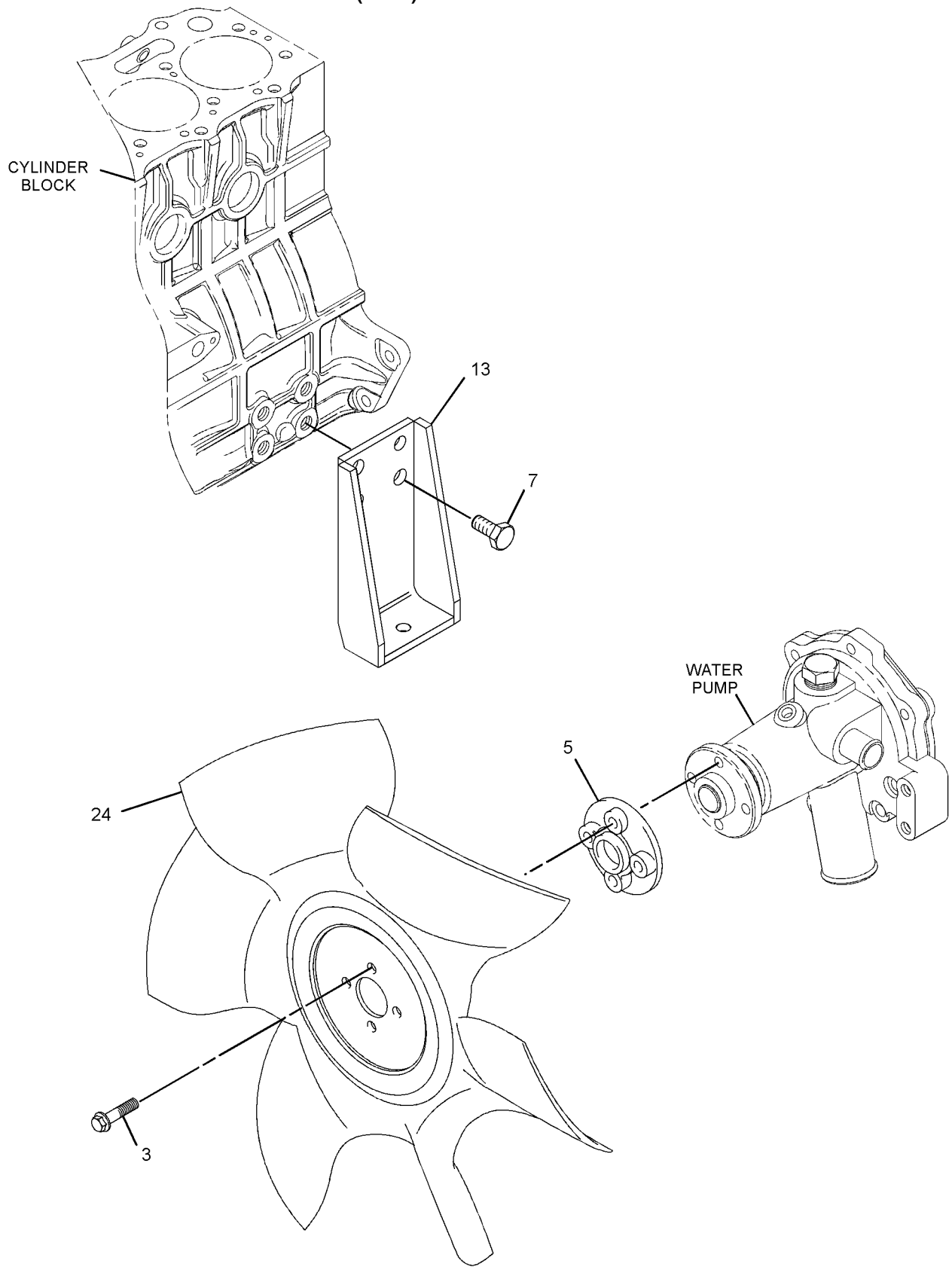

GRAPHIC #3 <END> g06183974

334-7307 RADIATOR & FAN GP

TYPE 4

SMCS-1353, 1356 **i07577283**

NOTE	REF NO	GRAPHIC REF	PART NUMBER	QTY	PART NAME 1 2 3 4 5 6 (PRODUCT LEVEL)	SEE PAGE
M	1	1,2	**6I-0217**	10	BOLT (M8X1.25X20-MM)	
M	2	1	**123-2899**	2	BOLT (M10X1.5X40-MM)	
CM	3	3	**6I-0917**	2	BOLT (M6X1X25-MM)	
M	4	2	**153-5592**	2	NUT (M8X1.25-THD)	
	5	3	**161-8260**	1	PLATE	
M	6	2	**114-4363**	10	BOLT (M8X1.25X12-MM)	
M	7	1,3	**198-2664**	15	BOLT-HEAD (M14X1.5X25-MM)	
	8	1	**238-0265**	1	HOSE-RADIATOR	
	9	1	**238-0266**	1	HOSE-RADIATOR	
	10	1	**238-0271**	1	RADIATOR AS	
	10A	1	**202-6616**	1	CAP-RADIATOR	
	10B	1	**295-5876**	1	SHROUD	
	11	2	**244-3259**	2	CLIP	
	12	1	**325-5941**	1	BRACKET AS	
M	12A	1	**8T-3490**	1	NUT-WELD (M10X1.5-THD)	
	13	3	**325-5943**	2	BRACKET	
	14	2	**328-6607**	1	GUARD	
	15	1	**439-2614**	1	BRACKET AS (SUPPORT)	
	16	1	**543-5898**	2	MOUNT AS	
M	17	1	**334-7300**	4	BOLT (M6X1X20-MM)	
	18	1	**476-5581**	1	BRACKET AS	
M	18A	1	**8T-3490**	1	NUT-WELD (M10X1.5-THD)	
	19	2	**334-7437**	1	BRACKET	
	20	2	**344-5868**	1	MOUNT	
	21	1	**363-5813**	4	CLAMP-HOSE	
	22	2	**366-2656**	1	GUARD AS-FAN	
M	22A	2	**6I-0254**	2	BOLT (M8X1.25X30-MM)	
M	22B	2	**362-8050**	2	NUT (M8X1.25-THD)	
	23	2	**366-2658**	1	GUARD-ALTERNATOR	
	24	3	**423-5640**	1	FAN (6-BLADE) (6-BLADE)	
	25	2	**487-9902**	1	BRACKET	
	26	2	**469-4428**	1	GUARD AS-FAN	

C - CHANGE FROM PREVIOUS TYPE
M - METRIC PART

334-7307 **RADIATOR & FAN GP** (contd.) **i07577283**

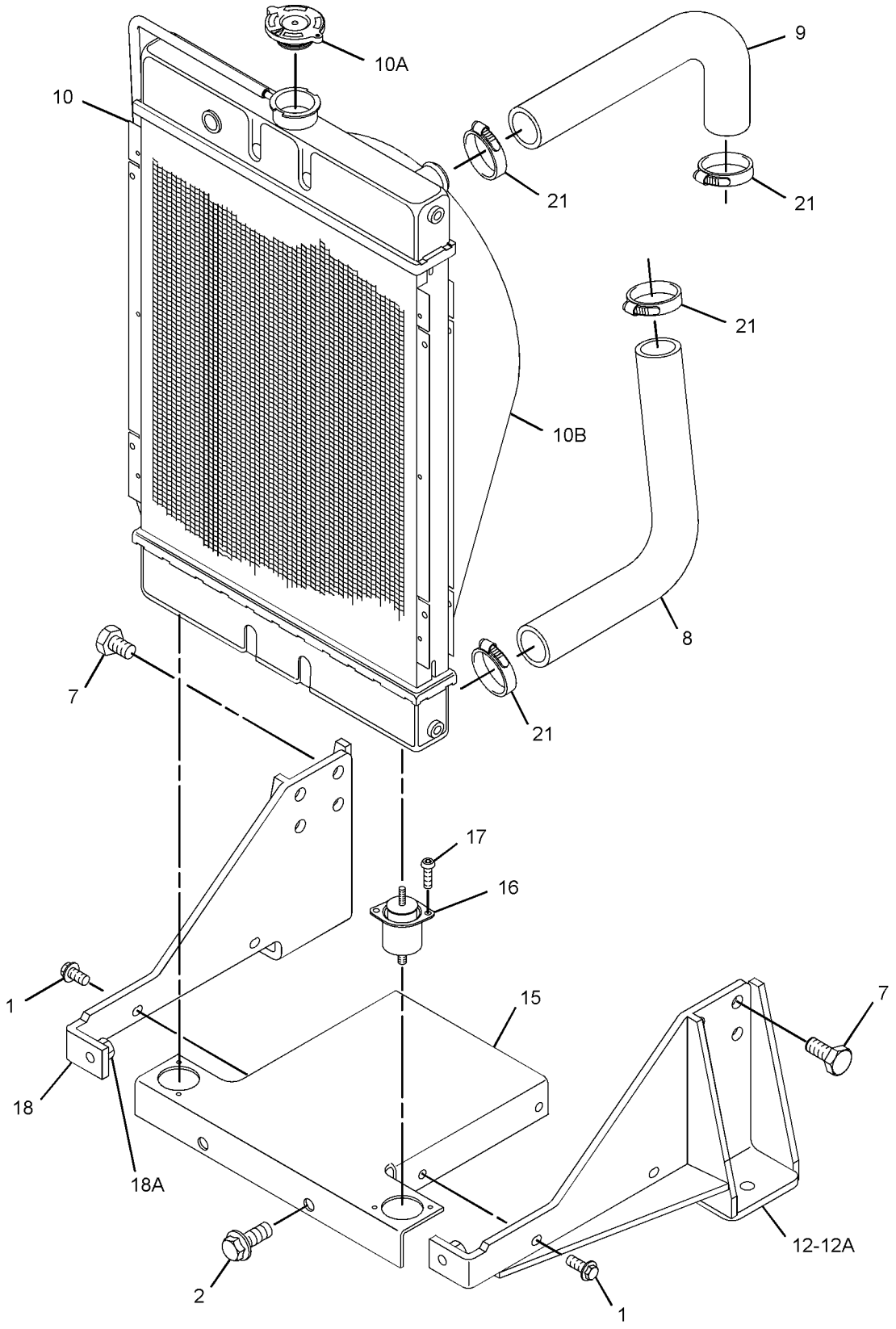

GRAPHIC #1 g06304948

334-7307 **RADIATOR & FAN GP (**contd.**)** **i07577283**

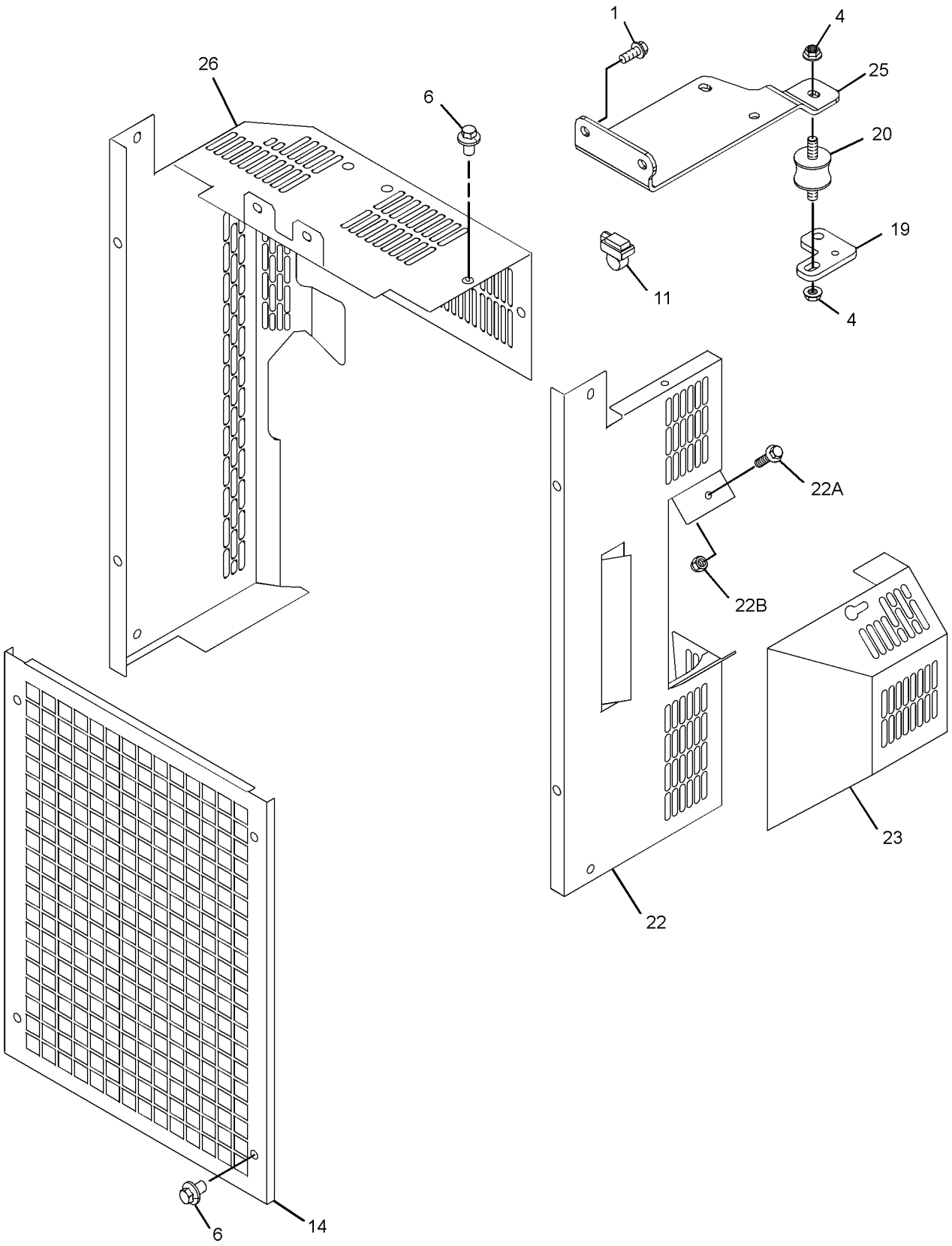

GRAPHIC #2 g06304949

334-7307 **RADIATOR & FAN GP (**contd.**)** **i07577283**

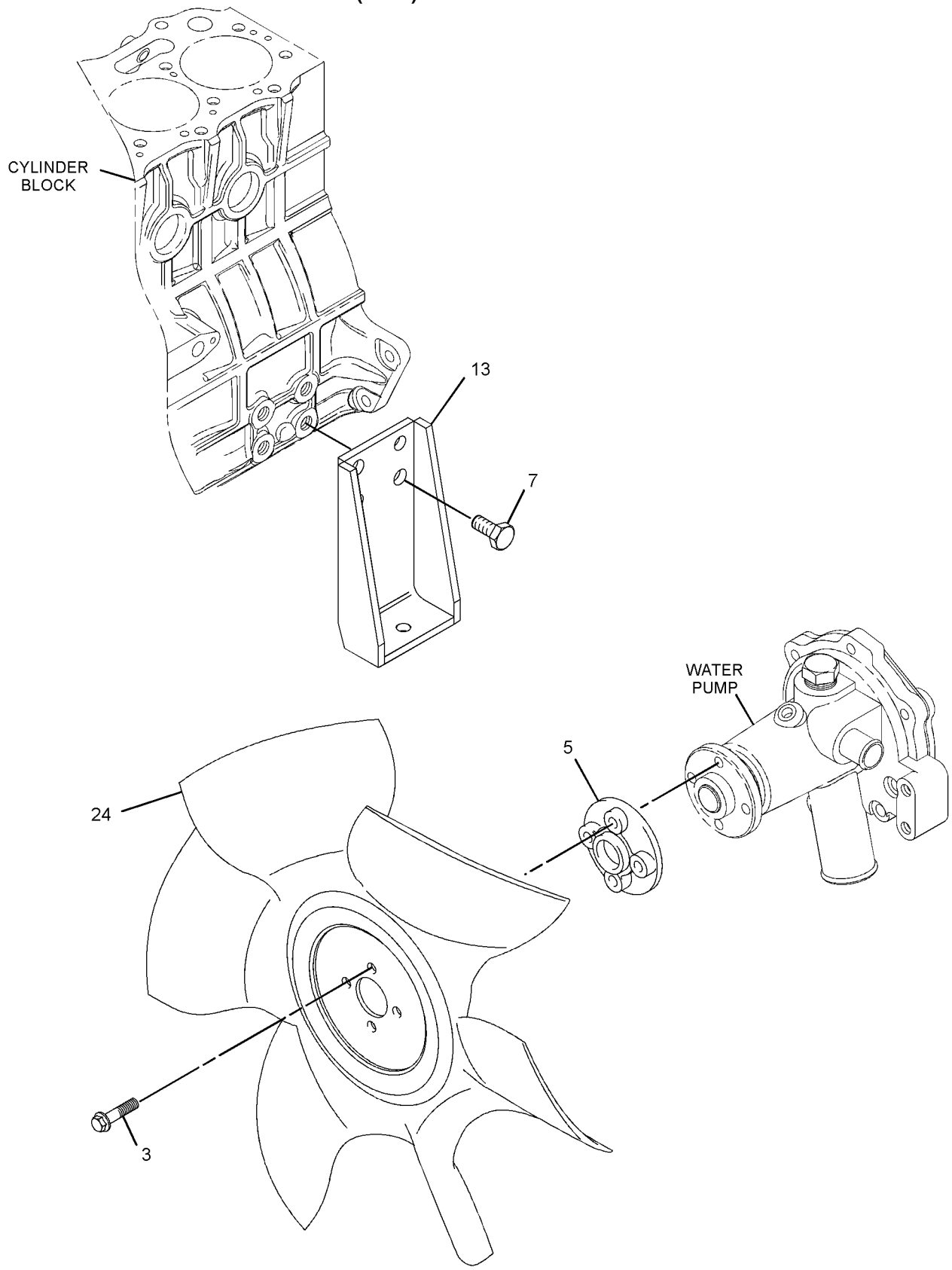

GRAPHIC #3 <END> g06183974

316-9713 RADIATOR GP

TYPE 1

SMCS-1353 **i04391358**

NOTE	REF NO	GRAPHIC REF	PART NUMBER	QTY	PART NAME 1 2 3 4 5 6 (PRODUCT LEVEL)	SEE PAGE
M	1	1,2	**6I-0217**	6	BOLT (M8X1.25X20-MM)	
M	2	1	**6I-0917**	2	BOLT (M6X1X25-MM)	
M	3	2	**124-3815**	4	BOLT (M8X1.25X16-MM)	
M	4	2	**153-5592**	2	NUT (M8X1.25-THD)	
M	5	3	**249-7263**	4	BOLT (M6X1X16-MM)	
M	7	2	**180-6118**	10	BOLT (M8X1.25X12-MM)	
M	8	1	**198-2664**	6	BOLT-HEAD (M14X1.5X25-MM)	
	9	2	**344-5868**	1	MOUNT	
	10	3	**238-0128**	1	FAN-BLOWER	
	11	1	**238-0265**	1	HOSE-RADIATOR (LOWER)	
	12	1	**238-0266**	1	HOSE-RADIATOR (UPPER)	
	13	1	**238-0271**	1	RADIATOR AS	
	13A	1	**202-6616**	1	CAP-RADIATOR	
	13B	1	**295-5876**	1	SHROUD	
	14	1	**334-7297**	1	BRACKET-SUPPORT	
M	15	1	**239-1137**	2	BOLT (M10X1.25X25-MM)	
	16	1	**363-5813**	4	CLAMP-HOSE	
	17	2	**334-7304**	1	GUARD-FAN (LH)	
	18	2	**337-3107**	1	GUARD-FAN (RH)	
	19	2	**334-7306**	1	GUARD-ALTERNATOR	
	20	2	**334-7436**	1	BRACKET	
	21	2	**334-7437**	1	BRACKET	
	22	1	**325-5941**	1	BRACKET AS	
	23	1	**325-5942**	1	BRACKET	
	24	2	**244-3259**	2	CLIP	
	25	2	**292-1988**	1	GUARD	
M	26	1	**334-7300**	4	BOLT (M6X1X20-MM)	
	27	1	**334-7299**	2	MOUNT	

M - METRIC PART

316-9713 **RADIATOR GP (**contd.**)** **i04391358**

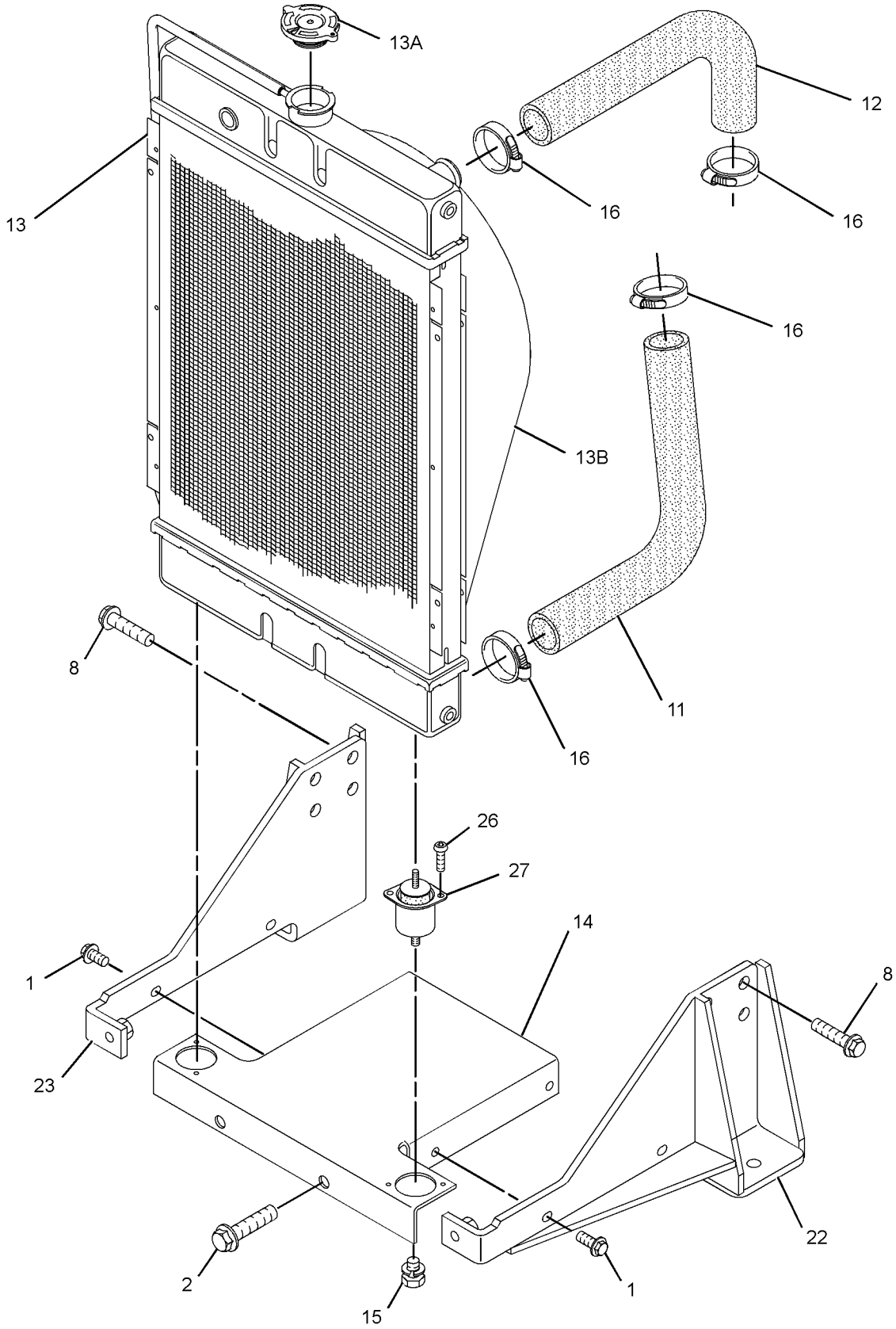

GRAPHIC #1 g01950005

316-9713 **RADIATOR GP** (contd.) **i04391358**

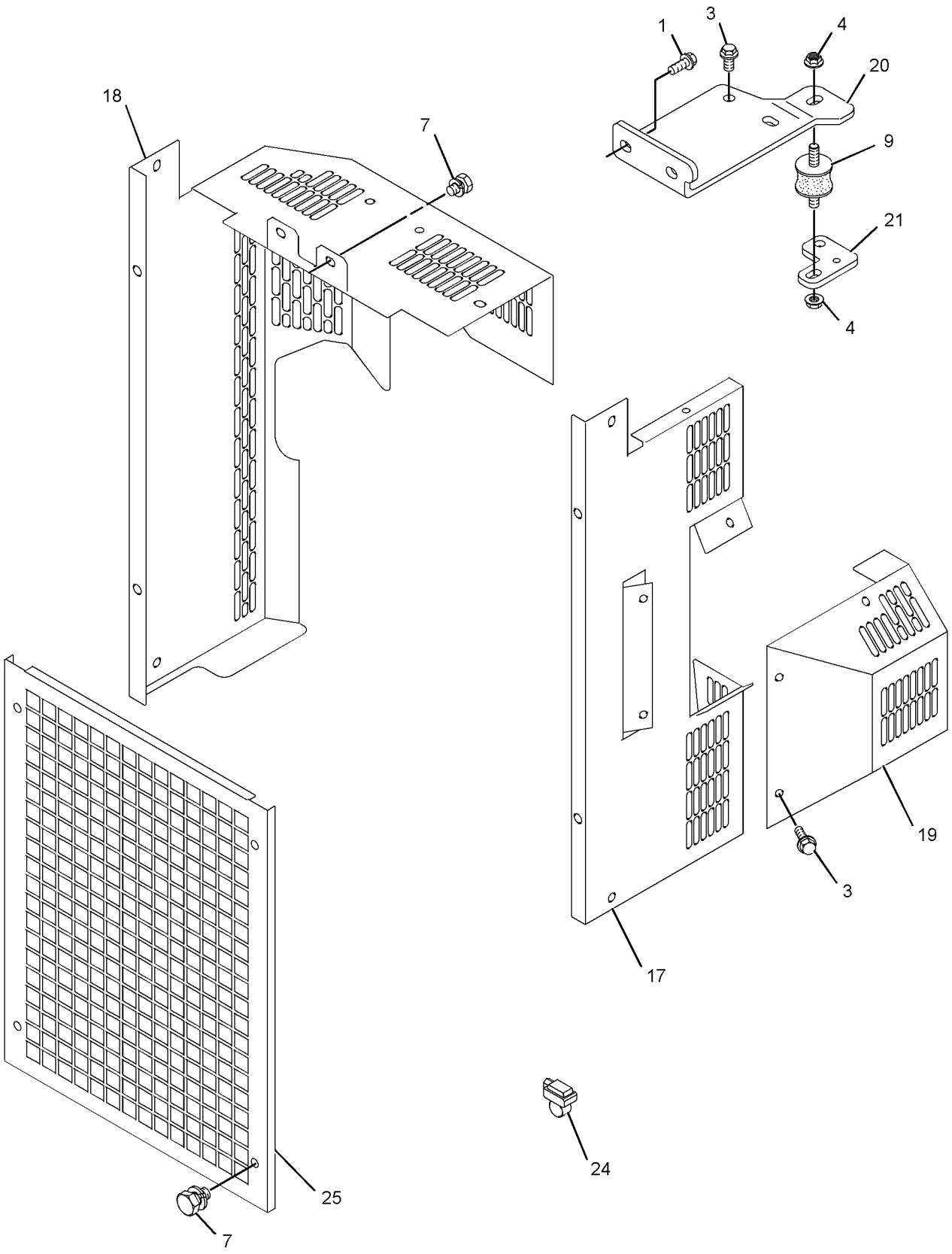

GRAPHIC #2 g01951509

316-9713 **RADIATOR GP (**contd.**)** **i04391358**

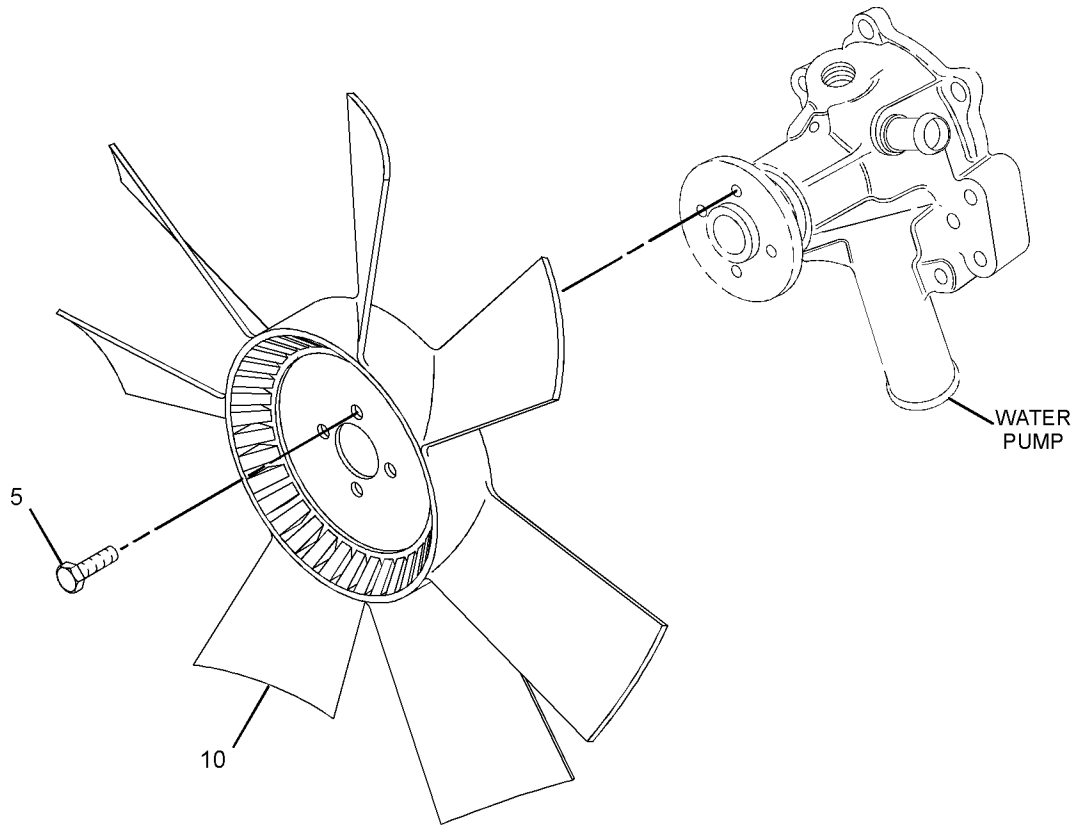

GRAPHIC #3 <END> g01950006

316-9713 RADIATOR GP

TYPE 2

SMCS-1353 **i06092427**

NOTE	REF NO	GRAPHIC REF	PART NUMBER	QTY	PART NAME 1 2 3 4 5 6 (PRODUCT LEVEL)	SEE PAGE
M	1	1,2	**6I-0217**	6	BOLT (M8X1.25X20-MM)	
M	2	1	**6I-0917**	2	BOLT (M6X1X25-MM)	
	3	2	**292-1988**	1	GUARD	
M	4	2	**153-5592**	2	NUT (M8X1.25-THD)	
M	5	3	**249-7263**	4	BOLT (M6X1X16-MM)	
M	7	2	**180-6118**	10	BOLT (M8X1.25X12-MM)	
M	8	1	**198-2664**	6	BOLT-HEAD (M14X1.5X25-MM)	
	9	2	**344-5868**	1	MOUNT	
	10	3	**238-0128**	1	FAN-BLOWER	
	11	1	**238-0265**	1	HOSE-RADIATOR (LOWER)	
	12	1	**238-0266**	1	HOSE-RADIATOR (UPPER)	
	13	1	**238-0271**	1	RADIATOR AS	
	13A	1	**202-6616**	1	CAP-RADIATOR	
	13B	1	**295-5876**	1	SHROUD	
CM	14	1	**6I-0654**	2	BOLT (M10X1.5X25-MM)	
	15	1	**239-0743**	1	SUPPORT	
	16	1	**363-5813**	4	CLAMP-HOSE	
	17	2	**366-2656**	1	GUARD AS-FAN (LH)	
M	17A	2	**6I-0254**	2	BOLT (M8X1.25X30-MM)	
M	17B	2	**362-8050**	2	NUT (M8X1.25-THD)	
	18	2	**337-3107**	1	GUARD-FAN (RH)	
	19	2	**366-2658**	1	GUARD-ALTERNATOR	
	20	2	**423-6334**	1	BRACKET	
	21	2	**334-7437**	1	BRACKET	
	22	1	**325-5941**	1	BRACKET AS	
	23	1	**325-5942**	1	BRACKET	
	24	2	**244-3259**	2	CLIP	
	25	1	**364-8947**	1	PLUG	

C - CHANGE FROM PREVIOUS TYPE
M - METRIC PART

316-9713 **RADIATOR GP (**contd.**)** **i06092427**

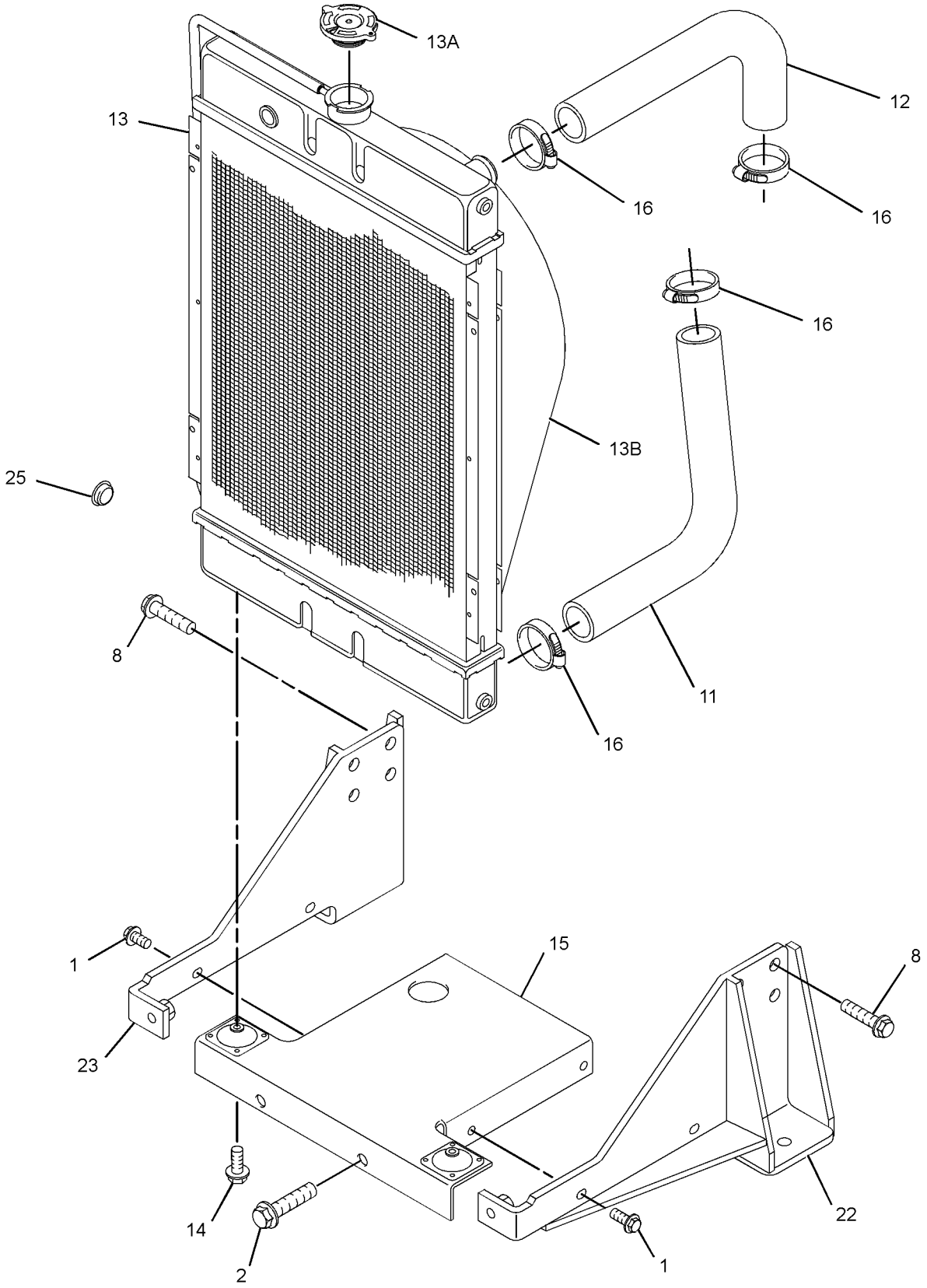

GRAPHIC #1 g03811756

316-9713 **RADIATOR GP (**contd.**)** **i06092427**

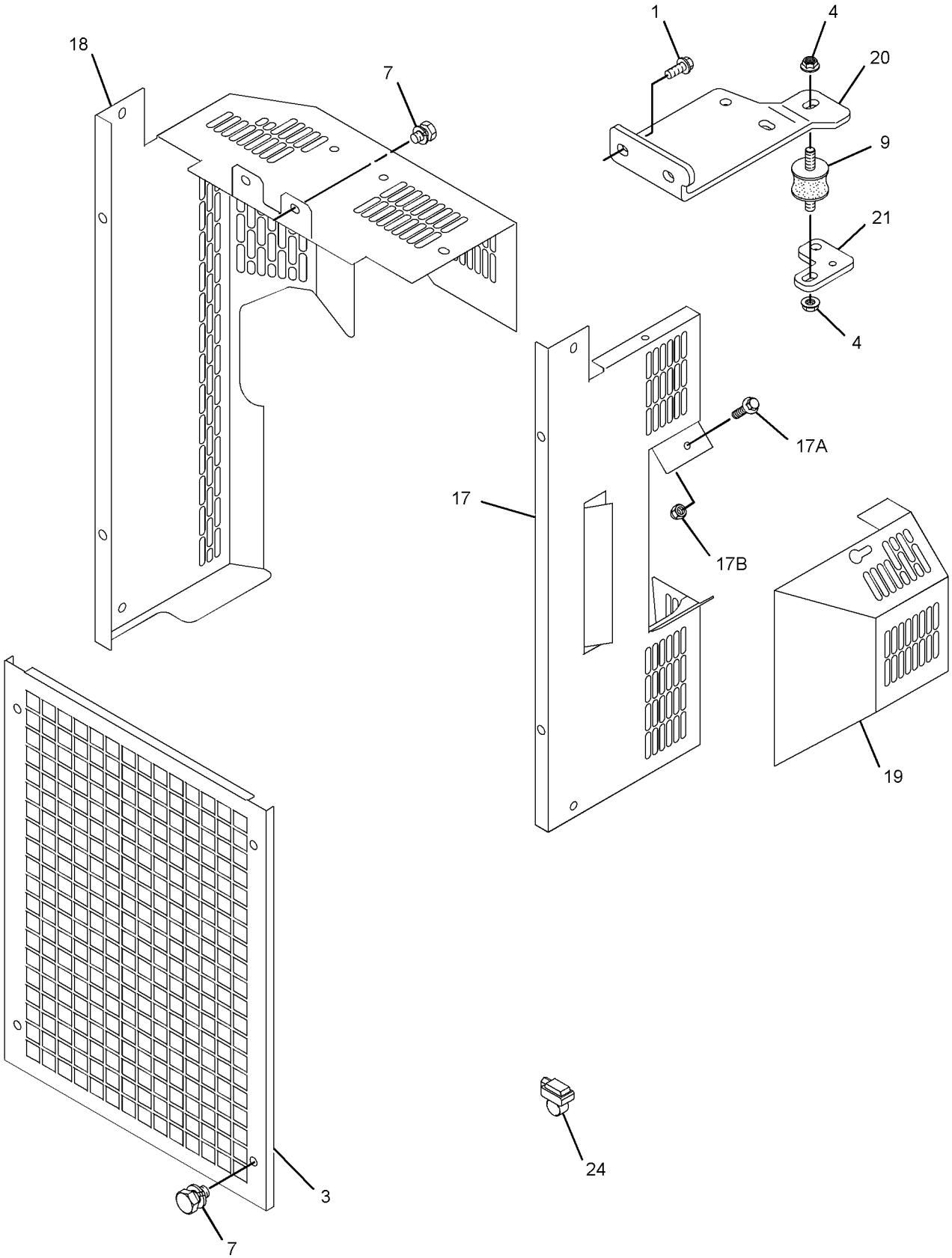

GRAPHIC #2 g03375922

316-9713 **RADIATOR GP (**contd.**)** **i06092427**

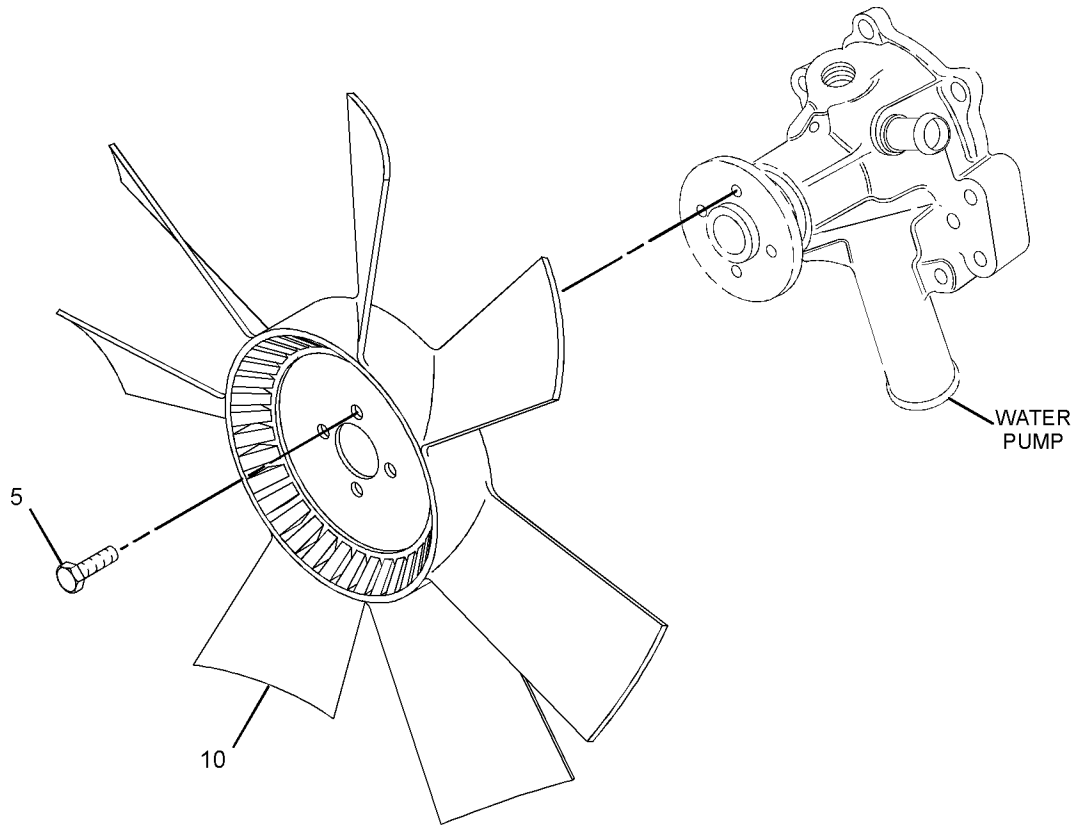

GRAPHIC #3 <END> g01950006

316-9713 RADIATOR GP

TYPE 3

SMCS-1353 **i07037487**

NOTE	REF NO	GRAPHIC REF	PART NUMBER	QTY	PART NAME 1 2 3 4 5 6 (PRODUCT LEVEL)	SEE PAGE
M	1	1,2	**6I-0217**	6	BOLT (M8X1.25X20-MM)	
M	2	1	**6I-0917**	2	BOLT (M6X1X25-MM)	
	3	2	**292-1988**	1	GUARD	
M	4	2	**153-5592**	2	NUT (M8X1.25-THD)	
M	5	3	**249-7263**	4	BOLT (M6X1X16-MM)	
M	7	2	**180-6118**	10	BOLT (M8X1.25X12-MM)	
M	8	1	**198-2664**	6	BOLT-HEAD (M14X1.5X25-MM)	
	9	2	**344-5868**	1	MOUNT	
	10	3	**423-5640**	1	FAN (6-BLADE) (6-BLADE)	
	11	1	**238-0265**	1	HOSE-RADIATOR (LOWER)	
	12	1	**238-0266**	1	HOSE-RADIATOR (UPPER)	
	13	1	**238-0271**	1	RADIATOR AS	
	13A	1	**202-6616**	1	CAP-RADIATOR	
	13B	1	**295-5876**	1	SHROUD	
CM	14	1	**6I-0654**	2	BOLT (M10X1.5X25-MM)	
	15	1	**239-0743**	1	SUPPORT	
	16	1	**363-5813**	4	CLAMP-HOSE	
	17	2	**366-2656**	1	GUARD AS-FAN (LH)	
M	17A	2	**6I-0254**	2	BOLT (M8X1.25X30-MM)	
M	17B	2	**362-8050**	2	NUT (M8X1.25-THD)	
	18	2	**337-3107**	1	GUARD-FAN (RH)	
	19	2	**366-2658**	1	GUARD-ALTERNATOR	
	20	2	**423-6334**	1	BRACKET	
	21	2	**334-7437**	1	BRACKET	
	22	1	**325-5941**	1	BRACKET AS	
C	23	1	**476-5581**	1	BRACKET AS	
	24	2	**244-3259**	2	CLIP	

C - CHANGE FROM PREVIOUS TYPE
M - METRIC PART

316-9713 **RADIATOR GP (**contd.**)** **i07037487**

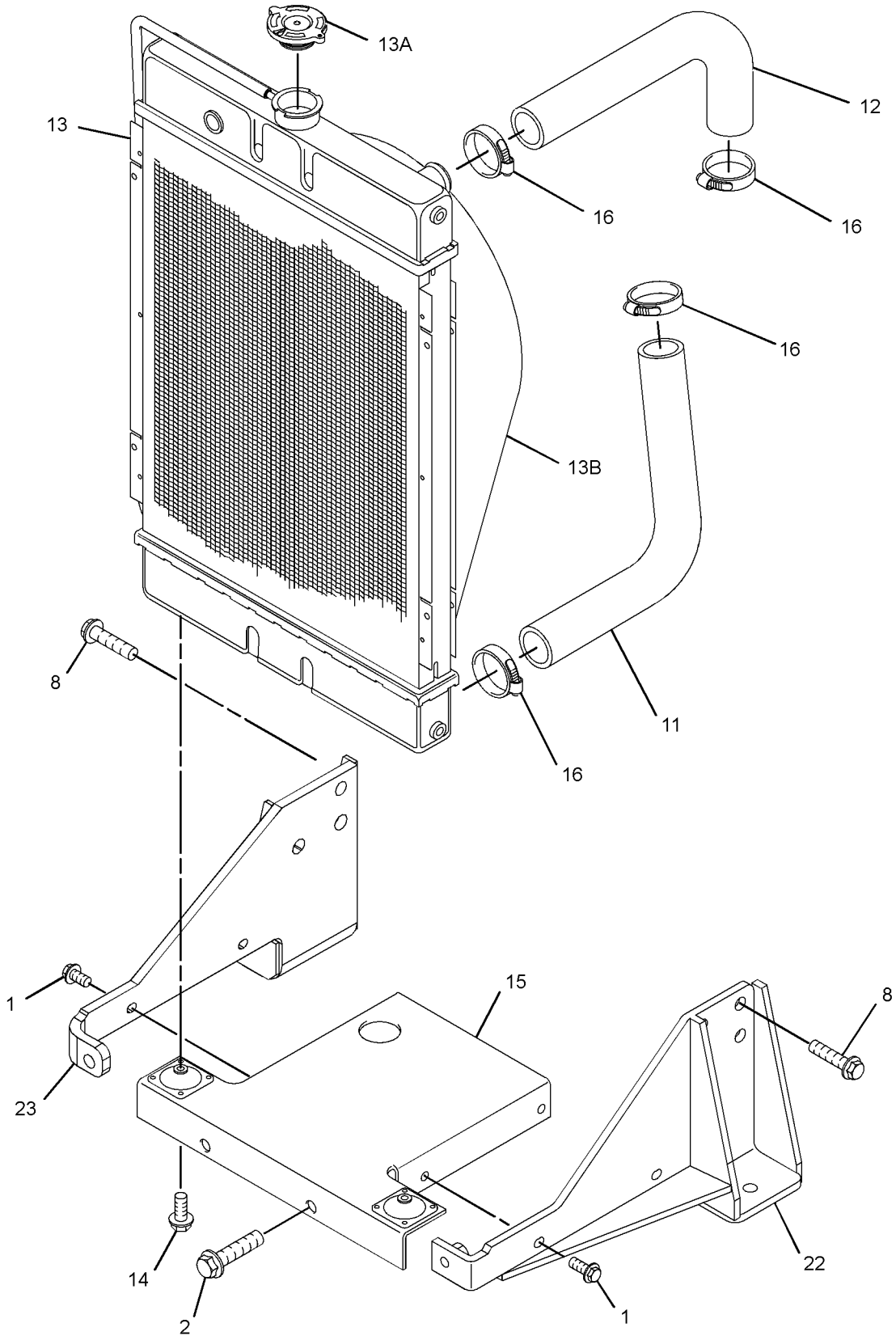

GRAPHIC #1 g06200256

316-9713 **RADIATOR GP** (contd.) **i07037487**

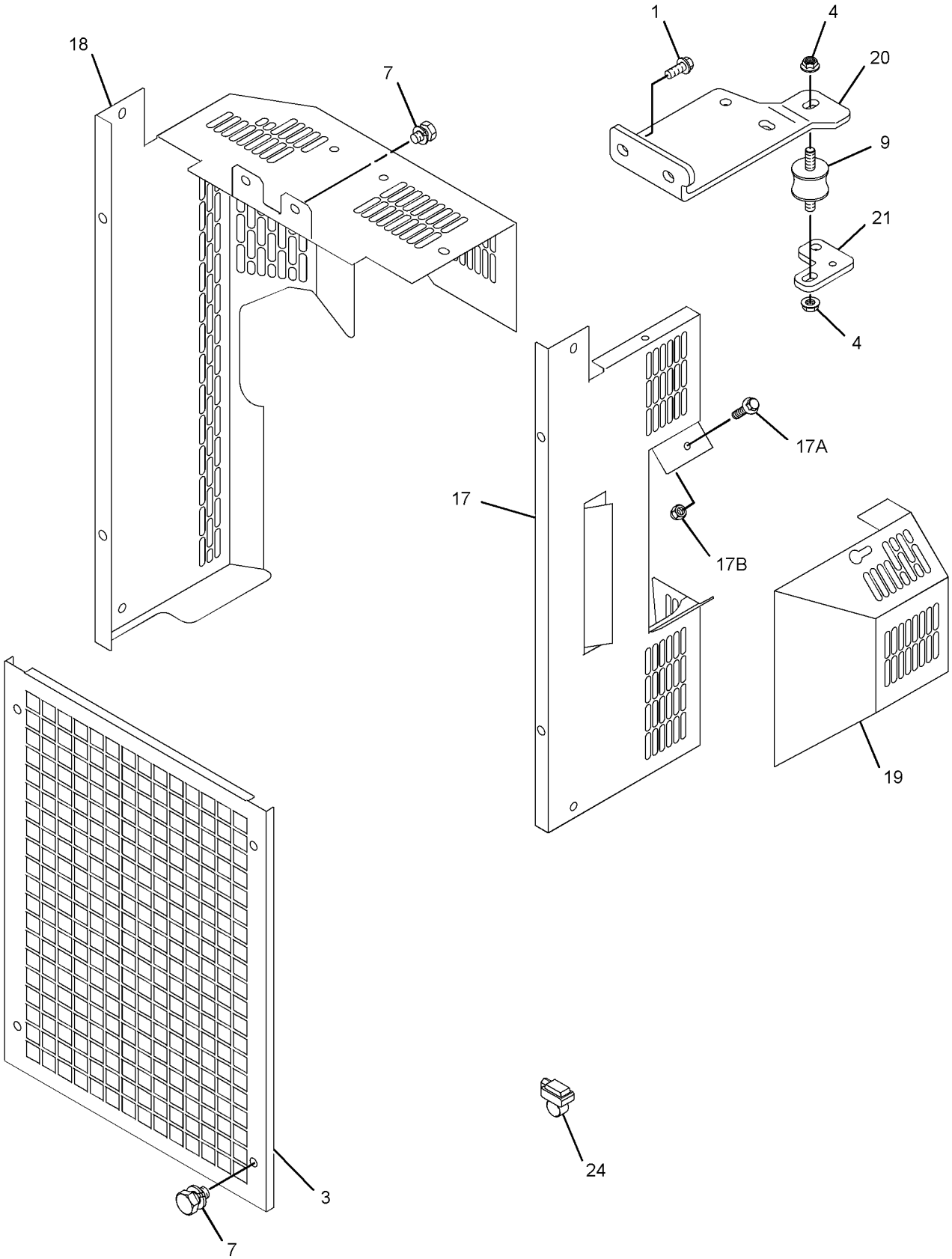

GRAPHIC #2 g06200257

316-9713 **RADIATOR GP (**contd.**)** **i07037487**

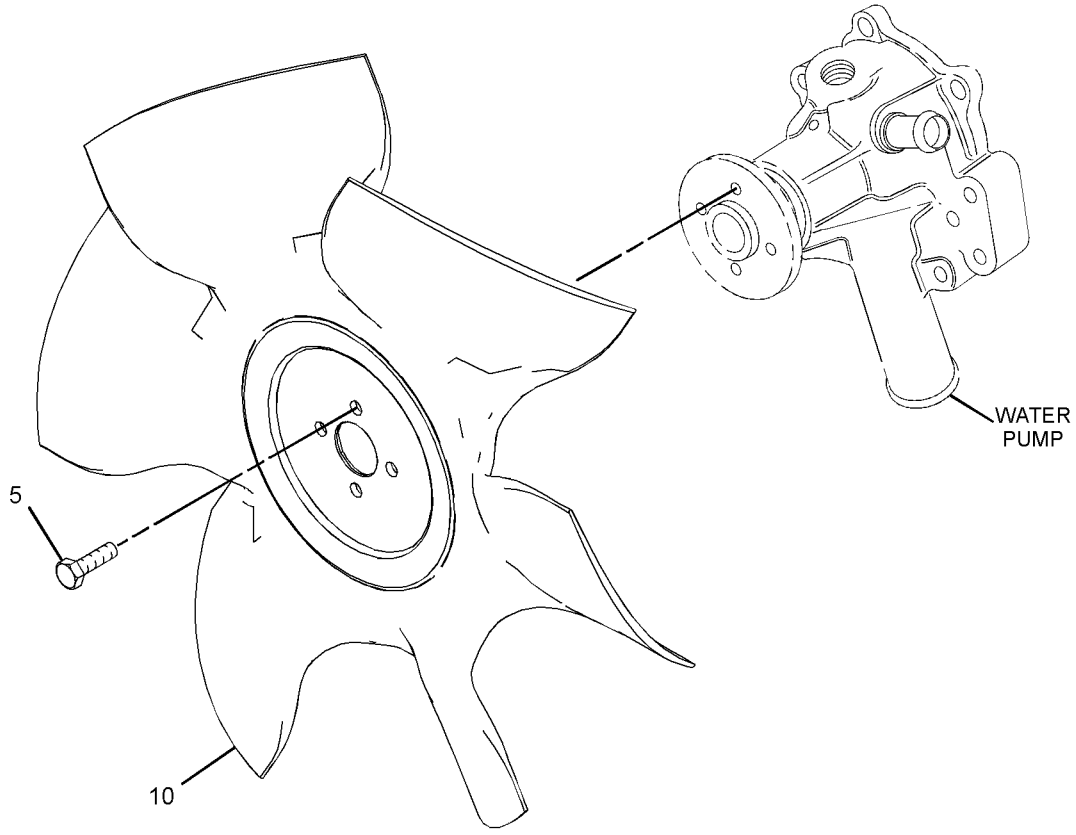

GRAPHIC #3 <END> g06200258

316-9713 RADIATOR GP

TYPE 4

SMCS-1353 **i07323095**

NOTE	REF NO	GRAPHIC REF	PART NUMBER	QTY	PART NAME 1 2 3 4 5 6 (PRODUCT LEVEL)	SEE PAGE
M	1	1,2	**6I-0217**	6	BOLT (M8X1.25X20-MM)	
CM	2	1,3	**6I-0917**	6	BOLT (M6X1X25-MM)	
	3	2	**328-6607**	1	GUARD	
M	4	2	**153-5592**	2	NUT (M8X1.25-THD)	
M	7	2	**180-6118**	10	BOLT (M8X1.25X12-MM)	
M	8	1	**198-2664**	6	BOLT-HEAD (M14X1.5X25-MM)	
	9	2	**344-5868**	1	MOUNT	
	10	3	**423-5640**	1	FAN (6-BLADE) (6-BLADE)	
	11	1	**238-0265**	1	HOSE-RADIATOR (LOWER)	
	12	1	**238-0266**	1	HOSE-RADIATOR (UPPER)	
	13	1	**238-0271**	1	RADIATOR AS	
	13A	1	**202-6616**	1	CAP-RADIATOR	
	13B	1	**295-5876**	1	SHROUD	
M	14	1	**6I-0654**	2	BOLT (M10X1.5X25-MM)	
	15	1	**239-0743**	1	SUPPORT	
	16	1	**363-5813**	4	CLAMP-HOSE	
	17	2	**366-2656**	1	GUARD AS-FAN (LH)	
M	17A	2	**6I-0254**	2	BOLT (M8X1.25X30-MM)	
M	17B	2	**362-8050**	2	NUT (M8X1.25-THD)	
	18	2	**337-3107**	1	GUARD-FAN (RH)	
	19	2	**366-2658**	1	GUARD-ALTERNATOR	
	20	2	**487-9902**	1	BRACKET	
	21	2	**334-7437**	1	BRACKET	
	22	1	**325-5941**	1	BRACKET AS	
	23	1	**476-5581**	1	BRACKET AS	
	24	2	**244-3259**	2	CLIP	
C	25	3	**161-8260**	1	PLATE	

C - CHANGE FROM PREVIOUS TYPE
M - METRIC PART

316-9713 **RADIATOR GP (**contd.**)** **i07323095**

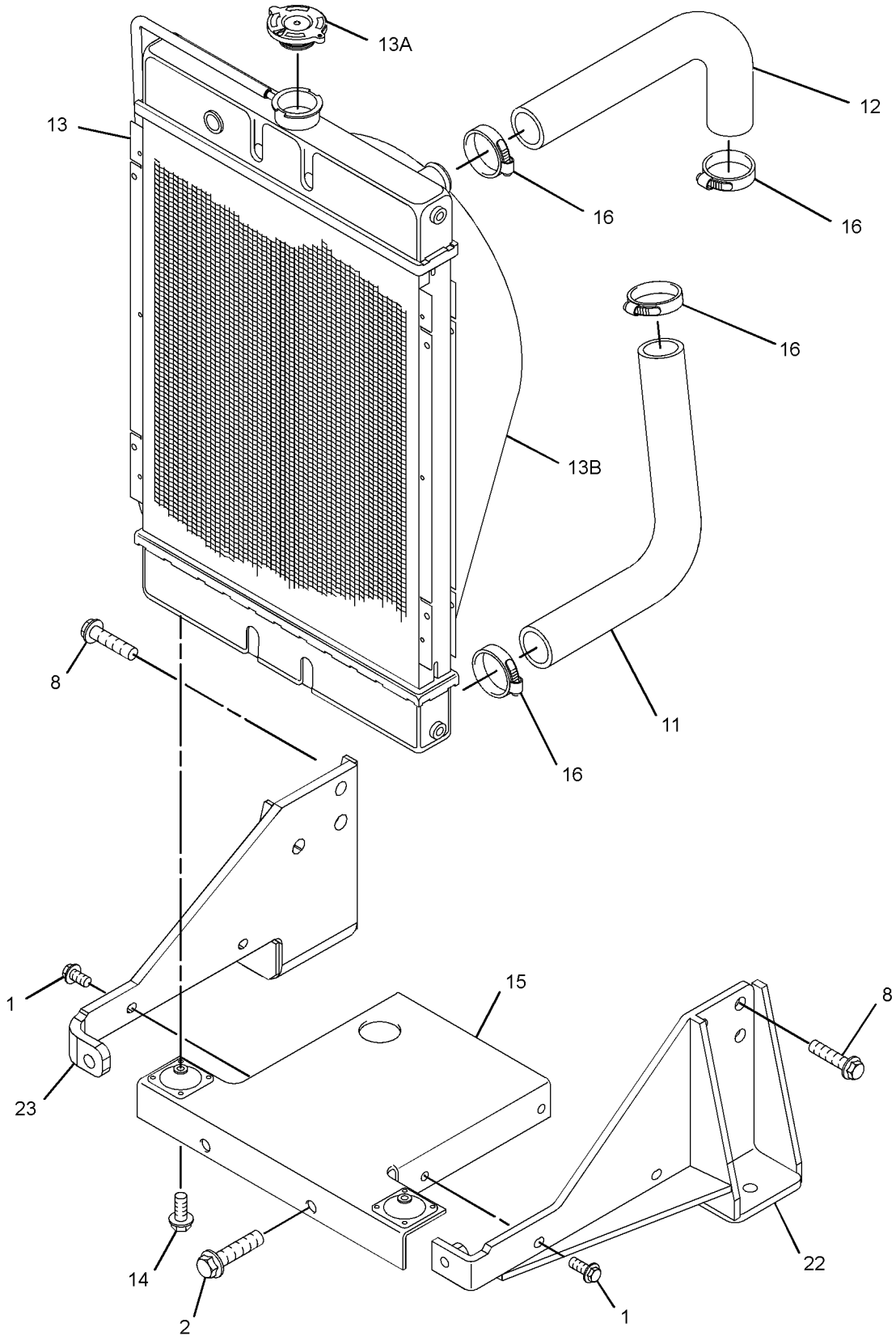

GRAPHIC #1 g06200256

316-9713 **RADIATOR GP** (contd.) **i07323095**

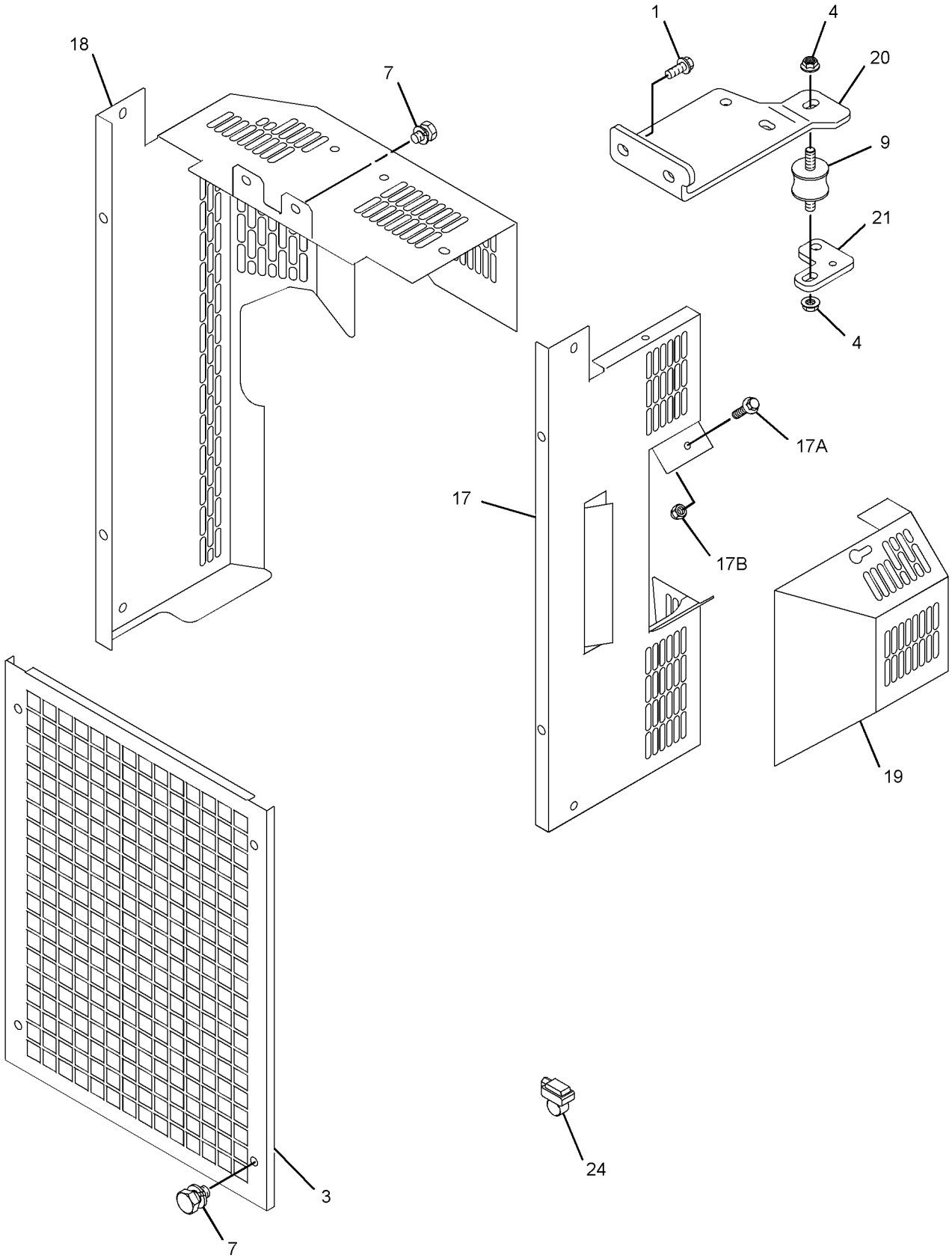

GRAPHIC #2 g06200257

316-9713 **RADIATOR GP (**contd.**)** **i07323095**

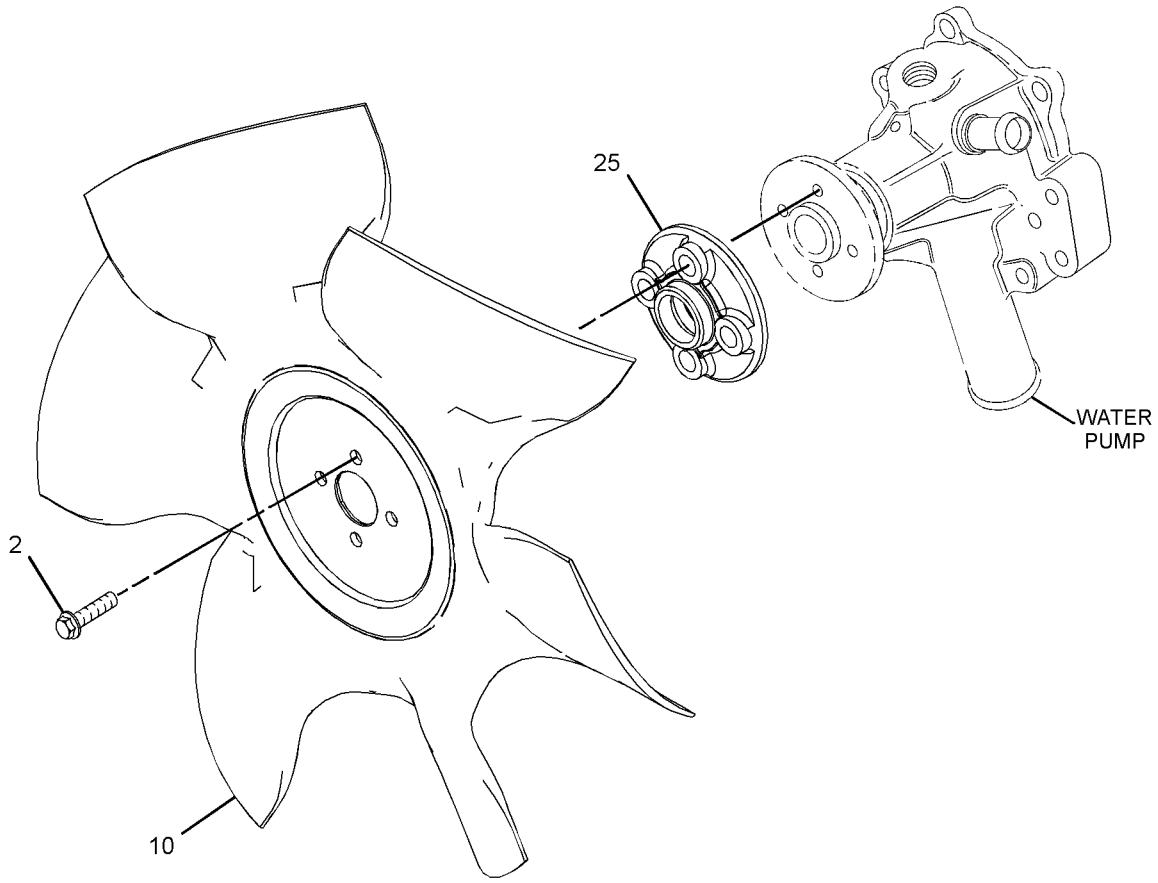

GRAPHIC #3 <END> g06246245

316-9713 RADIATOR GP

TYPE 5

SMCS-1353 **i07390410**

NOTE	REF NO	GRAPHIC REF	PART NUMBER	QTY	PART NAME 1 2 3 4 5 6 (PRODUCT LEVEL)	SEE PAGE
M	1	1,2	**6I-0217**	6	BOLT (M8X1.25X20-MM)	
M	2	1,3	**6I-0917**	6	BOLT (M6X1X25-MM)	
M	4	2	**153-5592**	2	NUT (M8X1.25-THD)	
CM	7	2	**180-6118**	6	BOLT (M8X1.25X12-MM)	
M	8	1	**198-2664**	6	BOLT-HEAD (M14X1.5X25-MM)	
	9	2	**344-5868**	1	MOUNT	
	10	3	**423-5640**	1	FAN (6-BLADE) (6-BLADE)	
	11	1	**238-0265**	1	HOSE-RADIATOR (LOWER)	
	12	1	**238-0266**	1	HOSE-RADIATOR (UPPER)	
	13	1	**238-0271**	1	RADIATOR AS	
	13A	1	**202-6616**	1	CAP-RADIATOR	
	13B	1	**295-5876**	1	SHROUD	
M	14	1	**6I-0654**	2	BOLT (M10X1.5X25-MM)	
	15	1	**239-0743**	1	SUPPORT	
	16	1	**363-5813**	4	CLAMP-HOSE	
	17	2	**366-2656**	1	GUARD AS-FAN (LH)	
M	17A	2	**6I-0254**	2	BOLT (M8X1.25X30-MM)	
M	17B	2	**362-8050**	2	NUT (M8X1.25-THD)	
	18	2	**337-3107**	1	GUARD-FAN (RH)	
	19	2	**366-2658**	1	GUARD-ALTERNATOR	
	20	2	**487-9902**	1	BRACKET	
	21	2	**334-7437**	1	BRACKET	
	22	1	**325-5941**	1	BRACKET AS (LH)	
M		1	**8T-3490**	1	NUT-WELD (M10X1.5-THD)	
	23	1	**476-5581**	1	BRACKET AS (RH)	
M		1	**8T-3490**	1	NUT-WELD (M10X1.5-THD)	
	24	2	**244-3259**	2	CLIP	
	25	3	**161-8260**	1	PLATE	

C - CHANGE FROM PREVIOUS TYPE
M - METRIC PART

316-9713 **RADIATOR GP (**contd.**)** **i07390410**

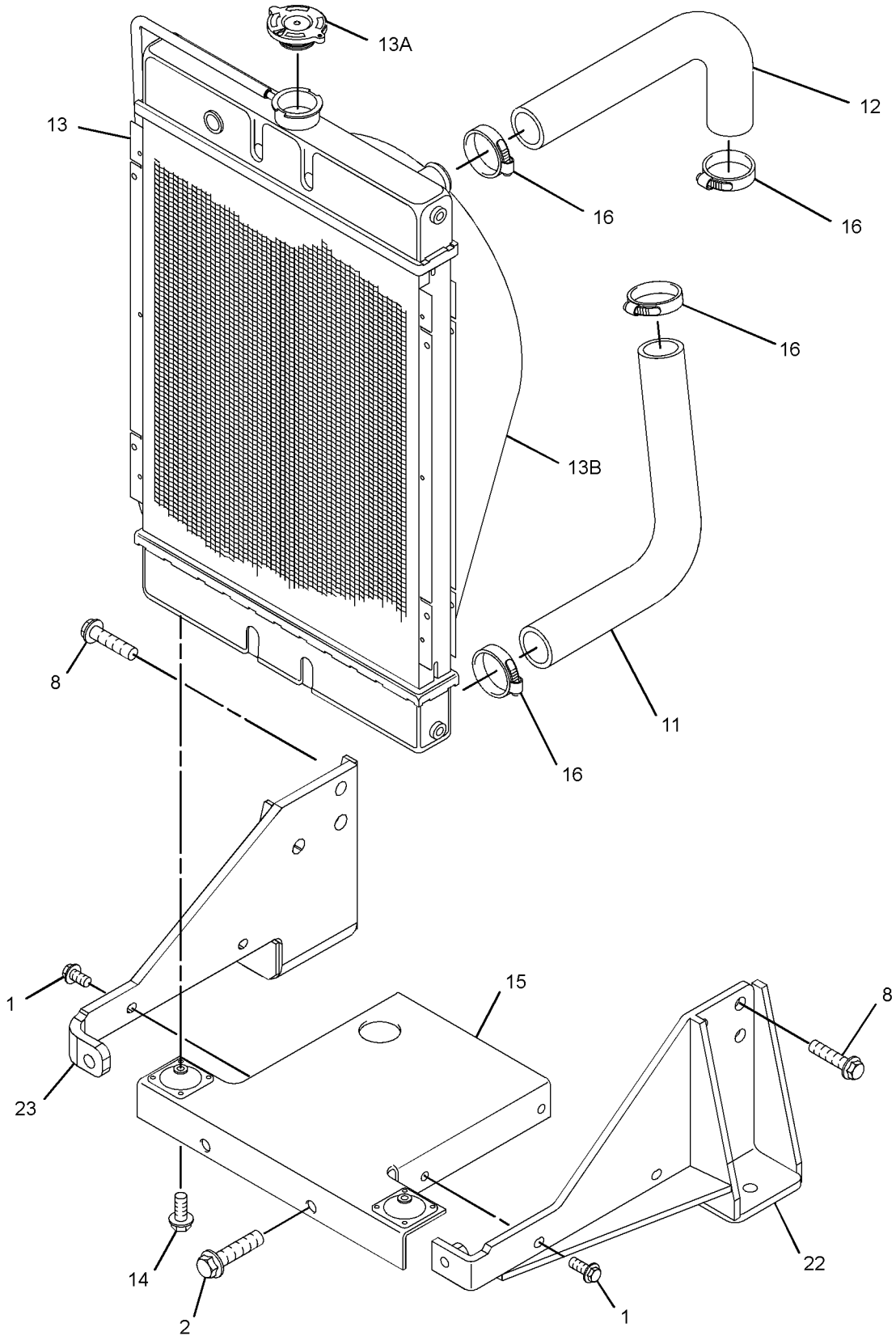

GRAPHIC #1 g06200256

316-9713 **RADIATOR GP** (contd.) **i07390410**

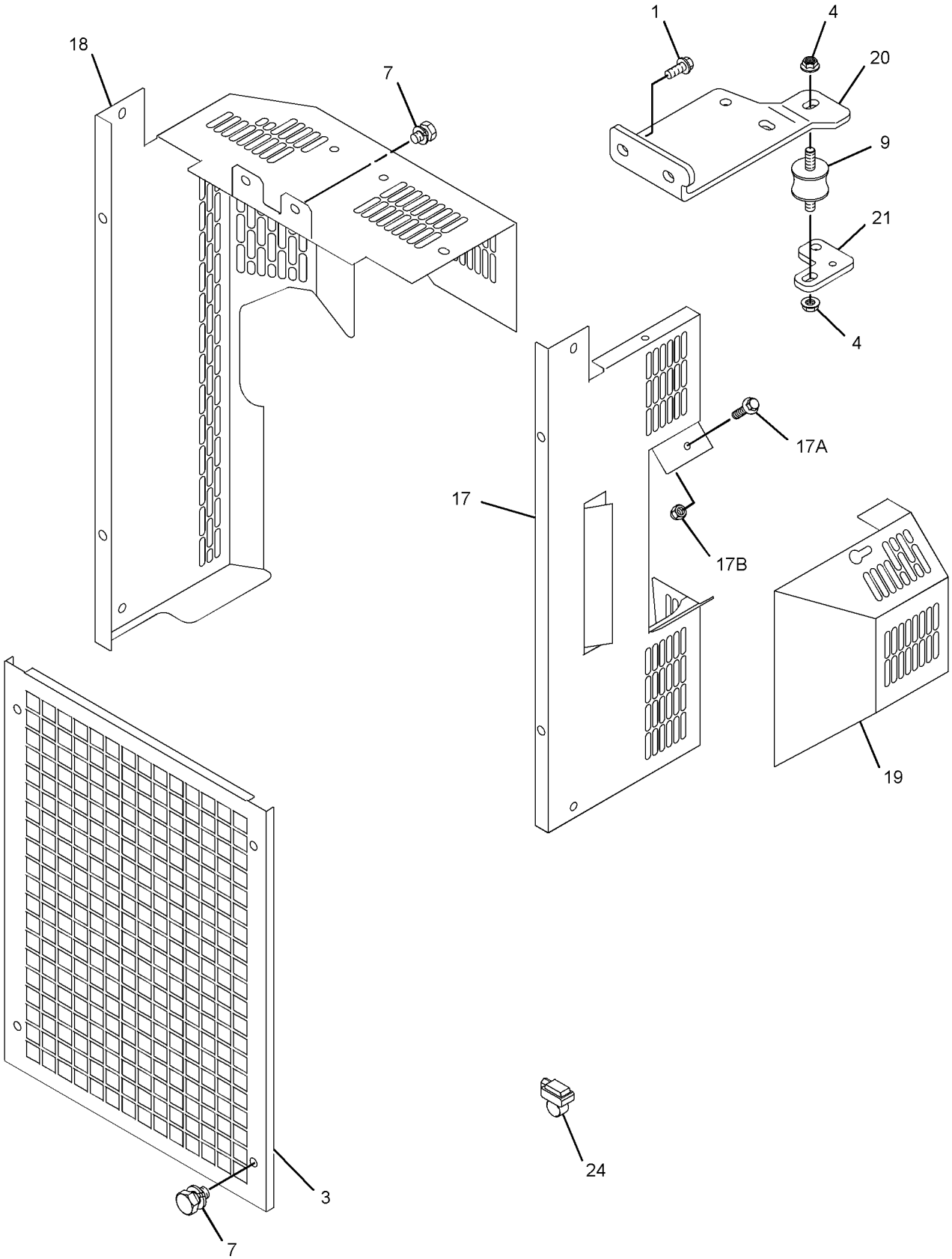

GRAPHIC #2 g06200257

316-9713 **RADIATOR GP (**contd.**)** **i07390410**

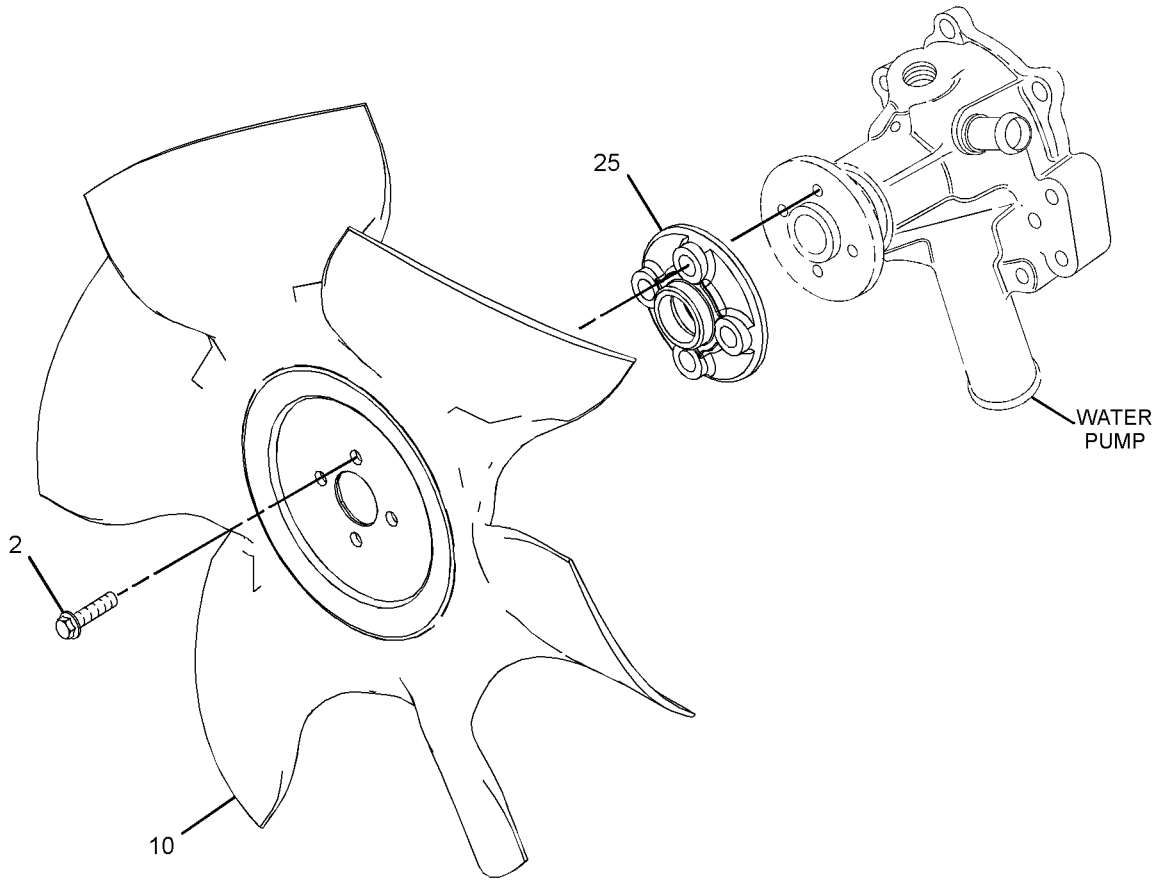

GRAPHIC #3 <END> g06246245

336-5517 RADIATOR GP

TYPE 1

SMCS-1353 **i07042132**

NOTE	REF NO	GRAPHIC REF	PART NUMBER	QTY	PART NAME 1 2 3 4 5 6 (PRODUCT LEVEL)	SEE PAGE
M	1	1,2	**6I-0217**	10	BOLT (M8X1.25X20-MM)	
	2	2	**363-5813**	4	CLAMP-HOSE	
M	3	1	**124-3815**	4	BOLT (M8X1.25X16-MM)	
M	4	1	**153-5592**	2	NUT (M8X1.25-THD)	
	5	3	**153-6861**	4	BOLT AS	
	6	3	**161-8260**	1	PLATE	
M	7	1	**180-6118**	10	BOLT (M8X1.25X12-MM)	
M	8	2,3	**198-2664**	15	BOLT-HEAD (M14X1.5X25-MM)	
	9	1	**344-5868**	1	MOUNT	
	10	2	**238-0265**	1	HOSE-RADIATOR (LOWER)	
	11	2	**238-0266**	1	HOSE-RADIATOR (UPPER)	
	12	2	**238-0271**	1	RADIATOR AS	
	12A	2	**202-6616**	1	CAP-RADIATOR	
	12B	2	**295-5876**	1	SHROUD	
M	13	2	**6I-0654**	2	BOLT (M10X1.5X25-MM)	
	14	1,2	**244-3259**	2	CLIP	
	15	1	**328-6607**	1	GUARD	
	16	2	**325-5941**	1	BRACKET AS	
	17	2	**325-5942**	1	BRACKET	
	18	3	**325-5943**	2	BRACKET	
	19	3	**328-6606**	1	FAN	
	20	2	**334-7297**	1	BRACKET-SUPPORT	
	21	2	**334-7299**	2	MOUNT	
M	22	2	**334-7300**	4	BOLT (M6X1X20-MM)	
	23	1	**334-7304**	1	GUARD-FAN	
	24	1	**334-7305**	1	GUARD-FAN	
	25	1	**334-7306**	1	GUARD-ALTERNATOR	
	26	1	**334-7436**	1	BRACKET	
	27	1	**334-7437**	1	BRACKET	
	28	2	**364-8947**	1	PLUG	

M - METRIC PART

336-5517 **RADIATOR GP (**contd.**)** **i07042132**

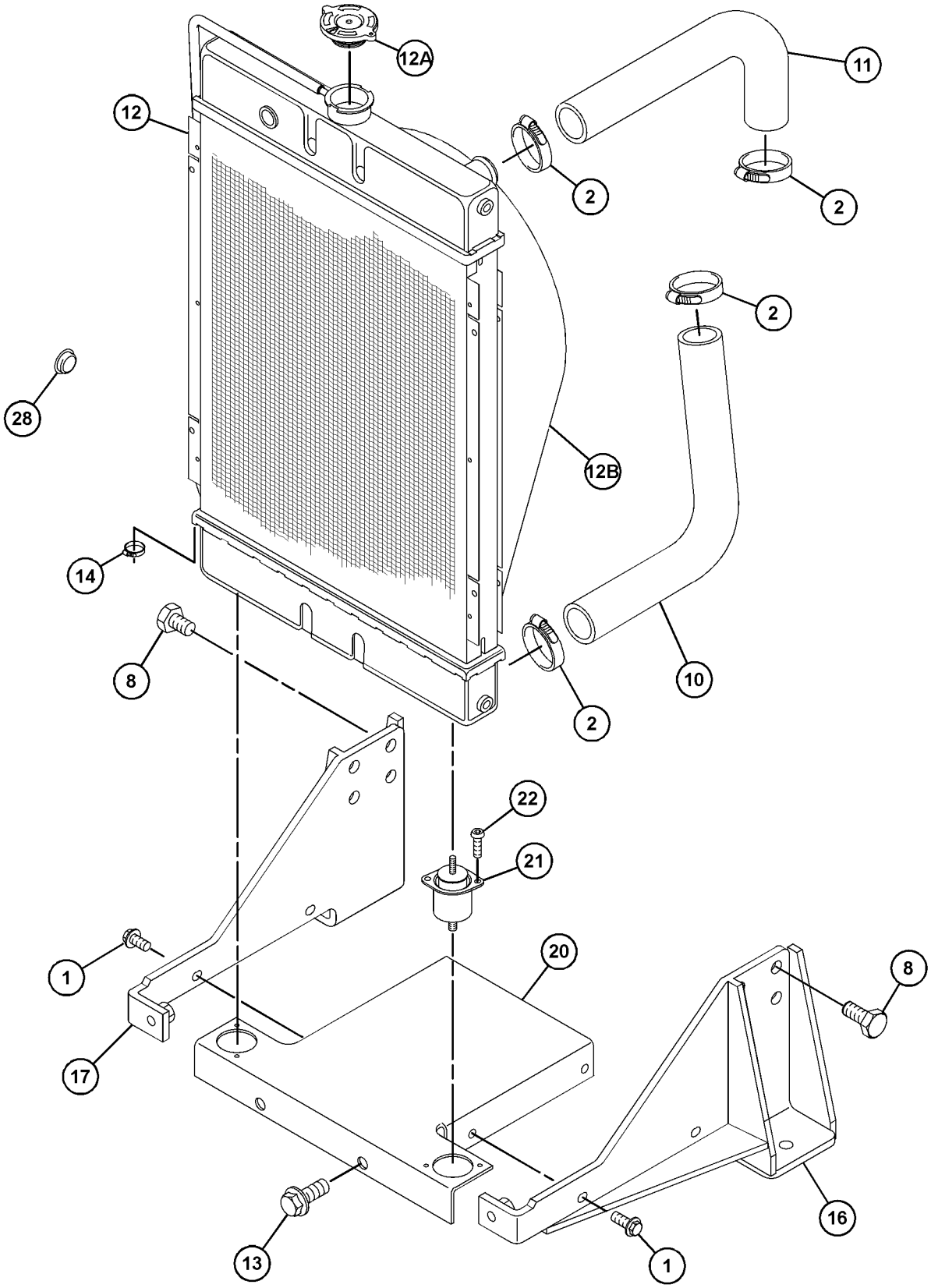

GRAPHIC #1 g06205824

336-5517 **RADIATOR GP** (contd.) **i07042132**

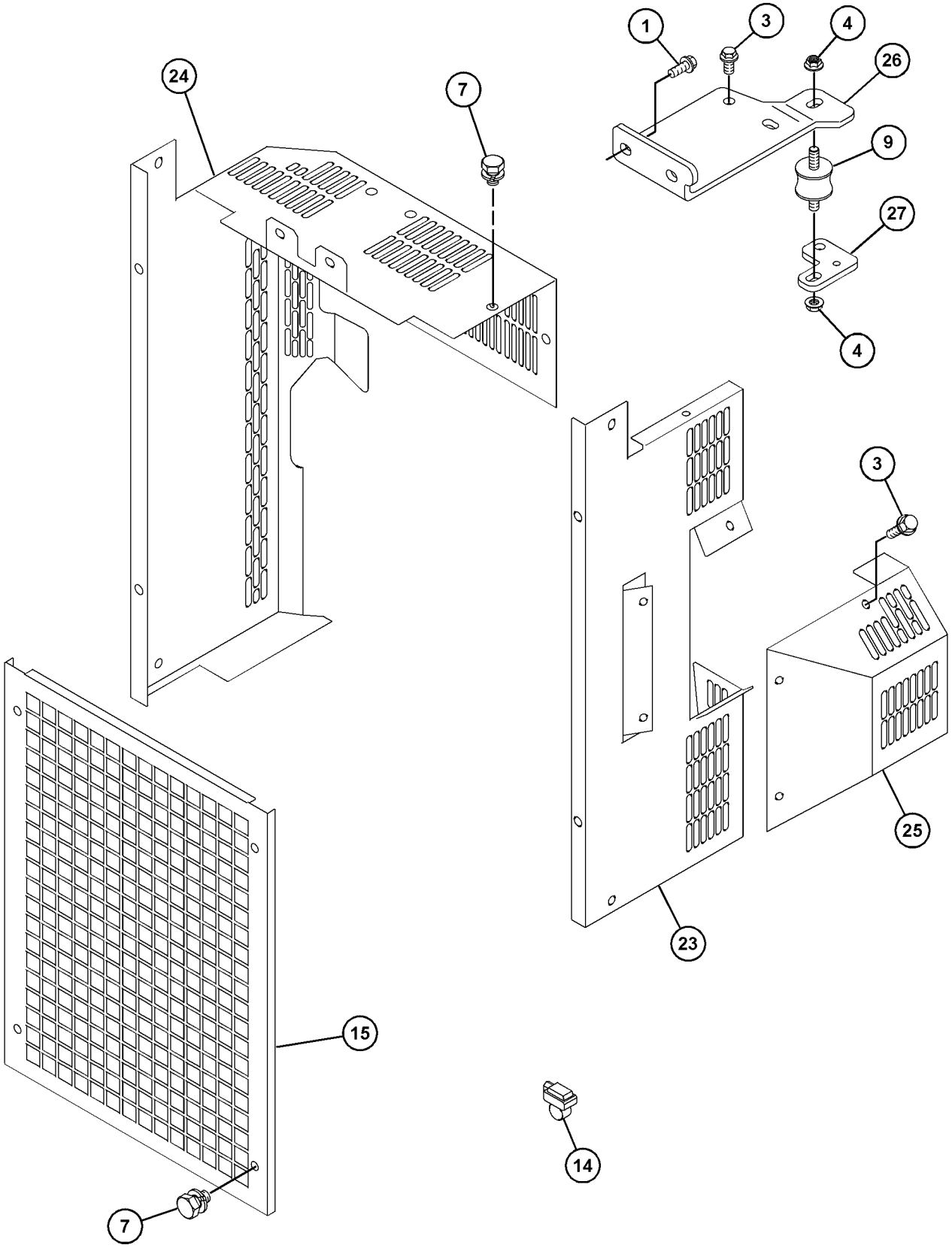

GRAPHIC #2 g06205825

336-5517 **RADIATOR GP (**contd.**)** **i07042132**

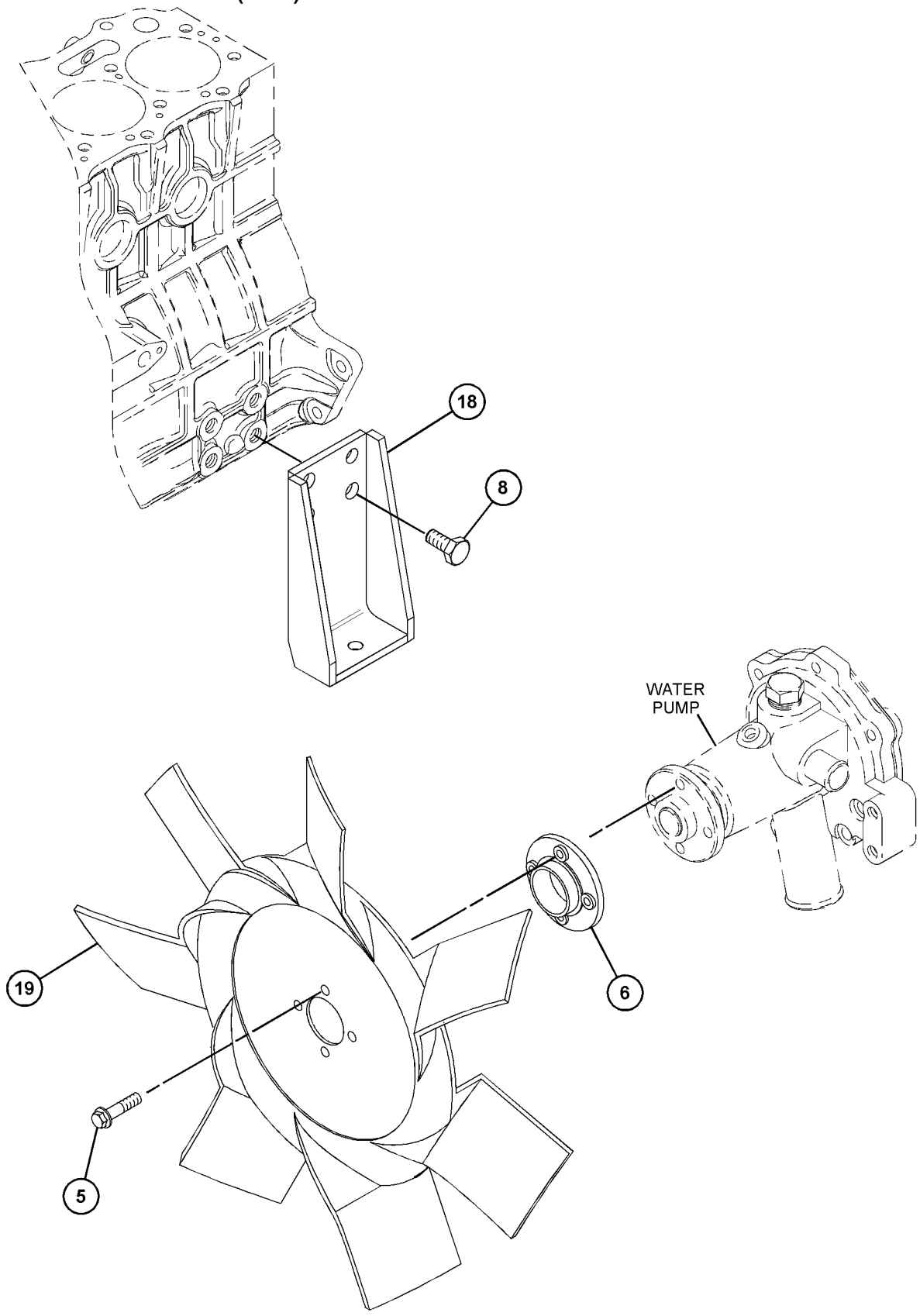

GRAPHIC #3 <END> g06205826

336-5517 RADIATOR GP

TYPE 2

SMCS-1353 **i07035444**

NOTE	REF NO	GRAPHIC REF	PART NUMBER	QTY	PART NAME 1 2 3 4 5 6 (PRODUCT LEVEL)	SEE PAGE
M	1	1,2	**6I-0217**	10	BOLT (M8X1.25X20-MM)	
	2	1	**363-5813**	4	CLAMP-HOSE	
M	4	2	**153-5592**	2	NUT (M8X1.25-THD)	
	5	3	**153-6861**	4	BOLT AS	
	6	3	**161-8260**	1	PLATE	
M	7	2	**180-6118**	10	BOLT (M8X1.25X12-MM)	
M	8	1,3	**198-2664**	15	BOLT-HEAD (M14X1.5X25-MM)	
	9	2	**344-5868**	1	MOUNT	
	10	1	**238-0265**	1	HOSE-RADIATOR (LOWER)	
	11	1	**238-0266**	1	HOSE-RADIATOR (UPPER)	
	12	1	**238-0271**	1	RADIATOR AS	
	12A	1	**202-6616**	1	CAP-RADIATOR	
	12B	1	**295-5876**	1	SHROUD	
M	13	1	**6I-0654**	2	BOLT (M10X1.5X25-MM)	
	14	1,2	**244-3259**	2	CLIP	
	15	2	**328-6607**	1	GUARD	
	16	1	**325-5941**	1	BRACKET AS	
	17	1	**325-5942**	1	BRACKET	
	18	3	**325-5943**	2	BRACKET	
	19	3	**328-6606**	1	FAN	
	20	1	**334-7297**	1	BRACKET-SUPPORT	
	21	1	**334-7299**	2	MOUNT	
M	22	1	**334-7300**	4	BOLT (M6X1X20-MM)	
C	23	2	**366-2656**	1	GUARD AS-FAN	
M	23A	2	**6I-0254**	2	BOLT (M8X1.25X30-MM)	
M	23B	2	**362-8050**	2	NUT (M8X1.25-THD)	
	24	2	**334-7305**	1	GUARD-FAN	
C	25	2	**366-2658**	1	GUARD-ALTERNATOR	
	26	2	**423-6334**	1	BRACKET	
	27	2	**334-7437**	1	BRACKET	
	28	1	**364-8947**	1	PLUG	

C - CHANGE FROM PREVIOUS TYPE
M - METRIC PART

336-5517 **RADIATOR GP (**contd.**)** **i07035444**

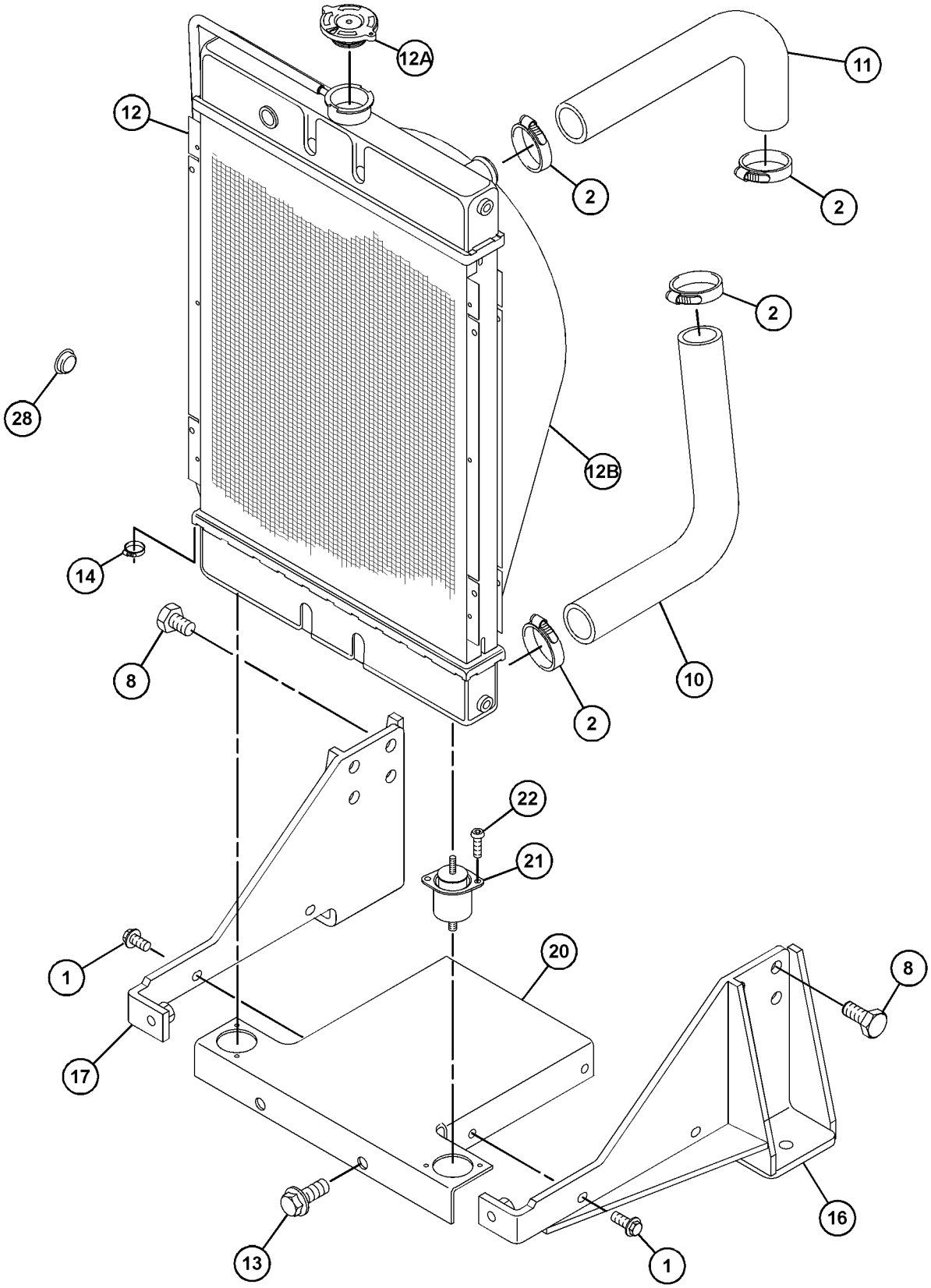

GRAPHIC #1 g06205824

336-5517 **RADIATOR GP** (contd.) **i07035444**

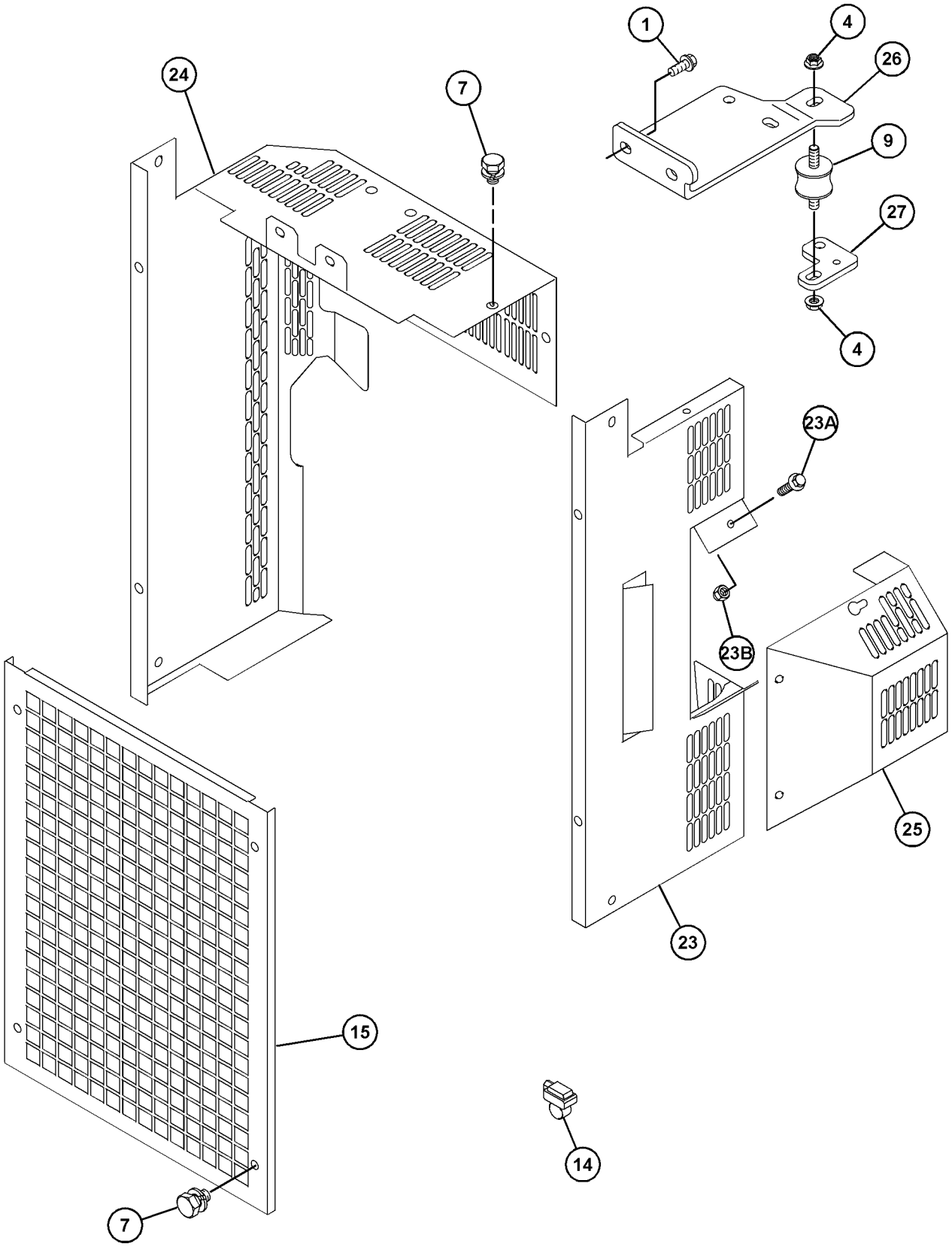

GRAPHIC #2 g06205852

336-5517 **RADIATOR GP (**contd.**)** **i07035444**

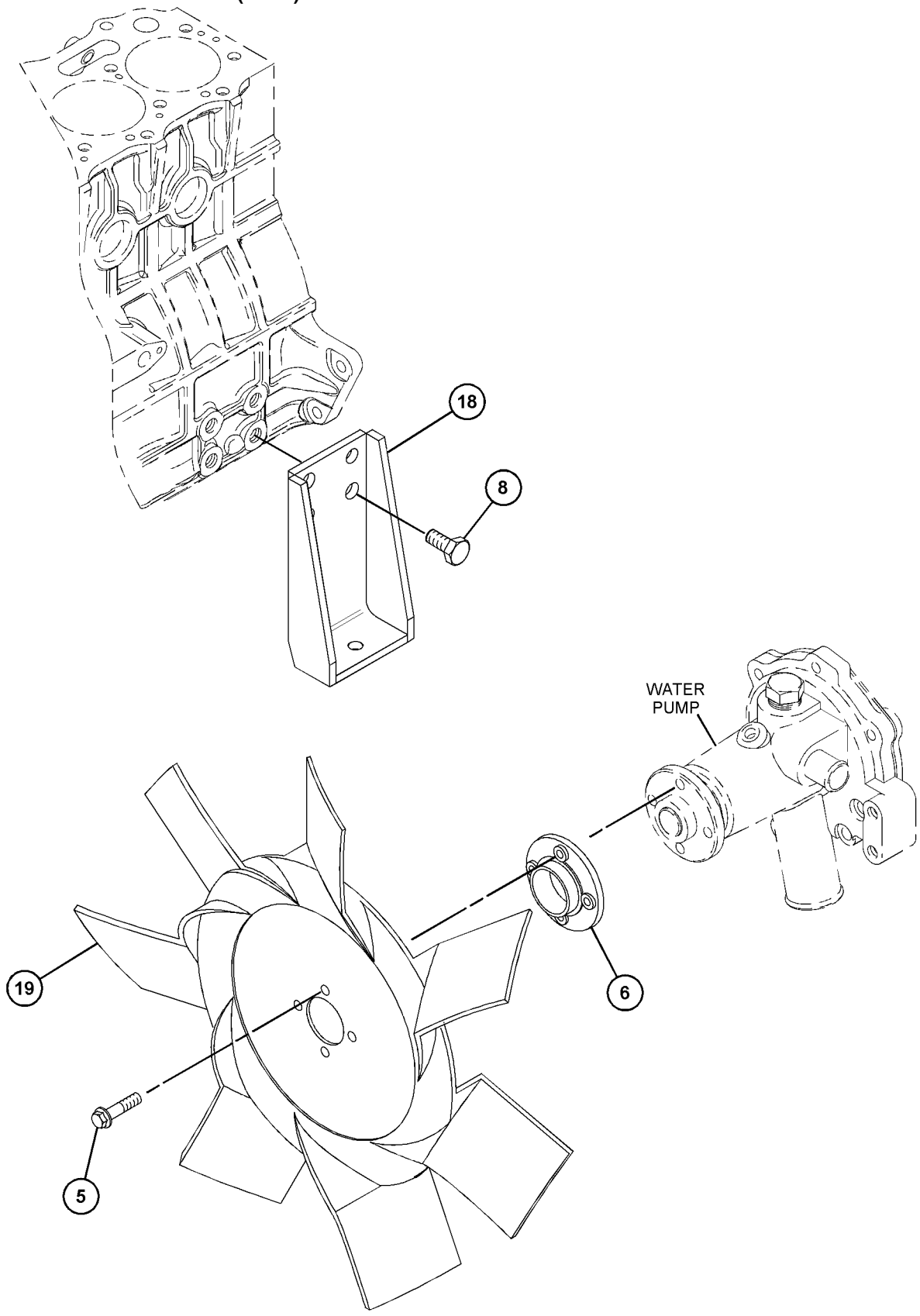

GRAPHIC #3 <END> g06205826

336-5517 RADIATOR GP

TYPE 3

SMCS-1353 **i07240652**

NOTE	REF NO	GRAPHIC REF	PART NUMBER	QTY	PART NAME 1 2 3 4 5 6 (PRODUCT LEVEL)	SEE PAGE
M	1	1,2	**6I-0217**	10	BOLT (M8X1.25X20-MM)	
M	2	1	**6I-0654**	2	BOLT (M10X1.5X25-MM)	
M	3	3	**6I-0917**	4	BOLT (M6X1X25-MM)	
M	4	2	**153-5592**	2	NUT (M8X1.25-THD)	
	5	3	**161-8260**	1	PLATE	
M	6	2	**180-6118**	10	BOLT (M8X1.25X12-MM)	
M	7	1,3	**198-2664**	15	BOLT-HEAD (M14X1.5X25-MM)	
	8	1	**238-0265**	1	HOSE-RADIATOR (LOWER)	
	9	1	**238-0266**	1	HOSE-RADIATOR (UPPER)	
	10	1	**238-0271**	1	RADIATOR AS	
	10A	1	**202-6616**	1	CAP-RADIATOR	
	10B	1	**295-5876**	1	SHROUD	
	11	1,2	**244-3259**	2	CLIP	
	12	1	**325-5941**	1	BRACKET AS	
	13	3	**325-5943**	2	BRACKET	
	14	2	**328-6607**	1	GUARD	
	15	1	**439-2614**	1	BRACKET AS	
	16	1	**334-7299**	2	MOUNT	
M	17	1	**334-7300**	4	BOLT (M6X1X20-MM)	
	18	2	**334-7437**	1	BRACKET	
	19	2	**344-5868**	1	MOUNT	
	20	1	**363-5813**	4	CLAMP-HOSE	
C	21	2	**366-2656**	1	GUARD AS-FAN	
M	21A	2	**6I-0254**	2	BOLT (M8X1.25X30-MM)	
M	21B	2	**362-8050**	2	NUT (M8X1.25-THD)	
C	22	2	**366-2658**	1	GUARD-ALTERNATOR	
	23	3	**444-7301**	1	FAN-SUCTION	
	24	2	**469-4428**	1	GUARD AS-FAN	
C	25	1	**476-5581**	1	BRACKET AS	
	26	2	**487-9902**	1	BRACKET	

C - CHANGE FROM PREVIOUS TYPE
M - METRIC PART

336-5517 **RADIATOR GP (**contd.**)** **i07240652**

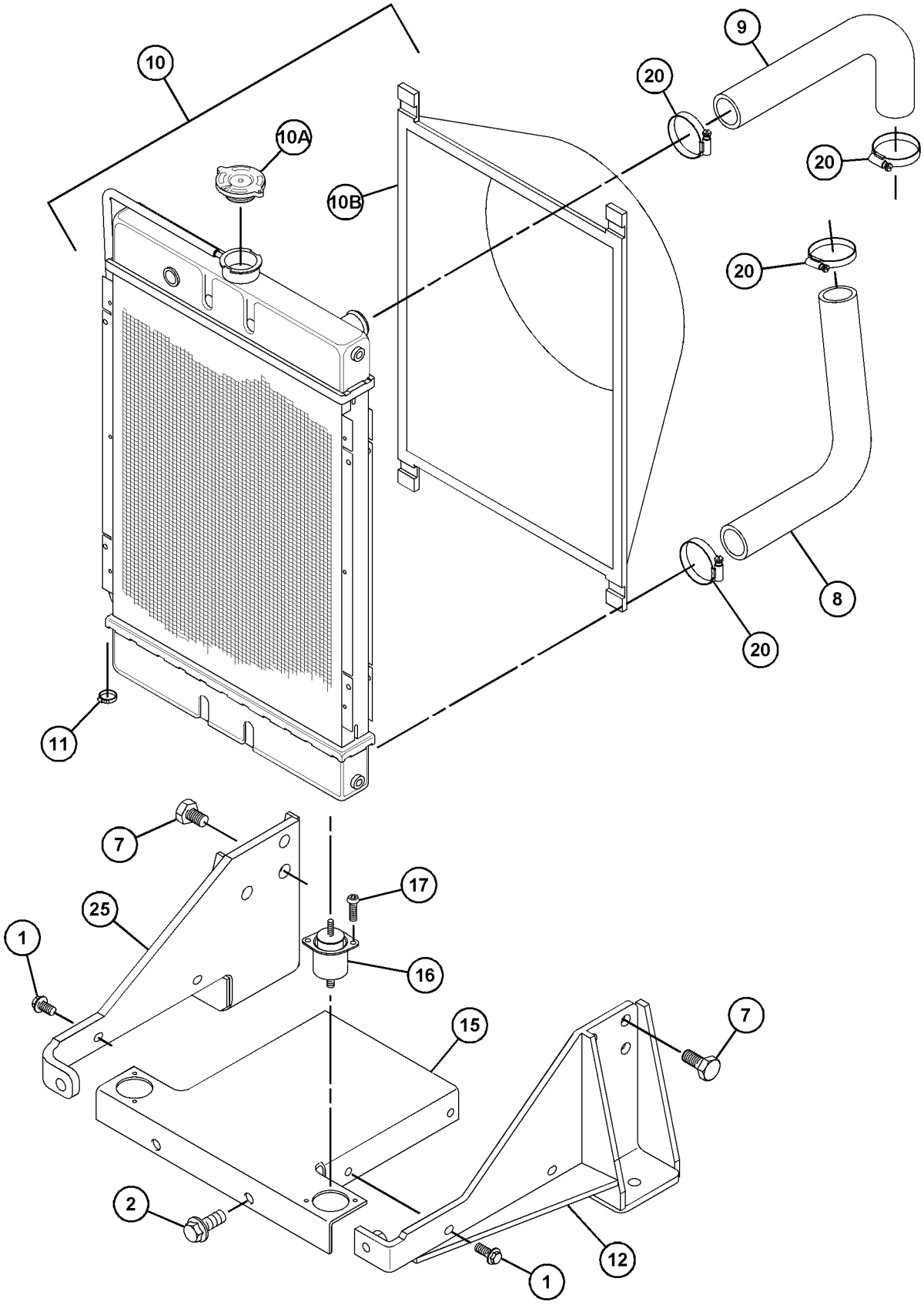

GRAPHIC #1 g06205558

336-5517 **RADIATOR GP** (contd.) **i07240652**

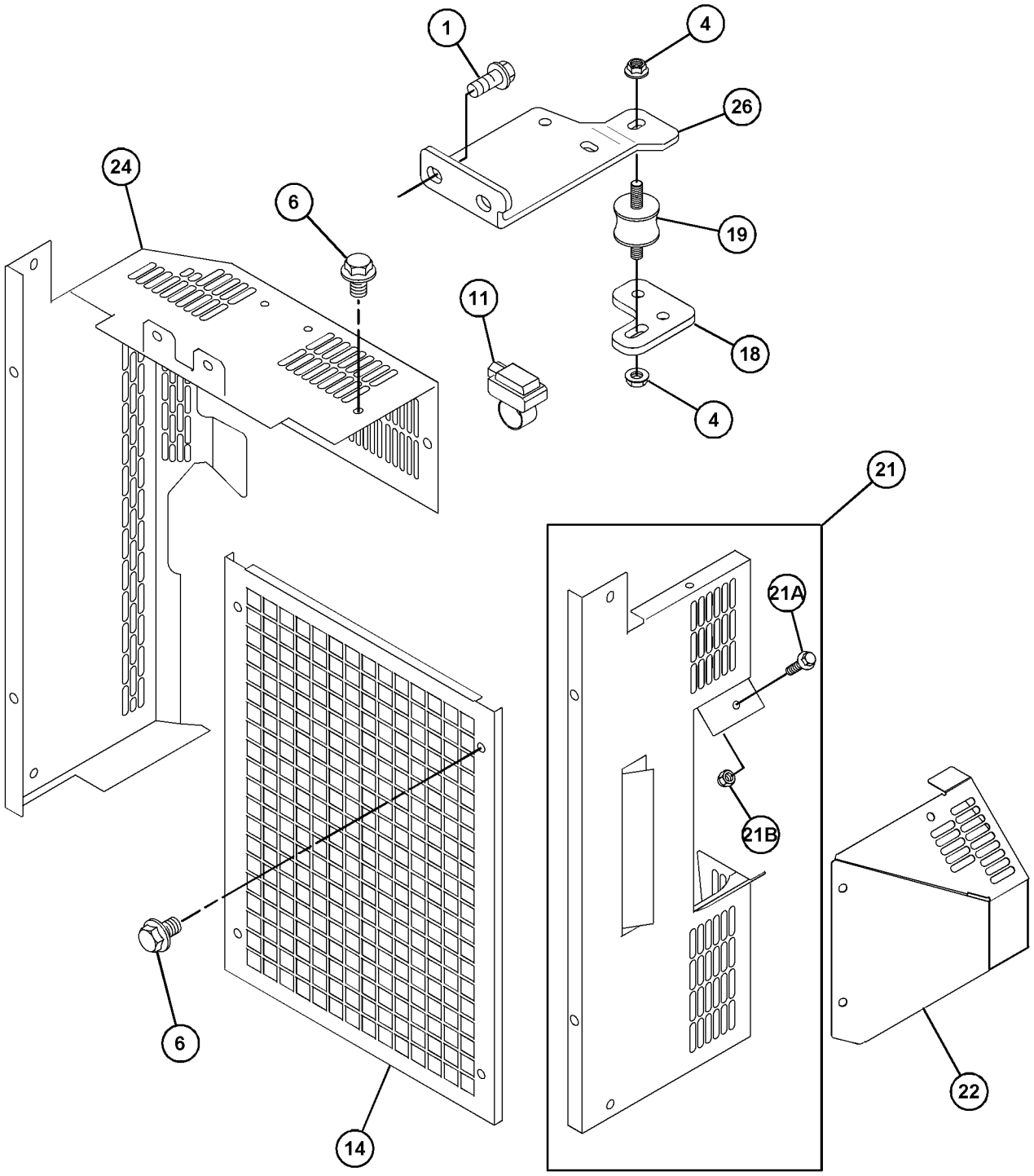

GRAPHIC #2 g06205559

336-5517 **RADIATOR GP (**contd.**)** **i07240652**

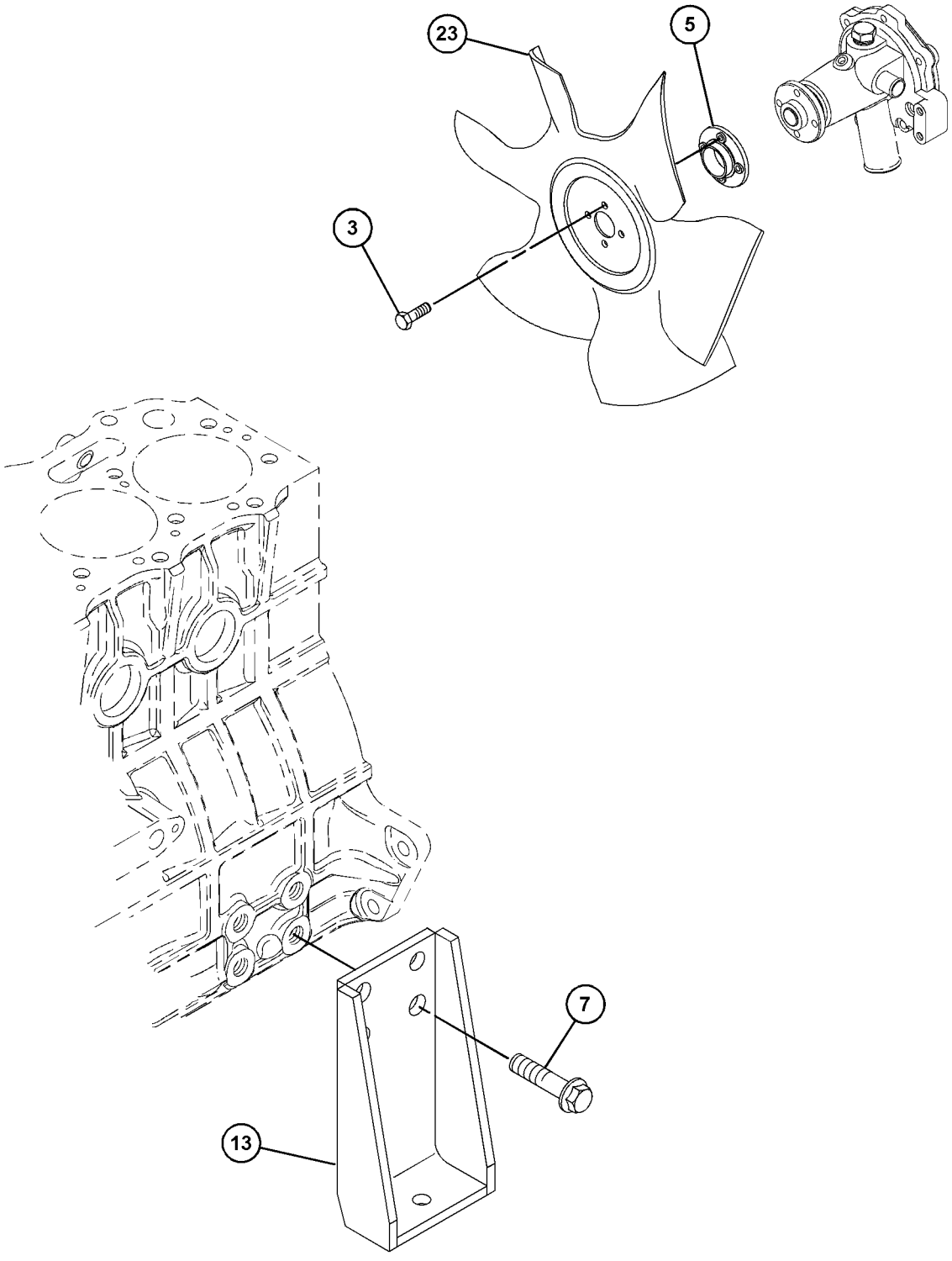

GRAPHIC #3 <END> g06205560

336-5517 RADIATOR GP

TYPE 4

SMCS-1353 **i07577429**

NOTE	REF NO	GRAPHIC REF	PART NUMBER	QTY	PART NAME 1 2 3 4 5 6 (PRODUCT LEVEL)	SEE PAGE
M	1	1,2	**6I-0217**	10	BOLT (M8X1.25X20-MM)	
M	2	1	**123-2899**	2	BOLT (M10X1.5X40-MM)	
CM	3	3	**6I-0917**	2	BOLT (M6X1X25-MM)	
M	4	2	**153-5592**	2	NUT (M8X1.25-THD)	
	5	3	**161-8260**	1	PLATE	
M	6	2	**114-4363**	10	BOLT (M8X1.25X12-MM)	
M	7	1,3	**198-2664**	15	BOLT-HEAD (M14X1.5X25-MM)	
	8	1	**238-0265**	1	HOSE-RADIATOR	
	9	1	**238-0266**	1	HOSE-RADIATOR	
	10	1	**238-0271**	1	RADIATOR AS	
	10A	1	**202-6616**	1	CAP-RADIATOR	
	10B	1	**295-5876**	1	SHROUD	
	11	1,2	**244-3259**	2	CLIP	
	12	1	**325-5941**	1	BRACKET AS	
M	12A	1	**8T-3490**	1	NUT-WELD (M10X1.5-THD)	
	13	3	**325-5943**	2	BRACKET	
	14	2	**328-6607**	1	GUARD	
	15	1	**439-2614**	1	BRACKET AS	
	16	1	**543-5898**	2	MOUNT AS	
M	17	1	**334-7300**	4	BOLT (M6X1X20-MM)	
	18	2	**334-7437**	1	BRACKET	
	19	2	**344-5868**	1	MOUNT	
	20	1	**363-5813**	4	CLAMP-HOSE	
	21	2	**366-2656**	1	GUARD AS-FAN	
M	21A	2	**6I-0254**	2	BOLT (M8X1.25X30-MM)	
M	21B	2	**362-8050**	2	NUT (M8X1.25-THD)	
	22	2	**366-2658**	1	GUARD-ALTERNATOR	
	23	3	**444-7301**	1	FAN-SUCTION (6-BLADE)	
	24	2	**469-4428**	1	GUARD AS-FAN	
	25	1	**476-5581**	1	BRACKET AS	
M	25A	1	**8T-3490**	1	NUT-WELD (M10X1.5-THD)	
	26	2	**487-9902**	1	BRACKET	

C - CHANGE FROM PREVIOUS TYPE
M - METRIC PART

336-5517 **RADIATOR GP (**contd.**)** **i07577429**

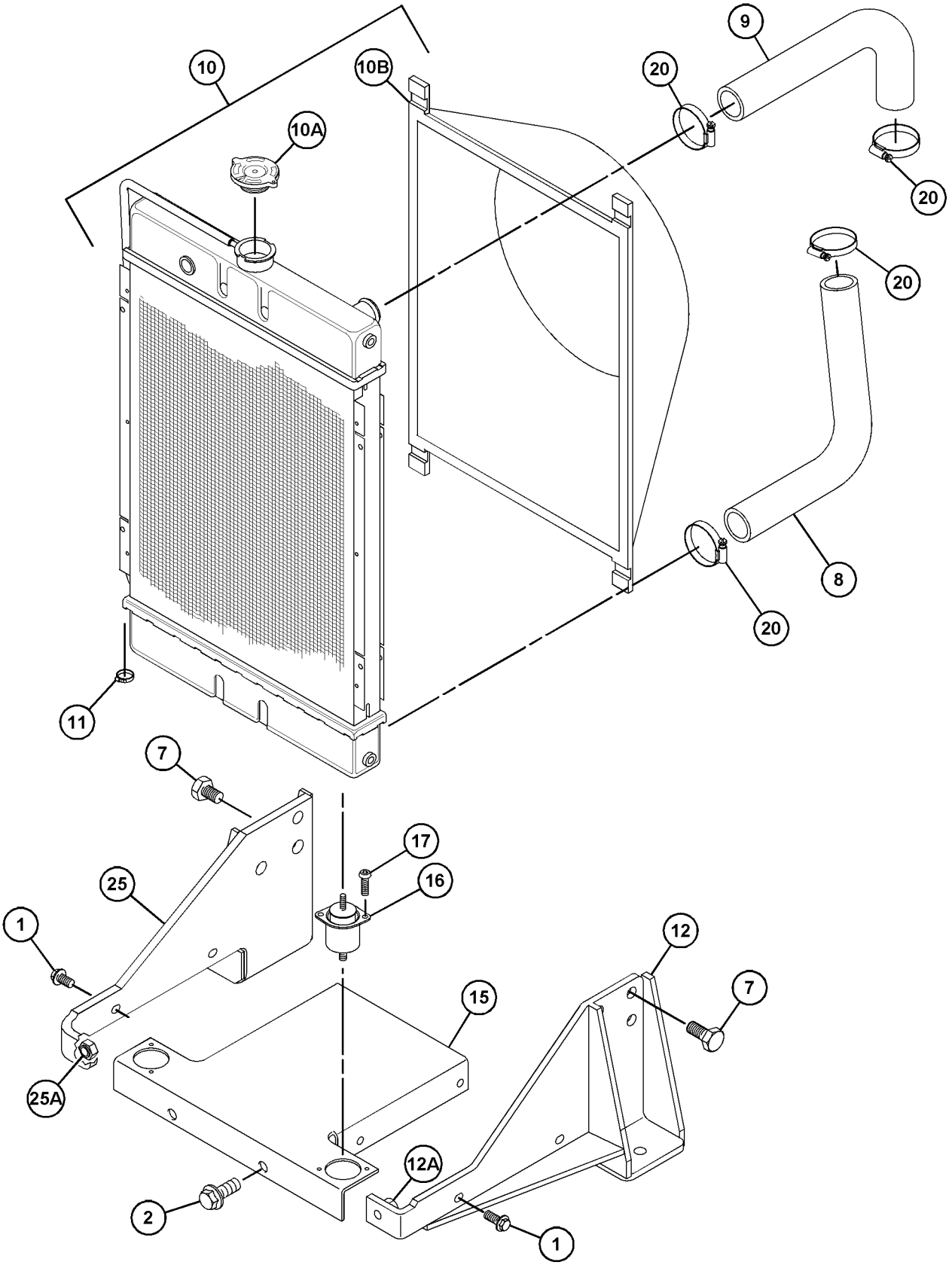

GRAPHIC #1 g06306087

336-5517 **RADIATOR GP** (contd.) **i07577429**

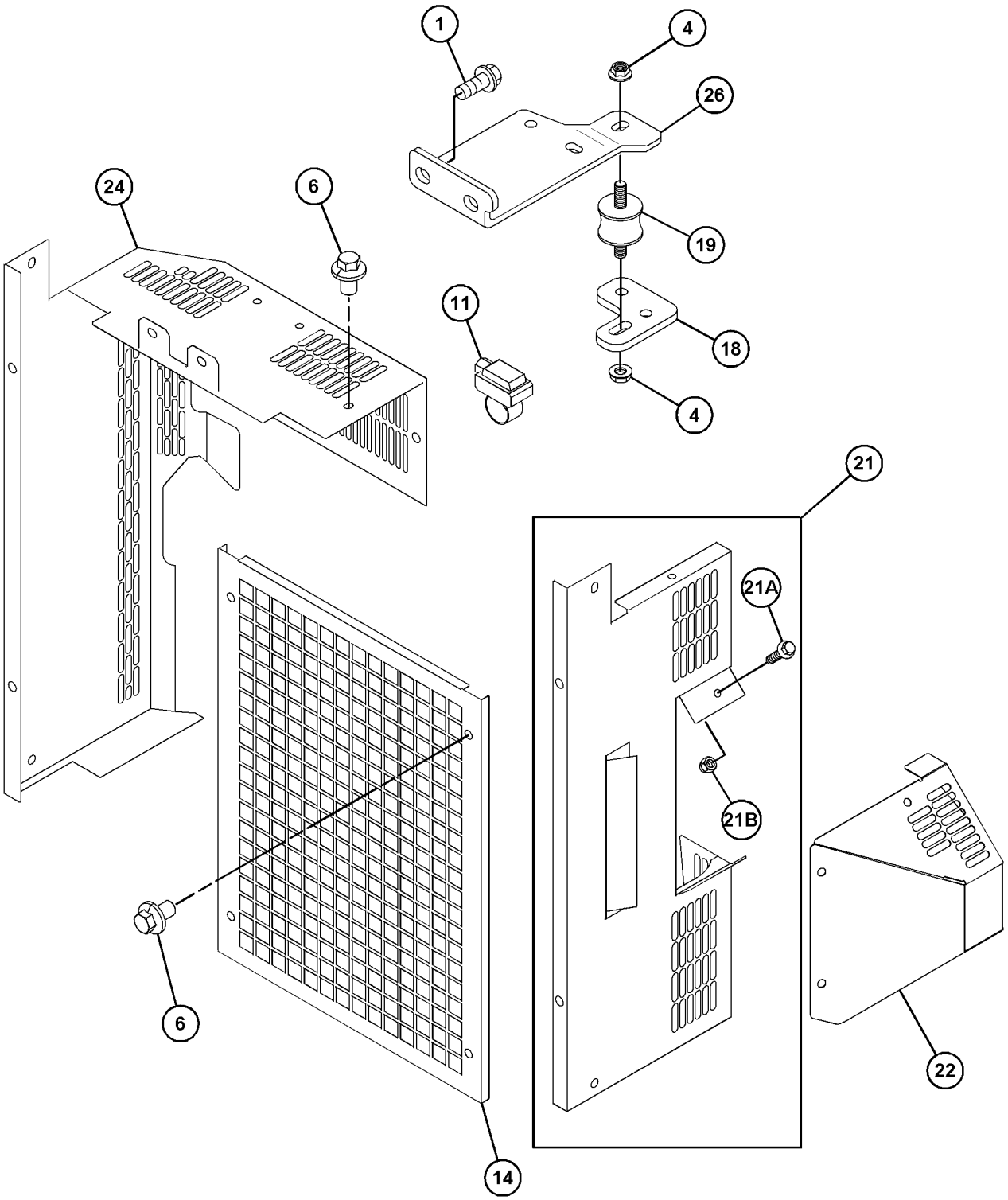

GRAPHIC #2 g06306088

336-5517 **RADIATOR GP (**contd.**)** **i07577429**

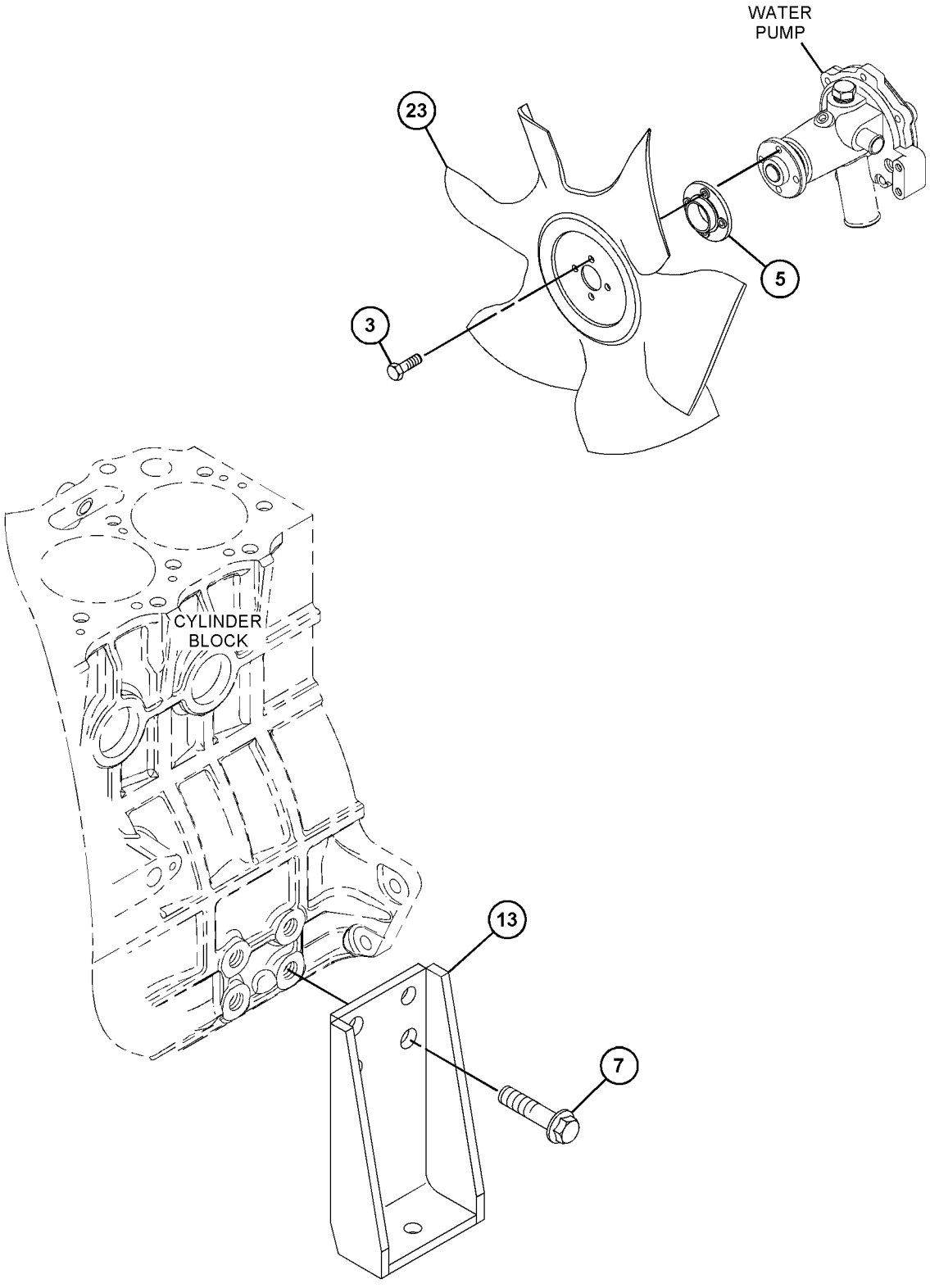

GRAPHIC #3 <END> g06306089

316-9664 AIR CLEANER GP

TYPE 1

SMCS-1051, 1054 **i04490235**

NOTE	REF NO	GRAPHIC REF	PART NUMBER	QTY	PART NAME 1 2 3 4 5 6 (PRODUCT LEVEL)	SEE PAGE
M	1	1	**6I-0217**	2	BOLT (M8X1.25X20-MM)	
M	2	1	**6I-0254**	2	BOLT (M8X1.25X30-MM)	
	3	1	**103-6714**	2	CLIP	
M	4	1	**153-5592**	2	NUT (M8X1.25-THD)	
	5	1	**241-6747**	1	HOSE	
Y	6	1	**244-0514**	1	FILTER ELEMENT AS-AIR	244
	7	1	**326-8547**	1	BRACKET	
	8	1	**292-1992**	1	SPACER	
	9	1	**334-7295**	1	CAP-RAIN	

M - METRIC PART
Y - SEPARATE ILLUSTRATION

316-9664 **AIR CLEANER GP (**contd.**)** **i04490235**

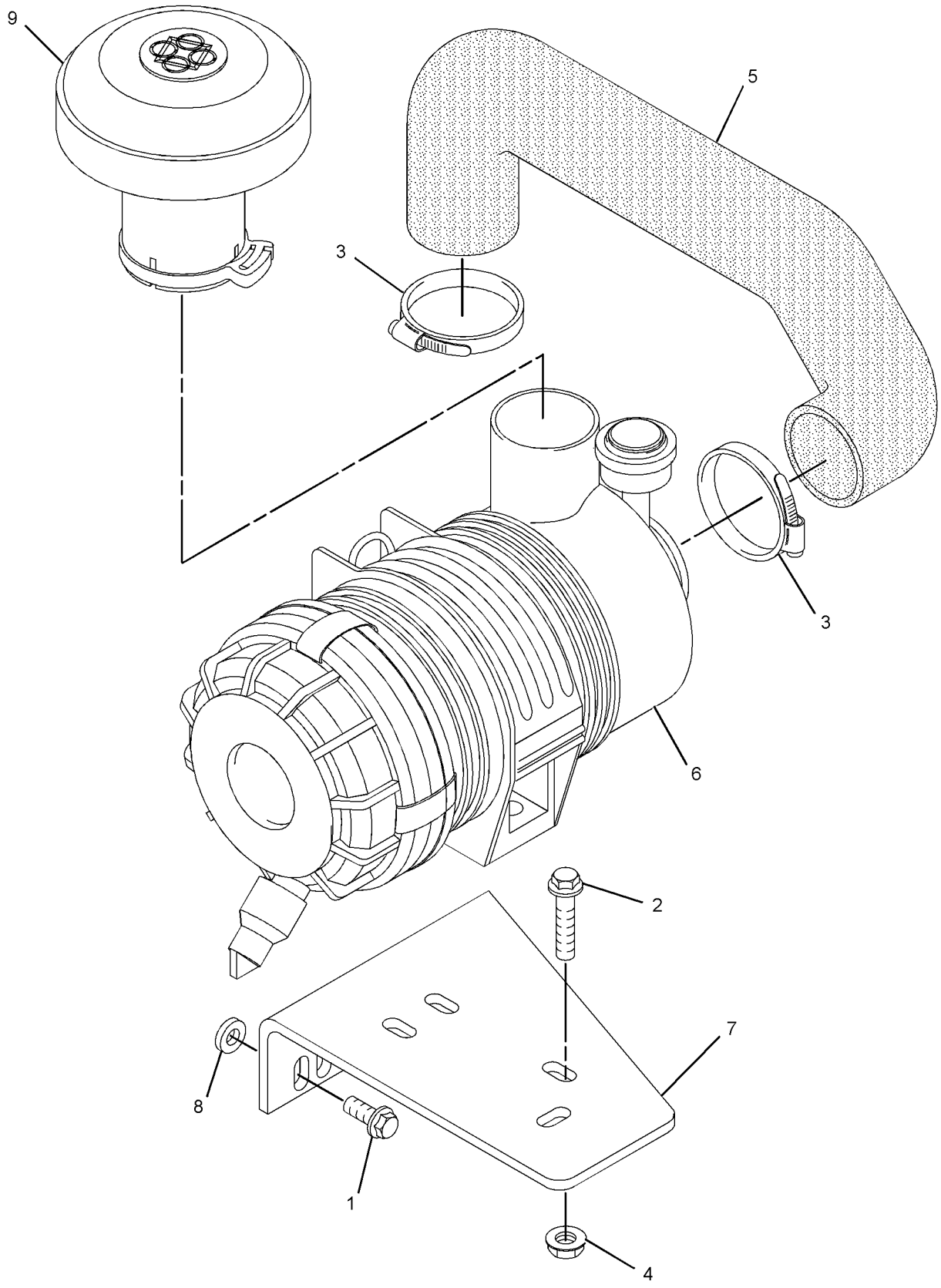

GRAPHIC #1 <END> g01948357

316-9664 AIR CLEANER GP

TYPE 2

SMCS-1051, 1054 **i06831580**

NOTE	REF NO	GRAPHIC REF	PART NUMBER	QTY	PART NAME 1 2 3 4 5 6 (PRODUCT LEVEL)	SEE PAGE
M	1	1	**6I-0217**	2	BOLT (M8X1.25X20-MM)	
M	2	1	**6I-0254**	2	BOLT (M8X1.25X30-MM)	
	3	1	**103-6714**	2	CLIP	
M	4	1	**153-5592**	2	NUT (M8X1.25-THD)	
	5	1	**241-6747**	1	HOSE	
Y	6	1	**244-0514**	1	FILTER ELEMENT AS-AIR	244
	7	1	**326-8547**	1	BRACKET	
	8	1	**468-7382**	1	SPACER (8.8X25.4X6-MM THK)	
	9	1	**326-9052**	1	FILM-WARNING (DO NOT SPRAY, READ OMM)	

M - METRIC PART
Y - SEPARATE ILLUSTRATION

316-9664 **AIR CLEANER GP (**contd.**)** **i06831580**

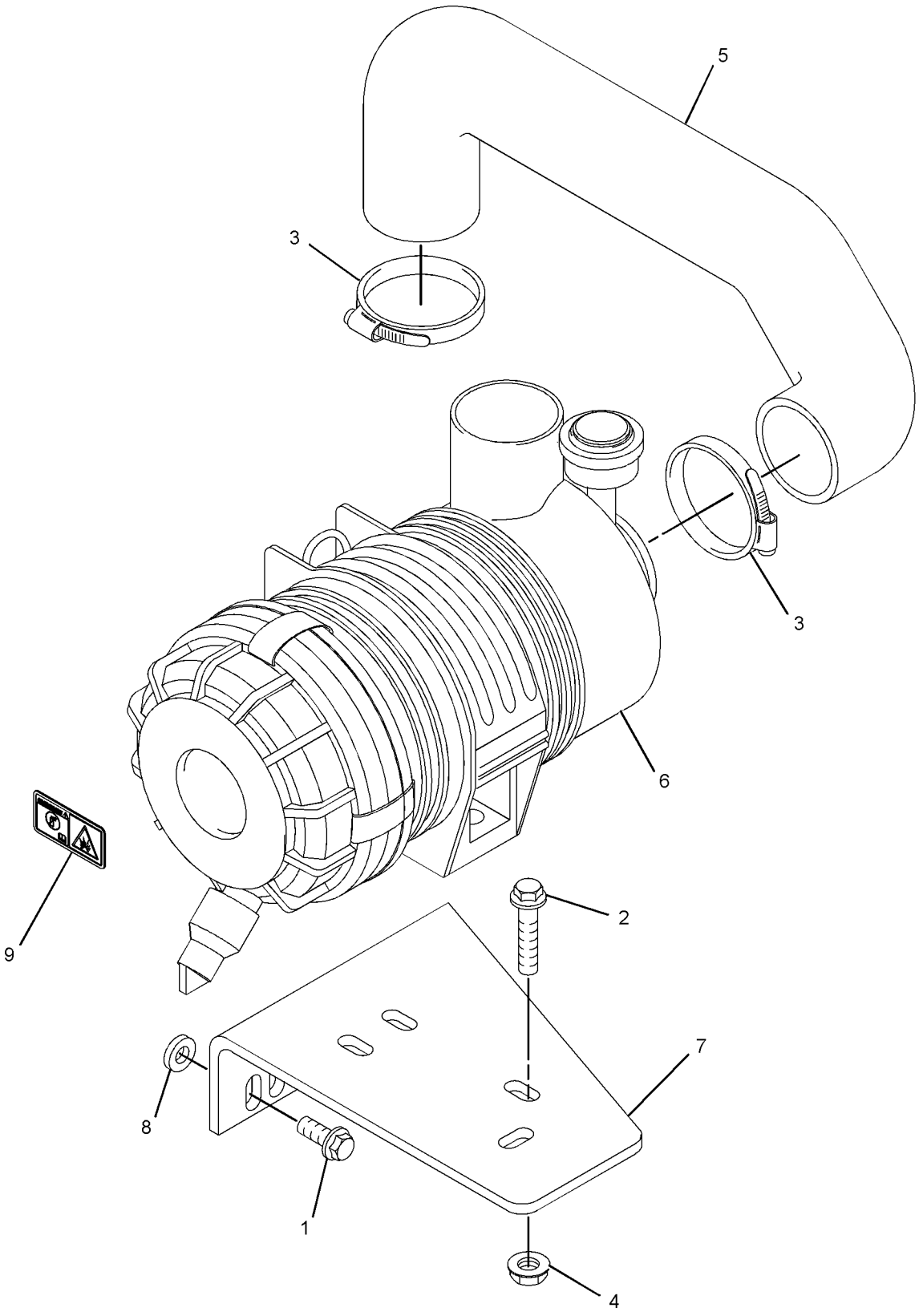

GRAPHIC #1 <END> g03869699

334-7296 AIR CLEANER GP

TYPE 1

SMCS-1051, 1054 **i04490337**

NOTE	REF NO	GRAPHIC REF	PART NUMBER	QTY	PART NAME 1 2 3 4 5 6 (PRODUCT LEVEL)	SEE PAGE
M	1	1	**6I-0217**	2	BOLT (M8X1.25X20-MM)	
M	2	1	**6I-0254**	2	BOLT (M8X1.25X30-MM)	
	3	1	**103-6714**	2	CLIP	
M	4	1	**153-5592**	2	NUT (M8X1.25-THD)	
	5	1	**241-6747**	1	HOSE	
Y	6	1	**244-0514**	1	FILTER ELEMENT AS-AIR	244
	7	1	**326-8547**	1	BRACKET	
	8	1	**292-1992**	1	SPACER	
	9	1	**334-7295**	1	CAP-RAIN	
	10	1	**318-8805**	1	BRACKET	

M - METRIC PART
Y - SEPARATE ILLUSTRATION

334-7296 **AIR CLEANER GP (**contd.**)** **i04490337**

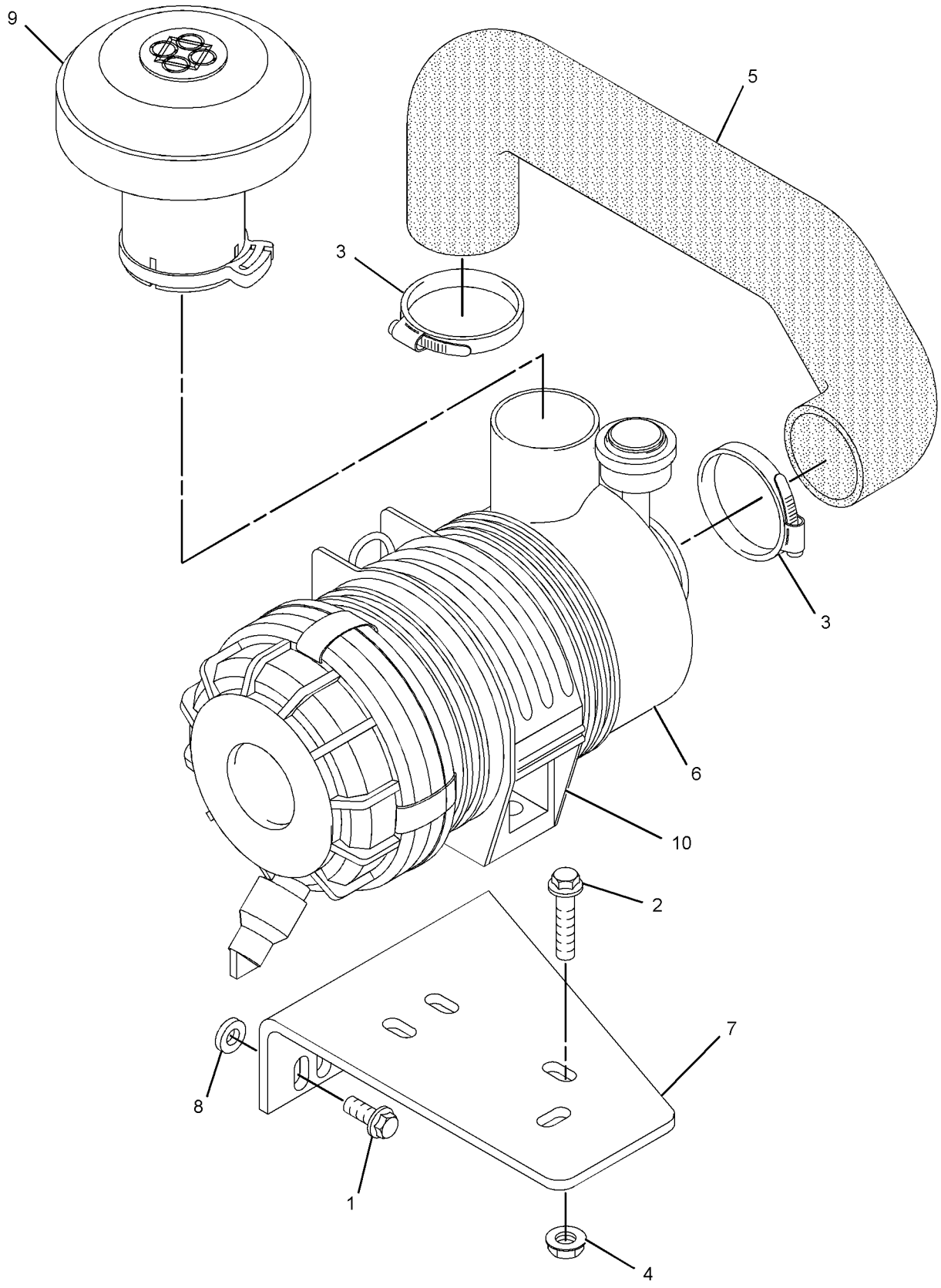

GRAPHIC #1 <END> g01948471

334-7296 AIR CLEANER GP

TYPE 2

SMCS-1051, 1054 **i06145036**

NOTE	REF NO	GRAPHIC REF	PART NUMBER	QTY	PART NAME 1 2 3 4 5 6 (PRODUCT LEVEL)	SEE PAGE
M	1	1	**6I-0217**	2	BOLT (M8X1.25X20-MM)	
M	2	1	**6I-0254**	2	BOLT (M8X1.25X30-MM)	
	3	1	**103-6714**	2	CLIP	
M	4	1	**153-5592**	2	NUT (M8X1.25-THD)	
	5	1	**241-6747**	1	HOSE	
Y	6	1	**244-0514**	1	FILTER ELEMENT AS-AIR	244
	7	1	**326-8547**	1	BRACKET	
	8	1	**292-1992**	1	SPACER	
	9	1	**318-8805**	1	BRACKET	

M - METRIC PART
Y - SEPARATE ILLUSTRATION

334-7296 **AIR CLEANER GP (**contd.**)** **i06145036**

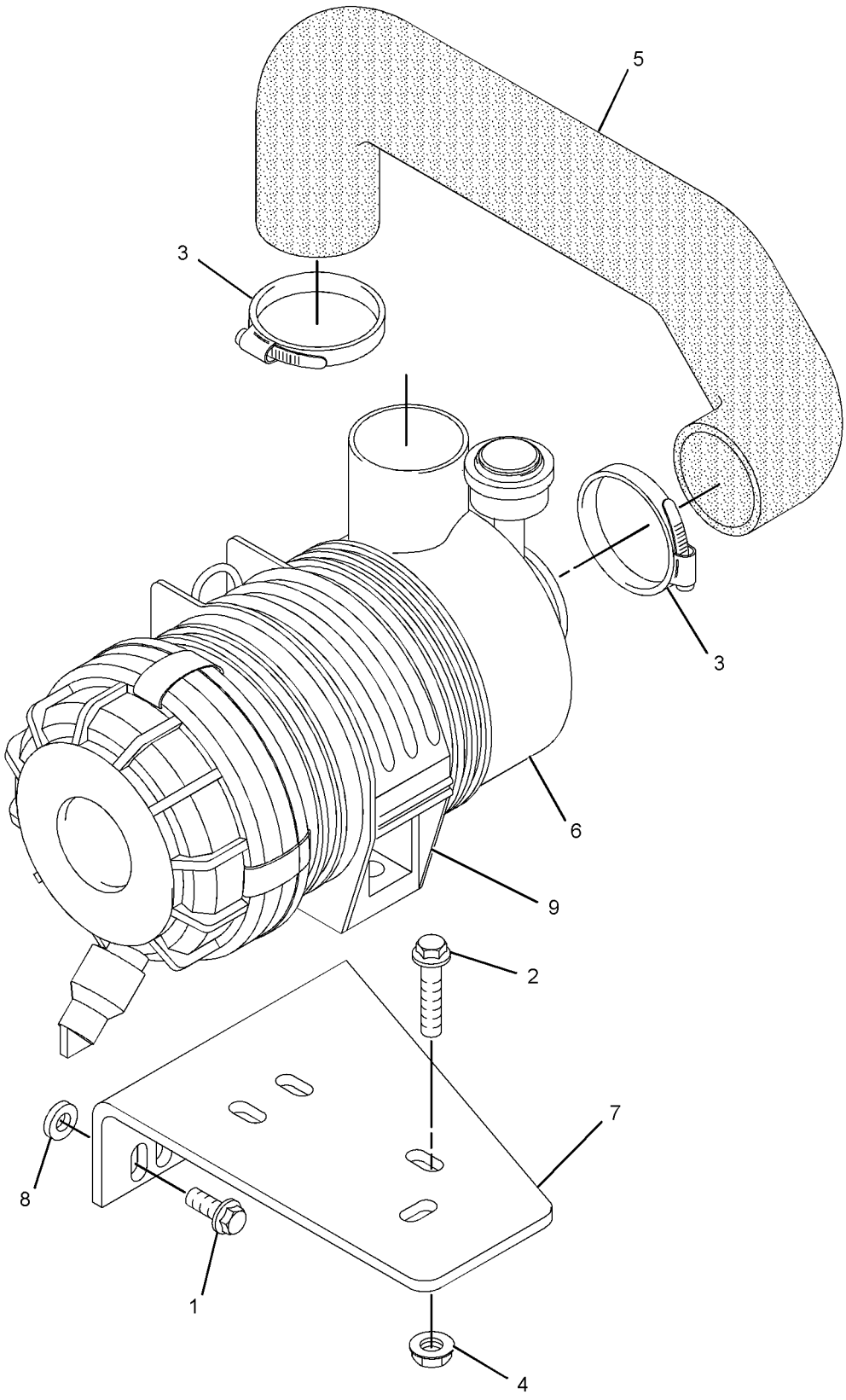

GRAPHIC #1 <END> g03825971

477-2865 AIR CLEANER GP

SMCS-1051, 1054 **i06060158**

NOTE	REF NO	GRAPHIC REF	PART NUMBER	QTY	PART NAME 1 2 3 4 5 6 (PRODUCT LEVEL)	SEE PAGE
M	1	1	**6I-0217**	2	BOLT (M8X1.25X20-MM)	
M	2	1	**6I-0254**	2	BOLT (M8X1.25X30-MM)	
	3	1	**103-6714**	2	CLIP	
M	4	1	**153-5592**	1	NUT (M8X1.25-THD)	
	5	1	**241-6747**	1	HOSE	
Y	6	1	**244-0514**	1	FILTER ELEMENT AS-AIR (TERMINAL)	244
	7	1	**292-1992**	2	SPACER	
	8	1	**318-8805**	1	BRACKET	
	9	1	**326-8547**	1	BRACKET	
	10	1	**326-9052**	1	FILM-WARNING (DO NOT SPRAY, READ OMM)	

M - METRIC PART
Y - SEPARATE ILLUSTRATION

477-2865 **AIR CLEANER GP (**contd.**)** **i06060158**

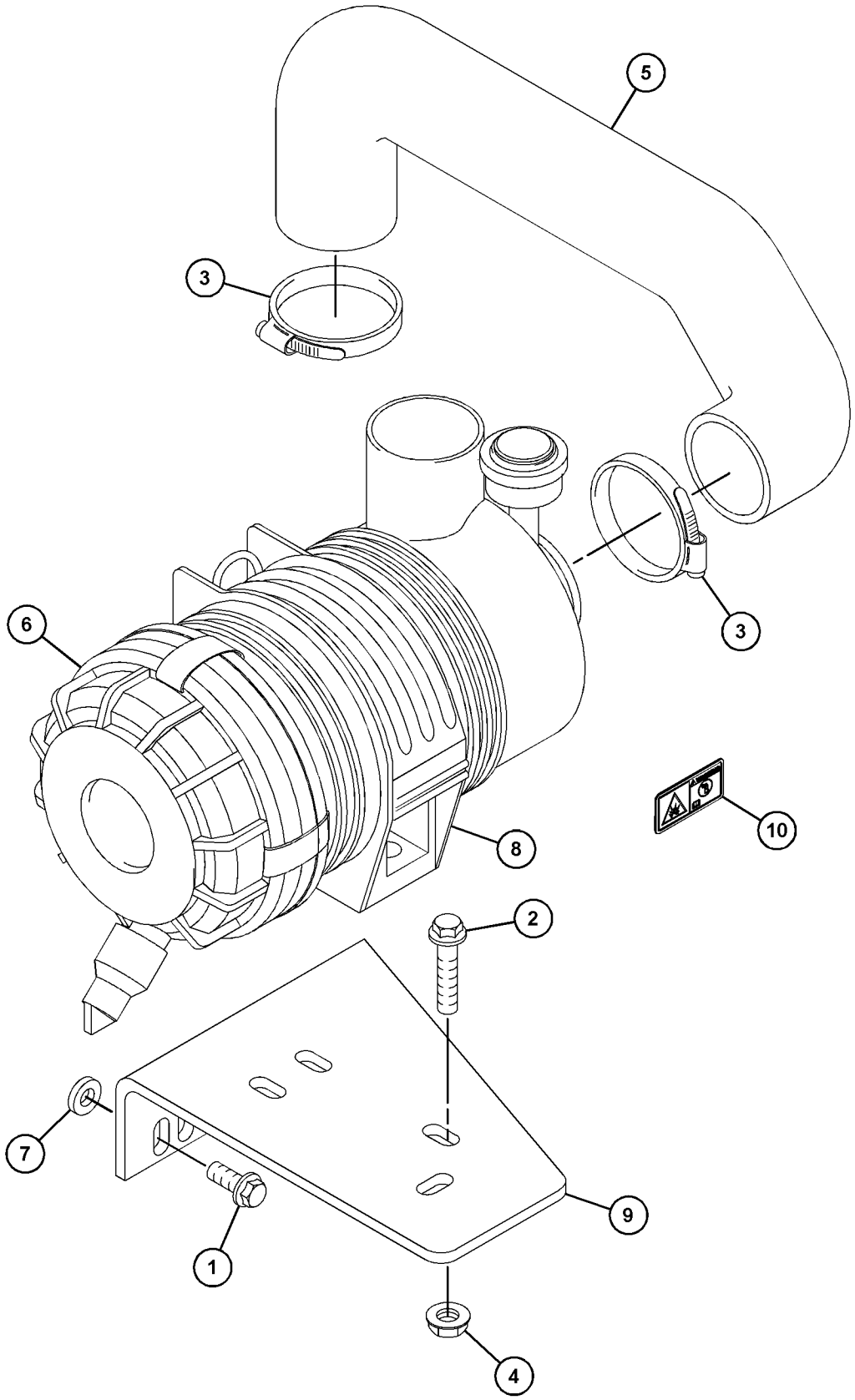

GRAPHIC #1 <END> g03857965

308-2309 CONNECTION GP-EXHAUST

SMCS-1061 **i07176210**

NOTE	REF NO	GRAPHIC REF	PART NUMBER	QTY	PART NAME 1 2 3 4 5 6 (PRODUCT LEVEL)	SEE PAGE
	1	1	**435-0208**	2	GASKET	
	2	1	**168-9001**	8	BOLT AS	
	3	1	**366-3065**	2	FLANGE	

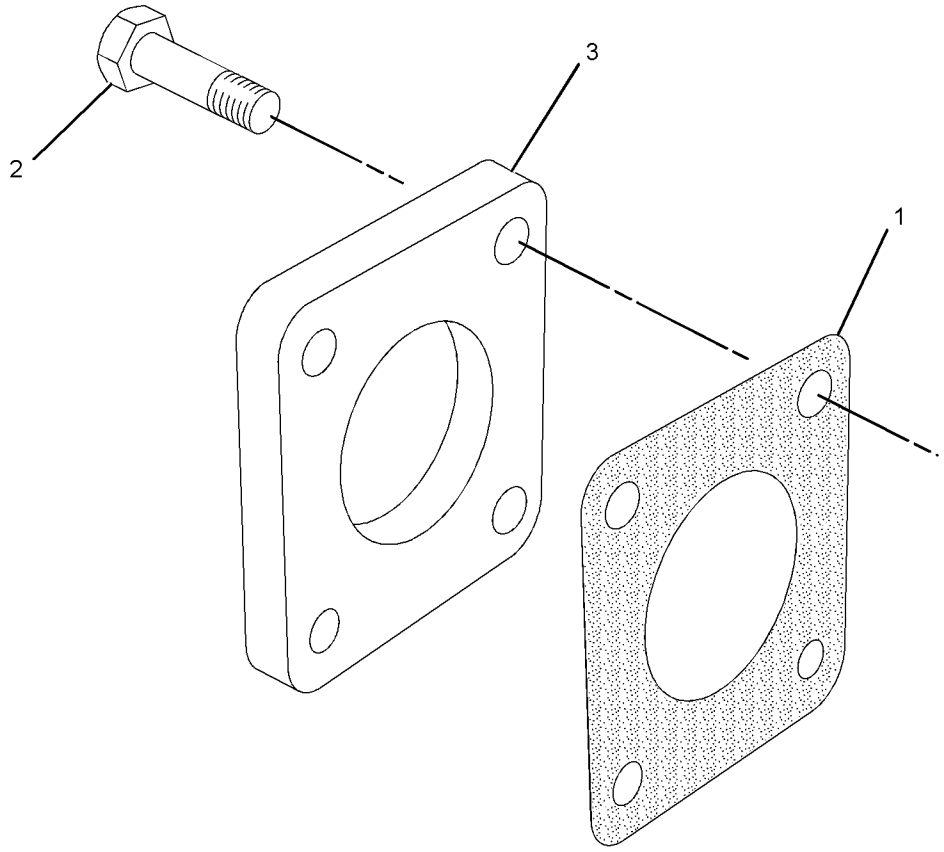

GRAPHIC #1 <END> g01388832

308-5610 CONNECTION GP-EXHAUST

SMCS-1061 **i07075824**

NOTE	REF NO	GRAPHIC REF	PART NUMBER	QTY	PART NAME 1 2 3 4 5 6 (PRODUCT LEVEL)	SEE PAGE
	1	1	**168-9001**	1	BOLT AS	
	2	1	**252-8372**	1	ELBOW AS-EXHAUST	
	2A	1	**163-5372**	4	WASHER (8X15.4X4-MM THK)	
	2B	1	**435-0208**	1	GASKET	
	2C	1	**191-0563**	1	ELBOW-EXHAUST	
	2D	1	**183-4335**	4	BOLT	
	3	1	**366-3065**	1	FLANGE	
	4	1	**435-0208**	1	GASKET	

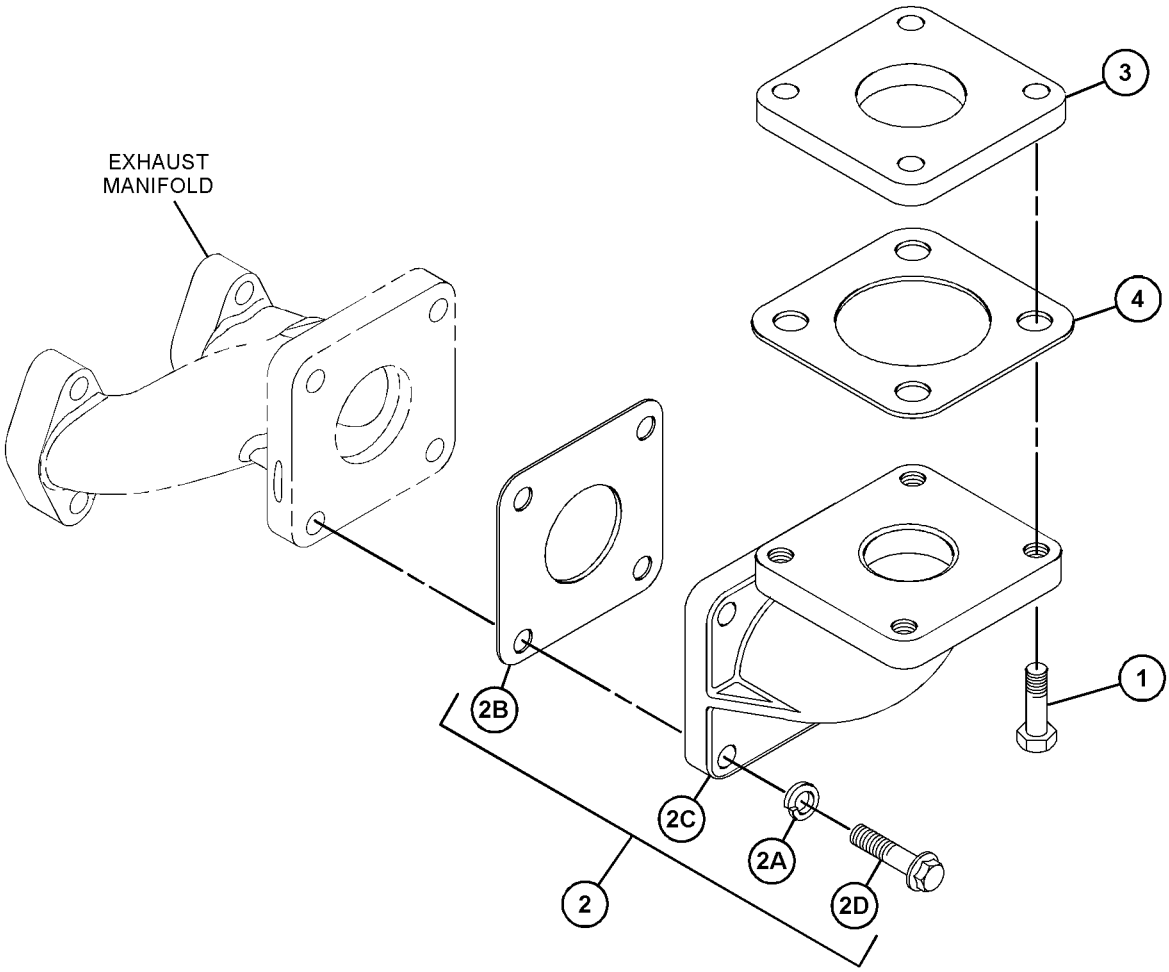

GRAPHIC #1 <END> g06220272

244-0514 FILTER ELEMENT AS-AIR

PART OF 316-9664, 334-7296, 477-2865 AIR CLEANER GP

SMCS-1054 **i02845393**

NOTE	REF NO	GRAPHIC REF	PART NUMBER	QTY	PART NAME 1 2 3 4 5 6 (PRODUCT LEVEL)	SEE PAGE
	1	1	**246-5011**	1	FILTER ELEMENT-AIR	
	2	1	**271-5059**	1	INDICATOR (AIR FILTER SERVICE)	
	3	1	**271-5062**	1	VALVE-DUST	

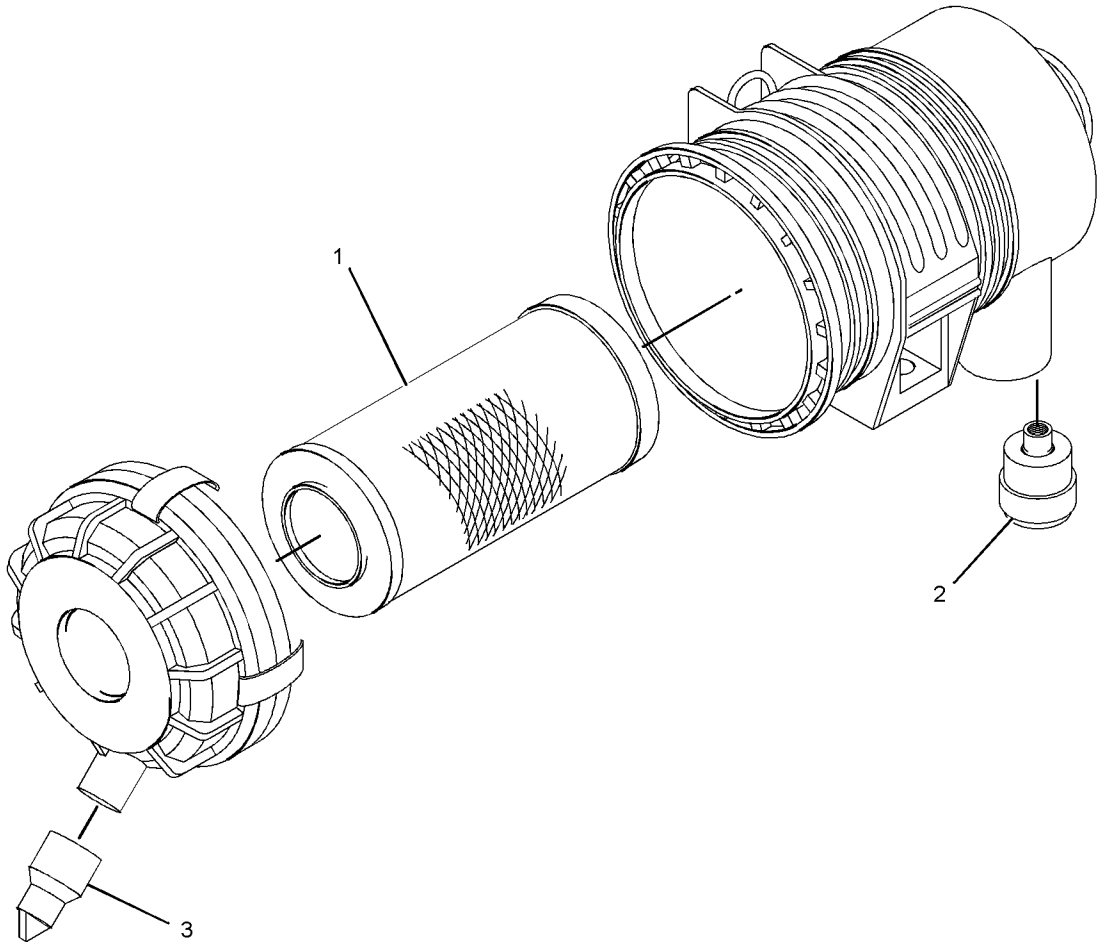

GRAPHIC #1 <END> g01196605

311-1124 MANIFOLD GP-EXHAUST

SMCS-1059 **i02843867**

NOTE	REF NO	GRAPHIC REF	PART NUMBER	QTY	PART NAME 1 2 3 4 5 6 (PRODUCT LEVEL)	SEE PAGE
M	1	1	**153-5592**	2	NUT (M8X1.25-THD)	
	2	1	**154-2428**	4	BOLT AS	
	3	1	**311-1172**	1	MANIFOLD-EXHAUST	
	4	1	**311-1173**	1	GASKET-MANIFOLD	

M - METRIC PART

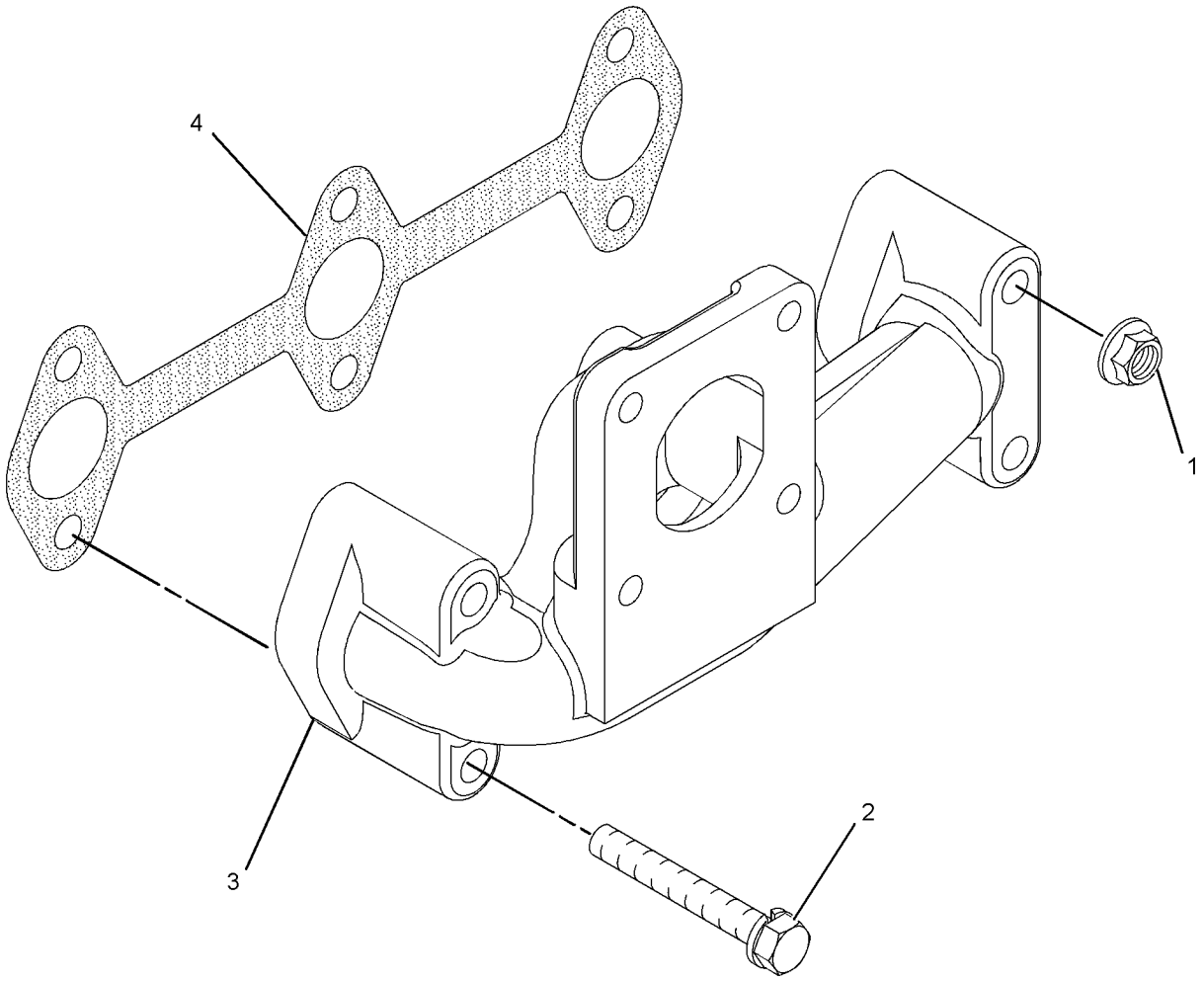

GRAPHIC #1 <END> g01408517

343-4578 MUFFLER GP

SMCS-1062 **i03460222**

NOTE	REF NO	GRAPHIC REF	PART NUMBER	QTY	PART NAME 1 2 3 4 5 6 (PRODUCT LEVEL)	SEE PAGE
	1	1	**168-9001**	4	BOLT AS	
	2	1	**226-4918**	1	MUFFLER AS	
M	2A	1	**5P-7970**	1	NUT (M8X1.25-THD)	
M	2B	1	**6V-5221**	1	BOLT (M8X1.25X80-MM)	
	2C	1	**155-7984**	1	WASHER (8.4X16X1.6-MM THK)	
	2D	1	**226-4919**	1	PIPE-EXHAUST	
		1	**226-4922**	1	MUFFLER	
	2E	1	**226-4923**	1	CLAMP	

M - METRIC PART

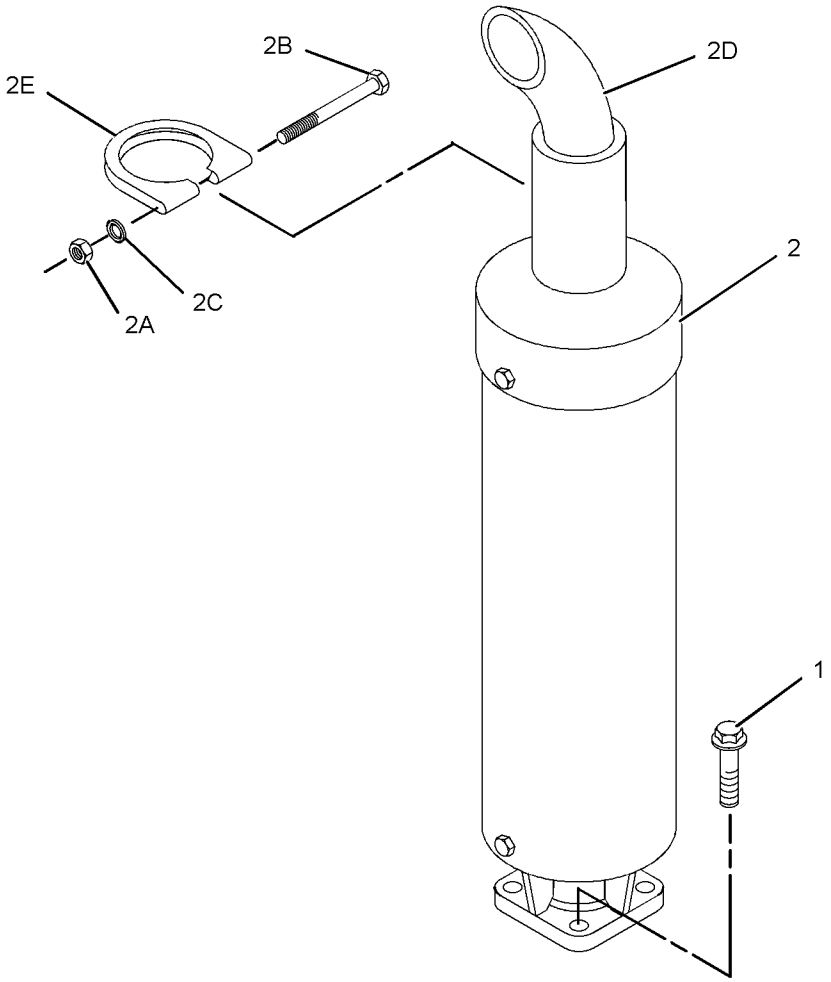

GRAPHIC #1 <END> g01970053

331-4511 TURBOCHARGER GP

SMCS-1052, 1053 **i06921697**

NOTE	REF NO	GRAPHIC REF	PART NUMBER	QTY	PART NAME 1 2 3 4 5 6 (PRODUCT LEVEL)	SEE PAGE
	1	2	**363-5813**	2	CLAMP-HOSE	
M	2	2	**153-5592**	5	NUT (M8X1.25-THD)	
	3	3	**153-5939**	1	STOPPER (OIL)	
	4	3	**153-5962**	2	BOLT AS	
	5	1	**153-6853**	1	SEAL-O-RING	
	6	2	**153-7640**	2	BOLT AS	
M	7	3	**154-1347**	3	NUT (M10X1.25-THD)	
	8	2	**154-2428**	4	BOLT AS	
	9	3	**165-2140**	2	BOLT AS	
	10	3	**183-1165**	1	PLUG	
M	11	1	**183-3572**	2	BOLT (M6X1X16-MM)	
	12	3	**246-4361**	3	WASHER (10.5X14X1.5-MM THK) (SEALING)	
	13	3	**217-5859**	1	VALVE-BREATHER (CRANKCASE)	
	14	3	**217-5861**	1	PLATE-RETAINING	
	15	3	**217-5862**	6	SCREW (SELF-TAPPING)	
	16	2	**437-5210**	1	GASKET	
	17	1	**225-8533**	2	GASKET (TURBOCHARGER)	
	18	3	**447-3735**	1	GASKET-COVER	
	19	3	**365-4125**	1	ADAPTER	
M	20	3	**238-9295**	4	BOLT (M4X0.7X30-MM)	
M	21	2	**239-0232**	2	STUD (M8X1.25X31-MM)	
	22	2	**366-3055**	1	ELBOW	
M	23	1	**249-7263**	4	BOLT (M6X1X16-MM)	
	24	3	**438-9362**	1	GASKET	
	25	2	**311-1173**	1	GASKET-MANIFOLD	
	26	3	**447-3580**	1	COVER-CYLINDER HEAD	
	27	2	**331-3875**	1	HOSE	
	28	2	**331-3876**	1	MANIFOLD-EXHAUST	
M	29	2	**201-9015**	1	STUD (M8X1.25X42-MM)	
	30	2	**331-3878**	1	TURBOCHARGER	
	31	1	**331-3879**	1	ELBOW-EXHAUST	
	32	1	**331-3881**	1	GASKET	
M	33	1	**331-3882**	1	BOLT (MX10X1.25X25-MM)	
M	34	1	**331-3883**	2	BOLT (M10X1.25X55-MM)	
	35	2	**331-3884**	1	GASKET	
	36	1	**331-3885**	1	TUBE	
	36A	1	**225-8526**	2	WASHER (10.4X13.75X1.37-MM THK)	
	36B	1	**317-0960**	1	BOLT-SPECIAL (BANJO)	
	37	1	**331-3886**	1	TUBE	

M - METRIC PART

331-4511 **TURBOCHARGER GP (**contd.**)** **i06921697**

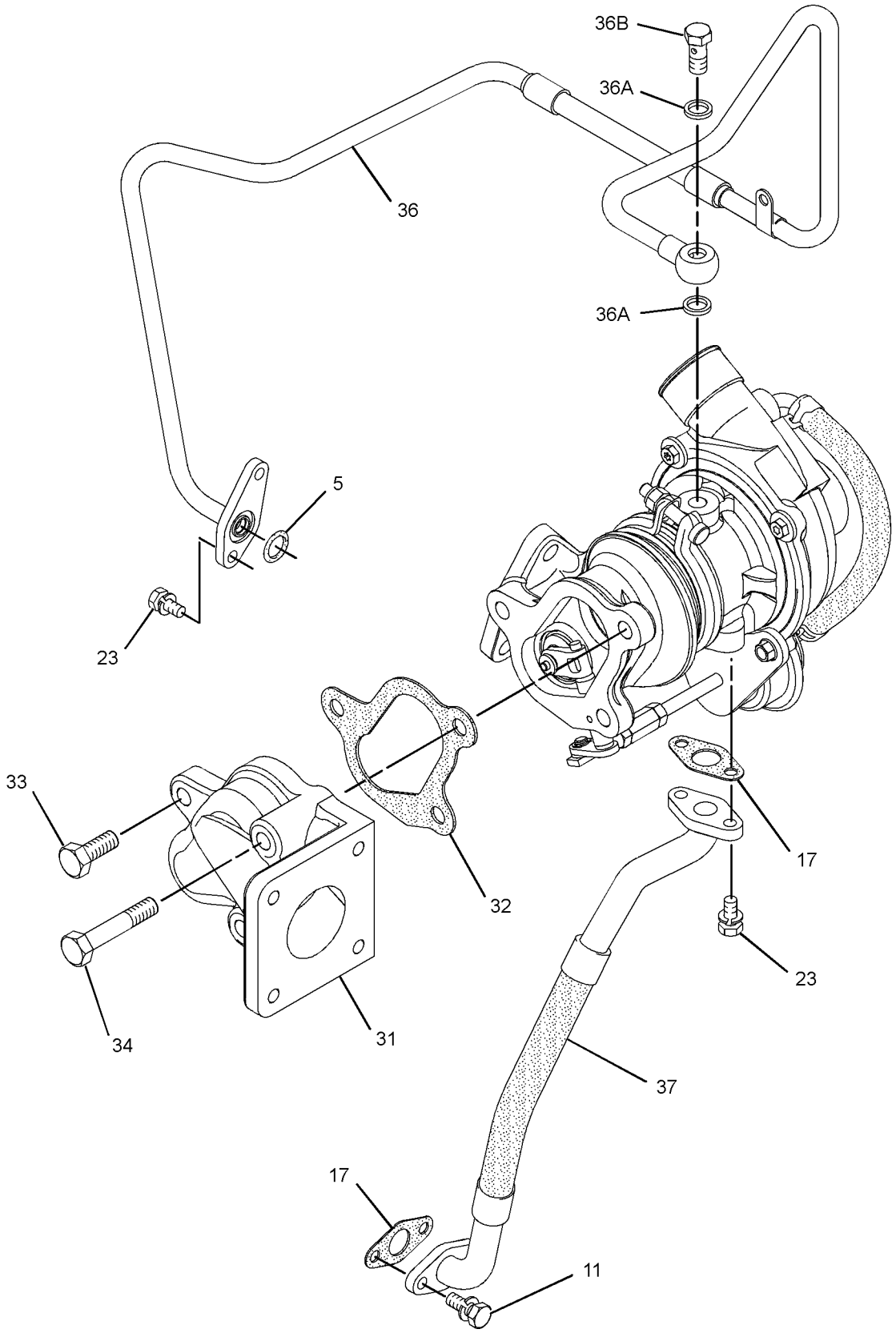

GRAPHIC #1 g01567978

331-4511 **TURBOCHARGER GP (**contd.**)** **i06921697**

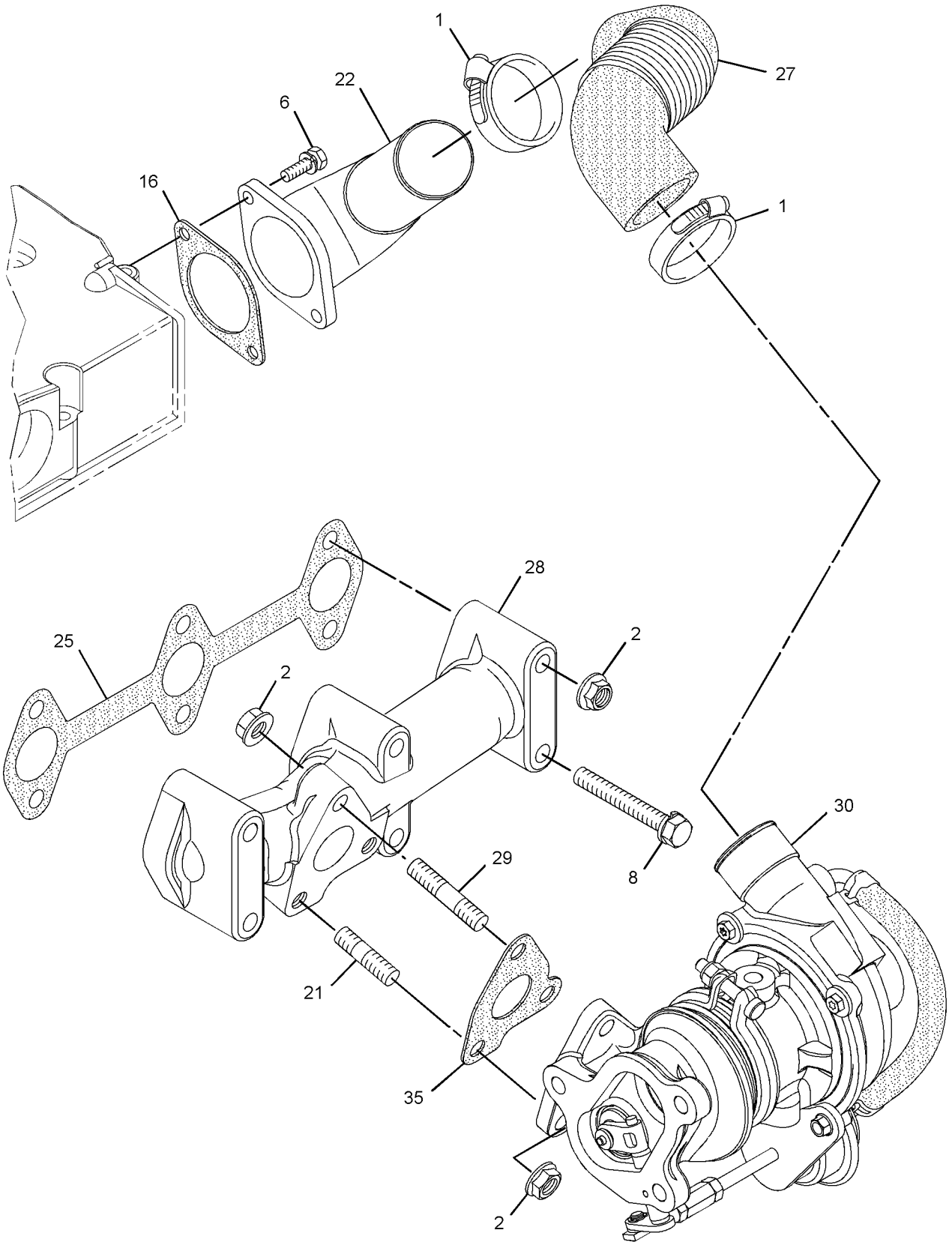

GRAPHIC #2 g02727136

331-4511 **TURBOCHARGER GP (**contd.**)** **i06921697**

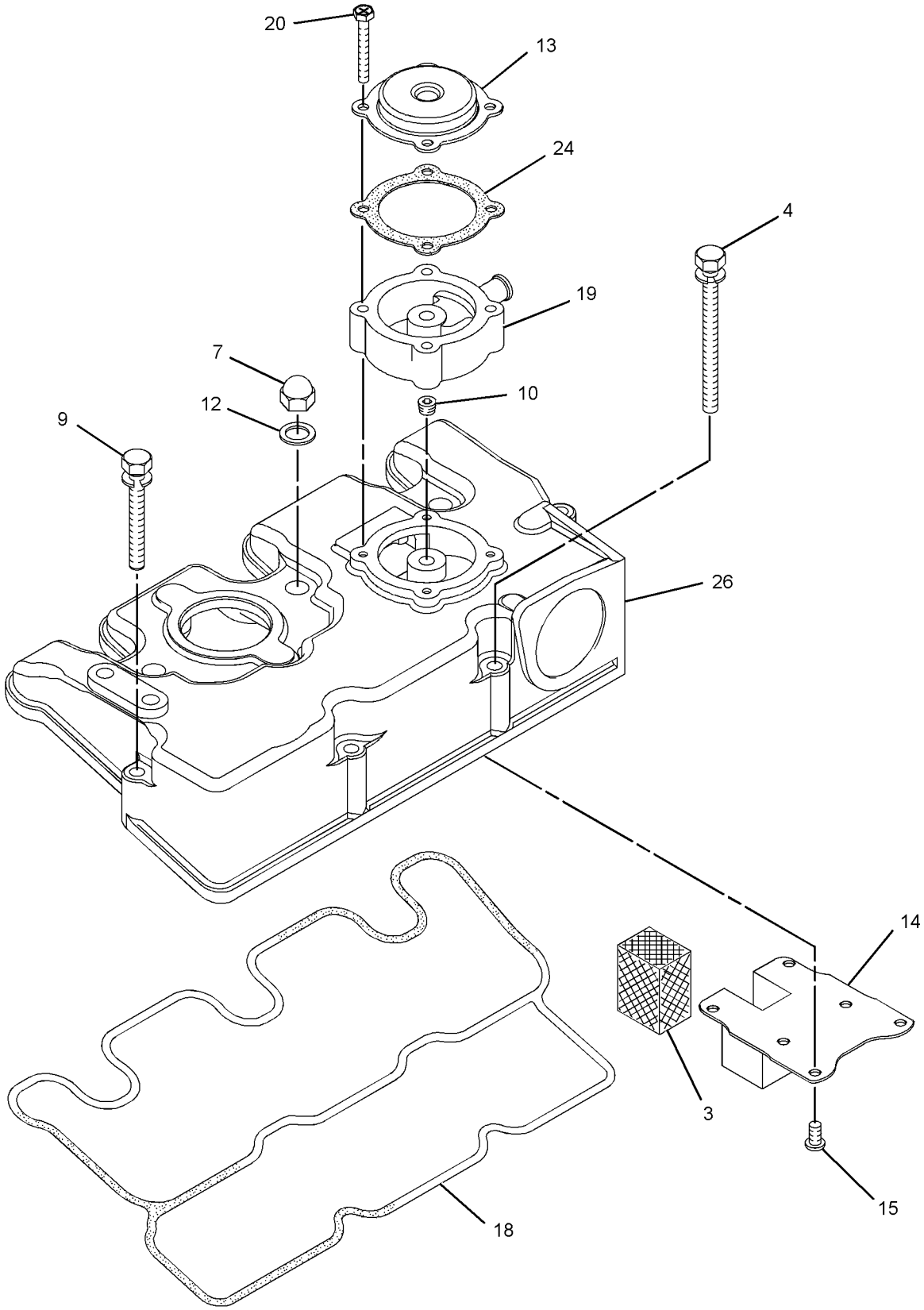

GRAPHIC #3 <END> g03695842

330-3011 CONTROL GP-GOVERNOR

SMCS-1265, 1276 **i07203747**

NOTE	REF NO	GRAPHIC REF	PART NUMBER	QTY	PART NAME 1 2 3 4 5 6 (PRODUCT LEVEL)	SEE PAGE
M	1	1	**5C-2890**	1	NUT (M6X1-THD)	
	2	1	**139-5511**	1	CAP (TAMPER RESISTANT)	
M	3	1	**153-5592**	1	NUT (M8X1.25-THD)	
	4	1	**153-6415**	2	WASHER (SEAL)	
	5	1	**153-7983**	1	PIN	
	6	1	**095-1574**	1	SEAL-O-RING	
	7	1	**309-6729**	1	SEAL-O-RING	
M	8	1	**369-4486**	2	BOLT (M6X1X35-MM)	
M	9	1	**162-2207**	1	NUT (M6X1-THD)	
M	10	1	**106-8916**	4	BOLT (M6X1X16-MM)	
	11	1	**217-7115**	1	CAP (TAMPER RESISTANT)	
	12	1	**335-5578**	1	BRACKET	
	13	1	**423-7724**	1	GASKET	
	14	1	**308-1882**	1	SPRING	
M	15	1	**308-1892**	1	NUT (M6X1-THD)	
	16	1	**308-1897**	2	RING	
	17	1	**425-7065**	1	CAP-TAMPER PROOF	
	18	1	**321-4249**	1	NUT	
	19	1	**330-9189**	1	PLUG	
	20	1	**308-4266**	1	SHAFT	
	21	1	**309-6728**	1	SHAFT	
	22	1	**311-0655**	1	SPRING	
	23	1	**315-5236**	1	BOLT AS	
	23A	1	**153-7987**	1	WASHER (9.2X17X1.8-MM THK)	
M	23B	1	**191-9297**	1	NUT (M10X1.25-THD)	
	23C	1	**315-5235**	1	SPRING	
	24	1	**364-7487**	1	SPRING	
	26	1	**334-0732**	1	ARM (FRONT HOUSING)	
	27	1	**322-7492**	1	LEVER-CONTROL	
	28	1	**324-3400**	1	LEVER AS-CONTROL	
M	29	1	**308-1889**	1	NUT (M10X1.25-THD)	
M	30	1	**495-0737**	1	BOLT (M6X0.5X19.5-MM)	
M	31	1	**313-2025**	1	BOLT-SPECIAL (M10X1.25-MM THD)	
	32	1	**336-2965**	1	SPRING	
	33	1	**308-1875**	1	SEAL-O-RING	

M - METRIC PART

330-3011 **CONTROL GP-GOVERNOR (**contd.**)** **i07203747**

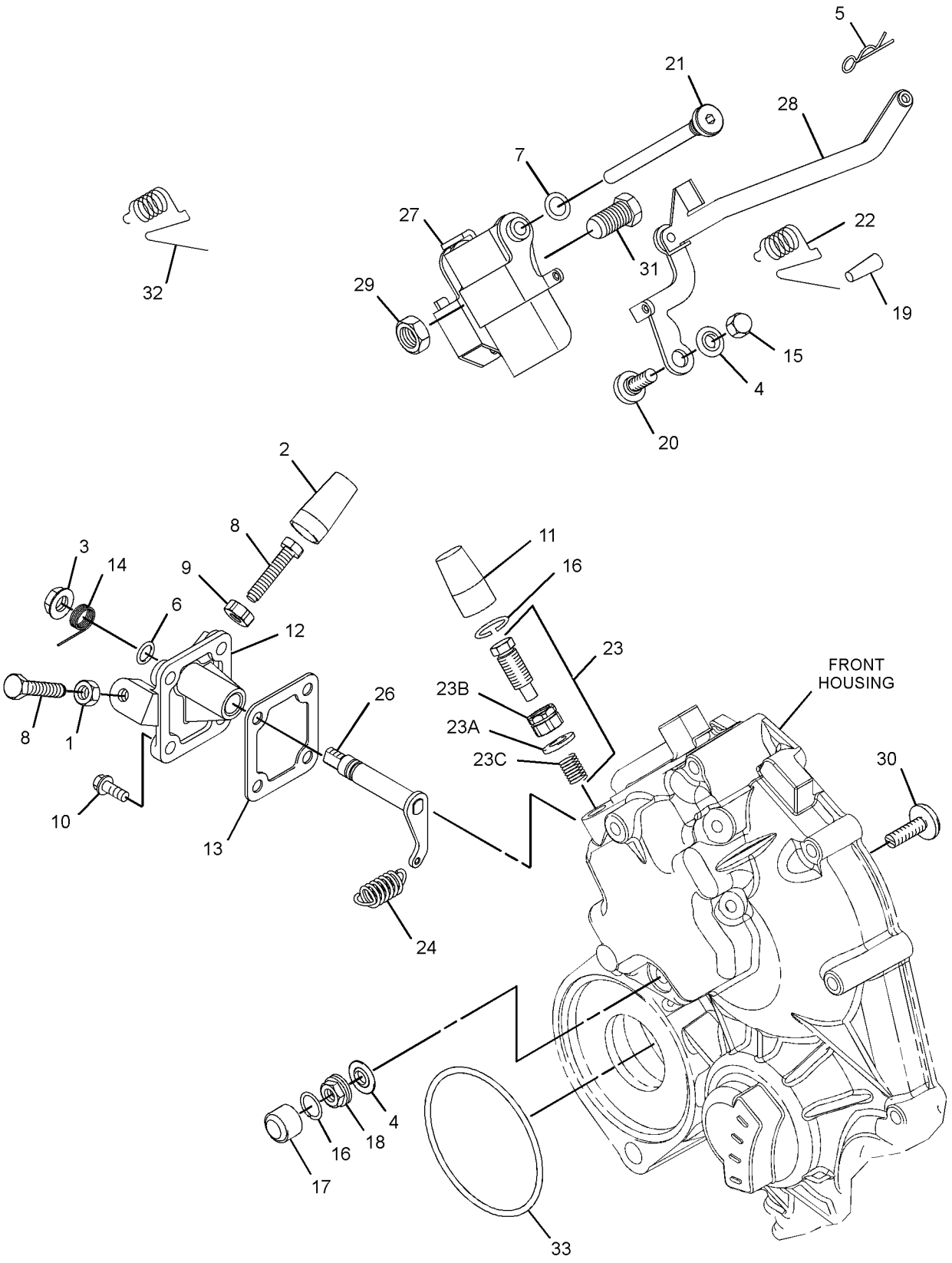

GRAPHIC #1 <END> g06205250

331-4506 CONTROL GP-GOVERNOR

PART OF 435-1657 ENGINE AR-PRIMARY

TYPE 1

SMCS-1265, 1276 **i07032147**

NOTE	REF NO	GRAPHIC REF	PART NUMBER	QTY	PART NAME 1 2 3 4 5 6 (PRODUCT LEVEL)	SEE PAGE
M	1	1	**5C-2890**	1	NUT (M6X1-THD)	
	2	1	**139-5511**	1	CAP (TAMPER RESISTANT)	
M	3	1	**153-5592**	1	NUT (M8X1.25-THD)	
	4	1	**153-6415**	2	WASHER (SEAL)	
	5	1	**153-7983**	1	PIN	
	6	1	**095-1574**	1	SEAL-O-RING	
	7	1	**154-2715**	1	WASHER	
M	8	1	**369-4486**	2	BOLT (M6X1X35-MM)	
M	9	1	**162-2207**	1	NUT (M6X1-THD)	
M	10	1	**106-8916**	4	BOLT (M6X1X16-MM)	
	11	1	**217-7115**	1	CAP (TAMPER RESISTANT)	
	12	1	**335-5578**	1	BRACKET	
	13	1	**423-7724**	1	GASKET	
	14	1	**308-1882**	1	SPRING	
M	15	1	**308-1889**	1	NUT (M10X1.25-THD)	
M	16	1	**308-1892**	1	NUT (M6X1-THD)	
	17	1	**308-1897**	2	RING	
	19	1	**308-4266**	1	SHAFT	
	20	1	**390-3731**	1	SHAFT	
M	21	1	**495-0737**	1	BOLT (M6X0.5X19.5-MM)	
	22	1	**311-0655**	1	SPRING	
	23	1	**313-5832**	1	BOLT AS	
	23A	1	**153-7987**	1	WASHER (9.2X17X1.8-MM THK)	
M	23B	1	**191-9297**	1	NUT (M10X1.25-THD)	
	23C	1	**313-5833**	1	SPRING	
	24	1	**317-7195**	1	SPRING	
	25	1	**321-4249**	1	NUT	
	26	1	**425-7065**	1	CAP-TAMPER PROOF	
	27	1	**334-0732**	1	ARM (FRONT HOUSING)	
	28	1	**390-3729**	1	LEVER-CONTROL	
	29	1	**324-3400**	1	LEVER AS-CONTROL	
	30	1	**330-9189**	1	PLUG	
	31	1	**331-3871**	1	GOVERNOR GP-ANGLEICH (TIMING, CAMSHAFT)	
	32	1	**336-2965**	1	SPRING	
	33	1	**308-1875**	1	SEAL-O-RING	

M - METRIC PART

331-4506 **CONTROL GP-GOVERNOR (**contd.**)** **i07032147**

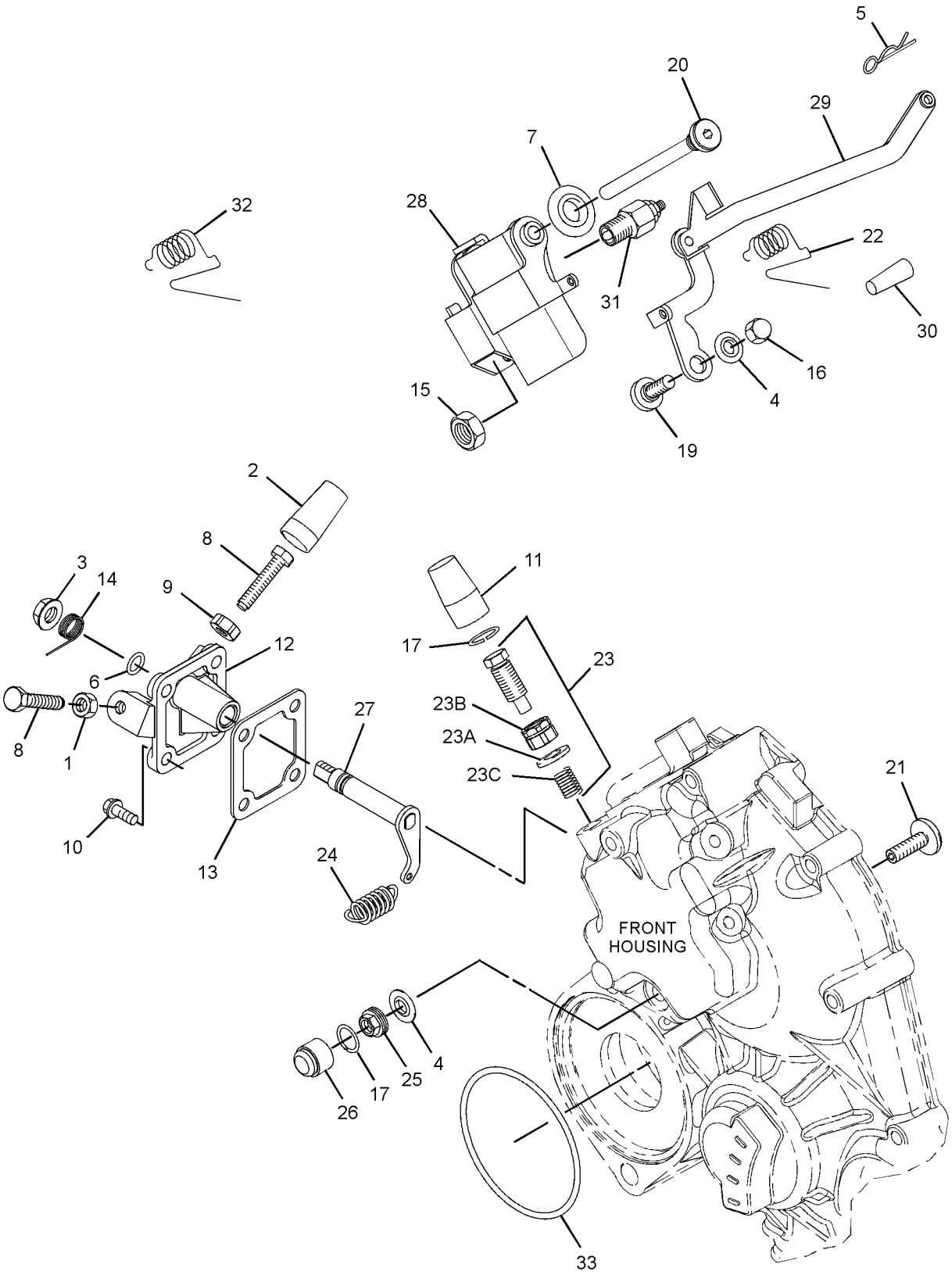

GRAPHIC #1 <END> g06198770

331-4506 CONTROL GP-GOVERNOR

PART OF 435-1657 ENGINE AR-PRIMARY

TYPE 2

SMCS-1265, 1276 **i07157239**

NOTE	REF NO	GRAPHIC REF	PART NUMBER	QTY	PART NAME 1 2 3 4 5 6 (PRODUCT LEVEL)	SEE PAGE
M	1	1	**5C-2890**	1	NUT (M6X1-THD)	
	2	1	**139-5511**	1	CAP (TAMPER RESISTANT)	
M	3	1	**153-5592**	1	NUT (M8X1.25-THD)	
	4	1	**153-6415**	2	WASHER (SEAL)	
	5	1	**153-7983**	1	PIN	
	6	1	**095-1574**	1	SEAL-O-RING	
	7	1	**154-2715**	1	WASHER	
M	8	1	**369-4486**	2	BOLT (M6X1X35-MM)	
M	9	1	**162-2207**	1	NUT (M6X1-THD)	
M	10	1	**106-8916**	4	BOLT (M6X1X16-MM)	
	11	1	**217-7115**	1	CAP (TAMPER RESISTANT)	
	12	1	**335-5578**	1	BRACKET	
	13	1	**423-7724**	1	GASKET	
	14	1	**308-1882**	1	SPRING	
M	15	1	**308-1889**	1	NUT (M10X1.25-THD)	
M	16	1	**308-1892**	1	NUT (M6X1-THD)	
C	17	1	**308-1897**	1	RING	
	19	1	**308-4266**	1	SHAFT	
	20	1	**390-3731**	1	SHAFT	
M	21	1	**495-0737**	1	BOLT (M6X0.5X19.5-MM)	
	22	1	**311-0655**	1	SPRING	
	23	1	**313-5832**	1	BOLT AS	
	23A	1	**153-7987**	1	WASHER (9.2X17X1.8-MM THK)	
M	23B	1	**191-9297**	1	NUT (M10X1.25-THD)	
	23C	1	**313-5833**	1	SPRING	
	24	1	**317-7195**	1	SPRING	
C	25	1	**502-9478**	1	NUT (TAMPER RESISTANT)	
C	26	1	**503-9707**	1	CAP	
	27	1	**334-0732**	1	ARM (FRONT HOUSING)	
	28	1	**390-3729**	1	LEVER-CONTROL	
	29	1	**324-3400**	1	LEVER AS-CONTROL	
	30	1	**330-9189**	1	PLUG	
	31	1	**331-3871**	1	GOVERNOR GP-ANGLEICH (TIMING)	
	32	1	**336-2965**	1	SPRING	
	33	1	**308-1875**	1	SEAL-O-RING	
C	34	1	**503-9731**	1	SHROUD	
C	35	1	**502-5421**	1	PIN	

C - CHANGE FROM PREVIOUS TYPE
M - METRIC PART

331-4506 **CONTROL GP-GOVERNOR (**contd.**)** **i07157239**

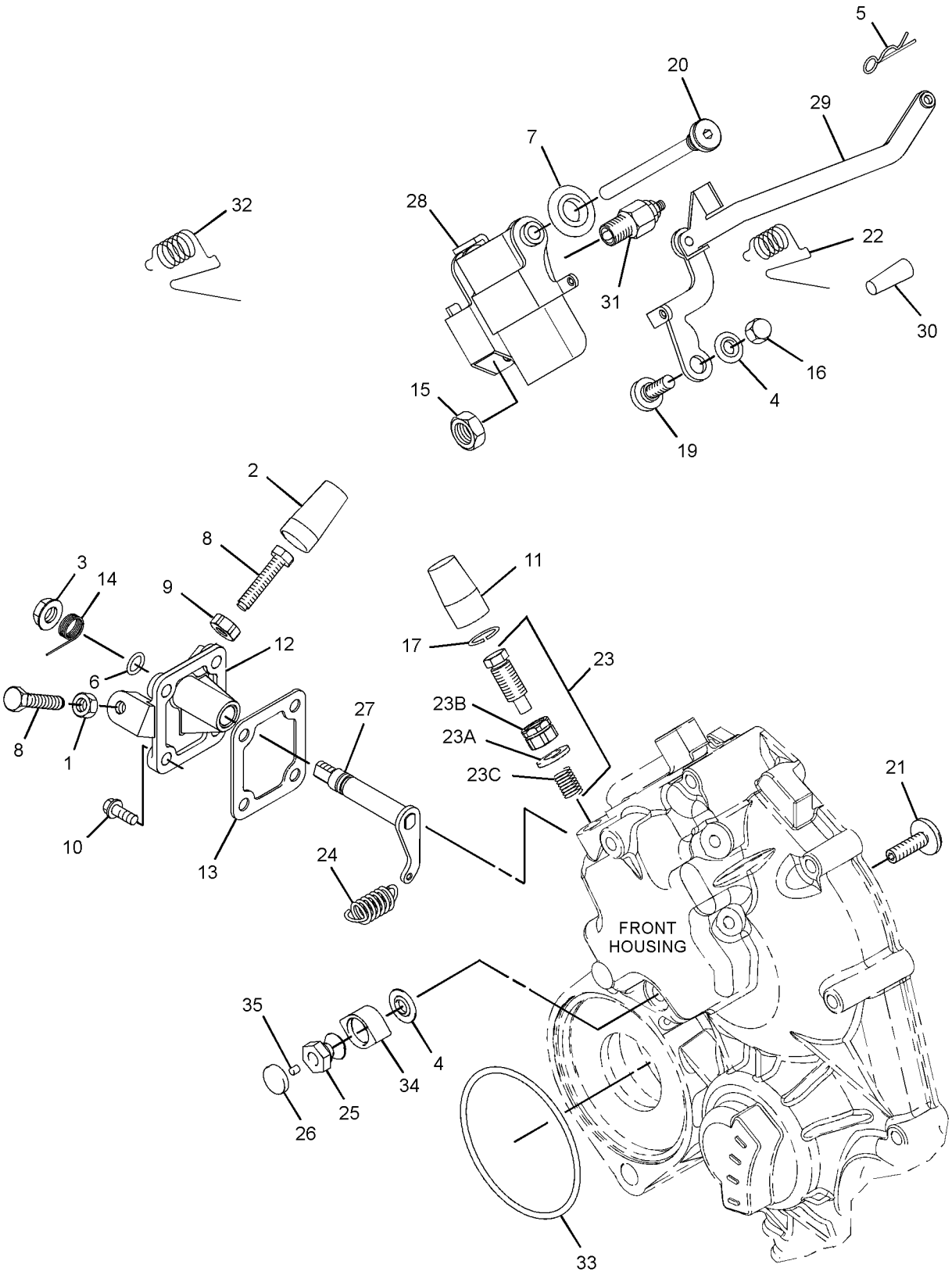

GRAPHIC #1 <END> g06245234

364-2720 CONTROL GP-GOVERNOR

SMCS-1265, 1276 **i07082770**

NOTE	REF NO	GRAPHIC REF	PART NUMBER	QTY	PART NAME 1 2 3 4 5 6 (PRODUCT LEVEL)	SEE PAGE
M	1	1	**106-8916**	4	BOLT (M6X1X16-MM)	
M	2	1	**5C-2890**	1	NUT (M6X1-THD)	
	3	1	**139-5511**	1	CAP (TAMPER RESISTANT)	
M	4	1	**153-5592**	1	NUT (M8X1.25-THD)	
	5	1	**153-6415**	2	WASHER (SEAL)	
	6	1	**153-7983**	1	PIN	
	7	1	**095-1574**	1	SEAL-O-RING	
M	8	1	**162-2207**	1	NUT (M6X1-THD)	
	9	1	**217-7115**	1	CAP (TAMPER RESISTANT)	
	10	1	**423-7724**	1	GASKET	
	11	1	**308-1882**	1	SPRING	
M	12	1	**308-1889**	1	NUT (M10X1.25-THD)	
M	13	1	**308-1892**	1	NUT (M6X1-THD)	
	14	1	**308-1897**	2	RING	
	15	1	**425-7065**	1	CAP-TAMPER PROOF	
	16	1	**308-4266**	1	SHAFT	
	17	1	**309-6729**	1	SEAL-O-RING	
M	18	1	**495-0737**	1	BOLT (M6X0.5X19.5-MM)	
	19	1	**311-0655**	1	SPRING	
M	20	1	**313-2025**	1	BOLT-SPECIAL (M10X1.25-MM THD)	
	21	1	**315-5236**	1	BOLT AS	
	21A	1	**153-7987**	1	WASHER (9.2X17X1.8-MM THK)	
M	21B	1	**191-9297**	1	NUT (M10X1.25-THD)	
	21C	1	**313-5833**	1	SPRING	
	22	1	**364-7487**	1	SPRING	
	23	1	**321-4249**	1	NUT	
	24	1	**324-3400**	1	LEVER AS-CONTROL	
	25	1	**330-9189**	1	PLUG	
	26	1	**334-0732**	1	ARM (FRONT HOUSING)	
	27	1	**335-5578**	1	BRACKET	
M	28	1	**369-4486**	2	BOLT (M6X1X35-MM)	
	29	1	**390-3729**	1	LEVER-CONTROL	
	30	1	**390-3731**	1	SHAFT	
	31	1	**336-2965**	1	SPRING	

M - METRIC PART

364-2720 **CONTROL GP-GOVERNOR (**contd.**)** **i07082770**

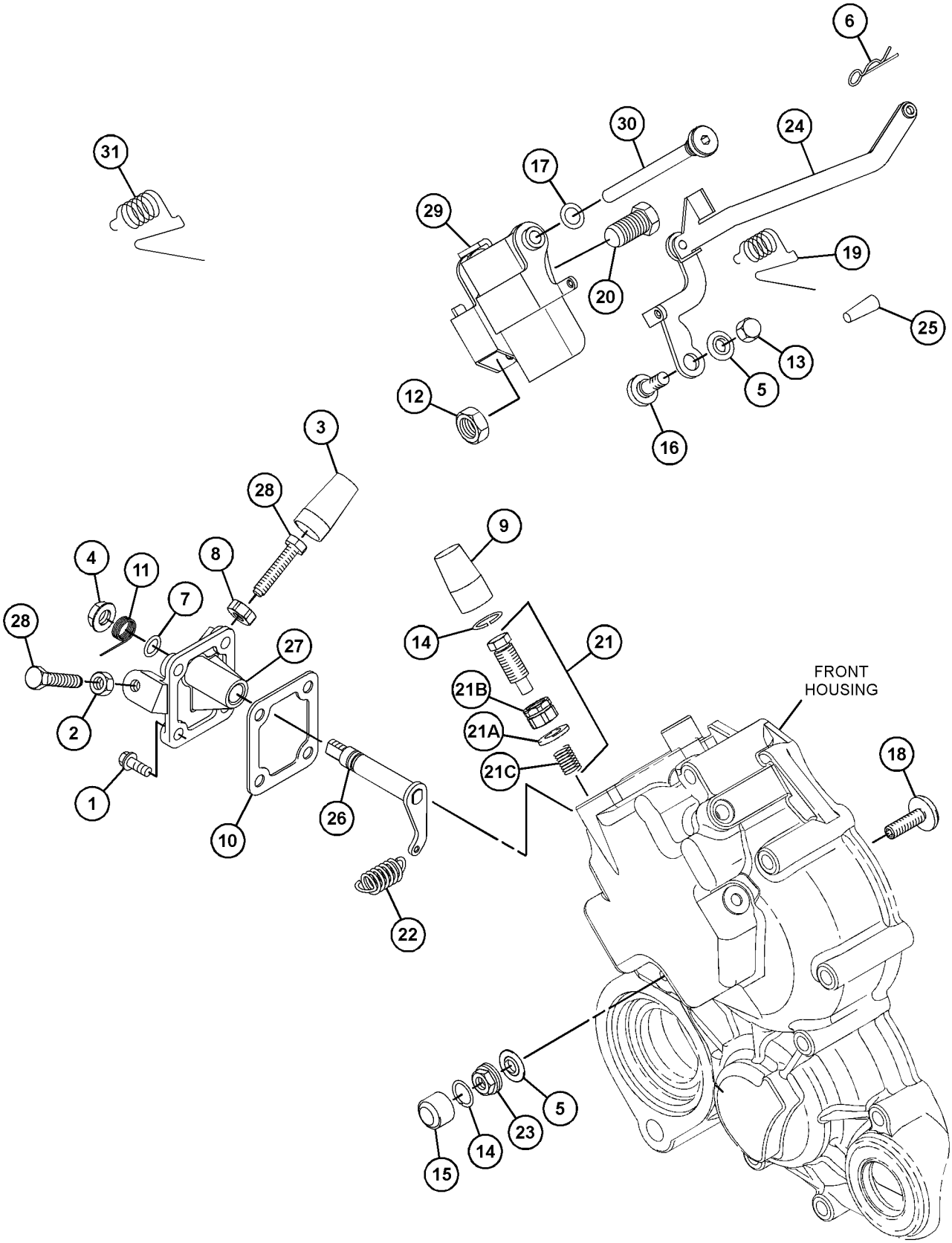

GRAPHIC #1 <END> g03819871

364-2720 CONTROL GP-GOVERNOR

SMCS-1265, 1276 **i07160695**

NOTE	REF NO	GRAPHIC REF	PART NUMBER	QTY	PART NAME 1 2 3 4 5 6 (PRODUCT LEVEL)	SEE PAGE
M	1	1	**106-8916**	4	BOLT (M6X1X16-MM)	
M	2	1	**5C-2890**	1	NUT (M6X1-THD)	
	3	1	**139-5511**	1	CAP (TAMPER RESISTANT)	
M	4	1	**153-5592**	1	NUT (M8X1.25-THD)	
	5	1	**153-6415**	2	WASHER (SEAL)	
	6	1	**153-7983**	1	PIN	
	7	1	**095-1574**	1	SEAL-O-RING	
M	8	1	**162-2207**	1	NUT (M6X1-THD)	
	9	1	**217-7115**	1	CAP (TAMPER RESISTANT)	
	10	1	**423-7724**	1	GASKET	
	11	1	**308-1882**	1	SPRING	
M	12	1	**308-1889**	1	NUT (M10X1.25-THD)	
M	13	1	**308-1892**	1	NUT (M6X1-THD)	
C	14	1	**308-1897**	1	RING	
C	15	1	**503-9707**	1	CAP	
	16	1	**308-4266**	1	SHAFT	
	17	1	**309-6729**	1	SEAL-O-RING	
M	18	1	**495-0737**	1	BOLT (M6X0.5X19.5-MM)	
	19	1	**311-0655**	1	SPRING	
M	20	1	**313-2025**	1	BOLT-SPECIAL (M10X1.25-MM THD)	
	21	1	**315-5236**	1	BOLT AS	
	21A	1	**153-7987**	1	WASHER (9.2X17X1.8-MM THK)	
M	21B	1	**191-9297**	1	NUT (M10X1.25-THD)	
	21C	1	**315-5235**	1	SPRING	
	22	1	**364-7487**	1	SPRING	
C	23	1	**502-9478**	1	NUT (TAMPER RESISTANT)	
	24	1	**324-3400**	1	LEVER AS-CONTROL	
	25	1	**330-9189**	1	PLUG	
	26	1	**334-0732**	1	ARM (FRONT HOUSING)	
	27	1	**335-5578**	1	BRACKET	
M	28	1	**369-4486**	2	BOLT (M6X1X35-MM)	
	29	1	**390-3729**	1	LEVER-CONTROL	
	30	1	**390-3731**	1	SHAFT	
	31	1	**336-2965**	1	SPRING	
C	32	1	**503-9731**	1	SHROUD	
C	33	1	**502-5421**	1	PIN	

C - CHANGE FROM PREVIOUS TYPE
M - METRIC PART

364-2720 **CONTROL GP-GOVERNOR (**contd.**)** **i07160695**

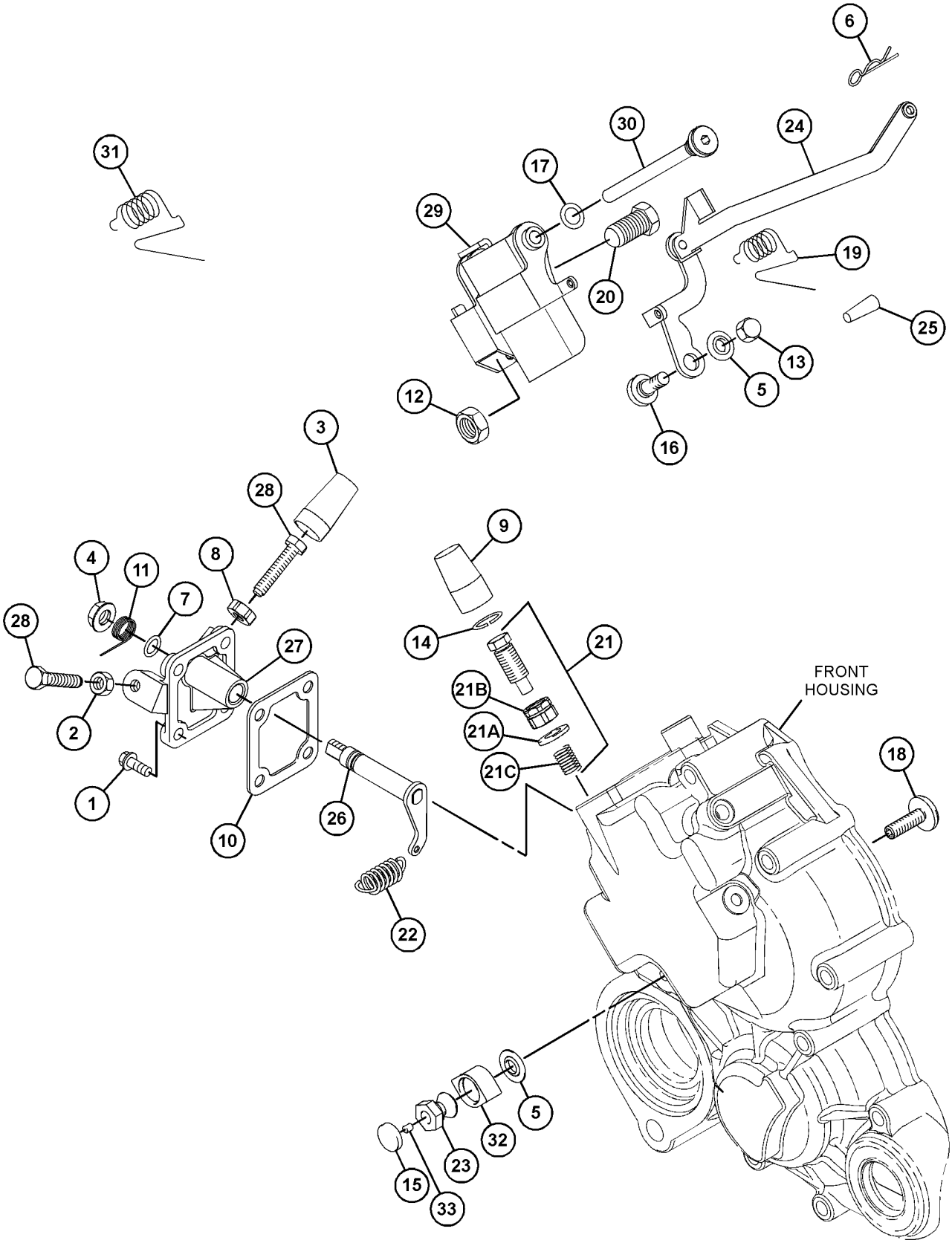

GRAPHIC #1 <END> g06239466

364-2742 CONTROL GP-GOVERNOR

SMCS-1265, 1276 **i06936063**

NOTE	REF NO	GRAPHIC REF	PART NUMBER	QTY	PART NAME 1 2 3 4 5 6 (PRODUCT LEVEL)	SEE PAGE
M	1	1	**106-8916**	4	BOLT (M6X1X16-MM)	
M	2	1	**5C-2890**	1	NUT (M6X1-THD)	
	3	1	**139-5511**	1	CAP (TAMPER RESISTANT)	
M	4	1	**153-5592**	1	NUT (M8X1.25-THD)	
	5	1	**153-6415**	2	WASHER (SEAL)	
	6	1	**153-7983**	1	PIN	
	7	1	**095-1574**	1	SEAL-O-RING	
M	8	1	**162-2207**	1	NUT (M6X1-THD)	
	9	1	**217-7115**	1	CAP (TAMPER RESISTANT)	
	10	1	**423-7724**	1	GASKET	
	11	1	**308-1882**	1	SPRING	
M	12	1	**308-1889**	1	NUT (M10X1.25-THD)	
M	13	1	**308-1892**	1	NUT (M6X1-THD)	
	14	1	**308-1897**	2	RING	
	15	1	**336-2965**	1	SPRING	
	16	1	**308-4266**	1	SHAFT	
	17	1	**309-6729**	1	SEAL-O-RING	
M	18	1	**495-0737**	1	BOLT (M6X0.5X19.5-MM)	
	19	1	**311-0655**	1	SPRING	
M	20	1	**313-2025**	1	BOLT-SPECIAL (M10X1.25-MM THD)	
	21	1	**315-5236**	1	BOLT AS	
	21A	1	**153-7987**	1	WASHER (9.2X17X1.8-MM THK)	
M	21B	1	**191-9297**	1	NUT (M10X1.25-THD)	
	21C	1	**315-5235**	1	SPRING	
	22	1	**364-7487**	1	SPRING	
	23	1	**321-4249**	1	NUT	
	24	1	**324-3400**	1	LEVER AS-CONTROL	
	25	1	**330-9189**	1	PLUG	
	26	1	**334-0732**	1	ARM (FRONT HOUSING)	
	27	1	**335-5578**	1	BRACKET	
M	28	1	**369-4486**	2	BOLT (M6X1X35-MM)	
	29	1	**390-3729**	1	LEVER-CONTROL	
	30	1	**390-3731**	1	SHAFT	
	31	1	**425-7065**	1	CAP-TAMPER PROOF	

M - METRIC PART

364-2742 **CONTROL GP-GOVERNOR (**contd.**)** **i06936063**

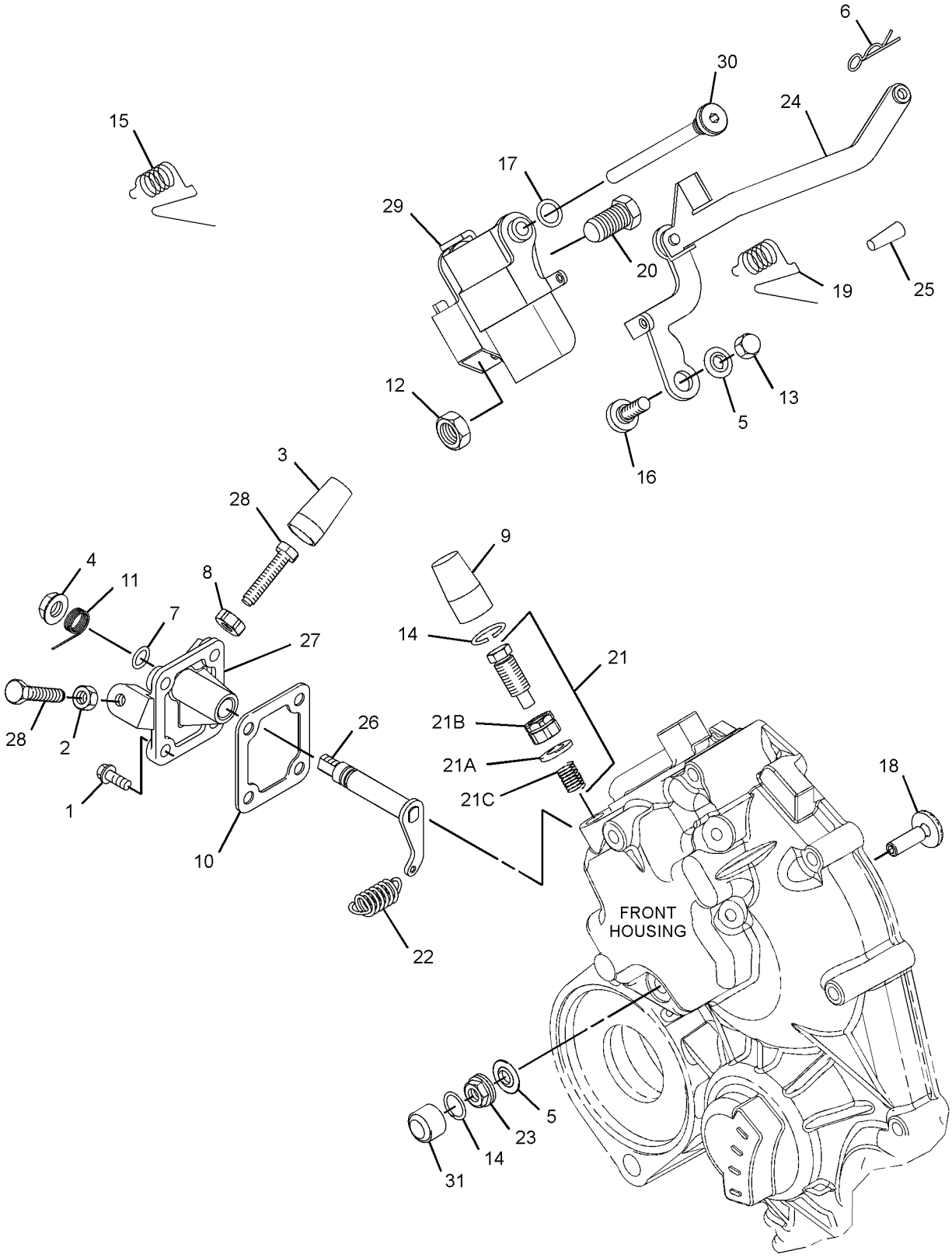

GRAPHIC #1 <END> g06174310

364-2742 CONTROL GP-GOVERNOR

SMCS-1265, 1276 **i07167223**

NOTE	REF NO	GRAPHIC REF	PART NUMBER	QTY	PART NAME 1 2 3 4 5 6 (PRODUCT LEVEL)	SEE PAGE
M	1	1	**106-8916**	4	BOLT (M6X1X16-MM)	
M	2	1	**5C-2890**	1	NUT (M6X1-THD)	
	3	1	**139-5511**	1	CAP (TAMPER RESISTANT)	
M	4	1	**153-5592**	1	NUT (M8X1.25-THD)	
	5	1	**153-6415**	2	WASHER (SEAL)	
	6	1	**153-7983**	1	PIN	
	7	1	**095-1574**	1	SEAL-O-RING	
M	8	1	**162-2207**	1	NUT (M6X1-THD)	
	9	1	**217-7115**	1	CAP (TAMPER RESISTANT)	
	10	1	**423-7724**	1	GASKET	
	11	1	**308-1882**	1	SPRING	
M	12	1	**308-1889**	1	NUT (M10X1.25-THD)	
M	13	1	**308-1892**	1	NUT (M6X1-THD)	
C	14	1	**308-1897**	1	RING	
	15	1	**336-2965**	1	SPRING	
	16	1	**308-4266**	1	SHAFT	
	17	1	**309-6729**	1	SEAL-O-RING	
M	18	1	**495-0737**	1	BOLT (M6X0.5X19.5-MM)	
	19	1	**311-0655**	1	SPRING	
M	20	1	**313-2025**	1	BOLT-SPECIAL (M10X1.25-MM THD)	
	21	1	**315-5236**	1	BOLT AS	
	21A	1	**153-7987**	1	WASHER (9.2X17X1.8-MM THK)	
M	21B	1	**191-9297**	1	NUT (M10X1.25-THD)	
	21C	1	**315-5235**	1	SPRING	
	22	1	**364-7487**	1	SPRING	
C	23	1	**502-9478**	1	NUT (TAMPER RESISTANT)	
	24	1	**324-3400**	1	LEVER AS-CONTROL	
	25	1	**330-9189**	1	PLUG	
	26	1	**334-0732**	1	ARM (FRONT HOUSING)	
	27	1	**335-5578**	1	BRACKET	
M	28	1	**369-4486**	2	BOLT (M6X1X35-MM)	
	29	1	**390-3729**	1	LEVER-CONTROL	
	30	1	**390-3731**	1	SHAFT	
C	31	1	**503-9707**	1	CAP	
C	32	1	**503-9731**	1	SHROUD	
C	33	1	**502-5421**	1	PIN	

C - CHANGE FROM PREVIOUS TYPE
M - METRIC PART

364-2742 **CONTROL GP-GOVERNOR (**contd.**)** **i07167223**

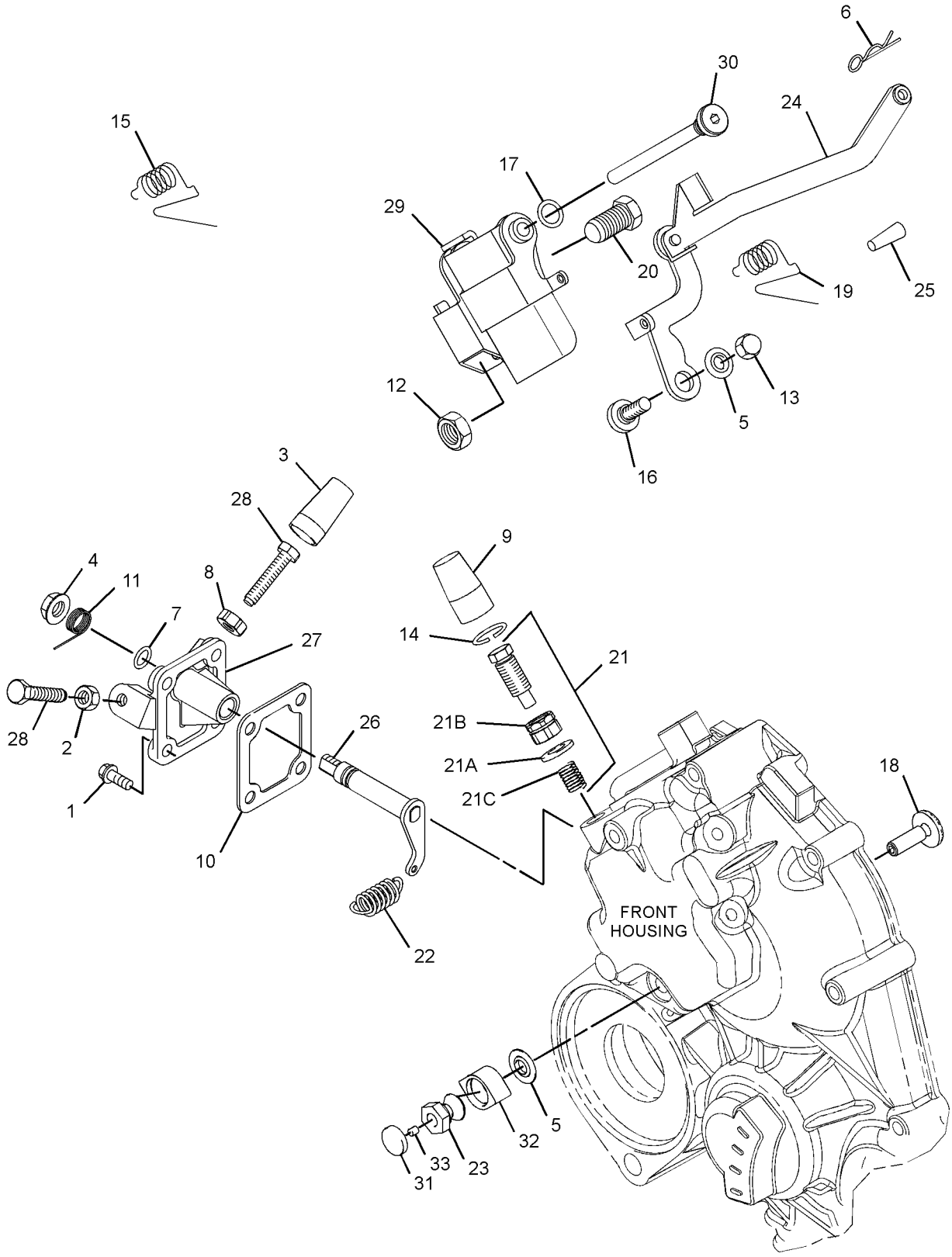

GRAPHIC #1 <END> g06242101

308-5704 FILTER GP-FUEL

SMCS-1261 **i02979431**

NOTE	REF NO	GRAPHIC REF	PART NUMBER	QTY	PART NAME 1 2 3 4 5 6 (PRODUCT LEVEL)	SEE PAGE
	1	1	**276-1804**	1	FILTER GP-FUEL	
	1A	1	**276-1806**	1	FILTER ELEMENT-FUEL (FILTER)	
	1B	1	**302-7776**	1	BOWL-FUEL FILTER	
	1C	1	**302-7777**	3	PLUG-DRAIN (FUEL FILTER)	
	1D	1	**302-7778**	1	SEAL	

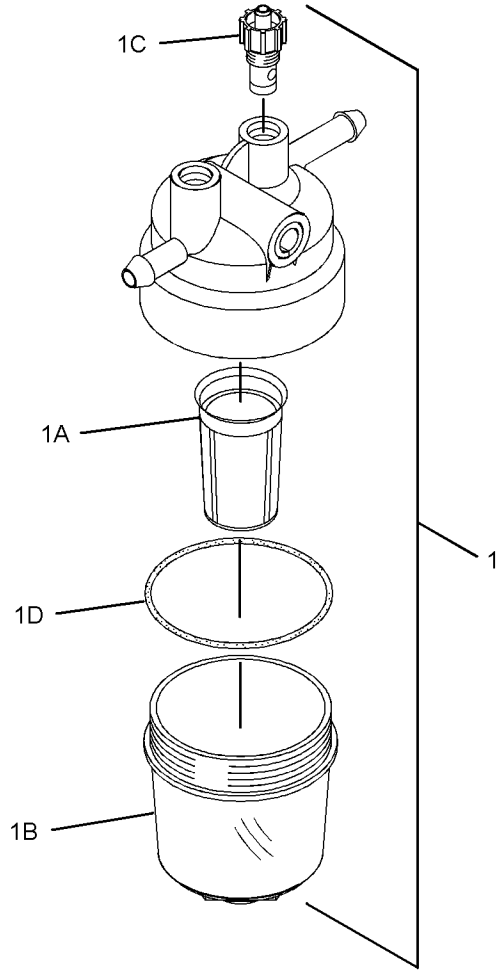

GRAPHIC #1 <END> g01363080

311-5814 GOVERNOR GP

PART OF 435-1631 ENGINE AR

TYPE 1

SMCS-1264, 1908 **i05876047**

NOTE	REF NO	GRAPHIC REF	PART NUMBER	QTY	PART NAME 1 2 3 4 5 6 (PRODUCT LEVEL)	SEE PAGE
M	1	1	**5C-2890**	1	NUT (M6X1-THD)	
	2	1	**139-5511**	1	CAP (TAMPER RESISTANT)	
M	3	1	**153-5592**	1	NUT (M8X1.25-THD)	
	4	1	**153-6415**	2	WASHER (SEAL)	
	5	1	**153-7983**	1	PIN	
	6	1	**095-1574**	1	SEAL-O-RING	
M	7	1	**369-4486**	2	BOLT (M6X1X35-MM)	
M	8	1	**162-2207**	1	NUT (M6X1-THD)	
M	9	1	**183-3572**	4	BOLT (M6X1X16-MM)	
	10	1	**217-7115**	1	CAP (TAMPER RESISTANT)	
	11	1	**335-5578**	1	BRACKET	
	12	1	**423-7724**	1	GASKET	
	13	1	**334-0732**	1	ARM (FRONT HOUSING)	
	14	1	**308-1882**	1	SPRING	
	15	1	**390-3729**	1	LEVER-CONTROL	
M	16	1	**308-1892**	1	NUT (M6X1-THD)	
	17	1	**313-5832**	1	BOLT AS	
	17A	1	**153-7987**	1	WASHER (9.2X17X1.8-MM THK)	
M	17B	1	**191-9297**	1	NUT (M10X1.25-THD)	
	17C	1	**313-5833**	1	SPRING	
	18	1	**308-1897**	2	RING	
	19	1	**425-7065**	1	CAP-TAMPER PROOF	
	20	1	**321-4249**	1	NUT	
M	21	1	**308-1889**	1	NUT (M10X1.25-THD)	
	22	1	**311-9622**	1	SPRING	
	23	1	**308-4266**	1	SHAFT	
	24	1	**390-3731**	1	SHAFT	
	25	1	**309-6729**	1	SEAL-O-RING	
	26	1	**309-6732**	1	BOLT	
	27	1	**311-0655**	1	SPRING	
	28	1	**324-3399**	1	LEVER-CONTROL	
	29	1	**336-2965**	1	SPRING	
	30	1	**330-9189**	1	PLUG	
	31	1	**354-7429**	1	GOVERNOR GP-ANGLEICH (TIMING)	

M - METRIC PART

311-5814 **GOVERNOR GP (**contd.**)** **i05876047**

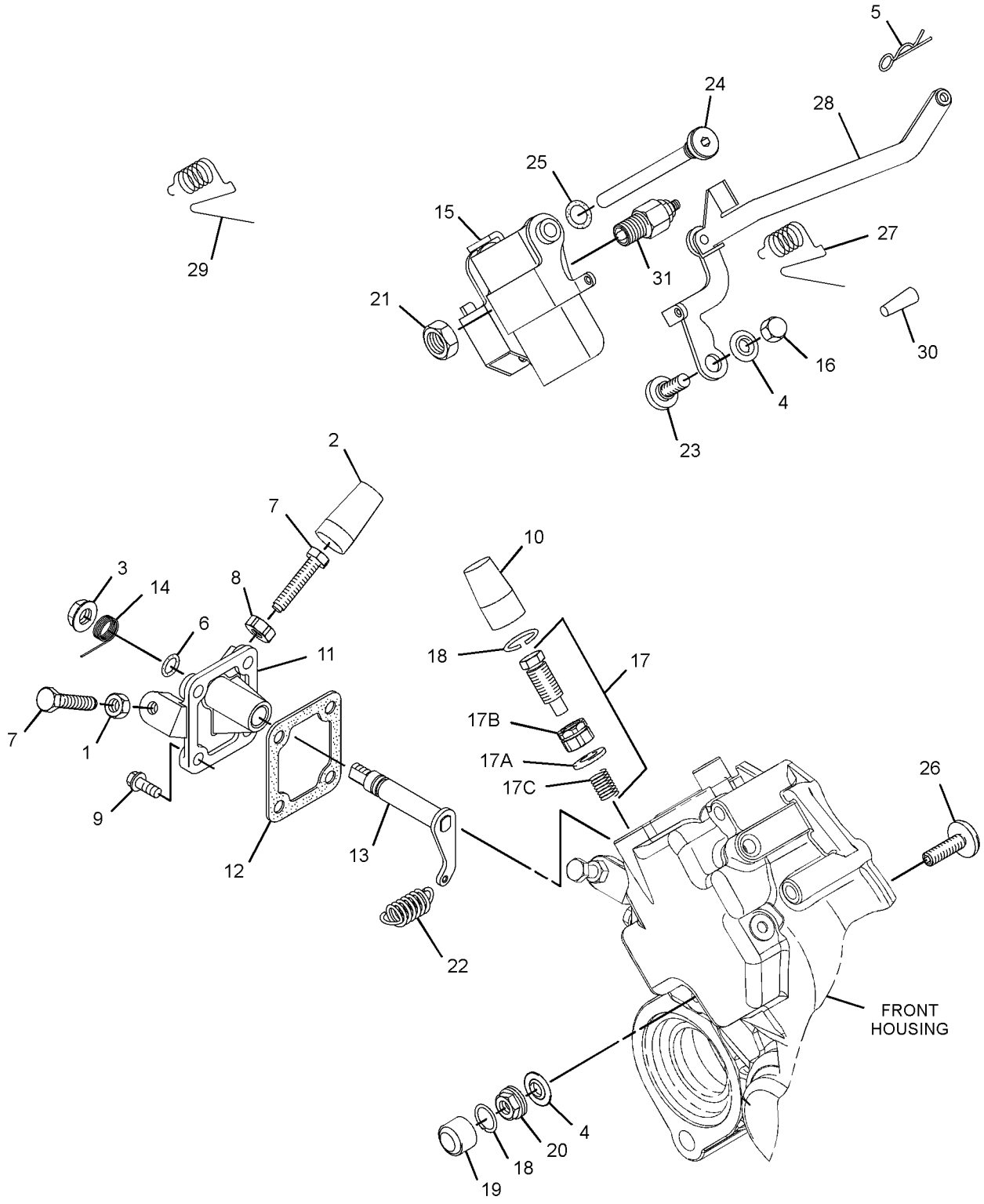

GRAPHIC #1 <END> g03720520

311-5814 GOVERNOR GP

PART OF 435-1631 ENGINE AR

TYPE 2

SMCS-1264, 1908 **i07157260**

NOTE	REF NO	GRAPHIC REF	PART NUMBER	QTY	PART NAME 1 2 3 4 5 6 (PRODUCT LEVEL)	SEE PAGE
M	1	1	**5C-2890**	1	NUT (M6X1-THD)	
	2	1	**139-5511**	1	CAP (TAMPER RESISTANT)	
M	3	1	**153-5592**	1	NUT (M8X1.25-THD)	
	4	1	**153-6415**	2	WASHER (SEAL)	
	5	1	**153-7983**	1	PIN	
	6	1	**095-1574**	1	SEAL-O-RING	
M	7	1	**369-4486**	2	BOLT (M6X1X35-MM)	
M	8	1	**162-2207**	1	NUT (M6X1-THD)	
M	9	1	**183-3572**	4	BOLT (M6X1X16-MM)	
	10	1	**217-7115**	1	CAP (TAMPER RESISTANT)	
	11	1	**335-5578**	1	BRACKET	
	12	1	**423-7724**	1	GASKET	
	13	1	**334-0732**	1	ARM (FRONT HOUSING)	
	14	1	**308-1882**	1	SPRING	
	15	1	**390-3729**	1	LEVER-CONTROL	
M	16	1	**308-1892**	1	NUT (M6X1-THD)	
	17	1	**313-5832**	1	BOLT AS	
	17A	1	**153-7987**	1	WASHER (9.2X17X1.8-MM THK)	
M	17B	1	**191-9297**	1	NUT (M10X1.25-THD)	
	17C	1	**313-5833**	1	SPRING	
C	18	1	**308-1897**	1	RING	
C	19	1	**503-9707**	1	CAP	
C	20	1	**502-9478**	1	NUT (TAMPER RESISTANT)	
M	21	1	**308-1889**	1	NUT (M10X1.25-THD)	
	22	1	**311-9622**	1	SPRING	
	23	1	**308-4266**	1	SHAFT	
	24	1	**390-3731**	1	SHAFT	
	25	1	**309-6729**	1	SEAL-O-RING	
M	26	1	**495-0737**	1	BOLT (M6X0.5X19.5-MM)	
	27	1	**311-0655**	1	SPRING	
	28	1	**324-3399**	1	LEVER-CONTROL	
	29	1	**336-2965**	1	SPRING	
	30	1	**330-9189**	1	PLUG	
	31	1	**354-7429**	1	GOVERNOR GP-ANGLEICH (TIMING)	
C	32	1	**503-9731**	1	SHROUD	
C	33	1	**502-5421**	1	PIN	

C - CHANGE FROM PREVIOUS TYPE
M - METRIC PART

311-5814 **GOVERNOR GP (**contd.**)** **i07157260**

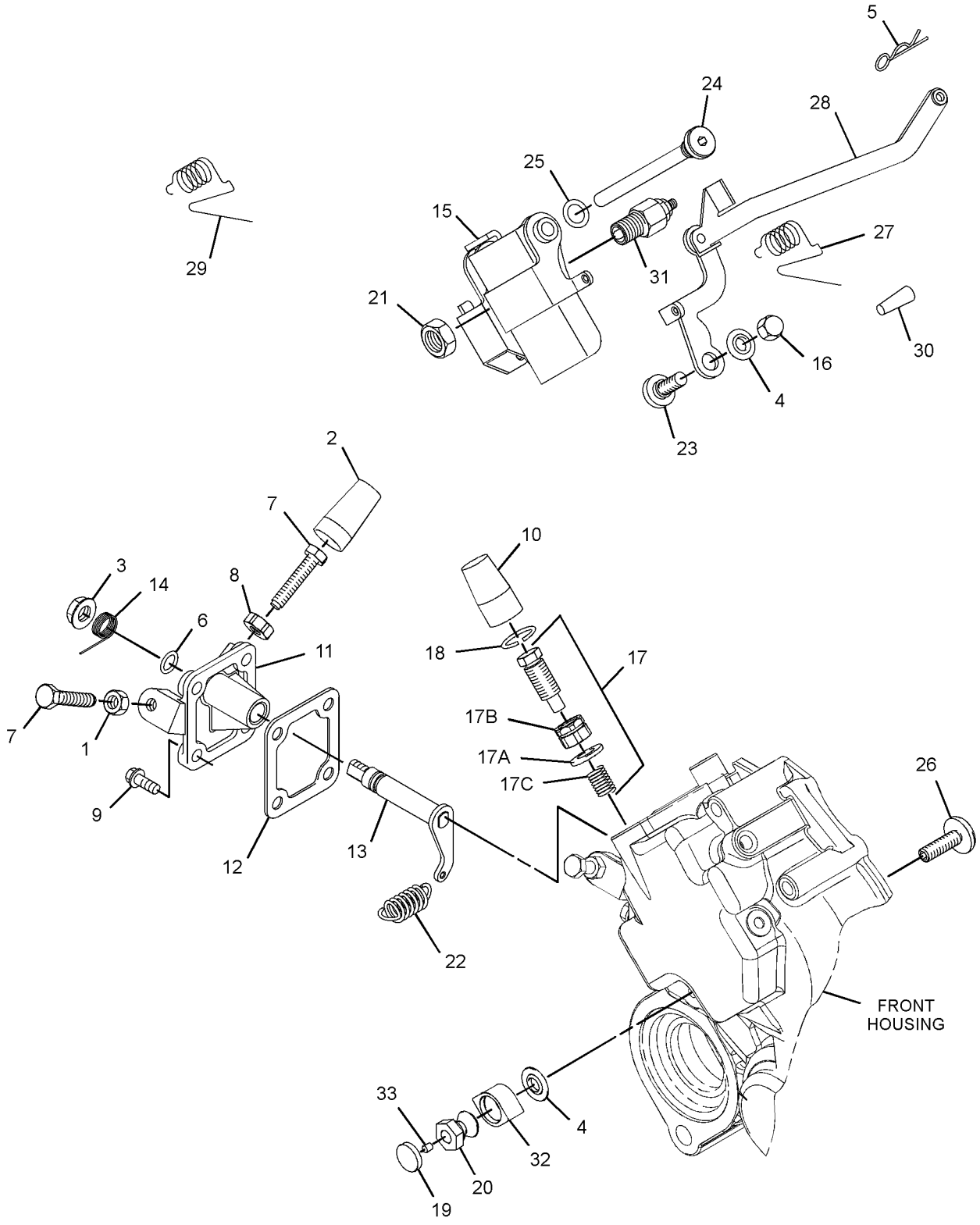

GRAPHIC #1 <END> g06240876

322-0562 GOVERNOR GP

PART OF 435-1654 ENGINE AR-PRIMARY

TYPE 1

SMCS-1264, 1908 **i07053012**

NOTE	REF NO	GRAPHIC REF	PART NUMBER	QTY	PART NAME 1 2 3 4 5 6 (PRODUCT LEVEL)	SEE PAGE
M	1	1	**5C-2890**	1	NUT (M6X1-THD)	
	2	1	**139-5511**	1	CAP (TAMPER RESISTANT)	
M	3	1	**153-5592**	1	NUT (M8X1.25-THD)	
	4	1	**153-6415**	2	WASHER (SEAL)	
	5	1	**153-7983**	1	PIN	
	6	1	**095-1574**	1	SEAL-O-RING	
	7	1	**154-2715**	1	WASHER	
M	8	1	**369-4486**	2	BOLT (M6X1X35-MM)	
M	9	1	**162-2207**	1	NUT (M6X1-THD)	
M	10	1	**106-8916**	4	BOLT (M6X1X16-MM)	
	11	1	**217-7115**	1	CAP (TAMPER RESISTANT)	
	12	1	**335-5578**	1	BRACKET	
	13	1	**423-7724**	1	GASKET	
	14	1	**334-0732**	1	ARM (FRONT HOUSING)	
	15	1	**308-1882**	1	SPRING	
M	16	1	**308-1889**	1	NUT (M10X1.25-THD)	
M	17	1	**308-1892**	1	NUT (M6X1-THD)	
	18	1	**308-1897**	2	RING	
	19	1	**425-7065**	2	CAP-TAMPER PROOF	
	20	1	**321-4249**	1	NUT	
	21	1	**330-9189**	1	PLUG	
	22	1	**308-4266**	1	SHAFT	
	23	1	**390-3731**	1	SHAFT	
M	24	1	**495-0737**	1	BOLT (M6X0.5X19.5-MM)	
	25	1	**319-3250**	1	CONTROL GP-GOVERNOR (ENGINE TIMING)	
	26	1	**324-3400**	1	LEVER AS-CONTROL	
	27	1	**390-3729**	1	LEVER-CONTROL	
	28	1	**315-5236**	1	BOLT AS	
	28A	1	**153-7987**	1	WASHER (9.2X17X1.8-MM THK)	
M	28B	1	**191-9297**	1	NUT (M10X1.25-THD)	
	28C	1	**315-5235**	1	SPRING	
	29	1	**317-7195**	1	SPRING	
	30	1	**308-1875**	1	SEAL-O-RING	

M - METRIC PART

322-0562 **GOVERNOR GP (**contd.**)** **i07053012**

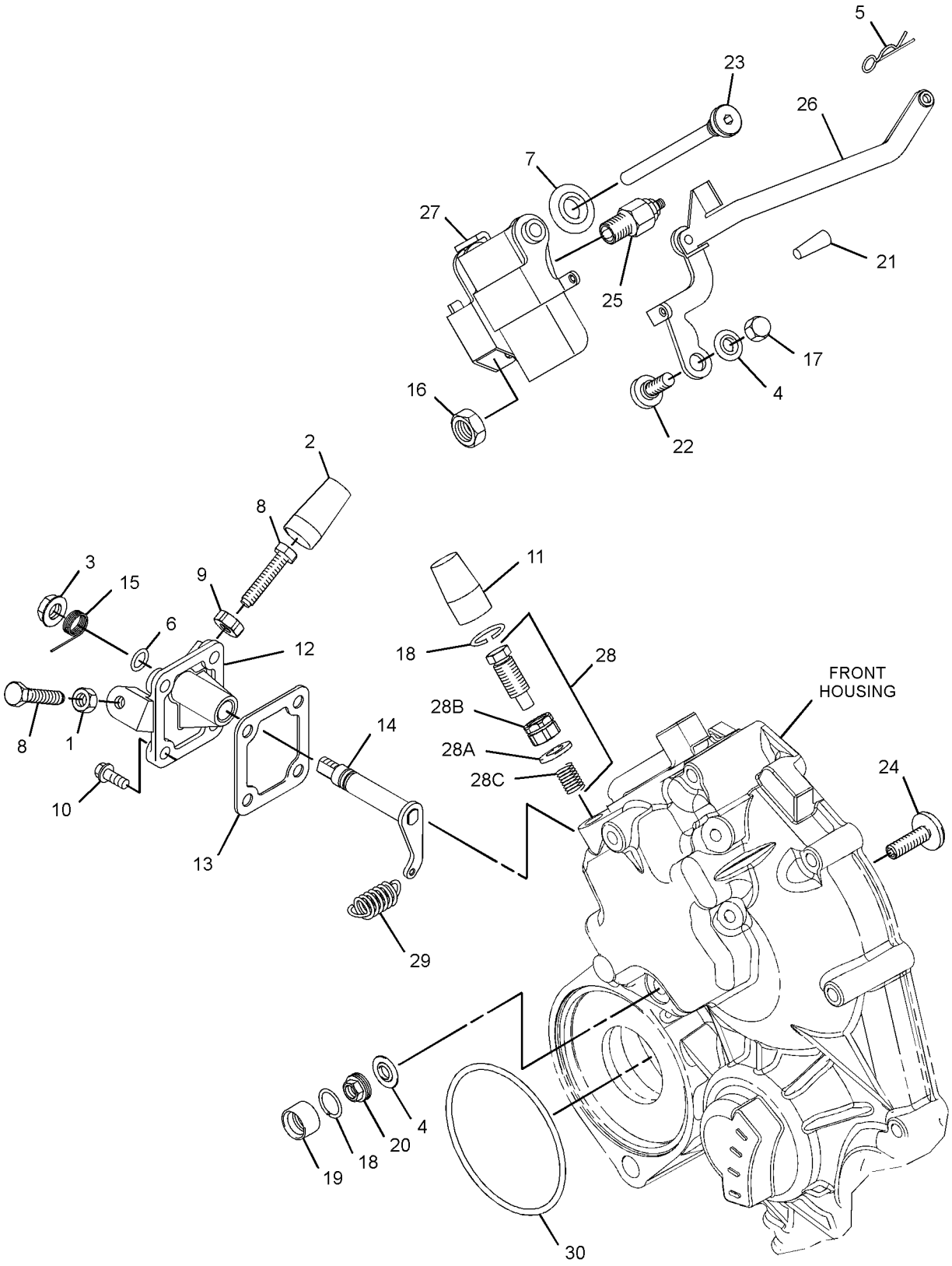

GRAPHIC #1 <END> g06206493

322-0562 GOVERNOR GP

PART OF 435-1654 ENGINE AR-PRIMARY

TYPE 2

SMCS-1264, 1908 **i07157309**

NOTE	REF NO	GRAPHIC REF	PART NUMBER	QTY	PART NAME 1 2 3 4 5 6 (PRODUCT LEVEL)	SEE PAGE
M	1	1	**5C-2890**	1	NUT (M6X1-THD)	
	2	1	**139-5511**	1	CAP (TAMPER RESISTANT)	
M	3	1	**153-5592**	1	NUT (M8X1.25-THD)	
	4	1	**153-6415**	2	WASHER (SEAL)	
	5	1	**153-7983**	1	PIN	
	6	1	**095-1574**	1	SEAL-O-RING	
	7	1	**154-2715**	1	WASHER	
M	8	1	**369-4486**	2	BOLT (M6X1X35-MM)	
M	9	1	**162-2207**	1	NUT (M6X1-THD)	
M	10	1	**106-8916**	4	BOLT (M6X1X16-MM)	
	11	1	**217-7115**	1	CAP (TAMPER RESISTANT)	
	12	1	**335-5578**	1	BRACKET	
	13	1	**423-7724**	1	GASKET	
	14	1	**334-0732**	1	ARM (FRONT HOUSING)	
	15	1	**308-1882**	1	SPRING	
M	16	1	**308-1889**	1	NUT (M10X1.25-THD)	
M	17	1	**308-1892**	1	NUT (M6X1-THD)	
C	18	1	**308-1897**	1	RING	
C	19	1	**503-9707**	1	CAP	
C	20	1	**502-9478**	1	NUT (TAMPER RESISTANT)	
	21	1	**330-9189**	1	PLUG	
	22	1	**308-4266**	1	SHAFT	
	23	1	**390-3731**	1	SHAFT	
M	24	1	**495-0737**	1	BOLT (M6X0.5X19.5-MM)	
	25	1	**319-3250**	1	CONTROL GP-GOVERNOR (ENGINE TIMING)	
	26	1	**324-3400**	1	LEVER AS-CONTROL	
	27	1	**390-3729**	1	LEVER-CONTROL	
	28	1	**315-5236**	1	BOLT AS	
	28A	1	**153-7987**	1	WASHER (9.2X17X1.8-MM THK)	
M	28B	1	**191-9297**	1	NUT (M10X1.25-THD)	
	28C	1	**315-5235**	1	SPRING	
	29	1	**317-7195**	1	SPRING	
	30	1	**308-1875**	1	SEAL-O-RING	
C	31	1	**503-9731**	1	SHROUD	
C	32	1	**502-5421**	1	PIN	

C - CHANGE FROM PREVIOUS TYPE
M - METRIC PART

322-0562 **GOVERNOR GP (**contd.**)** **i07157309**

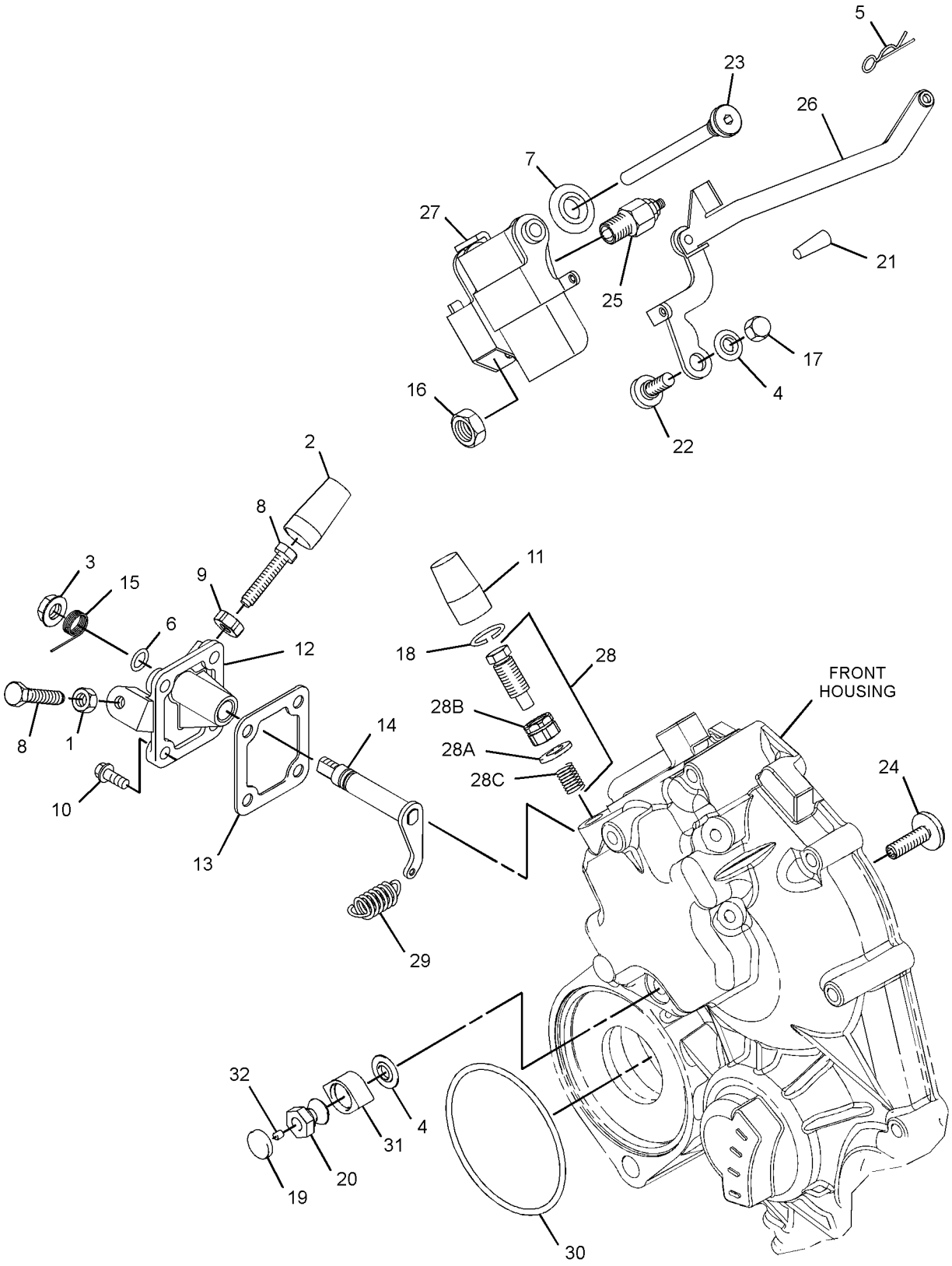

GRAPHIC #1 <END> g06245245

293-3246 PUMP GP-FUEL INJECTION

PART OF 322-1391, 322-3103 PUMP GP-FUEL INJECTION

SMCS-1251, 1290 **i06909464**

NOTE	REF NO	GRAPHIC REF	PART NUMBER	QTY	PART NAME 1 2 3 4 5 6 (PRODUCT LEVEL)	SEE PAGE
	1	1	**205-4726**	1	BOLT-SPECIAL (BANJO)	
	2	1	**205-4727**	2	WASHER	
	3	1	**205-4728**	1	CONNECTOR	
	4	1	**419-7640**	1	SOLENOID AS (12-VOLT) (FUEL SHUTOFF)	

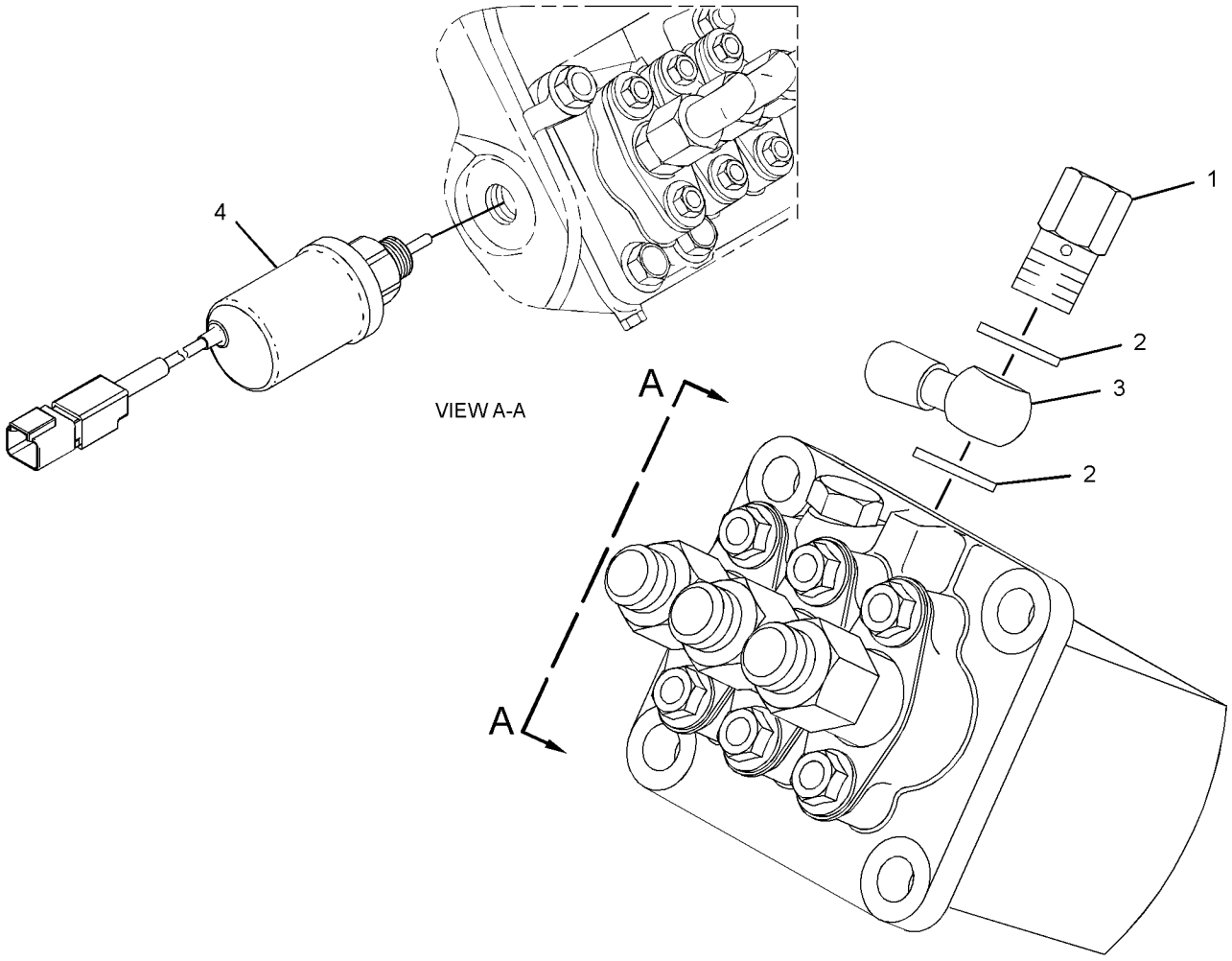

GRAPHIC #1 <END> g06160088

311-1106 PUMP GP-FUEL INJECTION

PART OF 435-1631 ENGINE AR

SMCS-1251, 1290 **i06151710**

NOTE	REF NO	GRAPHIC REF	PART NUMBER	QTY	PART NAME 1 2 3 4 5 6 (PRODUCT LEVEL)	SEE PAGE
M	1	1	**153-5592**	2	NUT (M8X1.25-THD)	
M	2	1	**153-5960**	2	NUT (M6X1-THD)	
M	3	1	**154-2713**	2	BOLT (M8X1.25X20-MM)	
	4	1	**154-2715**	2	WASHER	
	5	1	**426-4357**	3	GASKET	
	6	1	**252-1446**	3	INJECTOR AS-FUEL	
					(EACH INCLUDES)	
	6A	1	**202-1196**	1	WASHER-SPECIAL	
	6B	1	**205-4731**	1	NUT	
	7	1	**160-7034**	1	SHIM (0.9-MM THK)	
B		1	**236-4952**	1	SHIM (0.5-MM THK)	
B		1	**236-4954**	1	SHIM (0.4-MM THK)	
B		1	**311-1169**	1	SHIM (0.35-MM THK) (0.35-MM THK)	
B		1	**236-4959**	1	SHIM (0.3-MM THK)	
B		1	**311-1168**	1	SHIM (0.25-MM THK) (0.25-MM THK)	
B		1	**236-4961**	1	SHIM (0.2-MM THK)	
M	8	1	**183-3353**	2	BOLT (M6X1X25-MM)	
	9	1	**190-3801**	1	LINE	
M	10	1	**190-3803**	1	BOLT (M8X1X20-MM)	
	11	1	**235-5523**	1	LINE AS-FUEL INJECTION (CYL NO. 1)	
	12	1	**235-5524**	1	LINE AS-FUEL INJECTION (CYL NO. 2)	
	13	1	**235-5525**	1	LINE AS-FUEL INJECTION (CYL NO. 3)	
	14	1	**290-8014**	4	CLAMP	
	15	1	**311-3326**	1	PUMP-FUEL INJECTION	

B - USE AS REQUIRED
M - METRIC PART

311-1106 **PUMP GP-FUEL INJECTION (**contd.**)** **i06151710**

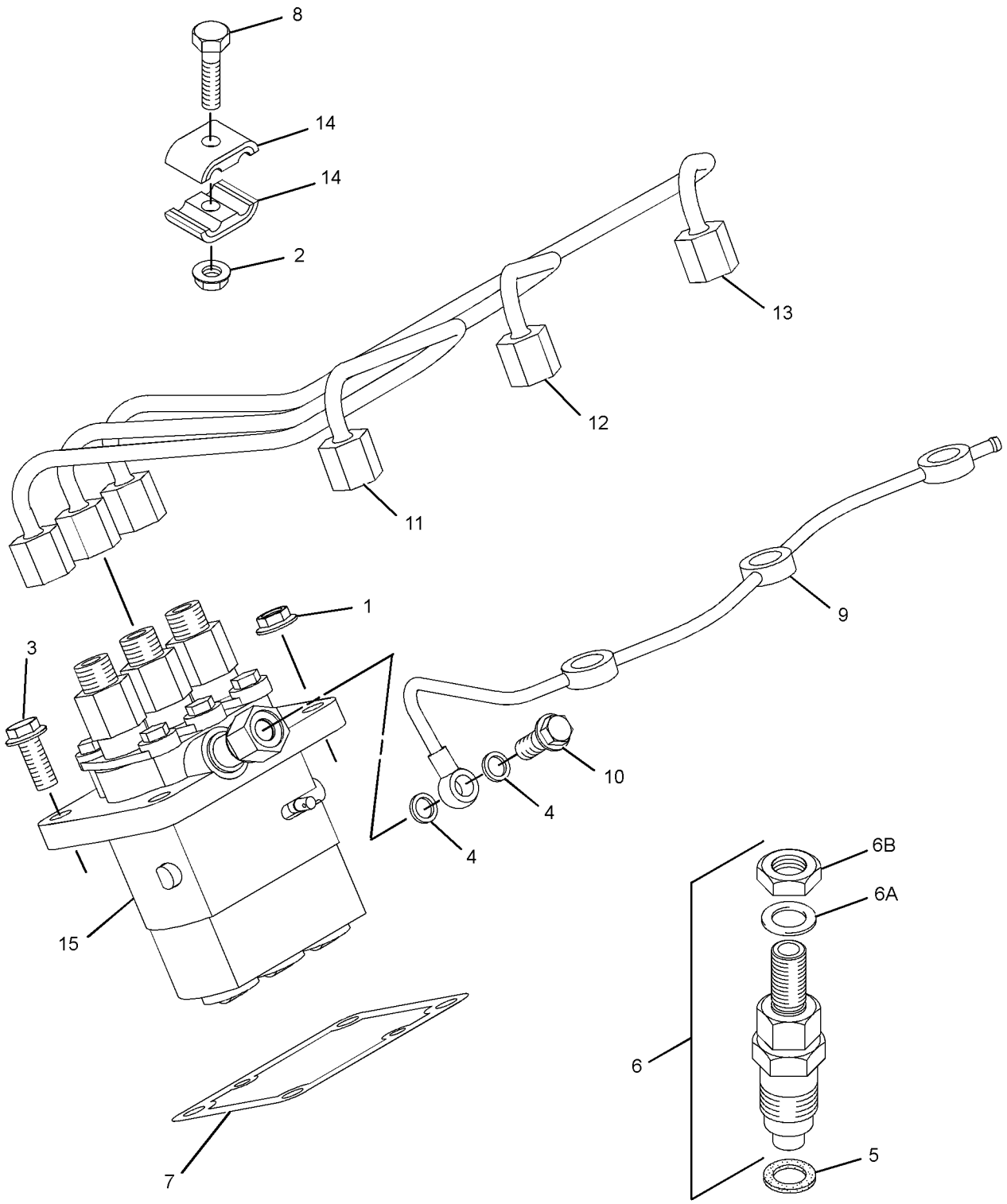

GRAPHIC #1 <END> g01413121

322-0564 PUMP GP-FUEL INJECTION

PART OF 435-1654 ENGINE AR-PRIMARY

SMCS-1251, 1290 **i06151663**

NOTE	REF NO	GRAPHIC REF	PART NUMBER	QTY	PART NAME 1 2 3 4 5 6 (PRODUCT LEVEL)	SEE PAGE
M	1	1	**153-5592**	2	NUT (M8X1.25-THD)	
M	2	1	**153-5960**	2	NUT (M6X1-THD)	
M	3	1	**154-2713**	2	BOLT (M8X1.25X20-MM)	
	4	1	**154-2715**	2	WASHER	
	5	1	**426-4357**	3	GASKET	
	6	1	**252-1446**	3	INJECTOR AS-FUEL	
					(EACH INCLUDES)	
	6A	1	**202-1196**	1	WASHER-SPECIAL	
	6B	1	**205-4731**	1	NUT	
M	7	1	**183-3353**	2	BOLT (M6X1X25-MM)	
	8	1	**190-3801**	1	LINE	
M	9	1	**190-3803**	1	BOLT (M8X1X20-MM)	
	10	1	**235-5523**	1	LINE AS-FUEL INJECTION (CYL NO. 1)	
	11	1	**235-5524**	1	LINE AS-FUEL INJECTION (CYL NO. 2)	
	12	1	**235-5525**	1	LINE AS-FUEL INJECTION (CYL NO. 3)	
	13	1	**290-8014**	4	CLAMP	
	14	1	**311-3326**	1	PUMP-FUEL INJECTION	
B	15	1	**160-7034**	1	SHIM (0.9-MM THK)	
B		1	**236-4952**	1	SHIM (0.5-MM THK)	
B		1	**236-4954**	1	SHIM (0.4-MM THK)	
B		1	**236-4959**	1	SHIM (0.3-MM THK)	
B		1	**236-4961**	1	SHIM (0.2-MM THK)	
B		1	**311-1168**	1	SHIM (0.25-MM THK) (0.25-MM THK)	
B		1	**311-1169**	1	SHIM (0.35-MM THK) (0.35-MM THK)	

B - USE AS REQUIRED
M - METRIC PART

322-0564 **PUMP GP-FUEL INJECTION (**contd.**)** **i06151663**

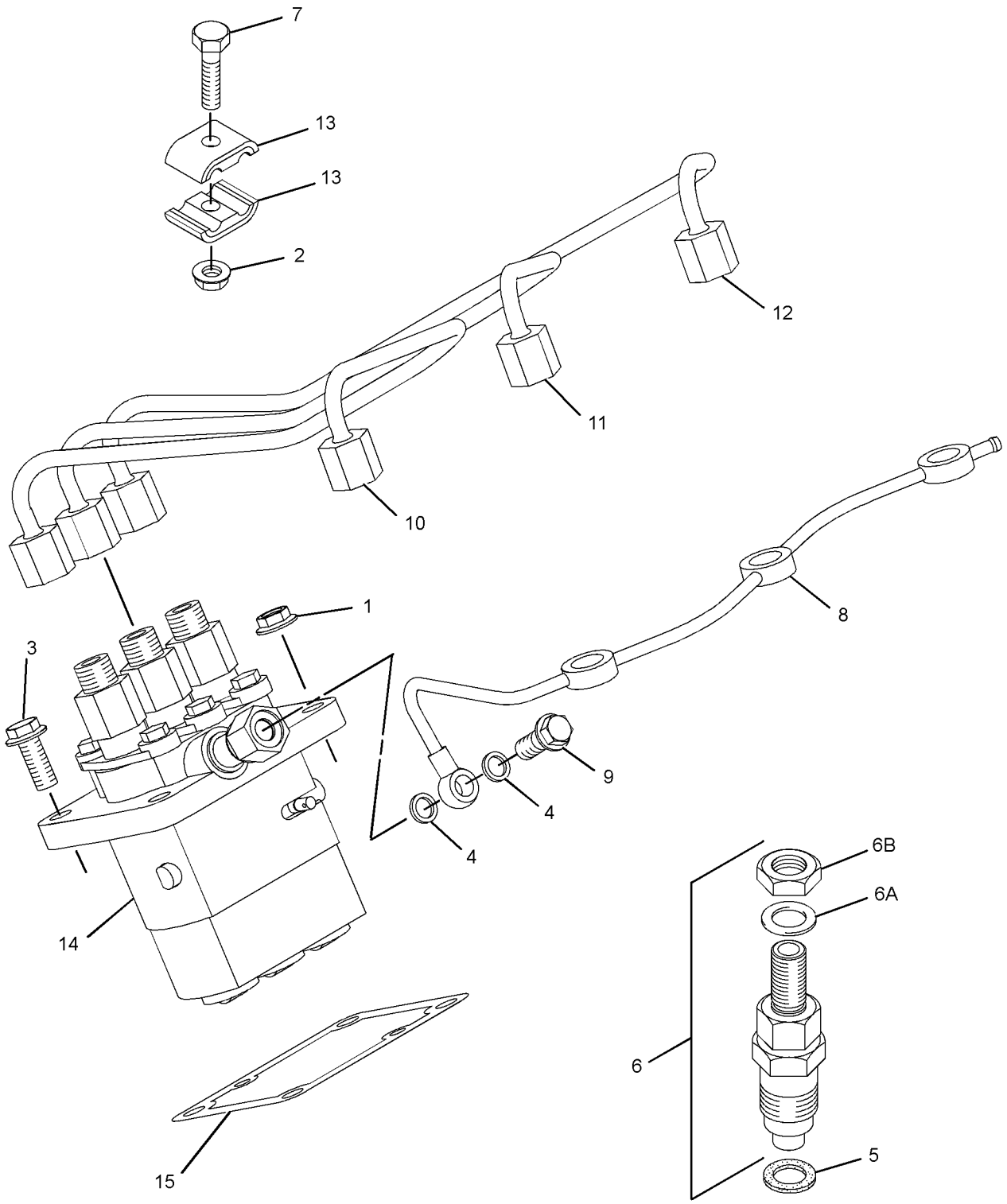

GRAPHIC #1 <END> g01515246

322-1391 PUMP GP-FUEL INJECTION

SMCS-1251, 1290 **i06097216**

NOTE	REF NO	GRAPHIC REF	PART NUMBER	QTY	PART NAME 1 2 3 4 5 6 (PRODUCT LEVEL)	SEE PAGE
M	1	1	**153-5592**	2	NUT (M8X1.25-THD)	
M	2	1	**153-5960**	2	NUT (M6X1-THD)	
M	3	1	**154-2713**	2	BOLT (M8X1.25X20-MM)	
	4	1	**154-2715**	2	WASHER	
	5	1	**426-4357**	3	GASKET	
M	6	1	**183-3353**	2	BOLT (M6X1X25-MM)	
	7	1	**190-3801**	1	LINE	
M	8	1	**190-3803**	1	BOLT (M8X1X20-MM)	
	9	1	**229-2288**	1	LINE AS-FUEL INJECTION (CYL NO. 1)	
	10	1	**229-2289**	1	LINE AS-FUEL INJECTION (CYL NO. 2)	
	11	1	**229-2290**	1	LINE AS-FUEL INJECTION (CYL NO. 3)	
	12	1	**252-1466**	3	INJECTOR AS-FUEL	
	12A	1	**202-1196**	1	WASHER-SPECIAL	
	13	1	**290-8014**	4	CLAMP	
Y	14	1	**293-3246**	1	PUMP GP-FUEL INJECTION	274
B	15	1	**160-7034**	1	SHIM (0.9-MM THK)	
B		1	**236-4952**	1	SHIM (0.5-MM THK)	
B		1	**236-4954**	1	SHIM (0.4-MM THK)	
B		1	**236-4959**	1	SHIM (0.3-MM THK)	
B		1	**236-4961**	1	SHIM (0.2-MM THK)	
B		1	**311-1168**	1	SHIM (0.25-MM THK) (0.25-MM THK)	
B		1	**311-1169**	1	SHIM (0.35-MM THK) (0.35-MM THK)	

B - USE AS REQUIRED
M - METRIC PART
Y - SEPARATE ILLUSTRATION

322-1391 **PUMP GP-FUEL INJECTION (**contd.**)** **i06097216**

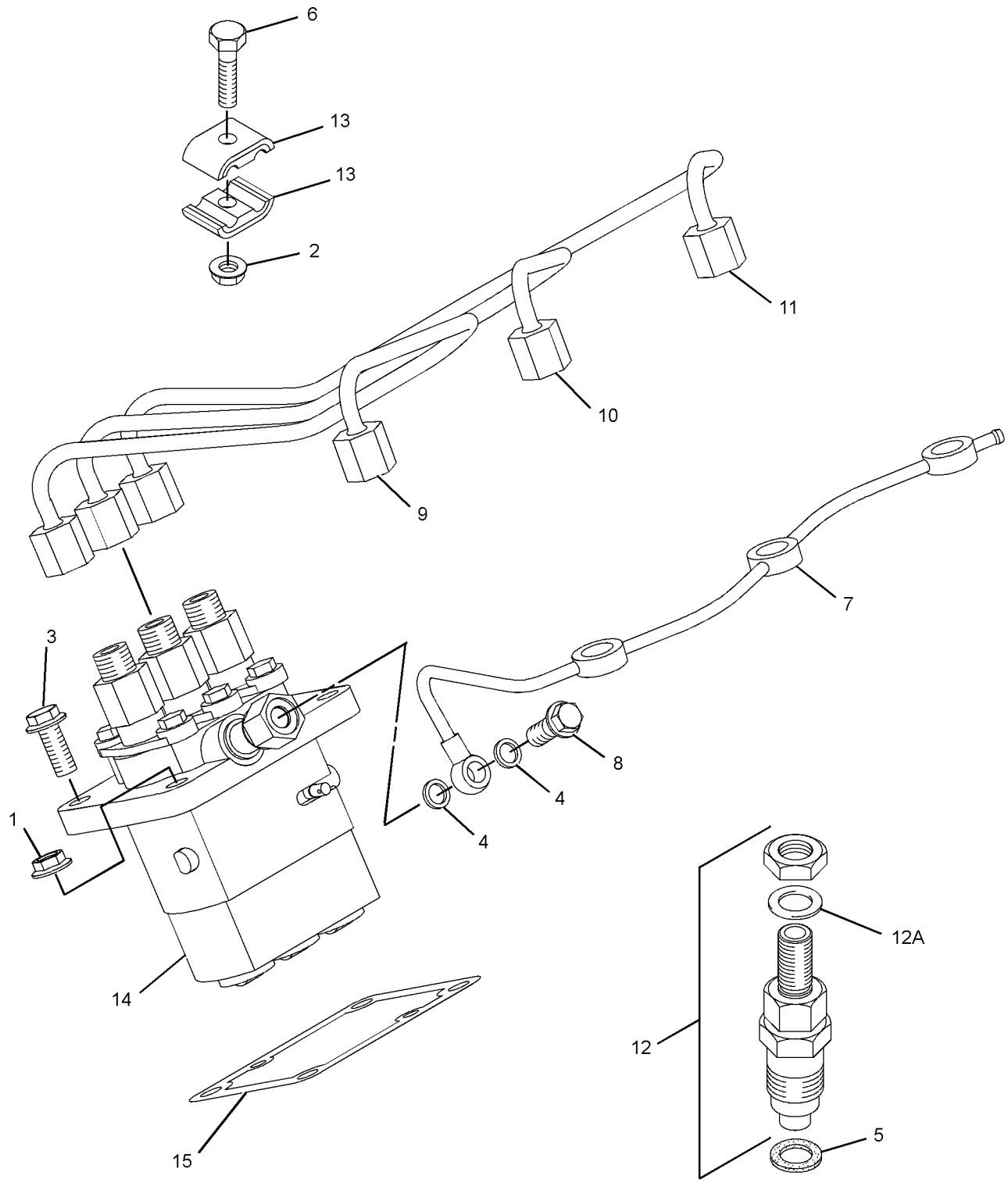

GRAPHIC #1 <END> g01878076

322-3103 PUMP GP-FUEL INJECTION

SMCS-1251, 1290 **i06097217**

NOTE	REF NO	GRAPHIC REF	PART NUMBER	QTY	PART NAME 1 2 3 4 5 6 (PRODUCT LEVEL)	SEE PAGE
M	1	1	**153-5592**	2	NUT (M8X1.25-THD)	
M	2	1	**153-5960**	2	NUT (M6X1-THD)	
M	3	1	**154-2713**	2	BOLT (M8X1.25X20-MM)	
	4	1	**154-2715**	2	WASHER	
	5	1	**426-4357**	3	GASKET	
M	6	1	**183-3353**	2	BOLT (M6X1X25-MM)	
	7	1	**190-3801**	1	LINE	
M	8	1	**190-3803**	1	BOLT (M8X1X20-MM)	
	9	1	**229-2288**	1	LINE AS-FUEL INJECTION (CYL NO. 1)	
	10	1	**229-2289**	1	LINE AS-FUEL INJECTION (CYL NO. 2)	
	11	1	**229-2290**	1	LINE AS-FUEL INJECTION (CYL NO. 3)	
	12	1	**252-1466**	3	INJECTOR AS-FUEL	
					(EACH INCLUDES)	
	12A	1	**202-1196**	1	WASHER-SPECIAL	
	12B	1	**205-4731**	1	NUT	
	13	1	**290-8014**	4	CLAMP	
Y	14	1	**293-3246**	1	PUMP GP-FUEL INJECTION	274
B	15	1	**160-7034**	1	SHIM (0.9-MM THK)	
B		1	**236-4952**	1	SHIM (0.5-MM THK)	
B		1	**236-4954**	1	SHIM (0.4-MM THK)	
B		1	**236-4959**	1	SHIM (0.3-MM THK)	
B		1	**236-4961**	1	SHIM (0.2-MM THK)	
B		1	**311-1168**	1	SHIM (0.25-MM THK) (0.25-MM THK)	
B		1	**311-1169**	1	SHIM (0.35-MM THK) (0.35-MM THK)	

B - USE AS REQUIRED
M - METRIC PART
Y - SEPARATE ILLUSTRATION

322-3103 **PUMP GP-FUEL INJECTION (**contd.**)** **i06097217**

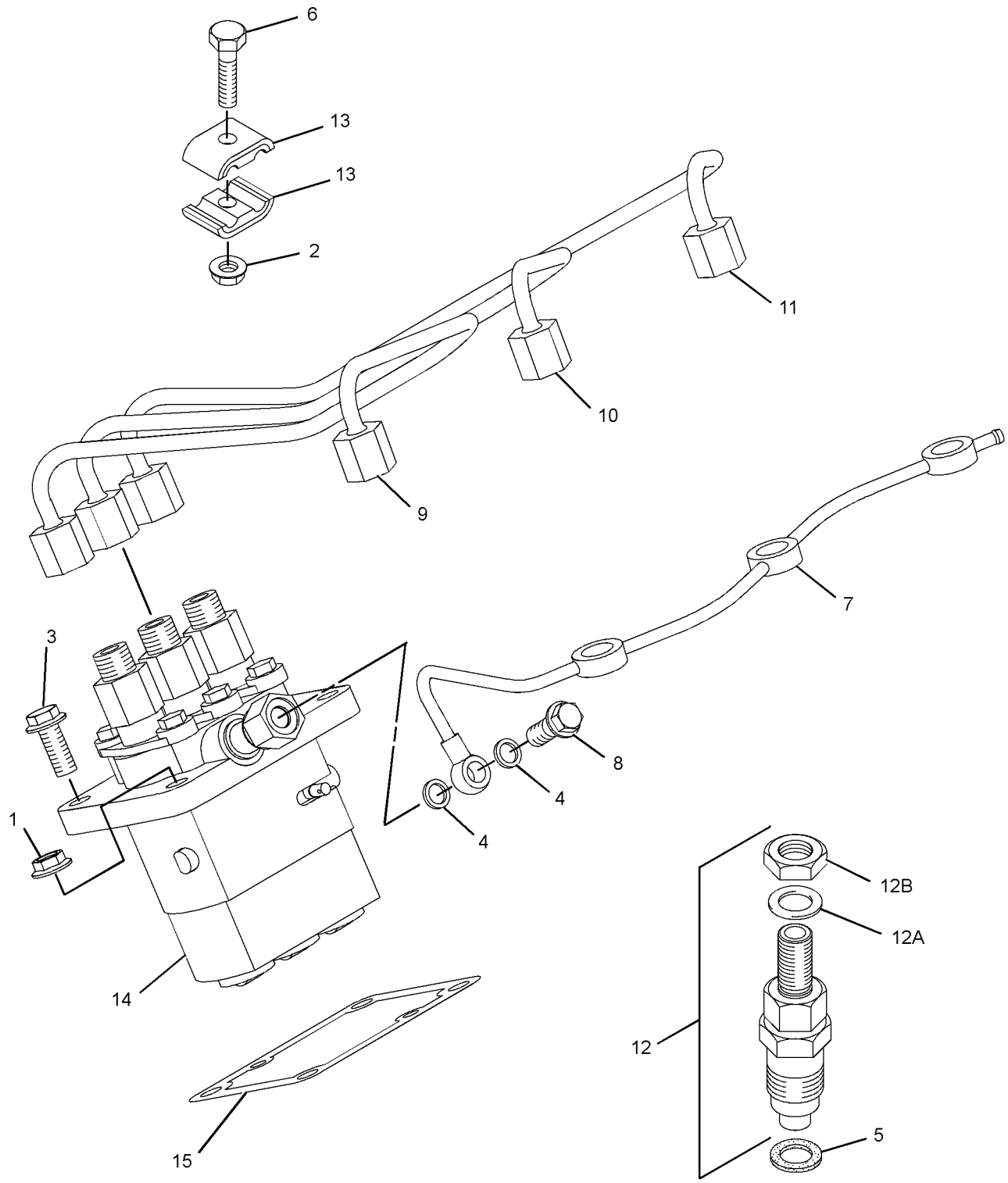

GRAPHIC #1 <END> g01710593

331-4508 PUMP GP-FUEL INJECTION

PART OF 435-1657 ENGINE AR-PRIMARY

SMCS-1251, 1290 **i06238340**

NOTE	REF NO	GRAPHIC REF	PART NUMBER	QTY	PART NAME 1 2 3 4 5 6 (PRODUCT LEVEL)	SEE PAGE
M	1	1	**153-5592**	2	NUT (M8X1.25-THD)	
M	2	1	**153-5960**	2	NUT (M6X1-THD)	
M	3	1	**154-2713**	2	BOLT (M8X1.25X20-MM)	
	4	1	**154-2715**	2	WASHER	
	5	1	**426-4357**	3	GASKET	
	6	1	**252-1446**	3	INJECTOR AS-FUEL	
					(EACH INCLUDES)	
	6A	1	**202-1196**	1	WASHER-SPECIAL	
	6B	1	**205-4731**	1	NUT	
M	7	1	**183-3353**	2	BOLT (M6X1X25-MM)	
	8	1	**190-3801**	1	LINE	
M	9	1	**190-3803**	1	BOLT (M8X1X20-MM)	
	10	1	**235-5523**	1	LINE AS-FUEL INJECTION (CYL NO. 1)	
	11	1	**235-5524**	1	LINE AS-FUEL INJECTION (CYL NO. 2)	
	12	1	**235-5525**	1	LINE AS-FUEL INJECTION (CYL NO. 3)	
	13	1	**290-8014**	4	CLAMP	
	14	1	**311-3326**	1	PUMP-FUEL INJECTION	
B	15	1	**160-7034**	1	SHIM (0.9-MM THK)	
B		1	**236-4952**	1	SHIM (0.5-MM THK)	
B		1	**236-4954**	1	SHIM (0.4-MM THK)	
B		1	**236-4959**	1	SHIM (0.3-MM THK)	
B		1	**236-4961**	1	SHIM (0.2-MM THK)	
B		1	**311-1168**	1	SHIM (0.25-MM THK) (0.25-MM THK)	
B		1	**311-1169**	1	SHIM (0.35-MM THK) (0.35-MM THK)	

B - USE AS REQUIRED
M - METRIC PART

331-4508 **PUMP GP-FUEL INJECTION (**contd.**)** **i06238340**

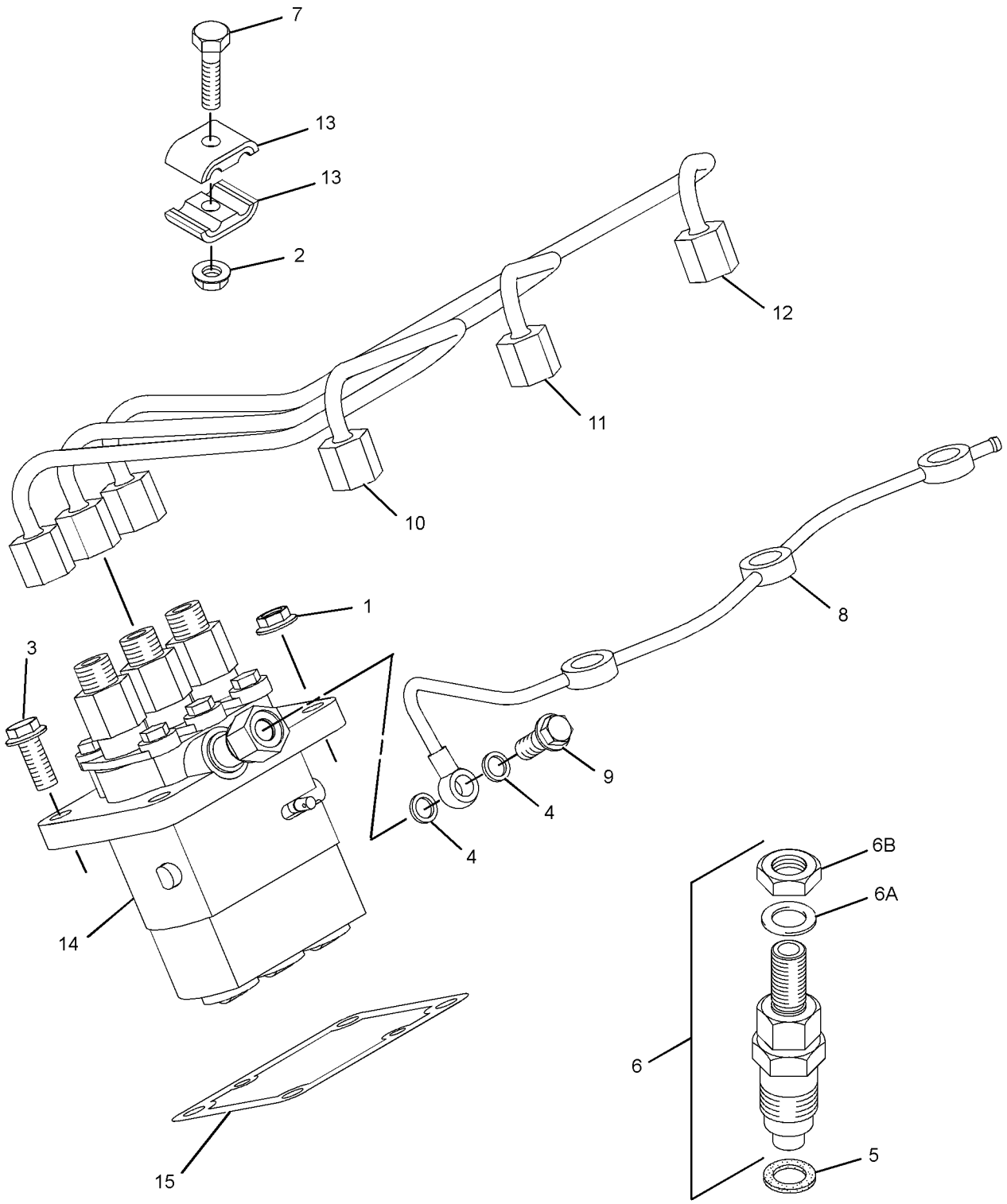

GRAPHIC #1 <END> g01515246

308-2320 PUMP GP-FUEL PRIMING

SMCS-1258 **i05810306**

NOTE	REF NO	GRAPHIC REF	PART NUMBER	QTY	PART NAME 1 2 3 4 5 6 (PRODUCT LEVEL)	SEE PAGE
	1	1	**197-8540**	1	PUMP GP-FUEL PRIMING	

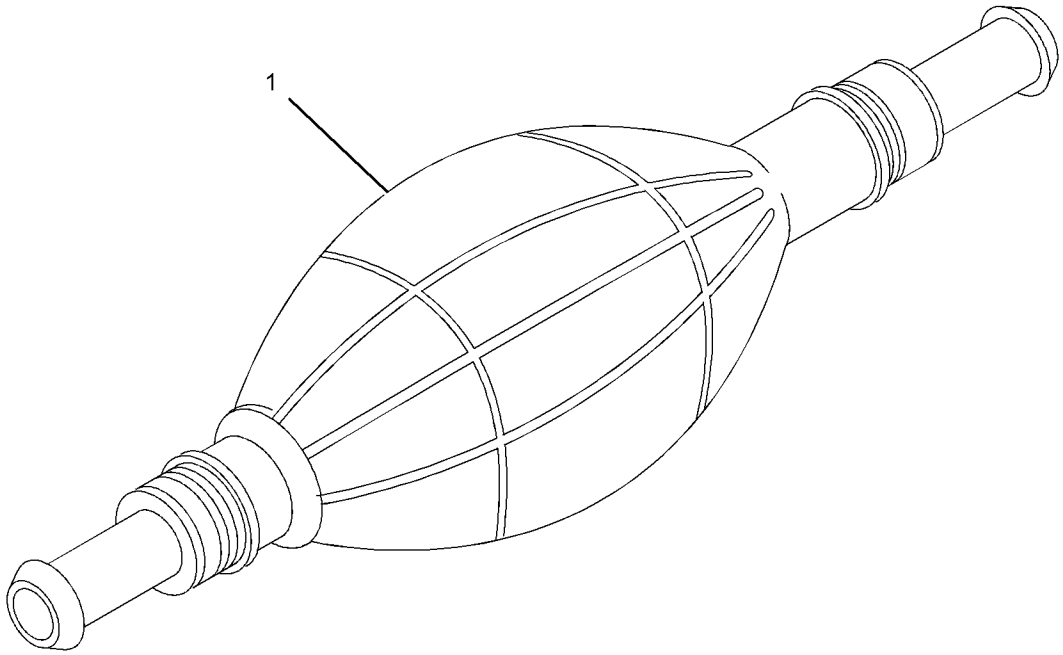

GRAPHIC #1 <END> g01912002

317-6706 PUMP GP-FUEL PRM & PRIM FILTER

SMCS-1256, 1258, 1260 **i03983176**

NOTE	REF NO	GRAPHIC REF	PART NUMBER	QTY	PART NAME 1 2 3 4 5 6 (PRODUCT LEVEL)	SEE PAGE
	1	1	**276-1804**	1	FILTER GP-FUEL (WATER SEPARATOR)	
	1A	1	**276-1806**	1	FILTER ELEMENT-FUEL	
	1B	1	**302-7776**	1	BOWL-FUEL FILTER	
	1C	1	**302-7777**	3	PLUG-DRAIN (WATER SEPARATOR)	
	1D	1	**302-7778**	1	SEAL (WATER SEPARATOR)	
	2	1	**197-8540**	1	PUMP GP-FUEL PRIMING	

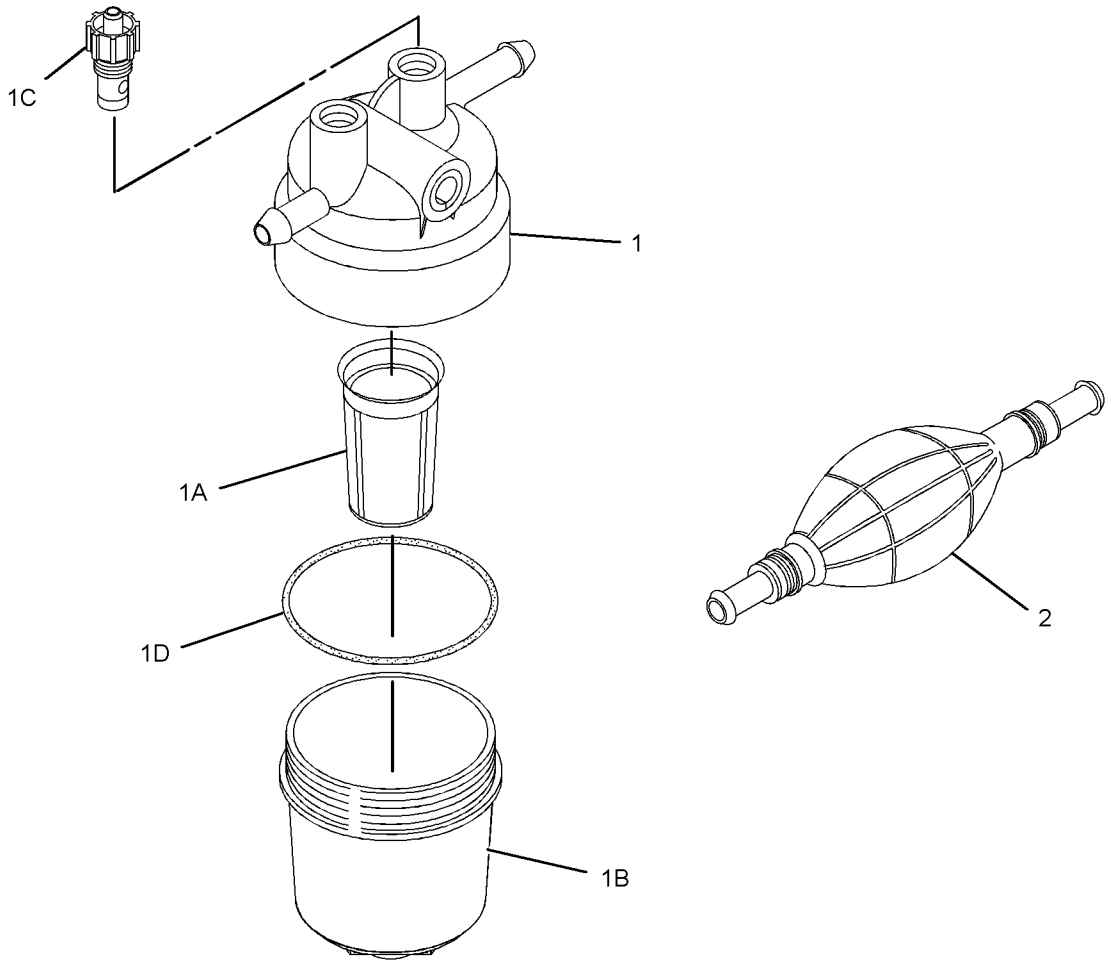

GRAPHIC #1 <END> g01915154

311-1125 PUMP GP-FILTER & FUEL TRANSFER

SMCS-1256 **i07141010**

NOTE	REF NO	GRAPHIC REF	PART NUMBER	QTY	PART NAME 1 2 3 4 5 6 (PRODUCT LEVEL)	SEE PAGE
M	1	1	**6I-0846**	2	BOLT (M6X1X14-MM)	
	2	1	**7W-4694**	1	PLUG	
	3	1	**032-8100**	2	WASHER (0.531X0.718X0.064-IN THK)	
	4	1	**033-7849**	2	PLUG	
	5	2	**358-9226**	1	FILTER AS-FUEL	
	5A	2	**067-6987**	1	FILTER-FUEL	
	6	1	**067-6269**	2	FERRULE	
	7	1	**067-6317**	1	WASHER (0.4X0.566X0.04-IN THK)	
M	8	1	**6I-0593**	2	BOLT (M10X1.5X30-MM)	
	9	1	**311-1174**	1	BRACKET	
	10	1	**154-2403**	2	WASHER	
	11	1	**423-5665**	1	HOSE	
M	12	1	**124-3815**	1	BOLT (M8X1.25X16-MM)	
M	13	1	**155-8085**	2	NUT (M10X1.5-THD)	
	14	1	**329-1292**	4	CLIP-HOSE	
	16	1	**176-7719**	1	SEAL-O-RING	
	17	1	**454-7991**	1	PIPE	
M	18	1	**6I-0217**	1	BOLT (M8X1.25X20-MM)	
	19	1	**295-4070**	1	PUMP AS-FUEL TRANSFER	
	20	1	**302-4187**	2	TUBE	

M - METRIC PART

311-1125 **PUMP GP-FILTER & FUEL TRANSFER** (contd.) **i07141010**

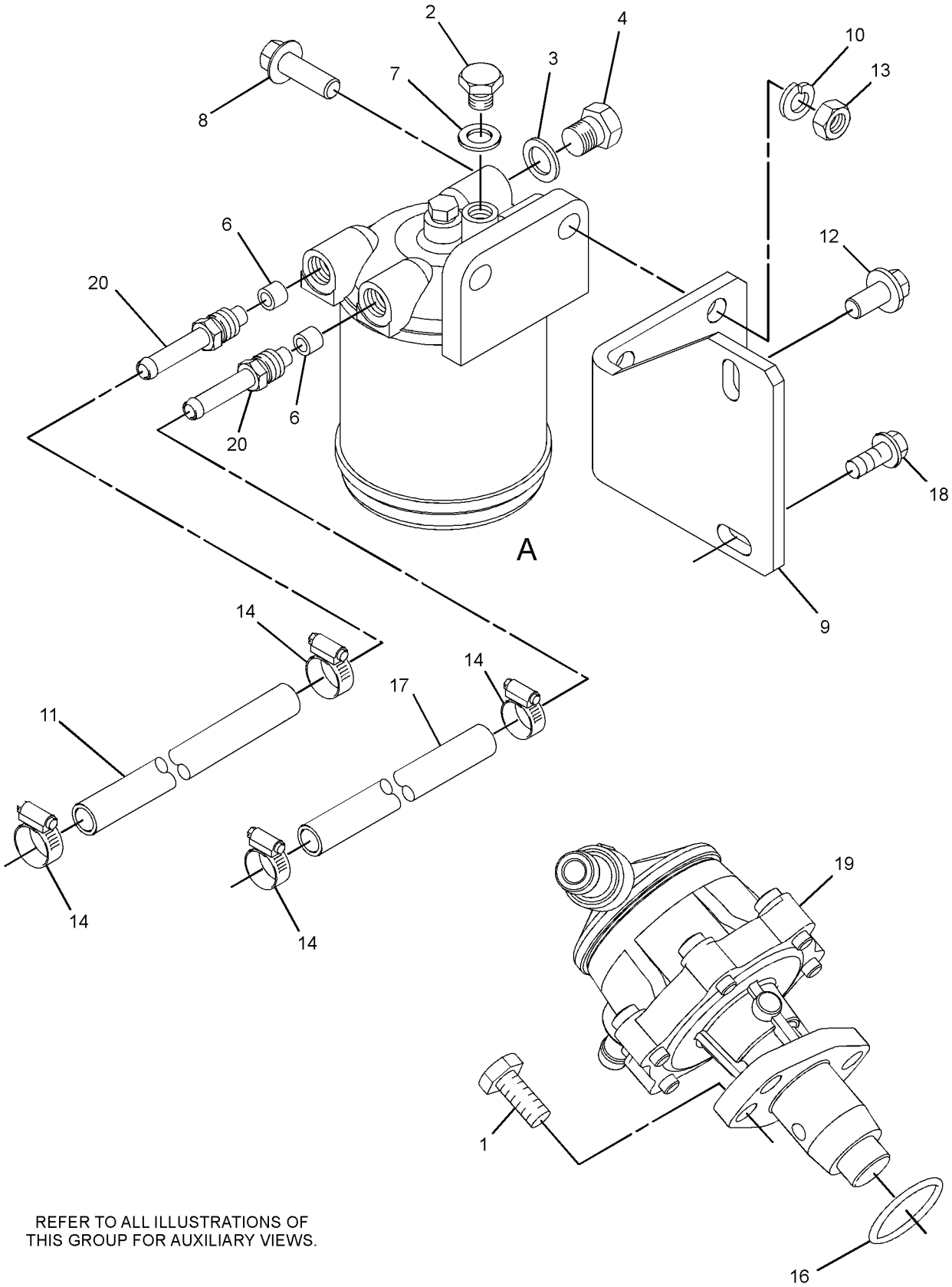

REFER TO ALL ILLUSTRATIONS OF
THIS GROUP FOR AUXILIARY VIEWS.

GRAPHIC #1 g06236858

311-1125 **PUMP GP-FILTER & FUEL TRANSFER (**contd.**)** **i07141010**

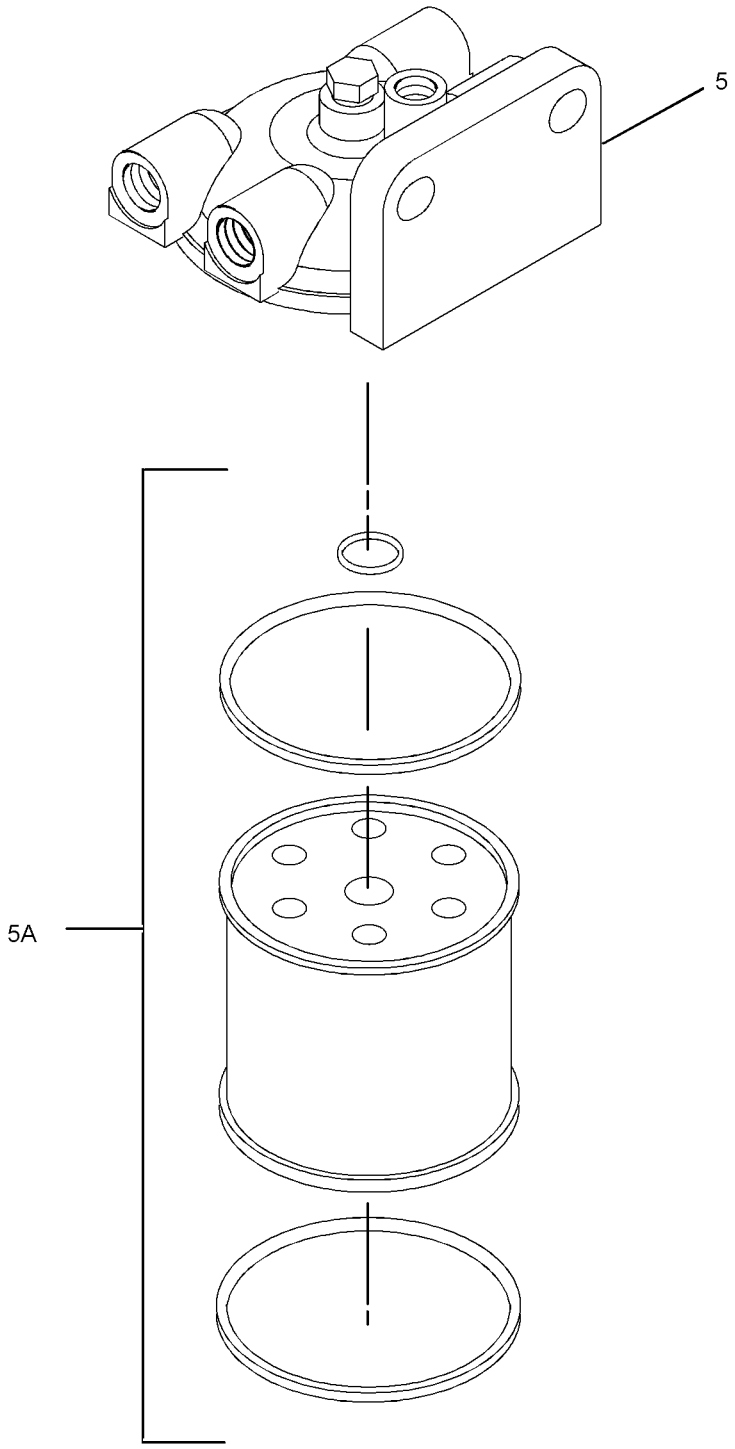

EXPLODED VIEW OF AREA A

GRAPHIC #2 <END> g06145823

315-5266 PUMP GP-FUEL TRANSFER

SMCS-1256 **i06692714**

NOTE	REF NO	GRAPHIC REF	PART NUMBER	QTY	PART NAME 1 2 3 4 5 6 (PRODUCT LEVEL)	SEE PAGE
M	1	1	**6I-0846**	2	BOLT (M6X1X14-MM)	
	2	1	**295-4070**	1	PUMP AS-FUEL TRANSFER	
	3	1	**176-7719**	1	SEAL-O-RING	
M	4	1	**124-3815**	1	BOLT (M8X1.25X16-MM)	

M - METRIC PART

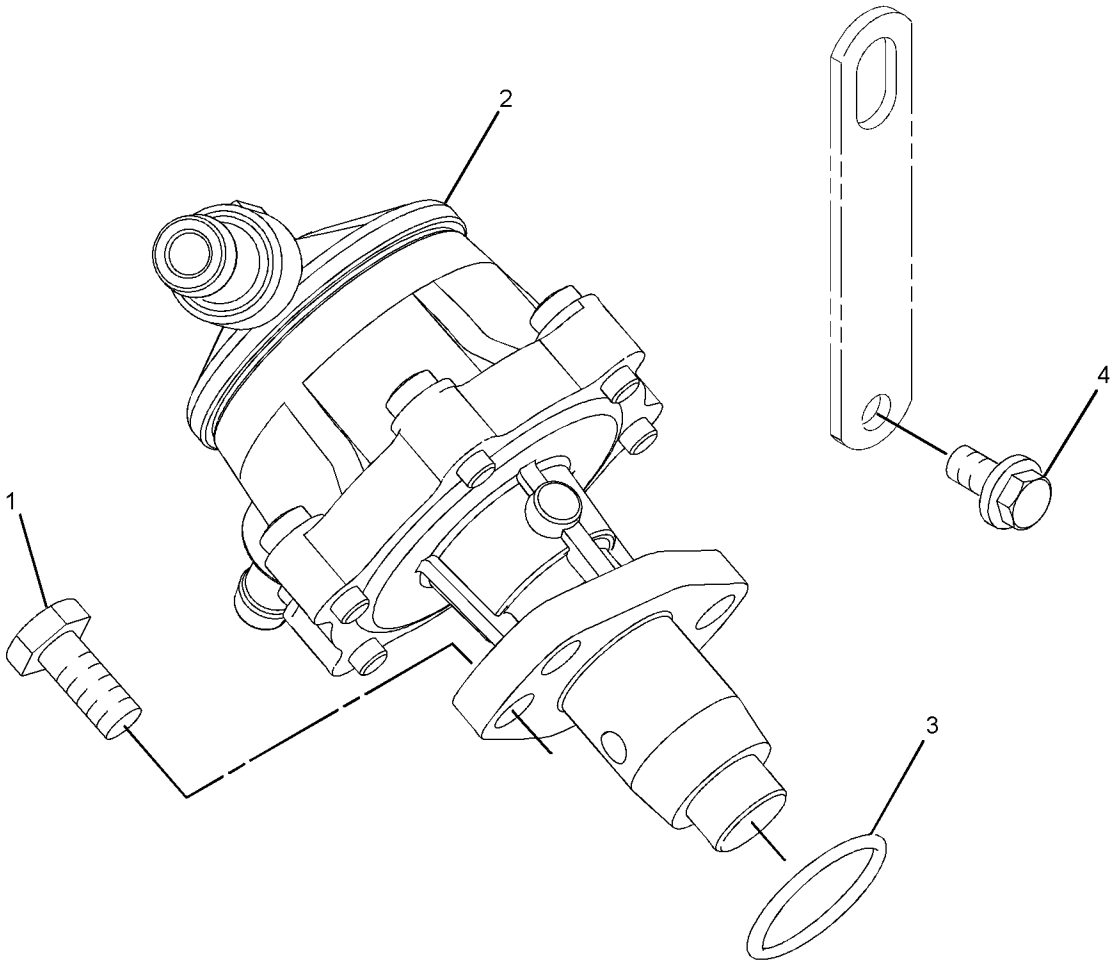

GRAPHIC #1 <END> g06110040

317-0566 PUMP GP-FUEL TRANSFER

SMCS-1256 **i06692777**

NOTE	REF NO	GRAPHIC REF	PART NUMBER	QTY	PART NAME 1 2 3 4 5 6 (PRODUCT LEVEL)	SEE PAGE
M	1	1	**153-5592**	1	NUT (M8X1.25-THD)	
	2	1	**243-6411**	1	FILTER AS-FUEL	
	3	1	**476-2680**	1	BRACKET	
M	4	1	**124-3815**	1	BOLT (M8X1.25X16-MM)	
	5	1	**183-4036**	1	CONNECTOR	
	6	1	**183-4320**	1	PUMP AS-FUEL TRANSFER	

M - METRIC PART

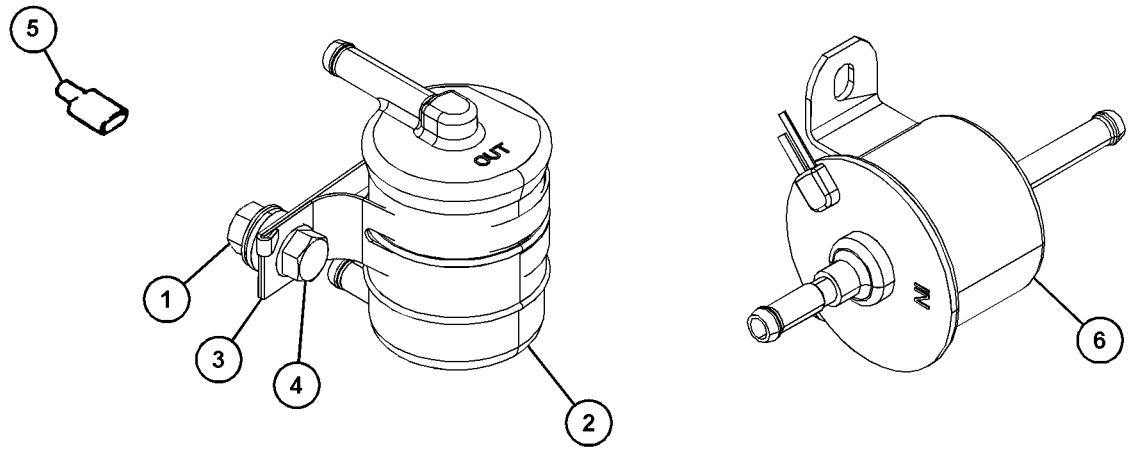

GRAPHIC #1 <END> g06111521

311-1120 ALTERNATOR GP-CHARGING

TYPE 1

SMCS-1405 **i04525445**

NOTE	REF NO	GRAPHIC REF	PART NUMBER	QTY	PART NAME 1 2 3 4 5 6 (PRODUCT LEVEL)	SEE PAGE
M	1	1	**359-9666**	1	BOLT-FLANGE HEAD (M8X1.25X130-MM)	
M	2	1	**180-8579**	1	NUT (M8X1.25-MM THD)	
	3	1	**155-7984**	1	WASHER (8.4X16X1.6-MM THK)	
	4	1	**165-2141**	3	BOLT AS	
	5	1	**168-8999**	1	LEVER	
	6	1	**168-9001**	2	BOLT AS	
	7	1	**168-9002**	1	WASHER (8.4X26X3.2-MM THK)	
	8	1	**246-4267**	1	BRACKET	
	9	1	**349-1368**	1	ALTERNATOR GP-CHARGING	
	10	1	**163-5372**	1	WASHER (8X15.4X4-MM THK)	

M - METRIC PART

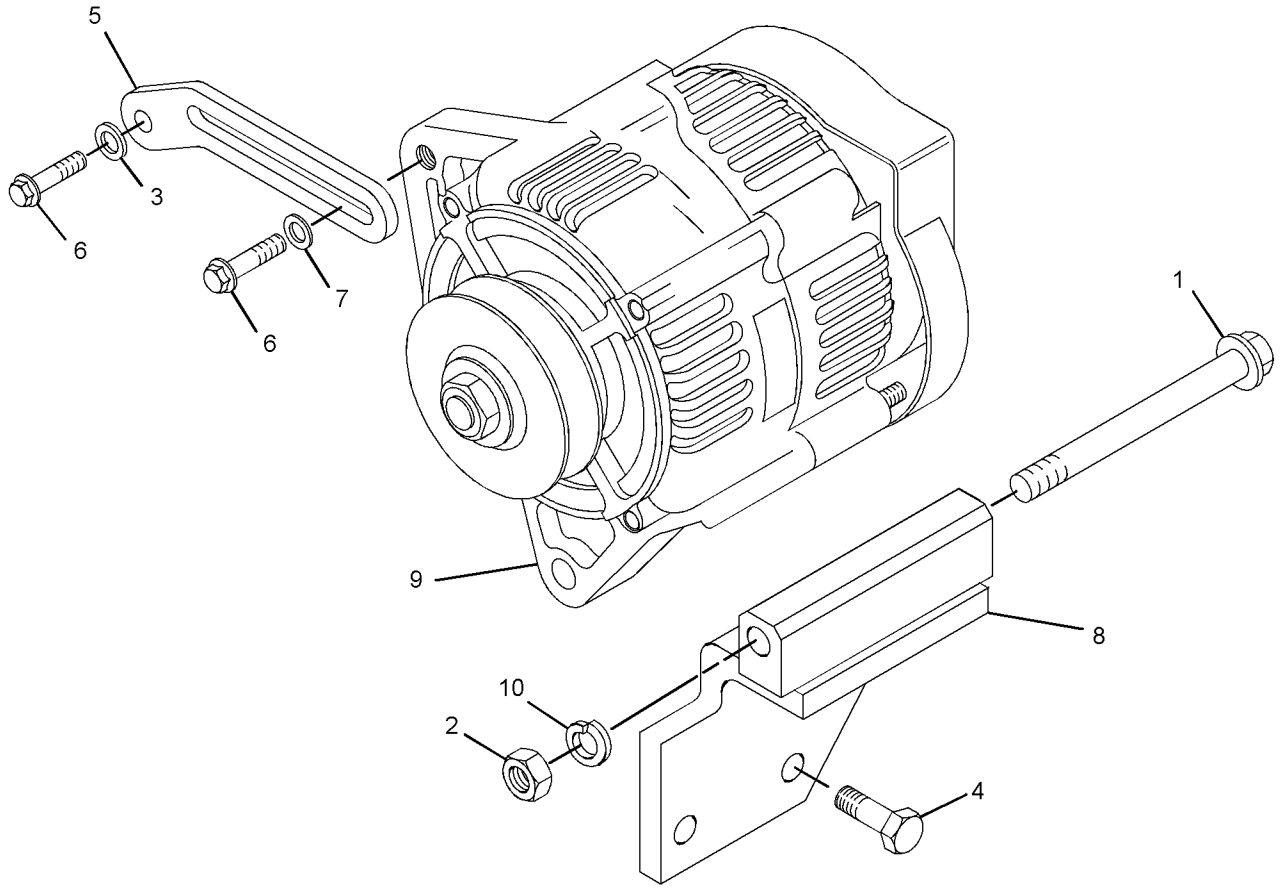

GRAPHIC #1 <END> g02153167

311-1120 ALTERNATOR GP-CHARGING

TYPE 2

SMCS-1405 **i06546062**

NOTE	REF NO	GRAPHIC REF	PART NUMBER	QTY	PART NAME 1 2 3 4 5 6 (PRODUCT LEVEL)	SEE PAGE
M	1	1	**359-9666**	1	BOLT-FLANGE HEAD (M8X1.25X130-MM)	
M	2	1	**180-8579**	1	NUT (M8X1.25-MM THD)	
	3	1	**155-7984**	1	WASHER (8.4X16X1.6-MM THK)	
M	4	1	**124-3815**	3	BOLT (M8X1.25X16-MM)	
	5	1	**168-8999**	1	LEVER	
M	6	1	**6I-0260**	1	BOLT (M8X1.25X25-MM)	
	7	1	**168-9002**	1	WASHER (8.4X26X3.2-MM THK)	
	8	1	**246-4267**	1	BRACKET	
C	9	1	**394-3494**	1	ALTERNATOR AS (12-VOLT, 65-AMPERE)	
	10	1	**163-5372**	1	WASHER (8X15.4X4-MM THK)	
	11	1	**168-9001**	1	BOLT AS	

C - CHANGE FROM PREVIOUS TYPE
M - METRIC PART

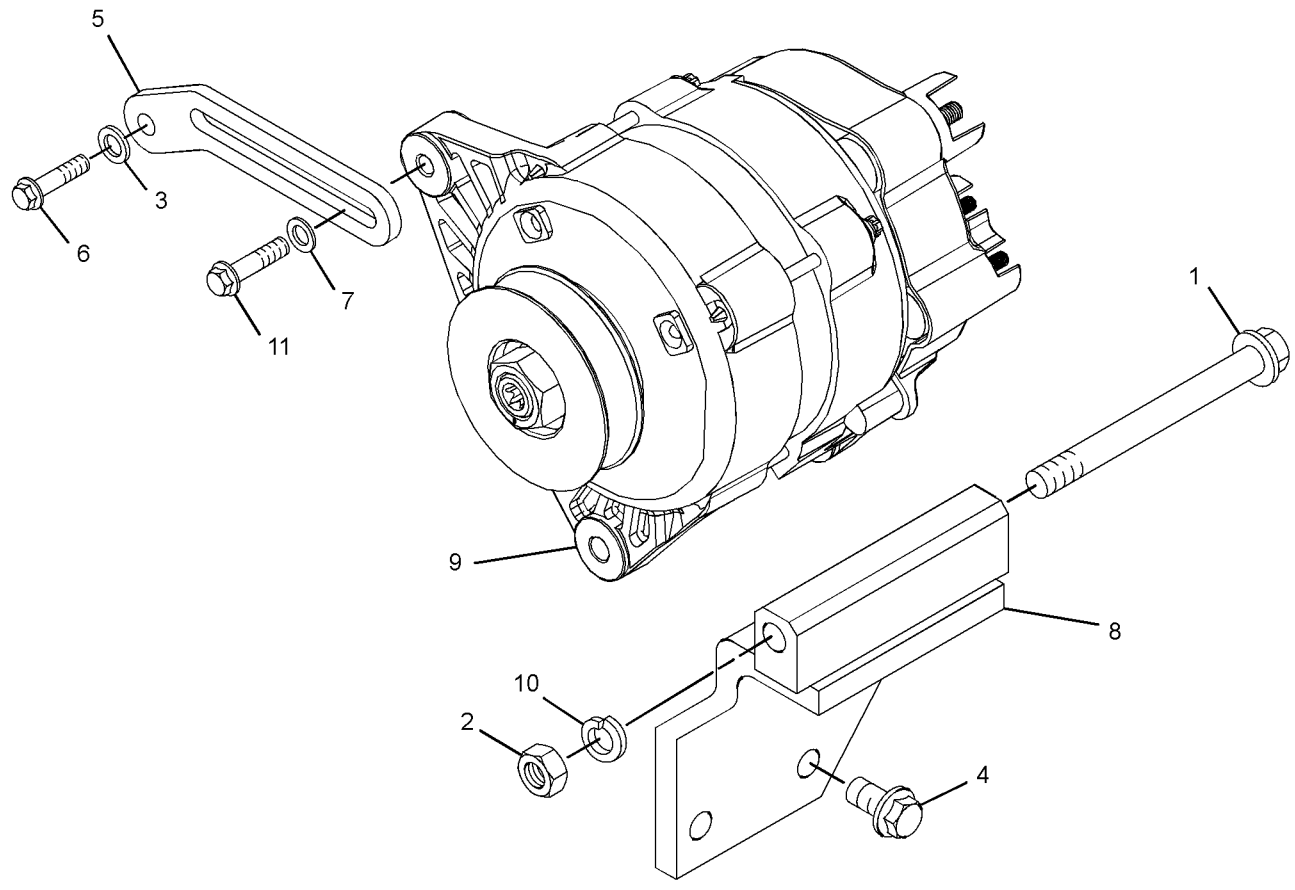

GRAPHIC #1 <END> g06040000

486-3293 ALTERNATOR GP-CHARGING

SMCS-1405 **i07195829**

NOTE	REF NO	GRAPHIC REF	PART NUMBER	QTY	PART NAME 1 2 3 4 5 6 (PRODUCT LEVEL)	SEE PAGE
	1	1	**155-7984**	1	WASHER (8.4X16X1.6-MM THK)	
	2	1	**163-5372**	1	WASHER (8X15.4X4-MM THK)	
M	3	1	**6I-0217**	3	BOLT (M8X1.25X20-MM)	
	4	1	**168-8999**	1	LEVER	
	5	1	**168-9001**	2	BOLT AS	
	6	1	**168-9002**	1	WASHER (8.4X26X3.2-MM THK)	
M	7	1	**180-8579**	1	NUT (M8X1.25-MM THD)	
	8	1	**467-4388**	1	BRACKET	
M	9	1	**359-9666**	1	BOLT-FLANGE HEAD (M8X1.25X130-MM)	
	10	1	**394-3492**	1	ALTERNATOR AS (12-VOLT, 40-AMPERE)	

M - METRIC PART

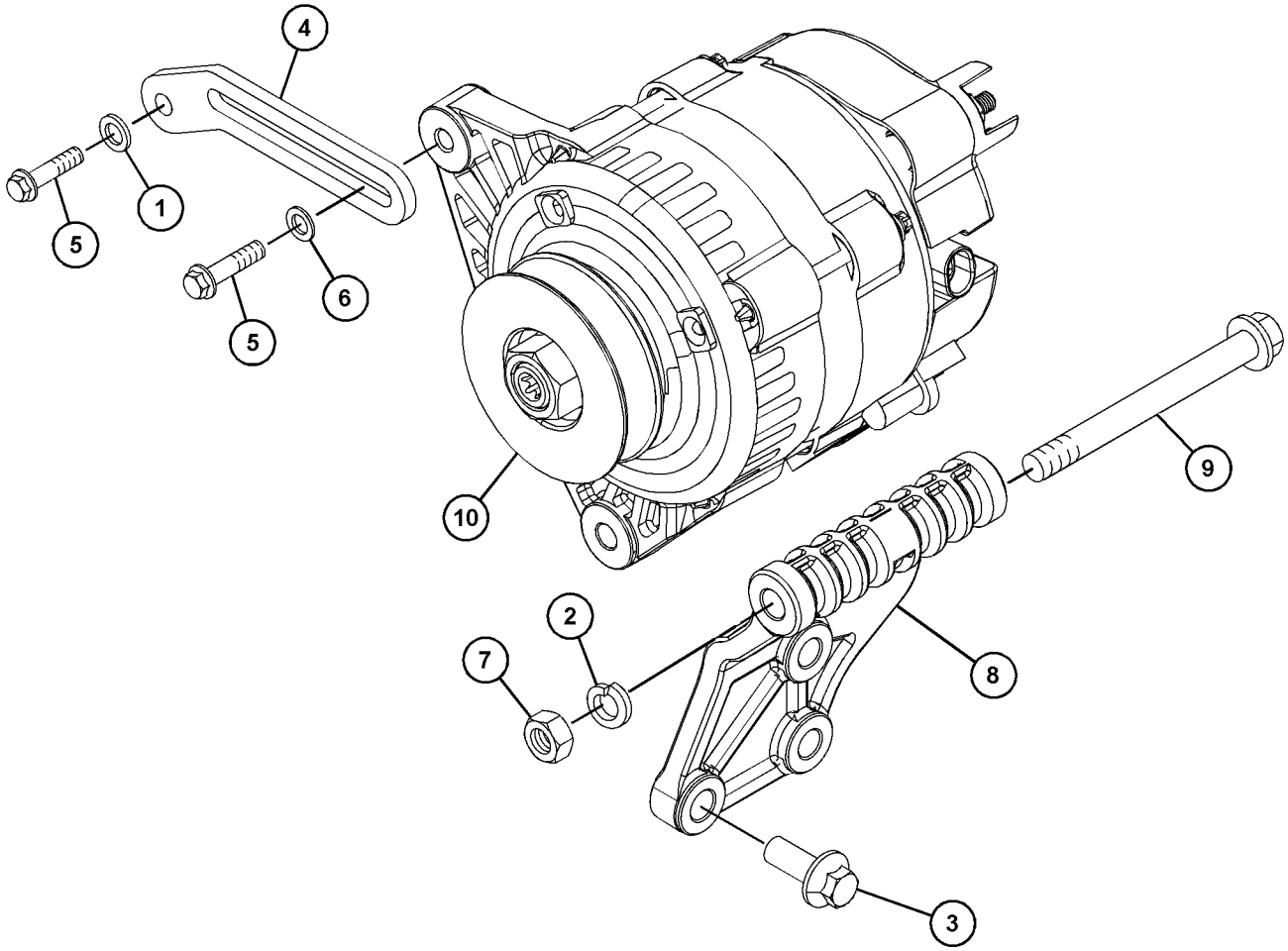

GRAPHIC #1 <END> g06243572

308-2319 CONNECTION GP-ELECTRICAL

SMCS-1408 **i02752317**

NOTE	REF NO	GRAPHIC REF	PART NUMBER	QTY	PART NAME 1 2 3 4 5 6 (PRODUCT LEVEL)	SEE PAGE
	1	1	**254-5541**	1	CONNECTION AS	
	2	1	**197-8555**	1	CONNECTION	

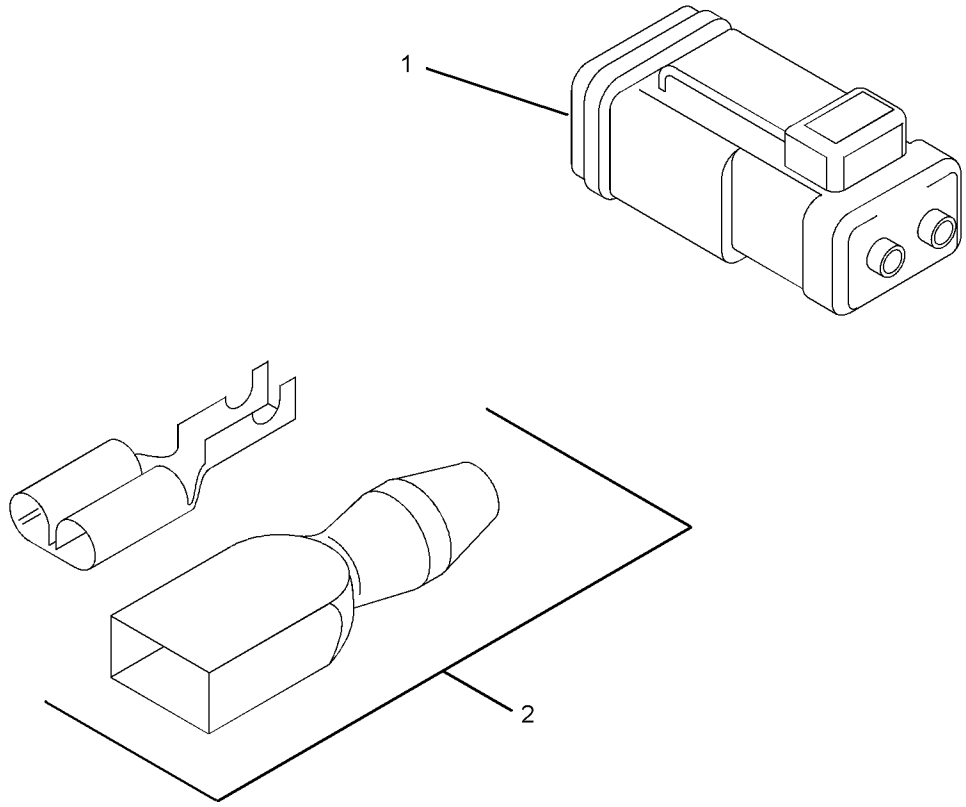

GRAPHIC #1 <END> g01389483

321-6741 CONNECTION GP-ELECTRICAL

SMCS-1408 **i02926669**

NOTE	REF NO	GRAPHIC REF	PART NUMBER	QTY	PART NAME 1 2 3 4 5 6 (PRODUCT LEVEL)	SEE PAGE
	1	1	**254-5541**	1	CONNECTION AS	

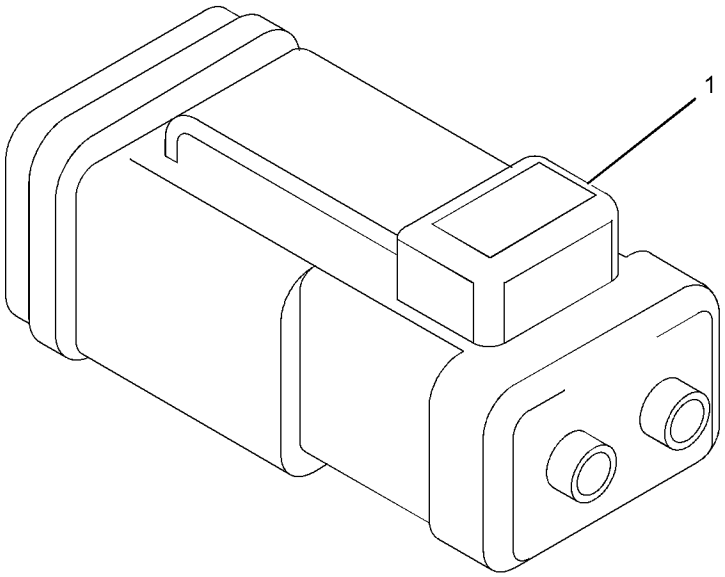

GRAPHIC #1 <END> g01513229

311-1127 GLOW PLUG GP

PART OF 435-1631 ENGINE AR, 435-1657 ENGINE AR-PRIMARY

TYPE 1

SMCS-1412 **i02843865**

NOTE	REF NO	GRAPHIC REF	PART NUMBER	QTY	PART NAME 1 2 3 4 5 6 (PRODUCT LEVEL)	SEE PAGE
	1	1	**172-4585**	3	GLOW PLUG	
	2	1	**155-8073**	1	BUS BAR AS	
	3	1	**155-8075**	1	WIRE	
M	4	1	**155-8076**	1	NUT (M4X0.4-THD)	
	5	1	**155-8077**	1	WASHER	

M - METRIC PART

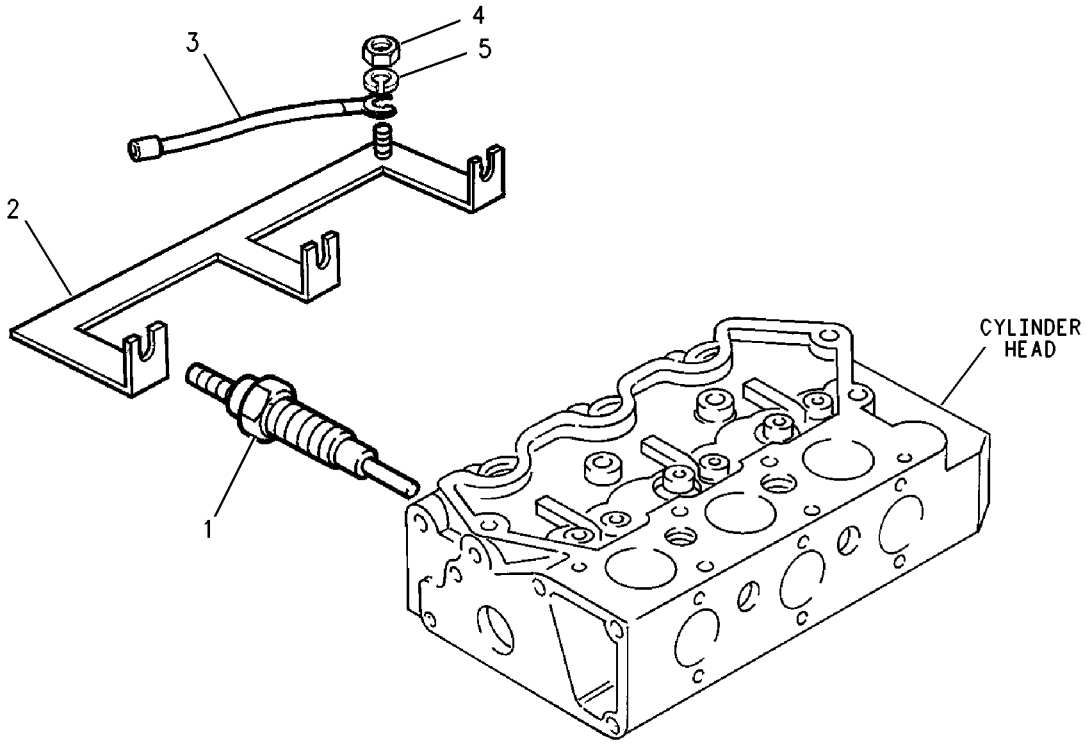

GRAPHIC #1 <END> g00459173

311-1127 GLOW PLUG GP

PART OF 435-1631 ENGINE AR, 435-1654, 435-1657 ENGINE AR-PRIMARY

TYPE 2

SMCS-1412 **i04899356**

NOTE	REF NO	GRAPHIC REF	PART NUMBER	QTY	PART NAME 1 2 3 4 5 6 (PRODUCT LEVEL)	SEE PAGE
	1	1	**172-4585**	3	GLOW PLUG	
	2	1	**155-8073**	1	BUS BAR AS	
	3	1	**155-8075**	1	WIRE	
M	4	1	**231-2839**	1	NUT-FLANGE (M4X0.7-THD)	

M - METRIC PART

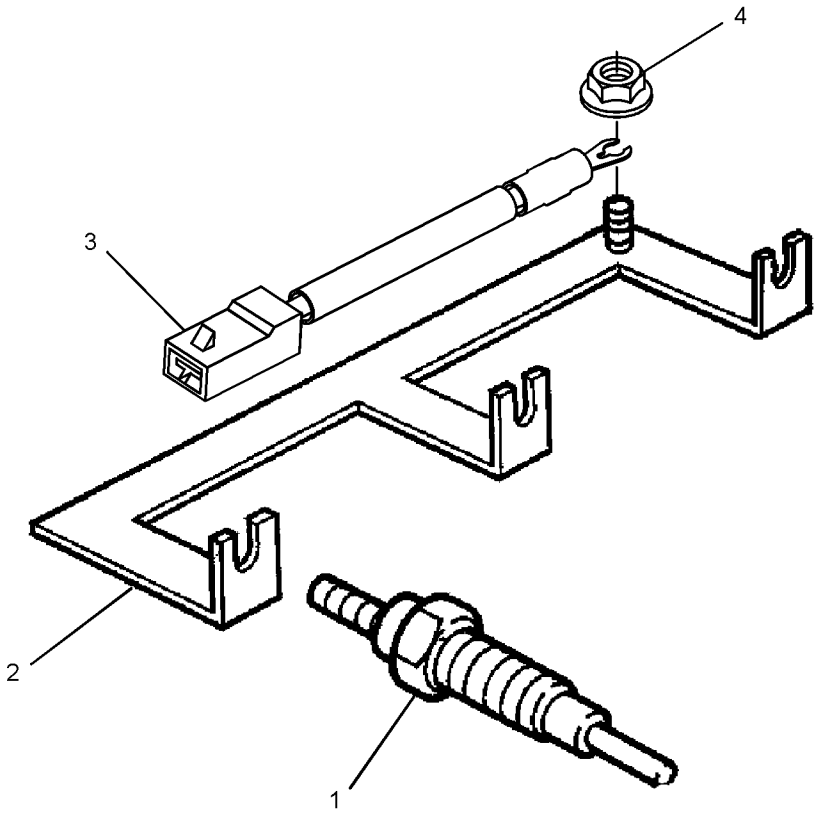

GRAPHIC #1 <END> g03078337

320-9114 SHUTOFF GP-ELECTRICAL

SMCS-7418 **i03384230**

NOTE	REF NO	GRAPHIC REF	PART NUMBER	QTY	PART NAME 1 2 3 4 5 6 (PRODUCT LEVEL)	SEE PAGE
	1	1	**340-0199**	1	SHUTOFF GP-ELECTRICAL	
	1A	1	**234-8762**	1	CONNECTOR	
	1B	1	**318-5038**	1	BOX	

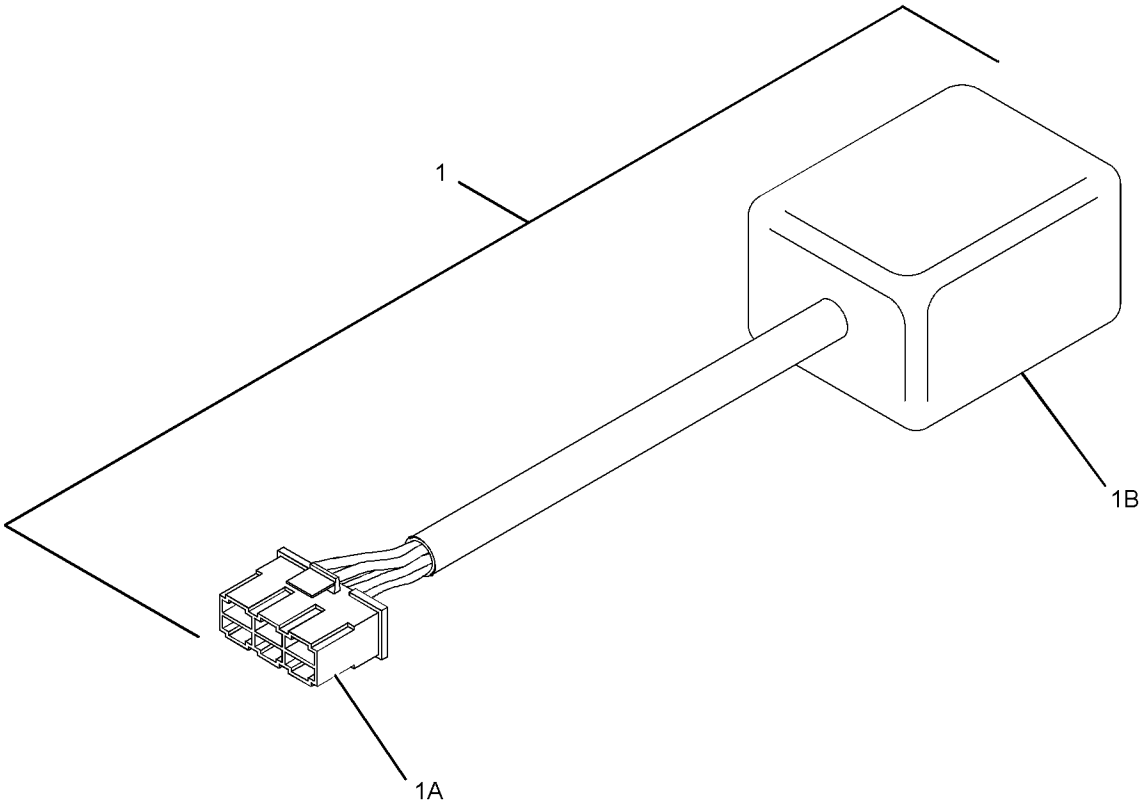

GRAPHIC #1 <END> g01504753

311-1128 SOLENOID GP-SHUTOFF

PART OF 435-1631 ENGINE AR, 435-1654, 435-1657 ENGINE AR-PRIMARY

SMCS-1259 **i06931539**

NOTE	REF NO	GRAPHIC REF	PART NUMBER	QTY	PART NAME 1 2 3 4 5 6 (PRODUCT LEVEL)	SEE PAGE
	1	1	**153-6412**	1	WASHER	
	2	1	**419-7640**	1	SOLENOID AS (12-VOLT) (FUEL SHUTOFF)	
	3	1	**308-1914**	1	LEVER-CONTROL (THROTTLE)	

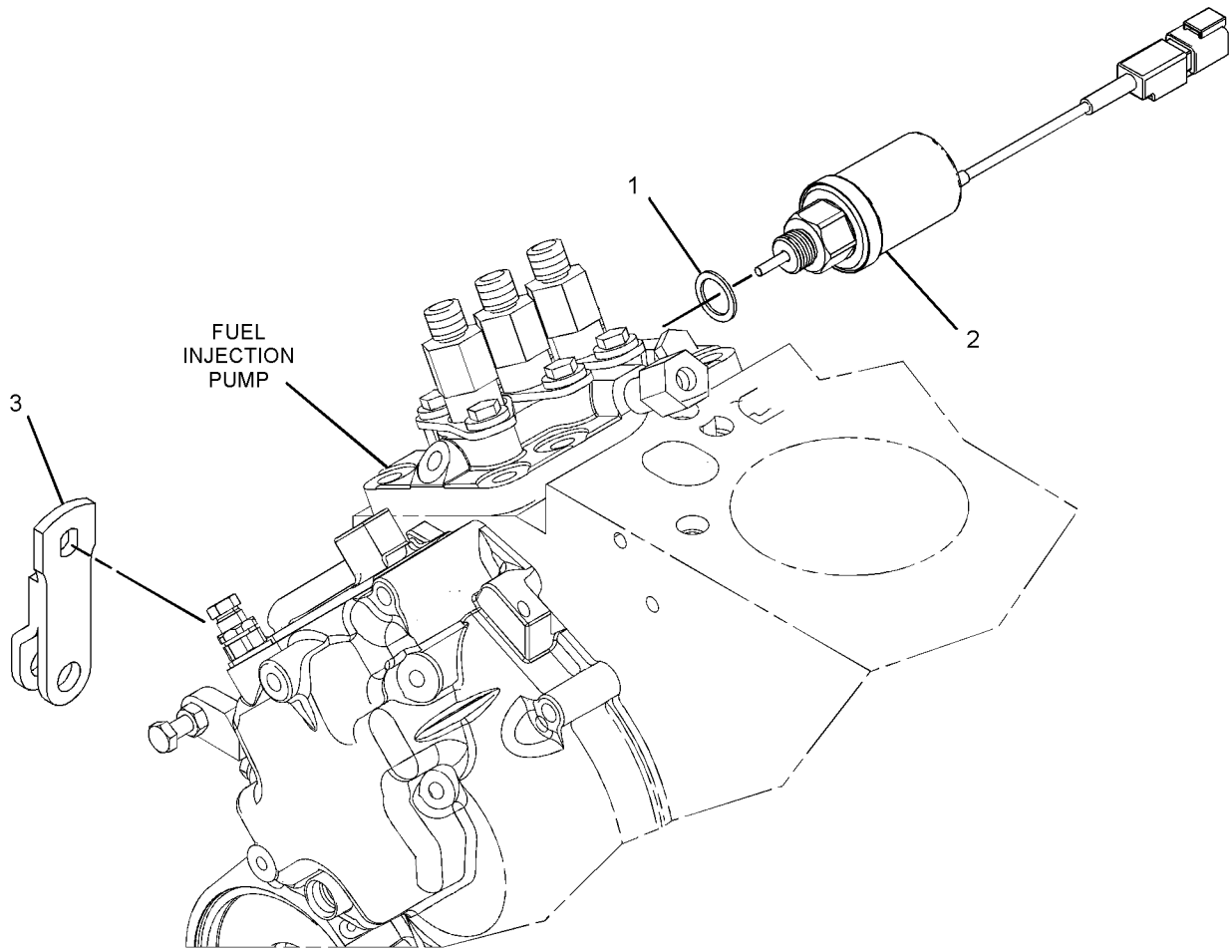

GRAPHIC #1 <END> g06160704

163-3361 STARTING MOTOR GP-ELECTRIC

FIELD REPLACEMENT ORDER 339-2900—PAGE: 308, 333-5930—PAGE: 307

PART OF 311-1109 STARTING MOTOR GP-ELECTRIC

SMCS-1453 **i02855315**

NOTE	REF NO	GRAPHIC REF	PART NUMBER	QTY	PART NAME 1 2 3 4 5 6 (PRODUCT LEVEL)	SEE PAGE
	1	1	**242-7070**	1	BUSHING	
	2	1	**242-7071**	1	SOLENOID (STARTING MOTOR)	
	3	1	**242-7073**	1	BUSHING	
	4	1	**242-7074**	1	DRIVE-MOTOR	
	5	1	**242-7075**	1	HOLDER	
	6	1	**242-7076**	1	BUSHING	
	7	1	**242-7077**	1	KIT-STARTING MOTOR	
	8	1	**242-7078**	1	ARMATURE	

163-3361 **STARTING MOTOR GP-ELECTRIC (**contd.**)** **i02855315**

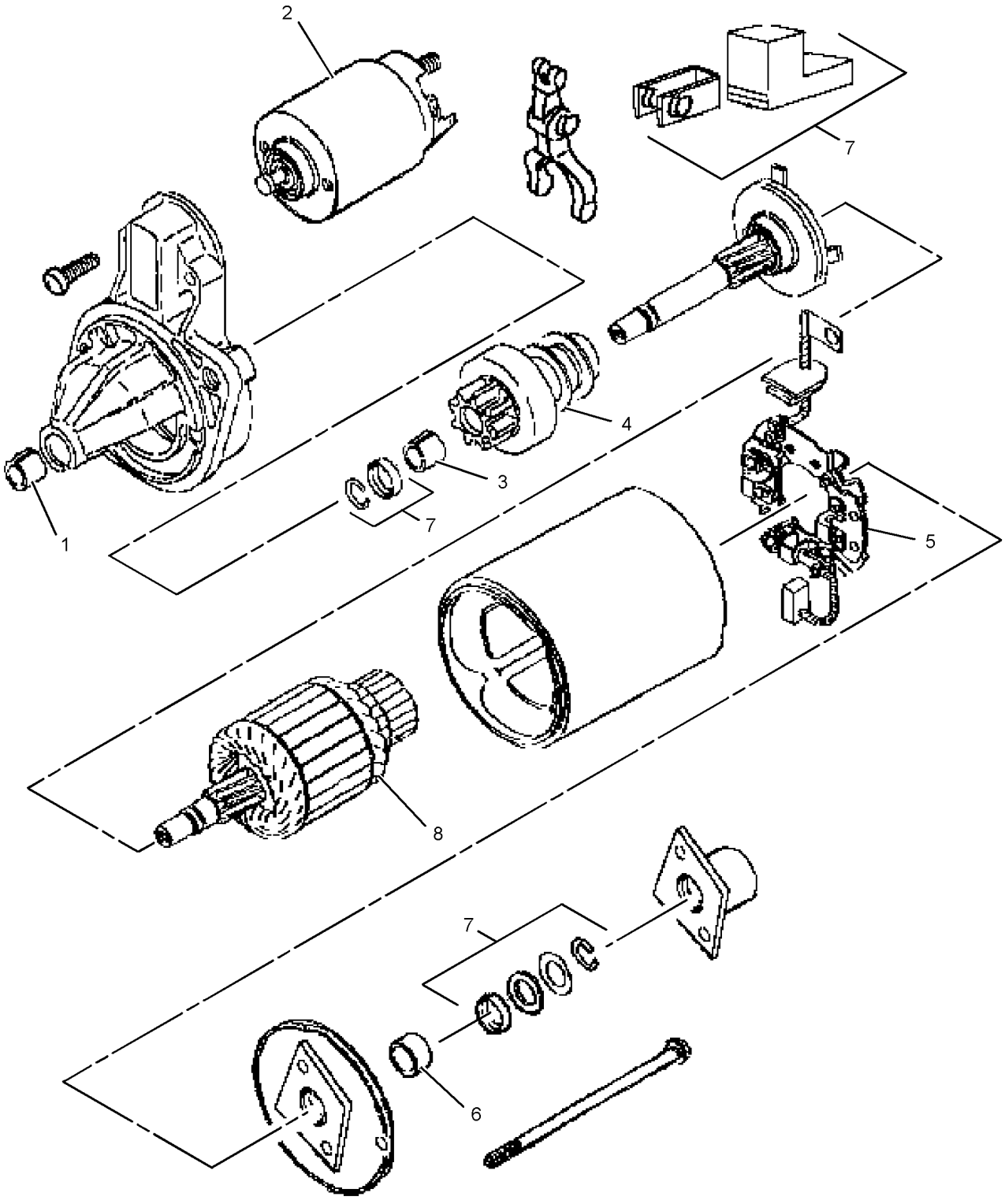

GRAPHIC #1 <END> g01158306

311-1109 STARTING MOTOR GP-ELECTRIC

TYPE 1

SMCS-1453 **i02843887**

NOTE	REF NO	GRAPHIC REF	PART NUMBER	QTY	PART NAME 1 2 3 4 5 6 (PRODUCT LEVEL)	SEE PAGE
Y	1	1	**163-3361**	1	STARTING MOTOR GP-ELECTRIC	301

Y - SEPARATE ILLUSTRATION

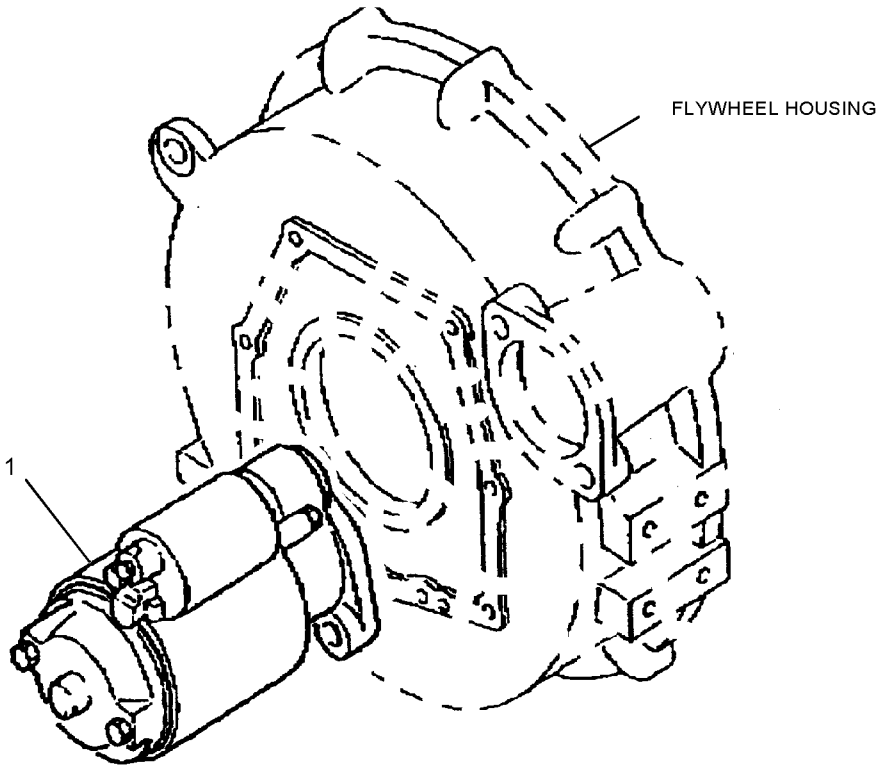

GRAPHIC #1 <END> g01140591

311-1109 STARTING MOTOR GP-ELECTRIC

TYPE 2

SMCS-1453 **i03393160**

NOTE	REF NO	GRAPHIC REF	PART NUMBER	QTY	PART NAME 1 2 3 4 5 6 (PRODUCT LEVEL)	SEE PAGE
CY	1	1	**339-2900**	1	STARTING MOTOR GP-ELECTRIC	308

C - CHANGE FROM PREVIOUS TYPE
Y - SEPARATE ILLUSTRATION

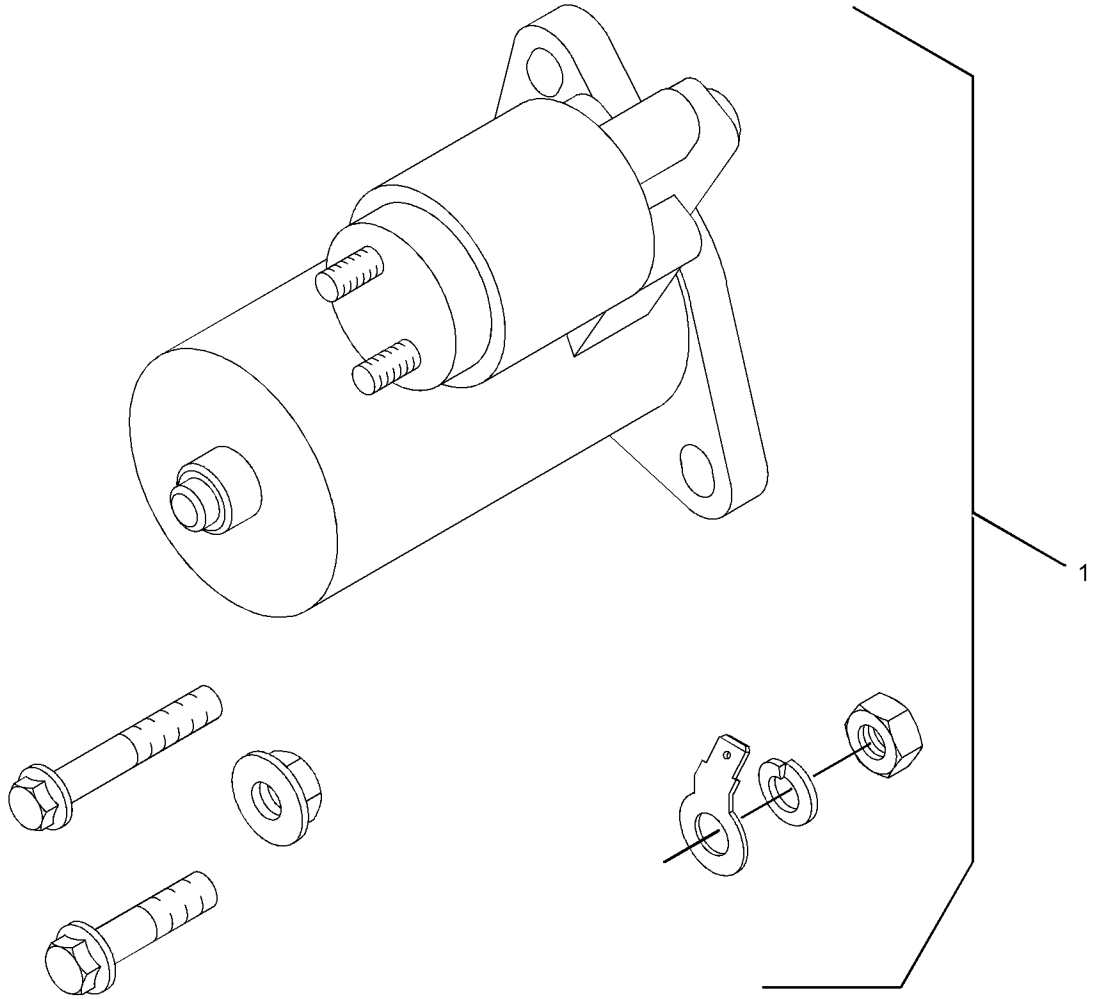

GRAPHIC #1 <END> g01761833

311-1109 STARTING MOTOR GP-ELECTRIC

TYPE 3

SMCS-1453 **i04856634**

NOTE	REF NO	GRAPHIC REF	PART NUMBER	QTY	PART NAME 1 2 3 4 5 6 (PRODUCT LEVEL)	SEE PAGE
CY	1	1	**385-5356**	1	STARTING MOTOR GP-ELECTRIC	309

C - CHANGE FROM PREVIOUS TYPE
Y - SEPARATE ILLUSTRATION

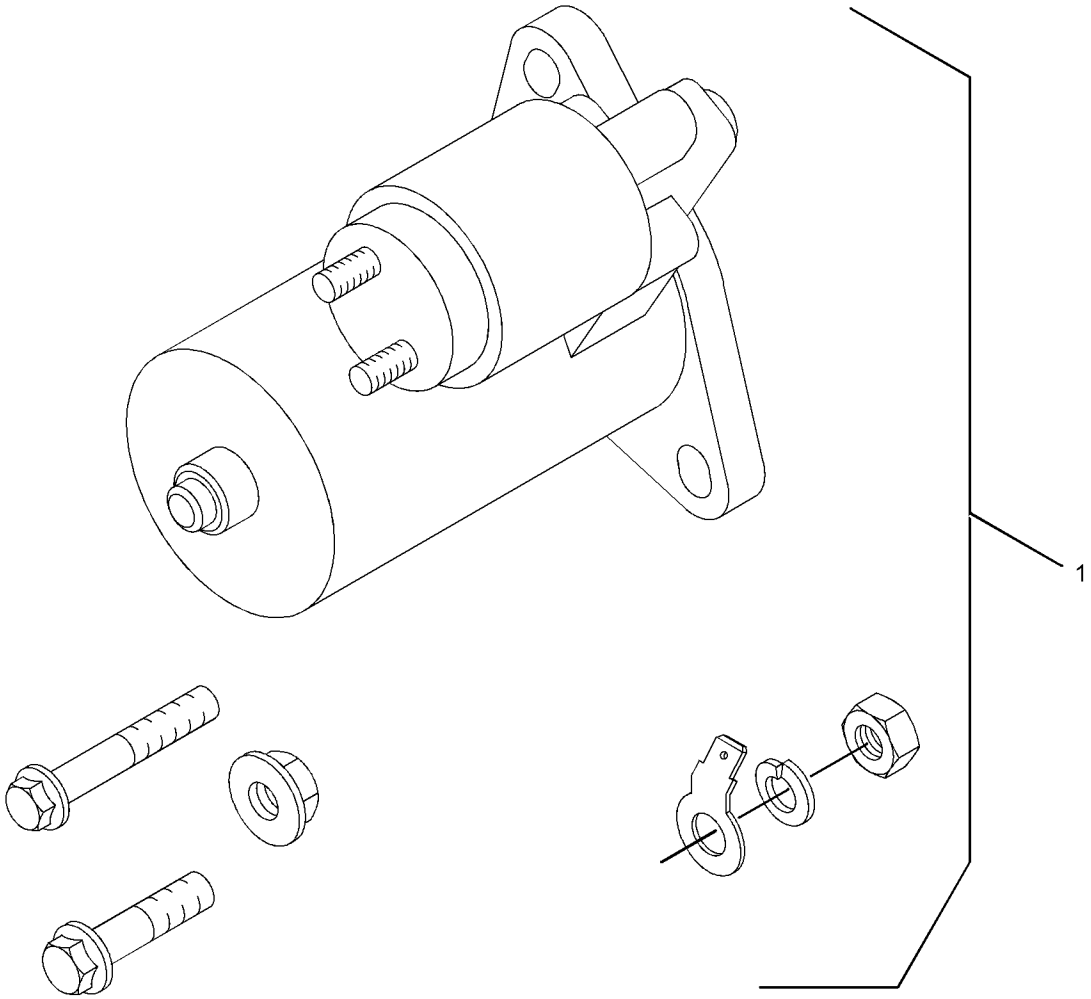

GRAPHIC #1 <END> g01761833

311-1109 STARTING MOTOR GP-ELECTRIC

TYPE 4

SMCS-1453 **i06254150**

NOTE	REF NO	GRAPHIC REF	PART NUMBER	QTY	PART NAME 1 2 3 4 5 6 (PRODUCT LEVEL)	SEE PAGE
	1	1	**424-3091**	1	STARTING MOTOR AS-ELECTRIC	

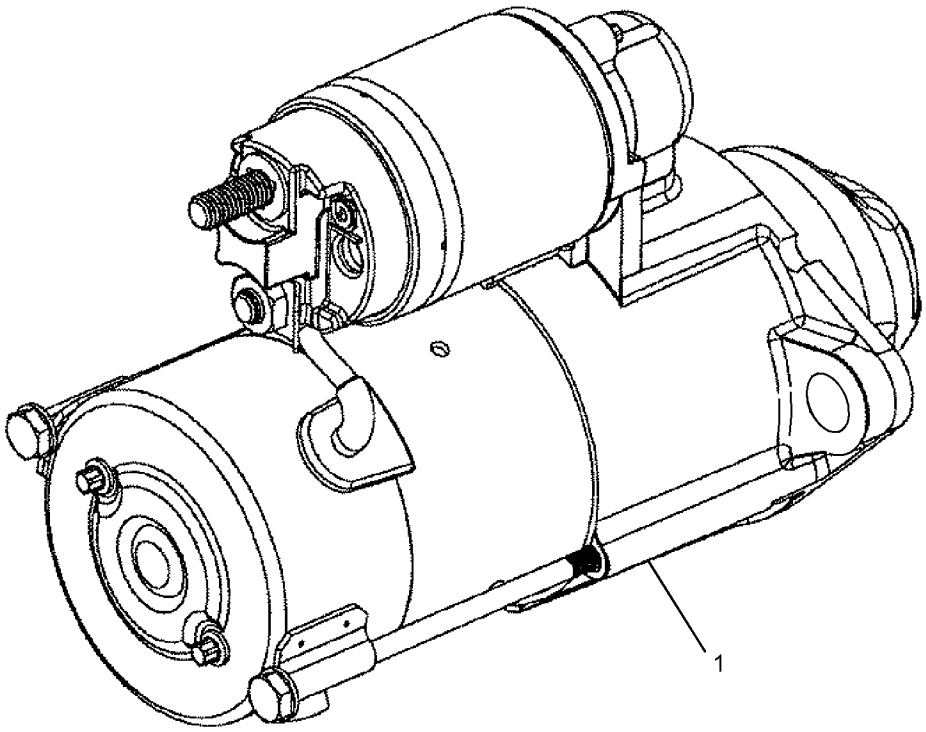

GRAPHIC #1 <END> g03873286

333-5930 STARTING MOTOR GP-ELECTRIC–12-VOLT

SMCS-1453 **i05897976**

NOTE	REF NO	GRAPHIC REF	PART NUMBER	QTY	PART NAME 1 2 3 4 5 6 (PRODUCT LEVEL)	SEE PAGE
M	1	1	**6I-0593**	2	BOLT (M10X1.5X30-MM)	
M	2	1	**6I-0594**	1	NUT (M10X1.5-THD)	
M	3	1	**140-8783**	2	BOLT (M10X1.5X45-MM)	
	4	1	**333-7903**	1	KIT-TERMINAL	

M - METRIC PART

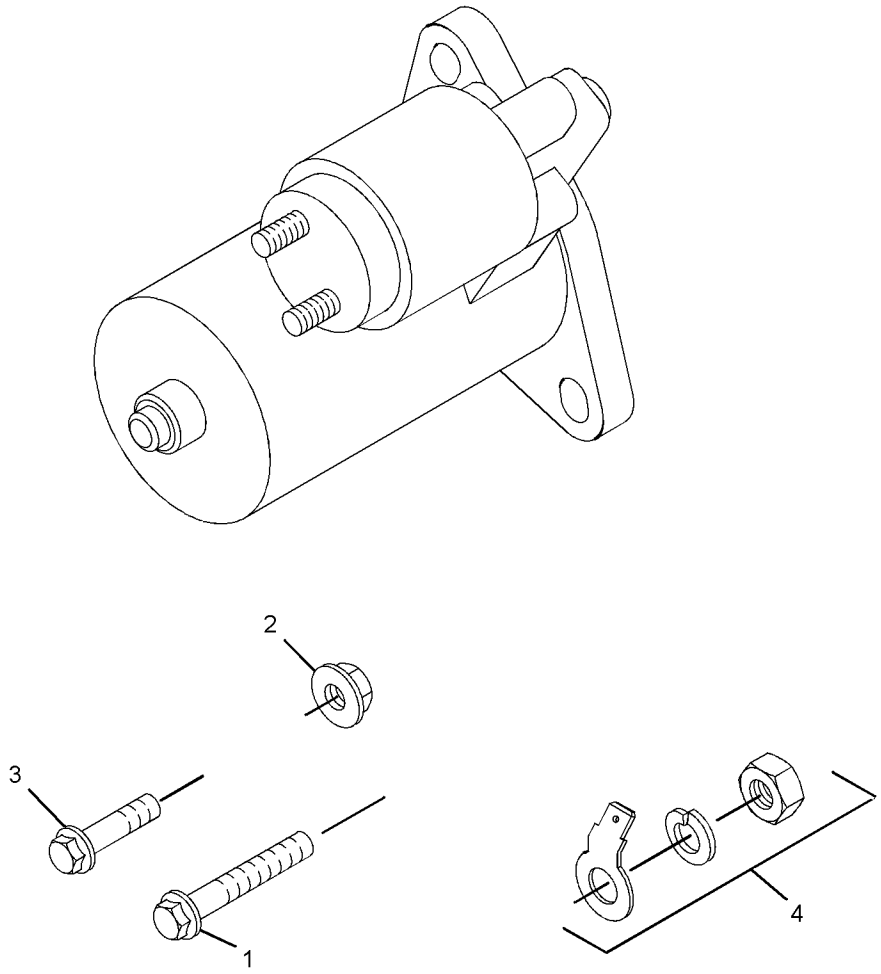

GRAPHIC #1 <END> g01755193

339-2900 STARTING MOTOR GP-ELECTRIC

FIELD REPLACEMENT FOR 163-3361—PAGE: 301, 385-5356—PAGE: 309
PART OF 311-1109 STARTING MOTOR GP-ELECTRIC

SMCS-1453 **i07409394**

NOTE	REF NO	GRAPHIC REF	PART NUMBER	QTY	PART NAME 1 2 3 4 5 6 (PRODUCT LEVEL)	SEE PAGE
M	1	1	**6I-0593**	2	BOLT (M10X1.5X30-MM)	
M	2	1	**175-7141**	2	NUT-HEX FLANGE (M10X1.5-THD)	
M	3	1	**140-8783**	2	BOLT (M10X1.5X45-MM)	
	4	1	**333-7903**	1	KIT-TERMINAL	
					(INCLUDES TERMINAL, NUT & WASHER SPRING)	
	5	1	**424-3091**	1	STARTING MOTOR AS-ELECTRIC	

M - METRIC PART

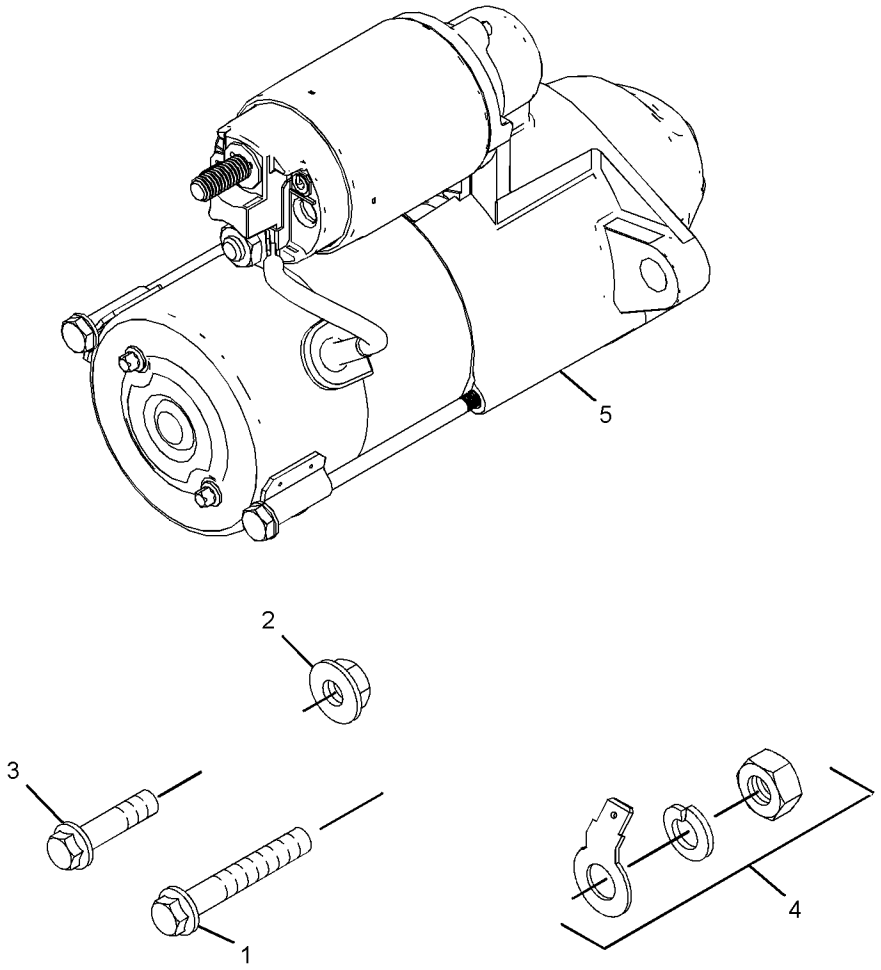

GRAPHIC #1 <END> g06323514

385-5356 STARTING MOTOR GP-ELECTRIC

FIELD REPLACEMENT ORDER 339-2900—PAGE: 308

PART OF 311-1109 STARTING MOTOR GP-ELECTRIC

SMCS-1453 **i04857714**

NOTE	REF NO	GRAPHIC REF	PART NUMBER	QTY	PART NAME 1 2 3 4 5 6 (PRODUCT LEVEL)	SEE PAGE
					(NO SERVICED PARTS)	

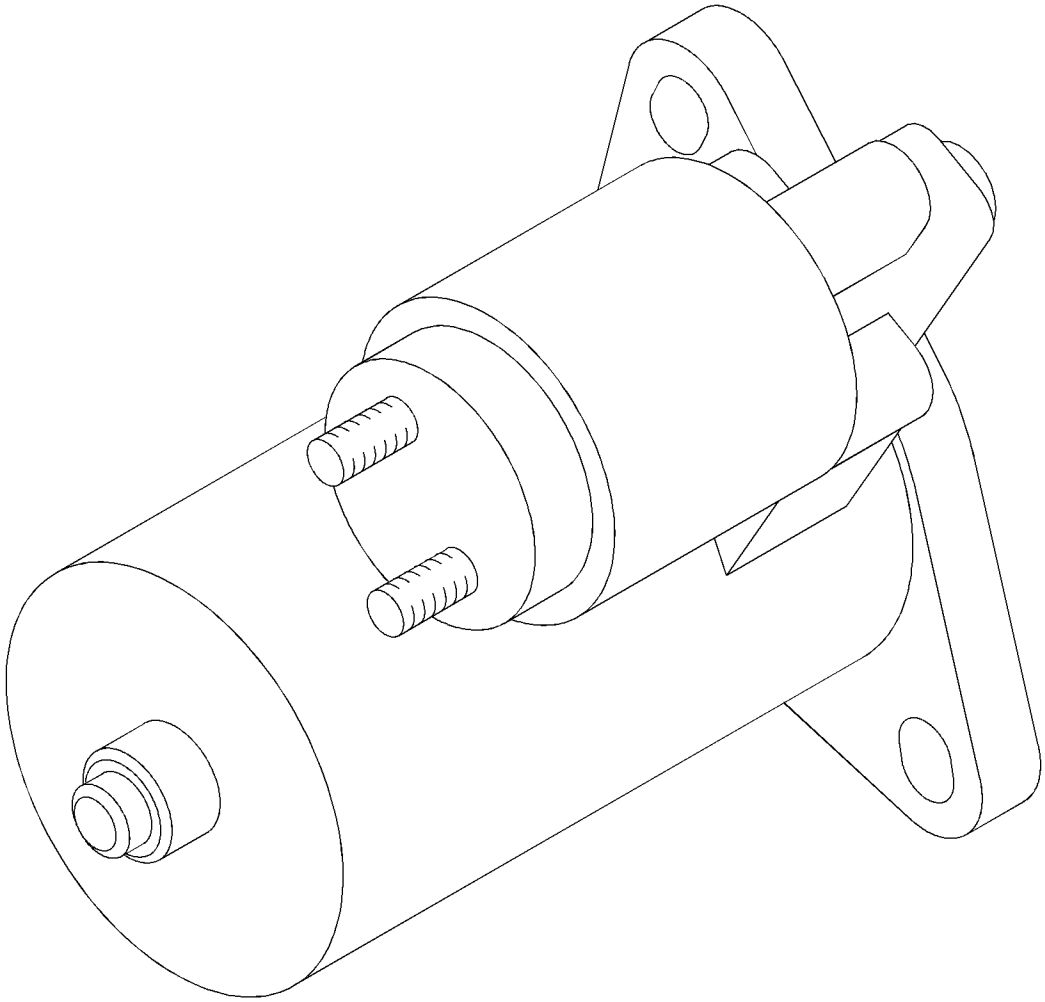

GRAPHIC #1 <END> g03025757

311-1129 SWITCH GP-PRESSURE—ENGINE OIL

SMCS-7400, 7421 **i05733318**

NOTE	REF NO	GRAPHIC REF	PART NUMBER	QTY	PART NAME 1 2 3 4 5 6 (PRODUCT LEVEL)	SEE PAGE
	1	1	**153-5936**	2	WASHER (8.2X14.5X1-MM)	
M	2	1	**153-6881**	1	BOLT (M8X1.25X18-MM)	
	3	1	**452-3668**	1	SWITCH-PRESSURE (ENGINE OIL)	

M - METRIC PART

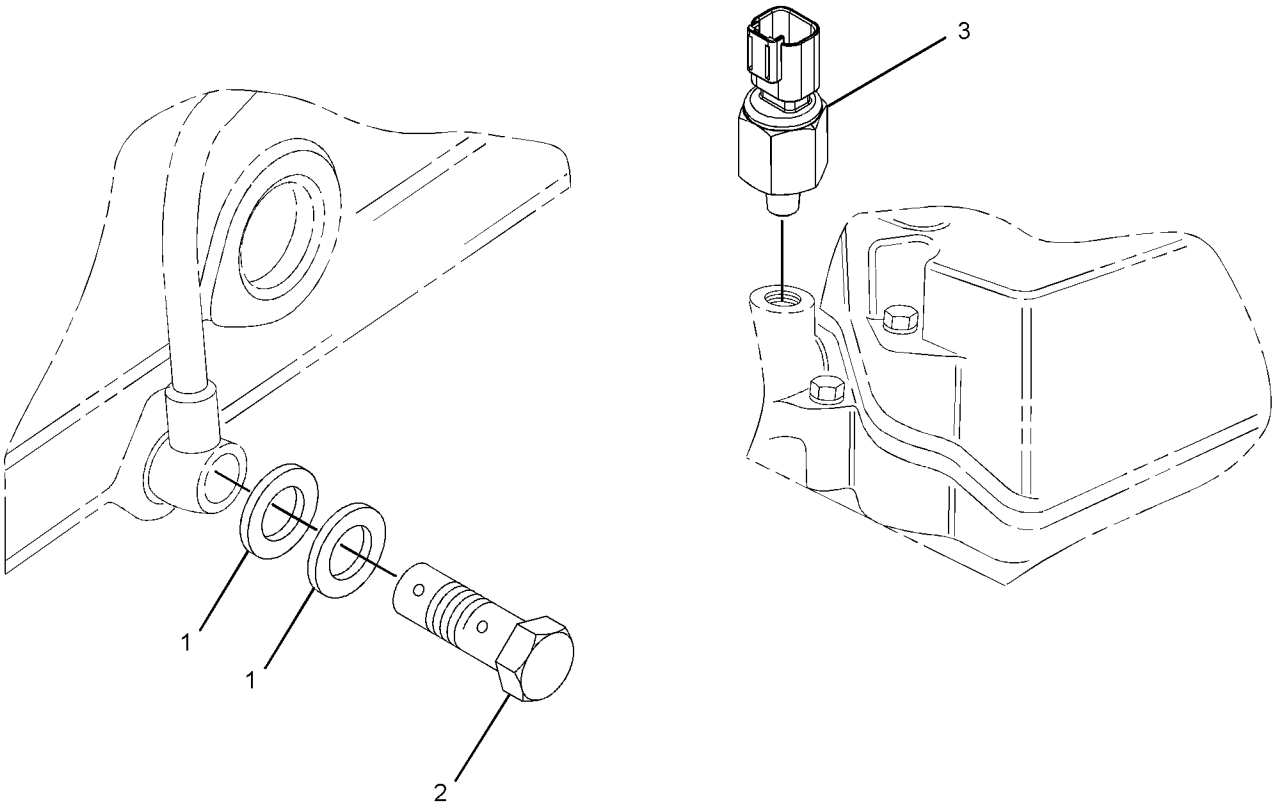

GRAPHIC #1 <END> g03654237

315-6638 SWITCH GP-PRESSURE–ENGINE OIL

PART OF 435-1631 ENGINE AR, 435-1654 ENGINE AR-PRIMARY

TYPE 1

SMCS-7400, 7421 **i06561739**

NOTE	REF NO	GRAPHIC REF	PART NUMBER	QTY	PART NAME 1 2 3 4 5 6 (PRODUCT LEVEL)	SEE PAGE
	1	1	**153-5936**	2	WASHER (8.2X14.5X1-MM)	
	2	1	**183-1165**	1	PLUG	
	3	1	**456-7377**	1	SWITCH (OIL PRESSURE) (ENGINE OIL)	
	4	1	**438-1431**	1	ADAPTER	

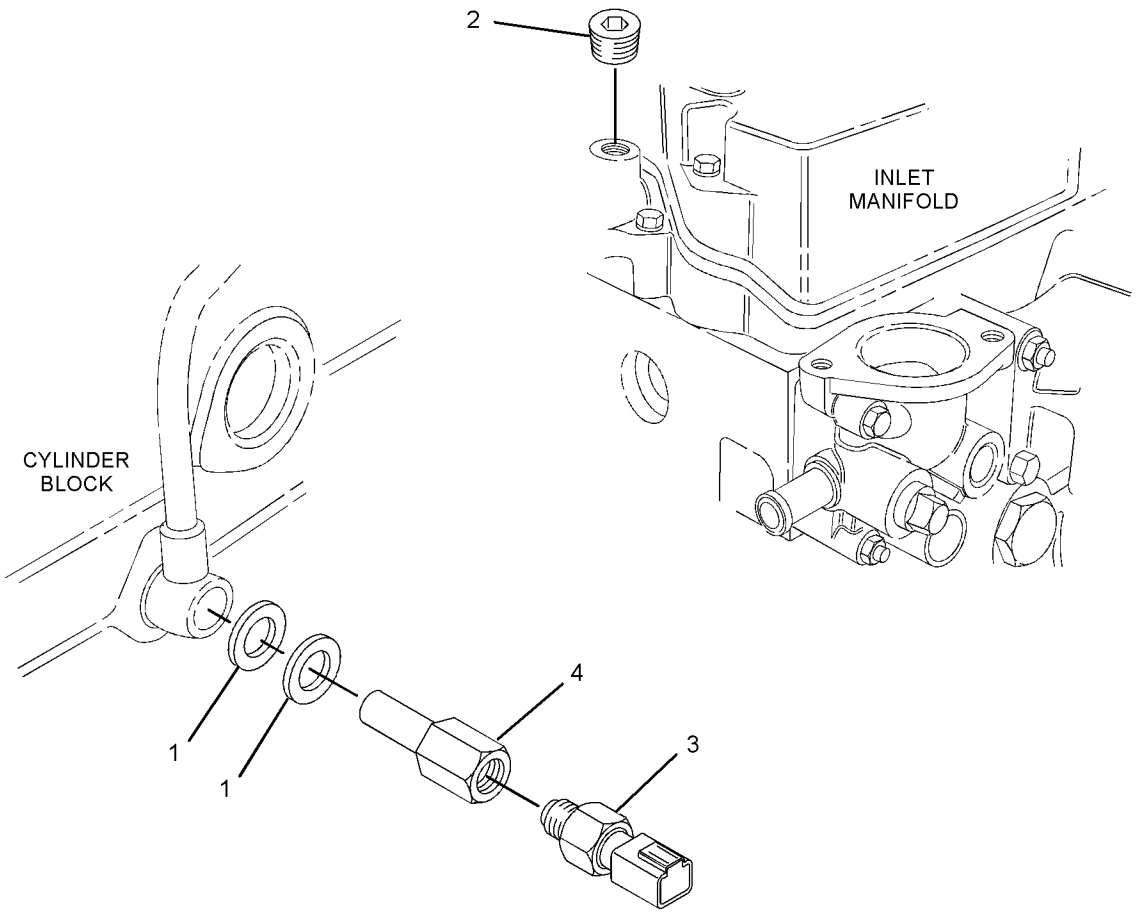

GRAPHIC #1 <END> g03505824

315-6638 SWITCH GP-PRESSURE—ENGINE OIL

PART OF 435-1631 ENGINE AR, 435-1654 ENGINE AR-PRIMARY

TYPE 2

SMCS-7400, 7421 **i07026290**

NOTE	REF NO	GRAPHIC REF	PART NUMBER	QTY	PART NAME 1 2 3 4 5 6 (PRODUCT LEVEL)	SEE PAGE
	1	1	**153-5936**	2	WASHER (8.2X14.5X1-MM)	
	2	1	**183-1165**	1	PLUG	
C	3	1	**484-0882**	1	SWITCH-OIL PRESSURE (ENGINE OIL)	

C - CHANGE FROM PREVIOUS TYPE

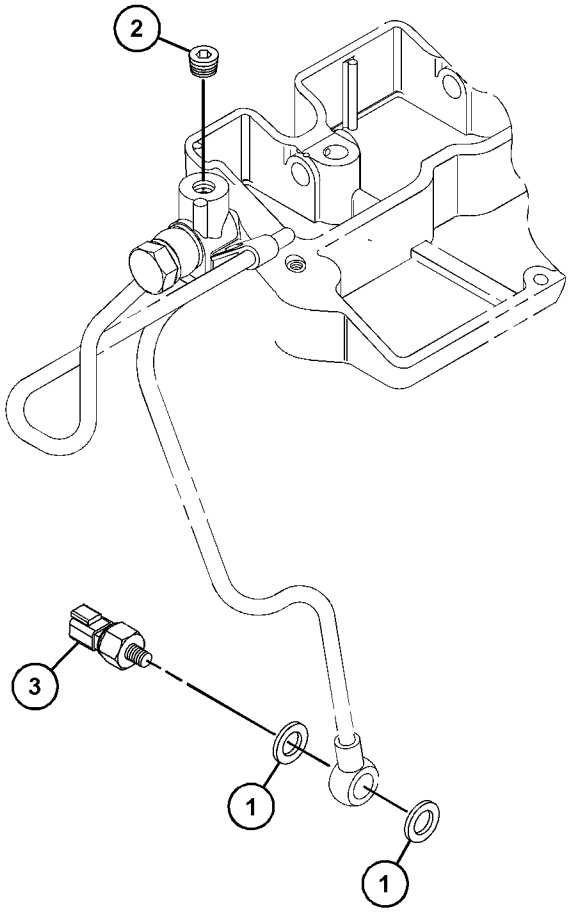

GRAPHIC #1 <END> g06199983

308-2314 SWITCH GP-START

SMCS-1416 **i05810290**

NOTE	REF NO	GRAPHIC REF	PART NUMBER	QTY	PART NAME 1 2 3 4 5 6 (PRODUCT LEVEL)	SEE PAGE
	1	1	**183-5460**	1	PLATE	
	2	1	**359-6000**	1	SWITCH AS-START	
	2A	1	**183-5458**	1	CAP	
	2B	1	**361-3925**	1	KEY-IGNITION	

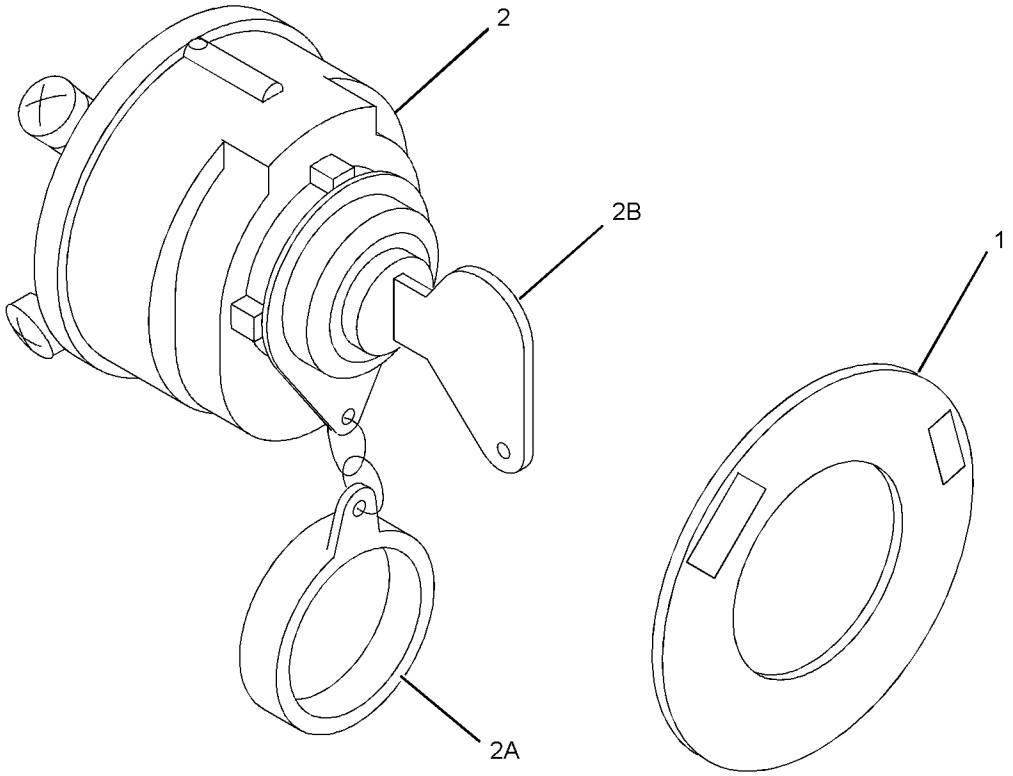

GRAPHIC #1 <END> g01389581

311-1130 SWITCH GP-TEMPERATURE—COOLANT

PART OF 435-1631 ENGINE AR, 435-1654, 435-1657 ENGINE AR-PRIMARY

SMCS-7400 **i04899181**

NOTE	REF NO	GRAPHIC REF	PART NUMBER	QTY	PART NAME 1 2 3 4 5 6 (PRODUCT LEVEL)	SEE PAGE
	1	1	**341-3600**	1	SWITCH-TEMPERATURE (ENGINE COOLANT)	

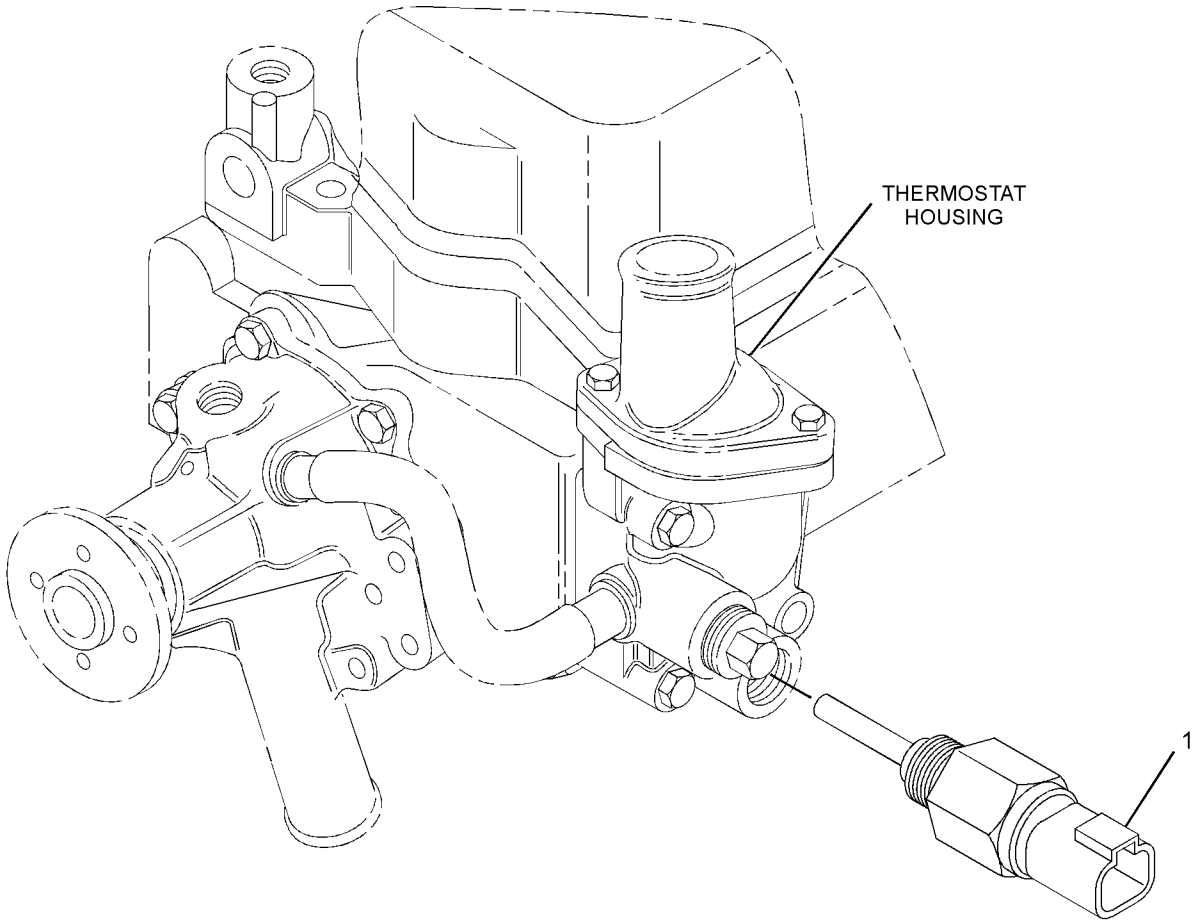

GRAPHIC #1 <END> g03076158

311-1131 LAMP GP

SMCS-4490, 7451 **i02843861**

NOTE	REF NO	GRAPHIC REF	PART NUMBER	QTY	PART NAME 1 2 3 4 5 6 (PRODUCT LEVEL)	SEE PAGE
	1	1	**197-8547**	1	LAMP (GLOW PLUG INDICATOR)	

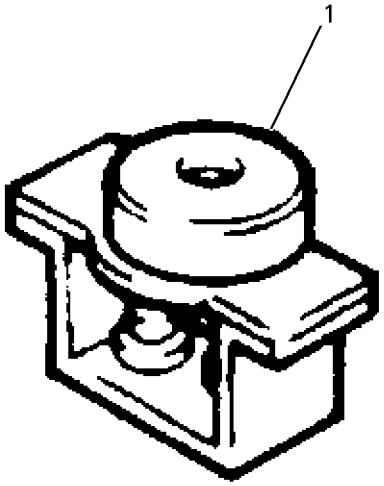

GRAPHIC #1 <END> g00758433

6L-4502 CHART-PLATE & FILM

SMCS-7557 **i03023594**

NOTE	PART NUMBER	QTY	PART NAME 1 2 3 4 5 6 (PRODUCT LEVEL)	SEE PAGE
			(NO SERVICED PARTS)	

<END>

342-1324 PARTS GP-MISCELLANEOUS

PART OF 435-1631 ENGINE AR, 435-1654, 435-1657 ENGINE AR-PRIMARY

SMCS-1000, 7950 **i05370943**

NOTE	REF NO	GRAPHIC REF	PART NUMBER	QTY	PART NAME 1 2 3 4 5 6 (PRODUCT LEVEL)	SEE PAGE
	1	1	**183-1165**	1	PLUG	
	2	1	**235-5531**	1	SEAL-VALVE COVER	
	3	1	**311-1173**	1	GASKET-MANIFOLD	

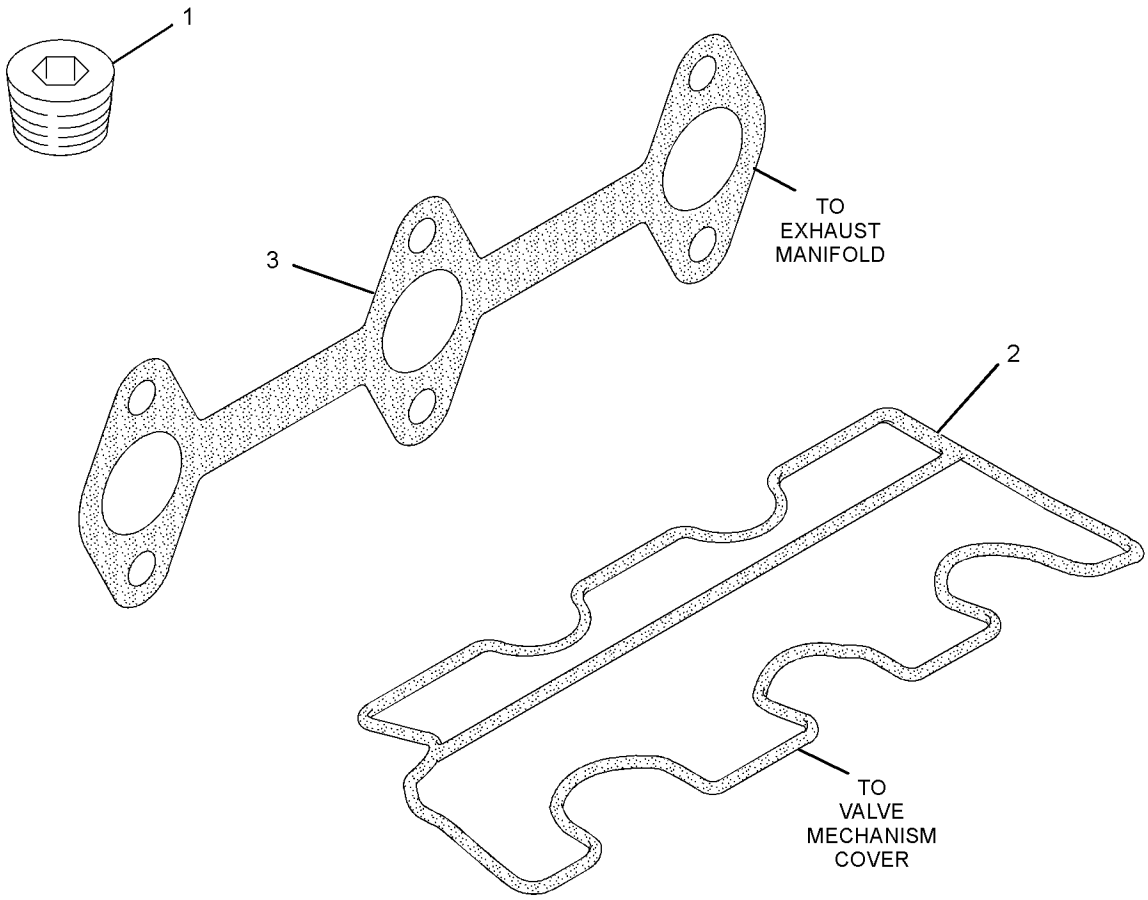

GRAPHIC #1 <END> g01954499

342-1324 PARTS GP-MISCELLANEOUS

PART OF 435-1631 ENGINE AR, 435-1654, 435-1657 ENGINE AR-PRIMARY

SMCS-1000, 7950 **i05735656**

NOTE	REF NO	GRAPHIC REF	PART NUMBER	QTY	PART NAME 1 2 3 4 5 6 (PRODUCT LEVEL)	SEE PAGE
	1	1	**183-1165**	1	PLUG	
	2	1	**311-1173**	1	GASKET-MANIFOLD	
	3	1	**447-3735**	1	GASKET-COVER	

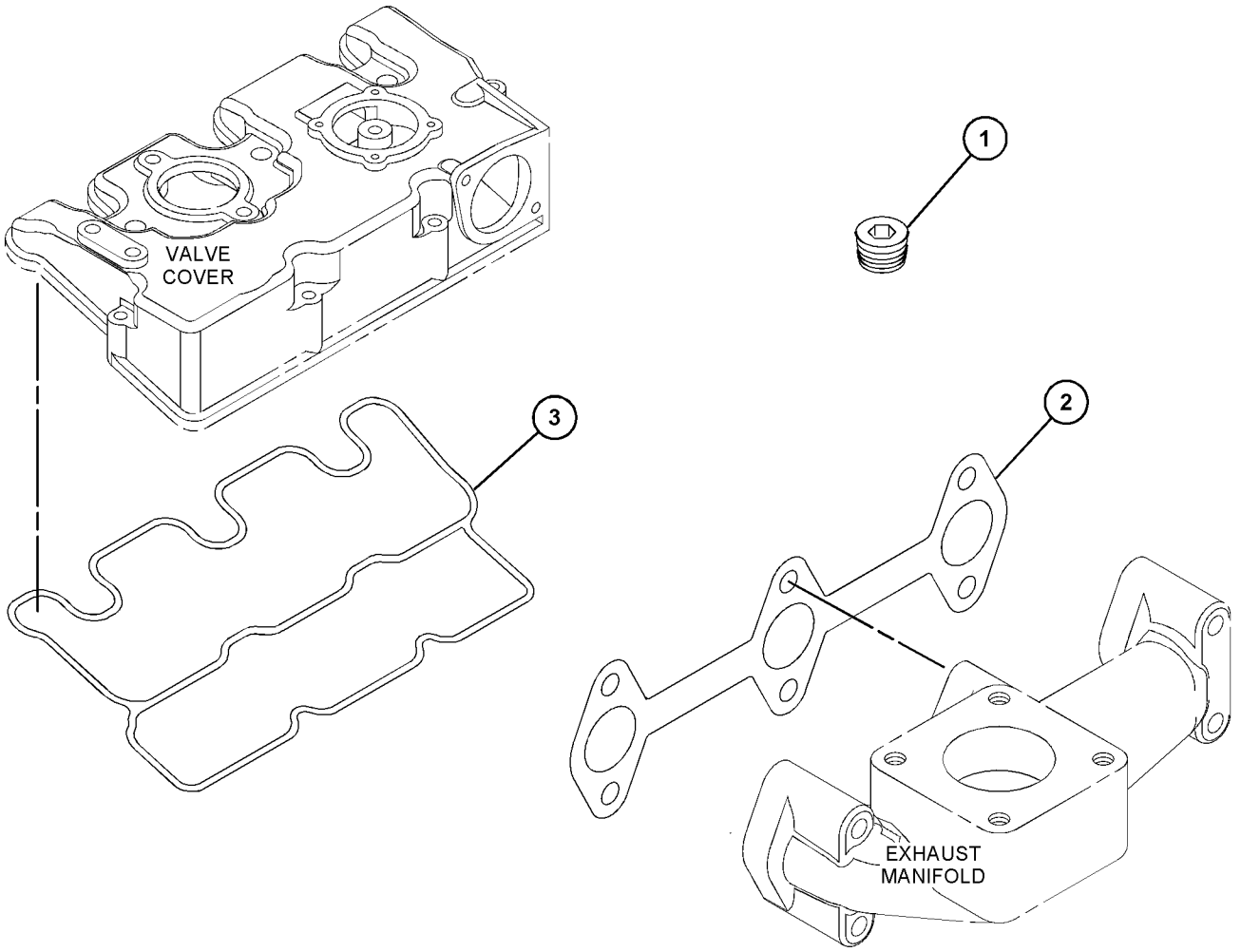

GRAPHIC #1 <END> g03665858

PART NUMBER INDEX

Part	Page
5	
5C-2890	83
	91
	101
	104
	107
	110
	251
	253
	255
	257
	259
	261
	263
	266
	268
	270
	272
5D-1026	167
	173
	178
5D-1319	83
	88
	90
	91
	96
	97
	98
	99
	100
	101
	104
	107
	110
5P-7970	246
6	
6B-0924	51
	53
6I-0217	157
	159
	180
	184
	188
	192
	196
	200
	204
	208
	212
	216
	220
	224
	228
	232
	234
	236
	238
	240
	287
	294
6I-0254	184
	188
	192
	200
	204
	208
	212
	220
	224
	228
	232
	234
	236
	238
	240
6I-0260	293
6I-0454	39
6I-0455	40
6I-0593	76
	78
	80
	81
	287
	307
	308
6I-0594	36
	37
	38
	39
	63
	81
	307
6I-0631	124
6I-0650	45
	47
	49
6I-0654	180
	184
	188
	200
	204
	208
	212
	216
	220
	224
6I-0846	68
	287
	290
6I-0917	66
	159
	188
	192
	196
	200
	204
	208
	212
	224
	228
6I-4200	78
	82
	116
	117
6L-4502	►316
6V-5221	246
7	
7W-4694	287
8	
8T-3490	192
	212
	228
9	
9M-7958	159
9X-6153	22
0	
032-8100	287
032-9020	163
	170
	175
033-7849	287
067-6269	287
067-6317	287
067-6987	287
095-1574	83
	91
	101
	104
	107
	110
	251
	253
	255
	257
	259
	261
	263
	266
	268
	270
	272
095-1604	145
1	
100-4463	37
	38
100-4841	120
	122
103-6714	232
	234
	236
	238
	240
106-8916	83
	91
	101
	104
	107
	110
	251
	253
	255
	257
	259
	261
	263
	270
	272
114-4363	78
	82
	192
	228
123-2899	192
	228
124-3815	115
	117
	159
	180
	196
	216
	287
	290
	291
	293
127-8281	148
	149
138-7162	75
	77
	79
138-7171	77
	78
138-7172	75
138-7421	73
139-5511	83
	88
	91
	101
	104
	107
	110
	251
	253
	255
	257
	259
	261
	263
	266
	268
	270
	272
140-8783	307
	308
153-5387	51
	53
153-5391	51
	53
153-5394	51
	53
153-5395	51
	53
153-5402	45
	47
	49
	51
	53
153-5518	45
	47
	49
153-5519	47
	49
153-5556	56
	62
153-5557	56
	62
153-5587	136
153-5590	136
153-5592	83
	91
	101
	104
	107
	110
	159
	180
	184
	188
	192
	196
	200
	204
	208

► PRIMARY REFERENCE

PART NUMBER INDEX

Part	Page
	212
	216
	220
	224
	228
	232
	234
	236
	238
	240
	245
	247
	251
	253
	255
	257
	259
	261
	263
	266
	268
	270
	272
	275
	277
	279
	281
	283
	291
153-5933	143
153-5936	131
	151
	152
	310
	311
	312
153-5939	33
	41
	43
	247
153-5960	69
	70
	83
	88
	90
	91
	95
	96
	97
	98
	99
	100
	163
	165
	167
	170
	173
	175
	178
	275
	277
	279
	281
	283
153-5961	139
	141
	163
	165
	167
	170
	173
	175
	178
153-5962	33
	41
	43
	69
	70
	83
	88
	90
	91
	95
	96
	97
	98
	99
	100
	114
	148
	132
	300
153-6415	83
	88
	91
	101
	104
	107
	110
	251
	253
	255
	257
	259
	261
	263
	266
	268
	270
	272
153-6492	21
	23
	24
	26
	27
	29
	30
	31
	32
	83
	133
153-6497	39
153-6833	118
153-6835	118
	120
	122
	124
	130
	136
153-6838	22
	24
	26
	27
	29
	30
	31
	32
	51
	53
	83
	91
	118
	120
	122
	124
153-6841	118
	120
	122
	124
153-6849	153
153-6850	153
153-6851	153
153-6853	151
	152
	247
153-6861	159
	216
	220
153-6868	81
153-6879	148
	149
	150
153-6881	131
	151
	152
	310
153-7640	33
	41
	43
	156
	247
153-7978	88
153-7983	83
	91
	101
	104
	107
	110
	251
	253
	255
	257
	259
	261
	263
	266
	268
	270
	272
153-7987	83
	91
	101
	104
	107
	110
	251
	253
	255
	257
	259
	261
	263
	266
	268
	270
	272
153-7988	139
	141
153-7990	26
	83
154-0175	51
	53
154-0181	45
154-0385	45
	47
	49
154-0386	45
154-0388	45
154-0389	45
154-0390	47
	49
154-0393	51
	53
154-0867	126
154-0869	126
	128
	129
154-0870	126
	127
	128
	129
154-0871	126
	127
	128
	129
154-0873	126
	127
	128
	129
154-0874	126
	127
	128
	129
154-1230	45
154-1231	45
	47
	49
154-1240	136
154-1241	136
154-1242	136
154-1243	136
154-1246	139
	141
154-1347	33
	41
	43
	247
154-1399	75
	77
	79
154-1673	95
154-1675	83
	90
	91
	95
	96
	97
	98
	99
	100
	101
	104
	107
	110
154-1817	163
	165
	167
	170
	173
	175
	178
154-1824	165
154-1831	165
154-1880	133
154-1942	151
	152
154-2395	75
	79
154-2403	75
	77
	79

PART NUMBER INDEX

Part	Page
	287
154-2406	71
	72
	73
	74
154-2428	245
	247
154-2433	156
154-2713	275
	277
	279
	281
	283
154-2715	91
	253
	255
	270
	272
	275
	277
	279
	281
	283
154-4506	23
154-4507	23
155-7984	81
	148
	246
	292
	293
	294
155-8073	297
	298
155-8075	297
	298
155-8076	297
155-8077	297
155-8085	77
	287
156-6959	71
156-6960	71
	72
	73
156-6961	79
	80
156-6967	47
	49
156-6968	47
	49
156-6969	51
	53
156-6970	47
	49
156-6973	51
	53
156-6977	47
	49
156-6980	128
	129
156-6997	21
	24
	26
	27
	29
	30
	31
	32
	83
160-3534	141
160-4150	113
	153
160-4151	113
	153
160-4152	113
	153
160-4153	113
	153
160-4826	148
	149
160-7034	275
	277
	279
	281
	283
161-2628	47
	49
161-2629	47
	49
161-2630	47
	49
161-2631	47
	49
161-8259	155
161-8260	66
	159
	188
	192
	208
	212
	216
	220
	224
	228
161-8273	130
162-2207	83
	91
	101
	104
	107
	110
	251
	253
	255
	257
	259
	261
	263
	266
	268
	270
	272
162-2468	137
163-3361	▶301
	▶303
163-5372	243
	292
	293
	294
164-7468	36
	63
	64
165-2140	33
	41
	43
	69
	70
	83
	88
	90
	91
	95
	96
	97
	98
	99
	100
	247
165-2141	35
	75
	76
	79
	80
	81
	292
168-8999	292
	293
	294
168-9001	154
	242
	243
	246
	292
	293
	294
168-9002	292
	293
	294
172-4585	297
	298
175-7141	64
	78
	308
176-7719	287
	290
180-6118	122
	159
	180
	184
	188
	196
	200
	204
	208
	212
	216
	220
	224
180-8579	292
	293
	294
183-1163	51
	53
183-1164	51
	53
183-1165	131
	247
	311
	312
	317
	318
183-1336	45
183-3213	59
	60
	61
183-3353	275
	277
	279
	281
	283
183-3543	158
183-3547	65
183-3551	157
183-3572	247
	266
	268
183-4036	291
183-4320	291
183-4323	143
183-4335	243
183-5458	313
183-5460	313
190-3762	33
	41
190-3801	275
	277
	279
	281
	283
190-3803	275
	277
	279
	281
	283
190-3828	151
	152
191-0563	243
191-9297	83
	91
	101
	104
	107
	110
	251
	253
	255
	257
	259
	261
	263
	266
	268
	270
	272
191-9342	135
197-8448	159
197-8540	285
	286
197-8547	315
197-8555	295
198-2664	180
	184
	188
	192
	196
	200
	204
	208
	212
	216
	220
	224
	228
2	
201-9015	247
202-1196	275
	277
	279
	281
	283
202-6616	159
	180
	184
	188
	192
	196
	200
	204
	208
	212
	216
	220
	224

► PRIMARY REFERENCE

PART NUMBER INDEX

Part	Page
	228
205-4726	274
205-4727	274
205-4728	274
205-4731	275
	277
	281
	283
209-7085	124
209-7087	122
209-7090	124
209-7091	122
215-2604	118
	124
215-2606	35
215-2620	51
	53
217-1456	128
	129
217-5859	33
	41
	43
	247
217-5860	33
	41
	43
217-5861	33
	41
	43
	247
217-5862	33
	41
	43
	247
217-5864	41
217-7115	83
	88
	91
	101
	104
	107
	110
	251
	253
	255
	257
	259
	261
	263
	266
	268
	270
	272
217-7358	143
	145
218-8533	59
	60
	61
218-8537	59
	60
	61
220-1523	147
221-1136	51
	53
225-8526	247
225-8533	41
	247
226-4918	246
226-4919	246
226-4922	246
226-4923	246
226-7902	77
	78
	81
	82
229-2288	279
	281
229-2289	279
	281
229-2290	279
	281
229-5150	118
	120
231-2839	298
231-8186	165
234-8762	299
235-5523	275
	277
	283
235-5524	275
	277
	283
235-5525	275
	277
	283
235-5531	33
	41
	317
235-6984	136
235-7123	118
	120
236-4952	275
	277
	279
	281
	283
236-4954	275
	277
	279
	281
	283
236-4959	275
	277
	279
	281
	283
236-4961	275
	277
	279
	281
	283
237-9315	51
	53
	56
	58
238-0128	159
	180
	184
	196
	200
238-0265	180
	184
	188
	192
	196
	200
	204
	208
	212
	216
	220
	224
	228
238-0266	180
	184
	188
	192
	196
	200
	204
	208
	212
	216
	220
	224
	228
238-0271	180
	184
	188
	192
	196
	200
	204
	208
	212
	216
	220
	224
	228
238-9137	167
	173
238-9295	247
239-0232	247
239-0743	200
	204
	208
	212
239-1137	159
	196
239-9987	41
241-6747	232
	234
	236
	238
	240
242-7070	301
242-7071	301
242-7073	301
242-7074	301
242-7075	301
242-7076	301
242-7077	301
242-7078	301
243-6411	291
244-0494	159
244-0495	159
244-0503	159
244-0509	159
244-0514	232
	234
	236
	238
	240
	244
244-3259	159
	180
	184
	188
	192
	196
	200
	204
	208
	212
	216
	220
	224
	228
245-1361	167
	170
	173
	175
	178
245-1362	167
	170
	173
	175
	178
245-1364	167
	170
	173
	175
	178
246-4267	292
	293
246-4361	43
	247
246-5011	244
249-5541	163
	167
	170
	173
	175
	178
249-7263	41
	67
	180
	184
	196
	200
	204
	247
252-1446	275
	277
	283
252-1466	279
	281
252-8372	243
254-5541	295
	296
256-2084	56
	58
256-2085	56
	58
258-4520	159
267-0328	165
270-6968	126
	127
270-6970	126
	127
271-5059	244
271-5062	244
276-1804	265
	286
276-1806	265
	286
286-7496	163
	167
	170
	173
	175
	178
288-6537	56
	58
288-6539	33
	43
288-6593	143
	145
	146
290-8014	275
	277
	279
	281
	283
290-8472	23
291-1808	56

PART NUMBER INDEX

Part	Page
	58
292-1988	196
	200
	204
292-1992	232
	236
	238
	240
292-9620	138
293-3246	▶274
	▶279
	▶281
294-4916	51
	53
295-4070	287
	290
295-5876	180
	184
	188
	192
	196
	200
	204
	208
	212
	216
	220
	224
	228
297-2996	154
3	
302-1818	▶10
302-4181	51
	53
302-4182	51
	53
302-4187	287
302-7776	265
	286
302-7777	265
	286
302-7778	265
	286
303-0338	56
	58
303-4100	▶11
303-4101	▶12
303-4102	▶13
303-4103	▶14
308-1852	45
308-1853	45
	47
	49
308-1854	45
308-1861	56
308-1862	59
	60
	61
308-1867	153
308-1869	153
308-1871	83
	95
	113
308-1874	36
	63
	64
308-1875	36
	37
	38
	63
	64
	251
	253
	255
	270
	272
308-1878	83
308-1882	83
	91
	101
	104
	107
	110
	251
	253
	255
	257
	259
	261
	263
	266
	268
	270
	272
308-1889	83
	91
	101
	104
	107
	110
	251
	253
	255
	257
	259
	261
	263
	266
	268
	270
	272
308-1892	83
	91
	101
	104
	107
	110
	251
	253
	255
	257
	259
	261
	263
	266
	268
	270
	272
308-1897	83
	91
	101
	104
	107
	110
	251
	253
	255
	257
	259
	261
	263
	266
	268
	270
	272
308-1901	83
308-1903	24
	27
	83
308-1904	22
	24
	27
	83
308-1907	163
	167
	170
	173
	175
	178
308-1914	300
308-2283	3
	45
308-2286	3
	126
	127
308-2298	1
	2
	3
	5
	7
	8
	9
	10
	11
	12
	13
	14
	16
	17
	19
	20
	55
	147
308-2304	17
	65
308-2309	2
	3
	5
	10
	11
	12
	13
	14
	19
	242
308-2314	2
	4
	6
	10
	11
	12
	13
	14
	313
308-2319	2
	3
	5
	10
	11
	12
	13
	14
	17
	19
	295
308-2320	2
	10
	11
	12
	13
	14
	19
	20
	55
	132
309-6725	2
	10
	14
	114
	115
309-6728	91
	251
309-6729	83
	101
	104
	107
	110
	251
	257
	259
	261
	263
	266
	268
308-2362	45
308-4266	83
	91
	101
	104
	107
	110
	251
	253
	255
	257
	259
	261
	263
	266
	268
	270
	272
308-4735	2
	3
	5
	7
	8
	9
	10
	55
	150
308-5610	16
	17
	243
308-5704	3
	265
308-6556	▶2
309-6720	1
	2
	3
	5
	7
	8
	9
	10
	11
	12
	13
	14
	17
	19
	20
	55
	132
309-6725	2
	10
	14
	114
	115
309-6728	91
	251
309-6729	83
	101
	104
	107
	110
	251
	257
	259
	261
	263
	266
	268

▶ PRIMARY REFERENCE

PART NUMBER INDEX

Part	Page
309-6732	83
	101
	107
	266
309-6735	33
	41
	43
309-6736	41
309-6737	114
310-7063	118
	120
	122
	124
311-0655	83
	91
	101
	104
	107
	110
	251
	253
	255
	257
	259
	261
	263
	266
	268
311-1099	2
	3
	5
	7
	8
	9
	10
	11
	12
	13
	14
	19
	51
	55
311-1100	2
	5
	7
	8
	9
	10
	11
	12
	13
	14
	19
	47
	55
311-1101	2
	5
	7
	8
	9
	10
	11
	12
	13
	14
	19
	55
	128
311-1102	2
	3
	5
	7
	8
	9
	10
	11
	12
	13
	14
	19
	55
	59
311-1103	2
	4
	6
	7
	8
	9
	10
	11
	12
	13
	14
	19
	55
	139
311-1104	2
	4
	6
	7
	8
	9
	10
	11
	12
	13
	14
	19
	55
	151
311-1105	2
	10
	12
	13
	14
	19
	83
311-1106	2
	7
	10
	12
	13
	14
	19
	275
311-1107	3
	5
	10
	11
	12
	75
	76
311-1108	13
	14
	16
	17
	19
	20
	71
311-1109	2
	4
	6
	10
	11
	12
	13
	14
	16
	17
	19
	20
	303
	304
	305
	306
311-1111	2
	10
	11
	12
	13
	14
	16
	17
	19
	20
	134
311-1112	1
	2
	3
	5
	7
	8
	9
	10
	11
	12
	13
	14
	16
	19
	55
	118
	120
311-1113	1
	2
	3
	5
	7
	8
	9
	10
	12
	14
	16
	17
	19
	55
	143
311-1114	1
	2
	3
	6
	7
	8
	9
	10
	11
	12
	13
	14
	16
	17
	19
	20
	55
	133
311-1115	2
	4
	6
	7
	8
	9
	10
	55
	163
311-1116	1
	2
	3
	5
	7
	8
	10
	11
	12
	13
	14
	16
	17
	19
	20
	55
	154
311-1118	2
	10
	155
311-1119	2
	10
	66
311-1120	2
	3
	5
	10
	11
	12
	13
	14
	16
	17
	19
	20
	292
	293
311-1121	2
	10
	11
	12
	13
	14
	16
	17
	19
	20
	137
311-1122	2
	8
	9
	10
	11
	12
	14
	16
	17
	19
	36
	55
311-1123	1
	2
	3
	5
	7
	8
	9
	10
	11
	12
	13

PART NUMBER INDEX

Part	Page
	14
	19
	41
	43
	55
311-1124	2
	3
	5
	10
	11
	12
	13
	14
	19
	245
311-1125	2
	4
	6
	10
	11
	12
	13
	16
	17
	19
	287
311-1127	1
	2
	3
	5
	7
	8
	9
	10
	11
	12
	13
	14
	16
	17
	19
	20
	55
	297
	298
311-1128	1
	2
	4
	6
	7
	8
	9
	10
	11
	12
	13
	14
	16
	17
	19
	20
	55
	300
311-1129	2
	10
	17
	310
311-1130	1
	2
	4
	6
	7
	8
	9
	10
	11
	12
311-1131	2
	3
	5
	10
	11
	12
	14
	16
	19
	315
311-1157	47
	49
311-1158	►56
	►59
	►60
311-1160	►136
	►139
	►141
311-1165	24
	27
	83
311-1168	275
	277
	279
	281
	283
311-1169	275
	277
	279
	281
	283
311-1172	245
311-1173	245
	247
	317
	318
311-1174	287
311-1753	2
	77
	78
311-1754	2
	72
311-3326	275
	277
	283
311-5813	7
	88
311-5814	7
	266
	268
311-5815	7
	22
311-5826	9
	165
311-5846	22
	23
311-5847	23
311-5852	39
311-5853	39
311-9622	266
	268
313-2025	91
	101
	104
	107
	110
	251
	257
	259
	261
	263
313-5832	253
	255
	266
	268
313-5833	253
	255
	257
	266
	268
313-9323	21
	24
	26
	27
	29
	30
	31
	32
	83
315-0451	►16
315-5235	83
	91
	101
	104
	107
	110
	251
	259
	261
	263
	270
	272
315-5236	83
	91
	101
	104
	107
	110
	251
	257
	259
	261
	263
	270
	272
315-5250	17
	20
	122
315-5253	16
	156
315-5266	20
	290
315-6636	13
	14
	16
	17
	19
	79
	80
315-6638	4
	6
	7
	8
	9
	11
	12
	13
	14
	19
	55
	311
	312
316-2273	118
316-2275	118
316-9548	3
	5
	10
	11
	12
	73
316-9664	3
	5
	11
	12
	13
	14
	19
	232
	234
316-9713	4
	6
	196
	200
	204
	208
	212
317-0566	14
	291
317-0960	247
317-6706	6
	16
	17
	286
317-7195	83
	253
	255
	270
	272
318-1671	►3
318-1672	►5
318-5038	299
318-8805	236
	238
	240
319-3250	270
	272
319-3252	83
319-7366	118
320-9110	2
	3
	5
	10
	11
	12
	13
	14
	16
	17
	19
	20
	116
320-9114	4
	6
	299
321-4249	83
	91
	101
	107
	251
	253
	257
	261

► PRIMARY REFERENCE

PART NUMBER INDEX

Part	Page
	266
	270
321-5906	39
321-5907	63
	64
321-6741	3
	5
	11
	12
	14
	17
	19
	296
322-0561	11
	55
	90
322-0562	11
	55
	270
	272
322-0563	11
	24
	55
322-0564	11
	55
	277
322-0629	17
	157
322-0630	17
	124
322-0886	4
	6
	138
322-1390	3
	91
322-1391	4
	9
	279
322-1392	3
	6
	135
322-2426	16
	130
322-3102	5
	95
322-3103	6
	8
	281
322-3808	20
	67
	68
322-4991	▶17
322-6874	51
322-7490	83
	95
322-7492	91
	251
323-2543	20
	81
323-9157	16
	20
	131
324-3399	266
	268
324-3400	83
	91
	101
	104
	107
	110
	251
	253
	255
	257
	259
	261
	263
	270
	272
324-7849	133
325-5924	159
325-5927	159
325-5932	159
325-5938	159
325-5939	159
325-5940	159
325-5941	180
	184
	188
	192
	196
	200
	204
	208
	212
	216
	220
	224
	228
325-5942	180
	184
	196
	200
	216
	220
325-5943	180
	184
	188
	192
	216
	220
	224
	228
325-9415	120
	122
	124
325-9416	122
	124
326-8547	232
	234
	236
	238
	240
326-9052	234
	240
327-0061	1
	7
	8
	9
	55
	74
328-3229	36
	38
	63
	64
328-3230	63
	64
328-6606	216
	220
328-6607	180
	184
	188
	192
	208
	216
	220
	224
	228
329-1292	287
329-3694	37
	38
329-3695	37
	38
329-3696	3
	5
	19
	37
	38
329-8576	39
329-8577	13
	39
330-3010	5
	26
330-3011	5
	251
330-9189	84
	91
	101
	104
	107
	110
	251
	253
	255
	257
	259
	261
	263
	266
	268
	270
	272
331-2590	149
331-3870	129
331-3871	253
	255
331-3872	148
	149
331-3873	148
331-3875	247
331-3876	247
331-3878	247
331-3879	247
331-3881	247
331-3882	247
331-3883	247
331-3884	247
331-3885	247
331-3886	247
331-4499	1
	16
	17
	20
	53
331-4500	1
	16
	17
	20
	49
331-4501	1
	16
	17
	20
	129
331-4502	1
	16
	17
	20
	60
	61
331-4503	1
	16
	17
	20
	141
331-4504	1
	16
	17
	20
	152
331-4505	1
	16
	17
	20
	96
331-4506	1
	16
	17
	20
	253
	255
331-4507	1
	16
	17
	20
	27
331-4508	1
	16
	17
	20
	283
331-4509	16
	17
	148
331-4510	1
	16
	17
	167
	170
331-4511	16
	17
	20
	247
331-5411	▶19
333-5930	▶307
333-7903	307
	308
334-0272	143
	145
	146
334-0732	83
	91
	101
	104
	107
	110
	251
	253
	255
	257
	259
	261
	263
	266
	268
	270
	272
334-7291	149
334-7293	1
	11
	12
	13
	14
	16
	17
	19

PART NUMBER INDEX

Part	Page
	20
	149
334-7294	11
	12
	13
	14
	19
	173
	175
334-7295	232
	236
334-7296	19
	236
	238
334-7297	180
	184
	196
	216
	220
334-7299	180
	184
	188
	196
	216
	220
	224
334-7300	180
	184
	188
	192
	196
	216
	220
	224
	228
334-7304	180
	196
	216
334-7305	180
	184
	216
	220
334-7306	180
	196
	216
334-7307	13
	19
	180
	184
	188
	192
334-7436	180
	196
	216
334-7437	159
	180
	184
	188
	192
	196
	200
	204
	208
	212
	216
	220
	224
	228
335-5578	83
	91
	101
	104
	107
	110
	251
	253
	255
	257
	259
	261
	263
	266
	268
	270
	272
335-8325	63
336-2965	84
	90
	91
	101
	104
	107
	110
	251
	253
	255
	257
	259
	261
	263
	266
	268
336-5517	11
	12
	14
	216
	220
	224
	228
337-3107	196
	200
	204
	208
	212
338-3403	51
	53
339-2900	304
	308
339-3017	1
	2
	3
	6
	7
	8
	9
	10
	11
	12
	13
	14
	16
	17
	19
	20
	55
	153
340-0199	299
341-2961	159
341-3600	314
342-1226	1
	7
	8
	9
	55
	82
342-1268	1
	7
	8
	9
	35
	55
342-1324	1
	7
	8
	9
	55
	317
	318
342-8499	21
	26
	29
	30
	31
	32
342-8500	▶21
	▶26
	▶29
	30
	31
	32
	▶91
343-4578	16
	246
344-5868	159
	180
	184
	188
	192
	196
	200
	204
	208
	212
	216
	220
	224
	228
349-1368	292
351-6854	▶20
354-1245	1
	7
	20
	63
	64
354-7429	266
	268
355-1393	▶113
358-4256	76
	80
358-9226	287
359-5135	88
359-6000	313
359-9666	292
	293
	294
360-7332	▶159
361-3925	313
362-8050	184
	188
	192
	200
	204
	208
	212
	220
	224
	228
363-5813	180
	184
	188
	192
	196
	200
	204
	208
	212
	216
	220
	224
	228
	232
	236
	240
	244
	247
363-8409	26
	29
	30
	31
	32
	91
363-8894	72
364-2719	3
	9
	97
	98
364-2720	3
	9
	257
	259
364-2721	3
	9
	29
364-2741	5
	8
	99
	100
364-2742	5
	8
	261
	263
364-2743	5
	8
	30
364-2755	104
	110
364-7487	91
	101
	104
	107
	110
	251
	257
	259
	261
	263
364-8947	180
	184
	200
	216
	220
365-0485	2
	3
	5
	10
	11
	12
	13
	16
	17
	20
365-4125	247
365-6508	16
	17
	20
	178
366-2656	184
	188

▶ PRIMARY REFERENCE

PART NUMBER INDEX

Part	Page
	192
	200
	204
	208
	212
	220
	224
	228
366-2658	184
	188
	192
	200
	204
	208
	212
	220
	224
	228
366-3055	247
366-3065	242
	243
366-4251	51
	53
369-4486	83
	91
	101
	104
	107
	110
	251
	253
	255
	257
	259
	261
	263
	266
	268
	270
	272
369-8010	120
	122
	124
370-6544	115
	116
	117
379-0870	65
383-1331	76
384-8063	167
	170
	178
385-5356	305
	309
390-3729	83
	101
	104
	107
	110
	253
	255
	257
	259
	261
	263
	266
	268
	270
	272
390-3731	83
	101
	104
	107
	110
	253
	255
	257
	259
	261
	263
	266
	268
	270
	272
394-3492	294
394-3494	293
396-6868	33
4	
419-6641	33
419-6642	3
	5
	33
419-6687	3
	5
	146
419-7640	274
	300
422-4226	43
423-5611	163
	167
	170
	173
	175
	178
423-5640	188
	192
	204
	208
	212
423-5665	287
423-6224	132
423-6334	184
	200
	204
	220
423-7663	58
423-7720	40
423-7722	120
	122
423-7723	90
	91
	96
	97
	98
	99
	100
423-7724	91
	101
	104
	107
	110
	251
	253
	255
	257
	259
	261
	263
	266
	268
	270
	272
423-8370	40
424-3091	306
	308
425-6360	120
425-6407	163
	167
	170
	173
	175
	178
425-6417	69
	70
425-7065	83
	88
	91
	101
	107
	251
	253
	257
	261
	266
	270
426-4357	275
	277
	279
	281
	283
435-0208	242
	243
435-1631	►7
	►12
435-1633	►8
435-1640	►9
435-1654	►55
435-1657	►1
435-9544	56
	62
435-9546	62
437-5210	247
438-1431	131
	311
438-9109	139
	141
438-9362	247
439-0945	154
439-2614	188
	192
	224
	228
439-3373	45
439-4992	163
	167
	170
	173
	175
	178
439-4993	167
	173
440-5104	56
	62
442-8532	1
	7
	8
	9
	55
	117
444-7301	224
	228
447-3580	247
447-3735	43
	247
	318
447-5255	139
	141
452-3668	310
454-7980	88
454-7991	287
456-5315	127
456-7377	311
457-5872	59
	60
	61
457-5876	59
	60
	61
463-1972	127
463-8238	20
	158
464-2090	90
	91
	96
465-6710	101
	104
	107
	110
465-7011	3
	5
	40
467-4388	294
468-7382	234
469-4428	188
	192
	224
	228
472-2214	167
	170
	173
	175
	178
472-2215	163
	170
	175
	178
476-2680	291
476-5581	188
	192
	204
	208
	212
	224
	228
477-2865	14
	240
477-8793	163
	173
	175
477-8828	56
	62
481-1650	143
481-4144	167
	170
	178
483-1210	97
	98
	99
	100
483-3937	134
484-0882	312
486-3293	3
	5
	294
486-8880	165
487-0157	51
	53
487-9902	188
	192
	208
	212
	224
	228

► PRIMARY REFERENCE

PART NUMBER INDEX

Part	Page
488-0405	64
490-0367	22
	24
	27
	29
	30
	31
	32
	91
494-9566	165
494-9569	43
495-0737	91
	251
	253
	255
	257
	259
	261
	263
	268
	270
	272
	32
514-7719	127
515-3138	117
515-3484	128
524-3340	47
	49
525-7106	45
525-8939	45
528-6883	139
540-0594	►58
	►62
540-0595	61
	62
543-5898	192
	228

5

Part	Page
500-3814	165
500-8345	165
502-5421	104
	110
	255
	259
	263
	268
	272
502-9478	104
	110
	255
	259
	263
	268
	272
503-9707	104
	110
	255
	259
	263
	268
	272
503-9731	104
	110
	255
	259
	263
	268
	272
504-3838	59
	60
	61
508-5627	5
	69
508-5628	5
	101
	104
508-5629	5
	31
508-6591	165
508-6672	3
	70
508-6673	3
	107
	110
508-6674	3

► PRIMARY REFERENCE

MEMORANDA

©2018 Caterpillar
All Rights Reserved

CAT, CATERPILLAR, LET'S DO THE WORK, their respective logos, “Caterpillar Corporate Yellow”, the "Power Edge" and Cat "Modern Hex" trade dress as well as corporate and product identity used herein, are trademarks of Caterpillar and may not be used without permission.