CATERPILLAR®

SEBP4546-12
June 2010

Parts Manual

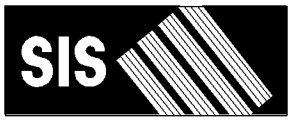

See “General Information” for New Parts Manual Features.

C1.1 Industrial Engine

C6L1-Up (Engine)

This Parts Manual is also Available in PDF Format on Compact Disk (CD-ROM)- Caterpillar Form No. SERP4546

Product and Dealer Information

Note: For product identification plate locations, see the section “Product Identification Information” in the Operation and Maintenance Manual.

Delivery Date: _____

Product Information

Model: _____

Product Identification Number: _____

Engine Serial Number: _____

Transmission Serial Number: _____

Generator Serial Number: _____

Attachment Serial Numbers: _____

Attachment Information: _____

Customer Equipment Number: _____

Dealer Equipment Number: _____

Dealer Information

Name: _____ Branch: _____

Address: _____

_____

_____

	Dealer Contact	Phone Number	Hours
Sales:	_____	_____	_____
Parts:	_____	_____	_____
Service:	_____	_____	_____

MEMORANDA

TABLE OF CONTENTS

Name	Page
GENERAL INFORMATION	A2
REPAIR ALTERNATIVES	A4
SUPPLEMENTAL COOLANT ADDITIVES	A5
MAINTENANCE PARTS	A6
INDEX	A8
ENGINE ARRANGEMENT	1
ENGINE AR	1
ENGINE AR-PRIMARY	8
BASIC ENGINE	24
CAMSHAFT GP	24
COVER GP-ENGINE	29
COVER GP-FRONT HOUSING	30
COVER GP-VALVE MECHANISM	31
CRANKSHAFT GP	37
CYLINDER BLOCK GP	39
CYLINDER HEAD AS	41
CYLINDER HEAD GP	43
DRAIN GP-ENGINE OIL	44
DRIVE GP-FAN	45
DRIVE GP-PUMP	48
FLYWHEEL GP	49
HOUSING GP-FLYWHEEL	52
HOUSING GP-FRONT	59
KIT-FRONT GEAR	71
LIFTING GP-ENGINE	72
MOUNTING GP-ENGINE	74
PAN GP-OIL	76
PISTON & ROD GP	88
PLUG GP-OIL PAN	89
PULLEY GP-CRANKSHAFT	91
PULLEY GP-WATER PUMP	93
V-BELT GP	94
VALVE MECHANISM GP	96
LUBRICATION SYSTEM	98
FILLER GP-ENGINE OIL	98
FILTER GP-ENGINE OIL	101
MOUNTING GP-ENGINE OIL FILTER	103
COOLING SYSTEM	104
CONNECTOR GP-CAB HEATER LINES	104
COVER GP-REGULATOR HOUSING	105
FAN GP	106
FAN GP-SUCTION	108
HOUSING GP-WATER REGULATOR	110
MOUNTING GP-FAN	111
PUMP GP-WATER	112
RADIATOR & FAN GP	115
RADIATOR GP	119
AIR INLET AND EXHAUST SYSTEM	123
CONNECTION GP-EXHAUST	123
FILTER ELEMENT AS-AIR	125
FILTER GP-AIR	126
MANIFOLD GP-EXHAUST	128
FUEL SYSTEM	131
CONTROL GP-GOVERNOR	131
FILTER GP-FUEL	135
GOVERNOR GP	136
PUMP GP-FILTER & FUEL TRANSFER	142
PUMP GP-FUEL INJECTION	145
PUMP GP-FUEL PRIMING	157
PUMP GP-FUEL PRM & PRIM FILTER	158
PUMP GP-FUEL TRANSFER	159
ELECTRICAL AND STARTING SYSTEM	161
ALTERNATOR GP-CHARGING	161
CONNECTION GP-ELECTRICAL	165
GLOW PLUG GP	168
SHUTOFF GP-ELECTRICAL	169
SOLENOID GP-SHUTOFF	170
STARTING MOTOR GP-ELECTRIC	172
SWITCH GP-PRESSURE	180
SWITCH GP-START	182
SWITCH GP-TEMPERATURE	183
OPERATOR STATION	184
LAMP GP-INDICATOR	184
SERVICE EQUIPMENT AND SUPPLIES	185
CHART-PLATE & FILM	185
KIT-ENGINE PARTS	186
PARTS GP-MISCELLANEOUS	187
PART NUMBER INDEX	B1

GENERAL INFORMATION

1. ENGINE IDENTIFICATION

Caterpillar engines are identified with Serial Numbers and Arrangement Numbers. In some cases, Modification Numbers are also used. The serial number plate which shows these numbers is mounted on the engine.

Caterpillar dealers need this information to determine which components were included on the engine when it was assembled at the factory. This permits accurate identification of replacement part numbers.

2. ORDERING PARTS

⚠ WARNING

When replacement parts are required for this product Caterpillar recommends using Caterpillar replacement parts or parts with equivalent specifications including, but not limited to, physical dimensions, type, strength and material.

Failure to heed this warning can lead to premature failures, product damage, personal injury or death.

Quality Caterpillar replacement parts are available from Caterpillar dealers throughout the world. Their parts inventories are up to date and include all parts normally required to protect your investment in Caterpillar Engines. Dealers may offer repair kits or remanufactured parts to allow selection of the most effective repair alternative for a particular situation. When ordering parts, your order should specify the quantity, part number, part name, and the serial number/product identification number of the engine for which the parts are needed.

3. PARTS MANUAL ORGANIZATION

Product information in this manual is presented as "information elements" that represent all of the components for the specific model. An Engine Arrangement is an example of an information element. The information elements are organized alphabetically by part name and secondarily by part number within each major section of the manual.

4. TABLE OF CONTENTS

A table of contents (TOC) is found at the beginning of the manual. The TOC lists each section of the manual with a complete list of all information elements organized as they appear in the manual. Page numbers are provided for quick reference to detailed parts identification illustrations and serviceable consist lists.

5. MAINTENANCE PARTS INDEX

The Maintenance Parts Index, located near the beginning of the manual, references most frequently used maintenance part numbers, providing description, quantity, usage and page number. This information is organized alphabetically by part description.

6. INDEX

The index located near the front of the manual is an alphabetical listing of all information elements included in the manual. Page numbers are provided for quick reference to detailed parts identification illustrations and serviceable consist lists.

7. PART NUMBER INDEX

A numerical index listing all part numbers and the corresponding page number(s) appears at the back of the manual.

8. CAPTIONS

Captions located at the beginning each information element identify the part number and part name along with additional descriptive information. S/N information found in each caption should be used to select correct information for a specific engine. Field replacement options, identification of optional attachment components, and where used ("part of") information is also provided.

The first line of a caption is shown in larger type font to indicate the beginning of an information element. Captions for additional pages that may be required to illustrate an information element will be shown in standard type font and will include the term *(contd.)* .

9. NON-SERVICED PARTS

In some instances it is necessary to display non-serviced parts that are a link to lower level serviceable consist lists. These non-serviced part numbers are shown in *italic* type indicating that they are not available. All consist lists have not been converted to reflect this enhancement.

10. PARTS LIST REFERENCE NUMBERS

Numbers shown in the Ref No column correspond to numbers used in the associated graphic(s). An alphabetic suffix may be added to a reference number to identify lower level consist items. Numbers shown in the Graphic Ref column refer to the graphic number identifier displayed in the lower left corner of each illustration. The Graphic Ref number may be used in combination with the item Ref No to determine the correct part number. There may be intentional omission of a Ref No in a consist list as information is updated to reflect the latest serviceable part numbers.

11. INDENTED PART NAMES

When a part name is indented in a parts list, it is part of (included in) the group or assembly under which it is indented.

12. ILLUSTRATION REFERENCE LETTERS

When necessary, illustrations contain reference letters (A, B, C etc.) that are intended to track lines and harnesses from one point to another. They are also used to show where to reconnect illustrations that have been separated.

13. ABBREVIATIONS AND SYMBOLS

O.D. – Outside Diameter
I.D. – Inside Diameter
A – Not Part Of This Group
B – Use As Required
C – Change From Previous Type
D – Order By The Meter
E – Order By The Centimeter
F – Not Shown
G – Order By The Inch
I – Refer To Hydraulic Information System
M – Metric Part
R – Remfg Part May Be Available
Y – Separate Illustration
Z – Not Serviced Separately

SIS *New Feature*

14. DESCRIPTION OF TYPE CHANGES

Type - A type is defined as any configuration change that requires an additional Information Element for an Arrangement, Group, or Assembly. If serial number breaks for types are not available, a type # (Type 1, Type 2, etc.) will be displayed in the caption. These "type" changes are identified with a "C" note (change from previous type) in the Parts List. Only the "types" that apply to this Parts Manual will be included. Additional types may exist causing "C" notes to appear on an Information Element when no other types are shown.

15. <END>

This symbol indicates the end of an information element.

NOTE:

Continuing improvement and advancement of product design may cause changes to your engine which may not be included in this publication. Whenever a question arises regarding your Caterpillar product or this publication, please consult your Caterpillar dealer for the latest available information.

REPAIR ALTERNATIVES

REMANUFACTURED COMPONENTS

As an option when making repairs consider Caterpillar Remanufactured Components. Components that are available through the Caterpillar Remanufactured Program are identified three ways in the parts book:

- with the letter R in the note field of the parts list
- with an R* at the beginning of the first line of the caption
- with an *R at the end of the first line of the caption

Typical components included in the Remanufacturing Program include:

ALTERNATORS
CONNECTING RODS
CRANKSHAFTS - UNDERSIZE
CRANKSHAFTS - UPGRADE TO NEW
CYLINDER HEADS
ELECTRONIC CONTROL MODULES (ECM)
ELECTRONIC SENSORS
FUEL INJECTORS
FUEL NOZZLES
FUEL PUMPS
GOVERNORS
OIL PUMPS
PISTONS
SHORT BLOCKS
STARTERS
TURBOCHARGERS - COMPLETE
TURBOCHARGER CARTRIDGES
WATER PUMPS

Caterpillar Remanufactured engines for many engine arrangements are also available.

SUPPLEMENTAL COOLANT ADDITIVES

CUSTOMER BENEFITS:

Protects against cavitation, foam, erosion, corrosion, and scale buildup in cooling systems.

- Provides measured coolant conditioner.

DESCRIPTION:

Additives deplete from the coolant with normal operation. For this reason, Supplemental Coolant Additives (SCA) must be added to all heavy duty coolants at regular intervals. In addition, when not using a fully formulated, pre-charged antifreeze, like Caterpillar's DEAC, an initial charge of SCA must be added to the cooling system. The amount of SCA added to the system is dependent on the capacity of the system.

The SCA for initial fill is provided as a liquid. SCA's for maintenance intervals are available in liquid form and as a spin-on element. (No Spin-on available for 3600 Family of Engines)

NOTE:

The amount of SCA added at initial fill is not the same as the amount added at maintenance intervals.

The coolant additive elements can be used with any ethylene or propylene glycol type antifreeze which meets ASTM D4985 or ASTM D5345 Specifications.

NOTE:

For use with standard heavy duty coolant only, not for use with Extended Life Coolant.

PARTS NEEDED:

Cooling System Capacity		Liquid SCA at Initial Fill	Liquid SCA at Maintenance*	Spin-on SCA Maintenance Element*
Liters	Gallons			
22-30	(6-8)	3P-2044 (1)	6V-3542 (1)	111-2370 (1)
30-38	(8-10)	3P-2044 (1) 6V-3542 (1)	111-2372 (1)	111-2369 (1)
38-49	(10-13)	3P-2044 (1) 8T-1589 (1)	111-2372 (1)	111-2369 (1)
49-64	(13-17)	3P-2044 (2)	8T-1589 (1)	9N-3368 (1)
64-83	(17-22)	3P-2044 (2) 8T-1589 (1)	111-2372 (1) 6V-3542 (1)	111-2371 (1)
83-114	(22-30)	3P-2044 (3) 8T-1589 (1)	3P-2044 (1)	9N-3718 (1)
114-163	(30-43)	3P-2044 (5)	3P-2044 (1) 6V-3542 (1)	111-2371 (2)
163-242	(43-64)	3P-2044 (8)	3P-2044 (2)	9N-3718 (2)

** Normal maintenance period is 250 hrs. See your Operation and Maintenance Manual for complete coolant maintenance instructions.*

( ) Indicates quantity required.

MAINTENANCE PARTS

DESCRIPTION	PART NUMBER	QTY	WHERE USED	PAGE
AIR INLET AND EXHAUST SYSTEM				
FILTER ELEMENT-AIR	246-5011	1	FILTER ELEMENT AS-AIR	125
BASIC ENGINE				
GAUZE (CRANKCASE BREATHER)	153-5939	1	COVER GP-VALVE MECHANISM	31
		1	COVER GP-VALVE MECHANISM	33
		1	COVER GP-VALVE MECHANISM	35
PLUG-DRAIN (ENGINE OIL PAN)	218-2334	2	PLUG GP-OIL PAN	89
PLUG-DRAIN (ENGINE OIL)	165-3605	2	PLUG GP-OIL PAN	90
SEAL-VALVE COVER	231-3020	1	COVER GP-VALVE MECHANISM	31
		1	COVER GP-VALVE MECHANISM	33
		1	COVER GP-VALVE MECHANISM	35
V-BELT (ALTERNATOR, WATER PUMP)	183-3942	1	V-BELT GP	95
V-BELT (DRIVE)	183-3942	1	V-BELT GP	94
COOLING SYSTEM				
CAP-RADIATOR	202-6616	1	RADIATOR & FAN GP	115
		1	RADIATOR GP	119
GASKET-COVER (TEMPERATURE REGULATOR)	231-7858	1	HOUSING GP-WATER REGULATOR	110
GASKET-COVER (WATER REGULATOR HOUSING)	231-7858	1	COVER GP-REGULATOR HOUSING	105
HOSE-RADIATOR	244-0503	1	RADIATOR & FAN GP	115
	258-4520	1	RADIATOR & FAN GP	115
HOSE-RADIATOR (LOWER)	258-4520	1	RADIATOR GP	119
HOSE-RADIATOR (UPPER)	244-0503	1	RADIATOR GP	119
REGULATOR-WATER TEMPERATURE	231-7859	1	PUMP GP-WATER	113
ELECTRICAL AND STARTING SYSTEM				
GLOW PLUG	307-8672	3	GLOW PLUG GP	168
KEY-IGNITION	251-1871	1	SWITCH GP-START	182
FUEL SYSTEM				
FILTER AS-FUEL	243-6411	1	PUMP GP-FILTER & FUEL TRANSFER	142
FILTER ELEMENT-FUEL	276-1806	1	PUMP GP-FUEL PRM & PRIM FILTER	158
FILTER ELEMENT-FUEL (FILTER)	276-1806	1	FILTER GP-FUEL	135
GASKET (FUEL FILTER)	069-2922	2	PUMP GP-FILTER & FUEL TRANSFER	142
		2	PUMP GP-FUEL TRANSFER	159
KIT-ELEMENT (FUEL FILTER)	067-6987	1	PUMP GP-FILTER & FUEL TRANSFER	142
		1	PUMP GP-FUEL TRANSFER	159
PLUG-DRAIN (FUEL FILTER)	302-7777	3	FILTER GP-FUEL	135
PLUG-DRAIN (WATER SEPARATOR)	302-7777	3	PUMP GP-FUEL PRM & PRIM FILTER	158
SEAL (WATER SEPARATOR)	302-7778	1	PUMP GP-FUEL PRM & PRIM FILTER	158
LUBRICATION SYSTEM				
CAP-FILLER (ENGINE OIL)	334-0272	1	FILLER GP-ENGINE OIL	99
CAP-FILLER (ENGINE)	334-0272	1	FILLER GP-ENGINE OIL	98
CAP-OIL FILLER	217-7358	1	FILLER GP-ENGINE OIL	98
CAP-OIL FILLER (ENGINE)	217-7358	2	FILLER GP-ENGINE OIL	99
FILTER AS-ENGINE OIL	220-1523	1	FILTER GP-ENGINE OIL	101
SEAL (ENGINE OIL FILL CAP)	153-5933	2	FILLER GP-ENGINE OIL	99
	288-6593	1	FILLER GP-ENGINE OIL	99
SEAL (ENGINE OIL FILLER)	288-6593	1	FILLER GP-ENGINE OIL	98

MAINTENANCE PARTS

DESCRIPTION	PART NUMBER	QTY	WHERE USED	PAGE
OPERATOR STATION				
LAMP (GLOW PLUG INDICATOR)	197-8547	1	LAMP GP-INDICATOR	184
SERVICE EQUIPMENT AND SUPPLIES				
HOSE-RADIATOR	244-0503	1	PARTS GP-MISCELLANEOUS	187

INDEX

Name	Page
A	
ALTERNATOR GP-CHARGING	161, 162, 164
C	
CAMSHAFT GP	24, 25, 26, 27, 28
CAP-FILLER (ENGINE OIL)	99
CAP-FILLER (ENGINE)	98
CAP-OIL FILLER	98
CAP-OIL FILLER (ENGINE)	99
CAP-RADIATOR	115, 119
CHART-PLATE & FILM	185
CONNECTION GP-ELECTRICAL	165, 166, 167
CONNECTION GP-EXHAUST	123, 124
CONNECTOR GP-CAB HEATER LINES	104
CONTROL GP-GOVERNOR	131, 133
COVER GP-ENGINE	29
COVER GP-FRONT HOUSING	30
COVER GP-REGULATOR HOUSING	105
COVER GP-VALVE MECHANISM	31, 33, 35
CRANKSHAFT GP	37
CYLINDER BLOCK GP	39
CYLINDER HEAD AS	41
CYLINDER HEAD GP	43
D	
DRAIN GP-ENGINE OIL	44
DRIVE GP-FAN	45, 46, 47
DRIVE GP-PUMP	48
E	
ENGINE AR	1, 2, 3, 4, 5, 6, 7
ENGINE AR-PRIMARY	8, 9, 10, 11, 12, 13, 14, 15, 16, 17, 18, 19, 20, 21, 22, 23
F	
FAN GP	106, 107
FAN GP-SUCTION	108, 109
FILLER GP-ENGINE OIL	98, 99
FILTER AS-ENGINE OIL	101
FILTER AS-FUEL	142
FILTER ELEMENT AS-AIR	125
FILTER ELEMENT-AIR	125
FILTER ELEMENT-FUEL	158
FILTER ELEMENT-FUEL (FILTER)	135
FILTER GP-AIR	126
FILTER GP-ENGINE OIL	101, 102
FILTER GP-FUEL	135
FLYWHEEL GP	49, 50, 51
G	
GASKET (FUEL FILTER)	142, 159
GASKET-COVER (TEMPERATURE REGULATOR)	110
GASKET-COVER (WATER REGULATOR HOUSING)	105
GAUGE AS-OIL LEVEL (DIPSTICK) (ENGINE)	86
GAUGE-OIL LEVEL (DIPSTICK) (ENGINE)	76, 78, 80, 82
GAUZE (CRANKCASE BREATHER)	31, 33

INDEX

Name	Page
	35
GLOW PLUG	168
GLOW PLUG GP	168
GOVERNOR GP	136
	138
	140
H	
HOSE-RADIATOR	115
	187
HOSE-RADIATOR (LOWER)	119
HOSE-RADIATOR (UPPER)	119
HOUSING GP-FLYWHEEL	52
	53
	54
	55
	56
	57
	58
HOUSING GP-FRONT	59
	61
	63
	65
	67
	69
HOUSING GP-WATER REGULATOR	110
I	
INDICATOR (AIR FILTER SERVICE)	125
K	
KEY-IGNITION	182
KIT-ELEMENT (FUEL FILTER)	142
	159
KIT-ENGINE PARTS	186
KIT-FRONT GEAR	71
L	
LAMP (GLOW PLUG INDICATOR)	184
LAMP GP-INDICATOR–GLOW PLUG	184
LIFTING GP-ENGINE	72
	73
M	
MANIFOLD GP-EXHAUST	128
	129
	130
MOUNTING GP-ENGINE	74
	75
MOUNTING GP-ENGINE OIL FILTER	103
MOUNTING GP-FAN	111
P	
PAN GP-OIL–ENGINE	76
	78
	80
	82
	84
	86
PARTS GP-MISCELLANEOUS	187
PISTON & ROD GP	88
PLUG GP-OIL PAN	90
PLUG GP-OIL PAN–DRAIN	89
PLUG-DRAIN (ENGINE OIL PAN)	89
PLUG-DRAIN (ENGINE OIL)	90
PLUG-DRAIN (FUEL FILTER)	135
PLUG-DRAIN (WATER SEPARATOR)	158
PULLEY GP-CRANKSHAFT	91
	92
PULLEY GP-WATER PUMP	93
PUMP AS-FUEL TRANSFER	142
PUMP GP-FILTER & FUEL TRANSFER	142
PUMP GP-FUEL INJECTION	145
	148
	151
	153
	155
PUMP GP-FUEL PRIMING	157
	158
PUMP GP-FUEL PRM & PRIM FILTER	158
PUMP GP-FUEL TRANSFER	159
PUMP GP-WATER	112
	113
R	
RADIATOR & FAN GP	115
RADIATOR GP	119
REGULATOR (ALTERNATOR VOLTAGE)	162
REGULATOR-WATER TEMPERATURE	113
S	
SEAL (ENGINE OIL FILL CAP)	99
SEAL (ENGINE OIL FILLER)	98
SEAL (WATER SEPARATOR)	158
SEAL-VALVE COVER	31
	33
	35
SENSOR-SPEED (TIMING, CAMSHAFT)	133
SENSOR-SPEED (TIMING, CAMSHAFT) (TIMING, CAMSHAFT)	131
	136
	138

INDEX

Name	Page
	140
SHUTOFF GP-ELECTRICAL	169
SOLENOID (FUEL SHUTOFF)	171
SOLENOID GP-SHUTOFF	171
SOLENOID GP-SHUTOFF–FUEL SHUTOFF	170
STARTING MOTOR GP-ELECTRIC	172
	174
	175
	176
	177
	178
STARTING MOTOR GP-ELECTRIC–12-VOLT	179
SWITCH AS-START	182
SWITCH GP-PRESSURE	181
SWITCH GP-PRESSURE–ENGINE OIL	180
SWITCH GP-START	182
SWITCH GP-TEMPERATURE–COOLANT	183
SWITCH-PRESSURE (ENGINE OIL)	180
	181
SWITCH-TEMPERATURE (COOLANT)	183

V

Name	Page
V-BELT (ALTERNATOR, WATER PUMP)	95
V-BELT (DRIVE)	94
V-BELT GP–ALTERNATOR	94
	95
VALVE MECHANISM GP	96
VALVE-BREATHER (CRANKCASE)	31
	33
	35
VALVE-DRAIN (ENGINE OIL SUMP)	44

ENGINE ARRANGEMENT

316-8410 ENGINE AR

21 BRAKE KW (28 BHP) AT 3400 RPM

SMCS-1000 **i03742490**

NOTE	PART NUMBER	QTY	PART NAME 1 2 3 4 5 6 (PRODUCT LEVEL)	SEE PAGE
Y	*319-7354*	1	ALTERNATOR GP-CHARGING	164
Y	*328-1431*	1	CAMSHAFT GP	27
Y	*336-2073*	1	CONNECTION GP-ELECTRICAL	167
Y	*308-5610*	1	CONNECTION GP-EXHAUST	124
Y	*328-1430*	1	CONTROL GP-GOVERNOR	131
Y	*328-1435*	1	COVER GP-VALVE MECHANISM	35
Y	*313-1984*	1	COVER GP-ENGINE	29
Y	*328-1434*	1	COVER GP-REGULATOR HOUSING	105
Y	*313-1962*	1	CRANKSHAFT GP	37
Y	*313-1957*	1	CYLINDER BLOCK GP	39
Y	*313-1964*	1	CYLINDER HEAD GP	43
Y	*322-3808*	1	DRIVE GP-FAN	46
Y	*313-1966*	1	DRIVE GP-PUMP	48
Y	*313-1975*	1	FILLER GP-ENGINE OIL	98
Y	*308-2298*	1	FILTER GP-ENGINE OIL	101
Y	*313-1970*	1	FLYWHEEL GP	49
Y	*313-2021*	1	GLOW PLUG GP	168
Y	*328-1433*	1	HOUSING GP-FLYWHEEL	57
Y	*328-1429*	1	HOUSING GP-FRONT	69
Y	**339-3016**	1	KIT-FRONT GEAR	71
Y	*308-2315*	1	LIFTING GP-ENGINE	72
Y	*313-1991*	1	MANIFOLD GP-EXHAUST	128
Y	*308-4735*	1	MOUNTING GP-ENGINE OIL FILTER	103
Y	*322-3806*	1	MOUNTING GP-FAN	111
Y	*313-1973*	1	PAN GP-OIL	76
Y	*313-1963*	1	PISTON & ROD GP	88
Y	*309-6720*	1	PLUG GP-OIL PAN	89
Y	*313-1976*	1	PULLEY GP-CRANKSHAFT	91
Y	*313-1972*	1	PULLEY GP-WATER PUMP	93
Y	*328-1432*	1	PUMP GP-FUEL INJECTION	155
Y	*317-6706*	1	PUMP GP-FUEL PRM & PRIM FILTER	158
Y	*313-2009*	1	PUMP GP-FUEL TRANSFER	159
Y	*313-1978*	1	PUMP GP-WATER	113
Y	*320-9114*	1	SHUTOFF GP-ELECTRICAL	169
Y	*319-7357*	1	SOLENOID GP-SHUTOFF	171
Y	*313-1971*	1	STARTING MOTOR GP-ELECTRIC	174
Y	*319-7358*	1	SWITCH GP-PRESSURE	181
Y	*313-2035*	1	SWITCH GP-TEMPERATURE	183
Y	*319-7355*	1	V-BELT GP (INCLUDES 1-BELT)	95
Y	*313-1965*	1	VALVE MECHANISM GP	96

Y-SEPARATE ILLUSTRATION

ENGINE ARRANGEMENT

316-8414 ENGINE AR

21 BRAKE KW (28 BHP) AT 3400 RPM

SMCS-1000 **i03759117**

NOTE	PART NUMBER	QTY	PART NAME 1 2 3 4 5 6 (PRODUCT LEVEL)	SEE PAGE
Y	*319-7354*	1	ALTERNATOR GP-CHARGING	164
Y	*328-1431*	1	CAMSHAFT GP	27
Y	*321-6741*	1	CONNECTION GP-ELECTRICAL	166
Y	*328-1430*	1	CONTROL GP-GOVERNOR	131
Y	*328-1435*	1	COVER GP-VALVE MECHANISM	35
Y	*313-1984*	1	COVER GP-ENGINE	29
Y	*313-1962*	1	CRANKSHAFT GP	37
Y	*313-1957*	1	CYLINDER BLOCK GP	39
Y	*313-1964*	1	CYLINDER HEAD GP	43
Y	*329-4423*	1	DRIVE GP-FAN	47
Y	*313-1966*	1	DRIVE GP-PUMP	48
Y	*329-4422*	1	FAN GP	106
Y	*313-1975*	1	FILLER GP-ENGINE OIL	98
Y	*308-2298*	1	FILTER GP-ENGINE OIL	101
Y	*313-1970*	1	FLYWHEEL GP	49
Y	*313-2021*	1	GLOW PLUG GP	168
Y	*328-1433*	1	HOUSING GP-FLYWHEEL	57
Y	*328-1429*	1	HOUSING GP-FRONT	69
Y	*313-1980*	1	HOUSING GP-WATER REGULATOR	110
Y	**339-3016**	1	KIT-FRONT GEAR	71
Y	*308-2315*	1	LIFTING GP-ENGINE	72
Y	*313-1991*	1	MANIFOLD GP-EXHAUST	128
Y	*329-4424*	1	MANIFOLD GP-EXHAUST	130
Y	*329-4427*	1	MOUNTING GP-ENGINE	74
Y	*308-4735*	1	MOUNTING GP-ENGINE OIL FILTER	103
Y	*329-4419*	1	PAN GP-OIL	82
Y	*329-4428*	1	PARTS GP-MISCELLANEOUS	187
Y	*313-1963*	1	PISTON & ROD GP	88
Y	*320-9108*	1	PLUG GP-OIL PAN	90
Y	*313-1976*	1	PULLEY GP-CRANKSHAFT	91
Y	*313-1972*	1	PULLEY GP-WATER PUMP	93
Y	*328-1432*	1	PUMP GP-FUEL INJECTION	155
Y	*313-2009*	1	PUMP GP-FUEL TRANSFER	159
Y	*313-1978*	1	PUMP GP-WATER	113
Y	*313-2023*	1	SOLENOID GP-SHUTOFF	170
Y	*319-7351*	1	STARTING MOTOR GP-ELECTRIC	176
Y	*313-2024*	1	SWITCH GP-PRESSURE	180
Y	*308-2314*	1	SWITCH GP-START	182
Y	*313-2035*	1	SWITCH GP-TEMPERATURE	183
Y	*319-7355*	1	V-BELT GP (INCLUDES 1-BELT)	95
Y	*313-1965*	1	VALVE MECHANISM GP	96

Y-SEPARATE ILLUSTRATION

ENGINE ARRANGEMENT

318-1667 ENGINE AR

10 BRAKE KW (13 BHP) AT 1500 RPM

SMCS-1000 **i03745292**

NOTE	PART NUMBER	QTY	PART NAME 1 2 3 4 5 6 (PRODUCT LEVEL)	SEE PAGE
Y	*319-7354*	1	ALTERNATOR GP-CHARGING	164
Y	*323-2409*	1	CAMSHAFT GP	26
Y	*308-2319*	1	CONNECTION GP-ELECTRICAL	165
Y	*308-5610*	1	CONNECTION GP-EXHAUST	124
Y	*329-8577*	1	COVER GP-FRONT HOUSING	30
Y	*313-1986*	1	COVER GP-VALVE MECHANISM	31
Y	*313-1962*	1	CRANKSHAFT GP	37
Y	*313-1957*	1	CYLINDER BLOCK GP	39
Y	*313-1964*	1	CYLINDER HEAD GP	43
Y	*313-1966*	1	DRIVE GP-PUMP	48
Y	*313-1975*	1	FILLER GP-ENGINE OIL	98
Y	*318-8804*	1	FILTER GP-AIR	126
Y	*308-2298*	1	FILTER GP-ENGINE OIL	101
Y	*318-8880*	1	FLYWHEEL GP	51
Y	*313-2021*	1	GLOW PLUG GP	168
Y	*323-2408*	1	GOVERNOR GP	140
Y	*318-8879*	1	HOUSING GP-FLYWHEEL	55
Y	*323-2407*	1	HOUSING GP-FRONT	67
Y	*313-1980*	1	HOUSING GP-WATER REGULATOR	110
Y	**339-3016**	1	KIT-FRONT GEAR	71
Y	*313-2026*	1	LAMP GP-INDICATOR	184
Y	*313-2022*	1	LIFTING GP-ENGINE	73
Y	*313-1991*	1	MANIFOLD GP-EXHAUST	128
Y	*308-4735*	1	MOUNTING GP-ENGINE OIL FILTER	103
Y	*313-1973*	1	PAN GP-OIL	76
Y	*313-1963*	1	PISTON & ROD GP	88
Y	*309-6720*	1	PLUG GP-OIL PAN	89
Y	*313-1976*	1	PULLEY GP-CRANKSHAFT	91
Y	*313-1972*	1	PULLEY GP-WATER PUMP	93
Y	*323-2410*	1	PUMP GP-FUEL INJECTION	153
Y	*317-6706*	1	PUMP GP-FUEL PRM & PRIM FILTER	158
Y	*313-2009*	1	PUMP GP-FUEL TRANSFER	159
Y	*313-1978*	1	PUMP GP-WATER	113
Y	*318-8803*	1	RADIATOR GP	119
Y	*320-9114*	1	SHUTOFF GP-ELECTRICAL	169
Y	*313-2023*	1	SOLENOID GP-SHUTOFF	170
Y	*313-1971*	1	STARTING MOTOR GP-ELECTRIC	174
Y	*313-2024*	1	SWITCH GP-PRESSURE	180
Y	*308-2314*	1	SWITCH GP-START	182
Y	*313-2035*	1	SWITCH GP-TEMPERATURE	183
Y	*319-7355*	1	V-BELT GP (INCLUDES 1-BELT)	95
Y	*313-1965*	1	VALVE MECHANISM GP	96

Y-SEPARATE ILLUSTRATION

ENGINE ARRANGEMENT

318-1670 ENGINE AR

12 BRAKE KW (16 BHP) AT 1800 RPM

SMCS-1000 **i03785457**

NOTE	PART NUMBER	QTY	PART NAME 1 2 3 4 5 6 (PRODUCT LEVEL)	SEE PAGE
Y	*313-1982*	1	ALTERNATOR GP-CHARGING	162
Y	*321-3143*	1	CAMSHAFT GP	25
Y	*308-2319*	1	CONNECTION GP-ELECTRICAL	165
Y	*308-2309*	1	CONNECTION GP-EXHAUST	123
Y	*329-8577*	1	COVER GP-FRONT HOUSING	30
Y	*313-1986*	1	COVER GP-VALVE MECHANISM	31
Y	*313-1962*	1	CRANKSHAFT GP	37
Y	*313-1957*	1	CYLINDER BLOCK GP	39
Y	*313-1964*	1	CYLINDER HEAD GP	43
Y	*313-1966*	1	DRIVE GP-PUMP	48
Y	*313-1975*	1	FILLER GP-ENGINE OIL	98
Y	*318-8804*	1	FILTER GP-AIR	126
Y	*308-2298*	1	FILTER GP-ENGINE OIL	101
Y	*318-8880*	1	FLYWHEEL GP	51
Y	*313-2021*	1	GLOW PLUG GP	168
Y	*321-3142*	1	GOVERNOR GP	138
Y	*318-8879*	1	HOUSING GP-FLYWHEEL	55
Y	*321-3140*	1	HOUSING GP-FRONT	65
Y	*313-1980*	1	HOUSING GP-WATER REGULATOR	110
Y	**339-3016**	1	KIT-FRONT GEAR	71
Y	*313-2026*	1	LAMP GP-INDICATOR	184
Y	*313-2022*	1	LIFTING GP-ENGINE	73
Y	*313-1991*	1	MANIFOLD GP-EXHAUST	128
Y	*308-4735*	1	MOUNTING GP-ENGINE OIL FILTER	103
Y	*313-1973*	1	PAN GP-OIL	76
Y	*313-1963*	1	PISTON & ROD GP	88
Y	*309-6720*	1	PLUG GP-OIL PAN	89
Y	*313-1976*	1	PULLEY GP-CRANKSHAFT	91
Y	*313-1972*	1	PULLEY GP-WATER PUMP	93
Y	*321-3334*	1	PUMP GP-FUEL INJECTION	151
Y	*317-6706*	1	PUMP GP-FUEL PRM & PRIM FILTER	158
Y	*313-2009*	1	PUMP GP-FUEL TRANSFER	159
Y	*313-1978*	1	PUMP GP-WATER	113
Y	*318-8803*	1	RADIATOR GP	119
Y	*320-9114*	1	SHUTOFF GP-ELECTRICAL	169
Y	*313-2023*	1	SOLENOID GP-SHUTOFF	170
Y	*313-1971*	1	STARTING MOTOR GP-ELECTRIC	174
Y	*313-2024*	1	SWITCH GP-PRESSURE	180
Y	*308-2314*	1	SWITCH GP-START	182
Y	*313-2035*	1	SWITCH GP-TEMPERATURE	183
Y	*313-1983*	1	V-BELT GP (ALTERNATOR)	94
Y	*313-1965*	1	VALVE MECHANISM GP	96

Y-SEPARATE ILLUSTRATION

ENGINE ARRANGEMENT

318-7060 ENGINE AR

12 BRAKE KW (16 BHP) AT 1800 RPM

SMCS-1000 **i03766319**

NOTE	PART NUMBER	QTY	PART NAME 1 2 3 4 5 6 (PRODUCT LEVEL)	SEE PAGE
Y	*313-1982*	1	ALTERNATOR GP-CHARGING	162
Y	*321-3143*	1	CAMSHAFT GP	25
Y	*308-2309*	1	CONNECTION GP-EXHAUST	123
Y	*329-8577*	1	COVER GP-FRONT HOUSING	30
Y	*313-1986*	1	COVER GP-VALVE MECHANISM	31
Y	*313-1962*	1	CRANKSHAFT GP	37
Y	*313-1957*	1	CYLINDER BLOCK GP	39
Y	*313-1964*	1	CYLINDER HEAD GP	43
Y	*313-1966*	1	DRIVE GP-PUMP	48
Y	*313-1975*	1	FILLER GP-ENGINE OIL	98
Y	*318-8804*	1	FILTER GP-AIR	126
Y	*308-2298*	1	FILTER GP-ENGINE OIL	101
Y	*318-8880*	1	FLYWHEEL GP	51
Y	*313-2021*	1	GLOW PLUG GP	168
Y	*321-3142*	1	GOVERNOR GP	138
Y	*318-8879*	1	HOUSING GP-FLYWHEEL	55
Y	*321-3140*	1	HOUSING GP-FRONT	65
Y	*313-1980*	1	HOUSING GP-WATER REGULATOR	110
Y	**339-3016**	1	KIT-FRONT GEAR	71
Y	*313-2026*	1	LAMP GP-INDICATOR	184
Y	*313-2022*	1	LIFTING GP-ENGINE	73
Y	*313-1991*	1	MANIFOLD GP-EXHAUST	128
Y	*308-4735*	1	MOUNTING GP-ENGINE OIL FILTER	103
Y	*313-1973*	1	PAN GP-OIL	76
Y	*313-1963*	1	PISTON & ROD GP	88
Y	*309-6720*	1	PLUG GP-OIL PAN	89
Y	*313-1976*	1	PULLEY GP-CRANKSHAFT	91
Y	*313-1972*	1	PULLEY GP-WATER PUMP	93
Y	*321-3334*	1	PUMP GP-FUEL INJECTION	151
Y	*308-2320*	1	PUMP GP-FUEL PRIMING	157
Y	*313-2009*	1	PUMP GP-FUEL TRANSFER	159
Y	*313-1978*	1	PUMP GP-WATER	113
Y	*318-8803*	1	RADIATOR GP	119
Y	*320-9114*	1	SHUTOFF GP-ELECTRICAL	169
Y	*313-2023*	1	SOLENOID GP-SHUTOFF	170
Y	*313-1971*	1	STARTING MOTOR GP-ELECTRIC	174
Y	*313-2024*	1	SWITCH GP-PRESSURE	180
Y	*308-2314*	1	SWITCH GP-START	182
Y	*313-2035*	1	SWITCH GP-TEMPERATURE	183
Y	*313-1983*	1	V-BELT GP (ALTERNATOR)	94
Y	*313-1965*	1	VALVE MECHANISM GP	96

Y-SEPARATE ILLUSTRATION

ENGINE ARRANGEMENT

318-7061 ENGINE AR

10 BRAKE KW (13 BHP) AT 1500 RPM

SMCS-1000 **i03766320**

NOTE	PART NUMBER	QTY	PART NAME 1 2 3 4 5 6 (PRODUCT LEVEL)	SEE PAGE
Y	*313-1982*	1	ALTERNATOR GP-CHARGING	162
Y	*323-2409*	1	CAMSHAFT GP	26
Y	*308-2309*	1	CONNECTION GP-EXHAUST	123
Y	*329-8577*	1	COVER GP-FRONT HOUSING	30
Y	*313-1986*	1	COVER GP-VALVE MECHANISM	31
Y	*313-1962*	1	CRANKSHAFT GP	37
Y	*313-1957*	1	CYLINDER BLOCK GP	39
Y	*313-1964*	1	CYLINDER HEAD GP	43
Y	*313-1966*	1	DRIVE GP-PUMP	48
Y	*313-1975*	1	FILLER GP-ENGINE OIL	98
Y	*318-8804*	1	FILTER GP-AIR	126
Y	*308-2298*	1	FILTER GP-ENGINE OIL	101
Y	*318-8880*	1	FLYWHEEL GP	51
Y	*313-2021*	1	GLOW PLUG GP	168
Y	*323-2408*	1	GOVERNOR GP	140
Y	*318-8879*	1	HOUSING GP-FLYWHEEL	55
Y	*323-2407*	1	HOUSING GP-FRONT	67
Y	*313-1980*	1	HOUSING GP-WATER REGULATOR	110
Y	**339-3016**	1	KIT-FRONT GEAR	71
Y	*313-2026*	1	LAMP GP-INDICATOR	184
Y	*313-2022*	1	LIFTING GP-ENGINE	73
Y	*313-1991*	1	MANIFOLD GP-EXHAUST	128
Y	*308-4735*	1	MOUNTING GP-ENGINE OIL FILTER	103
Y	*313-1973*	1	PAN GP-OIL	76
Y	*313-1963*	1	PISTON & ROD GP	88
Y	*309-6720*	1	PLUG GP-OIL PAN	89
Y	*313-1976*	1	PULLEY GP-CRANKSHAFT	91
Y	*313-1972*	1	PULLEY GP-WATER PUMP	93
Y	*323-2410*	1	PUMP GP-FUEL INJECTION	153
Y	*308-2320*	1	PUMP GP-FUEL PRIMING	157
Y	*313-2009*	1	PUMP GP-FUEL TRANSFER	159
Y	*313-1978*	1	PUMP GP-WATER	113
Y	*318-8803*	1	RADIATOR GP	119
Y	*320-9114*	1	SHUTOFF GP-ELECTRICAL	169
Y	*313-2023*	1	SOLENOID GP-SHUTOFF	170
Y	*313-1971*	1	STARTING MOTOR GP-ELECTRIC	174
Y	*313-2024*	1	SWITCH GP-PRESSURE	180
Y	*308-2314*	1	SWITCH GP-START	182
Y	*313-2035*	1	SWITCH GP-TEMPERATURE	183
Y	*313-1983*	1	V-BELT GP (ALTERNATOR)	94
Y	*313-1965*	1	VALVE MECHANISM GP	96

Y-SEPARATE ILLUSTRATION

ENGINE ARRANGEMENT

318-7062 ENGINE AR

10 BRAKE KW (13 BHP) AT 1800 RPM

SMCS-1000 **i03766321**

NOTE	PART NUMBER	QTY	PART NAME 1 2 3 4 5 6 (PRODUCT LEVEL)	SEE PAGE
Y	*313-1982*	1	ALTERNATOR GP-CHARGING	162
Y	*321-3143*	1	CAMSHAFT GP	25
Y	*308-2309*	1	CONNECTION GP-EXHAUST	123
Y	*329-8577*	1	COVER GP-FRONT HOUSING	30
Y	*313-1986*	1	COVER GP-VALVE MECHANISM	31
Y	*313-1962*	1	CRANKSHAFT GP	37
Y	*313-1957*	1	CYLINDER BLOCK GP	39
Y	*313-1964*	1	CYLINDER HEAD GP	43
Y	*313-1966*	1	DRIVE GP-PUMP	48
Y	*313-1975*	1	FILLER GP-ENGINE OIL	98
Y	*318-8804*	1	FILTER GP-AIR	126
Y	*308-2298*	1	FILTER GP-ENGINE OIL	101
Y	*318-8880*	1	FLYWHEEL GP	51
Y	*313-2021*	1	GLOW PLUG GP	168
Y	*321-3142*	1	GOVERNOR GP	138
Y	*318-8879*	1	HOUSING GP-FLYWHEEL	55
Y	*321-3140*	1	HOUSING GP-FRONT	65
Y	*313-1980*	1	HOUSING GP-WATER REGULATOR	110
Y	**339-3016**	1	KIT-FRONT GEAR	71
Y	*313-2026*	1	LAMP GP-INDICATOR	184
Y	*313-2022*	1	LIFTING GP-ENGINE	73
Y	*313-1991*	1	MANIFOLD GP-EXHAUST	128
Y	*308-4735*	1	MOUNTING GP-ENGINE OIL FILTER	103
Y	*313-1973*	1	PAN GP-OIL	76
Y	*313-1963*	1	PISTON & ROD GP	88
Y	*309-6720*	1	PLUG GP-OIL PAN	89
Y	*313-1976*	1	PULLEY GP-CRANKSHAFT	91
Y	*313-1972*	1	PULLEY GP-WATER PUMP	93
Y	*321-3334*	1	PUMP GP-FUEL INJECTION	151
Y	*308-2320*	1	PUMP GP-FUEL PRIMING	157
Y	*313-2009*	1	PUMP GP-FUEL TRANSFER	159
Y	*313-1978*	1	PUMP GP-WATER	113
Y	*318-8803*	1	RADIATOR GP	119
Y	*320-9114*	1	SHUTOFF GP-ELECTRICAL	169
Y	*313-2023*	1	SOLENOID GP-SHUTOFF	170
Y	*313-1971*	1	STARTING MOTOR GP-ELECTRIC	174
Y	*313-2024*	1	SWITCH GP-PRESSURE	180
Y	*308-2314*	1	SWITCH GP-START	182
Y	*313-2035*	1	SWITCH GP-TEMPERATURE	183
Y	*313-1983*	1	V-BELT GP (ALTERNATOR)	94
Y	*313-1965*	1	VALVE MECHANISM GP	96

Y-SEPARATE ILLUSTRATION

ENGINE ARRANGEMENT

302-1814 ENGINE AR-PRIMARY

18 BRAKE KW (25 BHP) AT 2800 RPM

SMCS-1000 **i03745226**

NOTE	PART NUMBER	QTY	PART NAME 1 2 3 4 5 6 (PRODUCT LEVEL)	SEE PAGE
Y	*313-1982*	1	ALTERNATOR GP-CHARGING	162
Y	*313-6215*	1	CAMSHAFT GP	24
Y	*308-2319*	1	CONNECTION GP-ELECTRICAL	165
Y	*308-2309*	1	CONNECTION GP-EXHAUST	123
Y	*313-1984*	1	COVER GP-ENGINE	29
Y	*313-1986*	1	COVER GP-VALVE MECHANISM	31
Y	*313-1962*	1	CRANKSHAFT GP	37
Y	*313-1957*	1	CYLINDER BLOCK GP	39
Y	*313-1964*	1	CYLINDER HEAD GP	43
Y	*322-3808*	1	DRIVE GP-FAN	46
Y	*313-1966*	1	DRIVE GP-PUMP	48
Y	*313-1981*	1	FAN GP-SUCTION	108
Y	*313-1975*	1	FILLER GP-ENGINE OIL	98
Y	*308-2298*	1	FILTER GP-ENGINE OIL	101
Y	*313-6218*	1	FLYWHEEL GP	50
Y	*313-2021*	1	GLOW PLUG GP	168
Y	*313-6214*	1	GOVERNOR GP	136
Y	*313-6217*	1	HOUSING GP-FLYWHEEL	54
Y	*313-6213*	1	HOUSING GP-FRONT	61
Y	*313-1980*	1	HOUSING GP-WATER REGULATOR	110
Y	**339-3016**	1	KIT-FRONT GEAR	71
Y	*313-2026*	1	LAMP GP-INDICATOR	184
Y	*313-2022*	1	LIFTING GP-ENGINE	73
Y	*313-1991*	1	MANIFOLD GP-EXHAUST	128
Y	*308-4735*	1	MOUNTING GP-ENGINE OIL FILTER	103
Y	*313-1973*	1	PAN GP-OIL	76
Y	*313-1963*	1	PISTON & ROD GP	88
Y	*309-6720*	1	PLUG GP-OIL PAN	89
Y	*313-1976*	1	PULLEY GP-CRANKSHAFT	91
Y	*313-1972*	1	PULLEY GP-WATER PUMP	93
Y	*313-6216*	1	PUMP GP-FUEL INJECTION	148
Y	*308-2320*	1	PUMP GP-FUEL PRIMING	157
Y	*313-2009*	1	PUMP GP-FUEL TRANSFER	159
Y	*313-1978*	1	PUMP GP-WATER	113
Y	*313-2023*	1	SOLENOID GP-SHUTOFF	170
Y	*313-1971*	1	STARTING MOTOR GP-ELECTRIC	174
Y	*313-2024*	1	SWITCH GP-PRESSURE	180
Y	*308-2314*	1	SWITCH GP-START	182
Y	*313-2035*	1	SWITCH GP-TEMPERATURE	183
Y	*313-1983*	1	V-BELT GP (ALTERNATOR)	94
Y	*313-1965*	1	VALVE MECHANISM GP	96

Y-SEPARATE ILLUSTRATION

ENGINE ARRANGEMENT

302-1815 ENGINE AR-PRIMARY

18 BRAKE KW (25 BHP) AT 2800 RPM

SMCS-1000 **i03732062**

NOTE	PART NUMBER	QTY	PART NAME 1 2 3 4 5 6 (PRODUCT LEVEL)	SEE PAGE
Y	*313-1982*	1	ALTERNATOR GP-CHARGING	162
Y	*313-6215*	1	CAMSHAFT GP	24
Y	*308-2319*	1	CONNECTION GP-ELECTRICAL	165
Y	*308-2309*	1	CONNECTION GP-EXHAUST	123
Y	*313-1984*	1	COVER GP-ENGINE	29
Y	*313-1986*	1	COVER GP-VALVE MECHANISM	31
Y	*313-1962*	1	CRANKSHAFT GP	37
Y	*313-1957*	1	CYLINDER BLOCK GP	39
Y	*313-1964*	1	CYLINDER HEAD GP	43
Y	*322-3808*	1	DRIVE GP-FAN	46
Y	*313-1966*	1	DRIVE GP-PUMP	48
Y	*313-1981*	1	FAN GP-SUCTION	108
Y	*313-1975*	1	FILLER GP-ENGINE OIL	98
Y	*308-2298*	1	FILTER GP-ENGINE OIL	101
Y	*313-1970*	1	FLYWHEEL GP	49
Y	*313-2021*	1	GLOW PLUG GP	168
Y	*313-6214*	1	GOVERNOR GP	136
Y	*313-1969*	1	HOUSING GP-FLYWHEEL	52
Y	*313-6213*	1	HOUSING GP-FRONT	61
Y	*313-1980*	1	HOUSING GP-WATER REGULATOR	110
Y	**339-3016**	1	KIT-FRONT GEAR	71
Y	*313-2026*	1	LAMP GP-INDICATOR	184
Y	*313-2022*	1	LIFTING GP-ENGINE	73
Y	*313-1991*	1	MANIFOLD GP-EXHAUST	128
Y	*308-4735*	1	MOUNTING GP-ENGINE OIL FILTER	103
Y	*313-1973*	1	PAN GP-OIL	76
Y	*313-1963*	1	PISTON & ROD GP	88
Y	*309-6720*	1	PLUG GP-OIL PAN	89
Y	*313-1976*	1	PULLEY GP-CRANKSHAFT	91
Y	*313-1972*	1	PULLEY GP-WATER PUMP	93
Y	*313-6216*	1	PUMP GP-FUEL INJECTION	148
Y	*308-2320*	1	PUMP GP-FUEL PRIMING	157
Y	*313-2009*	1	PUMP GP-FUEL TRANSFER	159
Y	*313-1978*	1	PUMP GP-WATER	113
Y	*313-2023*	1	SOLENOID GP-SHUTOFF	170
Y	*313-1971*	1	STARTING MOTOR GP-ELECTRIC	174
Y	*313-2024*	1	SWITCH GP-PRESSURE	180
Y	*308-2314*	1	SWITCH GP-START	182
Y	*313-2035*	1	SWITCH GP-TEMPERATURE	183
Y	*313-1983*	1	V-BELT GP (ALTERNATOR)	94
Y	*313-1965*	1	VALVE MECHANISM GP	96

Y-SEPARATE ILLUSTRATION

ENGINE ARRANGEMENT

303-4104 ENGINE AR-PRIMARY

20 BRAKE KW (26 BHP) AT 3000 RPM

SMCS-1000 **i03747966**

NOTE	PART NUMBER	QTY	PART NAME 1 2 3 4 5 6 (PRODUCT LEVEL)	SEE PAGE
Y	*313-1982*	1	ALTERNATOR GP-CHARGING	162
Y	*329-9765*	1	CAMSHAFT GP	28
Y	*308-2319*	1	CONNECTION GP-ELECTRICAL	165
Y	*308-2309*	1	CONNECTION GP-EXHAUST	123
Y	*329-9764*	1	CONTROL GP-GOVERNOR	133
Y	*329-8577*	1	COVER GP-FRONT HOUSING	30
Y	*313-1986*	1	COVER GP-VALVE MECHANISM	31
Y	*313-1962*	1	CRANKSHAFT GP	37
Y	*313-1957*	1	CYLINDER BLOCK GP	39
Y	*313-1964*	1	CYLINDER HEAD GP	43
Y	*313-1966*	1	DRIVE GP-PUMP	48
Y	*313-1975*	1	FILLER GP-ENGINE OIL	98
Y	*318-8804*	1	FILTER GP-AIR	126
Y	*308-2298*	1	FILTER GP-ENGINE OIL	101
Y	*313-1970*	1	FLYWHEEL GP	49
Y	*313-2021*	1	GLOW PLUG GP	168
Y	*313-1969*	1	HOUSING GP-FLYWHEEL	52
Y	*313-1967*	1	HOUSING GP-FRONT	59
Y	*313-1980*	1	HOUSING GP-WATER REGULATOR	110
Y	**339-3016**	1	KIT-FRONT GEAR	71
Y	*313-2026*	1	LAMP GP-INDICATOR	184
Y	*313-2022*	1	LIFTING GP-ENGINE	73
Y	*313-1991*	1	MANIFOLD GP-EXHAUST	128
Y	*308-4735*	1	MOUNTING GP-ENGINE OIL FILTER	103
Y	*313-1973*	1	PAN GP-OIL	76
Y	*313-1963*	1	PISTON & ROD GP	88
Y	*309-6720*	1	PLUG GP-OIL PAN	89
Y	*313-1976*	1	PULLEY GP-CRANKSHAFT	91
Y	*313-1972*	1	PULLEY GP-WATER PUMP	93
Y	*313-1968*	1	PUMP GP-FUEL INJECTION	145
Y	*308-2320*	1	PUMP GP-FUEL PRIMING	157
Y	*313-2009*	1	PUMP GP-FUEL TRANSFER	159
Y	*313-1978*	1	PUMP GP-WATER	113
Y	*318-8803*	1	RADIATOR GP	119
Y	*313-2023*	1	SOLENOID GP-SHUTOFF	170
Y	*313-1971*	1	STARTING MOTOR GP-ELECTRIC	174
Y	*313-2024*	1	SWITCH GP-PRESSURE	180
Y	*308-2314*	1	SWITCH GP-START	182
Y	*313-2035*	1	SWITCH GP-TEMPERATURE	183
Y	*313-1983*	1	V-BELT GP (ALTERNATOR)	94
Y	*313-1965*	1	VALVE MECHANISM GP	96

Y-SEPARATE ILLUSTRATION

ENGINE ARRANGEMENT

303-4105 ENGINE AR-PRIMARY

20 BRAKE KW (26 BHP) AT 3000 RPM

SMCS-1000 **i03282191**

NOTE	PART NUMBER	QTY	PART NAME 1 2 3 4 5 6 (PRODUCT LEVEL)	SEE PAGE
Y	*313-1982*	1	ALTERNATOR GP-CHARGING	162
Y	*329-9765*	1	CAMSHAFT GP	28
Y	*308-2319*	1	CONNECTION GP-ELECTRICAL	165
Y	*308-2309*	1	CONNECTION GP-EXHAUST	123
Y	*329-9764*	1	CONTROL GP-GOVERNOR	133
Y	*329-8577*	1	COVER GP-FRONT HOUSING	30
Y	*313-1986*	1	COVER GP-VALVE MECHANISM	31
Y	*313-1962*	1	CRANKSHAFT GP	37
Y	*313-1957*	1	CYLINDER BLOCK GP	39
Y	*313-1964*	1	CYLINDER HEAD GP	43
Y	*313-1966*	1	DRIVE GP-PUMP	48
Y	*313-1975*	1	FILLER GP-ENGINE OIL	98
Y	*318-8804*	1	FILTER GP-AIR	126
Y	*308-2298*	1	FILTER GP-ENGINE OIL	101
Y	*313-1970*	1	FLYWHEEL GP	49
Y	*313-2021*	1	GLOW PLUG GP	168
Y	*313-1969*	1	HOUSING GP-FLYWHEEL	52
Y	*313-1967*	1	HOUSING GP-FRONT	59
Y	*313-1980*	1	HOUSING GP-WATER REGULATOR	110
Y	*313-2026*	1	LAMP GP-INDICATOR	184
Y	*313-2022*	1	LIFTING GP-ENGINE	73
Y	*313-1991*	1	MANIFOLD GP-EXHAUST	128
Y	*308-4735*	1	MOUNTING GP-ENGINE OIL FILTER	103
Y	*313-1973*	1	PAN GP-OIL	76
Y	*313-1963*	1	PISTON & ROD GP	88
Y	*309-6720*	1	PLUG GP-OIL PAN	89
Y	*313-1976*	1	PULLEY GP-CRANKSHAFT	91
Y	*313-1972*	1	PULLEY GP-WATER PUMP	93
Y	*313-1968*	1	PUMP GP-FUEL INJECTION	145
Y	*308-2320*	1	PUMP GP-FUEL PRIMING	157
Y	*313-2009*	1	PUMP GP-FUEL TRANSFER	159
Y	*313-1978*	1	PUMP GP-WATER	113
Y	*318-8815*	1	RADIATOR & FAN GP	115
Y	*313-2023*	1	SOLENOID GP-SHUTOFF	170
Y	*313-1971*	1	STARTING MOTOR GP-ELECTRIC	174
Y	*313-2024*	1	SWITCH GP-PRESSURE	180
Y	*308-2314*	1	SWITCH GP-START	182
Y	*313-2035*	1	SWITCH GP-TEMPERATURE	183
Y	*313-1983*	1	V-BELT GP (ALTERNATOR)	94
Y	*313-1965*	1	VALVE MECHANISM GP	96

Y-SEPARATE ILLUSTRATION

ENGINE ARRANGEMENT

303-4106 ENGINE AR-PRIMARY

18 BRAKE KW (25 BHP) AT 2800 RPM

SMCS-1000 **i03747967**

NOTE	PART NUMBER	QTY	PART NAME 1 2 3 4 5 6 (PRODUCT LEVEL)	SEE PAGE
Y	*313-1982*	1	ALTERNATOR GP-CHARGING	162
Y	*308-2319*	1	CONNECTION GP-ELECTRICAL	165
Y	*308-2309*	1	CONNECTION GP-EXHAUST	123
Y	*329-8577*	1	COVER GP-FRONT HOUSING	30
Y	*313-1986*	1	COVER GP-VALVE MECHANISM	31
Y	*313-1962*	1	CRANKSHAFT GP	37
Y	*313-1957*	1	CYLINDER BLOCK GP	39
Y	*313-1964*	1	CYLINDER HEAD GP	43
Y	*313-1966*	1	DRIVE GP-PUMP	48
Y	*313-1975*	1	FILLER GP-ENGINE OIL	98
Y	*318-8804*	1	FILTER GP-AIR	126
Y	*308-2298*	1	FILTER GP-ENGINE OIL	101
Y	*318-8880*	1	FLYWHEEL GP	51
Y	*313-2021*	1	GLOW PLUG GP	168
Y	*318-8879*	1	HOUSING GP-FLYWHEEL	55
Y	*313-6213*	1	HOUSING GP-FRONT	61
Y	*313-1980*	1	HOUSING GP-WATER REGULATOR	110
Y	**339-3016**	1	KIT-FRONT GEAR	71
Y	*313-2026*	1	LAMP GP-INDICATOR	184
Y	*313-2022*	1	LIFTING GP-ENGINE	73
Y	*313-1991*	1	MANIFOLD GP-EXHAUST	128
Y	*308-4735*	1	MOUNTING GP-ENGINE OIL FILTER	103
Y	*313-1973*	1	PAN GP-OIL	76
Y	*313-1963*	1	PISTON & ROD GP	88
Y	*309-6720*	1	PLUG GP-OIL PAN	89
Y	*313-1976*	1	PULLEY GP-CRANKSHAFT	91
Y	*313-1972*	1	PULLEY GP-WATER PUMP	93
Y	*313-6216*	1	PUMP GP-FUEL INJECTION	148
Y	*308-2320*	1	PUMP GP-FUEL PRIMING	157
Y	*313-2009*	1	PUMP GP-FUEL TRANSFER	159
Y	*313-1978*	1	PUMP GP-WATER	113
Y	*318-8803*	1	RADIATOR GP	119
Y	*313-2023*	1	SOLENOID GP-SHUTOFF	170
Y	*313-1971*	1	STARTING MOTOR GP-ELECTRIC	174
Y	*313-2024*	1	SWITCH GP-PRESSURE	180
Y	*308-2314*	1	SWITCH GP-START	182
Y	*313-2035*	1	SWITCH GP-TEMPERATURE	183
Y	*313-1983*	1	V-BELT GP (ALTERNATOR)	94
Y	*313-1965*	1	VALVE MECHANISM GP	96

Y-SEPARATE ILLUSTRATION

ENGINE ARRANGEMENT

303-4107 ENGINE AR-PRIMARY

18 BRAKE KW (25 BHP) AT 2800 RPM

SMCS-1000 **i03747968**

NOTE	PART NUMBER	QTY	PART NAME 1 2 3 4 5 6 (PRODUCT LEVEL)	SEE PAGE
Y	*313-1982*	1	ALTERNATOR GP-CHARGING	162
Y	*313-6215*	1	CAMSHAFT GP	24
Y	*308-2319*	1	CONNECTION GP-ELECTRICAL	165
Y	*308-2309*	1	CONNECTION GP-EXHAUST	123
Y	*329-8577*	1	COVER GP-FRONT HOUSING	30
Y	*313-1986*	1	COVER GP-VALVE MECHANISM	31
Y	*313-1962*	1	CRANKSHAFT GP	37
Y	*313-1957*	1	CYLINDER BLOCK GP	39
Y	*313-1964*	1	CYLINDER HEAD GP	43
Y	*313-1966*	1	DRIVE GP-PUMP	48
Y	*313-1975*	1	FILLER GP-ENGINE OIL	98
Y	*318-8804*	1	FILTER GP-AIR	126
Y	*308-2298*	1	FILTER GP-ENGINE OIL	101
Y	*308-5704*	1	FILTER GP-FUEL	135
Y	*313-1970*	1	FLYWHEEL GP	49
Y	*313-2021*	1	GLOW PLUG GP	168
Y	*313-6214*	1	GOVERNOR GP	136
Y	*313-1969*	1	HOUSING GP-FLYWHEEL	52
Y	*313-6213*	1	HOUSING GP-FRONT	61
Y	*313-1980*	1	HOUSING GP-WATER REGULATOR	110
Y	**339-3016**	1	KIT-FRONT GEAR	71
Y	*313-2026*	1	LAMP GP-INDICATOR	184
Y	*313-2022*	1	LIFTING GP-ENGINE	73
Y	*313-1991*	1	MANIFOLD GP-EXHAUST	128
Y	*308-4735*	1	MOUNTING GP-ENGINE OIL FILTER	103
Y	*313-1973*	1	PAN GP-OIL	76
Y	*313-1963*	1	PISTON & ROD GP	88
Y	*309-6720*	1	PLUG GP-OIL PAN	89
Y	*313-1976*	1	PULLEY GP-CRANKSHAFT	91
Y	*313-1972*	1	PULLEY GP-WATER PUMP	93
Y	*313-6216*	1	PUMP GP-FUEL INJECTION	148
Y	*313-2009*	1	PUMP GP-FUEL TRANSFER	159
Y	*313-1978*	1	PUMP GP-WATER	113
Y	*318-8815*	1	RADIATOR & FAN GP	115
Y	*313-2023*	1	SOLENOID GP-SHUTOFF	170
Y	*313-1971*	1	STARTING MOTOR GP-ELECTRIC	174
Y	*313-2024*	1	SWITCH GP-PRESSURE	180
Y	*308-2314*	1	SWITCH GP-START	182
Y	*313-2035*	1	SWITCH GP-TEMPERATURE	183
Y	*313-1983*	1	V-BELT GP (ALTERNATOR)	94
Y	*313-1965*	1	VALVE MECHANISM GP	96

Y-SEPARATE ILLUSTRATION

ENGINE ARRANGEMENT

303-4108 ENGINE AR-PRIMARY

18 BRAKE KW (25 BHP) AT 2800 RPM

SMCS-1000 **i03747970**

NOTE	PART NUMBER	QTY	PART NAME 1 2 3 4 5 6 (PRODUCT LEVEL)	SEE PAGE
Y	*313-1982*	1	ALTERNATOR GP-CHARGING	162
Y	*313-6215*	1	CAMSHAFT GP	24
Y	*308-2319*	1	CONNECTION GP-ELECTRICAL	165
Y	*308-2309*	1	CONNECTION GP-EXHAUST	123
Y	*329-8577*	1	COVER GP-FRONT HOUSING	30
Y	*313-1986*	1	COVER GP-VALVE MECHANISM	31
Y	*313-1962*	1	CRANKSHAFT GP	37
Y	*313-1957*	1	CYLINDER BLOCK GP	39
Y	*313-1964*	1	CYLINDER HEAD GP	43
Y	*313-1966*	1	DRIVE GP-PUMP	48
Y	*313-1975*	1	FILLER GP-ENGINE OIL	98
Y	*318-8804*	1	FILTER GP-AIR	126
Y	*308-2298*	1	FILTER GP-ENGINE OIL	101
Y	*318-8880*	1	FLYWHEEL GP	51
Y	*313-2021*	1	GLOW PLUG GP	168
Y	*313-6214*	1	GOVERNOR GP	136
Y	*318-8879*	1	HOUSING GP-FLYWHEEL	55
Y	*313-6213*	1	HOUSING GP-FRONT	61
Y	*313-1980*	1	HOUSING GP-WATER REGULATOR	110
Y	**339-3016**	1	KIT-FRONT GEAR	71
Y	*313-2026*	1	LAMP GP-INDICATOR	184
Y	*313-2022*	1	LIFTING GP-ENGINE	73
Y	*313-1991*	1	MANIFOLD GP-EXHAUST	128
Y	*308-4735*	1	MOUNTING GP-ENGINE OIL FILTER	103
Y	*313-1973*	1	PAN GP-OIL	76
Y	*313-1963*	1	PISTON & ROD GP	88
Y	*309-6720*	1	PLUG GP-OIL PAN	89
Y	*313-1976*	1	PULLEY GP-CRANKSHAFT	91
Y	*313-1972*	1	PULLEY GP-WATER PUMP	93
Y	*313-6216*	1	PUMP GP-FUEL INJECTION	148
Y	*308-2320*	1	PUMP GP-FUEL PRIMING	157
Y	*313-2009*	1	PUMP GP-FUEL TRANSFER	159
Y	*313-1978*	1	PUMP GP-WATER	113
Y	*318-8815*	1	RADIATOR & FAN GP	115
Y	*313-2023*	1	SOLENOID GP-SHUTOFF	170
Y	*313-1971*	1	STARTING MOTOR GP-ELECTRIC	174
Y	*313-2024*	1	SWITCH GP-PRESSURE	180
Y	*308-2314*	1	SWITCH GP-START	182
Y	*313-2035*	1	SWITCH GP-TEMPERATURE	183
Y	*313-1983*	1	V-BELT GP (ALTERNATOR)	94
Y	*313-1965*	1	VALVE MECHANISM GP	96

Y-SEPARATE ILLUSTRATION

ENGINE ARRANGEMENT

307-9829 ENGINE AR-PRIMARY

20 BRAKE KW (26 BHP) AT 3000 RPM

SMCS-1000 **i03748102**

NOTE	PART NUMBER	QTY	PART NAME 1 2 3 4 5 6 (PRODUCT LEVEL)	SEE PAGE
Y	*313-1982*	1	ALTERNATOR GP-CHARGING	162
			S/N: C6L1-139	
Y	*319-7354*	1	ALTERNATOR GP-CHARGING	164
			S/N: C6L140-UP	
Y	*329-9765*	1	CAMSHAFT GP	28
Y	*329-9764*	1	CONTROL GP-GOVERNOR	133
Y	*325-5589*	1	COVER GP-VALVE MECHANISM	33
Y	*313-1984*	1	COVER GP-ENGINE	29
Y	*313-1962*	1	CRANKSHAFT GP	37
Y	*313-1957*	1	CYLINDER BLOCK GP	39
Y	*313-1964*	1	CYLINDER HEAD GP	43
Y	*322-3808*	1	DRIVE GP-FAN	46
Y	*313-1966*	1	DRIVE GP-PUMP	48
Y	*313-1981*	1	FAN GP-SUCTION	108
Y	*313-1975*	1	FILLER GP-ENGINE OIL	98
Y	*308-2298*	1	FILTER GP-ENGINE OIL	101
Y	*313-6218*	1	FLYWHEEL GP	50
Y	*313-2021*	1	GLOW PLUG GP	168
Y	*313-6217*	1	HOUSING GP-FLYWHEEL	54
Y	*313-1967*	1	HOUSING GP-FRONT	59
Y	*313-1980*	1	HOUSING GP-WATER REGULATOR	110
Y	**339-3016**	1	KIT-FRONT GEAR	71
Y	*313-2026*	1	LAMP GP-INDICATOR	184
Y	*313-2022*	1	LIFTING GP-ENGINE	73
Y	*325-5596*	1	MANIFOLD GP-EXHAUST	129
Y	*308-4735*	1	MOUNTING GP-ENGINE OIL FILTER	103
Y	*319-7352*	1	PAN GP-OIL	80
Y	*313-1963*	1	PISTON & ROD GP	88
Y	*309-6720*	1	PLUG GP-OIL PAN	89
Y	*313-1976*	1	PULLEY GP-CRANKSHAFT	91
Y	*313-1972*	1	PULLEY GP-WATER PUMP	93
Y	*313-1968*	1	PUMP GP-FUEL INJECTION	145
Y	*308-2320*	1	PUMP GP-FUEL PRIMING	157
Y	*313-2009*	1	PUMP GP-FUEL TRANSFER	159
			S/N: C6L1-139	
Y	*334-0280*	1	PUMP GP-FILTER & FUEL TRANSFER	142
			S/N: C6L140-UP	
Y	*313-1978*	1	PUMP GP-WATER	113
Y	*313-2023*	1	SOLENOID GP-SHUTOFF	170
Y	*313-1971*	1	STARTING MOTOR GP-ELECTRIC	174
Y	*313-2024*	1	SWITCH GP-PRESSURE	180
Y	*308-2314*	1	SWITCH GP-START	182
Y	*313-2035*	1	SWITCH GP-TEMPERATURE	183
Y	*313-1983*	1	V-BELT GP (ALTERNATOR)	94
Y	*313-1965*	1	VALVE MECHANISM GP	96

Y-SEPARATE ILLUSTRATION

ENGINE ARRANGEMENT

308-6555 ENGINE AR-PRIMARY

20 BRAKE KW (26 BHP) AT 3000 RPM

SMCS-1000 **i03753288**

NOTE	PART NUMBER	QTY	PART NAME 1 2 3 4 5 6 (PRODUCT LEVEL)	SEE PAGE
Y	*313-1982*	1	ALTERNATOR GP-CHARGING	162
Y	*329-9765*	1	CAMSHAFT GP	28
Y	*308-2319*	1	CONNECTION GP-ELECTRICAL	165
Y	*308-2309*	1	CONNECTION GP-EXHAUST	123
Y	*329-9764*	1	CONTROL GP-GOVERNOR	133
Y	*313-1984*	1	COVER GP-ENGINE	29
Y	*313-1986*	1	COVER GP-VALVE MECHANISM	31
Y	*313-1962*	1	CRANKSHAFT GP	37
Y	*313-1957*	1	CYLINDER BLOCK GP	39
Y	*313-1964*	1	CYLINDER HEAD GP	43
Y	*322-3808*	1	DRIVE GP-FAN	46
Y	*313-1966*	1	DRIVE GP-PUMP	48
Y	*313-1981*	1	FAN GP-SUCTION	108
Y	*313-1975*	1	FILLER GP-ENGINE OIL	98
Y	*308-2298*	1	FILTER GP-ENGINE OIL	101
Y	*313-1970*	1	FLYWHEEL GP	49
Y	*313-2021*	1	GLOW PLUG GP	168
Y	*313-1969*	1	HOUSING GP-FLYWHEEL	52
Y	*313-1967*	1	HOUSING GP-FRONT	59
Y	*313-1980*	1	HOUSING GP-WATER REGULATOR	110
Y	**339-3016**	1	KIT-FRONT GEAR	71
Y	*313-2026*	1	LAMP GP-INDICATOR	184
Y	*313-2022*	1	LIFTING GP-ENGINE	73
Y	*313-1991*	1	MANIFOLD GP-EXHAUST	128
Y	*308-4735*	1	MOUNTING GP-ENGINE OIL FILTER	103
Y	*313-1973*	1	PAN GP-OIL	76
Y	*313-1963*	1	PISTON & ROD GP	88
Y	*309-6720*	1	PLUG GP-OIL PAN	89
Y	*313-1976*	1	PULLEY GP-CRANKSHAFT	91
Y	*313-1972*	1	PULLEY GP-WATER PUMP	93
Y	*313-1968*	1	PUMP GP-FUEL INJECTION	145
Y	*308-2320*	1	PUMP GP-FUEL PRIMING	157
Y	*313-2009*	1	PUMP GP-FUEL TRANSFER	159
Y	*313-1978*	1	PUMP GP-WATER	113
Y	*313-2023*	1	SOLENOID GP-SHUTOFF	170
Y	*313-1971*	1	STARTING MOTOR GP-ELECTRIC	174
Y	*313-2024*	1	SWITCH GP-PRESSURE	180
Y	*308-2314*	1	SWITCH GP-START	182
Y	*313-2035*	1	SWITCH GP-TEMPERATURE	183
Y	*313-1983*	1	V-BELT GP (ALTERNATOR)	94
Y	*313-1965*	1	VALVE MECHANISM GP	96

Y-SEPARATE ILLUSTRATION

ENGINE ARRANGEMENT

316-6324 ENGINE AR-PRIMARY

20 BRAKE KW (26 BHP) AT 3000 RPM

SMCS-1000 **i03766332**

NOTE	PART NUMBER	QTY	PART NAME 1 2 3 4 5 6 (PRODUCT LEVEL)	SEE PAGE
Y	*319-7354*	1	ALTERNATOR GP-CHARGING	164
Y	*329-9765*	1	CAMSHAFT GP	28
Y	*308-2319*	1	CONNECTION GP-ELECTRICAL	165
Y	*308-5610*	1	CONNECTION GP-EXHAUST	124
Y	*329-9764*	1	CONTROL GP-GOVERNOR	133
Y	*313-1984*	1	COVER GP-ENGINE	29
Y	*313-1986*	1	COVER GP-VALVE MECHANISM	31
Y	*313-1962*	1	CRANKSHAFT GP	37
Y	*313-1957*	1	CYLINDER BLOCK GP	39
Y	*313-1964*	1	CYLINDER HEAD GP	43
Y	*322-3808*	1	DRIVE GP-FAN	46
Y	*313-1966*	1	DRIVE GP-PUMP	48
Y	*327-7700*	1	FAN GP-SUCTION	109
Y	*313-1975*	1	FILLER GP-ENGINE OIL	98
Y	*308-2298*	1	FILTER GP-ENGINE OIL	101
Y	*313-1970*	1	FLYWHEEL GP	49
Y	*313-2021*	1	GLOW PLUG GP	168
Y	*313-1969*	1	HOUSING GP-FLYWHEEL	52
Y	*313-1967*	1	HOUSING GP-FRONT	59
Y	*313-1980*	1	HOUSING GP-WATER REGULATOR	110
Y	**339-3016**	1	KIT-FRONT GEAR	71
Y	*313-2022*	1	LIFTING GP-ENGINE	73
Y	*313-1991*	1	MANIFOLD GP-EXHAUST	128
Y	*308-4735*	1	MOUNTING GP-ENGINE OIL FILTER	103
Y	*322-3806*	1	MOUNTING GP-FAN	111
Y	*319-7352*	1	PAN GP-OIL	80
Y	*313-1963*	1	PISTON & ROD GP	88
Y	*309-6720*	1	PLUG GP-OIL PAN	89
Y	*322-3805*	1	PULLEY GP-CRANKSHAFT	92
Y	*313-1972*	1	PULLEY GP-WATER PUMP	93
Y	*313-1968*	1	PUMP GP-FUEL INJECTION	145
Y	*317-6706*	1	PUMP GP-FUEL PRM & PRIM FILTER	158
Y	*313-2009*	1	PUMP GP-FUEL TRANSFER	159
Y	*313-1978*	1	PUMP GP-WATER	113
Y	*313-2023*	1	SOLENOID GP-SHUTOFF	170
Y	*319-7351*	1	STARTING MOTOR GP-ELECTRIC	176
Y	*319-7358*	1	SWITCH GP-PRESSURE	181
Y	*313-2035*	1	SWITCH GP-TEMPERATURE	183
Y	*319-7355*	1	V-BELT GP (INCLUDES 1-BELT)	95
Y	*313-1965*	1	VALVE MECHANISM GP	96

Y-SEPARATE ILLUSTRATION

ENGINE ARRANGEMENT

317-1548 ENGINE AR-PRIMARY

20 BRAKE KW (26 BHP) AT 3000 RPM

SMCS-1000 **i03766317**

NOTE	PART NUMBER	QTY	PART NAME 1 2 3 4 5 6 (PRODUCT LEVEL)	SEE PAGE
Y	*319-7354*	1	ALTERNATOR GP-CHARGING	164
Y	*329-9765*	1	CAMSHAFT GP	28
Y	*329-9764*	1	CONTROL GP-GOVERNOR	133
Y	*329-8577*	1	COVER GP-FRONT HOUSING	30
Y	*313-1986*	1	COVER GP-VALVE MECHANISM	31
Y	*313-1962*	1	CRANKSHAFT GP	37
Y	*313-1957*	1	CYLINDER BLOCK GP	39
Y	*313-1964*	1	CYLINDER HEAD GP	43
Y	*313-1966*	1	DRIVE GP-PUMP	48
Y	*313-1975*	1	FILLER GP-ENGINE OIL	98
Y	*318-8804*	1	FILTER GP-AIR	126
Y	*308-2298*	1	FILTER GP-ENGINE OIL	101
Y	*313-1970*	1	FLYWHEEL GP	49
Y	*313-2021*	1	GLOW PLUG GP	168
Y	*313-1969*	1	HOUSING GP-FLYWHEEL	52
Y	*313-1967*	1	HOUSING GP-FRONT	59
Y	*313-1980*	1	HOUSING GP-WATER REGULATOR	110
Y	**339-3016**	1	KIT-FRONT GEAR	71
Y	*313-2026*	1	LAMP GP-INDICATOR	184
Y	*313-2022*	1	LIFTING GP-ENGINE	73
Y	*313-1991*	1	MANIFOLD GP-EXHAUST	128
Y	*308-4735*	1	MOUNTING GP-ENGINE OIL FILTER	103
Y	*319-7352*	1	PAN GP-OIL	80
Y	*313-1963*	1	PISTON & ROD GP	88
Y	*309-6720*	1	PLUG GP-OIL PAN	89
Y	*313-1976*	1	PULLEY GP-CRANKSHAFT	91
Y	*313-1972*	1	PULLEY GP-WATER PUMP	93
Y	*313-1968*	1	PUMP GP-FUEL INJECTION	145
Y	*317-6706*	1	PUMP GP-FUEL PRM & PRIM FILTER	158
Y	*313-2009*	1	PUMP GP-FUEL TRANSFER	159
Y	*313-1978*	1	PUMP GP-WATER	113
Y	*318-8815*	1	RADIATOR & FAN GP	115
Y	*319-7357*	1	SOLENOID GP-SHUTOFF	171
Y	*313-1971*	1	STARTING MOTOR GP-ELECTRIC	174
Y	*313-2024*	1	SWITCH GP-PRESSURE	180
Y	*313-2035*	1	SWITCH GP-TEMPERATURE	183
Y	*319-7355*	1	V-BELT GP (INCLUDES 1-BELT)	95
Y	*313-1965*	1	VALVE MECHANISM GP	96

Y-SEPARATE ILLUSTRATION

ENGINE ARRANGEMENT

318-1668 ENGINE AR-PRIMARY

12 BRAKE KW (16 BHP) AT 1800 RPM

SMCS-1000 **i03765157**

NOTE	PART NUMBER	QTY	PART NAME 1 2 3 4 5 6 (PRODUCT LEVEL)	SEE PAGE
Y	*319-7354*	1	ALTERNATOR GP-CHARGING	164
Y	*321-3143*	1	CAMSHAFT GP	25
Y	*308-2319*	1	CONNECTION GP-ELECTRICAL	165
Y	*308-5610*	1	CONNECTION GP-EXHAUST	124
Y	*329-8577*	1	COVER GP-FRONT HOUSING	30
Y	*313-1986*	1	COVER GP-VALVE MECHANISM	31
Y	*313-1962*	1	CRANKSHAFT GP	37
Y	*313-1957*	1	CYLINDER BLOCK GP	39
Y	*313-1964*	1	CYLINDER HEAD GP	43
Y	*313-1966*	1	DRIVE GP-PUMP	48
Y	*313-1975*	1	FILLER GP-ENGINE OIL	98
Y	*318-8804*	1	FILTER GP-AIR	126
Y	*308-2298*	1	FILTER GP-ENGINE OIL	101
Y	*318-8880*	1	FLYWHEEL GP	51
Y	*313-2021*	1	GLOW PLUG GP	168
Y	*321-3142*	1	GOVERNOR GP	138
Y	*318-8879*	1	HOUSING GP-FLYWHEEL	55
Y	*321-3140*	1	HOUSING GP-FRONT	65
Y	*313-1980*	1	HOUSING GP-WATER REGULATOR	110
Y	**339-3016**	1	KIT-FRONT GEAR	71
Y	*313-2026*	1	LAMP GP-INDICATOR	184
Y	*313-2022*	1	LIFTING GP-ENGINE	73
Y	*313-1991*	1	MANIFOLD GP-EXHAUST	128
Y	*308-4735*	1	MOUNTING GP-ENGINE OIL FILTER	103
Y	*313-1973*	1	PAN GP-OIL	76
Y	*313-1963*	1	PISTON & ROD GP	88
Y	*309-6720*	1	PLUG GP-OIL PAN	89
Y	*313-1976*	1	PULLEY GP-CRANKSHAFT	91
Y	*313-1972*	1	PULLEY GP-WATER PUMP	93
Y	*321-3334*	1	PUMP GP-FUEL INJECTION	151
Y	*317-6706*	1	PUMP GP-FUEL PRM & PRIM FILTER	158
Y	*313-2009*	1	PUMP GP-FUEL TRANSFER	159
Y	*313-1978*	1	PUMP GP-WATER	113
Y	*318-8803*	1	RADIATOR GP	119
Y	*320-9114*	1	SHUTOFF GP-ELECTRICAL	169
Y	*313-2023*	1	SOLENOID GP-SHUTOFF	170
Y	*313-1971*	1	STARTING MOTOR GP-ELECTRIC	174
Y	*313-2024*	1	SWITCH GP-PRESSURE	180
Y	*308-2314*	1	SWITCH GP-START	182
Y	*313-2035*	1	SWITCH GP-TEMPERATURE	183
Y	*319-7355*	1	V-BELT GP (INCLUDES 1-BELT)	95
Y	*313-1965*	1	VALVE MECHANISM GP	96

Y-SEPARATE ILLUSTRATION

ENGINE ARRANGEMENT

318-1669 ENGINE AR-PRIMARY

10 BRAKE KW (13 BHP) AT 1500 RPM

SMCS-1000 **i03741244**

NOTE	PART NUMBER	QTY	PART NAME 1 2 3 4 5 6 (PRODUCT LEVEL)	SEE PAGE
Y	*313-1982*	1	ALTERNATOR GP-CHARGING	162
Y	*323-2409*	1	CAMSHAFT GP	26
Y	*308-2319*	1	CONNECTION GP-ELECTRICAL	165
Y	*308-2309*	1	CONNECTION GP-EXHAUST	123
Y	*329-8577*	1	COVER GP-FRONT HOUSING	30
Y	*313-1986*	1	COVER GP-VALVE MECHANISM	31
Y	*313-1962*	1	CRANKSHAFT GP	37
Y	*313-1957*	1	CYLINDER BLOCK GP	39
Y	*313-1964*	1	CYLINDER HEAD GP	43
Y	*313-1966*	1	DRIVE GP-PUMP	48
Y	*313-1975*	1	FILLER GP-ENGINE OIL	98
Y	*318-8804*	1	FILTER GP-AIR	126
Y	*308-2298*	1	FILTER GP-ENGINE OIL	101
Y	*318-8880*	1	FLYWHEEL GP	51
Y	*313-2021*	1	GLOW PLUG GP	168
Y	*323-2408*	1	GOVERNOR GP	140
Y	*318-8879*	1	HOUSING GP-FLYWHEEL	55
Y	*323-2407*	1	HOUSING GP-FRONT	67
Y	*313-1980*	1	HOUSING GP-WATER REGULATOR	110
Y	**339-3016**	1	KIT-FRONT GEAR	71
Y	*313-2026*	1	LAMP GP-INDICATOR	184
Y	*313-2022*	1	LIFTING GP-ENGINE	73
Y	*313-1991*	1	MANIFOLD GP-EXHAUST	128
Y	*308-4735*	1	MOUNTING GP-ENGINE OIL FILTER	103
Y	*313-1973*	1	PAN GP-OIL	76
Y	*313-1963*	1	PISTON & ROD GP	88
Y	*309-6720*	1	PLUG GP-OIL PAN	89
Y	*313-1976*	1	PULLEY GP-CRANKSHAFT	91
Y	*313-1972*	1	PULLEY GP-WATER PUMP	93
Y	*323-2410*	1	PUMP GP-FUEL INJECTION	153
Y	*317-6706*	1	PUMP GP-FUEL PRM & PRIM FILTER	158
Y	*313-2009*	1	PUMP GP-FUEL TRANSFER	159
Y	*313-1978*	1	PUMP GP-WATER	113
Y	*318-8803*	1	RADIATOR GP	119
Y	*320-9114*	1	SHUTOFF GP-ELECTRICAL	169
Y	*313-2023*	1	SOLENOID GP-SHUTOFF	170
Y	*313-1971*	1	STARTING MOTOR GP-ELECTRIC	174
Y	*313-2024*	1	SWITCH GP-PRESSURE	180
Y	*308-2314*	1	SWITCH GP-START	182
Y	*313-2035*	1	SWITCH GP-TEMPERATURE	183
Y	*313-1983*	1	V-BELT GP (ALTERNATOR)	94
Y	*313-1965*	1	VALVE MECHANISM GP	96

Y-SEPARATE ILLUSTRATION

ENGINE ARRANGEMENT

318-8405 ENGINE AR-PRIMARY

20 BRAKE KW (26 BHP) AT 3000 RPM

SMCS-1000 **i03766324**

NOTE	PART NUMBER	QTY	PART NAME 1 2 3 4 5 6 (PRODUCT LEVEL)	SEE PAGE
Y	*319-7354*	1	ALTERNATOR GP-CHARGING	164
Y	*329-9765*	1	CAMSHAFT GP	28
Y	*321-6741*	1	CONNECTION GP-ELECTRICAL	166
Y	*308-5610*	1	CONNECTION GP-EXHAUST	124
Y	*317-7194*	1	CONNECTOR GP-CAB HEATER LINES	104
Y	*329-9764*	1	CONTROL GP-GOVERNOR	133
Y	*313-1984*	1	COVER GP-ENGINE	29
Y	*313-1986*	1	COVER GP-VALVE MECHANISM	31
Y	*313-1962*	1	CRANKSHAFT GP	37
Y	*313-1957*	1	CYLINDER BLOCK GP	39
Y	*313-1964*	1	CYLINDER HEAD GP	43
Y	*311-5829*	1	DRIVE GP-FAN	45
Y	*313-1966*	1	DRIVE GP-PUMP	48
Y	*334-0278*	1	FILLER GP-ENGINE OIL	99
Y	*318-8804*	1	FILTER GP-AIR	126
Y	*308-2298*	1	FILTER GP-ENGINE OIL	101
Y	*334-0279*	1	FILTER GP-ENGINE OIL	102
Y	*313-1970*	1	FLYWHEEL GP	49
Y	*313-2021*	1	GLOW PLUG GP	168
Y	*313-6217*	1	HOUSING GP-FLYWHEEL	54
Y	*313-1967*	1	HOUSING GP-FRONT	59
Y	*313-1980*	1	HOUSING GP-WATER REGULATOR	110
Y	**339-3016**	1	KIT-FRONT GEAR	71
Y	*313-2026*	1	LAMP GP-INDICATOR	184
Y	*313-2022*	1	LIFTING GP-ENGINE	73
Y	*313-1991*	1	MANIFOLD GP-EXHAUST	128
Y	*334-0281*	1	MOUNTING GP-ENGINE	75
Y	*334-0277*	1	PAN GP-OIL	84
Y	*313-1963*	1	PISTON & ROD GP	88
Y	*309-6720*	1	PLUG GP-OIL PAN	89
Y	*313-1976*	1	PULLEY GP-CRANKSHAFT	91
Y	*313-1972*	1	PULLEY GP-WATER PUMP	93
Y	*334-0280*	1	PUMP GP-FILTER & FUEL TRANSFER	142
Y	*313-1968*	1	PUMP GP-FUEL INJECTION	145
Y	*317-6706*	1	PUMP GP-FUEL PRM & PRIM FILTER	158
Y	*313-1978*	1	PUMP GP-WATER	113
Y	*320-9114*	1	SHUTOFF GP-ELECTRICAL	169
Y	*319-7357*	1	SOLENOID GP-SHUTOFF	171
Y	*319-7351*	1	STARTING MOTOR GP-ELECTRIC	176
Y	*319-7358*	1	SWITCH GP-PRESSURE	181
Y	*308-2314*	1	SWITCH GP-START	182
Y	*313-2035*	1	SWITCH GP-TEMPERATURE	183
Y	*319-7355*	1	V-BELT GP (INCLUDES 1-BELT)	95
Y	*313-1965*	1	VALVE MECHANISM GP	96

Y-SEPARATE ILLUSTRATION

ENGINE ARRANGEMENT

329-2155 ENGINE AR-PRIMARY

20 BRAKE KW (26 BHP) AT 3000 RPM

SMCS-1000 **i03756123**

NOTE	PART NUMBER	QTY	PART NAME 1 2 3 4 5 6 (PRODUCT LEVEL)	SEE PAGE
Y	*319-7354*	1	ALTERNATOR GP-CHARGING	164
Y	*329-9765*	1	CAMSHAFT GP	28
Y	*308-2319*	1	CONNECTION GP-ELECTRICAL	165
Y	*308-2309*	1	CONNECTION GP-EXHAUST	123
Y	*329-9764*	1	CONTROL GP-GOVERNOR	133
Y	*329-8577*	1	COVER GP-FRONT HOUSING	30
Y	*313-1986*	1	COVER GP-VALVE MECHANISM	31
Y	*313-1962*	1	CRANKSHAFT GP	37
Y	*313-1957*	1	CYLINDER BLOCK GP	39
Y	*313-1964*	1	CYLINDER HEAD GP	43
Y	*322-3808*	1	DRIVE GP-FAN	46
Y	*313-1966*	1	DRIVE GP-PUMP	48
Y	*313-1981*	1	FAN GP-SUCTION	108
Y	*313-1975*	1	FILLER GP-ENGINE OIL	98
Y	*308-2298*	1	FILTER GP-ENGINE OIL	101
Y	*313-1970*	1	FLYWHEEL GP	49
Y	*313-2021*	1	GLOW PLUG GP	168
Y	*313-1969*	1	HOUSING GP-FLYWHEEL	52
Y	*313-1967*	1	HOUSING GP-FRONT	59
Y	*313-1980*	1	HOUSING GP-WATER REGULATOR	110
Y	**339-3016**	1	KIT-FRONT GEAR	71
Y	*313-2022*	1	LIFTING GP-ENGINE	73
Y	*313-1991*	1	MANIFOLD GP-EXHAUST	128
Y	*308-4735*	1	MOUNTING GP-ENGINE OIL FILTER	103
Y	*319-7352*	1	PAN GP-OIL	80
Y	*313-1963*	1	PISTON & ROD GP	88
Y	*309-6720*	1	PLUG GP-OIL PAN	89
Y	*322-3805*	1	PULLEY GP-CRANKSHAFT	92
Y	*313-1972*	1	PULLEY GP-WATER PUMP	93
Y	*313-1968*	1	PUMP GP-FUEL INJECTION	145
Y	*317-6706*	1	PUMP GP-FUEL PRM & PRIM FILTER	158
Y	*313-2009*	1	PUMP GP-FUEL TRANSFER	159
Y	*313-1978*	1	PUMP GP-WATER	113
Y	*313-2023*	1	SOLENOID GP-SHUTOFF	170
Y	*319-7351*	1	STARTING MOTOR GP-ELECTRIC	176
Y	*313-2024*	1	SWITCH GP-PRESSURE	180
Y	*308-2314*	1	SWITCH GP-START	182
Y	*313-2035*	1	SWITCH GP-TEMPERATURE	183
Y	*319-7355*	1	V-BELT GP (INCLUDES 1-BELT)	95
Y	*313-1965*	1	VALVE MECHANISM GP	96

Y-SEPARATE ILLUSTRATION

ENGINE ARRANGEMENT

330-5731 ENGINE AR-PRIMARY

20 BRAKE KW (26 BHP) AT 3000 RPM

SMCS-1000 **i03756136**

NOTE	PART NUMBER	QTY	PART NAME 1 2 3 4 5 6 (PRODUCT LEVEL)	SEE PAGE
Y	*313-1982*	1	ALTERNATOR GP-CHARGING	162
Y	*329-9765*	1	CAMSHAFT GP	28
Y	*308-2319*	1	CONNECTION GP-ELECTRICAL	165
Y	*308-2309*	1	CONNECTION GP-EXHAUST	123
Y	*329-9764*	1	CONTROL GP-GOVERNOR	133
Y	*313-1984*	1	COVER GP-ENGINE	29
Y	*313-1986*	1	COVER GP-VALVE MECHANISM	31
Y	*313-1962*	1	CRANKSHAFT GP	37
Y	*313-1957*	1	CYLINDER BLOCK GP	39
Y	*313-1964*	1	CYLINDER HEAD GP	43
Y	*343-8044*	1	DRAIN GP-ENGINE OIL	44
Y	*322-3808*	1	DRIVE GP-FAN	46
Y	*313-1966*	1	DRIVE GP-PUMP	48
Y	*334-8537*	1	FAN GP	107
Y	*313-1975*	1	FILLER GP-ENGINE OIL	98
Y	*308-2298*	1	FILTER GP-ENGINE OIL	101
Y	*313-1970*	1	FLYWHEEL GP	49
Y	*313-2021*	1	GLOW PLUG GP	168
Y	*313-1969*	1	HOUSING GP-FLYWHEEL	52
Y	*313-1967*	1	HOUSING GP-FRONT	59
Y	*313-1980*	1	HOUSING GP-WATER REGULATOR	110
Y	**339-3016**	1	KIT-FRONT GEAR	71
Y	*313-2026*	1	LAMP GP-INDICATOR	184
Y	*313-2022*	1	LIFTING GP-ENGINE	73
Y	*313-1991*	1	MANIFOLD GP-EXHAUST	128
Y	*308-4735*	1	MOUNTING GP-ENGINE OIL FILTER	103
Y	*334-8538*	1	PAN GP-OIL	86
Y	*313-1963*	1	PISTON & ROD GP	88
Y	*313-1976*	1	PULLEY GP-CRANKSHAFT	91
Y	*313-1972*	1	PULLEY GP-WATER PUMP	93
Y	*313-1968*	1	PUMP GP-FUEL INJECTION	145
Y	*308-2320*	1	PUMP GP-FUEL PRIMING	157
Y	*313-2009*	1	PUMP GP-FUEL TRANSFER	159
Y	*313-1978*	1	PUMP GP-WATER	113
Y	*320-9114*	1	SHUTOFF GP-ELECTRICAL	169
Y	*313-2023*	1	SOLENOID GP-SHUTOFF	170
Y	*313-1971*	1	STARTING MOTOR GP-ELECTRIC	174
Y	*313-2024*	1	SWITCH GP-PRESSURE	180
Y	*308-2314*	1	SWITCH GP-START	182
Y	*313-2035*	1	SWITCH GP-TEMPERATURE	183
Y	*313-1983*	1	V-BELT GP	94
Y	*313-1965*	1	VALVE MECHANISM GP	96

Y-SEPARATE ILLUSTRATION

BASIC ENGINE

313-6215 CAMSHAFT GP

SMCS-1210 **i03705552**

NOTE	REF NO	GRAPHIC REF	PART NUMBER	QTY	PART NAME 1 2 3 4 5 6 (PRODUCT LEVEL)	SEE PAGE
	1	1	**153-6838**	1	BOLT	
	2	1	**153-7990**	1	PLATE	
M	3	1	**9X-6153**	1	BOLT (M6X1X10-MM)	
	4	1	**308-1904**	1	SLIDER	
	5	1	**313-2038**	1	CAMSHAFT AS	
	5A	1	**153-6492**	1	KEY-WOODRUFF	
	5B	1	**183-3605**	1	BEARING	
	5C	1	**311-5847**	1	GEAR-CAMSHAFT	
	5D	1	**313-9323**	1	SPACER	

M-METRIC PART

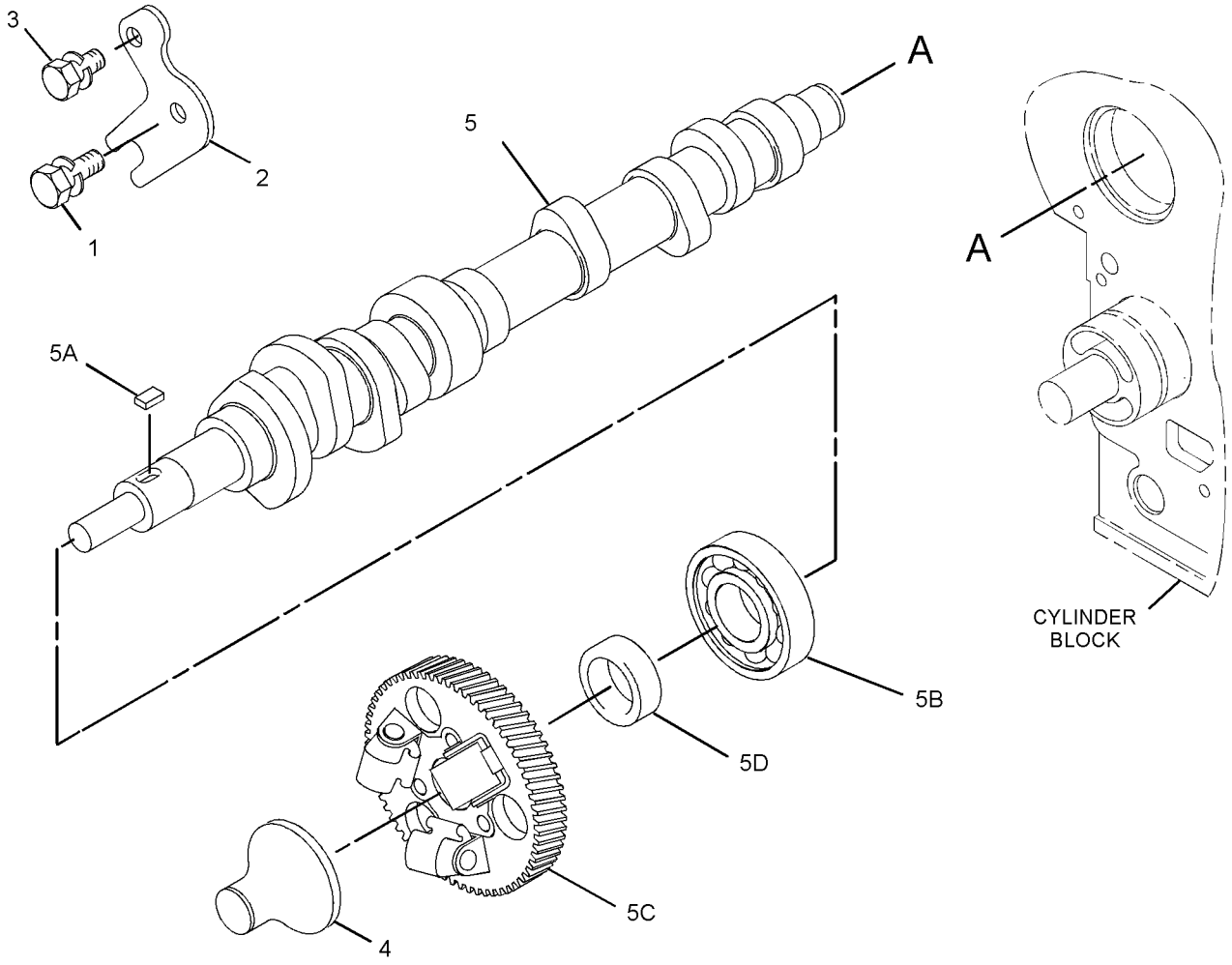

GRAPHIC #1 **<END>** g02019236

BASIC ENGINE

321-3143 CAMSHAFT GP

SMCS-1210 **i03737906**

NOTE	REF NO	GRAPHIC REF	PART NUMBER	QTY	PART NAME 1 2 3 4 5 6 (PRODUCT LEVEL)	SEE PAGE
	1	1	**153-6838**	1	BOLT	
	2	1	**313-2038**	1	CAMSHAFT AS	
	2A	1	**153-6492**	1	KEY-WOODRUFF	
	2B	1	**183-3605**	1	BEARING	
	2C	1	**311-5847**	1	GEAR-CAMSHAFT	
	2D	1	**313-9323**	1	SPACER	
	3	1	**153-7990**	1	PLATE	
M	4	1	**9X-6153**	1	BOLT (M6X1X10-MM)	
	5	1	**308-1904**	1	SLIDER	

M-METRIC PART

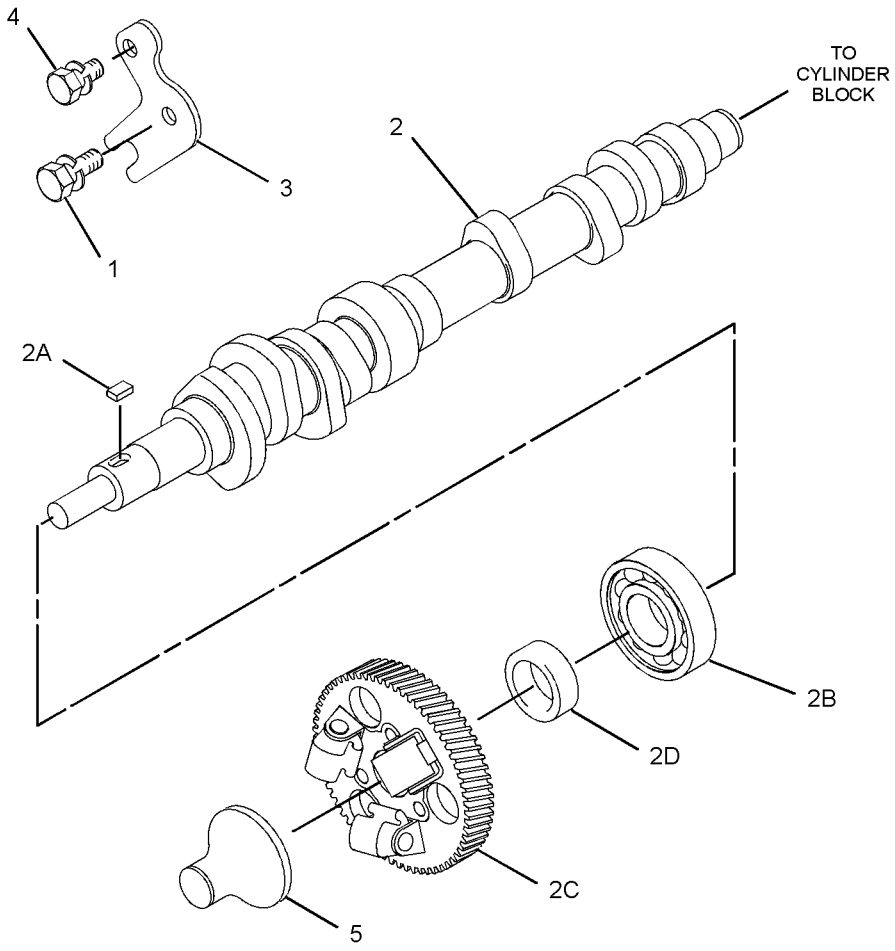

GRAPHIC #1 **<END>** g02022462

BASIC ENGINE

323-2409 CAMSHAFT GP

SMCS-1210 **i03770794**

NOTE	REF NO	GRAPHIC REF	PART NUMBER	QTY	PART NAME 1 2 3 4 5 6 (PRODUCT LEVEL)	SEE PAGE
	1	1	**153-6838**	1	BOLT	
	2	1	**153-7990**	1	PLATE	
M	3	1	**9X-6153**	1	BOLT (M6X1X10-MM)	
	4	1	**308-1904**	1	SLIDER	
	5	1	**313-2038**	1	CAMSHAFT AS	
	5A	1	**153-6492**	1	KEY-WOODRUFF	
	5B	1	**183-3605**	1	BEARING	
	5C	1	**311-5847**	1	GEAR-CAMSHAFT (52-TEETH)	
	5D	1	**313-9323**	1	SPACER	

M-METRIC PART

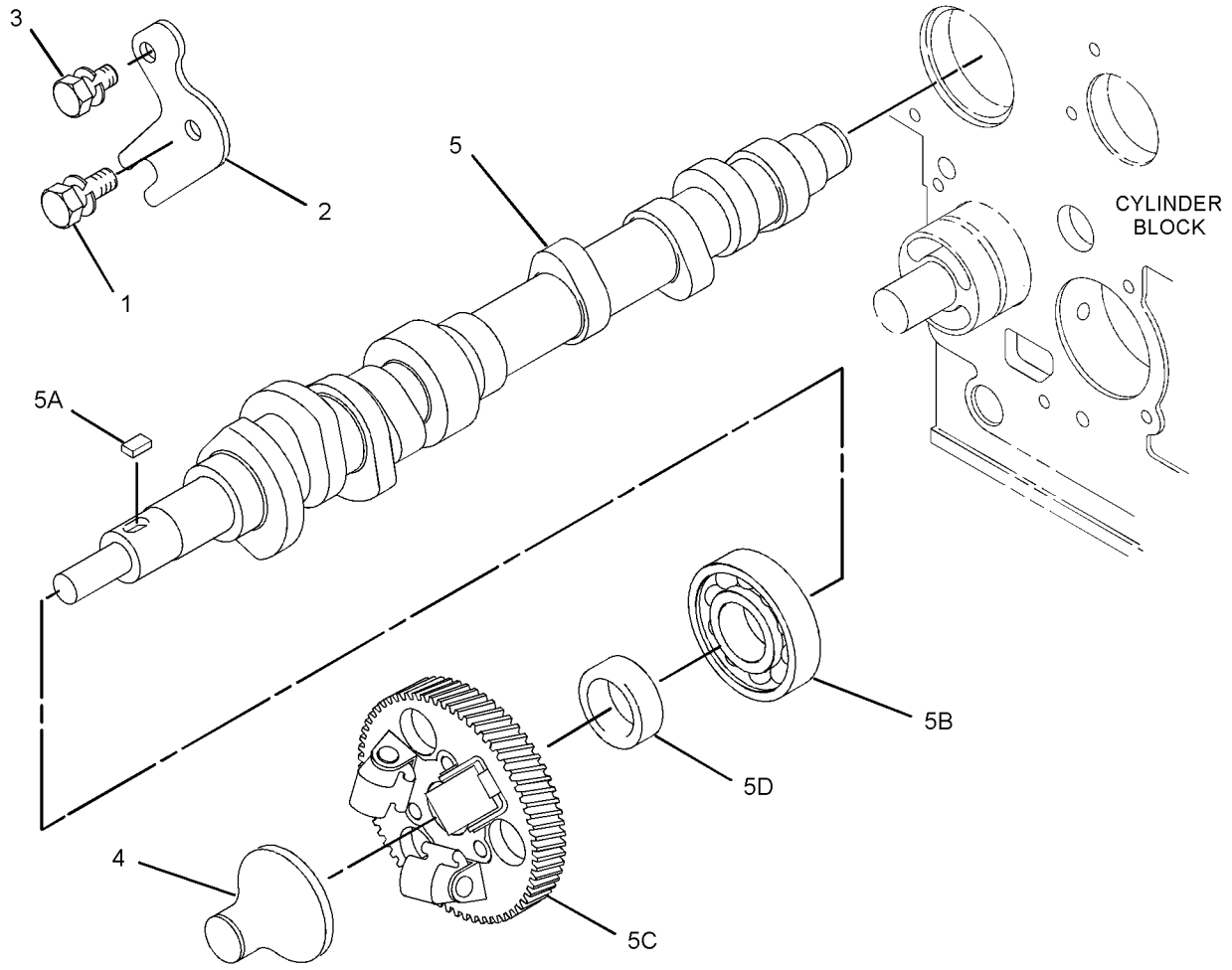

GRAPHIC #1 **<END>** g01991495

BASIC ENGINE

328-1431 CAMSHAFT GP

SMCS-1210 **i03770646**

NOTE	REF NO	GRAPHIC REF	PART NUMBER	QTY	PART NAME 1 2 3 4 5 6 (PRODUCT LEVEL)	SEE PAGE
	1	1	**153-6838**	1	BOLT	
	2	1	**153-7990**	1	PLATE	
M	3	1	**9X-6153**	1	BOLT (M6X1X10-MM)	
	4	1	**308-1904**	1	SLIDER	
	5	1	**328-1426**	1	CAMSHAFT GP	
	5A	1	**153-6492**	1	KEY-WOODRUFF	
	5B	1	**183-3605**	1	BEARING	
	5C	1	**311-5847**	1	GEAR-CAMSHAFT (52-TEETH)	
	5D	1	**313-9323**	1	SPACER	

M-METRIC PART

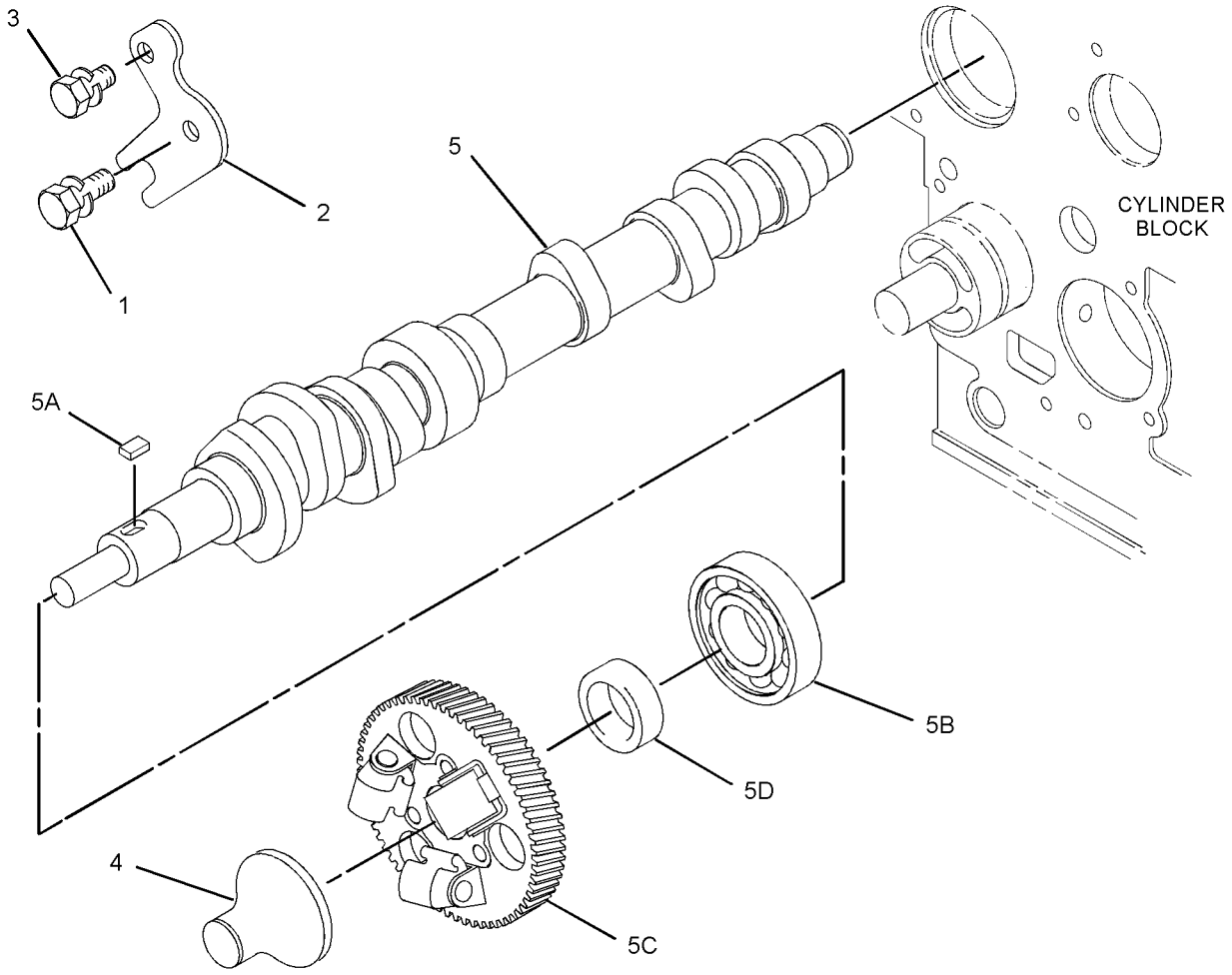

GRAPHIC #1 **<END>** g01991495

BASIC ENGINE

329-9765 CAMSHAFT GP

SMCS-1210 **i03737904**

NOTE	REF NO	GRAPHIC REF	PART NUMBER	QTY	PART NAME 1 2 3 4 5 6 (PRODUCT LEVEL)	SEE PAGE
	1	1	**153-6838**	1	BOLT	
	2	1	**313-2038**	1	CAMSHAFT AS	
	2A	1	**153-6492**	1	KEY-WOODRUFF	
	2B	1	**183-3605**	1	BEARING	
	2C	1	**311-5847**	1	GEAR-CAMSHAFT	
	2D	1	**313-9323**	1	SPACER	
	3	1	**153-7990**	1	PLATE	
M	4	1	**9X-6153**	1	BOLT (M6X1X10-MM)	
	5	1	**308-1904**	1	SLIDER	

M-METRIC PART

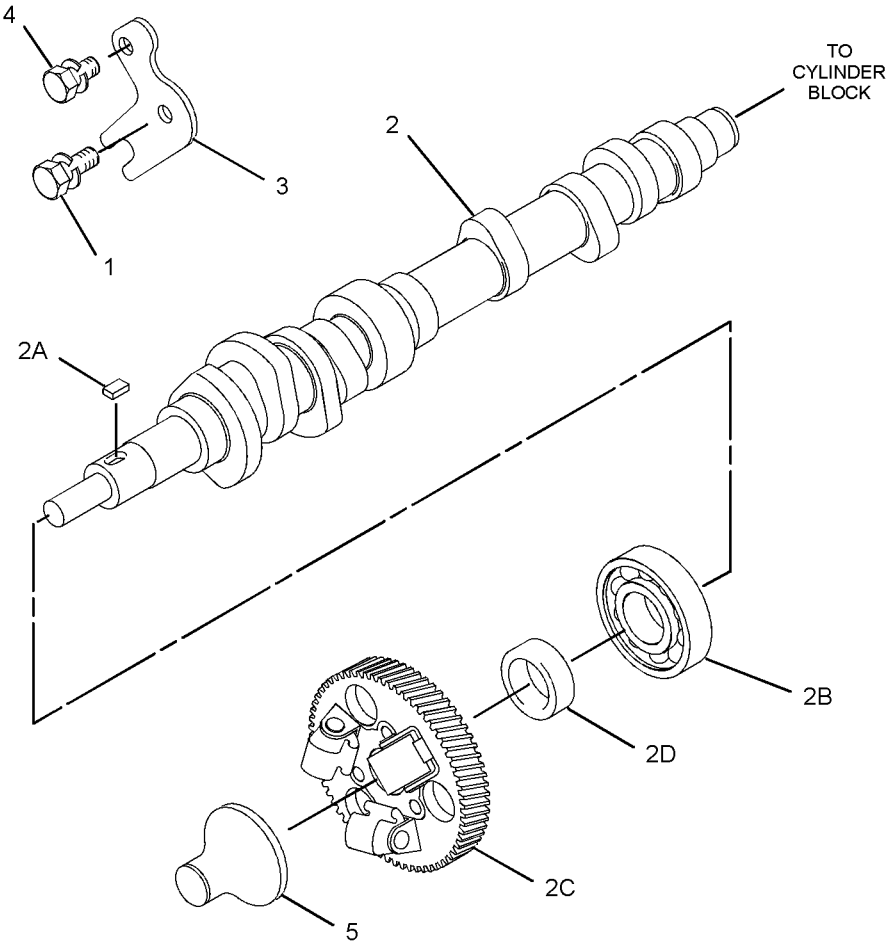

GRAPHIC #1 **<END>** g02022462

313-1984 COVER GP-ENGINE

SMCS-1000 **i03935992**

NOTE	REF NO	GRAPHIC REF	PART NUMBER	QTY	PART NAME 1 2 3 4 5 6 (PRODUCT LEVEL)	SEE PAGE
	1	1	**153-6497**	1	SEAL-O-RING	
	2	1	**311-1171**	2	NUT	
	3	1	**311-5852**	2	PLATE	
	4	1	**311-5853**	2	SEAL-O-RING	
	5	1	**311-5854**	2	BOLT	
	6	1	**313-2034**	1	RETAINER AS-BEARING	
	7	1	**154-2403**	2	WASHER	

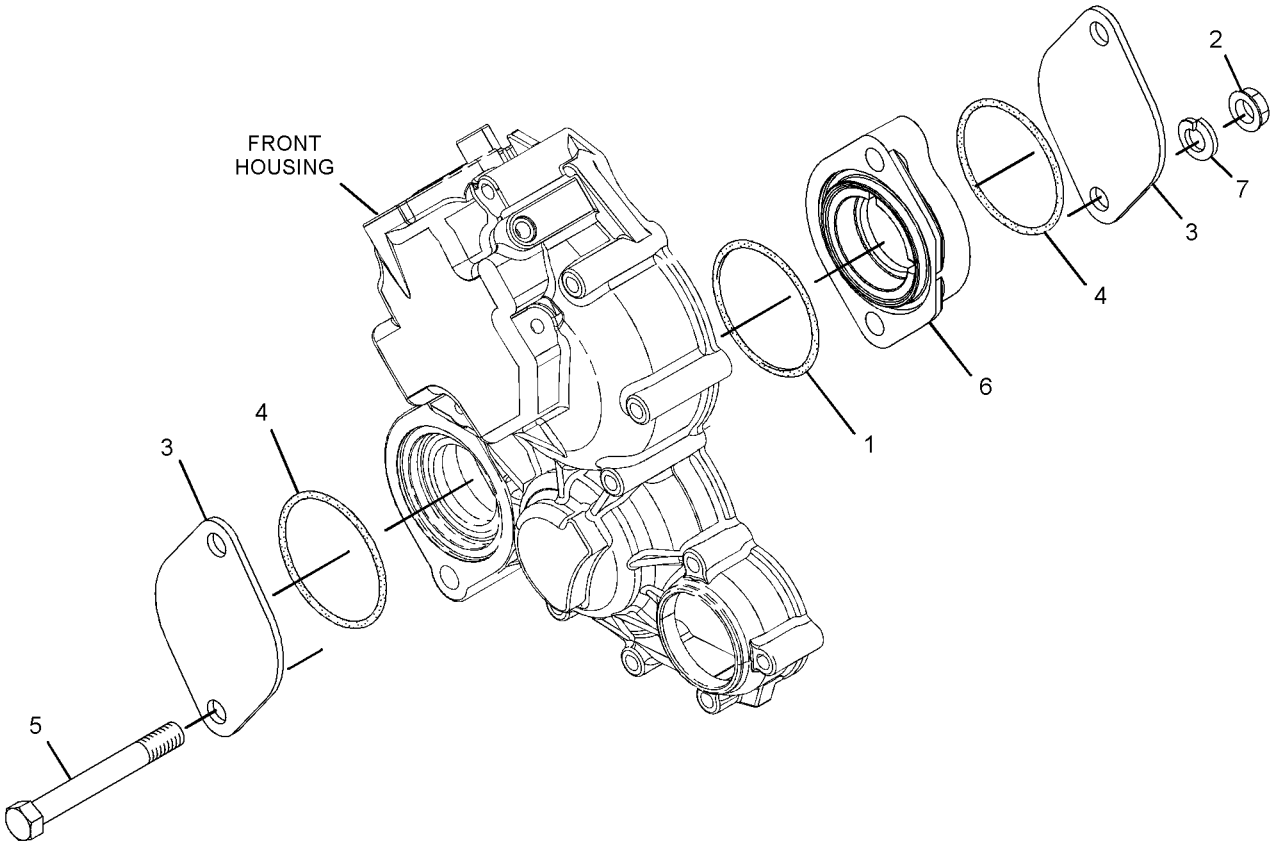

GRAPHIC #1 **<END>** g02158621

BASIC ENGINE

329-8577 COVER GP-FRONT HOUSING

SMCS-1151, 1166 **i03085040**

NOTE	REF NO	GRAPHIC REF	PART NUMBER	QTY	PART NAME 1 2 3 4 5 6 (PRODUCT LEVEL)	SEE PAGE
M	1	1	**6I-0454**	2	BOLT (M10X1.5X70-MM)	
	2	1	**6I-0594**	2	NUT (M10X1.5-THD)	
	3	1	**153-6497**	1	SEAL-O-RING	
	4	1	**311-5852**	1	PLATE	
	5	1	**311-5853**	1	SEAL-O-RING	
	6	1	**321-5906**	1	PLATE	
	7	1	**329-8576**	1	PLATE	

M-METRIC PART

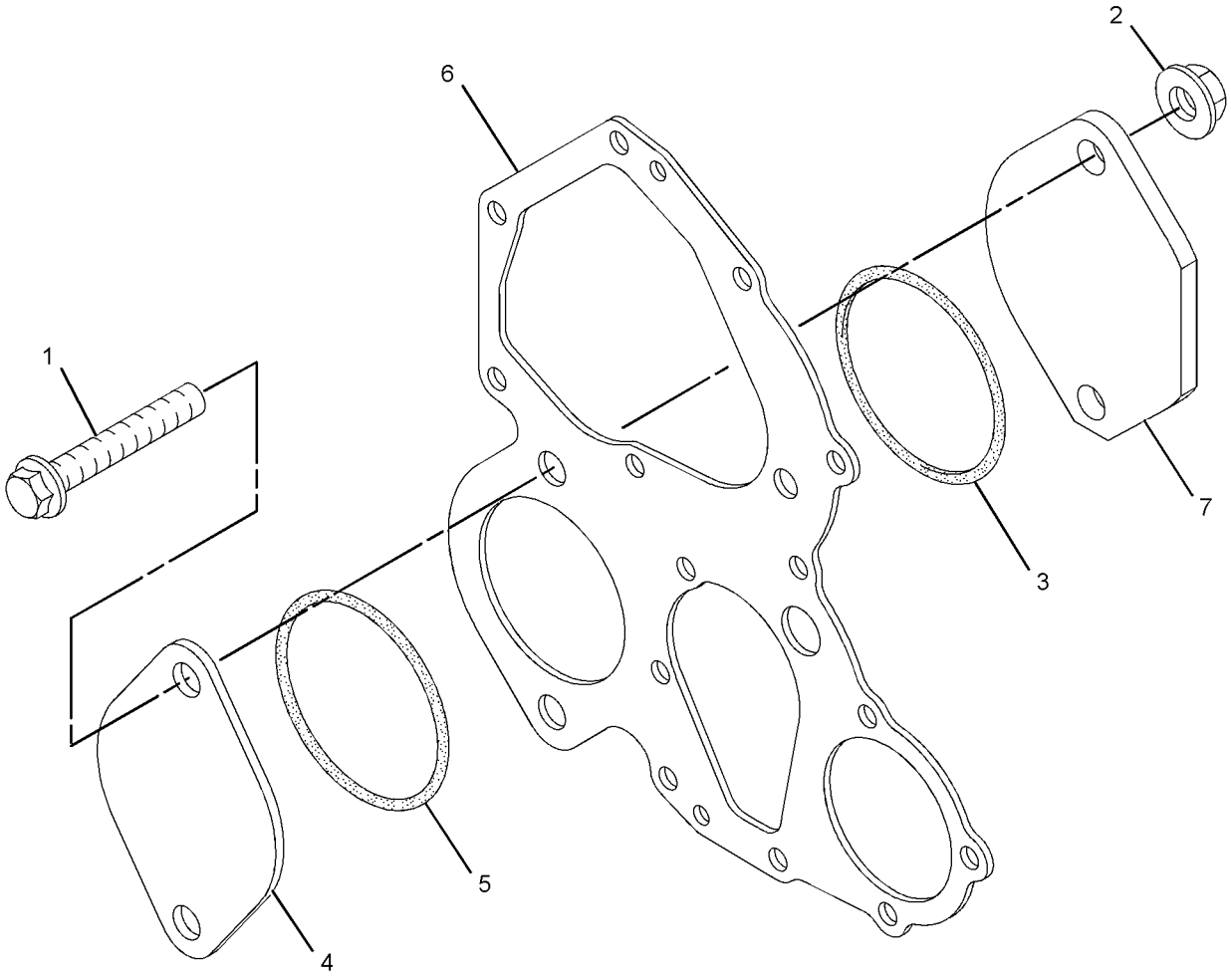

GRAPHIC #1 **<END>** g01614834

313-1986 COVER GP-VALVE MECHANISM

SMCS-1107 **i02773491**

NOTE	REF NO	GRAPHIC REF	PART NUMBER	QTY	PART NAME 1 2 3 4 5 6 (PRODUCT LEVEL)	SEE PAGE
	1	1	**153-5934**	3	NUT	
	2	1	**153-5936**	3	WASHER	
	3	1	**153-5939**	1	GAUZE (CRANKCASE BREATHER)	
	4	1	**153-6861**	2	BOLT	
	5	1	**153-7640**	2	BOLT	
	6	1	**165-2139**	3	BOLT	
	7	1	**217-5859**	1	VALVE-BREATHER (CRANKCASE)	
	8	1	**217-5860**	4	BOLT	
	9	1	**217-5862**	6	BOLT	
	10	1	**231-3009**	1	COVER-VALVE	
	11	1	**231-3010**	1	PLATE-RETAINING	
	12	1	**231-3013**	1	CONNECTION-AIR	
	13	1	**231-3014**	1	GASKET	
	14	1	**231-3020**	1	SEAL-VALVE COVER	

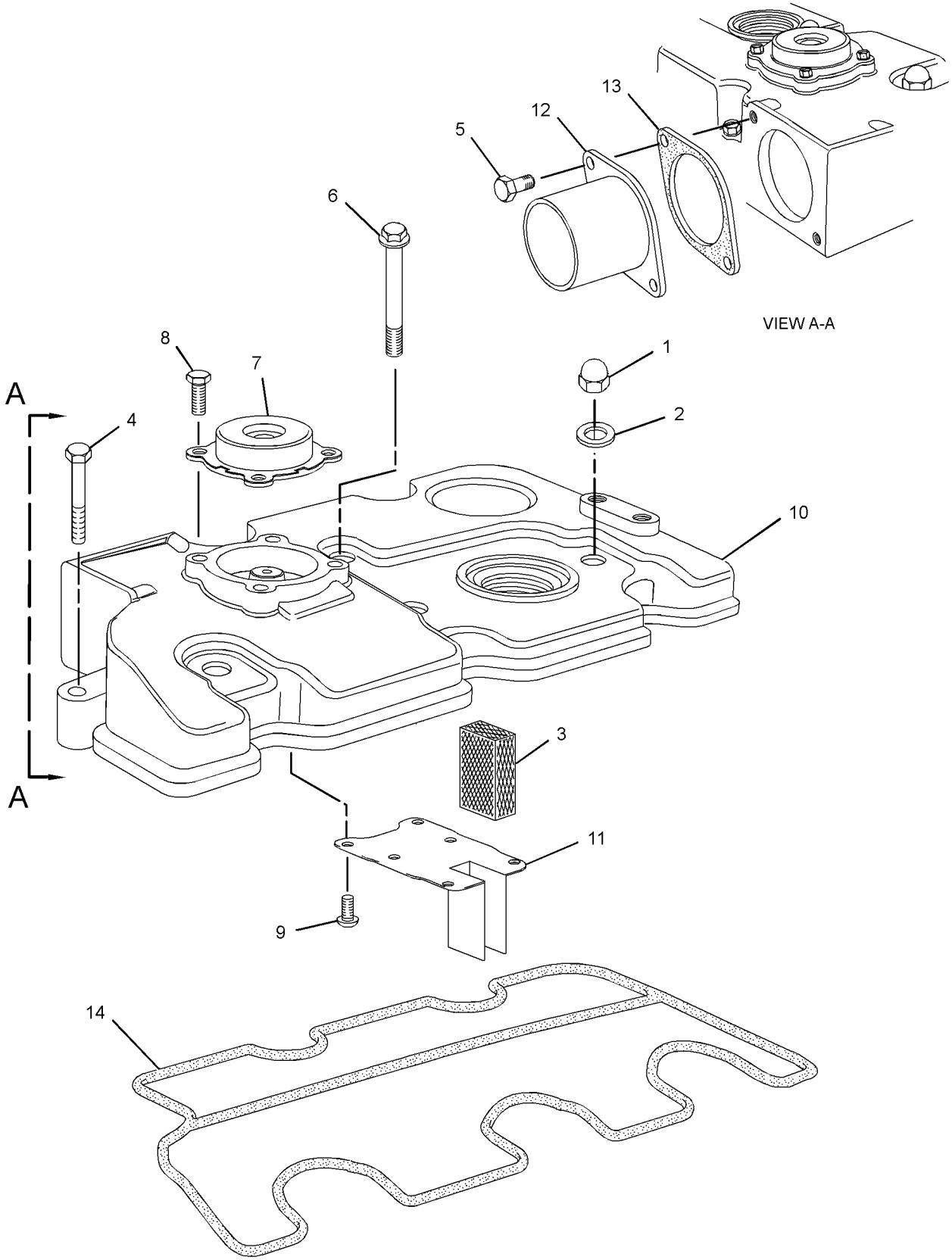

GRAPHIC #1 **<END>** g01387423

325-5589 COVER GP-VALVE MECHANISM

SMCS-1107 **i02959125**

NOTE	REF NO	GRAPHIC REF	PART NUMBER	QTY	PART NAME 1 2 3 4 5 6 (PRODUCT LEVEL)	SEE PAGE
	1	1	**153-5934**	3	NUT	
	2	1	**153-5936**	3	WASHER	
	3	1	**153-5939**	1	GAUZE (CRANKCASE BREATHER)	
	4	1	**153-6861**	2	BOLT	
	5	1	**153-7640**	2	BOLT	
	6	1	**165-2139**	3	BOLT	
	7	1	**217-5859**	1	VALVE-BREATHER (CRANKCASE)	
	8	1	**217-5860**	4	BOLT	
	9	1	**217-5862**	4	BOLT	
	10	1	**231-3010**	1	PLATE-RETAINING	
	11	1	**231-3013**	1	CONNECTION-AIR	
	12	1	**231-3014**	1	GASKET	
	13	1	**231-3020**	1	SEAL-VALVE COVER	
	14	1	**238-1330**	1	COVER-VALVE	

325-5589 **COVER GP-VALVE MECHANISM** *(contd.)* **i02959125**

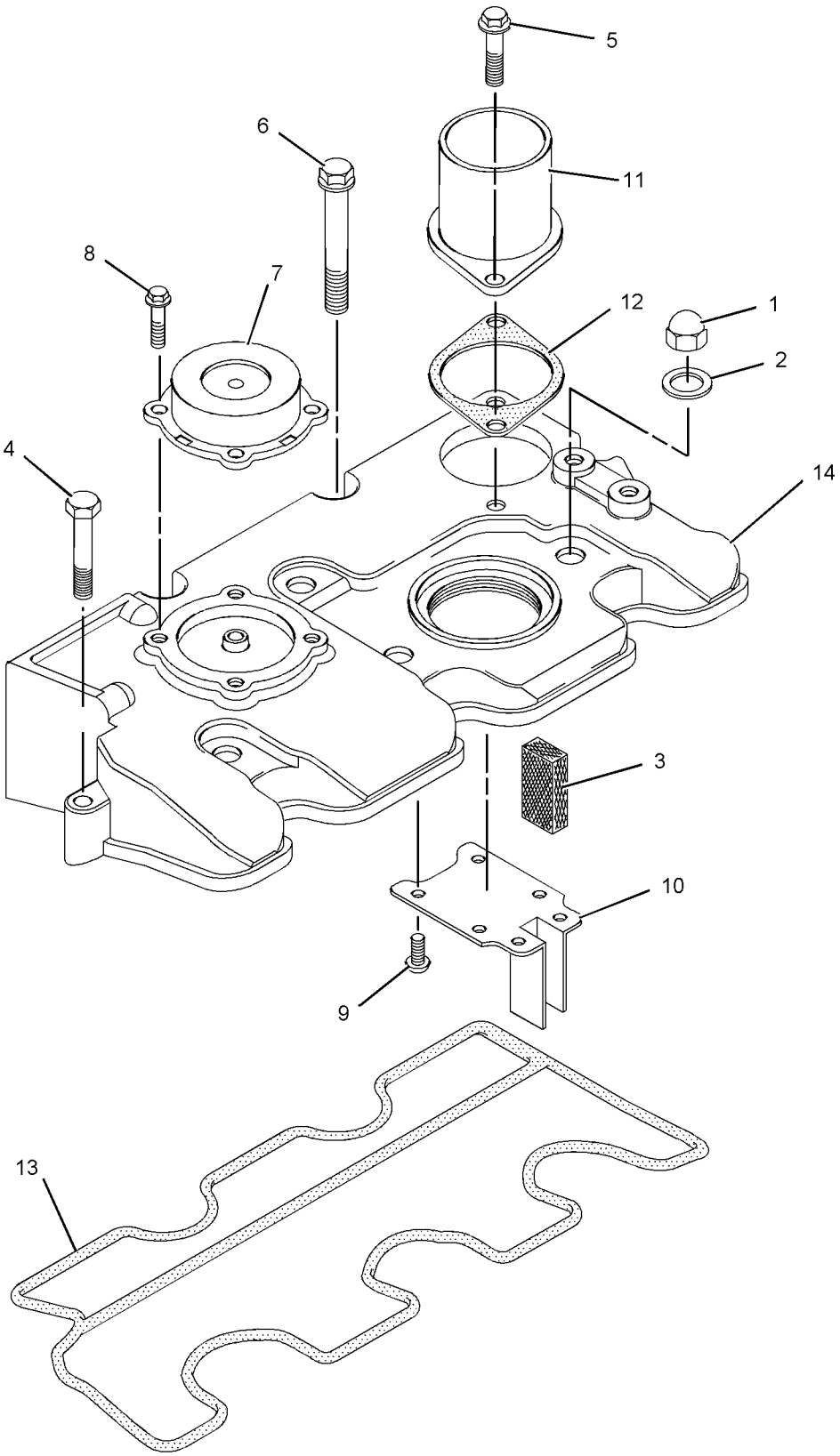

GRAPHIC #1 **<END>** g01060755

328-1435 COVER GP-VALVE MECHANISM

SMCS-1107 **i02973231**

NOTE	REF NO	GRAPHIC REF	PART NUMBER	QTY	PART NAME 1 2 3 4 5 6 (PRODUCT LEVEL)	SEE PAGE
	1	1	**153-5934**	3	NUT	
	2	1	**153-5936**	3	WASHER	
	3	1	**153-5939**	1	GAUZE (CRANKCASE BREATHER)	
	4	1	**153-6861**	2	BOLT	
	5	1	**153-7640**	2	BOLT	
	6	1	**165-2139**	3	BOLT	
	7	1	**217-5859**	1	VALVE-BREATHER (CRANKCASE)	
	8	1	**217-5860**	4	BOLT	
	9	1	**217-5862**	4	BOLT	
	10	1	**231-3010**	1	PLATE-RETAINING	
	11	1	**231-3013**	1	CONNECTION-AIR	
	12	1	**231-3014**	1	GASKET	
	13	1	**231-3020**	1	SEAL-VALVE COVER	
	14	1	**269-7005**	1	COVER-VALVE	

328-1435 **COVER GP-VALVE MECHANISM** *(contd.)* **i02973231**

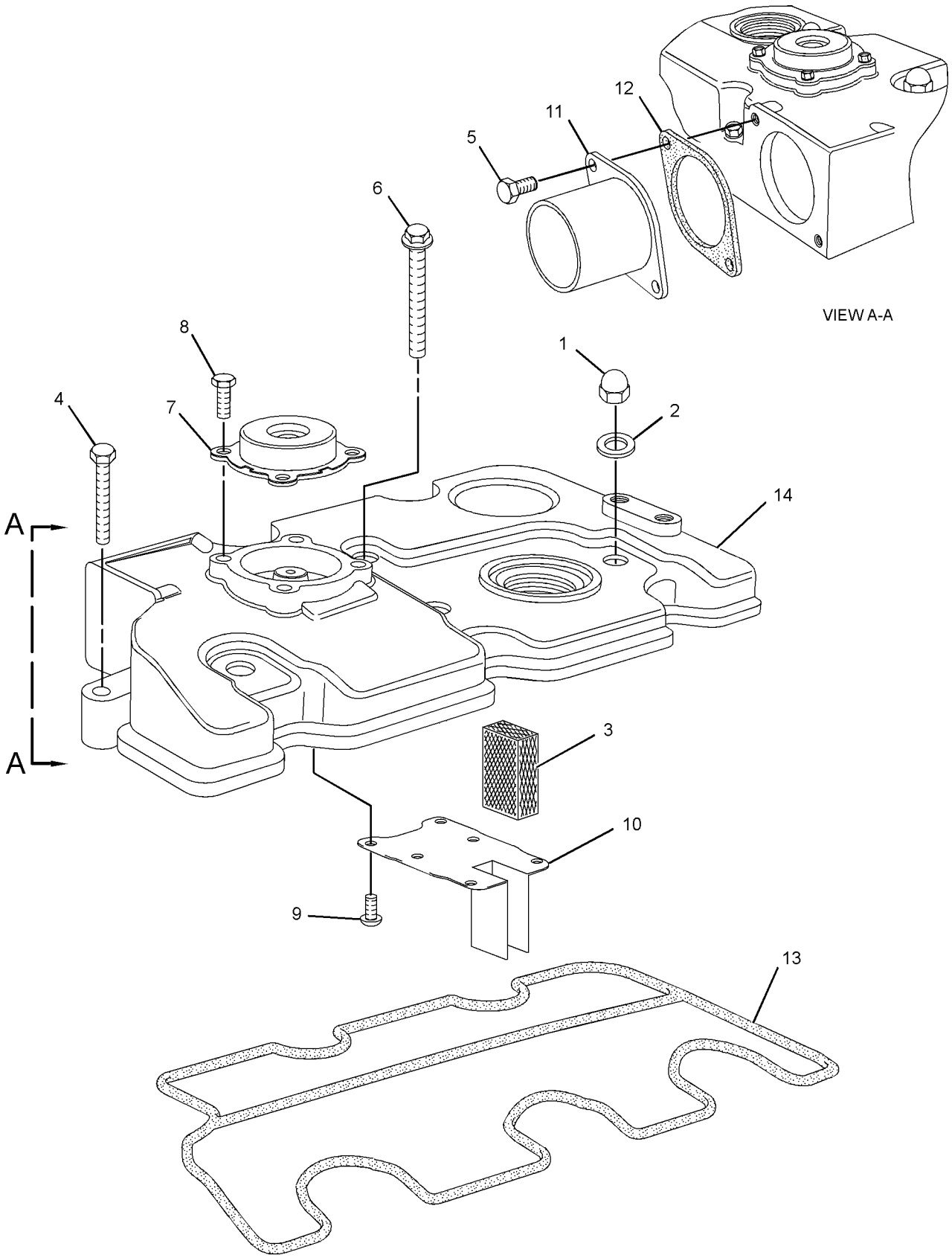

GRAPHIC #1 **<END>** g01510684

BASIC ENGINE

313-1962 CRANKSHAFT GP

SMCS-1202 **i03935129**

NOTE	REF NO	GRAPHIC REF	PART NUMBER	QTY	PART NAME 1 2 3 4 5 6 (PRODUCT LEVEL)	SEE PAGE
	1	1	**153-5397**	2	BOLT	
	2	1	**153-5408**	2	BOLT	
	3	1	**231-2801**	1	CAP AS-BEARING	
	3A	1	**153-5402**	2	DOWEL	
	3B	1	**153-5403**	2	BOLT	
	4	1	**231-2802**	1	CAP AS-BEARING	
	4A	1	**153-5402**	2	DOWEL	
	4B	1	**153-5403**	4	BOLT	
	5	1	**231-2803**	1	CAP AS-BEARING	
M	5A	1	**8T-0276**	2	BOLT (M8X1.25X45-MM)	
	5B	1	**153-5402**	2	DOWEL	
	6	1	**304-4764**	1	KIT-BEARING	
	7	1	**304-4766**	1	KIT-CRANKSHAFT BEARING	
	8	1	**313-2027**	1	CRANKSHAFT AS	
	8A	1	**153-5518**	1	KEY	
	8B	1	**153-5519**	1	PIN	
	8C	1	**356-3225**	1	GEAR-CRANKSHAFT	

M-METRIC PART

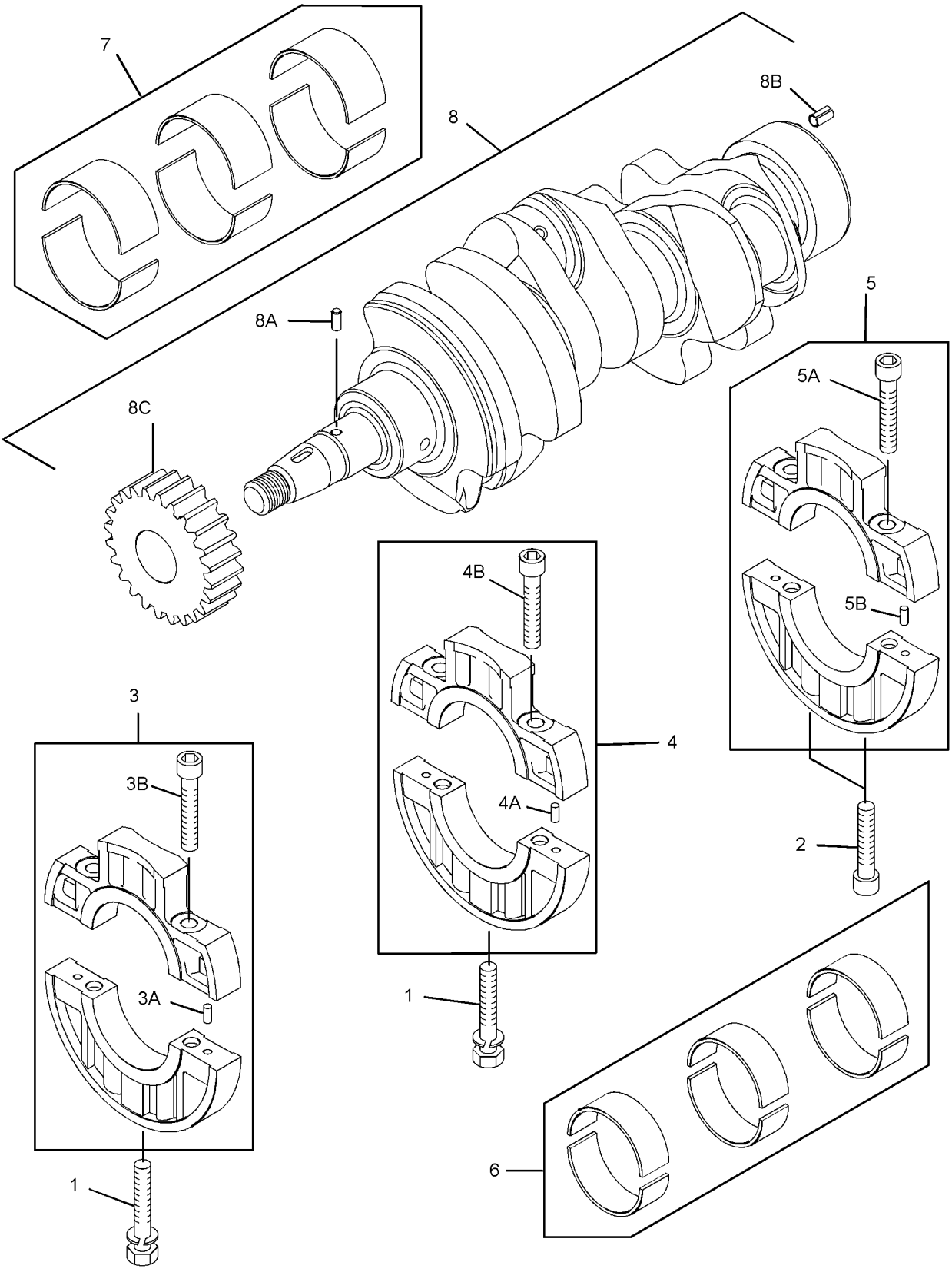

GRAPHIC #1 **<END>** g01389555

313-1957 CYLINDER BLOCK GP

SMCS-1201 **i03691003**

NOTE	REF NO	GRAPHIC REF	PART NUMBER	QTY	PART NAME 1 2 3 4 5 6 (PRODUCT LEVEL)	SEE PAGE
	1	1	**153-5385**	1	PLUG	
	2	1	**153-5387**	4	PLUG	
	3	1	**6B-0924**	1	BALL BEARING	
	4	1	**153-5391**	1	PLUG	
	5	1	**153-5392**	1	BEARING	
	6	1	**153-5393**	2	DOWEL	
	7	1	**153-5394**	2	DOWEL	
	8	1	**153-5395**	2	DOWEL	
	9	1	**153-5396**	2	PIN	
	10	1	**153-5407**	2	STUD	
	11	1	**153-5409**	1	CLIP	
	12	1	**153-6838**	3	BOLT	
	13	1	**183-1163**	1	STUD	
	14	1	**183-1164**	1	STUD	
	15	1	**215-2618**	1	GASKET	
	16	1	**221-1136**	4	PLUG	
	17	1	**231-8819**	1	SEAL-CRANKSHAFT	
	18	1	**304-3560**	1	BUSHING	
	19	1	**237-9315**	1	PLUG (SEALING)	
	20	1	**237-9316**	2	PLUG (SEALING)	
	21	1	**288-6538**	1	PLUG	
	22	1	**288-6539**	1	CAP	

313-1957 **CYLINDER BLOCK GP** *(contd.)* **i03691003**

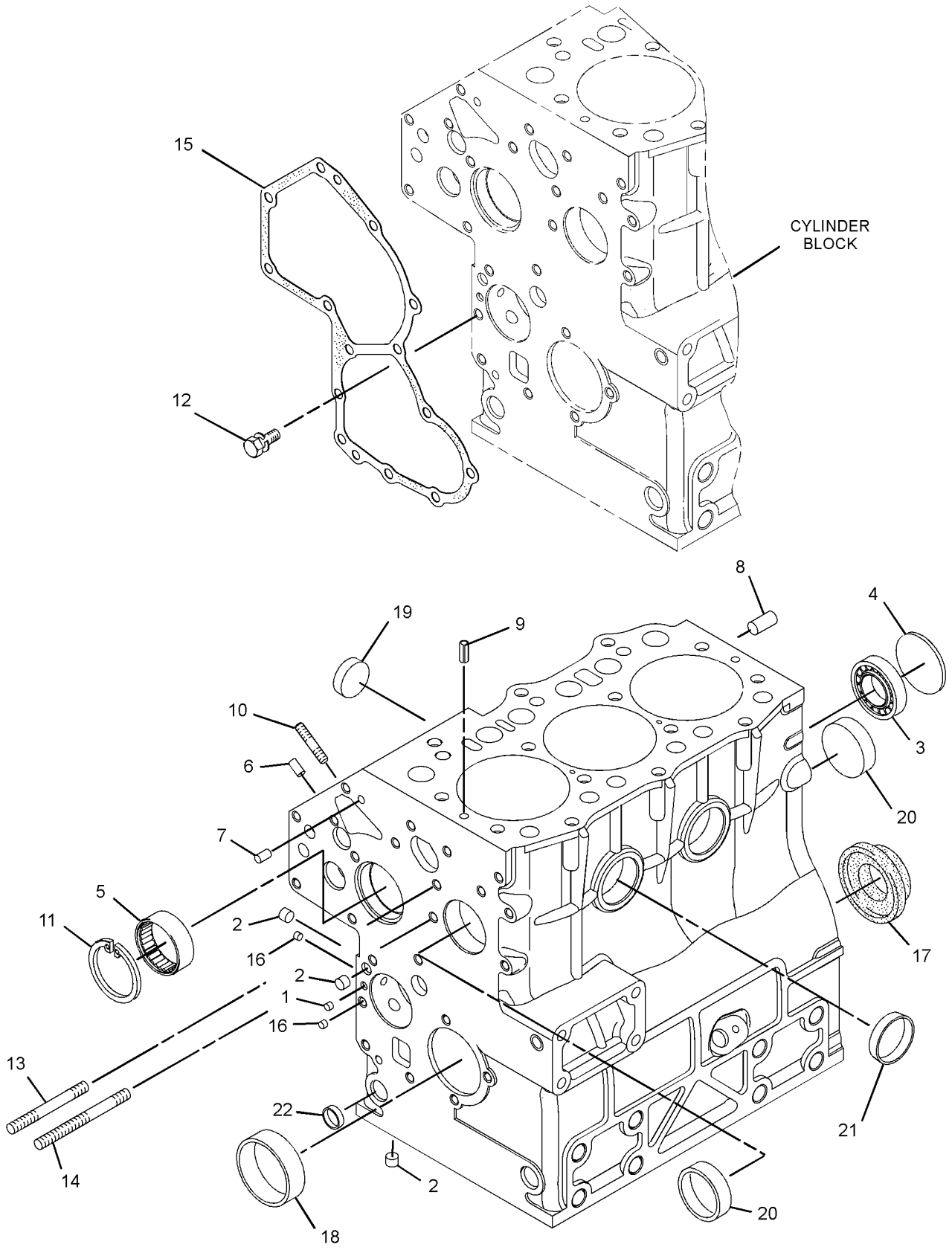

GRAPHIC #1 **<END>** g01991613

319-7268 CYLINDER HEAD AS

PART OF 313-1964 CYLINDER HEAD GP

SMCS-1100, 1101 **i02871639**

NOTE	REF NO	GRAPHIC REF	PART NUMBER	QTY	PART NAME 1 2 3 4 5 6 (PRODUCT LEVEL)	SEE PAGE
	1	1	**153-5554**	3	SEAL	
	2	1	**153-5555**	3	VALVE-EXHAUST	
	3	1	**153-5556**	12	RETAINER	
	4	1	**153-5557**	6	CAP	
	5	1	**153-5558**	6	SPRING	
	6	1	**153-5559**	3	SEAL	
	7	1	**231-2070**	3	VALVE-INLET	
	8	1	**256-2085**	1	INSERT-EXHAUST VALVE	
	9	1	**288-6537**	8	CAP	
	10	1	**291-1808**	2	CAP	

319-7268 **CYLINDER HEAD AS** *(contd.)* **i02871639**

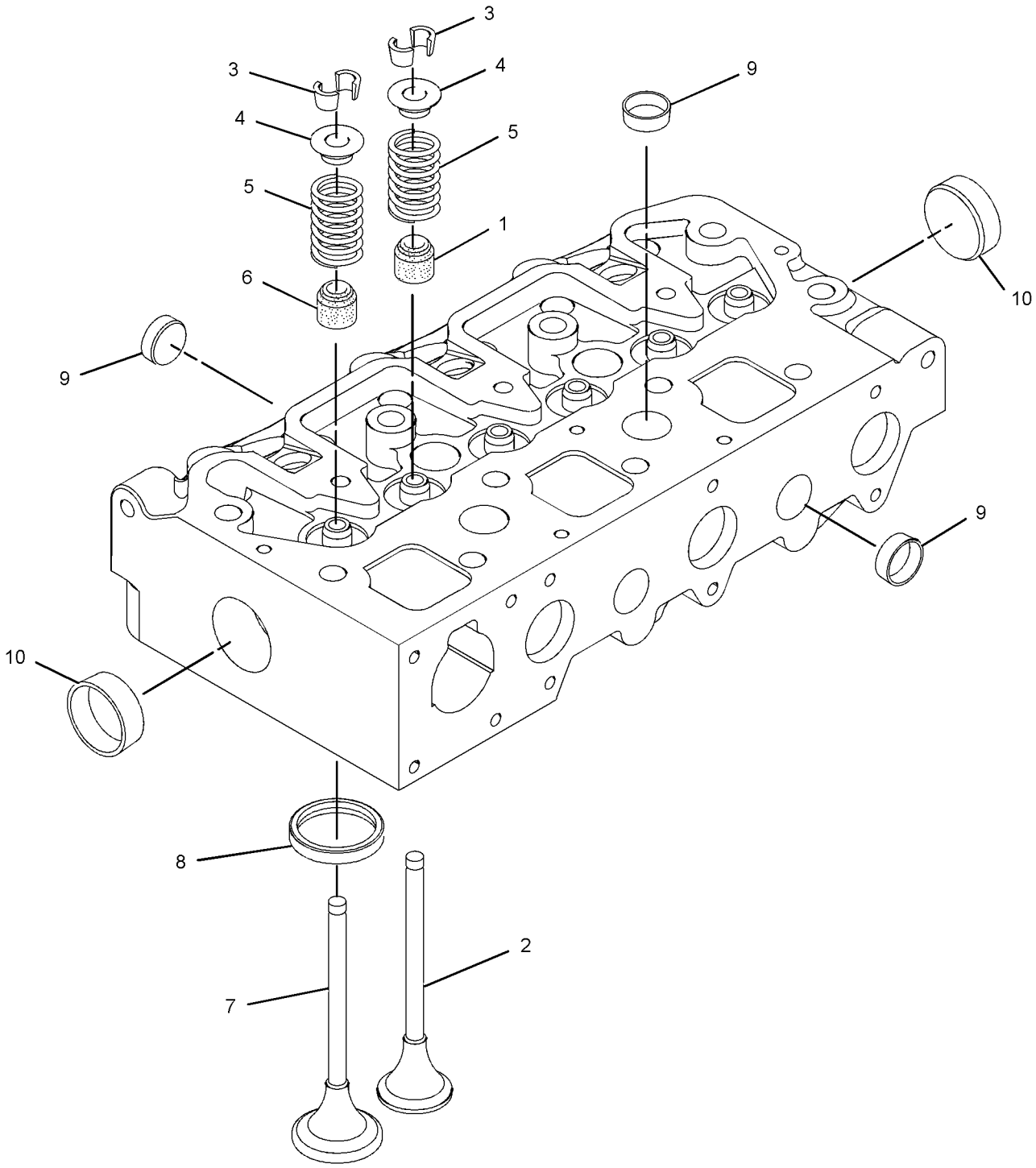

GRAPHIC #1 **<END>** g01389592

313-1964 CYLINDER HEAD GP

SMCS-1100 **i03137732**

NOTE	REF NO	GRAPHIC REF	PART NUMBER	QTY	PART NAME 1 2 3 4 5 6 (PRODUCT LEVEL)	SEE PAGE
	1	1	**322-7485**	6	CAP-VALVE SPRING	
	2	1	**153-5575**	11	BOLT	
	3	1	**153-5578**	3	BOLT	
	4	1	**153-5944**	4	STUD	
B	5	1	**231-2073**	1	GASKET-HEAD (1.3-MM THK)	
					—OR—	
B		1	**254-4504**	1	GASKET-HEAD (1.2-MM THK)	
Y	6	1	**319-7268**	1	CYLINDER HEAD AS	41

B-USE AS REQUIRED
Y-SEPARATE ILLUSTRATION

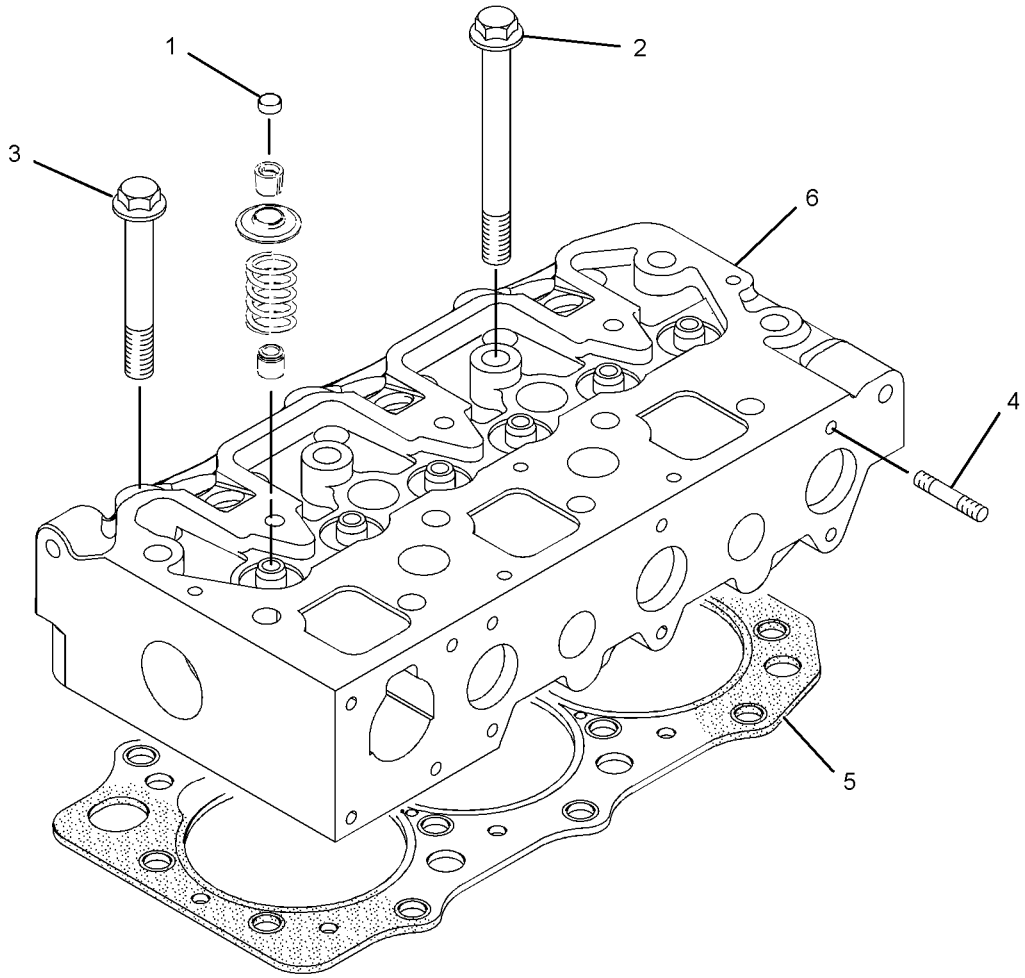

GRAPHIC #1 **<END>** g01388603

343-8044 DRAIN GP-ENGINE OIL

SMCS-1302 **i03542743**

NOTE	REF NO	GRAPHIC REF	PART NUMBER	QTY	PART NAME 1 2 3 4 5 6 (PRODUCT LEVEL)	SEE PAGE
	1	1	**144-9961**	1	VALVE-DRAIN (ENGINE OIL SUMP)	

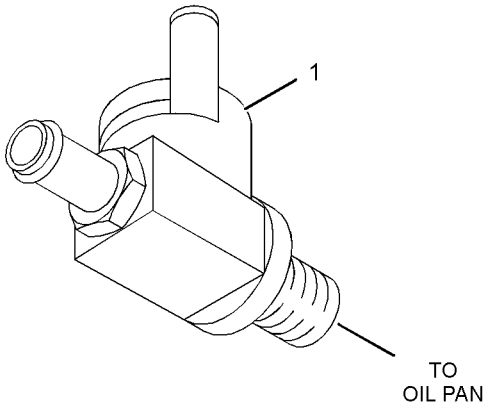

GRAPHIC #1 **<END>** g01963396

311-5829 DRIVE GP-FAN

SMCS-1359 **i02864351**

NOTE	REF NO	GRAPHIC REF	PART NUMBER	QTY	PART NAME 1 2 3 4 5 6 (PRODUCT LEVEL)	SEE PAGE
	1	1	**153-7640**	4	BOLT	
	2	1	**161-8260**	1	PLATE	

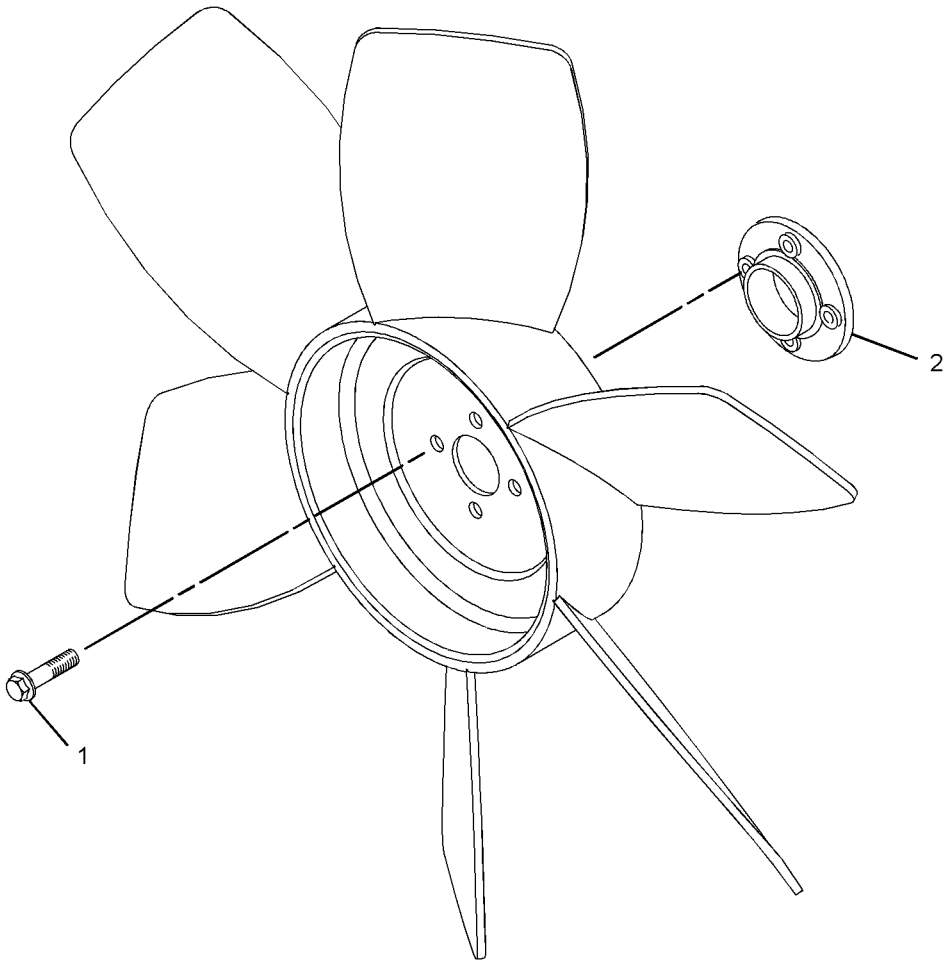

GRAPHIC #1 **<END>** g01427123

BASIC ENGINE

322-3808 DRIVE GP-FAN

SMCS-1359 **i03116002**

NOTE	REF NO	GRAPHIC REF	PART NUMBER	QTY	PART NAME 1 2 3 4 5 6 (PRODUCT LEVEL)	SEE PAGE
	1	1	**249-7263**	4	BOLT	

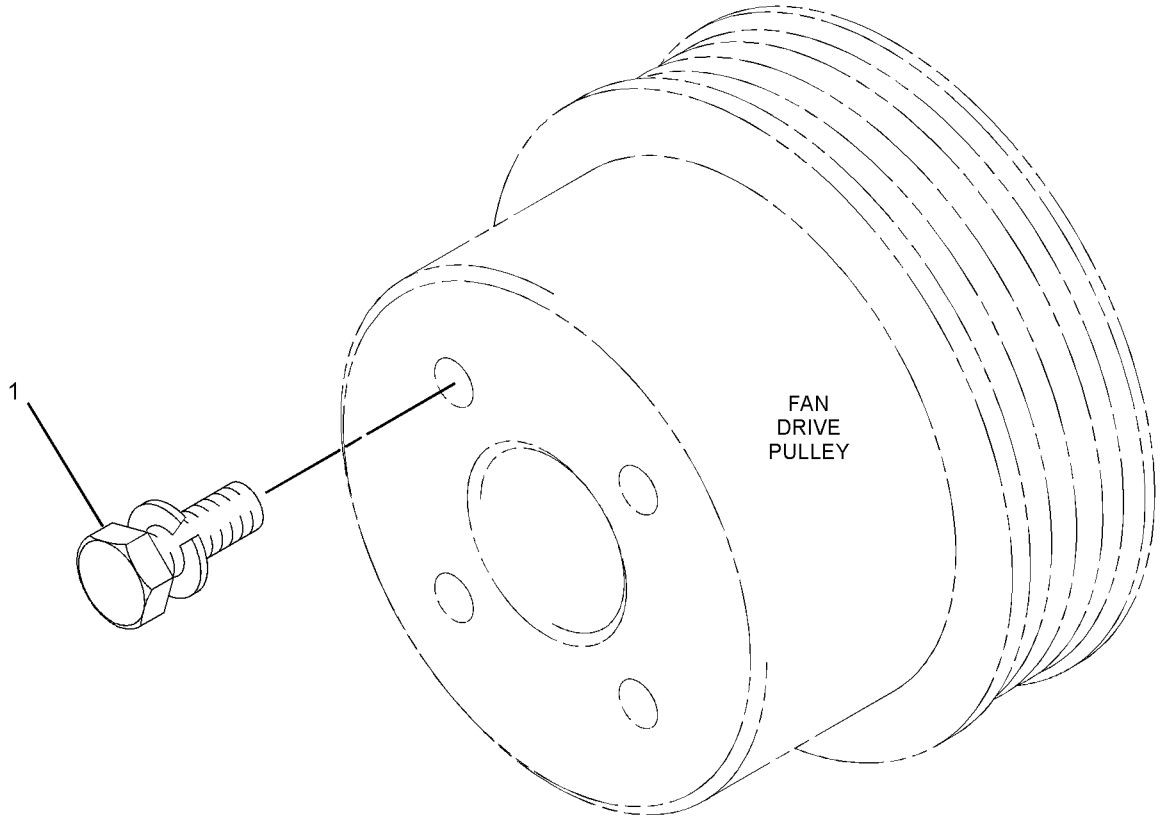

GRAPHIC #1 **<END>** g01514615

BASIC ENGINE

329-4423 DRIVE GP-FAN

SMCS-1359 **i03758865**

NOTE	REF NO	GRAPHIC REF	PART NUMBER	QTY	PART NAME 1 2 3 4 5 6 (PRODUCT LEVEL)	SEE PAGE
	1	1	**153-6861**	4	BOLT	
	2	1	**161-8260**	1	PLATE	

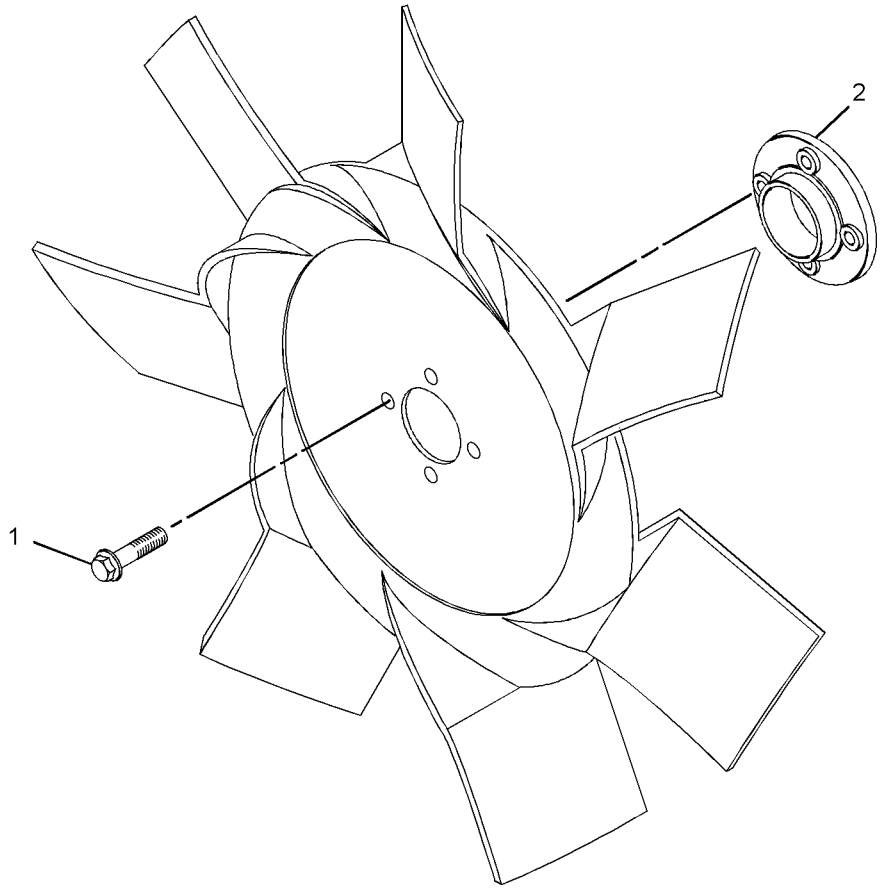

GRAPHIC #1 **<END>** g01959143

BASIC ENGINE

313-1966 DRIVE GP-PUMP

SMCS-1017, 1207, 3108 **i03705546**

NOTE	REF NO	GRAPHIC REF	PART NUMBER	QTY	PART NAME 1 2 3 4 5 6 (PRODUCT LEVEL)	SEE PAGE
	1	1	**153-5936**	2	WASHER	
	2	1	**153-6853**	1	SEAL-O-RING	
	3	1	**153-6881**	1	BOLT	
	4	1	**154-1942**	1	VALVE-RELIEF (ENGINE OIL PRESSURE)	
	5	1	**231-7864**	1	TUBE-OIL	

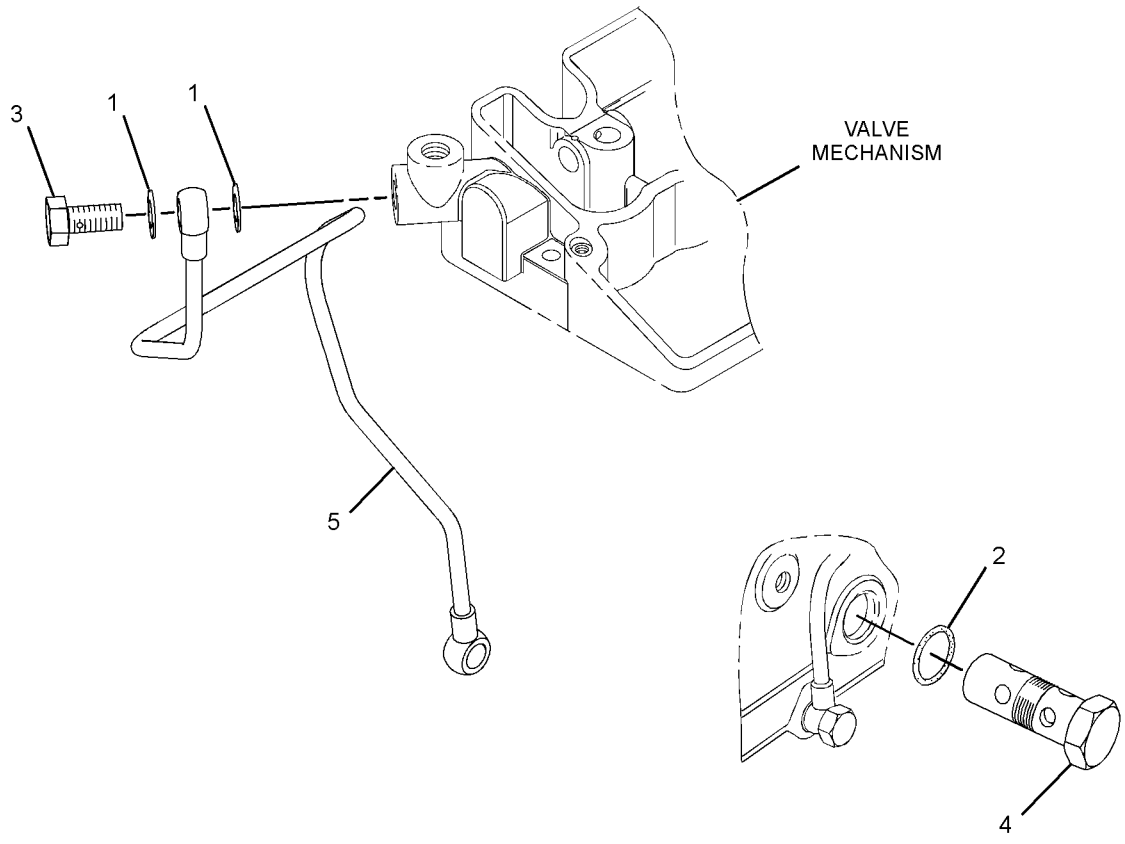

GRAPHIC #1 **<END>** g02005853

BASIC ENGINE

313-1970 FLYWHEEL GP

SMCS-1156 **i02966464**

NOTE	REF NO	GRAPHIC REF	PART NUMBER	QTY	PART NAME 1 2 3 4 5 6 (PRODUCT LEVEL)	SEE PAGE
	1		**327-4311**	1	FLYWHEEL GP	
	1A		**153-6865**	1	GEAR-STARTER (96-TEETH)	
	2		**153-6866**	6	BOLT	

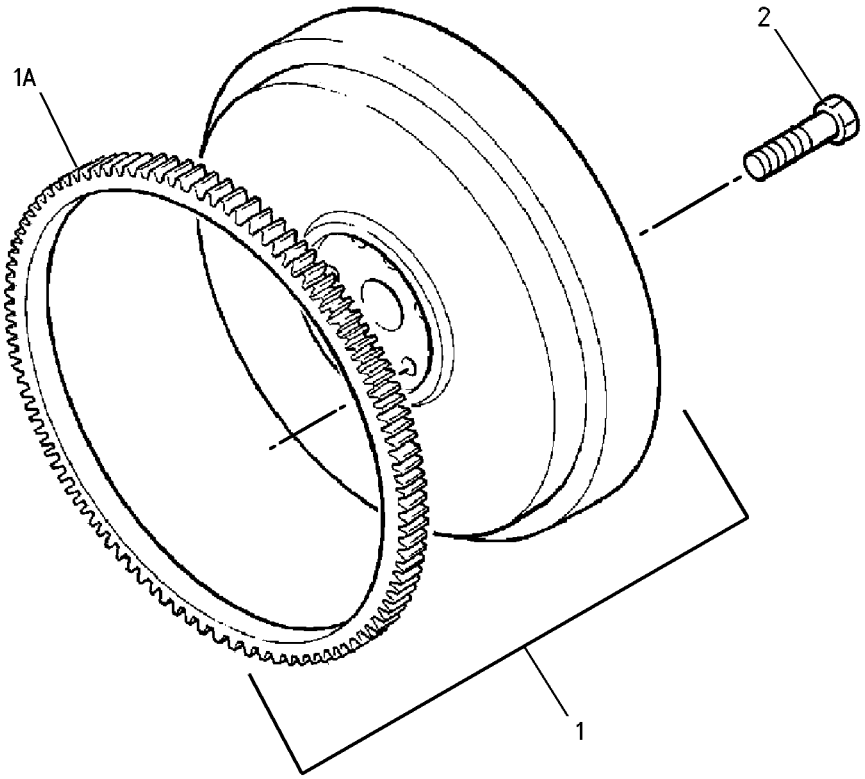

GRAPHIC #1 **<END>** g00640580

BASIC ENGINE

313-6218 FLYWHEEL GP

SMCS-1156 **i02963488**

NOTE	REF NO	GRAPHIC REF	PART NUMBER	QTY	PART NAME 1 2 3 4 5 6 (PRODUCT LEVEL)	SEE PAGE
	1	1	**327-5257**	1	FLYWHEEL GP	
	1A	1	**154-2405**	1	GEAR-STARTER (126-TEETH)	
	2	1	**153-6866**	6	BOLT	

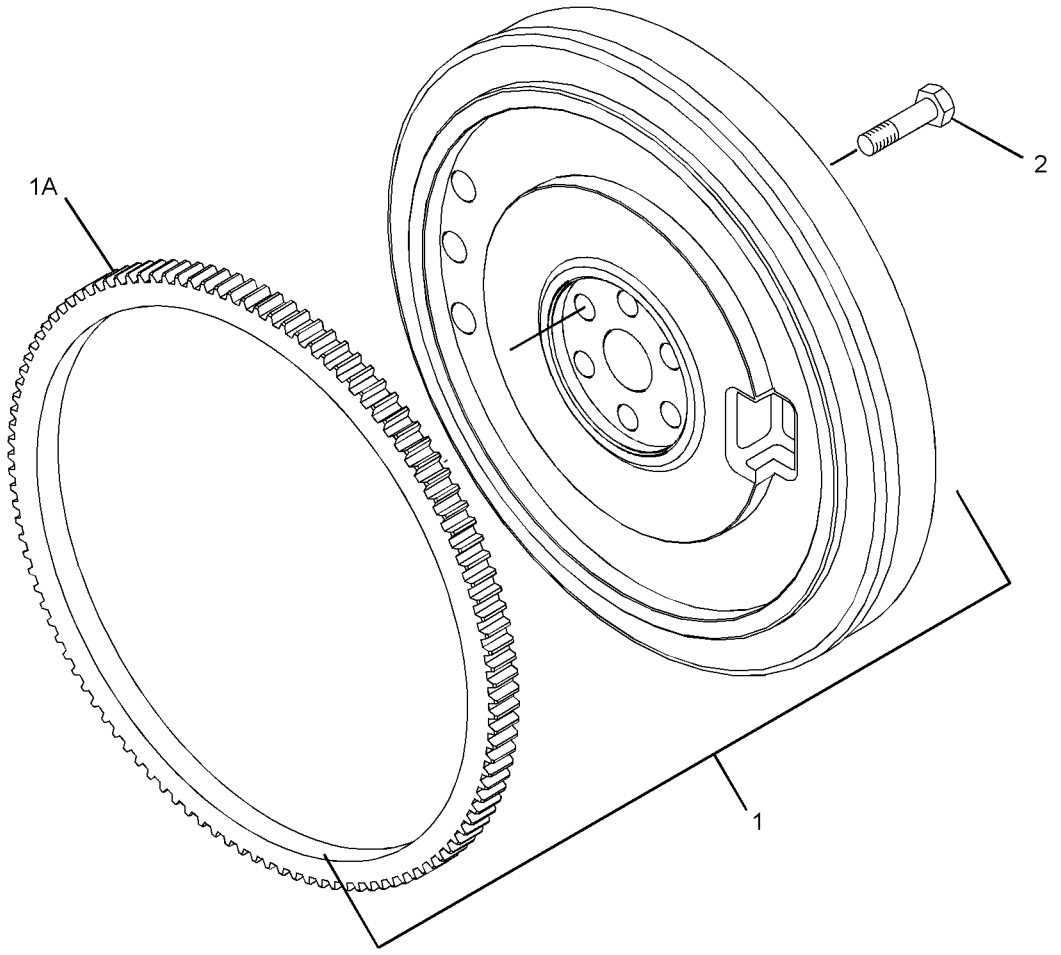

GRAPHIC #1 **<END>** g01389284

318-8880 FLYWHEEL GP

SMCS-1156 **i02980219**

NOTE	REF NO	GRAPHIC REF	PART NUMBER	QTY	PART NAME 1 2 3 4 5 6 (PRODUCT LEVEL)	SEE PAGE
	1	1	**327-5149**	1	FLYWHEEL GP	
	1A	1	**153-6865**	1	GEAR-STARTER (96-TEETH)	
	2	1	**153-6866**	6	BOLT	

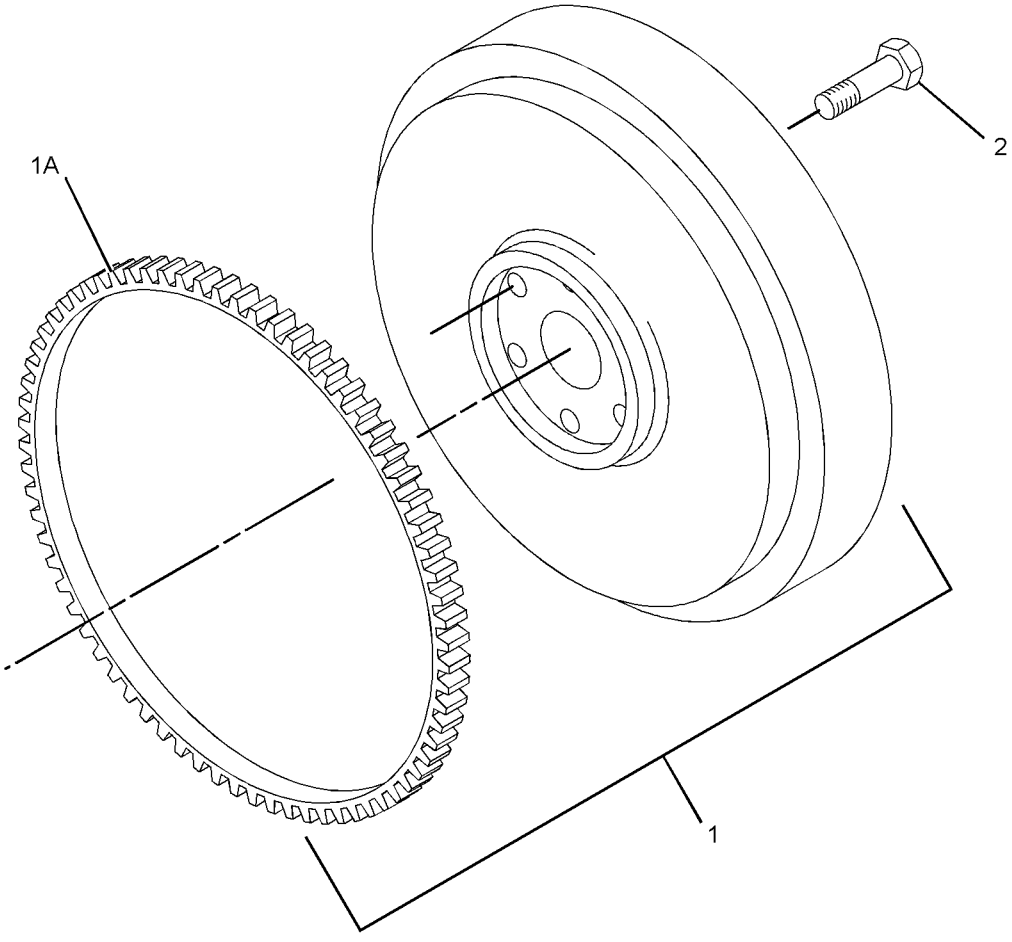

GRAPHIC #1 **<END>** g01502339

BASIC ENGINE

313-1969 HOUSING GP-FLYWHEEL

TYPE 1

SMCS-1157 **i02773446**

NOTE	REF NO	GRAPHIC REF	PART NUMBER	QTY	PART NAME 1 2 3 4 5 6 (PRODUCT LEVEL)	SEE PAGE
	1	1	**138-7146**	8	BOLT	
	2	1	**138-7166**	1	HOUSING-FLYWHEEL	
	3	1	**138-7142**	2	BOLT	
	4	1	**154-1399**	2	WASHER	
	5	1	**154-2403**	2	WASHER	
	6	1	**155-8085**	2	NUT	
	7	1	**154-2395**	1	PLUG	

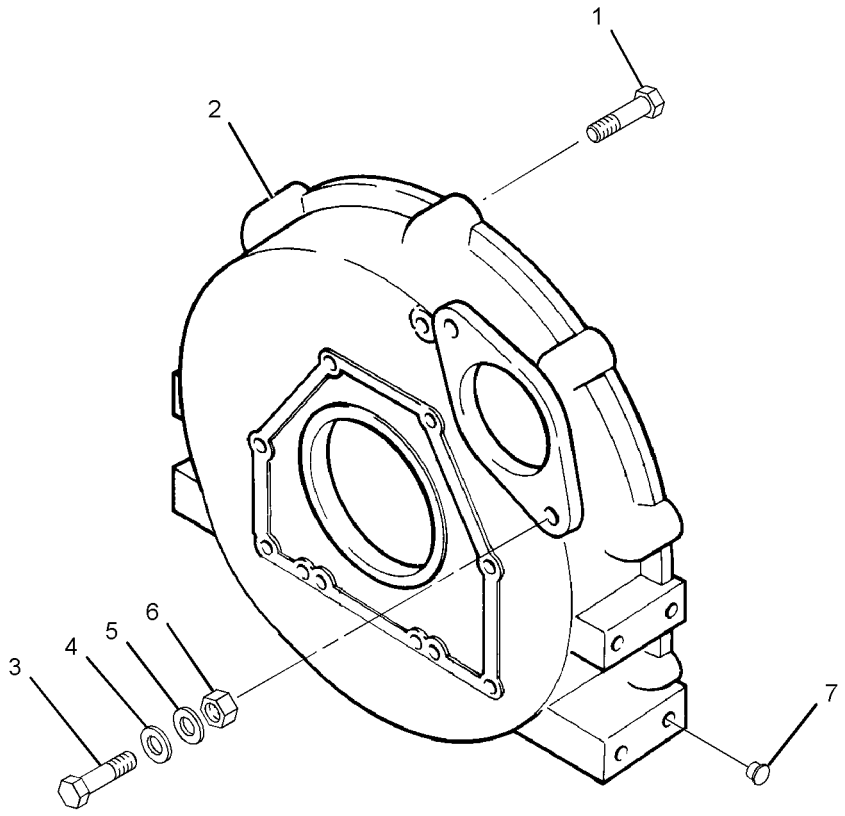

GRAPHIC #1 **<END>** g01141591

313-1969 HOUSING GP-FLYWHEEL

TYPE 2

SMCS-1157 **i03617904**

NOTE	REF NO	GRAPHIC REF	PART NUMBER	QTY	PART NAME 1 2 3 4 5 6 (PRODUCT LEVEL)	SEE PAGE
	1	1	**138-7146**	8	BOLT	
	2	1	**138-7166**	1	HOUSING-FLYWHEEL	
CM	3	1	**140-8783**	2	BOLT (M10X1.5X45-MM)	
C	4	1	**6I-0594**	2	NUT (M10X1.5-THD)	
	5	1	**154-2395**	1	PLUG	

C-CHANGE FROM PREVIOUS TYPE
M-METRIC PART

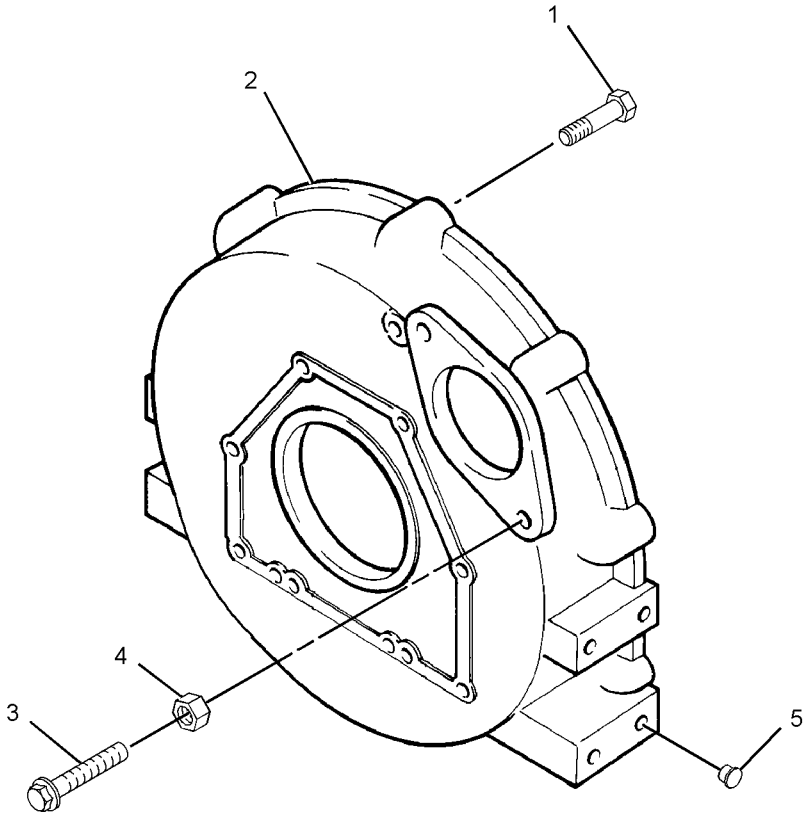

GRAPHIC #1 **<END>** g01997113

BASIC ENGINE

313-6217 HOUSING GP-FLYWHEEL

SMCS-1157 **i03854929**

NOTE	REF NO	GRAPHIC REF	PART NUMBER	QTY	PART NAME 1 2 3 4 5 6 (PRODUCT LEVEL)	SEE PAGE
M	1	1	**140-8783**	2	BOLT (M10X1.5X45-MM) (STARTER MOTOR)	
	2	1	**153-6375**	2	BOLT	
	3	1	**153-6867**	1	PLATE	
	4	1	**153-6868**	8	BOLT	
	5	1	**6I-0594**	2	NUT (M10X1.5-THD)	

M-METRIC PART

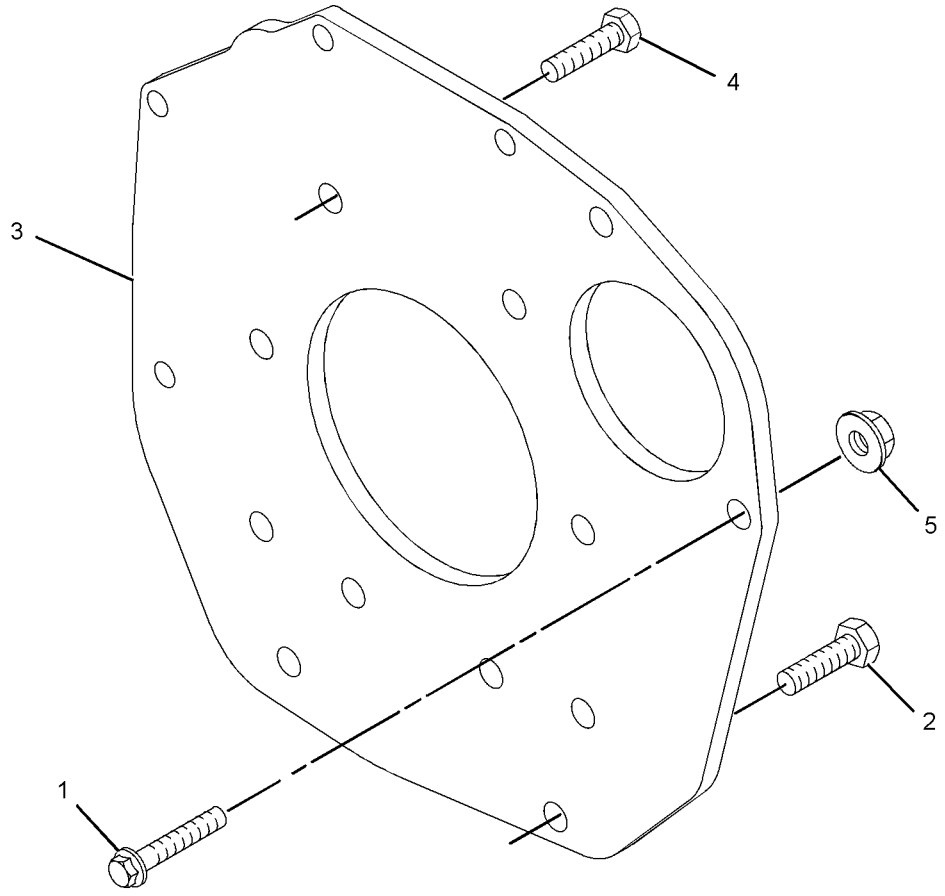

GRAPHIC #1 **<END>** g02163828

318-8879 HOUSING GP-FLYWHEEL

TYPE 1

SMCS-1157 **i02862964**

NOTE	REF NO	GRAPHIC REF	PART NUMBER	QTY	PART NAME 1 2 3 4 5 6 (PRODUCT LEVEL)	SEE PAGE
	1	1	**138-7146**	8	BOLT	
	2	1	**138-7149**	1	HOUSING-FLYWHEEL	
	3	1	**154-1399**	2	WASHER	
	4	1	**154-2395**	4	PLUG	
	5	1	**154-2403**	2	WASHER	
	6	1	**155-8085**	2	NUT	
	7	1	**138-7142**	2	BOLT	

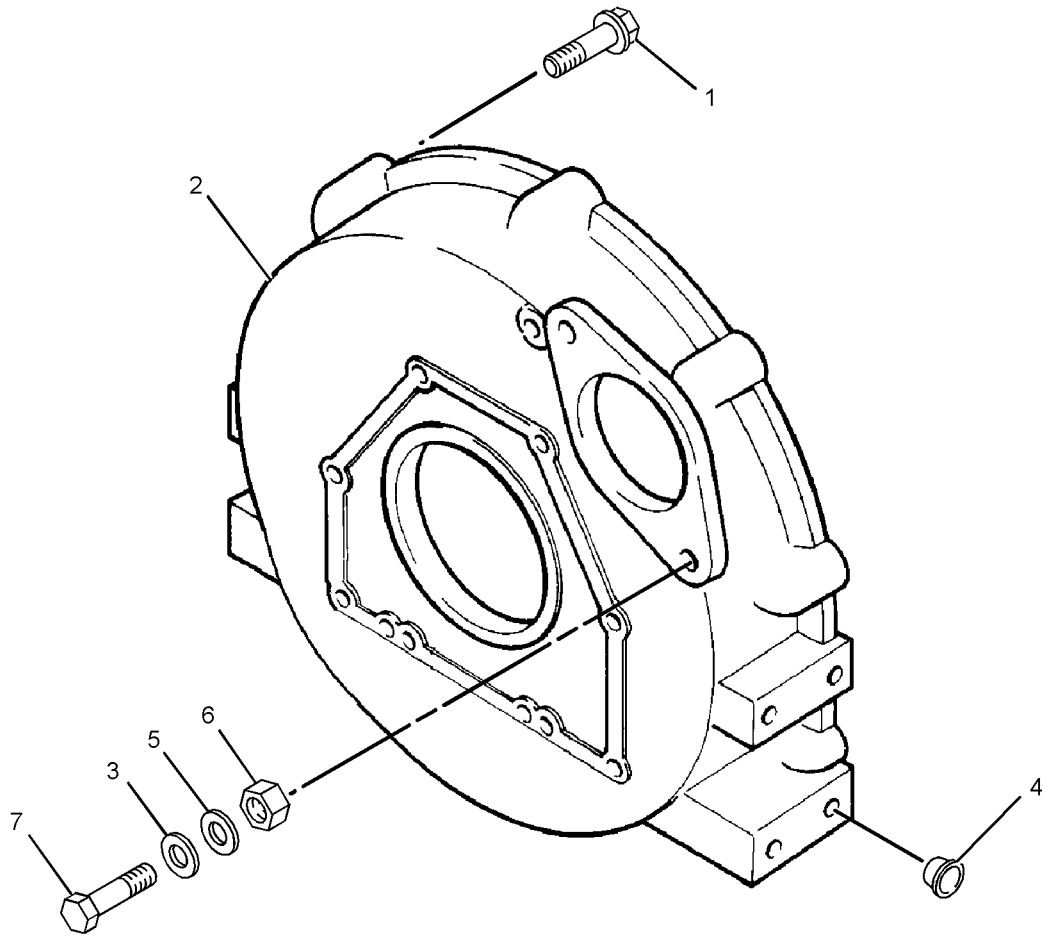

GRAPHIC #1 **<END>** g01502282

318-8879 HOUSING GP-FLYWHEEL

TYPE 2

SMCS-1157 **i03560702**

NOTE	REF NO	GRAPHIC REF	PART NUMBER	QTY	PART NAME 1 2 3 4 5 6 (PRODUCT LEVEL)	SEE PAGE
	1	1	**138-7146**	8	BOLT	
	2	1	**138-7149**	1	HOUSING-FLYWHEEL	
	3	1	**154-2395**	4	PLUG	
C	4	1	**6I-0594**	2	NUT (M10X1.5-THD)	
CM	5	1	**140-8783**	2	BOLT (M10X1.5X45-MM)	

C-CHANGE FROM PREVIOUS TYPE
M-METRIC PART

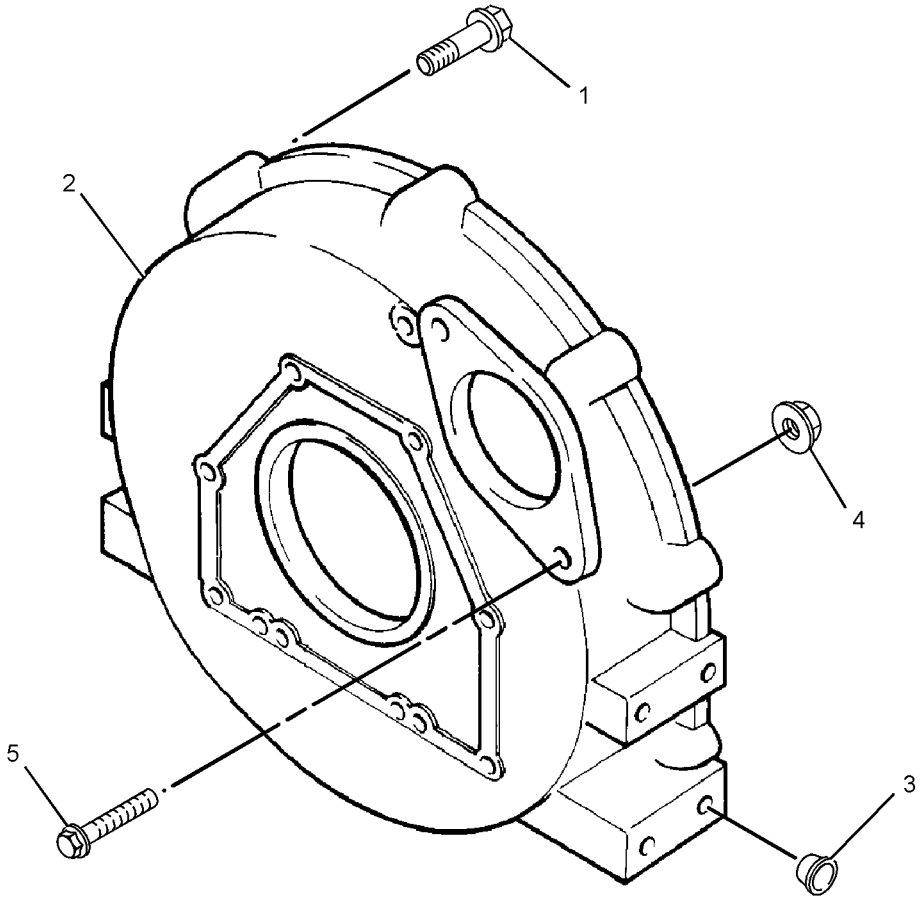

GRAPHIC #1 **<END>** g01953447

328-1433 HOUSING GP-FLYWHEEL

TYPE 1

SMCS-1157 **i02973230**

NOTE	REF NO	GRAPHIC REF	PART NUMBER	QTY	PART NAME 1 2 3 4 5 6 (PRODUCT LEVEL)	SEE PAGE
	1	1	**138-7142**	2	BOLT	
	2	1	**138-7146**	8	BOLT	
	3	1	**153-6867**	1	PLATE	
	4	1	**154-1399**	2	WASHER	
	5	1	**154-2403**	2	WASHER	
	6	1	**155-8085**	2	NUT	
	7	1	**165-2141**	2	BOLT	

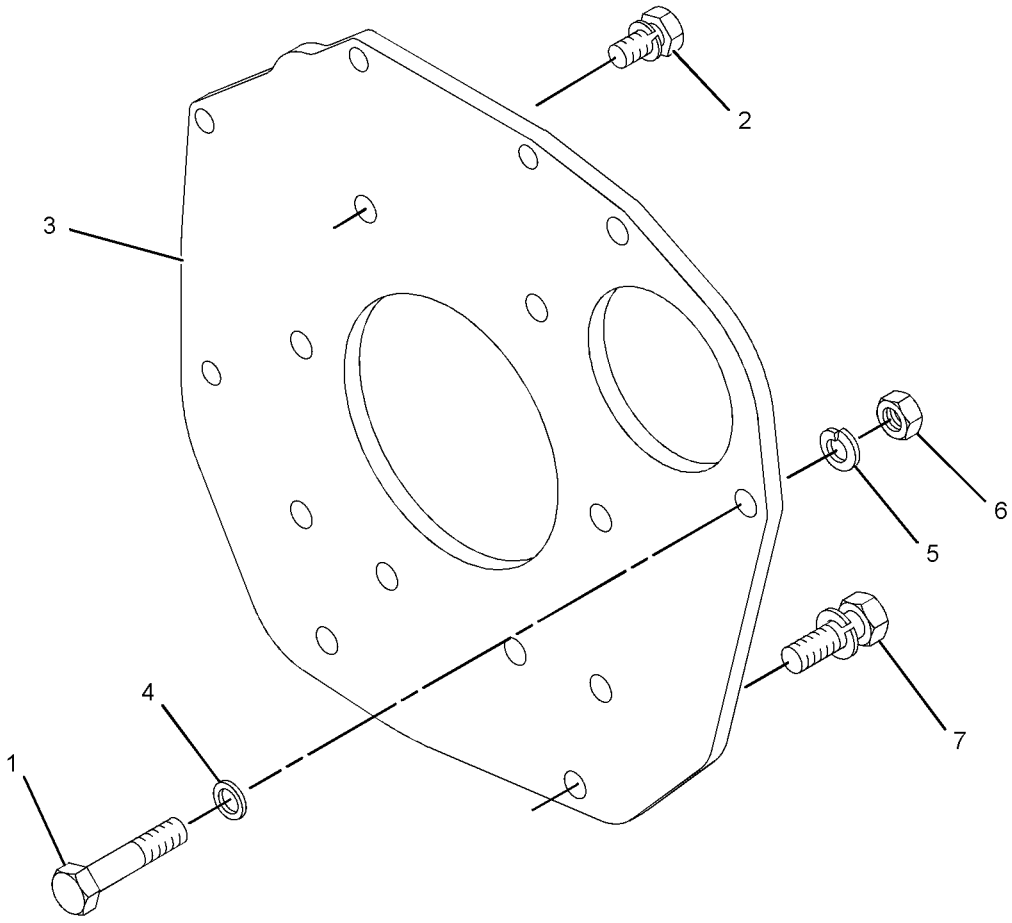

GRAPHIC #1 **<END>** g01512233

BASIC ENGINE

328-1433 HOUSING GP-FLYWHEEL

TYPE 2

SMCS-1157 **i03560700**

NOTE	REF NO	GRAPHIC REF	PART NUMBER	QTY	PART NAME 1 2 3 4 5 6 (PRODUCT LEVEL)	SEE PAGE
CM	1	1	**140-8783**	2	BOLT (M10X1.5X45-MM)	
	2	1	**138-7146**	8	BOLT	
	3	1	**153-6867**	1	PLATE	
C	6	1	**6I-0594**	2	NUT (M10X1.5-THD)	
	7	1	**165-2141**	2	BOLT	

C-CHANGE FROM PREVIOUS TYPE
M-METRIC PART

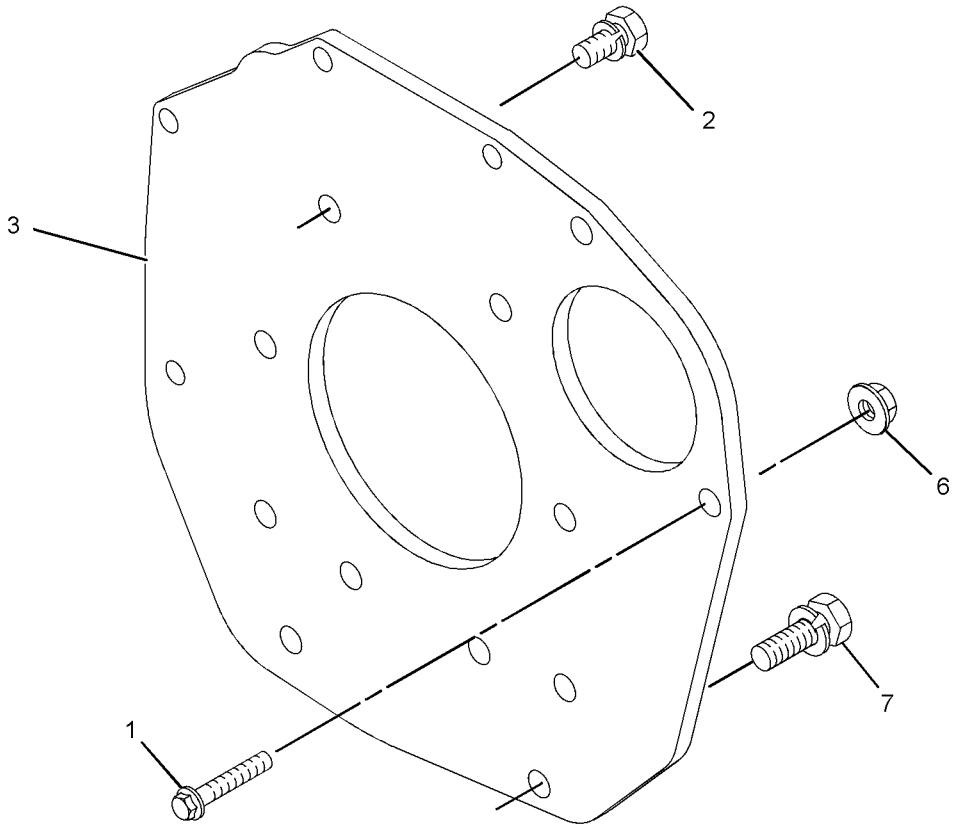

GRAPHIC #1 **<END>** g01947735

BASIC ENGINE

313-1967 HOUSING GP-FRONT

SMCS-1151, 1162, 1206 **i03937877**

NOTE	REF NO	GRAPHIC REF	PART NUMBER	QTY	PART NAME 1 2 3 4 5 6 (PRODUCT LEVEL)	SEE PAGE
	1	1	**153-5960**	1	NUT	
	2	1	**153-5962**	5	BOLT	
	3	1	**153-7978**	1	SEAL	
	4	1	**154-1673**	1	PIN	
	5	1	**165-2140**	5	BOLT	
	6	1	**313-2032**	1	GASKET	
	7	1	**359-5135**	1	HOUSING-FRONT	

313-1967 **HOUSING GP-FRONT** *(contd.)* **i03937877**

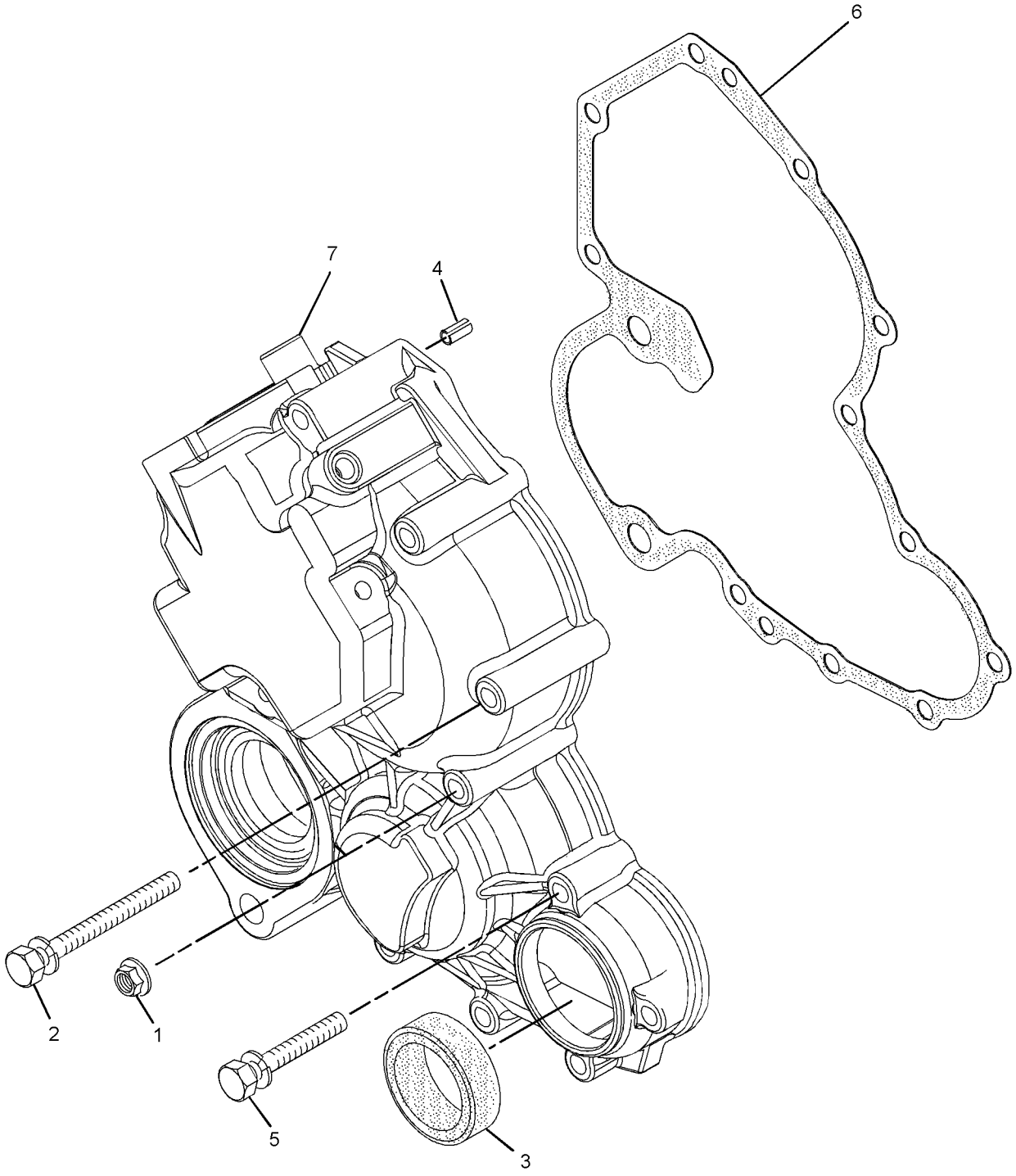

GRAPHIC #1 **<END>** g01652173

313-6213 HOUSING GP-FRONT

TYPE 1

SMCS-1151, 1162, 1206 **i03115541**

NOTE	REF NO	GRAPHIC REF	PART NUMBER	QTY	PART NAME 1 2 3 4 5 6 (PRODUCT LEVEL)	SEE PAGE
	1	1	**153-5960**	1	NUT	
	2	1	**153-5962**	5	BOLT	
	3	1	**153-6415**	1	WASHER	
	4	1	**153-6497**	1	SEAL-O-RING	
	5	1	**153-7978**	1	SEAL	
	7	1	**154-1673**	1	PIN	
	8	1	**165-2140**	5	BOLT	
	9	1	**321-8210**	1	CAP AS-PROTECTION	
	10	1	**321-4249**	1	NUT	
	11	1	**308-1901**	1	CAP	
	12	1	**309-6732**	1	BOLT	
	13	1	**311-5843**	1	GASKET	
	14	1	**319-7359**	1	HOUSING-FRONT	
	15	1	**313-2034**	1	RETAINER AS-BEARING	
	16	1	**313-5832**	1	BOLT AS	
	16A	1	**153-7987**	1	WASHER	
	16B	1	**191-9297**	1	NUT	
	16C	1	**313-5833**	1	SPRING	

313-6213 **HOUSING GP-FRONT** *(contd.)* **i03115541**

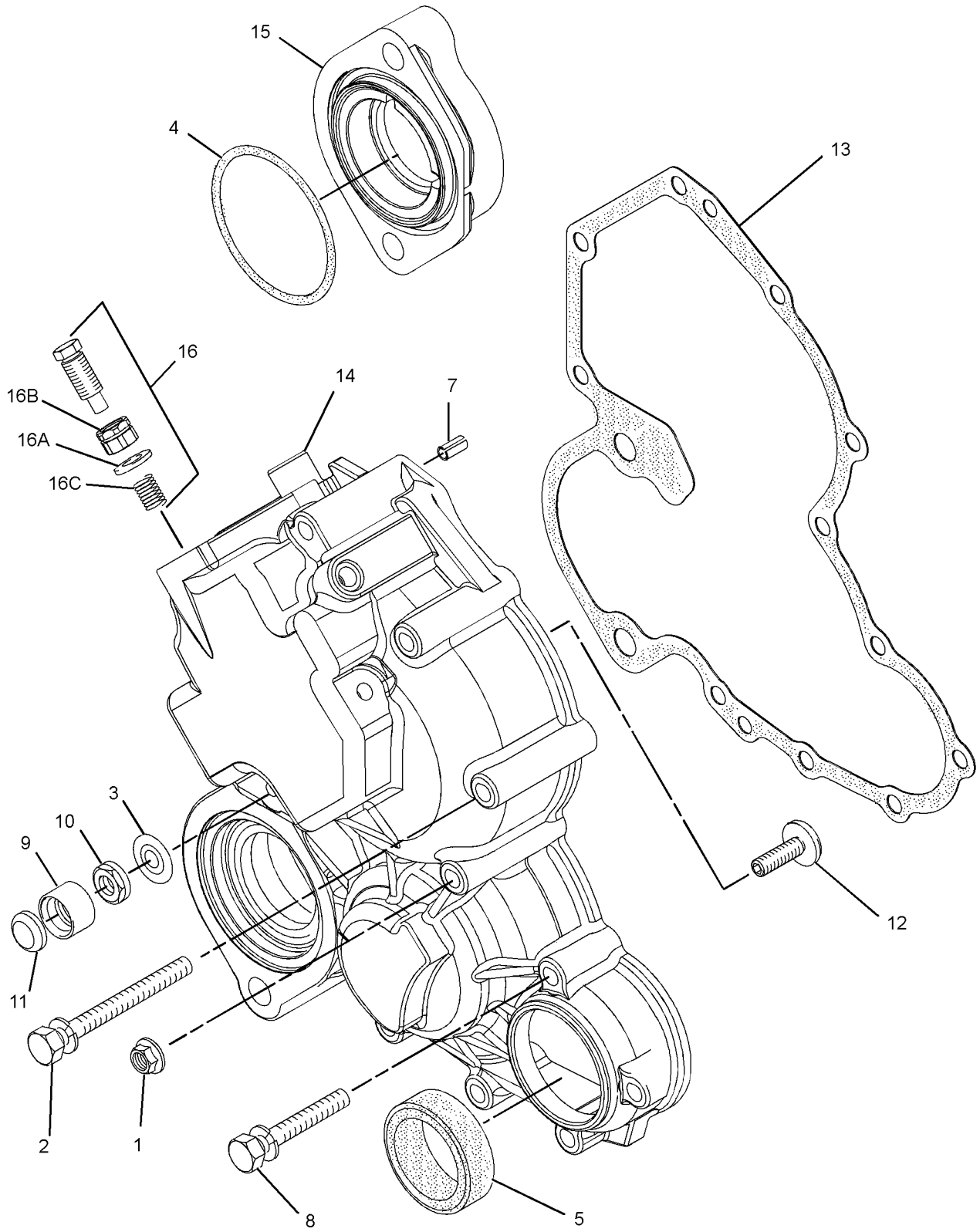

GRAPHIC #1 **<END>** g01487033

313-6213 HOUSING GP-FRONT

TYPE 2

SMCS-1151, 1162, 1206 **i03948348**

NOTE	REF NO	GRAPHIC REF	PART NUMBER	QTY	PART NAME 1 2 3 4 5 6 (PRODUCT LEVEL)	SEE PAGE
	1	1	**153-5960**	1	NUT	
	2	1	**153-5962**	5	BOLT	
	3	1	**153-6415**	1	WASHER	
	4	1	**313-5832**	1	BOLT AS	
	4A	1	**153-7987**	1	WASHER	
	4B	1	**191-9297**	1	NUT	
	4C	1	**313-5833**	1	SPRING	
	5	1	**153-7978**	1	SEAL	
	7	1	**5D-1319**	1	PIN-SPRING	
	8	1	**165-2140**	5	BOLT	
	9	1	**332-1361**	1	CAP-PROTECTION	
	10	1	**321-4249**	1	NUT	
	11	1	**308-1901**	1	CAP	
	12	1	**309-6732**	1	BOLT	
	13	1	**313-2032**	1	GASKET	
	14	1	**359-5135**	1	HOUSING-FRONT	
	15	1	**308-1897**	1	RING	

313-6213 **HOUSING GP-FRONT** *(contd.)* **i03948348**

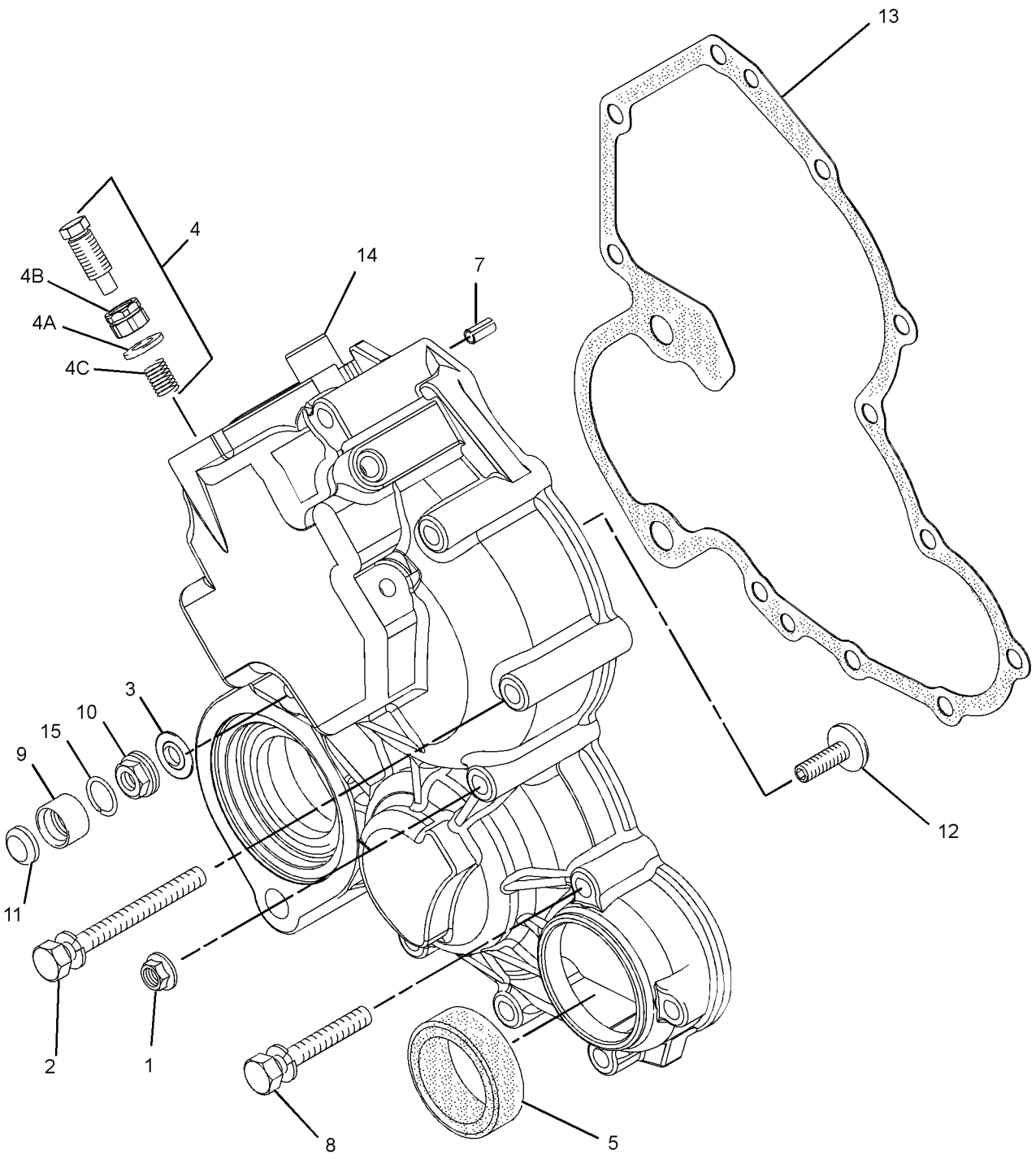

GRAPHIC #1 **<END>** g01667515

321-3140 HOUSING GP-FRONT

SMCS-1151, 1162, 1206 **i03938511**

NOTE	REF NO	GRAPHIC REF	PART NUMBER	QTY	PART NAME 1 2 3 4 5 6 (PRODUCT LEVEL)	SEE PAGE
	1	1	**153-5960**	1	NUT	
	2	1	**153-5962**	5	BOLT	
	4	1	**153-7978**	1	SEAL	
	5	1	**154-1673**	1	PIN	
	6	1	**165-2140**	5	BOLT	
	7	1	**313-2032**	1	GASKET	
	9	1	**359-5135**	1	HOUSING-FRONT	

321-3140 **HOUSING GP-FRONT** *(contd.)* **i03938511**

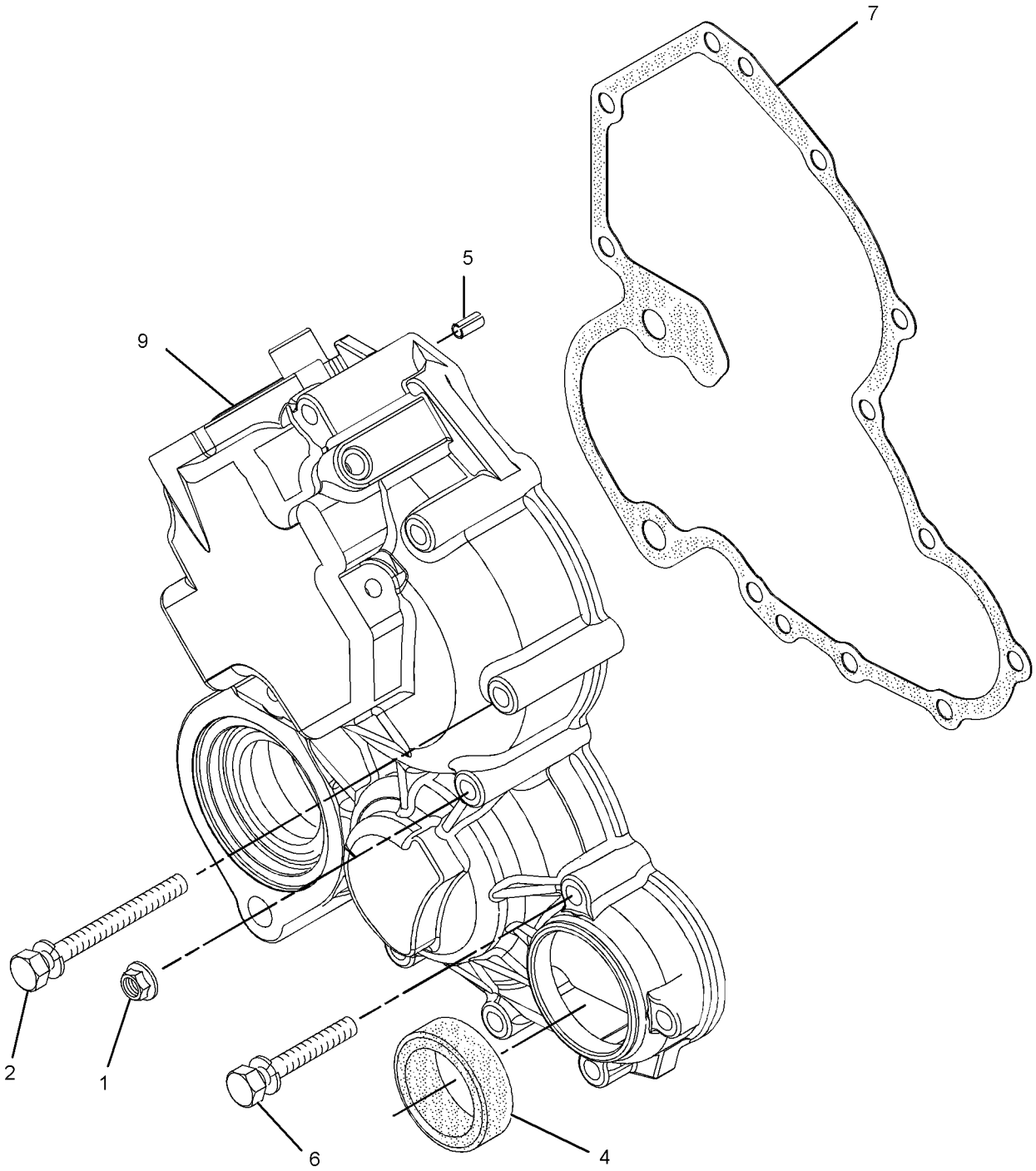

GRAPHIC #1 **<END>** g01712553

323-2407 HOUSING GP-FRONT

SMCS-1151, 1162, 1206 **i03938691**

NOTE	REF NO	GRAPHIC REF	PART NUMBER	QTY	PART NAME 1 2 3 4 5 6 (PRODUCT LEVEL)	SEE PAGE
	1	1	**153-5960**	1	NUT	
	2	1	**153-5962**	5	BOLT	
	4	1	**153-7978**	1	SEAL	
	5	1	**154-1673**	1	PIN	
	6	1	**165-2140**	5	BOLT	
	7	1	**313-2032**	1	GASKET	
	9	1	**359-5135**	1	HOUSING-FRONT	

323-2407 **HOUSING GP-FRONT** *(contd.)* **i03938691**

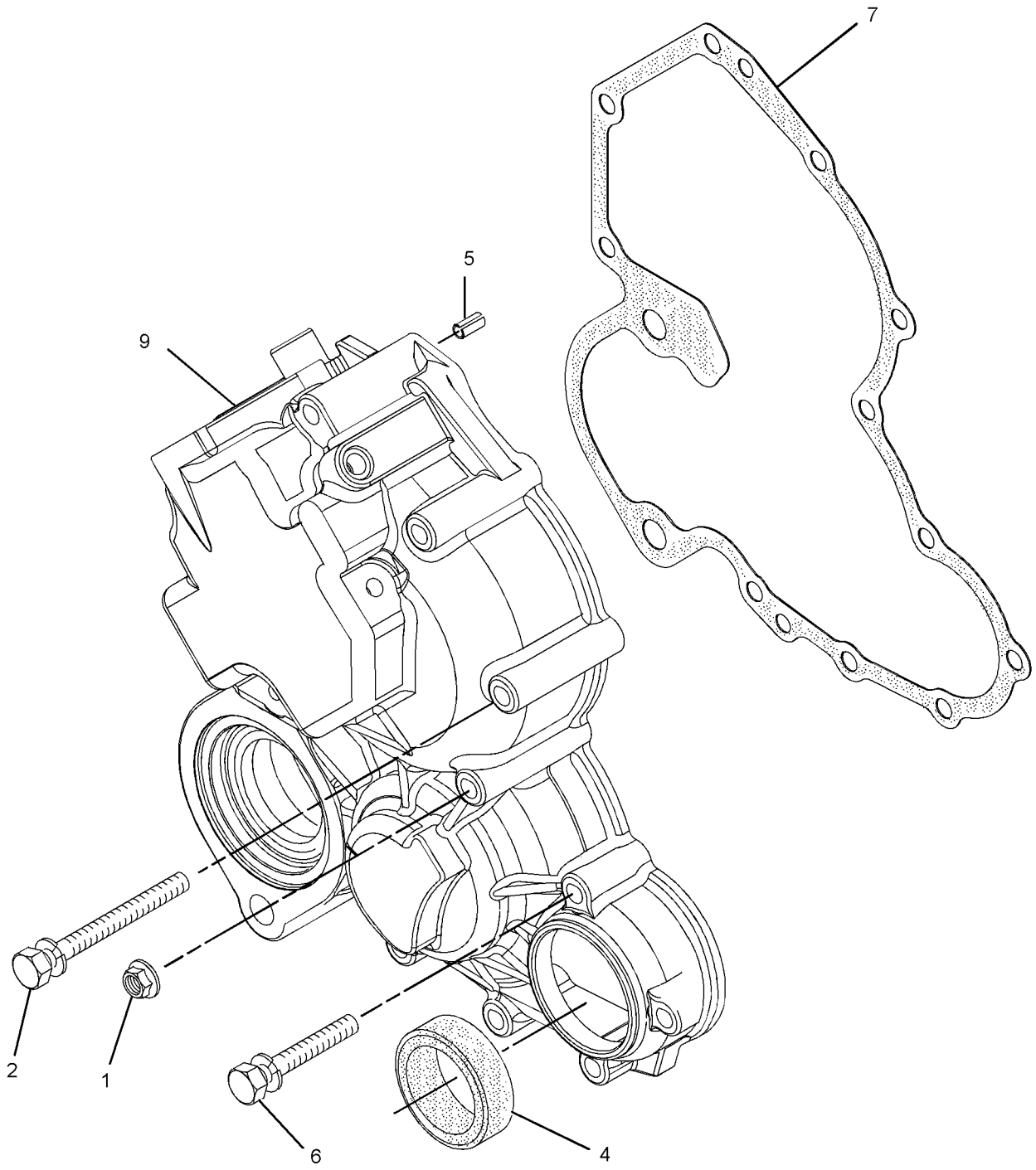

GRAPHIC #1 **<END>** g01623654

328-1429 HOUSING GP-FRONT

SMCS-1151, 1162, 1206 **i03948499**

NOTE	REF NO	GRAPHIC REF	PART NUMBER	QTY	PART NAME 1 2 3 4 5 6 (PRODUCT LEVEL)	SEE PAGE
	1	1	**153-5960**	1	NUT	
	2	1	**153-5962**	5	BOLT	
	3	1	**153-7978**	1	SEAL	
	4	1	**5D-1319**	1	PIN-SPRING	
	5	1	**165-2140**	5	BOLT	
	6	1	**313-2032**	1	GASKET	
	7	1	**359-5135**	1	HOUSING-FRONT	

328-1429 **HOUSING GP-FRONT** *(contd.)* **i03948499**

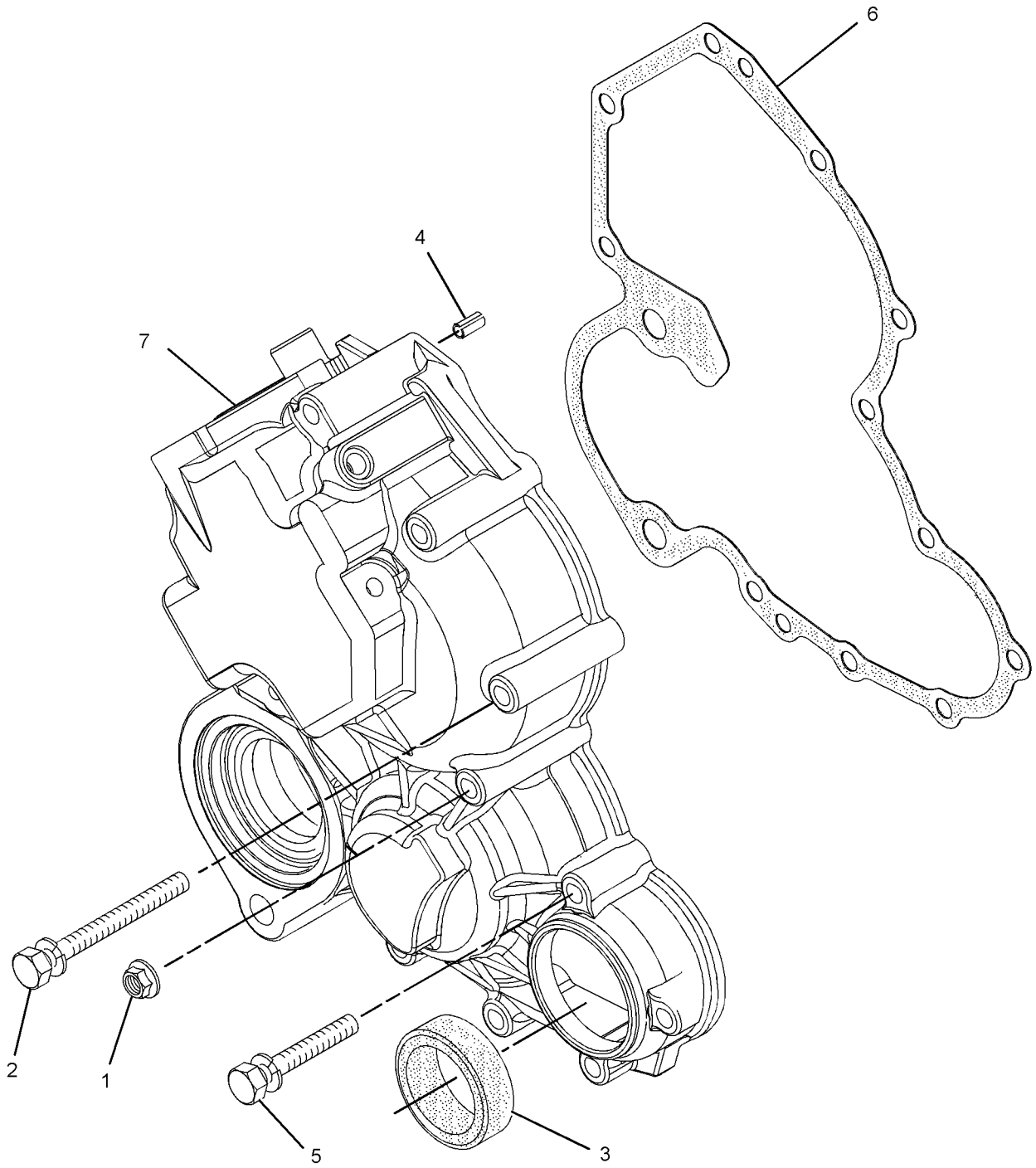

GRAPHIC #1 **<END>** g01512676

339-3016 KIT-FRONT GEAR

ALSO AN ATTACHMENT

SMCS-1204, 1212, 1234, 1361 **i03742543**

NOTE	REF NO	GRAPHIC REF	PART NUMBER	QTY	PART NAME 1 2 3 4 5 6 (PRODUCT LEVEL)	SEE PAGE
	1	1	**153-6848**	1	COVER	
	2	1	**153-6849**	1	SPRING	
	3	1	**153-6850**	1	COLLAR	
	4	1	**153-6851**	1	CLIP	
	5	1	**153-7985**	1	WASHER	
B	6	1	**160-4150**	1	SHIM (0.1-MM THK)	
B		1	**160-4151**	1	SHIM (0.15-MM THK)	
B		1	**160-4152**	1	SHIM (0.2-MM THK)	
B		1	**160-4153**	1	SHIM (0.5-MM THK)	

B-USE AS REQUIRED

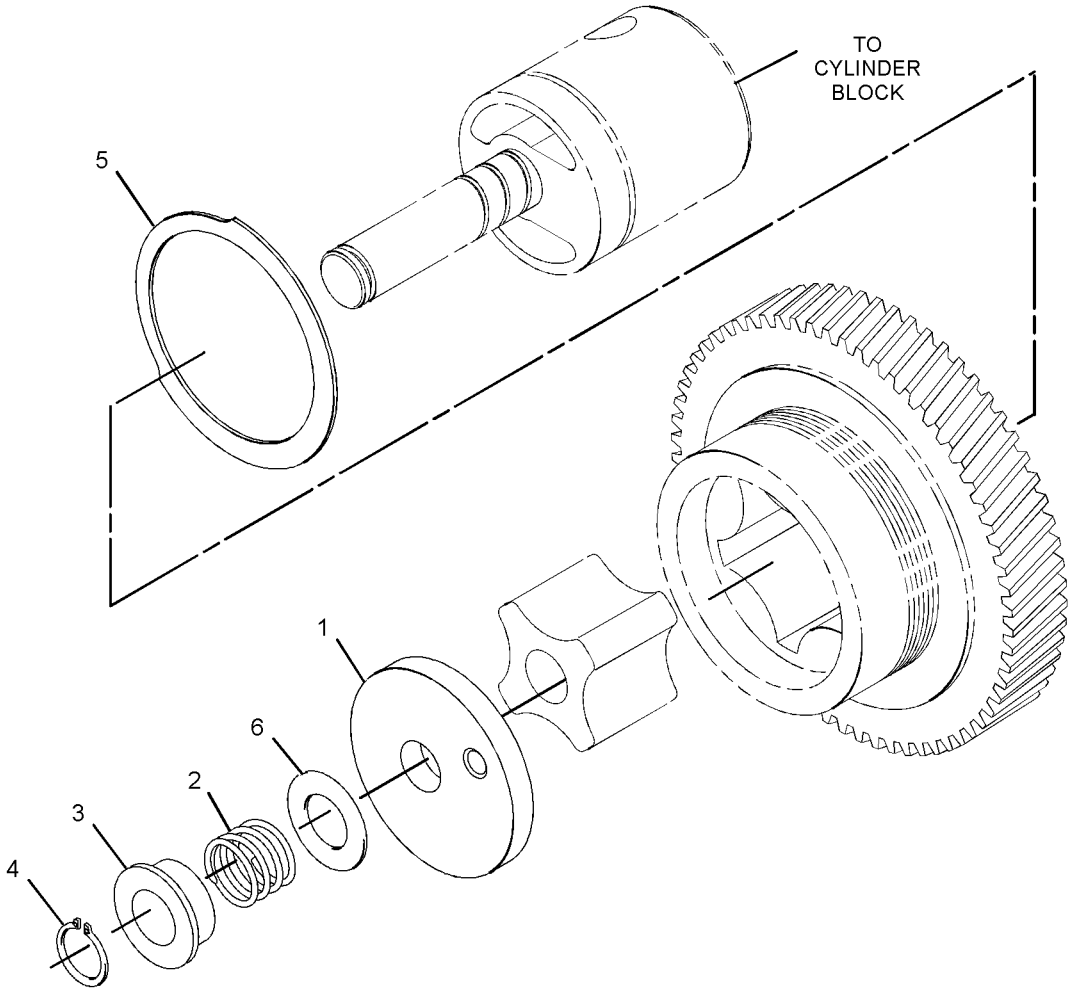

GRAPHIC #1 **<END>** g02013913

BASIC ENGINE

308-2315 LIFTING GP-ENGINE

SMCS-1122 **i02752302**

NOTE	REF NO	GRAPHIC REF	PART NUMBER	QTY	PART NAME 1 2 3 4 5 6 (PRODUCT LEVEL)	SEE PAGE
	1	1	**155-7984**	2	WASHER	
	2	1	**165-2141**	1	BOLT	
	3	1	**168-9001**	1	BOLT	
	4	1	**236-4128**	2	PLATE-LIFTING	

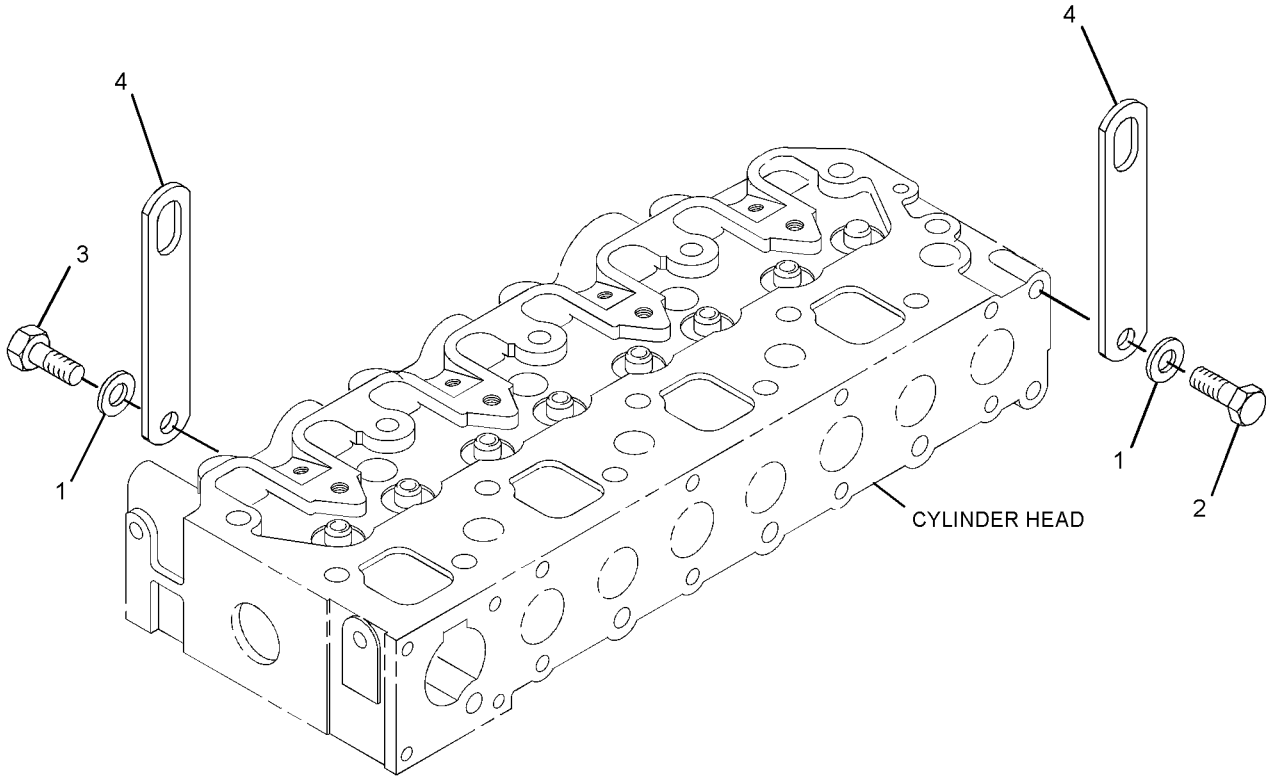

GRAPHIC #1 **<END>** g01414974

313-2022 LIFTING GP-ENGINE

SMCS-1122 **i02773489**

NOTE	REF NO	GRAPHIC REF	PART NUMBER	QTY	PART NAME 1 2 3 4 5 6 (PRODUCT LEVEL)	SEE PAGE
	1	1	**191-0573**	1	PLATE (FRONT)	
	2	1	**191-0574**	1	PLATE (REAR)	
	3	1	**153-6375**	2	BOLT	

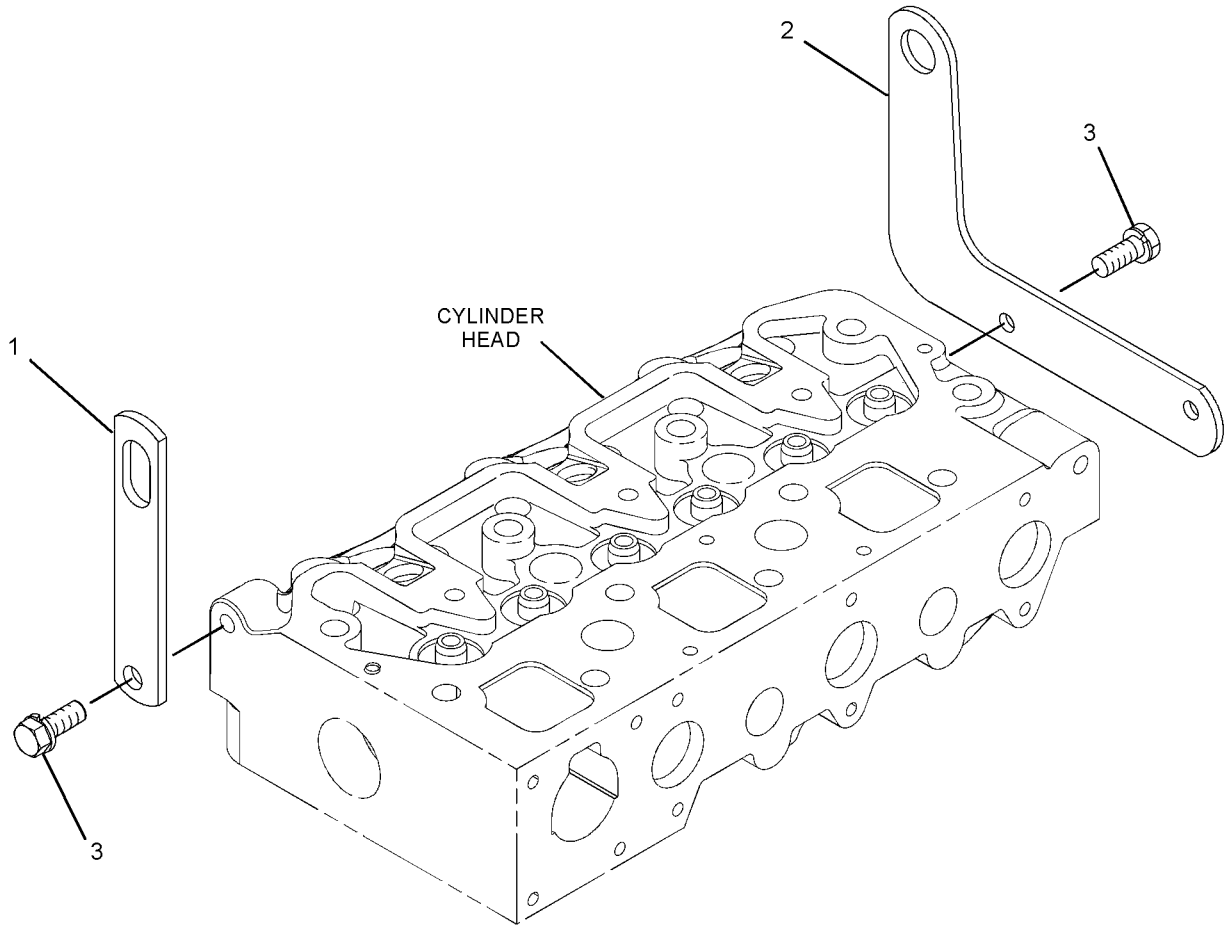

GRAPHIC #1 **<END>** g01389539

BASIC ENGINE

329-4427 MOUNTING GP-ENGINE

SMCS-1152, 1153, 1154 **i03758862**

NOTE	REF NO	GRAPHIC REF	PART NUMBER	QTY	PART NAME 1 2 3 4 5 6 (PRODUCT LEVEL)	SEE PAGE
	1	1	**197-8448**	16	BOLT	
	2	1	**332-9144**	4	BRACKET	

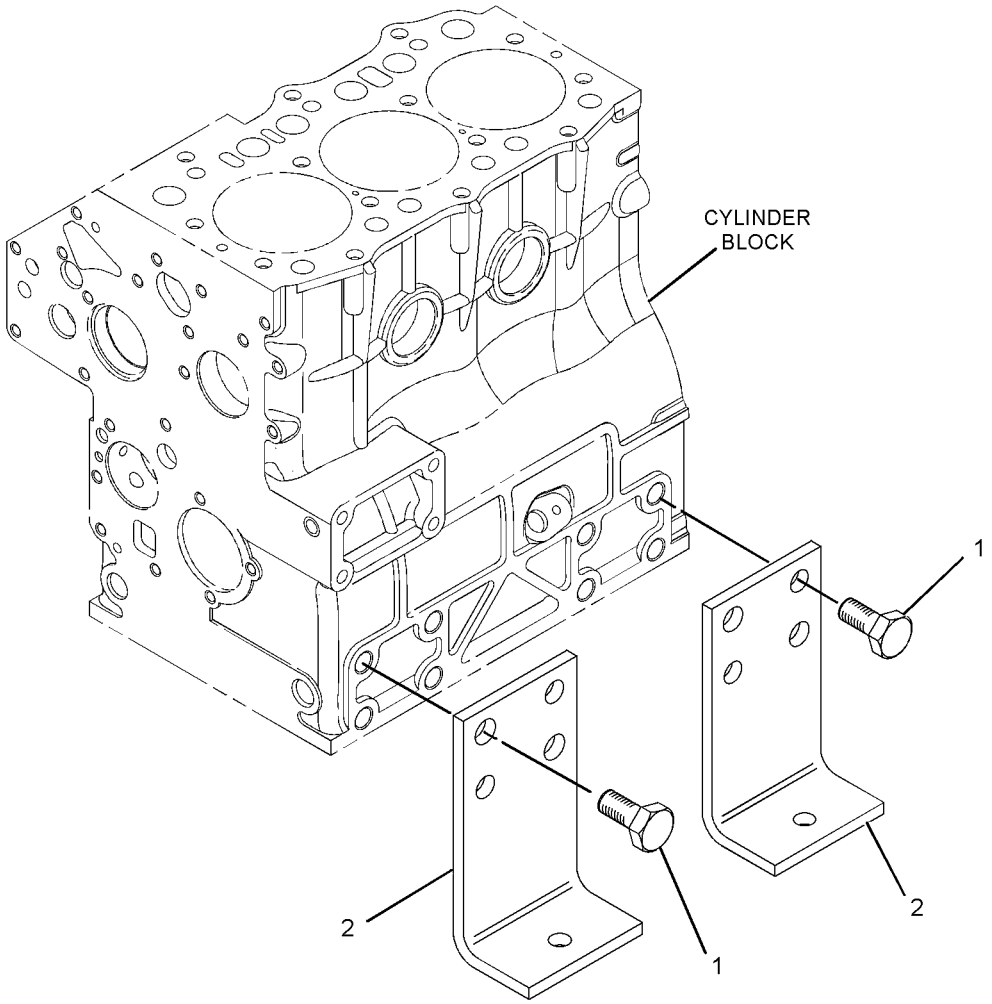

GRAPHIC #1 **<END>** g01800453

334-0281 MOUNTING GP-ENGINE

SMCS-1152, 1153, 1154 **i03294665**

NOTE	REF NO	GRAPHIC REF	PART NUMBER	QTY	PART NAME 1 2 3 4 5 6 (PRODUCT LEVEL)	SEE PAGE
	1	1	**154-2403**	8	WASHER	
	2	1	**197-8448**	8	BOLT	
	3	1	**332-9144**	2	BRACKET	
	4	1	**290-8042**	2	BRACKET	
	5	1	**290-8043**	8	BOLT	

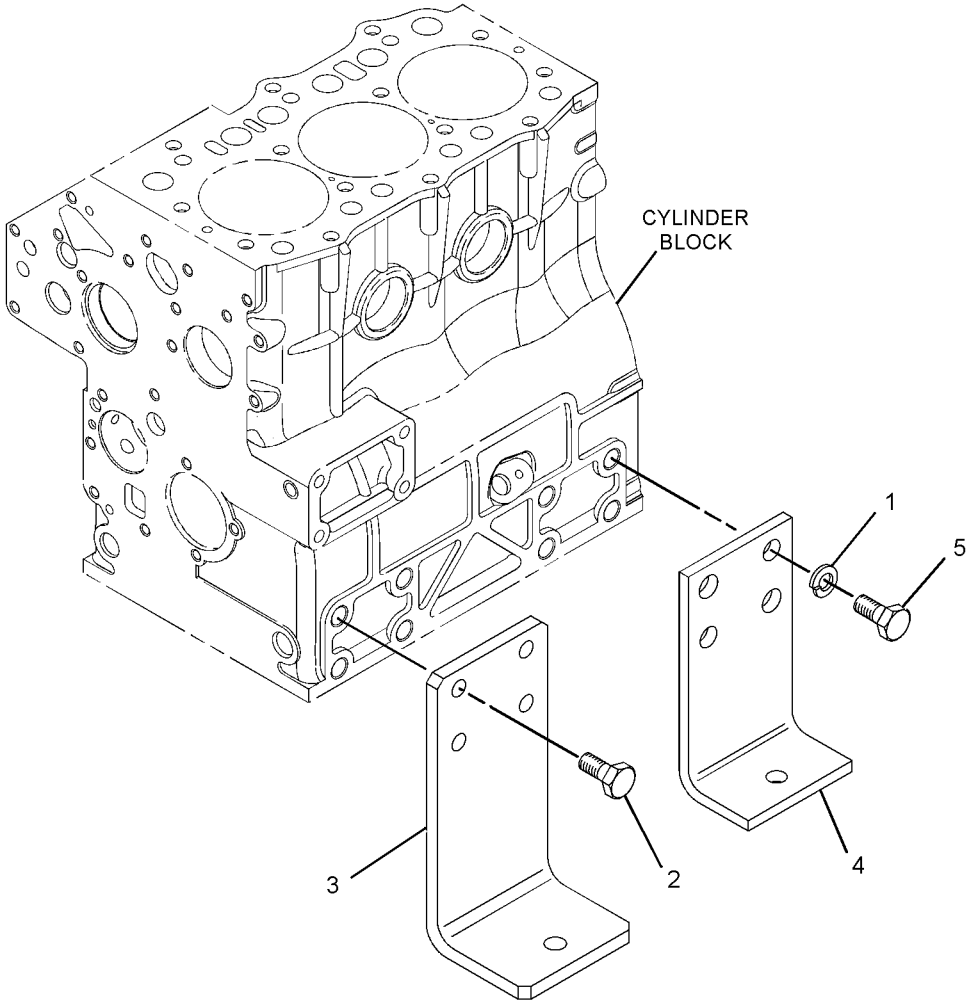

GRAPHIC #1 **<END>** g01801475

BASIC ENGINE

313-1973 PAN GP-OIL–ENGINE

TYPE 1

SMCS-1302 **i02978485**

NOTE	REF NO	GRAPHIC REF	PART NUMBER	QTY	PART NAME 1 2 3 4 5 6 (PRODUCT LEVEL)	SEE PAGE
	1	1,2	**153-6833**	21	BOLT	
	2	2	**153-6835**	1	SEAL-O-RING	
	3	2	**153-6838**	2	BOLT	
	4	1	**153-6841**	2	SEAL-O-RING	
	5	2	**219-4669**	1	GASKET	
	6	1	**229-5150**	1	TUBE AS	
	7	2	**230-7136**	1	STRAINER	
	8	2	**230-7138**	1	TUBE-OIL SUCTION	
	9	2	**238-1294**	1	PAN-OIL	
	10	1	**245-9735**	1	GAUGE-OIL LEVEL (DIPSTICK) (ENGINE)	

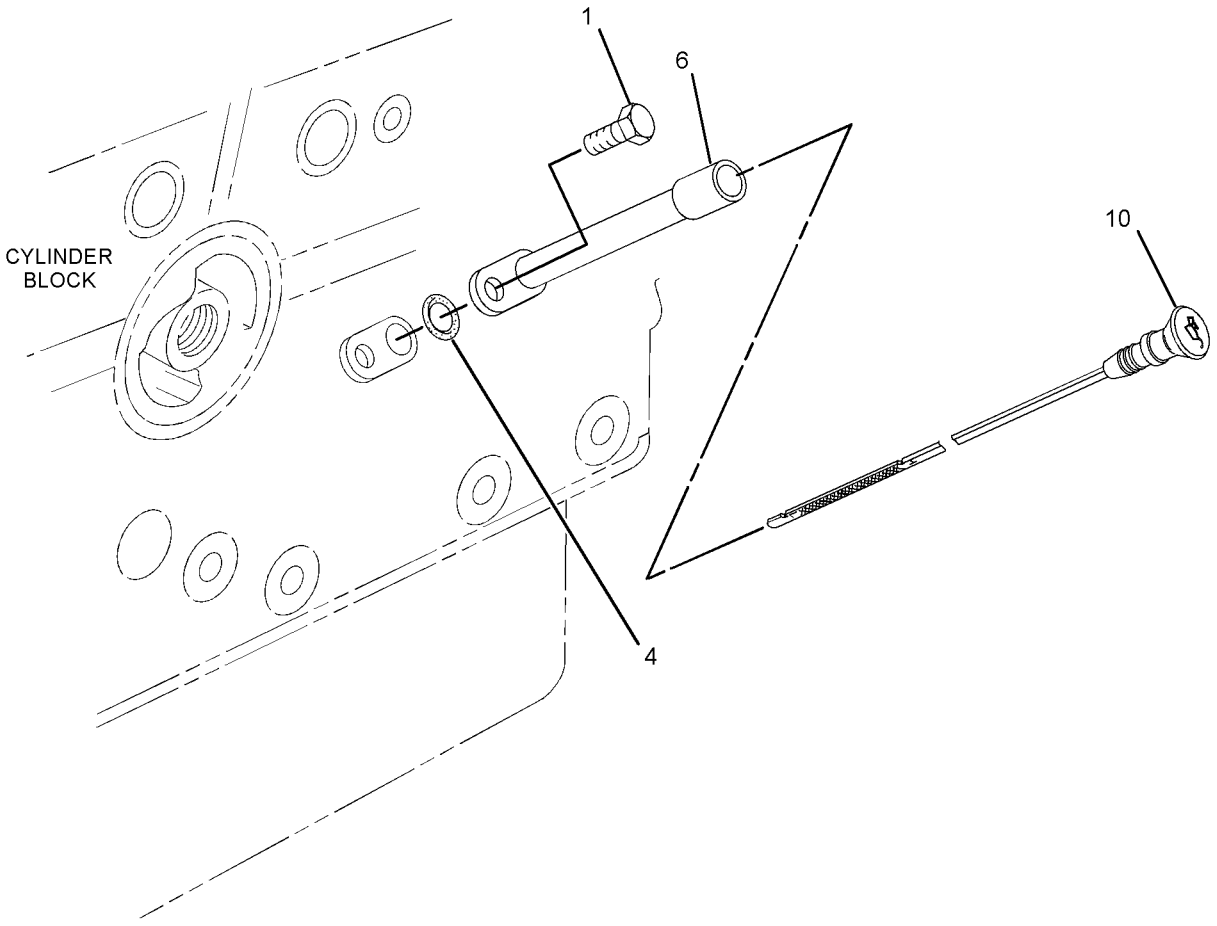

GRAPHIC #1 g01389007

313-1973 **PAN GP-OIL** *(contd.)* **i02978485**

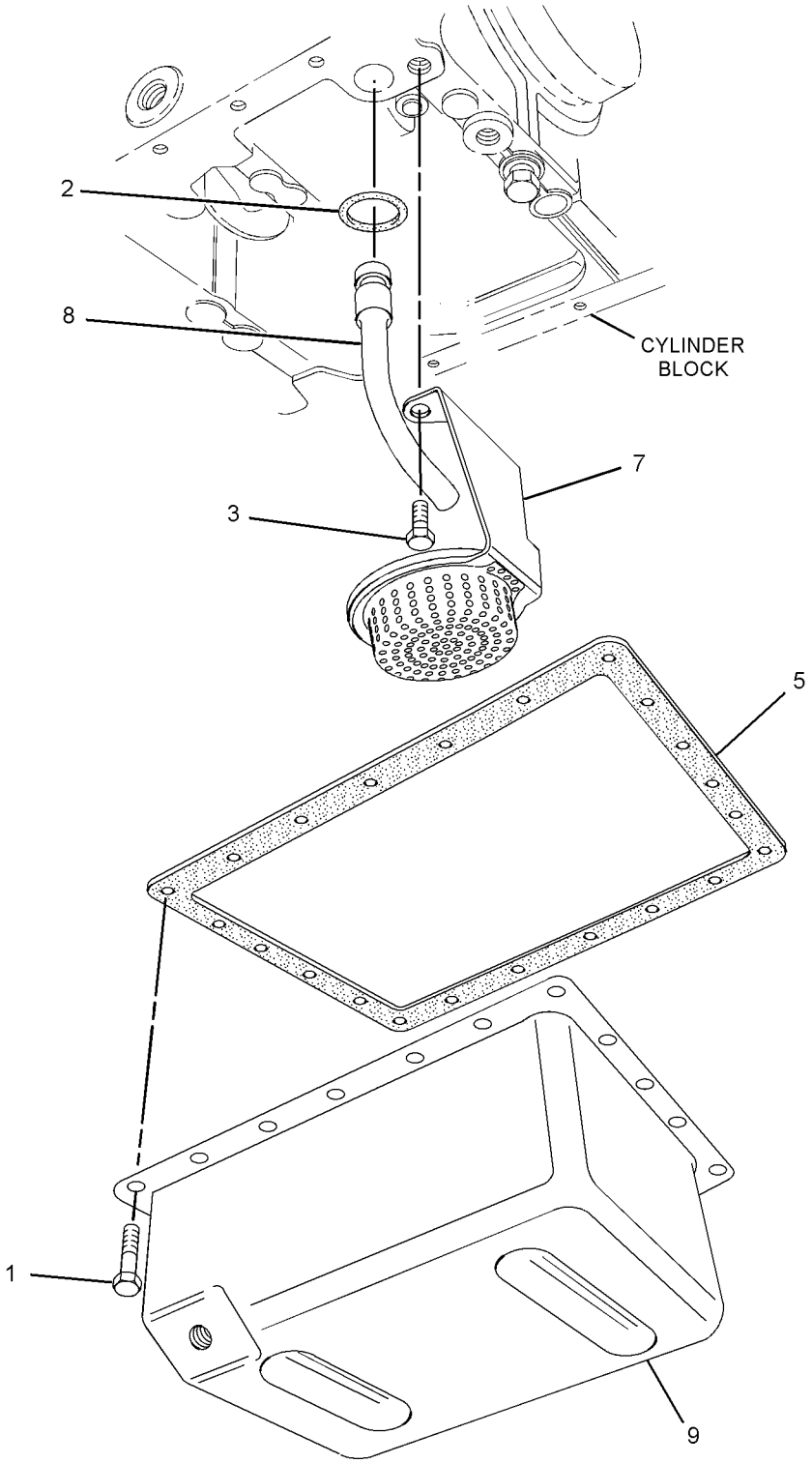

GRAPHIC #2 **<END>** g01389008

BASIC ENGINE

313-1973 PAN GP-OIL–ENGINE

TYPE 2

SMCS-1302 **i03165367**

NOTE	REF NO	GRAPHIC REF	PART NUMBER	QTY	PART NAME 1 2 3 4 5 6 (PRODUCT LEVEL)	SEE PAGE
	1	1,2	**153-6833**	21	BOLT	
	2	2	**153-6835**	1	SEAL-O-RING	
C	3	1,2	**153-6838**	3	BOLT	
C	4	1	**153-6841**	4	SEAL-O-RING	
	5	2	**219-4669**	1	GASKET	
	6	1	**229-5150**	1	TUBE AS	
	7	2	**230-7136**	1	STRAINER (ENGINE OIL)	
	8	2	**230-7138**	1	TUBE-OIL SUCTION	
	9	2	**238-1294**	1	PAN-OIL	
	10	1	**238-1295**	1	GAUGE-OIL LEVEL (DIPSTICK) (ENGINE)	
C	11	1	**319-7366**	1	PLUG	

C-CHANGE FROM PREVIOUS TYPE

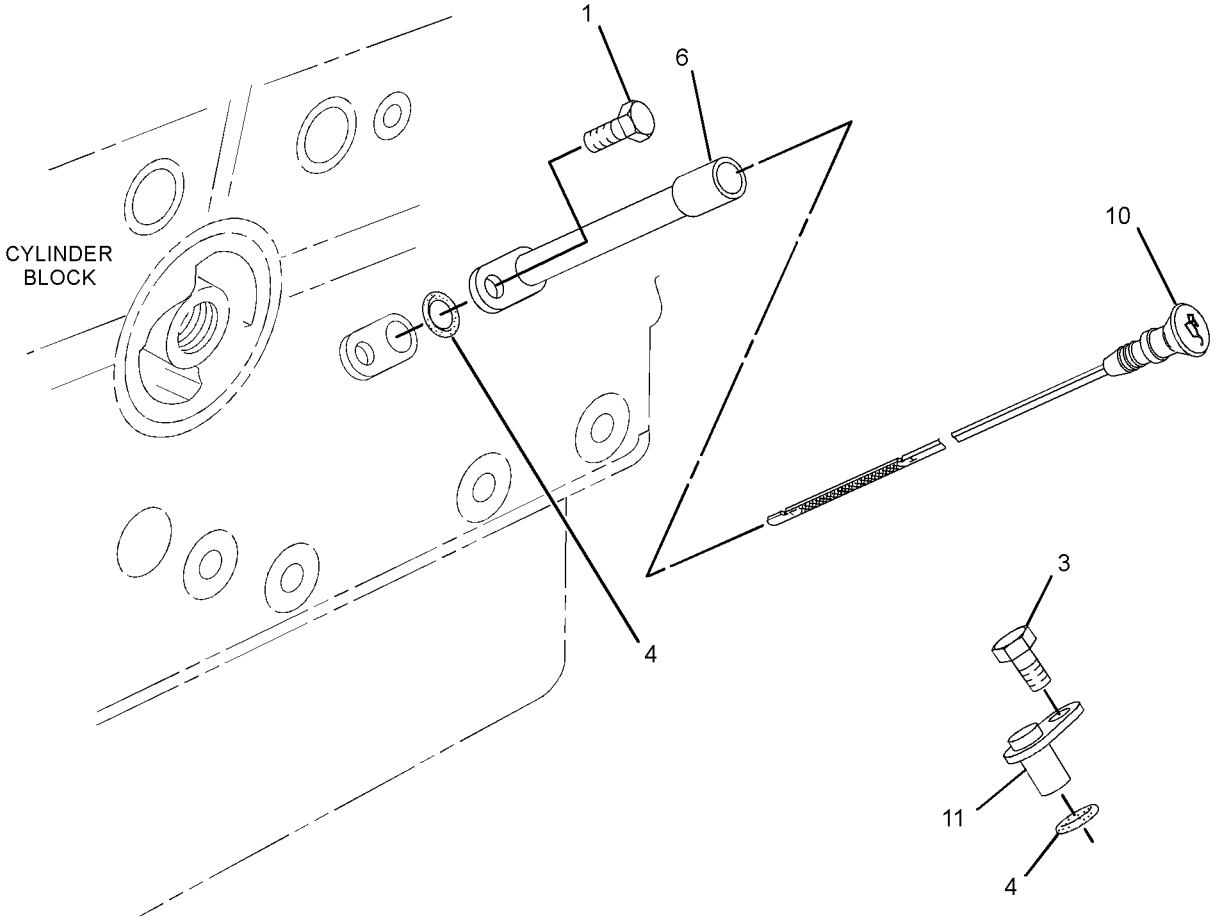

GRAPHIC #1 g01478146

313-1973 **PAN GP-OIL** *(contd.)* **i03165367**

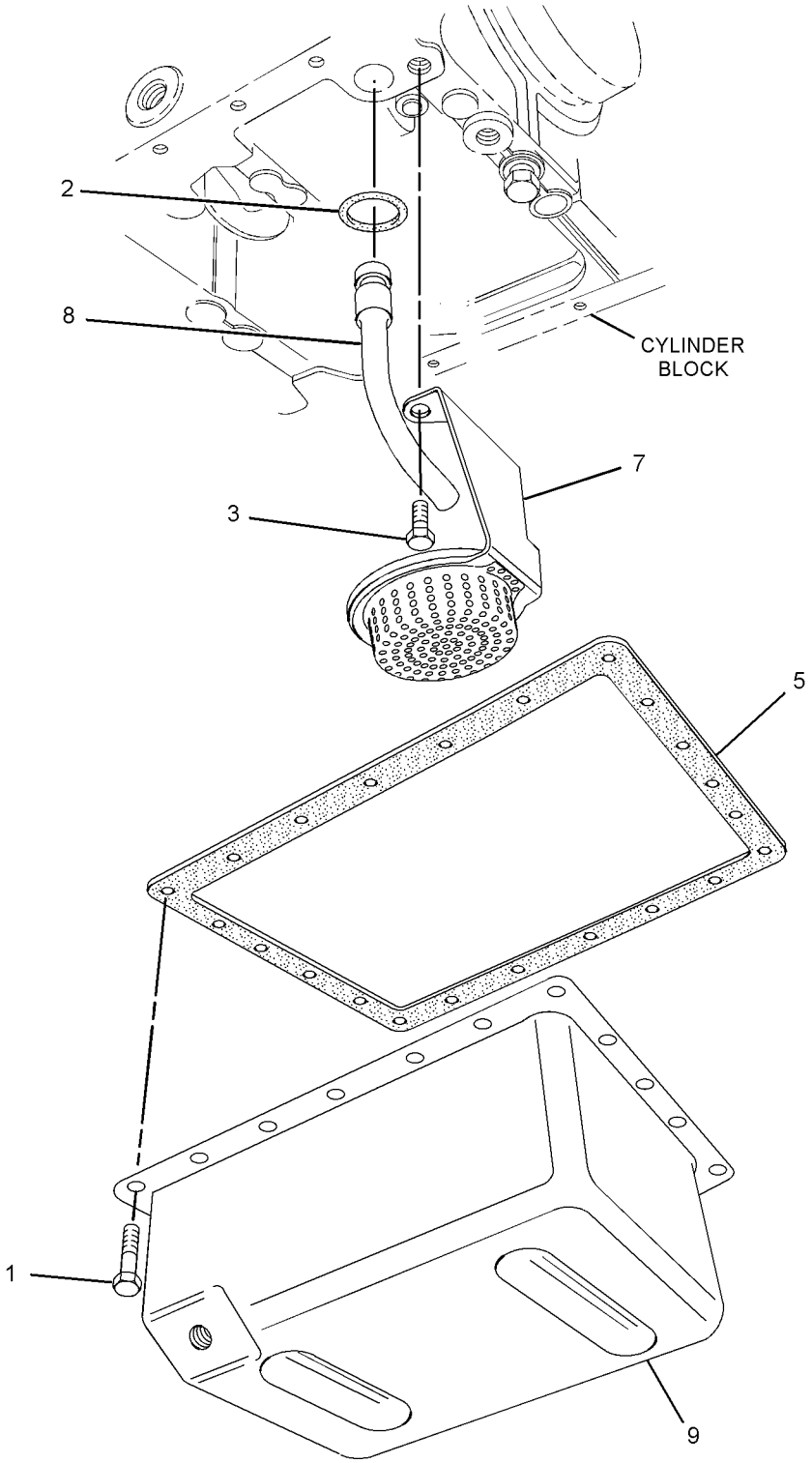

GRAPHIC #2 **<END>** g01389008

BASIC ENGINE

319-7352 PAN GP-OIL—ENGINE

SMCS-1302 **i03133561**

NOTE	REF NO	GRAPHIC REF	PART NUMBER	QTY	PART NAME 1 2 3 4 5 6 (PRODUCT LEVEL)	SEE PAGE
	1	1	**153-6833**	21	BOLT	
	2	1	**153-6835**	1	SEAL-O-RING	
	3	1	**153-6838**	3	BOLT	
	4	1	**153-6841**	3	SEAL-O-RING	
	5	1	**209-7084**	1	TUBE AS-GAUGE	
	6	1	**219-4669**	1	GASKET	
	7	1	**230-7136**	1	STRAINER	
	8	1	**230-7138**	1	TUBE-OIL SUCTION	
	9	1	**238-1294**	1	PAN-OIL	
	10	1	**245-9735**	1	GAUGE-OIL LEVEL (DIPSTICK) (ENGINE)	
	11	1	**319-7366**	1	PLUG	

319-7352 **PAN GP-OIL** *(contd.)* **i03133561**

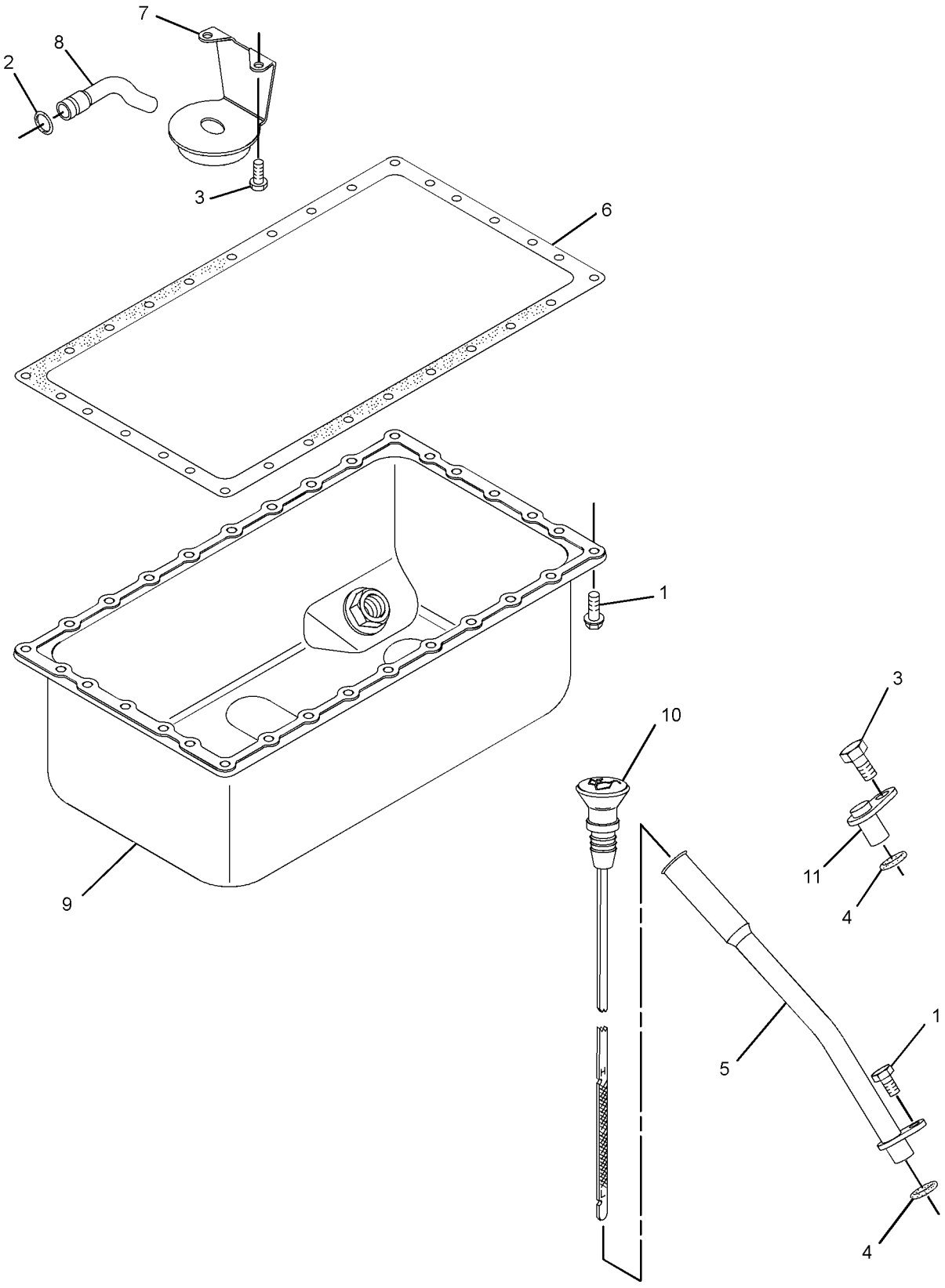

GRAPHIC #1 **<END>** g01816994

329-4419 PAN GP-OIL—ENGINE

SMCS-1302 **i03980774**

NOTE	REF NO	GRAPHIC REF	PART NUMBER	QTY	PART NAME 1 2 3 4 5 6 (PRODUCT LEVEL)	SEE PAGE
	1	2	**153-6830**	1	PAN-OIL	
	2	2	**153-6833**	21	BOLT	
	3	2	**153-6835**	1	SEAL-O-RING	
	4	2	**153-6837**	1	STRAINER	
	5	1,2	**153-6838**	3	BOLT	
	6	1	**153-6841**	4	SEAL-O-RING	
	7	2	**180-6117**	1	TUBE-OIL	
	8	2	**219-4669**	1	GASKET	
	9	1	**229-5150**	1	TUBE AS	
	10	1	**308-1929**	1	GAUGE-OIL LEVEL (DIPSTICK) (ENGINE)	
	11	1	**319-7366**	1	PLUG	

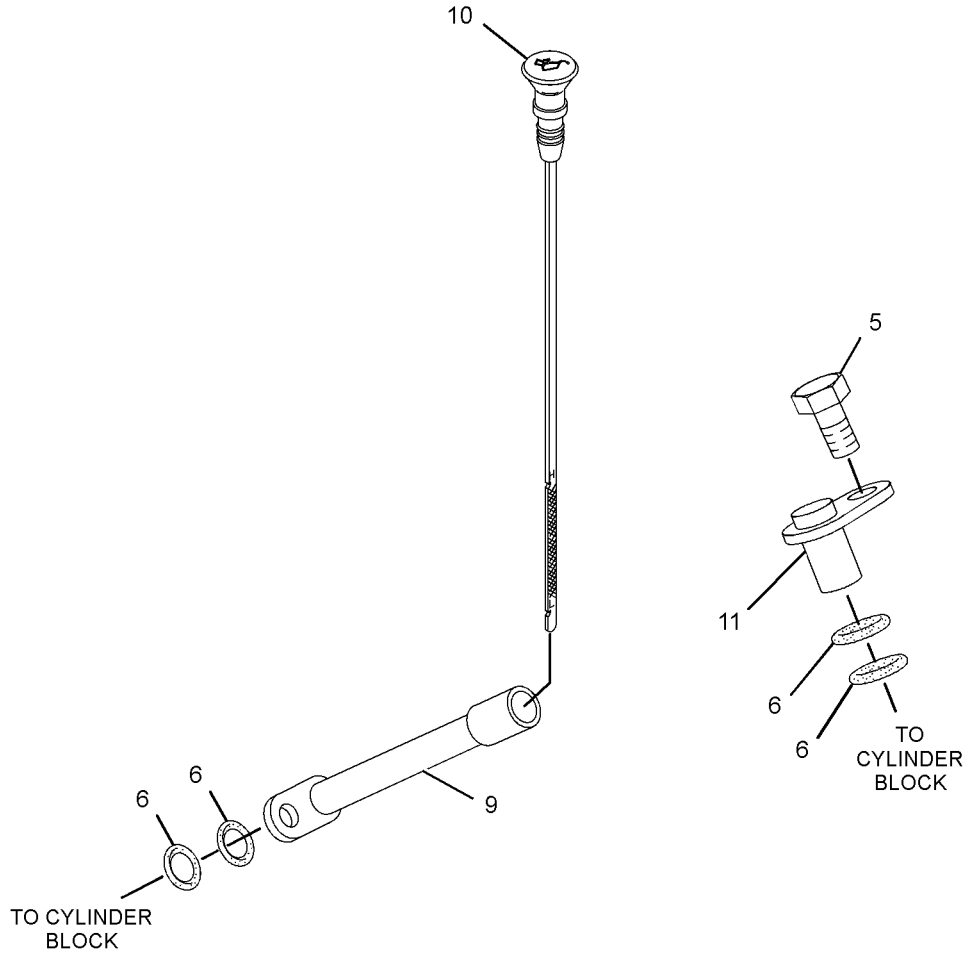

GRAPHIC #1 g01960494

329-4419 **PAN GP-OIL** *(contd.)* **i03980774**

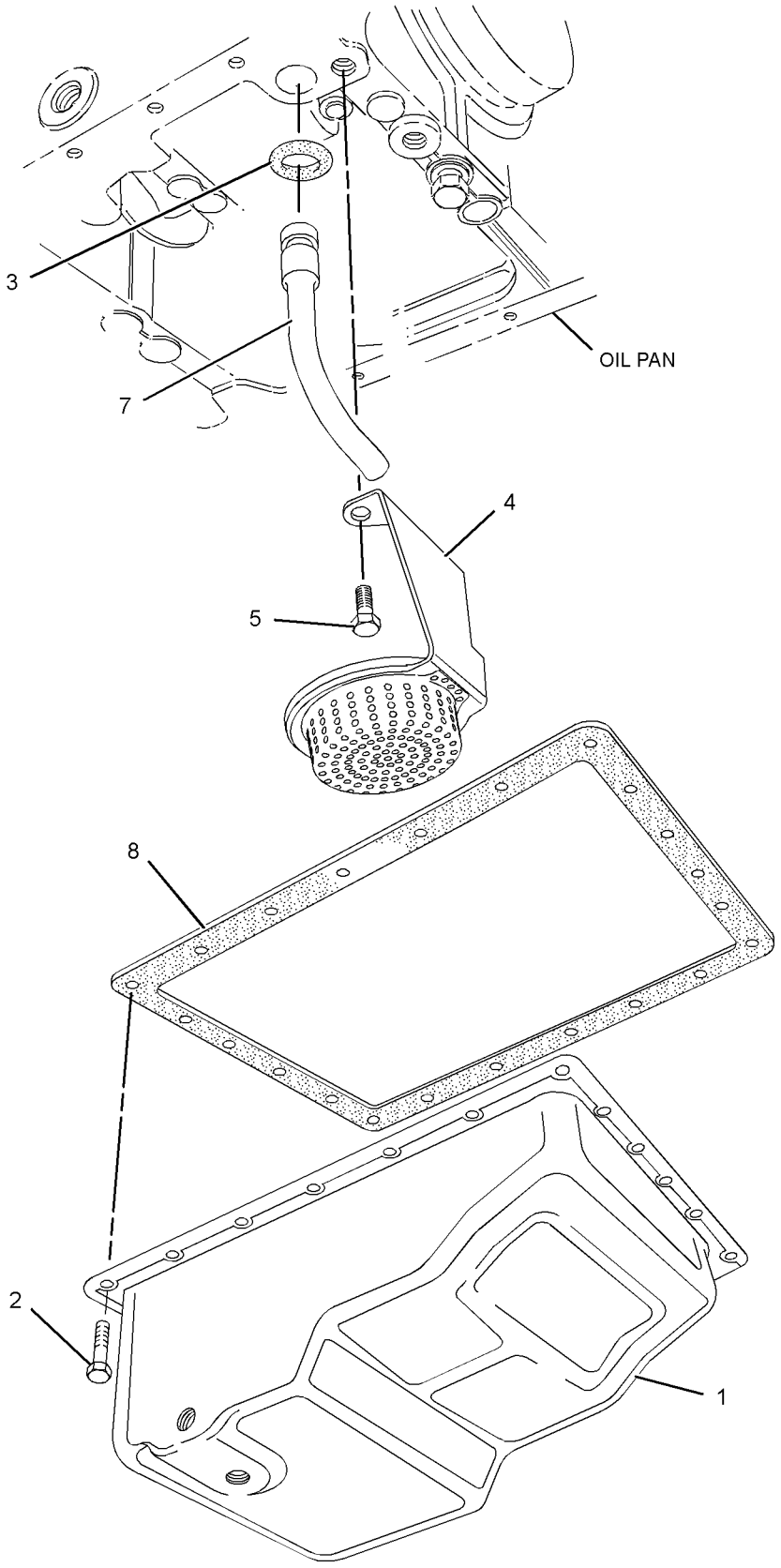

GRAPHIC #2 **<END>** g01960616

BASIC ENGINE

334-0277 PAN GP-OIL—ENGINE

SMCS-1302 **i03296392**

NOTE	REF NO	GRAPHIC REF	PART NUMBER	QTY	PART NAME 1 2 3 4 5 6 (PRODUCT LEVEL)	SEE PAGE
	1	1,2	**153-6833**	21	BOLT	
	2	2	**153-6835**	1	SEAL-O-RING	
	3	1,2	**153-6838**	3	BOLT	
	4	1	**153-6841**	4	SEAL-O-RING	
	5	1	**180-6118**	1	BOLT	
	6	1	**209-7086**	1	TUBE AS-GAUGE	
	7	2	**219-4669**	1	GASKET	
	8	2	**230-7136**	1	STRAINER	
	9	2	**230-7138**	1	TUBE-OIL SUCTION	
	10	2	**238-1294**	1	PAN-OIL	
	11	1	**319-7366**	1	PLUG	
	12	1	**334-0271**	1	GAUGE GP-OIL LEVEL (DIPSTICK) (ENGINE)	

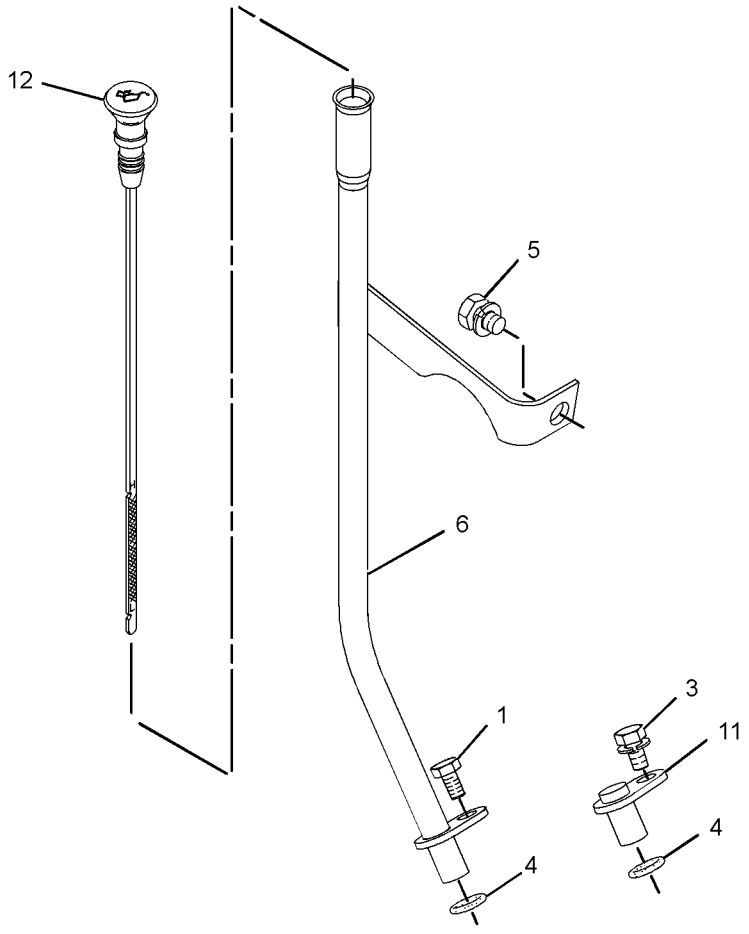

GRAPHIC #1 g01710736

334-0277 **PAN GP-OIL** *(contd.)* **i03296392**

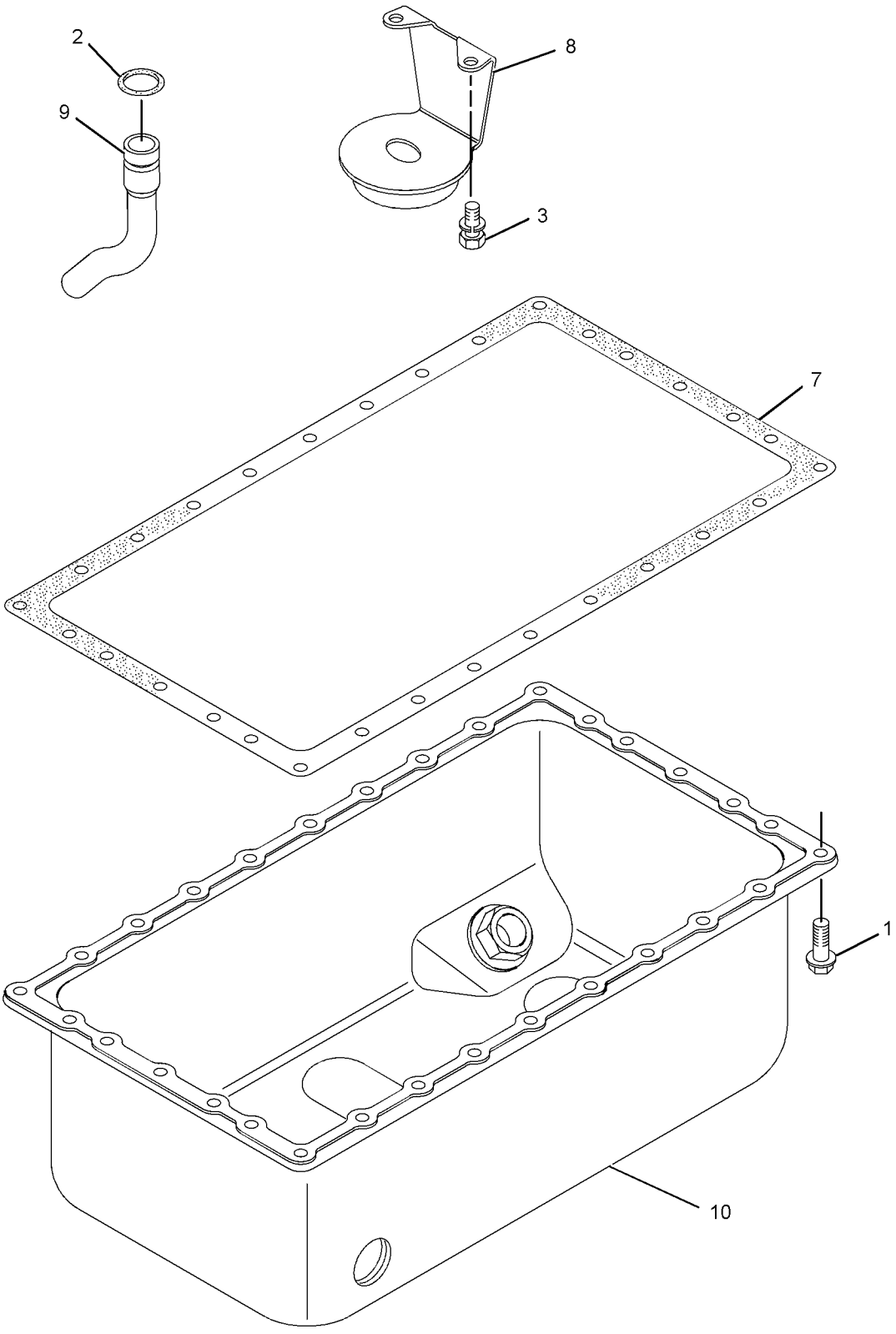

GRAPHIC #2 **<END>** g01710737

BASIC ENGINE

334-8538 PAN GP-OIL—ENGINE

SMCS-1302 **i03983012**

NOTE	REF NO	GRAPHIC REF	PART NUMBER	QTY	PART NAME 1 2 3 4 5 6 (PRODUCT LEVEL)	SEE PAGE
	1	1	**153-6830**	1	PAN-OIL	
	2	1	**153-6833**	21	BOLT	
	3	1	**153-6835**	1	SEAL-O-RING	
	4	1	**153-6837**	1	STRAINER	
	5	1	**153-6838**	3	BOLT	
	6	1	**153-6841**	4	SEAL-O-RING	
	7	1	**180-6117**	1	TUBE-OIL	
	8	1	**180-6118**	1	BOLT	
	9	1	**209-7086**	1	TUBE AS-GAUGE	
	10	1	**209-7091**	1	GAUGE AS-OIL LEVEL (DIPSTICK) (ENGINE)	
	11	1	**219-4669**	1	GASKET	
	12	1	**319-7366**	1	PLUG	

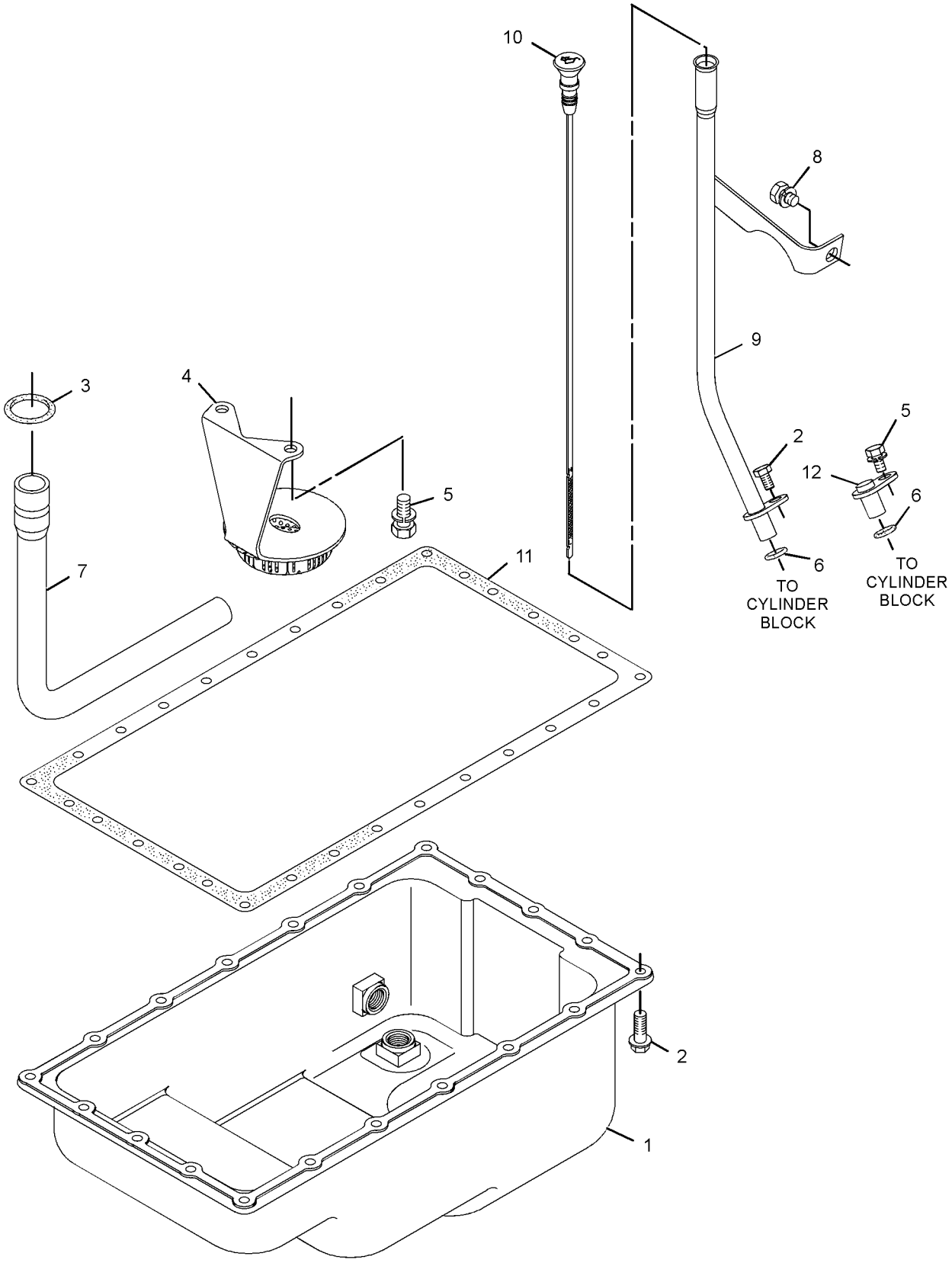

GRAPHIC #1 **<END>** g01967020

BASIC ENGINE

313-1963 PISTON & ROD GP

SMCS-1225 **i02773474**

NOTE	REF NO	GRAPHIC REF	PART NUMBER	QTY	PART NAME 1 2 3 4 5 6 (PRODUCT LEVEL)	SEE PAGE
	1	1	**153-5540**	3	PIN	
	2	1	**153-5541**	6	CLIP	
	3	1	**231-3870**	3	ROD AS-CONNECTING	
					(EACH INCLUDES)	
	3A	1	**153-5536**	1	BUSHING	
	3B	1	**153-5537**	2	BOLT	
	3C	1	**153-5538**	2	NUT	
	4	1	**290-8456**	3	KIT-PISTON	
					(EACH INCLUDES)	
	4A	1	**290-8458**	1	KIT-PISTON RING	

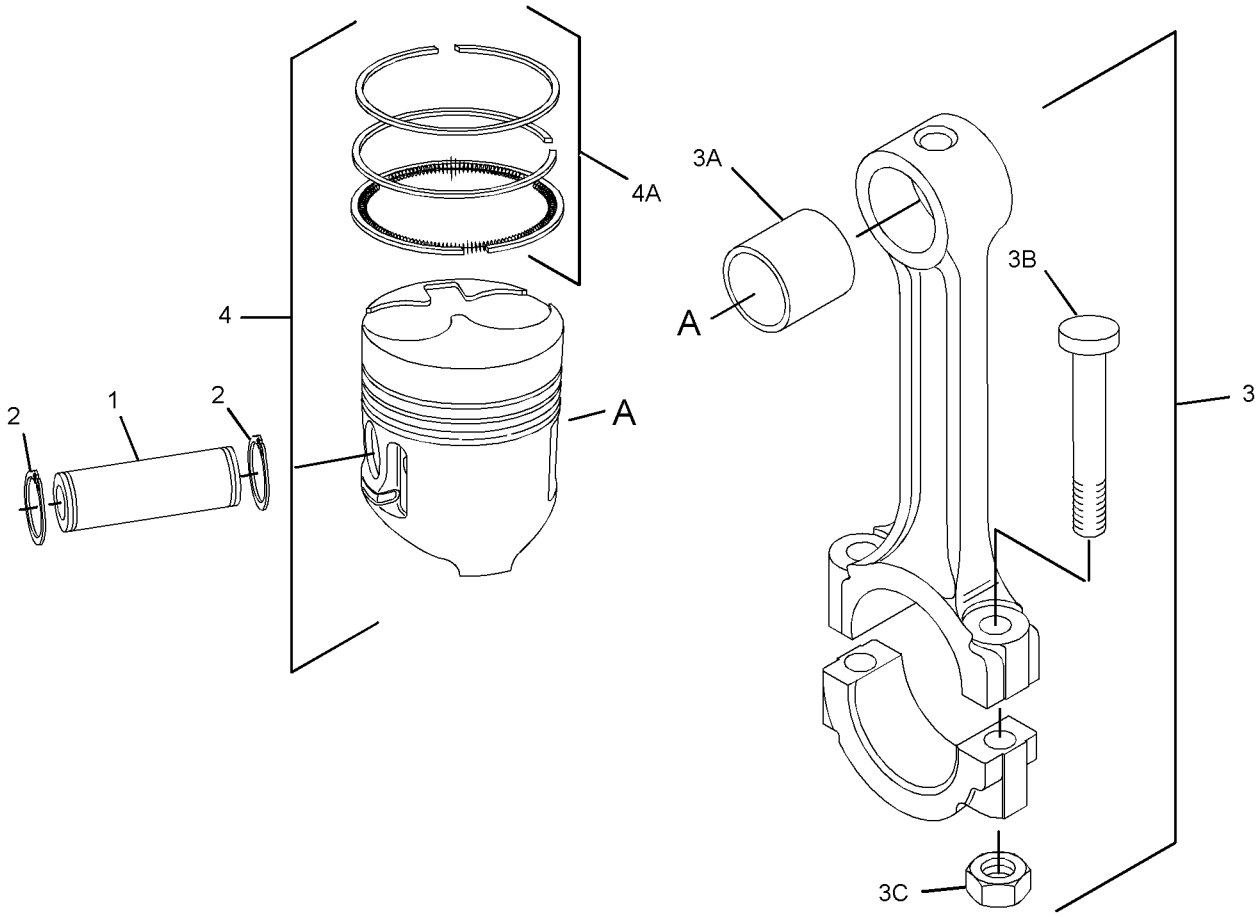

GRAPHIC #1 **<END>** g01389579

309-6720 PLUG GP-OIL PAN–DRAIN

SMCS-1302 **i02784631**

NOTE	REF NO	GRAPHIC REF	PART NUMBER	QTY	PART NAME 1 2 3 4 5 6 (PRODUCT LEVEL)	SEE PAGE
	1	1	**153-6412**	2	WASHER	
	2	1	**218-2334**	2	PLUG-DRAIN (ENGINE OIL PAN)	

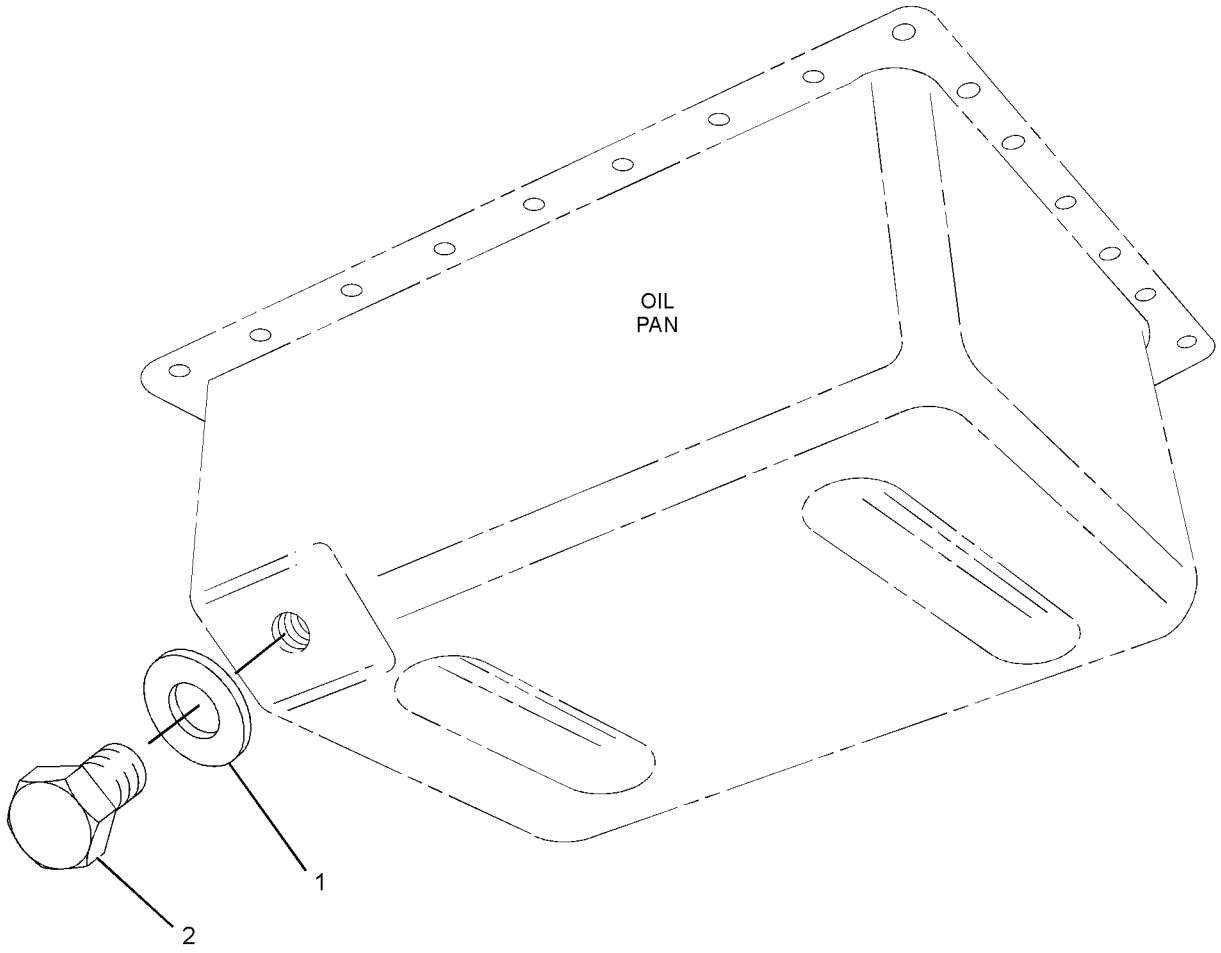

GRAPHIC #1 **<END>** g01347011

BASIC ENGINE

320-9108 PLUG GP-OIL PAN

SMCS-1302 **i03758911**

NOTE	REF NO	GRAPHIC REF	PART NUMBER	QTY	PART NAME 1 2 3 4 5 6 (PRODUCT LEVEL)	SEE PAGE
	1	1	**153-6832**	2	WASHER	
	2	1	**165-3605**	2	PLUG-DRAIN (ENGINE OIL)	

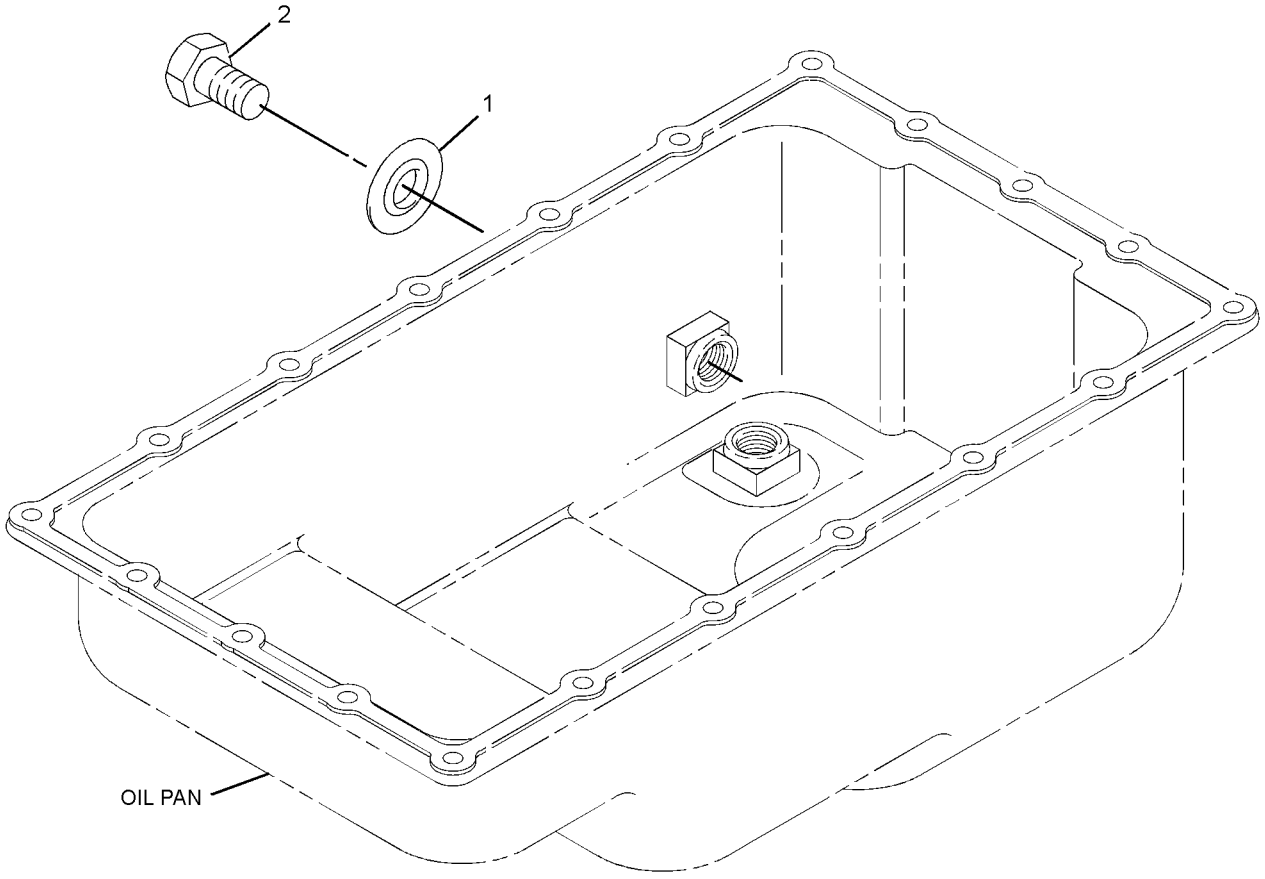

GRAPHIC #1 **<END>** g01513429

313-1976 PULLEY GP-CRANKSHAFT

SMCS-1205 **i02939899**

NOTE	REF NO	GRAPHIC REF	PART NUMBER	QTY	PART NAME 1 2 3 4 5 6 (PRODUCT LEVEL)	SEE PAGE
	1	1	**153-6492**	1	KEY-WOODRUFF	
	2	1	**153-6496**	1	NUT	
	3	1	**324-9024**	1	PULLEY-CRANKSHAFT	

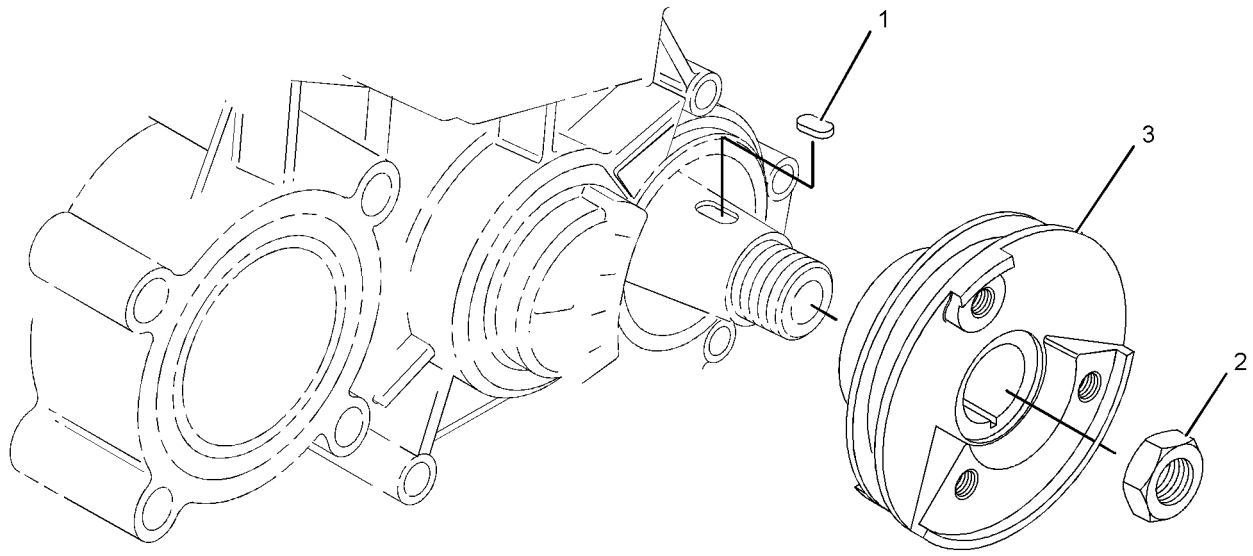

GRAPHIC #1 **<END>** g01142574

BASIC ENGINE

322-3805 PULLEY GP-CRANKSHAFT

SMCS-1205 **i02969480**

NOTE	REF NO	GRAPHIC REF	PART NUMBER	QTY	PART NAME 1 2 3 4 5 6 (PRODUCT LEVEL)	SEE PAGE
	1	1	**153-6492**	1	KEY-WOODRUFF	
	2	1	**153-6496**	1	NUT	
	3	1	**324-9024**	1	PULLEY-CRANKSHAFT	

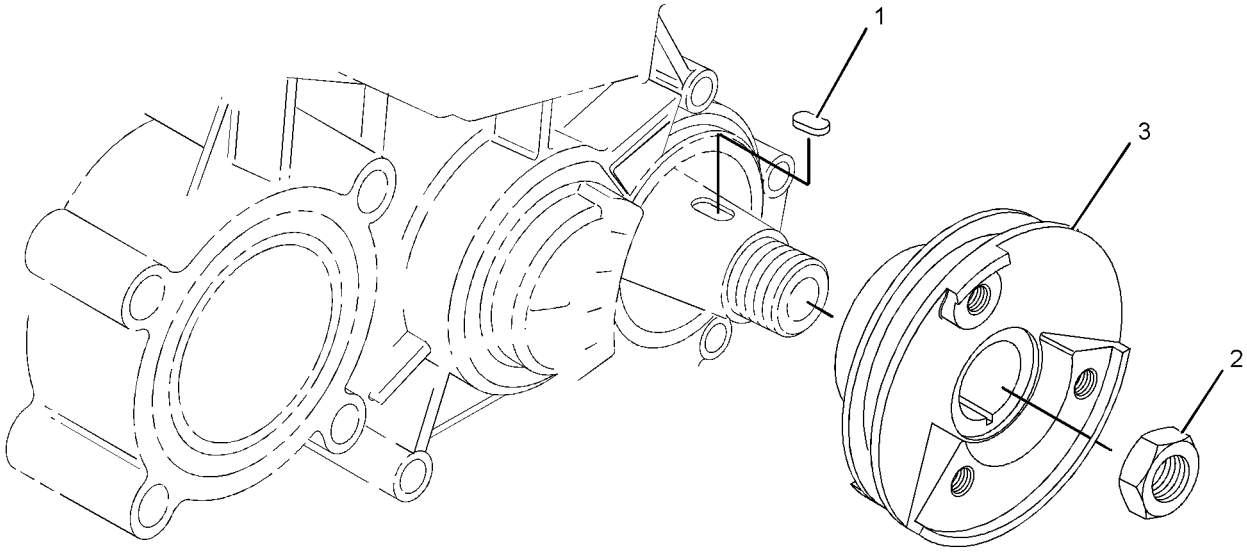

GRAPHIC #1 **<END>** g01142574

313-1972 PULLEY GP-WATER PUMP

SMCS-1384 **i02773430**

NOTE	REF NO	GRAPHIC REF	PART NUMBER	QTY	PART NAME 1 2 3 4 5 6 (PRODUCT LEVEL)	SEE PAGE
	1	1	**153-5963**	1	PULLEY-WATER PUMP	

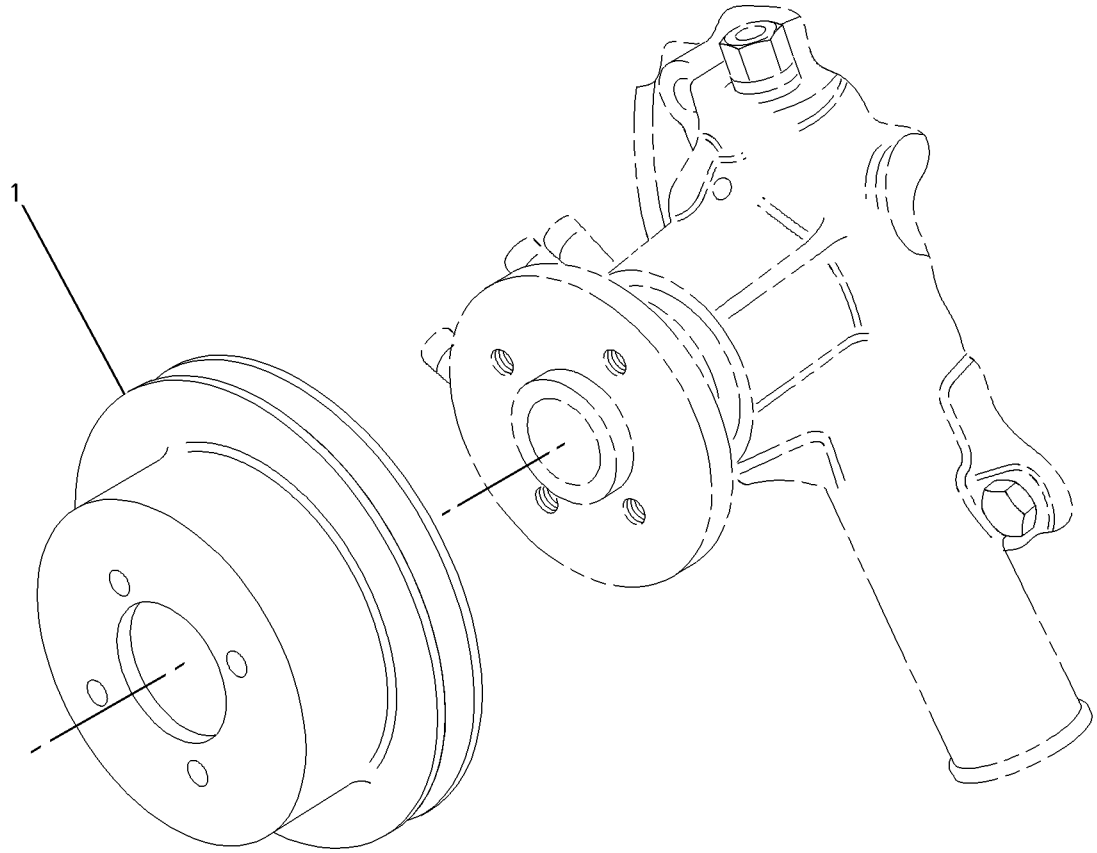

GRAPHIC #1 **<END>** g00852560

BASIC ENGINE

313-1983 V-BELT GP–ALTERNATOR

SMCS-1357 **i02773494**

NOTE	REF NO	GRAPHIC REF	PART NUMBER	QTY	PART NAME 1 2 3 4 5 6 (PRODUCT LEVEL)	SEE PAGE
	1	1	**183-3942**	1	V-BELT (DRIVE)	

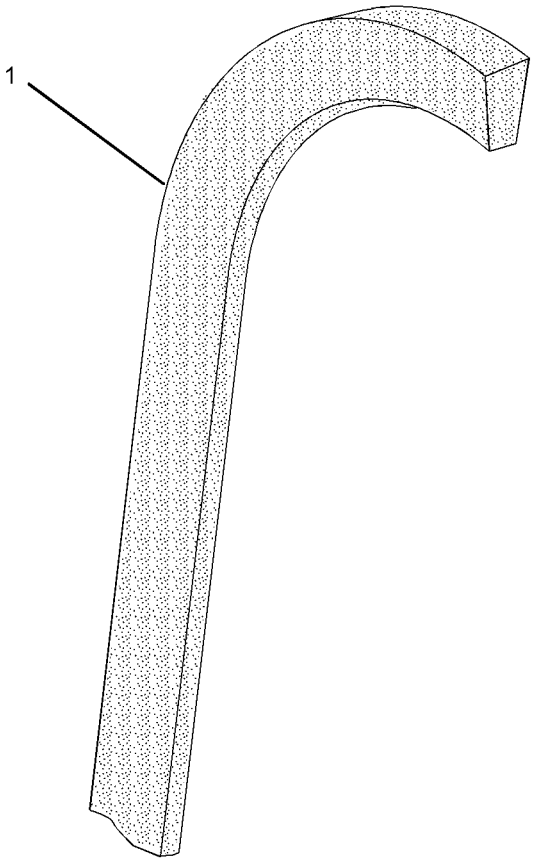

GRAPHIC #1 **<END>** g01389438

319-7355 V-BELT GP–ALTERNATOR

WATER PUMP

SMCS-1357 **i02929202**

NOTE	REF NO	GRAPHIC REF	PART NUMBER	QTY	PART NAME 1 2 3 4 5 6 (PRODUCT LEVEL)	SEE PAGE
	1	1	**183-3942**	1	V-BELT (ALTERNATOR, WATER PUMP)	

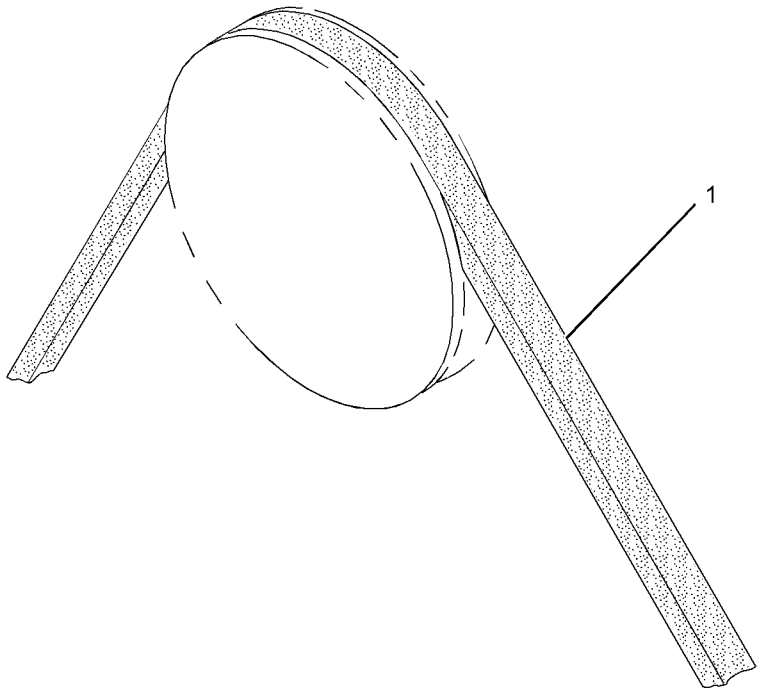

GRAPHIC #1 **<END>** g01321905

BASIC ENGINE

313-1965 VALVE MECHANISM GP

SMCS-1102, 1121, 1123, 1209 **i02773462**

NOTE	REF NO	GRAPHIC REF	PART NUMBER	QTY	PART NAME 1 2 3 4 5 6 (PRODUCT LEVEL)	SEE PAGE
	1	1	**153-5591**	3	STUD	
	2	1	**153-5592**	3	NUT	
	3	1	**153-6861**	2	BOLT	
	4	1	**154-1249**	6	TAPPET	
	5	1	**252-1624**	1	ROCKER ARM AS	
M	5A	1	**095-0641**	1	BOLT-SOCKET HEAD (M4X0.7X10-MM)	
	5B	1	**153-5577**	3	LEVER-LH	
	5C	1	**153-5579**	3	LEVER-RH	
	5D	1	**153-5586**	2	SPRING	
	5E	1	**153-5587**	6	SCREW-ADJUSTMENT	
	5F	1	**153-5590**	6	NUT	
	5G	1	**153-5595**	4	WASHER	
	5H	1	**156-6948**	1	PLUG	
	5J	1	**156-6950**	1	SEAL-O-RING	
	5K	1	**231-2183**	1	SHAFT	
	6	1	**231-2208**	1	SEAL	
	7	1	**231-2209**	6	PUSHROD	

M-METRIC PART

313-1965 **VALVE MECHANISM GP** *(contd.)* **i02773462**

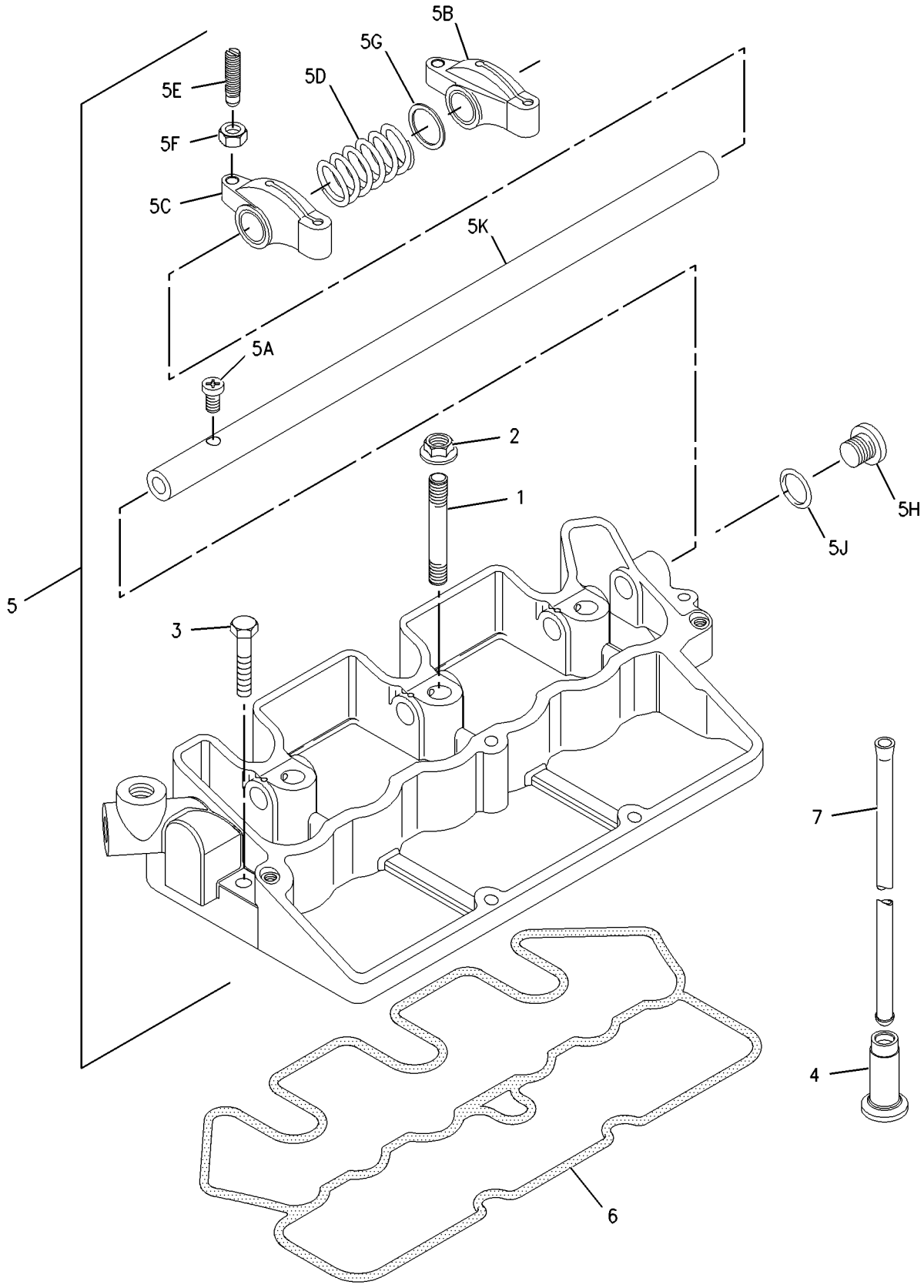

GRAPHIC #1 **<END>** g00980906

LUBRICATION SYSTEM

313-1975 FILLER GP-ENGINE OIL

SMCS-1316 **i03653878**

NOTE	REF NO	GRAPHIC REF	PART NUMBER	QTY	PART NAME 1 2 3 4 5 6 (PRODUCT LEVEL)	SEE PAGE
	1	1	**153-5933**	1	SEAL (ENGINE OIL FILLER)	
	2	1	**217-7358**	1	CAP-OIL FILLER	
	3	1	**288-6593**	1	SEAL (ENGINE OIL FILLER)	
	4	1	**334-0272**	1	CAP-FILLER (ENGINE)	

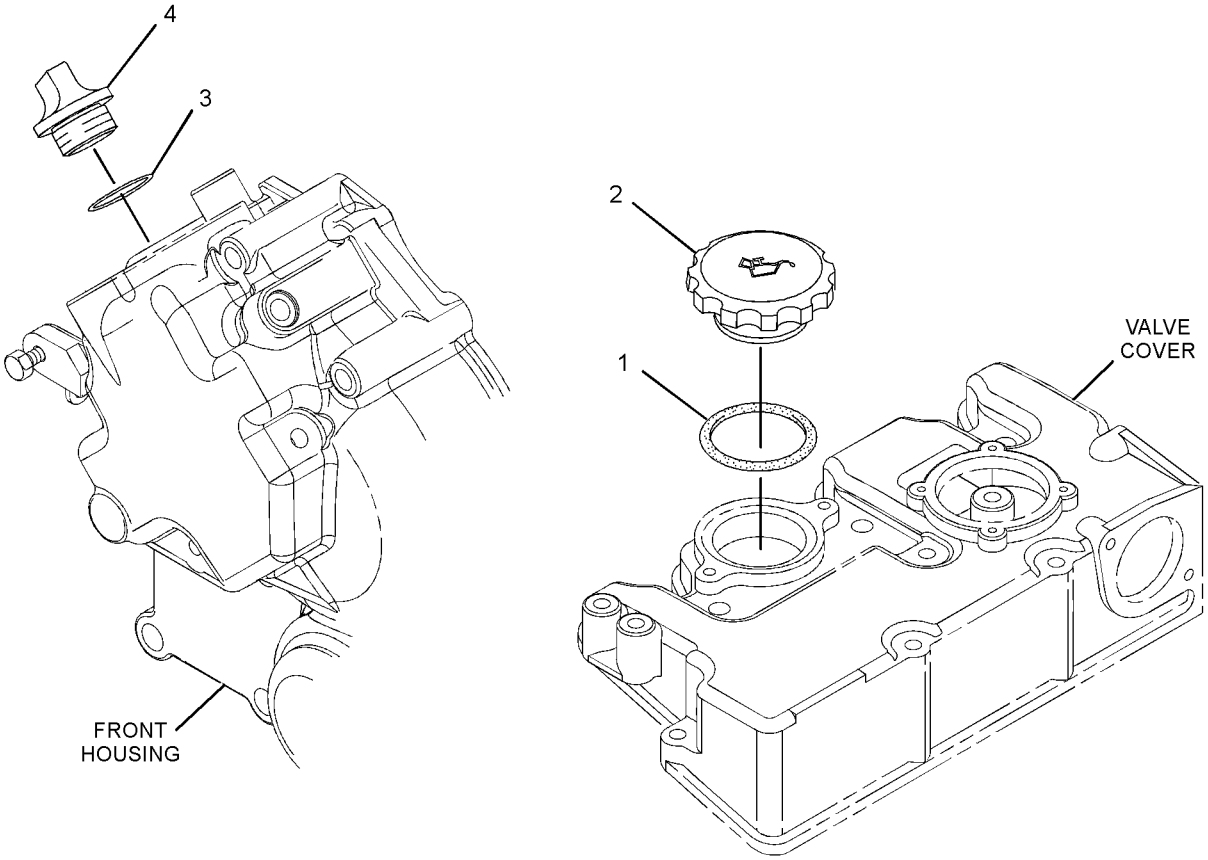

GRAPHIC #1 **<END>** g01388692

334-0278 FILLER GP-ENGINE OIL

SMCS-1316 **i03977591**

NOTE	REF NO	GRAPHIC REF	PART NUMBER	QTY	PART NAME 1 2 3 4 5 6 (PRODUCT LEVEL)	SEE PAGE
	1	1	**153-5933**	2	SEAL (ENGINE OIL FILL CAP)	
	2	1	**153-7640**	2	BOLT	
	3	1	**209-1355**	1	FILLER-OIL (ENGINE)	
	4	1	**9X-8256**	2	WASHER (6.6X12X2-MM THK)	
	5	1	**211-8559**	1	SEAL-O-RING	
	6	1	**217-7358**	2	CAP-OIL FILLER (ENGINE)	
	7	1	**288-6593**	1	SEAL (ENGINE OIL FILL CAP)	
	8	1	**334-0272**	1	CAP-FILLER (ENGINE OIL)	

334-0278 **FILLER GP-ENGINE OIL** *(contd.)* **i03977591**

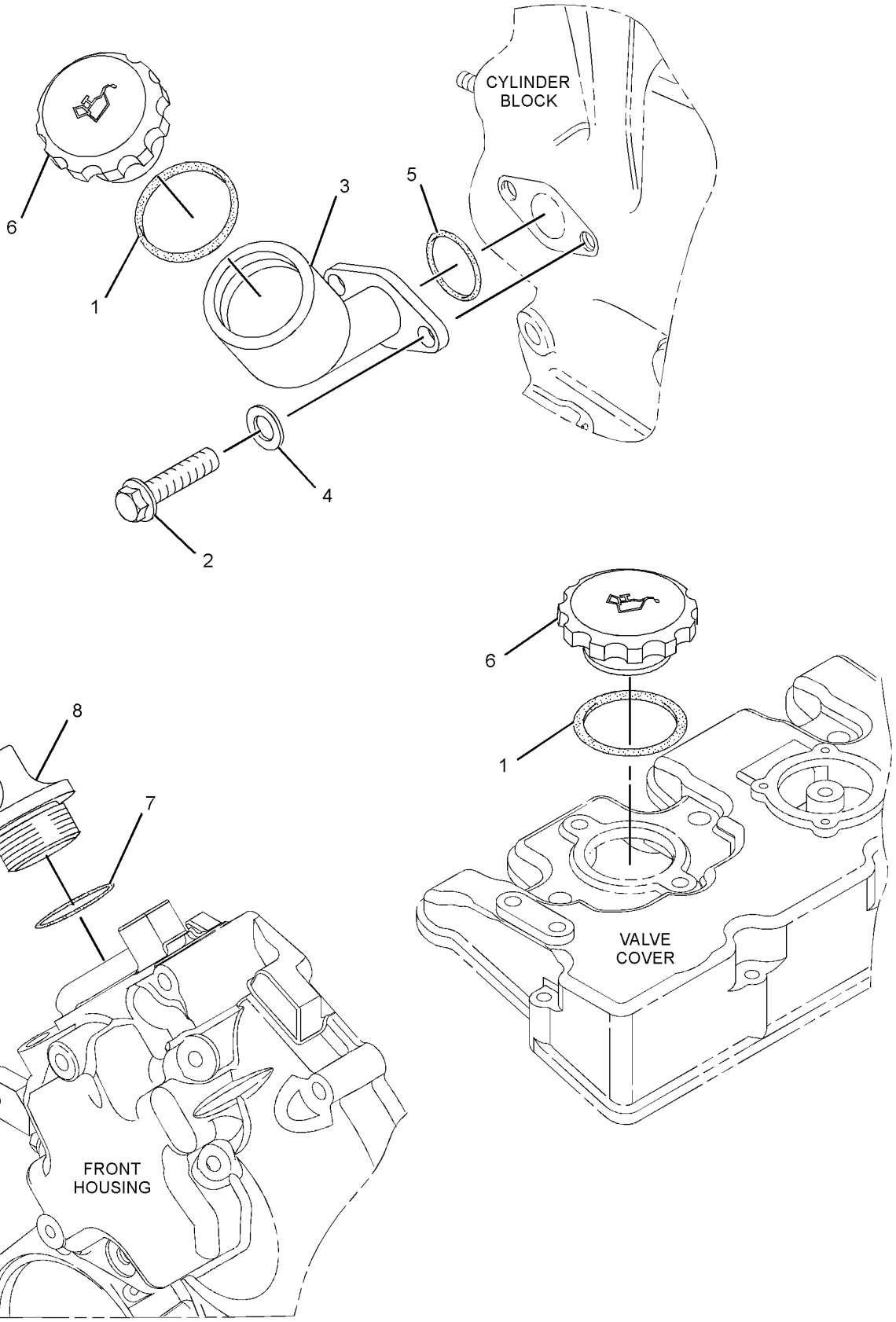

GRAPHIC #1 **<END>** g01960172

308-2298 FILTER GP-ENGINE OIL

SMCS-1306, 1308 **i02752263**

NOTE	REF NO	GRAPHIC REF	PART NUMBER	QTY	PART NAME 1 2 3 4 5 6 (PRODUCT LEVEL)	SEE PAGE
	1	1	**220-1523**	1	FILTER AS-ENGINE OIL	

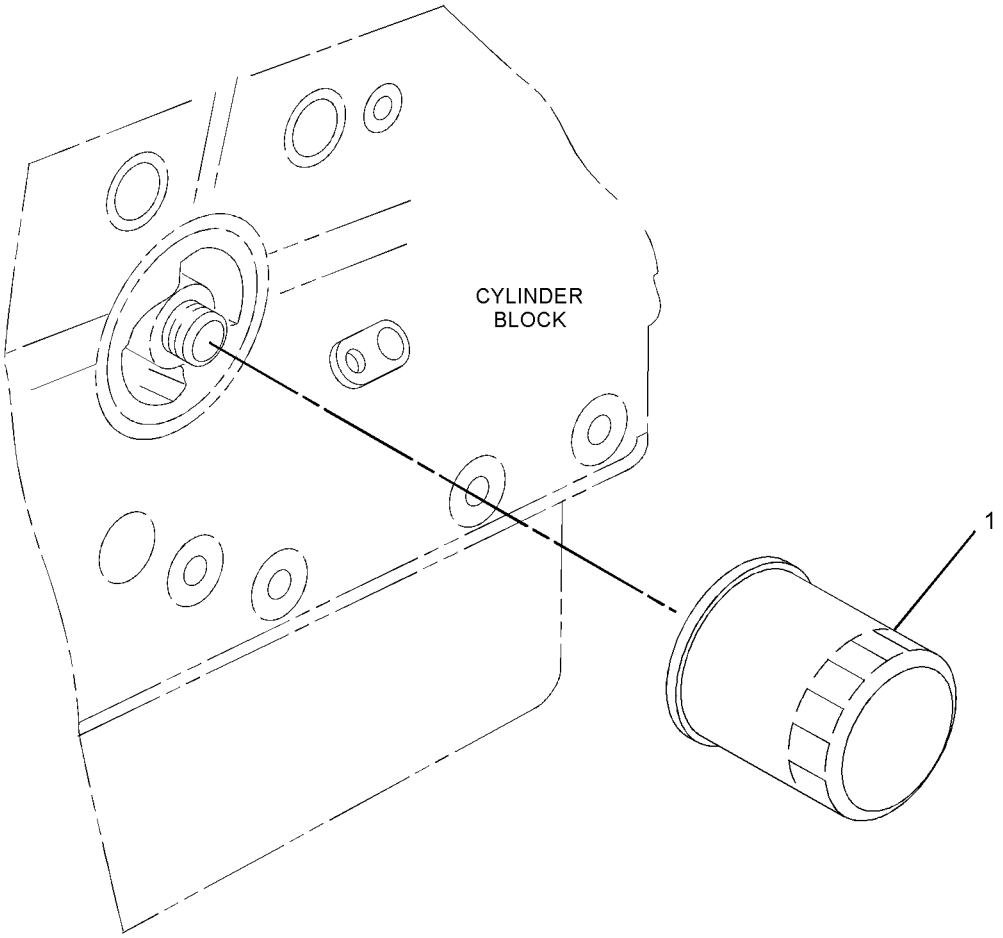

GRAPHIC #1 **<END>** g01389723

LUBRICATION SYSTEM

334-0279 FILTER GP-ENGINE OIL

SMCS-1306, 1308 **i03465603**

NOTE	REF NO	GRAPHIC REF	PART NUMBER	QTY	PART NAME 1 2 3 4 5 6 (PRODUCT LEVEL)	SEE PAGE
	1	1	**6I-1201**	1	SEAL-O-RING	
	2	1	**118-9145**	1	CONNECTOR	
	3	1	**164-7619**	1	SEAL-O-RING	
	4	1	**197-8449**	1	BOLT	
	5	1	**231-8920**	1	BOLT	
	6	1	**252-0787**	1	SEAL-O-RING	
	7	1	**334-0273**	1	HEAD-OIL FILTER	
	8	1	**334-0275**	1	WASHER	

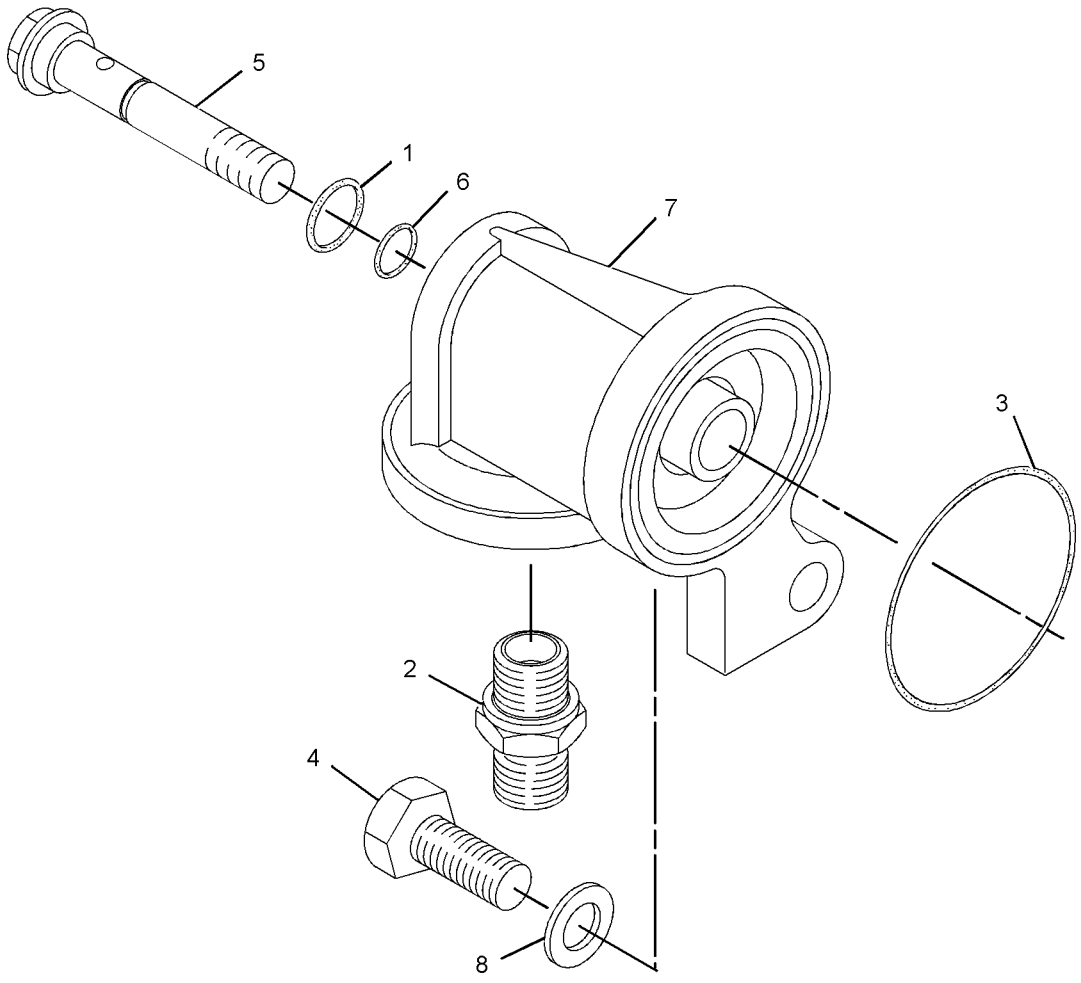

GRAPHIC #1 **<END>** g01972156

308-4735 MOUNTING GP-ENGINE OIL FILTER

SMCS-1306, 1308 **i02698018**

NOTE	REF NO	GRAPHIC REF	PART NUMBER	QTY	PART NAME 1 2 3 4 5 6 (PRODUCT LEVEL)	SEE PAGE
	1	1	**153-6879**	1	STUD-HOLLOW	

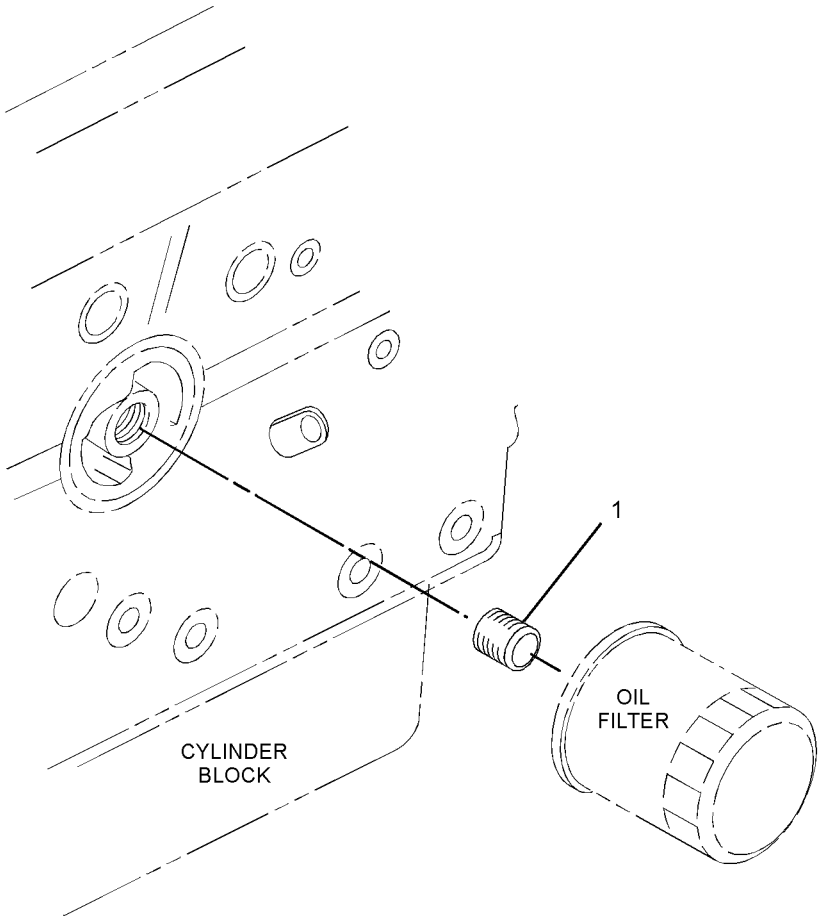

GRAPHIC #1 **<END>** g01355707

COOLING SYSTEM

317-7194 CONNECTOR GP-CAB HEATER LINES

SMCS-1380 **i02853760**

NOTE	REF NO	GRAPHIC REF	PART NUMBER	QTY	PART NAME 1 2 3 4 5 6 (PRODUCT LEVEL)	SEE PAGE
	1	1	**205-1133**	2	CONNECTOR	

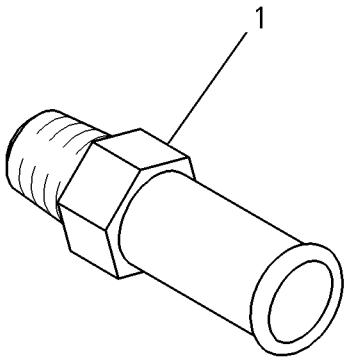

GRAPHIC #1 **<END>** g00785852

328-1434 COVER GP-REGULATOR HOUSING

SMCS-1393 **i03983136**

NOTE	REF NO	GRAPHIC REF	PART NUMBER	QTY	PART NAME 1 2 3 4 5 6 (PRODUCT LEVEL)	SEE PAGE
	1	1	**153-7640**	2	BOLT	
	2	1	**231-7858**	1	GASKET-COVER (WATER REGULATOR HOUSING)	
	3	1	**267-0022**	1	COVER-HOUSING	

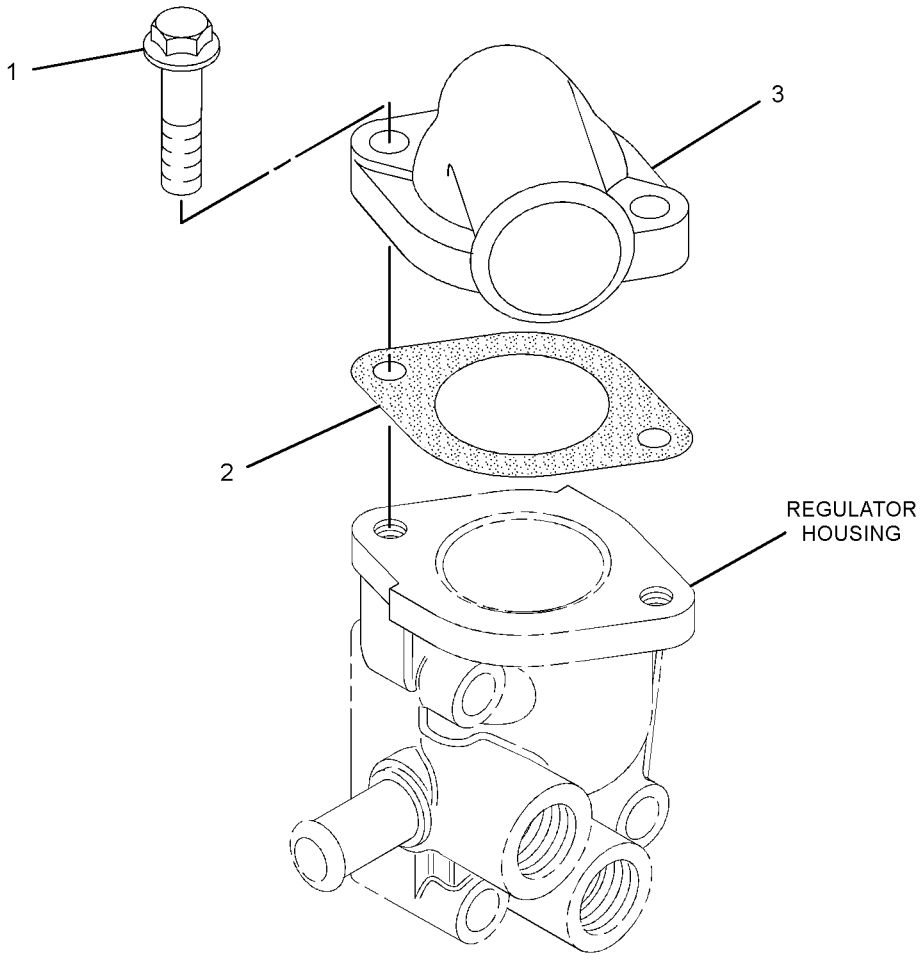

GRAPHIC #1 **<END>** g01511596

COOLING SYSTEM

329-4422 FAN GP

SMCS-1356 **i03572577**

NOTE	REF NO	GRAPHIC REF	PART NUMBER	QTY	PART NAME 1 2 3 4 5 6 (PRODUCT LEVEL)	SEE PAGE
	1	1	**328-6606**	1	FAN (7-BLADE)	

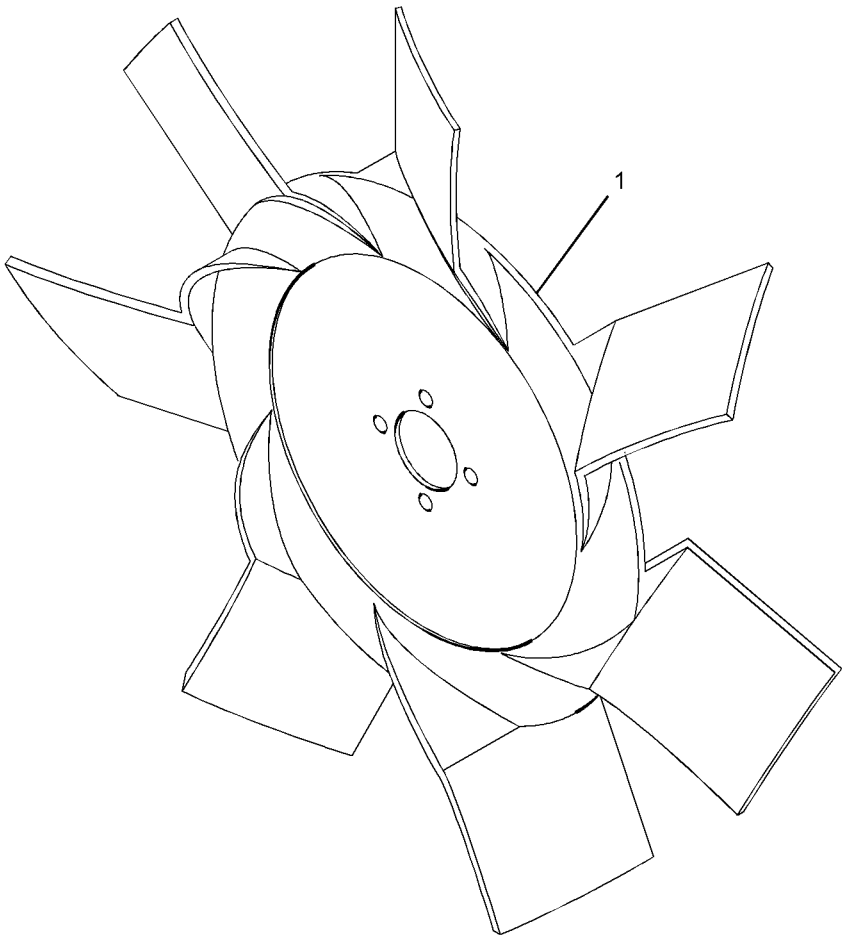

GRAPHIC #1 **<END>** g01884854

COOLING SYSTEM

334-8537 FAN GP

SMCS-1356 **i03351657**

NOTE	REF NO	GRAPHIC REF	PART NUMBER	QTY	PART NAME 1 2 3 4 5 6 (PRODUCT LEVEL)	SEE PAGE
	1	1	**334-8535**	1	FAN (5-BLADE)	

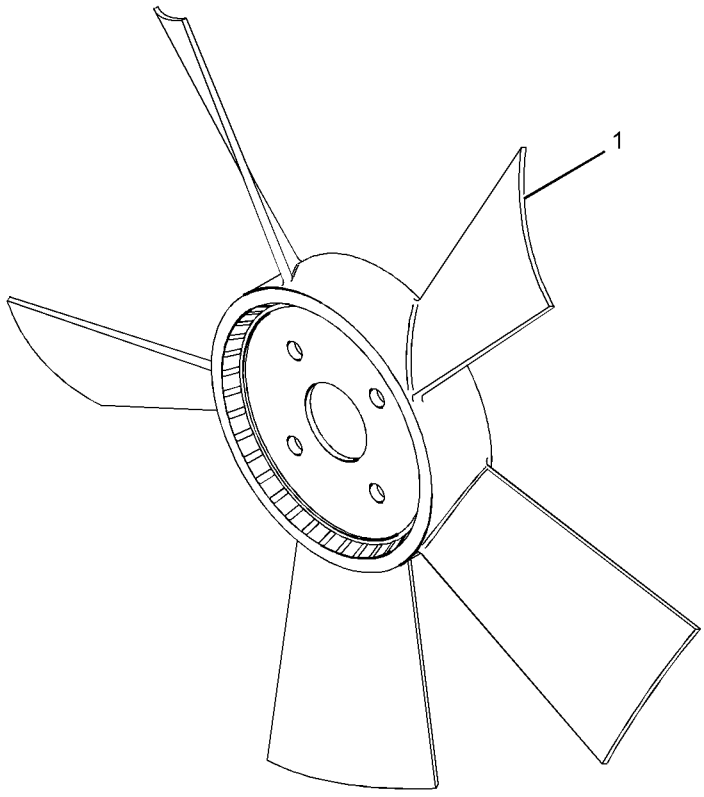

GRAPHIC #1 **<END>** g01959157

COOLING SYSTEM

313-1981 FAN GP-SUCTION

SMCS-1356 **i02773501**

NOTE	REF NO	GRAPHIC REF	PART NUMBER	QTY	PART NAME 1 2 3 4 5 6 (PRODUCT LEVEL)	SEE PAGE
	1	1	**183-3539**	1	FAN-SUCTION	

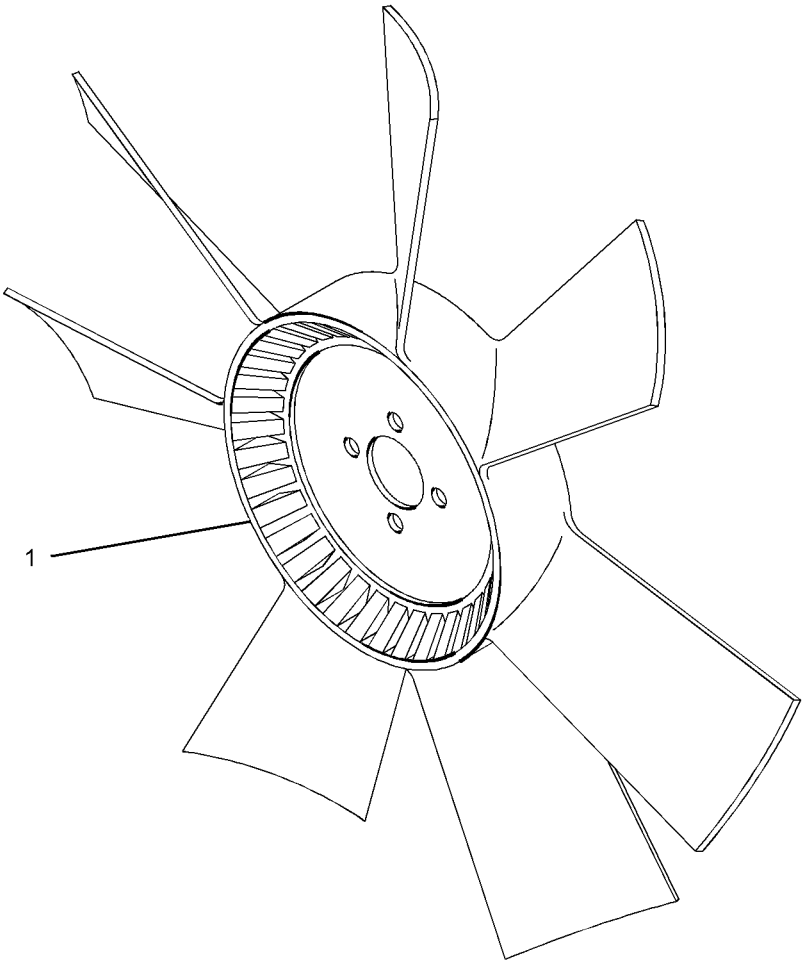

GRAPHIC #1 **<END>** g01387103

COOLING SYSTEM

327-7700 FAN GP-SUCTION

SMCS-1356 **i02969440**

NOTE	REF NO	GRAPHIC REF	PART NUMBER	QTY	PART NAME 1 2 3 4 5 6 (PRODUCT LEVEL)	SEE PAGE
	1	1	**165-2141**	4	BOLT	
	2	1	**183-3546**	1	EXTENSION-FAN	
	3	1	**183-3547**	4	BOLT	
	4	1	**183-3551**	1	FAN-SUCTION	

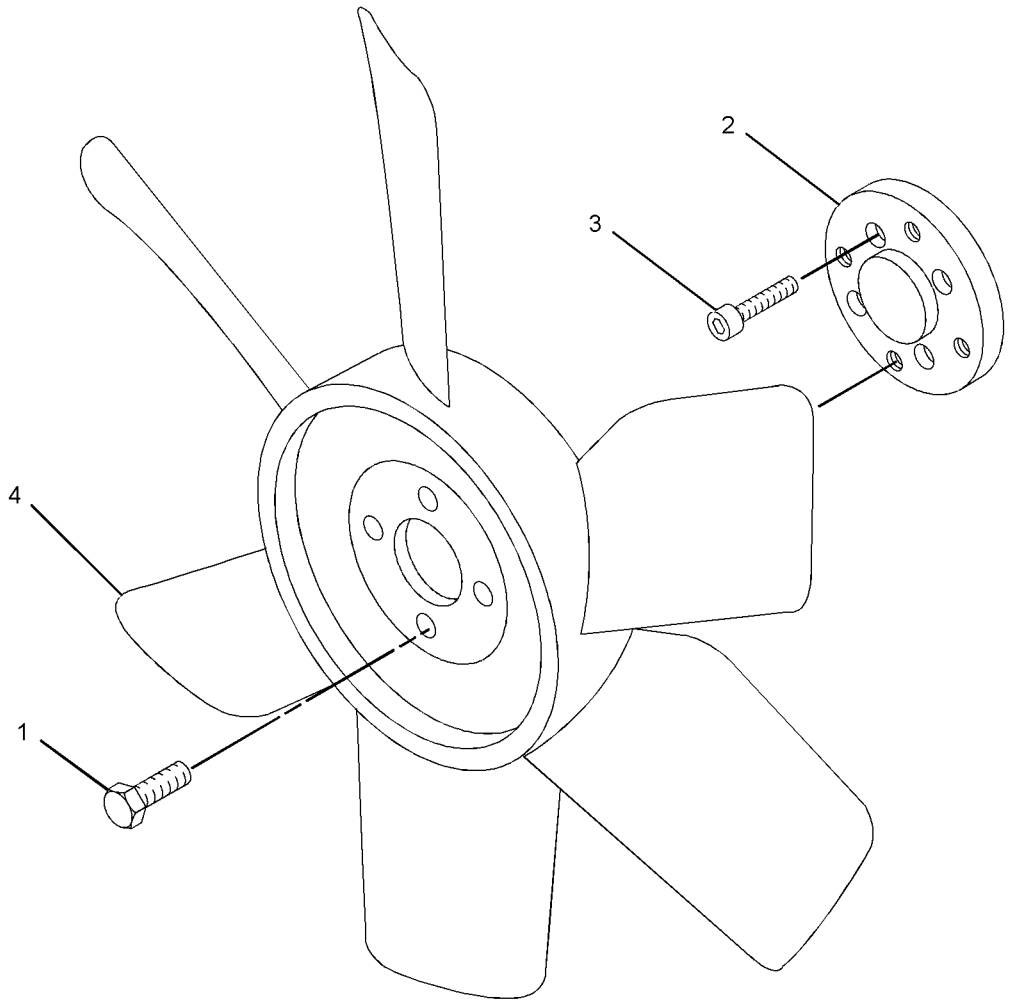

GRAPHIC #1 **<END>** g01350805

COOLING SYSTEM

313-1980 HOUSING GP-WATER REGULATOR

SMCS-1393 **i02773502**

NOTE	REF NO	GRAPHIC REF	PART NUMBER	QTY	PART NAME 1 2 3 4 5 6 (PRODUCT LEVEL)	SEE PAGE
	1	1	**153-7640**	2	BOLT	
	2	1	**231-7858**	1	GASKET-COVER (TEMPERATURE REGULATOR)	
	3	1	**311-5851**	1	HOUSING-WATER REGULATOR	

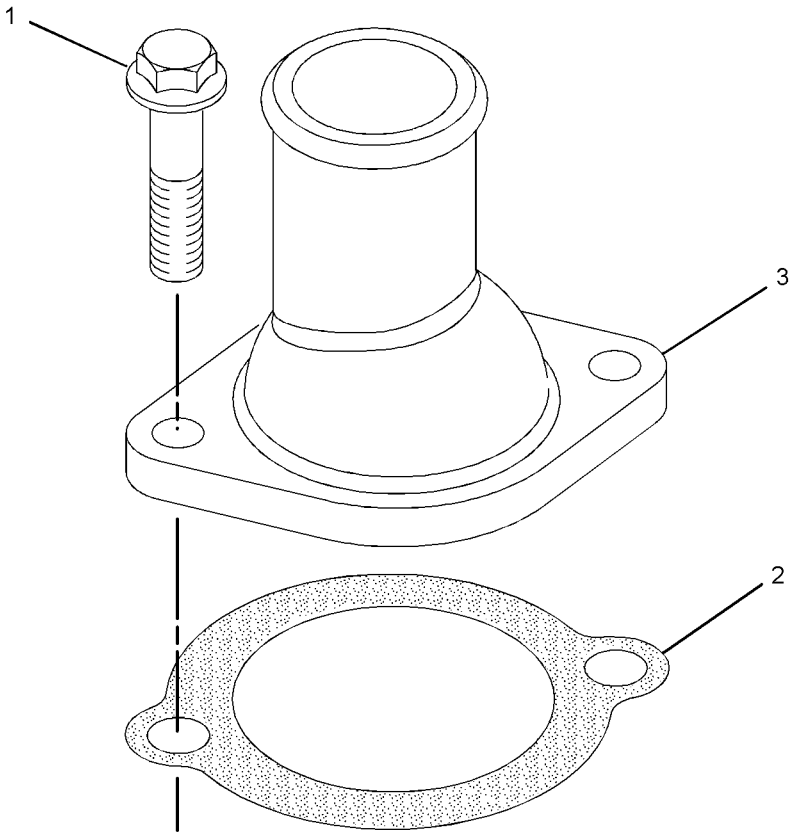

GRAPHIC #1 **<END>** g01387172

COOLING SYSTEM

322-3806 MOUNTING GP-FAN

SMCS-1356 **i02908389**

NOTE	REF NO	GRAPHIC REF	PART NUMBER	QTY	PART NAME 1 2 3 4 5 6 (PRODUCT LEVEL)	SEE PAGE
	1	1	**153-7639**	1	PLATE	

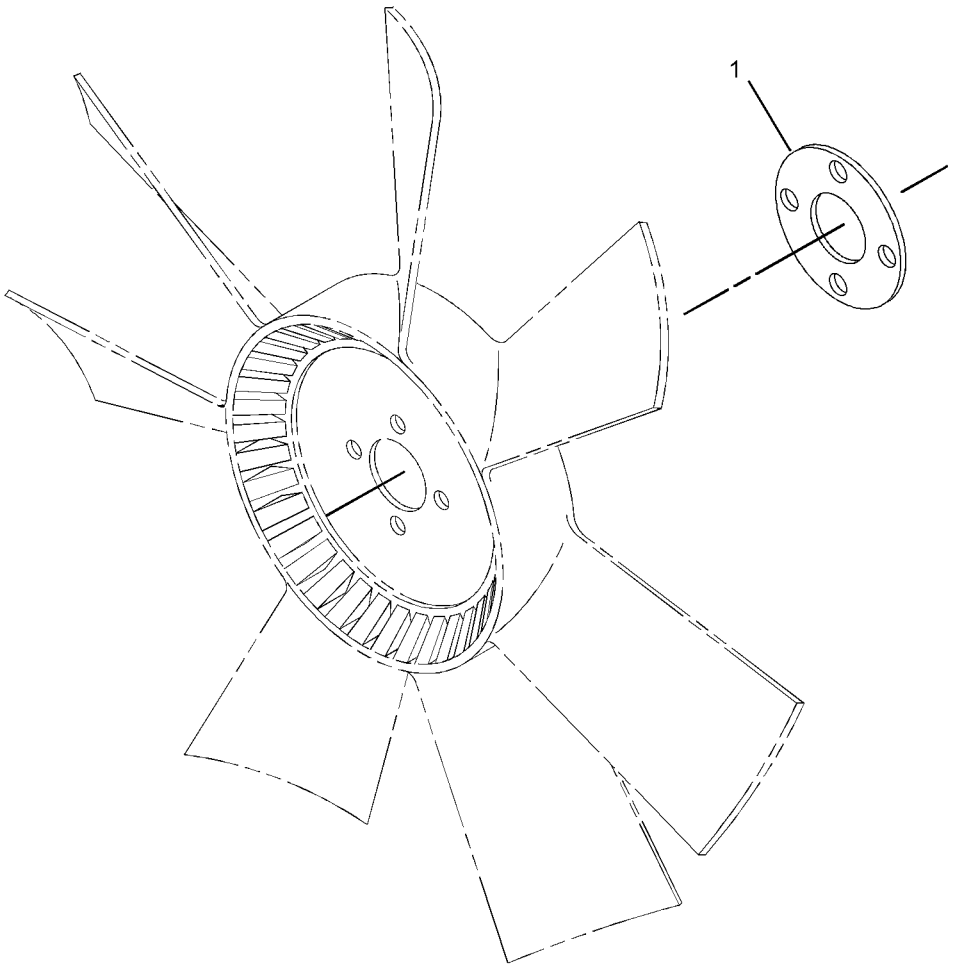

GRAPHIC #1 **<END>** g01516026

COOLING SYSTEM

231-7854 PUMP GP-WATER

PART OF 313-1978 PUMP GP-WATER

SMCS-1361 **i03140700**

NOTE	REF NO	GRAPHIC REF	PART NUMBER	QTY	PART NAME 1 2 3 4 5 6 (PRODUCT LEVEL)	SEE PAGE
	1	1	**154-1817**	1	PLUG	
	2	1	**154-1820**	3	BOLT	
	3	1	**292-1994**	1	PLATE	
	4	1	**292-1995**	1	GASKET	

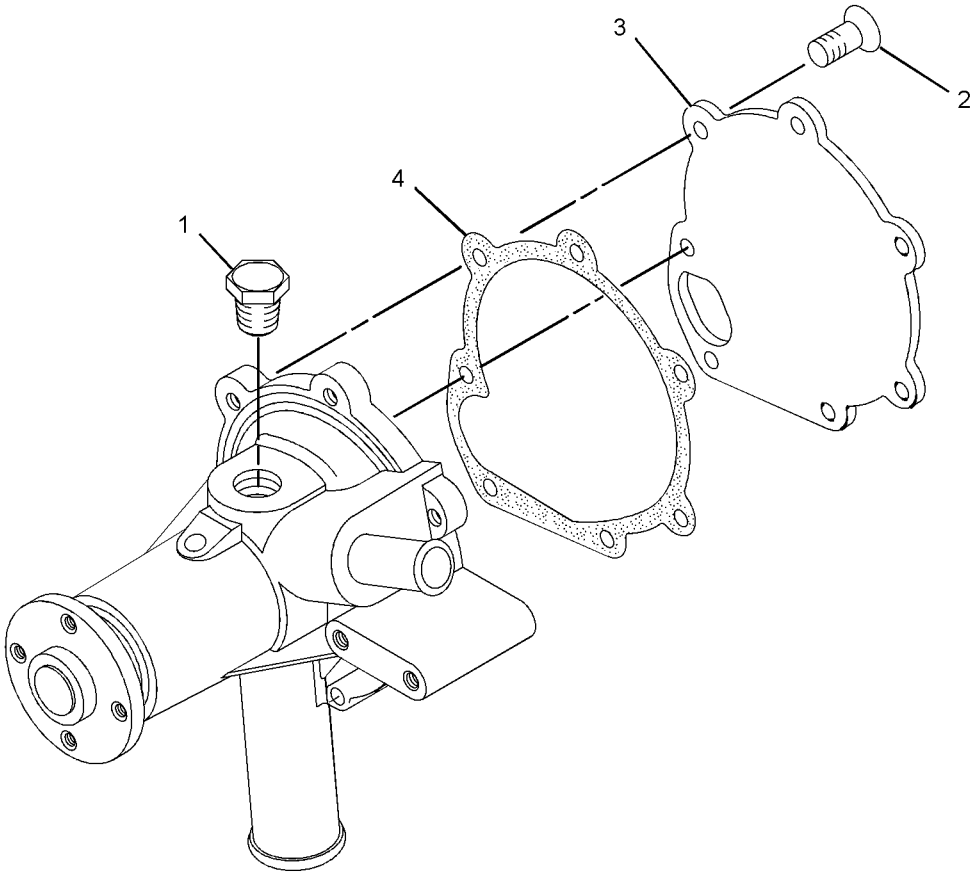

GRAPHIC #1 **<END>** g01370196

COOLING SYSTEM

313-1978 PUMP GP-WATER

SMCS-1361 **i03137727**

NOTE	REF NO	GRAPHIC REF	PART NUMBER	QTY	PART NAME 1 2 3 4 5 6 (PRODUCT LEVEL)	SEE PAGE
	1	1	**153-5960**	1	NUT	
	2	1	**153-5962**	4	BOLT	
	3	1	**154-1817**	2	PLUG	
	4	1	**154-1824**	2	CLAMP-HOSE	
	5	1	**154-1831**	1	PLUG	
	6	1	**231-7853**	1	GASKET-WATER PUMP	
	7	1	**231-7857**	1	HOUSING-REGULATOR	
	8	1	**231-7859**	1	REGULATOR-WATER TEMPERATURE	
	9	1	**231-7861**	1	GASKET	
	10	1	**267-0328**	1	HOSE	
Y	11	1	**231-7854**	1	PUMP GP-WATER	112

Y-SEPARATE ILLUSTRATION

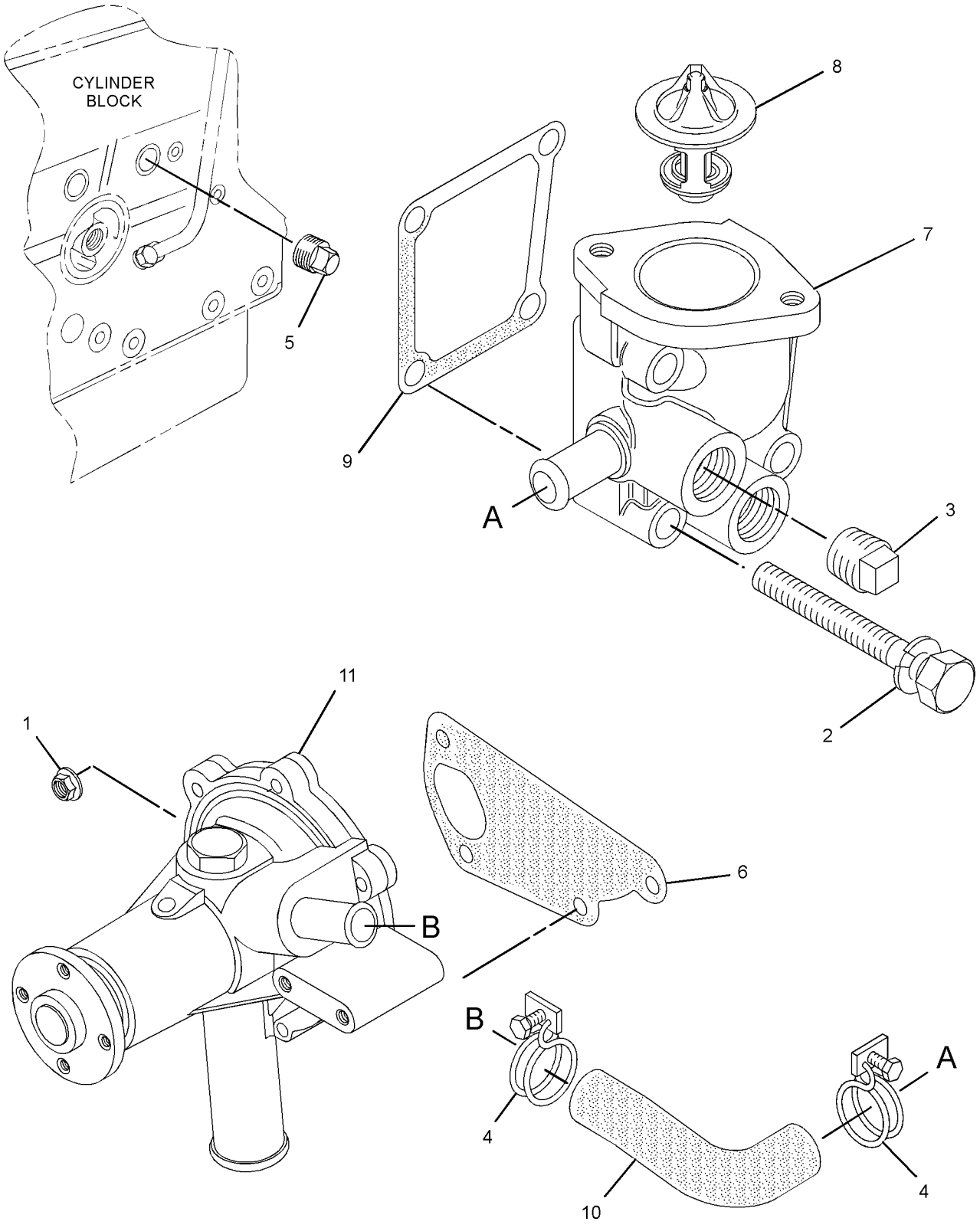

GRAPHIC #1 **<END>** g01849133

COOLING SYSTEM

318-8815 RADIATOR & FAN GP

SMCS-1353, 1356 **i03948364**

NOTE	REF NO	GRAPHIC REF	PART NUMBER	QTY	PART NAME 1 2 3 4 5 6 (PRODUCT LEVEL)	SEE PAGE
M	1	1	**6I-0217**	4	BOLT (M8X1.25X20-MM)	
	2	1	**6I-0917**	2	BOLT (M6X1X25-MM)	
	3	1	**064-3058**	4	CLAMP-HOSE	
M	4	2	**124-3815**	10	BOLT (M8X1.25X16-MM)	
	5	2	**153-5592**	2	NUT	
	6	3	**153-5961**	4	BOLT	
	7	2	**180-6118**	10	BOLT	
	8	1,3	**197-8448**	16	BOLT	
	9	2	**236-6610**	1	MOUNT	
	10	1	**239-1137**	2	BOLT (M10X1.25X25-MM)	
	11	3	**328-6606**	1	FAN	
	12	1	**244-0494**	1	RADIATOR AS	
	12A	1	**202-6616**	1	CAP-RADIATOR	
	13	1	**244-0495**	1	SUPPORT	
	14	1	**244-0503**	1	HOSE-RADIATOR	
	15	2	**244-0509**	1	GUARD	
	16	3	**255-1297**	1	PLATE	
	17	1	**258-4520**	1	HOSE-RADIATOR	
	18	2	**341-2961**	1	GUARD-FAN	
	19	2	**325-5924**	1	GUARD-FAN	
	20	2	**325-5927**	1	GUARD	
	21	2	**325-5932**	1	BRACKET	
	22	2	**334-7437**	1	BRACKET	
	23	1	**325-5938**	1	BRACKET	
	24	1	**325-5939**	1	BRACKET	
	25	3	**325-5940**	2	BRACKET	
	26	2	**244-3259**	2	CLIP	

M-METRIC PART

318-8815 **RADIATOR & FAN GP** *(contd.)* **i03948364**

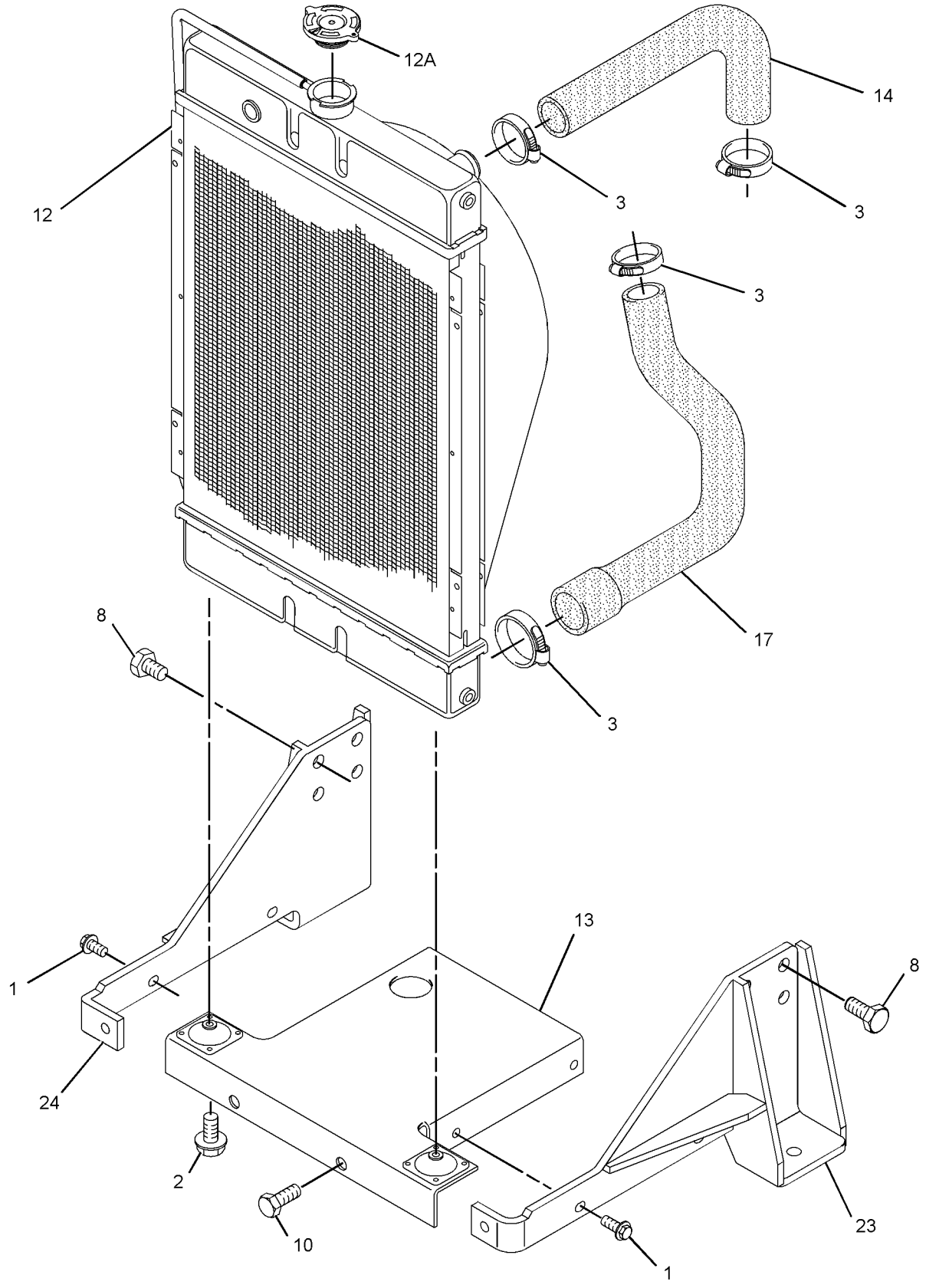

GRAPHIC #1 g01625315

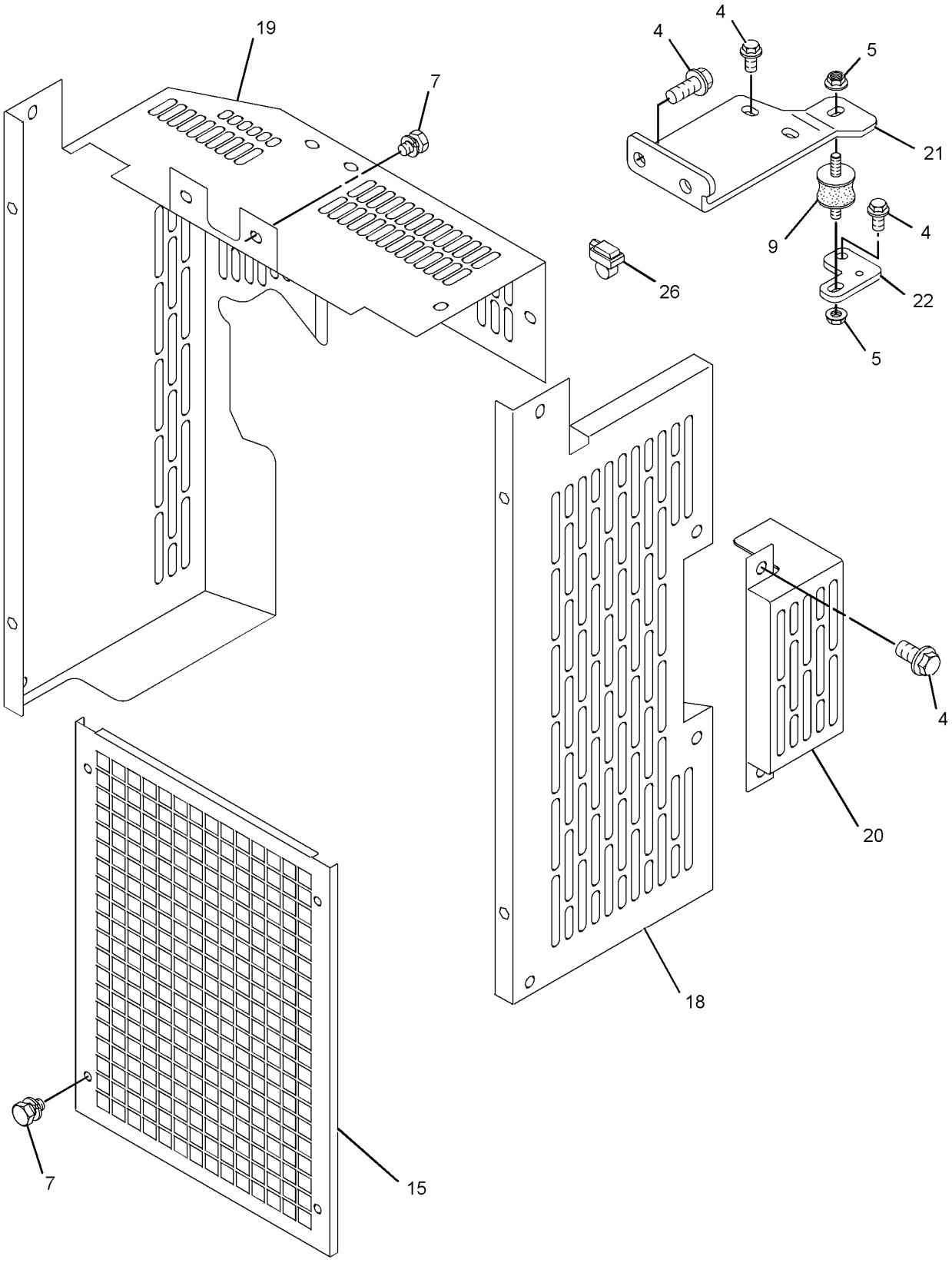

GRAPHIC #2 g02160549

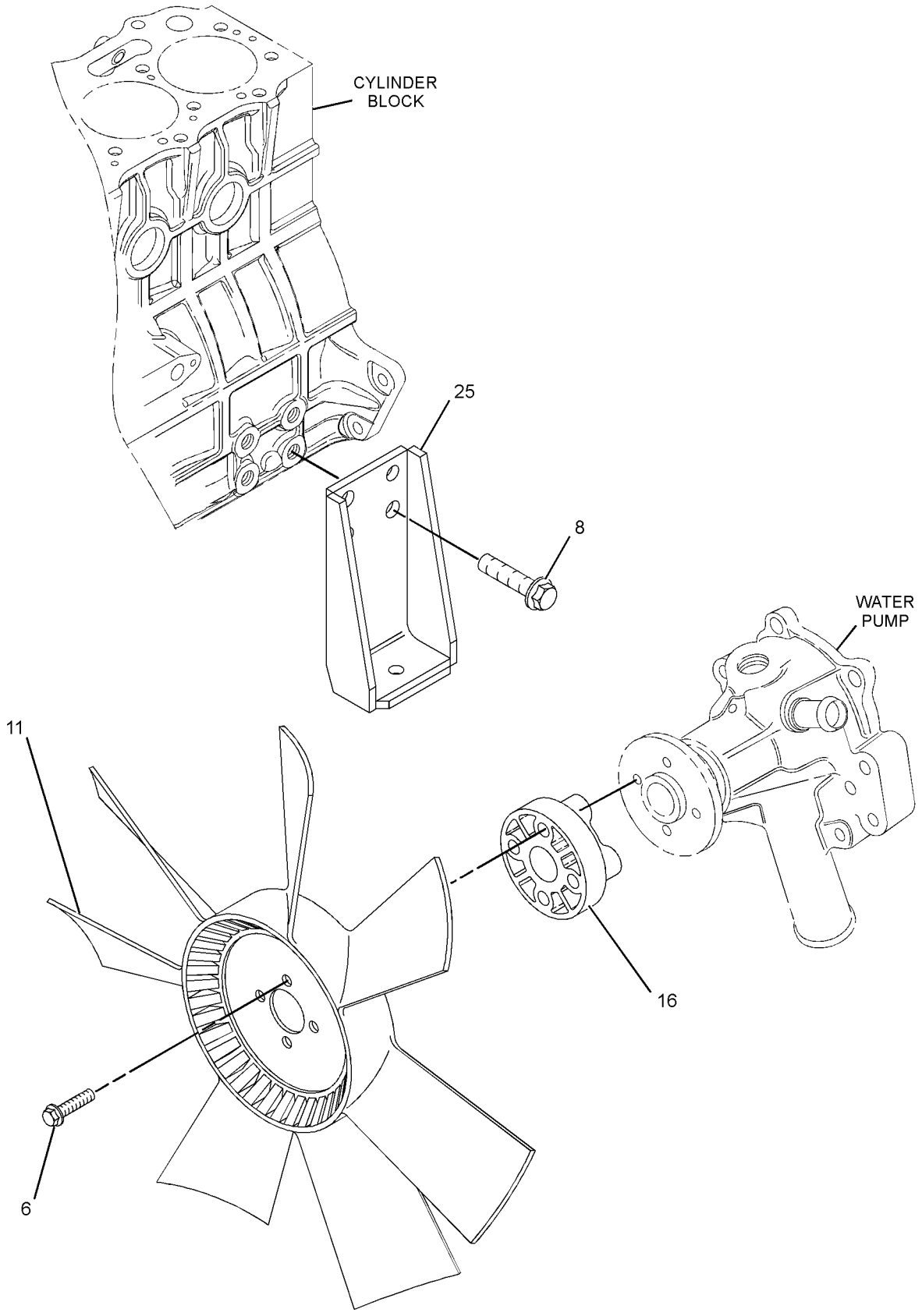

GRAPHIC #3 **<END>** g01952876

COOLING SYSTEM

318-8803 RADIATOR GP

SMCS-1353 **i03934811**

NOTE	REF NO	GRAPHIC REF	PART NUMBER	QTY	PART NAME 1 2 3 4 5 6 (PRODUCT LEVEL)	SEE PAGE
M	1	1	**6I-0217**	4	BOLT (M8X1.25X20-MM)	
	2	1	**6I-0917**	2	BOLT (M6X1X25-MM)	
	3	1	**064-3058**	4	CLAMP-HOSE	
M	4	2	**124-3815**	10	BOLT (M8X1.25X16-MM)	
	5	2	**153-5592**	2	NUT	
	6	3	**153-6861**	4	BOLT	
	7	3	**161-8260**	1	PLATE	
	8	2	**180-6118**	10	BOLT	
	9	1,3	**197-8448**	16	BOLT	
	10	2	**236-6610**	1	MOUNT	
	11	3	**238-0128**	1	FAN-BLOWER	
	12	1	**239-1137**	2	BOLT (M10X1.25X25-MM)	
	13	1	**244-0494**	1	RADIATOR AS	
	13A	1	**202-6616**	1	CAP-RADIATOR	
	14	1	**244-0495**	1	SUPPORT	
	15	1	**244-0503**	1	HOSE-RADIATOR (UPPER)	
	16	2	**244-0509**	1	GUARD	
	17	1	**258-4520**	1	HOSE-RADIATOR (LOWER)	
	18	2	**341-2961**	1	GUARD-FAN (LH)	
	19	2	**325-5924**	1	GUARD-FAN (RH)	
	20	2	**325-5927**	1	GUARD	
	21	2	**325-5932**	1	BRACKET	
	22	2	**334-7437**	1	BRACKET	
	23	1	**325-5938**	1	BRACKET	
	24	1	**325-5939**	1	BRACKET	
	25	3	**325-5940**	2	BRACKET	
	26	2	**244-3259**	2	CLIP	

M-METRIC PART

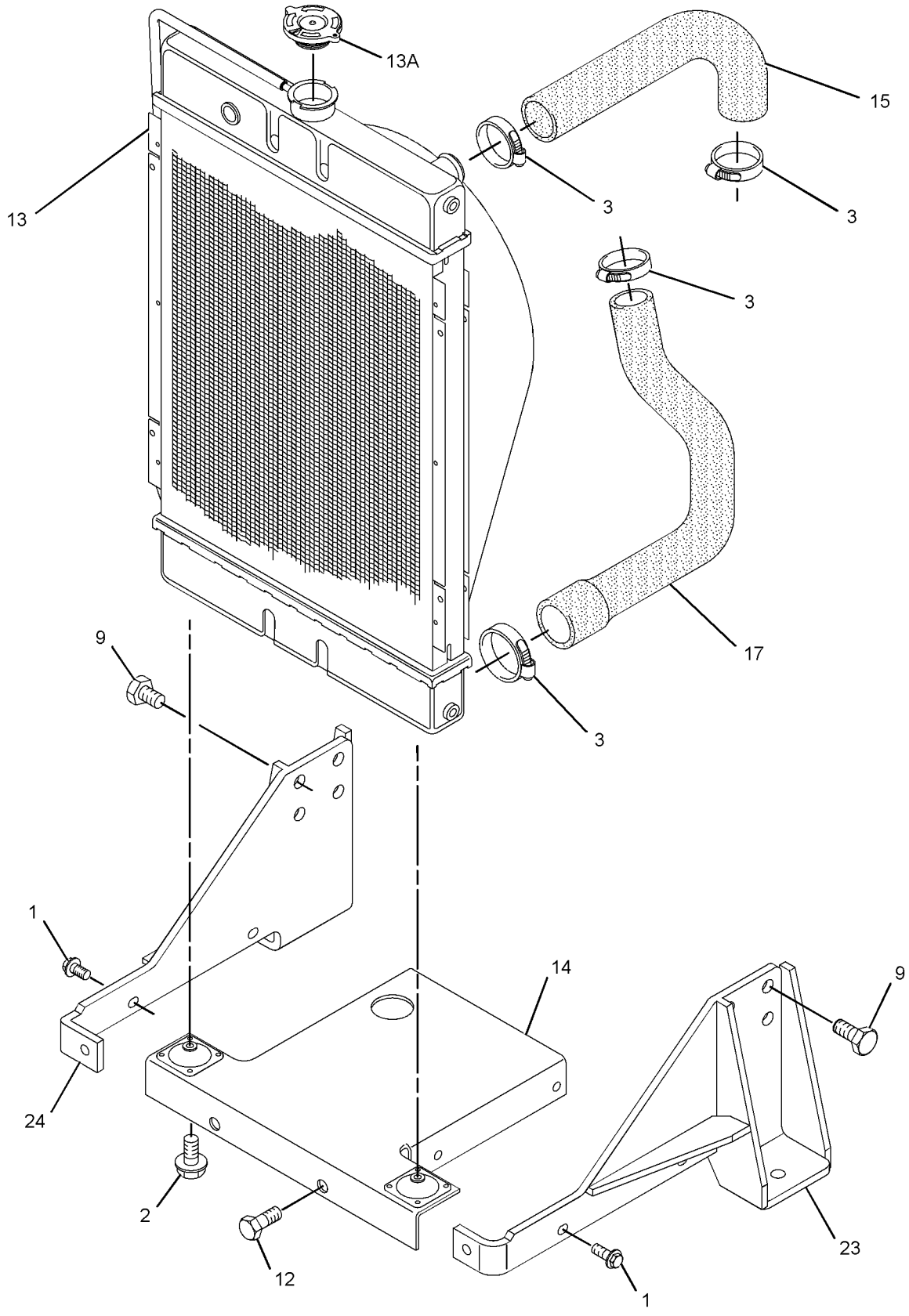

GRAPHIC #1 g01761594

318-8803 **RADIATOR GP** *(contd.)* **i03934811**

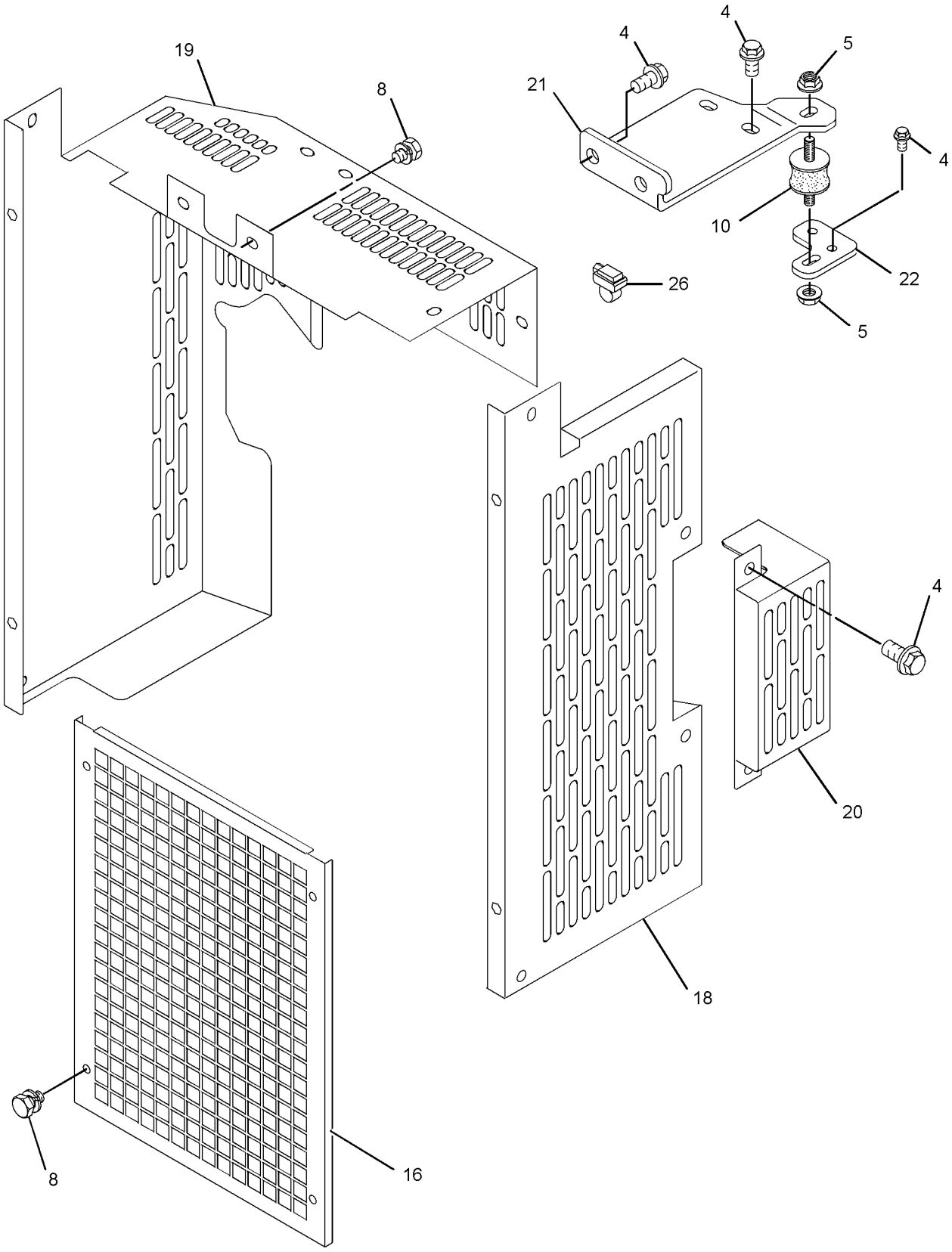

GRAPHIC #2 g02158773

318-8803 **RADIATOR GP** *(contd.)* **i03934811**

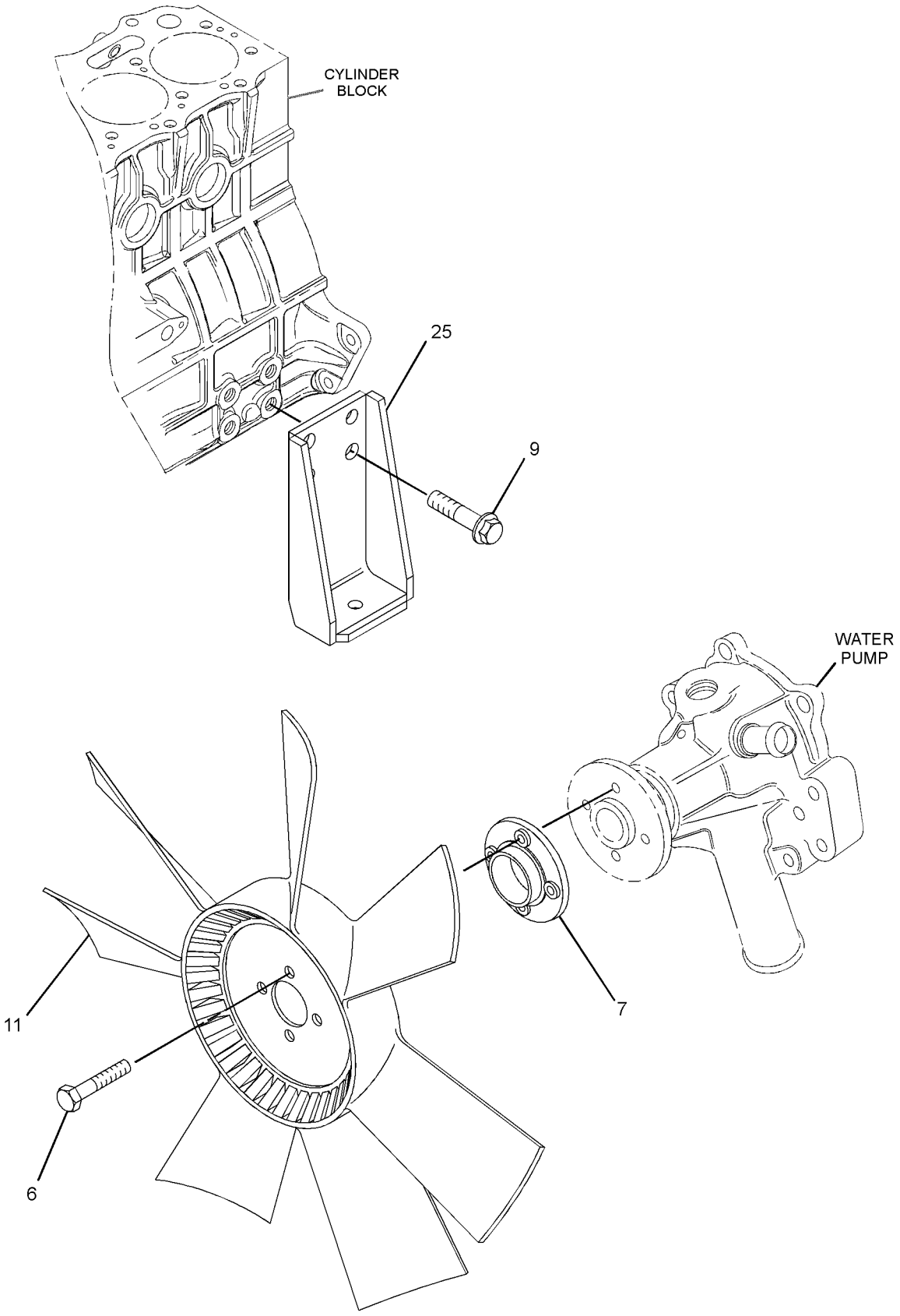

GRAPHIC #3 **<END>** g01761596

AIR INLET AND EXHAUST SYSTEM

308-2309 CONNECTION GP-EXHAUST

SMCS-1061 **i02752287**

NOTE	REF NO	GRAPHIC REF	PART NUMBER	QTY	PART NAME 1 2 3 4 5 6 (PRODUCT LEVEL)	SEE PAGE
	1	1	**153-7920**	2	GASKET	
	2	1	**168-9001**	8	BOLT	
	3	1	**197-8429**	2	FLANGE	

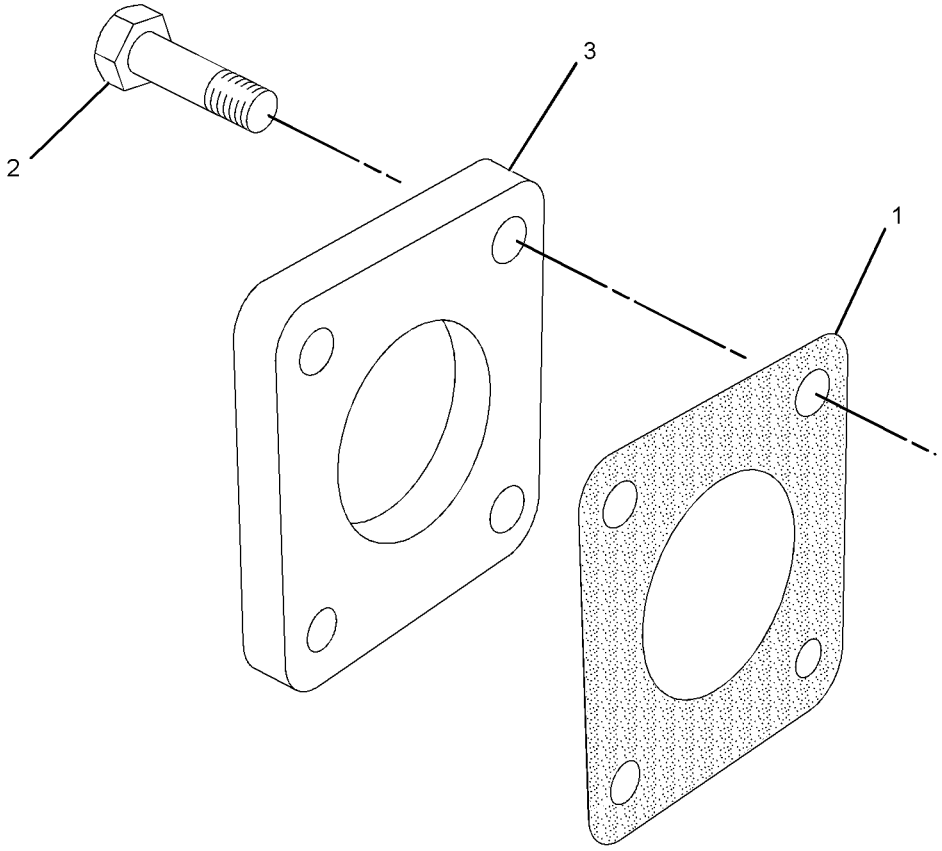

GRAPHIC #1 **<END>** g01388832

AIR INLET AND EXHAUST SYSTEM

308-5610 CONNECTION GP-EXHAUST

SMCS-1061 **i02698093**

NOTE	REF NO	GRAPHIC REF	PART NUMBER	QTY	PART NAME 1 2 3 4 5 6 (PRODUCT LEVEL)	SEE PAGE
	1	1	**153-7920**	1	GASKET	
	2	1	**168-9001**	1	BOLT	
	3	1	**197-8429**	1	FLANGE	
	4	1	**252-8372**	1	ELBOW AS-EXHAUST	
	4A	1	**153-7920**	1	GASKET	
	4B	1	**163-5372**	4	WASHER (8X15.4X4-MM THK)	
	4C	1	**191-0563**	1	ELBOW-EXHAUST	
	4D	1	**293-9223**	4	BOLT	

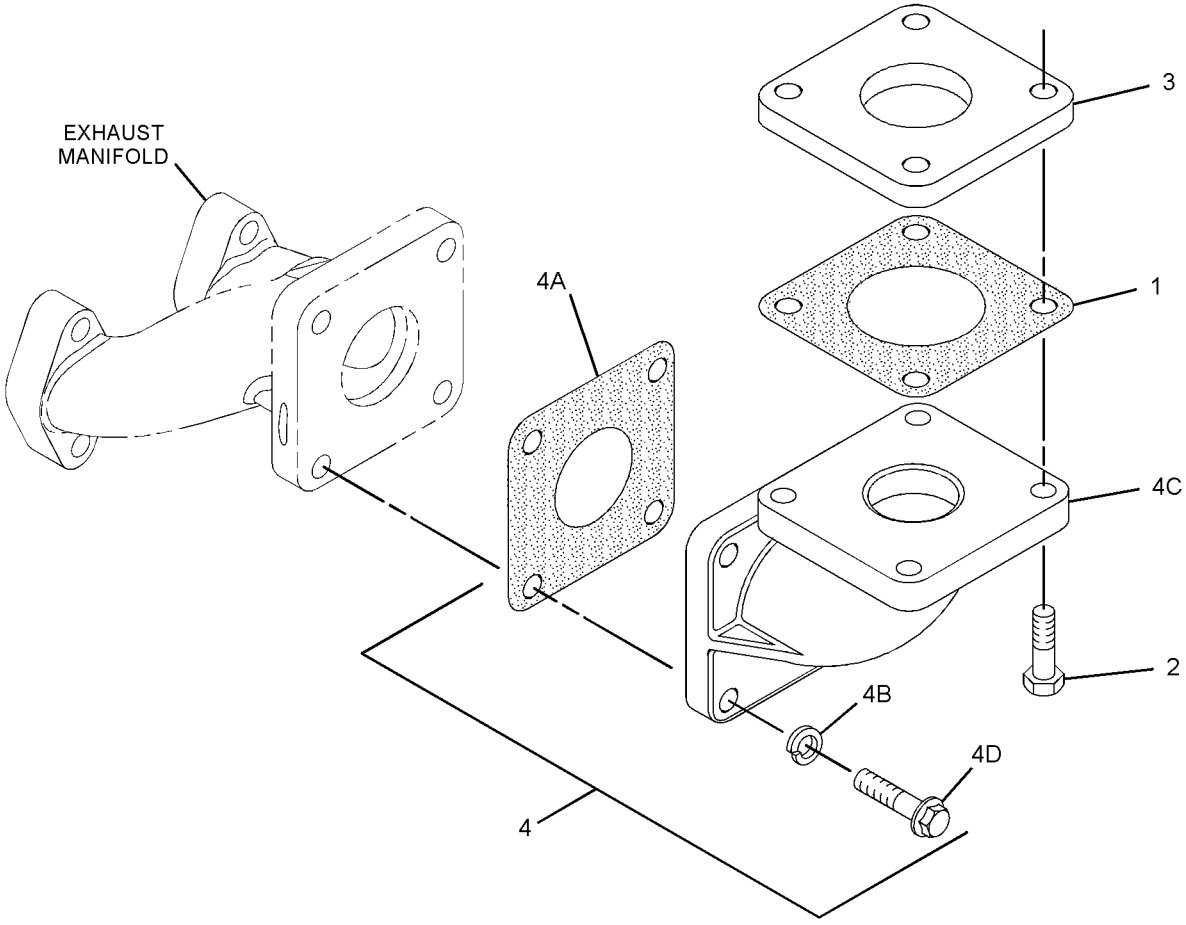

GRAPHIC #1 **<END>** g01358328

AIR INLET AND EXHAUST SYSTEM

244-0514 FILTER ELEMENT AS-AIR

PART OF 318-8804 FILTER GP-AIR

SMCS-1054 **i02845393**

NOTE	REF NO	GRAPHIC REF	PART NUMBER	QTY	PART NAME 1 2 3 4 5 6 (PRODUCT LEVEL)	SEE PAGE
	1	1	**246-5011**	1	FILTER ELEMENT-AIR	
	2	1	**271-5059**	1	INDICATOR (AIR FILTER SERVICE)	
	3	1	**271-5062**	1	VALVE-AIR CLEANER DUST	

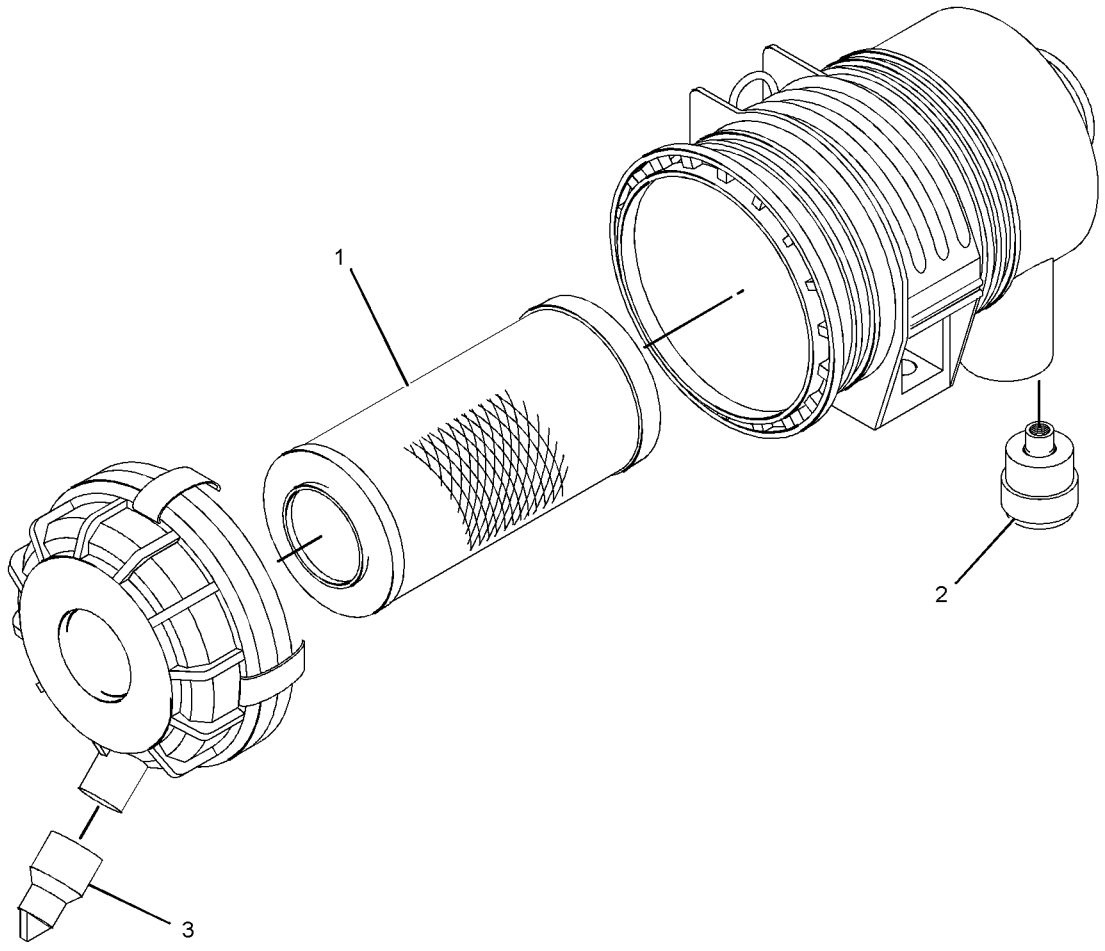

GRAPHIC #1 **<END>** g01196605

AIR INLET AND EXHAUST SYSTEM

318-8804 FILTER GP-AIR

SMCS-1051, 1054 **i03536312**

NOTE	REF NO	GRAPHIC REF	PART NUMBER	QTY	PART NAME 1 2 3 4 5 6 (PRODUCT LEVEL)	SEE PAGE
M	1	1	**6I-0217**	2	BOLT (M8X1.25X20-MM)	
M	2	1	**6I-0254**	2	BOLT (M8X1.25X30-MM)	
	3	1	**103-6714**	2	CLIP	
	4	1	**153-5592**	2	NUT	
	5	1	**244-0508**	1	HOSE	
Y	6	1	**244-0514**	1	FILTER ELEMENT AS-AIR	125
	7	1	**247-1376**	1	BRACKET-FILTER	
	8	1	**292-1992**	1	SPACER	
	9	1	**318-8805**	1	BRACKET	
	10	1	**334-7295**	1	CAP-RAIN	

M-METRIC PART
Y-SEPARATE ILLUSTRATION

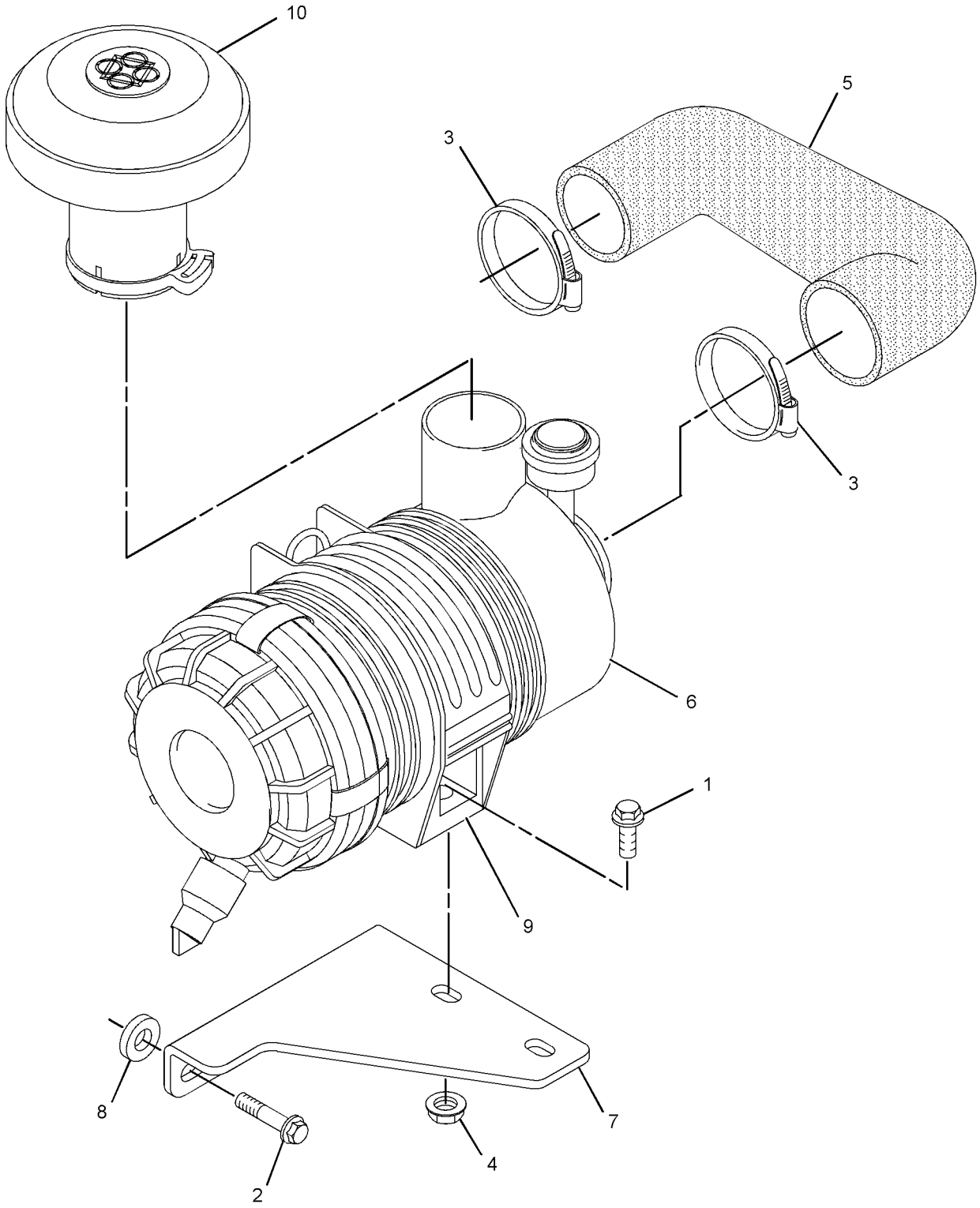

GRAPHIC #1 **<END>** g01948456

AIR INLET AND EXHAUST SYSTEM

313-1991 MANIFOLD GP-EXHAUST

SMCS-1059 **i02773427**

NOTE	REF NO	GRAPHIC REF	PART NUMBER	QTY	PART NAME 1 2 3 4 5 6 (PRODUCT LEVEL)	SEE PAGE
	1	1	**153-5960**	2	NUT	
	2	1	**153-6859**	1	MANIFOLD-EXHAUST	
	3	1	**153-6860**	1	GASKET	
	4	1	**153-6861**	4	BOLT	

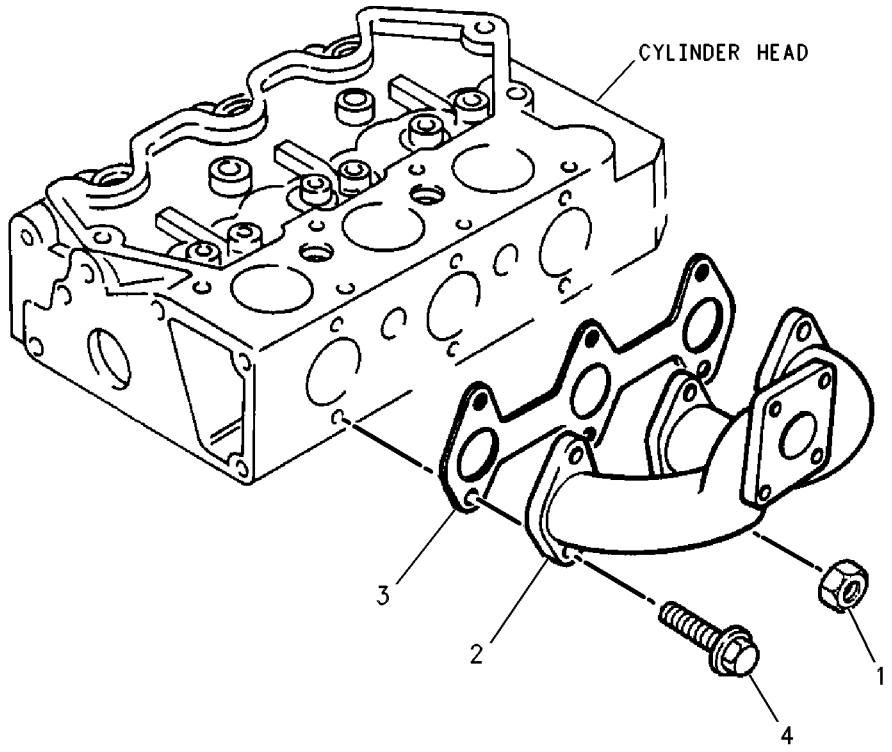

GRAPHIC #1 **<END>** g00461596

AIR INLET AND EXHAUST SYSTEM

325-5596 MANIFOLD GP-EXHAUST

SMCS-1059 **i02959126**

NOTE	REF NO	GRAPHIC REF	PART NUMBER	QTY	PART NAME 1 2 3 4 5 6 (PRODUCT LEVEL)	SEE PAGE
	1	1	**183-4332**	1	MANIFOLD-EXHAUST	
	2	1	**153-6860**	1	GASKET	
	3	1	**153-6861**	4	BOLT	
	4	1	**153-5960**	2	NUT	

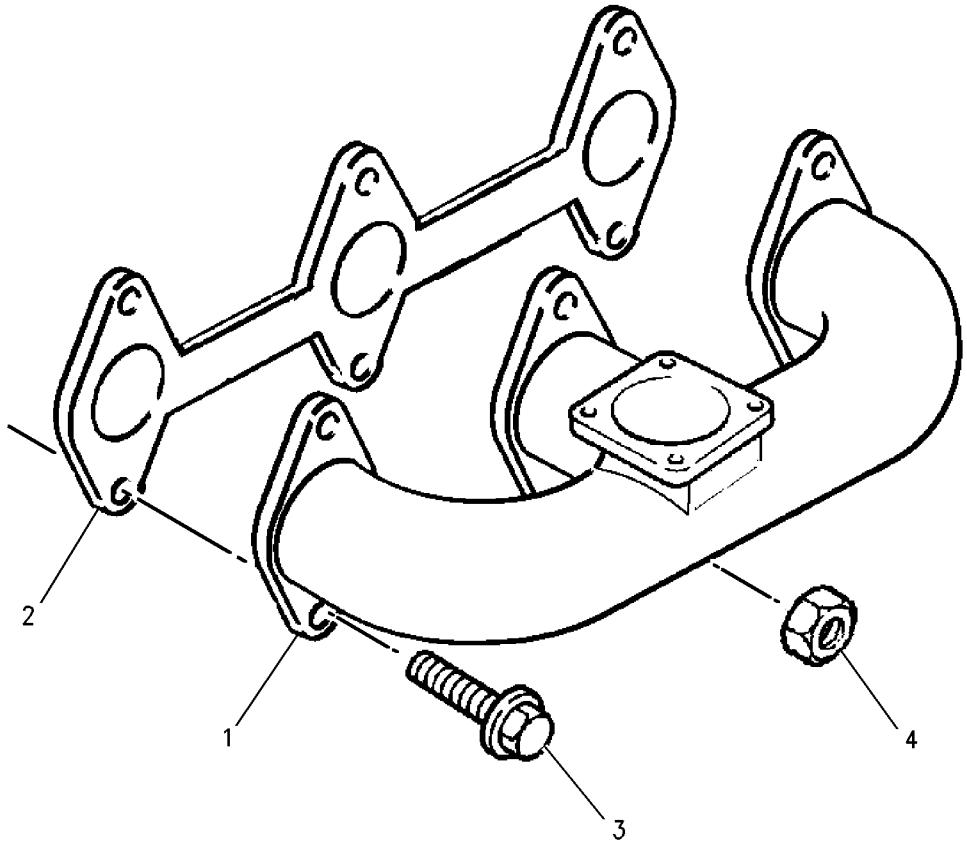

GRAPHIC #1 **<END>** g00688840

AIR INLET AND EXHAUST SYSTEM

329-4424 MANIFOLD GP-EXHAUST

SMCS-1059 **i03758881**

NOTE	REF NO	GRAPHIC REF	PART NUMBER	QTY	PART NAME 1 2 3 4 5 6 (PRODUCT LEVEL)	SEE PAGE
	1	1	**153-7920**	1	GASKET	
	2	1	**168-9001**	1	BOLT	

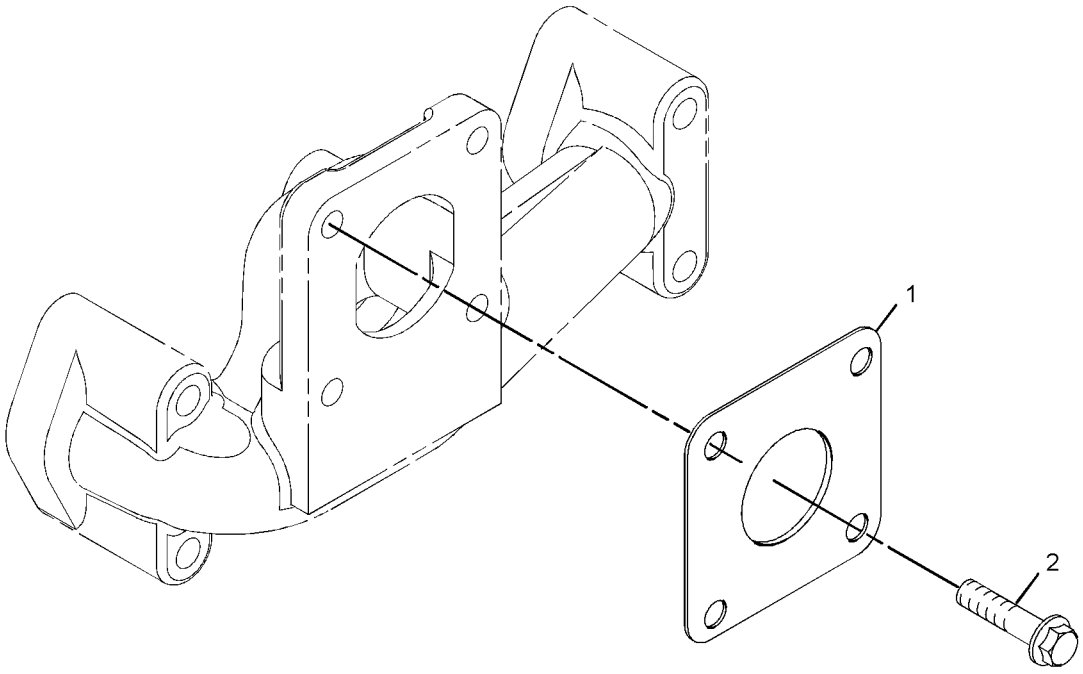

GRAPHIC #1 **<END>** g01959165

FUEL SYSTEM

328-1430 CONTROL GP-GOVERNOR

SMCS-1265, 1276 **i03948360**

NOTE	REF NO	GRAPHIC REF	PART NUMBER	QTY	PART NAME 1 2 3 4 5 6 (PRODUCT LEVEL)	SEE PAGE
M	1	1	**5C-2890**	1	NUT (M6X1-THD)	
	2	1	**139-5511**	1	CAP (TAMPER RESISTANT)	
	3	1	**153-5592**	1	NUT	
	4	1	**153-6415**	2	WASHER	
	5	1	**153-7983**	1	PIN	
	6	1	**154-1403**	1	SEAL-O-RING	
	7	1	**154-2715**	1	WASHER	
M	8	1	**8T-4971**	2	BOLT (M6X1X30-MM)	
	9	1	**162-2207**	1	NUT	
	10	1	**249-7263**	4	BOLT (M6X1X16-MM)	
	11	1	**335-5578**	1	BRACKET	
	12	1	**308-1878**	1	GASKET	
	13	1	**308-1882**	1	SPRING	
	14	1	**308-1889**	1	NUT	
	15	1	**308-1892**	1	NUT	
	16	1	**332-1361**	1	CAP-PROTECTION	
	17	1	**321-4249**	1	NUT	
	18	1	**308-1901**	1	CAP	
	19	1	**308-4266**	1	SHAFT	
	20	1	**309-6728**	1	SHAFT	
	21	1	**309-6732**	1	BOLT	
	22	1	**311-0655**	1	SPRING	
	23	1	**313-2025**	1	SENSOR-SPEED (TIMING, CAMSHAFT) (TIMING, CAMSHAFT)	
	24	1	**313-5832**	1	BOLT AS	
	24A	1	**153-7987**	1	WASHER	
	24B	1	**191-9297**	1	NUT	
	24C	1	**313-5833**	1	SPRING	
	25	1	**334-0732**	1	ARM	
	26	1	**322-7492**	1	LEVER-CONTROL	
	27	1	**324-3398**	1	LEVER-CONTROL	
	28	1	**327-5129**	1	SPRING	
	29	1	**308-1897**	1	RING	
	30	1	**336-2965**	1	TOOL	
	31	1	**330-9189**	1	PLUG	

M-METRIC PART

328-1430 **CONTROL GP-GOVERNOR** *(contd.)* **i03948360**

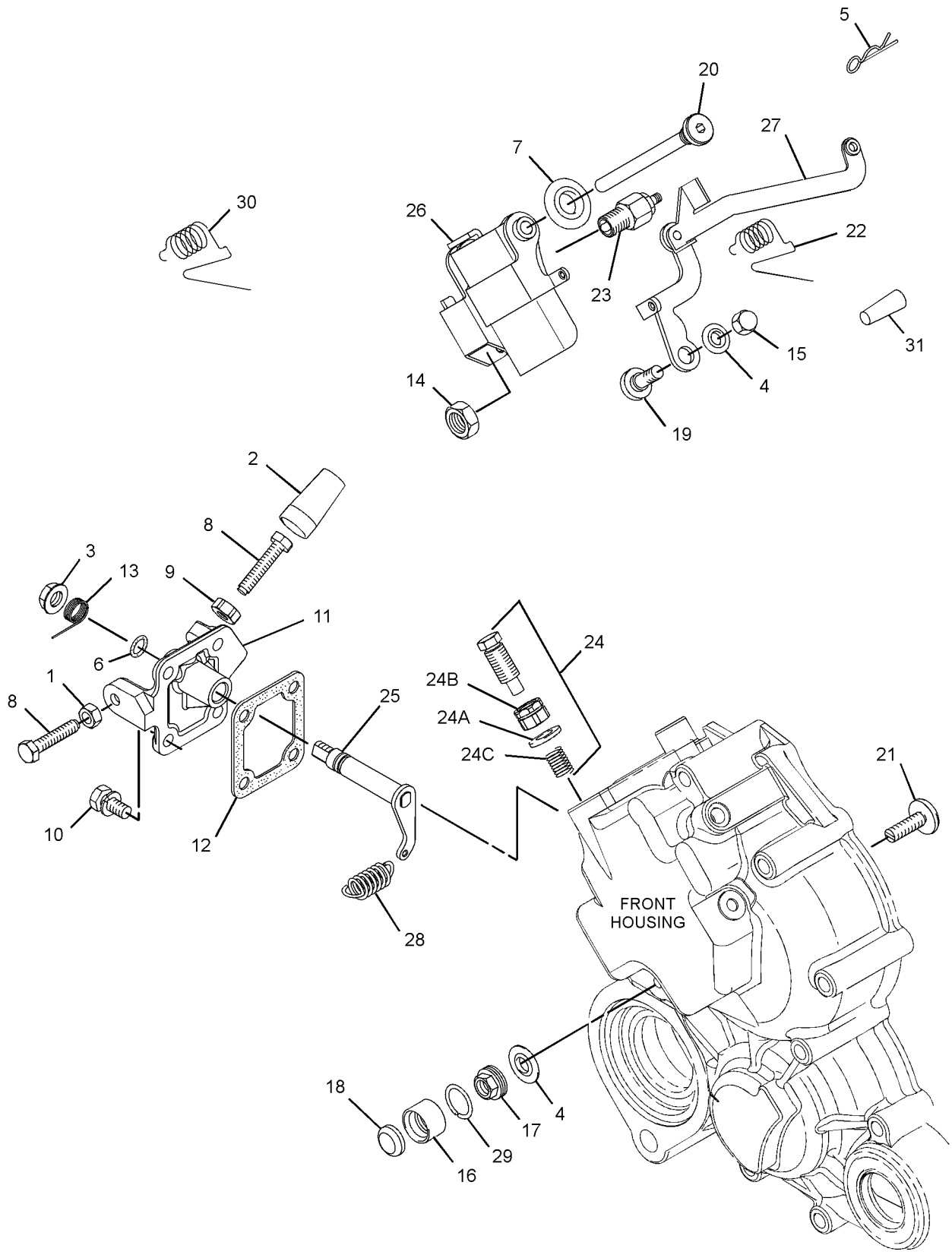

GRAPHIC #1 **<END>** g01708513

329-9764 CONTROL GP-GOVERNOR

SMCS-1265, 1276 **i03983143**

NOTE	REF NO	GRAPHIC REF	PART NUMBER	QTY	PART NAME 1 2 3 4 5 6 (PRODUCT LEVEL)	SEE PAGE
M	1	1	**5C-2890**	1	NUT (M6X1-THD)	
	2	1	**139-5511**	1	CAP (TAMPER RESISTANT)	
	3	1	**153-5592**	1	NUT	
	4	1	**153-6415**	2	WASHER	
	5	1	**153-7983**	1	PIN	
	6	1	**154-1403**	1	SEAL-O-RING	
	7	1	**154-2715**	1	WASHER	
M	8	1	**8T-4971**	2	BOLT (M6X1X30-MM)	
	9	1	**162-2207**	1	NUT	
	10	1	**249-7263**	4	BOLT (M6X1X16-MM)	
	11	1	**308-1878**	1	GASKET	
	12	1	**308-1882**	1	SPRING	
	13	1	**308-1889**	1	NUT	
	14	1	**308-1892**	1	NUT	
	15	1	**308-1897**	1	RING	
	16	1	**308-1901**	1	CAP	
	17	1	**308-4266**	1	SHAFT	
	18	1	**309-6728**	1	SHAFT	
	19	1	**309-6732**	1	BOLT	
	20	1	**311-0655**	1	SPRING	
	21	1	**311-9622**	1	SPRING	
	22	1	**313-2025**	1	SENSOR-SPEED (TIMING, CAMSHAFT)	
	23	1	**313-5832**	1	BOLT AS	
	23A	1	**153-7987**	1	WASHER	
	23B	1	**191-9297**	1	NUT	
	23C	1	**313-5833**	1	SPRING	
	24	1	**321-4249**	1	NUT	
	25	1	**322-7492**	1	LEVER-CONTROL	
	26	1	**324-3398**	1	LEVER-CONTROL	
	27	1	**330-9189**	1	PLUG	
	28	1	**332-1361**	1	CAP-PROTECTION	
	29	1	**334-0732**	1	ARM (FRONT HOUSING)	
	30	1	**335-5578**	1	BRACKET	
	31	1	**336-2965**	1	TOOL	

M-METRIC PART

329-9764 **CONTROL GP-GOVERNOR** *(contd.)* **i03983143**

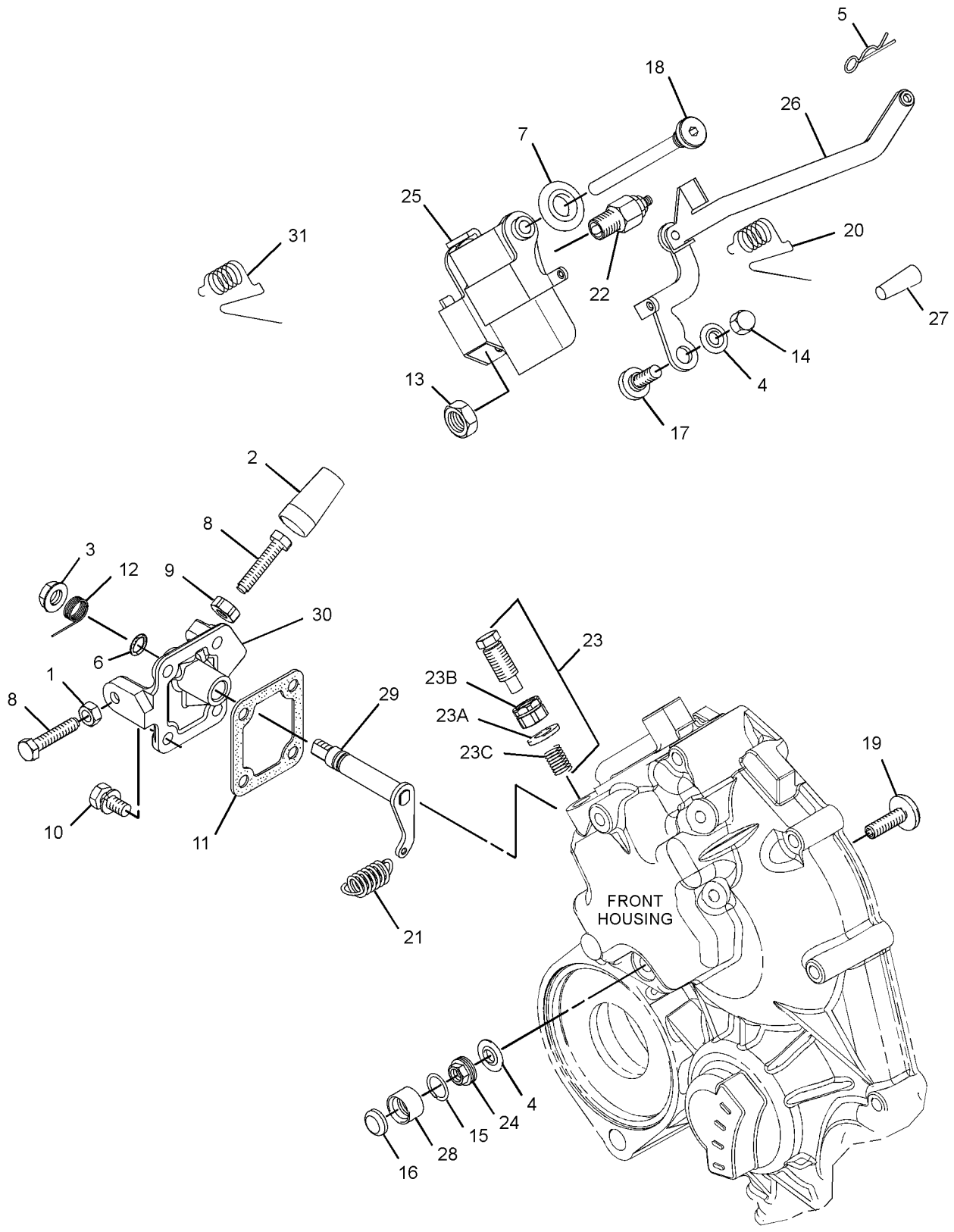

GRAPHIC #1 **<END>** g01757173

FUEL SYSTEM

308-5704 FILTER GP-FUEL

SMCS-1261 **i02979431**

NOTE	REF NO	GRAPHIC REF	PART NUMBER	QTY	PART NAME 1 2 3 4 5 6 (PRODUCT LEVEL)	SEE PAGE
	1	1	**276-1804**	1	FILTER GP-FUEL	
	1A	1	**276-1806**	1	FILTER ELEMENT-FUEL (FILTER)	
	1B	1	**302-7776**	1	BOWL-FUEL FILTER	
	1C	1	**302-7777**	3	PLUG-DRAIN (FUEL FILTER)	
	1D	1	**302-7778**	1	SEAL	

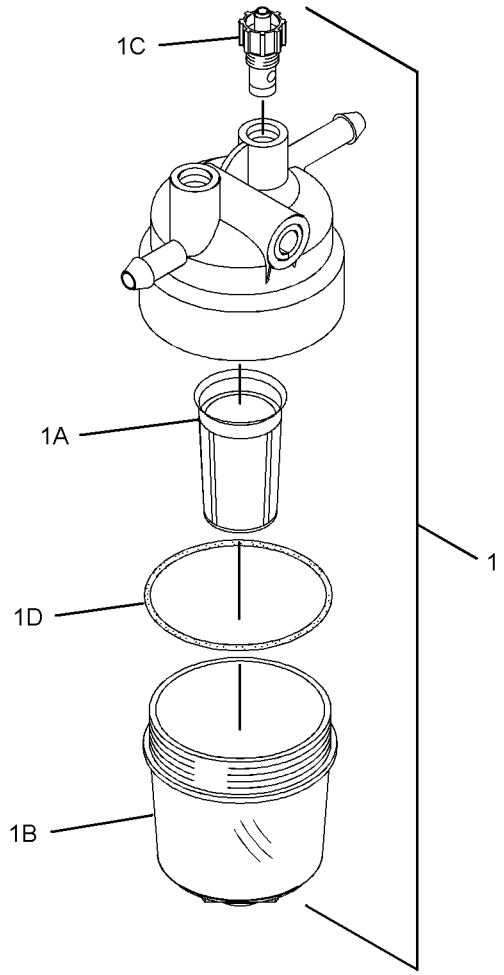

GRAPHIC #1 **<END>** g01363080

FUEL SYSTEM

313-6214 GOVERNOR GP

SMCS-1264, 1908 **i03948172**

NOTE	REF NO	GRAPHIC REF	PART NUMBER	QTY	PART NAME 1 2 3 4 5 6 (PRODUCT LEVEL)	SEE PAGE
M	1	1	**5C-2890**	1	NUT (M6X1-THD)	
	2	1	**139-5511**	1	CAP (TAMPER RESISTANT)	
	3	1	**153-5592**	1	NUT	
	4	1	**153-6415**	1	WASHER	
	5	1	**153-7983**	1	PIN	
	6	1	**154-1403**	1	SEAL-O-RING	
	7	1	**158-7936**	2	BOLT	
	8	1	**162-2207**	1	NUT	
	9	1	**249-7263**	4	BOLT (M6X1X16-MM)	
	10	1	**335-5578**	1	BRACKET	
	11	1	**308-1878**	1	GASKET	
	12	1	**334-0732**	1	ARM (FRONT HOUSING)	
	13	1	**308-1882**	1	SPRING	
	14	1	**308-1889**	1	NUT	
	15	1	**308-1892**	1	NUT	
	16	1	**311-0655**	1	SPRING	
	17	1	**308-4266**	1	SHAFT	
	18	1	**309-6728**	1	SHAFT	
	19	1	**309-6729**	1	SEAL-O-RING	
	20	1	**311-9622**	1	SPRING	
	21	1	**313-2025**	1	SENSOR-SPEED (TIMING, CAMSHAFT) (TIMING, CAMSHAFT)	
	22	1	**324-3396**	1	LEVER-CONTROL	
	23	1	**322-7492**	1	LEVER-CONTROL	
	24	1	**336-2965**	1	TOOL	
	25	1	**330-9189**	1	PLUG	

M-METRIC PART

313-6214 **GOVERNOR GP** *(contd.)* **i03948172**

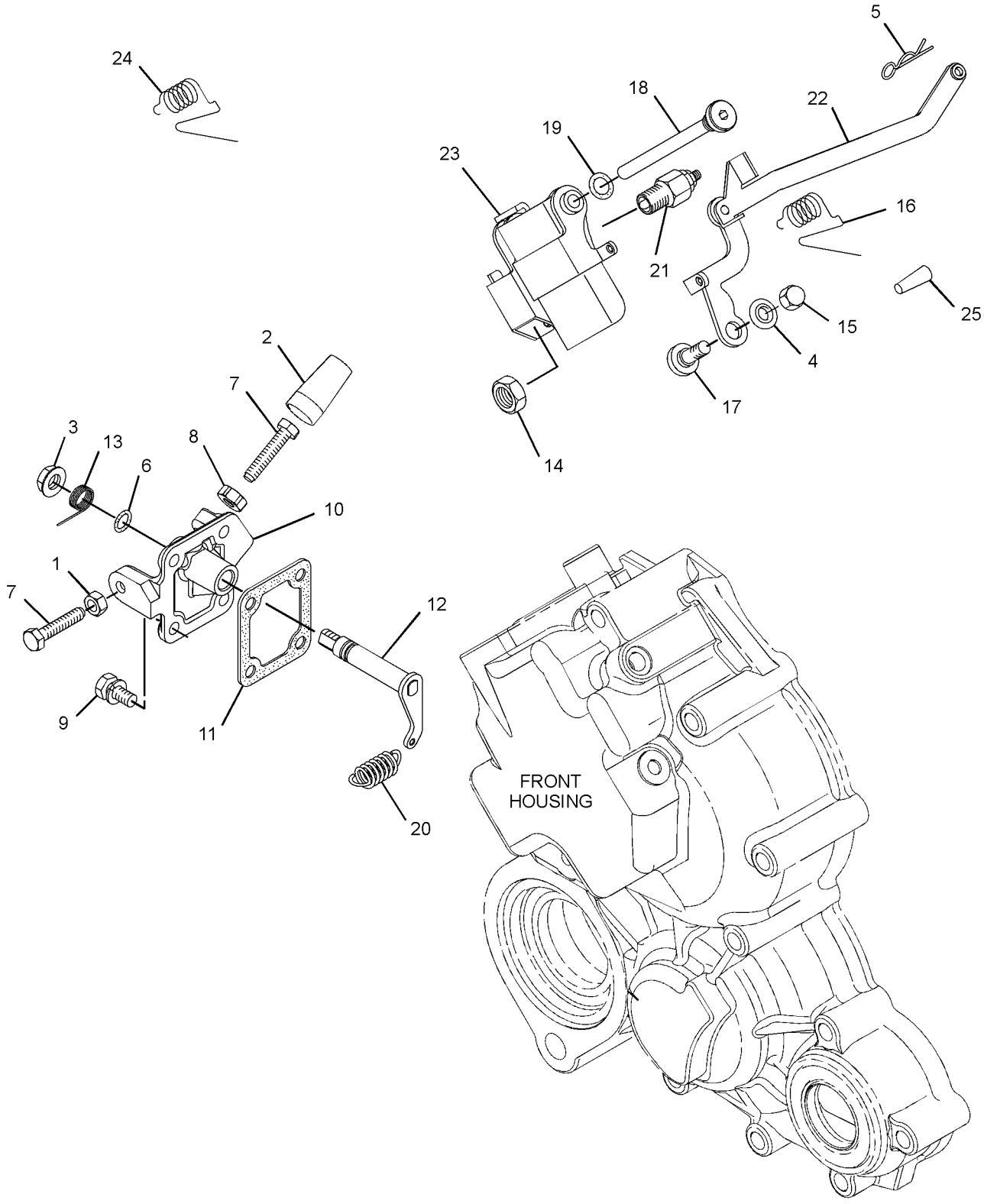

GRAPHIC #1 **<END>** g01694074

FUEL SYSTEM

321-3142 GOVERNOR GP

SMCS-1264, 1908 **i03938592**

NOTE	REF NO	GRAPHIC REF	PART NUMBER	QTY	PART NAME 1 2 3 4 5 6 (PRODUCT LEVEL)	SEE PAGE
M	1	1	**5C-2890**	1	NUT (M6X1-THD)	
	2	1	**139-5511**	1	CAP (TAMPER RESISTANT)	
	3	1	**153-5592**	1	NUT	
	4	1	**153-6415**	2	WASHER	
	5	1	**153-7983**	1	PIN	
	6	1	**154-1403**	1	SEAL-O-RING	
M	7	1	**8T-4971**	1	BOLT (M6X1X30-MM)	
	8	1	**162-2207**	1	NUT	
	9	1	**249-7263**	4	BOLT (M6X1X16-MM)	
	10	1	**217-7115**	1	CAP (TAMPER RESISTANT)	
	11	1	**335-5578**	1	BRACKET	
	12	1	**308-1878**	1	GASKET	
	13	1	**334-0732**	1	ARM (FRONT HOUSING)	
	14	1	**308-1882**	1	SPRING	
	15	1	**308-1889**	1	NUT	
	16	1	**308-1892**	1	NUT	
	17	1	**308-1897**	2	RING	
	18	1	**332-1361**	1	CAP-PROTECTION	
	19	1	**321-4249**	1	NUT	
	20	1	**308-1901**	1	CAP	
	21	1	**308-4266**	1	SHAFT	
	22	1	**309-6728**	1	SHAFT	
	23	1	**154-2715**	1	WASHER	
	24	1	**309-6732**	1	BOLT	
	25	1	**311-0655**	1	SPRING	
	26	1	**313-2025**	1	SENSOR-SPEED (TIMING, CAMSHAFT) (TIMING, CAMSHAFT)	
	27	1	**324-3396**	1	LEVER-CONTROL	
	28	1	**313-5832**	1	BOLT AS	
	28A	1	**153-7987**	1	WASHER	
	28B	1	**191-9297**	1	NUT	
	28C	1	**313-5833**	1	SPRING	
	29	1	**322-7492**	1	LEVER-CONTROL	
	30	1	**321-3145**	1	SPRING	
	31	1	**154-1407**	1	BOLT	
	32	1	**336-2965**	1	TOOL	
	33	1	**330-9189**	1	PLUG	

M-METRIC PART

321-3142 **GOVERNOR GP** *(contd.)* **i03938592**

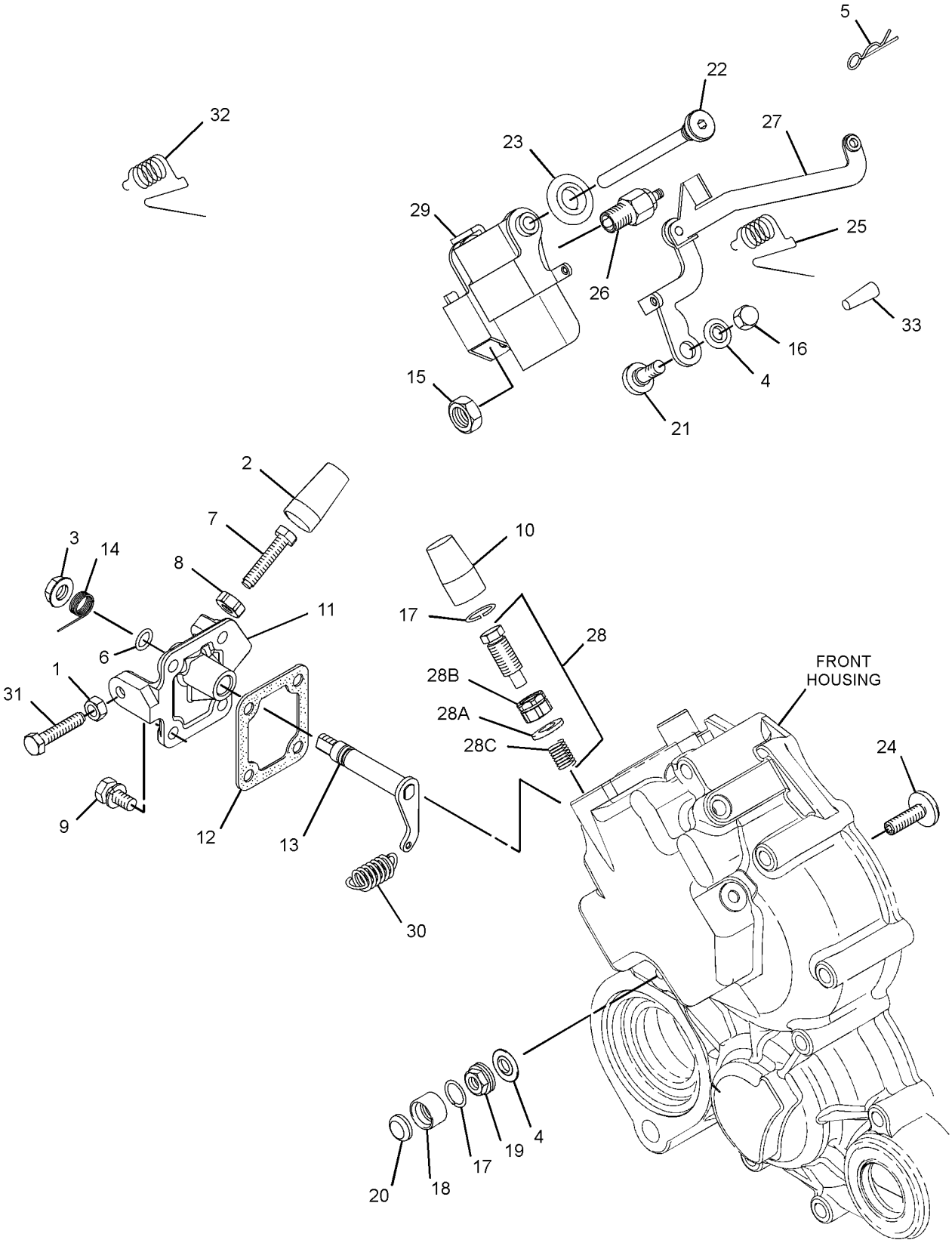

GRAPHIC #1 **<END>** g01705677

FUEL SYSTEM

323-2408 GOVERNOR GP

SMCS-1264, 1908 **i03942710**

NOTE	REF NO	GRAPHIC REF	PART NUMBER	QTY	PART NAME 1 2 3 4 5 6 (PRODUCT LEVEL)	SEE PAGE
M	1	1	**5C-2890**	1	NUT (M6X1-THD)	
	2	1	**139-5511**	1	CAP (TAMPER RESISTANT)	
	3	1	**153-5592**	1	NUT	
	4	1	**153-6415**	2	WASHER	
	5	1	**153-7983**	1	PIN	
	6	1	**154-1403**	1	SEAL-O-RING	
M	7	1	**8T-4971**	2	BOLT (M6X1X30-MM)	
	8	1	**162-2207**	1	NUT	
	9	1	**249-7263**	4	BOLT (M6X1X16-MM)	
	10	1	**217-7115**	1	CAP (TAMPER RESISTANT)	
	11	1	**335-5578**	1	BRACKET	
	12	1	**308-1878**	1	GASKET	
	13	1	**334-0732**	1	ARM (FRONT HOUSING)	
	14	1	**308-1882**	1	SPRING	
	15	1	**308-1889**	1	NUT	
	16	1	**308-1892**	1	NUT	
	17	1	**308-1897**	2	RING	
	18	1	**332-1361**	1	CAP-PROTECTION	
	19	1	**321-4249**	1	NUT	
	20	1	**308-1901**	1	CAP	
	21	1	**308-4266**	1	SHAFT	
	22	1	**309-6728**	1	SHAFT	
	23	1	**309-6729**	1	SEAL-O-RING	
	24	1	**309-6732**	1	BOLT	
	25	1	**311-0655**	1	SPRING	
	26	1	**313-2025**	1	SENSOR-SPEED (TIMING, CAMSHAFT) (TIMING, CAMSHAFT)	
	27	1	**324-3396**	1	LEVER-CONTROL	
	28	1	**313-5832**	1	BOLT AS	
	28A	1	**153-7987**	1	WASHER	
	28B	1	**191-9297**	1	NUT	
	28C	1	**313-5833**	1	SPRING	
	29	1	**322-7492**	1	LEVER-CONTROL	
	30	1	**321-3145**	1	SPRING	
	31	1	**336-2965**	1	TOOL	
	32	1	**330-9189**	1	PLUG	

M-METRIC PART

323-2408 **GOVERNOR GP** *(contd.)* **i03942710**

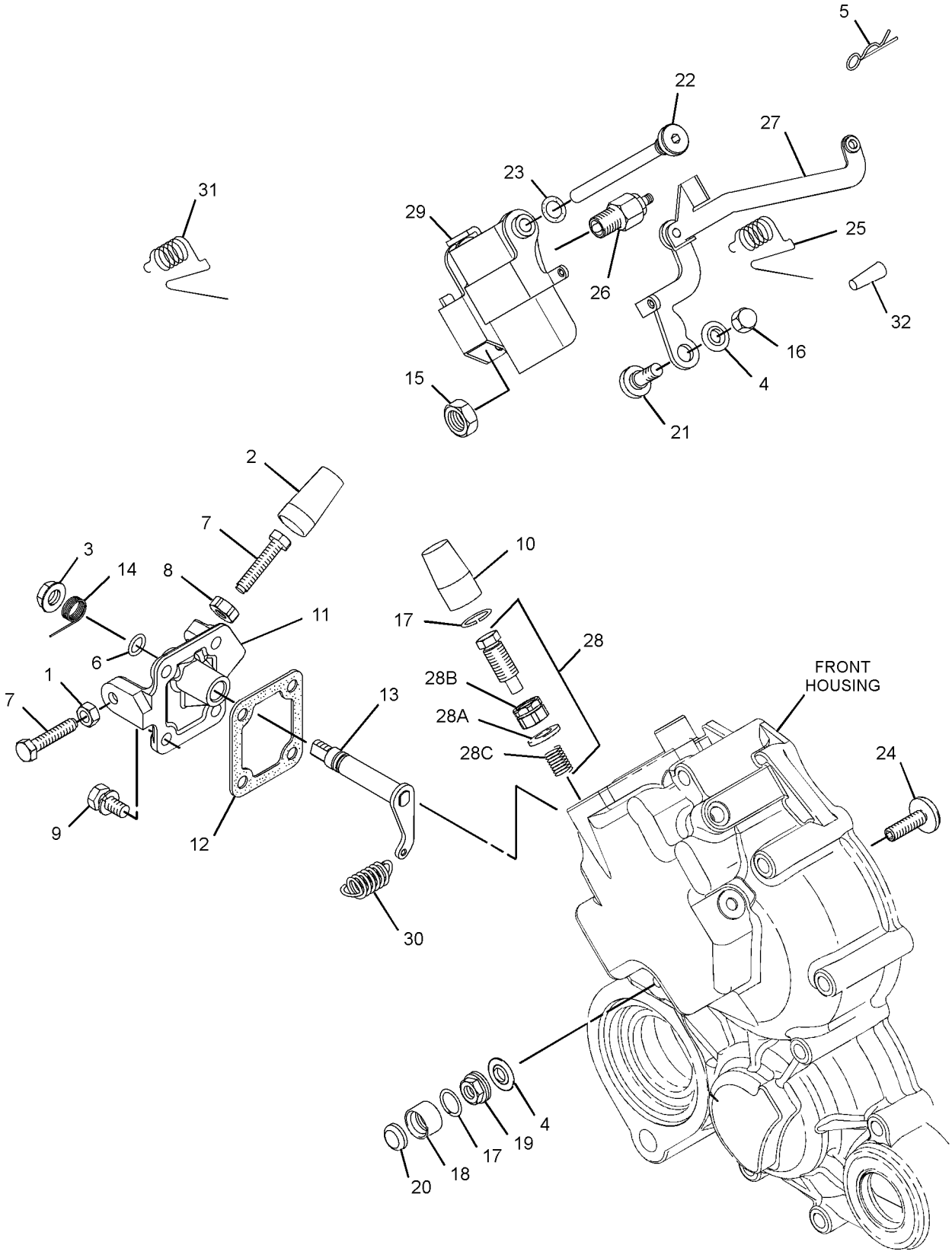

GRAPHIC #1 **<END>** g01693300

FUEL SYSTEM

334-0280 PUMP GP-FILTER & FUEL TRANSFER

SMCS-1256, 1261 **i03983170**

NOTE	REF NO	GRAPHIC REF	PART NUMBER	QTY	PART NAME 1 2 3 4 5 6 (PRODUCT LEVEL)	SEE PAGE
	1	1	**7W-4694**	1	PLUG	
	2	1	**033-7849**	2	PLUG	
	3	1	**033-7854**	1	FILTER AS-FUEL	
	3A	1	**067-6987**	1	KIT-ELEMENT (FUEL FILTER)	
	3B	1	**6F-4855**	2	SEAL-O-RING	
	3C	1	**069-2922**	2	GASKET (FUEL FILTER)	
	4	1	**067-6269**	2	FERRULE	
	5	1	**067-6317**	1	WASHER (0.4X0.566X0.04-IN THK)	
	6	2	**183-4036**	1	CONNECTOR	
	7	1	**138-7162**	2	BOLT (M10X1.5X30-MM)	
	8	2	**153-5592**	1	NUT	
	9	2	**153-6838**	2	BOLT	
	10	1	**154-1399**	2	WASHER	
	11	1	**154-2403**	2	WASHER	
	12	1,2	**155-7984**	3	WASHER	
	13	1	**155-8085**	2	NUT	
	14	1	**160-3550**	2	CLAMP-HOSE	
	15	1,2	**165-2141**	3	BOLT	
	16	2	**183-4320**	1	PUMP AS-FUEL TRANSFER	
	17	2	**183-4321**	1	BRACKET	
	18	2	**183-4323**	1	COVER	
	19	2	**225-8534**	1	GASKET	
	20	1	**311-9048**	1	WASHER	
	21	1	**226-2264**	1	BRACKET	
	22	2	**243-6411**	1	FILTER AS-FUEL	
	23	1	**269-2569**	1	TUBE	
	24	1	**302-4187**	2	TUBE	

334-0280 **PUMP GP-FILTER & FUEL TRANSFER** *(contd.)* **i03983170**

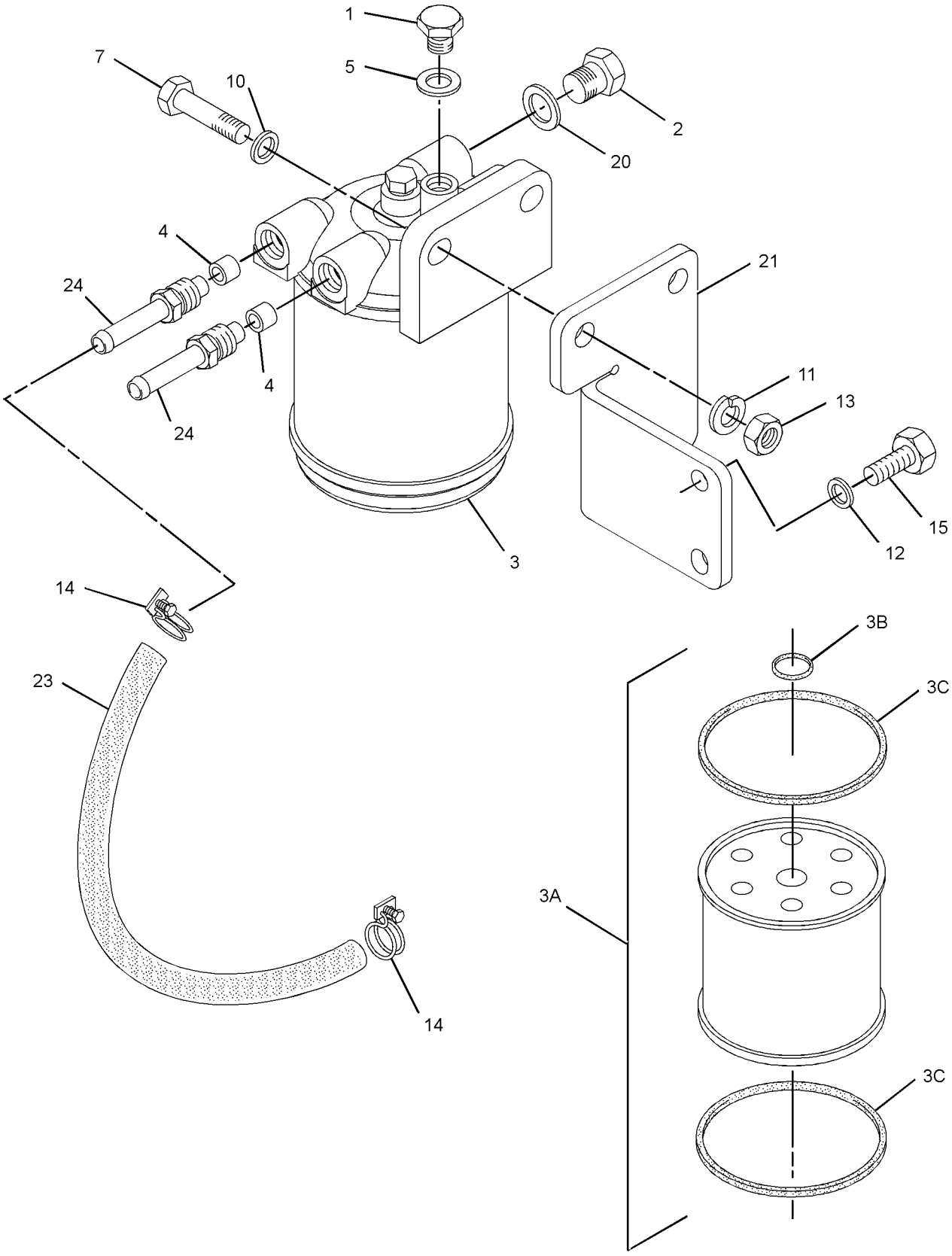

GRAPHIC #1

g02154292

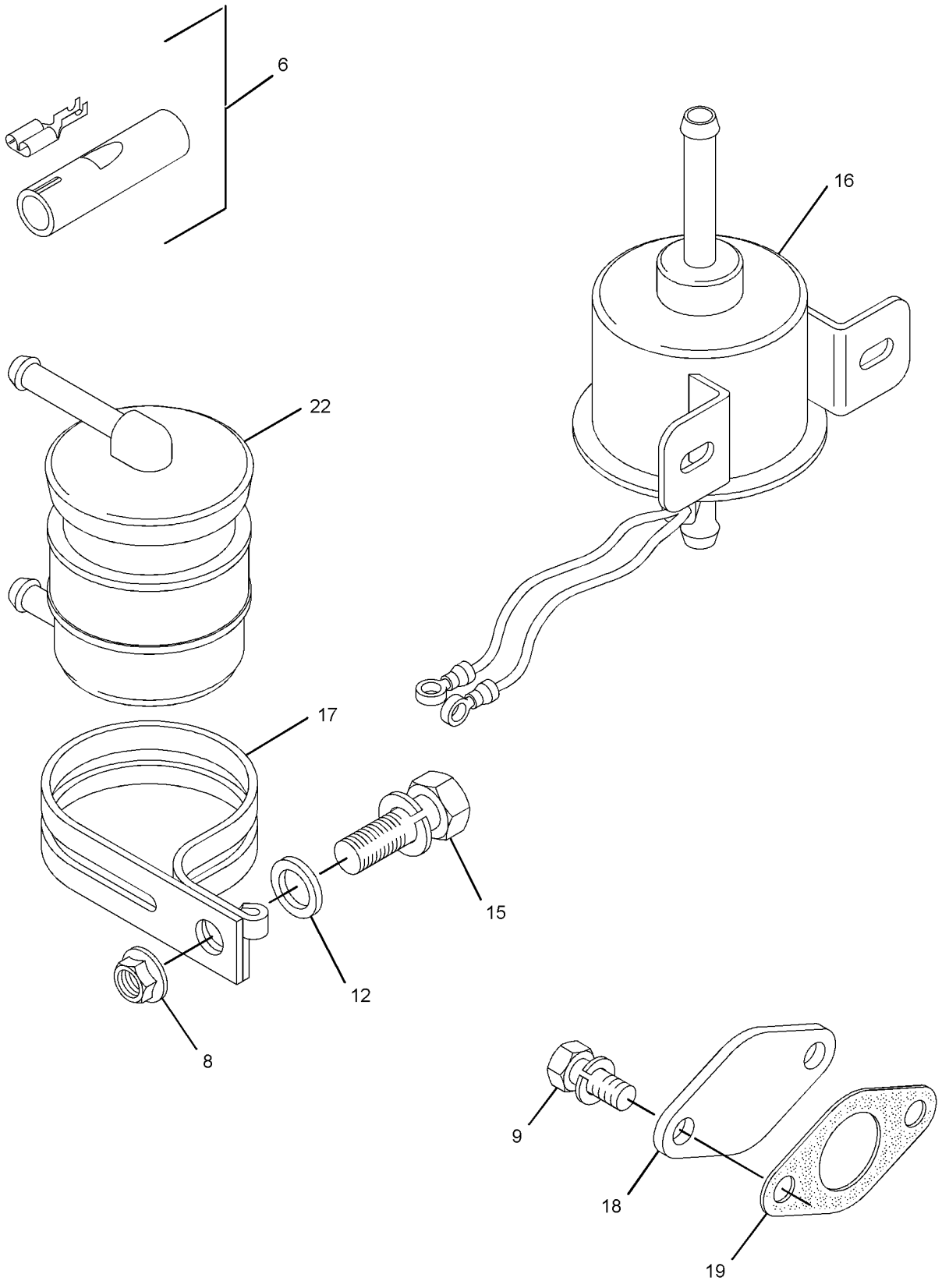

GRAPHIC #2 **<END>** g02154294

313-1968 PUMP GP-FUEL INJECTION

SMCS-1251, 1290 **i02784625**

NOTE	REF NO	GRAPHIC REF	PART NUMBER	QTY	PART NAME 1 2 3 4 5 6 (PRODUCT LEVEL)	SEE PAGE
	1	1,2	**153-5960**	4	NUT	
	2	2	**153-6415**	1	WASHER	
	3	1	**153-7640**	2	BOLT	
	4	2	**154-2716**	3	SEAL	
B	5	1	**153-6385**	1	SHIM (0.2-MM THK)	
B		1	**161-1432**	1	SHIM (0.3-MM THK)	
B		1	**161-1433**	1	SHIM (0.4-MM THK)	
B		1	**161-1434**	1	SHIM (0.5-MM THK)	
B		1	**161-1435**	1	SHIM (0.9-MM THK)	
B		1	**312-1583**	1	SHIM (0.25-MM OS)	
B		1	**312-1582**	1	SHIM (0.35-MM OS)	
	6	2	**183-3353**	2	BOLT	
	7	2	**231-7702**	1	TUBE AS (CYL NO. 1)	
	8	2	**231-7703**	1	TUBE AS (CYL NO. 2)	
	9	2	**231-7704**	1	TUBE AS (CYL NO. 3)	
	10	2	**231-7739**	1	LINE AS	
	11	2	**232-0218**	2	CLAMP	
	12	2	**232-0290**	1	CONNECTOR	
	13	2	**252-9229**	3	INJECTOR AS-FUEL	
					(EACH INCLUDES)	
	13A	2	**232-0793**	1	WASHER-SPECIAL	
	14	2	**290-8014**	4	CLAMP	
	15	1	**313-2039**	1	PUMP AS-FUEL INJECTION	
	16	2	**313-2040**	1	HOSE	

B-USE AS REQUIRED

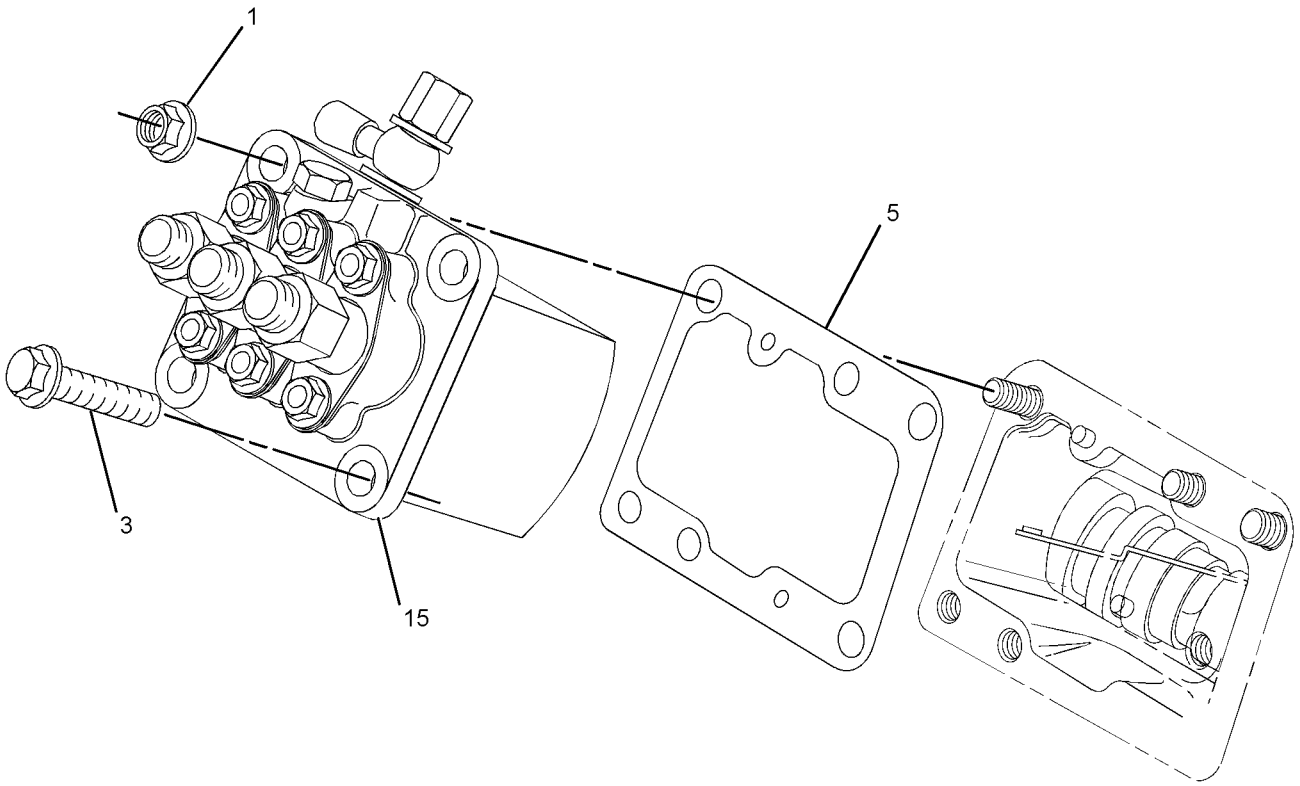

GRAPHIC #1 g01387217

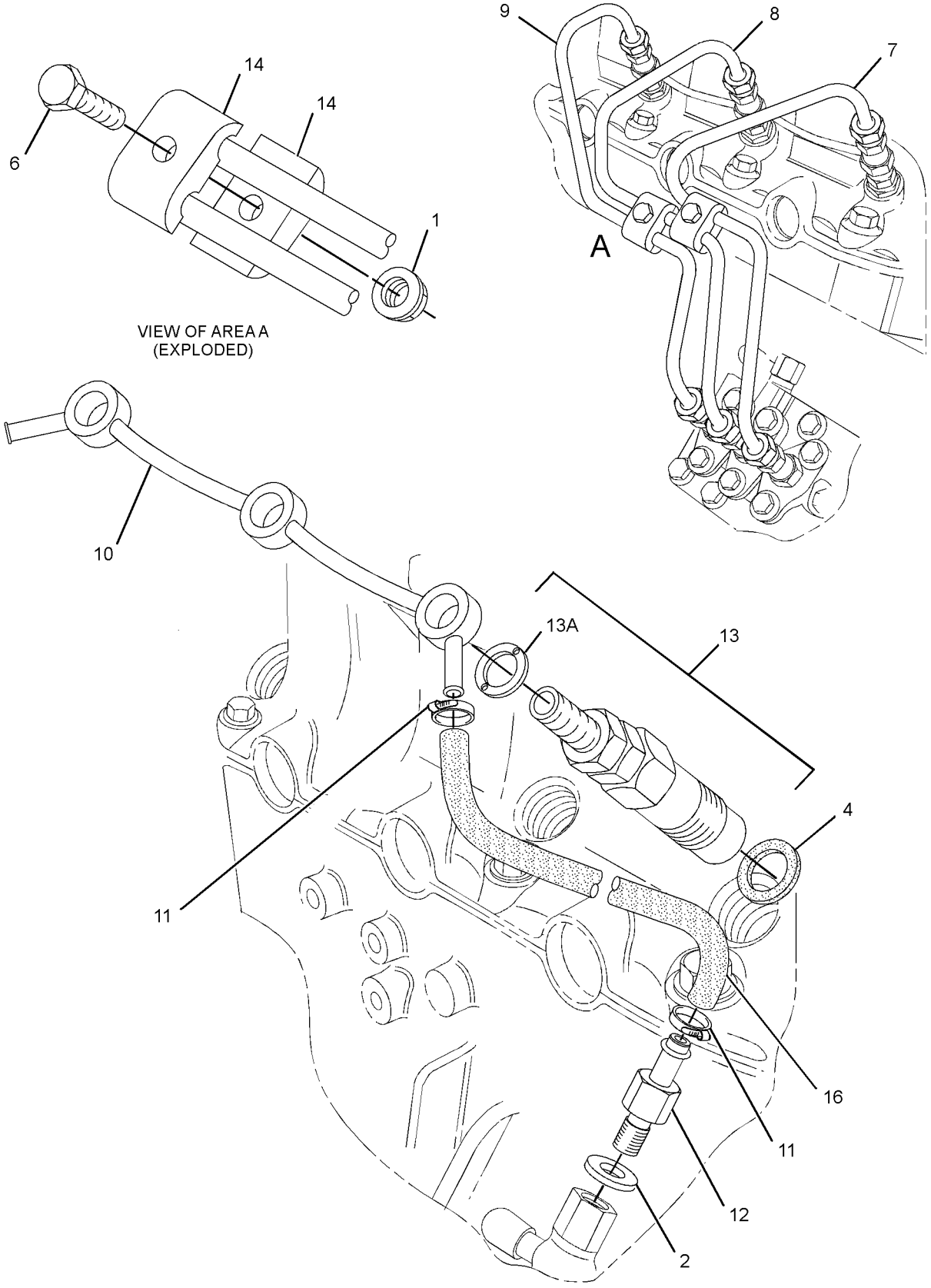

GRAPHIC #2 **<END>** g01387219

313-6216 PUMP GP-FUEL INJECTION

SMCS-1251, 1290 **i02784628**

NOTE	REF NO	GRAPHIC REF	PART NUMBER	QTY	PART NAME 1 2 3 4 5 6 (PRODUCT LEVEL)	SEE PAGE
	1	1,2	**153-5960**	4	NUT	
	2	2	**153-6415**	1	WASHER	
	3	1	**153-7640**	2	BOLT	
	4	2	**154-2716**	3	SEAL	
B	5	1	**153-6385**	1	SHIM (0.2-MM THK)	
B		1	**161-1432**	1	SHIM (0.3-MM THK)	
B		1	**161-1433**	1	SHIM (0.4-MM THK)	
B		1	**161-1434**	1	SHIM (0.5-MM THK)	
B		1	**161-1435**	1	SHIM (0.9-MM THK)	
B		1	**312-1583**	1	SHIM (0.25-MM OS)	
B		1	**312-1582**	1	SHIM (0.35-MM OS)	
	6	2	**183-3353**	2	BOLT	
	7	2	**231-7702**	1	TUBE AS (CYL NO. 1)	
	8	2	**231-7703**	1	TUBE AS (CYL NO. 2)	
	9	2	**231-7704**	1	TUBE AS (CYL NO. 3)	
	10	2	**231-7739**	1	LINE AS	
	11	2	**232-0218**	2	CLAMP	
	12	2	**232-0290**	1	CONNECTOR	
	13	2	**252-9229**	3	INJECTOR AS-FUEL	
					(EACH INCLUDES)	
	13A	2	**232-0793**	1	WASHER-SPECIAL	
	14	2	**290-8014**	4	CLAMP	
	15	1	**313-2039**	1	PUMP AS-FUEL INJECTION	
	16	2	**313-2040**	1	HOSE	

B-USE AS REQUIRED

313-6216 **PUMP GP-FUEL INJECTION** *(contd.)* **i02784628**

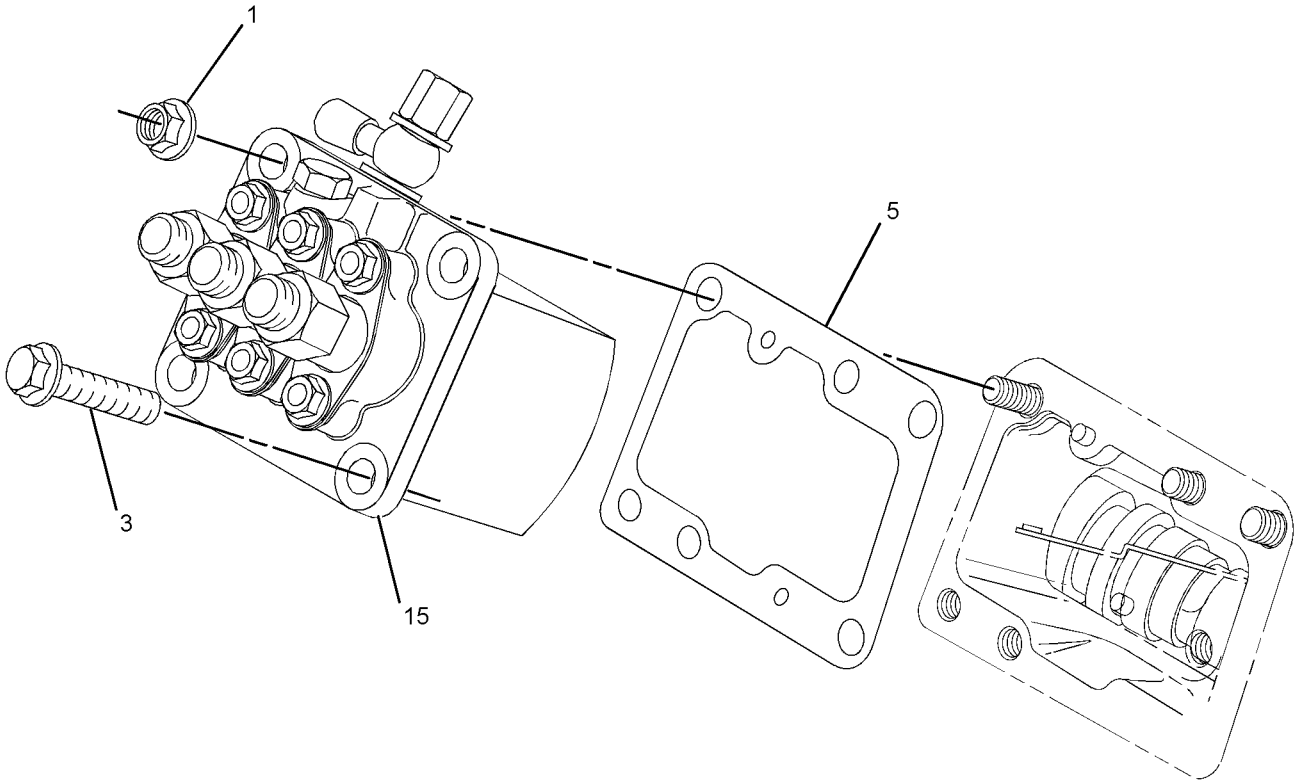

GRAPHIC #1 g01387217

313-6216 **PUMP GP-FUEL INJECTION** *(contd.)* **i02784628**

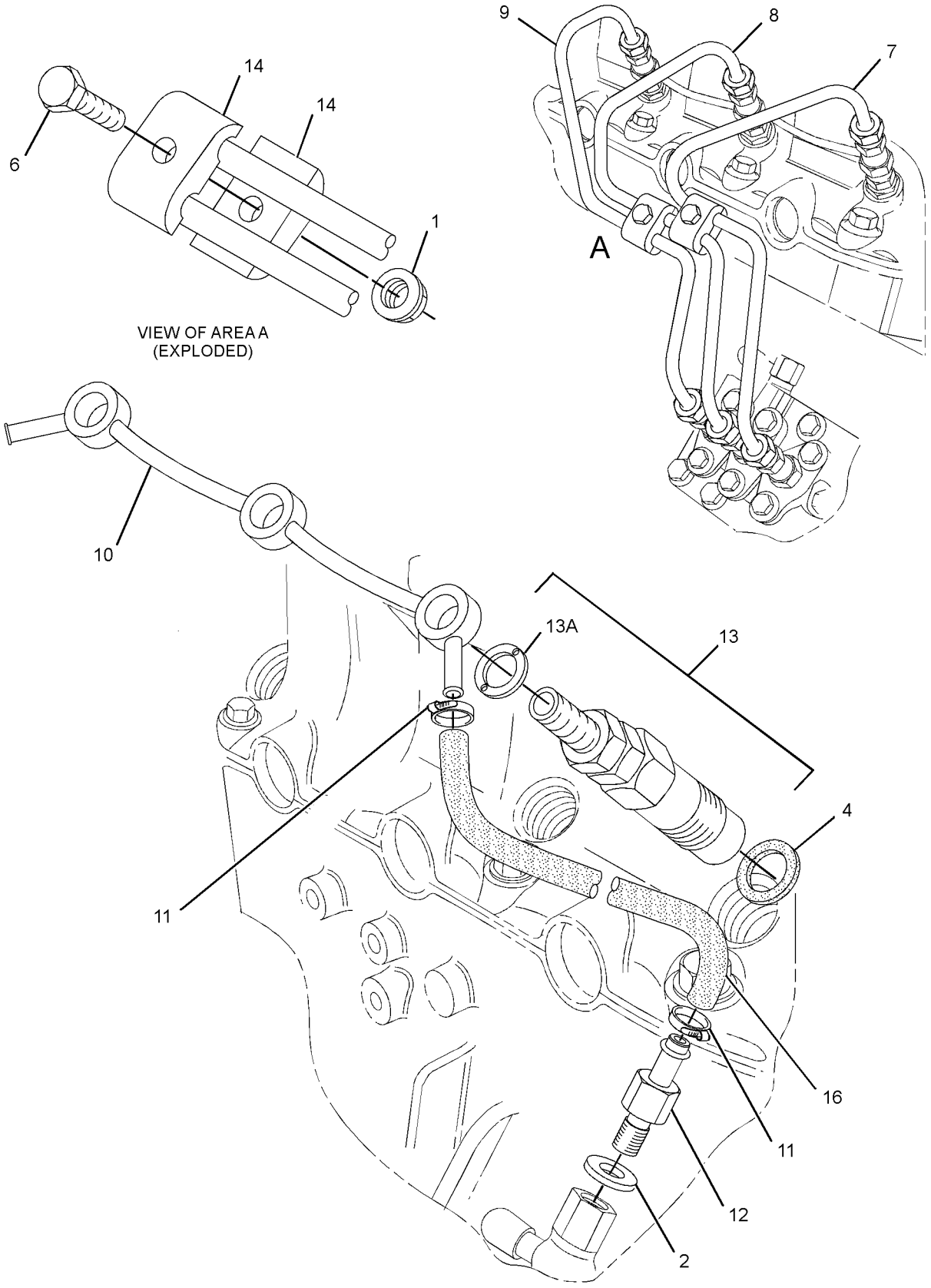

GRAPHIC #2 **<END>** g01387219

321-3334 PUMP GP-FUEL INJECTION

SMCS-1251, 1290 **i02934019**

NOTE	REF NO	GRAPHIC REF	PART NUMBER	QTY	PART NAME 1 2 3 4 5 6 (PRODUCT LEVEL)	SEE PAGE
	1	1	**153-6415**	1	WASHER	
	2	1	**153-7640**	2	BOLT	
	3	1	**154-2716**	3	SEAL	
	4	1	**183-3353**	2	BOLT	
	5	1	**231-7702**	1	TUBE AS (CYL NO. 1)	
	6	1	**231-7703**	1	TUBE AS (CYL NO. 2)	
	7	1	**231-7704**	1	TUBE AS (CYL NO. 3)	
	8	1	**231-7739**	1	LINE AS	
	9	1	**232-0218**	2	CLAMP	
	10	1	**232-0290**	1	CONNECTOR	
	11	1	**252-9229**	3	INJECTOR AS-FUEL	
	11A	1	**232-0793**	1	WASHER-SPECIAL	
	12	1	**290-8014**	4	CLAMP	
	13	1	**293-3230**	1	PUMP GP-FUEL INJECTION	
	14	1	**313-2040**	1	HOSE	
	15	1	**153-6385**	1	SHIM (0.2-MM THK)	
AB		1	**161-1432**	1	SHIM (0.3-MM THK)	
AB		1	**161-1433**	1	SHIM (0.4-MM THK)	
AB		1	**161-1434**	1	SHIM (0.5-MM THK)	
AB		1	**161-1435**	1	SHIM (0.9-MM THK)	
AB		1	**312-1582**	1	SHIM (0.35-MM OS)	
AB		1	**312-1583**	1	SHIM (0.25-MM OS)	
	16	1	**153-5960**	4	NUT	

A-NOT PART OF THIS GROUP
B-USE AS REQUIRED

321-3334 **PUMP GP-FUEL INJECTION** *(contd.)* **i02934019**

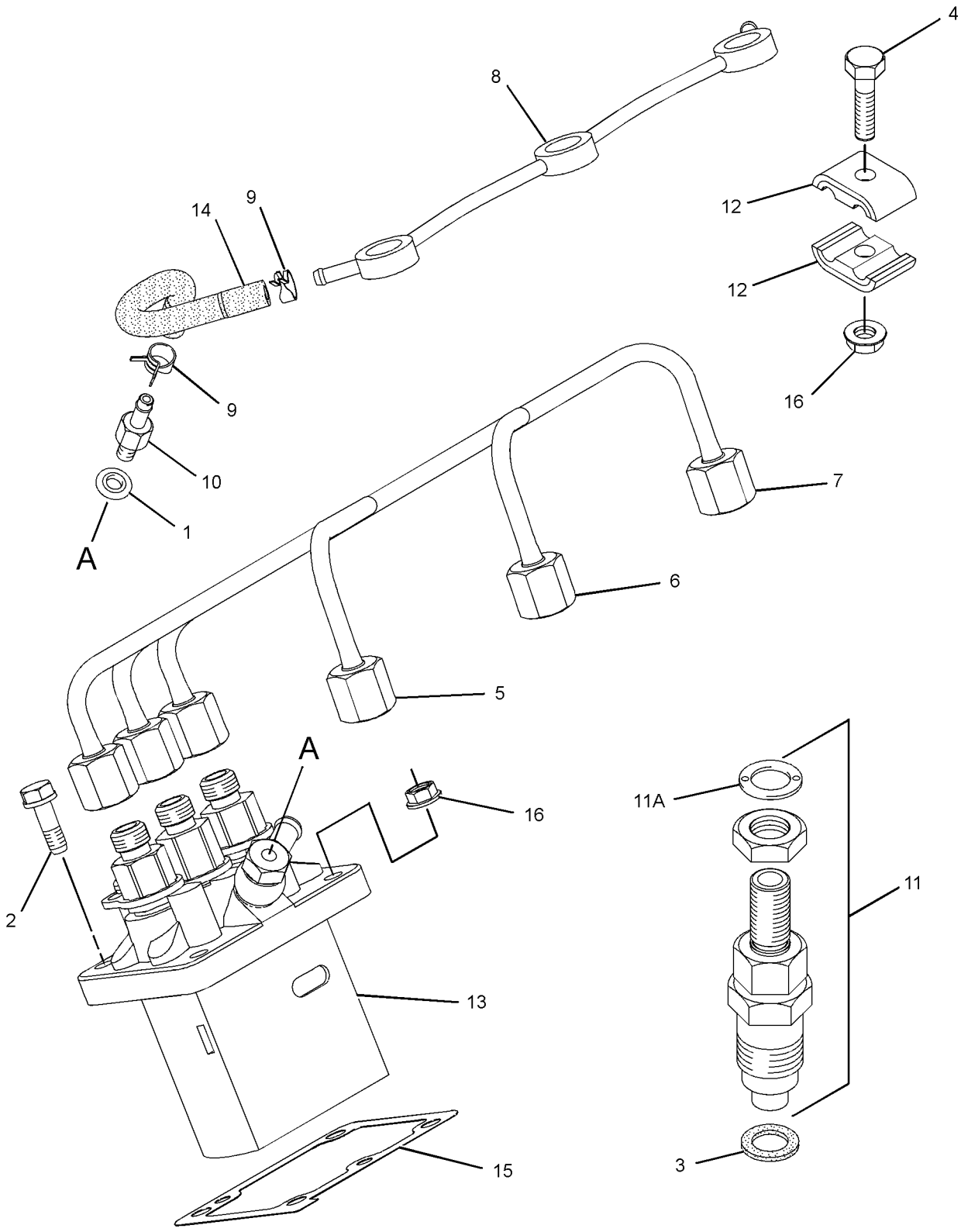

GRAPHIC #1 **<END>** g01433837

323-2410 PUMP GP-FUEL INJECTION

SMCS-1251, 1290 **i02927312**

NOTE	REF NO	GRAPHIC REF	PART NUMBER	QTY	PART NAME 1 2 3 4 5 6 (PRODUCT LEVEL)	SEE PAGE
	1	1	**153-6415**	1	WASHER	
	2	1	**153-7640**	2	BOLT	
	3	1	**154-2716**	3	SEAL	
	4	1	**183-3353**	2	BOLT	
	5	1	**231-7702**	1	TUBE AS (CYL NO. 1)	
	6	1	**231-7703**	1	TUBE AS (CYL NO. 2)	
	7	1	**231-7704**	1	TUBE AS (CYL NO. 3)	
	8	1	**231-7739**	1	LINE AS	
	9	1	**232-0218**	2	CLAMP	
	10	1	**232-0290**	1	CONNECTOR	
	11	1	**252-9229**	3	INJECTOR AS-FUEL	
	11A	1	**232-0793**	1	WASHER-SPECIAL	
	12	1	**290-8014**	4	CLAMP	
	13	1	**293-3230**	1	PUMP GP-FUEL INJECTION	
	14	1	**313-2040**	1	HOSE	
	15	1	**153-6385**	1	SHIM (0.2-MM THK)	
AB		1	**161-1432**	1	SHIM (0.3-MM THK)	
AB		1	**161-1433**	1	SHIM (0.4-MM THK)	
AB		1	**161-1434**	1	SHIM (0.5-MM THK)	
AB		1	**161-1435**	1	SHIM (0.9-MM THK)	
AB		1	**312-1582**	1	SHIM (0.35-MM OS)	
AB		1	**312-1583**	1	SHIM (0.25-MM OS)	
	16	1	**153-5960**	4	NUT	

A-NOT PART OF THIS GROUP
B-USE AS REQUIRED

323-2410 **PUMP GP-FUEL INJECTION** *(contd.)* **i02927312**

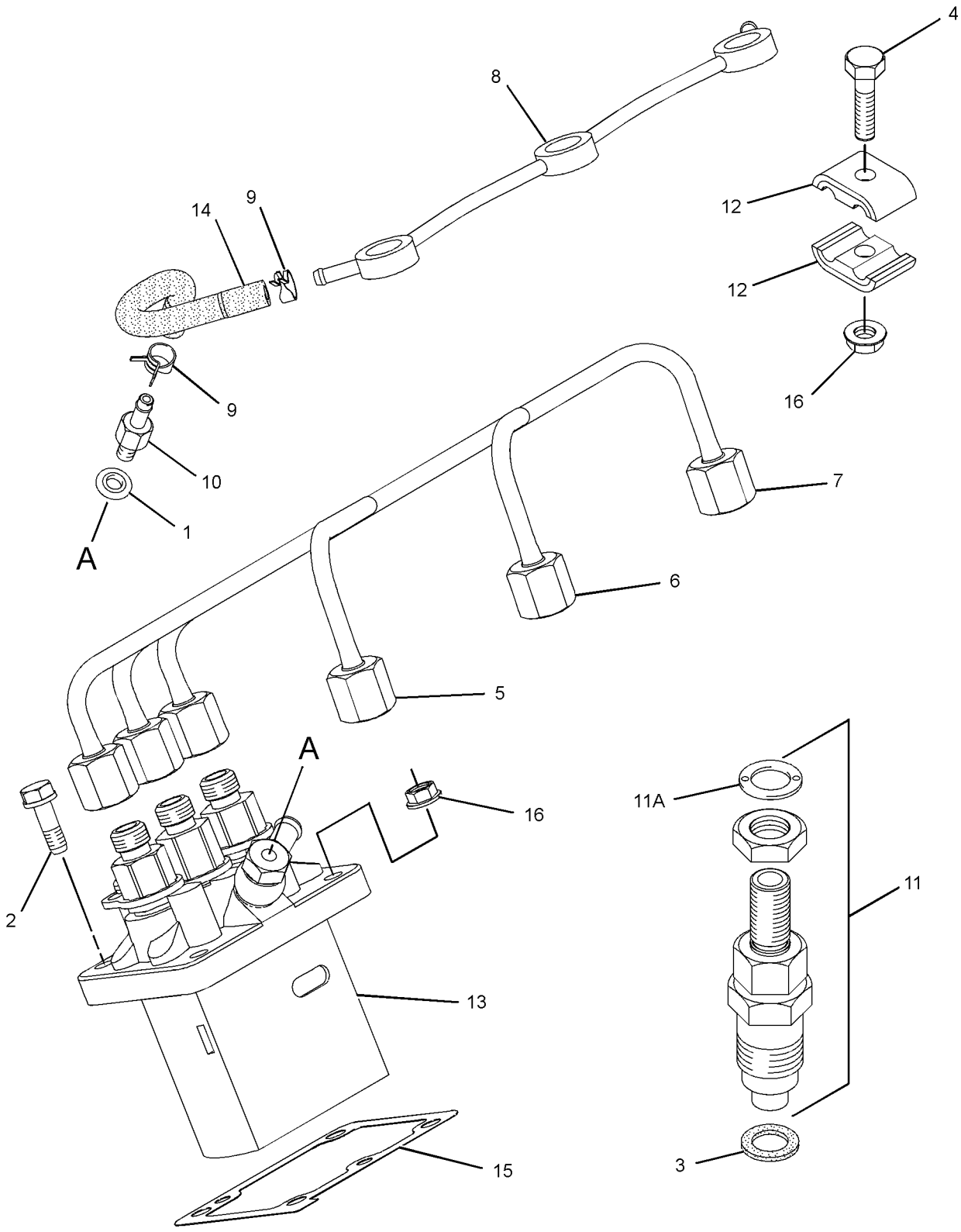

GRAPHIC #1 **<END>** g01433837

328-1432 PUMP GP-FUEL INJECTION

SMCS-1251, 1290 **i02973356**

NOTE	REF NO	GRAPHIC REF	PART NUMBER	QTY	PART NAME 1 2 3 4 5 6 (PRODUCT LEVEL)	SEE PAGE
	1	1	**153-5960**	4	NUT	
	2	1	**328-1427**	1	PUMP-FUEL INJECTION	
	3	1	**153-6415**	1	WASHER	
	4	1	**153-7640**	2	BOLT	
	5	1	**154-2716**	3	SEAL	
	6	1	**183-3353**	2	BOLT	
	7	1	**231-7702**	1	TUBE AS (CYL NO. 1)	
	8	1	**231-7703**	1	TUBE AS (CYL NO. 2)	
	9	1	**231-7704**	1	TUBE AS (CYL NO. 3)	
	10	1	**231-7739**	1	LINE AS	
	11	1	**232-0218**	2	CLAMP	
	12	1	**232-0290**	1	CONNECTOR	
	13	1	**232-0293**	3	INJECTOR AS-FUEL	
	13A	1	**232-0792**	1	NUT	
	13B	1	**232-0793**	1	WASHER-SPECIAL	
	14	1	**290-8014**	2	CLAMP	
B	15	1	**153-6385**	1	SHIM (0.2-MM THK)	
B		1	**312-1583**	1	SHIM (0.25-MM THK)	
B		1	**161-1432**	1	SHIM (0.3-MM THK)	
B		1	**312-1582**	1	SHIM (0.35-MM THK)	
B		1	**161-1433**	1	SHIM (0.4-MM THK)	
B		1	**161-1434**	1	SHIM (0.5-MM THK)	
B		1	**161-1435**	1	SHIM (0.9-MM THK)	
	16	1	**313-2040**	1	HOSE	

B-USE AS REQUIRED

328-1432 **PUMP GP-FUEL INJECTION** *(contd.)* **i02973356**

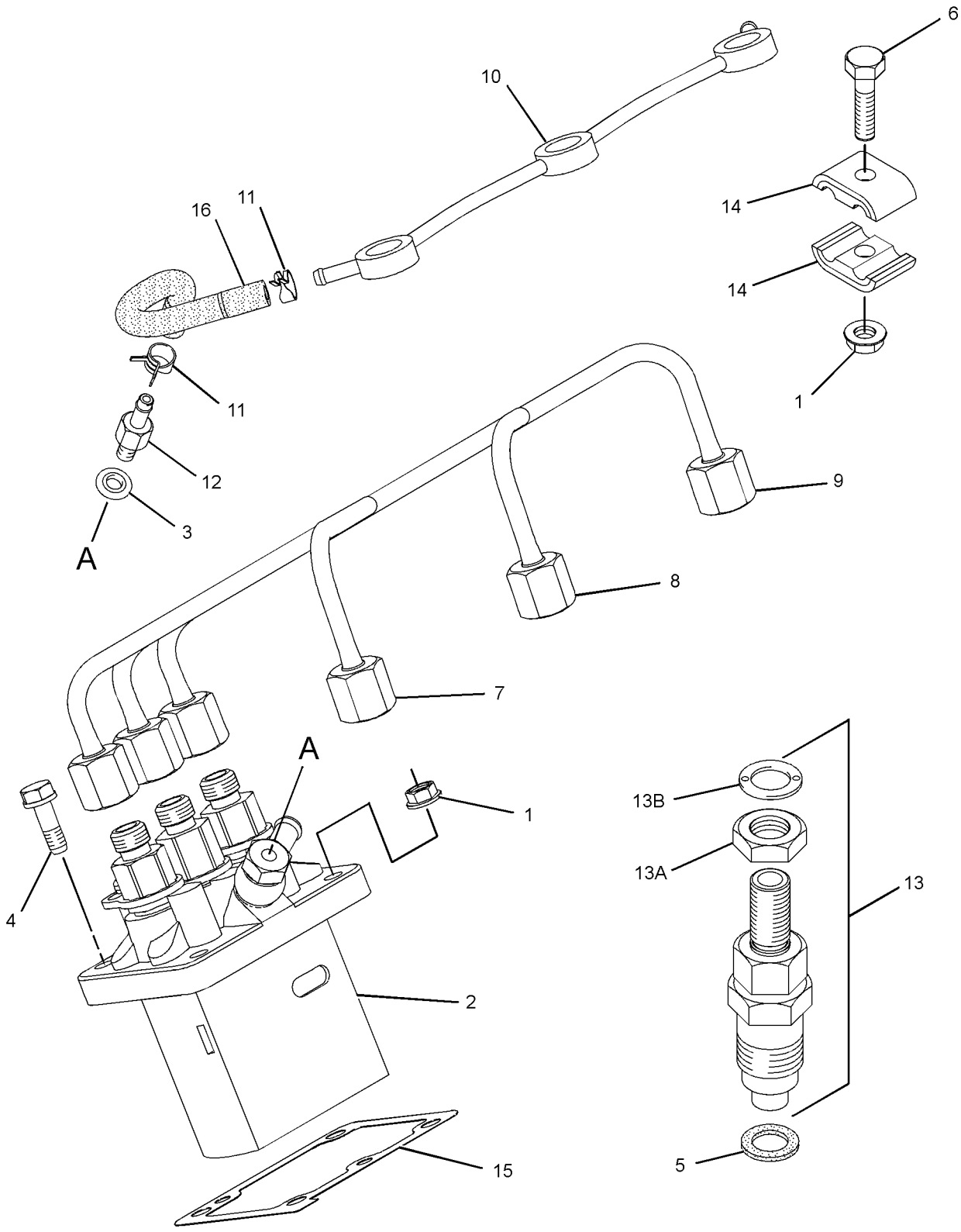

GRAPHIC #1 **<END>** g01513223

308-2320 PUMP GP-FUEL PRIMING

SMCS-1258 **i02752319**

NOTE	REF NO	GRAPHIC REF	PART NUMBER	QTY	PART NAME 1 2 3 4 5 6 (PRODUCT LEVEL)	SEE PAGE
	1	1	**197-8540**	1	PUMP GP-FUEL PRIMING	

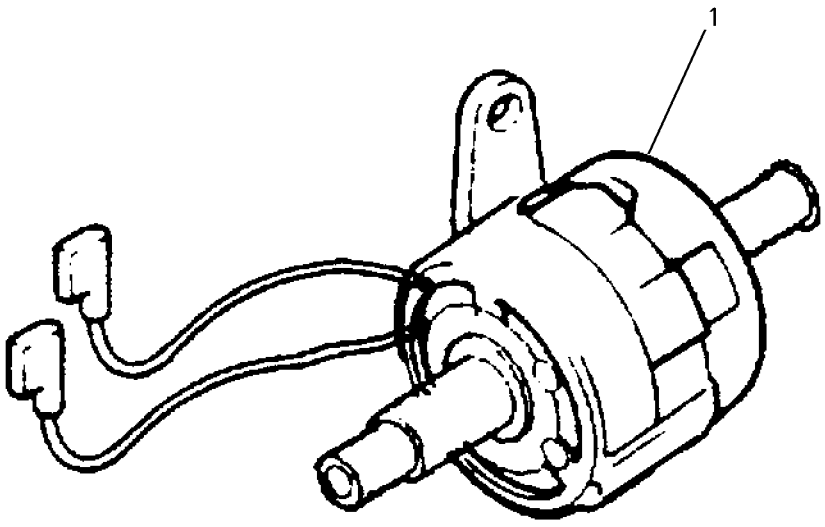

GRAPHIC #1 **<END>** g00758447

317-6706 PUMP GP-FUEL PRM & PRIM FILTER

SMCS-1256, 1258, 1260 **i03983176**

NOTE	REF NO	GRAPHIC REF	PART NUMBER	QTY	PART NAME 1 2 3 4 5 6 (PRODUCT LEVEL)	SEE PAGE
	1	1	**276-1804**	1	FILTER GP-FUEL (WATER SEPARATOR)	
	1A	1	**276-1806**	1	FILTER ELEMENT-FUEL	
	1B	1	**302-7776**	1	BOWL-FUEL FILTER	
	1C	1	**302-7777**	3	PLUG-DRAIN (WATER SEPARATOR)	
	1D	1	**302-7778**	1	SEAL (WATER SEPARATOR)	
	2	1	**197-8540**	1	PUMP GP-FUEL PRIMING	

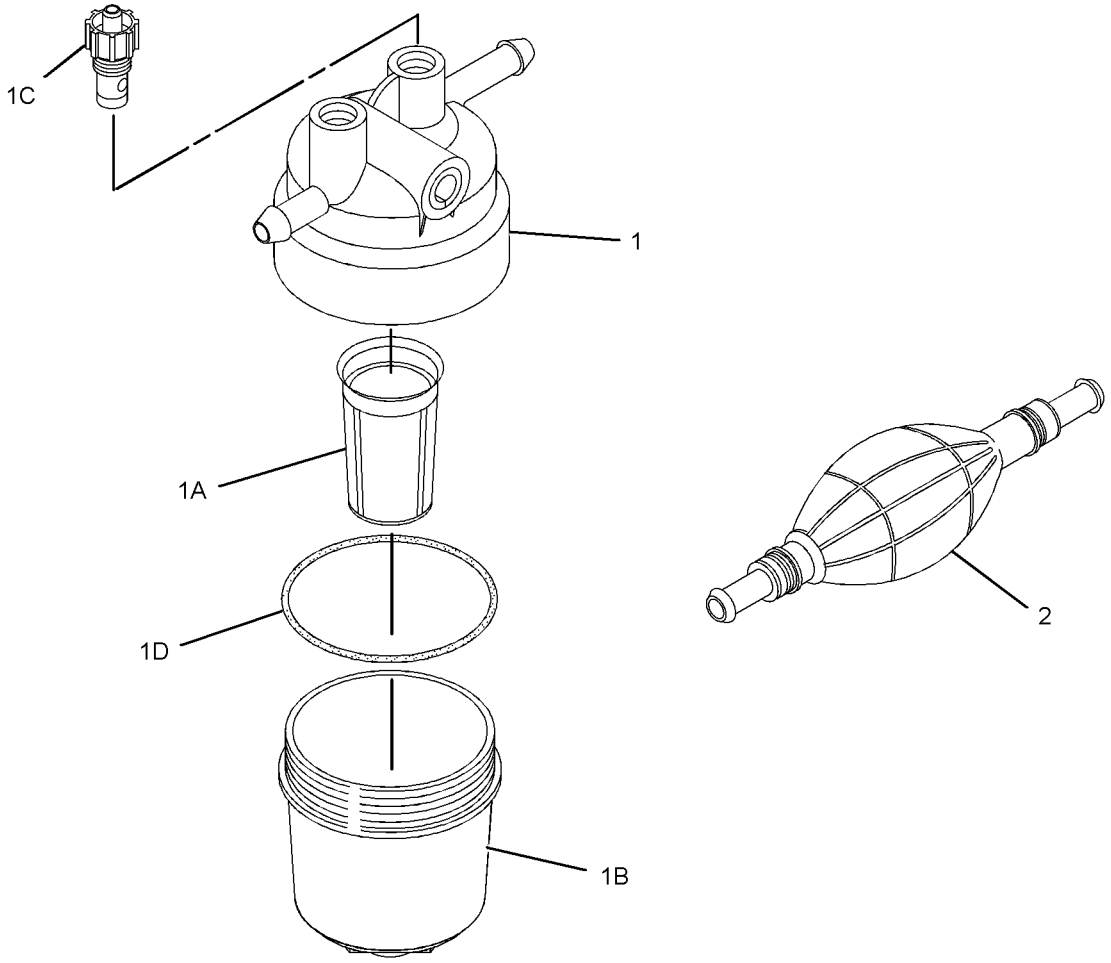

GRAPHIC #1 **<END>** g01915154

313-2009 PUMP GP-FUEL TRANSFER

SMCS-1256 **i03983175**

NOTE	REF NO	GRAPHIC REF	PART NUMBER	QTY	PART NAME 1 2 3 4 5 6 (PRODUCT LEVEL)	SEE PAGE
	1	1	**6I-0846**	2	BOLT (M6X1X14-MM)	
	2	1	**7W-4694**	1	PLUG	
	3	1	**032-8100**	2	WASHER (0.531X0.718X0.064-IN THK)	
	4	1	**033-7849**	2	PLUG	
	5	1	**033-7854**	1	FILTER AS-FUEL	
	5A	1	**067-6987**	1	KIT-ELEMENT (FUEL FILTER)	
	5B	1	**6F-4855**	2	SEAL-O-RING	
	5C	1	**069-2922**	2	GASKET (FUEL FILTER)	
	6	1	**067-6269**	2	FERRULE	
	7	1	**067-6317**	1	WASHER (0.4X0.566X0.04-IN THK)	
	8	1	**138-7162**	2	BOLT (M10X1.5X30-MM)	
	9	1	**154-1399**	2	WASHER	
	10	1	**154-2403**	2	WASHER	
	11	1	**155-7984**	2	WASHER	
	12	1	**155-8085**	2	NUT	
	13	1	**160-3550**	4	CLAMP-HOSE	
	14	1	**165-2141**	2	BOLT	
	15	1	**176-7719**	1	SEAL-O-RING	
	16	1	**183-4330**	1	TUBE-FUEL	
	17	1	**302-4187**	2	TUBE	
	18	1	**226-2264**	1	BRACKET	
	19	1	**269-2569**	1	TUBE	
	20	1	**295-4070**	1	PUMP AS-FUEL TRANSFER	

313-2009 **PUMP GP-FUEL TRANSFER** *(contd.)* **i03983175**

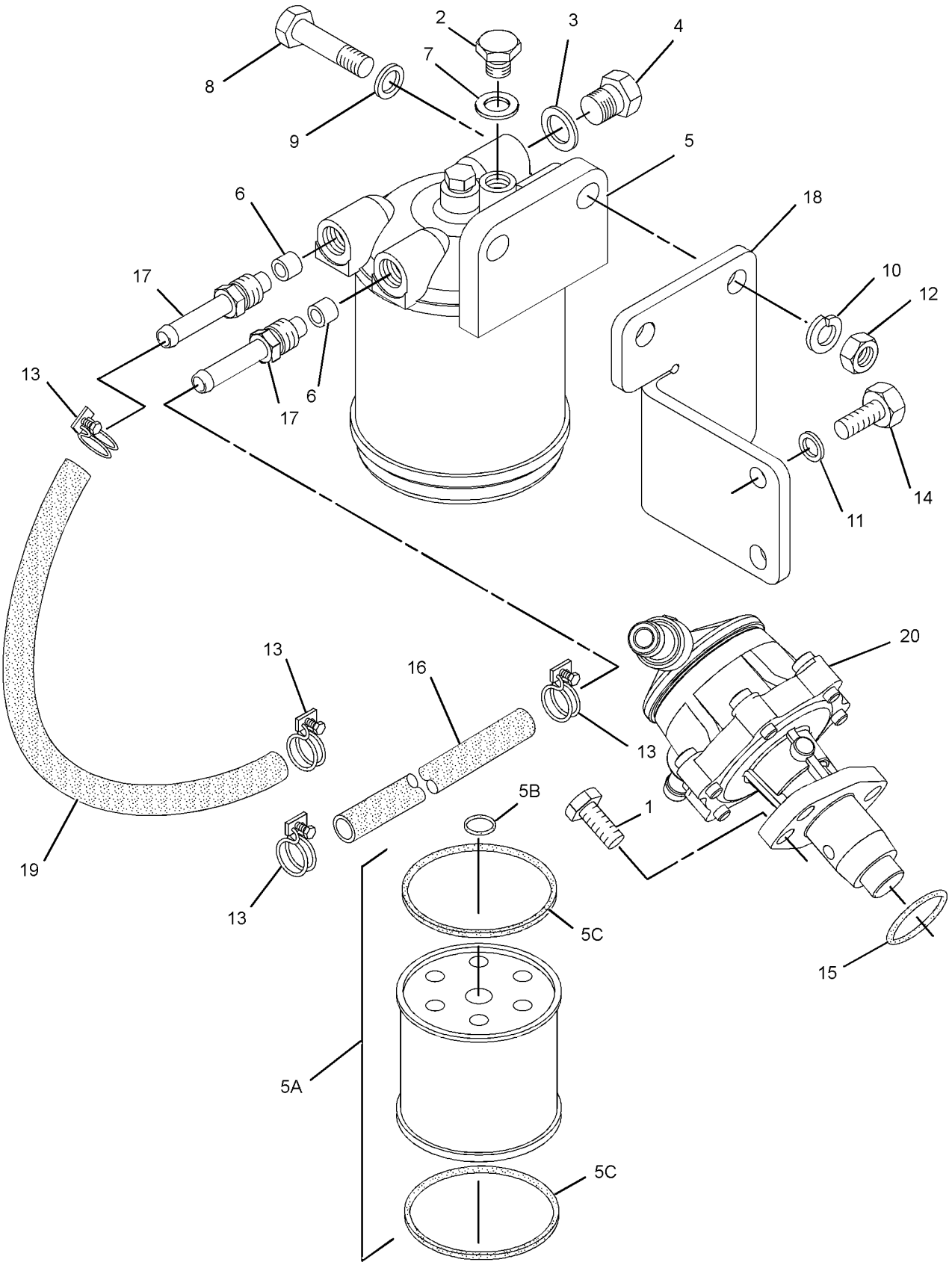

GRAPHIC #1 **<END>** g02153803

183-3938 ALTERNATOR GP-CHARGING

PART OF 313-1982 ALTERNATOR GP-CHARGING

SMCS-1405 **i02778842**

NOTE	REF NO	GRAPHIC REF	PART NUMBER	QTY	PART NAME 1 2 3 4 5 6 (PRODUCT LEVEL)	SEE PAGE
	1	1	**154-2403**	1	WASHER	
	2	1	**155-8084**	1	WASHER	
	3	1	**295-8597**	1	PLATE AS	
	4	1	**295-8605**	1	PULLEY AS	
	5	1	**295-8606**	1	COLLAR	
	6	1	**295-8607**	1	NUT	
	7	1	**295-8608**	1	CAP	

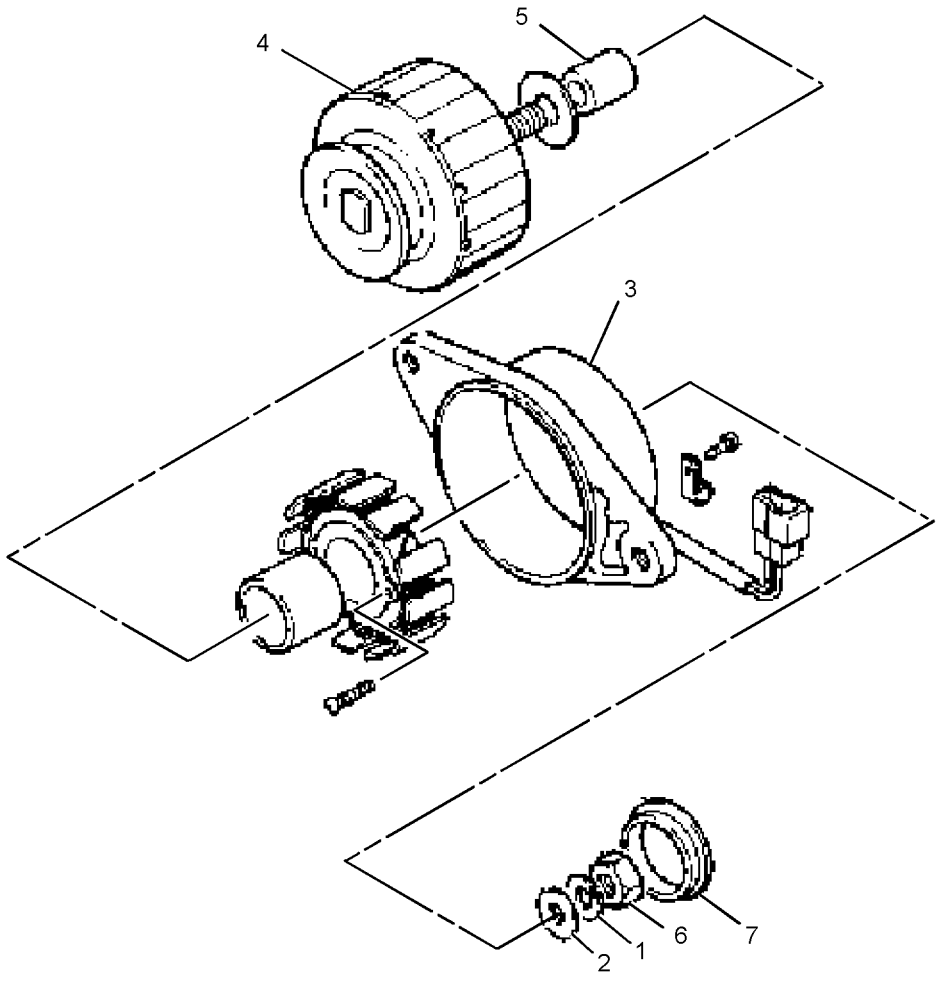

GRAPHIC #1 **<END>** g01380028

ELECTRICAL AND STARTING SYSTEM

313-1982 ALTERNATOR GP-CHARGING

SMCS-1405 **i02773498**

NOTE	REF NO	GRAPHIC REF	PART NUMBER	QTY	PART NAME 1 2 3 4 5 6 (PRODUCT LEVEL)	SEE PAGE
	1	1	**153-5961**	1	BOLT	
	2	1	**155-8084**	1	WASHER	
	3	1	**165-2140**	2	BOLT	
	4	1	**168-9002**	1	WASHER	
Y	5	1	**183-3938**	1	ALTERNATOR GP-CHARGING	161
	6	1	**183-3939**	1	BOLT	
	7	1	**183-3940**	1	LEVER-ADJUSTING	
	8	1	**183-3941**	1	BOLT	
	9	1	**197-8816**	1	REGULATOR (ALTERNATOR VOLTAGE)	
	10	1	**234-8762**	1	CONNECTOR	

Y-SEPARATE ILLUSTRATION

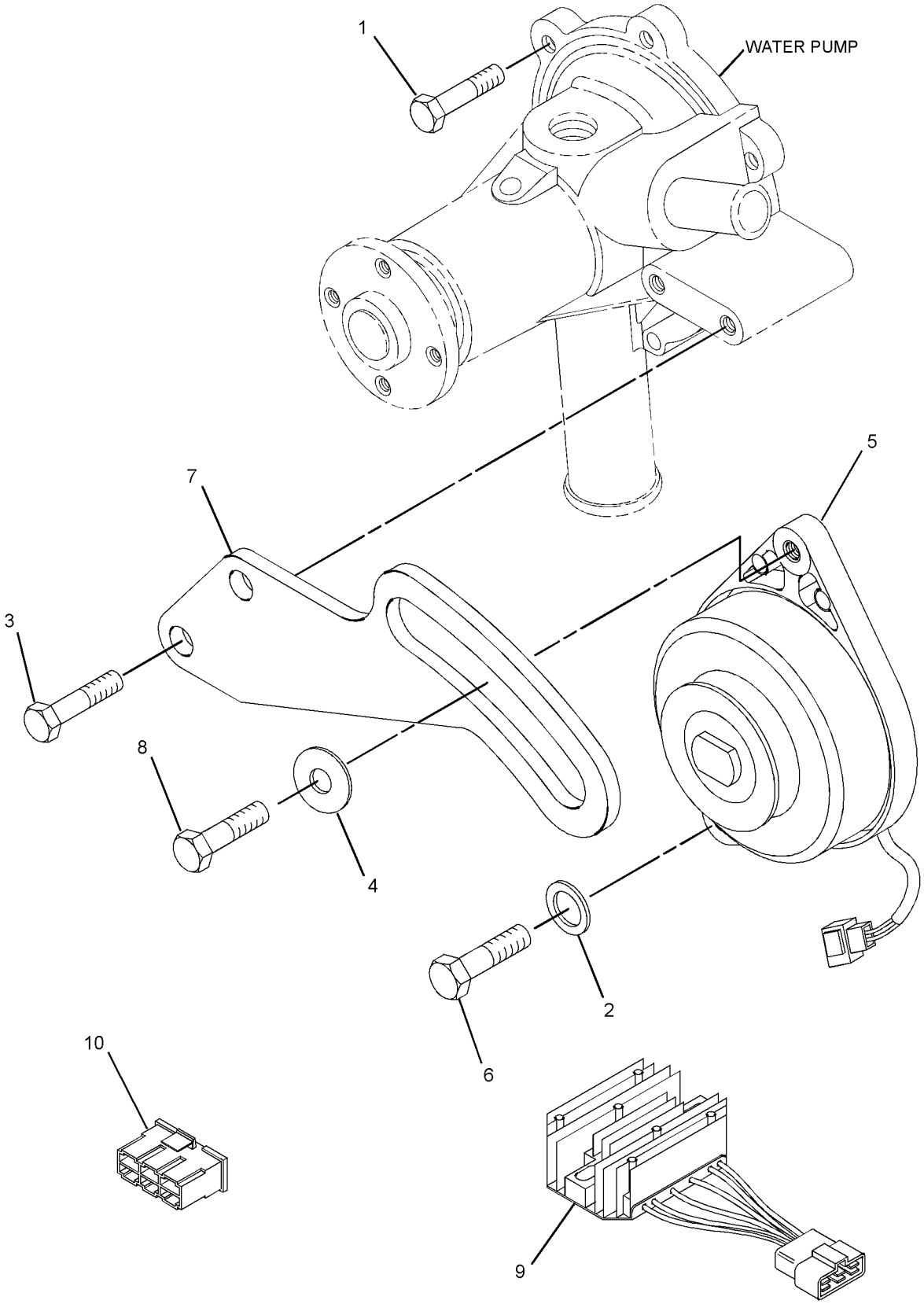

GRAPHIC #1 **<END>** g01389462

ELECTRICAL AND STARTING SYSTEM

319-7354 ALTERNATOR GP-CHARGING

SMCS-1405 **i03312346**

NOTE	REF NO	GRAPHIC REF	PART NUMBER	QTY	PART NAME 1 2 3 4 5 6 (PRODUCT LEVEL)	SEE PAGE
	1	1	**153-7640**	2	BOLT	
	2	1	**154-1399**	1	WASHER	
	3	1	**168-9002**	1	WASHER	
	4	1	**183-4029**	1	ALTERNATOR GP-CHARGING	
	5	1	**337-6523**	1	LEVER-ADJUSTING	
	6	1	**183-4031**	1	SPACER	
	7	1	**183-4032**	1	BOLT	
	8	1	**326-0053**	1	BRACKET	
	9	1	**183-4034**	2	BOLT	
	10	1	**183-4035**	1	BOLT	
	11	1	**183-4037**	1	CONNECTOR AS	
	12	1	**153-5961**	3	BOLT	

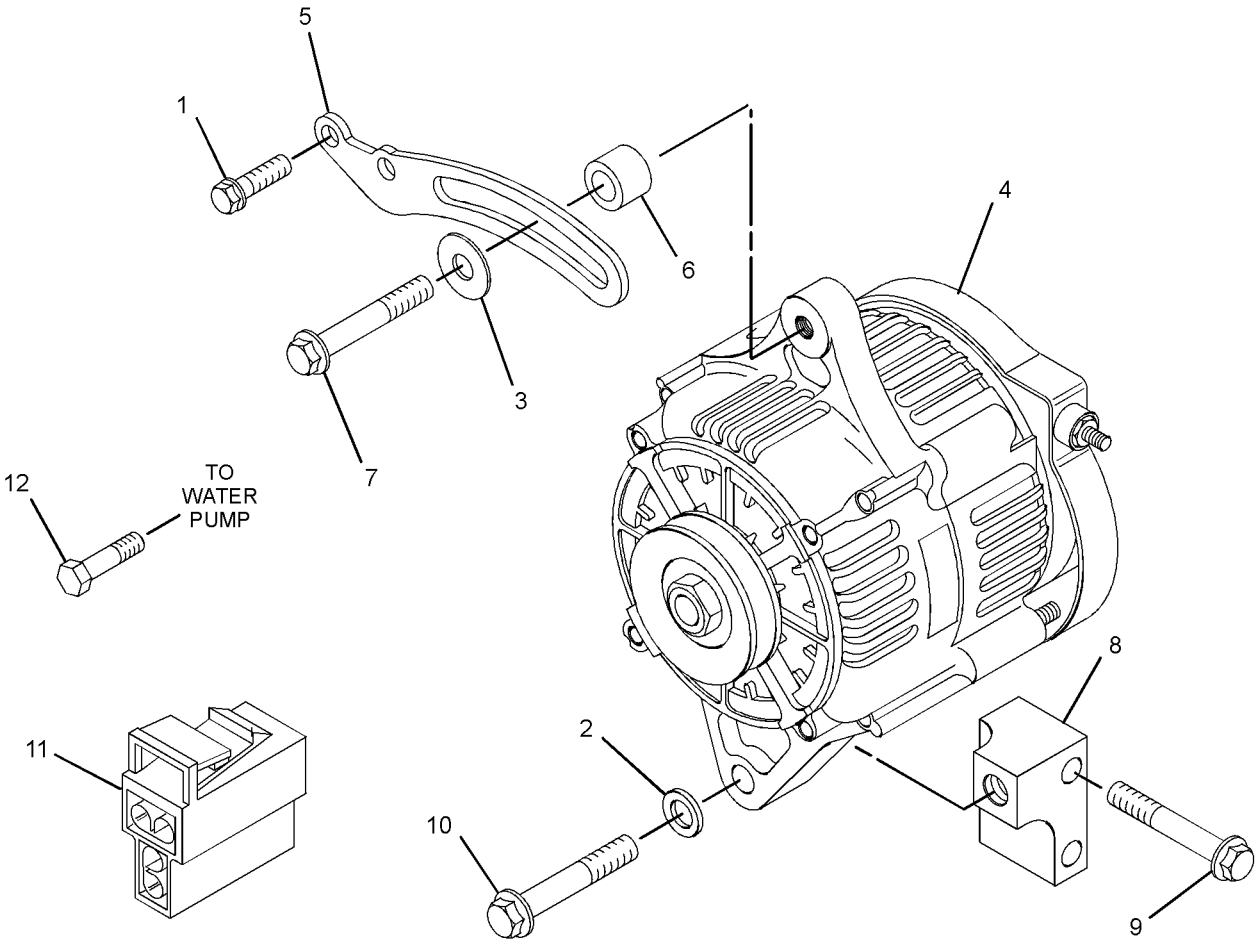

GRAPHIC #1 **<END>** g01433481

SMCS-1408 **i02752317**

NOTE	REF NO	GRAPHIC REF	PART NUMBER	QTY	PART NAME 1 2 3 4 5 6 (PRODUCT LEVEL)	SEE PAGE
	1	1	**254-5541**	1	CONNECTION AS	
	2	1	**197-8555**	1	CONNECTION	

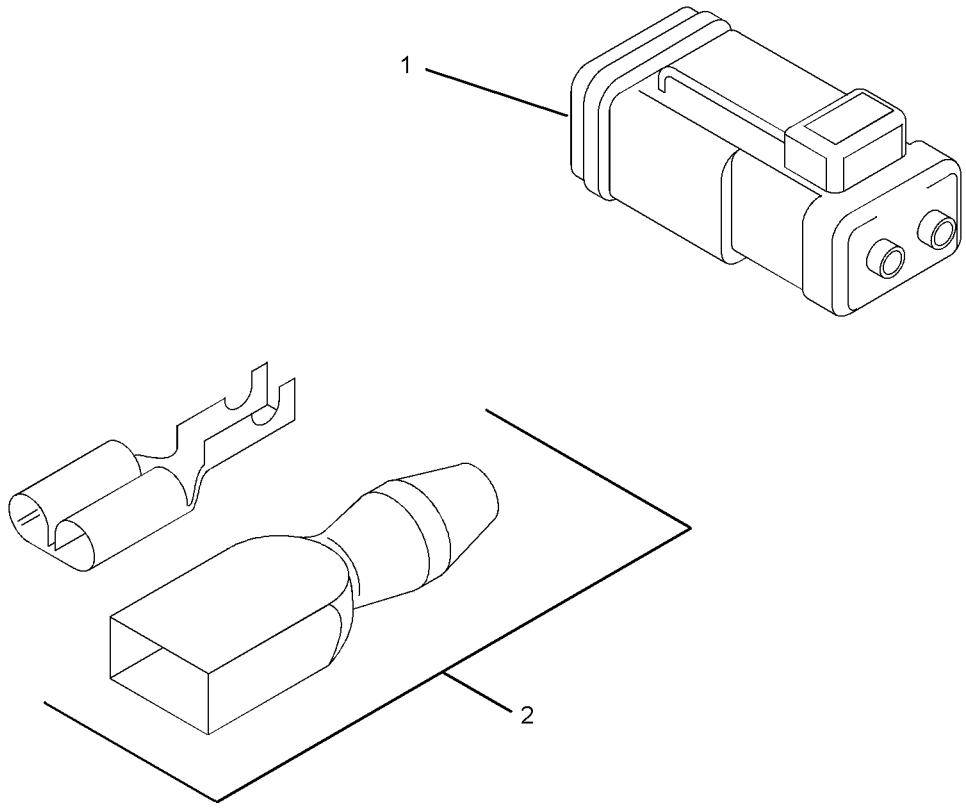

GRAPHIC #1 **<END>** g01389483

ELECTRICAL AND STARTING SYSTEM

321-6741 CONNECTION GP-ELECTRICAL

SMCS-1408 **i02926669**

NOTE	REF NO	GRAPHIC REF	PART NUMBER	QTY	PART NAME 1 2 3 4 5 6 (PRODUCT LEVEL)	SEE PAGE
	1	1	**254-5541**	1	CONNECTION AS	

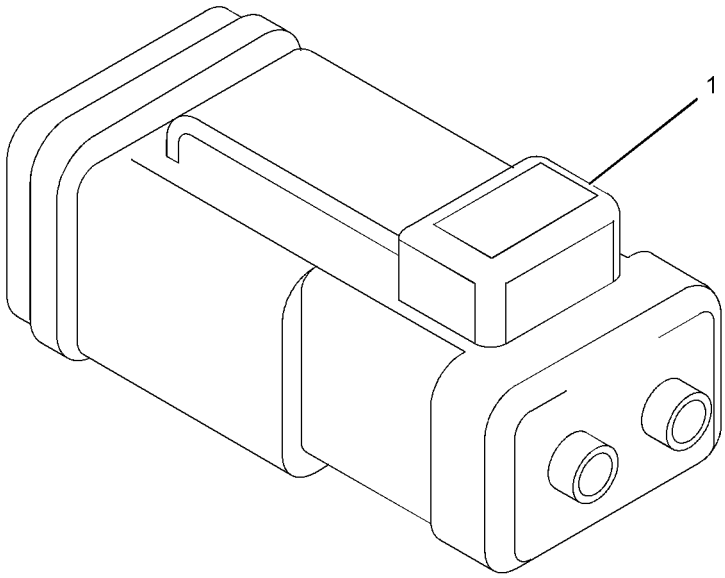

GRAPHIC #1 **<END>** g01513229

336-2073 CONNECTION GP-ELECTRICAL

SMCS-1408 **i03334640**

NOTE	REF NO	GRAPHIC REF	PART NUMBER	QTY	PART NAME 1 2 3 4 5 6 (PRODUCT LEVEL)	SEE PAGE
	1	1	**180-8579**	1	NUT	
	2	1	**197-8555**	1	CONNECTION (STARTING MOTOR)	

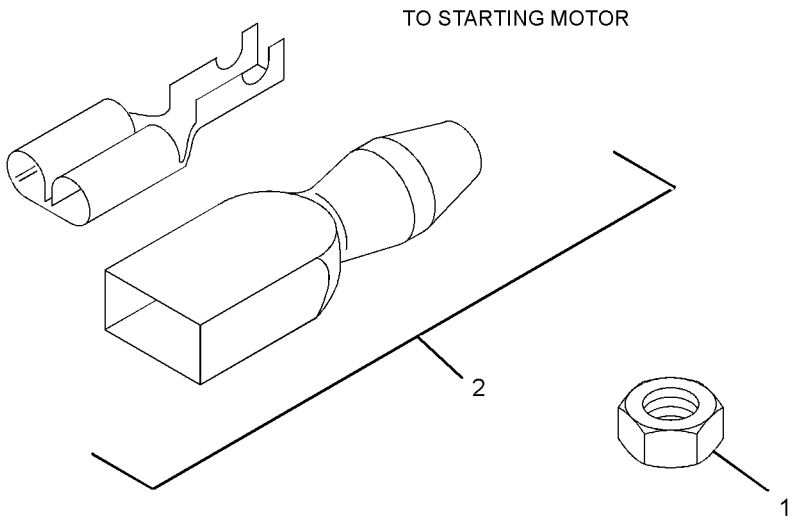

GRAPHIC #1 **<END>** g01738733

313-2021 GLOW PLUG GP

SMCS-1412 **i02773421**

NOTE	REF NO	GRAPHIC REF	PART NUMBER	QTY	PART NAME 1 2 3 4 5 6 (PRODUCT LEVEL)	SEE PAGE
	1	1	**155-8075**	1	WIRE	
	2	1	**231-2839**	3	NUT-FLANGE	
	3	1	**307-8672**	3	GLOW PLUG	
	4	1	**308-1167**	1	SUPPORT-PLUG	

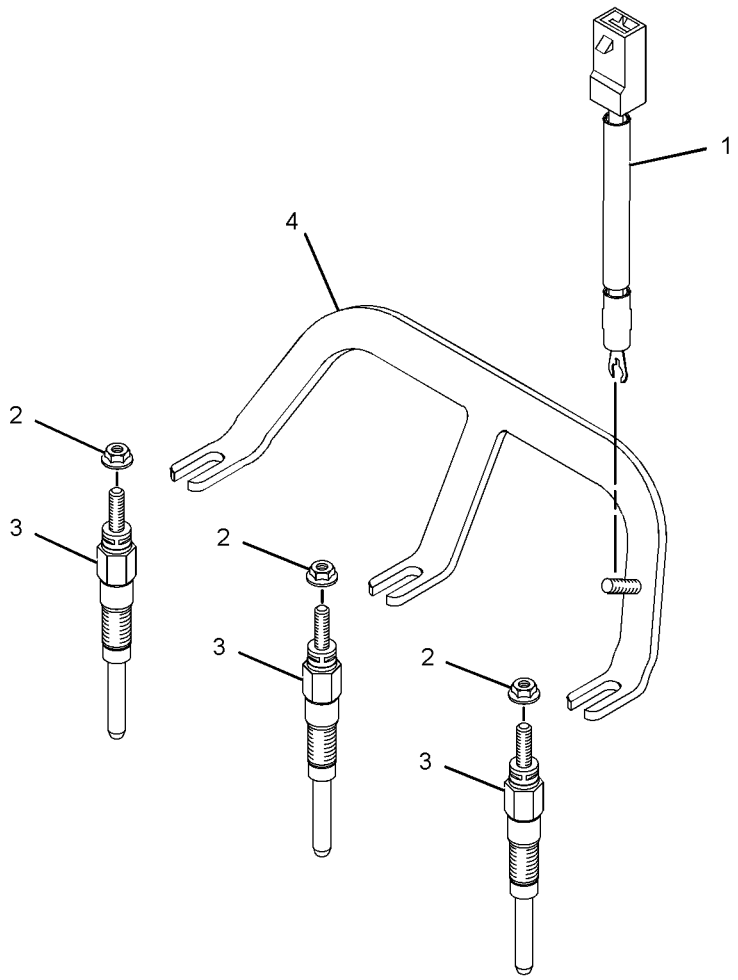

GRAPHIC #1 **<END>** g01387002

320-9114 SHUTOFF GP-ELECTRICAL

SMCS-7418 **i03384230**

NOTE	REF NO	GRAPHIC REF	PART NUMBER	QTY	PART NAME 1 2 3 4 5 6 (PRODUCT LEVEL)	SEE PAGE
	1	1	**340-0199**	1	AUTO SHUT DOWN	
	1A	1	**234-8762**	1	CONNECTOR	
	1B	1	**318-5038**	1	BOX	

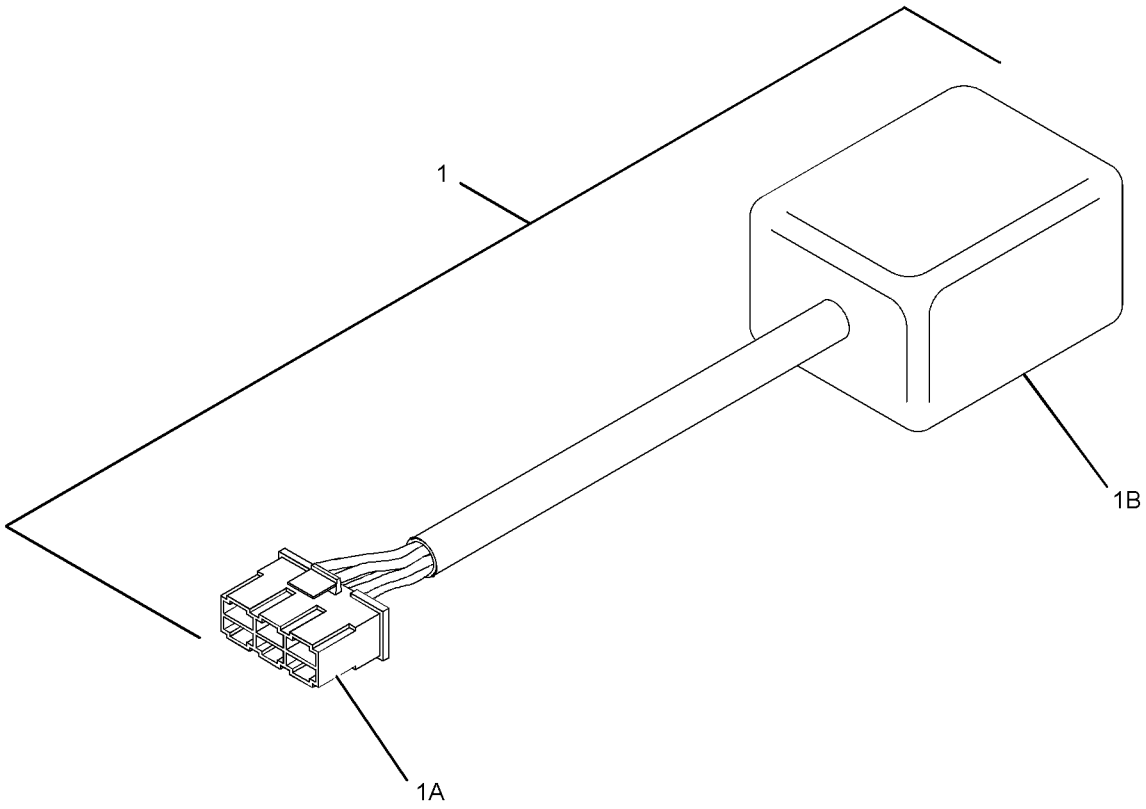

GRAPHIC #1 **<END>** g01504753

313-2023 SOLENOID GP-SHUTOFF–FUEL SHUTOFF

SMCS-1259 **i02939727**

NOTE	REF NO	GRAPHIC REF	PART NUMBER	QTY	PART NAME 1 2 3 4 5 6 (PRODUCT LEVEL)	SEE PAGE
	1	1	**153-6412**	1	WASHER	
	2	1	**324-4598**	1	SOLENOID (FUEL SHUTOFF)	
	3	1	**308-1914**	1	LEVER-CONTROL	

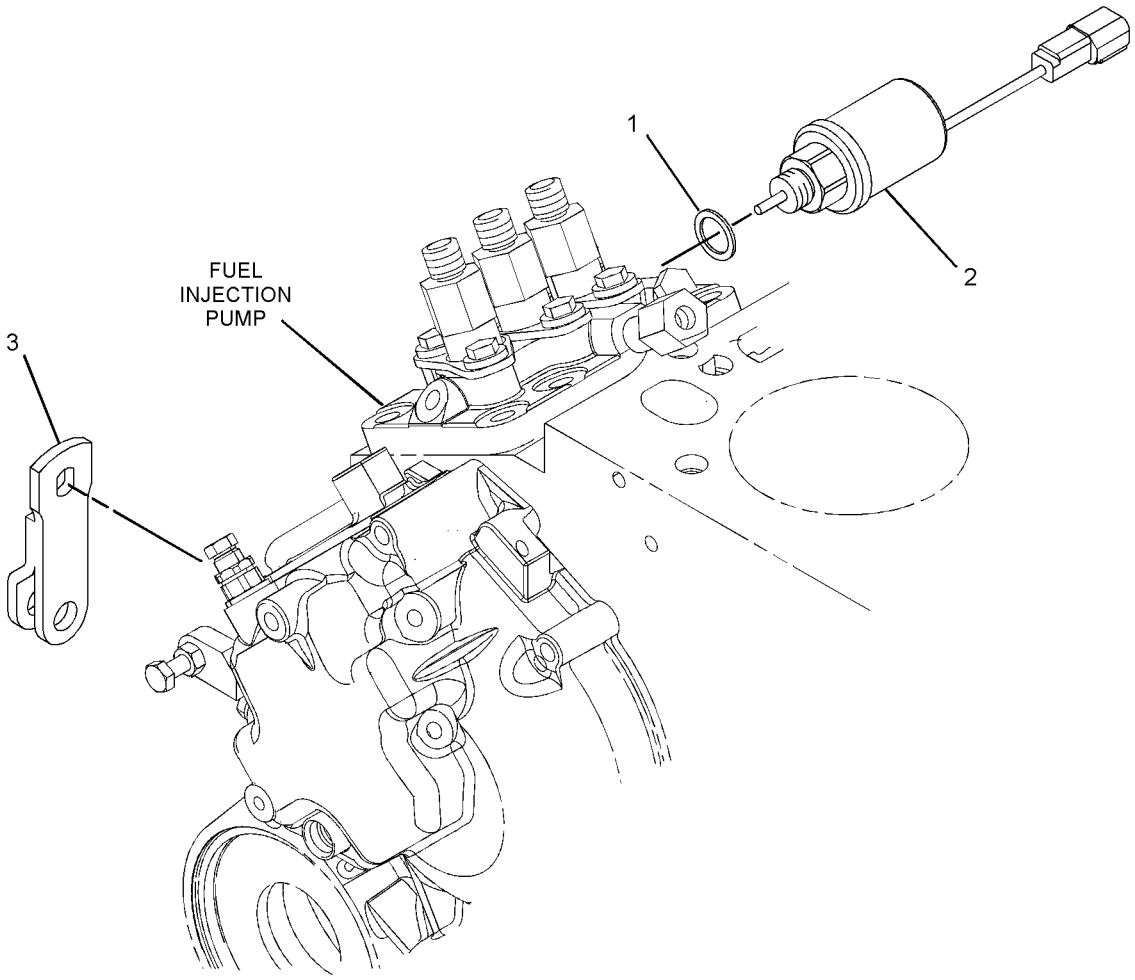

GRAPHIC #1 **<END>** g01388777

319-7357 SOLENOID GP-SHUTOFF

SMCS-1259 **i03983212**

NOTE	REF NO	GRAPHIC REF	PART NUMBER	QTY	PART NAME 1 2 3 4 5 6 (PRODUCT LEVEL)	SEE PAGE
	1	1	**153-6412**	1	WASHER	
	2	1	**324-4598**	1	SOLENOID (FUEL SHUTOFF)	
	3	1	**315-5237**	1	LEVER-CONTROL	

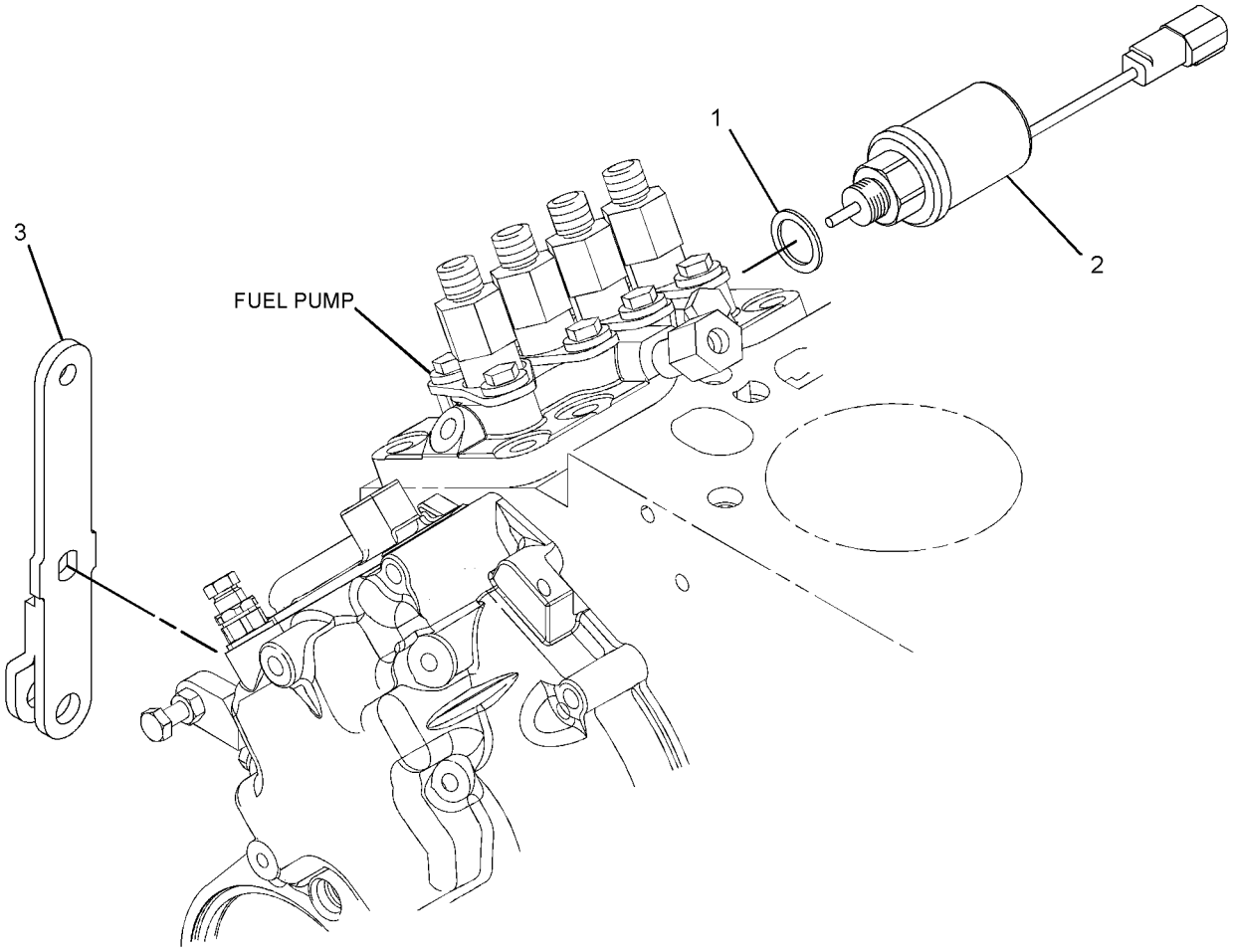

GRAPHIC #1 **<END>** g01421434

138-7454 STARTING MOTOR GP-ELECTRIC

PART OF 313-1971 STARTING MOTOR GP-ELECTRIC

FIELD REPLACEMENT ORDER 340-8308—PAGE 178

SMCS-1453 **i03386782**

NOTE	REF NO	GRAPHIC REF	PART NUMBER	QTY	PART NAME 1 2 3 4 5 6 (PRODUCT LEVEL)	SEE PAGE
	1	1	**242-7073**	1	BUSHING	
	2	1	**242-7076**	1	BUSHING	
	3	1	**242-7077**	1	KIT-STARTING MOTOR	
	4	1	**295-8592**	1	BUSHING	
	5	1	**295-8593**	1	SOLENOID	
	6	1	**295-8594**	1	DRIVE	
	7	1	**295-8595**	1	ARMATURE	
	8	1	**295-8596**	1	HOLDER	

138-7454 STARTING MOTOR GP-ELECTRIC *(contd.)* i03386782

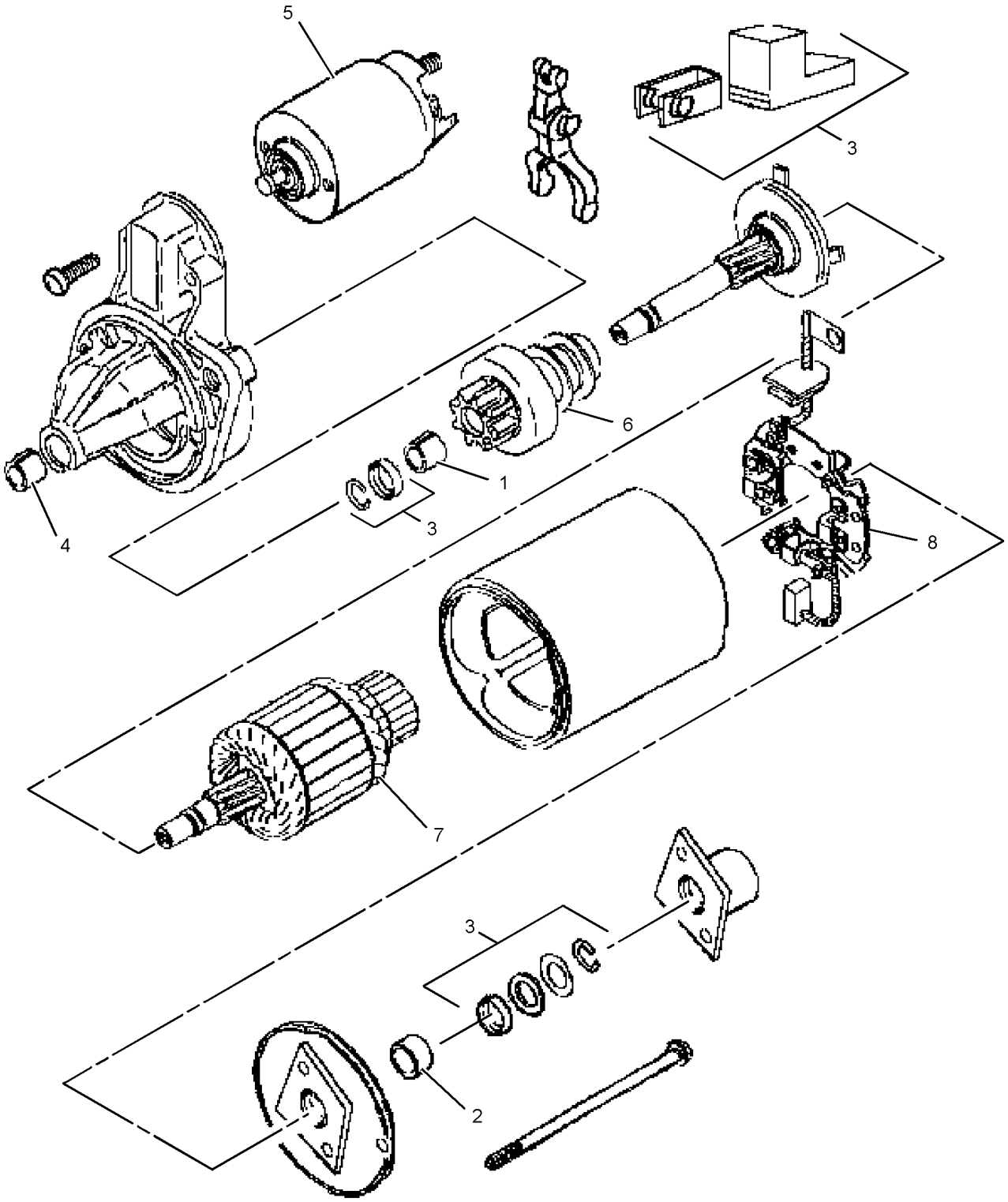

GRAPHIC #1 **<END>** g01376039

313-1971 STARTING MOTOR GP-ELECTRIC

TYPE 1

SMCS-1453 **i02773437**

NOTE	REF NO	GRAPHIC REF	PART NUMBER	QTY	PART NAME 1 2 3 4 5 6 (PRODUCT LEVEL)	SEE PAGE
Y	1	1	**138-7454**	1	STARTING MOTOR GP-ELECTRIC	172

Y-SEPARATE ILLUSTRATION

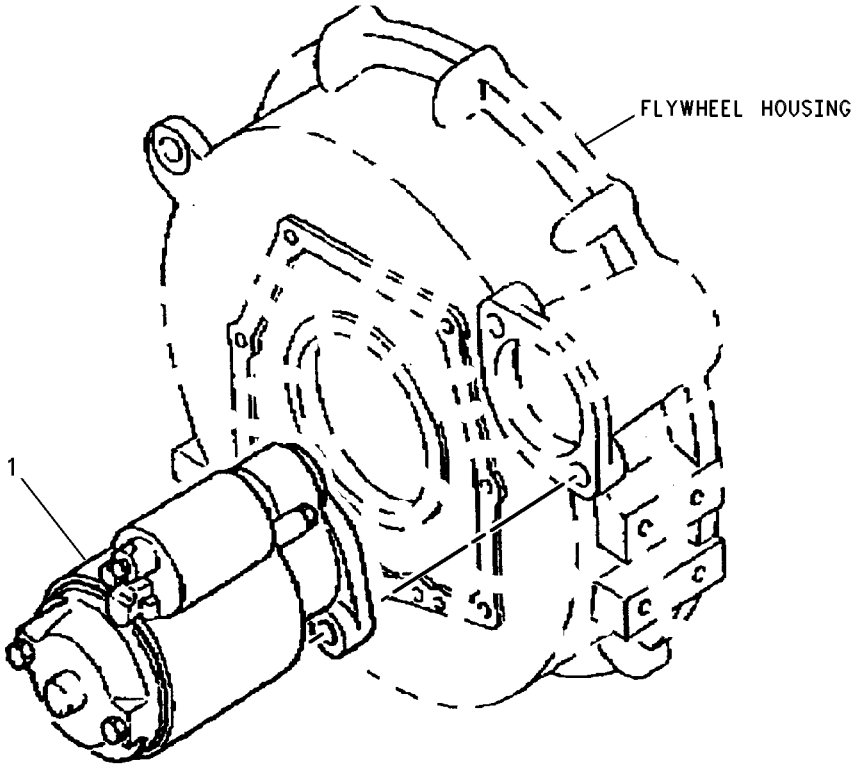

GRAPHIC #1 **<END>** g00640484

313-1971 STARTING MOTOR GP-ELECTRIC

TYPE 2

SMCS-1453 **i03938390**

NOTE	REF NO	GRAPHIC REF	PART NUMBER	QTY	PART NAME 1 2 3 4 5 6 (PRODUCT LEVEL)	SEE PAGE
CY	1	1	*361-3767*	1	STARTING MOTOR GP-ELECTRIC	179

C-CHANGE FROM PREVIOUS TYPE
Y-SEPARATE ILLUSTRATION

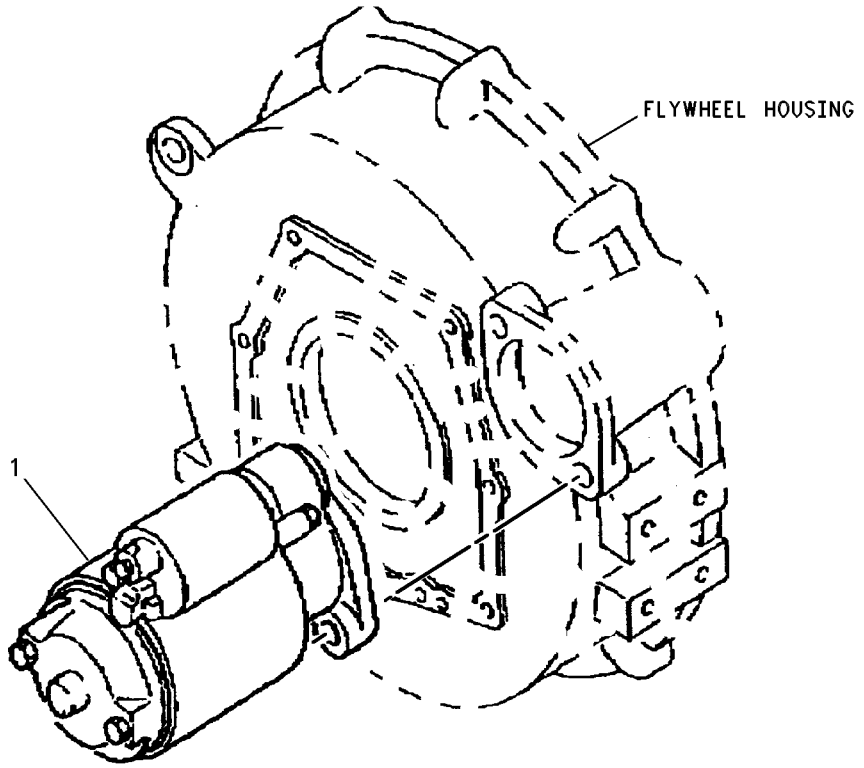

GRAPHIC #1 **<END>** g00640484

ELECTRICAL AND STARTING SYSTEM

319-7351 STARTING MOTOR GP-ELECTRIC

TYPE 1

SMCS-1453 **i02969561**

NOTE	REF NO	GRAPHIC REF	PART NUMBER	QTY	PART NAME 1 2 3 4 5 6 (PRODUCT LEVEL)	SEE PAGE
	1	1	**138-6754**	1	STARTING MOTOR GP-ELECTRIC	

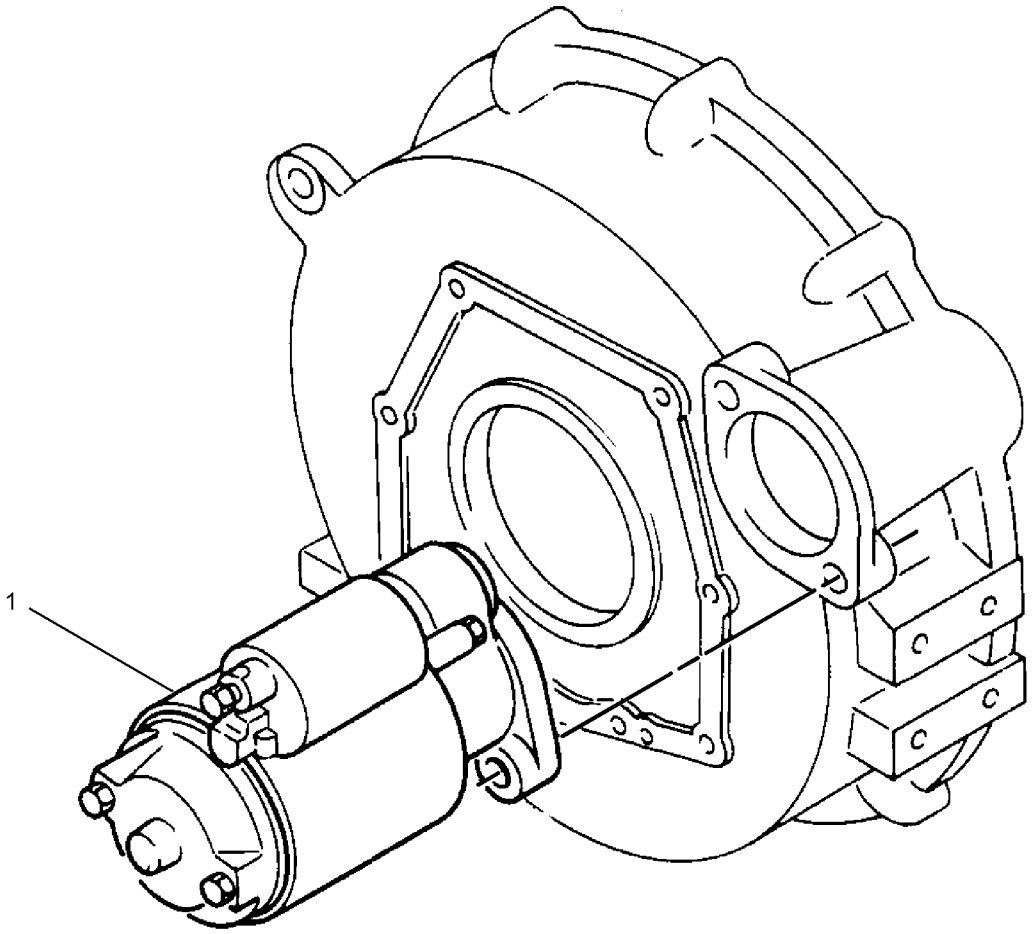

GRAPHIC #1 **<END>** g01350527

ELECTRICAL AND STARTING SYSTEM

319-7351 STARTING MOTOR GP-ELECTRIC

TYPE 2

SMCS-1453 **i03948480**

NOTE	REF NO	GRAPHIC REF	PART NUMBER	QTY	PART NAME 1 2 3 4 5 6 (PRODUCT LEVEL)	SEE PAGE
CY	1	1	**361-3767**	1	STARTING MOTOR GP-ELECTRIC	179

C-CHANGE FROM PREVIOUS TYPE
Y-SEPARATE ILLUSTRATION

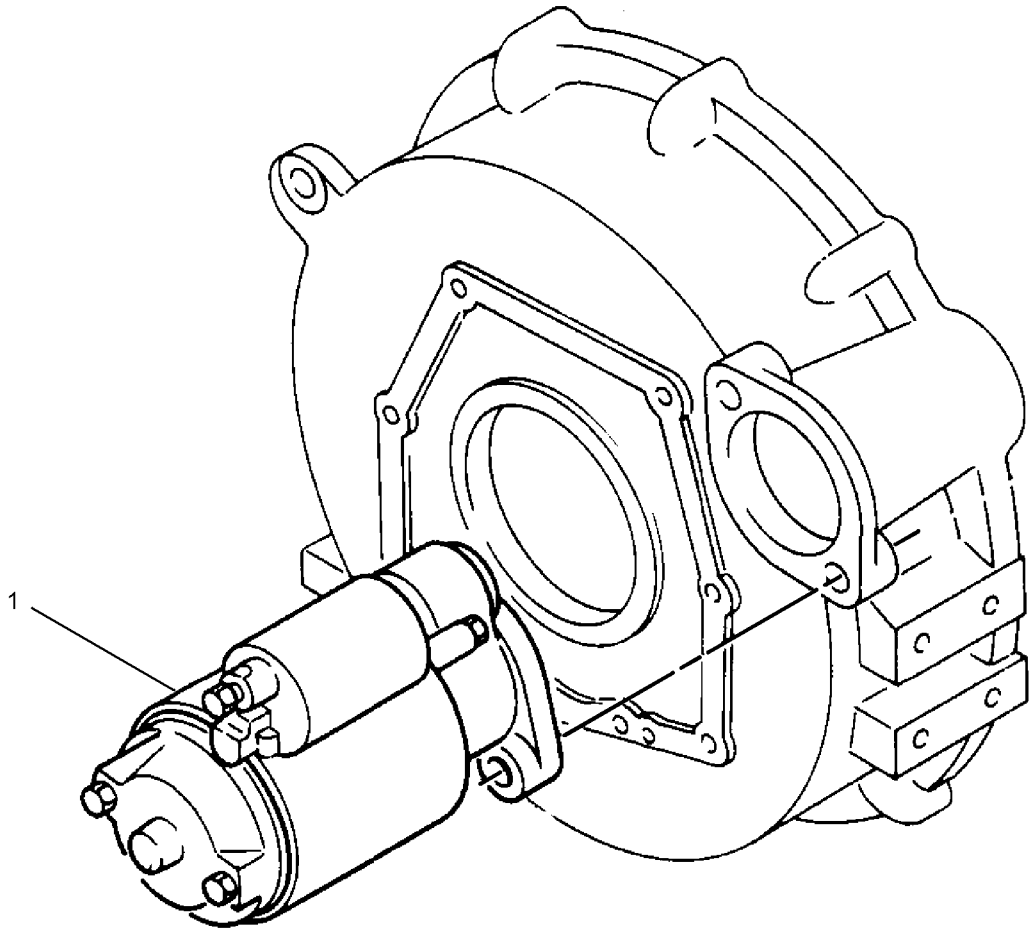

GRAPHIC #1 **<END>** g01350527

340-8308 STARTING MOTOR GP-ELECTRIC

FIELD REPLACEMENT FOR 138-7454—PAGE 172, 361-3767—PAGE 179

SMCS-1453 **i03386951**

NOTE	REF NO	GRAPHIC REF	PART NUMBER	QTY	PART NAME 1 2 3 4 5 6 (PRODUCT LEVEL)	SEE PAGE
M	1	1	**6I-0593**	2	BOLT (M10X1.5X30-MM)	
	2	1	**6I-0594**	2	NUT (M10X1.5-THD)	
M	3	1	**140-8783**	2	BOLT (M10X1.5X45-MM)	
	4	1	**333-7903**	1	KIT-TERMINAL	

M-METRIC PART

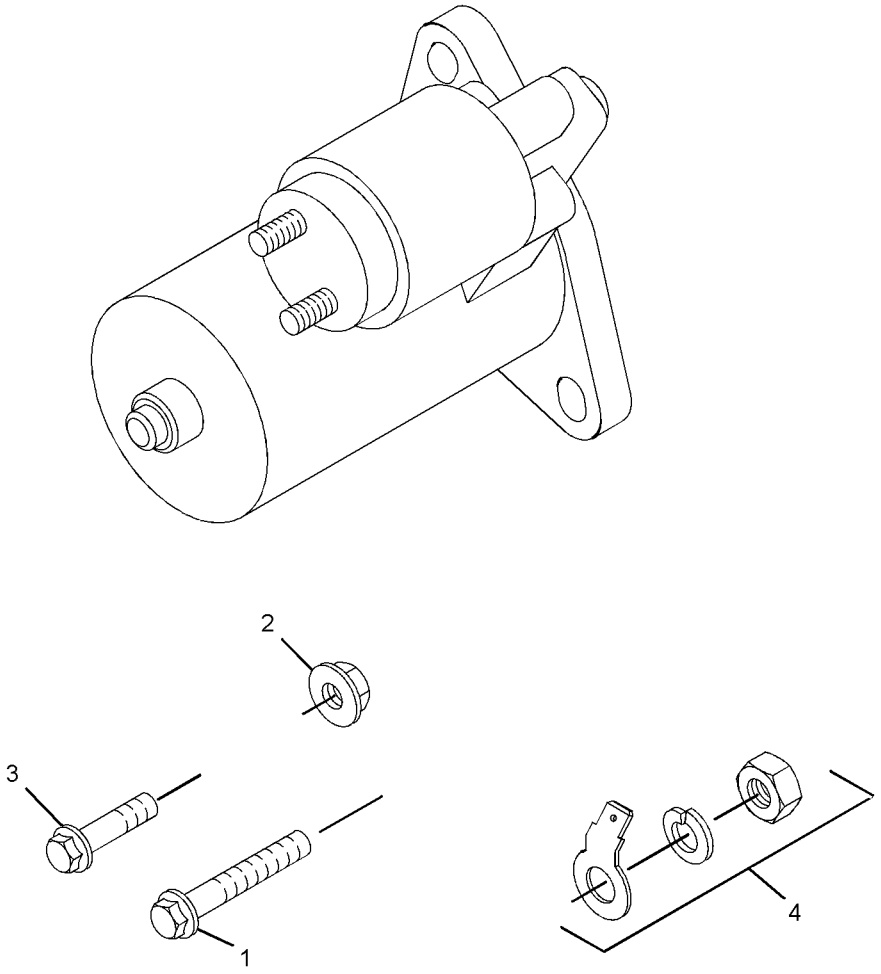

GRAPHIC #1 **<END>** g01755193

361-3767 STARTING MOTOR GP-ELECTRIC—12-VOLT

PART OF 313-1971, 319-7351 STARTING MOTOR GP-ELECTRIC
FIELD REPLACEMENT ORDER 340-8308—PAGE 178

SMCS-1453 **i03938010**

NOTE	REF NO	GRAPHIC REF	PART NUMBER	QTY	PART NAME 1 2 3 4 5 6 (PRODUCT LEVEL)	SEE PAGE
					(NO SERVICED PARTS)	

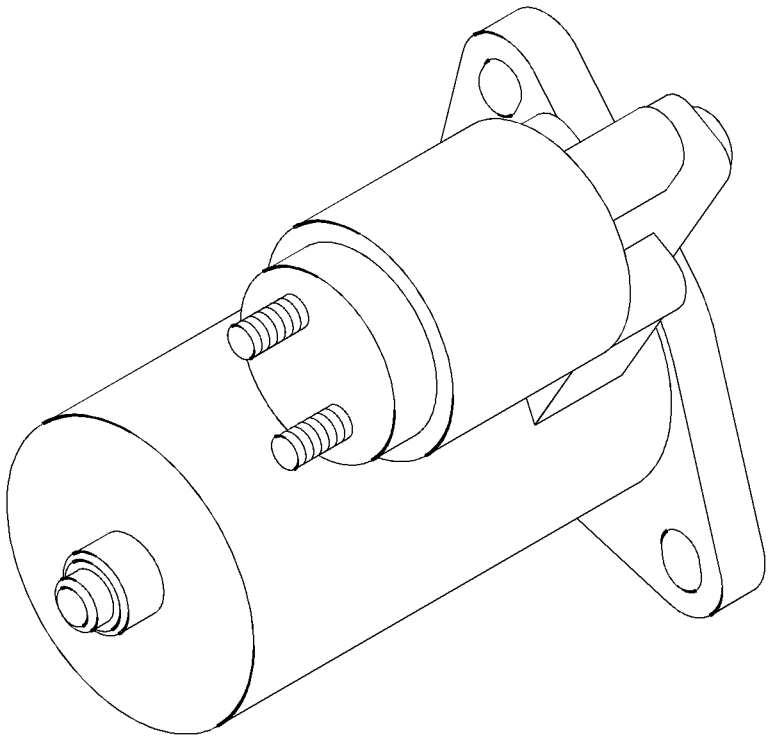

GRAPHIC #1 **<END>** g02158607

313-2024 SWITCH GP-PRESSURE–ENGINE OIL

SMCS-7400, 7421 **i02773411**

NOTE	REF NO	GRAPHIC REF	PART NUMBER	QTY	PART NAME 1 2 3 4 5 6 (PRODUCT LEVEL)	SEE PAGE
	1	1	**153-5936**	2	WASHER	
	2	1	**183-1165**	1	PLUG	
	3	1	**308-1222**	1	ADAPTER	
	4	1	**292-1993**	1	SWITCH-PRESSURE (ENGINE OIL)	

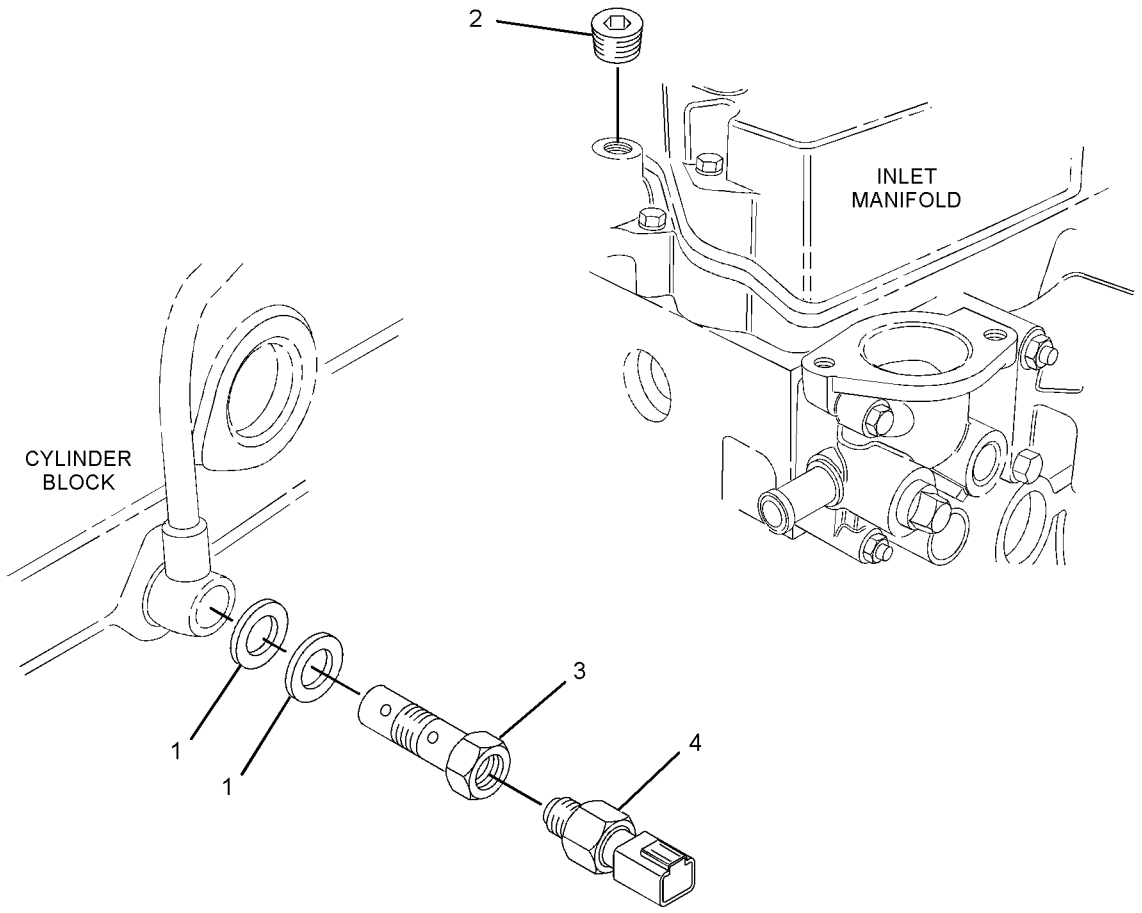

GRAPHIC #1 **<END>** g01350561

319-7358 SWITCH GP-PRESSURE

SMCS-7400, 7421 **i02969563**

NOTE	REF NO	GRAPHIC REF	PART NUMBER	QTY	PART NAME 1 2 3 4 5 6 (PRODUCT LEVEL)	SEE PAGE
	1	1	**153-5936**	2	WASHER	
	2	1	**153-6881**	1	BOLT	
	3	1	**292-1993**	1	SWITCH-PRESSURE (ENGINE OIL)	

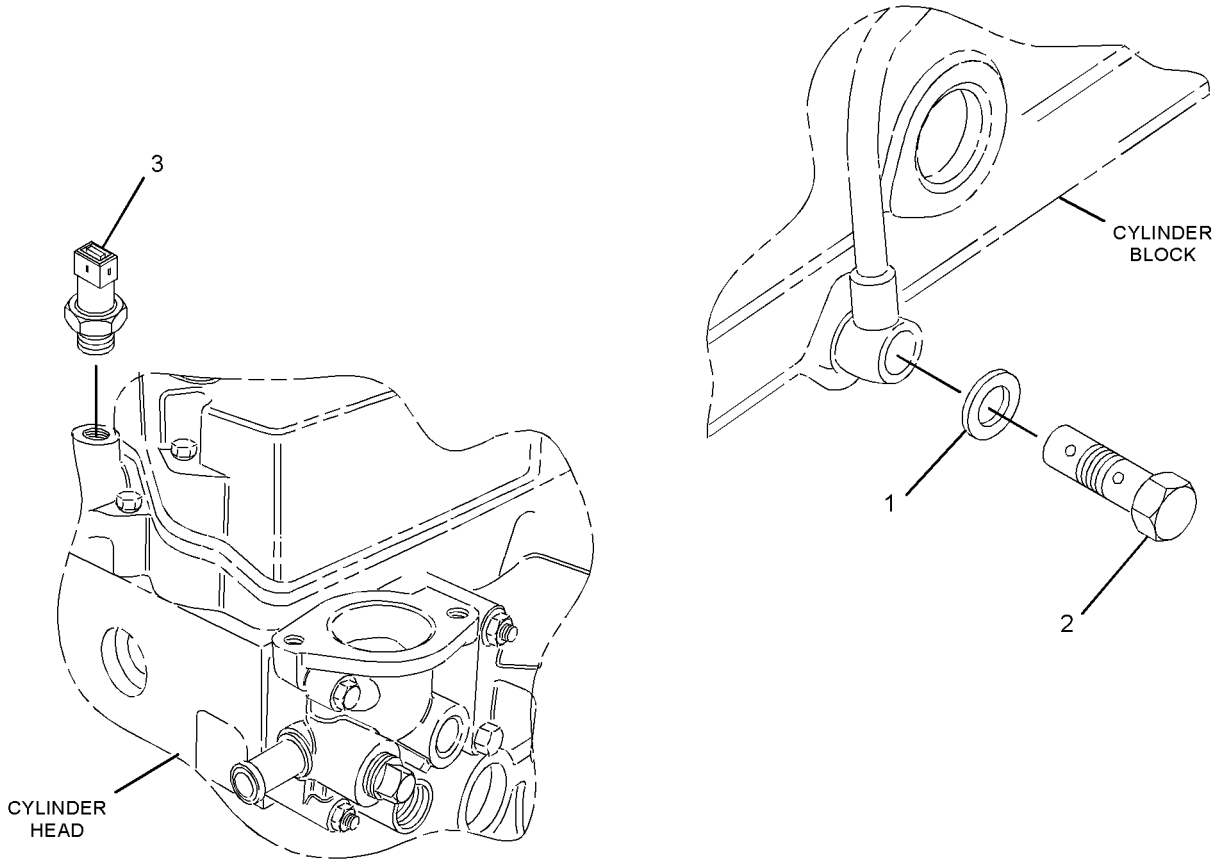

GRAPHIC #1 **<END>** g01141865

308-2314 SWITCH GP-START

SMCS-1416 **i02752305**

NOTE	REF NO	GRAPHIC REF	PART NUMBER	QTY	PART NAME 1 2 3 4 5 6 (PRODUCT LEVEL)	SEE PAGE
	1	1	**183-5460**	1	PLATE	
	2	1	**235-0977**	1	SWITCH AS-START	
	2A	1	**183-5458**	1	CAP	
	2B	1	**251-1871**	1	KEY-IGNITION	

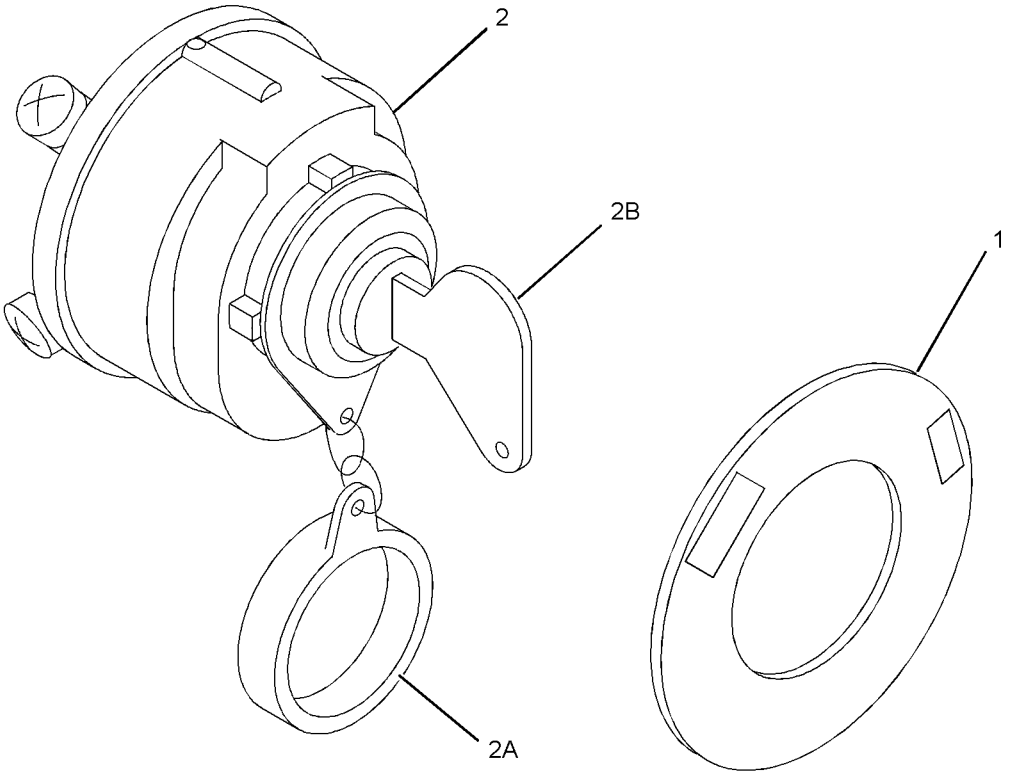

GRAPHIC #1 **<END>** g01389581

313-2035 SWITCH GP-TEMPERATURE–COOLANT

SMCS-7400 **i03524981**

NOTE	REF NO	GRAPHIC REF	PART NUMBER	QTY	PART NAME 1 2 3 4 5 6 (PRODUCT LEVEL)	SEE PAGE
	1	1	**341-3600**	1	SWITCH-TEMPERATURE (COOLANT)	

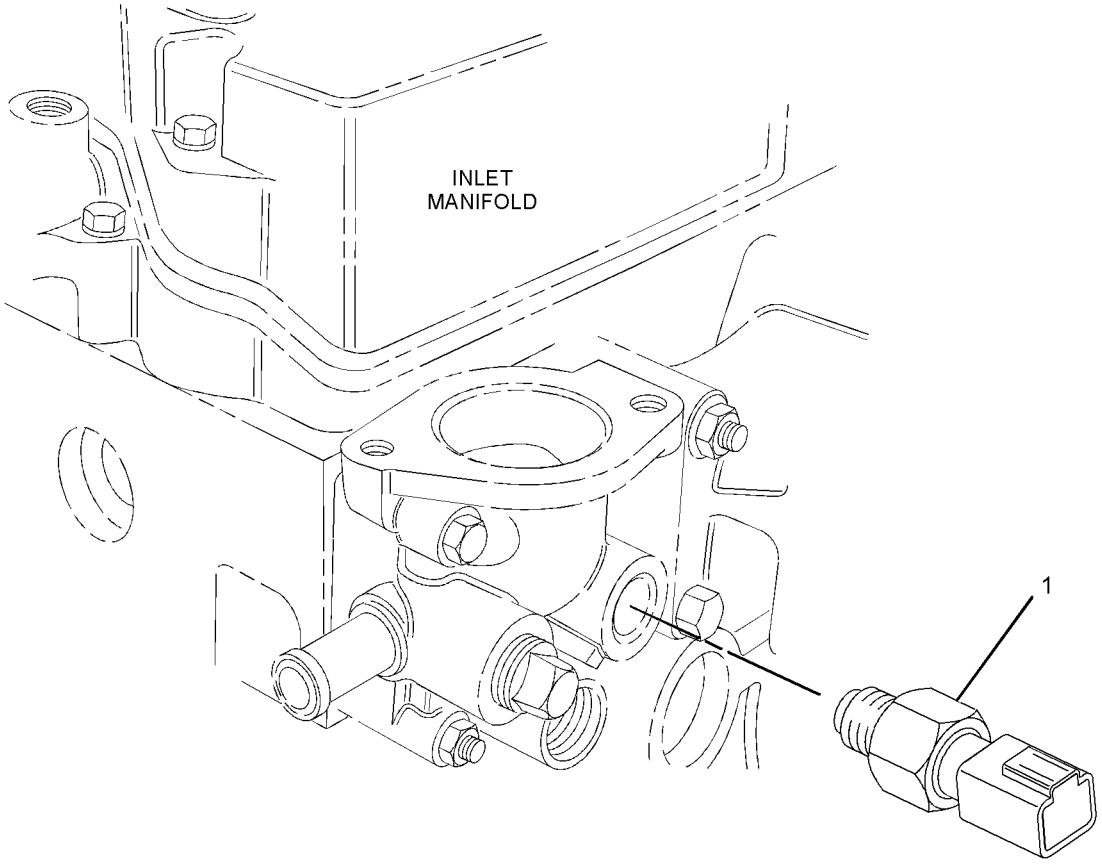

GRAPHIC #1 **<END>** g01380340

OPERATOR STATION

313-2026 LAMP GP-INDICATOR–GLOW PLUG

SMCS-7451 **i02773875**

NOTE	REF NO	GRAPHIC REF	PART NUMBER	QTY	PART NAME 1 2 3 4 5 6 (PRODUCT LEVEL)	SEE PAGE
	1	1	**197-8547**	1	LAMP (GLOW PLUG INDICATOR)	

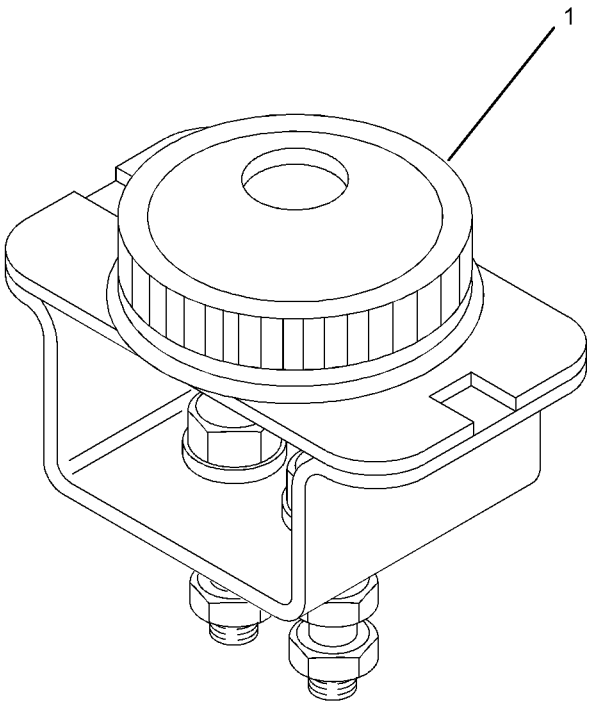

GRAPHIC #1 **<END>** g01389239

SERVICE EQUIPMENT AND SUPPLIES

6L-4502 CHART-PLATE & FILM

SMCS-7557 **i02783036**

NOTE	PART NUMBER	QTY	PART NAME 1 2 3 4 5 6 (PRODUCT LEVEL)	SEE PAGE
	311-0831	1	PLATE-IDENTIFICATION (CAT C1.1)	

<END>

SERVICE EQUIPMENT AND SUPPLIES

335-8330 KIT-ENGINE PARTS

AN ATTACHMENT

SMCS-1000 **i03214090**

NOTE	REF NO	GRAPHIC REF	PART NUMBER	QTY	PART NAME 1 2 3 4 5 6 (PRODUCT LEVEL)	SEE PAGE
	1	1	**311-5853**	2	SEAL-O-RING	
	2	1	**331-9381**	2	BALL BEARING	
	3	1	**335-8323**	1	GEAR (33-TEETH)	

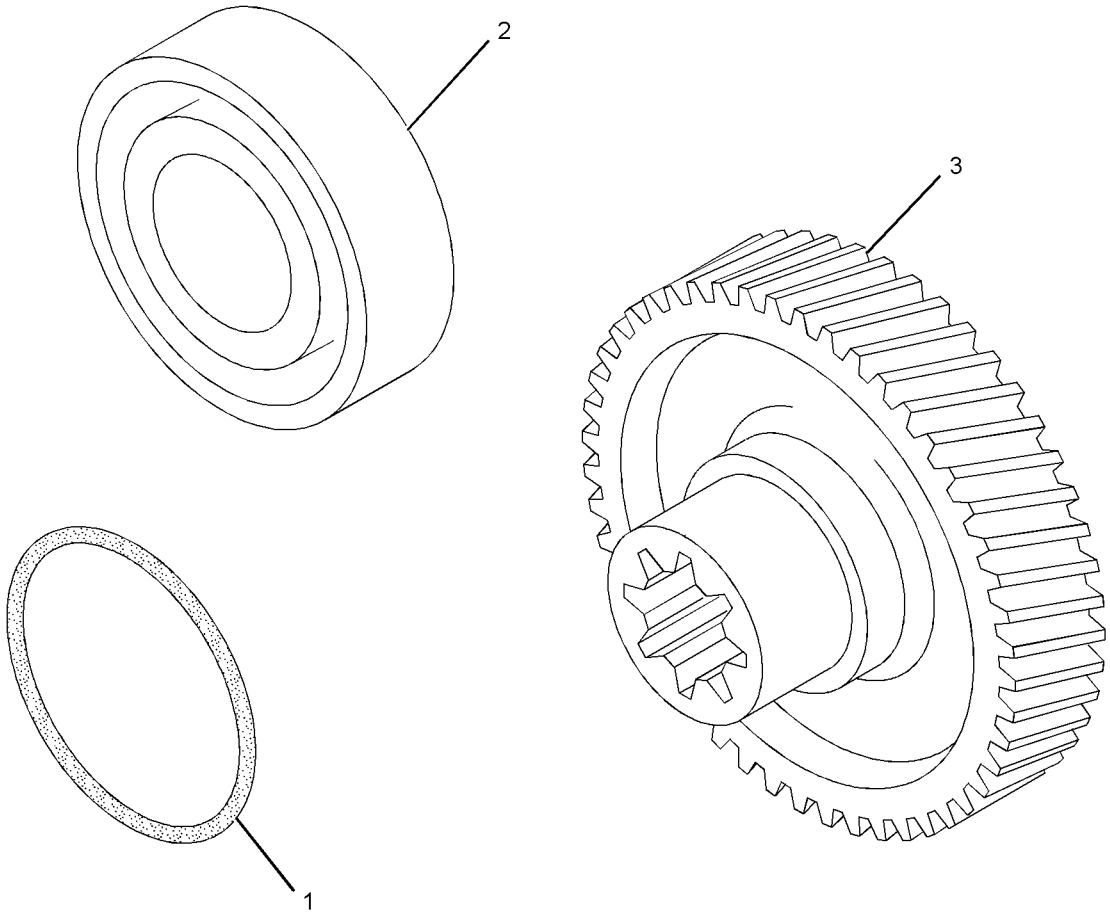

GRAPHIC #1 **<END>** g01647955

329-4428 PARTS GP-MISCELLANEOUS

SMCS-1000, 7950 **i03758893**

NOTE	REF NO	GRAPHIC REF	PART NUMBER	QTY	PART NAME 1 2 3 4 5 6 (PRODUCT LEVEL)	SEE PAGE
	1	1	**200-5976**	1	CONNECTION	
	2	1	**244-0503**	1	HOSE-RADIATOR	

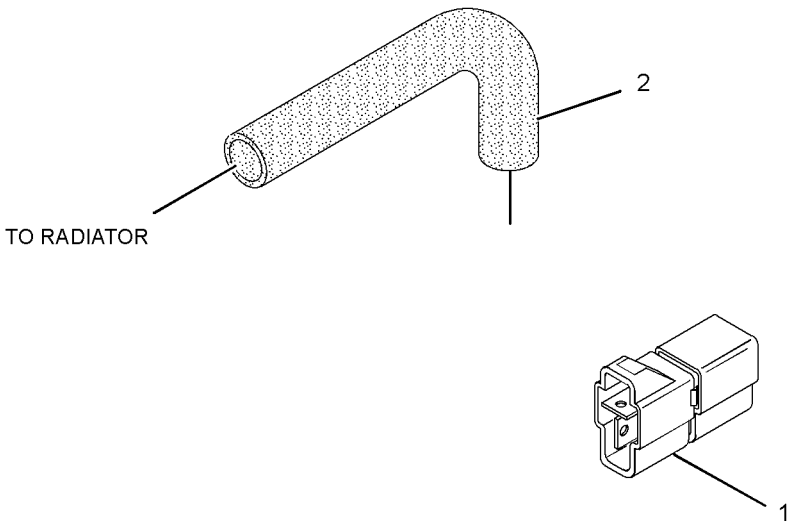

GRAPHIC #1 **<END>** g01960513

MEMORANDA

PART NUMBER INDEX

Part	Page
5	
5C-2890	131
	133
	136
	138
	140
5D-1319	63
	69
6	
6B-0924	39
6F-4855	142
	159
6I-0217	115
	119
	126
6I-0254	126
6I-0454	30
6I-0593	178
6I-0594	30
	53
	54
	56
	58
	178
6I-0846	159
6I-0917	115
	119
6I-1201	102
6L-4502	►185
7	
7W-4694	142
	159
8	
8T-0276	37
8T-4971	131
	133
	138
	140
9	
9X-6153	24
	25
	26
	27
	28
9X-8256	99
0	
032-8100	159
033-7849	142
	159
033-7854	142
	159
064-3058	115
	119
067-6269	142
	159
067-6317	142
	159
067-6987	142
	159
069-2922	142
	159
095-0641	96
1	
103-6714	126
118-9145	102
124-3815	115
	119
138-6754	176
138-7142	52
	55
	57
138-7146	52
	53
	55
	56
	57
	58
138-7149	55
	56
138-7162	142
	159
138-7166	52
	53
138-7454	►172
	174
139-5511	131
	133
	136
	138
	140
140-8783	53
	54
	56
	58
	178
144-9961	44
153-5385	39
153-5387	39
153-5391	39
153-5392	39
153-5393	39
153-5394	39
153-5395	39
153-5396	39
153-5397	37
153-5402	37
153-5403	37
153-5407	39
153-5408	37
153-5409	39
153-5518	37
153-5519	37
153-5536	88
153-5537	88
153-5538	88
153-5540	88
153-5541	88
153-5554	41
153-5555	41
153-5556	41
153-5557	41
153-5558	41
153-5559	41
153-5575	43
153-5577	96
153-5578	43
153-5579	96
153-5586	96
153-5587	96
153-5590	96
153-5591	96
153-5592	96
	115
	119
	126
	131
	133
	136
	138
	140
	142
153-5595	96
153-5933	98
	99
153-5934	31
	33
	35
153-5936	31
	33
	35
	48
	180
	181
153-5939	31
	33
	35
153-5944	43
153-5960	59
	61
	63
	65
	67
	69
	113
153-5963	93
153-6375	54
	73
153-6385	145
	148
	151
	153
	155
153-6412	89
	170
	171
153-6415	61
	63
	131
	133
	136
	138
	140
	145
	148
	151
	153
	155
153-6492	24
	25
	26
	27
	28
	91
	92
153-6496	91
	92
153-6497	29
	30
	61
153-6830	82
	86
153-6832	90
153-6833	76
	78
	80
	82
	84
	86
153-6835	76
	78
	80
	82
	84
	86
153-6837	82
	86
153-6838	24
	25
	26
	27
	28
	39
	76
	78
	80
	82

► **PRIMARY REFERENCE**

PART NUMBER INDEX

Part	Page
	84
	86
	142
153-6841	76
	78
	80
	82
	84
	86
153-6848	71
153-6849	71
153-6850	71
153-6851	71
153-6853	48
153-6859	128
153-6860	128
	129
153-6861	31
	33
	35
	47
	96
	119
	128
	129
153-6865	49
	51
153-6866	49
	50
	51
153-6867	54
	57
	58
153-6868	54
153-6879	103
153-6881	48
	181
153-7639	111
153-7640	31
	33
	35
	45
	99
	105
	110
	145
	148
	151
	153
	155
	164
153-7920	123
	124
	130
153-7978	59
	61
	63
	65
	67
	69
153-7983	131
	133
	136
	138
	140
153-7985	71
153-7987	61
	63
	131
	133
	138
	140
153-7990	24
	25
	26
	27
	28
154-1249	96
154-1399	52
	55
	57
	142
	159
	164
154-1403	131
	133
	136
	138
	140
154-1407	138
154-1673	59
	61
	65
	67
154-1817	112
	113
154-1820	112
154-1824	113
154-1831	113
154-1942	48
154-2395	52
	53
	55
	56
154-2403	29
	52
	55
	57
	75
	142
	159
	161
154-2405	50
154-2715	131
	133
	138
154-2716	145
	148
	151
	153
	155
155-7984	72
	142
	159
155-8075	168
155-8084	161
	162
155-8085	52
	55
	57
	142
	159
156-6948	96
156-6950	96
158-7936	136
160-3550	142
	159
160-4150	71
160-4151	71
160-4152	71
160-4153	71
161-1432	145
	148
	151
	153
	155
161-1433	145
	148
	151
	153
	155
161-1434	145
	148
	151
	153
	155
161-1435	145
	148
	151
	153
	155
161-8260	45
	47
	119
162-2207	131
	133
	136
	138
	140
163-5372	124
164-7619	102
165-2139	31
	33
	35
165-2140	59
	61
	63
	65
	67
	69
	162
165-2141	57
	58
	72
	109
	142
	159
165-3605	90
168-9001	72
	123
	124
	130
168-9002	162
	164
176-7719	159
180-6117	82
	86
180-6118	84
	86
	115
	119
180-8579	167
183-1163	39
183-1164	39
183-1165	180
183-3353	145
	148
	151
	153
	155
183-3539	108
183-3546	109
183-3547	109
183-3551	109
183-3605	24
	25
	26
	27
	28
183-3938	▶161
	162
183-3939	162
183-3940	162
183-3941	162
183-3942	94
	95
183-4029	164
183-4031	164
183-4032	164
183-4034	164
183-4035	164
183-4036	142
183-4037	164
183-4320	142
183-4321	142
183-4323	142
183-4330	159
183-4332	129
183-5458	182
183-5460	182
191-0563	124
191-0573	73
191-0574	73
191-9297	61
	63
	131
	133
	138
	140
197-8429	123
	124
197-8448	74
	75
	115
	119
197-8449	102
197-8540	157
	158
197-8547	184
197-8555	165

▶ **PRIMARY REFERENCE**

PART NUMBER INDEX

Part	Page
	167
197-8816	162
2	
200-5976	187
202-6616	115
	119
205-1133	104
209-1355	99
209-7084	80
209-7086	84
	86
209-7091	86
211-8559	99
215-2618	39
217-5859	31
	33
	35
217-5860	31
	33
	35
217-5862	31
	33
	35
217-7115	138
	140
217-7358	98
	99
218-2334	89
219-4669	76
	78
	80
	82
	84
	86
220-1523	101
221-1136	39
225-8534	142
226-2264	142
	159
229-5150	76
	78
	82
230-7136	76
	78
	80
	84
230-7138	76
	78
	80
	84
231-2070	41
231-2073	43
231-2183	96
231-2208	96
231-2209	96
231-2801	37
231-2802	37
231-2803	37
231-2839	168
231-3009	31
231-3010	31
	33
231-3013	31
	33
	35
231-3014	31
	33
	35
231-3020	31
	33
	35
231-3870	88
231-7702	145
	148
	151
	153
	155
231-7703	145
	148
	151
	153
	155
231-7704	145
	148
	151
	153
	155
231-7739	145
	148
	151
	153
	155
231-7853	113
231-7854	▶112
	113
231-7857	113
231-7858	105
	110
231-7859	113
231-7861	113
231-7864	48
231-8819	39
231-8920	102
232-0218	145
	148
	151
	153
	155
232-0290	145
	148
	151
	153
	155
232-0293	155
232-0792	155
232-0793	145
	148
	151
	153
	155
234-8762	162
	169
235-0977	182
236-4128	72
236-6610	115
	119
237-9315	39
237-9316	39
238-0128	119
238-1294	76
	78
	80
	84
238-1295	78
238-1330	33
239-1137	115
	119
242-7073	172
242-7076	172
242-7077	172
243-6411	142
244-0494	115
	119
244-0495	115
	119
244-0503	115
	119
	187
244-0508	126
244-0509	115
	119
244-0514	▶125
	126
244-3259	115
	119
245-9735	76
	80
246-5011	125
247-1376	126
249-7263	46
	131
	133
	136
	138
	140
251-1871	182
252-0787	102
252-1624	96
252-8372	124
252-9229	145
	148
	151
	153
254-4504	43
254-5541	165
	166
255-1297	115
256-2085	41
258-4520	115
	119
267-0022	105
267-0328	113
269-2569	142
	159
269-7005	35
271-5059	125
271-5062	125
276-1804	135
	158
276-1806	135
	158
288-6537	41
288-6538	39
288-6539	39
288-6593	98
	99
290-8014	145
	148
	151
	153
	155
290-8042	75
290-8043	75
290-8456	88
290-8458	88
291-1808	41
292-1992	126
292-1993	180
	181
292-1994	112
292-1995	112
293-3230	151
	153
293-9223	124
295-4070	159
295-8592	172
295-8593	172
295-8594	172
295-8595	172
295-8596	172
295-8597	161
295-8605	161
295-8606	161
295-8607	161
295-8608	161
3	
302-1814	▶8
302-1815	▶9
302-4187	142
	159
302-7776	135
	158
302-7777	135
	158
302-7778	135
	158
303-4104	▶10
303-4105	▶11
303-4106	▶12
303-4107	▶13
303-4108	▶14
304-3560	39
304-4764	37
304-4766	37
307-8672	168
307-9829	▶15
308-1167	168
308-1222	180
308-1878	131
	133
	136
	138
	140

▶ **PRIMARY REFERENCE**

PART NUMBER INDEX

Part	Page
308-1882	131
	133
	136
	138
	140
308-1889	131
	133
	136
	138
	140
308-1892	131
	133
	136
	138
	140
308-1897	63
	131
	133
	138
	140
308-1901	61
	63
	131
	133
	138
	140
308-1904	24
	25
	26
	27
	28
308-1914	170
308-1929	82
308-2298	1
	2
	3
	4
	5
	6
	7
	8
	9
	10
	11
	12
	13
	14
	15
	16
	17
	18
	19
	20
	21
	22
	23
	▶101
308-2309	4
	5
	6
	7
	8
	9
	10
	11
	12
	13
	14
	15
	16
	23
	▶157
308-4266	131
	133
	136
	138
	140
308-4735	1
	2
	3
	4
	5
	6
	7
	8
	9
	10
	11
	12
	13
	14
	15
	16
	17
	18
	19
	20
	21
	22
	▶89
309-6728	131
	133
	136
	138
	140
309-6729	136
	140
309-6732	61
	63
	131
	133
	138
	140
311-0655	131
	133
	136
	138
	140
311-0831	185
311-1171	29
311-5829	21
	▶45
311-5843	61
311-5847	24
	25
	26
	27
	28
311-5851	110
311-5852	29
	30
311-5853	29
	30
	186
311-5854	29
311-9048	142
311-9622	133
	136
312-1582	145
	148
	151
	153
	155
312-1583	145
	148
	151
	153
	155
313-1957	1
	2
	3
	4
	5
	6
	7
	8
	9
	10
	11
	12
	13
	14
	15
	16
	17
	18
	19
	20
	21
	22
	23
	▶39
313-1962	1
	2
	3

▶ **PRIMARY REFERENCE**

PART NUMBER INDEX

Part	Page
	4
	5
	6
	7
	8
	9
	10
	11
	12
	13
	14
	15
	16
	17
	18
	19
	20
	21
	22
	23
	▶37
313-1963	1
	2
	3
	4
	5
	6
	7
	8
	9
	10
	11
	12
	13
	14
	15
	16
	17
	18
	19
	20
	21
	22
	23
	▶88
313-1964	1
	2
	3
	4
	5
	6
	7
	8
	9
	10
	11
	12
	13
	14
	15
	16
	17
	18
	19
	20
	21
	22
	23
	▶43
313-1965	1
	2
	3
	4
	5
	6
	7
	8
	9
	10
	11
	12
	13
	14
	15
	16
	▶96
313-1966	1
	2
	3
	4
	5
	6
	7
	8
	9
	10
	11
	12
	13
	14
	15
	16
	▶48
313-1967	10
	11
	15
	16
	17
	18
	21
	22
	23
	▶59
313-1968	10
	11
	15
	16
	17
	18
	19
	20
	21
	22
	23
	▶145
313-1969	9
	10
	11
	13
	16
	17
	18
	22
	23
	▶52
	▶53
313-1970	1
	2
	9
	10
	11
	13
	16
	17
	18
	21
	22
	23
	▶49
313-1971	1
	3
	4
	5
	6
	7
	8
	9
	10
	11
	12
	13
	14
	15
	16
	18
	19
	20
	23
	▶174
	▶175
313-1972	1
	2
	3
	4
	5
	6
	7
	8
	9
	10
	11
	12
	13
	14
	15
	16
	17
	18
	19
	20
	21
	22
	23
	▶93
313-1973	1
	3
	4
	5
	6
	7
	8
	9
	10
	11
	12
	13
	14
	15
	16
	19
	20
	▶76
	▶78
313-1975	1
	2
	3
	4
	5
	6
	7
	8
	9
	10
	11
	12
	13
	14
	15
	16
	17
	18
	19
	20
	22
	23
	▶98
313-1976	1
	2
	3
	4
	5
	6
	7
	8
	9
	10
	11
	12
	13

▶ **PRIMARY REFERENCE**

PART NUMBER INDEX

Part	Page
	14
	15
	16
	18
	19
	20
	21
	23
	▶91
313-1978	1
	2
	3
	4
	5
	6
	7
	8
	9
	10
	11
	12
	13
	14
	15
	16
	17
	18
	19
	20
	21
	22
	23
	▶113
313-1980	2
	3
	4
	5
	6
	7
	8
	9
	10
	11
	12
	13
	14
	15
	16
	17
	18
	19
	20
	21
	22
	23
	▶110
313-1981	8
	9
	15
	16
	22
	▶108
313-1982	4
	5
	6
	7
	8
	9
	10
	11
	12
	13
	14
	15
	16
	17
	18
	19
	20
	21
	22
	23
	▶31
313-1991	1
	2
	3
	4
	5
	6
	7
	8
	9
	10
	11
	12
	13
	14
	15
	16
	17
	18
	19
	20
	21
	22
	23
	▶162
313-1983	4
	5
	6
	7
	8
	9
	10
	11
	12
	13
	14
	15
	16
	20
	23
	▶94
313-1984	1
	2
	8
	9
	15
	16
	17
	21
	23
	▶29
313-1986	3
	4
	5
	6
	7
	8
	9
	10
	11
	12
	13
	14
	16
	17
	18
	19
	20
	21
	22
	23
	▶168
313-2009	1
	2
	3
	4
	5
	6
	7
	8
	9
	10
	11
	12
	13
	14
	15
	16
	17
	18
	19
	20
	22
	23
	▶128
313-2021	1
	2
	3
	4
	5
	6
	7
	8
	9
	10
	11
	12
	13
	14
	15
	16
	17
	18
	19
	20
	21
	22
	23
	▶159
313-2022	3
	4
	5
	6
	7
	8
	9
	10
	11
	12
	13
	14
	15
	16
	17
	18
	19
	20
	21
	22
	23
	▶73
313-2023	2
	3
	4
	5
	6
	7
	8
	9
	10
	11
	12
	13
	14
	15
	16
	17
	19
	20
	22
	23
	▶170
313-2024	2
	3
	4
	5
	6
	7
	8
	9
	10
	11
	12
	13
	14
	15
	16
	18
	19
	20
	22
	23
	▶180
313-2025	131

▶ **PRIMARY REFERENCE**

PART NUMBER INDEX

Part	Page
	133
	136
	138
	140
313-2026	3
	4
	5
	6
	7
	8
	9
	10
	11
	12
	13
	14
	15
	16
	18
	19
	20
	21
	23
	▶184
313-2027	37
313-2032	59
	63
	65
	67
	69
313-2034	29
	61
313-2035	1
	2
	3
	4
	5
	6
	7
	8
	9
	10
	11
	12
	13
	14
	15
	16
	17
	18
	19
	20
	21
	22
	23
	▶183
313-2038	24
	25
	26
	28
313-2039	145
	148
313-2040	145
	148
	151
	153
	155
313-5832	61
	63
	131
	133
	138
	140
313-5833	61
	63
	131
	133
	138
	140
313-6213	8
	9
	12
	13
	14
	▶61
	▶63
313-6214	8
	9
	13
	14
	▶136
313-6215	8
	9
	13
	14
	▶24
313-6216	8
	9
	12
	13
	14
	▶148
313-6217	8
	15
	21
	▶54
313-6218	8
	15
	▶50
313-9323	24
	25
	26
	27
	28
315-5237	171
316-6324	▶17
316-8410	▶1
316-8414	▶2
317-1548	▶18
317-6706	1
	3
	4
	17
	18
	19
	20
	21
317-7194	21
	▶104
318-1667	▶3
318-1668	▶19
318-1669	▶20
318-1670	▶4
318-5038	169
318-7060	▶5
318-7061	▶6
318-7062	▶7
318-8405	▶21
318-8803	3
	4
	5
	6
	7
	10
	12
	19
	20
	▶119
318-8804	3
	4
	5
	6
	7
	10
	11
	12
	13
	14
	18
	19
	20
	21
	▶126
318-8805	126
318-8815	11
	13
	14
	18
	▶115
318-8879	3
	4
	5
	6
	7
	12
	14
	19
	20
	▶55
	▶56
318-8880	3
	4
	5
	6
	7
	12
	14
	19
	20
	▶51
319-7268	▶41
	43
319-7351	2
	17
	21
	22
	▶176
	▶177
319-7352	15
	17
	18
	22
	▶80
319-7354	1
	2
	3
	15
	17
	18
	19
	21
	22
	▶164
319-7355	1
	2
	3
	17
	18
	19
	21
	22
	▶95
319-7357	1
	18
	21
	▶171
319-7358	1
	17
	21
	▶181
319-7359	61
319-7366	78
	80
	82
	84
	86
320-9108	2
	▶90
320-9114	1
	3
	4
	5
	6
	7
	19
	20
	21
	23
	▶169
321-3140	4
	5
	7
	19
	▶65
321-3142	4
	5
	7
	19

▶ **PRIMARY REFERENCE**

PART NUMBER INDEX

Part	Page
	▶138
321-3143	4
	5
	7
	19
	▶25
321-3145	138
	140
321-3334	4
	5
	7
	19
	▶151
321-4249	61
	63
	131
	133
	138
	140
321-5906	30
321-6741	2
	21
	▶166
321-8210	61
322-3805	17
	22
	▶92
322-3806	1
	17
	▶111
322-3808	1
	8
	9
	15
	16
	17
	22
	23
	▶46
322-7485	43
322-7492	131
	133
	136
	138
	140
323-2407	3
	6
	20
	▶67
323-2408	3
	6
	20
	▶140
323-2409	3
	6
	20
	▶26
323-2410	3
	6
	20
	▶153
324-3396	136
	138
	140
324-3398	131
	133
324-4598	170
	171
324-9024	91
	92
325-5589	15
	▶33
325-5596	15
	▶129
325-5924	115
	119
325-5927	115
	119
325-5932	115
	119
325-5938	115
	119
325-5939	115
	119
325-5940	115
	119
326-0053	164
327-4311	49
327-5129	131
327-5149	51
327-5257	50
327-7700	17
	▶109
328-1426	27
328-1427	155
328-1429	1
	2
	▶69
328-1430	1
	2
	▶131
328-1431	1
	2
	▶27
328-1432	1
	2
	▶155
328-1433	1
	2
	▶57
	▶58
328-1434	1
	▶105
328-1435	1
	2
	▶35
328-6606	106
	115
329-2155	▶22
329-4419	2
	▶82
329-4422	2
	▶106
329-4423	2
	▶47
329-4424	2
	▶130
329-4427	2
	▶74
329-4428	2
	▶187
329-8576	30
329-8577	3
	4
	5
	6
	7
	10
	11
	12
	13
	14
	18
	19
	20
	22
	▶30
329-9764	10
	11
	15
	16
	17
	18
	21
	22
	23
	▶133
329-9765	10
	11
	15
	16
	17
	18
	21
	22
	23
	▶28
330-5731	▶23
330-9189	131
	133
	136
	138
	140
331-9381	186
332-1361	63
	131
	133
	138
	140
332-9144	74
	75
333-7903	178
334-0271	84
334-0272	98
	99
334-0273	102
334-0275	102
334-0277	21
	▶84
334-0278	21
	▶99
334-0279	21
	▶102
334-0280	15
	21
	▶142
334-0281	21
	▶75
334-0732	131
	133
	136
	138
	140
334-7295	126
334-7437	115
	119
334-8535	107
334-8537	23
	▶107
334-8538	23
	▶86
335-5578	131
	133
	136
	138
	140
335-8323	186
335-8330	▶186
336-2073	1
	▶167
336-2965	131
	133
	136
	138
	140
337-6523	164
339-3016	1
	2
	3
	4
	5
	6
	7
	8
	9
	10
	12
	13
	14
	15
	16
	17
	18
	19
	20
	21
	22
	23
	▶71
340-0199	169
340-8308	▶178
341-2961	115
	119
341-3600	183
343-8044	23
	▶44
356-3225	37
359-5135	59
	63
	65

▶ **PRIMARY REFERENCE**

PART NUMBER INDEX

Part	Page	Part	Page	Part	Page	Part	Page
	67						
	69						
361-3767	175						
	177						
	▶179						

▶ **PRIMARY REFERENCE**

MEMORANDA



© 2010 CATERPILLAR
ALL RIGHTS
RESERVED

CAT, CATERPILLAR, THEIR RESPECTIVE LOGOS, “CATERPILLAR YELLOW” AND THE POWER EDGE TRADE DRESS, AS WELL AS CORPORATE AND PRODUCT IDENTITY USED HEREIN, ARE TRADEMARKS OF CATERPILLAR AND MAY NOT BE USED WITHOUT PERMISSION.

PRINTED IN
U.S.A.