SEBP5284-77 (en-us)
November 2025

Parts Manual

C2.2 Industrial Engine

G7L1-UP (Engine)

Scan to find and purchase genuine Cat® parts and related service information.

Product and Dealer Information

Note: For product identification plate locations, see the section “Product Identification Information” in the Operation and Maintenance Manual.

Delivery Date: _____

Product Information

Model: _____

Product Identification Number: _____

Engine Serial Number: _____

Transmission Serial Number: _____

Generator Serial Number: _____

Attachment Serial Numbers: _____

Attachment Information: _____

Customer Equipment Number: _____

Dealer Equipment Number: _____

Dealer Information

Name: _____ Branch: _____

Address: _____

_____

_____

	Dealer Contact	Phone Number	Hours
Sales:	_____	_____	_____
Parts:	_____	_____	_____
Service:	_____	_____	_____

MEMORANDA

TABLE OF CONTENTS

NAME	PAGE
GENERAL INFORMATION	A3
REPAIR ALTERNATIVES	A5
SUPPLEMENTAL COOLANT ADDITIVES	A6
MAINTENANCE PARTS	A7
INDEX	A10
ENGINE ARRANGEMENT	1
ENGINE AR	1
ENGINE AR-PRIMARY	7
BASIC ENGINE	144
ACCESSORY GP-ENGINE	144
CAMSHAFT AS	145
CAMSHAFT GP	147
COVER GP-CYLINDER HEAD	188
COVER GP-ENGINE	192
COVER GP-FRONT HOUSING	193
COVER GP-VALVE MECHANISM	195
CRANKSHAFT GP	219
CYLINDER BLOCK GP	229
CYLINDER BLOCK GP-LONG	248
CYLINDER HEAD AS	249
CYLINDER HEAD GP	257
DRIVE GP-AUXILIARY	274
DRIVE GP-FAN	275
EXTENSION GP-FAN	278
FASTENER GP-COVER	283
FASTENER GP-FRONT HOUSING	284
FLYWHEEL GP	287
HOUSING GP-FLYWHEEL	297
HOUSING GP-FRONT	310
LIFTING GP-ENGINE	391
MOUNTING GP-ENGINE	397
PAN GP-OIL	398
PISTON & ROD GP	426
PLUG GP-CYLINDER HEAD	441
PLUG GP-ENGINE	442
PLUG GP-OIL PAN	444
PULLEY GP-AUXILIARY DRIVE	447
PULLEY GP-CRANKSHAFT	448
PULLEY GP-FAN	451
PULLEY GP-WATER PUMP	454
ROCKER ARM AS	456
ROCKER ARM GP	458
SHAFT GP-IDLER	459
V-BELT GP	460
VALVE & PLUG GP-OIL PAN DRAIN	466
VALVE MECHANISM GP	467
LUBRICATION SYSTEM	480
COVER GP-OIL FILLER	480
FASTENER GP-ENGINE OIL LINES	481
FILLER GP-ENGINE OIL	482
FILTER GP-ENGINE OIL	491
LINES GP-ENGINE OIL	493
MOUNTING GP-ENGINE OIL FILTER	495
VALVE GP-PRESSURE CONTROL	496
COOLING SYSTEM	497
CONNECTION GP-WATER	497
CONNECTOR GP-CAB HEATER LINES	501
FAN GP	504
FAN GP-BLOWER	505
FAN GP-SUCTION	506
HOUSING GP-WATER REGULATOR	511
LINES GP-COOLANT	512
PUMP GP-WATER	514
RADIATOR & FAN GP	540
RADIATOR AS	554
RADIATOR GP	555
AIR INLET AND EXHAUST SYSTEM	575
AIR CLEANER GP	575
CONNECTION GP-EXHAUST	595
COVER GP-EXHAUST	599
FASTENER GP-EXHAUST MANIFOLD	601
FASTENER GP-FILTER	602
GASKET GP-EXHAUST MANIFOLD	603
MANIFOLD GP-EXHAUST	604
MOUNTING GP-EXHAUST	609
MUFFLER GP	611
TURBOCHARGER GP	612
FUEL SYSTEM	681
CONTROL GP-GOVERNOR	681
CONTROL GP-THROTTLE	750
FILTER & MTG GP-FUEL	751
FILTER AS-FUEL	752
FILTER GP-FUEL	754
GOVERNOR GP	763
LEVER GP-CONTROL	793
LEVER GP-GOVERNOR CONTROL	794
PUMP & MTG GP-FUEL TRANSFER	795
PUMP GP-FILTER & FUEL TRANSFER	796
PUMP GP-FUEL INJECTION	812
PUMP GP-FUEL PRIMING	841
PUMP GP-FUEL PRM & PRIM FILTER	845
PUMP GP-FUEL TRANSFER	850

TABLE OF CONTENTS

NAME	PAGE
ELECTRICAL AND STARTING SYSTEM	866
ALTERNATOR GP-CHARGING	866
CONNECTION GP-ELECTRICAL	873
CONTROL GP-ELECTRONIC	877
CONTROL GP-ENGINE ELECTRONIC	878
CONTROL GP-ENGINE SPEED	882
CONTROL GP-MANUAL START/ STOP	884
GLOW PLUG GP	886
SENSOR GP-SPEED	890
SENSOR GP-TEMPERATURE	891
SHUTOFF GP-ELECTRICAL	894
SOLENOID GP-SHUTOFF	895
STARTING MOTOR GP-ELECTRIC	898
SWITCH GP-PRESSURE	911
SWITCH GP-START	921
SWITCH GP-TEMPERATURE	922
OPERATOR STATION	924
LAMP GP	924
SERVICE EQUIPMENT AND SUPPLIES	926
CAP GP-PROTECTION	926
FILM GP	927
PARTS GP-MISCELLANEOUS	931
PLATE & FILM GP	933
PART NUMBER INDEX	B1

1. ENGINE IDENTIFICATION

Cat engines are identified with Serial Numbers and Arrangement Numbers. In some cases, Modification Numbers are also used. The serial number plate which shows these numbers is mounted on the engine.

Cat dealers need this information to determine which components were included on the engine when it was assembled at the factory. This permits accurate identification of replacement part numbers.

2. ORDERING PARTS

⚠ WARNING

When replacement parts are required for this product Caterpillar recommends using Caterpillar replacement parts or parts with equivalent specifications including, but not limited to, physical dimensions, type, strength and material.

Failure to heed this warning can lead to premature failures, product damage, personal injury or death.

Quality Cat replacement parts are available from Cat dealers throughout the world. Their parts inventories are up to date and include all parts normally required to protect your investment in Cat Engines. Dealers may offer repair kits or remanufactured parts to allow selection of the most effective repair alternative for a particular situation. When ordering parts, your order should specify the quantity, part number, part name, and the serial number/product identification number of the engine for which the parts are needed.

3. PARTS MANUAL ORGANIZATION

Product information in this manual is presented as "information elements" that represent all of the components for the specific model. An Engine Arrangement is an example of an information element. The information elements are organized alphabetically by part name and secondarily by part number within each major section of the manual.

4. TABLE OF CONTENTS

A table of contents (TOC) is found at the beginning of the manual. The TOC lists each section of the manual with a complete list of all information elements organized as they appear in the manual. Page numbers are provided for quick reference to detailed parts identification illustrations and serviceable consist lists.

5. MAINTENANCE PARTS INDEX

The Maintenance Parts Index, located near the beginning of the manual, references most frequently used maintenance part numbers, providing description, quantity, usage and page number. This information is organized alphabetically by part description.

6. INDEX

The index located near the front of the manual is an alphabetical listing of all information elements included in the manual. Page numbers are provided for quick reference to detailed parts identification illustrations and serviceable consist lists.

7. PART NUMBER INDEX

A numerical index listing all part numbers and the corresponding page number(s) appears at the back of the manual.

8. CAPTIONS

Captions located at the beginning each information element identify the part number and part name along with additional descriptive information. S/N information found in each caption should be used to select correct information for a specific engine. Field replacement options, identification of optional attachment components, and where used ("part of") information is also provided.

The first line of a caption is shown in larger type font to indicate the beginning of an information element. Captions for additional pages that may be required to illustrate an information element will be shown in standard type font and will include the term (contd.).

9. NON-SERVICED PARTS

In some instances it is necessary to display non-serviced parts that are a link to lower level serviceable consist lists. These non-serviced part numbers are shown in italic type indicating that they are not available. All consist lists have not been converted to reflect this enhancement.

10. PARTS LIST REFERENCE NUMBERS

Numbers shown in the Ref No column correspond to numbers used in the associated graphic(s). An alphabetic suffix may be added to a reference number to identify lower level consist items. Numbers shown in the Graphic Ref column refer to the graphic number identifier displayed in the lower left corner of each illustration. The Graphic Ref number may be used in combination with the item Ref No to determine the correct part number. There may be intentional omission of a Ref No in a consist list as information is updated to reflect the latest serviceable part numbers.

11. INDENTED PART NAMES

When a part name is indented in a parts list, it is part of (included in) the group or assembly under which it is indented.

12. ILLUSTRATION REFERENCE LETTERS

When necessary, illustrations contain reference letters (A, B, C etc.) that are intended to track lines and harnesses from one point to another. They are also used to show where to reconnect illustrations that have been separated.

13. ABBREVIATIONS AND SYMBOLS

O.D. – Outside Diameter
I.D. – Inside Diameter
A – Not Part Of This Group
B – Use As Required
C – Change From Previous Type
D – Order By The Meter
E – Order By The Centimeter
F – Not Shown
G – Order By The Inch
I – Refer To Hydraulic Information System
M – Metric Part
R – Remfg Part May Be Available
Y – Separate Illustration
Z – Not Serviced Separately

14. DESCRIPTION OF TYPE CHANGES

Type - A type is defined as any configuration change that requires an additional Information Element for an Arrangement, Group, or Assembly. If serial number breaks for types are not available, a type # (Type 1, Type 2, etc.) will be displayed in the caption. These "type" changes are identified with a "C" note (change from previous type) in the Parts List. Only the "types" that apply to this Parts Manual will be included. Additional types may exist causing "C" notes to appear on an Information Element when no other types are shown.

15. <END>

This symbol indicates the end of an information element.

16. SUPPLEMENTAL COOLANT ADDITIVES

Information for Supplemental Coolant Additives is no longer included in this manual. See your Operation and Maintenance Manual for coolant maintenance information.

NOTE:

Continuing improvement and advancement of product design may cause changes to your engine which may not be included in this publication. Whenever a question arises regarding your Cat product or this publication, please consult your Cat dealer for the latest available information.

REMANUFACTURED COMPONENTS

As an option when making repairs consider Cat Remanufactured Components. Components that are available through the Cat Remanufactured Program are identified three ways in the parts book:

- with the letter R in the note field of the parts list
- with an R* at the beginning of the first line of the caption
- with an *R at the end of the first line of the caption

Typical components included in the Remanufacturing Program include:

ALTERNATORS
CONNECTING RODS
CRANKSHAFTS - UNDERSIZE
CRANKSHAFTS - UPGRADE TO NEW
CYLINDER HEADS
ELECTRONIC CONTROL MODULES (ECM)
ELECTRONIC SENSORS
FUEL INJECTORS
FUEL NOZZLES
FUEL PUMPS
GOVERNORS
OIL PUMPS
PISTONS
SHORT BLOCKS
STARTERS
TURBOCHARGERS - COMPLETE
TURBOCHARGER CARTRIDGES
WATER PUMPS

Cat Remanufactured engines for many engine arrangements are also available.

SUPPLEMENTAL COOLANT ADDITIVES

CUSTOMER BENEFITS:

Protects against cavitation, foam, erosion, corrosion, and scale buildup in cooling systems.

- Provides measured coolant conditioner.

DESCRIPTION:

Additives deplete from the coolant with normal operation. For this reason, Supplemental Coolant Additives (SCA) must be added to all heavy duty coolants at regular intervals. In addition, when not using a fully formulated, pre-charged antifreeze, like Cat DEAC, an initial charge of SCA must be added to the cooling system. The amount of SCA added to the system is dependent on the capacity of the system.

The SCA for initial fill is provided as a liquid. SCA's for maintenance intervals are available in liquid form and as a spin-on element. (No Spin-on available for 3600 Family of Engines)

NOTE:

The amount of SCA added at initial fill is not the same as the amount added at maintenance intervals.

The coolant additive elements can be used with any ethylene or propylene glycol type antifreeze which meets ASTM D4985 or ASTM D5345 Specifications.

NOTE:

For use with standard heavy duty coolant only, not for use with Extended Life Coolant.

PARTS NEEDED:

Cooling System Capacity		Liquid SCA at Initial Fill	Liquid SCA at Maintenance*	Spin-on SCA Maintenance Element*
Liters	Gallons			
22-30	(6-8)	3P-2044 (1)	6V-3542 (1)	111-2370 (1)
30-38	(8-10)	3P-2044 (1) 6V-3542 (1)	111-2372 (1)	111-2369 (1)
38-49	(10-13)	3P-2044 (1) 8T-1589 (1)	111-2372 (1)	111-2369 (1)
49-64	(13-17)	3P-2044 (2)	8T-1589 (1)	9N-3368 (1)
64-83	(17-22)	3P-2044 (2) 8T-1589 (1)	111-2372 (1) 6V-3542 (1)	111-2371 (1)
83-114	(22-30)	3P-2044 (3) 8T-1589 (1)	3P-2044 (1)	9N-3718 (1)
114-163	(30-43)	3P-2044 (5)	3P-2044 (1) 6V-3542 (1)	111-2371 (2)
163-242	(43-64)	3P-2044 (8)	3P-2044 (2)	9N-3718 (2)

* Normal maintenance period is 250 hrs. See your Operation and Maintenance Manual for complete coolant maintenance instructions.

( ) Indicates quantity required.

MAINTENANCE PARTS

DESCRIPTION	PART NUMBER	QTY	WHERE USED	PAGE
AIR INLET AND EXHAUST SYSTEM				
FILTER ELEMENT AS-AIR (TURBOCHARGER)	247-1378	1	AIR CLEANER GP	575
FILTER ELEMENT-AIR	247-1380	1	AIR CLEANER GP	575
	551-6183	1	AIR CLEANER GP	586
SEAL-VALVE COVER	233-0695	1	TURBOCHARGER GP	612
BASIC ENGINE				
KEY	153-5518	1	CRANKSHAFT GP	219
PLUG-DRAIN	423-6224	2	PLUG GP-OIL PAN	446
PLUG-DRAIN (ENGINE OIL DRAIN)	165-3605	2	PLUG GP-OIL PAN	445
PLUG-DRAIN (ENGINE OIL PAN)	423-6224	2	PLUG GP-OIL PAN	444
		1	VALVE & PLUG GP-OIL PAN DRAIN	466
SCREEN-SUCTION	293-4785	1	PAN GP-OIL	416
SEAL-VALVE COVER	233-0695	1	ACCESSORY GP-ENGINE	144
		1	COVER GP-CYLINDER HEAD	188 190
		1	COVER GP-VALVE MECHANISM	1951- 9820- 1204
STRAINER	425-6360	1	PAN GP-OIL	425
STRAINER (ENGINE OIL)	305-0584	1	PAN GP-OIL	400
	425-6360	1	PAN GP-OIL	404
STRAINER (ENGINE)	425-6360	1	PAN GP-OIL	418
STRAINER (OIL PAN)	446-5401	1	PAN GP-OIL	414
STRAINER (OIL PAN) (ENGINE)	154-1948	1	PAN GP-OIL	398
STRAINER (SUCTION)	425-6360	1	PAN GP-OIL	423
V-BELT	338-3398	1	V-BELT GP	462
V-BELT (ALTERNATOR)	424-8611	1	V-BELT GP	465
	438-1597	1	V-BELT GP	460
V-BELT (WATER PUMP)	424-8611	1	V-BELT GP	461
	438-1597	1	V-BELT GP	463
COOLING SYSTEM				
CAP-RADIATOR	202-6616	1	RADIATOR AS	554
		1	RADIATOR GP	556 559 562
	236-7764	1	RADIATOR GP	568
	326-8552	1	RADIATOR & FAN GP	543
CAP-RADIATOR (16-PSI)	211-6574	1	RADIATOR GP	555
HOSE-RADIATOR	238-0265	1	RADIATOR GP	569
	238-0266	1	RADIATOR GP	569
	326-8555	1	RADIATOR GP	573
	326-8556	1	RADIATOR GP	573
HOSE-RADIATOR (LOWER)	238-0265	1	RADIATOR & FAN GP	540
		1	RADIATOR GP	5565- 5956- 2565

MAINTENANCE PARTS

DESCRIPTION	PART NUMBER	QTY	WHERE USED	PAGE
	326-8556	1	RADIATOR & FAN GP	543
	342-4357	1	RADIATOR & FAN GP	551
HOSE-RADIATOR (UPPER)	238-0266	1	RADIATOR & FAN GP	540
		1	RADIATOR GP	5565- 5956- 2565
	326-8555	1	RADIATOR & FAN GP	543
	342-4358	1	RADIATOR & FAN GP	551
PLUG-DRAIN	326-8553	1	RADIATOR & FAN GP	543
RADIATOR AS	607-4843	1	RADIATOR & FAN GP	540
		1	RADIATOR GP	565 569
REGULATOR-TEMPERATURE (82-DEG C)	249-5541	1	PUMP GP-WATER	514
ELECTRICAL AND STARTING SYSTEM				
GLOW PLUG	243-4402	4	GLOW PLUG GP	887
HOSE-RADIATOR	238-0265	1	CONNECTION GP-ELECTRICAL	875
KEY-IGNITION	361-3925	1	SWITCH GP-START	921
ENGINE ARRANGEMENT				
FILTER AS-ENGINE OIL	220-1523	1	ENGINE AR-PRIMARY	104
V-BELT GP	340-5966	1	ENGINE AR-PRIMARY	35
V-BELT GP (WATER PUMP)	311-9029	1	ENGINE AR-PRIMARY	15
FUEL SYSTEM				
FILTER AS-FUEL	243-6411	1	FILTER GP-FUEL	761
		1	PUMP GP-FUEL TRANSFER	8508- 5385- 6858
	296-0888	1	PUMP GP-FILTER & FUEL TRANSFER	805
		1	PUMP GP-FUEL TRANSFER	860
	358-9226	1	PUMP GP-FILTER & FUEL TRANSFER	796
		1	PUMP GP-FUEL PRM & PRIM FILTER	846
		1	PUMP GP-FUEL TRANSFER	8508- 5485- 6858
	481-2063	1	FILTER AS-FUEL	753
		1	FILTER GP-FUEL	759
	599-9696	1	FILTER & MTG GP-FUEL	751
FILTER AS-FUEL (FUEL TRANSFER)	296-0888	1	PUMP GP-FILTER & FUEL TRANSFER	808
		1	PUMP GP-FUEL TRANSFER	863
FILTER ELEMENT-FUEL	276-1806	1	FILTER GP-FUEL	754
		1	PUMP GP-FUEL PRM & PRIM FILTER	845
FILTER ELEMENT-FUEL (FILTER)	276-1806	1	FILTER GP-FUEL	756
FILTER-FUEL	067-6987	1	FILTER GP-FUEL	762
		1	PUMP GP-FILTER & FUEL TRANSFER	796 799 802
		1	PUMP GP-FUEL PRM & PRIM FILTER	846

DESCRIPTION	PART NUMBER	QTY	WHERE USED	PAGE
		1	PUMP GP-FUEL TRANSFER	8508-5485-6858
	150-4142	1	FILTER GP-FUEL	757
		1	PUMP GP-FILTER & FUEL TRANSFER	805
		1	PUMP GP-FUEL TRANSFER	860
FILTER-FUEL (PUMP)	150-4142	1	PUMP GP-FILTER & FUEL TRANSFER	808
		1	PUMP GP-FUEL TRANSFER	863
PLUG-DRAIN (FUEL FILTER)	302-7777	3	FILTER GP-FUEL	756
PLUG-DRAIN (WATER SEPARATOR)	302-7777	3	FILTER GP-FUEL	754
		3	PUMP GP-FUEL PRM & PRIM FILTER	845
LUBRICATION SYSTEM				
CAP-OIL FILLER	217-7358	1	FILLER GP-ENGINE OIL	489
CAP-OIL FILLER (ENGINE)	217-7358	1	FILLER GP-ENGINE OIL	482
FILTER AS-ENGINE OIL	220-1523	1	FILTER GP-ENGINE OIL	491
OPERATOR STATION				
LAMP (INDICATOR)	291-4755	1	LAMP GP	925
LAMP (INDICATORS)	198-5310	1	LAMP GP	924
SERVICE EQUIPMENT AND SUPPLIES				
SEAL-VALVE COVER	233-0695	1	PARTS GP-MISCELLANEOUS	932

INDEX

NAME PAGE

A

ACCESSORY GP-ENGINE 144
AIR CLEANER GP 575
577
579
580
582
584
586
587
589
590
592
594
ALTERNATOR GP-CHARGING 866
867
868
869
870
871
872

C

CAMSHAFT AS 145
146
CAMSHAFT GP 147
148
149
150
151
152
153
154
156
158
160
162
164
166
167
168
169
170
171
173
174
175
176
177
178
179
180
181
182
184
185
186
CAP GP-PROTECTION 926

NAME PAGE

CAP-OIL FILLER 489
490
CAP-OIL FILLER (ENGINE) 482
484
486
CAP-RADIATOR 543
554
556
559
562
568
CAP-RADIATOR (16-PSI). 555
CONNECTION GP-ELECTRICAL. 873
874
875
876
CONNECTION GP-EXHAUST. 595
596
597
598
CONNECTION GP-OIL. 623
626
629
632
637
658
674
CONNECTION GP-WATER. 497
498
499
500
CONNECTOR GP-CAB HEATER LINES. 501
502
503
CONTROL GP-ELECTRONIC. 877
CONTROL GP-ELECTRONIC
(PROGRAMMED) 877
CONTROL GP-ENGINE ELECTRONIC 712
878
880
CONTROL GP-ENGINE SPEED 882

INDEX

NAME	PAGE
CONTROL GP-GOVERNOR	318
	681
	683
	685
	686
	688
	690
	692
	696
	700
	704
	706
	708
	710
	712
	714
	716
	718
	720
	722
	724
	726
	728
	730
	732
	734
	736
	738
	740
	741
	742
	744
	747
	793
CONTROL GP-GOVERNOR (ENGINE TIMING)	313
CONTROL GP-GOVERNOR (TIMING)	688
	690
	708
	710
CONTROL GP-MANUAL START/STOP	884
	885
CONTROL GP-THROTTLE	750
COVER GP-CYLINDER HEAD	188
	190
COVER GP-ENGINE	192
COVER GP-EXHAUST	599
	600
COVER GP-FRONT HOUSING	193
	194
COVER GP-OIL FILLER	480
COVER GP-VALVE MECHANISM	195
	198
	201
	204
	206
	208
	210
	214
	216
COVER GP-VALVE MECHANISM–REAR	212
CRANKSHAFT GP	219
	221
	223
	225
	227
CYLINDER BLOCK GP	229
	231
	233
	235
	237
	239
	241
	243
CYLINDER BLOCK GP-LONG	248
CYLINDER HEAD AS	249
	250
	251
	252
	253
	254
	255
	256
CYLINDER HEAD GP	257
	259
	261
	262
	263
	264
	265
	267
	269
	271
	272
	273

D

DRIVE GP-AUXILIARY	274
DRIVE GP-FAN	275
	276
	277

E

ENGINE AR	1
	3
	5
	6

INDEX

NAME	PAGE
ENGINE AR-PRIMARY	7
	8
	10
	11
	13
	14
	16
	17
	19
	21
	23
	25
	26
	29
	31
	32
	33
	35
	37
	39
	41
	42
	44
	46
	47
	48
	50
	52
	54
	56
	57
	58
	59
	60
	61
	63
	65
	67
	70
	72
	75
	76
	77
	78
	79
	80
	81
	82
	83
	84
	85
	86
	88
	89
	92
	95
	97
	98
	100
	102
	103
	104
	107
	108
	109
	111
-137	
	139
	142
	143
EXTENSION GP-FAN	278
	279
	280
	281
	282

F

FAN GP	504
FAN GP-BLOWER	505
FAN GP-SUCTION	506
	507
	508
	509
	510
FASTENER GP-COVER	283
FASTENER GP-ENGINE OIL LINES	481
FASTENER GP-EXHAUST MANIFOLD	601
FASTENER GP-FILTER	602
FASTENER GP-FRONT HOUSING	284
	285
	286
FILLER GP-ENGINE OIL	482
	484
	486
	488
	489
	490
FILM GP	927
	928
	929
FILM GP (ALTERNATOR)	27
	67
	72
	104
	139
	142
	143
FILM GP (RADIATOR)	72
	142
	143
FILM GP–RADIATOR	930
FILM-IDENTIFICATION (AIR FILTER)	589
	590
	592

INDEX

NAME PAGE

FILM-IDENTIFICATION (CAT) 554
867
868
869
871
905
906
910
929
930
933
934
FILM-IDENTIFICATION (QR CODE) 933
934
FILM-INFORMATION (FUEL FILTER) 933
FILM-WARNING (ETHER) 577
579
582
584
589
590
592
594
602
927
928
FILM-WARNING (UNIVERSAL WARNING) 933
934
FILTER & MTG GP-FUEL 751
FILTER AS-ENGINE OIL 104
491
492
FILTER AS-FUEL 751
752
753
759
761
796
799
802
805
846
850
853
854
856
858
860
FILTER AS-FUEL (FUEL TRANSFER) 808
863
FILTER ELEMENT AS-AIR (TURBOCHARGER) 575
577
580
582
FILTER ELEMENT-AIR 575
577
580
582
586
587

NAME PAGE

FILTER ELEMENT-FUEL 754
845
FILTER ELEMENT-FUEL (FILTER) 756
FILTER GP-ENGINE OIL 491
492
FILTER GP-FUEL 754
756
757
758
759
760
761
762
FILTER GP-FUEL (WATER SEPARATOR) 845
848
849
FILTER-FUEL 757
762
796
799
802
805
846
850
854
856
858
860
FILTER-FUEL (PUMP) 808
863
FLYWHEEL GP 287
288
289
290
291
292
293
294
295
296

G

GASKET GP-EXHAUST MANIFOLD 603
GAUGE AS-OIL LEVEL (DIPSTICK) 404
416
423
425
GAUGE AS-OIL LEVEL (DIPSTICK) (ENGINE) 408
410
412
414
GAUGE-OIL LEVEL (DIPSTICK) 420
422
GAUGE-OIL LEVEL (DIPSTICK) (ENGINE) 398
400
402
406
418

INDEX

NAME PAGE

GLOW PLUG. 887
888
GLOW PLUG GP. 886
887
888
889
GOVERNOR GP. 373
375
377
714
740
763
765
767
769
771
774
777
779
781
782
784
786
788
GOVERNOR GP (ENGINE TIMING). 767
769
GOVERNOR GP-ANGLEICH. 741
GUARD GP-FAN 573
GUARD GP-FAN (LH) 547

H

HARNESS AS-WIRING. 712
HOSE-RADIATOR 569
573
875
HOSE-RADIATOR (LOWER). 540
543
547
551
556
559
562
565
HOSE-RADIATOR (UPPER) 540
543
547
551
556
559
562
565

NAME PAGE

HOUSING GP-FLYWHEEL 297
298
299
300
301
302
303
304
305
306
307
308
309
HOUSING GP-FRONT 310
311
312
313
318
323
326
328
329
330
332
336
337
338
339
340
341
342
343
344
346
348
349
350
351
352
353
354
355
356
358
360
361
362
363
364
366
367
369
370
373
375
377
379
383
387
HOUSING GP-WATER REGULATOR. 511

INDEX

NAME PAGE

I

INDICATOR (AIR FILTER SERVICE) 575
577
580
582
586
587

K

KEY 219
221
223
225
227
KEY-IGNITION. 921

L

LAMP (INDICATOR) 925
LAMP (INDICATORS) 924
LAMP GP. 924
925
LEVER GP-CONTROL 793
LEVER GP-GOVERNOR 782
LEVER GP-GOVERNOR CONTROL. 794
LIFTING GP-ENGINE 391
392
393
394
395
396
LINES GP-COOLANT 512
513
LINES GP-ENGINE OIL 493
494

M

MANIFOLD GP-EXHAUST 604
605
606
607
608
MOTOR GP-ELECTRIC 909
MOUNTING GP-ENGINE 397
MOUNTING GP-ENGINE OIL FILTER 495
MOUNTING GP-EXHAUST 609
610
MUFFLER GP. 611

NAME PAGE

P

PAN GP-OIL 398
400
402
404
406
408
410
412
414
416
418
420
422
423
425
PARTS GP-MISCELLANEOUS 931
932
PISTON & ROD GP 426
427
429
430
432
433
435
436
437
438
439
440
PLATE & FILM GP 933
934
PLUG GP-CYLINDER HEAD 441
PLUG GP-ENGINE 442
443
PLUG GP-OIL PAN. 445
446
PLUG GP-OIL PAN–ENGINE 444
PLUG-DRAIN. 446
543
PLUG-DRAIN (ENGINE OIL DRAIN) 445
PLUG-DRAIN (ENGINE OIL PAN) 444
466
PLUG-DRAIN (FUEL FILTER) 756
PLUG-DRAIN (WATER SEPARATOR) 754
845
PULLEY GP-AUXILIARY DRIVE 447
PULLEY GP-CRANKSHAFT 448
449
450
PULLEY GP-FAN. 451
452
453
PULLEY GP-WATER PUMP 454
455
PUMP & MTG GP-FUEL TRANSFER 795

INDEX

NAME PAGE

PUMP GP-FILTER & FUEL TRANSFER. 796
799
802
805
808
811
PUMP GP-FUEL INJECTION 812
813
815
817
819
821
823
825
827
829
831
833
835
839
PUMP GP-FUEL PRIMING 841
842
843
844
PUMP GP-FUEL PRM & PRIM FILTER 845
846
848
849
PUMP GP-FUEL TRANSFER 850
853
854
856
858
860
863
PUMP GP-WATER. 514
517
519
521
524
527
530
531
534
537
539

R

RADIATOR & FAN GP. 540
543
547
551
RADIATOR AS 540
554
565
569

NAME PAGE

RADIATOR GP 543
547
555
556
559
562
565
568
569
573
REGULATOR-TEMPERATURE (82-DEG C) 514
517
519
521
524
527
530
531
534
537
539
ROCKER ARM AS 456
ROCKER ARM GP 458

S

SCREEN-SUCTION 416
SEAL-VALVE COVER. 144
188
190
195
198
201
204
206
208
210
212
214
216
612
616
620
623
626
629
632
637
642
645
648
651
654
658
662
666
669
932

INDEX

NAME	PAGE
SENSOR AS-SPEED	722
	728
	736
	744
	779
	782
	788
SENSOR AS-SPEED (ENGINE TIMING)	681
	683
	724
	730
	738
	763
	765
	771
	774
SENSOR AS-SPEED (TIMING, CAMSHAFT)	692
	696
	700
SENSOR AS-SPEED (TIMING)	344
	346
	777
	882
SENSOR GP-SPEED	890
SENSOR GP-SPEED (MAGNETIC, HIGH OUTPUT)	781
	885
SENSOR GP-TEMPERATURE	2
	4
	25
	28
	61
	74
	90
	94
	96
	99
	101
	142
	143
	891
	892
	893
SENSOR GP-TEMPERATURE (ENGINE COOLANT)	64
	141
SENSOR-SPEED	712
SENSOR-SPEED (ENGINE)	704
SHAFT GP-IDLER	459
SHUTOFF GP-ELECTRICAL	894
SOLENOID (24-VOLT)	884
SOLENOID (STARTING MOTOR)	898
SOLENOID AS (12-VOLT) (FUEL SHUTOFF)	895
	896
	897
SOLENOID GP-SHUTOFF	895
	897
SOLENOID GP-SHUTOFF–FUEL	896
STARTING MOTOR GP-ELECTRIC	898
	900
	901
	902
	903
	904
	905
	906
	907
	908
	909
	910
STARTING MOTOR GP-ELECTRIC (12-VOLT)	905
STRAINER	425
STRAINER (ENGINE OIL)	400
	402
	404
	406
	408
	410
	412
STRAINER (ENGINE)	418
	420
	422
STRAINER (OIL PAN)	414
STRAINER (OIL PAN) (ENGINE)	398
STRAINER (SUCTION)	423
SWITCH (OIL PRESSURE) (ENGINE OIL)	912
	913
SWITCH AS-START	921
SWITCH AS-TEMPERATURE (WATER)	892
SWITCH GP-PRESSURE	141
	913
	914
	915
	916
	917
	918
	919

INDEX

NAME	PAGE
SWITCH GP-PRESSURE (ENGINE OIL)	2
	4
	5
	6
	10
	12
	13
	15
	16
	17
	20
	24
	28
	30
	32
	35
	37
	39
	41
	42
	44
	52
	54
	56
	57
	58
	59
	60
	62
	64
	65
	74
	76
	77
	78
	80
	81
	82
	84
	85
	86
	88
	90
	94
	96
	97
	99
	101
	102
	103
	107
	108
	109
	111
	112
	115
	117
	118
	119
	121
	122

NAME	PAGE
	123
	127
	128
	130
	132
	133
	134
	135
	137
	142
	143
	248
SWITCH GP-PRESSURE–ALARM	920
SWITCH GP-PRESSURE–ENGINE OIL	911
	912
SWITCH GP-START	7
	9
	12
	13
	15
	17
	20
	30
	34
	37
	39
	41
	42
	56
	57
	58
	62
	65
	70
	74
	77
	80
	84
	85
	86
	88
	108
	109
	112
	113
	115
	117
	118
	119
	120
	121
	128
	130
	133
	134
	135
	921
SWITCH GP-START (HEATER)	21
	64
	111
SWITCH GP-TEMPERATURE	923

INDEX

NAME	PAGE
SWITCH GP-TEMPERATURE (ENGINE COOLANT)	2
	4
	5
	6
	7
	9
	10
	12
	13
	15
	16
	17
	20
	21
	24
	28
	30
	31
	32
	34
	37
	40
	41
	42
	44
	49
	52
	54
	56
	57
	58
	59
	60
	62
	64
	65
	70
	74
	76
	77
	78
	80
	81
	84
	85
	86
	88
	90
	94
	96
	97
	99
	101
	102
	103
	107
	108
	109
	111
	112
	113
	115
	117
	118
	119
	120
	121
	122
	124
	127
	128
	130
	132
	133
	134
	135
	137
	141
	248
SWITCH GP-TEMPERATURE–COOLANT	922
SWITCH-OIL PRESSURE	916
	920
SWITCH-OIL PRESSURE (ENGINE OIL)	914
SWITCH-PRESSURE (ENGINE OIL)	911
	915
	917
SWITCH-PRESSURE (OIL PRESSURE)	919
SWITCH-TEMPERATURE	923
SWITCH-TEMPERATURE (12-VOLT) (ENGINE COOLANT)	922
SWITCH-TEMPERATURE (12-VOLT) (WATER)	893
SWITCH-TEMPERATURE (ENGINE COOLANT)	891

T

TURBOCHARGER GP	612
	616
	620
	623
	626
	629
	632
	637
	642
	645
	648
	651
	654
	658
	662
	666
	669
	672
	674
	676
	677
	679

NAME PAGE

V

V-BELT 462
V-BELT (ALTERNATOR) 460
464
465
V-BELT (WATER PUMP) 461
463
V-BELT GP 35
461
462
463
464
465
V-BELT GP (WATER PUMP) 15
24
25
32
42
53
62
81
82
106
107
122
123
124
126
141
V-BELT GP–FAN DRIVE 460
VALVE & PLUG GP-OIL PAN DRAIN 466
VALVE AS-RELIEF 243
VALVE AS-RELIEF (ENGINE OIL PRESSURE) 493
494
VALVE GP-PRESSURE CONTROL 496
VALVE MECHANISM GP 467
469
471
473
475
477
479
VALVE-RELIEF (ENGINE OIL PRESSURE) 496

433-1379 ENGINE AR

38 BRAKE KW (51 BHP) AT 3000 RPM

FIELD REPLACEMENT FOR 303-4099—PAGE: 10
: FOR 329-2157—PAGE: 56
: FOR 438-7869—PAGE: 111
: FOR 438-7873—PAGE: 112

SMCS-1000 **i10024244**

NOTE	PART NUMBER	QTY	PART NAME 1 2 3 4 5 6 (PRODUCT LEVEL)	SEE PAGE
Y	*325-9476*	1	CAMSHAFT GP	152
			—OR—	
Y	*596-3428*	1	CAMSHAFT GP	182
Y	*398-4274*	1	FILM GP	927
Y	*612-8795*	1	PLATE & FILM GP	934
Y	*532-8293*	1	FILLER GP-ENGINE OIL	489
Y	*559-9084*	1	CAP GP-PROTECTION	926
Y	*584-3189*	1	ROCKER ARM GP	458
Y	*584-9800*	1	MANIFOLD GP-EXHAUST	607
Y	*308-2302*	1	CONNECTION GP-WATER	497
			—OR—	
Y	*398-5884*	1	CONNECTION GP-WATER	500
Y	*325-9475*	1	CONTROL GP-GOVERNOR	688
			—OR—	
Y	*596-3462*	1	GOVERNOR GP	784
Y	*309-6722*	1	COVER GP-VALVE MECHANISM	195
			—OR—	
Y	*586-6654*	1	COVER GP-VALVE MECHANISM	214
Y	*309-6713*	1	CRANKSHAFT GP	223
			—OR—	
Y	*399-4716*	1	CRANKSHAFT GP	227
Y	*309-6715*	1	CYLINDER HEAD GP	261
			—OR—	
Y	*596-2861*	1	CYLINDER HEAD GP	272
Y	*308-2298*	1	FILTER GP-ENGINE OIL	491
			—OR—	
Y	*398-8178*	1	FILTER GP-ENGINE OIL	492
Y	*322-2412*	1	FLYWHEEL GP	290
			—OR—	
Y	*566-9450*	1	FLYWHEEL GP	296
Y	*308-2311*	1	GLOW PLUG GP	886
			—OR—	
Y	*587-0270*	1	GLOW PLUG GP	889
Y	*342-9604*	1	HOUSING GP-FLYWHEEL	302
			—OR—	
Y	*398-4795*	1	HOUSING GP-FLYWHEEL	306
Y	*354-1245*	1	HOUSING GP-FRONT	350
Y	*311-1682*	1	HOUSING GP-FRONT	323
			—OR—	
Y	*599-9836*	1	HOUSING GP-FRONT	387
Y	*342-1268*	1	FASTENER GP-COVER	283
Y	*309-6717*	1	LINES GP-ENGINE OIL	494
Y	*309-6716*	1	VALVE MECHANISM GP	473

ENGINE ARRANGEMENT

433-1379 **ENGINE AR (**contd.**)** **i10024244**

NOTE	PART NUMBER	QTY	PART NAME 1 2 3 4 5 6 (PRODUCT LEVEL)	SEE PAGE
Y	*308-4735*	1	MOUNTING GP-ENGINE OIL FILTER	495
Y	*309-6712*	1	CYLINDER BLOCK GP	233
			—OR—	
Y	*584-3179*	1	CYLINDER BLOCK GP	243
Y	*309-6725*	1	LIFTING GP-ENGINE	392
			—OR—	
Y	*603-1463*	1	LIFTING GP-ENGINE	396
Y	*308-2295*	1	PAN GP-OIL	398
			—OR—	
Y	*588-9925*	1	PAN GP-OIL	425
Y	*342-9607*	1	PARTS GP-MISCELLANEOUS	932
			—OR—	
Y	*600-6923*	1	ACCESSORY GP-ENGINE	144
Y	*309-6714*	1	PISTON & ROD GP	429
			—OR—	
Y	*596-2866*	1	PISTON & ROD GP	438
Y	*308-2297*	1	FILLER GP-ENGINE OIL	482
Y	*309-6720*	1	PLUG GP-OIL PAN	444
			—OR—	
Y	*398-5865*	1	PLUG GP-OIL PAN	446
Y	*308-2300*	1	PULLEY GP-CRANKSHAFT	448
			—OR—	
Y	*445-9988*	1	PULLEY GP-CRANKSHAFT	450
Y	*311-1683*	1	PUMP GP-FUEL INJECTION	819
			—OR—	
Y	*596-2825*	1	PUMP GP-FUEL INJECTION	833
Y	*309-6721*	1	PUMP GP-WATER	517
			—OR—	
Y	*598-5726*	1	PUMP GP-WATER	539
Y	*308-2313*	1	SOLENOID GP-SHUTOFF (FUEL)	895
			—OR—	
Y	*519-4412*	1	SOLENOID GP-SHUTOFF (FUEL)	897
Y	*315-7819*	1	SWITCH GP-PRESSURE (ENGINE OIL)	912
			—OR—	
Y	*584-9822*	1	SWITCH GP-PRESSURE (ENGINE OIL)	920
Y	*308-2317*	1	SWITCH GP-TEMPERATURE (ENGINE COOLANT)	922
			—OR—	
Y	*601-4322*	1	SENSOR GP-TEMPERATURE	893

Y - SEPARATE ILLUSTRATION

<END>

433-1380 ENGINE AR

FIELD REPLACEMENT FOR 348-8502—PAGE: 70
: FOR 329-2159—PAGE: 57

SMCS-1000 **i10080911**

NOTE	PART NUMBER	QTY	PART NAME 1 2 3 4 5 6 (PRODUCT LEVEL)	SEE PAGE
Y	*398-4274*	1	FILM GP	927
Y	*317-0971*	1	CAMSHAFT GP	148
			—OR—	
Y	*596-3442*	1	CAMSHAFT GP	185
Y	*559-9084*	1	CAP GP-PROTECTION	926
Y	*308-2299*	1	LINES GP-COOLANT	512
			—OR—	
Y	*331-2589*	1	LINES GP-COOLANT	513
Y	*308-2302*	1	CONNECTION GP-WATER	497
Y	*398-5884*	1	CONNECTION GP-WATER	500
Y	*341-1358*	1	CONTROL GP-GOVERNOR	714
Y	*399-4716*	1	CRANKSHAFT GP	227
Y	*442-9881*	1	CONTROL GP-THROTTLE	750
			—OR—	
Y	*308-2313*	1	SOLENOID GP-SHUTOFF (FUEL)	895
			—OR—	
Y	*519-4412*	1	SOLENOID GP-SHUTOFF (FUEL)	897
Y	*342-1268*	1	FASTENER GP-COVER	283
Y	*308-2283*	1	CRANKSHAFT GP	219
Y	*308-2281*	1	CYLINDER BLOCK GP	229
			—OR—	
Y	*584-3179*	1	CYLINDER BLOCK GP	243
Y	*308-2284*	1	CYLINDER HEAD GP	259
			—OR—	
Y	*596-2862*	1	CYLINDER HEAD GP	273
Y	*354-1245*	1	HOUSING GP-FRONT	350
Y	*308-2297*	1	FILLER GP-ENGINE OIL	482
			—OR—	
Y	*532-8293*	1	FILLER GP-ENGINE OIL	489
Y	*308-2298*	1	FILTER GP-ENGINE OIL	491
Y	*398-8178*	1	FILTER GP-ENGINE OIL	492
Y	*322-2412*	1	FLYWHEEL GP	290
			—OR—	
Y	*398-4795*	1	HOUSING GP-FLYWHEEL	306
Y	*308-2311*	1	GLOW PLUG GP	886
			—OR—	
Y	*587-0270*	1	GLOW PLUG GP	889
Y	*342-9604*	1	HOUSING GP-FLYWHEEL	302
			—OR—	
Y	*566-9450*	1	FLYWHEEL GP	296
Y	*596-3472*	1	GOVERNOR GP	786
Y	*317-0965*	1	HOUSING GP-FRONT	328
			—OR—	
Y	*599-9836*	1	HOUSING GP-FRONT	387
Y	*309-6725*	1	LIFTING GP-ENGINE	392
			—OR—	

433-1380 **ENGINE AR (**contd.**)** **i10080911**

NOTE	PART NUMBER	QTY	PART NAME 1 2 3 4 5 6 (PRODUCT LEVEL)	SEE PAGE
Y	*603-1463*	1	LIFTING GP-ENGINE	396
Y	*600-5135*	1	COVER GP-EXHAUST	600
Y	*308-2295*	1	PAN GP-OIL	398
			—OR—	
Y	*588-9925*	1	PAN GP-OIL	425
Y	*342-9607*	1	PARTS GP-MISCELLANEOUS	932
			—OR—	
Y	*600-6923*	1	ACCESSORY GP-ENGINE	144
Y	*308-2286*	1	PISTON & ROD GP	426
			—OR—	
Y	*596-2865*	1	PISTON & ROD GP	437
Y	*612-8795*	1	PLATE & FILM GP	934
Y	*309-6720*	1	PLUG GP-OIL PAN	444
			—OR—	
Y	*398-5865*	1	PLUG GP-OIL PAN	446
Y	*321-6740*	1	PULLEY GP-CRANKSHAFT	449
			—OR—	
Y	*445-9988*	1	PULLEY GP-CRANKSHAFT	450
Y	*308-2287*	1	LINES GP-ENGINE OIL	493
Y	*317-0977*	1	PUMP GP-FUEL INJECTION	823
			—OR—	
Y	*596-2828*	1	PUMP GP-FUEL INJECTION	839
Y	*317-0979*	1	PUMP GP-WATER	521
			—OR—	
Y	*598-5724*	1	PUMP GP-WATER	537
Y	*584-3189*	1	ROCKER ARM GP	458
Y	*315-7819*	1	SWITCH GP-PRESSURE (ENGINE OIL)	912
			—OR—	
Y	*584-9822*	1	SWITCH GP-PRESSURE (ENGINE OIL)	920
Y	*308-2317*	1	SWITCH GP-TEMPERATURE (ENGINE COOLANT)	922
			—OR—	
Y	*601-4322*	1	SENSOR GP-TEMPERATURE	893
Y	*442-9826*	1	TURBOCHARGER GP	651
			—OR—	
Y	*508-8740*	1	TURBOCHARGER GP	669
			—OR—	
Y	*600-5115*	1	TURBOCHARGER GP	672
Y	*308-2285*	1	VALVE MECHANISM GP	467

Y - SEPARATE ILLUSTRATION

<END>

435-1637 ENGINE AR

40 BRAKE KW (54 BHP) AT 2600 RPM

FIELD REPLACEMENT FOR 321-6712—PAGE: 47

SMCS-1000 **i10733063**

NOTE	PART NUMBER	QTY	PART NAME 1 2 3 4 5 6 (PRODUCT LEVEL)	SEE PAGE
Y	*331-0216*	1	CAMSHAFT GP	158
Y	*308-2302*	1	CONNECTION GP-WATER	497
Y	*331-0215*	1	CONTROL GP-GOVERNOR	704
Y	*442-9881*	1	CONTROL GP-THROTTLE	750
			—OR—	
Y	*308-2313*	1	SOLENOID GP-SHUTOFF (FUEL)	895
Y	*342-1268*	1	FASTENER GP-COVER	283
Y	*308-2283*	1	CRANKSHAFT GP	219
Y	*308-2281*	1	CYLINDER BLOCK GP	229
Y	*308-2284*	1	CYLINDER HEAD GP	259
Y	*354-1245*	1	HOUSING GP-FRONT	350
Y	*308-2297*	1	FILLER GP-ENGINE OIL	482
Y	*308-2298*	1	FILTER GP-ENGINE OIL	491
Y	*322-2412*	1	FLYWHEEL GP	290
Y	*308-2311*	1	GLOW PLUG GP	886
Y	*342-9604*	1	HOUSING GP-FLYWHEEL	302
Y	*331-0214*	1	HOUSING GP-FRONT	348
Y	*309-6725*	1	LIFTING GP-ENGINE	392
Y	*308-2299*	1	LINES GP-COOLANT	512
			—OR—	
Y	*331-2589*	1	LINES GP-COOLANT	513
Y	*308-2287*	1	LINES GP-ENGINE OIL	493
Y	*308-2295*	1	PAN GP-OIL	398
Y	*342-9607*	1	PARTS GP-MISCELLANEOUS	932
Y	*308-2286*	1	PISTON & ROD GP	426
Y	*309-6720*	1	PLUG GP-OIL PAN	444
Y	*321-6740*	1	PULLEY GP-CRANKSHAFT	449
Y	*328-3294*	1	PUMP GP-FUEL INJECTION	831
Y	*317-0979*	1	PUMP GP-WATER	521
Y	*315-7819*	1	SWITCH GP-PRESSURE (ENGINE OIL)	912
Y	*308-2317*	1	SWITCH GP-TEMPERATURE (ENGINE COOLANT)	922
Y	*442-9826*	1	TURBOCHARGER GP	651
			—OR—	
Y	*508-8740*	1	TURBOCHARGER GP	669
Y	*308-2285*	1	VALVE MECHANISM GP	467

Y - SEPARATE ILLUSTRATION

<END>

435-1638 ENGINE AR

43 BRAKE KW (58 BHP) AT 2600 RPM

FIELD REPLACEMENT FOR 321-6711—PAGE: 46

SMCS-1000 **i10733056**

NOTE	PART NUMBER	QTY	PART NAME 1 2 3 4 5 6 (PRODUCT LEVEL)	SEE PAGE
Y	*331-0216*	1	CAMSHAFT GP	158
Y	*331-2589*	1	LINES GP-COOLANT	513
Y	*308-2302*	1	CONNECTION GP-WATER	497
Y	*331-0215*	1	CONTROL GP-GOVERNOR	704
Y	*442-9881*	1	CONTROL GP-THROTTLE	750
			—OR—	
Y	*308-2313*	1	SOLENOID GP-SHUTOFF (FUEL)	895
Y	*342-1268*	1	FASTENER GP-COVER	283
Y	*308-2283*	1	CRANKSHAFT GP	219
Y	*308-2281*	1	CYLINDER BLOCK GP	229
Y	*308-2284*	1	CYLINDER HEAD GP	259
Y	*354-1245*	1	HOUSING GP-FRONT	350
Y	*308-2297*	1	FILLER GP-ENGINE OIL	482
Y	*308-2298*	1	FILTER GP-ENGINE OIL	491
Y	*322-2412*	1	FLYWHEEL GP	290
Y	*308-2311*	1	GLOW PLUG GP	886
Y	*342-9604*	1	HOUSING GP-FLYWHEEL	302
Y	*331-0214*	1	HOUSING GP-FRONT	348
Y	*309-6725*	1	LIFTING GP-ENGINE	392
Y	*308-2295*	1	PAN GP-OIL	398
Y	*342-9607*	1	PARTS GP-MISCELLANEOUS	932
Y	*308-2286*	1	PISTON & ROD GP	426
Y	*309-6720*	1	PLUG GP-OIL PAN	444
Y	*321-6740*	1	PULLEY GP-CRANKSHAFT	449
Y	*308-2287*	1	LINES GP-ENGINE OIL	493
Y	*328-3294*	1	PUMP GP-FUEL INJECTION	831
Y	*317-0979*	1	PUMP GP-WATER	521
Y	*315-7819*	1	SWITCH GP-PRESSURE (ENGINE OIL)	912
Y	*308-2317*	1	SWITCH GP-TEMPERATURE (ENGINE COOLANT)	922
Y	*442-9826*	1	TURBOCHARGER GP	651
			—OR—	
Y	*508-8740*	1	TURBOCHARGER GP	669
Y	*308-2285*	1	VALVE MECHANISM GP	467

Y - SEPARATE ILLUSTRATION

<END>

301-2948 ENGINE AR-PRIMARY

49 BRAKE KW (66 BHP) AT 2800 RPM

SMCS-1000 **i10194041**

NOTE	PART NUMBER	QTY	PART NAME 1 2 3 4 5 6 (PRODUCT LEVEL)	SEE PAGE
Y	*308-2305*	1	ALTERNATOR GP-CHARGING	866
Y	*308-2319*	1	CONNECTION GP-ELECTRICAL	873
			—OR—	
Y	*321-6741*	1	CONNECTION GP-ELECTRICAL	874
Y	*308-2299*	1	LINES GP-COOLANT	512
Y	*308-2309*	1	CONNECTION GP-EXHAUST	595
Y	*308-2307*	1	HOUSING GP-FRONT	310
Y	*308-2283*	1	CRANKSHAFT GP	219
Y	*308-2281*	1	CYLINDER BLOCK GP	229
Y	*308-2284*	1	CYLINDER HEAD GP	259
Y	*308-2304*	1	EXTENSION GP-FAN	278
Y	*308-2303*	1	FAN GP-SUCTION	506
Y	*363-3165*	1	FILLER GP-ENGINE OIL	486
Y	*308-2298*	1	FILTER GP-ENGINE OIL	491
Y	*308-2291*	1	FLYWHEEL GP	287
Y	*308-2311*	1	GLOW PLUG GP	886
Y	*308-2290*	1	HOUSING GP-FLYWHEEL	297
Y	*308-3329*	1	HOUSING GP-FRONT	312
Y	*308-2321*	1	LAMP GP	924
Y	*308-2315*	1	LIFTING GP-ENGINE	391
			—OR—	
Y	*309-6725*	1	LIFTING GP-ENGINE	392
Y	*308-2295*	1	PAN GP-OIL	398
Y	*308-2286*	1	PISTON & ROD GP	426
Y	*309-6720*	1	PLUG GP-OIL PAN	444
Y	*321-6740*	1	PULLEY GP-CRANKSHAFT	449
Y	*308-2294*	1	PULLEY GP-FAN	451
Y	*308-2287*	1	LINES GP-ENGINE OIL	493
Y	*308-2310*	1	PUMP GP-FILTER & FUEL TRANSFER	796
Y	*308-3330*	1	PUMP GP-FUEL INJECTION	815
Y	*308-2320*	1	PUMP GP-FUEL PRIMING	841
Y	*308-2313*	1	SOLENOID GP-SHUTOFF (FUEL)	895
Y	*308-2293*	1	STARTING MOTOR GP-ELECTRIC	900
Y	*308-2312*	1	SWITCH GP-PRESSURE	911
Y	*308-2314*	1	SWITCH GP-START	921
Y	*308-2317*	1	SWITCH GP-TEMPERATURE (ENGINE COOLANT)	922
Y	*485-9426*	1	TURBOCHARGER GP	662
			—OR—	
Y	*488-1898*	1	TURBOCHARGER GP	666
Y	*308-2306*	1	V-BELT GP (WATER PUMP) (DRIVE)	460
Y	*308-2285*	1	VALVE MECHANISM GP	467

Y - SEPARATE ILLUSTRATION

<END>

302-1820 ENGINE AR-PRIMARY

37 BRAKE KW (50 BHP) AT 2800 RPM

FIELD REPLACEMENT ORDER 435-1646—PAGE: 98

SMCS-1000 **i10194050**

NOTE	PART NUMBER	QTY	PART NAME 1 2 3 4 5 6 (PRODUCT LEVEL)	SEE PAGE
Y	*308-2305*	1	ALTERNATOR GP-CHARGING	866
Y	*441-6514*	1	CAMSHAFT GP	174
			—OR—	
Y	*454-6144*	1	CAMSHAFT GP	175
Y	*308-2319*	1	CONNECTION GP-ELECTRICAL	873
			—OR—	
Y	*321-6741*	1	CONNECTION GP-ELECTRICAL	874
Y	*308-2309*	1	CONNECTION GP-EXHAUST	595
Y	*308-2302*	1	CONNECTION GP-WATER	497
Y	*441-6513*	1	CONTROL GP-GOVERNOR	726
			—OR—	
Y	*454-6143*	1	CONTROL GP-GOVERNOR	728
Y	*308-2307*	1	HOUSING GP-FRONT	310
Y	*317-0590*	1	COVER GP-VALVE MECHANISM	204
Y	*309-6713*	1	CRANKSHAFT GP	223
Y	*309-6712*	1	CYLINDER BLOCK GP	233
Y	*309-6715*	1	CYLINDER HEAD GP	261
Y	*308-2304*	1	EXTENSION GP-FAN	278
Y	*308-2303*	1	FAN GP-SUCTION	506
Y	*308-2297*	1	FILLER GP-ENGINE OIL	482
			—OR—	
Y	*363-3165*	1	FILLER GP-ENGINE OIL	486
Y	*308-2298*	1	FILTER GP-ENGINE OIL	491
Y	*308-2291*	1	FLYWHEEL GP	287
Y	*308-2311*	1	GLOW PLUG GP	886
Y	*308-2290*	1	HOUSING GP-FLYWHEEL	297
Y	*309-6718*	1	HOUSING GP-FRONT	313
			—OR—	
Y	*441-6512*	1	HOUSING GP-FRONT	358
			—OR—	
Y	*454-6141*	1	HOUSING GP-FRONT	360
Y	*308-2321*	1	LAMP GP	924
Y	*309-6725*	1	LIFTING GP-ENGINE	392
Y	*309-6717*	1	LINES GP-ENGINE OIL	494
Y	*309-6724*	1	MANIFOLD GP-EXHAUST	604
Y	*308-4735*	1	MOUNTING GP-ENGINE OIL FILTER	495
Y	*308-2295*	1	PAN GP-OIL	398
Y	*309-6714*	1	PISTON & ROD GP	429
Y	*309-6720*	1	PLUG GP-OIL PAN	444
Y	*308-2300*	1	PULLEY GP-CRANKSHAFT	448
Y	*308-2294*	1	PULLEY GP-FAN	451
Y	*308-2310*	1	PUMP GP-FILTER & FUEL TRANSFER	796
Y	*309-6719*	1	PUMP GP-FUEL INJECTION	817
Y	*308-2320*	1	PUMP GP-FUEL PRIMING	841
Y	*309-6721*	1	PUMP GP-WATER	517
Y	*308-2313*	1	SOLENOID GP-SHUTOFF (FUEL)	895
Y	*308-2293*	1	STARTING MOTOR GP-ELECTRIC	900

302-1820 **ENGINE AR-PRIMARY (**contd.**)** **i10194050**

NOTE	PART NUMBER	QTY	PART NAME 1 2 3 4 5 6 (PRODUCT LEVEL)	SEE PAGE
Y	*308-2312*	1	SWITCH GP-PRESSURE	911
Y	*308-2314*	1	SWITCH GP-START	921
Y	*308-2317*	1	SWITCH GP-TEMPERATURE (ENGINE COOLANT)	922
Y	*308-2306*	1	V-BELT GP (WATER PUMP) (DRIVE)	460
Y	*309-6716*	1	VALVE MECHANISM GP	473

Y - SEPARATE ILLUSTRATION

<END>

303-4099 ENGINE AR-PRIMARY

38 BRAKE KW (51 BHP) AT 3000 RPM

FIELD REPLACEMENT ORDER 433-1379—PAGE: 1

SMCS-1000 **i10697899**

NOTE	PART NUMBER	QTY	PART NAME 1 2 3 4 5 6 (PRODUCT LEVEL)	SEE PAGE
Y	*317-0649*	1	AIR CLEANER GP	575
Y	*308-2305*	1	ALTERNATOR GP-CHARGING	866
Y	*325-9476*	1	CAMSHAFT GP	152
Y	*308-2319*	1	CONNECTION GP-ELECTRICAL	873
			—OR—	
Y	*321-6741*	1	CONNECTION GP-ELECTRICAL	874
Y	*308-2309*	1	CONNECTION GP-EXHAUST	595
Y	*308-2302*	1	CONNECTION GP-WATER	497
Y	*325-9475*	1	CONTROL GP-GOVERNOR	688
Y	*308-2307*	1	HOUSING GP-FRONT	310
Y	*309-6722*	1	COVER GP-VALVE MECHANISM	195
Y	*309-6713*	1	CRANKSHAFT GP	223
Y	*309-6712*	1	CYLINDER BLOCK GP	233
Y	*309-6715*	1	CYLINDER HEAD GP	261
Y	*308-2297*	1	FILLER GP-ENGINE OIL	482
			—OR—	
Y	*363-3165*	1	FILLER GP-ENGINE OIL	486
Y	*308-2298*	1	FILTER GP-ENGINE OIL	491
Y	*308-2291*	1	FLYWHEEL GP	287
Y	*308-2311*	1	GLOW PLUG GP	886
Y	*308-2290*	1	HOUSING GP-FLYWHEEL	297
Y	*311-1682*	1	HOUSING GP-FRONT	323
Y	*309-6725*	1	LIFTING GP-ENGINE	392
Y	*331-2589*	1	LINES GP-COOLANT	513
Y	*309-6717*	1	LINES GP-ENGINE OIL	494
Y	*309-6724*	1	MANIFOLD GP-EXHAUST	604
Y	*308-2295*	1	PAN GP-OIL	398
Y	*309-6714*	1	PISTON & ROD GP	429
Y	*309-6720*	1	PLUG GP-OIL PAN	444
Y	*308-2300*	1	PULLEY GP-CRANKSHAFT	448
Y	*308-2294*	1	PULLEY GP-FAN	451
Y	*308-2310*	1	PUMP GP-FILTER & FUEL TRANSFER	796
Y	*311-1683*	1	PUMP GP-FUEL INJECTION	819
Y	*308-2320*	1	PUMP GP-FUEL PRIMING	841
			—OR—	
Y	*579-9444*	1	PUMP GP-FUEL PRIMING	844
Y	*308-2301*	1	PUMP GP-WATER	514
Y	*331-3270*	1	RADIATOR GP	556
Y	*308-2313*	1	SOLENOID GP-SHUTOFF (FUEL)	895
Y	*308-2293*	1	STARTING MOTOR GP-ELECTRIC	900
Y	*315-7819*	1	SWITCH GP-PRESSURE (ENGINE OIL)	912
Y	*308-2317*	1	SWITCH GP-TEMPERATURE (ENGINE COOLANT)	922
Y	*308-2306*	1	V-BELT GP (WATER PUMP)	460
Y	*309-6716*	1	VALVE MECHANISM GP	473

Y - SEPARATE ILLUSTRATION

<END>

303-4225 ENGINE AR-PRIMARY

38 BRAKE KW (51 BHP) AT 2800 RPM

FIELD REPLACEMENT ORDER 435-1646—PAGE: 98

SMCS-1000 **i10698432**

NOTE	PART NUMBER	QTY	PART NAME 1 2 3 4 5 6 (PRODUCT LEVEL)	SEE PAGE
Y	*317-0649*	1	AIR CLEANER GP	575
Y	*308-2305*	1	ALTERNATOR GP-CHARGING	866
Y	*441-6514*	1	CAMSHAFT GP	174
			—OR—	
Y	*454-6144*	1	CAMSHAFT GP	175
Y	*308-2319*	1	CONNECTION GP-ELECTRICAL	873
			—OR—	
Y	*321-6741*	1	CONNECTION GP-ELECTRICAL	874
Y	*308-2309*	1	CONNECTION GP-EXHAUST	595
Y	*308-2302*	1	CONNECTION GP-WATER	497
Y	*441-6513*	1	CONTROL GP-GOVERNOR	726
			—OR—	
Y	*454-6143*	1	CONTROL GP-GOVERNOR	728
Y	*329-8577*	1	COVER GP-FRONT HOUSING	193
Y	*309-6722*	1	COVER GP-VALVE MECHANISM	195
Y	*309-6713*	1	CRANKSHAFT GP	223
Y	*309-6712*	1	CYLINDER BLOCK GP	233
Y	*309-6715*	1	CYLINDER HEAD GP	261
Y	*308-2297*	1	FILLER GP-ENGINE OIL	482
			—OR—	
Y	*363-3165*	1	FILLER GP-ENGINE OIL	486
Y	*308-2298*	1	FILTER GP-ENGINE OIL	491
Y	*308-2291*	1	FLYWHEEL GP	287
Y	*308-2311*	1	GLOW PLUG GP	886
Y	*308-2290*	1	HOUSING GP-FLYWHEEL	297
Y	*309-6718*	1	HOUSING GP-FRONT	313
			—OR—	
Y	*441-6512*	1	HOUSING GP-FRONT	358
			—OR—	
Y	*454-6141*	1	HOUSING GP-FRONT	360
Y	*308-2321*	1	LAMP GP	924
Y	*309-6725*	1	LIFTING GP-ENGINE	392
Y	*331-2589*	1	LINES GP-COOLANT	513
Y	*309-6717*	1	LINES GP-ENGINE OIL	494
Y	*309-6724*	1	MANIFOLD GP-EXHAUST	604
Y	*308-2295*	1	PAN GP-OIL	398
Y	*309-6714*	1	PISTON & ROD GP	429
Y	*309-6720*	1	PLUG GP-OIL PAN	444
Y	*308-2300*	1	PULLEY GP-CRANKSHAFT	448
Y	*308-2294*	1	PULLEY GP-FAN	451
Y	*308-2310*	1	PUMP GP-FILTER & FUEL TRANSFER	796
Y	*309-6719*	1	PUMP GP-FUEL INJECTION	817
Y	*308-2320*	1	PUMP GP-FUEL PRIMING	841
			—OR—	
Y	*579-9444*	1	PUMP GP-FUEL PRIMING	844
Y	*308-2301*	1	PUMP GP-WATER	514
Y	*331-3270*	1	RADIATOR GP	556

303-4225 **ENGINE AR-PRIMARY (**contd.**)** **i10698432**

NOTE	PART NUMBER	QTY	PART NAME 1 2 3 4 5 6 (PRODUCT LEVEL)	SEE PAGE
Y	*308-2313*	1	SOLENOID GP-SHUTOFF (FUEL)	895
Y	*308-2293*	1	STARTING MOTOR GP-ELECTRIC	900
Y	*315-7819*	1	SWITCH GP-PRESSURE (ENGINE OIL)	912
Y	*308-2314*	1	SWITCH GP-START	921
Y	*308-2317*	1	SWITCH GP-TEMPERATURE (ENGINE COOLANT)	922
Y	*308-2306*	1	V-BELT GP (WATER PUMP)	460
Y	*309-6716*	1	VALVE MECHANISM GP	473

Y - SEPARATE ILLUSTRATION

<END>

303-4226 ENGINE AR-PRIMARY

37 BRAKE KW (50BHP) AT 2800 RPM. TIER III
FIELD REPLACEMENT ORDER 435-1646—PAGE: 98

SMCS-1000 **i10702438**

NOTE	PART NUMBER	QTY	PART NAME 1 2 3 4 5 6 (PRODUCT LEVEL)	SEE PAGE
Y	*317-0649*	1	AIR CLEANER GP	575
Y	*308-2305*	1	ALTERNATOR GP-CHARGING	866
Y	*308-2319*	1	CONNECTION GP-ELECTRICAL	873
Y	*308-2302*	1	CONNECTION GP-WATER	497
Y	*308-2307*	1	HOUSING GP-FRONT	310
Y	*309-6722*	1	COVER GP-VALVE MECHANISM	195
Y	*309-6713*	1	CRANKSHAFT GP	223
Y	*309-6712*	1	CYLINDER BLOCK GP	233
Y	*309-6715*	1	CYLINDER HEAD GP	261
Y	*308-2297*	1	FILLER GP-ENGINE OIL	482
			—OR—	
Y	**363-3165**	1	FILLER GP-ENGINE OIL	486
Y	*308-2298*	1	FILTER GP-ENGINE OIL	491
Y	*317-0586*	1	FLYWHEEL GP	289
Y	*308-2311*	1	GLOW PLUG GP	886
Y	*317-0588*	1	HOUSING GP-FLYWHEEL	301
Y	*309-6718*	1	HOUSING GP-FRONT	313
Y	*308-2321*	1	LAMP GP	924
Y	*309-6725*	1	LIFTING GP-ENGINE	392
Y	*331-2589*	1	LINES GP-COOLANT	513
Y	*309-6724*	1	MANIFOLD GP-EXHAUST	604
Y	*308-2295*	1	PAN GP-OIL	398
Y	*309-6714*	1	PISTON & ROD GP	429
Y	*309-6720*	1	PLUG GP-OIL PAN	444
Y	*308-2300*	1	PULLEY GP-CRANKSHAFT	448
Y	*308-2294*	1	PULLEY GP-FAN	451
Y	*309-6717*	1	LINES GP-ENGINE OIL	494
Y	*308-2310*	1	PUMP GP-FILTER & FUEL TRANSFER	796
Y	*309-6719*	1	PUMP GP-FUEL INJECTION	817
Y	*308-2320*	1	PUMP GP-FUEL PRIMING	841
Y	*308-2301*	1	PUMP GP-WATER	514
Y	*331-3270*	1	RADIATOR GP	556
Y	*308-2313*	1	SOLENOID GP-SHUTOFF (FUEL)	895
Y	*308-2293*	1	STARTING MOTOR GP-ELECTRIC	900
Y	*315-7819*	1	SWITCH GP-PRESSURE (ENGINE OIL)	912
Y	*308-2314*	1	SWITCH GP-START	921
Y	*308-2317*	1	SWITCH GP-TEMPERATURE (ENGINE COOLANT)	922
Y	*308-2306*	1	V-BELT GP (WATER PUMP)	460
Y	*309-6716*	1	VALVE MECHANISM GP	473

Y - SEPARATE ILLUSTRATION

<END>

306-9226 ENGINE AR-PRIMARY

45 BRAKE KW (60 BHP) AT 2800 RPM

FIELD REPLACEMENT ORDER 435-1636—PAGE: 92

SMCS-1000 **i10702464**

NOTE	PART NUMBER	QTY	PART NAME 1 2 3 4 5 6 (PRODUCT LEVEL)	SEE PAGE
Y	*308-2305*	1	ALTERNATOR GP-CHARGING	866
Y	*329-9278*	1	CAMSHAFT GP	154
			—OR—	
Y	*365-4292*	1	CAMSHAFT GP	170
			—OR—	
Y	*481-5624*	1	CAMSHAFT GP	178
Y	*308-2299*	1	LINES GP-COOLANT	512
			—OR—	
Y	*331-2589*	1	LINES GP-COOLANT	513
Y	*308-5610*	1	CONNECTION GP-EXHAUST	596
Y	*308-2302*	1	CONNECTION GP-WATER	497
Y	*329-9277*	1	HOUSING GP-FRONT	346
			—OR—	
Y	*365-4290*	1	CONTROL GP-ENGINE SPEED	882
			—OR—	
Y	*481-5623*	1	GOVERNOR GP	779
Y	*308-2307*	1	HOUSING GP-FRONT	310
			—OR—	
Y	*354-1245*	1	HOUSING GP-FRONT	350
Y	*308-2283*	1	CRANKSHAFT GP	219
Y	*308-2281*	1	CYLINDER BLOCK GP	229
Y	*308-2284*	1	CYLINDER HEAD GP	259
Y	*308-2304*	1	EXTENSION GP-FAN	278
Y	*308-2303*	1	FAN GP-SUCTION	506
Y	*308-2297*	1	FILLER GP-ENGINE OIL	482
			—OR—	
Y	*363-3165*	1	FILLER GP-ENGINE OIL	486
Y	*308-2298*	1	FILTER GP-ENGINE OIL	491
Y	*322-2412*	1	FLYWHEEL GP	290
Y	*308-2311*	1	GLOW PLUG GP	886
Y	*311-1883*	1	HOUSING GP-FLYWHEEL	299
Y	*308-2288*	1	FASTENER GP-FRONT HOUSING	284
			—OR—	
Y	*365-4288*	1	HOUSING GP-FRONT	355
			—OR—	
Y	*481-5621*	1	HOUSING GP-FRONT	363
Y	*308-2321*	1	LAMP GP	924
Y	*309-6725*	1	LIFTING GP-ENGINE	392
Y	*308-2287*	1	LINES GP-ENGINE OIL	493
Y	*311-1886*	1	PAN GP-OIL	406
Y	*308-2286*	1	PISTON & ROD GP	426
Y	*309-6720*	1	PLUG GP-OIL PAN	444
Y	*321-6740*	1	PULLEY GP-CRANKSHAFT	449
Y	*311-9027*	1	PULLEY GP-WATER PUMP	454
			—OR—	
Y	*308-2294*	1	PULLEY GP-FAN	451

306-9226 **ENGINE AR-PRIMARY (**contd.**)** **i10702464**

NOTE	PART NUMBER	QTY	PART NAME 1 2 3 4 5 6 (PRODUCT LEVEL)	SEE PAGE
Y	*308-2310*	1	PUMP GP-FILTER & FUEL TRANSFER	796
			—OR—	
Y	*311-9028*	1	PUMP GP-FUEL TRANSFER	850
Y	*308-2289*	1	PUMP GP-FUEL INJECTION	813
Y	*308-2320*	1	PUMP GP-FUEL PRIMING	841
Y	*317-0979*	1	PUMP GP-WATER	521
			—OR—	
Y	*442-7729*	1	PUMP GP-WATER	531
Y	*308-2313*	1	SOLENOID GP-SHUTOFF (FUEL)	895
Y	*308-2293*	1	STARTING MOTOR GP-ELECTRIC	900
Y	*315-7819*	1	SWITCH GP-PRESSURE (ENGINE OIL)	912
Y	*308-2314*	1	SWITCH GP-START	921
Y	*308-2317*	1	SWITCH GP-TEMPERATURE (ENGINE COOLANT)	922
Y	*308-2308*	1	TURBOCHARGER GP	612
			—OR—	
Y	*442-7759*	1	TURBOCHARGER GP	648
Y	*311-9029*	1	V-BELT GP (WATER PUMP)	461
			—OR—	
Y	*308-2306*	1	V-BELT GP (WATER PUMP)	460
Y	*308-2285*	1	VALVE MECHANISM GP	467

Y - SEPARATE ILLUSTRATION

<END>

307-9833 ENGINE AR-PRIMARY

37 BRAKE KW (50 BHP) AT 2800 RPM

FIELD REPLACEMENT ORDER 435-1646—PAGE: 98

SMCS-1000 **i10704362**

NOTE	PART NUMBER	QTY	PART NAME 1 2 3 4 5 6 (PRODUCT LEVEL)	SEE PAGE
Y	*308-2305*	1	ALTERNATOR GP-CHARGING	866
Y	*365-4284*	1	CAMSHAFT GP	167
			—OR—	
Y	*465-2209*	1	CAMSHAFT GP	176
Y	*308-2309*	1	CONNECTION GP-EXHAUST	595
Y	*308-2302*	1	CONNECTION GP-WATER	497
Y	*365-4283*	1	CONTROL GP-GOVERNOR	716
			—OR—	
Y	*465-2207*	1	CONTROL GP-GOVERNOR	732
Y	*308-2307*	1	HOUSING GP-FRONT	310
Y	*317-0590*	1	COVER GP-VALVE MECHANISM	204
Y	*309-6713*	1	CRANKSHAFT GP	223
Y	*309-6712*	1	CYLINDER BLOCK GP	233
Y	*309-6715*	1	CYLINDER HEAD GP	261
Y	*308-2304*	1	EXTENSION GP-FAN	278
Y	*308-2303*	1	FAN GP-SUCTION	506
Y	*308-2297*	1	FILLER GP-ENGINE OIL	482
Y	*308-2298*	1	FILTER GP-ENGINE OIL	491
Y	*308-2291*	1	FLYWHEEL GP	287
Y	*308-2311*	1	GLOW PLUG GP	886
Y	*308-2290*	1	HOUSING GP-FLYWHEEL	297
Y	*309-6718*	1	HOUSING GP-FRONT	313
			—OR—	
Y	*365-4282*	1	HOUSING GP-FRONT	353
			—OR—	
Y	*465-2205*	1	HOUSING GP-FRONT	361
Y	*309-6725*	1	LIFTING GP-ENGINE	392
Y	*309-6724*	1	MANIFOLD GP-EXHAUST	604
Y	*308-4735*	1	MOUNTING GP-ENGINE OIL FILTER	495
Y	*311-1886*	1	PAN GP-OIL	406
Y	*309-6714*	1	PISTON & ROD GP	429
Y	*309-6720*	1	PLUG GP-OIL PAN	444
Y	*308-2300*	1	PULLEY GP-CRANKSHAFT	448
Y	*308-2294*	1	PULLEY GP-FAN	451
Y	*315-7814*	1	PUMP & MTG GP-FUEL TRANSFER	795
Y	*309-6717*	1	LINES GP-ENGINE OIL	494
Y	*309-6719*	1	PUMP GP-FUEL INJECTION	817
Y	*309-6721*	1	PUMP GP-WATER	517
Y	*308-2313*	1	SOLENOID GP-SHUTOFF (FUEL)	895
Y	*308-2293*	1	STARTING MOTOR GP-ELECTRIC	900
Y	*315-7819*	1	SWITCH GP-PRESSURE (ENGINE OIL)	912
Y	*308-2317*	1	SWITCH GP-TEMPERATURE (ENGINE COOLANT)	922
Y	*308-2306*	1	V-BELT GP (WATER PUMP)	460
Y	*309-6716*	1	VALVE MECHANISM GP	473

Y - SEPARATE ILLUSTRATION

<END>

307-9834 ENGINE AR-PRIMARY

37 BRAKE KW (50 BHP) AT 2800 RPM

FIELD REPLACEMENT ORDER 435-1646—PAGE: 98

SMCS-1000 **i10704396**

NOTE	PART NUMBER	QTY	PART NAME 1 2 3 4 5 6 (PRODUCT LEVEL)	SEE PAGE
Y	*365-4284*	1	CAMSHAFT GP	167
			—OR—	
Y	*465-2209*	1	CAMSHAFT GP	176
Y	*365-4283*	1	CONTROL GP-GOVERNOR	716
			—OR—	
Y	*465-2207*	1	CONTROL GP-GOVERNOR	732
Y	*308-2307*	1	HOUSING GP-FRONT	310
Y	*317-0590*	1	COVER GP-VALVE MECHANISM	204
Y	*309-6713*	1	CRANKSHAFT GP	223
Y	*309-6712*	1	CYLINDER BLOCK GP	233
Y	*309-6715*	1	CYLINDER HEAD GP	261
Y	*308-2304*	1	EXTENSION GP-FAN	278
Y	*308-2303*	1	FAN GP-SUCTION	506
Y	*308-2297*	1	FILLER GP-ENGINE OIL	482
			—OR—	
Y	*363-3165*	1	FILLER GP-ENGINE OIL	486
Y	*308-2298*	1	FILTER GP-ENGINE OIL	491
Y	*311-1884*	1	FLYWHEEL GP	288
Y	*308-2311*	1	GLOW PLUG GP	886
Y	*311-1883*	1	HOUSING GP-FLYWHEEL	299
Y	*309-6718*	1	HOUSING GP-FRONT	313
			—OR—	
Y	*365-4282*	1	HOUSING GP-FRONT	353
			—OR—	
Y	*465-2205*	1	HOUSING GP-FRONT	361
Y	*317-0980*	1	HOUSING GP-WATER REGULATOR	511
Y	*308-2321*	1	LAMP GP	924
Y	*309-6725*	1	LIFTING GP-ENGINE	392
Y	*309-6724*	1	MANIFOLD GP-EXHAUST	604
Y	*308-4735*	1	MOUNTING GP-ENGINE OIL FILTER	495
Y	*311-1886*	1	PAN GP-OIL	406
Y	*309-6714*	1	PISTON & ROD GP	429
Y	*309-6720*	1	PLUG GP-OIL PAN	444
Y	*308-2300*	1	PULLEY GP-CRANKSHAFT	448
Y	*308-2294*	1	PULLEY GP-FAN	451
Y	*309-6717*	1	LINES GP-ENGINE OIL	494
Y	*308-2310*	1	PUMP GP-FILTER & FUEL TRANSFER	796
Y	*309-6719*	1	PUMP GP-FUEL INJECTION	817
Y	*308-2320*	1	PUMP GP-FUEL PRIMING	841
			—OR—	
Y	*579-9444*	1	PUMP GP-FUEL PRIMING	844
Y	*309-6721*	1	PUMP GP-WATER	517
Y	*308-2313*	1	SOLENOID GP-SHUTOFF (FUEL)	895
Y	*315-7819*	1	SWITCH GP-PRESSURE (ENGINE OIL)	912
Y	*308-2314*	1	SWITCH GP-START	921
Y	*308-2317*	1	SWITCH GP-TEMPERATURE (ENGINE COOLANT)	922
Y	*309-6716*	1	VALVE MECHANISM GP	473

307-9834 **ENGINE AR-PRIMARY (**contd.**)** **i10704396**

NOTE	PART NUMBER	QTY	PART NAME 1 2 3 4 5 6 (PRODUCT LEVEL)	SEE PAGE
Y - SEPARATE ILLUSTRATION				

<END>

307-9835 ENGINE AR-PRIMARY*R

45 BRAKE KW (60 BHP) AT 2800 RPM

FIELD REPLACEMENT ORDER 435-1636—PAGE: 92

SMCS-1000 **i10079514**

NOTE	PART NUMBER	QTY	PART NAME 1 2 3 4 5 6 (PRODUCT LEVEL)	SEE PAGE
Y	*329-9278*	1	CAMSHAFT GP	154
			—OR—	
Y	*365-4292*	1	CAMSHAFT GP	170
			—OR—	
Y	*481-5624*	1	CAMSHAFT GP	178
Y	*308-2302*	1	CONNECTION GP-WATER	497
Y	*329-9277*	1	HOUSING GP-FRONT	346
			—OR—	
Y	*365-4290*	1	CONTROL GP-ENGINE SPEED	882
			—OR—	
Y	*481-5623*	1	GOVERNOR GP	779
Y	*308-2307*	1	HOUSING GP-FRONT	310
Y	*308-2283*	1	CRANKSHAFT GP	219
Y	*308-2281*	1	CYLINDER BLOCK GP	229
Y	*308-2284*	1	CYLINDER HEAD GP	259
Y	*308-2297*	1	FILLER GP-ENGINE OIL	482
			S/N: G7L1-4333	
Y	*363-3165*	1	FILLER GP-ENGINE OIL	486
			S/N: G7L4334-UP	
Y	*308-2298*	1	FILTER GP-ENGINE OIL	491
Y	*322-2412*	1	FLYWHEEL GP	290
Y	*308-2311*	1	GLOW PLUG GP	886
Y	*311-1883*	1	HOUSING GP-FLYWHEEL	299
Y	*308-2288*	1	FASTENER GP-FRONT HOUSING	284
			—OR—	
Y	*365-4288*	1	HOUSING GP-FRONT	355
			—OR—	
Y	*481-5621*	1	HOUSING GP-FRONT	363
Y	*308-2321*	1	LAMP GP	924
			S/N: G7L1-5541	
Y	*309-6725*	1	LIFTING GP-ENGINE	392
Y	*308-2299*	1	LINES GP-COOLANT	512
			S/N: G7L1-11648	
Y	*331-2589*	1	LINES GP-COOLANT	513
			S/N: G7L11649-UP	
Y	*308-2287*	1	LINES GP-ENGINE OIL	493
Y	*315-7813*	1	EXTENSION GP-FAN	279
Y	*311-1886*	1	PAN GP-OIL	406
Y	*308-2286*	1	PISTON & ROD GP	426
Y	*309-6720*	1	PLUG GP-OIL PAN	444
Y	*321-6740*	1	PULLEY GP-CRANKSHAFT	449
Y	*308-2294*	1	PULLEY GP-FAN	451
Y	*308-2310*	1	PUMP GP-FILTER & FUEL TRANSFER	796
Y	*308-2289*	1	PUMP GP-FUEL INJECTION	813
Y	*308-2320*	1	PUMP GP-FUEL PRIMING	841
			—OR—	

307-9835 **ENGINE AR-PRIMARY (**contd.**)** **i10079514**

NOTE	PART NUMBER	QTY	PART NAME 1 2 3 4 5 6 (PRODUCT LEVEL)	SEE PAGE
Y	*579-9444*	1	PUMP GP-FUEL PRIMING	844
Y	*317-0979*	1	PUMP GP-WATER	521
			S/N: G7L1-11648	
Y	*442-7729*	1	PUMP GP-WATER	531
			S/N: G7L11649-UP	
Y	*308-2313*	1	SOLENOID GP-SHUTOFF (FUEL)	895
Y	*315-7819*	1	SWITCH GP-PRESSURE (ENGINE OIL)	912
Y	*308-2314*	1	SWITCH GP-START	921
Y	*308-2317*	1	SWITCH GP-TEMPERATURE (ENGINE COOLANT)	922
Y	*308-2308*	1	TURBOCHARGER GP	612
			—OR—	
Y	*442-7759*	1	TURBOCHARGER GP	648
Y	*308-2285*	1	VALVE MECHANISM GP	467

Y - SEPARATE ILLUSTRATION

<END>

308-6563 ENGINE AR-PRIMARY

45 BRAKE KW (60 BHP) AT 2800 RPM

FIELD REPLACEMENT ORDER 435-1636—PAGE: 92

SMCS-1000 **i10704519**

NOTE	PART NUMBER	QTY	PART NAME 1 2 3 4 5 6 (PRODUCT LEVEL)	SEE PAGE
Y	*308-2305*	1	ALTERNATOR GP-CHARGING	866
Y	*323-9147*	1	CAMSHAFT GP	150
			—OR—	
Y	*329-9278*	1	CAMSHAFT GP	154
Y	*308-2319*	1	CONNECTION GP-ELECTRICAL	873
			—OR—	
Y	*321-6741*	1	CONNECTION GP-ELECTRICAL	874
Y	*308-2299*	1	LINES GP-COOLANT	512
			—OR—	
Y	*331-2589*	1	LINES GP-COOLANT	513
Y	*308-2309*	1	CONNECTION GP-EXHAUST	595
Y	*308-2302*	1	CONNECTION GP-WATER	497
Y	*308-2307*	1	HOUSING GP-FRONT	310
Y	*308-2283*	1	CRANKSHAFT GP	219
Y	*308-2281*	1	CYLINDER BLOCK GP	229
Y	*308-2284*	1	CYLINDER HEAD GP	259
Y	*308-2304*	1	EXTENSION GP-FAN	278
Y	*308-2303*	1	FAN GP-SUCTION	506
Y	*363-3165*	1	FILLER GP-ENGINE OIL	486
Y	*308-2298*	1	FILTER GP-ENGINE OIL	491
Y	*308-2291*	1	FLYWHEEL GP	287
Y	*308-2311*	1	GLOW PLUG GP	886
Y	*323-9146*	1	GOVERNOR GP	771
			—OR—	
Y	*329-9277*	1	HOUSING GP-FRONT	346
Y	*308-2290*	1	HOUSING GP-FLYWHEEL	297
Y	*323-9145*	1	HOUSING GP-FRONT	336
			—OR—	
Y	*308-2288*	1	FASTENER GP-FRONT HOUSING	284
Y	*308-2321*	1	LAMP GP	924
			S/N: G7L1-4431	
Y	*308-2315*	1	LIFTING GP-ENGINE	391
Y	*308-2295*	1	PAN GP-OIL	398
Y	*308-2286*	1	PISTON & ROD GP	426
Y	*309-6720*	1	PLUG GP-OIL PAN	444
Y	*321-6740*	1	PULLEY GP-CRANKSHAFT	449
Y	*308-2287*	1	LINES GP-ENGINE OIL	493
Y	*308-2310*	1	PUMP GP-FILTER & FUEL TRANSFER	796
Y	*308-2320*	1	PUMP GP-FUEL PRIMING	841
Y	*317-0979*	1	PUMP GP-WATER	521
			—OR—	
Y	*442-7729*	1	PUMP GP-WATER	531
Y	*308-2313*	1	SOLENOID GP-SHUTOFF (FUEL)	895
Y	*308-2293*	1	STARTING MOTOR GP-ELECTRIC	900
Y	*308-2312*	1	SWITCH GP-PRESSURE (ENGINE OIL)	911
Y	*308-2314*	1	SWITCH GP-START (HEATER)	921
Y	*308-2317*	1	SWITCH GP-TEMPERATURE (ENGINE COOLANT)	922

308-6563 **ENGINE AR-PRIMARY (**contd.**)** **i10704519**

NOTE	PART NUMBER	QTY	PART NAME 1 2 3 4 5 6 (PRODUCT LEVEL)	SEE PAGE
Y	*308-2308*	1	TURBOCHARGER GP	612
			–OR–	
Y	*442-7759*	1	TURBOCHARGER GP	648
Y	*308-2306*	1	V-BELT GP (WATER PUMP)	460
Y	*308-2285*	1	VALVE MECHANISM GP	467

Y - SEPARATE ILLUSTRATION

<END>

310-7852 ENGINE AR-PRIMARY*R

45 BRAKE KW (60 BHP) AT 2800 RPM

FIELD REPLACEMENT ORDER 435-1636—PAGE: 92

SMCS-1000 **i10704529**

NOTE	PART NUMBER	QTY	PART NAME 1 2 3 4 5 6 (PRODUCT LEVEL)	SEE PAGE
Y	*308-2305*	1	ALTERNATOR GP-CHARGING	866
Y	*323-9147*	1	CAMSHAFT GP	150
			—OR—	
Y	*329-9278*	1	CAMSHAFT GP	154
			—OR—	
Y	*365-4292*	1	CAMSHAFT GP	170
			—OR—	
Y	*481-5624*	1	CAMSHAFT GP	178
Y	*321-6741*	1	CONNECTION GP-ELECTRICAL	874
Y	*308-2309*	1	CONNECTION GP-EXHAUST	595
Y	*308-2302*	1	CONNECTION GP-WATER	497
Y	*308-2307*	1	HOUSING GP-FRONT	310
Y	*308-2283*	1	CRANKSHAFT GP	219
Y	*308-2281*	1	CYLINDER BLOCK GP	229
Y	*308-2284*	1	CYLINDER HEAD GP	259
Y	*308-2297*	1	FILLER GP-ENGINE OIL	482
			—OR—	
Y	*363-3165*	1	FILLER GP-ENGINE OIL	486
Y	*308-2298*	1	FILTER GP-ENGINE OIL	491
Y	*327-7632*	1	FLYWHEEL GP	292
Y	*308-2311*	1	GLOW PLUG GP	886
Y	*323-9146*	1	GOVERNOR GP	771
			—OR—	
Y	*329-9277*	1	HOUSING GP-FRONT	346
			—OR—	
Y	*365-4290*	1	CONTROL GP-ENGINE SPEED	882
			—OR—	
Y	*481-5621*	1	HOUSING GP-FRONT	363
Y	*317-0588*	1	HOUSING GP-FLYWHEEL	301
Y	*323-9145*	1	HOUSING GP-FRONT	336
			—OR—	
Y	*308-2288*	1	FASTENER GP-FRONT HOUSING	284
			—OR—	
Y	*365-4288*	1	HOUSING GP-FRONT	355
			—OR—	
Y	*481-5623*	1	GOVERNOR GP	779
Y	*309-6725*	1	LIFTING GP-ENGINE	392
Y	*308-2299*	1	LINES GP-COOLANT	512
			—OR—	
Y	*331-2589*	1	LINES GP-COOLANT (COOLER)	513
Y	*308-2287*	1	LINES GP-ENGINE OIL	493
Y	*315-7813*	1	EXTENSION GP-FAN	279
Y	*317-3037*	1	PAN GP-OIL	410
Y	*308-2286*	1	PISTON & ROD GP	426
Y	*309-6720*	1	PLUG GP-OIL PAN	444
Y	*321-6740*	1	PULLEY GP-CRANKSHAFT	449

310-7852 **ENGINE AR-PRIMARY (**contd.**)** **i10704529**

NOTE	PART NUMBER	QTY	PART NAME 1 2 3 4 5 6 (PRODUCT LEVEL)	SEE PAGE
Y	*311-9027*	1	PULLEY GP-WATER PUMP	454
Y	*308-2289*	1	PUMP GP-FUEL INJECTION	813
Y	*327-7633*	1	PUMP GP-FUEL TRANSFER	854
Y	*317-0979*	1	PUMP GP-WATER	521
			—OR—	
Y	*442-7729*	1	PUMP GP-WATER	531
Y	*308-2313*	1	SOLENOID GP-SHUTOFF (FUEL)	895
Y	*308-2293*	1	STARTING MOTOR GP-ELECTRIC	900
Y	*315-7819*	1	SWITCH GP-PRESSURE (ENGINE OIL)	912
Y	*308-2317*	1	SWITCH GP-TEMPERATURE (ENGINE COOLANT)	922
Y	*308-2308*	1	TURBOCHARGER GP	612
			—OR—	
Y	*442-7759*	1	TURBOCHARGER GP	648
Y	*311-9029*	1	V-BELT GP (WATER PUMP)	461
Y	*308-2285*	1	VALVE MECHANISM GP	467

Y - SEPARATE ILLUSTRATION

<END>

311-2714 ENGINE AR-PRIMARY

34 BRAKE KW (46 BHP) AT 2400 RPM

FIELD REPLACEMENT ORDER 435-1641—PAGE: 95

SMCS-1000 **i10709829**

NOTE	PART NUMBER	QTY	PART NAME 1 2 3 4 5 6 (PRODUCT LEVEL)	SEE PAGE
Y	*308-2305*	1	ALTERNATOR GP-CHARGING	866
Y	*311-9025*	1	CAMSHAFT GP	147
Y	*308-2302*	1	CONNECTION GP-WATER	497
Y	*309-6722*	1	COVER GP-VALVE MECHANISM	195
Y	*309-6713*	1	CRANKSHAFT GP	223
Y	*309-6712*	1	CYLINDER BLOCK GP	233
Y	*309-6715*	1	CYLINDER HEAD GP	261
Y	*308-2304*	1	EXTENSION GP-FAN	278
Y	*308-2303*	1	FAN GP-SUCTION	506
Y	*308-2297*	1	FILLER GP-ENGINE OIL	482
Y	*308-2298*	1	FILTER GP-ENGINE OIL	491
Y	*308-5704*	1	FILTER GP-FUEL	756
Y	*308-2291*	1	FLYWHEEL GP	287
Y	*308-2311*	1	GLOW PLUG GP	886
Y	*311-9024*	1	GOVERNOR GP	763
Y	*308-2290*	1	HOUSING GP-FLYWHEEL	297
Y	*308-2307*	1	HOUSING GP-FRONT	310
Y	*311-9023*	1	HOUSING GP-FRONT	326
Y	*309-6725*	1	LIFTING GP-ENGINE	392
Y	*309-6717*	1	LINES GP-ENGINE OIL	494
Y	*309-6724*	1	MANIFOLD GP-EXHAUST	604
Y	*308-4735*	1	MOUNTING GP-ENGINE OIL FILTER	495
Y	*311-1886*	1	PAN GP-OIL	406
Y	*309-6714*	1	PISTON & ROD GP	429
Y	*309-6720*	1	PLUG GP-OIL PAN	444
Y	*308-2300*	1	PULLEY GP-CRANKSHAFT	448
Y	*311-9027*	1	PULLEY GP-WATER PUMP	454
Y	*311-9026*	1	PUMP GP-FUEL INJECTION	821
Y	*311-9028*	1	PUMP GP-FUEL TRANSFER	850
Y	*309-6721*	1	PUMP GP-WATER	517
Y	*311-9030*	1	SENSOR GP-TEMPERATURE	891
Y	*308-2313*	1	SOLENOID GP-SHUTOFF (FUEL)	895
Y	*308-2293*	1	STARTING MOTOR GP-ELECTRIC	900
Y	*308-2312*	1	SWITCH GP-PRESSURE	911
Y	*311-9029*	1	V-BELT GP (WATER PUMP)	461
Y	*309-6716*	1	VALVE MECHANISM GP	473

Y - SEPARATE ILLUSTRATION

<END>

311-3840 ENGINE AR-PRIMARY

36 BRAKE KW (48 BHP) AT 2600 RPM

OPTIONAL FIELD REPLACEMENT ORDER 435-1645—PAGE: 248

SMCS-1000 **i10681347**

NOTE	PART NUMBER	QTY	PART NAME 1 2 3 4 5 6 (PRODUCT LEVEL)	SEE PAGE
Y	*308-2305*	1	ALTERNATOR GP-CHARGING	866
			—OR—	
Y	*518-9064*	1	ALTERNATOR GP-CHARGING	871
			—OR—	
Y	*584-9497*	1	ALTERNATOR GP-CHARGING	872
Y	*584-3189*	1	ROCKER ARM GP	458
Y	*420-3212*	1	CAMSHAFT GP	173
			—OR—	
Y	*596-3428*	1	CAMSHAFT GP	182
Y	*317-7194*	1	CONNECTOR GP-CAB HEATER LINES	501
			—OR—	
Y	*542-8640*	1	CONNECTOR GP-CAB HEATER LINES	503
Y	*502-4820*	1	CONTROL GP-ELECTRONIC	877
Y	*420-3211*	1	CONTROL GP-GOVERNOR	722
			—OR—	
Y	*596-3466*	1	CONTROL GP-GOVERNOR	744
Y	*308-2307*	1	HOUSING GP-FRONT	310
			—OR—	
Y	*599-9816*	1	HOUSING GP-FRONT	383
Y	*309-6722*	1	COVER GP-VALVE MECHANISM	195
			—OR—	
Y	*586-6654*	1	COVER GP-VALVE MECHANISM	214
Y	*309-6713*	1	CRANKSHAFT GP	223
			—OR—	
Y	*399-4716*	1	CRANKSHAFT GP	227
Y	*309-6712*	1	CYLINDER BLOCK GP	233
			—OR—	
Y	*584-3179*	1	CYLINDER BLOCK GP	243
Y	*309-6715*	1	CYLINDER HEAD GP	261
			—OR—	
Y	*596-2861*	1	CYLINDER HEAD GP	272
Y	*308-2304*	1	EXTENSION GP-FAN	278
			—OR—	
Y	*311-1119*	1	DRIVE GP-FAN	275
Y	*308-2303*	1	FAN GP-SUCTION	506
			—OR—	
Y	*319-1623*	1	FAN GP-BLOWER	505
			—OR—	
Y	*315-7813*	1	EXTENSION GP-FAN	279
			—OR—	
Y	*398-9092*	1	EXTENSION GP-FAN	280
Y	*363-3165*	1	FILLER GP-ENGINE OIL	486
			—OR—	
Y	*533-3936*	1	FILLER GP-ENGINE OIL	490
Y	*398-4274*	1	FILM GP	927

311-3840 **ENGINE AR-PRIMARY (**contd.**)** **i10681347**

NOTE	PART NUMBER	QTY	PART NAME 1 2 3 4 5 6 (PRODUCT LEVEL)	SEE PAGE
			—OR—	
Y	*629-5293*	1	FASTENER GP-FILTER	602
Y	*604-4574*	1	FILM GP (ALTERNATOR)	929
Y	*308-2298*	1	FILTER GP-ENGINE OIL (ENGINE)	491
Y	*398-8178*	1	FILTER GP-ENGINE OIL	492
Y	*308-2291*	1	FLYWHEEL GP	287
			—OR—	
Y	*398-4803*	1	FLYWHEEL GP	293
Y	*308-2311*	1	GLOW PLUG GP	886
			—OR—	
Y	*587-0270*	1	GLOW PLUG GP	889
Y	*308-2290*	1	HOUSING GP-FLYWHEEL	297
			—OR—	
Y	*591-2135*	1	HOUSING GP-FLYWHEEL	308
Y	*420-3210*	1	HOUSING GP-FRONT	356
Y	*317-7191*	1	CONNECTION GP-WATER	498
			—OR—	
Y	*398-3408*	1	CONNECTION GP-WATER	499
Y	*309-6725*	1	LIFTING GP-ENGINE	392
			—OR—	
Y	*584-9814*	1	LIFTING GP-ENGINE	395
Y	*309-6717*	1	LINES GP-ENGINE OIL	494
Y	*317-7192*	1	MANIFOLD GP-EXHAUST	605
			—OR—	
Y	*309-6724*	1	MANIFOLD GP-EXHAUST	604
			—OR—	
Y	*584-9801*	1	MANIFOLD GP-EXHAUST	608
Y	*308-4735*	1	MOUNTING GP-ENGINE OIL FILTER	495
Y	*317-7193*	1	MUFFLER GP	611
Y	*308-2295*	1	PAN GP-OIL	398
			—OR—	
Y	*588-9925*	1	PAN GP-OIL	425
Y	*309-6714*	1	PISTON & ROD GP	429
			—OR—	
Y	*596-2866*	1	PISTON & ROD GP	438
Y	*518-9053*	1	PLATE & FILM GP	933
Y	*309-6720*	1	PLUG GP-OIL PAN	444
			—OR—	
Y	*398-5865*	1	PLUG GP-OIL PAN	446
Y	*308-2300*	1	PULLEY GP-CRANKSHAFT	448
			—OR—	
Y	*445-9988*	1	PULLEY GP-CRANKSHAFT	450
Y	*308-2294*	1	PULLEY GP-FAN	451
			—OR—	
Y	*398-4866*	1	PULLEY GP-FAN	452
Y	*308-2310*	1	PUMP GP-FILTER & FUEL TRANSFER	796
Y	*317-7190*	1	PUMP GP-FUEL INJECTION	825
			—OR—	
Y	*596-2825*	1	PUMP GP-FUEL INJECTION	833

311-3840 **ENGINE AR-PRIMARY (**contd.**)** **i10681347**

NOTE	PART NUMBER	QTY	PART NAME 1 2 3 4 5 6 (PRODUCT LEVEL)	SEE PAGE
Y	*317-6706*	1	PUMP GP-FUEL PRM & PRIM FILTER	845
			—OR—	
Y	*579-9465*	1	PUMP GP-FUEL PRM & PRIM FILTER	849
Y	*599-9752*	1	PUMP GP-FILTER & FUEL TRANSFER	811
			—OR—	
Y	*599-9741*	1	FILTER GP-FUEL	760
Y	*309-6721*	1	PUMP GP-WATER	517
			—OR—	
Y	*598-5726*	1	PUMP GP-WATER	539
Y	*315-7817*	1	SOLENOID GP-SHUTOFF	896
			—OR—	
Y	*492-4924*	1	GOVERNOR GP	781
			—OR—	
Y	*542-8638*	1	CONTROL GP-MANUAL START/STOP	885
Y	*308-2293*	1	STARTING MOTOR GP-ELECTRIC	900
			—OR—	
Y	*398-4818*	1	STARTING MOTOR GP-ELECTRIC	908
Y	*315-7819*	1	SWITCH GP-PRESSURE (ENGINE OIL)	912
			—OR—	
Y	*584-9822*	1	SWITCH GP-PRESSURE (ENGINE OIL)	920
Y	*308-2317*	1	SWITCH GP-TEMPERATURE (ENGINE COOLANT)	922
			—OR—	
Y	*601-4322*	1	SENSOR GP-TEMPERATURE	893
Y	*308-2306*	1	V-BELT GP (WATER PUMP)	460
			—OR—	
Y	*428-5948*	1	V-BELT GP (WATER PUMP)	464
Y	*309-6716*	1	VALVE MECHANISM GP	473

Y - SEPARATE ILLUSTRATION

<END>

316-8411 ENGINE AR-PRIMARY

24 BRAKE KW (33 BHP) AT 1800 RPM

FIELD REPLACEMENT ORDER 435-1647—PAGE: 100

SMCS-1000 **i10704598**

NOTE	PART NUMBER	QTY	PART NAME 1 2 3 4 5 6 (PRODUCT LEVEL)	SEE PAGE
Y	*317-0649*	1	AIR CLEANER GP	575
Y	*308-2305*	1	ALTERNATOR GP-CHARGING	866
			—OR—	
Y	*458-3287*	1	ALTERNATOR GP-CHARGING	870
Y	*364-2522*	1	CAMSHAFT GP	166
			S/N: G7L1-10580	
Y	*508-9044*	1	CAMSHAFT GP	179
			S/N: G7L10581-UP	
Y	*321-6741*	1	CONNECTION GP-ELECTRICAL	874
Y	*308-2309*	1	CONNECTION GP-EXHAUST	595
Y	*308-2302*	1	CONNECTION GP-WATER	497
Y	*364-2521*	1	CONTROL GP-ENGINE ELECTRONIC	878
			S/N: G7L1-10581	
Y	*308-2313*	1	SOLENOID GP-SHUTOFF (FUEL)	895
Y	*329-3696*	1	HOUSING GP-FRONT	342
			S/N: G7L1-10580	
Y	*465-7011*	1	COVER GP-FRONT HOUSING	194
			S/N: G7L10581-UP	
Y	*309-6722*	1	COVER GP-VALVE MECHANISM	195
			—OR—	
Y	*420-0328*	1	COVER GP-VALVE MECHANISM	208
Y	*309-6713*	1	CRANKSHAFT GP	223
Y	*309-6712*	1	CYLINDER BLOCK GP	233
Y	*309-6715*	1	CYLINDER HEAD GP	261
Y	*508-9041*	1	FASTENER GP-FRONT HOUSING	285
Y	*363-3165*	1	FILLER GP-ENGINE OIL	486
			—OR—	
	441-5692	1	COVER GP-OIL FILLER	
	288-6593	1	SEAL	
	334-0272	1	PLUG-OIL FILLER	
Y	*308-2298*	1	FILTER GP-ENGINE OIL	491
Y	*317-0586*	1	FLYWHEEL GP	289
Y	*308-2311*	1	GLOW PLUG GP	886
Y	*317-0588*	1	HOUSING GP-FLYWHEEL	301
Y	*321-4257*	1	HOUSING GP-FRONT	332
			—OR—	
Y	*364-2520*	1	HOUSING GP-FRONT	352
			—OR—	
Y	*508-9043*	1	HOUSING GP-FRONT	369
Y	*308-2321*	1	LAMP GP	924
Y	*309-6725*	1	LIFTING GP-ENGINE	392
Y	*331-2589*	1	LINES GP-COOLANT	513
Y	*309-6724*	1	MANIFOLD GP-EXHAUST	604
Y	*308-2295*	1	PAN GP-OIL	398
Y	*309-6714*	1	PISTON & ROD GP	429
Y	*309-6720*	1	PLUG GP-OIL PAN	444

316-8411 **ENGINE AR-PRIMARY (**contd.**)** **i10704598**

NOTE	PART NUMBER	QTY	PART NAME 1 2 3 4 5 6 (PRODUCT LEVEL)	SEE PAGE
Y	*308-2300*	1	PULLEY GP-CRANKSHAFT	448
Y	*308-2294*	1	PULLEY GP-FAN	451
Y	*309-6717*	1	LINES GP-ENGINE OIL	494
Y	*324-8999*	1	PUMP GP-FILTER & FUEL TRANSFER	805
Y	*321-4258*	1	PUMP GP-FUEL INJECTION	827
Y	*308-2320*	1	PUMP GP-FUEL PRIMING	841
Y	*308-2301*	1	PUMP GP-WATER	514
Y	*331-3270*	1	RADIATOR GP	556
Y	*320-9114*	1	SHUTOFF GP-ELECTRICAL	894
Y	*308-2293*	1	STARTING MOTOR GP-ELECTRIC	900
Y	*315-7819*	1	SWITCH GP-PRESSURE (ENGINE OIL)	912
Y	*308-2314*	1	SWITCH GP-START	921
Y	*308-2317*	1	SWITCH GP-TEMPERATURE (ENGINE COOLANT)	922
Y	*308-2306*	1	V-BELT GP (WATER PUMP)	460
Y	*309-6716*	1	VALVE MECHANISM GP	473

Y - SEPARATE ILLUSTRATION

<END>

317-4987 ENGINE AR-PRIMARY

24 BRAKE KW (33 BHP) AT 1770 RPM

SMCS-1000 **i10704613**

NOTE	PART NUMBER	QTY	PART NAME 1 2 3 4 5 6 (PRODUCT LEVEL)	SEE PAGE
Y	*308-2305*	1	ALTERNATOR GP-CHARGING	866
Y	*325-5663*	1	CAMSHAFT GP	151
			—OR—	
Y	*365-4287*	1	CAMSHAFT GP	168
Y	*308-2302*	1	CONNECTION GP-WATER	497
Y	*325-5662*	1	CONTROL GP-GOVERNOR	686
			—OR—	
Y	*365-4286*	1	CONTROL GP-GOVERNOR	718
Y	*308-2307*	1	HOUSING GP-FRONT	310
Y	*317-0590*	1	COVER GP-VALVE MECHANISM	204
Y	*309-6713*	1	CRANKSHAFT GP	223
Y	*309-6712*	1	CYLINDER BLOCK GP	233
Y	*309-6715*	1	CYLINDER HEAD GP	261
Y	*325-5669*	1	DRIVE GP-FAN	277
Y	*319-1623*	1	FAN GP-BLOWER	505
Y	*308-2297*	1	FILLER GP-ENGINE OIL	482
Y	*308-2298*	1	FILTER GP-ENGINE OIL	491
Y	*325-5671*	1	FILTER GP-FUEL	757
Y	*325-5668*	1	FLYWHEEL GP	291
Y	*315-5256*	1	GASKET GP-EXHAUST MANIFOLD	603
Y	*308-2311*	1	GLOW PLUG GP	886
Y	*325-5661*	1	HOUSING GP-FRONT	337
			—OR—	
Y	*365-4285*	1	HOUSING GP-FRONT	354
Y	*325-5667*	1	HOUSING GP-FRONT	338
Y	*309-6725*	1	LIFTING GP-ENGINE	392
Y	*309-6724*	1	MANIFOLD GP-EXHAUST	604
Y	*308-4735*	1	MOUNTING GP-ENGINE OIL FILTER	495
Y	*308-2295*	1	PAN GP-OIL	398
Y	*309-6714*	1	PISTON & ROD GP	429
Y	*309-6720*	1	PLUG GP-OIL PAN	444
Y	*308-2300*	1	PULLEY GP-CRANKSHAFT	448
Y	*308-2294*	1	PULLEY GP-FAN	451
Y	*309-6717*	1	LINES GP-ENGINE OIL	494
Y	*325-5665*	1	PUMP GP-FUEL INJECTION	829
Y	*325-5670*	1	PUMP GP-FUEL TRANSFER	853
Y	*309-6721*	1	PUMP GP-WATER	517
Y	*308-2313*	1	SOLENOID GP-SHUTOFF (FUEL)	895
Y	*308-2293*	1	STARTING MOTOR GP-ELECTRIC	900
Y	*316-6890*	1	SWITCH GP-PRESSURE (ENGINE-OIL)	913
Y	*308-2317*	1	SWITCH GP-TEMPERATURE (ENGINE COOLANT)	922
Y	*308-2306*	1	V-BELT GP (WATER PUMP)	460
Y	*309-6716*	1	VALVE MECHANISM GP	473

Y - SEPARATE ILLUSTRATION

<END>

318-8442 ENGINE AR-PRIMARY

37 BRAKE KW (50 BHP) AT 2800 RPM

FIELD REPLACEMENT ORDER 435-1646—PAGE: 98

SMCS-1000 **i10704617**

NOTE	PART NUMBER	QTY	PART NAME 1 2 3 4 5 6 (PRODUCT LEVEL)	SEE PAGE
Y	*308-2305*	1	ALTERNATOR GP-CHARGING	866
Y	*308-2309*	1	CONNECTION GP-EXHAUST	595
Y	*308-2302*	1	CONNECTION GP-WATER	497
Y	*308-2307*	1	HOUSING GP-FRONT	310
Y	*317-0590*	1	COVER GP-VALVE MECHANISM	204
Y	*309-6713*	1	CRANKSHAFT GP	223
Y	*309-6712*	1	CYLINDER BLOCK GP	233
Y	*309-6715*	1	CYLINDER HEAD GP	261
Y	*311-1119*	1	DRIVE GP-FAN	275
Y	*363-3165*	1	FILLER GP-ENGINE OIL	486
Y	*308-2298*	1	FILTER GP-ENGINE OIL	491
Y	*308-2291*	1	FLYWHEEL GP	287
Y	*308-2311*	1	GLOW PLUG GP	886
Y	*308-2290*	1	HOUSING GP-FLYWHEEL	297
Y	*309-6718*	1	HOUSING GP-FRONT	313
			—OR—	
Y	*441-6512*	1	HOUSING GP-FRONT	358
			—OR—	
Y	*454-6141*	1	HOUSING GP-FRONT	360
Y	*441-6513*	1	CONTROL GP-GOVERNOR	726
			—OR—	
Y	*454-6143*	1	CONTROL GP-GOVERNOR	728
Y	*441-6514*	1	CAMSHAFT GP	174
			—OR—	
Y	*454-6144*	1	CAMSHAFT GP	175
Y	*309-6725*	1	LIFTING GP-ENGINE	392
Y	*317-7192*	1	MANIFOLD GP-EXHAUST	605
Y	*308-4735*	1	MOUNTING GP-ENGINE OIL FILTER	495
Y	*322-2416*	1	PAN GP-OIL	414
Y	*309-6714*	1	PISTON & ROD GP	429
Y	*322-2420*	1	PLUG GP-OIL PAN	445
Y	*308-2300*	1	PULLEY GP-CRANKSHAFT	448
Y	*311-9027*	1	PULLEY GP-WATER PUMP	454
Y	*309-6717*	1	LINES GP-ENGINE OIL	494
Y	*308-2310*	1	PUMP GP-FILTER & FUEL TRANSFER	796
Y	*309-6719*	1	PUMP GP-FUEL INJECTION	817
Y	*309-6721*	1	PUMP GP-WATER	517
Y	*308-2313*	1	SOLENOID GP-SHUTOFF (FUEL)	895
Y	*308-2293*	1	STARTING MOTOR GP-ELECTRIC	900
Y	*315-7819*	1	SWITCH GP-PRESSURE (ENGINE OIL)	912
Y	*308-2317*	1	SWITCH GP-TEMPERATURE (ENGINE COOLANT)	922
Y	*311-9029*	1	V-BELT GP (WATER PUMP)	461
Y	*309-6716*	1	VALVE MECHANISM GP	473

Y - SEPARATE ILLUSTRATION

<END>

318-8497 ENGINE AR-PRIMARY

45 BRAKE KW (60 BHP) AT 2800 RPM

FIELD REPLACEMENT ORDER 435-1636—PAGE: 92

SMCS-1000 **i10709935**

NOTE	PART NUMBER	QTY	PART NAME 1 2 3 4 5 6 (PRODUCT LEVEL)	SEE PAGE
Y	*308-2305*	1	ALTERNATOR GP-CHARGING	866
Y	*323-9147*	1	CAMSHAFT GP	150
			—OR—	
Y	*329-9278*	2	CAMSHAFT GP	154
Y	*308-2319*	1	CONNECTION GP-ELECTRICAL	873
			—OR—	
Y	*321-6741*	1	CONNECTION GP-ELECTRICAL	874
Y	*308-2302*	1	CONNECTION GP-WATER	497
Y	*323-9146*	1	GOVERNOR GP	771
			—OR—	
Y	*329-9277*	2	HOUSING GP-FRONT	346
Y	*308-2307*	1	HOUSING GP-FRONT	310
Y	*308-2283*	1	CRANKSHAFT GP	219
Y	*308-2281*	1	CYLINDER BLOCK GP	229
Y	*308-2284*	1	CYLINDER HEAD GP	259
Y	*308-2304*	1	EXTENSION GP-FAN	278
Y	*308-2303*	1	FAN GP-SUCTION	506
Y	*308-2297*	1	FILLER GP-ENGINE OIL	482
			—OR—	
Y	*363-3165*	1	FILLER GP-ENGINE OIL	486
Y	*308-2298*	1	FILTER GP-ENGINE OIL	491
Y	*317-0586*	1	FLYWHEEL GP	289
Y	*308-2311*	1	GLOW PLUG GP	886
Y	*317-0588*	1	HOUSING GP-FLYWHEEL	301
Y	*308-2288*	1	FASTENER GP-FRONT HOUSING	284
Y	*308-2321*	1	LAMP GP	924
Y	*309-6725*	1	LIFTING GP-ENGINE	392
Y	*308-2299*	1	LINES GP-COOLANT	512
			—OR—	
Y	*331-2589*	1	LINES GP-COOLANT	513
Y	*308-2287*	1	LINES GP-ENGINE OIL	493
Y	*317-3037*	1	PAN GP-OIL	410
Y	*308-2286*	1	PISTON & ROD GP	426
Y	*309-6720*	1	PLUG GP-OIL PAN	444
Y	*321-6740*	1	PULLEY GP-CRANKSHAFT	449
Y	*308-2294*	1	PULLEY GP-FAN	451
Y	*308-2310*	1	PUMP GP-FILTER & FUEL TRANSFER	796
Y	*308-2289*	1	PUMP GP-FUEL INJECTION	813
Y	*317-6706*	1	PUMP GP-FUEL PRM & PRIM FILTER	845
			—OR—	
Y	*579-9465*	1	PUMP GP-FUEL PRM & PRIM FILTER	849
Y	*317-0979*	1	PUMP GP-WATER	521
			—OR—	
Y	*442-7729*	1	PUMP GP-WATER	531
Y	*320-9114*	1	SHUTOFF GP-ELECTRICAL	894
Y	*308-2313*	1	SOLENOID GP-SHUTOFF (FUEL)	895
Y	*308-2293*	1	STARTING MOTOR GP-ELECTRIC	900

318-8497 **ENGINE AR-PRIMARY (**contd.**)** **i10709935**

NOTE	PART NUMBER	QTY	PART NAME 1 2 3 4 5 6 (PRODUCT LEVEL)	SEE PAGE
Y	*308-2312*	1	SWITCH GP-PRESSURE	911
Y	*308-2314*	1	SWITCH GP-START	921
Y	*308-2317*	1	SWITCH GP-TEMPERATURE (ENGINE COOLANT)	922
Y	*308-2308*	1	TURBOCHARGER GP	612
			—OR—	
Y	*442-7759*	1	TURBOCHARGER GP	648
Y	*308-2306*	1	V-BELT GP (WATER PUMP)	460
Y	*308-2285*	1	VALVE MECHANISM GP	467

Y - SEPARATE ILLUSTRATION

<END>

319-5616 ENGINE AR-PRIMARY

36 BRAKE KW (49 BHP) AT 2800 RPM

FIELD REPLACEMENT ORDER 435-1642—PAGE: 97

SMCS-1000 **i10709942**

NOTE	PART NUMBER	QTY	PART NAME 1 2 3 4 5 6 (PRODUCT LEVEL)	SEE PAGE
Y	*340-5947*	1	ALTERNATOR GP-CHARGING	868
Y	*465-2494*	1	CAMSHAFT GP	177
			S/N: G7L1-12144	
Y	*454-6144*	1	CAMSHAFT GP	175
			S/N: G7L12145-UP	
Y	*308-2302*	1	CONNECTION GP-WATER	497
Y	*340-6911*	1	CONTROL GP-GOVERNOR	712
Y	*308-2307*	1	HOUSING GP-FRONT	310
Y	*317-0590*	1	COVER GP-VALVE MECHANISM	204
Y	*340-5782*	1	CRANKSHAFT GP	225
Y	*340-5781*	1	CYLINDER BLOCK GP	239
Y	*340-5784*	1	CYLINDER HEAD GP	265
Y	*315-5252*	1	VALVE & PLUG GP-OIL PAN DRAIN	466
Y	*308-2297*	1	FILLER GP-ENGINE OIL	482
			S/N: G7L1-8311	
Y	*363-3165*	1	FILLER GP-ENGINE OIL	486
			S/N: G7L8312-UP	
Y	*308-2298*	1	FILTER GP-ENGINE OIL	491
Y	*308-2291*	1	FLYWHEEL GP	287
Y	*308-2311*	1	GLOW PLUG GP	886
Y	*465-2493*	1	CONTROL GP-GOVERNOR	736
			S/N: G7L1-12144	
Y	*454-6143*	1	CONTROL GP-GOVERNOR	728
			S/N: G7L12145-UP	
Y	*308-2290*	1	HOUSING GP-FLYWHEEL	297
Y	*465-2492*	1	HOUSING GP-FRONT	362
			S/N: G7L1-12144	
Y	*454-6141*	1	HOUSING GP-FRONT	360
			S/N: G7L12145-UP	
Y	*340-6069*	1	LIFTING GP-ENGINE	394
Y	*309-6724*	1	MANIFOLD GP-EXHAUST (INLET)	604
Y	*329-4424*	1	MANIFOLD GP-EXHAUST (OUTLET)	606
Y	*308-4735*	1	MOUNTING GP-ENGINE OIL FILTER	495
Y	*315-7813*	1	EXTENSION GP-FAN	279
Y	*340-5864*	1	PAN GP-OIL	418
Y	*340-5783*	1	PISTON & ROD GP	432
Y	*308-2300*	1	PULLEY GP-CRANKSHAFT	448
Y	*308-2294*	1	PULLEY GP-FAN	451
Y	*309-6719*	1	PUMP GP-FUEL INJECTION	817
Y	*340-5967*	1	PUMP GP-FUEL TRANSFER	860
Y	*340-5886*	1	PUMP GP-WATER	530
Y	*308-2293*	1	STARTING MOTOR GP-ELECTRIC	900
Y	*315-7819*	1	SWITCH GP-PRESSURE (ENGINE OIL)	912
Y	*340-6913*	1	SWITCH GP-TEMPERATURE	923
Y	*340-5966*	1	V-BELT GP	462
Y	*340-5786*	1	VALVE GP-PRESSURE CONTROL	496
Y	*340-5785*	1	VALVE MECHANISM GP	477

319-5616 **ENGINE AR-PRIMARY (**contd.**)** **i10709942**

NOTE	PART NUMBER	QTY	PART NAME 1 2 3 4 5 6 (PRODUCT LEVEL)	SEE PAGE
Y - SEPARATE ILLUSTRATION				

<END>

319-7216 ENGINE AR-PRIMARY

45 BRAKE KW (60 BHP) AT 2800 RPM

FIELD REPLACEMENT ORDER 435-1636—PAGE: 92

SMCS-1000 **i10709967**

NOTE	PART NUMBER	QTY	PART NAME 1 2 3 4 5 6 (PRODUCT LEVEL)	SEE PAGE
Y	*326-8543*	1	AIR CLEANER GP	580
Y	*308-2305*	1	ALTERNATOR GP-CHARGING	866
Y	*323-9147*	1	CAMSHAFT GP	150
			—OR—	
Y	*329-9278*	1	CAMSHAFT GP	154
Y	*308-2319*	1	CONNECTION GP-ELECTRICAL	873
			—OR—	
Y	*321-6741*	1	CONNECTION GP-ELECTRICAL	874
Y	*308-2309*	1	CONNECTION GP-EXHAUST	595
Y	*308-2302*	1	CONNECTION GP-WATER	497
Y	*308-2307*	1	HOUSING GP-FRONT	310
Y	*308-2283*	1	CRANKSHAFT GP	219
Y	*308-2281*	1	CYLINDER BLOCK GP	229
Y	*308-2284*	1	CYLINDER HEAD GP	259
Y	*363-3165*	1	FILLER GP-ENGINE OIL	486
Y	*308-2298*	1	FILTER GP-ENGINE OIL	491
Y	*311-1884*	1	FLYWHEEL GP	288
Y	*308-2311*	1	GLOW PLUG GP	886
Y	*323-9146*	1	GOVERNOR GP	771
			—OR—	
Y	*329-9277*	1	HOUSING GP-FRONT	346
Y	*311-1883*	1	HOUSING GP-FLYWHEEL	299
Y	*323-9145*	1	HOUSING GP-FRONT	336
			—OR—	
Y	*308-2288*	1	FASTENER GP-FRONT HOUSING	284
Y	*317-7191*	1	CONNECTION GP-WATER	498
Y	*308-2321*	1	LAMP GP	924
Y	*309-6725*	1	LIFTING GP-ENGINE	392
Y	*331-2589*	1	LINES GP-COOLANT	513
Y	*308-2287*	1	LINES GP-ENGINE OIL	493
Y	*308-2295*	1	PAN GP-OIL	398
Y	*308-2286*	1	PISTON & ROD GP	426
Y	*309-6720*	1	PLUG GP-OIL PAN	444
Y	*321-6740*	1	PULLEY GP-CRANKSHAFT	449
Y	*308-2294*	1	PULLEY GP-FAN	451
Y	*308-2310*	1	PUMP GP-FILTER & FUEL TRANSFER	796
Y	*308-2289*	1	PUMP GP-FUEL INJECTION	813
Y	*317-6706*	1	PUMP GP-FUEL PRM & PRIM FILTER	845
Y	*317-0979*	1	PUMP GP-WATER	521
Y	*341-6658*	1	RADIATOR & FAN GP	543
Y	*308-2313*	1	SOLENOID GP-SHUTOFF (FUEL)	895
Y	*308-2293*	1	STARTING MOTOR GP-ELECTRIC	900
Y	*315-7819*	1	SWITCH GP-PRESSURE (ENGINE OIL)	912
Y	*308-2314*	1	SWITCH GP-START	921
Y	*308-2317*	1	SWITCH GP-TEMPERATURE (ENGINE COOLANT)	922
Y	*341-6642*	1	TURBOCHARGER GP	623
			—OR—	

319-7216 **ENGINE AR-PRIMARY (**contd.**)** **i10709967**

NOTE	PART NUMBER	QTY	PART NAME 1 2 3 4 5 6 (PRODUCT LEVEL)	SEE PAGE
Y	*441-8101*	1	TURBOCHARGER GP	632
Y	*341-6637*	1	V-BELT GP	463
			—OR—	
Y	*308-2306*	1	V-BELT GP (WATER PUMP) (DRIVE)	460
Y	*308-2285*	1	VALVE MECHANISM GP	467

Y - SEPARATE ILLUSTRATION

<END>

320-0290 ENGINE AR-PRIMARY

45 BRAKE KW (60 BHP) AT 2800 RPM

FIELD REPLACEMENT ORDER 435-1636—PAGE: 92

SMCS-1000 **i10709980**

NOTE	PART NUMBER	QTY	PART NAME 1 2 3 4 5 6 (PRODUCT LEVEL)	SEE PAGE
Y	*326-8543*	1	AIR CLEANER GP	580
			—OR—	
Y	*600-1135*	1	AIR CLEANER GP	589
Y	*308-2305*	1	ALTERNATOR GP-CHARGING	866
Y	*323-9147*	1	CAMSHAFT GP	150
			—OR—	
Y	*329-9278*	1	CAMSHAFT GP	154
Y	*308-2319*	1	CONNECTION GP-ELECTRICAL	873
			—OR—	
Y	*321-6741*	1	CONNECTION GP-ELECTRICAL	874
Y	*308-2309*	1	CONNECTION GP-EXHAUST	595
Y	*308-2302*	1	CONNECTION GP-WATER	497
Y	*308-2307*	1	HOUSING GP-FRONT	310
Y	*308-2283*	1	CRANKSHAFT GP	219
Y	*308-2281*	1	CYLINDER BLOCK GP	229
Y	*308-2284*	1	CYLINDER HEAD GP	259
Y	*363-3165*	1	FILLER GP-ENGINE OIL	486
Y	*308-2298*	1	FILTER GP-ENGINE OIL	491
Y	*308-2291*	1	FLYWHEEL GP	287
Y	*308-2311*	1	GLOW PLUG GP	886
Y	*323-9146*	1	GOVERNOR GP	771
			—OR—	
Y	*329-9277*	1	HOUSING GP-FRONT	346
Y	*308-2290*	1	HOUSING GP-FLYWHEEL	297
Y	*323-9145*	1	HOUSING GP-FRONT	336
			—OR—	
Y	*308-2288*	1	FASTENER GP-FRONT HOUSING	284
Y	*308-2321*	1	LAMP GP	924
Y	*309-6725*	1	LIFTING GP-ENGINE	392
Y	*331-2589*	1	LINES GP-COOLANT	513
Y	*308-2287*	1	LINES GP-ENGINE OIL	493
Y	*308-2295*	1	PAN GP-OIL	398
Y	*308-2286*	1	PISTON & ROD GP	426
Y	*309-6720*	1	PLUG GP-OIL PAN	444
Y	*321-6740*	1	PULLEY GP-CRANKSHAFT	449
Y	*308-2294*	1	PULLEY GP-FAN	451
Y	*308-2310*	1	PUMP GP-FILTER & FUEL TRANSFER	796
Y	*308-2289*	1	PUMP GP-FUEL INJECTION	813
Y	*317-6706*	1	PUMP GP-FUEL PRM & PRIM FILTER	845
			—OR—	
Y	*579-9465*	1	PUMP GP-FUEL PRM & PRIM FILTER	849
Y	*317-0979*	1	PUMP GP-WATER	521
Y	*341-6658*	1	RADIATOR & FAN GP	543
Y	*308-2313*	1	SOLENOID GP-SHUTOFF (FUEL)	895
Y	*308-2293*	1	STARTING MOTOR GP-ELECTRIC	900
Y	*315-7819*	1	SWITCH GP-PRESSURE (ENGINE OIL)	912
Y	*308-2314*	1	SWITCH GP-START	921

320-0290 **ENGINE AR-PRIMARY (**contd.**)** **i10709980**

NOTE	PART NUMBER	QTY	PART NAME 1 2 3 4 5 6 (PRODUCT LEVEL)	SEE PAGE
Y	*308-2317*	1	SWITCH GP-TEMPERATURE (ENGINE COOLANT)	922
Y	*341-6642*	1	TURBOCHARGER GP	623
			—OR—	
Y	*441-8101*	1	TURBOCHARGER GP	632
Y	*308-2306*	1	V-BELT GP (WATER PUMP)	460
Y	*308-2285*	1	VALVE MECHANISM GP	467

Y - SEPARATE ILLUSTRATION

<END>

320-0291 ENGINE AR-PRIMARY

45 BRAKE KW (60 BHP) AT 2800 RPM

FIELD REPLACEMENT ORDER 435-1636—PAGE: 92

SMCS-1000 **i10709990**

NOTE	PART NUMBER	QTY	PART NAME 1 2 3 4 5 6 (PRODUCT LEVEL)	SEE PAGE
Y	*326-8543*	1	AIR CLEANER GP	580
Y	*308-2305*	1	ALTERNATOR GP-CHARGING	866
Y	*329-9278*	1	CAMSHAFT GP	154
Y	*308-2319*	1	CONNECTION GP-ELECTRICAL	873
Y	*308-2309*	1	CONNECTION GP-EXHAUST	595
Y	*308-2302*	1	CONNECTION GP-WATER	497
Y	*329-9277*	1	HOUSING GP-FRONT	346
Y	*308-2307*	1	HOUSING GP-FRONT	310
Y	*308-2283*	1	CRANKSHAFT GP	219
Y	*308-2281*	1	CYLINDER BLOCK GP	229
Y	*308-2284*	1	CYLINDER HEAD GP	259
Y	*363-3165*	1	FILLER GP-ENGINE OIL	486
Y	*308-2298*	1	FILTER GP-ENGINE OIL	491
Y	*317-0586*	1	FLYWHEEL GP	289
Y	*308-2311*	1	GLOW PLUG GP	886
Y	*317-0588*	1	HOUSING GP-FLYWHEEL	301
Y	*308-2288*	1	FASTENER GP-FRONT HOUSING	284
Y	*309-6725*	1	LIFTING GP-ENGINE	392
Y	*331-2589*	1	LINES GP-COOLANT	513
Y	*308-2295*	1	PAN GP-OIL	398
Y	*308-2286*	1	PISTON & ROD GP	426
Y	*309-6720*	1	PLUG GP-OIL PAN	444
Y	*321-6740*	1	PULLEY GP-CRANKSHAFT	449
Y	*308-2294*	1	PULLEY GP-FAN	451
Y	*308-2287*	1	LINES GP-ENGINE OIL	493
Y	*308-2310*	1	PUMP GP-FILTER & FUEL TRANSFER	796
Y	*308-2289*	1	PUMP GP-FUEL INJECTION	813
Y	*317-6706*	1	PUMP GP-FUEL PRM & PRIM FILTER	845
			—OR—	
Y	*579-9465*	1	PUMP GP-FUEL PRM & PRIM FILTER	849
Y	*317-0979*	1	PUMP GP-WATER	521
Y	*341-6658*	1	RADIATOR & FAN GP	543
Y	*308-2313*	1	SOLENOID GP-SHUTOFF (FUEL)	895
Y	*308-2293*	1	STARTING MOTOR GP-ELECTRIC	900
Y	*315-7819*	1	SWITCH GP-PRESSURE (ENGINE OIL)	912
Y	*308-2314*	1	SWITCH GP-START	921
Y	*308-2317*	1	SWITCH GP-TEMPERATURE (ENGINE COOLANT)	922
Y	*341-6642*	1	TURBOCHARGER GP	623
			—OR—	
Y	*441-8101*	1	TURBOCHARGER GP	632
Y	*308-2306*	1	V-BELT GP (WATER PUMP)	460
Y	*308-2285*	1	VALVE MECHANISM GP	467

Y - SEPARATE ILLUSTRATION

<END>

320-0337 ENGINE AR-PRIMARY

49 BRAKE KW (66 BHP) AT 2800 RPM

FIELD REPLACEMENT ORDER 435-1658—PAGE: 103

SMCS-1000 **i10116280**

NOTE	PART NUMBER	QTY	PART NAME 1 2 3 4 5 6 (PRODUCT LEVEL)	SEE PAGE
Y	*326-8543*	1	AIR CLEANER GP	580
			—OR—	
Y	*600-1135*	1	AIR CLEANER GP	589
Y	*308-2305*	1	ALTERNATOR GP-CHARGING	866
Y	*373-7284*	1	CAMSHAFT GP	171
Y	*321-6741*	1	CONNECTION GP-ELECTRICAL	874
Y	*308-2309*	1	CONNECTION GP-EXHAUST	595
Y	*308-2302*	1	CONNECTION GP-WATER	497
Y	*373-7283*	1	GOVERNOR GP	777
Y	*308-2307*	1	HOUSING GP-FRONT	310
Y	*308-2283*	1	CRANKSHAFT GP	219
Y	*308-2281*	1	CYLINDER BLOCK GP	229
Y	*308-2284*	1	CYLINDER HEAD GP	259
Y	*315-5252*	1	VALVE & PLUG GP-OIL PAN DRAIN	466
Y	*363-3165*	1	FILLER GP-ENGINE OIL	486
Y	*308-2298*	1	FILTER GP-ENGINE OIL	491
Y	*317-0586*	1	FLYWHEEL GP	289
Y	*308-2311*	1	GLOW PLUG GP	886
Y	*317-0588*	1	HOUSING GP-FLYWHEEL	301
Y	*308-3329*	1	HOUSING GP-FRONT	312
Y	*309-6725*	1	LIFTING GP-ENGINE	392
Y	*331-2589*	1	LINES GP-COOLANT	513
Y	*308-2287*	1	LINES GP-ENGINE OIL	493
Y	*308-2295*	1	PAN GP-OIL	398
Y	*308-2286*	1	PISTON & ROD GP	426
Y	*321-6740*	1	PULLEY GP-CRANKSHAFT	449
Y	*308-2294*	1	PULLEY GP-FAN	451
			—OR—	
Y	*311-9027*	1	PULLEY GP-WATER PUMP	454
Y	*308-2310*	1	PUMP GP-FILTER & FUEL TRANSFER	796
Y	*308-3330*	1	PUMP GP-FUEL INJECTION	815
Y	*317-6706*	1	PUMP GP-FUEL PRM & PRIM FILTER	845
			—OR—	
Y	*579-9465*	1	PUMP GP-FUEL PRM & PRIM FILTER	849
Y	*317-0979*	1	PUMP GP-WATER	521
Y	*344-5881*	1	RADIATOR & FAN GP	551
Y	*308-2313*	1	SOLENOID GP-SHUTOFF (FUEL)	895
Y	*308-2293*	1	STARTING MOTOR GP-ELECTRIC	900
Y	*315-7819*	1	SWITCH GP-PRESSURE (ENGINE OIL)	912
Y	*308-2314*	1	SWITCH GP-START	921
Y	*308-2317*	1	SWITCH GP-TEMPERATURE (ENGINE COOLANT)	922
Y	*344-5515*	1	TURBOCHARGER GP	626
Y	*308-2306*	1	V-BELT GP (WATER PUMP)	460
			—OR—	
Y	*311-9029*	1	V-BELT GP (WATER PUMP)	461
Y	*308-2285*	1	VALVE MECHANISM GP	467

320-0337 **ENGINE AR-PRIMARY (**contd.**)** **i10116280**

NOTE	PART NUMBER	QTY	PART NAME 1 2 3 4 5 6 (PRODUCT LEVEL)	SEE PAGE
Y - SEPARATE ILLUSTRATION				

<END>

320-3618 ENGINE AR-PRIMARY

45 BRAKE KW (60 BHP) AT 2800 RPM

FIELD REPLACEMENT ORDER 435-1636—PAGE: 92

SMCS-1000 **i10710027**

NOTE	PART NUMBER	QTY	PART NAME 1 2 3 4 5 6 (PRODUCT LEVEL)	SEE PAGE
Y	*308-2305*	1	ALTERNATOR GP-CHARGING	866
Y	*323-9147*	1	CAMSHAFT GP	150
			—OR—	
Y	*329-9278*	1	CAMSHAFT GP	154
Y	*308-2319*	1	CONNECTION GP-ELECTRICAL	873
			—OR—	
Y	*321-6741*	1	CONNECTION GP-ELECTRICAL	874
Y	*308-2309*	1	CONNECTION GP-EXHAUST	595
Y	*308-2302*	1	CONNECTION GP-WATER	497
Y	*308-2307*	1	HOUSING GP-FRONT	310
Y	*308-2283*	1	CRANKSHAFT GP	219
Y	*308-2281*	1	CYLINDER BLOCK GP	229
Y	*308-2284*	1	CYLINDER HEAD GP	259
Y	*308-2297*	1	FILLER GP-ENGINE OIL	482
			—OR—	
Y	*363-3165*	1	FILLER GP-ENGINE OIL	486
Y	*308-2298*	1	FILTER GP-ENGINE OIL	491
Y	*327-7632*	1	FLYWHEEL GP	292
Y	*308-2311*	1	GLOW PLUG GP	886
Y	*323-9146*	1	GOVERNOR GP	771
			—OR—	
Y	*329-9277*	1	HOUSING GP-FRONT	346
Y	*317-0588*	1	HOUSING GP-FLYWHEEL	301
Y	*323-9145*	1	HOUSING GP-FRONT	336
			—OR—	
Y	*308-2288*	1	FASTENER GP-FRONT HOUSING	284
Y	*308-2321*	1	LAMP GP	924
Y	*309-6725*	1	LIFTING GP-ENGINE	392
Y	*331-2589*	1	LINES GP-COOLANT	513
Y	*308-2287*	1	LINES GP-ENGINE OIL	493
Y	*315-7813*	1	EXTENSION GP-FAN	279
Y	*308-2295*	1	PAN GP-OIL	398
Y	*308-2286*	1	PISTON & ROD GP	426
Y	*309-6720*	1	PLUG GP-OIL PAN	444
Y	*321-6740*	1	PULLEY GP-CRANKSHAFT	449
Y	*308-2294*	1	PULLEY GP-FAN	451
Y	*308-2310*	1	PUMP GP-FILTER & FUEL TRANSFER	796
Y	*308-2289*	1	PUMP GP-FUEL INJECTION	813
Y	*317-6706*	1	PUMP GP-FUEL PRM & PRIM FILTER	845
Y	*442-7729*	1	PUMP GP-WATER	531
Y	*320-9114*	1	SHUTOFF GP-ELECTRICAL	894
Y	*315-7817*	1	SOLENOID GP-SHUTOFF	896
Y	*308-2293*	1	STARTING MOTOR GP-ELECTRIC	900
Y	*315-7819*	1	SWITCH GP-PRESSURE (ENGINE OIL)	912
Y	*308-2317*	1	SWITCH GP-TEMPERATURE (ENGINE COOLANT)	922
Y	*326-8542*	1	TURBOCHARGER GP	620
			S/N: G7L1-939	

320-3618 **ENGINE AR-PRIMARY (**contd.**)** **i10710027**

NOTE	PART NUMBER	QTY	PART NAME 1 2 3 4 5 6 (PRODUCT LEVEL)	SEE PAGE
Y	*442-6206*	1	TURBOCHARGER GP	642
			S/N: G7L940-UP	
Y	*308-2306*	1	V-BELT GP (WATER PUMP) (DRIVE)	460
Y	*308-2285*	1	VALVE MECHANISM GP	467

Y - SEPARATE ILLUSTRATION

<END>

321-6711 ENGINE AR-PRIMARY*R

43 BRAKE KW (58 BHP) AT 2600 RPM

FIELD REPLACEMENT ORDER 435-1638—PAGE: 6

SMCS-1000 **i10720615**

NOTE	PART NUMBER	QTY	PART NAME 1 2 3 4 5 6 (PRODUCT LEVEL)	SEE PAGE
Y	*308-2305*	1	ALTERNATOR GP-CHARGING	866
Y	*328-3293*	1	CAMSHAFT GP	153
Y	*321-6741*	1	CONNECTION GP-ELECTRICAL	874
Y	*308-2299*	1	LINES GP-COOLANT	512
			—OR—	
Y	*331-2589*	1	LINES GP-COOLANT (COOLER)	513
Y	*308-2302*	1	CONNECTION GP-WATER	497
Y	*322-2427*	1	CONNECTOR GP-CAB HEATER LINES	502
Y	*328-3292*	1	CONTROL GP-GOVERNOR	692
Y	*308-2283*	1	CRANKSHAFT GP	219
Y	*308-2281*	1	CYLINDER BLOCK GP	229
Y	*308-2284*	1	CYLINDER HEAD GP	259
Y	*328-3296*	1	DRIVE GP-AUXILIARY	274
Y	*325-5669*	1	DRIVE GP-FAN	277
Y	*322-2421*	1	FILLER GP-ENGINE OIL	484
Y	*308-2298*	1	FILTER GP-ENGINE OIL	491
Y	*322-2412*	1	FLYWHEEL GP	290
Y	*308-2311*	1	GLOW PLUG GP	886
Y	*311-1883*	1	HOUSING GP-FLYWHEEL	299
			—OR—	
Y	*342-9604*	1	HOUSING GP-FLYWHEEL	302
Y	*328-3291*	1	HOUSING GP-FRONT	340
Y	*309-6725*	1	LIFTING GP-ENGINE	392
Y	*315-5256*	1	GASKET GP-EXHAUST MANIFOLD	603
Y	*322-2416*	1	PAN GP-OIL	414
Y	*328-3297*	1	PARTS GP-MISCELLANEOUS	931
Y	*308-2286*	1	PISTON & ROD GP	426
Y	*322-2426*	1	PLUG GP-ENGINE	442
Y	*322-2420*	1	PLUG GP-OIL PAN	445
Y	*322-2422*	1	PULLEY GP-AUXILIARY DRIVE	447
Y	*321-6740*	1	PULLEY GP-CRANKSHAFT	449
Y	*308-2294*	1	PULLEY GP-FAN	451
Y	*308-2287*	1	LINES GP-ENGINE OIL	493
Y	*328-3294*	1	PUMP GP-FUEL INJECTION	831
Y	*328-1882*	1	PUMP GP-FUEL TRANSFER	856
Y	*317-0979*	1	PUMP GP-WATER	521
			—OR—	
Y	*442-7729*	1	PUMP GP-WATER	531
Y	*308-2313*	1	SOLENOID GP-SHUTOFF (FUEL)	895
Y	*308-2293*	1	STARTING MOTOR GP-ELECTRIC	900
Y	*308-2312*	1	SWITCH GP-PRESSURE	911
Y	*326-8542*	1	TURBOCHARGER GP	620
			—OR—	
Y	*442-6206*	1	TURBOCHARGER GP	642
Y	*308-2306*	1	V-BELT GP (WATER PUMP)	460
Y	*308-2285*	1	VALVE MECHANISM GP	467

321-6711 **ENGINE AR-PRIMARY (**contd.**)** **i10720615**

NOTE	PART NUMBER	QTY	PART NAME 1 2 3 4 5 6 (PRODUCT LEVEL)	SEE PAGE
Y - SEPARATE ILLUSTRATION				

<END>

321-6712 ENGINE AR-PRIMARY

40 BRAKE KW (54 BHP) AT 2600 RPM
FIELD REPLACEMENT ORDER 435-1637—PAGE: 5

SMCS-1000 **i10720630**

NOTE	PART NUMBER	QTY	PART NAME 1 2 3 4 5 6 (PRODUCT LEVEL)	SEE PAGE
Y	*308-2305*	1	ALTERNATOR GP-CHARGING	866
Y	*328-3293*	1	CAMSHAFT GP	153
Y	*321-6741*	1	CONNECTION GP-ELECTRICAL	874
Y	*442-7729*	1	PUMP GP-WATER	531
Y	*308-2302*	1	CONNECTION GP-WATER	497
Y	*322-2427*	1	CONNECTOR GP-CAB HEATER LINES	502
Y	*328-3292*	1	CONTROL GP-GOVERNOR	692
Y	*308-2283*	1	CRANKSHAFT GP	219
Y	*308-2281*	1	CYLINDER BLOCK GP	229
Y	*308-2284*	1	CYLINDER HEAD GP	259
Y	*328-3296*	1	DRIVE GP-AUXILIARY	274
Y	*325-5669*	1	DRIVE GP-FAN	277
Y	*322-2421*	1	FILLER GP-ENGINE OIL	484
Y	*308-2298*	1	FILTER GP-ENGINE OIL	491
Y	*322-2412*	1	FLYWHEEL GP	290
Y	*308-2311*	1	GLOW PLUG GP	886
Y	*311-1883*	1	HOUSING GP-FLYWHEEL	299
Y	*342-9604*	1	HOUSING GP-FLYWHEEL	302
Y	*328-3291*	1	HOUSING GP-FRONT	340
Y	*309-6725*	1	LIFTING GP-ENGINE	392
Y	*315-5256*	1	GASKET GP-EXHAUST MANIFOLD	603
Y	*322-2416*	1	PAN GP-OIL	414
Y	*328-3297*	1	PARTS GP-MISCELLANEOUS	931
Y	*308-2286*	1	PISTON & ROD GP	426
Y	*322-2426*	1	PLUG GP-ENGINE	442
Y	*322-2420*	1	PLUG GP-OIL PAN	445
Y	*322-2422*	1	PULLEY GP-AUXILIARY DRIVE	447
Y	*321-6740*	1	PULLEY GP-CRANKSHAFT	449
Y	*308-2294*	1	PULLEY GP-FAN	451
Y	*308-2287*	1	LINES GP-ENGINE OIL	493
Y	*328-3294*	1	PUMP GP-FUEL INJECTION	831
Y	*328-1882*	1	PUMP GP-FUEL TRANSFER	856
Y	*331-2589*	1	LINES GP-COOLANT	513
Y	*308-2313*	1	SOLENOID GP-SHUTOFF (FUEL)	895
Y	*308-2293*	1	STARTING MOTOR GP-ELECTRIC	900
Y	*308-2312*	1	SWITCH GP-PRESSURE	911
Y	*442-6206*	1	TURBOCHARGER GP	642
Y	*308-2306*	1	V-BELT GP (WATER PUMP)	460
Y	*308-2285*	1	VALVE MECHANISM GP	467
Y - SEPARATE ILLUSTRATION				

<END>

325-4339 ENGINE AR-PRIMARY

45 BRAKE KW (60 BHP) AT 2800 RPM

FIELD REPLACEMENT ORDER 435-1636—PAGE: 92

SMCS-1000 **i10720725**

NOTE	PART NUMBER	QTY	PART NAME 1 2 3 4 5 6 (PRODUCT LEVEL)	SEE PAGE
Y	*323-9147*	1	CAMSHAFT GP	150
			S/N: G7L1-8317	
Y	*626-7889*	1	CAMSHAFT GP	186
			S/N: G7L8318-UP	
Y	*308-2309*	1	CONNECTION GP-EXHAUST	595
Y	*331-9611*	1	CONTROL GP-MANUAL START/STOP	884
Y	*308-2307*	1	HOUSING GP-FRONT	310
Y	*308-2283*	1	CRANKSHAFT GP	219
Y	*308-2281*	1	CYLINDER BLOCK GP	229
Y	*308-2284*	1	CYLINDER HEAD GP	259
Y	*315-7813*	1	EXTENSION GP-FAN	279
Y	*308-2297*	1	FILLER GP-ENGINE OIL	482
			S/N: G7L1-4897	
Y	*363-3165*	1	FILLER GP-ENGINE OIL	486
			S/N: G7L4898-UP	
Y	*308-2298*	1	FILTER GP-ENGINE OIL	491
Y	*317-0586*	1	FLYWHEEL GP	289
Y	*317-3040*	1	GLOW PLUG GP	887
Y	*323-9146*	1	GOVERNOR GP	771
			S/N: G7L1-8317	
Y	*626-7887*	1	GOVERNOR GP	788
			S/N: G7L8318-UP	
Y	*317-0588*	1	HOUSING GP-FLYWHEEL	301
Y	*323-9145*	1	HOUSING GP-FRONT	336
			S/N: G7L1-8317	
Y	*483-1373*	1	HOUSING GP-FRONT	366
			S/N: G7L8318-UP	
Y	*317-7191*	1	CONNECTION GP-WATER	498
Y	*331-9614*	1	LAMP GP	925
			S/N: G7L1-5158	
Y	*309-6725*	1	LIFTING GP-ENGINE	392
Y	*308-2299*	1	LINES GP-COOLANT	512
			S/N: G7L1-8318	
Y	*331-2589*	1	LINES GP-COOLANT	513
			S/N: G7L8319-UP	
Y	*308-2287*	1	LINES GP-ENGINE OIL	493
Y	*331-9610*	1	PAN GP-OIL	416
Y	*308-2286*	1	PISTON & ROD GP	426
Y	*323-9157*	1	PLUG GP-ENGINE	443
Y	*322-2420*	1	PLUG GP-OIL PAN	445
Y	*321-6740*	1	PULLEY GP-CRANKSHAFT	449
Y	*308-2294*	1	PULLEY GP-FAN	451
Y	*308-2310*	1	PUMP GP-FILTER & FUEL TRANSFER	796
Y	*308-2289*	1	PUMP GP-FUEL INJECTION	813
Y	*317-0979*	1	PUMP GP-WATER	521
			S/N: G7L1-8318	

325-4339 **ENGINE AR-PRIMARY (**contd.**)** **i10720725**

NOTE	PART NUMBER	QTY	PART NAME 1 2 3 4 5 6 (PRODUCT LEVEL)	SEE PAGE
Y	*442-7729*	1	PUMP GP-WATER	531
			S/N: G7L8319-UP	
Y	*317-3036*	1	STARTING MOTOR GP-ELECTRIC	904
			S/N: G7L1-8317	
Y	*499-5166*	1	STARTING MOTOR GP-ELECTRIC	910
			S/N: G7L8318-UP	
Y	*308-2317*	1	SWITCH GP-TEMPERATURE (ENGINE COOLANT)	922
Y	*308-2308*	1	TURBOCHARGER GP	612
			S/N: G7L1-8317	
Y	*442-7759*	1	TURBOCHARGER GP	648
			S/N: G7L8318-UP	
Y	*308-2285*	1	VALVE MECHANISM GP	467

Y - SEPARATE ILLUSTRATION

<END>

326-1872 ENGINE AR-PRIMARY*R

36 BRAKE KW (49 BHP) AT 2800 RPM

FIELD REPLACEMENT ORDER 435-1642—PAGE: 97

SMCS-1000 **i10720738**

NOTE	PART NUMBER	QTY	PART NAME 1 2 3 4 5 6 (PRODUCT LEVEL)	SEE PAGE
Y	*308-2305*	1	ALTERNATOR GP-CHARGING	866
Y	*365-4284*	1	CAMSHAFT GP	167
			—OR—	
Y	*465-2209*	1	CAMSHAFT GP	176
Y	*308-2302*	1	CONNECTION GP-WATER	497
Y	*365-4283*	1	CONTROL GP-GOVERNOR	716
			—OR—	
Y	*465-2207*	1	CONTROL GP-GOVERNOR	732
Y	*308-2307*	1	HOUSING GP-FRONT	310
Y	*317-0590*	1	COVER GP-VALVE MECHANISM	204
Y	*309-6713*	1	CRANKSHAFT GP	223
Y	*309-6712*	1	CYLINDER BLOCK GP	233
Y	*309-6715*	1	CYLINDER HEAD GP	261
Y	*308-2297*	1	FILLER GP-ENGINE OIL	482
			S/N: G7L1-4342	
Y	*363-3165*	1	FILLER GP-ENGINE OIL	486
			S/N: G7L4343-UP	
Y	*308-2298*	1	FILTER GP-ENGINE OIL	491
Y	*308-2291*	1	FLYWHEEL GP	287
Y	*308-2311*	1	GLOW PLUG GP	886
Y	*311-1883*	1	HOUSING GP-FLYWHEEL	299
			S/N: G7L1-4342	
Y	*363-6308*	1	HOUSING GP-FLYWHEEL	305
			S/N: G7L4343-UP	
Y	*309-6718*	1	HOUSING GP-FRONT	313
			—OR—	
Y	*365-4282*	1	HOUSING GP-FRONT	353
			—OR—	
Y	*465-2205*	1	HOUSING GP-FRONT	361
Y	*309-6725*	1	LIFTING GP-ENGINE	392
Y	*309-6717*	1	LINES GP-ENGINE OIL	494
Y	*309-6724*	1	MANIFOLD GP-EXHAUST	604
Y	*308-4735*	1	MOUNTING GP-ENGINE OIL FILTER	495
Y	*315-7813*	1	EXTENSION GP-FAN	279
Y	*317-3037*	1	PAN GP-OIL	410
Y	*309-6714*	1	PISTON & ROD GP	429
Y	*322-2426*	1	PLUG GP-ENGINE	442
Y	*309-6720*	1	PLUG GP-OIL PAN	444
Y	*308-2300*	1	PULLEY GP-CRANKSHAFT	448
Y	*308-2294*	1	PULLEY GP-FAN	451
Y	*315-7814*	1	PUMP & MTG GP-FUEL TRANSFER	795
Y	*309-6719*	1	PUMP GP-FUEL INJECTION	817
Y	*309-6721*	1	PUMP GP-WATER	517
Y	*315-7817*	1	SOLENOID GP-SHUTOFF	896
Y	*308-2293*	1	STARTING MOTOR GP-ELECTRIC	900
Y	*334-0268*	1	SWITCH GP-PRESSURE	917

326-1872 **ENGINE AR-PRIMARY (**contd.**)** **i10720738**

NOTE	PART NUMBER	QTY	PART NAME 1 2 3 4 5 6 (PRODUCT LEVEL)	SEE PAGE
Y	*308-2306*	1	V-BELT GP (WATER PUMP)	460
Y	*309-6716*	1	VALVE MECHANISM GP	473

Y - SEPARATE ILLUSTRATION

<END>

326-6416 ENGINE AR-PRIMARY

36 BRAKE KW (49 BHP) AT 2800 RPM

FIELD REPLACEMENT ORDER 435-1634—PAGE: 89

SMCS-1000 **i10720750**

NOTE	PART NUMBER	QTY	PART NAME 1 2 3 4 5 6 (PRODUCT LEVEL)	SEE PAGE
Y	*308-2305*	1	ALTERNATOR GP-CHARGING	866
Y	*332-1364*	1	CAMSHAFT GP	162
Y	*321-6741*	1	CONNECTION GP-ELECTRICAL	874
Y	*308-2309*	1	CONNECTION GP-EXHAUST	595
Y	*308-2302*	1	CONNECTION GP-WATER	497
Y	*332-1363*	1	CONTROL GP-GOVERNOR	708
Y	*308-2307*	1	HOUSING GP-FRONT	310
Y	*308-2283*	1	CRANKSHAFT GP	219
Y	*308-2281*	1	CYLINDER BLOCK GP	229
Y	*308-2284*	1	CYLINDER HEAD GP	259
Y	*308-2297*	1	FILLER GP-ENGINE OIL	482
			S/N: G7L1-4702	
Y	*363-3165*	1	FILLER GP-ENGINE OIL	486
			S/N: G7L4703-UP	
Y	*308-2298*	1	FILTER GP-ENGINE OIL	491
Y	*327-7632*	1	FLYWHEEL GP	292
Y	*308-2311*	1	GLOW PLUG GP	886
Y	*317-0588*	1	HOUSING GP-FLYWHEEL	301
Y	*332-1362*	1	HOUSING GP-FRONT	349
Y	*309-6725*	1	LIFTING GP-ENGINE	392
Y	*308-2299*	1	LINES GP-COOLANT	512
			S/N: G7L1-7061	
Y	*331-2589*	1	LINES GP-COOLANT	513
			S/N: G7L7062-UP	
Y	*308-2287*	1	LINES GP-ENGINE OIL	493
Y	*315-7813*	1	EXTENSION GP-FAN	279
Y	*317-3037*	1	PAN GP-OIL	410
Y	*308-2286*	1	PISTON & ROD GP	426
Y	*309-6720*	1	PLUG GP-OIL PAN	444
Y	*321-6740*	1	PULLEY GP-CRANKSHAFT	449
Y	*311-9027*	1	PULLEY GP-WATER PUMP	454
Y	*308-2310*	1	PUMP GP-FILTER & FUEL TRANSFER	796
			—OR—	
Y	*327-7633*	1	PUMP GP-FUEL TRANSFER	854
			—OR—	
Y	*447-2702*	1	PUMP GP-FUEL PRM & PRIM FILTER	846
Y	*308-2289*	1	PUMP GP-FUEL INJECTION	813
Y	*317-0979*	1	PUMP GP-WATER	521
			S/N: G7L1-7061	
Y	*442-7729*	1	PUMP GP-WATER	531
			S/N: G7L7062-UP	
Y	*308-2313*	1	SOLENOID GP-SHUTOFF (FUEL)	895
Y	*308-2293*	1	STARTING MOTOR GP-ELECTRIC	900
Y	*315-7819*	1	SWITCH GP-PRESSURE (ENGINE OIL)	912
Y	*308-2317*	1	SWITCH GP-TEMPERATURE (ENGINE COOLANT)	922
Y	*308-2308*	1	TURBOCHARGER GP	612

326-6416 **ENGINE AR-PRIMARY (**contd.**)** **i10720750**

NOTE	PART NUMBER	QTY	PART NAME 1 2 3 4 5 6 (PRODUCT LEVEL)	SEE PAGE
			S/N: G7L1-10939	
Y	*442-7759*	1	TURBOCHARGER GP	648
			S/N: G7L10940-UP	
Y	*311-9029*	1	V-BELT GP (WATER PUMP)	461
Y	*308-2285*	1	VALVE MECHANISM GP	467

Y - SEPARATE ILLUSTRATION

<END>

326-7873 ENGINE AR-PRIMARY

36 BRAKE KW (49 BHP) AT 2800 RPM

FIELD REPLACEMENT ORDER 435-1634—PAGE: 89

SMCS-1000 **i10720768**

NOTE	PART NUMBER	QTY	PART NAME 1 2 3 4 5 6 (PRODUCT LEVEL)	SEE PAGE
Y	*308-2305*	1	ALTERNATOR GP-CHARGING	866
Y	*332-1364*	1	CAMSHAFT GP	162
Y	*308-2319*	1	CONNECTION GP-ELECTRICAL	873
			—OR—	
Y	*321-6741*	1	CONNECTION GP-ELECTRICAL	874
Y	*308-2302*	1	CONNECTION GP-WATER	497
Y	*332-1363*	1	CONTROL GP-GOVERNOR	708
Y	*308-2307*	1	HOUSING GP-FRONT	310
Y	*308-2283*	1	CRANKSHAFT GP	219
Y	*308-2281*	1	CYLINDER BLOCK GP	229
Y	*308-2284*	1	CYLINDER HEAD GP	259
Y	*363-3165*	1	FILLER GP-ENGINE OIL	486
Y	*308-2298*	1	FILTER GP-ENGINE OIL	491
Y	*308-5704*	1	FILTER GP-FUEL	756
Y	*327-7632*	1	FLYWHEEL GP	292
Y	*308-2311*	1	GLOW PLUG GP	886
Y	*317-0588*	1	HOUSING GP-FLYWHEEL	301
Y	*332-1362*	1	HOUSING GP-FRONT	349
Y	*309-6725*	1	LIFTING GP-ENGINE	392
Y	*331-2589*	1	LINES GP-COOLANT	513
Y	*308-2299*	1	LINES GP-COOLANT	512
			—OR—	
Y	*308-2309*	1	CONNECTION GP-EXHAUST	595
Y	*308-2287*	1	LINES GP-ENGINE OIL	493
Y	*315-7813*	1	EXTENSION GP-FAN	279
Y	*308-2295*	1	PAN GP-OIL	398
Y	*308-2286*	1	PISTON & ROD GP	426
Y	*309-6720*	1	PLUG GP-OIL PAN	444
Y	*321-6740*	1	PULLEY GP-CRANKSHAFT	449
Y	*308-2294*	1	PULLEY GP-FAN	451
Y	*308-2310*	1	PUMP GP-FILTER & FUEL TRANSFER	796
Y	*308-2289*	1	PUMP GP-FUEL INJECTION	813
Y	*317-6706*	1	PUMP GP-FUEL PRM & PRIM FILTER	845
			—OR—	
Y	*579-9465*	1	PUMP GP-FUEL PRM & PRIM FILTER	849
Y	*317-0979*	1	PUMP GP-WATER	521
			—OR—	
Y	*442-7729*	1	PUMP GP-WATER	531
Y	*320-9114*	1	SHUTOFF GP-ELECTRICAL	894
Y	*315-7817*	1	SOLENOID GP-SHUTOFF	896
Y	*308-2293*	1	STARTING MOTOR GP-ELECTRIC	900
Y	*315-7819*	1	SWITCH GP-PRESSURE (ENGINE OIL)	912
Y	*308-2317*	1	SWITCH GP-TEMPERATURE (ENGINE COOLANT)	922
Y	*326-8542*	1	TURBOCHARGER GP	620
			—OR—	
Y	*442-6206*	1	TURBOCHARGER GP	642

326-7873 **ENGINE AR-PRIMARY (**contd.**)** **i10720768**

NOTE	PART NUMBER	QTY	PART NAME 1 2 3 4 5 6 (PRODUCT LEVEL)	SEE PAGE
Y	*308-2306*	1	V-BELT GP (WATER PUMP)	460
Y	*308-2285*	1	VALVE MECHANISM GP	467

Y - SEPARATE ILLUSTRATION

<END>

329-2157 ENGINE AR-PRIMARY

38 BRAKE KW (51 BHP) AT 3000 RPM

FIELD REPLACEMENT ORDER 433-1379—PAGE: 1

SMCS-1000 **i10720803**

NOTE	PART NUMBER	QTY	PART NAME 1 2 3 4 5 6 (PRODUCT LEVEL)	SEE PAGE
Y	*308-2305*	1	ALTERNATOR GP-CHARGING	866
Y	*509-0009*	1	CAMSHAFT GP	181
Y	*308-2319*	1	CONNECTION GP-ELECTRICAL	873
			—OR—	
Y	*321-6741*	1	CONNECTION GP-ELECTRICAL	874
Y	*308-2302*	1	CONNECTION GP-WATER	497
Y	*465-7011*	1	COVER GP-FRONT HOUSING	194
Y	*309-6722*	1	COVER GP-VALVE MECHANISM	195
Y	*309-6713*	1	CRANKSHAFT GP	223
Y	*309-6712*	1	CYLINDER BLOCK GP	233
Y	*309-6715*	1	CYLINDER HEAD GP	261
Y	*308-2304*	1	EXTENSION GP-FAN	278
Y	*308-2303*	1	FAN GP-SUCTION	506
Y	*509-0007*	1	FASTENER GP-FRONT HOUSING	286
Y	*363-3165*	1	FILLER GP-ENGINE OIL	486
Y	*308-2298*	1	FILTER GP-ENGINE OIL	491
Y	*308-2291*	1	FLYWHEEL GP	287
Y	*308-2311*	1	GLOW PLUG GP	886
Y	*308-2290*	1	HOUSING GP-FLYWHEEL	297
Y	*509-0008*	1	HOUSING GP-FRONT	373
Y	*309-6725*	1	LIFTING GP-ENGINE	392
Y	*309-6724*	1	MANIFOLD GP-EXHAUST	604
Y	*308-4735*	1	MOUNTING GP-ENGINE OIL FILTER	495
Y	*311-1886*	1	PAN GP-OIL	406
Y	*309-6714*	1	PISTON & ROD GP	429
Y	*309-6720*	1	PLUG GP-OIL PAN	444
Y	*321-6740*	1	PULLEY GP-CRANKSHAFT	449
Y	*308-2294*	1	PULLEY GP-FAN	451
Y	*309-6717*	1	LINES GP-ENGINE OIL	494
Y	*308-2310*	1	PUMP GP-FILTER & FUEL TRANSFER	796
Y	*311-1683*	1	PUMP GP-FUEL INJECTION	819
Y	*317-6706*	1	PUMP GP-FUEL PRM & PRIM FILTER	845
Y	*309-6721*	1	PUMP GP-WATER	517
Y	*308-2313*	1	SOLENOID GP-SHUTOFF (FUEL)	895
Y	*308-2293*	1	STARTING MOTOR GP-ELECTRIC	900
Y	*315-7819*	1	SWITCH GP-PRESSURE (ENGINE OIL)	912
Y	*308-2314*	1	SWITCH GP-START	921
Y	*308-2317*	1	SWITCH GP-TEMPERATURE (ENGINE COOLANT)	922
Y	*488-1898*	1	TURBOCHARGER GP	666
Y	*308-2306*	1	V-BELT GP (WATER PUMP) (DRIVE)	460
Y	*309-6716*	1	VALVE MECHANISM GP	473

Y - SEPARATE ILLUSTRATION

<END>

329-2159 ENGINE AR-PRIMARY

46 BRAKE KW (61 BHP) AT 3000 RPM

FIELD REPLACEMENT ORDER 433-1380—PAGE: 3

SMCS-1000 **i10720810**

NOTE	PART NUMBER	QTY	PART NAME 1 2 3 4 5 6 (PRODUCT LEVEL)	SEE PAGE
Y	*308-2305*	1	ALTERNATOR GP-CHARGING	866
Y	*317-0971*	1	CAMSHAFT GP	148
Y	*308-2319*	1	CONNECTION GP-ELECTRICAL	873
			—OR—	
Y	*321-6741*	1	CONNECTION GP-ELECTRICAL	874
Y	*308-2309*	1	CONNECTION GP-EXHAUST	595
Y	*308-2302*	1	CONNECTION GP-WATER	497
Y	*364-2827*	1	COVER GP-ENGINE	192
Y	*308-2283*	1	CRANKSHAFT GP	219
Y	*308-2281*	1	CYLINDER BLOCK GP	229
Y	*308-2284*	1	CYLINDER HEAD GP	259
Y	*308-2303*	1	FAN GP-SUCTION	506
Y	*363-3165*	1	FILLER GP-ENGINE OIL	486
Y	*308-2298*	1	FILTER GP-ENGINE OIL	491
Y	*308-2291*	1	FLYWHEEL GP	287
Y	*308-2311*	1	GLOW PLUG GP	886
Y	*317-0967*	1	GOVERNOR GP	767
Y	*308-2290*	1	HOUSING GP-FLYWHEEL	297
Y	*317-0965*	1	HOUSING GP-FRONT	328
Y	*308-2315*	1	LIFTING GP-ENGINE	391
Y	*331-2589*	1	LINES GP-COOLANT	513
Y	*308-2287*	1	LINES GP-ENGINE OIL	493
Y	*311-1886*	1	PAN GP-OIL	406
Y	*308-2286*	1	PISTON & ROD GP	426
Y	*322-2420*	1	PLUG GP-OIL PAN	445
Y	*321-6740*	1	PULLEY GP-CRANKSHAFT	449
Y	*308-2294*	1	PULLEY GP-FAN	451
Y	*308-2310*	1	PUMP GP-FILTER & FUEL TRANSFER	796
Y	*317-0977*	1	PUMP GP-FUEL INJECTION	823
Y	*317-6706*	1	PUMP GP-FUEL PRM & PRIM FILTER	845
Y	*442-7729*	1	PUMP GP-WATER	531
Y	*308-2313*	1	SOLENOID GP-SHUTOFF (FUEL)	895
Y	*308-2293*	1	STARTING MOTOR GP-ELECTRIC	900
Y	*315-7819*	1	SWITCH GP-PRESSURE (ENGINE OIL)	912
Y	*308-2314*	1	SWITCH GP-START	921
Y	*308-2317*	1	SWITCH GP-TEMPERATURE (ENGINE COOLANT)	922
Y	*308-2308*	1	TURBOCHARGER GP	612
			—OR—	
Y	*442-7759*	1	TURBOCHARGER GP	648
Y	*308-2306*	1	V-BELT GP (WATER PUMP) (DRIVE)	460
Y	*308-2285*	1	VALVE MECHANISM GP	467

Y - SEPARATE ILLUSTRATION

<END>

334-0267 ENGINE AR-PRIMARY

33 BRAKE KW (44 BHP) AT 2800 RPM

FIELD REPLACEMENT ORDER 435-1656—PAGE: 102

SMCS-1000 **i10720816**

NOTE	PART NUMBER	QTY	PART NAME 1 2 3 4 5 6 (PRODUCT LEVEL)	SEE PAGE
Y	*317-0649*	1	AIR CLEANER GP	575
Y	*308-2305*	1	ALTERNATOR GP-CHARGING	866
Y	*308-2319*	1	CONNECTION GP-ELECTRICAL	873
			—OR—	
Y	*321-6741*	1	CONNECTION GP-ELECTRICAL	874
Y	*308-2309*	1	CONNECTION GP-EXHAUST	595
Y	*308-2302*	1	CONNECTION GP-WATER	497
Y	*308-2307*	1	HOUSING GP-FRONT	310
Y	*309-6722*	1	COVER GP-VALVE MECHANISM	195
Y	*309-6713*	1	CRANKSHAFT GP	223
Y	*309-6712*	1	CYLINDER BLOCK GP	233
Y	*309-6715*	1	CYLINDER HEAD GP	261
Y	*308-2297*	1	FILLER GP-ENGINE OIL	482
			—OR—	
Y	*363-3165*	1	FILLER GP-ENGINE OIL	486
Y	*308-2298*	1	FILTER GP-ENGINE OIL	491
Y	*317-0586*	1	FLYWHEEL GP	289
Y	*308-2311*	1	GLOW PLUG GP	886
Y	*317-0588*	1	HOUSING GP-FLYWHEEL	301
Y	*309-6718*	1	HOUSING GP-FRONT	313
Y	*308-2321*	1	LAMP GP	924
Y	*309-6725*	1	LIFTING GP-ENGINE	392
Y	*331-2589*	1	LINES GP-COOLANT	513
Y	*309-6724*	1	MANIFOLD GP-EXHAUST	604
Y	*308-2295*	1	PAN GP-OIL	398
Y	*309-6714*	1	PISTON & ROD GP	429
Y	*309-6720*	1	PLUG GP-OIL PAN	444
Y	*308-2300*	1	PULLEY GP-CRANKSHAFT	448
Y	*308-2294*	1	PULLEY GP-FAN	451
Y	*309-6717*	1	LINES GP-ENGINE OIL	494
Y	*308-2310*	1	PUMP GP-FILTER & FUEL TRANSFER	796
Y	*309-6719*	1	PUMP GP-FUEL INJECTION	817
Y	*308-2320*	1	PUMP GP-FUEL PRIMING	841
Y	*308-2301*	1	PUMP GP-WATER	514
Y	*331-3270*	1	RADIATOR GP	556
Y	*308-2313*	1	SOLENOID GP-SHUTOFF (FUEL)	895
Y	*308-2293*	1	STARTING MOTOR GP-ELECTRIC	900
Y	*315-7819*	1	SWITCH GP-PRESSURE (ENGINE OIL)	912
Y	*308-2314*	1	SWITCH GP-START	921
Y	*308-2317*	1	SWITCH GP-TEMPERATURE (ENGINE COOLANT)	922
Y	*308-2306*	1	V-BELT GP (WATER PUMP)	460
Y	*309-6716*	1	VALVE MECHANISM GP	473

Y - SEPARATE ILLUSTRATION

<END>

342-0407 ENGINE AR-PRIMARY

37 BRAKE KW (50 BHP) AT 2800 RPM

FIELD REPLACEMENT ORDER 435-1646—PAGE: 98

SMCS-1000 **i10720830**

NOTE	PART NUMBER	QTY	PART NAME 1 2 3 4 5 6 (PRODUCT LEVEL)	SEE PAGE
Y	*308-2305*	1	ALTERNATOR GP-CHARGING	866
Y	*308-2302*	1	CONNECTION GP-WATER	497
Y	*317-0590*	1	COVER GP-VALVE MECHANISM	204
Y	*309-6713*	1	CRANKSHAFT GP	223
Y	*309-6712*	1	CYLINDER BLOCK GP	233
Y	*309-6715*	1	CYLINDER HEAD GP	261
Y	*354-1245*	1	HOUSING GP-FRONT	350
Y	*308-2304*	1	EXTENSION GP-FAN	278
Y	*308-2303*	1	FAN GP-SUCTION	506
Y	*308-2297*	1	FILLER GP-ENGINE OIL	482
Y	*308-2298*	1	FILTER GP-ENGINE OIL	491
Y	*322-2412*	1	FLYWHEEL GP	290
Y	*308-2311*	1	GLOW PLUG GP	886
Y	*311-1883*	1	HOUSING GP-FLYWHEEL	299
Y	*309-6718*	1	HOUSING GP-FRONT	313
Y	*308-2321*	1	LAMP GP	924
Y	*309-6725*	1	LIFTING GP-ENGINE	392
Y	*309-6724*	1	MANIFOLD GP-EXHAUST	604
Y	*308-4735*	1	MOUNTING GP-ENGINE OIL FILTER	495
Y	*311-1886*	1	PAN GP-OIL	406
Y	*309-6714*	1	PISTON & ROD GP	429
Y	*309-6720*	1	PLUG GP-OIL PAN	444
Y	*308-2300*	1	PULLEY GP-CRANKSHAFT	448
Y	*308-2294*	1	PULLEY GP-FAN	451
Y	*309-6717*	1	LINES GP-ENGINE OIL	494
Y	*309-6719*	1	PUMP GP-FUEL INJECTION	817
Y	*311-9028*	1	PUMP GP-FUEL TRANSFER	850
Y	*309-6721*	1	PUMP GP-WATER	517
Y	*308-2313*	1	SOLENOID GP-SHUTOFF (FUEL)	895
Y	*308-2293*	1	STARTING MOTOR GP-ELECTRIC	900
Y	*315-7819*	1	SWITCH GP-PRESSURE (ENGINE OIL)	912
Y	*308-2317*	1	SWITCH GP-TEMPERATURE (ENGINE COOLANT)	922
Y	*308-2306*	1	V-BELT GP (WATER PUMP)	460
Y	*309-6716*	1	VALVE MECHANISM GP	473

Y - SEPARATE ILLUSTRATION

<END>

342-0408 ENGINE AR-PRIMARY

44 BRAKE KW (60 BHP) AT 2800 RPM

FIELD REPLACEMENT ORDER 435-1636—PAGE: 92

SMCS-1000 **i10720867**

NOTE	PART NUMBER	QTY	PART NAME 1 2 3 4 5 6 (PRODUCT LEVEL)	SEE PAGE
Y	*308-2305*	1	ALTERNATOR GP-CHARGING	866
Y	*323-9147*	1	CAMSHAFT GP	150
Y	*308-2302*	1	CONNECTION GP-WATER	497
Y	*308-2307*	1	HOUSING GP-FRONT	310
Y	*308-2283*	1	CRANKSHAFT GP	219
Y	*308-2281*	1	CYLINDER BLOCK GP	229
Y	*308-2284*	1	CYLINDER HEAD GP	259
Y	*308-2303*	1	FAN GP-SUCTION	506
Y	*363-3165*	1	FILLER GP-ENGINE OIL	486
Y	*308-2298*	1	FILTER GP-ENGINE OIL	491
Y	*322-2412*	1	FLYWHEEL GP	290
Y	*308-2311*	1	GLOW PLUG GP	886
Y	*323-9146*	1	GOVERNOR GP	771
Y	*311-1883*	1	HOUSING GP-FLYWHEEL	299
Y	*323-9145*	1	HOUSING GP-FRONT	336
Y	*309-6725*	1	LIFTING GP-ENGINE	392
Y	*331-2589*	1	LINES GP-COOLANT	513
Y	*308-2287*	1	LINES GP-ENGINE OIL	493
Y	*311-1886*	1	PAN GP-OIL	406
Y	*308-2286*	1	PISTON & ROD GP	426
Y	*309-6720*	1	PLUG GP-OIL PAN	444
Y	*321-6740*	1	PULLEY GP-CRANKSHAFT	449
Y	*308-2294*	1	PULLEY GP-FAN	451
Y	*308-2310*	1	PUMP GP-FILTER & FUEL TRANSFER	796
Y	*308-2289*	1	PUMP GP-FUEL INJECTION	813
Y	*308-2320*	1	PUMP GP-FUEL PRIMING	841
Y	*442-7729*	1	PUMP GP-WATER	531
Y	*308-2313*	1	SOLENOID GP-SHUTOFF (FUEL)	895
Y	*308-2293*	1	STARTING MOTOR GP-ELECTRIC	900
Y	*315-7819*	1	SWITCH GP-PRESSURE (ENGINE OIL)	912
Y	*308-2317*	1	SWITCH GP-TEMPERATURE (ENGINE COOLANT)	922
Y	*442-7759*	1	TURBOCHARGER GP	648
Y	*308-2306*	1	V-BELT GP (WATER PUMP)	460
Y	*308-2285*	1	VALVE MECHANISM GP	467

Y - SEPARATE ILLUSTRATION

<END>

344-8934 ENGINE AR-PRIMARY

45 BRAKE KW (60 BHP) AT 2800 RPM

FIELD REPLACEMENT ORDER 435-1636—PAGE: 92

SMCS-1000 **i10153124**

NOTE	PART NUMBER	QTY	PART NAME 1 2 3 4 5 6 (PRODUCT LEVEL)	SEE PAGE
Y	*326-8543*	1	AIR CLEANER GP	580
			—OR—	
Y	*600-1135*	1	AIR CLEANER GP	589
Y	*308-2305*	1	ALTERNATOR GP-CHARGING	866
Y	*323-9147*	1	CAMSHAFT GP	150
			—OR—	
Y	*329-9278*	1	CAMSHAFT GP	154
Y	*308-2319*	1	CONNECTION GP-ELECTRICAL	873
			—OR—	
Y	*321-6741*	1	CONNECTION GP-ELECTRICAL	874
Y	*308-2309*	1	CONNECTION GP-EXHAUST	595
Y	*308-2302*	1	CONNECTION GP-WATER	497
Y	*308-2307*	1	HOUSING GP-FRONT	310
Y	*308-2283*	1	CRANKSHAFT GP	219
Y	*308-2281*	1	CYLINDER BLOCK GP	229
Y	*308-2284*	1	CYLINDER HEAD GP	259
Y	*363-3165*	1	FILLER GP-ENGINE OIL	486
Y	*308-2298*	1	FILTER GP-ENGINE OIL	491
Y	*327-7632*	1	FLYWHEEL GP	292
Y	*308-2311*	1	GLOW PLUG GP	886
Y	*323-9146*	1	GOVERNOR GP	771
			—OR—	
Y	*329-9277*	1	HOUSING GP-FRONT	346
Y	*317-0588*	1	HOUSING GP-FLYWHEEL	301
Y	*323-9145*	1	HOUSING GP-FRONT	336
			—OR—	
Y	*308-2288*	1	FASTENER GP-FRONT HOUSING	284
Y	*308-2321*	1	LAMP GP	924
Y	*309-6725*	1	LIFTING GP-ENGINE	392
Y	*331-2589*	1	LINES GP-COOLANT	513
Y	*308-2287*	1	LINES GP-ENGINE OIL	493
Y	*308-2295*	1	PAN GP-OIL	398
Y	*308-2286*	1	PISTON & ROD GP	426
Y	*309-6720*	1	PLUG GP-OIL PAN	444
Y	*321-6740*	1	PULLEY GP-CRANKSHAFT	449
Y	*308-2294*	1	PULLEY GP-FAN	451
			—OR—	
Y	*311-9027*	1	PULLEY GP-WATER PUMP	454
Y	*308-2310*	1	PUMP GP-FILTER & FUEL TRANSFER	796
Y	*308-2289*	1	PUMP GP-FUEL INJECTION	813
Y	*317-6706*	1	PUMP GP-FUEL PRM & PRIM FILTER	845
			—OR—	
Y	*579-9465*	1	PUMP GP-FUEL PRM & PRIM FILTER	849
Y	*317-0979*	1	PUMP GP-WATER	521
Y	*341-6658*	1	RADIATOR & FAN GP	543
Y	*308-2313*	1	SOLENOID GP-SHUTOFF (FUEL)	895
Y	*311-9030*	1	SENSOR GP-TEMPERATURE	891

344-8934 **ENGINE AR-PRIMARY (**contd.**)** **i10153124**

NOTE	PART NUMBER	QTY	PART NAME 1 2 3 4 5 6 (PRODUCT LEVEL)	SEE PAGE
Y	*308-2293*	1	STARTING MOTOR GP-ELECTRIC	900
Y	*315-7819*	1	SWITCH GP-PRESSURE (ENGINE OIL)	912
Y	*321-4261*	1	SWITCH GP-PRESSURE (ENGINE OIL)	915
Y	*308-2314*	1	SWITCH GP-START	921
Y	*308-2317*	1	SWITCH GP-TEMPERATURE (ENGINE COOLANT)	922
Y	*368-4106*	1	TURBOCHARGER GP	629
			—OR—	
Y	*477-6922*	1	TURBOCHARGER GP	658
			—OR—	
Y	*441-8101*	1	TURBOCHARGER GP	632
Y	*308-2306*	1	V-BELT GP (WATER PUMP)	460
			—OR—	
Y	*311-9029*	1	V-BELT GP (WATER PUMP)	461
Y	*308-2285*	1	VALVE MECHANISM GP	467

Y - SEPARATE ILLUSTRATION

<END>

345-0355 ENGINE AR-PRIMARY

37 BRAKE KW (50 BHP) AT 2800 RPM

FIELD REPLACEMENT ORDER 435-1646—PAGE: 98

SMCS-1000 **i10720930**

NOTE	PART NUMBER	QTY	PART NAME 1 2 3 4 5 6 (PRODUCT LEVEL)	SEE PAGE
Y	*317-0649*	1	AIR CLEANER GP	575
Y	*308-2305*	1	ALTERNATOR GP-CHARGING	866
Y	*441-6514*	1	CAMSHAFT GP	174
			—OR—	
Y	*454-6144*	1	CAMSHAFT GP	175
Y	*308-2319*	1	CONNECTION GP-ELECTRICAL	873
			—OR—	
Y	*321-6741*	1	CONNECTION GP-ELECTRICAL	874
Y	*308-2309*	1	CONNECTION GP-EXHAUST	595
Y	*308-2302*	1	CONNECTION GP-WATER	497
Y	*441-6513*	1	CONTROL GP-GOVERNOR	726
			—OR—	
Y	*454-6143*	1	CONTROL GP-GOVERNOR	728
Y	*308-2307*	1	HOUSING GP-FRONT	310
Y	*309-6722*	1	COVER GP-VALVE MECHANISM	195
Y	*309-6713*	1	CRANKSHAFT GP	223
Y	*309-6712*	1	CYLINDER BLOCK GP	233
Y	*309-6715*	1	CYLINDER HEAD GP	261
Y	*308-2297*	1	FILLER GP-ENGINE OIL	482
			—OR—	
Y	*363-3165*	1	FILLER GP-ENGINE OIL	486
Y	*308-2298*	1	FILTER GP-ENGINE OIL	491
Y	*327-7632*	1	FLYWHEEL GP	292
Y	*308-2311*	1	GLOW PLUG GP	886
Y	*317-0588*	1	HOUSING GP-FLYWHEEL	301
Y	*309-6718*	1	HOUSING GP-FRONT	313
			—OR—	
Y	*441-6512*	1	HOUSING GP-FRONT	358
			—OR—	
Y	*454-6141*	1	HOUSING GP-FRONT	360
Y	*308-2321*	1	LAMP GP	924
Y	*309-6725*	1	LIFTING GP-ENGINE	392
Y	*331-2589*	1	LINES GP-COOLANT	513
Y	*309-6724*	1	MANIFOLD GP-EXHAUST	604
			—OR—	
Y	*317-7192*	1	MANIFOLD GP-EXHAUST	605
Y	*308-2295*	1	PAN GP-OIL	398
Y	*309-6714*	1	PISTON & ROD GP	429
Y	*309-6720*	1	PLUG GP-OIL PAN	444
Y	*308-2300*	1	PULLEY GP-CRANKSHAFT	448
Y	*308-2294*	1	PULLEY GP-FAN	451
Y	*309-6717*	1	LINES GP-ENGINE OIL	494
Y	*308-2310*	1	PUMP GP-FILTER & FUEL TRANSFER	796
Y	*309-6719*	1	PUMP GP-FUEL INJECTION	817
Y	*308-2320*	1	PUMP GP-FUEL PRIMING	841
			—OR—	
Y	*579-9444*	1	PUMP GP-FUEL PRIMING	844

345-0355 **ENGINE AR-PRIMARY (**contd.**)** **i10720930**

NOTE	PART NUMBER	QTY	PART NAME 1 2 3 4 5 6 (PRODUCT LEVEL)	SEE PAGE
Y	*308-2301*	1	PUMP GP-WATER	514
Y	*331-3270*	1	RADIATOR GP	556
Y	*308-2313*	1	SOLENOID GP-SHUTOFF (FUEL)	895
Y	*308-2293*	1	STARTING MOTOR GP-ELECTRIC	900
Y	*315-7819*	1	SWITCH GP-PRESSURE (ENGINE OIL)	912
			—OR—	
Y	*321-4261*	1	SWITCH GP-PRESSURE (ENGINE OIL) (ENGINE OIL)	915
Y	*308-2314*	1	SWITCH GP-START (HEATER)	921
Y	*308-2317*	1	SWITCH GP-TEMPERATURE (ENGINE COOLANT)	922
			—OR—	
Y	*311-9030*	1	SENSOR GP-TEMPERATURE (ENGINE COOLANT)	891
Y	*308-2306*	1	V-BELT GP (WATER PUMP) (DRIVE)	460
Y	*309-6716*	1	VALVE MECHANISM GP	473

Y - SEPARATE ILLUSTRATION

<END>

345-4149 ENGINE AR-PRIMARY

24 BRAKE KW (33 BHP) AT 1800 RPM

FIELD REPLACEMENT ORDER 435-1647—PAGE: 100

SMCS-1000 **i10720948**

NOTE	PART NUMBER	QTY	PART NAME 1 2 3 4 5 6 (PRODUCT LEVEL)	SEE PAGE
Y	*308-2305*	1	ALTERNATOR GP-CHARGING	866
			—OR—	
Y	*458-3287*	1	ALTERNATOR GP-CHARGING	870
Y	*308-2319*	1	CONNECTION GP-ELECTRICAL	873
			—OR—	
Y	*321-6741*	1	CONNECTION GP-ELECTRICAL	874
Y	*392-8657*	1	CONNECTION GP-ELECTRICAL	875
Y	*308-2309*	1	CONNECTION GP-EXHAUST	595
Y	*308-2302*	1	CONNECTION GP-WATER	497
Y	*308-2307*	1	HOUSING GP-FRONT	310
Y	*322-2424*	1	COVER GP-VALVE MECHANISM	206
			S/N: G7L1-11976	
Y	*466-1519*	1	COVER GP-VALVE MECHANISM	212
			S/N: G7L11977-UP	
Y	*309-6713*	1	CRANKSHAFT GP	223
Y	*309-6712*	1	CYLINDER BLOCK GP	233
Y	*309-6715*	1	CYLINDER HEAD GP	261
Y	*315-5252*	1	VALVE & PLUG GP-OIL PAN DRAIN	466
Y	*311-1119*	1	DRIVE GP-FAN	275
Y	*319-1623*	1	FAN GP-BLOWER	505
Y	*363-3165*	1	FILLER GP-ENGINE OIL	486
Y	*308-2298*	1	FILTER GP-ENGINE OIL	491
Y	*317-0586*	1	FLYWHEEL GP	289
Y	*308-2311*	1	GLOW PLUG GP	886
Y	*317-0588*	1	HOUSING GP-FLYWHEEL	301
Y	*321-4257*	1	HOUSING GP-FRONT	332
Y	*309-6725*	1	LIFTING GP-ENGINE	392
Y	*309-6724*	1	MANIFOLD GP-EXHAUST	604
Y	*308-4735*	1	MOUNTING GP-ENGINE OIL FILTER	495
Y	*308-2295*	1	PAN GP-OIL	398
Y	*309-6714*	1	PISTON & ROD GP	429
Y	*308-2300*	1	PULLEY GP-CRANKSHAFT	448
Y	*308-2294*	1	PULLEY GP-FAN	451
Y	*309-6717*	1	LINES GP-ENGINE OIL	494
Y	*308-2310*	1	PUMP GP-FILTER & FUEL TRANSFER	796
Y	*321-4258*	1	PUMP GP-FUEL INJECTION	827
Y	*308-2320*	1	PUMP GP-FUEL PRIMING	841
			—OR—	
Y	*579-9444*	1	PUMP GP-FUEL PRIMING	844
Y	*309-6721*	1	PUMP GP-WATER	517
Y	*320-9114*	1	SHUTOFF GP-ELECTRICAL	894
Y	*308-2313*	1	SOLENOID GP-SHUTOFF (FUEL)	895
Y	*308-2293*	1	STARTING MOTOR GP-ELECTRIC	900
Y	*315-7819*	1	SWITCH GP-PRESSURE (ENGINE OIL)	912
Y	*308-2314*	1	SWITCH GP-START	921
Y	*308-2317*	1	SWITCH GP-TEMPERATURE (ENGINE COOLANT)	922

345-4149 **ENGINE AR-PRIMARY (**contd.**)** **i10720948**

NOTE	PART NUMBER	QTY	PART NAME 1 2 3 4 5 6 (PRODUCT LEVEL)	SEE PAGE
Y	*308-2306*	1	V-BELT GP (WATER PUMP)	460
Y	*309-6716*	1	VALVE MECHANISM GP	473

Y - SEPARATE ILLUSTRATION

<END>

348-2243 ENGINE AR-PRIMARY

36 BRAKE KW (49 BHP) AT 2800 RPM

FIELD REPLACEMENT ORDER 435-1642—PAGE: 97, 549-8284—PAGE: 136

SMCS-1000 **i10721020**

NOTE	PART NUMBER	QTY	PART NAME 1 2 3 4 5 6 (PRODUCT LEVEL)	SEE PAGE
Y	*308-2305*	1	ALTERNATOR GP-CHARGING	866
			—OR—	
Y	*584-9497*	1	ALTERNATOR GP-CHARGING	872
Y	*465-2494*	1	CAMSHAFT GP	177
			—OR—	
Y	*454-6144*	1	CAMSHAFT GP	175
			—OR—	
Y	*596-3428*	1	CAMSHAFT GP	182
Y	*308-5610*	1	CONNECTION GP-EXHAUST	596
			—OR—	
Y	*532-9707*	1	CONNECTION GP-EXHAUST	598
Y	*398-5884*	1	CONNECTION GP-WATER	500
Y	*317-0590*	1	COVER GP-VALVE MECHANISM	204
			—OR—	
Y	*586-6656*	1	COVER GP-VALVE MECHANISM	216
Y	*309-6713*	1	CRANKSHAFT GP	223
			—OR—	
Y	*399-4716*	1	CRANKSHAFT GP	227
Y	*309-6712*	1	CYLINDER BLOCK GP	233
			—OR—	
Y	*584-3179*	1	CYLINDER BLOCK GP	243
Y	*309-6715*	1	CYLINDER HEAD GP	261
			—OR—	
Y	*596-2861*	1	CYLINDER HEAD GP	272
Y	*354-1245*	1	HOUSING GP-FRONT	350
			—OR—	
Y	*599-9836*	1	HOUSING GP-FRONT	387
Y	*308-2304*	1	EXTENSION GP-FAN	278
			—OR—	
Y	*437-2623*	1	EXTENSION GP-FAN	282
Y	*308-2303*	1	FAN GP-SUCTION	506
			—OR—	
Y	*437-2599*	1	FAN GP-SUCTION	507
Y	*398-4274*	1	FILM GP	927
			—OR—	
Y	*629-5293*	1	FASTENER GP-FILTER	602
Y	*604-4574*	1	FILM GP (ALTERNATOR)	929
Y	*308-2297*	1	FILLER GP-ENGINE OIL	482
			—OR—	
Y	*532-8293*	1	FILLER GP-ENGINE OIL	489
Y	*308-2298*	1	FILTER GP-ENGINE OIL	491
			—OR—	
Y	*398-8178*	1	FILTER GP-ENGINE OIL	492
Y	*308-2291*	1	FLYWHEEL GP	287
			—OR—	
Y	*398-4803*	1	FLYWHEEL GP	293

348-2243 **ENGINE AR-PRIMARY (**contd.**)** **i10721020**

NOTE	PART NUMBER	QTY	PART NAME 1 2 3 4 5 6 (PRODUCT LEVEL)	SEE PAGE
Y	*308-2311*	1	GLOW PLUG GP	886
			—OR—	
Y	*587-0270*	1	GLOW PLUG GP	889
Y	*465-2493*	1	CONTROL GP-GOVERNOR	736
			—OR—	
Y	*454-6143*	1	CONTROL GP-GOVERNOR	728
			—OR—	
Y	*596-3466*	1	CONTROL GP-GOVERNOR	744
Y	*354-4846*	1	HOUSING GP-FLYWHEEL	304
			—OR—	
Y	*588-1967*	1	HOUSING GP-FLYWHEEL	307
Y	*309-6725*	1	LIFTING GP-ENGINE	392
			—OR—	
Y	*584-9814*	1	LIFTING GP-ENGINE	395
Y	*309-6724*	1	MANIFOLD GP-EXHAUST	604
			—OR—	
Y	*584-9801*	1	MANIFOLD GP-EXHAUST	608
Y	*308-4735*	1	MOUNTING GP-ENGINE OIL FILTER	495
Y	*311-1886*	1	PAN GP-OIL	406
			—OR—	
Y	*398-4953*	1	PAN GP-OIL	422
Y	*309-6714*	1	PISTON & ROD GP	429
			—OR—	
Y	*596-2866*	1	PISTON & ROD GP	438
Y	*322-2426*	1	PLUG GP-ENGINE	442
			—OR—	
Y	*601-4317*	1	PLUG GP-CYLINDER HEAD	441
Y	*323-9157*	1	PLUG GP-ENGINE (CENTRAL)	443
Y	*610-3545*	1	FASTENER GP-ENGINE OIL LINES	481
Y	*309-6720*	1	PLUG GP-OIL PAN	444
			—OR—	
Y	*398-5865*	1	PLUG GP-OIL PAN	446
Y	*308-2300*	1	PULLEY GP-CRANKSHAFT	448
			—OR—	
Y	*445-9988*	1	PULLEY GP-CRANKSHAFT	450
Y	*308-2294*	1	PULLEY GP-FAN	451
			—OR—	
Y	*398-4866*	1	PULLEY GP-FAN	452
Y	*309-6717*	1	LINES GP-ENGINE OIL	494
Y	*518-9053*	1	PLATE & FILM GP	933
Y	*309-6719*	1	PUMP GP-FUEL INJECTION	817
			—OR—	
Y	*596-2825*	1	PUMP GP-FUEL INJECTION	833
Y	*311-9028*	1	PUMP GP-FUEL TRANSFER	850
			—OR—	
Y	*599-9743*	1	FILTER GP-FUEL	761
Y	*309-6721*	1	PUMP GP-WATER	517
			—OR—	
Y	*598-5726*	1	PUMP GP-WATER	539

348-2243 **ENGINE AR-PRIMARY (**contd.**)** **i10721020**

NOTE	PART NUMBER	QTY	PART NAME 1 2 3 4 5 6 (PRODUCT LEVEL)	SEE PAGE
Y	*584-3189*	1	ROCKER ARM GP	458
Y	*308-2313*	1	SOLENOID GP-SHUTOFF (FUEL)	895
			—OR—	
Y	*519-4412*	1	SOLENOID GP-SHUTOFF (FUEL)	897
Y	*308-2293*	1	STARTING MOTOR GP-ELECTRIC	900
			—OR—	
Y	*443-9113*	1	STARTING MOTOR GP-ELECTRIC	909
Y	*308-2306*	1	V-BELT GP (WATER PUMP)	460
			—OR—	
Y	*428-5948*	1	V-BELT GP (WATER PUMP)	464
Y	*309-6716*	1	VALVE MECHANISM GP	473

Y - SEPARATE ILLUSTRATION

<END>

348-8502 ENGINE AR-PRIMARY

46 BRAKE KW (61 BHP) AT 3000 RPM

FIELD REPLACEMENT ORDER 433-1380—PAGE: 3

SMCS-1000 **i10720990**

NOTE	PART NUMBER	QTY	PART NAME 1 2 3 4 5 6 (PRODUCT LEVEL)	SEE PAGE
Y	*308-2305*	1	ALTERNATOR GP-CHARGING	866
Y	*317-0971*	1	CAMSHAFT GP	148
Y	*308-2319*	1	CONNECTION GP-ELECTRICAL	873
			—OR—	
Y	*321-6741*	1	CONNECTION GP-ELECTRICAL	874
Y	*308-2299*	1	LINES GP-COOLANT	512
			S/N: G7L1-11794	
Y	*331-2589*	1	LINES GP-COOLANT	513
			S/N: G7L11795-UP	
Y	*308-2309*	1	CONNECTION GP-EXHAUST	595
Y	*308-2302*	1	CONNECTION GP-WATER	497
Y	*308-2283*	1	CRANKSHAFT GP	219
Y	*308-2281*	1	CYLINDER BLOCK GP	229
Y	*308-2284*	1	CYLINDER HEAD GP	259
Y	*308-2304*	1	EXTENSION GP-FAN	278
Y	*308-2303*	1	FAN GP-SUCTION	506
Y	*363-3165*	1	FILLER GP-ENGINE OIL	486
Y	*308-2298*	1	FILTER GP-ENGINE OIL	491
Y	*327-7632*	1	FLYWHEEL GP	292
Y	*308-2311*	1	GLOW PLUG GP	886
Y	*317-0967*	1	GOVERNOR GP	767
Y	*317-0588*	1	HOUSING GP-FLYWHEEL	301
Y	*317-0965*	1	HOUSING GP-FRONT	328
Y	*309-6725*	1	LIFTING GP-ENGINE	392
Y	*368-4112*	1	MOUNTING GP-ENGINE	397
Y	*308-2295*	1	PAN GP-OIL	398
Y	*308-2286*	1	PISTON & ROD GP	426
Y	*354-1245*	1	HOUSING GP-FRONT	350
Y	*309-6720*	1	PLUG GP-OIL PAN	444
Y	*321-6740*	1	PULLEY GP-CRANKSHAFT	449
Y	*308-2294*	1	PULLEY GP-FAN	451
Y	*308-2287*	1	LINES GP-ENGINE OIL	493
Y	*308-2310*	1	PUMP GP-FILTER & FUEL TRANSFER	796
Y	*317-0977*	1	PUMP GP-FUEL INJECTION	823
Y	*308-2320*	1	PUMP GP-FUEL PRIMING	841
			—OR—	
Y	*579-9444*	1	PUMP GP-FUEL PRIMING	844
Y	*317-0979*	1	PUMP GP-WATER	521
			S/N: G7L1-11794	
Y	*442-7729*	1	PUMP GP-WATER	531
			S/N: G7L11795-UP	
Y	*308-2313*	1	SOLENOID GP-SHUTOFF (FUEL)	895
Y	*308-2293*	1	STARTING MOTOR GP-ELECTRIC	900
Y	*308-2312*	1	SWITCH GP-PRESSURE	911
Y	*308-2314*	1	SWITCH GP-START	921
Y	*308-2317*	1	SWITCH GP-TEMPERATURE (ENGINE COOLANT)	922
Y	*308-2308*	1	TURBOCHARGER GP	612

348-8502 **ENGINE AR-PRIMARY (**contd.**)** **i10720990**

NOTE	PART NUMBER	QTY	PART NAME 1 2 3 4 5 6 (PRODUCT LEVEL)	SEE PAGE
			S/N: G7L1-10939	
Y	*442-7759*	1	TURBOCHARGER GP	648
			S/N: G7L10940-UP	
Y	*308-2306*	1	V-BELT GP (WATER PUMP)	460
Y	*308-2285*	1	VALVE MECHANISM GP	467

Y - SEPARATE ILLUSTRATION

<END>

417-7274 ENGINE AR-PRIMARY

36.3-KILO WATT, 2800-RPM

SMCS-1000 **i10157662**

NOTE	PART NUMBER	QTY	PART NAME 1 2 3 4 5 6 (PRODUCT LEVEL)	SEE PAGE
Y	*317-0649*	1	AIR CLEANER GP	575
			—OR—	
Y	*611-6891*	1	AIR CLEANER GP	594
			—OR—	
Y	*600-5149*	1	AIR CLEANER GP	590
Y	*308-2305*	1	ALTERNATOR GP-CHARGING	866
			—OR—	
Y	*518-9064*	1	ALTERNATOR GP-CHARGING	871
Y	*454-6144*	1	CAMSHAFT GP	175
			—OR—	
Y	*596-3428*	1	CAMSHAFT GP	182
Y	*321-6741*	1	CONNECTION GP-ELECTRICAL	874
			—OR—	
Y	*541-6343*	1	CONNECTION GP-ELECTRICAL	876
Y	*308-2309*	1	CONNECTION GP-EXHAUST	595
			—OR—	
Y	*532-9705*	1	CONNECTION GP-EXHAUST	597
Y	*308-2302*	1	CONNECTION GP-WATER	497
			—OR—	
Y	*398-5884*	1	CONNECTION GP-WATER	500
Y	*454-6143*	1	CONTROL GP-GOVERNOR	728
			—OR—	
Y	*596-3466*	1	CONTROL GP-GOVERNOR	744
Y	*308-2307*	1	HOUSING GP-FRONT	310
			—OR—	
Y	*599-9816*	1	HOUSING GP-FRONT	383
Y	*309-6722*	1	COVER GP-VALVE MECHANISM	195
			—OR—	
Y	*586-6654*	1	COVER GP-VALVE MECHANISM	214
Y	*399-4716*	1	CRANKSHAFT GP	227
Y	*309-6712*	1	CYLINDER BLOCK GP	233
			—OR—	
Y	*584-3179*	1	CYLINDER BLOCK GP	243
Y	*596-2861*	1	CYLINDER HEAD GP	272
Y	*398-9095*	1	EXTENSION GP-FAN	281
Y	*521-8165*	1	FAN GP-SUCTION	509
Y	*363-3165*	1	FILLER GP-ENGINE OIL	486
			—OR—	
Y	*533-3936*	1	FILLER GP-ENGINE OIL	490
Y	*607-7117*	1	FILM GP (RADIATOR)	930
Y	*604-4574*	1	FILM GP (ALTERNATOR)	929
Y	*308-2298*	1	FILTER GP-ENGINE OIL	491
			—OR—	
Y	*398-8178*	1	FILTER GP-ENGINE OIL	492
Y	*317-0586*	1	FLYWHEEL GP	289
			—OR—	
Y	*398-4807*	1	FLYWHEEL GP	294

417-7274 **ENGINE AR-PRIMARY (**contd.**)** **i10157662**

NOTE	PART NUMBER	QTY	PART NAME 1 2 3 4 5 6 (PRODUCT LEVEL)	SEE PAGE
Y	*308-2311*	1	GLOW PLUG GP	886
			—OR—	
Y	*587-0270*	1	GLOW PLUG GP	889
Y	*317-0588*	1	HOUSING GP-FLYWHEEL	301
			—OR—	
Y	*591-2138*	1	HOUSING GP-FLYWHEEL	309
Y	*454-6141*	1	HOUSING GP-FRONT	360
Y	*309-6725*	1	LIFTING GP-ENGINE	392
			—OR—	
Y	*584-9814*	1	LIFTING GP-ENGINE	395
Y	*331-2589*	1	LINES GP-COOLANT	513
Y	*309-6724*	1	MANIFOLD GP-EXHAUST	604
			—OR—	
Y	*584-9801*	1	MANIFOLD GP-EXHAUST	608
Y	*308-2295*	1	PAN GP-OIL	398
			—OR—	
Y	*588-9925*	1	PAN GP-OIL	425
Y	*596-2866*	1	PISTON & ROD GP	438
Y	*518-9053*	1	PLATE & FILM GP	933
Y	*309-6720*	1	PLUG GP-OIL PAN	444
			—OR—	
Y	*398-5865*	1	PLUG GP-OIL PAN	446
Y	*308-2300*	1	PULLEY GP-CRANKSHAFT	448
			—OR—	
Y	*445-9988*	1	PULLEY GP-CRANKSHAFT	450
Y	*308-2294*	1	PULLEY GP-FAN	451
			—OR—	
Y	*398-4866*	1	PULLEY GP-FAN	452
Y	*308-2310*	1	PUMP GP-FILTER & FUEL TRANSFER	796
			—OR—	
Y	*599-9752*	1	PUMP GP-FILTER & FUEL TRANSFER	811
Y	*309-6719*	1	PUMP GP-FUEL INJECTION	817
			—OR—	
Y	*596-2825*	1	PUMP GP-FUEL INJECTION	833
Y	*308-2320*	1	PUMP GP-FUEL PRIMING	841
			—OR—	
Y	*579-9444*	1	PUMP GP-FUEL PRIMING	844
			—OR—	
Y	*565-2285*	1	PUMP GP-FUEL PRIMING	843
Y	*308-2301*	1	PUMP GP-WATER	514
			—OR—	
Y	*598-5724*	1	PUMP GP-WATER	537
Y	*331-3270*	1	RADIATOR GP	556
			—OR—	
Y	*584-9829*	1	RADIATOR GP	569
Y	*584-3189*	1	ROCKER ARM GP	458
Y	*308-2313*	1	SOLENOID GP-SHUTOFF (FUEL)	895
			—OR—	
Y	*519-4412*	1	SOLENOID GP-SHUTOFF (FUEL)	897

417-7274 **ENGINE AR-PRIMARY (**contd.**)** **i10157662**

NOTE	PART NUMBER	QTY	PART NAME 1 2 3 4 5 6 (PRODUCT LEVEL)	SEE PAGE
Y	*308-2293*	1	STARTING MOTOR GP-ELECTRIC	900
			—OR—	
Y	*398-4818*	1	STARTING MOTOR GP-ELECTRIC	908
Y	*315-7819*	1	SWITCH GP-PRESSURE (ENGINE OIL)	912
			—OR—	
Y	*584-9822*	1	SWITCH GP-PRESSURE (ENGINE OIL)	920
Y	*308-2314*	1	SWITCH GP-START	921
Y	*308-2317*	1	SWITCH GP-TEMPERATURE (ENGINE COOLANT)	922
			—OR—	
Y	*601-4322*	1	SENSOR GP-TEMPERATURE	893
Y	*308-2306*	1	V-BELT GP (WATER PUMP)	460
			—OR—	
Y	*428-5948*	1	V-BELT GP (WATER PUMP)	464

Y - SEPARATE ILLUSTRATION

<END>

425-3801 ENGINE AR-PRIMARY

36.3 BRAKE KW (48.6 BHP) @ 2800-RPM

FIELD REPLACEMENT ORDER 435-1642—PAGE: 97

SMCS-1000 **i10730564**

NOTE	PART NUMBER	QTY	PART NAME 1 2 3 4 5 6 (PRODUCT LEVEL)	SEE PAGE
Y	*308-2305*	1	ALTERNATOR GP-CHARGING	866
Y	*465-2209*	1	CAMSHAFT GP	176
Y	*308-2302*	1	CONNECTION GP-WATER	497
Y	*308-2307*	1	HOUSING GP-FRONT	310
Y	*317-0590*	1	COVER GP-VALVE MECHANISM	204
Y	*309-6713*	1	CRANKSHAFT GP	223
Y	*309-6712*	1	CYLINDER BLOCK GP	233
Y	*309-6715*	1	CYLINDER HEAD GP	261
Y	*363-3165*	1	FILLER GP-ENGINE OIL	486
Y	*308-2298*	1	FILTER GP-ENGINE OIL	491
Y	*308-2291*	1	FLYWHEEL GP	287
Y	*308-2311*	1	GLOW PLUG GP	886
Y	*465-2207*	1	CONTROL GP-GOVERNOR	732
Y	*363-6308*	1	HOUSING GP-FLYWHEEL	305
Y	*465-2205*	1	HOUSING GP-FRONT	361
Y	*309-6725*	1	LIFTING GP-ENGINE	392
Y	*309-6724*	1	MANIFOLD GP-EXHAUST	604
Y	*308-4735*	1	MOUNTING GP-ENGINE OIL FILTER	495
Y	*315-7813*	1	EXTENSION GP-FAN	279
Y	*317-3037*	1	PAN GP-OIL	410
Y	*309-6714*	1	PISTON & ROD GP	429
Y	*322-2426*	1	PLUG GP-ENGINE	442
Y	*309-6720*	1	PLUG GP-OIL PAN	444
Y	*308-2300*	1	PULLEY GP-CRANKSHAFT	448
Y	*308-2294*	1	PULLEY GP-FAN	451
Y	*315-7814*	1	PUMP & MTG GP-FUEL TRANSFER	795
Y	*309-6717*	1	LINES GP-ENGINE OIL	494
Y	*309-6719*	1	PUMP GP-FUEL INJECTION	817
Y	*309-6721*	1	PUMP GP-WATER	517
Y	*315-7817*	1	SOLENOID GP-SHUTOFF	896
Y	*308-2293*	1	STARTING MOTOR GP-ELECTRIC	900
Y	*334-0268*	1	SWITCH GP-PRESSURE	917
Y	*308-2306*	1	V-BELT GP (WATER PUMP)	460
Y	*309-6716*	1	VALVE MECHANISM GP	473

Y - SEPARATE ILLUSTRATION

<END>

425-3806 ENGINE AR-PRIMARY

45 BRAKE KW (60 BHP) AT 2800 RPM
OPTIONAL FIELD REPLACEMENT ORDER 435-1636—PAGE: 92
FOR USE WITH USA AND CANADA ONLY

SMCS-1000 **i10730569**

NOTE	PART NUMBER	QTY	PART NAME 1 2 3 4 5 6 (PRODUCT LEVEL)	SEE PAGE
Y	*308-2305*	1	ALTERNATOR GP-CHARGING	866
Y	*329-9278*	1	CAMSHAFT GP	154
Y	*321-6741*	1	CONNECTION GP-ELECTRICAL	874
Y	*308-2309*	1	CONNECTION GP-EXHAUST	595
Y	*308-2302*	1	CONNECTION GP-WATER	497
Y	*308-2307*	1	HOUSING GP-FRONT	310
Y	*308-2283*	1	CRANKSHAFT GP	219
Y	*308-2281*	1	CYLINDER BLOCK GP	229
Y	*308-2284*	1	CYLINDER HEAD GP	259
Y	*308-2288*	1	FASTENER GP-FRONT HOUSING	284
Y	*363-3165*	1	FILLER GP-ENGINE OIL	486
Y	*308-2298*	1	FILTER GP-ENGINE OIL	491
Y	*327-7632*	1	FLYWHEEL GP	292
Y	*308-2311*	1	GLOW PLUG GP	886
Y	*317-0588*	1	HOUSING GP-FLYWHEEL	301
Y	*329-9277*	1	HOUSING GP-FRONT	346
Y	*309-6725*	1	LIFTING GP-ENGINE	392
Y	*331-2589*	1	LINES GP-COOLANT	513
Y	*308-2287*	1	LINES GP-ENGINE OIL	493
Y	*315-7813*	1	EXTENSION GP-FAN	279
Y	*308-2295*	1	PAN GP-OIL	398
Y	*308-2286*	1	PISTON & ROD GP	426
Y	*309-6720*	1	PLUG GP-OIL PAN	444
Y	*321-6740*	1	PULLEY GP-CRANKSHAFT	449
Y	*308-2294*	1	PULLEY GP-FAN	451
Y	*308-2310*	1	PUMP GP-FILTER & FUEL TRANSFER	796
Y	*308-2289*	1	PUMP GP-FUEL INJECTION	813
Y	*317-6706*	1	PUMP GP-FUEL PRM & PRIM FILTER	845
Y	*442-7729*	1	PUMP GP-WATER	531
Y	*320-9114*	1	SHUTOFF GP-ELECTRICAL	894
Y	*315-7817*	1	SOLENOID GP-SHUTOFF	896
Y	*308-2293*	1	STARTING MOTOR GP-ELECTRIC	900
Y	*315-7819*	1	SWITCH GP-PRESSURE (ENGINE OIL)	912
Y	*308-2317*	1	SWITCH GP-TEMPERATURE (ENGINE COOLANT)	922
Y	*442-6206*	1	TURBOCHARGER GP	642
Y	*308-2306*	1	V-BELT GP (WATER PUMP)	460
Y	*308-2285*	1	VALVE MECHANISM GP	467

Y - SEPARATE ILLUSTRATION

<END>

425-3807 ENGINE AR-PRIMARY

45 BRAKE KW (60 BHP) AT 2800 RPM

FIELD REPLACEMENT ORDER 435-1636—PAGE: 92

SMCS-1000 **i10730572**

NOTE	PART NUMBER	QTY	PART NAME 1 2 3 4 5 6 (PRODUCT LEVEL)	SEE PAGE
Y	*308-2305*	1	ALTERNATOR GP-CHARGING	866
Y	*365-4292*	1	CAMSHAFT GP	170
			—OR—	
Y	*481-5624*	1	CAMSHAFT GP	178
Y	*308-5610*	1	CONNECTION GP-EXHAUST	596
Y	*308-2302*	1	CONNECTION GP-WATER	497
Y	*365-4290*	1	CONTROL GP-ENGINE SPEED	882
			—OR—	
Y	*481-5623*	1	GOVERNOR GP	779
Y	*442-7729*	1	PUMP GP-WATER	531
Y	*308-2281*	1	CYLINDER BLOCK GP	229
Y	*354-1245*	1	HOUSING GP-FRONT	350
Y	*308-2304*	1	EXTENSION GP-FAN	278
Y	*308-2303*	1	FAN GP-SUCTION	506
Y	*308-2297*	1	FILLER GP-ENGINE OIL	482
Y	*308-2298*	1	FILTER GP-ENGINE OIL	491
Y	*322-2412*	1	FLYWHEEL GP	290
Y	*308-2311*	1	GLOW PLUG GP	886
Y	*311-1883*	1	HOUSING GP-FLYWHEEL	299
Y	*365-4288*	1	HOUSING GP-FRONT	355
			—OR—	
Y	*481-5621*	1	HOUSING GP-FRONT	363
Y	*309-6725*	1	LIFTING GP-ENGINE	392
Y	*331-2589*	1	LINES GP-COOLANT	513
Y	*311-1886*	1	PAN GP-OIL	406
Y	*309-6720*	1	PLUG GP-OIL PAN	444
Y	*321-6740*	1	PULLEY GP-CRANKSHAFT	449
Y	*308-2294*	1	PULLEY GP-FAN	451
Y	*308-2289*	1	PUMP GP-FUEL INJECTION	813
Y	*311-9028*	1	PUMP GP-FUEL TRANSFER	850
Y	*308-2313*	1	SOLENOID GP-SHUTOFF (FUEL)	895
Y	*308-2293*	1	STARTING MOTOR GP-ELECTRIC	900
Y	*315-7819*	1	SWITCH GP-PRESSURE (ENGINE OIL)	912
Y	*308-2314*	1	SWITCH GP-START	921
Y	*308-2317*	1	SWITCH GP-TEMPERATURE (ENGINE COOLANT)	922
Y	*442-7759*	1	TURBOCHARGER GP	648
Y	*308-2306*	1	V-BELT GP (WATER PUMP) (DRIVE)	460

Y - SEPARATE ILLUSTRATION

<END>

425-3808 ENGINE AR-PRIMARY

36 BRAKE KW (49 BHP) AT 2800 RPM

FIELD REPLACEMENT ORDER 435-1634—PAGE: 89

SMCS-1000 **i10730588**

NOTE	PART NUMBER	QTY	PART NAME 1 2 3 4 5 6 (PRODUCT LEVEL)	SEE PAGE
Y	*308-2305*	1	ALTERNATOR GP-CHARGING	866
Y	*332-1364*	1	CAMSHAFT GP	162
Y	*308-2319*	1	CONNECTION GP-ELECTRICAL	873
			—OR—	
Y	*321-6741*	1	CONNECTION GP-ELECTRICAL	874
Y	*308-2309*	1	CONNECTION GP-EXHAUST	595
Y	*308-2302*	1	CONNECTION GP-WATER	497
Y	*332-1363*	1	CONTROL GP-GOVERNOR	708
Y	*442-7729*	1	PUMP GP-WATER	531
Y	*308-2307*	1	HOUSING GP-FRONT	310
Y	*308-2283*	1	CRANKSHAFT GP	219
Y	*308-2281*	1	CYLINDER BLOCK GP	229
Y	*308-2284*	1	CYLINDER HEAD GP	259
Y	*363-3165*	1	FILLER GP-ENGINE OIL	486
Y	*308-2298*	1	FILTER GP-ENGINE OIL	491
Y	*327-7632*	1	FLYWHEEL GP	292
Y	*308-2311*	1	GLOW PLUG GP	886
Y	*317-0588*	1	HOUSING GP-FLYWHEEL	301
Y	*332-1362*	1	HOUSING GP-FRONT	349
Y	*309-6725*	1	LIFTING GP-ENGINE	392
Y	*331-2589*	1	LINES GP-COOLANT	513
Y	*308-2287*	1	LINES GP-ENGINE OIL	493
Y	*315-7813*	1	EXTENSION GP-FAN	279
Y	*308-2295*	1	PAN GP-OIL	398
Y	*308-2286*	1	PISTON & ROD GP	426
Y	*309-6720*	1	PLUG GP-OIL PAN	444
Y	*321-6740*	1	PULLEY GP-CRANKSHAFT	449
Y	*308-2294*	1	PULLEY GP-FAN	451
Y	*308-2310*	1	PUMP GP-FILTER & FUEL TRANSFER	796
Y	*308-2289*	1	PUMP GP-FUEL INJECTION	813
Y	*317-6706*	1	PUMP GP-FUEL PRM & PRIM FILTER	845
Y	*320-9114*	1	SHUTOFF GP-ELECTRICAL	894
Y	*315-7817*	1	SOLENOID GP-SHUTOFF	896
Y	*308-2293*	1	STARTING MOTOR GP-ELECTRIC	900
Y	*315-7819*	1	SWITCH GP-PRESSURE (ENGINE OIL)	912
Y	*308-2317*	1	SWITCH GP-TEMPERATURE (ENGINE COOLANT)	922
Y	*442-6206*	1	TURBOCHARGER GP	642
Y	*308-2306*	1	V-BELT GP (WATER PUMP) (DRIVE)	460
Y	*308-2285*	1	VALVE MECHANISM GP	467

Y - SEPARATE ILLUSTRATION

<END>

425-3809 ENGINE AR-PRIMARY

36 BRAKE KW (49 BHP) AT 2800 RPM

FIELD REPLACEMENT ORDER 435-1642—PAGE: 97

SMCS-1000 **i10730601**

NOTE	PART NUMBER	QTY	PART NAME 1 2 3 4 5 6 (PRODUCT LEVEL)	SEE PAGE
Y	*308-2305*	1	ALTERNATOR GP-CHARGING	866
Y	*465-2494*	1	CAMSHAFT GP	177
			—OR—	
Y	*454-6144*	1	CAMSHAFT GP	175
Y	*308-5610*	1	CONNECTION GP-EXHAUST	596
Y	*308-2302*	1	CONNECTION GP-WATER	497
Y	*317-0590*	1	COVER GP-VALVE MECHANISM	204
Y	*309-6713*	1	CRANKSHAFT GP	223
Y	*309-6712*	1	CYLINDER BLOCK GP	233
Y	*309-6715*	1	CYLINDER HEAD GP	261
Y	*354-1245*	1	HOUSING GP-FRONT	350
Y	*308-2304*	1	EXTENSION GP-FAN	278
Y	*308-2303*	1	FAN GP-SUCTION	506
Y	*308-2297*	1	FILLER GP-ENGINE OIL	482
Y	*308-2298*	1	FILTER GP-ENGINE OIL	491
Y	*308-2291*	1	FLYWHEEL GP	287
Y	*308-2311*	1	GLOW PLUG GP	886
Y	*465-2493*	1	CONTROL GP-GOVERNOR	736
			—OR—	
Y	*454-6143*	1	CONTROL GP-GOVERNOR	728
Y	*354-4846*	1	HOUSING GP-FLYWHEEL	304
Y	*309-6718*	1	HOUSING GP-FRONT	313
			—OR—	
Y	*465-2492*	1	HOUSING GP-FRONT	362
			—OR—	
Y	*454-6141*	1	HOUSING GP-FRONT	360
Y	*309-6725*	1	LIFTING GP-ENGINE	392
Y	*309-6724*	1	MANIFOLD GP-EXHAUST	604
Y	*308-4735*	1	MOUNTING GP-ENGINE OIL FILTER	495
Y	*311-1886*	1	PAN GP-OIL	406
Y	*309-6714*	1	PISTON & ROD GP	429
Y	*322-2426*	1	PLUG GP-ENGINE	442
Y	*323-9157*	1	PLUG GP-ENGINE	443
Y	*309-6720*	1	PLUG GP-OIL PAN	444
Y	*308-2300*	1	PULLEY GP-CRANKSHAFT	448
Y	*308-2294*	1	PULLEY GP-FAN	451
Y	*309-6717*	1	LINES GP-ENGINE OIL	494
Y	*309-6719*	1	PUMP GP-FUEL INJECTION	817
Y	*311-9028*	1	PUMP GP-FUEL TRANSFER	850
Y	*309-6721*	1	PUMP GP-WATER	517
Y	*308-2313*	1	SOLENOID GP-SHUTOFF (FUEL)	895
Y	*308-2293*	1	STARTING MOTOR GP-ELECTRIC	900
Y	*308-2306*	1	V-BELT GP (WATER PUMP) (DRIVE)	460
Y	*309-6716*	1	VALVE MECHANISM GP	473

Y - SEPARATE ILLUSTRATION

<END>

425-3810 ENGINE AR-PRIMARY

45 BRAKE KW (60 BHP) AT 2800 RPM

FIELD REPLACEMENT ORDER 435-1636—PAGE: 92

SMCS-1000 **i10730613**

NOTE	PART NUMBER	QTY	PART NAME 1 2 3 4 5 6 (PRODUCT LEVEL)	SEE PAGE
Y	*308-2305*	1	ALTERNATOR GP-CHARGING	866
Y	*365-4292*	1	CAMSHAFT GP	170
			—OR—	
Y	*481-5624*	1	CAMSHAFT GP	178
Y	*308-5610*	1	CONNECTION GP-EXHAUST	596
Y	*308-2302*	1	CONNECTION GP-WATER	497
Y	*365-4290*	1	CONTROL GP-ENGINE SPEED	882
			—OR—	
Y	*481-5623*	1	GOVERNOR GP	779
Y	*308-2281*	1	CYLINDER BLOCK GP	229
Y	*354-1245*	1	HOUSING GP-FRONT	350
Y	*308-2304*	1	EXTENSION GP-FAN	278
Y	*308-2303*	1	FAN GP-SUCTION	506
Y	*308-2297*	1	FILLER GP-ENGINE OIL	482
Y	*308-2298*	1	FILTER GP-ENGINE OIL	491
Y	*322-2412*	1	FLYWHEEL GP	290
Y	*308-2311*	1	GLOW PLUG GP	886
Y	*311-1883*	1	HOUSING GP-FLYWHEEL	299
Y	*365-4288*	1	HOUSING GP-FRONT	355
			—OR—	
Y	*481-5621*	1	HOUSING GP-FRONT	363
Y	*309-6725*	1	LIFTING GP-ENGINE	392
Y	*331-2589*	1	LINES GP-COOLANT	513
Y	*311-1886*	1	PAN GP-OIL	406
Y	*309-6720*	1	PLUG GP-OIL PAN	444
Y	*321-6740*	1	PULLEY GP-CRANKSHAFT	449
Y	*308-2294*	1	PULLEY GP-FAN	451
Y	*308-2289*	1	PUMP GP-FUEL INJECTION	813
Y	*311-9028*	1	PUMP GP-FUEL TRANSFER	850
Y	*442-7729*	1	PUMP GP-WATER	531
Y	*308-2313*	1	SOLENOID GP-SHUTOFF (FUEL)	895
Y	*308-2293*	1	STARTING MOTOR GP-ELECTRIC	900
Y	*315-7819*	1	SWITCH GP-PRESSURE (ENGINE OIL)	912
Y	*308-2314*	1	SWITCH GP-START	921
Y	*308-2317*	1	SWITCH GP-TEMPERATURE (ENGINE COOLANT)	922
Y	*442-7759*	1	TURBOCHARGER GP	648
Y	**308-2306**	1	V-BELT GP (WATER PUMP)	460

Y - SEPARATE ILLUSTRATION

<END>

425-7985 ENGINE AR-PRIMARY

36 BRAKE KW (49 BHP) AT 2800 RPM

FIELD REPLACEMENT ORDER 435-1634—PAGE: 89

SMCS-1000 **i10732420**

NOTE	PART NUMBER	QTY	PART NAME 1 2 3 4 5 6 (PRODUCT LEVEL)	SEE PAGE
Y	*308-2305*	1	ALTERNATOR GP-CHARGING	866
Y	*332-1364*	1	CAMSHAFT GP	162
Y	*321-6741*	1	CONNECTION GP-ELECTRICAL	874
Y	*308-2309*	1	CONNECTION GP-EXHAUST	595
Y	*308-2302*	1	CONNECTION GP-WATER	497
Y	*332-1363*	1	CONTROL GP-GOVERNOR	708
Y	*442-7729*	1	PUMP GP-WATER	531
Y	*308-2307*	1	HOUSING GP-FRONT	310
Y	*308-2283*	1	CRANKSHAFT GP	219
Y	*308-2281*	1	CYLINDER BLOCK GP	229
Y	*308-2284*	1	CYLINDER HEAD GP	259
Y	*363-3165*	1	FILLER GP-ENGINE OIL	486
Y	*308-2298*	1	FILTER GP-ENGINE OIL	491
Y	*327-7632*	1	FLYWHEEL GP	292
Y	*308-2311*	1	GLOW PLUG GP	886
Y	*317-0588*	1	HOUSING GP-FLYWHEEL	301
Y	*332-1362*	1	HOUSING GP-FRONT	349
Y	*309-6725*	1	LIFTING GP-ENGINE	392
Y	*308-2287*	1	LINES GP-ENGINE OIL	493
Y	*331-2589*	1	LINES GP-COOLANT	513
Y	*315-7813*	1	EXTENSION GP-FAN	279
Y	*317-3037*	1	PAN GP-OIL	410
Y	*308-2286*	1	PISTON & ROD GP	426
Y	*309-6720*	1	PLUG GP-OIL PAN	444
Y	*321-6740*	1	PULLEY GP-CRANKSHAFT	449
Y	*311-9027*	1	PULLEY GP-WATER PUMP	454
Y	*308-2289*	1	PUMP GP-FUEL INJECTION	813
Y	*447-2702*	1	PUMP GP-FUEL PRM & PRIM FILTER	846
Y	*308-2313*	1	SOLENOID GP-SHUTOFF (FUEL)	895
Y	*308-2293*	1	STARTING MOTOR GP-ELECTRIC	900
Y	*315-7819*	1	SWITCH GP-PRESSURE (ENGINE OIL)	912
Y	*308-2317*	1	SWITCH GP-TEMPERATURE (ENGINE COOLANT)	922
Y	*442-7759*	1	TURBOCHARGER GP	648
Y	*311-9029*	1	V-BELT GP (WATER PUMP)	461
Y	*308-2285*	1	VALVE MECHANISM GP	467

Y - SEPARATE ILLUSTRATION

<END>

425-7986 ENGINE AR-PRIMARY

45 BRAKE KW (60 BHP) AT 2800 RPM

FIELD REPLACEMENT ORDER 435-1636—PAGE: 92

SMCS-1000 **i10732427**

NOTE	PART NUMBER	QTY	PART NAME 1 2 3 4 5 6 (PRODUCT LEVEL)	SEE PAGE
Y	*308-2305*	1	ALTERNATOR GP-CHARGING	866
Y	*365-4292*	1	CAMSHAFT GP	170
			—OR—	
Y	*481-5624*	1	CAMSHAFT GP	178
Y	*321-6741*	1	CONNECTION GP-ELECTRICAL	874
Y	*308-2309*	1	CONNECTION GP-EXHAUST	595
Y	*308-2302*	1	CONNECTION GP-WATER	497
Y	*365-4290*	1	CONTROL GP-ENGINE SPEED	882
			—OR—	
Y	*481-5621*	1	HOUSING GP-FRONT	363
Y	*308-2307*	1	HOUSING GP-FRONT	310
Y	*308-2283*	1	CRANKSHAFT GP	219
Y	*308-2281*	1	CYLINDER BLOCK GP	229
Y	*308-2284*	1	CYLINDER HEAD GP	259
Y	*363-3165*	1	FILLER GP-ENGINE OIL	486
Y	*308-2298*	1	FILTER GP-ENGINE OIL	491
Y	*327-7632*	1	FLYWHEEL GP	292
Y	*308-2311*	1	GLOW PLUG GP	886
Y	*317-0588*	1	HOUSING GP-FLYWHEEL	301
Y	*365-4288*	1	HOUSING GP-FRONT	355
			—OR—	
Y	*481-5623*	1	GOVERNOR GP	779
Y	*309-6725*	1	LIFTING GP-ENGINE	392
Y	*331-2589*	1	LINES GP-COOLANT	513
Y	*308-2287*	1	LINES GP-ENGINE OIL	493
Y	*315-7813*	1	EXTENSION GP-FAN	279
Y	*317-3037*	1	PAN GP-OIL	410
Y	*308-2286*	1	PISTON & ROD GP	426
Y	*309-6720*	1	PLUG GP-OIL PAN	444
Y	*321-6740*	1	PULLEY GP-CRANKSHAFT	449
Y	*311-9027*	1	PULLEY GP-WATER PUMP	454
Y	*308-2289*	1	PUMP GP-FUEL INJECTION	813
Y	*327-7633*	1	PUMP GP-FUEL TRANSFER	854
			—OR—	
Y	*447-2702*	1	PUMP GP-FUEL PRM & PRIM FILTER	846
Y	*442-7729*	1	PUMP GP-WATER	531
Y	*442-7794*	1	SENSOR GP-TEMPERATURE	892
Y	*308-2313*	1	SOLENOID GP-SHUTOFF (FUEL)	895
Y	*308-2293*	1	STARTING MOTOR GP-ELECTRIC	900
Y	*315-7819*	1	SWITCH GP-PRESSURE (ENGINE OIL)	912
Y	*442-7759*	1	TURBOCHARGER GP	648
Y	*311-9029*	1	V-BELT GP (WATER PUMP)	461
Y	*308-2285*	1	VALVE MECHANISM GP	467

Y - SEPARATE ILLUSTRATION

<END>

425-7991 ENGINE AR-PRIMARY

36 BRAKE KW (49 BHP) AT 2800 RPM

FIELD REPLACEMENT ORDER 435-1642—PAGE: 97

SMCS-1000 **i10732432**

NOTE	PART NUMBER	QTY	PART NAME 1 2 3 4 5 6 (PRODUCT LEVEL)	SEE PAGE
Y	**308-2305**	1	ALTERNATOR GP-CHARGING	866
Y	*465-2494*	1	CAMSHAFT GP	177
			—OR—	
Y	*454-6144*	1	CAMSHAFT GP	175
Y	*308-5610*	1	CONNECTION GP-EXHAUST	596
Y	*308-2302*	1	CONNECTION GP-WATER	497
Y	*317-0590*	1	COVER GP-VALVE MECHANISM	204
Y	*309-6713*	1	CRANKSHAFT GP	223
Y	*309-6712*	1	CYLINDER BLOCK GP	233
Y	*309-6715*	1	CYLINDER HEAD GP	261
Y	*354-1245*	1	HOUSING GP-FRONT	350
Y	*308-2304*	1	EXTENSION GP-FAN	278
Y	*308-2303*	1	FAN GP-SUCTION	506
Y	*308-2297*	1	FILLER GP-ENGINE OIL	482
Y	*308-2298*	1	FILTER GP-ENGINE OIL	491
Y	*308-2291*	1	FLYWHEEL GP	287
Y	*308-2311*	1	GLOW PLUG GP	886
Y	*465-2493*	1	CONTROL GP-GOVERNOR	736
			—OR—	
Y	*454-6143*	1	CONTROL GP-GOVERNOR	728
Y	*354-4846*	1	HOUSING GP-FLYWHEEL	304
Y	*465-2492*	1	HOUSING GP-FRONT	362
			—OR—	
Y	*454-6141*	1	HOUSING GP-FRONT	360
Y	*309-6725*	1	LIFTING GP-ENGINE	392
Y	*309-6724*	1	MANIFOLD GP-EXHAUST	604
Y	*308-4735*	1	MOUNTING GP-ENGINE OIL FILTER	495
Y	*311-1886*	1	PAN GP-OIL	406
Y	*309-6714*	1	PISTON & ROD GP	429
Y	*322-2426*	1	PLUG GP-ENGINE	442
Y	*323-9157*	1	PLUG GP-ENGINE	443
Y	*309-6720*	1	PLUG GP-OIL PAN	444
Y	*308-2300*	1	PULLEY GP-CRANKSHAFT	448
Y	*308-2294*	1	PULLEY GP-FAN	451
Y	*309-6717*	1	LINES GP-ENGINE OIL	494
Y	*309-6719*	1	PUMP GP-FUEL INJECTION	817
Y	*311-9028*	1	PUMP GP-FUEL TRANSFER	850
Y	*309-6721*	1	PUMP GP-WATER	517
Y	*308-2313*	1	SOLENOID GP-SHUTOFF (FUEL)	895
Y	*308-2293*	1	STARTING MOTOR GP-ELECTRIC	900
Y	*308-2306*	1	V-BELT GP (WATER PUMP) (DRIVE)	460
Y	**309-6716**	1	VALVE MECHANISM GP	473

Y - SEPARATE ILLUSTRATION

<END>

431-1759 ENGINE AR-PRIMARY

48 BRAKE KW (60 BHP) AT 2800 RPM

OPTIONAL FIELD REPLACEMENT ORDER 435-1636—PAGE: 92

SMCS-1000 **i10732444**

NOTE	PART NUMBER	QTY	PART NAME 1 2 3 4 5 6 (PRODUCT LEVEL)	SEE PAGE
Y	*326-8543*	1	AIR CLEANER GP	580
Y	*308-2305*	1	ALTERNATOR GP-CHARGING	866
Y	*329-9278*	1	CAMSHAFT GP	154
Y	*308-2319*	1	CONNECTION GP-ELECTRICAL	873
			—OR—	
Y	*321-6741*	1	CONNECTION GP-ELECTRICAL	874
Y	*308-2309*	1	CONNECTION GP-EXHAUST	595
Y	*308-2302*	1	CONNECTION GP-WATER	497
Y	*329-9277*	1	HOUSING GP-FRONT	346
Y	*308-2307*	1	HOUSING GP-FRONT	310
Y	*308-2283*	1	CRANKSHAFT GP	219
Y	*308-2281*	1	CYLINDER BLOCK GP	229
Y	*308-2284*	1	CYLINDER HEAD GP	259
Y	*363-3165*	1	FILLER GP-ENGINE OIL	486
Y	*308-2298*	1	FILTER GP-ENGINE OIL	491
Y	*317-0586*	1	FLYWHEEL GP	289
Y	*308-2311*	1	GLOW PLUG GP	886
Y	*317-0588*	1	HOUSING GP-FLYWHEEL	301
Y	*308-2288*	1	FASTENER GP-FRONT HOUSING	284
Y	*309-6725*	1	LIFTING GP-ENGINE	392
Y	*331-2589*	1	LINES GP-COOLANT	513
Y	*308-2287*	1	LINES GP-ENGINE OIL	493
Y	*308-2295*	1	PAN GP-OIL	398
Y	*308-2286*	1	PISTON & ROD GP	426
Y	*309-6720*	1	PLUG GP-OIL PAN	444
Y	*321-6740*	1	PULLEY GP-CRANKSHAFT	449
Y	*308-2294*	1	PULLEY GP-FAN	451
Y	*308-2310*	1	PUMP GP-FILTER & FUEL TRANSFER	796
Y	*308-2289*	1	PUMP GP-FUEL INJECTION	813
Y	*317-6706*	1	PUMP GP-FUEL PRM & PRIM FILTER	845
			—OR—	
Y	*579-9465*	1	PUMP GP-FUEL PRM & PRIM FILTER	849
Y	*317-0979*	1	PUMP GP-WATER	521
Y	*341-6658*	1	RADIATOR & FAN GP	543
Y	*308-2313*	1	SOLENOID GP-SHUTOFF (FUEL)	895
Y	*308-2293*	1	STARTING MOTOR GP-ELECTRIC	900
Y	*315-7819*	1	SWITCH GP-PRESSURE (ENGINE OIL)	912
Y	*308-2314*	1	SWITCH GP-START	921
Y	*308-2317*	1	SWITCH GP-TEMPERATURE (ENGINE COOLANT)	922
Y	*441-8101*	1	TURBOCHARGER GP	632
Y	*308-2306*	1	V-BELT GP (WATER PUMP) (DRIVE)	460
Y	*308-2285*	1	VALVE MECHANISM GP	467

Y - SEPARATE ILLUSTRATION

<END>

431-1762 ENGINE AR-PRIMARY

24 BRAKE KW (33 BHP) AT 1800 RPM

FIELD REPLACEMENT ORDER 435-1647—PAGE: 100

SMCS-1000 **i10732454**

NOTE	PART NUMBER	QTY	PART NAME 1 2 3 4 5 6 (PRODUCT LEVEL)	SEE PAGE
Y	*458-3287*	1	ALTERNATOR GP-CHARGING	870
Y	*392-8657*	1	CONNECTION GP-ELECTRICAL	875
Y	*308-2319*	1	CONNECTION GP-ELECTRICAL	873
			—OR—	
Y	*321-6741*	1	CONNECTION GP-ELECTRICAL	874
Y	*308-2302*	1	CONNECTION GP-WATER	497
Y	*466-1519*	1	COVER GP-VALVE MECHANISM	212
Y	*308-2307*	1	HOUSING GP-FRONT	310
Y	*309-6713*	1	CRANKSHAFT GP	223
Y	*309-6712*	1	CYLINDER BLOCK GP	233
Y	*309-6715*	1	CYLINDER HEAD GP	261
Y	*315-5252*	1	VALVE & PLUG GP-OIL PAN DRAIN	466
Y	*311-1119*	1	DRIVE GP-FAN	275
Y	*319-1623*	1	FAN GP-BLOWER	505
Y	*363-3165*	1	FILLER GP-ENGINE OIL	486
Y	*308-2298*	1	FILTER GP-ENGINE OIL	491
Y	*317-0586*	1	FLYWHEEL GP	289
Y	*308-2311*	1	GLOW PLUG GP	886
Y	*317-0588*	1	HOUSING GP-FLYWHEEL	301
Y	*321-4257*	1	HOUSING GP-FRONT	332
Y	*309-6725*	1	LIFTING GP-ENGINE	392
Y	*309-6724*	1	MANIFOLD GP-EXHAUST	604
Y	*308-4735*	1	MOUNTING GP-ENGINE OIL FILTER	495
Y	*308-2295*	1	PAN GP-OIL	398
Y	*309-6714*	1	PISTON & ROD GP	429
Y	*308-2300*	1	PULLEY GP-CRANKSHAFT	448
Y	*308-2294*	1	PULLEY GP-FAN	451
Y	*309-6717*	1	LINES GP-ENGINE OIL	494
Y	*308-2310*	1	PUMP GP-FILTER & FUEL TRANSFER	796
Y	*321-4258*	1	PUMP GP-FUEL INJECTION	827
Y	*308-2320*	1	PUMP GP-FUEL PRIMING	841
Y	*309-6721*	1	PUMP GP-WATER	517
Y	*320-9114*	1	SHUTOFF GP-ELECTRICAL	894
Y	*308-2313*	1	SOLENOID GP-SHUTOFF (FUEL)	895
Y	*308-2293*	1	STARTING MOTOR GP-ELECTRIC	900
Y	*315-7819*	1	SWITCH GP-PRESSURE (ENGINE OIL)	912
Y	*308-2314*	1	SWITCH GP-START	921
Y	*308-2317*	1	SWITCH GP-TEMPERATURE (ENGINE COOLANT)	922
Y	*309-6716*	1	VALVE MECHANISM GP	473
Y	*308-2306*	1	V-BELT GP (WATER PUMP) (DRIVE)	460

Y - SEPARATE ILLUSTRATION

<END>

434-2165 ENGINE AR-PRIMARY

37 BRAKE KW (50 BHP) AT 2800 RPM

FIELD REPLACEMENT ORDER 435-1646—PAGE: 98

SMCS-1000 **i10732459**

NOTE	PART NUMBER	QTY	PART NAME 1 2 3 4 5 6 (PRODUCT LEVEL)	SEE PAGE
Y	*317-0649*	1	AIR CLEANER GP	575
Y	*308-2305*	1	ALTERNATOR GP-CHARGING	866
Y	*441-6514*	1	CAMSHAFT GP	174
			—OR—	
Y	*454-6144*	1	CAMSHAFT GP	175
Y	*308-2319*	1	CONNECTION GP-ELECTRICAL	873
			—OR—	
Y	*321-6741*	1	CONNECTION GP-ELECTRICAL	874
Y	*308-2309*	1	CONNECTION GP-EXHAUST	595
Y	*308-2302*	1	CONNECTION GP-WATER	497
Y	*441-6513*	1	CONTROL GP-GOVERNOR	726
			—OR—	
Y	*454-6143*	1	CONTROL GP-GOVERNOR	728
Y	*308-2307*	1	HOUSING GP-FRONT	310
Y	*309-6722*	1	COVER GP-VALVE MECHANISM	195
Y	*309-6713*	1	CRANKSHAFT GP	223
Y	*309-6712*	1	CYLINDER BLOCK GP	233
Y	*309-6715*	1	CYLINDER HEAD GP	261
Y	*363-3165*	1	FILLER GP-ENGINE OIL	486
Y	*308-2298*	1	FILTER GP-ENGINE OIL	491
Y	*317-0586*	1	FLYWHEEL GP	289
Y	*308-2311*	1	GLOW PLUG GP	886
Y	*317-0588*	1	HOUSING GP-FLYWHEEL	301
Y	*441-6512*	1	HOUSING GP-FRONT	358
			—OR—	
Y	*454-6141*	1	HOUSING GP-FRONT	360
Y	*309-6725*	1	LIFTING GP-ENGINE	392
Y	*331-2589*	1	LINES GP-COOLANT	513
Y	*309-6724*	1	MANIFOLD GP-EXHAUST	604
Y	*308-2295*	1	PAN GP-OIL	398
Y	*309-6714*	1	PISTON & ROD GP	429
Y	*309-6720*	1	PLUG GP-OIL PAN	444
Y	*308-2300*	1	PULLEY GP-CRANKSHAFT	448
Y	*308-2294*	1	PULLEY GP-FAN	451
Y	*309-6717*	1	LINES GP-ENGINE OIL	494
Y	*308-2310*	1	PUMP GP-FILTER & FUEL TRANSFER	796
Y	*309-6719*	1	PUMP GP-FUEL INJECTION	817
Y	*308-2320*	1	PUMP GP-FUEL PRIMING	841
			—OR—	
Y	*579-9444*	1	PUMP GP-FUEL PRIMING	844
Y	*308-2301*	1	PUMP GP-WATER	514
Y	*331-3270*	1	RADIATOR GP	556
Y	*308-2313*	1	SOLENOID GP-SHUTOFF (FUEL)	895
Y	*308-2293*	1	STARTING MOTOR GP-ELECTRIC	900
Y	*315-7819*	1	SWITCH GP-PRESSURE (ENGINE OIL)	912
Y	*308-2314*	1	SWITCH GP-START	921
Y	*308-2317*	1	SWITCH GP-TEMPERATURE (ENGINE COOLANT)	922

434-2165 **ENGINE AR-PRIMARY (**contd.**)** **i10732459**

NOTE	PART NUMBER	QTY	PART NAME 1 2 3 4 5 6 (PRODUCT LEVEL)	SEE PAGE
Y	*308-2306*	1	V-BELT GP (WATER PUMP) (DRIVE)	460
Y	*309-6716*	1	VALVE MECHANISM GP	473

Y - SEPARATE ILLUSTRATION

<END>

434-2170 ENGINE AR-PRIMARY

45 BRAKE KW (60 BHP) AT 2800 RPM

SMCS-1000 **i10732473**

NOTE	PART NUMBER	QTY	PART NAME 1 2 3 4 5 6 (PRODUCT LEVEL)	SEE PAGE
Y	*326-8543*	1	AIR CLEANER GP	580
Y	*308-2305*	1	ALTERNATOR GP-CHARGING	866
Y	*329-9278*	1	CAMSHAFT GP	154
Y	*308-2283*	1	CRANKSHAFT GP	219
Y	*308-2319*	1	CONNECTION GP-ELECTRICAL	873
			—OR—	
Y	*321-6741*	1	CONNECTION GP-ELECTRICAL	874
Y	*308-2309*	1	CONNECTION GP-EXHAUST	595
Y	*308-2302*	1	CONNECTION GP-WATER	497
Y	*329-9277*	1	HOUSING GP-FRONT	346
Y	*308-2307*	1	HOUSING GP-FRONT	310
Y	*308-2281*	1	CYLINDER BLOCK GP	229
Y	*308-2284*	1	CYLINDER HEAD GP	259
Y	*363-3165*	1	FILLER GP-ENGINE OIL	486
Y	*308-2298*	1	FILTER GP-ENGINE OIL	491
Y	*317-0586*	1	FLYWHEEL GP	289
Y	*308-2311*	1	GLOW PLUG GP	886
Y	*317-0588*	1	HOUSING GP-FLYWHEEL	301
Y	*308-2288*	1	FASTENER GP-FRONT HOUSING	284
Y	*309-6725*	1	LIFTING GP-ENGINE	392
Y	*331-2589*	1	LINES GP-COOLANT	513
Y	*308-2295*	1	PAN GP-OIL	398
Y	*308-2286*	1	PISTON & ROD GP	426
Y	*309-6720*	1	PLUG GP-OIL PAN	444
Y	*321-6740*	1	PULLEY GP-CRANKSHAFT	449
Y	*308-2294*	1	PULLEY GP-FAN	451
Y	*308-2287*	1	LINES GP-ENGINE OIL	493
Y	*308-2310*	1	PUMP GP-FILTER & FUEL TRANSFER	796
Y	*308-2289*	1	PUMP GP-FUEL INJECTION	813
Y	*317-6706*	1	PUMP GP-FUEL PRM & PRIM FILTER	845
			—OR—	
Y	*579-9465*	1	PUMP GP-FUEL PRM & PRIM FILTER	849
Y	*317-0979*	1	PUMP GP-WATER	521
Y	*341-6658*	1	RADIATOR & FAN GP	543
Y	*308-2313*	1	SOLENOID GP-SHUTOFF (FUEL)	895
Y	*308-2293*	1	STARTING MOTOR GP-ELECTRIC	900
Y	*315-7819*	1	SWITCH GP-PRESSURE (ENGINE OIL)	912
Y	*308-2314*	1	SWITCH GP-START	921
Y	*308-2317*	1	SWITCH GP-TEMPERATURE (ENGINE COOLANT)	922
Y	*441-8101*	1	TURBOCHARGER GP	632
Y	*308-2285*	1	VALVE MECHANISM GP	467
Y	*308-2306*	1	V-BELT GP (WATER PUMP) (DRIVE)	460

Y - SEPARATE ILLUSTRATION

<END>

435-1634 ENGINE AR-PRIMARY

36 BRAKE KW (49 BHP) AT 2800 RPM
FIELD REPLACEMENT FOR 326-7873—PAGE: 54
: FOR 326-6416—PAGE: 52
: FOR 425-7985—PAGE: 81
: FOR 425-3808—PAGE: 78
: FOR 465-2421—PAGE: 127
: FOR 461-7894—PAGE: 124
: FOR 461-7892—PAGE: 122
ALSO FIELD INSTALLATION

SMCS-1000 **i10340697**

NOTE	PART NUMBER	QTY	PART NAME 1 2 3 4 5 6 (PRODUCT LEVEL)	SEE PAGE
Y	*398-4274*	1	FILM GP	927
Y	*559-9084*	1	CAP GP-PROTECTION	926
Y	*329-9278*	1	CAMSHAFT GP	154
			—OR—	
Y	*332-1364*	1	CAMSHAFT GP	162
			—OR—	
Y	*596-3442*	1	CAMSHAFT GP	185
Y	*308-2302*	1	CONNECTION GP-WATER	497
Y	*398-5884*	1	CONNECTION GP-WATER	500
Y	*329-9277*	1	HOUSING GP-FRONT	346
			—OR—	
Y	*332-1362*	1	HOUSING GP-FRONT	349
			—OR—	
Y	*599-9836*	1	HOUSING GP-FRONT	387
Y	*442-9881*	1	CONTROL GP-THROTTLE	750
			—OR—	
Y	*308-2313*	1	SOLENOID GP-SHUTOFF (FUEL)	895
			—OR—	
Y	*519-4412*	1	SOLENOID GP-SHUTOFF (FUEL)	897
Y	*342-1268*	1	FASTENER GP-COVER	283
			—OR—	
Y	*596-3460*	1	GOVERNOR GP	782
Y	*308-2283*	1	CRANKSHAFT GP	219
			—OR—	
Y	*399-4716*	1	CRANKSHAFT GP	227
Y	*308-2281*	1	CYLINDER BLOCK GP	229
Y	*308-2284*	1	CYLINDER HEAD GP	259
			—OR—	
Y	*596-2862*	1	CYLINDER HEAD GP	273
Y	*354-1245*	1	HOUSING GP-FRONT	350
Y	*308-2288*	1	FASTENER GP-FRONT HOUSING	284
			—OR—	
Y	*332-1363*	1	CONTROL GP-GOVERNOR	708
Y	*308-2297*	1	FILLER GP-ENGINE OIL	482
			—OR—	
Y	*532-8293*	1	FILLER GP-ENGINE OIL	489
Y	*308-2298*	1	FILTER GP-ENGINE OIL	491
Y	*322-2412*	1	FLYWHEEL GP	290
Y	*566-9450*	1	FLYWHEEL GP	296
Y	*308-2311*	1	GLOW PLUG GP	886

435-1634 **ENGINE AR-PRIMARY (**contd.**)** **i10340697**

NOTE	PART NUMBER	QTY	PART NAME 1 2 3 4 5 6 (PRODUCT LEVEL)	SEE PAGE
			—OR—	
Y	*587-0270*	1	GLOW PLUG GP	889
Y	*342-9604*	1	HOUSING GP-FLYWHEEL	302
			—OR—	
Y	*398-4795*	1	HOUSING GP-FLYWHEEL	306
Y	*584-3179*	1	CYLINDER BLOCK GP	243
Y	*309-6725*	1	LIFTING GP-ENGINE	392
			—OR—	
Y	*603-1463*	1	LIFTING GP-ENGINE	396
Y	*331-2589*	1	LINES GP-COOLANT	513
Y	*308-2287*	1	LINES GP-ENGINE OIL	493
			—OR—	
Y	*398-8178*	1	FILTER GP-ENGINE OIL	492
Y	*600-5135*	1	COVER GP-EXHAUST	600
Y	*308-2295*	1	PAN GP-OIL	398
			—OR—	
Y	*588-9925*	1	PAN GP-OIL	425
Y	*342-9607*	1	PARTS GP-MISCELLANEOUS	932
			—OR—	
Y	*600-6923*	1	ACCESSORY GP-ENGINE	144
Y	*308-2286*	1	PISTON & ROD GP	426
			—OR—	
Y	*596-2865*	1	PISTON & ROD GP	437
			—OR—	
Y	*587-0189*	1	PISTON & ROD GP	436
Y	*518-9053*	1	PLATE & FILM GP	933
			—OR—	
Y	*612-8795*	1	PLATE & FILM GP	934
Y	*309-6720*	1	PLUG GP-OIL PAN	444
			—OR—	
Y	*398-5865*	1	PLUG GP-OIL PAN	446
Y	*321-6740*	1	PULLEY GP-CRANKSHAFT	449
			—OR—	
Y	*445-9988*	1	PULLEY GP-CRANKSHAFT	450
Y	*308-2289*	1	PUMP GP-FUEL INJECTION	813
			—OR—	
Y	*596-2828*	1	PUMP GP-FUEL INJECTION	839
Y	*317-0979*	1	PUMP GP-WATER	521
			—OR—	
Y	*598-5724*	1	PUMP GP-WATER	537
Y	*584-3189*	1	ROCKER ARM GP	458
Y	*315-7819*	1	SWITCH GP-PRESSURE (ENGINE OIL)	912
			—OR—	
Y	*584-9822*	1	SWITCH GP-PRESSURE (ENGINE OIL)	920
Y	*308-2317*	1	SWITCH GP-TEMPERATURE (ENGINE COOLANT)	922
			—OR—	
Y	*601-4322*	1	SENSOR GP-TEMPERATURE	893
Y	*442-9826*	1	TURBOCHARGER GP	651

435-1634 **ENGINE AR-PRIMARY (**contd.**)** **i10340697**

NOTE	PART NUMBER	QTY	PART NAME 1 2 3 4 5 6 (PRODUCT LEVEL)	SEE PAGE
			—OR—	
Y	*508-8740*	1	TURBOCHARGER GP	669
			—OR—	
Y	*600-5115*	1	TURBOCHARGER GP	672
Y	*308-2285*	1	VALVE MECHANISM GP	467

Y - SEPARATE ILLUSTRATION

<END>

435-1636 ENGINE AR-PRIMARY

45 BRAKE KW (60 BHP) AT 2800 RPM

FIELD REPLACEMENT FOR 320-0291—PAGE: 41
: FOR 310-7852—PAGE: 23
: FOR 325-4339—PAGE: 48
: FOR 318-8497—PAGE: 33
: FOR 326-1872—PAGE: 50
: FOR 344-8934—PAGE: 61
: FOR 307-9835—PAGE: 19
: FOR 308-6563—PAGE: 21
: FOR 319-7216—PAGE: 37
: FOR 425-7986—PAGE: 82
: FOR 425-3807—PAGE: 77
: FOR 425-3810—PAGE: 80
: FOR 431-1759—PAGE: 84
: FOR 436-6741—PAGE: 104
: FOR 446-7440—PAGE: 113
: FOR 461-7893—PAGE: 123
: FOR 482-8655—PAGE: 128
: FOR 425-3806—PAGE: 76
: FOR 320-0290—PAGE: 39
: FOR 459-2953—PAGE: 118
: FOR 541-9277—PAGE: 135
: FOR 461-7893—PAGE: 123
: FOR 491-3396—PAGE: 130
: FOR 495-6243—PAGE: 133
: FOR 460-1334—PAGE: 120
: FOR 461-5602—PAGE: 121
: FOR 516-9335—PAGE: 134
: FOR 587-9328—PAGE: 139

SMCS-1000 **i10402945**

NOTE	PART NUMBER	QTY	PART NAME 1 2 3 4 5 6 (PRODUCT LEVEL)	SEE PAGE
Y	*398-4274*	1	FILM GP	927
Y	*329-9278*	1	CAMSHAFT GP	154
			—OR—	
Y	*596-3460*	1	GOVERNOR GP	782
Y	*596-3442*	1	CAMSHAFT GP	185
Y	*398-5884*	1	CONNECTION GP-WATER	500
Y	*308-2302*	1	CONNECTION GP-WATER	497
Y	*442-9881*	1	CONTROL GP-THROTTLE	750
			—OR—	
Y	*308-2313*	1	SOLENOID GP-SHUTOFF (FUEL)	895
			—OR—	
Y	*519-4412*	1	SOLENOID GP-SHUTOFF (FUEL)	897
Y	*342-1268*	1	FASTENER GP-COVER	283
			—OR—	
Y	*559-9084*	1	CAP GP-PROTECTION	926
Y	*308-2283*	1	CRANKSHAFT GP	219
			—OR—	
Y	*399-4716*	1	CRANKSHAFT GP	227
Y	*308-2281*	1	CYLINDER BLOCK GP	229
			—OR—	
Y	*584-3179*	1	CYLINDER BLOCK GP	243
Y	*308-2284*	1	CYLINDER HEAD GP	259

435-1636 **ENGINE AR-PRIMARY (**contd.**)** **i10402945**

NOTE	PART NUMBER	QTY	PART NAME 1 2 3 4 5 6 (PRODUCT LEVEL)	SEE PAGE
			—OR—	
Y	*596-2865*	1	PISTON & ROD GP	437
			—OR—	
Y	*587-0189*	1	PISTON & ROD GP	436
Y	*354-1245*	1	HOUSING GP-FRONT	350
			—OR—	
Y	*599-9836*	1	HOUSING GP-FRONT	387
Y	*308-2297*	1	FILLER GP-ENGINE OIL	482
			—OR—	
Y	*532-8293*	1	FILLER GP-ENGINE OIL	489
Y	*308-2298*	1	FILTER GP-ENGINE OIL	491
			—OR—	
Y	*398-8178*	1	FILTER GP-ENGINE OIL	492
Y	*322-2412*	1	FLYWHEEL GP	290
			—OR—	
Y	*566-9450*	1	FLYWHEEL GP	296
Y	*308-2311*	1	GLOW PLUG GP	886
			—OR—	
Y	*587-0270*	1	GLOW PLUG GP	889
Y	*342-9604*	1	HOUSING GP-FLYWHEEL	302
			—OR—	
Y	*398-4795*	1	HOUSING GP-FLYWHEEL	306
Y	*329-9277*	1	HOUSING GP-FRONT	346
Y	*308-2288*	1	FASTENER GP-FRONT HOUSING (MOUNTING)	284
Y	*309-6725*	1	LIFTING GP-ENGINE	392
			—OR—	
Y	*603-1463*	1	LIFTING GP-ENGINE	396
Y	*308-2299*	1	LINES GP-COOLANT	512
			—OR—	
Y	*331-2589*	1	LINES GP-COOLANT	513
Y	*308-2287*	1	LINES GP-ENGINE OIL	493
Y	*600-5135*	1	COVER GP-EXHAUST	600
Y	*308-2295*	1	PAN GP-OIL	398
			—OR—	
Y	*588-9925*	1	PAN GP-OIL	425
Y	*342-9607*	1	PARTS GP-MISCELLANEOUS	932
			—OR—	
Y	*600-6923*	1	ACCESSORY GP-ENGINE	144
Y	*308-2286*	1	PISTON & ROD GP	426
			—OR—	
Y	*596-2862*	1	CYLINDER HEAD GP	273
Y	*309-6720*	1	PLUG GP-OIL PAN	444
			—OR—	
Y	*398-5865*	1	PLUG GP-OIL PAN	446
Y	*321-6740*	1	PULLEY GP-CRANKSHAFT	449
			—OR—	
Y	*445-9988*	1	PULLEY GP-CRANKSHAFT	450
Y	*308-2289*	1	PUMP GP-FUEL INJECTION	813

435-1636 **ENGINE AR-PRIMARY (**contd.**)** **i10402945**

NOTE	PART NUMBER	QTY	PART NAME 1 2 3 4 5 6 (PRODUCT LEVEL)	SEE PAGE
			—OR—	
Y	*596-2828*	1	PUMP GP-FUEL INJECTION	839
Y	*317-0979*	1	PUMP GP-WATER	521
			—OR—	
Y	*598-5724*	1	PUMP GP-WATER	537
Y	*584-3189*	1	ROCKER ARM GP	458
Y	*315-7819*	1	SWITCH GP-PRESSURE (ENGINE OIL)	912
			—OR—	
Y	*584-9822*	1	SWITCH GP-PRESSURE (ENGINE OIL)	920
Y	*308-2317*	1	SWITCH GP-TEMPERATURE (ENGINE COOLANT)	922
			—OR—	
Y	*601-4322*	1	SENSOR GP-TEMPERATURE	893
Y	*442-9826*	1	TURBOCHARGER GP	651
			—OR—	
Y	*508-8740*	1	TURBOCHARGER GP	669
			—OR—	
Y	*600-5115*	1	TURBOCHARGER GP	672
Y	*308-2285*	1	VALVE MECHANISM GP	467
Y	*518-9053*	1	PLATE & FILM GP	933
			—OR—	
Y	*612-8795*	1	PLATE & FILM GP	934

Y - SEPARATE ILLUSTRATION

<END>

435-1641 ENGINE AR-PRIMARY

34 BRAKE KW (46 BHP) AT 2400 RPM

FIELD REPLACEMENT FOR 311-2714—PAGE: 25

SMCS-1000 **i08803694**

NOTE	PART NUMBER	QTY	PART NAME 1 2 3 4 5 6 (PRODUCT LEVEL)	SEE PAGE
Y	*600-6923*	1	ACCESSORY GP-ENGINE	144
Y	*398-4274*	1	FILM GP	927
Y	*311-9025*	1	CAMSHAFT GP	147
			—OR—	
Y	*596-3428*	1	CAMSHAFT GP	182
Y	*559-9084*	1	CAP GP-PROTECTION	926
Y	*308-2302*	1	CONNECTION GP-WATER	497
			—OR—	
Y	*598-5726*	1	PUMP GP-WATER	539
Y	*342-1268*	1	FASTENER GP-COVER	283
Y	*309-6722*	1	COVER GP-VALVE MECHANISM	195
			—OR—	
Y	*586-6654*	1	COVER GP-VALVE MECHANISM	214
Y	*309-6713*	1	CRANKSHAFT GP	223
			—OR—	
Y	*399-4716*	1	CRANKSHAFT GP	227
Y	*309-6712*	1	CYLINDER BLOCK GP	233
Y	*309-6715*	1	CYLINDER HEAD GP	261
			—OR—	
Y	*596-2861*	1	CYLINDER HEAD GP	272
Y	*354-1245*	1	HOUSING GP-FRONT	350
Y	*308-2297*	1	FILLER GP-ENGINE OIL	482
			—OR—	
Y	*532-8293*	1	FILLER GP-ENGINE OIL	489
Y	*308-2298*	1	FILTER GP-ENGINE OIL	491
			—OR—	
Y	*398-8178*	1	FILTER GP-ENGINE OIL	492
Y	*322-2412*	1	FLYWHEEL GP	290
			—OR—	
Y	*566-9450*	1	FLYWHEEL GP	296
Y	*308-2311*	1	GLOW PLUG GP	886
			—OR—	
Y	*587-0270*	1	GLOW PLUG GP	889
Y	*311-9024*	1	GOVERNOR GP	763
			—OR—	
Y	*596-3470*	1	CONTROL GP-GOVERNOR	747
Y	*342-9604*	1	HOUSING GP-FLYWHEEL	302
			—OR—	
Y	*398-4795*	1	HOUSING GP-FLYWHEEL	306
Y	*311-9023*	1	HOUSING GP-FRONT	326
			—OR—	
Y	*599-9836*	1	HOUSING GP-FRONT	387
Y	*584-3179*	1	CYLINDER BLOCK GP	243
Y	*309-6725*	1	LIFTING GP-ENGINE	392
			—OR—	
Y	*603-1463*	1	LIFTING GP-ENGINE	396

435-1641 **ENGINE AR-PRIMARY (**contd.**)** **i08803694**

NOTE	PART NUMBER	QTY	PART NAME 1 2 3 4 5 6 (PRODUCT LEVEL)	SEE PAGE
Y	*309-6717*	1	LINES GP-ENGINE OIL	494
Y	*584-9800*	1	MANIFOLD GP-EXHAUST	607
Y	*308-4735*	1	MOUNTING GP-ENGINE OIL FILTER	495
			—OR—	
Y	*398-5884*	1	CONNECTION GP-WATER	500
Y	*308-2295*	1	PAN GP-OIL	398
			—OR—	
Y	*588-9925*	1	PAN GP-OIL	425
Y	*342-9607*	1	PARTS GP-MISCELLANEOUS	932
Y	*309-6714*	1	PISTON & ROD GP	429
			—OR—	
Y	*596-2866*	1	PISTON & ROD GP	438
Y	*612-8795*	1	PLATE & FILM GP	934
Y	*309-6720*	1	PLUG GP-OIL PAN	444
			—OR—	
Y	*398-5865*	1	PLUG GP-OIL PAN	446
Y	*308-2300*	1	PULLEY GP-CRANKSHAFT	448
			—OR—	
Y	*445-9988*	1	PULLEY GP-CRANKSHAFT	450
Y	*311-9026*	1	PUMP GP-FUEL INJECTION	821
			—OR—	
Y	*596-2825*	1	PUMP GP-FUEL INJECTION	833
Y	*309-6721*	1	PUMP GP-WATER	517
			—OR—	
Y	*598-5726*	1	PUMP GP-WATER	539
Y	*584-3189*	1	ROCKER ARM GP	458
Y	*308-2313*	1	SOLENOID GP-SHUTOFF (FUEL)	895
			—OR—	
Y	*519-4412*	1	SOLENOID GP-SHUTOFF (FUEL)	897
Y	*315-7819*	1	SWITCH GP-PRESSURE (ENGINE OIL)	912
			—OR—	
Y	*584-9822*	1	SWITCH GP-PRESSURE (ENGINE OIL)	920
Y	*308-2317*	1	SWITCH GP-TEMPERATURE (ENGINE COOLANT)	922
			—OR—	
Y	*601-4322*	1	SENSOR GP-TEMPERATURE	893
Y	*309-6716*	1	VALVE MECHANISM GP	473

Y - SEPARATE ILLUSTRATION

<END>

435-1642 ENGINE AR-PRIMARY

36 BRAKE KW (49 BHP) AT 2800 RPM

FIELD REPLACEMENT FOR 461-7895—PAGE: 125
: FOR 319-5616—PAGE: 35
: FOR 326-1872—PAGE: 50
: FOR 425-7991—PAGE: 83
: FOR 425-3801—PAGE: 75
: FOR 549-8284—PAGE: 136
: FOR 484-4145—PAGE: 129
: FOR 492-6602—PAGE: 131

SMCS-1000 **i10041112**

NOTE	PART NUMBER	QTY	PART NAME 1 2 3 4 5 6 (PRODUCT LEVEL)	SEE PAGE
Y	*465-2494*	1	CAMSHAFT GP	177
			—OR—	
Y	*454-6144*	1	CAMSHAFT GP	175
Y	*308-2302*	1	CONNECTION GP-WATER	497
Y	*342-1268*	1	FASTENER GP-COVER	283
Y	*309-6722*	1	COVER GP-VALVE MECHANISM	195
Y	*309-6713*	1	CRANKSHAFT GP	223
Y	*309-6712*	1	CYLINDER BLOCK GP	233
Y	*309-6715*	1	CYLINDER HEAD GP	261
Y	*354-1245*	1	HOUSING GP-FRONT	350
Y	*308-2297*	1	FILLER GP-ENGINE OIL	482
Y	*308-2298*	1	FILTER GP-ENGINE OIL	491
Y	*322-2412*	1	FLYWHEEL GP	290
Y	*308-2311*	1	GLOW PLUG GP	886
Y	*465-2493*	1	CONTROL GP-GOVERNOR	736
			—OR—	
Y	**454-6143**	1	CONTROL GP-GOVERNOR	728
Y	*342-9604*	1	HOUSING GP-FLYWHEEL	302
Y	*465-2492*	1	HOUSING GP-FRONT	362
			—OR—	
Y	*454-6141*	1	HOUSING GP-FRONT	360
Y	*309-6725*	1	LIFTING GP-ENGINE	392
Y	*309-6717*	1	LINES GP-ENGINE OIL	494
Y	*308-4735*	1	MOUNTING GP-ENGINE OIL FILTER	495
Y	*308-2295*	1	PAN GP-OIL	398
Y	*342-9607*	1	PARTS GP-MISCELLANEOUS	932
Y	*309-6714*	1	PISTON & ROD GP	429
Y	*309-6720*	1	PLUG GP-OIL PAN	444
Y	*308-2300*	1	PULLEY GP-CRANKSHAFT	448
Y	*309-6719*	1	PUMP GP-FUEL INJECTION	817
Y	*309-6721*	1	PUMP GP-WATER	517
Y	*308-2313*	1	SOLENOID GP-SHUTOFF (FUEL)	895
Y	*315-7819*	1	SWITCH GP-PRESSURE (ENGINE OIL)	912
Y	*308-2317*	1	SWITCH GP-TEMPERATURE (ENGINE COOLANT)	922
Y	*309-6716*	1	VALVE MECHANISM GP	473

Y - SEPARATE ILLUSTRATION

<END>

435-1646 ENGINE AR-PRIMARY

36 BRAKE KW (49 BHP) AT 2800 RPM

FIELD REPLACEMENT FOR 303-4225—PAGE: 11
: FOR 345-0355—PAGE: 63
: FOR 302-1820—PAGE: 8
: FOR 307-9833—PAGE: 16
: FOR 307-9834—PAGE: 17
: FOR 434-2165—PAGE: 86
: FOR 438-7868—PAGE: 109
: FOR 307-9834—PAGE: 17
: FOR 456-6973—PAGE: 117
: FOR 459-8934—PAGE: 119

SMCS-1000 **i10081071**

NOTE	PART NUMBER	QTY	PART NAME 1 2 3 4 5 6 (PRODUCT LEVEL)	SEE PAGE
Y	*308-2302*	1	CONNECTION GP-WATER	497
			—OR—	
Y	*398-5884*	1	CONNECTION GP-WATER	500
Y	*398-4274*	1	FILM GP	927
Y	*600-6923*	1	ACCESSORY GP-ENGINE	144
Y	*342-1268*	1	FASTENER GP-COVER	283
Y	*559-9084*	1	CAP GP-PROTECTION	926
Y	*398-4795*	1	HOUSING GP-FLYWHEEL	306
Y	*309-6722*	1	COVER GP-VALVE MECHANISM	195
			—OR—	
Y	*586-6654*	1	COVER GP-VALVE MECHANISM	214
Y	*309-6713*	1	CRANKSHAFT GP	223
			—OR—	
Y	*399-4716*	1	CRANKSHAFT GP	227
Y	*309-6712*	1	CYLINDER BLOCK GP	233
Y	*309-6715*	1	CYLINDER HEAD GP	261
Y	*596-2861*	1	CYLINDER HEAD GP	272
Y	*354-1245*	1	HOUSING GP-FRONT	350
			—OR—	
Y	*599-9836*	1	HOUSING GP-FRONT	387
Y	*308-2297*	1	FILLER GP-ENGINE OIL	482
			—OR—	
Y	*532-8293*	1	FILLER GP-ENGINE OIL	489
Y	*308-2298*	1	FILTER GP-ENGINE OIL	491
			—OR—	
Y	*398-8178*	1	FILTER GP-ENGINE OIL	492
Y	*322-2412*	1	FLYWHEEL GP	290
			—OR—	
Y	*566-9450*	1	FLYWHEEL GP	296
Y	*308-2311*	1	GLOW PLUG GP	886
			—OR—	
Y	*587-0270*	1	GLOW PLUG GP	889
Y	*342-9604*	1	HOUSING GP-FLYWHEEL	302
Y	*309-6718*	1	HOUSING GP-FRONT	313
			—OR—	
Y	*584-3179*	1	CYLINDER BLOCK GP	243
Y	*309-6725*	1	LIFTING GP-ENGINE	392
			—OR—	

435-1646 **ENGINE AR-PRIMARY (**contd.**)** **i10081071**

NOTE	PART NUMBER	QTY	PART NAME 1 2 3 4 5 6 (PRODUCT LEVEL)	SEE PAGE
Y	*603-1463*	1	LIFTING GP-ENGINE	396
Y	*308-4735*	1	MOUNTING GP-ENGINE OIL FILTER	495
Y	*308-2295*	1	PAN GP-OIL	398
			—OR—	
Y	*588-9925*	1	PAN GP-OIL	425
Y	*342-9607*	1	PARTS GP-MISCELLANEOUS	932
Y	*309-6714*	1	PISTON & ROD GP	429
			—OR—	
Y	*596-2866*	1	PISTON & ROD GP	438
Y	*309-6720*	1	PLUG GP-OIL PAN	444
			—OR—	
Y	*398-5865*	1	PLUG GP-OIL PAN	446
Y	*308-2300*	1	PULLEY GP-CRANKSHAFT	448
			—OR—	
Y	*445-9988*	1	PULLEY GP-CRANKSHAFT	450
Y	*309-6717*	1	LINES GP-ENGINE OIL	494
Y	*309-6719*	1	PUMP GP-FUEL INJECTION	817
			—OR—	
Y	*596-2825*	1	PUMP GP-FUEL INJECTION	833
Y	*309-6721*	1	PUMP GP-WATER	517
			—OR—	
Y	*598-5726*	1	PUMP GP-WATER	539
Y	*308-2313*	1	SOLENOID GP-SHUTOFF (FUEL)	895
			—OR—	
Y	*519-4412*	1	SOLENOID GP-SHUTOFF (FUEL)	897
Y	*315-7819*	1	SWITCH GP-PRESSURE (ENGINE OIL)	912
			—OR—	
Y	*584-9822*	1	SWITCH GP-PRESSURE (ENGINE OIL)	920
Y	*308-2317*	1	SWITCH GP-TEMPERATURE (ENGINE COOLANT)	922
			—OR—	
Y	*601-4322*	1	SENSOR GP-TEMPERATURE	893
Y	*309-6716*	1	VALVE MECHANISM GP	473
			FOR GASKET KIT INFORMATION, PLEASE REFERENCE THE KIT INFORMATION IN SIS OR CONTACT YOUR LOCAL DEALER.	

Y - SEPARATE ILLUSTRATION

<END>

435-1647 ENGINE AR-PRIMARY

24 BRAKE KW (33 BHP) AT 1800 RPM

FIELD REPLACEMENT FOR 345-4149—PAGE: 65

SMCS-1000 **i10645355**

NOTE	PART NUMBER	QTY	PART NAME 1 2 3 4 5 6 (PRODUCT LEVEL)	SEE PAGE
Y	*364-2522*	1	CAMSHAFT GP	166
			—OR—	
Y	*596-3440*	1	CAMSHAFT GP	184
Y	*308-2302*	1	CONNECTION GP-WATER	497
			—OR—	
Y	*398-5884*	1	CONNECTION GP-WATER	500
Y	*364-2521*	1	CONTROL GP-ENGINE ELECTRONIC	878
Y	*596-3463*	1	CONTROL GP-GOVERNOR	742
Y	*342-1268*	1	FASTENER GP-COVER	283
Y	*308-2307*	1	HOUSING GP-FRONT	310
			—OR—	
Y	*599-9816*	1	HOUSING GP-FRONT	383
Y	*309-6722*	1	COVER GP-VALVE MECHANISM	195
			—OR—	
Y	*586-6654*	1	COVER GP-VALVE MECHANISM	214
Y	*309-6713*	1	CRANKSHAFT GP	223
			—OR—	
Y	*399-4716*	1	CRANKSHAFT GP	227
Y	*309-6712*	1	CYLINDER BLOCK GP	233
Y	*309-6715*	1	CYLINDER HEAD GP	261
			—OR—	
Y	*596-2861*	1	CYLINDER HEAD GP	272
Y	*308-2297*	1	FILLER GP-ENGINE OIL	482
			—OR—	
Y	*532-8293*	1	FILLER GP-ENGINE OIL	489
Y	*398-4274*	1	FILM GP	927
Y	*308-2298*	1	FILTER GP-ENGINE OIL	491
			—OR—	
Y	*398-8178*	1	FILTER GP-ENGINE OIL	492
Y	*322-2412*	1	FLYWHEEL GP	290
			—OR—	
Y	*566-9450*	1	FLYWHEEL GP	296
Y	*308-2311*	1	GLOW PLUG GP	886
			—OR—	
Y	*587-0270*	1	GLOW PLUG GP	889
Y	*342-9604*	1	HOUSING GP-FLYWHEEL	302
			—OR—	
Y	*398-4795*	1	HOUSING GP-FLYWHEEL	306
Y	*364-2520*	1	HOUSING GP-FRONT	352
Y	*309-6725*	1	LIFTING GP-ENGINE	392
			—OR—	
Y	*603-1463*	1	LIFTING GP-ENGINE	396
Y	*584-9800*	1	MANIFOLD GP-EXHAUST	607
Y	*308-4735*	1	MOUNTING GP-ENGINE OIL FILTER	495
			—OR—	
Y	*584-3179*	1	CYLINDER BLOCK GP	243

435-1647 **ENGINE AR-PRIMARY (**contd.**)** **i10645355**

NOTE	PART NUMBER	QTY	PART NAME 1 2 3 4 5 6 (PRODUCT LEVEL)	SEE PAGE
Y	*308-2295*	1	PAN GP-OIL	398
			—OR—	
Y	*588-9925*	1	PAN GP-OIL	425
Y	*342-9607*	1	PARTS GP-MISCELLANEOUS	932
			—OR—	
Y	*600-6923*	1	ACCESSORY GP-ENGINE	144
Y	*309-6714*	1	PISTON & ROD GP	429
			—OR—	
Y	*596-2866*	1	PISTON & ROD GP	438
Y	*612-8795*	1	PLATE & FILM GP	934
Y	*309-6720*	1	PLUG GP-OIL PAN	444
			—OR—	
Y	*398-5865*	1	PLUG GP-OIL PAN	446
Y	*308-2300*	1	PULLEY GP-CRANKSHAFT	448
			—OR—	
Y	*445-9988*	1	PULLEY GP-CRANKSHAFT	450
Y	*309-6717*	1	LINES GP-ENGINE OIL	494
Y	*612-8795*	1	PLATE & FILM GP	934
Y	*321-4258*	1	PUMP GP-FUEL INJECTION	827
			—OR—	
Y	*596-2826*	1	PUMP GP-FUEL INJECTION	835
Y	*309-6721*	1	PUMP GP-WATER	517
			—OR—	
Y	*598-5726*	1	PUMP GP-WATER	539
Y	*584-3189*	1	ROCKER ARM GP	458
Y	*308-2313*	1	SOLENOID GP-SHUTOFF (FUEL)	895
			—OR—	
Y	*519-4412*	1	SOLENOID GP-SHUTOFF (FUEL)	897
Y	*315-7819*	1	SWITCH GP-PRESSURE (ENGINE OIL)	912
			—OR—	
Y	*584-9822*	1	SWITCH GP-PRESSURE (ENGINE OIL)	920
Y	*308-2317*	1	SWITCH GP-TEMPERATURE (ENGINE COOLANT)	922
			—OR—	
Y	*601-4322*	1	SENSOR GP-TEMPERATURE	893
Y	*309-6716*	1	VALVE MECHANISM GP	473

Y - SEPARATE ILLUSTRATION

<END>

435-1656 ENGINE AR-PRIMARY

33 BRAKE KW (44 BHP) AT 2800 RPM

FIELD REPLACEMENT FOR 316-8411—PAGE: 29

SMCS-1000 **i10733039**

NOTE	PART NUMBER	QTY	PART NAME 1 2 3 4 5 6 (PRODUCT LEVEL)	SEE PAGE
Y	*308-2302*	1	CONNECTION GP-WATER	497
Y	*342-1268*	1	FASTENER GP-COVER	283
Y	*309-6722*	1	COVER GP-VALVE MECHANISM	195
Y	*309-6713*	1	CRANKSHAFT GP	223
Y	*309-6712*	1	CYLINDER BLOCK GP	233
Y	*309-6715*	1	CYLINDER HEAD GP	261
Y	*354-1245*	1	HOUSING GP-FRONT	350
Y	*308-2297*	1	FILLER GP-ENGINE OIL	482
Y	*308-2298*	1	FILTER GP-ENGINE OIL	491
Y	*322-2412*	1	FLYWHEEL GP	290
Y	*308-2311*	1	GLOW PLUG GP	886
Y	*342-9604*	1	HOUSING GP-FLYWHEEL	302
Y	*309-6718*	1	HOUSING GP-FRONT	313
Y	*309-6725*	1	LIFTING GP-ENGINE	392
Y	*308-4735*	1	MOUNTING GP-ENGINE OIL FILTER	495
Y	*308-2295*	1	PAN GP-OIL	398
Y	*342-9607*	1	PARTS GP-MISCELLANEOUS	932
Y	*309-6714*	1	PISTON & ROD GP	429
Y	*309-6720*	1	PLUG GP-OIL PAN	444
Y	*308-2300*	1	PULLEY GP-CRANKSHAFT	448
Y	*309-6717*	1	LINES GP-ENGINE OIL	494
Y	*309-6719*	1	PUMP GP-FUEL INJECTION	817
Y	*309-6721*	1	PUMP GP-WATER	517
Y	*308-2313*	1	SOLENOID GP-SHUTOFF (FUEL)	895
Y	*315-7819*	1	SWITCH GP-PRESSURE (ENGINE OIL)	912
Y	*308-2317*	1	SWITCH GP-TEMPERATURE (ENGINE COOLANT)	922
Y	*309-6716*	1	VALVE MECHANISM GP	473

Y - SEPARATE ILLUSTRATION

<END>

435-1658 ENGINE AR-PRIMARY

66 BRAKE KW (49 BHP) AT 2800 RPM
FIELD REPLACEMENT FOR 557-9727—PAGE: 137
: FOR 320-0337—PAGE: 42

SMCS-1000 **i10733041**

NOTE	PART NUMBER	QTY	PART NAME 1 2 3 4 5 6 (PRODUCT LEVEL)	SEE PAGE
Y	*373-7284*	1	CAMSHAFT GP	171
Y	*308-2302*	1	CONNECTION GP-WATER	497
Y	*373-7283*	1	GOVERNOR GP	777
Y	*342-1268*	1	FASTENER GP-COVER	283
Y	*308-2283*	1	CRANKSHAFT GP	219
Y	*308-2281*	1	CYLINDER BLOCK GP	229
Y	*308-2284*	1	CYLINDER HEAD GP	259
Y	*354-1245*	1	HOUSING GP-FRONT	350
Y	*308-2297*	1	FILLER GP-ENGINE OIL	482
Y	*308-2298*	1	FILTER GP-ENGINE OIL	491
Y	*322-2412*	1	FLYWHEEL GP	290
Y	*308-2311*	1	GLOW PLUG GP	886
Y	*342-9604*	1	HOUSING GP-FLYWHEEL	302
Y	*308-3329*	1	HOUSING GP-FRONT	312
Y	*309-6725*	1	LIFTING GP-ENGINE	392
Y	*331-2589*	1	LINES GP-COOLANT	513
Y	*308-2287*	1	LINES GP-ENGINE OIL	493
Y	*308-2295*	1	PAN GP-OIL	398
Y	*342-9607*	1	PARTS GP-MISCELLANEOUS	932
Y	*308-2286*	1	PISTON & ROD GP	426
Y	*309-6720*	1	PLUG GP-OIL PAN	444
Y	*321-6740*	1	PULLEY GP-CRANKSHAFT	449
Y	*308-3330*	1	PUMP GP-FUEL INJECTION	815
Y	*317-0979*	1	PUMP GP-WATER	521
Y	*308-2313*	1	SOLENOID GP-SHUTOFF (FUEL)	895
Y	*315-7819*	1	SWITCH GP-PRESSURE (ENGINE OIL)	912
Y	*308-2317*	1	SWITCH GP-TEMPERATURE (ENGINE COOLANT)	922
Y	*450-7277*	1	TURBOCHARGER GP	654
Y	*308-2285*	1	VALVE MECHANISM GP	467

Y - SEPARATE ILLUSTRATION

<END>

436-6741 ENGINE AR-PRIMARY

45 BRAKE KW (60 BHP) AT 2800 RPM

FIELD REPLACEMENT ORDER 435-1636—PAGE: 92

SMCS-1000 **i10709908**

NOTE	PART NUMBER	QTY	PART NAME 1 2 3 4 5 6 (PRODUCT LEVEL)	SEE PAGE
Y	*308-2305*	1	ALTERNATOR GP-CHARGING	866
			—OR—	
Y	*518-9064*	1	ALTERNATOR GP-CHARGING	871
Y	*481-5624*	1	CAMSHAFT GP	178
			—OR—	
Y	*596-3442*	1	CAMSHAFT GP	185
	493-7109	1	CONNECTION GP-ELECTRICAL	
			—OR—	
Y	*596-3460*	1	GOVERNOR GP	782
Y	*308-2302*	1	CONNECTION GP-WATER	497
			—OR—	
Y	*398-5884*	1	CONNECTION GP-WATER	500
Y	*308-2283*	1	CRANKSHAFT GP	219
			—OR—	
Y	*399-4716*	1	CRANKSHAFT GP	227
Y	*308-2281*	1	CYLINDER BLOCK GP	229
			—OR—	
Y	*584-3179*	1	CYLINDER BLOCK GP	243
Y	*308-2284*	1	CYLINDER HEAD GP	259
			—OR—	
Y	*596-2862*	1	CYLINDER HEAD GP	273
Y	*315-7813*	1	EXTENSION GP-FAN	279
			—OR—	
Y	*398-9092*	1	EXTENSION GP-FAN	280
Y	**435-1636**	1	ENGINE AR-PRIMARY	92
Y	*363-3165*	1	FILLER GP-ENGINE OIL	486
			—OR—	
Y	*533-3936*	1	FILLER GP-ENGINE OIL	490
Y	*398-4274*	1	FILM GP	927
Y	*604-4574*	1	FILM GP (ALTERNATOR)	929
Y	*308-2298*	1	FILTER GP-ENGINE OIL	491
			—OR—	
Y	*398-8178*	1	FILTER GP-ENGINE OIL	492
	220-1523	1	FILTER AS-ENGINE OIL	
Y	*327-7632*	1	FLYWHEEL GP	292
			—OR—	
Y	*398-4810*	1	FLYWHEEL GP	295
	154-2405	1	GEAR-STARTER (126-TEETH)	
M	**154-2406**	6	BOLT (M10X1.25X34-MM)	
	327-5608	1	FLYWHEEL GP	
Y	*315-5256*	1	GASKET GP-EXHAUST MANIFOLD	603
			—OR—	
	532-9837	1	GASKET GP-EXHAUST MANIFOLD	
	435-0208	1	GASKET	
Y	*308-2311*	1	GLOW PLUG GP	886

436-6741 **ENGINE AR-PRIMARY (**contd.**)** **i10709908**

NOTE	PART NUMBER	QTY	PART NAME 1 2 3 4 5 6 (PRODUCT LEVEL)	SEE PAGE
			—OR—	
Y	*587-0270*	1	GLOW PLUG GP	889
Y	*481-5623*	1	GOVERNOR GP	779
Y	*317-0588*	1	HOUSING GP-FLYWHEEL	301
			—OR—	
Y	*591-2138*	1	HOUSING GP-FLYWHEEL	309
Y	*308-2307*	1	HOUSING GP-FRONT	310
			—OR—	
Y	*599-9816*	1	HOUSING GP-FRONT	383
Y	*481-5621*	1	HOUSING GP-FRONT	363
Y	*309-6725*	1	LIFTING GP-ENGINE	392
			—OR—	
Y	*584-9814*	1	LIFTING GP-ENGINE	395
Y	*331-2589*	1	LINES GP-COOLANT	513
Y	*308-2287*	1	LINES GP-ENGINE OIL	493
Y	*600-5139*	1	MOUNTING GP-EXHAUST	609
Y	*317-3037*	1	PAN GP-OIL	410
			—OR—	
Y	*584-9471*	1	PAN GP-OIL	423
Y	*308-2286*	1	PISTON & ROD GP	426
			—OR—	
Y	*596-2865*	1	PISTON & ROD GP	437
Y	*518-9053*	1	PLATE & FILM GP	933
Y	*309-6720*	1	PLUG GP-OIL PAN	444
			—OR—	
Y	*398-5865*	1	PLUG GP-OIL PAN	446
	501-1055	1	PLUG GP-WATER LINES	
Y	*321-6740*	1	PULLEY GP-CRANKSHAFT	449
			—OR—	
Y	*445-9988*	1	PULLEY GP-CRANKSHAFT	450
Y	*311-9027*	1	PULLEY GP-WATER PUMP	454
			—OR—	
Y	*398-4900*	1	PULLEY GP-FAN	453
Y	*308-2289*	1	PUMP GP-FUEL INJECTION	813
			—OR—	
Y	*596-2828*	1	PUMP GP-FUEL INJECTION	839
Y	*447-2702*	1	PUMP GP-FUEL PRM & PRIM FILTER	846
			—OR—	
Y	*599-9801*	1	FILTER & MTG GP-FUEL	751
Y	*442-7729*	1	PUMP GP-WATER	531
			—OR—	
Y	*598-5724*	1	PUMP GP-WATER	537
Y	*584-3189*	1	ROCKER ARM GP	458
Y	*442-7794*	1	SENSOR GP-TEMPERATURE	892
			—OR—	
	600-5821	1	SENSOR GP-TEMPERATURE	
Y	*308-2313*	1	SOLENOID GP-SHUTOFF (FUEL)	895
			—OR—	
Y	*519-4412*	1	SOLENOID GP-SHUTOFF (FUEL)	897

436-6741 **ENGINE AR-PRIMARY (**contd.**)** **i10709908**

NOTE	PART NUMBER	QTY	PART NAME 1 2 3 4 5 6 (PRODUCT LEVEL)	SEE PAGE
Y	*308-2293*	1	STARTING MOTOR GP-ELECTRIC	900
			—OR—	
Y	*398-4818*	1	STARTING MOTOR GP-ELECTRIC	908
Y	*520-0722*	1	SWITCH GP-PRESSURE (ENGINE OIL)	918
			—OR—	
	600-5786	1	SWITCH GP	
	153-5936	1	WASHER (8.2X14.5X1-MM)	
M	**153-6881**	1	BOLT (M8X1.25X18-MM)	
	438-1431	1	ADAPTER	
	458-6608	1	PLUG-SEAL	
Y	*442-7759*	1	TURBOCHARGER GP	648
			—OR—	
Y	*607-1257*	1	TURBOCHARGER GP	679
Y	*311-9029*	1	V-BELT GP (WATER PUMP)	461
			—OR—	
Y	*428-5949*	1	V-BELT GP	465
Y	*308-2285*	1	VALVE MECHANISM GP	467

M - METRIC PART
Y - SEPARATE ILLUSTRATION

<END>

436-6742 ENGINE AR-PRIMARY

36 BRAKE KW (49 BHP) AT 2800 RPM

FIELD REPLACEMENT ORDER 435-1634—PAGE: 89

SMCS-1000 **i10732525**

NOTE	PART NUMBER	QTY	PART NAME 1 2 3 4 5 6 (PRODUCT LEVEL)	SEE PAGE
Y	*308-2305*	1	ALTERNATOR GP-CHARGING	866
Y	*332-1364*	1	CAMSHAFT GP	162
Y	*321-6741*	1	CONNECTION GP-ELECTRICAL	874
			—OR—	
	493-7109	1	CONNECTION GP-ELECTRICAL	
Y	*308-2309*	1	CONNECTION GP-EXHAUST	595
			—OR—	
Y	*315-5256*	1	GASKET GP-EXHAUST MANIFOLD	603
Y	*308-2302*	1	CONNECTION GP-WATER	497
Y	*332-1363*	1	CONTROL GP-GOVERNOR	708
Y	*308-2307*	1	HOUSING GP-FRONT	310
Y	*308-2283*	1	CRANKSHAFT GP	219
Y	*308-2281*	1	CYLINDER BLOCK GP	229
Y	*308-2284*	1	CYLINDER HEAD GP	259
Y	**435-1634**	1	ENGINE AR-PRIMARY	89
Y	*363-3165*	1	FILLER GP-ENGINE OIL	486
Y	*308-2298*	1	FILTER GP-ENGINE OIL	491
Y	*327-7632*	1	FLYWHEEL GP	292
Y	*308-2311*	1	GLOW PLUG GP	886
Y	*317-0588*	1	HOUSING GP-FLYWHEEL	301
Y	*332-1362*	1	HOUSING GP-FRONT	349
Y	*309-6725*	1	LIFTING GP-ENGINE	392
Y	*331-2589*	1	LINES GP-COOLANT	513
Y	*308-2287*	1	LINES GP-ENGINE OIL	493
Y	*315-7813*	1	EXTENSION GP-FAN	279
Y	*317-3037*	1	PAN GP-OIL	410
Y	*308-2286*	1	PISTON & ROD GP	426
Y	*309-6720*	1	PLUG GP-OIL PAN	444
Y	*321-6740*	1	PULLEY GP-CRANKSHAFT	449
Y	*311-9027*	1	PULLEY GP-WATER PUMP	454
Y	*308-2289*	1	PUMP GP-FUEL INJECTION	813
Y	*447-2702*	1	PUMP GP-FUEL PRM & PRIM FILTER	846
Y	*442-7729*	1	PUMP GP-WATER	531
Y	*308-2313*	1	SOLENOID GP-SHUTOFF (FUEL)	895
Y	*308-2293*	1	STARTING MOTOR GP-ELECTRIC	900
Y	*315-7819*	1	SWITCH GP-PRESSURE (ENGINE OIL)	912
			—OR—	
Y	*520-0722*	1	SWITCH GP-PRESSURE (ENGINE OIL)	918
Y	*308-2317*	1	SWITCH GP-TEMPERATURE (ENGINE COOLANT)	922
Y	*442-7759*	1	TURBOCHARGER GP	648
Y	*311-9029*	1	V-BELT GP (WATER PUMP)	461
Y	*308-2285*	1	VALVE MECHANISM GP	467

Y - SEPARATE ILLUSTRATION

<END>

436-6747 ENGINE AR-PRIMARY

45 BRAKE KW (60 BHP) AT 2800 RPM

SMCS-1000 **i10732543**

NOTE	PART NUMBER	QTY	PART NAME 1 2 3 4 5 6 (PRODUCT LEVEL)	SEE PAGE
Y	*326-8543*	1	AIR CLEANER GP	580
			—OR—	
Y	*600-1135*	1	AIR CLEANER GP	589
Y	*308-2305*	1	ALTERNATOR GP-CHARGING	866
Y	*329-9278*	1	CAMSHAFT GP	154
Y	*308-2319*	1	CONNECTION GP-ELECTRICAL	873
			S/N: G7L1-14605	
Y	*321-6741*	1	CONNECTION GP-ELECTRICAL	874
			S/N: G7L14606-UP	
Y	*308-2309*	1	CONNECTION GP-EXHAUST	595
Y	*308-2302*	1	CONNECTION GP-WATER	497
Y	*329-9277*	1	HOUSING GP-FRONT	346
Y	*308-2307*	1	HOUSING GP-FRONT	310
Y	*308-2283*	1	CRANKSHAFT GP	219
Y	*308-2281*	1	CYLINDER BLOCK GP	229
Y	*308-2284*	1	CYLINDER HEAD GP	259
Y	*363-3165*	1	FILLER GP-ENGINE OIL	486
Y	*308-2298*	1	FILTER GP-ENGINE OIL	491
Y	*317-0586*	1	FLYWHEEL GP	289
Y	*308-2311*	1	GLOW PLUG GP	886
Y	*317-0588*	1	HOUSING GP-FLYWHEEL	301
Y	*308-2288*	1	FASTENER GP-FRONT HOUSING	284
Y	*309-6725*	1	LIFTING GP-ENGINE	392
Y	*331-2589*	1	LINES GP-COOLANT	513
Y	*308-2287*	1	LINES GP-ENGINE OIL	493
Y	*308-2295*	1	PAN GP-OIL	398
Y	*308-2286*	1	PISTON & ROD GP	426
Y	*309-6720*	1	PLUG GP-OIL PAN	444
Y	*321-6740*	1	PULLEY GP-CRANKSHAFT	449
Y	*308-2294*	1	PULLEY GP-FAN	451
Y	*308-2310*	1	PUMP GP-FILTER & FUEL TRANSFER	796
Y	*308-2289*	1	PUMP GP-FUEL INJECTION	813
Y	*317-6706*	1	PUMP GP-FUEL PRM & PRIM FILTER	845
Y	*317-0979*	1	PUMP GP-WATER	521
Y	*341-6658*	1	RADIATOR & FAN GP	543
Y	*308-2313*	1	SOLENOID GP-SHUTOFF (FUEL)	895
Y	*308-2293*	1	STARTING MOTOR GP-ELECTRIC	900
Y	*315-7819*	1	SWITCH GP-PRESSURE (ENGINE OIL)	912
Y	*308-2314*	1	SWITCH GP-START	921
Y	*308-2317*	1	SWITCH GP-TEMPERATURE (ENGINE COOLANT)	922
Y	*441-8101*	1	TURBOCHARGER GP	632
Y	*308-2306*	1	V-BELT GP (WATER PUMP) (DRIVE)	460
Y	*308-2285*	1	VALVE MECHANISM GP	467

Y - SEPARATE ILLUSTRATION

<END>

438-7868 ENGINE AR-PRIMARY

37 BRAKE KW (50 BHP) AT 2800 RPM

FIELD REPLACEMENT ORDER 435-1646—PAGE: 98

SMCS-1000 **i10732553**

NOTE	PART NUMBER	QTY	PART NAME 1 2 3 4 5 6 (PRODUCT LEVEL)	SEE PAGE
Y	*317-0649*	1	AIR CLEANER GP	575
Y	*308-2305*	1	ALTERNATOR GP-CHARGING	866
Y	*441-6514*	1	CAMSHAFT GP	174
			—OR—	
Y	*454-6144*	1	CAMSHAFT GP	175
Y	*308-2319*	1	CONNECTION GP-ELECTRICAL	873
			—OR—	
Y	*321-6741*	1	CONNECTION GP-ELECTRICAL	874
Y	*308-2309*	1	CONNECTION GP-EXHAUST	595
Y	*308-2302*	1	CONNECTION GP-WATER	497
Y	*441-6513*	1	CONTROL GP-GOVERNOR	726
			—OR—	
Y	*454-6143*	1	CONTROL GP-GOVERNOR	728
Y	*308-2307*	1	HOUSING GP-FRONT	310
Y	*309-6722*	1	COVER GP-VALVE MECHANISM	195
Y	*309-6713*	1	CRANKSHAFT GP	223
Y	*309-6712*	1	CYLINDER BLOCK GP	233
Y	*309-6715*	1	CYLINDER HEAD GP	261
Y	*363-3165*	1	FILLER GP-ENGINE OIL	486
Y	*308-2298*	1	FILTER GP-ENGINE OIL	491
Y	*308-2291*	1	FLYWHEEL GP	287
Y	*308-2311*	1	GLOW PLUG GP	886
Y	*308-2290*	1	HOUSING GP-FLYWHEEL	297
Y	*441-6512*	1	HOUSING GP-FRONT	358
			—OR—	
Y	*454-6141*	1	HOUSING GP-FRONT	360
Y	*309-6725*	1	LIFTING GP-ENGINE	392
Y	*331-2589*	1	LINES GP-COOLANT	513
Y	*309-6724*	1	MANIFOLD GP-EXHAUST	604
Y	*308-2295*	1	PAN GP-OIL	398
Y	*309-6714*	1	PISTON & ROD GP	429
Y	*309-6720*	1	PLUG GP-OIL PAN	444
Y	*308-2300*	1	PULLEY GP-CRANKSHAFT	448
Y	*308-2294*	1	PULLEY GP-FAN	451
Y	*309-6717*	1	LINES GP-ENGINE OIL	494
Y	*308-2310*	1	PUMP GP-FILTER & FUEL TRANSFER	796
Y	*309-6719*	1	PUMP GP-FUEL INJECTION	817
Y	*308-2320*	1	PUMP GP-FUEL PRIMING	841
			—OR—	
Y	*579-9444*	1	PUMP GP-FUEL PRIMING	844
Y	*308-2301*	1	PUMP GP-WATER	514
Y	*331-3270*	1	RADIATOR GP	556
Y	*308-2313*	1	SOLENOID GP-SHUTOFF (FUEL)	895
Y	*308-2293*	1	STARTING MOTOR GP-ELECTRIC	900
Y	*315-7819*	1	SWITCH GP-PRESSURE (ENGINE OIL)	912
Y	*308-2314*	1	SWITCH GP-START	921
Y	*308-2317*	1	SWITCH GP-TEMPERATURE (ENGINE COOLANT)	922

438-7868 **ENGINE AR-PRIMARY (**contd.**)** **i10732553**

NOTE	PART NUMBER	QTY	PART NAME 1 2 3 4 5 6 (PRODUCT LEVEL)	SEE PAGE
Y	*308-2306*	1	V-BELT GP (WATER PUMP)	460
Y	*309-6716*	1	VALVE MECHANISM GP	473

Y - SEPARATE ILLUSTRATION

<END>

438-7869 ENGINE AR-PRIMARY

38 BRAKE KW (51 BHP) AT 3000 RPM

FIELD REPLACEMENT ORDER 433-1379—PAGE: 1

SMCS-1000 **i10732566**

NOTE	PART NUMBER	QTY	PART NAME 1 2 3 4 5 6 (PRODUCT LEVEL)	SEE PAGE
Y	*317-0649*	1	AIR CLEANER GP	575
Y	*308-2305*	1	ALTERNATOR GP-CHARGING	866
Y	*325-9476*	1	CAMSHAFT GP	152
Y	*308-2319*	1	CONNECTION GP-ELECTRICAL	873
			—OR—	
Y	*321-6741*	1	CONNECTION GP-ELECTRICAL	874
Y	*308-2309*	1	CONNECTION GP-EXHAUST	595
Y	*308-2302*	1	CONNECTION GP-WATER	497
Y	*325-9475*	1	CONTROL GP-GOVERNOR	688
Y	*308-2307*	1	HOUSING GP-FRONT	310
Y	*309-6722*	1	COVER GP-VALVE MECHANISM	195
Y	*309-6713*	1	CRANKSHAFT GP	223
Y	*309-6712*	1	CYLINDER BLOCK GP	233
Y	*309-6715*	1	CYLINDER HEAD GP	261
Y	*363-3165*	1	FILLER GP-ENGINE OIL (PRIMARY)	486
Y	*308-2298*	1	FILTER GP-ENGINE OIL	491
Y	*308-2291*	1	FLYWHEEL GP	287
Y	*308-2311*	1	GLOW PLUG GP	886
Y	*308-2290*	1	HOUSING GP-FLYWHEEL	297
Y	*311-1682*	1	HOUSING GP-FRONT	323
Y	*309-6725*	1	LIFTING GP-ENGINE	392
Y	*331-2589*	1	LINES GP-COOLANT	513
Y	*309-6724*	1	MANIFOLD GP-EXHAUST	604
Y	*308-2295*	1	PAN GP-OIL	398
Y	*309-6714*	1	PISTON & ROD GP	429
Y	*309-6720*	1	PLUG GP-OIL PAN	444
Y	*308-2300*	1	PULLEY GP-CRANKSHAFT	448
Y	*308-2294*	1	PULLEY GP-FAN	451
Y	*309-6717*	1	LINES GP-ENGINE OIL	494
Y	*308-2310*	1	PUMP GP-FILTER & FUEL TRANSFER	796
Y	*311-1683*	1	PUMP GP-FUEL INJECTION	819
Y	*308-2320*	1	PUMP GP-FUEL PRIMING	841
			—OR—	
Y	*579-9444*	1	PUMP GP-FUEL PRIMING	844
Y	*308-2301*	1	PUMP GP-WATER	514
Y	*331-3270*	1	RADIATOR GP	556
Y	*308-2313*	1	SOLENOID GP-SHUTOFF (FUEL)	895
Y	*308-2293*	1	STARTING MOTOR GP-ELECTRIC	900
Y	*315-7819*	1	SWITCH GP-PRESSURE (ENGINE OIL)	912
Y	*308-2314*	1	SWITCH GP-START (HEATER)	921
Y	*308-2317*	1	SWITCH GP-TEMPERATURE (ENGINE COOLANT)	922
Y	*308-2306*	1	V-BELT GP (WATER PUMP)	460
Y	*309-6716*	1	VALVE MECHANISM GP	473

Y - SEPARATE ILLUSTRATION

<END>

438-7873 ENGINE AR-PRIMARY

38 BRAKE KW (51 BHP) AT 3000 RPM

FIELD REPLACEMENT ORDER 433-1379—PAGE: 1

SMCS-1000 **i10732571**

NOTE	PART NUMBER	QTY	PART NAME 1 2 3 4 5 6 (PRODUCT LEVEL)	SEE PAGE
Y	*317-0649*	1	AIR CLEANER GP	575
Y	*308-2305*	1	ALTERNATOR GP-CHARGING	866
Y	*325-9476*	1	CAMSHAFT GP	152
Y	*321-6741*	1	CONNECTION GP-ELECTRICAL	874
Y	*308-2309*	1	CONNECTION GP-EXHAUST	595
Y	*308-2302*	1	CONNECTION GP-WATER	497
Y	*325-9475*	1	CONTROL GP-GOVERNOR	688
Y	*308-2307*	1	HOUSING GP-FRONT	310
Y	*309-6722*	1	COVER GP-VALVE MECHANISM	195
Y	*309-6713*	1	CRANKSHAFT GP	223
Y	*309-6712*	1	CYLINDER BLOCK GP	233
Y	*309-6715*	1	CYLINDER HEAD GP	261
Y	*363-3165*	1	FILLER GP-ENGINE OIL (PRIMARY)	486
Y	*308-2298*	1	FILTER GP-ENGINE OIL	491
Y	*308-2291*	1	FLYWHEEL GP	287
Y	*308-2311*	1	GLOW PLUG GP	886
Y	*308-2290*	1	HOUSING GP-FLYWHEEL	297
Y	*311-1682*	1	HOUSING GP-FRONT	323
Y	*309-6725*	1	LIFTING GP-ENGINE	392
Y	*331-2589*	1	LINES GP-COOLANT	513
Y	*309-6724*	1	MANIFOLD GP-EXHAUST	604
Y	*308-2295*	1	PAN GP-OIL	398
Y	*309-6714*	1	PISTON & ROD GP	429
Y	*309-6720*	1	PLUG GP-OIL PAN	444
Y	*308-2300*	1	PULLEY GP-CRANKSHAFT	448
Y	*308-2294*	1	PULLEY GP-FAN	451
Y	*309-6717*	1	LINES GP-ENGINE OIL	494
Y	*308-2310*	1	PUMP GP-FILTER & FUEL TRANSFER	796
Y	*311-1683*	1	PUMP GP-FUEL INJECTION	819
Y	*308-2320*	1	PUMP GP-FUEL PRIMING	841
Y	*308-2301*	1	PUMP GP-WATER	514
Y	*331-3270*	1	RADIATOR GP	556
Y	*308-2313*	1	SOLENOID GP-SHUTOFF (FUEL)	895
Y	*308-2293*	1	STARTING MOTOR GP-ELECTRIC	900
Y	*315-7819*	1	SWITCH GP-PRESSURE (ENGINE OIL)	912
Y	*308-2314*	1	SWITCH GP-START	921
Y	*308-2317*	1	SWITCH GP-TEMPERATURE (ENGINE COOLANT)	922
Y	*308-2306*	1	V-BELT GP (WATER PUMP) (DRIVE)	460
Y	*309-6716*	1	VALVE MECHANISM GP	473

Y - SEPARATE ILLUSTRATION

<END>

446-7440 ENGINE AR-PRIMARY

45 BRAKE KW (60 BHP) AT 2800 RPM

OPTIONAL FIELD REPLACEMENT ORDER 435-1636—PAGE: 92

SMCS-1000 **i10732575**

NOTE	PART NUMBER	QTY	PART NAME 1 2 3 4 5 6 (PRODUCT LEVEL)	SEE PAGE
Y	*308-2305*	1	ALTERNATOR GP-CHARGING	866
Y	*329-9278*	1	CAMSHAFT GP	154
Y	*308-2319*	1	CONNECTION GP-ELECTRICAL	873
			—OR—	
Y	*321-6741*	1	CONNECTION GP-ELECTRICAL	874
Y	*308-2309*	1	CONNECTION GP-EXHAUST	595
Y	*308-2302*	1	CONNECTION GP-WATER	497
Y	*329-9277*	1	HOUSING GP-FRONT	346
Y	*442-7729*	1	PUMP GP-WATER	531
Y	*308-2307*	1	HOUSING GP-FRONT	310
Y	*308-2283*	1	CRANKSHAFT GP	219
Y	*308-2281*	1	CYLINDER BLOCK GP	229
Y	*308-2284*	1	CYLINDER HEAD GP	259
Y	*308-2304*	1	EXTENSION GP-FAN	278
Y	*308-2303*	1	FAN GP-SUCTION	506
Y	*363-3165*	1	FILLER GP-ENGINE OIL	486
Y	*308-2298*	1	FILTER GP-ENGINE OIL	491
Y	*308-2291*	1	FLYWHEEL GP	287
Y	*308-2311*	1	GLOW PLUG GP	886
Y	*308-2290*	1	HOUSING GP-FLYWHEEL	297
Y	*308-2288*	1	FASTENER GP-FRONT HOUSING	284
Y	*309-6725*	1	LIFTING GP-ENGINE	392
Y	*331-2589*	1	LINES GP-COOLANT	513
Y	*308-2287*	1	LINES GP-ENGINE OIL	493
Y	*308-2295*	1	PAN GP-OIL	398
Y	*308-2286*	1	PISTON & ROD GP	426
Y	*309-6720*	1	PLUG GP-OIL PAN	444
Y	*321-6740*	1	PULLEY GP-CRANKSHAFT	449
Y	*308-2294*	1	PULLEY GP-FAN	451
Y	*308-2310*	1	PUMP GP-FILTER & FUEL TRANSFER	796
Y	*308-2289*	1	PUMP GP-FUEL INJECTION	813
Y	*308-2320*	1	PUMP GP-FUEL PRIMING	841
			—OR—	
Y	*579-9444*	1	PUMP GP-FUEL PRIMING	844
Y	*308-2313*	1	SOLENOID GP-SHUTOFF (FUEL)	895
Y	*308-2293*	1	STARTING MOTOR GP-ELECTRIC	900
Y	*308-2312*	1	SWITCH GP-PRESSURE	911
Y	*308-2314*	1	SWITCH GP-START	921
Y	*308-2317*	1	SWITCH GP-TEMPERATURE (ENGINE COOLANT)	922
Y	*442-7759*	1	TURBOCHARGER GP	648
Y	*308-2306*	1	V-BELT GP (WATER PUMP)	460
Y	*308-2285*	1	VALVE MECHANISM GP	467

Y - SEPARATE ILLUSTRATION

<END>

453-2805 ENGINE AR-PRIMARY

37 BRAKE KW (51 BHP) AT 2800-RPM

SMCS-1000 **i07729901**

NOTE	PART NUMBER	QTY	PART NAME 1 2 3 4 5 6 (PRODUCT LEVEL)	SEE PAGE
			(NO SERVICED PARTS)	

<END>

455-3021 ENGINE AR-PRIMARY

45 BRAKE KW (60 BHP) AT 2800 RPM

SMCS-1000 **i10732586**

NOTE	PART NUMBER	QTY	PART NAME 1 2 3 4 5 6 (PRODUCT LEVEL)	SEE PAGE
Y	*326-8543*	1	AIR CLEANER GP	580
Y	*308-2305*	1	ALTERNATOR GP-CHARGING	866
Y	*329-9278*	1	CAMSHAFT GP	154
Y	*321-6741*	1	CONNECTION GP-ELECTRICAL	874
Y	*308-2309*	1	CONNECTION GP-EXHAUST	595
Y	*308-2302*	1	CONNECTION GP-WATER	497
Y	*308-2307*	1	HOUSING GP-FRONT	310
Y	*308-2283*	1	CRANKSHAFT GP	219
Y	*308-2281*	1	CYLINDER BLOCK GP	229
Y	*308-2284*	1	CYLINDER HEAD GP	259
Y	*363-3165*	1	FILLER GP-ENGINE OIL	486
Y	*308-2298*	1	FILTER GP-ENGINE OIL	491
Y	*308-2291*	1	FLYWHEEL GP	287
Y	*308-2311*	1	GLOW PLUG GP	886
Y	*308-2290*	1	HOUSING GP-FLYWHEEL	297
Y	*329-9277*	1	HOUSING GP-FRONT	346
Y	*308-2288*	1	FASTENER GP-FRONT HOUSING (MOUNTING)	284
Y	*309-6725*	1	LIFTING GP-ENGINE	392
Y	*331-2589*	1	LINES GP-COOLANT	513
Y	*308-2287*	1	LINES GP-ENGINE OIL	493
Y	*308-2295*	1	PAN GP-OIL	398
Y	*308-2286*	1	PISTON & ROD GP	426
Y	*309-6720*	1	PLUG GP-OIL PAN	444
Y	*321-6740*	1	PULLEY GP-CRANKSHAFT	449
Y	*308-2294*	1	PULLEY GP-FAN	451
Y	*308-2310*	1	PUMP GP-FILTER & FUEL TRANSFER	796
Y	*308-2289*	1	PUMP GP-FUEL INJECTION	813
Y	*317-6706*	1	PUMP GP-FUEL PRM & PRIM FILTER	845
			—OR—	
Y	*579-9465*	1	PUMP GP-FUEL PRM & PRIM FILTER	849
Y	*317-0979*	1	PUMP GP-WATER	521
Y	*341-6658*	1	RADIATOR & FAN GP	543
Y	*308-2313*	1	SOLENOID GP-SHUTOFF (FUEL)	895
Y	*308-2293*	1	STARTING MOTOR GP-ELECTRIC	900
Y	*315-7819*	1	SWITCH GP-PRESSURE (ENGINE OIL)	912
Y	*308-2314*	1	SWITCH GP-START	921
Y	*308-2317*	1	SWITCH GP-TEMPERATURE (ENGINE COOLANT)	922
Y	*441-8101*	1	TURBOCHARGER GP	632
Y	*308-2306*	1	V-BELT GP (WATER PUMP)	460
Y	*308-2285*	1	VALVE MECHANISM GP	467

Y - SEPARATE ILLUSTRATION

<END>

455-3592 ENGINE AR-PRIMARY

37 BRAKE KW (50 BHP) AT 2800-RPM

SMCS-1000 **i07729896**

NOTE	PART NUMBER	QTY	PART NAME 1 2 3 4 5 6 (PRODUCT LEVEL)	SEE PAGE
			(NO SERVICED PARTS)	
			<END>	

455-3599 ENGINE AR-PRIMARY

45 BRAKE KW (60 BHP) AT 2800-RPM

SMCS-1000 **i07729898**

NOTE	PART NUMBER	QTY	PART NAME 1 2 3 4 5 6 (PRODUCT LEVEL)	SEE PAGE
			(NO SERVICED PARTS)	
			<END>	

456-6973 ENGINE AR-PRIMARY

37 BRAKE KW (50 BHP) AT 2800 RPM

OPTIONAL FIELD REPLACEMENT ORDER 435-1646—PAGE: 98

SMCS-1000 **i10732597**

NOTE	PART NUMBER	QTY	PART NAME 1 2 3 4 5 6 (PRODUCT LEVEL)	SEE PAGE
Y	*317-0649*	1	AIR CLEANER GP	575
Y	*308-2305*	1	ALTERNATOR GP-CHARGING	866
Y	*454-6144*	1	CAMSHAFT GP (CENTRAL)	175
Y	*321-6741*	1	CONNECTION GP-ELECTRICAL	874
Y	*308-2309*	1	CONNECTION GP-EXHAUST	595
Y	*308-2302*	1	CONNECTION GP-WATER	497
Y	*454-6143*	1	CONTROL GP-GOVERNOR (CENTRAL)	728
Y	*308-2307*	1	HOUSING GP-FRONT	310
Y	*309-6722*	1	COVER GP-VALVE MECHANISM	195
Y	*309-6713*	1	CRANKSHAFT GP	223
Y	*309-6712*	1	CYLINDER BLOCK GP	233
Y	*309-6715*	1	CYLINDER HEAD GP	261
Y	*363-3165*	1	FILLER GP-ENGINE OIL	486
Y	*308-2298*	1	FILTER GP-ENGINE OIL	491
Y	*317-0586*	1	FLYWHEEL GP	289
Y	*308-2311*	1	GLOW PLUG GP	886
Y	*317-0588*	1	HOUSING GP-FLYWHEEL	301
Y	*454-6141*	1	HOUSING GP-FRONT	360
Y	*309-6725*	1	LIFTING GP-ENGINE	392
Y	*331-2589*	1	LINES GP-COOLANT	513
Y	*309-6724*	1	MANIFOLD GP-EXHAUST	604
Y	*308-2295*	1	PAN GP-OIL	398
Y	*309-6714*	1	PISTON & ROD GP	429
Y	*309-6720*	1	PLUG GP-OIL PAN (ENGINE)	444
Y	*308-2300*	1	PULLEY GP-CRANKSHAFT	448
Y	*308-2294*	1	PULLEY GP-FAN	451
Y	*309-6717*	1	LINES GP-ENGINE OIL	494
Y	*308-2310*	1	PUMP GP-FILTER & FUEL TRANSFER	796
Y	*309-6719*	1	PUMP GP-FUEL INJECTION	817
Y	*308-2320*	1	PUMP GP-FUEL PRIMING	841
			—OR—	
Y	*579-9444*	1	PUMP GP-FUEL PRIMING	844
Y	*308-2301*	1	PUMP GP-WATER	514
Y	*331-3270*	1	RADIATOR GP	556
Y	*308-2313*	1	SOLENOID GP-SHUTOFF (FUEL)	895
Y	*308-2293*	1	STARTING MOTOR GP-ELECTRIC	900
Y	*315-7819*	1	SWITCH GP-PRESSURE (ENGINE OIL)	912
Y	*308-2314*	1	SWITCH GP-START	921
Y	*308-2317*	1	SWITCH GP-TEMPERATURE (ENGINE COOLANT)	922
Y	*308-2306*	1	V-BELT GP (WATER PUMP)	460
Y	*309-6716*	1	VALVE MECHANISM GP	473

Y - SEPARATE ILLUSTRATION

<END>

459-2953 ENGINE AR-PRIMARY

45 BRAKE KW (60 BHP) AT 2800 RPM

FIELD REPLACEMENT ORDER 435-1636—PAGE: 92

SMCS-1000 **i10732603**

NOTE	PART NUMBER	QTY	PART NAME 1 2 3 4 5 6 (PRODUCT LEVEL)	SEE PAGE
Y	*308-2305*	1	ALTERNATOR GP-CHARGING	866
Y	*329-9278*	1	CAMSHAFT GP	154
Y	*308-5610*	1	CONNECTION GP-EXHAUST	596
Y	*308-2302*	1	CONNECTION GP-WATER	497
Y	*442-9881*	1	CONTROL GP-THROTTLE	750
			—OR—	
Y	*308-2313*	1	SOLENOID GP-SHUTOFF (FUEL)	895
Y	*308-2283*	1	CRANKSHAFT GP	219
Y	*308-2281*	1	CYLINDER BLOCK GP	229
Y	*308-2284*	1	CYLINDER HEAD GP	259
Y	*354-1245*	1	HOUSING GP-FRONT	350
Y	*308-2304*	1	EXTENSION GP-FAN	278
Y	*308-2288*	1	FASTENER GP-FRONT HOUSING	284
Y	*308-2297*	1	FILLER GP-ENGINE OIL	482
Y	*308-2298*	1	FILTER GP-ENGINE OIL	491
Y	*327-7632*	1	FLYWHEEL GP	292
Y	*308-2311*	1	GLOW PLUG GP	886
Y	*317-0588*	1	HOUSING GP-FLYWHEEL	301
Y	*329-9277*	1	HOUSING GP-FRONT	346
Y	*309-6725*	1	LIFTING GP-ENGINE	392
Y	*331-2589*	1	LINES GP-COOLANT	513
Y	*308-2287*	1	LINES GP-ENGINE OIL	493
Y	*311-1886*	1	PAN GP-OIL	406
Y	*308-2286*	1	PISTON & ROD GP	426
Y	*309-6720*	1	PLUG GP-OIL PAN	444
Y	*321-6740*	1	PULLEY GP-CRANKSHAFT	449
Y	*308-2294*	1	PULLEY GP-FAN	451
Y	*308-2289*	1	PUMP GP-FUEL INJECTION	813
Y	*311-9028*	1	PUMP GP-FUEL TRANSFER	850
Y	*317-0979*	1	PUMP GP-WATER	521
Y	*308-2293*	1	STARTING MOTOR GP-ELECTRIC	900
Y	*315-7819*	1	SWITCH GP-PRESSURE (ENGINE OIL)	912
Y	*308-2314*	1	SWITCH GP-START	921
Y	*308-2317*	1	SWITCH GP-TEMPERATURE (ENGINE COOLANT)	922
Y	*308-2308*	1	TURBOCHARGER GP	612
			—OR—	
Y	*442-7759*	1	TURBOCHARGER GP	648
Y	*308-2306*	1	V-BELT GP (WATER PUMP)	460
Y	*308-2285*	1	VALVE MECHANISM GP	467

Y - SEPARATE ILLUSTRATION

<END>

459-8934 ENGINE AR-PRIMARY

36 BRAKE KW (49 BHP) AT 2800 RPM

FIELD REPLACEMENT ORDER 435-1646—PAGE: 98

SMCS-1000 **i10732612**

NOTE	PART NUMBER	QTY	PART NAME 1 2 3 4 5 6 (PRODUCT LEVEL)	SEE PAGE
Y	*317-0649*	1	AIR CLEANER GP	575
Y	*308-2305*	1	ALTERNATOR GP-CHARGING	866
Y	*454-6144*	1	CAMSHAFT GP	175
Y	*321-6741*	1	CONNECTION GP-ELECTRICAL	874
Y	*308-2309*	1	CONNECTION GP-EXHAUST	595
Y	*308-2302*	1	CONNECTION GP-WATER	497
Y	*454-6143*	1	CONTROL GP-GOVERNOR	728
Y	*308-2307*	1	HOUSING GP-FRONT	310
Y	*309-6722*	1	COVER GP-VALVE MECHANISM	195
Y	*309-6713*	1	CRANKSHAFT GP	223
Y	*309-6712*	1	CYLINDER BLOCK GP	233
Y	*309-6715*	1	CYLINDER HEAD GP	261
Y	*363-3165*	1	FILLER GP-ENGINE OIL	486
Y	*308-2298*	1	FILTER GP-ENGINE OIL	491
Y	*317-0586*	1	FLYWHEEL GP	289
Y	*308-2311*	1	GLOW PLUG GP	886
Y	*317-0588*	1	HOUSING GP-FLYWHEEL	301
Y	*454-6141*	1	HOUSING GP-FRONT	360
Y	*309-6725*	1	LIFTING GP-ENGINE	392
Y	*331-2589*	1	LINES GP-COOLANT	513
Y	*309-6724*	1	MANIFOLD GP-EXHAUST	604
Y	*308-2295*	1	PAN GP-OIL	398
Y	*309-6714*	1	PISTON & ROD GP	429
Y	*309-6720*	1	PLUG GP-OIL PAN	444
Y	*308-2300*	1	PULLEY GP-CRANKSHAFT	448
Y	*308-2294*	1	PULLEY GP-FAN	451
Y	*309-6717*	1	LINES GP-ENGINE OIL	494
Y	*308-2310*	1	PUMP GP-FILTER & FUEL TRANSFER	796
Y	*309-6719*	1	PUMP GP-FUEL INJECTION	817
Y	*308-2320*	1	PUMP GP-FUEL PRIMING	841
			—OR—	
Y	*579-9444*	1	PUMP GP-FUEL PRIMING	844
Y	*308-2301*	1	PUMP GP-WATER	514
Y	*331-3270*	1	RADIATOR GP	556
Y	*308-2313*	1	SOLENOID GP-SHUTOFF (FUEL)	895
Y	*308-2293*	1	STARTING MOTOR GP-ELECTRIC	900
Y	*315-7819*	1	SWITCH GP-PRESSURE (ENGINE OIL)	912
Y	*308-2314*	1	SWITCH GP-START	921
Y	*308-2317*	1	SWITCH GP-TEMPERATURE (ENGINE COOLANT)	922
Y	*308-2306*	1	V-BELT GP (WATER PUMP)	460
Y	*309-6716*	1	VALVE MECHANISM GP	473

Y - SEPARATE ILLUSTRATION

<END>

460-1334 ENGINE AR-PRIMARY

45 BRAKE KW (60 BHP) AT 2800 RPM

FIELD REPLACEMENT ORDER 435-1636—PAGE: 92

SMCS-1000 **i10732690**

NOTE	PART NUMBER	QTY	PART NAME 1 2 3 4 5 6 (PRODUCT LEVEL)	SEE PAGE
Y	*308-2305*	1	ALTERNATOR GP-CHARGING	866
Y	*329-9278*	1	CAMSHAFT GP	154
Y	*321-6741*	1	CONNECTION GP-ELECTRICAL	874
Y	*308-2302*	1	CONNECTION GP-WATER	497
Y	*308-2307*	1	HOUSING GP-FRONT	310
Y	*308-2283*	1	CRANKSHAFT GP	219
Y	*308-2281*	1	CYLINDER BLOCK GP	229
Y	*308-2284*	1	CYLINDER HEAD GP	259
Y	*308-2304*	1	EXTENSION GP-FAN	278
Y	*308-2303*	1	FAN GP-SUCTION	506
Y	*363-3165*	1	FILLER GP-ENGINE OIL	486
Y	*308-2298*	1	FILTER GP-ENGINE OIL	491
Y	*317-0586*	1	FLYWHEEL GP	289
Y	*308-2311*	1	GLOW PLUG GP	886
Y	*317-0588*	1	HOUSING GP-FLYWHEEL	301
Y	*329-9277*	1	HOUSING GP-FRONT	346
Y	*308-2288*	1	FASTENER GP-FRONT HOUSING	284
Y	*309-6725*	1	LIFTING GP-ENGINE	392
Y	*331-2589*	1	LINES GP-COOLANT	513
Y	*308-2287*	1	LINES GP-ENGINE OIL	493
Y	*317-3037*	1	PAN GP-OIL	410
Y	*308-2286*	1	PISTON & ROD GP	426
Y	*309-6720*	1	PLUG GP-OIL PAN	444
Y	*321-6740*	1	PULLEY GP-CRANKSHAFT	449
Y	*308-2294*	1	PULLEY GP-FAN	451
Y	*308-2310*	1	PUMP GP-FILTER & FUEL TRANSFER	796
Y	*308-2289*	1	PUMP GP-FUEL INJECTION	813
Y	*317-6706*	1	PUMP GP-FUEL PRM & PRIM FILTER	845
Y	*442-7729*	1	PUMP GP-WATER	531
Y	*320-9114*	1	SHUTOFF GP-ELECTRICAL	894
Y	*308-2313*	1	SOLENOID GP-SHUTOFF (FUEL)	895
Y	*308-2293*	1	STARTING MOTOR GP-ELECTRIC	900
Y	*308-2312*	1	SWITCH GP-PRESSURE	911
Y	*308-2314*	1	SWITCH GP-START	921
Y	*308-2317*	1	SWITCH GP-TEMPERATURE (ENGINE COOLANT)	922
Y	*442-7759*	1	TURBOCHARGER GP	648
Y	*308-2306*	1	V-BELT GP (WATER PUMP)	460
Y	*308-2285*	1	VALVE MECHANISM GP	467

Y - SEPARATE ILLUSTRATION

<END>

461-5602 ENGINE AR-PRIMARY

60 BHP (45 BRAKE KW) AT 2800 RPM

FIELD REPLACEMENT ORDER 435-1636—PAGE: 92

SMCS-1000 **i10732702**

NOTE	PART NUMBER	QTY	PART NAME 1 2 3 4 5 6 (PRODUCT LEVEL)	SEE PAGE
Y	*308-2305*	1	ALTERNATOR GP-CHARGING	866
Y	*329-9278*	1	CAMSHAFT GP	154
Y	*308-5610*	1	CONNECTION GP-EXHAUST	596
Y	*308-2302*	1	CONNECTION GP-WATER	497
Y	*442-9881*	1	CONTROL GP-THROTTLE	750
			—OR—	
Y	*308-2313*	1	SOLENOID GP-SHUTOFF (FUEL)	895
Y	*308-2283*	1	CRANKSHAFT GP	219
Y	*308-2281*	1	CYLINDER BLOCK GP	229
Y	*308-2284*	1	CYLINDER HEAD GP	259
Y	*354-1245*	1	HOUSING GP-FRONT	350
Y	*308-2304*	1	EXTENSION GP-FAN	278
Y	*308-2288*	1	FASTENER GP-FRONT HOUSING	284
Y	*308-2297*	1	FILLER GP-ENGINE OIL	482
Y	*308-2298*	1	FILTER GP-ENGINE OIL	491
Y	*311-1884*	1	FLYWHEEL GP	288
Y	*308-2311*	1	GLOW PLUG GP	886
Y	*317-0588*	1	HOUSING GP-FLYWHEEL	301
Y	*329-9277*	1	HOUSING GP-FRONT	346
Y	*309-6725*	1	LIFTING GP-ENGINE	392
Y	*331-2589*	1	LINES GP-COOLANT	513
Y	*308-2287*	1	LINES GP-ENGINE OIL	493
Y	*311-1886*	1	PAN GP-OIL	406
Y	*308-2286*	1	PISTON & ROD GP	426
Y	*309-6720*	1	PLUG GP-OIL PAN	444
Y	*321-6740*	1	PULLEY GP-CRANKSHAFT	449
Y	*308-2294*	1	PULLEY GP-FAN	451
Y	*308-2289*	1	PUMP GP-FUEL INJECTION	813
Y	*311-9028*	1	PUMP GP-FUEL TRANSFER	850
Y	*317-0979*	1	PUMP GP-WATER	521
Y	*308-2293*	1	STARTING MOTOR GP-ELECTRIC	900
Y	*315-7819*	1	SWITCH GP-PRESSURE (ENGINE OIL)	912
Y	*308-2314*	1	SWITCH GP-START	921
Y	*308-2317*	1	SWITCH GP-TEMPERATURE (ENGINE COOLANT)	922
Y	*308-2308*	1	TURBOCHARGER GP	612
			—OR—	
Y	*442-7759*	1	TURBOCHARGER GP	648
Y	*308-2306*	1	V-BELT GP (WATER PUMP)	460
Y	*308-2285*	1	VALVE MECHANISM GP	467

Y - SEPARATE ILLUSTRATION

<END>

461-7892 ENGINE AR-PRIMARY

36 BRAKE KW (49 BHP) AT 2800-RPM

FIELD REPLACEMENT ORDER 435-1634—PAGE: 89

SMCS-1000 **i10732766**

NOTE	PART NUMBER	QTY	PART NAME 1 2 3 4 5 6 (PRODUCT LEVEL)	SEE PAGE
Y	*308-2305*	1	ALTERNATOR GP-CHARGING	866
Y	*332-1364*	1	CAMSHAFT GP	162
Y	*321-6741*	1	CONNECTION GP-ELECTRICAL	874
Y	*308-2309*	1	CONNECTION GP-EXHAUST	595
Y	*308-2302*	1	CONNECTION GP-WATER	497
Y	*332-1363*	1	CONTROL GP-GOVERNOR	708
Y	*308-2307*	1	HOUSING GP-FRONT	310
Y	*308-2283*	1	CRANKSHAFT GP	219
Y	*308-2281*	1	CYLINDER BLOCK GP	229
Y	*308-2284*	1	CYLINDER HEAD GP	259
Y	*363-3165*	1	FILLER GP-ENGINE OIL	486
Y	*308-2298*	1	FILTER GP-ENGINE OIL	491
Y	*327-7632*	1	FLYWHEEL GP	292
Y	*308-2311*	1	GLOW PLUG GP	886
Y	*317-0588*	1	HOUSING GP-FLYWHEEL	301
Y	*332-1362*	1	HOUSING GP-FRONT	349
Y	*309-6725*	1	LIFTING GP-ENGINE	392
Y	*331-2589*	1	LINES GP-COOLANT	513
Y	*308-2287*	1	LINES GP-ENGINE OIL	493
Y	*315-7813*	1	EXTENSION GP-FAN	279
Y	*317-3037*	1	PAN GP-OIL	410
Y	*308-2286*	1	PISTON & ROD GP	426
Y	*309-6720*	1	PLUG GP-OIL PAN	444
Y	*321-6740*	1	PULLEY GP-CRANKSHAFT	449
Y	*311-9027*	1	PULLEY GP-WATER PUMP	454
Y	*308-2289*	1	PUMP GP-FUEL INJECTION	813
Y	*447-2702*	1	PUMP GP-FUEL PRM & PRIM FILTER	846
Y	*442-7729*	1	PUMP GP-WATER	531
Y	*308-2313*	1	SOLENOID GP-SHUTOFF (FUEL)	895
Y	*308-2293*	1	STARTING MOTOR GP-ELECTRIC	900
Y	*315-7819*	1	SWITCH GP-PRESSURE (ENGINE OIL)	912
Y	*308-2317*	1	SWITCH GP-TEMPERATURE (ENGINE COOLANT)	922
Y	*442-7759*	1	TURBOCHARGER GP	648
Y	*311-9029*	1	V-BELT GP (WATER PUMP)	461
Y	*308-2285*	1	VALVE MECHANISM GP	467

Y - SEPARATE ILLUSTRATION

<END>

461-7893 ENGINE AR-PRIMARY

45 BRAKE KW (60 BHP) AT 2800 RPM

OPTIONAL FIELD REPLACEMENT ORDER 435-1636—PAGE: 92

SMCS-1000 **i10732725**

NOTE	PART NUMBER	QTY	PART NAME 1 2 3 4 5 6 (PRODUCT LEVEL)	SEE PAGE
Y	**308-2305**	1	ALTERNATOR GP-CHARGING	866
Y	*481-5624*	1	CAMSHAFT GP	178
Y	*321-6741*	1	CONNECTION GP-ELECTRICAL	874
Y	*308-2309*	1	CONNECTION GP-EXHAUST	595
Y	*308-2302*	1	CONNECTION GP-WATER	497
Y	*308-2307*	1	HOUSING GP-FRONT	310
Y	*308-2283*	1	CRANKSHAFT GP	219
Y	*308-2281*	1	CYLINDER BLOCK GP	229
Y	*308-2284*	1	CYLINDER HEAD GP	259
Y	*363-3165*	1	FILLER GP-ENGINE OIL	486
Y	*308-2298*	1	FILTER GP-ENGINE OIL (PRIMARY)	491
Y	*327-7632*	1	FLYWHEEL GP	292
Y	*308-2311*	1	GLOW PLUG GP	886
Y	*481-5623*	1	GOVERNOR GP	779
Y	*317-0588*	1	HOUSING GP-FLYWHEEL	301
Y	*309-6725*	1	LIFTING GP-ENGINE	392
Y	*331-2589*	1	LINES GP-COOLANT	513
Y	*308-2287*	1	LINES GP-ENGINE OIL	493
Y	*315-7813*	1	EXTENSION GP-FAN	279
Y	*317-3037*	1	PAN GP-OIL	410
Y	*308-2286*	1	PISTON & ROD GP	426
Y	*309-6720*	1	PLUG GP-OIL PAN	444
Y	*321-6740*	1	PULLEY GP-CRANKSHAFT	449
Y	*311-9027*	1	PULLEY GP-WATER PUMP	454
Y	*308-2289*	1	PUMP GP-FUEL INJECTION	813
Y	*447-2702*	1	PUMP GP-FUEL PRM & PRIM FILTER	846
Y	*442-7729*	1	PUMP GP-WATER	531
Y	*442-7794*	1	SENSOR GP-TEMPERATURE	892
Y	*308-2313*	1	SOLENOID GP-SHUTOFF (FUEL)	895
Y	*308-2293*	1	STARTING MOTOR GP-ELECTRIC	900
Y	*315-7819*	1	SWITCH GP-PRESSURE (ENGINE OIL)	912
Y	*442-7759*	1	TURBOCHARGER GP	648
Y	*311-9029*	1	V-BELT GP (WATER PUMP)	461
Y	*308-2285*	1	VALVE MECHANISM GP	467

Y - SEPARATE ILLUSTRATION

<END>

461-7894 ENGINE AR-PRIMARY

36 BRAKE KW (49 BHP) AT 2800-RPM

FIELD REPLACEMENT ORDER 435-1634—PAGE: 89

SMCS-1000 **i10732738**

NOTE	PART NUMBER	QTY	PART NAME 1 2 3 4 5 6 (PRODUCT LEVEL)	SEE PAGE
Y	*308-2305*	1	ALTERNATOR GP-CHARGING	866
Y	*332-1364*	1	CAMSHAFT GP	162
Y	*308-2302*	1	CONNECTION GP-WATER	497
Y	*332-1363*	1	CONTROL GP-GOVERNOR	708
Y	*308-2307*	1	HOUSING GP-FRONT	310
Y	*308-2283*	1	CRANKSHAFT GP	219
Y	*308-2281*	1	CYLINDER BLOCK GP	229
Y	*308-2284*	1	CYLINDER HEAD GP	259
Y	*363-3165*	1	FILLER GP-ENGINE OIL	486
Y	*308-2298*	1	FILTER GP-ENGINE OIL	491
Y	*327-7632*	1	FLYWHEEL GP	292
Y	*315-5256*	1	GASKET GP-EXHAUST MANIFOLD	603
Y	*308-2311*	1	GLOW PLUG GP	886
Y	*317-0588*	1	HOUSING GP-FLYWHEEL	301
Y	*332-1362*	1	HOUSING GP-FRONT	349
Y	*309-6725*	1	LIFTING GP-ENGINE	392
Y	*331-2589*	1	LINES GP-COOLANT	513
Y	*308-2287*	1	LINES GP-ENGINE OIL	493
Y	*315-7813*	1	EXTENSION GP-FAN	279
Y	*317-3037*	1	PAN GP-OIL	410
Y	*308-2286*	1	PISTON & ROD GP	426
Y	*309-6720*	1	PLUG GP-OIL PAN	444
Y	*321-6740*	1	PULLEY GP-CRANKSHAFT	449
Y	*311-9027*	1	PULLEY GP-WATER PUMP	454
Y	*308-2289*	1	PUMP GP-FUEL INJECTION	813
Y	*447-2702*	1	PUMP GP-FUEL PRM & PRIM FILTER	846
Y	*442-7729*	1	PUMP GP-WATER	531
Y	*308-2313*	1	SOLENOID GP-SHUTOFF (FUEL)	895
Y	*308-2293*	1	STARTING MOTOR GP-ELECTRIC	900
Y	*520-0722*	1	SWITCH GP-PRESSURE (ENGINE OIL)	918
Y	*308-2317*	1	SWITCH GP-TEMPERATURE (ENGINE COOLANT)	922
Y	*442-7759*	1	TURBOCHARGER GP	648
Y	*311-9029*	1	V-BELT GP (WATER PUMP)	461
Y	*308-2285*	1	VALVE MECHANISM GP	467

Y - SEPARATE ILLUSTRATION

<END>

461-7895 ENGINE AR-PRIMARY

36 BRAKE KW (49 BHP) AT 2900 RPM

OPTIONAL FIELD REPLACEMENT ORDER 435-1642—PAGE: 97

SMCS-1000 **i10732745**

NOTE	PART NUMBER	QTY	PART NAME 1 2 3 4 5 6 (PRODUCT LEVEL)	SEE PAGE
Y	*308-2305*	1	ALTERNATOR GP-CHARGING	866
Y	*465-2209*	1	CAMSHAFT GP	176
Y	*308-2302*	1	CONNECTION GP-WATER	497
Y	*465-2207*	1	CONTROL GP-GOVERNOR	732
Y	*308-2307*	1	HOUSING GP-FRONT	310
Y	*317-0590*	1	COVER GP-VALVE MECHANISM	204
Y	*309-6713*	1	CRANKSHAFT GP	223
Y	*309-6712*	1	CYLINDER BLOCK GP	233
Y	*309-6715*	1	CYLINDER HEAD GP	261
Y	*363-3165*	1	FILLER GP-ENGINE OIL	486
Y	*308-2298*	1	FILTER GP-ENGINE OIL	491
Y	*308-2291*	1	FLYWHEEL GP	287
Y	*308-2311*	1	GLOW PLUG GP	886
Y	*363-6308*	1	HOUSING GP-FLYWHEEL	305
Y	*465-2205*	1	HOUSING GP-FRONT	361
Y	*309-6725*	1	LIFTING GP-ENGINE	392
Y	*309-6724*	1	MANIFOLD GP-EXHAUST	604
Y	*308-4735*	1	MOUNTING GP-ENGINE OIL FILTER	495
Y	*315-7813*	1	EXTENSION GP-FAN	279
Y	*317-3037*	1	PAN GP-OIL	410
Y	*309-6714*	1	PISTON & ROD GP	429
Y	*322-2426*	1	PLUG GP-ENGINE	442
Y	*309-6720*	1	PLUG GP-OIL PAN	444
Y	*308-2300*	1	PULLEY GP-CRANKSHAFT	448
Y	*308-2294*	1	PULLEY GP-FAN	451
Y	*315-7814*	1	PUMP & MTG GP-FUEL TRANSFER	795
Y	*309-6717*	1	LINES GP-ENGINE OIL	494
Y	*309-6719*	1	PUMP GP-FUEL INJECTION	817
Y	*309-6721*	1	PUMP GP-WATER	517
Y	*315-7817*	1	SOLENOID GP-SHUTOFF	896
Y	*308-2293*	1	STARTING MOTOR GP-ELECTRIC	900
Y	*334-0268*	1	SWITCH GP-PRESSURE	917
Y	*308-2306*	1	V-BELT GP (WATER PUMP)	460
Y	*309-6716*	1	VALVE MECHANISM GP	473

Y - SEPARATE ILLUSTRATION

<END>

465-1477 ENGINE AR-PRIMARY

45 BRAKE KW (60 BHP) AT 2800-RPM

FIELD REPLACEMENT ORDER 435-1636—PAGE: 92

SMCS-1000 **i10732989**

NOTE	PART NUMBER	QTY	PART NAME 1 2 3 4 5 6 (PRODUCT LEVEL)	SEE PAGE
Y	*308-2305*	1	ALTERNATOR GP-CHARGING	866
Y	*481-5624*	1	CAMSHAFT GP	178
Y	*308-2302*	1	CONNECTION GP-WATER	497
Y	*308-2307*	1	HOUSING GP-FRONT	310
Y	*308-2283*	1	CRANKSHAFT GP	219
Y	*308-2281*	1	CYLINDER BLOCK GP	229
Y	*308-2284*	1	CYLINDER HEAD GP	259
Y	*363-3165*	1	FILLER GP-ENGINE OIL	486
Y	*308-2298*	1	FILTER GP-ENGINE OIL	491
Y	*327-7632*	1	FLYWHEEL GP	292
Y	*315-5256*	1	GASKET GP-EXHAUST MANIFOLD	603
Y	*308-2311*	1	GLOW PLUG GP	886
Y	*481-5623*	1	GOVERNOR GP	779
Y	*317-0588*	1	HOUSING GP-FLYWHEEL	301
Y	*481-5621*	1	HOUSING GP-FRONT	363
Y	*309-6725*	1	LIFTING GP-ENGINE	392
Y	*331-2589*	1	LINES GP-COOLANT	513
Y	*308-2287*	1	LINES GP-ENGINE OIL	493
Y	*315-7813*	1	EXTENSION GP-FAN	279
Y	*317-3037*	1	PAN GP-OIL	410
Y	*308-2286*	1	PISTON & ROD GP	426
Y	*309-6720*	1	PLUG GP-OIL PAN	444
Y	*321-6740*	1	PULLEY GP-CRANKSHAFT	449
Y	*311-9027*	1	PULLEY GP-WATER PUMP	454
Y	*308-2289*	1	PUMP GP-FUEL INJECTION	813
Y	*447-2702*	1	PUMP GP-FUEL PRM & PRIM FILTER	846
Y	*442-7729*	1	PUMP GP-WATER	531
Y	*442-7794*	1	SENSOR GP-TEMPERATURE	892
Y	*308-2313*	1	SOLENOID GP-SHUTOFF (FUEL)	895
Y	*308-2293*	1	STARTING MOTOR GP-ELECTRIC	900
Y	*520-0722*	1	SWITCH GP-PRESSURE (ENGINE OIL)	918
Y	*442-7759*	1	TURBOCHARGER GP	648
Y	*311-9029*	1	V-BELT GP (WATER PUMP)	461
Y	*308-2285*	1	VALVE MECHANISM GP	467

Y - SEPARATE ILLUSTRATION

<END>

465-2420 ENGINE AR-PRIMARY

45 BRAKE KW (60 BHP) AT 2200-RPM

SMCS-1000 **i07729897**

NOTE	PART NUMBER	QTY	PART NAME 1 2 3 4 5 6 (PRODUCT LEVEL)	SEE PAGE
			(NO SERVICED PARTS)	

<END>

465-2421 ENGINE AR-PRIMARY

49 BHP (36 BRAKE KW) AT 2800 RPM

FIELD REPLACEMENT ORDER 435-1634—PAGE: 89

SMCS-1000 **i10732992**

NOTE	PART NUMBER	QTY	PART NAME 1 2 3 4 5 6 (PRODUCT LEVEL)	SEE PAGE
Y	*308-2305*	1	ALTERNATOR GP-CHARGING	866
Y	*332-1364*	1	CAMSHAFT GP	162
Y	*321-6741*	1	CONNECTION GP-ELECTRICAL	874
Y	*308-2309*	1	CONNECTION GP-EXHAUST	595
Y	*308-2302*	1	CONNECTION GP-WATER	497
Y	*332-1363*	1	CONTROL GP-GOVERNOR	708
Y	*442-7729*	1	PUMP GP-WATER	531
Y	*308-2307*	1	HOUSING GP-FRONT	310
Y	*308-2283*	1	CRANKSHAFT GP	219
Y	*308-2281*	1	CYLINDER BLOCK GP	229
Y	*308-2284*	1	CYLINDER HEAD GP	259
Y	*363-3165*	1	FILLER GP-ENGINE OIL	486
Y	*308-2298*	1	FILTER GP-ENGINE OIL	491
Y	*327-7632*	1	FLYWHEEL GP	292
Y	*308-2311*	1	GLOW PLUG GP	886
Y	*317-0588*	1	HOUSING GP-FLYWHEEL	301
Y	*332-1362*	1	HOUSING GP-FRONT	349
Y	*309-6725*	1	LIFTING GP-ENGINE	392
Y	*331-2589*	1	LINES GP-COOLANT	513
Y	*308-2287*	1	LINES GP-ENGINE OIL	493
Y	*315-7813*	1	EXTENSION GP-FAN	279
Y	*308-2295*	1	PAN GP-OIL	398
Y	*308-2286*	1	PISTON & ROD GP	426
Y	*309-6720*	1	PLUG GP-OIL PAN	444
Y	*321-6740*	1	PULLEY GP-CRANKSHAFT	449
Y	*308-2294*	1	PULLEY GP-FAN	451
Y	*308-2310*	1	PUMP GP-FILTER & FUEL TRANSFER	796
Y	*308-2289*	1	PUMP GP-FUEL INJECTION	813
Y	*317-6706*	1	PUMP GP-FUEL PRM & PRIM FILTER	845
			—OR—	
Y	*579-9465*	1	PUMP GP-FUEL PRM & PRIM FILTER	849
Y	*320-9114*	1	SHUTOFF GP-ELECTRICAL	894
Y	*315-7817*	1	SOLENOID GP-SHUTOFF	896
Y	*308-2293*	1	STARTING MOTOR GP-ELECTRIC	900
Y	*315-7819*	1	SWITCH GP-PRESSURE (ENGINE OIL)	912
Y	*308-2317*	1	SWITCH GP-TEMPERATURE (ENGINE COOLANT)	922
Y	*442-6206*	1	TURBOCHARGER GP	642
Y	*308-2306*	1	V-BELT GP (WATER PUMP)	460
Y	*308-2285*	1	VALVE MECHANISM GP	467

Y - SEPARATE ILLUSTRATION

<END>

482-8655 ENGINE AR-PRIMARY

45 BRAKE KW (60 BHP) AT 2800 RPM

FIELD REPLACEMENT ORDER 435-1636—PAGE: 92

SMCS-1000 **i10732995**

NOTE	PART NUMBER	QTY	PART NAME 1 2 3 4 5 6 (PRODUCT LEVEL)	SEE PAGE
Y	*308-2305*	1	ALTERNATOR GP-CHARGING	866
Y	*329-9278*	1	CAMSHAFT GP	154
Y	*308-5610*	1	CONNECTION GP-EXHAUST	596
Y	*308-2302*	1	CONNECTION GP-WATER	497
Y	*329-9277*	1	HOUSING GP-FRONT	346
Y	*442-9881*	1	CONTROL GP-THROTTLE	750
			—OR—	
Y	*308-2313*	1	SOLENOID GP-SHUTOFF (FUEL)	895
Y	*308-2283*	1	CRANKSHAFT GP	219
Y	*308-2281*	1	CYLINDER BLOCK GP	229
Y	*308-2284*	1	CYLINDER HEAD GP	259
Y	*354-1245*	1	HOUSING GP-FRONT	350
Y	*308-2304*	1	EXTENSION GP-FAN	278
Y	*308-2297*	1	FILLER GP-ENGINE OIL	482
Y	*308-2298*	1	FILTER GP-ENGINE OIL	491
Y	*311-1884*	1	FLYWHEEL GP	288
Y	*308-2311*	1	GLOW PLUG GP	886
Y	*317-0588*	1	HOUSING GP-FLYWHEEL	301
Y	*308-2288*	1	FASTENER GP-FRONT HOUSING	284
Y	*309-6725*	1	LIFTING GP-ENGINE	392
Y	*331-2589*	1	LINES GP-COOLANT	513
Y	*308-2287*	1	LINES GP-ENGINE OIL	493
Y	*311-1886*	1	PAN GP-OIL	406
Y	*308-2286*	1	PISTON & ROD GP	426
Y	*309-6720*	1	PLUG GP-OIL PAN	444
Y	*321-6740*	1	PULLEY GP-CRANKSHAFT	449
Y	*308-2294*	1	PULLEY GP-FAN	451
Y	*308-2289*	1	PUMP GP-FUEL INJECTION	813
Y	*311-9028*	1	PUMP GP-FUEL TRANSFER	850
Y	*317-0979*	1	PUMP GP-WATER	521
Y	*308-2293*	1	STARTING MOTOR GP-ELECTRIC	900
Y	*315-7819*	1	SWITCH GP-PRESSURE (ENGINE OIL)	912
Y	*308-2314*	1	SWITCH GP-START	921
Y	*308-2317*	1	SWITCH GP-TEMPERATURE (ENGINE COOLANT)	922
Y	*308-2308*	1	TURBOCHARGER GP	612
Y	*308-2306*	1	V-BELT GP (WATER PUMP)	460
Y	*308-2285*	1	VALVE MECHANISM GP	467

Y - SEPARATE ILLUSTRATION

<END>

484-4145 ENGINE AR-PRIMARY

36 BRAKE KW (49 BHP) AT 2800RPM

FIELD REPLACEMENT ORDER 435-1642—PAGE: 97

SMCS-1000 **i10732998**

NOTE	PART NUMBER	QTY	PART NAME 1 2 3 4 5 6 (PRODUCT LEVEL)	SEE PAGE
Y	*308-2305*	1	ALTERNATOR GP-CHARGING	866
Y	*465-2209*	1	CAMSHAFT GP	176
Y	*308-2302*	1	CONNECTION GP-WATER	497
Y	*465-2207*	1	CONTROL GP-GOVERNOR	732
Y	*308-2307*	1	HOUSING GP-FRONT	310
Y	*317-0590*	1	COVER GP-VALVE MECHANISM	204
Y	*309-6713*	1	CRANKSHAFT GP	223
Y	*309-6712*	1	CYLINDER BLOCK GP	233
Y	*309-6715*	1	CYLINDER HEAD GP	261
Y	*363-3165*	1	FILLER GP-ENGINE OIL	486
Y	*308-2298*	1	FILTER GP-ENGINE OIL	491
Y	*308-2291*	1	FLYWHEEL GP	287
Y	*308-2311*	1	GLOW PLUG GP	886
Y	*363-6308*	1	HOUSING GP-FLYWHEEL	305
Y	*465-2205*	1	HOUSING GP-FRONT	361
Y	*309-6725*	1	LIFTING GP-ENGINE	392
Y	*309-6724*	1	MANIFOLD GP-EXHAUST	604
Y	*308-4735*	1	MOUNTING GP-ENGINE OIL FILTER	495
Y	*315-7813*	1	EXTENSION GP-FAN	279
Y	*317-3037*	1	PAN GP-OIL	410
Y	*309-6714*	1	PISTON & ROD GP	429
Y	*322-2426*	1	PLUG GP-ENGINE	442
Y	*309-6720*	1	PLUG GP-OIL PAN	444
Y	*308-2300*	1	PULLEY GP-CRANKSHAFT	448
Y	*308-2294*	1	PULLEY GP-FAN	451
Y	*315-7814*	1	PUMP & MTG GP-FUEL TRANSFER	795
Y	*309-6717*	1	LINES GP-ENGINE OIL	494
Y	*309-6719*	1	PUMP GP-FUEL INJECTION	817
Y	*309-6721*	1	PUMP GP-WATER	517
Y	*315-7817*	1	SOLENOID GP-SHUTOFF	896
Y	*308-2293*	1	STARTING MOTOR GP-ELECTRIC	900
Y	*334-0268*	1	SWITCH GP-PRESSURE	917
Y	*308-2306*	1	V-BELT GP (WATER PUMP)	460
Y	*309-6716*	1	VALVE MECHANISM GP	473

Y - SEPARATE ILLUSTRATION

<END>

491-3396 ENGINE AR-PRIMARY

45 BRAKE KW (60 BHP) AT 2800 RPM

OPTIONAL FIELD REPLACEMENT ORDER 435-1636—PAGE: 92

SMCS-1000 **i10733000**

NOTE	PART NUMBER	QTY	PART NAME 1 2 3 4 5 6 (PRODUCT LEVEL)	SEE PAGE
Y	*326-8543*	1	AIR CLEANER GP	580
Y	*308-2305*	1	ALTERNATOR GP-CHARGING	866
Y	*329-9278*	1	CAMSHAFT GP	154
Y	*321-6741*	1	CONNECTION GP-ELECTRICAL	874
Y	*308-2309*	1	CONNECTION GP-EXHAUST	595
Y	*308-2302*	1	CONNECTION GP-WATER	497
Y	*308-2307*	1	HOUSING GP-FRONT	310
Y	*308-2283*	1	CRANKSHAFT GP	219
Y	*308-2281*	1	CYLINDER BLOCK GP	229
Y	*308-2284*	1	CYLINDER HEAD GP	259
Y	*363-3165*	1	FILLER GP-ENGINE OIL	486
Y	*308-2298*	1	FILTER GP-ENGINE OIL	491
Y	*308-2291*	1	FLYWHEEL GP	287
Y	*308-2311*	1	GLOW PLUG GP	886
Y	*308-2290*	1	HOUSING GP-FLYWHEEL	297
Y	*329-9277*	1	HOUSING GP-FRONT	346
Y	*308-2288*	1	FASTENER GP-FRONT HOUSING	284
Y	*309-6725*	1	LIFTING GP-ENGINE	392
Y	*331-2589*	1	LINES GP-COOLANT	513
Y	*308-2287*	1	LINES GP-ENGINE OIL	493
Y	*308-2295*	1	PAN GP-OIL	398
Y	*308-2286*	1	PISTON & ROD GP	426
Y	*309-6720*	1	PLUG GP-OIL PAN	444
Y	*321-6740*	1	PULLEY GP-CRANKSHAFT	449
Y	*308-2294*	1	PULLEY GP-FAN	451
Y	*308-2310*	1	PUMP GP-FILTER & FUEL TRANSFER	796
Y	*308-2289*	1	PUMP GP-FUEL INJECTION	813
Y	*317-6706*	1	PUMP GP-FUEL PRM & PRIM FILTER	845
Y	*317-0979*	1	PUMP GP-WATER	521
Y	*341-6658*	1	RADIATOR & FAN GP	543
Y	*308-2313*	1	SOLENOID GP-SHUTOFF (FUEL)	895
Y	*308-2293*	1	STARTING MOTOR GP-ELECTRIC	900
Y	*315-7819*	1	SWITCH GP-PRESSURE (ENGINE OIL)	912
Y	*308-2314*	1	SWITCH GP-START	921
Y	*308-2317*	1	SWITCH GP-TEMPERATURE (ENGINE COOLANT)	922
Y	*441-8101*	1	TURBOCHARGER GP	632
Y	*308-2306*	1	V-BELT GP (WATER PUMP)	460
Y	*308-2285*	1	VALVE MECHANISM GP	467

Y - SEPARATE ILLUSTRATION

<END>

492-6602 ENGINE AR-PRIMARY

36 BRAKE KW (49 BHP) AT 2800 RPM, US ONLY
FIELD REPLACEMENT ORDER 435-1642—PAGE: 97

SMCS-1000 **i10733003**

NOTE	PART NUMBER	QTY	PART NAME 1 2 3 4 5 6 (PRODUCT LEVEL)	SEE PAGE
Y	**308-2305**	1	ALTERNATOR GP-CHARGING	866
Y	*454-6144*	1	CAMSHAFT GP	175
Y	*308-5610*	1	CONNECTION GP-EXHAUST	596
Y	*308-2302*	1	CONNECTION GP-WATER	497
Y	*317-0590*	1	COVER GP-VALVE MECHANISM	204
Y	*309-6713*	1	CRANKSHAFT GP	223
Y	*309-6712*	1	CYLINDER BLOCK GP	233
Y	*309-6715*	1	CYLINDER HEAD GP	261
Y	*354-1245*	1	HOUSING GP-FRONT	350
Y	*308-2304*	1	EXTENSION GP-FAN	278
Y	*308-2303*	1	FAN GP-SUCTION	506
Y	*308-2297*	1	FILLER GP-ENGINE OIL	482
Y	*308-2298*	1	FILTER GP-ENGINE OIL	491
Y	*308-2291*	1	FLYWHEEL GP	287
Y	*308-2311*	1	GLOW PLUG GP	886
Y	*454-6143*	1	CONTROL GP-GOVERNOR	728
Y	*354-4846*	1	HOUSING GP-FLYWHEEL	304
Y	*454-6141*	1	HOUSING GP-FRONT	360
Y	*309-6725*	1	LIFTING GP-ENGINE	392
Y	*309-6724*	1	MANIFOLD GP-EXHAUST	604
Y	*308-4735*	1	MOUNTING GP-ENGINE OIL FILTER	495
Y	*311-1886*	1	PAN GP-OIL	406
Y	*309-6714*	1	PISTON & ROD GP	429
Y	*322-2426*	1	PLUG GP-ENGINE	442
Y	*323-9157*	1	PLUG GP-ENGINE	443
Y	*309-6720*	1	PLUG GP-OIL PAN	444
Y	*308-2300*	1	PULLEY GP-CRANKSHAFT	448
Y	*308-2294*	1	PULLEY GP-FAN	451
Y	*309-6717*	1	LINES GP-ENGINE OIL	494
Y	*309-6719*	1	PUMP GP-FUEL INJECTION	817
Y	*311-9028*	1	PUMP GP-FUEL TRANSFER	850
Y	*309-6721*	1	PUMP GP-WATER	517
Y	*308-2313*	1	SOLENOID GP-SHUTOFF (FUEL)	895
Y	*308-2293*	1	STARTING MOTOR GP-ELECTRIC	900
Y	*308-2306*	1	V-BELT GP (WATER PUMP)	460
Y	**309-6716**	1	VALVE MECHANISM GP	473

Y - SEPARATE ILLUSTRATION

<END>

495-3121 ENGINE AR-PRIMARY

36.3 BRAKE KW (48.6 BHP) AT 2800-RPM

SMCS-1000 **i10733005**

NOTE	PART NUMBER	QTY	PART NAME 1 2 3 4 5 6 (PRODUCT LEVEL)	SEE PAGE
Y	*308-2305*	1	ALTERNATOR GP-CHARGING	866
Y	*332-1364*	1	CAMSHAFT GP	162
Y	*321-6741*	1	CONNECTION GP-ELECTRICAL	874
Y	*308-2309*	1	CONNECTION GP-EXHAUST	595
Y	*308-2302*	1	CONNECTION GP-WATER	497
Y	*332-1363*	1	CONTROL GP-GOVERNOR	708
Y	*308-2307*	1	HOUSING GP-FRONT	310
Y	*308-2283*	1	CRANKSHAFT GP	219
Y	*308-2281*	1	CYLINDER BLOCK GP	229
Y	*308-2284*	1	CYLINDER HEAD GP	259
Y	*363-3165*	1	FILLER GP-ENGINE OIL	486
Y	*308-2298*	1	FILTER GP-ENGINE OIL	491
Y	*327-7632*	1	FLYWHEEL GP	292
Y	*308-2311*	1	GLOW PLUG GP	886
Y	*317-0588*	1	HOUSING GP-FLYWHEEL	301
Y	*332-1362*	1	HOUSING GP-FRONT	349
Y	*309-6725*	1	LIFTING GP-ENGINE	392
Y	*331-2589*	1	LINES GP-COOLANT	513
Y	*308-2287*	1	LINES GP-ENGINE OIL	493
Y	*315-7813*	1	EXTENSION GP-FAN	279
Y	*308-2295*	1	PAN GP-OIL	398
Y	*308-2286*	1	PISTON & ROD GP	426
Y	*309-6720*	1	PLUG GP-OIL PAN	444
Y	*321-6740*	1	PULLEY GP-CRANKSHAFT	449
Y	*308-2294*	1	PULLEY GP-FAN	451
Y	*308-2310*	1	PUMP GP-FILTER & FUEL TRANSFER	796
Y	*308-2289*	1	PUMP GP-FUEL INJECTION	813
Y	*317-6706*	1	PUMP GP-FUEL PRM & PRIM FILTER	845
Y	*442-7729*	1	PUMP GP-WATER	531
Y	*320-9114*	1	SHUTOFF GP-ELECTRICAL	894
Y	*315-7817*	1	SOLENOID GP-SHUTOFF	896
Y	*308-2293*	1	STARTING MOTOR GP-ELECTRIC	900
Y	*315-7819*	1	SWITCH GP-PRESSURE (ENGINE OIL)	912
Y	*308-2317*	1	SWITCH GP-TEMPERATURE (ENGINE COOLANT)	922
Y	*442-6206*	1	TURBOCHARGER GP	642
Y	*308-2306*	1	V-BELT GP (WATER PUMP)	460
Y	*308-2285*	1	VALVE MECHANISM GP	467

Y - SEPARATE ILLUSTRATION

<END>

495-6243 ENGINE AR-PRIMARY

45 BRAKE KW (60 BHP) AT 2800 RPM

OPTIONAL FIELD REPLACEMENT ORDER 435-1636—PAGE: 92

SMCS-1000 **i10733007**

NOTE	PART NUMBER	QTY	PART NAME 1 2 3 4 5 6 (PRODUCT LEVEL)	SEE PAGE
Y	*308-2305*	1	ALTERNATOR GP-CHARGING	866
Y	*329-9278*	1	CAMSHAFT GP	154
Y	*308-5610*	1	CONNECTION GP-EXHAUST	596
Y	*308-2302*	1	CONNECTION GP-WATER	497
Y	*442-9881*	1	CONTROL GP-THROTTLE	750
			—OR—	
Y	*308-2313*	1	SOLENOID GP-SHUTOFF (FUEL)	895
Y	*308-2283*	1	CRANKSHAFT GP	219
Y	*308-2281*	1	CYLINDER BLOCK GP	229
Y	*308-2284*	1	CYLINDER HEAD GP	259
Y	*354-1245*	1	HOUSING GP-FRONT	350
Y	*308-2304*	1	EXTENSION GP-FAN	278
Y	*308-2297*	1	FILLER GP-ENGINE OIL	482
Y	*308-2298*	1	FILTER GP-ENGINE OIL	491
Y	*311-1884*	1	FLYWHEEL GP	288
Y	*308-2311*	1	GLOW PLUG GP	886
Y	*317-0588*	1	HOUSING GP-FLYWHEEL	301
Y	*329-9277*	1	HOUSING GP-FRONT	346
Y	*308-2288*	1	FASTENER GP-FRONT HOUSING	284
Y	*309-6725*	1	LIFTING GP-ENGINE	392
Y	*331-2589*	1	LINES GP-COOLANT	513
Y	*308-2287*	1	LINES GP-ENGINE OIL	493
Y	*311-1886*	1	PAN GP-OIL	406
Y	*308-2286*	1	PISTON & ROD GP	426
Y	*309-6720*	1	PLUG GP-OIL PAN	444
Y	*321-6740*	1	PULLEY GP-CRANKSHAFT	449
Y	*308-2294*	1	PULLEY GP-FAN	451
Y	*308-2289*	1	PUMP GP-FUEL INJECTION	813
Y	*311-9028*	1	PUMP GP-FUEL TRANSFER	850
Y	*317-0979*	1	PUMP GP-WATER	521
Y	*308-2293*	1	STARTING MOTOR GP-ELECTRIC	900
Y	*315-7819*	1	SWITCH GP-PRESSURE (ENGINE OIL)	912
Y	*308-2314*	1	SWITCH GP-START	921
Y	*308-2317*	1	SWITCH GP-TEMPERATURE (ENGINE COOLANT)	922
Y	*442-7759*	1	TURBOCHARGER GP	648
Y	*308-2306*	1	V-BELT GP (WATER PUMP)	460
Y	*308-2285*	1	VALVE MECHANISM GP	467

Y - SEPARATE ILLUSTRATION

<END>

516-9335 ENGINE AR-PRIMARY

38 BRAKE KW (60 BHP) AT 3000 RPM

FIELD REPLACEMENT ORDER 435-1636—PAGE: 92

SMCS-1000 **i10733011**

NOTE	PART NUMBER	QTY	PART NAME 1 2 3 4 5 6 (PRODUCT LEVEL)	SEE PAGE
Y	*317-0649*	1	AIR CLEANER GP	575
Y	*308-2305*	1	ALTERNATOR GP-CHARGING	866
Y	*325-9476*	1	CAMSHAFT GP	152
Y	*321-6741*	1	CONNECTION GP-ELECTRICAL	874
Y	*308-2309*	1	CONNECTION GP-EXHAUST	595
Y	*308-2302*	1	CONNECTION GP-WATER	497
Y	*325-9475*	1	CONTROL GP-GOVERNOR	688
Y	*308-2307*	1	HOUSING GP-FRONT	310
Y	*309-6722*	1	COVER GP-VALVE MECHANISM	195
Y	*309-6713*	1	CRANKSHAFT GP	223
Y	*309-6712*	1	CYLINDER BLOCK GP	233
Y	*309-6715*	1	CYLINDER HEAD GP	261
Y	*363-3165*	1	FILLER GP-ENGINE OIL	486
Y	*308-2298*	1	FILTER GP-ENGINE OIL	491
Y	*308-2291*	1	FLYWHEEL GP	287
Y	*308-2311*	1	GLOW PLUG GP	886
Y	*308-2290*	1	HOUSING GP-FLYWHEEL	297
Y	*311-1682*	1	HOUSING GP-FRONT	323
Y	*309-6725*	1	LIFTING GP-ENGINE	392
Y	*331-2589*	1	LINES GP-COOLANT	513
Y	*309-6717*	1	LINES GP-ENGINE OIL	494
Y	*309-6724*	1	MANIFOLD GP-EXHAUST	604
Y	*308-2295*	1	PAN GP-OIL	398
Y	*309-6714*	1	PISTON & ROD GP	429
Y	*309-6720*	1	PLUG GP-OIL PAN	444
Y	*308-2300*	1	PULLEY GP-CRANKSHAFT	448
Y	*308-2294*	1	PULLEY GP-FAN	451
Y	*308-2310*	1	PUMP GP-FILTER & FUEL TRANSFER	796
Y	*311-1683*	1	PUMP GP-FUEL INJECTION	819
Y	*579-9444*	1	PUMP GP-FUEL PRIMING	844
Y	*308-2301*	1	PUMP GP-WATER	514
Y	*331-3270*	1	RADIATOR GP	556
Y	*308-2313*	1	SOLENOID GP-SHUTOFF (FUEL)	895
Y	*308-2293*	1	STARTING MOTOR GP-ELECTRIC	900
Y	*315-7819*	1	SWITCH GP-PRESSURE (ENGINE OIL)	912
Y	*308-2314*	1	SWITCH GP-START	921
Y	*308-2317*	1	SWITCH GP-TEMPERATURE (ENGINE COOLANT)	922
Y	*308-2306*	1	V-BELT GP (WATER PUMP)	460
Y	*309-6716*	1	VALVE MECHANISM GP	473

Y - SEPARATE ILLUSTRATION

<END>

541-9277 ENGINE AR-PRIMARY

45 BRAKE KW (64 BHP) AT 2800 RPM

FIELD REPLACEMENT ORDER 435-1636—PAGE: 92

SMCS-1000 **i10733012**

NOTE	PART NUMBER	QTY	PART NAME 1 2 3 4 5 6 (PRODUCT LEVEL)	SEE PAGE
Y	*326-8543*	1	AIR CLEANER GP	580
Y	*308-2305*	1	ALTERNATOR GP-CHARGING	866
Y	*329-9278*	1	CAMSHAFT GP	154
Y	*321-6741*	1	CONNECTION GP-ELECTRICAL	874
Y	*308-2309*	1	CONNECTION GP-EXHAUST	595
Y	*308-2302*	1	CONNECTION GP-WATER	497
Y	*308-2307*	1	HOUSING GP-FRONT	310
Y	*308-2283*	1	CRANKSHAFT GP	219
Y	*308-2281*	1	CYLINDER BLOCK GP	229
Y	*308-2284*	1	CYLINDER HEAD GP	259
Y	*363-3165*	1	FILLER GP-ENGINE OIL	486
Y	*308-2298*	1	FILTER GP-ENGINE OIL	491
Y	*308-2291*	1	FLYWHEEL GP	287
Y	*308-2311*	1	GLOW PLUG GP	886
Y	*308-2290*	1	HOUSING GP-FLYWHEEL	297
Y	*329-9277*	1	HOUSING GP-FRONT	346
Y	*308-2288*	1	FASTENER GP-FRONT HOUSING	284
Y	*309-6725*	1	LIFTING GP-ENGINE	392
Y	*331-2589*	1	LINES GP-COOLANT	513
Y	*308-2287*	1	LINES GP-ENGINE OIL	493
Y	*308-2295*	1	PAN GP-OIL	398
Y	*308-2286*	1	PISTON & ROD GP	426
Y	*309-6720*	1	PLUG GP-OIL PAN	444
Y	*321-6740*	1	PULLEY GP-CRANKSHAFT	449
Y	*308-2294*	1	PULLEY GP-FAN	451
Y	*308-2310*	1	PUMP GP-FILTER & FUEL TRANSFER	796
Y	*308-2289*	1	PUMP GP-FUEL INJECTION	813
Y	*317-6706*	1	PUMP GP-FUEL PRM & PRIM FILTER	845
			—OR—	
Y	*579-9465*	1	PUMP GP-FUEL PRM & PRIM FILTER	849
Y	*317-0979*	1	PUMP GP-WATER	521
Y	*341-6658*	1	RADIATOR & FAN GP	543
Y	*308-2313*	1	SOLENOID GP-SHUTOFF (FUEL)	895
Y	*308-2293*	1	STARTING MOTOR GP-ELECTRIC	900
Y	*315-7819*	1	SWITCH GP-PRESSURE (ENGINE OIL)	912
Y	*308-2314*	1	SWITCH GP-START	921
Y	*308-2317*	1	SWITCH GP-TEMPERATURE (ENGINE COOLANT)	922
Y	*441-8101*	1	TURBOCHARGER GP	632
Y	*308-2306*	1	V-BELT GP (WATER PUMP)	460
Y	*308-2285*	1	VALVE MECHANISM GP	467

Y - SEPARATE ILLUSTRATION

<END>

549-8284 ENGINE AR-PRIMARY

36 BRAKE KW (49 BHP) AT 2800 RPM
FIELD REPLACEMENT ORDER 435-1642—PAGE: 97
FIELD REPLACEMENT FOR 348-2243—PAGE: 67

SMCS-1000 **i10733015**

NOTE	PART NUMBER	QTY	PART NAME 1 2 3 4 5 6 (PRODUCT LEVEL)	SEE PAGE
Y	*308-2305*	1	ALTERNATOR GP-CHARGING	866
Y	*454-6144*	1	CAMSHAFT GP	175
Y	*308-5610*	1	CONNECTION GP-EXHAUST	596
Y	*308-2302*	1	CONNECTION GP-WATER	497
Y	*454-6143*	1	CONTROL GP-GOVERNOR	728
Y	*317-0590*	1	COVER GP-VALVE MECHANISM	204
Y	*309-6713*	1	CRANKSHAFT GP	223
Y	*309-6712*	1	CYLINDER BLOCK GP	233
Y	*309-6715*	1	CYLINDER HEAD GP	261
Y	*354-1245*	1	HOUSING GP-FRONT	350
Y	*308-2304*	1	EXTENSION GP-FAN	278
Y	*308-2303*	1	FAN GP-SUCTION	506
Y	*308-2297*	1	FILLER GP-ENGINE OIL (ENGINE)	482
Y	*308-2298*	1	FILTER GP-ENGINE OIL (PRIMARY)	491
Y	*308-2291*	1	FLYWHEEL GP	287
Y	*308-2311*	1	GLOW PLUG GP	886
Y	*354-4846*	1	HOUSING GP-FLYWHEEL	304
Y	*454-6141*	1	HOUSING GP-FRONT	360
Y	*309-6725*	1	LIFTING GP-ENGINE	392
Y	*309-6724*	1	MANIFOLD GP-EXHAUST	604
Y	*308-4735*	1	MOUNTING GP-ENGINE OIL FILTER	495
Y	*311-1886*	1	PAN GP-OIL	406
Y	*331-9610*	1	PAN GP-OIL	416
Y	*309-6714*	1	PISTON & ROD GP	429
Y	*322-2426*	1	PLUG GP-ENGINE	442
Y	*323-9157*	1	PLUG GP-ENGINE (CENTRAL)	443
Y	*309-6720*	1	PLUG GP-OIL PAN	444
Y	*308-2300*	1	PULLEY GP-CRANKSHAFT	448
Y	*308-2294*	1	PULLEY GP-FAN	451
Y	*309-6717*	1	LINES GP-ENGINE OIL	494
Y	*309-6719*	1	PUMP GP-FUEL INJECTION	817
Y	*311-9028*	1	PUMP GP-FUEL TRANSFER	850
Y	*309-6721*	1	PUMP GP-WATER	517
Y	*308-2313*	1	SOLENOID GP-SHUTOFF (FUEL)	895
Y	*308-2293*	1	STARTING MOTOR GP-ELECTRIC	900
Y	*308-2306*	1	V-BELT GP (WATER PUMP)	460
Y	*309-6716*	1	VALVE MECHANISM GP	473

Y - SEPARATE ILLUSTRATION

<END>

557-9727 ENGINE AR-PRIMARY

49 BRAKE KW (66 BHP) AT 2800 RPM

OPTIONAL FIELD REPLACEMENT ORDER 435-1658—PAGE: 103

SMCS-1000 **i10733017**

NOTE	PART NUMBER	QTY	PART NAME 1 2 3 4 5 6 (PRODUCT LEVEL)	SEE PAGE
Y	*326-8543*	1	AIR CLEANER GP	580
			—OR—	
Y	*600-1135*	1	AIR CLEANER GP	589
Y	*308-2305*	1	ALTERNATOR GP-CHARGING	866
Y	*373-7284*	1	CAMSHAFT GP	171
Y	*321-6741*	1	CONNECTION GP-ELECTRICAL	874
Y	*308-5610*	1	CONNECTION GP-EXHAUST	596
Y	*308-2302*	1	CONNECTION GP-WATER	497
Y	*373-7283*	1	GOVERNOR GP	777
Y	*308-2283*	1	CRANKSHAFT GP	219
Y	*308-2281*	1	CYLINDER BLOCK GP	229
Y	*308-2284*	1	CYLINDER HEAD GP	259
Y	*315-5252*	1	VALVE & PLUG GP-OIL PAN DRAIN	466
Y	*354-1245*	1	HOUSING GP-FRONT	350
Y	*322-2423*	1	DRIVE GP-FAN	276
Y	*499-5184*	1	FAN GP-SUCTION	508
Y	*363-3165*	1	FILLER GP-ENGINE OIL	486
Y	*466-7112*	1	FILLER GP-ENGINE OIL	488
Y	*308-2298*	1	FILTER GP-ENGINE OIL	491
Y	*327-7632*	1	FLYWHEEL GP	292
Y	*308-2311*	1	GLOW PLUG GP	886
Y	*317-0588*	1	HOUSING GP-FLYWHEEL	301
Y	*308-3329*	1	HOUSING GP-FRONT	312
Y	*309-6725*	1	LIFTING GP-ENGINE	392
Y	*331-2589*	1	LINES GP-COOLANT	513
Y	*308-2287*	1	LINES GP-ENGINE OIL	493
Y	*308-2295*	1	PAN GP-OIL	398
Y	*308-2286*	1	PISTON & ROD GP	426
Y	*322-2422*	1	PULLEY GP-AUXILIARY DRIVE	447
Y	*321-6740*	1	PULLEY GP-CRANKSHAFT	449
Y	*328-2488*	1	PULLEY GP-WATER PUMP	455
Y	*308-2310*	1	PUMP GP-FILTER & FUEL TRANSFER	796
Y	*308-3330*	1	PUMP GP-FUEL INJECTION	815
Y	*317-6706*	1	PUMP GP-FUEL PRM & PRIM FILTER	845
			S/N: G7L1-27046	
Y	*579-9465*	1	PUMP GP-FUEL PRM & PRIM FILTER	849
			S/N: G7L27047-UP	
Y	*317-0979*	1	PUMP GP-WATER	521
Y	*320-9114*	1	SHUTOFF GP-ELECTRICAL	894
Y	*315-7817*	1	SOLENOID GP-SHUTOFF	896
Y	*308-2293*	1	STARTING MOTOR GP-ELECTRIC	900
Y	*315-7819*	1	SWITCH GP-PRESSURE (ENGINE OIL)	912
Y	*308-2317*	1	SWITCH GP-TEMPERATURE (ENGINE COOLANT)	922
Y	*341-6637*	1	V-BELT GP	463
Y	*308-2285*	1	VALVE MECHANISM GP	467

557-9727 **ENGINE AR-PRIMARY (**contd.**)** **i10733017**

NOTE	PART NUMBER	QTY	PART NAME 1 2 3 4 5 6 (PRODUCT LEVEL)	SEE PAGE
Y - SEPARATE ILLUSTRATION				

<END>

587-9328 ENGINE AR-PRIMARY

45 BRAKE KW (60 BHP) AT 2800 RPM

FIELD REPLACEMENT ORDER 435-1636—PAGE: 92

SMCS-1000 **i10521709**

NOTE	PART NUMBER	QTY	PART NAME 1 2 3 4 5 6 (PRODUCT LEVEL)	SEE PAGE
Y	*399-2625*	1	ALTERNATOR GP-CHARGING	869
			—OR—	
Y	*584-9497*	1	ALTERNATOR GP-CHARGING	872
Y	*329-9278*	1	CAMSHAFT GP	154
Y	*596-3442*	1	CAMSHAFT GP	185
Y	*308-2302*	1	CONNECTION GP-WATER	497
			—OR—	
Y	*398-5884*	1	CONNECTION GP-WATER	500
Y	*308-2283*	1	CRANKSHAFT GP	219
			—OR—	
Y	*399-4716*	1	CRANKSHAFT GP	227
Y	*308-2281*	1	CYLINDER BLOCK GP	229
			—OR—	
Y	*584-3179*	1	CYLINDER BLOCK GP	243
Y	*308-2284*	1	CYLINDER HEAD GP	259
			—OR—	
Y	*596-2862*	1	CYLINDER HEAD GP	273
Y	*308-2304*	1	EXTENSION GP-FAN	278
			—OR—	
Y	*437-2623*	1	EXTENSION GP-FAN	282
Y	*308-2288*	1	FASTENER GP-FRONT HOUSING	284
			—OR—	
Y	*596-3460*	1	GOVERNOR GP	782
Y	*308-2297*	1	FILLER GP-ENGINE OIL	482
			—OR—	
Y	*532-8293*	1	FILLER GP-ENGINE OIL	489
Y	*516-8900*	1	FILM GP	928
			—OR—	
Y	*398-4274*	1	FILM GP	927
			—OR—	
Y	*629-5293*	1	FASTENER GP-FILTER	602
Y	*604-4574*	1	FILM GP (ALTERNATOR)	929
Y	*308-2298*	1	FILTER GP-ENGINE OIL	491
			—OR—	
Y	*398-8178*	1	FILTER GP-ENGINE OIL	492
Y	*308-5704*	1	FILTER GP-FUEL	756
			—OR—	
Y	*532-9922*	1	FILTER GP-FUEL	758
Y	*317-0586*	1	FLYWHEEL GP	289
			—OR—	
Y	*398-4807*	1	FLYWHEEL GP	294
Y	*308-2311*	1	GLOW PLUG GP	886
			—OR—	
Y	*587-0270*	1	GLOW PLUG GP	889
Y	*317-0588*	1	HOUSING GP-FLYWHEEL	301

587-9328 **ENGINE AR-PRIMARY (**contd.**)** **i10521709**

NOTE	PART NUMBER	QTY	PART NAME 1 2 3 4 5 6 (PRODUCT LEVEL)	SEE PAGE
			—OR—	
Y	*591-2138*	1	HOUSING GP-FLYWHEEL	309
Y	*308-2307*	1	HOUSING GP-FRONT	310
			—OR—	
Y	*599-9816*	1	HOUSING GP-FRONT	383
Y	*329-9277*	1	HOUSING GP-FRONT	346
Y	*309-6725*	1	LIFTING GP-ENGINE	392
			—OR—	
Y	*584-9814*	1	LIFTING GP-ENGINE	395
Y	*331-2589*	1	LINES GP-COOLANT	513
Y	*308-2287*	1	LINES GP-ENGINE OIL	493
Y	*329-4424*	1	MANIFOLD GP-EXHAUST	606
			—OR—	
Y	*532-8309*	1	FASTENER GP-EXHAUST MANIFOLD	601
Y	*311-1886*	1	PAN GP-OIL	406
			—OR—	
Y	*398-4953*	1	PAN GP-OIL	422
Y	*308-2286*	1	PISTON & ROD GP	426
			—OR—	
Y	*596-2865*	1	PISTON & ROD GP	437
			—OR—	
Y	*587-0189*	1	PISTON & ROD GP	436
Y	*518-9053*	1	PLATE & FILM GP	933
Y	*309-6720*	1	PLUG GP-OIL PAN	444
			—OR—	
Y	*398-5865*	1	PLUG GP-OIL PAN	446
Y	*321-6740*	1	PULLEY GP-CRANKSHAFT	449
			—OR—	
Y	*445-9988*	1	PULLEY GP-CRANKSHAFT	450
Y	*311-9027*	1	PULLEY GP-WATER PUMP	454
			—OR—	
Y	*398-4900*	1	PULLEY GP-FAN	453
Y	*308-2289*	1	PUMP GP-FUEL INJECTION	813
			—OR—	
Y	*596-2828*	1	PUMP GP-FUEL INJECTION	839
Y	*311-9028*	1	PUMP GP-FUEL TRANSFER	850
			—OR—	
Y	*599-9743*	1	FILTER GP-FUEL	761
Y	*317-0979*	1	PUMP GP-WATER	521
			—OR—	
Y	*598-5724*	1	PUMP GP-WATER	537
Y	*584-3189*	1	ROCKER ARM GP	458
Y	*308-2313*	1	SOLENOID GP-SHUTOFF (FUEL)	895
			—OR—	
Y	*519-4412*	1	SOLENOID GP-SHUTOFF (FUEL)	897
Y	*308-2293*	1	STARTING MOTOR GP-ELECTRIC	900
			—OR—	
Y	*398-4818*	1	STARTING MOTOR GP-ELECTRIC	908
Y	*308-2312*	1	SWITCH GP-PRESSURE	911

587-9328 **ENGINE AR-PRIMARY (**contd.**)** **i10521709**

NOTE	PART NUMBER	QTY	PART NAME 1 2 3 4 5 6 (PRODUCT LEVEL)	SEE PAGE
			—OR—	
Y	*532-8314*	1	SWITCH GP-PRESSURE	919
Y	*308-2317*	1	SWITCH GP-TEMPERATURE (ENGINE COOLANT)	922
			—OR—	
Y	*601-4322*	1	SENSOR GP-TEMPERATURE (ENGINE COOLANT)	893
Y	*442-6206*	1	TURBOCHARGER GP	642
			—OR—	
Y	*600-5115*	1	TURBOCHARGER GP	672
Y	*311-9029*	1	V-BELT GP (WATER PUMP)	461
			—OR—	
Y	*428-5949*	1	V-BELT GP	465
Y	*308-2285*	1	VALVE MECHANISM GP	467
Y	*600-5140*	1	MOUNTING GP-EXHAUST	610

Y - SEPARATE ILLUSTRATION

<END>

610-7720 ENGINE AR-PRIMARY

38 BRAKE KW (51 BHP) AT 3000 RPM

SMCS-1000 **i10663394**

NOTE	PART NUMBER	QTY	PART NAME 1 2 3 4 5 6 (PRODUCT LEVEL)	SEE PAGE
Y	*600-5149*	1	AIR CLEANER GP	590
Y	*518-9064*	1	ALTERNATOR GP-CHARGING	871
Y	*596-3428*	1	CAMSHAFT GP	182
Y	*541-6343*	1	CONNECTION GP-ELECTRICAL	876
Y	*532-9705*	1	CONNECTION GP-EXHAUST	597
Y	*398-5884*	1	CONNECTION GP-WATER	500
Y	*586-6654*	1	COVER GP-VALVE MECHANISM	214
Y	*399-4716*	1	CRANKSHAFT GP	227
Y	*584-3179*	1	CYLINDER BLOCK GP	243
Y	*596-2861*	1	CYLINDER HEAD GP	272
Y	*398-9095*	1	EXTENSION GP-FAN	281
Y	*521-8165*	1	FAN GP-SUCTION	509
Y	*533-3936*	1	FILLER GP-ENGINE OIL	490
Y	*604-4574*	1	FILM GP (ALTERNATOR)	929
Y	*607-7117*	1	FILM GP (RADIATOR)	930
Y	*398-8178*	1	FILTER GP-ENGINE OIL	492
Y	*398-4803*	1	FLYWHEEL GP	293
Y	*587-0270*	1	GLOW PLUG GP	889
Y	*596-3462*	1	GOVERNOR GP	784
Y	*591-2135*	1	HOUSING GP-FLYWHEEL	308
Y	*599-9816*	1	HOUSING GP-FRONT	383
Y	*584-9814*	1	LIFTING GP-ENGINE	395
Y	*584-9801*	1	MANIFOLD GP-EXHAUST	608
Y	*398-4951*	1	PAN GP-OIL	420
Y	*596-2866*	1	PISTON & ROD GP	438
Y	*518-9053*	1	PLATE & FILM GP	933
Y	*398-5865*	1	PLUG GP-OIL PAN	446
Y	*445-9988*	1	PULLEY GP-CRANKSHAFT	450
Y	*398-4866*	1	PULLEY GP-FAN	452
Y	*599-9752*	1	PUMP GP-FILTER & FUEL TRANSFER	811
Y	*596-2825*	1	PUMP GP-FUEL INJECTION	833
Y	*565-2285*	1	PUMP GP-FUEL PRIMING	843
Y	*598-5724*	1	PUMP GP-WATER	537
Y	*584-9829*	1	RADIATOR GP	569
Y	*584-3189*	1	ROCKER ARM GP	458
Y	*601-4322*	1	SENSOR GP-TEMPERATURE	893
Y	*519-4412*	1	SOLENOID GP-SHUTOFF (FUEL)	897
Y	*398-4818*	1	STARTING MOTOR GP-ELECTRIC	908
Y	*584-9822*	1	SWITCH GP-PRESSURE (ENGINE OIL)	920
Y	*428-5948*	1	V-BELT GP (WATER PUMP)	464

Y - SEPARATE ILLUSTRATION

<END>

610-7721 ENGINE AR-PRIMARY

45 BRAKE KW (60 BHP) AT 2800 RPM

SMCS-1000 **i10663400**

NOTE	PART NUMBER	QTY	PART NAME 1 2 3 4 5 6 (PRODUCT LEVEL)	SEE PAGE
Y	*600-5153*	1	AIR CLEANER GP	592
Y	*518-9064*	1	ALTERNATOR GP-CHARGING	871
Y	*596-3442*	1	CAMSHAFT GP	185
Y	*541-6343*	1	CONNECTION GP-ELECTRICAL	876
Y	*532-9705*	1	CONNECTION GP-EXHAUST	597
Y	*398-5884*	1	CONNECTION GP-WATER	500
Y	*399-4716*	1	CRANKSHAFT GP	227
Y	*584-3179*	1	CYLINDER BLOCK GP	243
Y	*596-2862*	1	CYLINDER HEAD GP	273
Y	*437-2624*	1	FAN GP (EXTENSION)	504
Y	*608-8936*	1	FAN GP-SUCTION	510
Y	*533-3936*	1	FILLER GP-ENGINE OIL	490
Y	*607-7117*	1	FILM GP (RADIATOR)	930
Y	*604-4574*	1	FILM GP (ALTERNATOR)	929
Y	*398-8178*	1	FILTER GP-ENGINE OIL	492
Y	*398-4807*	1	FLYWHEEL GP	294
Y	*587-0270*	1	GLOW PLUG GP	889
Y	*596-3460*	1	GOVERNOR GP	782
Y	*591-2138*	1	HOUSING GP-FLYWHEEL	309
Y	*599-9816*	1	HOUSING GP-FRONT	383
Y	*584-9814*	1	LIFTING GP-ENGINE	395
Y	*600-5140*	1	MOUNTING GP-EXHAUST	610
Y	*398-4951*	1	PAN GP-OIL	420
Y	*587-0189*	1	PISTON & ROD GP	436
Y	*518-9053*	1	PLATE & FILM GP	933
Y	*398-5865*	1	PLUG GP-OIL PAN	446
Y	*445-9988*	1	PULLEY GP-CRANKSHAFT	450
Y	*398-4900*	1	PULLEY GP-FAN	453
Y	*599-9752*	1	PUMP GP-FILTER & FUEL TRANSFER	811
Y	*596-2828*	1	PUMP GP-FUEL INJECTION	839
Y	*565-2286*	1	PUMP GP-FUEL PRM & PRIM FILTER	848
Y	*598-5724*	1	PUMP GP-WATER	537
Y	*600-6119*	1	RADIATOR GP	573
Y	*584-3189*	1	ROCKER ARM GP	458
Y	*601-4322*	1	SENSOR GP-TEMPERATURE	893
Y	*519-4412*	1	SOLENOID GP-SHUTOFF (FUEL)	897
Y	*398-4818*	1	STARTING MOTOR GP-ELECTRIC	908
Y	*584-9822*	1	SWITCH GP-PRESSURE (ENGINE OIL)	920
Y	*600-5117*	1	TURBOCHARGER GP	674
Y	*428-5949*	1	V-BELT GP	465

Y - SEPARATE ILLUSTRATION

<END>

600-6923 ACCESSORY GP-ENGINE

PART OF 433-1379, 433-1380 ENGINE AR, 435-1636, 435-1641, 435-1646, 435-1647 ENGINE AR-PRIMARY

SMCS-1358, 1405, 1802 **i08746177**

NOTE	REF NO	GRAPHIC REF	PART NUMBER	QTY	PART NAME 1 2 3 4 5 6 (PRODUCT LEVEL)	SEE PAGE
	1	1	**154-2427**	1	GASKET-EXHAUST MANIFOLD	
	2	1	**233-0695**	1	SEAL-VALVE COVER	
	3	1	**458-6608**	1	PLUG-SEAL	

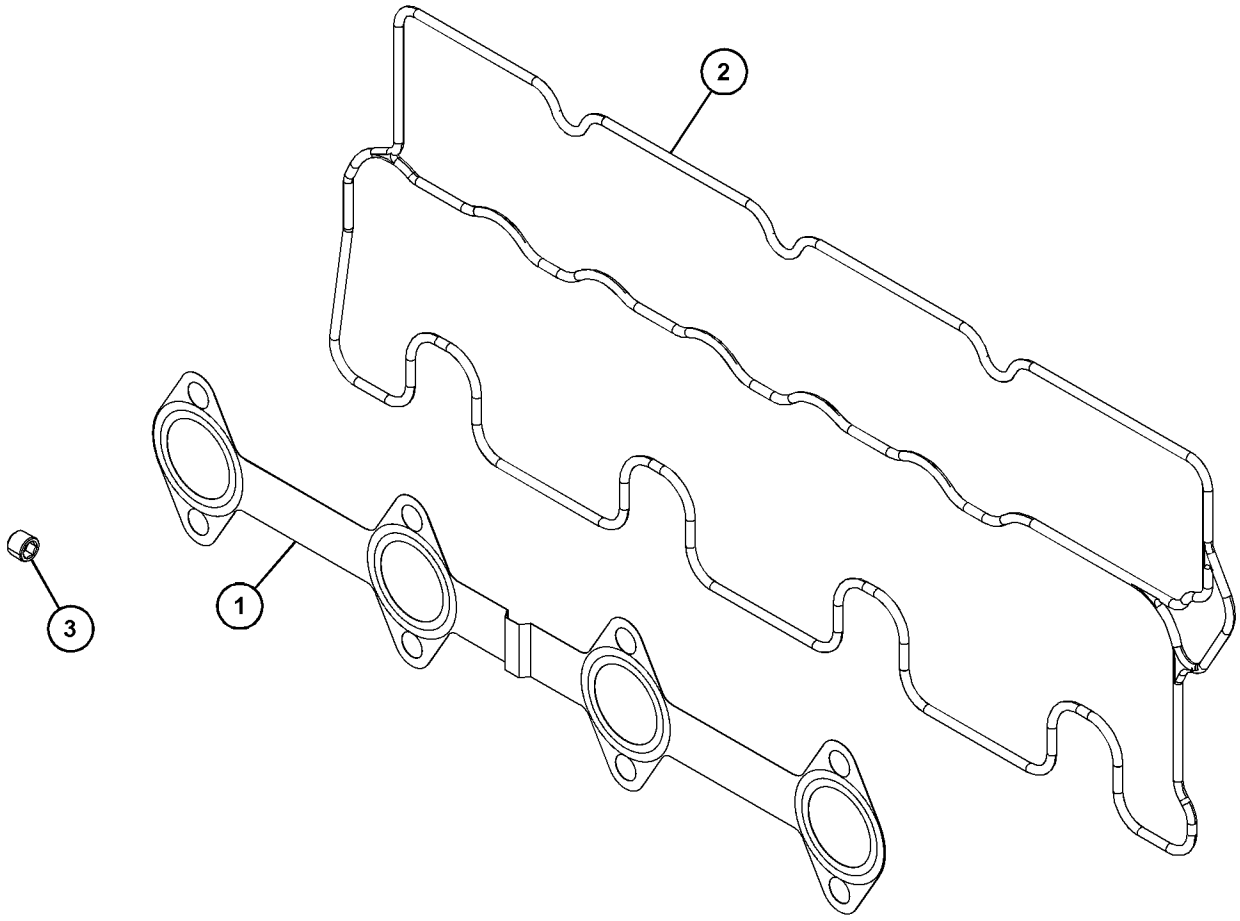

GRAPHIC #1 <END> g06724195

308-1902 CAMSHAFT AS

PART OF 596-3442, 626-7889 CAMSHAFT GP

SMCS-1210 **i09107342**

NOTE	REF NO	GRAPHIC REF	PART NUMBER	QTY	PART NAME 1 2 3 4 5 6 (PRODUCT LEVEL)	SEE PAGE
F			**153-6492**	1	KEY-WOODRUFF	
F			**154-4505**	1	BEARING	
F			**308-1903**	1	GEAR-CAMSHAFT (66-TEETH)	
F			**313-9323**	1	SPACER (20.5X28X9.3-MM THK)	

F - NOT SHOWN

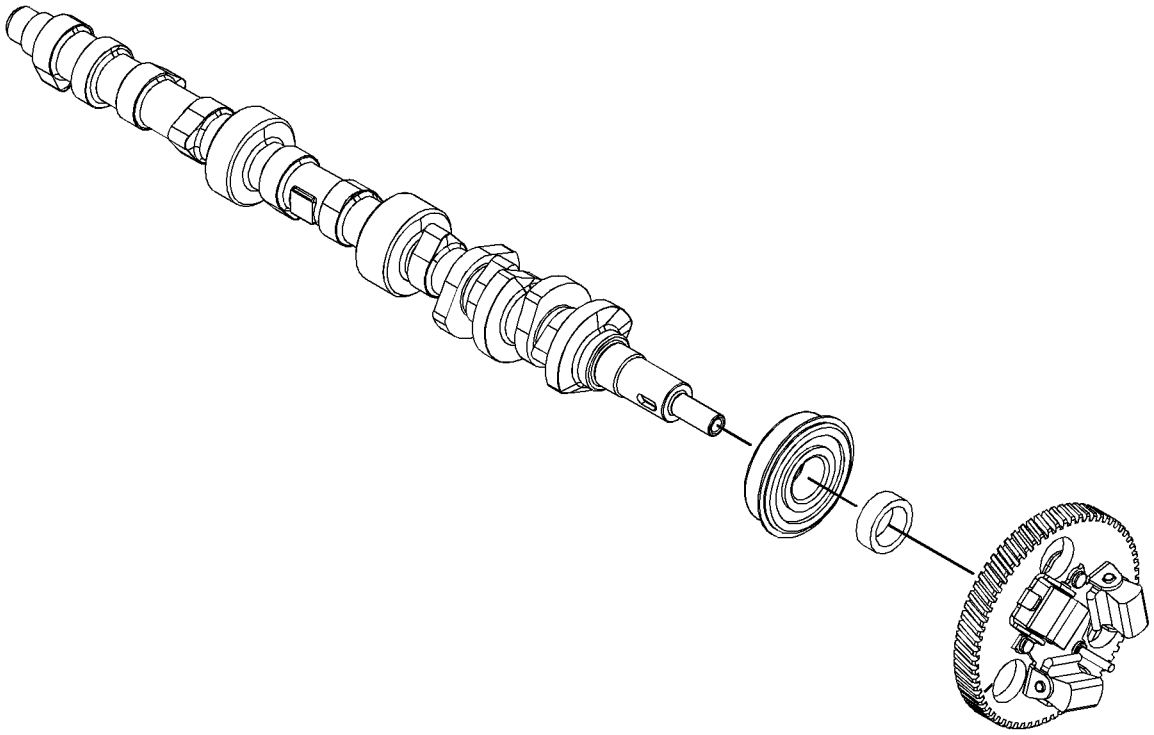

GRAPHIC #1 <END> g07516311

343-2871 CAMSHAFT AS

PART OF 364-2522, 365-4287, 508-9044, 596-3440 CAMSHAFT GP, 321-4257 HOUSING GP-FRONT

SMCS-1210 **i08198021**

NOTE	REF NO	GRAPHIC REF	PART NUMBER	QTY	PART NAME 1 2 3 4 5 6 (PRODUCT LEVEL)	SEE PAGE
	1	1	**153-6492**	1	KEY-WOODRUFF	
	2	1	**154-4505**	1	BEARING	
	3	1	**313-9323**	1	SPACER (20.5X28X9.3-MM THK)	
	4	1	**342-8499**	1	GEAR-CAMSHAFT (62-TEETH)	

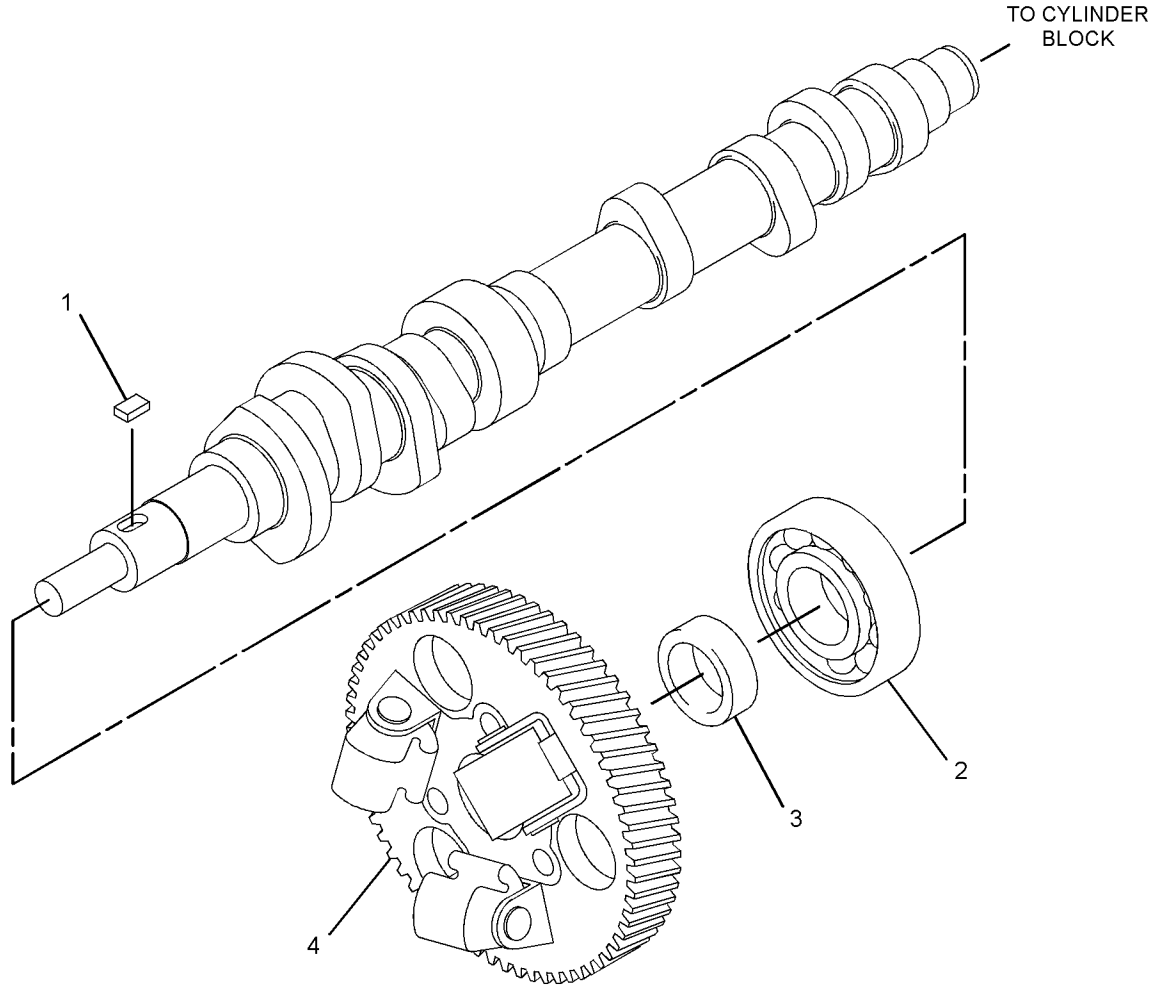

GRAPHIC #1 <END> g03333891

311-9025 CAMSHAFT GP

PART OF 435-1641 ENGINE AR-PRIMARY

SMCS-1210 **i02770458**

NOTE	REF NO	GRAPHIC REF	PART NUMBER	QTY	PART NAME 1 2 3 4 5 6 (PRODUCT LEVEL)	SEE PAGE
	1	1	**153-6838**	2	BOLT AS	
	2	1	**154-1680**	1	PLATE	
	3	1	**308-1904**	1	SLIDER	
	4	1	**309-6733**	1	CAMSHAFT AS	
	4A	1	**153-6492**	1	KEY-WOODRUFF	
	4B	1	**154-4505**	1	BEARING	
	4C	1	**308-1903**	1	GEAR-CAMSHAFT (66-TEETH)	
	4D	1	**313-9323**	1	SPACER (20.5X28X9.3-MM THK)	

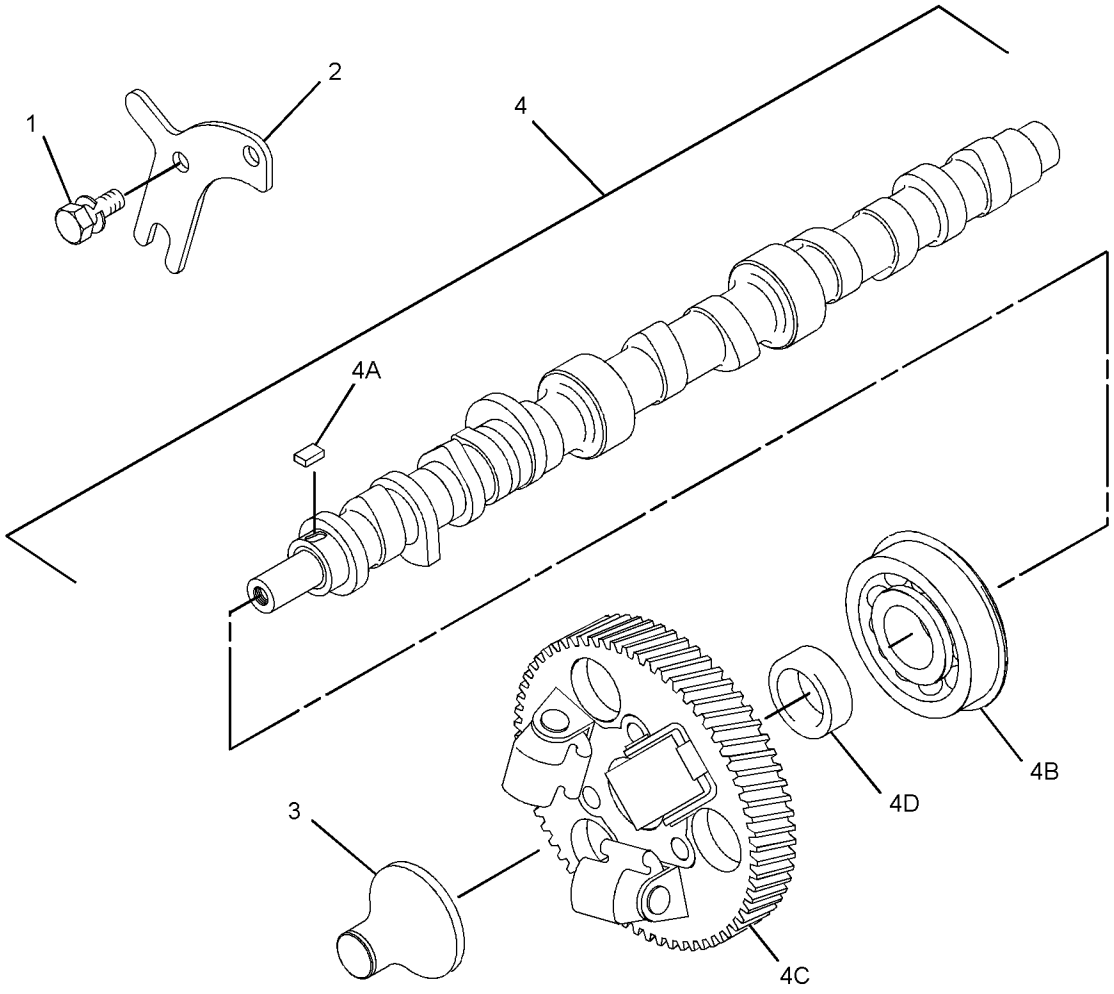

GRAPHIC #1 <END> g01418833

317-0971 CAMSHAFT GP

PART OF 433-1380 ENGINE AR

SMCS-1210 **i05480733**

NOTE	REF NO	GRAPHIC REF	PART NUMBER	QTY	PART NAME 1 2 3 4 5 6 (PRODUCT LEVEL)	SEE PAGE
	1	1	**153-6838**	2	BOLT AS	
	2	1	**154-1680**	1	PLATE	
	3	1	**308-1904**	1	SLIDER	
	4	1	**308-1902**	1	CAMSHAFT AS	
	4A	1	**153-6492**	1	KEY-WOODRUFF	
	4B	1	**154-4505**	1	BEARING	
	4C	1	**308-1903**	1	GEAR-CAMSHAFT (66-TEETH)	
	4D	1	**313-9323**	1	SPACER (20.5X28X9.3-MM THK)	

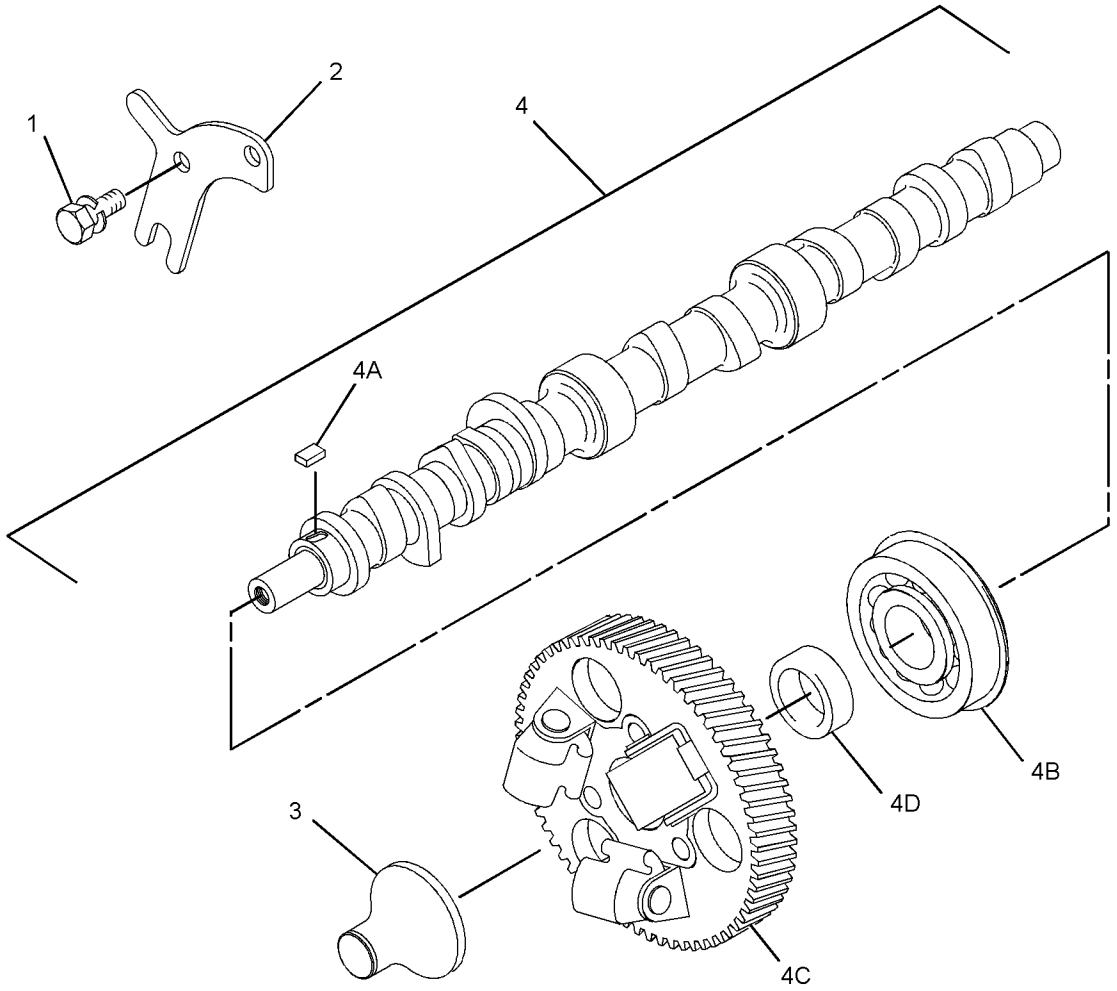

GRAPHIC #1 <END> g01418833

317-7188 CAMSHAFT GP

PART OF 435-1645 CYLINDER BLOCK GP-LONG

SMCS-1210 **i04404845**

NOTE	REF NO	GRAPHIC REF	PART NUMBER	QTY	PART NAME 1 2 3 4 5 6 (PRODUCT LEVEL)	SEE PAGE
	1	1	**153-6838**	2	BOLT AS	
	2	1	**154-1680**	1	PLATE	
	3	1	**321-4252**	1	SLIDER	
	4	1	**309-6733**	1	CAMSHAFT AS	
	4A	1	**153-6492**	1	KEY-WOODRUFF	
	4B	1	**154-4505**	1	BEARING	
	4C	1	**308-1903**	1	GEAR-CAMSHAFT (66-TEETH) (66-TEETH)	
	4D	1	**313-9323**	1	SPACER (20.5X28X9.3-MM THK)	

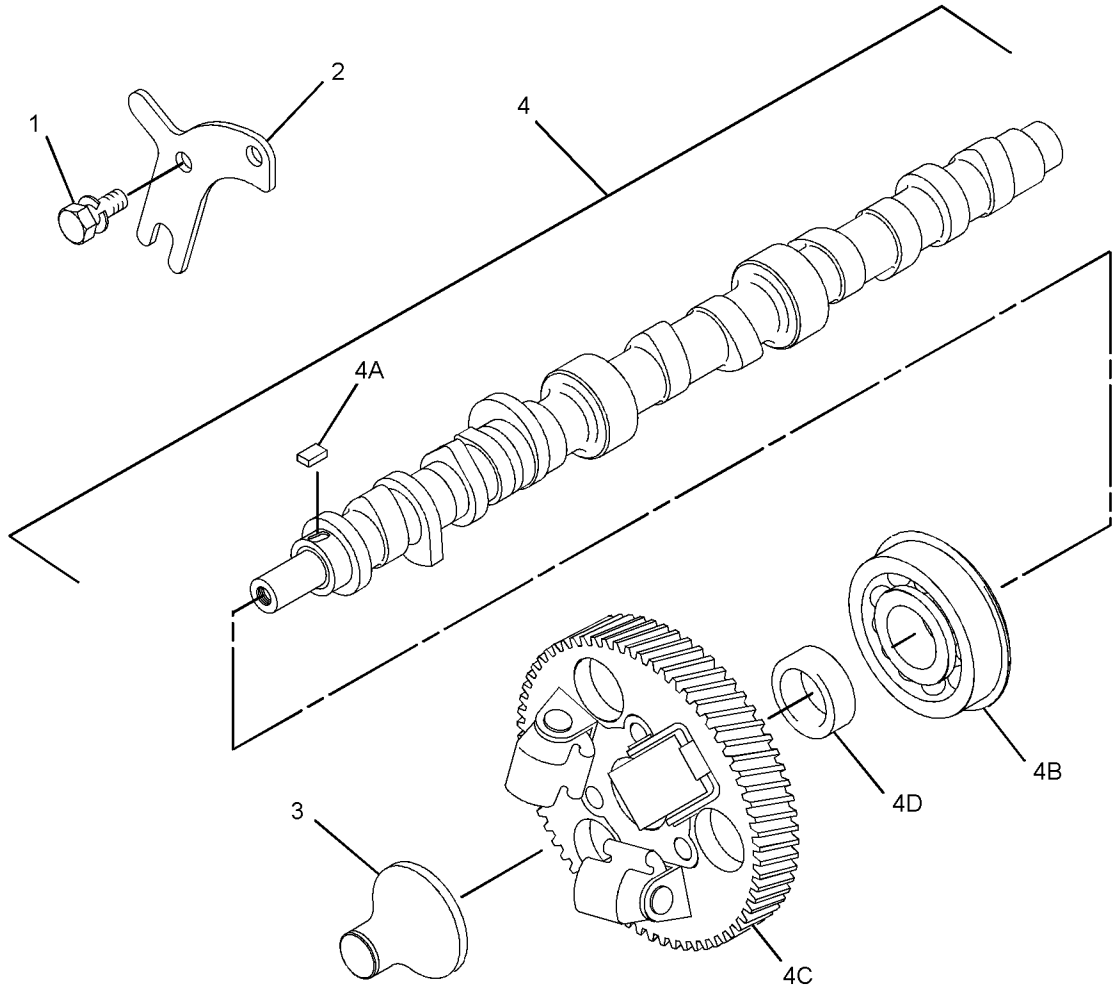

GRAPHIC #1 <END> g01418833

323-9147 CAMSHAFT GP

SMCS-1210 **i02908568**

NOTE	REF NO	GRAPHIC REF	PART NUMBER	QTY	PART NAME 1 2 3 4 5 6 (PRODUCT LEVEL)	SEE PAGE
	1	1	**153-6838**	2	BOLT AS	
	2	1	**154-1680**	1	PLATE	
	3	1	**308-1902**	1	CAMSHAFT AS	
	3A	1	**153-6492**	1	KEY-WOODRUFF	
	3B	1	**154-4505**	1	BEARING	
	3C	1	**308-1903**	1	GEAR-CAMSHAFT (66-TEETH)	
	3D	1	**313-9323**	1	SPACER (20.5X28X9.3-MM THK)	
	4	1	**308-1904**	1	SLIDER	

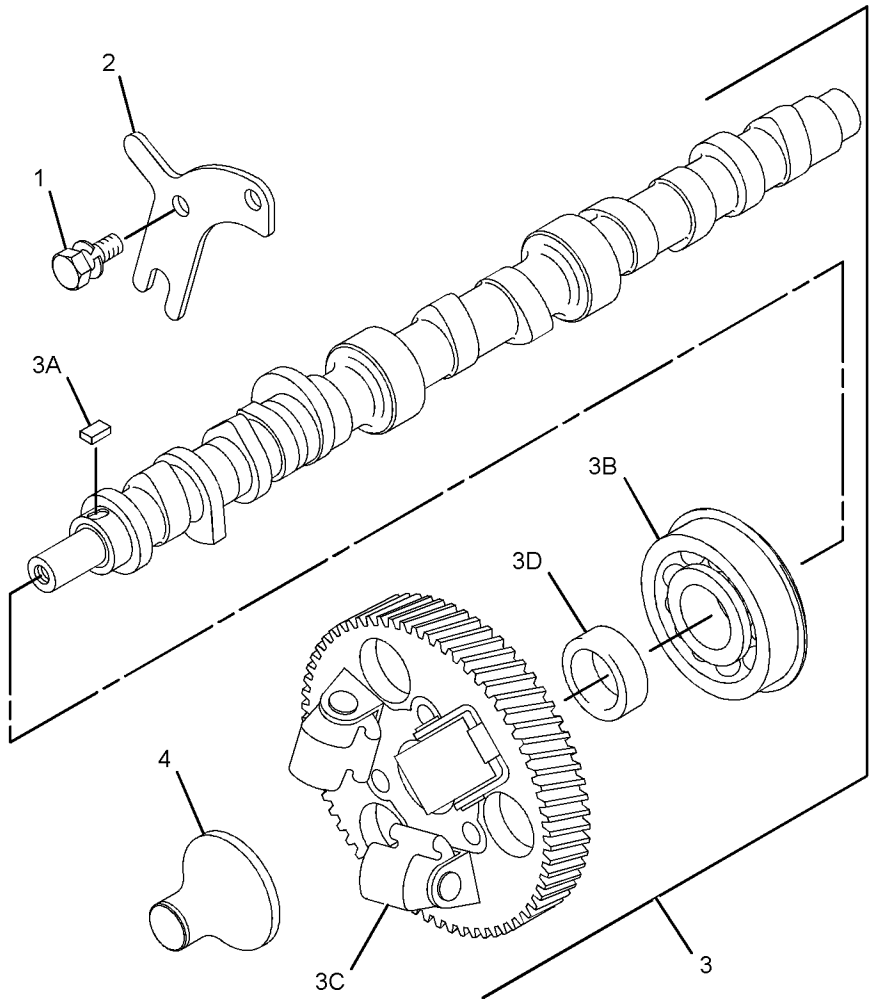

GRAPHIC #1 <END> g01629653

325-5663 CAMSHAFT GP

SMCS-1210 **i07483721**

NOTE	REF NO	GRAPHIC REF	PART NUMBER	QTY	PART NAME 1 2 3 4 5 6 (PRODUCT LEVEL)	SEE PAGE
	1	1	**153-6838**	2	BOLT AS	
	2	1	**154-1680**	1	PLATE	
	3	1	**363-8409**	1	SLIDER	
	4	1	**343-2871**	1	CAMSHAFT AS	
	4A	1	**153-6492**	1	KEY-WOODRUFF	
	4B	1	**154-4505**	1	BEARING	
	4C	1	**313-9323**	1	SPACER (20.5X28X9.3-MM THK)	
	4D	1	**342-8499**	1	GEAR-CAMSHAFT (62-TEETH)	

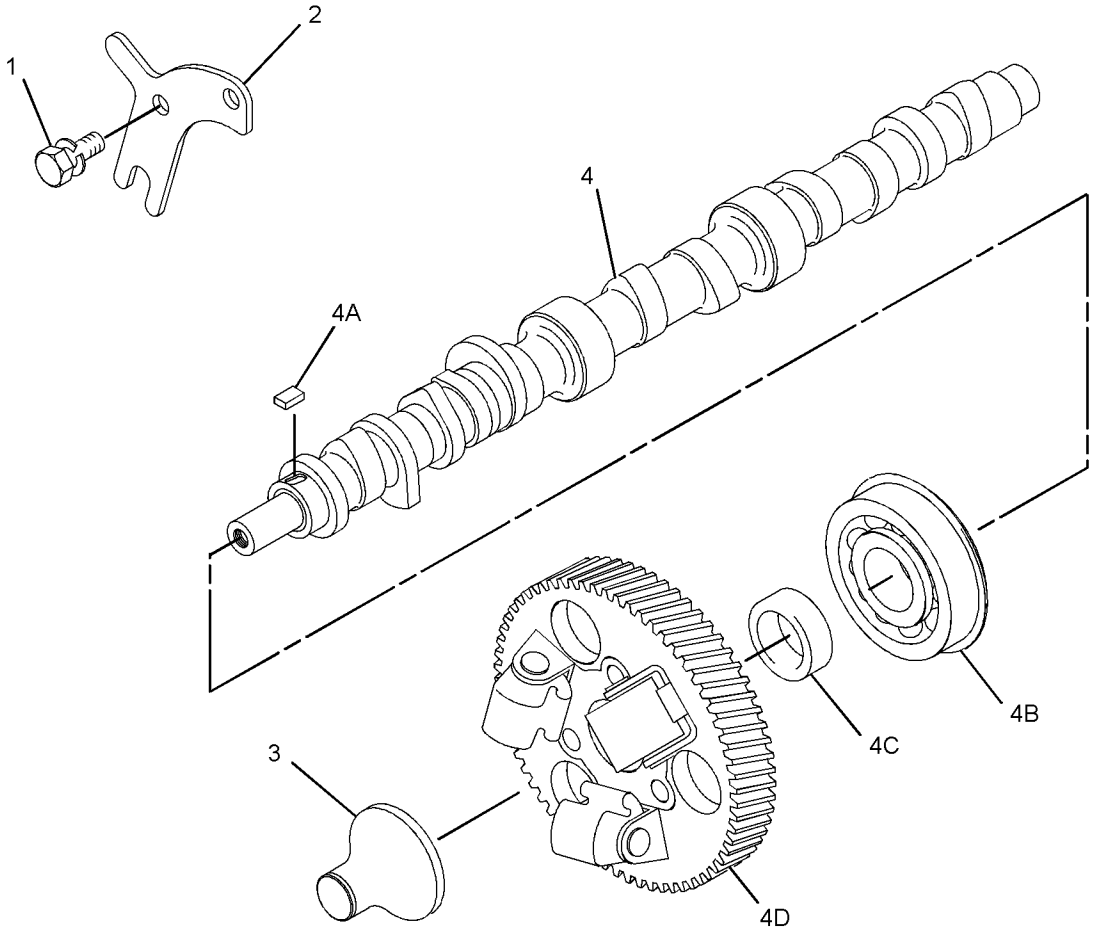

GRAPHIC #1 <END> g02038835

325-9476 CAMSHAFT GP

PART OF 433-1379 ENGINE AR, 516-9335 ENGINE AR-PRIMARY

SMCS-1210 **i02958747**

NOTE	REF NO	GRAPHIC REF	PART NUMBER	QTY	PART NAME 1 2 3 4 5 6 (PRODUCT LEVEL)	SEE PAGE
	1	1	**153-6838**	2	BOLT AS	
	2	1	**154-1680**	1	PLATE	
	3	1	**308-1904**	1	SLIDER	
	4	1	**309-6733**	1	CAMSHAFT AS	
	4A	1	**153-6492**	1	KEY-WOODRUFF	
	4B	1	**154-4505**	1	BEARING	
	4C	1	**308-1903**	1	GEAR-CAMSHAFT (66-TEETH)	
	4D	1	**313-9323**	1	SPACER (20.5X28X9.3-MM THK)	

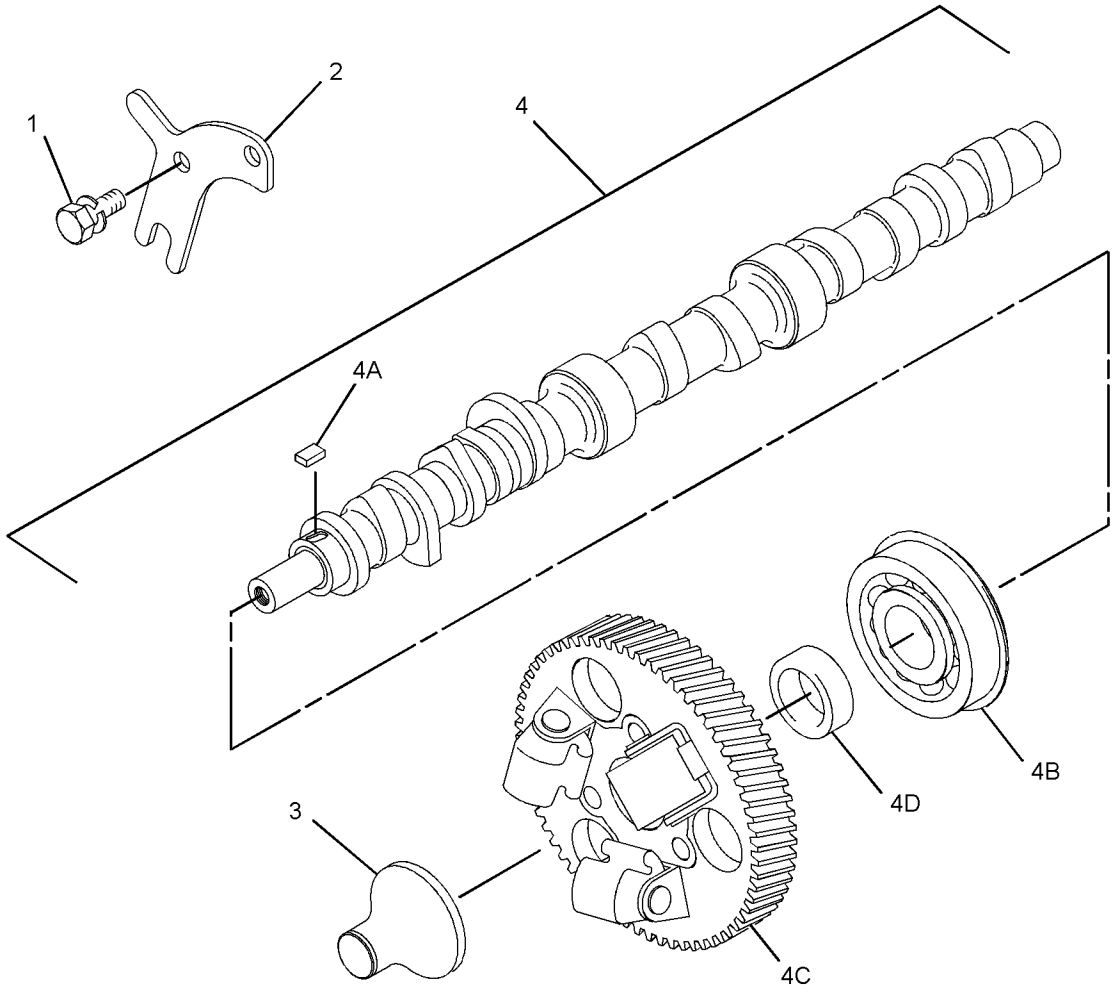

GRAPHIC #1 <END> g01418833

328-3293 CAMSHAFT GP

SMCS-1210 **i03536315**

NOTE	REF NO	GRAPHIC REF	PART NUMBER	QTY	PART NAME 1 2 3 4 5 6 (PRODUCT LEVEL)	SEE PAGE
	1	1	**153-6838**	2	BOLT AS	
	2	1	**154-1680**	1	PLATE	
	3	1	**308-1902**	1	CAMSHAFT AS	
	3A	1	**153-6492**	1	KEY-WOODRUFF	
	3B	1	**154-4505**	1	BEARING	
	3C	1	**308-1903**	1	GEAR-CAMSHAFT (66-TEETH)	
	3D	1	**313-9323**	1	SPACER (20.5X28X9.3-MM THK)	
	4	1	**308-1904**	1	SLIDER	

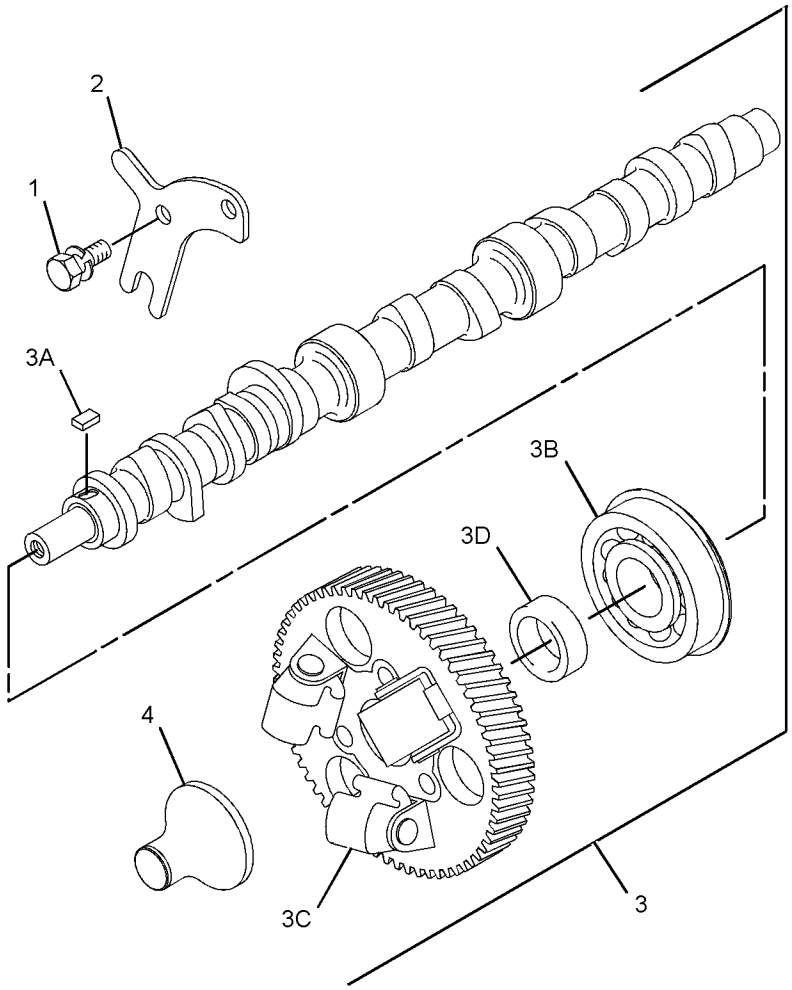

GRAPHIC #1 <END> g01886857

329-9278 CAMSHAFT GP

PART OF 435-1636, 459-2953 ENGINE AR-PRIMARY

TYPE 1

SMCS-1210 **i05815415**

NOTE	REF NO	GRAPHIC REF	PART NUMBER	QTY	PART NAME 1 2 3 4 5 6 (PRODUCT LEVEL)	SEE PAGE
M	1	1	**6I-0846**	1	BOLT (M6X1X14-MM)	
	2	1	**153-6415**	1	WASHER (SEAL)	
	3	1	**153-6838**	2	BOLT AS	
	4	1	**154-1680**	1	PLATE	
	5	1	**308-1902**	1	CAMSHAFT AS	
	5A	1	**153-6492**	1	KEY-WOODRUFF	
	5B	1	**154-4505**	1	BEARING	
	5C	1	**308-1903**	1	GEAR-CAMSHAFT (66-TEETH)	
	5D	1	**313-9323**	1	SPACER (20.5X28X9.3-MM THK)	
	6	1	**308-1904**	1	SLIDER	

M - METRIC PART

329-9278 **CAMSHAFT GP (**contd.**)** **i05815415**

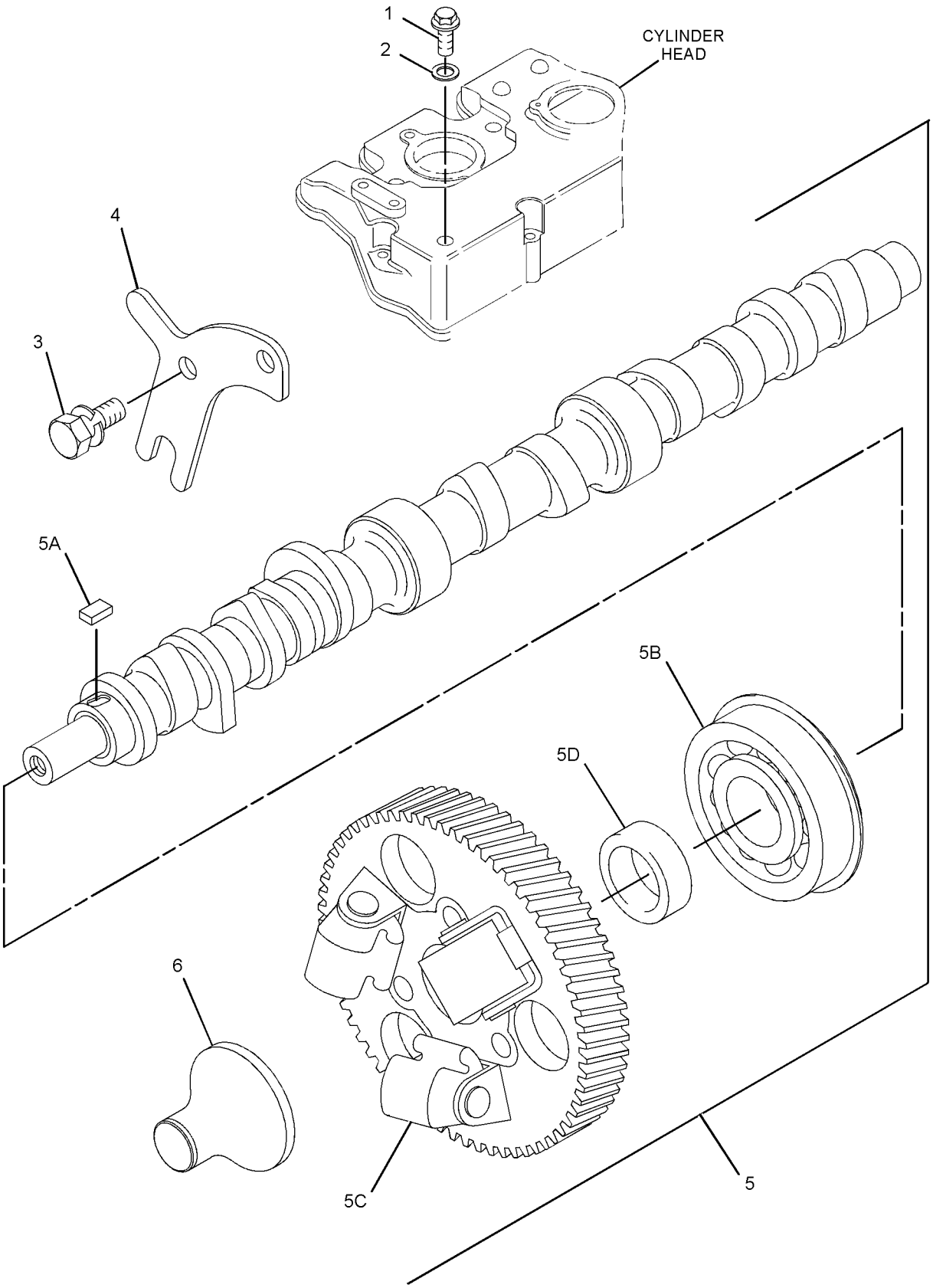

GRAPHIC #1 <END> g01616642

329-9278 CAMSHAFT GP

PART OF 435-1636, 459-2953, 491-3396, 495-6243, 541-9277, 587-9328 ENGINE AR-PRIMARY
TYPE 2

SMCS-1210 **i06842574**

NOTE	REF NO	GRAPHIC REF	PART NUMBER	QTY	PART NAME 1 2 3 4 5 6 (PRODUCT LEVEL)	SEE PAGE
	1	1	**308-1902**	1	CAMSHAFT AS	
	1A	1	**153-6492**	1	KEY-WOODRUFF	
	1B	1	**154-4505**	1	BEARING	
	1C	1	**308-1903**	1	GEAR-CAMSHAFT (66-TEETH)	
	1D	1	**313-9323**	1	SPACER (20.5X28X9.3-MM THK)	
	2	1	**308-1904**	1	SLIDER	
	3	1	**153-6838**	2	BOLT AS	
	4	1	**154-1680**	1	PLATE	

329-9278 **CAMSHAFT GP (**contd.**)** **i06842574**

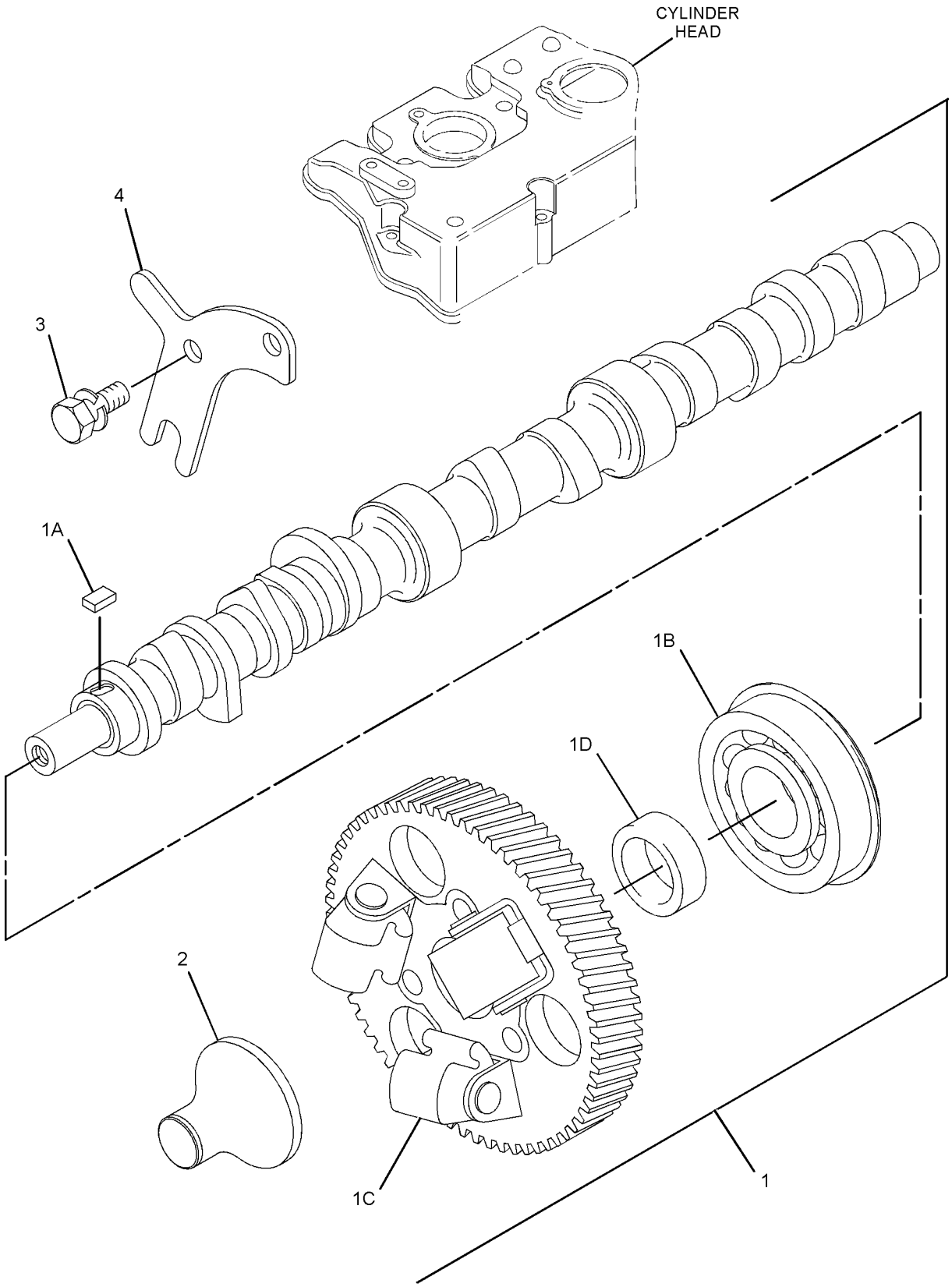

GRAPHIC #1 <END> g06138171

331-0216 CAMSHAFT GP

PART OF 435-1637, 435-1638 ENGINE AR

TYPE 1

SMCS-1210 **i03115940**

NOTE	REF NO	GRAPHIC REF	PART NUMBER	QTY	PART NAME 1 2 3 4 5 6 (PRODUCT LEVEL)	SEE PAGE
M	1	1	**6I-0846**	1	BOLT (M6X1X14-MM)	
	2	1	**153-6415**	1	WASHER (SEAL)	
	3	1	**153-6838**	2	BOLT AS	
	4	1	**154-1680**	1	PLATE	
	5	1	**308-1902**	1	CAMSHAFT AS	
	5A	1	**153-6492**	1	KEY-WOODRUFF	
	5B	1	**154-4505**	1	BEARING	
	5C	1	**308-1903**	1	GEAR-CAMSHAFT (66-TEETH)	
	5D	1	**313-9323**	1	SPACER (20.5X28X9.3-MM THK)	
	6	1	**308-1904**	1	SLIDER	

M - METRIC PART

331-0216 **CAMSHAFT GP (**contd.**)** **i03115940**

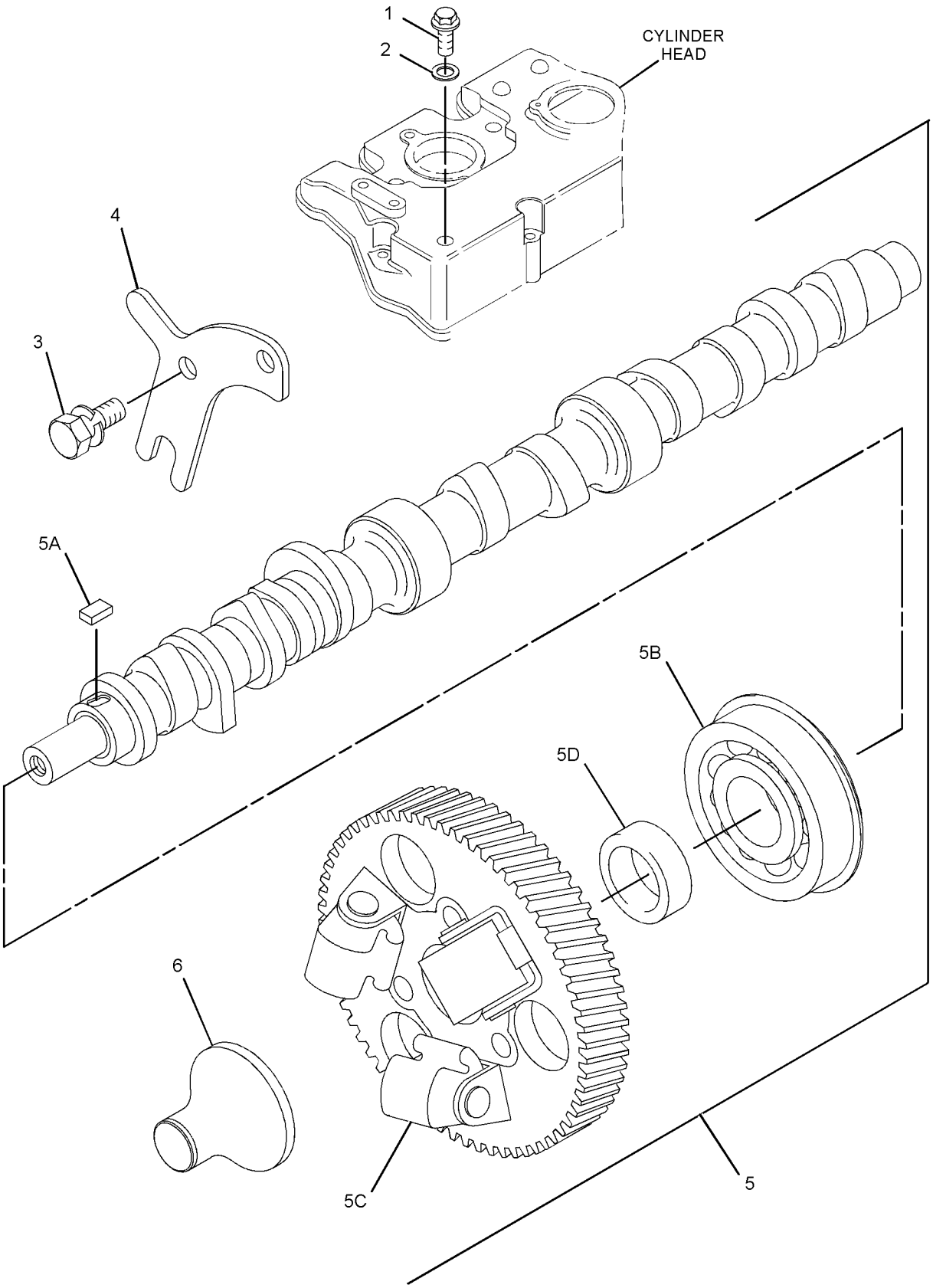

GRAPHIC #1 <END> g01616642

331-0216 CAMSHAFT GP

PART OF 435-1637, 435-1638 ENGINE AR
TYPE 2

SMCS-1210 **i06842596**

NOTE	REF NO	GRAPHIC REF	PART NUMBER	QTY	PART NAME 1 2 3 4 5 6 (PRODUCT LEVEL)	SEE PAGE
	1	1	**308-1902**	1	CAMSHAFT AS	
	1A	1	**153-6492**	1	KEY-WOODRUFF	
	1B	1	**154-4505**	1	BEARING	
	1C	1	**308-1903**	1	GEAR-CAMSHAFT (66-TEETH)	
	1D	1	**313-9323**	1	SPACER (20.5X28X9.3-MM THK)	
	2	1	**308-1904**	1	SLIDER	
	3	1	**153-6838**	2	BOLT AS	
	4	1	**154-1680**	1	PLATE	

331-0216 **CAMSHAFT GP (**contd.**)** **i06842596**

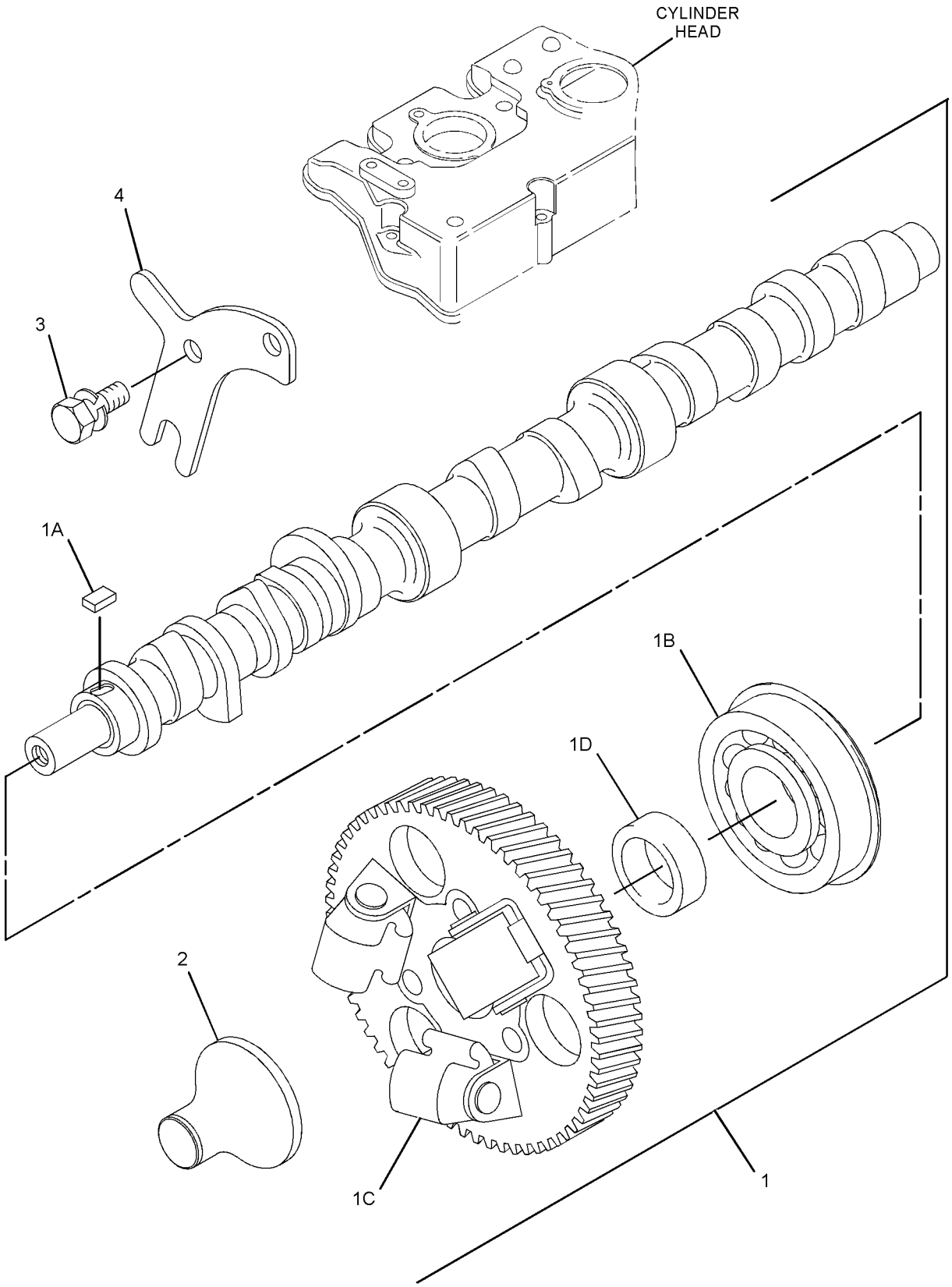

GRAPHIC #1 <END> g06138169

332-1364 CAMSHAFT GP

PART OF 495-3121 ENGINE AR-PRIMARY

TYPE 1

SMCS-1210 **i03179578**

NOTE	REF NO	GRAPHIC REF	PART NUMBER	QTY	PART NAME 1 2 3 4 5 6 (PRODUCT LEVEL)	SEE PAGE
M	1	1	**6I-0846**	1	BOLT (M6X1X14-MM)	
	2	1	**153-6415**	1	WASHER (SEAL)	
	3	1	**153-6838**	2	BOLT AS	
	4	1	**154-1680**	1	PLATE	
	5	1	**308-1902**	1	CAMSHAFT AS	
	5A	1	**153-6492**	1	KEY-WOODRUFF	
	5B	1	**154-4505**	1	BEARING	
	5C	1	**308-1903**	1	GEAR-CAMSHAFT (66-TEETH)	
	5D	1	**313-9323**	1	SPACER (20.5X28X9.3-MM THK)	
	6	1	**308-1904**	1	SLIDER	

M - METRIC PART

332-1364 **CAMSHAFT GP (**contd.**)** **i03179578**

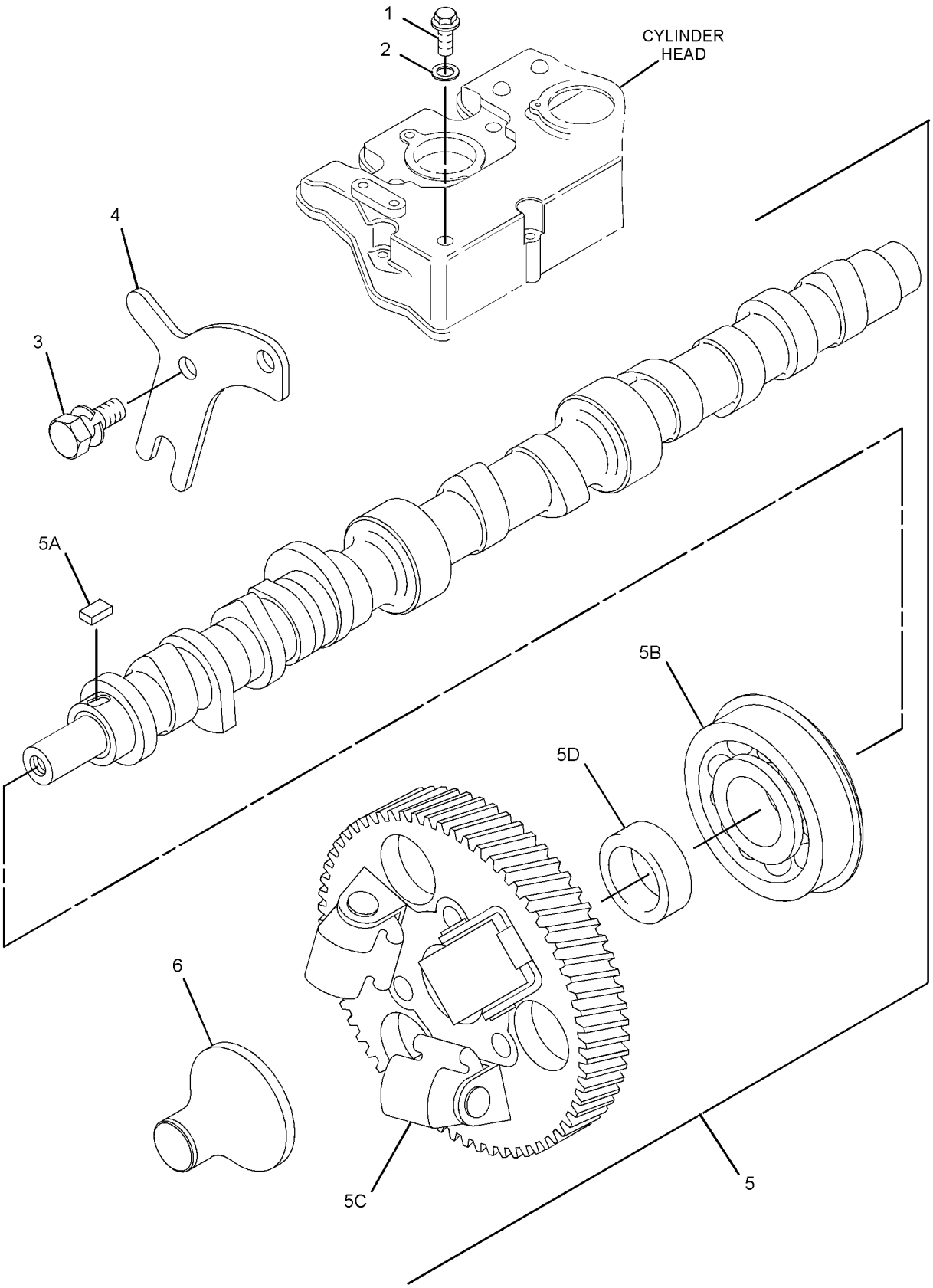

GRAPHIC #1 <END> g01616642

332-1364 CAMSHAFT GP

PART OF 461-7892, 461-7894, 495-3121 ENGINE AR-PRIMARY

TYPE 2

SMCS-1210 **i06842600**

NOTE	REF NO	GRAPHIC REF	PART NUMBER	QTY	PART NAME 1 2 3 4 5 6 (PRODUCT LEVEL)	SEE PAGE
	1	1	**308-1902**	1	CAMSHAFT AS	
	1A	1	**153-6492**	1	KEY-WOODRUFF	
	1B	1	**154-4505**	1	BEARING	
	1C	1	**308-1903**	1	GEAR-CAMSHAFT (66-TEETH)	
	1D	1	**313-9323**	1	SPACER (20.5X28X9.3-MM THK)	
	2	1	**308-1904**	1	SLIDER	
	3	1	**153-6838**	2	BOLT AS	
					(EACH INCLUDES)	
		1	**3B-4504**	1	LOCKWASHER	
M		1	**8T-4171**	1	BOLT (M6X1X12-MM)	
	4	1	**154-1680**	1	PLATE	

M - METRIC PART

332-1364 **CAMSHAFT GP (**contd.**)** **i06842600**

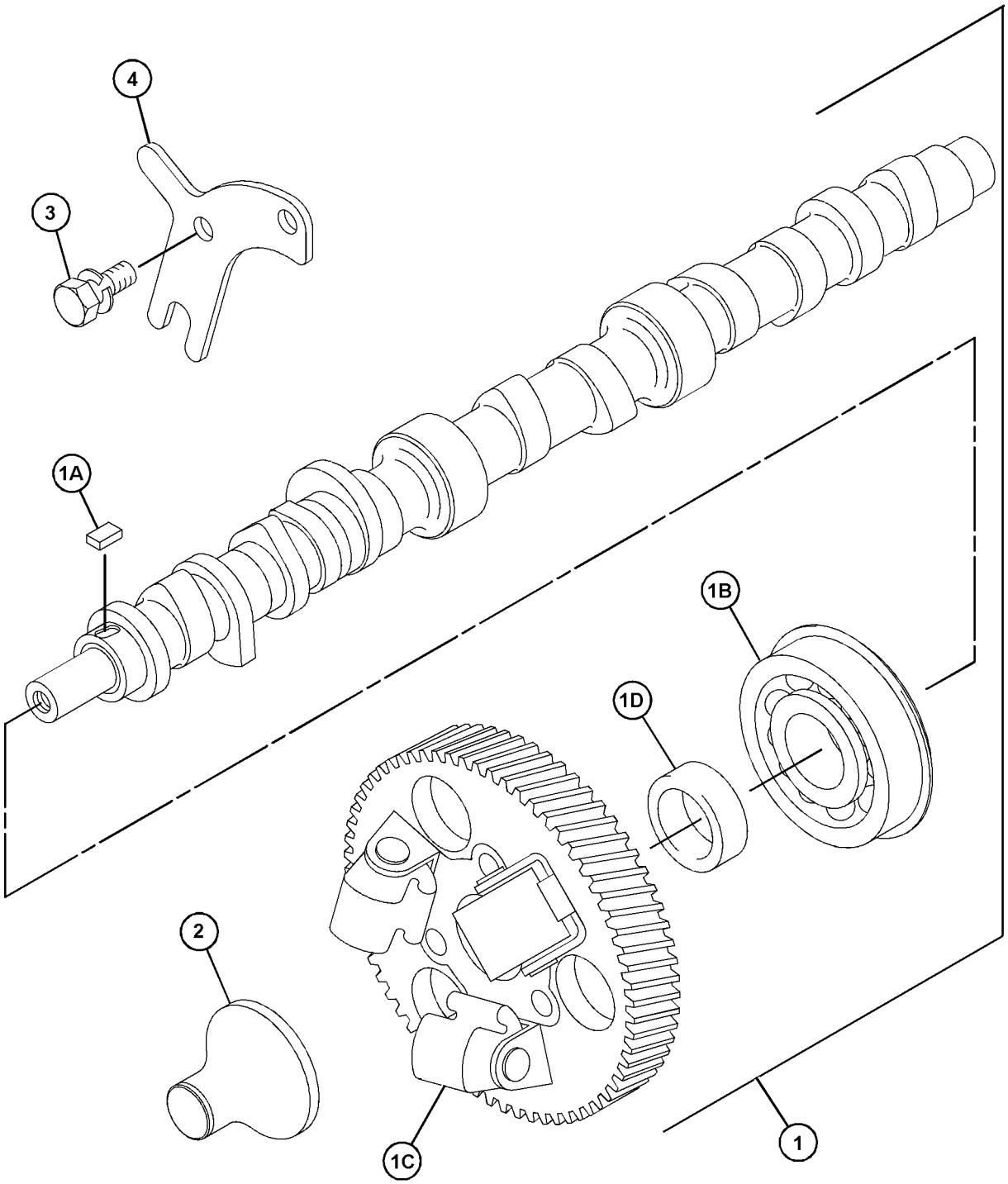

GRAPHIC #1 <END> g06196138

364-2522 CAMSHAFT GP

PART OF 435-1647 ENGINE AR-PRIMARY

SMCS-1210 **i07486504**

NOTE	REF NO	GRAPHIC REF	PART NUMBER	QTY	PART NAME 1 2 3 4 5 6 (PRODUCT LEVEL)	SEE PAGE
	1	1	**153-6838**	2	BOLT AS	
	2	1	**154-1680**	1	PLATE	
	3	1	**363-8409**	1	SLIDER	
Y	4	1	**343-2871**	1	CAMSHAFT AS	146

PARTS SHOWN IN GRAPHIC(S) WITHOUT A REFERENCE NUMBER ARE NOT SERVICED SEPARATELY

Y - SEPARATE ILLUSTRATION

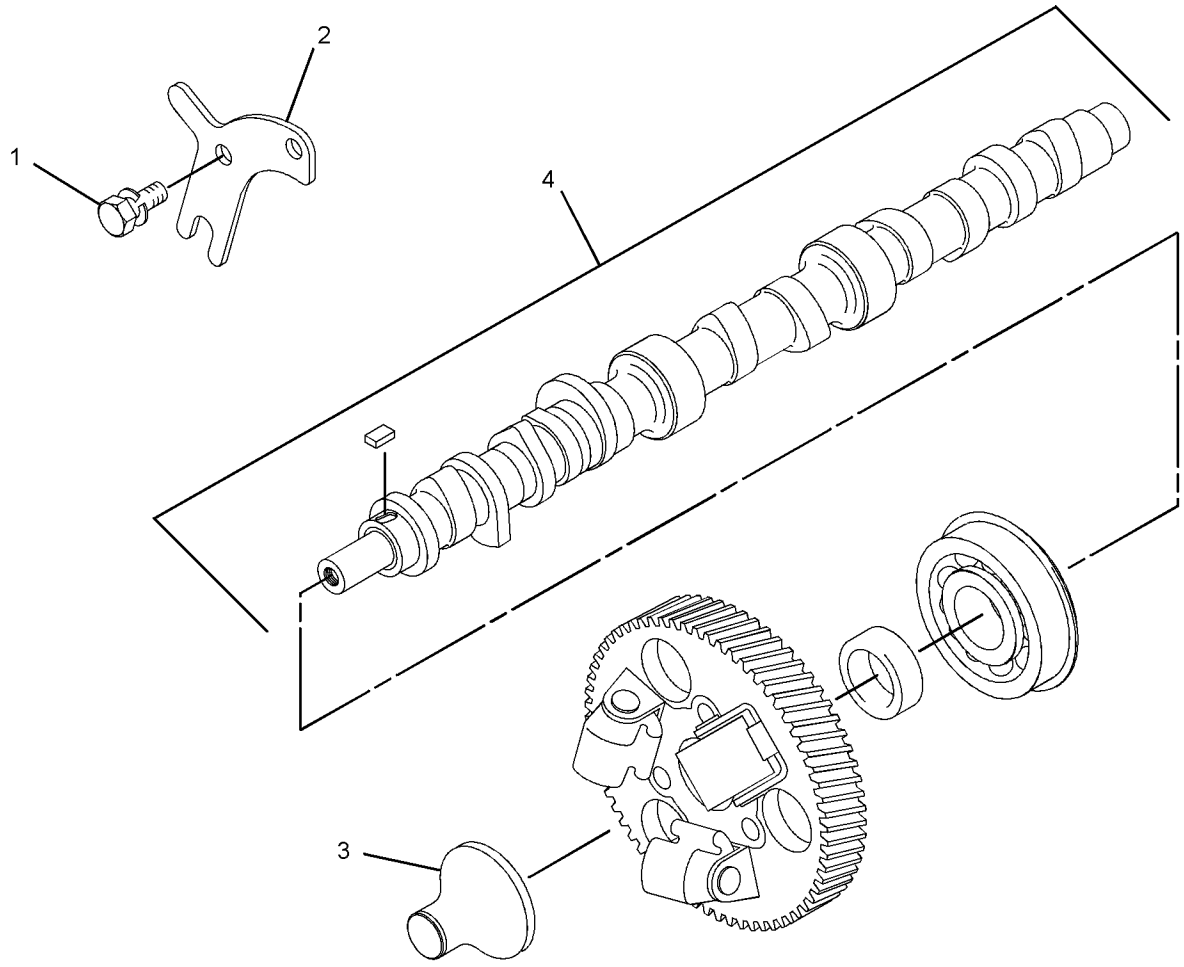

GRAPHIC #1 <END> g03333976

365-4284 CAMSHAFT GP

SMCS-1210 **i04493254**

NOTE	REF NO	GRAPHIC REF	PART NUMBER	QTY	PART NAME 1 2 3 4 5 6 (PRODUCT LEVEL)	SEE PAGE
	1	1	**153-6838**	2	BOLT AS	
	2	1	**154-1680**	1	PLATE	
	3	1	**321-4252**	1	SLIDER	
	4	1	**309-6733**	1	CAMSHAFT AS	
	4A	1	**153-6492**	1	KEY-WOODRUFF	
	4B	1	**154-4505**	1	BEARING	
	4C	1	**308-1903**	1	GEAR-CAMSHAFT (66-TEETH) (66-TEETH)	
	4D	1	**313-9323**	1	SPACER (20.5X28X9.3-MM THK)	

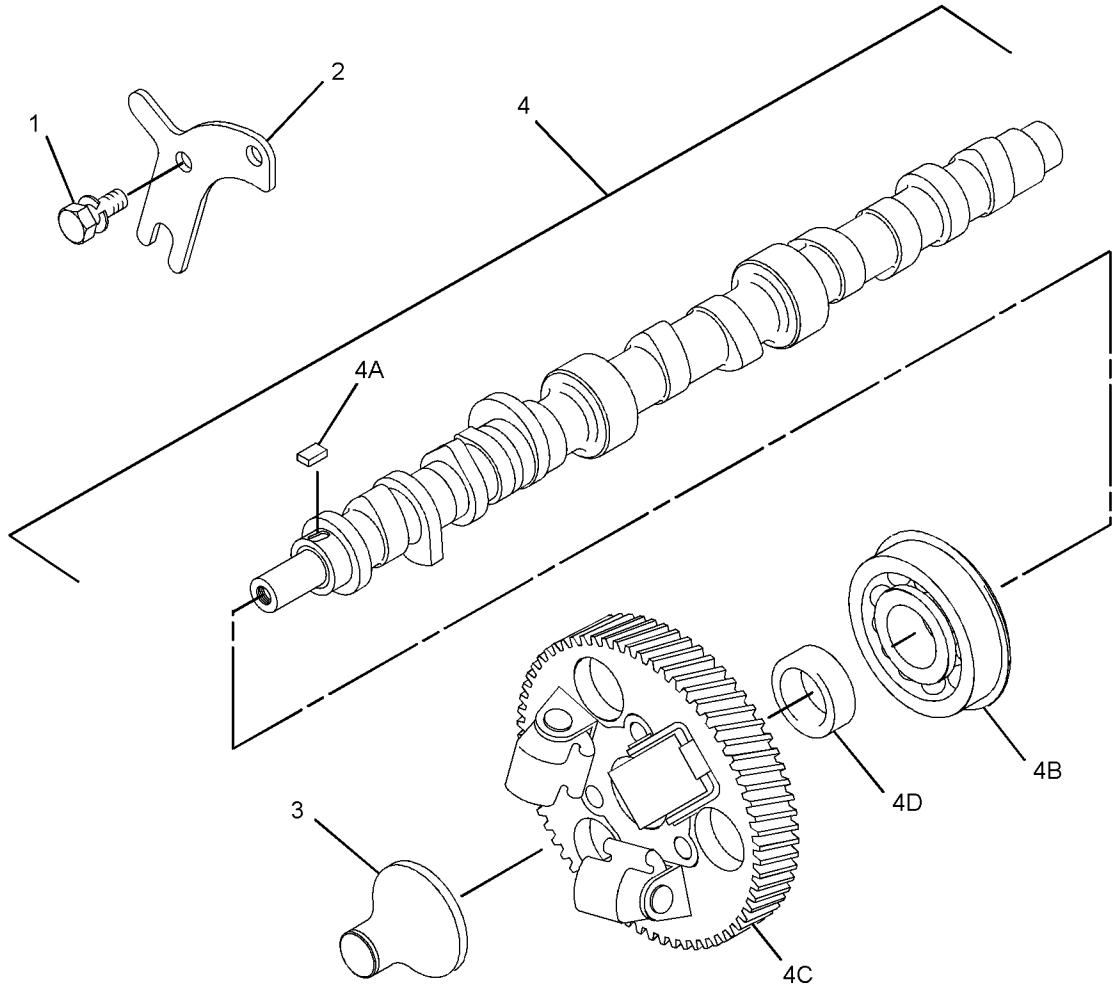

GRAPHIC #1 <END> g01418833

365-4287 CAMSHAFT GP

TYPE 1

SMCS-1210 **i05044989**

NOTE	REF NO	GRAPHIC REF	PART NUMBER	QTY	PART NAME 1 2 3 4 5 6 (PRODUCT LEVEL)	SEE PAGE
	1	1	**153-6838**	2	BOLT AS	
	2	1	**154-1680**	1	PLATE	
	3	1	**321-4252**	1	SLIDER	
Y	4	1	**343-2871**	1	CAMSHAFT AS	146

PARTS SHOWN IN GRAPHIC(S) WITHOUT A REFERENCE NUMBER ARE NOT SERVICED SEPARATELY

Y - SEPARATE ILLUSTRATION

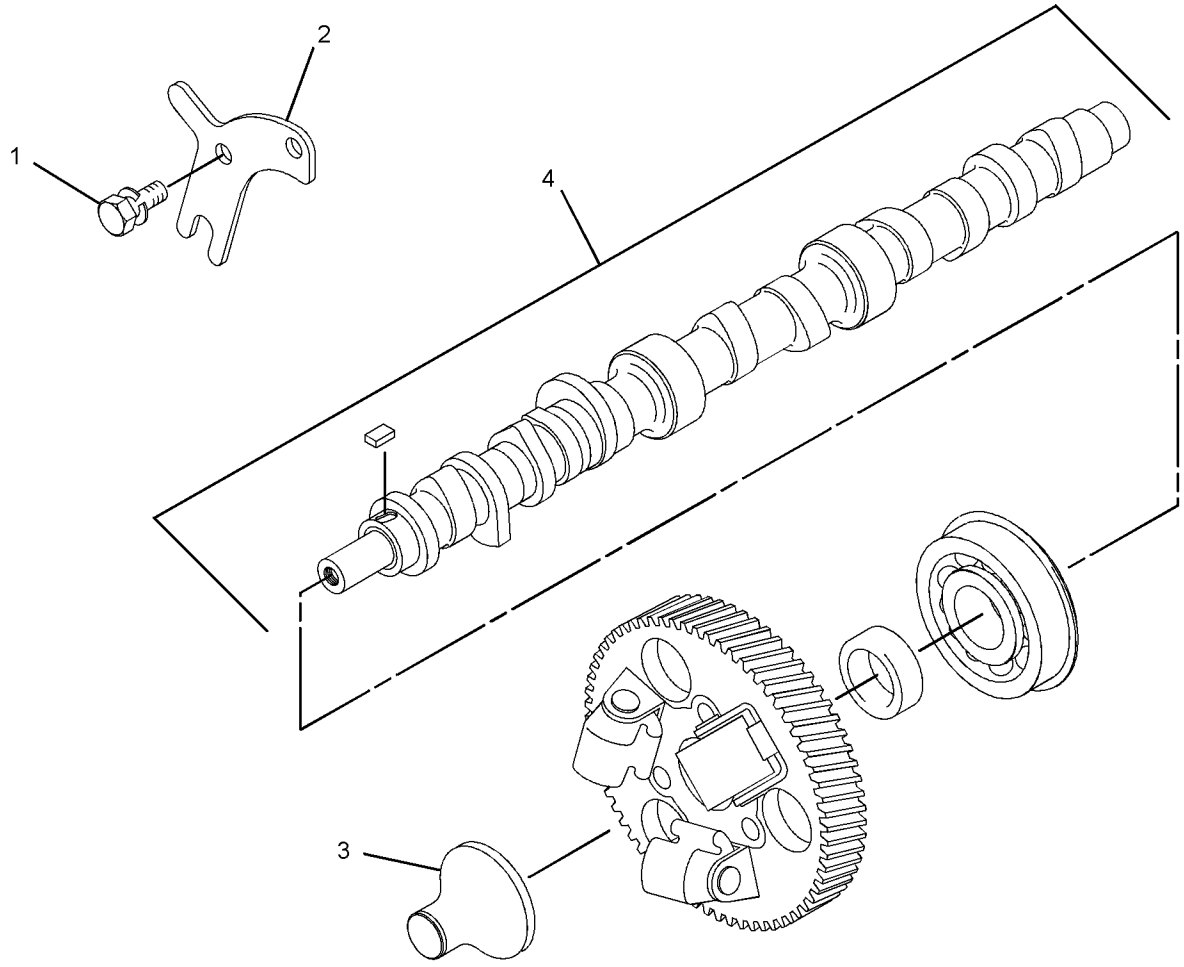

GRAPHIC #1 <END> g03333976

365-4287 CAMSHAFT GP

TYPE 2

SMCS-1210 **i07463411**

NOTE	REF NO	GRAPHIC REF	PART NUMBER	QTY	PART NAME 1 2 3 4 5 6 (PRODUCT LEVEL)	SEE PAGE
	1	1	**153-6838**	2	BOLT AS	
	2	1	**154-1680**	1	PLATE	
C	3	1	**363-8409**	1	SLIDER	
Y	4	1	**343-2871**	1	CAMSHAFT AS	146

PARTS SHOWN IN GRAPHIC(S) WITHOUT A REFERENCE NUMBER ARE NOT SERVICED SEPARATELY

C - CHANGE FROM PREVIOUS TYPE
Y - SEPARATE ILLUSTRATION

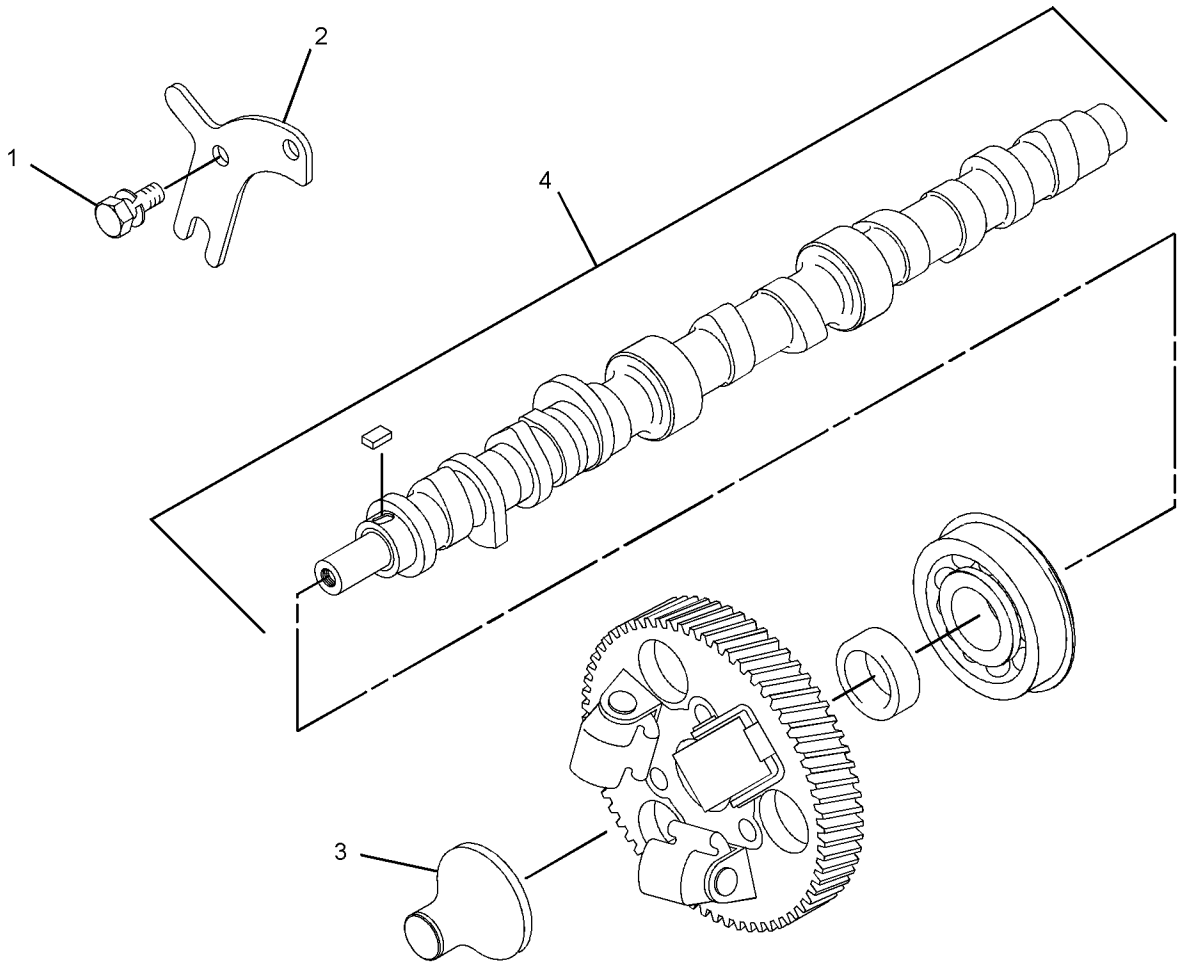

GRAPHIC #1 <END> g03333976

365-4292 CAMSHAFT GP

SMCS-1210 **i04117958**

NOTE	REF NO	GRAPHIC REF	PART NUMBER	QTY	PART NAME 1 2 3 4 5 6 (PRODUCT LEVEL)	SEE PAGE
	1	1	**153-6838**	2	BOLT AS	
	2	1	**154-1680**	1	PLATE	
	3	1	**308-1904**	1	SLIDER	
	4	1	**308-1902**	1	CAMSHAFT AS	
	4A	1	**153-6492**	1	KEY-WOODRUFF	
	4B	1	**154-4505**	1	BEARING	
	4C	1	**308-1903**	1	GEAR-CAMSHAFT (66-TEETH) (66-TEETH)	
	4D	1	**313-9323**	1	SPACER (20.5X28X9.3-MM THK)	

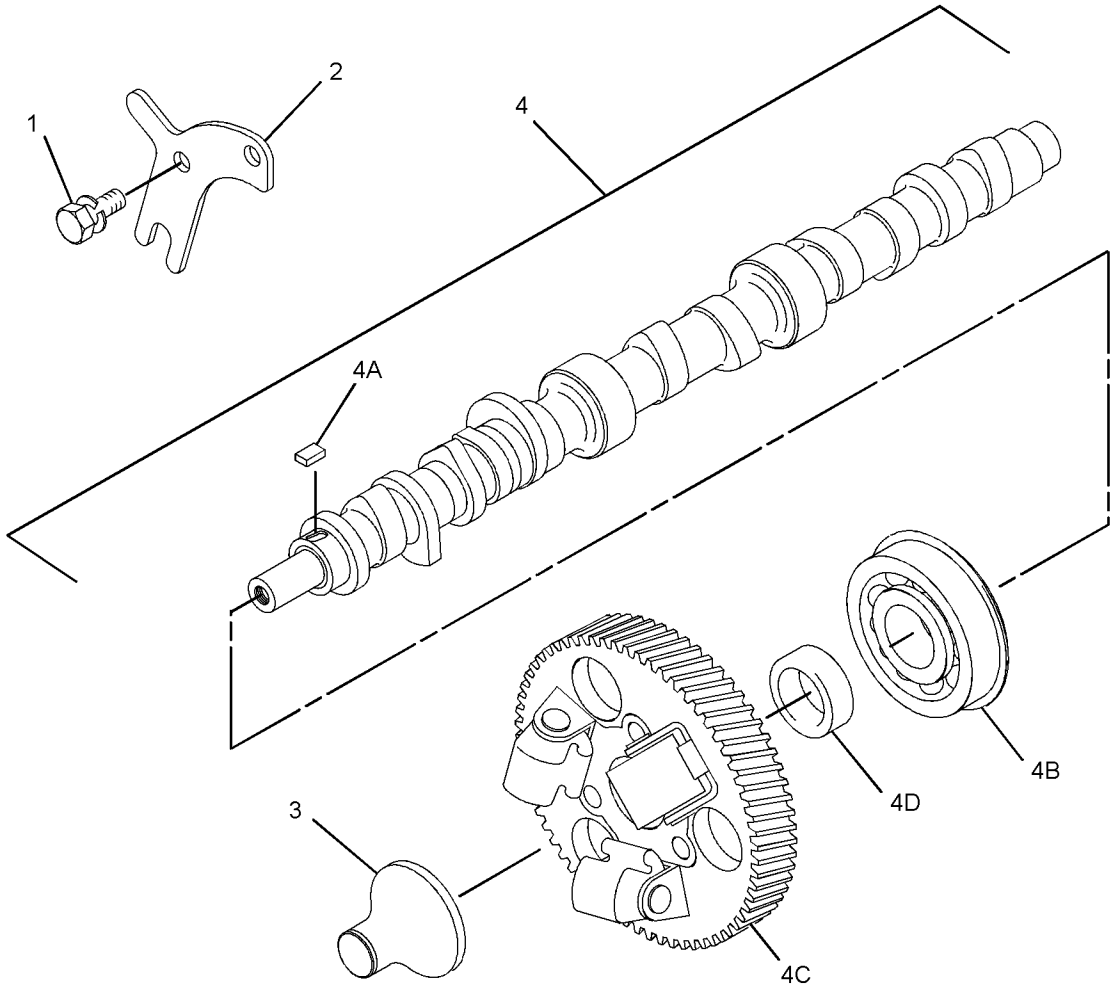

GRAPHIC #1 <END> g01418833

373-7284 CAMSHAFT GP

PART OF 435-1658, 557-9727 ENGINE AR-PRIMARY

SMCS-1210 **i07568837**

NOTE	REF NO	GRAPHIC REF	PART NUMBER	QTY	PART NAME 1 2 3 4 5 6 (PRODUCT LEVEL)	SEE PAGE
	1	1	**308-1902**	1	CAMSHAFT AS	
	1A	1	**153-6492**	1	KEY-WOODRUFF	
	1B	1	**154-4505**	1	BEARING	
	1C	1	**308-1903**	1	GEAR-CAMSHAFT (66-TEETH)	
	1D	1	**313-9323**	1	SPACER (20.5X28X9.3-MM THK)	
	2	1	**308-1904**	1	SLIDER	
	3	1	**153-6838**	2	BOLT AS	
	4	1	**154-1680**	1	PLATE	

373-7284 **CAMSHAFT GP (**contd.**)** **i07568837**

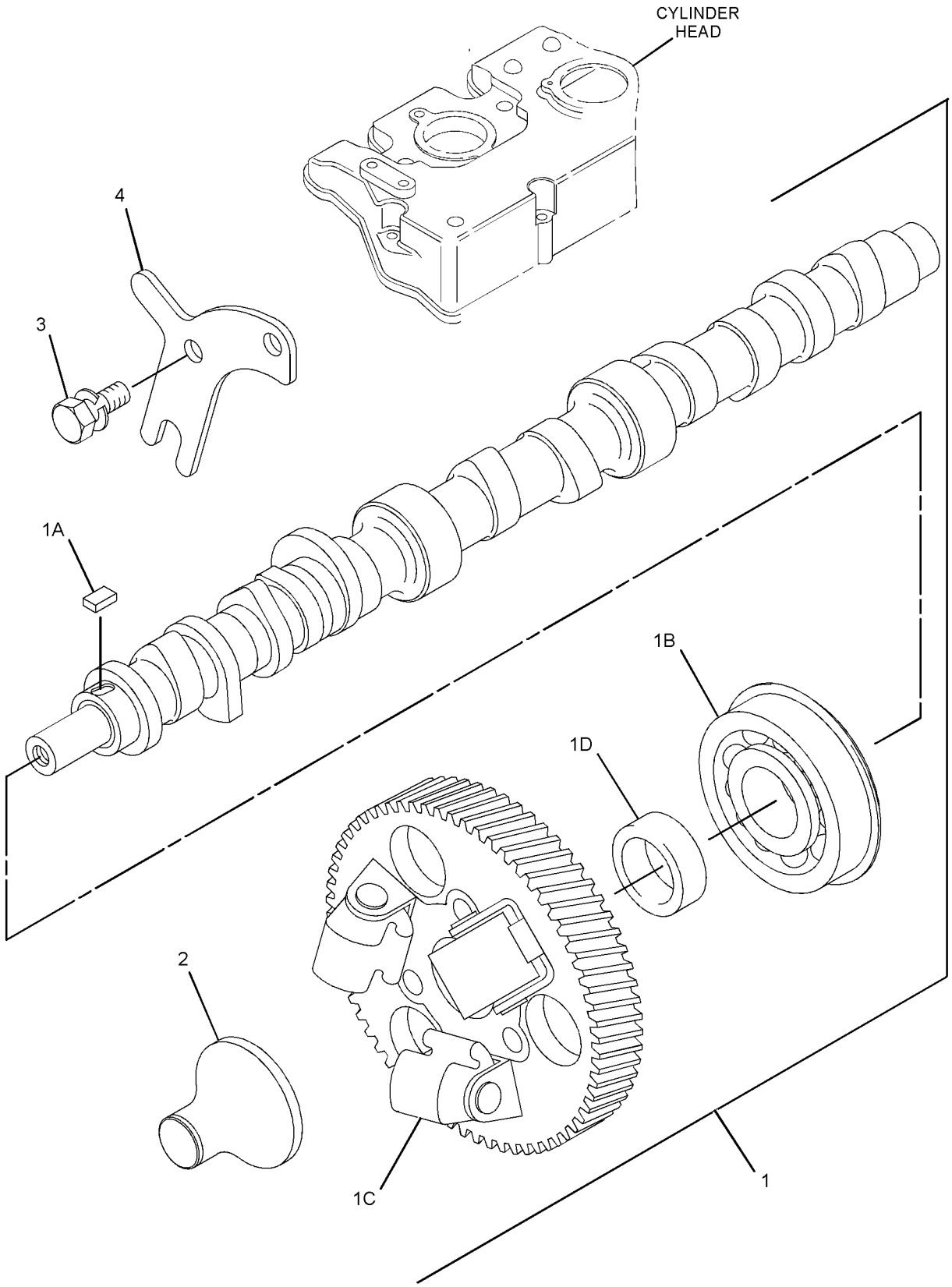

GRAPHIC #1 <END> g06139016

420-3212 CAMSHAFT GP

SMCS-1210 **i06512157**

NOTE	REF NO	GRAPHIC REF	PART NUMBER	QTY	PART NAME 1 2 3 4 5 6 (PRODUCT LEVEL)	SEE PAGE
	1	1	**153-6838**	2	BOLT AS	
	2	1	**154-1680**	1	PLATE	
	3	1	**309-6733**	1	CAMSHAFT AS	
	3A	1	**153-6492**	1	KEY-WOODRUFF	
	3B	1	**154-4505**	1	BEARING	
	3C	1	**308-1903**	1	GEAR-CAMSHAFT (66-TEETH)	
	3D	1	**313-9323**	1	SPACER (20.5X28X9.3-MM THK)	
	4	1	**321-4252**	1	SLIDER	

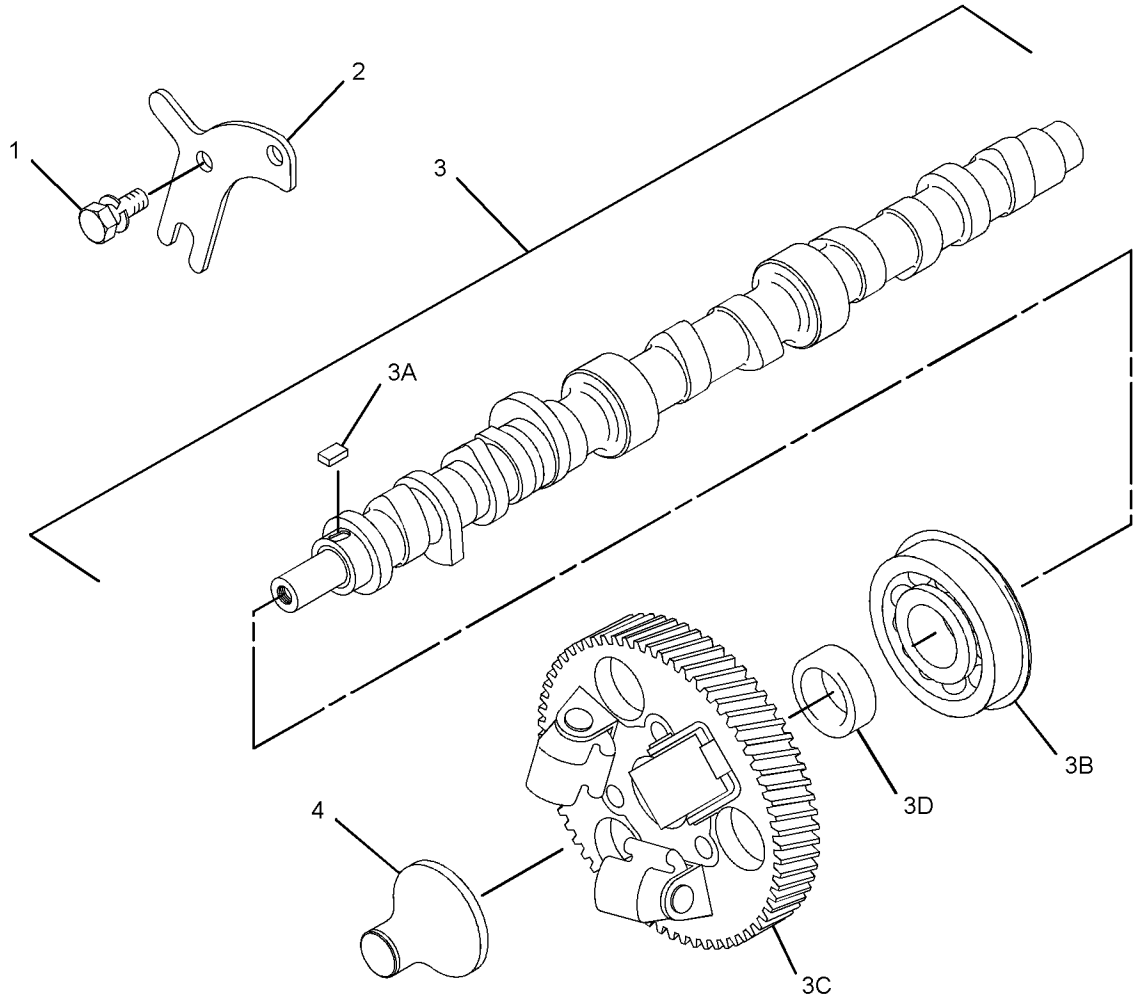

GRAPHIC #1 <END> g03326305

441-6514 CAMSHAFT GP

SMCS-1210 **i05445713**

NOTE	REF NO	GRAPHIC REF	PART NUMBER	QTY	PART NAME 1 2 3 4 5 6 (PRODUCT LEVEL)	SEE PAGE
	1	1	**153-6838**	2	BOLT AS	
	2	1	**154-1680**	1	PLATE	
	3	1	**309-6733**	1	CAMSHAFT AS	
	3A	1	**153-6492**	1	KEY-WOODRUFF	
	3B	1	**154-4505**	1	BEARING	
	3C	1	**308-1903**	1	GEAR-CAMSHAFT (66-TEETH)	
	3D	1	**313-9323**	1	SPACER (20.5X28X9.3-MM THK)	
	4	1	**321-4252**	1	SLIDER	

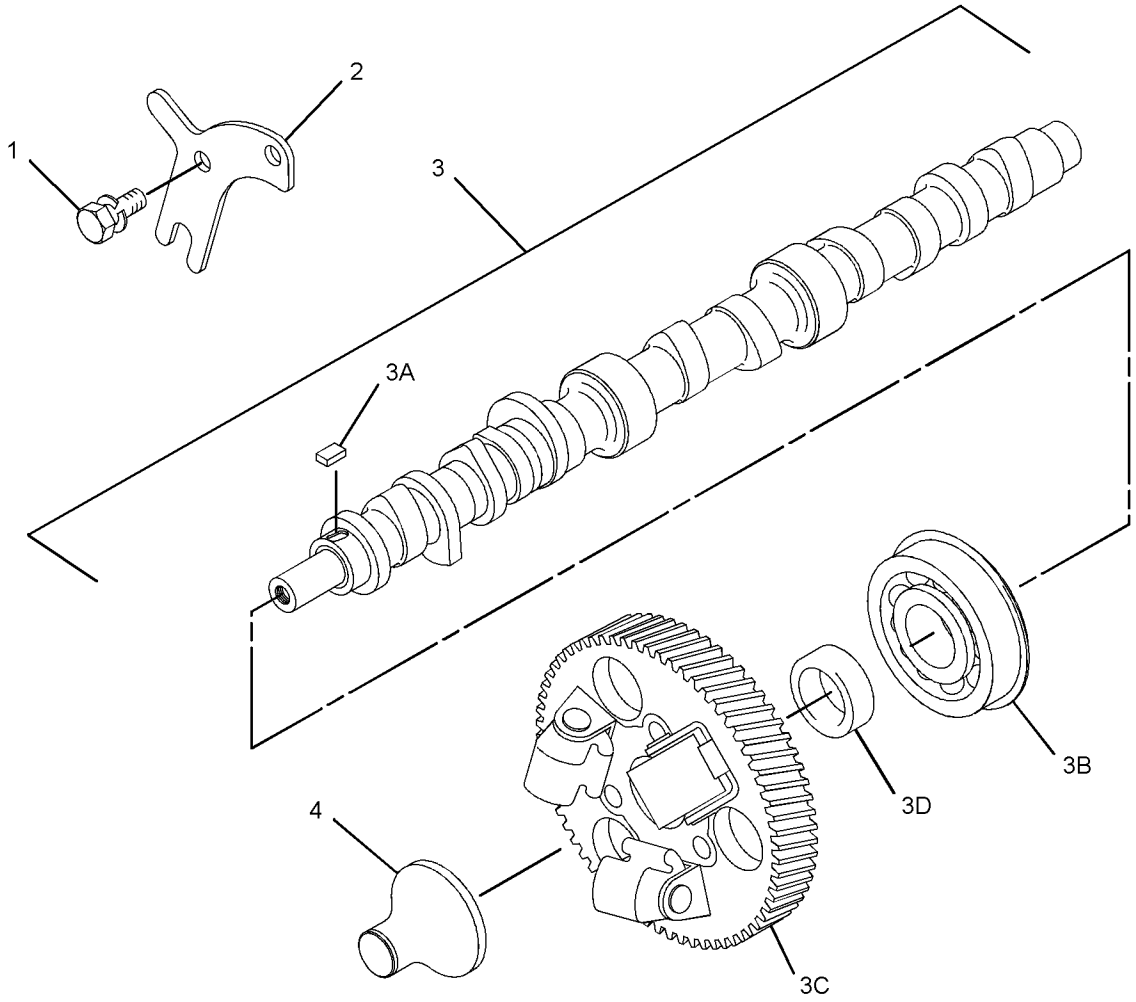

GRAPHIC #1 <END> g03326305

454-6144 CAMSHAFT GP

PART OF 435-1642, 492-6602, 549-8284 ENGINE AR-PRIMARY

SMCS-1210 **i10262164**

NOTE	REF NO	GRAPHIC REF	PART NUMBER	QTY	PART NAME 1 2 3 4 5 6 (PRODUCT LEVEL)	SEE PAGE
M	1	1	**100-4841**	2	BOLT (M6X1X10-MM)	
	2	1	**154-1680**	1	PLATE	
	3	1	**321-4252**	1	SLIDER	
	4	1	**309-6733**	1	CAMSHAFT AS	
	4A	1	**153-6492**	1	KEY-WOODRUFF	
	4B	1	**154-4505**	1	BEARING	
	4C	1	**308-1903**	1	GEAR-CAMSHAFT (66-TEETH)	
	4D	1	**313-9323**	1	SPACER (20.5X28X9.3-MM THK)	

M - METRIC PART

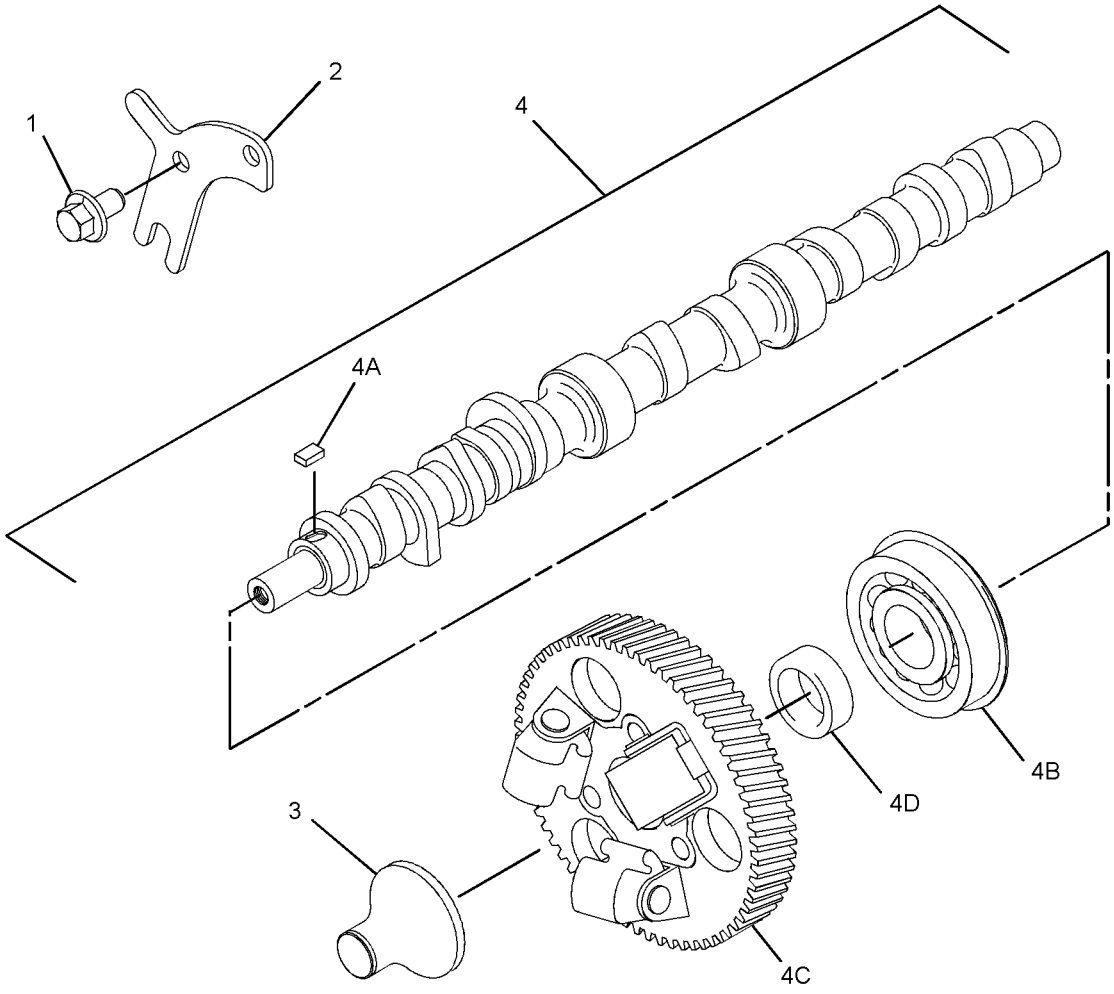

GRAPHIC #1 <END> g07848582

465-2209 CAMSHAFT GP

PART OF 461-7895 ENGINE AR-PRIMARY

SMCS-1210 **i06061052**

NOTE	REF NO	GRAPHIC REF	PART NUMBER	QTY	PART NAME 1 2 3 4 5 6 (PRODUCT LEVEL)	SEE PAGE
	1	1	**153-6838**	2	BOLT AS	
	2	1	**154-1680**	1	PLATE	
	3	1	**309-6733**	1	CAMSHAFT AS	
	3A	1	**153-6492**	1	KEY-WOODRUFF	
	3B	1	**154-4505**	1	BEARING	
	3C	1	**308-1903**	1	GEAR-CAMSHAFT (66-TEETH)	
	3D	1	**313-9323**	1	SPACER (20.5X28X9.3-MM THK)	
	4	1	**321-4252**	1	SLIDER	

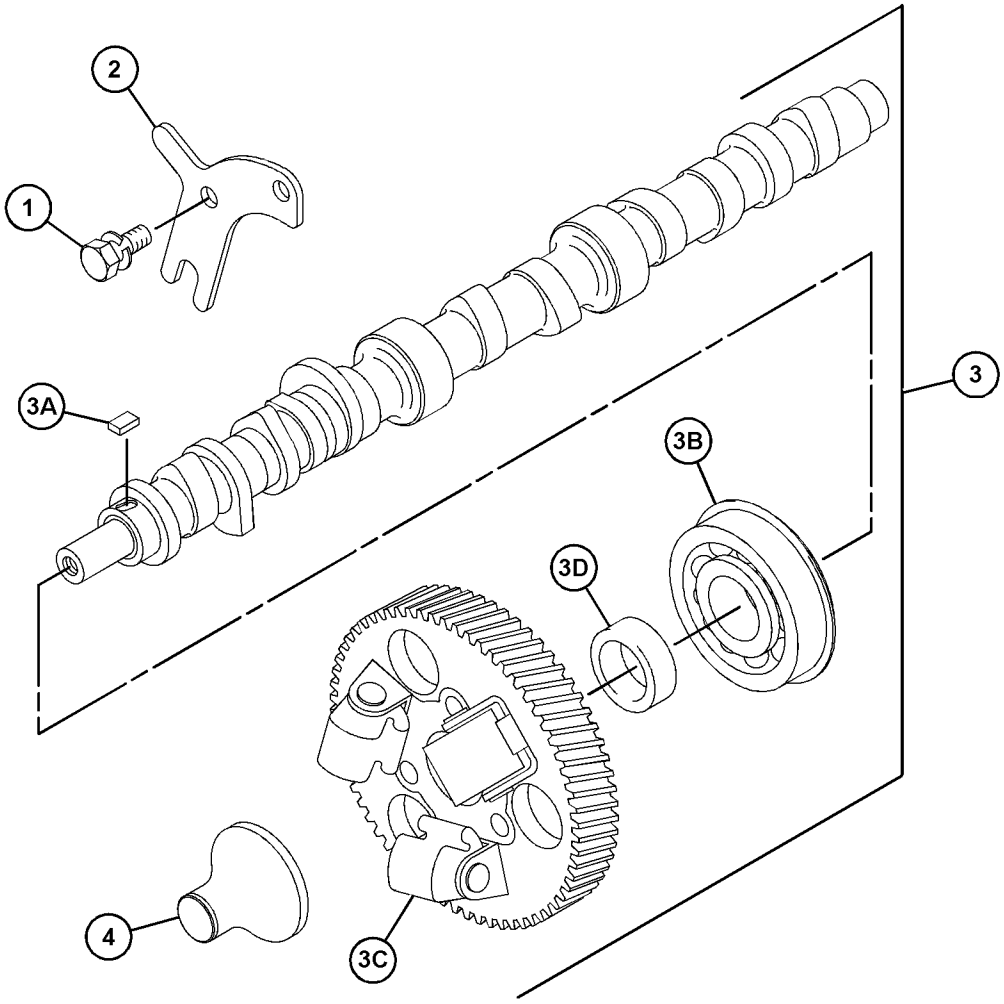

GRAPHIC #1 <END> g03856522

465-2494 CAMSHAFT GP

PART OF 435-1642 ENGINE AR-PRIMARY

SMCS-1210 **i05908241**

NOTE	REF NO	GRAPHIC REF	PART NUMBER	QTY	PART NAME 1 2 3 4 5 6 (PRODUCT LEVEL)	SEE PAGE
	1	1	**153-6838**	2	BOLT AS	
	2	1	**154-1680**	1	PLATE	
	3	1	**309-6733**	1	CAMSHAFT AS	
	3A	1	**153-6492**	1	KEY-WOODRUFF	
	3B	1	**154-4505**	1	BEARING	
	3C	1	**308-1903**	1	GEAR-CAMSHAFT (66-TEETH)	
	3D	1	**313-9323**	1	SPACER (20.5X28X9.3-MM THK)	
	4	1	**321-4252**	1	SLIDER	

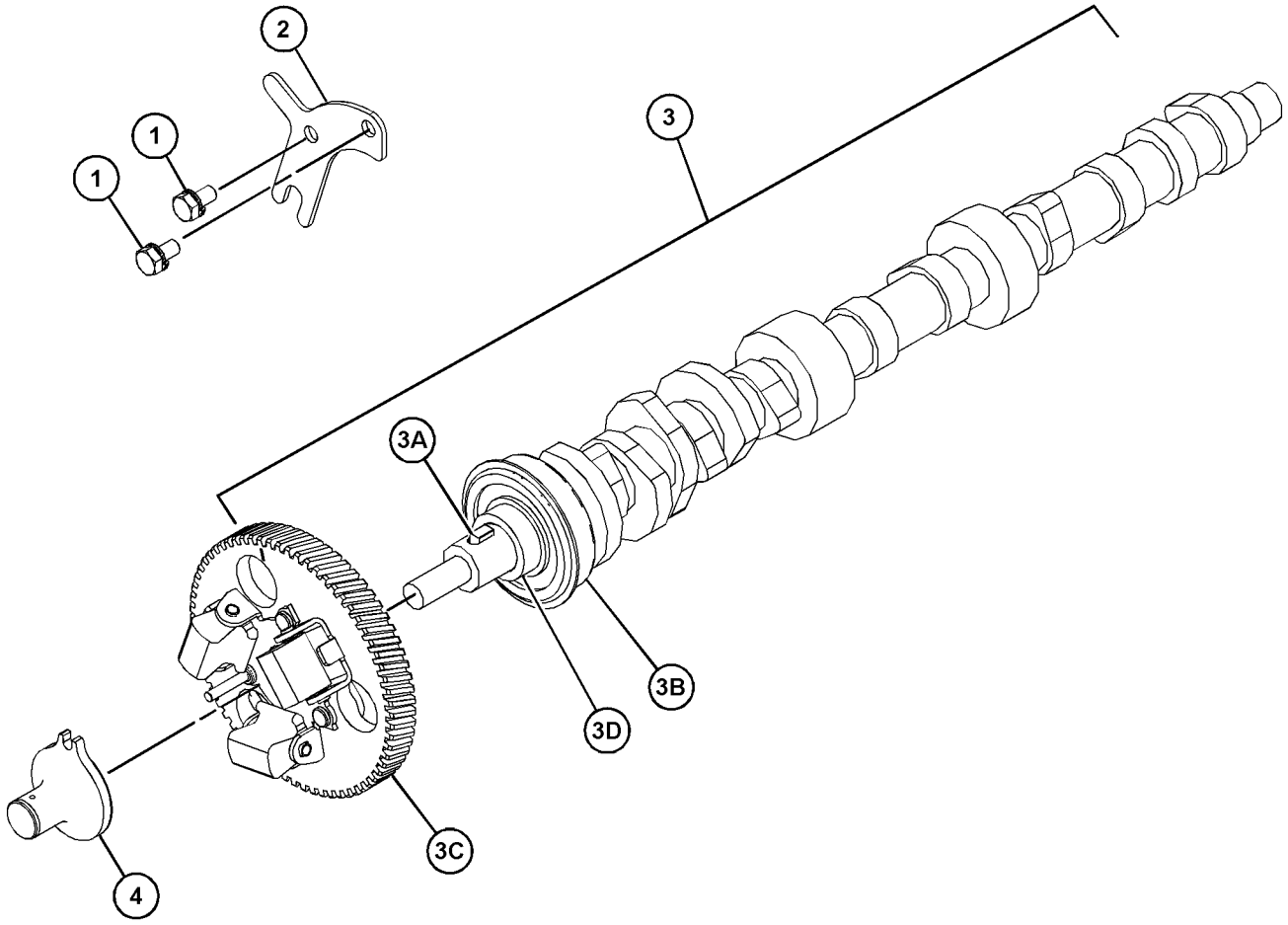

GRAPHIC #1 <END> g03723398

481-5624 CAMSHAFT GP

PART OF 465-1477 ENGINE AR-PRIMARY

SMCS-1210 **i06107543**

NOTE	REF NO	GRAPHIC REF	PART NUMBER	QTY	PART NAME 1 2 3 4 5 6 (PRODUCT LEVEL)	SEE PAGE
	1	1	**153-6838**	2	BOLT AS	
	2	1	**154-1680**	1	PLATE	
	3	1	**308-1902**	1	CAMSHAFT AS	
	3A	1	**153-6492**	1	KEY-WOODRUFF	
	3B	1	**154-4505**	1	BEARING	
	3C	1	**308-1903**	1	GEAR-CAMSHAFT (66-TEETH)	
	3D	1	**313-9323**	1	SPACER (20.5X28X9.3-MM THK)	
	4	1	**308-1904**	1	SLIDER	

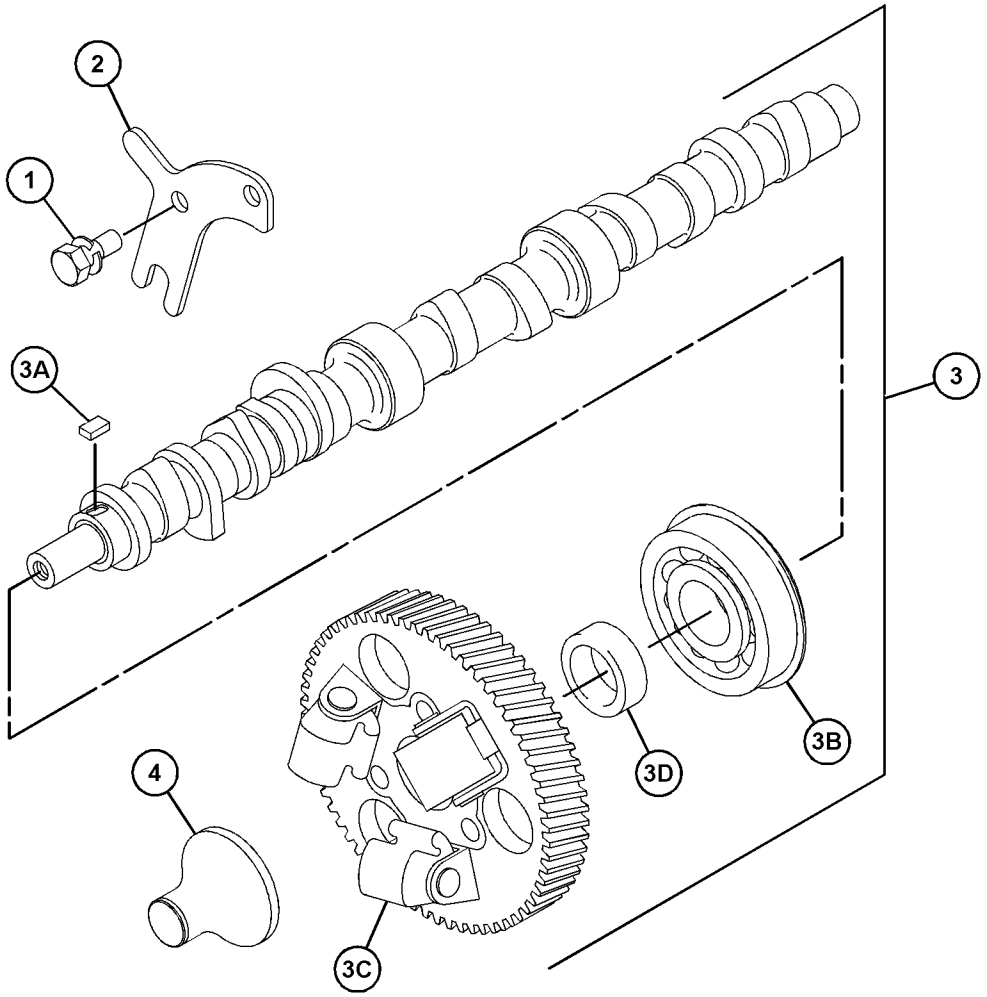

GRAPHIC #1 <END> g03812753

508-9044 CAMSHAFT GP

S/N: G7L10581-UP

TYPE 1

SMCS-1210 **i06682260**

NOTE	REF NO	GRAPHIC REF	PART NUMBER	QTY	PART NAME 1 2 3 4 5 6 (PRODUCT LEVEL)	SEE PAGE
	1	1	**153-6838**	2	BOLT AS	
	2	1	**154-1680**	1	PLATE	
	3	1	**321-4252**	1	SLIDER	
Y	4	1	**343-2871**	1	CAMSHAFT AS	146

Y - SEPARATE ILLUSTRATION

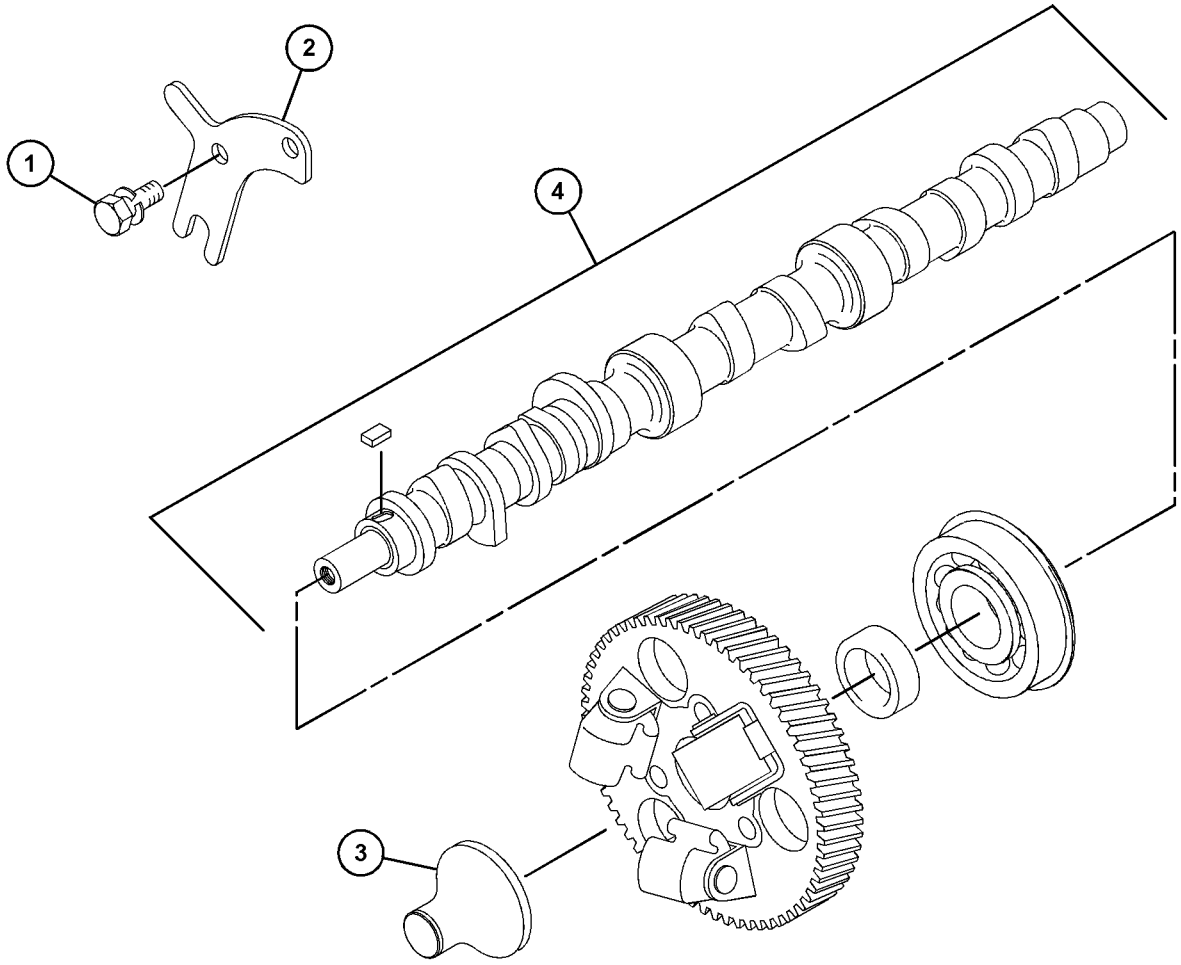

GRAPHIC #1 <END> g06120071

508-9044 CAMSHAFT GP

S/N: G7L10581-UP

TYPE 2

SMCS-1210 **i07463398**

NOTE	REF NO	GRAPHIC REF	PART NUMBER	QTY	PART NAME 1 2 3 4 5 6 (PRODUCT LEVEL)	SEE PAGE
	1	1	**153-6838**	2	BOLT AS	
	2	1	**154-1680**	1	PLATE	
C	3	1	**363-8409**	1	SLIDER	
Y	4	1	**343-2871**	1	CAMSHAFT AS	146

C - CHANGE FROM PREVIOUS TYPE
Y - SEPARATE ILLUSTRATION

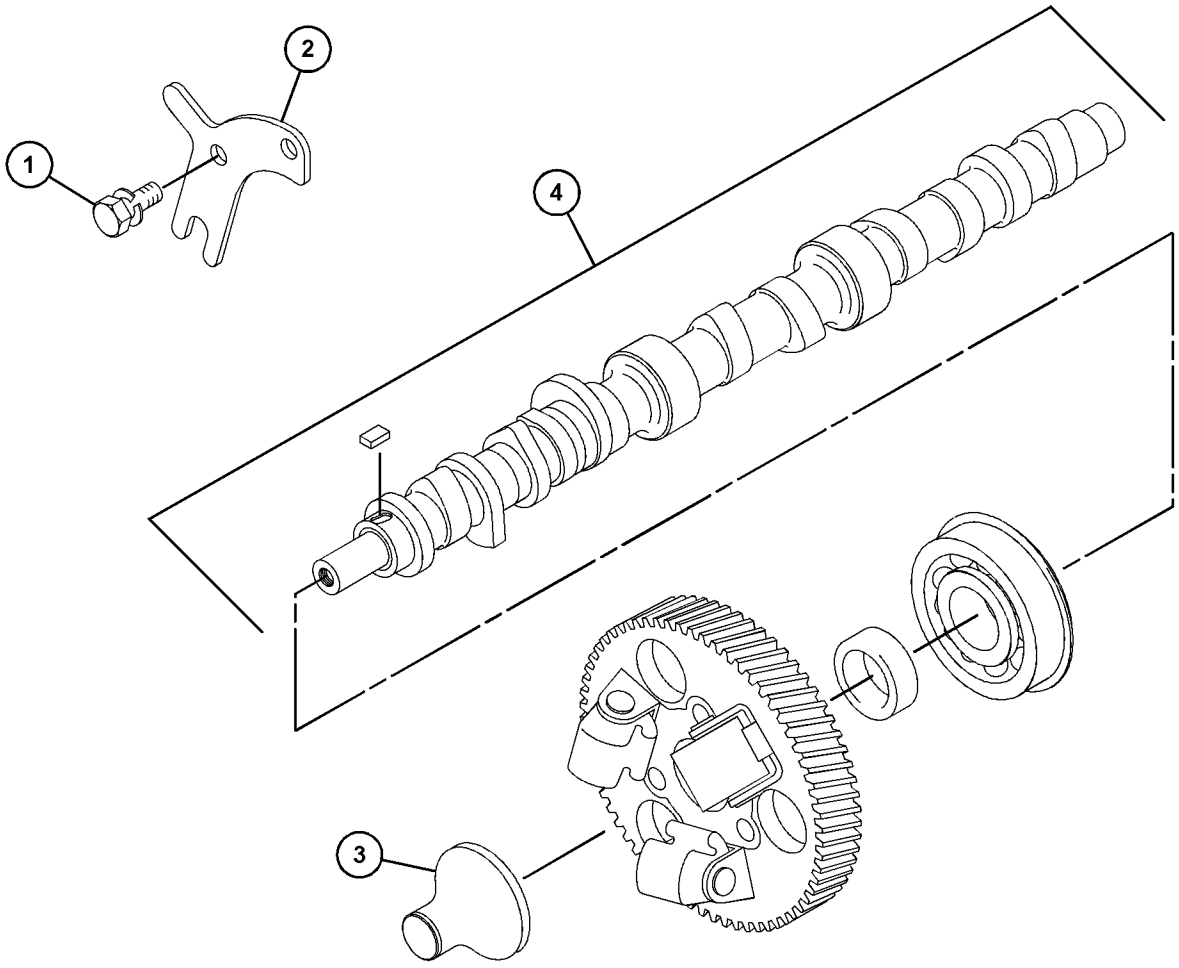

GRAPHIC #1 <END> g06120071

509-0009 CAMSHAFT GP

SMCS-1210 **i06731815**

NOTE	REF NO	GRAPHIC REF	PART NUMBER	QTY	PART NAME 1 2 3 4 5 6 (PRODUCT LEVEL)	SEE PAGE
	1	1	**153-6838**	2	BOLT AS	
	2	1	**154-1680**	1	PLATE	
	3	1	**308-1904**	1	SLIDER	
	4	1	**309-6733**	1	CAMSHAFT AS	
	4A	1	**153-6492**	1	KEY-WOODRUFF	
	4B	1	**154-4505**	1	BEARING	
	4C	1	**308-1903**	1	GEAR-CAMSHAFT (66-TEETH)	
	4D	1	**313-9323**	1	SPACER (20.5X28X9.3-MM THK)	

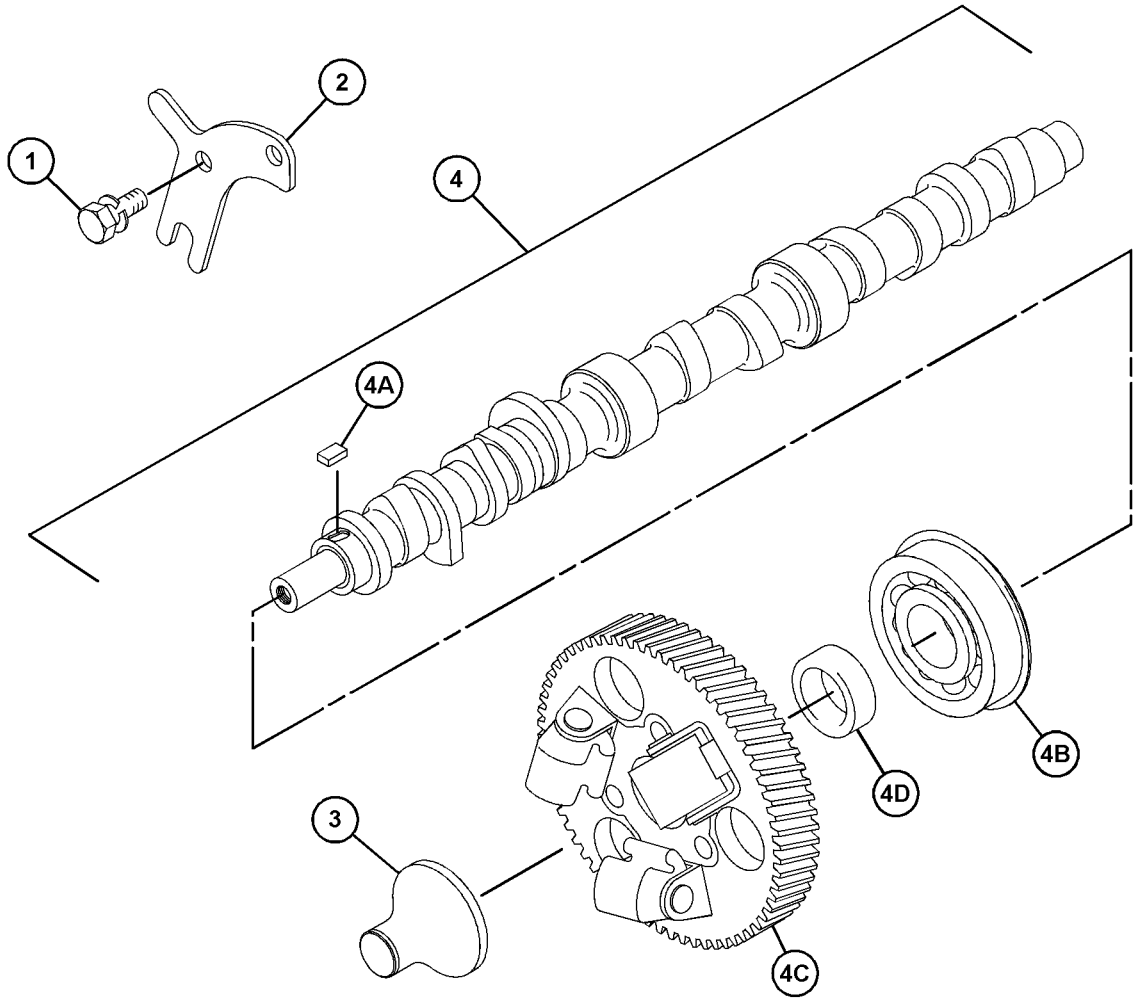

GRAPHIC #1 <END> g06166247

596-3428 CAMSHAFT GP

PART OF 433-1379 ENGINE AR, 435-1641, 610-7720 ENGINE AR-PRIMARY

SMCS-1210 **i08697190**

NOTE	REF NO	GRAPHIC REF	PART NUMBER	QTY	PART NAME 1 2 3 4 5 6 (PRODUCT LEVEL)	SEE PAGE
	1	1	**528-6882**	8	PUSHROD AS	
M	2	1	**100-4841**	2	BOLT (M6X1X10-MM)	
	3	1	**154-1680**	1	PLATE	
	4	2	**309-6733**	1	CAMSHAFT AS	
	4A	2	**154-4505**	1	BEARING	
	4B	2	**153-6492**	1	KEY-WOODRUFF	
	4C	2	**308-1903**	1	GEAR-CAMSHAFT (66-TEETH)	
	4D	2	**313-9323**	1	SPACER (20.5X28X9.3-MM THK)	
	5	1	**438-9109**	8	TAPPET	

M - METRIC PART

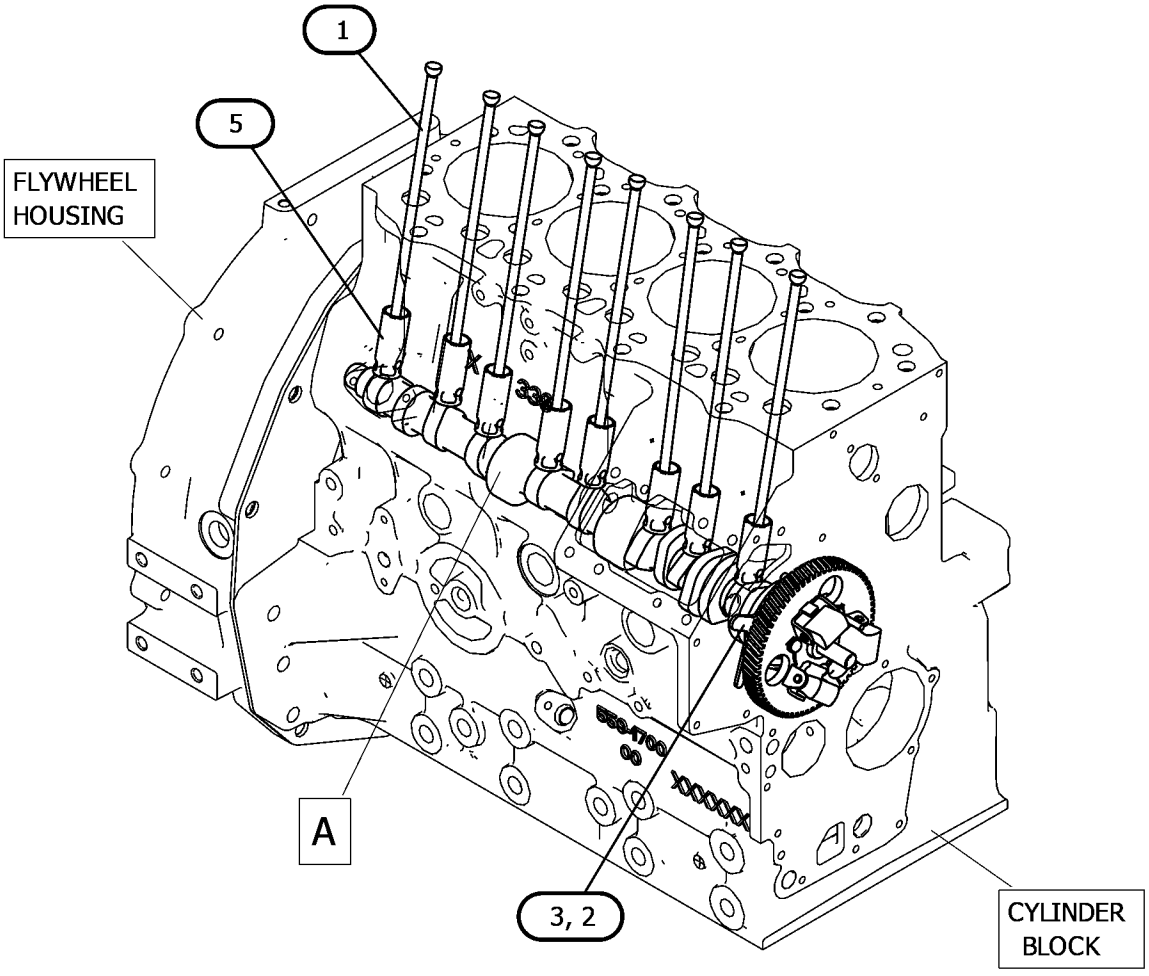

GRAPHIC #1 g07495457

596-3428 **CAMSHAFT GP (**contd.**)** **i08697190**

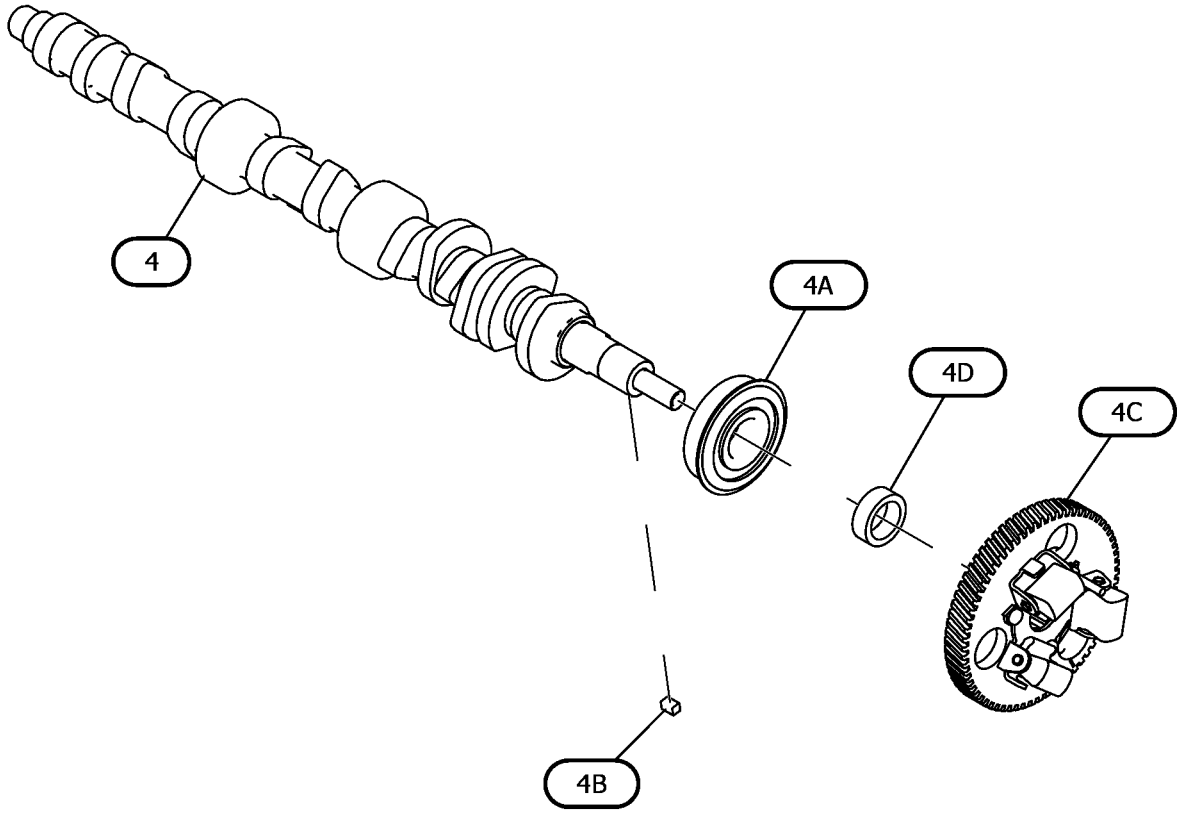

VIEW OF AREA A
(PARTS REMOVED FOR CLARITY)

GRAPHIC #2 <END> g07495457_01

596-3440 CAMSHAFT GP

PART OF 435-1647 ENGINE AR-PRIMARY

SMCS-1210 **i08829372**

NOTE	REF NO	GRAPHIC REF	PART NUMBER	QTY	PART NAME 1 2 3 4 5 6 (PRODUCT LEVEL)	SEE PAGE
	1	1	**528-6882**	8	PUSHROD AS	
M	2	1	**100-4841**	2	BOLT (M6X1X10-MM)	
	3	1	**154-1680**	1	PLATE	
Y	4	1	**343-2871**	1	CAMSHAFT AS	146
	5	1	**438-9109**	8	TAPPET	

M - METRIC PART
Y - SEPARATE ILLUSTRATION

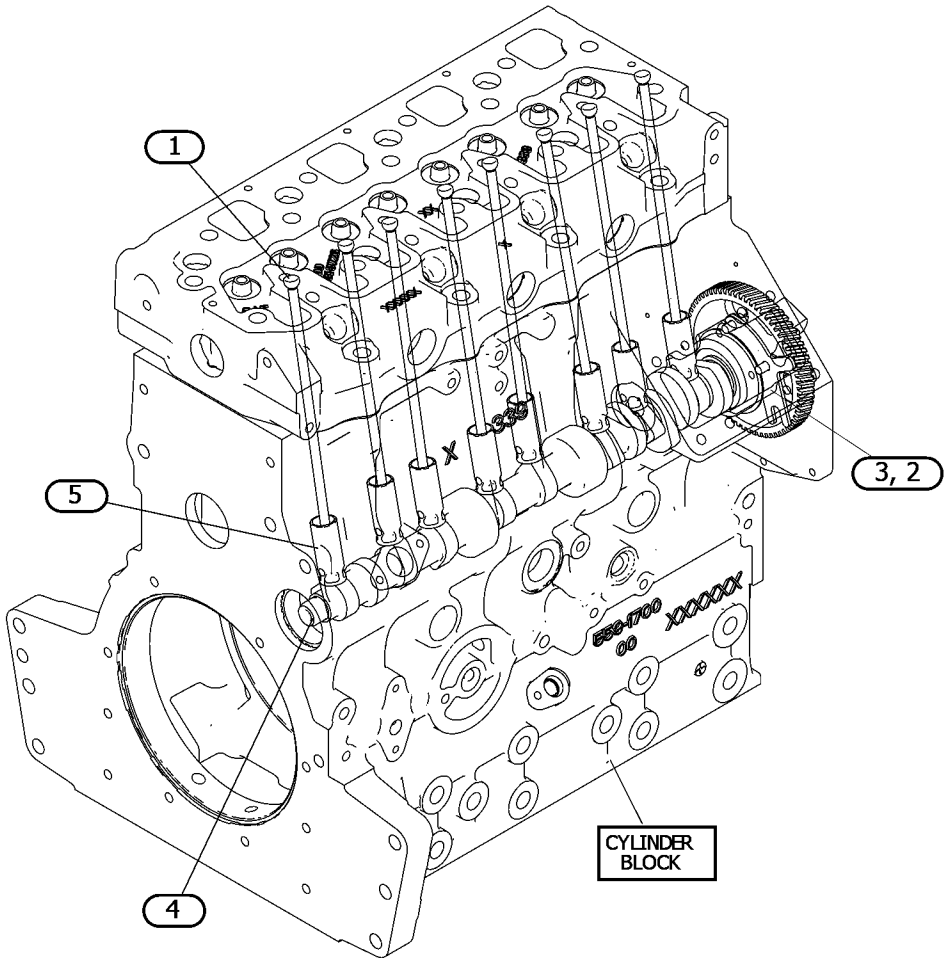

GRAPHIC #1 <END> g07555151

596-3442 CAMSHAFT GP

PART OF 433-1380 ENGINE AR, 435-1636, 587-9328, 610-7721 ENGINE AR-PRIMARY

SMCS-1210 **i08838958**

NOTE	REF NO	GRAPHIC REF	PART NUMBER	QTY	PART NAME 1 2 3 4 5 6 (PRODUCT LEVEL)	SEE PAGE
	1	1	**528-6882**	8	PUSHROD AS	
M	2	1	**100-4841**	2	BOLT (M6X1X10-MM)	
	3	1	**154-1680**	1	PLATE	
Y	4	1	**308-1902**	1	CAMSHAFT AS	145
	5	1	**438-9109**	8	TAPPET	

M - METRIC PART
Y - SEPARATE ILLUSTRATION

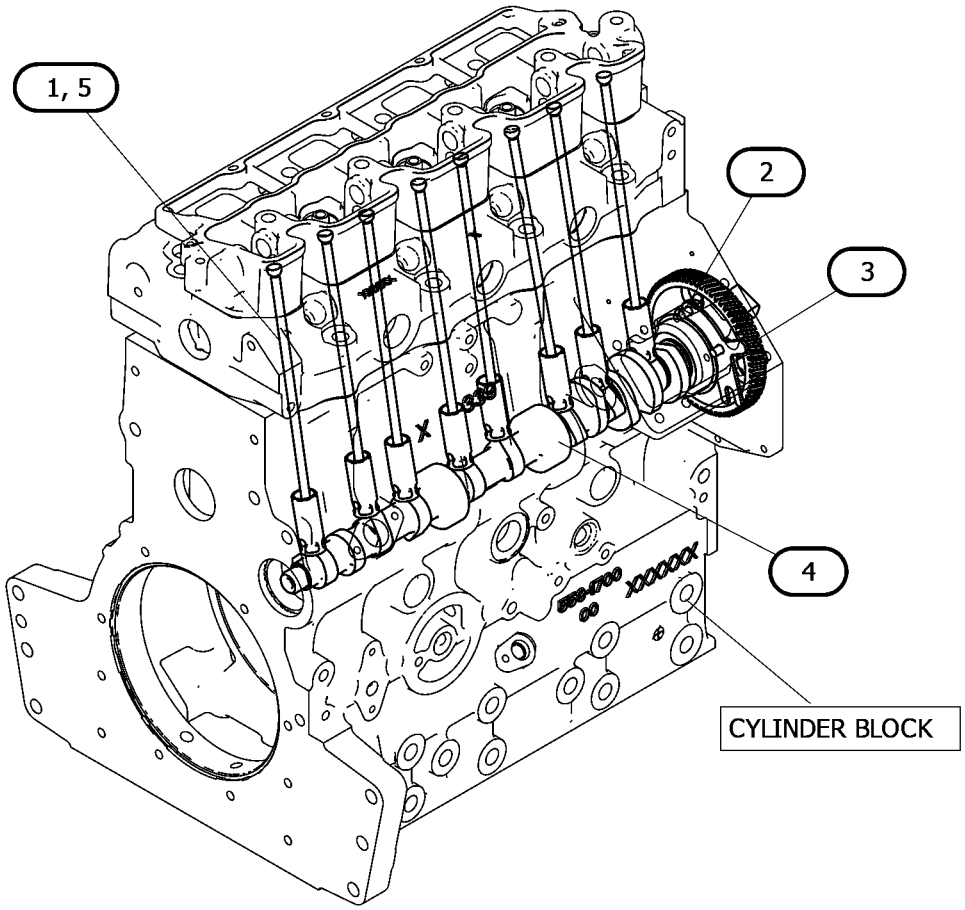

GRAPHIC #1 <END> g07515349

626-7889 CAMSHAFT GP

S/N: G7L8318-UP

SMCS-1210 **i09573187**

NOTE	REF NO	GRAPHIC REF	PART NUMBER	QTY	PART NAME 1 2 3 4 5 6 (PRODUCT LEVEL)	SEE PAGE
	1	1	**153-6838**	2	BOLT AS	
	2	1	**154-1680**	1	PLATE	
Y	3	1	**308-1902**	1	CAMSHAFT AS	145
	4	1	**308-1904**	1	SLIDER	

Y - SEPARATE ILLUSTRATION

626-7889 **CAMSHAFT GP (**contd.**)** **i09573187**

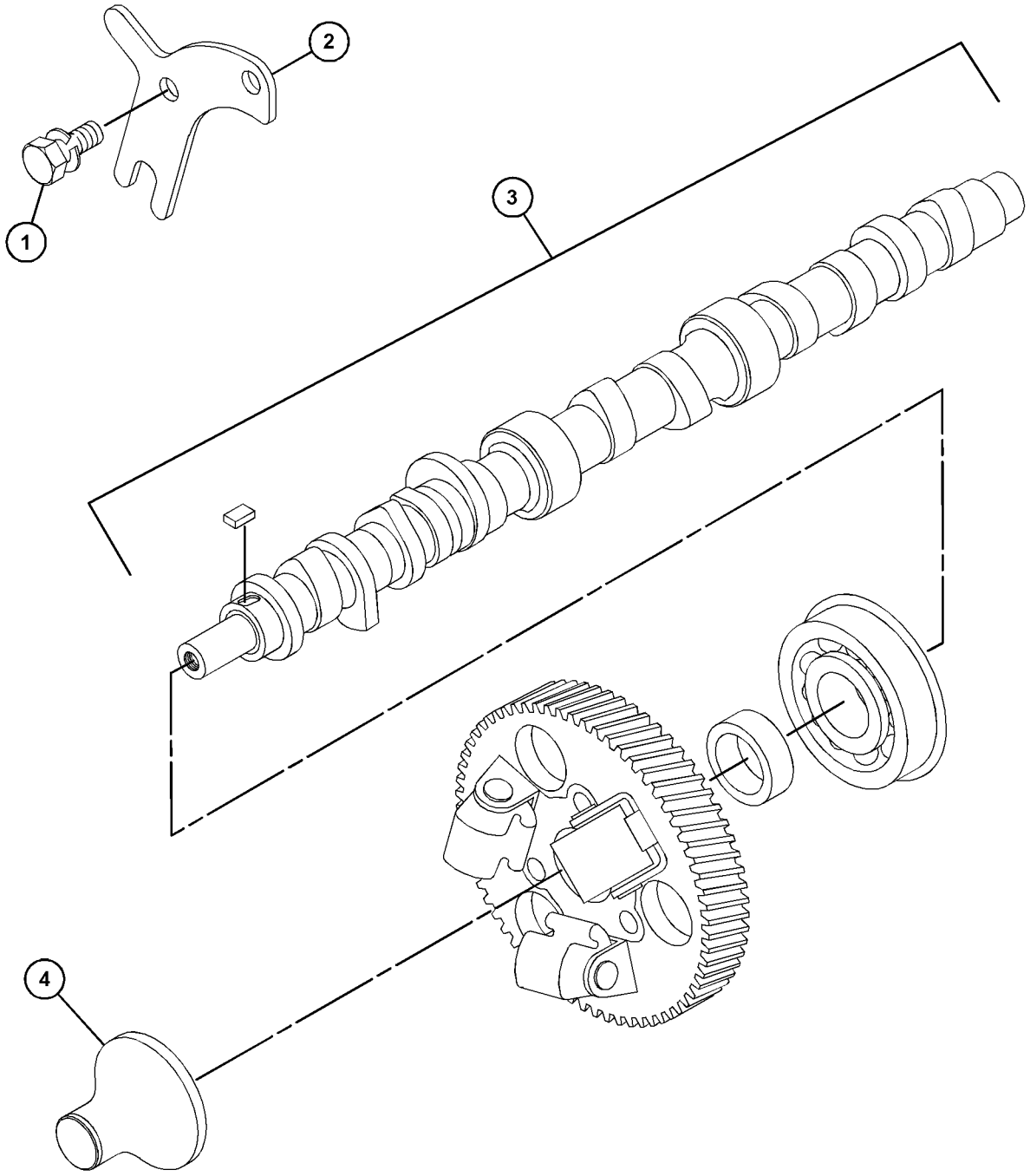

GRAPHIC #1 <END> g07622861

601-0474 COVER GP-CYLINDER HEAD

PART OF 600-5115, 600-5117 TURBOCHARGER GP

SMCS-1100 **i08578567**

NOTE	REF NO	GRAPHIC REF	PART NUMBER	QTY	PART NAME 1 2 3 4 5 6 (PRODUCT LEVEL)	SEE PAGE
	1	2	**153-5939**	1	STOPPER (OIL)	
	2	1	**153-7640**	2	BOLT AS	
	3	1	**217-5859**	1	VALVE-BREATHER (CRANKCASE)	
	4	2	**217-5862**	6	SCREW (SELF-TAPPING)	
	5	2	**233-0695**	1	SEAL-VALVE COVER	
M	6	1	**238-9295**	4	BOLT (M4X0.7X30-MM)	
	7	2	**320-8401**	1	PLATE-RETAINING	
	8	1	**365-4125**	1	ADAPTER	
	9	1	**366-3055**	1	ELBOW	
	10	1	**438-9362**	1	GASKET	
	11	1	**583-6088**	1	COVER-HEAD	
	12	2	**183-1165**	1	PLUG	
	13	1	**494-9569**	1	GASKET	

M - METRIC PART

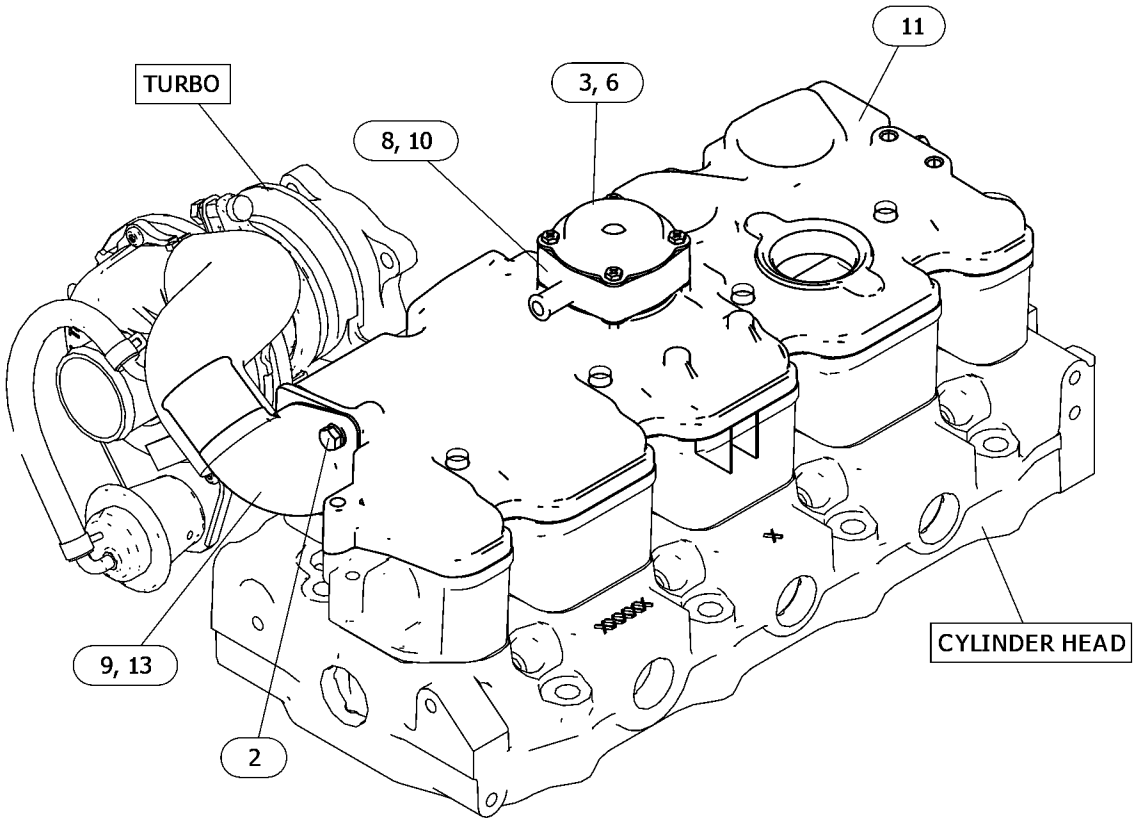

GRAPHIC #1 g06770097

601-0474 **COVER GP-CYLINDER HEAD (**contd.**)** **i08578567**

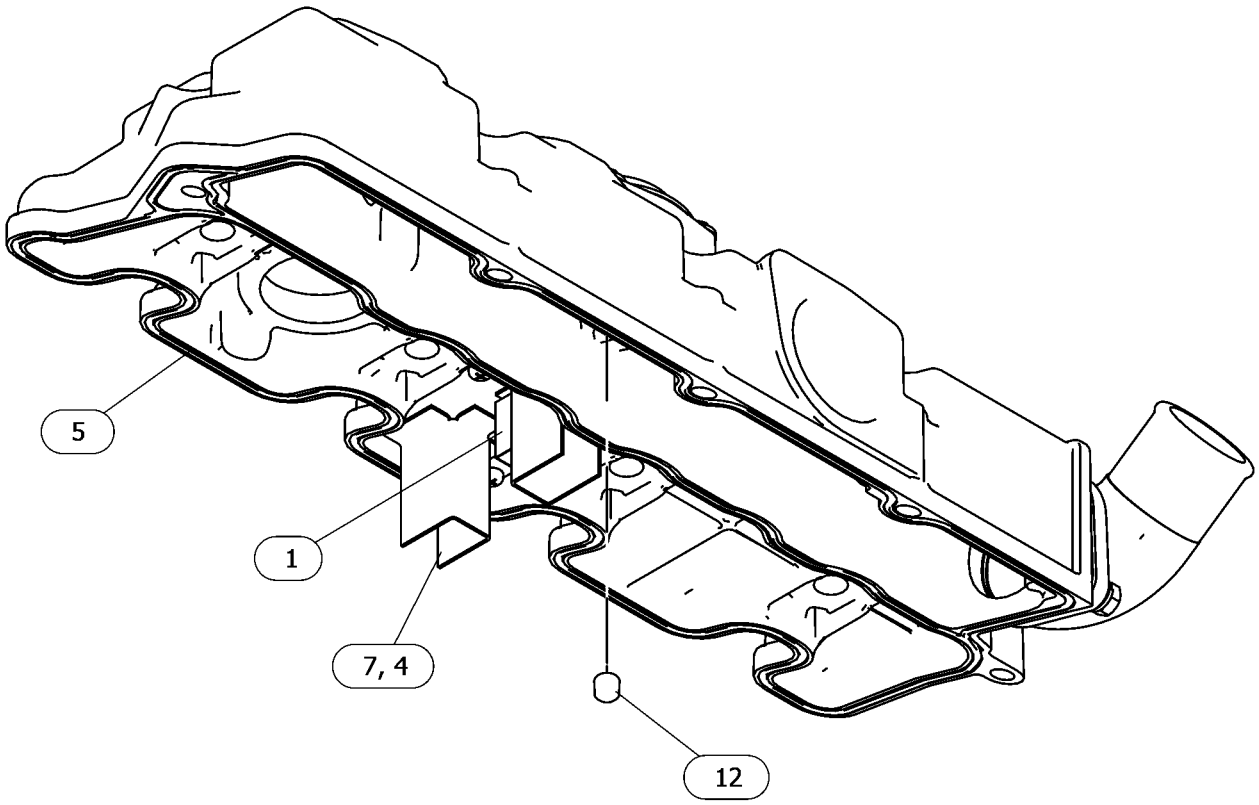

(VIEWED FROM BOTTOM)

GRAPHIC #2 <END> g06770097_01

607-1324 COVER GP-CYLINDER HEAD

S/N: G7L27560-UP

PART OF 607-1257 TURBOCHARGER GP

SMCS-1100 **i10733138**

NOTE	REF NO	GRAPHIC REF	PART NUMBER	QTY	PART NAME 1 2 3 4 5 6 (PRODUCT LEVEL)	SEE PAGE
	1	2	**153-5939**	1	STOPPER (OIL)	
	2	1	**153-7640**	2	BOLT AS	
	3	1	**458-6608**	1	PLUG-SEAL	
	4	2	**217-5859**	1	VALVE-BREATHER (CRANKCASE)	
	5	2	**217-5862**	6	SCREW (SELF-TAPPING)	
	6	1	**233-0695**	1	SEAL-VALVE COVER	
M	7	2	**238-9295**	4	BOLT (M4X0.7X30-MM)	
	8	2	**320-8401**	1	PLATE-RETAINING	
	9	2	**365-4125**	1	ADAPTER	
	10	1	**366-3055**	1	ELBOW	
	11	2	**438-9362**	1	GASKET	
	12	1	**583-6088**	1	COVER-HEAD	
	13	1	**494-9569**	1	GASKET (AIR INTAKE)	

M - METRIC PART

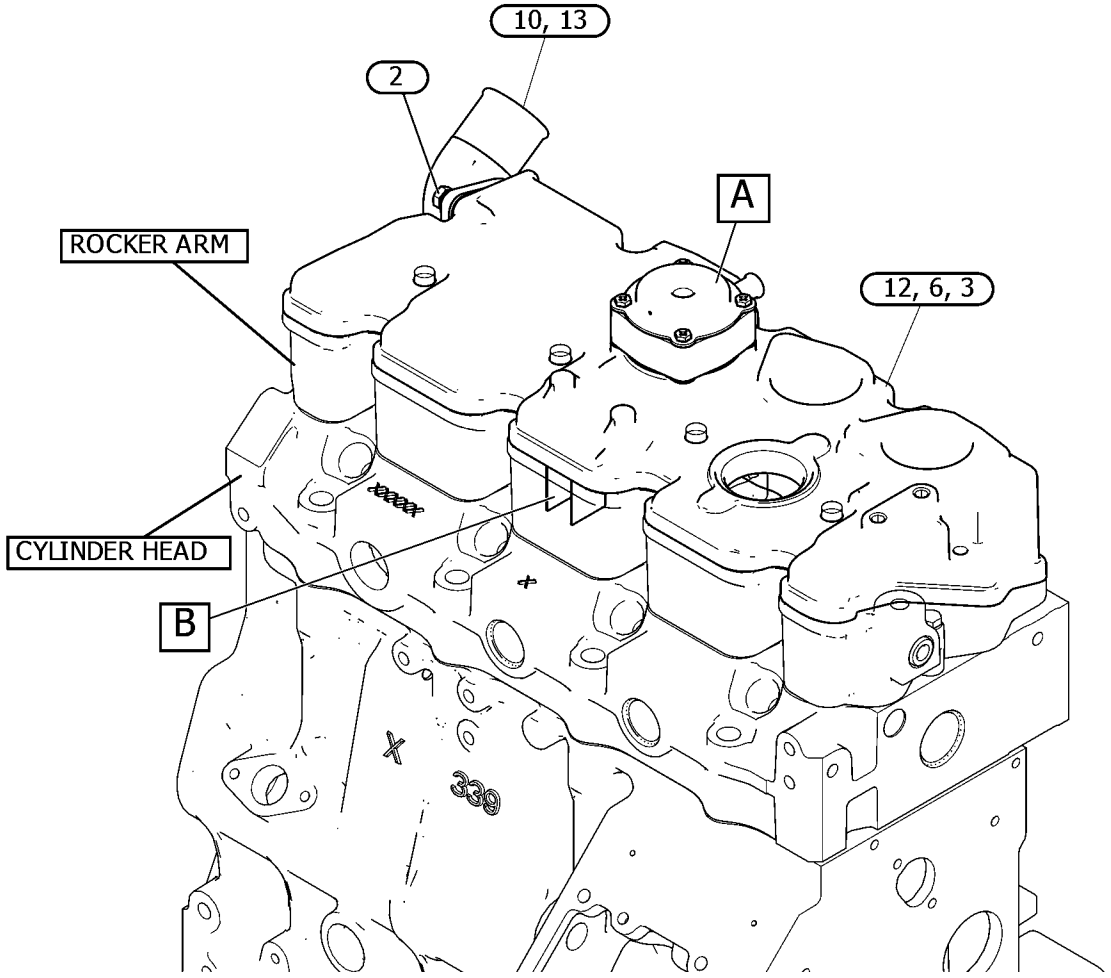

GRAPHIC #1 g07972856

607-1324 **COVER GP-CYLINDER HEAD (**contd.**)** **i10733138**

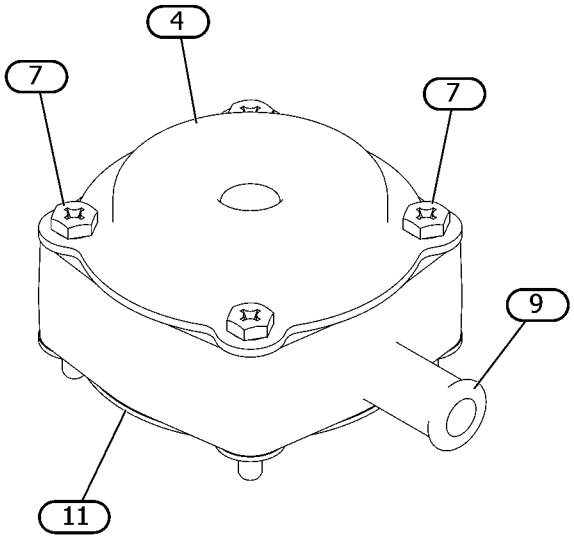

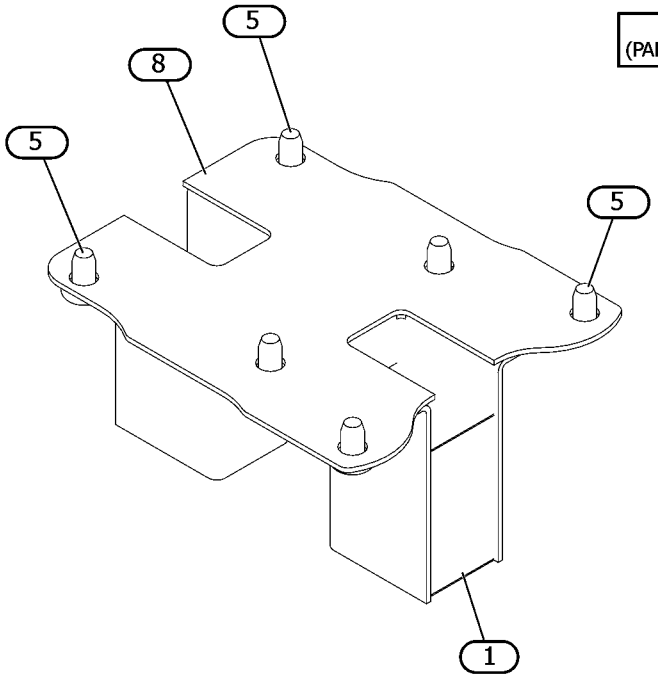

VIEW OF AREA A
(PARTS REMOVED FOR CLARITY)

90°

VIEW OF AREA B
(PARTS REMOVED FOR CLARITY)

90°

GRAPHIC #2 <END> g07972856_01

364-2827 COVER GP-ENGINE

SMCS-795C **i05316733**

NOTE	REF NO	GRAPHIC REF	PART NUMBER	QTY	PART NAME 1 2 3 4 5 6 (PRODUCT LEVEL)	SEE PAGE
M	1	1	**6I-0594**	2	NUT (M10X1.5-THD)	
M	2	1	**100-4463**	2	BOLT (M10X1.5X80-MM)	
	3	1	**308-1875**	1	SEAL-O-RING	
	4	1	**328-3229**	1	COVER	
	5	1	**329-3694**	1	PLATE	
	6	1	**329-3695**	1	COVER	

M - METRIC PART

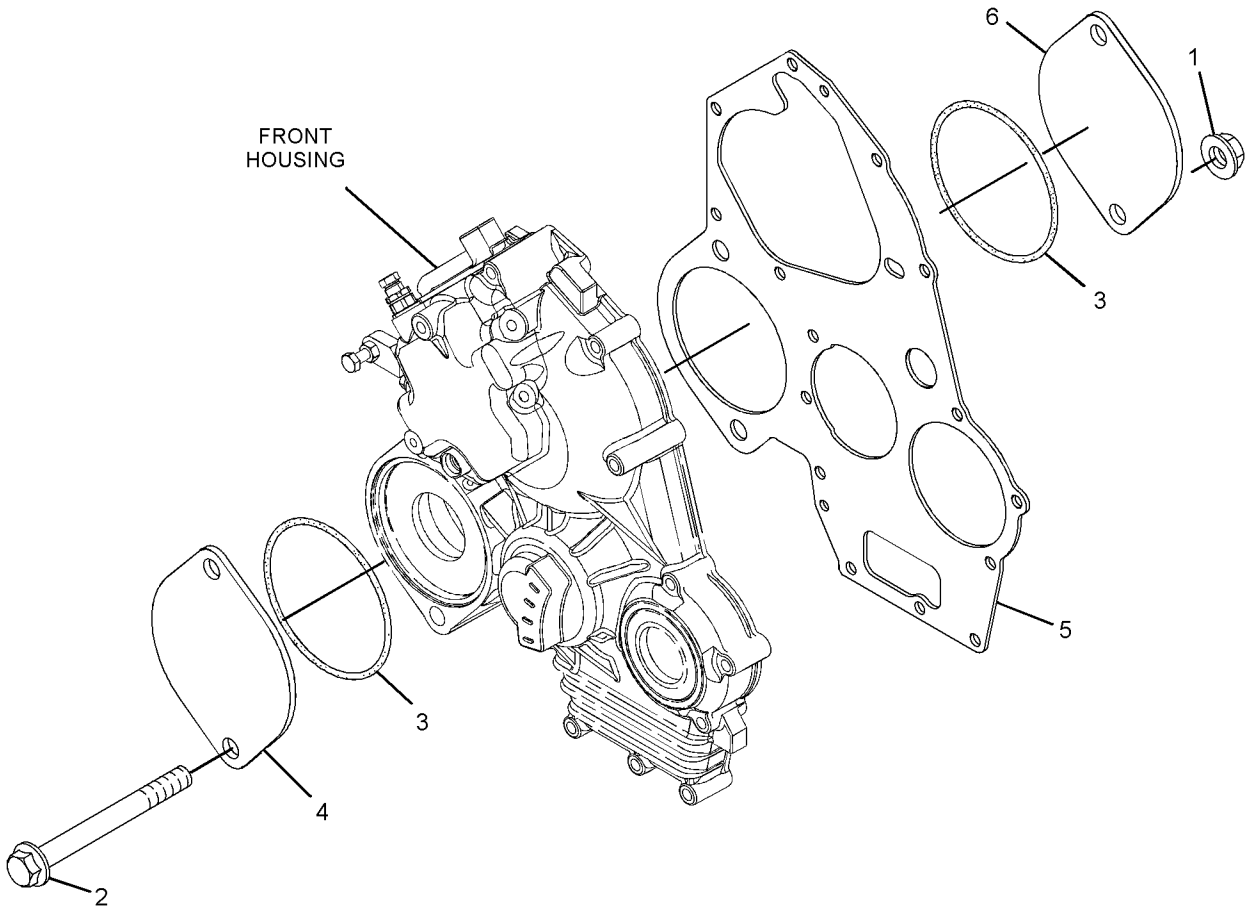

GRAPHIC #1 <END> g01637231

329-8577 COVER GP-FRONT HOUSING

SMCS-1151, 1166 **i03124562**

NOTE	REF NO	GRAPHIC REF	PART NUMBER	QTY	PART NAME 1 2 3 4 5 6 (PRODUCT LEVEL)	SEE PAGE
M	1	1	**6I-0454**	2	BOLT (M10X1.5X70-MM)	
M	2	1	**6I-0594**	2	NUT (M10X1.5-THD)	
	3	1	**153-6497**	1	SEAL-O-RING	
	4	1	**311-5852**	1	PLATE	
	5	1	**311-5853**	1	SEAL-O-RING	
	6	1	**321-5906**	1	PLATE	
	7	1	**329-8576**	1	PLATE	

M - METRIC PART

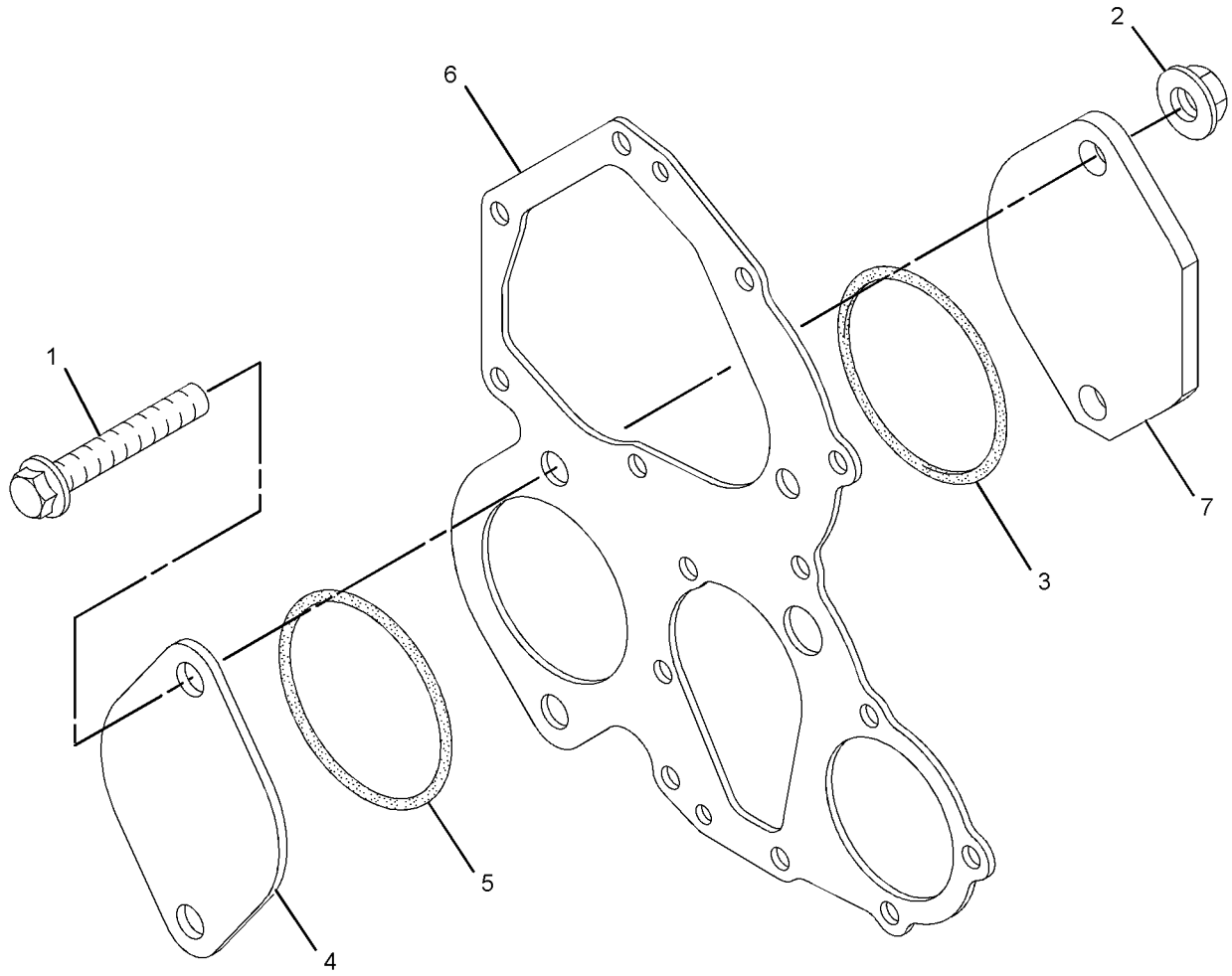

GRAPHIC #1 <END> g01614834

465-7011 COVER GP-FRONT HOUSING

SMCS-1151, 1166 **i06180158**

NOTE	REF NO	GRAPHIC REF	PART NUMBER	QTY	PART NAME 1 2 3 4 5 6 (PRODUCT LEVEL)	SEE PAGE
M	1	1	**6I-0455**	2	BOLT (M8X1.25X55-MM)	
	2	1	**423-7720**	1	PLATE-FRONT	
	3	1	**423-8370**	1	PLATE-THREADED	

M - METRIC PART

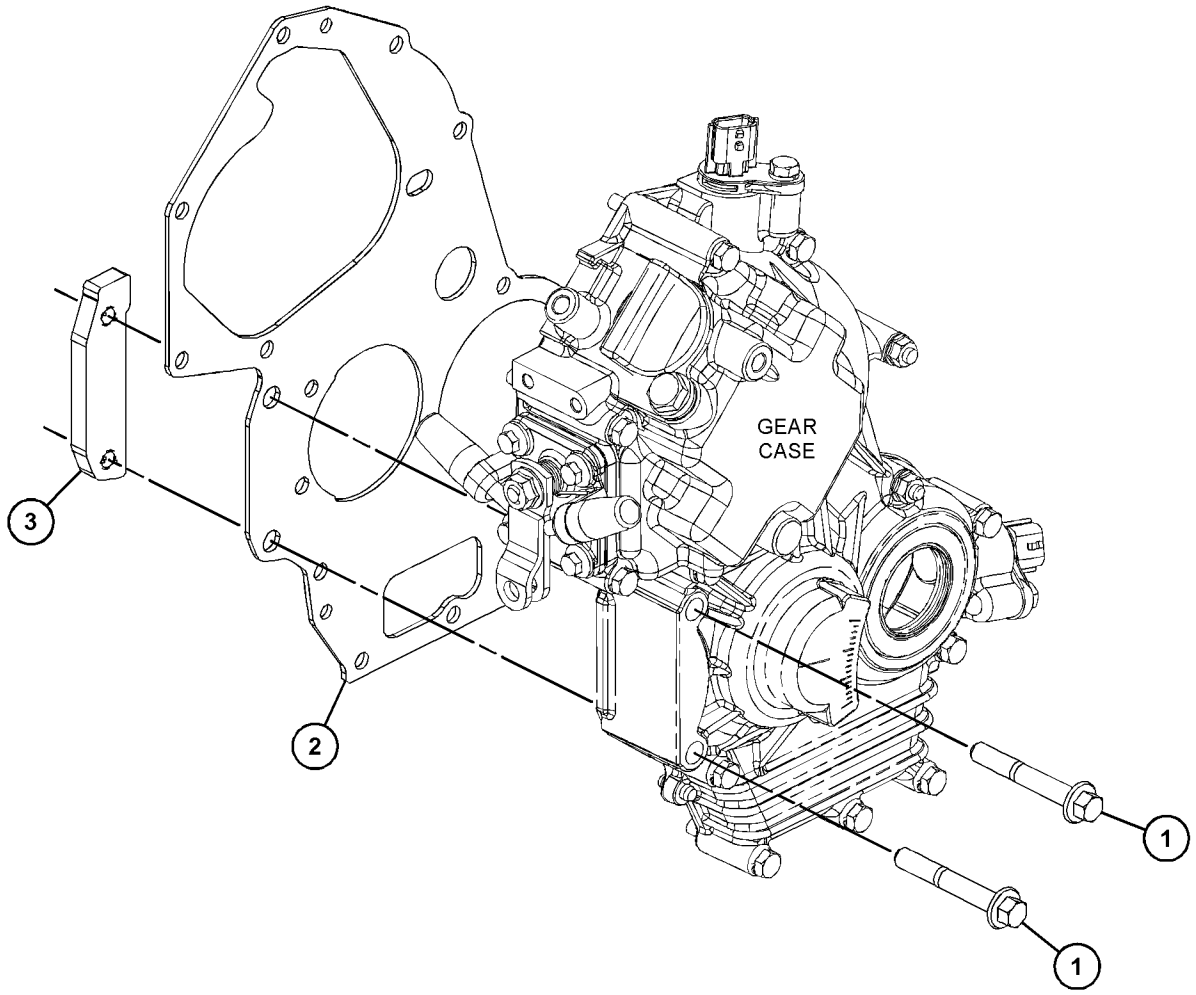

GRAPHIC #1 <END> g03852348

309-6722 COVER GP-VALVE MECHANISM

PART OF 435-1645 CYLINDER BLOCK GP-LONG, 433-1379 ENGINE AR, 435-1641, 435-1646, 435-1656 ENGINE AR-PRIMARY

TYPE 1

SMCS-1107 **i03398282**

NOTE	REF NO	GRAPHIC REF	PART NUMBER	QTY	PART NAME 1 2 3 4 5 6 (PRODUCT LEVEL)	SEE PAGE
	1	2	**153-5939**	1	STOPPER (OIL)	
	2	2	**153-5962**	3	BOLT AS	
	3	2	**153-7640**	2	BOLT AS	
M	4	2	**154-1347**	4	NUT (M10X1.25-THD)	
M	5	1	**249-7263**	2	BOLT (M6X1X16-MM) (M6X1X16-MM)	
	6	2	**165-2140**	2	BOLT AS	
	7	2	**190-3762**	4	WASHER	
	8	2	**217-5859**	1	VALVE-BREATHER (CRANKCASE)	
M	9	2	**217-5860**	4	BOLT (M4X0.7X8-MM)	
	10	2	**320-8401**	1	PLATE-RETAINING	
	11	2	**217-5862**	6	SCREW (SELF-TAPPING)	
	12	2	**217-5864**	1	GASKET	
	13	1	**225-8533**	1	GASKET (TURBOCHARGER)	
	14	2	**233-0695**	1	SEAL-VALVE COVER	
	15	2	**233-7061**	1	COVER-VALVE	
	16	2	**309-6735**	1	TUBE-AIR	
	17	1	**309-6736**	1	COVER	

M - METRIC PART

309-6722 **COVER GP-VALVE MECHANISM (**contd.**)** **i03398282**

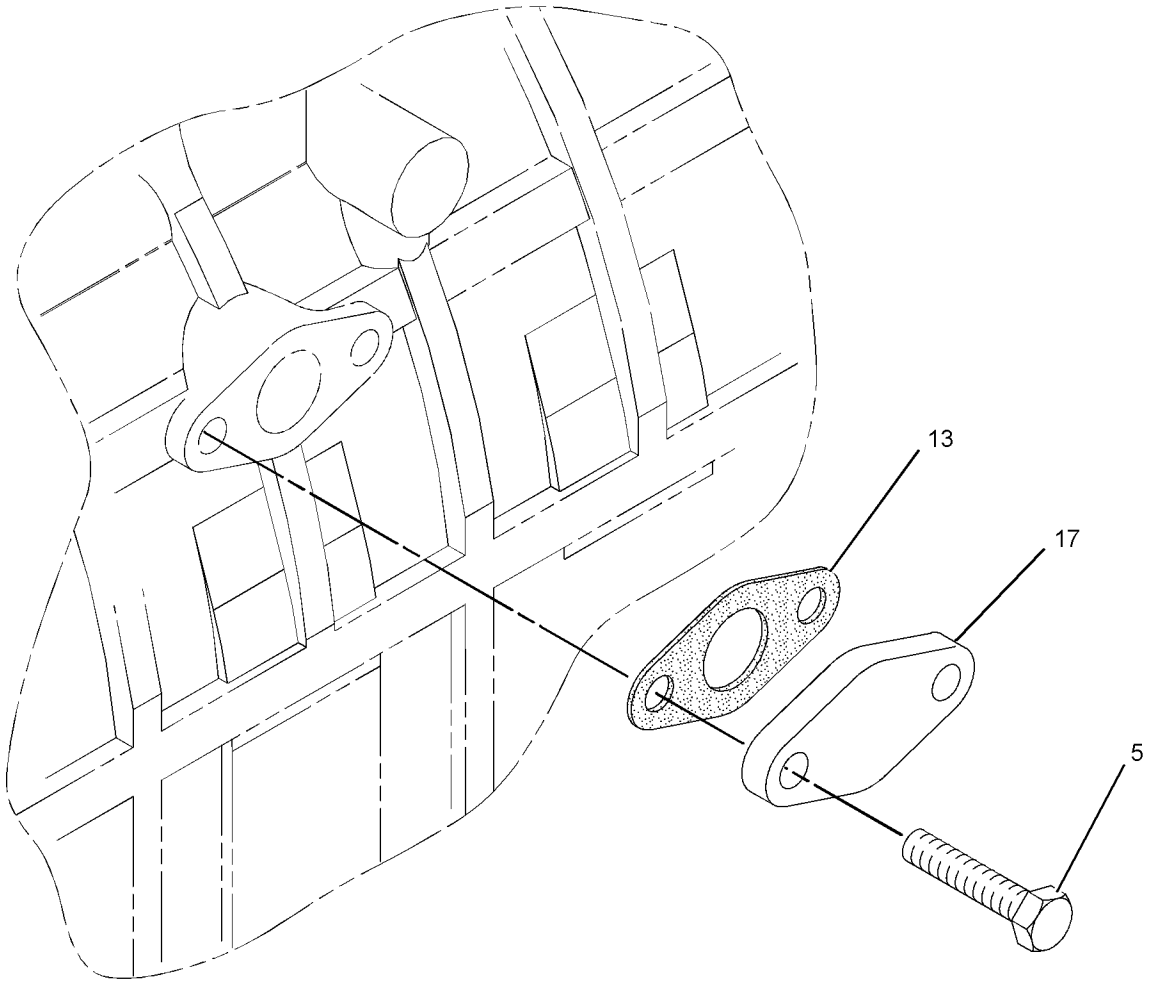

GRAPHIC #1 g01397234

309-6722 **COVER GP-VALVE MECHANISM (**contd.**)** **i03398282**

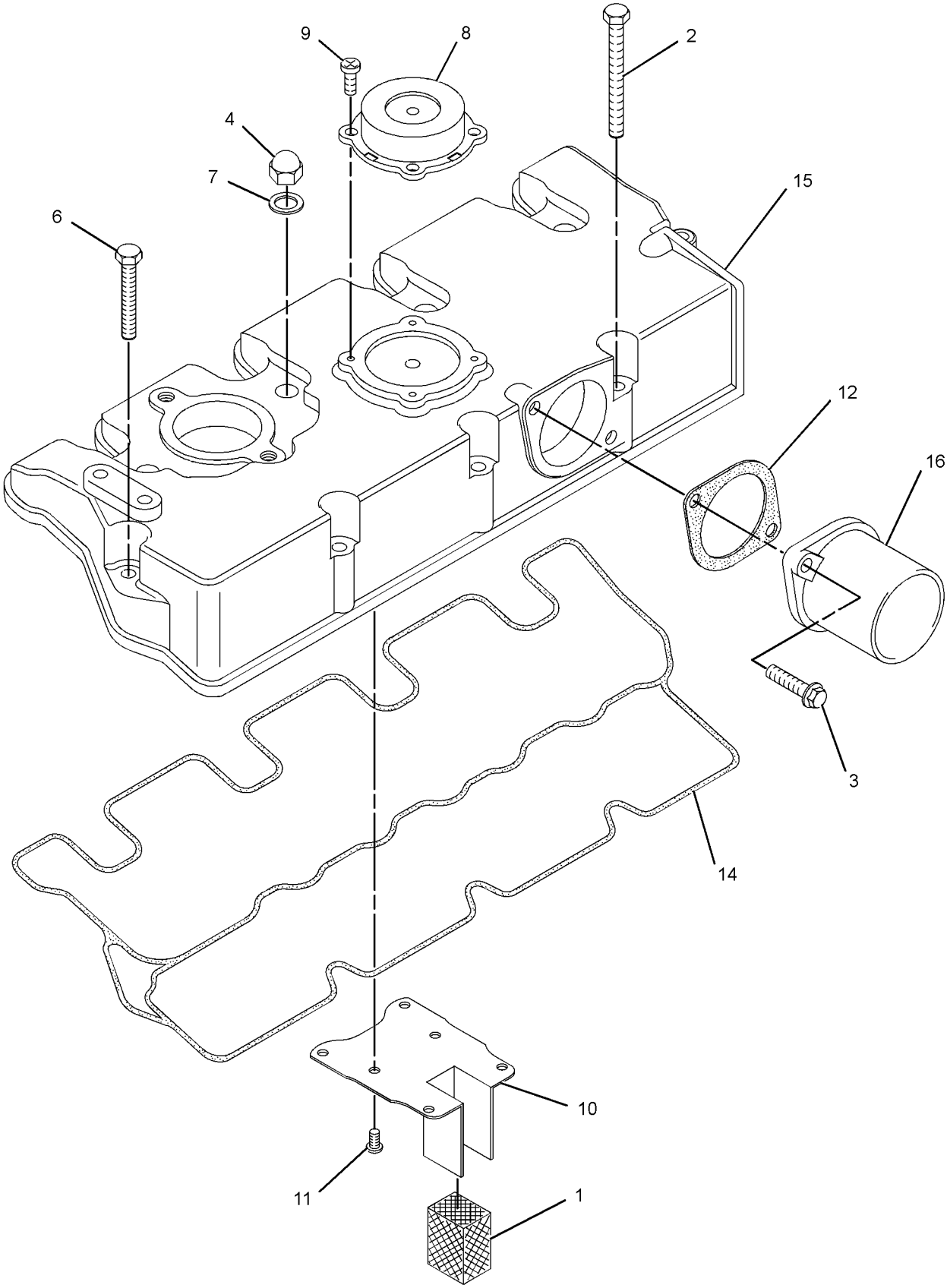

GRAPHIC #2

<END>

g01397236

309-6722 COVER GP-VALVE MECHANISM

PART OF 435-1645 CYLINDER BLOCK GP-LONG, 433-1379 ENGINE AR, 435-1641, 435-1642, 435-1646, 435-1647, 435-1656 ENGINE AR-PRIMARY
TYPE 2

SMCS-1107 **i06803398**

NOTE	REF NO	GRAPHIC REF	PART NUMBER	QTY	PART NAME 1 2 3 4 5 6 (PRODUCT LEVEL)	SEE PAGE
	1	2	**153-5939**	1	STOPPER (OIL)	
	2	2	**153-5962**	3	BOLT AS	
	3	2	**153-7640**	2	BOLT AS	
M	4	2	**154-1347**	4	NUT (M10X1.25-THD)	
C	5	1	**288-6539**	1	CAP	
	6	2	**165-2140**	1	BOLT AS	
	7	2	**246-4361**	4	WASHER (10.5X14X1.5-MM THK)	
	8	2	**217-5859**	1	VALVE-BREATHER (CRANKCASE)	
M	9	2	**217-5860**	4	BOLT (M4X0.7X8-MM)	
	10	2	**320-8401**	1	PLATE-RETAINING	
	11	2	**217-5862**	6	SCREW (SELF-TAPPING)	
	12	2	**494-9569**	1	GASKET	
	13	2	**309-6735**	1	TUBE-AIR	
	14	2	**233-0695**	1	SEAL-VALVE COVER	
	15	2	**476-5582**	1	COVER-HEAD	
M	16	2	**153-5960**	1	NUT (M6X1-THD)	
M	17	2	**360-9545**	1	STUD (M6X1X48-MM)	

C - CHANGE FROM PREVIOUS TYPE
M - METRIC PART

309-6722 **COVER GP-VALVE MECHANISM (**contd.**)** **i06803398**

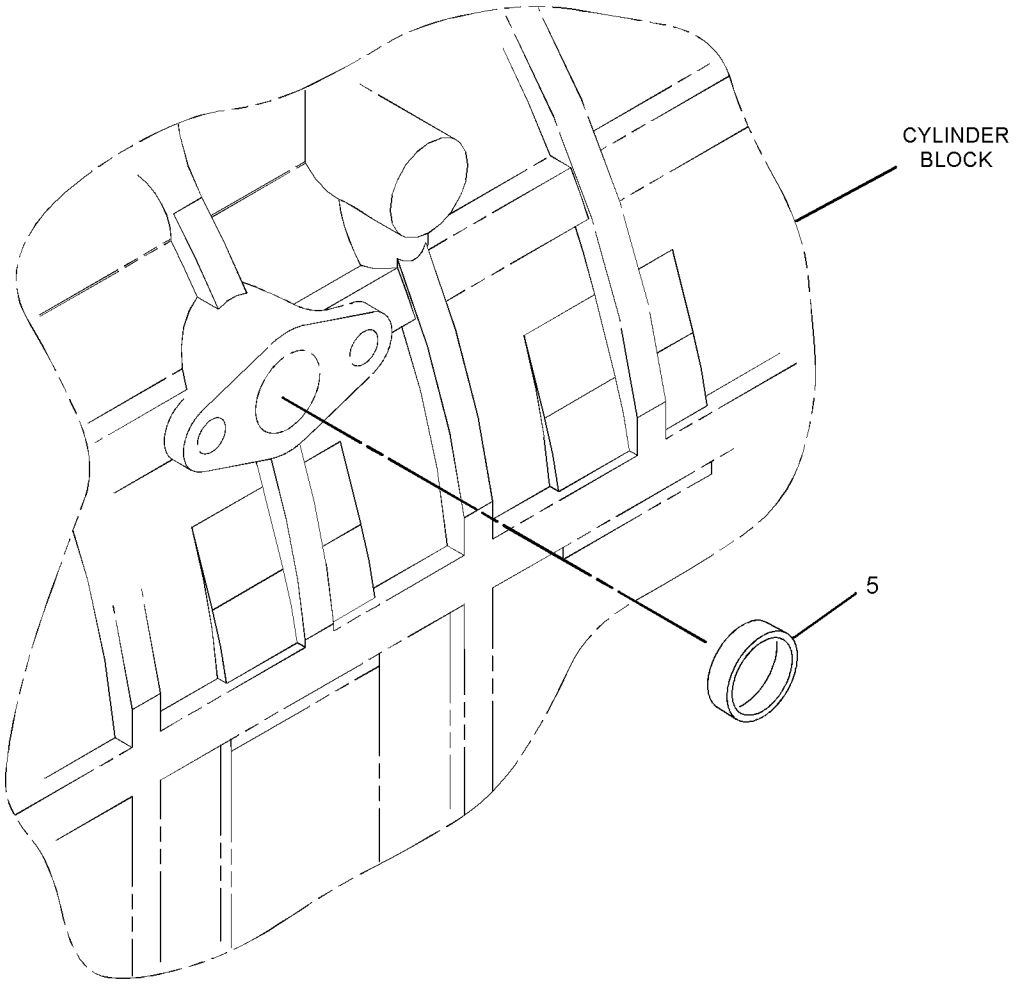

GRAPHIC #1 g02155789

309-6722 **COVER GP-VALVE MECHANISM (**contd.**)** **i06803398**

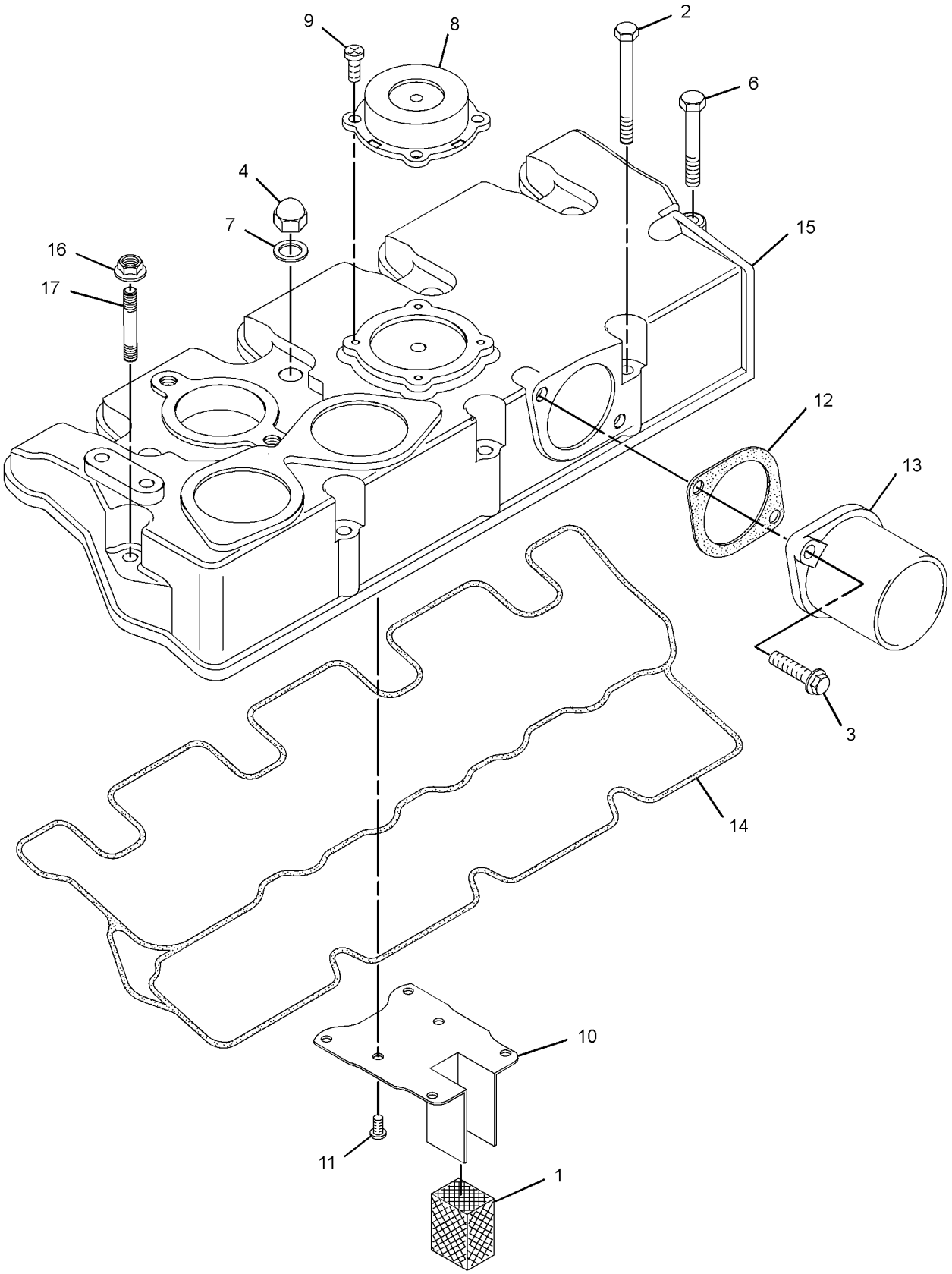

GRAPHIC #2 <END> g02626343

309-6722 COVER GP-VALVE MECHANISM

PART OF 435-1645 CYLINDER BLOCK GP-LONG, 433-1379 ENGINE AR, 435-1641, 435-1642, 435-1646, 435-1647, 435-1656, 516-9335 ENGINE AR-PRIMARY
TYPE 3

SMCS-1107 **i08777036**

NOTE	REF NO	GRAPHIC REF	PART NUMBER	QTY	PART NAME 1 2 3 4 5 6 (PRODUCT LEVEL)	SEE PAGE
	1	2	**153-5939**	1	STOPPER (OIL)	
	2	2	**153-5962**	3	BOLT AS	
	3	2	**153-7640**	2	BOLT AS	
CM	4	2	**539-0439**	4	NUT (M10X1.25-THD)	
	5	1	**288-6539**	1	CAP	
	6	2	**165-2140**	1	BOLT AS	
	7	2	**246-4361**	4	WASHER (10.5X14X1.5-MM THK)	
	8	2	**217-5859**	1	VALVE-BREATHER (CRANKCASE)	
M	9	2	**217-5860**	4	BOLT (M4X0.7X8-MM)	
	10	2	**320-8401**	1	PLATE-RETAINING	
	11	2	**217-5862**	6	SCREW (SELF-TAPPING)	
	12	2	**494-9569**	1	GASKET	
	13	2	**560-8837**	1	ADAPTER	
	14	2	**233-0695**	1	SEAL-VALVE COVER	
	15	2	**583-6830**	1	COVER-HEAD	
M	16	2	**153-5960**	1	NUT (M6X1-THD)	
M	17	2	**360-9545**	1	STUD (M6X1X48-MM)	

C - CHANGE FROM PREVIOUS TYPE
M - METRIC PART

309-6722 **COVER GP-VALVE MECHANISM (**contd.**)** **i08777036**

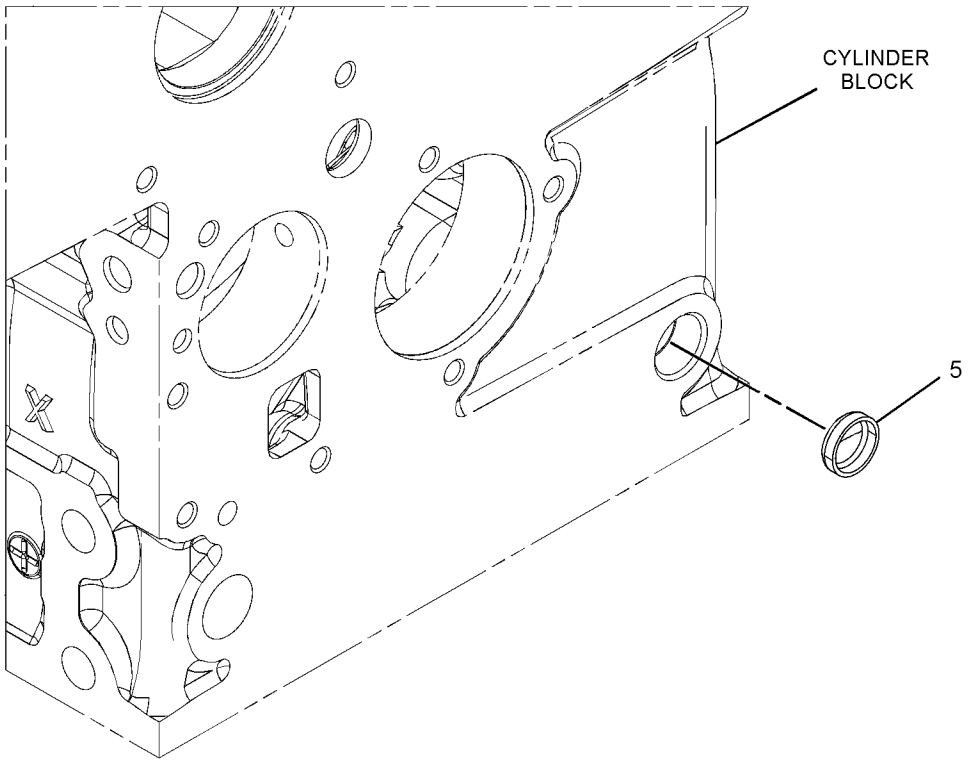

GRAPHIC #1 g06775967

309-6722 **COVER GP-VALVE MECHANISM (**contd.**)** **i08777036**

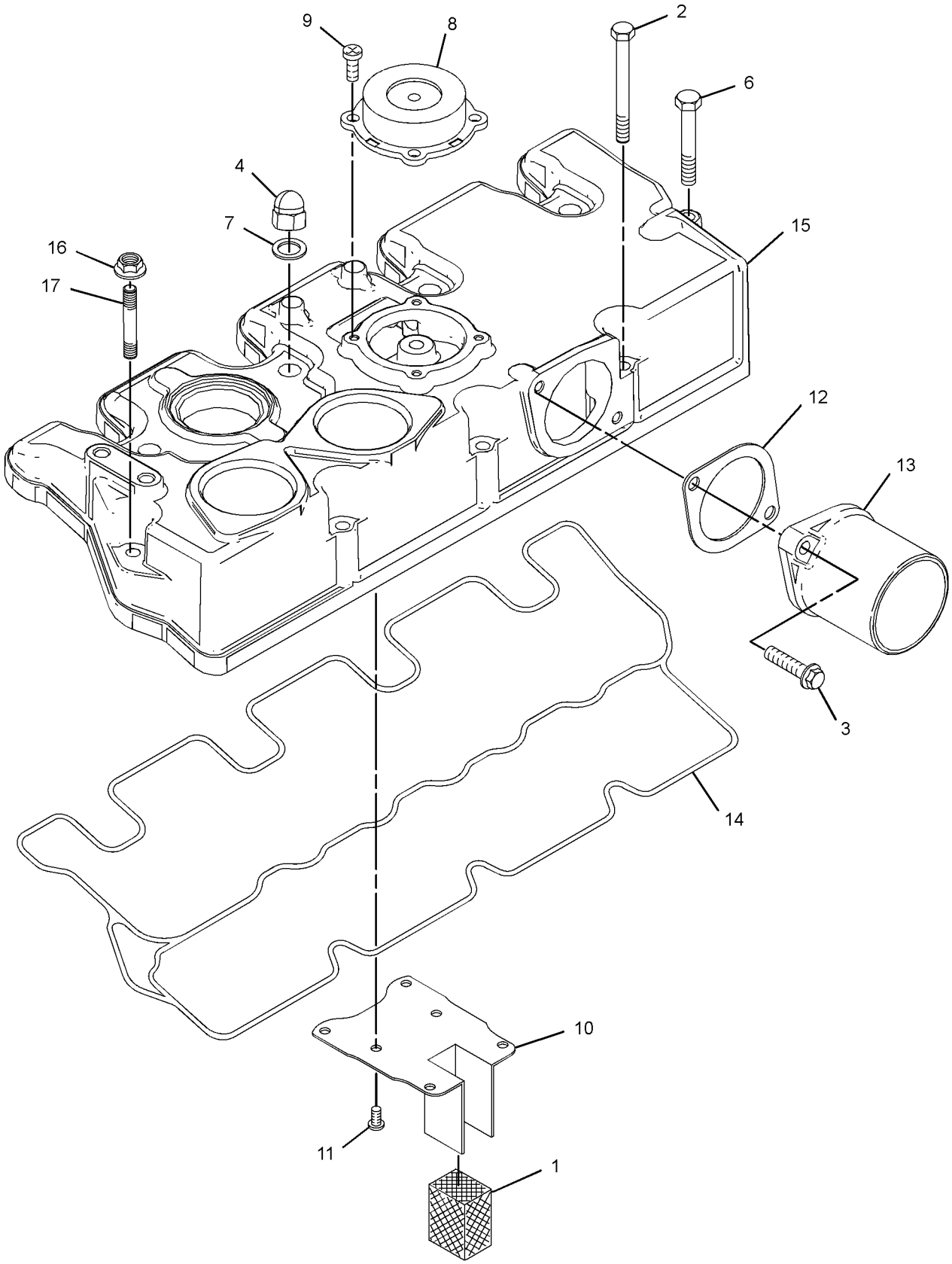

GRAPHIC #2 <END> g06775419

317-0590 COVER GP-VALVE MECHANISM

PART OF 461-7895, 492-6602, 549-8284 ENGINE AR-PRIMARY

SMCS-1107 **i08532484**

NOTE	REF NO	GRAPHIC REF	PART NUMBER	QTY	PART NAME 1 2 3 4 5 6 (PRODUCT LEVEL)	SEE PAGE
	1	2	**153-5939**	1	STOPPER (OIL)	
	2	2	**153-5962**	3	BOLT AS	
	3	2	**153-7640**	2	BOLT AS	
M	4	2	**539-0439**	4	NUT (M10X1.25-THD)	
M	5	2	**153-5960**	1	NUT (M6X1-THD)	
	6	2	**165-2140**	1	BOLT AS	
	7	2	**246-4361**	4	WASHER (10.5X14X1.5-MM THK)	
	8	2	**217-5859**	1	VALVE-BREATHER (CRANKCASE)	
M	9	2	**217-5860**	4	BOLT (M4X0.7X8-MM)	
	10	2	**320-8401**	1	PLATE-RETAINING	
	11	2	**217-5862**	6	SCREW (SELF-TAPPING)	
	12	2	**494-9569**	1	GASKET	
M	13	2	**360-9545**	1	STUD (M6X1X48-MM)	
	14	2	**233-0695**	1	SEAL-VALVE COVER	
	15	2	**583-6831**	1	COVER-HEAD	
	16	2	**560-8837**	1	ADAPTER	
	17	1	**288-6539**	1	CAP	

M - METRIC PART

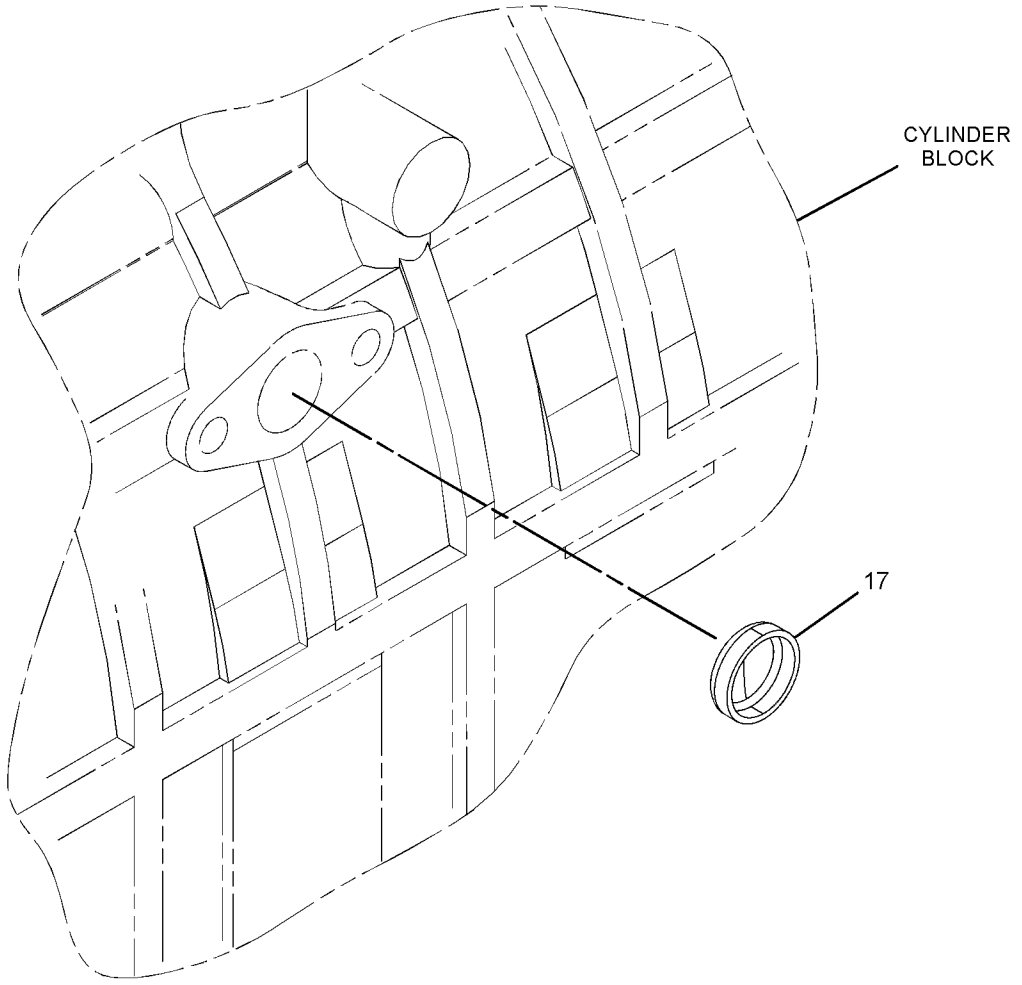

GRAPHIC #1 g07490340

317-0590 **COVER GP-VALVE MECHANISM (**contd.**)** **i08532484**

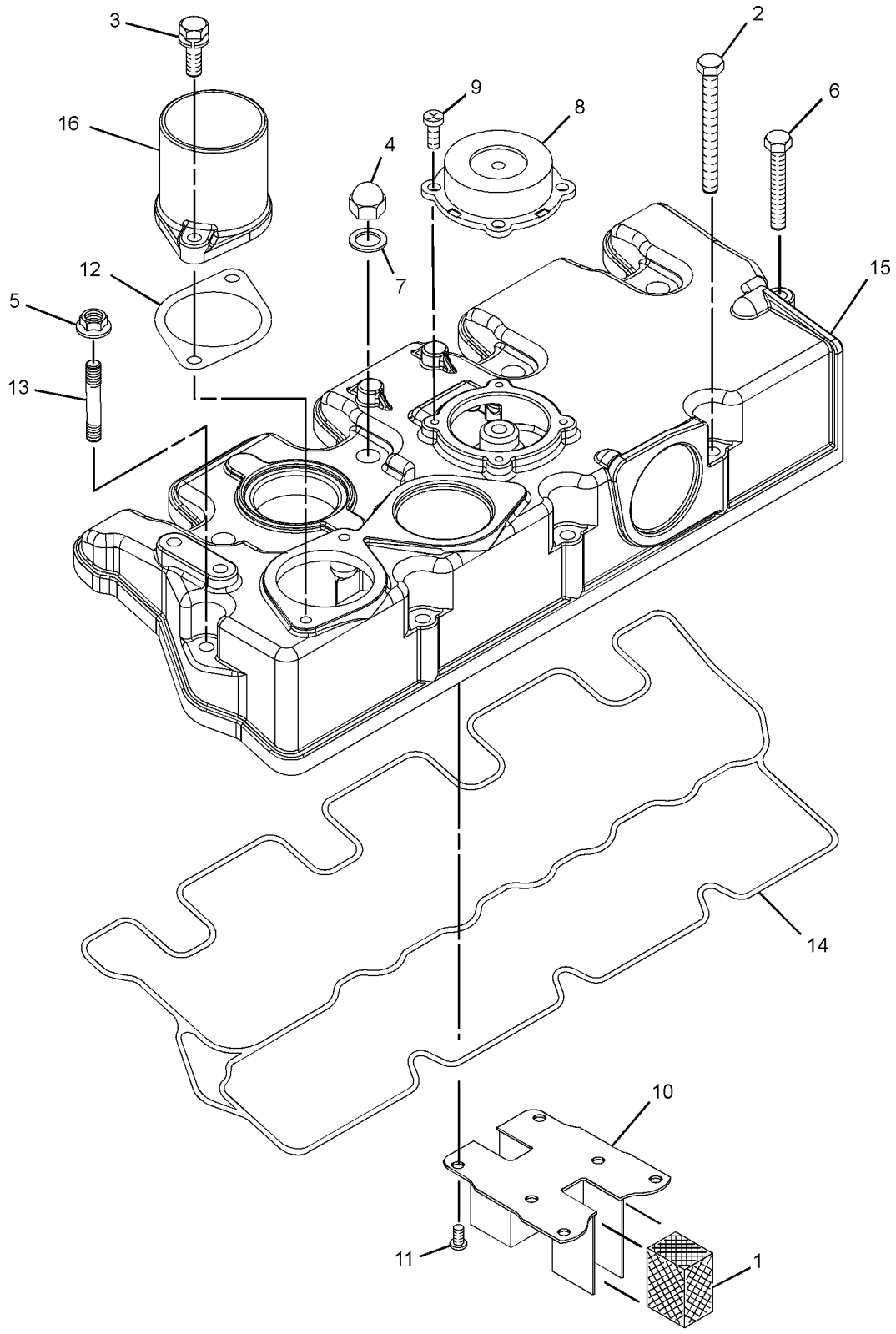

GRAPHIC #2 <END> g07490341

322-2424 COVER GP-VALVE MECHANISM

S/N: G7L1-11976

SMCS-1107 **i07769105**

NOTE	REF NO	GRAPHIC REF	PART NUMBER	QTY	PART NAME 1 2 3 4 5 6 (PRODUCT LEVEL)	SEE PAGE
	1	2	**153-5939**	1	STOPPER (OIL)	
	2	2	**153-5962**	3	BOLT AS	
	3	2	**153-7640**	2	BOLT AS	
M	4	2	**539-0439**	4	NUT (M10X1.25-THD)	
M	5	2	**360-9545**	1	STUD (M6X1X48-MM)	
	6	2	**246-4361**	4	WASHER (10.5X14X1.5-MM THK)	
	7	2	**217-5859**	1	VALVE-BREATHER (CRANKCASE)	
M	8	2	**217-5860**	4	BOLT (M4X0.7X8-MM)	
	9	2	**320-8401**	1	PLATE-RETAINING	
	10	2	**217-5862**	6	SCREW (SELF-TAPPING)	
	11	2	**494-9569**	1	GASKET	
	12	2	**165-2140**	1	BOLT AS	
	13	2	**476-5586**	1	COVER-HEAD	
	14	2	**233-0695**	1	SEAL-VALVE COVER	
	16	2	**309-6735**	1	TUBE-AIR	
M	17	2	**153-5960**	1	NUT (M6X1-THD)	
	18	1	**288-6539**	1	CAP	

M - METRIC PART

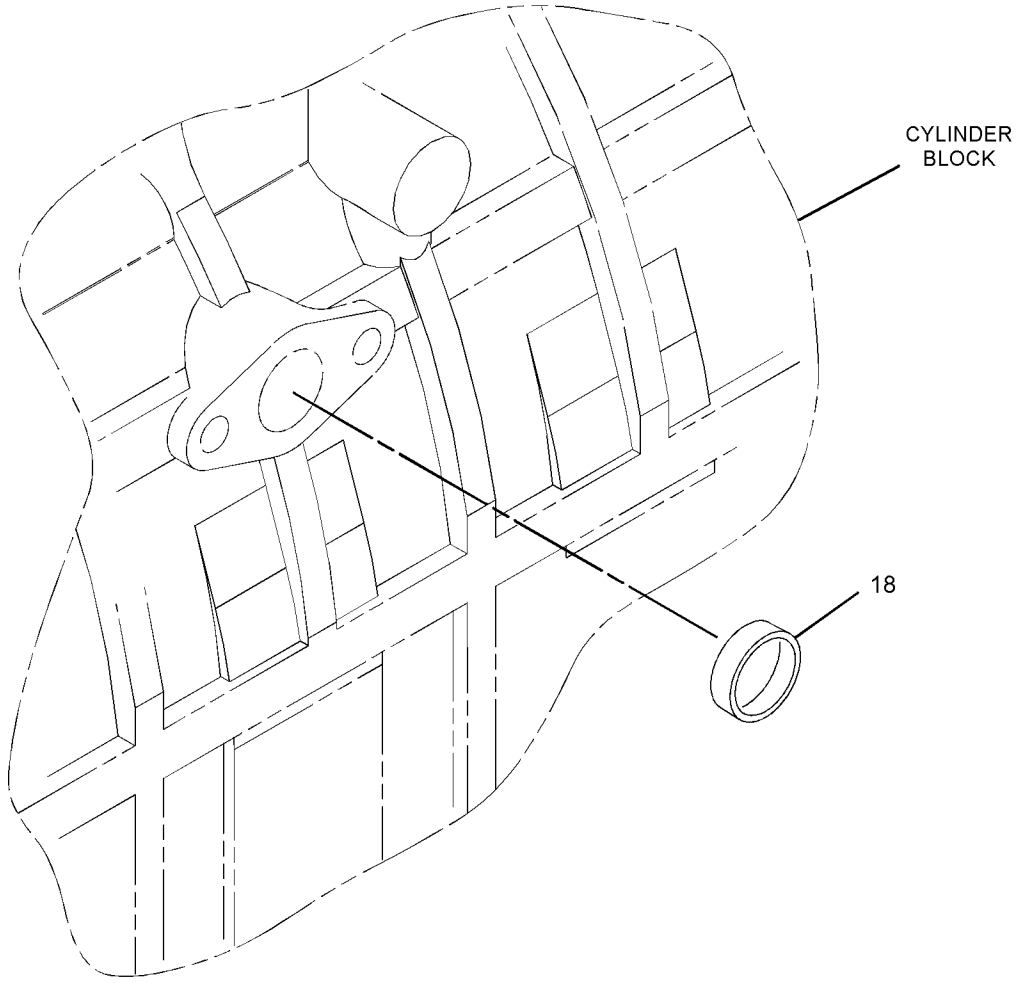

GRAPHIC #1 g01762195

322-2424 **COVER GP-VALVE MECHANISM (**contd.**)** **i07769105**

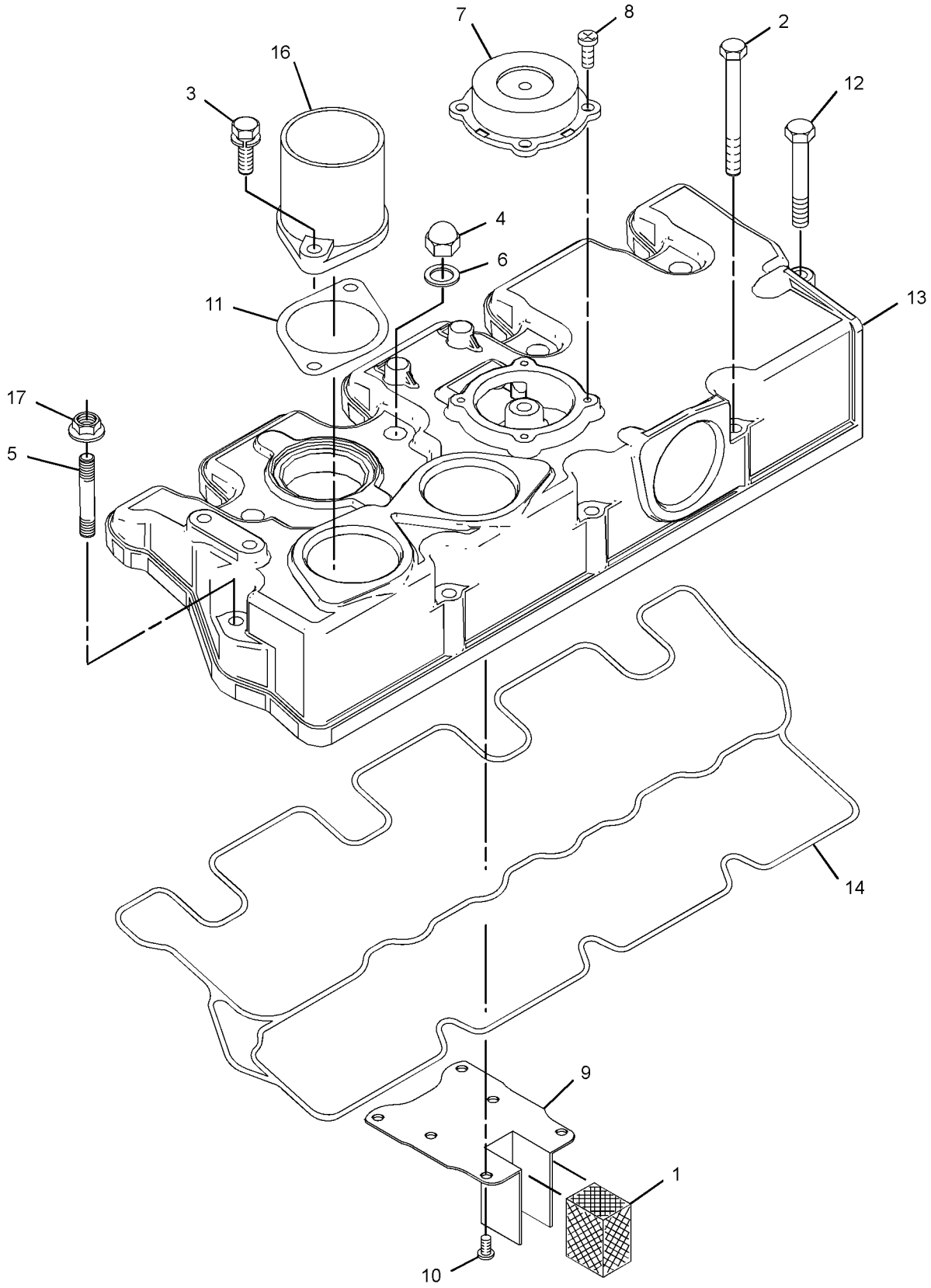

GRAPHIC #2 <END> g06105928

420-0328 COVER GP-VALVE MECHANISM

TYPE 1

SMCS-1107 **i06719643**

NOTE	REF NO	GRAPHIC REF	PART NUMBER	QTY	PART NAME 1 2 3 4 5 6 (PRODUCT LEVEL)	SEE PAGE
	1	1	**153-5939**	1	STOPPER (OIL)	
M	2	1	**153-5960**	1	NUT (M6X1-THD)	
	3	1	**153-5962**	3	BOLT AS	
	4	1	**153-7640**	2	BOLT AS	
M	5	1	**154-1347**	4	NUT (M10X1.25-THD)	
	6	1	**165-2140**	1	BOLT AS	
	7	1	**246-4361**	4	WASHER (10.5X14X1.5-MM THK)	
	8	1	**217-5859**	1	VALVE-BREATHER (CRANKCASE)	
M	9	1	**217-5860**	4	BOLT (M4X0.7X8-MM)	
	10	1	**217-5862**	6	SCREW (SELF-TAPPING)	
	11	1	**233-0695**	1	SEAL-VALVE COVER	
	12	1	**288-6539**	1	CAP	
	13	1	**309-6735**	1	TUBE-AIR	
	14	1	**320-8401**	1	PLATE-RETAINING	
M	15	1	**360-9545**	1	STUD (M6X1X48-MM)	
	16	1	**494-9569**	1	GASKET	
	17	1	**420-0321**	1	COVER-CYLINDER HEAD	

M - METRIC PART

420-0328 **COVER GP-VALVE MECHANISM (**contd.**)** **i06719643**

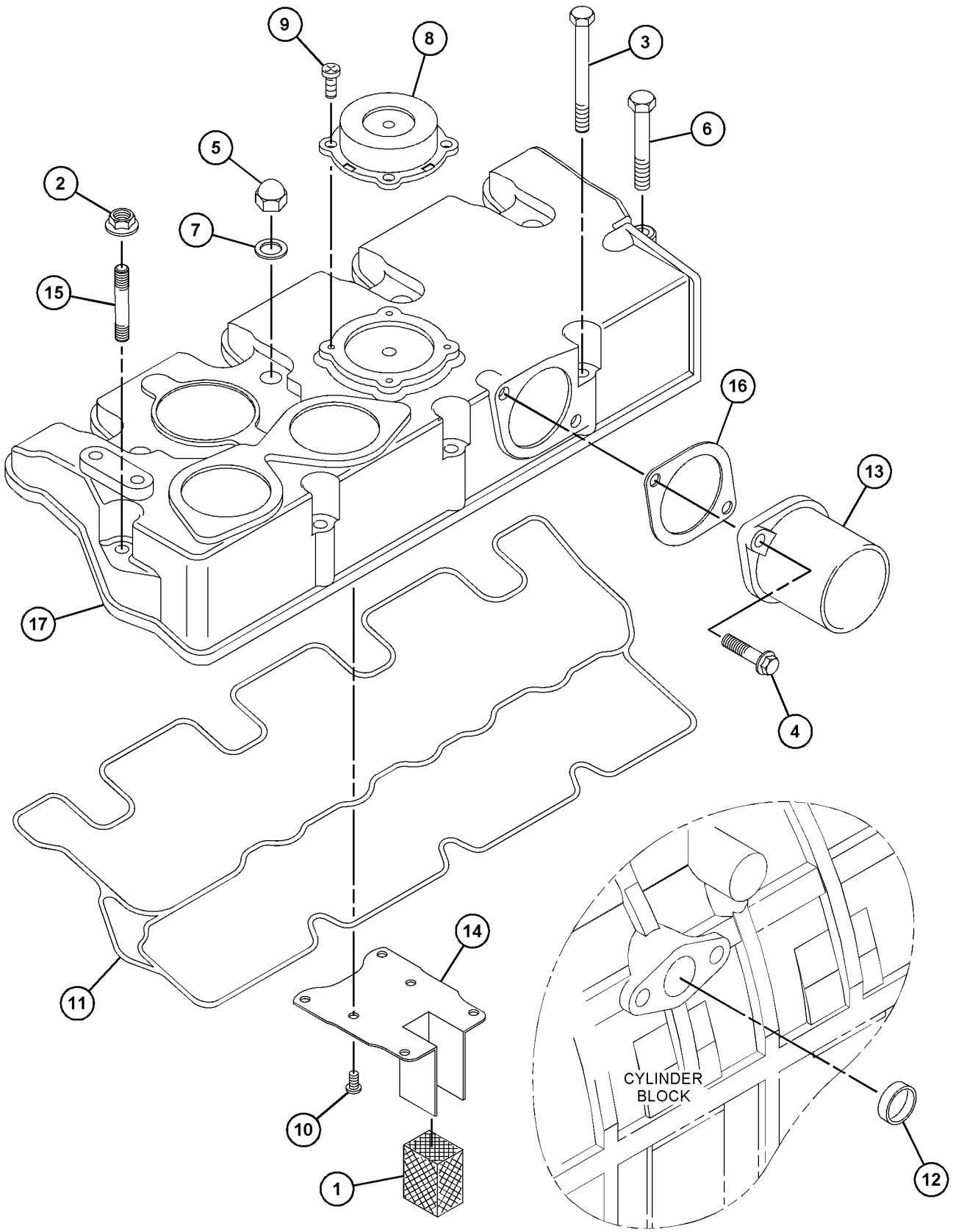

GRAPHIC #1 <END> g03680994

420-0328 COVER GP-VALVE MECHANISM

TYPE 2

SMCS-1107 **i07619304**

NOTE	REF NO	GRAPHIC REF	PART NUMBER	QTY	PART NAME 1 2 3 4 5 6 (PRODUCT LEVEL)	SEE PAGE
	1	1	**153-5939**	1	STOPPER (OIL)	
M	2	1	**153-5960**	1	NUT (M6X1-THD)	
	3	1	**153-5962**	3	BOLT AS	
	4	1	**153-7640**	2	BOLT AS	
CM	5	1	**539-0439**	4	NUT (M10X1.25-THD)	
	6	1	**165-2140**	1	BOLT AS	
	7	1	**246-4361**	4	WASHER (10.5X14X1.5-MM THK)	
	8	1	**217-5859**	1	VALVE-BREATHER (CRANKCASE)	
M	9	1	**217-5860**	4	BOLT (M4X0.7X8-MM)	
	10	1	**217-5862**	6	SCREW (SELF-TAPPING)	
	11	1	**233-0695**	1	SEAL-VALVE COVER	
	12	1	**288-6539**	1	CAP	
	13	1	**309-6735**	1	TUBE-AIR	
	14	1	**320-8401**	1	PLATE-RETAINING	
M	15	1	**360-9545**	1	STUD (M6X1X48-MM)	
	16	1	**494-9569**	1	GASKET	
	17	1	**420-0321**	1	COVER-CYLINDER HEAD	

C - CHANGE FROM PREVIOUS TYPE
M - METRIC PART

420-0328 **COVER GP-VALVE MECHANISM (**contd.**)** **i07619304**

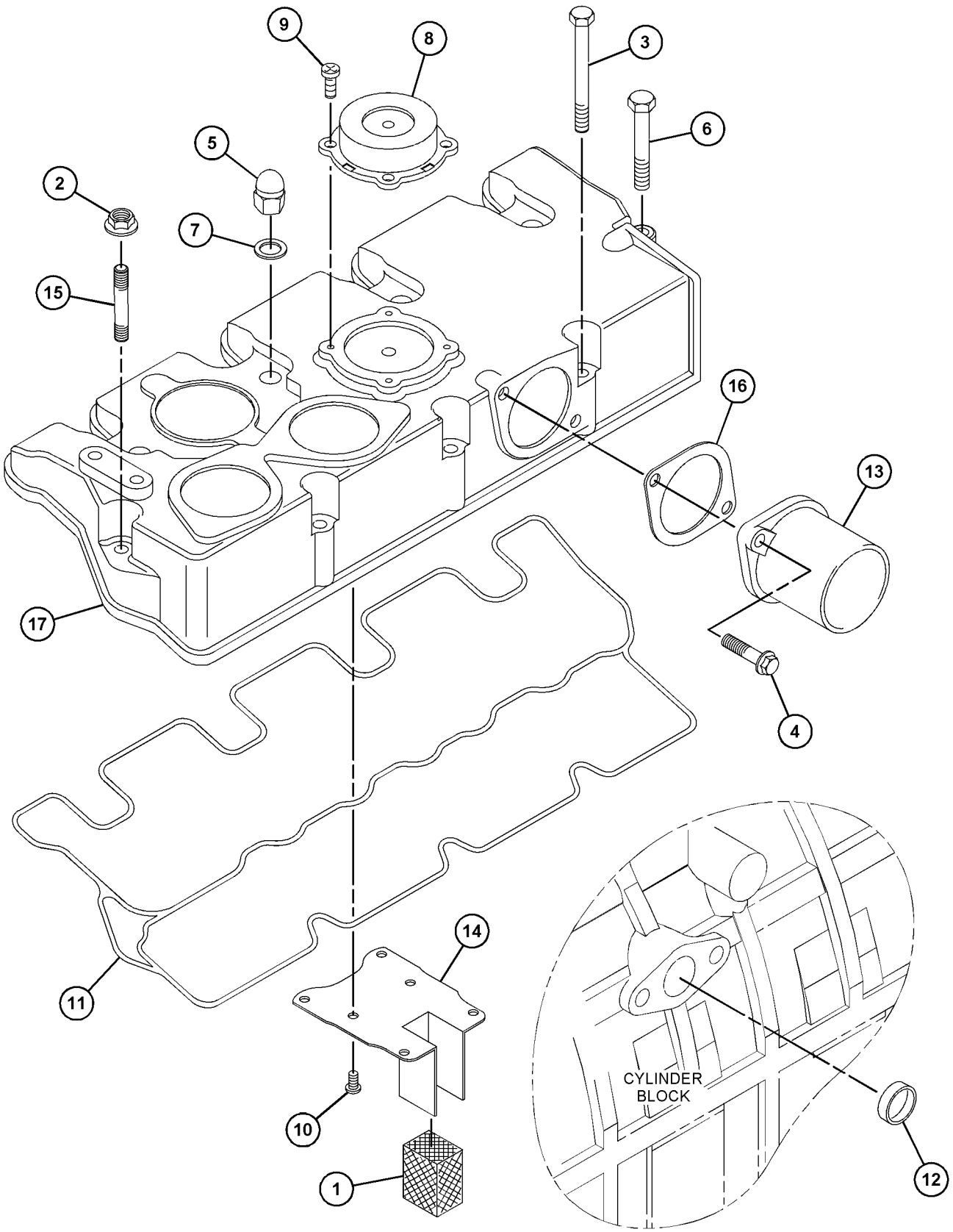

GRAPHIC #1 <END> g06471284

466-1519 COVER GP-VALVE MECHANISM—REAR

SMCS-1107 **i10493887**

NOTE	REF NO	GRAPHIC REF	PART NUMBER	QTY	PART NAME 1 2 3 4 5 6 (PRODUCT LEVEL)	SEE PAGE
M	1	1	**360-9545**	1	STUD (M6X1X48-MM)	
M	2	1	**153-5960**	1	NUT (M6X1-THD)	
	3	1	**153-5939**	1	STOPPER (OIL)	
	4	1	**153-5962**	3	BOLT AS	
	5	1	**583-6832**	1	COVER-HEAD	
	6	1	**233-0695**	1	SEAL-VALVE COVER	
	7	1	**153-7640**	2	BOLT AS	
M	8	1	**539-0439**	4	NUT (M10X1.25-THD)	
	9	1	**494-9569**	1	GASKET	
	10	1	**217-5862**	6	SCREW (SELF-TAPPING)	
	11	1	**320-8401**	1	PLATE-RETAINING	
	12	1	**165-2140**	1	BOLT AS	
	13	1	**217-5859**	1	VALVE-BREATHER (CRANKCASE)	
	14	1	**246-4361**	4	WASHER (10.5X14X1.5-MM THK)	
	15	1	**288-6539**	1	CAP	
	16	1	**560-8837**	1	ADAPTER	
M	17	1	**217-5860**	4	BOLT (M4X0.7X8-MM)	

M - METRIC PART

466-1519 **COVER GP-VALVE MECHANISM (**contd.**)** **i10493887**

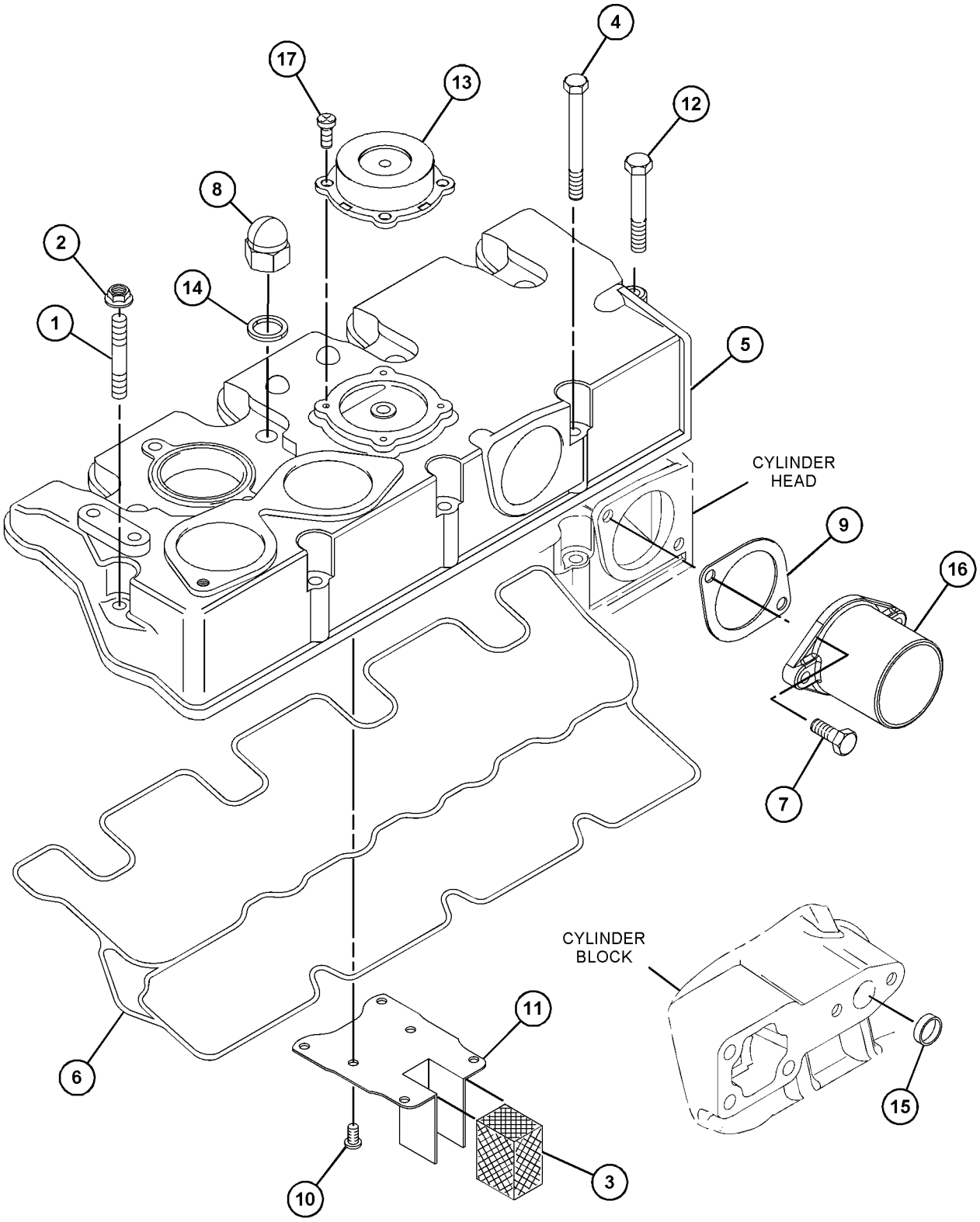

GRAPHIC #1 <END> g07914850

586-6654 COVER GP-VALVE MECHANISM

PART OF 433-1379 ENGINE AR, 435-1641, 435-1646, 435-1647, 610-7720 ENGINE AR-PRIMARY

SMCS-1107 **i10497018**

NOTE	REF NO	GRAPHIC REF	PART NUMBER	QTY	PART NAME 1 2 3 4 5 6 (PRODUCT LEVEL)	SEE PAGE
M	1	1	**099-6418**	1	NUT (M6X1-THD)	
	2	2	**153-5962**	3	BOLT AS	
	3	2	**153-7640**	2	BOLT AS	
	4	2	**165-2140**	1	BOLT AS	
	5	2	**217-5859**	1	VALVE-BREATHER (CRANKCASE)	
M	6	2	**217-5860**	4	BOLT (M4X0.7X8-MM)	
	7	1	**233-0695**	1	SEAL-VALVE COVER	
	8	1,2	**246-4361**	4	WASHER (10.5X14X1.5-MM THK)	
	9	2	**320-8401**	1	PLATE-RETAINING	
M	10	1	**360-9545**	1	STUD (M6X1X48-MM)	
	11	2	**494-9569**	1	GASKET	
M	12	1,2	**539-0439**	4	NUT (M10X1.25-THD)	
	13	2	**288-6539**	1	CAP	
	14	2	**153-5939**	1	STOPPER (OIL)	
	15	2	**217-5862**	6	SCREW (SELF-TAPPING)	
	16	2	**560-8837**	1	ADAPTER	
	17	1	**583-6830**	1	COVER-HEAD	
	18	1	**154-0175**	1	PLUG	

M - METRIC PART

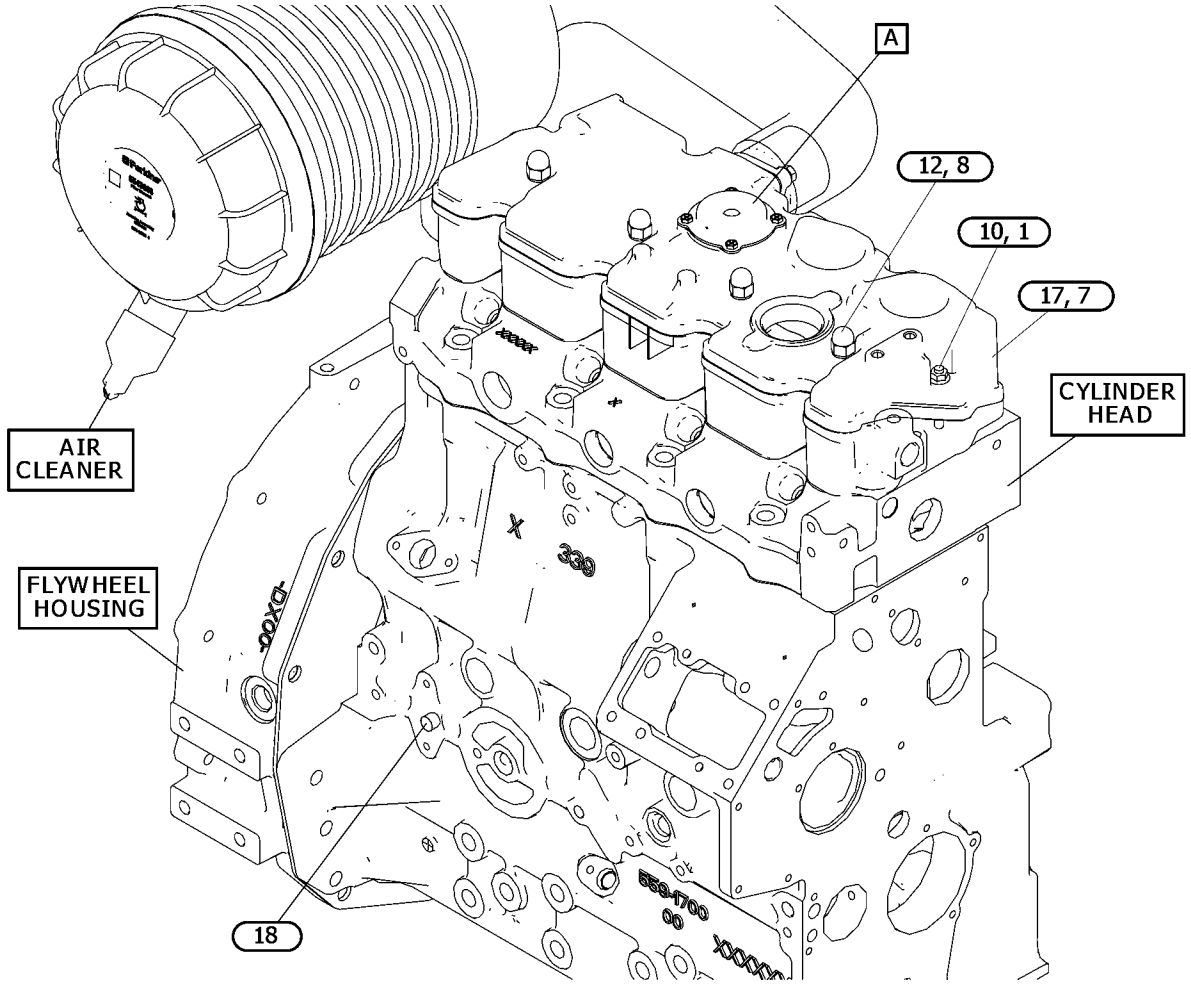

GRAPHIC #1 g07889830

586-6654 **COVER GP-VALVE MECHANISM (**contd.**)** **i10497018**

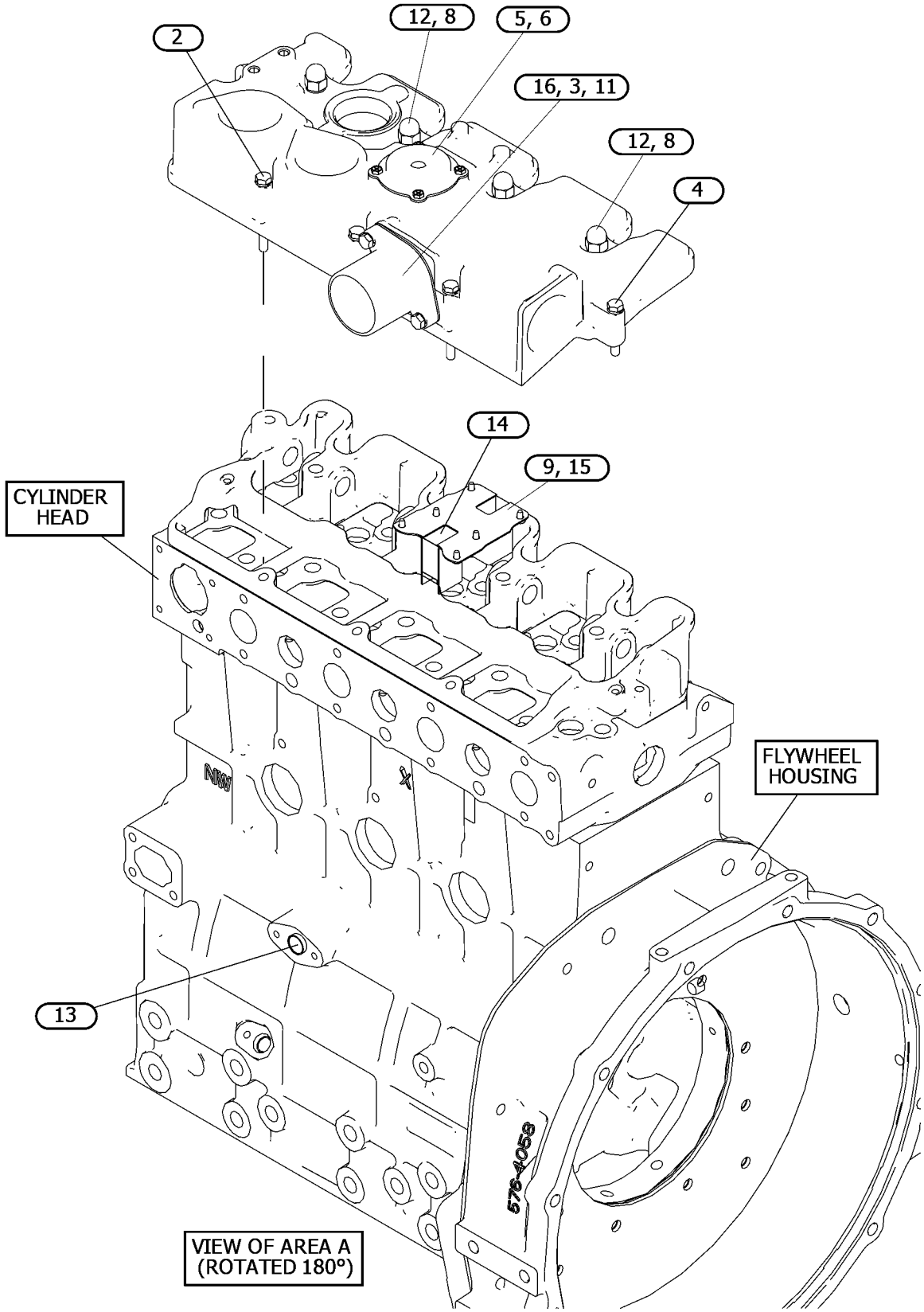

GRAPHIC #2 <END> g07889830_01

586-6656 COVER GP-VALVE MECHANISM

S/N: G7L27601-UP

INLET

SMCS-1107 **i10547782**

NOTE	REF NO	GRAPHIC REF	PART NUMBER	QTY	PART NAME 1 2 3 4 5 6 (PRODUCT LEVEL)	SEE PAGE
M	1	2	**153-5960**	1	NUT (M6X1-THD)	
	2	2	**153-5962**	3	BOLT AS	
	3	2	**153-7640**	2	BOLT AS	
	4	2	**165-2140**	1	BOLT AS	
	5	2	**217-5859**	1	VALVE-BREATHER (CRANKCASE)	
M	6	2	**217-5860**	4	BOLT (M4X0.7X8-MM)	
	7	1	**233-0695**	1	SEAL-VALVE COVER	
	8	2	**246-4361**	4	WASHER (10.5X14X1.5-MM THK)	
	9	2	**320-8401**	1	PLATE-RETAINING	
M	10	2	**360-9545**	1	STUD (M6X1X48-MM)	
	11	2	**494-9569**	1	GASKET	
M	12	2	**539-0439**	4	NUT (M10X1.25-THD)	
	13	1	**288-6539**	1	CAP	
	14	2	**153-5939**	1	STOPPER (OIL)	
	15	2	**217-5862**	6	SCREW (SELF-TAPPING)	
	16	2	**560-8837**	1	ADAPTER	
	17	1	**583-6831**	1	COVER-HEAD	
	18	1	**154-0175**	1	PLUG	

M - METRIC PART

586-6656 **COVER GP-VALVE MECHANISM (**contd.**)** **i10547782**

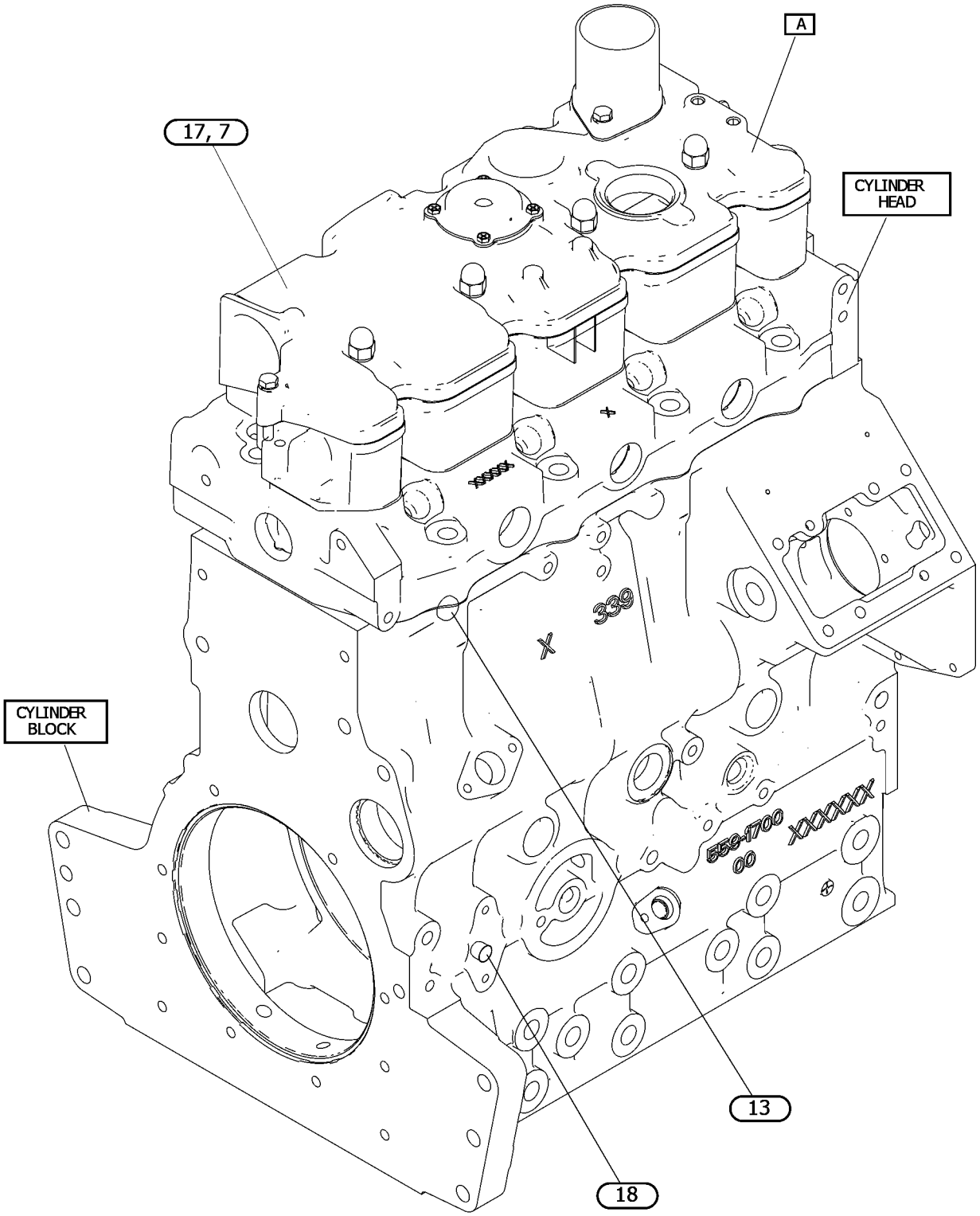

GRAPHIC #1 g07549795

586-6656 **COVER GP-VALVE MECHANISM (**contd.**)** **i10547782**

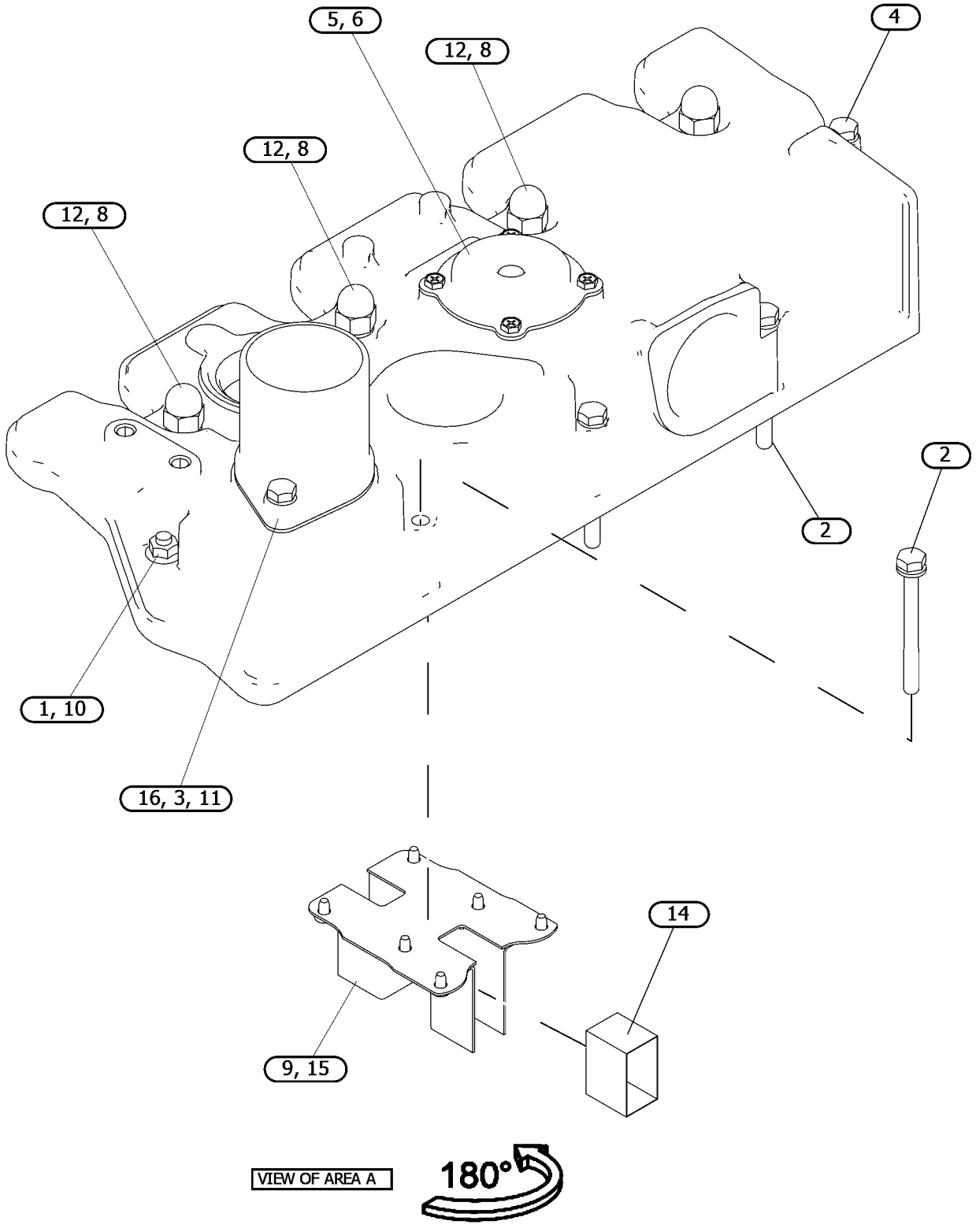

GRAPHIC #2 <END> g07549795_01

308-2283 CRANKSHAFT GP

PART OF 433-1380, 435-1637, 435-1638 ENGINE AR, 435-1636, 435-1658, 459-2953, 461-7892, 461-7894, 465-1477, 491-3396, 495-3121, 495-6243, 541-9277, 557-9727, 587-9328 ENGINE AR-PRIMARY
TYPE 1

SMCS-1202 **i08776238**

NOTE	REF NO	GRAPHIC REF	PART NUMBER	QTY	PART NAME 1 2 3 4 5 6 (PRODUCT LEVEL)	SEE PAGE
	1	1	**154-0181**	1	CAP AS-BEARING	
	1A	1	**153-5402**	2	DOWEL	
M	1B	1	**154-0385**	2	BOLT (M10X1.5X55-MM)	
	2	1	**154-0386**	1	CAP AS-BEARING	
	2A	1	**153-5402**	2	DOWEL	
M	2B	1	**154-0385**	2	BOLT (M10X1.5X55-MM)	
	3	1	**154-0388**	1	CAP AS-BEARING	
	3A	1	**153-5402**	2	DOWEL	
M	3B	1	**154-0385**	2	BOLT (M10X1.5X55-MM)	
	4	1	**154-0389**	1	CAP AS-BEARING	
	4A	1	**153-5402**	2	DOWEL	
M	4B	1	**154-0385**	2	BOLT (M10X1.5X55-MM)	
	5	1	**154-1230**	1	WASHER-THRUST	
	6	1	**154-1231**	2	WASHER-THRUST	
M	7	1	**6I-0650**	3	BOLT (M10X1.5X65-MM)	
M	8	1	**183-1336**	2	BOLT (M8X1.25X60-MM)	
	9	1	**308-1852**	1	CRANKSHAFT AS	
	9A	1	**153-5518**	1	KEY	
	9B	1	**308-1853**	1	GEAR-CRANKSHAFT (33-TEETH) (62-TEETH)	
	10	1	**599-8820**	1	KIT-BEARING	
AB		1	**599-8821**		KIT-BEARING (0.25-MM US)	
AB		1	**599-8823**		KIT-BEARING (0.50-MM US)	
	11	1	**599-8880**	1	KIT-BEARING (STANDARD) (STANDARD)	
AB		1	**599-8881**		KIT-BEARING (0.25-MM US)	
AB		1	**599-8882**		KIT-BEARING (0.50-MM US)	

A - NOT PART OF THIS GROUP
B - USE AS REQUIRED
M - METRIC PART

308-2283 **CRANKSHAFT GP** (contd.) **i08776238**

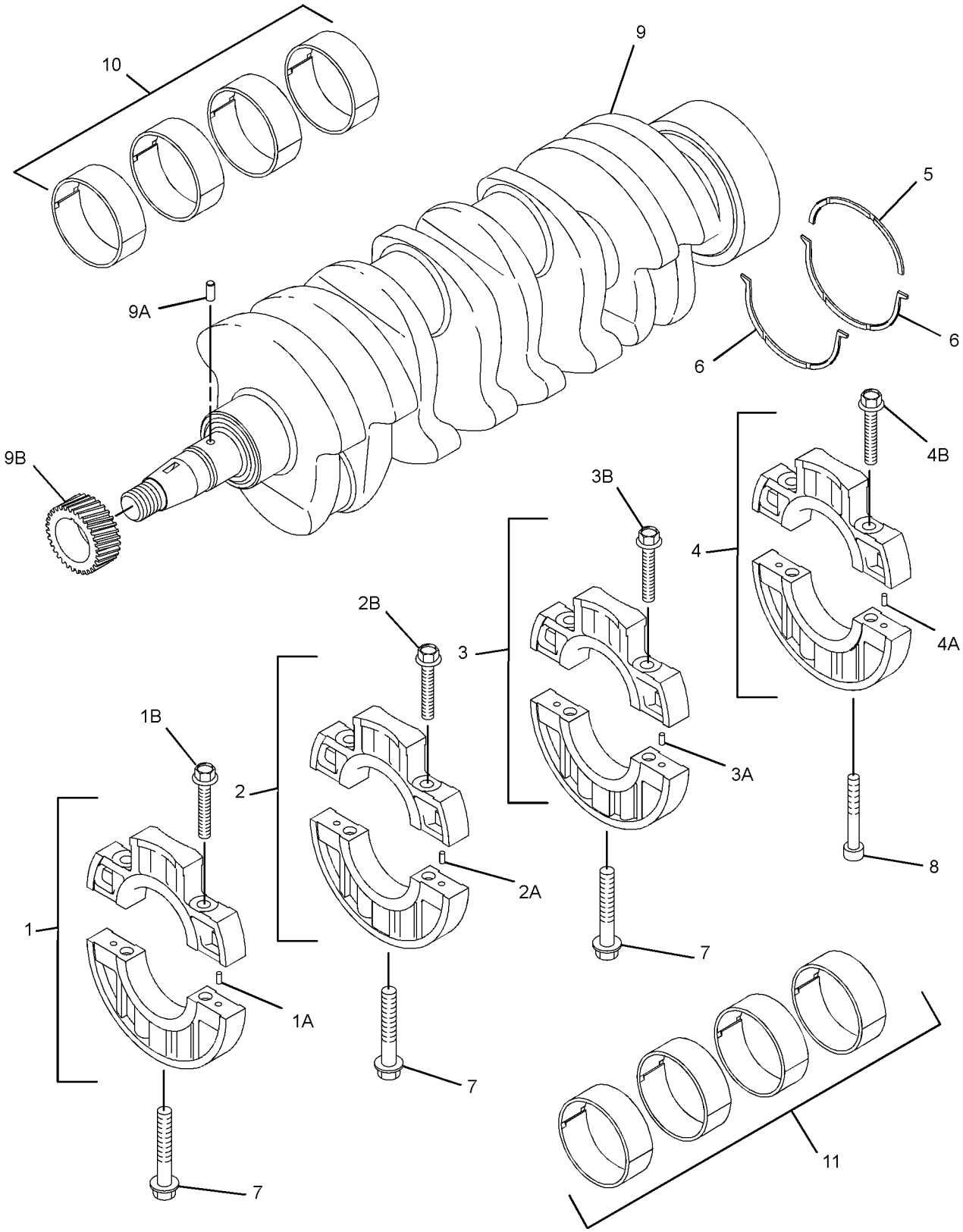

GRAPHIC #1 <END> g07612573

308-2283 CRANKSHAFT GP

PART OF 435-1637, 435-1638 ENGINE AR, 435-1658, 459-2953, 461-7892, 461-7894, 465-1477, 491-3396, 495-3121, 495-6243, 541-9277, 557-9727 ENGINE AR-PRIMARY
TYPE 2

SMCS-1202 **i10389136**

NOTE	REF NO	GRAPHIC REF	PART NUMBER	QTY	PART NAME 1 2 3 4 5 6 (PRODUCT LEVEL)	SEE PAGE
	1	1	**154-0181**	1	CAP AS-BEARING	
	1A	1	**153-5402**	2	DOWEL	
M	1B	1	**154-0385**	2	BOLT (M10X1.5X55-MM)	
	2	1	**154-0386**	1	CAP AS-BEARING	
	2A	1	**153-5402**	2	DOWEL	
M	2B	1	**154-0385**	2	BOLT (M10X1.5X55-MM)	
	3	1	**154-0388**	1	CAP AS-BEARING	
	3A	1	**153-5402**	2	DOWEL	
M	3B	1	**154-0385**	2	BOLT (M10X1.5X55-MM)	
	4	1	**154-0389**	1	CAP AS-BEARING	
	4A	1	**153-5402**	2	DOWEL	
M	4B	1	**154-0385**	2	BOLT (M10X1.5X55-MM)	
	5	1	**154-1230**	1	WASHER-THRUST	
	6	1	**154-1231**	2	WASHER-THRUST	
M	7	1	**6I-0650**	3	BOLT (M10X1.5X65-MM)	
M	8	1	**183-1336**	2	BOLT (M8X1.25X60-MM)	
	9	1	**308-1852**	1	CRANKSHAFT AS	
	9A	1	**153-5518**	1	KEY	
	9B	1	**308-1853**	1	GEAR-CRANKSHAFT (33-TEETH)	
CJ	10	1	**627-6877**	1	KIT-BEARING (STANDARD)	
ABF			**636-6709**	1	KIT-BEARING (0.25-MM US)	
ABF			**636-6712**	1	KIT-BEARING (0.50-MM US)	
	11	1	**599-8880**	1	KIT-BEARING (STANDARD)	
ABF			**599-8881**	1	KIT-BEARING (0.25-MM US)	
ABF			**599-8882**	1	KIT-BEARING (0.50-MM US)	

A - NOT PART OF THIS GROUP
B - USE AS REQUIRED
C - CHANGE FROM PREVIOUS TYPE
F - NOT SHOWN
J - FOR USE WITH ROD AS 585-1921
M - METRIC PART

308-2283 **CRANKSHAFT GP** (contd.) **i10389136**

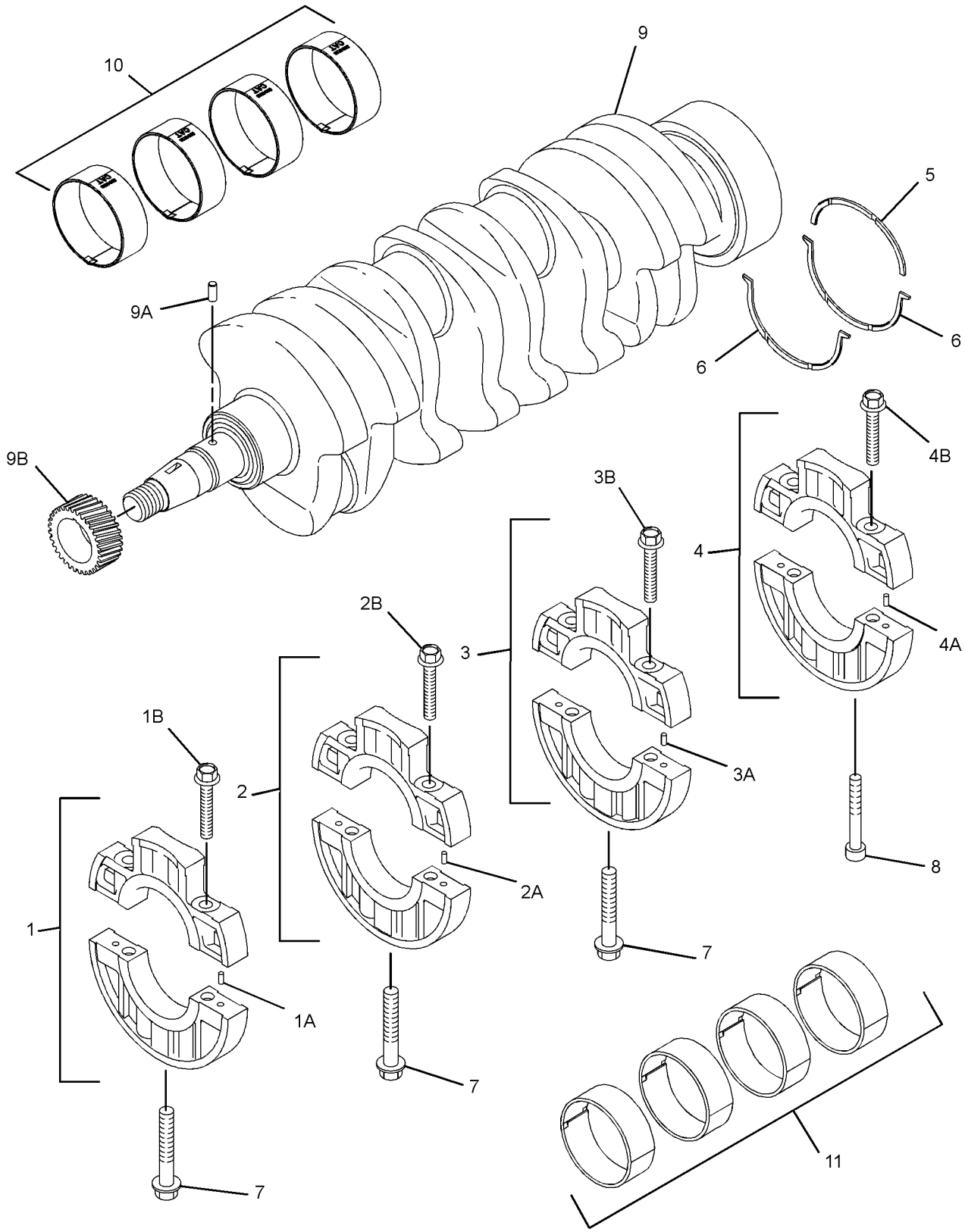

GRAPHIC #1 <END> g07637777

309-6713 CRANKSHAFT GP

PART OF 435-1645 CYLINDER BLOCK GP-LONG, 433-1379 ENGINE AR, 435-1641, 435-1642, 435-1646, 435-1647, 435-1656, 461-7895, 492-6602, 516-9335, 549-8284 ENGINE AR-PRIMARY

SMCS-1202 **i09555931**

NOTE	REF NO	GRAPHIC REF	PART NUMBER	QTY	PART NAME 1 2 3 4 5 6 (PRODUCT LEVEL)	SEE PAGE
	1	1	**154-0181**	1	CAP AS-BEARING	
	1A	1	**153-5402**	2	DOWEL	
M	1B	1	**154-0385**	2	BOLT (M10X1.5X55-MM)	
	2	1	**154-0386**	1	CAP AS-BEARING	
	2A	1	**153-5402**	2	DOWEL	
M	2B	1	**154-0385**	2	BOLT (M10X1.5X55-MM)	
	3	1	**154-0388**	1	CAP AS-BEARING	
	3A	1	**153-5402**	2	DOWEL	
M	3B	1	**154-0385**	2	BOLT (M10X1.5X55-MM)	
	4	1	**154-0389**	1	CAP AS-BEARING	
	4A	1	**153-5402**	2	DOWEL	
M	4B	1	**154-0385**	2	BOLT (M10X1.5X55-MM)	
	5	1	**154-1230**	1	WASHER-THRUST	
	6	1	**154-1231**	2	WASHER-THRUST	
M	7	1	**6I-0650**	3	BOLT (M10X1.5X65-MM)	
M	8	1	**8T-9535**	2	BOLT-SOCKET HEAD (M8X1.25X60-MM)	
	9	1	**308-1852**	1	CRANKSHAFT AS	
	9A	1	**153-5518**	1	KEY	
	9B	1	**308-1853**	1	GEAR-CRANKSHAFT (33-TEETH) (62-TEETH)	
	10	1	**599-8820**	1	KIT-BEARING (STANDARD ROD)	
AB		1	**599-8821**		KIT-BEARING (0.25-MM US)	
AB		1	**599-8823**		KIT-BEARING (0.50-MM US)	
	11	1	**599-8880**	1	KIT-BEARING (STANDARD) (STANDARD)	
AB		1	**599-8881**		KIT-BEARING (0.25-MM US)	
AB		1	**599-8882**		KIT-BEARING (0.50-MM US)	

A - NOT PART OF THIS GROUP
B - USE AS REQUIRED
M - METRIC PART

309-6713 **CRANKSHAFT GP (**contd.**)** **i09555931**

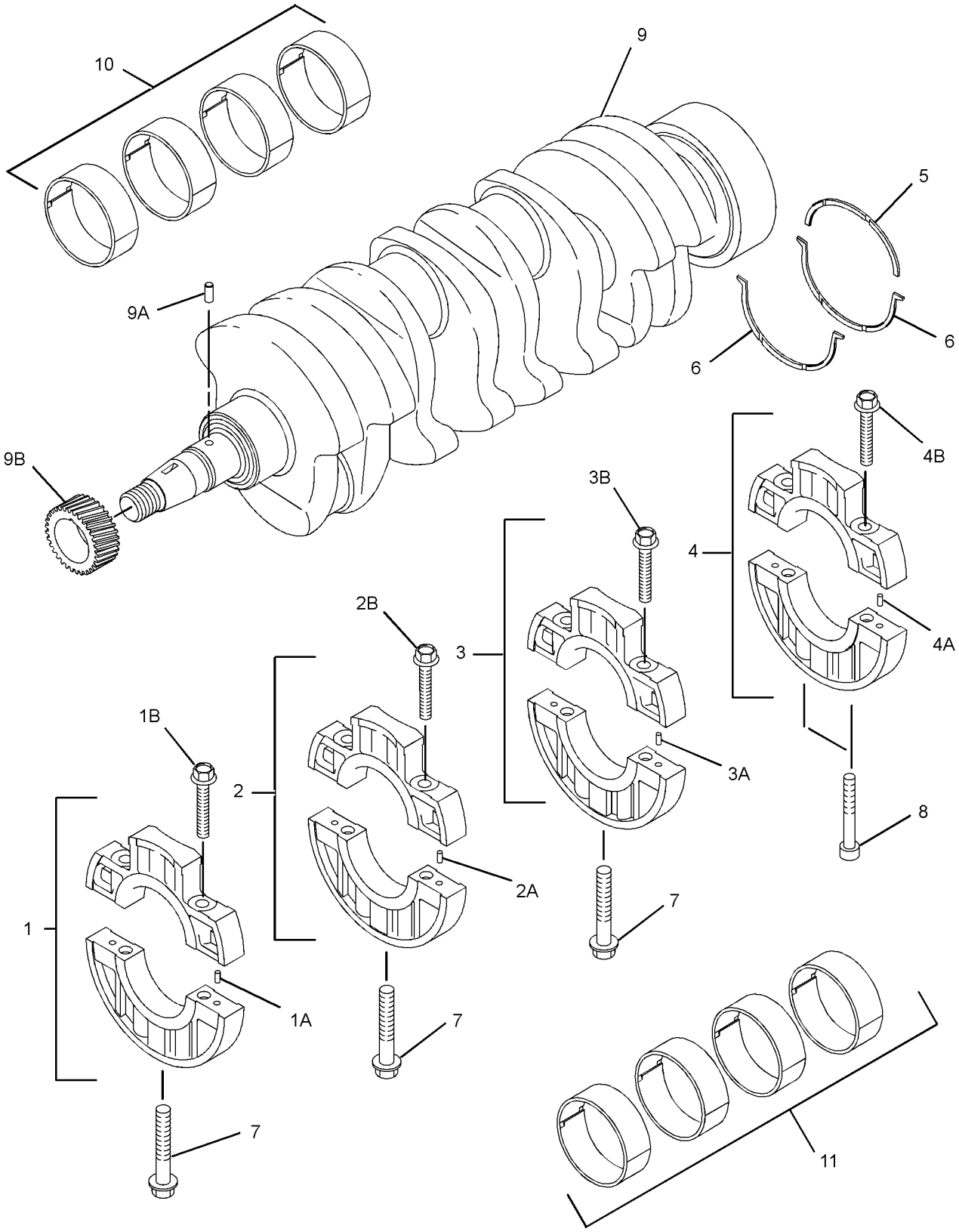

GRAPHIC #1 <END> g07587865

340-5782 CRANKSHAFT GP

SMCS-1202 **i07439180**

NOTE	REF NO	GRAPHIC REF	PART NUMBER	QTY	PART NAME 1 2 3 4 5 6 (PRODUCT LEVEL)	SEE PAGE
	1	1	**154-0181**	1	CAP AS-BEARING	
	1A	1	**153-5402**	2	DOWEL	
M	1B	1	**154-0385**	2	BOLT (M10X1.5X55-MM)	
	2	1	**154-0386**	1	CAP AS-BEARING	
	2A	1	**153-5402**	2	DOWEL	
M	2B	1	**154-0385**	2	BOLT (M10X1.5X55-MM)	
	3	1	**154-0388**	1	CAP AS-BEARING	
	3A	1	**153-5402**	2	DOWEL	
M	3B	1	**154-0385**	2	BOLT (M10X1.5X55-MM)	
	4	1	**154-0389**	1	CAP AS-BEARING	
	4A	1	**153-5402**	2	DOWEL	
M	4B	1	**154-0385**	2	BOLT (M10X1.5X55-MM)	
	7	1	**154-1230**	1	WASHER-THRUST	
	8	1	**154-1231**	2	WASHER-THRUST	
M	9	1	**6I-0650**	3	BOLT (M10X1.5X65-MM)	
M	10	1	**183-1336**	2	BOLT (M8X1.25X60-MM)	
	11	1	**308-1852**	1	CRANKSHAFT AS	
	11A	1	**153-5518**	1	KEY	
	11B	1	**308-1853**	1	GEAR-CRANKSHAFT (33-TEETH) (62-TEETH)	
	12	1	**308-1854**	1	KIT-BEARING (MAIN)	
AB		1	**308-2362**		KIT-BEARING (0.25-MM US)	
	13	1	**525-7106**	1	KIT-BEARING (STANDARD) (STANDARD ROD)	
AB		1	**439-3373**		KIT-BEARING (0.25-MM US)	

A - NOT PART OF THIS GROUP
B - USE AS REQUIRED
M - METRIC PART

340-5782 **CRANKSHAFT GP (**contd.**)** **i07439180**

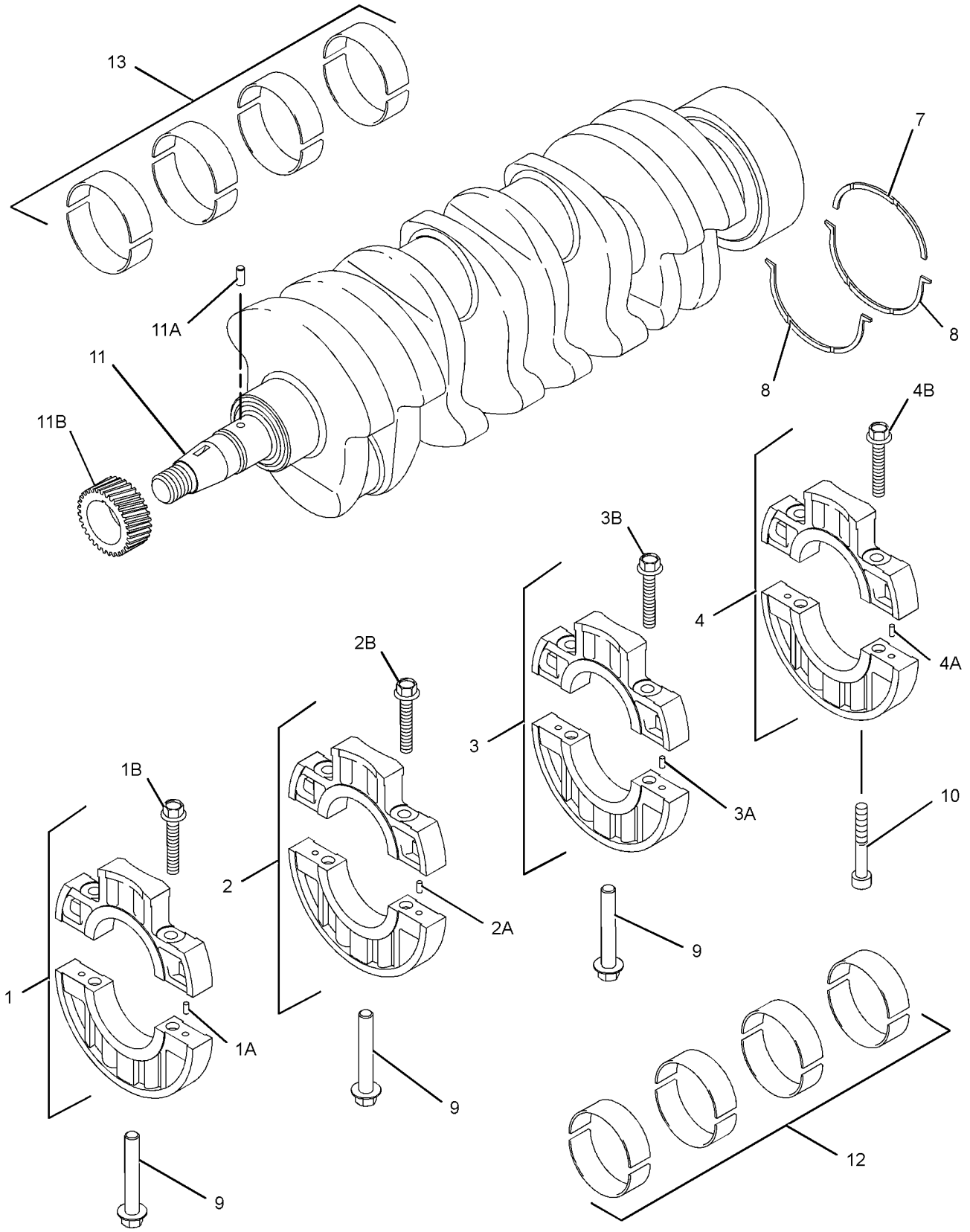

GRAPHIC #1 <END> g06110697

399-4716 CRANKSHAFT GP

PART OF 433-1379, 433-1380 ENGINE AR, 435-1636, 435-1641, 435-1646, 435-1647, 587-9328, 610-7720, 610-7721 ENGINE AR-PRIMARY

SMCS-1202 **i09819605**

NOTE	REF NO	GRAPHIC REF	PART NUMBER	QTY	PART NAME 1 2 3 4 5 6 (PRODUCT LEVEL)	SEE PAGE
M	1	1	**6I-0650**	3	BOLT (M10X1.5X65-MM)	
	2	1	**154-0181**	1	CAP AS-BEARING	
	2A	1	**153-5402**	2	DOWEL	
M	2B	1	**154-0385**	2	BOLT (M10X1.5X55-MM)	
	3	1	**154-0386**	1	CAP AS-BEARING	
	3A	1	**153-5402**	2	DOWEL	
M	3B	1	**154-0385**	2	BOLT (M10X1.5X55-MM)	
	4	1	**154-0388**	1	CAP AS-BEARING	
	4A	1	**153-5402**	2	DOWEL	
M	4B	1	**154-0385**	2	BOLT (M10X1.5X55-MM)	
	5	1	**154-0389**	1	CAP AS-BEARING	
	5A	1	**153-5402**	2	DOWEL	
M	5B	1	**154-0385**	2	BOLT (M10X1.5X55-MM)	
	6	1	**154-1230**	1	WASHER-THRUST	
	7	1	**589-6469**	2	WASHER-THRUST	
M	8	1	**8T-9535**	2	BOLT-SOCKET HEAD (M8X1.25X60-MM)	
	9	1	**308-1852**	1	CRANKSHAFT AS	
	9A	1	**153-5518**	1	KEY	
	9B	1	**308-1853**	1	GEAR-CRANKSHAFT (33-TEETH)	
	10	1	*590-0696*	4	BEARING-LOWER	
	11	1	*590-0693*	4	BEARING-UPPER	
					AVAILABLE REPAIR KIT(S):	
			308-1854	1	KIT-BEARING (STANDARD)	
			308-2362	1	KIT-BEARING (0.25-MM US)	

M - METRIC PART

399-4716 **CRANKSHAFT GP** (contd.) **i09819605**

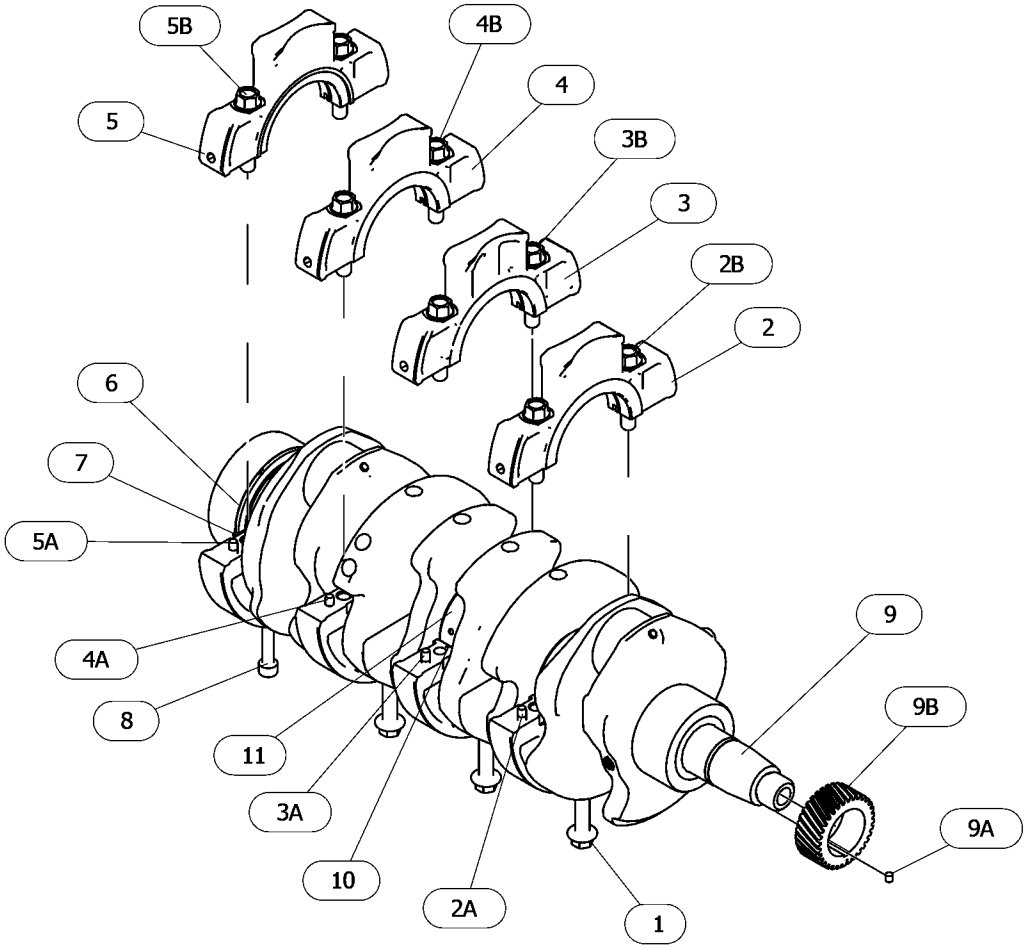

GRAPHIC #1 <END> g06586085

308-2281 CYLINDER BLOCK GP

PART OF 433-1380, 435-1637, 435-1638 ENGINE AR, 435-1636, 459-2953, 461-7892, 495-6243, 541-9277 ENGINE AR-PRIMARY

TYPE 1

SMCS-1201 **i09931727**

NOTE	REF NO	GRAPHIC REF	PART NUMBER	QTY	PART NAME 1 2 3 4 5 6 (PRODUCT LEVEL)	SEE PAGE
	1	1	**153-5387**	3	PLUG (BLANK)	
	2	1	**153-5390**	1	BALL BEARING	
	3	1	**153-5391**	1	PLUG (EXPANSION)	
	4	1	**153-5394**	2	DOWEL	
	5	1	**153-5395**	2	DOWEL	
	6	1	**487-0157**	2	PIN-SPRING	
	7	1	**153-5402**	2	DOWEL	
	8	1	**153-6838**	2	BOLT AS	
	9	1	**154-0175**	2	PLUG	
	10	1	**154-0176**	1	BEARING-NEEDLE	
	11	1	**154-0177**	1	BEARING-NEEDLE	
	12	1	**154-0178**	1	SEAL AS-OIL	
		1	**326-0081**	1	SLEEVE	
M	13	1	**319-6358**	3	STUD (M8X1.25X31-MM)	
M	14	1	**587-3846**	1	STUD (M6X1X43-MM)	
M	15	1	**587-3847**	1	STUD (M6X1X68-MM)	
	16	1	**592-3246**	1	GASKET	
	17	1	**217-5770**	2	PLUG (BLANKING)	
	18	1	**221-1136**	4	PLUG (BLANKING)	
	19	1	**237-9315**	2	PLUG (SEALING)	
	20	1	**366-4251**	5	PLUG-SEAL	
	21	1	**590-0692**	1	BEARING	
M	22	1	**587-3848**	1	STUD (M6X1X48-MM)	
CY	23	1	*533-4971*	1	SHAFT GP-IDLER	459

C - CHANGE FROM PREVIOUS TYPE
M - METRIC PART
Y - SEPARATE ILLUSTRATION

308-2281 **CYLINDER BLOCK GP (**contd.**)** **i09931727**

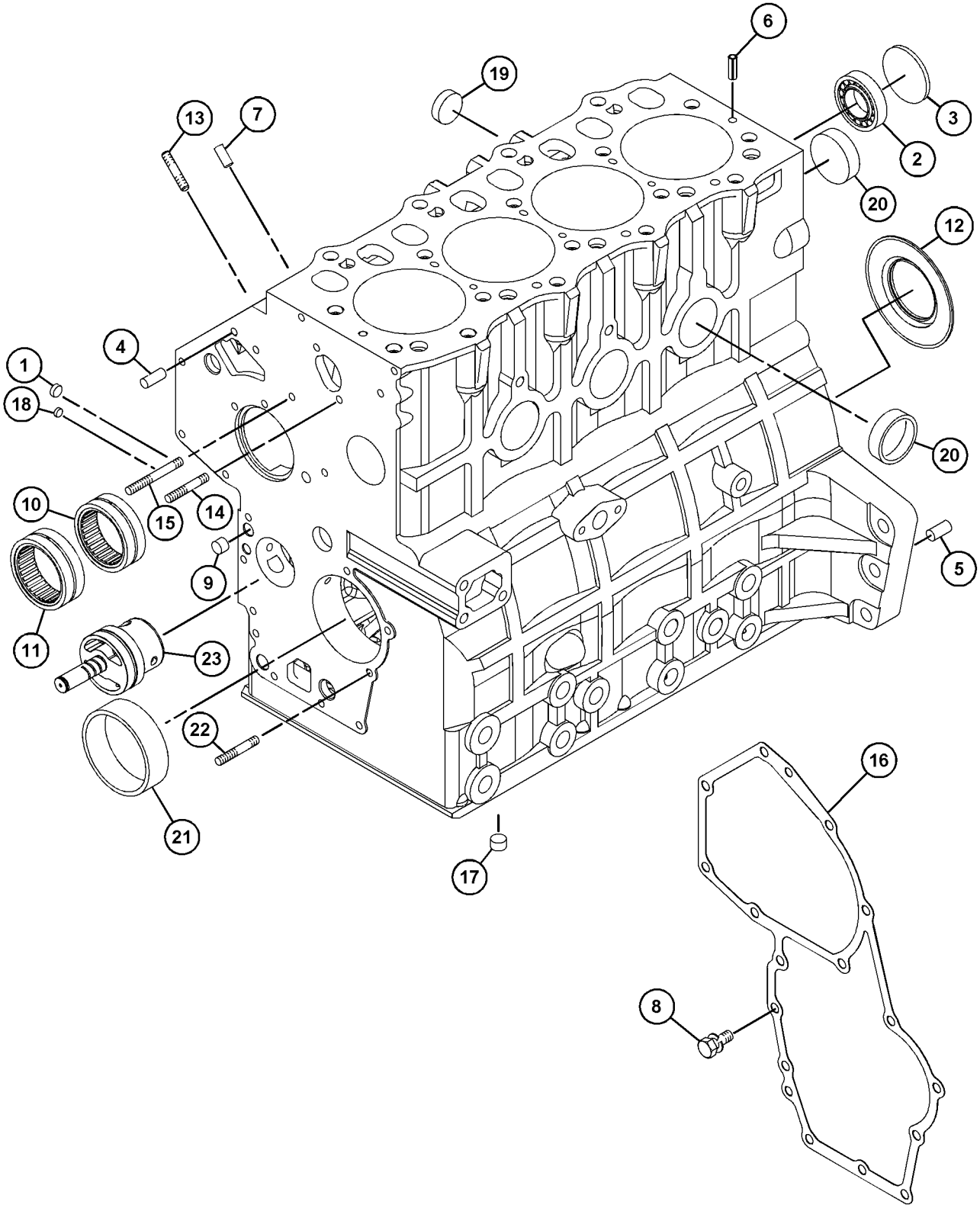

GRAPHIC #1 <END> g07652056

308-2281 CYLINDER BLOCK GP

PART OF 433-1380, 435-1637, 435-1638 ENGINE AR, 435-1636, 435-1658, 459-2953, 461-7892, 461-7894, 465-1477, 491-3396, 495-3121, 495-6243, 541-9277, 557-9727, 587-9328 ENGINE AR-PRIMARY
TYPE 2

SMCS-1201 **i08136347**

NOTE	REF NO	GRAPHIC REF	PART NUMBER	QTY	PART NAME 1 2 3 4 5 6 (PRODUCT LEVEL)	SEE PAGE
	1	1	**153-5387**	3	PLUG (BLANK)	
	2	1	**153-5390**	1	BALL BEARING	
	3	1	**153-5391**	1	PLUG (EXPANSION)	
	4	1	**153-5394**	2	DOWEL	
	5	1	**153-5395**	2	DOWEL	
	6	1	**487-0157**	2	PIN-SPRING	
	7	1	**153-5402**	2	DOWEL	
	8	1	**153-6838**	2	BOLT AS	
	9	1	**154-0175**	2	PLUG	
	10	1	**154-0176**	1	BEARING-NEEDLE	
	11	1	**154-0177**	1	BEARING-NEEDLE	
	12	1	**154-0178**	1	SEAL AS-OIL	
M	13	1	**154-0393**	3	STUD (M8X1.25X31-MM)	
M	14	1	**183-1163**	1	STUD (M6X1X43-MM)	
M	15	1	**183-1164**	1	STUD (M6X1X68-MM)	
	16	1	**215-2620**	1	GASKET	
	17	1	**217-5770**	2	PLUG (BLANKING)	
	18	1	**221-1136**	4	PLUG (BLANKING) (BLANK)	
	19	1	**237-9315**	2	PLUG (SEALING)	
	20	1	**366-4251**	5	PLUG-SEAL	
	21	1	**294-4916**	1	BUSHING (STANDARD)	
AB		1	**302-4181**		BUSHING (0.25-MM US)	
AB		1	**302-4182**		BUSHING (0.50-MM US)	
	22	1	**322-6874**	1	STUD	
C	23	1	**536-9734**	1	SHAFT GP-IDLER	
M		1	**153-5592**	1	NUT (M8X1.25-THD)	

A - NOT PART OF THIS GROUP
B - USE AS REQUIRED
C - CHANGE FROM PREVIOUS TYPE
M - METRIC PART

308-2281 **CYLINDER BLOCK GP (**contd.**)** **i08136347**

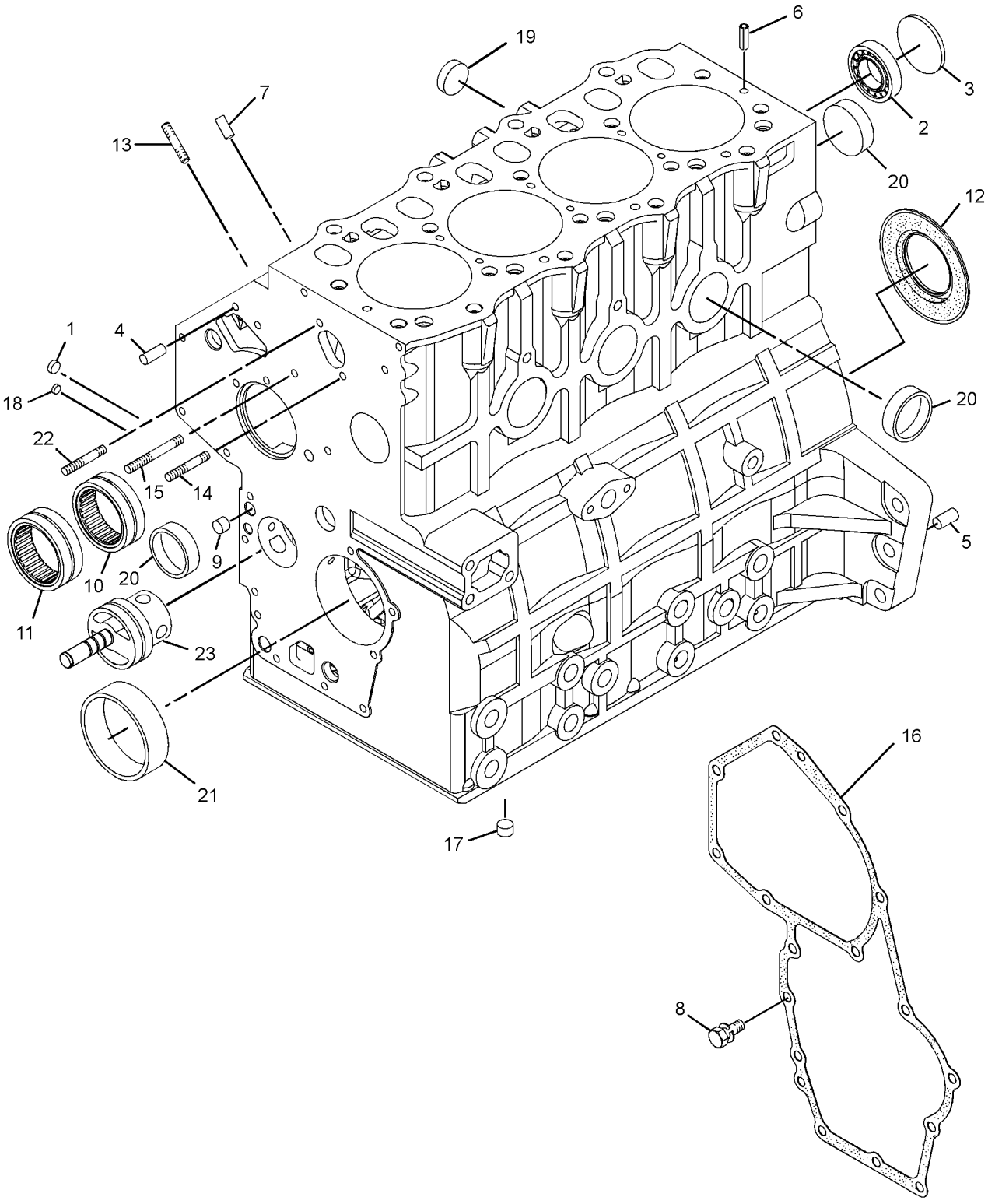

GRAPHIC #1 <END> g01996262

309-6712 CYLINDER BLOCK GP

PART OF 435-1645 CYLINDER BLOCK GP-LONG, 433-1379 ENGINE AR, 435-1641, 435-1642, 435-1646, 435-1647, 435-1656, 461-7895, 492-6602, 549-8284 ENGINE AR-PRIMARY
TYPE 1

SMCS-1201 **i10024256**

NOTE	REF NO	GRAPHIC REF	PART NUMBER	QTY	PART NAME 1 2 3 4 5 6 (PRODUCT LEVEL)	SEE PAGE
	1	1	**153-5387**	3	PLUG	
	2	1	**153-5390**	1	BALL BEARING	
	3	1	**153-5391**	1	PLUG	
	4	1	**153-5394**	2	DOWEL	
	5	1	**153-5395**	2	DOWEL	
	6	1	**487-0157**	2	PIN-SPRING	
	7	1	**153-5402**	2	DOWEL	
	8	1	**153-6838**	2	BOLT AS	
	9	1	**154-0175**	3	PLUG	
	10	1	**154-0176**	1	BEARING-NEEDLE	
	11	1	**154-0177**	1	BEARING-NEEDLE	
	12	1	**154-0178**	1	SEAL AS-OIL	
M	13	1	**154-0393**	3	STUD (M8X1.25X31-MM)	
M	14	1	**183-1163**	1	STUD (M6X1X43-MM)	
M	15	1	**183-1164**	1	STUD (M6X1X68-MM)	
	16	1	**215-2620**	1	GASKET	
	17	1	**217-5770**	2	PLUG (BLANKING)	
	18	1	**221-1136**	4	PLUG (BLANKING)	
	19	1	**237-9315**	2	PLUG (SEALING)	
	20	1	**366-4251**	5	PLUG-SEAL	
	21	1	**294-4916**	1	BUSHING (STANDARD)	
AB		1	**302-4181**		BUSHING (0.25-MM US)	
AB		1	**302-4182**		BUSHING (0.50-MM US)	
	22	1	**322-6874**	1	STUD	

A - NOT PART OF THIS GROUP
B - USE AS REQUIRED
M - METRIC PART

309-6712 **CYLINDER BLOCK GP (**contd.**)** **i10024256**

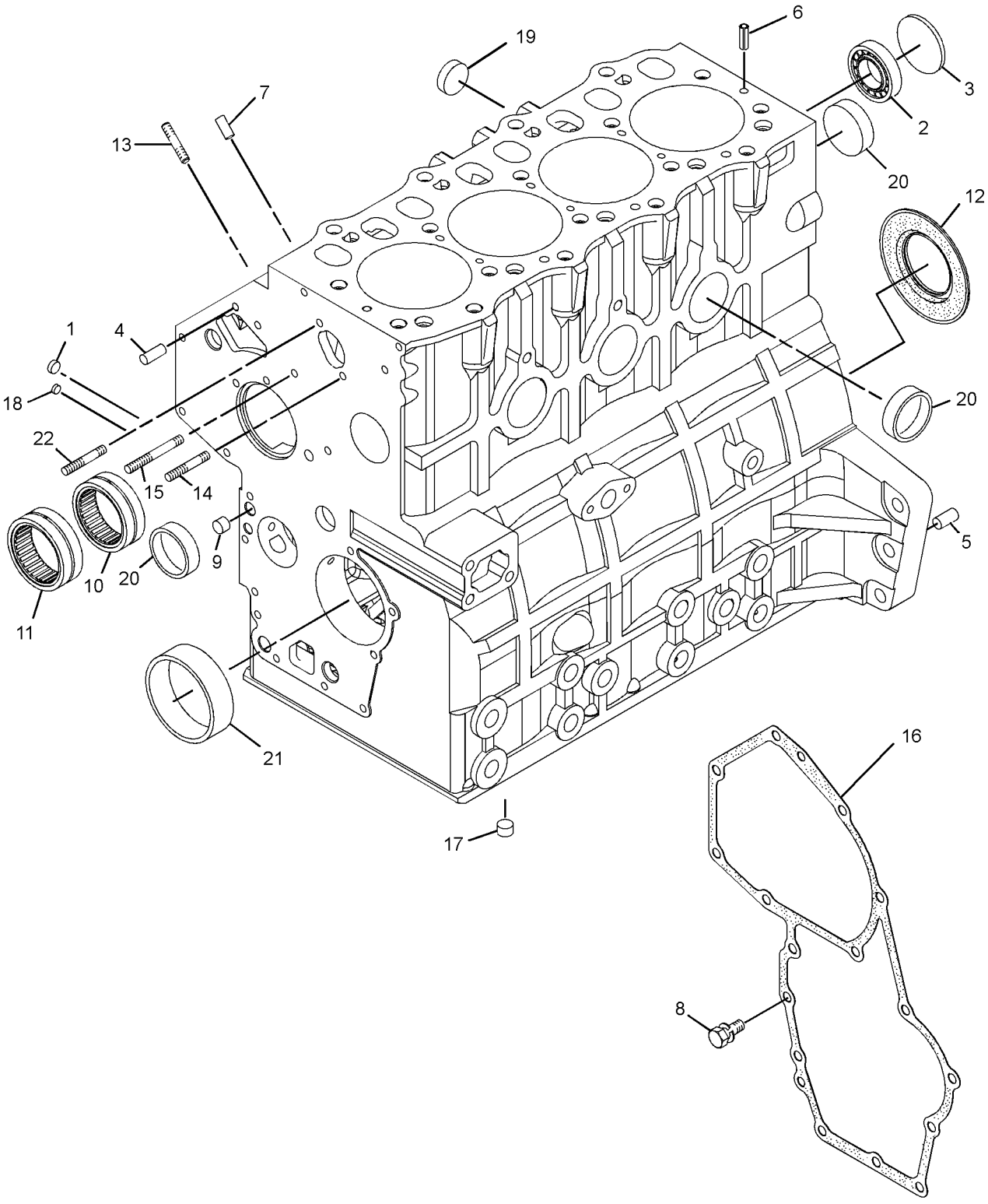

GRAPHIC #1 <END> g07704467

309-6712 CYLINDER BLOCK GP

PART OF 435-1645 CYLINDER BLOCK GP-LONG, 433-1379 ENGINE AR, 435-1641, 435-1642, 435-1646, 435-1647, 435-1656, 461-7895, 492-6602, 549-8284 ENGINE AR-PRIMARY
TYPE 2

SMCS-1201 **i08136411**

NOTE	REF NO	GRAPHIC REF	PART NUMBER	QTY	PART NAME 1 2 3 4 5 6 (PRODUCT LEVEL)	SEE PAGE
	1	1	**153-5387**	3	PLUG (BLANK)	
	2	1	**153-5390**	1	BALL BEARING	
	3	1	**153-5391**	1	PLUG (EXPANSION)	
	4	1	**153-5394**	2	DOWEL	
	5	1	**153-5395**	2	DOWEL	
	6	1	**487-0157**	2	PIN-SPRING	
	7	1	**153-5402**	2	DOWEL	
	8	1	**153-6838**	2	BOLT AS	
	9	1	**154-0175**	3	PLUG	
	10	1	**154-0176**	1	BEARING-NEEDLE	
	11	1	**154-0177**	1	BEARING-NEEDLE	
	12	1	**154-0178**	1	SEAL AS-OIL	
M	13	1	**154-0393**	3	STUD (M8X1.25X31-MM)	
M	14	1	**183-1163**	1	STUD (M6X1X43-MM)	
M	15	1	**183-1164**	1	STUD (M6X1X68-MM)	
	16	1	**215-2620**	1	GASKET	
	17	1	**217-5770**	2	PLUG (BLANKING)	
	18	1	**221-1136**	4	PLUG (BLANKING)	
	19	1	**237-9315**	2	PLUG (SEALING)	
	20	1	**366-4251**	5	PLUG-SEAL	
	21	1	**294-4916**	1	BUSHING (STANDARD)	
AB		1	**302-4181**		BUSHING (0.25-MM US)	
AB		1	**302-4182**		BUSHING (0.50-MM US)	
	22	1	**322-6874**	1	STUD	
C	23	1	**536-9734**	1	SHAFT GP-IDLER	
M	23A	1	**153-5592**	1	NUT (M8X1.25-THD)	

A - NOT PART OF THIS GROUP
B - USE AS REQUIRED
C - CHANGE FROM PREVIOUS TYPE
M - METRIC PART

309-6712 **CYLINDER BLOCK GP (**contd.**)** **i08136411**

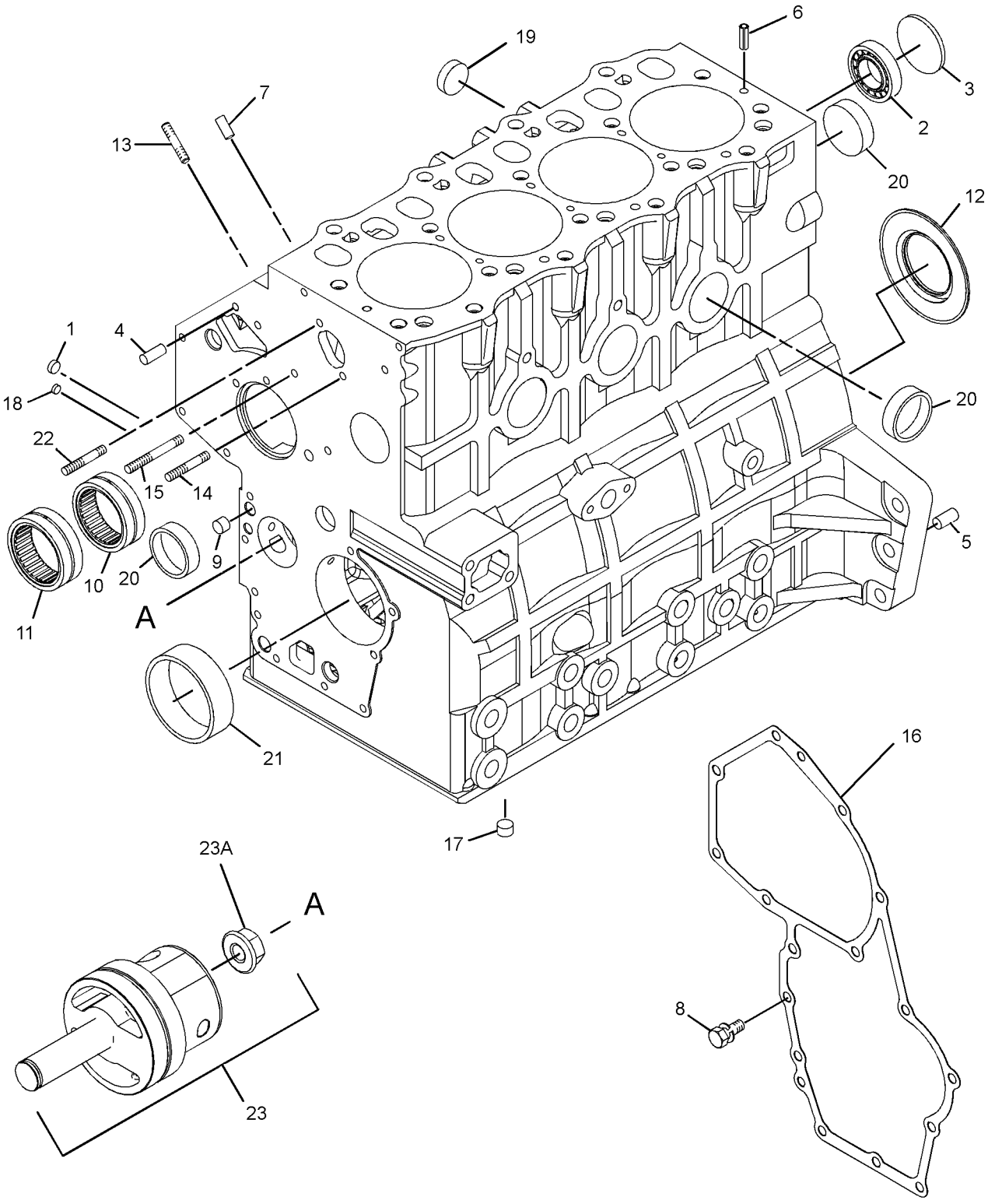

GRAPHIC #1 <END> g06430400

309-6712 CYLINDER BLOCK GP

PART OF 435-1645 CYLINDER BLOCK GP-LONG, 433-1379 ENGINE AR, 435-1641, 435-1642, 435-1646, 435-1647, 435-1656, 461-7895, 492-6602, 516-9335, 549-8284 ENGINE AR-
PRIMARY
TYPE 3

SMCS-1201 **i09870805**

NOTE	REF NO	GRAPHIC REF	PART NUMBER	QTY	PART NAME 1 2 3 4 5 6 (PRODUCT LEVEL)	SEE PAGE
	1	1	**153-5387**	3	PLUG	
	2	1	**153-5390**	1	BALL BEARING	
	3	1	**153-5391**	1	PLUG	
	4	1	**153-5394**	2	DOWEL	
	5	1	**153-5395**	2	DOWEL	
	6	1	**487-0157**	2	PIN-SPRING	
	7	1	**153-5402**	2	DOWEL	
	8	1	**153-6838**	2	BOLT AS	
	9	1	**154-0175**	3	PLUG	
	10	1	**154-0176**	1	BEARING-NEEDLE	
	11	1	**154-0177**	1	BEARING-NEEDLE	
	12	1	**154-0178**	1	SEAL AS-OIL	
		1	**326-0081**	1	SLEEVE	
M	13	1	**319-6358**	3	STUD (M8X1.25X31-MM)	
M	14	1	**587-3846**	1	STUD (M6X1X43-MM)	
M	15	1	**587-3847**	1	STUD (M6X1X68-MM)	
	16	1	**592-3246**	1	GASKET	
	17	1	**217-5770**	2	PLUG (BLANKING)	
	18	1	**221-1136**	4	PLUG (BLANKING)	
	19	1	**504-9786**	2	PLUG	
	20	1	**366-4251**	5	PLUG-SEAL	
	21	1	**590-0692**	1	BEARING	
M	22	1	**587-3848**	1	STUD (M6X1X48-MM)	
CY	23	1	*533-4971*	1	SHAFT GP-IDLER	459

PARTS SHOWN IN GRAPHIC(S) WITHOUT A REFERENCE NUMBER ARE NOT SERVICED SEPARATELY

C - CHANGE FROM PREVIOUS TYPE
M - METRIC PART
Y - SEPARATE ILLUSTRATION

309-6712 **CYLINDER BLOCK GP (**contd.**)** **i09870805**

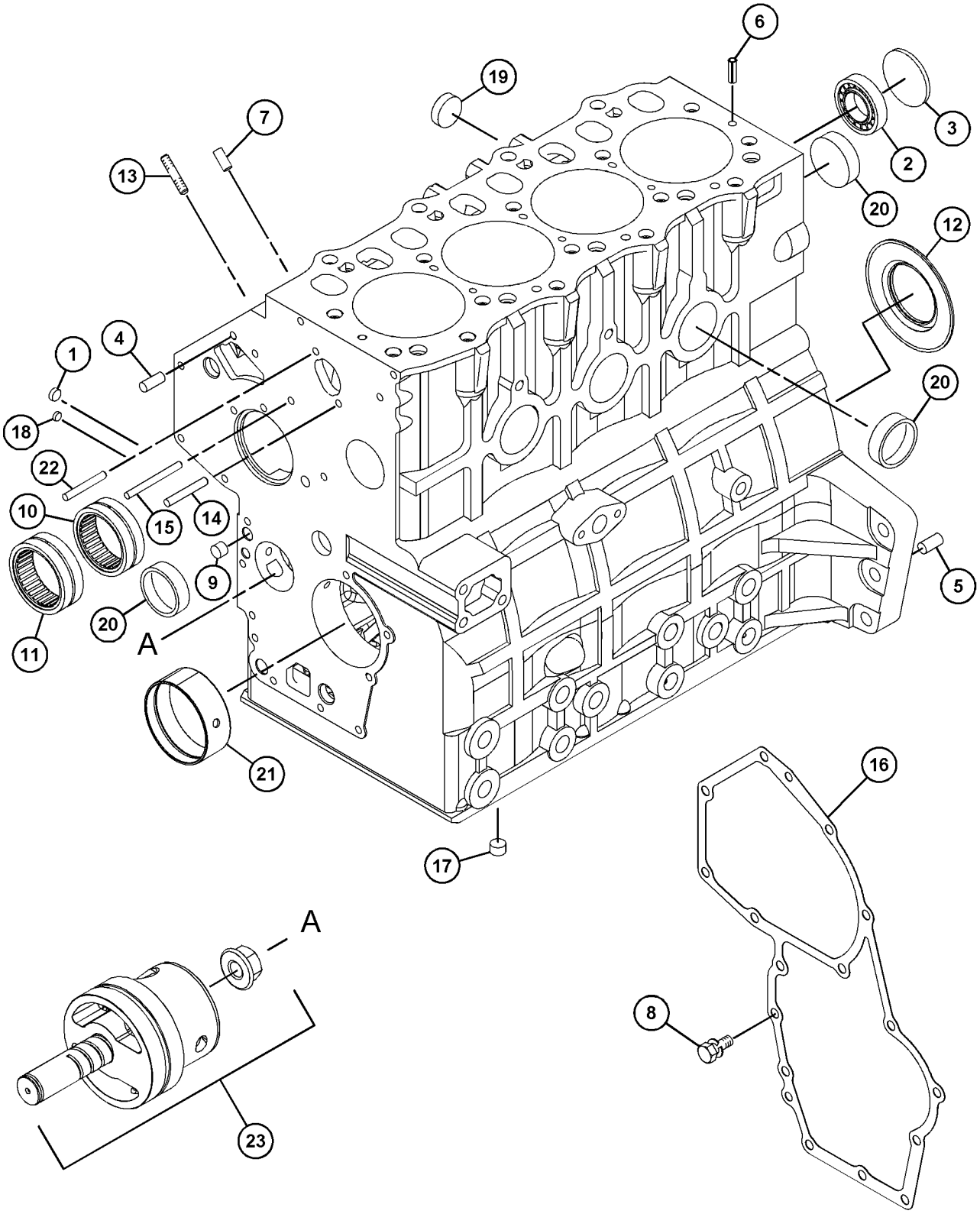

GRAPHIC #1 <END> g07664943

340-5781 CYLINDER BLOCK GP

TYPE 1

SMCS-1201 **i07510603**

NOTE	REF NO	GRAPHIC REF	PART NUMBER	QTY	PART NAME 1 2 3 4 5 6 (PRODUCT LEVEL)	SEE PAGE
	1	1	**153-5387**	3	PLUG	
	2	1	**153-5390**	1	BALL BEARING	
	3	1	**153-5391**	1	PLUG	
	4	1	**153-5394**	2	DOWEL	
	5	1	**153-5395**	2	DOWEL	
	6	1	**487-0157**	2	PIN-SPRING	
	7	1	**153-5402**	2	DOWEL	
	8	1	**153-6838**	2	BOLT AS	
	9	1	**154-0175**	3	PLUG	
	10	1	**154-0176**	1	BEARING-NEEDLE	
	11	1	**154-0177**	1	BEARING-NEEDLE	
J	12	1	**154-0178**	1	SEAL AS-OIL	
M	13	1	**154-0393**	3	STUD (M8X1.25X31-MM)	
M	14	1	**183-1163**	1	STUD (M6X1X43-MM)	
M	15	1	**183-1164**	1	STUD (M6X1X68-MM)	
	16	1	**215-2620**	1	GASKET	
	17	1	**217-5770**	2	PLUG (BLANKING)	
	18	1	**221-1136**	4	PLUG (BLANKING)	
	19	1	**237-9315**	2	PLUG (SEALING)	
	20	1	**366-4251**	5	PLUG-SEAL	
	21	1	**294-4916**	1	BUSHING (STANDARD)	
AB		1	**302-4181**		BUSHING (0.25-MM US)	
AB		1	**302-4182**		BUSHING (0.50-MM US)	
	22	1	**322-6874**	1	STUD	
	23	1	*536-9734*	1	SHAFT GP-IDLER	
M	23A	1	**153-5592**	1	NUT (M8X1.25-THD)	

A - NOT PART OF THIS GROUP
B - USE AS REQUIRED
J - ALSO ORDER WEAR SLEEVE 326-0081
M - METRIC PART

340-5781 **CYLINDER BLOCK GP (**contd.**)** **i07510603**

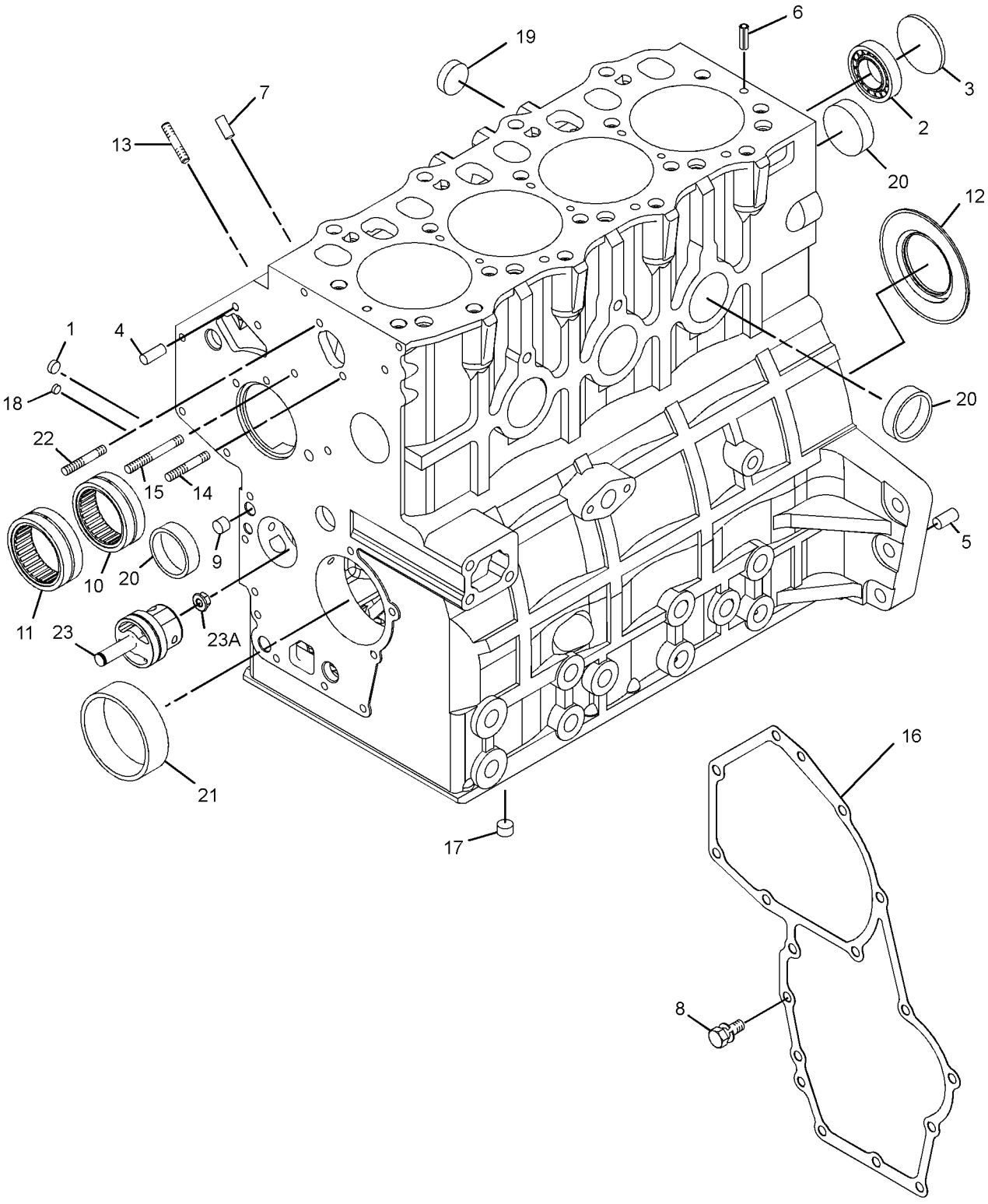

GRAPHIC #1 <END> g06385842

340-5781 CYLINDER BLOCK GP

TYPE 2

SMCS-1201 **i10484465**

NOTE	REF NO	GRAPHIC REF	PART NUMBER	QTY	PART NAME 1 2 3 4 5 6 (PRODUCT LEVEL)	SEE PAGE
	1	1	**153-5387**	3	PLUG	
	2	1	**153-5390**	1	BALL BEARING	
	3	1	**153-5391**	1	PLUG	
	4	1	**153-5394**	2	DOWEL	
	5	1	**153-5395**	2	DOWEL	
	6	1	**8C-3347**	2	PIN-ROLL	
	7	1	**153-5402**	2	DOWEL	
	8	1	**153-6838**	2	BOLT AS	
	9	1	**154-0175**	3	PLUG	
	10	1	**154-0176**	1	BEARING-NEEDLE	
	11	1	**154-0177**	1	BEARING-NEEDLE	
J	12	1	**154-0178**	1	SEAL AS-OIL	
	12A	1	**326-0081**	1	SLEEVE	
M	13	1	**319-6358**	3	STUD (M8X1.25X31-MM)	
M	14	1	**587-3846**	1	STUD (M6X1X43-MM)	
M	15	1	**587-3847**	1	STUD (M6X1X68-MM)	
	16	1	**592-3246**	1	GASKET	
	17	1	**217-5770**	2	PLUG (BLANKING)	
	18	1	**221-1136**	4	PLUG (BLANKING)	
	19	1	**504-9786**	2	PLUG	
	20	1	**366-4251**	5	PLUG-SEAL	
	21	1	**590-0692**	1	BEARING	
M	22	1	**587-3848**	1	STUD (M6X1X48-MM)	
CY	23	1	*533-4971*	1	SHAFT GP-IDLER	459

PARTS SHOWN IN GRAPHIC(S) WITHOUT A REFERENCE NUMBER ARE NOT SERVICED SEPARATELY

C - CHANGE FROM PREVIOUS TYPE
J - ALSO ORDER WEAR SLEEVE 326-0081
M - METRIC PART
Y - SEPARATE ILLUSTRATION

340-5781 **CYLINDER BLOCK GP (**contd.**)** **i10484465**

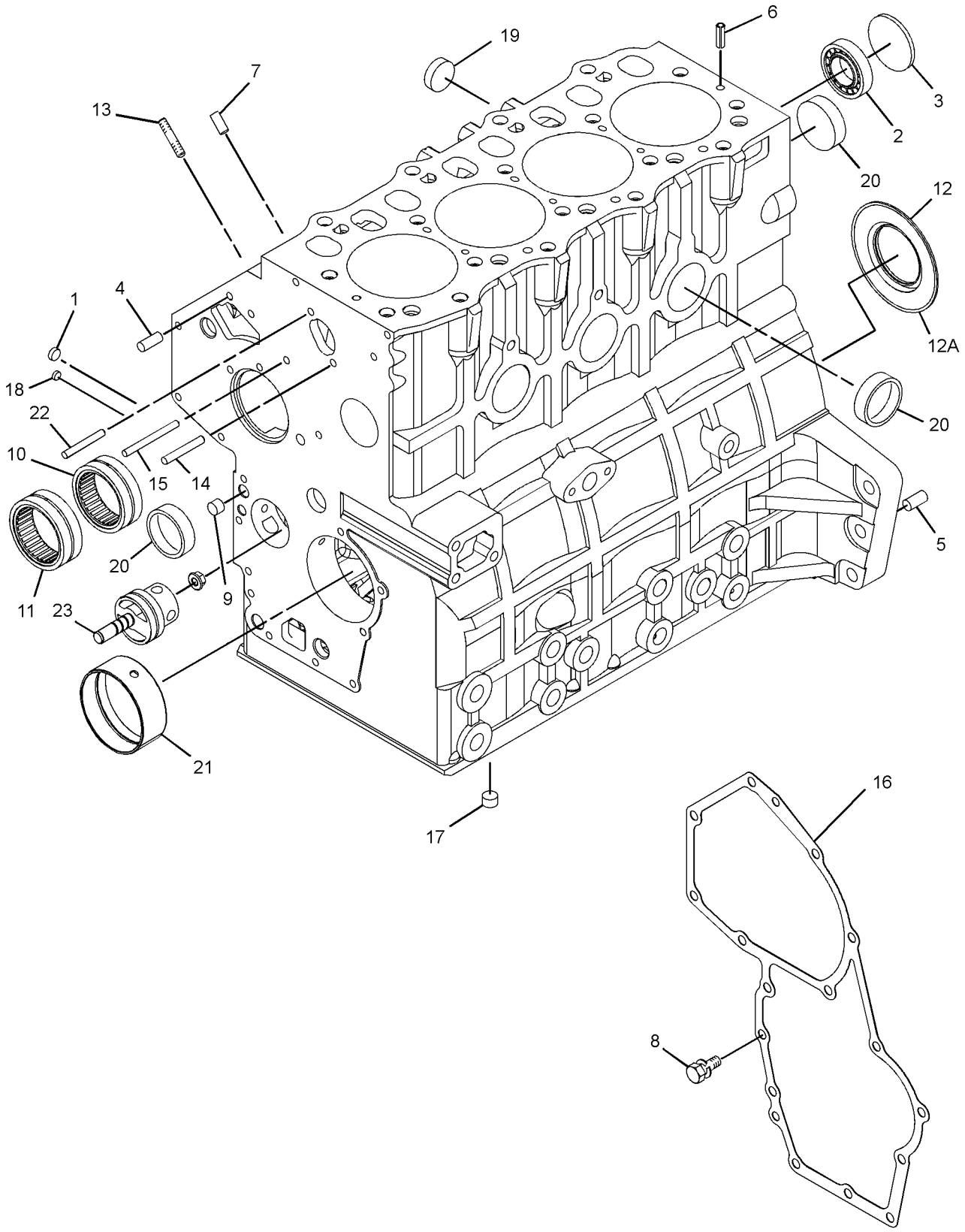

GRAPHIC #1 <END> g07913509

584-3179 CYLINDER BLOCK GP

PART OF 433-1379, 433-1380 ENGINE AR, 435-1636, 435-1641, 435-1646, 435-1647, 587-9328, 610-7720, 610-7721 ENGINE AR-PRIMARY

SMCS-1201 **i10429364**

NOTE	REF NO	GRAPHIC REF	PART NUMBER	QTY	PART NAME 1 2 3 4 5 6 (PRODUCT LEVEL)	SEE PAGE
	1	2	**153-6853**	1	SEAL-O-RING	
B	2	3	**160-4150**	1	SHIM (0.1-MM THK)	
B	3	3	**160-4151**	1	SHIM (0.15-MM THK)	
B	4	3	**160-4152**	1	SHIM (0.2-MM THK)	
B	5	3	**160-4153**	1	SHIM (0.5-MM THK)	
	6	1,3	**153-5387**	3	PLUG	
	7	4	**153-5390**	1	BALL BEARING	
	8	4	**153-5391**	1	PLUG	
	9	1	**153-5395**	2	DOWEL	
	10	1	**153-5402**	2	DOWEL	
	11	2	**153-6849**	1	SPRING	
	12	2	**153-6850**	1	COLLAR	
	13	2	**153-6851**	1	CLIP	
	14	1	**153-6879**	1	STUD-HOLLOW	
	15	1,3	**154-0175**	2	PLUG	
	16	4	**154-0176**	1	BEARING-NEEDLE	
	17	2	**154-0177**	1	BEARING-NEEDLE	
	18	1	**154-0178**	1	SEAL AS-OIL	
A		1	**326-0081**	1	SLEEVE	
	19	2	**599-4589**	1	VALVE AS-RELIEF	
	20	1	**154-2353**	1	TUBE AS-OIL	
	21	2	**217-5770**	2	PLUG	
	22	1	**221-1136**	4	PLUG (BLANKING)	
	23	2	**590-0692**	1	BEARING	
	24	3	**308-1867**	1	WASHER-THRUST	
	25	3	**308-1869**	1	COVER	
	26	2	**472-2215**	1	PLUG	
	27	1	**487-0157**	2	PIN-SPRING	
	32	1	*559-1702*	1	CYLINDER BLOCK AS	
	32A	1,2	**237-9315**	2	PLUG (SEALING)	
	32B	1,2,3	**366-4251**	5	PLUG-SEAL	
Y	33	2	*533-4971*	1	SHAFT GP-IDLER	459

PARTS SHOWN IN GRAPHIC(S) WITHOUT A REFERENCE NUMBER ARE NOT SERVICED SEPARATELY

A - NOT PART OF THIS GROUP
B - USE AS REQUIRED
Y - SEPARATE ILLUSTRATION

584-3179 **CYLINDER BLOCK GP (**contd.**)** **i10429364**

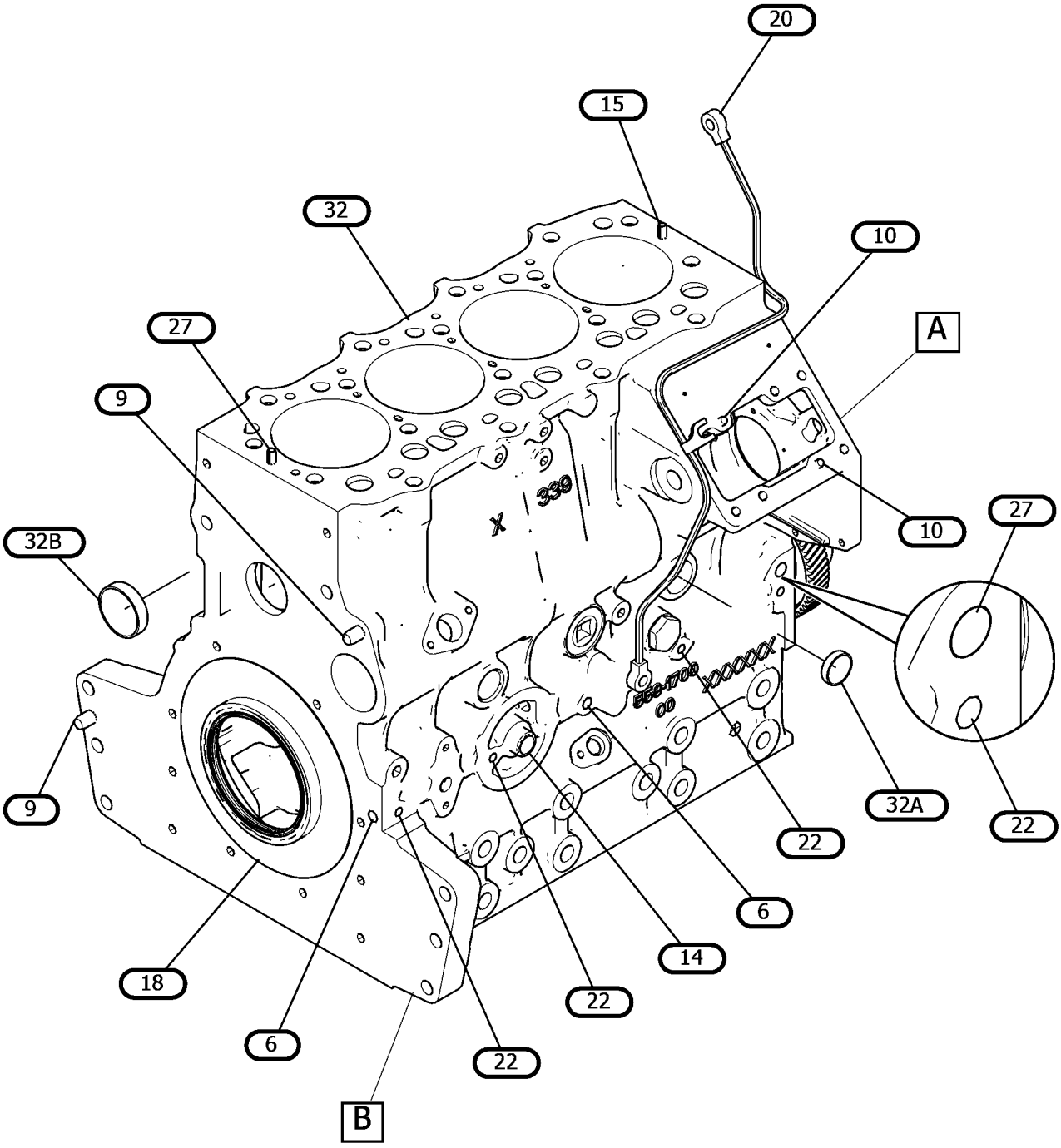

GRAPHIC #1 g07826594

584-3179 **CYLINDER BLOCK GP (**contd.**)** **i10429364**

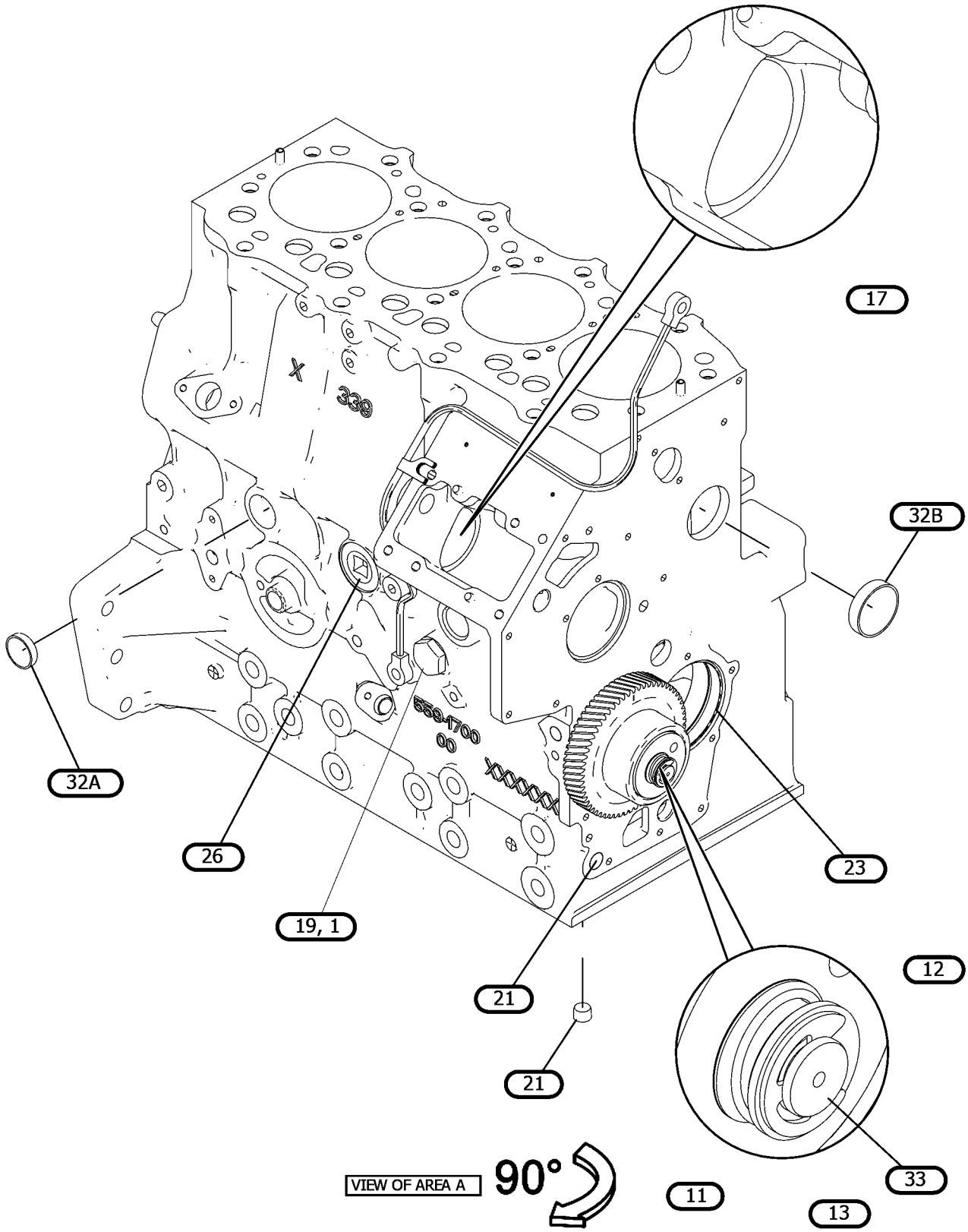

GRAPHIC #2 g07826594_01

584-3179 **CYLINDER BLOCK GP (**contd.**)** **i10429364**

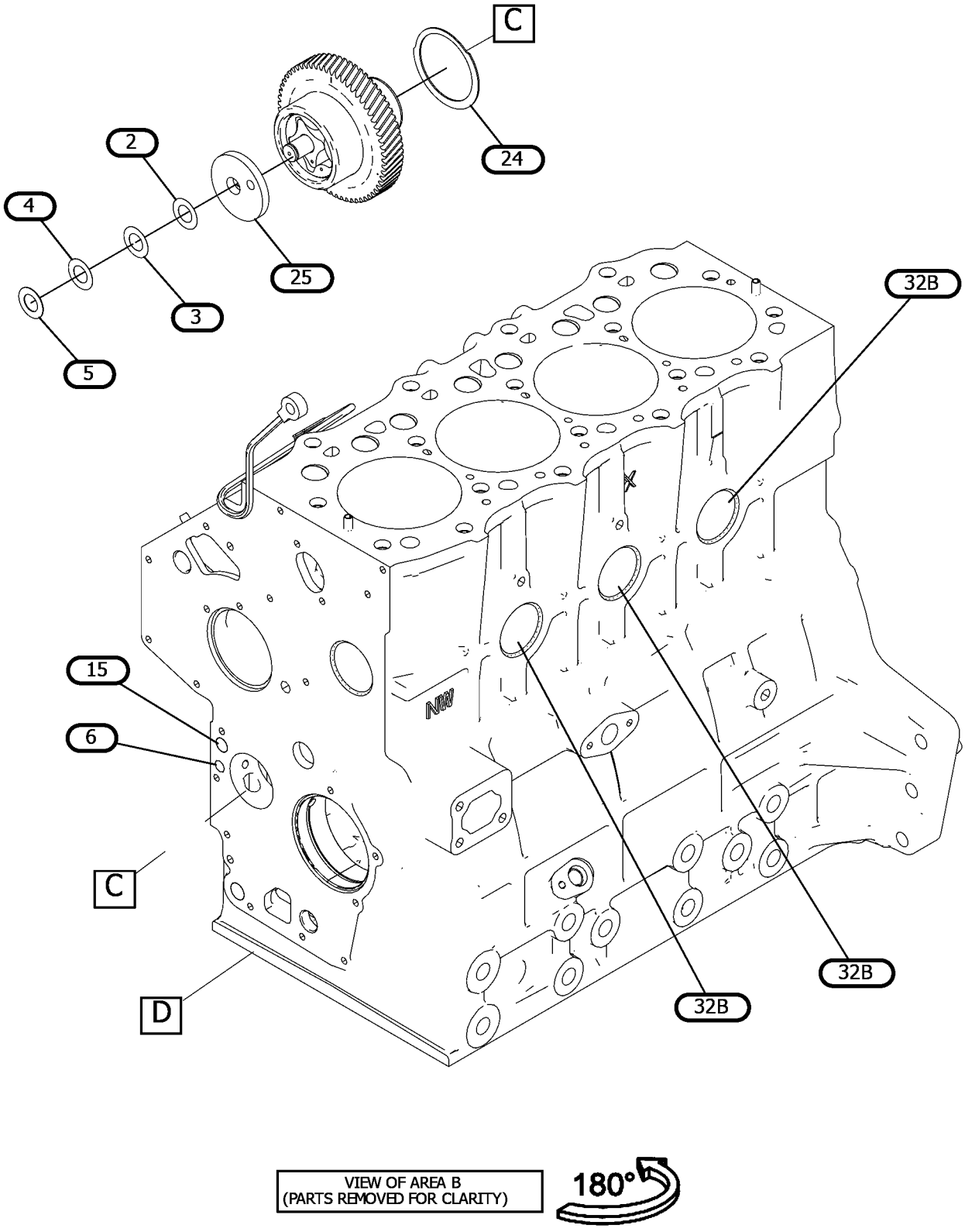

GRAPHIC #3 g07826594_02

584-3179 **CYLINDER BLOCK GP (**contd.**)** **i10429364**

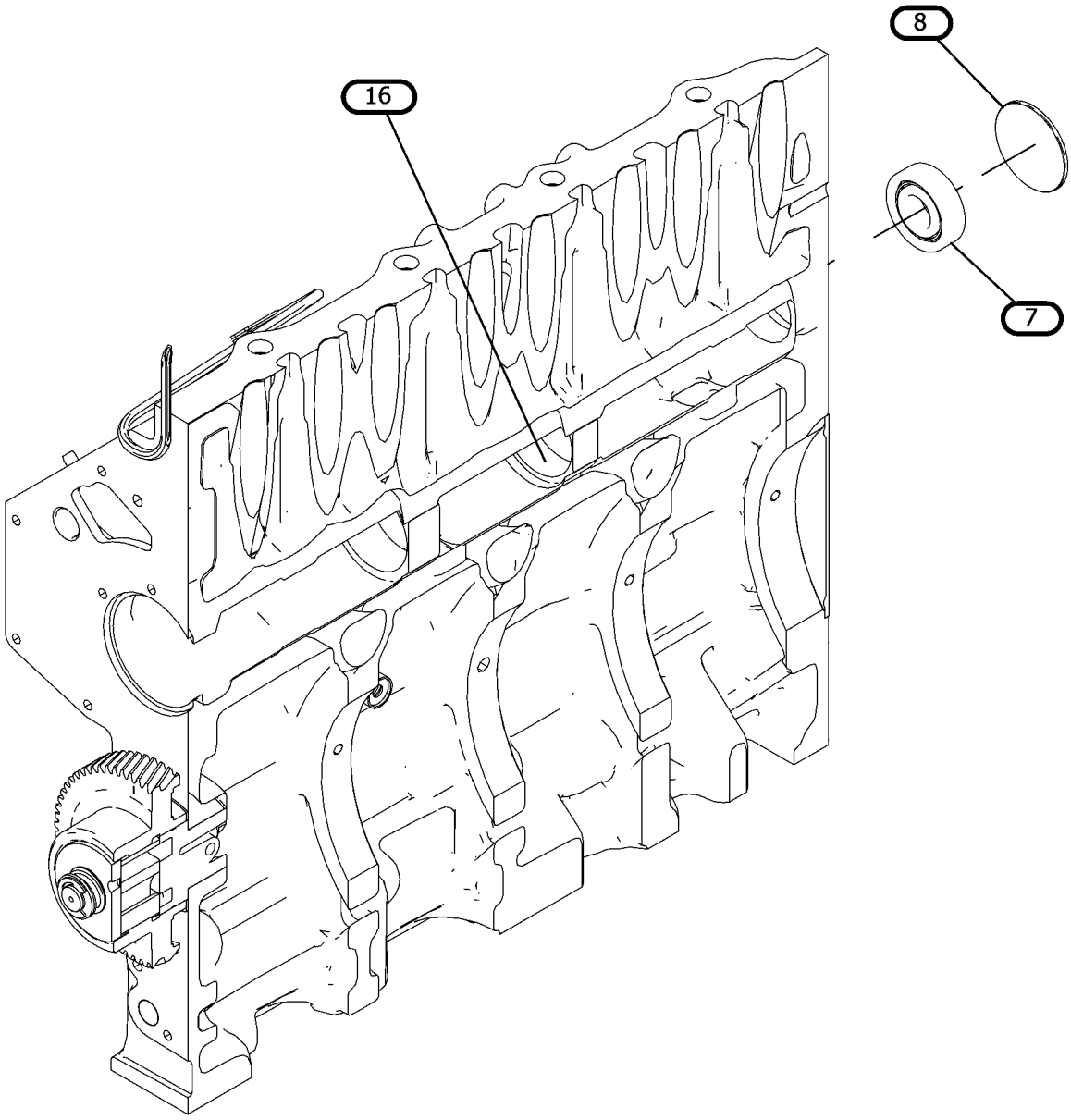

SECTION D

GRAPHIC #4 <END> g07826594_03

435-1645 CYLINDER BLOCK GP-LONG

37 BRAKE KW (50 BHP) AT 2800 RPM

FIELD REPLACEMENT FOR 311-3840—PAGE: 26

SMCS-1020 **i10733037**

NOTE	PART NUMBER	QTY	PART NAME 1 2 3 4 5 6 (PRODUCT LEVEL)	SEE PAGE
Y	*317-7188*	1	CAMSHAFT GP	149
Y	*308-2302*	1	CONNECTION GP-WATER	497
Y	*317-7187*	1	CONTROL GP-GOVERNOR	681
Y	*342-1268*	1	FASTENER GP-COVER	283
Y	*309-6722*	1	COVER GP-VALVE MECHANISM	195
Y	*309-6713*	1	CRANKSHAFT GP	223
Y	*309-6712*	1	CYLINDER BLOCK GP	233
Y	*309-6715*	1	CYLINDER HEAD GP	261
Y	*354-1245*	1	HOUSING GP-FRONT	350
Y	*308-2297*	1	FILLER GP-ENGINE OIL	482
Y	*308-2298*	1	FILTER GP-ENGINE OIL	491
Y	*322-2412*	1	FLYWHEEL GP	290
Y	*308-2311*	1	GLOW PLUG GP	886
Y	*342-9604*	1	HOUSING GP-FLYWHEEL	302
Y	*317-7186*	1	HOUSING GP-FRONT	330
Y	*309-6725*	1	LIFTING GP-ENGINE	392
Y	*308-4735*	1	MOUNTING GP-ENGINE OIL FILTER	495
Y	*308-2295*	1	PAN GP-OIL	398
Y	*342-9607*	1	PARTS GP-MISCELLANEOUS	932
Y	*309-6714*	1	PISTON & ROD GP	429
Y	*309-6720*	1	PLUG GP-OIL PAN	444
Y	*308-2300*	1	PULLEY GP-CRANKSHAFT	448
Y	*309-6717*	1	LINES GP-ENGINE OIL	494
Y	*317-7190*	1	PUMP GP-FUEL INJECTION	825
Y	*309-6721*	1	PUMP GP-WATER	517
Y	*308-2313*	1	SOLENOID GP-SHUTOFF (FUEL)	895
Y	*315-7819*	1	SWITCH GP-PRESSURE (ENGINE OIL)	912
Y	*308-2317*	1	SWITCH GP-TEMPERATURE (ENGINE COOLANT)	922
Y	*309-6716*	1	VALVE MECHANISM GP	473

Y - SEPARATE ILLUSTRATION

<END>

308-1859 CYLINDER HEAD AS

FIELD REPLACEMENT FOR 590-2500—PAGE: 271
PART OF 308-2284 CYLINDER HEAD GP
TYPE 1

SMCS-1100, 1101 **i07678709**

NOTE	REF NO	GRAPHIC REF	PART NUMBER	QTY	PART NAME 1 2 3 4 5 6 (PRODUCT LEVEL)	SEE PAGE
	1	1	**153-5556**	16	RETAINER	
	2	1	**153-5557**	8	RETAINER	
Y	3	1	*426-3438*	1	CYLINDER HEAD AS	252
	4	1	**435-9544**	4	VALVE-INLET	
	5	1	**435-9546**	4	VALVE-EXHAUST	
	6	1	**440-5104**	8	SEAL	
	7	1	**477-8828**	8	SPRING	

Y - SEPARATE ILLUSTRATION

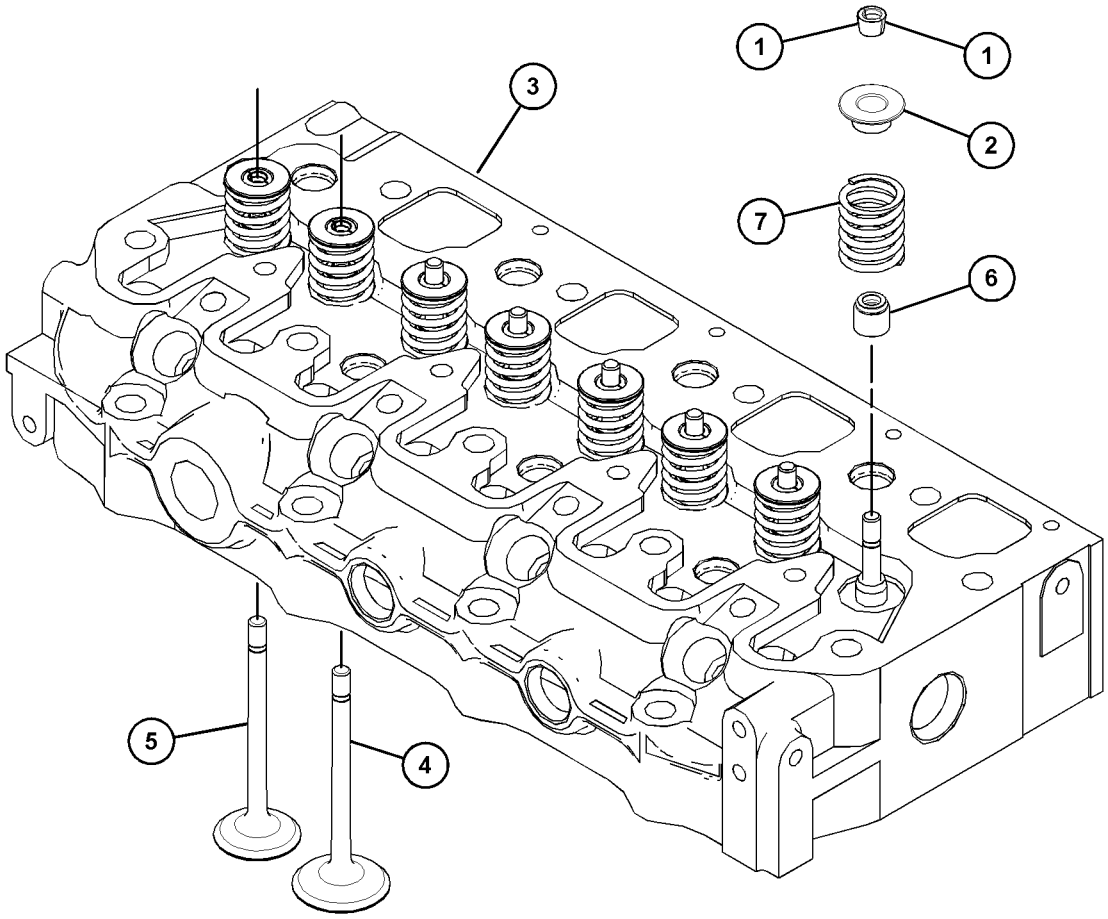

GRAPHIC #1 <END> g06205200

308-1859 CYLINDER HEAD AS

FIELD REPLACEMENT FOR 590-2500—PAGE: 271
PART OF 308-2284, 596-2862 CYLINDER HEAD GP
TYPE 2

SMCS-1100, 1101 **i08586172**

NOTE	REF NO	GRAPHIC REF	PART NUMBER	QTY	PART NAME 1 2 3 4 5 6 (PRODUCT LEVEL)	SEE PAGE
	1	1	**153-5556**	16	RETAINER	
	2	1	**153-5557**	8	RETAINER	
CY	3	1	*581-9724*	1	CYLINDER HEAD AS	255
	4	1	**435-9544**	4	VALVE-INLET	
	5	1	**435-9547**	4	VALVE-EXHAUST	
	6	1	**440-5104**	8	SEAL	
	7	1	**477-8828**	8	SPRING	

C - CHANGE FROM PREVIOUS TYPE
Y - SEPARATE ILLUSTRATION

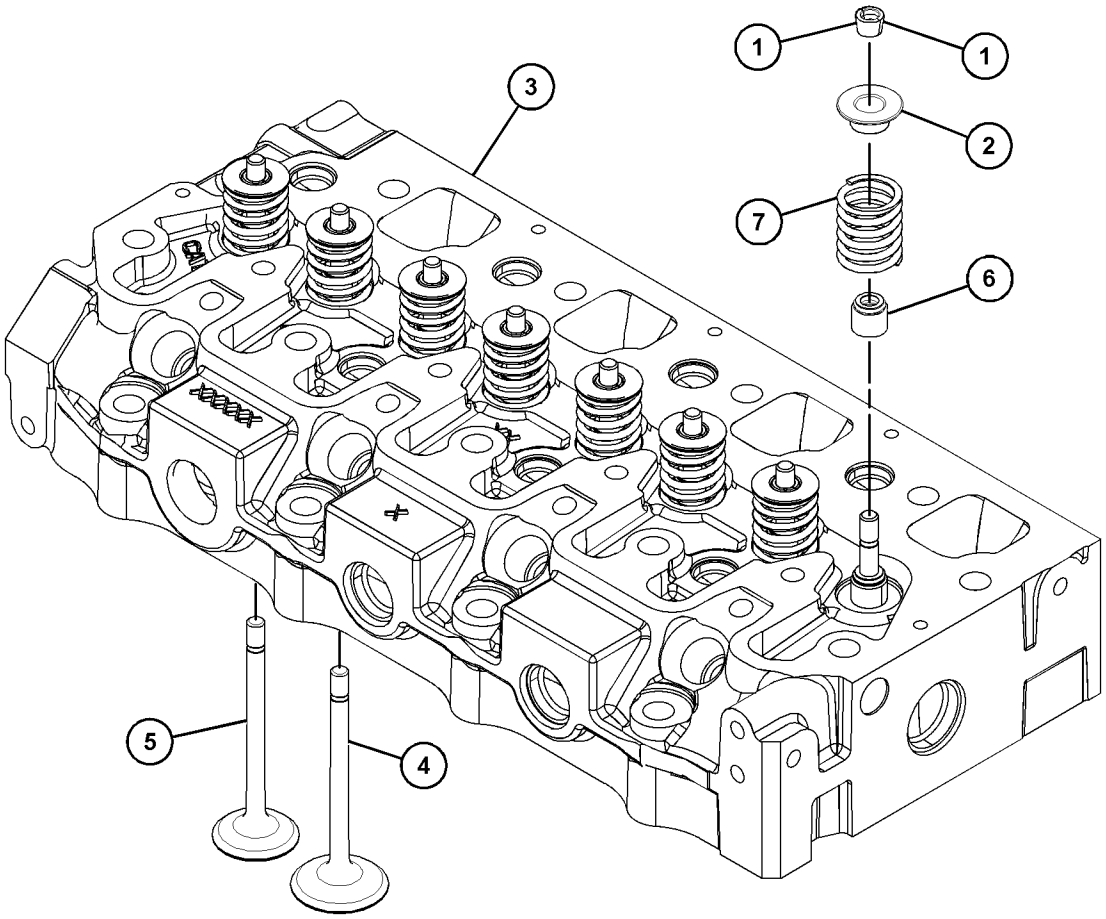

GRAPHIC #1 <END> g06770569

308-1859 CYLINDER HEAD AS

FIELD REPLACEMENT FOR 590-2500—PAGE: 271
PART OF 308-2284 CYLINDER HEAD GP
TYPE 3

SMCS-1100, 1101 **i07793243**

NOTE	REF NO	GRAPHIC REF	PART NUMBER	QTY	PART NAME 1 2 3 4 5 6 (PRODUCT LEVEL)	SEE PAGE
	1	1	**153-5556**	16	RETAINER	
	2	1	**153-5557**	8	RETAINER	
Y	3	1	*521-2896*	1	CYLINDER HEAD AS	253
	4	1	**435-9544**	4	VALVE-INLET	
	5	1	**435-9546**	4	VALVE-EXHAUST	
	6	1	**440-5104**	8	SEAL	
	7	1	**477-8828**	8	SPRING	

Y - SEPARATE ILLUSTRATION

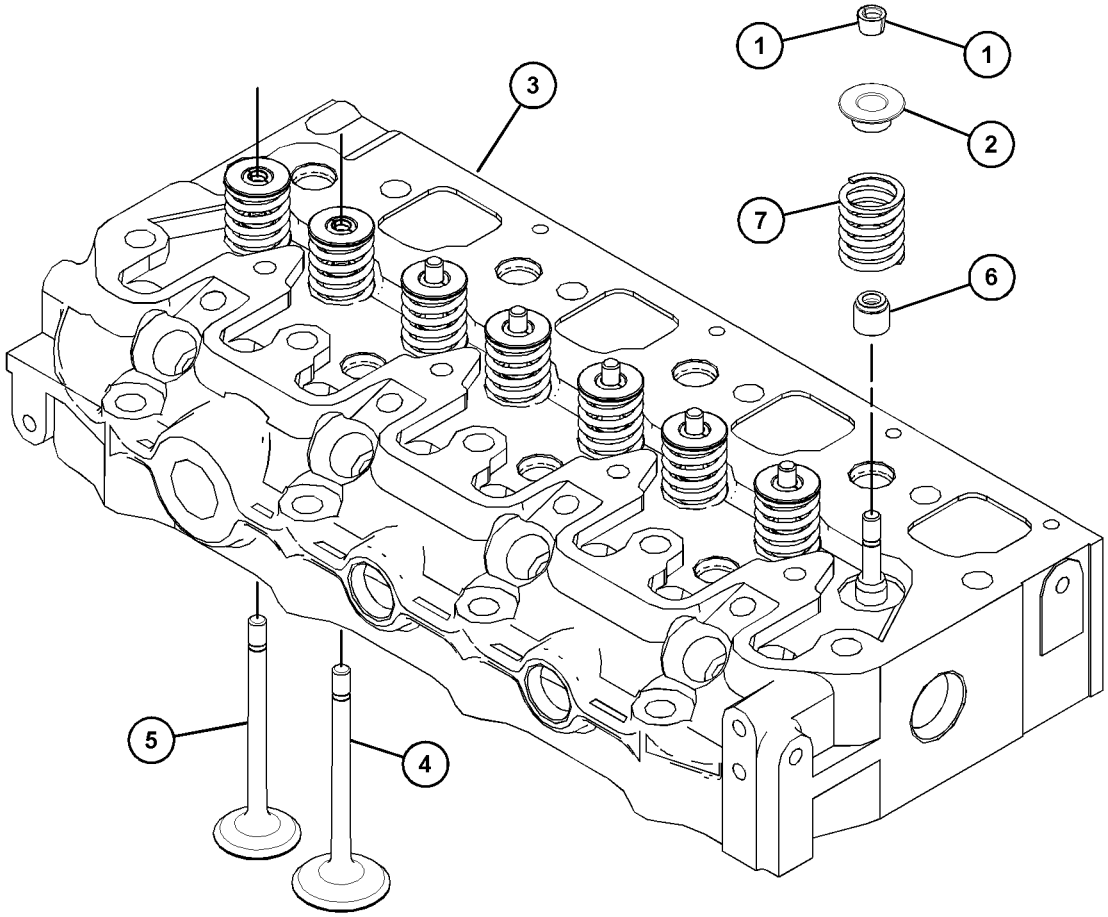

GRAPHIC #1 <END> g06205200

426-3438 CYLINDER HEAD AS

PART OF 308-1859 CYLINDER HEAD AS

SMCS-1100, 1101 **i08096612**

NOTE	REF NO	GRAPHIC REF	PART NUMBER	QTY	PART NAME 1 2 3 4 5 6 (PRODUCT LEVEL)	SEE PAGE
	1	1	**237-9315**	5	PLUG (SEALING)	
	2	1	**288-6537**	7	CAP	
	3	1	**291-1808**	2	CAP	
	4	1	**303-0338**	3	PLUG	
	5	1	*423-7666*	1	CYLINDER HEAD AS	
	5A	1	**256-2084**	4	INSERT-INLET VALVE	
	5B	1	**256-2085**	4	INSERT-VALVE SEAT	

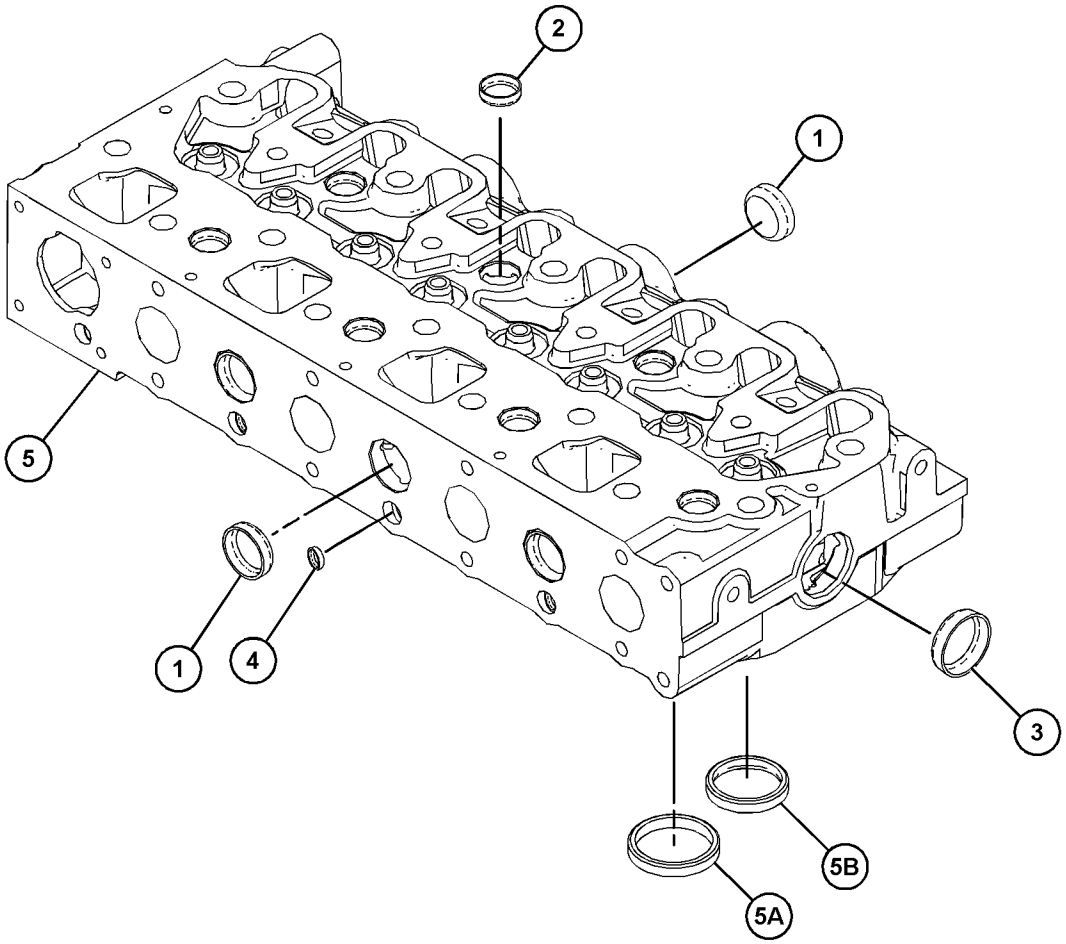

GRAPHIC #1 <END> g06543444

521-2896 CYLINDER HEAD AS

PART OF 308-1859 CYLINDER HEAD AS

SMCS-1100, 1101 **i08593883**

NOTE	REF NO	GRAPHIC REF	PART NUMBER	QTY	PART NAME 1 2 3 4 5 6 (PRODUCT LEVEL)	SEE PAGE
	1	1	*423-7666*	1	CYLINDER HEAD AS	
	1A	1	**256-2084**	4	INSERT-INLET VALVE	
	1B	1	**256-2085**	4	INSERT-VALVE SEAT	
	2	1	**504-9775**	3	PLUG	
	3	1	**504-9785**	7	PLUG	
	4	1	**504-9786**	5	PLUG	
	5	1	**504-9787**	2	PLUG	

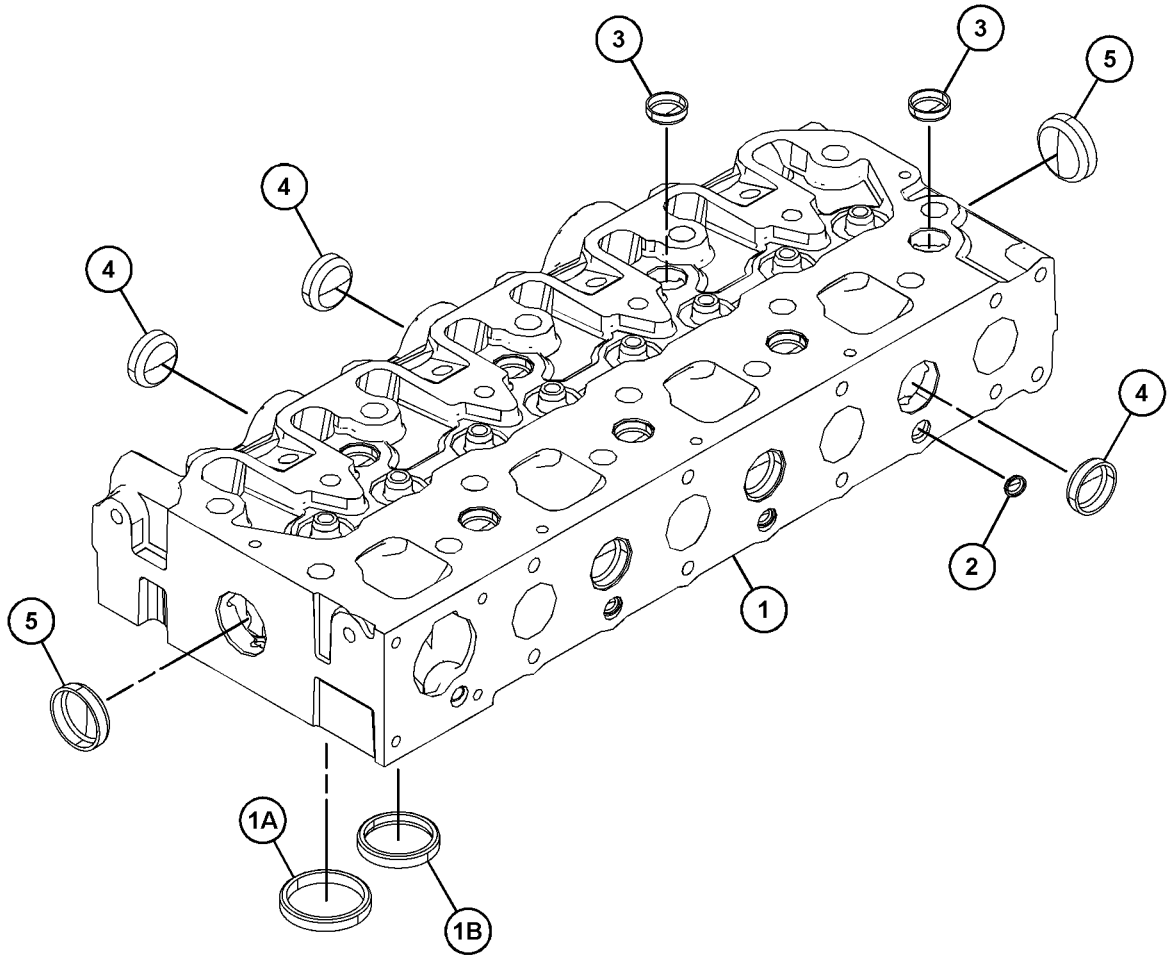

GRAPHIC #1 <END> g06691400

581-9723 CYLINDER HEAD AS

PART OF 321-4061, 589-8060 CYLINDER HEAD GP

SMCS-1100, 1101 **i08582730**

NOTE	REF NO	GRAPHIC REF	PART NUMBER	QTY	PART NAME 1 2 3 4 5 6 (PRODUCT LEVEL)	SEE PAGE
	1	1	**504-9775**	3	PLUG	
	2	1	**504-9785**	7	PLUG	
	3	1	**504-9786**	5	PLUG	
	4	1	**504-9787**	2	PLUG	
	5	1	*595-7167*	1	CYLINDER HEAD AS	
		1	**256-2084**	4	INSERT-INLET VALVE	
		1	**256-2085**	4	INSERT-VALVE SEAT	

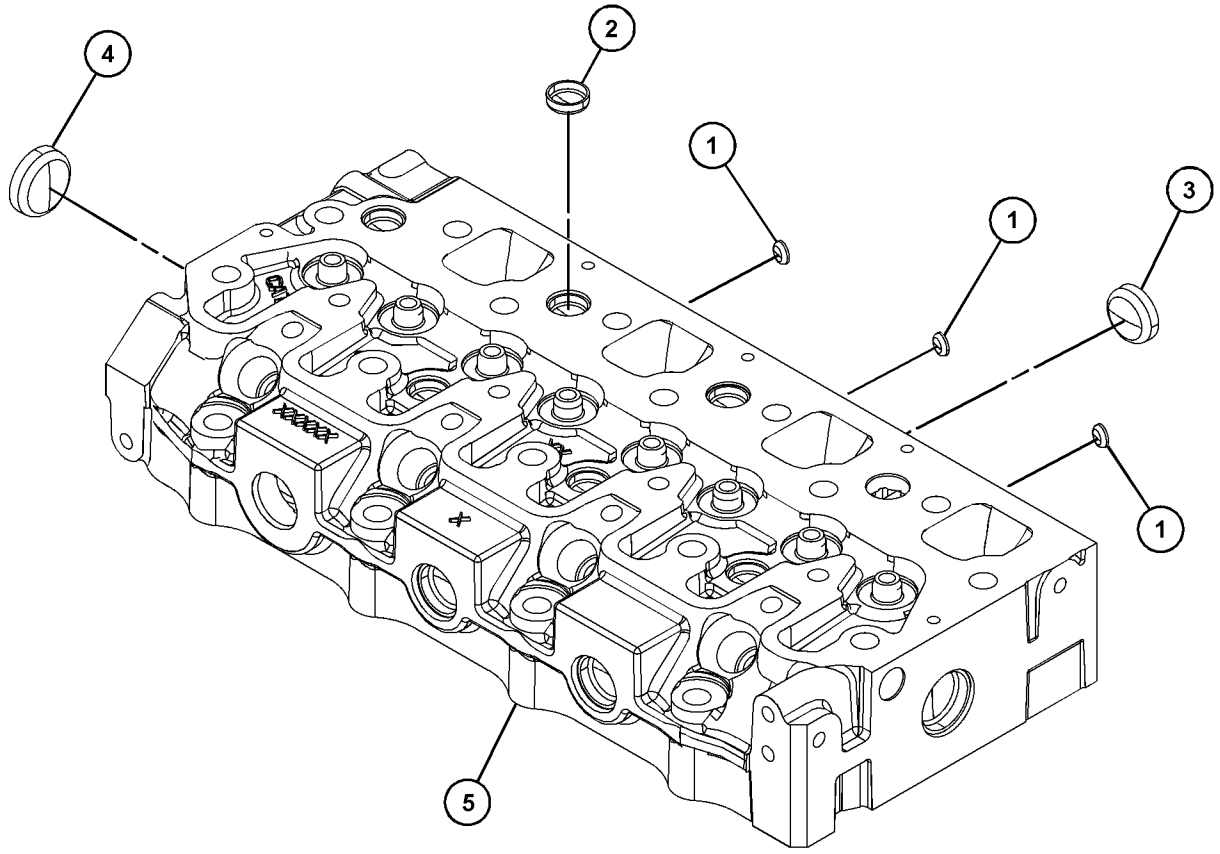

GRAPHIC #1 <END> g06673000

581-9724 CYLINDER HEAD AS

PART OF 308-1859 CYLINDER HEAD AS, 590-2500 CYLINDER HEAD GP

SMCS-1100, 1101 **i08576700**

NOTE	REF NO	GRAPHIC REF	PART NUMBER	QTY	PART NAME 1 2 3 4 5 6 (PRODUCT LEVEL)	SEE PAGE
	1	1	**504-9775**	3	PLUG	
	2	1	**504-9785**	7	PLUG	
	3	1	**504-9786**	5	PLUG	
	4	1	**504-9787**	2	PLUG	
Y	5	1	*596-4237*	1	CYLINDER HEAD AS	256

Y - SEPARATE ILLUSTRATION

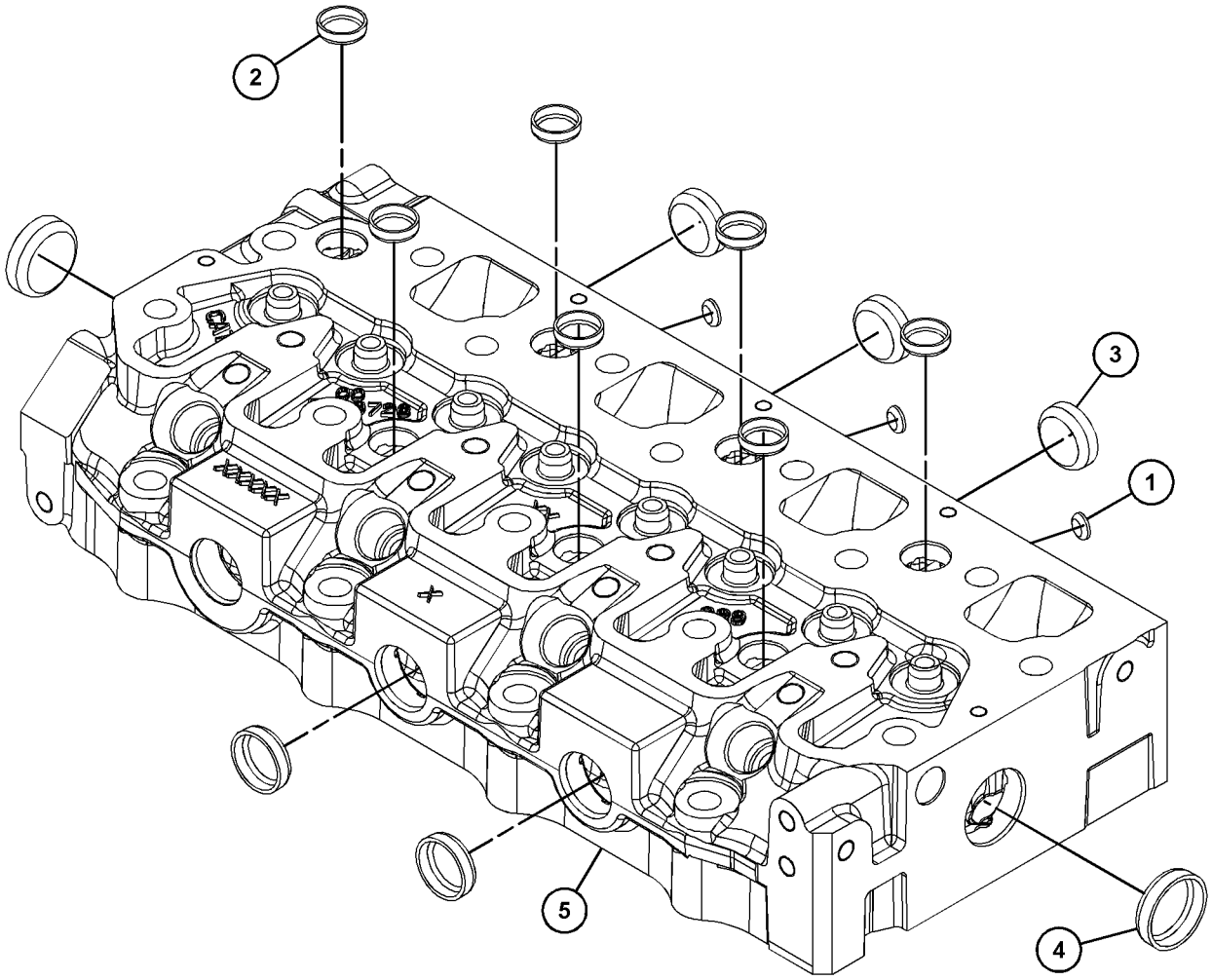

GRAPHIC #1 <END> g06773242

596-4237 CYLINDER HEAD AS

PART OF 581-9724 CYLINDER HEAD AS

SMCS-1100, 1101 **i08576708**

NOTE	REF NO	GRAPHIC REF	PART NUMBER	QTY	PART NAME 1 2 3 4 5 6 (PRODUCT LEVEL)	SEE PAGE
	1	1	**256-2084**	4	INSERT-INLET VALVE	
	2	1	**256-2085**	4	INSERT-VALVE SEAT	

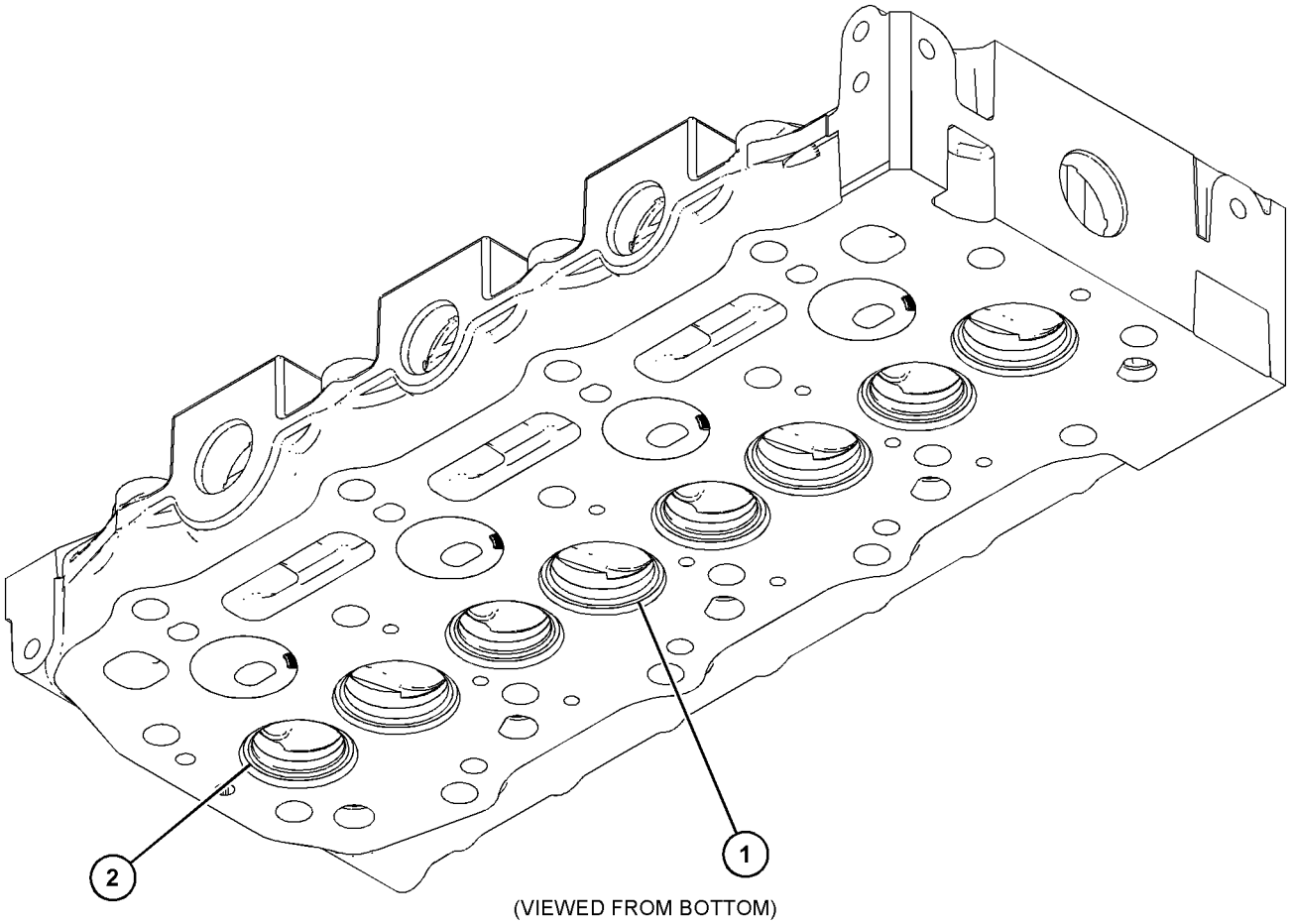

(VIEWED FROM BOTTOM)

GRAPHIC #1 <END> g06773250

308-2284 CYLINDER HEAD GP

PART OF 433-1380, 435-1637, 435-1638 ENGINE AR, 435-1636, 435-1658, 461-7892, 461-7894, 465-1477, 491-3396, 495-3121, 495-6243, 541-9277, 557-9727, 587-9328 ENGINE AR-PRIMARY
TYPE 1

SMCS-1100 **i09911950**

NOTE	REF NO	GRAPHIC REF	PART NUMBER	QTY	PART NAME 1 2 3 4 5 6 (PRODUCT LEVEL)	SEE PAGE
	1	1	**504-3838**	8	CAP	
JNM	2	1	**532-6842**	14	BOLT-FLANGE HEAD (M11X1.25X91-MM)	
JNM	3	1	**532-6841**	4	BOLT-FLANGE HEAD (M11X1.25X72-MM)	
M	4	1	**183-3213**	4	STUD (M8X1.25X71-MM)	
Y	5	1	*590-2500*	1	CYLINDER HEAD GP	271
M	6	1	**587-3850**	2	STUD (M6X1X63-MM)	
B	7	1	**322-7488**	1	GASKET (1.1-MM THK)	
B		1	**322-7487**	1	GASKET (1.2-MM THK)	
B		1	**322-7486**	1	GASKET (1.3-MM THK)	
					AVAILABLE REPAIR KIT(S):	
ABJ			**524-3347**		KIT-BOLT	
					(USED ON 4 CYLINDER ENGINES)	
ABN			**524-3348**		KIT-BOLT	
					(USED ON 3 CYLINDER ENGINES)	

A - NOT PART OF THIS GROUP
B - USE AS REQUIRED
J - KIT MARKED J SERVICES PART(S) MARKED J
M - METRIC PART
N - KIT MARKED N SERVICES PART(S) MARKED N
Y - SEPARATE ILLUSTRATION

308-2284 **CYLINDER HEAD GP (**contd.**)** **i09911950**

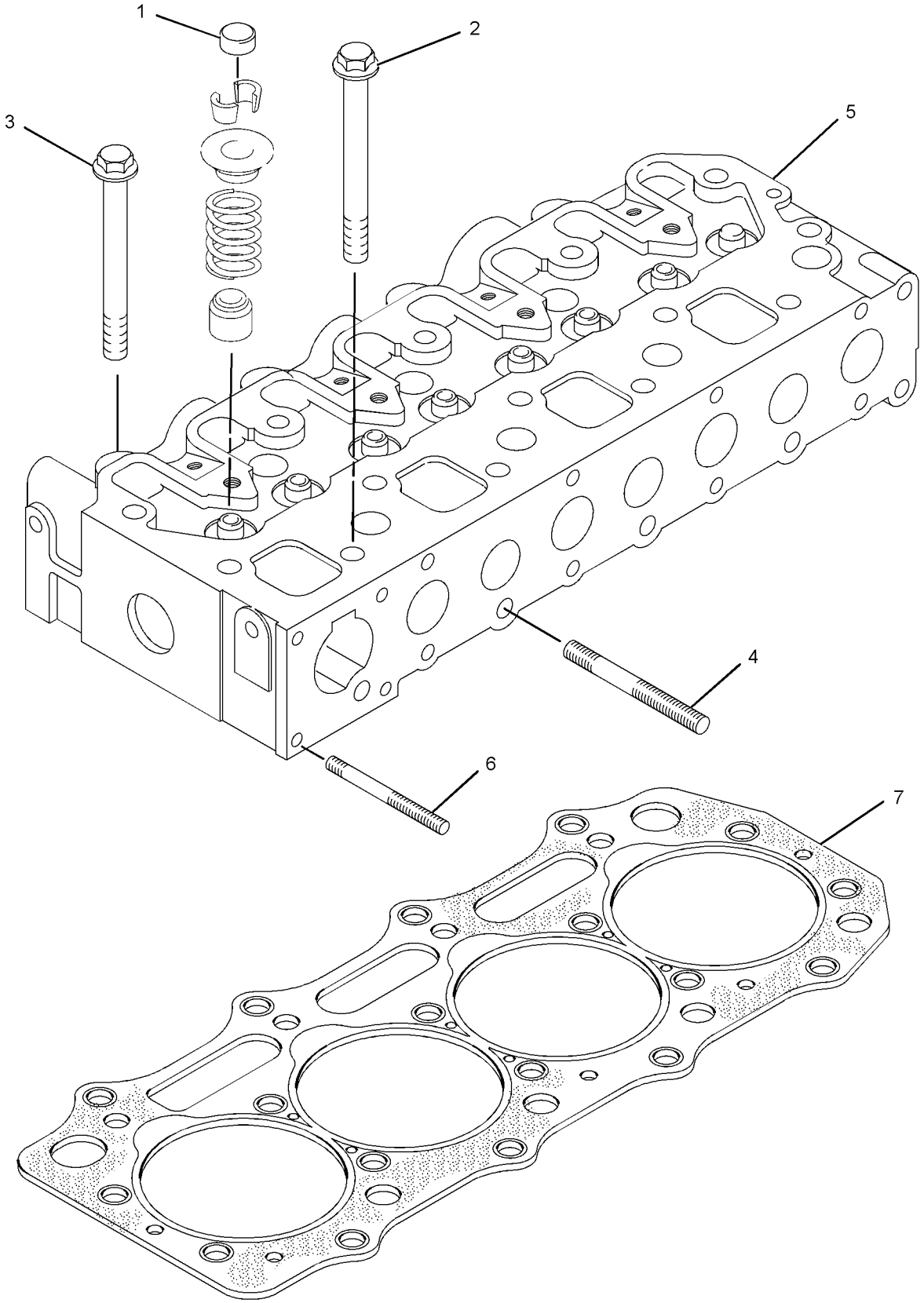

GRAPHIC #1 <END> g01409220

308-2284 CYLINDER HEAD GP

PART OF 435-1636, 459-2953 ENGINE AR-PRIMARY

TYPE 2

SMCS-1100 **i10389173**

NOTE	REF NO	GRAPHIC REF	PART NUMBER	QTY	PART NAME 1 2 3 4 5 6 (PRODUCT LEVEL)	SEE PAGE
	1	1	**504-3838**	8	CAP	
JM	2	1	**532-6842**	14	BOLT-FLANGE HEAD (M11X1.25X91-MM)	
JM	3	1	**532-6841**	4	BOLT-FLANGE HEAD (M11X1.25X72-MM)	
M	4	1	**599-4957**	4	STUD (M8X1.25X71-MM)	
Y	5	1	**308-1859**	1	CYLINDER HEAD AS	249
M	6	1	**587-3850**	2	STUD (M6X1X63-MM)	
B	7	1	**322-7488**	1	GASKET (1.1-MM THK)	
B		1	**322-7487**	1	GASKET (1.2-MM THK)	
B		1	**322-7486**	1	GASKET (1.3-MM THK)	
					AVAILABLE REPAIR KIT(S):	
J			**524-3347**	1	KIT-BOLT	
					(FOR USE WITH 4 CYLINDER CRDI ENGINE)	
J			**524-3348**	1	KIT-BOLT	
					(FOR USE WITH 3 CYLINDER CRDI ENGINE)	

B - USE AS REQUIRED
J - KIT MARKED J SERVICES PART(S) MARKED J
M - METRIC PART
Y - SEPARATE ILLUSTRATION

308-2284 **CYLINDER HEAD GP (**contd.**)** **i10389173**

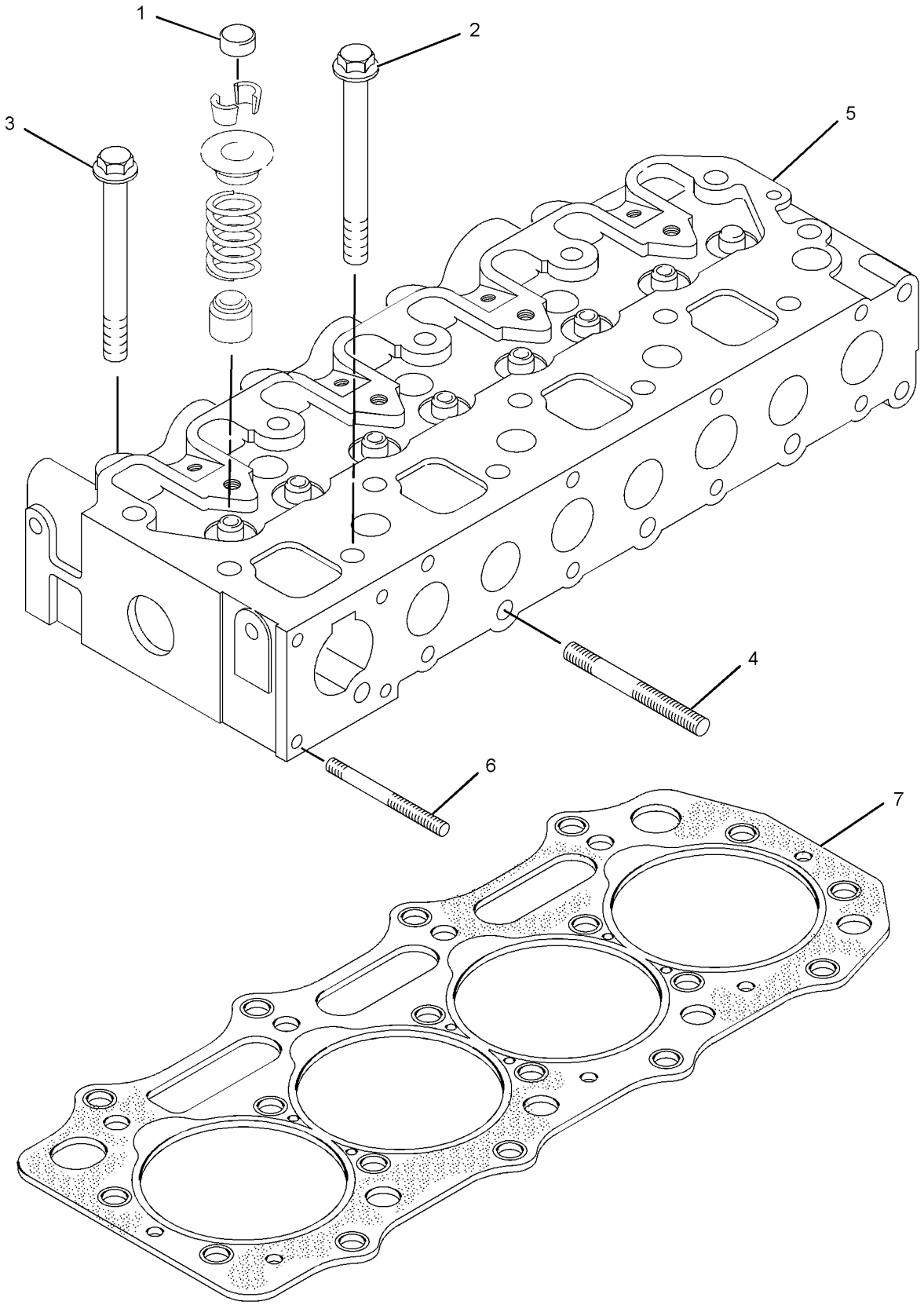

GRAPHIC #1 <END> g01409220

309-6715 CYLINDER HEAD GP

PART OF 435-1645 CYLINDER BLOCK GP-LONG, 433-1379 ENGINE AR, 435-1641, 435-1642, 435-1646, 435-1647, 435-1656, 461-7895, 492-6602, 549-8284 ENGINE AR-PRIMARY
TYPE 1

SMCS-1100 **i07474378**

NOTE	REF NO	GRAPHIC REF	PART NUMBER	QTY	PART NAME 1 2 3 4 5 6 (PRODUCT LEVEL)	SEE PAGE
	1	1	**322-7485**	8	CAP-VALVE SPRING	
	2	1	**156-6988**	14	BOLT	
M	3	1	**156-6989**	4	BOLT (M11X1.25X72-MM)	
M	4	1	**183-3213**	2	STUD (M8X1.25X71-MM)	
M	5	1	**308-1862**	2	STUD (M6X1X63-MM)	
Y	6	1	**321-4061**	1	CYLINDER HEAD GP	264
B	7	1	**322-7488**	1	GASKET (1.1-MM THK)	
B		1	**322-7487**	1	GASKET (1.2-MM THK)	
B		1	**322-7486**	1	GASKET (1.3-MM THK)	

B - USE AS REQUIRED
M - METRIC PART
Y - SEPARATE ILLUSTRATION

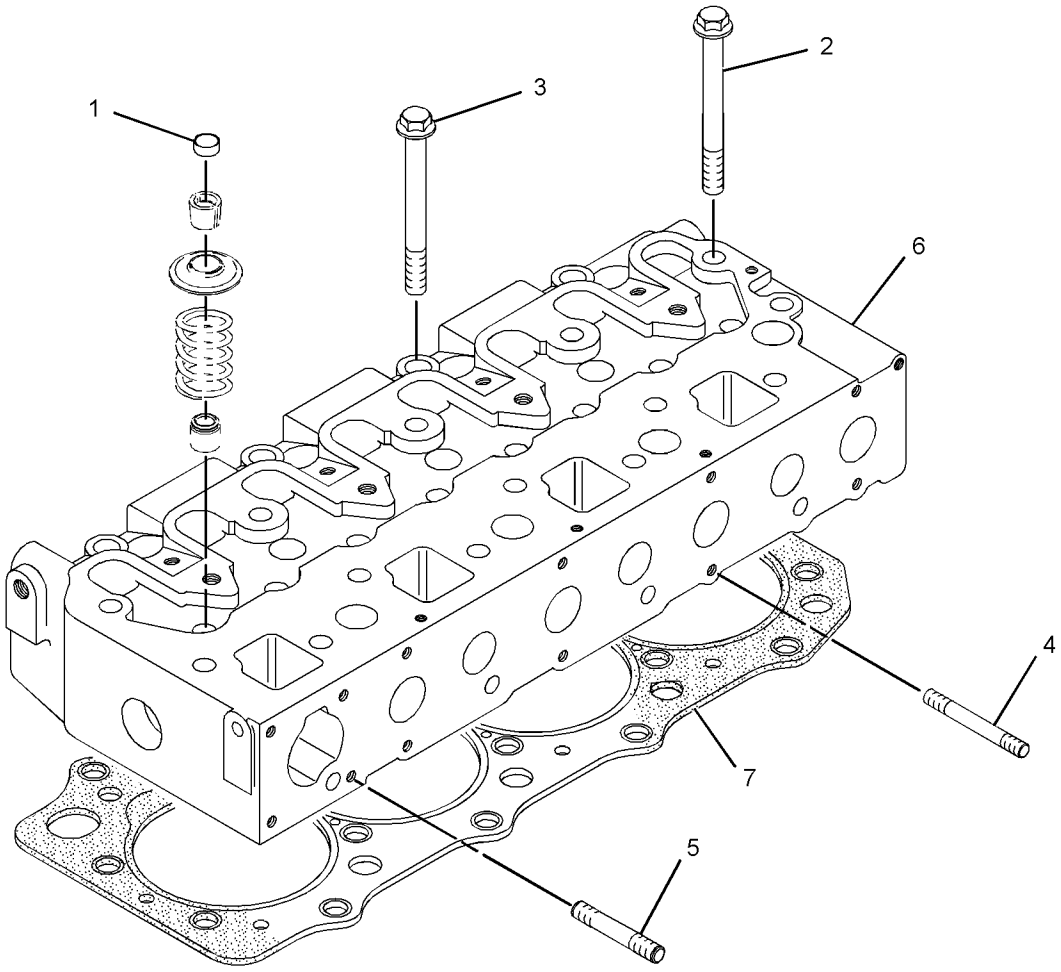

GRAPHIC #1 <END> g01394446

309-6715 CYLINDER HEAD GP

PART OF 435-1645 CYLINDER BLOCK GP-LONG, 433-1379 ENGINE AR, 435-1641, 435-1642, 435-1646, 435-1647, 435-1656, 461-7895, 492-6602, 516-9335, 549-8284 ENGINE AR-PRIMARY

TYPE 2

SMCS-1100 **i10517999**

NOTE	REF NO	GRAPHIC REF	PART NUMBER	QTY	PART NAME 1 2 3 4 5 6 (PRODUCT LEVEL)	SEE PAGE
M	1	1	**599-4957**	2	STUD (M8X1.25X71-MM)	
M	2	1	**587-3850**	2	STUD (M6X1X63-MM)	
Y	3	1	**321-4061**	1	CYLINDER HEAD GP	264
B	4	1	**322-7486**	1	GASKET (1.3-MM THK)	
B	5	1	**322-7487**	1	GASKET (1.2-MM THK)	
B	6	1	**322-7488**	1	GASKET (1.1-MM THK)	
M	7	1	**532-6842**	14	BOLT-FLANGE HEAD (M11X1.25X91-MM)	
M	8	1	**532-6841**	4	BOLT-FLANGE HEAD (M11X1.25X72-MM)	
C	9	1	**504-3838**	8	CAP	

B - USE AS REQUIRED
C - CHANGE FROM PREVIOUS TYPE
M - METRIC PART
Y - SEPARATE ILLUSTRATION

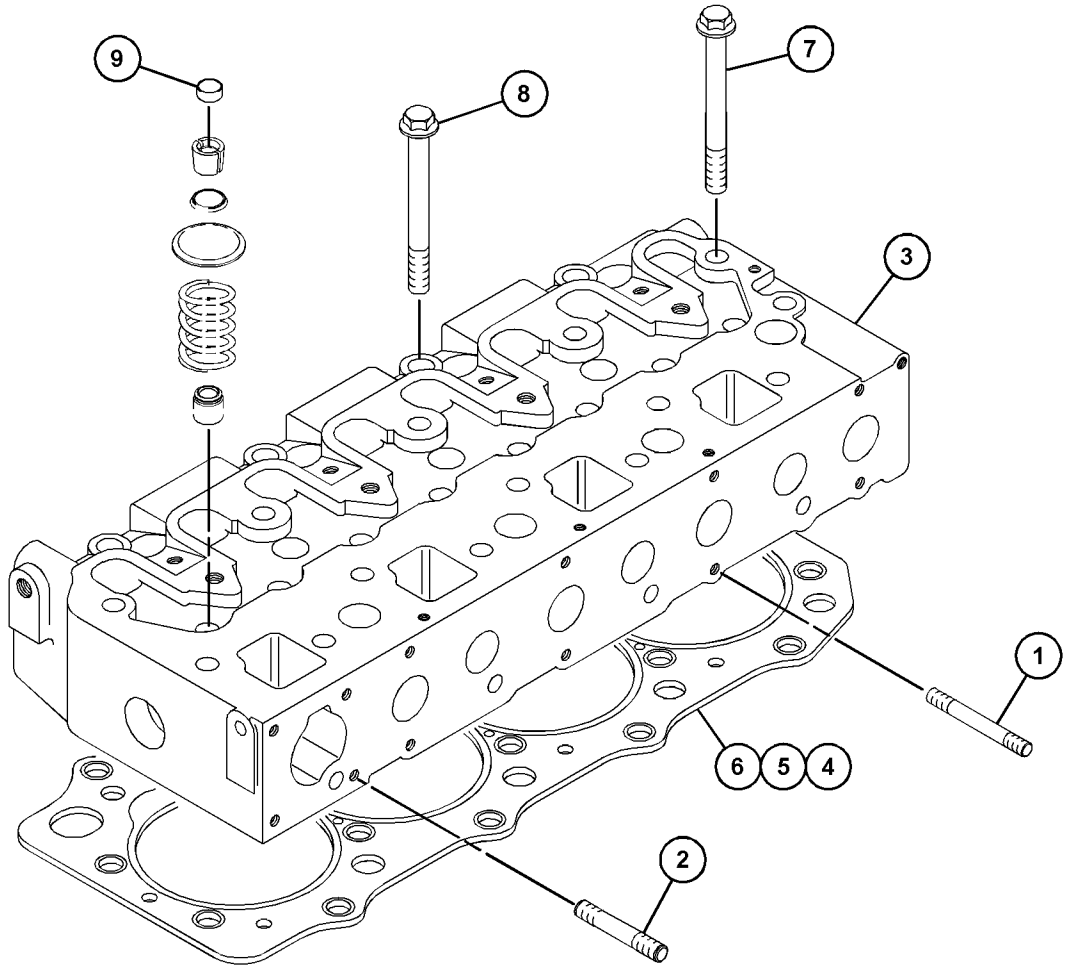

GRAPHIC #1 <END> g06306554

309-6715 CYLINDER HEAD GP

PART OF 435-1645 CYLINDER BLOCK GP-LONG, 433-1379 ENGINE AR, 435-1641, 435-1642, 435-1646, 435-1647, 435-1656, 461-7895, 492-6602, 549-8284 ENGINE AR-PRIMARY
TYPE 3

SMCS-1100 **i07766067**

NOTE	REF NO	GRAPHIC REF	PART NUMBER	QTY	PART NAME 1 2 3 4 5 6 (PRODUCT LEVEL)	SEE PAGE
	1	1	**504-3838**	8	CAP	
CM	2	1	**532-6842**	14	BOLT-FLANGE HEAD (M11X1.25X91-MM)	
CM	3	1	**532-6841**	4	BOLT-FLANGE HEAD (M11X1.25X72-MM)	
M	4	1	**183-3213**	2	STUD (M8X1.25X71-MM)	
M	5	1	**308-1862**	2	STUD (M6X1X63-MM)	
Y	6	1	**321-4061**	1	CYLINDER HEAD GP	264
B	7	1	**322-7488**	1	GASKET (1.1-MM THK)	
B		1	**322-7487**	1	GASKET (1.2-MM THK)	
B		1	**322-7486**	1	GASKET (1.3-MM THK)	

B - USE AS REQUIRED
C - CHANGE FROM PREVIOUS TYPE
M - METRIC PART
Y - SEPARATE ILLUSTRATION

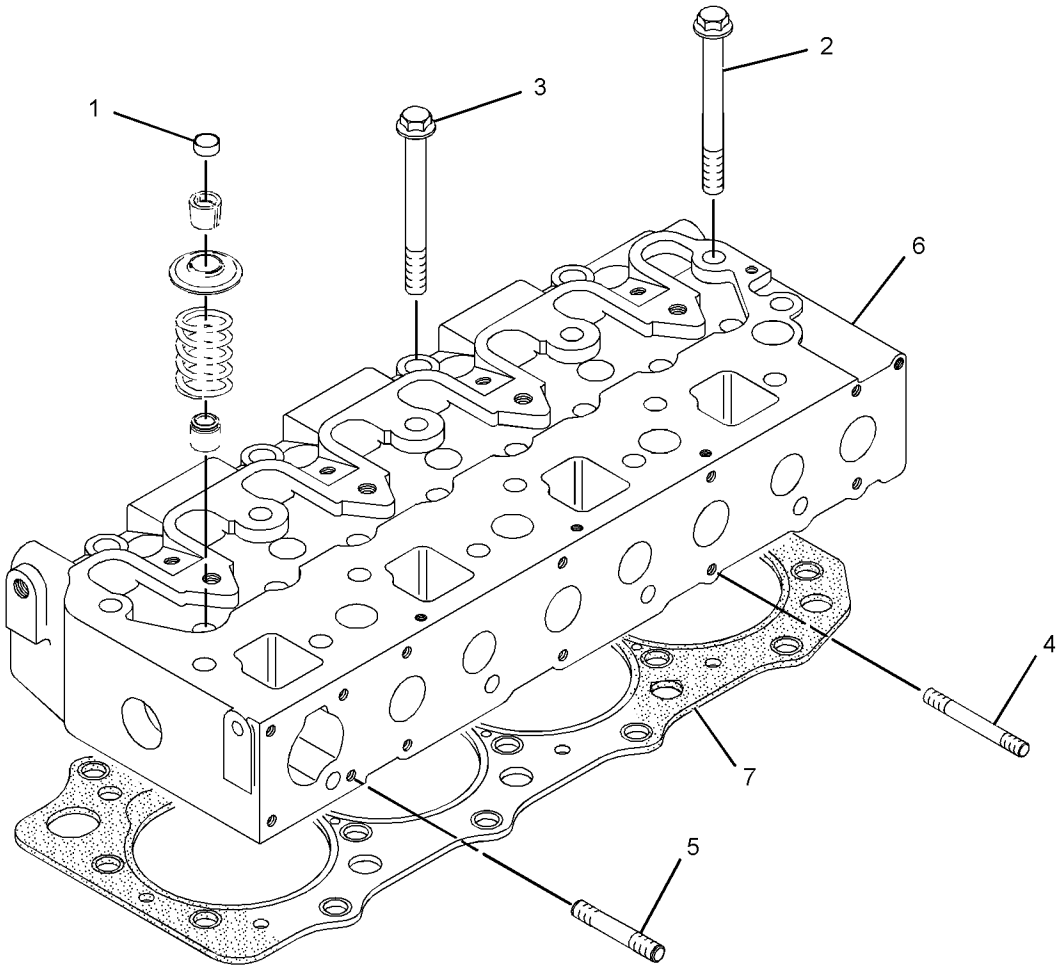

GRAPHIC #1 <END> g01394446

321-4061 CYLINDER HEAD GP

PART OF 309-6715, 340-5784, 596-2861 CYLINDER HEAD GP

SMCS-1100 **i08671013**

NOTE	REF NO	GRAPHIC REF	PART NUMBER	QTY	PART NAME 1 2 3 4 5 6 (PRODUCT LEVEL)	SEE PAGE
	1	1	**435-9544**	4	VALVE-INLET	
	2	1	**435-9546**	4	VALVE-EXHAUST	
	3	1	**440-5104**	8	SEAL	
	4	1	**477-8828**	8	SPRING	
Y	5	1	*581-9723*	1	CYLINDER HEAD AS	254
	6	1	**153-5556**	16	RETAINER	
	7	1	**153-5557**	8	RETAINER	
F			**256-2084**	4	INSERT-INLET VALVE	
F			**256-2085**	4	INSERT-VALVE SEAT	

F - NOT SHOWN
Y - SEPARATE ILLUSTRATION

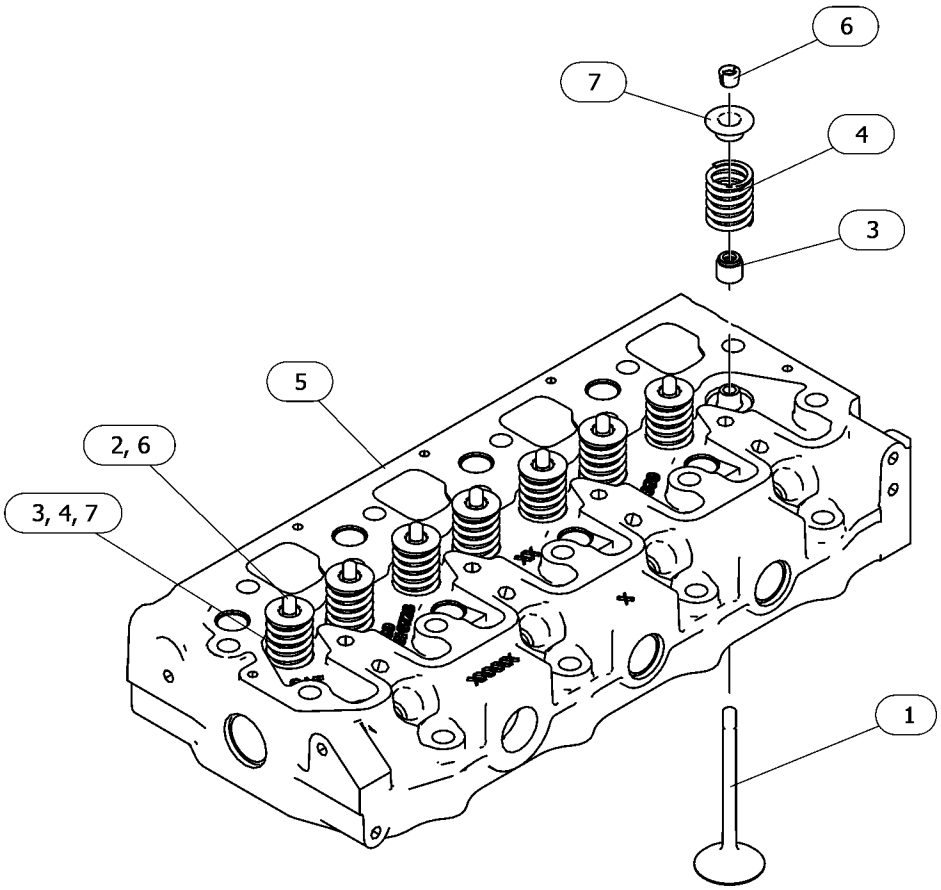

GRAPHIC #1 <END> g06722066

340-5784 CYLINDER HEAD GP

TYPE 1

SMCS-1100 **i07791760**

NOTE	REF NO	GRAPHIC REF	PART NUMBER	QTY	PART NAME 1 2 3 4 5 6 (PRODUCT LEVEL)	SEE PAGE
	1	1	**504-3838**	8	CAP	
M	2	1	**532-6842**	14	BOLT-FLANGE HEAD (M11X1.25X91-MM)	
M	3	1	**532-6841**	4	BOLT-FLANGE HEAD (M11X1.25X72-MM)	
M	4	1	**183-3213**	2	STUD (M8X1.25X71-MM)	
Y	5	1	**321-4061**	1	CYLINDER HEAD GP	264
M	6	1	**308-1862**	2	STUD (M6X1X63-MM)	
B	7	1	**322-7488**	1	GASKET (1.1-MM THK)	
B		1	**322-7487**	1	GASKET (1.2-MM THK)	
B		1	**322-7486**	1	GASKET (1.3-MM THK)	

B - USE AS REQUIRED
M - METRIC PART
Y - SEPARATE ILLUSTRATION

340-5784 **CYLINDER HEAD GP (**contd.**)** **i07791760**

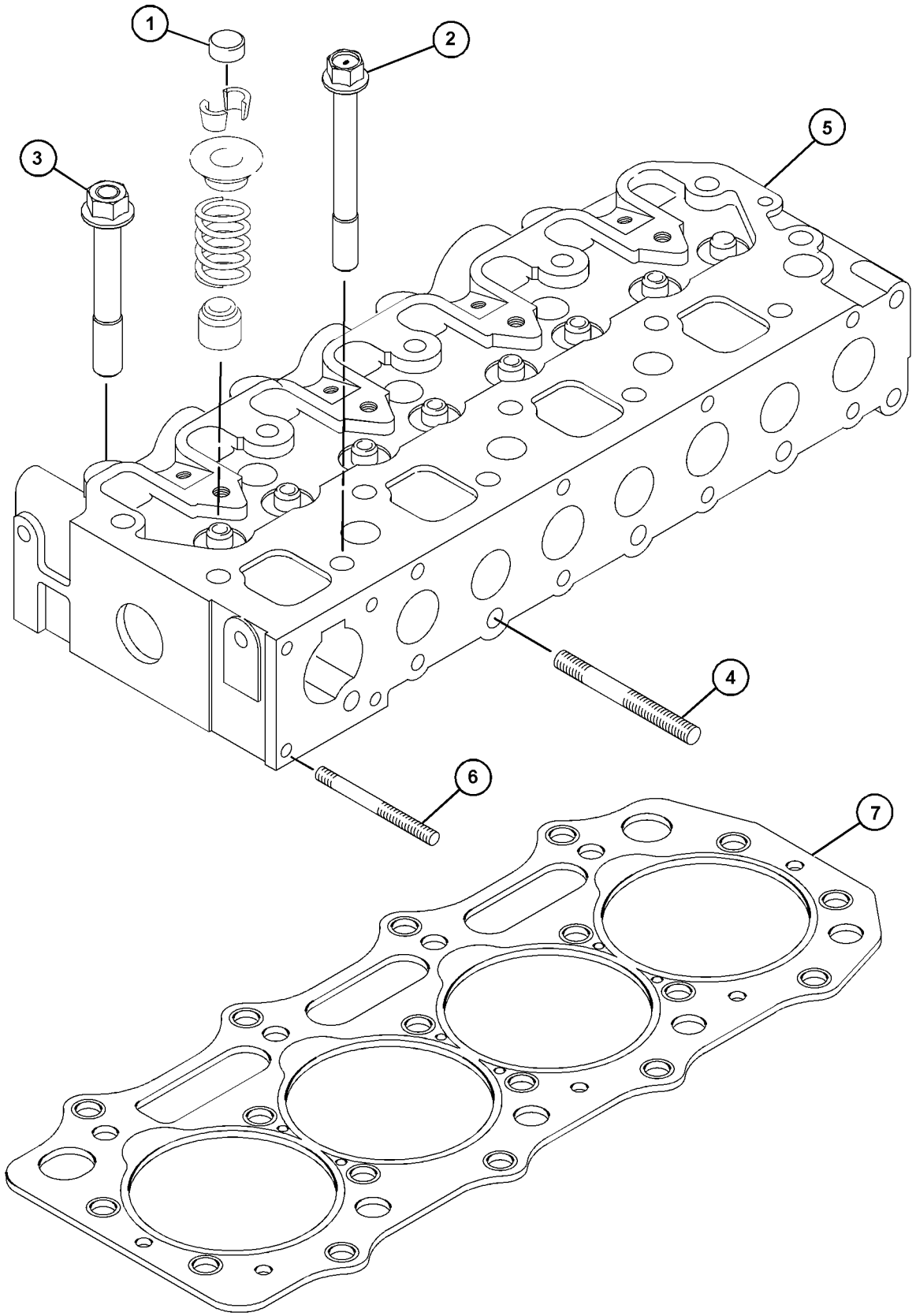

GRAPHIC #1 <END> g06315417

340-5784 CYLINDER HEAD GP

TYPE 2

SMCS-1100 **i09576443**

NOTE	REF NO	GRAPHIC REF	PART NUMBER	QTY	PART NAME 1 2 3 4 5 6 (PRODUCT LEVEL)	SEE PAGE
	1	1	**504-3838**	8	CAP	
JNM	2	1	**532-6842**	14	BOLT-FLANGE HEAD (M11X1.25X91-MM)	
JNM	3	1	**532-6841**	4	BOLT-FLANGE HEAD (M11X1.25X72-MM)	
M	4	1	**183-3213**	2	STUD (M8X1.25X71-MM)	
CY	5	1	**589-8060**	1	CYLINDER HEAD GP	269
M	6	1	**587-3850**	2	STUD (M6X1X63-MM)	
B	7	1	**322-7488**	1	GASKET (1.1-MM THK)	
B		1	**322-7487**	1	GASKET (1.2-MM THK)	
B		1	**322-7486**	1	GASKET (1.3-MM THK)	
					AVAILABLE REPAIR KIT(S):	
ABJ			**524-3347**		KIT-BOLT	
					(INCLUDES BOLTS)	
ABN			**524-3348**		KIT-BOLT	
					(INCLUDES NOTES)	

A - NOT PART OF THIS GROUP
B - USE AS REQUIRED
C - CHANGE FROM PREVIOUS TYPE
J - KIT MARKED J SERVICES PART(S) MARKED J
M - METRIC PART
N - KIT MARKED N SERVICES PART(S) MARKED N
Y - SEPARATE ILLUSTRATION

340-5784 **CYLINDER HEAD GP (**contd.**)** **i09576443**

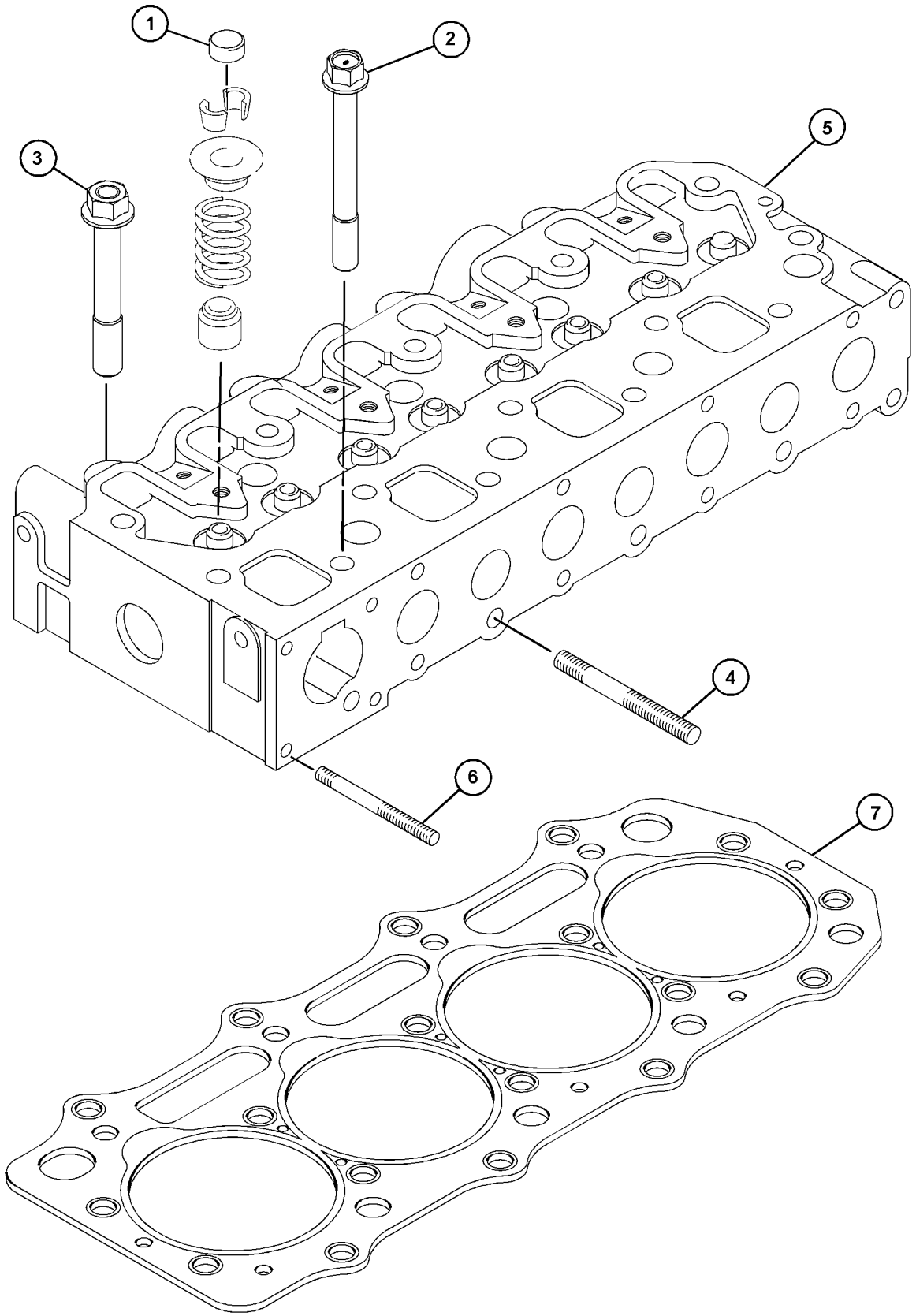

GRAPHIC #1 <END> g06315417

589-8060 CYLINDER HEAD GP

PART OF 340-5784 CYLINDER HEAD GP

SMCS-1100 **i08582729**

NOTE	REF NO	GRAPHIC REF	PART NUMBER	QTY	PART NAME 1 2 3 4 5 6 (PRODUCT LEVEL)	SEE PAGE
	1	1	**153-5556**	16	RETAINER	
	2	1	**153-5557**	8	RETAINER	
Y	3	1	*581-9723*	1	CYLINDER HEAD AS	254
	4	1	**435-9544**	4	VALVE-INLET	
	5	1	**435-9546**	4	VALVE-EXHAUST	
	6	1	**440-5104**	8	SEAL	
	7	1	**477-8828**	8	SPRING	

Y - SEPARATE ILLUSTRATION

589-8060 **CYLINDER HEAD GP (**contd.**)** **i08582729**

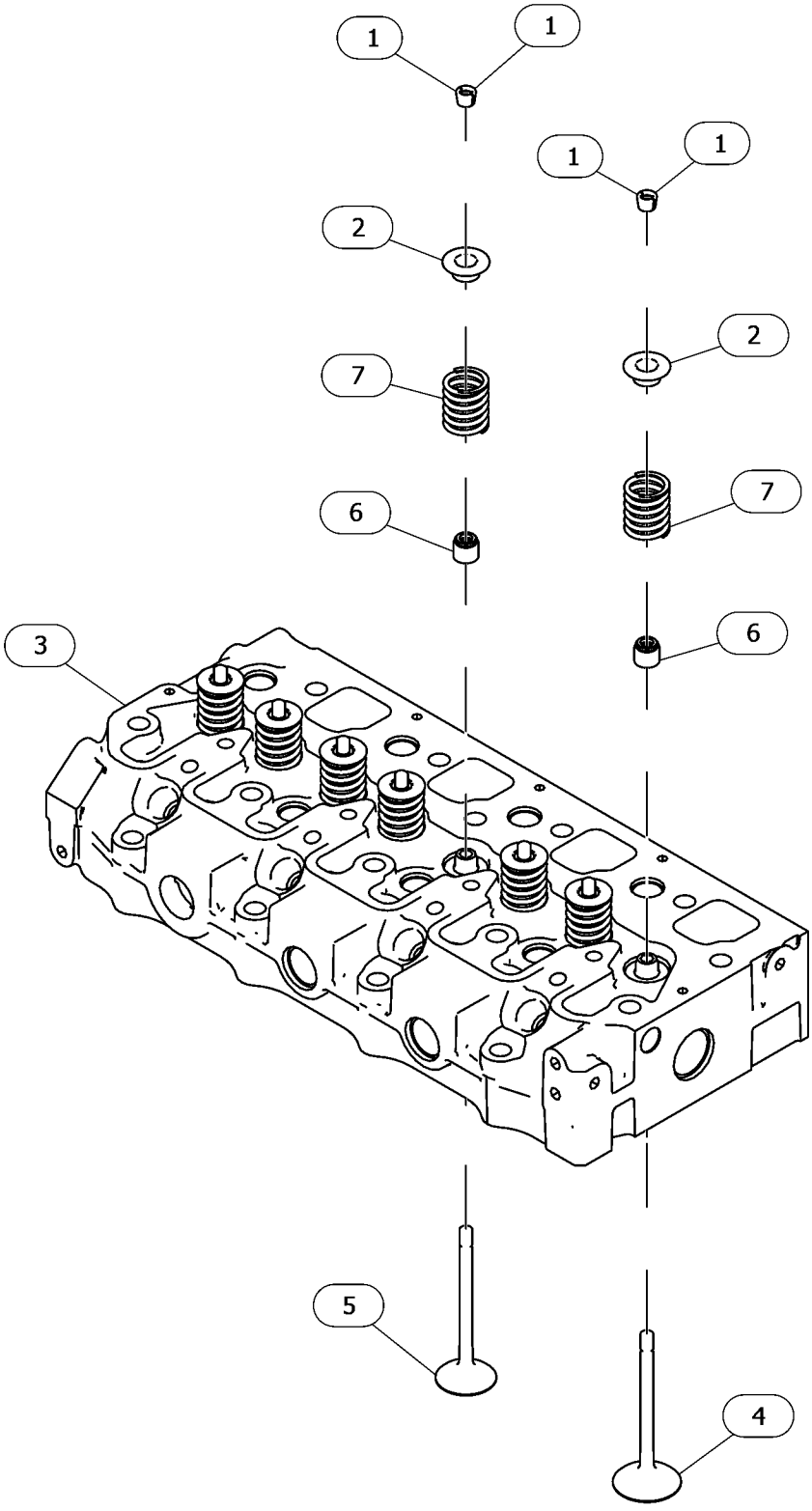

GRAPHIC #1 <END> g06721921

590-2500 CYLINDER HEAD GP

FIELD REPLACEMENT ORDER 308-1859—PAGE: 249

PART OF 308-2284 CYLINDER HEAD GP

SMCS-1100 **i08772471**

NOTE	REF NO	GRAPHIC REF	PART NUMBER	QTY	PART NAME 1 2 3 4 5 6 (PRODUCT LEVEL)	SEE PAGE
	1	1	**153-5556**	16	RETAINER	
	2	1	**153-5557**	8	RETAINER	
Y	3	1	*581-9724*	1	CYLINDER HEAD AS	255
	4	1	**435-9544**	4	VALVE-INLET	
	5	1	**435-9547**	4	VALVE-EXHAUST	
	6	1	**440-5104**	8	SEAL	
	7	1	**477-8828**	8	SPRING	

Y - SEPARATE ILLUSTRATION

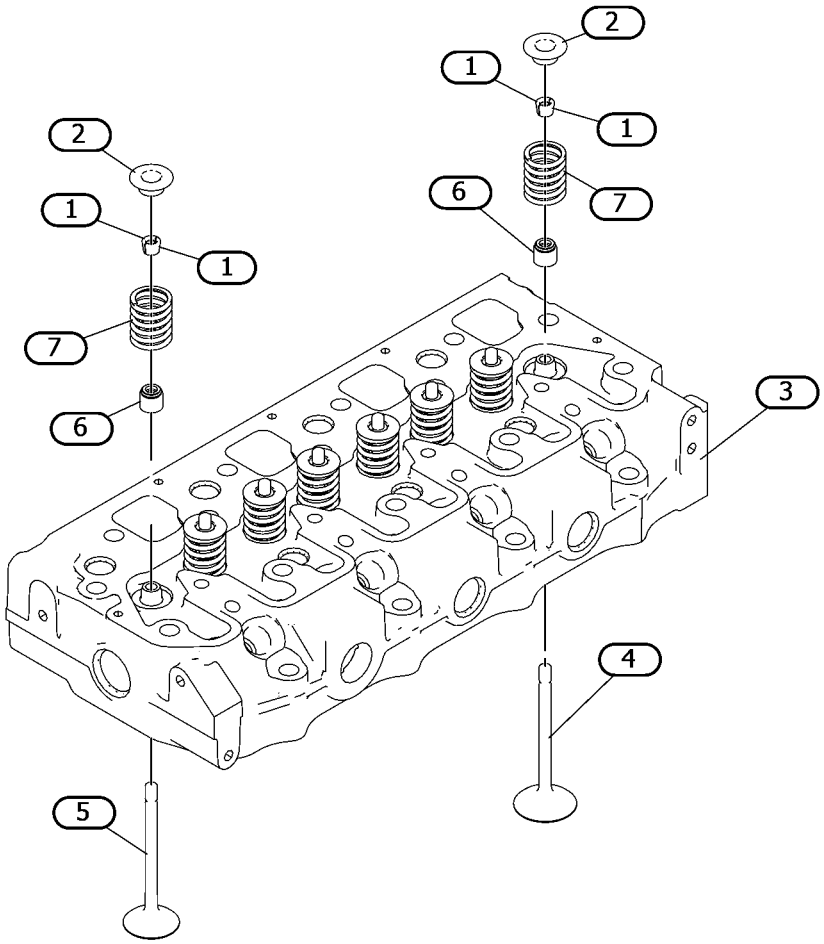

GRAPHIC #1 <END> g07542790

596-2861 CYLINDER HEAD GP

PART OF 433-1379 ENGINE AR, 435-1641, 435-1646, 435-1647, 610-7720 ENGINE AR-PRIMARY

SMCS-1100 **i08697196**

NOTE	REF NO	GRAPHIC REF	PART NUMBER	QTY	PART NAME 1 2 3 4 5 6 (PRODUCT LEVEL)	SEE PAGE
Y	1	1	**321-4061**	1	CYLINDER HEAD GP	264
JLM	2	1	**532-6841**	4	BOLT-FLANGE HEAD (M11X1.25X72-MM)	
JLM	3	1	**532-6842**	14	BOLT-FLANGE HEAD (M11X1.25X91-MM)	
	4	1	*595-5217*	1	GASKET AS-CYLINDER HEAD	
B		1	**322-7486**	1	GASKET (1.3-MM THK)	
B		1	**322-7487**	1	GASKET (1.2-MM THK)	
B		1	**322-7488**	1	GASKET (1.1-MM THK)	
					AVAILABLE REPAIR KIT(S):	
ABJ			**524-3347**		KIT-BOLT	
					(USED ON 4 CYLINDER ENGINES)	
ABL			**524-3348**		KIT-BOLT	
					(USED ON 3 CYLINDER ENGINES)	

A - NOT PART OF THIS GROUP
B - USE AS REQUIRED
J - KIT MARKED J SERVICES PART(S) MARKED J
L - KIT MARKED L SERVICES PART(S) MARKED L
M - METRIC PART
Y - SEPARATE ILLUSTRATION

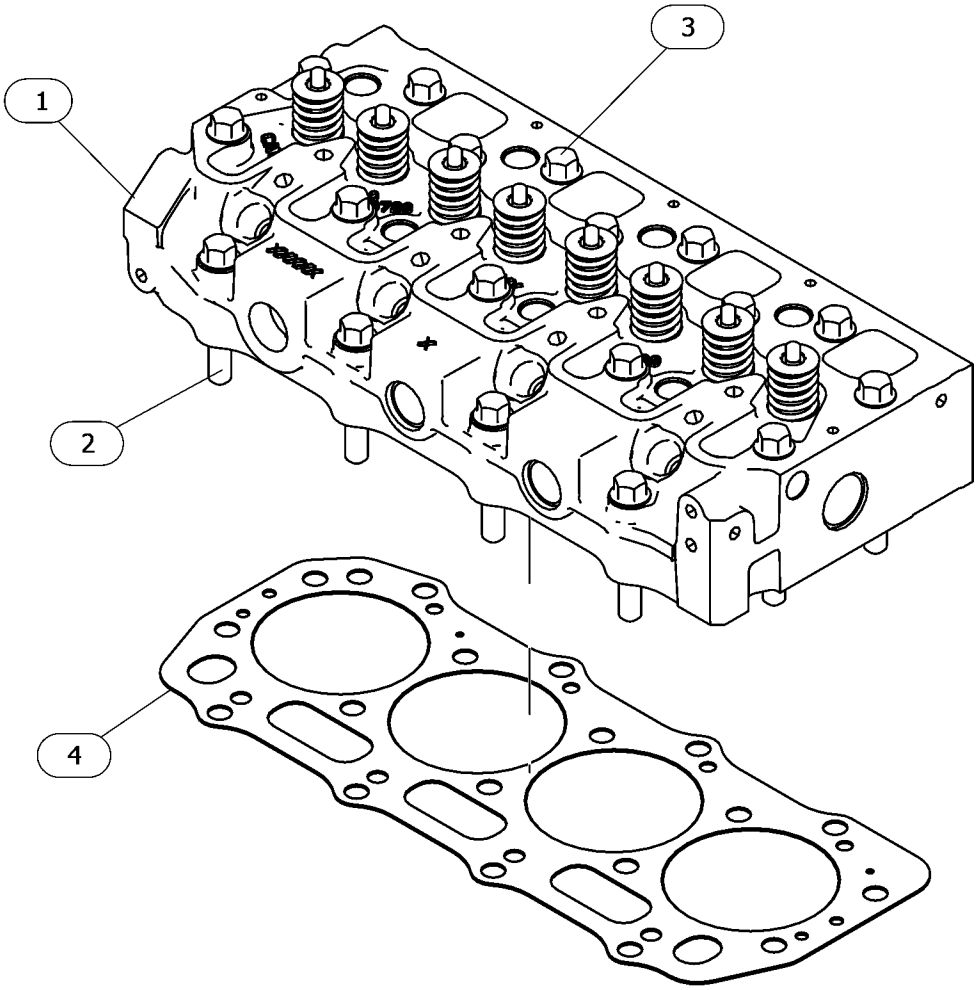

GRAPHIC #1 <END> g07513312

596-2862 CYLINDER HEAD GP

PART OF 433-1380 ENGINE AR, 435-1636, 587-9328, 610-7721 ENGINE AR-PRIMARY

SMCS-1100 **i08838957**

NOTE	REF NO	GRAPHIC REF	PART NUMBER	QTY	PART NAME 1 2 3 4 5 6 (PRODUCT LEVEL)	SEE PAGE
Y	1	1	**308-1859**	1	CYLINDER HEAD AS	249
JNM	2	1	**532-6841**	4	BOLT-FLANGE HEAD (M11X1.25X72-MM)	
JNM	3	1	**532-6842**	14	BOLT-FLANGE HEAD (M11X1.25X91-MM)	
	4	1	*595-5217*	1	GASKET AS-CYLINDER HEAD	
B		1	**322-7486**	1	GASKET (1.3-MM THK)	
B		1	**322-7487**	1	GASKET (1.2-MM THK)	
B		1	**322-7488**	1	GASKET (1.1-MM THK)	
					AVAILABLE REPAIR KIT(S):	
ABJ			**524-3347**		KIT-BOLT	
					(USED ON 4 CYLINDER ENGINES)	
ABN			**524-3348**		KIT-BOLT	
					(USED ON 3 CYLINDER ENGINES)	

A - NOT PART OF THIS GROUP
B - USE AS REQUIRED
J - KIT MARKED J SERVICES PART(S) MARKED J
M - METRIC PART
N - KIT MARKED N SERVICES PART(S) MARKED N
Y - SEPARATE ILLUSTRATION

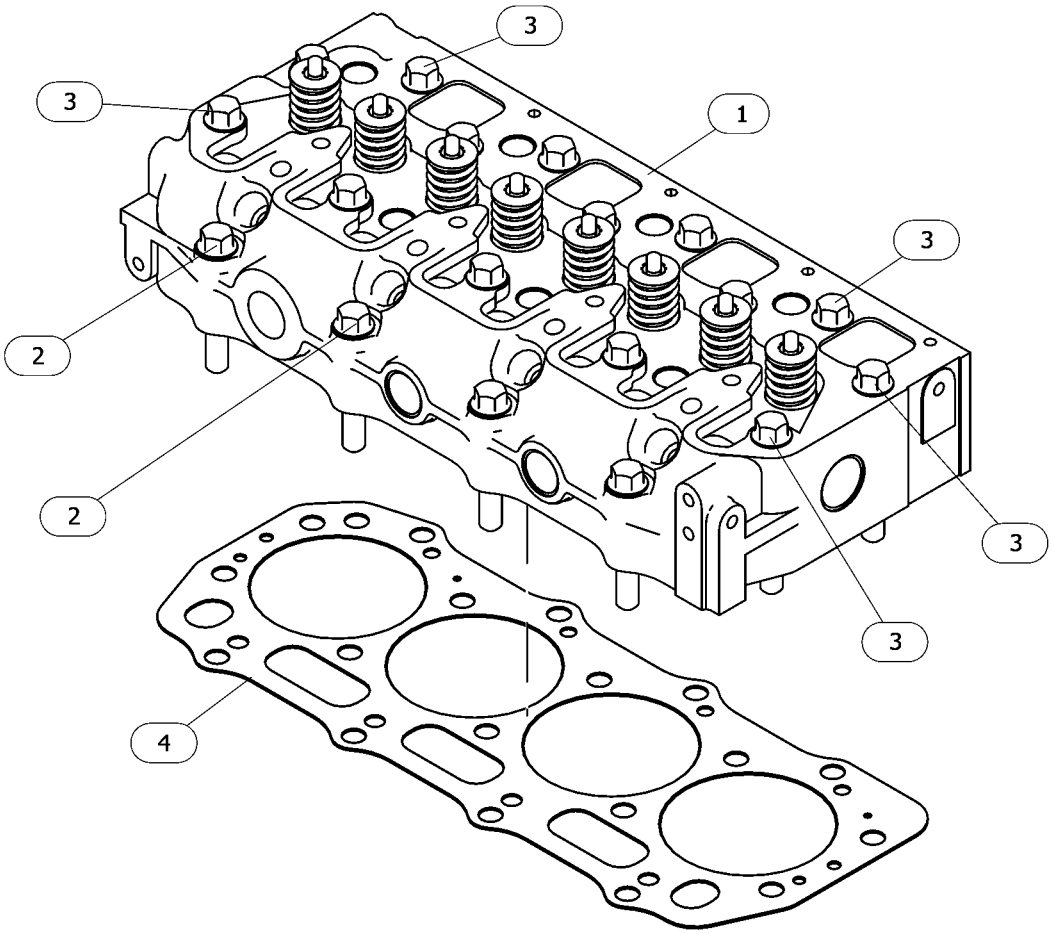

GRAPHIC #1 <END> g06769099

328-3296 DRIVE GP-AUXILIARY

FRONT

SMCS-1207 **i10693726**

NOTE	REF NO	GRAPHIC REF	PART NUMBER	QTY	PART NAME 1 2 3 4 5 6 (PRODUCT LEVEL)	SEE PAGE
M	1	1	**175-7141**	2	NUT-HEX FLANGE (M10X1.5-THD)	
M	2	1	**164-7468**	2	BOLT (M10X1.5X95-MM)	
	3	1	**592-7636**	1	ADAPTER AS	
	3A	1	**365-5317**	2	SEAL	
	4	1	**477-0679**	1	GEAR-DRIVE	
	5	1	**321-5907**	1	PLATE	
	6	1	**328-3229**	2	COVER	
	7	1	**328-3230**	2	BALL BEARING	

M - METRIC PART

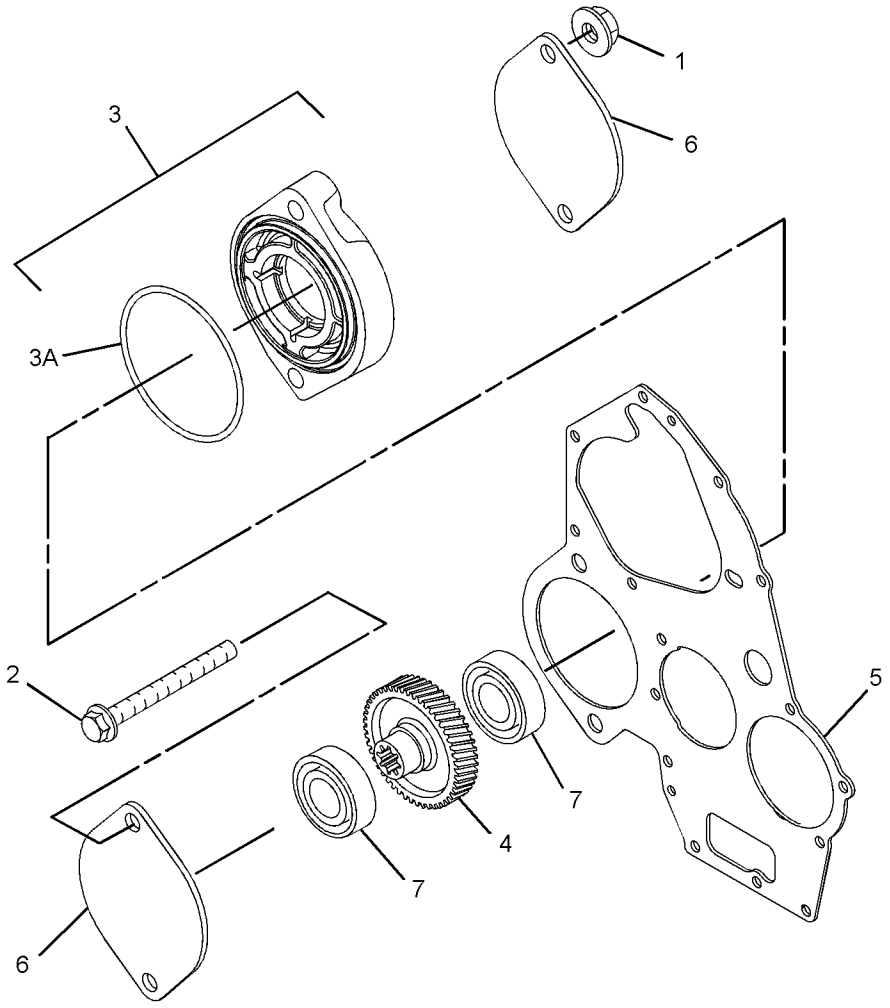

GRAPHIC #1 <END> g07937234

311-1119 DRIVE GP-FAN

SMCS-1359 **i06901680**

NOTE	REF NO	GRAPHIC REF	PART NUMBER	QTY	PART NAME 1 2 3 4 5 6 (PRODUCT LEVEL)	SEE PAGE
M	1	1	**6I-0917**	4	BOLT (M6X1X25-MM)	
	2	1	**161-8260**	1	PLATE	

M - METRIC PART

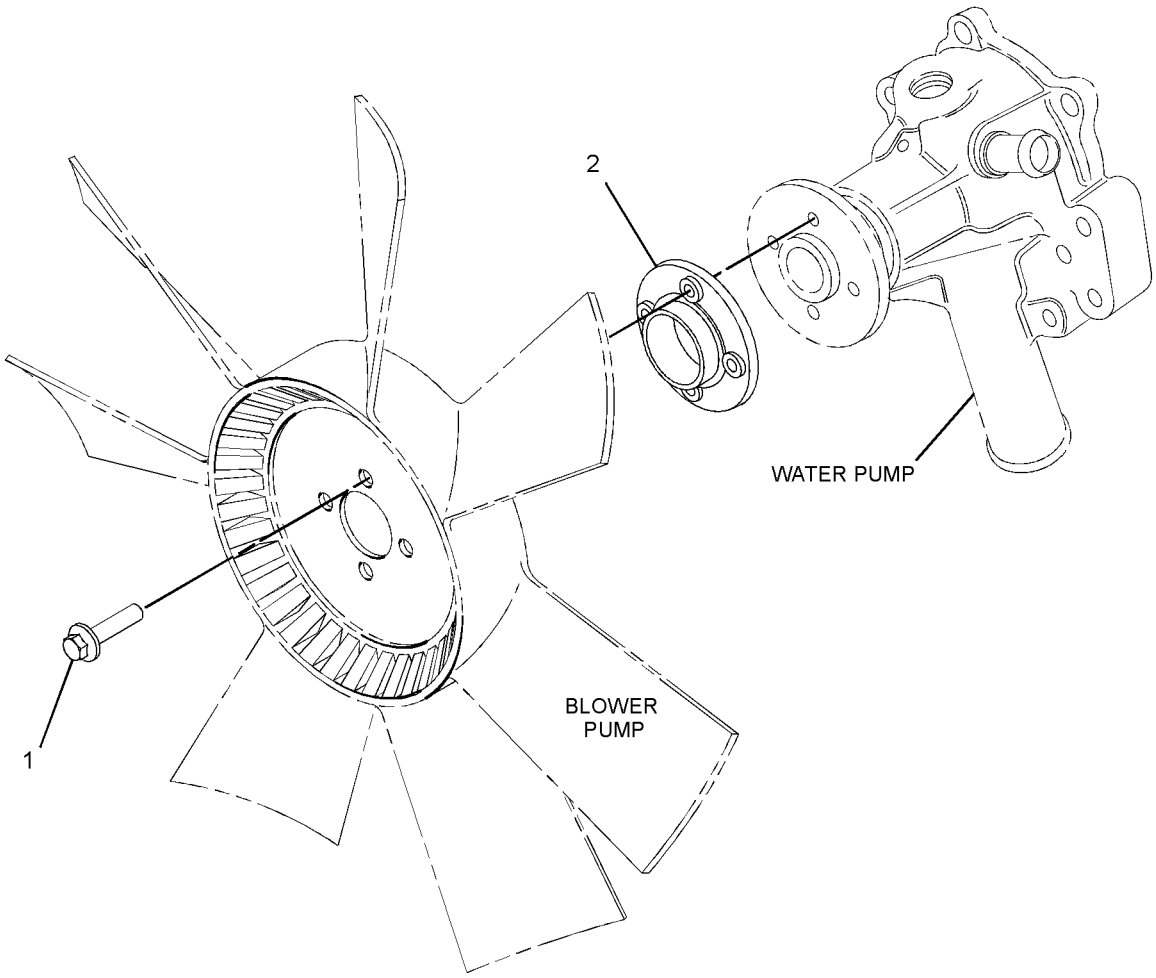

GRAPHIC #1 <END> g06200728

322-2423 DRIVE GP-FAN

PART OF 557-9727 ENGINE AR-PRIMARY

SMCS-1359 **i05416773**

NOTE	REF NO	GRAPHIC REF	PART NUMBER	QTY	PART NAME 1 2 3 4 5 6 (PRODUCT LEVEL)	SEE PAGE
	1	1	**424-9881**	1	HOLDER	
	2	1	**322-2430**	4	BOLT	

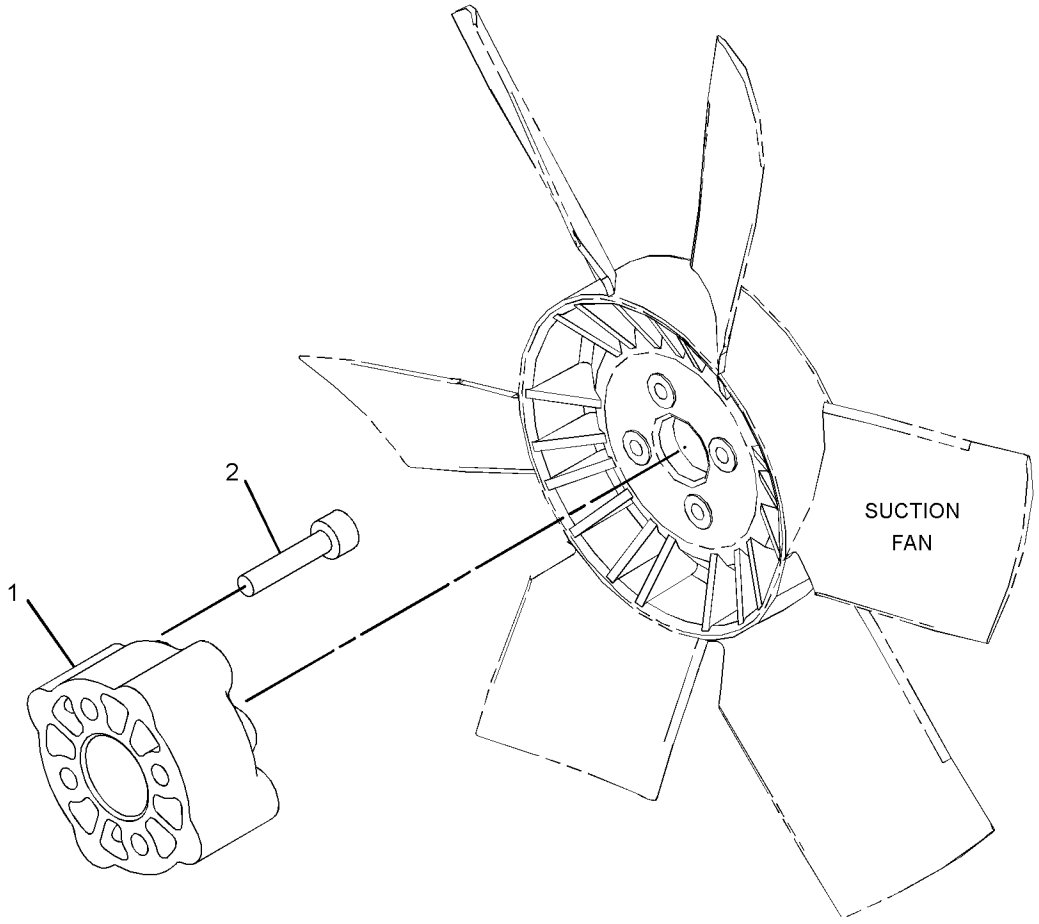

GRAPHIC #1 <END> g03429901

325-5669 DRIVE GP-FAN

SMCS-1359 **i07193058**

NOTE	REF NO	GRAPHIC REF	PART NUMBER	QTY	PART NAME 1 2 3 4 5 6 (PRODUCT LEVEL)	SEE PAGE
M	1	1	**178-2510**	4	BOLT (M6X1X45-MM)	
	2	1	**432-6548**	1	HOLDER	

M - METRIC PART

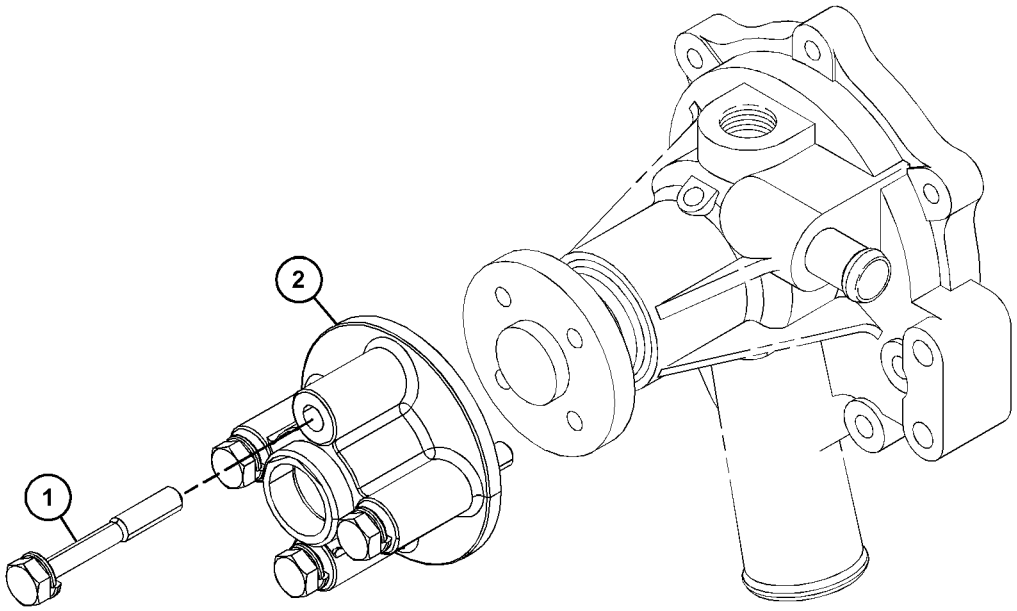

GRAPHIC #1 <END> g06202623

308-2304 EXTENSION GP-FAN

PART OF 459-2953, 492-6602, 495-6243, 549-8284, 587-9328 ENGINE AR-PRIMARY

SMCS-1359 **i06930423**

NOTE	REF NO	GRAPHIC REF	PART NUMBER	QTY	PART NAME 1 2 3 4 5 6 (PRODUCT LEVEL)	SEE PAGE
	1	1	**183-3547**	4	BOLT	
	2	1	**497-9115**	1	EXTENSION-FAN	

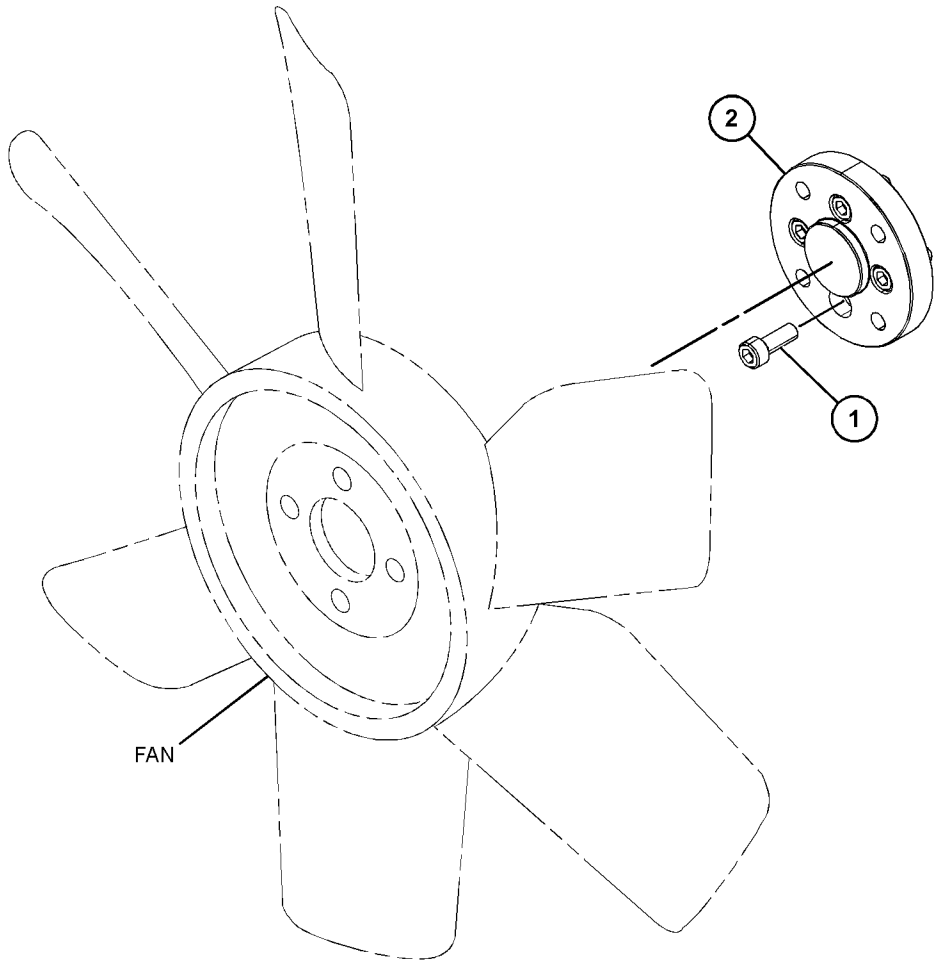

GRAPHIC #1 <END> g06205243

315-7813 EXTENSION GP-FAN

PART OF 461-7892, 461-7894, 461-7895, 465-1477, 495-3121 ENGINE AR-PRIMARY

SMCS-1359 **i10389092**

NOTE	REF NO	GRAPHIC REF	PART NUMBER	QTY	PART NAME 1 2 3 4 5 6 (PRODUCT LEVEL)	SEE PAGE
M	1	1	**106-8916**	4	BOLT (M6X1X16-MM)	
	2	1	**453-4800**	1	PLATE	

M - METRIC PART

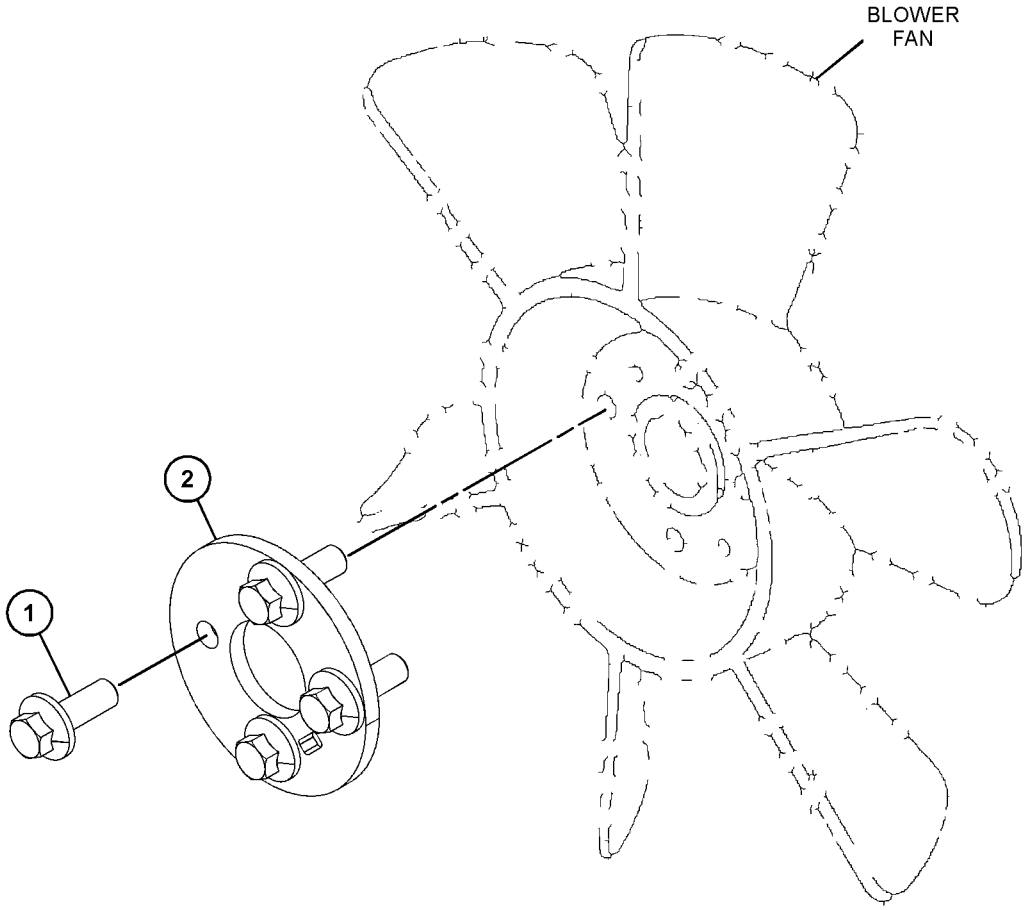

GRAPHIC #1 <END> g07892330

398-9092 EXTENSION GP-FAN

SMCS-1359 **i10453515**

NOTE	REF NO	GRAPHIC REF	PART NUMBER	QTY	PART NAME 1 2 3 4 5 6 (PRODUCT LEVEL)	SEE PAGE
M	1	1	**106-8916**	4	BOLT (M6X1X16-MM)	
	2	1	**453-4800**	1	PLATE	

M - METRIC PART

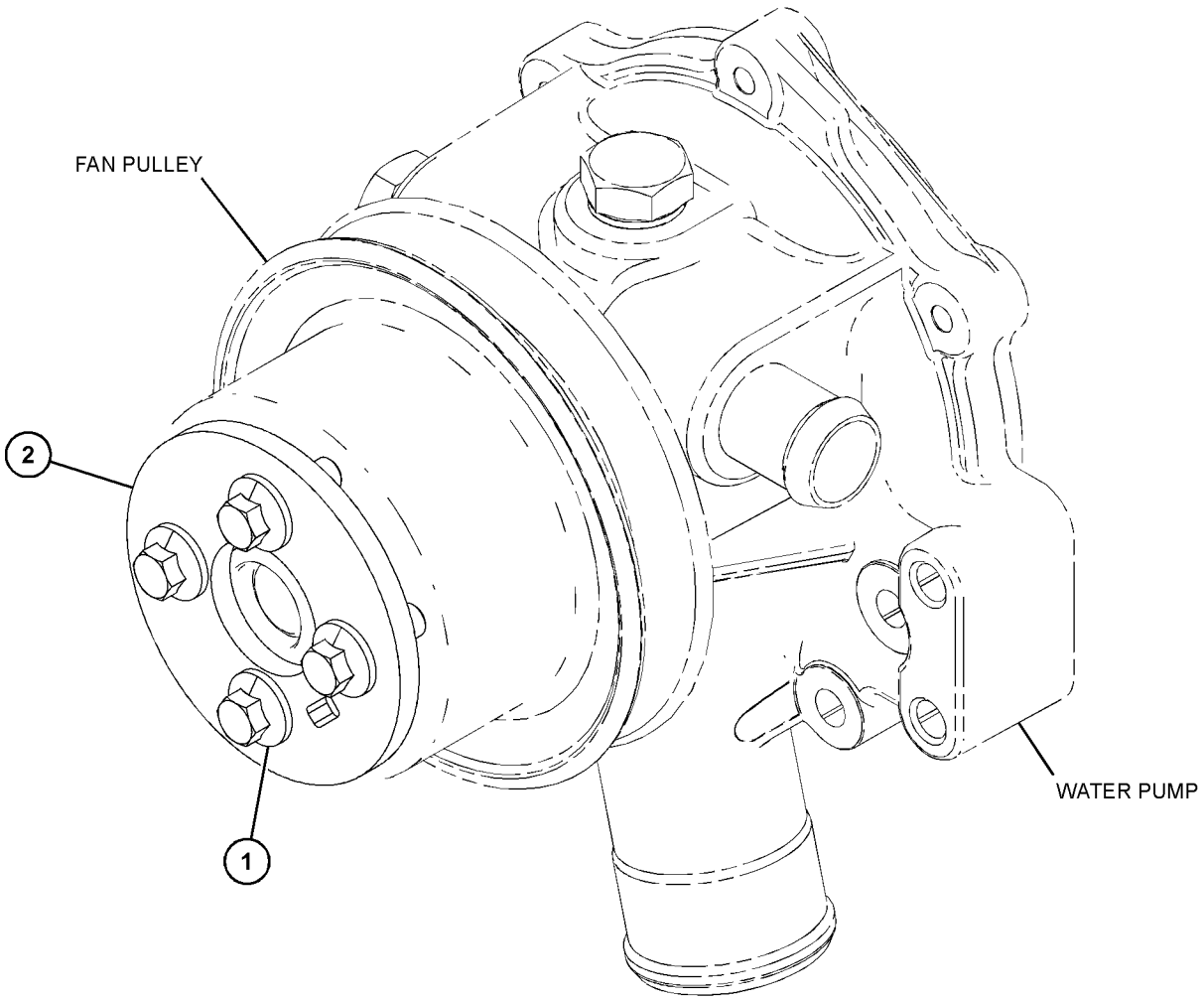

GRAPHIC #1 <END> g07891214

398-9095 EXTENSION GP-FAN

EXTENSION

PART OF 610-7720 ENGINE AR-PRIMARY

SMCS-1359 **i07409381**

NOTE	REF NO	GRAPHIC REF	PART NUMBER	QTY	PART NAME 1 2 3 4 5 6 (PRODUCT LEVEL)	SEE PAGE
M	1	1	**6I-0917**	4	BOLT (M6X1X25-MM)	
	2	1	**161-8260**	1	PLATE	

M - METRIC PART

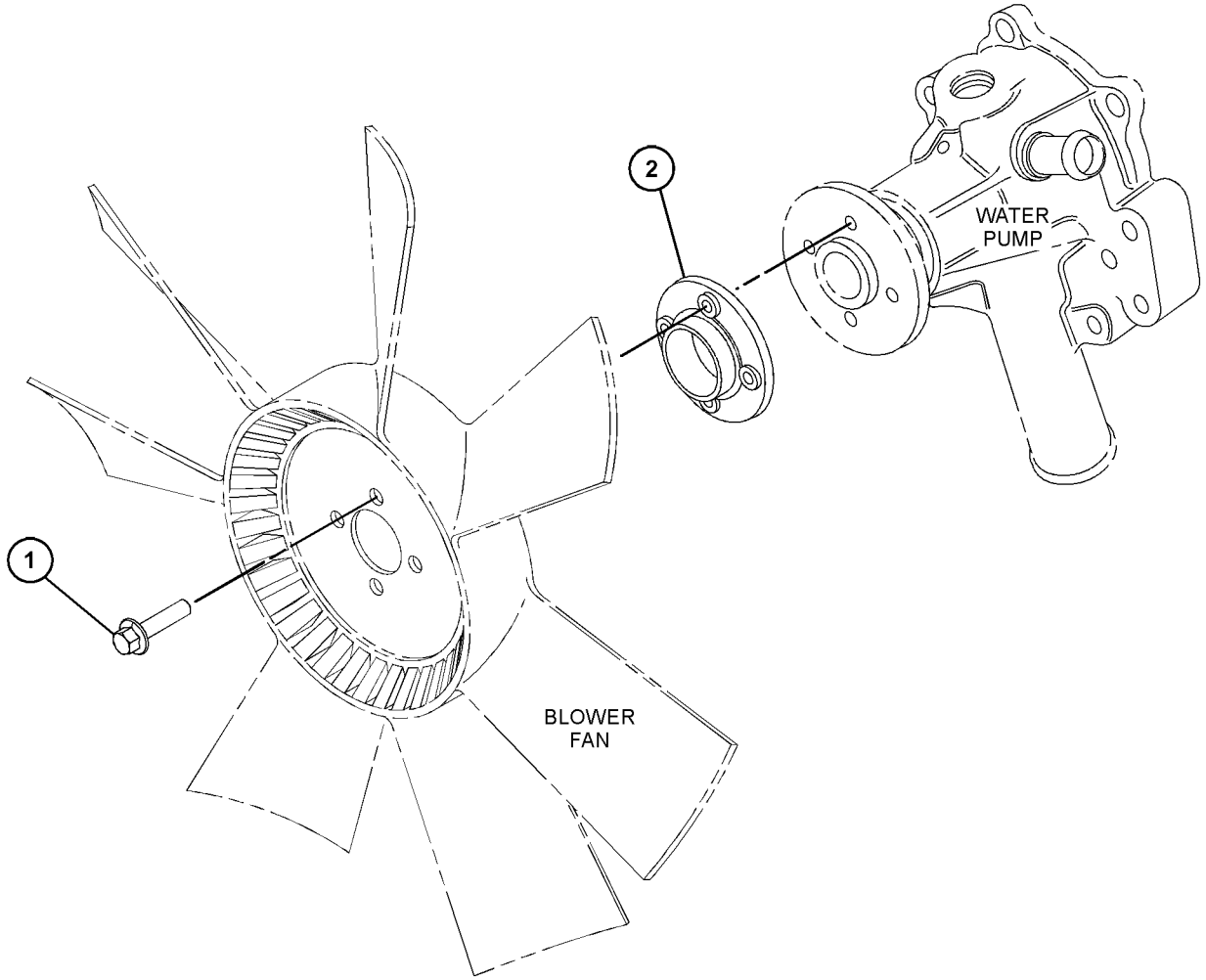

GRAPHIC #1 <END> g06115123

437-2623 EXTENSION GP-FAN

PART OF 587-9328 ENGINE AR-PRIMARY

SMCS-1359 **i06689781**

NOTE	REF NO	GRAPHIC REF	PART NUMBER	QTY	PART NAME 1 2 3 4 5 6 (PRODUCT LEVEL)	SEE PAGE
	1	1	**183-3547**	4	BOLT	
	2	1	**497-9115**	1	EXTENSION-FAN	

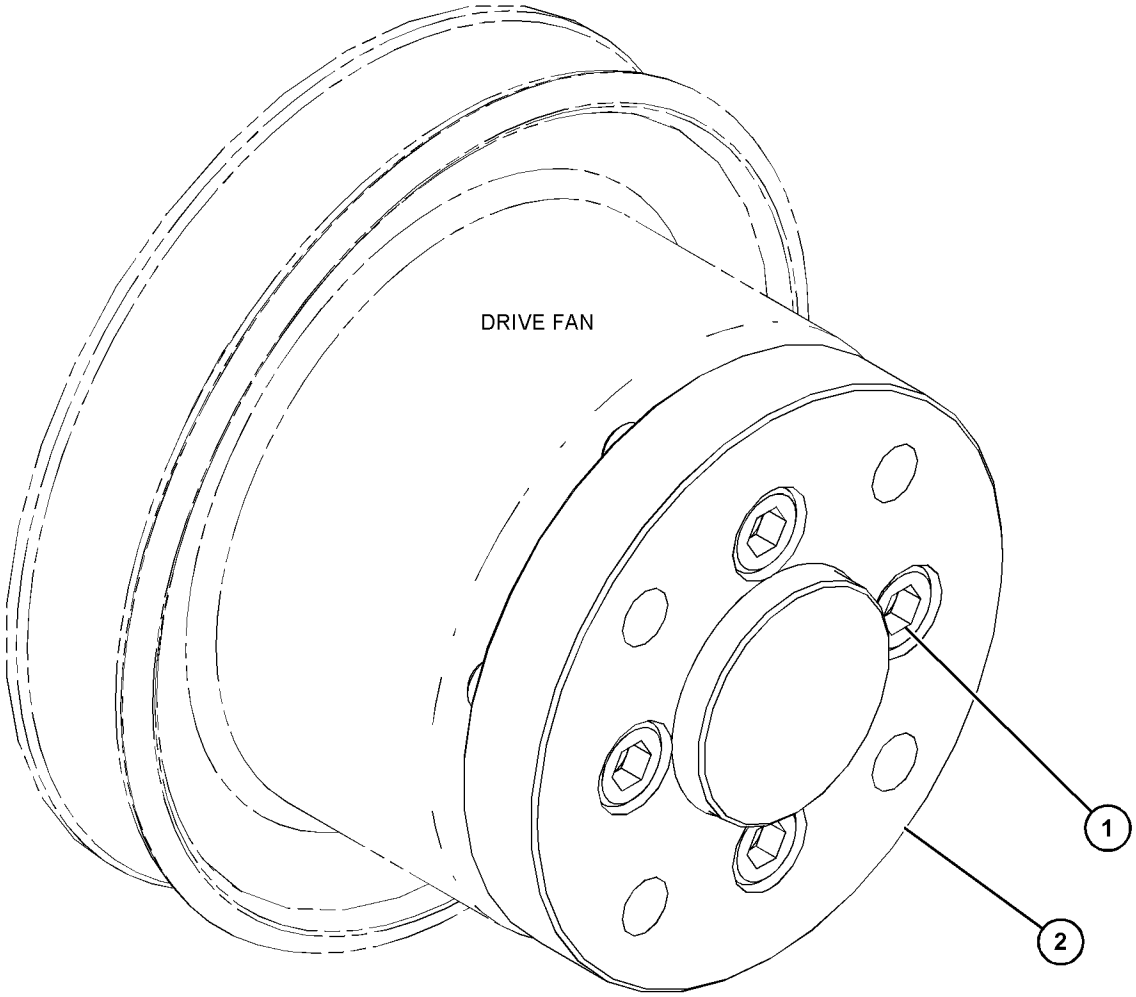

GRAPHIC #1 <END> g06081334

342-1268 FASTENER GP-COVER

PART OF 435-1645 CYLINDER BLOCK GP-LONG, 433-1379, 433-1380, 435-1637, 435-1638 ENGINE AR, 435-1636, 435-1641, 435-1642, 435-1646, 435-1647, 435-1656, 435-1658 ENGINE AR-PRIMARY

SMCS-7553 **i07591033**

NOTE	REF NO	GRAPHIC REF	PART NUMBER	QTY	PART NAME 1 2 3 4 5 6 (PRODUCT LEVEL)	SEE PAGE
M	1	1	**124-3815**	1	BOLT (M8X1.25X16-MM)	

M - METRIC PART

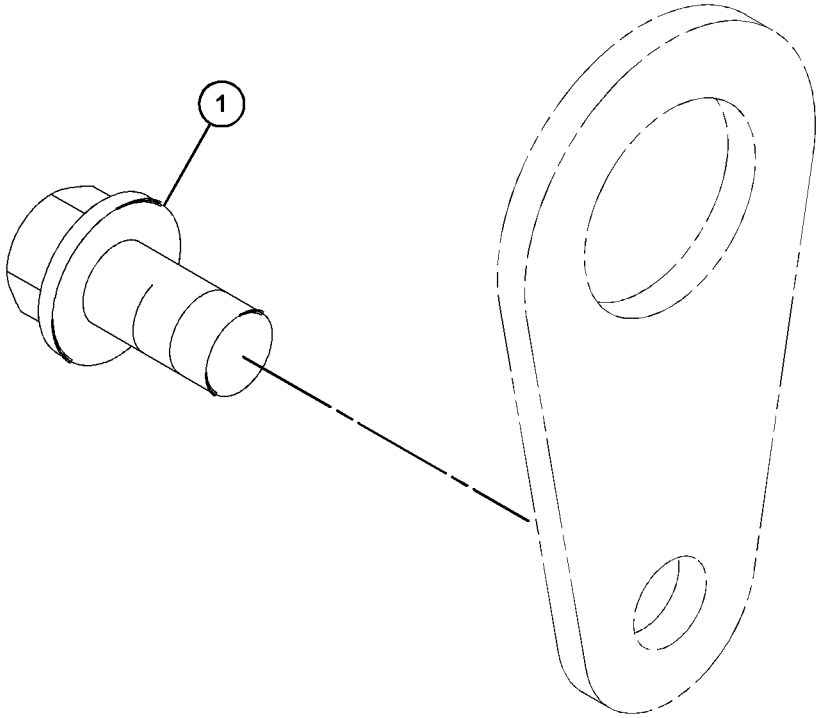

GRAPHIC #1 <END> g06393400

308-2288 FASTENER GP-FRONT HOUSING

PART OF 435-1636, 459-2953, 491-3396, 495-6243, 541-9277, 587-9328 ENGINE AR-PRIMARY

SMCS-1151, 1162 **i09569911**

NOTE	REF NO	GRAPHIC REF	PART NUMBER	QTY	PART NAME 1 2 3 4 5 6 (PRODUCT LEVEL)	SEE PAGE
M	1	1	**153-5960**	2	NUT (M6X1-THD)	
	2	1	**153-5962**	4	BOLT AS	
	3	1	**165-2140**	7	BOLT AS	
	4	1	**592-3241**	1	GASKET-GEAR CASE	

M - METRIC PART

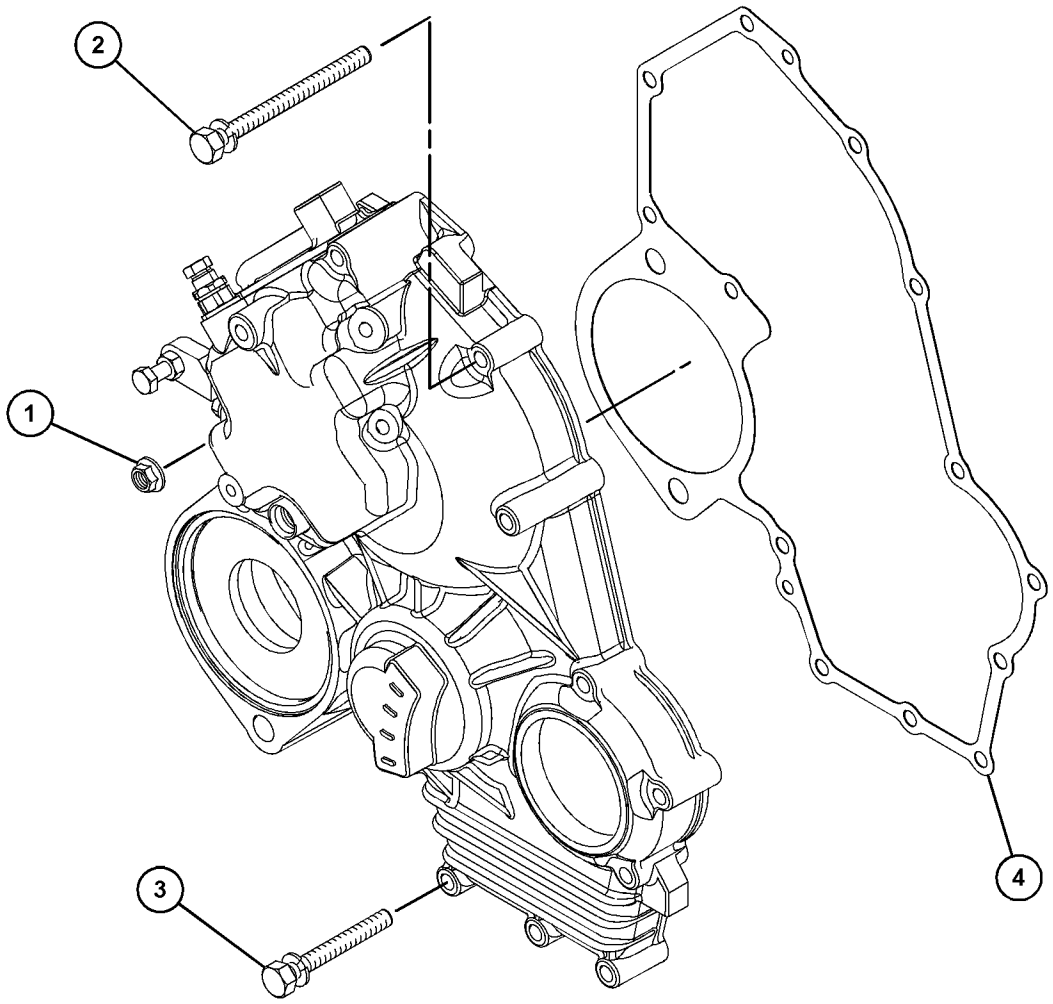

GRAPHIC #1 <END> g06009671

508-9041 FASTENER GP-FRONT HOUSING

S/N: G7L10581-UP

SMCS-1151, 1162 **i09548139**

NOTE	REF NO	GRAPHIC REF	PART NUMBER	QTY	PART NAME 1 2 3 4 5 6 (PRODUCT LEVEL)	SEE PAGE
M	1	1	**153-5960**	2	NUT (M6X1-THD)	
	2	1	**153-5962**	4	BOLT AS	
	3	1	**165-2140**	7	BOLT AS	
	4	1	**592-3239**	1	GASKET-GEAR CASE	

M - METRIC PART

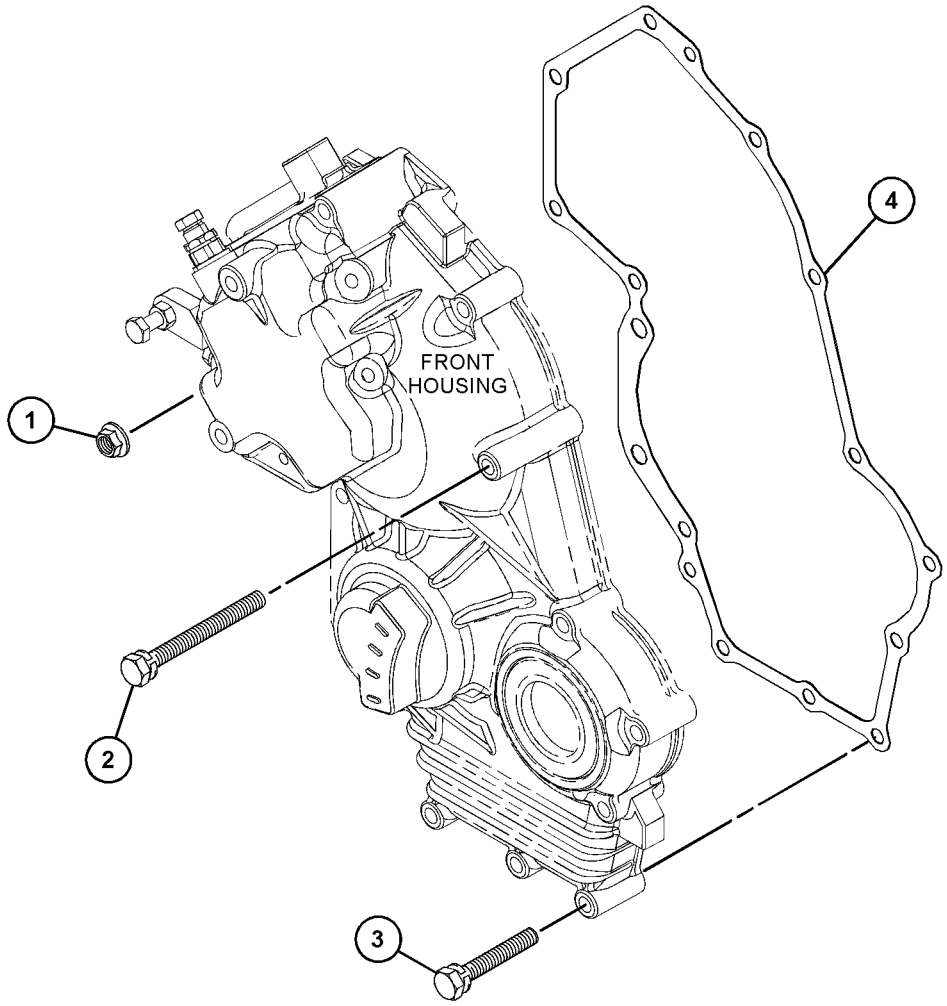

GRAPHIC #1 <END> g07621375

509-0007 FASTENER GP-FRONT HOUSING

SMCS-1151, 1162 **i09548460**

NOTE	REF NO	GRAPHIC REF	PART NUMBER	QTY	PART NAME 1 2 3 4 5 6 (PRODUCT LEVEL)	SEE PAGE
M	1	1	**153-5960**	2	NUT (M6X1-THD)	
	2	1	**153-5962**	4	BOLT AS	
	3	1	**165-2140**	7	BOLT AS	
	4	1	**592-3239**	1	GASKET-GEAR CASE	

M - METRIC PART

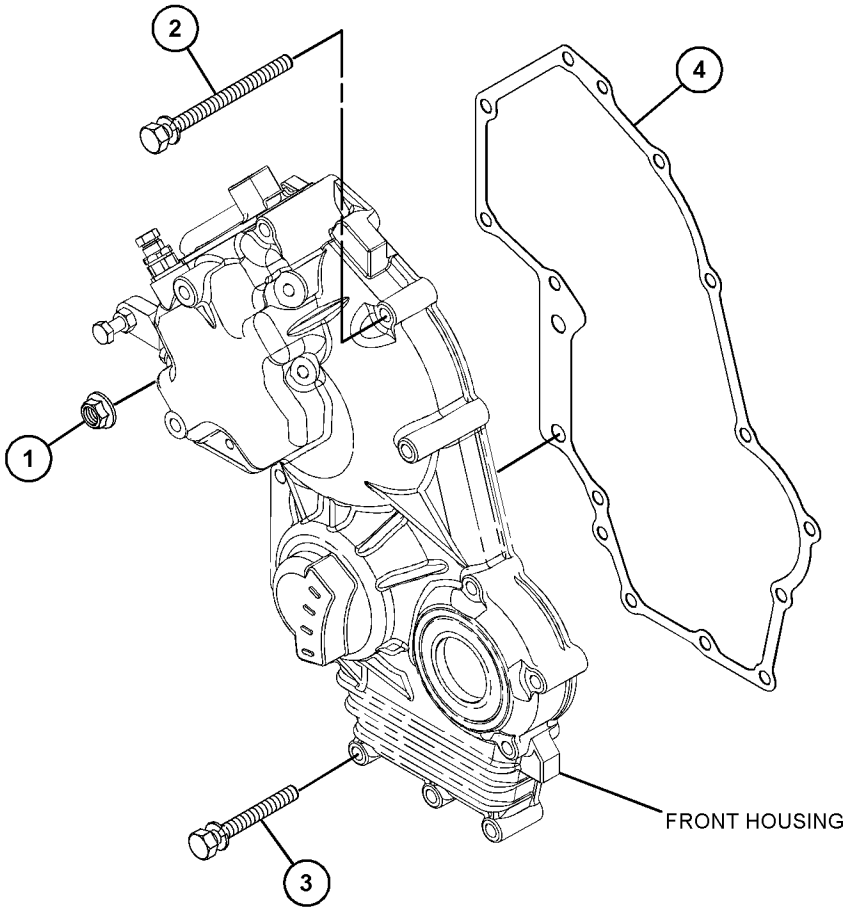

GRAPHIC #1 <END> g06142357

308-2291 FLYWHEEL GP

PART OF 461-7895, 491-3396, 492-6602, 516-9335, 541-9277, 549-8284 ENGINE AR-PRIMARY

SMCS-1156 **i05815110**

NOTE	REF NO	GRAPHIC REF	PART NUMBER	QTY	PART NAME 1 2 3 4 5 6 (PRODUCT LEVEL)	SEE PAGE
	1	1	**327-5154**	1	FLYWHEEL GP	
	1A	1	**154-2405**	1	GEAR-STARTER (126-TEETH)	
M	2	1	**154-2406**	6	BOLT (M10X1.25X34-MM)	

M - METRIC PART

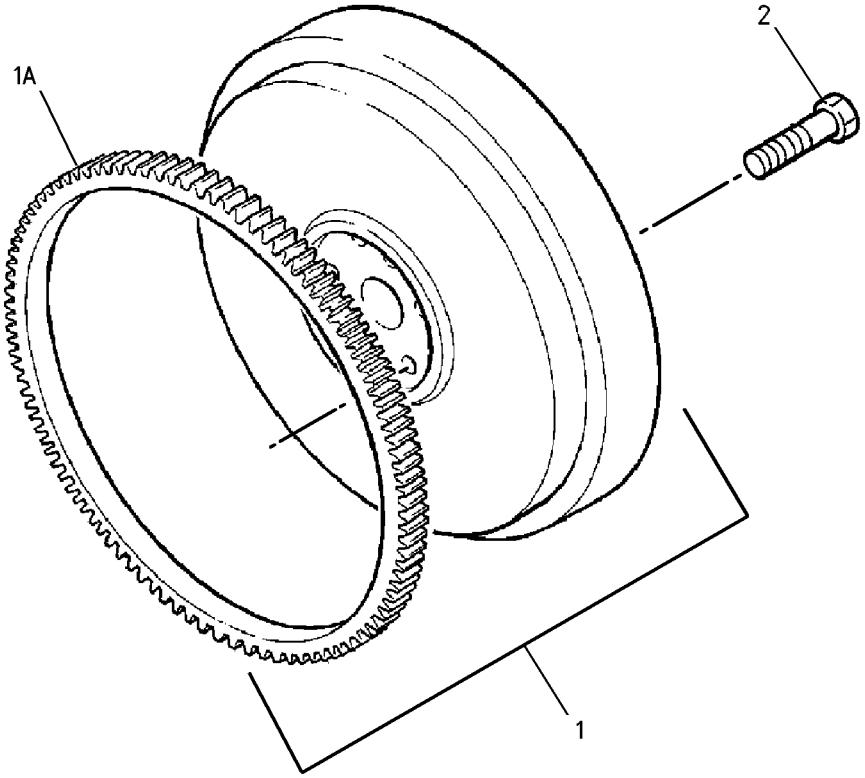

GRAPHIC #1 <END> g00640776

311-1884 FLYWHEEL GP

PART OF 495-6243 ENGINE AR-PRIMARY

SMCS-1156 **i02990545**

NOTE	REF NO	GRAPHIC REF	PART NUMBER	QTY	PART NAME 1 2 3 4 5 6 (PRODUCT LEVEL)	SEE PAGE
	1	1	**326-5052**	1	FLYWHEEL GP	
	1A	1	**154-2405**	1	GEAR-STARTER (126-TEETH)	
M	2	1	**154-2406**	6	BOLT (M10X1.25X34-MM)	

M - METRIC PART

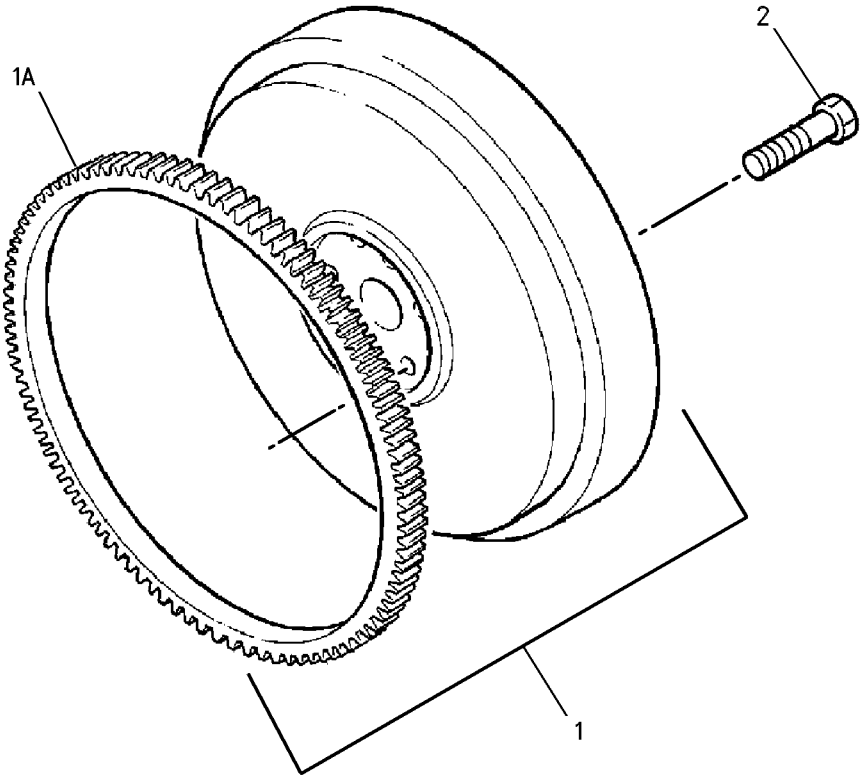

GRAPHIC #1 <END> g00640766

317-0586 FLYWHEEL GP

PART OF 587-9328 ENGINE AR-PRIMARY

SMCS-1156 **i02996902**

NOTE	REF NO	GRAPHIC REF	PART NUMBER	QTY	PART NAME 1 2 3 4 5 6 (PRODUCT LEVEL)	SEE PAGE
	1	1	**327-5241**	1	FLYWHEEL GP	
	1A	1	**154-2405**	1	GEAR-STARTER (126-TEETH)	
M	2	1	**154-2406**	6	BOLT (M10X1.25X34-MM)	

M - METRIC PART

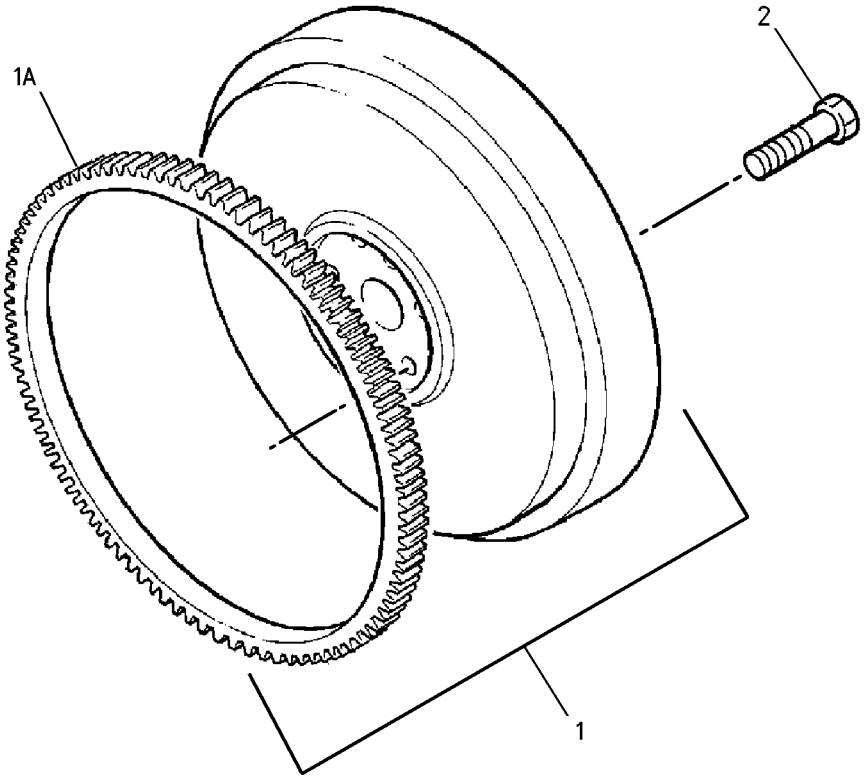

GRAPHIC #1 <END> g00640766

322-2412 FLYWHEEL GP

PART OF 435-1645 CYLINDER BLOCK GP-LONG, 433-1379, 433-1380, 435-1637, 435-1638 ENGINE AR, 435-1636, 435-1641, 435-1642, 435-1646, 435-1647, 435-1656, 435-1658 ENGINE AR-PRIMARY

SMCS-1156 **i07377998**

NOTE	REF NO	GRAPHIC REF	PART NUMBER	QTY	PART NAME 1 2 3 4 5 6 (PRODUCT LEVEL)	SEE PAGE
M	1	1	**154-2406**	6	BOLT (M10X1.25X34-MM)	

M - METRIC PART

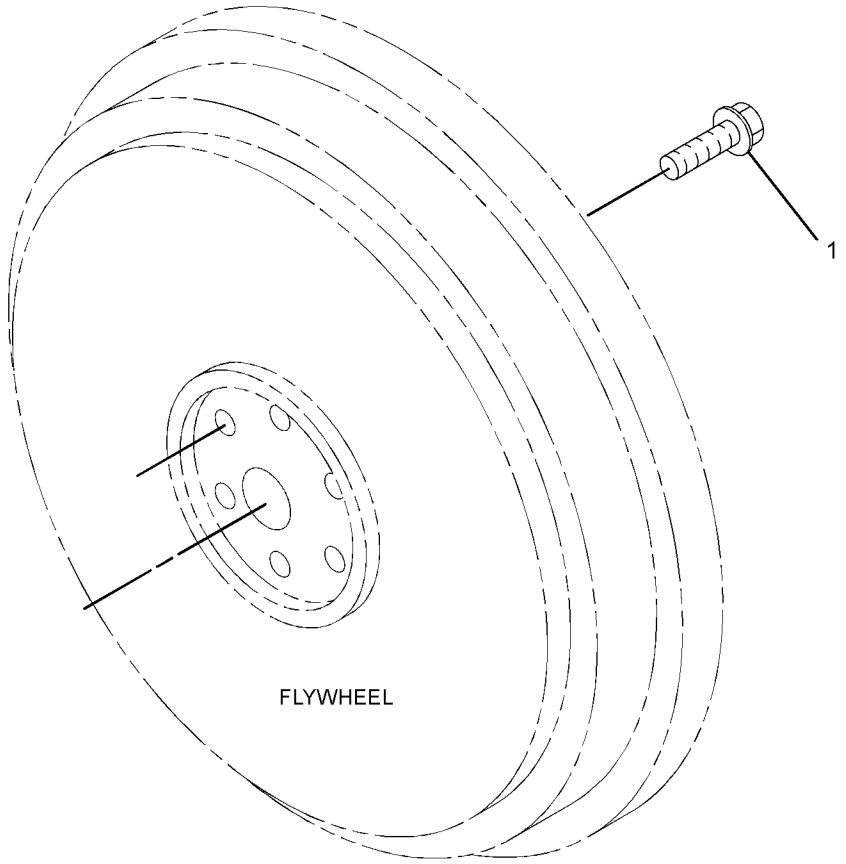

GRAPHIC #1 <END> g01640274

325-5668 FLYWHEEL GP

SMCS-1156 **i02962244**

NOTE	REF NO	GRAPHIC REF	PART NUMBER	QTY	PART NAME 1 2 3 4 5 6 (PRODUCT LEVEL)	SEE PAGE
M	1	1	**154-2406**	6	BOLT (M10X1.25X34-MM)	
	2	1	**325-5672**	1	FLYWHEEL GP	
	2A	1	**154-2405**	1	GEAR-STARTER (126-TEETH)	

M - METRIC PART

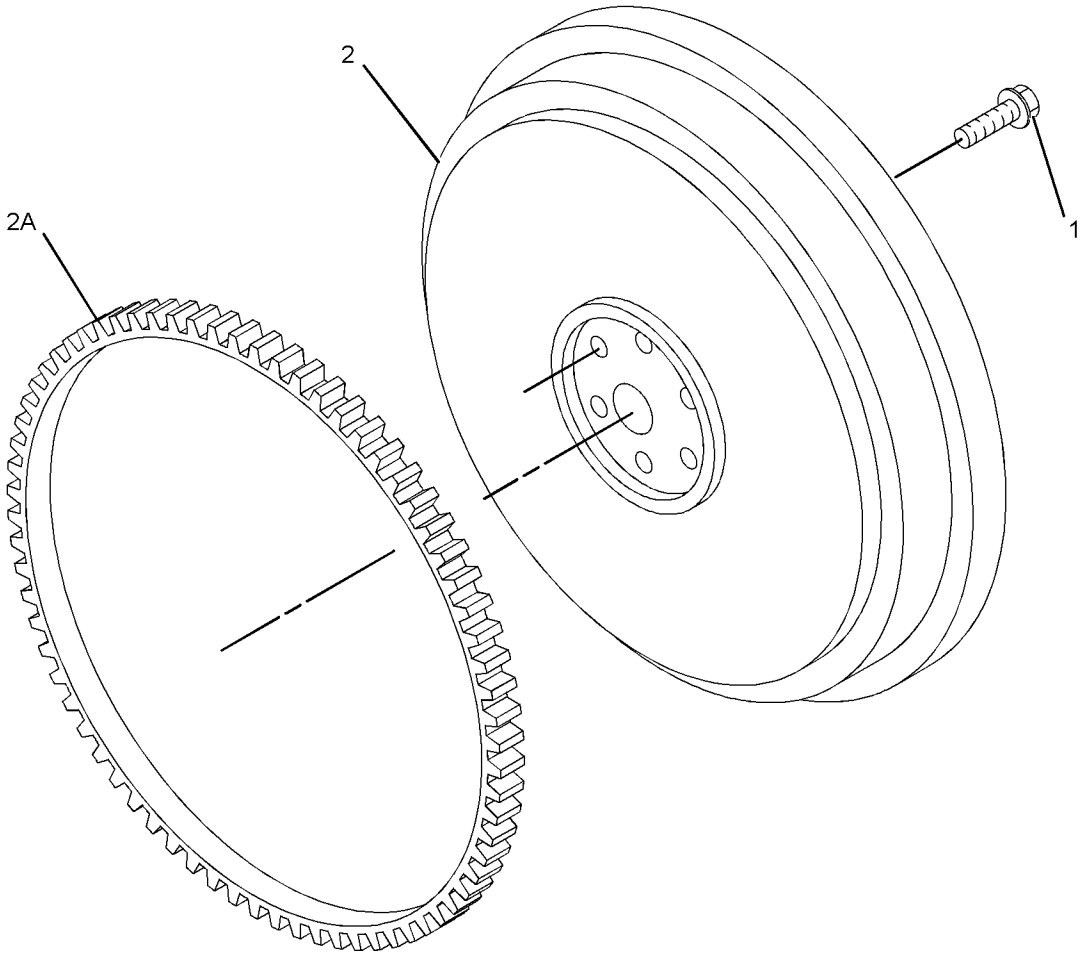

GRAPHIC #1 <END> g01538394

327-7632 FLYWHEEL GP

PART OF 459-2953, 461-7892, 461-7894, 465-1477, 495-3121, 557-9727 ENGINE AR-PRIMARY

SMCS-1156 **i03085937**

NOTE	REF NO	GRAPHIC REF	PART NUMBER	QTY	PART NAME 1 2 3 4 5 6 (PRODUCT LEVEL)	SEE PAGE
	1	1	**327-5608**	1	FLYWHEEL GP	
	1A	1	**154-2405**	1	GEAR-STARTER (126-TEETH)	
M	2	1	**154-2406**	6	BOLT (M10X1.25X34-MM)	

M - METRIC PART

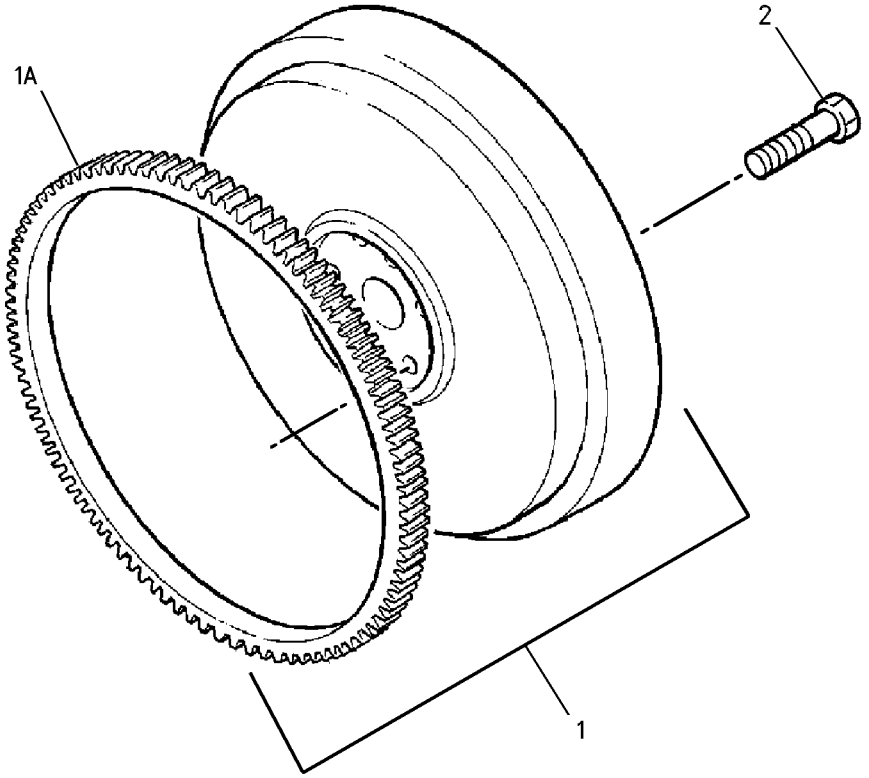

GRAPHIC #1 <END> g00640766

398-4803 FLYWHEEL GP

PART OF 610-7720 ENGINE AR-PRIMARY

SMCS-1156 **i05663527**

NOTE	REF NO	GRAPHIC REF	PART NUMBER	QTY	PART NAME 1 2 3 4 5 6 (PRODUCT LEVEL)	SEE PAGE
M	1	1	**154-2406**	6	BOLT (M10X1.25X34-MM)	
	2	1	**327-5154**	1	FLYWHEEL GP	
	2A	1	**154-2405**	1	GEAR-STARTER (126-TEETH)	

M - METRIC PART

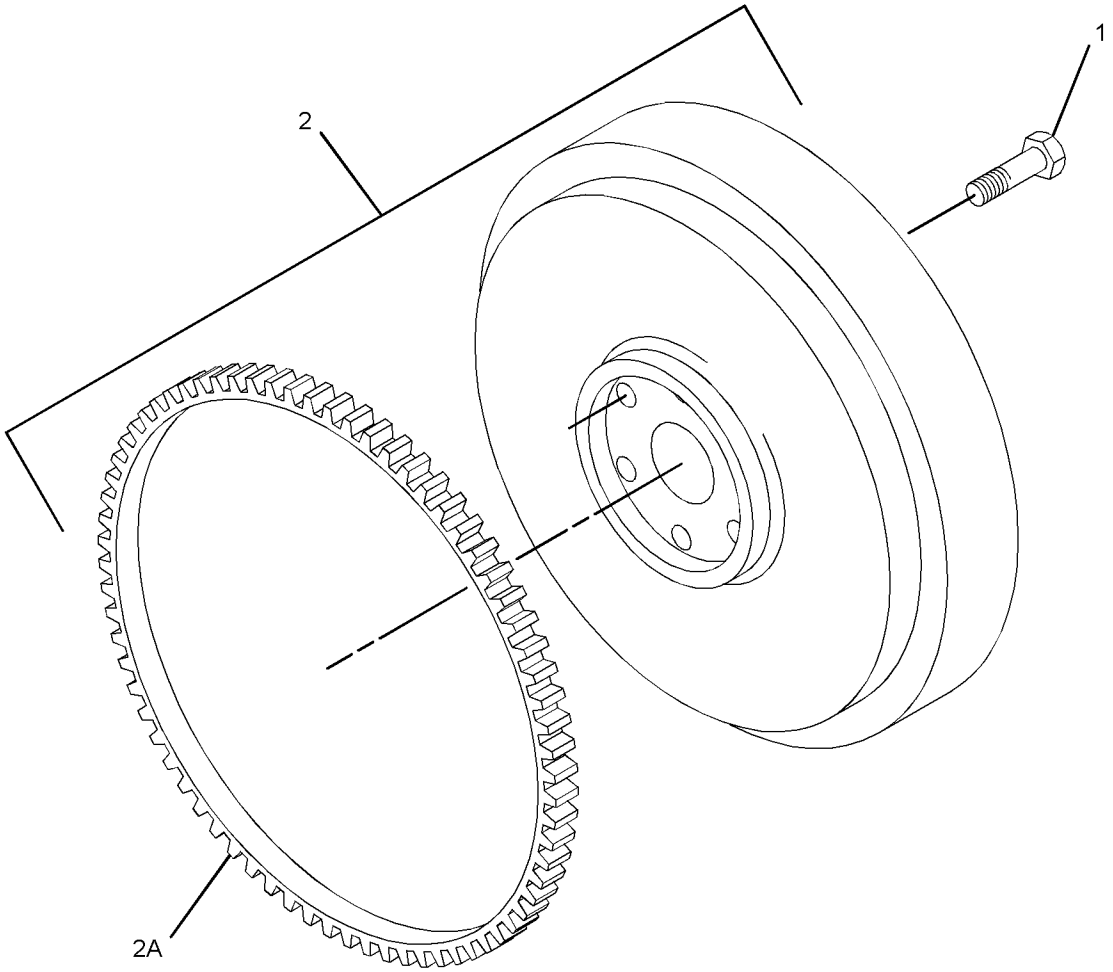

GRAPHIC #1 <END> g03397866

398-4807 FLYWHEEL GP

PART OF 587-9328, 610-7721 ENGINE AR-PRIMARY

SMCS-1156 **i08829424**

NOTE	REF NO	GRAPHIC REF	PART NUMBER	QTY	PART NAME 1 2 3 4 5 6 (PRODUCT LEVEL)	SEE PAGE
M	1	1	**154-2406**	6	BOLT (M10X1.25X34-MM)	
	2	1	**327-5241**	1	FLYWHEEL GP	
		1	**154-2405**	1	GEAR-STARTER (126-TEETH)	

M - METRIC PART

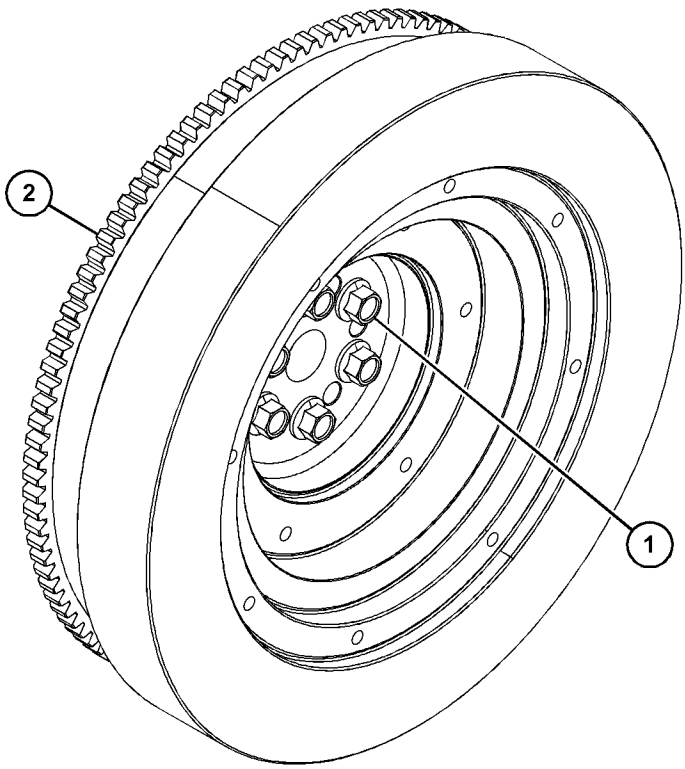

GRAPHIC #1 <END> g06770019

398-4810 FLYWHEEL GP

S/N: G7L27560-UP

SMCS-1156 **i05329681**

NOTE	REF NO	GRAPHIC REF	PART NUMBER	QTY	PART NAME 1 2 3 4 5 6 (PRODUCT LEVEL)	SEE PAGE
M	1	1	**154-2406**	6	BOLT (M10X1.25X34-MM)	
	2	1	**327-5608**	1	FLYWHEEL GP	
	2A	1	**154-2405**	1	GEAR-STARTER (126-TEETH)	

M - METRIC PART

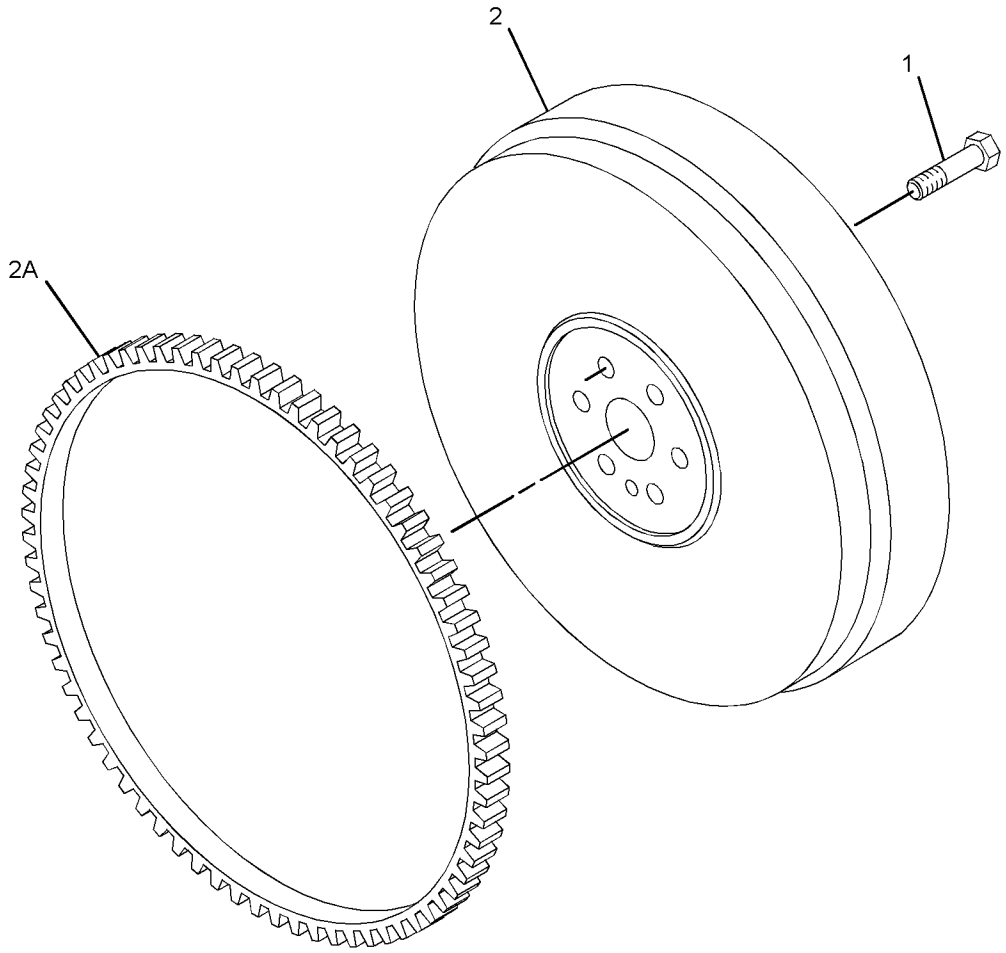

GRAPHIC #1 <END> g03395919

566-9450 FLYWHEEL GP

PART OF 433-1379, 433-1380 ENGINE AR, 435-1636, 435-1641, 435-1646, 435-1647 ENGINE AR-PRIMARY

SMCS-1156 **i08587291**

NOTE	REF NO	GRAPHIC REF	PART NUMBER	QTY	PART NAME 1 2 3 4 5 6 (PRODUCT LEVEL)	SEE PAGE
M	1	1	**154-2406**	6	BOLT (M10X1.25X34-MM)	

M - METRIC PART

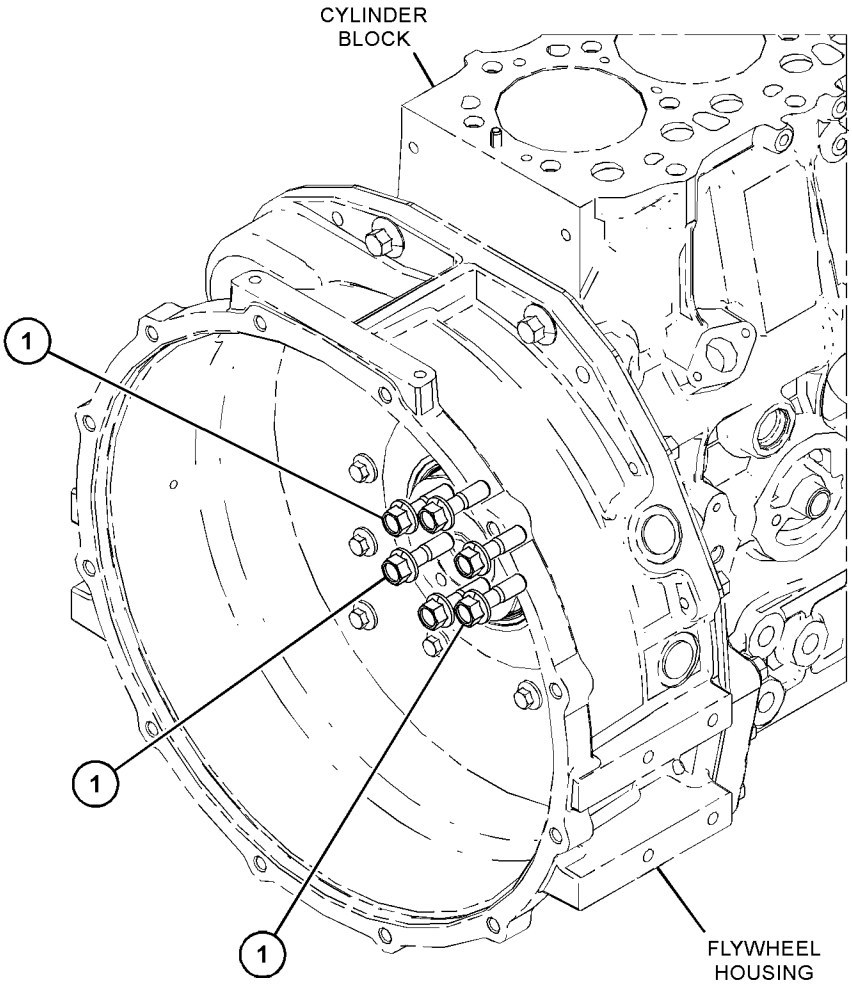

GRAPHIC #1 <END> g06708120

308-2290 HOUSING GP-FLYWHEEL

TYPE 1

SMCS-1157 **i04547787**

NOTE	REF NO	GRAPHIC REF	PART NUMBER	QTY	PART NAME 1 2 3 4 5 6 (PRODUCT LEVEL)	SEE PAGE
M	1	1	**138-7162**	6	BOLT (M10X1.5X30-MM)	
	2	1	**138-7401**	1	HOUSING-FLYWHEEL	
	3	1	**252-1802**	6	BOLT	
	4	1	**153-6375**	10	BOLT AS	
	5	1	**153-6868**	2	BOLT	
	6	1	**154-1399**	2	WASHER (10.5X18X1.6-MM THK)	
	7	1	**154-2394**	1	PLATE	
	8	1	**154-2395**	2	PLUG	
	9	1	**154-2403**	6	WASHER	
	10	1	**165-2142**	2	BOLT	
	11	1	**166-2338**	4	NUT	

M - METRIC PART

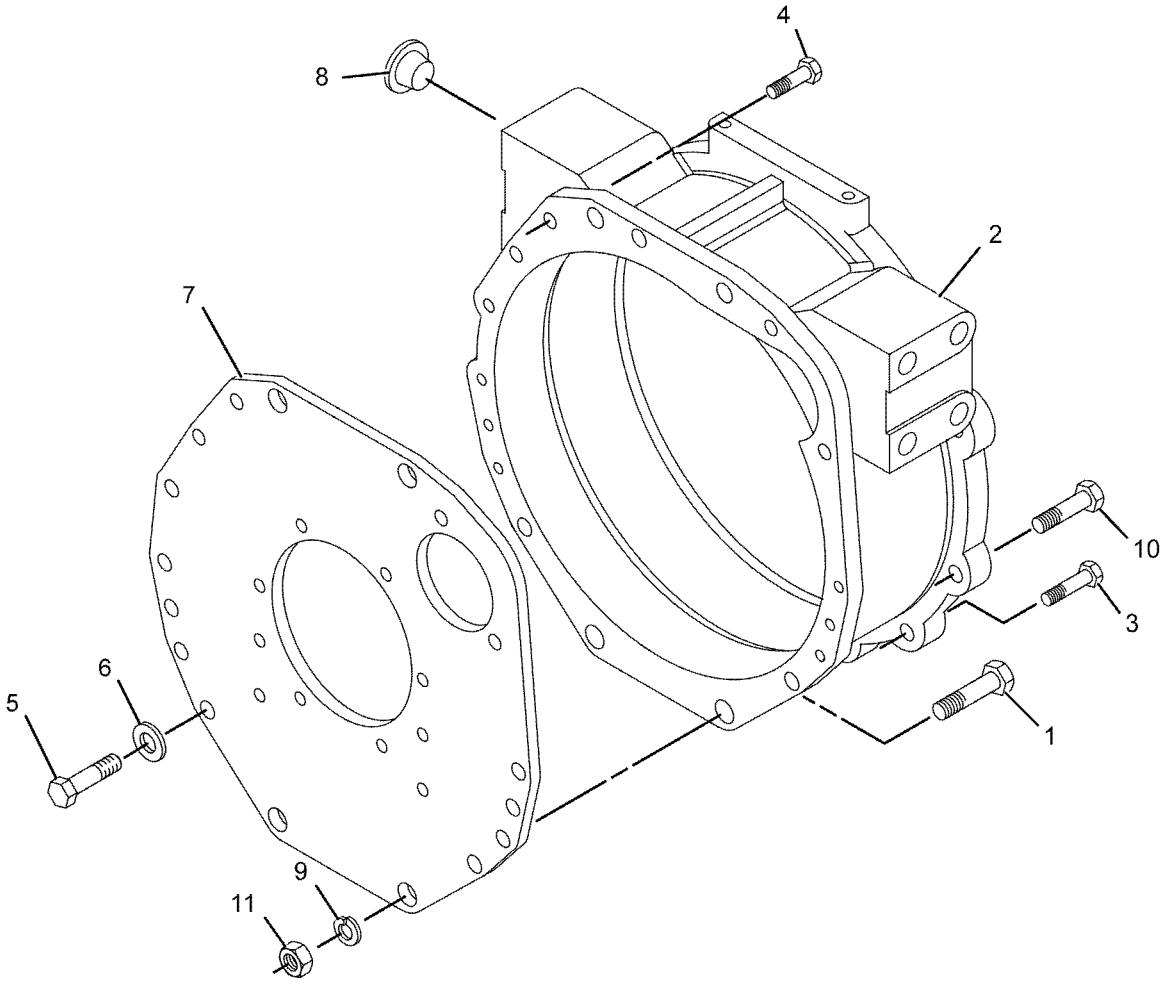

GRAPHIC #1 <END> g01140728

308-2290 HOUSING GP-FLYWHEEL

PART OF 491-3396, 516-9335, 541-9277 ENGINE AR-PRIMARY

TYPE 2

SMCS-1157 **i06853189**

NOTE	REF NO	GRAPHIC REF	PART NUMBER	QTY	PART NAME 1 2 3 4 5 6 (PRODUCT LEVEL)	SEE PAGE
CM	1	1	**6I-0593**	6	BOLT (M10X1.5X30-MM)	
M	2	1	**106-8954**	2	BOLT (M12X1.75X35-MM)	
M	3	1	**123-2899**	6	BOLT (M10X1.5X40-MM)	
M	4	1	**114-4363**	10	BOLT (M8X1.25X12-MM)	
M	5	1	**6I-4200**	2	BOLT-FLANGE HEAD (M10X1.5X16-MM)	
M	6	1	**175-7141**	4	NUT-HEX FLANGE (M10X1.5-THD)	
	7	1	**154-2394**	1	PLATE	
	8	1	**364-8947**	1	PLUG	
	9	1	**448-8575**	1	HOUSING-FLYWHEEL	

C - CHANGE FROM PREVIOUS TYPE
M - METRIC PART

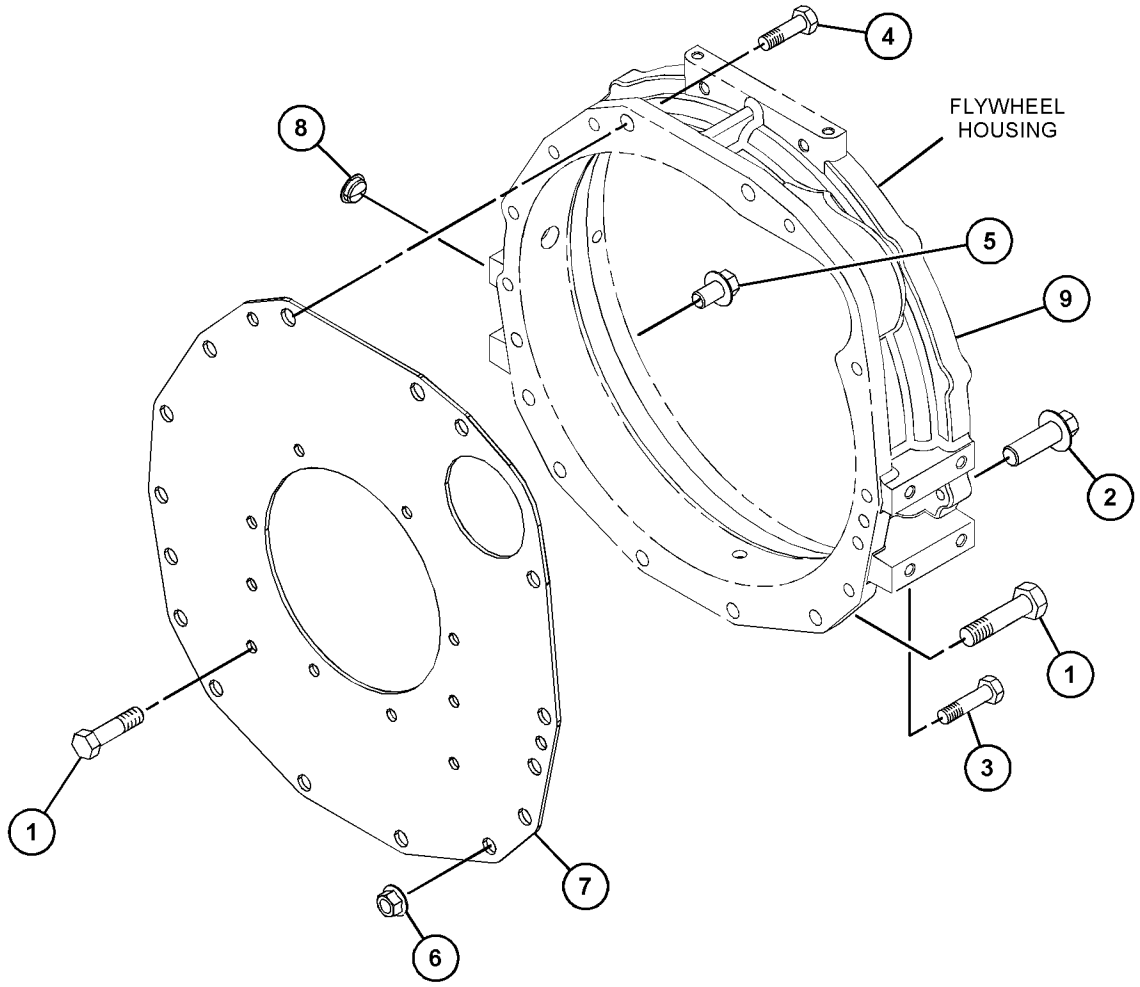

GRAPHIC #1 <END> g06178789

311-1883 HOUSING GP-FLYWHEEL

TYPE 1

SMCS-1157 **i02812238**

NOTE	REF NO	GRAPHIC REF	PART NUMBER	QTY	PART NAME 1 2 3 4 5 6 (PRODUCT LEVEL)	SEE PAGE
M	1	1	**138-7162**	2	BOLT (M10X1.5X30-MM)	
	2	1	**138-7171**	2	BOLT	
	3	1	**153-6375**	10	BOLT AS	
	4	1	**154-1399**	2	WASHER (10.5X18X1.6-MM THK)	
	5	1	**154-2394**	1	PLATE	
	6	1	**154-2403**	2	WASHER	
M	7	1	**155-8085**	2	NUT (M10X1.5-THD)	

M - METRIC PART

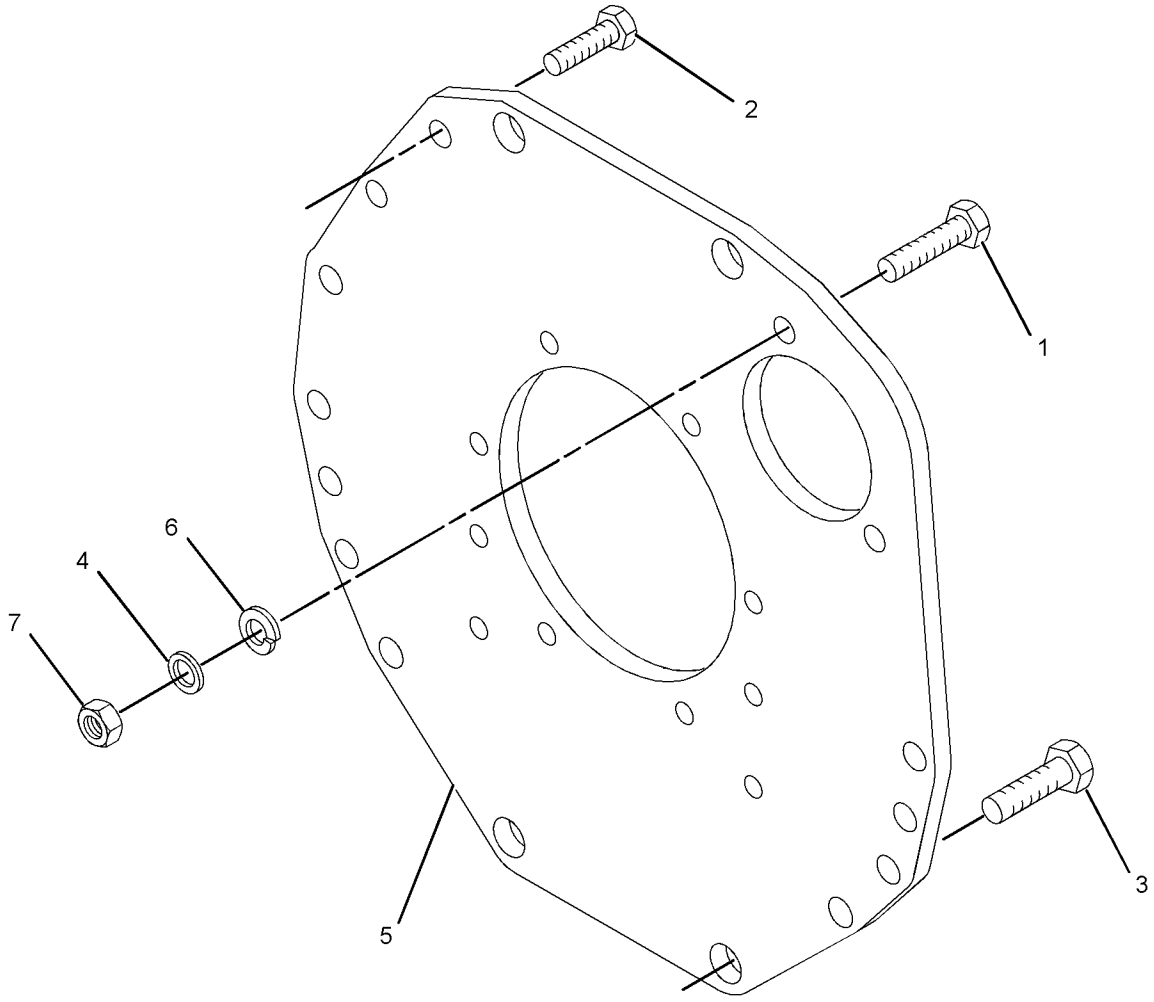

GRAPHIC #1 <END> g01414247

311-1883 HOUSING GP-FLYWHEEL

TYPE 2

SMCS-1157 **i07104578**

NOTE	REF NO	GRAPHIC REF	PART NUMBER	QTY	PART NAME 1 2 3 4 5 6 (PRODUCT LEVEL)	SEE PAGE
CM	1	1	**6I-0593**	2	BOLT (M10X1.5X30-MM)	
M	2	1	**306-2347**	2	BOLT (M12X1.75X14-MM)	
M	3	1	**114-4363**	10	BOLT (M8X1.25X12-MM)	
	5	1	**154-2394**	1	PLATE	
CM	7	1	**6I-0594**	2	NUT (M10X1.5-THD)	

C - CHANGE FROM PREVIOUS TYPE
M - METRIC PART

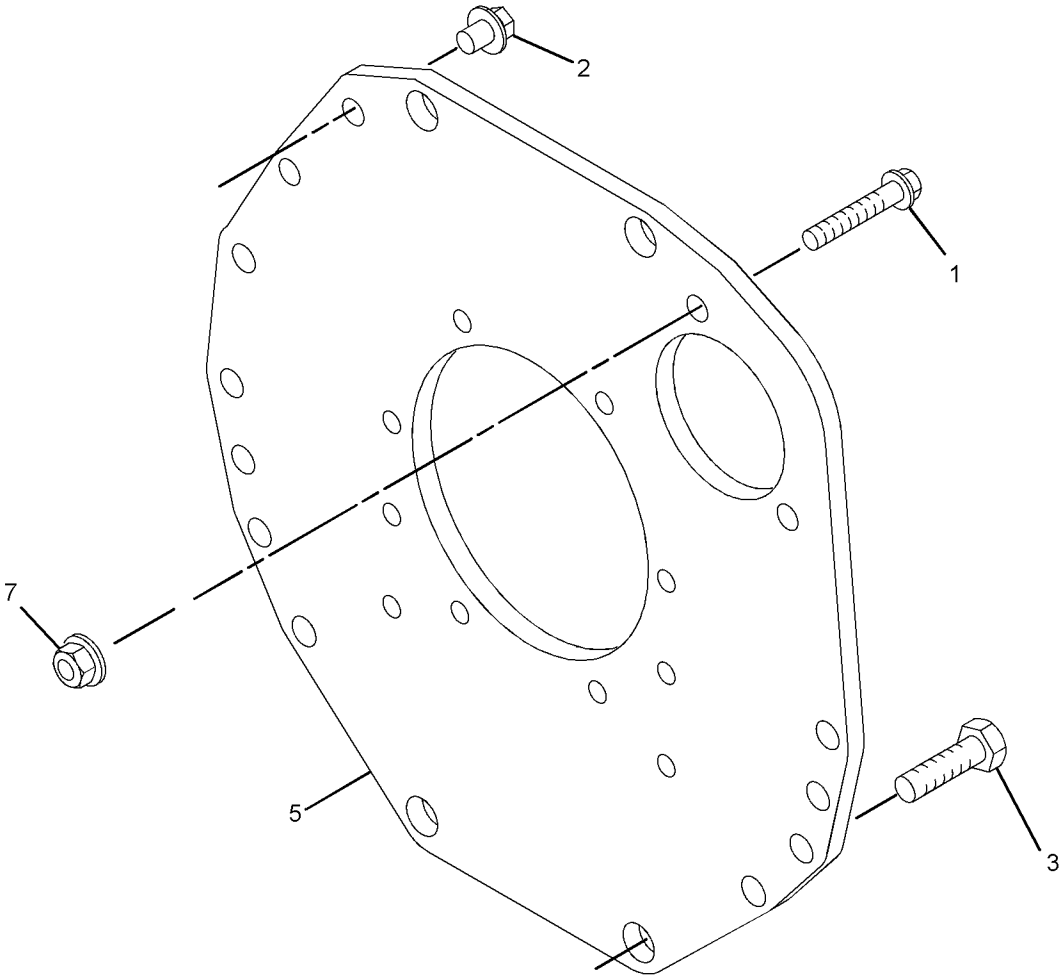

GRAPHIC #1 <END> g06224730

317-0588 HOUSING GP-FLYWHEEL

PART OF 459-2953, 461-7892, 461-7894, 465-1477, 495-3121, 495-6243, 557-9727, 587-9328 ENGINE AR-PRIMARY

SMCS-1157 **i06853207**

NOTE	REF NO	GRAPHIC REF	PART NUMBER	QTY	PART NAME 1 2 3 4 5 6 (PRODUCT LEVEL)	SEE PAGE
M	1	1	**6I-0593**	6	BOLT (M10X1.5X30-MM)	
M	2	1	**123-2899**	6	BOLT (M10X1.5X40-MM)	
M	3	1	**114-4363**	10	BOLT (M8X1.25X12-MM)	
M	4	1	**6I-4200**	2	BOLT-FLANGE HEAD (M10X1.5X16-MM)	
	6	1	**154-2394**	1	PLATE	
	7	1	**358-4256**	2	PLUG	
	8	1	**423-7697**	1	COVER-FLYWHEEL	
M	9	1	**106-8954**	2	BOLT (M12X1.75X35-MM)	
M	10	1	**175-7141**	4	NUT-HEX FLANGE (M10X1.5-THD)	

M - METRIC PART

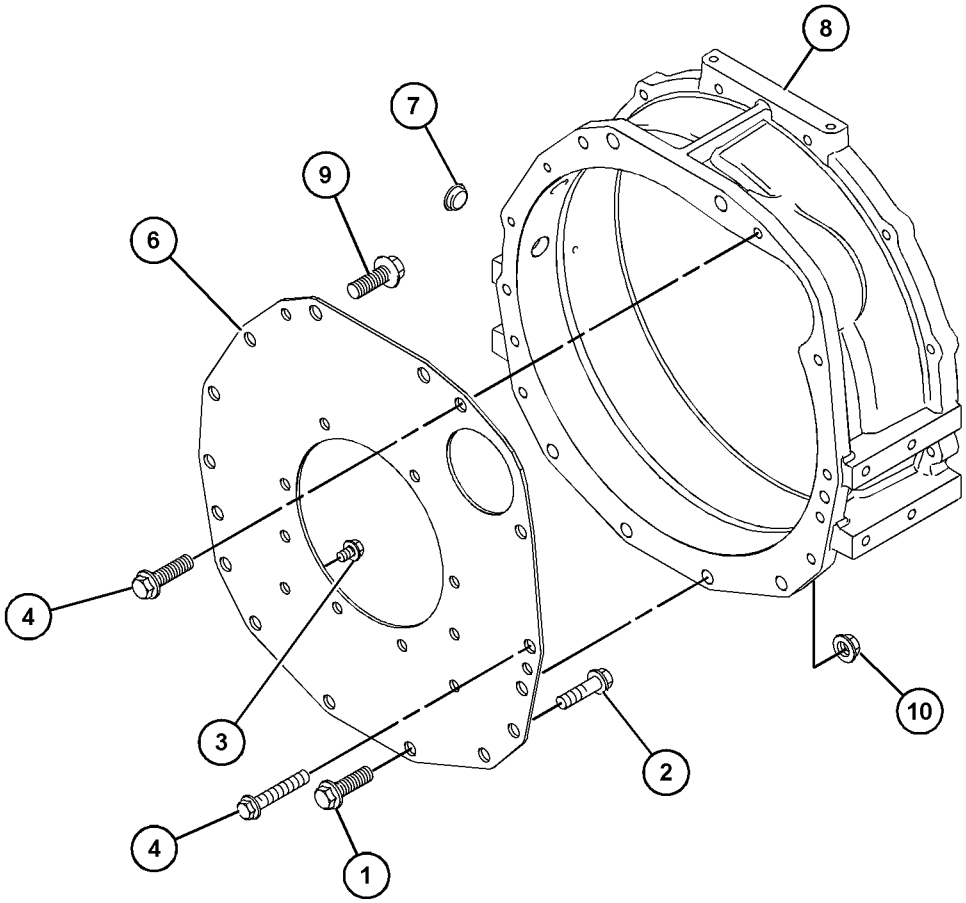

GRAPHIC #1 <END> g06150742

342-9604 HOUSING GP-FLYWHEEL

PART OF 435-1645 CYLINDER BLOCK GP-LONG, 433-1379, 433-1380, 435-1637, 435-1638 ENGINE AR, 435-1636, 435-1641, 435-1642, 435-1646, 435-1647, 435-1656 ENGINE AR-PRIMARY
TYPE 1

SMCS-1157 **i06227720**

NOTE	REF NO	GRAPHIC REF	PART NUMBER	QTY	PART NAME 1 2 3 4 5 6 (PRODUCT LEVEL)	SEE PAGE
	1	1	**138-7171**	2	BOLT	
M	2	1	**114-4363**	10	BOLT (M8X1.25X12-MM)	
	3	1	**154-2394**	1	PLATE	

M - METRIC PART

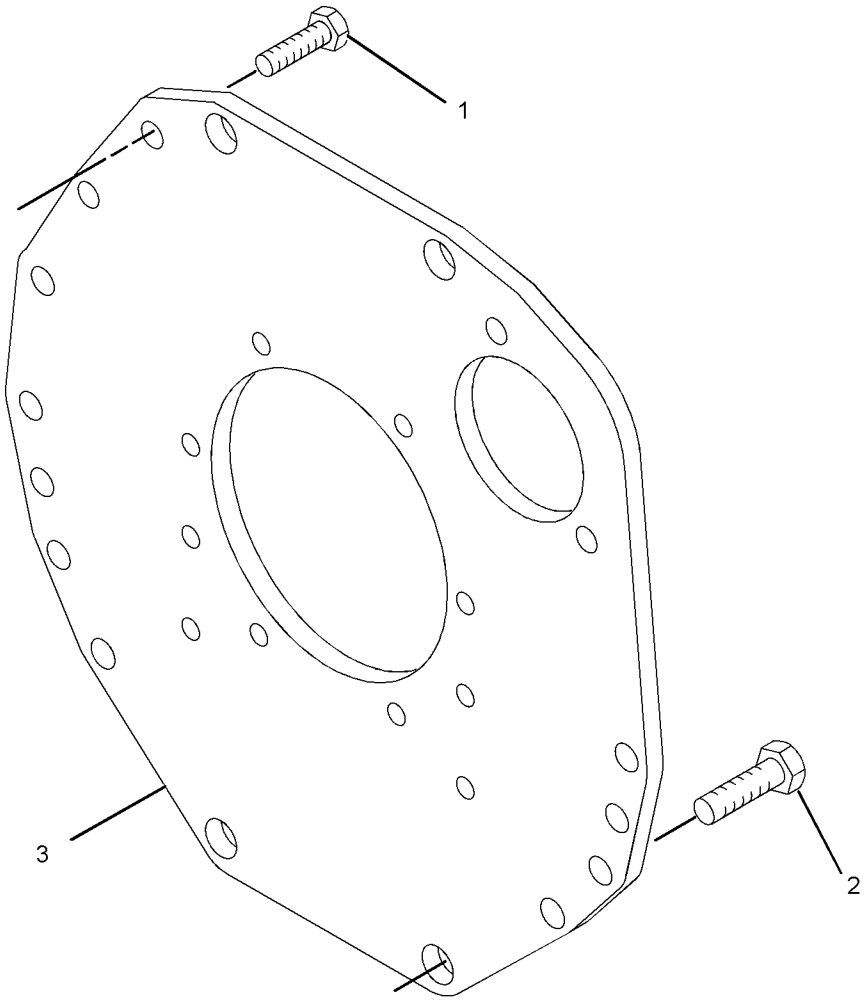

GRAPHIC #1 <END> g01969958

342-9604 HOUSING GP-FLYWHEEL

PART OF 435-1645 CYLINDER BLOCK GP-LONG, 433-1379, 433-1380, 435-1637, 435-1638 ENGINE AR, 435-1636, 435-1641, 435-1642, 435-1646, 435-1647, 435-1656, 435-1658 ENGINE AR-PRIMARY
TYPE 2

SMCS-1157 **i07174080**

NOTE	REF NO	GRAPHIC REF	PART NUMBER	QTY	PART NAME 1 2 3 4 5 6 (PRODUCT LEVEL)	SEE PAGE
CM	1	1	**306-2347**	2	BOLT (M12X1.75X14-MM)	
M	2	1	**114-4363**	10	BOLT (M8X1.25X12-MM)	
	3	1	**154-2394**	1	PLATE	

C - CHANGE FROM PREVIOUS TYPE
M - METRIC PART

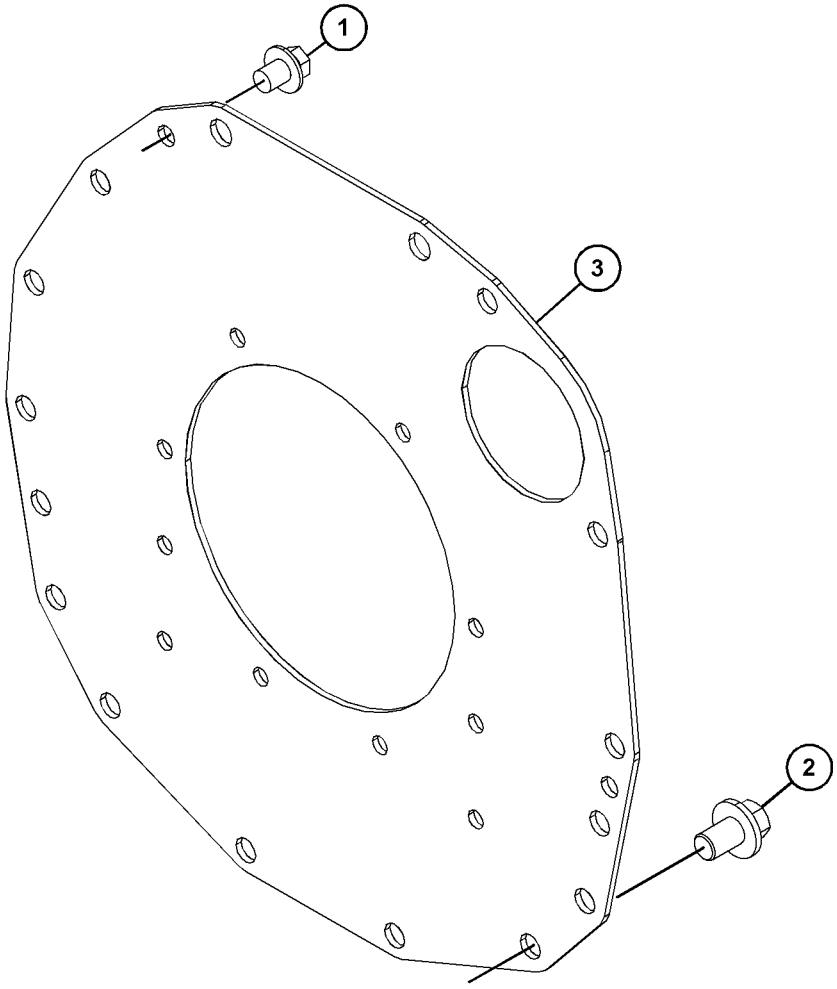

GRAPHIC #1 <END> g06243606

354-4846 HOUSING GP-FLYWHEEL

PART OF 492-6602, 549-8284 ENGINE AR-PRIMARY

SMCS-1157 **i08194330**

NOTE	REF NO	GRAPHIC REF	PART NUMBER	QTY	PART NAME 1 2 3 4 5 6 (PRODUCT LEVEL)	SEE PAGE
M	1	1	**6I-0593**	2	BOLT (M10X1.5X30-MM)	
M	2	1	**306-2347**	2	BOLT (M12X1.75X14-MM)	
M	3	1	**124-3815**	10	BOLT (M8X1.25X16-MM)	
M	4	1	**175-7141**	2	NUT-HEX FLANGE (M10X1.5-THD)	
	5	1	**154-2394**	1	PLATE	

M - METRIC PART

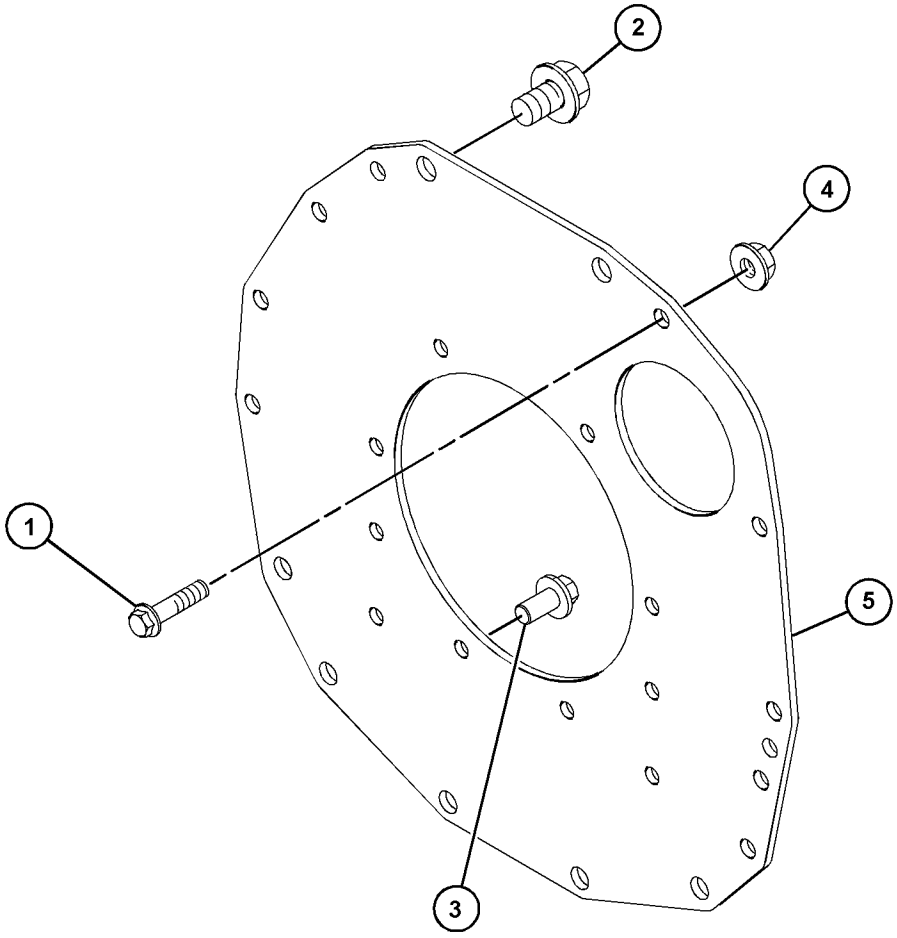

GRAPHIC #1 <END> g06741405

363-6308 HOUSING GP-FLYWHEEL

PART OF 461-7895 ENGINE AR-PRIMARY

SMCS-1157 **i05039365**

NOTE	REF NO	GRAPHIC REF	PART NUMBER	QTY	PART NAME 1 2 3 4 5 6 (PRODUCT LEVEL)	SEE PAGE
M	1	1	**6I-0593**	2	BOLT (M10X1.5X30-MM)	
M	2	1	**102-9941**	2	BOLT (M12X1.75X25-MM)	
	3	1	**168-9001**	10	BOLT AS	
	4	1	**183-4035**	6	BOLT	
	5	1	**363-6307**	1	PLATE	

M - METRIC PART

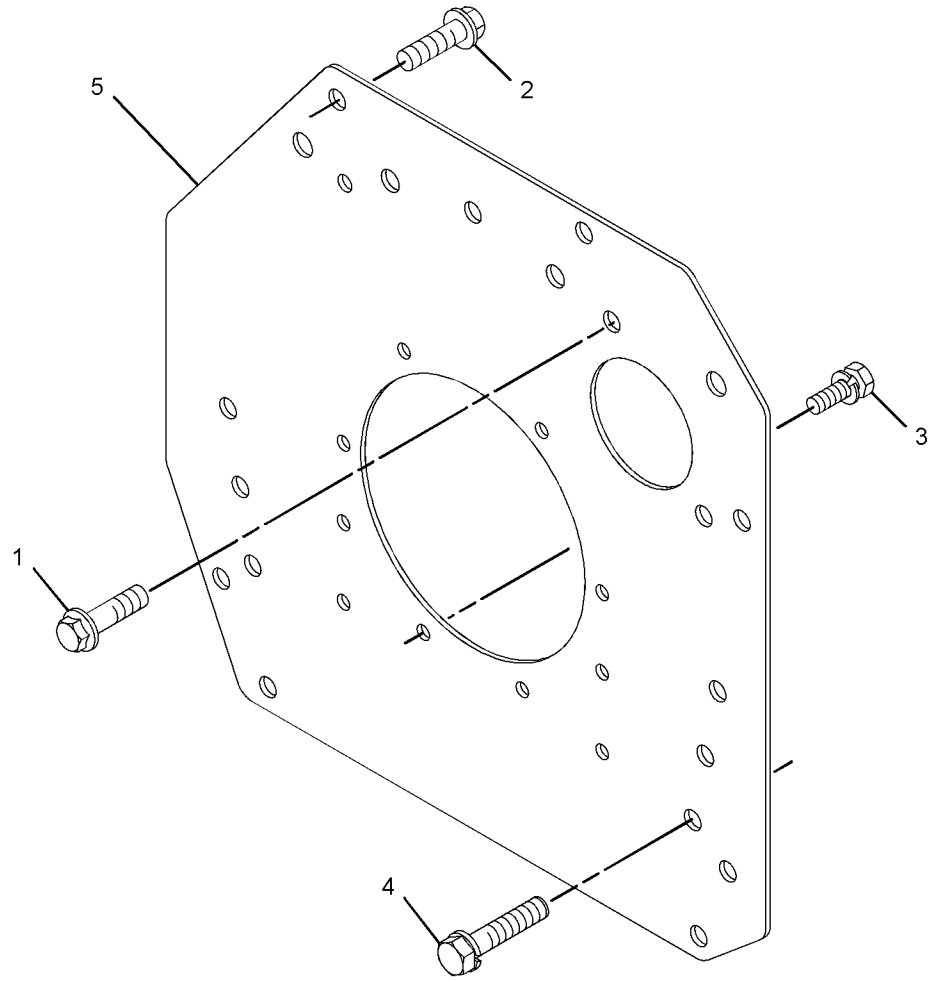

GRAPHIC #1 <END> g03349082

398-4795 HOUSING GP-FLYWHEEL

PART OF 433-1379, 433-1380 ENGINE AR, 435-1636, 435-1641, 435-1646, 435-1647 ENGINE AR-PRIMARY

SMCS-1157 **i08697199**

NOTE	REF NO	GRAPHIC REF	PART NUMBER	QTY	PART NAME 1 2 3 4 5 6 (PRODUCT LEVEL)	SEE PAGE
M	1	1	**114-4363**	10	BOLT (M8X1.25X12-MM)	
	2	1	**154-2394**	1	PLATE	
M	3	1	**306-2347**	2	BOLT (M12X1.75X14-MM)	

M - METRIC PART

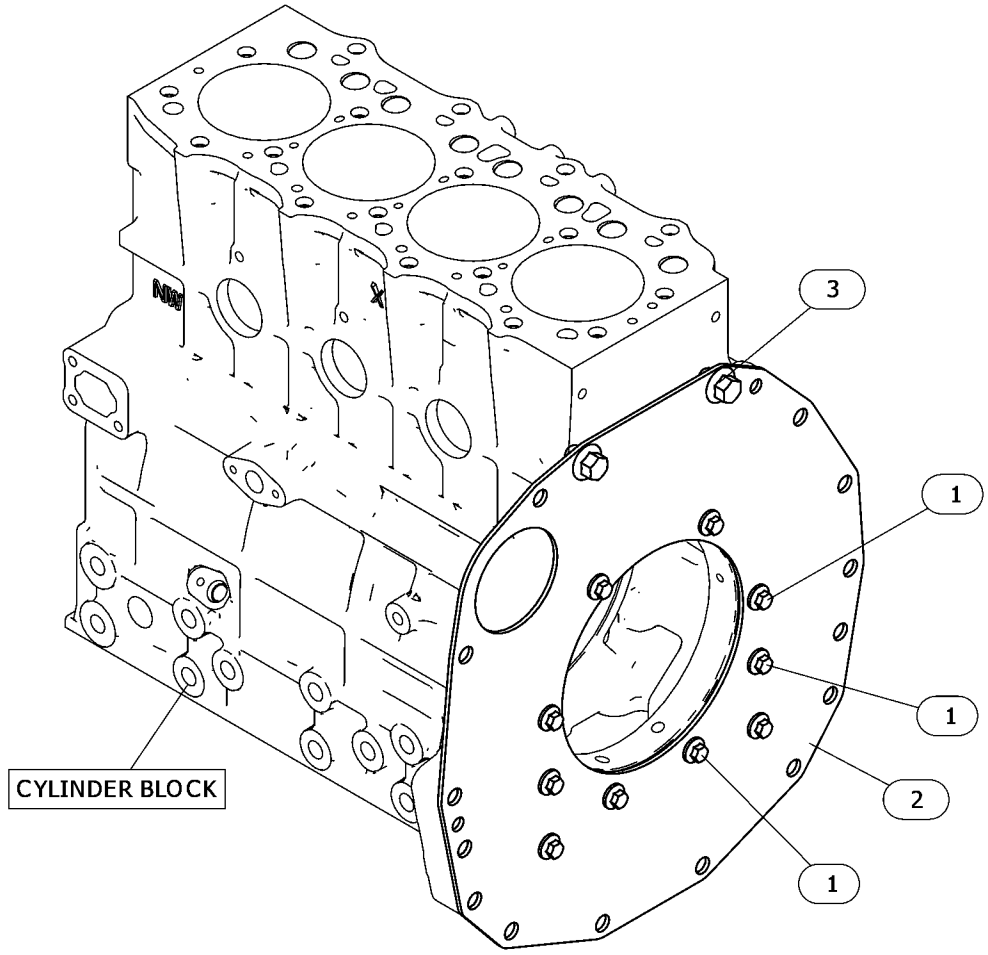

GRAPHIC #1 <END> g06718879

588-1967 HOUSING GP-FLYWHEEL

S/N: G7L27601-UP

SMCS-1157 **i10551240**

NOTE	REF NO	GRAPHIC REF	PART NUMBER	QTY	PART NAME 1 2 3 4 5 6 (PRODUCT LEVEL)	SEE PAGE
	1	1	**154-2394**	2	PLATE	
	2	1	**165-2141**	10	BOLT AS	
M	3	1	**306-2347**	2	BOLT (M12X1.75X14-MM)	

M - METRIC PART

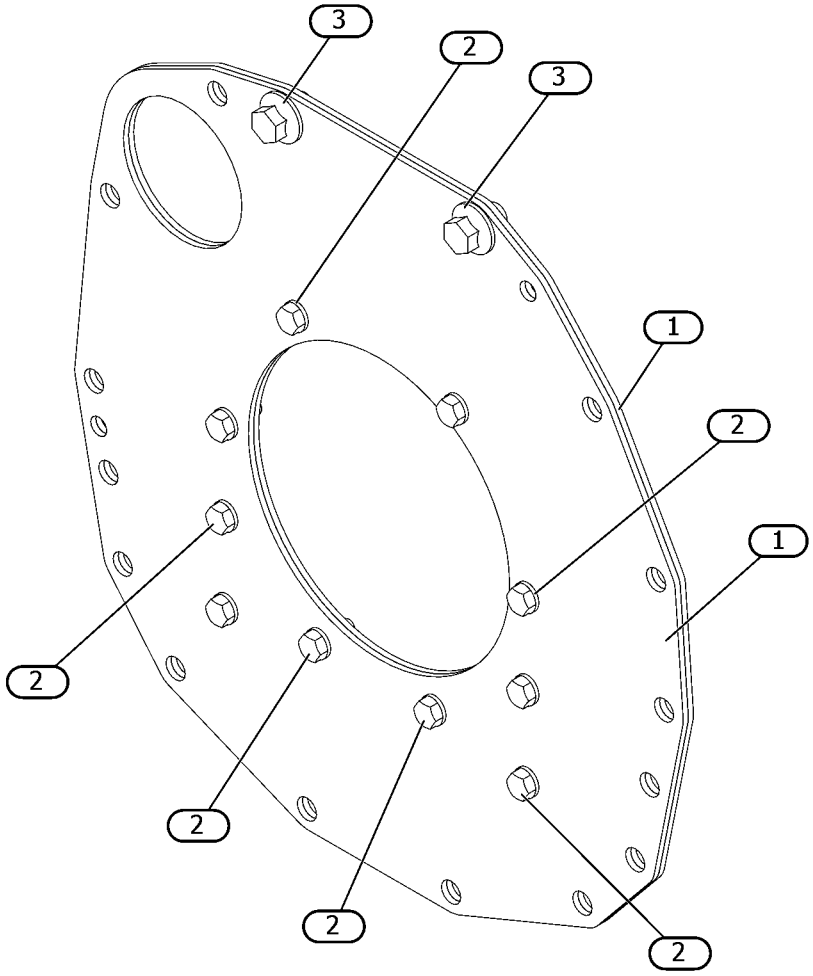

GRAPHIC #1 <END> g07949162

591-2135 HOUSING GP-FLYWHEEL

PART OF 610-7720 ENGINE AR-PRIMARY

SMCS-1157 **i10521657**

NOTE	REF NO	GRAPHIC REF	PART NUMBER	QTY	PART NAME 1 2 3 4 5 6 (PRODUCT LEVEL)	SEE PAGE
M	1	1	**6I-0593**	4	BOLT (M10X1.5X30-MM)	
M	2	1	**175-7141**	4	NUT-HEX FLANGE (M10X1.5-THD)	
M	3	1	**6I-4200**	2	BOLT-FLANGE HEAD (M10X1.5X16-MM)	
M	4	1	**114-4363**	10	BOLT (M8X1.25X12-MM)	
M	5	1	**123-2899**	6	BOLT (M10X1.5X40-MM)	
	6	1	**154-2394**	1	PLATE	
	7	1	**448-8575**	1	HOUSING-FLYWHEEL	
M	8	1	**106-8954**	2	BOLT (M12X1.75X35-MM)	
	9	1	**364-8947**	1	PLUG	

M - METRIC PART

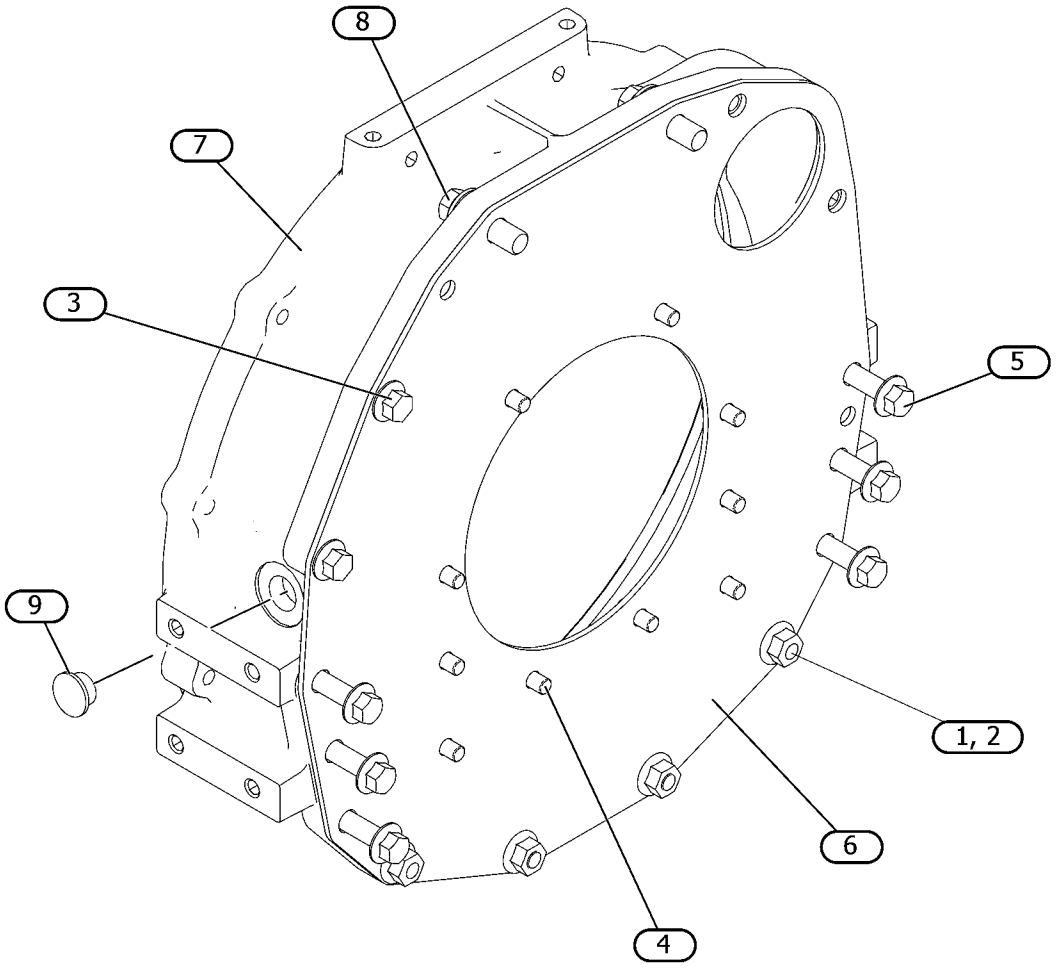

GRAPHIC #1 <END> g07901129

591-2138 HOUSING GP-FLYWHEEL

PART OF 587-9328, 610-7721 ENGINE AR-PRIMARY

SMCS-1157 **i08829425**

NOTE	REF NO	GRAPHIC REF	PART NUMBER	QTY	PART NAME 1 2 3 4 5 6 (PRODUCT LEVEL)	SEE PAGE
M	1	1	**6I-0593**	4	BOLT (M10X1.5X30-MM)	
M	2	1	**175-7141**	4	NUT-HEX FLANGE (M10X1.5-THD)	
M	3	1	**6I-4200**	2	BOLT-FLANGE HEAD (M10X1.5X16-MM)	
M	4	1	**114-4363**	10	BOLT (M8X1.25X12-MM)	
M	5	1	**123-2899**	6	BOLT (M10X1.5X40-MM)	
	6	1	**154-2394**	1	PLATE	
	7	1	**423-7697**	1	COVER-FLYWHEEL	
M	8	1	**106-8954**	2	BOLT (M12X1.75X35-MM)	
	9	1	**364-8947**	2	PLUG	

M - METRIC PART

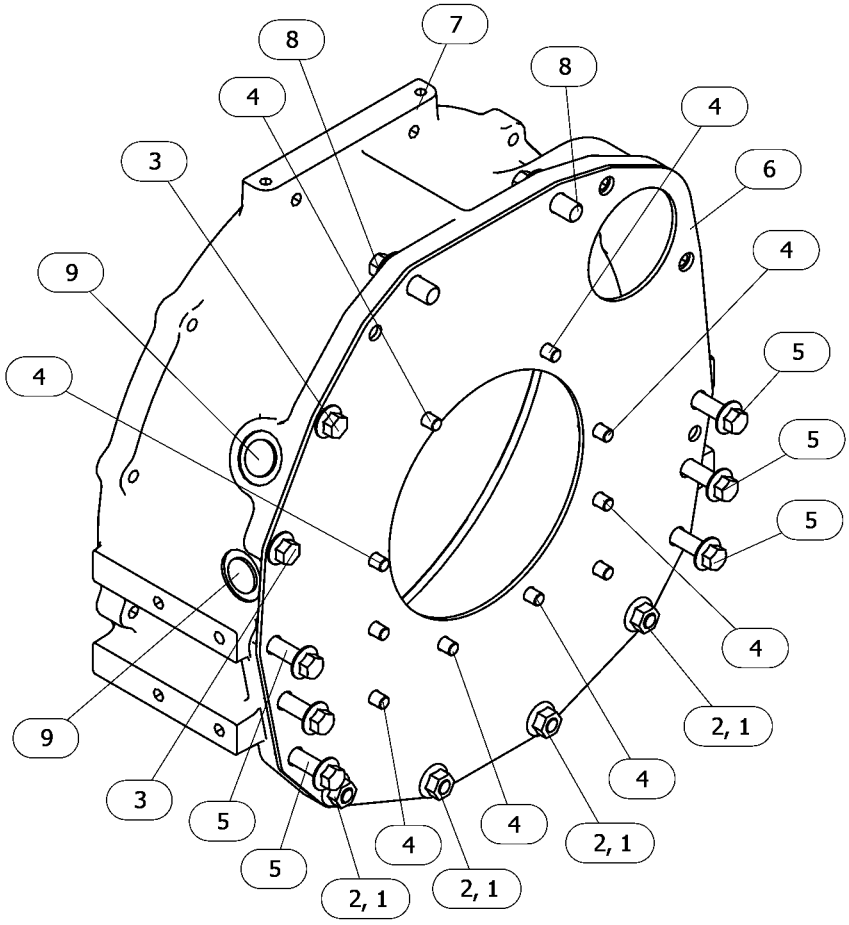

GRAPHIC #1 <END> g06755712

308-2307 HOUSING GP-FRONT

PART OF 435-1647, 461-7892, 461-7894, 461-7895, 465-1477, 491-3396, 495-3121, 516-9335, 541-9277, 587-9328 ENGINE AR-PRIMARY

SMCS-1151, 1162, 1206

i10547457

NOTE	REF NO	GRAPHIC REF	PART NUMBER	QTY	PART NAME 1 2 3 4 5 6 (PRODUCT LEVEL)	SEE PAGE
M	1	1	**175-7141**	2	NUT-HEX FLANGE (M10X1.5-THD)	
	2	1	**328-3229**	2	COVER	
M	3	1	**164-7468**	2	BOLT (M10X1.5X95-MM)	
	4	1	**308-1874**	1	HOLDER	
	5	1	**308-1875**	2	SEAL-O-RING	

M - METRIC PART

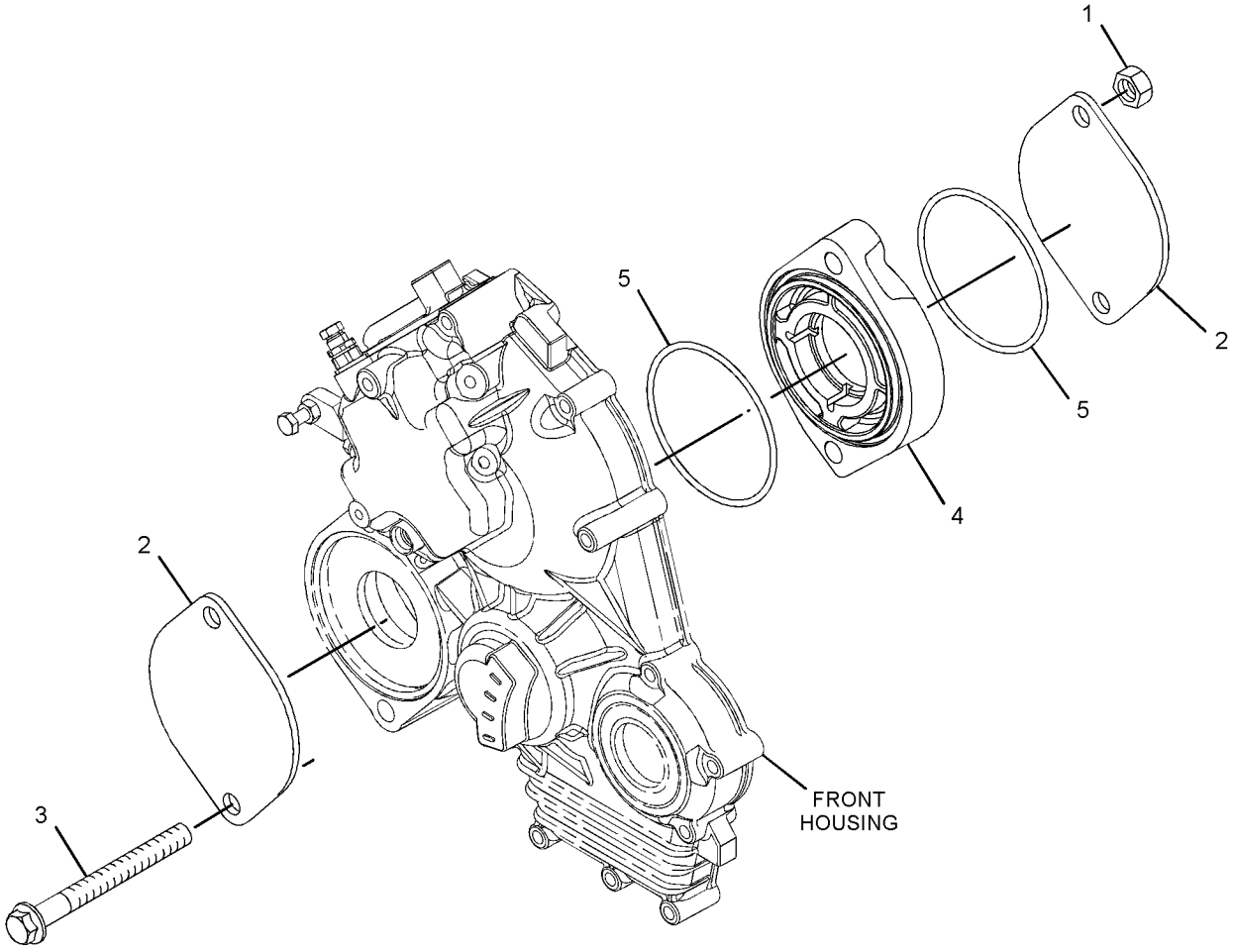

GRAPHIC #1 <END> g07912791

308-2307 HOUSING GP-FRONT

PART OF 461-7892, 461-7894, 461-7895, 465-1477, 491-3396, 495-3121, 516-9335, 541-9277, 587-9328 ENGINE AR-PRIMARY

SMCS-1151, 1162, 1206

i10558412

NOTE	REF NO	GRAPHIC REF	PART NUMBER	QTY	PART NAME 1 2 3 4 5 6 (PRODUCT LEVEL)	SEE PAGE
M	1	1	**175-7141**	2	NUT-HEX FLANGE (M10X1.5-THD)	
	2	1	**328-3229**	2	COVER	
M	3	1	**164-7468**	2	BOLT (M10X1.5X95-MM)	
C	4	1	**592-7636**	1	ADAPTER AS	
	4A	1	**365-5317**	2	SEAL	

C - CHANGE FROM PREVIOUS TYPE
M - METRIC PART

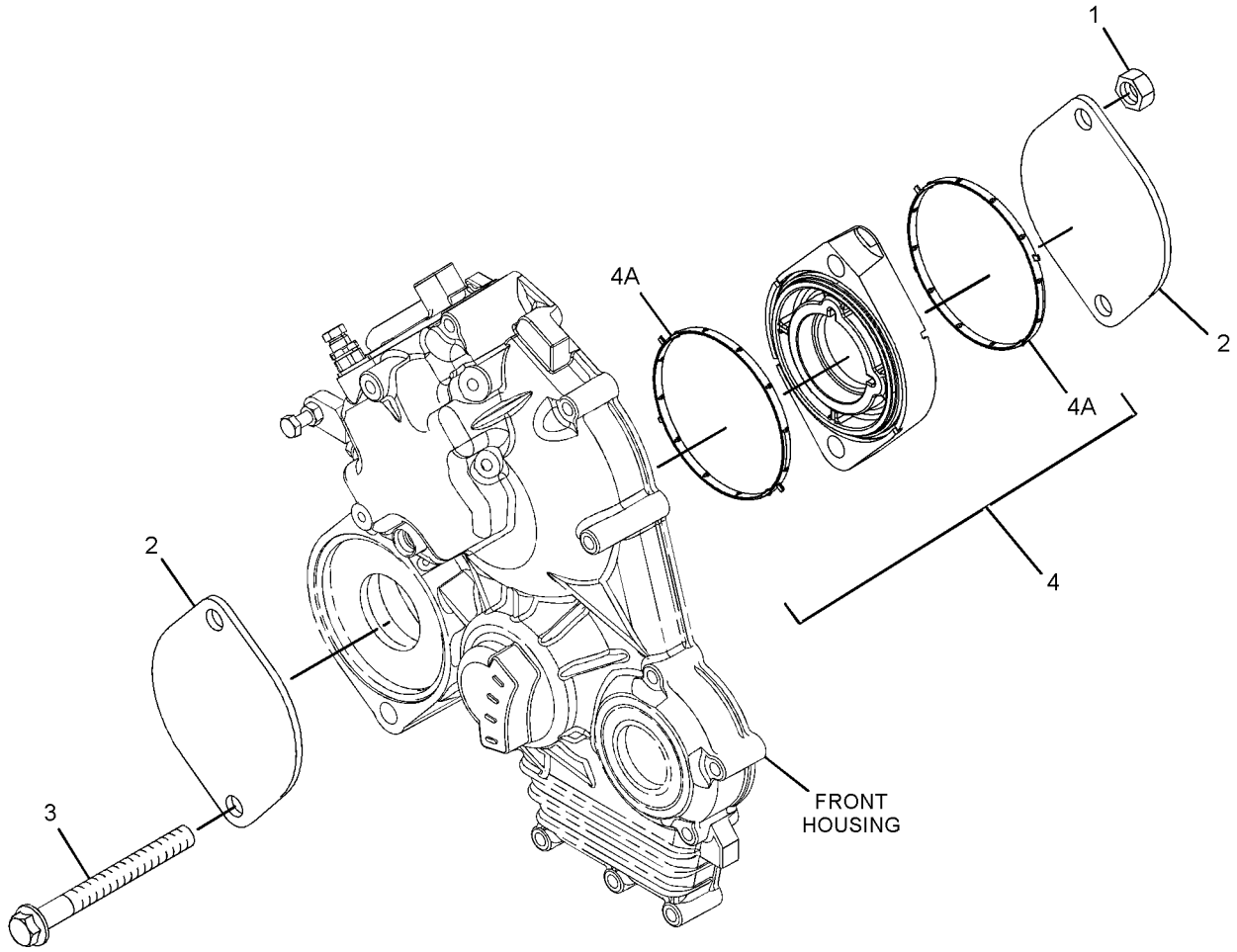

GRAPHIC #1

<END>

g07918721

308-3329 HOUSING GP-FRONT

TIMING

PART OF 435-1658, 557-9727 ENGINE AR-PRIMARY

SMCS-1151, 1162, 1206 **i10537166**

NOTE	REF NO	GRAPHIC REF	PART NUMBER	QTY	PART NAME 1 2 3 4 5 6 (PRODUCT LEVEL)	SEE PAGE
M	1	1	**153-5960**	2	NUT (M6X1-THD)	
	2	1	**153-5962**	4	BOLT AS	
	3	1	**609-9566**	1	CASE AS-GEAR	
	4	1	**5D-1319**	1	PIN-SPRING	
	5	1	**154-1675**	1	SEAL	
M	6	1	**495-0737**	1	BOLT (M6X0.5X19.5-MM)	
	7	1	**165-2140**	7	BOLT AS	
					(EACH INCLUDES)	
		1	**3B-4504**	1	LOCKWASHER	
M		1	**8C-8451**	1	BOLT (M6X1X40-MM)	
	8	1	**592-3241**	1	GASKET-GEAR CASE	
	9	1	**308-1874**	1	HOLDER	
	10	1	**308-1875**	1	SEAL-O-RING	
F			**154-1396**	1	CLIP	

F - NOT SHOWN
M - METRIC PART

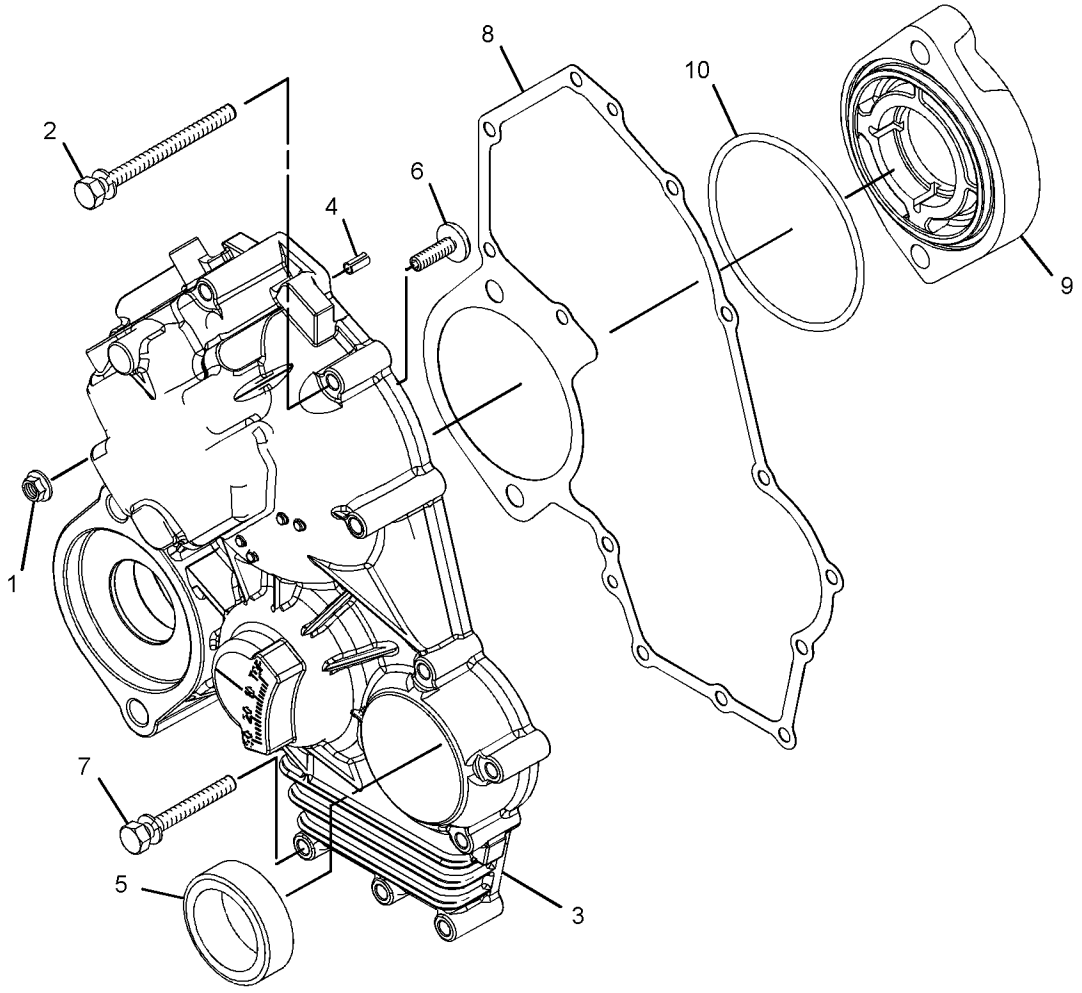

GRAPHIC #1 <END> g07936763

309-6718 HOUSING GP-FRONT

PART OF 435-1646 ENGINE AR-PRIMARY

TYPE 1

SMCS-1151, 1162, 1206 **i06881514**

NOTE	REF NO	GRAPHIC REF	PART NUMBER	QTY	PART NAME 1 2 3 4 5 6 (PRODUCT LEVEL)	SEE PAGE
M	1	2	**5C-2890**	1	NUT (M6X1-THD)	
	2	2	**139-5511**	1	CAP (TAMPER RESISTANT)	
M	3	2	**153-5592**	1	NUT (M8X1.25-THD)	
M	4	1	**153-5960**	3	NUT (M6X1-THD)	
	5	1	**153-5962**	4	BOLT AS	
	6	2	**153-6415**	2	WASHER (SEAL)	
	7	3	**153-6838**	2	BOLT AS	
	8	2	**153-7983**	1	PIN	
	10	2	**154-1403**	1	SEAL-O-RING	
	11	1	**154-1673**	1	PIN	
	12	1	**154-1675**	1	SEAL	
	13	3	**154-1680**	1	PLATE	
M	14	2	**8T-4971**	2	BOLT (M6X1X30-MM)	
M	15	2	**162-2207**	1	NUT (M6X1-THD)	
	16	1	**165-2140**	7	BOLT AS	
	17	2	**183-3538**	4	BOLT	
	18	2	**217-7115**	1	CAP (TAMPER RESISTANT)	
	19	1	**308-1871**	1	GASKET	
	20	1	**322-7490**	1	HOUSING-FRONT	
	21	1	**308-1874**	1	HOLDER	
	22	1	**308-1875**	3	SEAL-O-RING	
	23	2	**308-1877**	1	BRACKET	
	24	2	**308-1878**	1	GASKET	
	25	2	**322-7491**	1	ARM (FRONT HOUSING)	
	26	2	**317-7195**	1	SPRING	
	27	2	**308-1882**	1	SPRING	
	28	2	**322-7492**	1	LEVER-CONTROL	
M	29	2	**308-1889**	1	NUT (M10X1.25-THD)	
	30	2	**322-7493**	1	LEVER AS-CONTROL	
M	31	2	**308-1892**	1	NUT (M6X1-THD)	
	32	2	**311-0655**	1	SPRING	
	33	2	**308-1897**	1	RING	
	34	2	**332-1361**	1	CAP-PROTECTION	
	35	2	**321-4249**	1	NUT	
	36	2	**308-1901**	1	CAP	
	37	3	**308-1904**	1	SLIDER	
	38	2	**308-4266**	1	SHAFT	
	39	2	**309-6728**	1	SHAFT	
	40	2	**309-6729**	1	SEAL-O-RING	
	41	2	**319-3250**	1	CONTROL GP-GOVERNOR (ENGINE TIMING)	
	42	2	**313-5832**	1	BOLT AS	
	42A	2	**153-7987**	1	WASHER (9.2X17X1.8-MM THK)	
M	42B	2	**191-9297**	1	NUT (M10X1.25-THD)	
	42C	2	**313-5833**	1	SPRING	
	43	2	**309-6732**	1	BOLT	
	44	3	**309-6733**	1	CAMSHAFT AS	
	44A	3	**153-6492**	1	KEY-WOODRUFF	

309-6718 **HOUSING GP-FRONT (**contd.**)** **i06881514**

NOTE	REF NO	GRAPHIC REF	PART NUMBER	QTY	PART NAME 1 2 3 4 5 6 (PRODUCT LEVEL)	SEE PAGE
	44B	3	**154-4505**	1	BEARING	
	44C	3	**308-1903**	1	GEAR-CAMSHAFT (66-TEETH)	
	44D	3	**313-9323**	1	SPACER (20.5X28X9.3-MM THK)	
F			**154-1396**	1	CLIP	

F - NOT SHOWN
M - METRIC PART

309-6718 **HOUSING GP-FRONT (**contd.**)** **i06881514**

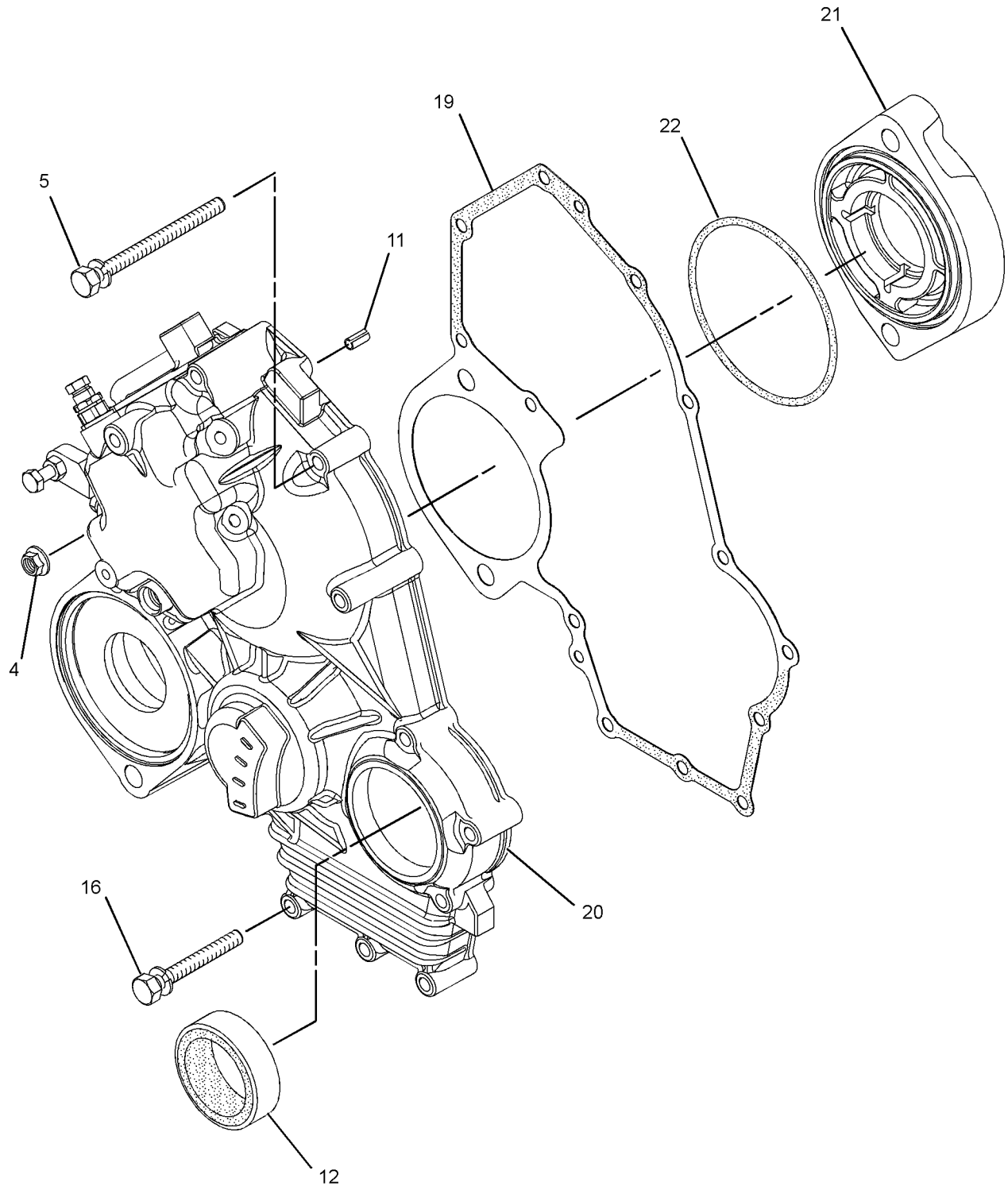

GRAPHIC #1 g01415338

309-6718 **HOUSING GP-FRONT (**contd.**)** **i06881514**

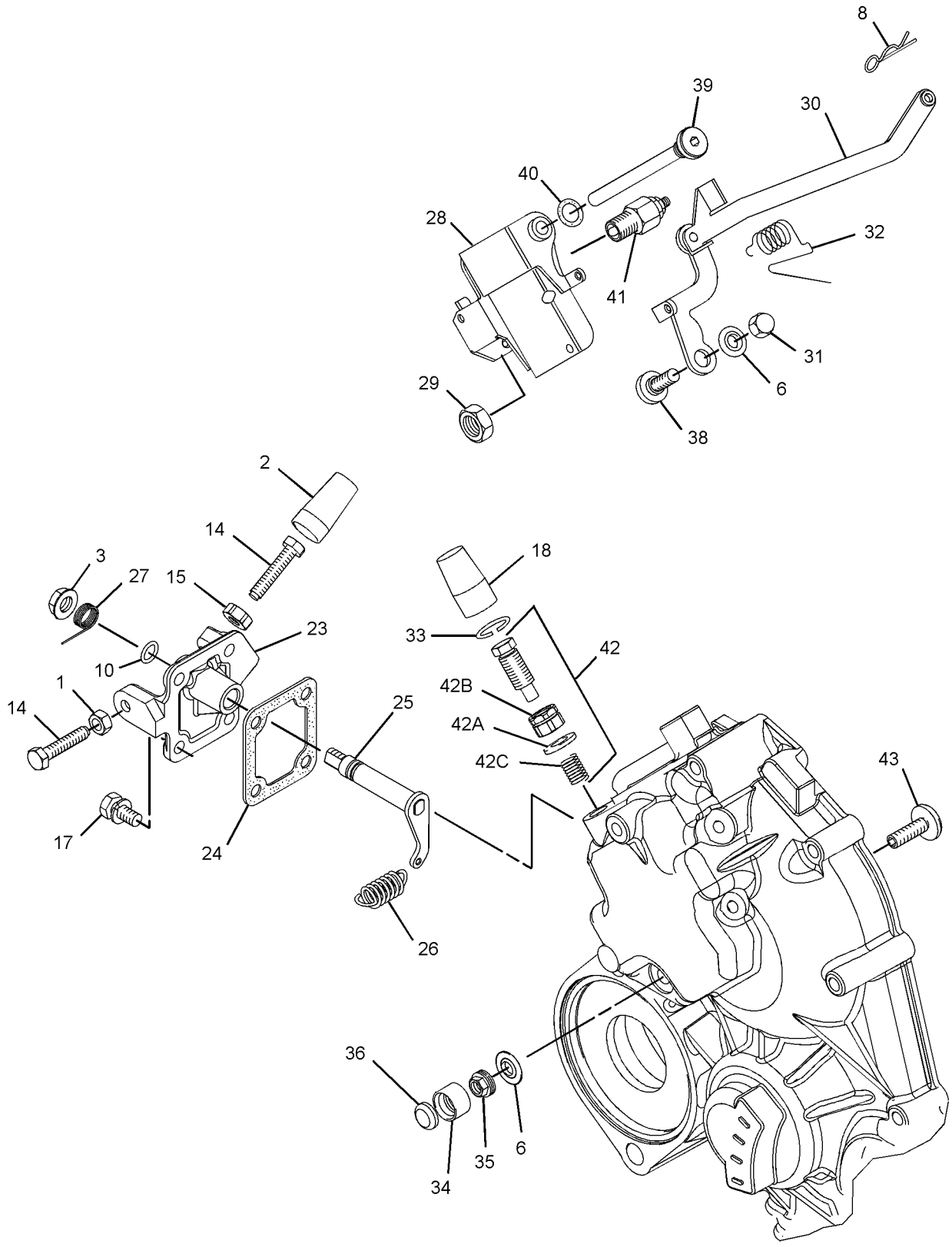

GRAPHIC #2 g01633334

309-6718 **HOUSING GP-FRONT (**contd.**)** **i06881514**

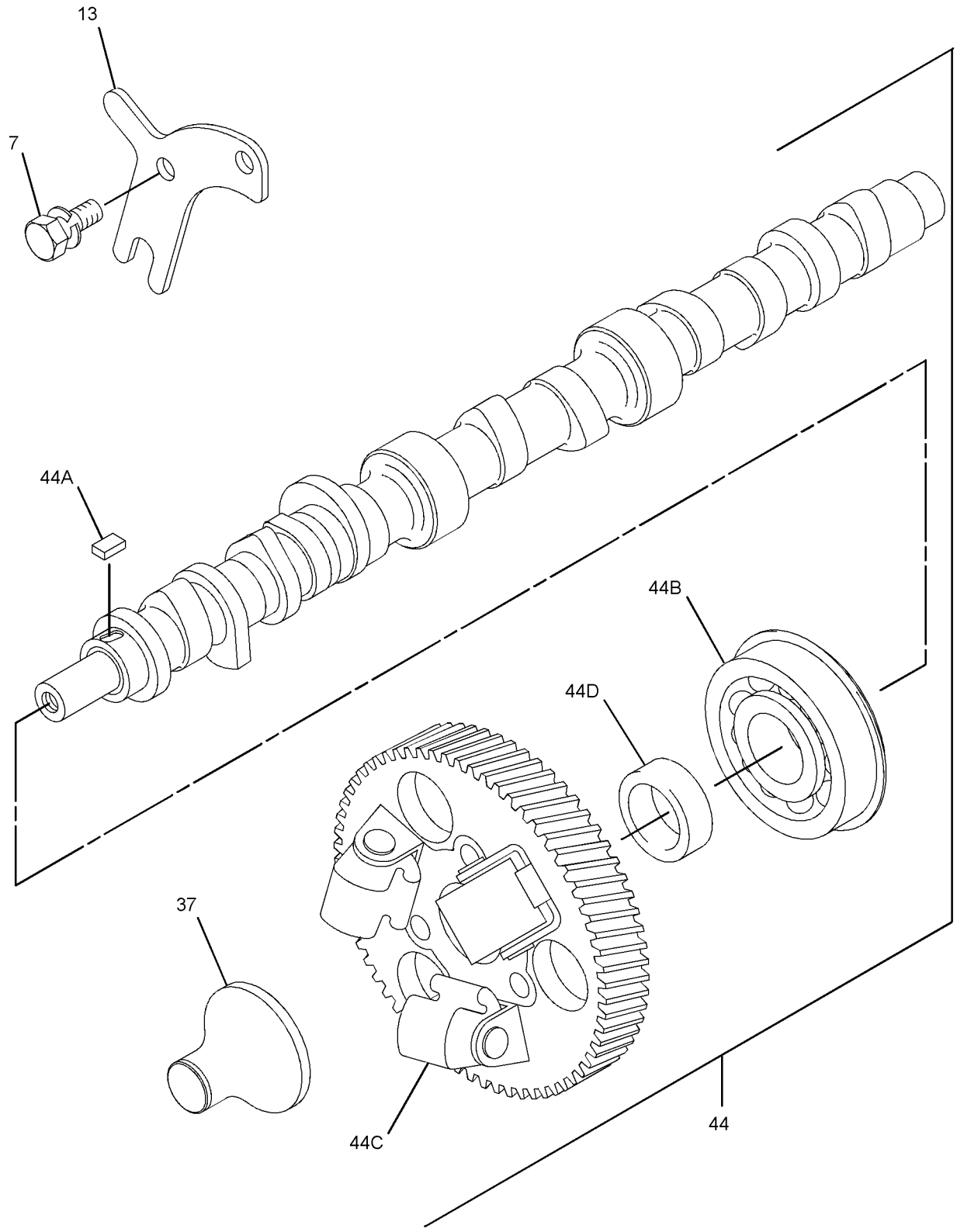

GRAPHIC #3 <END> g01415341

309-6718 HOUSING GP-FRONT

PART OF 435-1646, 435-1656 ENGINE AR-PRIMARY

TYPE 2

SMCS-1151, 1162, 1206 **i10403032**

NOTE	REF NO	GRAPHIC REF	PART NUMBER	QTY	PART NAME 1 2 3 4 5 6 (PRODUCT LEVEL)	SEE PAGE
M	1	2	**5C-2890**	1	NUT (M6X1-THD)	
	2	2	**139-5511**	1	CAP (TAMPER RESISTANT)	
M	3	2	**153-5592**	1	NUT (M8X1.25-THD)	
M	4	1	**153-5960**	3	NUT (M6X1-THD)	
	5	1	**153-5962**	4	BOLT AS	
	6	2	**153-6415**	2	WASHER (SEAL)	
	7	3	**153-6838**	2	BOLT AS	
	8	2	**153-7983**	1	PIN	
	10	2	**095-1574**	1	SEAL-O-RING	
	11	1	**5D-1319**	1	PIN-SPRING	
	12	1	**154-1675**	1	SEAL	
	13	3	**154-1680**	1	PLATE	
M	14	2	**7X-2533**	2	BOLT (M6X1X35-MM)	
M	15	2	**162-2207**	1	NUT (M6X1-THD)	
	16	1	**165-2140**	7	BOLT AS	
M	17	2	**106-8916**	4	BOLT (M6X1X16-MM)	
	18	2	**217-7115**	1	CAP (TAMPER RESISTANT)	
	19	1	**592-3241**	1	GASKET-GEAR CASE	
	20	1	**609-9566**	1	CASE AS-GEAR	
	23	2	**335-5578**	1	BRACKET	
	24	2	**423-7724**	1	GASKET	
	25	2	**334-0732**	1	ARM AS (FRONT HOUSING)	
	26	2	**317-7195**	1	SPRING	
	27	2	**308-1882**	1	SPRING	
	28	2	**580-0398**	1	LEVER AS-CONTROL	
M	29	2	**308-1889**	1	NUT (M10X1.25-THD)	
	30	2	**322-7493**	1	LEVER AS-CONTROL (FLOATING)	
	30A	2	**154-1400**	1	PIN	
M	31	2	**308-1892**	1	NUT (M6X1-THD)	
	32	2	**311-0655**	1	SPRING	
	33	2	**308-1897**	2	RING	
	34	2	**425-7065**	1	CAP-TAMPER PROOF	
	35	2	**321-4249**	1	NUT	
	36	2	**330-9189**	1	PLUG	
	37	3	**321-4252**	1	SLIDER	
	38	2	**308-4266**	1	SHAFT	
	39	2	**390-3731**	1	SHAFT	
	40	2	**309-6729**	1	SEAL-O-RING	
Y	41	2	**319-3250**	1	CONTROL GP-GOVERNOR	685
	42	2	**313-5832**	1	BOLT AS	
	42A	2	**153-7987**	1	WASHER (9.2X17X1.8-MM THK)	
M	42B	2	**191-9297**	1	NUT (M10X1.25-THD)	
	42C	2	**313-5833**	1	SPRING	
M	43	2	**495-0737**	1	BOLT (M6X0.5X19.5-MM)	
	44	3	**309-6733**	1	CAMSHAFT AS	
	44A	3	**153-6492**	1	KEY-WOODRUFF	
	44B	3	**154-4505**	1	BEARING	

309-6718 **HOUSING GP-FRONT (**contd.**)** **i10403032**

NOTE	REF NO	GRAPHIC REF	PART NUMBER	QTY	PART NAME 1 2 3 4 5 6 (PRODUCT LEVEL)	SEE PAGE
	44C	3	**308-1903**	1	GEAR-CAMSHAFT (66-TEETH)	
	44D	3	**313-9323**	1	SPACER (20.5X28X9.3-MM THK)	
	45	2	**336-2965**	1	SPRING	
C	46	1	**308-1875**	1	SEAL-O-RING	
F			**154-1396**	1	CLIP	

C - CHANGE FROM PREVIOUS TYPE
F - NOT SHOWN
M - METRIC PART
Y - SEPARATE ILLUSTRATION

309-6718 **HOUSING GP-FRONT** (contd.) **i10403032**

REFER TO ALL ILLUSTRATIONS OF
THIS GROUP FOR AUXILIARY VIEWS

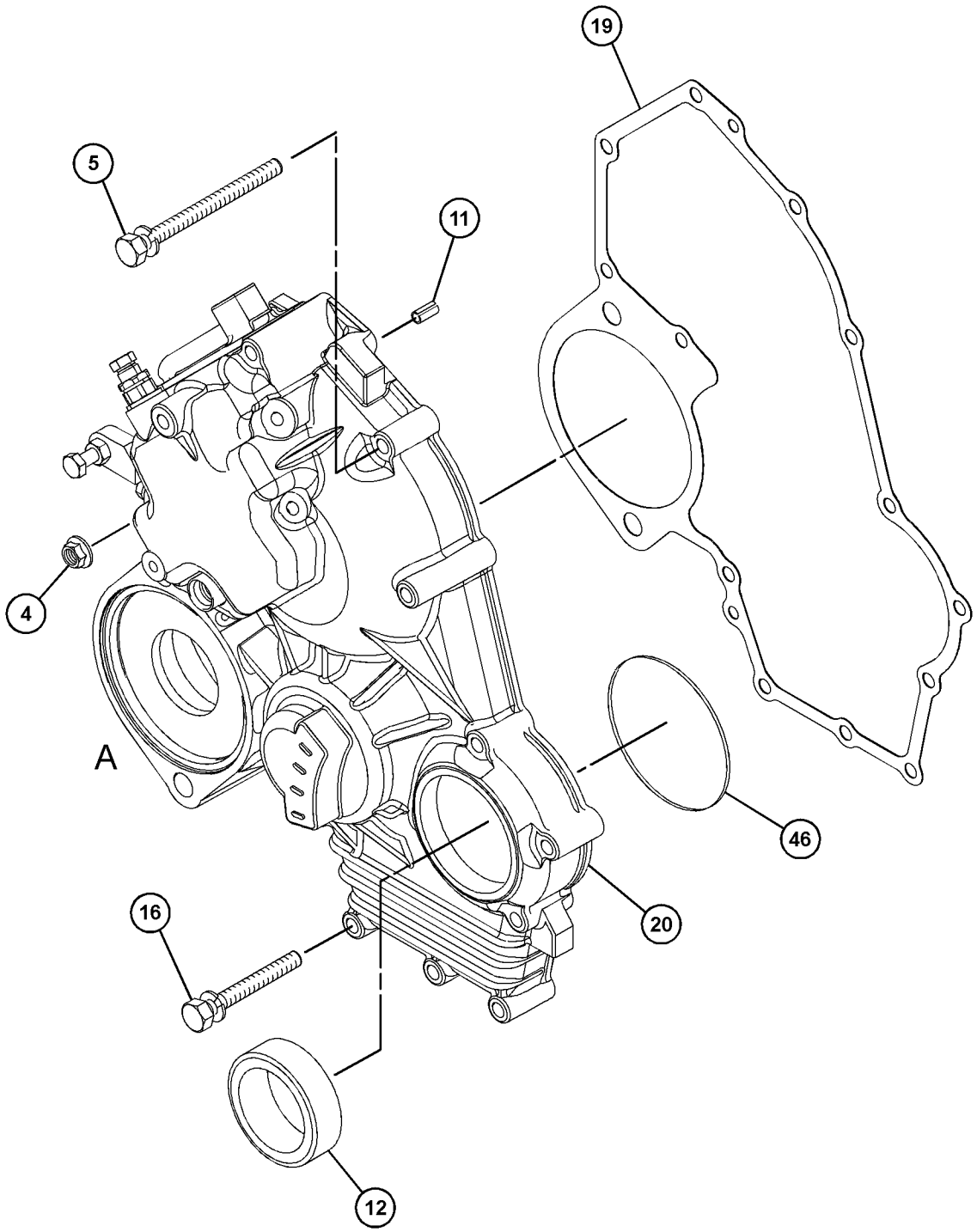

GRAPHIC #1 g07892616

309-6718 **HOUSING GP-FRONT (**contd.**)** **i10403032**

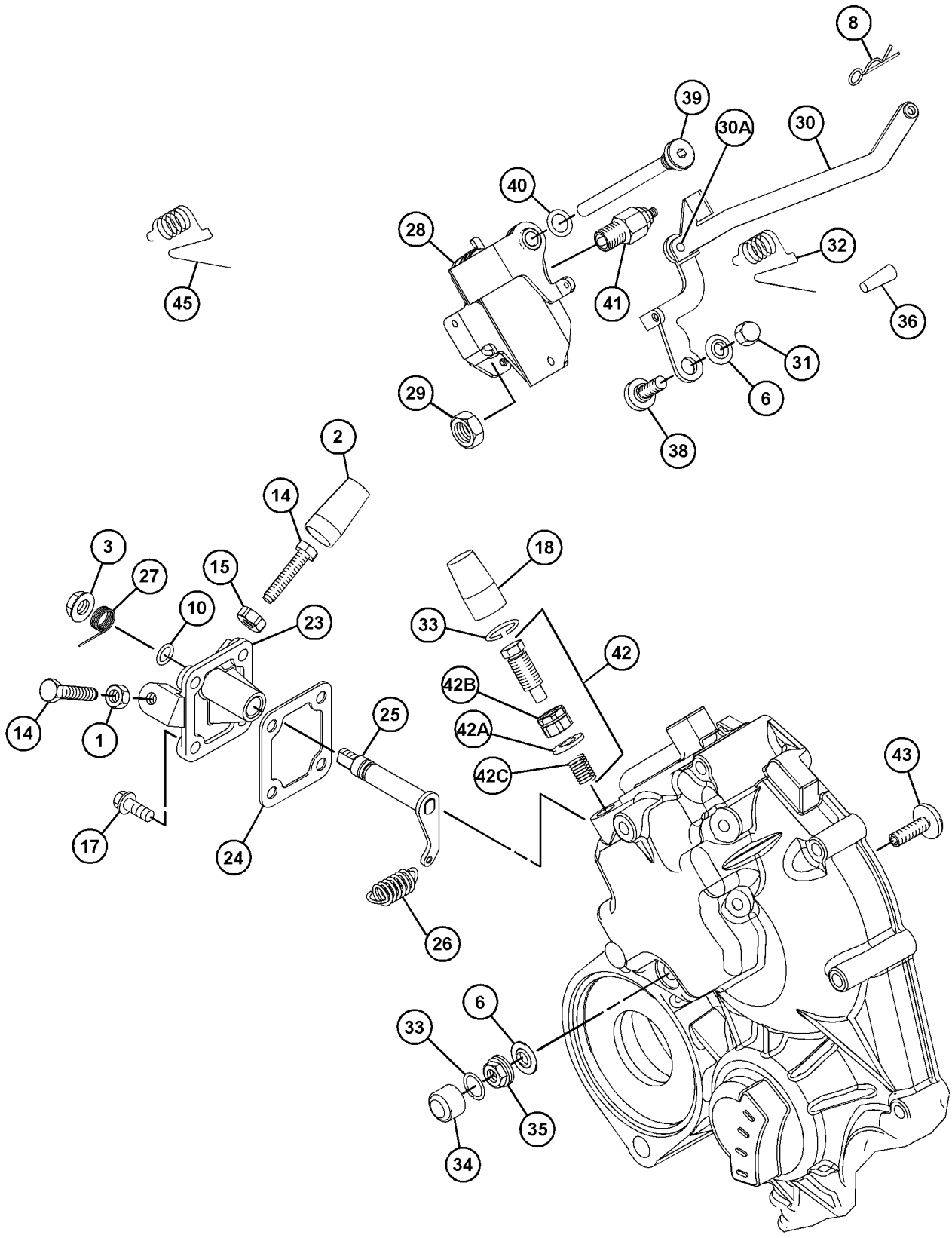

VIEW OF AREA A

GRAPHIC #2 g07892579

309-6718 **HOUSING GP-FRONT (**contd.**)** **i10403032**

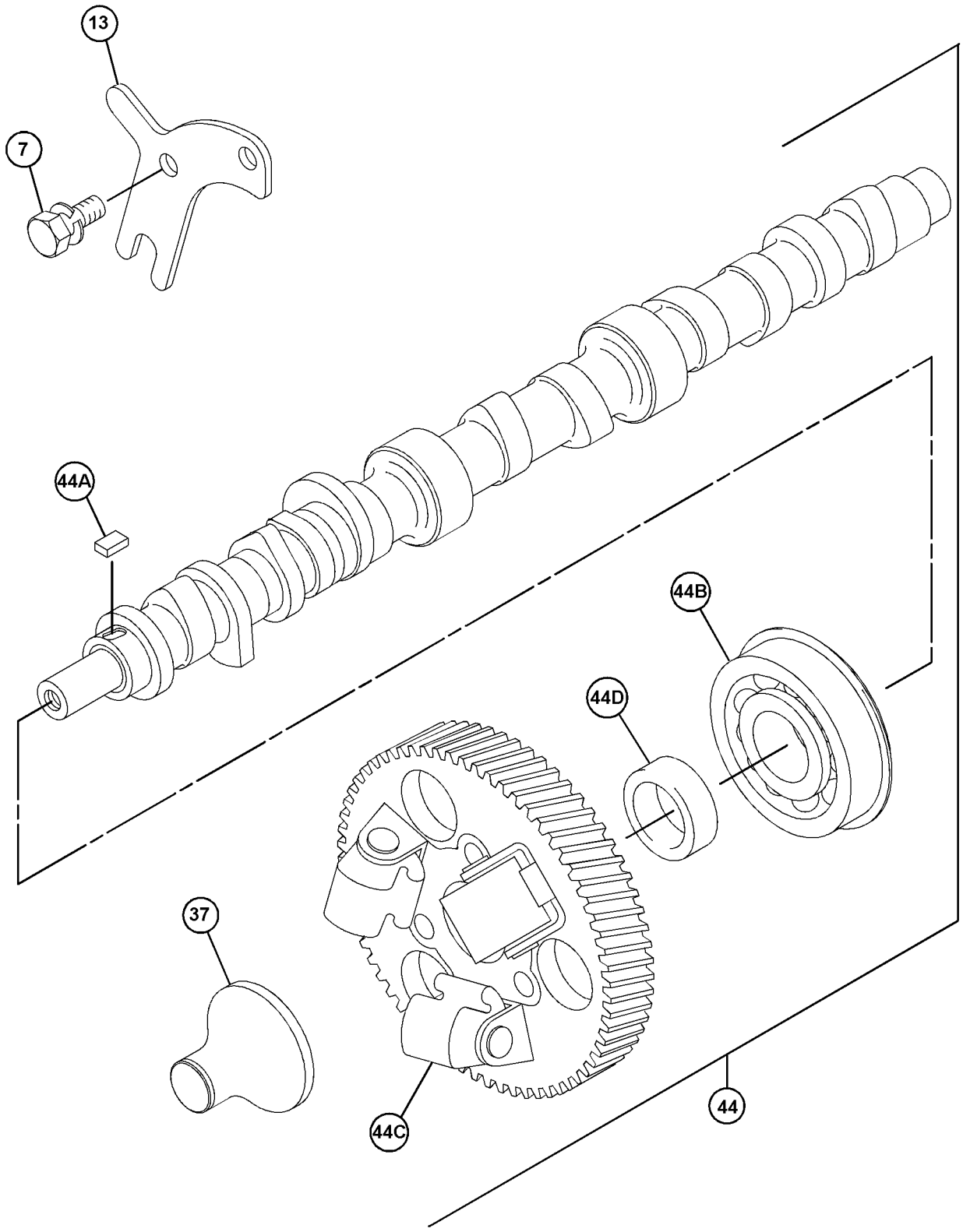

GRAPHIC #3 <END> g06208679

311-1682 HOUSING GP-FRONT

PART OF 433-1379 ENGINE AR, 516-9335 ENGINE AR-PRIMARY

SMCS-1151, 1162, 1206 **i09547513**

NOTE	REF NO	GRAPHIC REF	PART NUMBER	QTY	PART NAME 1 2 3 4 5 6 (PRODUCT LEVEL)	SEE PAGE
M	1	2	**153-5960**	2	NUT (M6X1-THD)	
	2	2	**153-5962**	4	BOLT AS	
	3	2	**5D-1319**	1	PIN-SPRING	
	4	2	**154-1675**	1	SEAL	
	5	2	**165-2140**	7	BOLT AS	
	6	1	**217-7115**	1	CAP (TAMPER RESISTANT)	
	7	2	**592-3241**	1	GASKET-GEAR CASE	
	8	1	**309-6729**	1	SEAL-O-RING	
	9	2	**464-2090**	1	HOUSING-FRONT	

M - METRIC PART

311-1682 **HOUSING GP-FRONT (**contd.**)** **i09547513**

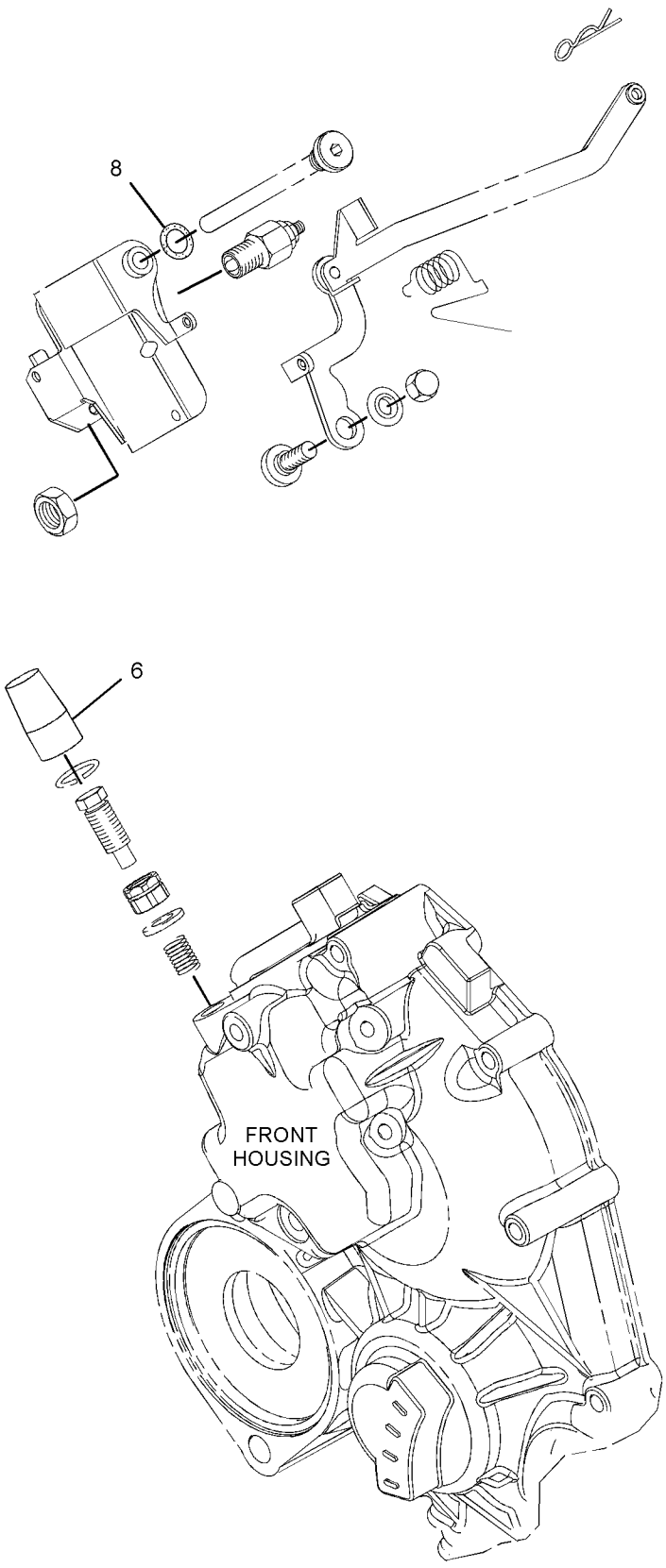

GRAPHIC #1 g03722727

311-1682 **HOUSING GP-FRONT (**contd.**)** **i09547513**

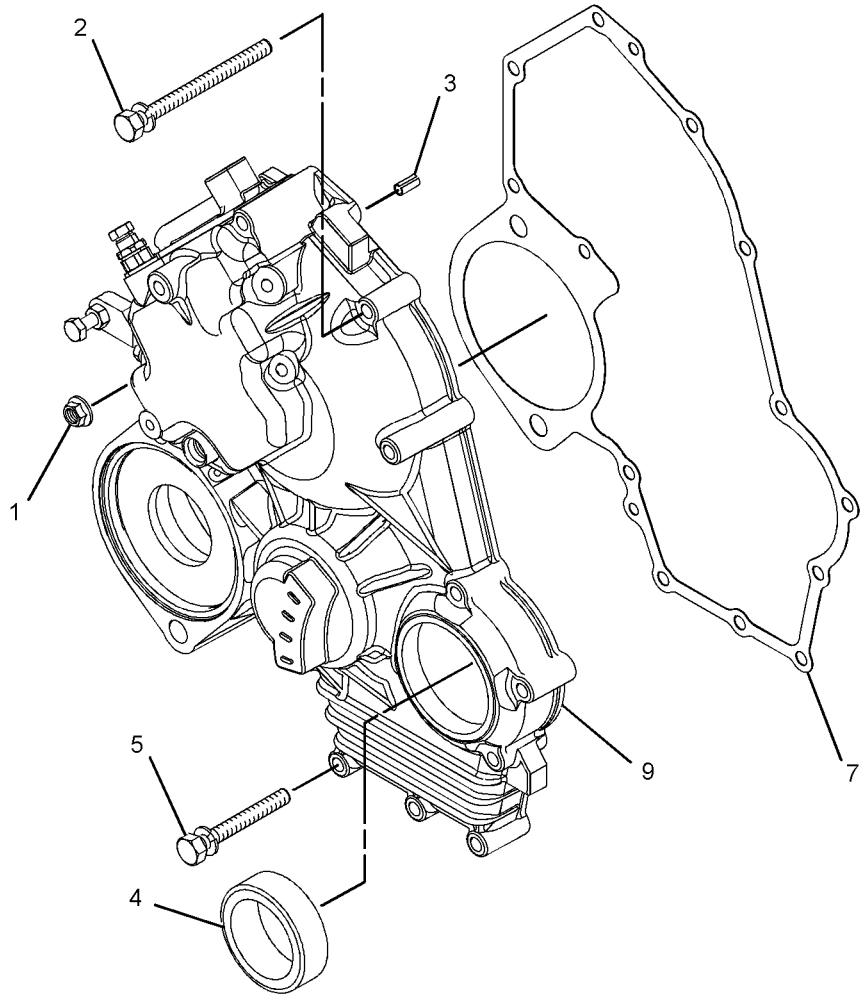

GRAPHIC #2 <END> g07626851

311-9023 HOUSING GP-FRONT

PART OF 435-1641 ENGINE AR-PRIMARY

SMCS-1151, 1162, 1206 **i10420155**

NOTE	REF NO	GRAPHIC REF	PART NUMBER	QTY	PART NAME 1 2 3 4 5 6 (PRODUCT LEVEL)	SEE PAGE
M	1	1	**153-5960**	2	NUT (M6X1-THD)	
	2	1	**153-5962**	4	BOLT AS	
	3	1	**5D-1319**	1	PIN-SPRING	
	4	1	**154-1675**	1	SEAL	
	5	1	**165-2140**	7	BOLT AS	
	6	1	**592-3241**	1	GASKET-GEAR CASE	
	7	1	**609-9566**	1	CASE AS-GEAR	
	8	1	**308-1875**	2	SEAL-O-RING	
F			**153-6415**	1	WASHER (SEAL)	

F - NOT SHOWN
M - METRIC PART

311-9023 **HOUSING GP-FRONT (**contd.**)** **i10420155**

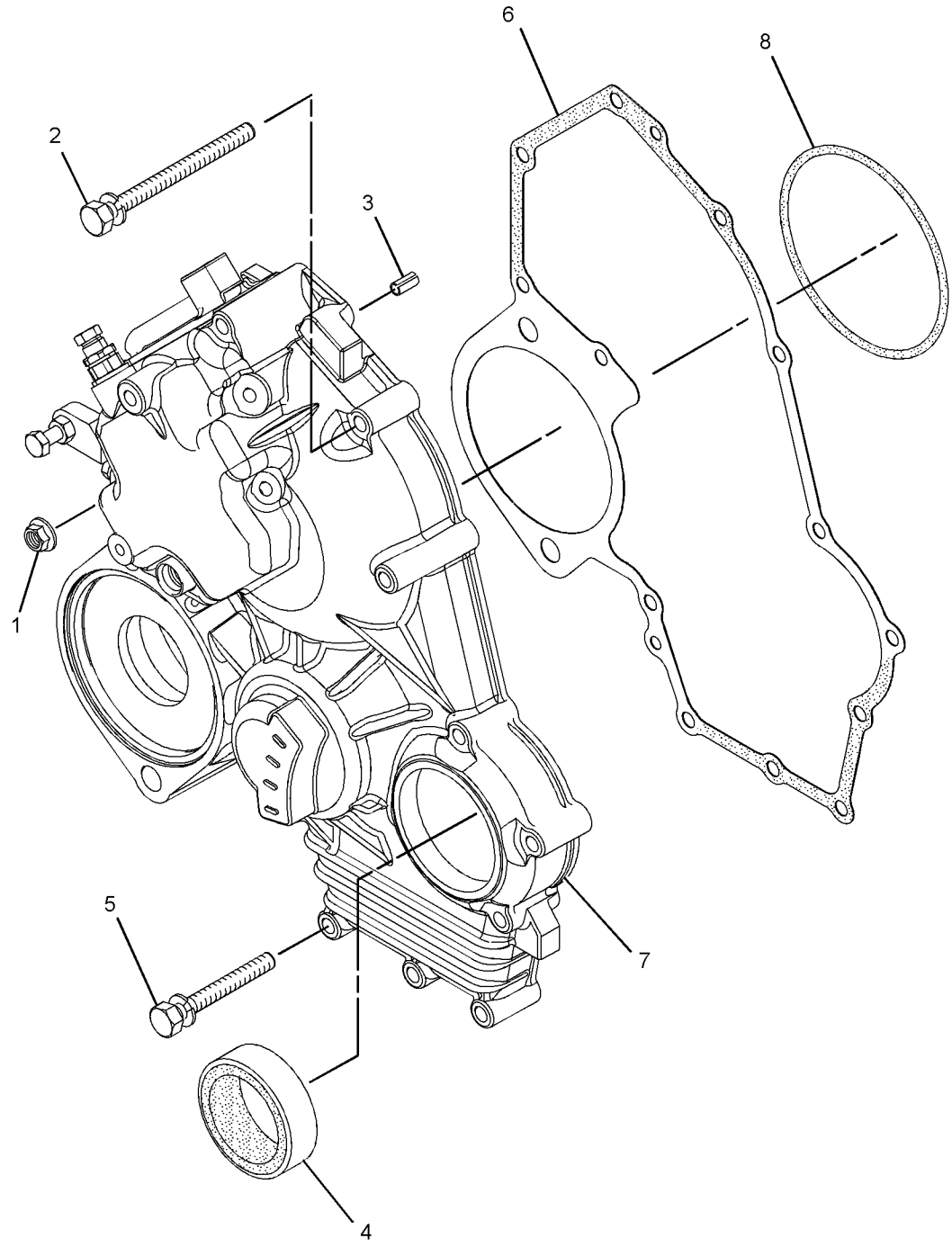

GRAPHIC #1 <END> g03725718

317-0965 HOUSING GP-FRONT

PART OF 433-1380 ENGINE AR

TYPE 1

SMCS-1151, 1162, 1206 **i06217419**

NOTE	REF NO	GRAPHIC REF	PART NUMBER	QTY	PART NAME 1 2 3 4 5 6 (PRODUCT LEVEL)	SEE PAGE
M	1	1	**153-5960**	2	NUT (M6X1-THD)	
	2	1	**153-5962**	4	BOLT AS	
	3	1	**5D-1319**	1	PIN-SPRING	
	4	1	**154-1675**	1	SEAL	
	5	1	**165-2140**	7	BOLT AS	
	6	1	**423-7723**	1	GASKET	
M	7	1	**6I-0846**	1	BOLT (M6X1X14-MM)	
	8	1	**153-6415**	1	WASHER (SEAL)	
	9	1	**464-2090**	1	HOUSING-FRONT	

M - METRIC PART

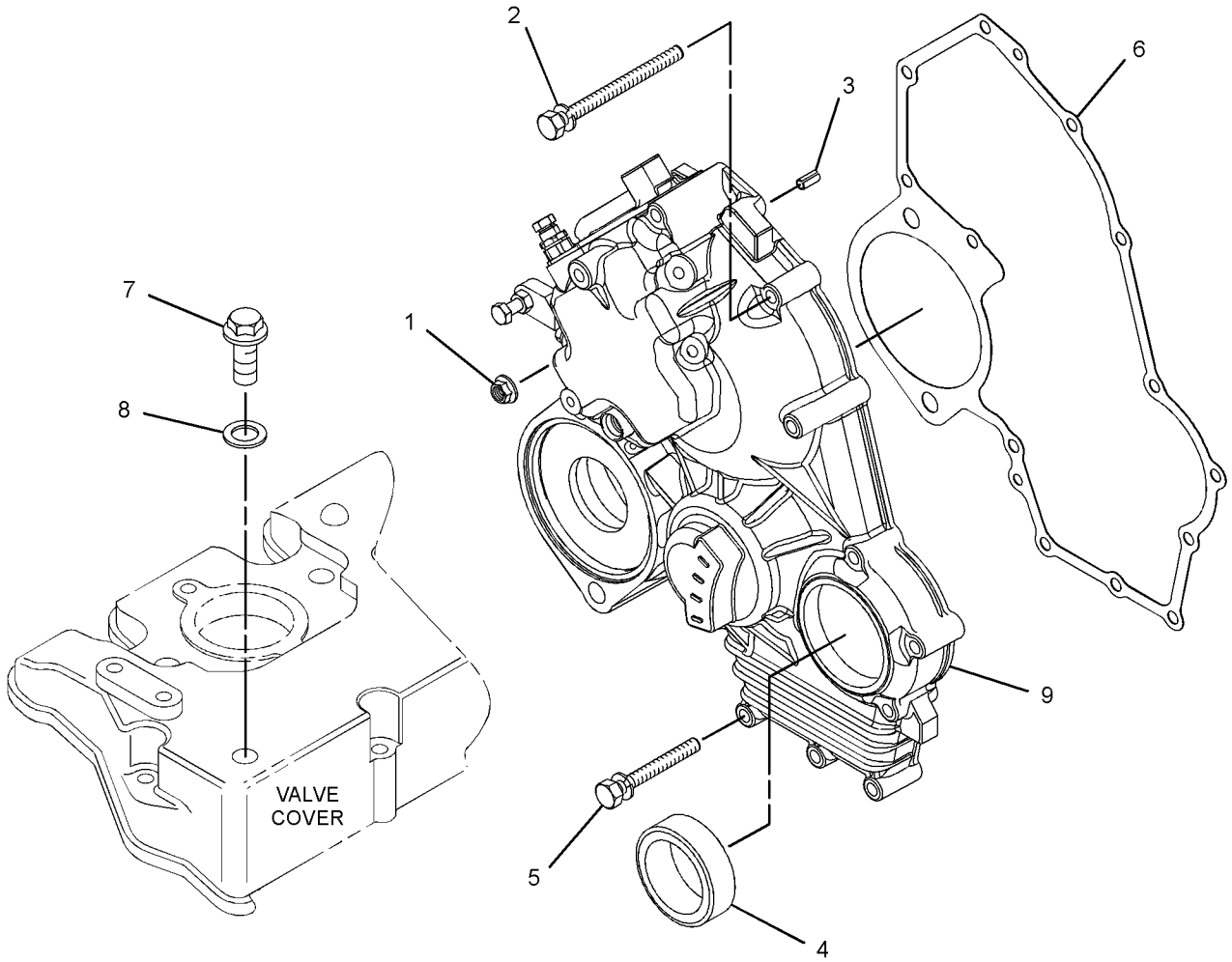

GRAPHIC #1 <END> g03374565

317-0965 HOUSING GP-FRONT

PART OF 433-1380 ENGINE AR

TYPE 2

SMCS-1151, 1162, 1206 **i10694835**

NOTE	REF NO	GRAPHIC REF	PART NUMBER	QTY	PART NAME 1 2 3 4 5 6 (PRODUCT LEVEL)	SEE PAGE
M	1	1	**153-5960**	2	NUT (M6X1-THD)	
	2	1	**153-5962**	4	BOLT AS	
	3	1	**5D-1319**	1	PIN-SPRING	
	4	1	**154-1675**	1	SEAL	
	5	1	**165-2140**	7	BOLT AS	
	6	1	**592-3241**	1	GASKET-GEAR CASE	
	7	1	**609-9566**	1	CASE AS-GEAR	

M - METRIC PART

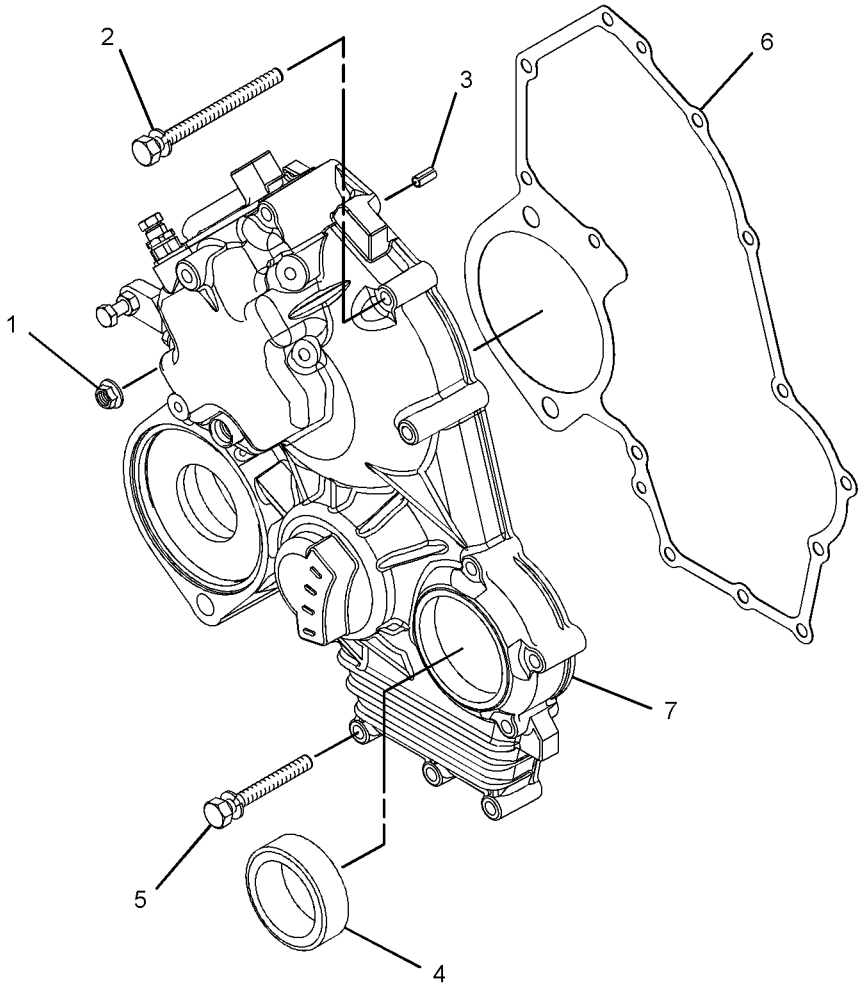

GRAPHIC #1 <END> g06209741

317-7186 HOUSING GP-FRONT

TIMING CASE

PART OF 435-1645 CYLINDER BLOCK GP-LONG

SMCS-1151, 1162, 1206

i10694849

NOTE	REF NO	GRAPHIC REF	PART NUMBER	QTY	PART NAME 1 2 3 4 5 6 (PRODUCT LEVEL)	SEE PAGE
M	1	1	**153-5960**	2	NUT (M6X1-THD)	
	2	1	**153-5962**	4	BOLT AS	
	3	1	**5D-1319**	1	PIN-SPRING	
	4	1	**154-1675**	1	SEAL	
	5	1	**165-2140**	6	BOLT AS	
	6	1	**592-3241**	1	GASKET-GEAR CASE	
	7	1	**464-2090**	1	HOUSING-FRONT	

M - METRIC PART

317-7186 **HOUSING GP-FRONT (**contd.**)** **i10694849**

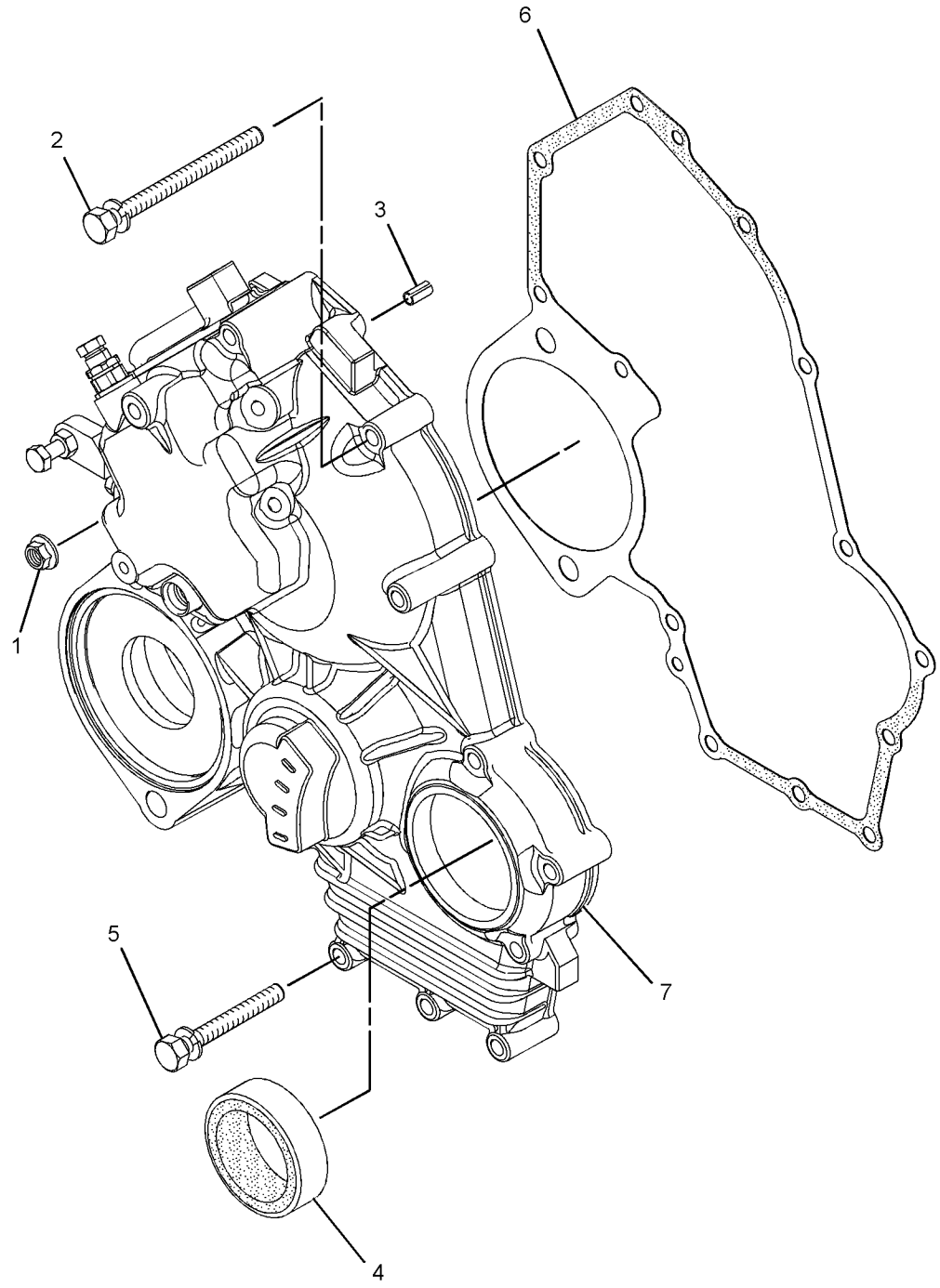

GRAPHIC #1 <END> g01624458

321-4257 HOUSING GP-FRONT

TIMING CASE

SMCS-1151, 1162, 1206 **i10575848**

NOTE	REF NO	GRAPHIC REF	PART NUMBER	QTY	PART NAME 1 2 3 4 5 6 (PRODUCT LEVEL)	SEE PAGE
M	1	2	**5C-2890**	1	NUT (M6X1-THD)	
	2	2	**139-5511**	1	CAP (TAMPER RESISTANT)	
M	3	2	**153-5592**	1	NUT (M8X1.25-THD)	
M	4	1	**153-5960**	2	NUT (M6X1-THD)	
	5	1	**153-5962**	4	BOLT AS	
	6	2	**153-6415**	2	WASHER (SEAL)	
	7	3	**153-6838**	1	BOLT AS	
	8	2	**153-7983**	1	PIN	
	9	2	**095-1574**	1	SEAL-O-RING	
M	10	2	**369-4486**	2	BOLT (M6X1X35-MM)	
	11	1	**5D-1319**	1	PIN-SPRING	
	12	1	**154-1675**	1	SEAL	
	13	3	**154-1680**	1	PLATE	
	14	2	**154-2715**	1	WASHER	
M	16	2	**162-2207**	1	NUT (M6X1-THD)	
	17	1	**165-2140**	6	BOLT AS	
M	18	2	**106-8916**	4	BOLT (M6X1X16-MM)	
	19	2	**217-7115**	1	CAP (TAMPER RESISTANT)	
	20	1	**592-3241**	1	GASKET-GEAR CASE	
	21	2	**335-5578**	1	BRACKET	
	22	2	**423-7724**	1	GASKET	
	23	2	**308-1882**	1	SPRING	
M	24	2	**308-1889**	1	NUT (M10X1.25-THD)	
M	25	2	**308-1892**	1	NUT (M6X1-THD)	
	26	2	**308-1897**	2	RING	
	28	2	**308-4266**	1	SHAFT	
	29	2	**390-3731**	1	SHAFT	
	30	2	**364-2755**	1	BOLT-SPECIAL	
	31	2	**311-0655**	1	SPRING	
M	32	2	**313-2025**	1	BOLT-SPECIAL (M10X1.25-MM THD)	
	33	2	**315-5236**	1	BOLT AS	
	33A	2	**153-7987**	1	WASHER (9.2X17X1.8-MM THK)	
M	33B	2	**191-9297**	1	NUT (M10X1.25-THD)	
	33C	2	**315-5235**	1	SPRING	
	34	2	**321-3145**	1	SPRING	
	35	2	**321-4249**	1	NUT	
Y	36	3	**343-2871**	1	CAMSHAFT AS	146
	37	3	**363-8409**	1	SLIDER	
	38	2	**425-7065**	1	CAP-TAMPER PROOF	
	39	1	**464-2090**	1	HOUSING-FRONT	
	40	2	**334-0732**	1	ARM AS (FRONT HOUSING)	
	41	2	**390-3729**	1	LEVER-CONTROL	
	42	2	**322-7493**	1	LEVER AS-CONTROL	
	43	2	**336-2965**	1	SPRING	
	44	2	**330-9189**	1	PLUG	

M - METRIC PART
Y - SEPARATE ILLUSTRATION

321-4257 **HOUSING GP-FRONT (**contd.**)** **i10575848**

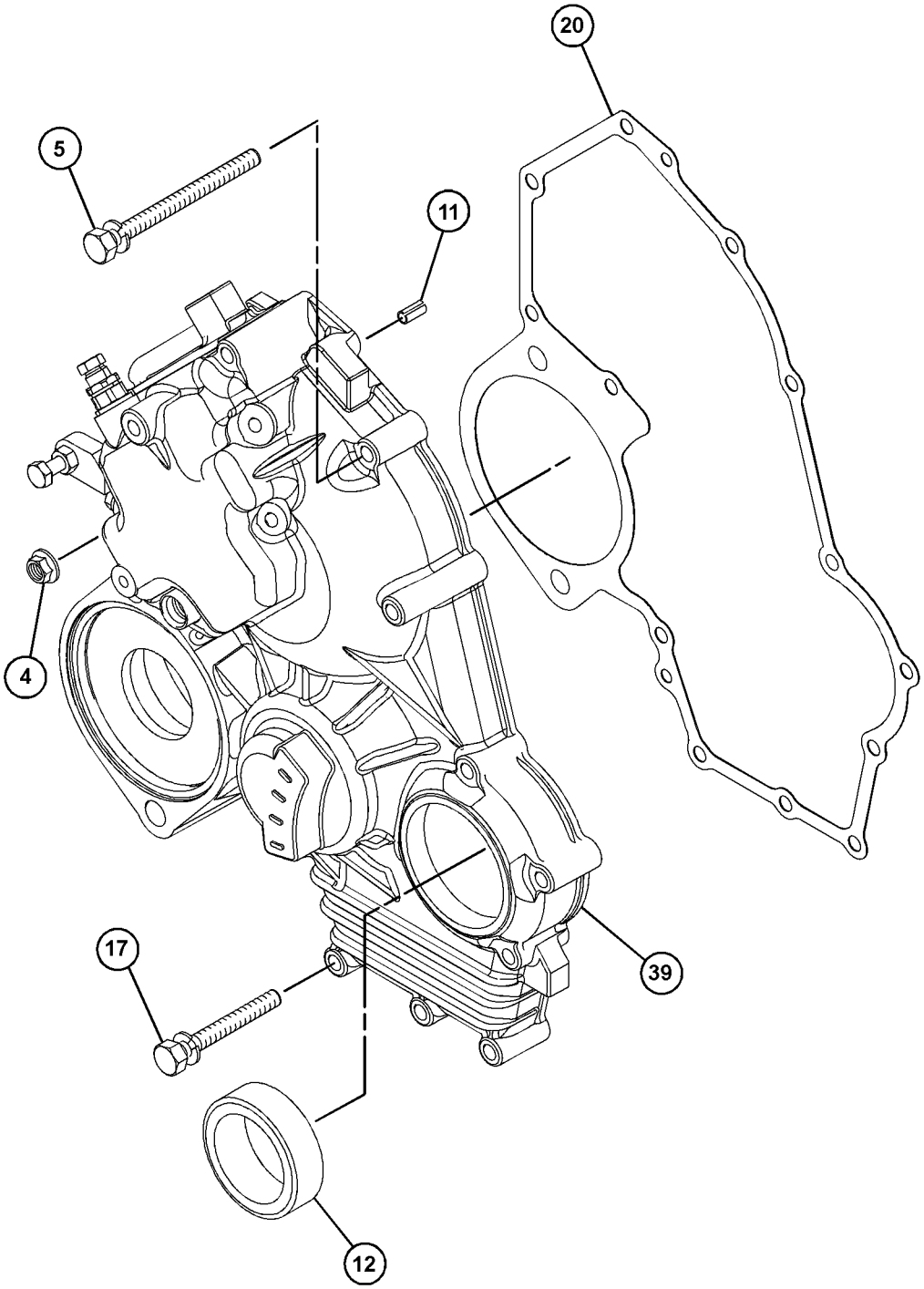

GRAPHIC #1 g06208649

321-4257 **HOUSING GP-FRONT (**contd.**)** **i10575848**

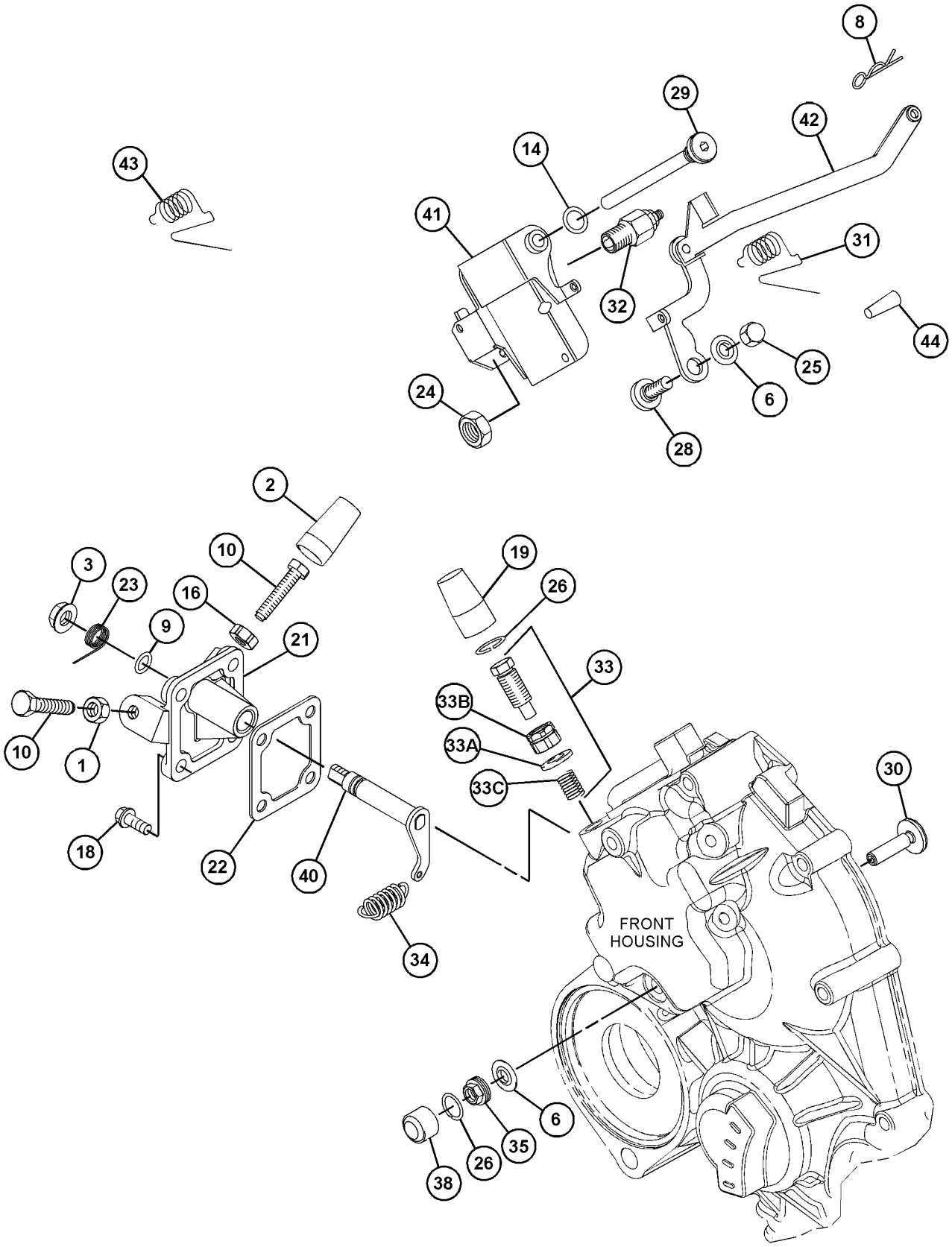

GRAPHIC #2 g06472230

321-4257 **HOUSING GP-FRONT (**contd.**)** **i10575848**

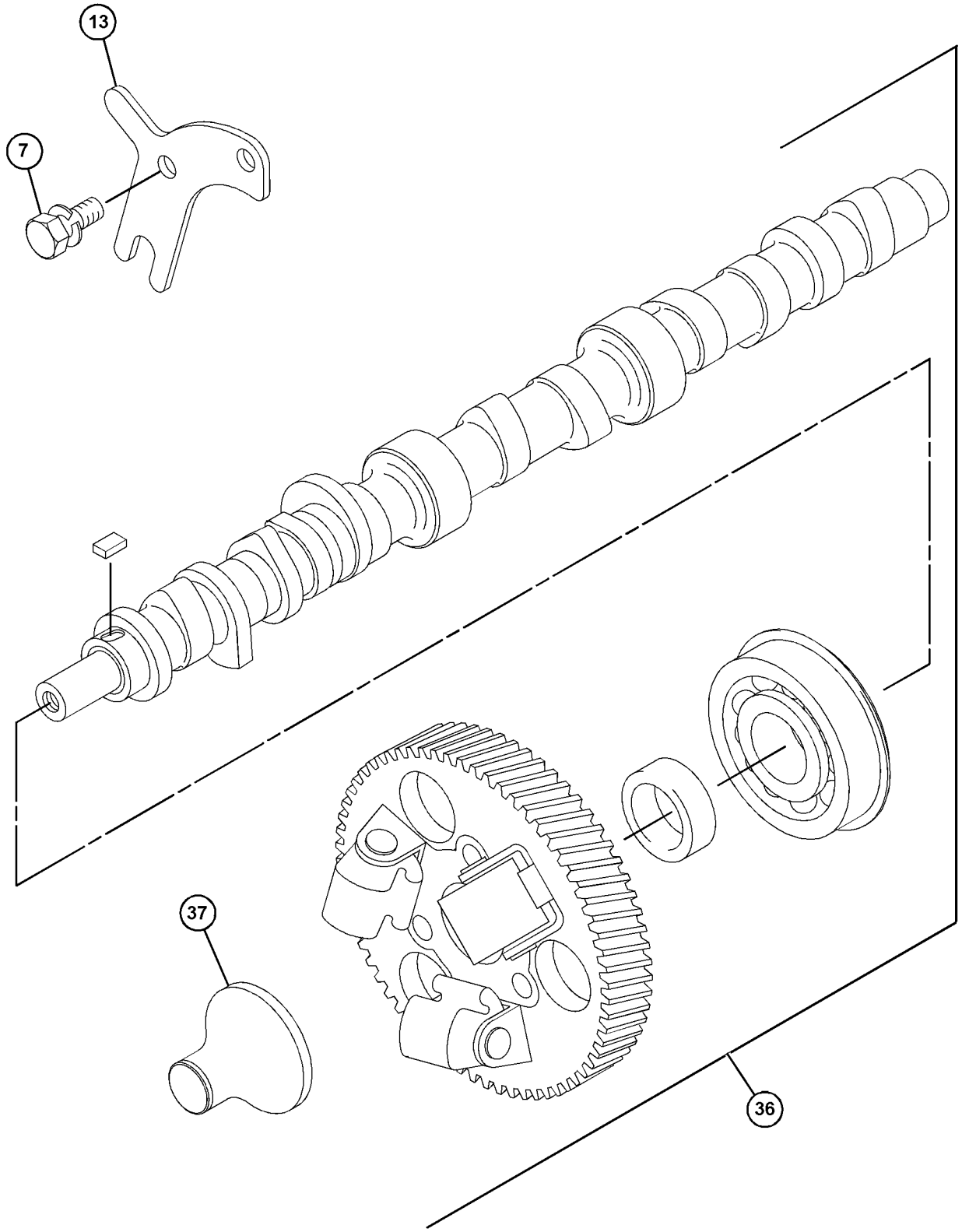

GRAPHIC #3 <END> g06475659

323-9145 HOUSING GP-FRONT

SMCS-1151, 1162, 1206 **i07296886**

NOTE	REF NO	GRAPHIC REF	PART NUMBER	QTY	PART NAME 1 2 3 4 5 6 (PRODUCT LEVEL)	SEE PAGE
M	1	1	**153-5960**	2	NUT (M6X1-THD)	
	2	1	**153-5962**	4	BOLT AS	
	3	1	**5D-1319**	1	PIN-SPRING	
	4	1	**154-1675**	1	SEAL	
	5	1	**165-2140**	7	BOLT AS	
	6	1	**423-7723**	1	GASKET	
	7	1	**328-3226**	1	HOUSING-FRONT	

M - METRIC PART

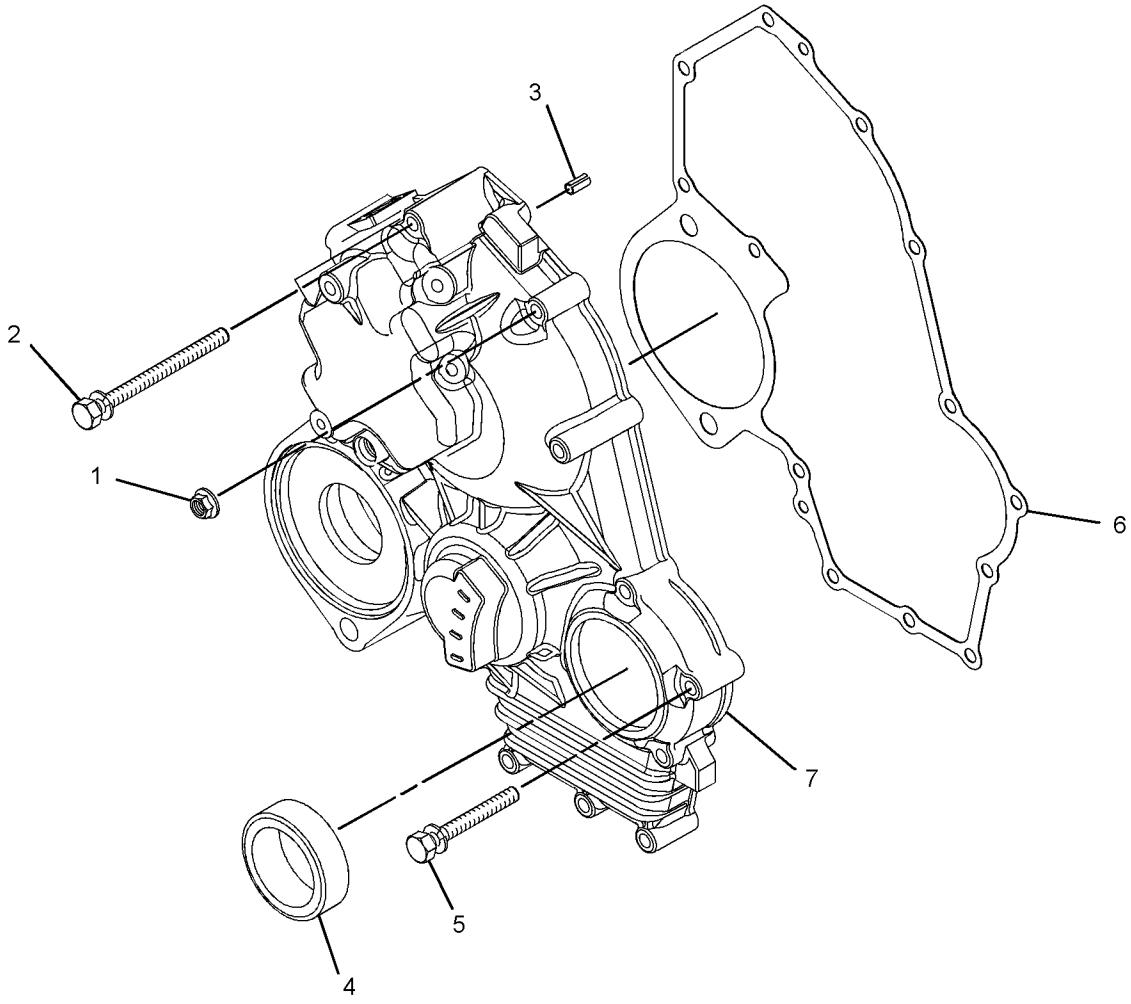

GRAPHIC #1 <END> g06281840

325-5661 HOUSING GP-FRONT

SMCS-1151, 1162, 1206 **i10694798**

NOTE	REF NO	GRAPHIC REF	PART NUMBER	QTY	PART NAME 1 2 3 4 5 6 (PRODUCT LEVEL)	SEE PAGE
M	1	1	**153-5960**	2	NUT (M6X1-THD)	
	2	1	**153-5962**	4	BOLT AS	
	3	1	**5D-1319**	1	PIN-SPRING	
	4	1	**154-1675**	1	SEAL	
	5	1	**165-2140**	7	BOLT AS	
	6	1	**592-3241**	1	GASKET-GEAR CASE	
	7	1	**609-9566**	1	CASE AS-GEAR	

M - METRIC PART

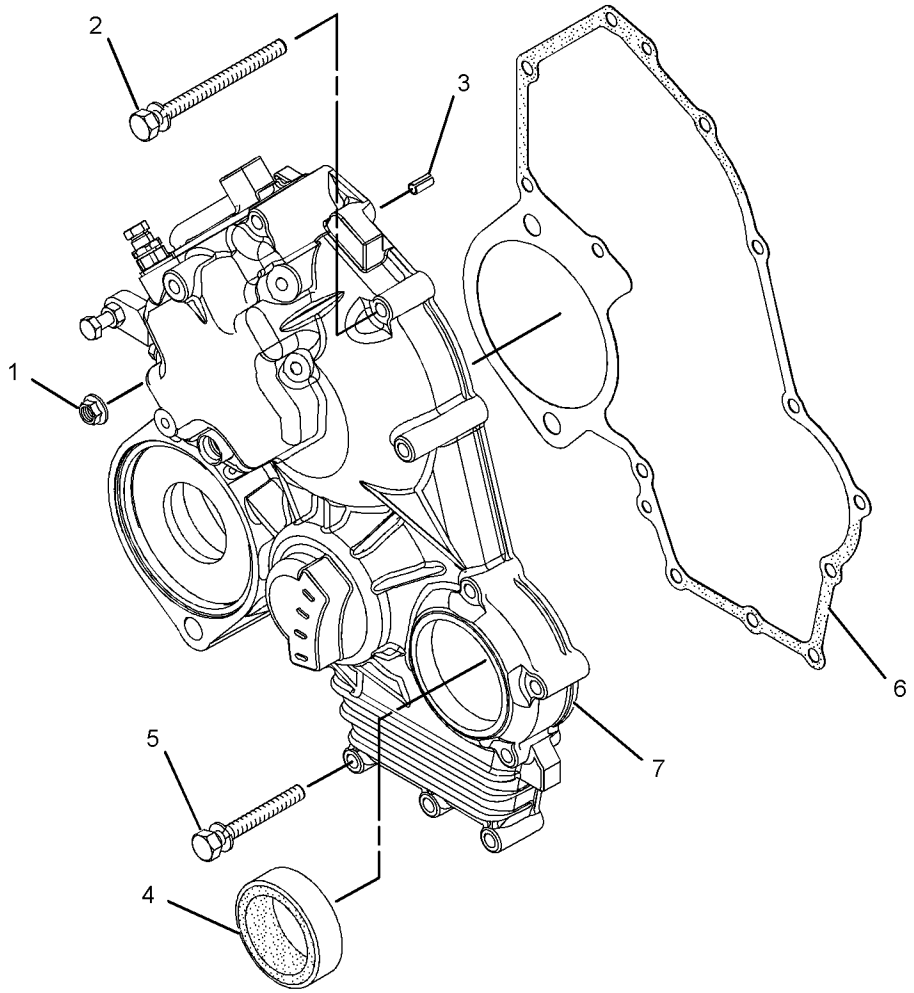

GRAPHIC #1 <END> g01542613

325-5667 HOUSING GP-FRONT

TYPE 1

SMCS-1151, 1162, 1206 **i03103443**

NOTE	REF NO	GRAPHIC REF	PART NUMBER	QTY	PART NAME 1 2 3 4 5 6 (PRODUCT LEVEL)	SEE PAGE
M	1	1	**138-7162**	2	BOLT (M10X1.5X30-MM)	
	2	1	**154-1399**	2	WASHER (10.5X18X1.6-MM THK)	
	3	1	**154-2403**	2	WASHER	
	5	1	**168-9001**	12	BOLT AS	
	6	1	**210-9587**	6	DOWEL	
	7	1	**293-0582**	1	PLATE	

M - METRIC PART

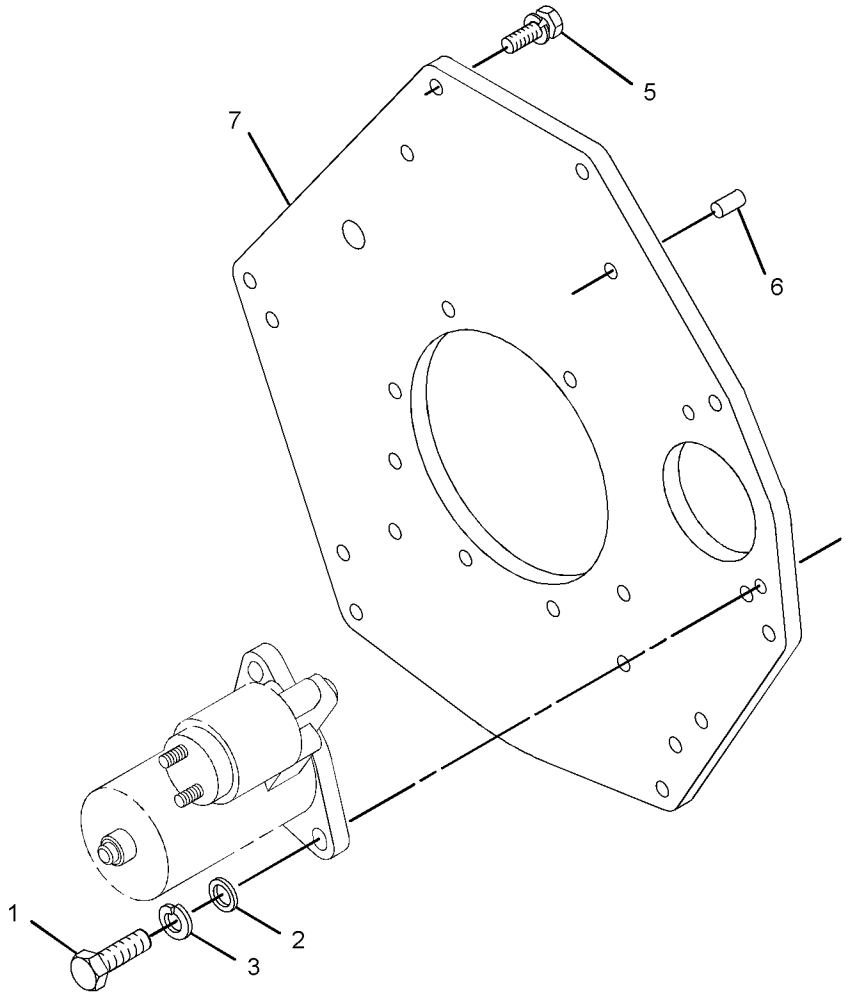

GRAPHIC #1 <END> g01640704

325-5667 HOUSING GP-FRONT

TYPE 2

SMCS-1151, 1162, 1206 **i10496819**

NOTE	REF NO	GRAPHIC REF	PART NUMBER	QTY	PART NAME 1 2 3 4 5 6 (PRODUCT LEVEL)	SEE PAGE
CM	1	1	**6I-0593**	2	BOLT (M10X1.5X30-MM)	
	2	1	**168-9001**	12	BOLT AS	
	3	1	**210-9587**	6	DOWEL	
	4	1	**432-6536**	1	PLATE	

C - CHANGE FROM PREVIOUS TYPE
M - METRIC PART

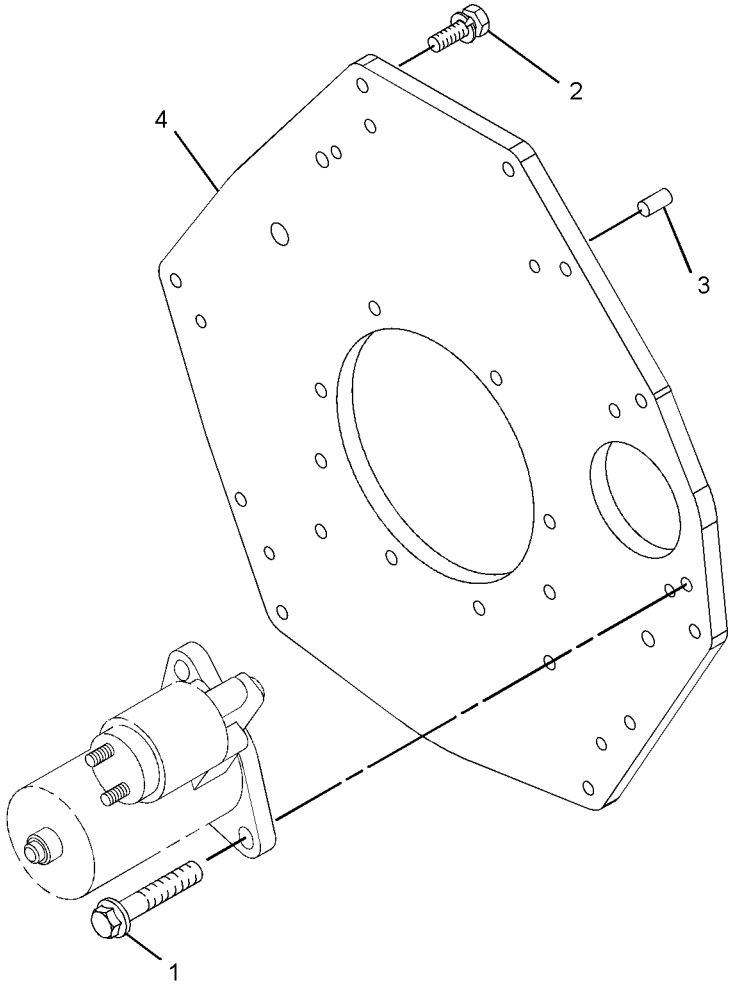

GRAPHIC #1 <END> g07915355

328-3291 HOUSING GP-FRONT

TYPE 1

SMCS-1151, 1162, 1206 **i06238283**

NOTE	REF NO	GRAPHIC REF	PART NUMBER	QTY	PART NAME 1 2 3 4 5 6 (PRODUCT LEVEL)	SEE PAGE
M	1	1	**153-5960**	2	NUT (M6X1-THD)	
	2	1	**153-5962**	4	BOLT AS	
	3	1	**5D-1319**	1	PIN-SPRING	
	4	1	**154-1675**	1	SEAL	
	5	1	**165-2140**	7	BOLT AS	
	6	1	**423-7723**	1	GASKET	
	7	1	**328-3226**	1	HOUSING-FRONT	
	8	1	**308-1897**	1	RING	
	9	1	**425-7065**	1	CAP-TAMPER PROOF	

M - METRIC PART

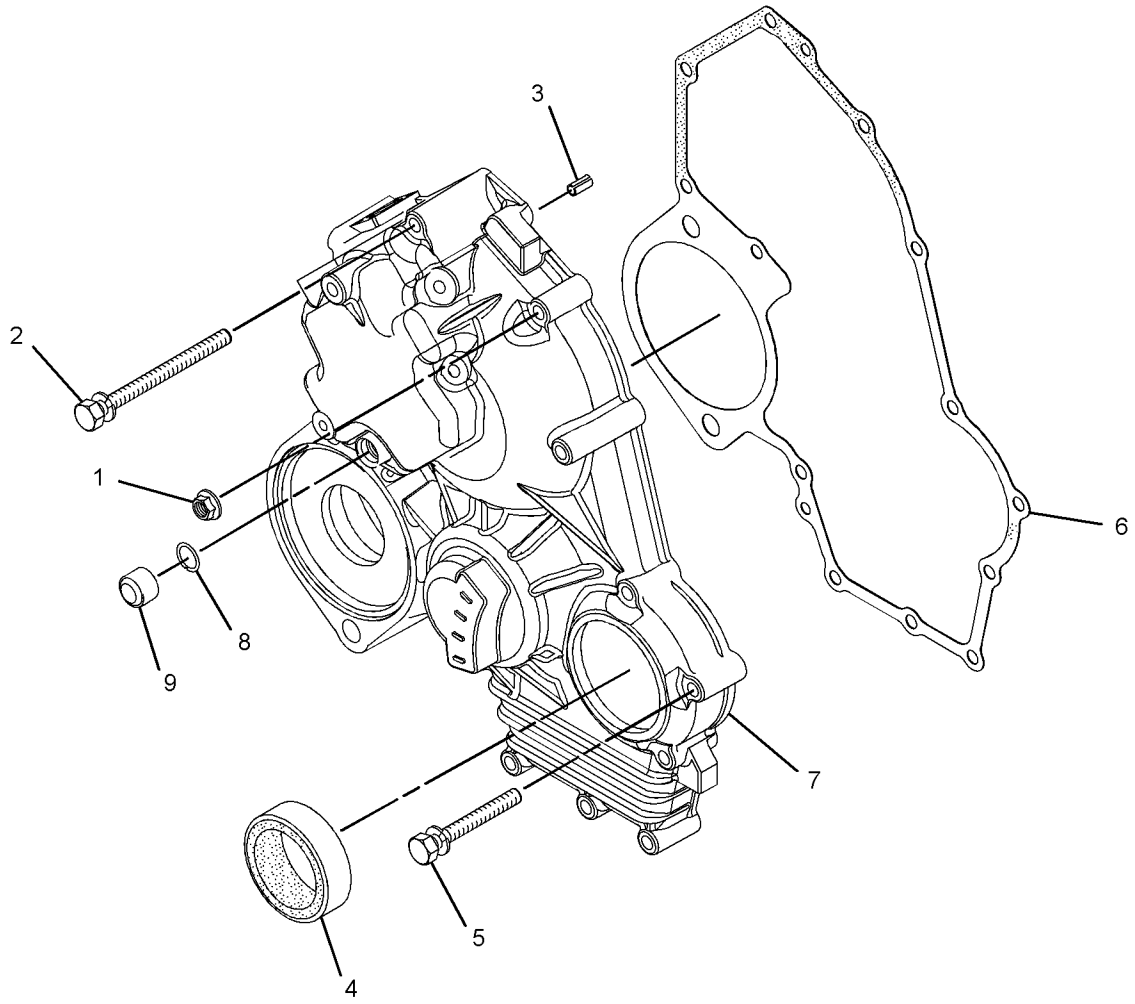

GRAPHIC #1 <END> g03728777

328-3291 HOUSING GP-FRONT

TYPE 2

SMCS-1151, 1162, 1206 **i07531473**

NOTE	REF NO	GRAPHIC REF	PART NUMBER	QTY	PART NAME 1 2 3 4 5 6 (PRODUCT LEVEL)	SEE PAGE
M	1	1	**153-5960**	2	NUT (M6X1-THD)	
	2	1	**153-5962**	4	BOLT AS	
	3	1	**5D-1319**	1	PIN-SPRING	
	4	1	**154-1675**	1	SEAL	
	5	1	**165-2140**	7	BOLT AS	
	6	1	**423-7723**	1	GASKET	
	7	1	**328-3226**	1	HOUSING-FRONT	

M - METRIC PART

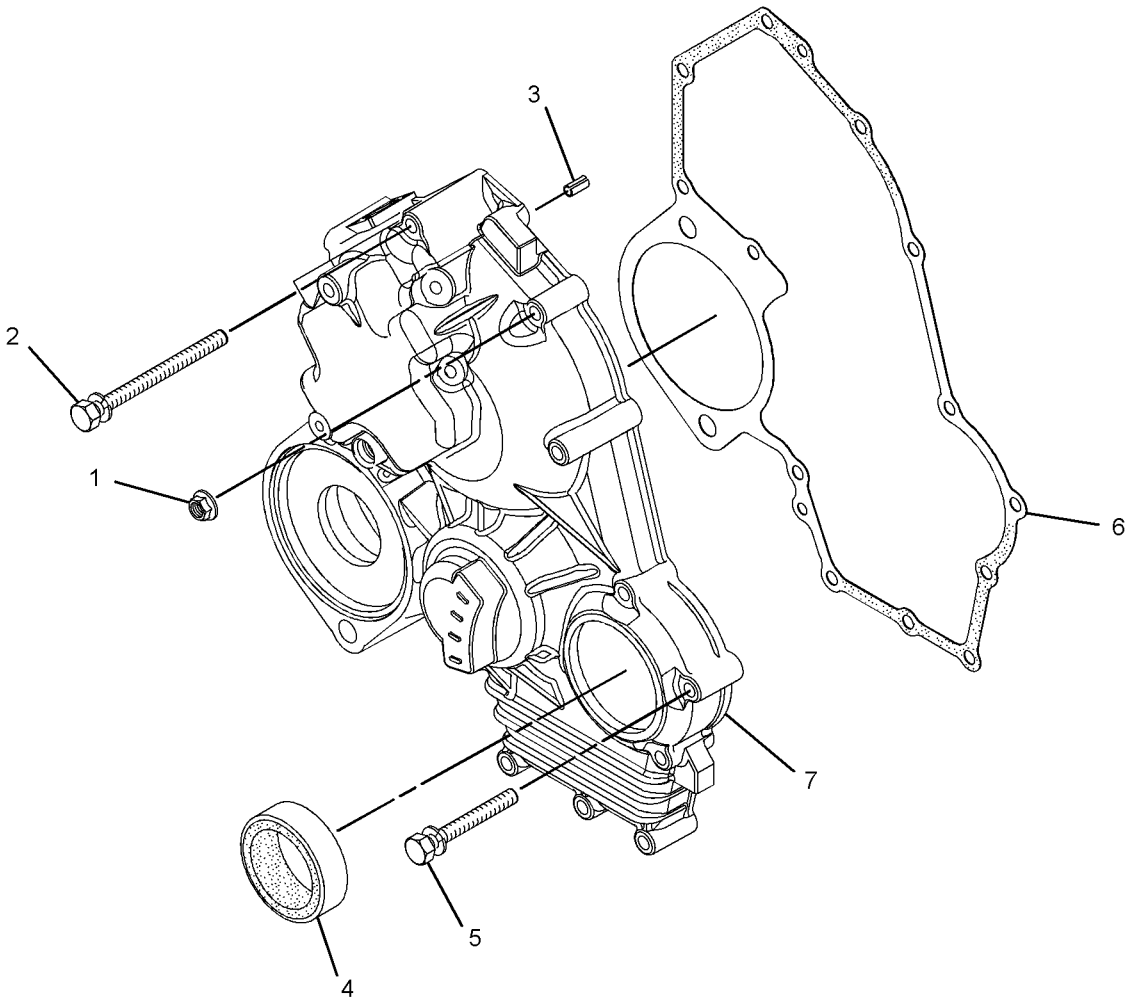

GRAPHIC #1 <END> g06353877

329-3696 HOUSING GP-FRONT

SMCS-1151, 1162, 1206 **i05031428**

NOTE	REF NO	GRAPHIC REF	PART NUMBER	QTY	PART NAME 1 2 3 4 5 6 (PRODUCT LEVEL)	SEE PAGE
M	1	1	**6I-0594**	2	NUT (M10X1.5-THD)	
M	2	1	**100-4463**	2	BOLT (M10X1.5X80-MM)	
	3	1	**308-1875**	1	SEAL-O-RING	
	4	1	**328-3229**	1	COVER	
	5	1	**329-3694**	1	PLATE	
	6	1	**329-3695**	1	COVER	

M - METRIC PART

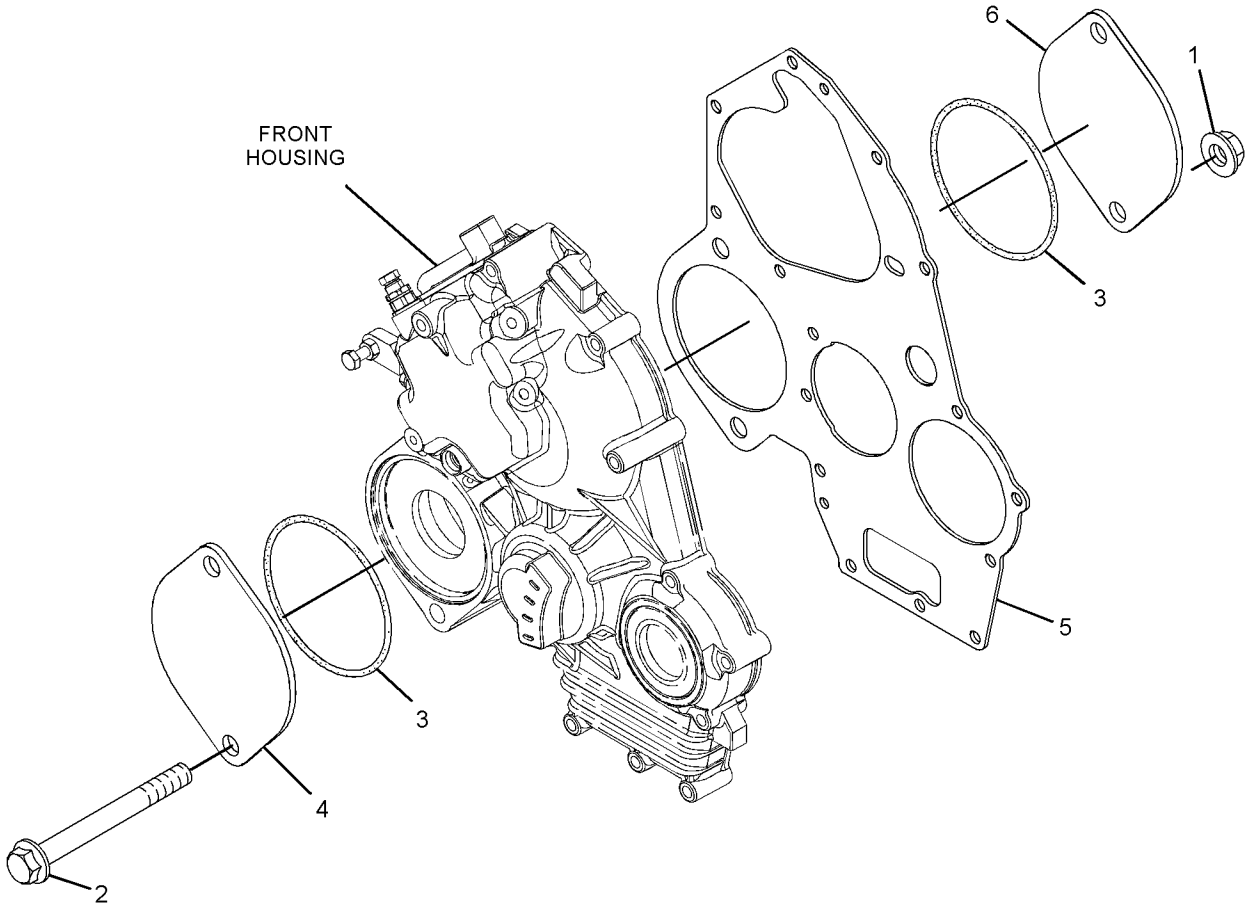

GRAPHIC #1 <END> g01637231

329-3696 HOUSING GP-FRONT

S/N: G7L1-10580

SMCS-1151, 1162, 1206 **i05413009**

NOTE	REF NO	GRAPHIC REF	PART NUMBER	QTY	PART NAME 1 2 3 4 5 6 (PRODUCT LEVEL)	SEE PAGE
M	1	1	**6I-0594**	2	NUT (M10X1.5-THD)	
M	2	1	**100-4463**	2	BOLT (M10X1.5X80-MM)	
	3	1	**308-1875**	1	SEAL-O-RING	
	4	1	**329-3694**	1	PLATE	
	5	1	**329-3695**	1	COVER	

M - METRIC PART

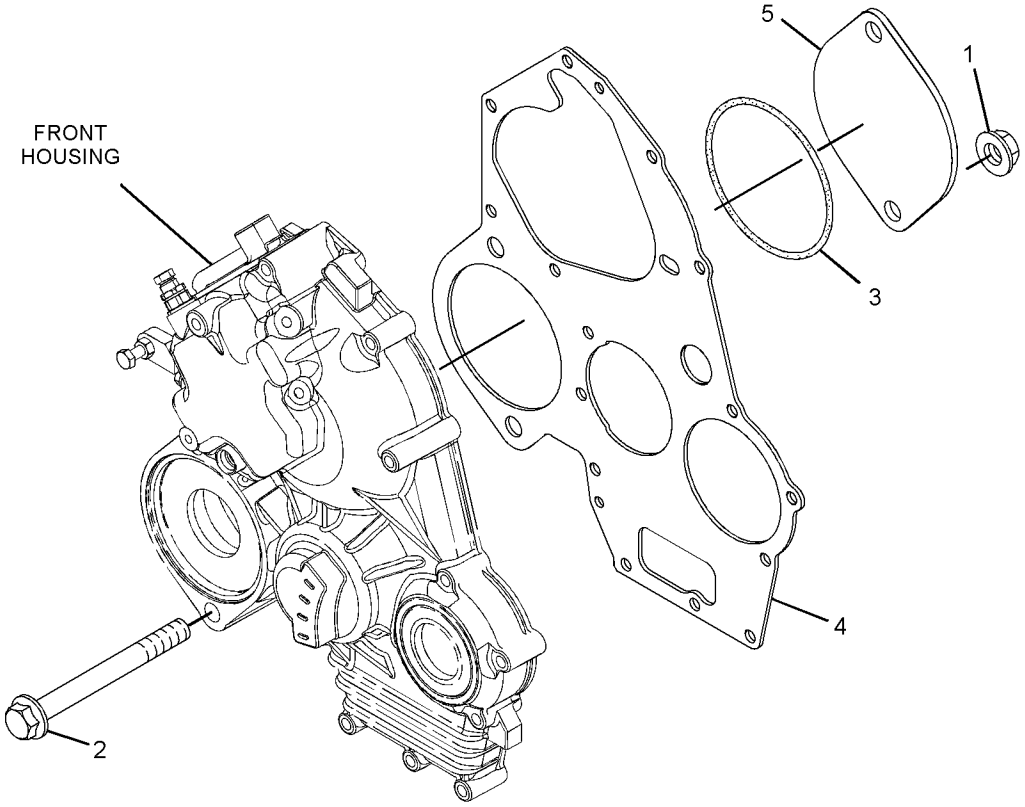

GRAPHIC #1 <END> g03417853

329-9277 HOUSING GP-FRONT

PART OF 435-1636, 459-2953, 491-3396, 495-6243, 541-9277, 587-9328 ENGINE AR-PRIMARY
TYPE 2

SMCS-1151, 1162, 1206

i10537149

NOTE	REF NO	GRAPHIC REF	PART NUMBER	QTY	PART NAME 1 2 3 4 5 6 (PRODUCT LEVEL)	SEE PAGE
Y	1	1	**483-1372**	1	HOUSING GP-FRONT	364
	2	1	**139-5511**	1	CAP (TAMPER RESISTANT)	
C	3	1	**575-5055**	1	CAP	
	4	1	**580-0398**	1	LEVER AS-CONTROL	
	5	1	**153-7983**	1	PIN	
	6	1	**319-3253**	1	SENSOR AS-SPEED (TIMING)	
M	6A	1	**5C-8312**	1	NUT (M4X0.7-THD)	
	7	1	**154-2715**	1	WASHER	
	8	1	**313-5832**	1	BOLT AS	
	9	1	**336-2965**	1	SPRING	
C	10	1	**308-1897**	1	RING	
	11	1	**217-7115**	1	CAP (TAMPER RESISTANT)	
M	12	1	**308-1889**	1	NUT (M10X1.25-THD)	
	13	1	**308-1875**	1	SEAL-O-RING	
C	14	1	**502-5421**	1	PIN	

C - CHANGE FROM PREVIOUS TYPE
M - METRIC PART
Y - SEPARATE ILLUSTRATION

329-9277 **HOUSING GP-FRONT (**contd.**)** **i10537149**

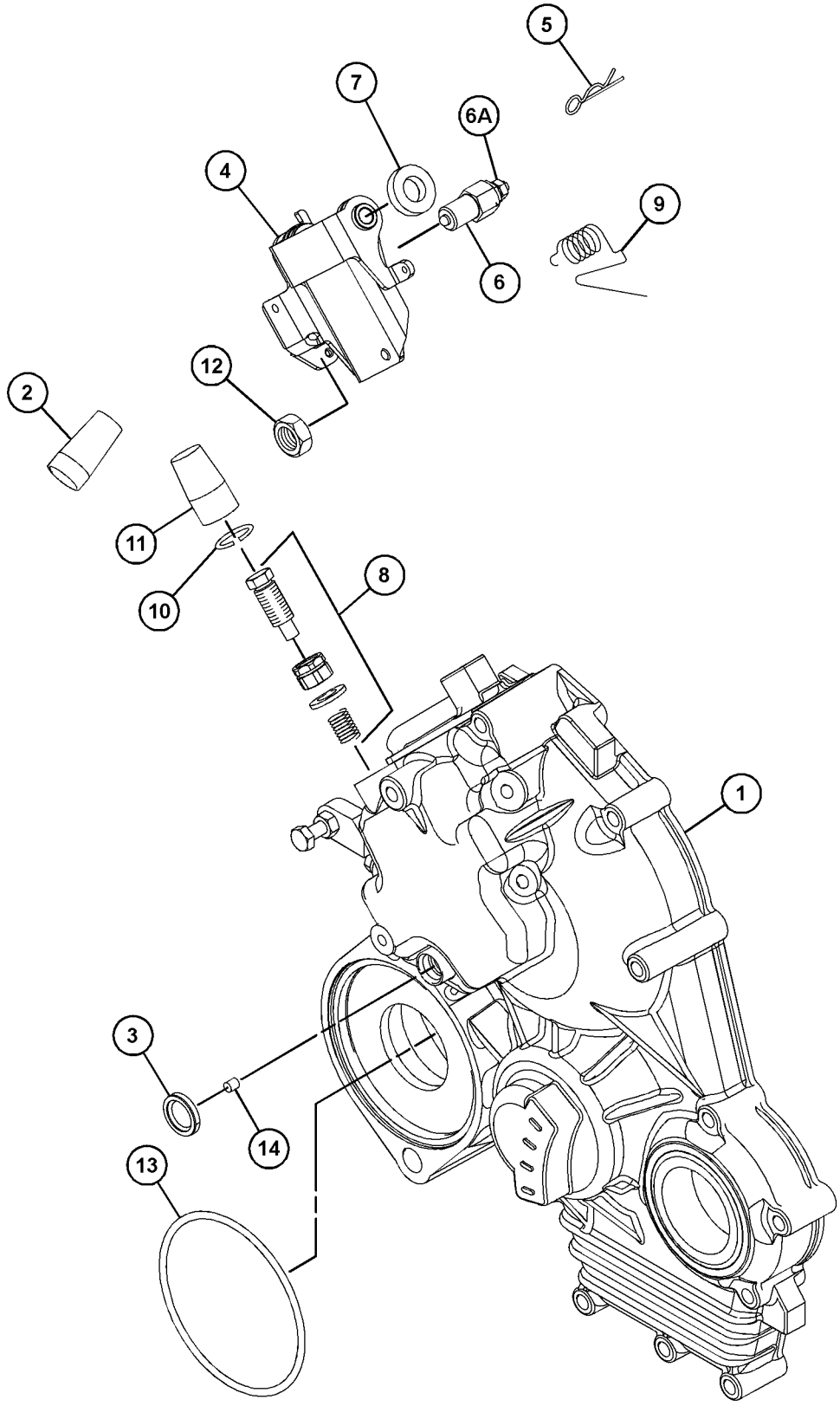

GRAPHIC #1 <END> g07935786

329-9277 HOUSING GP-FRONT

PART OF 435-1636, 495-6243 ENGINE AR-PRIMARY

TYPE 1

SMCS-1151, 1162, 1206 **i06841103**

NOTE	REF NO	GRAPHIC REF	PART NUMBER	QTY	PART NAME 1 2 3 4 5 6 (PRODUCT LEVEL)	SEE PAGE
Y	1	1	**483-1372**	1	HOUSING GP-FRONT	364
	2	1	**139-5511**	1	CAP (TAMPER RESISTANT)	
	3	1	**425-7065**	1	CAP-TAMPER PROOF	
	4	1	**390-3729**	1	LEVER-CONTROL	
	5	1	**153-7983**	1	PIN	
	6	1	**319-3253**	1	SENSOR AS-SPEED (TIMING)	
	7	1	**154-2715**	1	WASHER	
	8	1	**313-5832**	1	BOLT AS	
	8A	1	**153-7987**	1	WASHER (9.2X17X1.8-MM THK)	
M	8B	1	**191-9297**	1	NUT (M10X1.25-THD)	
	8C	1	**313-5833**	1	SPRING	
	9	1	**336-2965**	1	SPRING	
	10	1	**308-1897**	2	RING	
	11	1	**217-7115**	1	CAP (TAMPER RESISTANT)	
M	12	1	**308-1889**	1	NUT (M10X1.25-THD)	
	13	1	**308-1875**	1	SEAL-O-RING	

M - METRIC PART
Y - SEPARATE ILLUSTRATION

329-9277 **HOUSING GP-FRONT (**contd.**)** **i06841103**

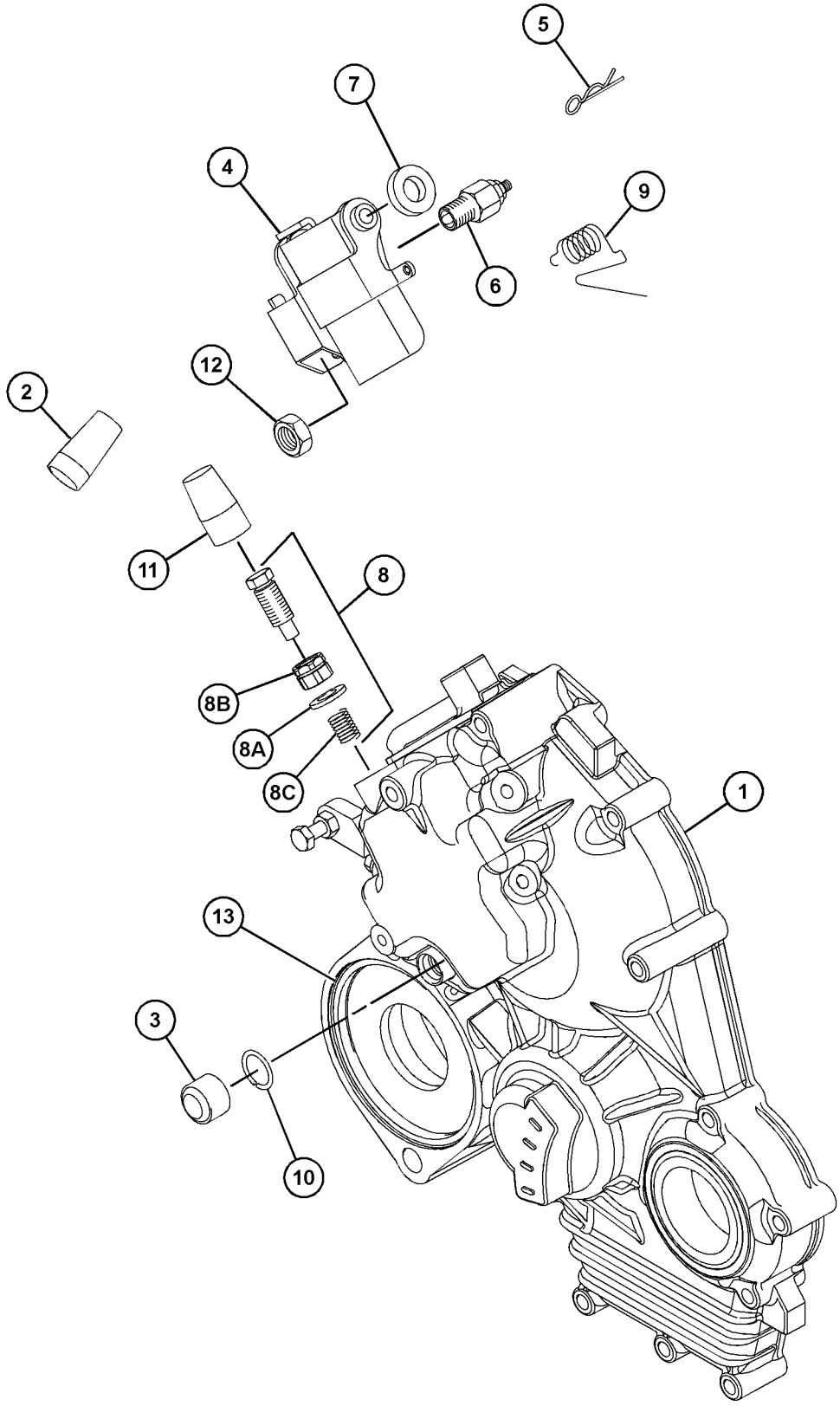

GRAPHIC #1 <END> g06160071

331-0214 HOUSING GP-FRONT

PART OF 435-1637, 435-1638 ENGINE AR

SMCS-1151, 1162, 1206 **i09578093**

NOTE	REF NO	GRAPHIC REF	PART NUMBER	QTY	PART NAME 1 2 3 4 5 6 (PRODUCT LEVEL)	SEE PAGE
M	1	1	**153-5960**	2	NUT (M6X1-THD)	
	2	1	**153-5962**	4	BOLT AS	
	3	1	**5D-1319**	1	PIN-SPRING	
	4	1	**154-1675**	1	SEAL	
	5	1	**165-2140**	7	BOLT AS	
	6	1	**592-3241**	1	GASKET-GEAR CASE	
	7	1	**464-2090**	1	HOUSING-FRONT	

M - METRIC PART

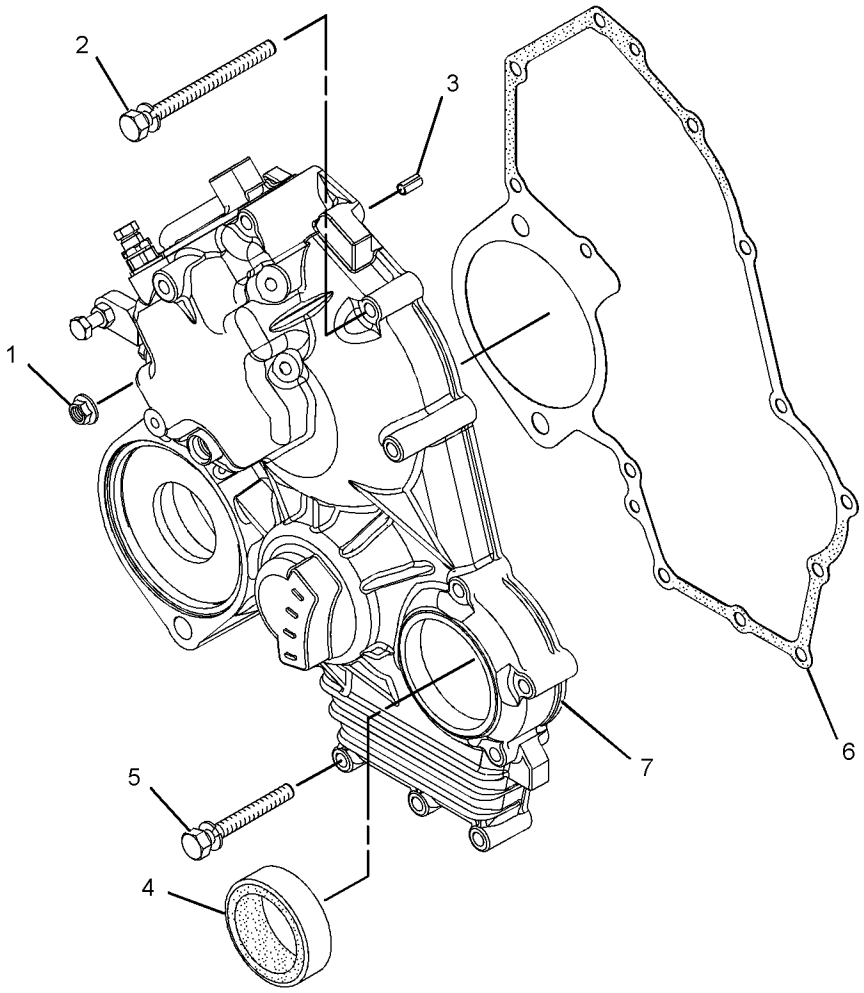

GRAPHIC #1 <END> g01660414

332-1362 HOUSING GP-FRONT

PART OF 461-7892, 461-7894, 495-3121 ENGINE AR-PRIMARY

SMCS-1151, 1162, 1206 **i09578123**

NOTE	REF NO	GRAPHIC REF	PART NUMBER	QTY	PART NAME 1 2 3 4 5 6 (PRODUCT LEVEL)	SEE PAGE
M	1	1	**153-5960**	1	NUT (M6X1-THD)	
	2	1	**153-5962**	4	BOLT AS	
	3	1	**5D-1319**	1	PIN-SPRING	
	4	1	**154-1675**	1	SEAL	
	5	1	**165-2140**	8	BOLT AS	
	6	1	**592-3241**	1	GASKET-GEAR CASE	
	7	1	**464-2090**	1	HOUSING-FRONT	

M - METRIC PART

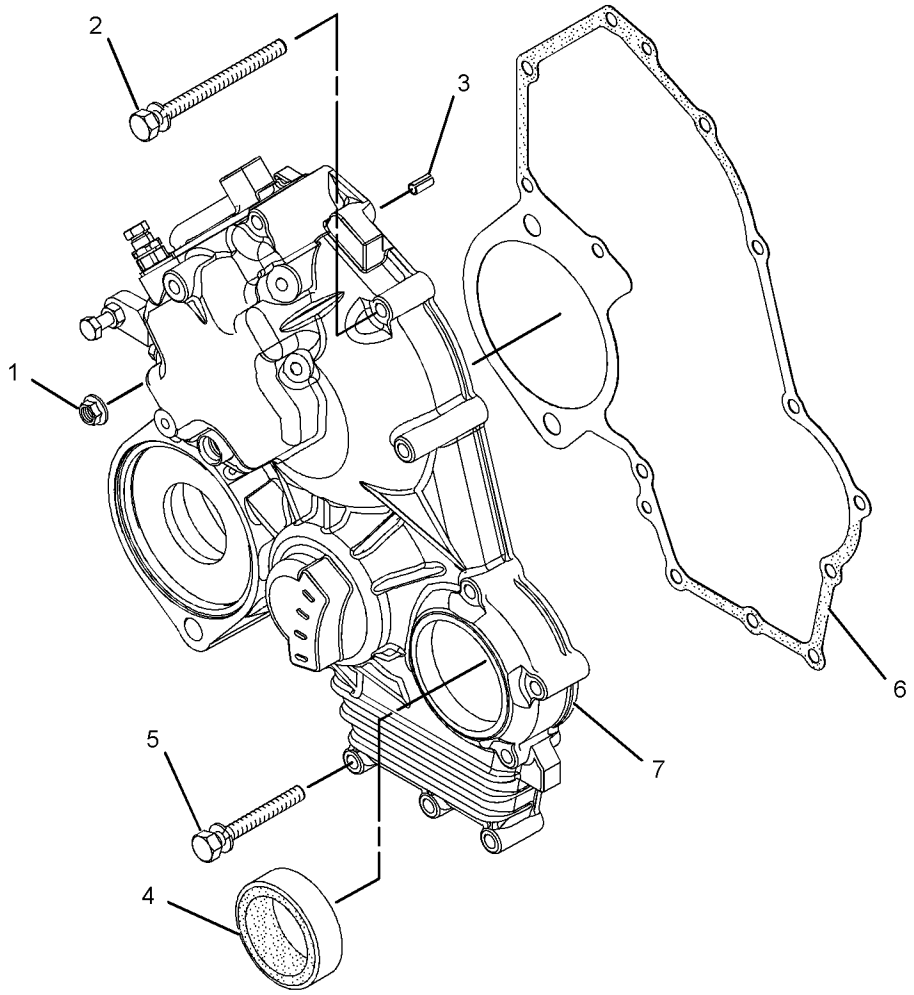

GRAPHIC #1 <END> g01542613

354-1245 HOUSING GP-FRONT

PART OF 435-1645 CYLINDER BLOCK GP-LONG, 433-1379, 433-1380, 435-1637, 435-1638 ENGINE AR, 435-1636, 435-1641, 435-1642, 435-1646, 435-1656, 435-1658, 459-2953, 492-6602, 495-6243, 549-8284, 557-9727 ENGINE AR-PRIMARY
TYPE 1

SMCS-1151, 1162, 1206 **i10548952**

NOTE	REF NO	GRAPHIC REF	PART NUMBER	QTY	PART NAME 1 2 3 4 5 6 (PRODUCT LEVEL)	SEE PAGE
M	1	1	**175-7141**	2	NUT-HEX FLANGE (M10X1.5-THD)	
M	2	1	**164-7468**	2	BOLT (M10X1.5X95-MM)	
	3	1	**308-1875**	2	SEAL-O-RING	
	4	1	**321-5907**	1	PLATE	
	5	1	**328-3229**	2	COVER	
	6	1	**328-3230**	2	BALL BEARING	
	7	1	**488-0405**	1	GEAR-DRIVE (48-TEETH)	
	8	1	**308-1874**	1	HOLDER	

M - METRIC PART

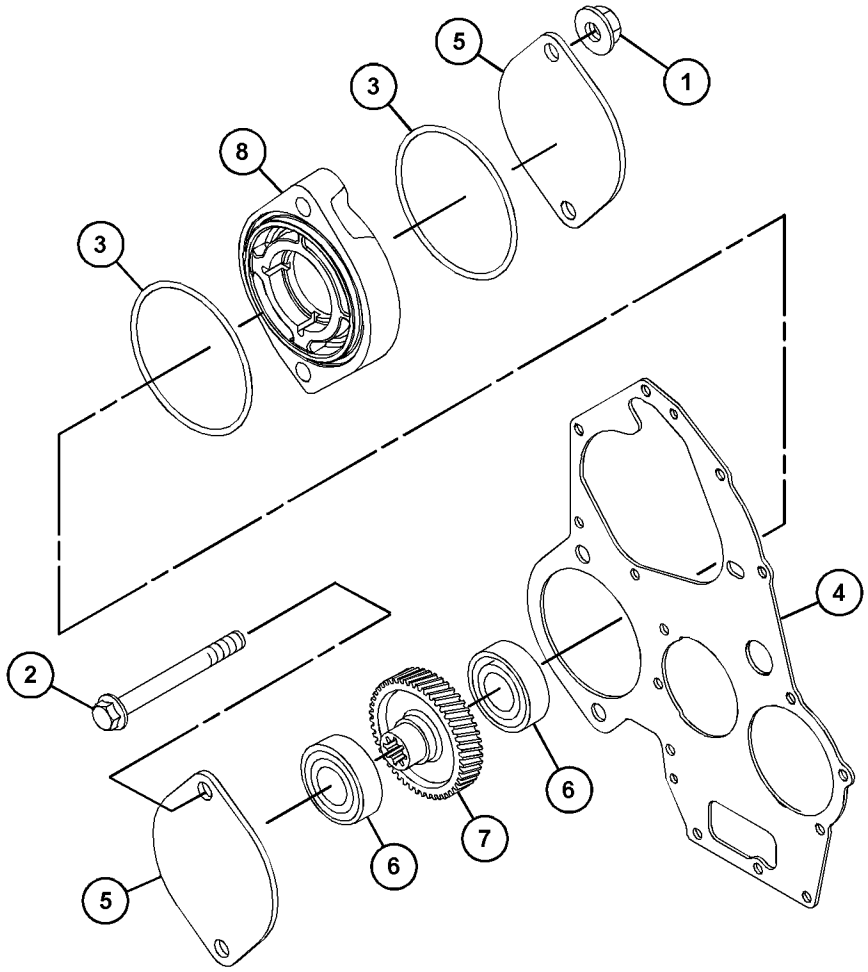

GRAPHIC #1 <END> g06721525

354-1245 HOUSING GP-FRONT

PART OF 435-1637, 435-1638 ENGINE AR, 435-1642, 435-1656, 435-1658, 459-2953, 492-6602, 495-6243, 549-8284, 557-9727 ENGINE AR-PRIMARY
TYPE 2

SMCS-1151, 1162, 1206 **i10549216**

NOTE	REF NO	GRAPHIC REF	PART NUMBER	QTY	PART NAME 1 2 3 4 5 6 (PRODUCT LEVEL)	SEE PAGE
M	1	1	**175-7141**	2	NUT-HEX FLANGE (M10X1.5-THD)	
M	2	1	**164-7468**	2	BOLT (M10X1.5X95-MM)	
	3	1	**321-5907**	1	PLATE	
	4	1	**328-3229**	2	COVER	
	5	1	**328-3230**	2	BALL BEARING	
	6	1	**488-0405**	1	GEAR-DRIVE (48-TEETH)	
C	7	1	**592-7636**	1	ADAPTER AS	
	7A	1	**365-5317**	2	SEAL	

C - CHANGE FROM PREVIOUS TYPE
M - METRIC PART

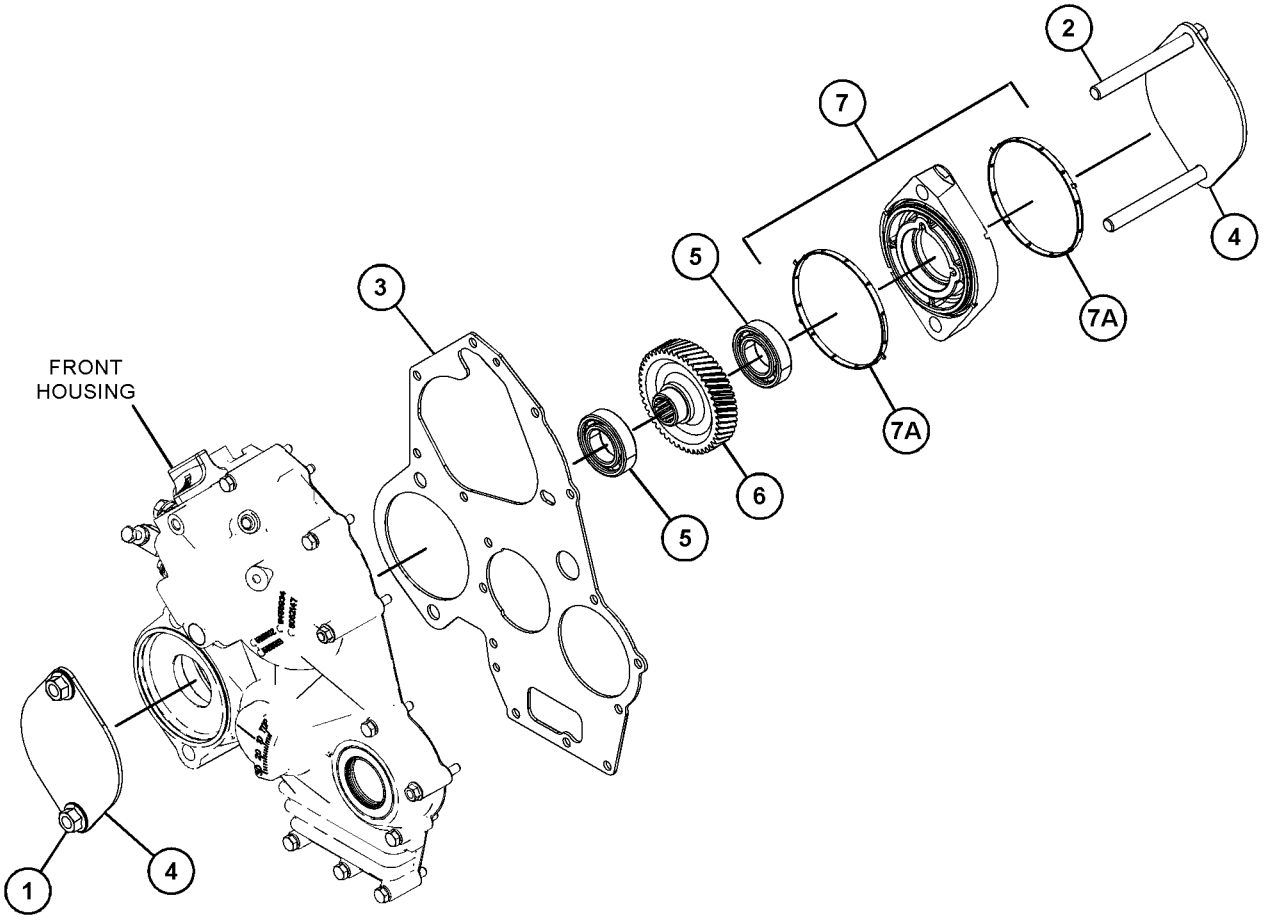

GRAPHIC #1 <END> g07918788

364-2520 HOUSING GP-FRONT

PART OF 435-1647 ENGINE AR-PRIMARY

SMCS-1151, 1162, 1206 **i09578152**

NOTE	REF NO	GRAPHIC REF	PART NUMBER	QTY	PART NAME 1 2 3 4 5 6 (PRODUCT LEVEL)	SEE PAGE
M	1	1	**153-5960**	2	NUT (M6X1-THD)	
	2	1	**153-5962**	4	BOLT AS	
	3	1	**5D-1319**	1	PIN-SPRING	
	4	1	**154-1675**	1	SEAL	
	5	1	**165-2140**	7	BOLT AS	
	6	1	**592-3241**	1	GASKET-GEAR CASE	
	7	1	**483-1210**	1	CASE-GEAR	

M - METRIC PART

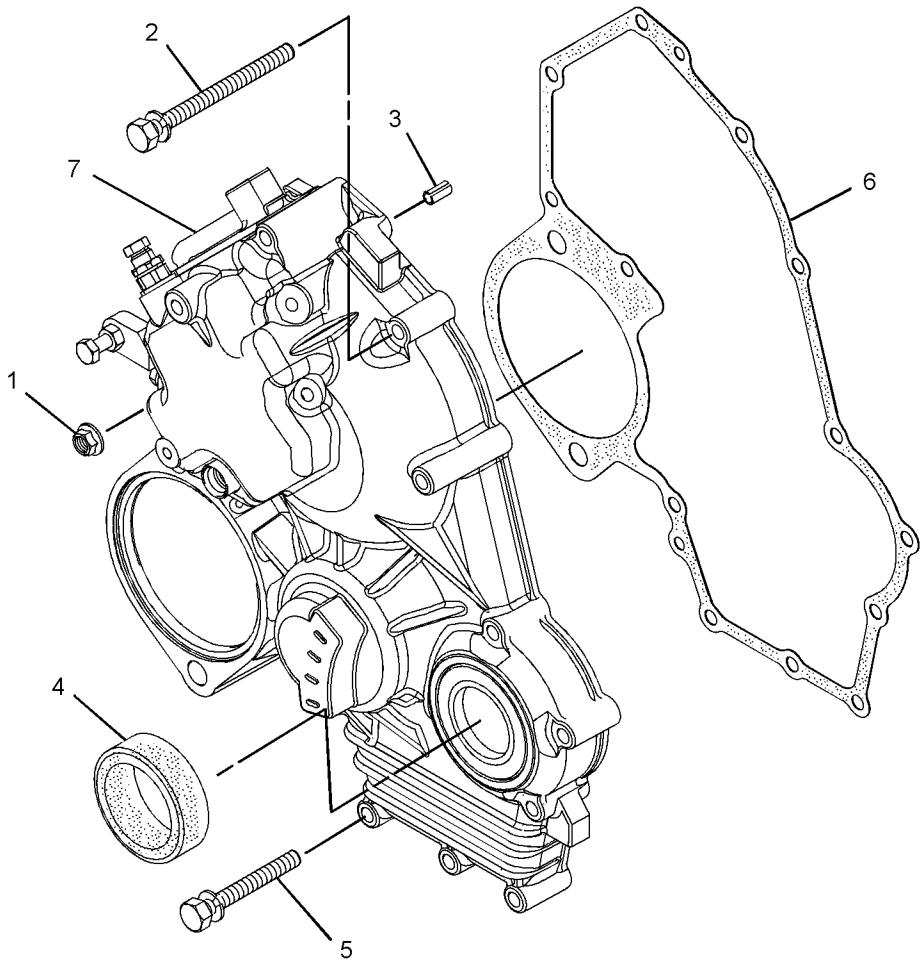

GRAPHIC #1 <END> g02334639

365-4282 HOUSING GP-FRONT

SMCS-1151, 1162, 1206 **i06238291**

NOTE	REF NO	GRAPHIC REF	PART NUMBER	QTY	PART NAME 1 2 3 4 5 6 (PRODUCT LEVEL)	SEE PAGE
M	1	1	**153-5960**	1	NUT (M6X1-THD)	
	2	1	**153-5962**	4	BOLT AS	
	3	1	**5D-1319**	1	PIN-SPRING	
	4	1	**154-1675**	1	SEAL	
	5	1	**165-2140**	7	BOLT AS	
	6	1	**423-7723**	1	GASKET	
	7	1	**364-2523**	1	HOUSING-FRONT	

M - METRIC PART

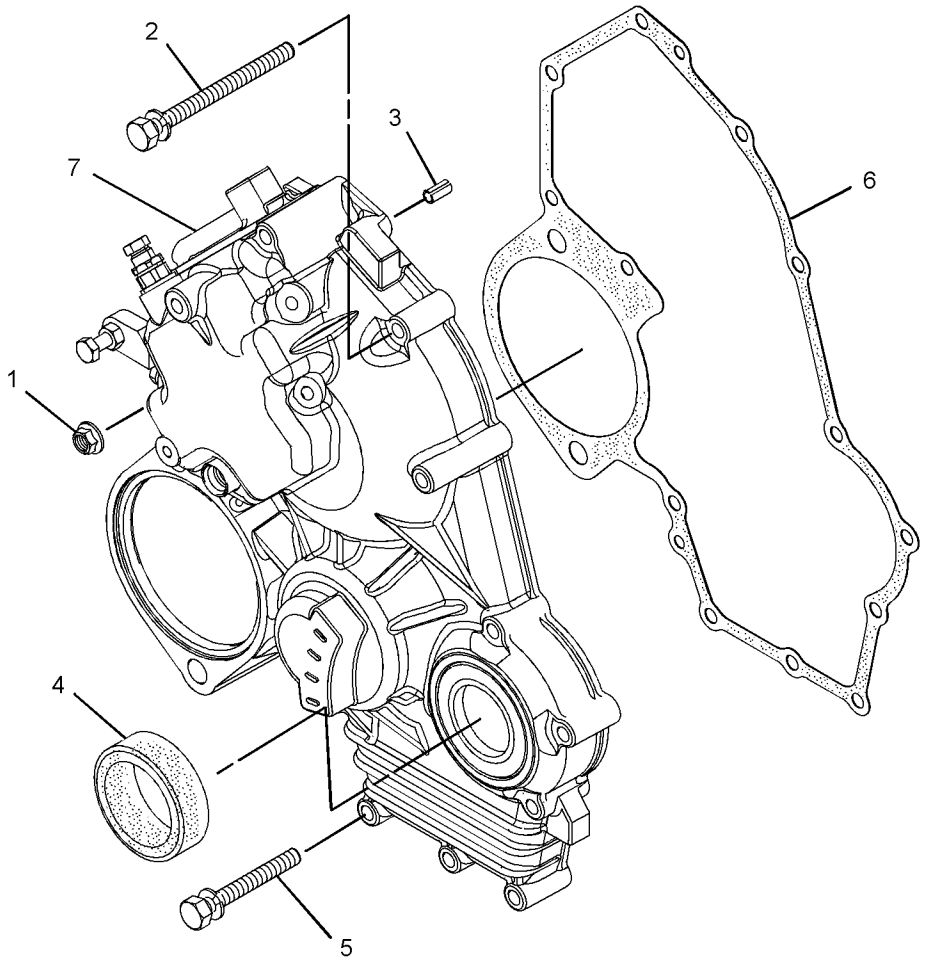

GRAPHIC #1 <END> g02334639

365-4285 HOUSING GP-FRONT

SMCS-1151, 1162, 1206 **i09578066**

NOTE	REF NO	GRAPHIC REF	PART NUMBER	QTY	PART NAME 1 2 3 4 5 6 (PRODUCT LEVEL)	SEE PAGE
M	1	1	**153-5960**	2	NUT (M6X1-THD)	
	2	1	**153-5962**	4	BOLT AS	
	3	1	**5D-1319**	1	PIN-SPRING	
	4	1	**154-1675**	1	SEAL	
	5	1	**165-2140**	7	BOLT AS	
	6	1	**592-3241**	1	GASKET-GEAR CASE	
	7	1	**483-1210**	1	CASE-GEAR	

M - METRIC PART

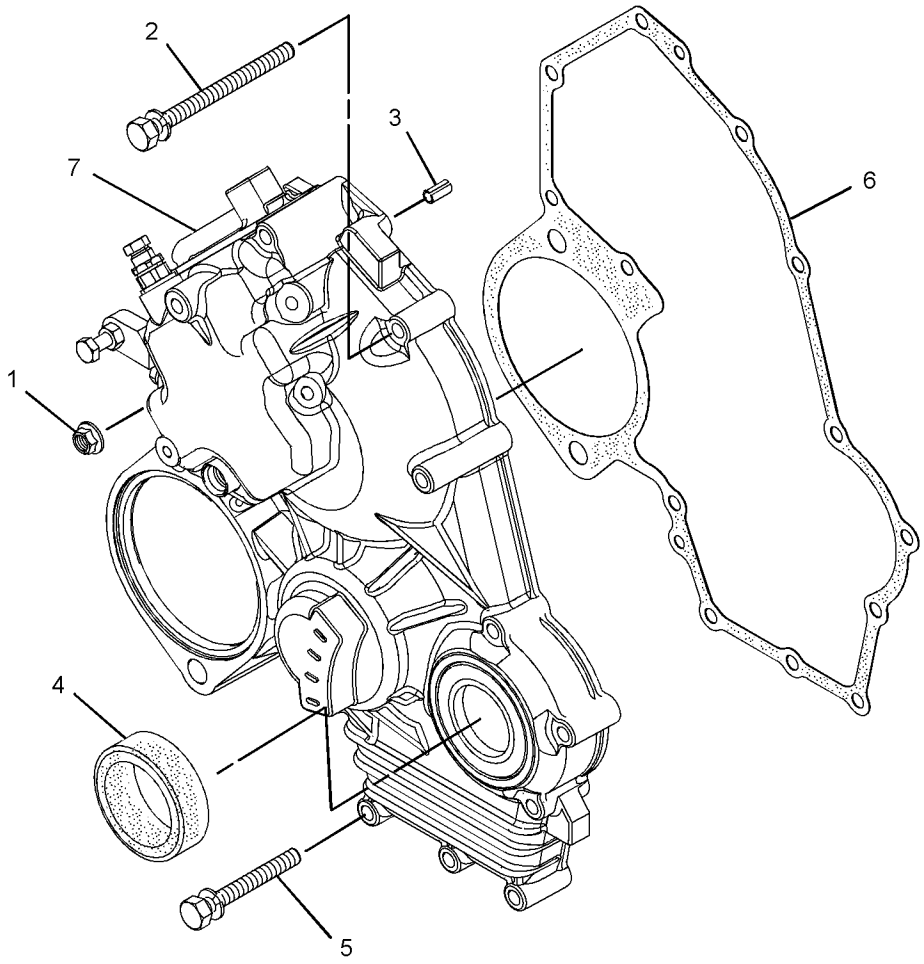

GRAPHIC #1 <END> g02334639

365-4288 HOUSING GP-FRONT

SMCS-1151, 1162, 1206 **i09596779**

NOTE	REF NO	GRAPHIC REF	PART NUMBER	QTY	PART NAME 1 2 3 4 5 6 (PRODUCT LEVEL)	SEE PAGE
M	1	1	**153-5960**	2	NUT (M6X1-THD)	
	2	1	**153-5962**	4	BOLT AS	
	3	1	**5D-1319**	1	PIN-SPRING	
	4	1	**154-1675**	1	SEAL	
	5	1	**165-2140**	7	BOLT AS	
	6	1	**592-3241**	1	GASKET-GEAR CASE	

M - METRIC PART

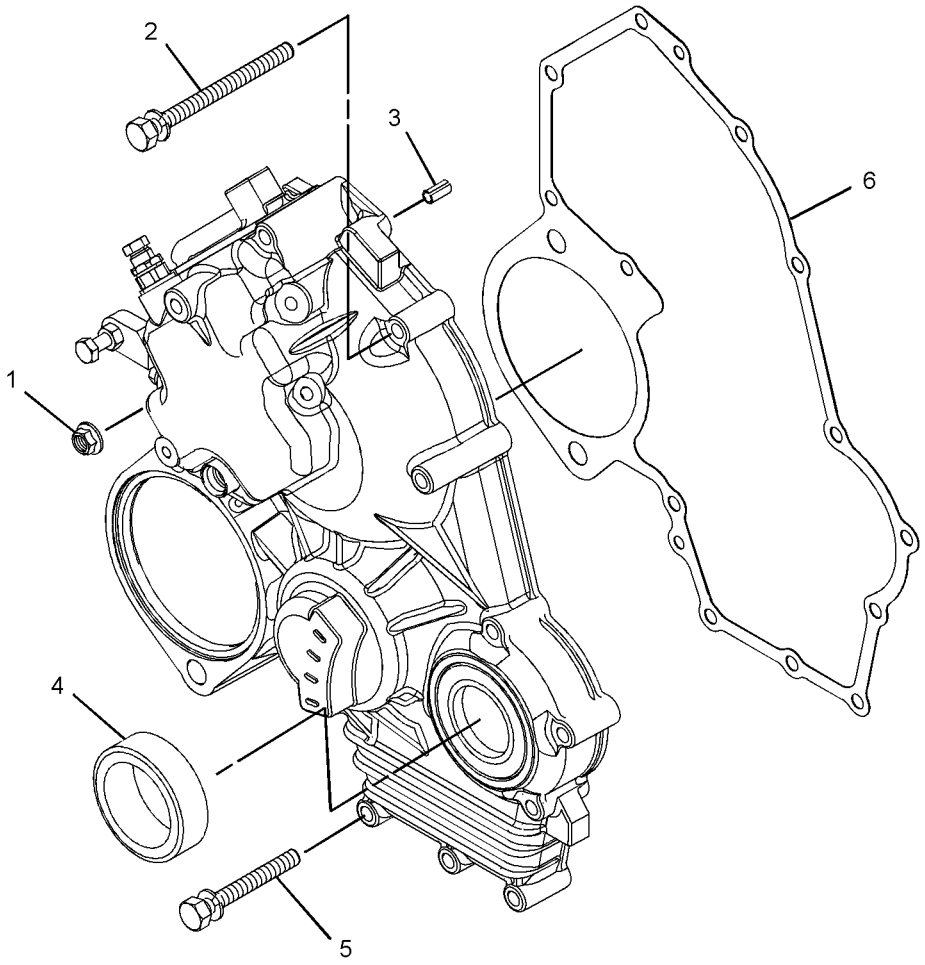

GRAPHIC #1 <END> g06051869

420-3210 HOUSING GP-FRONT

SMCS-1151, 1162, 1206

i09576097

NOTE	REF NO	GRAPHIC REF	PART NUMBER	QTY	PART NAME 1 2 3 4 5 6 (PRODUCT LEVEL)	SEE PAGE
M	1	1	**153-5960**	2	NUT (M6X1-THD)	
	2	1	**153-5962**	4	BOLT AS	
	3	1	**5D-1319**	1	PIN-SPRING	
	4	1	**154-1675**	1	SEAL	
	5	1	**165-2140**	8	BOLT AS	
	6	1	**592-3241**	1	GASKET-GEAR CASE	
	7	1	**464-2090**	1	HOUSING-FRONT	

M - METRIC PART

420-3210 **HOUSING GP-FRONT (**contd.**)** **i09576097**

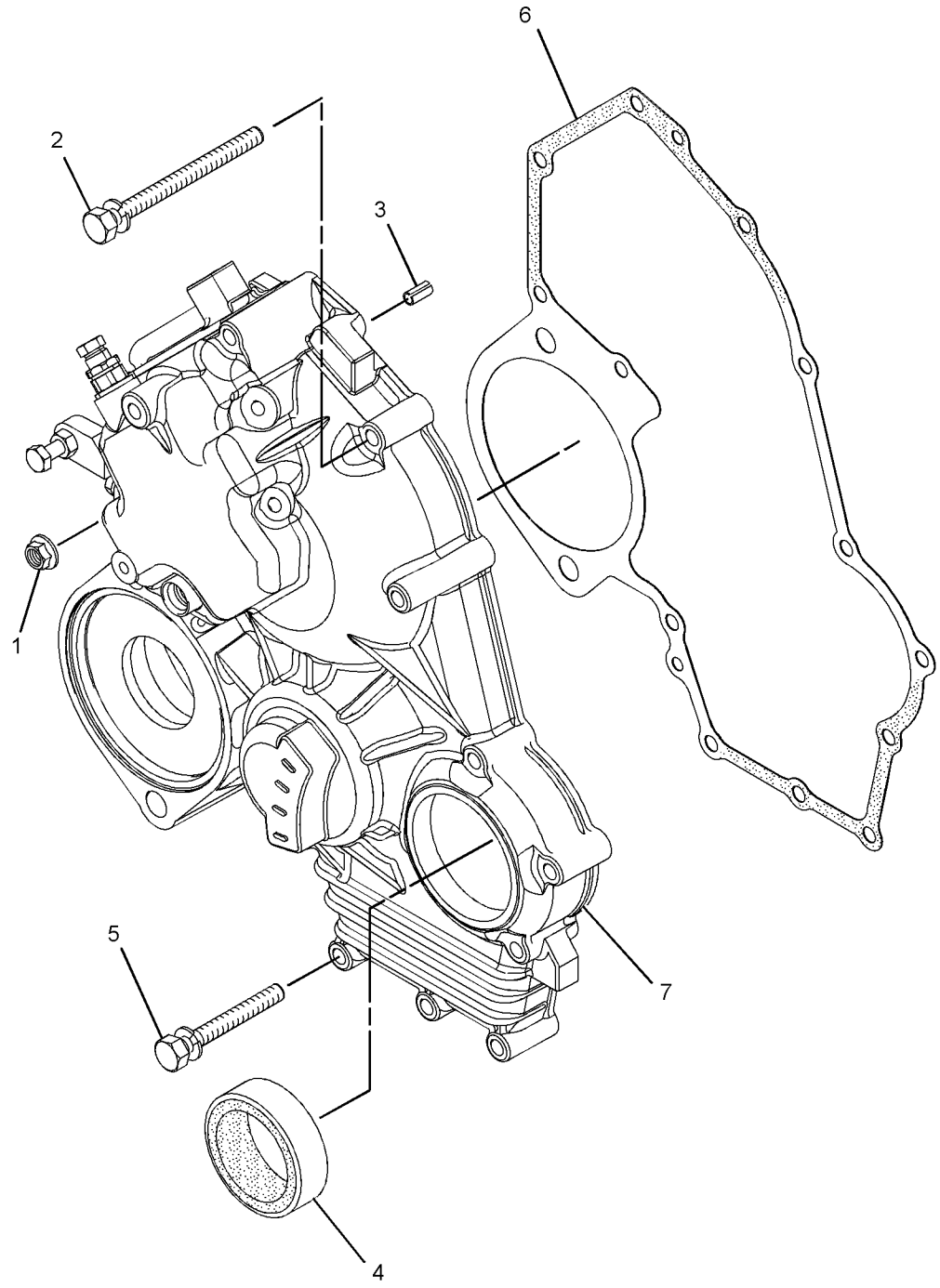

GRAPHIC #1 <END> g01624458

441-6512 HOUSING GP-FRONT

SMCS-1151, 1162, 1206 **i10694796**

NOTE	REF NO	GRAPHIC REF	PART NUMBER	QTY	PART NAME 1 2 3 4 5 6 (PRODUCT LEVEL)	SEE PAGE
M	1	1	**153-5960**	2	NUT (M6X1-THD)	
	2	1	**153-5962**	4	BOLT AS	
	3	1	**5D-1319**	1	PIN-SPRING	
	4	1	**154-1675**	1	SEAL	
	5	1	**165-2140**	7	BOLT AS	
	6	1	**592-3241**	1	GASKET-GEAR CASE	
	7	1	**609-9566**	1	CASE AS-GEAR	
		1	**5D-1319**	1	PIN-SPRING	

M - METRIC PART

441-6512 **HOUSING GP-FRONT (**contd.**)** **i10694796**

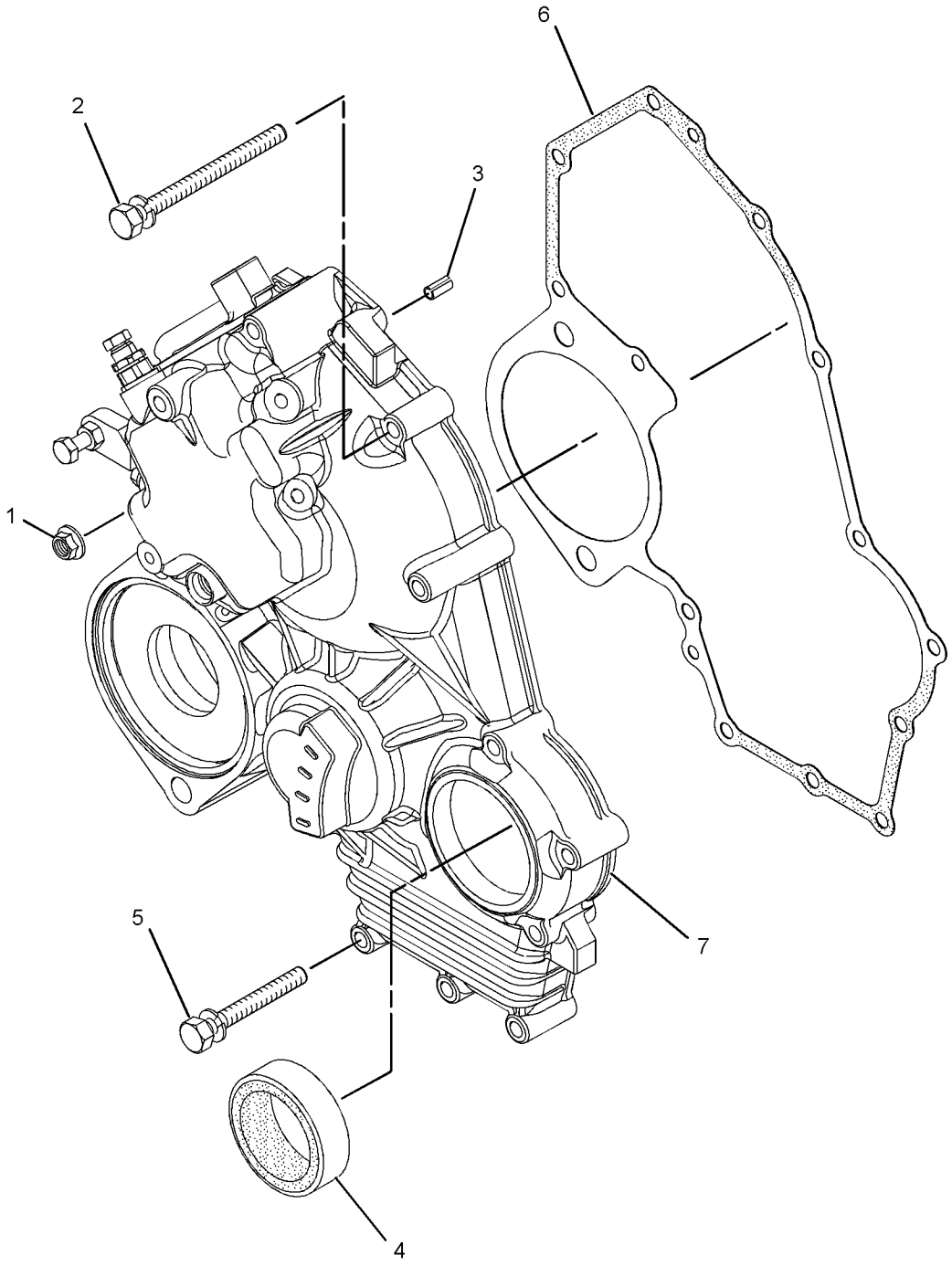

GRAPHIC #1 <END> g03734877

454-6141 HOUSING GP-FRONT

PART OF 435-1642, 492-6602, 549-8284 ENGINE AR-PRIMARY

SMCS-1151, 1162, 1206 **i10694806**

NOTE	REF NO	GRAPHIC REF	PART NUMBER	QTY	PART NAME 1 2 3 4 5 6 (PRODUCT LEVEL)	SEE PAGE
M	1	1	**153-5960**	2	NUT (M6X1-THD)	
	2	1	**153-5962**	4	BOLT AS	
	3	1	**5D-1319**	1	PIN-SPRING	
	4	1	**154-1675**	1	SEAL	
	5	1	**165-2140**	7	BOLT AS	
	6	1	**592-3241**	1	GASKET-GEAR CASE	
	7	1	**609-9566**	1	CASE AS-GEAR	

M - METRIC PART

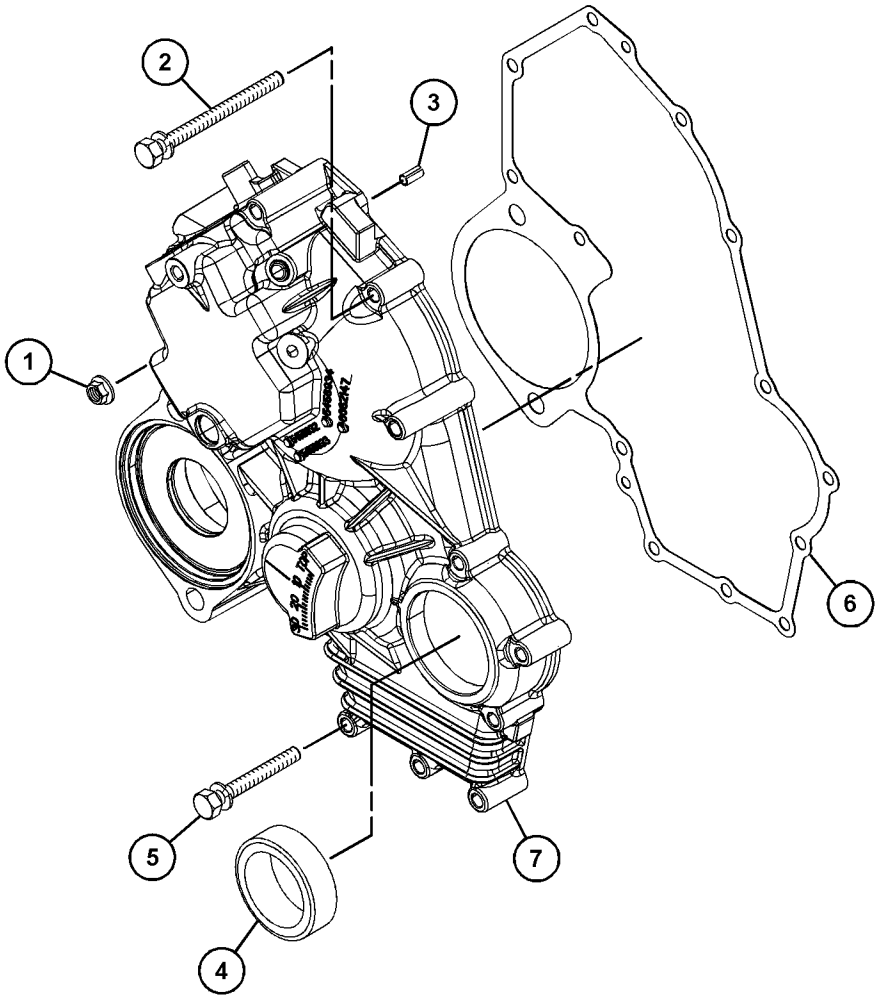

GRAPHIC #1 <END> g07938146

465-2205 HOUSING GP-FRONT

PART OF 461-7895 ENGINE AR-PRIMARY

SMCS-1151, 1162, 1206 **i09605191**

NOTE	REF NO	GRAPHIC REF	PART NUMBER	QTY	PART NAME 1 2 3 4 5 6 (PRODUCT LEVEL)	SEE PAGE
M	1	1	**153-5960**	2	NUT (M6X1-THD)	
	2	1	**153-5962**	4	BOLT AS	
	3	1	**5D-1319**	1	PIN-SPRING	
	4	1	**154-1675**	1	SEAL	
	5	1	**165-2140**	7	BOLT AS	
	6	1	**592-3241**	1	GASKET-GEAR CASE	
	7	1	**483-1210**	1	CASE-GEAR	

M - METRIC PART

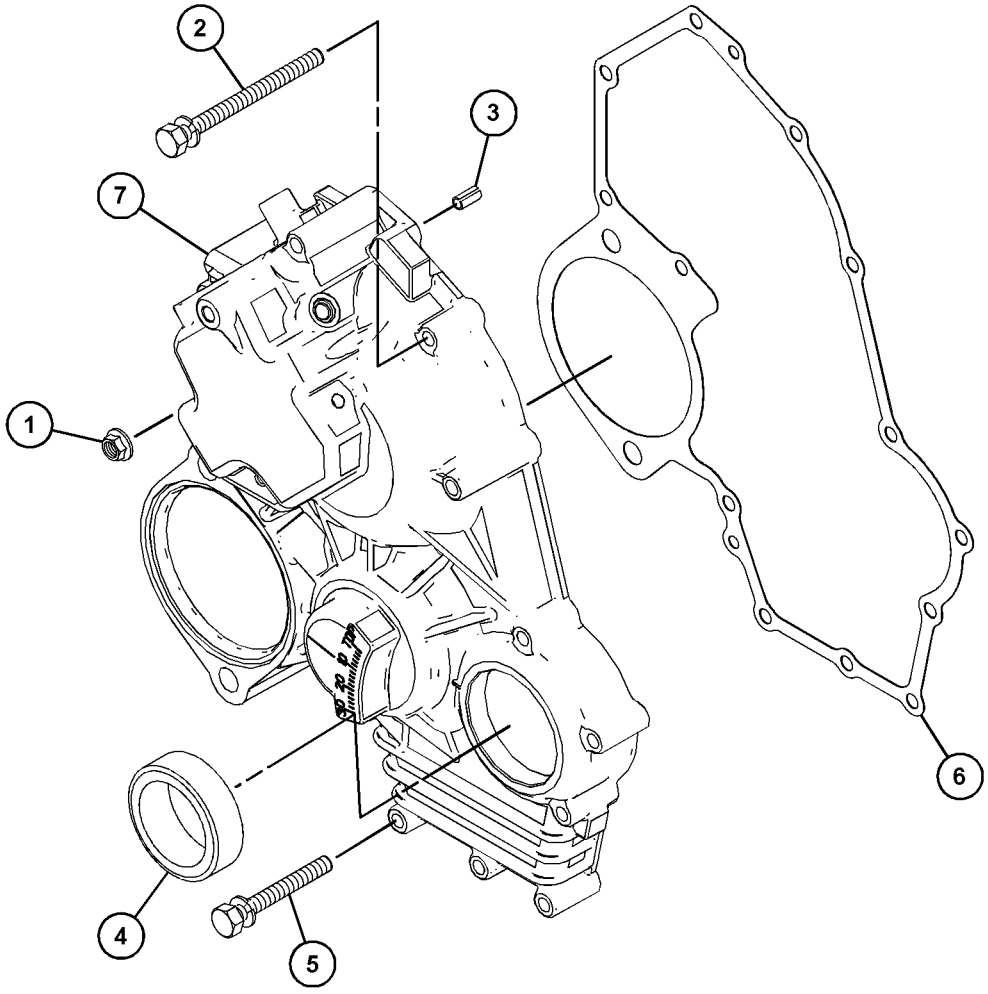

GRAPHIC #1 <END> g07597887

465-2492 HOUSING GP-FRONT

PART OF 435-1642 ENGINE AR-PRIMARY

SMCS-1151, 1162, 1206 **i10694793**

NOTE	REF NO	GRAPHIC REF	PART NUMBER	QTY	PART NAME 1 2 3 4 5 6 (PRODUCT LEVEL)	SEE PAGE
M	1	1	**153-5960**	1	NUT (M6X1-THD)	
	2	1	**153-5962**	4	BOLT AS	
	3	1	**5D-1319**	1	PIN-SPRING	
	4	1	**154-1675**	1	SEAL	
	5	1	**165-2140**	7	BOLT AS	
	6	1	**592-3241**	1	GASKET-GEAR CASE	
	7	1	**609-9566**	1	CASE AS-GEAR	

M - METRIC PART

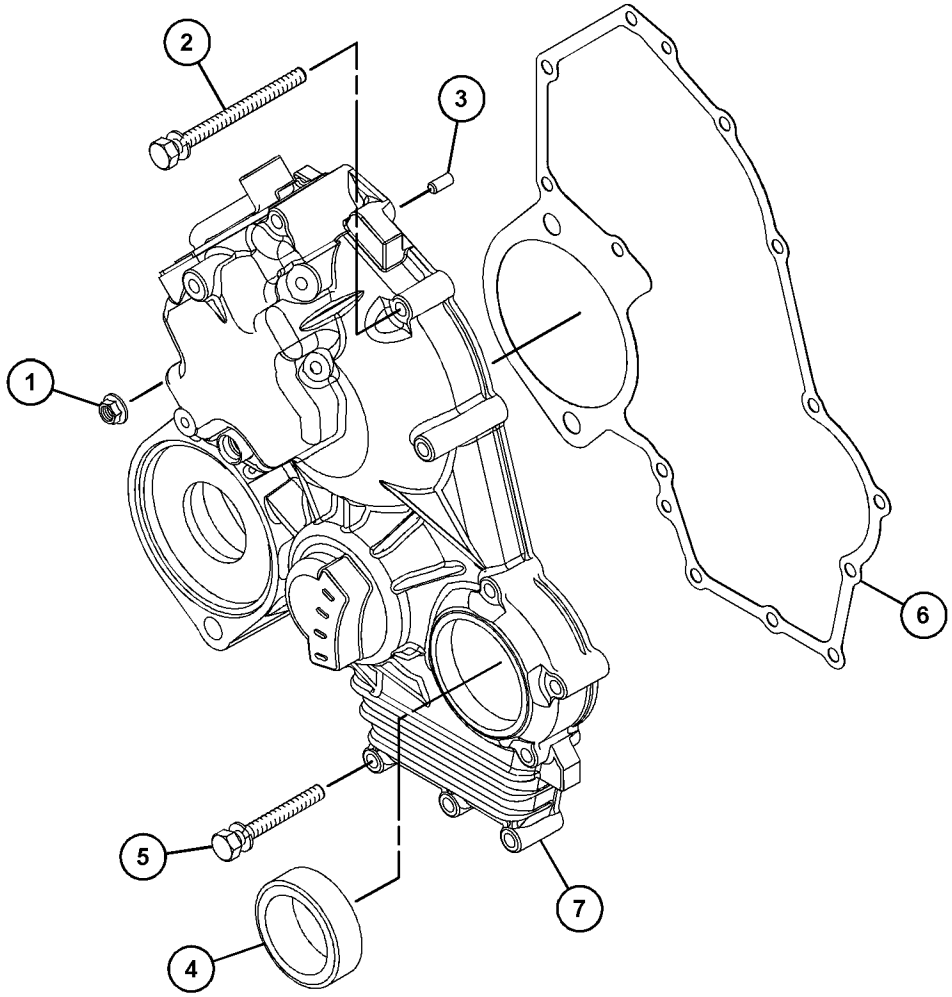

GRAPHIC #1 <END> g03721947

481-5621 HOUSING GP-FRONT

PART OF 465-1477 ENGINE AR-PRIMARY

SMCS-1151, 1162, 1206 **i10518458**

NOTE	REF NO	GRAPHIC REF	PART NUMBER	QTY	PART NAME 1 2 3 4 5 6 (PRODUCT LEVEL)	SEE PAGE
M	1	1	**153-5960**	2	NUT (M6X1-THD)	
	2	1	**153-5962**	4	BOLT AS	
	3	1	**165-2140**	7	BOLT AS	
	4	1	**592-3241**	1	GASKET-GEAR CASE	

M - METRIC PART

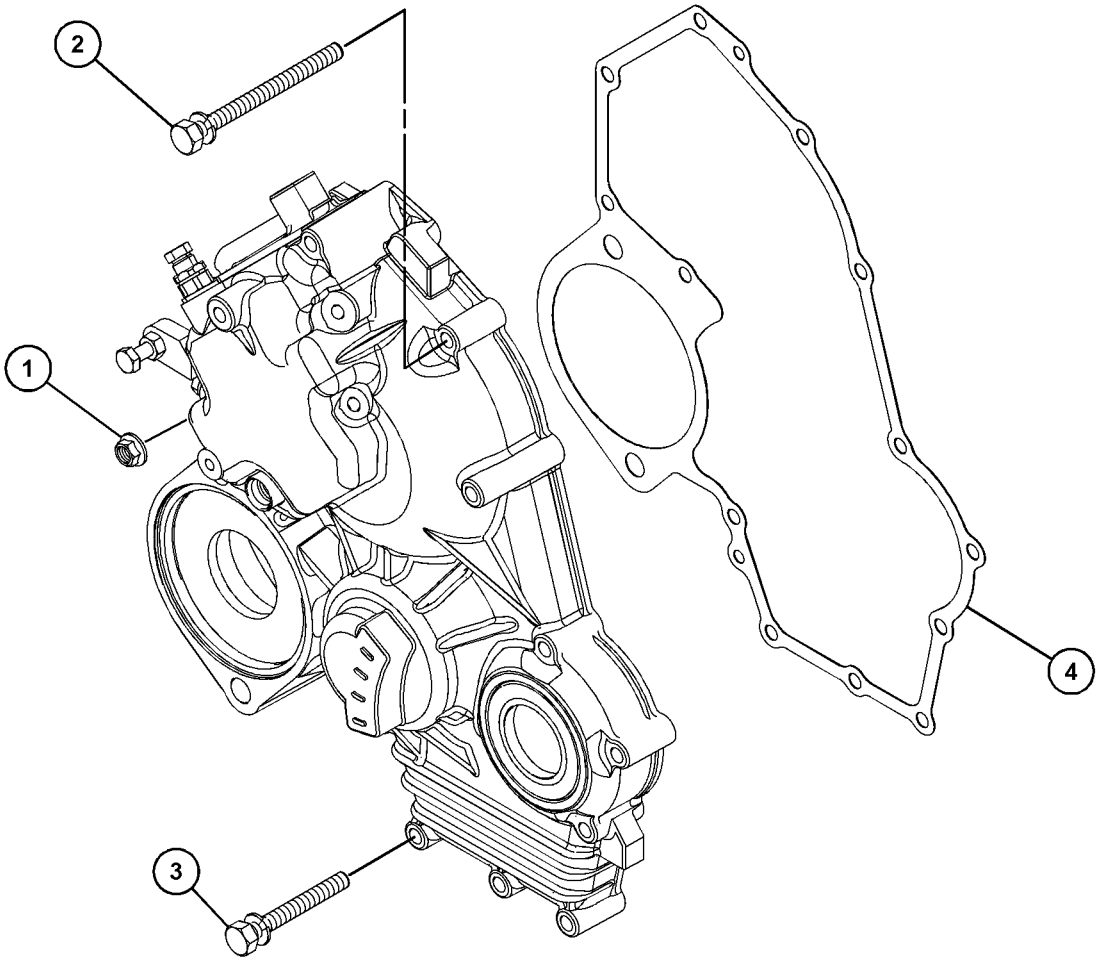

GRAPHIC #1 <END> g06206065

483-1372 HOUSING GP-FRONT

PART OF 329-9277 HOUSING GP-FRONT

SMCS-1151, 1162, 1206 **i06305631**

NOTE	REF NO	GRAPHIC REF	PART NUMBER	QTY	PART NAME 1 2 3 4 5 6 (PRODUCT LEVEL)	SEE PAGE
M	1	1	**106-8916**	4	BOLT (M6X1X16-MM)	
M	2	1	**5C-2890**	1	NUT (M6X1-THD)	
M	3	1	**153-5592**	1	NUT (M8X1.25-THD)	
	4	1	**153-6415**	2	WASHER (SEAL)	
	5	1	**095-1574**	1	SEAL-O-RING	
	6	1	**5D-1319**	1	PIN-SPRING	
	7	1	**154-1675**	1	SEAL	
M	8	1	**162-2207**	1	NUT (M6X1-THD)	
	9	1	**308-1882**	1	SPRING	
M	10	1	**308-1892**	1	NUT (M6X1-THD)	
	11	1	**308-4266**	1	SHAFT	
	12	1	**309-6729**	1	SEAL-O-RING	
	13	1	**311-0655**	1	SPRING	
	14	1	**317-7195**	1	SPRING	
	15	1	**321-4249**	1	NUT	
	16	1	**322-7493**	1	LEVER AS-CONTROL	
	17	1	**330-9189**	1	PLUG	
	18	1	**334-0732**	1	ARM AS (FRONT HOUSING)	
	19	1	**335-5578**	1	BRACKET	
	20	1	**364-2755**	1	BOLT-SPECIAL	
M	21	1	**369-4486**	2	BOLT (M6X1X35-MM)	
	22	1	**390-3731**	1	SHAFT	
	23	1	**423-7724**	1	GASKET	
	24	1	**464-2090**	1	HOUSING-FRONT	

PARTS SHOWN IN GRAPHIC(S) WITHOUT A REFERENCE NUMBER ARE NOT SERVICED SEPARATELY

M - METRIC PART

483-1372 **HOUSING GP-FRONT (**contd.**)** **i06305631**

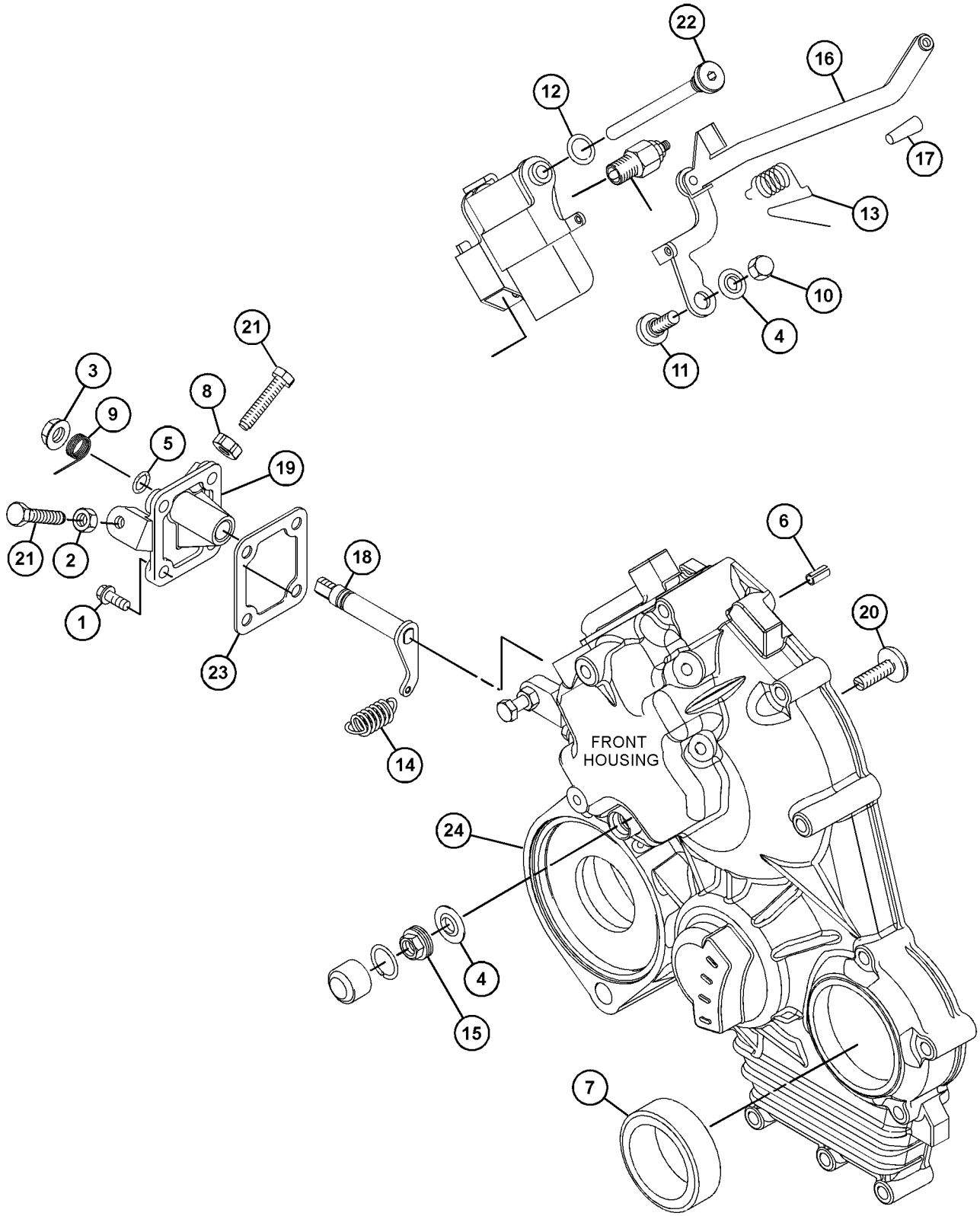

GRAPHIC #1 <END> g06101604

483-1373 HOUSING GP-FRONT

S/N: G7L8318-UP

SMCS-1151, 1162, 1206 **i09550146**

NOTE	REF NO	GRAPHIC REF	PART NUMBER	QTY	PART NAME 1 2 3 4 5 6 (PRODUCT LEVEL)	SEE PAGE
M	1	1	**153-5960**	2	NUT (M6X1-THD)	
	2	1	**153-5962**	4	BOLT AS	
	3	1	**165-2140**	7	BOLT AS	
	4	1	**423-7723**	1	GASKET	

M - METRIC PART

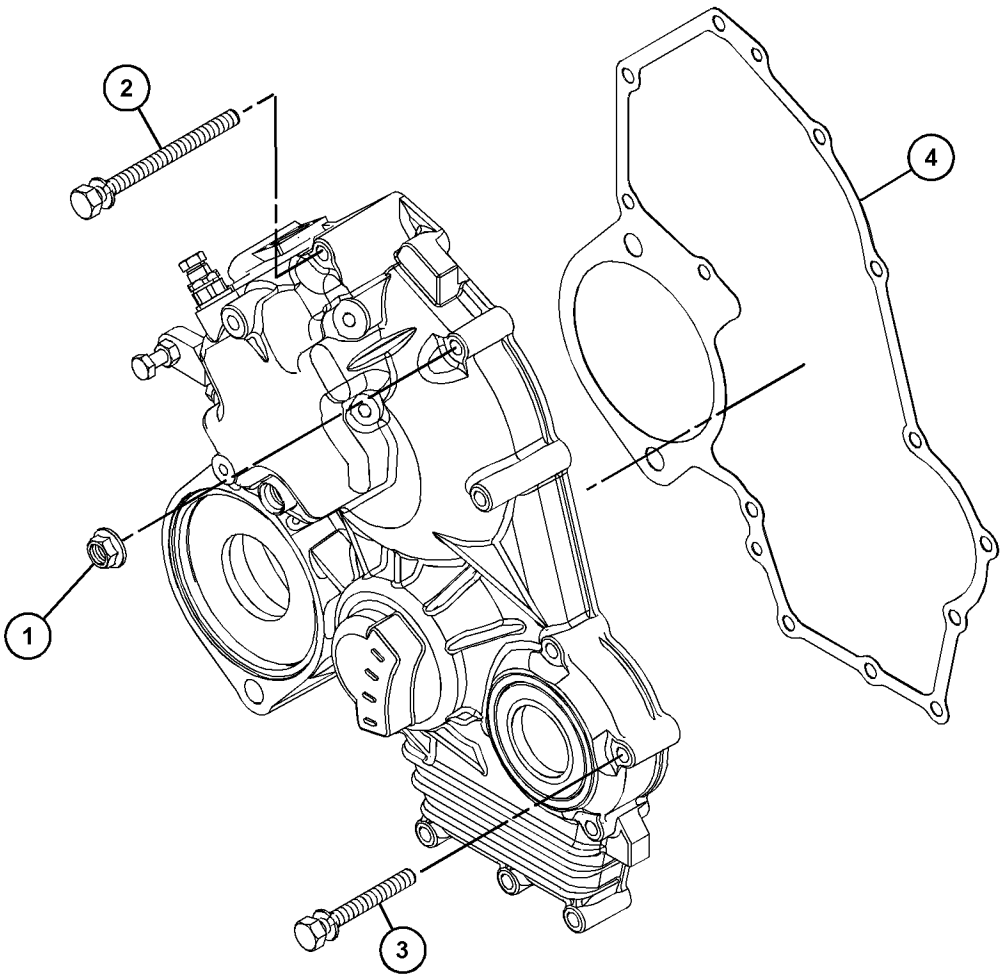

GRAPHIC #1 <END> g07629015

486-9344 HOUSING GP-FRONT

PART OF 365-4290 CONTROL GP-ENGINE SPEED

SMCS-1151, 1162, 1206 **i07384852**

NOTE	REF NO	GRAPHIC REF	PART NUMBER	QTY	PART NAME 1 2 3 4 5 6 (PRODUCT LEVEL)	SEE PAGE
M	1	1	**106-8916**	4	BOLT (M6X1X16-MM)	
M	2	1	**5C-2890**	1	NUT (M6X1-THD)	
M	3	1	**153-5592**	1	NUT (M8X1.25-THD)	
	4	1	**153-6415**	2	WASHER (SEAL) (SEAL)	
	5	1	**095-1574**	1	SEAL-O-RING	
	6	1	**5D-1319**	1	PIN-SPRING	
	7	1	**154-1675**	1	SEAL	
M	8	1	**162-2207**	1	NUT (M6X1-THD) (M6X1X13-MM)	
	9	1	**308-1882**	1	SPRING	
M	10	1	**308-1892**	1	NUT (M6X1-THD)	
	11	1	**308-4266**	1	SHAFT	
	12	1	**309-6729**	1	SEAL-O-RING	
	13	1	**311-0655**	1	SPRING	
	14	1	**317-7195**	1	SPRING	
	15	1	**502-9478**	1	NUT (TAMPER RESISTANT) (HEX)	
	16	1	**322-7493**	1	LEVER AS-CONTROL	
	17	1	**330-9189**	1	PLUG	
	18	1	**334-0732**	1	ARM AS (FRONT HOUSING)	
	19	1	**335-5578**	1	BRACKET	
	20	1	**483-1210**	1	CASE-GEAR	
	21	1	**364-2755**	1	BOLT-SPECIAL (ADJUSTING)	
M	22	1	**369-4486**	2	BOLT (M6X1X35-MM)	
	23	1	**390-3731**	1	SHAFT	
	24	1	**423-7724**	1	GASKET	
	25	1	**503-9731**	1	SHROUD	

M - METRIC PART

486-9344 **HOUSING GP-FRONT (**contd.**)** **i07384852**

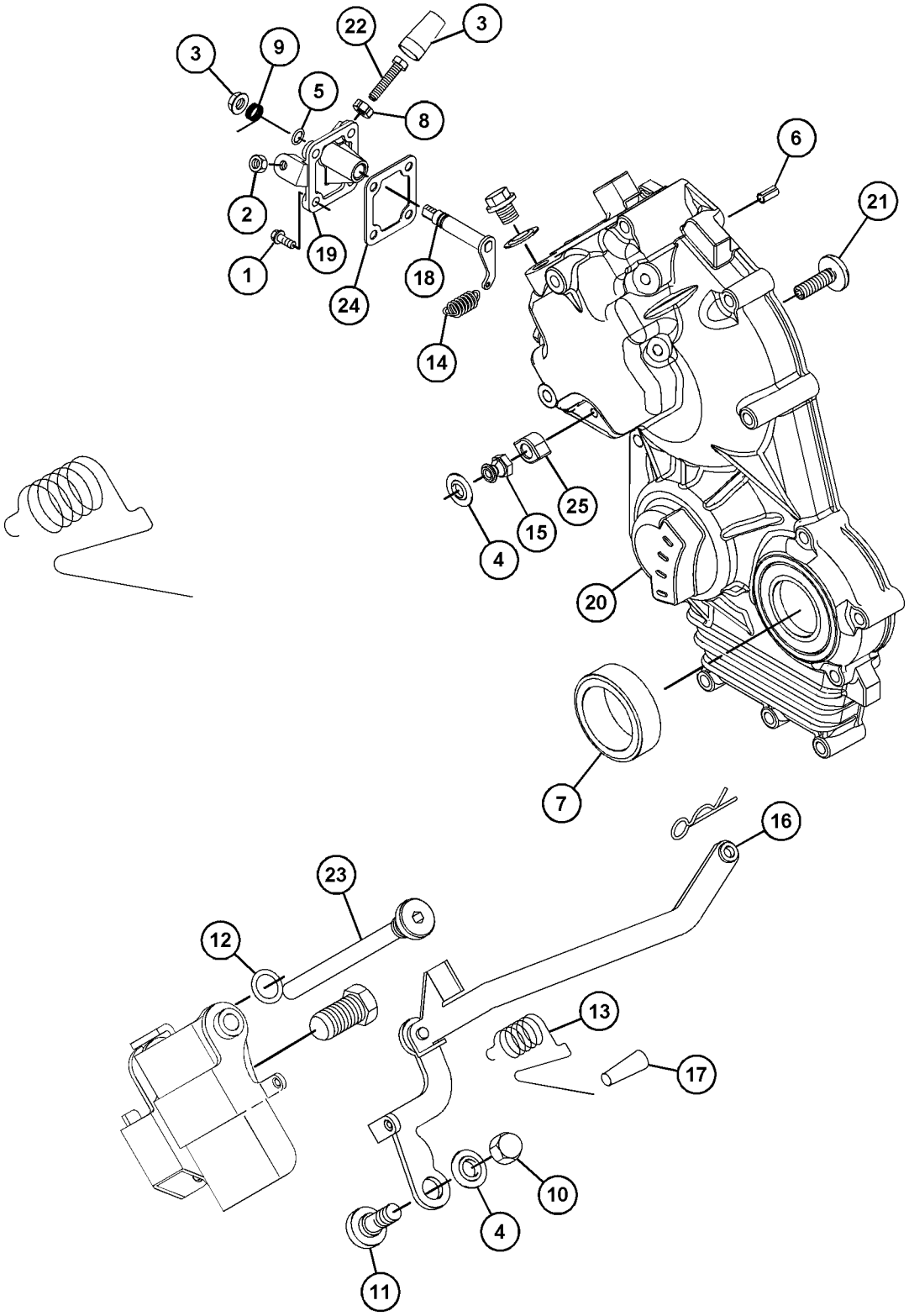

GRAPHIC #1 <END> g06315738

508-9043 HOUSING GP-FRONT

S/N: G7L10581-UP

TYPE 1

SMCS-1151, 1162, 1206 **i07036185**

NOTE	PART NUMBER	QTY	PART NAME 1 2 3 4 5 6 (PRODUCT LEVEL)	SEE PAGE
M	**106-8916**	4	BOLT (M6X1X16-MM)	
M	**5C-2890**	1	NUT (M6X1-THD)	
	139-5511	1	CAP (TAMPER RESISTANT)	
M	**153-5592**	1	NUT (M8X1.25-THD)	
	153-6415	1	WASHER (SEAL)	
	153-7983	1	PIN	
	095-1574	1	SEAL-O-RING	
	5D-1319	1	PIN-SPRING	
	154-1675	1	SEAL	
M	**162-2207**	1	NUT (M6X1-THD)	
	217-7115	1	CAP (TAMPER RESISTANT)	
	308-1882	1	SPRING	
M	**308-1889**	1	NUT (M10X1.25-THD)	
M	**308-1892**	1	NUT (M6X1-THD)	
	308-1897	1	RING	
	308-4266	1	SHAFT	
	309-6729	1	SEAL-O-RING	
M	**495-0737**	1	BOLT (M6X0.5X19.5-MM)	
	311-0655	1	SPRING	
M	**313-2025**	1	BOLT-SPECIAL (M10X1.25-MM THD)	
	315-5236	1	BOLT AS	
	153-7987	1	WASHER (9.2X17X1.8-MM THK)	
M	**191-9297**	1	NUT (M10X1.25-THD)	
	321-3145	1	SPRING	
	321-4249	1	NUT	
	322-7493	1	LEVER AS-CONTROL	
	330-9189	1	PLUG	
	334-0732	1	ARM AS	
	335-5578	1	BRACKET	
	336-2965	1	SPRING	
M	**369-4486**	1	BOLT (M6X1X35-MM)	
	390-3729	1	LEVER-CONTROL	
	390-3731	1	SHAFT	
	423-7724	1	GASKET	
	425-7065	1	CAP-TAMPER PROOF	
	425-7065	1	CAP-TAMPER PROOF	
	465-6710	1	HOUSING	

M - METRIC PART

<END>

508-9043 HOUSING GP-FRONT

S/N: G7L10581-UP

TYPE 2

SMCS-1151, 1162, 1206 **i07730920**

NOTE	REF NO	GRAPHIC REF	PART NUMBER	QTY	PART NAME 1 2 3 4 5 6 (PRODUCT LEVEL)	SEE PAGE
M	1	1	**106-8916**	4	BOLT (M6X1X16-MM)	
M	2	1	**5C-2890**	1	NUT (M6X1-THD)	
	3	1	**139-5511**	1	CAP (TAMPER RESISTANT)	
M	4	1	**153-5592**	1	NUT (M8X1.25-THD)	
	5	2	**153-6415**	2	WASHER (SEAL)	
	6	2	**153-7983**	1	PIN	
	7	1	**095-1574**	1	SEAL-O-RING	
	8	1	**5D-1319**	1	PIN-SPRING	
	9	1	**154-1675**	1	SEAL	
M	10	1	**162-2207**	1	NUT (M6X1-THD)	
	11	2	**217-7115**	1	CAP (TAMPER RESISTANT)	
	12	1	**308-1882**	1	SPRING	
M	13	2	**308-1889**	1	NUT (M10X1.25-THD)	
M	14	2	**308-1892**	1	NUT (M6X1-THD)	
	15	2	**308-1897**	1	RING	
	16	2	**308-4266**	1	SHAFT	
	17	2	**309-6729**	1	SEAL-O-RING	
	18	2	**364-2755**	1	BOLT-SPECIAL	
	19	2	**311-0655**	1	SPRING	
M	20	2	**313-2025**	1	BOLT-SPECIAL (M10X1.25-MM THD)	
	21	2	**315-5236**	1	BOLT AS	
	21A	2	**153-7987**	1	WASHER (9.2X17X1.8-MM THK)	
M	21B	2	**191-9297**	1	NUT (M10X1.25-THD)	
	21C	2	**315-5235**	1	SPRING	
	22	1	**321-3145**	1	SPRING	
	23	2	**322-7493**	1	LEVER AS-CONTROL	
	24	2	**330-9189**	1	PLUG	
	25	1	**334-0732**	1	ARM AS (FRONT HOUSING)	
	26	1	**335-5578**	1	BRACKET	
M	27	1	**369-4486**	2	BOLT (M6X1X35-MM)	
	28	2	**390-3729**	1	LEVER-CONTROL	
	29	2	**390-3731**	1	SHAFT	
	30	1	**423-7724**	1	GASKET	
	31	1	**465-6710**	1	HOUSING	
C	32	2	**502-5421**	1	PIN	
C	33	2	**502-9478**	1	NUT (TAMPER RESISTANT)	
C	34	2	**503-9707**	1	CAP	
C	35	2	**503-9731**	1	SHROUD	
	36	1	**336-2965**	1	SPRING	

C - CHANGE FROM PREVIOUS TYPE
M - METRIC PART

508-9043 **HOUSING GP-FRONT (**contd.**)** **i07730920**

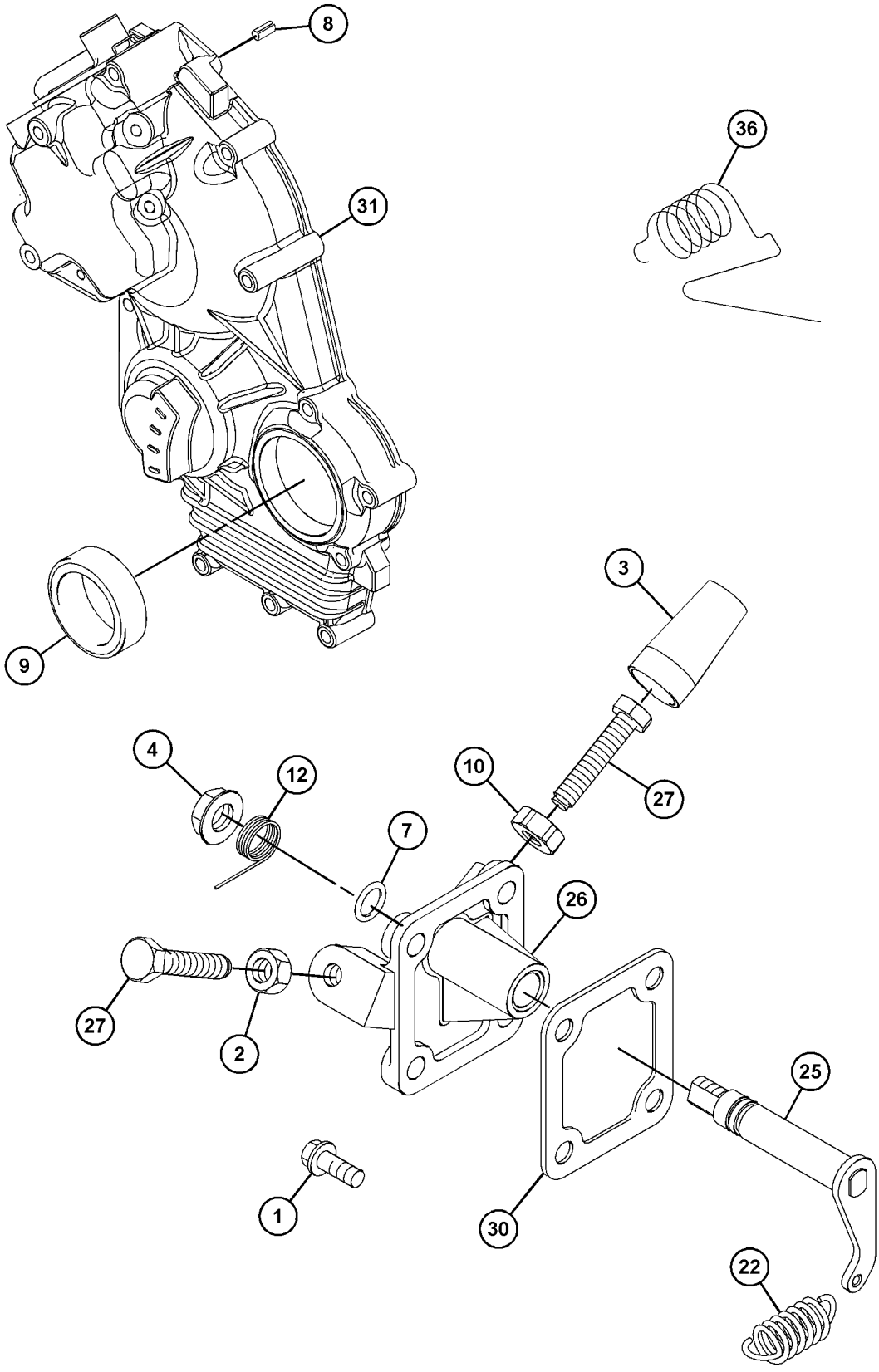

GRAPHIC #1 g06255218

508-9043 **HOUSING GP-FRONT (**contd.**)** **i07730920**

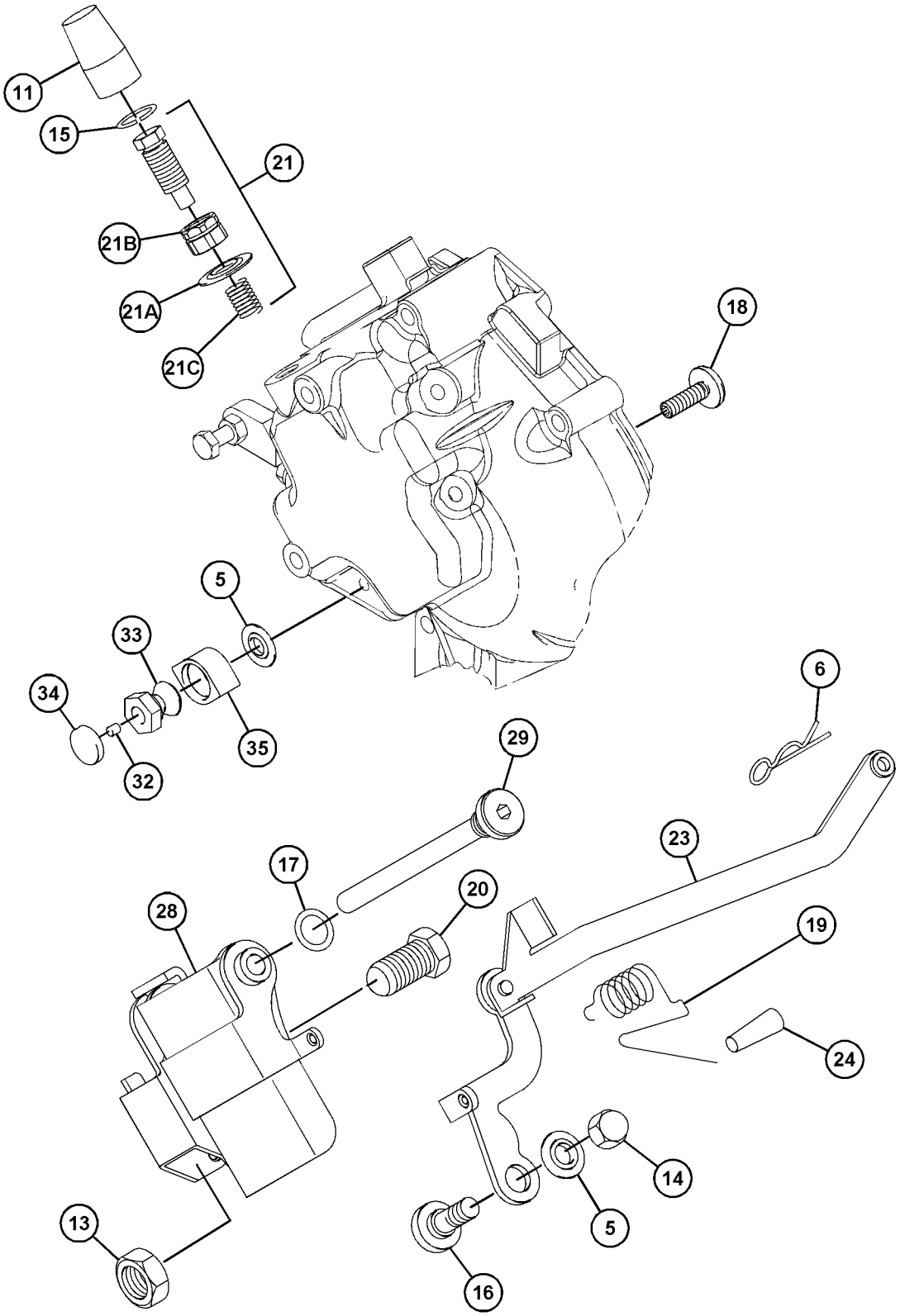

GRAPHIC #2 <END> g06255220

509-0008 HOUSING GP-FRONT

TYPE 1

SMCS-1151, 1162, 1206 **i06750868**

NOTE	REF NO	GRAPHIC REF	PART NUMBER	QTY	PART NAME 1 2 3 4 5 6 (PRODUCT LEVEL)	SEE PAGE
M	1	1	**106-8916**	4	BOLT (M6X1X16-MM)	
M	2	1	**5C-2890**	1	NUT (M6X1-THD)	
	3	1	**139-5511**	1	CAP (TAMPER RESISTANT)	
M	4	1	**153-5592**	1	NUT (M8X1.25-THD)	
	5	1	**153-6415**	2	WASHER (SEAL)	
	6	1	**153-7983**	1	PIN	
	7	1	**095-1574**	1	SEAL-O-RING	
	8	1	**5D-1319**	1	PIN-SPRING	
	9	1	**154-1675**	1	SEAL	
M	10	1	**162-2207**	1	NUT (M6X1-THD)	
	11	1	**217-7115**	1	CAP (TAMPER RESISTANT)	
	12	1	**218-2254**	1	GOVERNOR GP	
	13	1	**308-1882**	1	SPRING	
M	14	1	**308-1889**	1	NUT (M10X1.25-THD)	
M	15	1	**308-1892**	1	NUT (M6X1-THD)	
	16	1	**308-1897**	2	RING	
	17	1	**308-4266**	1	SHAFT	
	18	1	**309-6729**	1	SEAL-O-RING	
	19	1	**311-0655**	1	SPRING	
	20	1	**313-5832**	1	BOLT AS	
	20A	1	**153-7987**	1	WASHER (9.2X17X1.8-MM THK)	
M	20B	1	**191-9297**	1	NUT (M10X1.25-THD)	
	20C	1	**313-5833**	1	SPRING	
	21	1	**321-4249**	1	NUT	
	22	1	**322-7493**	1	LEVER AS-CONTROL	
	23	1	**330-9189**	1	PLUG	
	24	1	**334-0732**	1	ARM AS	
	25	1	**335-5578**	1	BRACKET	
	26	1	**364-2755**	1	BOLT-SPECIAL	
	27	1	**364-7487**	1	SPRING	
M	28	1	**369-4486**	2	BOLT (M6X1X35-MM)	
	29	1	**390-3729**	1	LEVER-CONTROL	
	30	1	**390-3731**	1	SHAFT	
	31	1	**423-7724**	1	GASKET	
	32	1	**425-7065**	1	CAP-TAMPER PROOF	
	33	1	**465-6710**	1	HOUSING	
	34	1	**336-2965**	1	SPRING	

M - METRIC PART

509-0008 **HOUSING GP-FRONT (**contd.**)** **i06750868**

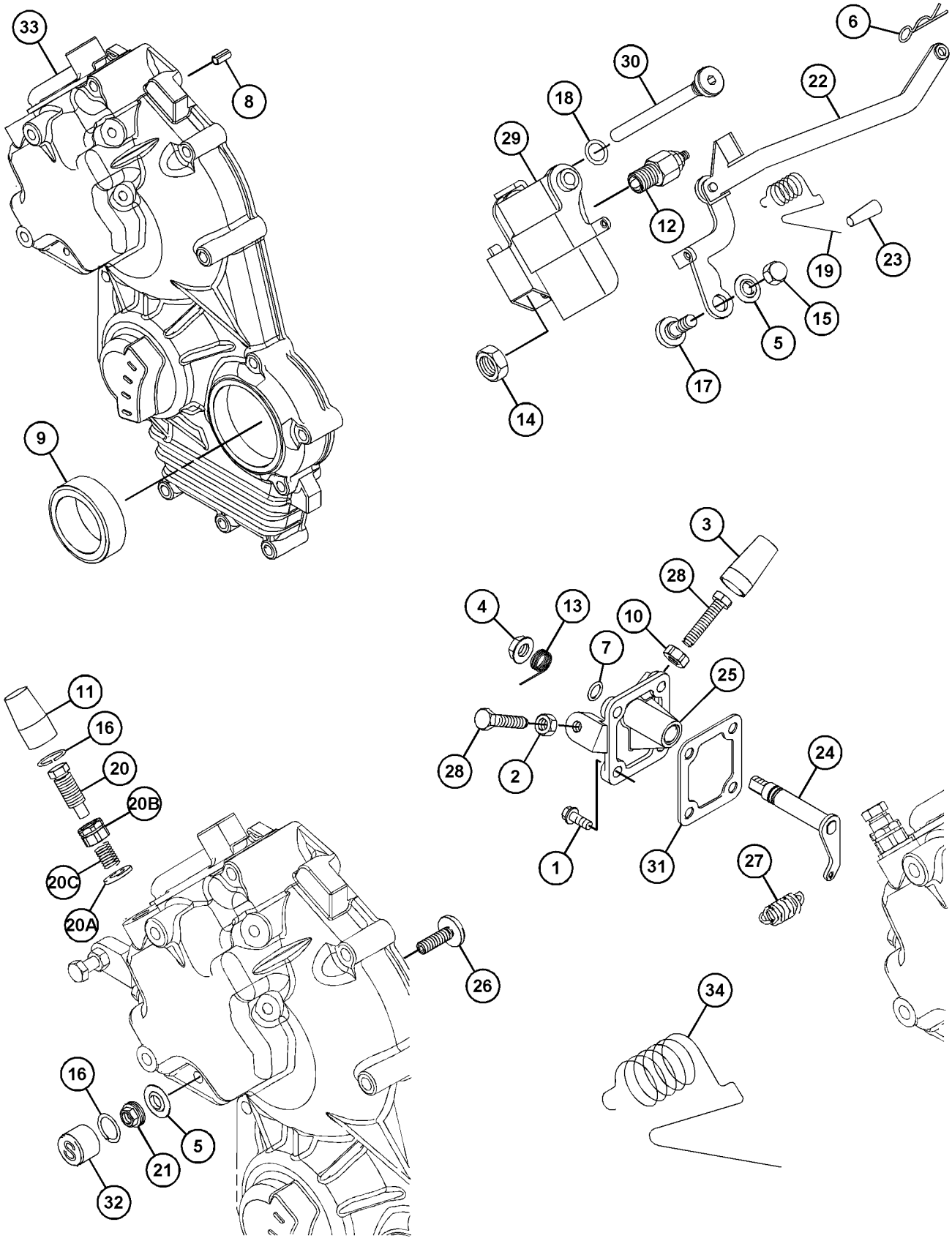

GRAPHIC #1 <END> g06164767

509-0008 HOUSING GP-FRONT

TYPE 2

SMCS-1151, 1162, 1206 **i08311193**

NOTE	REF NO	GRAPHIC REF	PART NUMBER	QTY	PART NAME 1 2 3 4 5 6 (PRODUCT LEVEL)	SEE PAGE
M	1	1	**106-8916**	4	BOLT (M6X1X16-MM)	
M	2	1	**5C-2890**	1	NUT (M6X1-THD)	
	3	1	**139-5511**	1	CAP (TAMPER RESISTANT)	
M	4	1	**153-5592**	1	NUT (M8X1.25-THD)	
	5	1	**153-6415**	2	WASHER (SEAL)	
	6	1	**153-7983**	1	PIN	
	7	1	**095-1574**	1	SEAL-O-RING	
	8	1	**5D-1319**	1	PIN-SPRING	
	9	1	**154-1675**	1	SEAL	
M	10	1	**162-2207**	1	NUT (M6X1-THD)	
	11	1	**217-7115**	1	CAP (TAMPER RESISTANT)	
	12	1	**218-2254**	1	GOVERNOR GP	
M	12A	1	**155-8076**	1	NUT (M4X0.4-THD)	
	13	1	**308-1882**	1	SPRING	
M	14	1	**308-1889**	1	NUT (M10X1.25-THD)	
M	15	1	**248-2714**	1	NUT-ACORN (M6X1-THD)	
C	16	1	**308-1897**	1	RING	
	17	1	**308-4266**	1	SHAFT	
	18	1	**309-6729**	1	SEAL-O-RING	
	19	1	**311-0655**	1	SPRING	
	20	1	**313-5832**	1	BOLT AS	
	20A	1	**153-7987**	1	WASHER (9.2X17X1.8-MM THK)	
M	20B	1	**191-9297**	1	NUT (M10X1.25-THD)	
	20C	1	**313-5833**	1	SPRING	
C	21	1	**502-9478**	1	NUT (TAMPER RESISTANT)	
	22	1	**322-7493**	1	LEVER AS-CONTROL	
	22A	1	**154-1400**	1	PIN	
	23	1	**330-9189**	1	PLUG	
	24	1	**334-0732**	1	ARM AS (FRONT HOUSING)	
	25	1	**335-5578**	1	BRACKET	
	26	1	**364-2755**	1	BOLT-SPECIAL	
	27	1	**364-7487**	1	SPRING	
M	28	1	**7X-2533**	2	BOLT (M6X1X35-MM)	
	29	1	**580-0398**	1	LEVER AS-CONTROL	
	30	1	**390-3731**	1	SHAFT	
	31	1	**423-7724**	1	GASKET	
C	32	1	**503-9707**	1	CAP	
	33	1	**609-9565**	1	CASE AS-GEAR	
	34	1	**336-2965**	1	SPRING	
C	35	1	**503-9731**	1	SHROUD	
C	36	1	**502-5421**	1	PIN	

C - CHANGE FROM PREVIOUS TYPE
M - METRIC PART

509-0008 **HOUSING GP-FRONT (**contd.**)** **i08311193**

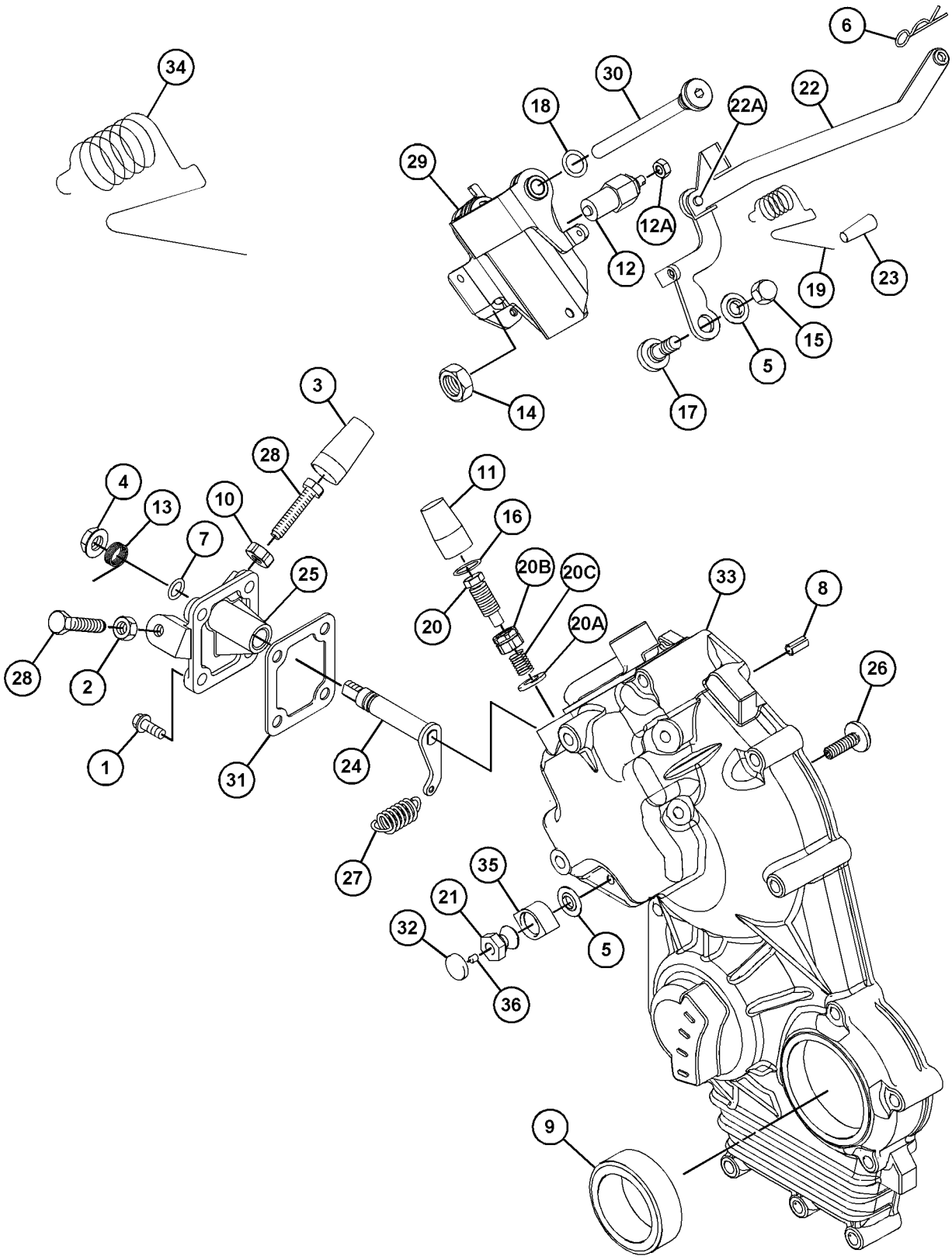

GRAPHIC #1 <END> g06754508

509-0008 HOUSING GP-FRONT

TYPE 3

SMCS-1151, 1162, 1206 **i10697470**

NOTE	REF NO	GRAPHIC REF	PART NUMBER	QTY	PART NAME 1 2 3 4 5 6 (PRODUCT LEVEL)	SEE PAGE
M	1	1	**106-8916**	4	BOLT (M6X1X16-MM)	
M	2	1	**5C-2890**	1	NUT (M6X1-THD)	
	3	1	**139-5511**	1	CAP (TAMPER RESISTANT)	
M	4	1	**153-5592**	1	NUT (M8X1.25-THD)	
	5	1	**153-6415**	2	WASHER (SEAL)	
	6	1	**153-7983**	1	PIN	
	7	1	**095-1574**	1	SEAL-O-RING	
	9	1	**154-1675**	1	SEAL	
M	10	1	**162-2207**	1	NUT (M6X1-THD)	
	11	1	**217-7115**	1	CAP (TAMPER RESISTANT)	
	12	1	**218-2254**	1	GOVERNOR GP	
M	12A	1	**5C-8312**	1	NUT (M4X0.7-THD)	
	13	1	**308-1882**	1	SPRING	
M	14	1	**308-1889**	1	NUT (M10X1.25-THD)	
M	15	1	**308-1892**	1	NUT (M6X1-THD)	
	16	1	**308-1897**	1	RING	
	17	1	**308-4266**	1	SHAFT	
	18	1	**309-6729**	1	SEAL-O-RING	
	19	1	**311-0655**	1	SPRING	
	20	1	**313-5832**	1	BOLT AS	
	20A	1	**153-7987**	1	WASHER (9.2X17X1.8-MM THK)	
M	20B	1	**191-9297**	1	NUT (M10X1.25-THD)	
	20C	1	**313-5833**	1	SPRING	
	21	1	**502-9478**	1	NUT (TAMPER RESISTANT)	
	22	1	**322-7493**	1	LEVER AS-CONTROL	
	22A	1	**154-1400**	1	PIN	
	23	1	**330-9189**	1	PLUG	
	24	1	**334-0732**	1	ARM AS	
	25	1	**335-5578**	1	BRACKET	
	26	1	**364-2755**	1	BOLT-SPECIAL	
	27	1	**364-7487**	1	SPRING	
M	28	1	**7X-2533**	2	BOLT (M6X1X35-MM)	
	29	1	**580-0398**	1	LEVER AS-CONTROL	
	30	1	**390-3731**	1	SHAFT	
	31	1	**423-7724**	1	GASKET	
C	32	1	**575-5055**	1	CAP	
C	33	1	**609-9565**	1	CASE AS-GEAR	
	33A	1	**5D-1319**	1	PIN-SPRING	
	34	1	**336-2965**	1	SPRING	
	36	1	**502-5421**	1	PIN	

C - CHANGE FROM PREVIOUS TYPE
M - METRIC PART

509-0008 **HOUSING GP-FRONT (**contd.**)** **i10697470**

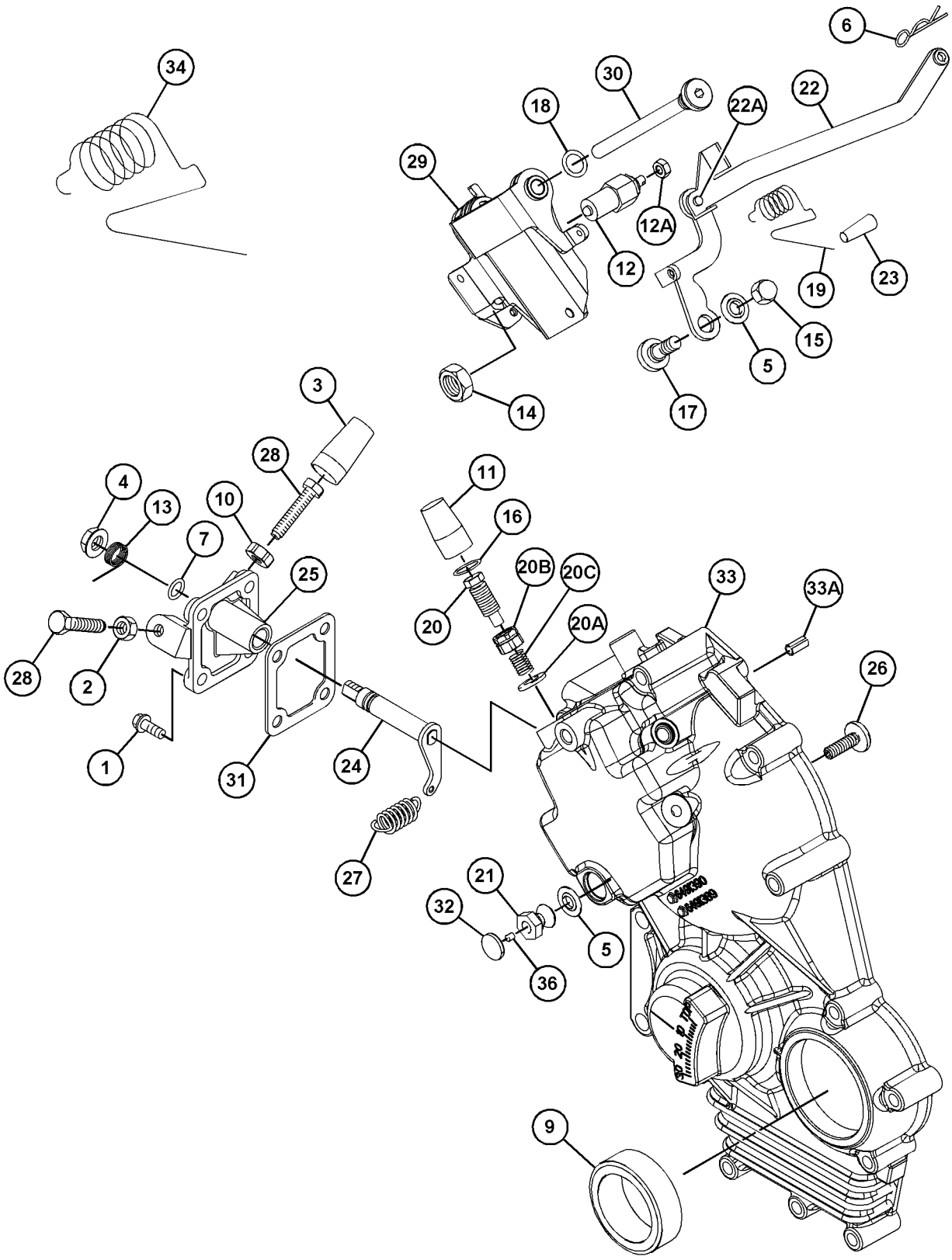

GRAPHIC #1 <END> g07938989

599-9816 HOUSING GP-FRONT

PART OF 435-1647, 587-9328, 610-7720, 610-7721 ENGINE AR-PRIMARY
TYPE 1

SMCS-1151, 1162, 1206 **i09929033**

NOTE	REF NO	GRAPHIC REF	PART NUMBER	QTY	PART NAME 1 2 3 4 5 6 (PRODUCT LEVEL)	SEE PAGE
	1	1	**553-4376**	1	SEAL-O-RING	
M	2	2	**106-8916**	4	BOLT (M6X1X16-MM)	
M	3	2	**5C-2890**	1	NUT (M6X1-THD)	
	4	3	**153-5394**	2	DOWEL	
	5	1	**153-5962**	4	BOLT AS	
CM	6	3	**100-4841**	2	BOLT (M6X1X10-MM)	
M	7	1	**164-7468**	2	BOLT (M10X1.5X95-MM)	
	8	1	**165-2140**	7	BOLT AS	
M	9	1	**587-3847**	1	STUD (M6X1X68-MM)	
M	10	1	**587-3848**	1	STUD (M6X1X48-MM)	
M	11	2	**7X-2533**	2	BOLT (M6X1X35-MM)	
	12	3	**592-3241**	1	GASKET-GEAR CASE	
	13	2	**423-7724**	1	GASKET	
C	14	3	**609-9566**	1	CASE AS-GEAR	
		3	**5D-1319**	1	PIN-SPRING	
	15	2	**364-2755**	1	BOLT-SPECIAL	
M	16	2	**153-5592**	1	NUT (M8X1.25-THD)	
M	17	1	**153-5960**	2	NUT (M6X1-THD)	
	18	2	**153-6415**	1	WASHER (SEAL)	
	19	2	**095-1574**	1	SEAL-O-RING	
	20	3	**5D-1319**	1	PIN-SPRING	
	21	1	**154-1675**	1	SEAL	
M	22	2	**162-2207**	1	NUT (M6X1-THD)	
	23	2	**139-5511**	1	CAP (TAMPER RESISTANT)	
	24	3	**592-3246**	1	GASKET	
	25	3	**592-7636**	1	ADAPTER AS	
	25A	3	**365-5317**	2	SEAL	
	26	3	**308-1875**	1	SEAL-O-RING	
	27	2	**308-1882**	1	SPRING	
	28	3	**321-5907**	1	PLATE	
	29	1,3	**328-3229**	2	COVER	
	30	3	**330-9189**	1	PLUG	
C	31	1	**612-7549**	1	CAP (OIL FILL)	
	32	2	**334-0732**	1	ARM AS	
	33	2	**335-5578**	1	BRACKET	
	34	2	**502-5421**	1	PIN	
	35	2	**502-9478**	1	NUT (TAMPER RESISTANT)	
C	36	2	**575-5055**	1	CAP	
M	38	1	**175-7141**	2	NUT-HEX FLANGE (M10X1.5-THD)	

C - CHANGE FROM PREVIOUS TYPE
M - METRIC PART

599-9816 **HOUSING GP-FRONT (**contd.**)** **i09929033**

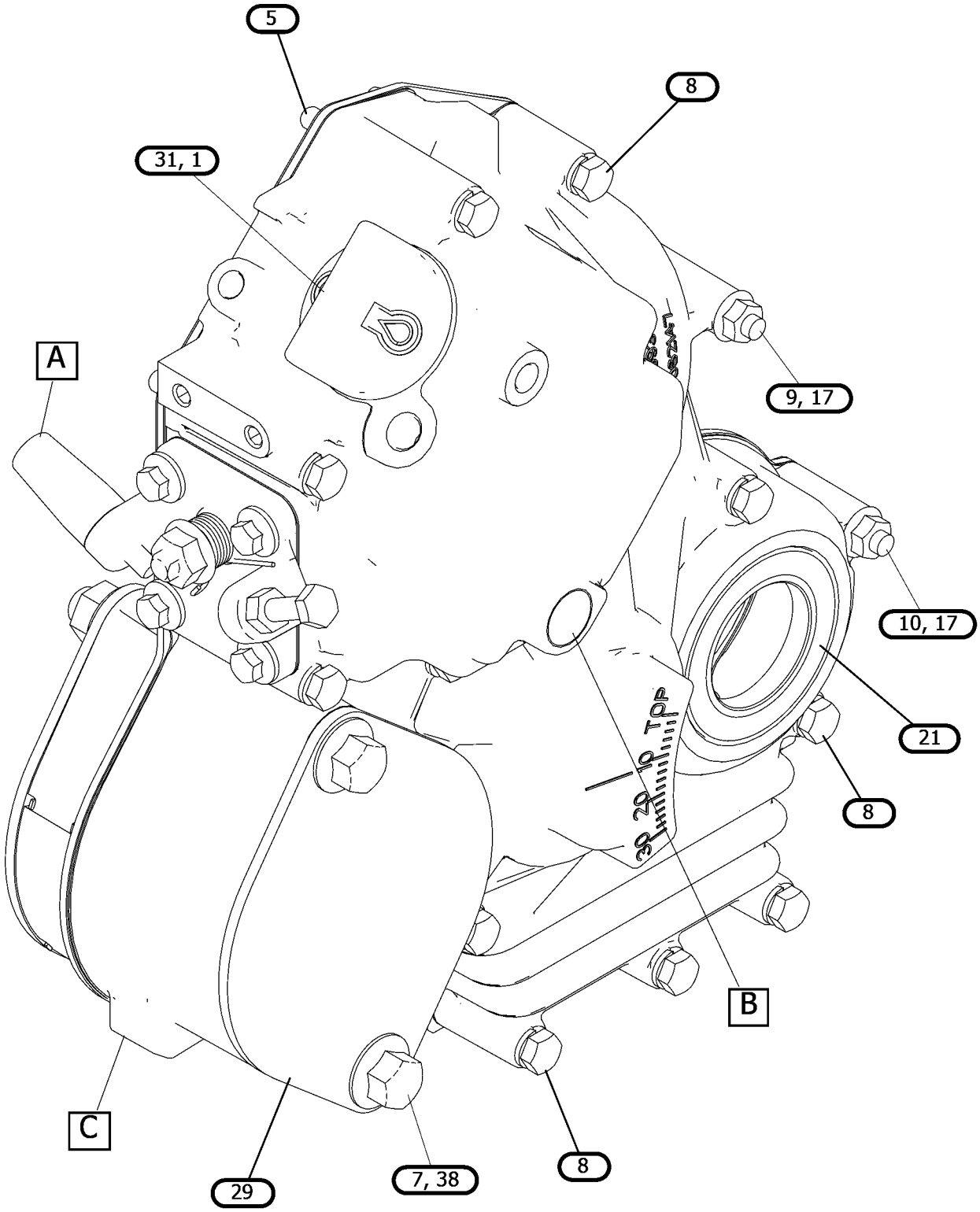

GRAPHIC #1 g07728729

599-9816 **HOUSING GP-FRONT (**contd.**)** **i09929033**

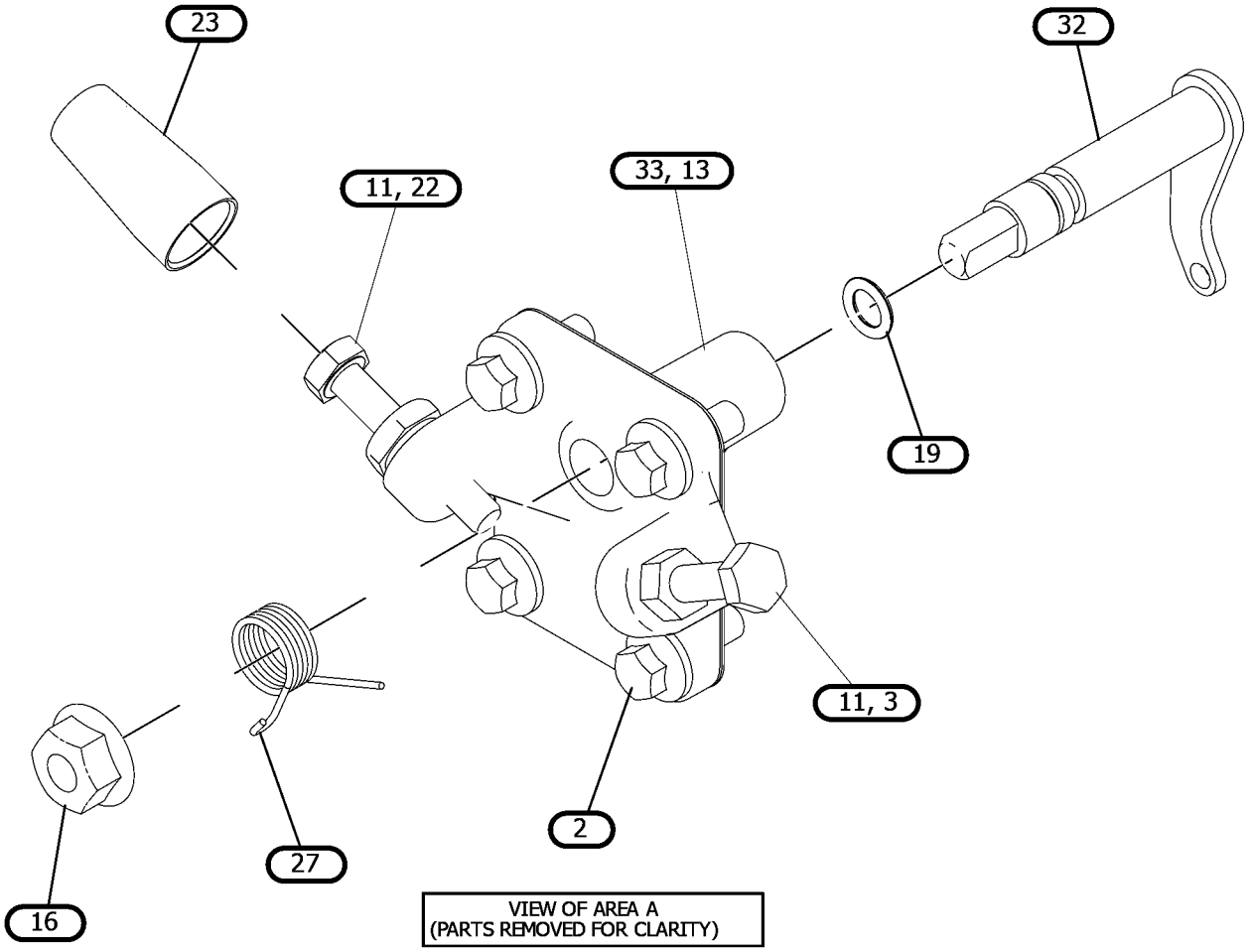

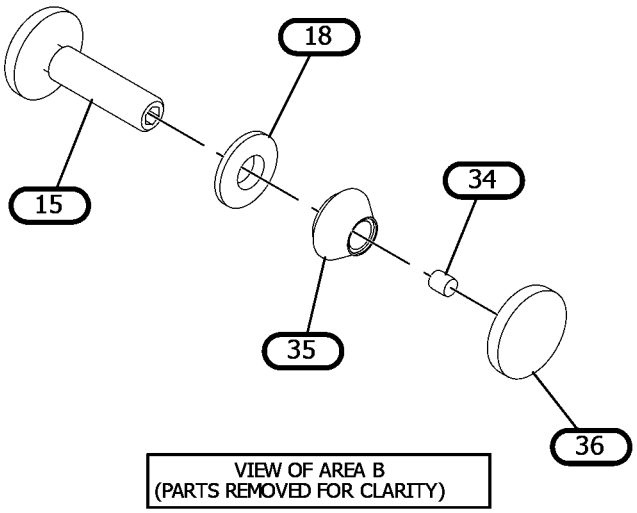

GRAPHIC #2 g07728729_01

599-9816 **HOUSING GP-FRONT (**contd.**)** **i09929033**

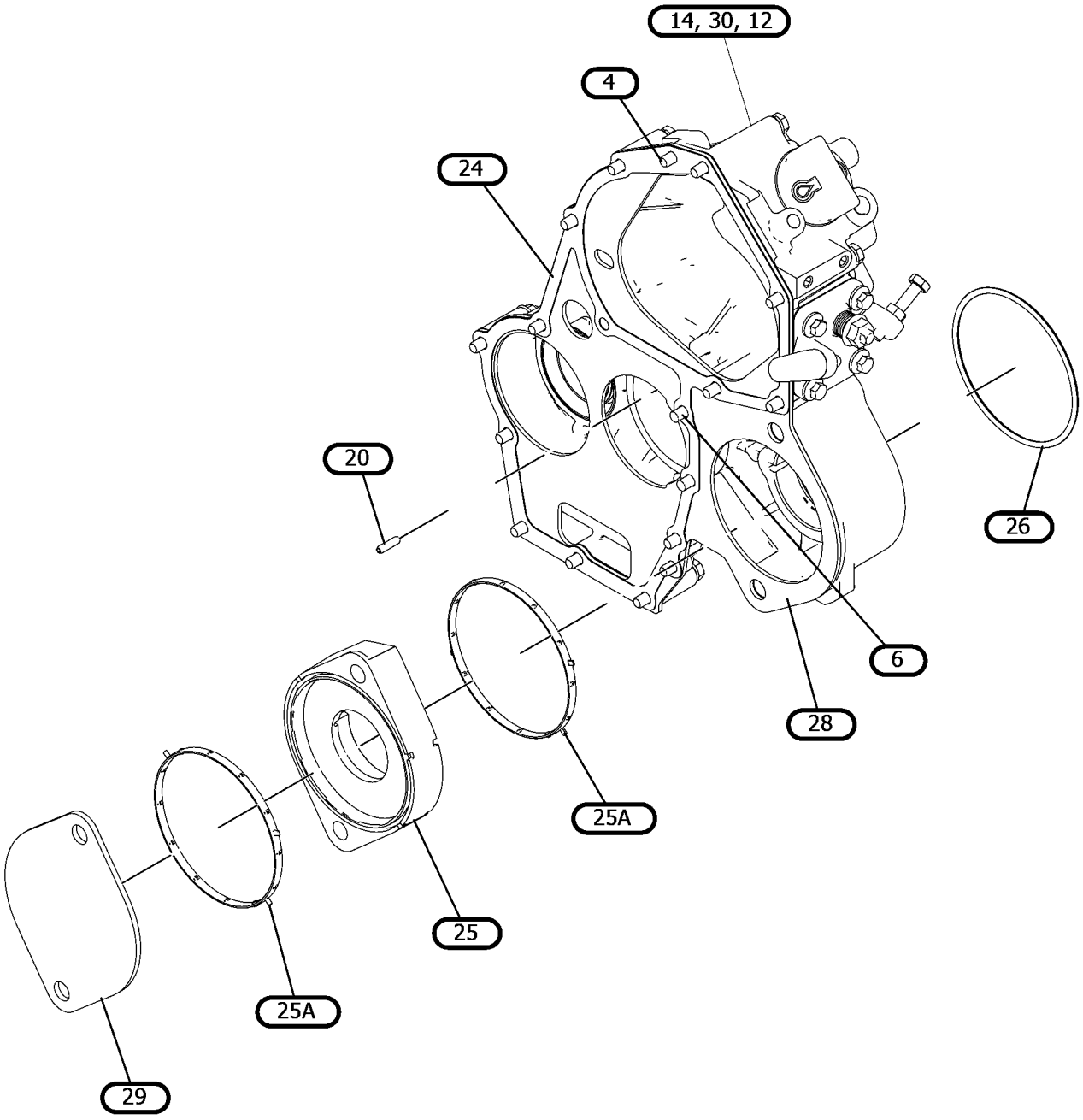

GRAPHIC #3 <END> g07728729_02

599-9816 HOUSING GP-FRONT

PART OF 435-1647 ENGINE AR-PRIMARY

TYPE 2

SMCS-1151, 1162, 1206 **i09613786**

NOTE	REF NO	GRAPHIC REF	PART NUMBER	QTY	PART NAME 1 2 3 4 5 6 (PRODUCT LEVEL)	SEE PAGE
	1	1	**553-4376**	1	SEAL-O-RING	
M	2	2	**106-8916**	4	BOLT (M6X1X16-MM)	
M	3	2	**5C-2890**	1	NUT (M6X1-THD)	
	4	3	**153-5394**	2	DOWEL	
	5	1	**153-5962**	4	BOLT AS	
	6	3	**153-6838**	2	BOLT AS	
M	7	1	**164-7468**	2	BOLT (M10X1.5X95-MM)	
	8	1	**165-2140**	7	BOLT AS	
M	9	1	**587-3847**	1	STUD (M6X1X68-MM)	
M	10	1	**587-3848**	1	STUD (M6X1X48-MM)	
M	11	2	**7X-2533**	2	BOLT (M6X1X35-MM)	
	12	3	**592-3241**	1	GASKET-GEAR CASE	
	13	2	**423-7724**	1	GASKET	
	14	1	**464-2090**	1	HOUSING-FRONT	
	15	2	**364-2755**	1	BOLT-SPECIAL	
M	16	2	**153-5592**	1	NUT (M8X1.25-THD)	
M	17	1	**153-5960**	2	NUT (M6X1-THD)	
	18	2	**153-6415**	1	WASHER (SEAL)	
	19	2	**095-1574**	1	SEAL-O-RING	
	20	1	**5D-1319**	1	PIN-SPRING	
	21	1	**154-1675**	1	SEAL	
M	22	2	**162-2207**	1	NUT (M6X1-THD)	
	23	2	**139-5511**	1	CAP (TAMPER RESISTANT)	
	24	3	**592-3246**	1	GASKET	
	25	3	**592-7636**	1	ADAPTER AS	
	25A	3	**365-5317**	2	SEAL	
	26	1	**308-1875**	1	SEAL-O-RING	
	27	2	**308-1882**	1	SPRING	
	28	3	**321-5907**	1	PLATE	
	29	1,3	**328-3229**	2	COVER	
	30	1	**330-9189**	1	PLUG	
	31	1	**334-0272**	1	PLUG-OIL FILLER	
	32	2	**334-0732**	1	ARM AS	
	33	2	**335-5578**	1	BRACKET	
	34	2	**502-5421**	1	PIN	
	35	2	**502-9478**	1	NUT (TAMPER RESISTANT)	
	36	2	**503-9707**	1	CAP	
	37	2	**503-9731**	1	SHROUD	
M	38	1	**175-7141**	2	NUT-HEX FLANGE (M10X1.5-THD)	
F			**609-9566**	1	CASE AS-GEAR	
F			**5D-1319**	1	PIN-SPRING	
F			**464-2090**	1	HOUSING-FRONT	

F - NOT SHOWN
M - METRIC PART

599-9816 **HOUSING GP-FRONT (**contd.**)** **i09613786**

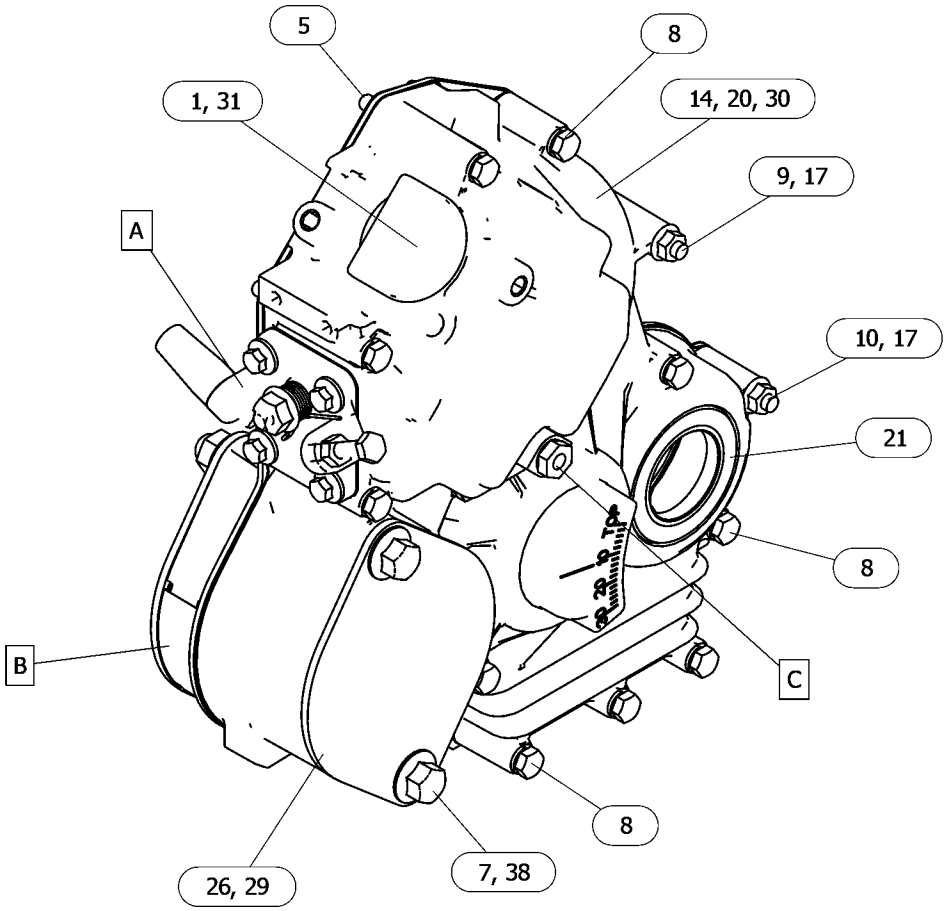

GRAPHIC #1 g06719106

599-9816 **HOUSING GP-FRONT (**contd.**)** **i09613786**

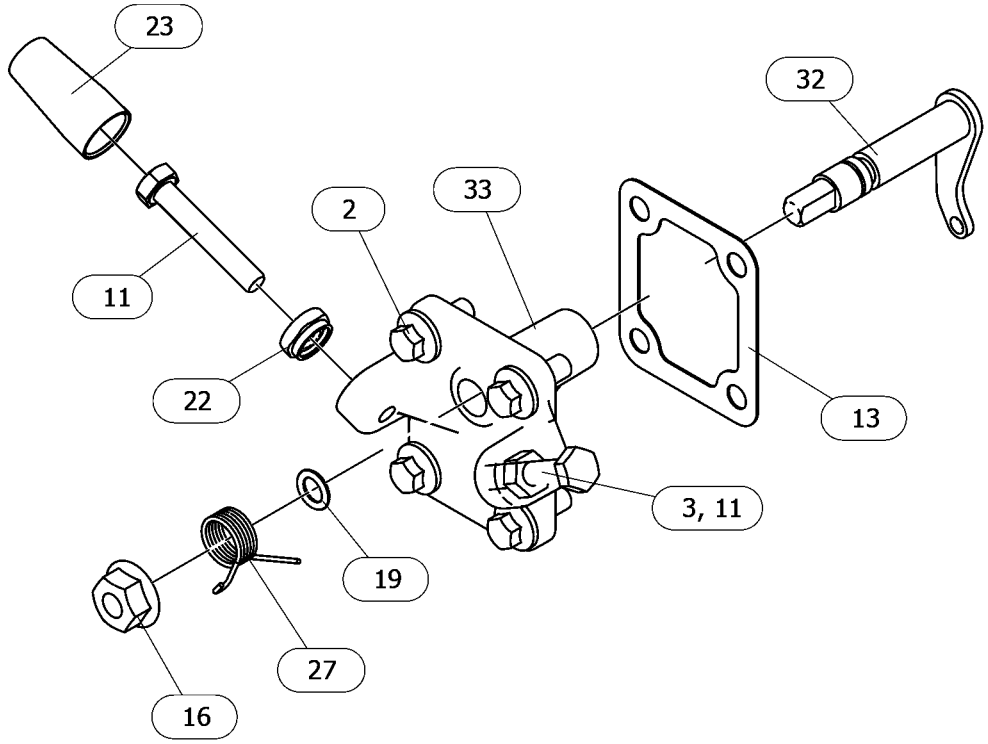

VIEW OF AREA A
(PARTS REMOVED FOR CLARITY)

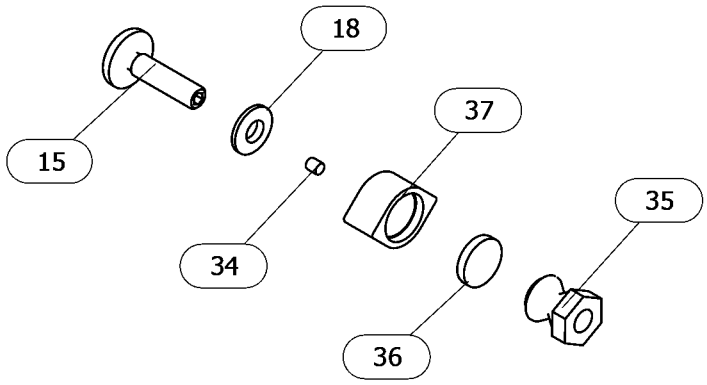

VIEW OF AREA C
(PARTS REMOVED FOR CLARITY)

GRAPHIC #2 g06719106_01

599-9816 **HOUSING GP-FRONT (**contd.**)** **i09613786**

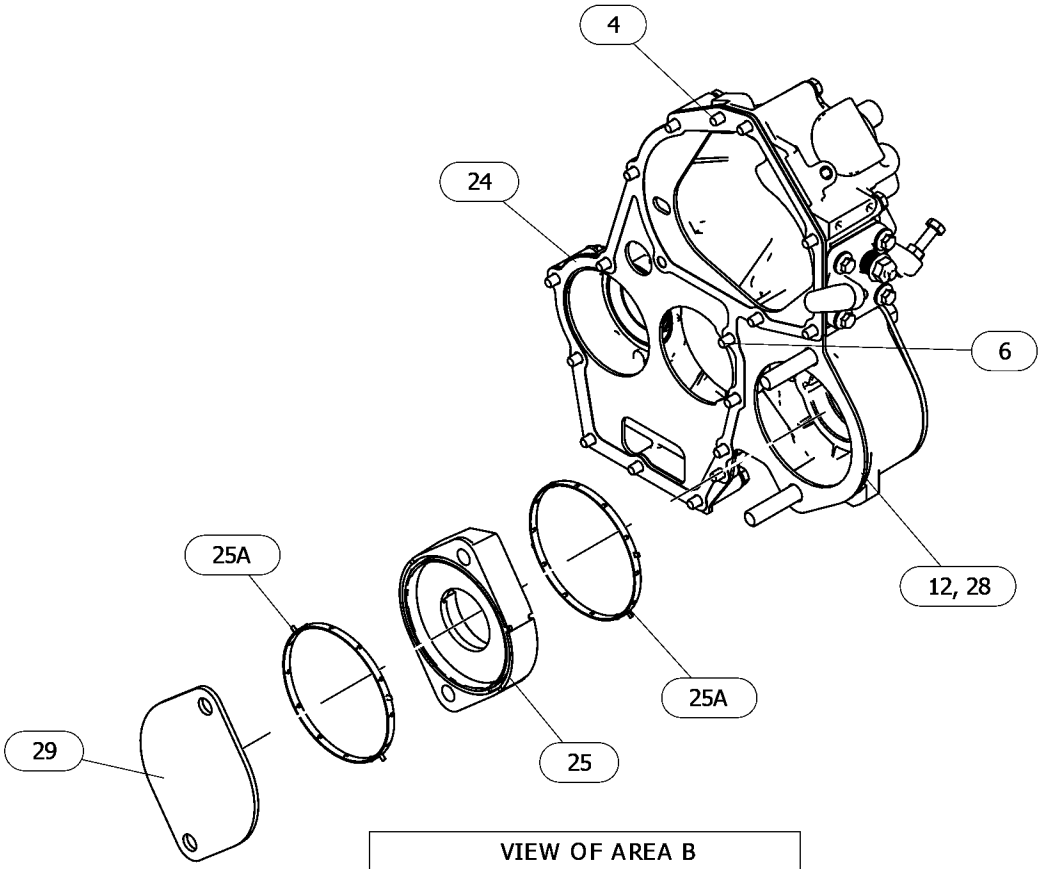

GRAPHIC #3 <END> g06719106_02

599-9836 HOUSING GP-FRONT

PART OF 433-1379, 433-1380 ENGINE AR, 435-1636, 435-1641, 435-1646 ENGINE AR-PRIMARY

SMCS-1151, 1162, 1206 **i10431734**

NOTE	REF NO	GRAPHIC REF	PART NUMBER	QTY	PART NAME 1 2 3 4 5 6 (PRODUCT LEVEL)	SEE PAGE
	1	2	**553-4376**	1	SEAL-O-RING	
M	2	3	**106-8916**	4	BOLT (M6X1X16-MM)	
M	3	3	**5C-2890**	1	NUT (M6X1-THD)	
	4	2	**153-5394**	2	DOWEL	
	5	1	**153-5962**	4	BOLT AS	
M	6	2	**100-4841**	2	BOLT (M6X1X10-MM)	
M	7	1	**164-7468**	2	BOLT (M10X1.5X95-MM)	
	8	1	**165-2140**	7	BOLT AS	
M	9	1	**587-3847**	1	STUD (M6X1X68-MM)	
M	10	1	**587-3848**	1	STUD (M6X1X48-MM)	
M	11	3	**7X-2533**	2	BOLT (M6X1X35-MM)	
	12	2	**592-3241**	1	GASKET-GEAR CASE	
	13	3	**423-7724**	1	GASKET	
	14	2	**609-9566**	1	CASE AS-GEAR	
		2	**5D-1319**	1	PIN-SPRING	
	15	1	**488-0405**	1	GEAR-DRIVE (48-TEETH)	
	16	2	**364-2755**	1	BOLT-SPECIAL	
M	17	3	**178-3336**	1	NUT-HEX FLANGE (M8X1.25-THD)	
M	18	1	**099-6418**	2	NUT (M6X1-THD)	
	19	1	**153-6415**	1	WASHER (SEAL)	
	20	3	**095-1574**	1	SEAL-O-RING	
	21	2	**5D-1319**	1	PIN-SPRING	
	22	1	**154-1675**	1	SEAL	
M	23	3	**162-2207**	1	NUT (M6X1-THD)	
	24	1	**139-5511**	1	CAP (TAMPER RESISTANT)	
	25	2	**592-3246**	1	GASKET	
	26	1	**592-7636**	1	ADAPTER AS	
		1	**365-5317**	2	SEAL	
	27	1	**308-1875**	1	SEAL-O-RING	
	28	3	**308-1882**	1	SPRING	
	29	2	**321-5907**	1	PLATE	
	30	1	**328-3229**	2	COVER	
	31	1	**328-3230**	2	BALL BEARING	
	32	2	**330-9189**	1	PLUG	
	33	2	**612-7549**	1	CAP	
	34	3	**334-0732**	1	ARM AS (FRONT HOUSING)	
	35	3	**335-5578**	1	BRACKET	
	36	2	**502-5421**	1	PIN	
	37	1	**502-9478**	1	NUT (TAMPER RESISTANT)	
M	40	1	**175-7141**	2	NUT-HEX FLANGE (M10X1.5-THD)	
	41	1	**575-5055**	1	CAP	

M - METRIC PART

599-9836 **HOUSING GP-FRONT (**contd.**)** **i10431734**

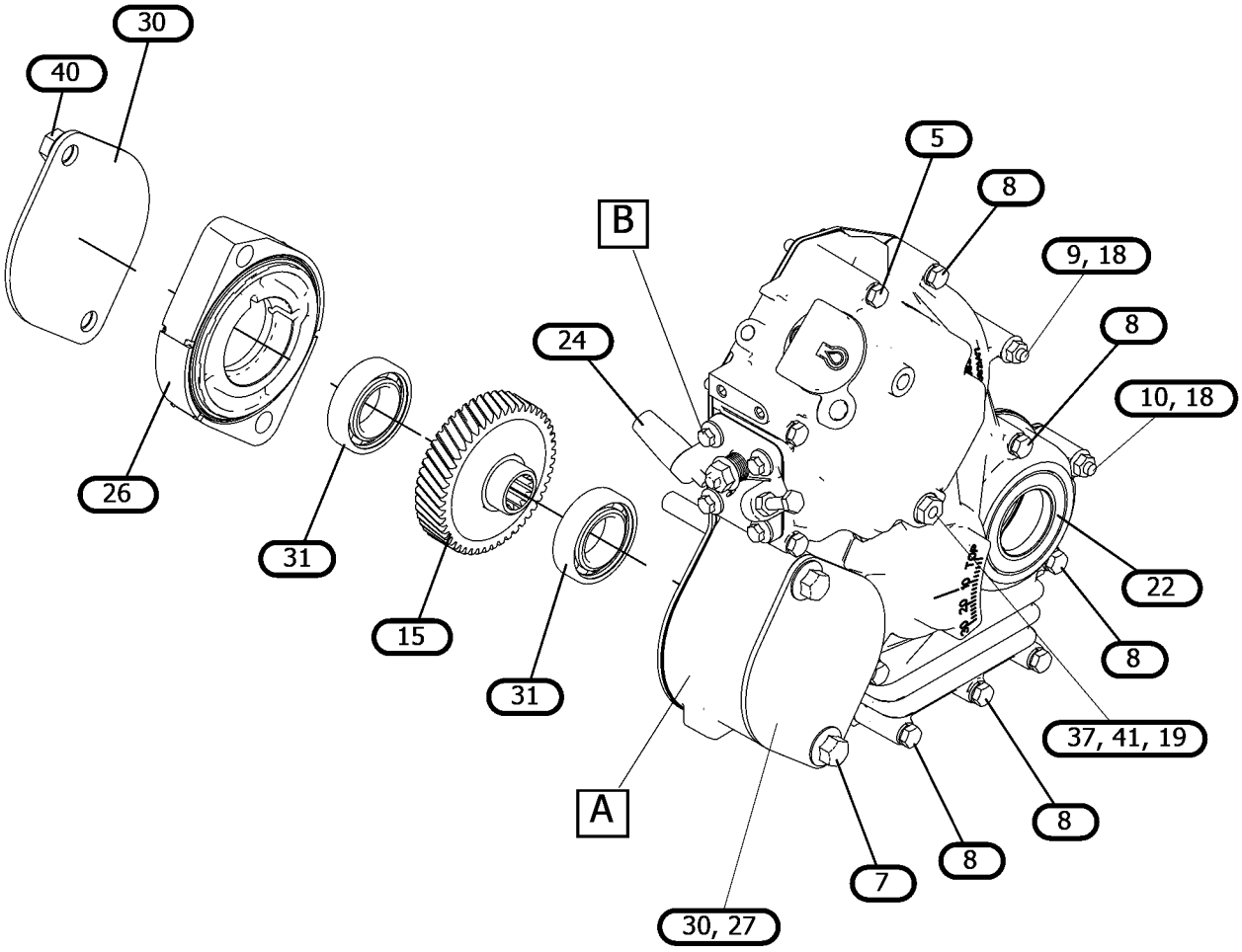

GRAPHIC #1 g07885721

599-9836 **HOUSING GP-FRONT (**contd.**)** **i10431734**

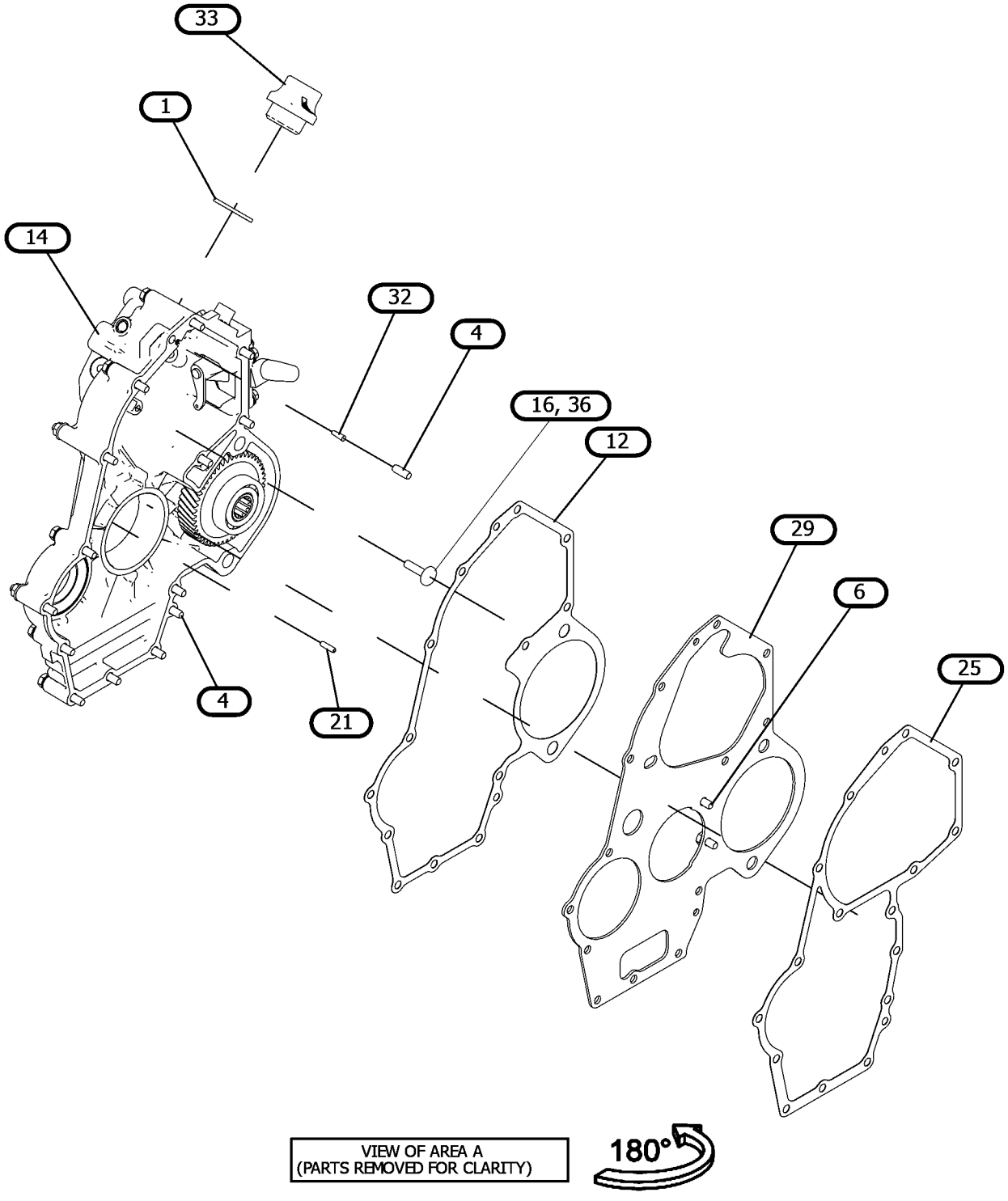

GRAPHIC #2 g07885721_01

599-9836 **HOUSING GP-FRONT (**contd.**)** **i10431734**

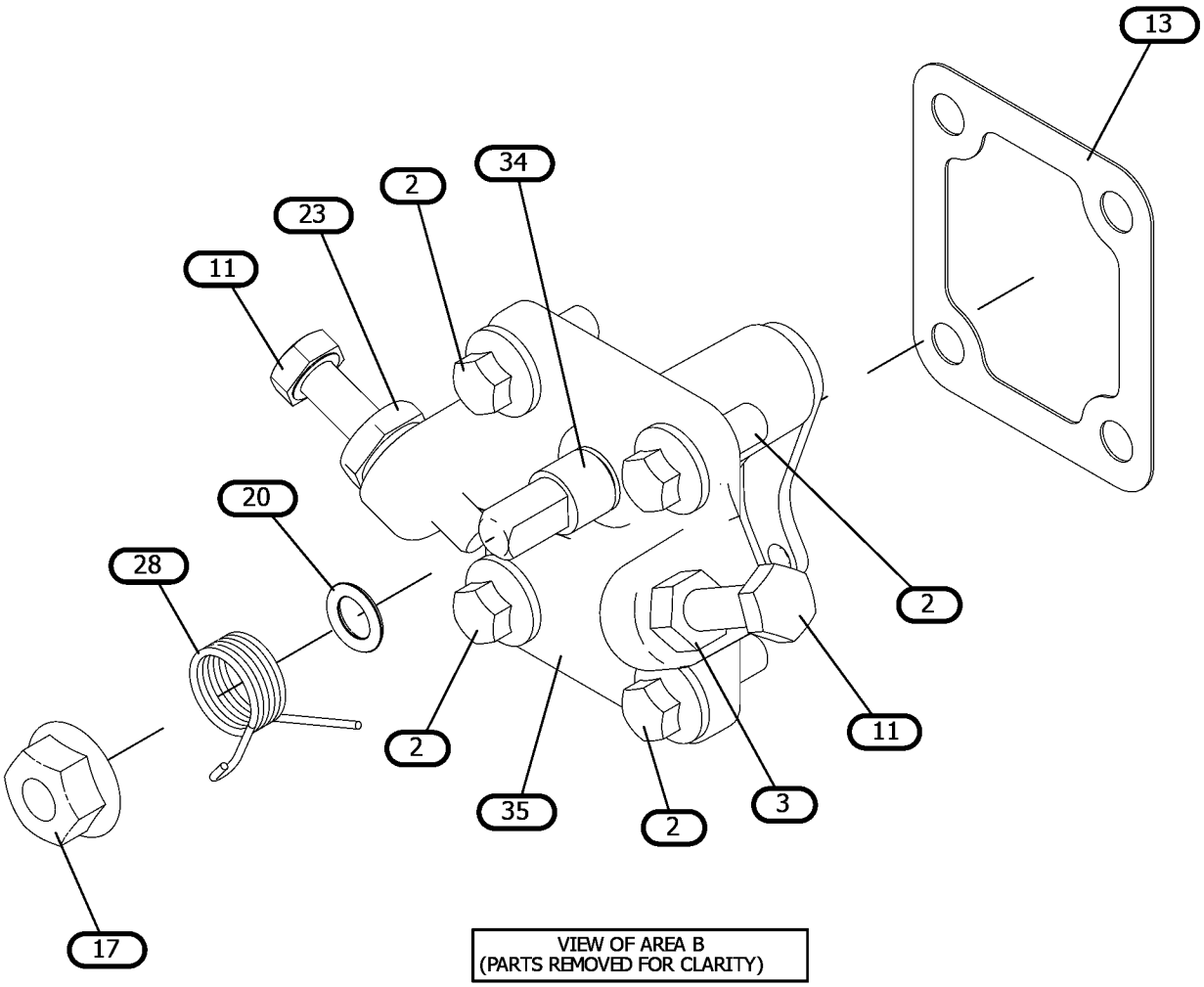

VIEW OF AREA B
(PARTS REMOVED FOR CLARITY)

GRAPHIC #3 <END> g07885721_02

308-2315 LIFTING GP-ENGINE

SMCS-1122 **i06547675**

NOTE	REF NO	GRAPHIC REF	PART NUMBER	QTY	PART NAME 1 2 3 4 5 6 (PRODUCT LEVEL)	SEE PAGE
	1	1	**155-7984**	1	WASHER (8.4X16X1.6-MM THK)	
M	2	1	**124-3815**	1	BOLT (M8X1.25X16-MM)	
	3	1	**168-9001**	1	BOLT AS	
	4	1	**370-6544**	2	PLATE-LIFTING	

M - METRIC PART

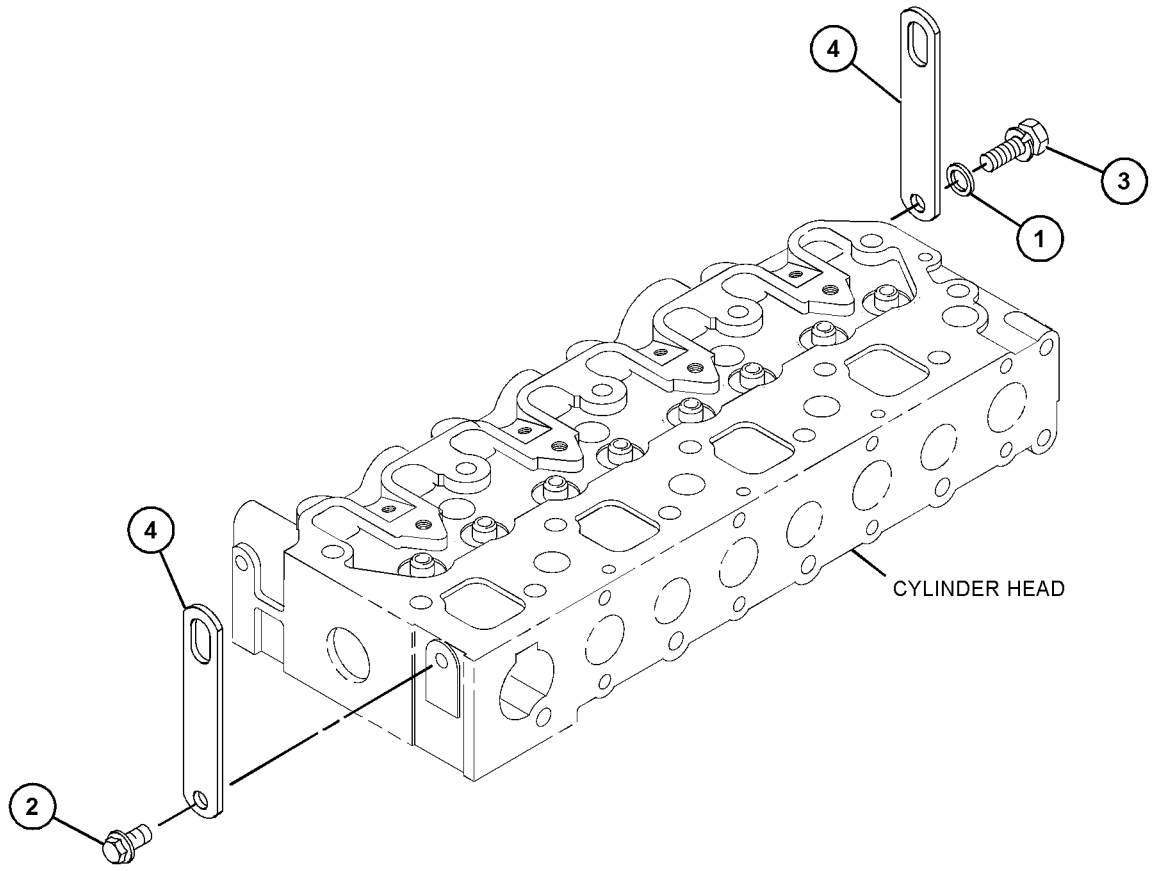

GRAPHIC #1 <END> g06107090

309-6725 LIFTING GP-ENGINE

PART OF 435-1645 CYLINDER BLOCK GP-LONG, 435-1637 ENGINE AR, 435-1641, 435-1646, 435-1656 ENGINE AR-PRIMARY

TYPE 1

SMCS-1122 **i02859884**

NOTE	REF NO	GRAPHIC REF	PART NUMBER	QTY	PART NAME 1 2 3 4 5 6 (PRODUCT LEVEL)	SEE PAGE
	1	1	**153-6375**	3	BOLT AS	
	2	1	**309-6737**	1	EYE-LIFTING	
	3	1	**153-6374**	1	PLATE	

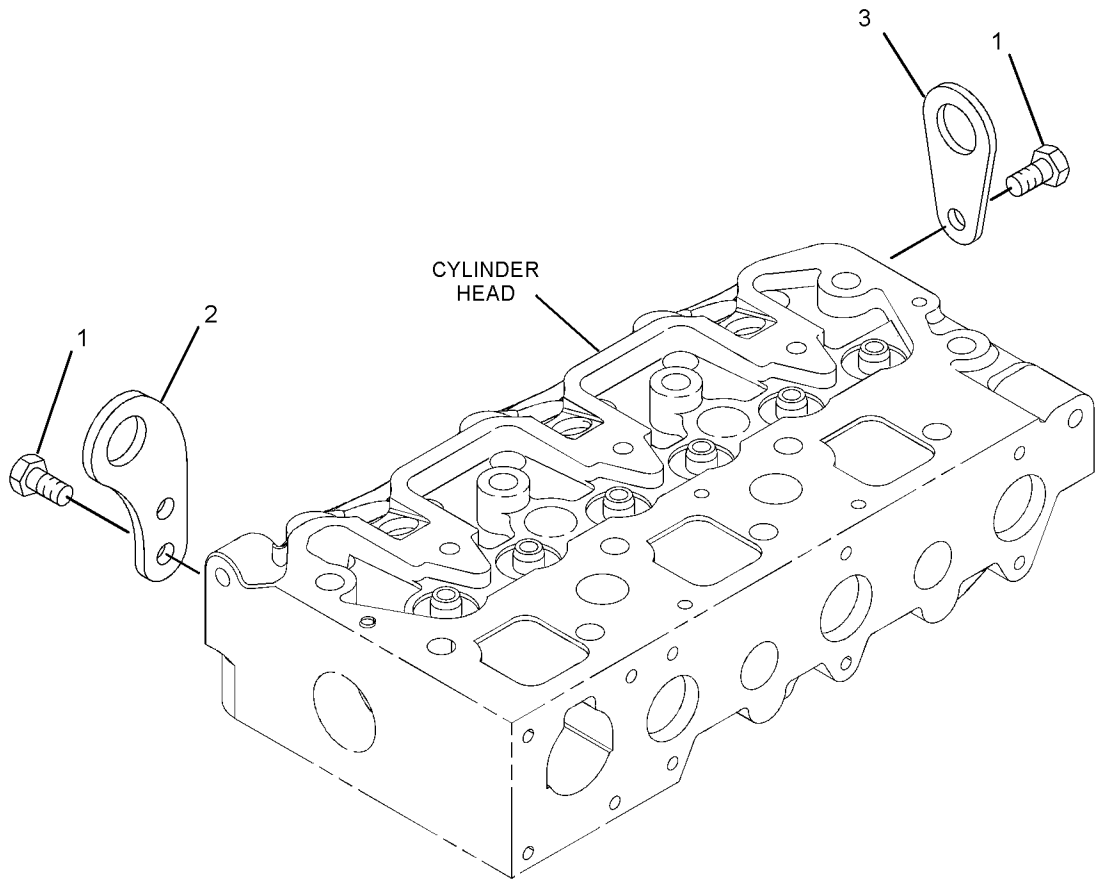

GRAPHIC #1 <END> g01389556

309-6725 LIFTING GP-ENGINE

PART OF 435-1645 CYLINDER BLOCK GP-LONG, 433-1379, 433-1380, 435-1637, 435-1638 ENGINE AR, 435-1636, 435-1641, 435-1642, 435-1646, 435-1647, 435-1656, 435-1658, 459-2953, 461-7892, 461-7894, 461-7895, 465-1477, 491-3396, 492-6602, 495-3121, 495-6243, 516-9335, 541-9277, 549-8284, 557-9727, 587-9328 ENGINE AR-PRIMARY TYPE 2

SMCS-1122 **i06628467**

NOTE	REF NO	GRAPHIC REF	PART NUMBER	QTY	PART NAME 1 2 3 4 5 6 (PRODUCT LEVEL)	SEE PAGE
M	1	1	**124-3815**	1	BOLT (M8X1.25X16-MM)	
	2	1	**370-6544**	2	PLATE-LIFTING	

M - METRIC PART

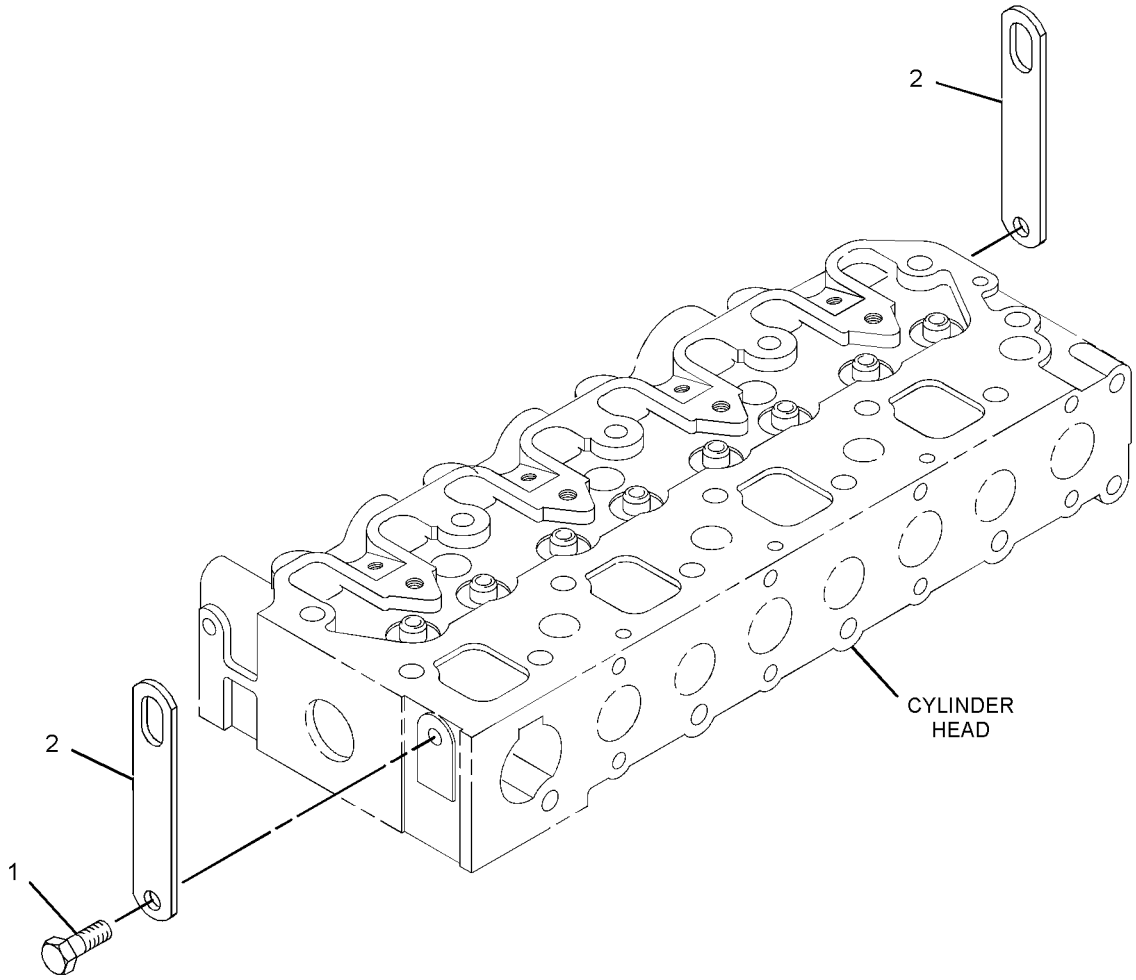

GRAPHIC #1 <END> g06099954

340-6069 LIFTING GP-ENGINE

SMCS-1122 **i03541943**

NOTE	REF NO	GRAPHIC REF	PART NUMBER	QTY	PART NAME 1 2 3 4 5 6 (PRODUCT LEVEL)	SEE PAGE
M	1	1	**6I-0217**	2	BOLT (M8X1.25X20-MM)	
M	2	1	**124-3815**	4	BOLT (M8X1.25X16-MM)	
	3	1	**338-3377**	1	EYE-LIFTING	
	4	1	**338-3391**	1	EYE-LIFTING	

M - METRIC PART

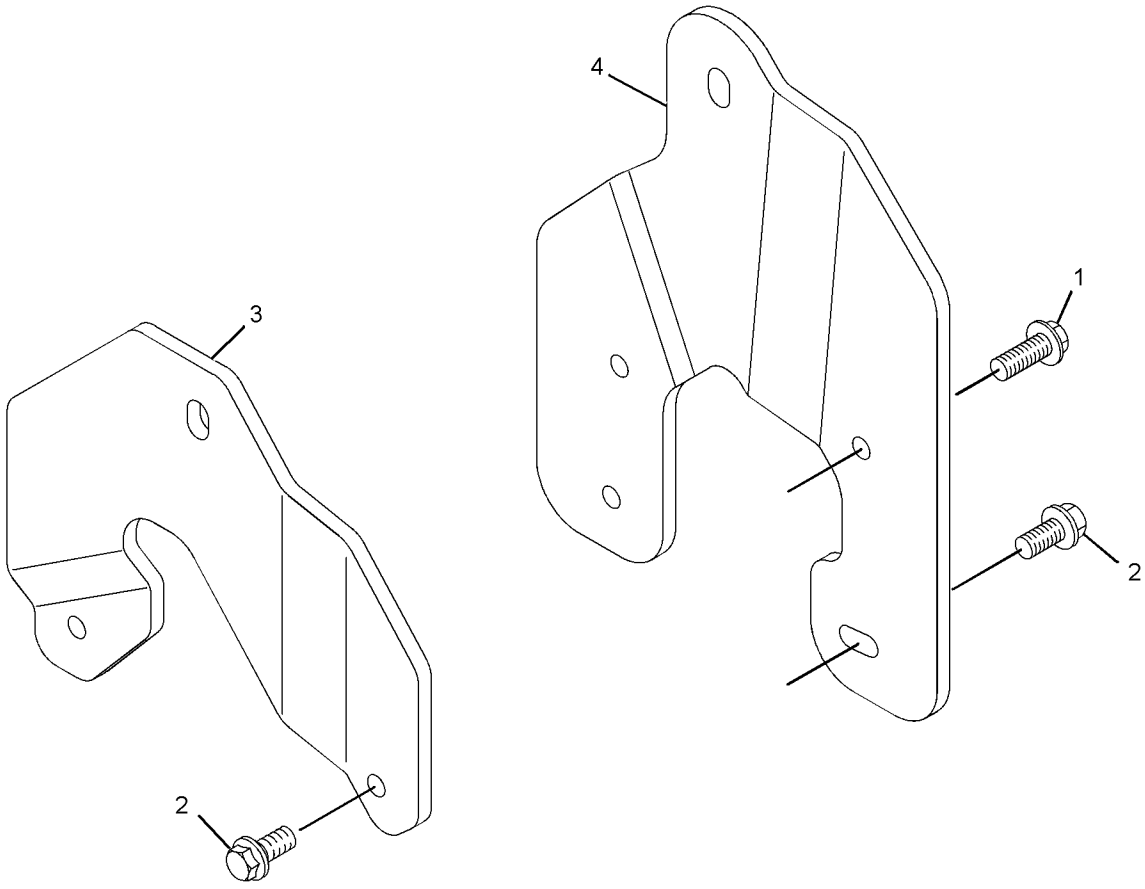

GRAPHIC #1 <END> g01963497

584-9814 LIFTING GP-ENGINE

PART OF 587-9328, 610-7720, 610-7721 ENGINE AR-PRIMARY

SMCS-1122 **i09697258**

NOTE	REF NO	GRAPHIC REF	PART NUMBER	QTY	PART NAME 1 2 3 4 5 6 (PRODUCT LEVEL)	SEE PAGE
M	1	1	**124-3815**	1	BOLT (M8X1.25X16-MM)	
	2	1	**370-6544**	2	PLATE-LIFTING	
M	3	1	**6I-0217**	1	BOLT (M8X1.25X20-MM)	

M - METRIC PART

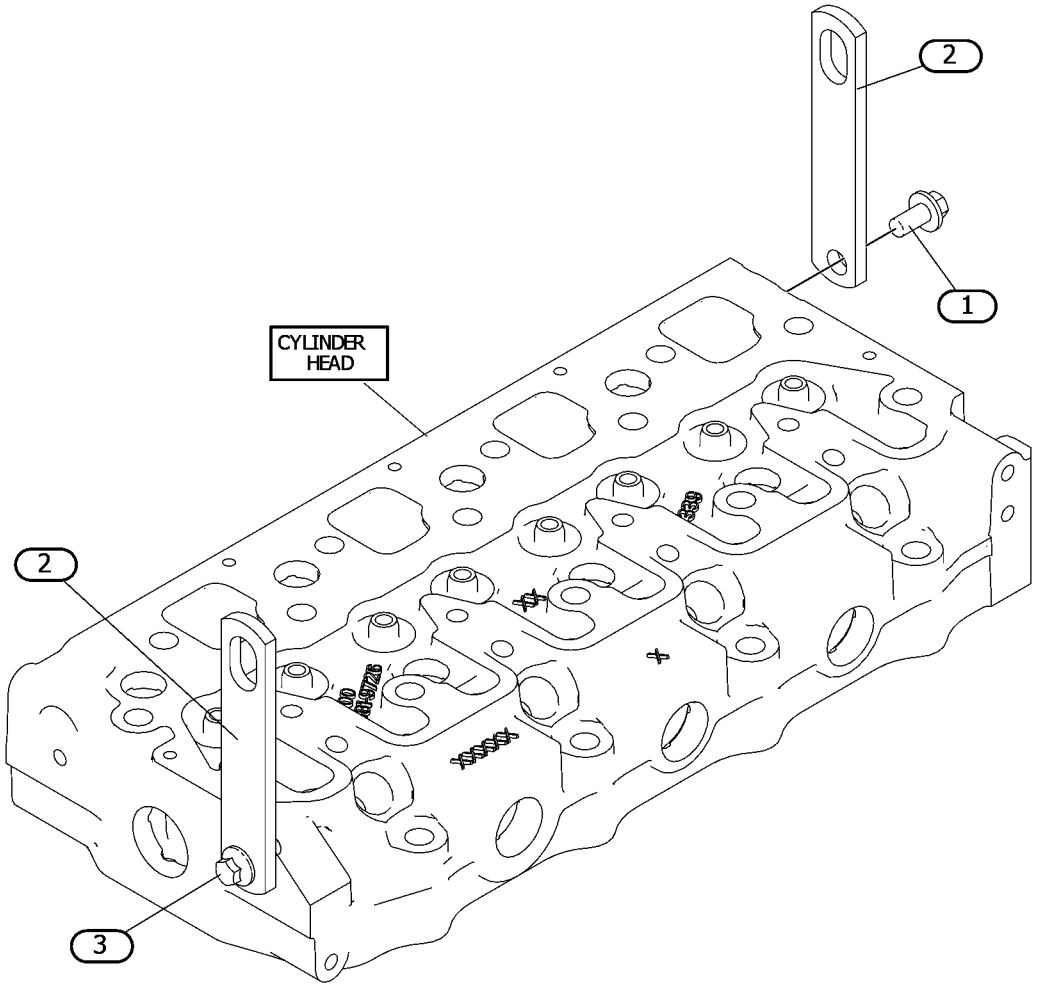

GRAPHIC #1 <END> g07605212

603-1463 LIFTING GP-ENGINE

PART OF 433-1379, 433-1380 ENGINE AR, 435-1636, 435-1641, 435-1646, 435-1647 ENGINE AR-PRIMARY

SMCS-1122 **i08697162**

NOTE	REF NO	GRAPHIC REF	PART NUMBER	QTY	PART NAME 1 2 3 4 5 6 (PRODUCT LEVEL)	SEE PAGE
M	1	1	**124-3815**	2	BOLT (M8X1.25X16-MM)	
	2	1	**370-6544**	2	PLATE-LIFTING	

M - METRIC PART

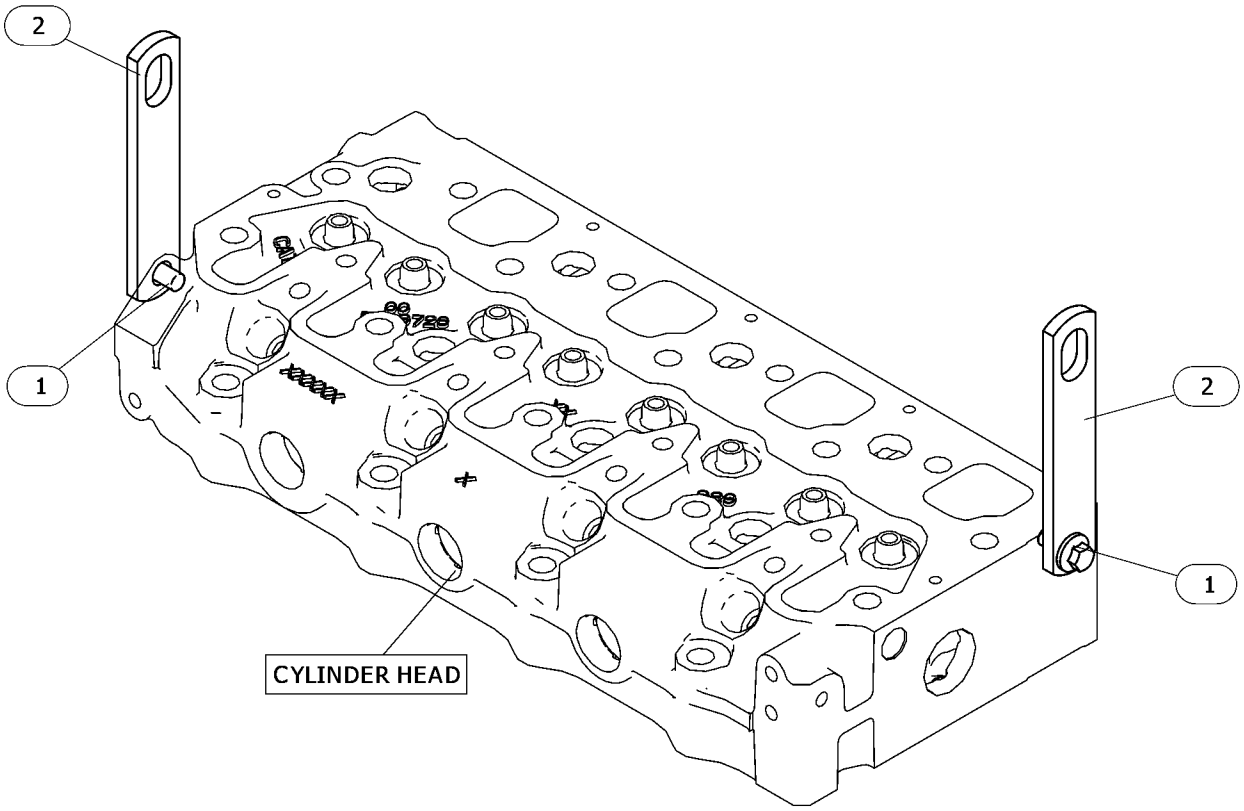

GRAPHIC #1 <END> g06719920

368-4112 MOUNTING GP-ENGINE

SMCS-1152, 1153, 1154 **i04315075**

NOTE	REF NO	GRAPHIC REF	PART NUMBER	QTY	PART NAME 1 2 3 4 5 6 (PRODUCT LEVEL)	SEE PAGE
	1	1	**290-8043**	8	BOLT	
	2	1	**154-2403**	8	WASHER	
M	3	1	**198-2663**	8	BOLT (M14X1.5X30-MM)	
	4	1	**271-2877**	2	BRACKET-MOUNTING	
	5	1	**238-9628**	2	BRACKET-MOUNTING	

M - METRIC PART

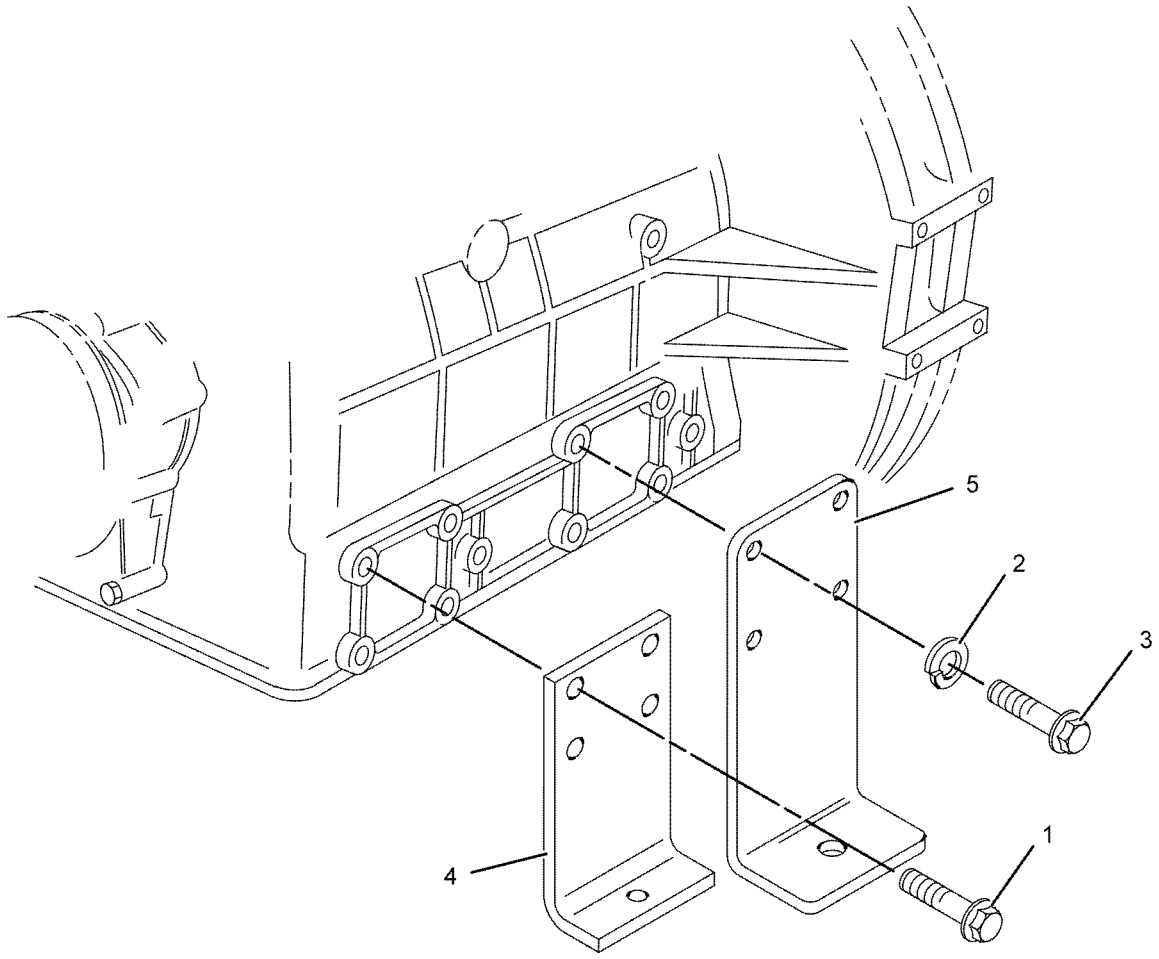

GRAPHIC #1 <END> g01085947

308-2295 PAN GP-OIL

PART OF 435-1645 CYLINDER BLOCK GP-LONG, 433-1379, 435-1637, 435-1638 ENGINE AR, 435-1641, 435-1646 ENGINE AR-PRIMARY

TYPE 1

SMCS-1302 **i03200751**

NOTE	REF NO	GRAPHIC REF	PART NUMBER	QTY	PART NAME 1 2 3 4 5 6 (PRODUCT LEVEL)	SEE PAGE
M	1	1	**153-6833**	31	BOLT (M6X1X13-MM)	
	2	1	**153-6835**	1	SEAL-O-RING	
	3	1	**153-6838**	3	BOLT AS	
	4	1	**153-6841**	4	SEAL-O-RING	
	5	1	**154-1947**	1	PIPE-OIL	
	6	1	**154-1948**	1	STRAINER (OIL PAN) (ENGINE)	
	7	1	**215-2605**	1	GASKET	
	8	1	**218-2333**	1	PAN-OIL	
	9	1	**229-5150**	1	GUIDE AS-GAUGE	
	10	1	**229-5151**	1	GAUGE-OIL LEVEL (DIPSTICK) (ENGINE)	
	11	1	**319-7366**	1	PLUG	

M - METRIC PART

308-2295 **PAN GP-OIL (**contd.**)** **i03200751**

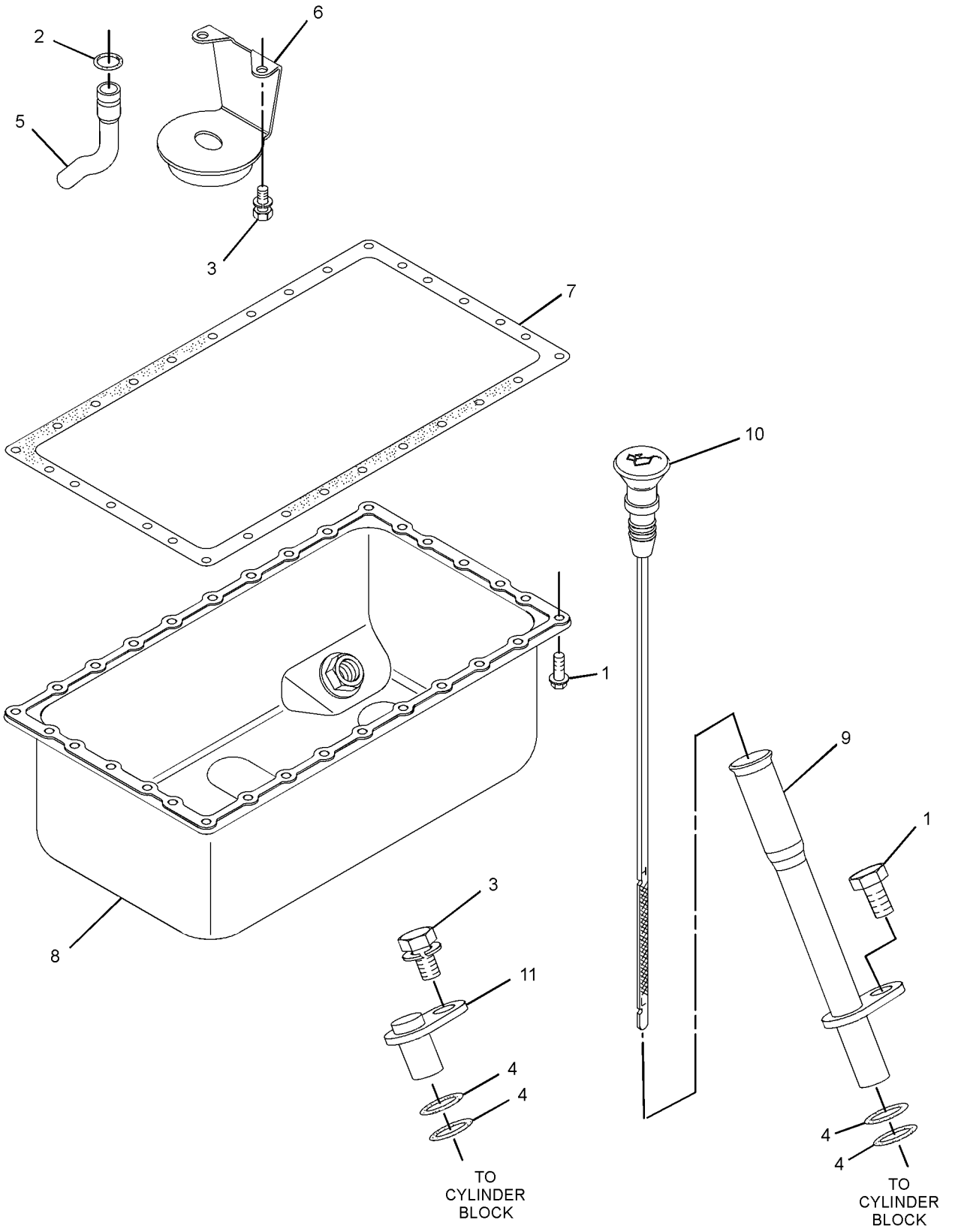

GRAPHIC #1 <END> g01528313

308-2295 PAN GP-OIL

PART OF 435-1645 CYLINDER BLOCK GP-LONG, 433-1379, 433-1380, 435-1637, 435-1638 ENGINE AR, 435-1641, 435-1646, 435-1656 ENGINE AR-PRIMARY
TYPE 2

SMCS-1302 **i03398584**

NOTE	REF NO	GRAPHIC REF	PART NUMBER	QTY	PART NAME 1 2 3 4 5 6 (PRODUCT LEVEL)	SEE PAGE
M	1	1	**153-6833**	31	BOLT (M6X1X13-MM)	
	2	1	**153-6835**	1	SEAL-O-RING	
	3	1	**153-6838**	3	BOLT AS	
	4	1	**153-6841**	4	SEAL-O-RING	
C	5	1	**316-1016**	1	PIPE-SUCTION	
C	6	1	**305-0584**	1	STRAINER (ENGINE OIL)	
	7	1	**215-2605**	1	GASKET	
	8	1	**218-2333**	1	PAN-OIL	
	9	1	**229-5150**	1	GUIDE AS-GAUGE (GAUGE)	
	10	1	**229-5151**	1	GAUGE-OIL LEVEL (DIPSTICK) (ENGINE)	
	11	1	**319-7366**	1	PLUG	

C - CHANGE FROM PREVIOUS TYPE
M - METRIC PART

308-2295 **PAN GP-OIL (**contd.**)** **i03398584**

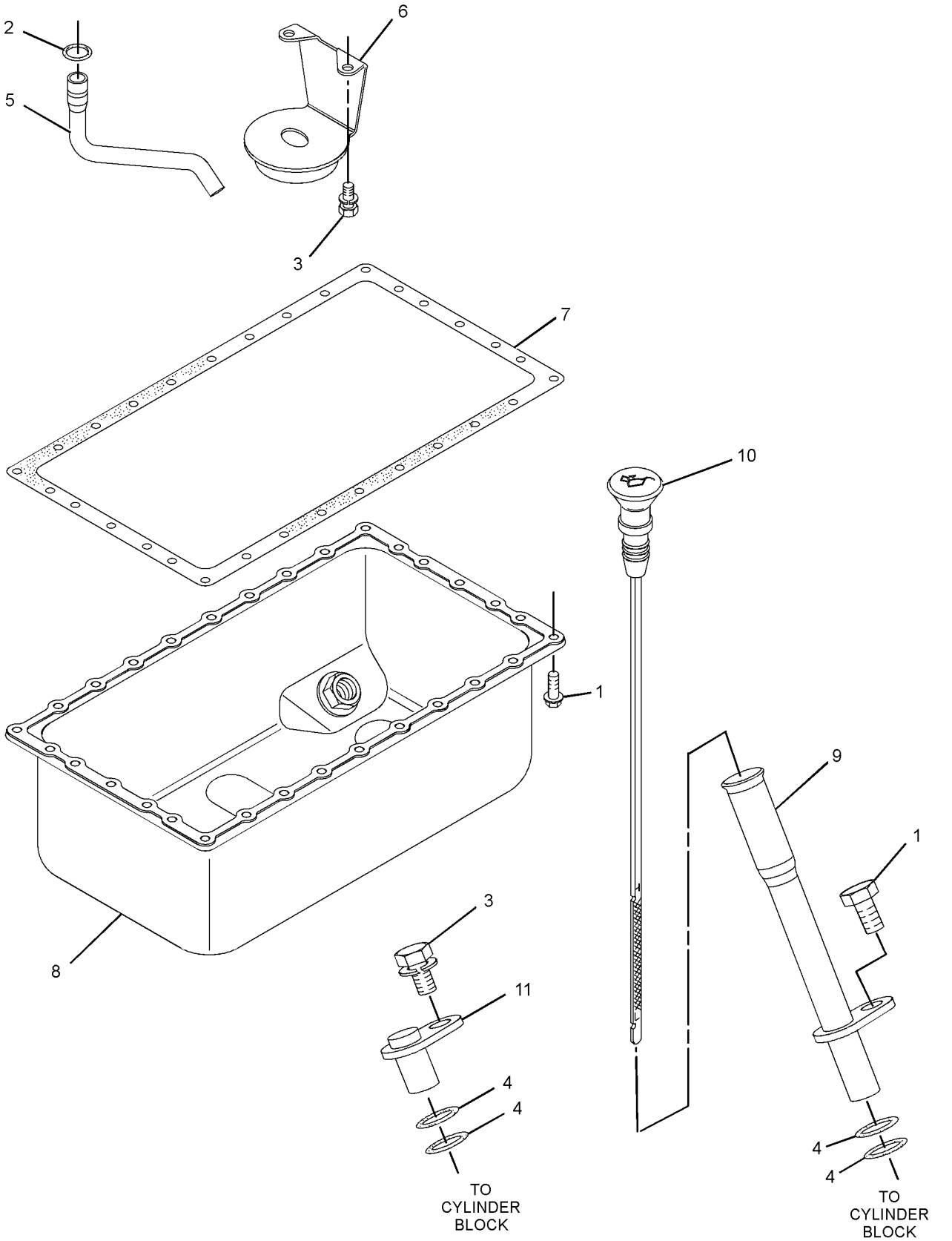

GRAPHIC #1 <END> g01762175

308-2295 PAN GP-OIL

PART OF 435-1645 CYLINDER BLOCK GP-LONG, 433-1379, 433-1380, 435-1637, 435-1638 ENGINE AR, 435-1636, 435-1641, 435-1646, 435-1656 ENGINE AR-PRIMARY
TYPE 3

SMCS-1302 **i03398628**

NOTE	REF NO	GRAPHIC REF	PART NUMBER	QTY	PART NAME 1 2 3 4 5 6 (PRODUCT LEVEL)	SEE PAGE
M	1	1	**153-6833**	31	BOLT (M6X1X13-MM)	
	2	1	**153-6835**	1	SEAL-O-RING	
	3	1	**153-6838**	3	BOLT AS	
	4	1	**153-6841**	4	SEAL-O-RING	
C	5	1	**316-2275**	1	TUBE-OIL SUCTION	
	6	1	**305-0584**	1	STRAINER (ENGINE OIL)	
	7	1	**215-2605**	1	GASKET	
	8	1	**218-2333**	1	PAN-OIL	
	9	1	**229-5150**	1	GUIDE AS-GAUGE (GAUGE)	
	10	1	**229-5151**	1	GAUGE-OIL LEVEL (DIPSTICK) (ENGINE)	
	11	1	**319-7366**	1	PLUG	

C - CHANGE FROM PREVIOUS TYPE
M - METRIC PART

308-2295 **PAN GP-OIL (**contd.**)** **i03398628**

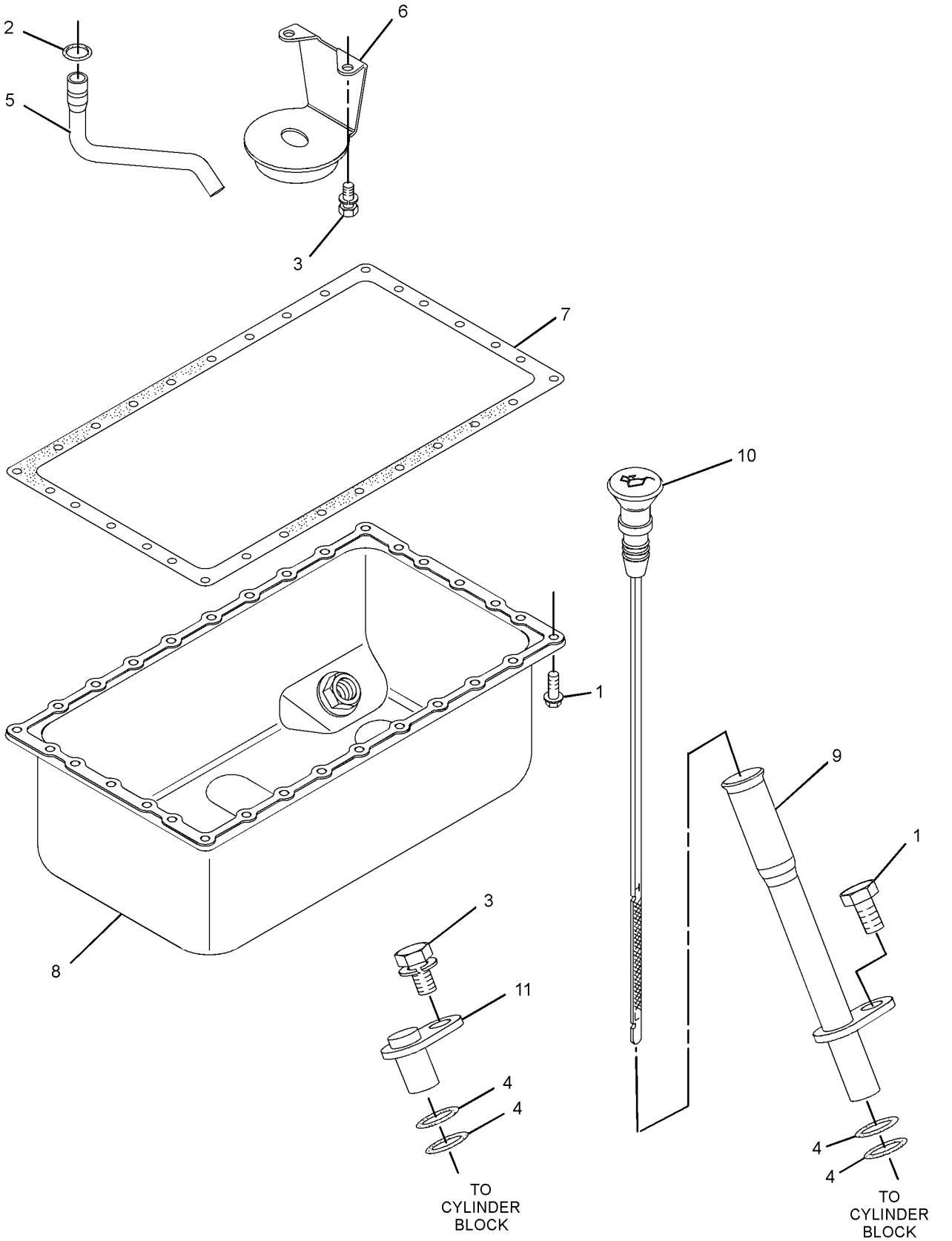

GRAPHIC #1 <END> g01762175

308-2295 PAN GP-OIL

PART OF 435-1645 CYLINDER BLOCK GP-LONG, 433-1379, 433-1380, 435-1637, 435-1638 ENGINE AR, 435-1636, 435-1641, 435-1642, 435-1646, 435-1647, 435-1656, 435-1658, 491-3396, 495-3121, 516-9335, 541-9277, 557-9727 ENGINE AR-PRIMARY
TYPE 4

SMCS-1302 **i10340005**

NOTE	REF NO	GRAPHIC REF	PART NUMBER	QTY	PART NAME 1 2 3 4 5 6 (PRODUCT LEVEL)	SEE PAGE
M	1	1	**100-4841**	32	BOLT (M6X1X10-MM)	
	2	1	**153-6835**	1	SEAL-O-RING	
	3	1	**153-6838**	2	BOLT AS	
	4	1	**189-9763**	4	SEAL-O-RING	
C	5	1	**325-9415**	1	TUBE-OIL SUCTION	
C	6	1	**425-6360**	1	STRAINER (ENGINE OIL)	
	7	1	**423-5607**	1	GASKET	
	8	1	**232-7823**	1	PAN-OIL	
	9	1	**229-5150**	1	GUIDE AS-GAUGE (ENGINE)	
	10	1	**611-4942**	1	GAUGE AS-OIL LEVEL (DIPSTICK)	
	10A	1	**612-8165**	2	SEAL-O-RING	
	11	1	**369-8010**	1	PLUG	

C - CHANGE FROM PREVIOUS TYPE
M - METRIC PART

308-2295 **PAN GP-OIL (**contd.**)** **i10340005**

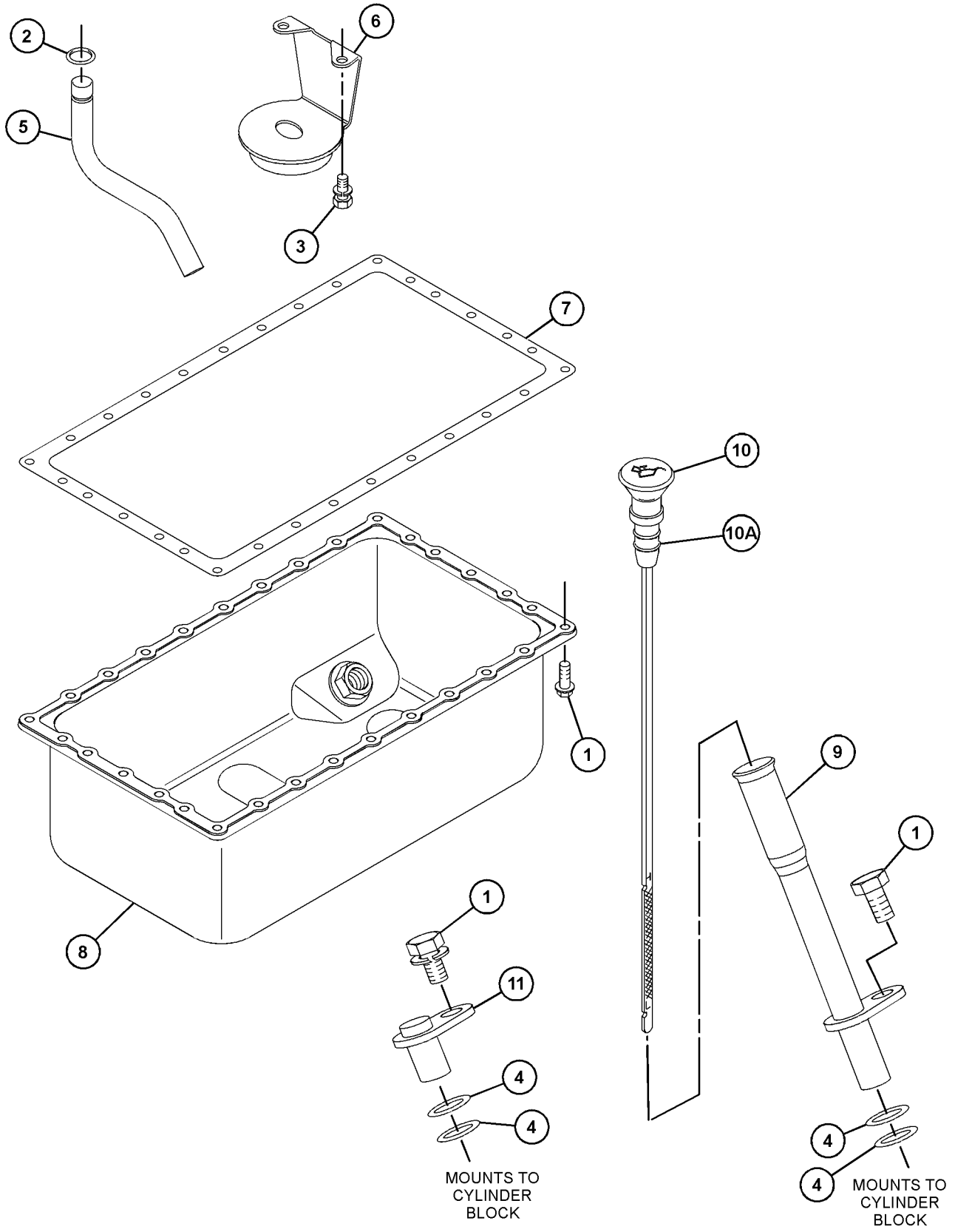

GRAPHIC #1 <END> g07850060

311-1886 PAN GP-OIL

SMCS-1302 **i03104792**

NOTE	REF NO	GRAPHIC REF	PART NUMBER	QTY	PART NAME 1 2 3 4 5 6 (PRODUCT LEVEL)	SEE PAGE
M	1	1,2	**153-6833**	31	BOLT (M6X1X13-MM)	
	2	2	**153-6835**	1	SEAL-O-RING	
	3	2	**153-6838**	3	BOLT AS	
	4	1,2	**153-6841**	4	SEAL-O-RING	
	5	1	**209-7084**	1	TUBE AS-OIL GAUGE	
	6	2	**215-2605**	1	GASKET	
	7	2	**218-2333**	1	PAN-OIL	
	8	1	**236-3983**	1	GAUGE-OIL LEVEL (DIPSTICK) (ENGINE)	
	9	2	**305-0584**	1	STRAINER (ENGINE OIL)	
	10	2	**316-2275**	1	TUBE-OIL SUCTION	
	11	2	**319-7366**	1	PLUG	

M - METRIC PART

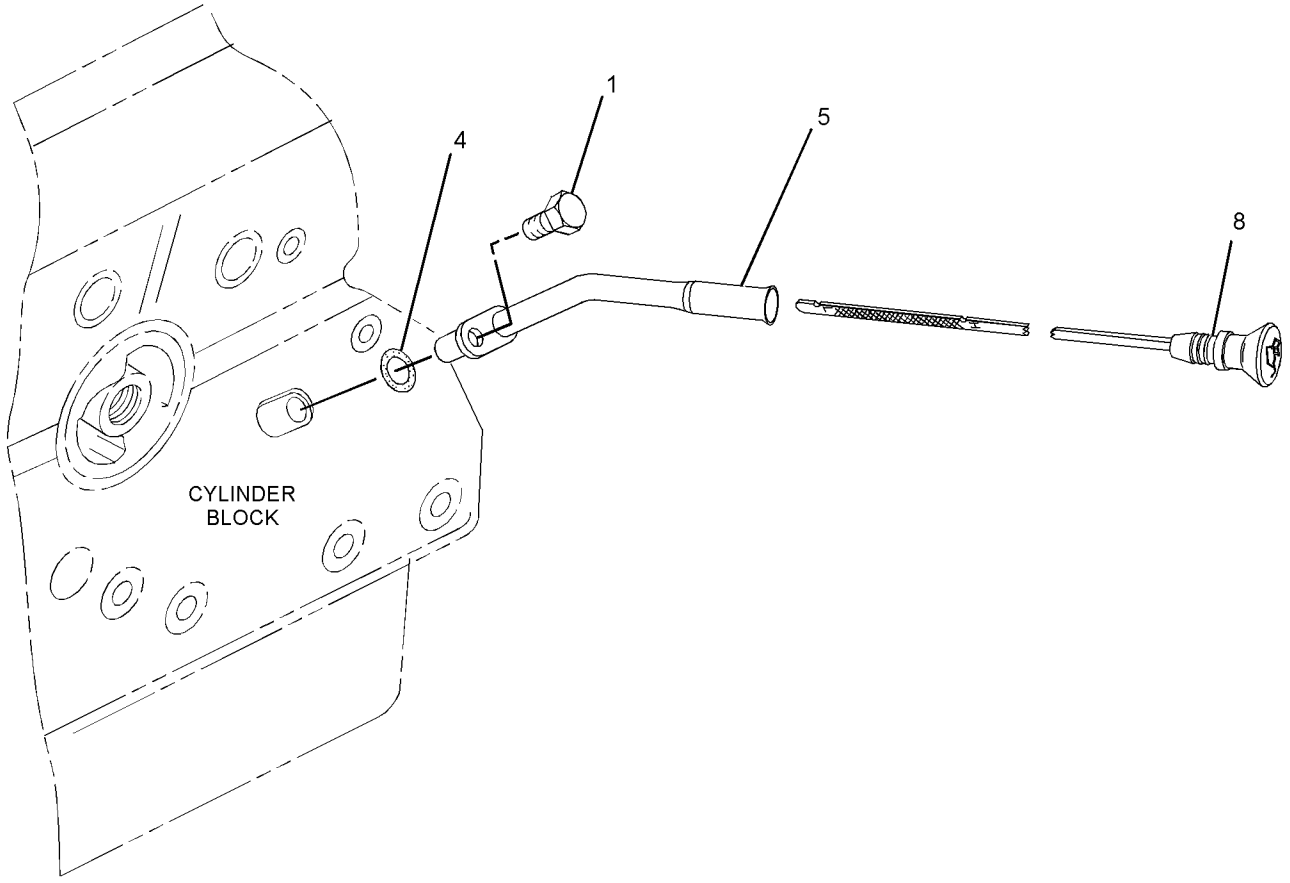

GRAPHIC #1 g01636233

311-1886 **PAN GP-OIL (**contd.**)** **i03104792**

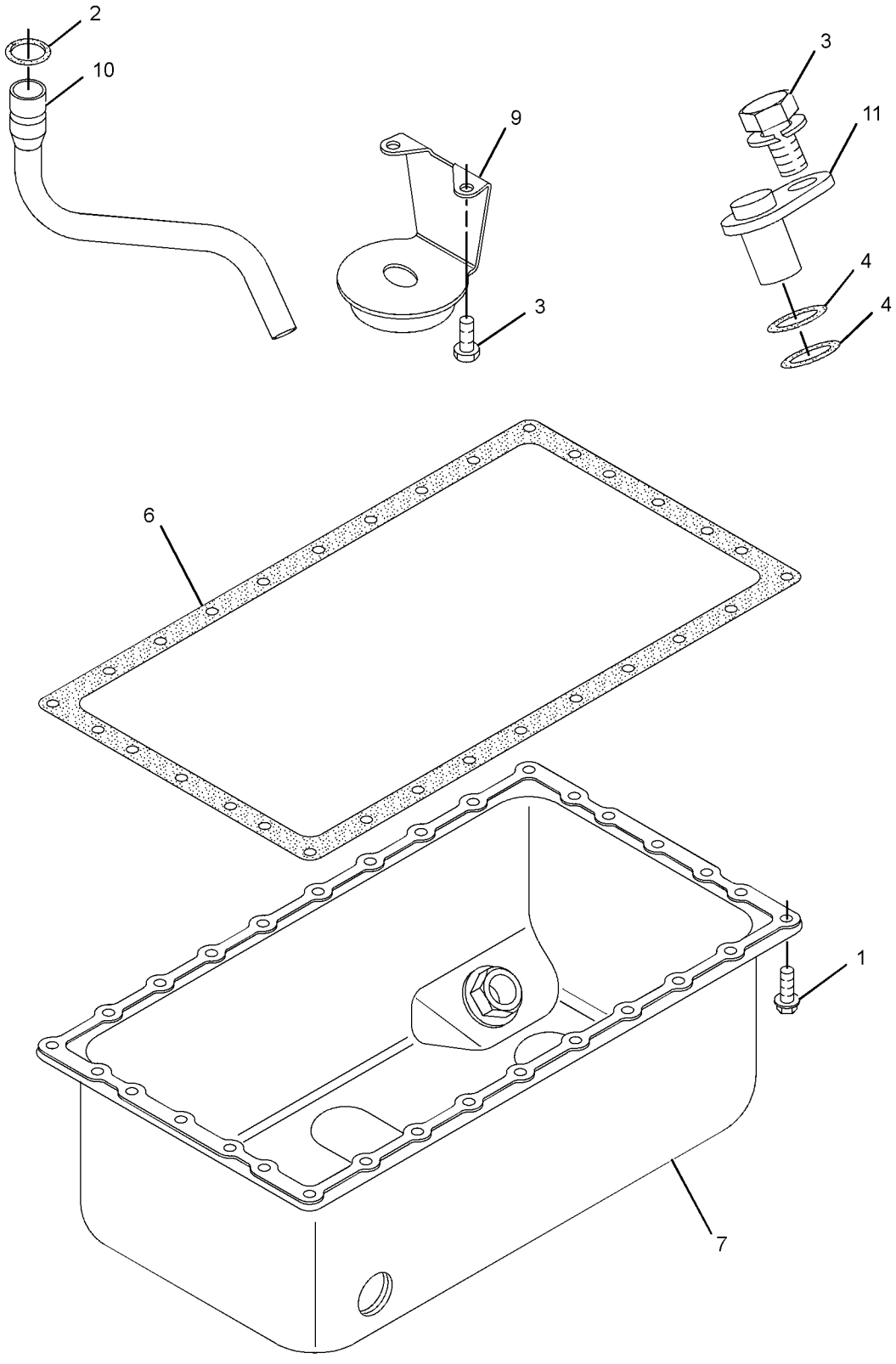

GRAPHIC #2 <END> g01636234

311-1886 PAN GP-OIL

PART OF 459-2953, 492-6602, 495-6243, 549-8284, 587-9328 ENGINE AR-PRIMARY

SMCS-1302 **i10570284**

NOTE	REF NO	GRAPHIC REF	PART NUMBER	QTY	PART NAME 1 2 3 4 5 6 (PRODUCT LEVEL)	SEE PAGE
M	1	1	**100-4841**	32	BOLT (M6X1X10-MM)	
	2	1	**153-6835**	1	SEAL-O-RING	
	3	1	**153-6838**	2	BOLT AS	
	4	1	**189-9763**	4	SEAL-O-RING	
	5	1	**232-7823**	1	PAN-OIL	
C	6	1	**325-9415**	1	TUBE-OIL SUCTION	
	7	1	**369-8010**	1	PLUG	
	8	1	**423-5607**	1	GASKET	
C	9	1	**425-6360**	1	STRAINER (ENGINE OIL)	
	10	1	**209-7084**	1	TUBE AS-OIL GAUGE	
	11	1	**611-8499**	1	GAUGE AS-OIL LEVEL (DIPSTICK) (ENGINE)	
	11A	1	**612-8165**	2	SEAL-O-RING	

C - CHANGE FROM PREVIOUS TYPE
M - METRIC PART

311-1886 **PAN GP-OIL (**contd.**)** **i10570284**

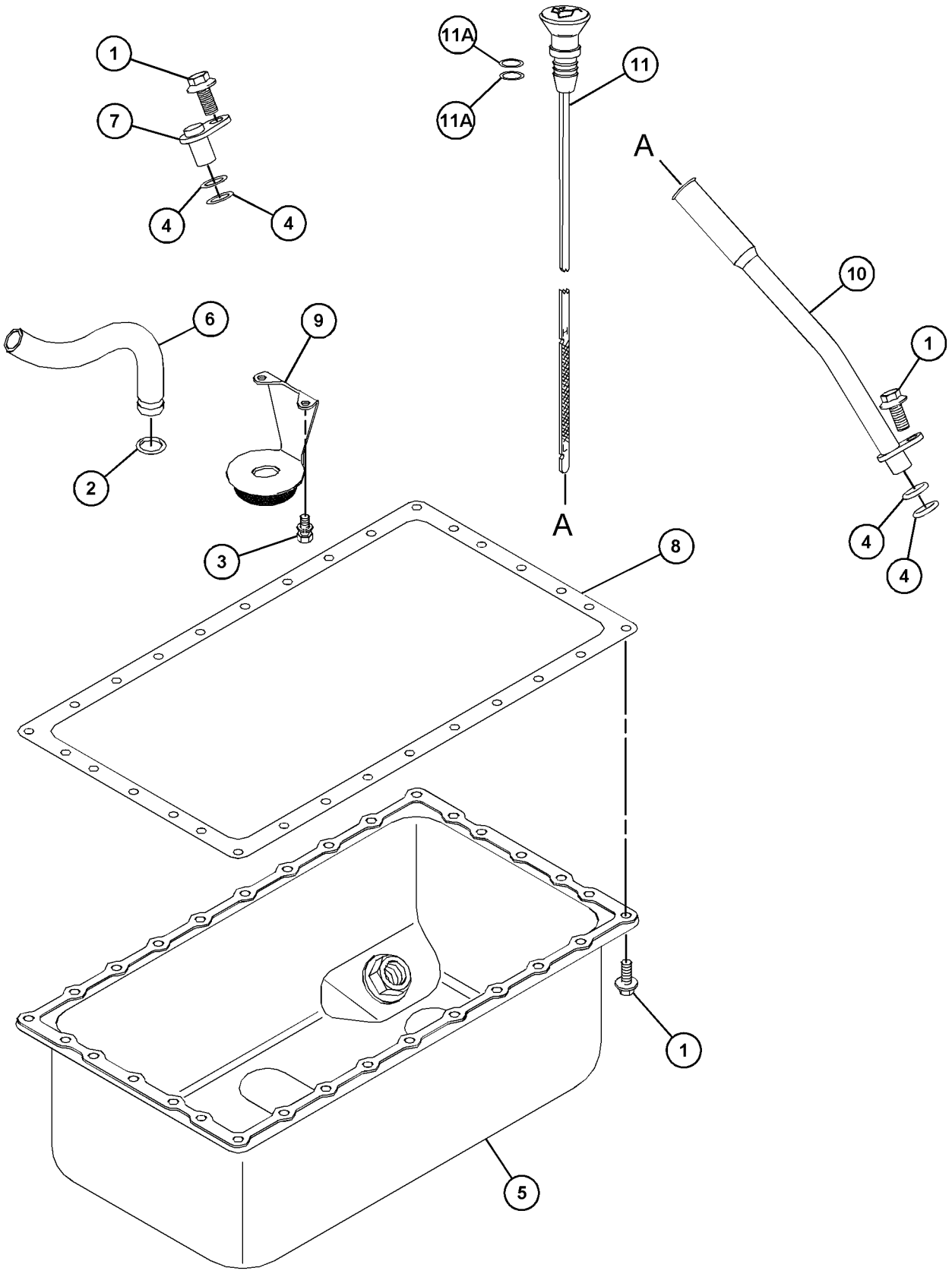

GRAPHIC #1 <END> g07959405

317-3037 PAN GP-OIL

TYPE 1

SMCS-1302 **i02888560**

NOTE	REF NO	GRAPHIC REF	PART NUMBER	QTY	PART NAME 1 2 3 4 5 6 (PRODUCT LEVEL)	SEE PAGE
M	1	1,2	**153-6833**	31	BOLT (M6X1X13-MM)	
	2	2	**153-6835**	1	SEAL-O-RING	
	3	1,2	**153-6838**	3	BOLT AS	
	4	1	**153-6841**	4	SEAL-O-RING	
M	5	1	**180-6118**	1	BOLT AS (M8X1.25X12-MM)	
	6	1	**209-7088**	1	TUBE AS-OIL GAUGE	
	7	2	**215-2605**	1	GASKET	
	8	2	**218-2333**	1	PAN-OIL	
	9	1	**228-7472**	1	GAUGE AS-OIL LEVEL (DIPSTICK) (ENGINE)	
	10	2	**305-0584**	1	STRAINER (ENGINE OIL)	
	11	2	**316-2275**	1	TUBE-OIL SUCTION	
	12	1	**319-7366**	1	PLUG	

M - METRIC PART

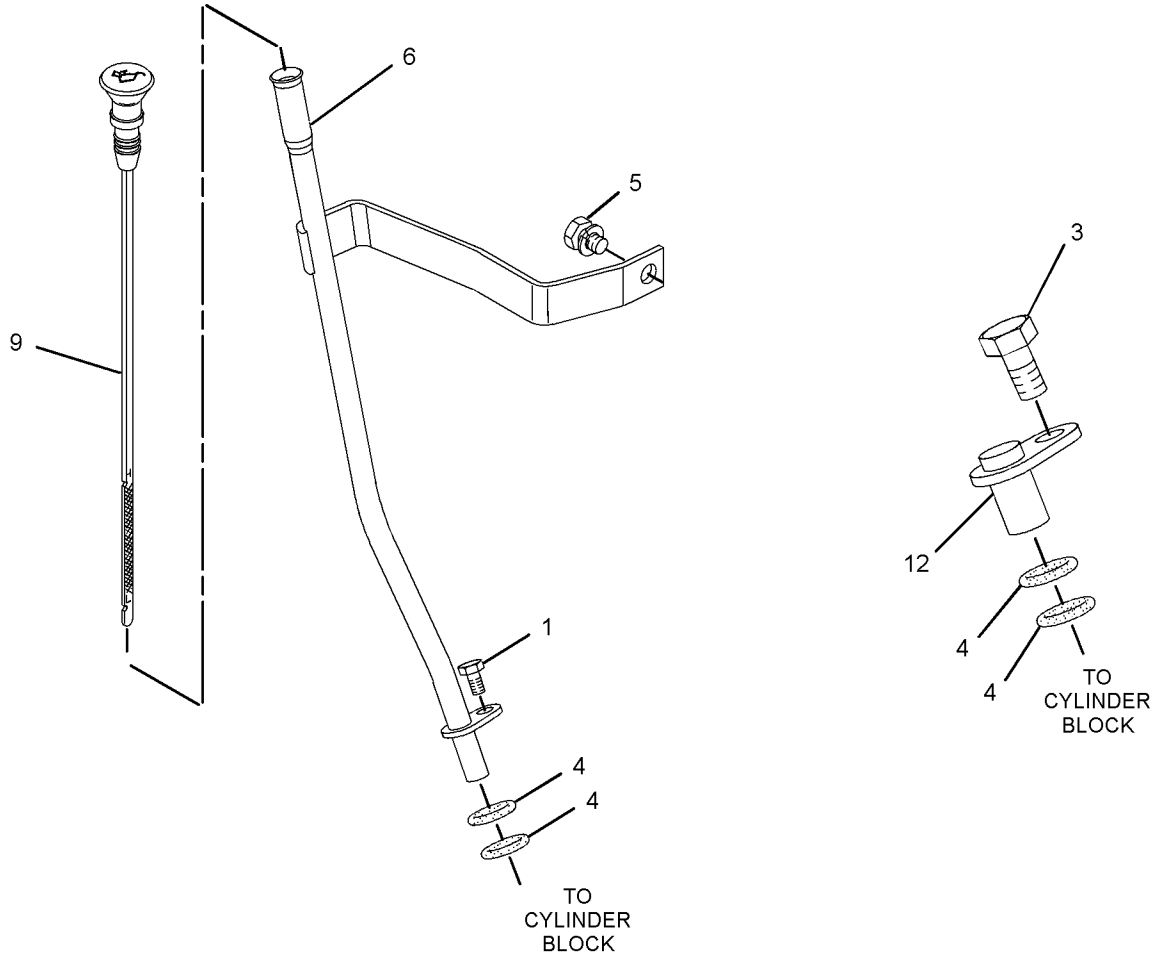

GRAPHIC #1 g01639954

317-3037 **PAN GP-OIL (**contd.**)** **i02888560**

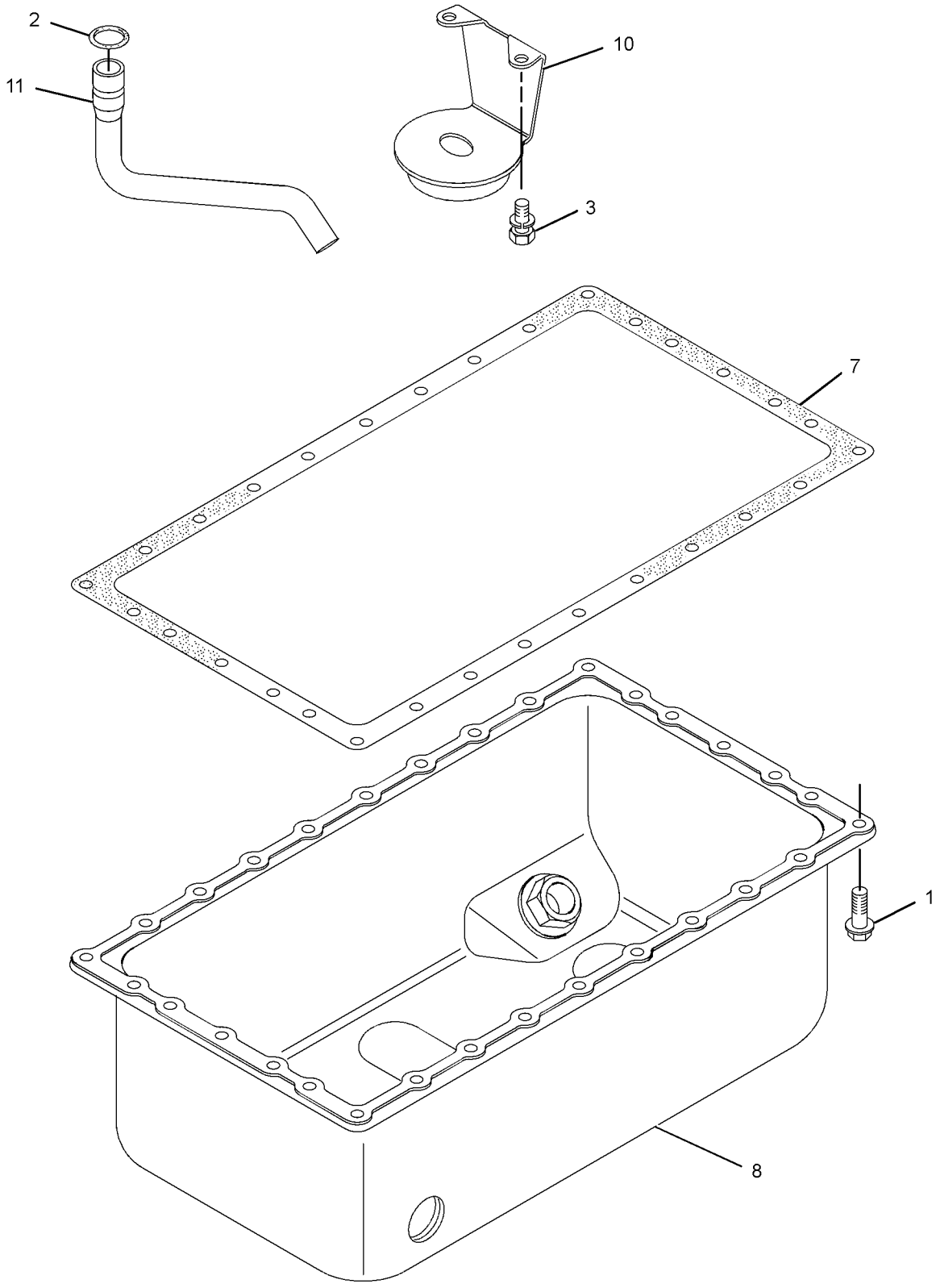

GRAPHIC #2 <END> g01639955

317-3037 PAN GP-OIL

PART OF 461-7892, 461-7894, 461-7895, 465-1477 ENGINE AR-PRIMARY
TYPE 2

SMCS-1302 **i10453529**

NOTE	REF NO	GRAPHIC REF	PART NUMBER	QTY	PART NAME 1 2 3 4 5 6 (PRODUCT LEVEL)	SEE PAGE
M	1	1	**100-4841**	32	BOLT (M6X1X10-MM)	
	2	2	**153-6835**	1	SEAL-O-RING	
	3	2	**153-6838**	2	BOLT AS	
	4	1	**189-9763**	4	SEAL-O-RING	
M	5	1	**180-6118**	1	BOLT AS (M8X1.25X12-MM)	
	6	1	**209-7088**	1	TUBE AS-OIL GAUGE	
	7	1	**611-8501**	1	GAUGE AS-OIL LEVEL (DIPSTICK) (ENGINE)	
	7A	1	**612-8165**	2	SEAL-O-RING	
C	8	2	**325-9415**	1	TUBE-OIL SUCTION	
	9	1	**369-8010**	1	PLUG	
	10	2	**423-5607**	1	GASKET	
C	11	2	**425-6360**	1	STRAINER (ENGINE OIL)	
	12	2	**232-7823**	1	PAN-OIL	

C - CHANGE FROM PREVIOUS TYPE
M - METRIC PART

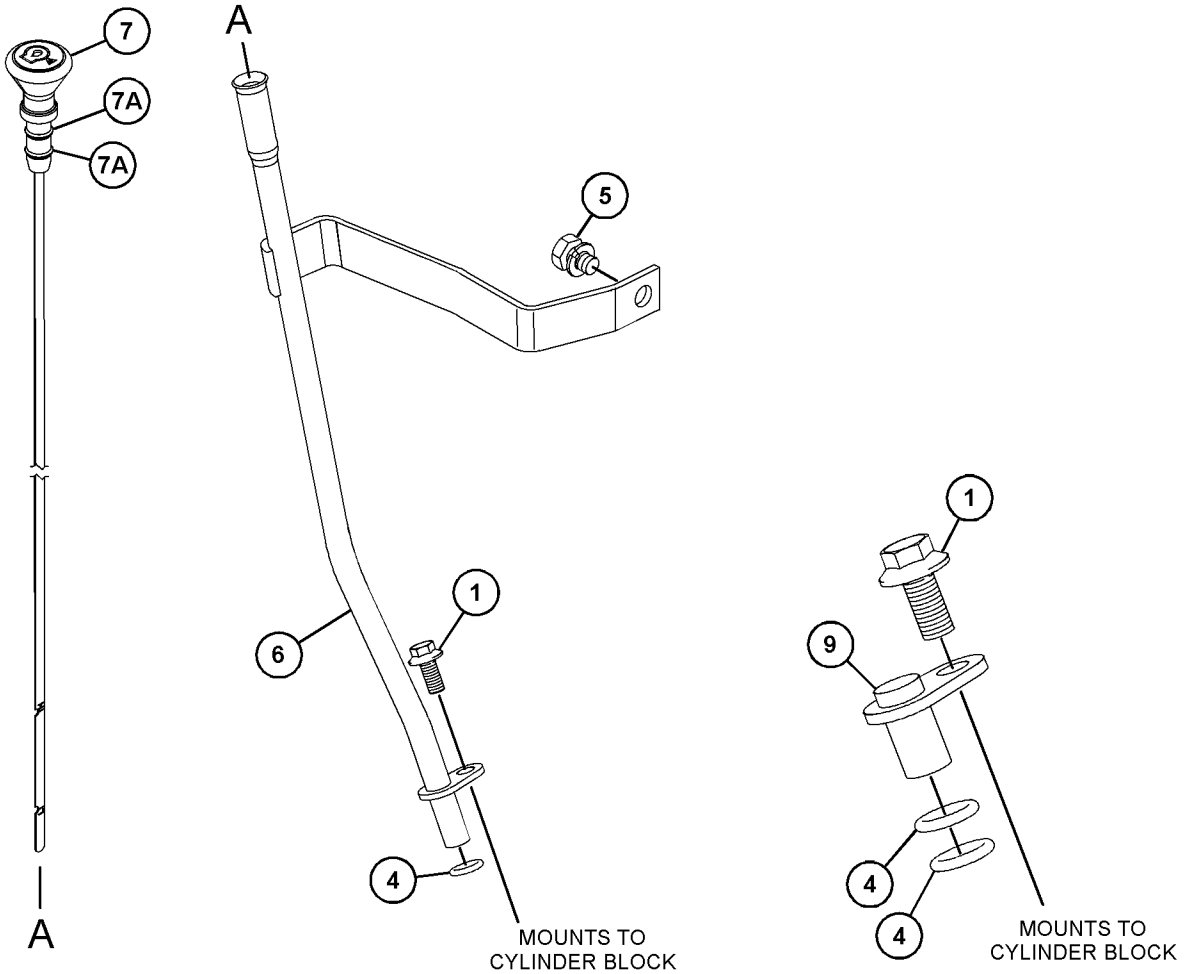

GRAPHIC #1 g07903106

317-3037 **PAN GP-OIL (**contd.**)** **i10453529**

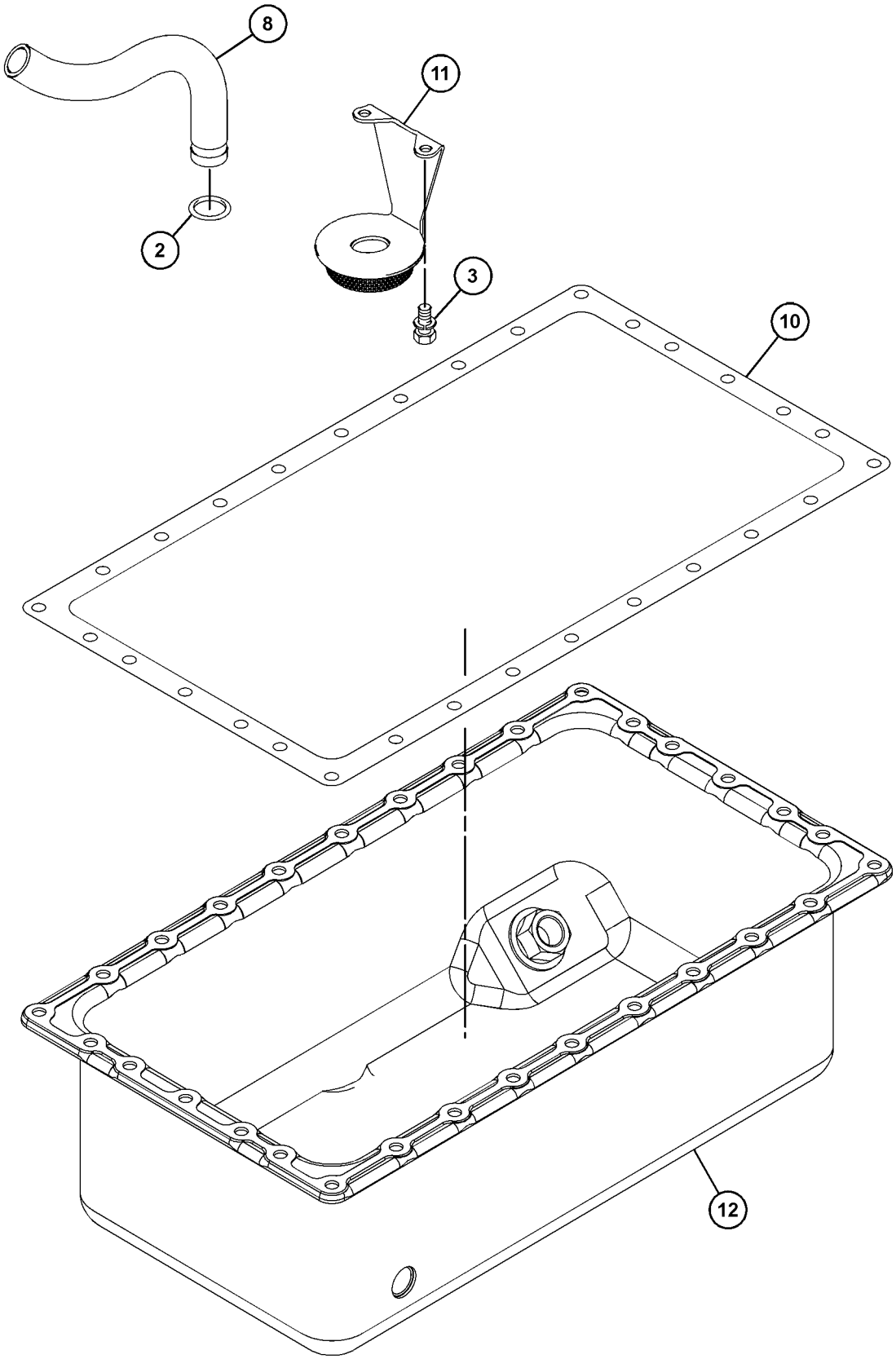

GRAPHIC #2 <END> g07903107

322-2416 PAN GP-OIL

SMCS-1302 **i10545702**

NOTE	REF NO	GRAPHIC REF	PART NUMBER	QTY	PART NAME 1 2 3 4 5 6 (PRODUCT LEVEL)	SEE PAGE
M	1	1,2	**100-4841**	32	BOLT (M6X1X10-MM)	
	2	2	**153-6835**	1	SEAL-O-RING	
	3	1,2	**153-6838**	2	BOLT AS	
	4	1	**189-9763**	4	SEAL-O-RING	
	5	2	**288-8814**	1	PIPE-OIL	
	6	2	**446-5401**	1	STRAINER (OIL PAN)	
	7	2	**423-5607**	1	GASKET	
	8	1	**229-5150**	1	GUIDE AS-GAUGE	
	9	1	**611-4942**	1	GAUGE AS-OIL LEVEL (DIPSTICK) (ENGINE)	
	9A	1	**612-8165**	2	SEAL-O-RING	
	10	2	**557-8814**	1	PAN AS-OIL	
	11	1	**369-8010**	1	PLUG	

M - METRIC PART

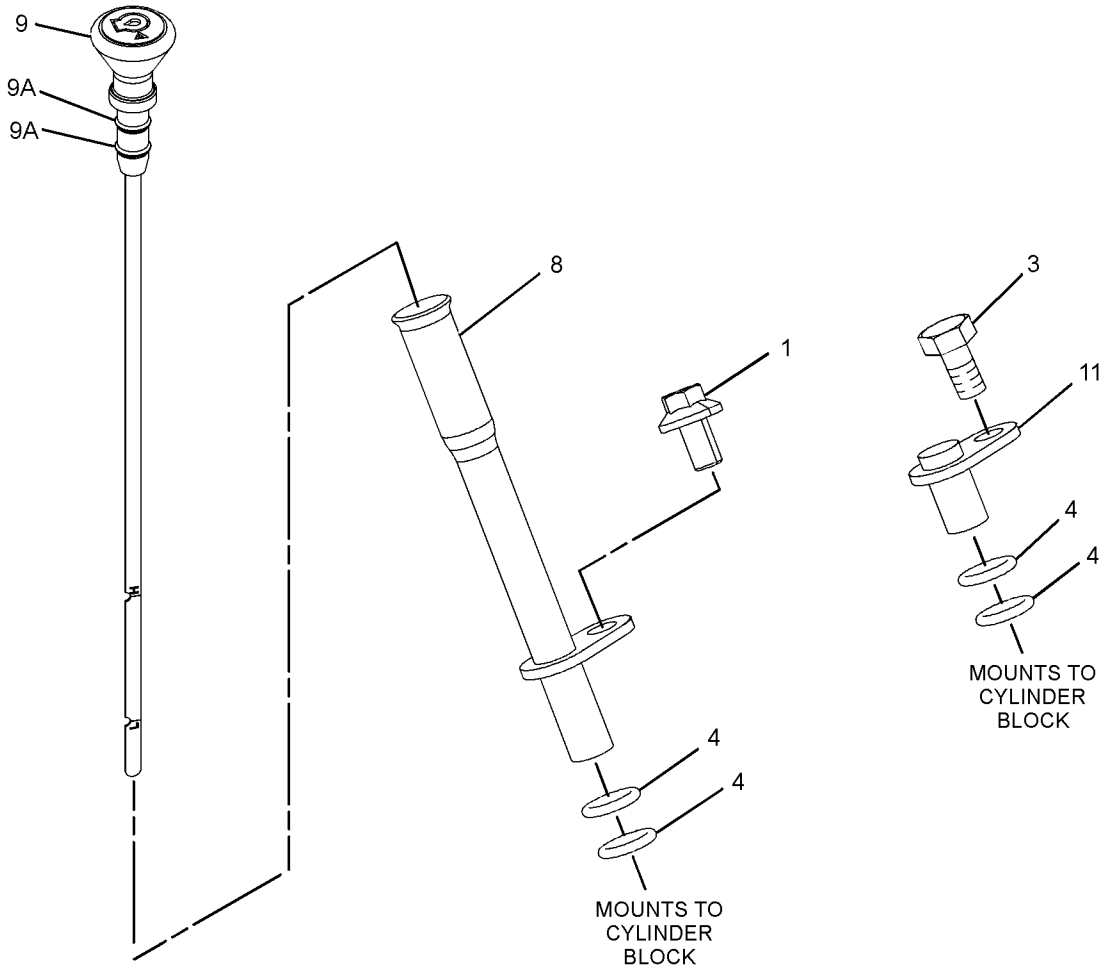

GRAPHIC #1 g07937844

322-2416 **PAN GP-OIL (**contd.**)** **i10545702**

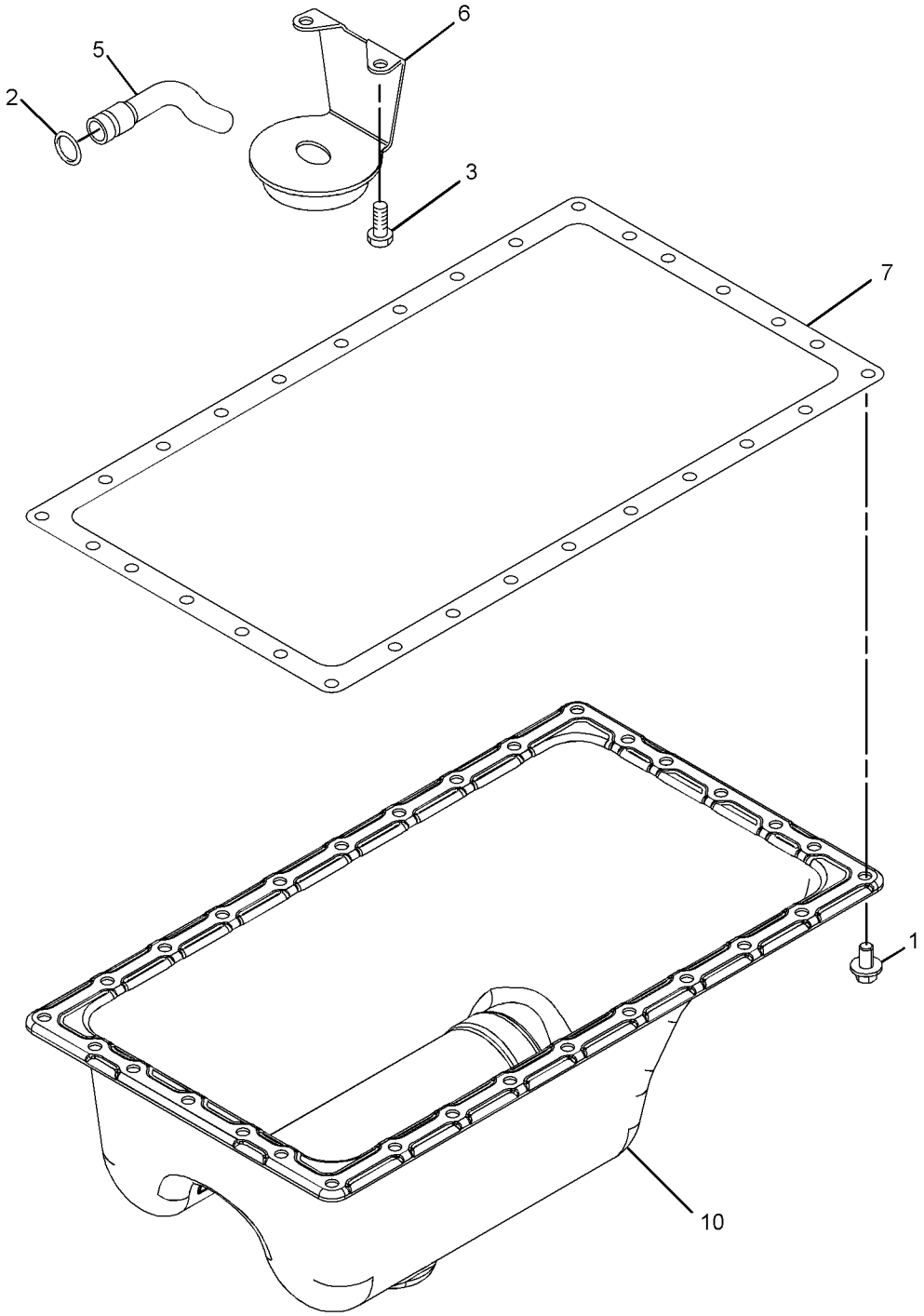

GRAPHIC #2 <END> g07349712

331-9610 PAN GP-OIL

SMCS-1302 **i08197654**

NOTE	REF NO	GRAPHIC REF	PART NUMBER	QTY	PART NAME 1 2 3 4 5 6 (PRODUCT LEVEL)	SEE PAGE
M	1	1	**100-4841**	32	BOLT (M6X1X10-MM)	
	2	1	**153-6835**	1	SEAL-O-RING	
	3	1	**153-6838**	2	BOLT AS	
	4	1	**189-9763**	4	SEAL-O-RING	
	5	1	**293-4786**	1	PIPE-SUCTION	
	6	1	**293-4785**	1	SCREEN-SUCTION	
	7	1	**160-3562**	1	PAN-OIL	
M	8	1	**114-4363**	1	BOLT (M8X1.25X12-MM)	
	9	1	**209-7088**	1	TUBE AS-OIL GAUGE	
	10	1	**423-5607**	1	GASKET	
	11	1	**228-7472**	1	GAUGE AS-OIL LEVEL (DIPSTICK)	
	12	1	**289-6119**	2	SEAL-O-RING	
	13	1	**369-8010**	1	PLUG	

M - METRIC PART

331-9610 **PAN GP-OIL (**contd.**)** **i08197654**

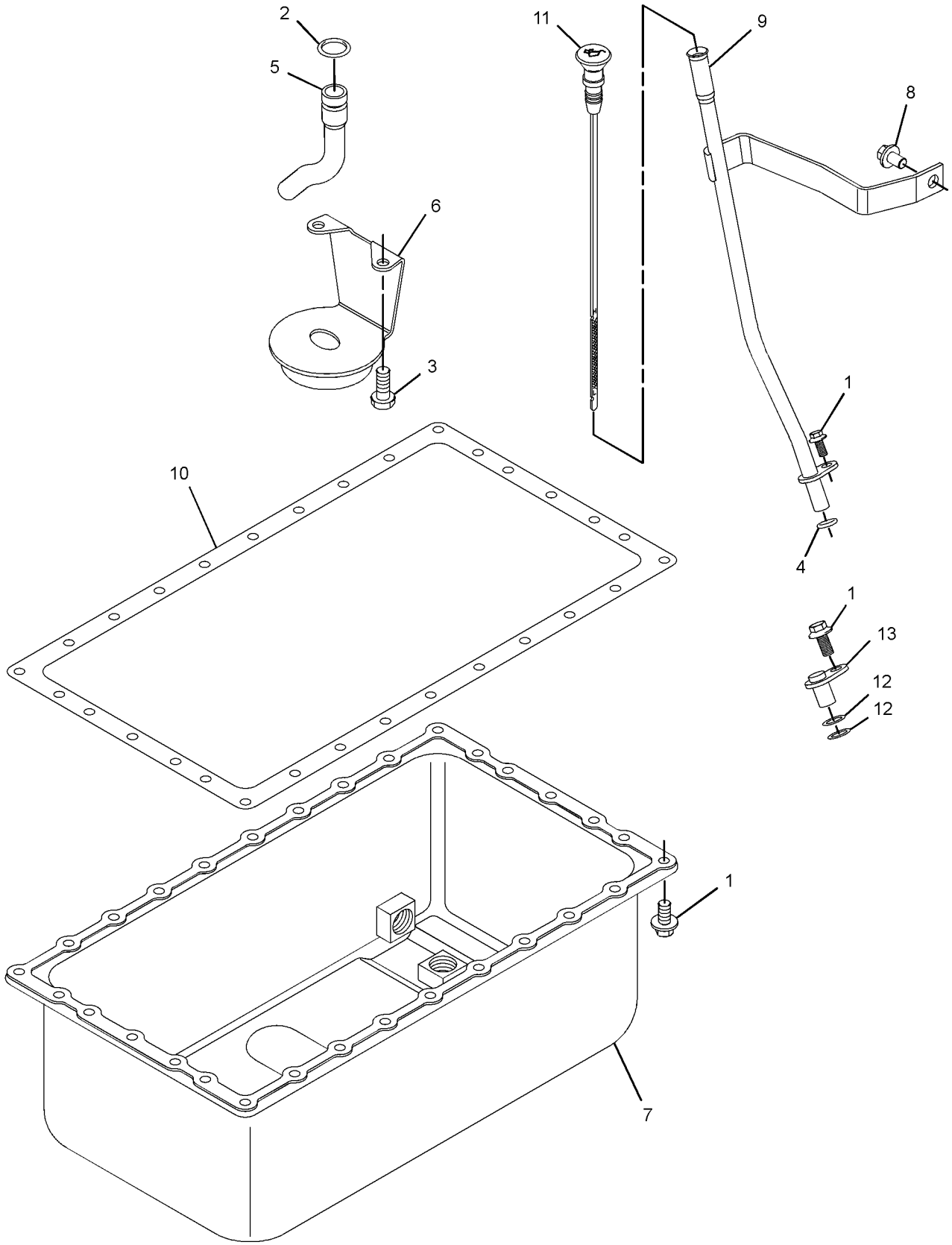

GRAPHIC #1 <END> g06319173

340-5864 PAN GP-OIL

SMCS-1302 **i08202498**

NOTE	REF NO	GRAPHIC REF	PART NUMBER	QTY	PART NAME 1 2 3 4 5 6 (PRODUCT LEVEL)	SEE PAGE
M	1	1	**100-4841**	2	BOLT (M6X1X10-MM)	
	2	2	**153-6835**	1	SEAL-O-RING	
	3	1,2	**153-6838**	2	BOLT AS	
	4	1	**189-9763**	4	SEAL-O-RING	
	5	2	**423-5607**	1	GASKET	
	6	2	**232-7823**	1	PAN-OIL	
	7	1	**369-8010**	1	PLUG	
	8	2	**325-9415**	1	TUBE-OIL SUCTION	
	9	2	**425-6360**	1	STRAINER (ENGINE)	
	10	1	**338-3393**	1	GAUGE-OIL LEVEL (DIPSTICK) (ENGINE)	
	11	1	**380-0279**	1	TUBE-OIL	
M	12	2	**454-6672**	30	BOLT-FLANGE HEAD (M6X1X10-MM)	

M - METRIC PART

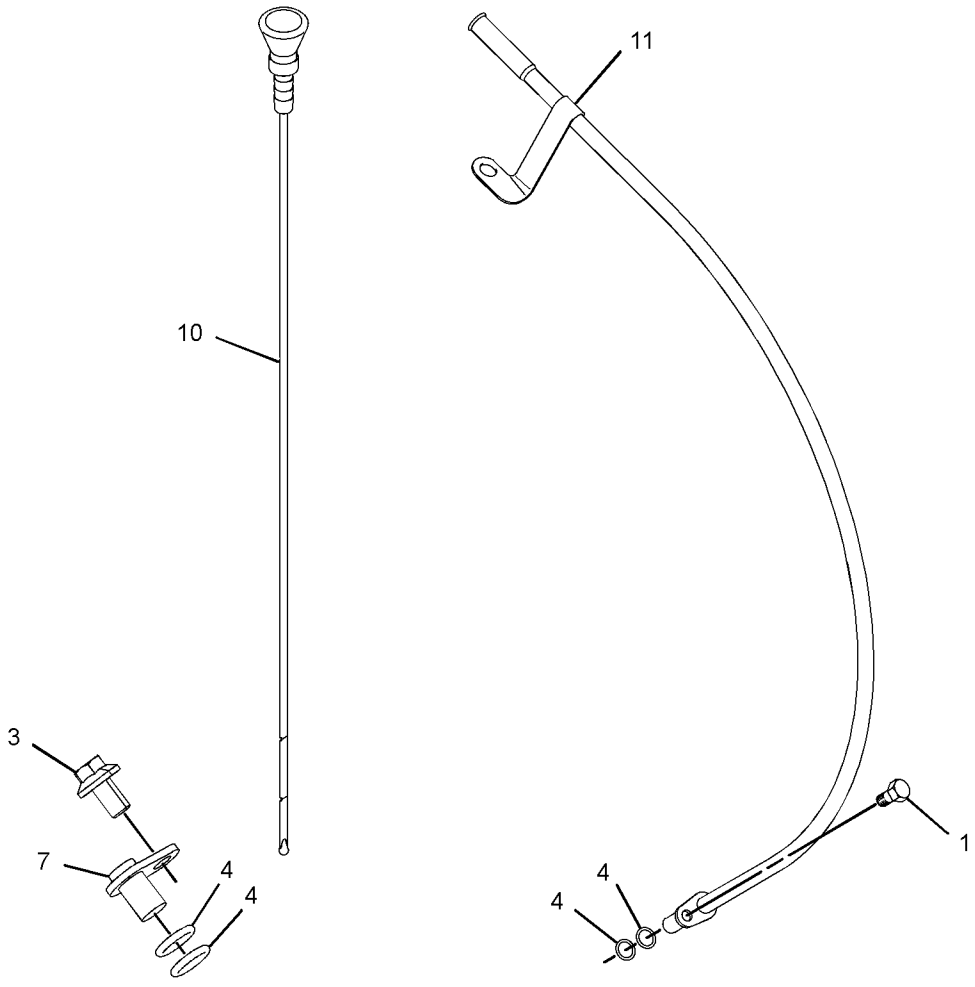

GRAPHIC #1 g06587289

340-5864 **PAN GP-OIL (**contd.**)** **i08202498**

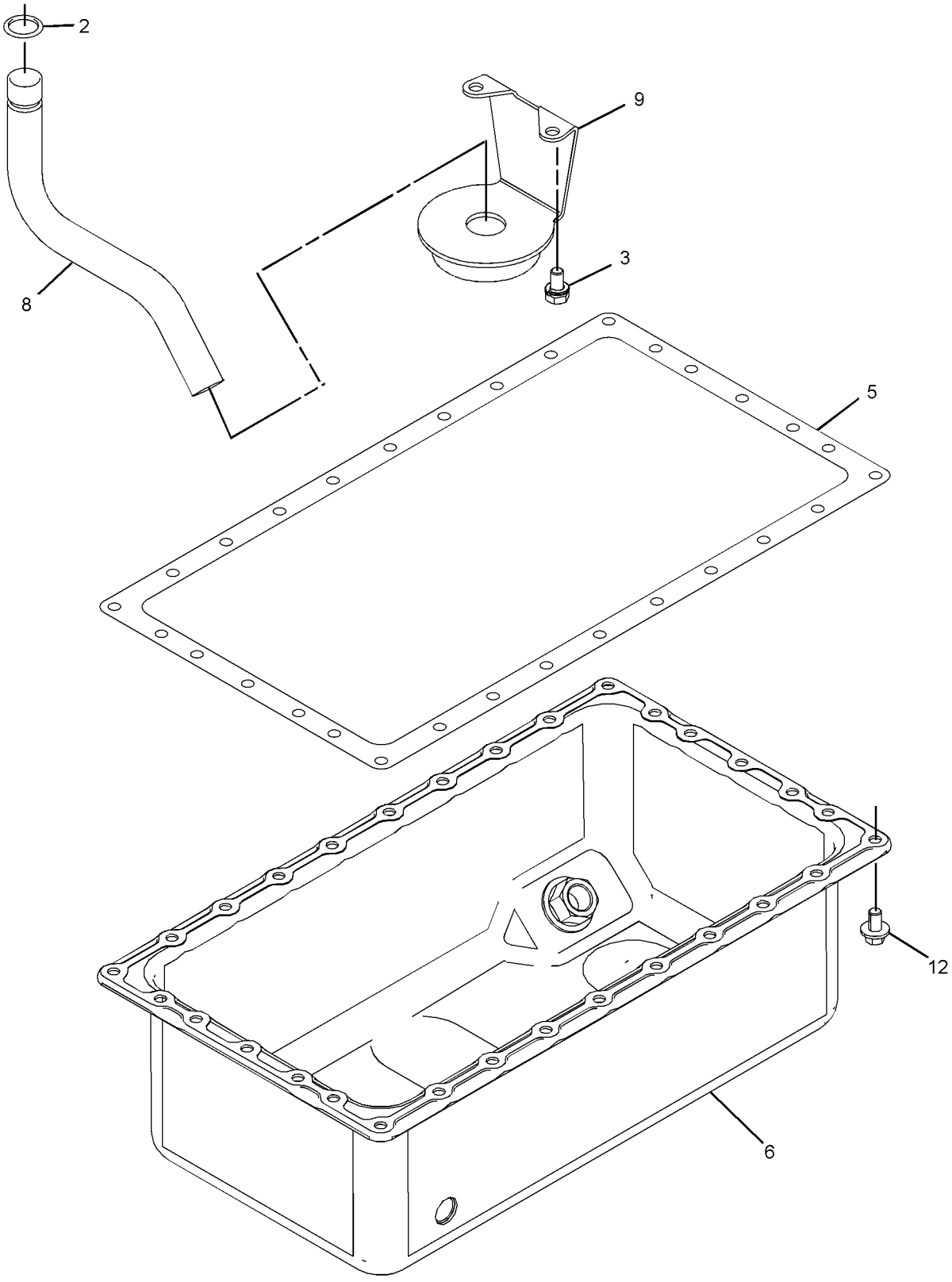

GRAPHIC #2 <END> g06111524

398-4951 PAN GP-OIL

PART OF 610-7720, 610-7721 ENGINE AR-PRIMARY

SMCS-1302 **i08397350**

NOTE	REF NO	GRAPHIC REF	PART NUMBER	QTY	PART NAME 1 2 3 4 5 6 (PRODUCT LEVEL)	SEE PAGE
CM	1	1	**100-4841**	32	BOLT (M6X1X10-MM)	
	2	1	**153-6835**	1	SEAL-O-RING	
	3	1	**153-6838**	2	BOLT AS	
	4	1	**189-9763**	4	SEAL-O-RING	
	5	1	**229-5150**	1	GUIDE AS-GAUGE	
	6	1	**229-5151**	1	GAUGE-OIL LEVEL (DIPSTICK)	
C	7	1	**232-7823**	1	PAN-OIL	
	8	1	**325-9415**	1	TUBE-OIL SUCTION	
	9	1	**369-8010**	1	PLUG	
	10	1	**423-5607**	1	GASKET	
	11	1	**425-6360**	1	STRAINER (ENGINE)	

C - CHANGE FROM PREVIOUS TYPE
M - METRIC PART

398-4951 **PAN GP-OIL (**contd.**)** **i08397350**

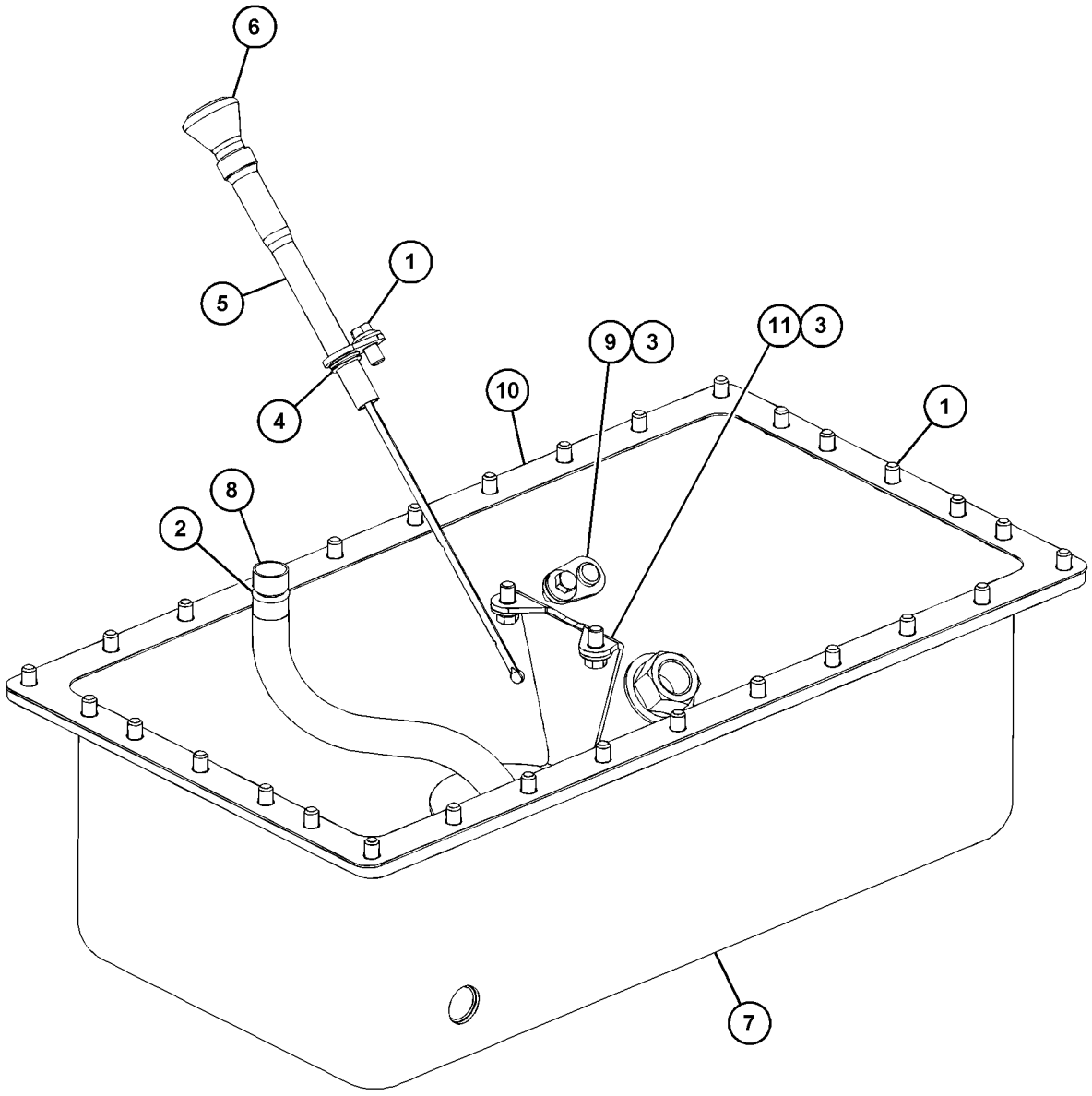

GRAPHIC #1 <END> g07056863

398-4953 PAN GP-OIL

PART OF 587-9328 ENGINE AR-PRIMARY

SMCS-1302 **i08520486**

NOTE	REF NO	GRAPHIC REF	PART NUMBER	QTY	PART NAME 1 2 3 4 5 6 (PRODUCT LEVEL)	SEE PAGE
	1	1	**153-6838**	2	BOLT AS	
	2	1	**153-6835**	1	SEAL-O-RING	
M	3	1	**100-4841**	32	BOLT (M6X1X10-MM)	
	4	1	**189-9763**	4	SEAL-O-RING	
	5	1	**236-3983**	1	GAUGE-OIL LEVEL (DIPSTICK)	
	6	1	**325-9415**	1	TUBE-OIL SUCTION	
	7	1	**369-8010**	1	PLUG	
	8	1	**423-5607**	1	GASKET	
	9	1	**425-6360**	1	STRAINER (ENGINE)	
	10	1	**209-7084**	1	TUBE AS-OIL GAUGE	
	11	1	**232-7823**	1	PAN-OIL	

M - METRIC PART

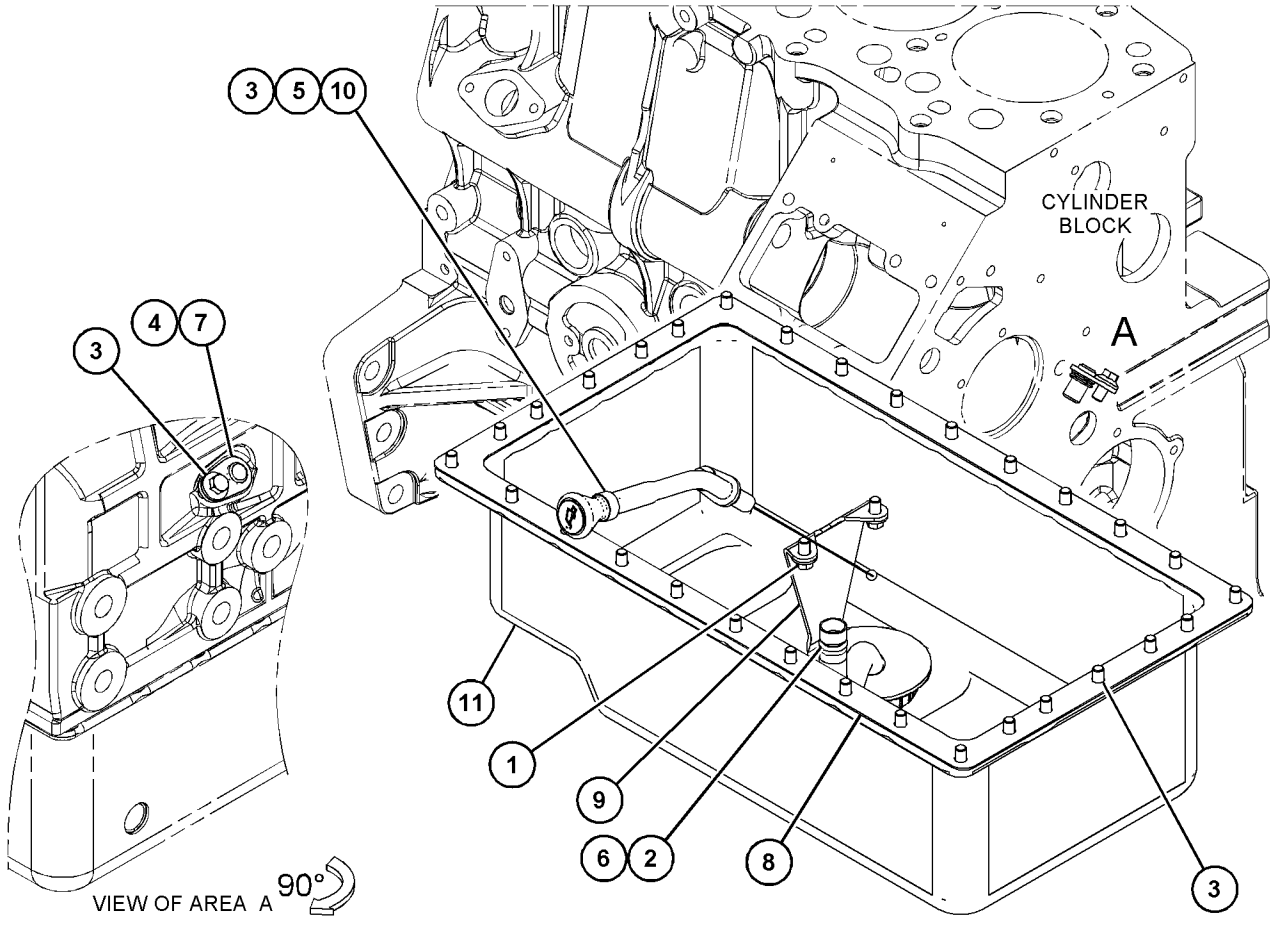

GRAPHIC #1 <END> g06582690

584-9471 PAN GP-OIL

S/N: G7L27560-UP

SMCS-1302 **i10726954**

NOTE	REF NO	GRAPHIC REF	PART NUMBER	QTY	PART NAME 1 2 3 4 5 6 (PRODUCT LEVEL)	SEE PAGE
M	1	1	**114-4363**	1	BOLT (M8X1.25X12-MM)	
	2	2	**153-6838**	2	BOLT AS	
	3	1	**189-9763**	4	SEAL-O-RING	
	4	1	**369-8010**	1	PLUG	
	5	2	**423-5607**	1	GASKET	
	6	2	**425-6360**	1	STRAINER (SUCTION)	
M	7	1,2	**100-4841**	32	BOLT (M6X1X10-MM)	
	8	2	**153-6835**	1	SEAL-O-RING	
	9	1	**209-7088**	1	TUBE AS-OIL GAUGE	
	10	1	**228-7472**	1	GAUGE AS-OIL LEVEL (DIPSTICK)	
	11	2	**232-7823**	1	PAN-OIL	
	12	2	**325-9415**	1	TUBE-OIL SUCTION	

M - METRIC PART

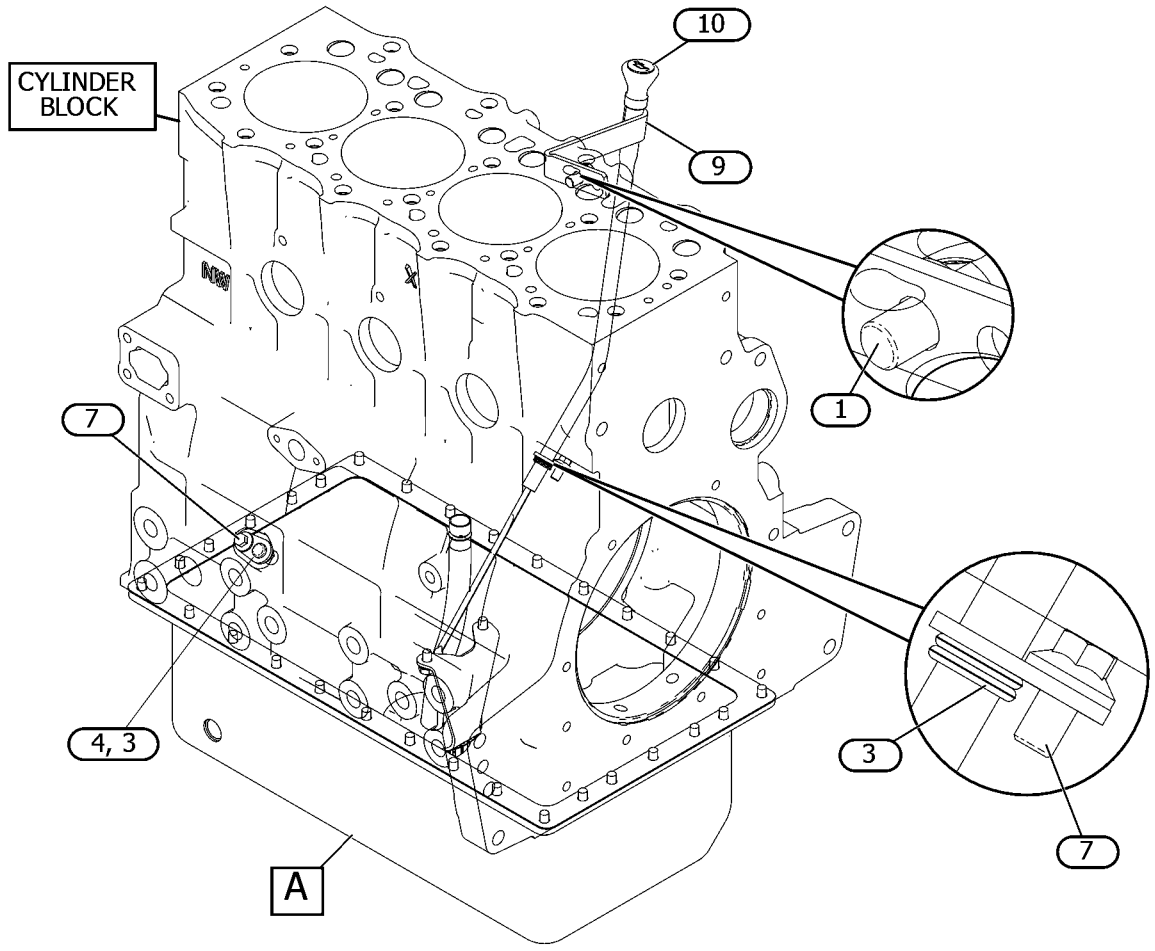

GRAPHIC #1 g07972785

584-9471 **PAN GP-OIL (**contd.**)** **i10726954**

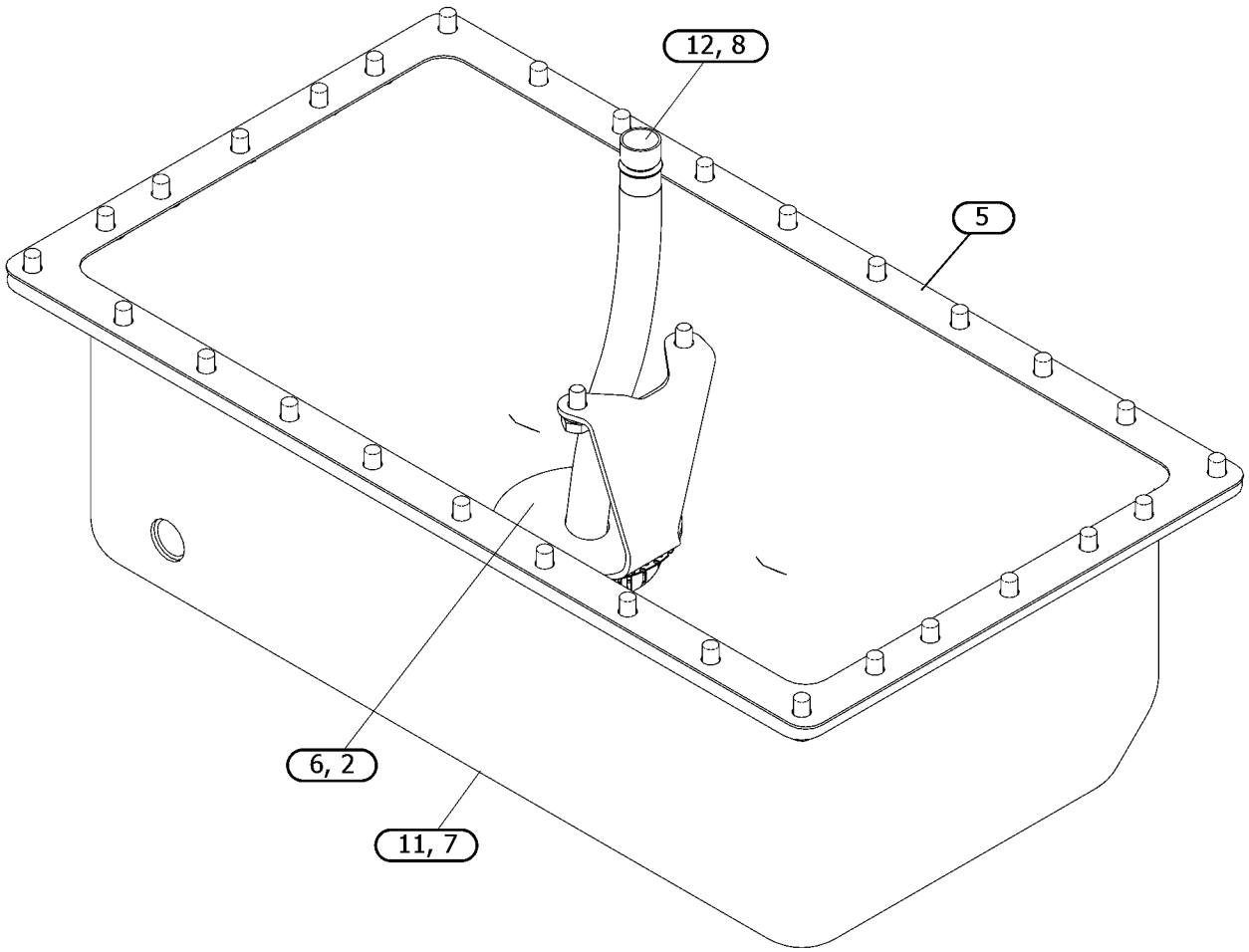

VIEW OF AREA A

GRAPHIC #2 <END> g07972785_01

588-9925 PAN GP-OIL

PART OF 433-1379, 433-1380 ENGINE AR, 435-1636, 435-1641, 435-1646, 435-1647 ENGINE AR-PRIMARY

SMCS-1302 **i10516909**

NOTE	REF NO	GRAPHIC REF	PART NUMBER	QTY	PART NAME 1 2 3 4 5 6 (PRODUCT LEVEL)	SEE PAGE
M	1	1	**100-4841**	32	BOLT (M6X1X10-MM)	
	2	1	**153-6835**	1	SEAL-O-RING	
	3	1	**153-6838**	2	BOLT AS	
	4	1	**189-9763**	4	SEAL-O-RING	
	5	1	**423-5607**	1	GASKET	
	6	1	**229-5150**	1	GUIDE AS-GAUGE	
	7	1	**611-4942**	1	GAUGE AS-OIL LEVEL (DIPSTICK)	
		1	**612-8165**	2	SEAL-O-RING	
	8	1	**325-9415**	1	TUBE-OIL SUCTION	
	9	1	**369-8010**	1	PLUG	
	10	1	**425-6360**	1	STRAINER	
	11	1	**232-7823**	1	PAN-OIL	

M - METRIC PART

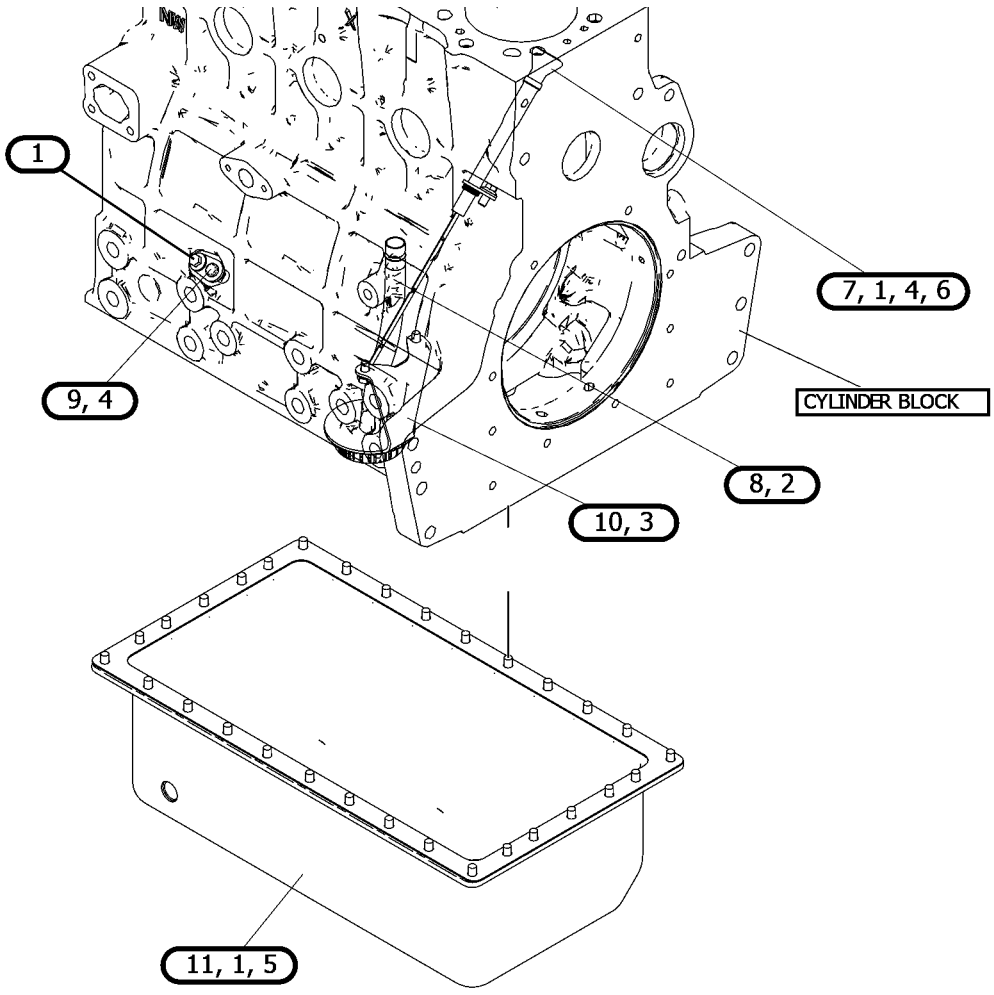

GRAPHIC #1 <END> g07896404

308-2286 PISTON & ROD GP

233:1 COMPRESSION RATIO

PART OF 433-1380, 435-1637, 435-1638 ENGINE AR, 435-1636, 435-1658, 459-2953, 495-3121, 495-6243, 541-9277, 557-9727 ENGINE AR-PRIMARY

TYPE 1

SMCS-1225 **i05815088**

NOTE	REF NO	GRAPHIC REF	PART NUMBER	QTY	PART NAME 1 2 3 4 5 6 (PRODUCT LEVEL)	SEE PAGE
	1	1	**154-0867**	4	ROD AS-CONNECTING	
					(EACH INCLUDES)	
	1A	1	**154-0869**	1	BUSHING	
M	1B	1	**154-0870**	2	BOLT (M10X1.25X57.5-MM)	
M	1C	1	**154-0871**	2	NUT (M10X1.25X10-MM)	
	2	1	**154-0873**	4	PIN	
	3	1	**154-0874**	8	RING-RETAINING (INTERNAL)	
	4	1	**270-6968**	4	PISTON AS	
					(EACH INCLUDES)	
	4A	1	**270-6970**	1	KIT-PISTON RING	

M - METRIC PART

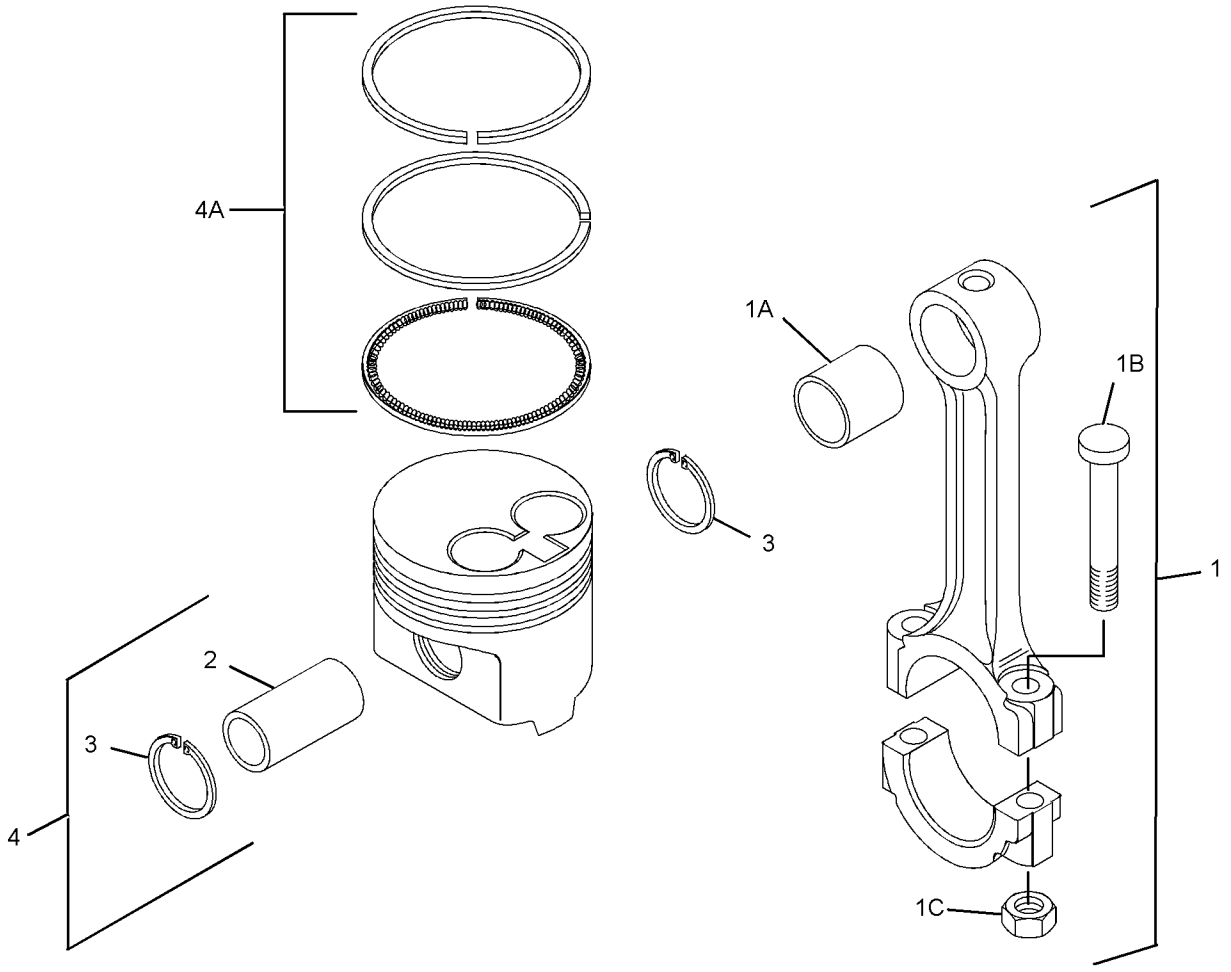

GRAPHIC #1 <END> g01410074

308-2286 PISTON & ROD GP

233:1 COMPRESSION RATIO

PART OF 433-1380, 435-1637, 435-1638 ENGINE AR, 435-1636, 435-1658, 459-2953, 461-7892, 461-7894, 465-1477, 491-3396, 495-3121, 495-6243, 541-9277, 557-9727, 587-9328 ENGINE AR-PRIMARY

TYPE 2

SMCS-1225 **i08779293**

NOTE	REF NO	GRAPHIC REF	PART NUMBER	QTY	PART NAME 1 2 3 4 5 6 (PRODUCT LEVEL)	SEE PAGE
C	1	1	**585-1921**	4	ROD AS	
					(EACH INCLUDES)	
M	1A	1	**154-0871**	2	NUT (M10X1.25X10-MM)	
M	1B	1	**154-0870**	2	BOLT (M10X1.25X57.5-MM)	
J	2	1	**154-0873**	1	PIN	
J	3	1	**154-0874**	2	RING-RETAINING (INTERNAL)	
J	4	1	**270-6968**	4	PISTON AS	
					(EACH INCLUDES)	
	4A	1	**270-6970**	1	KIT-PISTON RING	
					(INCLUDES RINGS)	
					AVAILABLE REPAIR KIT(S):	
ABJ			**485-0005**		KIT-PISTON & RING (0.25-MM OS)	
					(ALSO INCLUDES KIT-RING)	

A - NOT PART OF THIS GROUP
B - USE AS REQUIRED
C - CHANGE FROM PREVIOUS TYPE
J - KIT MARKED J SERVICES PART(S) MARKED J
M - METRIC PART

308-2286 **PISTON & ROD GP (**contd.**)** **i08779293**

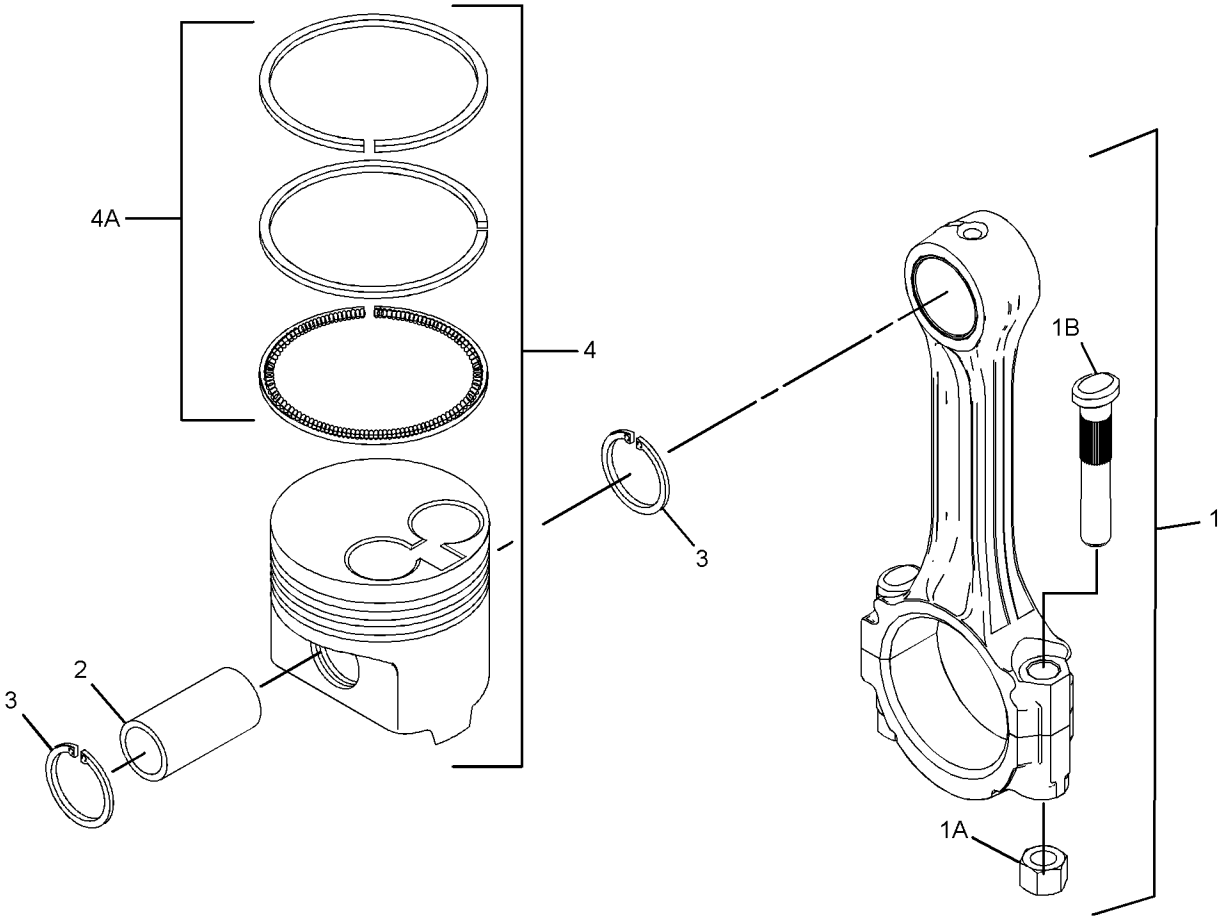

GRAPHIC #1 <END> g07612923

309-6714 PISTON & ROD GP

PART OF 435-1645 CYLINDER BLOCK GP-LONG, 433-1379 ENGINE AR, 435-1641, 435-1642, 435-1646, 435-1647, 435-1656, 461-7895, 492-6602, 549-8284 ENGINE AR-PRIMARY
TYPE 1

SMCS-1225 **i02770511**

NOTE	REF NO	GRAPHIC REF	PART NUMBER	QTY	PART NAME 1 2 3 4 5 6 (PRODUCT LEVEL)	SEE PAGE
	1	1	**154-0867**	4	ROD AS-CONNECTING	
					(EACH INCLUDES)	
	1A	1	**154-0869**	1	BUSHING	
M	1B	1	**154-0870**	2	BOLT (M10X1.25X57.5-MM)	
M	1C	1	**154-0871**	2	NUT (M10X1.25X10-MM)	
	2	1	**154-0873**	4	PIN	
	3	1	**154-0874**	8	RING-RETAINING (INTERNAL)	
	4	1	**297-3080**	4	PISTON AS	
					(EACH INCLUDES)	
	4A	1	**217-1456**	1	KIT-PISTON RING	

M - METRIC PART

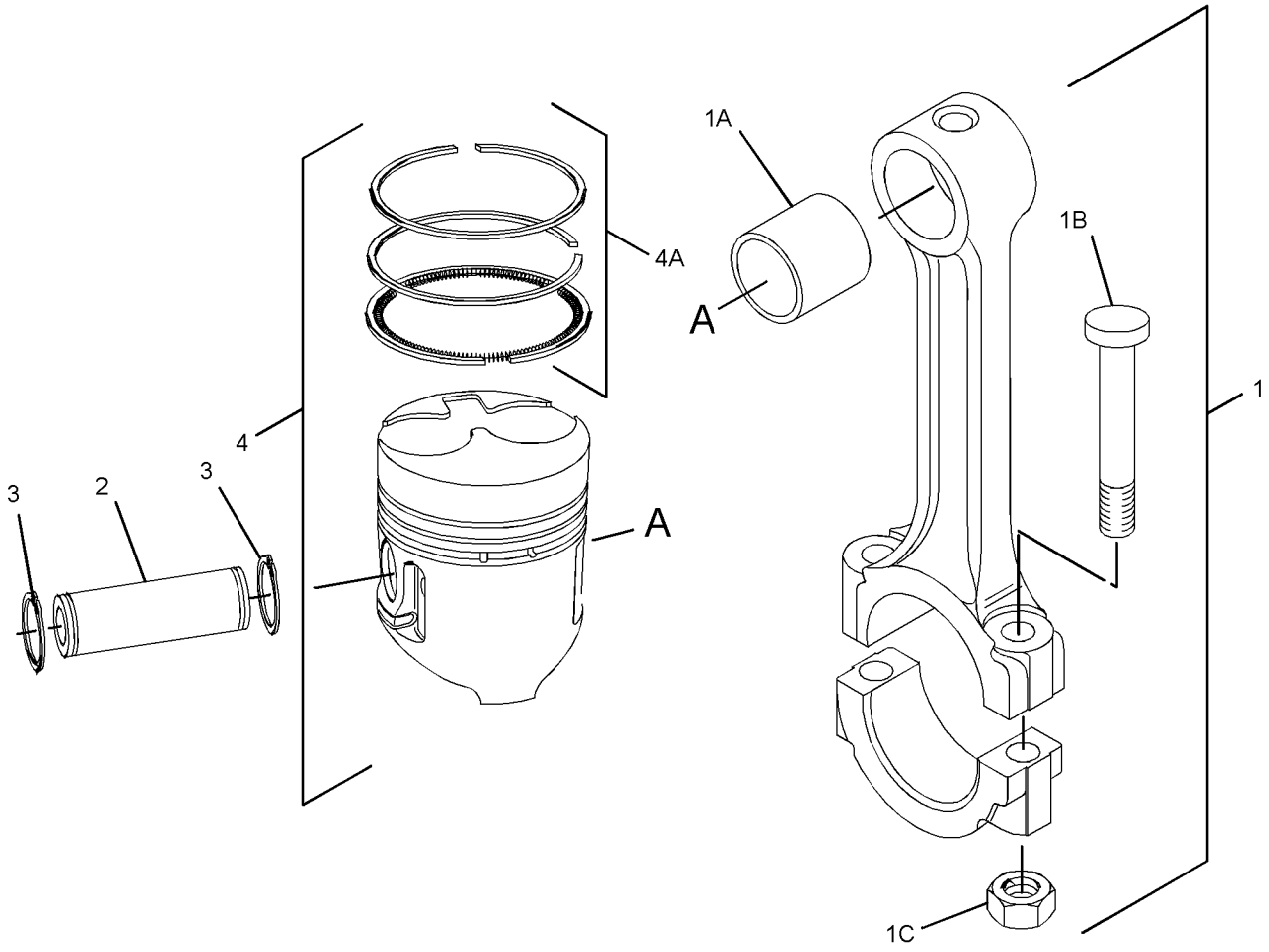

GRAPHIC #1 <END> g01415430

309-6714 PISTON & ROD GP

PART OF 435-1645 CYLINDER BLOCK GP-LONG, 433-1379 ENGINE AR, 435-1641, 435-1642, 435-1646, 435-1647, 435-1656, 461-7895, 492-6602, 516-9335, 549-8284 ENGINE AR-PRIMARY
TYPE 2

SMCS-1225 **i08788259**

NOTE	REF NO	GRAPHIC REF	PART NUMBER	QTY	PART NAME 1 2 3 4 5 6 (PRODUCT LEVEL)	SEE PAGE
C	1	1	**585-1921**	4	ROD AS	
					(EACH INCLUDES)	
M	1A	1	**154-0871**	2	NUT (M10X1.25X10-MM)	
M	1B	1	**154-0870**	2	BOLT (M10X1.25X57.5-MM)	
L	2	1	**154-0873**	4	PIN	
L	3	1	**154-0874**	8	RING-RETAINING (INTERNAL)	
J	4	1	**297-3080**	4	PISTON AS	
					(EACH INCLUDES)	
LNP	4A	1	**217-1456**	1	KIT-PISTON RING	
					(INCLUDES RING, PISTON RING & RING AS)	
					AVAILABLE REPAIR KIT(S):	
ABL			**484-9910**		KIT-PISTON (0.25-MM OS)	
					(INCLUDES PIN, RETAINING RINGS & KIT-PISTON RING)	
ABJ			**484-9911**		KIT-PISTON RING (0.25-MM OS)	
P			**439-3372**	1	KIT-PISTON RING	
					(INCLUDES RINGS & RING AS)	
N			**615-3292**	1	KIT-PISTON RING	
					(INCLUDES RINGS & RING AS)	

A - NOT PART OF THIS GROUP
B - USE AS REQUIRED
C - CHANGE FROM PREVIOUS TYPE
J - KIT MARKED J SERVICES PART(S) MARKED J
L - KIT MARKED L SERVICES PART(S) MARKED L
M - METRIC PART
N - KIT MARKED N SERVICES PART(S) MARKED N
P - KIT MARKED P SERVICES PART(S) MARKED P

309-6714 **PISTON & ROD GP** (contd.) **i08788259**

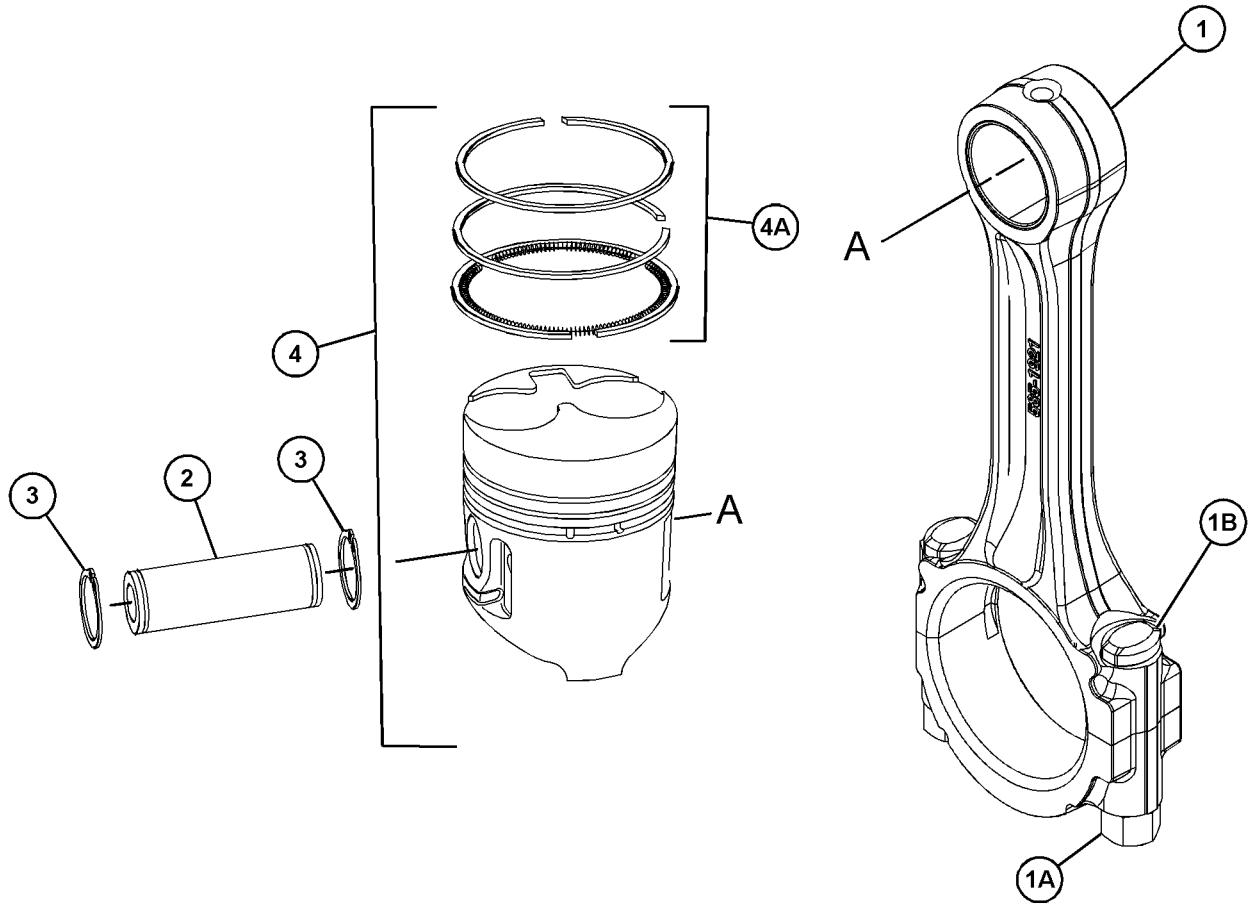

GRAPHIC #1 <END> g07583593

340-5783 PISTON & ROD GP

TYPE 1

SMCS-1225 **i03365228**

NOTE	REF NO	GRAPHIC REF	PART NUMBER	QTY	PART NAME 1 2 3 4 5 6 (PRODUCT LEVEL)	SEE PAGE
	1	1	**154-0867**	4	ROD AS-CONNECTING	
					(EACH INCLUDES)	
	1A	1	**154-0869**	1	BUSHING	
M	1B	1	**154-0870**	2	BOLT (M10X1.25X57.5-MM)	
M	1C	1	**154-0871**	2	NUT (M10X1.25X10-MM)	
	2	1	**154-0873**	4	PIN	
	3	1	**154-0874**	8	RING-RETAINING (INTERNAL)	
	4	1	**297-3080**	4	PISTON AS	
					(EACH INCLUDES)	
	4A	1	**217-1456**	1	KIT-PISTON RING	

M - METRIC PART

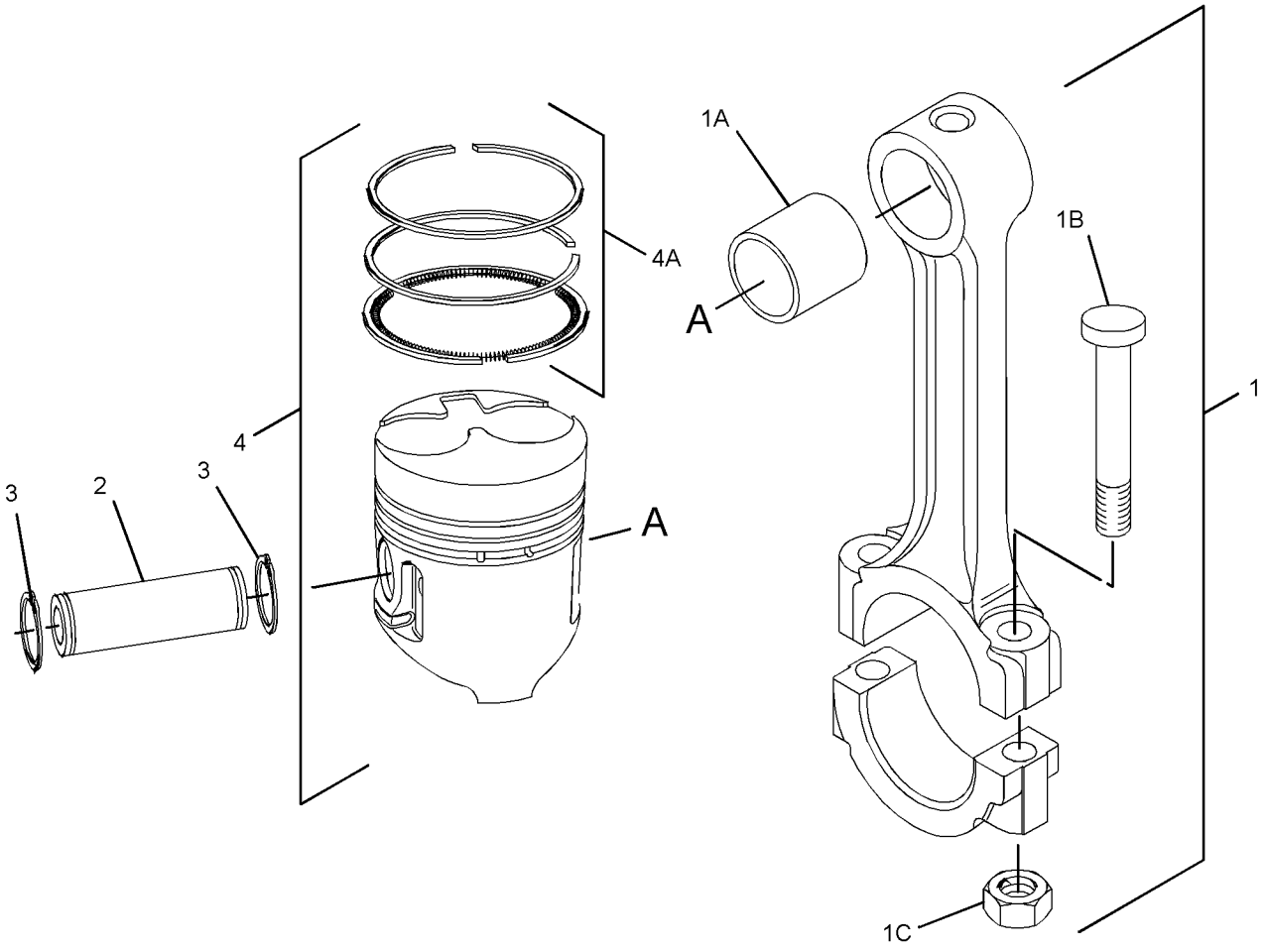

GRAPHIC #1 <END> g01415430

340-5783 PISTON & ROD GP

TYPE 2

SMCS-1225 **i10599036**

NOTE	REF NO	GRAPHIC REF	PART NUMBER	QTY	PART NAME 1 2 3 4 5 6 (PRODUCT LEVEL)	SEE PAGE
C	1	1	**514-7719**	4	ROD AS-CONNECTING	
					(EACH INCLUDES)	
J	1A	1	**587-8006**	1	BUSHING	
M	1B	1	**154-0870**	2	BOLT (M10X1.25X57.5-MM)	
M	1C	1	**154-0871**	2	NUT (M10X1.25X10-MM)	
	2	1	**154-0873**	4	PIN	
	3	1	**154-0874**	8	RING-RETAINING (INTERNAL)	
BFJ			**463-1972**	1	BUSHING	
					PARTS SHOWN IN GRAPHIC(S) WITHOUT A REFERENCE NUMBER ARE NOT SERVICED SEPARATELY	
					AVAILABLE REPAIR KIT(S):	
AB			**484-9910**		KIT-PISTON (0.25-MM OS)	
					(INCLUDES PIN, CLIPS, & PISTON RING)	

A - NOT PART OF THIS GROUP
B - USE AS REQUIRED
C - CHANGE FROM PREVIOUS TYPE
F - NOT SHOWN
J - PART MARKED J SERVICES PART(S) MARKED J
M - METRIC PART

340-5783 **PISTON & ROD GP (**contd.**)** **i10599036**

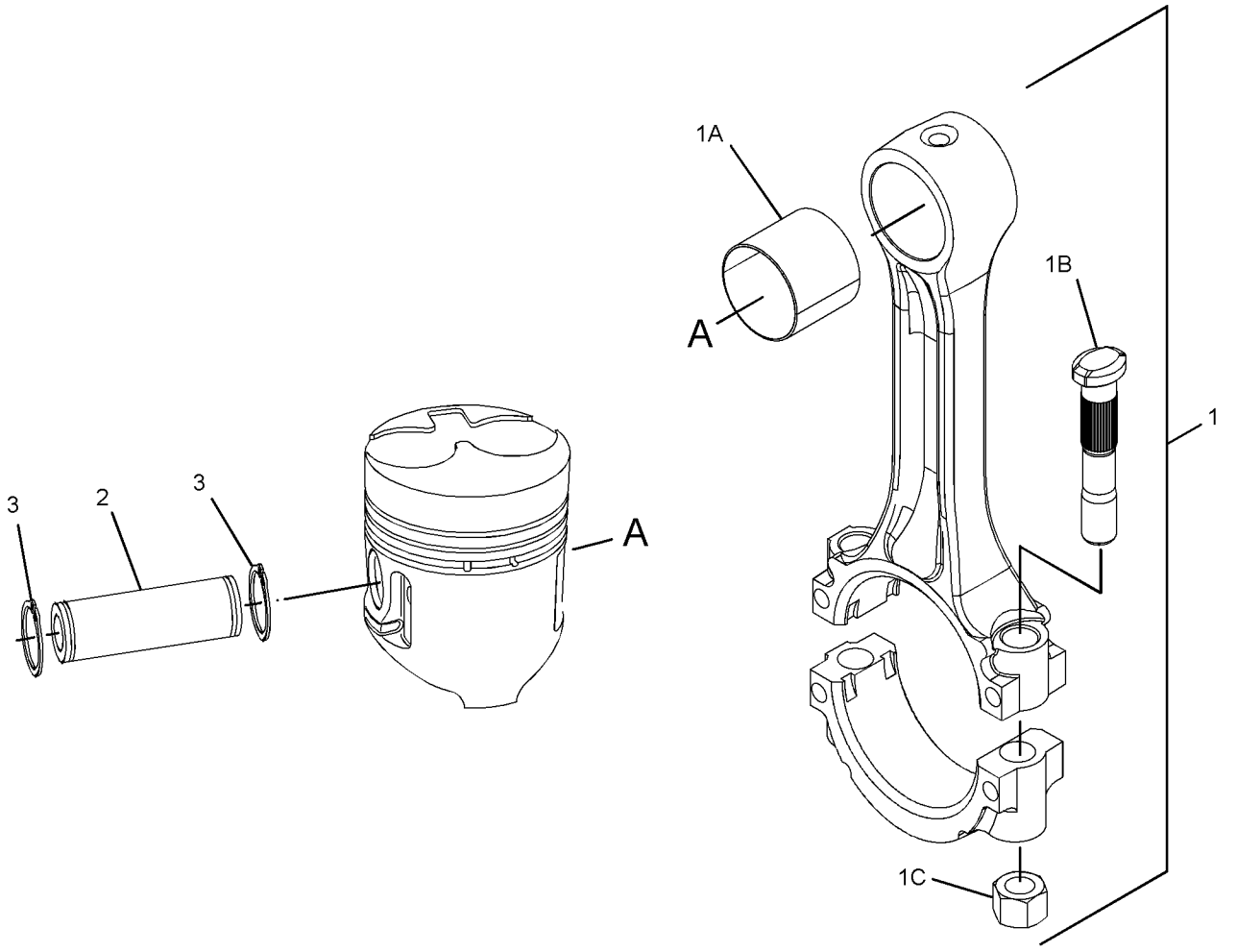

GRAPHIC #1 <END> g07954075

418-3614 PISTON & ROD GP

PART OF 587-0189 PISTON & ROD GP

SMCS-1225 **i10516217**

NOTE	REF NO	GRAPHIC REF	PART NUMBER	QTY	PART NAME 1 2 3 4 5 6 (PRODUCT LEVEL)	SEE PAGE
C	1	1	**585-1921**	1	ROD AS	
M	1A	1	**154-0870**	2	BOLT (M10X1.25X57.5-MM)	
M	1B	1	**154-0871**	2	NUT (M10X1.25X10-MM)	
	2	1	**154-0873**	1	PIN	
	3	1	**154-0874**	2	RING-RETAINING (INTERNAL)	
	4	1	**424-5615**	1	PISTON	

C - CHANGE FROM PREVIOUS TYPE
M - METRIC PART

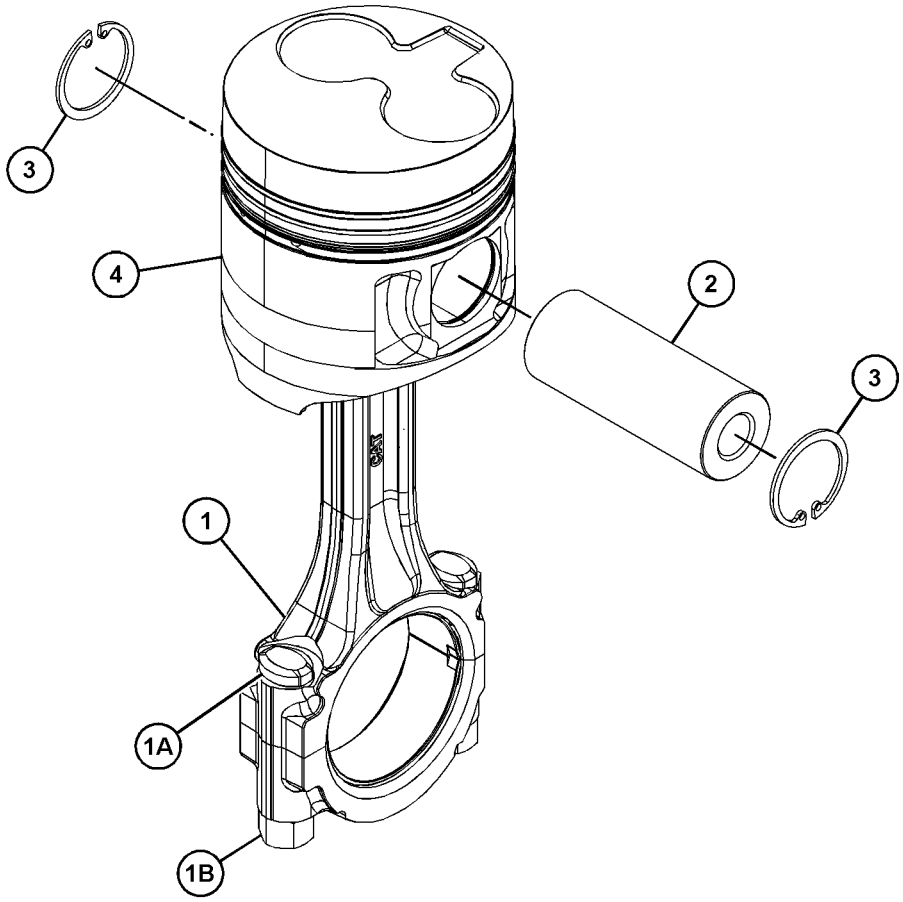

GRAPHIC #1 <END> g07896650

587-0189 PISTON & ROD GP

PART OF 435-1636, 587-9328, 610-7721 ENGINE AR-PRIMARY

SMCS-1225 **i10340718**

NOTE	REF NO	GRAPHIC REF	PART NUMBER	QTY	PART NAME 1 2 3 4 5 6 (PRODUCT LEVEL)	SEE PAGE
Y	1	1	*418-3614*	4	PISTON & ROD GP	435

Y - SEPARATE ILLUSTRATION

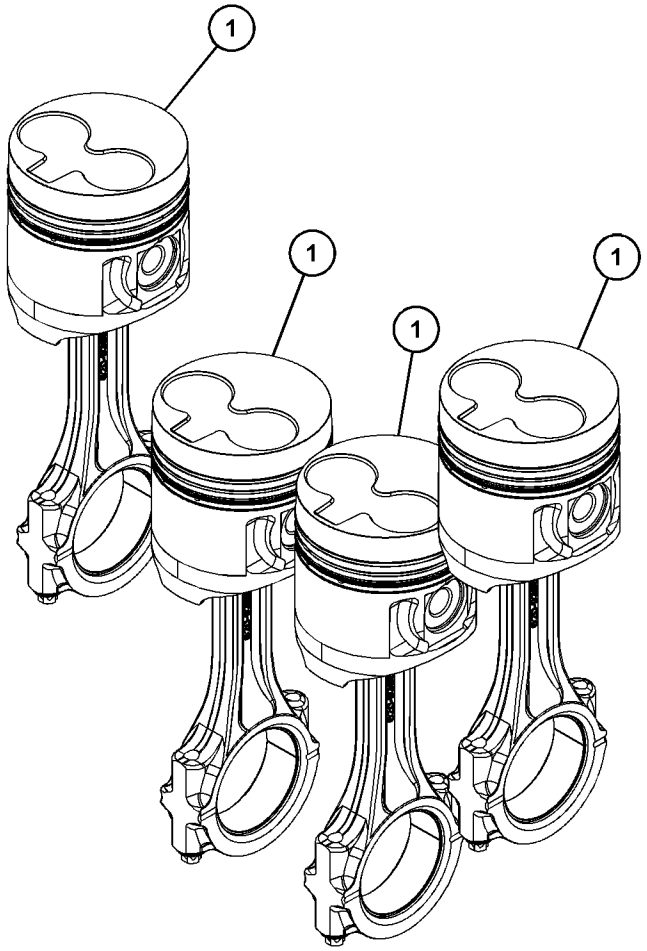

GRAPHIC #1 <END> g07856359

596-2865 PISTON & ROD GP

PART OF 433-1380 ENGINE AR, 435-1636, 587-9328 ENGINE AR-PRIMARY

SMCS-1225 **i09634838**

NOTE	REF NO	GRAPHIC REF	PART NUMBER	QTY	PART NAME 1 2 3 4 5 6 (PRODUCT LEVEL)	SEE PAGE
Y	1	1	*596-4180*	4	PISTON & ROD GP	439
					AVAILABLE REPAIR KIT(S):	
			599-8820	1	KIT-BEARING (STANDARD)	
					(INCLUDES BEARINGS)	
AB			**599-8821**		KIT-BEARING (0.25-MM US)	
					(INCLUDES BEARINGS)	
AB			**599-8823**		KIT-BEARING (0.50-MM US)	
					(INCLUDES BEARINGS)	

A - NOT PART OF THIS GROUP
B - USE AS REQUIRED
Y - SEPARATE ILLUSTRATION

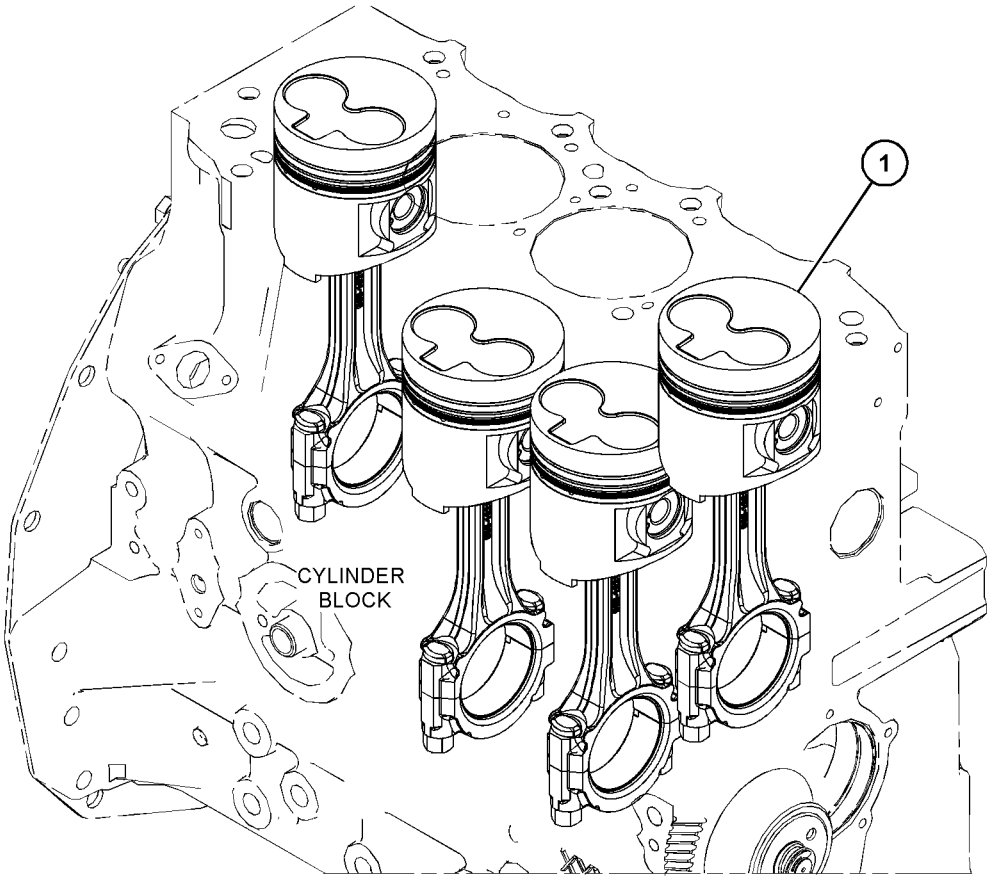

GRAPHIC #1 <END> g06770041

596-2866 PISTON & ROD GP

PART OF 433-1379 ENGINE AR, 435-1641, 435-1646, 435-1647, 610-7720 ENGINE AR-PRIMARY

SMCS-1225 **i08716667**

NOTE	REF NO	GRAPHIC REF	PART NUMBER	QTY	PART NAME 1 2 3 4 5 6 (PRODUCT LEVEL)	SEE PAGE
Y	1	1	*596-4181*	4	PISTON & ROD GP	440
					AVAILABLE REPAIR KIT(S):	
			599-8820	1	KIT-BEARING	
					(INCLUDES BEARINGS)	
AB			**599-8821**		KIT-BEARING (0.25-MM US) (0.25-MM US)	
					(INCLUDES BEARINGS)	
AB			**599-8823**		KIT-BEARING (0.50-MM US) (0.50-MM US)	
					(INCLUDES BEARINGS)	

A - NOT PART OF THIS GROUP
B - USE AS REQUIRED
Y - SEPARATE ILLUSTRATION

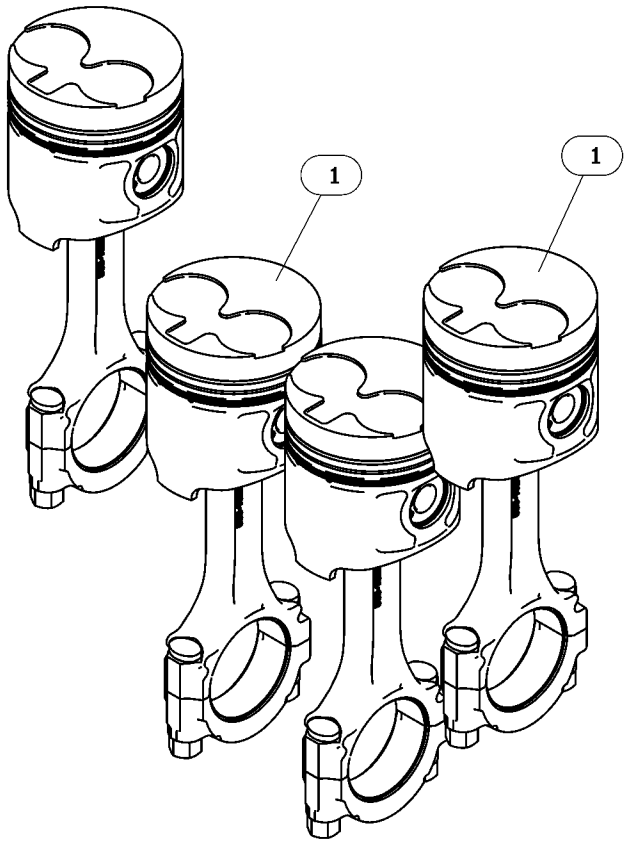

GRAPHIC #1 <END> g06759076

596-4180 PISTON & ROD GP

PART OF 596-2865 PISTON & ROD GP

SMCS-1225 **i10616569**

NOTE	REF NO	GRAPHIC REF	PART NUMBER	QTY	PART NAME 1 2 3 4 5 6 (PRODUCT LEVEL)	SEE PAGE
	1	1	**585-1921**	1	ROD AS	
M		1	**154-0870**	2	BOLT (M10X1.25X57.5-MM)	
M		1	**154-0871**	2	NUT (M10X1.25X10-MM)	
	2	1	**154-0874**	2	RING-RETAINING (INTERNAL)	
	3	1	**154-0873**	1	PIN	
	4	1	**423-8419**	1	PISTON	

M - METRIC PART

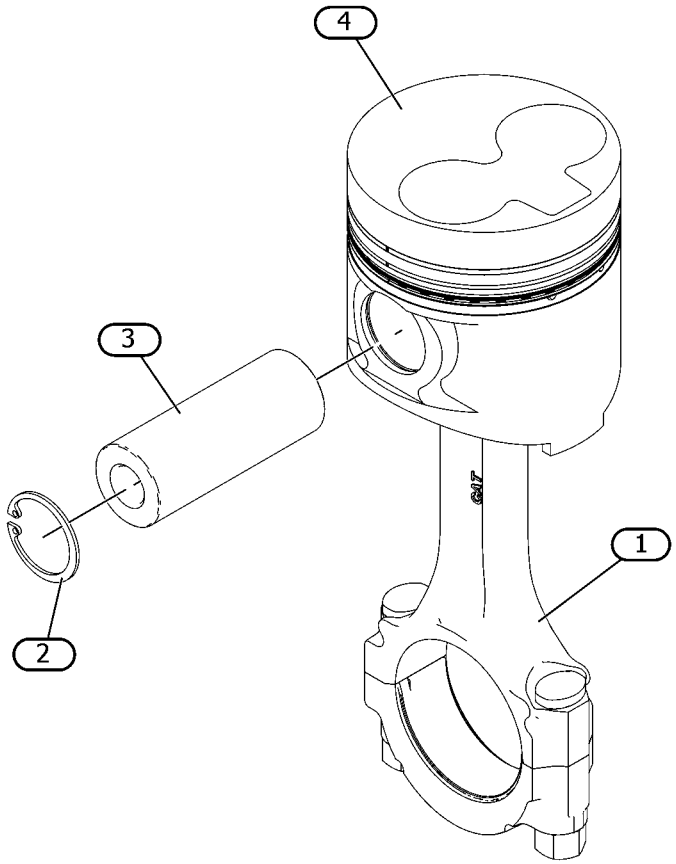

GRAPHIC #1 <END> g07932383

596-4181 PISTON & ROD GP

PART OF 596-2866 PISTON & ROD GP

SMCS-1225 **i10249112**

NOTE	REF NO	GRAPHIC REF	PART NUMBER	QTY	PART NAME 1 2 3 4 5 6 (PRODUCT LEVEL)	SEE PAGE
	1	1	**154-0873**	1	PIN	
	2	1	**154-0874**	2	RING-RETAINING (INTERNAL)	
	3	1	*615-8547*	1	PISTON	
	4	1	*423-8330*	1	RING	
JN	5	1	*423-8335*	1	RING	
	6	1	*424-3213*	1	RING-OIL	
	7	1	**585-1921**	1	ROD AS	
M	7A	1	**154-0870**	2	BOLT (M10X1.25X57.5-MM)	
M	7B	1	**154-0871**	2	NUT (M10X1.25X10-MM)	
	8	1	*586-4228*	1	SHELL-BEARING	
	9	1	*590-0697*	1	BEARING-LOWER	
					AVAILABLE REPAIR KIT(S):	
J			**626-6718**	1	KIT-PISTON RING	
					(INCLUDES OIL RING ASSEMBLY & PISTON RING)	

J - KIT MARKED J SERVICES PART(S) MARKED J
M - METRIC PART
N - KIT MARKED N SERVICES PART(S) MARKED N

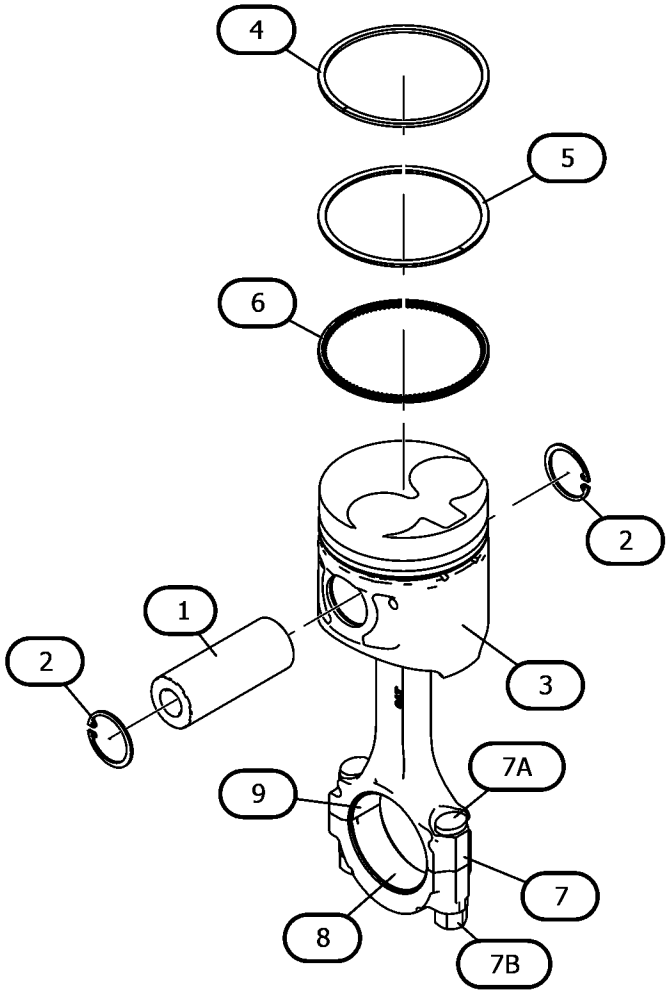

GRAPHIC #1 <END> g06954716

601-4317 PLUG GP-CYLINDER HEAD

S/N: G7L27601-UP

SMCS-1100 **i08829443**

NOTE	REF NO	GRAPHIC REF	PART NUMBER	QTY	PART NAME 1 2 3 4 5 6 (PRODUCT LEVEL)	SEE PAGE
	1	1	**454-0472**	1	PLUG	
	2	1	**153-6412**	1	WASHER	
	3	1	**154-1817**	2	PLUG	

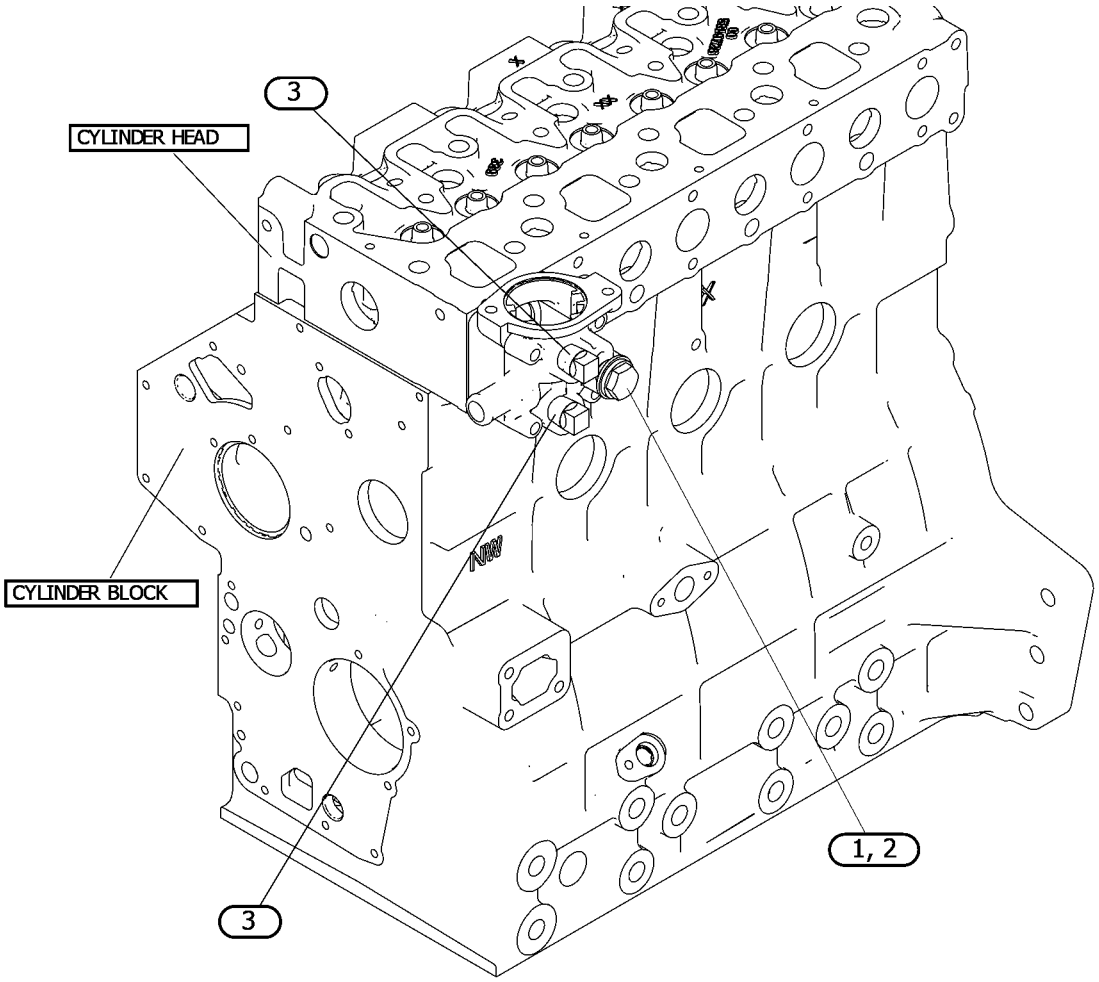

GRAPHIC #1 <END> g07555203

322-2426 PLUG GP-ENGINE

PART OF 461-7895, 492-6602, 549-8284 ENGINE AR-PRIMARY

SMCS-1100, 1201 **i10431759**

NOTE	REF NO	GRAPHIC REF	PART NUMBER	QTY	PART NAME 1 2 3 4 5 6 (PRODUCT LEVEL)	SEE PAGE
	1	1	**384-8063**	1	PLUG	

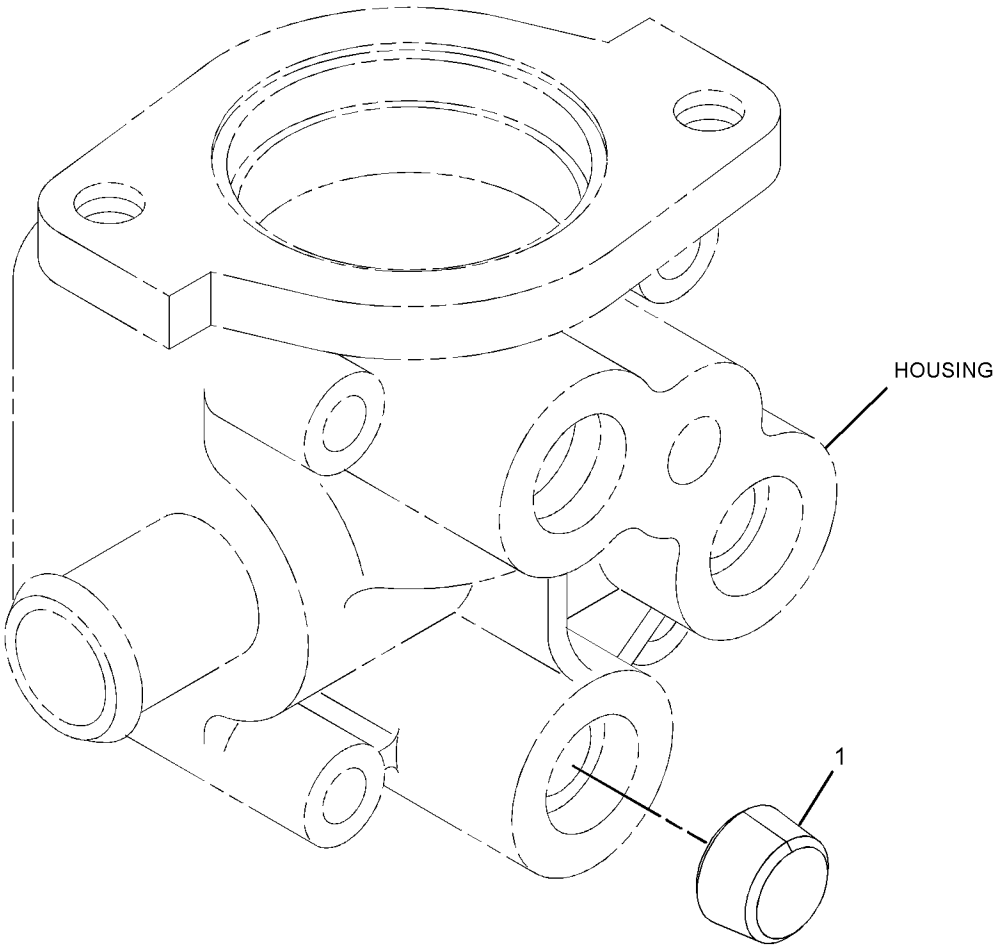

GRAPHIC #1 <END> g07890993

323-9157 PLUG GP-ENGINE

PART OF 492-6602, 549-8284 ENGINE AR-PRIMARY

SMCS-1100, 1201 **i05533435**

NOTE	REF NO	GRAPHIC REF	PART NUMBER	QTY	PART NAME 1 2 3 4 5 6 (PRODUCT LEVEL)	SEE PAGE
	1	1	**153-5936**	2	WASHER (8.2X14.5X1-MM)	
	2	1	**183-1165**	1	PLUG	
	3	1	**438-1431**	1	ADAPTER	
M	4	1	**153-6881**	1	BOLT (M8X1.25X18-MM)	

M - METRIC PART

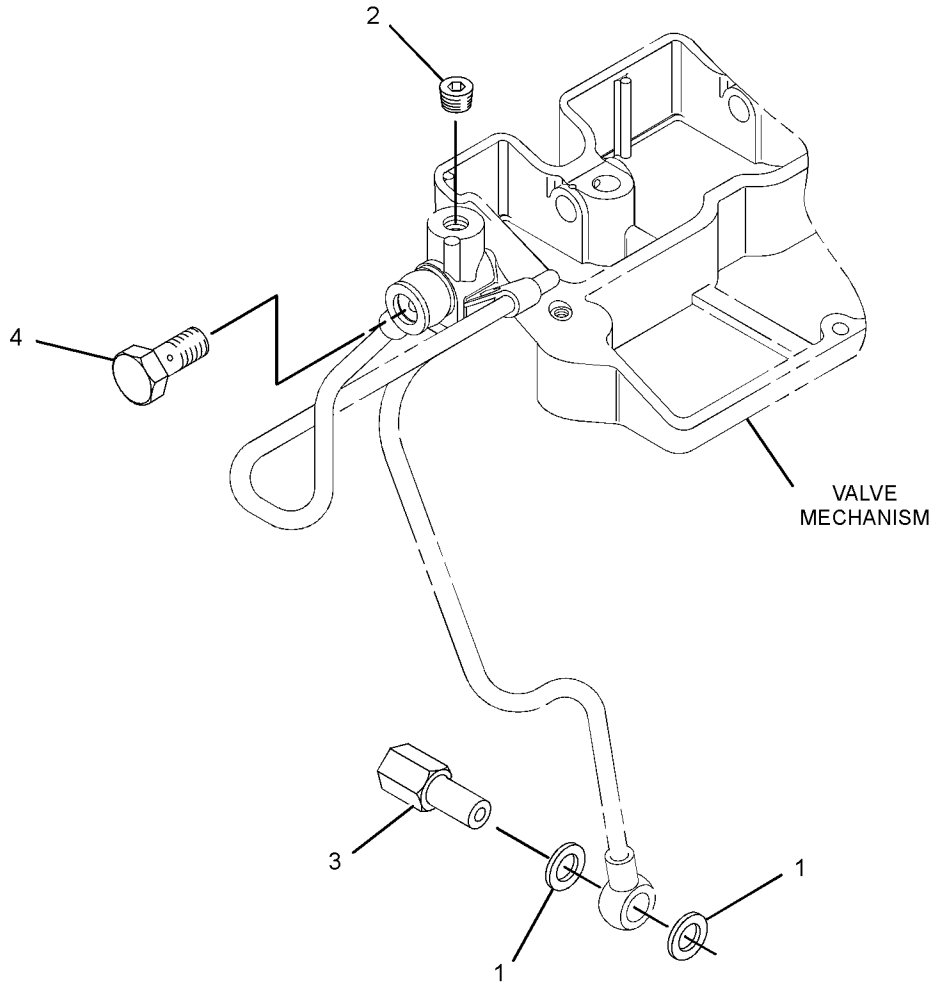

GRAPHIC #1 <END> g03505981

309-6720 PLUG GP-OIL PAN–ENGINE

PART OF 435-1645 CYLINDER BLOCK GP-LONG, 433-1379, 433-1380, 435-1637, 435-1638 ENGINE AR, 435-1636, 435-1641, 435-1642, 435-1646, 435-1647, 435-1656, 435-1658, 459-2953, 461-7892, 461-7894, 461-7895, 465-1477, 491-3396, 492-6602, 495-3121, 495-6243, 516-9335, 541-9277, 549-8284, 587-9328 ENGINE AR-PRIMARY

SMCS-1302 **i05815394**

NOTE	REF NO	GRAPHIC REF	PART NUMBER	QTY	PART NAME 1 2 3 4 5 6 (PRODUCT LEVEL)	SEE PAGE
	1	1	**153-6412**	2	WASHER	
	2	1	**423-6224**	2	PLUG-DRAIN (ENGINE OIL PAN)	

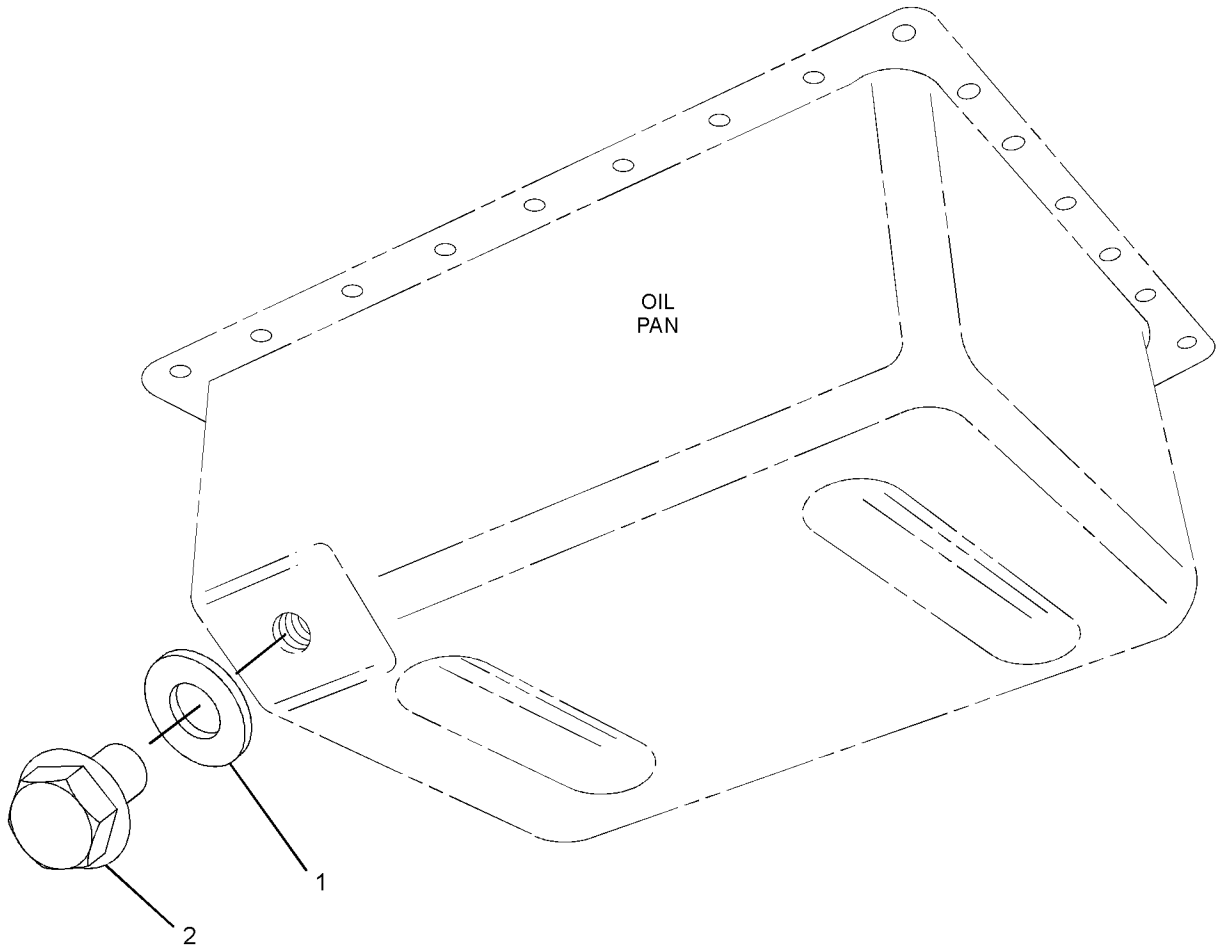

GRAPHIC #1 <END> g03428832

322-2420 PLUG GP-OIL PAN

SMCS-1302 **i02936709**

NOTE	REF NO	GRAPHIC REF	PART NUMBER	QTY	PART NAME 1 2 3 4 5 6 (PRODUCT LEVEL)	SEE PAGE
	1	1	**153-6832**	2	WASHER	
	2	1	**165-3605**	2	PLUG-DRAIN (ENGINE OIL DRAIN)	

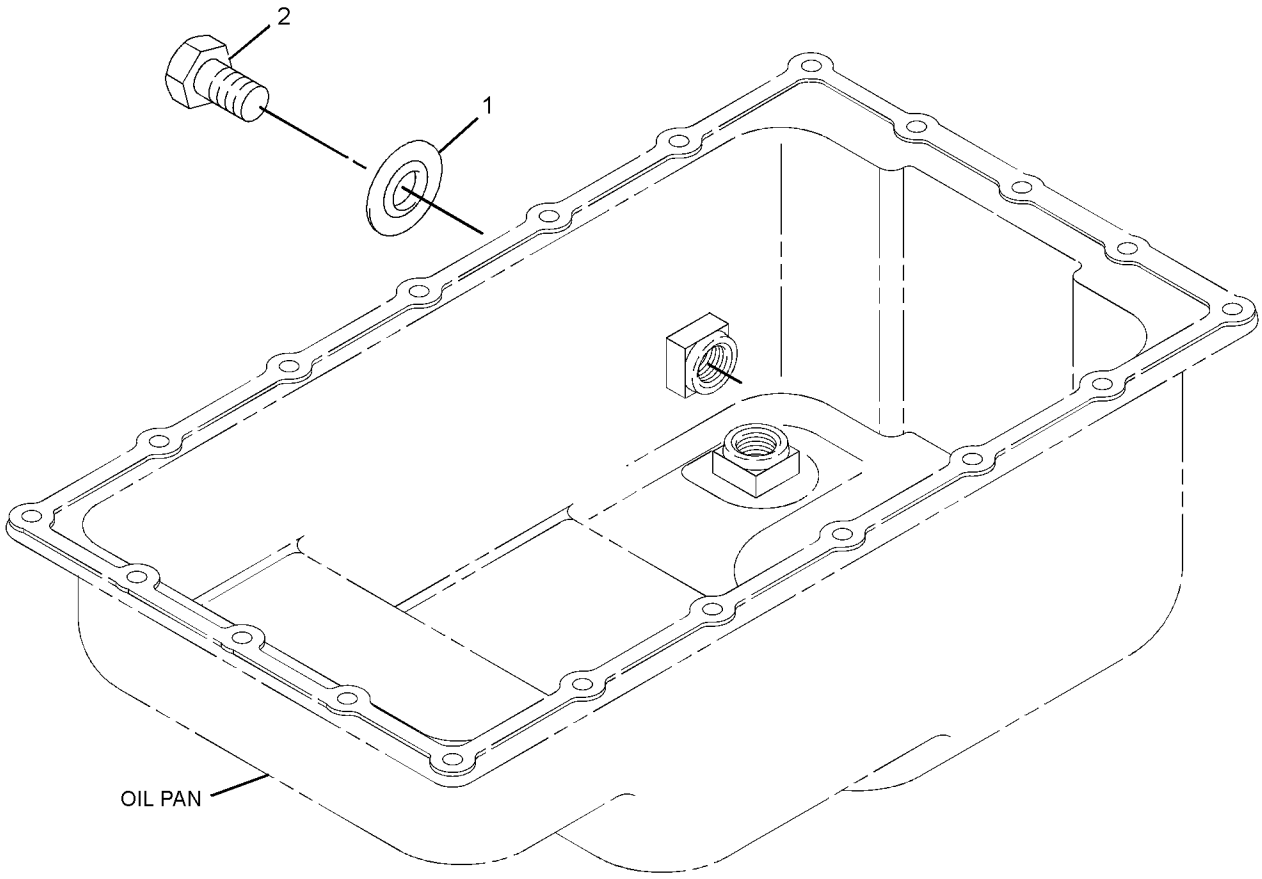

GRAPHIC #1 <END> g01513429

398-5865 PLUG GP-OIL PAN

PART OF 433-1379, 433-1380 ENGINE AR, 435-1636, 435-1641, 435-1646, 435-1647, 587-9328, 610-7720, 610-7721 ENGINE AR-PRIMARY

SMCS-1302 **i05663567**

NOTE	REF NO	GRAPHIC REF	PART NUMBER	QTY	PART NAME 1 2 3 4 5 6 (PRODUCT LEVEL)	SEE PAGE
	1	1	**153-6412**	2	WASHER	
	2	1	**423-6224**	2	PLUG-DRAIN	

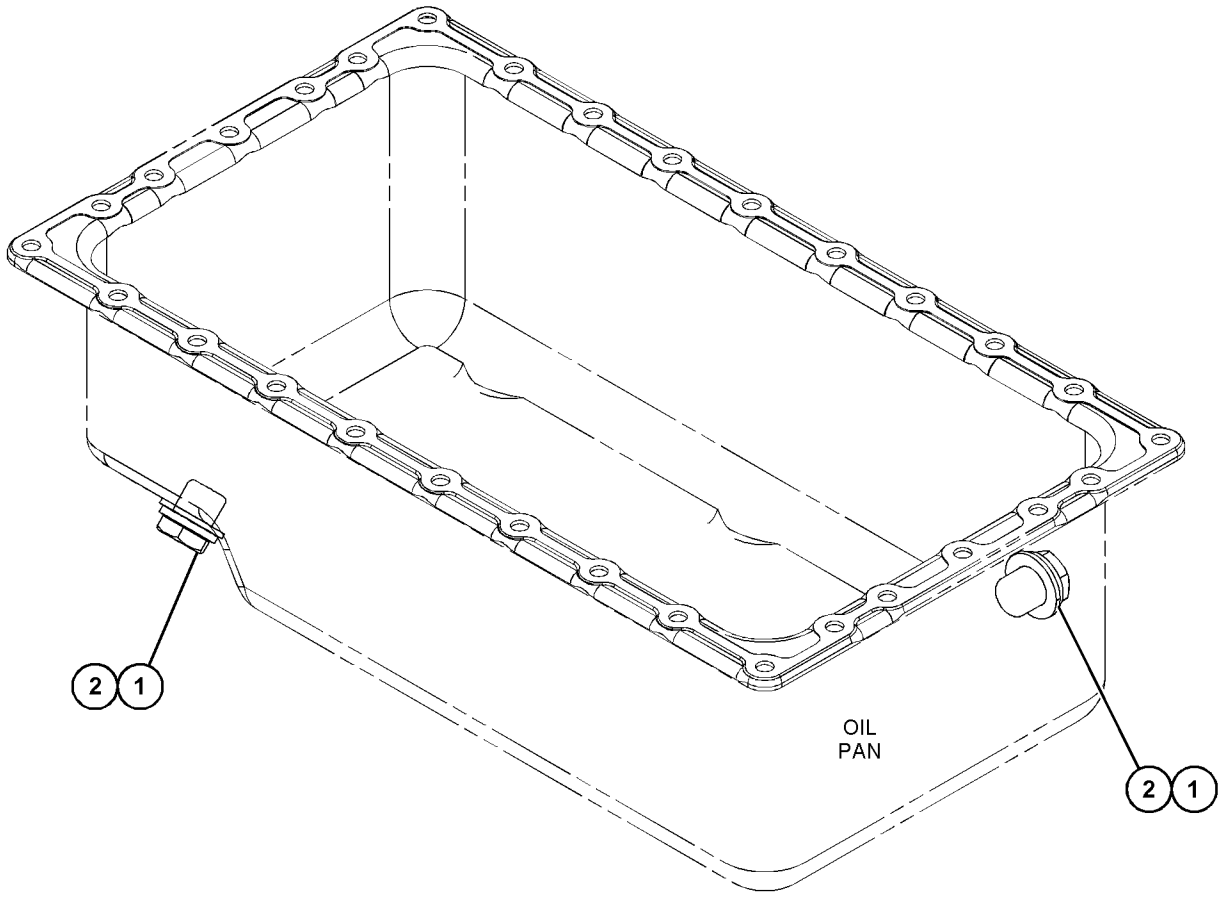

GRAPHIC #1 <END> g03643353

322-2422 PULLEY GP-AUXILIARY DRIVE

PART OF 557-9727 ENGINE AR-PRIMARY

SMCS-1205, 1207 **i06922473**

NOTE	REF NO	GRAPHIC REF	PART NUMBER	QTY	PART NAME 1 2 3 4 5 6 (PRODUCT LEVEL)	SEE PAGE
M	1	1	**106-8954**	3	BOLT (M12X1.75X35-MM)	
	2	1	**238-9621**	1	PULLEY	

M - METRIC PART

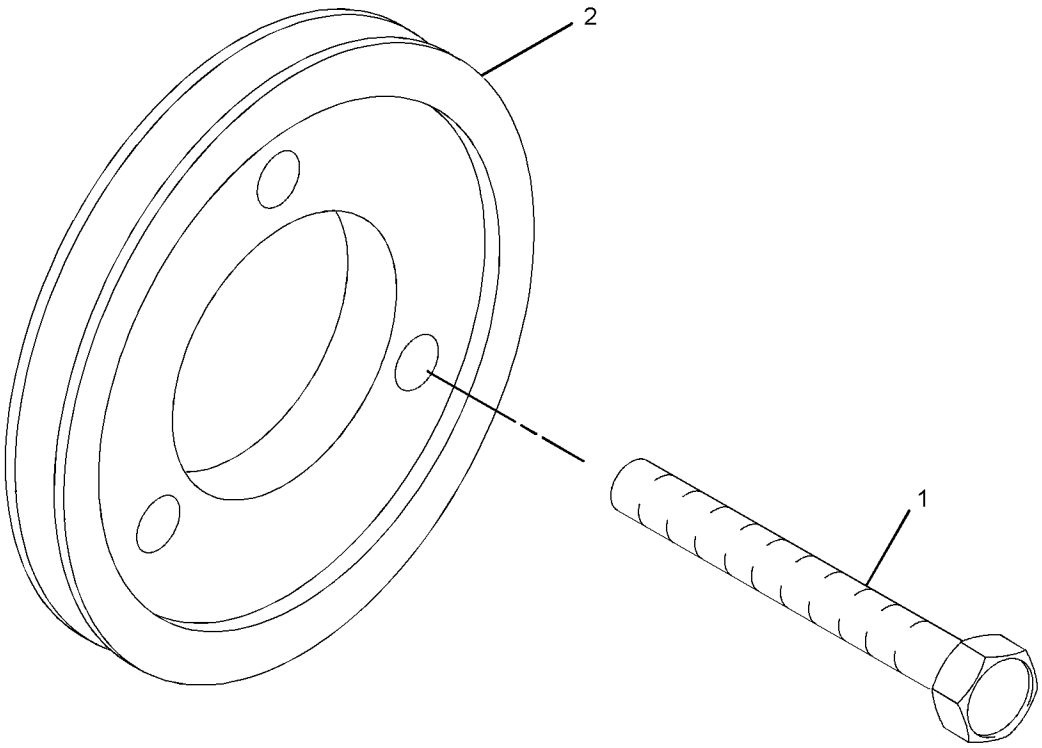

GRAPHIC #1 <END> g01636445

308-2300 PULLEY GP-CRANKSHAFT

PART OF 435-1645 CYLINDER BLOCK GP-LONG, 433-1379 ENGINE AR, 435-1641, 435-1642, 435-1646, 435-1647, 435-1656, 461-7895, 492-6602, 516-9335, 549-8284 ENGINE AR-PRIMARY

SMCS-1205 **i02939569**

NOTE	REF NO	GRAPHIC REF	PART NUMBER	QTY	PART NAME 1 2 3 4 5 6 (PRODUCT LEVEL)	SEE PAGE
	1	1	**153-6492**	1	KEY-WOODRUFF	
M	2	1	**154-1880**	1	NUT (M24X1.5-THD)	
	3	1	**321-6738**	1	PULLEY-CRANKSHAFT	

M - METRIC PART

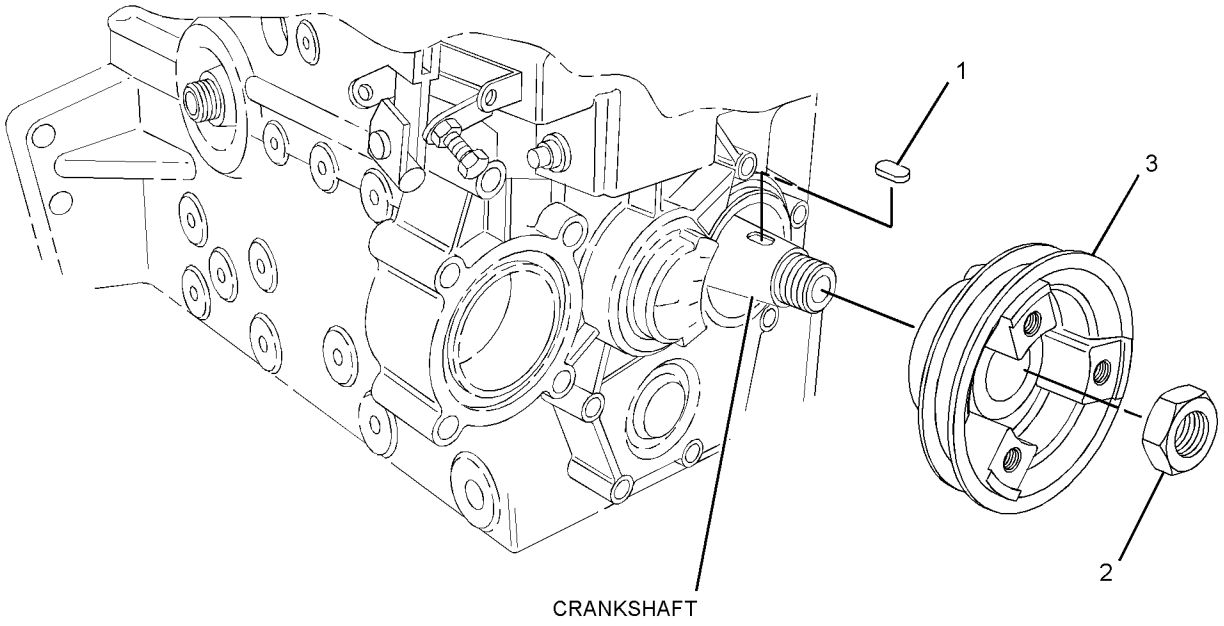

GRAPHIC #1 <END> g01390599

321-6740 PULLEY GP-CRANKSHAFT

PART OF 433-1380, 435-1637, 435-1638 ENGINE AR, 435-1636, 435-1658, 459-2953, 461-7892, 461-7894, 465-1477, 491-3396, 495-3121, 495-6243, 541-9277, 557-9727, 587-9328 ENGINE AR-PRIMARY

SMCS-1205 **i05815414**

NOTE	REF NO	GRAPHIC REF	PART NUMBER	QTY	PART NAME 1 2 3 4 5 6 (PRODUCT LEVEL)	SEE PAGE
	1	1	**153-6492**	1	KEY-WOODRUFF	
M	2	1	**154-1880**	1	NUT (M24X1.5-THD)	
	3	1	**321-6738**	1	PULLEY-CRANKSHAFT	

M - METRIC PART

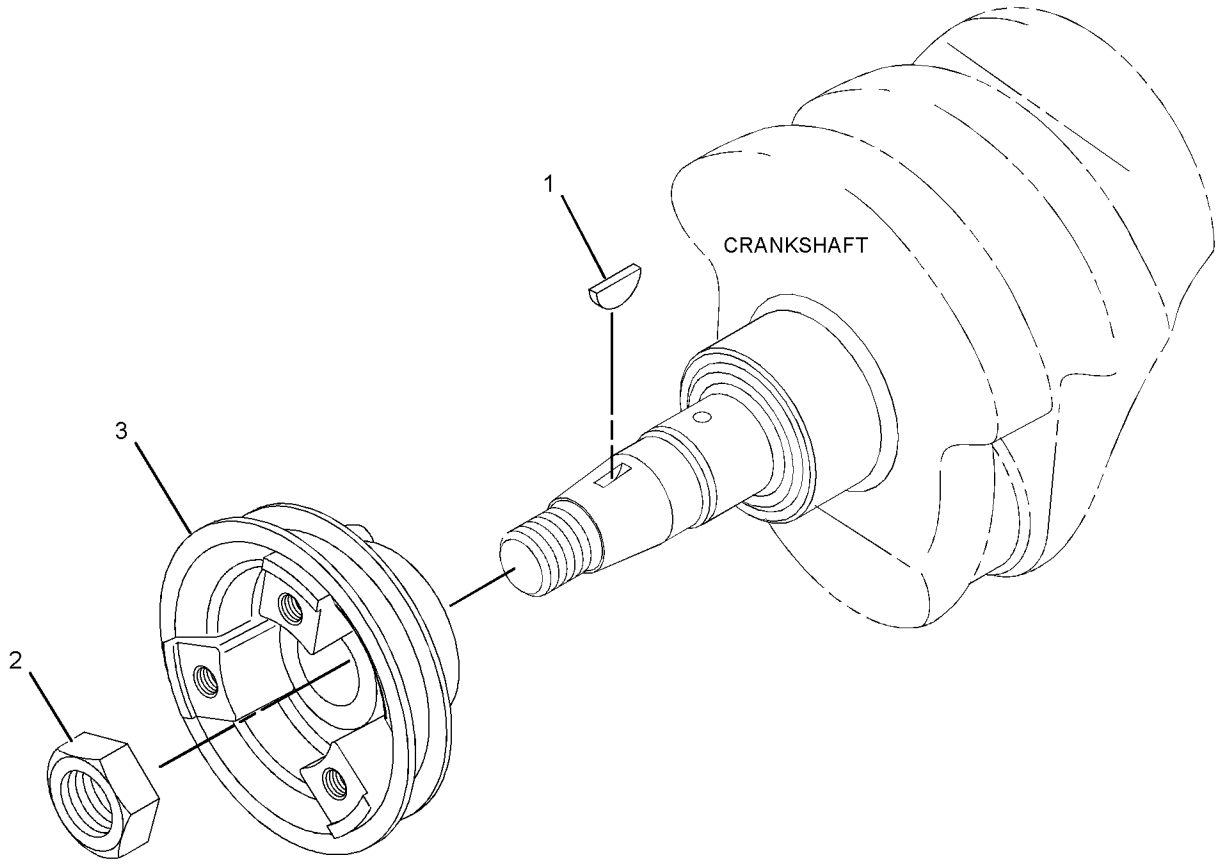

GRAPHIC #1 <END> g01622072

445-9988 PULLEY GP-CRANKSHAFT

PART OF 433-1379, 433-1380 ENGINE AR, 435-1636, 435-1641, 435-1646, 435-1647, 587-9328, 610-7720, 610-7721 ENGINE AR-PRIMARY

SMCS-1205 **i06240298**

NOTE	REF NO	GRAPHIC REF	PART NUMBER	QTY	PART NAME 1 2 3 4 5 6 (PRODUCT LEVEL)	SEE PAGE
	1	1	**153-6492**	1	KEY-WOODRUFF	
M	2	1	**154-1880**	1	NUT (M24X1.5-THD)	
	3	1	**321-6738**	1	PULLEY-CRANKSHAFT	

M - METRIC PART

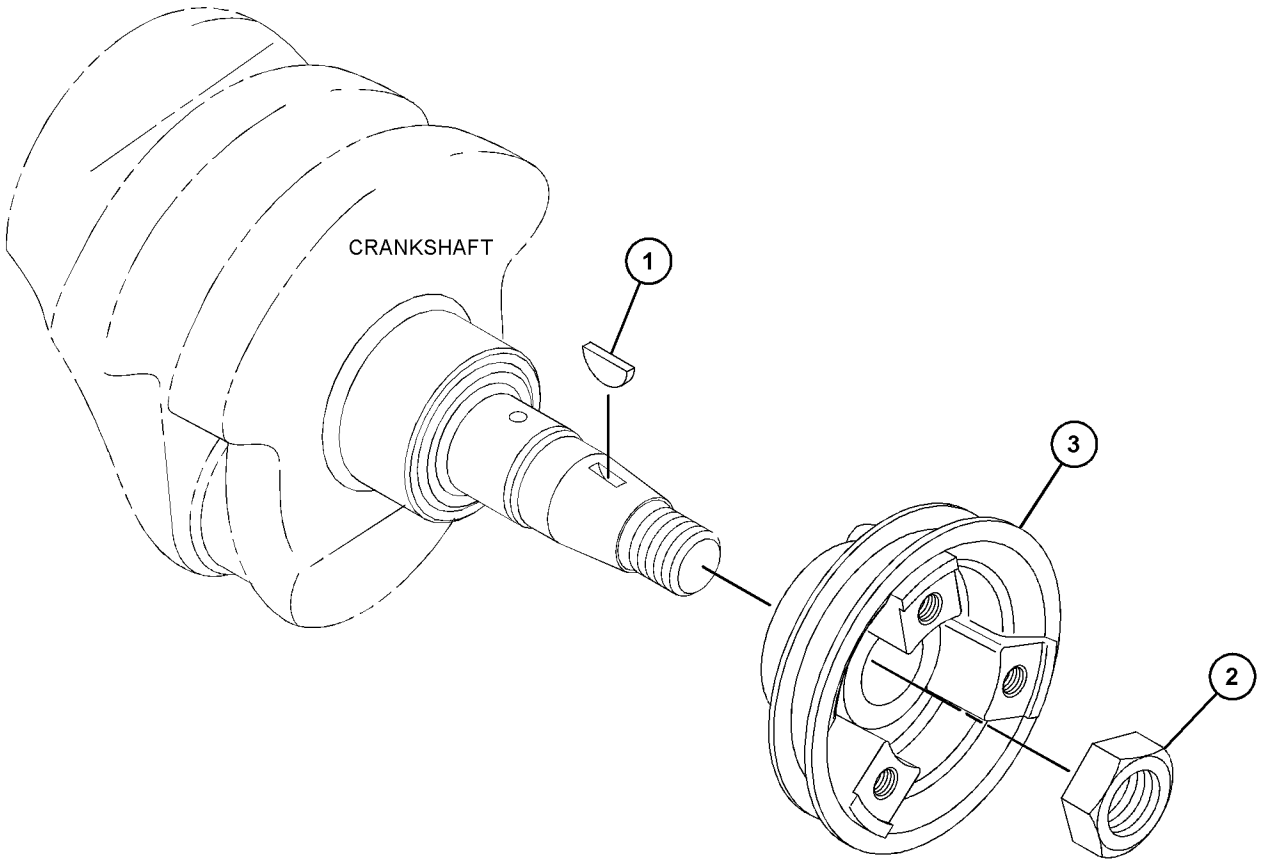

GRAPHIC #1 <END> g03850967

308-2294 PULLEY GP-FAN

PART OF 459-2953, 461-7895, 491-3396, 492-6602, 495-3121, 495-6243, 516-9335, 541-9277, 549-8284 ENGINE AR-PRIMARY

SMCS-1359 **i07573845**

NOTE	REF NO	GRAPHIC REF	PART NUMBER	QTY	PART NAME 1 2 3 4 5 6 (PRODUCT LEVEL)	SEE PAGE
	1	1	**483-3937**	1	PULLEY-FAN	

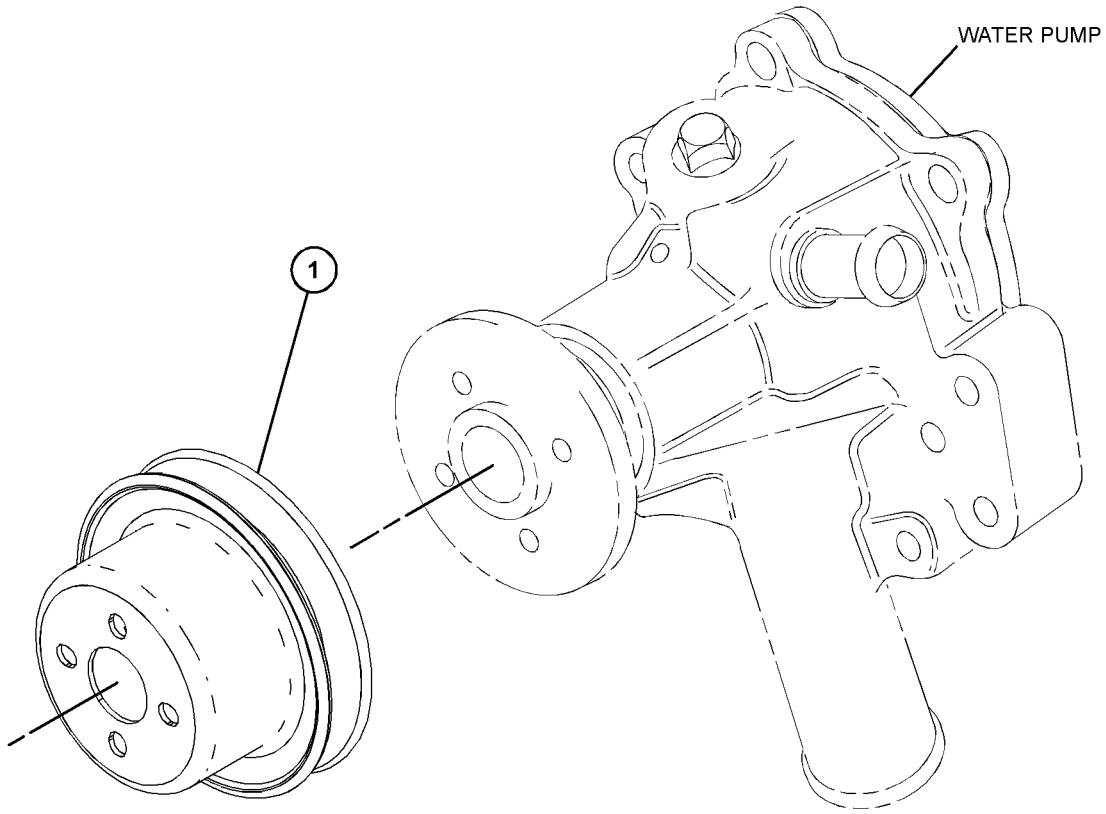

GRAPHIC #1 <END> g06386762

398-4866 PULLEY GP-FAN

PART OF 610-7720 ENGINE AR-PRIMARY

SMCS-1359 **i07568735**

NOTE	REF NO	GRAPHIC REF	PART NUMBER	QTY	PART NAME 1 2 3 4 5 6 (PRODUCT LEVEL)	SEE PAGE
	1	1	**483-3937**	1	PULLEY-FAN	

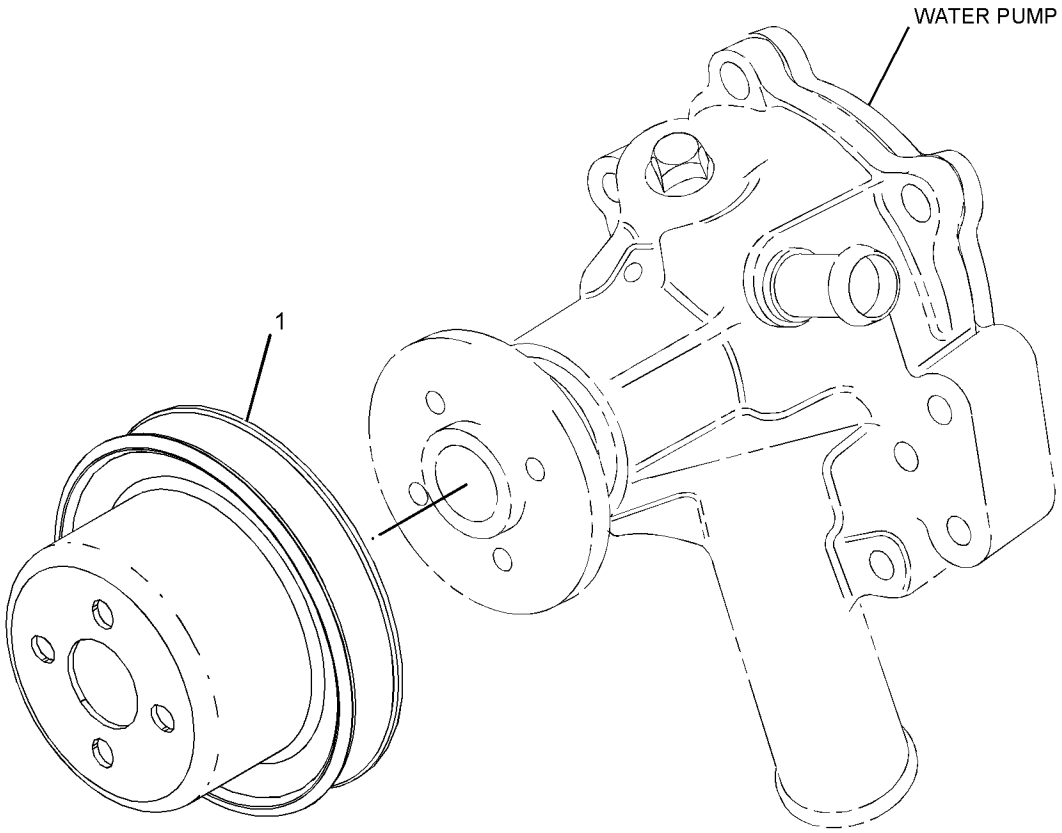

GRAPHIC #1 <END> g06069093

398-4900 PULLEY GP-FAN

PART OF 587-9328, 610-7721 ENGINE AR-PRIMARY

SMCS-1359 **i06930417**

NOTE	REF NO	GRAPHIC REF	PART NUMBER	QTY	PART NAME 1 2 3 4 5 6 (PRODUCT LEVEL)	SEE PAGE
C	1	1	**483-3938**	1	PULLEY-FAN	

C - CHANGE FROM PREVIOUS TYPE

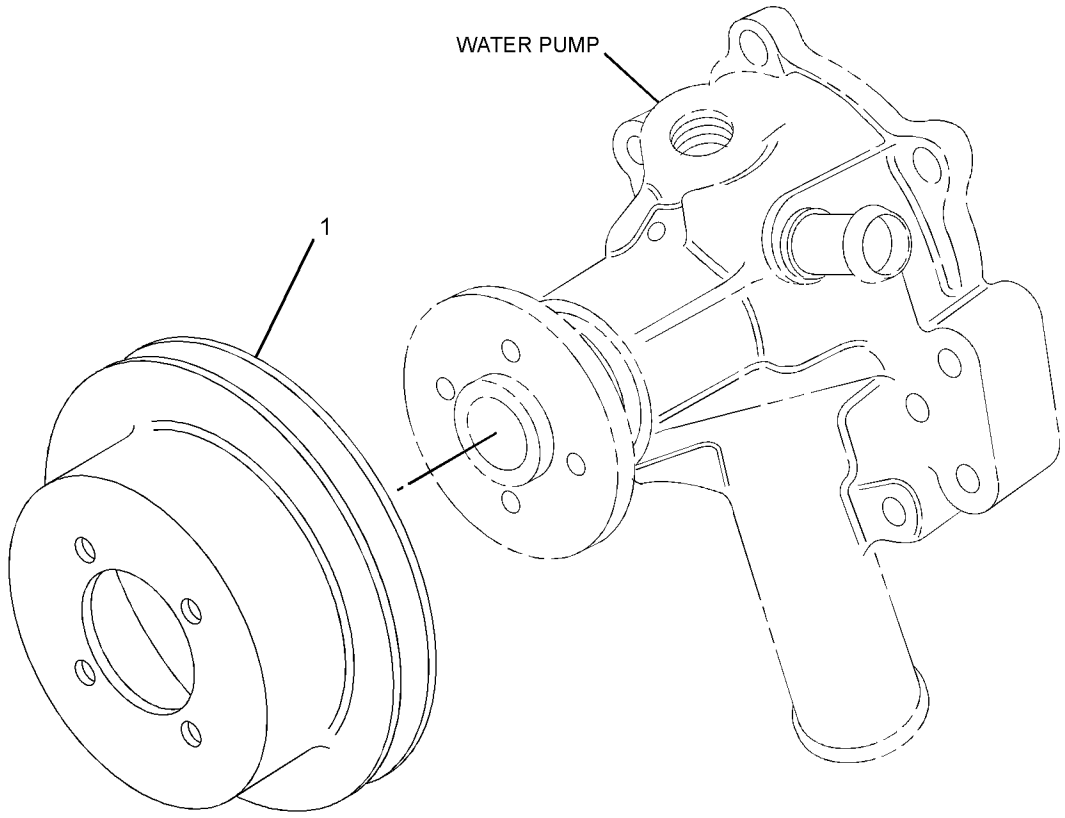

GRAPHIC #1 <END> g03398287

311-9027 PULLEY GP-WATER PUMP

PART OF 461-7892, 461-7894, 465-1477, 587-9328 ENGINE AR-PRIMARY

SMCS-1384 **i07743006**

NOTE	REF NO	GRAPHIC REF	PART NUMBER	QTY	PART NAME 1 2 3 4 5 6 (PRODUCT LEVEL)	SEE PAGE
	1	1	**483-3938**	1	PULLEY-FAN	

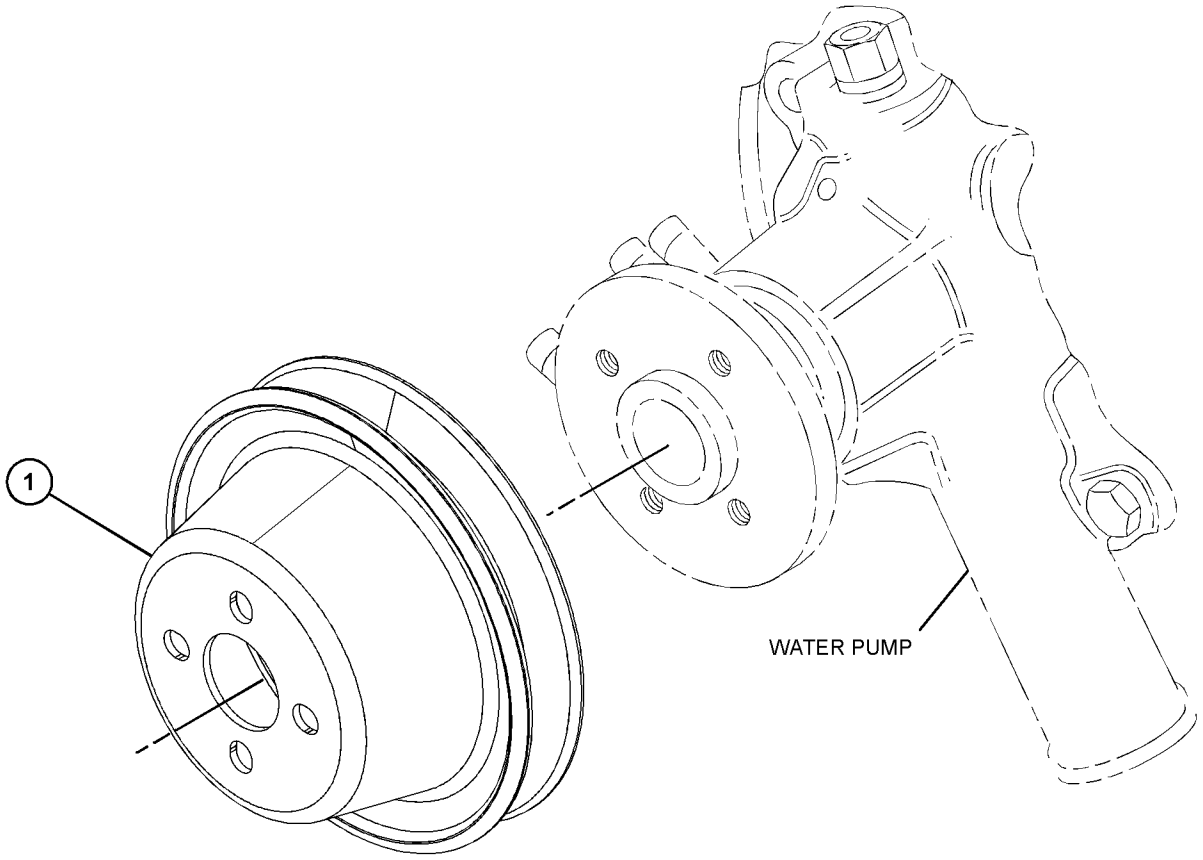

GRAPHIC #1 <END> g06472411

328-2488 PULLEY GP-WATER PUMP

PART OF 557-9727 ENGINE AR-PRIMARY

SMCS-1384 **i07592164**

NOTE	REF NO	GRAPHIC REF	PART NUMBER	QTY	PART NAME 1 2 3 4 5 6 (PRODUCT LEVEL)	SEE PAGE
	1	1	**483-3939**	1	PULLEY-FAN	

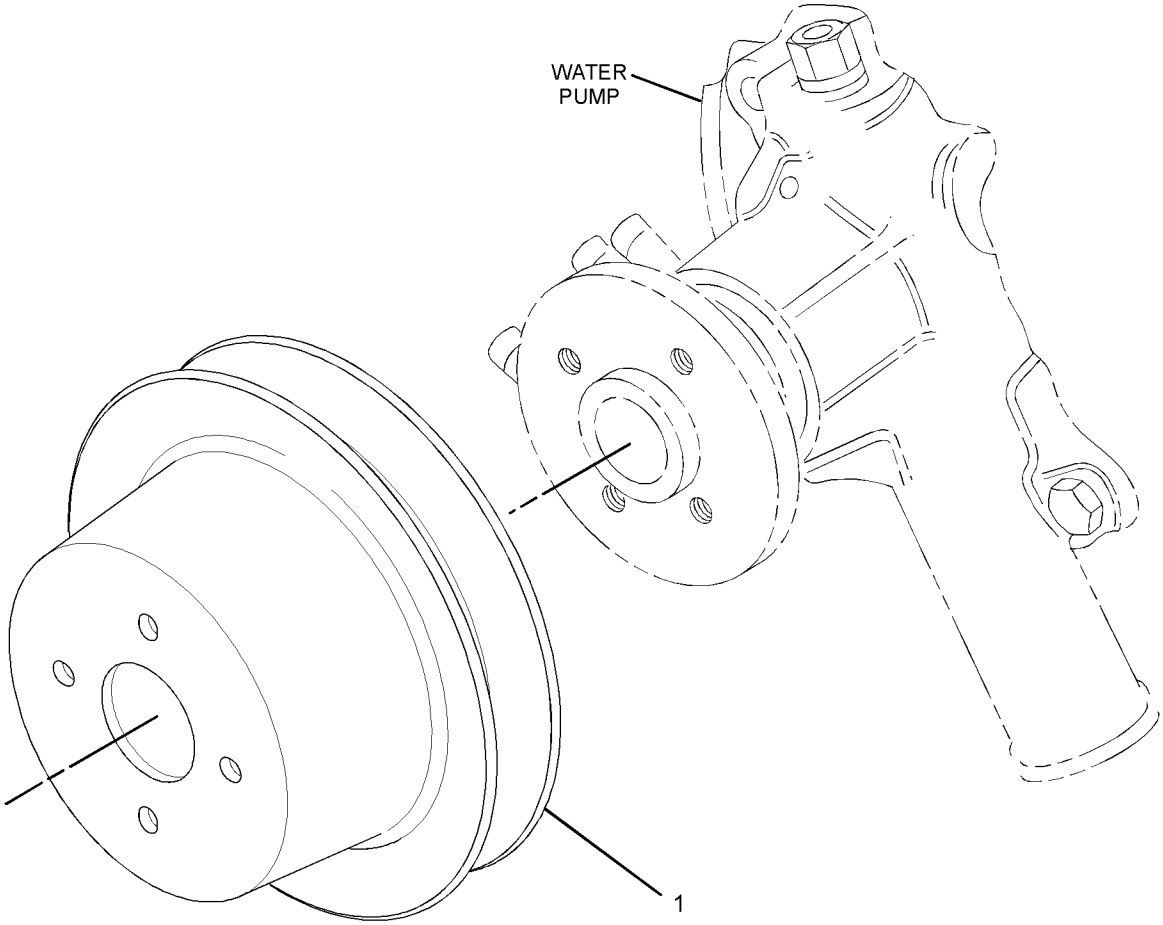

GRAPHIC #1 <END> g01622233

557-7240 ROCKER ARM AS

PART OF 584-3189 ROCKER ARM GP, 308-2285, 309-6716, 340-5785 VALVE MECHANISM GP

SMCS-1123 **i08197926**

NOTE	REF NO	GRAPHIC REF	PART NUMBER	QTY	PART NAME 1 2 3 4 5 6 (PRODUCT LEVEL)	SEE PAGE
M	1	2	**153-5590**	8	NUT (M7X1-THD)	
	2	2	**154-1243**	6	WASHER (15.2X21X0.5-MM THK)	
	3	2	**557-7242**	1	SEAL-O-RING	
	4	2	**557-7246**	3	SPRING	
	5	2	**557-7247**	1	SHAFT	
	6	1,2	**557-7254**	4	ROCKER ARM AS (INLET)	
	7	2	**557-7249**	8	SCREW-ADJUSTING	
	8	1,2	**557-7250**	4	ROCKER ARM AS (EXHAUST)	

M - METRIC PART

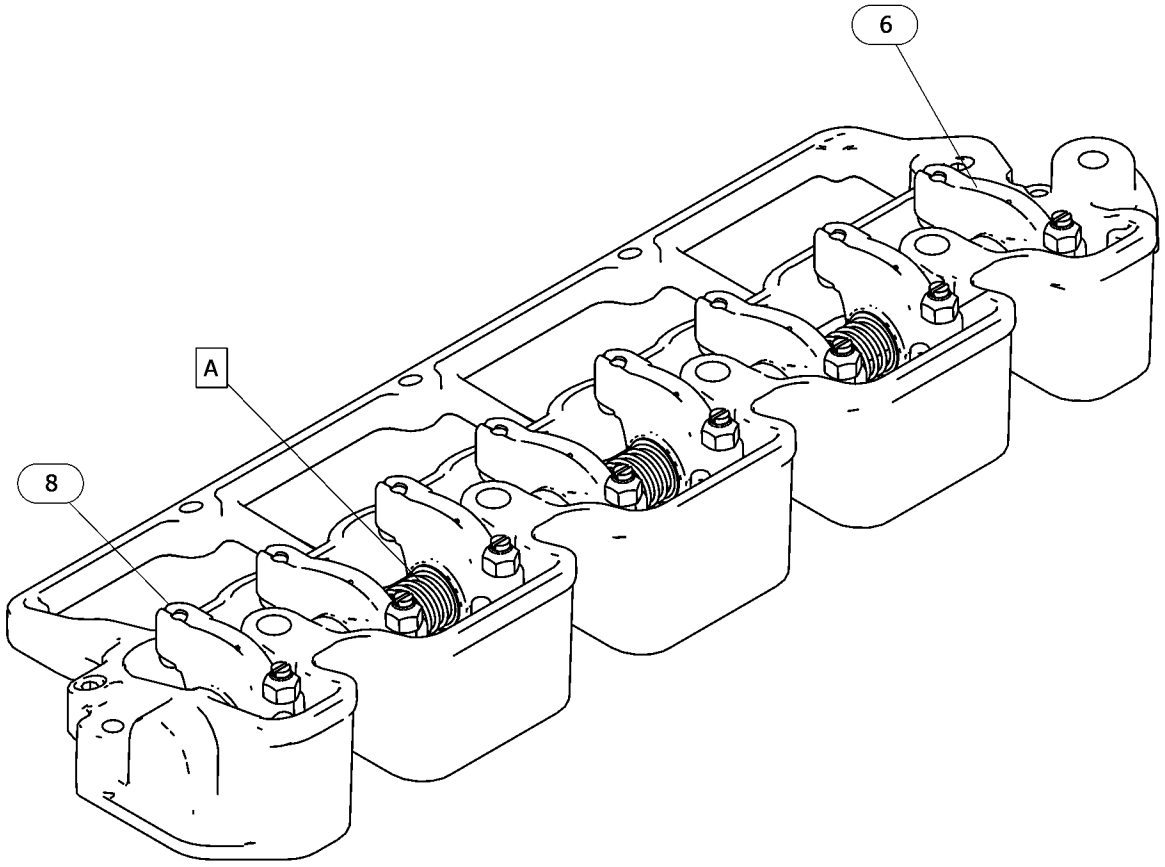

GRAPHIC #1 g06712443

557-7240 **ROCKER ARM AS (**contd.**)** **i08197926**

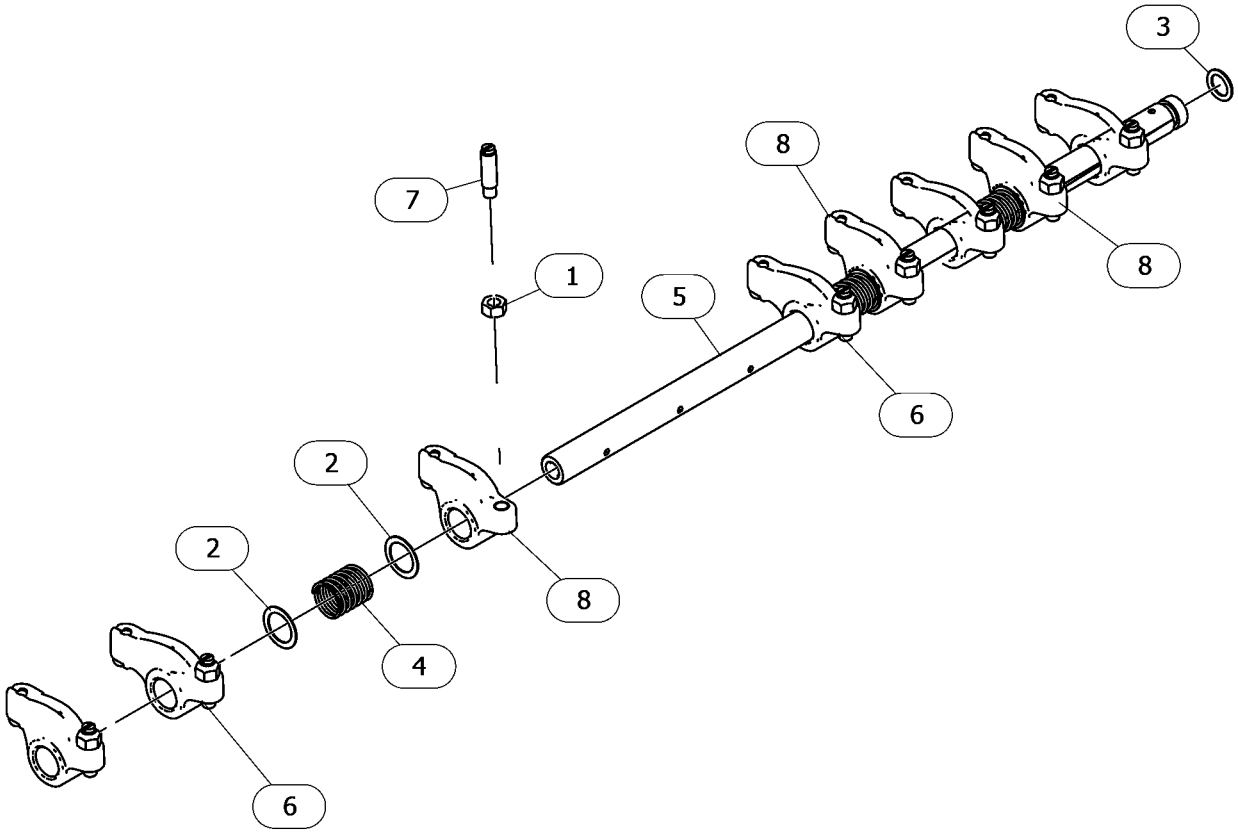

VIEW OF AREA A
(PARTS REMOVED FOR CLARITY)

GRAPHIC #2 <END> g06712443_01

584-3189 ROCKER ARM GP

PART OF 433-1379, 433-1380 ENGINE AR, 435-1636, 435-1641, 435-1647, 587-9328, 610-7720, 610-7721 ENGINE AR-PRIMARY

SMCS-1123 **i09817661**

NOTE	REF NO	GRAPHIC REF	PART NUMBER	QTY	PART NAME 1 2 3 4 5 6 (PRODUCT LEVEL)	SEE PAGE
	1	1	**153-5961**	2	BOLT AS	
M	2	1	**153-7988**	4	NUT (M10X1.25-THD)	
M	3	1	**154-1246**	4	STUD (M10X1.5X95-MM)	
	4	1	**438-1393**	1	GASKET	
	5	1	**504-3838**	8	CAP	
Y	6	1	**557-7240**	1	ROCKER ARM AS	456

M - METRIC PART
Y - SEPARATE ILLUSTRATION

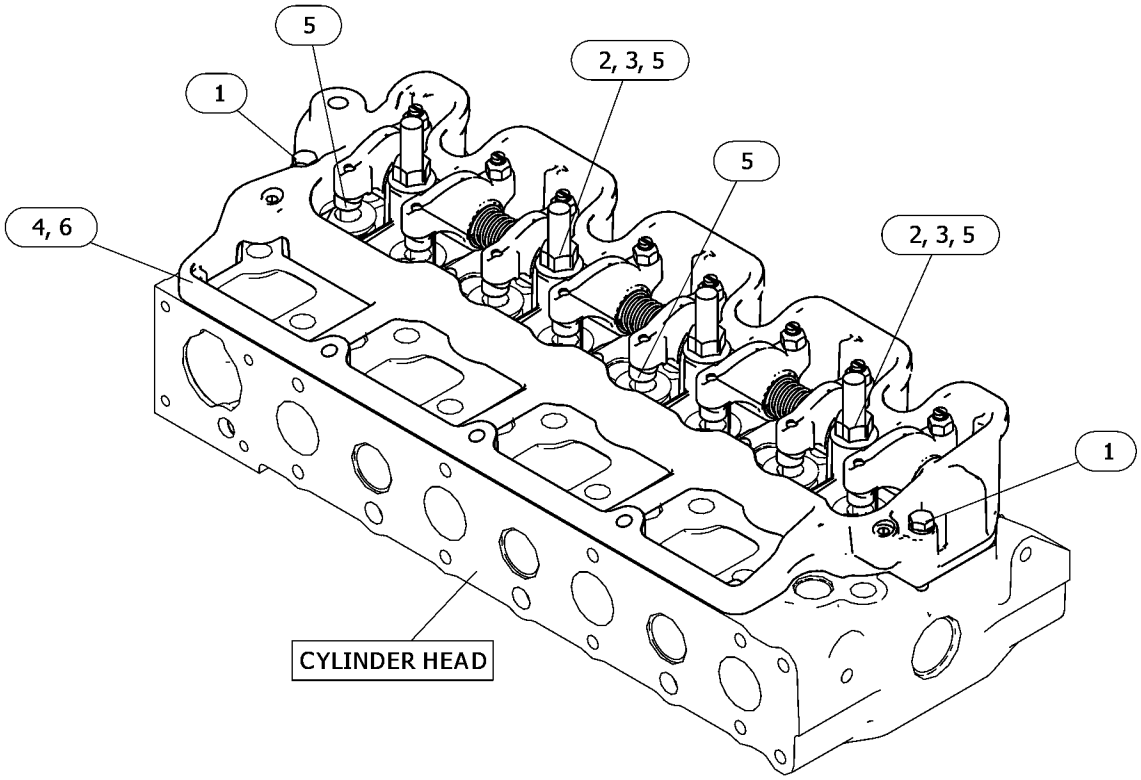

GRAPHIC #1 <END> g06719844

533-4971 SHAFT GP-IDLER

PART OF 308-2281, 309-6712, 340-5781, 584-3179 CYLINDER BLOCK GP

SMCS-1206 **i08206478**

NOTE	REF NO	GRAPHIC REF	PART NUMBER	QTY	PART NAME 1 2 3 4 5 6 (PRODUCT LEVEL)	SEE PAGE
M	1	1	**153-5592**	1	NUT (M8X1.25-THD)	

M - METRIC PART

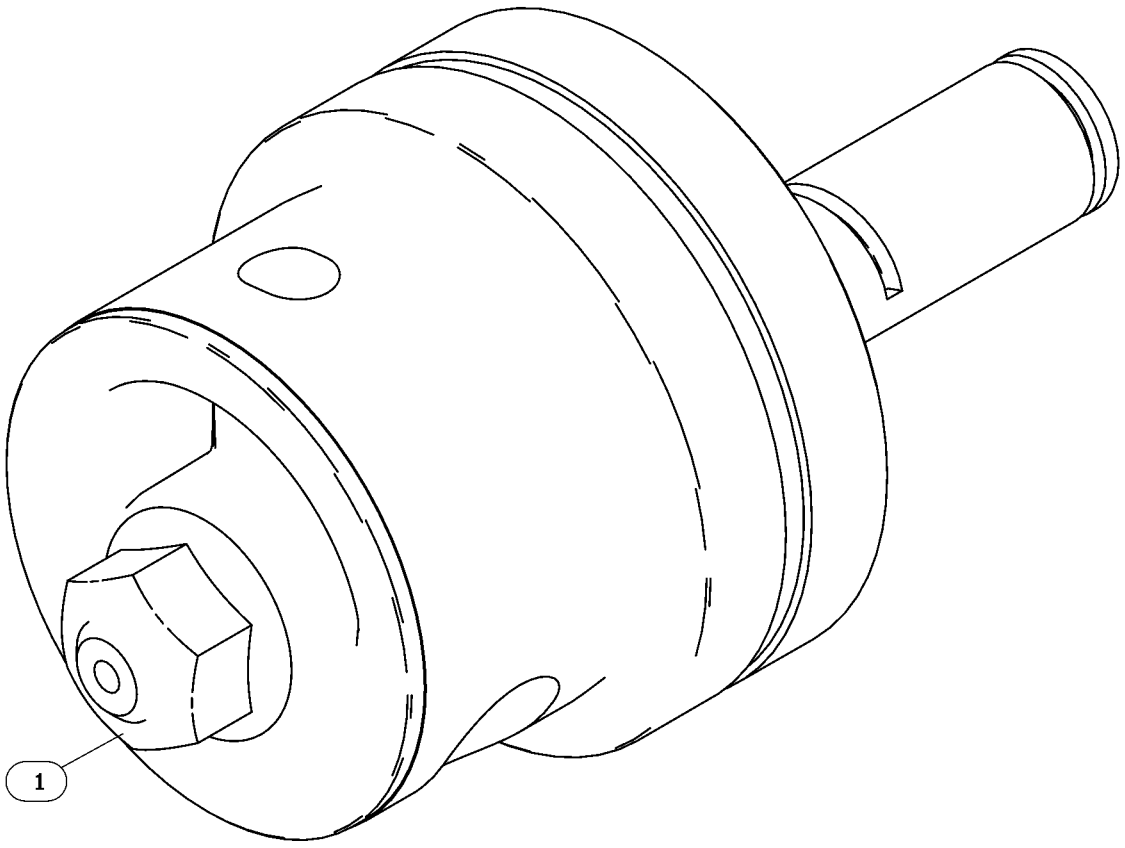

GRAPHIC #1 <END> g06589182

308-2306 V-BELT GP—FAN DRIVE

PART OF 459-2953, 461-7895, 491-3396, 492-6602, 495-3121, 495-6243, 516-9335, 541-9277, 549-8284 ENGINE AR-PRIMARY

SMCS-1357 **i05985130**

NOTE	REF NO	GRAPHIC REF	PART NUMBER	QTY	PART NAME 1 2 3 4 5 6 (PRODUCT LEVEL)	SEE PAGE
	1	1	**438-1597**	1	V-BELT (ALTERNATOR)	

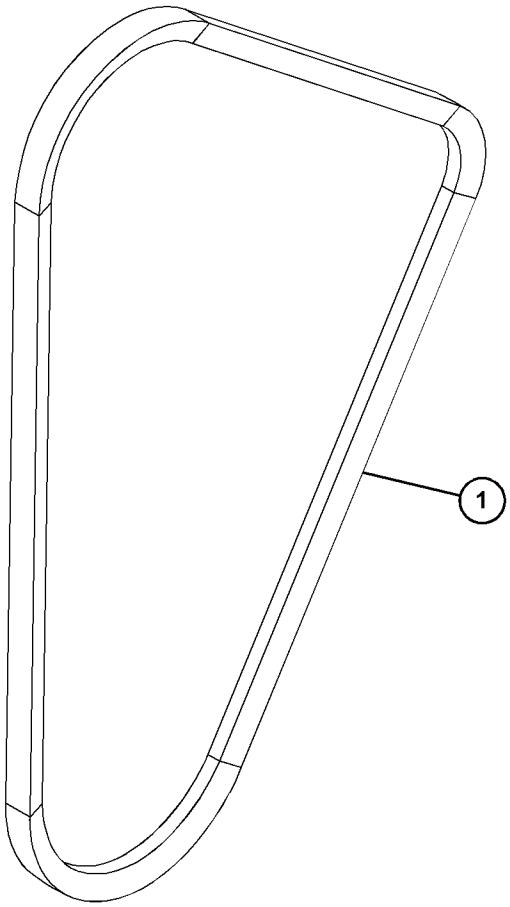

GRAPHIC #1 <END> g03749774

311-9029 V-BELT GP

PART OF 461-7892, 461-7894, 465-1477, 587-9328 ENGINE AR-PRIMARY

SMCS-1357 **i06249491**

NOTE	REF NO	GRAPHIC REF	PART NUMBER	QTY	PART NAME 1 2 3 4 5 6 (PRODUCT LEVEL)	SEE PAGE
	1	1	**424-8611**	1	V-BELT (WATER PUMP)	

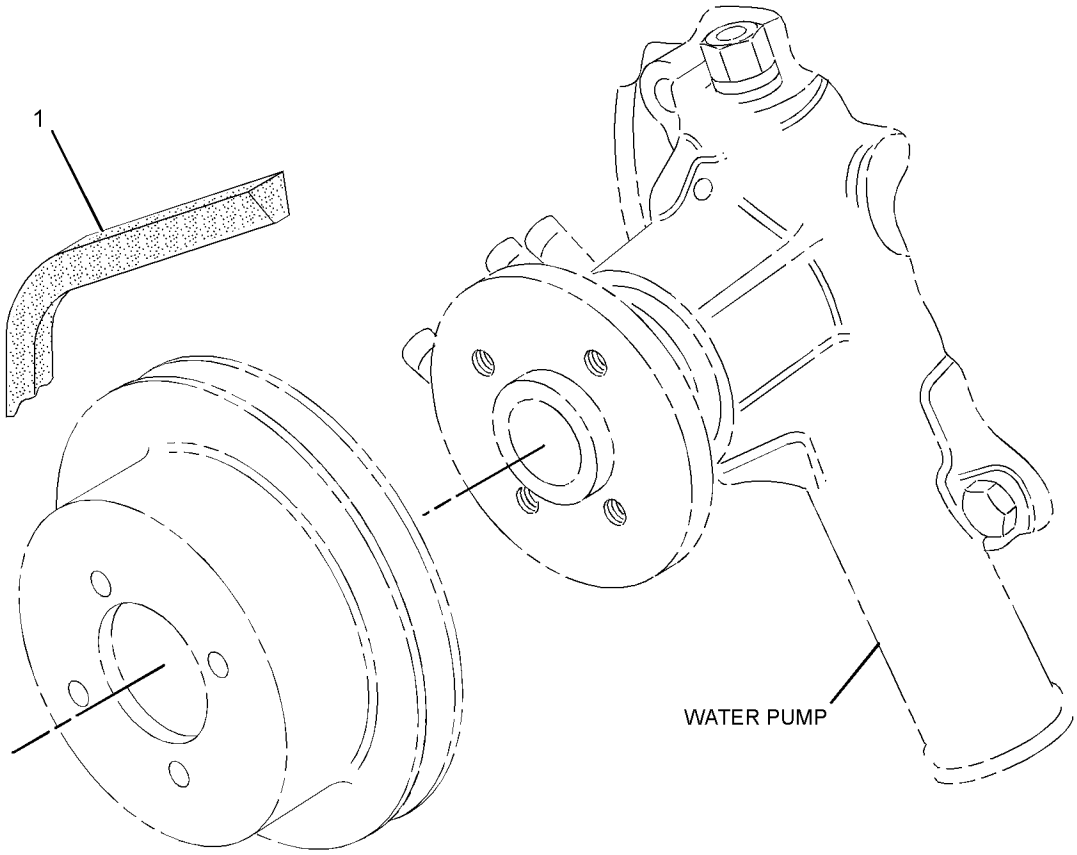

GRAPHIC #1 <END> g01418782

340-5966 V-BELT GP

SMCS-1357 **i03600783**

NOTE	REF NO	GRAPHIC REF	PART NUMBER	QTY	PART NAME 1 2 3 4 5 6 (PRODUCT LEVEL)	SEE PAGE
	1	1	**338-3398**	1	V-BELT	

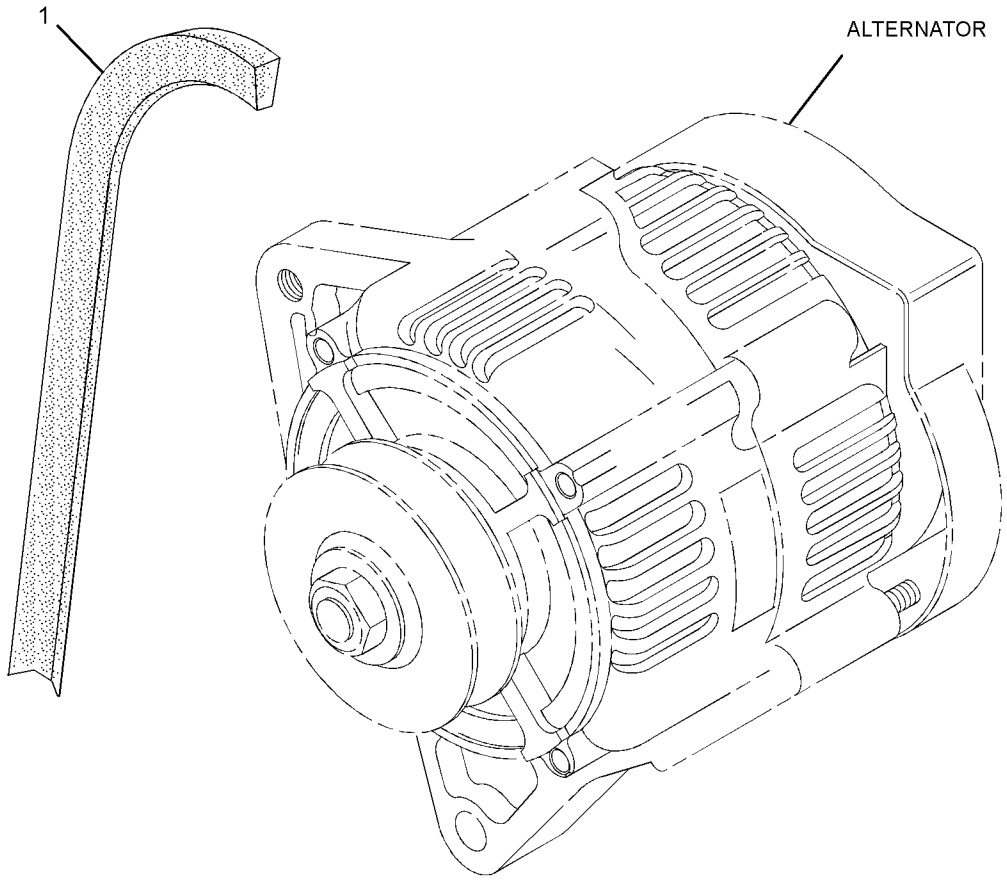

GRAPHIC #1 <END> g01982537

341-6637 V-BELT GP

PART OF 557-9727 ENGINE AR-PRIMARY

SMCS-1357 **i07443227**

NOTE	REF NO	GRAPHIC REF	PART NUMBER	QTY	PART NAME 1 2 3 4 5 6 (PRODUCT LEVEL)	SEE PAGE
	1	1	**438-1597**	1	V-BELT (WATER PUMP)	

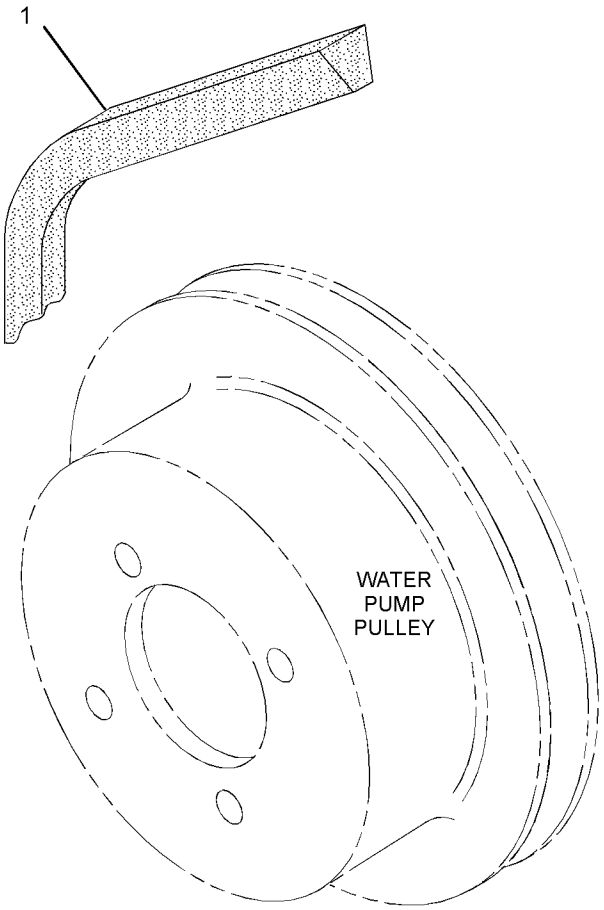

GRAPHIC #1 <END> g01407842

428-5948 V-BELT GP

PART OF 610-7720 ENGINE AR-PRIMARY

SMCS-1357 **i09613752**

NOTE	REF NO	GRAPHIC REF	PART NUMBER	QTY	PART NAME 1 2 3 4 5 6 (PRODUCT LEVEL)	SEE PAGE
	1	1	**438-1597**	1	V-BELT (ALTERNATOR)	

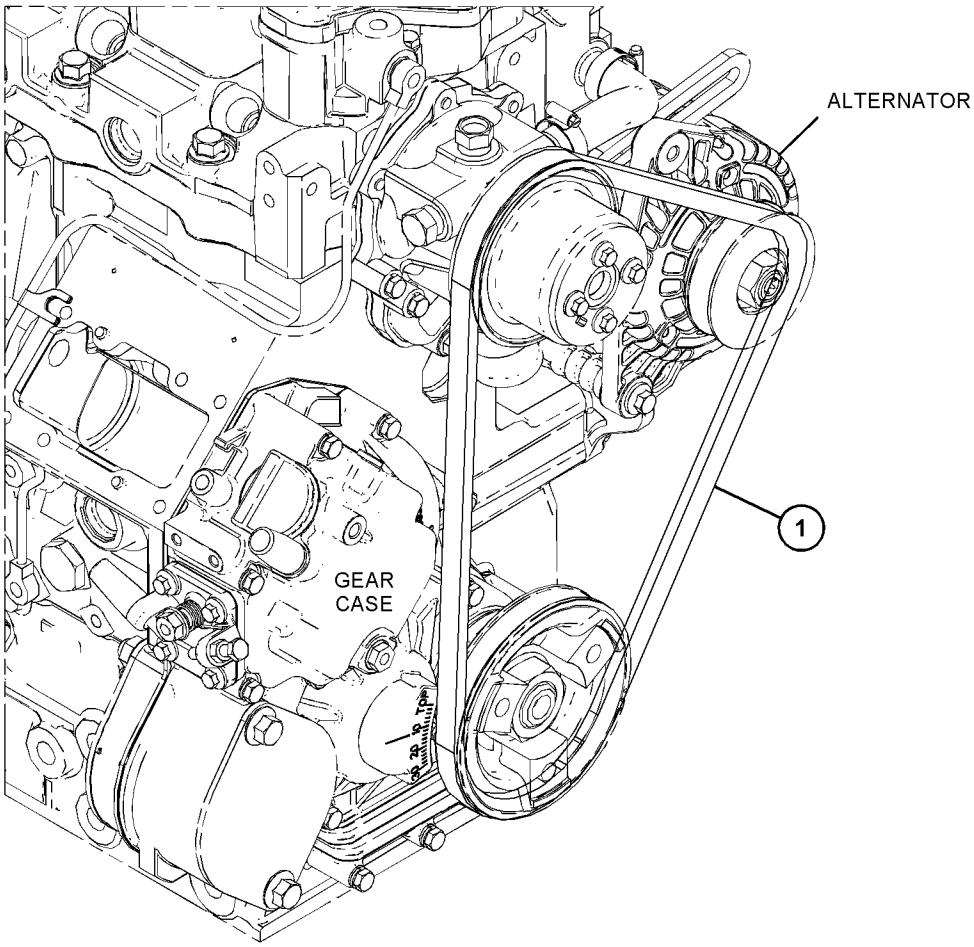

GRAPHIC #1 <END> g06770758

428-5949 V-BELT GP

PART OF 587-9328, 610-7721 ENGINE AR-PRIMARY

SMCS-1357 **i10428777**

NOTE	REF NO	GRAPHIC REF	PART NUMBER	QTY	PART NAME 1 2 3 4 5 6 (PRODUCT LEVEL)	SEE PAGE
	1	1	**424-8611**	1	V-BELT (ALTERNATOR)	

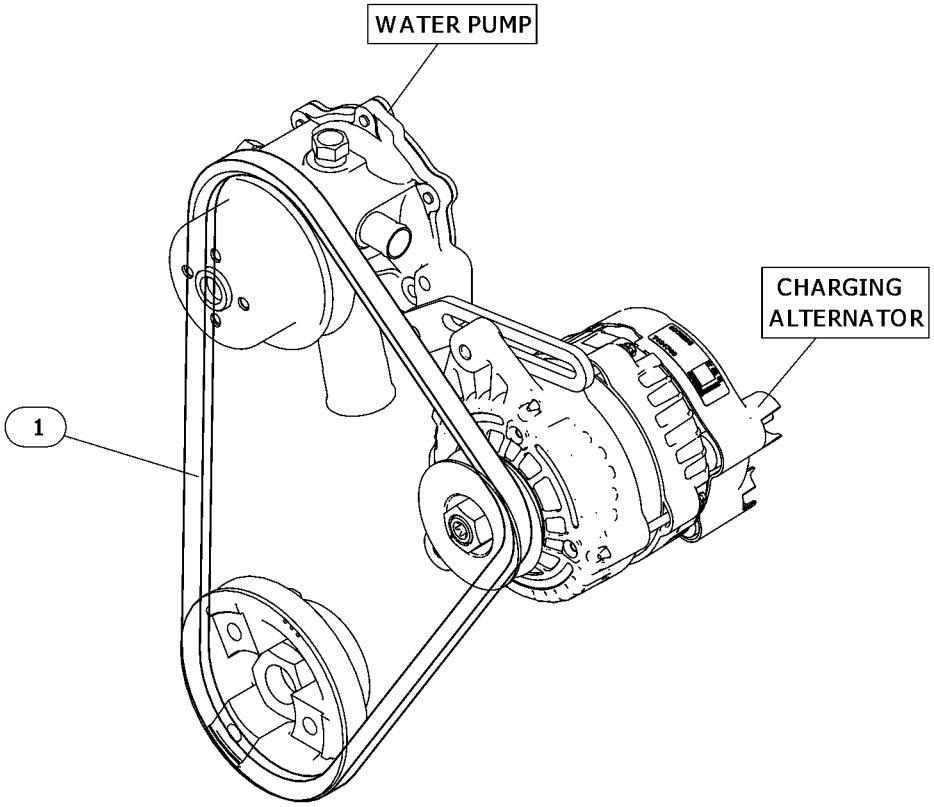

GRAPHIC #1 <END> g06769252

315-5252 VALVE & PLUG GP-OIL PAN DRAIN

PART OF 557-9727 ENGINE AR-PRIMARY

SMCS-1302 **i10694979**

NOTE	REF NO	GRAPHIC REF	PART NUMBER	QTY	PART NAME 1 2 3 4 5 6 (PRODUCT LEVEL)	SEE PAGE
	1	1	**153-6412**	2	WASHER	
	2	1	**423-6224**	1	PLUG-DRAIN (ENGINE OIL PAN)	
	3	1	**483-4031**	1	VALVE-BALL	

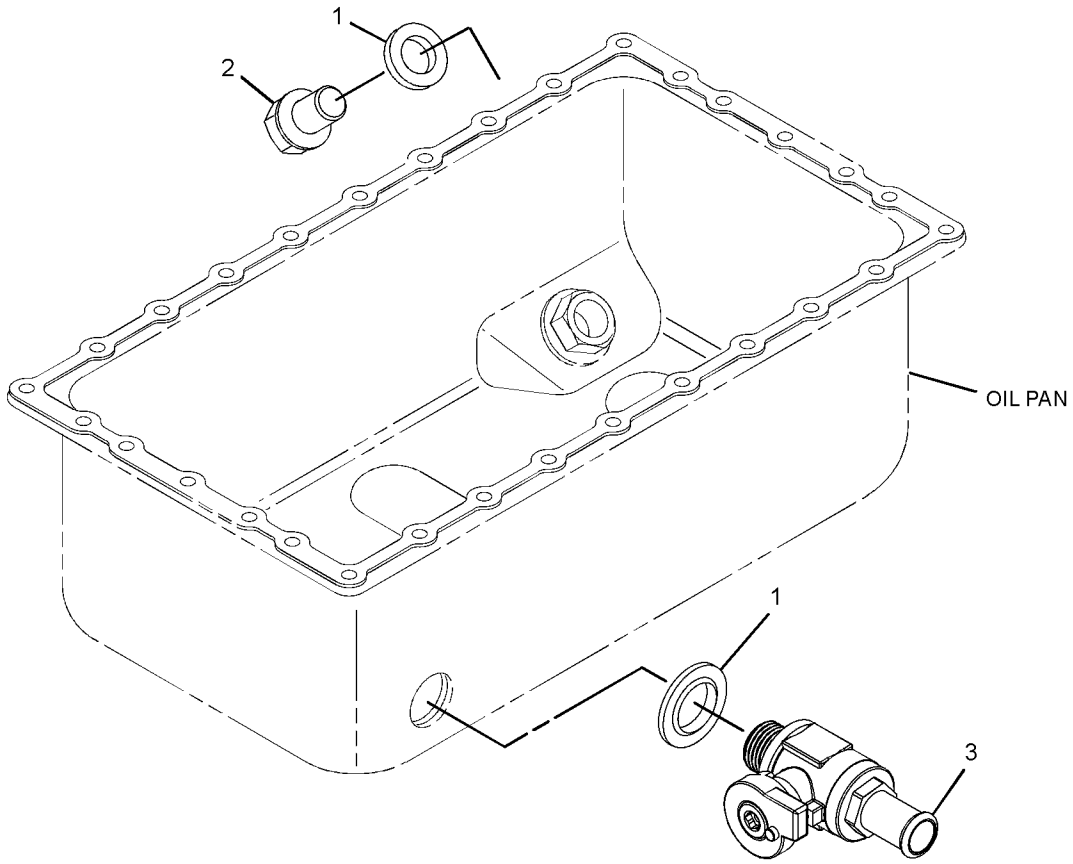

GRAPHIC #1 <END> g07940073

308-2285 VALVE MECHANISM GP

PART OF 433-1380, 435-1637, 435-1638 ENGINE AR, 435-1636, 435-1658, 459-2953, 461-7894, 491-3396, 495-3121, 495-6243, 541-9277, 557-9727 ENGINE AR-PRIMARY
TYPE 1

SMCS-1102, 1121, 1123, 1209 **i09627728**

NOTE	REF NO	GRAPHIC REF	PART NUMBER	QTY	PART NAME 1 2 3 4 5 6 (PRODUCT LEVEL)	SEE PAGE
	1	1	**153-5961**	2	BOLT AS	
M	2	1	**153-7988**	4	NUT (M10X1.25-THD)	
M	3	1	**154-1246**	4	STUD (M10X1.5X95-MM)	
	4	1	**528-6882**	8	PUSHROD AS	
	5	1	**438-9109**	8	TAPPET	
	6	1	**438-1393**	1	GASKET	
Y	7	1	**365-5278**	1	VALVE MECHANISM GP	479

M - METRIC PART
Y - SEPARATE ILLUSTRATION

308-2285 **VALVE MECHANISM GP (**contd.**)** **i09627728**

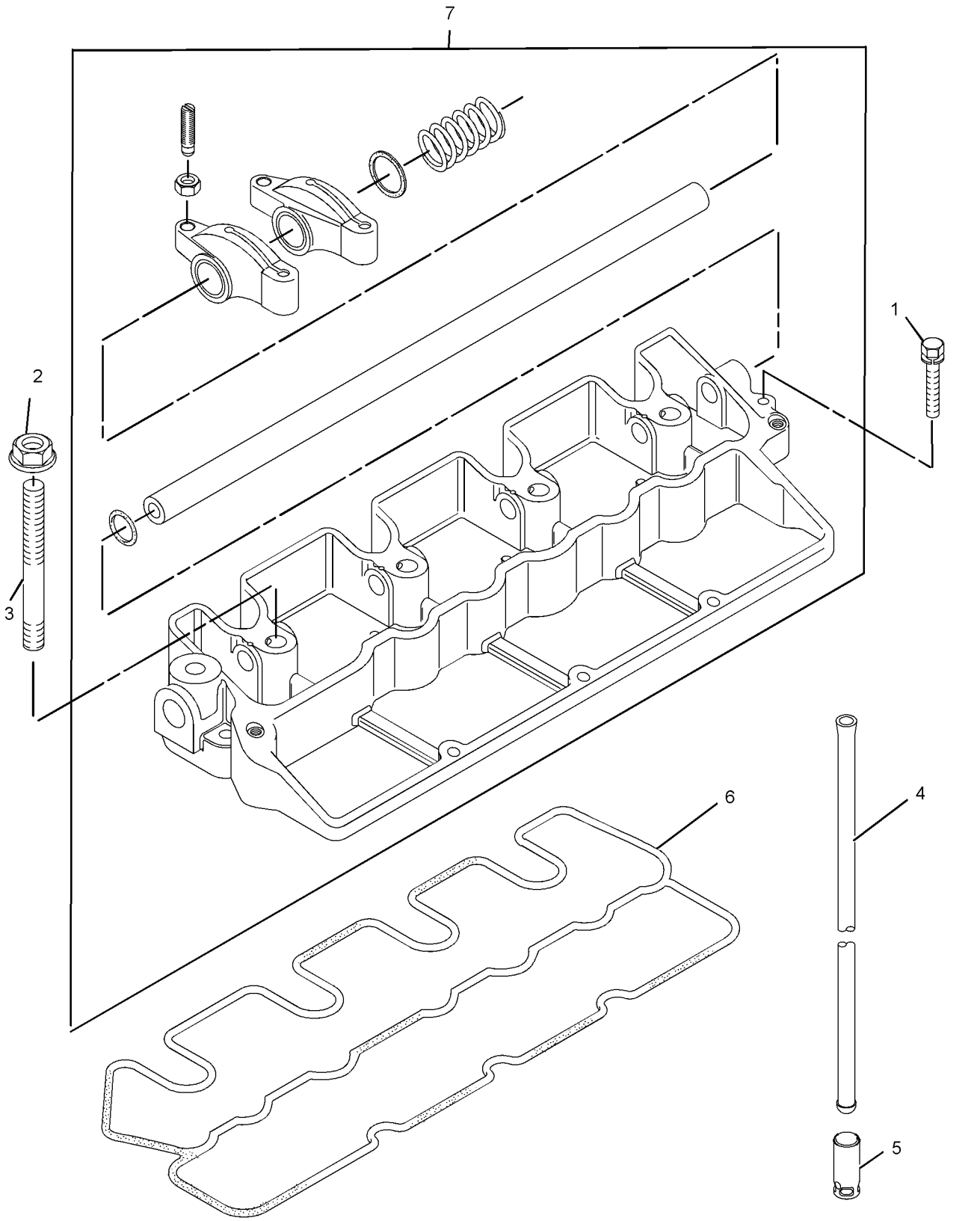

GRAPHIC #1 <END> g01409366

308-2285 VALVE MECHANISM GP

PART OF 433-1380, 435-1637, 435-1638 ENGINE AR, 435-1636, 435-1658, 459-2953, 461-7892, 461-7894, 465-1477, 491-3396, 495-3121, 495-6243, 541-9277, 557-9727, 587-9328 ENGINE AR-PRIMARY
TYPE 2

SMCS-1102, 1121, 1123, 1209 **i07497017**

NOTE	REF NO	GRAPHIC REF	PART NUMBER	QTY	PART NAME 1 2 3 4 5 6 (PRODUCT LEVEL)	SEE PAGE
	1	1	**153-5961**	2	BOLT AS	
M	2	1	**153-7988**	4	NUT (M10X1.25-THD)	
M	3	1	**154-1246**	4	STUD (M10X1.5X95-MM)	
C	4	1	**528-6882**	8	PUSHROD AS	
	5	1	**438-9109**	8	TAPPET	
	6	1	**438-1393**	1	GASKET (BRACKET)	
Y	7	1	**365-5278**	1	VALVE MECHANISM GP	479

C - CHANGE FROM PREVIOUS TYPE
M - METRIC PART
Y - SEPARATE ILLUSTRATION

308-2285 **VALVE MECHANISM GP (**contd.**)** **i07497017**

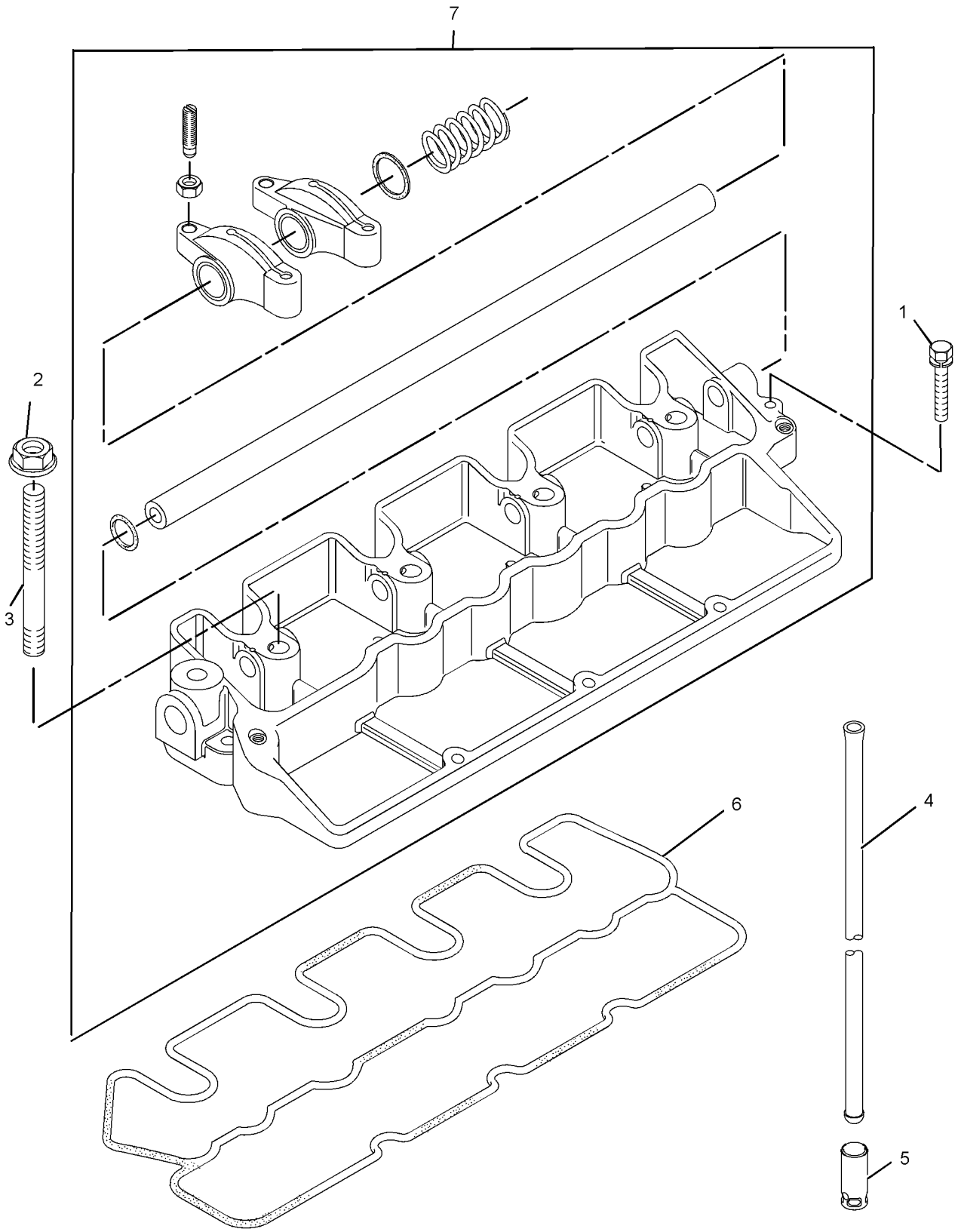

GRAPHIC #1 <END> g01409366

308-2285 VALVE MECHANISM GP

PART OF 435-1637, 435-1638 ENGINE AR, 435-1658, 459-2953, 461-7892, 461-7894, 465-1477, 491-3396, 495-3121, 495-6243, 541-9277, 557-9727 ENGINE AR-PRIMARY
TYPE 3

SMCS-1102, 1121, 1123, 1209

i09944512

NOTE	REF NO	GRAPHIC REF	PART NUMBER	QTY	PART NAME 1 2 3 4 5 6 (PRODUCT LEVEL)	SEE PAGE
	1	1	**153-5961**	2	BOLT AS	
M	2	1	**153-7988**	4	NUT (M10X1.25-THD)	
M	3	1	**154-1246**	4	STUD (M10X1.5X95-MM)	
	4	1	**528-6882**	8	PUSHROD AS	
	5	1	**438-9109**	8	TAPPET	
	6	1	**438-1393**	1	GASKET	
CY	7	1	**557-7240**	1	ROCKER ARM AS	456

C - CHANGE FROM PREVIOUS TYPE
M - METRIC PART
Y - SEPARATE ILLUSTRATION

308-2285 **VALVE MECHANISM GP (**contd.**)** **i09944512**

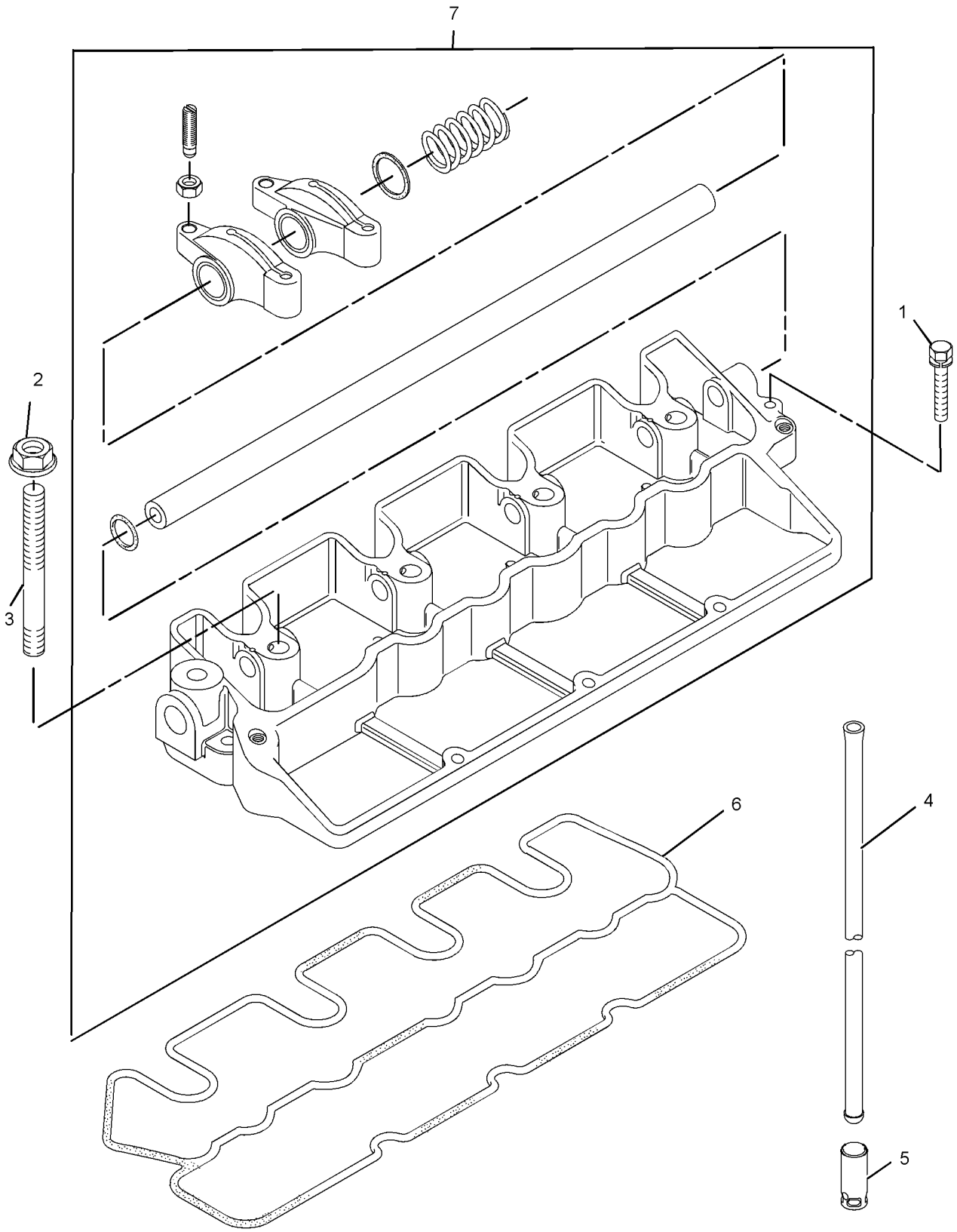

GRAPHIC #1 <END> g01409366

309-6716 VALVE MECHANISM GP

PART OF 435-1645 CYLINDER BLOCK GP-LONG, 433-1379 ENGINE AR, 435-1641, 435-1642, 435-1646, 435-1647, 435-1656, 461-7895, 492-6602, 516-9335, 549-8284 ENGINE AR-PRIMARY
TYPE 1

SMCS-1102, 1121, 1123, 1209 **i08509936**

NOTE	REF NO	GRAPHIC REF	PART NUMBER	QTY	PART NAME 1 2 3 4 5 6 (PRODUCT LEVEL)	SEE PAGE
	1	1	**153-5961**	2	BOLT AS	
M	2	1	**153-7988**	4	NUT (M10X1.25-THD)	
M	3	1	**154-1246**	4	STUD (M10X1.5X95-MM)	
	4	1	**528-6882**	8	PUSHROD AS	
	5	1	**438-9109**	8	TAPPET	
	6	1	**438-1393**	1	GASKET	
Y	7	1	**365-5278**	1	VALVE MECHANISM GP	479

M - METRIC PART
Y - SEPARATE ILLUSTRATION

309-6716 **VALVE MECHANISM GP (**contd.**)** **i08509936**

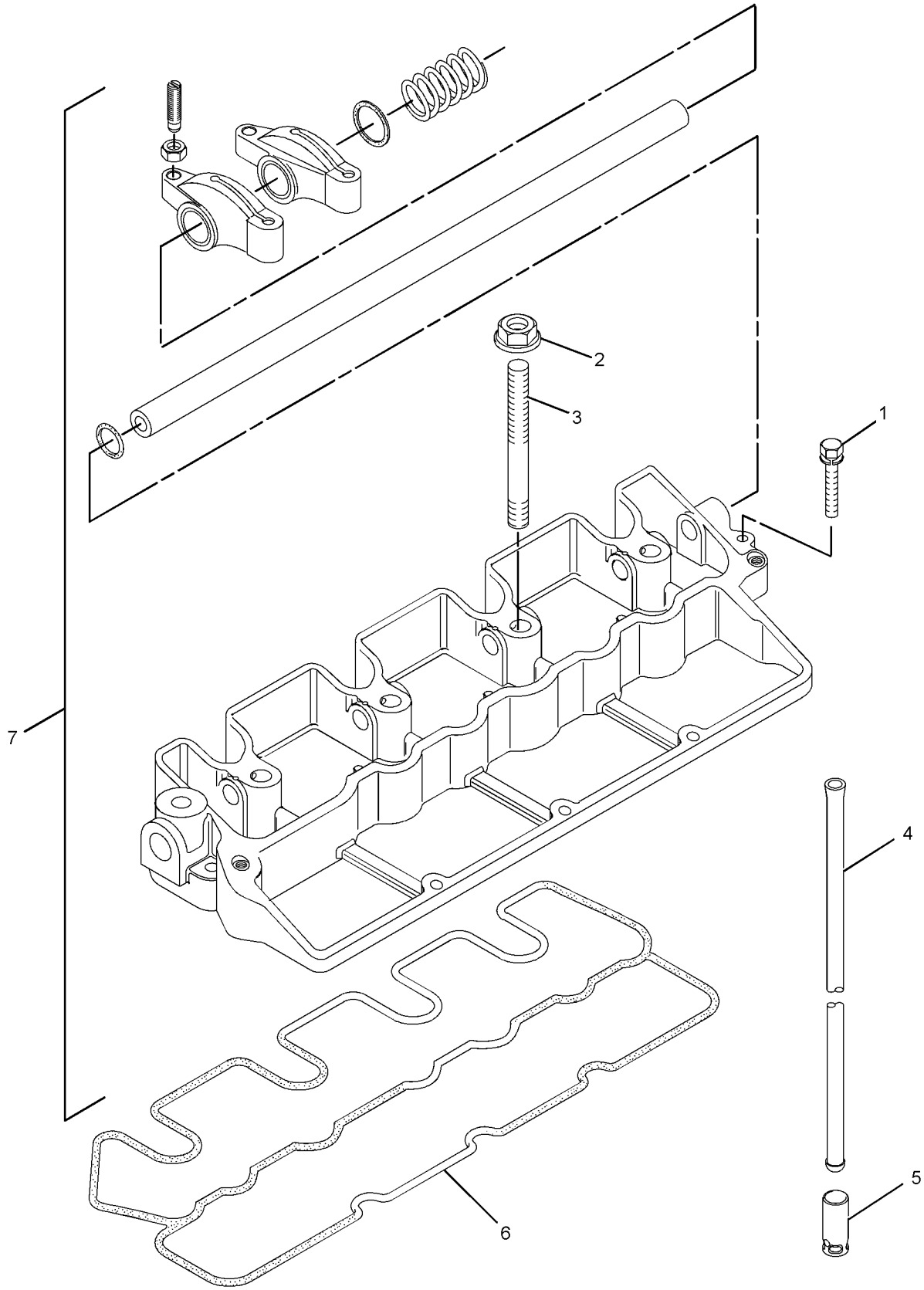

GRAPHIC #1 <END> g01419056

309-6716 VALVE MECHANISM GP

PART OF 435-1642, 435-1656, 461-7895, 492-6602, 516-9335, 549-8284 ENGINE AR-PRIMARY
TYPE 2

SMCS-1102, 1121, 1123, 1209

i09929572

NOTE	REF NO	GRAPHIC REF	PART NUMBER	QTY	PART NAME 1 2 3 4 5 6 (PRODUCT LEVEL)	SEE PAGE
	1	1	**153-5961**	2	BOLT AS	
M	2	1	**153-7988**	4	NUT (M10X1.25-THD)	
M	3	1	**154-1246**	4	STUD (M10X1.5X95-MM)	
	4	1	**528-6882**	8	PUSHROD AS	
	5	1	**438-9109**	8	TAPPET	
C	6	1	**438-1393**	1	GASKET	
CY	7	1	**557-7240**	1	ROCKER ARM AS	456

C - CHANGE FROM PREVIOUS TYPE
M - METRIC PART
Y - SEPARATE ILLUSTRATION

309-6716 **VALVE MECHANISM GP (**contd.**)** **i09929572**

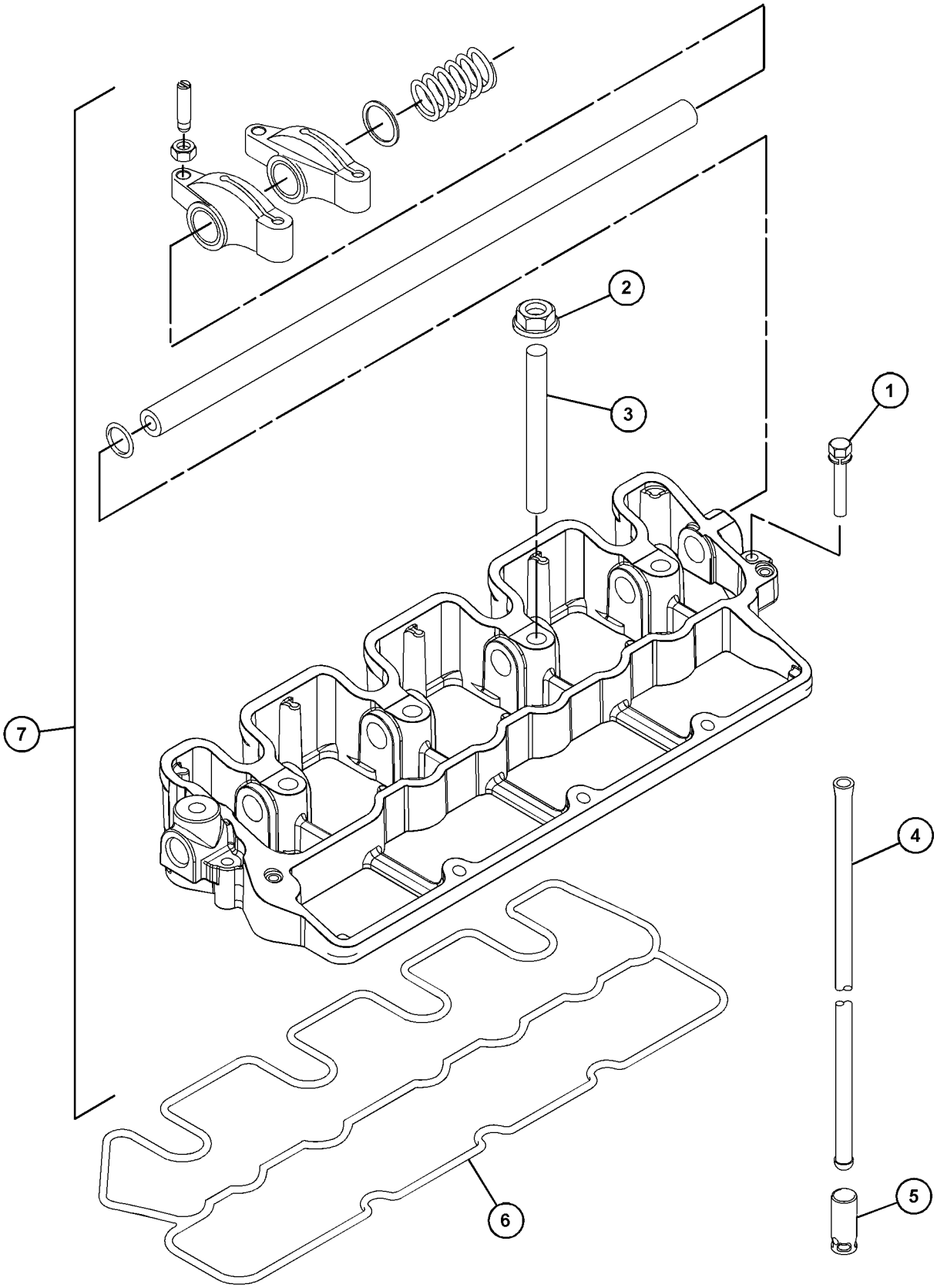

GRAPHIC #1 <END> g07671090

340-5785 VALVE MECHANISM GP

SMCS-1102, 1121, 1123, 1209 **i10694854**

NOTE	REF NO	GRAPHIC REF	PART NUMBER	QTY	PART NAME 1 2 3 4 5 6 (PRODUCT LEVEL)	SEE PAGE
	1	1	**153-5961**	2	BOLT AS	
M	2	1	**153-7988**	4	NUT (M10X1.25-THD)	
M	3	1	**154-1246**	4	STUD (M10X1.5X95-MM)	
	4	1	**528-6882**	8	PUSHROD AS	
	5	1	**438-9109**	8	TAPPET	
	6	1	**438-1393**	1	GASKET (VALVE BRACKET)	
Y	7	1	**557-7240**	1	ROCKER ARM AS	456

M - METRIC PART
Y - SEPARATE ILLUSTRATION

340-5785 **VALVE MECHANISM GP (**contd.**)** **i10694854**

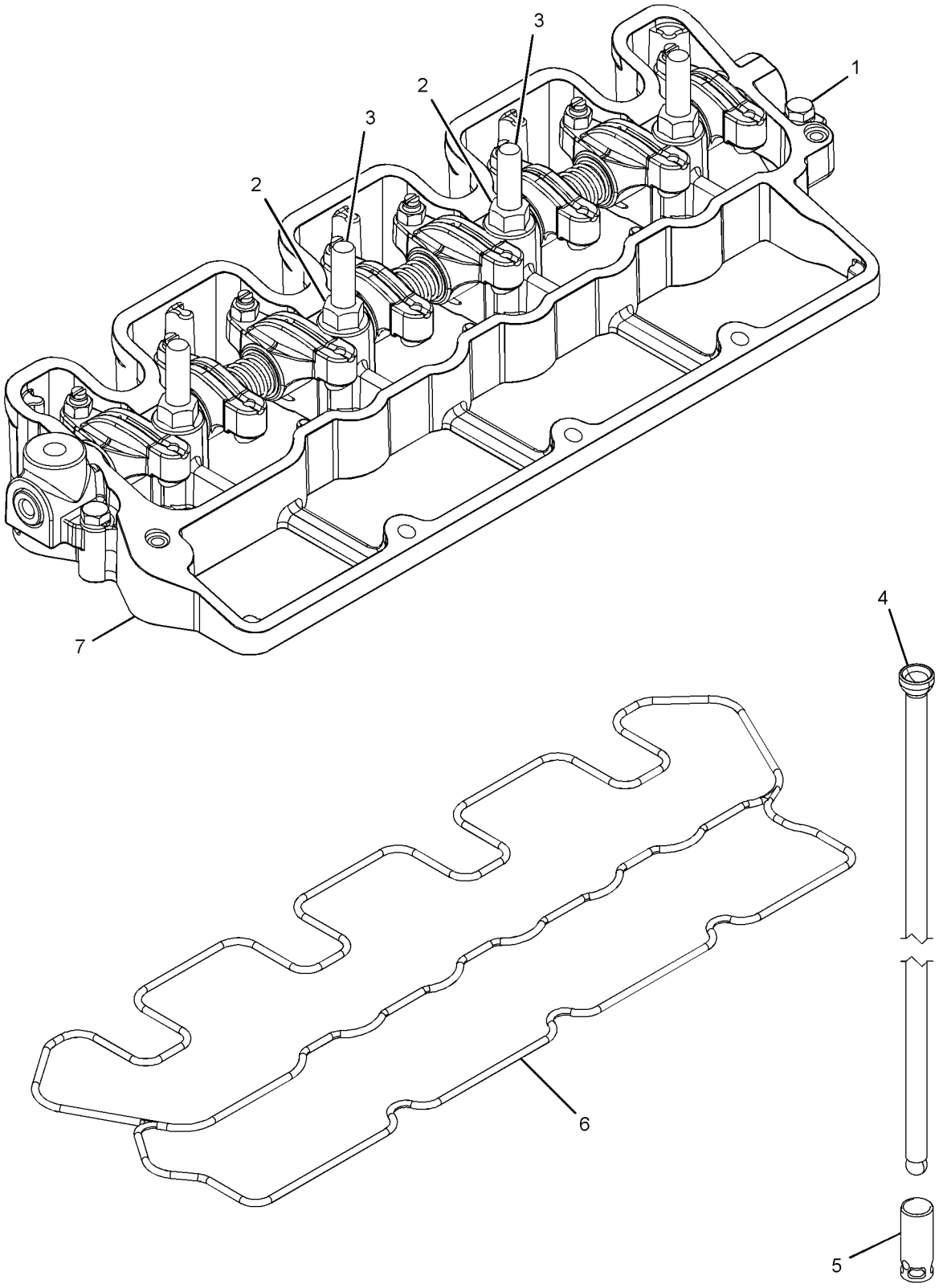

GRAPHIC #1 <END> g07939308

365-5278 VALVE MECHANISM GP

PART OF 308-2285, 309-6716 VALVE MECHANISM GP

SMCS-1102, 1121, 1123, 1209 **i07831148**

NOTE	REF NO	GRAPHIC REF	PART NUMBER	QTY	PART NAME 1 2 3 4 5 6 (PRODUCT LEVEL)	SEE PAGE
	1	1	**154-1243**	6	WASHER (15.2X21X0.5-MM THK)	
	2	1	**153-5587**	8	SCREW-ADJUSTMENT	
M	3	1	**153-5590**	8	NUT (M7X1-THD)	
	4	1	**153-6835**	1	SEAL-O-RING	
	5	1	**206-3499**	1	SHAFT-ROCKER ARM	
	7	1	**154-1240**	4	LEVER (RH)	
	8	1	**154-1241**	4	LEVER (LH)	
	9	1	**154-1242**	3	SPRING	

M - METRIC PART

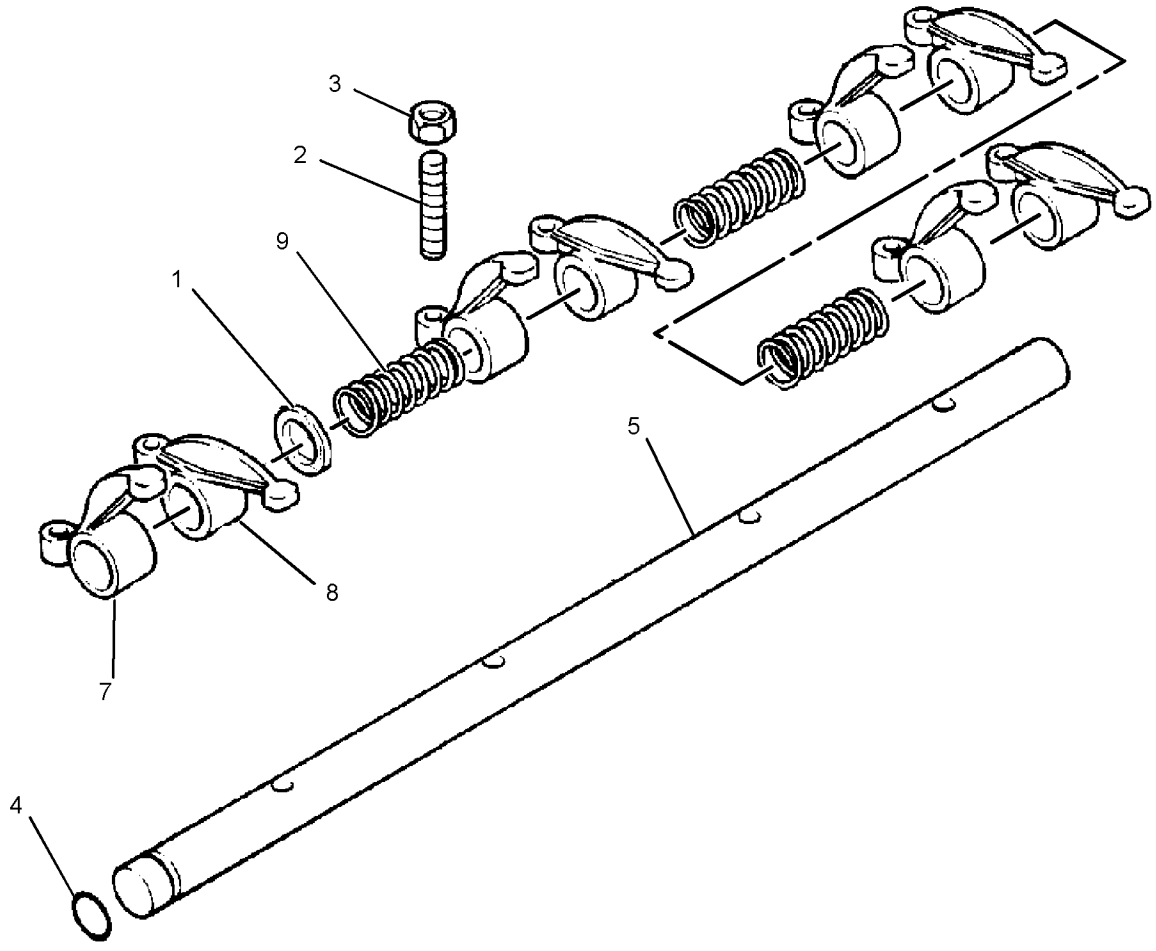

GRAPHIC #1 <END> g01395519

441-5692 COVER GP-OIL FILLER

SMCS-1316 **i10494433**

NOTE	REF NO	GRAPHIC REF	PART NUMBER	QTY	PART NAME 1 2 3 4 5 6 (PRODUCT LEVEL)	SEE PAGE
	1	1	**553-4376**	1	SEAL-O-RING	
	2	1	**612-7549**	1	CAP	

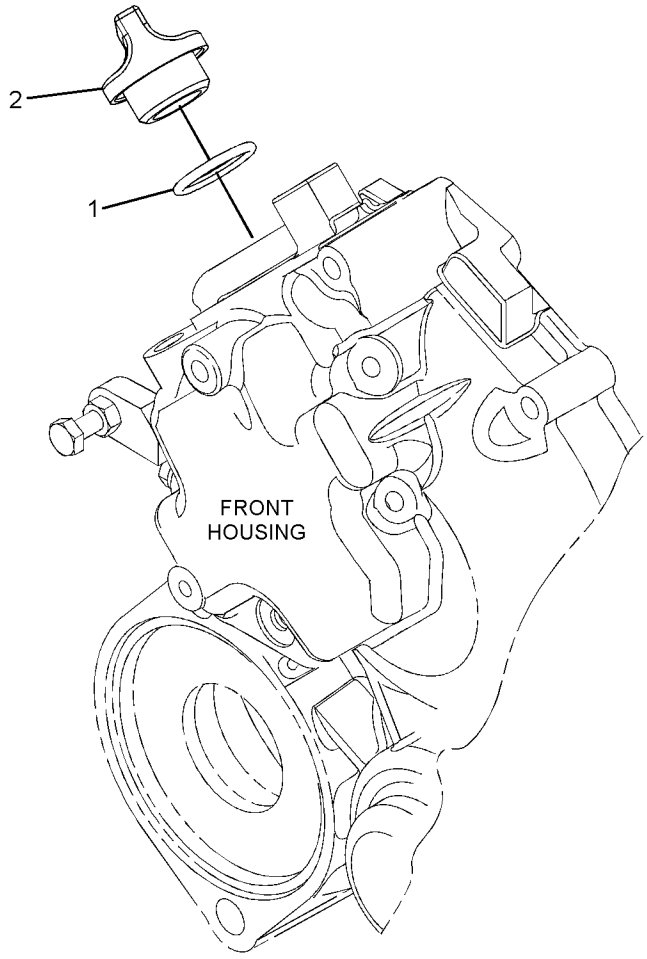

GRAPHIC #1 <END> g07915452

610-3545 FASTENER GP-ENGINE OIL LINES

S/N: G7L27601-UP

SMCS-7553 **i10521655**

NOTE	REF NO	GRAPHIC REF	PART NUMBER	QTY	PART NAME 1 2 3 4 5 6 (PRODUCT LEVEL)	SEE PAGE
	1	1	**153-5936**	4	WASHER (8.2X14.5X1-MM)	
M	2	1	**153-6881**	2	BOLT (M8X1.25X18-MM)	
	3	1	**458-6608**	1	PLUG-SEAL	

M - METRIC PART

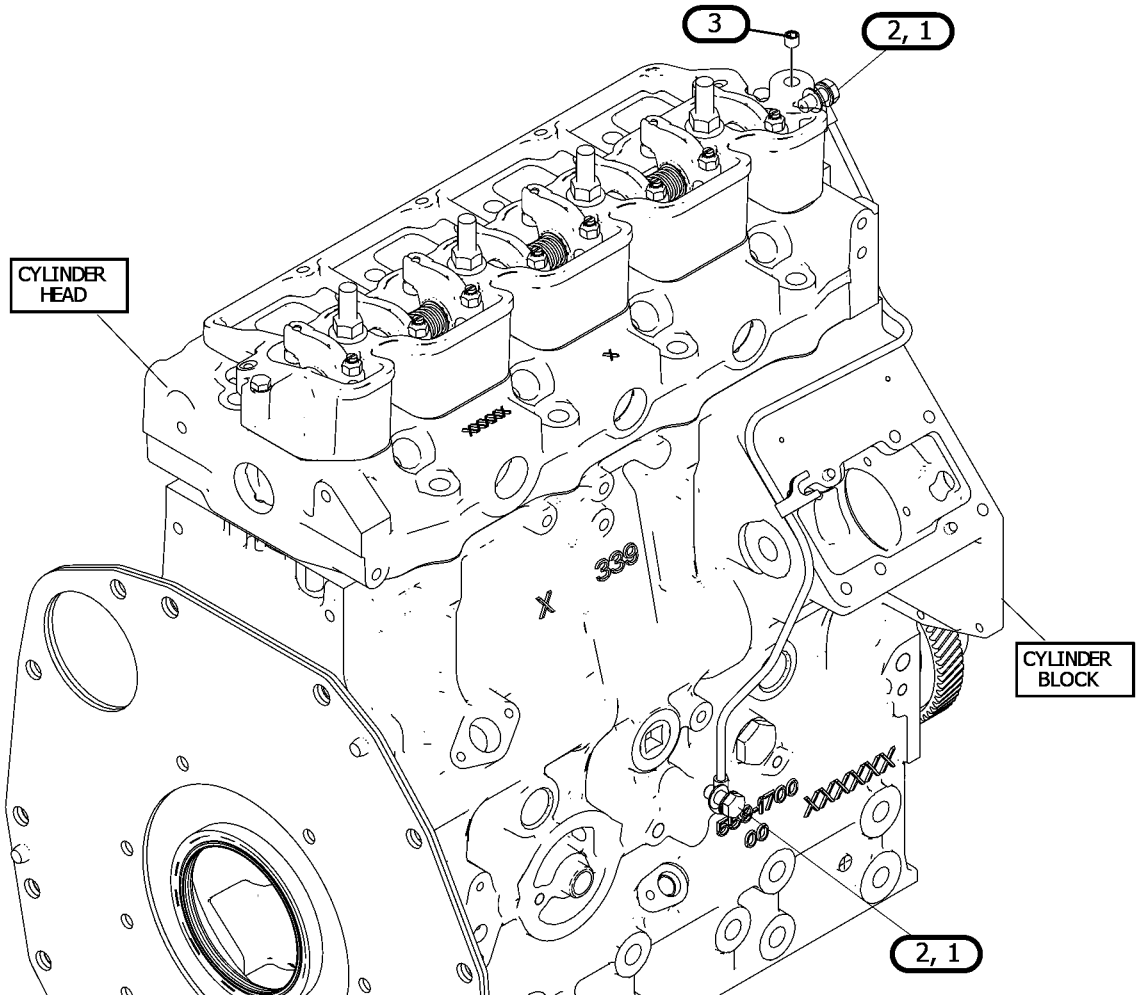

GRAPHIC #1 <END> g07710777

308-2297 FILLER GP-ENGINE OIL

PART OF 435-1645 CYLINDER BLOCK GP-LONG, 433-1379, 433-1380, 435-1637, 435-1638 ENGINE AR, 435-1636, 435-1641, 435-1642, 435-1646, 435-1647, 435-1656, 435-1658, 459-2953, 492-6602, 495-6243, 549-8284, 587-9328 ENGINE AR-PRIMARY

SMCS-1316 **i07748751**

NOTE	REF NO	GRAPHIC REF	PART NUMBER	QTY	PART NAME 1 2 3 4 5 6 (PRODUCT LEVEL)	SEE PAGE
	1	1	**553-4377**	1	SEAL-O-RING (ENGINE OIL FILL CAP)	
	2	1	**217-7358**	1	CAP-OIL FILLER (ENGINE)	
	3	1	**553-4376**	1	SEAL-O-RING (ENGINE OIL FILL CAP)	
	4	1	**334-0272**	1	PLUG-OIL FILLER (ENGINE OIL)	
	5	1	**481-1650**	1	GASKET	
	6	1	**183-4323**	1	COVER	
	7	1	**153-6838**	2	BOLT AS	

308-2297 **FILLER GP-ENGINE OIL (**contd.**)** **i07748751**

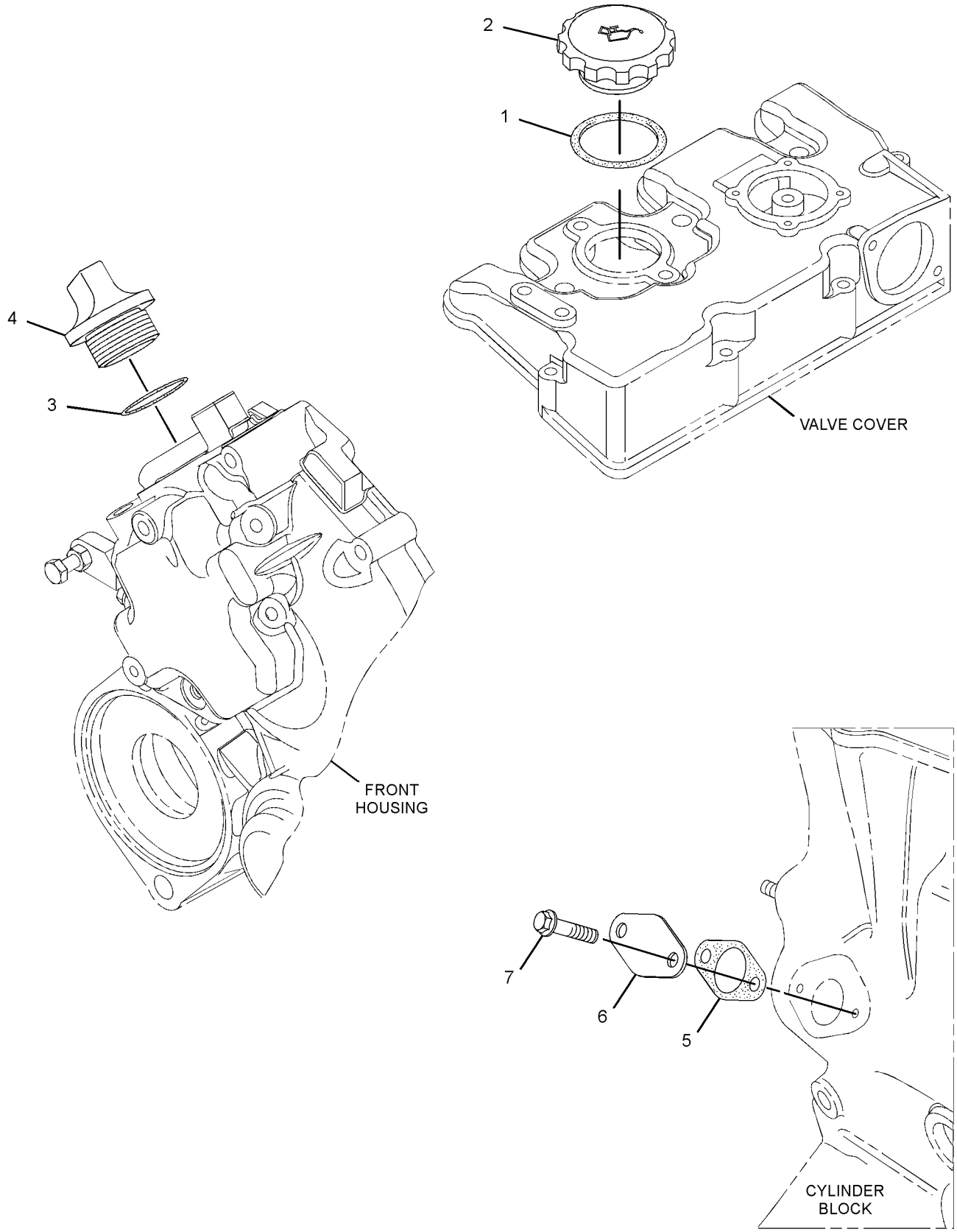

GRAPHIC #1 <END> g02712709

322-2421 FILLER GP-ENGINE OIL

SMCS-1316 **i07748005**

NOTE	REF NO	GRAPHIC REF	PART NUMBER	QTY	PART NAME 1 2 3 4 5 6 (PRODUCT LEVEL)	SEE PAGE
	1	1	**553-4377**	2	SEAL-O-RING (ENGINE OIL FILLER)	
	2	1	**153-7640**	2	BOLT AS	
	3	1	**209-1355**	1	FILLER-OIL	
	4	1	**9X-8256**	2	WASHER-HARD (6.6X12X2-MM THK)	
	5	1	**211-8559**	1	SEAL-O-RING	
	6	1	**217-7358**	2	CAP-OIL FILLER (ENGINE)	
	7	1	**553-4376**	1	SEAL-O-RING (ENGINE OIL FILLER)	
	8	1	**334-0272**	1	PLUG-OIL FILLER (ENGINE OIL)	

322-2421 **FILLER GP-ENGINE OIL (**contd.**)** **i07748005**

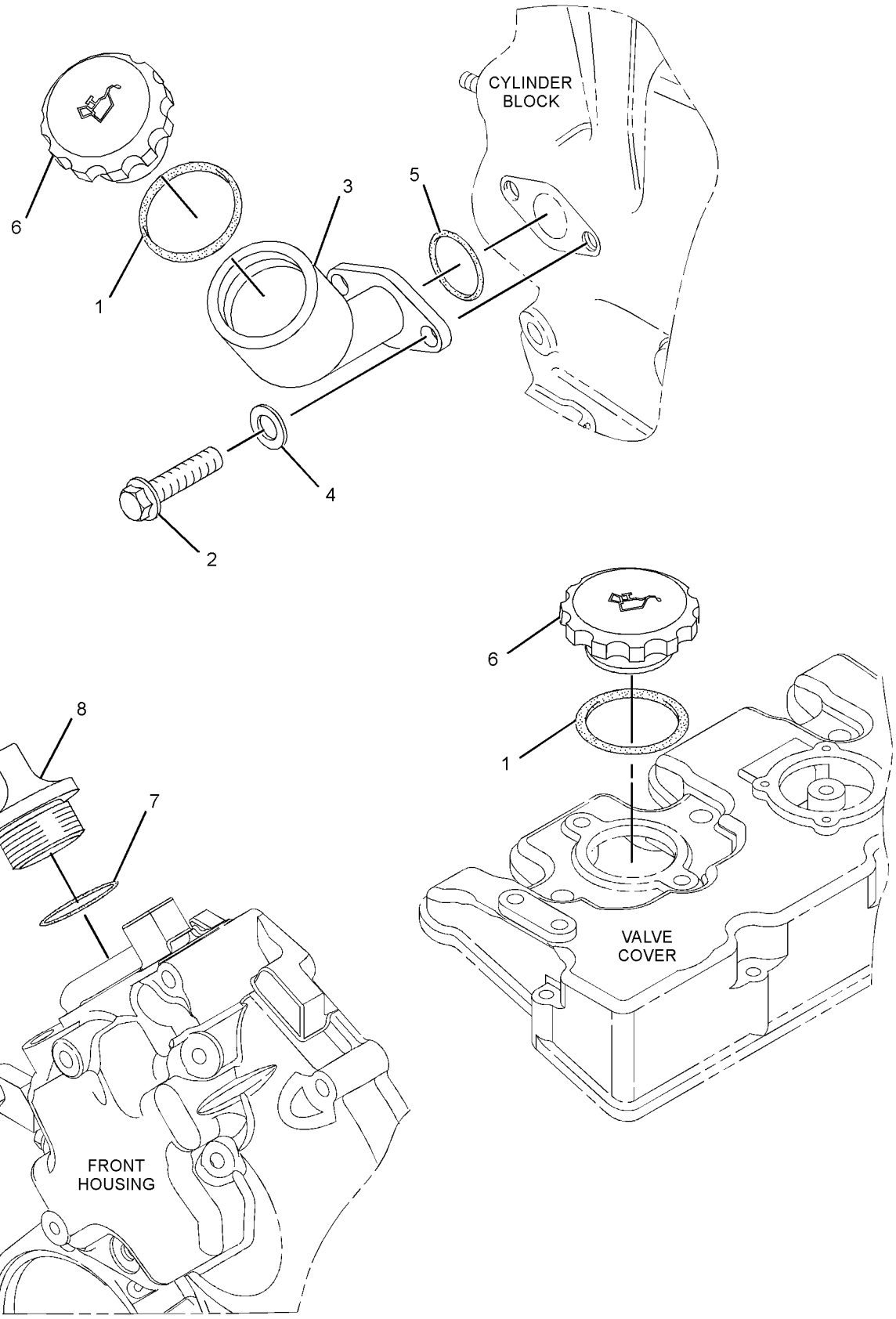

GRAPHIC #1 <END> g01660474

363-3165 FILLER GP-ENGINE OIL

PART OF 461-7892, 461-7894, 461-7895, 465-1477, 491-3396, 495-3121, 516-9335, 541-9277, 557-9727 ENGINE AR-PRIMARY

SMCS-1316 **i10516777**

NOTE	REF NO	GRAPHIC REF	PART NUMBER	QTY	PART NAME 1 2 3 4 5 6 (PRODUCT LEVEL)	SEE PAGE
	1	1	**553-4377**	1	SEAL-O-RING (ENGINE OIL FILL CAP)	
	2	1	**217-7358**	1	CAP-OIL FILLER (ENGINE)	
	3	1	**553-4376**	1	SEAL-O-RING (ENGINE OIL FILL CAP)	
	4	1	**612-7549**	1	CAP (ENGINE OIL)	

363-3165 **FILLER GP-ENGINE OIL (**contd.**)** **i10516777**

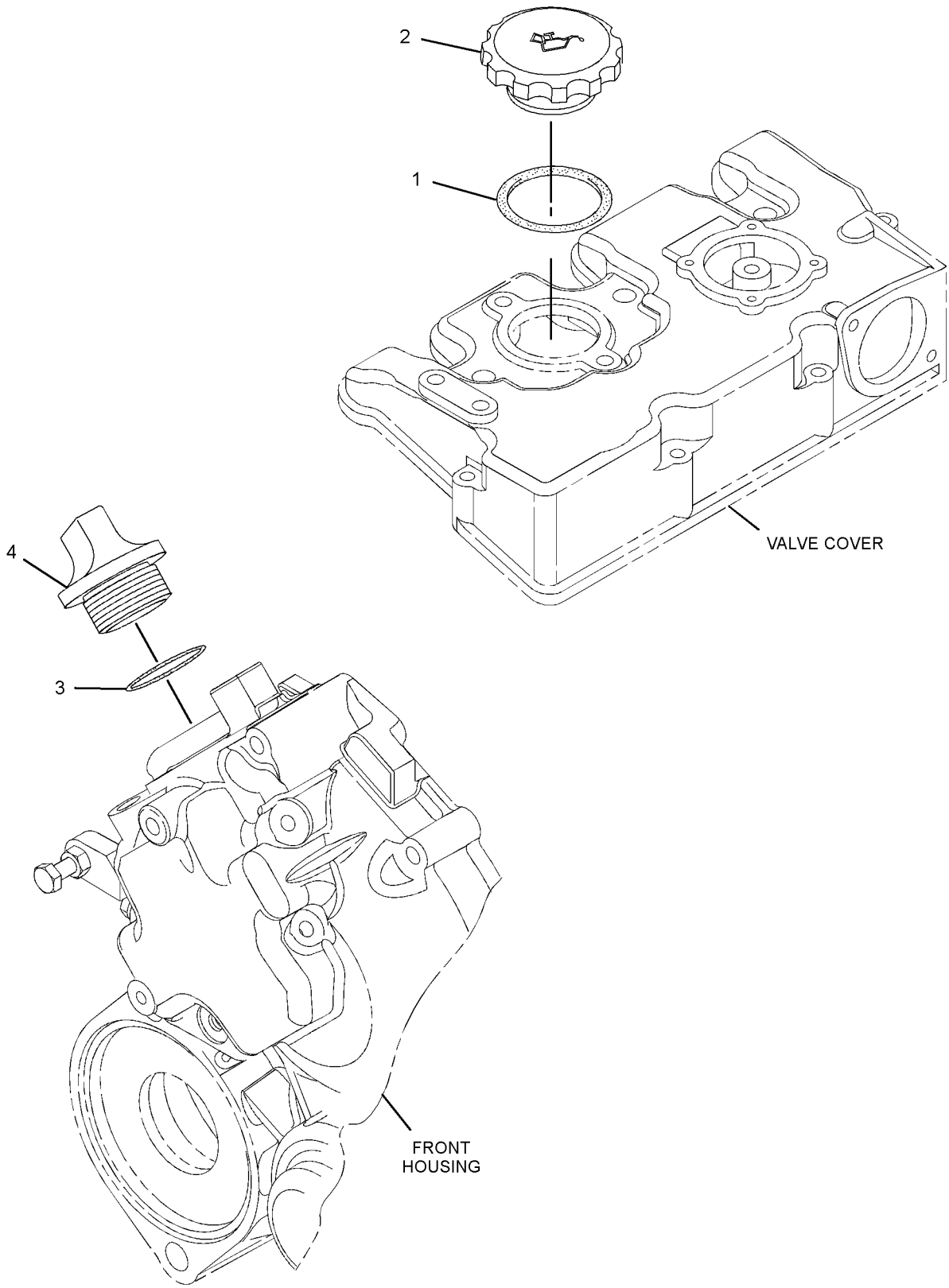

GRAPHIC #1 <END> g01412730

466-7112 FILLER GP-ENGINE OIL

PART OF 557-9727 ENGINE AR-PRIMARY

SMCS-1316 **i10565402**

NOTE	REF NO	GRAPHIC REF	PART NUMBER	QTY	PART NAME 1 2 3 4 5 6 (PRODUCT LEVEL)	SEE PAGE
	1	1	**205-7713**	1	FILLER-OIL	
	2	1	**553-4377**	1	SEAL-O-RING (FILLER)	

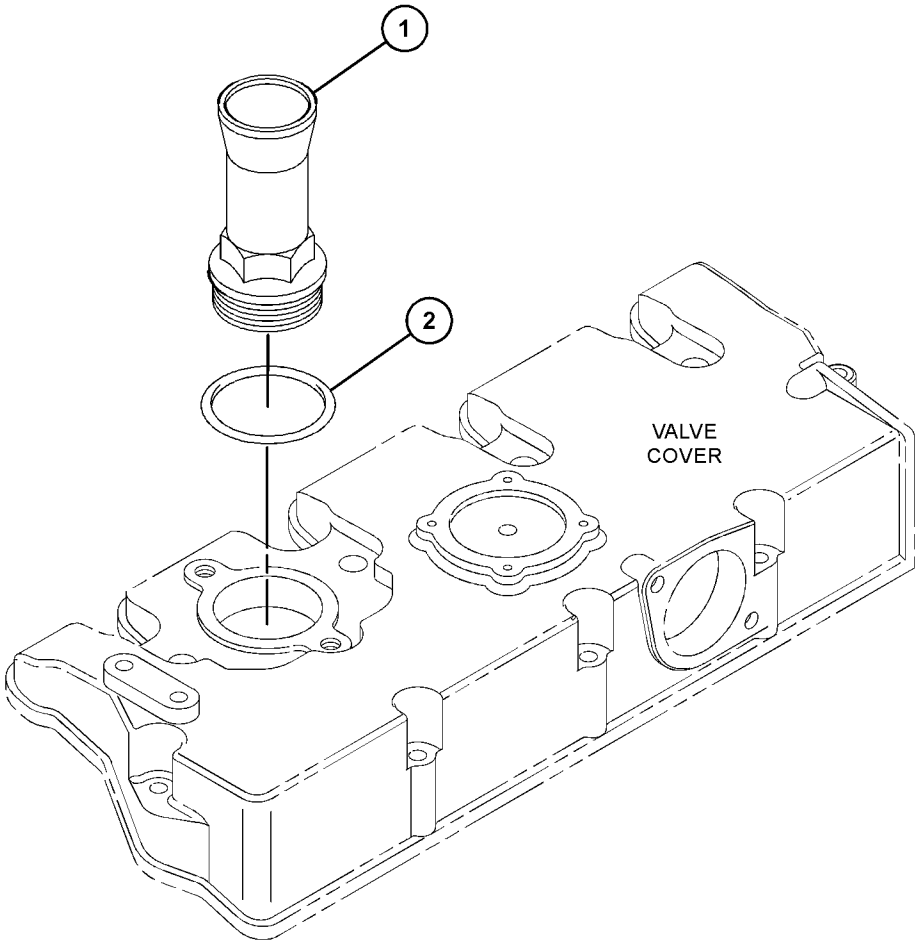

GRAPHIC #1 <END> g07958603

532-8293 FILLER GP-ENGINE OIL

PART OF 433-1379, 433-1380 ENGINE AR, 435-1636, 435-1641, 435-1646, 435-1647, 587-9328 ENGINE AR-PRIMARY

SMCS-1316 **i08697191**

NOTE	REF NO	GRAPHIC REF	PART NUMBER	QTY	PART NAME 1 2 3 4 5 6 (PRODUCT LEVEL)	SEE PAGE
	1	1	**553-4377**	1	SEAL-O-RING	
	2	1	**481-1650**	1	GASKET	
	3	1	**153-6838**	2	BOLT AS	
	4	1	**183-4323**	1	COVER	
	5	1	**217-7358**	1	CAP-OIL FILLER	

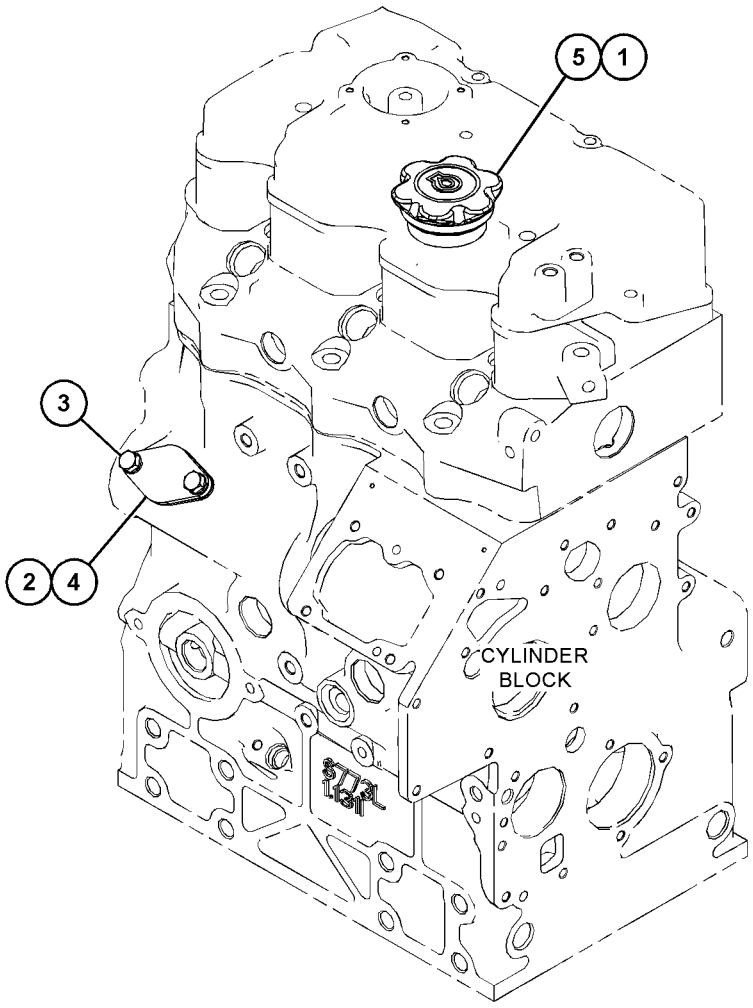

GRAPHIC #1 <END> g06314487

533-3936 FILLER GP-ENGINE OIL

PART OF 610-7720, 610-7721 ENGINE AR-PRIMARY

SMCS-1316 **i08796338**

NOTE	REF NO	GRAPHIC REF	PART NUMBER	QTY	PART NAME 1 2 3 4 5 6 (PRODUCT LEVEL)	SEE PAGE
	1	1	**553-4377**	1	SEAL-O-RING	
	2	1	**217-7358**	1	CAP-OIL FILLER	

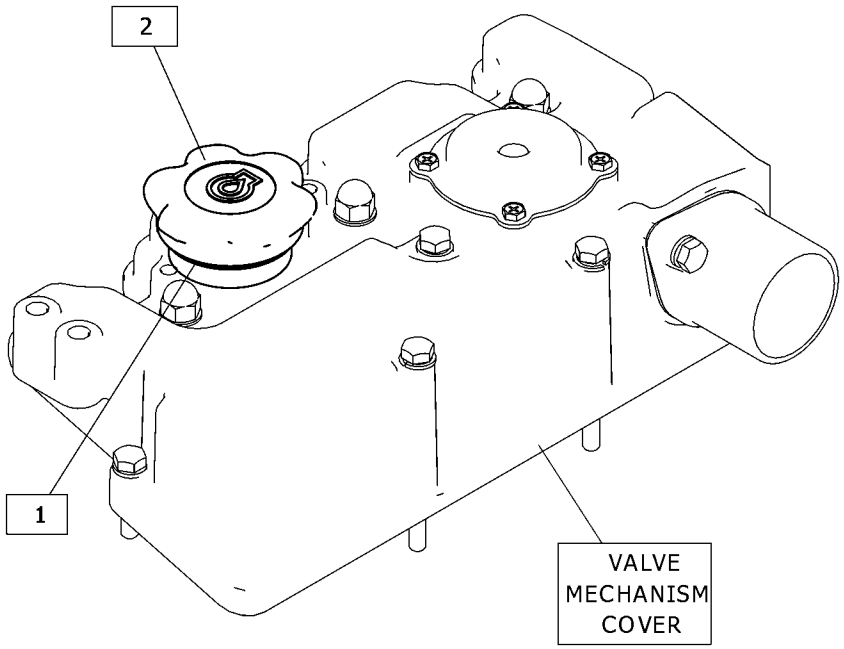

GRAPHIC #1 <END> g06386433

308-2298 FILTER GP-ENGINE OIL

PART OF 435-1645 CYLINDER BLOCK GP-LONG, 433-1379, 433-1380, 435-1637, 435-1638 ENGINE AR, 435-1636, 435-1641, 435-1642, 435-1646, 435-1647, 435-1656, 435-1658, 459-2953, 461-7892, 461-7894, 461-7895, 465-1477, 491-3396, 492-6602, 495-3121, 495-6243, 516-9335, 541-9277, 549-8284, 557-9727, 587-9328 ENGINE AR-PRIMARY

SMCS-1306, 1308 **i05815127**

NOTE	REF NO	GRAPHIC REF	PART NUMBER	QTY	PART NAME 1 2 3 4 5 6 (PRODUCT LEVEL)	SEE PAGE
	1	1	**220-1523**	1	FILTER AS-ENGINE OIL	

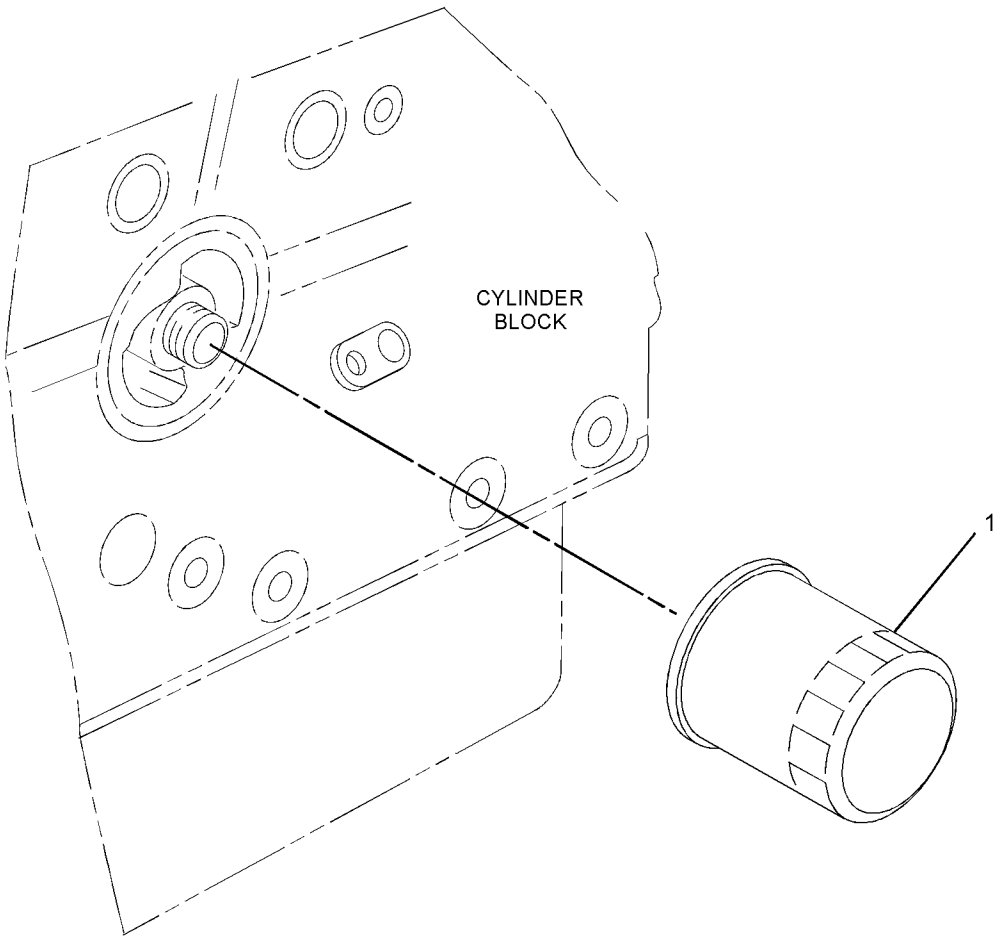

GRAPHIC #1 <END> g01389723

398-8178 FILTER GP-ENGINE OIL

PART OF 433-1379, 433-1380 ENGINE AR, 435-1636, 435-1641, 435-1646, 435-1647, 587-9328, 610-7720, 610-7721 ENGINE AR-PRIMARY

SMCS-1306, 1308

i05339369

NOTE	REF NO	GRAPHIC REF	PART NUMBER	QTY	PART NAME 1 2 3 4 5 6 (PRODUCT LEVEL)	SEE PAGE
	1	1	**220-1523**	1	FILTER AS-ENGINE OIL	

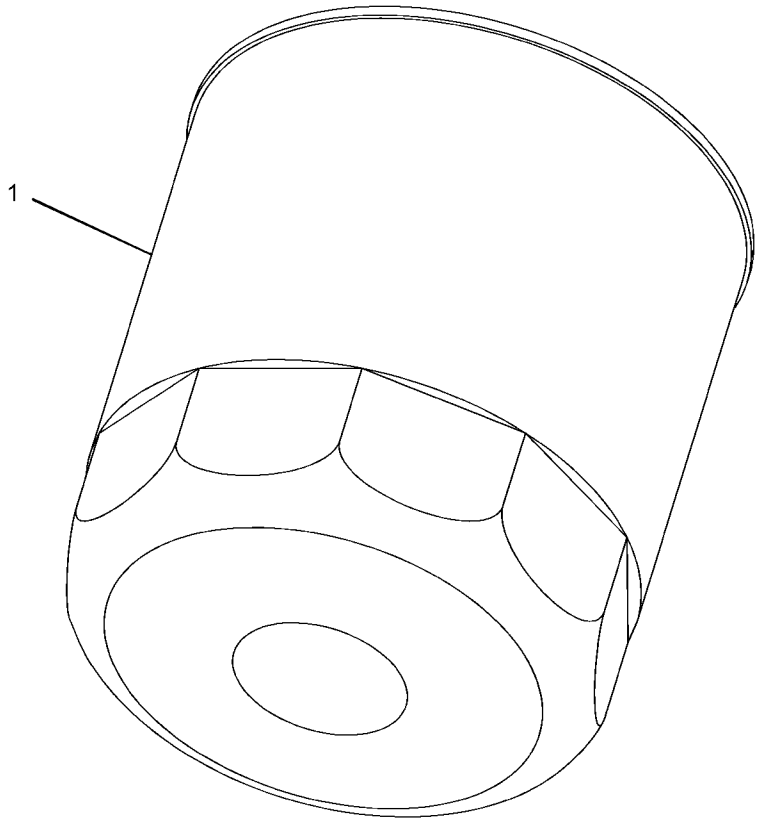

GRAPHIC #1 <END> g03396700

308-2287 LINES GP-ENGINE OIL

PUMP

PART OF 433-1380, 435-1637, 435-1638 ENGINE AR, 435-1636, 435-1658, 459-2953, 461-7892, 461-7894, 465-1477, 491-3396, 495-3121, 495-6243, 541-9277, 557-9727, 587-9328 ENGINE AR-PRIMARY

SMCS-1307 **i10537053**

NOTE	REF NO	GRAPHIC REF	PART NUMBER	QTY	PART NAME 1 2 3 4 5 6 (PRODUCT LEVEL)	SEE PAGE
	1	1	**153-5936**	2	WASHER (8.2X14.5X1-MM)	
	2	1	**153-6853**	1	SEAL-O-RING	
M	3	1	**153-6881**	1	BOLT (M8X1.25X18-MM)	
	4	1	**599-4589**	1	VALVE AS-RELIEF (ENGINE OIL PRESSURE)	
	5	1	**154-2353**	1	TUBE AS-OIL	

M - METRIC PART

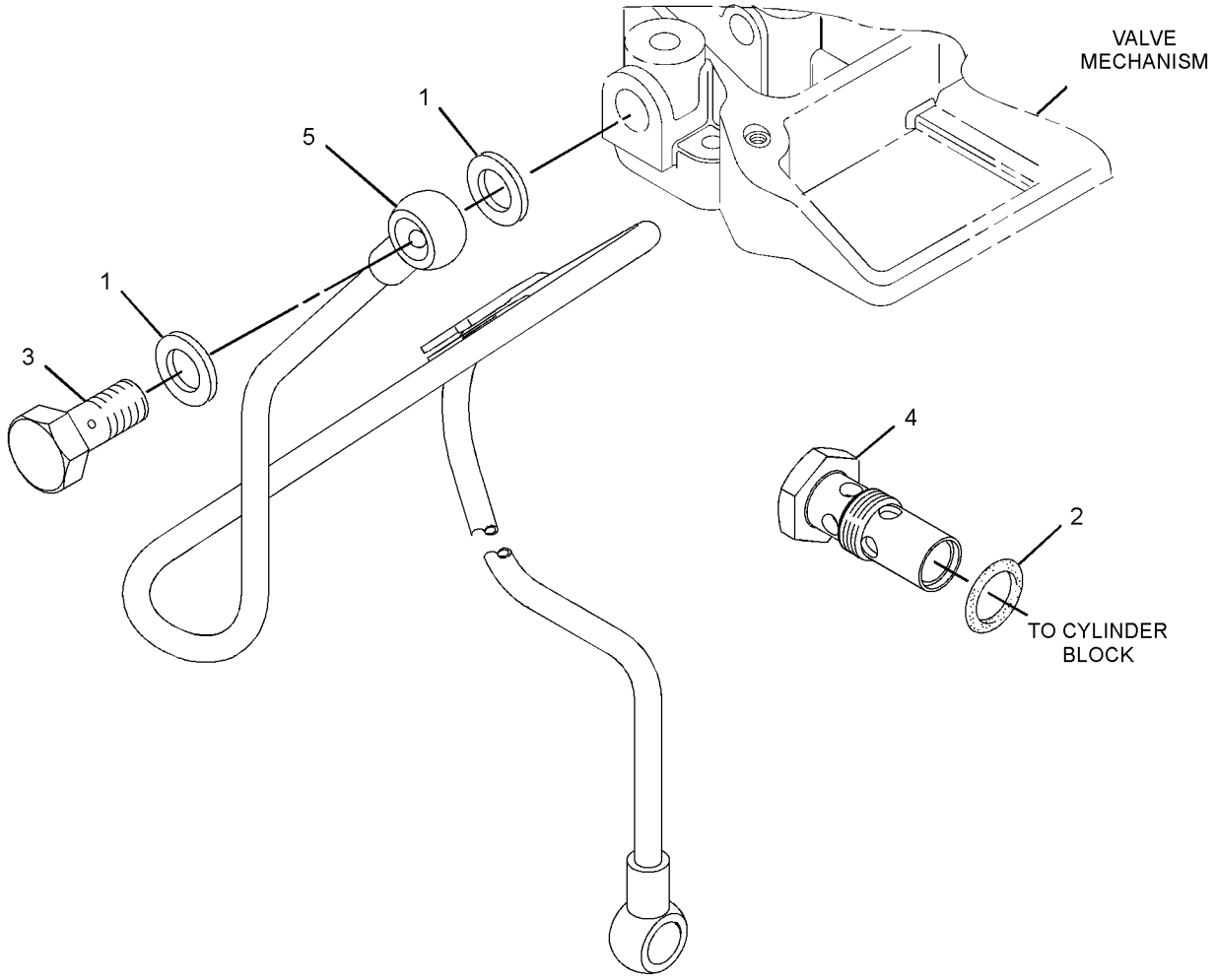

GRAPHIC #1 <END> g01996978

309-6717 LINES GP-ENGINE OIL

PART OF 435-1645 CYLINDER BLOCK GP-LONG, 433-1379 ENGINE AR, 435-1641, 435-1642, 435-1646, 435-1647, 435-1656, 461-7895, 492-6602, 516-9335, 549-8284 ENGINE AR-PRIMARY

SMCS-1307 **i10403012**

NOTE	REF NO	GRAPHIC REF	PART NUMBER	QTY	PART NAME 1 2 3 4 5 6 (PRODUCT LEVEL)	SEE PAGE
	1	1	**153-5936**	2	WASHER (8.2X14.5X1-MM)	
	2	1	**153-6853**	1	SEAL-O-RING	
M	3	1	**153-6881**	1	BOLT (M8X1.25X18-MM)	
	4	1	**599-4589**	1	VALVE AS-RELIEF (ENGINE OIL PRESSURE)	
	5	1	**154-2353**	1	TUBE AS-OIL	

M - METRIC PART

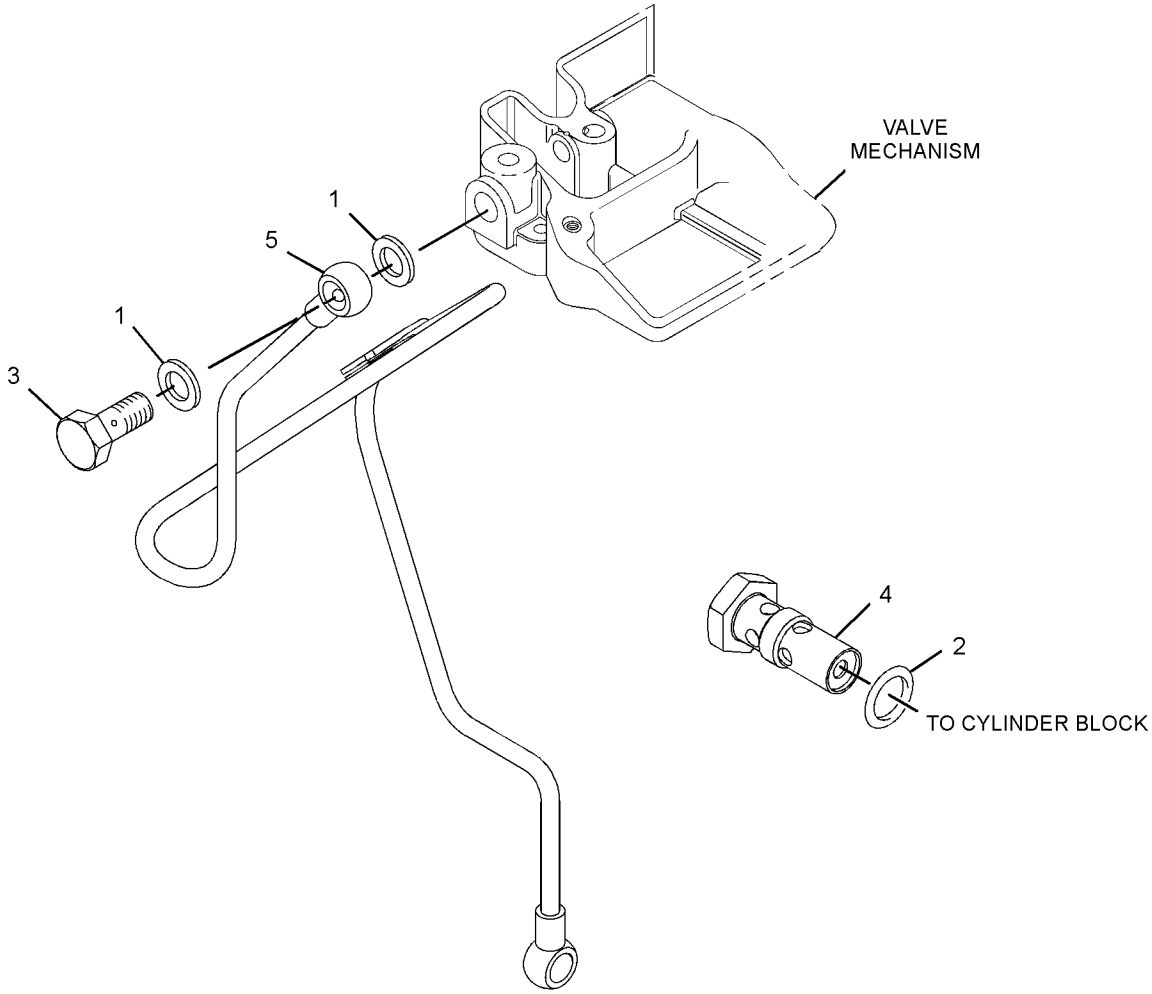

GRAPHIC #1 <END> g07892795

308-4735 MOUNTING GP-ENGINE OIL FILTER

PART OF 435-1645 CYLINDER BLOCK GP-LONG, 433-1379 ENGINE AR, 435-1641, 435-1642, 435-1646, 435-1647, 435-1656, 461-7895, 492-6602, 549-8284 ENGINE AR-PRIMARY

SMCS-1306, 1308

i02786451

NOTE	REF NO	GRAPHIC REF	PART NUMBER	QTY	PART NAME 1 2 3 4 5 6 (PRODUCT LEVEL)	SEE PAGE
	1	1	**153-6879**	1	STUD-HOLLOW	

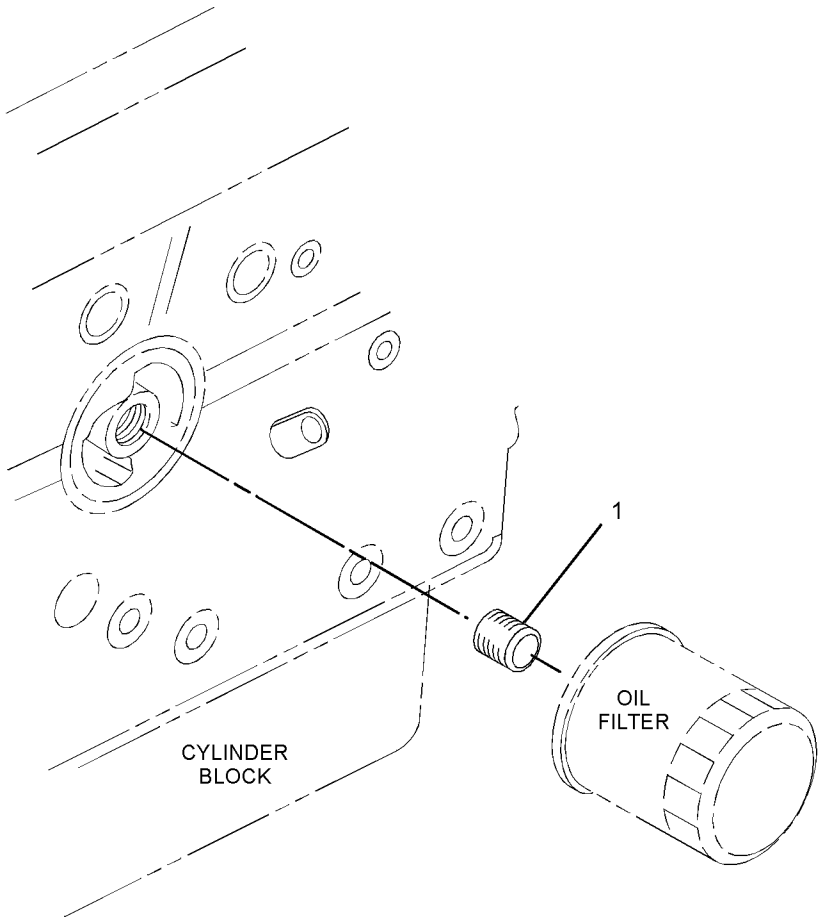

GRAPHIC #1 <END> g01355707

340-5786 VALVE GP-PRESSURE CONTROL

SMCS-5117 **i03769387**

NOTE	REF NO	GRAPHIC REF	PART NUMBER	QTY	PART NAME 1 2 3 4 5 6 (PRODUCT LEVEL)	SEE PAGE
	1	1	**153-5936**	2	WASHER (8.2X14.5X1-MM)	
	2	1	**153-6853**	1	SEAL-O-RING	
M	3	1	**153-6881**	1	BOLT (M8X1.25X18-MM)	
	4	1	**154-1942**	1	VALVE-RELIEF (ENGINE OIL PRESSURE)	
	5	1	**154-2353**	1	TUBE AS-OIL	

M - METRIC PART

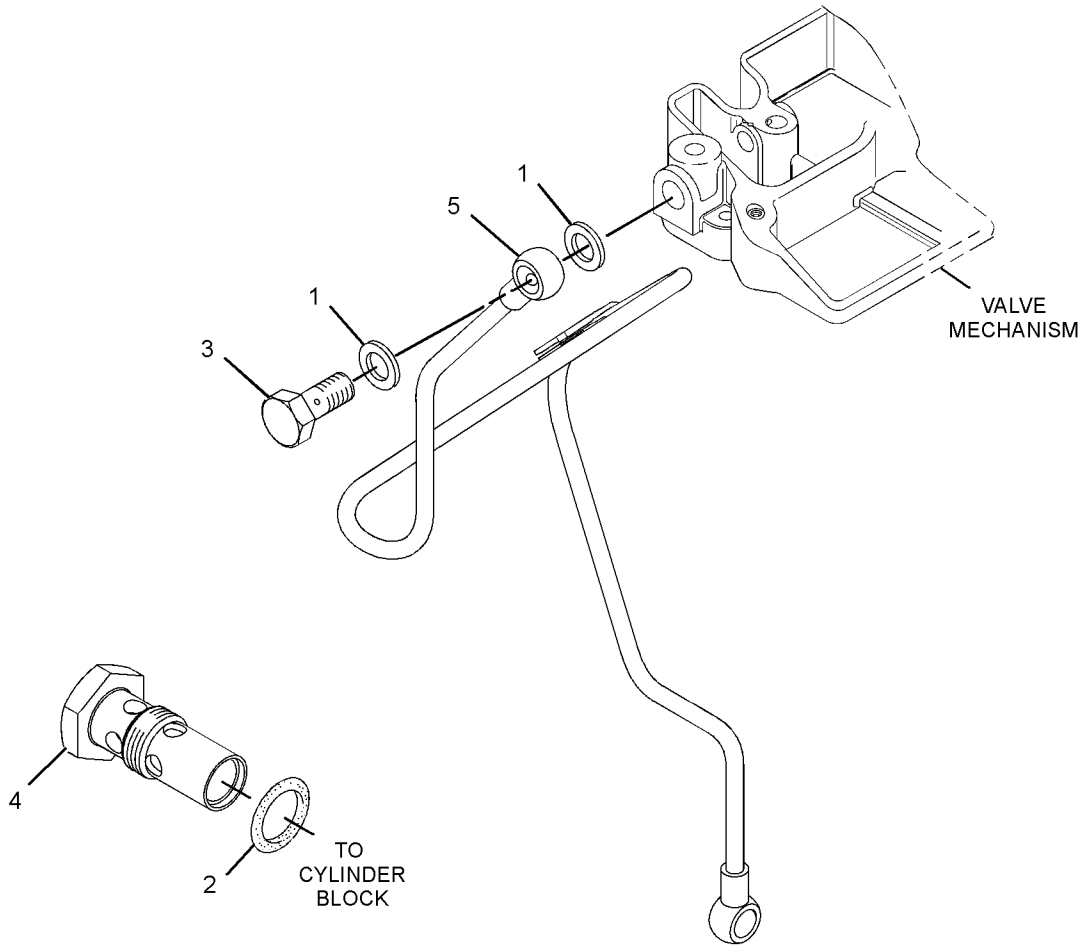

GRAPHIC #1 <END> g02044113

308-2302 CONNECTION GP-WATER

PART OF 435-1645 CYLINDER BLOCK GP-LONG, 433-1379, 433-1380, 435-1637, 435-1638 ENGINE AR, 435-1636, 435-1641, 435-1642, 435-1646, 435-1647, 435-1656, 435-1658, 459-2953, 461-7892, 461-7894, 461-7895, 465-1477, 491-3396, 492-6602, 495-3121, 495-6243, 516-9335, 541-9277, 549-8284, 557-9727, 587-9328 ENGINE AR-PRIMARY

SMCS-1380 **i10516306**

NOTE	REF NO	GRAPHIC REF	PART NUMBER	QTY	PART NAME 1 2 3 4 5 6 (PRODUCT LEVEL)	SEE PAGE
	1	1	**439-0945**	1	GASKET (WATER TEMPERATURE REGULATOR)	
	2	1	**168-9001**	2	BOLT AS	
	3	1	**560-8843**	1	COVER-THERMOSTAT	

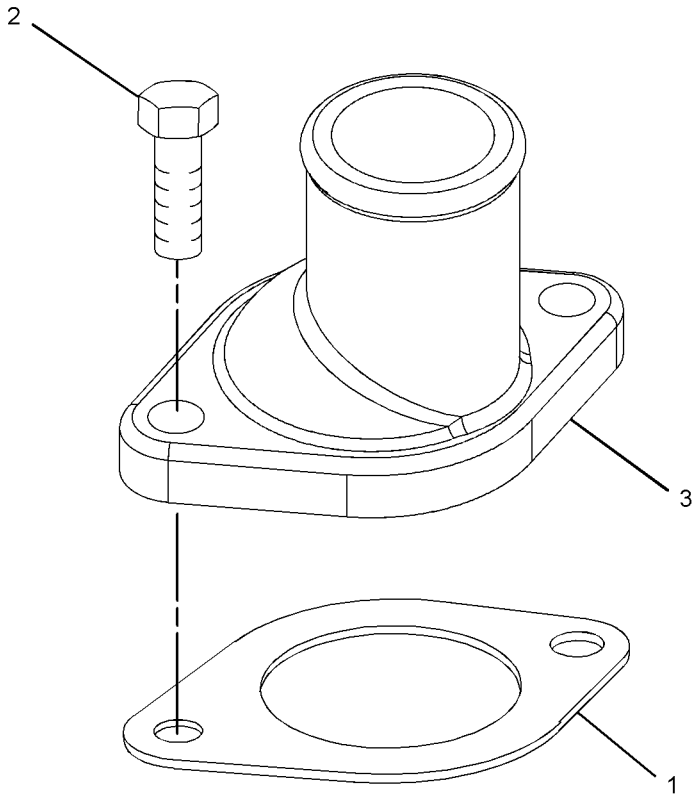

GRAPHIC #1 <END> g06669102

317-7191 CONNECTION GP-WATER

SMCS-1380 **i05425301**

NOTE	REF NO	GRAPHIC REF	PART NUMBER	QTY	PART NAME 1 2 3 4 5 6 (PRODUCT LEVEL)	SEE PAGE
	1	1	**439-0945**	1	GASKET (WATER TEMPERATURE REGULATOR)	
	2	1	**168-9001**	2	BOLT AS	
	3	1	**246-9218**	1	COVER-HOUSING	

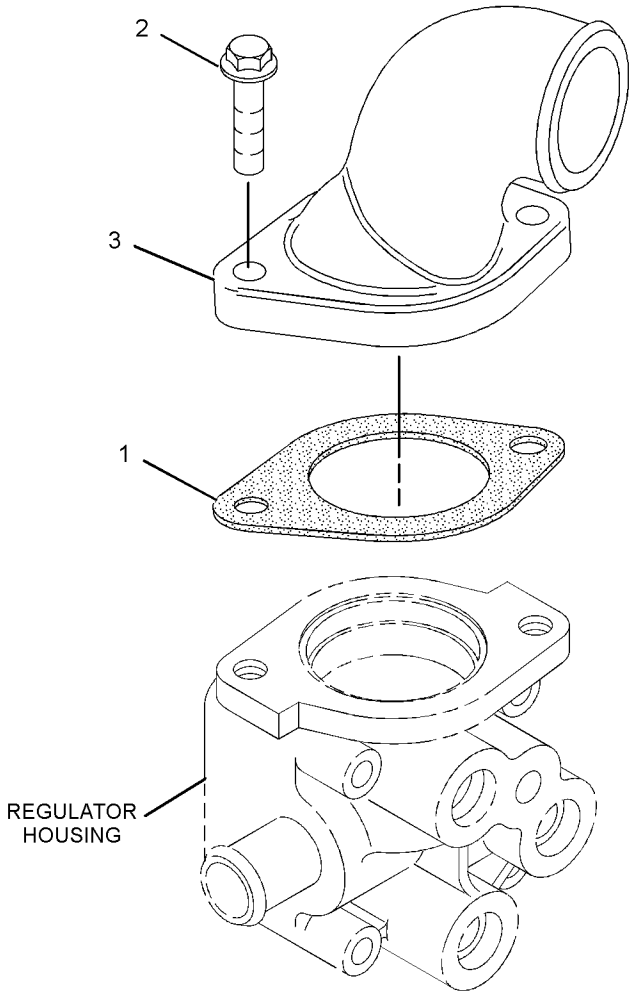

GRAPHIC #1 <END> g01635136

398-3408 CONNECTION GP-WATER

SMCS-1380 **i10431654**

NOTE	REF NO	GRAPHIC REF	PART NUMBER	QTY	PART NAME 1 2 3 4 5 6 (PRODUCT LEVEL)	SEE PAGE
	1	1	**168-9001**	2	BOLT AS	
	2	1	**439-0945**	1	GASKET	
	3	1	**246-9218**	1	COVER-HOUSING	

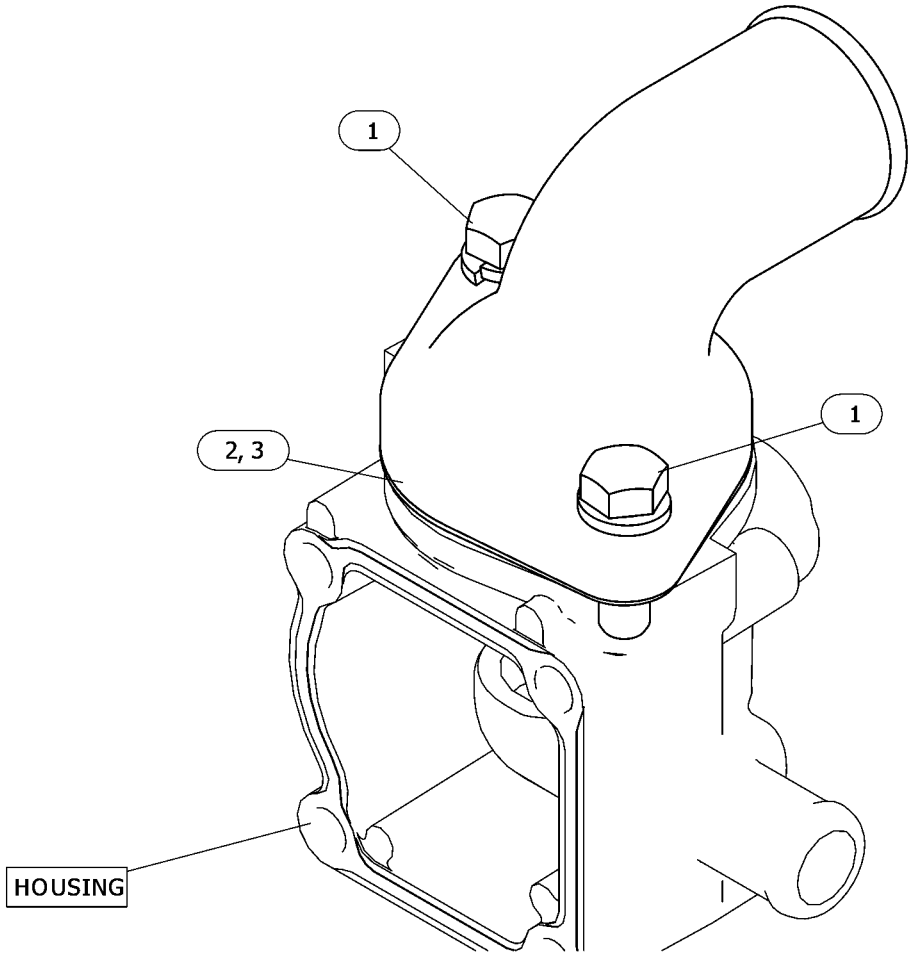

GRAPHIC #1 <END> g06643123

398-5884 CONNECTION GP-WATER

PART OF 433-1379, 433-1380 ENGINE AR, 435-1636, 435-1641, 435-1646, 435-1647, 587-9328, 610-7720, 610-7721 ENGINE AR-PRIMARY

SMCS-1380 **i10112711**

NOTE	REF NO	GRAPHIC REF	PART NUMBER	QTY	PART NAME 1 2 3 4 5 6 (PRODUCT LEVEL)	SEE PAGE
	1	1	**168-9001**	2	BOLT AS	
	2	1	**439-0945**	1	GASKET	
	3	1	**560-8843**	1	COVER-THERMOSTAT	

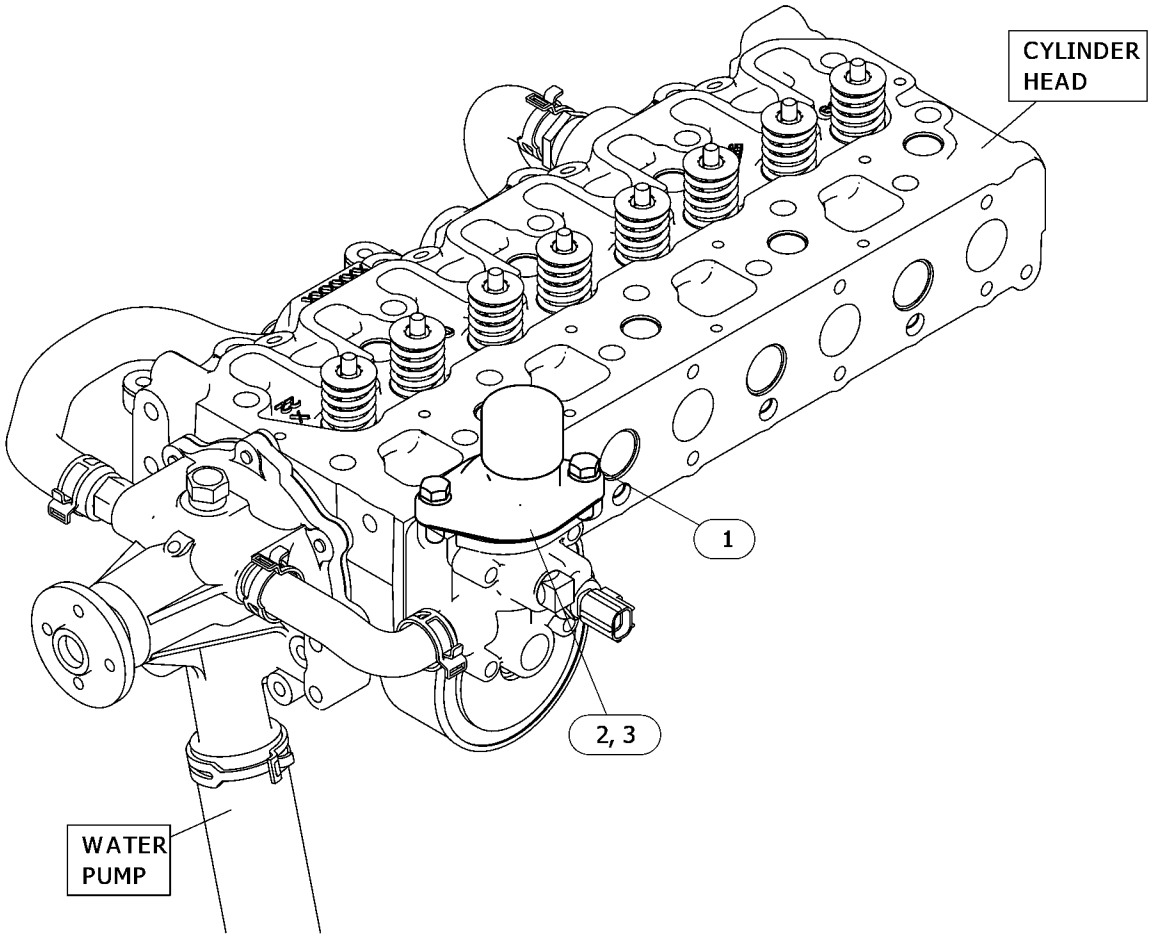

GRAPHIC #1 <END> g06604203

317-7194 CONNECTOR GP-CAB HEATER LINES

SMCS-1380 **i07287905**

NOTE	REF NO	GRAPHIC REF	PART NUMBER	QTY	PART NAME 1 2 3 4 5 6 (PRODUCT LEVEL)	SEE PAGE
	1	1	**238-9137**	1	CONNECTOR	
	2	1	**472-2214**	1	CONNECTOR	

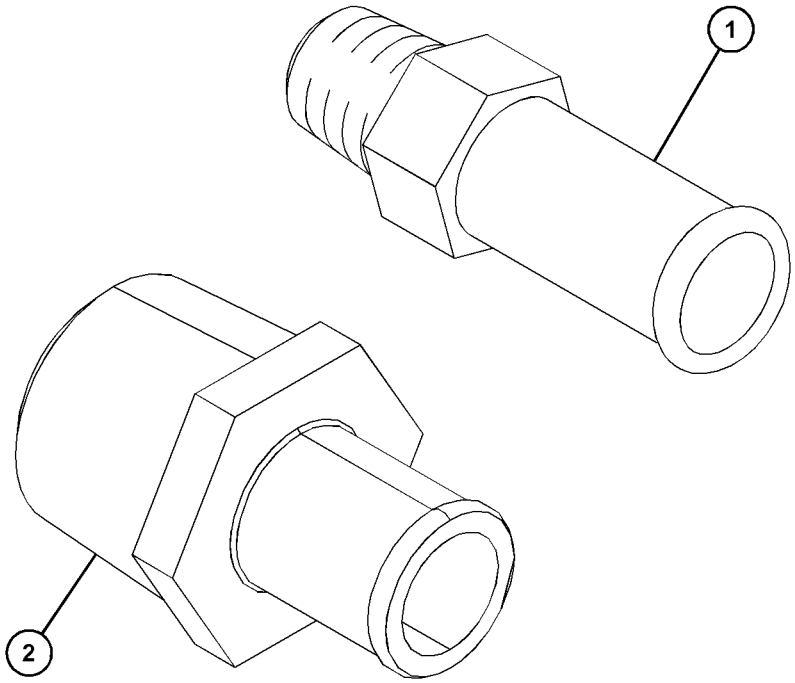

GRAPHIC #1 <END> g06298889

322-2427 CONNECTOR GP-CAB HEATER LINES

SMCS-1380 **i07244134**

NOTE	REF NO	GRAPHIC REF	PART NUMBER	QTY	PART NAME 1 2 3 4 5 6 (PRODUCT LEVEL)	SEE PAGE
	1	1	**472-2214**	1	CONNECTOR	

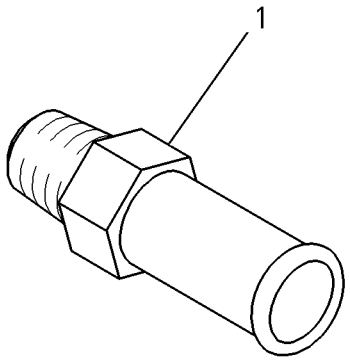

GRAPHIC #1 <END> g00785852

542-8640 CONNECTOR GP-CAB HEATER LINES

SMCS-1380 **i10681529**

NOTE	REF NO	GRAPHIC REF	PART NUMBER	QTY	PART NAME 1 2 3 4 5 6 (PRODUCT LEVEL)	SEE PAGE
	1	1	**238-9137**	2	CONNECTOR	

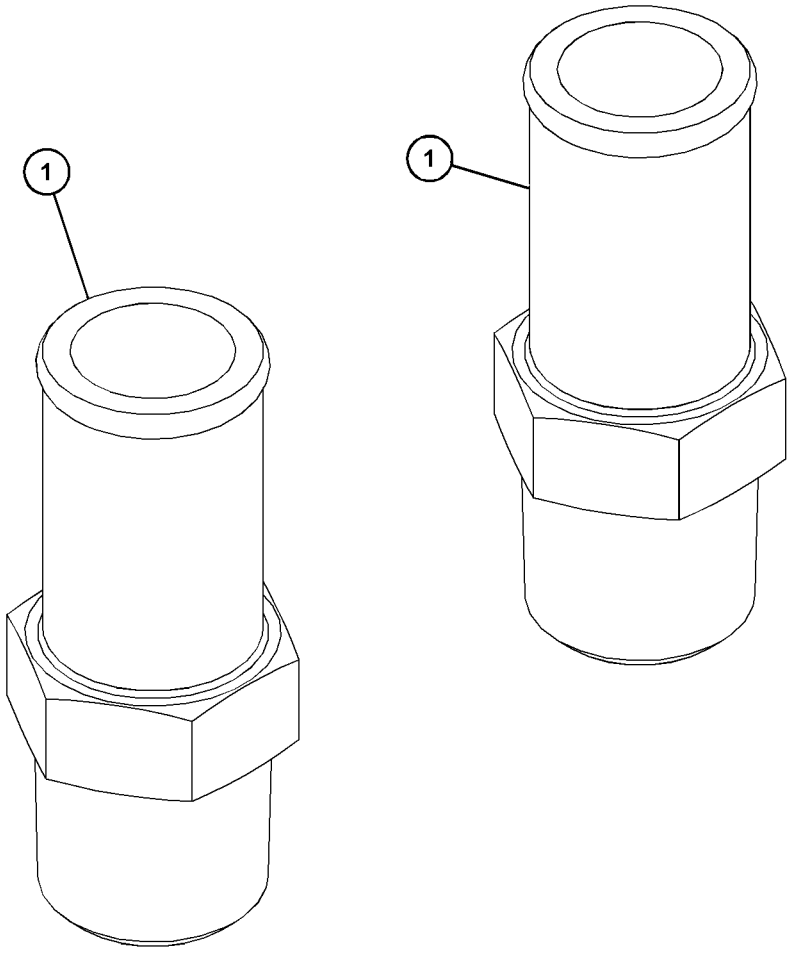

GRAPHIC #1 <END> g07958271

437-2624 FAN GP

PART OF 610-7721 ENGINE AR-PRIMARY

SMCS-1356 **i07153230**

NOTE	REF NO	GRAPHIC REF	PART NUMBER	QTY	PART NAME 1 2 3 4 5 6 (PRODUCT LEVEL)	SEE PAGE
	1	1	**255-1297**	1	PLATE	
M	2	1	**273-9253**	4	BOLT (M6X1X35-MM)	

M - METRIC PART

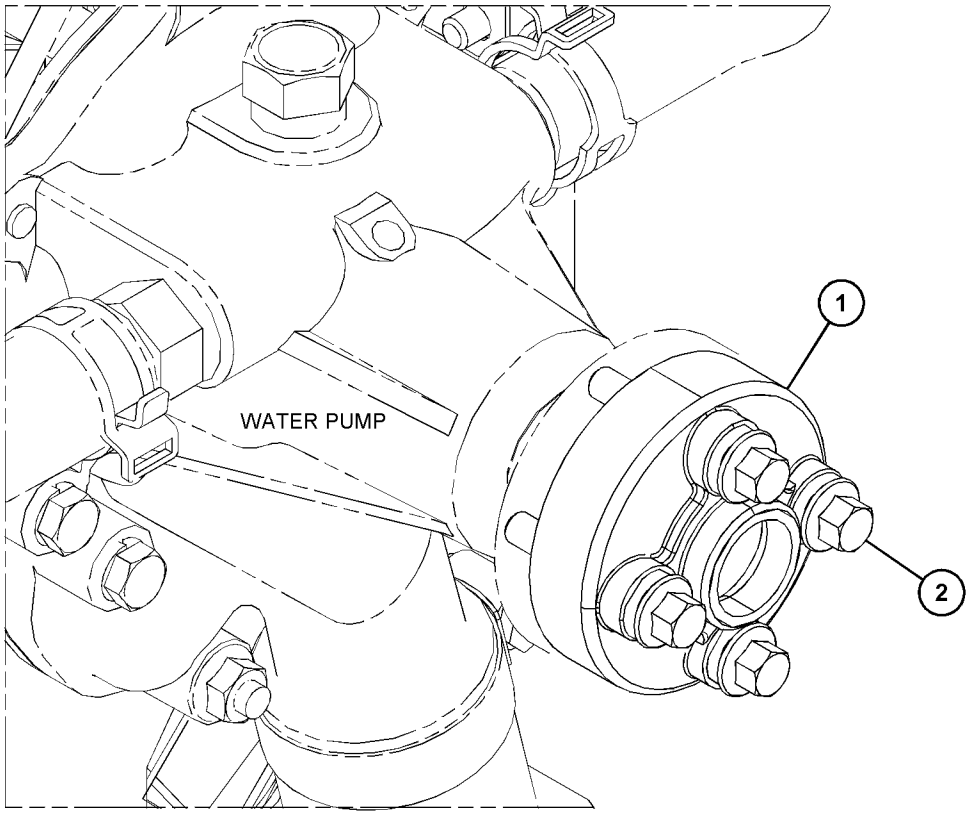

GRAPHIC #1 <END> g06243263

319-1623 FAN GP-BLOWER

SMCS-1356, 1360 **i02980189**

NOTE	REF NO	GRAPHIC REF	PART NUMBER	QTY	PART NAME 1 2 3 4 5 6 (PRODUCT LEVEL)	SEE PAGE
	1	1	**183-3552**	1	FAN-BLOWER (6-BLADE)	

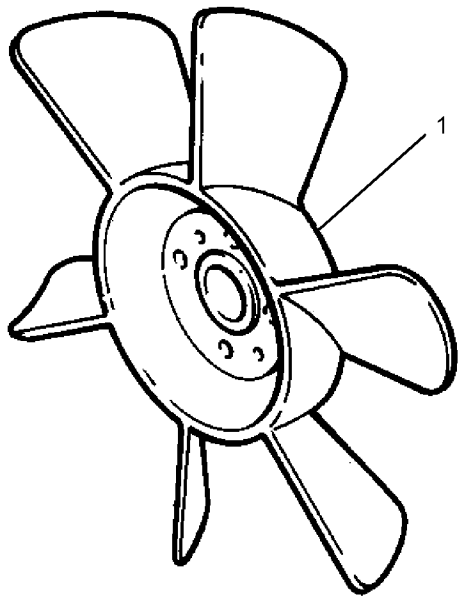

GRAPHIC #1 <END> g01640094

308-2303 FAN GP-SUCTION

PART OF 492-6602, 549-8284 ENGINE AR-PRIMARY

SMCS-1356 **i06721895**

NOTE	REF NO	GRAPHIC REF	PART NUMBER	QTY	PART NAME 1 2 3 4 5 6 (PRODUCT LEVEL)	SEE PAGE
M	1	1	**6I-0217**	4	BOLT (M8X1.25X20-MM)	
	2	1	**183-3551**	1	FAN-SUCTION	

M - METRIC PART

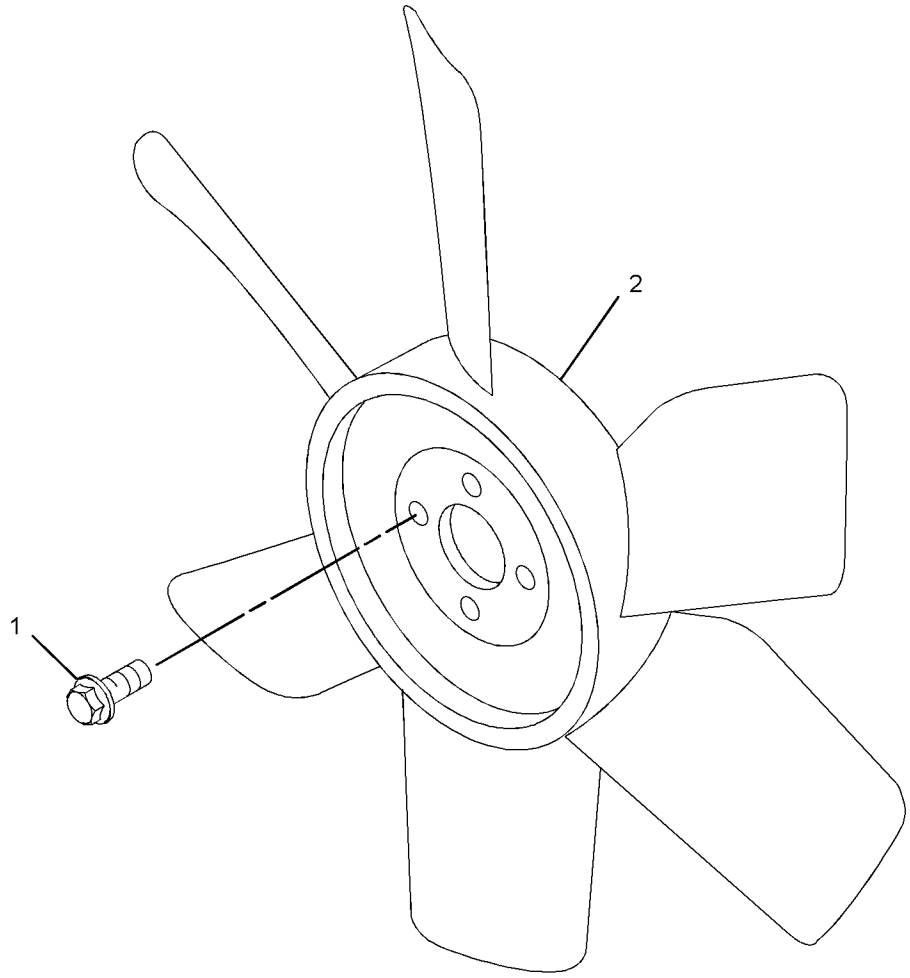

GRAPHIC #1 <END> g06196802

437-2599 FAN GP-SUCTION

S/N: G7L27601-UP

EXTENSION

SMCS-1356 **i06240036**

NOTE	REF NO	GRAPHIC REF	PART NUMBER	QTY	PART NAME 1 2 3 4 5 6 (PRODUCT LEVEL)	SEE PAGE
M	1	1	**6I-0217**	4	BOLT (M8X1.25X20-MM)	
	2	1	**183-3551**	1	FAN-SUCTION	

M - METRIC PART

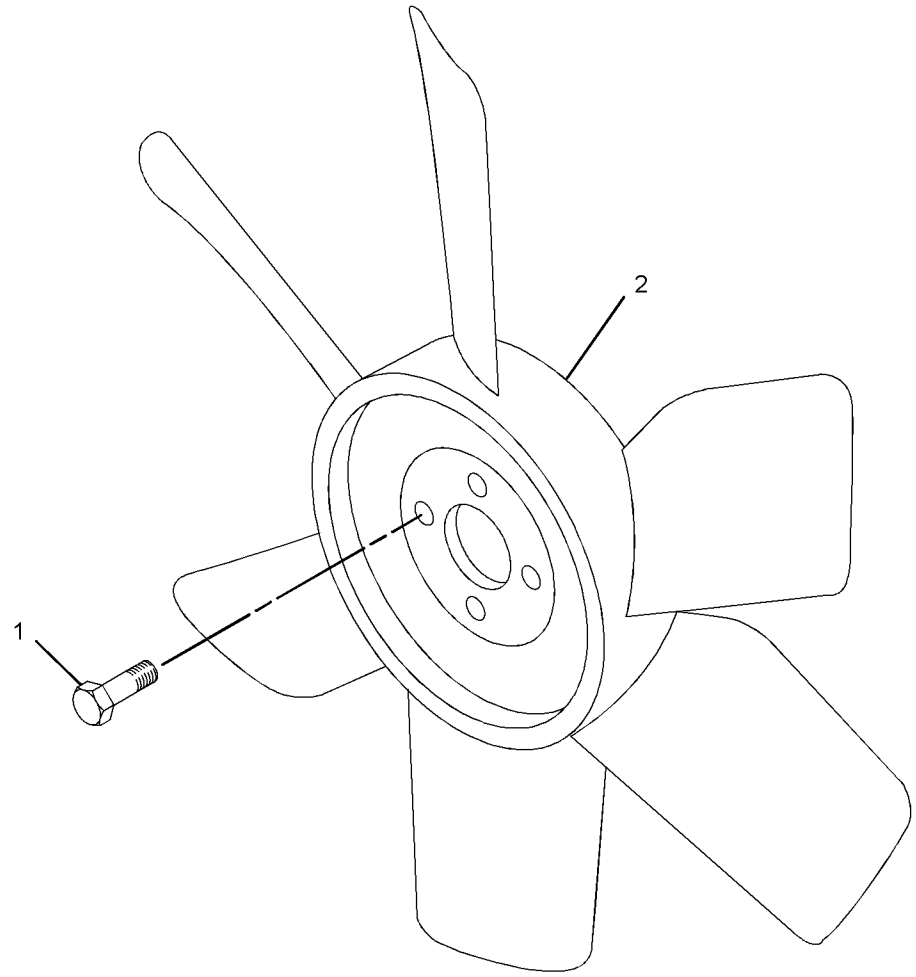

GRAPHIC #1 <END> g01415664

499-5184 FAN GP-SUCTION

PART OF 557-9727 ENGINE AR-PRIMARY

SMCS-1356 **i07568840**

NOTE	REF NO	GRAPHIC REF	PART NUMBER	QTY	PART NAME 1 2 3 4 5 6 (PRODUCT LEVEL)	SEE PAGE
M	1	1	**6I-0217**	4	BOLT (M8X1.25X20-MM)	
	2	1	**183-3551**	1	FAN-SUCTION (6-BLADE)	

M - METRIC PART

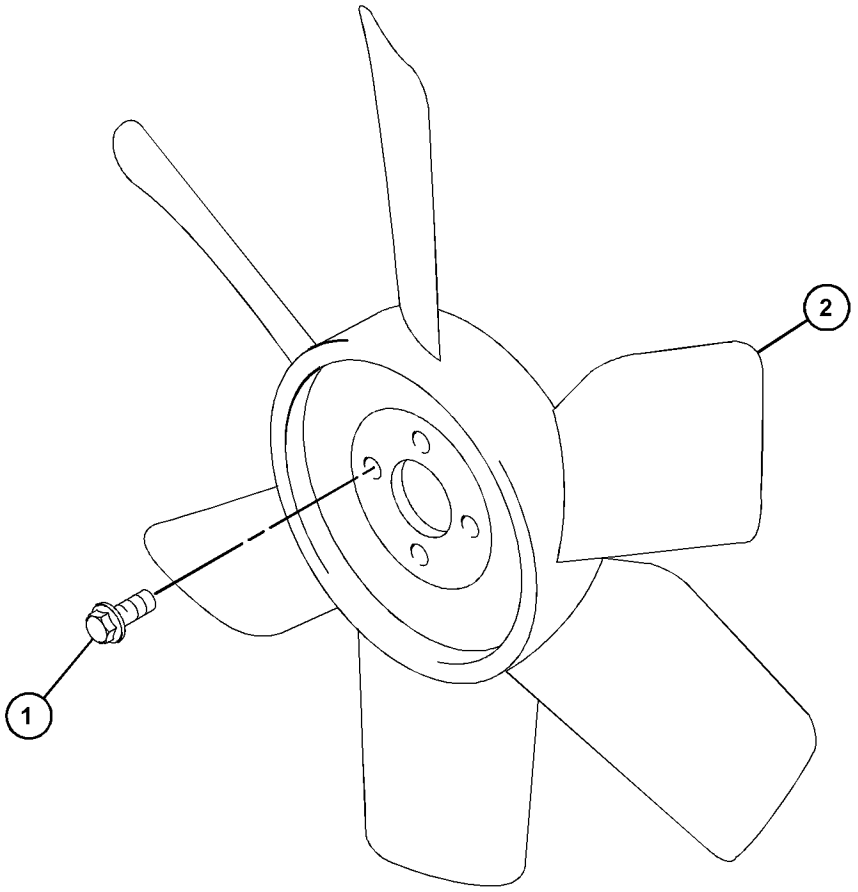

GRAPHIC #1 <END> g06224881

521-8165 FAN GP-SUCTION

PART OF 610-7720 ENGINE AR-PRIMARY

SMCS-1356 **i08517637**

NOTE	REF NO	GRAPHIC REF	PART NUMBER	QTY	PART NAME 1 2 3 4 5 6 (PRODUCT LEVEL)	SEE PAGE
	1	1	**568-8664**	1	FAN-SUCTION (7-BLADE)	

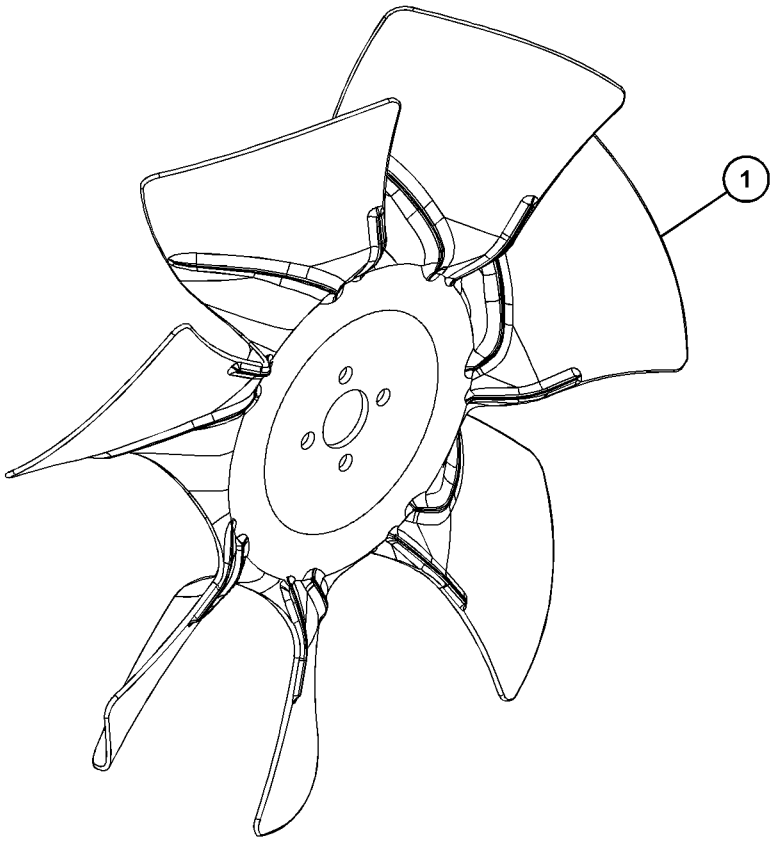

GRAPHIC #1 <END> g07486106

608-8936 FAN GP-SUCTION

PART OF 610-7721 ENGINE AR-PRIMARY

SMCS-1356 **i08803945**

NOTE	REF NO	GRAPHIC REF	PART NUMBER	QTY	PART NAME 1 2 3 4 5 6 (PRODUCT LEVEL)	SEE PAGE
	1	1	**568-8653**	1	FAN-SUCTION (7-BLADE)	

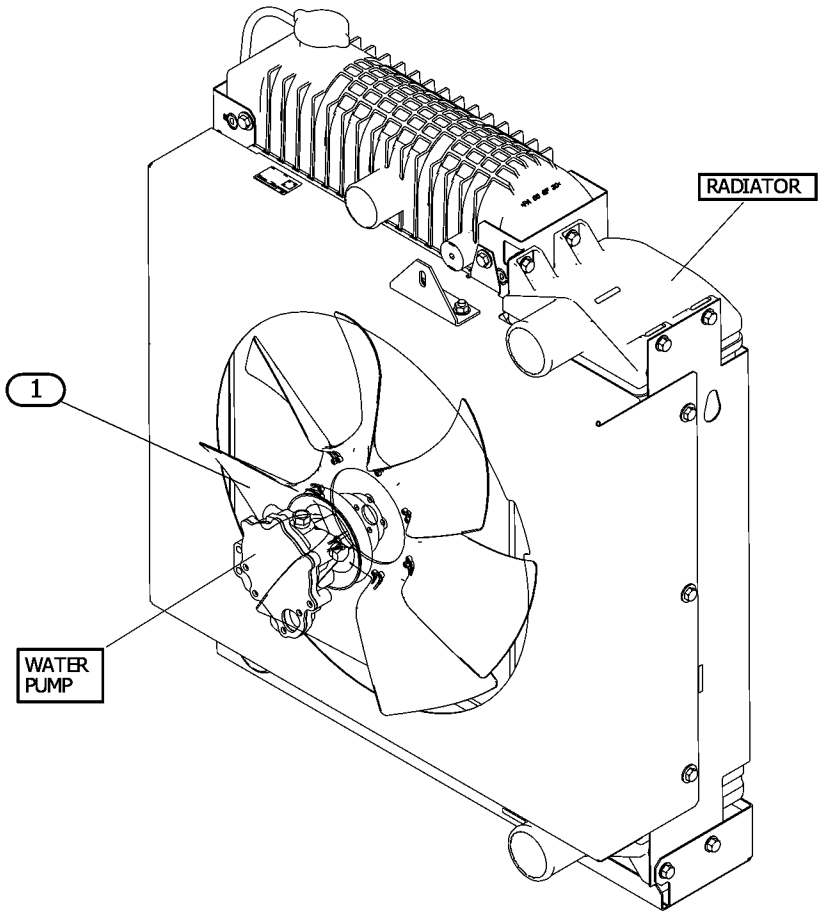

GRAPHIC #1 <END> g07550647

317-0980 HOUSING GP-WATER REGULATOR

SMCS-1393 **i05400355**

NOTE	REF NO	GRAPHIC REF	PART NUMBER	QTY	PART NAME 1 2 3 4 5 6 (PRODUCT LEVEL)	SEE PAGE
	1	1	**439-0945**	1	GASKET (TEMPERATURE REGULATOR)	
	2	1	**168-9001**	2	BOLT AS	
	3	1	**420-8944**	1	HOUSING	

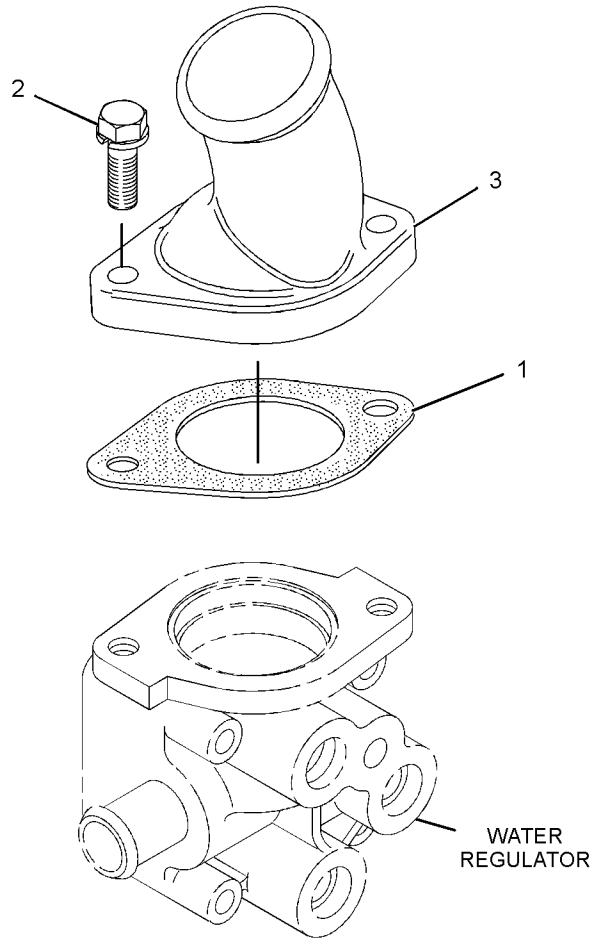

GRAPHIC #1 <END> g01439312

308-2299 LINES GP-COOLANT

PART OF 433-1380, 435-1637, 435-1638 ENGINE AR, 435-1636 ENGINE AR-PRIMARY

SMCS-1380 **i09722640**

NOTE	REF NO	GRAPHIC REF	PART NUMBER	QTY	PART NAME 1 2 3 4 5 6 (PRODUCT LEVEL)	SEE PAGE
	1	1	**153-6879**	1	STUD-HOLLOW	
	2	1	**160-4826**	4	CLAMP-HOSE	
	3	1	**238-9145**	1	HOSE	
	4	1	**331-2590**	1	HOSE	
	5	1	**423-8282**	1	CLIP	

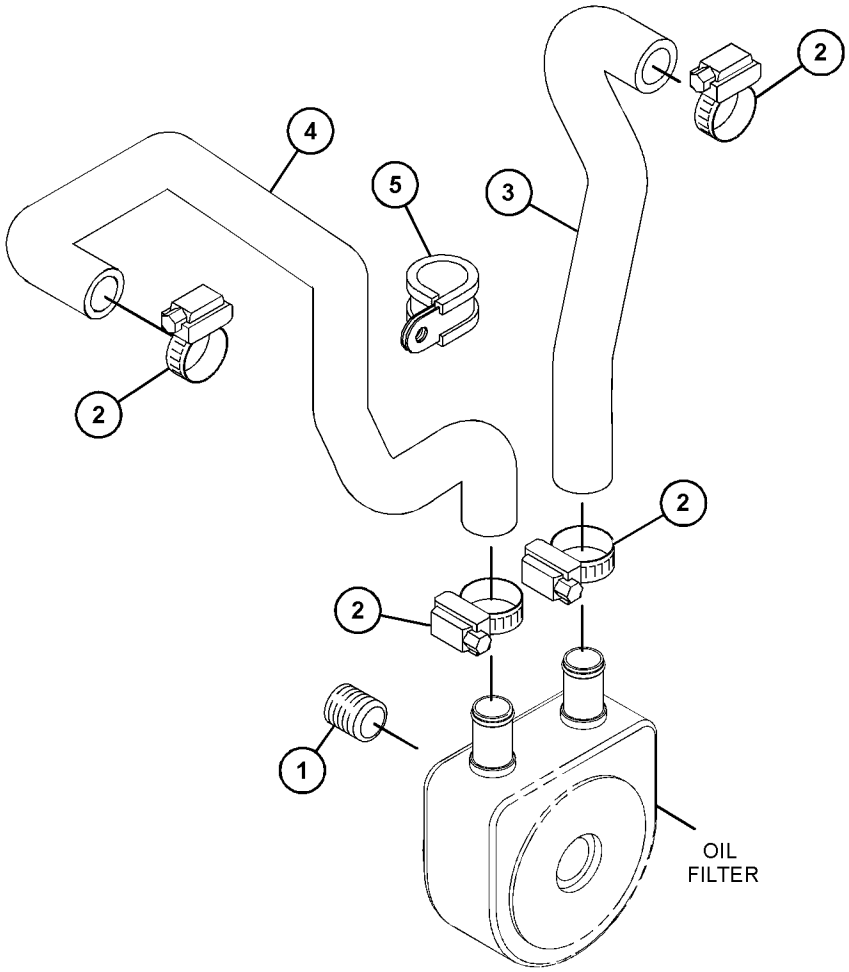

GRAPHIC #1 <END> g07566634

331-2589 LINES GP-COOLANT

PART OF 433-1380, 435-1637, 435-1638 ENGINE AR, 435-1636, 435-1658, 459-2953, 461-7892, 461-7894, 465-1477, 491-3396, 495-3121, 495-6243, 516-9335, 541-9277, 557-9727, 587-9328 ENGINE AR-PRIMARY

SMCS-1380 **i09722641**

NOTE	REF NO	GRAPHIC REF	PART NUMBER	QTY	PART NAME 1 2 3 4 5 6 (PRODUCT LEVEL)	SEE PAGE
	1	1	**153-6879**	1	STUD-HOLLOW	
	2	1	**160-4826**	4	CLAMP-HOSE	
	3	1	**238-9145**	1	HOSE (OIL COOLER)	
	4	1	**331-2590**	1	HOSE	
	5	1	**423-8282**	1	CLIP	

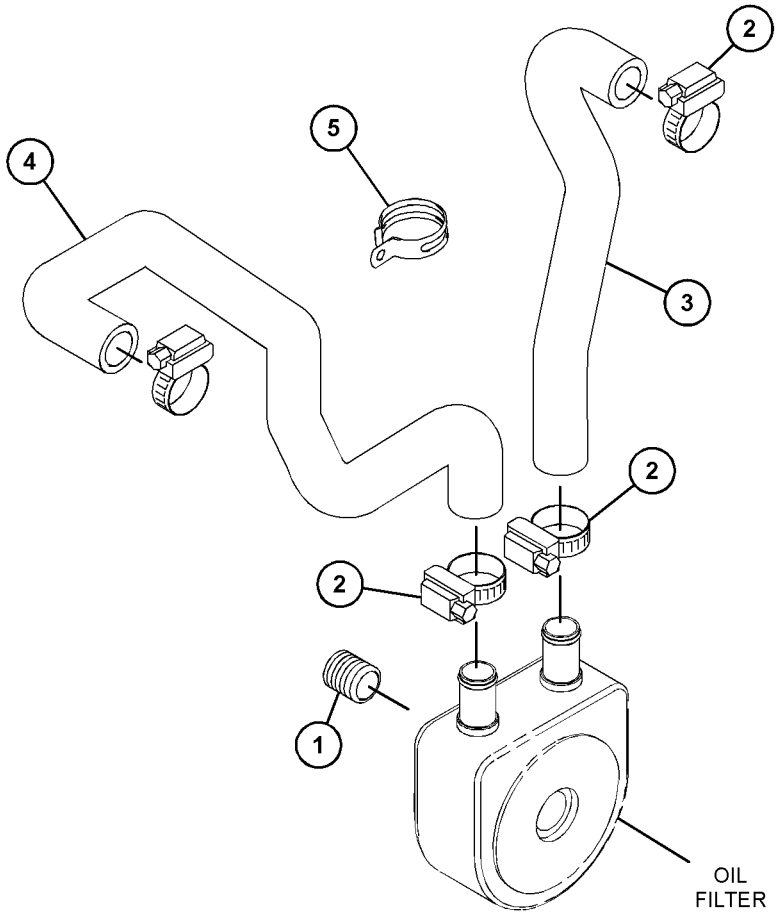

GRAPHIC #1 <END> g07566635

308-2301 PUMP GP-WATER

PART OF 516-9335 ENGINE AR-PRIMARY

SMCS-1361 **i09930069**

NOTE	REF NO	GRAPHIC REF	PART NUMBER	QTY	PART NAME 1 2 3 4 5 6 (PRODUCT LEVEL)	SEE PAGE
M	1	2	**152-6581**	2	BOLT (M6X1X55-MM)	
M	2	2	**153-5960**	3	NUT (M6X1-THD)	
	3	2	**153-5961**	4	BOLT AS	
	4	2	**154-1817**	2	PLUG	
	5	2	**472-2215**	1	PLUG	
	6	2	**423-5611**	1	GASKET	
	7	2	**032-9020**	2	CLIP	
	8	2	**425-6407**	1	GASKET	
	9	2	**439-4992**	1	PUMP AS-WATER	
	10	1	**472-2214**	1	CONNECTOR	
	11	1	**245-1361**	1	COOLER AS-OIL	
	11A	1	**245-1362**	1	CONNECTOR	
	11B	1	**245-1364**	1	SEAL	
	12	2	**249-5541**	1	REGULATOR-TEMPERATURE (82-DEG C)	
	13	2	**585-0737**	1	HOUSING AS-THERMOSTAT	
	14	2	**286-7496**	1	HOSE-WATER	
	15	2	**238-9137**	1	CONNECTOR	

M - METRIC PART

308-2301 **PUMP GP-WATER (**contd.**)** **i09930069**

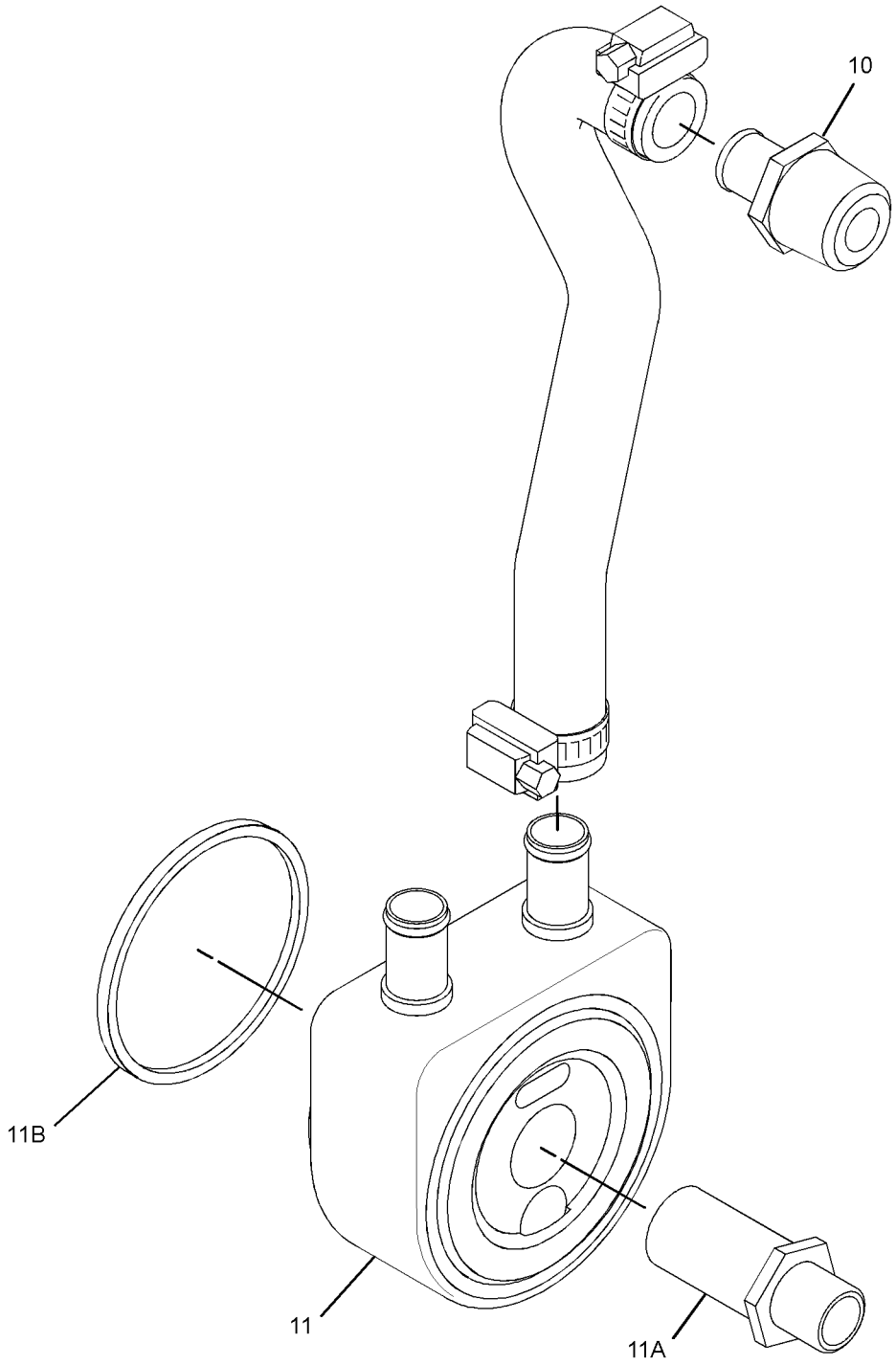

GRAPHIC #1 g06229707

308-2301 **PUMP GP-WATER (**contd.**)** **i09930069**

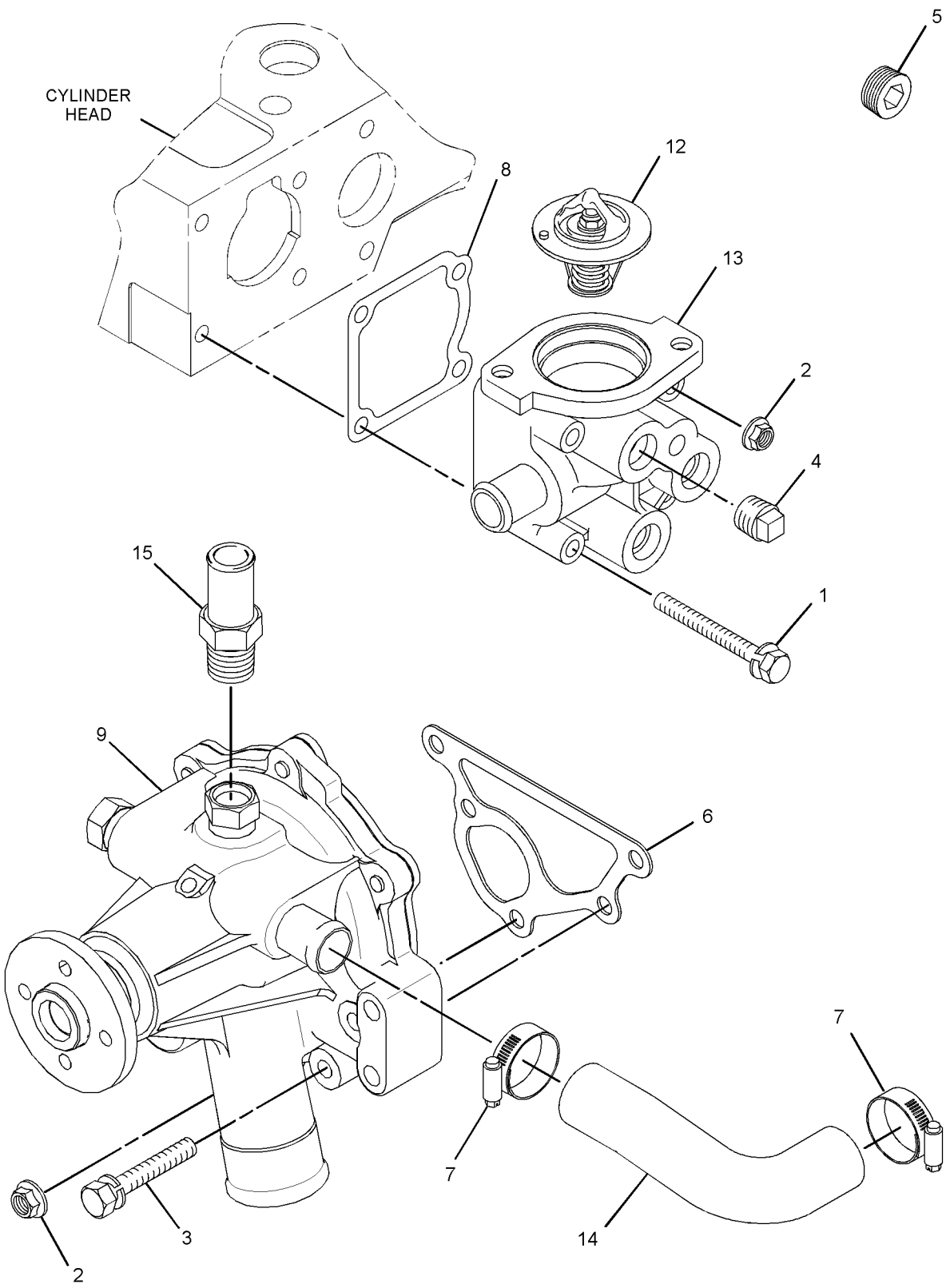

GRAPHIC #2 <END> g06237402

309-6721 PUMP GP-WATER

PART OF 435-1645 CYLINDER BLOCK GP-LONG, 433-1379 ENGINE AR, 435-1641, 435-1646, 435-1656 ENGINE AR-PRIMARY

TYPE 1

SMCS-1361 **i03859298**

NOTE	REF NO	GRAPHIC REF	PART NUMBER	QTY	PART NAME 1 2 3 4 5 6 (PRODUCT LEVEL)	SEE PAGE
M	1	1	**153-5960**	3	NUT (M6X1-THD)	
	2	1	**153-5961**	4	BOLT AS	
	3	1	**154-1817**	1	PLUG	
	4	1	**154-1831**	2	PLUG	
	5	1	**215-2617**	1	GASKET (HOUSING)	
	6	1	**249-5541**	1	REGULATOR-TEMPERATURE (82-DEG C)	
	7	1	**286-7495**	1	HOUSING-THERMOSTAT	
	8	1	**286-7496**	1	HOSE-WATER	
	9	1	**311-0023**	1	PUMP-WATER	
	10	1	**303-0307**	1	GASKET (WATER PUMP)	
	11	1	**308-1907**	2	BOLT AS	
	12	1	**5D-1026**	2	CLAMP-BAND	

M - METRIC PART

309-6721 **PUMP GP-WATER (**contd.**)** **i03859298**

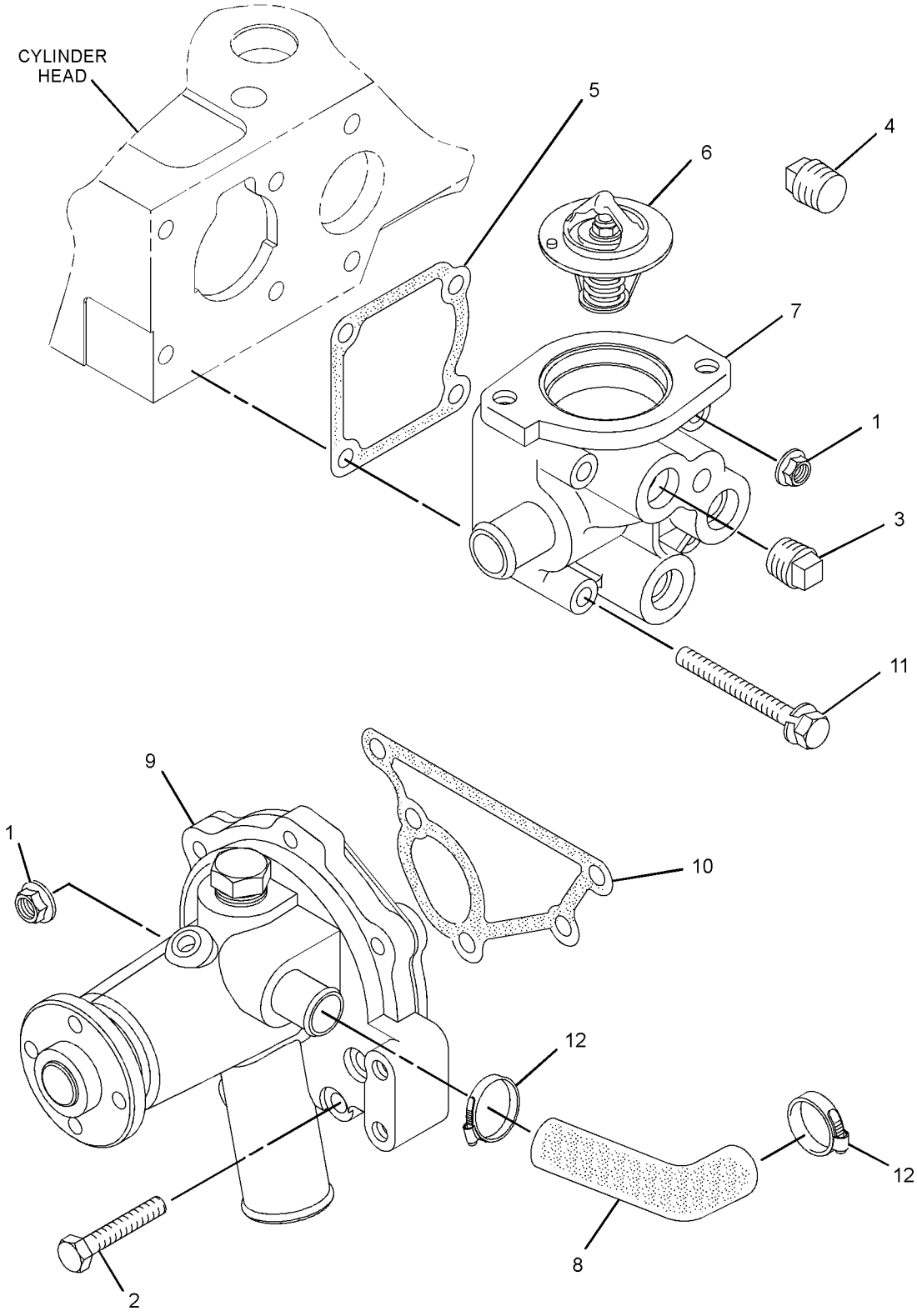

GRAPHIC #1 <END> g01699713

309-6721 PUMP GP-WATER

PART OF 435-1645 CYLINDER BLOCK GP-LONG, 433-1379 ENGINE AR, 435-1641, 435-1642, 435-1646, 435-1647, 435-1656, 461-7895, 492-6602, 549-8284 ENGINE AR-PRIMARY
TYPE 2

SMCS-1361 **i10518069**

NOTE	REF NO	GRAPHIC REF	PART NUMBER	QTY	PART NAME 1 2 3 4 5 6 (PRODUCT LEVEL)	SEE PAGE
M	1	1	**099-6418**	3	NUT (M6X1-THD)	
	2	1	**153-5961**	4	BOLT AS	
	3	1	**154-1817**	1	PLUG	
	4	1	**472-2215**	2	PLUG	
	5	1	**425-6407**	1	GASKET (HOUSING)	
	6	1	**249-5541**	1	REGULATOR-TEMPERATURE (82-DEG C)	
C	7	1	**585-0737**	1	HOUSING AS-THERMOSTAT (THERMOSTAT)	
	8	1	**286-7496**	1	HOSE-WATER	
	9	1	**660-0868**	1	PUMP AS-WATER	
	10	1	**423-5611**	1	GASKET (WATER PUMP)	
M	11	1	**632-1229**	2	BOLT-FLANGE HEAD (M6X1X55-MM)	
	12	1	**032-9020**	2	CLIP	

C - CHANGE FROM PREVIOUS TYPE
M - METRIC PART

309-6721 **PUMP GP-WATER (**contd.**)** **i10518069**

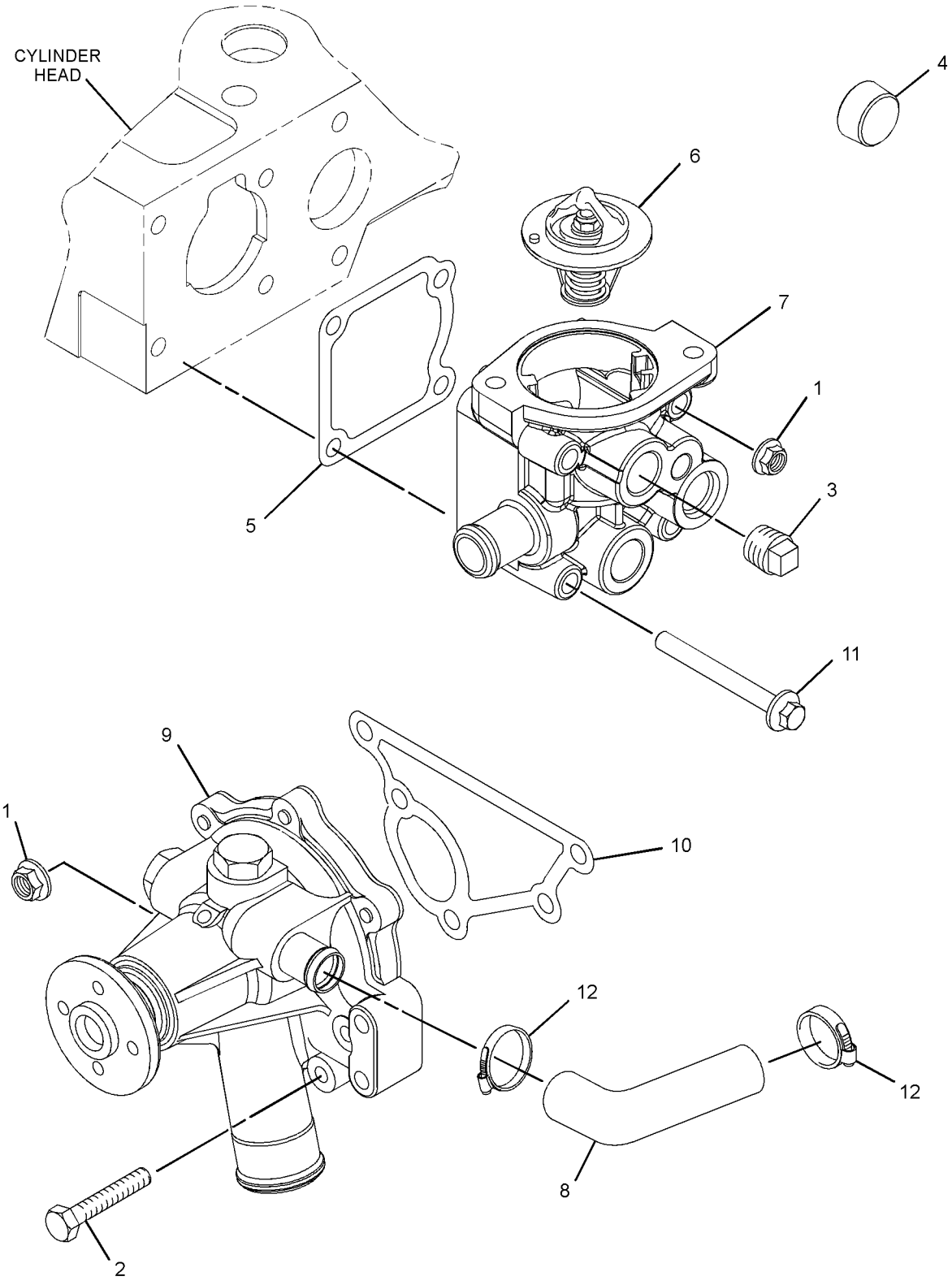

GRAPHIC #1 <END> g07664737

317-0979 PUMP GP-WATER

PART OF 433-1380, 435-1637, 435-1638 ENGINE AR, 435-1636, 435-1658, 459-2953, 495-6243, 541-9277 ENGINE AR-PRIMARY

TYPE 1

SMCS-1361 **i06801152**

NOTE	REF NO	GRAPHIC REF	PART NUMBER	QTY	PART NAME 1 2 3 4 5 6 (PRODUCT LEVEL)	SEE PAGE
	1	1	**5D-1026**	2	CLAMP-BAND	
	2	2	**127-8281**	1	CLIP	
M	3	1	**153-5960**	3	NUT (M6X1-THD)	
	4	1	**153-5961**	4	BOLT AS	
	5	1	**154-1817**	1	PLUG	
	6	1	**439-4993**	1	PLUG	
	7	2	**155-7984**	1	WASHER (8.4X16X1.6-MM THK)	
M	8	2	**180-6118**	1	BOLT AS (M8X1.25X12-MM)	
	9	1	**425-6407**	1	GASKET	
	10	1	**238-9137**	1	CONNECTOR	
	11	2	**472-2214**	1	CONNECTOR	
	12	2	**245-1361**	1	COOLER AS-OIL (ENGINE)	
	12A	2	**245-1362**	1	CONNECTOR	
	12B	2	**245-1364**	1	SEAL	
	13	1	**249-5541**	1	REGULATOR-TEMPERATURE (82-DEG C)	
	14	1	**477-8793**	1	HOUSING (THERMOSTAT)	
	15	1	**286-7496**	1	HOSE-WATER	
	16	1	**308-1907**	2	BOLT AS	
	17	1	**423-5611**	1	GASKET	
	18	1	**371-0183**	1	PUMP-WATER	

M - METRIC PART

317-0979 **PUMP GP-WATER (**contd.**)** **i06801152**

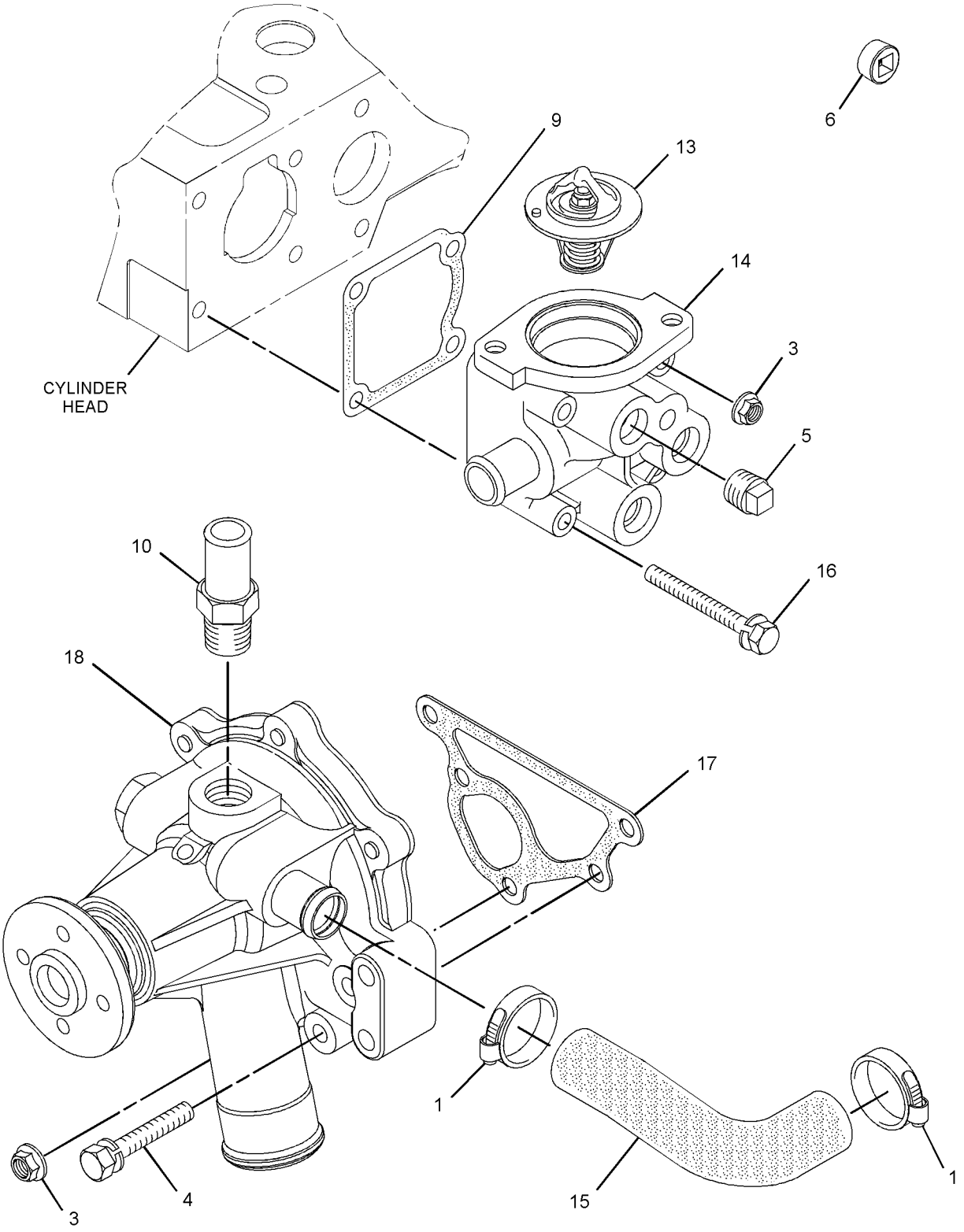

GRAPHIC #1 g03541666

317-0979 **PUMP GP-WATER (**contd.**)** **i06801152**

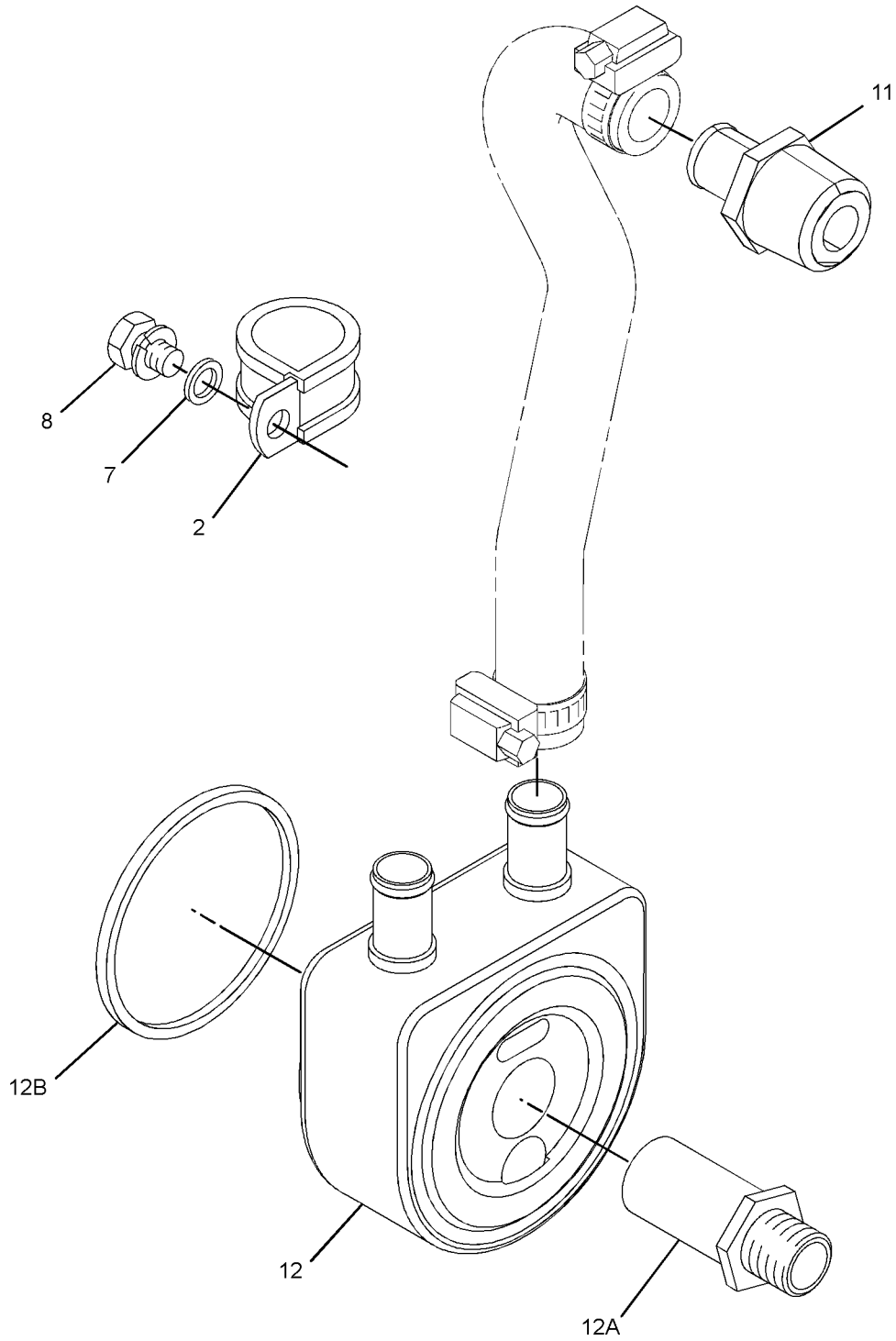

GRAPHIC #2 <END> g06194672

317-0979 PUMP GP-WATER

PART OF 433-1380, 435-1637, 435-1638 ENGINE AR, 435-1636, 435-1658, 459-2953, 491-3396, 495-6243, 541-9277 ENGINE AR-PRIMARY

TYPE 2

SMCS-1361 **i07187923**

NOTE	REF NO	GRAPHIC REF	PART NUMBER	QTY	PART NAME 1 2 3 4 5 6 (PRODUCT LEVEL)	SEE PAGE
	1	1	**5D-1026**	2	CLAMP-BAND	
M	3	1	**153-5960**	3	NUT (M6X1-THD)	
	4	1	**153-5961**	4	BOLT AS	
	5	1	**154-1817**	1	PLUG	
	6	1	**439-4993**	1	PLUG	
	7	2	**155-7984**	1	WASHER (8.4X16X1.6-MM THK)	
M	8	2	**180-6118**	1	BOLT AS (M8X1.25X12-MM)	
	9	1	**425-6407**	1	GASKET	
	10	1	**238-9137**	1	CONNECTOR	
	11	2	**472-2214**	1	CONNECTOR	
	12	2	**245-1361**	1	COOLER AS-OIL (ENGINE)	
	12A	2	**245-1362**	1	CONNECTOR	
	12B	2	**245-1364**	1	SEAL	
	13	1	**249-5541**	1	REGULATOR-TEMPERATURE (82-DEG C)	
	14	1	**477-8793**	1	HOUSING (THERMOSTAT)	
	15	1	**286-7496**	1	HOSE-WATER	
	16	1	**308-1907**	2	BOLT AS	
	17	1	**423-5611**	1	GASKET	
	18	1	**371-0183**	1	PUMP-WATER	

M - METRIC PART

317-0979 **PUMP GP-WATER (**contd.**)** **i07187923**

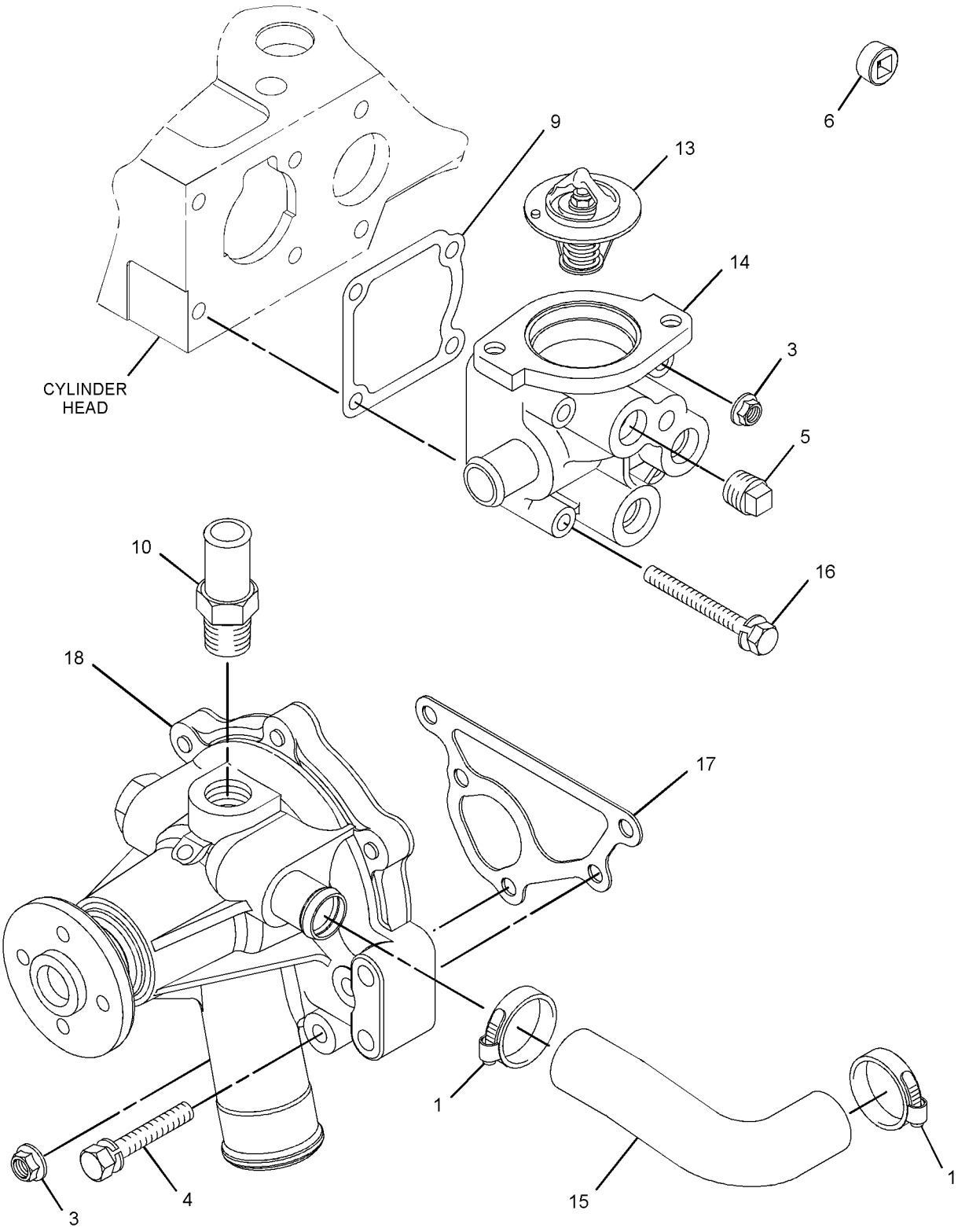

GRAPHIC #1 g06254232

317-0979 **PUMP GP-WATER (**contd.**)** **i07187923**

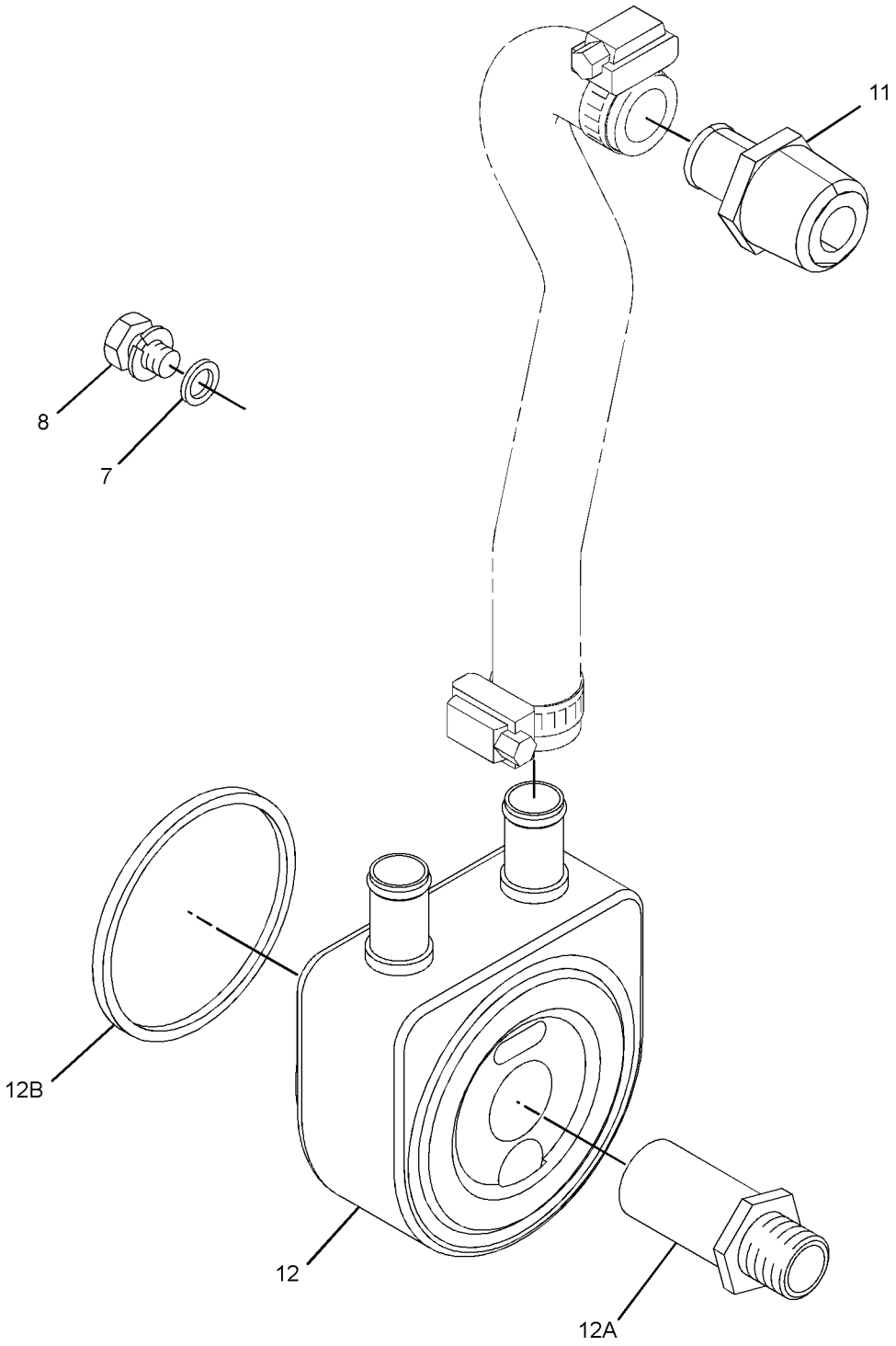

GRAPHIC #2 <END> g06254233

317-0979 PUMP GP-WATER

PART OF 433-1380, 435-1637, 435-1638 ENGINE AR, 435-1636, 435-1658, 459-2953, 491-3396, 495-6243, 541-9277, 557-9727, 587-9328 ENGINE AR-PRIMARY
TYPE 3

SMCS-1361 **i10613690**

NOTE	REF NO	GRAPHIC REF	PART NUMBER	QTY	PART NAME 1 2 3 4 5 6 (PRODUCT LEVEL)	SEE PAGE
	1	1	**032-9020**	2	CLIP	
C	2	1	**472-2215**	1	PLUG	
M	3	1	**153-5960**	3	NUT (M6X1-THD)	
	4	1	**153-5961**	4	BOLT AS	
	5	1	**154-1817**	1	PLUG	
	6	1	**423-5611**	1	GASKET	
	7	2	**155-7984**	1	WASHER (8.4X16X1.6-MM THK)	
M	8	2	**114-4363**	1	BOLT (M8X1.25X12-MM)	
	9	1	**425-6407**	1	GASKET	
	10	1	**439-4992**	1	PUMP AS-WATER	
	11	2	**472-2214**	1	CONNECTOR	
	12	2	**245-1361**	1	COOLER AS-OIL	
	12A	2	**245-1362**	1	CONNECTOR	
	12B	2	**245-1364**	1	SEAL	
	13	1	**249-5541**	1	REGULATOR-TEMPERATURE (82-DEG C)	
	14	1	**585-0737**	1	HOUSING AS-THERMOSTAT	
	15	1	**286-7496**	1	HOSE-WATER	
M	16	1	**632-1229**	2	BOLT-FLANGE HEAD (M6X1X55-MM)	
	17	1	**238-9137**	1	CONNECTOR	

C - CHANGE FROM PREVIOUS TYPE
M - METRIC PART

317-0979 **PUMP GP-WATER (**contd.**)** **i10613690**

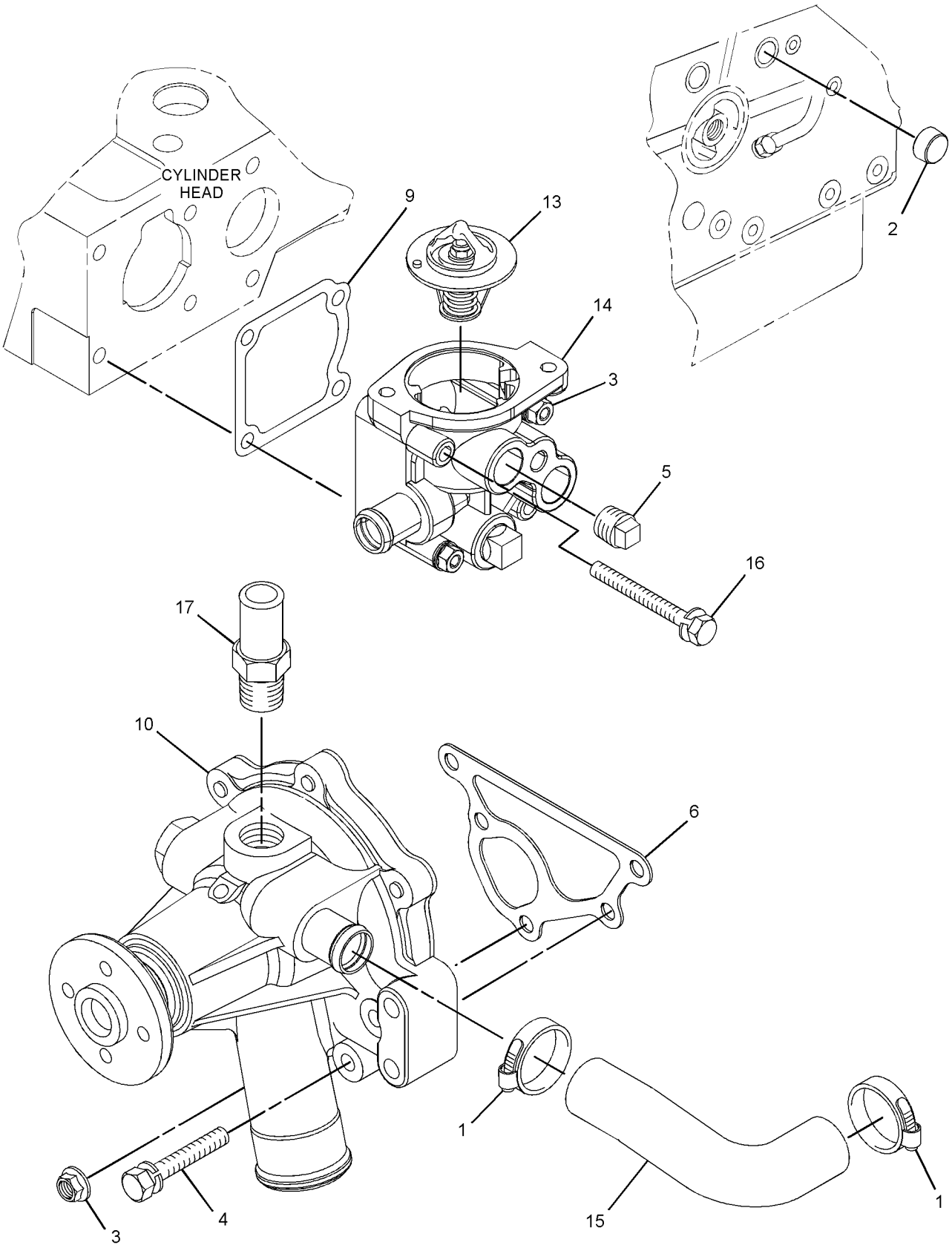

GRAPHIC #1 g07934441

317-0979 **PUMP GP-WATER (**contd.**)** **i10613690**

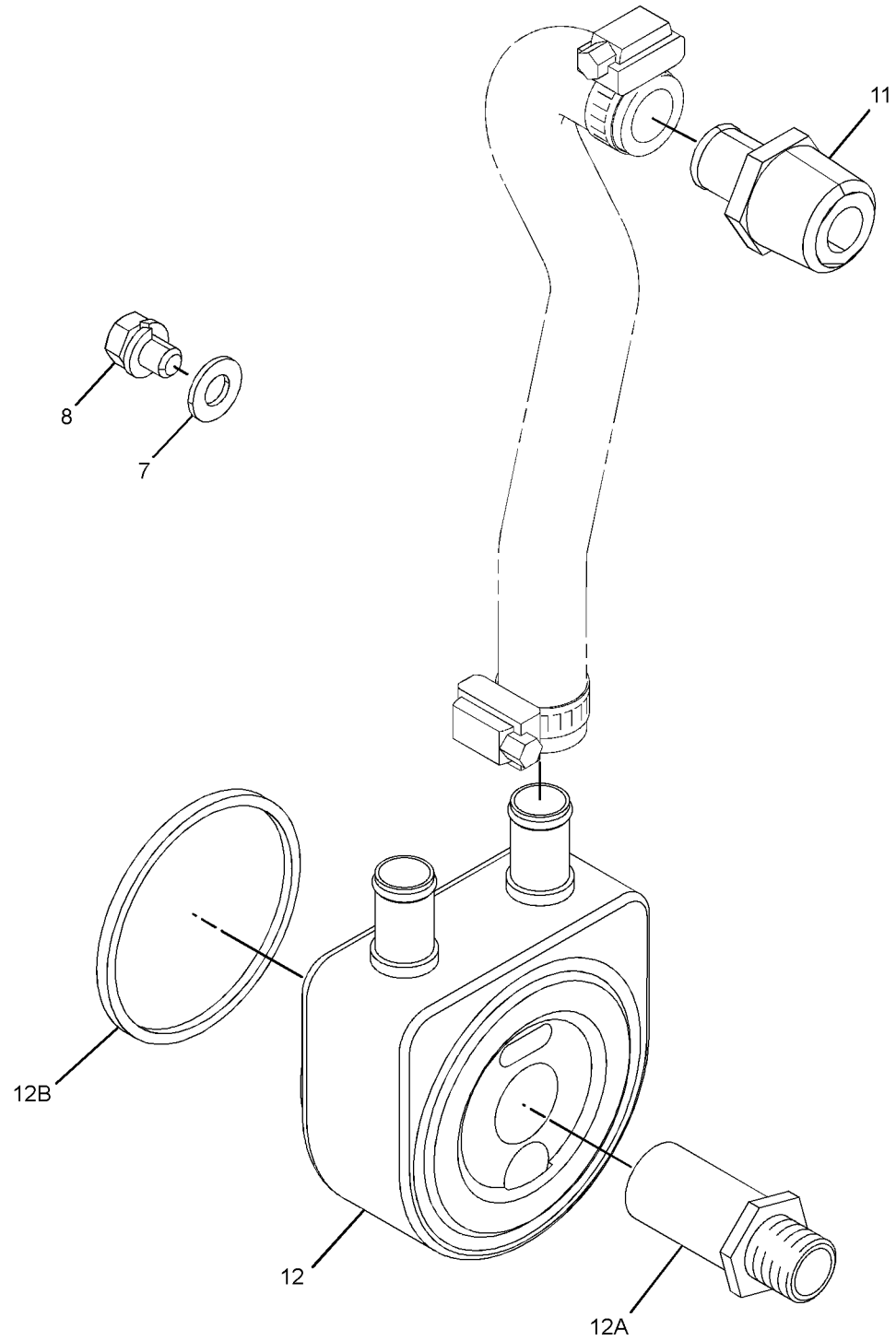

GRAPHIC #2 <END> g07934443

340-5886 PUMP GP-WATER

SMCS-1361 **i07188002**

NOTE	REF NO	GRAPHIC REF	PART NUMBER	QTY	PART NAME 1 2 3 4 5 6 (PRODUCT LEVEL)	SEE PAGE
M	1	1	**153-5960**	4	NUT (M6X1-THD)	
	2	1	**153-5961**	4	BOLT AS	
	3	1	**154-1817**	1	PLUG	
	4	1	**472-2215**	2	PLUG	
	5	1	**032-9020**	2	CLIP	
	6	1	**425-6407**	1	GASKET	
	7	1	**249-5541**	1	REGULATOR-TEMPERATURE (82-DEG C)	
	8	1	**477-8793**	1	HOUSING (THERMOSTAT)	
	9	1	**308-1907**	2	BOLT AS	
	10	1	**423-5611**	1	GASKET	
	11	1	**439-4992**	1	PUMP AS-WATER	
	12	1	**338-3397**	1	HOSE-WATER	

M - METRIC PART

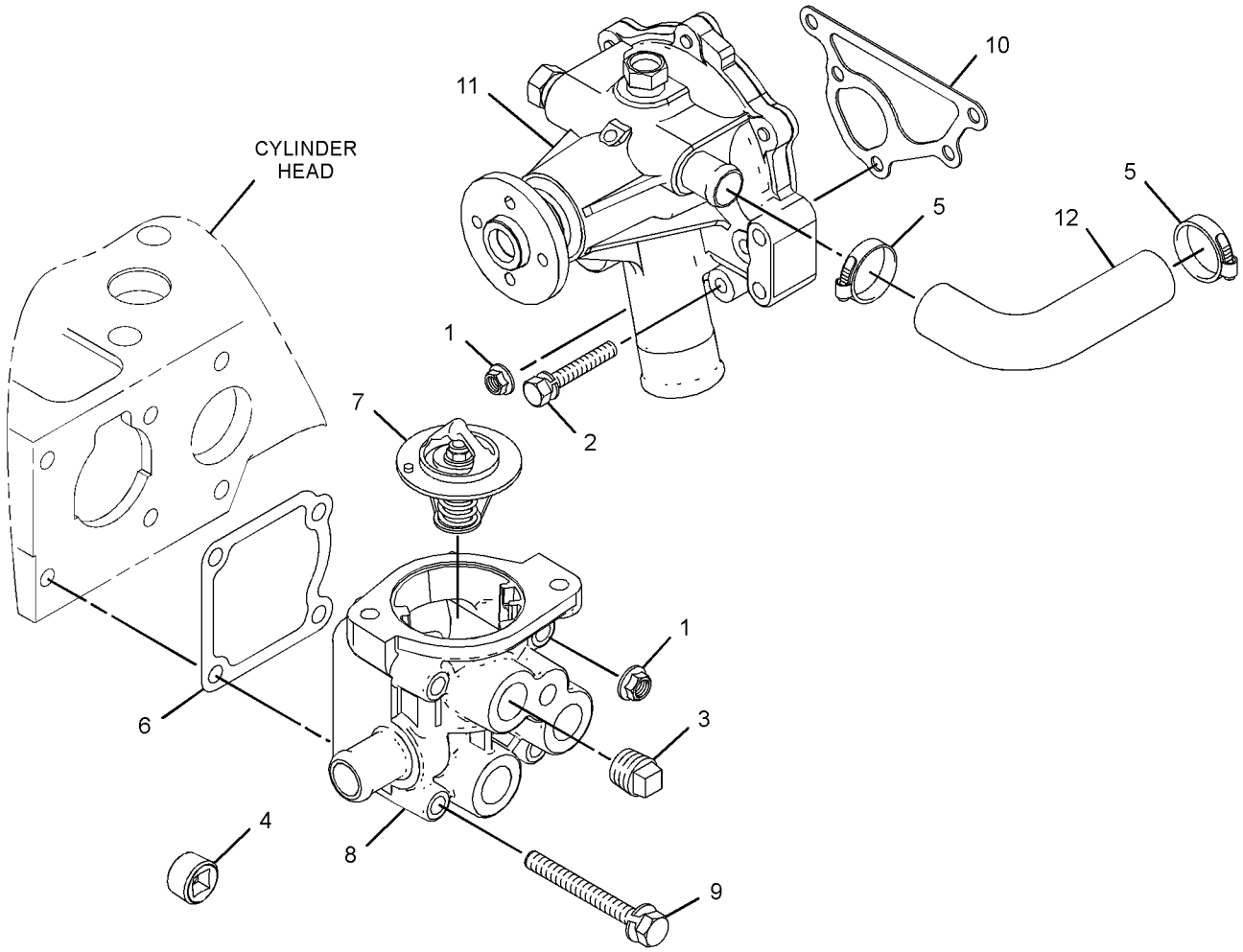

GRAPHIC #1 <END> g06210742

442-7729 PUMP GP-WATER

PART OF 495-3121 ENGINE AR-PRIMARY

TYPE 1

SMCS-1361 **i06882810**

NOTE	REF NO	GRAPHIC REF	PART NUMBER	QTY	PART NAME 1 2 3 4 5 6 (PRODUCT LEVEL)	SEE PAGE
	1	1	**5D-1026**	2	CLAMP-BAND	
	2	1	**371-0183**	1	PUMP-WATER	
M	3	1	**153-5960**	3	NUT (M6X1-THD)	
	4	1	**153-5961**	4	BOLT AS	
	5	1	**154-1817**	1	PLUG	
	6	1	**439-4993**	1	PLUG	
	7	1	**423-5611**	1	GASKET	
	8	1	**308-1907**	2	BOLT AS	
	9	1	**425-6407**	1	GASKET	
	10	1	**238-9137**	1	CONNECTOR	
	11	2	**472-2214**	1	CONNECTOR	
	12	2	**245-1361**	1	COOLER AS-OIL (ENGINE)	
	12A	2	**245-1362**	1	CONNECTOR	
	12B	2	**245-1364**	1	SEAL	
	13	1	**249-5541**	1	REGULATOR-TEMPERATURE (82-DEG C)	
	14	1	**477-8793**	1	HOUSING (THERMOSTAT)	
	15	1	**286-7496**	1	HOSE-WATER	

M - METRIC PART

442-7729 **PUMP GP-WATER (**contd.**)** **i06882810**

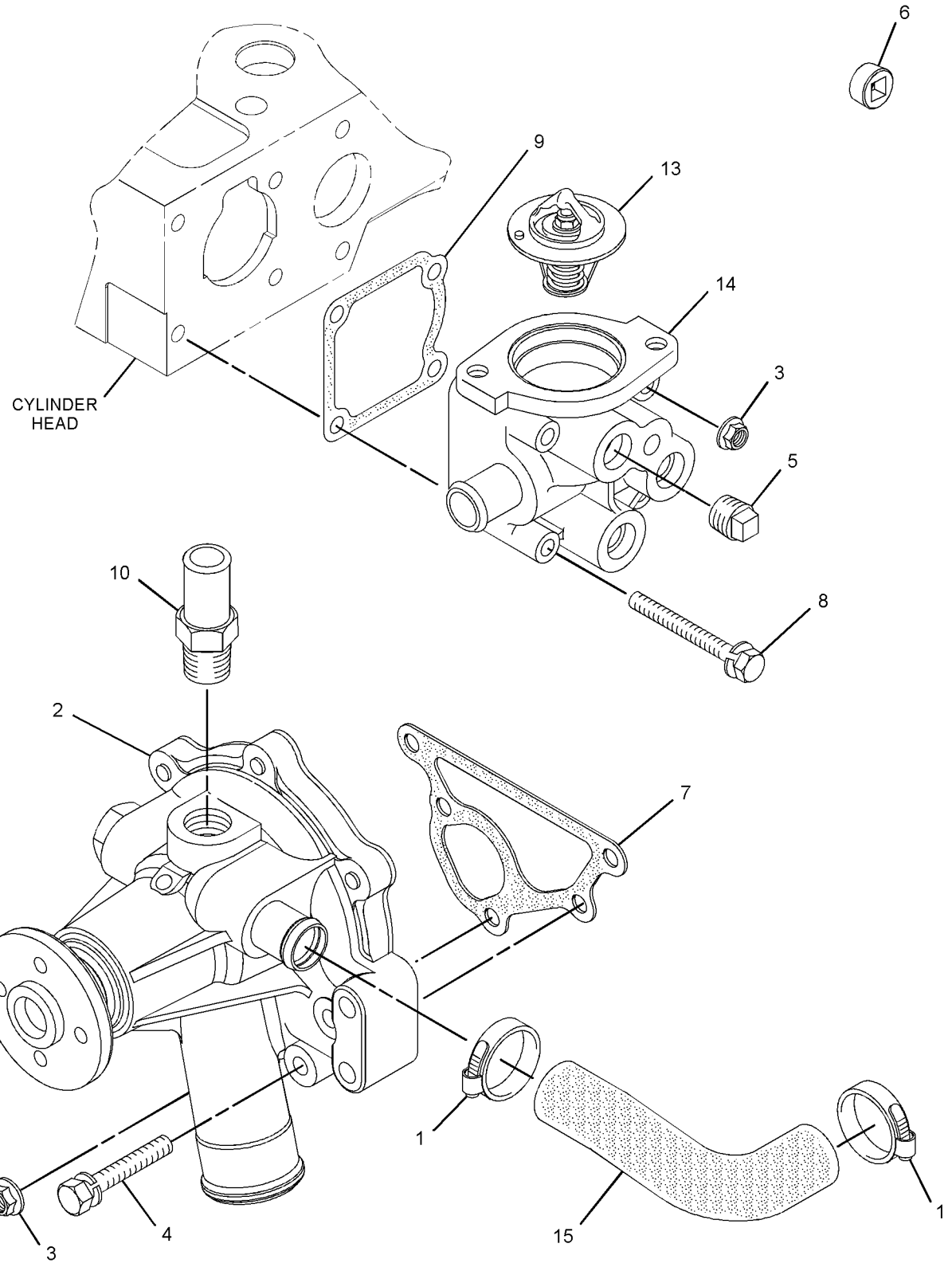

GRAPHIC #1 g03669931

442-7729 **PUMP GP-WATER (**contd.**)** **i06882810**

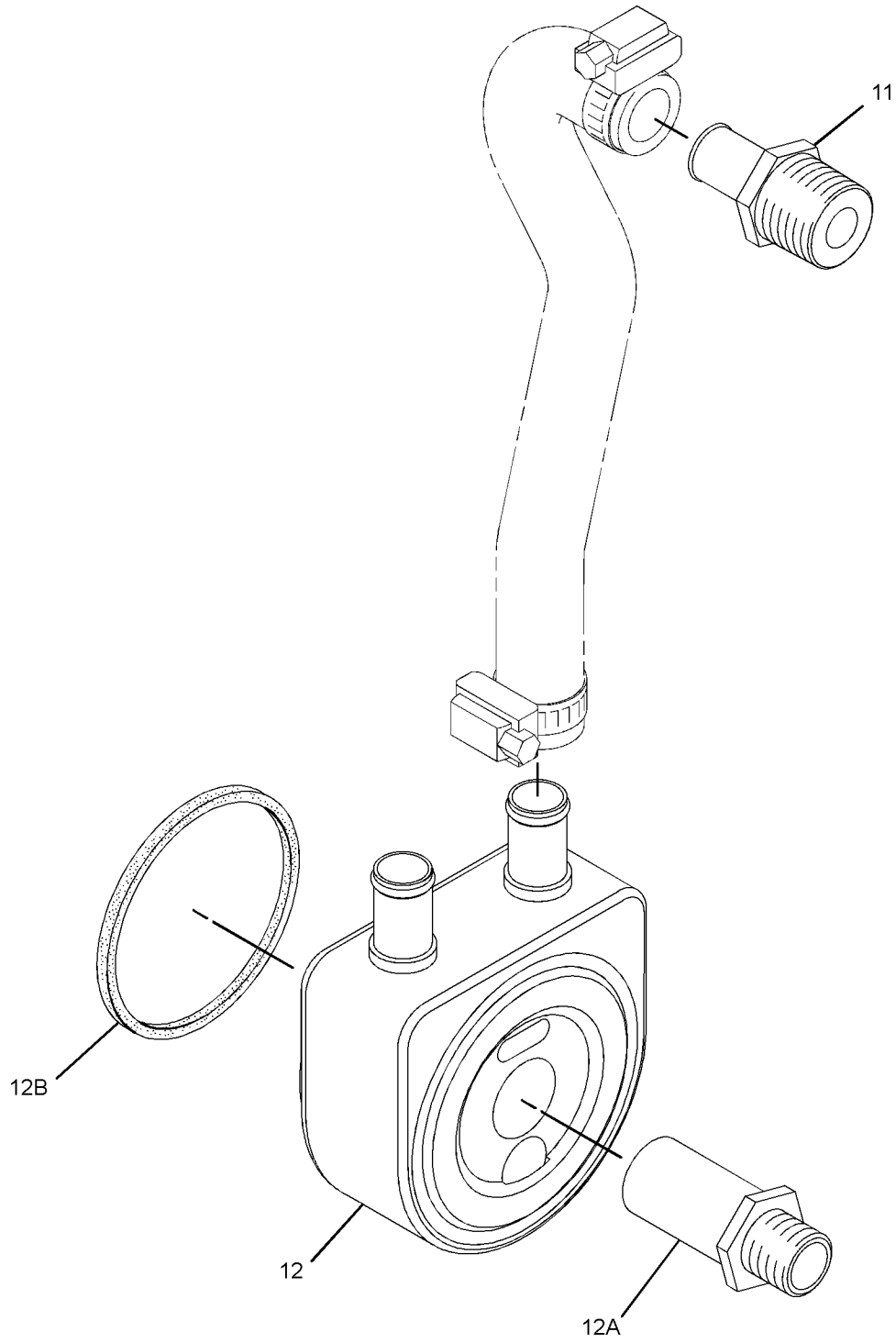

GRAPHIC #2 <END> g03516077

442-7729 PUMP GP-WATER

PART OF 461-7892, 461-7894, 465-1477, 495-3121 ENGINE AR-PRIMARY
TYPE 2

SMCS-1361 **i06882908**

NOTE	REF NO	GRAPHIC REF	PART NUMBER	QTY	PART NAME 1 2 3 4 5 6 (PRODUCT LEVEL)	SEE PAGE
	1	1	**032-9020**	2	CLIP	
	2	1	**439-4992**	1	PUMP AS-WATER	
M	3	1	**153-5960**	3	NUT (M6X1-THD)	
	4	1	**153-5961**	4	BOLT AS	
	5	1	**154-1817**	1	PLUG	
C	6	1	**472-2215**	1	PLUG	
	7	1	**423-5611**	1	GASKET	
	8	1	**308-1907**	2	BOLT AS	
	9	1	**425-6407**	1	GASKET	
	10	1	**286-7496**	1	HOSE-WATER	
	11	2	**472-2214**	1	CONNECTOR	
	12	2	**245-1361**	1	COOLER AS-OIL (ENGINE)	
	12A	2	**245-1362**	1	CONNECTOR	
	12B	2	**245-1364**	1	SEAL	
	13	1	**249-5541**	1	REGULATOR-TEMPERATURE (82-DEG C)	
	14	1	**477-8793**	1	HOUSING (THERMOSTAT)	

C - CHANGE FROM PREVIOUS TYPE
M - METRIC PART

442-7729 **PUMP GP-WATER (**contd.**)** **i06882908**

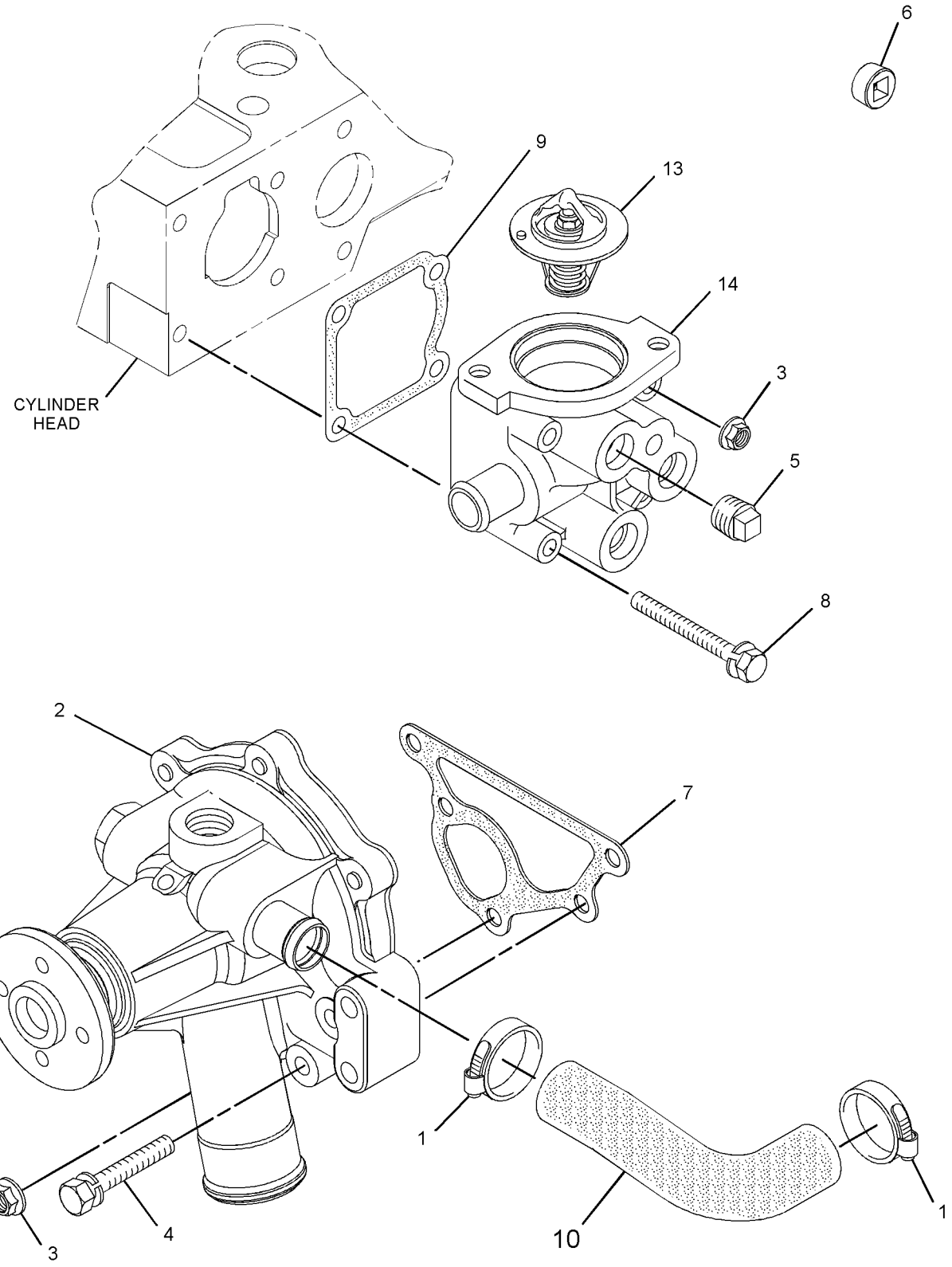

GRAPHIC #1 g06152398

442-7729 **PUMP GP-WATER (**contd.**)** **i06882908**

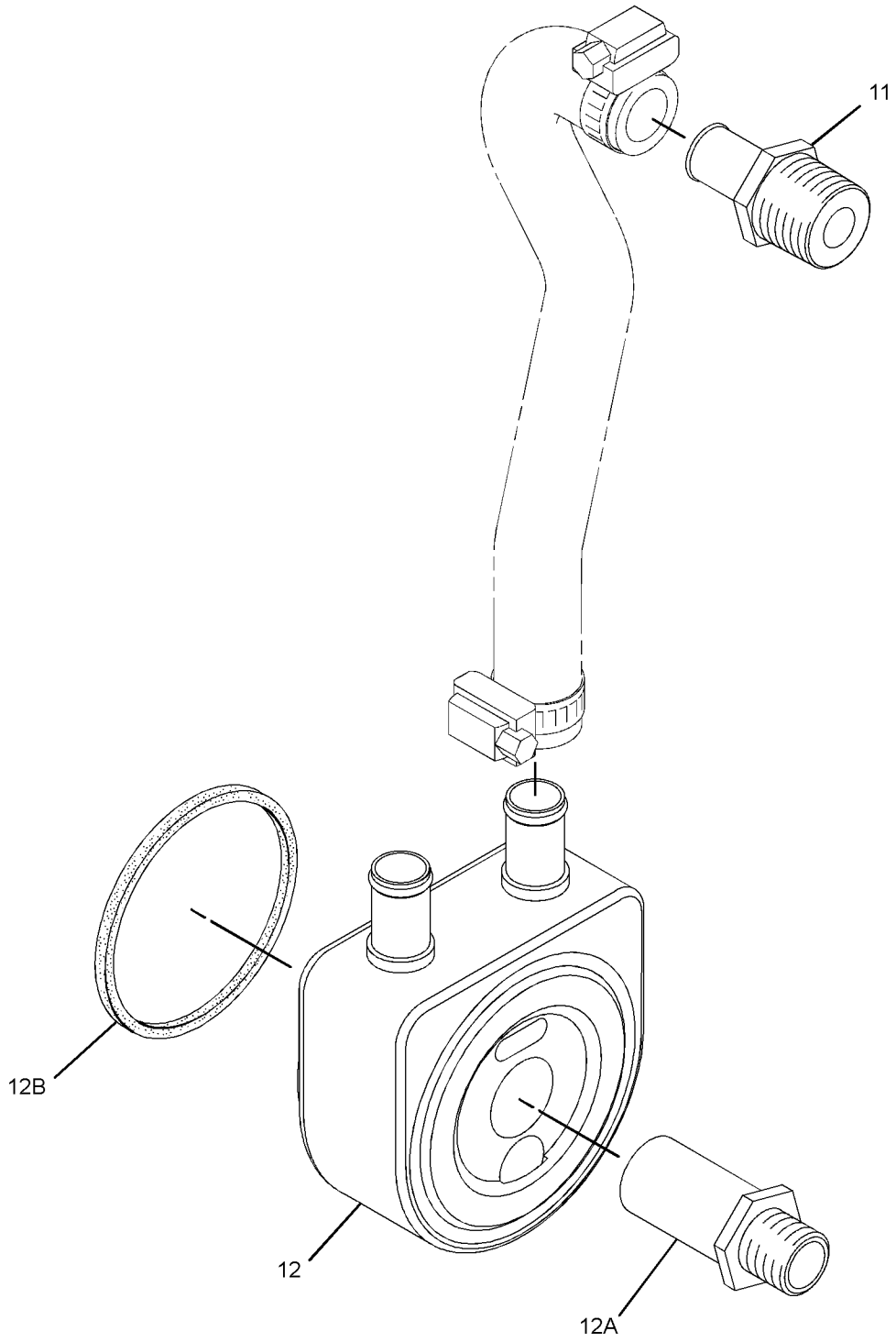

GRAPHIC #2 <END> g03516077

598-5724 PUMP GP-WATER

PART OF 433-1380 ENGINE AR, 435-1636, 587-9328, 610-7720, 610-7721 ENGINE AR-PRIMARY

SMCS-1361 **i10511045**

NOTE	REF NO	GRAPHIC REF	PART NUMBER	QTY	PART NAME 1 2 3 4 5 6 (PRODUCT LEVEL)	SEE PAGE
M	1	1	**153-5960**	3	NUT (M6X1-THD)	
	2	1	**153-5961**	4	BOLT AS	
	3	1	**155-7984**	1	WASHER (8.4X16X1.6-MM THK)	
M	4	1	**587-3846**	1	STUD (M6X1X43-MM)	
	5	1	**238-9137**	1	CONNECTOR	
	6	1	**238-9145**	1	HOSE	
	7	1	**245-1361**	1	COOLER AS-OIL	
	7A	1	**245-1362**	1	CONNECTOR	
	7B	1	**245-1364**	1	SEAL	
	8	1	**249-5541**	1	REGULATOR-TEMPERATURE (82-DEG C)	
	9	1	**286-7496**	1	HOSE-WATER	
M	10	1	**632-1229**	2	BOLT-FLANGE HEAD (M6X1X55-MM)	
	11	1	**331-2590**	1	HOSE	
	12	1	**423-5611**	1	GASKET	
	13	1	**425-2286**	1	CLAMP	
	14	1	**425-6407**	1	GASKET	
	15	1	**660-0868**	1	PUMP AS-WATER	
	16	1	**472-2214**	1	CONNECTOR	
	17	1	**160-4826**	4	CLAMP-HOSE	
	18	1	**032-9020**	2	CLIP	
	19	1	**585-0737**	1	HOUSING AS-THERMOSTAT	
M	20	1	**587-3850**	2	STUD (M6X1X63-MM)	

M - METRIC PART

598-5724 **PUMP GP-WATER (**contd.**)** **i10511045**

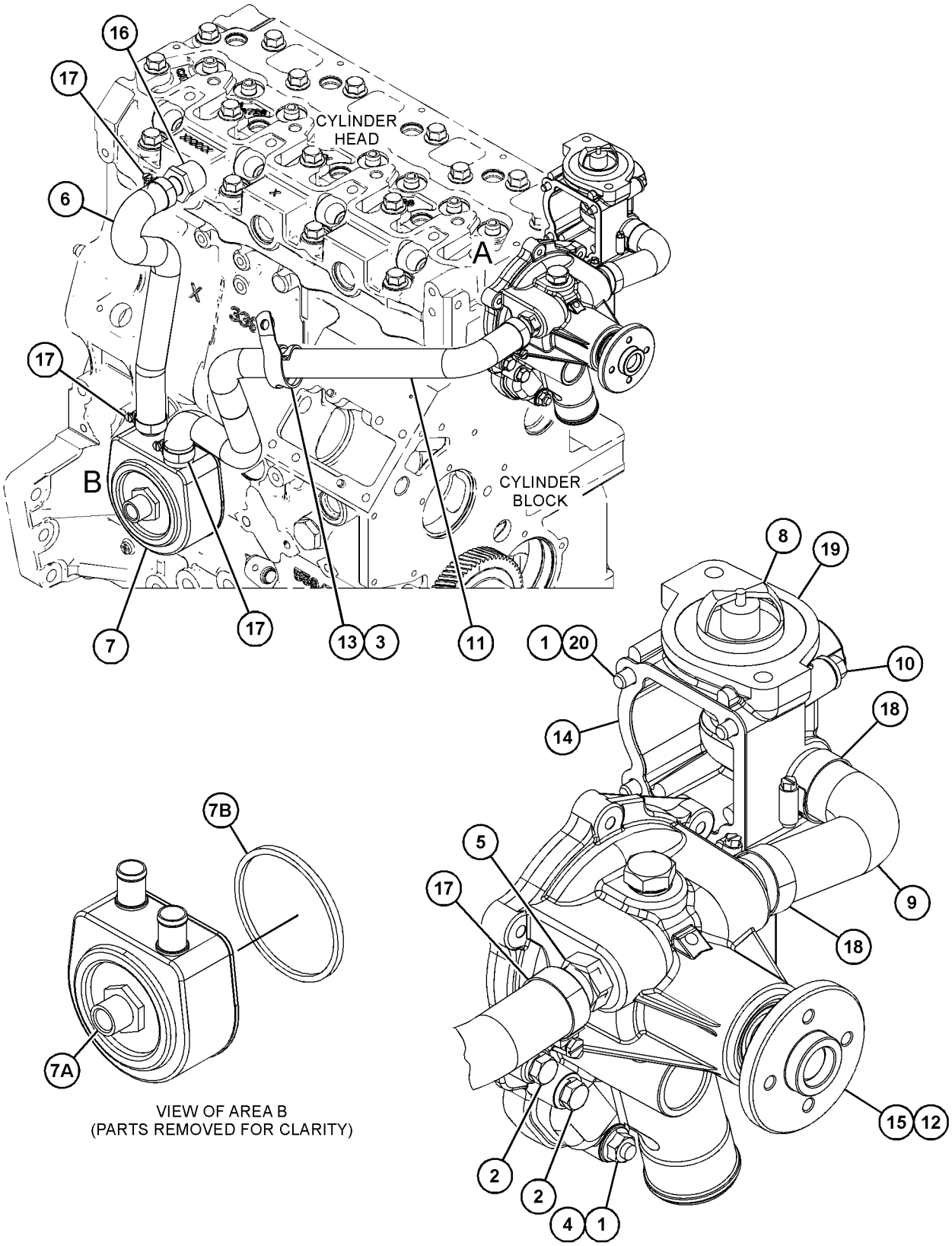

GRAPHIC #1 <END> g07894577

598-5726 PUMP GP-WATER

PART OF 433-1379 ENGINE AR, 435-1641, 435-1646, 435-1647 ENGINE AR-PRIMARY

SMCS-1361 **i10517018**

NOTE	REF NO	GRAPHIC REF	PART NUMBER	QTY	PART NAME 1 2 3 4 5 6 (PRODUCT LEVEL)	SEE PAGE
M	1	1	**153-5960**	3	NUT (M6X1-THD)	
	2	1	**153-5961**	4	BOLT AS	
M	3	1	**587-3846**	1	STUD (M6X1X43-MM)	
	4	1	**249-5541**	1	REGULATOR-TEMPERATURE (82-DEG C)	
	5	1	**286-7496**	1	HOSE-WATER	
M	6	1	**587-3850**	2	STUD (M6X1X63-MM)	
M	7	1	**632-1229**	2	BOLT-FLANGE HEAD (M6X1X55-MM)	
	8	1	**423-5611**	1	GASKET	
	9	1	**425-6407**	1	GASKET	
	10	1	**660-0868**	1	PUMP AS-WATER	
	11	1	**472-2215**	1	PLUG	
	12	1	**585-0737**	1	HOUSING AS-THERMOSTAT	
	13	1	**032-9020**	2	CLIP	

M - METRIC PART

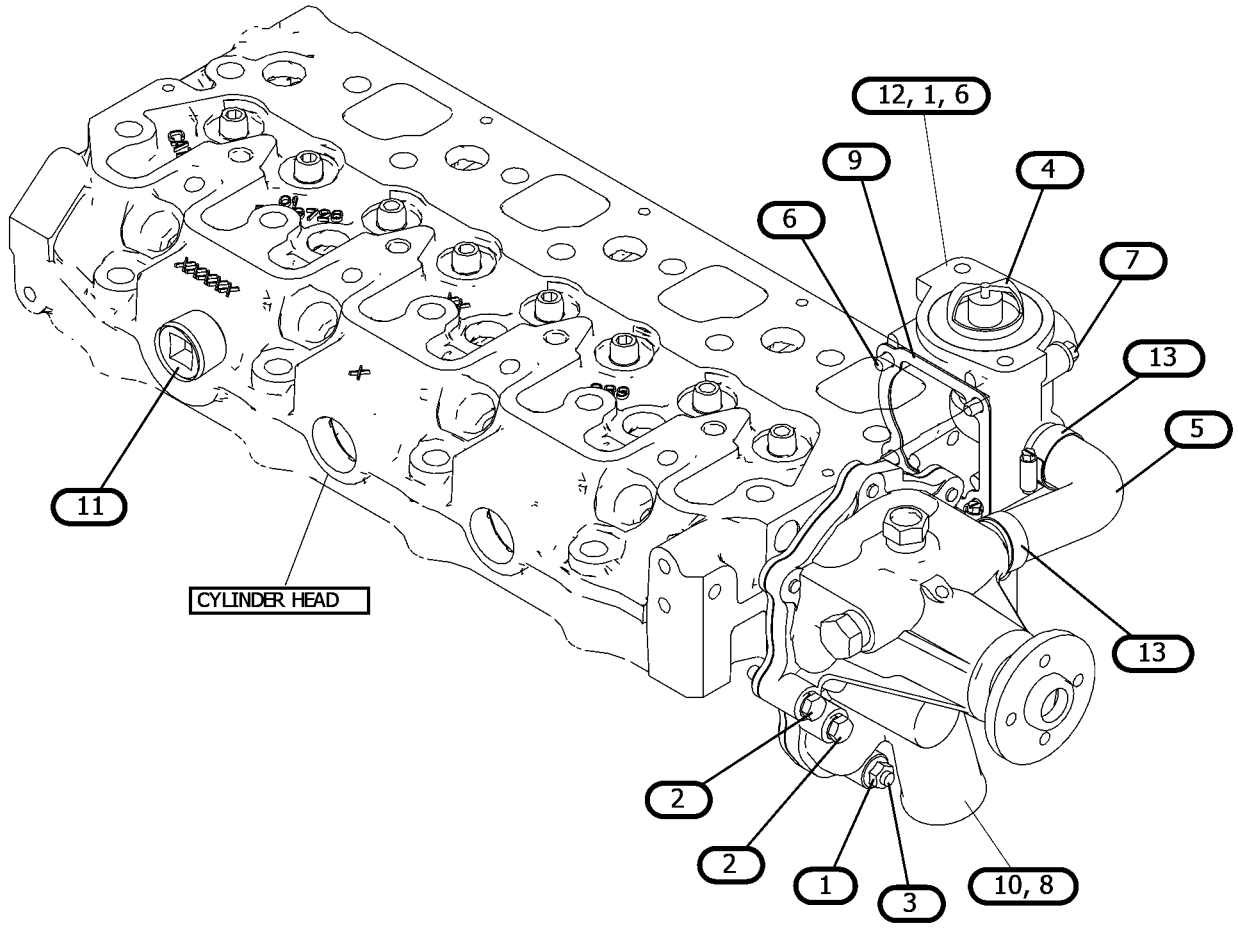

GRAPHIC #1 <END> g07894214

331-2552 RADIATOR & FAN GP

SMCS-1353, 1356 **i10663427**

NOTE	REF NO	GRAPHIC REF	PART NUMBER	QTY	PART NAME 1 2 3 4 5 6 (PRODUCT LEVEL)	SEE PAGE
M	1	1,2	**6I-0217**	6	BOLT (M8X1.25X20-MM)	
M	2	1,2	**6I-0917**	6	BOLT (M6X1X25-MM)	
M	3	2	**124-3815**	2	BOLT (M8X1.25X16-MM)	
M	4	2	**153-5592**	2	NUT (M8X1.25-THD)	
M	5	2	**114-4363**	10	BOLT (M8X1.25X12-MM)	
M	6	1	**141-5453**	15	BOLT (M14X1.5X30-MM)	
	7	2	**344-5868**	1	MOUNT	
	8	2	**568-8661**	1	FAN (7-BLADE)	
	9	1	**238-0265**	1	HOSE-RADIATOR (LOWER)	
	10	1	**238-0266**	1	HOSE-RADIATOR (UPPER)	
Y	11	1	**607-4843**	1	RADIATOR AS	554
	12	1	**438-8534**	1	BRACKET AS	
M	13	1	**208-9295**	2	BOLT-FLANGE HEAD (M10X1.5X40-MM)	
	14	2	**161-8260**	1	PLATE	
	15	2	**328-6607**	1	GUARD	
	16	1	**363-5813**	4	CLAMP-HOSE	
	17	2	**366-2656**	1	GUARD AS-FAN	
	18	2	**366-2658**	1	GUARD-ALTERNATOR	
	19	2	**487-9902**	1	BRACKET (TOP)	
	20	2	**334-7437**	1	BRACKET	
	21	1	**325-5944**	1	BRACKET (LH)	
	22	1	**430-5926**	1	BRACKET-MOUNTING (RH)	
	23	1	**325-5948**	2	BRACKET (REAR RH)	
	24	2	**469-4427**	1	GUARD AS	
	25	2	**244-3259**	2	CLIP	

PARTS SHOWN IN GRAPHIC(S) WITHOUT A REFERENCE NUMBER ARE NOT SERVICED SEPARATELY

M - METRIC PART
Y - SEPARATE ILLUSTRATION

331-2552 **RADIATOR & FAN GP** (contd.) **i10663427**

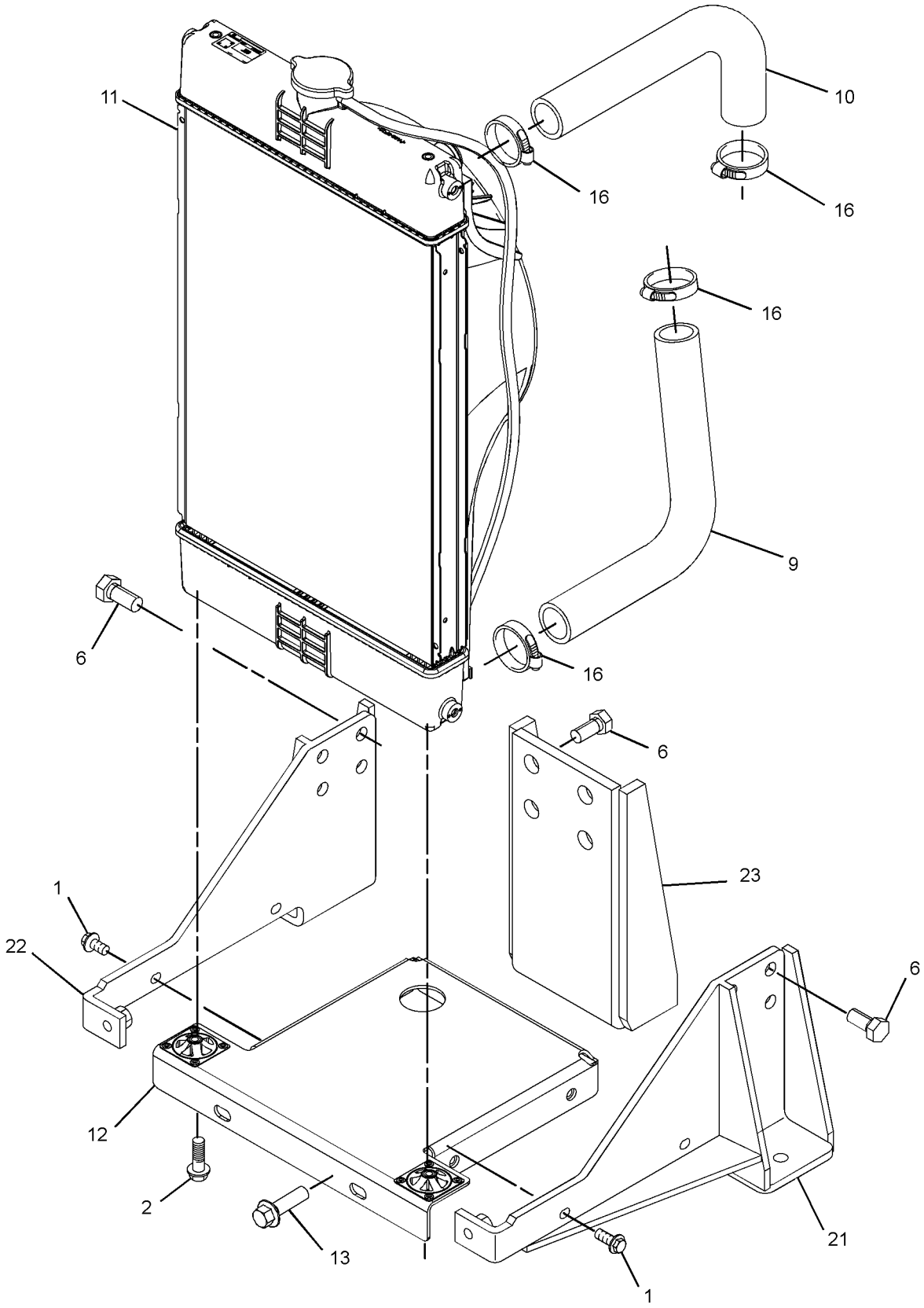

GRAPHIC #1 g07920188

331-2552 **RADIATOR & FAN GP (**contd.**)** **i10663427**

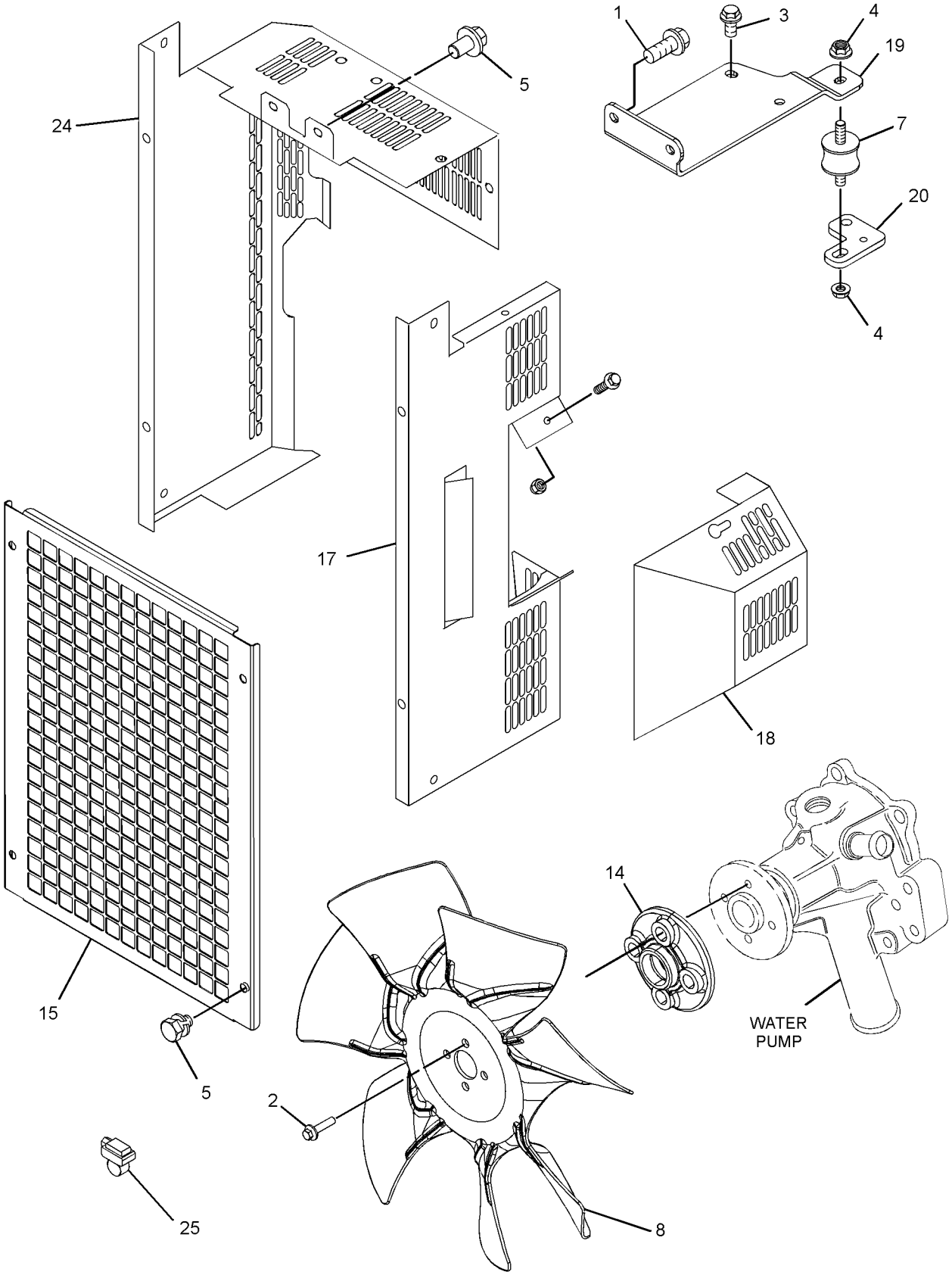

GRAPHIC #2 <END> g07948024

341-6658 RADIATOR & FAN GP

TYPE 1

SMCS-1353, 1356 **i05426291**

NOTE	REF NO	GRAPHIC REF	PART NUMBER	QTY	PART NAME 1 2 3 4 5 6 (PRODUCT LEVEL)	SEE PAGE
M	1	1,2	**6I-0217**	6	BOLT (M8X1.25X20-MM)	
	2	1	**363-5813**	2	CLAMP-HOSE	
M	3	2	**101-7178**	2	BOLT (M10X1.5X55-MM)	
M	4	2	**101-7541**	4	SCREW-FLAT HEAD (M8X1.25X25-MM)	
M	5	3	**124-3815**	10	BOLT (M8X1.25X16-MM)	
M	6	1	**153-5592**	2	NUT (M8X1.25-THD)	
	7	2	**153-5961**	4	BOLT AS	
M	8	3	**180-6118**	10	BOLT AS (M8X1.25X12-MM)	
M	9	2	**198-2664**	15	BOLT-HEAD (M14X1.5X25-MM)	
	10	1	**244-3259**	2	CLIP	
	11	2	**255-1297**	1	PLATE	
	12	2	**326-8559**	2	MOUNT-VIBRATION	
	13	2	**325-5944**	1	BRACKET	
	14	2	**325-5946**	1	BRACKET	
	15	2	**325-5948**	2	BRACKET	
	16	1	**326-8551**	1	RADIATOR GP	
	16A	1	**326-8552**	1	CAP-RADIATOR	
	16B	1	**326-8553**	1	PLUG-DRAIN	
	16C	1	**326-8554**	1	WASHER	
	17	1	**326-8555**	1	HOSE-RADIATOR (UPPER)	
	18	1	**326-8556**	1	HOSE-RADIATOR (LOWER)	
	19	1	**326-8557**	2	CLIP-HOSE	
	20	3	**326-8561**	1	GUARD-RADIATOR (LH)	
	21	3	**326-8562**	1	GUARD-RADIATOR (RH)	
	22	1	**326-8564**	1	ARM (RADIATOR)	
	23	1	**334-7437**	1	BRACKET	
	24	3	**341-6649**	1	GUARD	
	25	2	**341-6653**	1	FAN	
	26	2	**363-7274**	1	BRACKET	
	27	3	**342-4422**	1	GUARD-ALTERNATOR	
	28	2	**364-8947**	1	PLUG	

M - METRIC PART

341-6658 **RADIATOR & FAN GP (**contd.**)** **i05426291**

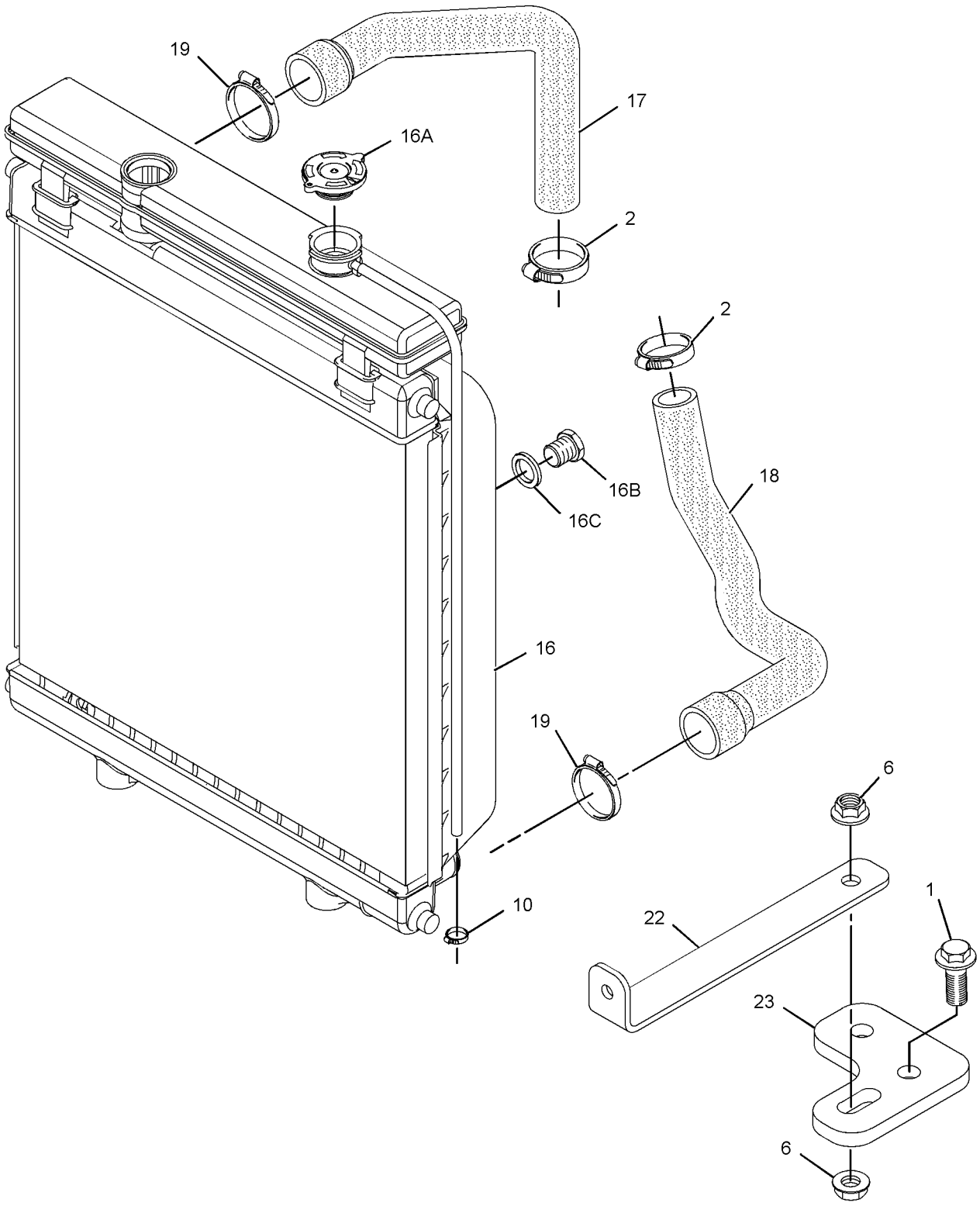

GRAPHIC #1 g03282857

341-6658 **RADIATOR & FAN GP** (contd.) **i05426291**

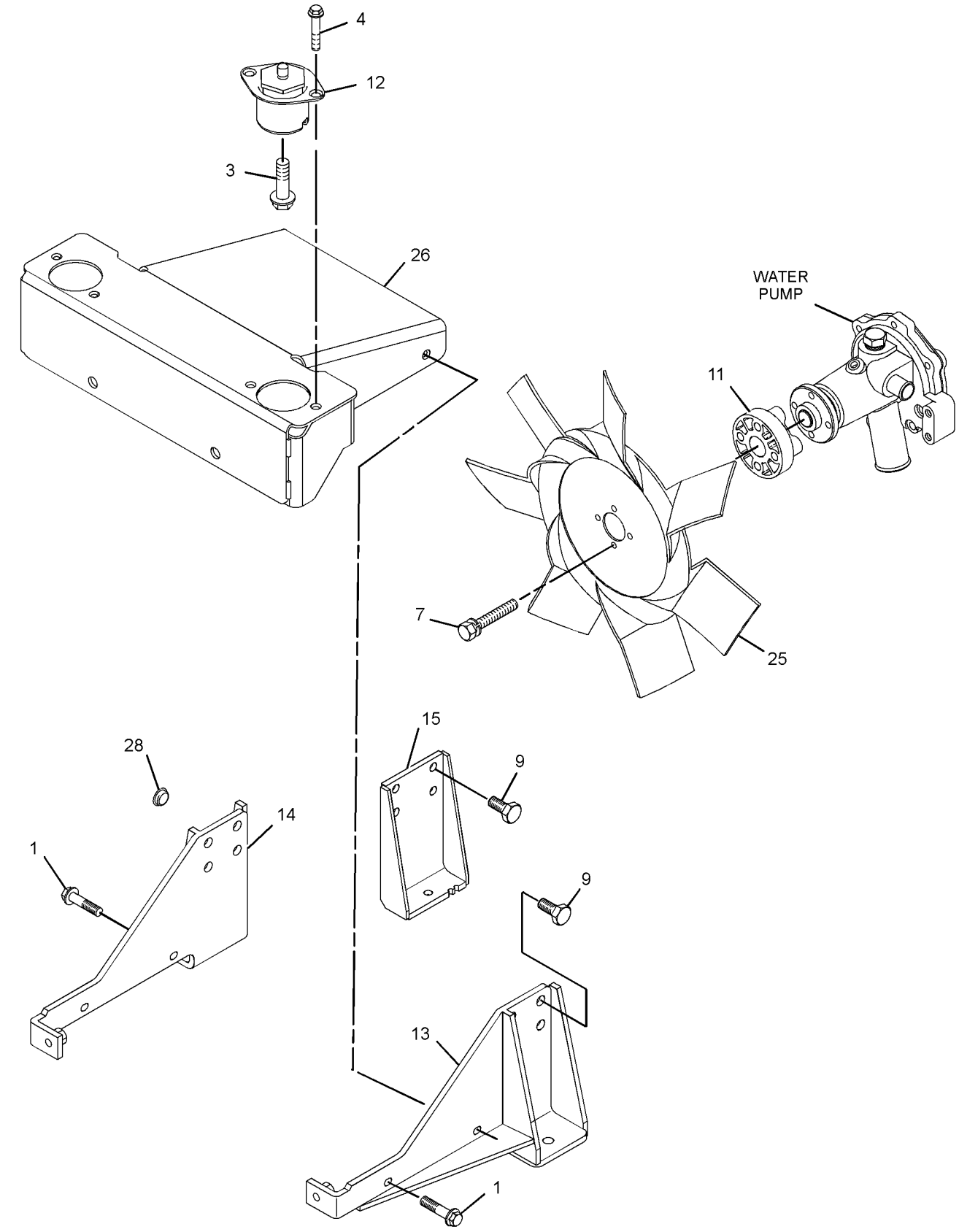

GRAPHIC #2 g03425678

341-6658 **RADIATOR & FAN GP (**contd.**)** **i05426291**

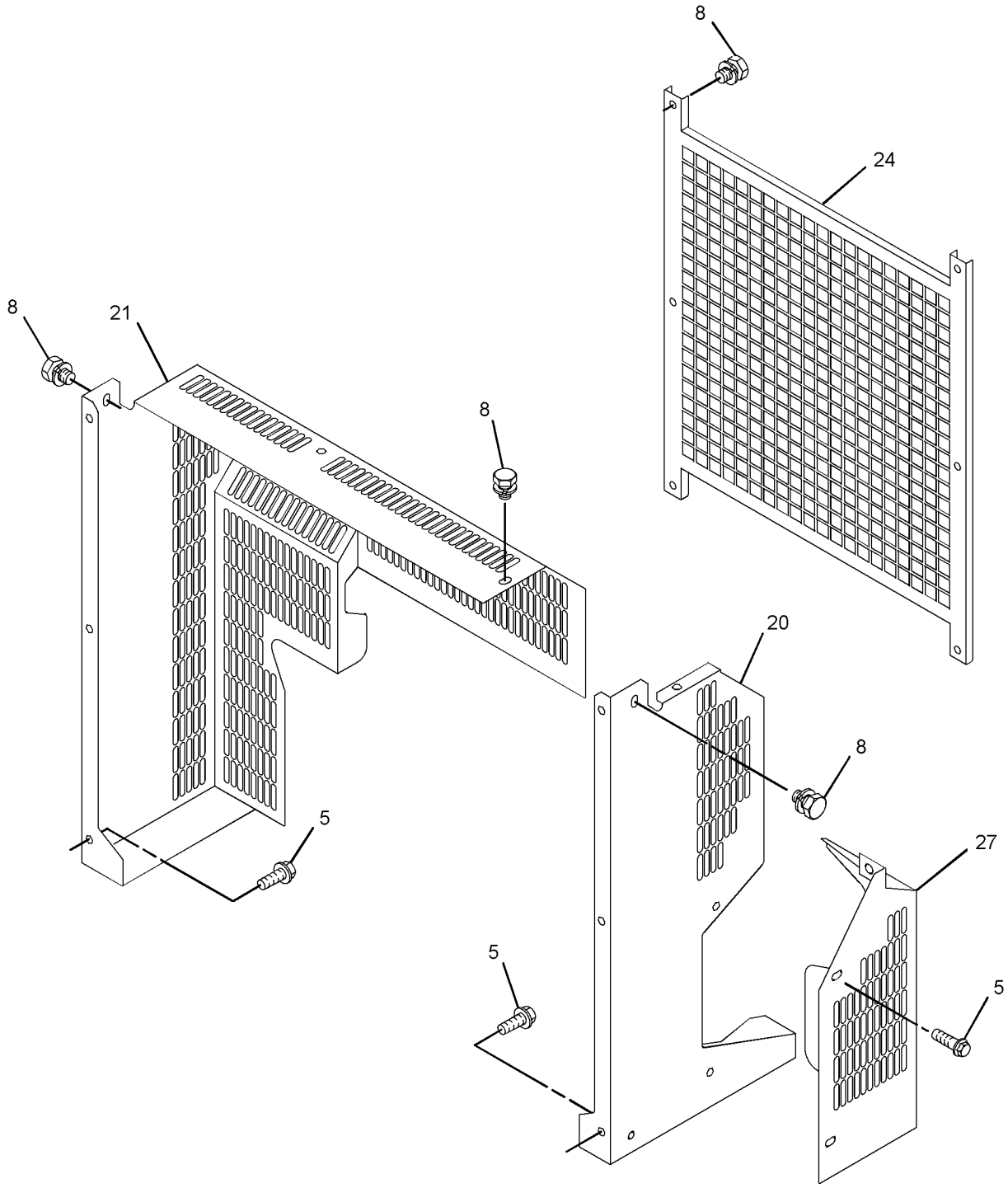

GRAPHIC #3 <END> g03282459

341-6658 RADIATOR & FAN GP

PART OF 491-3396, 541-9277 ENGINE AR-PRIMARY
TYPE 2

SMCS-1353, 1356 **i07508339**

NOTE	REF NO	GRAPHIC REF	PART NUMBER	QTY	PART NAME 1 2 3 4 5 6 (PRODUCT LEVEL)	SEE PAGE
M	1	1,2	**6I-0217**	6	BOLT (M8X1.25X20-MM)	
	2	1	**363-5813**	2	CLAMP-HOSE	
M	3	2	**101-7178**	2	BOLT (M10X1.5X55-MM)	
M	4	2	**101-7541**	4	SCREW-FLAT HEAD (M8X1.25X25-MM)	
M	5	3	**124-3815**	5	BOLT (M8X1.25X16-MM)	
M	6	1	**153-5592**	2	NUT (M8X1.25-THD)	
M	7	2	**273-9253**	4	BOLT (M6X1X35-MM)	
M	8	3	**114-4363**	10	BOLT (M8X1.25X12-MM)	
M	9	2	**198-2664**	15	BOLT-HEAD (M14X1.5X25-MM)	
	10	1	**244-3259**	2	CLIP	
	11	2	**255-1297**	1	PLATE	
	12	2	**326-8559**	2	MOUNT-VIBRATION	
	13	2	**325-5944**	1	BRACKET	
C	14	2	**430-5926**	1	BRACKET-MOUNTING	
	15	2	**325-5948**	2	BRACKET	
Y	16	1	**326-8551**	1	RADIATOR GP	555
	17	1	**326-8555**	1	HOSE-RADIATOR (UPPER)	
	18	1	**326-8556**	1	HOSE-RADIATOR (LOWER)	
	19	1	**103-1067**	2	CLAMP-HOSE	
	20	3	**510-1244**	1	GUARD GP-FAN (LH)	
M		3	**6I-0254**	4	BOLT (M8X1.25X30-MM)	
M		3	**362-8050**	4	NUT (M8X1.25-THD)	
		3	**431-7089**	1	GUARD AS-FAN	
	21	3	**326-8562**	1	GUARD-RADIATOR (RH)	
	22	1	**326-8564**	1	ARM (RADIATOR)	
	23	1	**334-7437**	1	BRACKET	
	24	3	**341-6649**	1	GUARD	
	25	2	**447-7691**	1	FAN AS (6-BLADE)	
	26	2	**527-9209**	1	PLATE AS-BASE	
	27	3	**426-5345**	1	GUARD (ALTERNATOR)	
	28	3	**505-8353**	1	BOLT-FLANGE HEAD	

C - CHANGE FROM PREVIOUS TYPE
M - METRIC PART
Y - SEPARATE ILLUSTRATION

341-6658 **RADIATOR & FAN GP (**contd.**)** **i07508339**

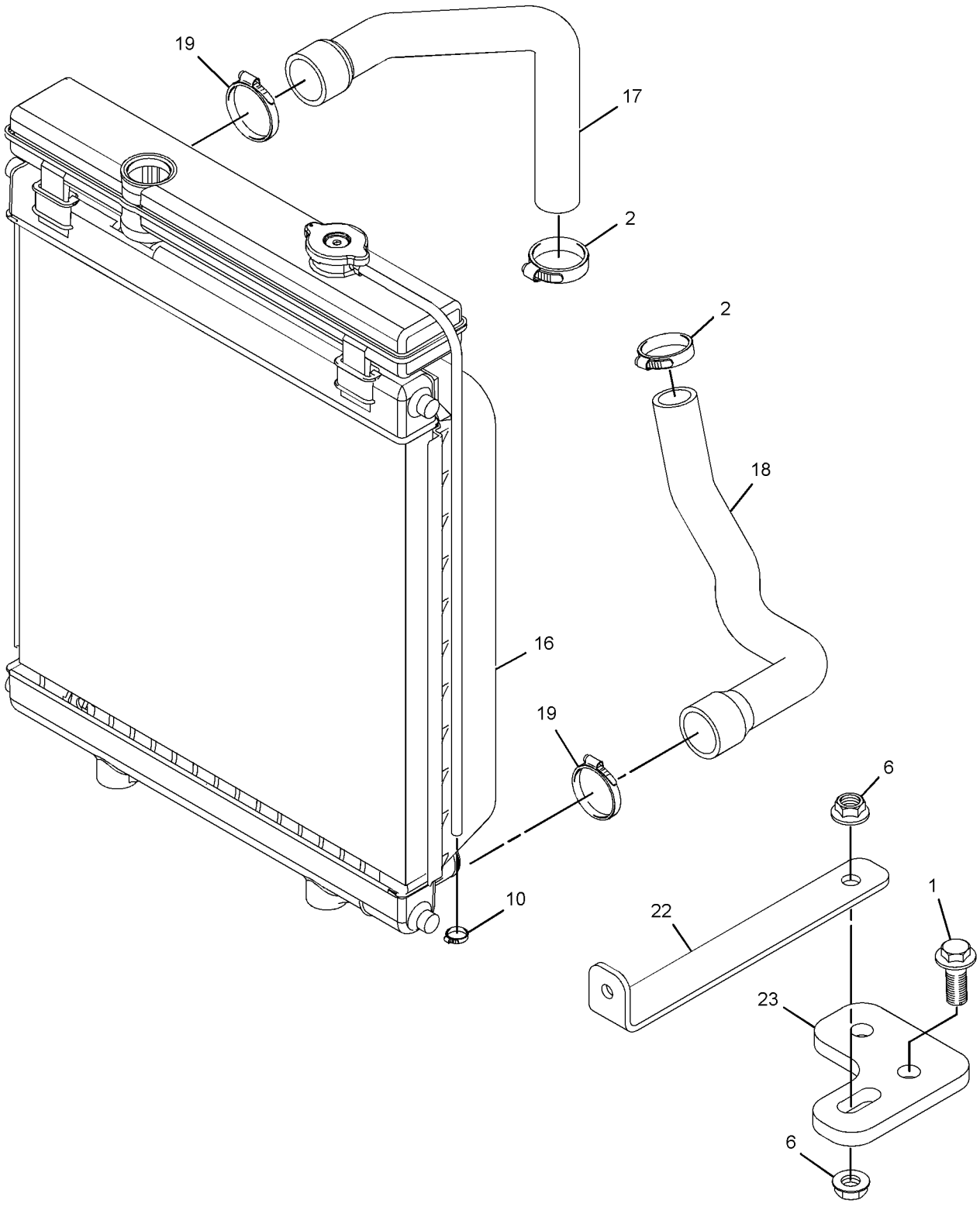

GRAPHIC #1 g06385814

341-6658 **RADIATOR & FAN GP (**contd.**)** **i07508339**

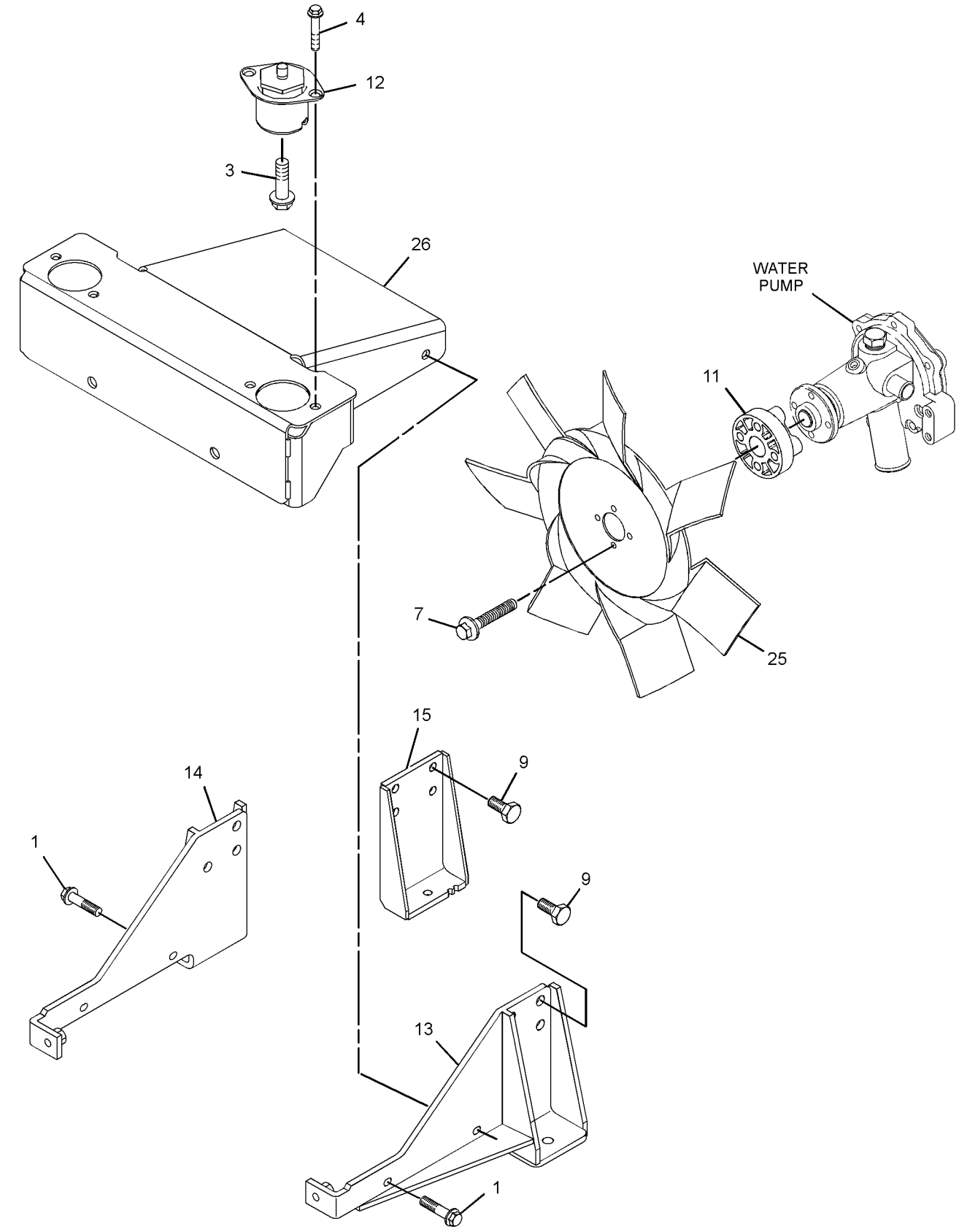

GRAPHIC #2 g06206037

341-6658 **RADIATOR & FAN GP (**contd.**)** **i07508339**

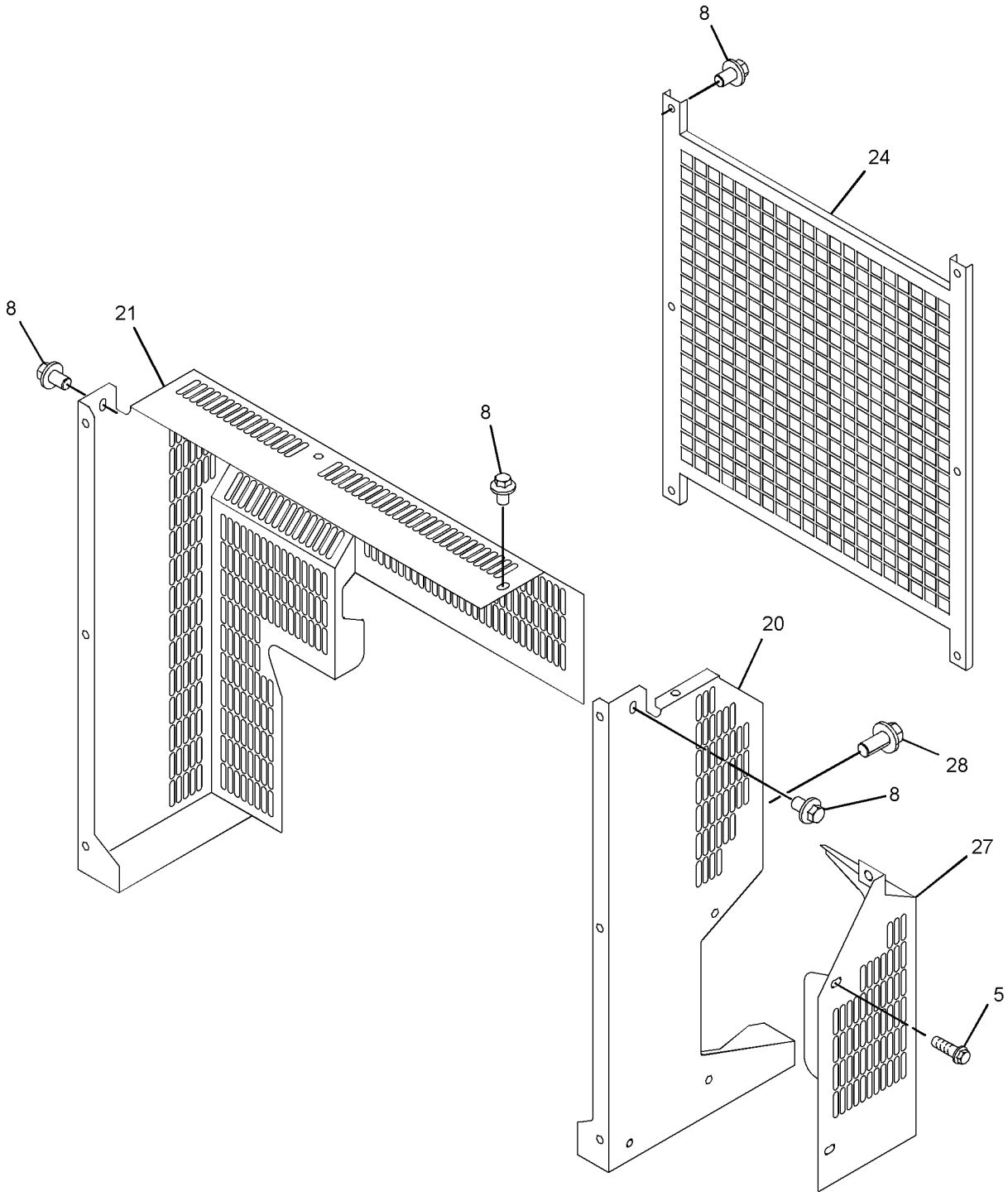

GRAPHIC #3 <END> g06385431

344-5881 RADIATOR & FAN GP

SMCS-1353, 1356 **i08361873**

NOTE	REF NO	GRAPHIC REF	PART NUMBER	QTY	PART NAME 1 2 3 4 5 6 (PRODUCT LEVEL)	SEE PAGE
M	1	2	**6I-0254**	2	BOLT (M8X1.25X30-MM)	
M	2	2	**6I-0846**	1	BOLT (M6X1X14-MM)	
	3	1	**7W-2601**	2	SPACER (10.3X19X3.2-MM THK)	
	4	1	**9M-7959**	5	CLAMP-HOSE	
	5	1	**363-5813**	3	CLAMP-HOSE	
M	6	1	**101-7178**	2	BOLT (M10X1.5X55-MM)	
	7	1	**101-7540**	2	WASHER (11.9X38.2X1.6-MM THK)	
M	8	1	**101-7541**	4	SCREW-FLAT HEAD (M8X1.25X25-MM)	
M	9	2	**124-3815**	6	BOLT (M8X1.25X16-MM)	
M	10	2	**153-5592**	3	NUT (M8X1.25-THD)	
M	11	2	**153-5960**	1	NUT (M6X1-THD)	
	12	2	**153-5961**	4	BOLT AS	
	13	1	**357-9895**	1	BRACKET-MOUNTING	
M	14	1,2	**198-2664**	14	BOLT-HEAD (M14X1.5X25-MM)	
M	15	1	**6I-0654**	6	BOLT (M10X1.5X25-MM)	
	16	1	**244-3259**	2	CLIP	
	17	2	**255-1297**	1	PLATE	
	19	2	**325-5948**	2	BRACKET	
	20	2	**334-7437**	1	BRACKET	
	21	2	**341-6653**	1	FAN	
	22	1	**342-4356**	1	RADIATOR AS	
		1	**422-6385**	1	PLUG	
		1	**422-6388**	1	WASHER	
	23	1	**342-4357**	1	HOSE-RADIATOR (LOWER)	
	24	1	**342-4358**	1	HOSE-RADIATOR (UPPER)	
	25	1	**342-4362**	1	TUBE AS	
	25A	1	**236-7734**	1	HOSE	
	25B	1	**236-7735**	1	HOSE	
	25C	1	**342-4359**	1	PLUG	
	25D	1	**342-4360**	2	CLIP-HOSE	
	26	2	**476-5579**	1	BRACKET	
	27	2	**342-4364**	1	CLIP	
	28	1	**342-4367**	1	TUBE AS	
	28A	1	**363-5813**	2	CLAMP-HOSE	
	28B	1	**342-4359**	1	PLUG	
	28C	1	**342-4365**	1	HOSE	
	28D	1	**342-4366**	1	HOSE	
	29	2	**342-4368**	1	GUARD-FAN	
	30	2	**469-4426**	1	GUARD AS-FAN	
	31	2	**342-4370**	1	BRACKET	
	32	1	**366-0164**	2	MOUNTING	
	33	1	**357-9897**	1	PLATE	
	34	1	**357-9896**	1	BRACKET-MOUNTING	
	35	2	**292-1992**	2	SPACER	
	36	2	**344-5868**	1	MOUNT	
	37	2	**344-5880**	1	GUARD-RADIATOR	
	38	1	**364-8947**	1	PLUG	
M	39	2	**114-4363**	14	BOLT (M8X1.25X12-MM)	

M - METRIC PART

344-5881 **RADIATOR & FAN GP (**contd.**)** **i08361873**

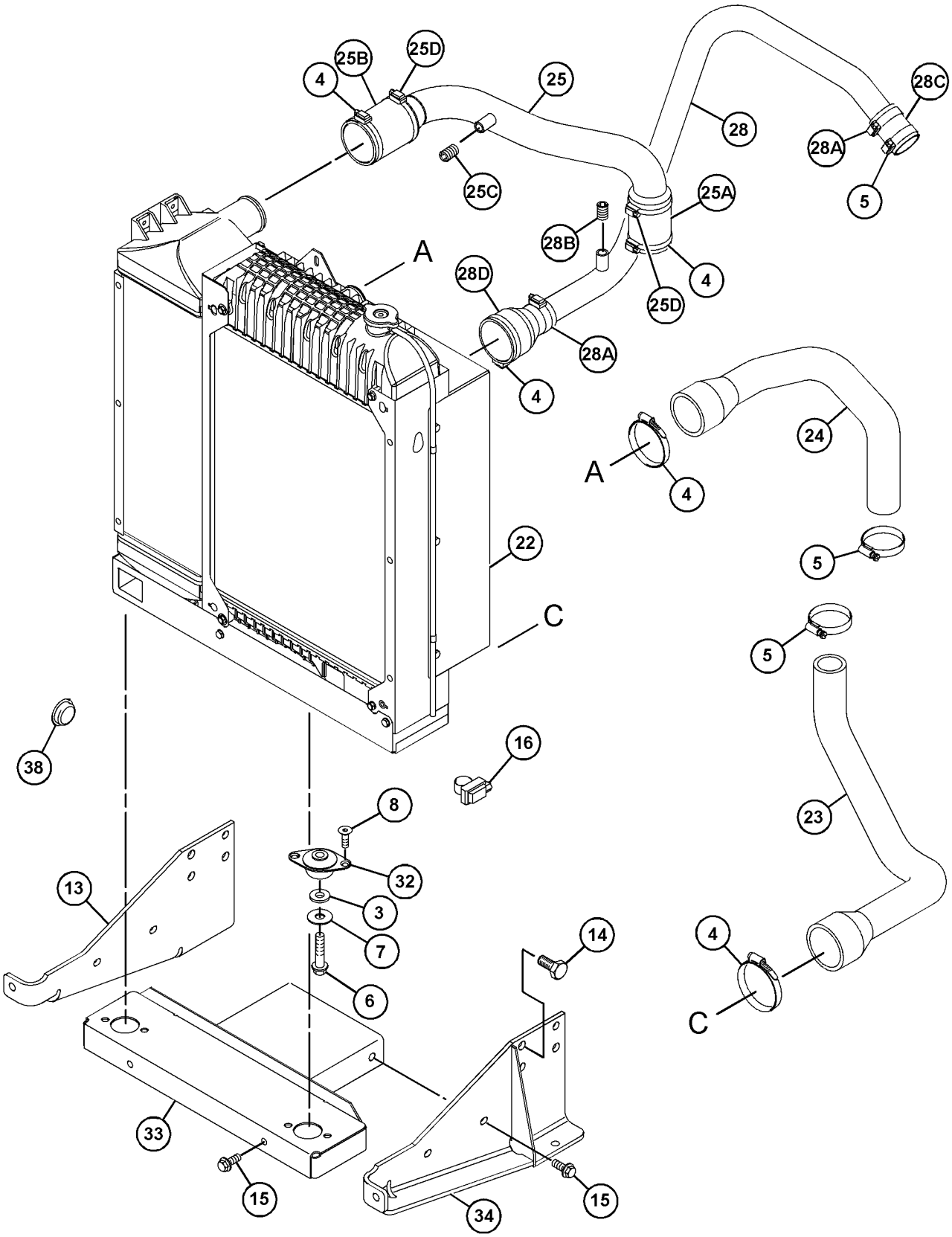

GRAPHIC #1 g06403074

344-5881 **RADIATOR & FAN GP (**contd.**)** **i08361873**

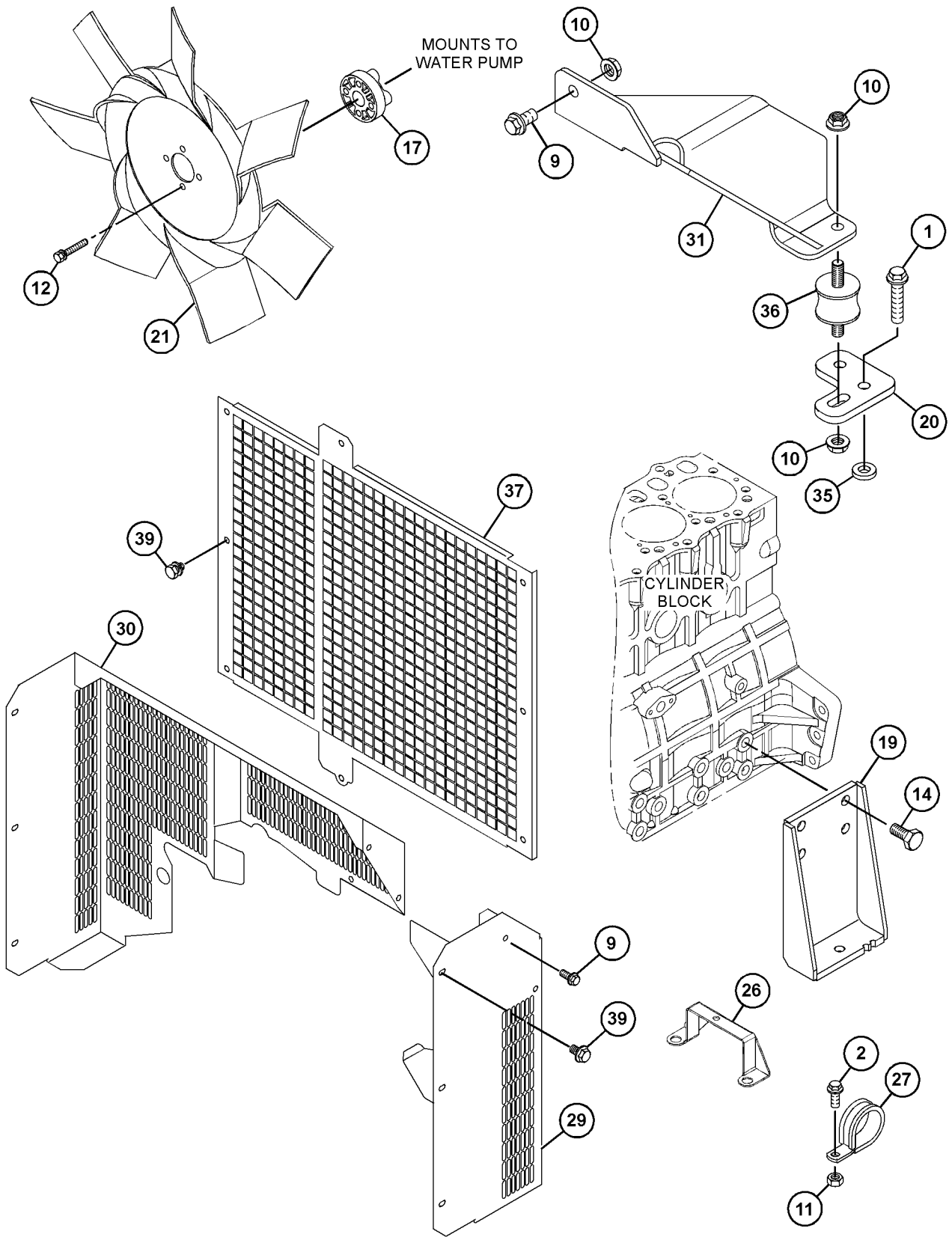

GRAPHIC #2 <END> g06403075

607-4843 RADIATOR AS

PART OF 331-2552 RADIATOR & FAN GP, 331-3270, 584-9829 RADIATOR GP

SMCS-1353 **i08729190**

NOTE	REF NO	GRAPHIC REF	PART NUMBER	QTY	PART NAME 1 2 3 4 5 6 (PRODUCT LEVEL)	SEE PAGE
	1	1	**451-7225**	1	FILM-IDENTIFICATION (CAT)	
	2	1	*561-9509*	1	RADIATOR AS	
	2A	1	**202-6616**	1	CAP-RADIATOR	
	2B	1	**295-5876**	1	SHROUD	

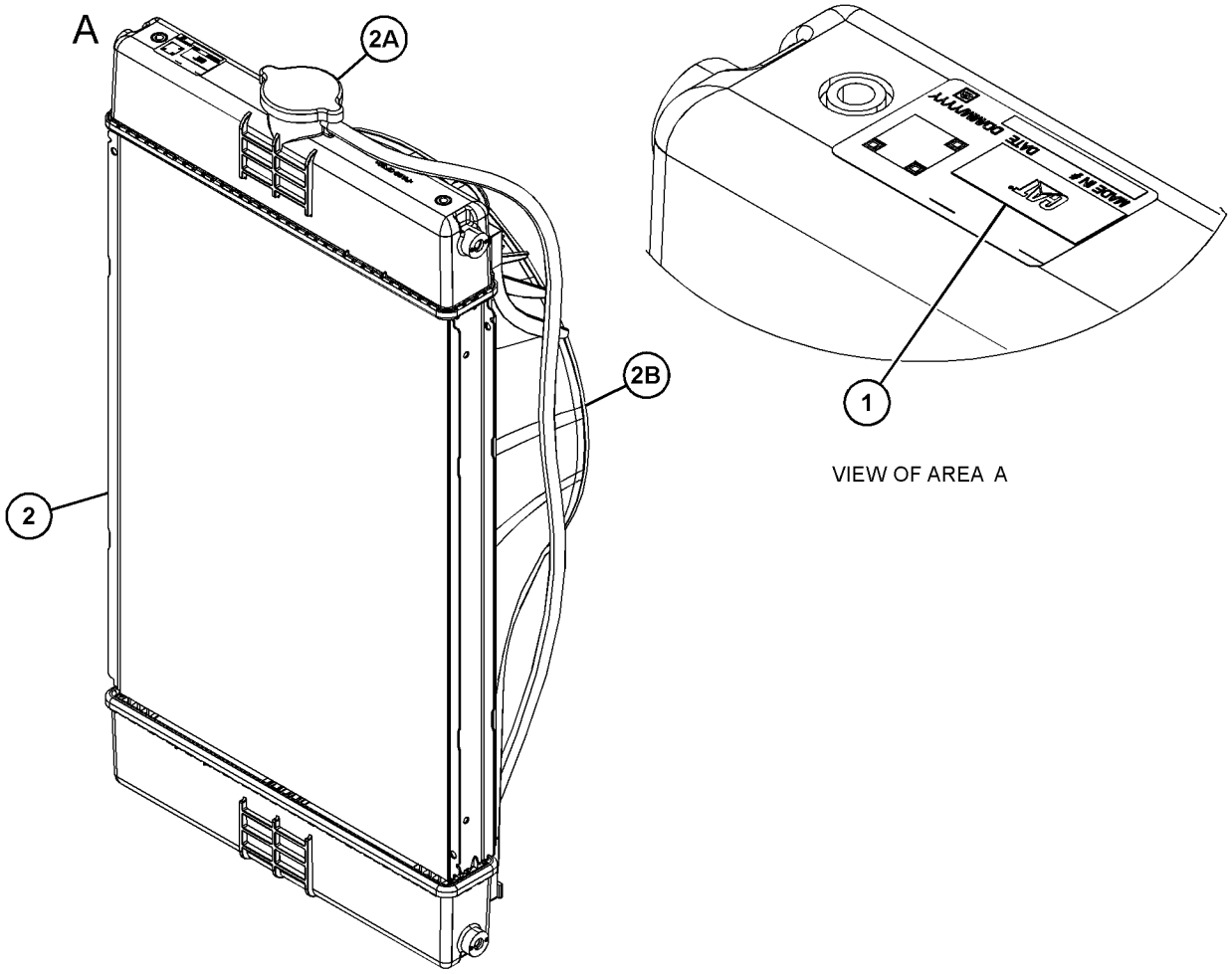

VIEW OF AREA A

GRAPHIC #1 <END> g06760474

326-8551 RADIATOR GP

PART OF 341-6658 RADIATOR & FAN GP

SMCS-1353 **i09968040**

NOTE	REF NO	GRAPHIC REF	PART NUMBER	QTY	PART NAME 1 2 3 4 5 6 (PRODUCT LEVEL)	SEE PAGE
	1	1	**211-6574**	1	CAP-RADIATOR (16-PSI)	
	2	1	**422-6430**	1	KIT-PLUG (ASSEMBLY)	
		1	**422-6389**	1	WASHER	
	3	1	**326-8554**	1	WASHER	
	4	1	**526-2333**	1	HEADER	
	5	1	**526-2334**	1	COWLING	

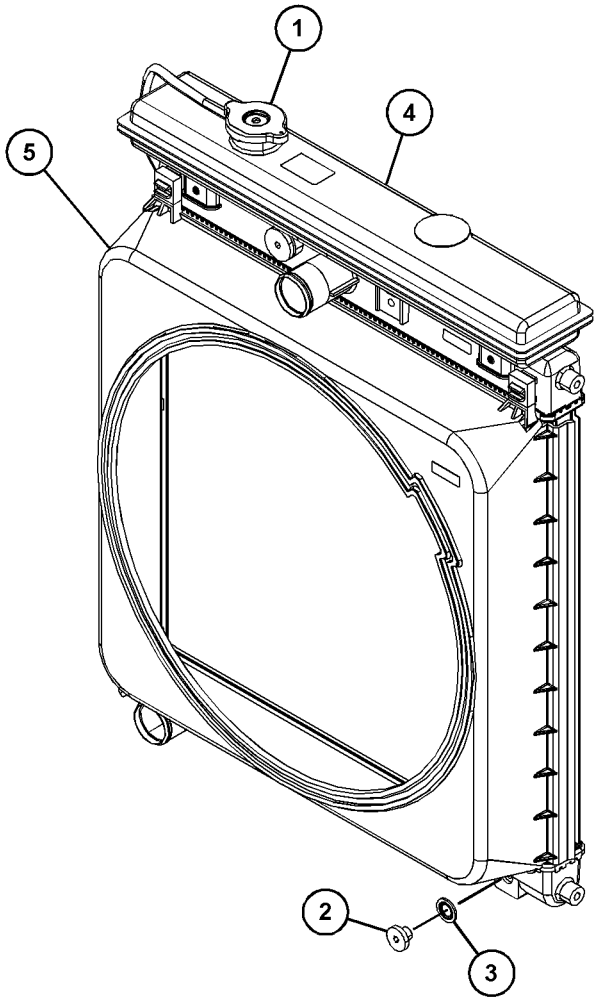

GRAPHIC #1 <END> g07659407

331-3270 RADIATOR GP

S/N: G7L1-4863

SMCS-1353 **i07055372**

NOTE	REF NO	GRAPHIC REF	PART NUMBER	QTY	PART NAME 1 2 3 4 5 6 (PRODUCT LEVEL)	SEE PAGE
M	1	1,2	**6I-0217**	6	BOLT (M8X1.25X20-MM)	
M	2	1	**6I-0917**	2	BOLT (M6X1X25-MM)	
M	3	2	**124-3815**	6	BOLT (M8X1.25X16-MM)	
M	4	2	**153-5592**	2	NUT (M8X1.25-THD)	
	5	2	**153-6861**	4	BOLT AS	
	6	2	**161-8260**	1	PLATE	
M	7	2	**180-6118**	10	BOLT AS (M8X1.25X12-MM)	
M	8	1	**198-2664**	15	BOLT-HEAD (M14X1.5X25-MM)	
	9	2	**344-5868**	1	MOUNT	
	10	1	**238-0265**	1	HOSE-RADIATOR (LOWER)	
	11	1	**238-0266**	1	HOSE-RADIATOR (UPPER)	
	12	1	**238-0271**	1	RADIATOR AS	
	12A	1	**202-6616**	1	CAP-RADIATOR	
	12B	1	**295-5876**	1	SHROUD	
	13	1	**239-0743**	1	SUPPORT	
M	14	1	**6I-0654**	2	BOLT (M10X1.5X25-MM)	
	15	2	**328-6606**	1	FAN (7-BLADE)	
	16	1	**363-5813**	4	CLAMP-HOSE	
	17	2	**334-7304**	1	GUARD-FAN	
	18	2	**334-7306**	1	GUARD-ALTERNATOR	
	19	2	**334-7436**	1	BRACKET	
	20	2	**334-7437**	1	BRACKET	
	21	1	**325-5944**	1	BRACKET (LH)	
	22	1	**325-5946**	1	BRACKET (RH)	
	23	1	**325-5948**	2	BRACKET (REAR RH)	
	24	2	**328-6607**	1	GUARD	
	25	2	**331-2553**	1	GUARD-FAN	
	26	2	**244-3259**	2	CLIP	
	27	1	**364-8947**	1	PLUG	

M - METRIC PART

331-3270 **RADIATOR GP (**contd.**)** **i07055372**

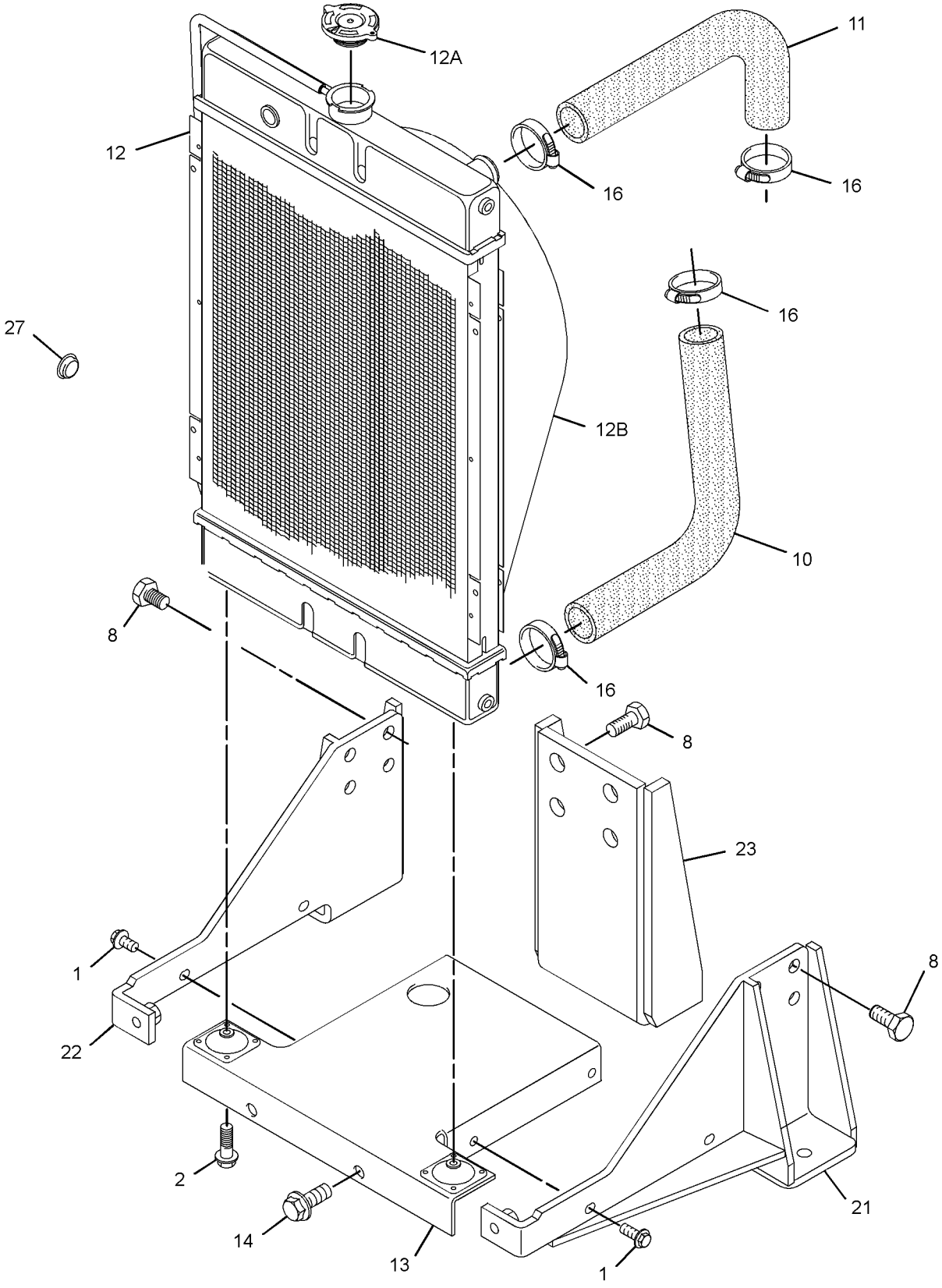

GRAPHIC #1 g02614759

331-3270 **RADIATOR GP (**contd.**)** **i07055372**

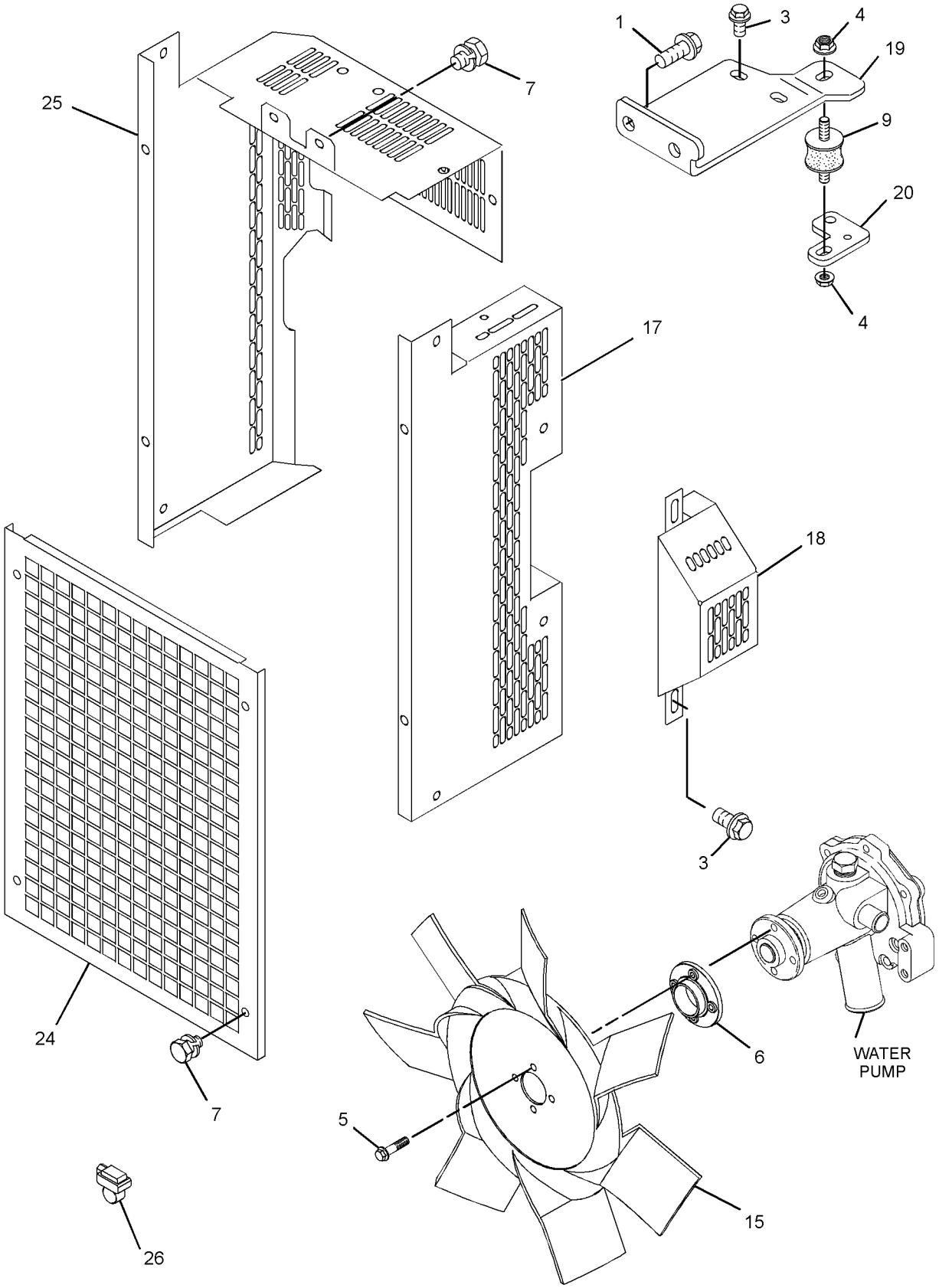

GRAPHIC #2 <END> g02213933

331-3270 RADIATOR GP

TYPE 1

SMCS-1353 **i07055384**

NOTE	REF NO	GRAPHIC REF	PART NUMBER	QTY	PART NAME 1 2 3 4 5 6 (PRODUCT LEVEL)	SEE PAGE
M	1	1,2	**6I-0217**	6	BOLT (M8X1.25X20-MM)	
M	2	1	**6I-0917**	2	BOLT (M6X1X25-MM)	
M	3	2	**124-3815**	2	BOLT (M8X1.25X16-MM)	
M	4	2	**153-5592**	2	NUT (M8X1.25-THD)	
	5	2	**153-6861**	4	BOLT AS	
	6	2	**161-8260**	1	PLATE	
M	7	2	**180-6118**	10	BOLT AS (M8X1.25X12-MM)	
M	8	1	**198-2664**	15	BOLT-HEAD (M14X1.5X25-MM)	
	9	2	**344-5868**	1	MOUNT	
	10	1	**238-0265**	1	HOSE-RADIATOR (LOWER)	
	11	1	**238-0266**	1	HOSE-RADIATOR (UPPER)	
	12	1	**238-0271**	1	RADIATOR AS	
	12A	1	**202-6616**	1	CAP-RADIATOR	
	12B	1	**295-5876**	1	SHROUD	
	13	1	**239-0743**	1	SUPPORT	
M	14	1	**6I-0654**	2	BOLT (M10X1.5X25-MM)	
	15	2	**328-6606**	1	FAN (7-BLADE)	
	16	1	**363-5813**	4	CLAMP-HOSE	
C	17	2	**366-2656**	1	GUARD AS-FAN	
M	17A	2	**6I-0254**	2	BOLT (M8X1.25X30-MM)	
M	17B	2	**362-8050**	2	NUT (M8X1.25-THD)	
C	18	2	**366-2658**	1	GUARD-ALTERNATOR	
	19	2	**334-7436**	1	BRACKET	
	20	2	**334-7437**	1	BRACKET	
	21	1	**325-5944**	1	BRACKET (LH)	
	22	1	**325-5946**	1	BRACKET (RH)	
	23	1	**325-5948**	2	BRACKET (REAR RH)	
	24	2	**328-6607**	1	GUARD	
	25	2	**331-2553**	1	GUARD-FAN	
	26	2	**244-3259**	2	CLIP	
	27	1	**364-8947**	1	PLUG	

C - CHANGE FROM PREVIOUS TYPE
M - METRIC PART

331-3270 **RADIATOR GP (**contd.**)** **i07055384**

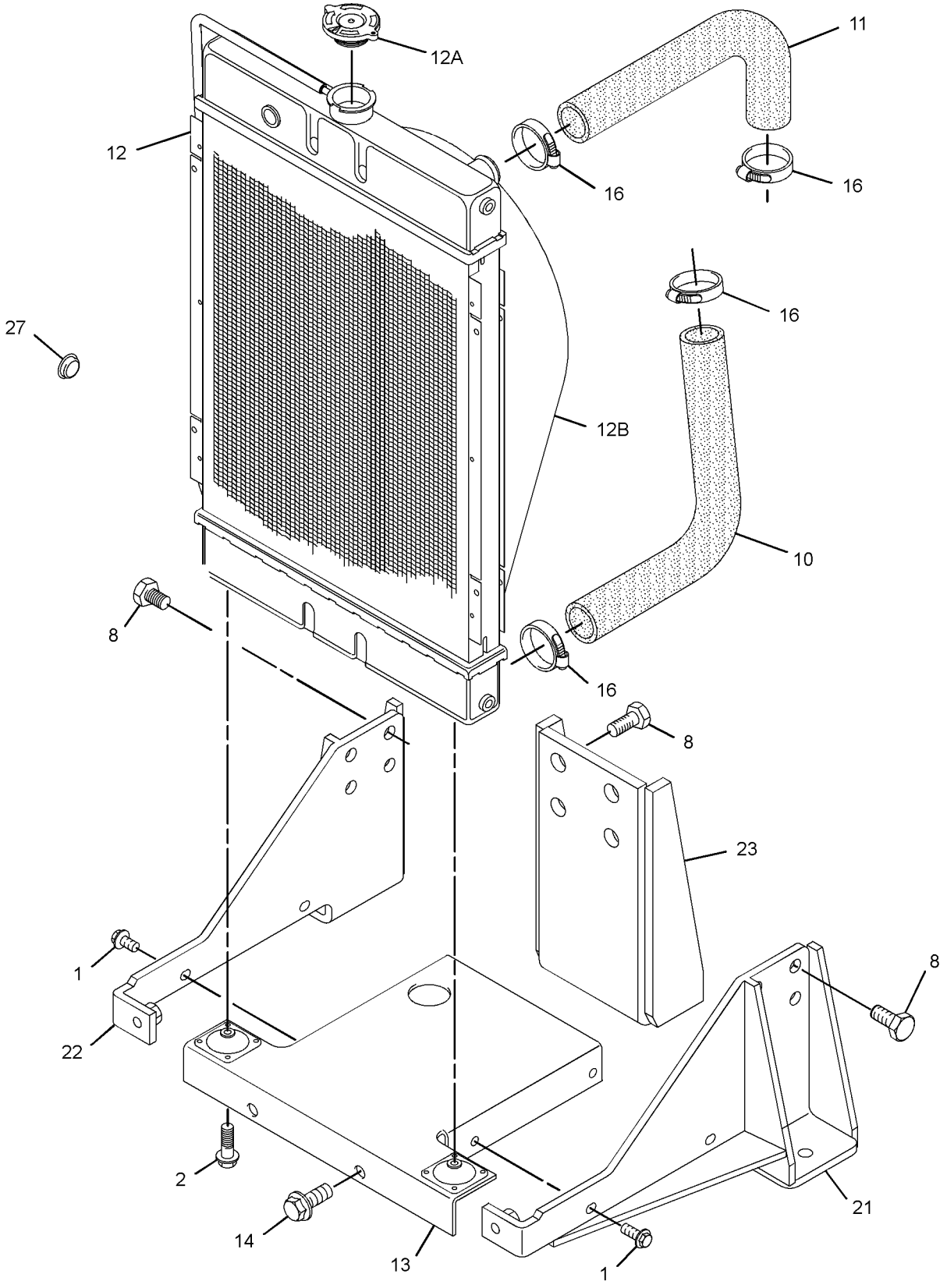

GRAPHIC #1 g02614759

331-3270 **RADIATOR GP (**contd.**)** **i07055384**

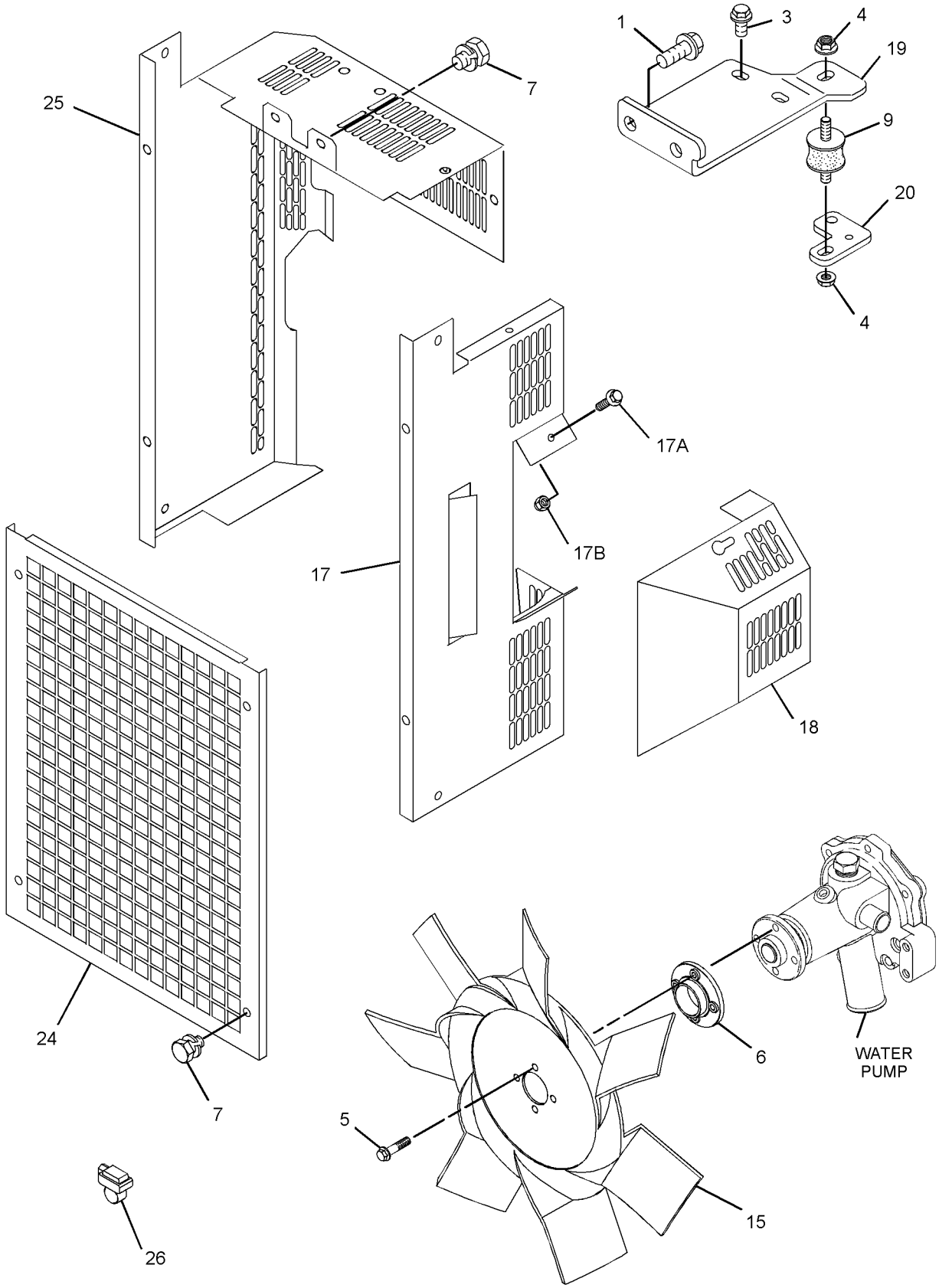

GRAPHIC #2 <END> g03337585

331-3270 RADIATOR GP

TYPE 2

SMCS-1353 **i07039490**

NOTE	REF NO	GRAPHIC REF	PART NUMBER	QTY	PART NAME 1 2 3 4 5 6 (PRODUCT LEVEL)	SEE PAGE
M	1	1,2	**6I-0217**	6	BOLT (M8X1.25X20-MM)	
M	2	1	**6I-0917**	2	BOLT (M6X1X25-MM)	
M	3	2	**124-3815**	2	BOLT (M8X1.25X16-MM)	
M	4	2	**153-5592**	2	NUT (M8X1.25-THD)	
	5	2	**153-6861**	4	BOLT AS	
	6	2	**161-8260**	1	PLATE	
M	7	2	**180-6118**	10	BOLT AS (M8X1.25X12-MM)	
M	8	1	**198-2664**	15	BOLT-HEAD (M14X1.5X25-MM)	
	9	2	**344-5868**	1	MOUNT	
	10	1	**238-0265**	1	HOSE-RADIATOR (LOWER)	
	11	1	**238-0266**	1	HOSE-RADIATOR (UPPER)	
	12	1	**238-0271**	1	RADIATOR AS	
	12A	1	**202-6616**	1	CAP-RADIATOR	
	12B	1	**295-5876**	1	SHROUD	
	13	1	**239-0743**	1	SUPPORT	
M	14	1	**6I-0654**	2	BOLT (M10X1.5X25-MM)	
	15	2	**444-7301**	1	FAN-SUCTION (6-BLADE)	
	16	1	**363-5813**	4	CLAMP-HOSE	
	17	2	**366-2656**	1	GUARD AS-FAN	
M	17A	2	**6I-0254**	2	BOLT (M8X1.25X30-MM)	
M	17B	2	**362-8050**	2	NUT (M8X1.25-THD)	
	18	2	**366-2658**	1	GUARD-ALTERNATOR	
	19	2	**487-9902**	1	BRACKET	
	20	2	**334-7437**	1	BRACKET	
	21	1	**325-5944**	1	BRACKET (LH)	
C	22	1	**430-5926**	1	BRACKET-MOUNTING (RH)	
	23	1	**325-5948**	2	BRACKET (REAR RH)	
	24	2	**328-6607**	1	GUARD	
	25	2	**469-4427**	1	GUARD AS	
	26	2	**244-3259**	2	CLIP	

C - CHANGE FROM PREVIOUS TYPE
M - METRIC PART

331-3270 **RADIATOR GP (**contd.**)** **i07039490**

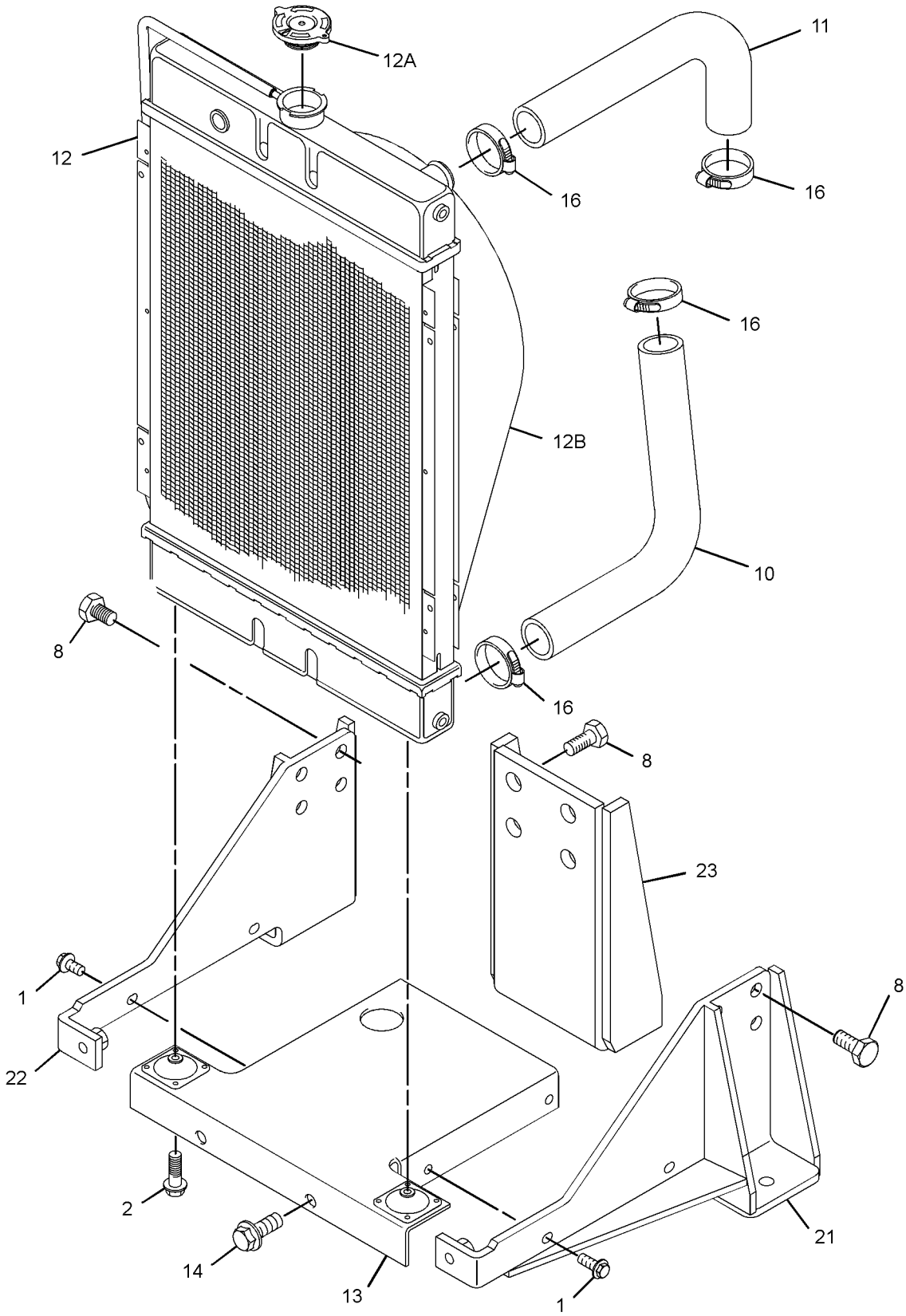

GRAPHIC #1 g06200171

331-3270 **RADIATOR GP (**contd.**)** **i07039490**

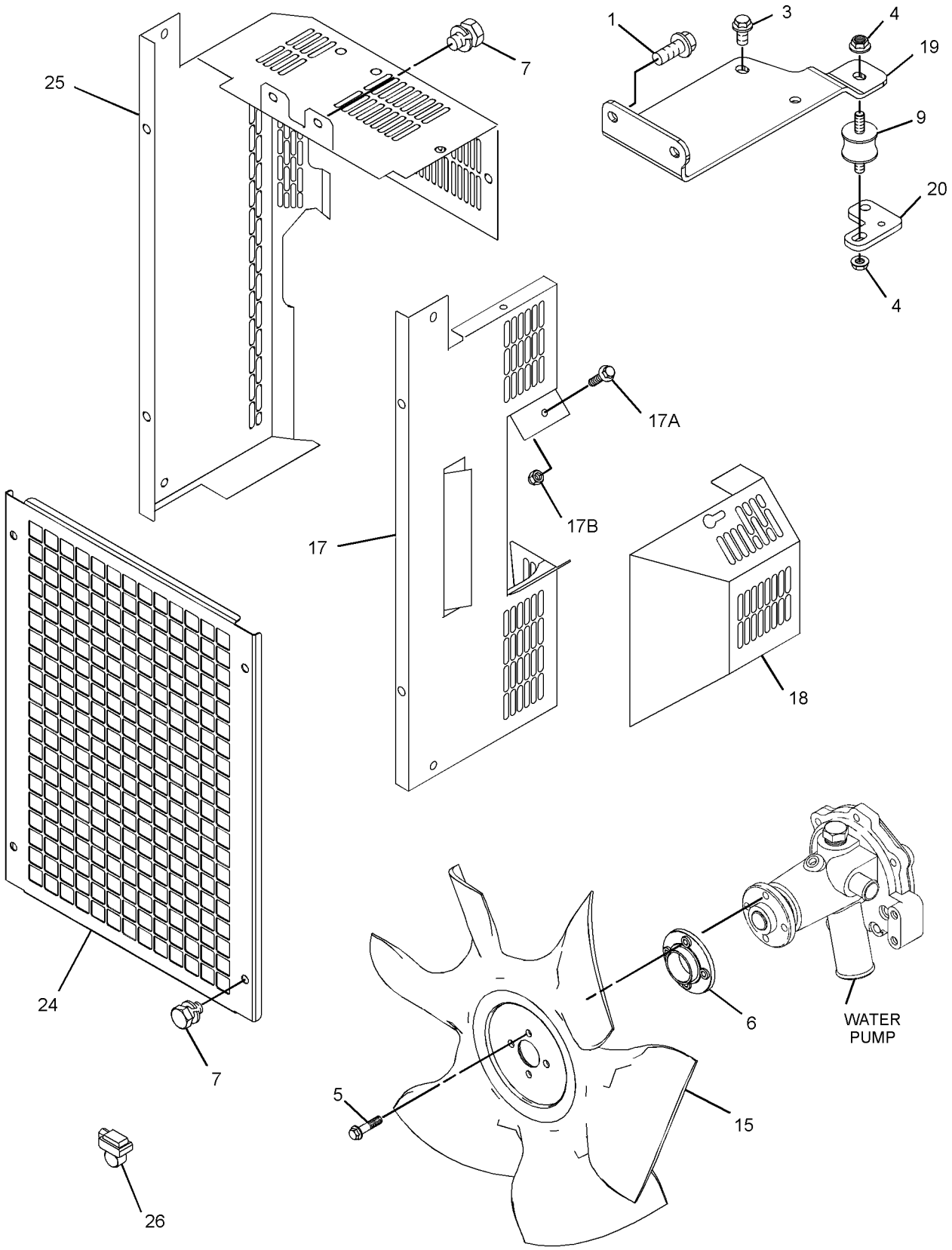

GRAPHIC #2 <END> g06210207

331-3270 RADIATOR GP

PART OF 516-9335 ENGINE AR-PRIMARY

TYPE 3

SMCS-1353 **i10515844**

NOTE	REF NO	GRAPHIC REF	PART NUMBER	QTY	PART NAME 1 2 3 4 5 6 (PRODUCT LEVEL)	SEE PAGE
M	1	1,2	**6I-0217**	6	BOLT (M8X1.25X20-MM)	
CM	2	1,2	**6I-0917**	6	BOLT (M6X1X25-MM)	
M	3	2	**124-3815**	2	BOLT (M8X1.25X16-MM)	
M	4	2	**153-5592**	2	NUT (M8X1.25-THD)	
	5	2	**244-3259**	2	CLIP	
	6	2	**161-8260**	1	PLATE	
M	7	2	**114-4363**	10	BOLT (M8X1.25X12-MM)	
M	8	1	**141-5453**	15	BOLT (M14X1.5X30-MM)	
	9	2	**344-5868**	1	MOUNT	
	10	1	**238-0265**	1	HOSE-RADIATOR (LOWER)	
	11	1	**238-0266**	1	HOSE-RADIATOR (UPPER)	
Y	12	1	**607-4843**	1	RADIATOR AS	554
	13	1	**438-8534**	1	BRACKET AS	
M	14	1	**208-9295**	2	BOLT-FLANGE HEAD (M10X1.5X40-MM)	
	15	2	**568-8664**	1	FAN-SUCTION (6-BLADE)	
	16	1	**363-5813**	4	CLAMP-HOSE	
	17	2	**366-2656**	1	GUARD AS-FAN	
	18	2	**366-2658**	1	GUARD-ALTERNATOR	
	19	2	**487-9902**	1	BRACKET	
	20	2	**334-7437**	1	BRACKET	
	21	1	**325-5944**	1	BRACKET (LH)	
	22	1	**430-5926**	1	BRACKET-MOUNTING (RH)	
	23	1	**325-5948**	2	BRACKET (REAR RH)	
	24	2	**328-6607**	1	GUARD	
	25	2	**469-4427**	1	GUARD AS	

C - CHANGE FROM PREVIOUS TYPE
M - METRIC PART
Y - SEPARATE ILLUSTRATION

331-3270 **RADIATOR GP (**contd.**)** **i10515844**

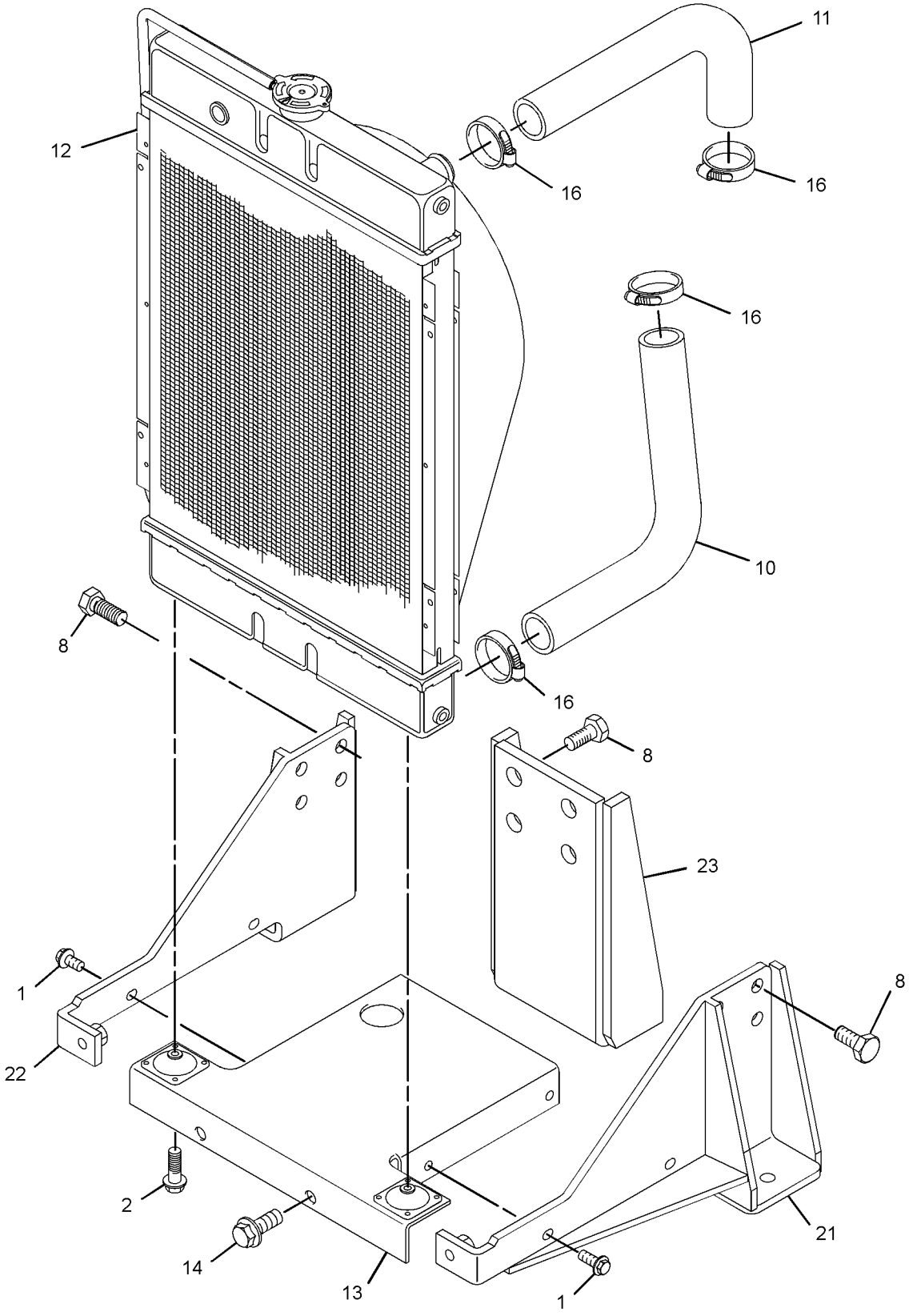

GRAPHIC #1 g07937458

331-3270 **RADIATOR GP (**contd.**)** **i10515844**

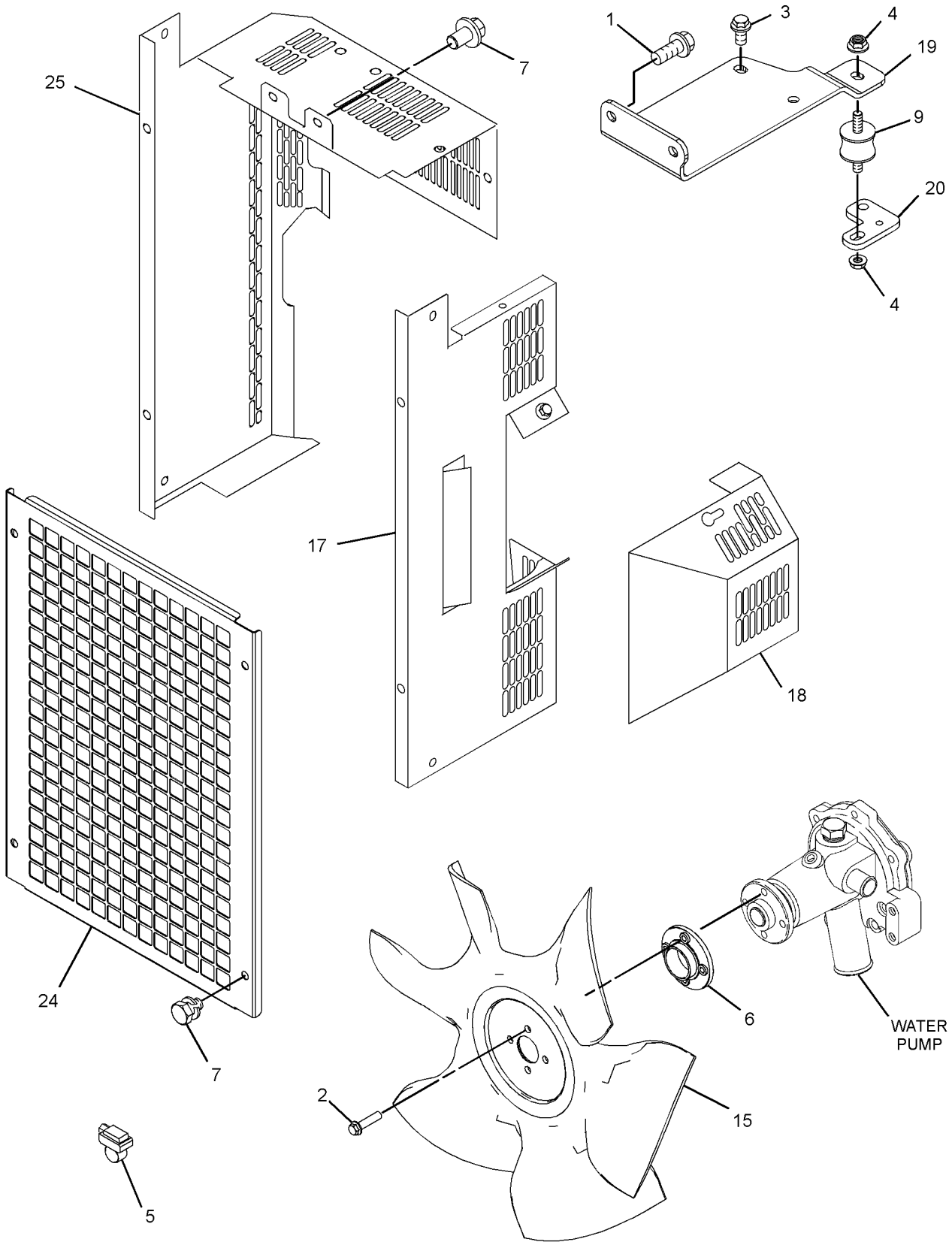

GRAPHIC #2 <END> g07937879

561-9498 RADIATOR GP

PART OF 600-6119 RADIATOR GP

SMCS-1353 **i09812650**

NOTE	REF NO	GRAPHIC REF	PART NUMBER	QTY	PART NAME 1 2 3 4 5 6 (PRODUCT LEVEL)	SEE PAGE
	1	1	**236-7764**	1	CAP-RADIATOR	
	2	1	**422-6430**	1	KIT-PLUG	
					(INCLUDES PLUG & WASHER)	
	3	1	**326-8554**	1	WASHER	
	4	1	**526-2333**	1	HEADER	
	5	1	**526-2334**	1	COWLING	

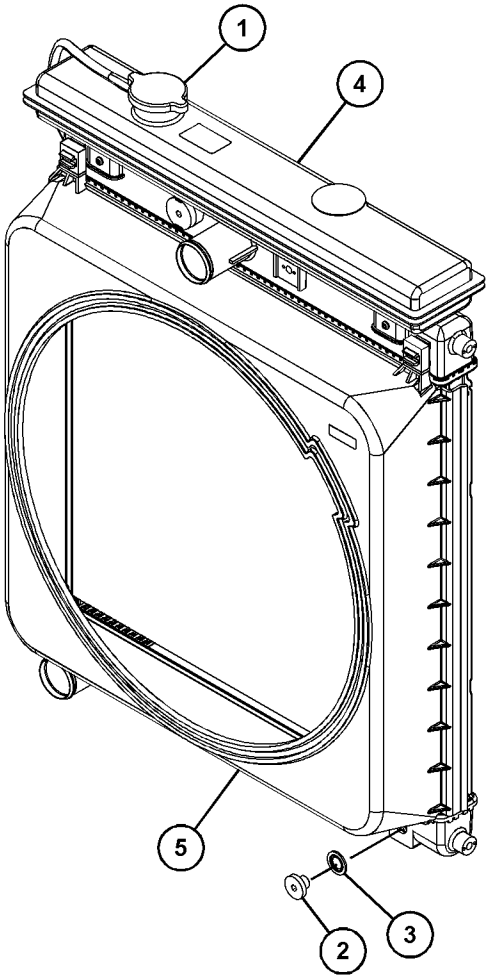

GRAPHIC #1 <END> g06771580

584-9829 RADIATOR GP

PART OF 610-7720 ENGINE AR-PRIMARY

SMCS-1353 **i10198747**

NOTE	REF NO	GRAPHIC REF	PART NUMBER	QTY	PART NAME 1 2 3 4 5 6 (PRODUCT LEVEL)	SEE PAGE
	1	1,2	**363-5813**	4	CLAMP-HOSE	
M	2	1,2,3	**114-4363**	10	BOLT (M8X1.25X12-MM)	
M	3	1	**124-3815**	4	BOLT (M8X1.25X16-MM)	
M	4	2	**153-5592**	2	NUT (M8X1.25-THD)	
M	5	1,2	**141-5453**	15	BOLT (M14X1.5X30-MM)	
M	6	3	**208-9295**	2	BOLT-FLANGE HEAD (M10X1.5X40-MM)	
	7	2	**238-0265**	1	HOSE-RADIATOR	
	8	1	**238-0266**	1	HOSE-RADIATOR	
Y	9	1	**607-4843**	1	RADIATOR AS	554
	10	3	**244-3259**	2	CLIP	
	11	2	**325-5944**	1	BRACKET	
	12	1	**325-5948**	2	BRACKET	
	13	3	**328-6607**	1	GUARD	
	14	1	**334-7437**	1	BRACKET	
	15	2	**344-5868**	1	MOUNT	
	16	2	**366-2658**	1	GUARD-ALTERNATOR	
	17	2	**423-6342**	1	GUARD AS-FAN	
M		2	**362-8050**	2	NUT (M8X1.25-THD)	
M		2	**6I-0254**	2	BOLT (M8X1.25X30-MM)	
		2	**423-6343**	1	GUARD-FAN	
	18	1	**430-5926**	1	BRACKET-MOUNTING	
	19	3	**438-8534**	1	BRACKET AS	
	20	1	**469-4427**	1	GUARD AS	
	21	1	**487-9902**	1	BRACKET	
M	22	1,2	**6I-0217**	6	BOLT (M8X1.25X20-MM)	
M	23	3	**6I-0917**	2	BOLT (M6X1X25-MM)	

M - METRIC PART
Y - SEPARATE ILLUSTRATION

584-9829 **RADIATOR GP** (contd.) **i10198747**

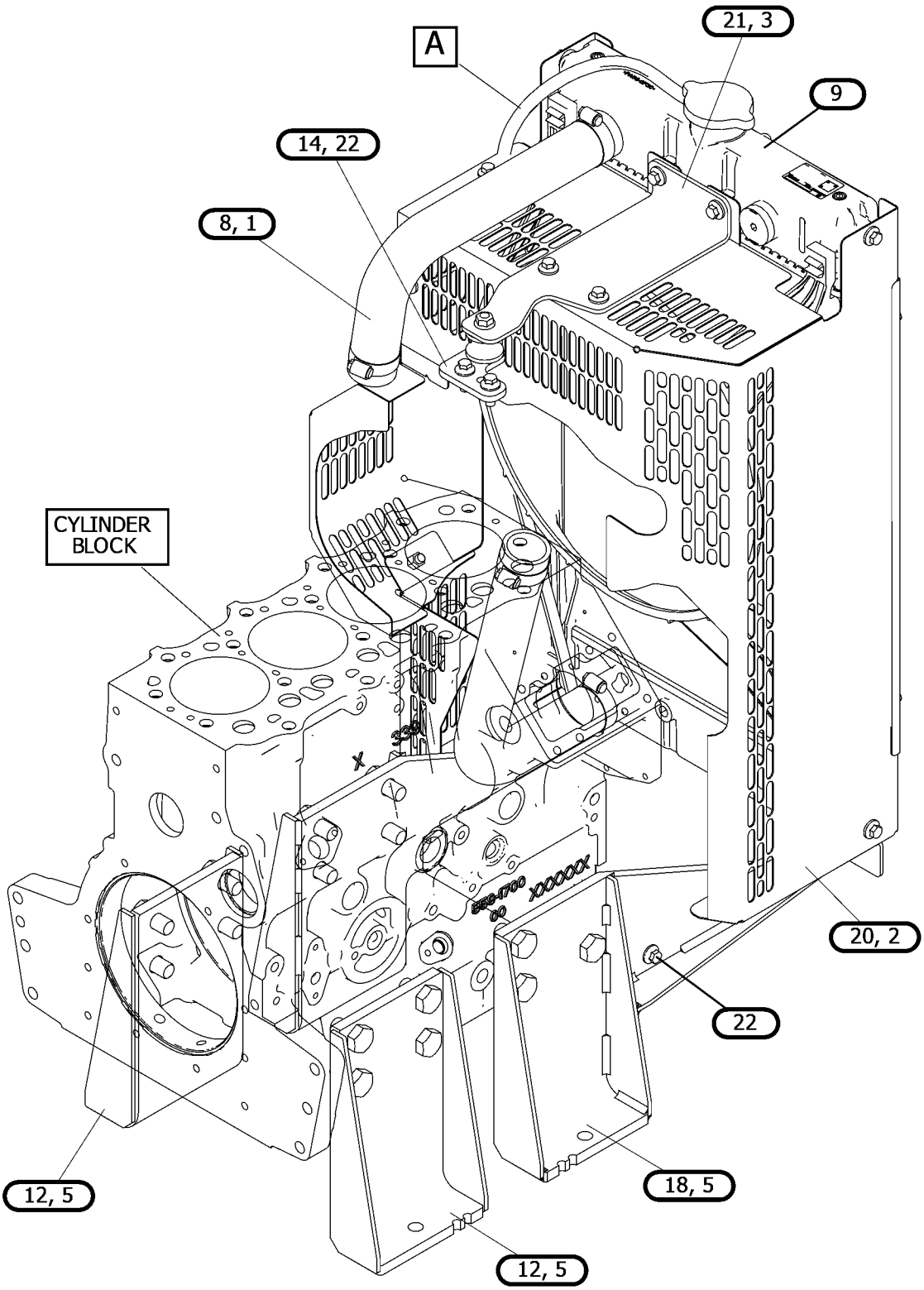

GRAPHIC #1 g07790405

584-9829 **RADIATOR GP (**contd.**)** **i10198747**

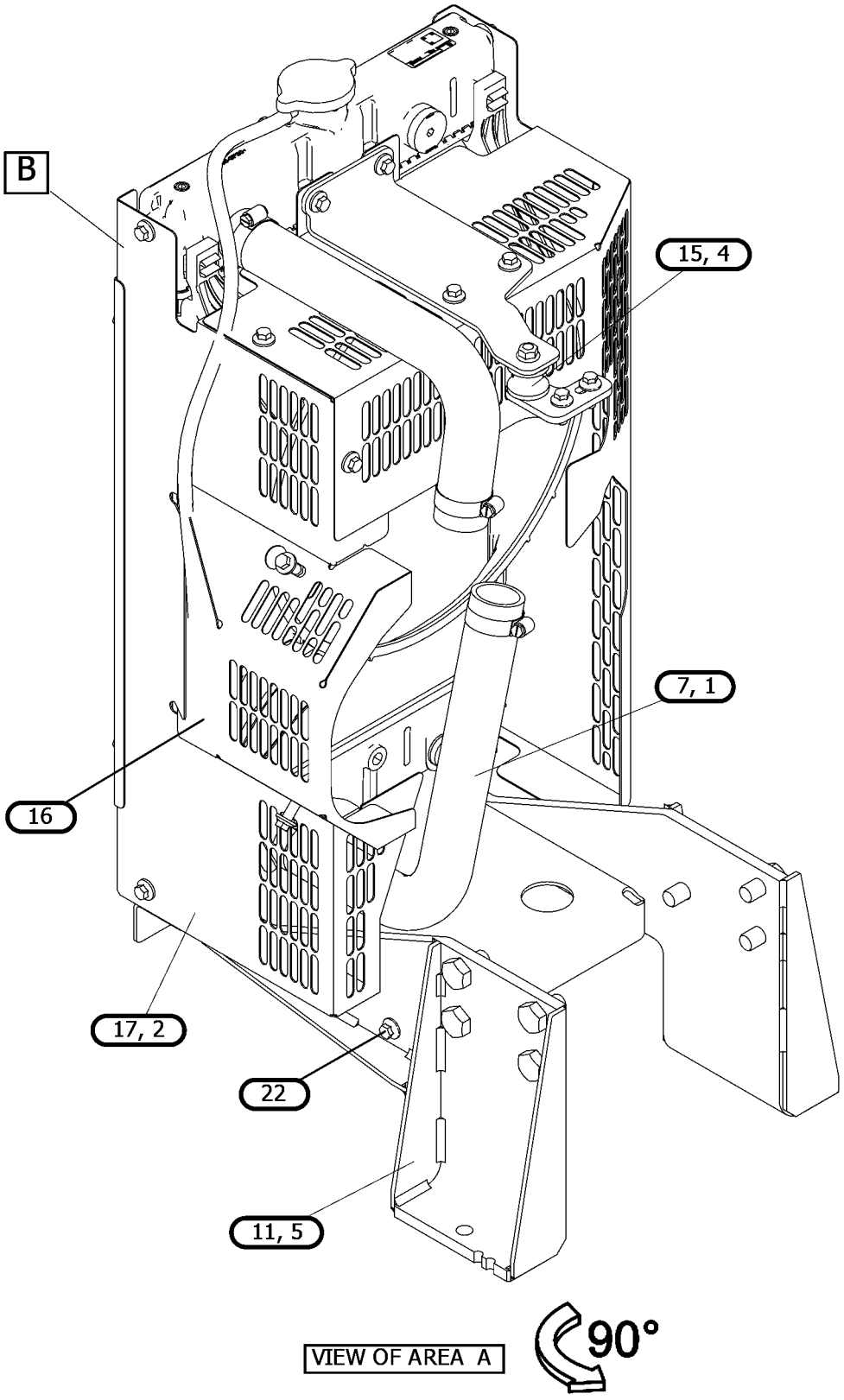

GRAPHIC #2 g07790405_01

584-9829 **RADIATOR GP** (contd.) **i10198747**

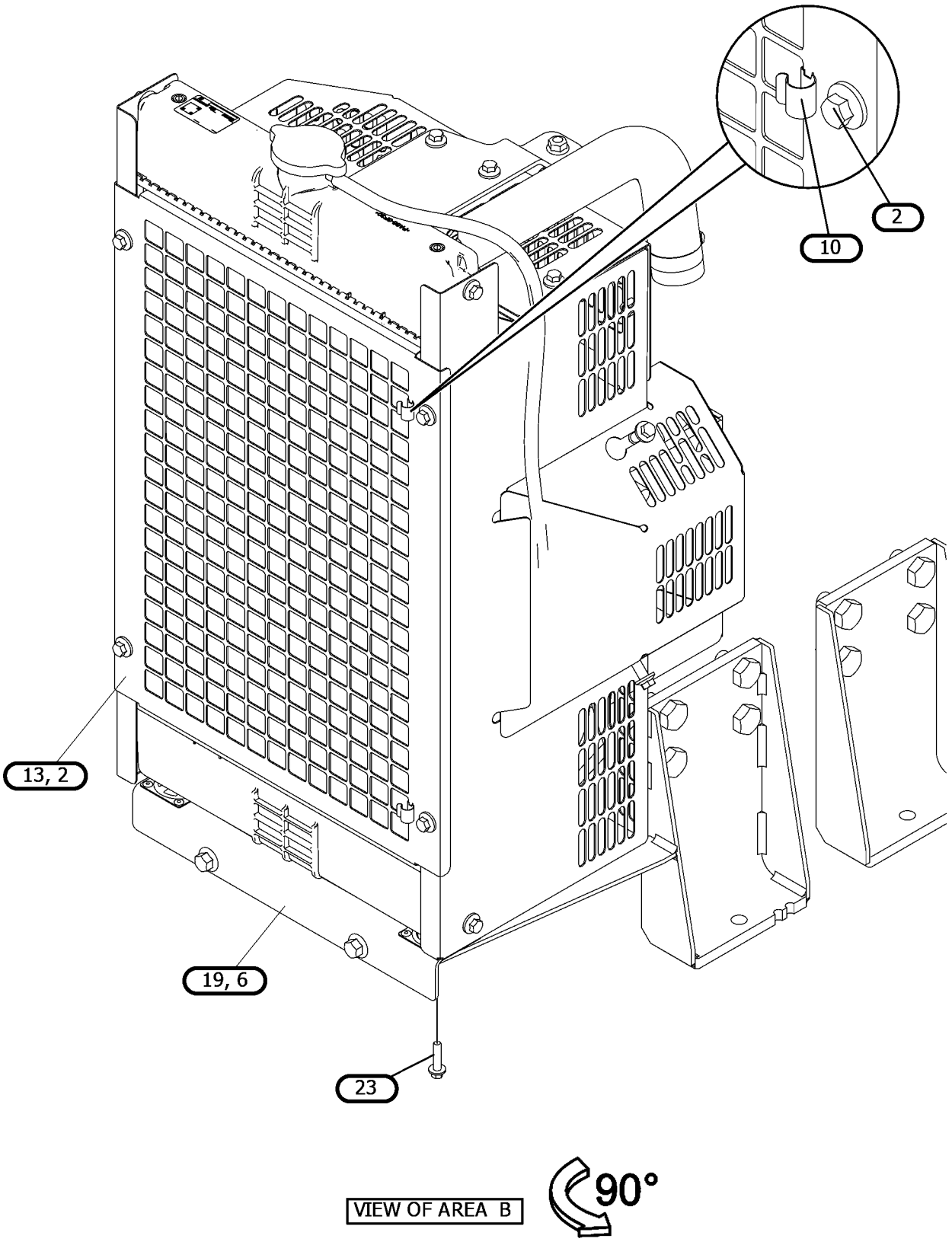

GRAPHIC #3 <END> g07790405_02

600-6119 RADIATOR GP

PART OF 610-7721 ENGINE AR-PRIMARY

SMCS-1353 **i10686042**

NOTE	REF NO	GRAPHIC REF	PART NUMBER	QTY	PART NAME 1 2 3 4 5 6 (PRODUCT LEVEL)	SEE PAGE
	1	1	**103-1067**	2	CLAMP-HOSE	
	2	1	**363-5813**	2	CLAMP-HOSE	
M	3	1	**101-7178**	2	BOLT (M10X1.5X55-MM)	
M	4	1	**188-9644**	4	SCREW-FLAT HEAD (M8X1.25X25-MM)	
M	5	1	**114-4363**	10	BOLT (M8X1.25X12-MM)	
CM	6	1	**124-3815**	6	BOLT (M8X1.25X16-MM)	
M	7	1	**153-5592**	2	NUT (M8X1.25-THD)	
M	8	1	**174-3877**	15	BOLT (M14X1.5X25-MM)	
C	9	1	**244-3259**	2	CLIP	
C	10	1	**272-0483**	2	MOUNT	
	11	1	**325-5944**	1	BRACKET	
	12	1	**325-5948**	2	BRACKET	
	13	1	**326-8555**	1	HOSE-RADIATOR	
	14	1	**326-8556**	1	HOSE-RADIATOR	
	15	1	**326-8562**	1	GUARD-RADIATOR	
	16	1	**326-8564**	1	ARM	
	17	1	**334-7437**	1	BRACKET	
	18	1	**341-6649**	1	GUARD	
	19	1	**344-5868**	1	MOUNT	
	20	1	**426-5345**	1	GUARD	
	21	1	**430-5926**	1	BRACKET-MOUNTING	
	22	1	**510-1244**	1	GUARD GP-FAN	
M	22A	1	**195-3699**	4	NUT (M8X1.25-THD)	
M	22B	1	**6I-0254**	4	BOLT (M8X1.25X30-MM)	
	23	1	**527-9209**	1	PLATE AS-BASE	
CY	24	1	*561-9498*	1	RADIATOR GP	568
M	25	1	**6I-0217**	6	BOLT (M8X1.25X20-MM)	

C - CHANGE FROM PREVIOUS TYPE
M - METRIC PART
Y - SEPARATE ILLUSTRATION

600-6119 **RADIATOR GP (**contd.**)** **i10686042**

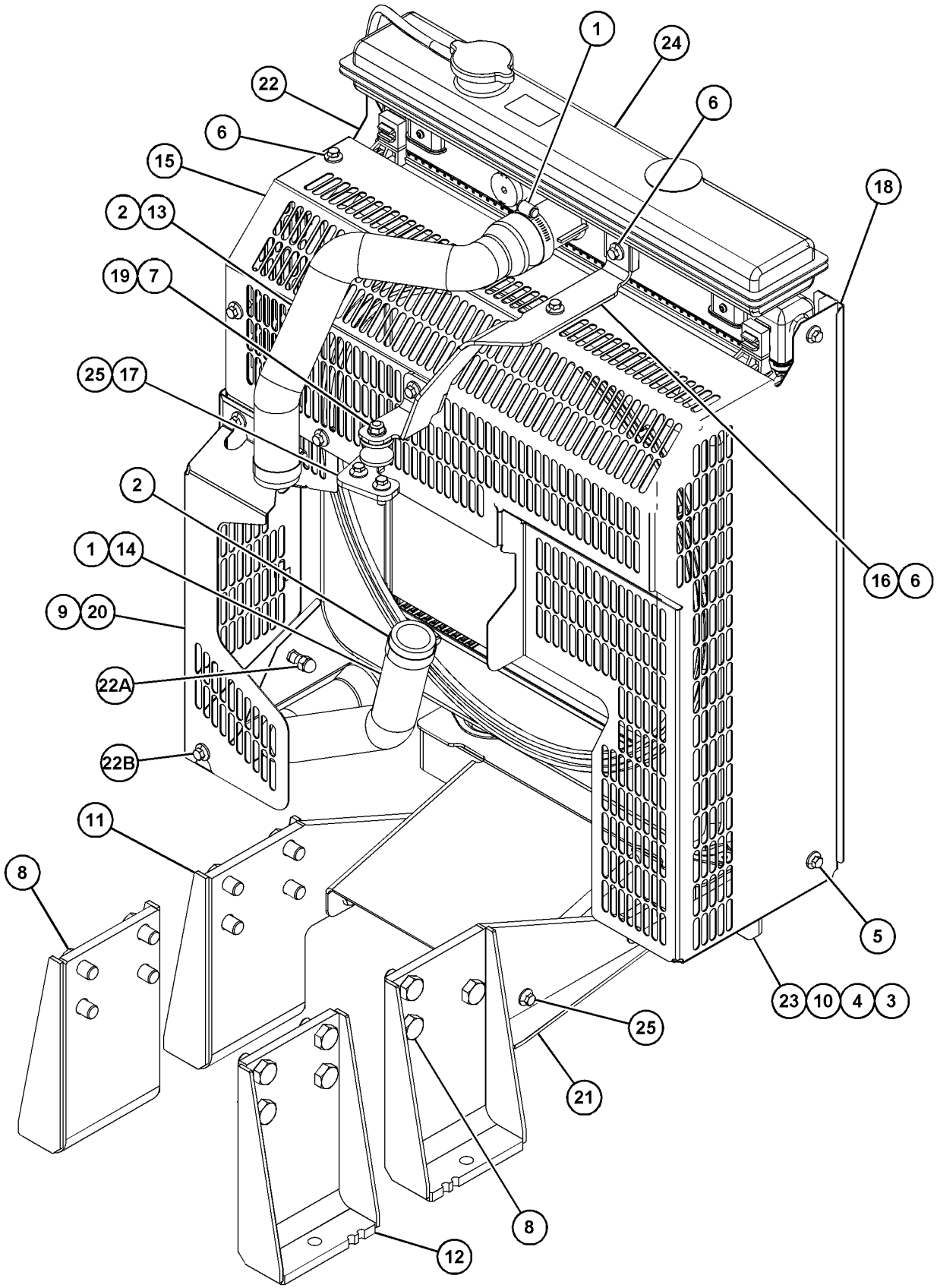

GRAPHIC #1 <END> g07715860

317-0649 AIR CLEANER GP

TYPE 1

SMCS-1051, 1054 **i04490335**

NOTE	REF NO	GRAPHIC REF	PART NUMBER	QTY	PART NAME 1 2 3 4 5 6 (PRODUCT LEVEL)	SEE PAGE
M	1	2	**6I-0217**	2	BOLT (M8X1.25X20-MM)	
M	2	2	**6I-0254**	2	BOLT (M8X1.25X30-MM)	
	3	2	**9M-7959**	1	CLAMP-HOSE	
	4	2	**103-6714**	1	CLIP	
M	5	2	**153-5592**	2	NUT (M8X1.25-THD)	
	6	2	**238-0245**	1	HOSE-AIR CLEANER	
	7	2	**326-8547**	1	BRACKET	
	8	1	**247-1378**	1	FILTER ELEMENT AS-AIR (TURBOCHARGER)	
	8A	1	**247-1380**	1	FILTER ELEMENT-AIR	
	8B	1	**271-5059**	1	INDICATOR (AIR FILTER SERVICE)	
	8C	1	**271-5062**	1	VALVE-DUST	
	8D	1	**321-7701**	1	BRACKET	
	9	2	**336-4079**	1	CAP-RAIN	
	10	2	**292-1992**	1	SPACER	

M - METRIC PART

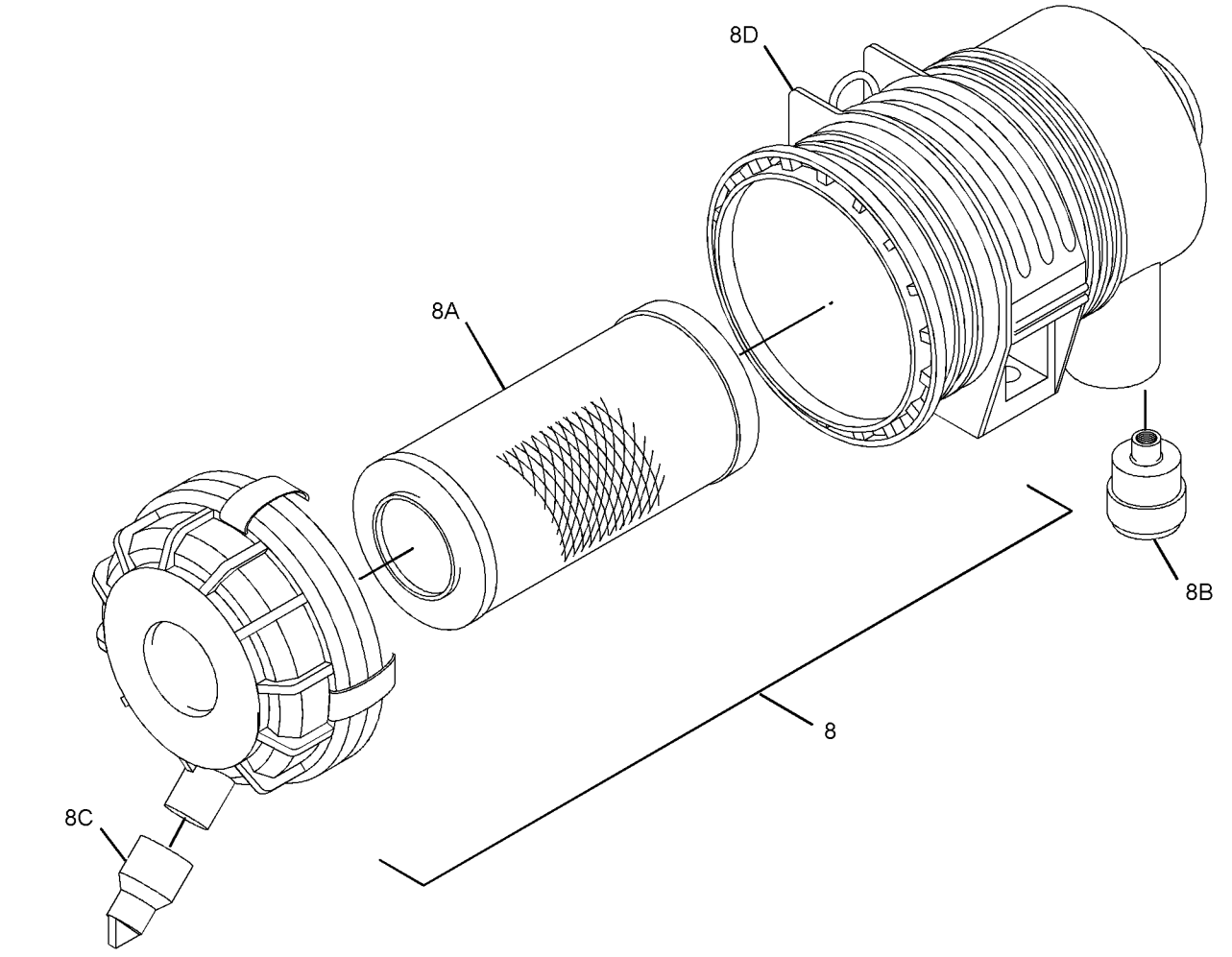

GRAPHIC #1 g01953439

317-0649 **AIR CLEANER GP (**contd.**)** **i04490335**

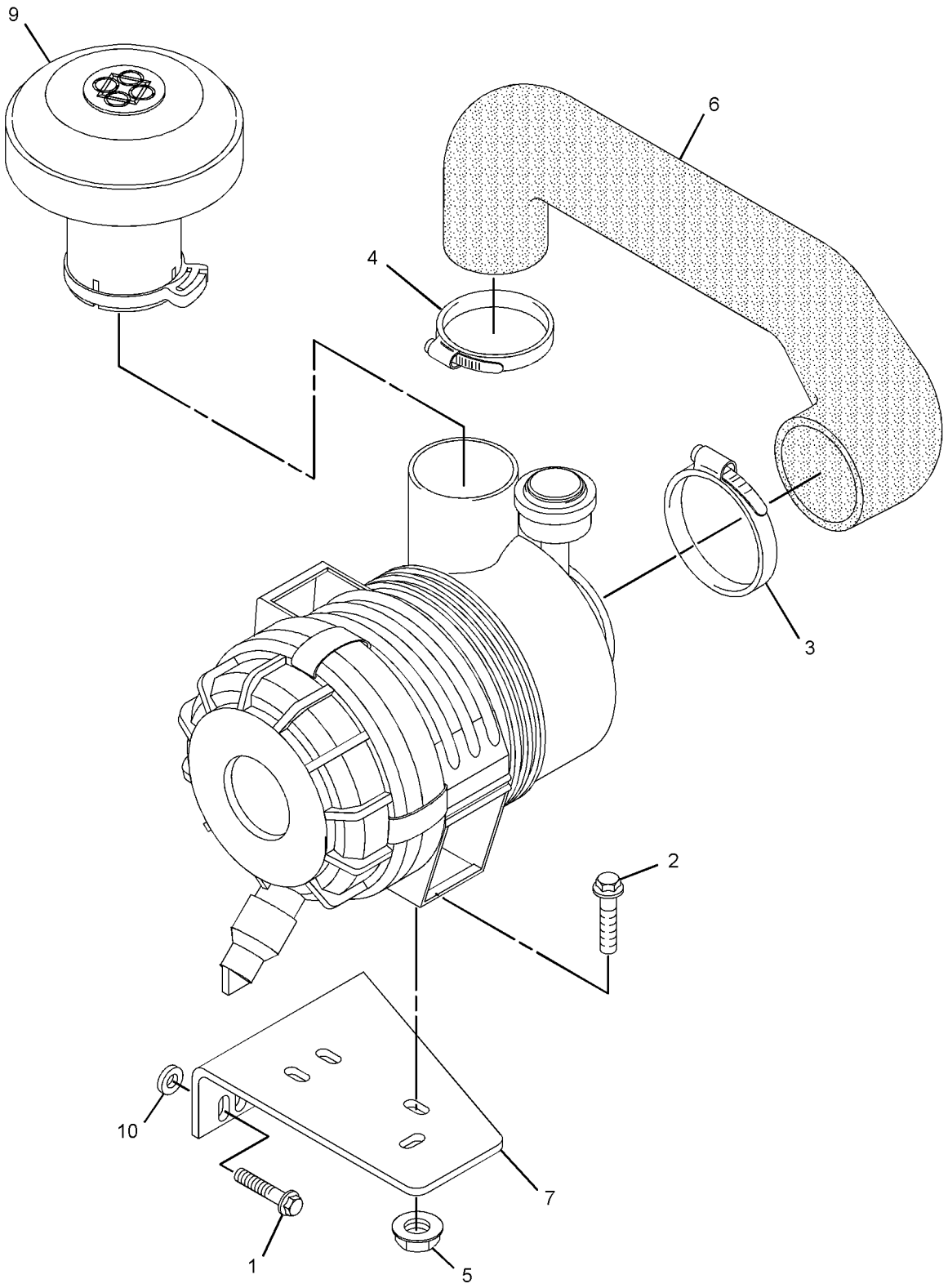

GRAPHIC #2 <END> g02682819

317-0649 AIR CLEANER GP
TYPE 2

SMCS-1051, 1054 **i06907223**

NOTE	REF NO	GRAPHIC REF	PART NUMBER	QTY	PART NAME 1 2 3 4 5 6 (PRODUCT LEVEL)	SEE PAGE
M	1	2	**6I-0217**	2	BOLT (M8X1.25X20-MM)	
M	2	2	**6I-0254**	2	BOLT (M8X1.25X30-MM)	
	3	2	**9M-7959**	1	CLAMP-HOSE	
	4	2	**103-1067**	1	CLAMP-HOSE	
M	5	2	**153-5592**	2	NUT (M8X1.25-THD)	
	6	2	**238-0245**	1	HOSE-AIR CLEANER	
	7	2	**326-8547**	1	BRACKET	
	8	1	**247-1378**	1	FILTER ELEMENT AS-AIR (TURBOCHARGER)	
	8A	1	**247-1380**	1	FILTER ELEMENT-AIR	
	8B	1	**271-5059**	1	INDICATOR (AIR FILTER SERVICE)	
	8C	1	**271-5062**	1	VALVE-DUST	
	8D	1	**321-7701**	1	BRACKET	
	9	2	**468-7382**	1	SPACER (8.8X25.4X6-MM THK)	
	10	2	**326-9052**	1	FILM-WARNING (ETHER)	

M - METRIC PART

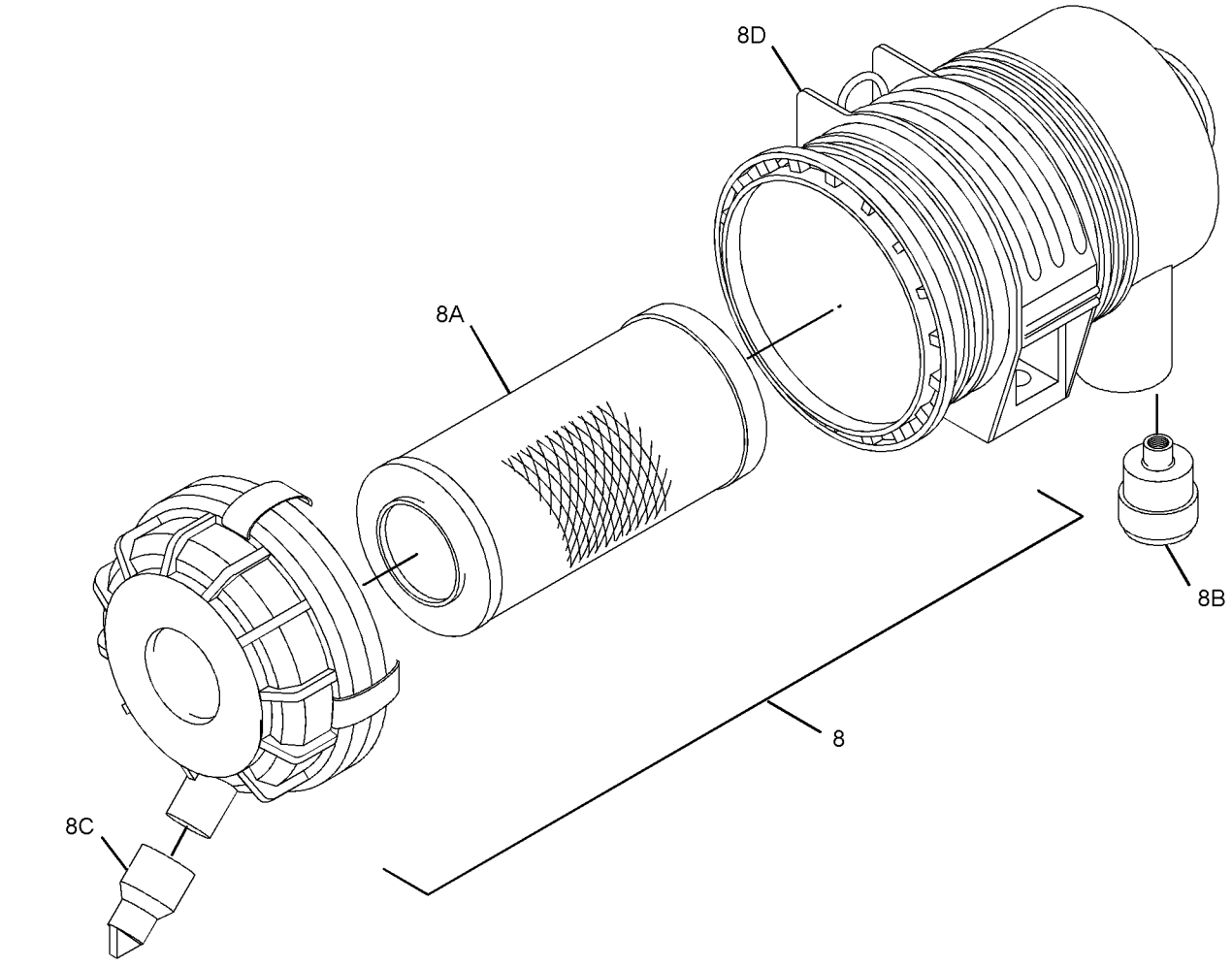

GRAPHIC #1 g01953439

317-0649 **AIR CLEANER GP (**contd.**)** **i06907223**

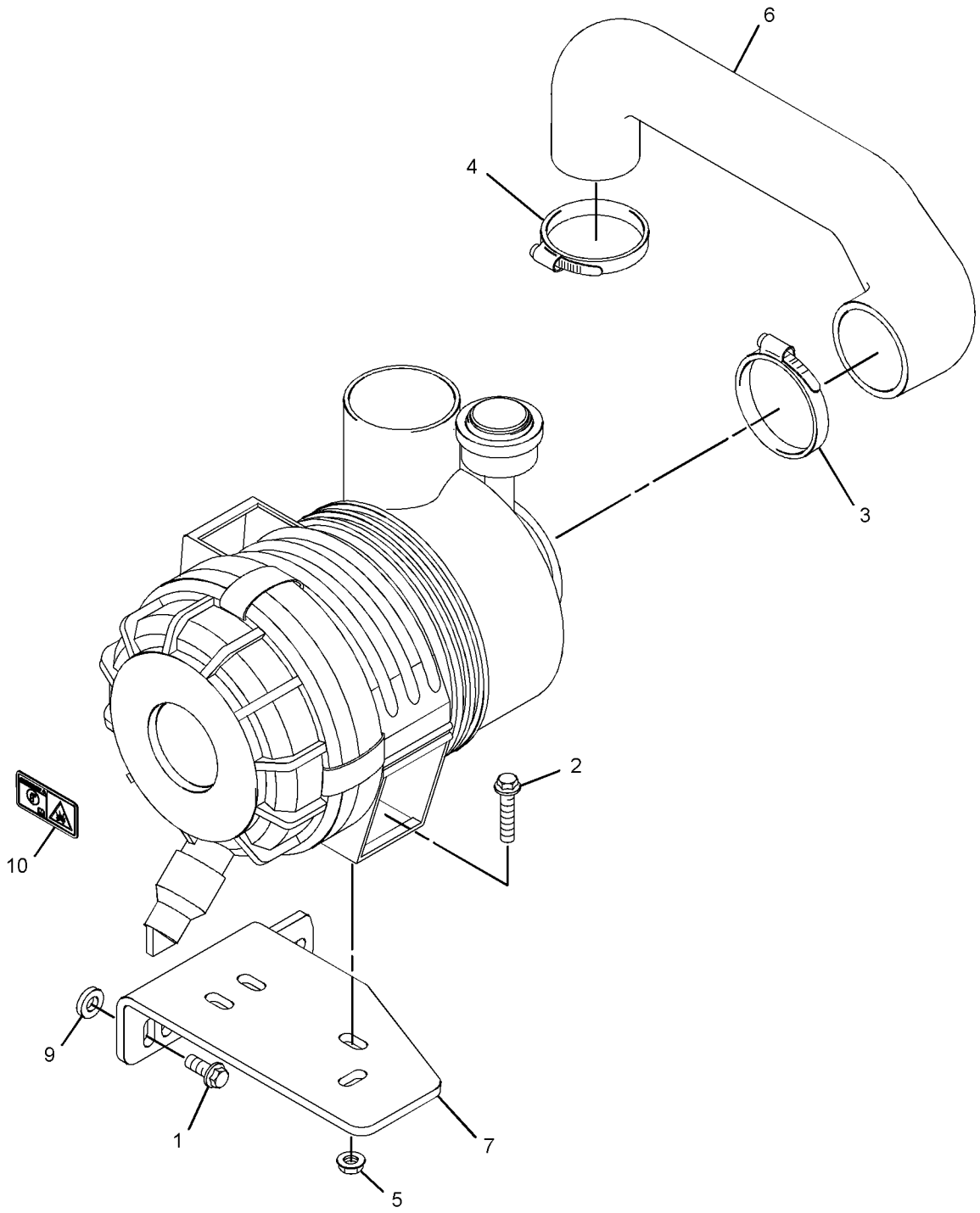

GRAPHIC #2 <END> g06157989

317-0649 AIR CLEANER GP

PART OF 516-9335 ENGINE AR-PRIMARY

TYPE 3

SMCS-1051, 1054 **i10432786**

NOTE	REF NO	GRAPHIC REF	PART NUMBER	QTY	PART NAME 1 2 3 4 5 6 (PRODUCT LEVEL)	SEE PAGE
M	1	1	**6I-0217**	2	BOLT (M8X1.25X20-MM)	
M	2	1	**6I-0254**	2	BOLT (M8X1.25X30-MM)	
	3	1	**9M-7959**	1	CLAMP-HOSE	
	4	1	**103-1067**	1	CLAMP-HOSE	
M	5	1	**153-5592**	2	NUT (M8X1.25-THD)	
	6	1	**238-0245**	1	HOSE-AIR CLEANER	
	7	1	**326-8547**	1	BRACKET	
CY	8	1	*554-3084*	1	AIR CLEANER GP (TURBOCHARGER)	587
	9	1	**468-7382**	1	SPACER (8.8X25.4X6-MM THK)	
	10	1	**326-9052**	1	FILM-WARNING (ETHER)	
					(EXPLOSION HAZARD COULD CAUSE PERSONAL INJURY OR DEATH. DO NOT USE ETHER. READ THE OPERATOR'S MANUAL)	
	11	1	**217-0099**	2	SPACER (8.2X25X2-MM THK)	
					PARTS SHOWN IN GRAPHIC(S) WITHOUT A REFERENCE NUMBER ARE NOT SERVICED SEPARATELY	

C - CHANGE FROM PREVIOUS TYPE
M - METRIC PART
Y - SEPARATE ILLUSTRATION

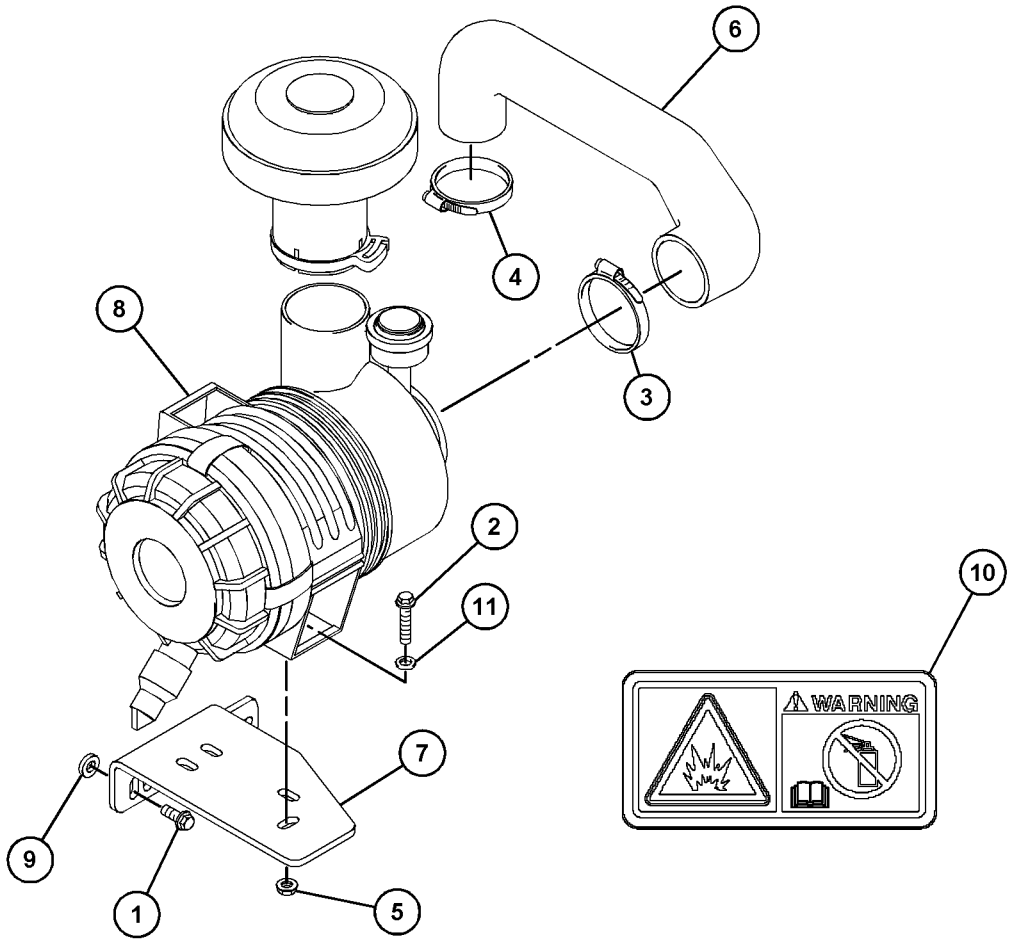

GRAPHIC #1 <END> g07902336

326-8543 AIR CLEANER GP

TYPE 1

SMCS-1051, 1054 **i04891423**

NOTE	REF NO	GRAPHIC REF	PART NUMBER	QTY	PART NAME 1 2 3 4 5 6 (PRODUCT LEVEL)	SEE PAGE
M	1	2	**6I-0217**	2	BOLT (M8X1.25X20-MM)	
M	2	2	**6I-0254**	2	BOLT (M8X1.25X30-MM)	
	3	2	**103-6714**	1	CLIP	
M	4	2	**153-5592**	2	NUT (M8X1.25-THD)	
	5	1	**247-1378**	1	FILTER ELEMENT AS-AIR (TURBOCHARGER)	
	5A	1	**247-1380**	1	FILTER ELEMENT-AIR	
	5B	1	**271-5059**	1	INDICATOR (AIR FILTER SERVICE)	
	5C	1	**271-5062**	1	VALVE-DUST	
	5D	1	**321-7701**	1	BRACKET	
	6	2	**292-1992**	1	SPACER	
	7	2	**326-1010**	1	CLAMP-HOSE	
	8	2	**326-8547**	1	BRACKET	
	9	2	**365-5515**	1	HOSE-AIR	
	10	2	**329-1292**	1	CLIP-HOSE	
	11	2	**336-4079**	1	CAP-RAIN	

M - METRIC PART

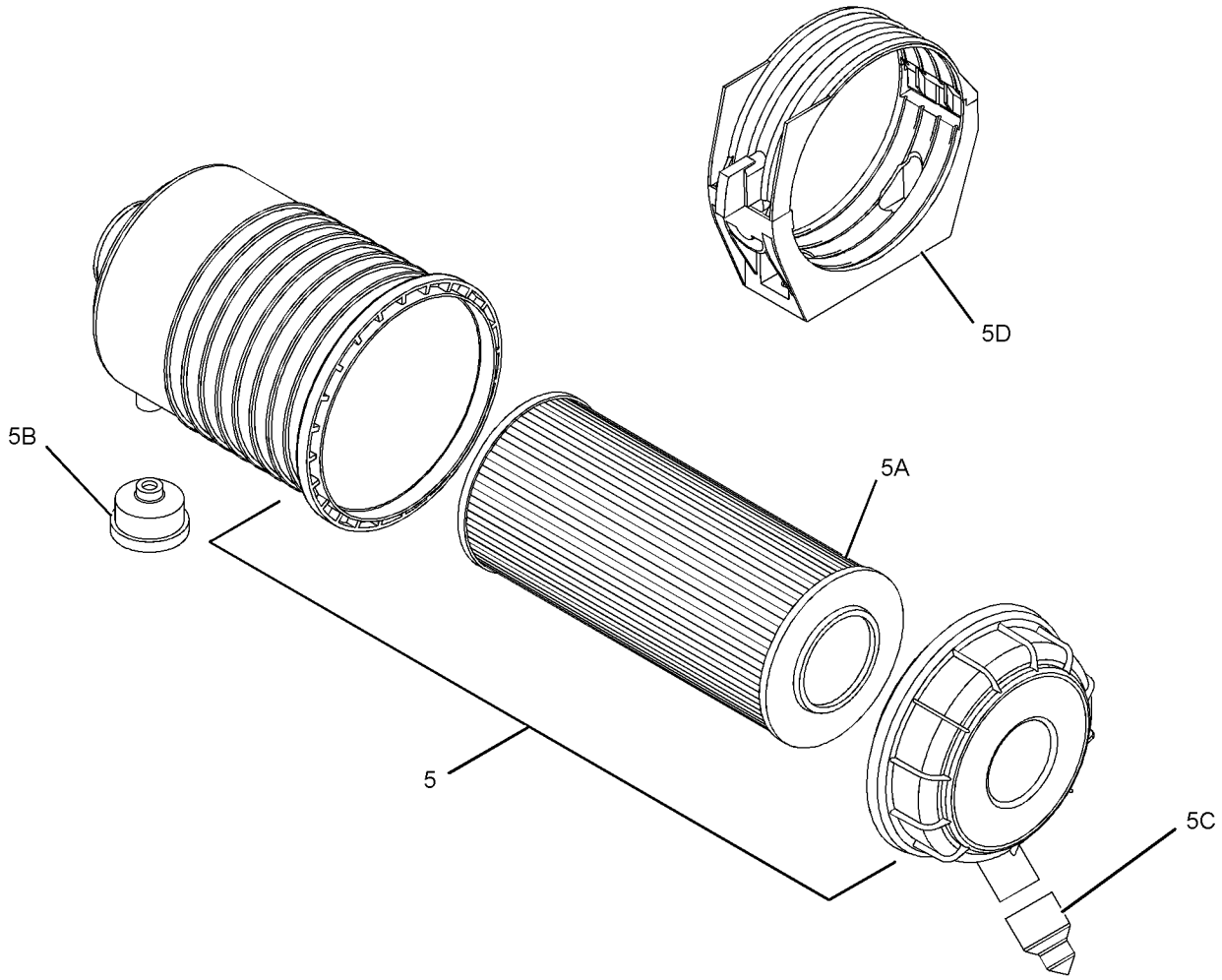

GRAPHIC #1 g01618583

326-8543 **AIR CLEANER GP (**contd.**)** **i04891423**

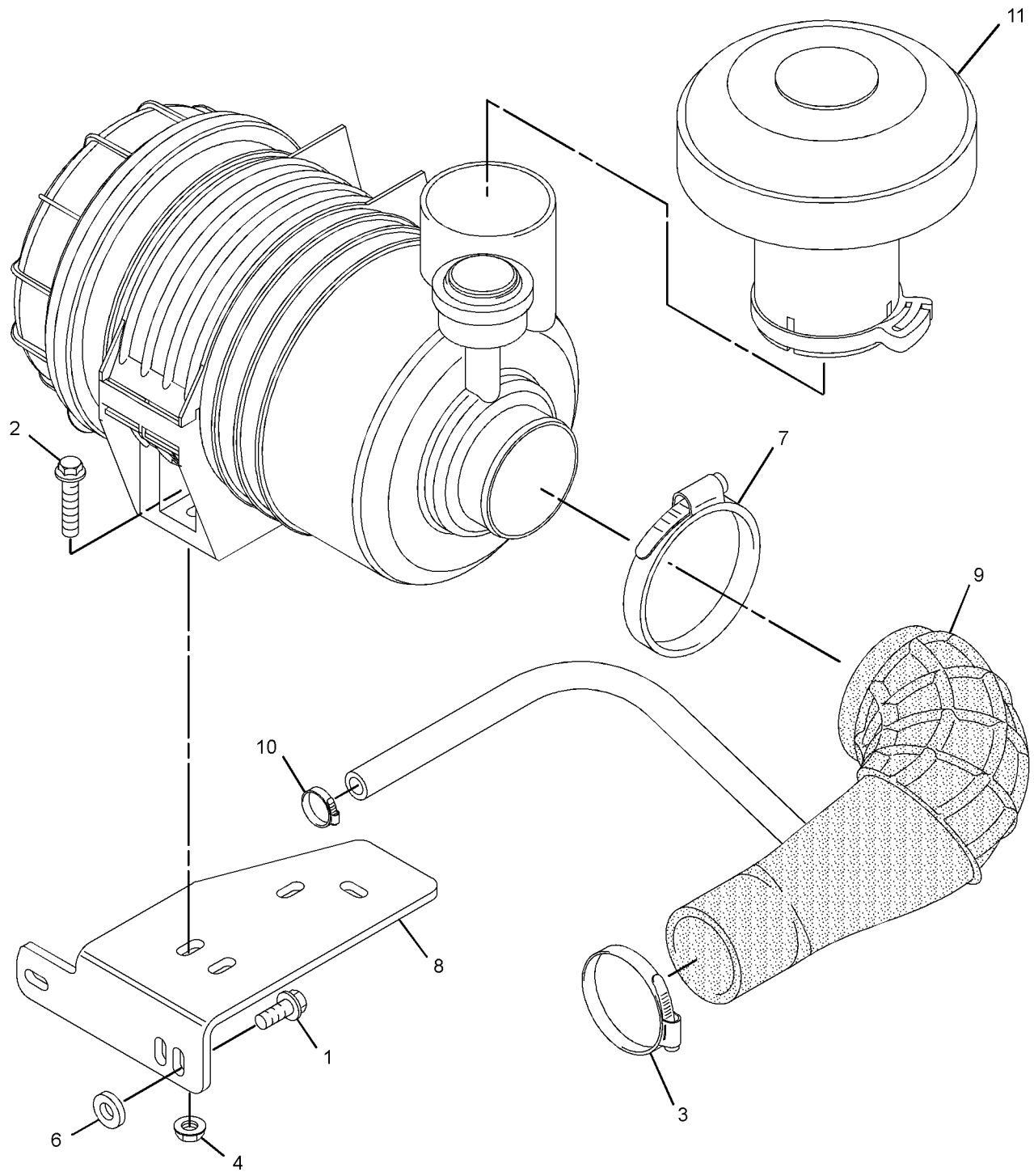

GRAPHIC #2 <END> g03033736

326-8543 AIR CLEANER GP

PART OF 491-3396, 541-9277, 557-9727 ENGINE AR-PRIMARY
TYPE 2

SMCS-1051, 1054 **i06871123**

NOTE	REF NO	GRAPHIC REF	PART NUMBER	QTY	PART NAME 1 2 3 4 5 6 (PRODUCT LEVEL)	SEE PAGE
M	1	2	**6I-0217**	2	BOLT (M8X1.25X20-MM)	
M	2	2	**6I-0254**	2	BOLT (M8X1.25X30-MM)	
	3	2	**103-1067**	1	CLAMP-HOSE	
M	4	2	**153-5592**	2	NUT (M8X1.25-THD)	
	5	1	**247-1378**	1	FILTER ELEMENT AS-AIR (TURBOCHARGER)	
	5A	1	**247-1380**	1	FILTER ELEMENT-AIR	
	5B	1	**271-5059**	1	INDICATOR (AIR FILTER SERVICE)	
	5C	1	**271-5062**	1	VALVE-DUST	
	5D	1	**321-7701**	1	BRACKET	
	6	2	**468-7382**	1	SPACER (8.8X25.4X6-MM THK)	
	7	2	**326-1010**	1	CLAMP-HOSE	
	8	2	**326-8547**	1	BRACKET	
	9	2	**365-5515**	1	HOSE-AIR	
	10	2	**329-1292**	1	CLIP-HOSE	
	11	2	**326-9052**	1	FILM-WARNING (ETHER)	

M - METRIC PART

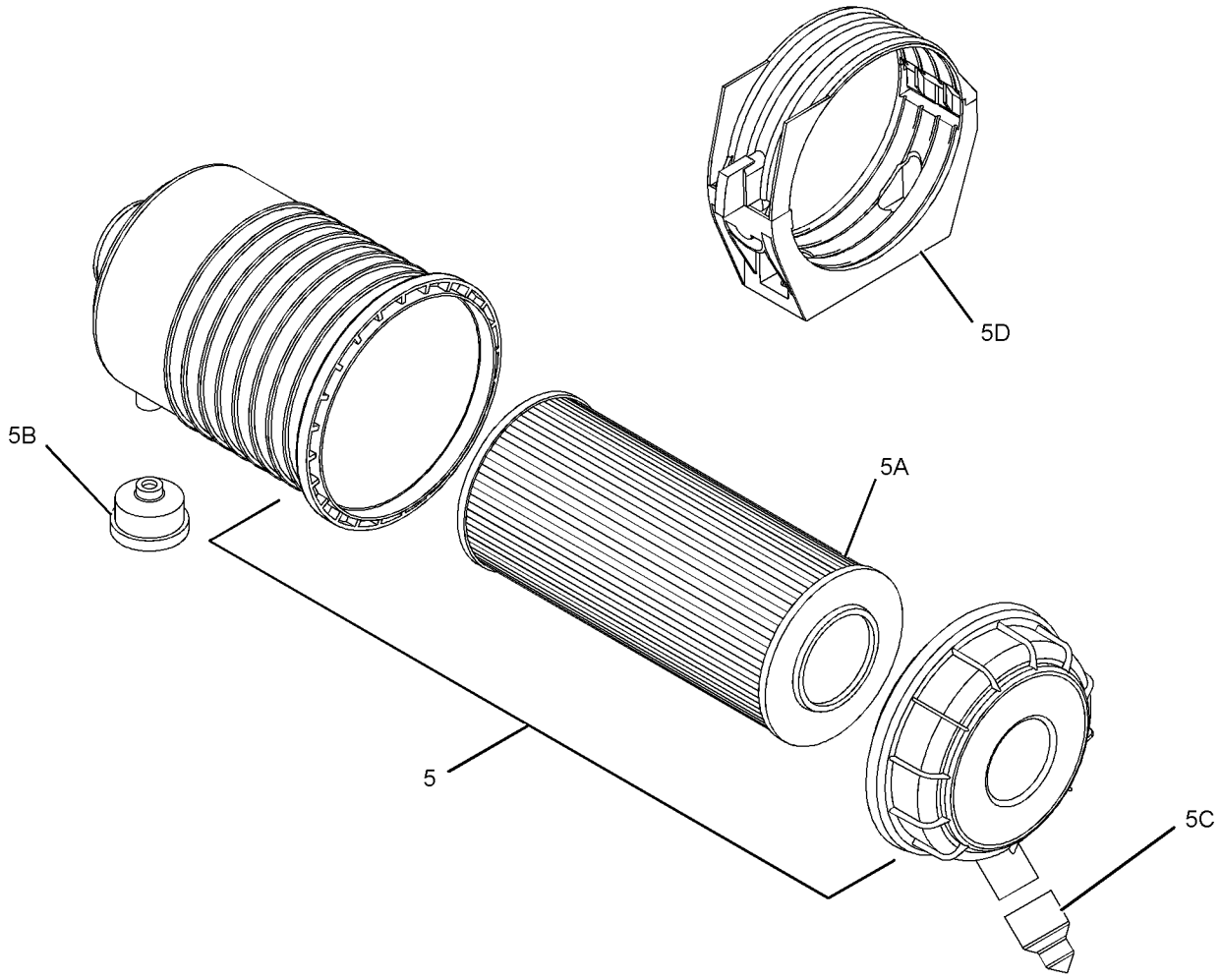

GRAPHIC #1 g01618583

326-8543 **AIR CLEANER GP (**contd.**)** **i06871123**

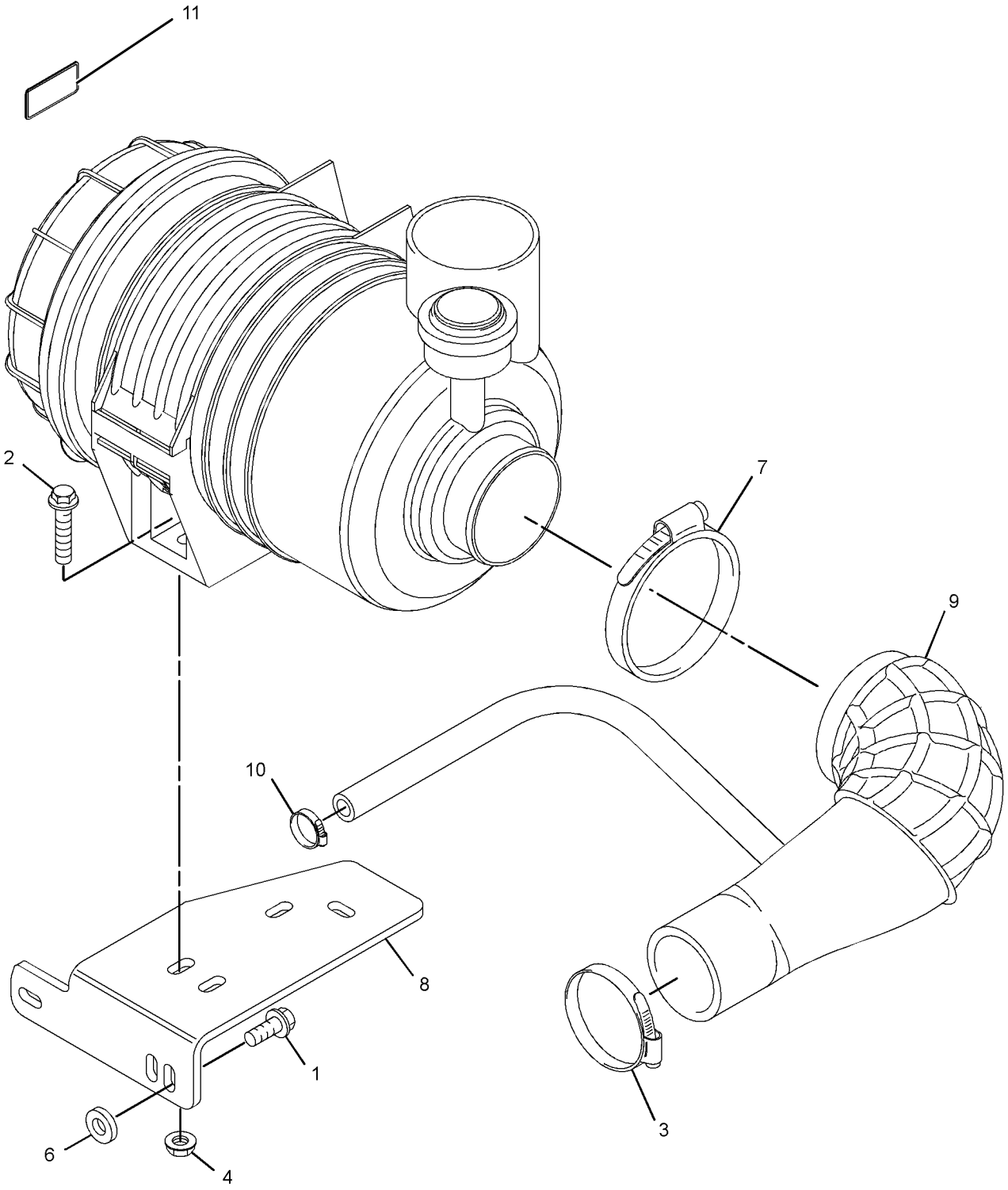

GRAPHIC #2 <END> g03869648

326-8543 AIR CLEANER GP

PART OF 491-3396, 541-9277, 557-9727 ENGINE AR-PRIMARY

TYPE 3

SMCS-1051, 1054

i10499129

NOTE	REF NO	GRAPHIC REF	PART NUMBER	QTY	PART NAME 1 2 3 4 5 6 (PRODUCT LEVEL)	SEE PAGE
M	1	1	**6I-0217**	2	BOLT (M8X1.25X20-MM)	
M	2	1	**6I-0254**	2	BOLT (M8X1.25X30-MM)	
	3	1	**103-1067**	1	CLAMP-HOSE	
M	4	1	**153-5592**	2	NUT (M8X1.25-THD)	
CY	5	1	*554-3084*	1	AIR CLEANER GP	587
	6	1	**468-7382**	1	SPACER (8.8X25.4X6-MM THK)	
	7	1	**326-1010**	1	CLAMP-HOSE	
	8	1	**326-8547**	1	BRACKET	
	9	1	**365-5515**	1	HOSE-AIR	
	10	1	**329-1292**	1	CLIP-HOSE	
	11	1	**326-9052**	1	FILM-WARNING (ETHER)	
					EXPLOSION HAZARD COULD CAUSE PERSONAL INJURY OR DEATH. DO NOT USE ETHER. READ THE OPERATOR'S MANUAL.	
	12	1	**217-0099**	2	SPACER (8.2X25X2-MM THK)	

C - CHANGE FROM PREVIOUS TYPE
M - METRIC PART
Y - SEPARATE ILLUSTRATION

326-8543 **AIR CLEANER GP (**contd.**)** **i10499129**

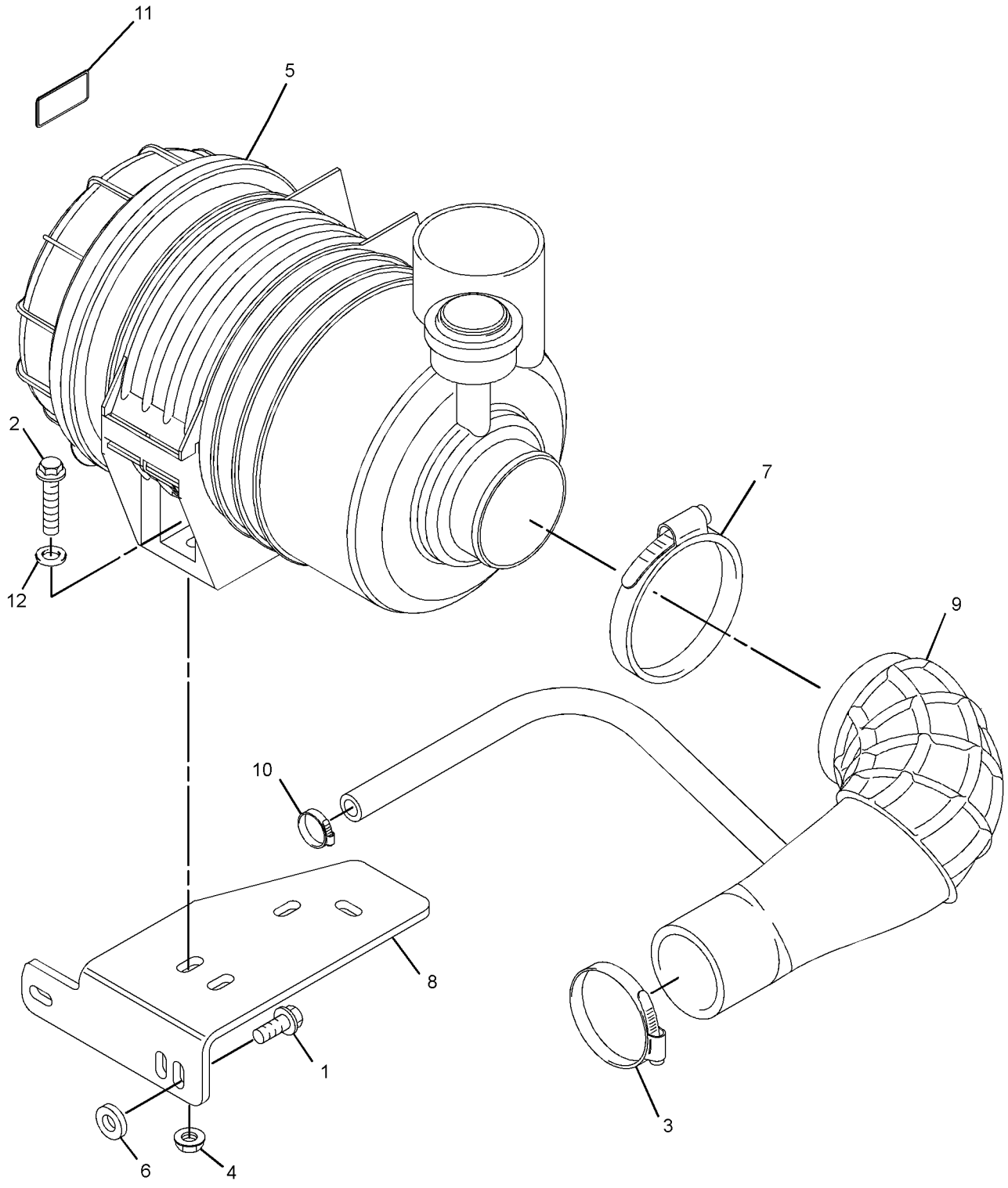

GRAPHIC #1 <END> g07930707

551-6187 AIR CLEANER GP

7-IN

FIELD REPLACEMENT FOR 554-3084—PAGE: 587

PART OF 611-6891 AIR CLEANER GP

SMCS-1051, 1054

i07786679

NOTE	REF NO	GRAPHIC REF	PART NUMBER	QTY	PART NAME 1 2 3 4 5 6 (PRODUCT LEVEL)	SEE PAGE
	1	1	**271-5059**	1	INDICATOR (AIR FILTER SERVICE)	
	2	1	**271-5062**	1	VALVE-DUST	
	3	1	**321-7701**	1	BRACKET	
	4	1	**551-6183**	1	FILTER ELEMENT-AIR	

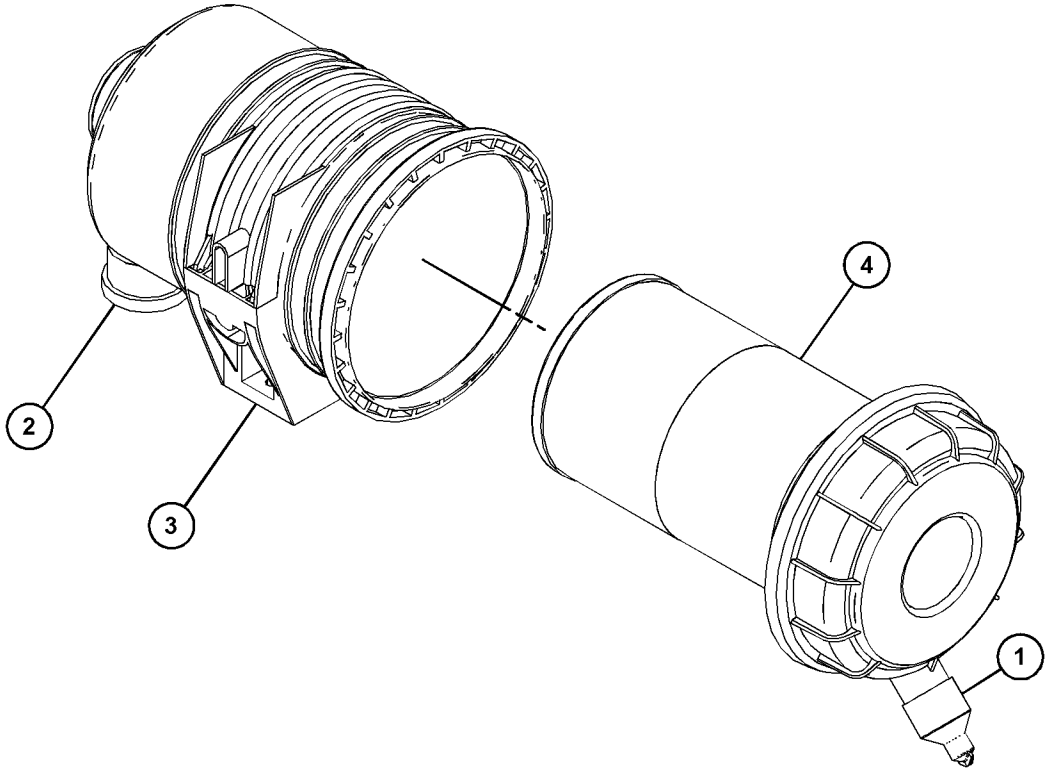

GRAPHIC #1 <END> g06451612

554-3084 AIR CLEANER GP

7-IN

FIELD REPLACEMENT ORDER 551-6187—PAGE: 586

PART OF 317-0649, 326-8543, 600-1135, 600-5149, 600-5153 AIR CLEANER GP

SMCS-1051, 1054

i08424957

NOTE	REF NO	GRAPHIC REF	PART NUMBER	QTY	PART NAME 1 2 3 4 5 6 (PRODUCT LEVEL)	SEE PAGE
	1	1	**271-5059**	1	INDICATOR (AIR FILTER SERVICE)	
	2	1	**271-5062**	1	VALVE-DUST	
	3	1	**321-7701**	1	BRACKET	
	4	1	**551-6183**	1	FILTER ELEMENT-AIR	

554-3084 **AIR CLEANER GP (**contd.**)** **i08424957**

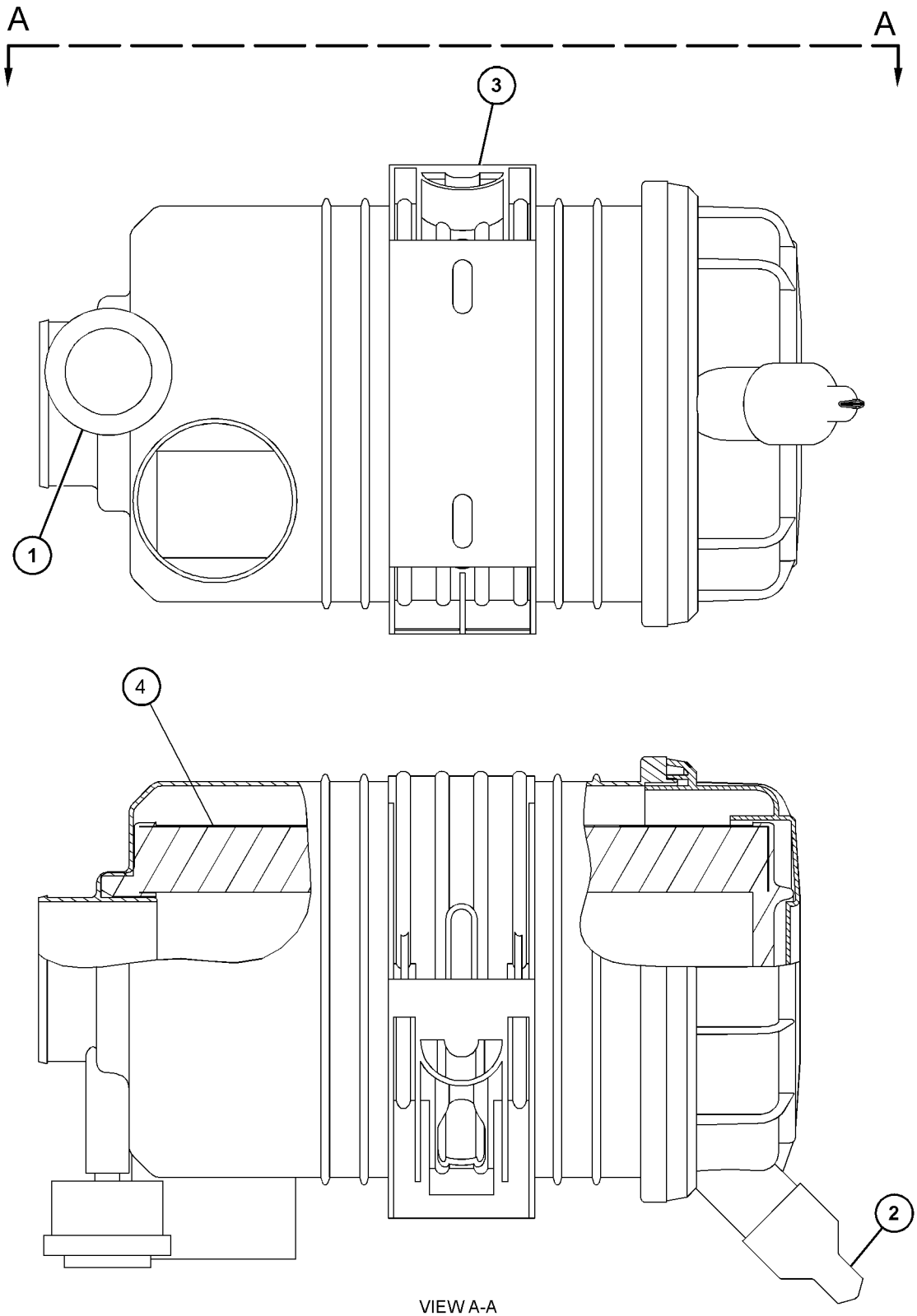

VIEW A-A

GRAPHIC #1 <END> g06659172

600-1135 AIR CLEANER GP

PART OF 557-9727 ENGINE AR-PRIMARY

SMCS-1051, 1054 **i10501187**

NOTE	REF NO	GRAPHIC REF	PART NUMBER	QTY	PART NAME 1 2 3 4 5 6 (PRODUCT LEVEL)	SEE PAGE
M	1	1	**6I-0217**	2	BOLT (M8X1.25X20-MM)	
M	2	1	**6I-0254**	2	BOLT (M8X1.25X30-MM)	
M	3	1	**153-5592**	2	NUT (M8X1.25-THD)	
	4	1	**103-1067**	1	CLAMP-HOSE	
	5	1	**326-1010**	1	CLAMP-HOSE	
	6	1	**326-8547**	1	BRACKET	
	7	1	**329-1292**	1	CLIP-HOSE	
	8	1	**365-5515**	1	HOSE-AIR	
	9	1	**468-7382**	1	SPACER (8.8X25.4X6-MM THK)	
Y	10	1	*554-3084*	1	AIR CLEANER GP	587
	11	1	**326-9052**	1	FILM-WARNING (ETHER)	
					(EXPLOSION HAZARD. COULD CAUSE PERSONAL INJURY OR DEATH. DO NOT USE ETHER. READ THE OPERATOR'S MANUAL.)	
	12	1	**217-0099**	2	SPACER (8.2X25X2-MM THK)	
F			**555-8348**	1	FILM-IDENTIFICATION (AIR FILTER)	

F - NOT SHOWN
M - METRIC PART
Y - SEPARATE ILLUSTRATION

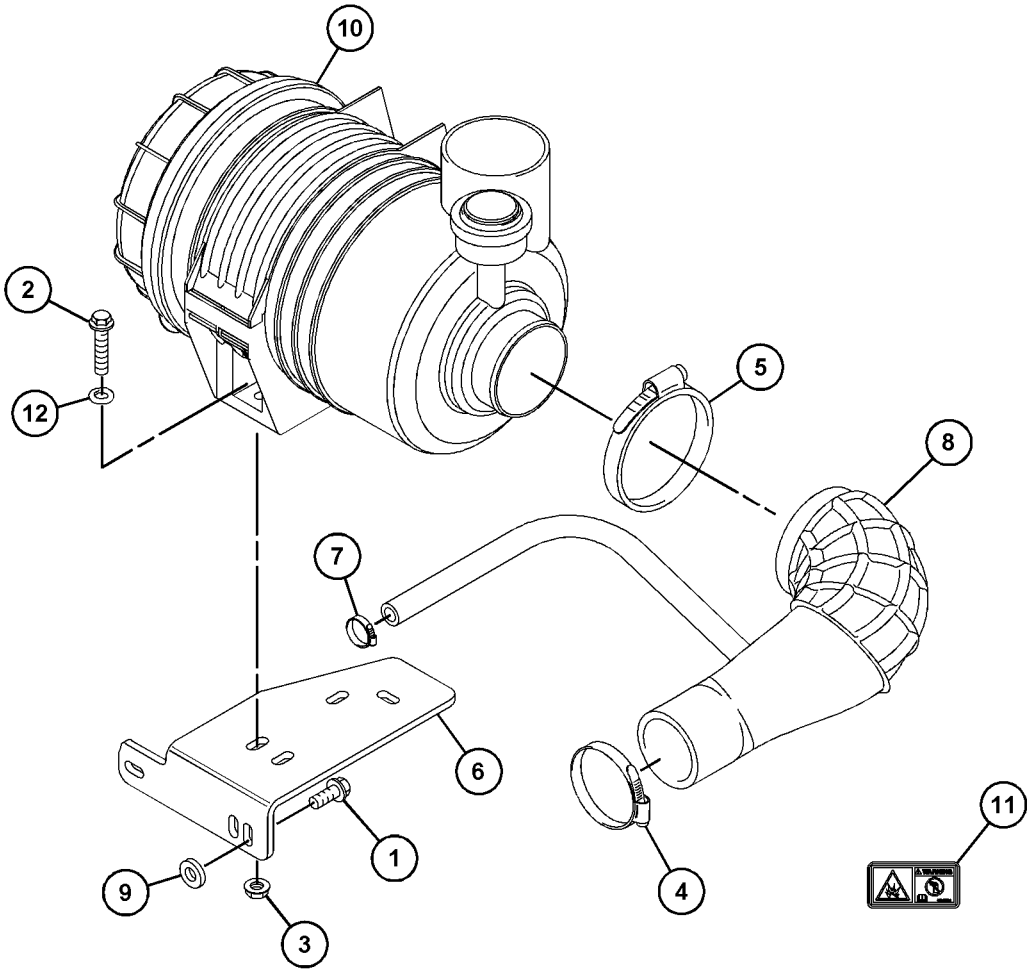

GRAPHIC #1 <END> g07924111

600-5149 AIR CLEANER GP

PART OF 610-7720 ENGINE AR-PRIMARY

SMCS-1051, 1054 **i09841874**

NOTE	REF NO	GRAPHIC REF	PART NUMBER	QTY	PART NAME 1 2 3 4 5 6 (PRODUCT LEVEL)	SEE PAGE
	1	1	**103-1067**	1	CLAMP-HOSE	
M	2	2	**153-5592**	2	NUT (M8X1.25-THD)	
	3	1	**238-0245**	1	HOSE-AIR CLEANER	
	4	1	**326-1010**	1	CLAMP-HOSE	
	5	2	**326-8547**	1	BRACKET	
	6	1	**326-9052**	1	FILM-WARNING (ETHER)	
					(EXPLOSION HAZARD. COULD CAUSE PERSONAL INJURY OR DEATH. DO NOT USE ETHER. READ THE OPERATORS MANUAL.)	
	7	2	**468-7382**	1	SPACER (8.8X25.4X6-MM THK)	
Y	8	1	*554-3084*	1	AIR CLEANER GP	587
	9	1	**555-8348**	1	FILM-IDENTIFICATION (AIR FILTER)	
M	10	2	**6I-0217**	2	BOLT (M8X1.25X20-MM)	
M	11	2	**6I-0254**	2	BOLT (M8X1.25X30-MM)	
	12	2	**217-0099**	2	SPACER (8.2X25X2-MM THK)	

M - METRIC PART
Y - SEPARATE ILLUSTRATION

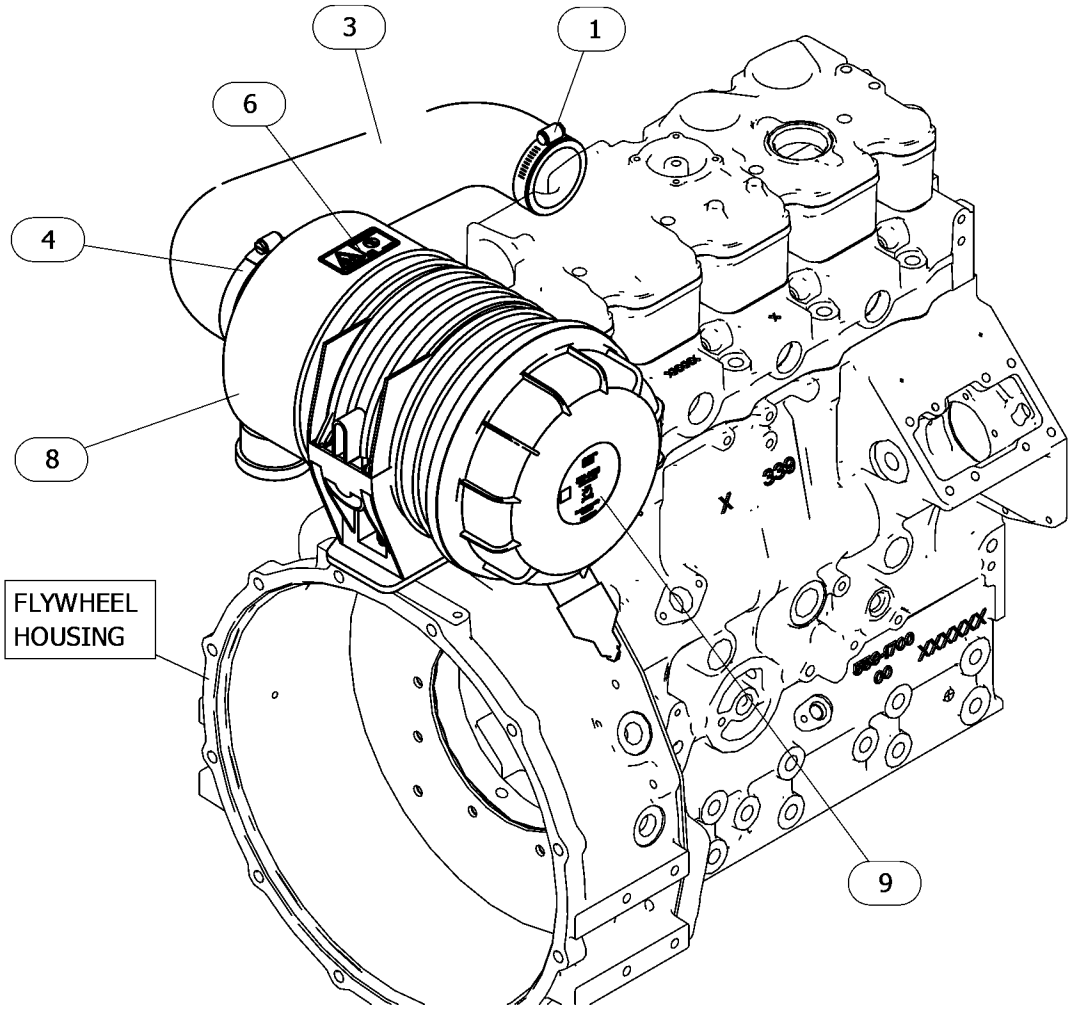

GRAPHIC #1 g06770831

600-5149 **AIR CLEANER GP (**contd.**)** **i09841874**

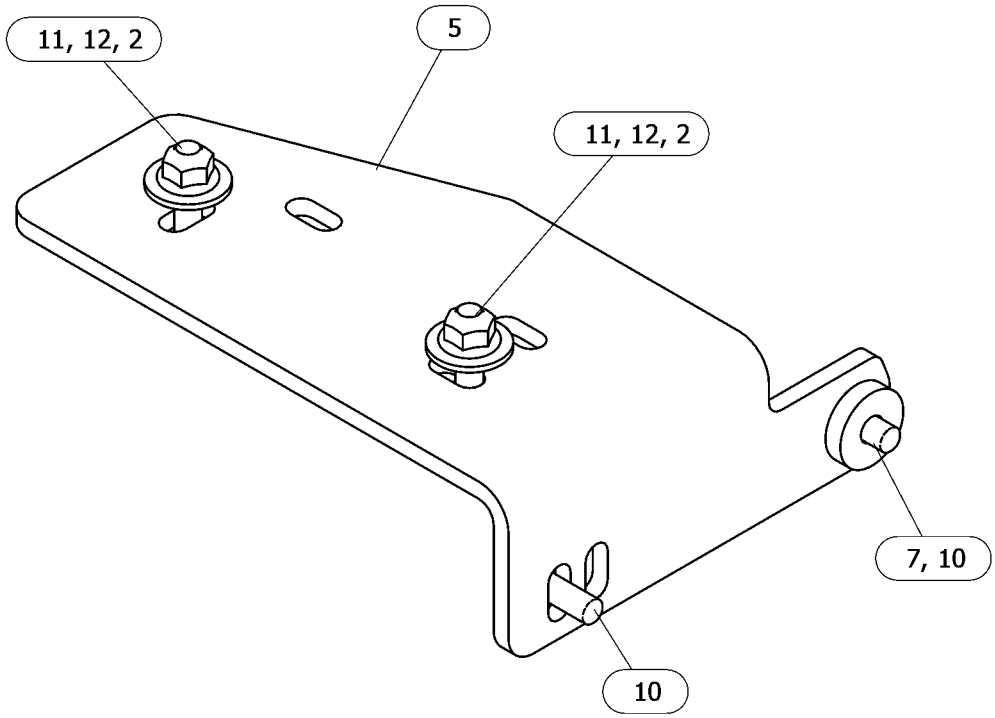

VIEW OF AREA A
(PARTS REMOVED FOR CLARITY)
(ROTATED 90° CLOCKWISE)

GRAPHIC #2 <END> g06770831_01

600-5153 AIR CLEANER GP

PART OF 610-7721 ENGINE AR-PRIMARY

SMCS-1051, 1054 **i10686038**

NOTE	REF NO	GRAPHIC REF	PART NUMBER	QTY	PART NAME 1 2 3 4 5 6 (PRODUCT LEVEL)	SEE PAGE
	1	2	**103-1067**	1	CLAMP-HOSE	
M	2	2	**153-5592**	2	NUT (M8X1.25-THD)	
	3	1	**326-1010**	1	CLAMP-HOSE	
	4	2	**326-8547**	1	BRACKET	
	5	1	**326-9052**	1	FILM-WARNING (ETHER)	
					(EXPLOSION HAZARD. COULD CAUSE PERSONAL INJURY OR DEATH. DO NOT USE ETHER. READ THE OPERATOR'S MANUAL.)	
	6	1	**329-1292**	1	CLIP-HOSE	
	7	2	**365-5515**	1	HOSE-AIR	
	8	2	**468-7382**	1	SPACER (8.8X25.4X6-MM THK)	
Y	9	1	*554-3084*	1	AIR CLEANER GP	587
	10	2	**555-8348**	1	FILM-IDENTIFICATION (AIR FILTER)	
M	11	2	**6I-0217**	2	BOLT (M8X1.25X20-MM)	
M	12	2	**6I-0254**	2	BOLT (M8X1.25X30-MM)	
	13	2	**217-0099**	2	SPACER (8.2X25X2-MM THK)	

M - METRIC PART
Y - SEPARATE ILLUSTRATION

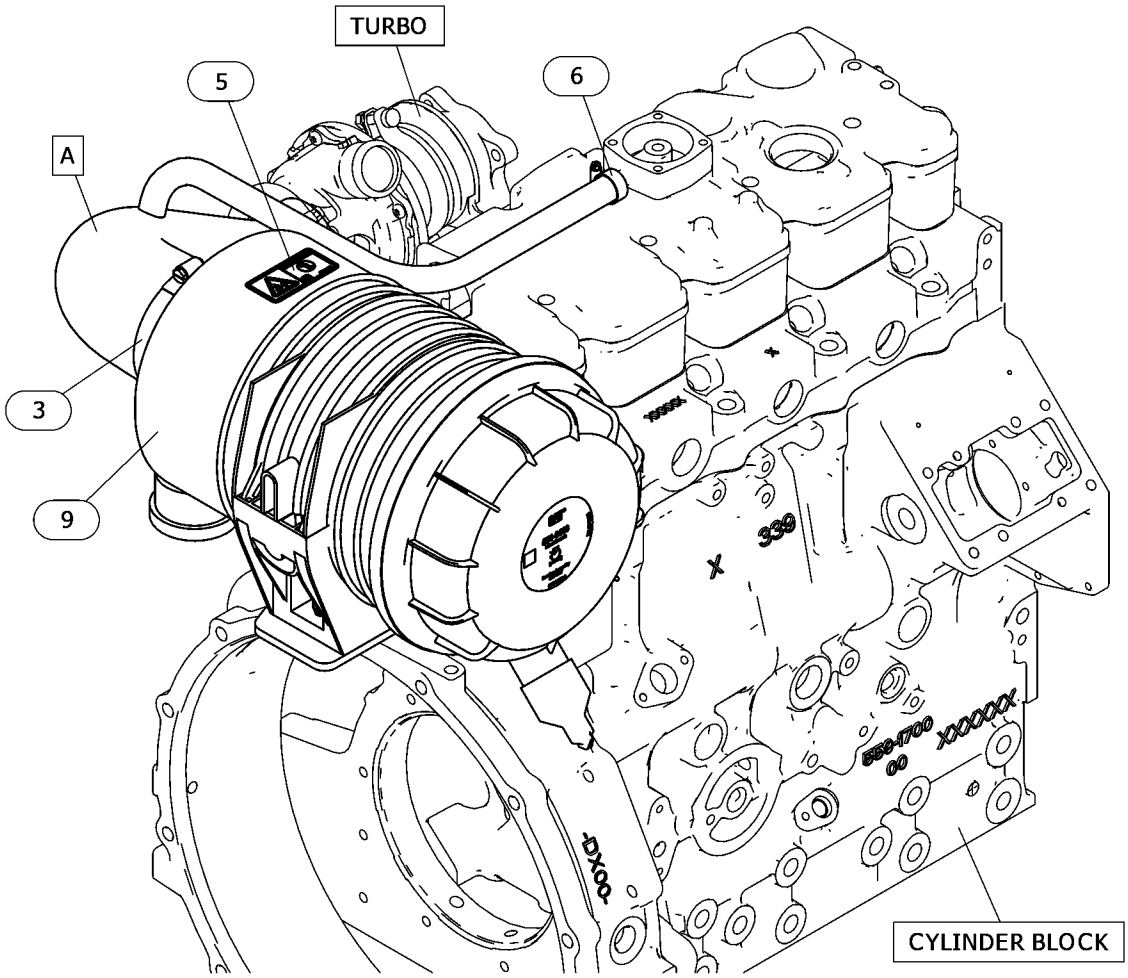

GRAPHIC #1 g06769900

600-5153 **AIR CLEANER GP (**contd.**)** **i10686038**

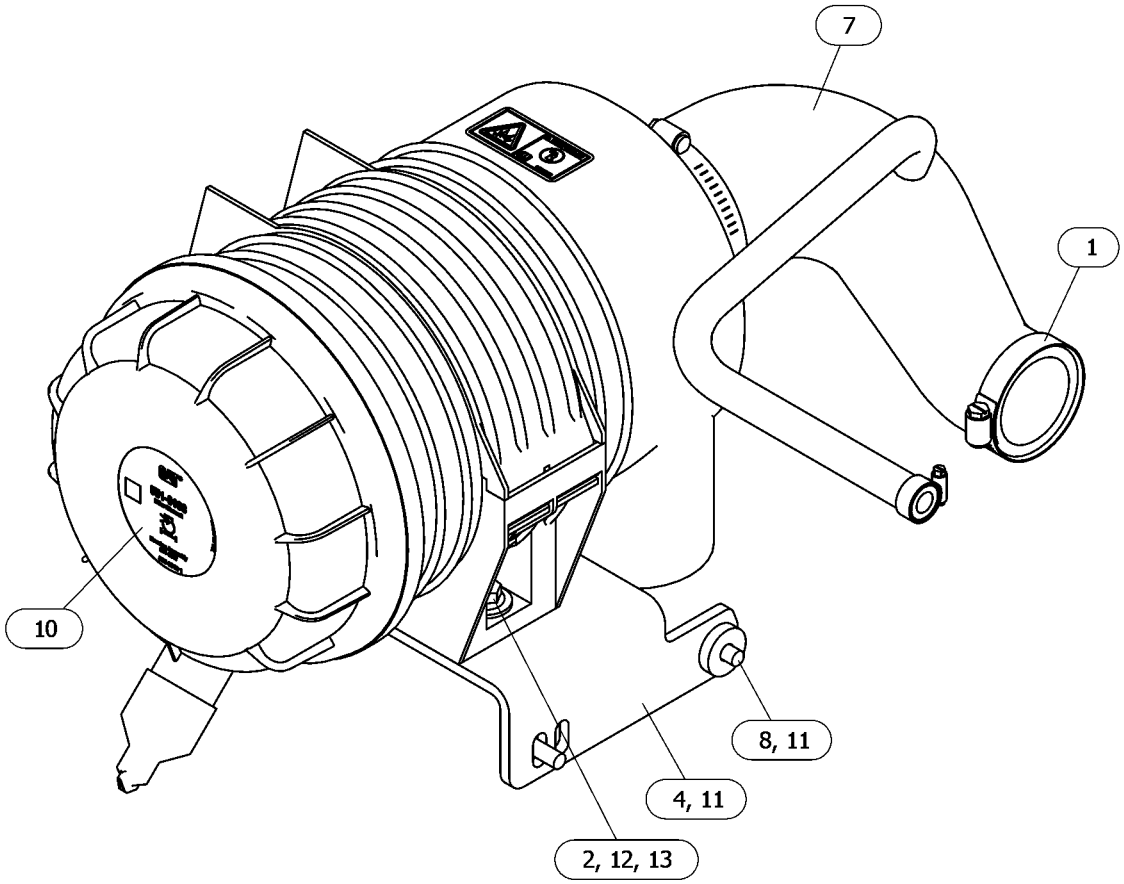

GRAPHIC #2 <END> g06769900_01

611-6891 AIR CLEANER GP

SMCS-1051, 1054 **i10501196**

NOTE	REF NO	GRAPHIC REF	PART NUMBER	QTY	PART NAME 1 2 3 4 5 6 (PRODUCT LEVEL)	SEE PAGE
M	1	1	**6I-0217**	2	BOLT (M8X1.25X20-MM)	
M	2	1	**6I-0254**	2	BOLT (M8X1.25X30-MM)	
	3	1	**103-1067**	1	CLAMP-HOSE	
M	4	1	**153-5592**	2	NUT (M8X1.25-THD)	
	5	1	**238-0245**	1	HOSE-AIR CLEANER	
	6	1	**326-1010**	1	CLAMP-HOSE	
	7	1	**326-8547**	1	BRACKET	
	8	1	**326-9052**	1	FILM-WARNING (ETHER)	
					(EXPLOSION HAZARD. COULD CAUSE PERSONAL INJURY OR DEATH. DO NOT USE ETHER. READ THE OPERATORS MANUAL.)	
	9	1	**468-7382**	1	SPACER (8.8X25.4X6-MM THK)	
Y	10	1	**551-6187**	1	AIR CLEANER GP	586
	11	1	**217-0099**	2	SPACER (8.2X25X2-MM THK)	

M - METRIC PART
Y - SEPARATE ILLUSTRATION

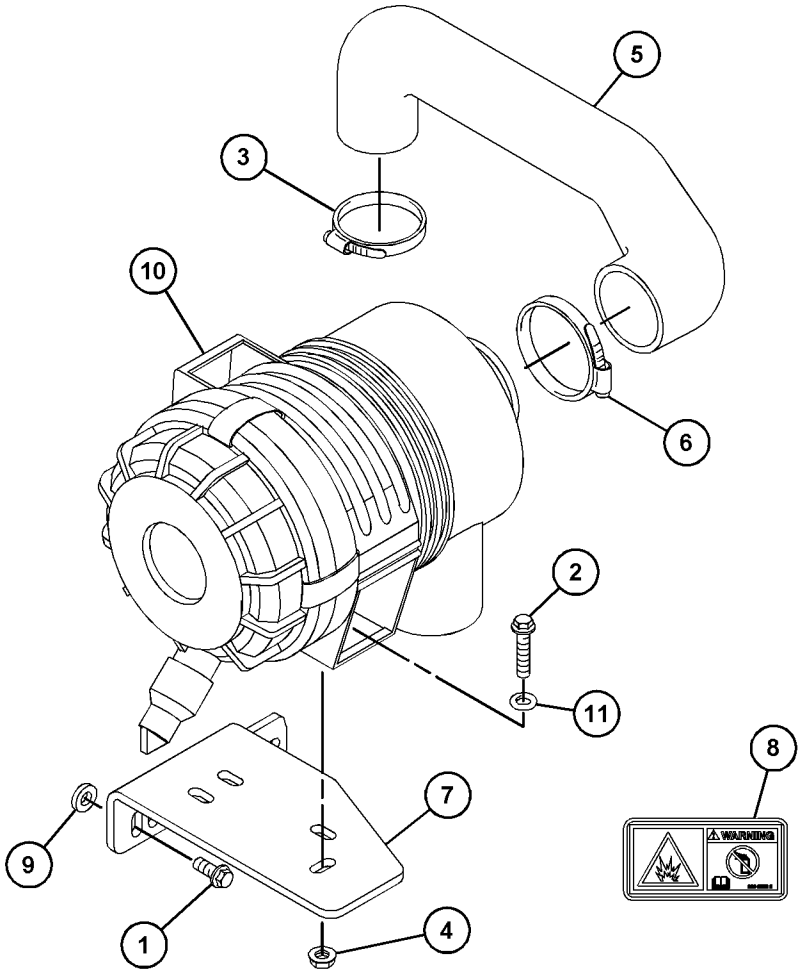

GRAPHIC #1 <END> g07924129

308-2309 CONNECTION GP-EXHAUST

PART OF 461-7892, 491-3396, 495-3121, 516-9335, 541-9277 ENGINE AR-PRIMARY

SMCS-1061 **i07176211**

NOTE	REF NO	GRAPHIC REF	PART NUMBER	QTY	PART NAME 1 2 3 4 5 6 (PRODUCT LEVEL)	SEE PAGE
	1	1	**435-0208**	2	GASKET	
	2	1	**168-9001**	8	BOLT AS	
	3	1	**366-3065**	2	FLANGE	

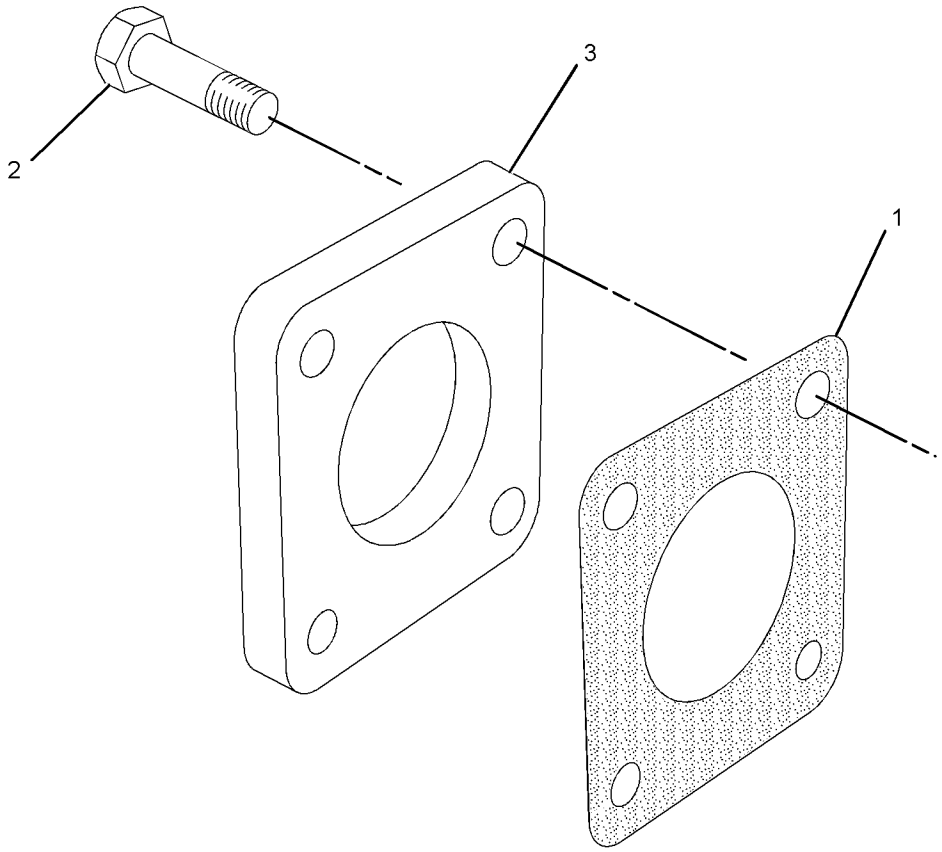

GRAPHIC #1 <END> g01388832

308-5610 CONNECTION GP-EXHAUST

PART OF 459-2953, 492-6602, 495-6243, 549-8284, 557-9727 ENGINE AR-PRIMARY

SMCS-1061 **i07075827**

NOTE	REF NO	GRAPHIC REF	PART NUMBER	QTY	PART NAME 1 2 3 4 5 6 (PRODUCT LEVEL)	SEE PAGE
	1	1	**168-9001**	1	BOLT AS	
	2	1	**252-8372**	1	ELBOW AS-EXHAUST	
	2A	1	**163-5372**	4	WASHER (8X15.4X4-MM THK)	
	2B	1	**435-0208**	1	GASKET	
	2C	1	**191-0563**	1	ELBOW-EXHAUST	
	2D	1	**183-4335**	4	BOLT (M8X1.25X22-MM)	
	3	1	**366-3065**	1	FLANGE	
	4	1	**435-0208**	1	GASKET	

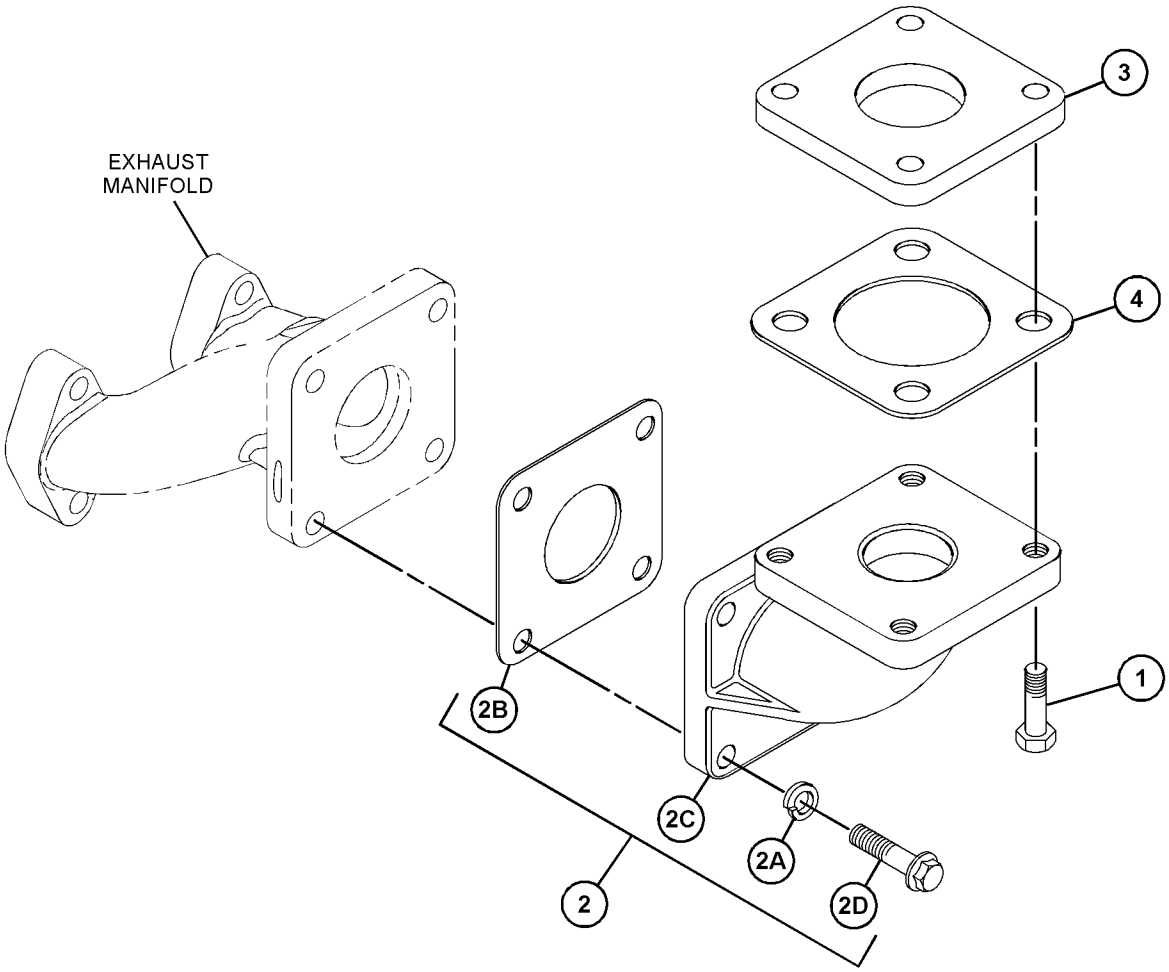

GRAPHIC #1 <END> g06220272

532-9705 CONNECTION GP-EXHAUST

PART OF 610-7720, 610-7721 ENGINE AR-PRIMARY

SMCS-1061 **i09606886**

NOTE	REF NO	GRAPHIC REF	PART NUMBER	QTY	PART NAME 1 2 3 4 5 6 (PRODUCT LEVEL)	SEE PAGE
	1	1	**168-9001**	4	BOLT AS	
	2	1	**366-3065**	1	FLANGE	
	3	1	**435-0208**	1	GASKET	

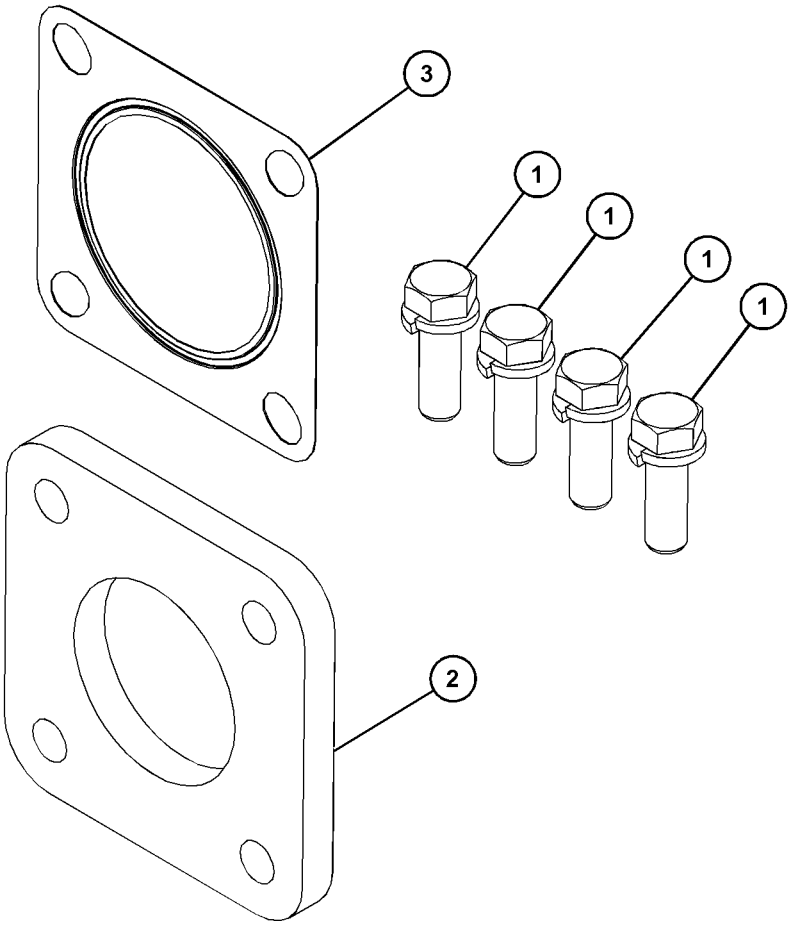

GRAPHIC #1 <END> g06447406

532-9707 CONNECTION GP-EXHAUST

S/N: G7L27601-UP

SMCS-1061 **i10547777**

NOTE	REF NO	GRAPHIC REF	PART NUMBER	QTY	PART NAME 1 2 3 4 5 6 (PRODUCT LEVEL)	SEE PAGE
	1	1	**168-9001**	4	BOLT AS	
	2	1	**252-8372**	1	ELBOW AS-EXHAUST	
		1	**3B-4505**	4	LOCKWASHER	
M		1	**475-7281**	4	BOLT (M8X1.25X22-MM)	
		1	**435-0208**	1	GASKET	
	3	1	**366-3065**	1	FLANGE	
	4	1	**435-0208**	1	GASKET	

M - METRIC PART

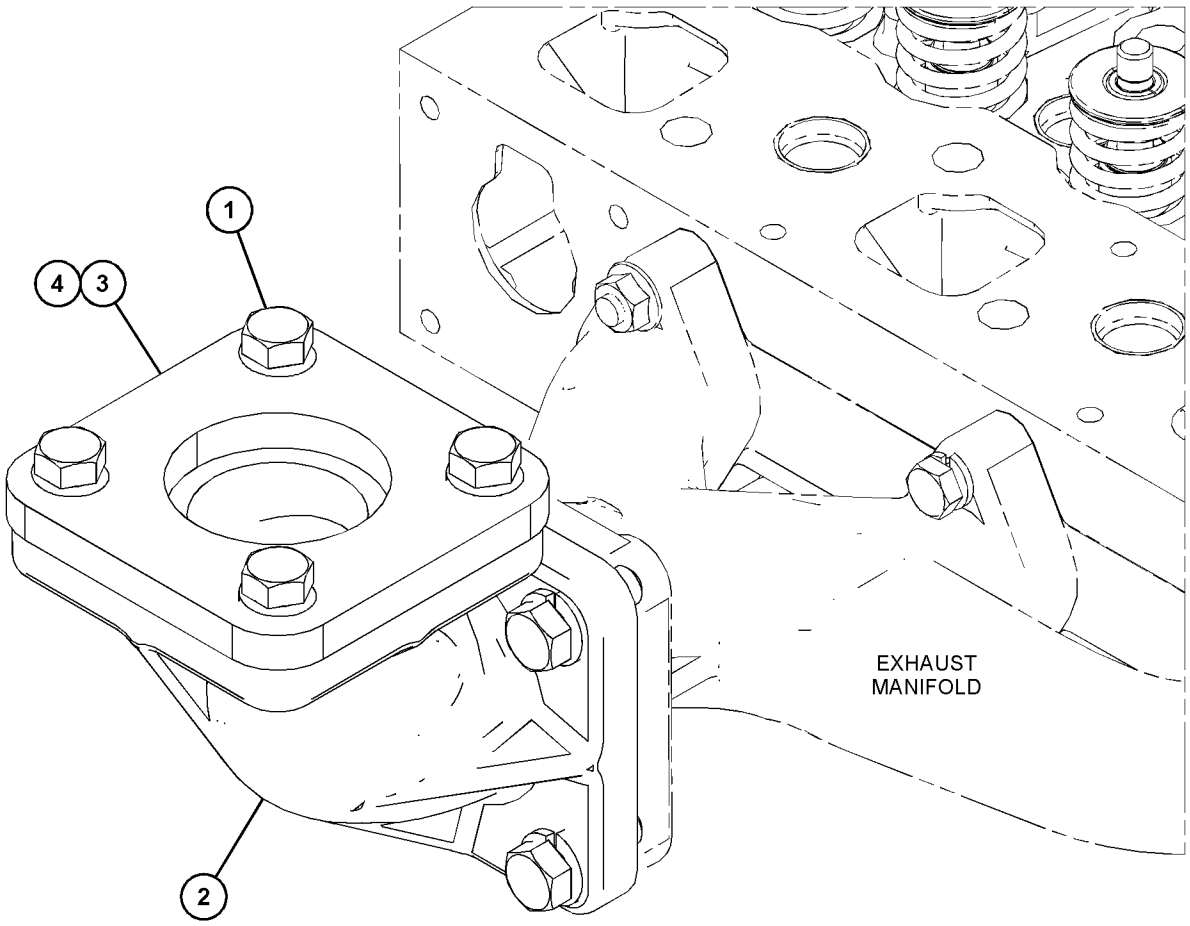

GRAPHIC #1 <END> g07533903

600-5135 COVER GP-EXHAUST

PART OF 433-1380 ENGINE AR, 435-1636 ENGINE AR-PRIMARY

TYPE 1

SMCS-1062, 1091 **i09857653**

NOTE	REF NO	GRAPHIC REF	PART NUMBER	QTY	PART NAME 1 2 3 4 5 6 (PRODUCT LEVEL)	SEE PAGE
M	1	1	**148-7140**	5	STUD (M8X1.25X37-MM)	
M	2	1	**153-5592**	5	NUT (M8X1.25-THD)	

M - METRIC PART

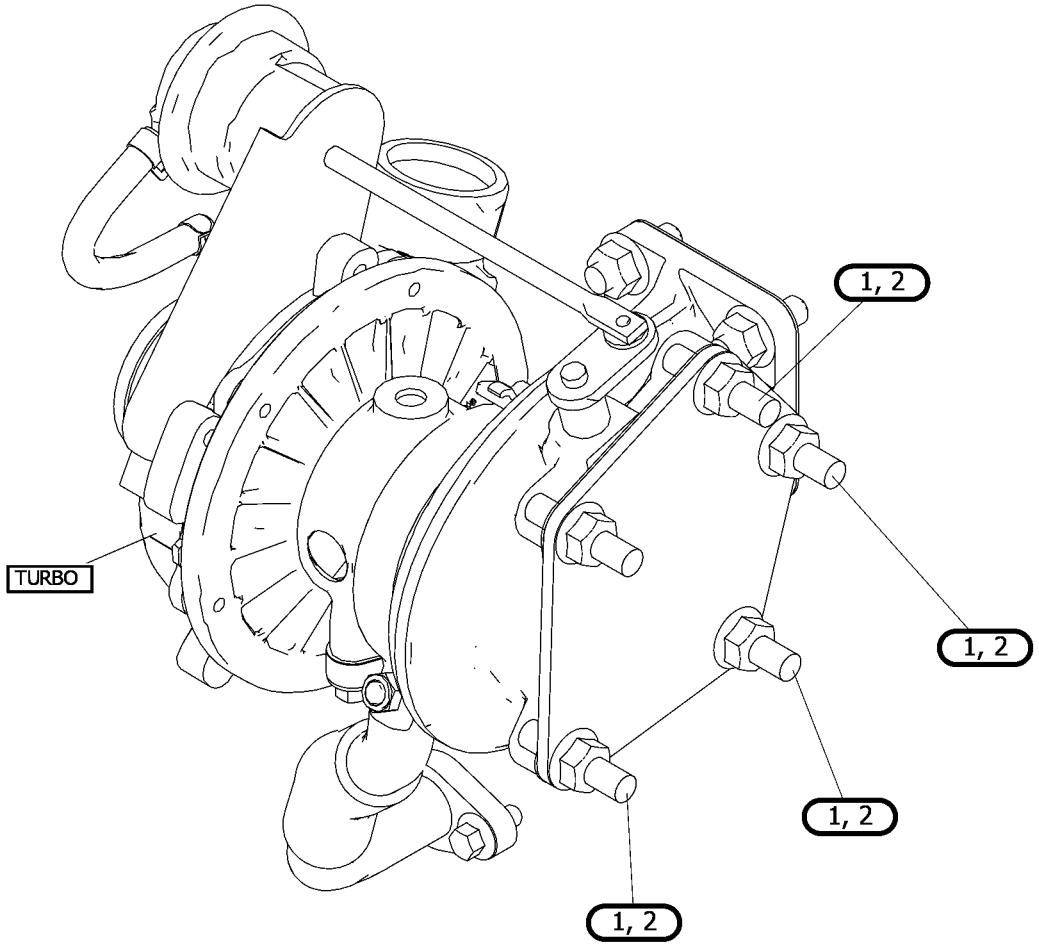

GRAPHIC #1 <END> g07712194

600-5135 COVER GP-EXHAUST

PART OF 433-1380 ENGINE AR, 435-1636 ENGINE AR-PRIMARY

TYPE 2

SMCS-1062, 1091 **i08838961**

NOTE	REF NO	GRAPHIC REF	PART NUMBER	QTY	PART NAME 1 2 3 4 5 6 (PRODUCT LEVEL)	SEE PAGE
M	1	1	**148-7140**	5	STUD (M8X1.25X37-MM)	
M	2	1	**153-5592**	5	NUT (M8X1.25-THD)	
	3	1	**8F-7242**	5	WASHER (8.7X15.9X1.6-MM THK)	
	4	1	**163-5372**	5	WASHER (8X15.4X4-MM THK)	

M - METRIC PART

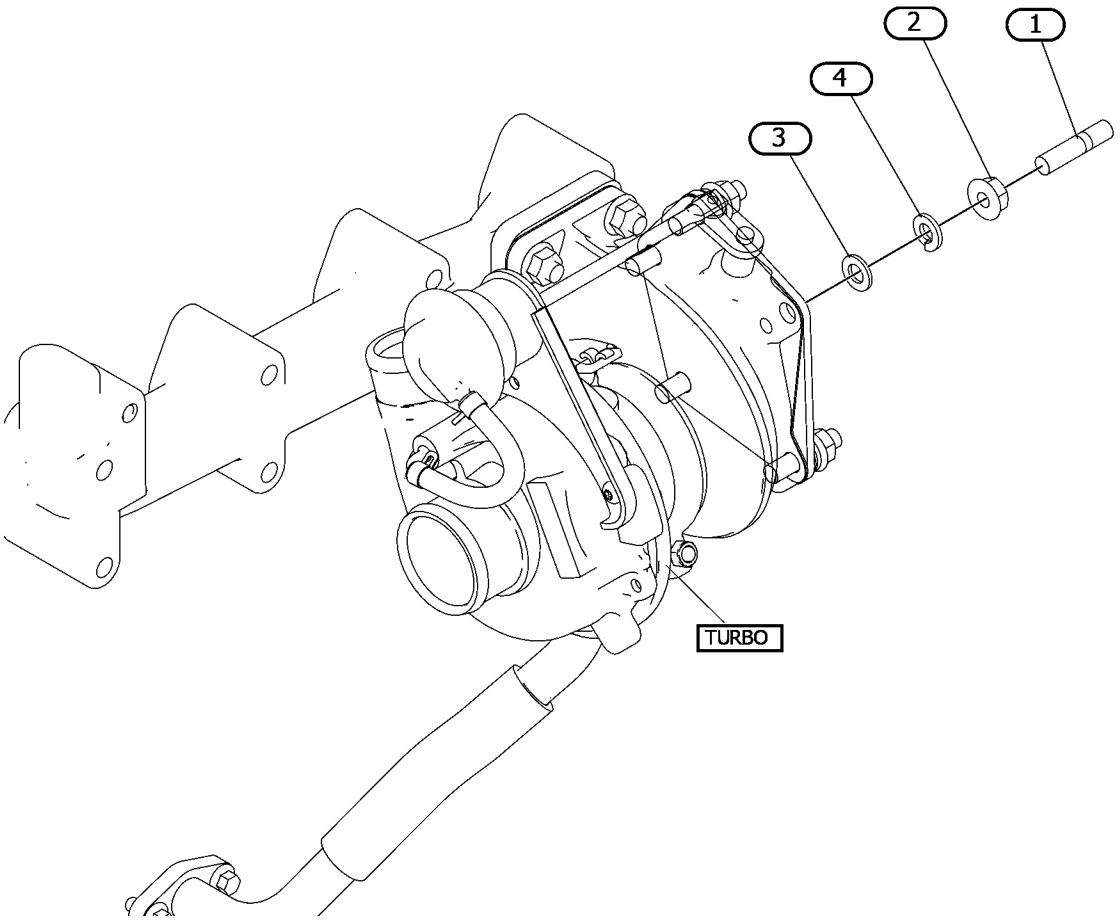

GRAPHIC #1 <END> g07556209

532-8309 FASTENER GP-EXHAUST MANIFOLD

PART OF 587-9328 ENGINE AR-PRIMARY

SMCS-1059 **i08796318**

NOTE	REF NO	GRAPHIC REF	PART NUMBER	QTY	PART NAME 1 2 3 4 5 6 (PRODUCT LEVEL)	SEE PAGE
	1	1	**168-9001**	4	BOLT AS	
	2	1	**435-0208**	1	GASKET	

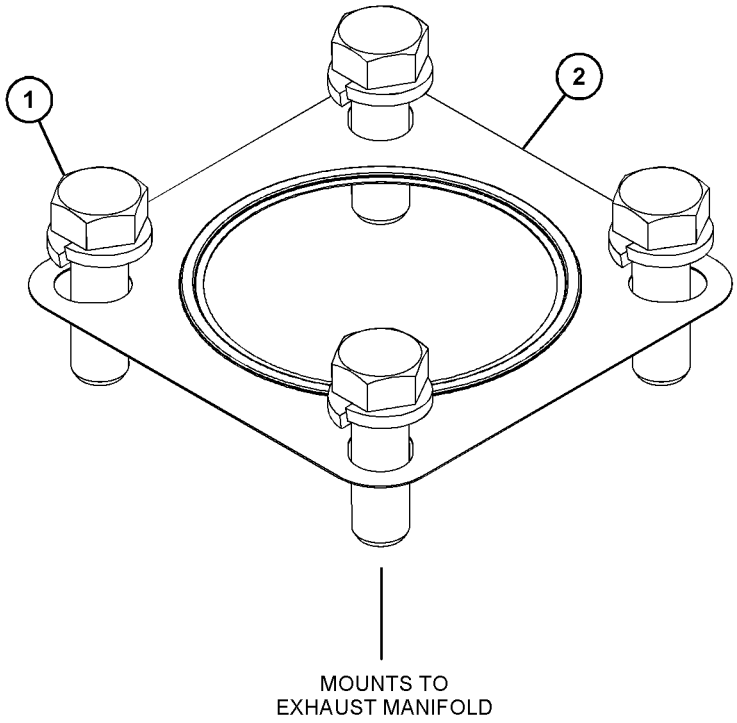

GRAPHIC #1 <END> g06315602

629-5293 FASTENER GP-FILTER

PART OF 587-9328 ENGINE AR-PRIMARY

SMCS-7553 **i10141070**

NOTE	REF NO	GRAPHIC REF	PART NUMBER	QTY	PART NAME 1 2 3 4 5 6 (PRODUCT LEVEL)	SEE PAGE
M	1	1	**124-3815**	1	BOLT (M8X1.25X16-MM)	
	2	1	**326-9052**	1	FILM-WARNING (ETHER)	
					(EXPLOSION HAZARD. COULD CAUSE PERSONAL INJURY OR DEATH. DO NOT USE ETHER. READ THE OPERATOR'S MANUAL.)	

M - METRIC PART

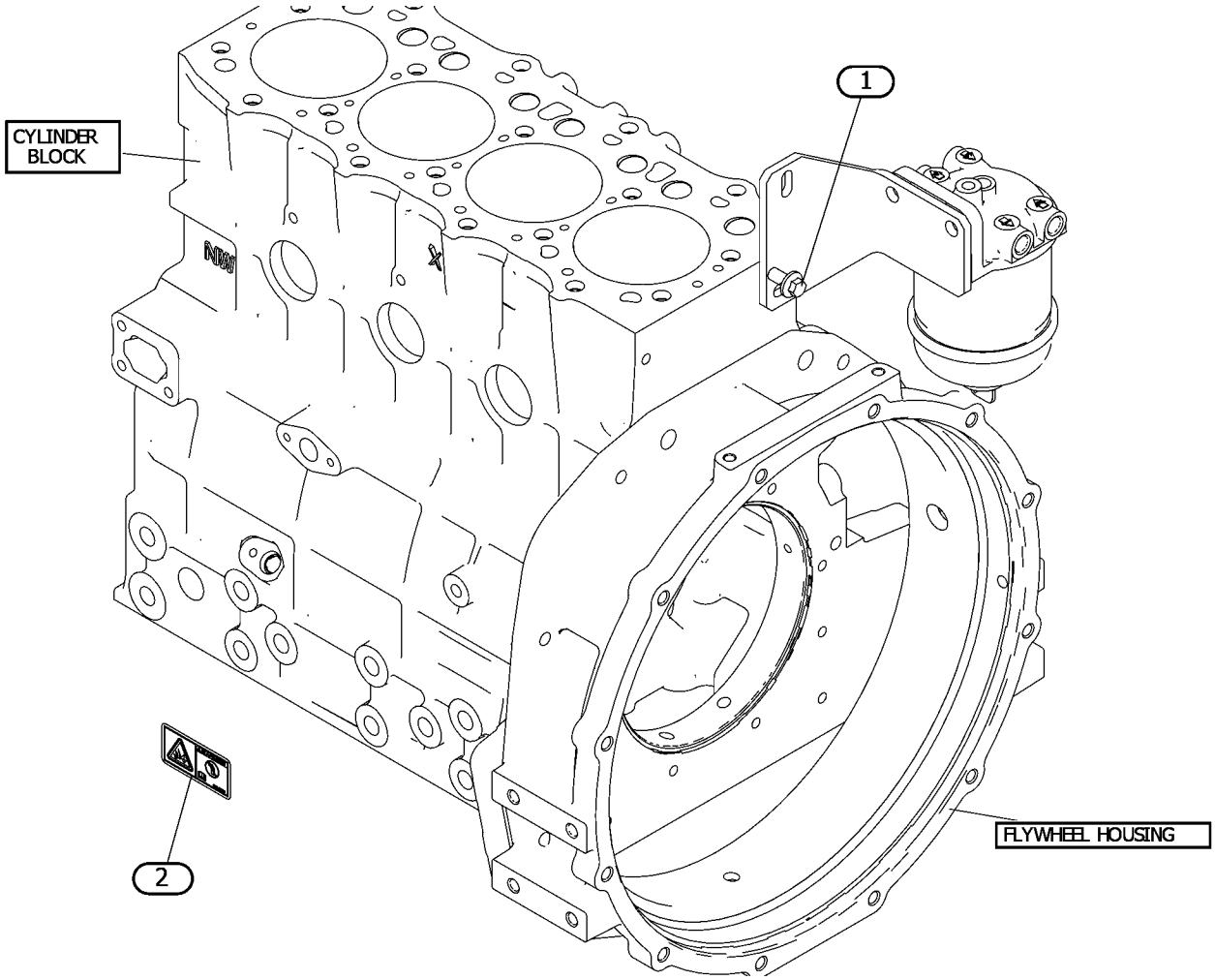

GRAPHIC #1 <END> g07592968

315-5256 GASKET GP-EXHAUST MANIFOLD

PART OF 461-7894, 465-1477 ENGINE AR-PRIMARY

SMCS-1059 **i07076314**

NOTE	REF NO	GRAPHIC REF	PART NUMBER	QTY	PART NAME 1 2 3 4 5 6 (PRODUCT LEVEL)	SEE PAGE
	1	1	**435-0208**	1	GASKET	

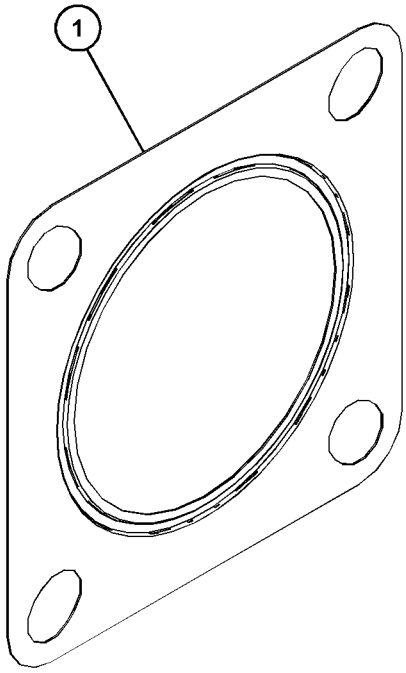

GRAPHIC #1 <END> g06220000

309-6724 MANIFOLD GP-EXHAUST

PART OF 461-7895, 492-6602, 516-9335, 549-8284 ENGINE AR-PRIMARY

SMCS-1059 **i02770506**

NOTE	REF NO	GRAPHIC REF	PART NUMBER	QTY	PART NAME 1 2 3 4 5 6 (PRODUCT LEVEL)	SEE PAGE
M	1	1	**153-5592**	2	NUT (M8X1.25-THD)	
	2	1	**154-2426**	1	MANIFOLD-EXHAUST	
	3	1	**154-2427**	1	GASKET-EXHAUST MANIFOLD	
	4	1	**154-2428**	6	BOLT AS	

M - METRIC PART

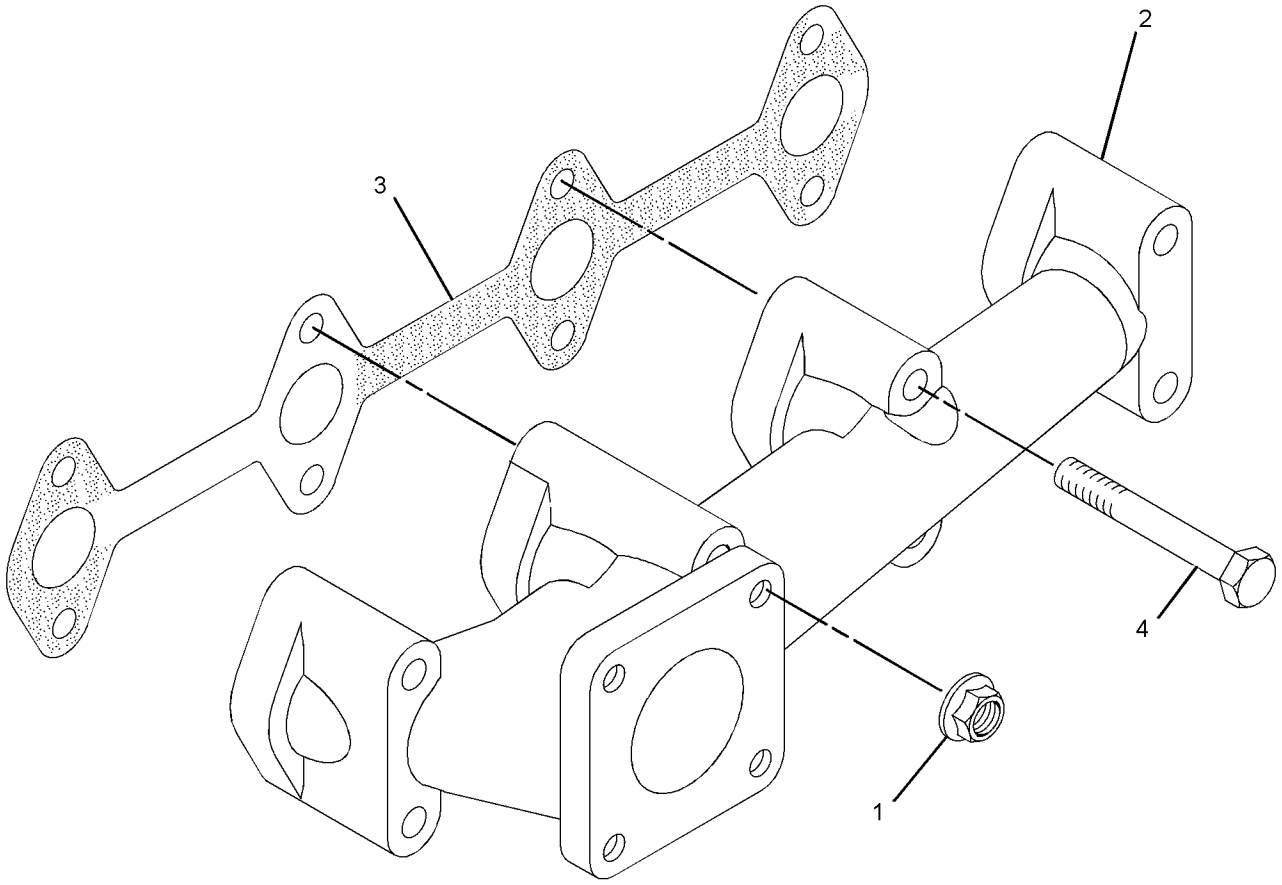

GRAPHIC #1 <END> g01419140

317-7192 MANIFOLD GP-EXHAUST

SMCS-1059 **i02853767**

NOTE	REF NO	GRAPHIC REF	PART NUMBER	QTY	PART NAME 1 2 3 4 5 6 (PRODUCT LEVEL)	SEE PAGE
M	1	1	**153-5592**	2	NUT (M8X1.25-THD)	
	2	1	**154-2427**	1	GASKET-EXHAUST MANIFOLD	
	3	1	**154-2428**	4	BOLT AS	
	4	1	**163-5371**	2	BOLT	
	5	1	**163-5372**	2	WASHER (8X15.4X4-MM THK)	
	6	1	**205-7709**	1	MANIFOLD-EXHAUST	

M - METRIC PART

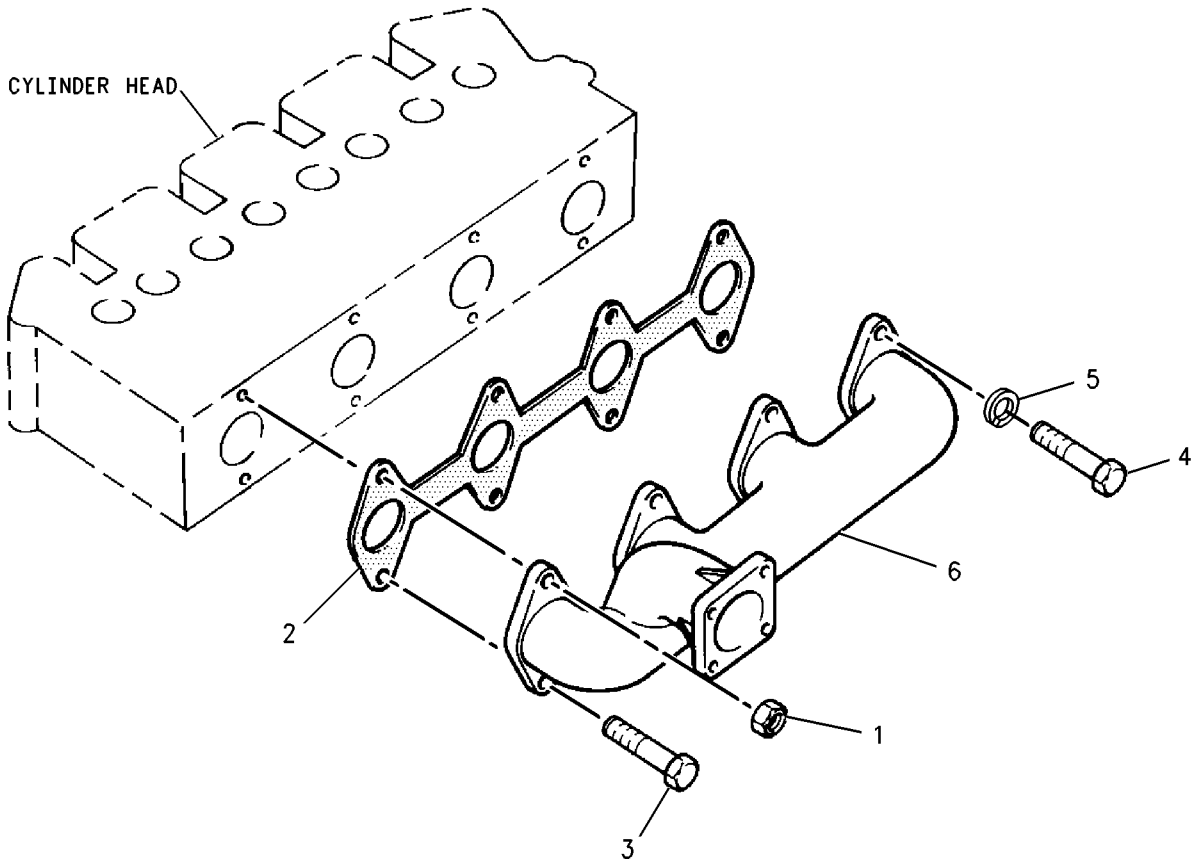

GRAPHIC #1 <END> g00812497

329-4424 MANIFOLD GP-EXHAUST

PART OF 587-9328 ENGINE AR-PRIMARY

SMCS-1059 **i07075837**

NOTE	REF NO	GRAPHIC REF	PART NUMBER	QTY	PART NAME 1 2 3 4 5 6 (PRODUCT LEVEL)	SEE PAGE
	1	1	**168-9001**	1	BOLT AS	
	2	1	**435-0208**	1	GASKET	

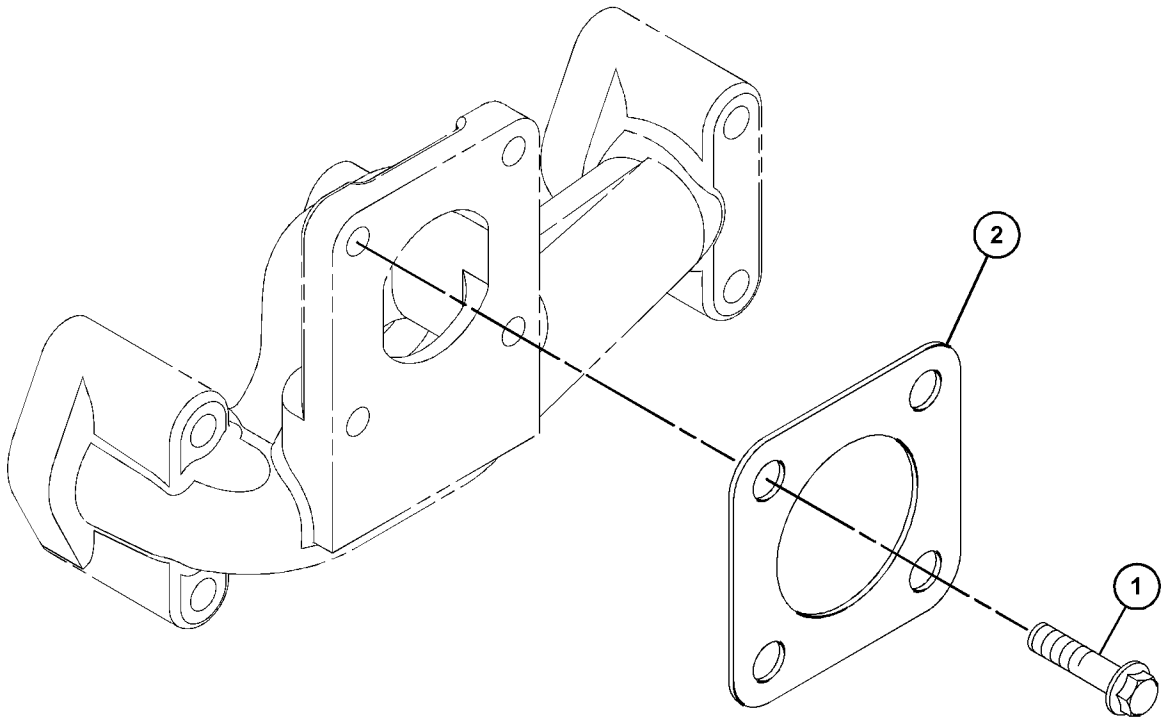

GRAPHIC #1 <END> g06220261

584-9800 MANIFOLD GP-EXHAUST

PART OF 433-1379 ENGINE AR, 435-1641, 435-1647 ENGINE AR-PRIMARY

SMCS-1059 **i08697194**

NOTE	REF NO	GRAPHIC REF	PART NUMBER	QTY	PART NAME 1 2 3 4 5 6 (PRODUCT LEVEL)	SEE PAGE
M	1	1	**599-4957**	2	STUD (M8X1.25X71-MM)	

M - METRIC PART

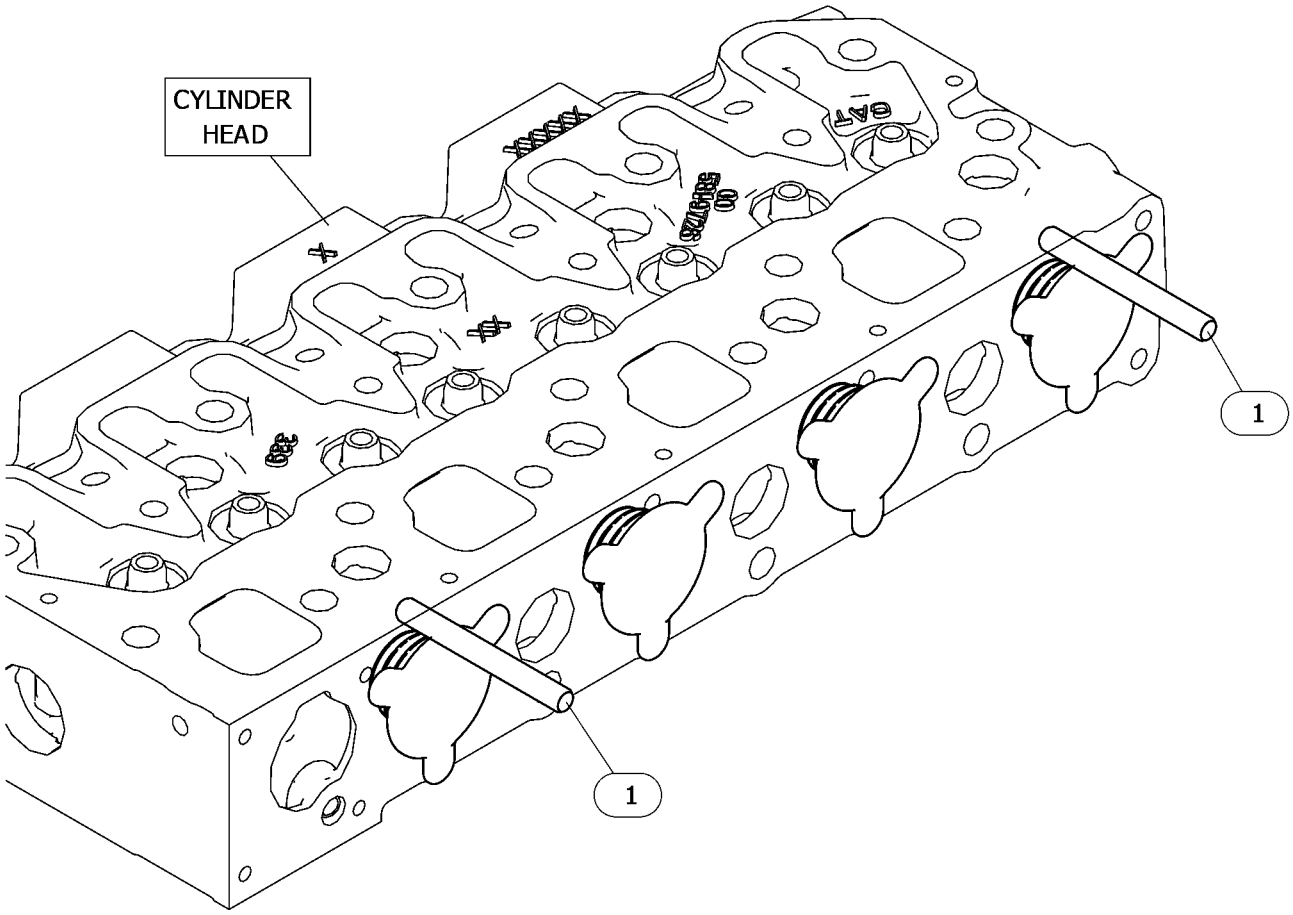

GRAPHIC #1 <END> g07513328

584-9801 MANIFOLD GP-EXHAUST

PART OF 610-7720 ENGINE AR-PRIMARY

SMCS-1059 **i09813971**

NOTE	REF NO	GRAPHIC REF	PART NUMBER	QTY	PART NAME 1 2 3 4 5 6 (PRODUCT LEVEL)	SEE PAGE
	1	1	**154-2427**	1	GASKET-EXHAUST MANIFOLD	
	2	1	**154-2428**	6	BOLT AS	
M	3	1	**599-4957**	2	STUD (M8X1.25X71-MM)	
	4	1	**202-0528**	1	MANIFOLD-EXHAUST	
M	5	1	**153-5592**	2	NUT (M8X1.25-THD)	

M - METRIC PART

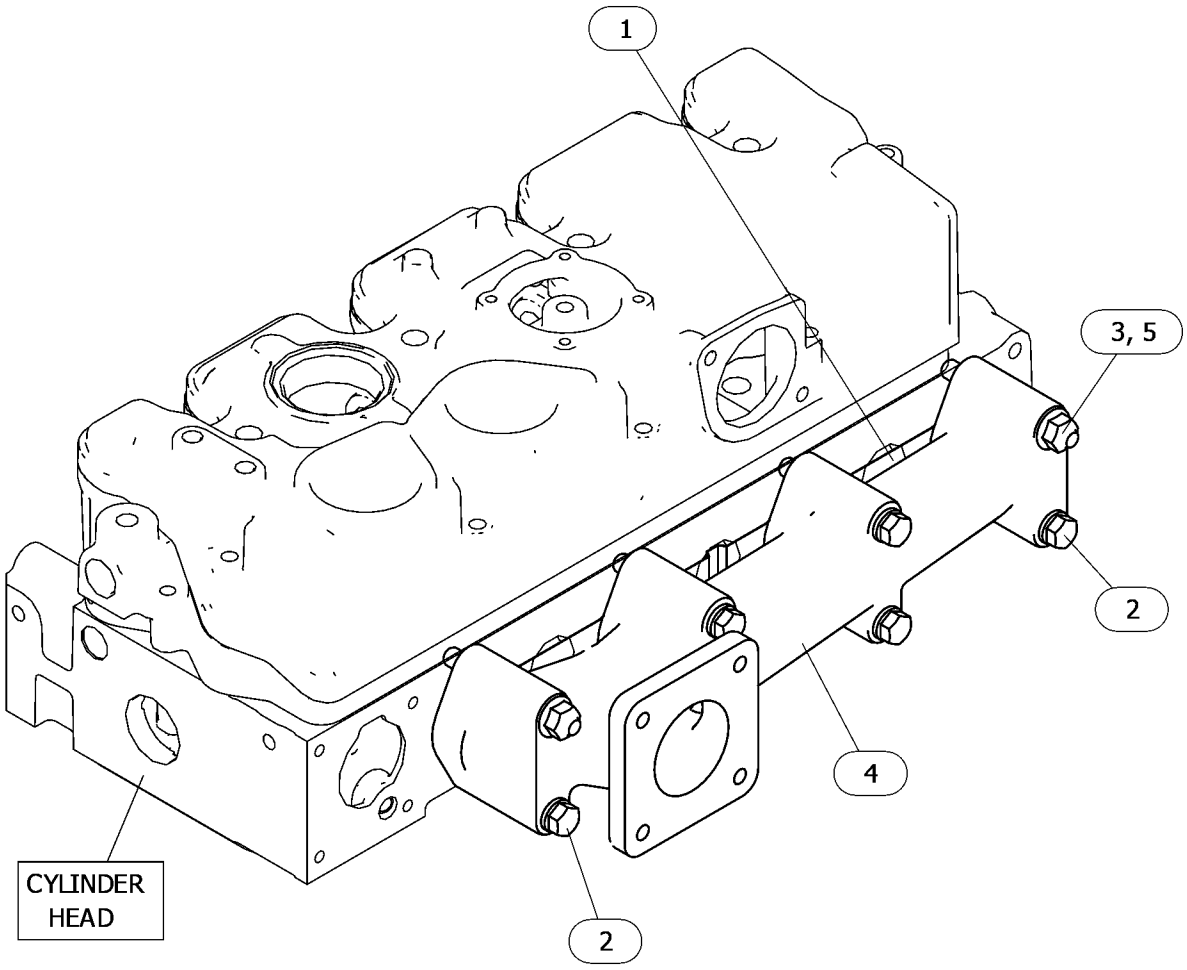

GRAPHIC #1 <END> g06770825

600-5139 MOUNTING GP-EXHAUST

S/N: G7L27560-UP

SMCS-1061 **i10484791**

NOTE	REF NO	GRAPHIC REF	PART NUMBER	QTY	PART NAME 1 2 3 4 5 6 (PRODUCT LEVEL)	SEE PAGE
M	1	1	**124-3815**	2	BOLT (M8X1.25X16-MM)	
	2	1	**239-0187**	1	BRACKET	
	3	1	**163-5372**	5	WASHER (8X15.4X4-MM THK)	
	4	1	**238-9198**	1	ELBOW-EXHAUST	
M	5	1	**5A-3604**	5	BOLT-SOCKET HEAD (M8X1.25X25-MM)	

M - METRIC PART

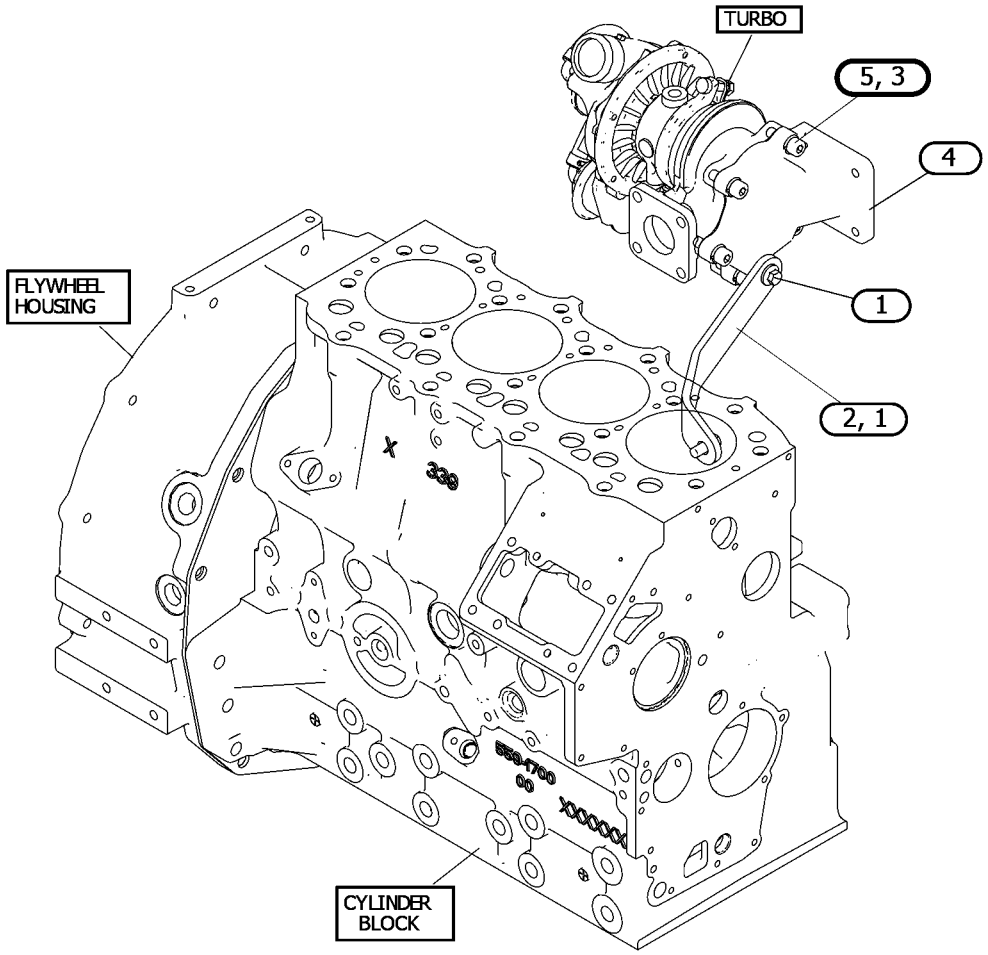

GRAPHIC #1 <END> g07896728

600-5140 MOUNTING GP-EXHAUST

PART OF 587-9328, 610-7721 ENGINE AR-PRIMARY

SMCS-1061 **i10428790**

NOTE	REF NO	GRAPHIC REF	PART NUMBER	QTY	PART NAME 1 2 3 4 5 6 (PRODUCT LEVEL)	SEE PAGE
M	1	1	**124-3815**	2	BOLT (M8X1.25X16-MM)	
	2	1	**594-3935**	1	ELBOW AS-EXHAUST	
	3	1	**163-5372**	5	WASHER (8X15.4X4-MM THK)	
M	4	1	**5A-3604**	5	BOLT-SOCKET HEAD (M8X1.25X25-MM)	
	5	1	**239-0187**	1	BRACKET	

M - METRIC PART

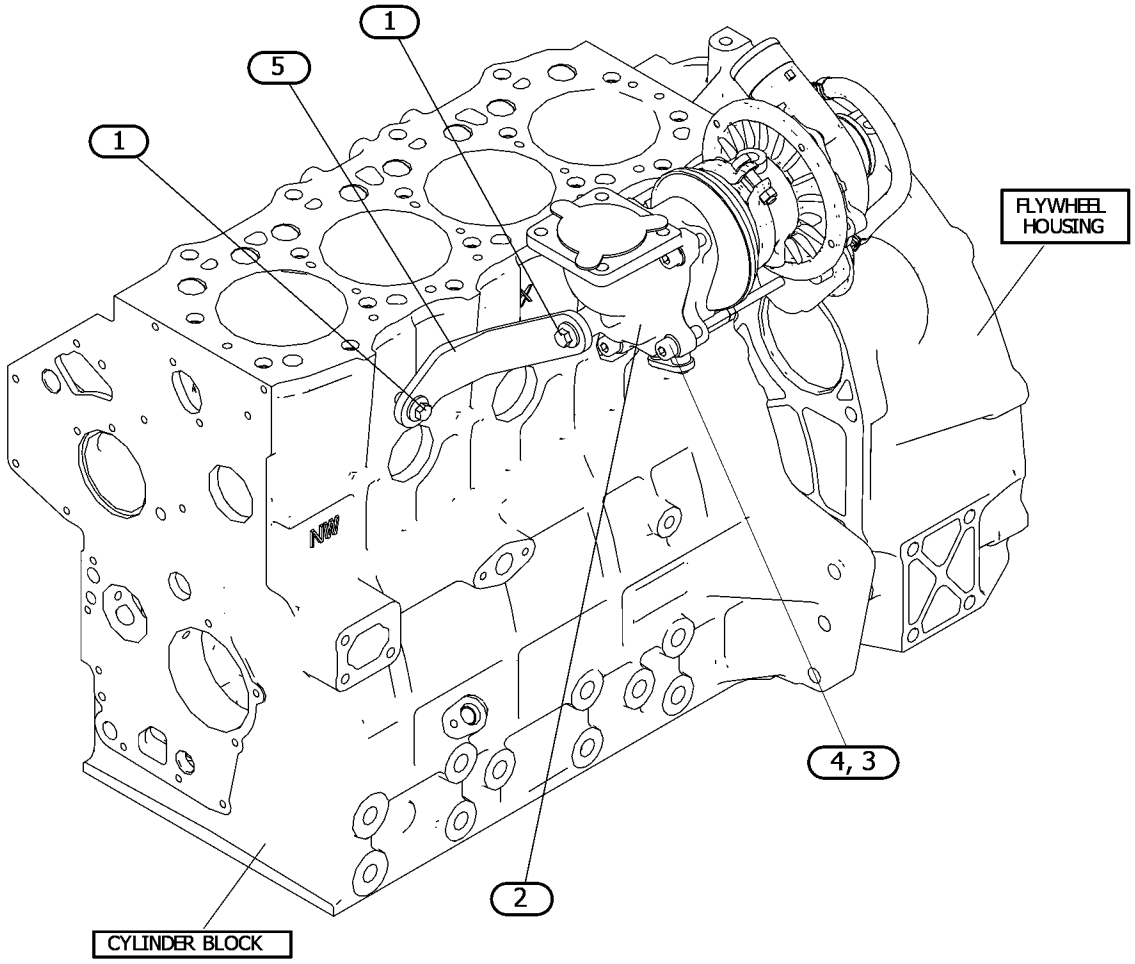

GRAPHIC #1 <END> g07701429

317-7193 MUFFLER GP

SMCS-1062 **i02853768**

NOTE	REF NO	GRAPHIC REF	PART NUMBER	QTY	PART NAME 1 2 3 4 5 6 (PRODUCT LEVEL)	SEE PAGE
	1	1	**168-9001**	4	BOLT AS	
	2	1	**226-4918**	1	MUFFLER GP	
		1	**226-4922**	1	MUFFLER	
M	2A	1	**5P-7970**	1	NUT (M8X1.25-THD)	
M	2B	1	**6V-5221**	1	BOLT (M8X1.25X80-MM)	
	2C	1	**155-7984**	1	WASHER (8.4X16X1.6-MM THK)	
	2D	1	**226-4919**	1	PIPE-EXHAUST	
	2E	1	**226-4923**	1	CLAMP	

M - METRIC PART

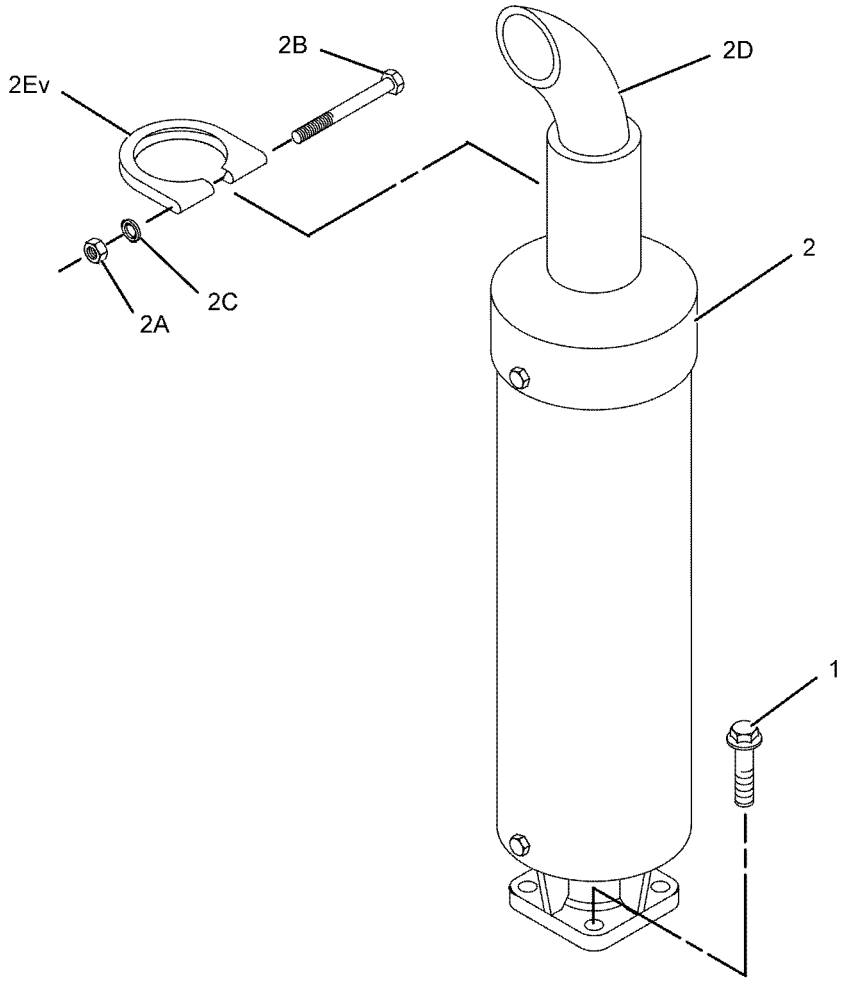

GRAPHIC #1 <END> g01038464

308-2308 TURBOCHARGER GP

PART OF 459-2953 ENGINE AR-PRIMARY

TYPE 1

SMCS-1052, 1053 **i07404897**

NOTE	REF NO	GRAPHIC REF	PART NUMBER	QTY	PART NAME 1 2 3 4 5 6 (PRODUCT LEVEL)	SEE PAGE
	1	2	**363-5813**	2	CLAMP-HOSE	
M	2	2	**153-5592**	8	NUT (M8X1.25-THD)	
	3	3	**153-5939**	1	STOPPER (OIL)	
	4	3	**153-5962**	3	BOLT AS	
M	5	1	**124-3815**	2	BOLT (M8X1.25X16-MM)	
	6	1	**153-6853**	1	SEAL-O-RING	
M	7	1,2	**6I-0846**	6	BOLT (M6X1X14-MM)	
M	8	3	**154-1347**	4	NUT (M10X1.25-THD)	
	9	2	**154-2427**	1	GASKET-EXHAUST MANIFOLD	
	10	2	**154-2428**	4	BOLT AS	
	11	2	**155-7984**	1	WASHER (8.4X16X1.6-MM THK)	
	13	1	**163-5372**	5	WASHER (8X15.4X4-MM THK)	
	14	3	**165-2140**	1	BOLT AS	
M	16	1	**6I-0217**	1	BOLT (M8X1.25X20-MM)	
	17	3	**183-1165**	1	PLUG	
	18	3	**246-4361**	4	WASHER (10.5X14X1.5-MM THK)	
	19	3	**217-5859**	1	VALVE-BREATHER (CRANKCASE)	
	20	3	**320-8401**	1	PLATE-RETAINING	
	21	3	**217-5862**	6	SCREW (SELF-TAPPING)	
	22	2	**494-9569**	1	GASKET	
	23	1	**225-8533**	2	GASKET (TURBOCHARGER)	
	24	3	**233-0695**	1	SEAL-VALVE COVER	
	25	2	**236-9987**	1	MANIFOLD-EXHAUST	
	26	3	**365-4125**	1	ADAPTER	
	27	2	**238-9196**	1	GASKET-TURBOCHARGER	
	28	1	**238-9198**	1	ELBOW-EXHAUST	
M	29	1	**5A-3604**	5	BOLT-SOCKET HEAD (M8X1.25X25-MM)	
	30	3	**423-8167**	1	COVER-CYLINDER HEAD	
M	31	3	**238-9295**	4	BOLT (M4X0.7X30-MM)	
R	32	2	**238-9349**	1	TURBOCHARGER GP	
	33	1	**317-0962**	1	TUBE-TURBOCHARGER OIL	
	34	1	**239-0187**	1	BRACKET	
	35	1	**239-0228**	1	TUBE AS	
	35A	1	**225-8526**	2	WASHER (10.4X13.75X1.37-MM THK)	
	35B	1	**239-0169**	1	BOLT-SPECIAL (BANJO)	
	35C	1	**239-0227**	2	CLIP	
	36	1	**039-2281**	1	SPACER (9X16X25-MM THK)	
M	37	2	**239-0232**	4	STUD (M8X1.25X31-MM)	
	38	2	**366-3055**	1	ELBOW	
	39	2	**249-1532**	1	HOSE-AIR INLET	
	40	3	**438-9362**	1	GASKET	
	41	1	**304-5061**	1	GASKET (ELBOW)	
M	42	3	**360-9545**	1	STUD (M6X1X48-MM)	
M	43	3	**153-5960**	1	NUT (M6X1-THD)	

M - METRIC PART
R - REMANUFACTURED PART MAY BE AVAILABLE

308-2308 **TURBOCHARGER GP (**contd.**)** **i07404897**

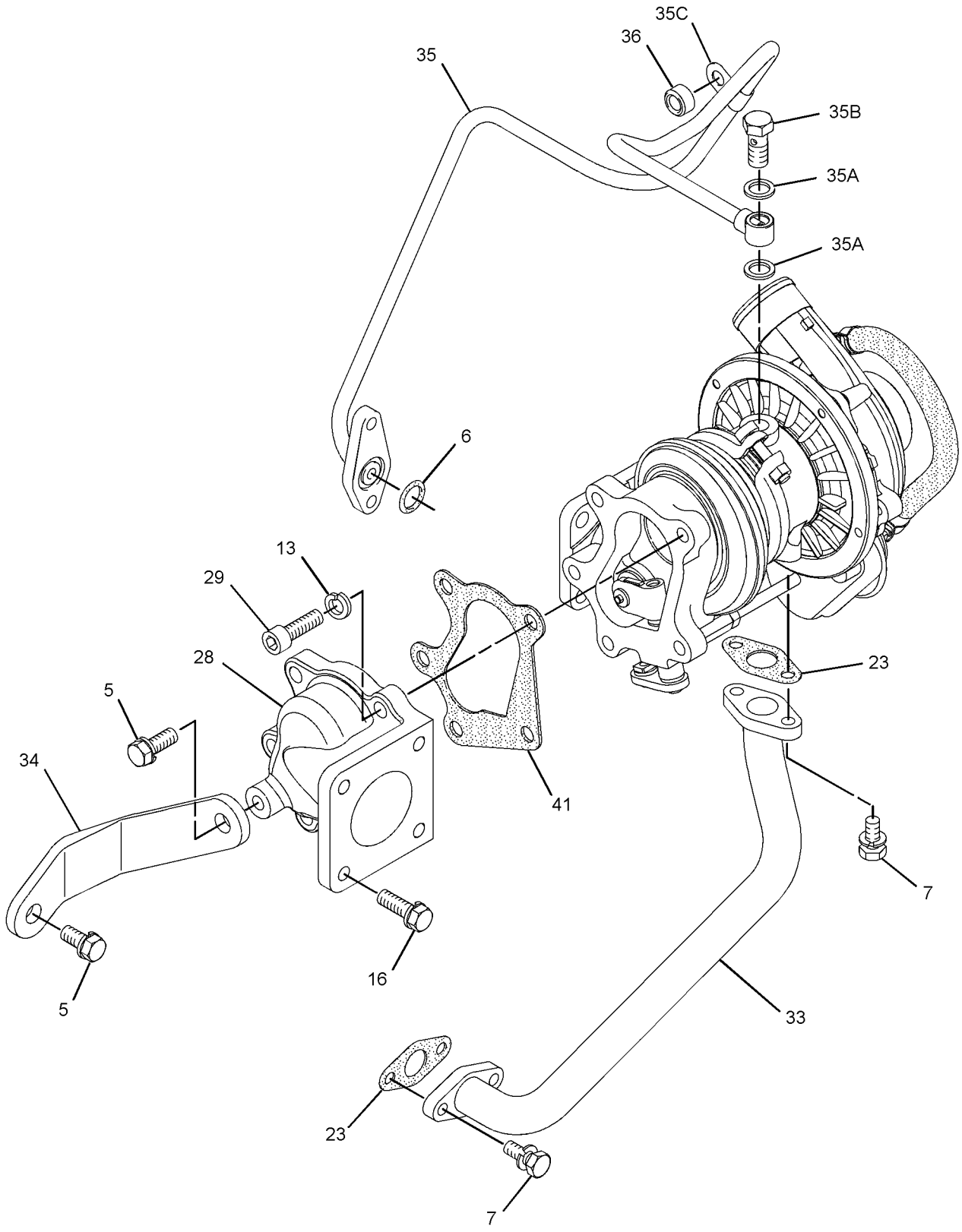

GRAPHIC #1 g06080164

308-2308 **TURBOCHARGER GP (**contd.**)** **i07404897**

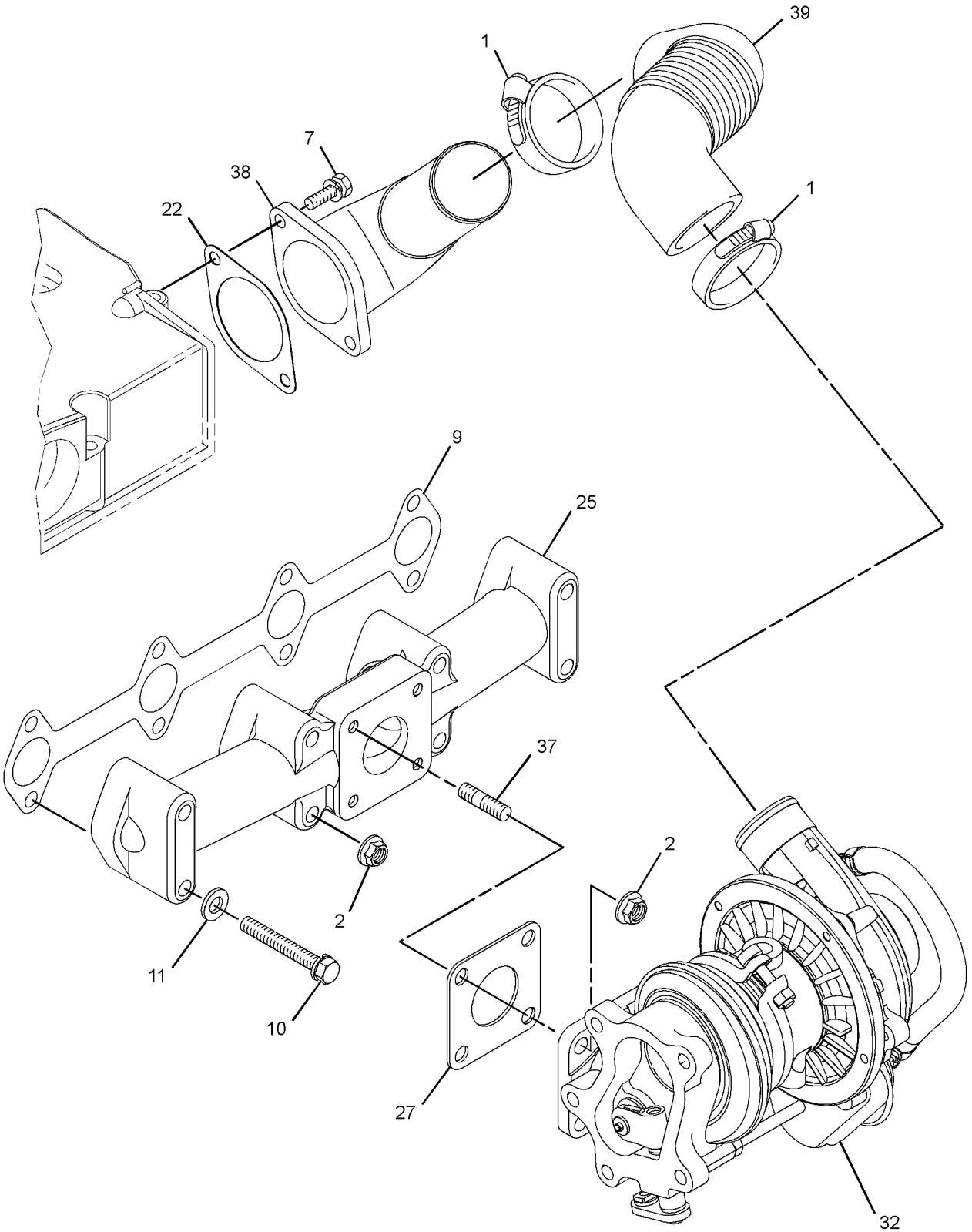

GRAPHIC #2 g06048946

308-2308 **TURBOCHARGER GP (**contd.**)** **i07404897**

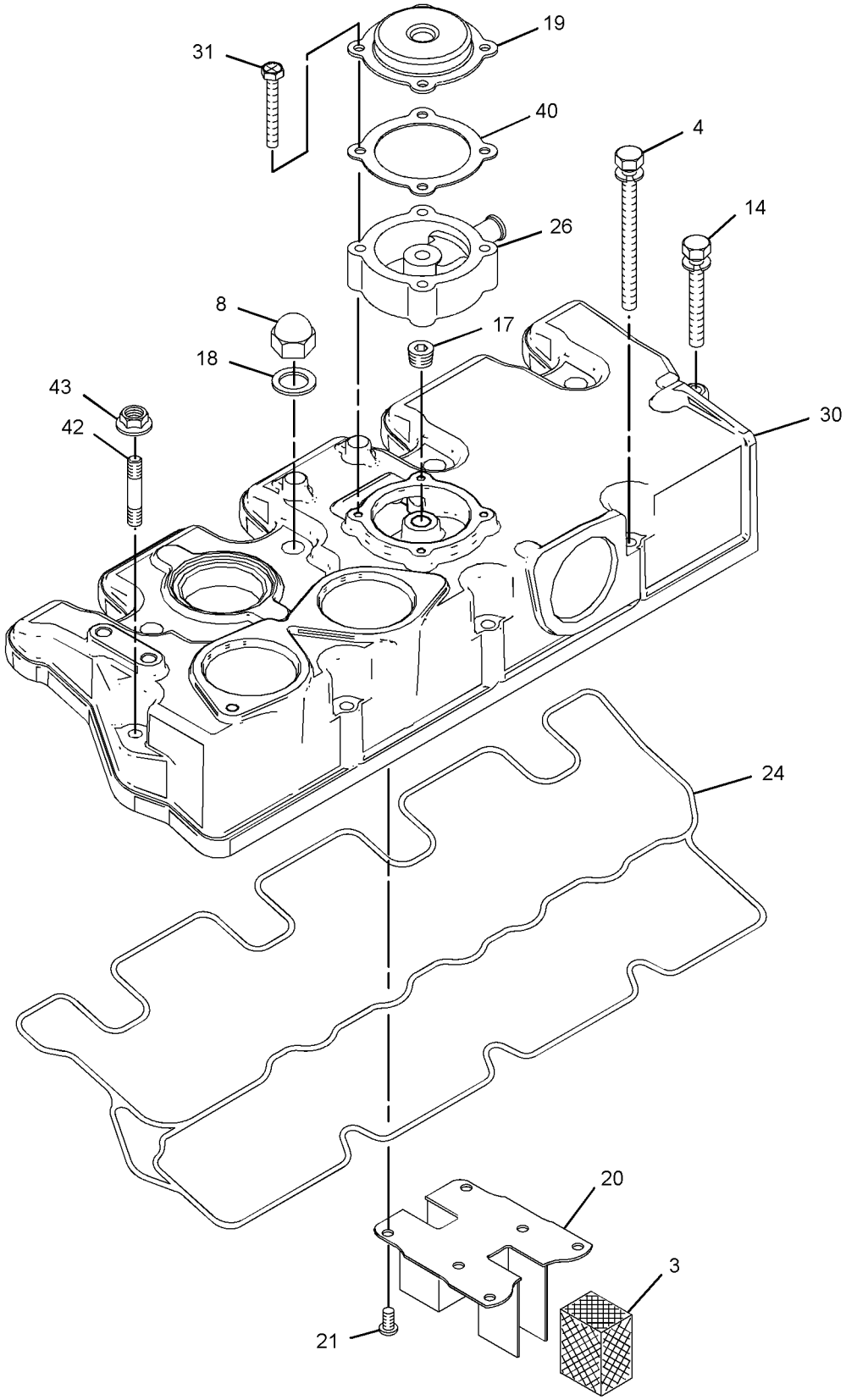

GRAPHIC #3 <END> g06048947

308-2308 TURBOCHARGER GP

TYPE 2

SMCS-1052, 1053 **i08197273**

NOTE	REF NO	GRAPHIC REF	PART NUMBER	QTY	PART NAME 1 2 3 4 5 6 (PRODUCT LEVEL)	SEE PAGE
	1	2	**363-5813**	2	CLAMP-HOSE	
M	2	2	**153-5592**	8	NUT (M8X1.25-THD)	
	3	3	**153-5939**	1	STOPPER (OIL)	
	4	3	**153-5962**	3	BOLT AS	
M	5	1	**124-3815**	2	BOLT (M8X1.25X16-MM)	
	6	1	**153-6853**	1	SEAL-O-RING	
M	7	1,2	**6I-0846**	6	BOLT (M6X1X14-MM)	
M	8	3	**539-0439**	4	NUT (M10X1.25-THD)	
	9	2	**154-2427**	1	GASKET-EXHAUST MANIFOLD	
	10	2	**154-2428**	4	BOLT AS	
	11	2	**155-7984**	1	WASHER (8.4X16X1.6-MM THK)	
	13	1	**163-5372**	5	WASHER (8X15.4X4-MM THK)	
	14	3	**165-2140**	1	BOLT AS	
M	16	1	**6I-0217**	1	BOLT (M8X1.25X20-MM)	
	17	3	**183-1165**	1	PLUG	
	18	3	**246-4361**	4	WASHER (10.5X14X1.5-MM THK)	
	19	3	**217-5859**	1	VALVE-BREATHER (CRANKCASE)	
	20	3	**320-8401**	1	PLATE-RETAINING	
	21	3	**217-5862**	6	SCREW (SELF-TAPPING)	
	22	2	**494-9569**	1	GASKET	
	23	1	**225-8533**	2	GASKET (TURBOCHARGER)	
	24	3	**233-0695**	1	SEAL-VALVE COVER	
	25	2	**236-9987**	1	MANIFOLD-EXHAUST	
	26	3	**365-4125**	1	ADAPTER	
	27	2	**238-9196**	1	GASKET-TURBOCHARGER	
	28	1	**238-9198**	1	ELBOW-EXHAUST	
M	29	1	**5A-3604**	5	BOLT-SOCKET HEAD (M8X1.25X25-MM)	
	30	3	**583-6090**	1	COVER-HEAD	
M	31	3	**238-9295**	4	BOLT (M4X0.7X30-MM)	
CR	32	2	**513-6823**	1	TURBOCHARGER AS	
	33	1	**317-0962**	1	TUBE-TURBOCHARGER OIL	
	34	1	**239-0187**	1	BRACKET	
	35	1	**239-0228**	1	TUBE AS	
	35A	1	**225-8526**	2	WASHER (10.4X13.75X1.37-MM THK)	
	35B	1	**239-0169**	1	BOLT-SPECIAL (BANJO)	
	35C	1	**239-0227**	2	CLIP	
	36	1	**239-0229**	1	SPACER (8.4X15X9-MM THK)	
M	37	2	**239-0232**	4	STUD (M8X1.25X31-MM)	
	38	2	**366-3055**	1	ELBOW	
	39	2	**249-1532**	1	HOSE-AIR INLET	
	40	3	**438-9362**	1	GASKET	
	41	1	**304-5061**	1	GASKET (ELBOW)	
M	42	3	**360-9545**	1	STUD (M6X1X48-MM)	
M	43	3	**153-5960**	1	NUT (M6X1-THD)	

C - CHANGE FROM PREVIOUS TYPE
M - METRIC PART
R - REMANUFACTURED PART MAY BE AVAILABLE

308-2308 **TURBOCHARGER GP (**contd.**)** **i08197273**

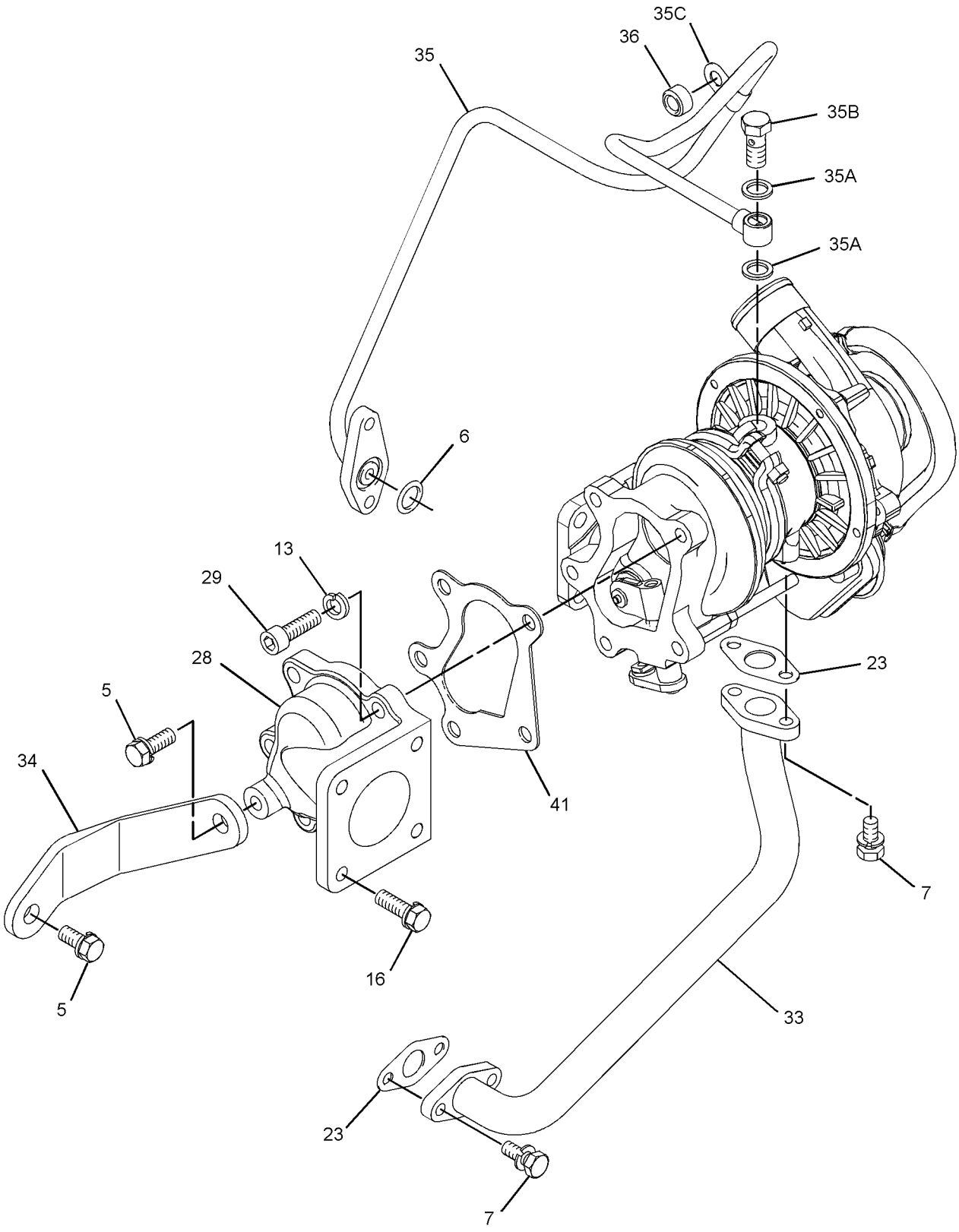

GRAPHIC #1 g06311469

308-2308 **TURBOCHARGER GP (**contd.**)** **i08197273**

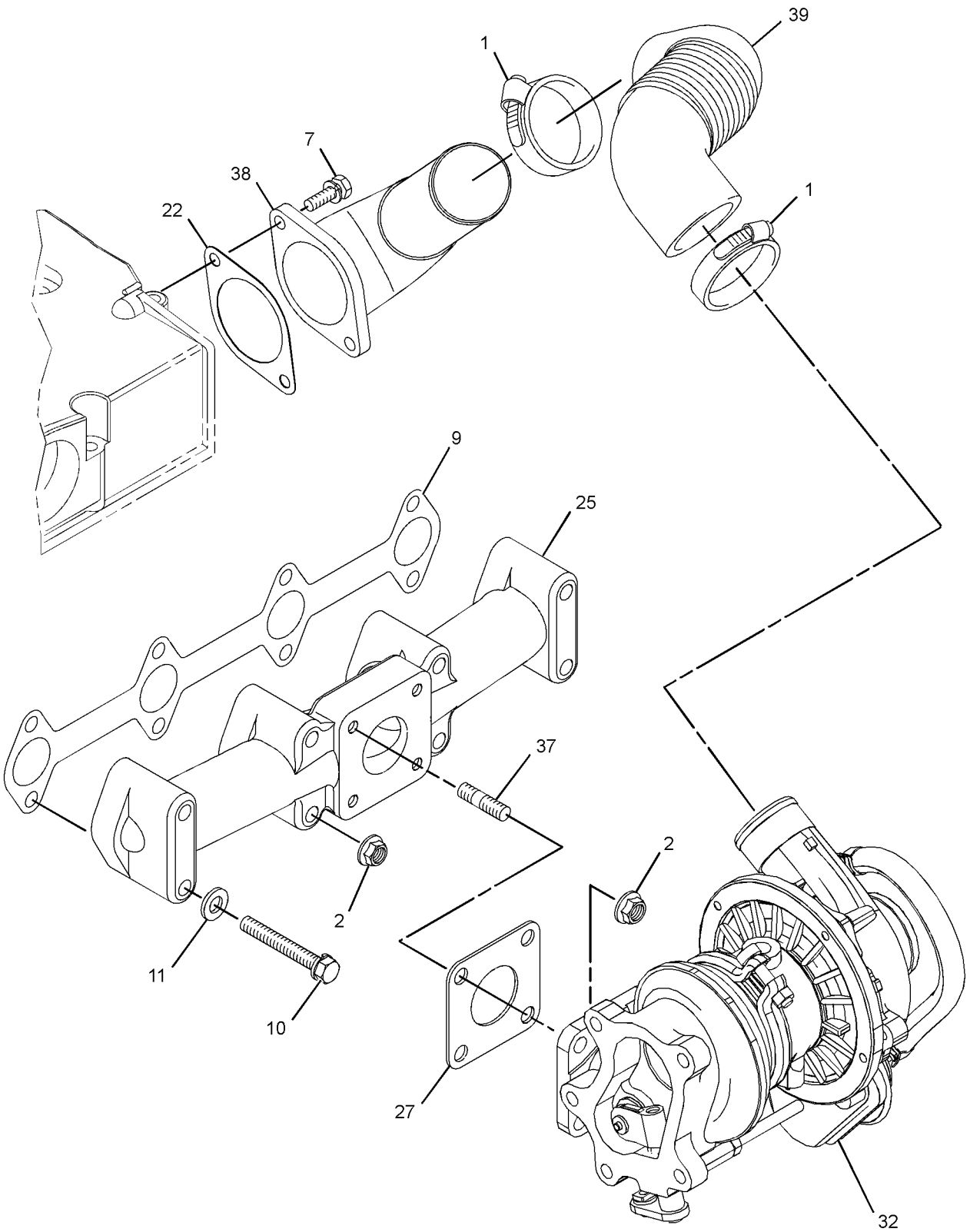

GRAPHIC #2 g06661045

308-2308 **TURBOCHARGER GP (**contd.**)** **i08197273**

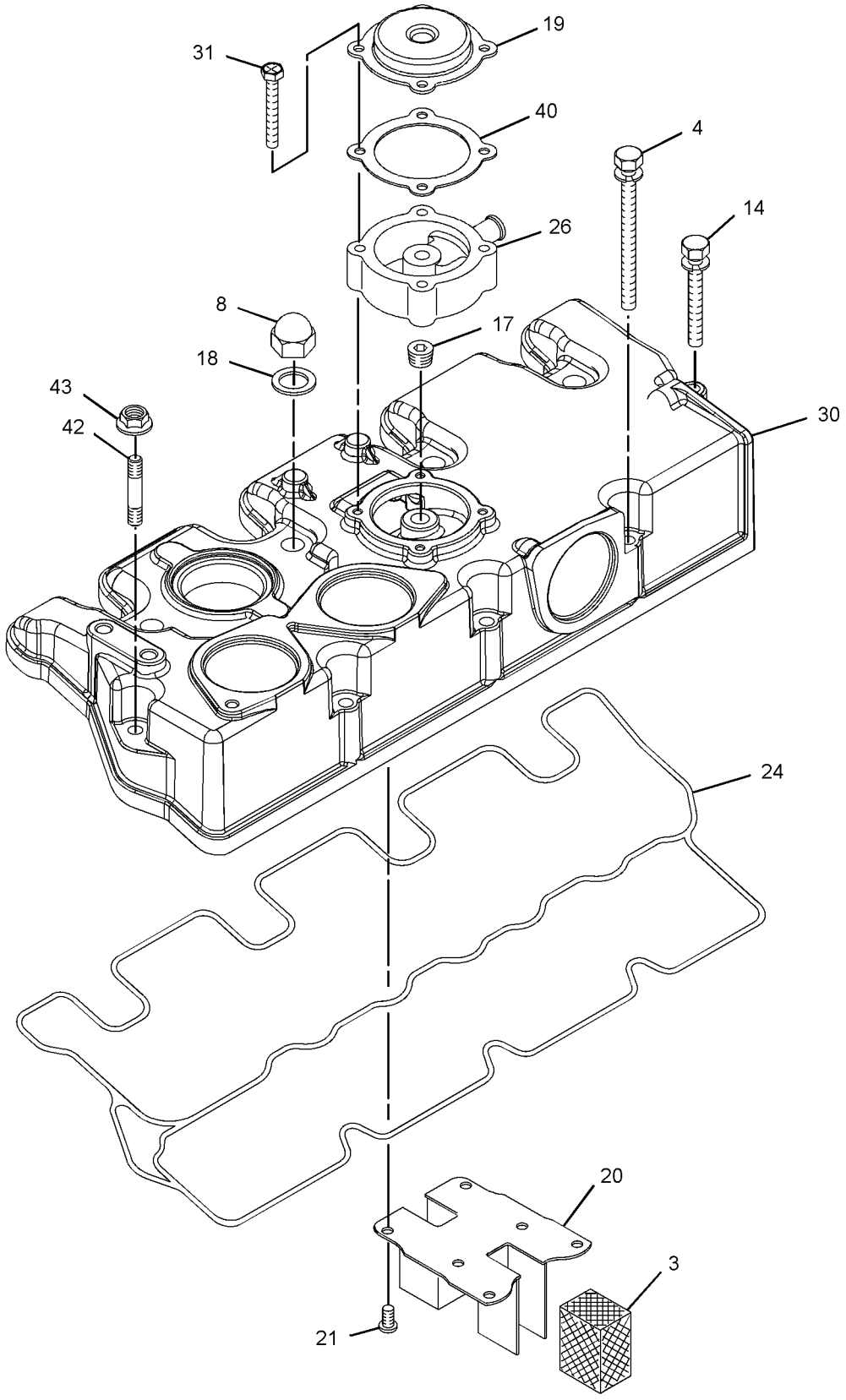

GRAPHIC #3 <END> g06661044

326-8542 TURBOCHARGER GP

SMCS-1052, 1053 **i08197258**

NOTE	REF NO	GRAPHIC REF	PART NUMBER	QTY	PART NAME 1 2 3 4 5 6 (PRODUCT LEVEL)	SEE PAGE
	1	2	**363-5813**	2	CLAMP-HOSE	
M	2	1	**153-5592**	8	NUT (M8X1.25-THD)	
	3	2	**153-5939**	1	STOPPER (OIL)	
	4	2	**153-5962**	3	BOLT AS	
M	5	1	**124-3815**	2	BOLT (M8X1.25X16-MM)	
	6	1	**153-6853**	1	SEAL-O-RING	
M	7	1,2	**6I-0846**	6	BOLT (M6X1X14-MM)	
M	8	2	**539-0439**	4	NUT (M10X1.25-THD)	
	9	1	**154-2427**	1	GASKET-EXHAUST MANIFOLD	
	10	1	**154-2428**	4	BOLT AS	
	11	1	**163-5372**	5	WASHER (8X15.4X4-MM THK)	
	12	2	**165-2140**	1	BOLT AS	
M	14	1	**6I-0217**	1	BOLT (M8X1.25X20-MM)	
	15	2	**183-1165**	1	PLUG (SEALING)	
	16	2	**246-4361**	4	WASHER (10.5X14X1.5-MM THK)	
	17	2	**217-5859**	1	VALVE-BREATHER (CRANKCASE)	
	18	2	**320-8401**	1	PLATE-RETAINING	
	19	2	**217-5862**	6	SCREW (SELF-TAPPING)	
	20	2	**494-9569**	1	GASKET	
	21	1	**225-8533**	2	GASKET (TURBOCHARGER)	
	22	2	**233-0695**	1	SEAL-VALVE COVER	
	23	1	**236-9987**	1	MANIFOLD-EXHAUST	
	24	2	**365-4125**	1	ADAPTER	
	25	1	**238-9196**	1	GASKET-TURBOCHARGER	
M	26	1	**5A-3604**	5	BOLT-SOCKET HEAD (M8X1.25X25-MM)	
M	27	2	**238-9295**	4	BOLT (M4X0.7X30-MM)	
R	28	1	**513-6823**	1	TURBOCHARGER AS	
	29	1	**239-0187**	1	BRACKET	
	30	1	**239-0228**	1	TUBE AS	
	30A	1	**225-8526**	2	WASHER (10.4X13.75X1.37-MM THK)	
	30B	1	**239-0169**	1	BOLT-SPECIAL (BANJO)	
	30C	1	**239-0227**	2	CLIP	
	31	1	**239-0229**	1	SPACER (8.4X15X9-MM THK)	
M	32	1	**239-0232**	4	STUD (M8X1.25X31-MM)	
	33	2	**366-3055**	1	ELBOW	
	34	2	**249-1532**	1	HOSE-AIR INLET	
	36	2	**438-9362**	1	GASKET	
	37	1	**268-3421**	1	ELBOW-EXHAUST	
	38	1	**304-5061**	1	GASKET	
	39	1	**317-0962**	1	TUBE-TURBOCHARGER OIL	
	40	2	**583-6090**	1	COVER-HEAD	
M	41	2	**153-5960**	1	NUT (M6X1-THD)	
M	42	2	**360-9545**	1	STUD (M6X1X48-MM)	

M - METRIC PART
R - REMANUFACTURED PART MAY BE AVAILABLE

326-8542 **TURBOCHARGER GP (**contd.**)** **i08197258**

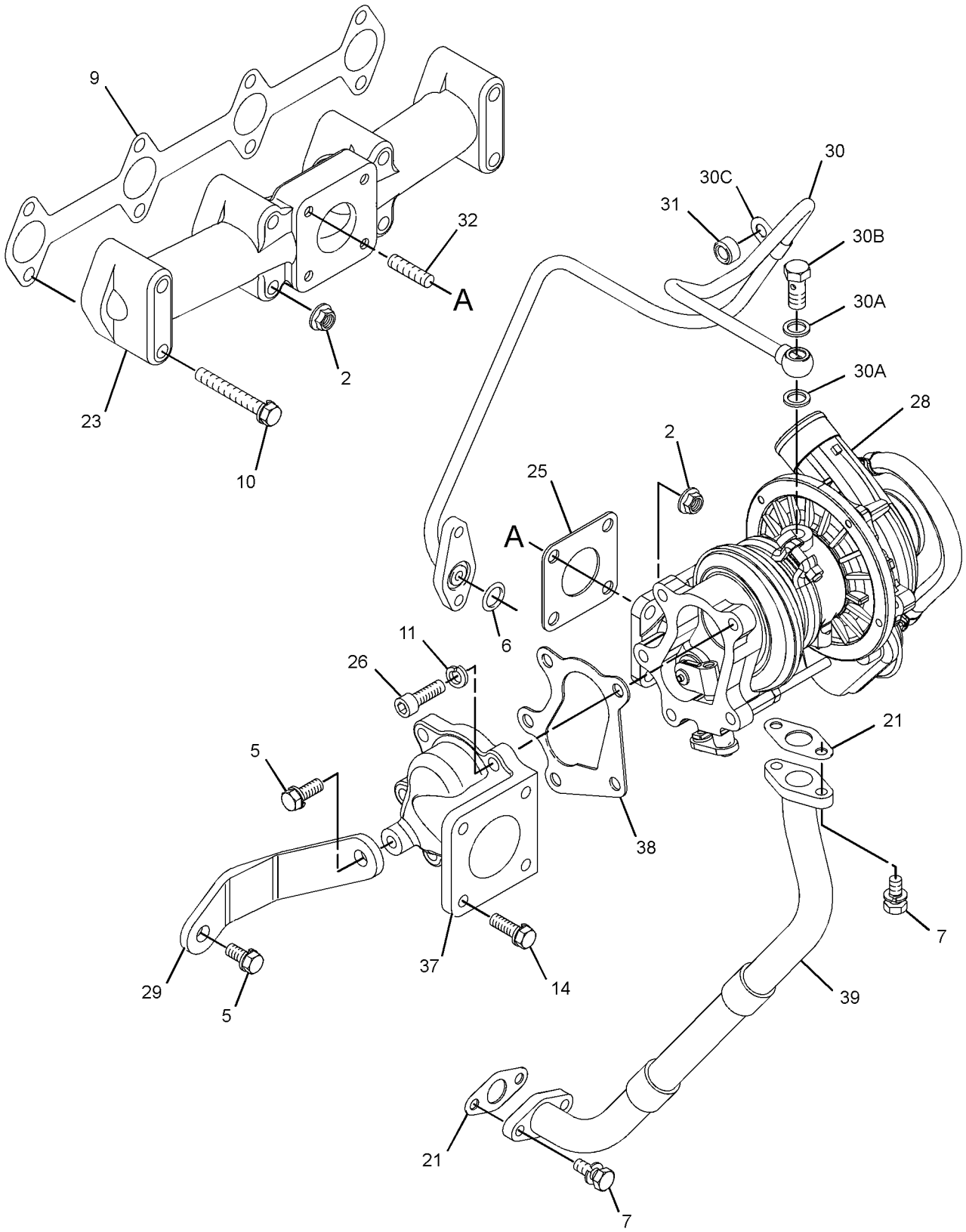

GRAPHIC #1 g06318412

326-8542 **TURBOCHARGER GP** (contd.) **i08197258**

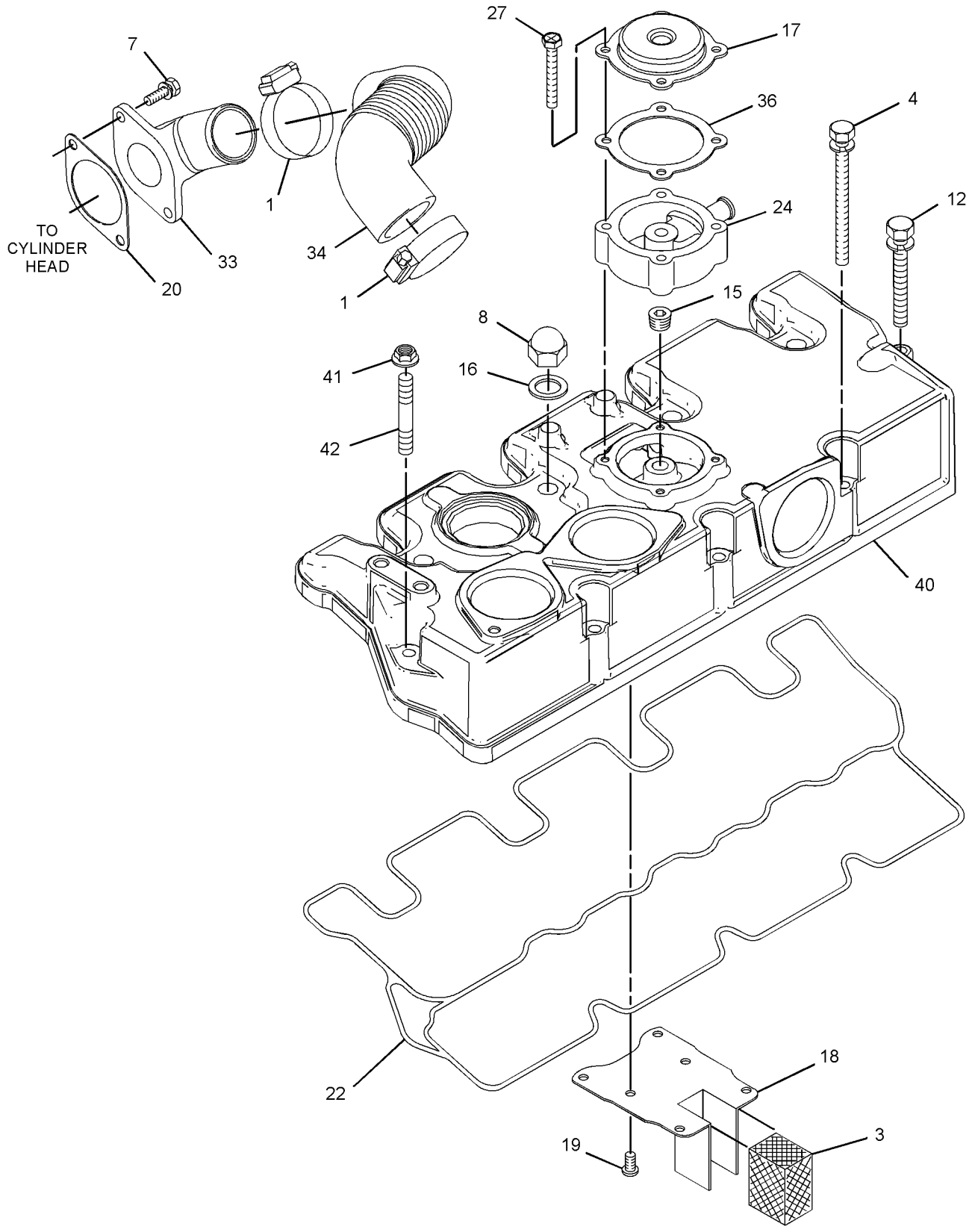

GRAPHIC #2 <END> g06658786

341-6642 TURBOCHARGER GP

SMCS-1052, 1053 **i10564673**

NOTE	REF NO	GRAPHIC REF	PART NUMBER	QTY	PART NAME 1 2 3 4 5 6 (PRODUCT LEVEL)	SEE PAGE
M	1	1	**6I-0254**	1	BOLT (M8X1.25X30-MM)	
	2	2	**363-5813**	2	CLAMP-HOSE	
M	3	1	**153-5592**	8	NUT (M8X1.25-THD)	
	4	2	**153-5939**	1	STOPPER (OIL)	
	5	2	**153-5962**	3	BOLT AS	
M	6	1	**124-3815**	2	BOLT (M8X1.25X16-MM)	
M	7	1,2	**6I-0846**	6	BOLT (M6X1X14-MM)	
M	8	2	**539-0439**	4	NUT (M10X1.25-THD)	
	9	1	**154-2427**	1	GASKET-EXHAUST MANIFOLD	
	10	1	**154-2428**	4	BOLT AS	
	11	1	**163-5372**	5	WASHER (8X15.4X4-MM THK)	
	12	2	**165-2140**	2	BOLT AS	
	14	1	**168-9001**	4	BOLT AS	
	15	2	**458-6608**	1	PLUG-SEAL	
	16	2	**246-4361**	4	WASHER (10.5X14X1.5-MM THK)	
	17	2	**217-5859**	1	VALVE-BREATHER (CRANKCASE)	
	18	2	**320-8401**	1	PLATE-RETAINING	
	19	2	**217-5862**	6	SCREW (SELF-TAPPING)	
	20	2	**494-9569**	1	GASKET	
	21	1	**225-8533**	2	GASKET	
	22	2	**233-0695**	1	SEAL-VALVE COVER	
	23	1	**236-9987**	1	MANIFOLD-EXHAUST	
	24	2	**365-4125**	1	ADAPTER	
	25	1	**238-9196**	1	GASKET-TURBOCHARGER	
M	26	1	**5A-3604**	5	BOLT-SOCKET HEAD (M8X1.25X25-MM)	
M	27	2	**238-9295**	4	BOLT (M4X0.7X30-MM)	
R	28	1	**513-6823**	1	TURBOCHARGER AS	
	29	1	**239-0187**	1	BRACKET	
	30	1	**239-0229**	1	SPACER (8.4X15X9-MM THK)	
M	31	1	**239-0232**	4	STUD (M8X1.25X31-MM)	
	32	2	**366-3055**	1	ELBOW	
	33	2	**249-1532**	1	HOSE-AIR INLET	
	35	2	**438-9362**	1	GASKET	
	36	1	**594-3935**	1	ELBOW AS-EXHAUST	
	37	1	**304-5061**	1	GASKET	
	38	1	**317-0962**	1	TUBE-TURBOCHARGER OIL	
	39	2	**583-6090**	1	COVER-HEAD	
	40	1	**153-6853**	1	SEAL-O-RING	
	41	1	**341-6641**	1	CONNECTION GP-OIL	
	41A	1	**225-8526**	2	WASHER (10.4X13.75X1.37-MM THK)	
	41B	1	**317-0960**	1	BOLT-SPECIAL (BANJO)	
	41C	1	**317-0961**	1	CLIP	

M - METRIC PART
R - REMANUFACTURED PART MAY BE AVAILABLE

341-6642 **TURBOCHARGER GP (**contd.**)** **i10564673**

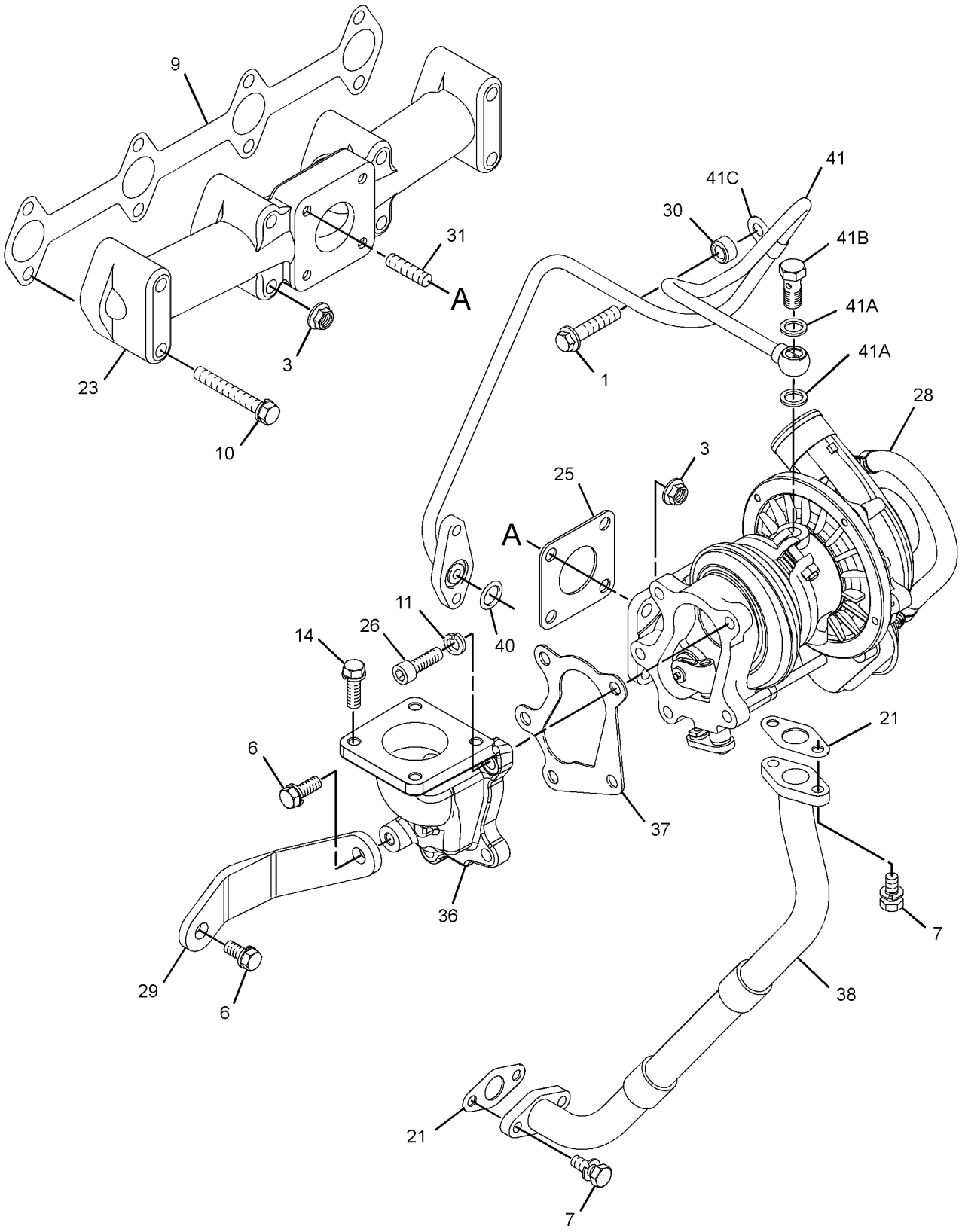

GRAPHIC #1 g07958936

341-6642 **TURBOCHARGER GP (**contd.**)** **i10564673**

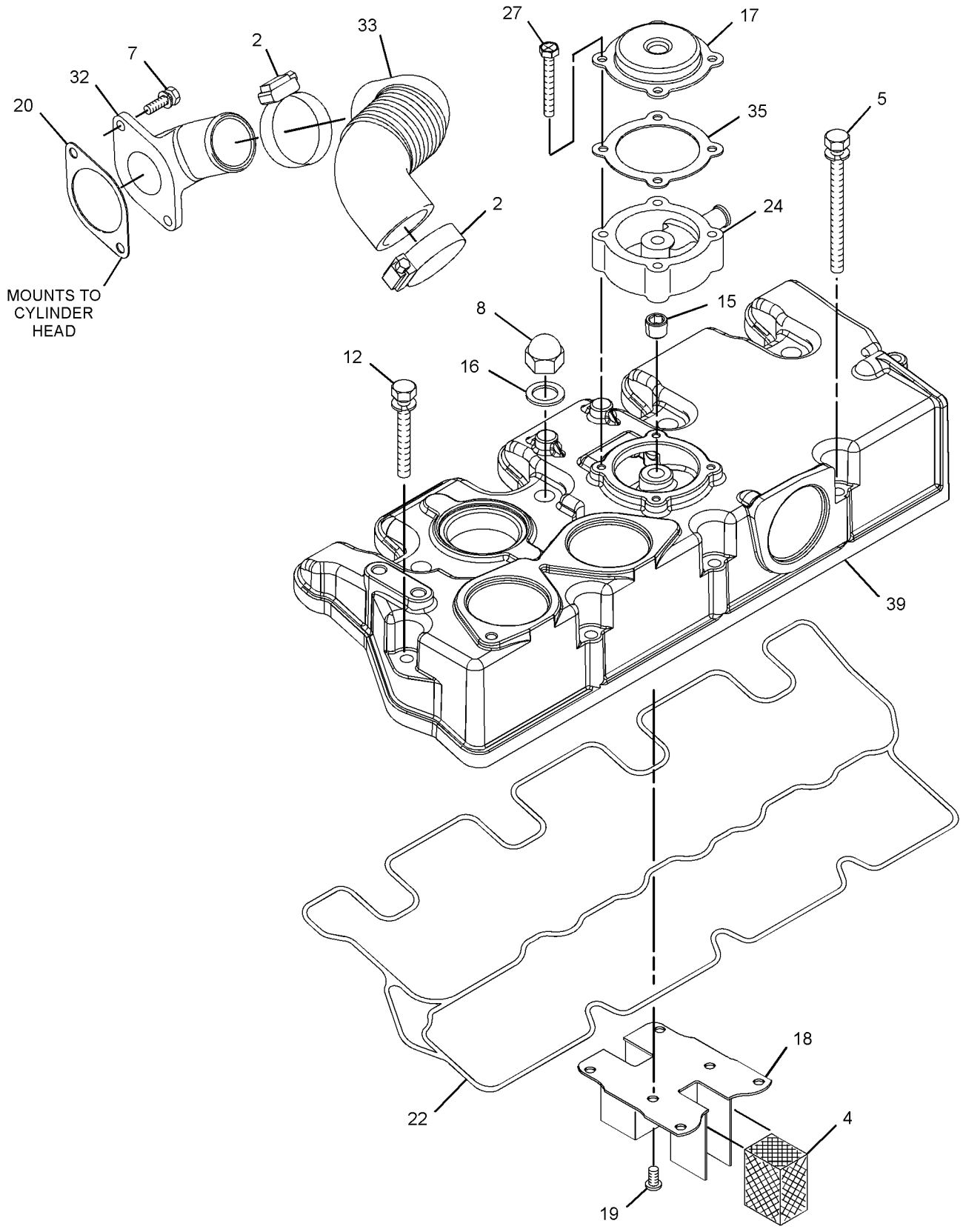

GRAPHIC #2 <END> g07958937

344-5515 TURBOCHARGER GP

SMCS-1052, 1053 **i10482518**

NOTE	REF NO	GRAPHIC REF	PART NUMBER	QTY	PART NAME 1 2 3 4 5 6 (PRODUCT LEVEL)	SEE PAGE
M	1	1	**6I-0254**	1	BOLT (M8X1.25X30-MM)	
M	2	1	**153-5592**	8	NUT (M8X1.25-THD)	
	3	2	**153-5939**	1	STOPPER (OIL)	
	4	2	**153-5962**	3	BOLT AS	
M	5	1	**124-3815**	2	BOLT (M8X1.25X16-MM)	
	6	1	**153-6853**	1	SEAL-O-RING	
M	8	2	**539-0439**	4	NUT (M10X1.25-THD)	
	9	1	**154-2427**	1	GASKET-EXHAUST MANIFOLD	
	10	1	**154-2428**	4	BOLT AS	
	12	1	**3B-4505**	5	LOCKWASHER	
	13	2	**165-2140**	2	BOLT AS	
	15	2	**458-6608**	1	PLUG-SEAL	
	16	2	**246-4361**	4	WASHER (10.5X14X1.5-MM THK)	
	17	2	**217-5859**	1	VALVE-BREATHER (CRANKCASE)	
	18	2	**217-5862**	6	SCREW (SELF-TAPPING)	
	19	2	**494-9569**	1	GASKET (AIR INTAKE)	
	20	1	**225-8533**	2	GASKET	
	21	2	**233-0695**	1	SEAL-VALVE COVER	
	22	1	**236-9987**	1	MANIFOLD-EXHAUST	
	23	2	**365-4125**	1	ADAPTER	
	24	1	**238-9196**	1	GASKET-TURBOCHARGER	
M	25	1	**5A-3604**	5	BOLT-SOCKET HEAD (M8X1.25X25-MM)	
M	26	2	**238-9295**	4	BOLT (M4X0.7X30-MM)	
	27	1	**239-0187**	1	BRACKET	
	28	1	**239-0229**	1	SPACER (8.4X15X9-MM THK)	
M	29	1	**239-0232**	4	STUD (M8X1.25X31-MM)	
M	30	1,2	**6I-0846**	7	BOLT (M6X1X14-MM)	
	31	2	**438-9362**	1	GASKET	
	32	1	**594-3935**	1	ELBOW AS-EXHAUST	
	33	1	**304-5061**	1	GASKET	
	34	2	**560-8837**	1	ADAPTER	
	35	1	**317-0962**	1	TUBE-TURBOCHARGER OIL	
	36	2	**320-8401**	1	PLATE-RETAINING	
	37	2	**583-6089**	1	COVER-HEAD	
	38	1	**341-6641**	1	CONNECTION GP-OIL	
	38A	1	**225-8526**	2	WASHER (10.4X13.75X1.37-MM THK)	
	38B	1	**317-0960**	1	BOLT-SPECIAL (BANJO)	
	38C	1	**317-0961**	1	CLIP	
	39	1	**513-6822**	1	TURBOCHARGER AS	
	40	2	**153-6415**	1	WASHER (SEAL)	

M - METRIC PART

344-5515 **TURBOCHARGER GP (**contd.**)** **i10482518**

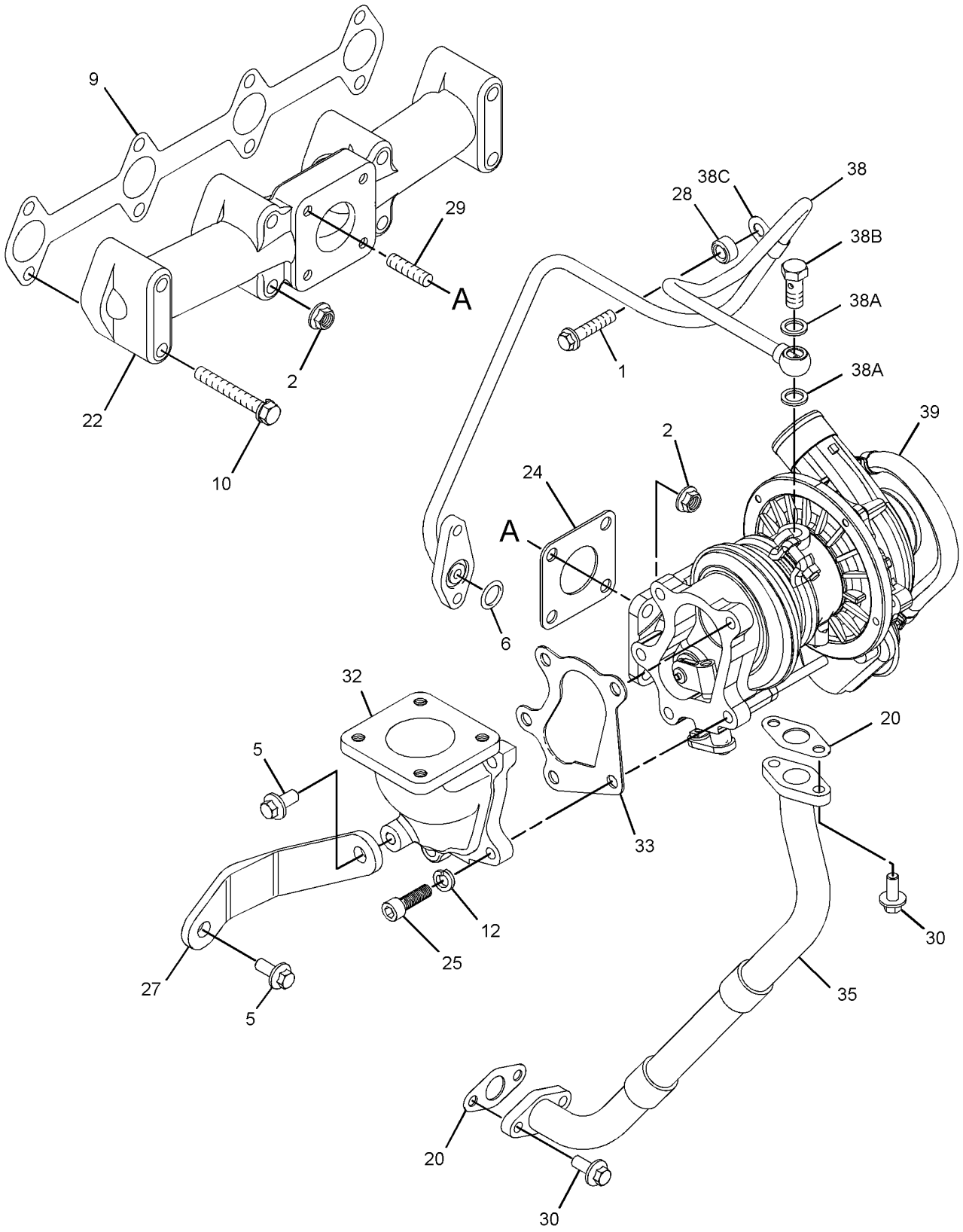

GRAPHIC #1 g07908669

344-5515 **TURBOCHARGER GP (**contd.**)** **i10482518**

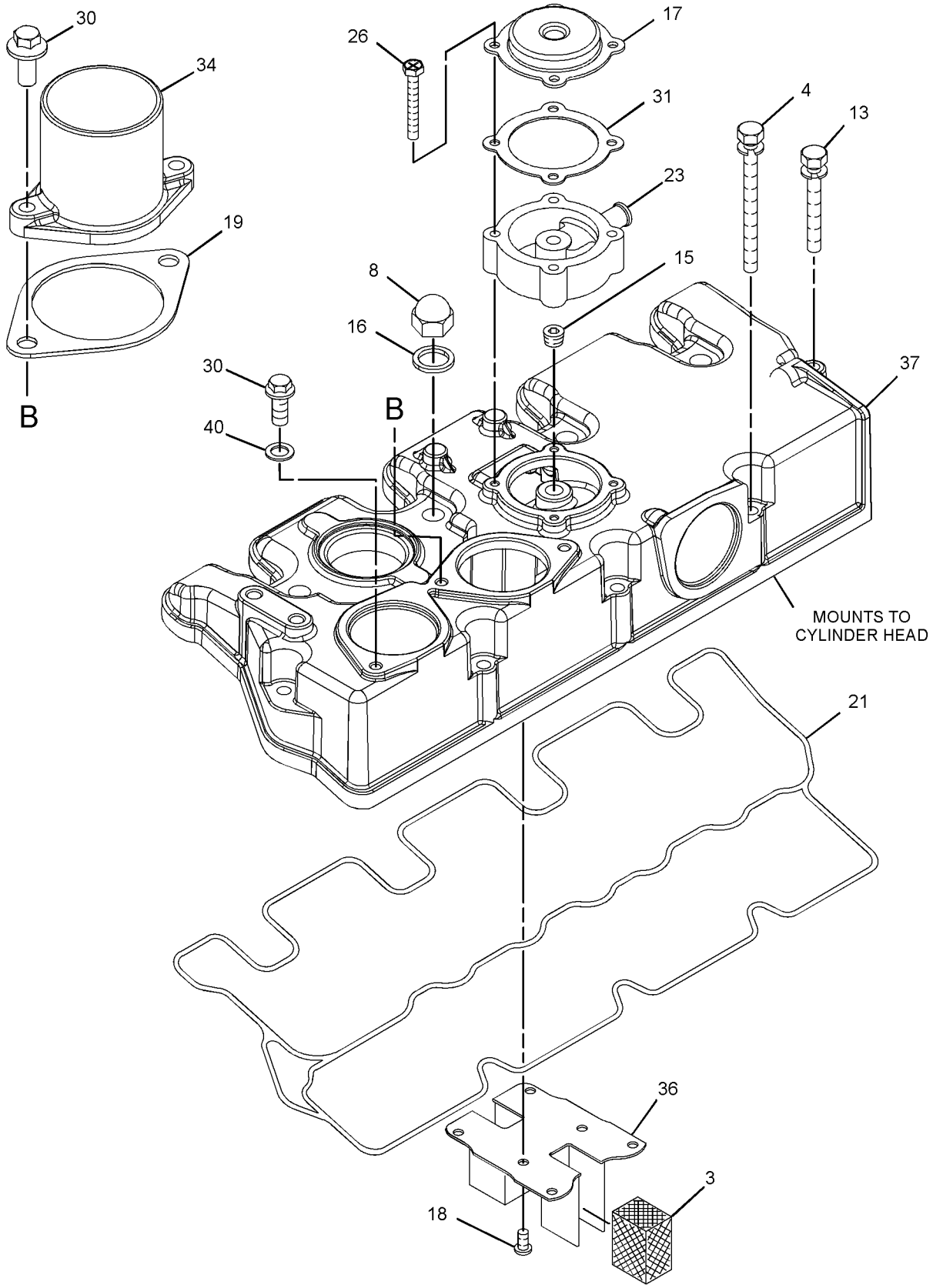

GRAPHIC #2 <END> g07908670

368-4106 TURBOCHARGER GP

S/N: G7L1-10939

SMCS-1052, 1053 **i06041050**

NOTE	REF NO	GRAPHIC REF	PART NUMBER	QTY	PART NAME 1 2 3 4 5 6 (PRODUCT LEVEL)	SEE PAGE
M	1	1	**6I-0254**	1	BOLT (M8X1.25X30-MM)	
M	2	1	**153-5592**	8	NUT (M8X1.25-THD)	
	3	2	**153-5939**	1	STOPPER (OIL)	
M	4	2	**153-5960**	1	NUT (M6X1-THD)	
	5	2	**153-5962**	3	BOLT AS	
	6	1	**153-6375**	1	BOLT AS	
	7	1	**153-6853**	1	SEAL-O-RING	
	8	2	**153-7640**	2	BOLT AS	
M	9	2	**154-1347**	4	NUT (M10X1.25-THD)	
	10	1	**154-2427**	1	GASKET-EXHAUST MANIFOLD	
	11	1	**154-2428**	4	BOLT AS	
	12	1	**155-7984**	2	WASHER (8.4X16X1.6-MM THK)	
	13	1	**163-5372**	5	WASHER (8X15.4X4-MM THK)	
	14	2	**165-2140**	1	BOLT AS	
	15	1	**165-2141**	1	BOLT AS	
	16	2	**183-1165**	1	PLUG	
	17	2	**190-3762**	4	WASHER	
	18	2	**217-5859**	1	VALVE-BREATHER (CRANKCASE)	
	19	2	**217-5862**	6	SCREW (SELF-TAPPING)	
	20	2	**437-5210**	1	GASKET	
	21	1	**225-8533**	2	GASKET	
	22	2	**233-0695**	1	SEAL-VALVE COVER	
	23	1	**236-9987**	1	MANIFOLD-EXHAUST	
	24	1	**238-9196**	1	GASKET-TURBOCHARGER	
	25	1	**238-9198**	1	ELBOW-EXHAUST	
M	26	1	**5A-3604**	5	BOLT-SOCKET HEAD (M8X1.25X25-MM)	
M	27	2	**238-9295**	4	BOLT (M4X0.7X30-MM)	
R	28	1	**238-9349**	1	TURBOCHARGER GP	
	29	1	**239-0187**	1	BRACKET	
	30	1	**039-2281**	1	SPACER (9X16X25-MM THK)	
M	31	1	**239-0232**	4	STUD (M8X1.25X31-MM)	
	32	2	**249-1532**	1	HOSE-AIR INLET	
M	33	1	**249-7263**	2	BOLT (M6X1X16-MM)	
	34	2	**438-9362**	1	GASKET	
	35	1	**304-5061**	1	GASKET	
	36	1	**317-0962**	1	TUBE-TURBOCHARGER OIL	
	37	2	**320-8401**	1	PLATE-RETAINING	
	38	1	**341-6641**	1	CONNECTION GP-OIL	
	38A	1	**225-8526**	2	WASHER (10.4X13.75X1.37-MM THK)	
	38B	1	**317-0960**	1	BOLT-SPECIAL (BANJO)	
	38C	1	**317-0961**	1	CLIP	
M	39	2	**360-9545**	1	STUD (M6X1X48-MM)	
	40	2	**363-5813**	2	CLAMP-HOSE	
	41	2	**365-4125**	1	ADAPTER	
	42	2	**366-3055**	1	ELBOW	
	43	2	**423-8167**	1	COVER-CYLINDER HEAD	

M - METRIC PART
R - REMANUFACTURED PART MAY BE AVAILABLE

368-4106 **TURBOCHARGER GP (**contd.**)** **i06041050**

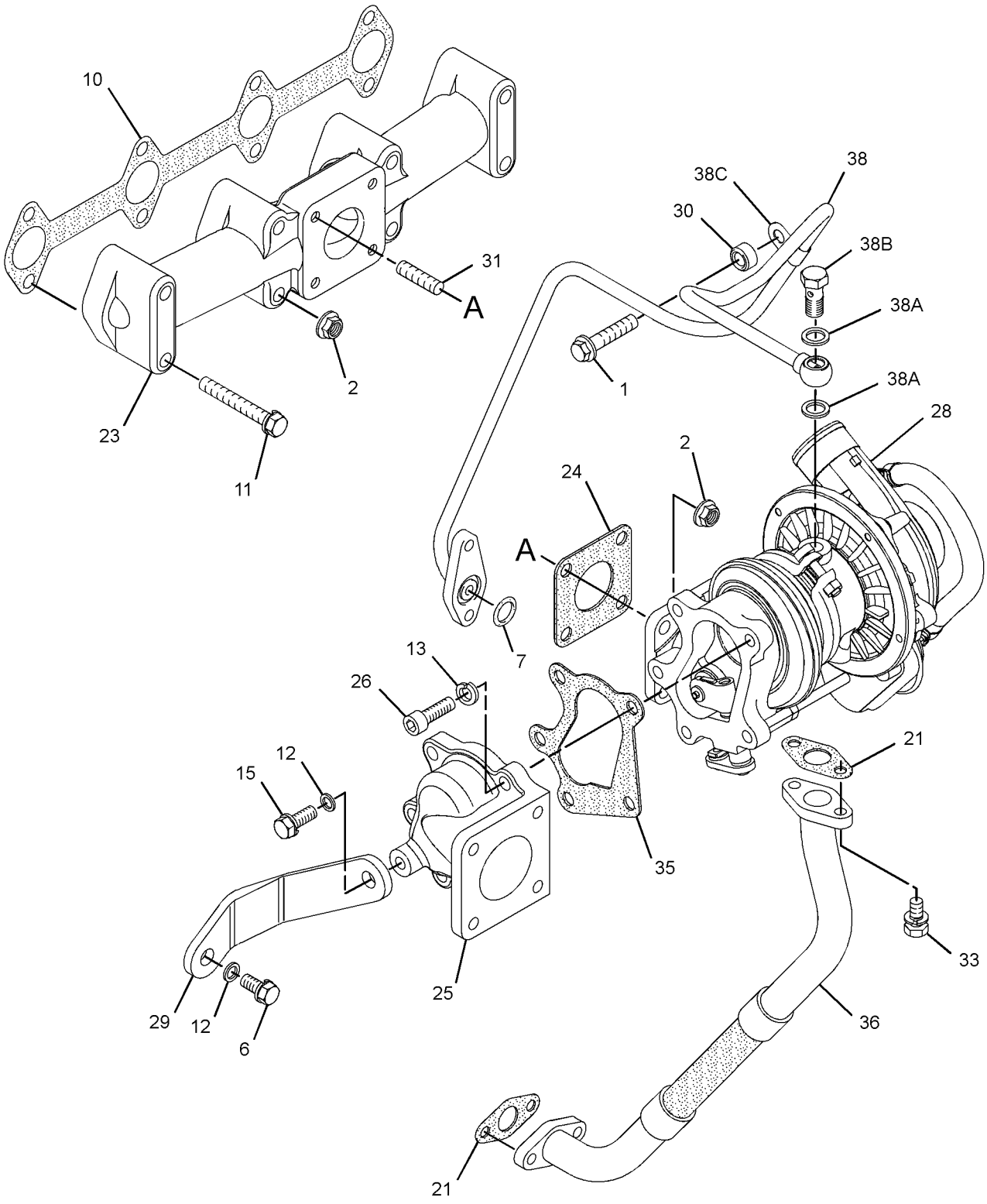

GRAPHIC #1 g02523399

368-4106 **TURBOCHARGER GP (**contd.**)** **i06041050**

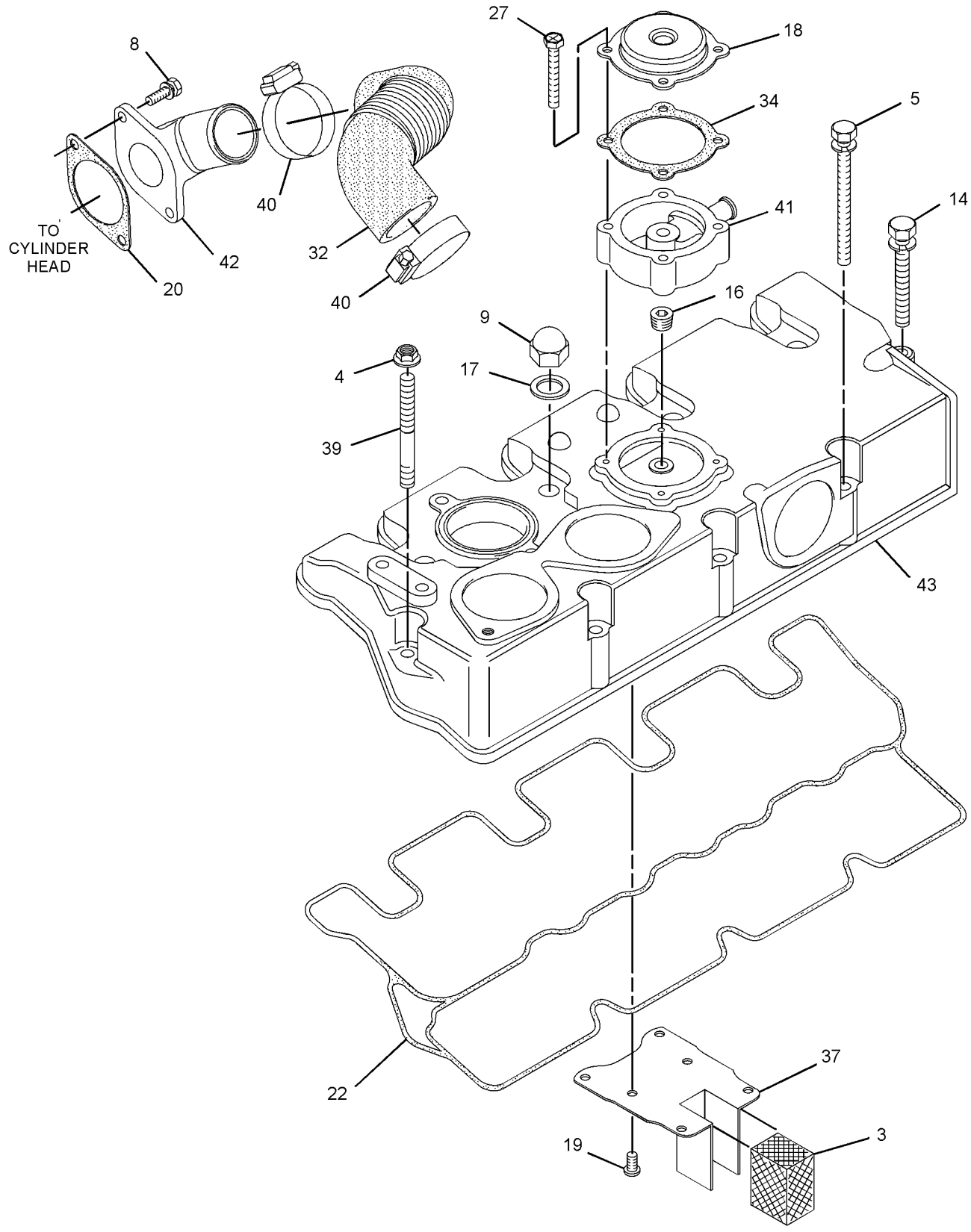

GRAPHIC #2 <END> g02523496

441-8101 TURBOCHARGER GP

PART OF 491-3396, 541-9277 ENGINE AR-PRIMARY

TYPE 1

SMCS-1052, 1053 **i07684157**

NOTE	REF NO	GRAPHIC REF	PART NUMBER	QTY	PART NAME 1 2 3 4 5 6 (PRODUCT LEVEL)	SEE PAGE
	1	3	**365-4125**	1	ADAPTER	
M	2	2	**6I-0254**	1	BOLT (M8X1.25X30-MM)	
	3	3	**153-5962**	3	BOLT AS	
M	4	1	**124-3815**	2	BOLT (M8X1.25X16-MM)	
	6	4	**154-2428**	4	BOLT AS	
	7	3	**165-2140**	2	BOLT AS	
	9	1	**168-9001**	4	BOLT AS	
	10	3	**217-5862**	6	SCREW (SELF-TAPPING) (SELF-TAPPING)	
M	11	1	**5A-3604**	5	BOLT-SOCKET HEAD (M8X1.25X25-MM)	
M	12	3	**238-9295**	4	BOLT (M4X0.7X30-MM) (HEX)	
M	13	2,4	**6I-0846**	6	BOLT (M6X1X14-MM)	
	14	1	**239-0187**	1	BRACKET	
	15	4	**363-5813**	2	CLAMP-HOSE	
	16	2	**341-6641**	1	CONNECTION GP-OIL	
	16A	2	**225-8526**	2	WASHER (10.4X13.75X1.37-MM THK)	
	16B	2	**317-0960**	1	BOLT-SPECIAL (BANJO)	
	16C	2	**317-0961**	1	CLIP	
	17	3	**383-9577**	1	COVER-VALVE	
	18	4	**366-3055**	1	ELBOW	
	19	1	**268-3421**	1	ELBOW-EXHAUST	
	20	3	**153-5939**	1	STOPPER (OIL)	
	21	3	**438-9362**	1	GASKET	
	22	1	**304-5061**	1	GASKET	
	23	4	**494-9569**	1	GASKET	
	24	4	**154-2427**	1	GASKET-EXHAUST MANIFOLD	
	25	1	**238-9196**	1	GASKET-TURBOCHARGER	
	26	2	**353-3477**	2	GASKET-TURBOCHARGER	
	27	4	**249-1532**	1	HOSE-AIR INLET	
	28	4	**236-9987**	1	MANIFOLD-EXHAUST	
M	29	1,4	**153-5592**	8	NUT (M8X1.25-THD)	
M	30	3	**539-0439**	4	NUT (M10X1.25-THD)	
	31	3	**320-8401**	1	PLATE-RETAINING	
	32	3	**183-1165**	1	PLUG (SEALING)	
	33	2	**153-6853**	1	SEAL-O-RING	
	34	3	**233-0695**	1	SEAL-VALVE COVER	
	35	2	**039-2281**	1	SPACER (9X16X25-MM THK)	
M	36	4	**239-0232**	4	STUD (M8X1.25X31-MM)	
	37	2	**317-0962**	1	TUBE-TURBOCHARGER OIL	
R	38	1	**513-6823**	1	TURBOCHARGER AS	
	39	3	**217-5859**	1	VALVE-BREATHER (CRANKCASE)	
	41	1	**163-5372**	5	WASHER (8X15.4X4-MM THK)	
	42	3	**246-4361**	4	WASHER (10.5X14X1.5-MM THK) (SEALING)	

M - METRIC PART
R - REMANUFACTURED PART MAY BE AVAILABLE

441-8101 **TURBOCHARGER GP (**contd.**)** **i07684157**

REFER TO ALL ILLUSTRATIONS OF
THIS GROUP FOR AUXILIARY VIEWS

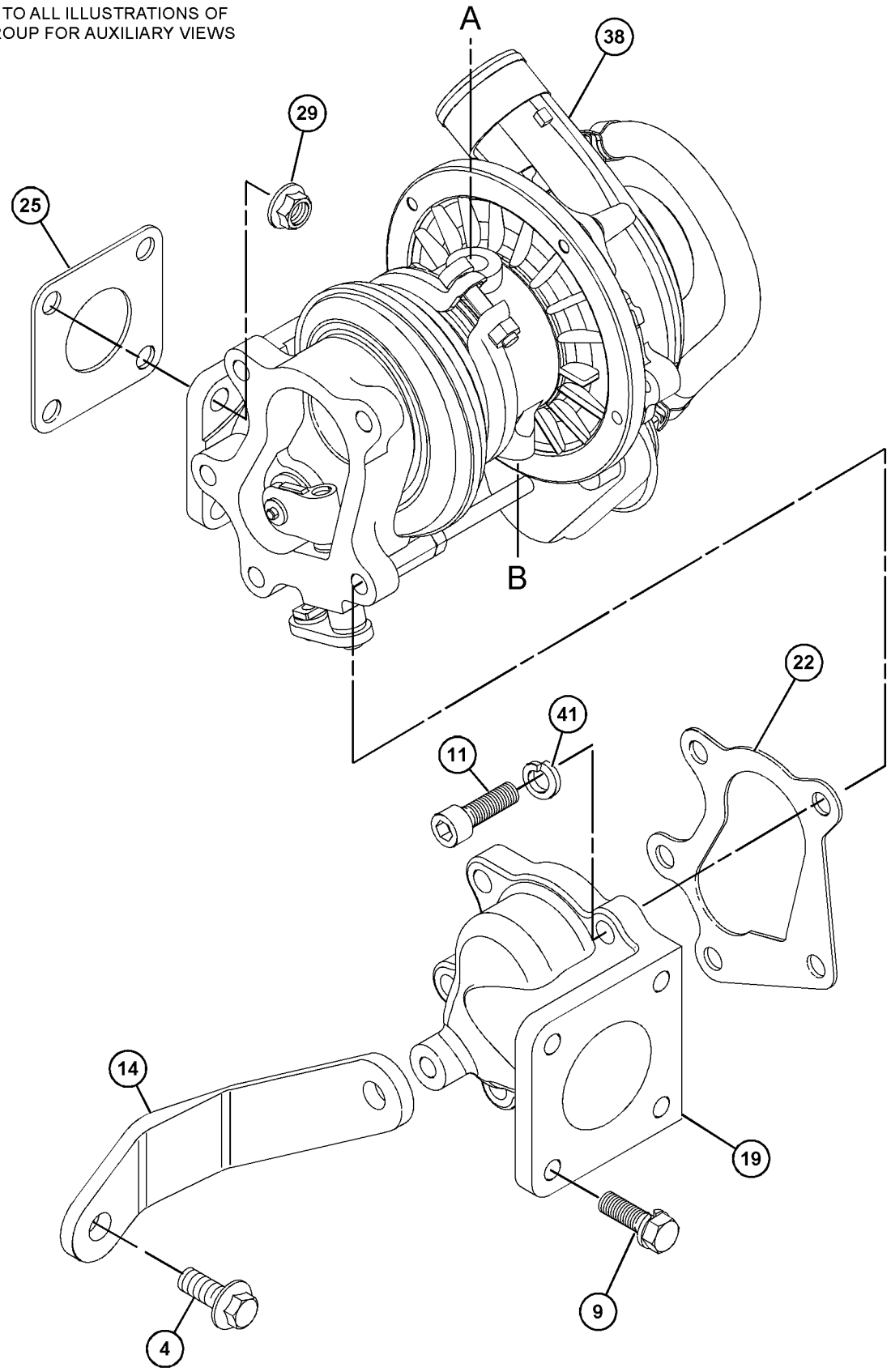

GRAPHIC #1 g06082132

441-8101 **TURBOCHARGER GP** (contd.) **i07684157**

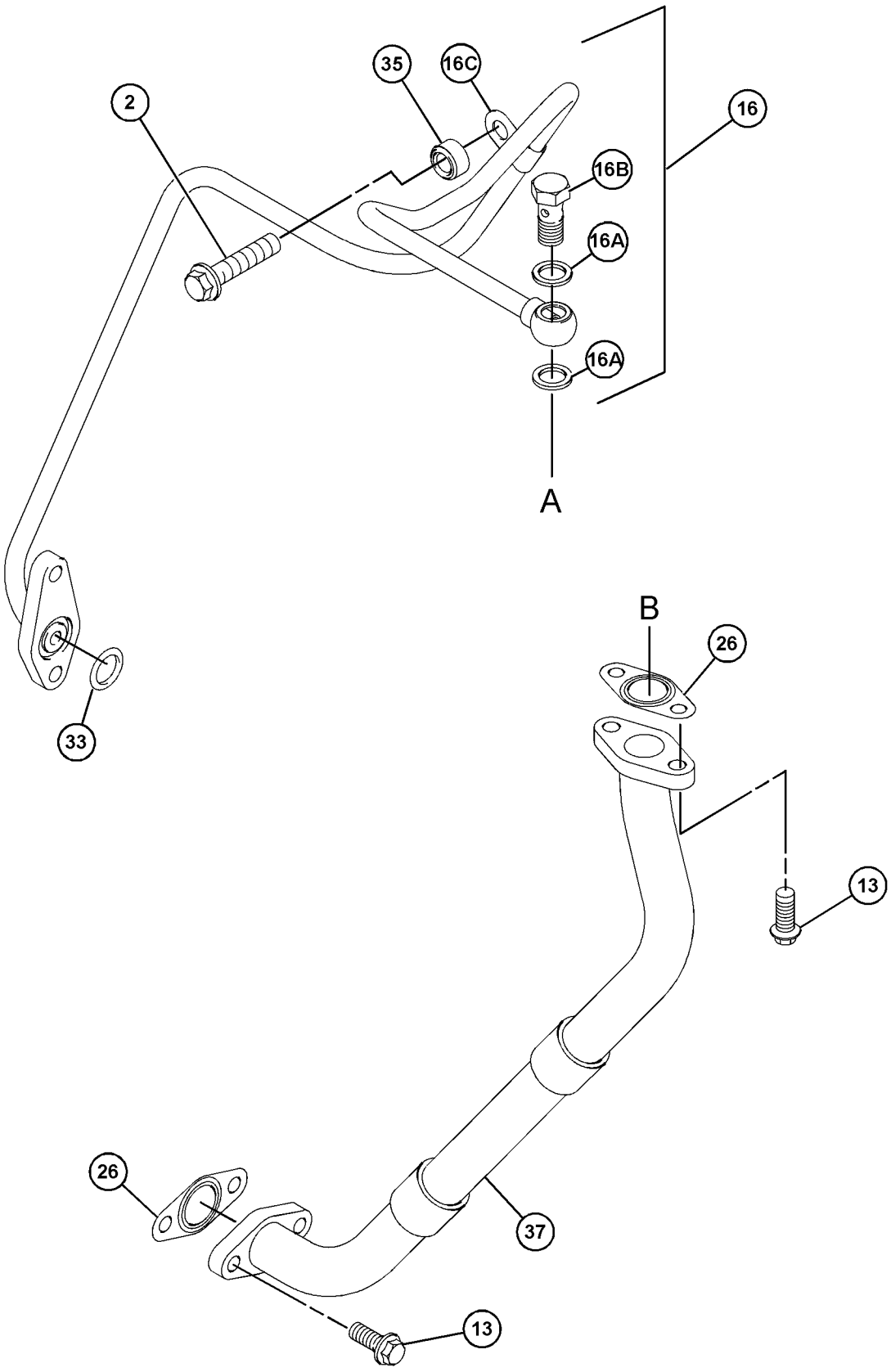

GRAPHIC #2 g06049389

441-8101 **TURBOCHARGER GP (**contd.**)** **i07684157**

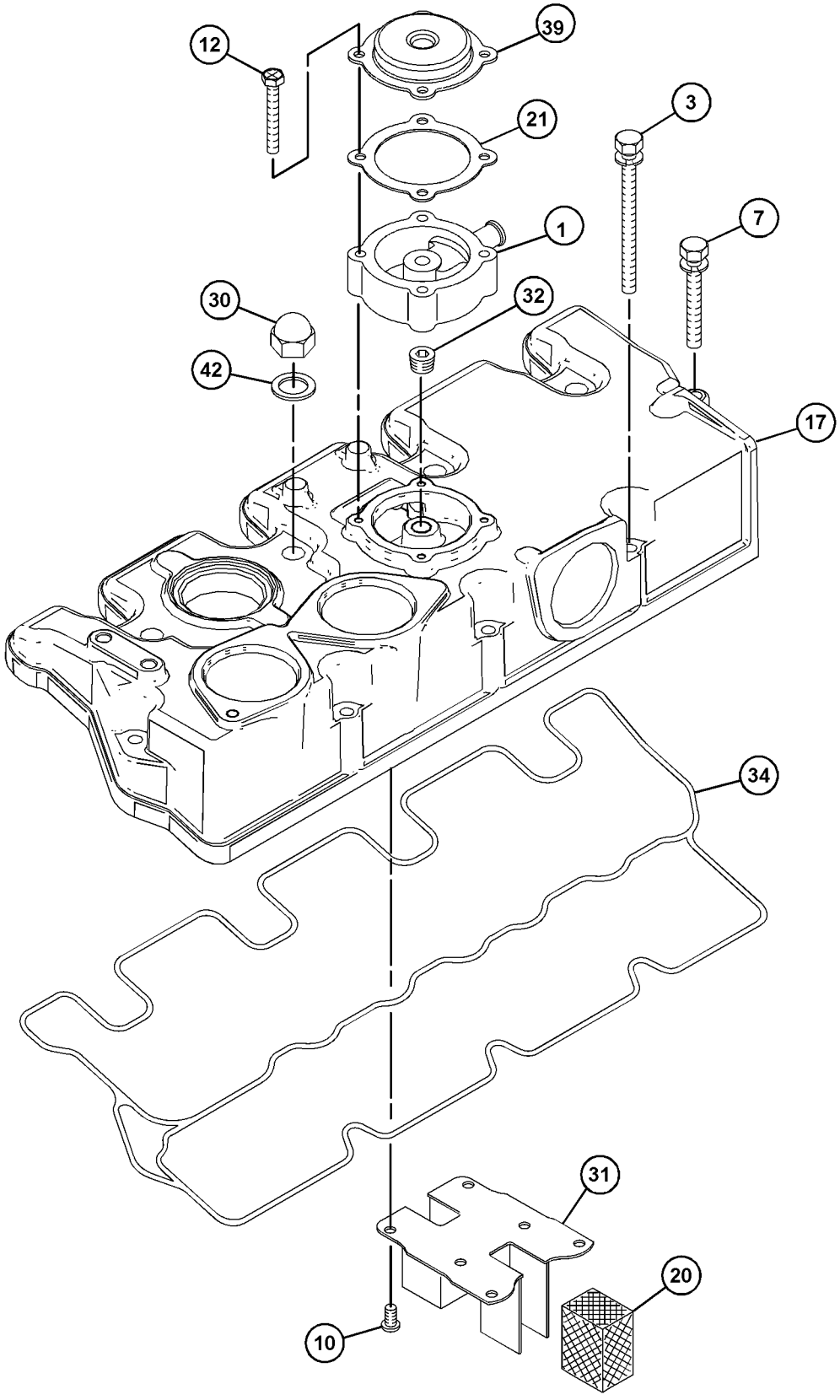

GRAPHIC #3 g06049451

441-8101 **TURBOCHARGER GP (**contd.**)** **i07684157**

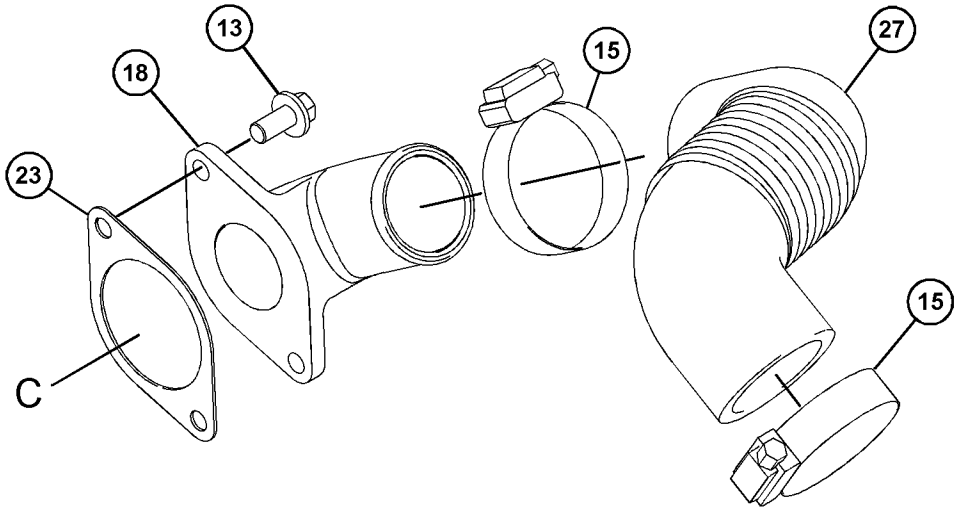

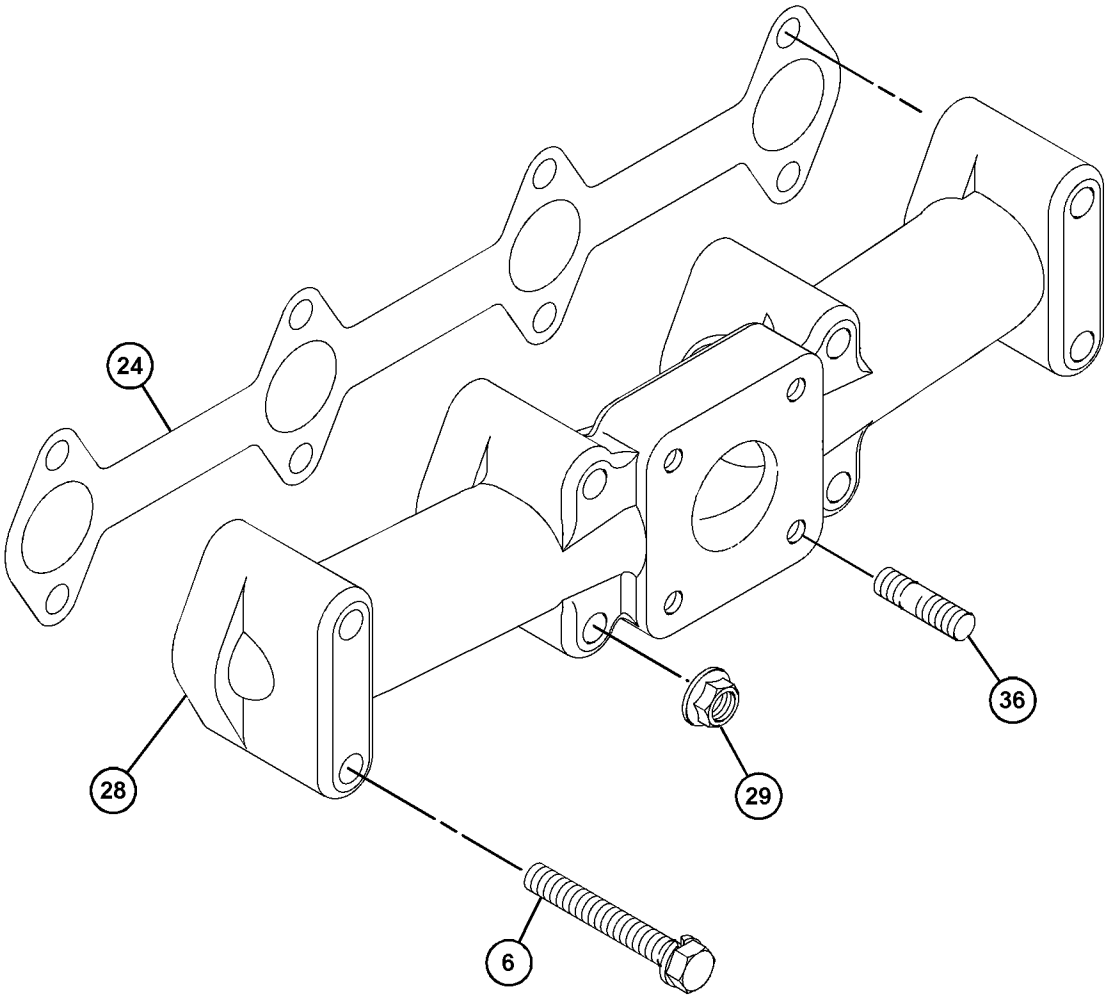

GRAPHIC #4 <END> g06049446

441-8101 TURBOCHARGER GP

PART OF 491-3396, 541-9277 ENGINE AR-PRIMARY
TYPE 2

SMCS-1052, 1053 **i08811915**

NOTE	REF NO	GRAPHIC REF	PART NUMBER	QTY	PART NAME 1 2 3 4 5 6 (PRODUCT LEVEL)	SEE PAGE
	1	3	**365-4125**	1	ADAPTER	
M	2	2	**6I-0254**	1	BOLT (M8X1.25X30-MM)	
	3	3	**153-5962**	3	BOLT AS	
M	4	1	**124-3815**	2	BOLT (M8X1.25X16-MM)	
	6	4	**154-2428**	4	BOLT AS	
	7	3	**165-2140**	2	BOLT AS	
	9	1	**168-9001**	4	BOLT AS	
	10	3	**217-5862**	6	SCREW (SELF-TAPPING)	
M	11	1	**5A-3604**	5	BOLT-SOCKET HEAD (M8X1.25X25-MM)	
M	12	3	**238-9295**	4	BOLT (M4X0.7X30-MM) (HEX)	
M	13	2,4	**6I-0846**	6	BOLT (M6X1X14-MM)	
	14	1	**239-0187**	1	BRACKET	
	15	4	**363-5813**	2	CLAMP-HOSE	
	16	2	**341-6641**	1	CONNECTION GP-OIL	
	16A	2	**225-8526**	2	WASHER (10.4X13.75X1.37-MM THK)	
	16B	2	**317-0960**	1	BOLT-SPECIAL (BANJO)	
	16C	2	**317-0961**	1	CLIP	
	16D	2	**596-4209**	1	EYE	
	18	4	**366-3055**	1	ELBOW	
	19	1	**594-3935**	1	ELBOW AS-EXHAUST	
	20	3	**153-5939**	1	STOPPER (OIL)	
	21	3	**438-9362**	1	GASKET	
	22	1	**304-5061**	1	GASKET	
	23	4	**494-9569**	1	GASKET	
	24	4	**154-2427**	1	GASKET-EXHAUST MANIFOLD	
	25	1	**238-9196**	1	GASKET-TURBOCHARGER	
	26	2	**353-3477**	2	GASKET-TURBOCHARGER	
	27	4	**249-1532**	1	HOSE-AIR INLET	
	28	4	**236-9987**	1	MANIFOLD-EXHAUST	
M	29	1,4	**153-5592**	8	NUT (M8X1.25-THD)	
M	30	3	**539-0439**	4	NUT (M10X1.25-THD)	
	31	3	**320-8401**	1	PLATE-RETAINING	
	32	3	**458-6608**	1	PLUG-SEAL	
	33	2	**153-6853**	1	SEAL-O-RING	
	34	3	**233-0695**	1	SEAL-VALVE COVER	
	35	2	**039-2281**	1	SPACER (9X16X25-MM THK)	
M	36	4	**239-0232**	4	STUD (M8X1.25X31-MM)	
	37	2	**317-0962**	1	TUBE-TURBOCHARGER OIL	
R	38	1	**513-6823**	1	TURBOCHARGER AS	
	39	3	**217-5859**	1	VALVE-BREATHER (CRANKCASE)	
	41	1	**163-5372**	5	WASHER (8X15.4X4-MM THK)	
	42	3	**246-4361**	4	WASHER (10.5X14X1.5-MM THK) (SEALING)	
C	43	3	**583-6088**	1	COVER-HEAD	

C - CHANGE FROM PREVIOUS TYPE
M - METRIC PART
R - REMANUFACTURED PART MAY BE AVAILABLE

441-8101 **TURBOCHARGER GP** (contd.) **i08811915**

REFER TO ALL ILLUSTRATIONS OF
THIS GROUP FOR AUXILIARY VIEWS

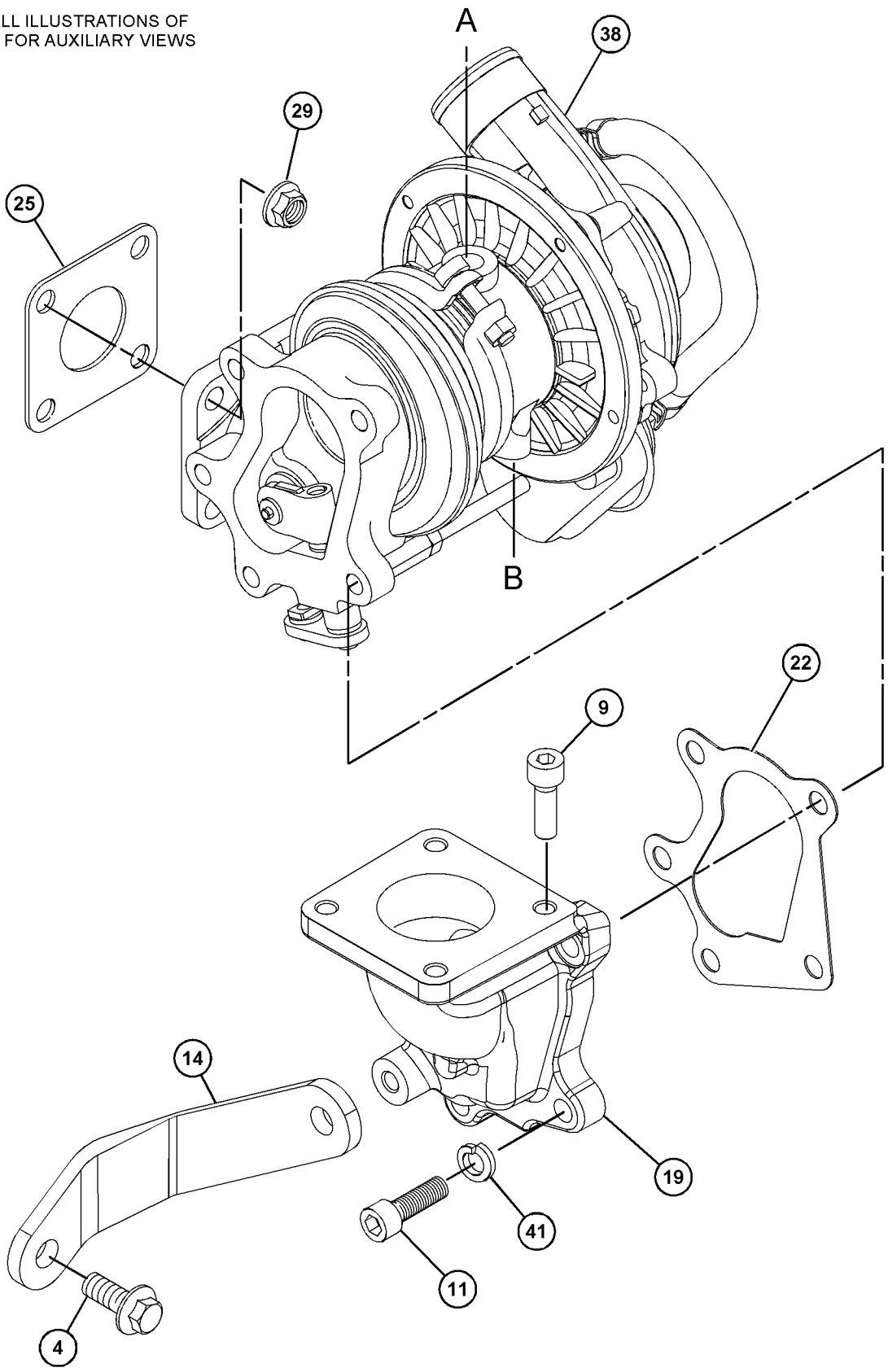

GRAPHIC #1 g07511949

441-8101 **TURBOCHARGER GP (**contd.**)** **i08811915**

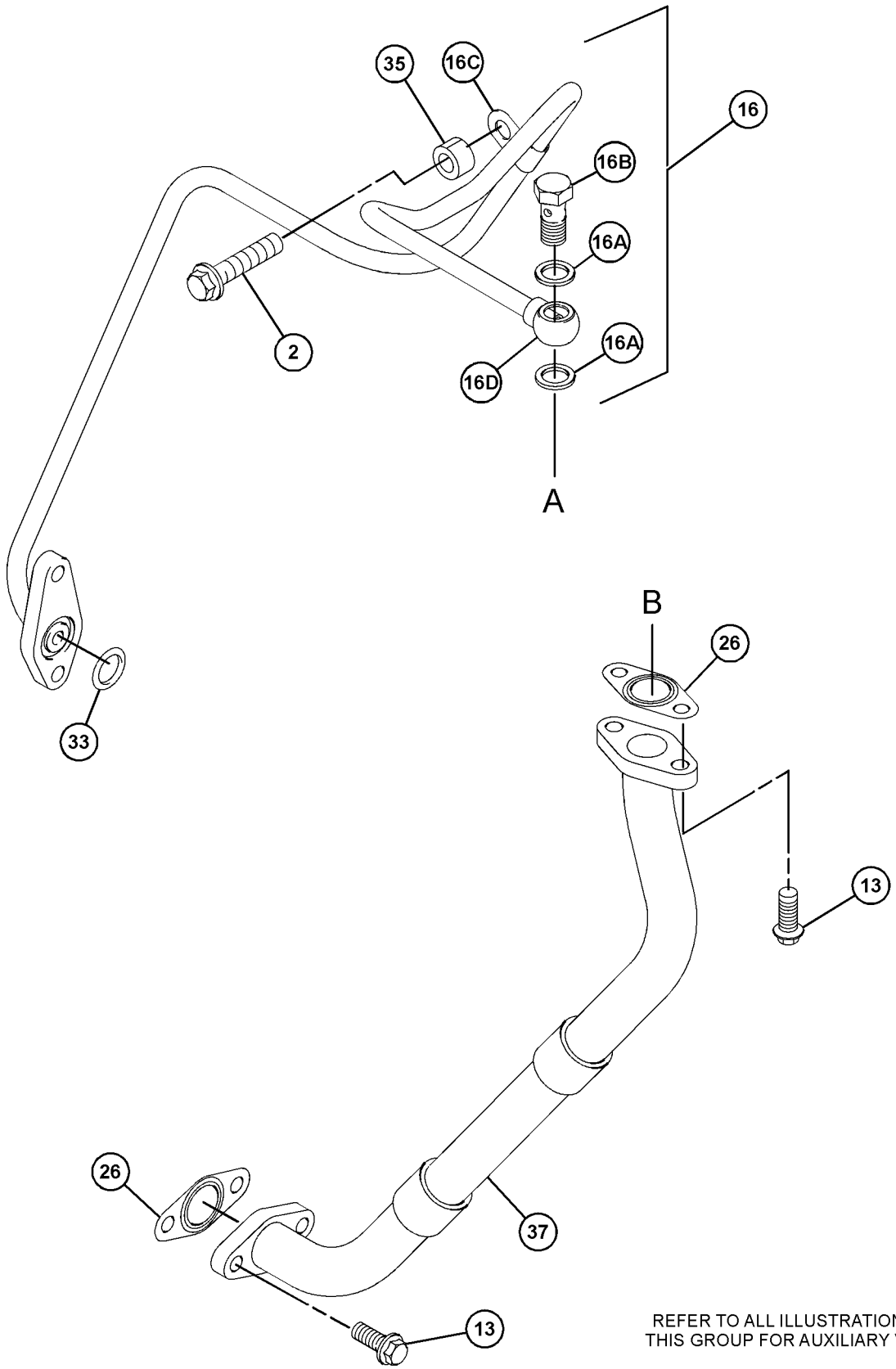

REFER TO ALL ILLUSTRATIONS OF
THIS GROUP FOR AUXILIARY VIEWS

GRAPHIC #2

g07511950

441-8101 **TURBOCHARGER GP (**contd.**)** **i08811915**

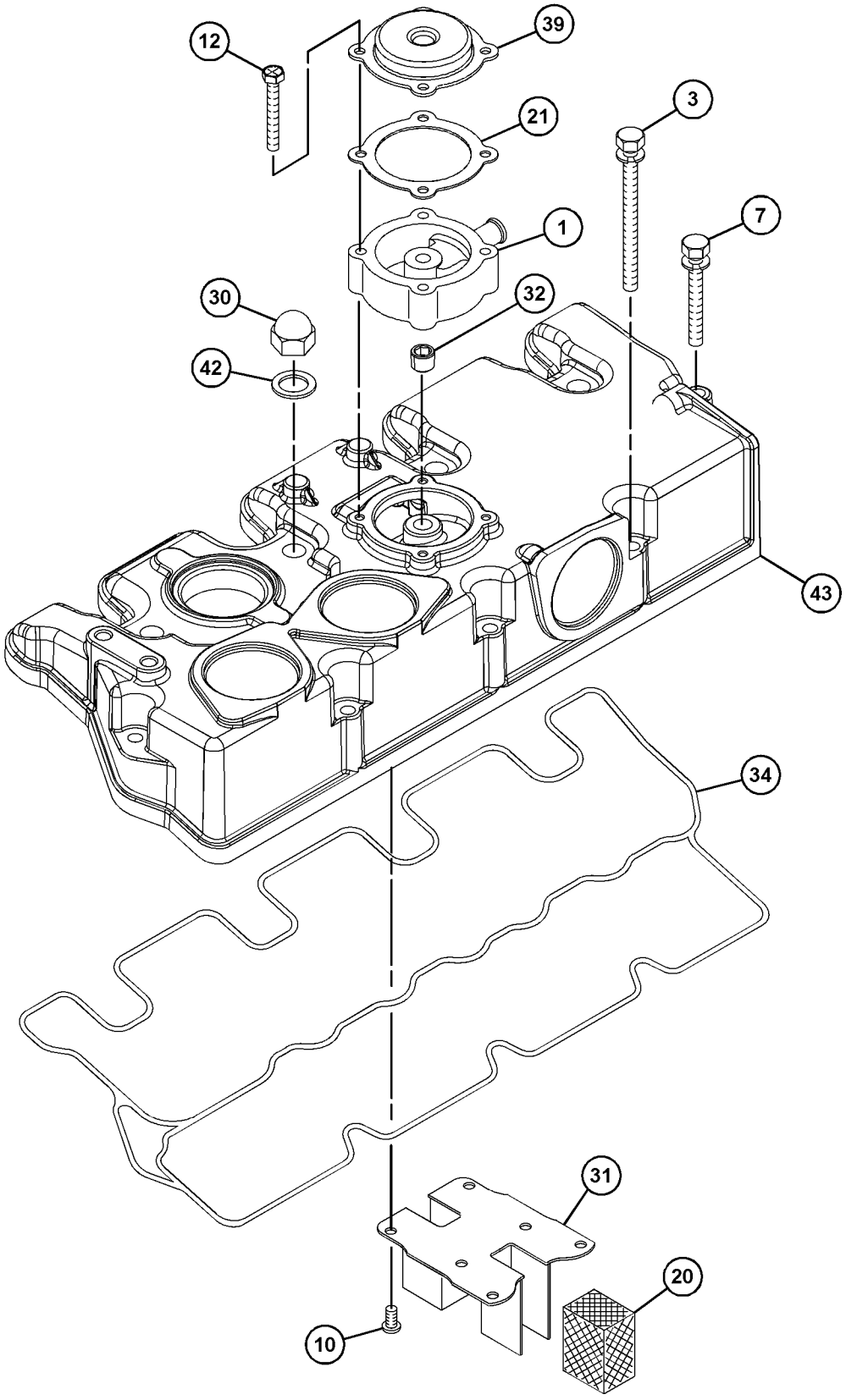

GRAPHIC #3 g07511951

441-8101 **TURBOCHARGER GP (**contd.**)** **i08811915**

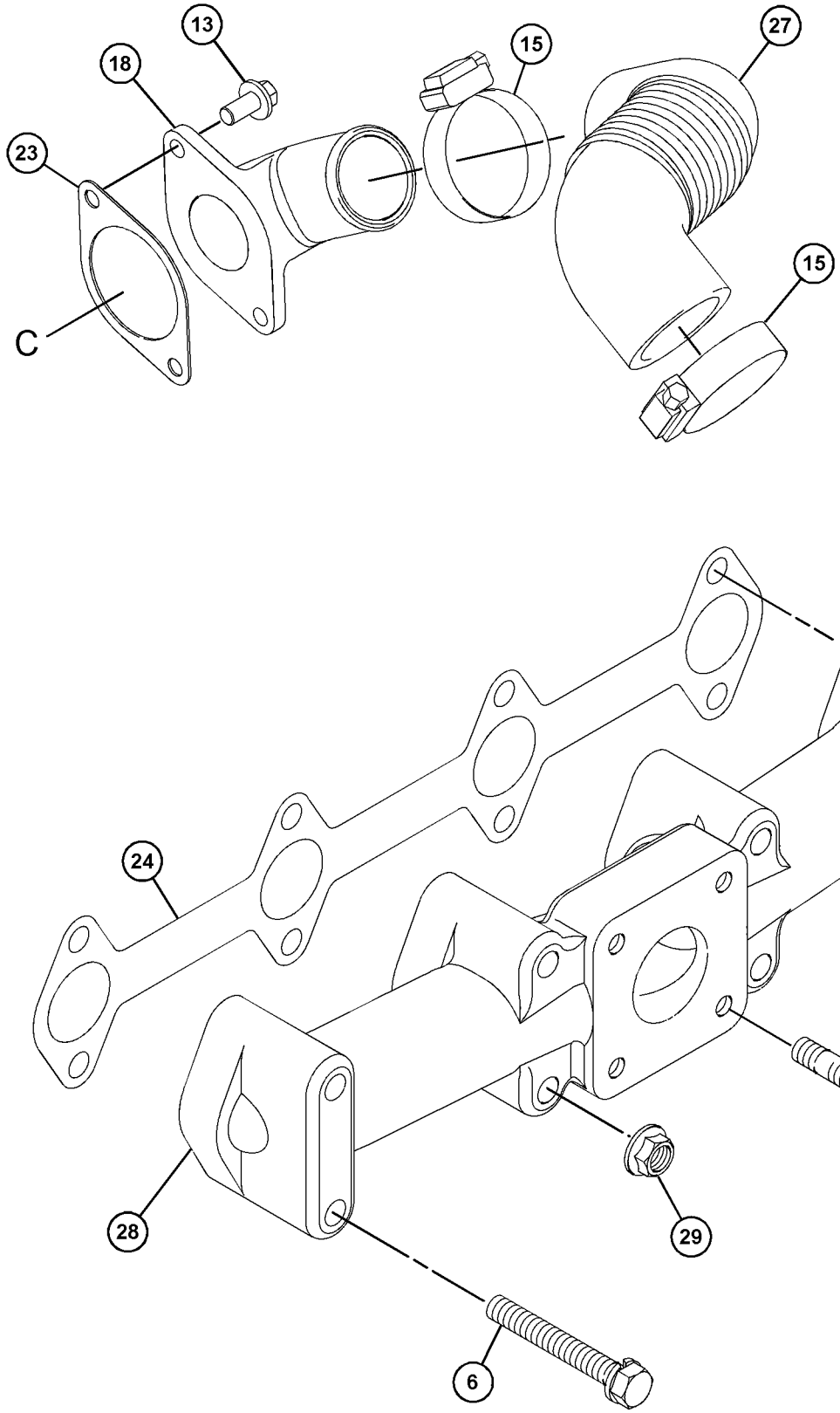

GRAPHIC #4 <END> g06049446

442-6206 TURBOCHARGER GP

PART OF 495-3121 ENGINE AR-PRIMARY

TYPE 1

SMCS-1052, 1053 **i06916012**

NOTE	REF NO	GRAPHIC REF	PART NUMBER	QTY	PART NAME 1 2 3 4 5 6 (PRODUCT LEVEL)	SEE PAGE
M	1	2	**153-5592**	8	NUT (M8X1.25-THD)	
	2	1	**153-5939**	1	STOPPER (OIL)	
M	3	1	**153-5960**	1	NUT (M6X1-THD)	
	4	1	**153-5962**	3	BOLT AS	
M	5	2	**124-3815**	2	BOLT (M8X1.25X16-MM)	
	6	2	**153-6853**	1	SEAL-O-RING	
M	7	1,2	**6I-0846**	6	BOLT (M6X1X14-MM)	
M	8	1	**154-1347**	4	NUT (M10X1.25-THD)	
	9	2	**154-2427**	1	GASKET-EXHAUST MANIFOLD	
	10	2	**154-2428**	4	BOLT AS	
	12	2	**163-5372**	5	WASHER (8X15.4X4-MM THK)	
	13	1	**165-2140**	2	BOLT AS	
M	15	2	**6I-0217**	1	BOLT (M8X1.25X20-MM)	
	16	1	**183-1165**	1	PLUG	
	17	1	**246-4361**	4	WASHER (10.5X14X1.5-MM THK)	
	18	1	**217-5859**	1	VALVE-BREATHER (CRANKCASE)	
	19	1	**217-5862**	6	SCREW (SELF-TAPPING)	
	20	1	**233-0695**	1	SEAL-VALVE COVER	
	21	2	**236-9987**	1	MANIFOLD-EXHAUST	
	22	2	**238-9196**	1	GASKET-TURBOCHARGER	
M	23	2	**5A-3604**	5	BOLT-SOCKET HEAD (M8X1.25X25-MM)	
M	24	1	**238-9295**	4	BOLT (M4X0.7X30-MM)	
R	25	2	**513-6823**	1	TURBOCHARGER AS	
	26	2	**239-0187**	1	BRACKET	
	27	2	**239-0228**	1	TUBE AS	
	27A	2	**225-8526**	2	WASHER (10.4X13.75X1.37-MM THK)	
	27B	2	**239-0169**	1	BOLT-SPECIAL (BANJO)	
	27C	2	**317-0961**	2	CLIP	
	28	2	**039-2281**	1	SPACER (9X16X25-MM THK)	
M	29	2	**239-0232**	4	STUD (M8X1.25X31-MM)	
	30	1	**249-1532**	1	HOSE-AIR INLET	
	32	2	**268-3421**	1	ELBOW-EXHAUST	
	33	2	**304-5061**	1	GASKET	
	34	2	**317-0962**	1	TUBE-TURBOCHARGER OIL	
	35	1	**320-8401**	1	PLATE-RETAINING	
	36	2	**353-3477**	2	GASKET-TURBOCHARGER	
M	37	1	**360-9545**	1	STUD (M6X1X48-MM)	
	38	1	**363-5813**	2	CLAMP-HOSE	
	39	1	**365-4125**	1	ADAPTER	
	40	1	**366-3055**	1	ELBOW	
	41	1	**383-9577**	1	COVER-VALVE	
	42	1	**494-9569**	1	GASKET	
	43	1	**438-9362**	1	GASKET	

M - METRIC PART
R - REMANUFACTURED PART MAY BE AVAILABLE

442-6206 **TURBOCHARGER GP (**contd.**)** **i06916012**

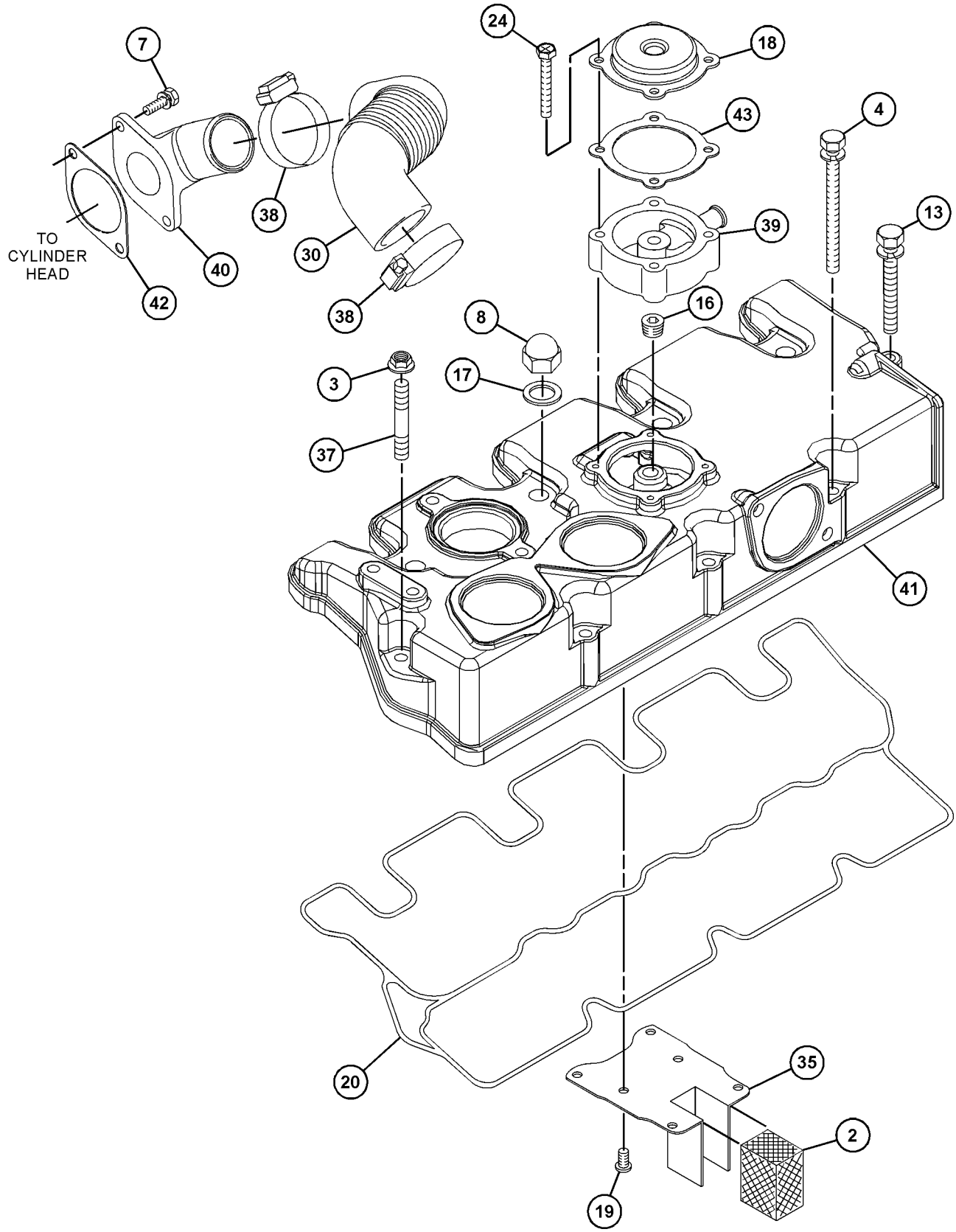

GRAPHIC #1 g06209705

442-6206 **TURBOCHARGER GP (**contd.**)** **i06916012**

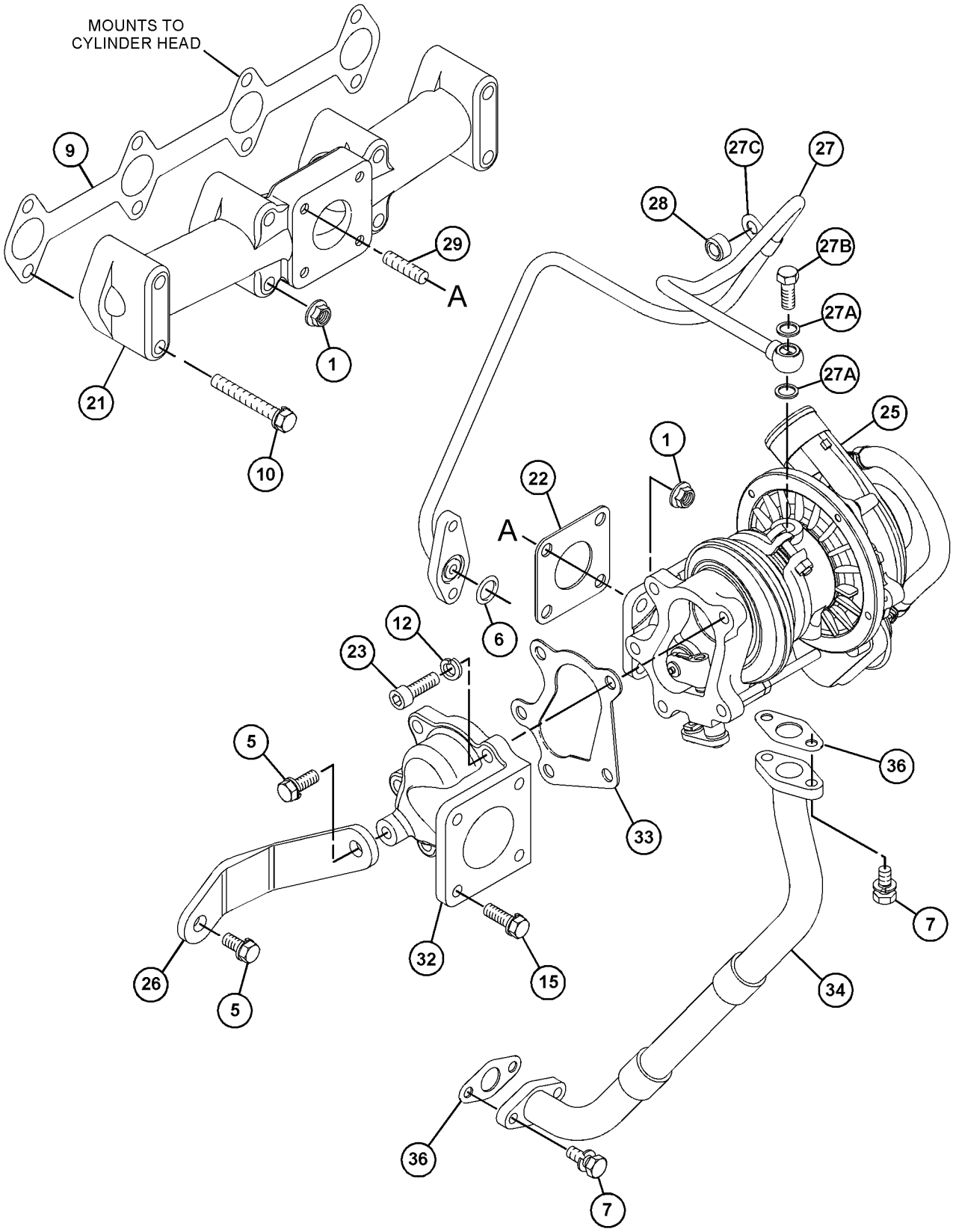

GRAPHIC #2 <END> g06209706

442-6206 TURBOCHARGER GP

PART OF 495-3121, 587-9328 ENGINE AR-PRIMARY

TYPE 2

SMCS-1052, 1053 **i08197260**

NOTE	REF NO	GRAPHIC REF	PART NUMBER	QTY	PART NAME 1 2 3 4 5 6 (PRODUCT LEVEL)	SEE PAGE
M	1	2	**153-5592**	8	NUT (M8X1.25-THD)	
	2	1	**153-5939**	1	STOPPER (OIL)	
M	3	1	**153-5960**	1	NUT (M6X1-THD)	
	4	1	**153-5962**	3	BOLT AS	
M	5	2	**124-3815**	2	BOLT (M8X1.25X16-MM)	
	6	2	**153-6853**	1	SEAL-O-RING	
M	7	1,2	**6I-0846**	6	BOLT (M6X1X14-MM)	
M	8	1	**539-0439**	4	NUT (M10X1.25-THD)	
	9	2	**154-2427**	1	GASKET-EXHAUST MANIFOLD	
	10	2	**154-2428**	4	BOLT AS	
	12	2	**163-5372**	5	WASHER (8X15.4X4-MM THK)	
	13	1	**165-2140**	2	BOLT AS	
M	15	2	**6I-0217**	1	BOLT (M8X1.25X20-MM)	
	16	1	**183-1165**	1	PLUG (SEALING)	
	17	1	**246-4361**	4	WASHER (10.5X14X1.5-MM THK)	
	18	1	**217-5859**	1	VALVE-BREATHER (CRANKCASE)	
	19	1	**217-5862**	6	SCREW (SELF-TAPPING)	
	20	1	**233-0695**	1	SEAL-VALVE COVER	
	21	2	**236-9987**	1	MANIFOLD-EXHAUST	
	22	2	**238-9196**	1	GASKET-TURBOCHARGER	
M	23	2	**5A-3604**	5	BOLT-SOCKET HEAD (M8X1.25X25-MM)	
M	24	1	**238-9295**	4	BOLT (M4X0.7X30-MM) (HEX)	
CR	25	2	**513-6823**	1	TURBOCHARGER AS	
	26	2	**239-0187**	1	BRACKET	
	27	2	**239-0228**	1	TUBE AS	
	28	2	**239-0229**	1	SPACER (8.4X15X9-MM THK)	
M	29	2	**239-0232**	4	STUD (M8X1.25X31-MM)	
	30	1	**249-1532**	1	HOSE-AIR INLET	
	32	2	**268-3421**	1	ELBOW-EXHAUST	
	33	2	**304-5061**	1	GASKET	
	34	2	**317-0962**	1	TUBE-TURBOCHARGER OIL	
	35	1	**320-8401**	1	PLATE-RETAINING	
	36	2	**353-3477**	2	GASKET-TURBOCHARGER	
M	37	1	**360-9545**	1	STUD (M6X1X48-MM)	
	38	1	**363-5813**	2	CLAMP-HOSE	
	39	1	**365-4125**	1	ADAPTER	
	40	1	**366-3055**	1	ELBOW	
	41	1	**583-6088**	1	COVER-HEAD	
	42	1	**494-9569**	1	GASKET	
	43	1	**438-9362**	1	GASKET	

C - CHANGE FROM PREVIOUS TYPE
M - METRIC PART
R - REMANUFACTURED PART MAY BE AVAILABLE

442-6206 **TURBOCHARGER GP** (contd.) **i08197260**

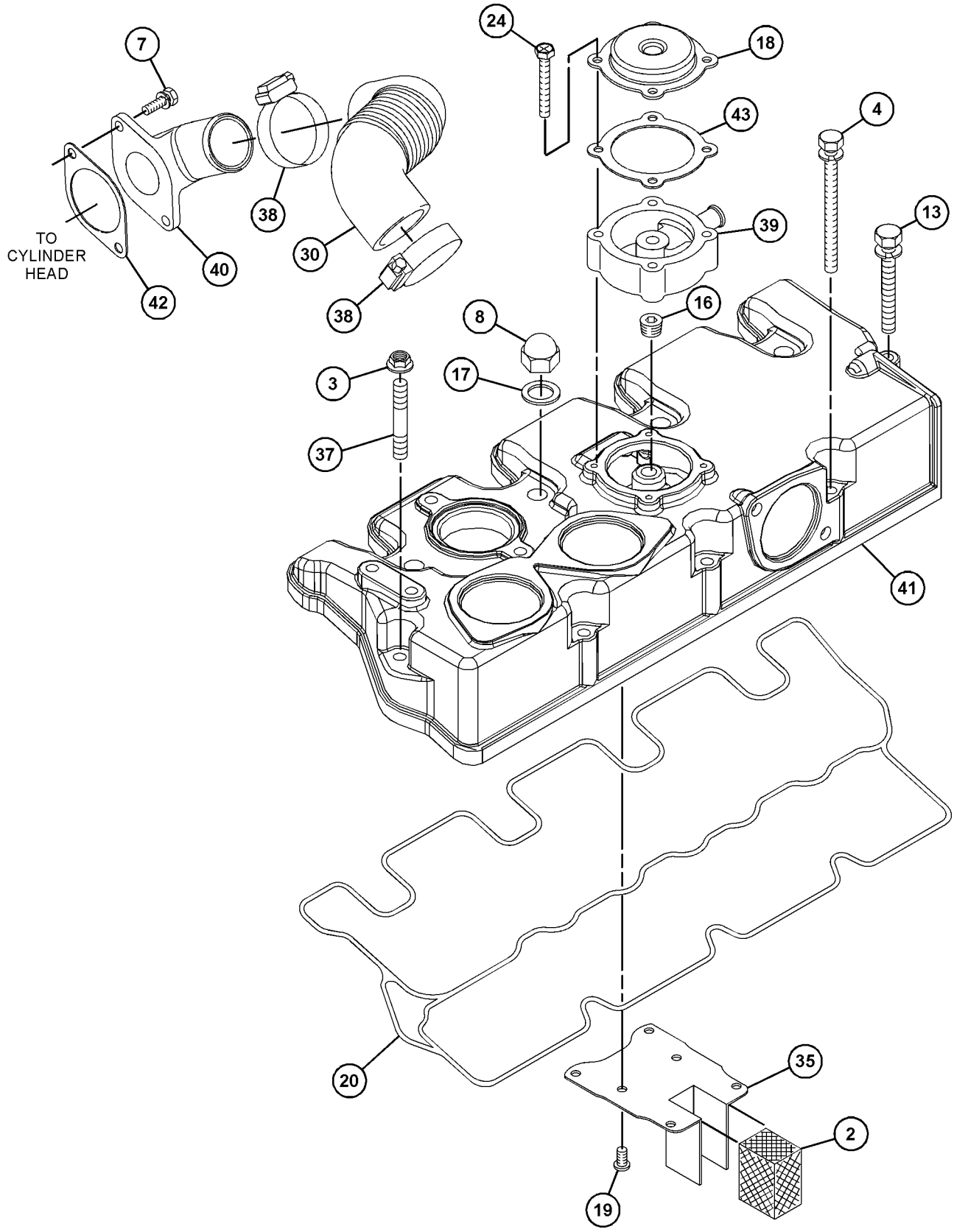

GRAPHIC #1 g06209705

442-6206 **TURBOCHARGER GP (**contd.**)** **i08197260**

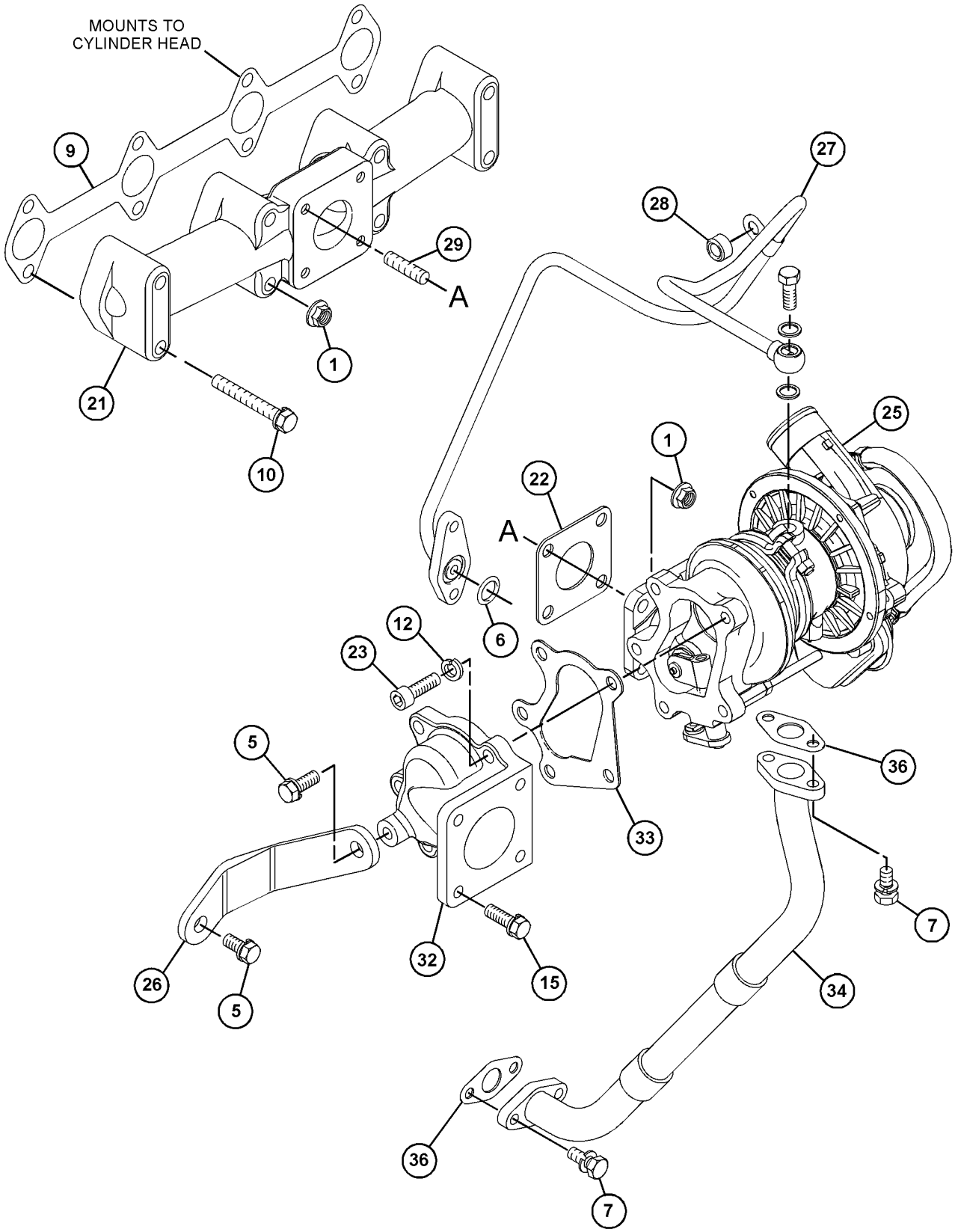

GRAPHIC #2 <END> g06660602

442-7759 TURBOCHARGER GP

PART OF 459-2953, 461-7892, 461-7894, 465-1477, 495-6243 ENGINE AR-PRIMARY

SMCS-1052, 1053 **i08437326**

NOTE	REF NO	GRAPHIC REF	PART NUMBER	QTY	PART NAME 1 2 3 4 5 6 (PRODUCT LEVEL)	SEE PAGE
M	1	2	**153-5592**	4	NUT (M8X1.25-THD)	
	2	1	**153-5939**	1	STOPPER (OIL)	
M	3	1	**153-5960**	1	NUT (M6X1-THD)	
	4	1	**153-5962**	3	BOLT AS	
M	5	2	**124-3815**	2	BOLT (M8X1.25X16-MM)	
	6	2	**153-6853**	1	SEAL-O-RING	
M	8	1	**539-0439**	4	NUT (M10X1.25-THD)	
	9	2	**154-2427**	1	GASKET-EXHAUST MANIFOLD	
	10	2	**154-2428**	4	BOLT AS	
	11	2	**163-5372**	5	WASHER (8X15.4X4-MM THK)	
	12	1	**165-2140**	2	BOLT AS	
	15	1	**183-1165**	1	PLUG	
	16	1	**246-4361**	4	WASHER (10.5X14X1.5-MM THK)	
	17	1	**217-5859**	1	VALVE-BREATHER (CRANKCASE)	
	18	1	**217-5862**	6	SCREW (SELF-TAPPING)	
	19	1	**233-0695**	1	SEAL-VALVE COVER	
	20	2	**236-9987**	1	MANIFOLD-EXHAUST	
	21	2	**238-9196**	1	GASKET-TURBOCHARGER	
	22	2	**238-9198**	1	ELBOW-EXHAUST	
M	23	2	**5A-3604**	5	BOLT-SOCKET HEAD (M8X1.25X25-MM)	
M	24	1	**238-9295**	4	BOLT (M4X0.7X30-MM)	
R	25	2	**513-6823**	1	TURBOCHARGER AS	
	26	2	**239-0187**	1	BRACKET	
	27	2	**239-0228**	1	TUBE AS	
	27A	2	**225-8526**	2	WASHER (10.4X13.75X1.37-MM THK)	
	27B	2	**298-4543**	1	BOLT	
	27C	2	**317-0961**	2	CLIP	
	29	2	**239-0229**	1	SPACER (8.4X15X9-MM THK)	
M	30	2	**239-0232**	4	STUD (M8X1.25X31-MM)	
	31	1	**249-1532**	1	HOSE-AIR INLET	
	33	2	**304-5061**	1	GASKET	
	34	2	**317-0962**	1	TUBE-TURBOCHARGER OIL	
	35	1	**320-8401**	1	PLATE-RETAINING	
	36	2	**353-3477**	2	GASKET-TURBOCHARGER	
M	37	1	**360-9545**	1	STUD (M6X1X48-MM)	
	38	1	**363-5813**	2	CLAMP-HOSE	
	39	1	**365-4125**	1	ADAPTER	
	40	1	**366-3055**	1	ELBOW	
	41	1	**583-6088**	1	COVER-HEAD	
	42	1	**494-9569**	1	GASKET	
	43	1	**438-9362**	1	GASKET	
M	44	2	**6I-0217**	1	BOLT (M8X1.25X20-MM)	
M	45	1,2	**6I-0846**	6	BOLT (M6X1X14-MM)	

M - METRIC PART
R - REMANUFACTURED PART MAY BE AVAILABLE

442-7759 **TURBOCHARGER GP (**contd.**)** **i08437326**

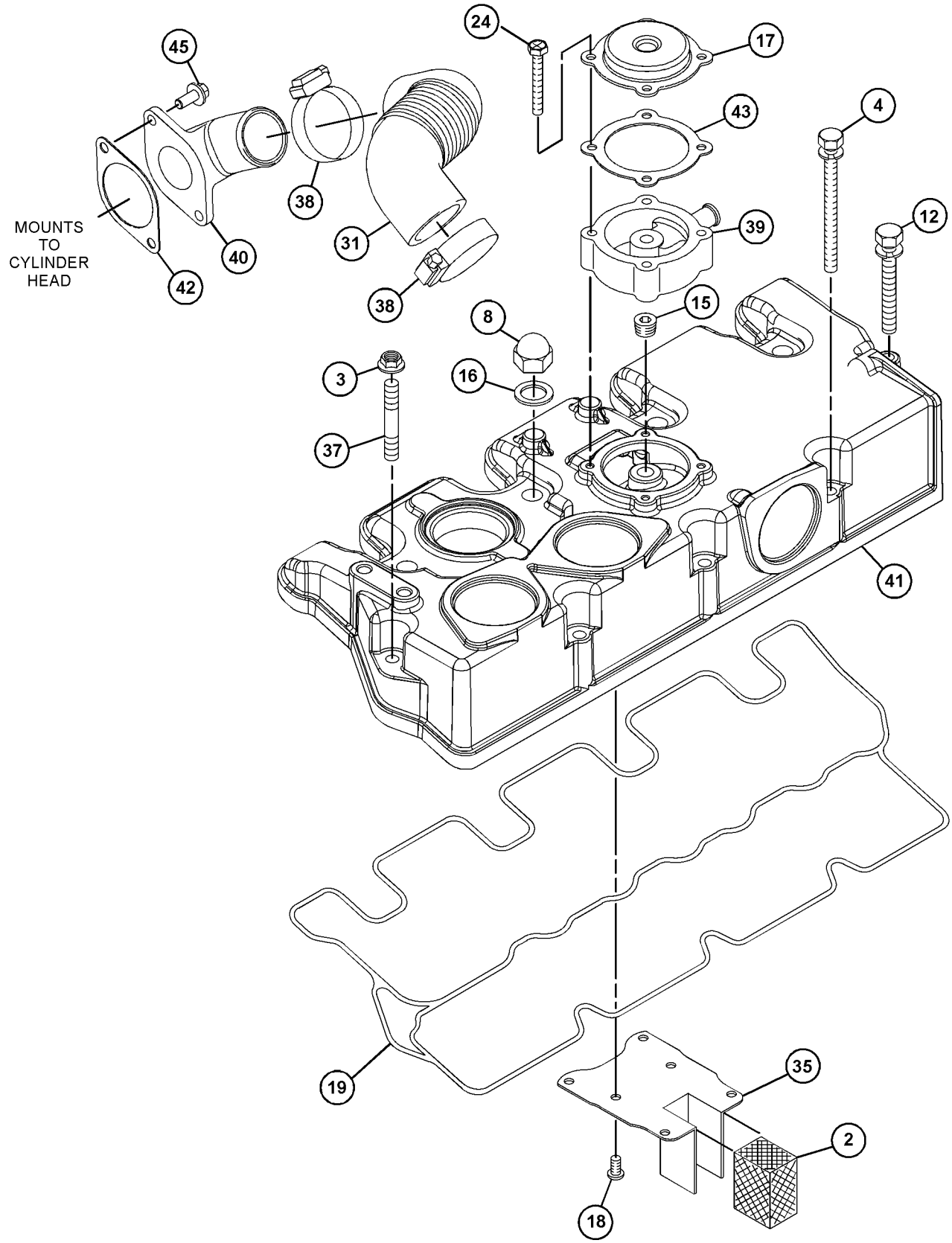

GRAPHIC #1 g06652454

442-7759 **TURBOCHARGER GP (**contd.**)** **i08437326**

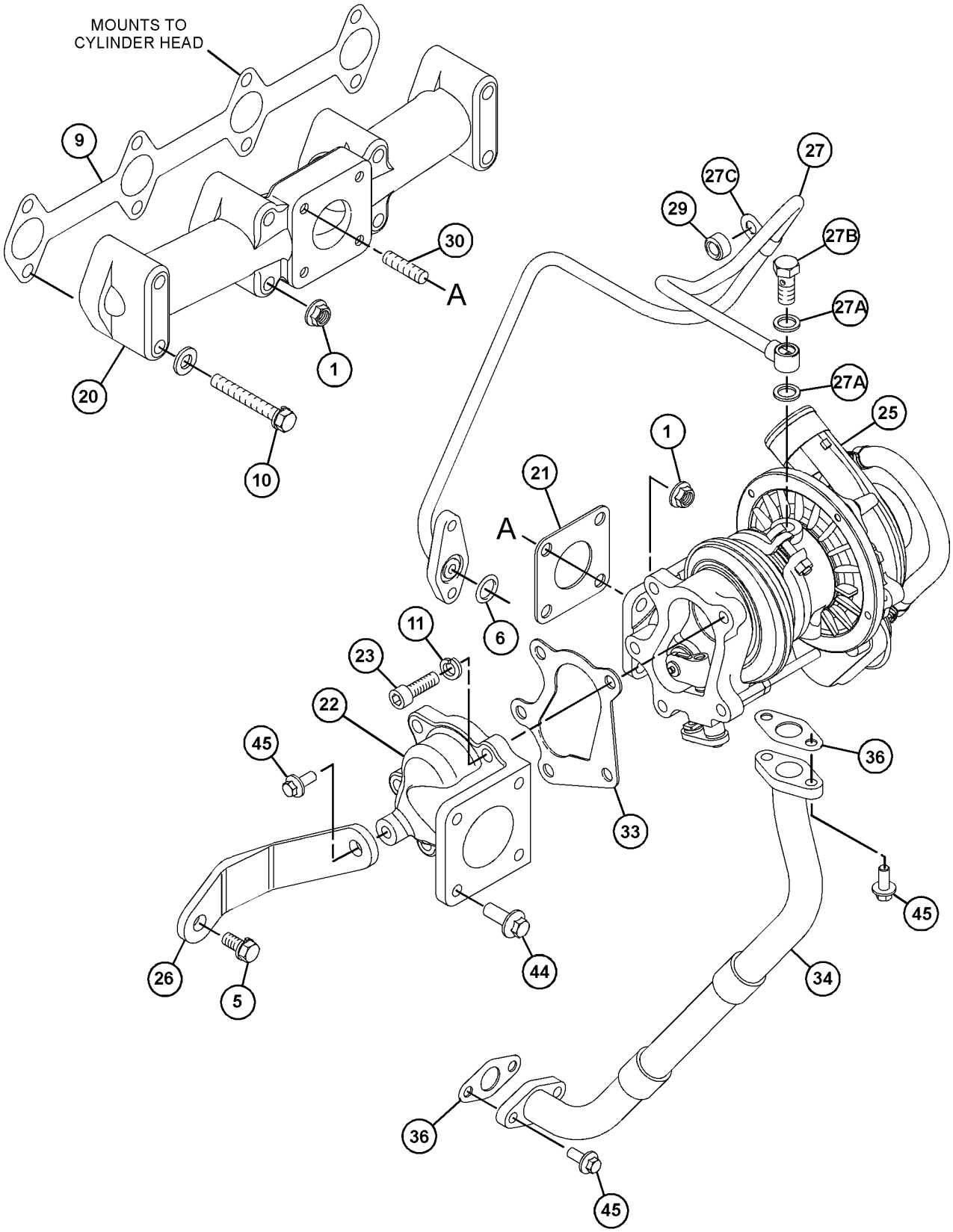

GRAPHIC #2 <END> g06205570

442-9826 TURBOCHARGER GP

PART OF 433-1380, 435-1637, 435-1638 ENGINE AR, 435-1636 ENGINE AR-PRIMARY

SMCS-1052, 1053 **i08699606**

NOTE	REF NO	GRAPHIC REF	PART NUMBER	QTY	PART NAME 1 2 3 4 5 6 (PRODUCT LEVEL)	SEE PAGE
M	1	2	**153-5592**	8	NUT (M8X1.25-THD)	
	2	1	**153-5939**	1	STOPPER (OIL)	
M	3	1	**153-5960**	1	NUT (M6X1-THD)	
	5	1	**153-5962**	3	BOLT AS	
	7	2	**153-6853**	1	SEAL-O-RING	
M	8	1,2	**6I-0846**	6	BOLT (M6X1X14-MM)	
M	9	1	**539-0439**	4	NUT (M10X1.25-THD)	
	10	2	**154-2427**	1	GASKET-EXHAUST MANIFOLD	
	11	2	**154-2428**	4	BOLT AS	
	12	2	**163-5372**	5	WASHER (8X15.4X4-MM THK)	
	13	1	**165-2140**	1	BOLT AS	
M	15	2	**6I-0217**	1	BOLT (M8X1.25X20-MM)	
	16	1	**183-1165**	1	PLUG	
	17	1	**246-4361**	4	WASHER (10.5X14X1.5-MM THK)	
	18	1	**217-5859**	1	VALVE-BREATHER (CRANKCASE)	
	19	1	**217-5862**	6	SCREW (SELF-TAPPING)	
	20	1	**494-9569**	1	GASKET	
	21	2	**225-8533**	2	GASKET	
	22	1	**233-0695**	1	SEAL-VALVE COVER	
	23	2	**236-9987**	1	MANIFOLD-EXHAUST	
	24	2	**238-9196**	1	GASKET-TURBOCHARGER	
M	25	2	**5A-3604**	5	BOLT-SOCKET HEAD (M8X1.25X25-MM)	
M	26	1	**238-9295**	4	BOLT (M4X0.7X30-MM)	
R	27	2	**513-6823**	1	TURBOCHARGER AS	
	29	2	**239-0228**	1	TUBE AS	
	30	2	**039-2281**	1	SPACER (9X16X25-MM THK)	
M	31	2	**239-0232**	4	STUD (M8X1.25X31-MM)	
	32	1	**249-1532**	1	HOSE-AIR INLET	
	34	1	**438-9362**	1	GASKET	
	35	2	**304-5061**	1	GASKET	
	36	2	**317-0962**	1	TUBE-TURBOCHARGER OIL	
	37	1	**320-8401**	1	PLATE-RETAINING	
M	38	1	**360-9545**	1	STUD (M6X1X48-MM)	
	39	1	**363-5813**	2	CLAMP-HOSE	
	40	1	**365-4125**	1	ADAPTER	
	41	1	**366-3055**	1	ELBOW	
	42	1	**583-6090**	1	COVER-HEAD	

M - METRIC PART
R - REMANUFACTURED PART MAY BE AVAILABLE

442-9826 **TURBOCHARGER GP (**contd.**)** **i08699606**

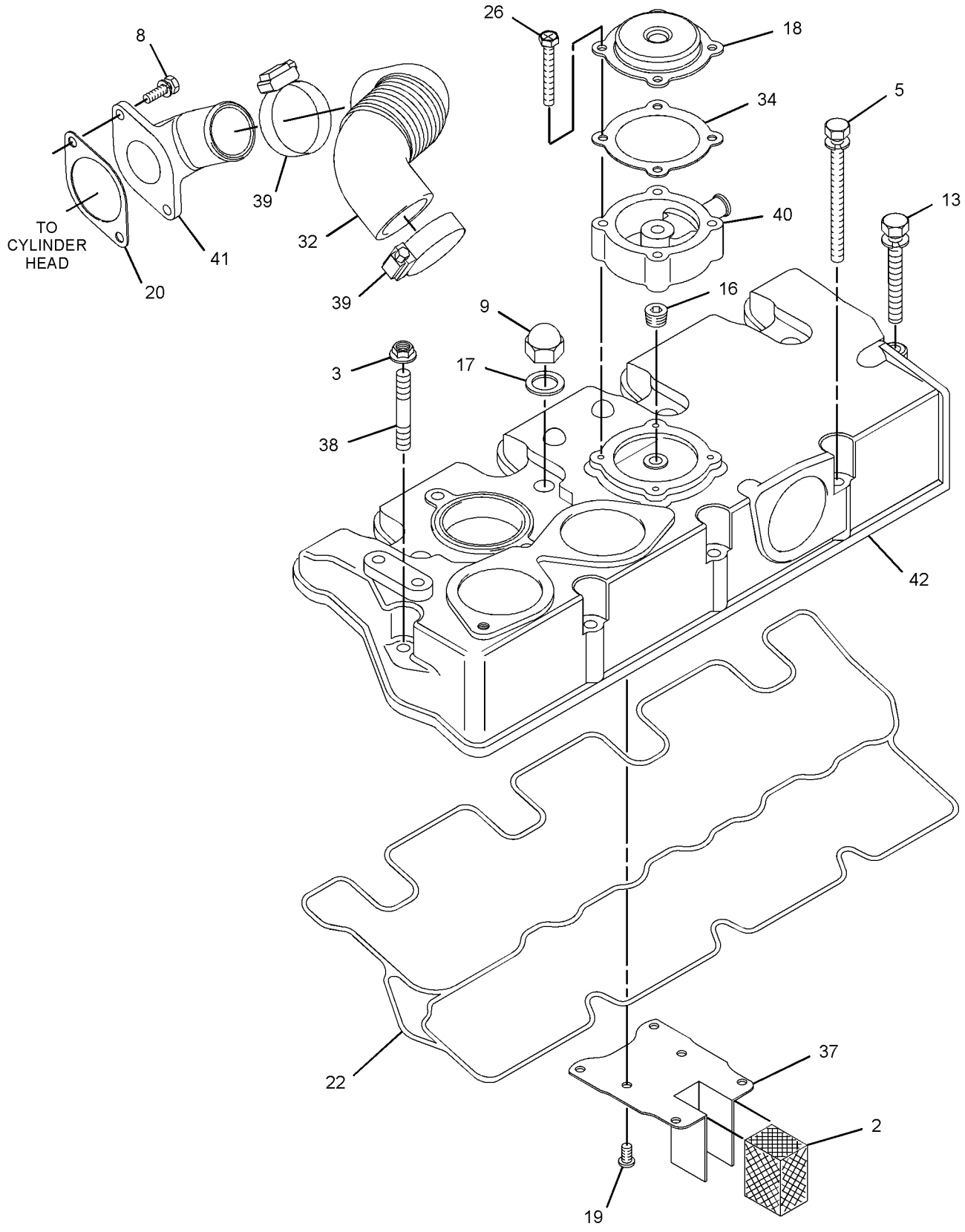

GRAPHIC #1 g07521188

442-9826 **TURBOCHARGER GP (**contd.**)** **i08699606**

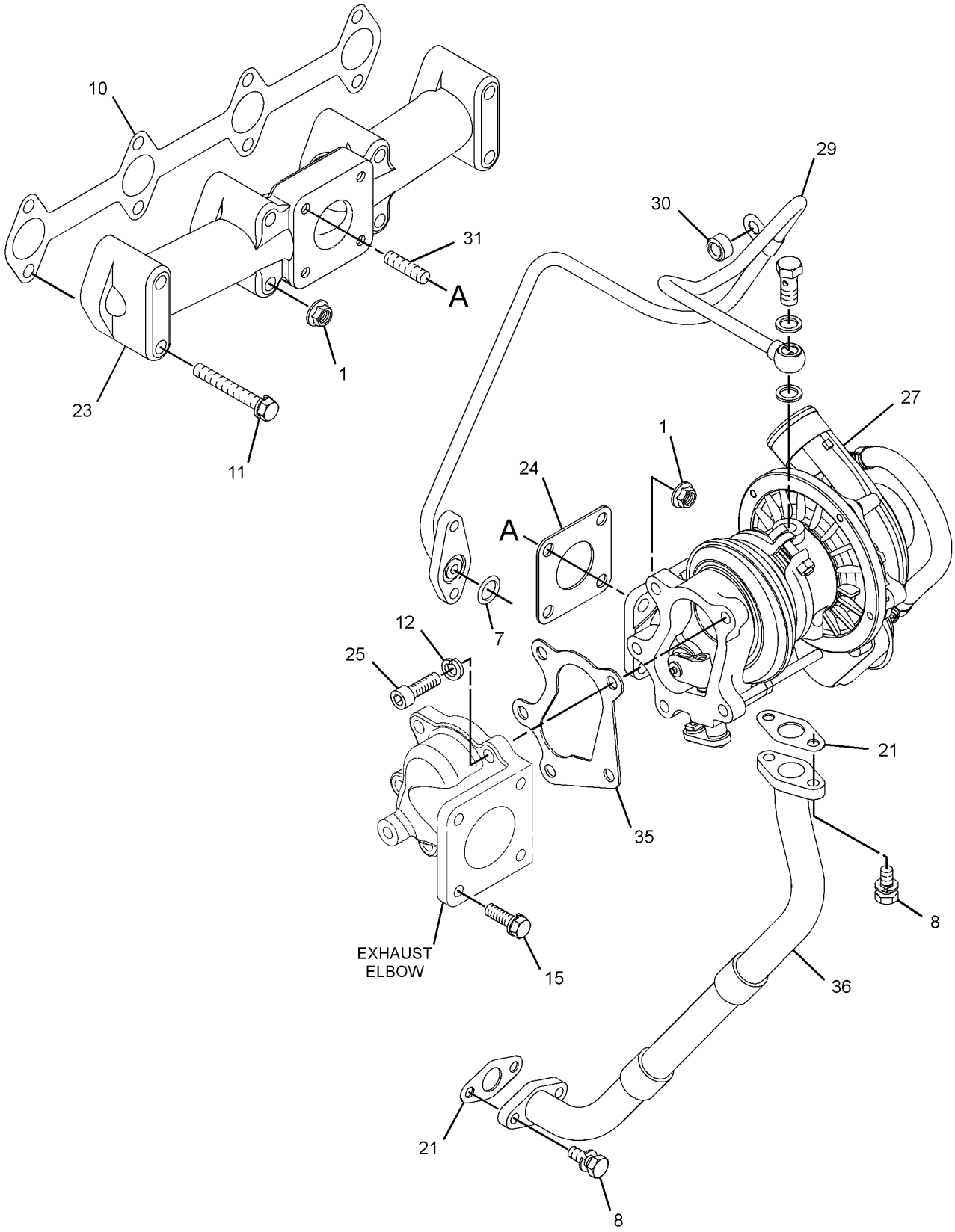

GRAPHIC #2 <END> g07521205

450-7277 TURBOCHARGER GP

PART OF 435-1658 ENGINE AR-PRIMARY

SMCS-1052, 1053 **i08269260**

NOTE	REF NO	GRAPHIC REF	PART NUMBER	QTY	PART NAME 1 2 3 4 5 6 (PRODUCT LEVEL)	SEE PAGE
M	1	1	**148-7140**	5	STUD (M8X1.25X37-MM)	
M	2	1,3	**153-5592**	14	NUT (M8X1.25-THD)	
	3	2	**153-5939**	1	STOPPER (OIL) (CRANKCASE)	
M	4	2	**153-5960**	1	NUT (M6X1-THD)	
	5	2	**153-5962**	3	BOLT AS	
	7	1	**153-6853**	1	SEAL-O-RING	
M	9	2	**539-0439**	4	NUT (M10X1.25-THD)	
	10	1	**8F-7242**	5	WASHER (8.7X15.9X1.6-MM THK)	
	11	3	**154-2427**	1	GASKET-EXHAUST MANIFOLD	
	12	3	**154-2428**	4	BOLT AS	
	13	1	**163-5372**	5	WASHER (8X15.4X4-MM THK)	
	14	2	**165-2140**	1	BOLT AS	
	16	2	**183-1165**	1	PLUG	
	17	2	**246-4361**	4	WASHER (10.5X14X1.5-MM THK)	
	18	2	**217-5859**	1	VALVE-BREATHER (CRANKCASE)	
	19	2	**217-5861**	1	PLATE-RETAINING	
	20	2	**217-5862**	6	SCREW (SELF-TAPPING)	
	21	2	**233-0695**	1	SEAL-VALVE COVER	
	22	3	**236-9987**	1	MANIFOLD-EXHAUST	
	23	1	**238-9196**	1	GASKET-TURBOCHARGER	
M	24	2	**238-9295**	4	BOLT (M4X0.7X30-MM)	
	25	1	**239-0187**	1	BRACKET	
	26	1	**239-0228**	1	TUBE AS	
	27	1	**239-0229**	1	SPACER (8.4X15X9-MM THK)	
M	28	3	**239-0232**	4	STUD (M8X1.25X31-MM)	
M	29	1,2	**6I-0846**	6	BOLT (M6X1X14-MM)	
	30	1	**304-5061**	1	GASKET	
	31	1	**317-0962**	1	TUBE-TURBOCHARGER OIL	
	32	1	**513-6822**	1	TURBOCHARGER AS	
	33	1	**353-3477**	2	GASKET-TURBOCHARGER	
M	34	2	**360-9545**	1	STUD (M6X1X48-MM)	
	35	2	**365-4125**	1	ADAPTER	
	36	2	**366-3055**	1	ELBOW	
	37	2	**583-6090**	1	COVER-HEAD	
	38	2	**494-9569**	1	GASKET	
	39	2	**438-9362**	1	GASKET	
M	40	1	**6I-0217**	1	BOLT (M8X1.25X20-MM)	

M - METRIC PART

450-7277 **TURBOCHARGER GP (**contd.**)** **i08269260**

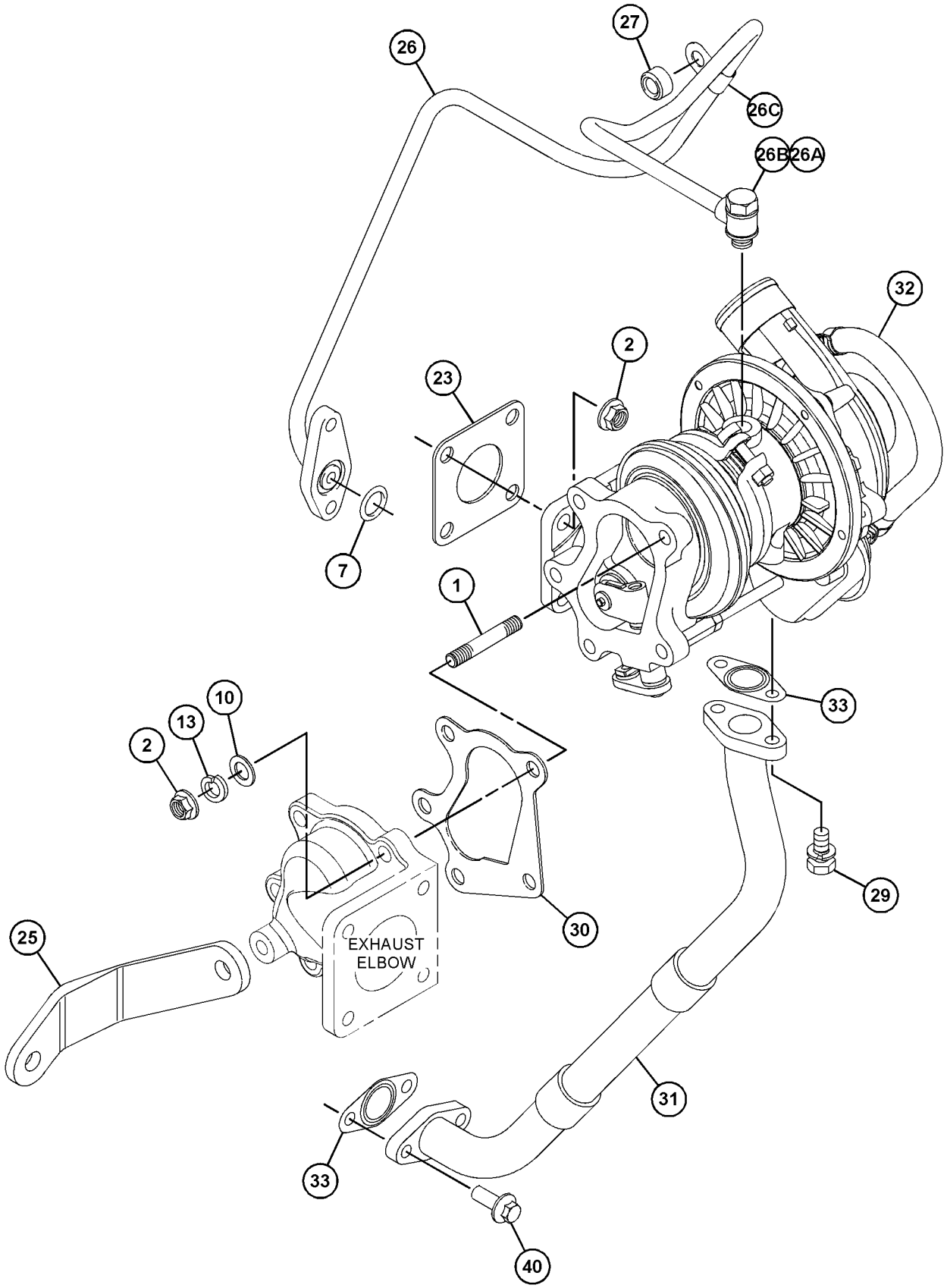

GRAPHIC #1 g06168944

450-7277 **TURBOCHARGER GP** (contd.) **i08269260**

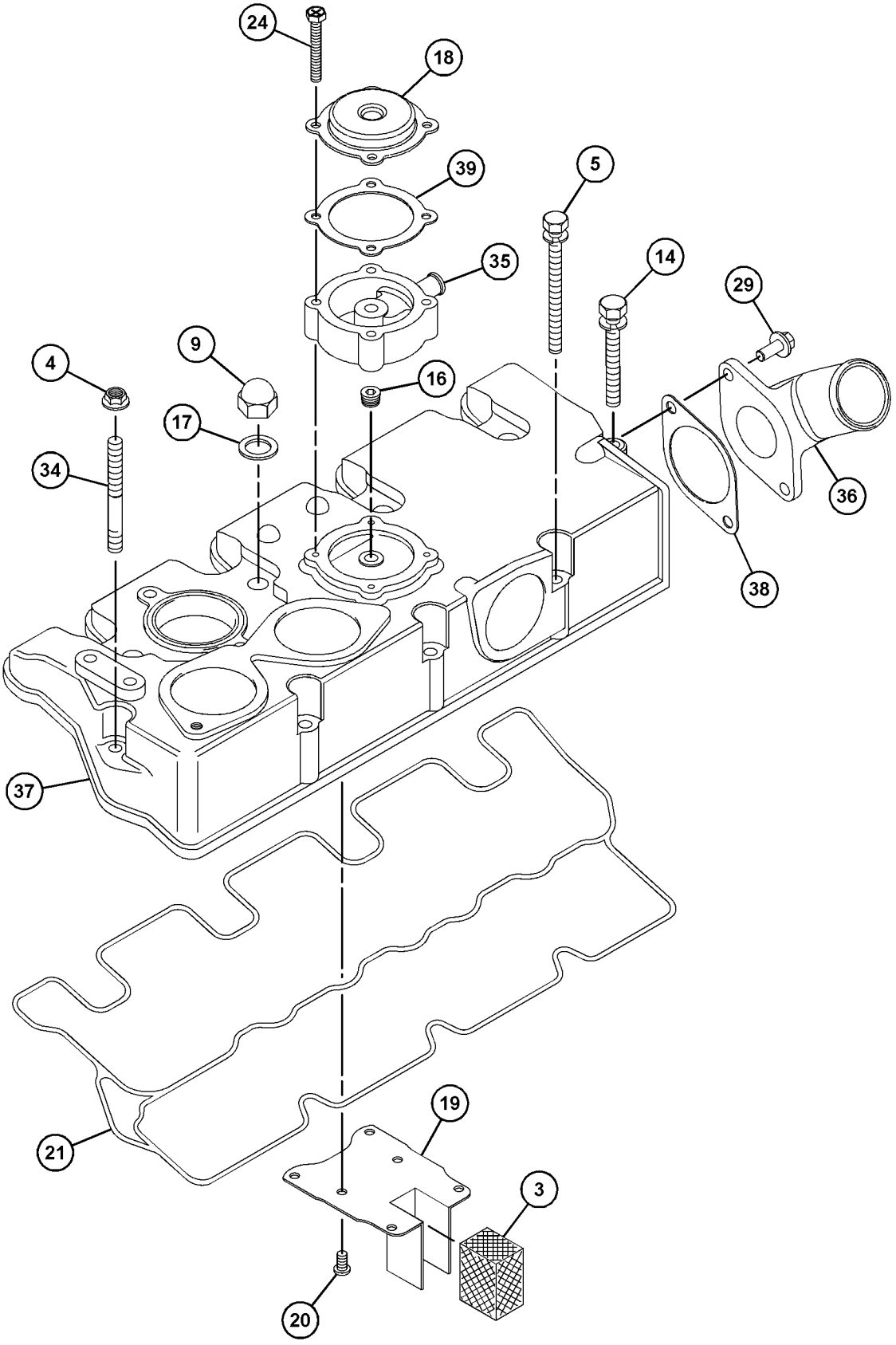

GRAPHIC #2 g06114623

450-7277 **TURBOCHARGER GP (**contd.**)** **i08269260**

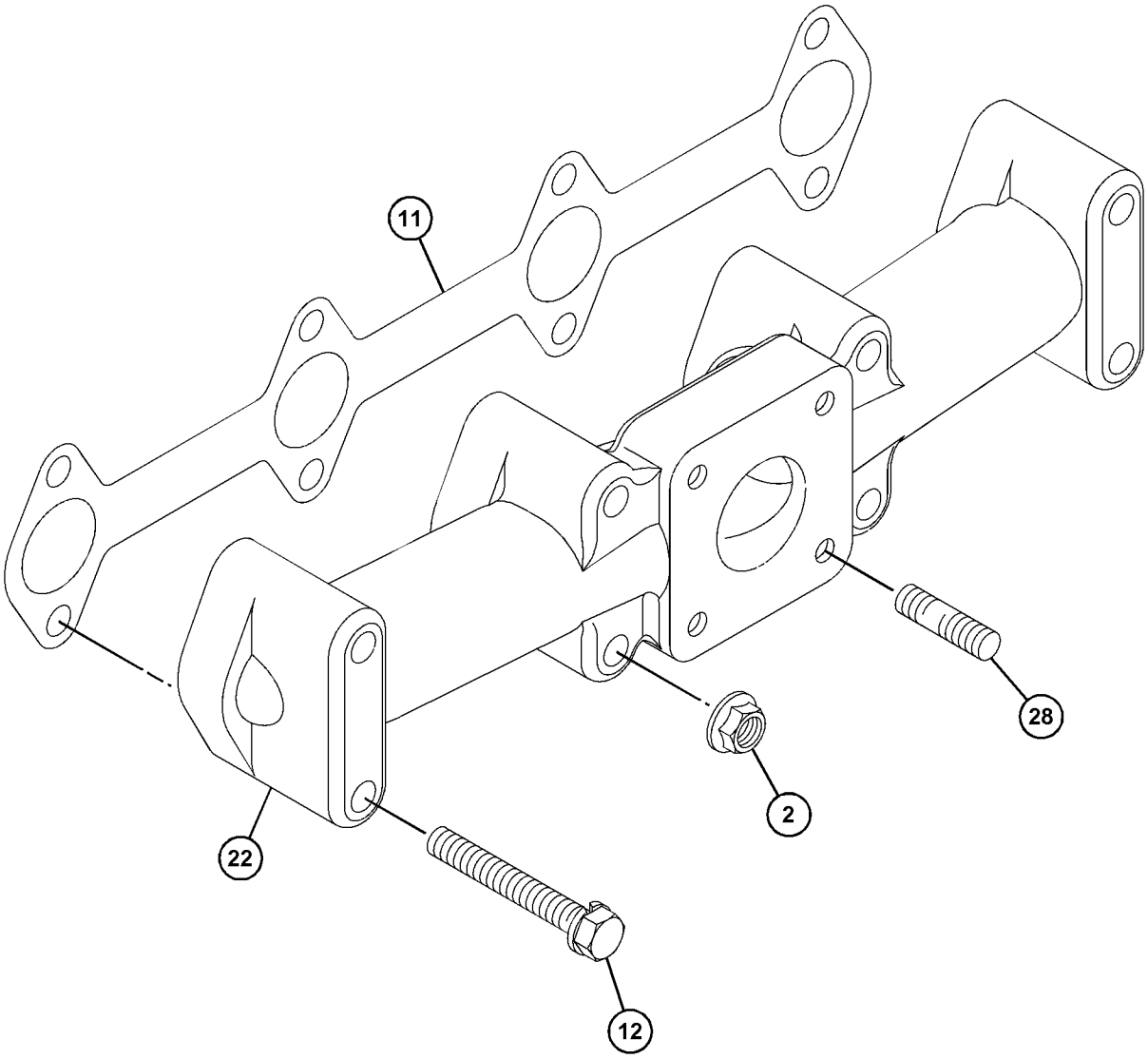

GRAPHIC #3 <END> g03681477

477-6922 TURBOCHARGER GP

S/N: G7L10940-11245

SMCS-1052, 1053 **i08194937**

NOTE	REF NO	GRAPHIC REF	PART NUMBER	QTY	PART NAME 1 2 3 4 5 6 (PRODUCT LEVEL)	SEE PAGE
M	1	1	**6I-0254**	1	BOLT (M8X1.25X30-MM)	
M	2	1	**153-5592**	8	NUT (M8X1.25-THD)	
	3	2	**153-5939**	1	STOPPER (OIL)	
M	4	2	**153-5960**	1	NUT (M6X1-THD)	
	5	2	**153-5962**	3	BOLT AS	
M	6	1	**124-3815**	2	BOLT (M8X1.25X16-MM)	
	7	1	**153-6853**	1	SEAL-O-RING	
	8	2	**153-7640**	2	BOLT AS	
M	9	2	**539-0439**	4	NUT (M10X1.25-THD)	
	10	1	**154-2427**	1	GASKET-EXHAUST MANIFOLD	
	11	1	**154-2428**	4	BOLT AS	
	12	1	**163-5372**	5	WASHER (8X15.4X4-MM THK)	
	13	2	**165-2140**	2	BOLT AS	
	15	1	**168-9001**	4	BOLT AS	
	16	2	**183-1165**	1	PLUG	
	17	2	**246-4361**	4	WASHER (10.5X14X1.5-MM THK)	
	18	2	**217-5859**	1	VALVE-BREATHER (CRANKCASE)	
	19	2	**217-5862**	6	SCREW (SELF-TAPPING)	
	20	1	**225-8533**	2	GASKET	
	21	2	**233-0695**	1	SEAL-VALVE COVER	
	22	1	**236-9987**	1	MANIFOLD-EXHAUST	
	23	1	**238-9196**	1	GASKET-TURBOCHARGER	
	24	1	**238-9198**	1	ELBOW-EXHAUST	
M	25	1	**5A-3604**	5	BOLT-SOCKET HEAD (M8X1.25X25-MM)	
M	26	2	**238-9295**	4	BOLT (M4X0.7X30-MM)	
R	27	1	**513-6823**	1	TURBOCHARGER AS	
	28	1	**239-0187**	1	BRACKET	
	29	1	**239-0229**	1	SPACER (8.4X15X9-MM THK)	
M	30	1	**239-0232**	4	STUD (M8X1.25X31-MM)	
	31	2	**249-1532**	1	HOSE-AIR INLET	
M	32	1	**6I-0846**	4	BOLT (M6X1X14-MM)	
	33	1	**304-5061**	1	GASKET	
	34	1	**317-0962**	1	TUBE-TURBOCHARGER OIL	
	35	2	**320-8401**	1	PLATE-RETAINING	
	36	1	**341-6641**	1	CONNECTION GP-OIL	
	36A	1	**225-8526**	2	WASHER (10.4X13.75X1.37-MM THK)	
	36B	1	**317-0960**	1	BOLT-SPECIAL (BANJO)	
	36C	1	**317-0961**	1	CLIP	
	36D	1	**596-4209**	1	EYE	
M	37	2	**360-9545**	1	STUD (M6X1X48-MM)	
	38	2	**363-5813**	2	CLAMP-HOSE	
	39	2	**365-4125**	1	ADAPTER	
	40	2	**366-3055**	1	ELBOW	
	41	2	**494-9569**	1	GASKET	
	42	2	**438-9362**	1	GASKET	
	45	2	**583-6088**	1	COVER-HEAD	
F			**383-9577**	1	COVER-VALVE	

477-6922 **TURBOCHARGER GP (**contd.**)** **i08194937**

NOTE	REF NO	GRAPHIC REF	PART NUMBER	QTY	PART NAME 1 2 3 4 5 6 (PRODUCT LEVEL)	SEE PAGE

F - NOT SHOWN
M - METRIC PART
R - REMANUFACTURED PART MAY BE AVAILABLE

477-6922 **TURBOCHARGER GP (**contd.**)** **i08194937**

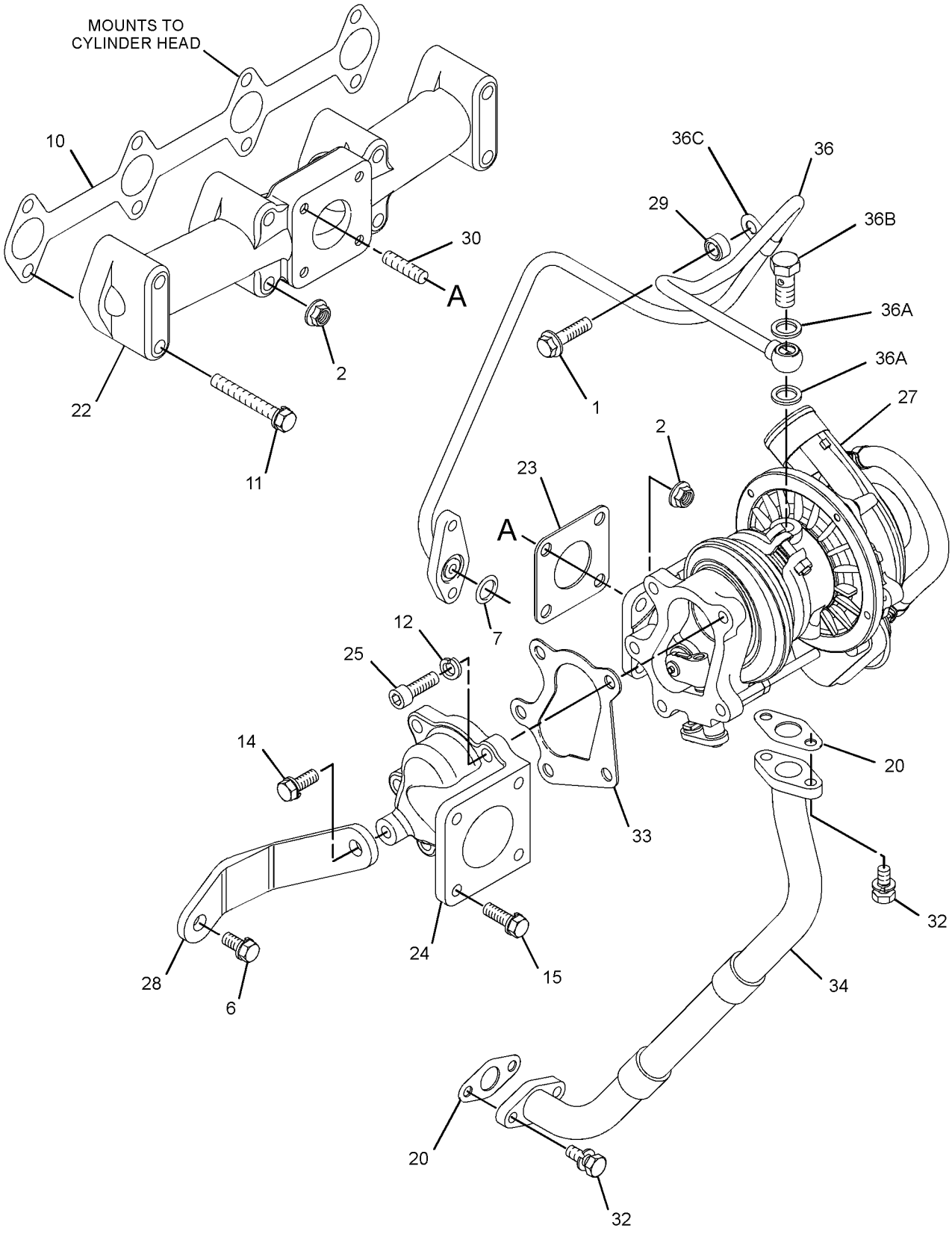

GRAPHIC #1 g03885244

477-6922 **TURBOCHARGER GP (**contd.**)** **i08194937**

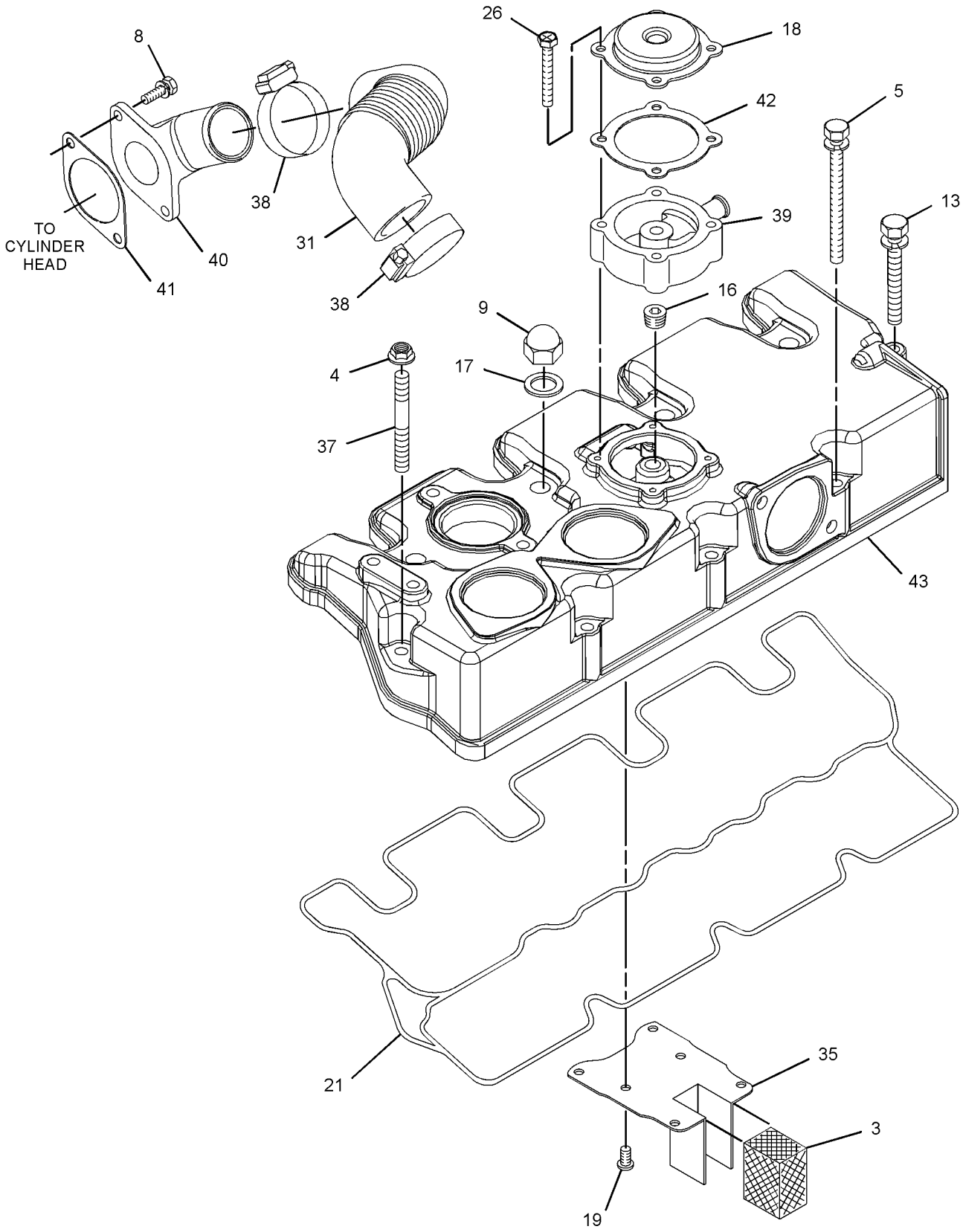

GRAPHIC #2 <END> g03885246

AIR INLET AND EXHAUST SYSTEM

485-9426 TURBOCHARGER GP

SMCS-1052, 1053 **i06921702**

NOTE	REF NO	GRAPHIC REF	PART NUMBER	QTY	PART NAME 1 2 3 4 5 6 (PRODUCT LEVEL)	SEE PAGE
M	1	2	**6I-0217**	1	BOLT (M8X1.25X20-MM)	
M	2	2	**124-3815**	2	BOLT (M8X1.25X16-MM)	
M	3	2,3	**153-5592**	8	NUT (M8X1.25-THD)	
	4	1	**153-5939**	1	STOPPER (OIL)	
M	5	1	**153-5960**	1	NUT (M6X1-THD)	
	6	1	**153-5962**	3	BOLT AS	
	7	2	**153-6853**	1	SEAL-O-RING	
	8	3	**153-7640**	2	BOLT AS	
M	9	1	**154-1347**	4	NUT (M10X1.25-THD)	
	10	3	**154-2427**	1	GASKET-EXHAUST MANIFOLD	
	11	3	**154-2428**	4	BOLT AS	
	12	2	**163-5372**	5	WASHER (8X15.4X4-MM THK)	
	13	1	**165-2140**	1	BOLT AS	
	14	1	**183-1165**	1	PLUG	
	15	1	**246-4361**	4	WASHER (10.5X14X1.5-MM THK) (SEALING)	
	16	1	**217-5859**	1	VALVE-BREATHER (CRANKCASE)	
	17	1	**217-5862**	6	SCREW (SELF-TAPPING)	
	18	2	**225-8533**	2	GASKET (TURBOCHARGER)	
	19	1	**233-0695**	1	SEAL-VALVE COVER	
	20	3	**236-9987**	1	MANIFOLD-EXHAUST	
	21	2	**238-9196**	1	GASKET-TURBOCHARGER	
	22	2	**238-9198**	1	ELBOW-EXHAUST	
M	23	2	**5A-3604**	5	BOLT-SOCKET HEAD (M8X1.25X25-MM)	
M	24	1	**238-9295**	4	BOLT (M4X0.7X30-MM)	
	25	2	**239-0187**	1	BRACKET	
	26	2	**239-0228**	1	TUBE AS	
	26A	2	**225-8526**	2	WASHER (10.4X13.75X1.37-MM THK)	
	26B	2	**239-0169**	1	BOLT-SPECIAL (BANJO)	
	26C	2	**239-0227**	2	CLIP	
	27	2	**039-2281**	1	SPACER (9X16X25-MM THK)	
M	28	3	**239-0232**	4	STUD (M8X1.25X31-MM)	
	29	3	**249-1532**	1	HOSE-AIR INLET	
M	30	2	**249-7263**	4	BOLT (M6X1X16-MM)	
	31	2	**304-5061**	1	GASKET	
	32	2	**317-0962**	1	TUBE-TURBOCHARGER OIL	
	33	1	**320-8401**	1	PLATE-RETAINING	
	34	2	**344-5517**	1	TURBOCHARGER GP	
M	35	1	**360-9545**	1	STUD (M6X1X48-MM)	
	36	3	**363-5813**	2	CLAMP-HOSE	
	37	1	**365-4125**	1	ADAPTER	
	38	3	**366-3055**	1	ELBOW	
	39	1	**383-9577**	1	COVER-VALVE	
	40	1	**438-9362**	1	GASKET	
	41	3	**494-9569**	1	GASKET	

M - METRIC PART

485-9426 **TURBOCHARGER GP (**contd.**)** **i06921702**

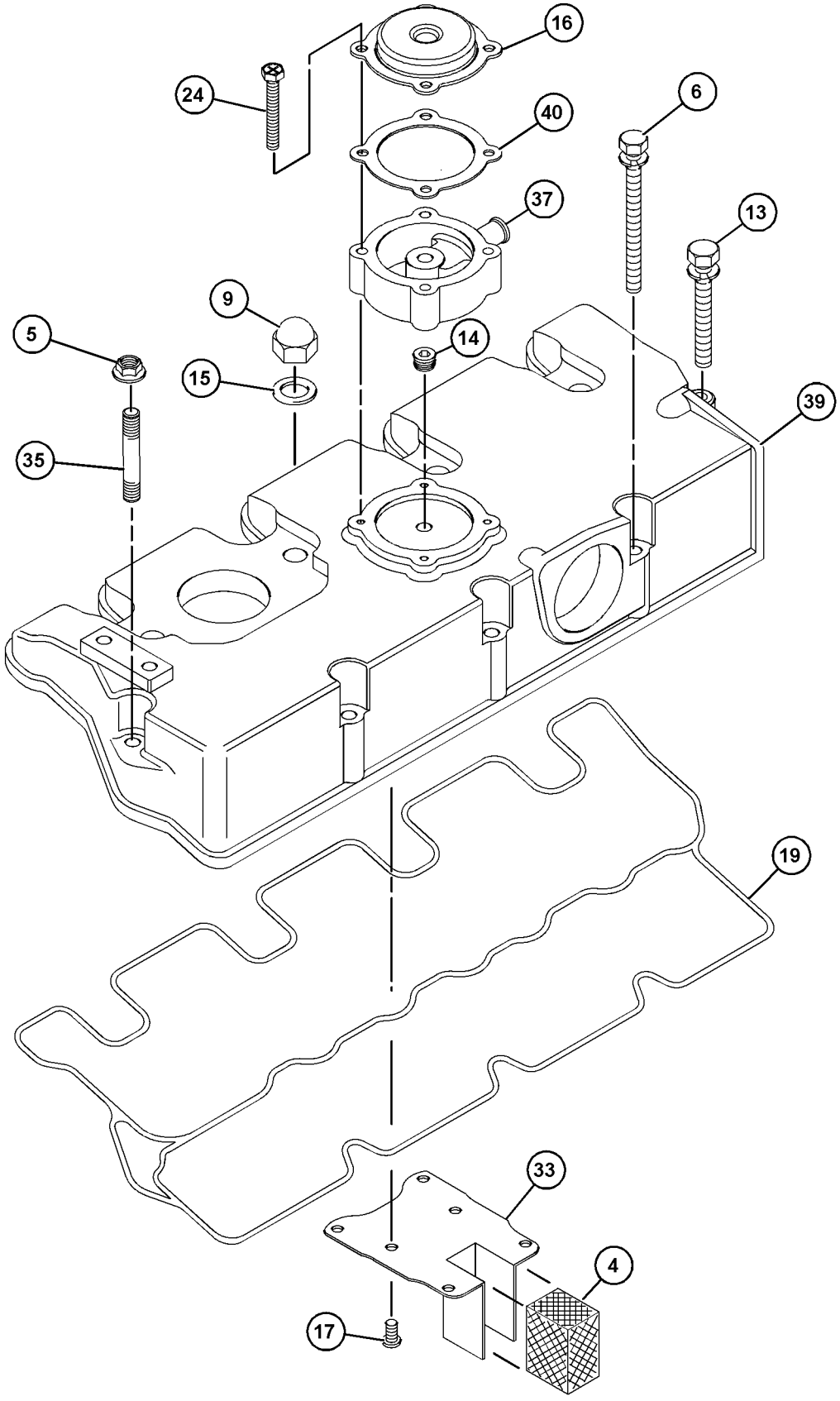

GRAPHIC #1 g06153284

485-9426 **TURBOCHARGER GP (**contd.**)** **i06921702**

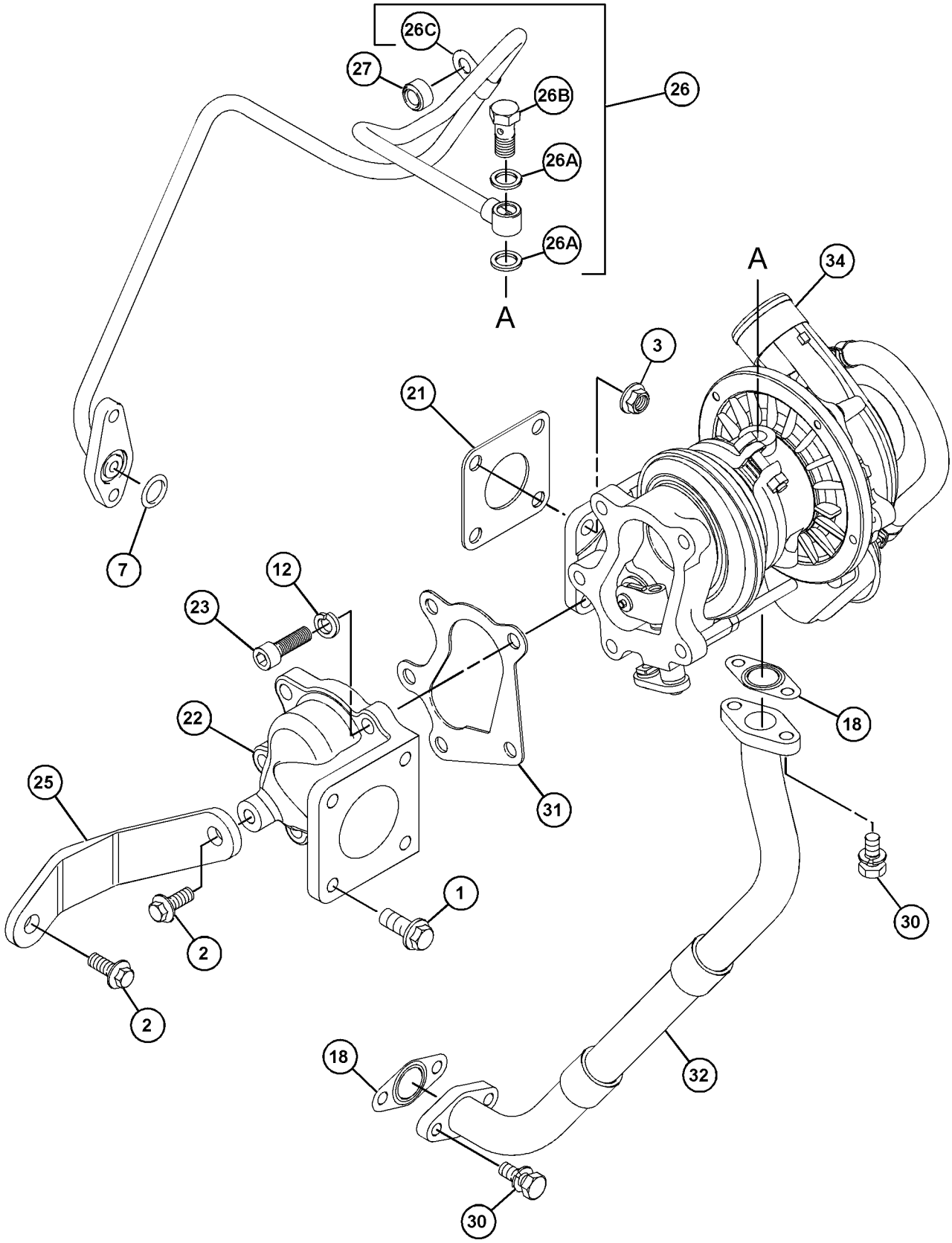

GRAPHIC #2 g06153285

485-9426 **TURBOCHARGER GP (**contd.**)** **i06921702**

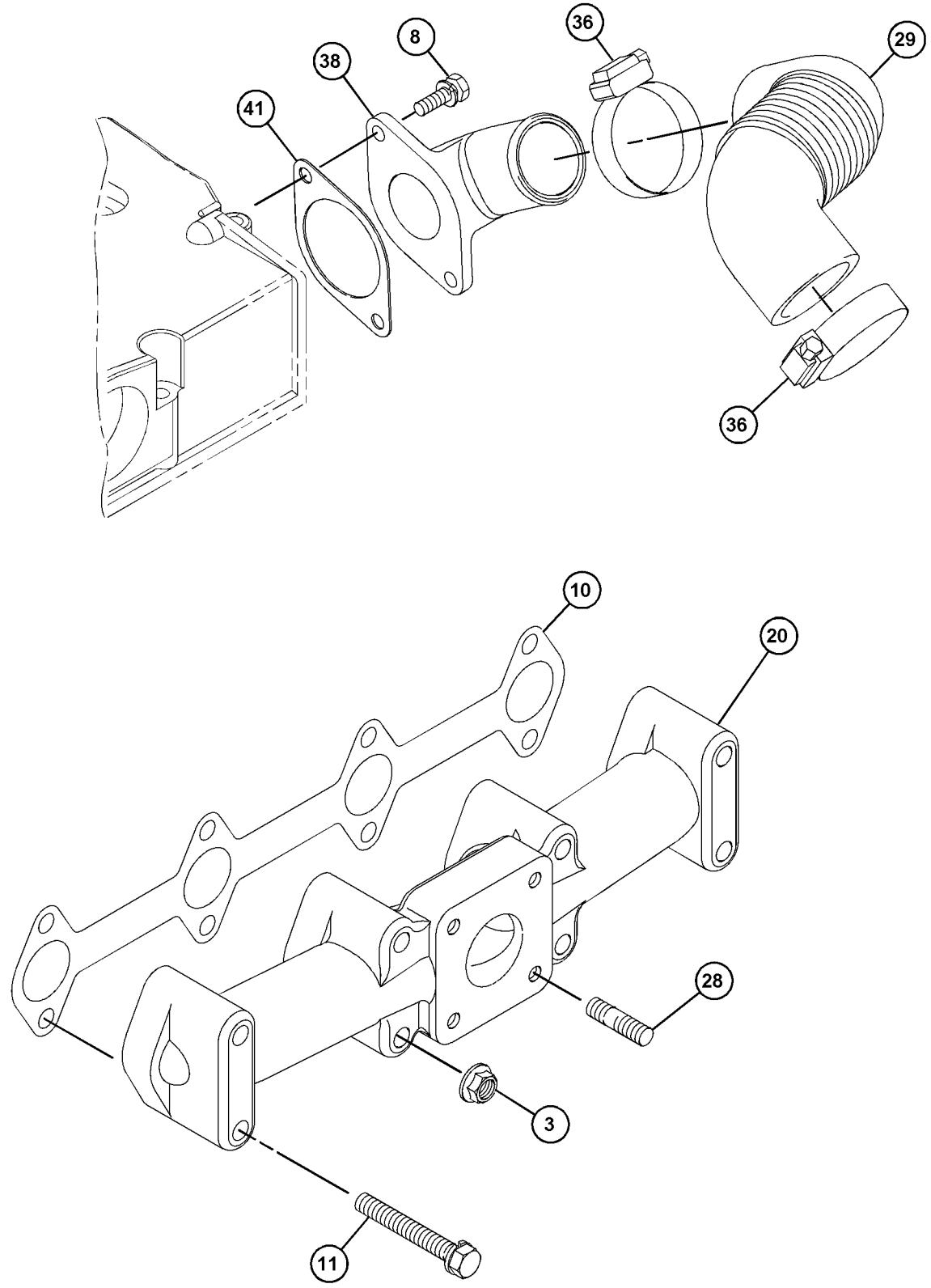

GRAPHIC #3 <END> g06153286

488-1898 TURBOCHARGER GP

SMCS-1052, 1053 **i08197274**

NOTE	REF NO	GRAPHIC REF	PART NUMBER	QTY	PART NAME 1 2 3 4 5 6 (PRODUCT LEVEL)	SEE PAGE
M	1	1	**6I-0217**	1	BOLT (M8X1.25X20-MM)	
M	2	1	**6I-0846**	6	BOLT (M6X1X14-MM)	
M	3	1	**124-3815**	2	BOLT (M8X1.25X16-MM)	
M	4	1,2	**153-5592**	8	NUT (M8X1.25-THD)	
	5	2	**153-5939**	1	STOPPER (OIL)	
M	6	2	**153-5960**	1	NUT (M6X1-THD)	
	7	2	**153-5962**	3	BOLT AS	
	8	1	**153-6853**	1	SEAL-O-RING	
	9	2	**153-7640**	2	BOLT AS	
M	10	2	**539-0439**	4	NUT (M10X1.25-THD)	
	11	2	**154-2427**	1	GASKET-EXHAUST MANIFOLD	
	12	2	**154-2428**	4	BOLT AS	
	13	1	**155-7984**	1	WASHER (8.4X16X1.6-MM THK)	
	14	1	**163-5372**	5	WASHER (8X15.4X4-MM THK)	
	15	2	**165-2140**	1	BOLT AS	
	16	2	**183-1165**	1	PLUG	
	17	2	**217-5859**	1	VALVE-BREATHER (CRANKCASE)	
	18	2	**217-5862**	6	SCREW (SELF-TAPPING)	
	19	1	**225-8533**	2	GASKET	
	20	2	**233-0695**	1	SEAL-VALVE COVER	
	21	2	**236-9987**	1	MANIFOLD-EXHAUST	
	22	1	**238-9196**	1	GASKET-TURBOCHARGER	
	23	1	**238-9198**	1	ELBOW-EXHAUST	
M	24	1	**5A-3604**	5	BOLT-SOCKET HEAD (M8X1.25X25-MM)	
M	25	2	**238-9295**	4	BOLT (M4X0.7X30-MM)	
	26	1	**239-0187**	1	BRACKET	
	27	1	**239-0228**	1	TUBE AS	
	28	1	**239-0229**	1	SPACER (8.4X15X9-MM THK)	
M	29	2	**239-0232**	4	STUD (M8X1.25X31-MM)	
	30	2	**246-4361**	4	WASHER (10.5X14X1.5-MM THK)	
	31	1	**304-5061**	1	GASKET	
	32	1	**317-0962**	1	TUBE-TURBOCHARGER OIL	
	33	2	**320-8401**	1	PLATE-RETAINING	
M	34	2	**360-9545**	1	STUD (M6X1X48-MM)	
	35	2	**365-4125**	1	ADAPTER	
	36	2	**366-3055**	1	ELBOW	
	37	2	**438-9362**	1	GASKET	
	38	2	**583-6088**	1	COVER-HEAD	
	39	2	**494-9569**	1	GASKET	
	40	1	**513-6822**	1	TURBOCHARGER AS	
F			**383-9577**	1	COVER-VALVE	

F - NOT SHOWN
M - METRIC PART

488-1898 **TURBOCHARGER GP (**contd.**)** **i08197274**

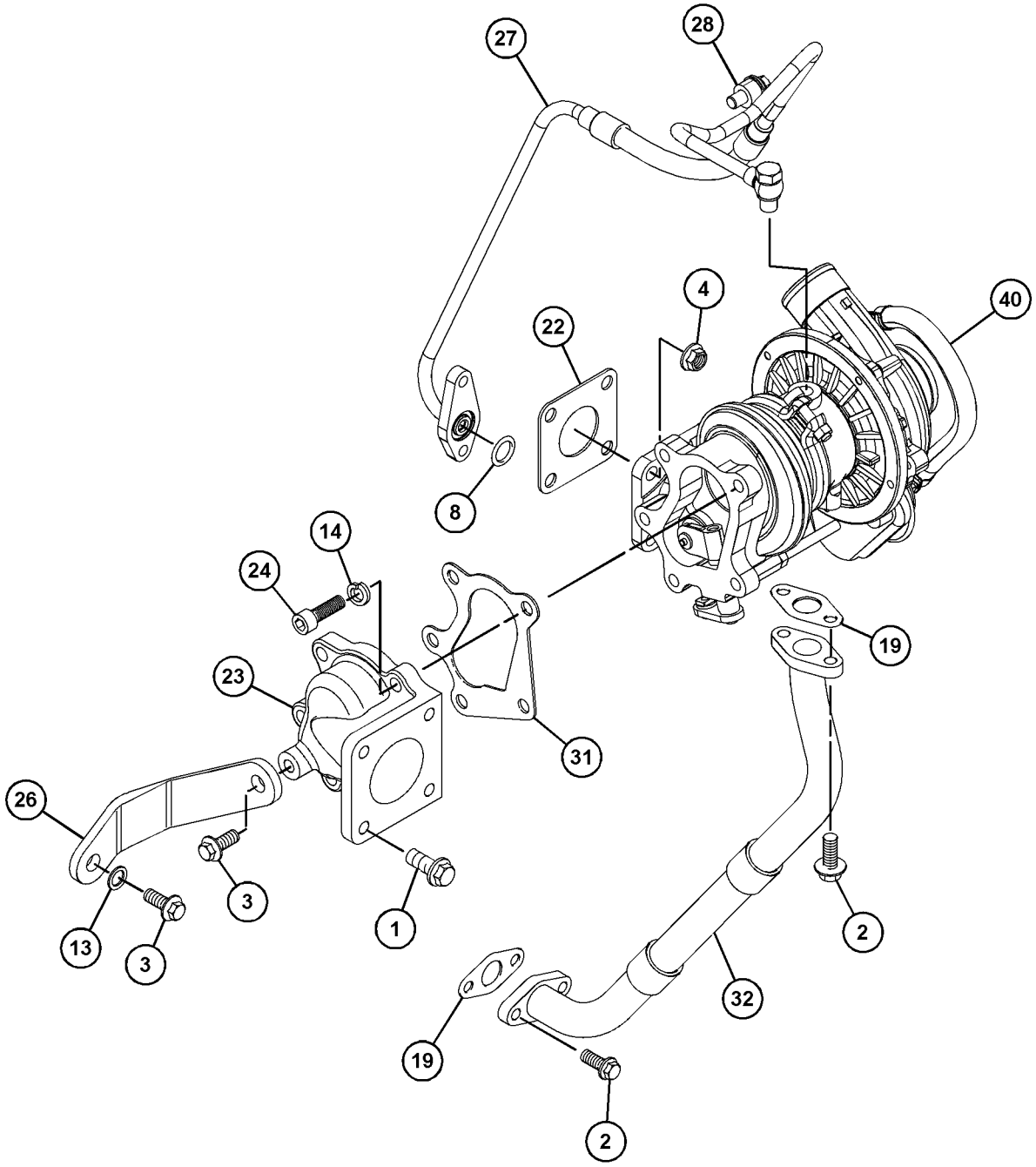

GRAPHIC #1 g06742317

488-1898 **TURBOCHARGER GP (**contd.**)** **i08197274**

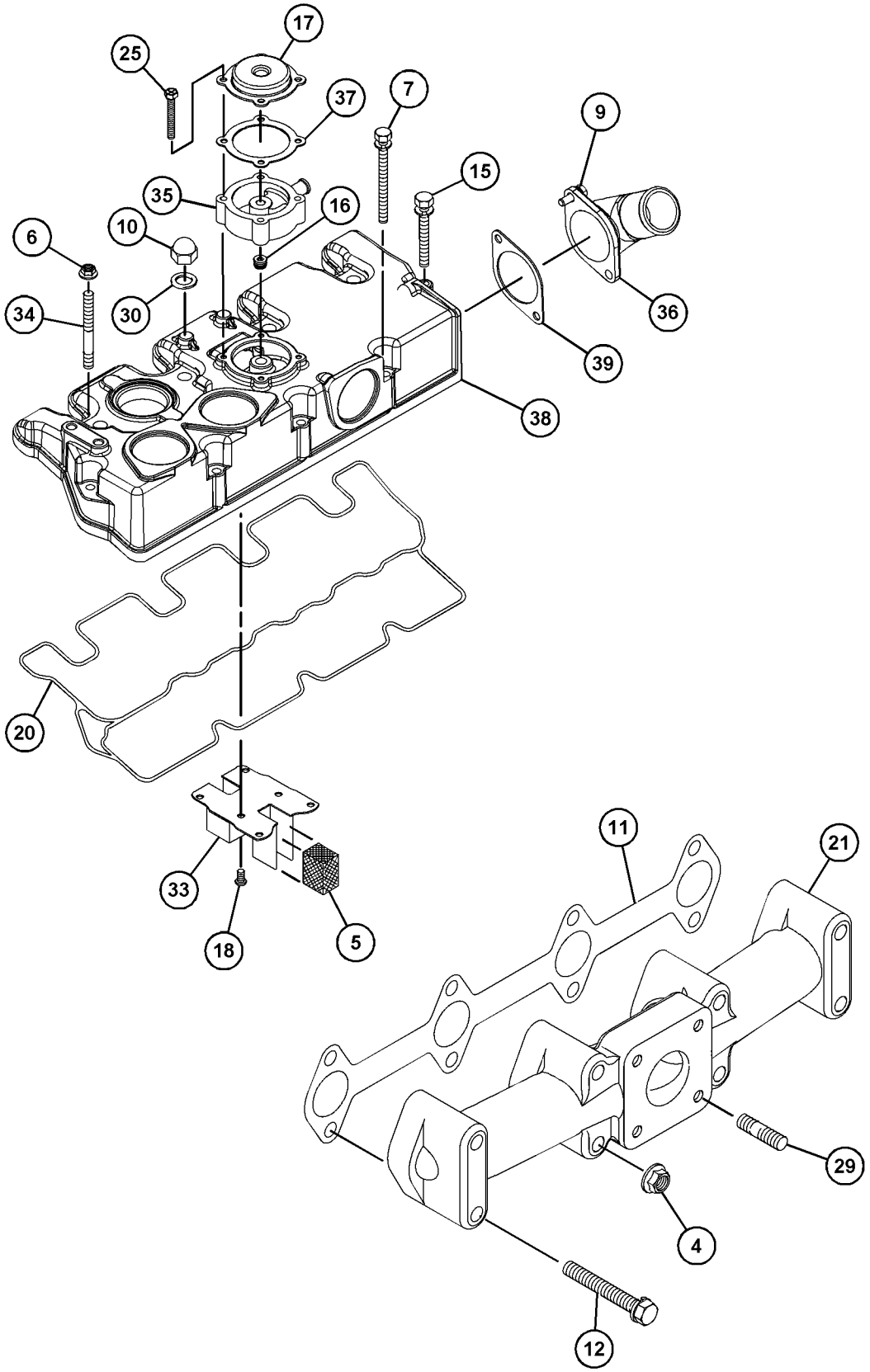

GRAPHIC #2 <END> g06742318

508-8740 TURBOCHARGER GP

PART OF 433-1380, 435-1637, 435-1638 ENGINE AR, 435-1636 ENGINE AR-PRIMARY

SMCS-1052, 1053 **i08217839**

NOTE	REF NO	GRAPHIC REF	PART NUMBER	QTY	PART NAME 1 2 3 4 5 6 (PRODUCT LEVEL)	SEE PAGE
M	1	1	**6I-0217**	1	BOLT (M8X1.25X20-MM)	
M	2	1	**6I-0846**	6	BOLT (M6X1X14-MM)	
M	3	1	**100-4458**	1	BOLT (M8X1.25X14-MM)	
M	4	1	**148-7140**	5	STUD (M8X1.25X37-MM)	
M	5	1	**153-5592**	13	NUT (M8X1.25-THD)	
	6	2	**153-5939**	1	STOPPER (OIL)	
M	7	2	**153-5960**	1	NUT (M6X1-THD)	
	8	2	**153-5962**	3	BOLT AS	
	9	1	**153-6853**	1	SEAL-O-RING	
	10	2	**153-7640**	2	BOLT AS	
M	11	2	**539-0439**	4	NUT (M10X1.25-THD)	
	12	1	**8F-7242**	5	WASHER (8.7X15.9X1.6-MM THK)	
	13	1	**154-2427**	1	GASKET-EXHAUST MANIFOLD	
	14	1	**154-2428**	4	BOLT AS	
	15	1	**155-7984**	3	WASHER (8.4X16X1.6-MM THK)	
	16	1	**163-5372**	5	WASHER (8X15.4X4-MM THK)	
	17	2	**165-2140**	1	BOLT AS	
	18	2	**183-1165**	1	PLUG	
	19	2	**217-5859**	1	VALVE-BREATHER (CRANKCASE)	
	20	2	**217-5862**	6	SCREW (SELF-TAPPING)	
	21	1	**225-8533**	2	GASKET	
	22	2	**233-0695**	1	SEAL-VALVE COVER	
	23	1	**236-9987**	1	MANIFOLD-EXHAUST	
	24	1	**238-9196**	1	GASKET-TURBOCHARGER	
M	25	2	**238-9295**	4	BOLT (M4X0.7X30-MM)	
	26	1	**239-0228**	1	TUBE AS	
	26A	1	**225-8526**	2	WASHER (10.4X13.75X1.37-MM THK)	
	26B	1	**239-0169**	1	BOLT-SPECIAL (BANJO)	
	26C	1	**317-0961**	2	CLIP	
	27	1	**239-0229**	1	SPACER (8.4X15X9-MM THK)	
M	28	1	**239-0232**	4	STUD (M8X1.25X31-MM)	
	29	2	**246-4361**	4	WASHER (10.5X14X1.5-MM THK)	
	30	2	**249-1532**	1	HOSE-AIR INLET	
	31	1	**304-5061**	1	GASKET	
	32	1	**317-0962**	1	TUBE-TURBOCHARGER OIL	
	33	2	**320-8401**	1	PLATE-RETAINING	
M	34	2	**360-9545**	1	STUD (M6X1X48-MM)	
	35	2	**363-5813**	2	CLAMP-HOSE	
	36	2	**365-4125**	1	ADAPTER	
	37	2	**366-3055**	1	ELBOW	
	38	2	**438-9362**	1	GASKET	
	39	2	**583-6088**	1	COVER-HEAD	
	41	2	**494-9569**	1	GASKET	
R	42	1	**513-6823**	1	TURBOCHARGER AS	

M - METRIC PART
R - REMANUFACTURED PART MAY BE AVAILABLE

508-8740 **TURBOCHARGER GP (**contd.**)** **i08217839**

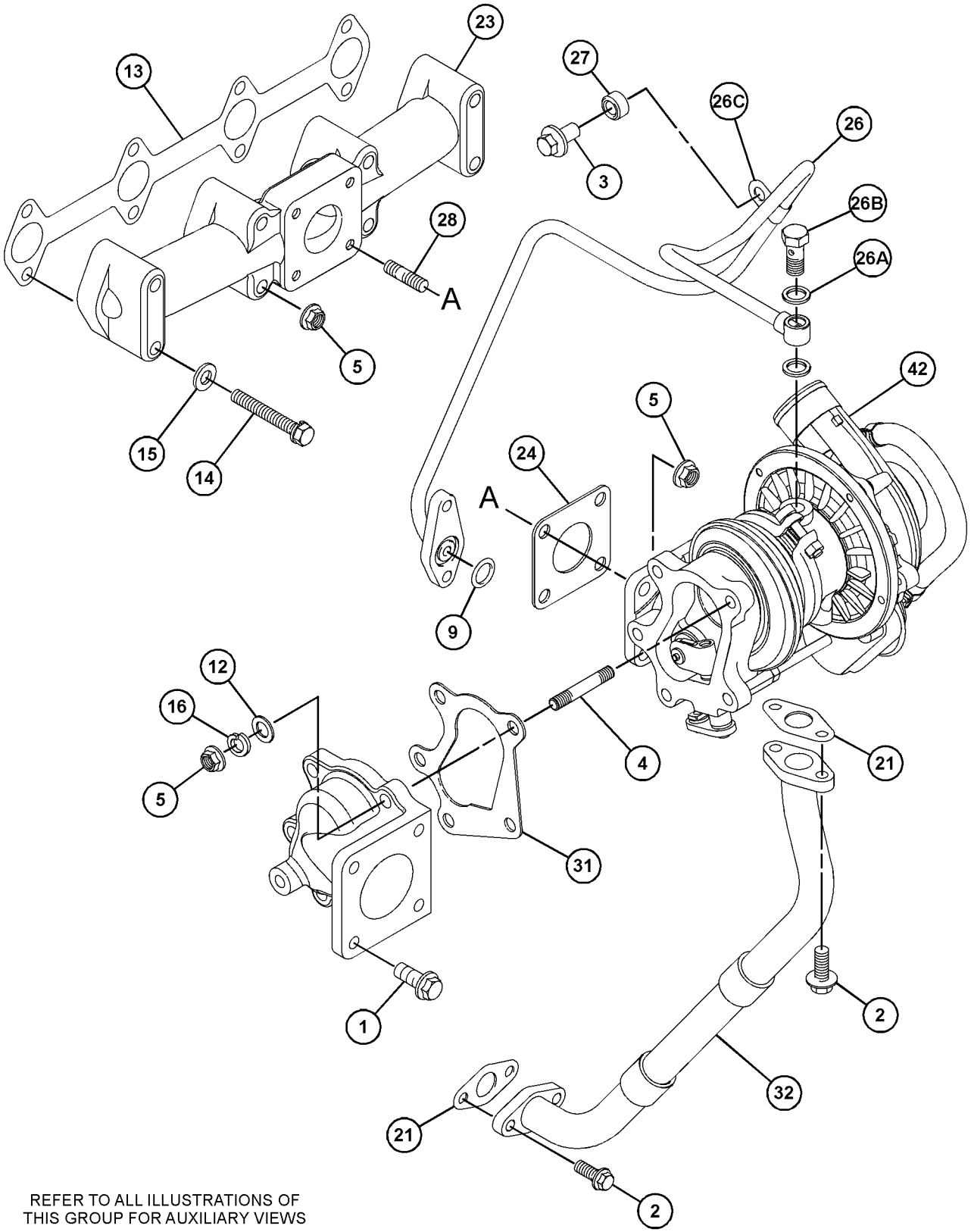

REFER TO ALL ILLUSTRATIONS OF
THIS GROUP FOR AUXILIARY VIEWS

GRAPHIC #1 g06209533

508-8740 **TURBOCHARGER GP (**contd.**)** **i08217839**

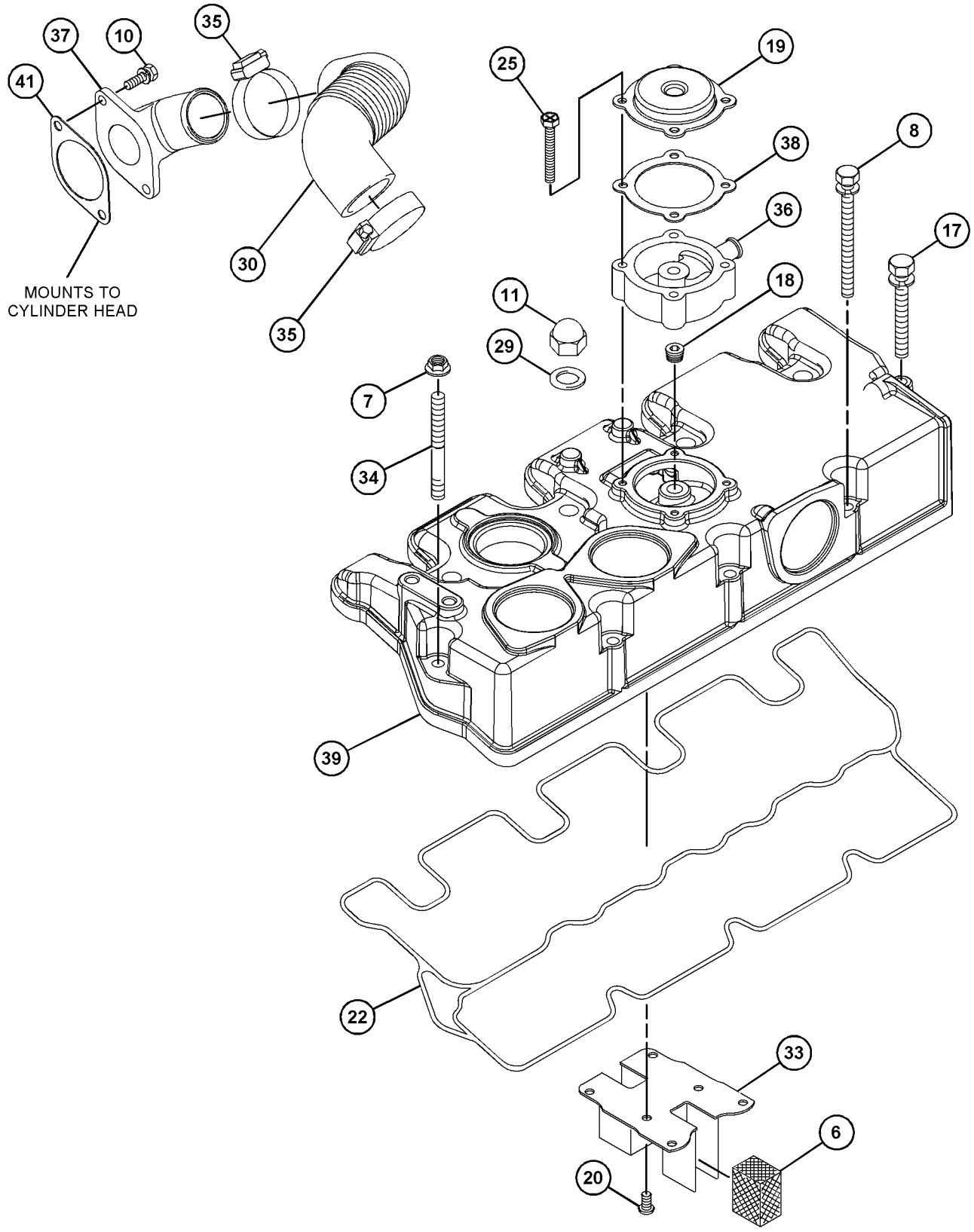

GRAPHIC #2 <END> g06690723

600-5115 TURBOCHARGER GP

PART OF 433-1380 ENGINE AR, 435-1636, 587-9328 ENGINE AR-PRIMARY

SMCS-1052, 1053 **i10402982**

NOTE	REF NO	GRAPHIC REF	PART NUMBER	QTY	PART NAME 1 2 3 4 5 6 (PRODUCT LEVEL)	SEE PAGE
	1	1	**246-4361**	4	WASHER (10.5X14X1.5-MM THK)	
	2	1	**363-5813**	2	CLAMP-HOSE	
M	3	1	**153-5592**	4	NUT (M8X1.25-THD)	
M	4	1	**153-5960**	1	NUT (M6X1-THD)	
	5	1	**153-5962**	3	BOLT AS	
	6	1	**153-6853**	1	SEAL-O-RING	
	7	1	**154-2427**	1	GASKET-EXHAUST MANIFOLD	
	8	1	**154-2428**	4	BOLT AS	
	9	1	**165-2140**	1	BOLT AS	
M	10	1	**599-4957**	4	STUD (M8X1.25X71-MM)	
	11	1	**225-8533**	1	GASKET	
	12	1	**239-0228**	1	TUBE AS	
	12A	1	**225-8526**	2	WASHER (10.4X13.75X1.37-MM THK)	
	12B	1	**298-4543**	1	BOLT	
	12C	1	**317-0961**	2	CLIP	
	13	1	**239-0229**	1	SPACER (8.4X15X9-MM THK)	
	14	1	**249-1532**	1	HOSE-AIR INLET	
M	15	1	**360-9545**	1	STUD (M6X1X48-MM)	
M	16	1	**539-0439**	4	NUT (M10X1.25-THD)	
Y	17	1	*601-0472*	1	TURBOCHARGER GP	676
Y	18	1	*601-0474*	1	COVER GP-CYLINDER HEAD	188
M	19	1	**6I-0217**	1	BOLT (M8X1.25X20-MM)	
M	20	1	**6I-0846**	2	BOLT (M6X1X14-MM)	

M - METRIC PART
Y - SEPARATE ILLUSTRATION

600-5115 **TURBOCHARGER GP (**contd.**)** **i10402982**

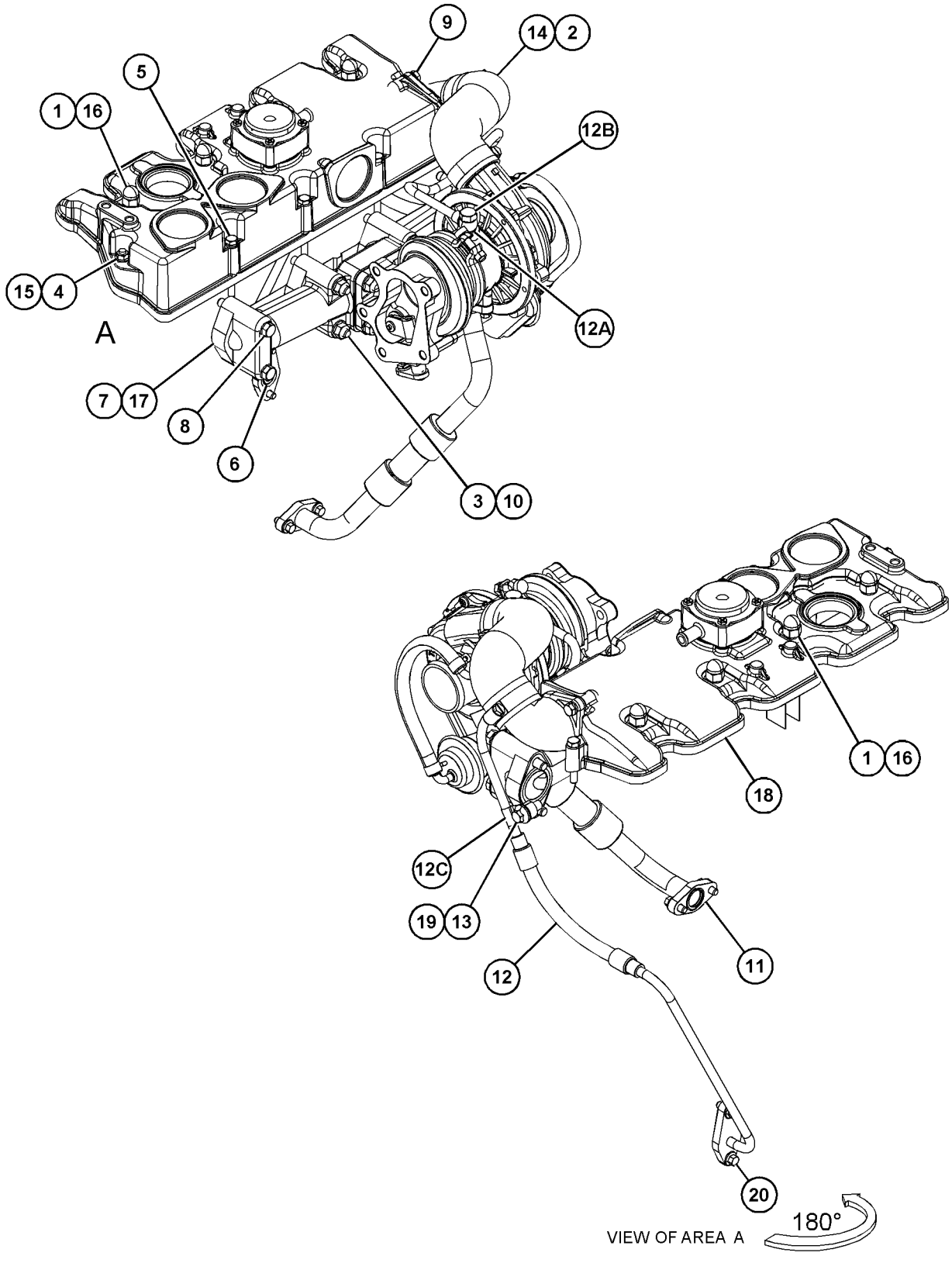

GRAPHIC #1 <END> g06789924

600-5117 TURBOCHARGER GP

PART OF 610-7721 ENGINE AR-PRIMARY

SMCS-1052, 1053 **i10686030**

NOTE	REF NO	GRAPHIC REF	PART NUMBER	QTY	PART NAME 1 2 3 4 5 6 (PRODUCT LEVEL)	SEE PAGE
	1	1	**246-4361**	4	WASHER (10.5X14X1.5-MM THK)	
	2	1	**363-5813**	2	CLAMP-HOSE	
M	3	1	**178-3336**	4	NUT-HEX FLANGE (M8X1.25-THD)	
M	4	1	**099-6418**	1	NUT (M6X1-THD)	
	5	1	**153-5962**	3	BOLT AS	
	6	1	**153-6853**	1	SEAL-O-RING	
	7	1	**154-2427**	1	GASKET-EXHAUST MANIFOLD	
	8	1	**154-2428**	4	BOLT AS	
	9	1	**165-2140**	1	BOLT AS	
M	10	1	**599-4957**	4	STUD (M8X1.25X71-MM)	
	11	1	**225-8533**	1	GASKET	
	12	1	**239-0229**	2	SPACER (8.4X15X9-MM THK)	
	13	1	**249-1532**	1	HOSE-AIR INLET	
	14	1	**341-6641**	1	CONNECTION GP-OIL	
	14A	1	**225-8526**	2	WASHER (10.4X13.75X1.37-MM THK)	
	14B	1	**317-0960**	1	BOLT-SPECIAL (BANJO)	
	14C	1	**317-0961**	1	CLIP	
	14D	1	**596-4209**	1	EYE	
M	15	1	**360-9545**	1	STUD (M6X1X48-MM)	
M	16	1	**539-0439**	4	NUT (M10X1.25-THD)	
Y	17	1	*601-0474*	1	COVER GP-CYLINDER HEAD	188
Y	18	1	*601-0476*	1	TURBOCHARGER GP	677
M	19	1	**6I-0254**	1	BOLT (M8X1.25X30-MM)	
M	20	1	**6I-0846**	2	BOLT (M6X1X14-MM)	

M - METRIC PART
Y - SEPARATE ILLUSTRATION

600-5117 **TURBOCHARGER GP (**contd.**)** **i10686030**

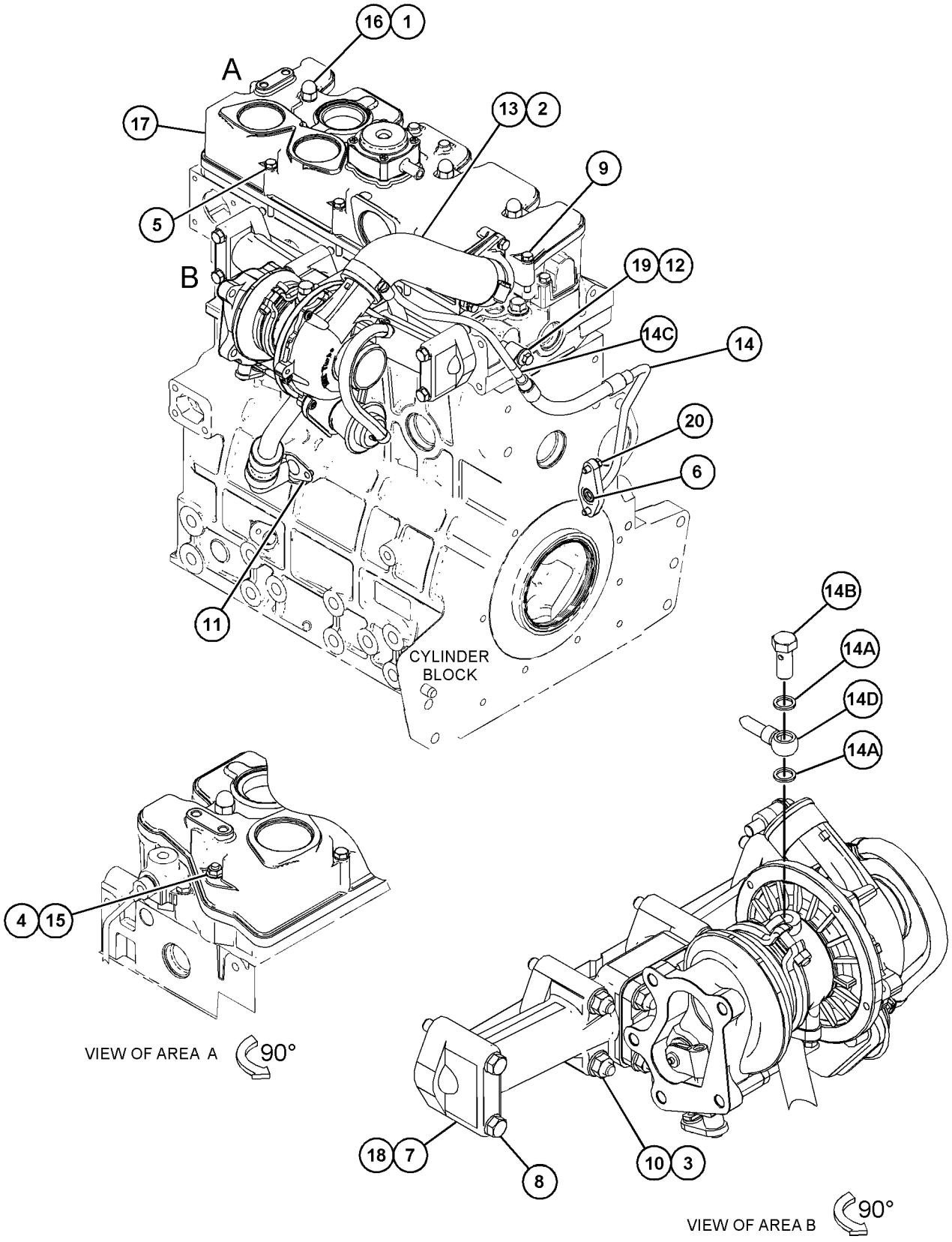

GRAPHIC #1 <END> g07519464

601-0472 TURBOCHARGER GP

PART OF 600-5115, 607-1257 TURBOCHARGER GP

SMCS-1052, 1053 **i08578563**

NOTE	REF NO	GRAPHIC REF	PART NUMBER	QTY	PART NAME 1 2 3 4 5 6 (PRODUCT LEVEL)	SEE PAGE
M	1	1	**153-5592**	4	NUT (M8X1.25-THD)	
	2	1	**225-8533**	1	GASKET	
	3	1	**236-9987**	1	MANIFOLD-EXHAUST	
	4	1	**238-9196**	1	GASKET-TURBOCHARGER	
M	5	1	**239-0232**	4	STUD (M8X1.25X31-MM)	
	6	1	**304-5061**	1	GASKET	
	7	1	**317-0962**	1	TUBE-TURBOCHARGER OIL	
R	8	1	**513-6823**	1	TURBOCHARGER AS	
M	9	1	**6I-0846**	4	BOLT (M6X1X14-MM)	

M - METRIC PART
R - REMANUFACTURED PART MAY BE AVAILABLE

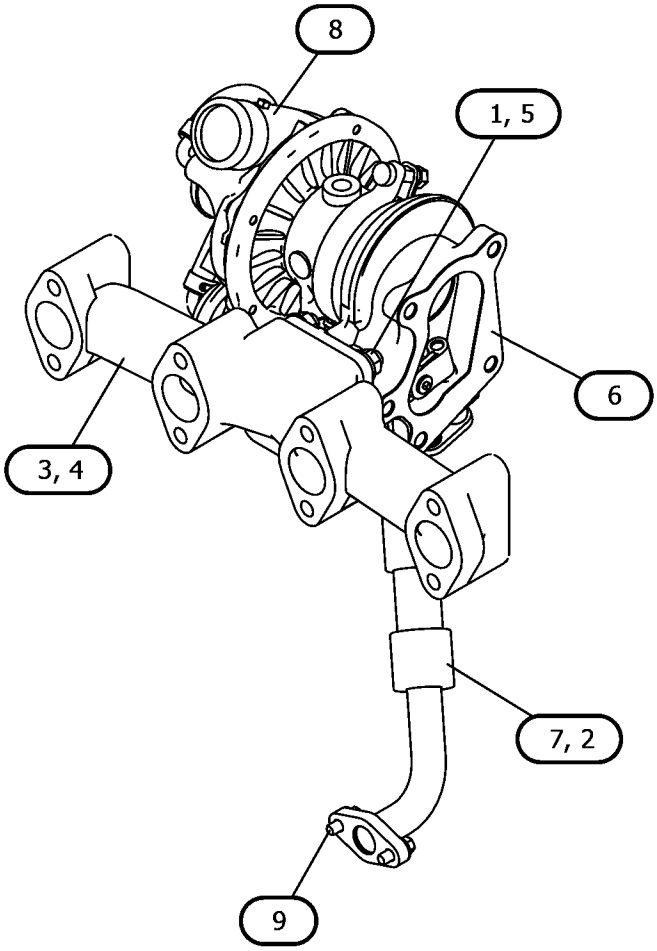

GRAPHIC #1 <END> g07499029

601-0476 TURBOCHARGER GP

PART OF 600-5117 TURBOCHARGER GP

SMCS-1052, 1053 **i10686034**

NOTE	REF NO	GRAPHIC REF	PART NUMBER	QTY	PART NAME 1 2 3 4 5 6 (PRODUCT LEVEL)	SEE PAGE
M	1	1	**153-5592**	4	NUT (M8X1.25-THD)	
	2	1	**225-8533**	1	GASKET	
	3	1	**236-9987**	1	MANIFOLD-EXHAUST	
	4	1	**238-9196**	1	GASKET-TURBOCHARGER	
M	5	1	**239-0232**	4	STUD (M8X1.25X31-MM)	
	6	1	**304-5061**	1	GASKET	
	7	1	**317-0962**	1	TUBE-TURBOCHARGER OIL	
R	8	1	**513-6823**	1	TURBOCHARGER AS	
M	9	1	**6I-0846**	4	BOLT (M6X1X14-MM)	

M - METRIC PART
R - REMANUFACTURED PART MAY BE AVAILABLE

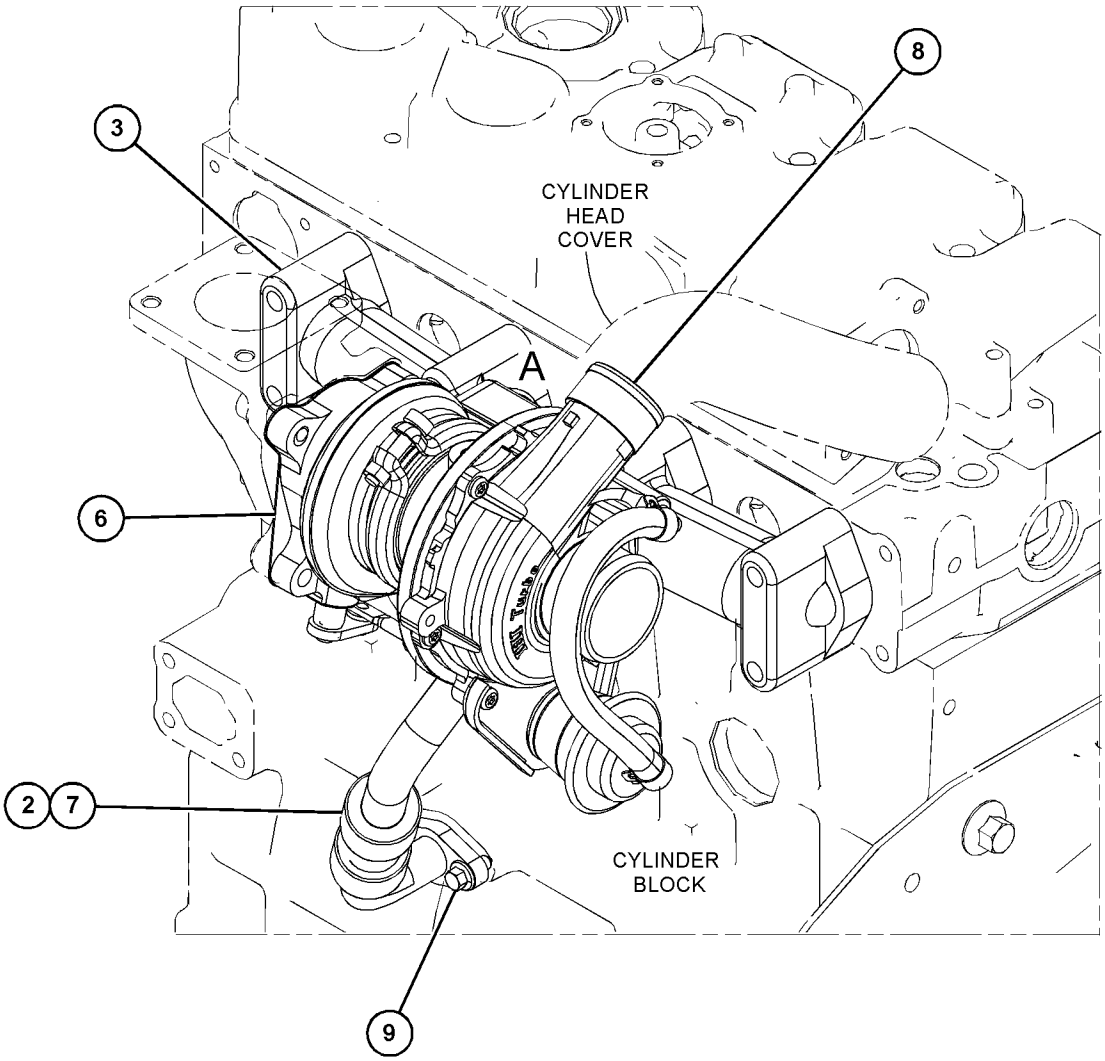

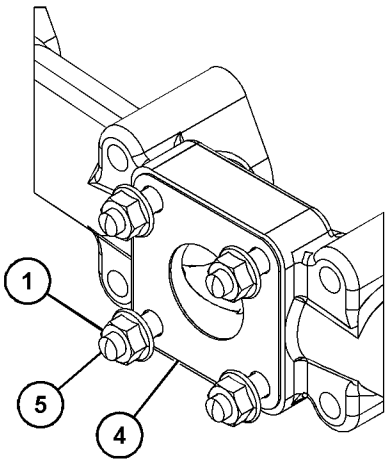

VIEW OF AREA A
(PARTS REMOVED FOR CLARITY)

GRAPHIC #1 <END> g06770000

607-1257 TURBOCHARGER GP

S/N: G7L27560-UP

SMCS-1052, 1053 **i10726951**

NOTE	REF NO	GRAPHIC REF	PART NUMBER	QTY	PART NAME 1 2 3 4 5 6 (PRODUCT LEVEL)	SEE PAGE
	1	1	**153-6853**	1	SEAL-O-RING	
	2	1	**363-5813**	2	CLAMP-HOSE	
M	3	1	**153-5592**	4	NUT (M8X1.25-THD)	
M	4	1	**153-5960**	1	NUT (M6X1-THD)	
	5	1	**153-5962**	3	BOLT AS	
	6	1	**246-4361**	4	WASHER (10.5X14X1.5-MM THK)	
	7	1	**154-2427**	1	GASKET-EXHAUST MANIFOLD	
	8	1	**154-2428**	4	BOLT AS	
	9	1	**165-2140**	1	BOLT AS	
M	10	1	**599-4957**	4	STUD (M8X1.25X71-MM)	
	11	1	**225-8533**	1	GASKET	
	12	1	**239-0228**	1	TUBE AS	
	12A	1	**225-8526**	2	WASHER (10.4X13.75X1.37-MM THK)	
	12B	1	**298-4543**	1	BOLT	
	12C	1	**317-0961**	2	CLIP	
	13	1	**239-0229**	1	SPACER (8.4X15X9-MM THK)	
	14	1	**249-1532**	1	HOSE-AIR INLET	
M	15	1	**360-9545**	1	STUD (M6X1X48-MM)	
M	16	1	**539-0439**	4	NUT (M10X1.25-THD)	
Y	17	1	*601-0472*	1	TURBOCHARGER GP	676
Y	18	1	*607-1324*	1	COVER GP-CYLINDER HEAD	190
M	19	1	**6I-0217**	1	BOLT (M8X1.25X20-MM)	
M	20	1	**6I-0846**	2	BOLT (M6X1X14-MM)	

M - METRIC PART
Y - SEPARATE ILLUSTRATION

607-1257 **TURBOCHARGER GP (**contd.**)** **i10726951**

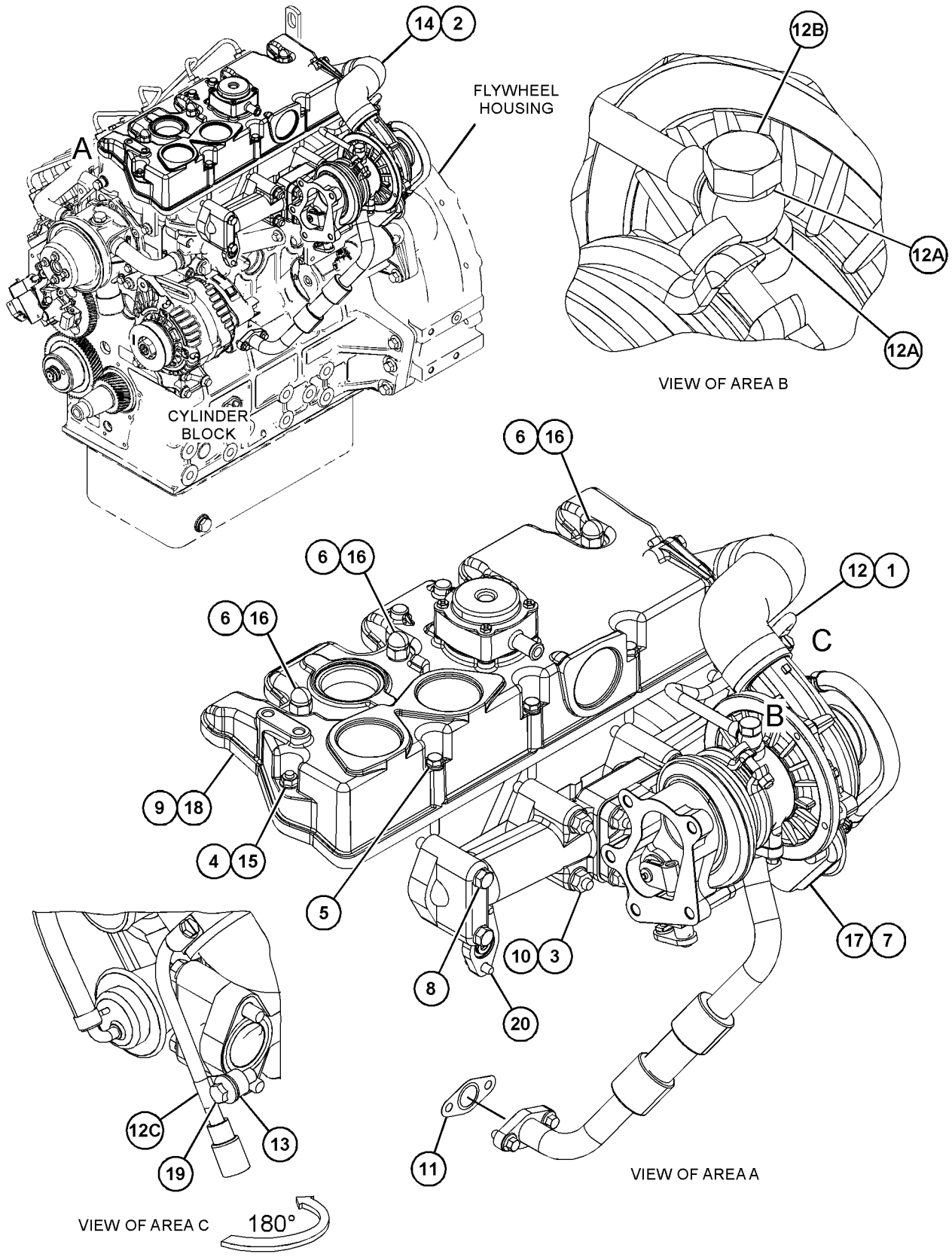

GRAPHIC #1 <END> g07973800

317-7187 CONTROL GP-GOVERNOR

PART OF 435-1645 CYLINDER BLOCK GP-LONG

SMCS-1265, 1276 **i07005638**

NOTE	REF NO	GRAPHIC REF	PART NUMBER	QTY	PART NAME 1 2 3 4 5 6 (PRODUCT LEVEL)	SEE PAGE
M	1	1	**5C-2890**	1	NUT (M6X1-THD)	
	2	1	**139-5511**	1	CAP (TAMPER RESISTANT)	
M	3	1	**153-5592**	1	NUT (M8X1.25-THD)	
	4	1	**153-6415**	2	WASHER (SEAL)	
	5	1	**153-7983**	1	PIN	
	6	1	**095-1574**	1	SEAL-O-RING	
	7	1	**154-2715**	1	WASHER	
M	8	1	**369-4486**	2	BOLT (M6X1X35-MM)	
M	9	1	**162-2207**	1	NUT (M6X1-THD)	
M	10	1	**106-8916**	4	BOLT (M6X1X16-MM)	
	11	1	**217-7115**	1	CAP (TAMPER RESISTANT)	
	12	1	**335-5578**	1	BRACKET	
	13	1	**423-7724**	1	GASKET	
	14	1	**308-1882**	1	SPRING	
M	15	1	**308-1889**	1	NUT (M10X1.25-THD)	
M	16	1	**308-1892**	1	NUT (M6X1-THD)	
	17	1	**308-1897**	2	RING	
	18	1	**330-9189**	1	PLUG	
	19	1	**308-4266**	1	SHAFT	
	20	1	**390-3731**	1	SHAFT	
M	21	1	**495-0737**	1	BOLT (M6X0.5X19.5-MM)	
	22	1	**311-0655**	1	SPRING	
	23	1	**313-5832**	1	BOLT AS	
	23A	1	**153-7987**	1	WASHER (9.2X17X1.8-MM THK)	
M	23B	1	**191-9297**	1	NUT (M10X1.25-THD)	
	23C	1	**313-5833**	1	SPRING	
	24	1	**317-7195**	1	SPRING	
	25	1	**319-3252**	1	SENSOR AS-SPEED (ENGINE TIMING)	
	26	1	**321-4249**	1	NUT	
	27	1	**425-7065**	1	CAP-TAMPER PROOF	
	28	1	**334-0732**	1	ARM AS (FRONT HOUSING)	
	29	1	**390-3729**	1	LEVER-CONTROL	
	30	1	**322-7493**	1	LEVER AS-CONTROL	
	31	1	**336-2965**	1	SPRING	
	32	1	**308-1875**	1	SEAL-O-RING	

M - METRIC PART

317-7187 **CONTROL GP-GOVERNOR (**contd.**)** **i07005638**

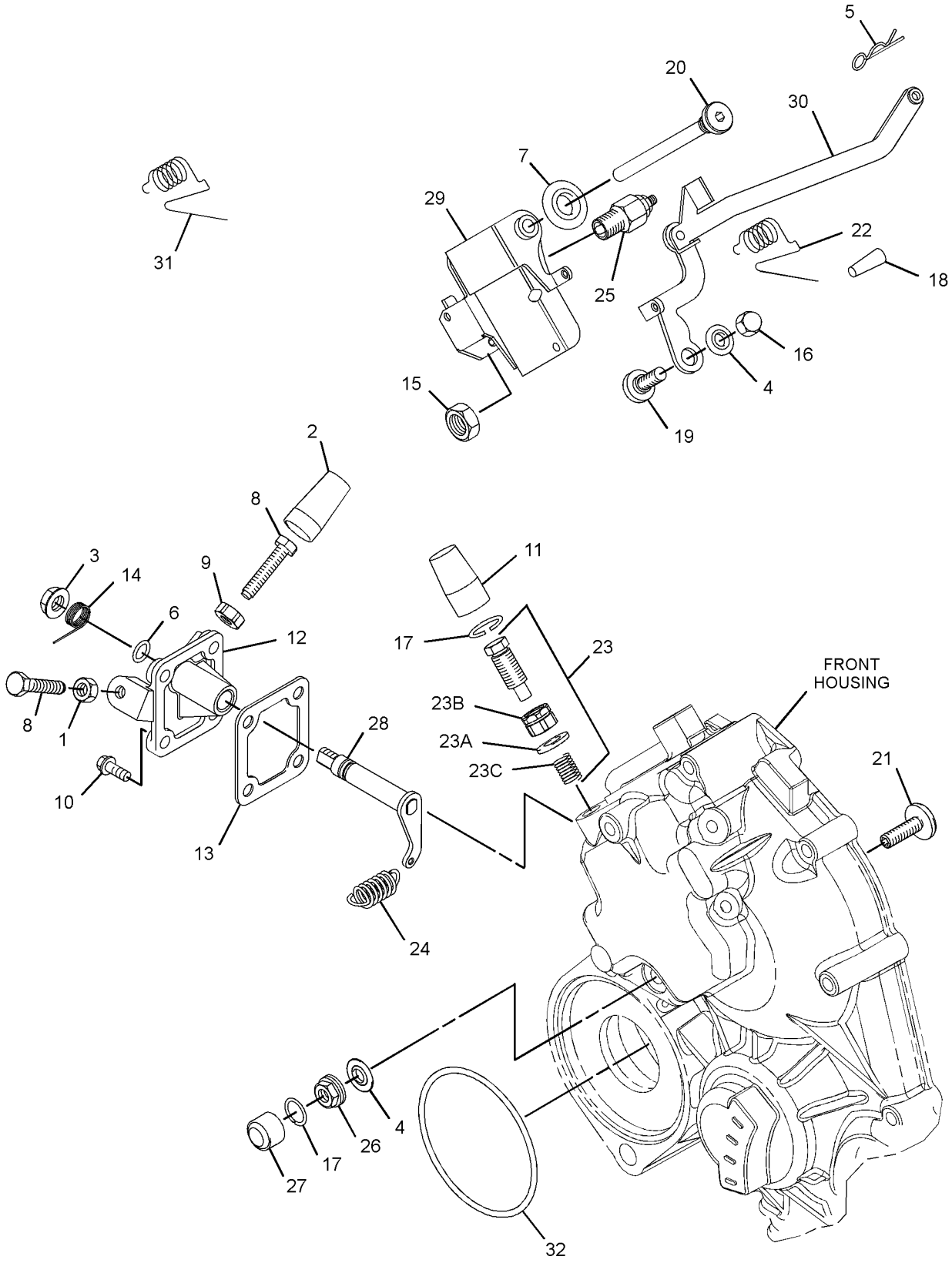

GRAPHIC #1 <END> g06214767

317-7187 CONTROL GP-GOVERNOR

PART OF 435-1645 CYLINDER BLOCK GP-LONG

SMCS-1265, 1276 **i08312604**

NOTE	REF NO	GRAPHIC REF	PART NUMBER	QTY	PART NAME 1 2 3 4 5 6 (PRODUCT LEVEL)	SEE PAGE
M	1	1	**5C-2890**	1	NUT (M6X1-THD)	
	2	1	**139-5511**	1	CAP (TAMPER RESISTANT)	
M	3	1	**153-5592**	1	NUT (M8X1.25-THD)	
	4	1	**153-6415**	2	WASHER (SEAL)	
	5	1	**153-7983**	1	PIN	
	6	1	**095-1574**	1	SEAL-O-RING	
	7	1	**154-2715**	1	WASHER	
M	8	1	**7X-2533**	2	BOLT (M6X1X35-MM)	
M	9	1	**162-2207**	1	NUT (M6X1-THD)	
M	10	1	**106-8916**	4	BOLT (M6X1X16-MM)	
	11	1	**217-7115**	1	CAP (TAMPER RESISTANT)	
	12	1	**335-5578**	1	BRACKET	
	13	1	**423-7724**	1	GASKET	
	14	1	**308-1882**	1	SPRING	
M	15	1	**308-1889**	1	NUT (M10X1.25-THD)	
M	16	1	**248-2714**	1	NUT-ACORN (M6X1-THD)	
C	17	1	**308-1897**	1	RING	
	18	1	**330-9189**	1	PLUG	
	19	1	**308-4266**	1	SHAFT	
	20	1	**390-3731**	1	SHAFT	
M	21	1	**495-0737**	1	BOLT (M6X0.5X19.5-MM)	
	22	1	**311-0655**	1	SPRING	
	23	1	**313-5832**	1	BOLT AS	
	23A	1	**153-7987**	1	WASHER (9.2X17X1.8-MM THK)	
M	23B	1	**191-9297**	1	NUT (M10X1.25-THD)	
	23C	1	**313-5833**	1	SPRING	
	24	1	**317-7195**	1	SPRING	
	25	1	**319-3252**	1	SENSOR AS-SPEED (ENGINE TIMING)	
M		1	**155-8076**	1	NUT (M4X0.4-THD)	
C	26	1	**502-9478**	1	NUT (TAMPER RESISTANT)	
C	27	1	**503-9707**	1	CAP	
	28	1	**334-0732**	1	ARM AS (FRONT HOUSING)	
	29	1	**580-0398**	1	LEVER AS-CONTROL	
	30	1	**322-7493**	1	LEVER AS-CONTROL (FLOATING)	
		1	**154-1400**	1	PIN	
	31	1	**336-2965**	1	SPRING	
	32	1	**308-1875**	1	SEAL-O-RING	
C	33	1	**503-9731**	1	SHROUD	
C	34	1	**502-5421**	1	PIN	

C - CHANGE FROM PREVIOUS TYPE
M - METRIC PART

317-7187 **CONTROL GP-GOVERNOR (**contd.**)** **i08312604**

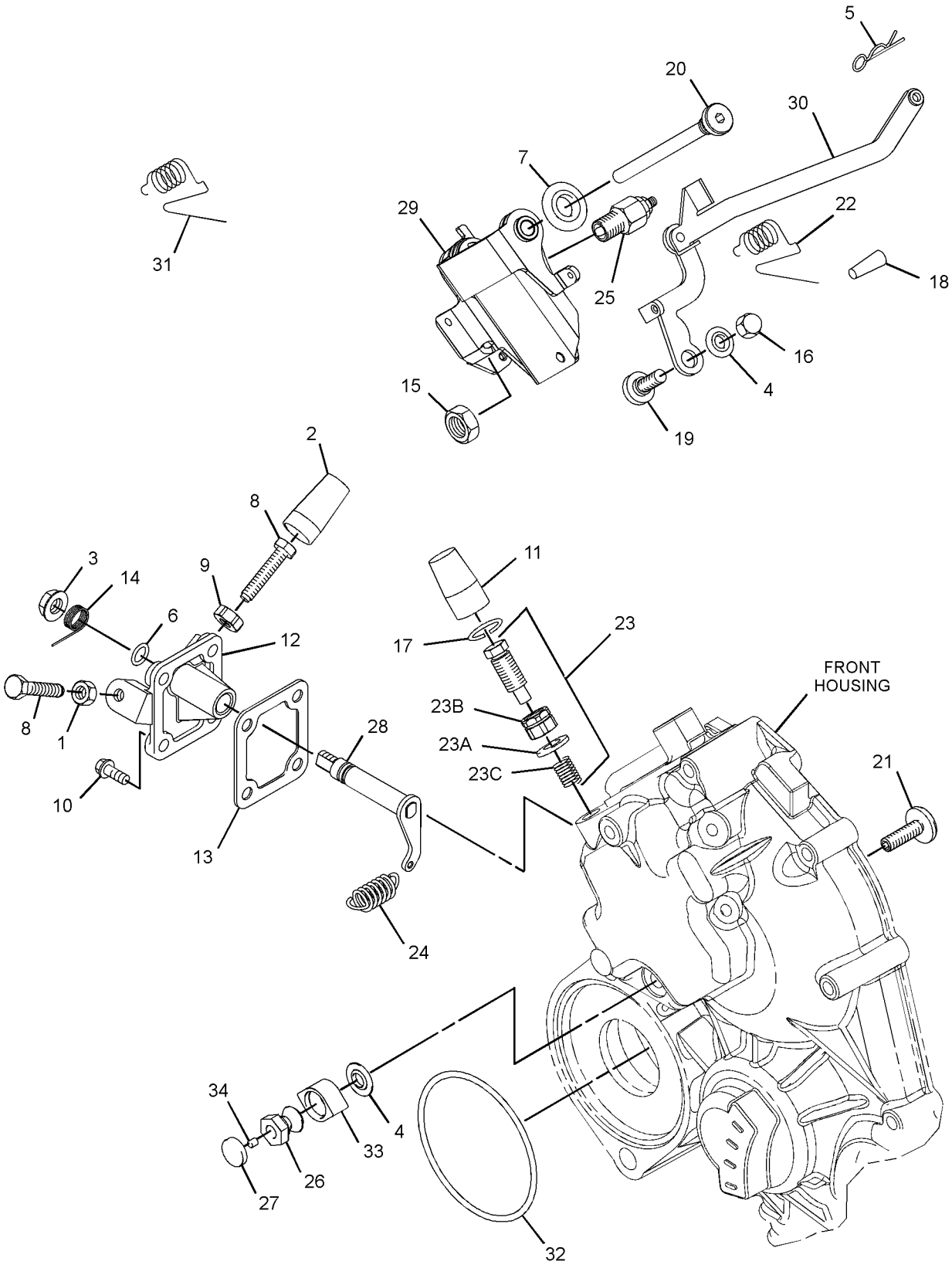

GRAPHIC #1 <END> g06754782

319-3250 CONTROL GP-GOVERNOR

PART OF 325-9475, 332-1363, 465-2207 CONTROL GP-GOVERNOR, 309-6718 HOUSING GP-FRONT, 598-5603 LEVER GP-CONTROL

SMCS-1265, 1276 **i08589035**

NOTE	REF NO	GRAPHIC REF	PART NUMBER	QTY	PART NAME 1 2 3 4 5 6 (PRODUCT LEVEL)	SEE PAGE
M	1	1	**5C-8312**	1	NUT (M4X0.7-THD)	

M - METRIC PART

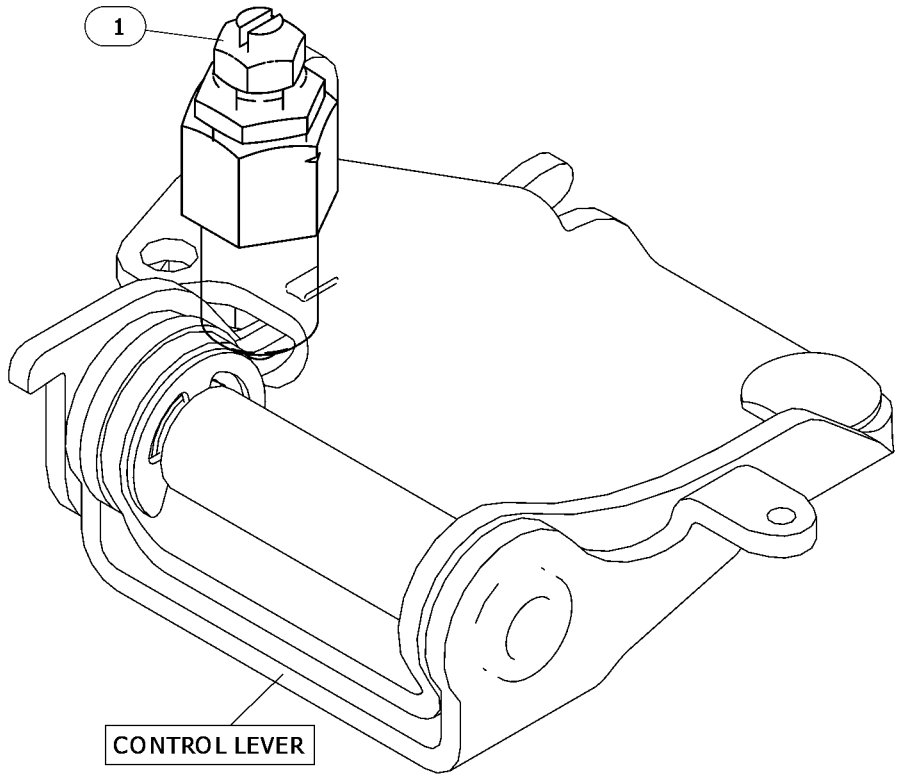

GRAPHIC #1 <END> g06637155

325-5662 CONTROL GP-GOVERNOR

SMCS-1265, 1276 **i07577970**

NOTE	REF NO	GRAPHIC REF	PART NUMBER	QTY	PART NAME 1 2 3 4 5 6 (PRODUCT LEVEL)	SEE PAGE
M	1	1	**5C-2890**	1	NUT (M6X1-THD)	
	2	1	**139-5511**	1	CAP (TAMPER RESISTANT)	
M	3	1	**153-5592**	1	NUT (M8X1.25-THD)	
	4	1	**153-6415**	2	WASHER (SEAL)	
	5	1	**153-7983**	1	PIN	
	6	1	**095-1574**	1	SEAL-O-RING	
	7	1	**154-2715**	1	WASHER	
M	8	1	**369-4486**	2	BOLT (M6X1X35-MM)	
M	9	1	**162-2207**	1	NUT (M6X1-THD)	
M	10	1	**106-8916**	4	BOLT (M6X1X16-MM)	
	11	1	**217-7115**	1	CAP (TAMPER RESISTANT)	
	12	1	**335-5578**	1	BRACKET	
	13	1	**308-1878**	1	GASKET	
	14	1	**308-1882**	1	SPRING	
M	15	1	**308-1889**	1	NUT (M10X1.25-THD)	
M	16	1	**308-1892**	1	NUT (M6X1-THD)	
	17	1	**308-1897**	2	RING	
	18	1	**308-1901**	1	CAP	
	19	1	**308-4266**	1	SHAFT	
	20	1	**309-6728**	1	SHAFT	
	21	1	**364-2755**	1	BOLT-SPECIAL	
	22	1	**311-0655**	1	SPRING	
M	23	1	**313-2025**	1	BOLT-SPECIAL (M10X1.25-MM THD)	
	24	1	**315-5236**	1	BOLT AS	
	24A	1	**153-7987**	1	WASHER (9.2X17X1.8-MM THK)	
M	24B	1	**191-9297**	1	NUT (M10X1.25-THD)	
	24C	1	**315-5235**	1	SPRING	
	25	1	**321-3145**	1	SPRING	
	26	1	**321-4249**	1	NUT	
	27	1	**332-1361**	1	CAP-PROTECTION	
	28	1	**334-0732**	1	ARM AS (FRONT HOUSING)	
	29	1	**322-7492**	1	LEVER-CONTROL	
	30	1	**322-7493**	1	LEVER AS-CONTROL	
	32	1	**336-2965**	1	SPRING	
	33	1	**330-9189**	1	PLUG	

M - METRIC PART

325-5662 **CONTROL GP-GOVERNOR (**contd.**)** **i07577970**

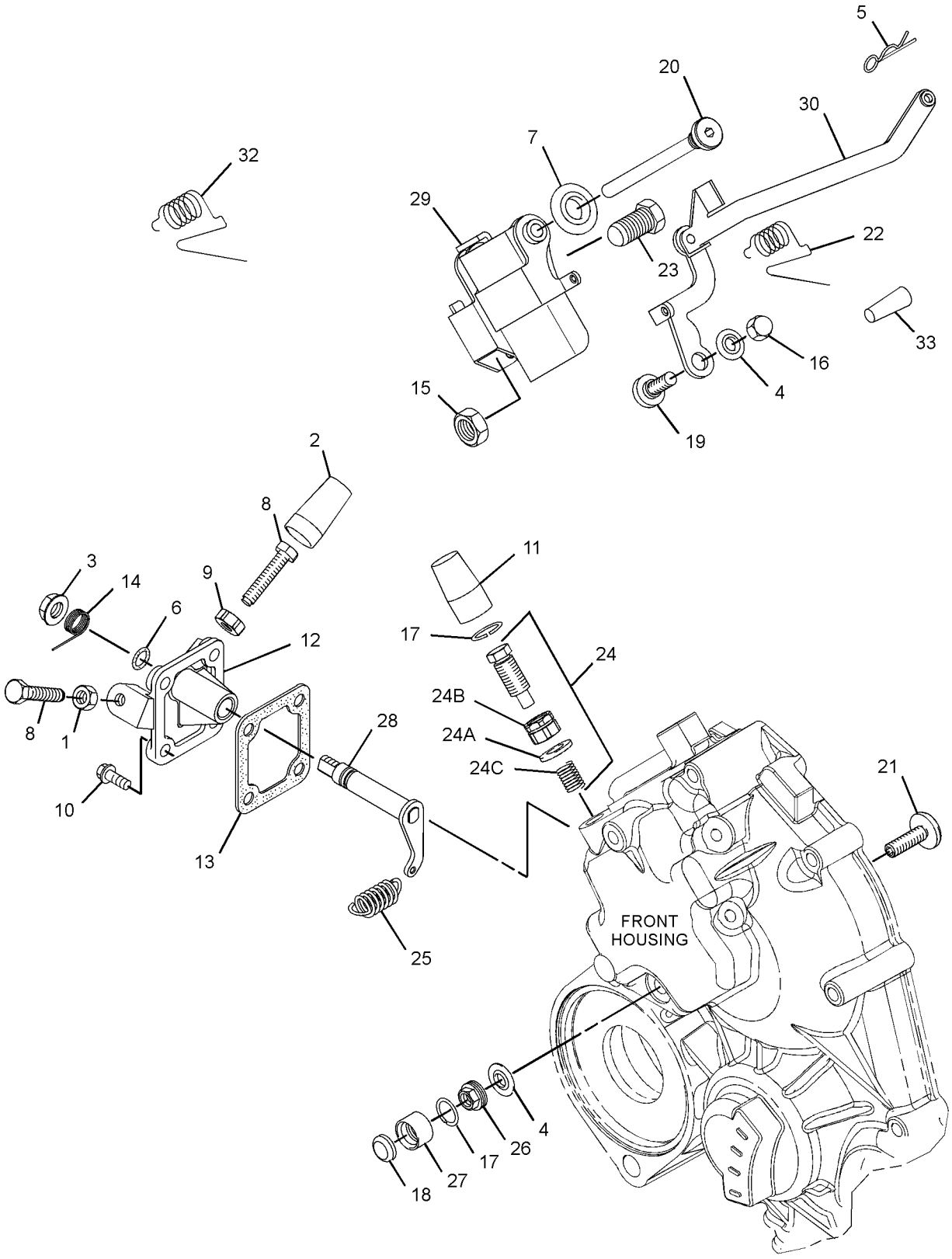

GRAPHIC #1 <END> g02609716

325-9475 CONTROL GP-GOVERNOR

PART OF 433-1379 ENGINE AR

TYPE 1

SMCS-1265, 1276 **i06841121**

NOTE	REF NO	GRAPHIC REF	PART NUMBER	QTY	PART NAME 1 2 3 4 5 6 (PRODUCT LEVEL)	SEE PAGE
M	1	1	**5C-2890**	1	NUT (M6X1-THD)	
	2	1	**139-5511**	1	CAP (TAMPER RESISTANT)	
M	3	1	**153-5592**	1	NUT (M8X1.25-THD)	
	4	1	**153-6415**	2	WASHER (SEAL)	
	5	1	**153-7983**	1	PIN	
	6	1	**095-1574**	1	SEAL-O-RING	
	7	1	**154-2715**	1	WASHER	
M	8	1	**369-4486**	2	BOLT (M6X1X35-MM)	
M	9	1	**162-2207**	1	NUT (M6X1-THD)	
M	10	1	**106-8916**	4	BOLT (M6X1X16-MM)	
	11	1	**217-7115**	1	CAP (TAMPER RESISTANT)	
	12	1	**335-5578**	1	BRACKET	
	13	1	**423-7724**	1	GASKET	
	14	1	**308-1882**	1	SPRING	
M	15	1	**308-1889**	1	NUT (M10X1.25-THD)	
M	16	1	**308-1892**	1	NUT (M6X1-THD)	
	17	1	**308-1897**	2	RING	
	18	1	**425-7065**	1	CAP-TAMPER PROOF	
	19	1	**321-4249**	1	NUT	
	21	1	**308-4266**	1	SHAFT	
	22	1	**390-3731**	1	SHAFT	
M	23	1	**495-0737**	1	BOLT (M6X0.5X19.5-MM)	
	24	1	**311-0655**	1	SPRING	
	25	1	**313-5832**	1	BOLT AS	
	25A	1	**153-7987**	1	WASHER (9.2X17X1.8-MM THK)	
M	25B	1	**191-9297**	1	NUT (M10X1.25-THD)	
	25C	1	**313-5833**	1	SPRING	
	26	1	**317-7195**	1	SPRING	
	27	1	**319-3250**	1	CONTROL GP-GOVERNOR (TIMING)	
	28	1	**334-0732**	1	ARM AS (FRONT HOUSING)	
	29	1	**390-3729**	1	LEVER-CONTROL	
	30	1	**322-7493**	1	LEVER AS-CONTROL	
	31	1	**336-2965**	1	SPRING	
	32	1	**330-9189**	1	PLUG	
	33	1	**308-1875**	1	SEAL-O-RING	

M - METRIC PART

325-9475 **CONTROL GP-GOVERNOR (**contd.**)** **i06841121**

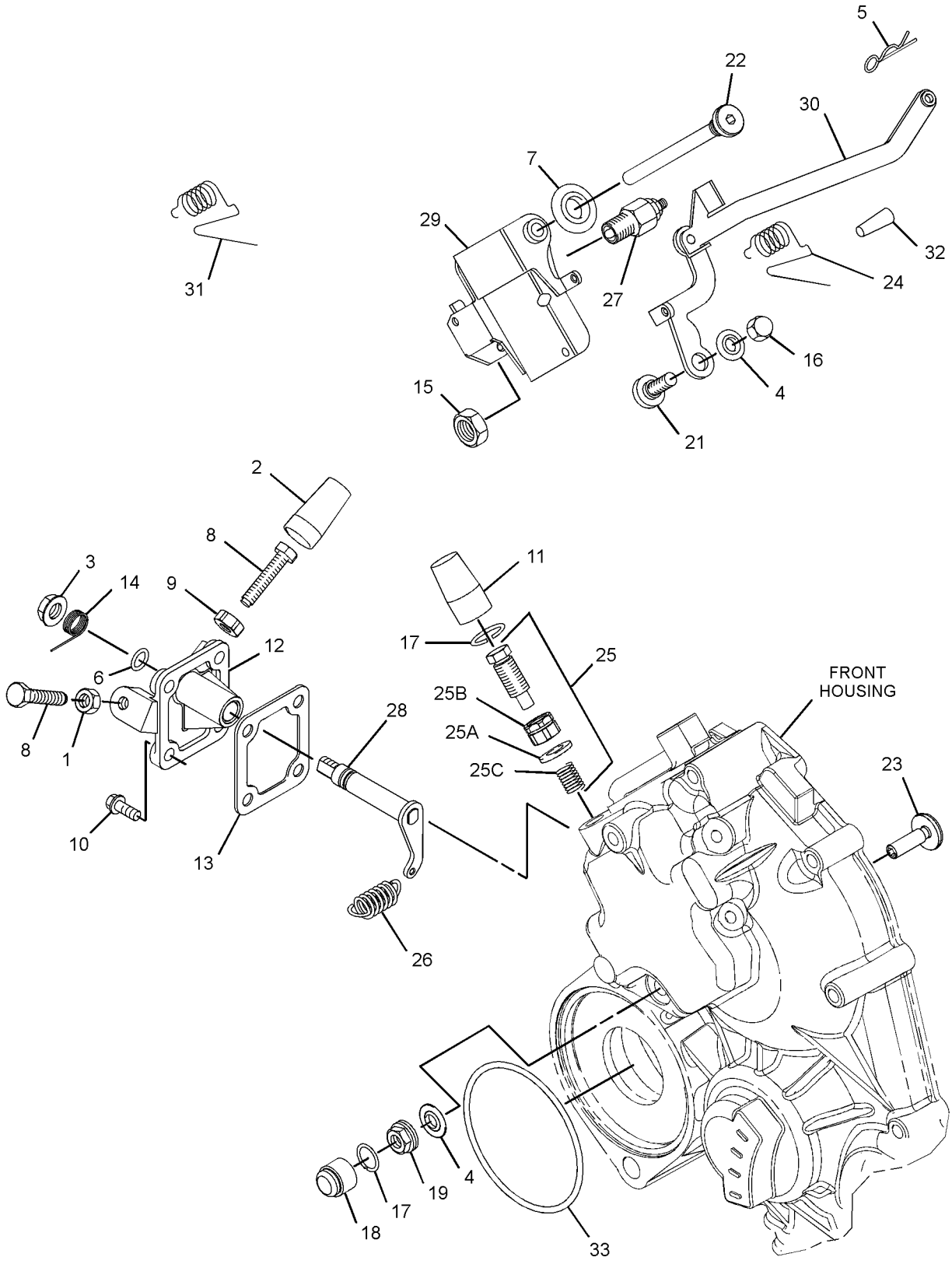

GRAPHIC #1 <END> g06197591

325-9475 CONTROL GP-GOVERNOR

PART OF 433-1379 ENGINE AR, 516-9335 ENGINE AR-PRIMARY

TYPE 2

SMCS-1265, 1276 **i08302878**

NOTE	REF NO	GRAPHIC REF	PART NUMBER	QTY	PART NAME 1 2 3 4 5 6 (PRODUCT LEVEL)	SEE PAGE
M	1	1	**5C-2890**	1	NUT (M6X1-THD)	
	2	1	**139-5511**	1	CAP (TAMPER RESISTANT)	
M	3	1	**153-5592**	1	NUT (M8X1.25-THD)	
	4	1	**153-6415**	2	WASHER (SEAL)	
	5	1	**153-7983**	1	PIN	
	6	1	**095-1574**	1	SEAL-O-RING	
	7	1	**154-2715**	1	WASHER	
M	8	1	**7X-2533**	2	BOLT (M6X1X35-MM)	
M	9	1	**162-2207**	1	NUT (M6X1-THD)	
M	10	1	**106-8916**	4	BOLT (M6X1X16-MM)	
	11	1	**217-7115**	1	CAP (TAMPER RESISTANT)	
	12	1	**335-5578**	1	BRACKET	
	13	1	**423-7724**	1	GASKET	
	14	1	**308-1882**	1	SPRING	
M	15	1	**308-1889**	1	NUT (M10X1.25-THD)	
M	16	1	**308-1892**	1	NUT (M6X1-THD)	
C	17	1	**308-1897**	1	RING	
C	18	1	**503-9707**	1	CAP	
C	19	1	**502-9478**	1	NUT (TAMPER RESISTANT)	
	21	1	**308-4266**	1	SHAFT	
	22	1	**390-3731**	1	SHAFT	
M	23	1	**495-0737**	1	BOLT (M6X0.5X19.5-MM)	
	24	1	**311-0655**	1	SPRING	
	25	1	**313-5832**	1	BOLT AS	
	25A	1	**153-7987**	1	WASHER (9.2X17X1.8-MM THK)	
M	25B	1	**191-9297**	1	NUT (M10X1.25-THD)	
	25C	1	**313-5833**	1	SPRING	
	26	1	**317-7195**	1	SPRING	
Y	27	1	**319-3250**	1	CONTROL GP-GOVERNOR (TIMING)	685
	28	1	**334-0732**	1	ARM AS (FRONT HOUSING)	
	29	1	**580-0398**	1	LEVER AS-CONTROL	
	30	1	**322-7493**	1	LEVER AS-CONTROL	
	31	1	**336-2965**	1	SPRING	
	32	1	**330-9189**	1	PLUG	
	33	1	**308-1875**	1	SEAL-O-RING	
C	34	1	**503-9731**	1	SHROUD	
C	35	1	**502-5421**	1	PIN	

C - CHANGE FROM PREVIOUS TYPE
M - METRIC PART
Y - SEPARATE ILLUSTRATION

325-9475 **CONTROL GP-GOVERNOR (**contd.**)** **i08302878**

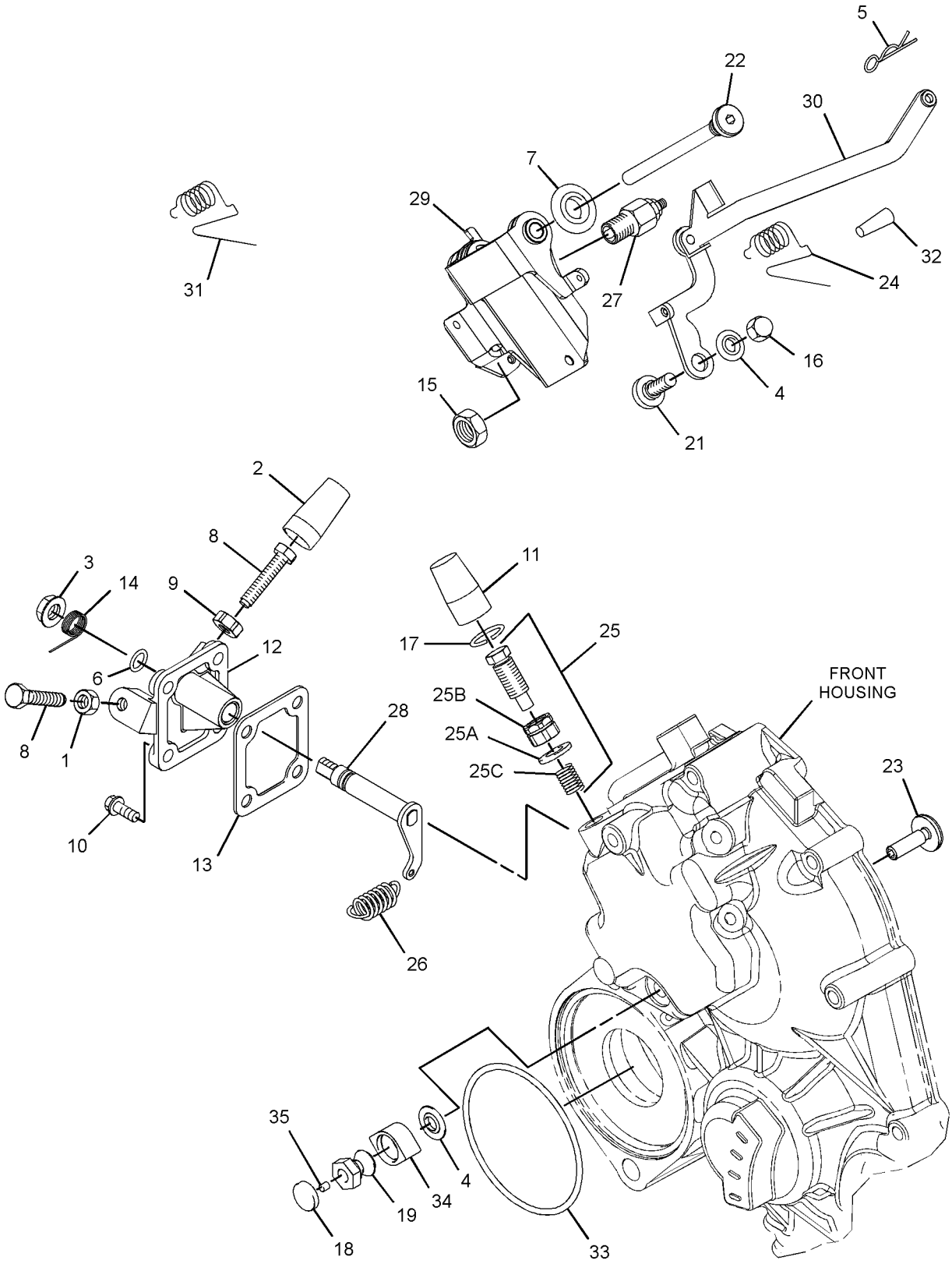

GRAPHIC #1 <END> g06753258

328-3292 CONTROL GP-GOVERNOR

S/N: G7L1-3966

SMCS-1265, 1276 **i04370688**

NOTE	REF NO	GRAPHIC REF	PART NUMBER	QTY	PART NAME 1 2 3 4 5 6 (PRODUCT LEVEL)	SEE PAGE
M	1	1	**5C-2890**	1	NUT (M6X1-THD)	
	2	1	**139-5511**	1	CAP (TAMPER RESISTANT)	
M	3	1,2	**153-5592**	2	NUT (M8X1.25-THD)	
	4	2	**153-6375**	1	BOLT AS	
	5	1,2	**153-6415**	5	WASHER (SEAL)	
	6	2	**153-6861**	1	BOLT AS	
	7	1	**153-7983**	1	PIN	
	8	1	**095-1574**	1	SEAL-O-RING	
M	9	1	**369-4486**	2	BOLT (M6X1X35-MM)	
M	10	1	**162-2207**	1	NUT (M6X1-THD)	
BM	11	1	**183-3572**	4	BOLT AS (M6X1X16-MM)	
					—OR—	
BM		1	**106-8916**	4	BOLT (M6X1X16-MM)	
M	12	2	**217-5860**	4	BOLT (M4X0.7X8-MM)	
	13	1	**217-7115**	1	CAP (TAMPER RESISTANT)	
	14	2	**232-0218**	2	CLAMP	
	15	2	**232-0290**	1	CONNECTOR	
	16	1	**335-5578**	1	BRACKET	
	17	1	**308-1878**	1	GASKET	
	18	1	**308-1882**	1	SPRING	
M	19	1	**308-1889**	1	NUT (M10X1.25-THD)	
M	20	1	**308-1892**	1	NUT (M6X1-THD)	
	21	1	**308-1897**	2	RING	
	22	1	**308-1901**	1	CAP	
	23	1	**308-4266**	1	SHAFT	
	24	1	**309-6728**	1	SHAFT	
	25	1	**309-6729**	1	SEAL-O-RING	
	26	1	**364-2755**	1	BOLT-SPECIAL	
	27	1	**311-0655**	1	SPRING	
	28	1	**313-5832**	1	BOLT AS	
	28A	1	**153-7987**	1	WASHER (9.2X17X1.8-MM THK)	
M	28B	1	**191-9297**	1	NUT (M10X1.25-THD)	
	28C	1	**313-5833**	1	SPRING	
	29	1	**317-7195**	1	SPRING	
	30	1,2	**321-4249**	2	NUT	
	31	1	**321-8209**	1	SENSOR AS-SPEED (TIMING, CAMSHAFT)	
	32	2	**321-8211**	1	DIAPHRAGM	
	33	2	**321-8212**	1	COVER	
	34	2	**321-8214**	1	BOLT	
	35	2	**321-8216**	1	TUBE	
	36	2	**321-8217**	1	BOLT	
	37	2	**321-8218**	1	HOSE	
	38	1	**322-7492**	1	LEVER-CONTROL	
	39	1	**322-7493**	1	LEVER AS-CONTROL	
	40	2	**328-5174**	1	LEVER-STOP	
	41	1	**330-9189**	1	PLUG	
	42	1	**332-1361**	1	CAP-PROTECTION	
	43	1	**334-0732**	1	ARM AS (FRONT HOUSING)	

328-3292 **CONTROL GP-GOVERNOR (**contd.**)** **i04370688**

NOTE	REF NO	GRAPHIC REF	PART NUMBER	QTY	PART NAME 1 2 3 4 5 6 (PRODUCT LEVEL)	SEE PAGE
	44	2	**285-3555**	1	CLIP	
	45	1	**336-2965**	1	SPRING	

B - USE AS REQUIRED
M - METRIC PART

328-3292 **CONTROL GP-GOVERNOR (**contd.**)** **i04370688**

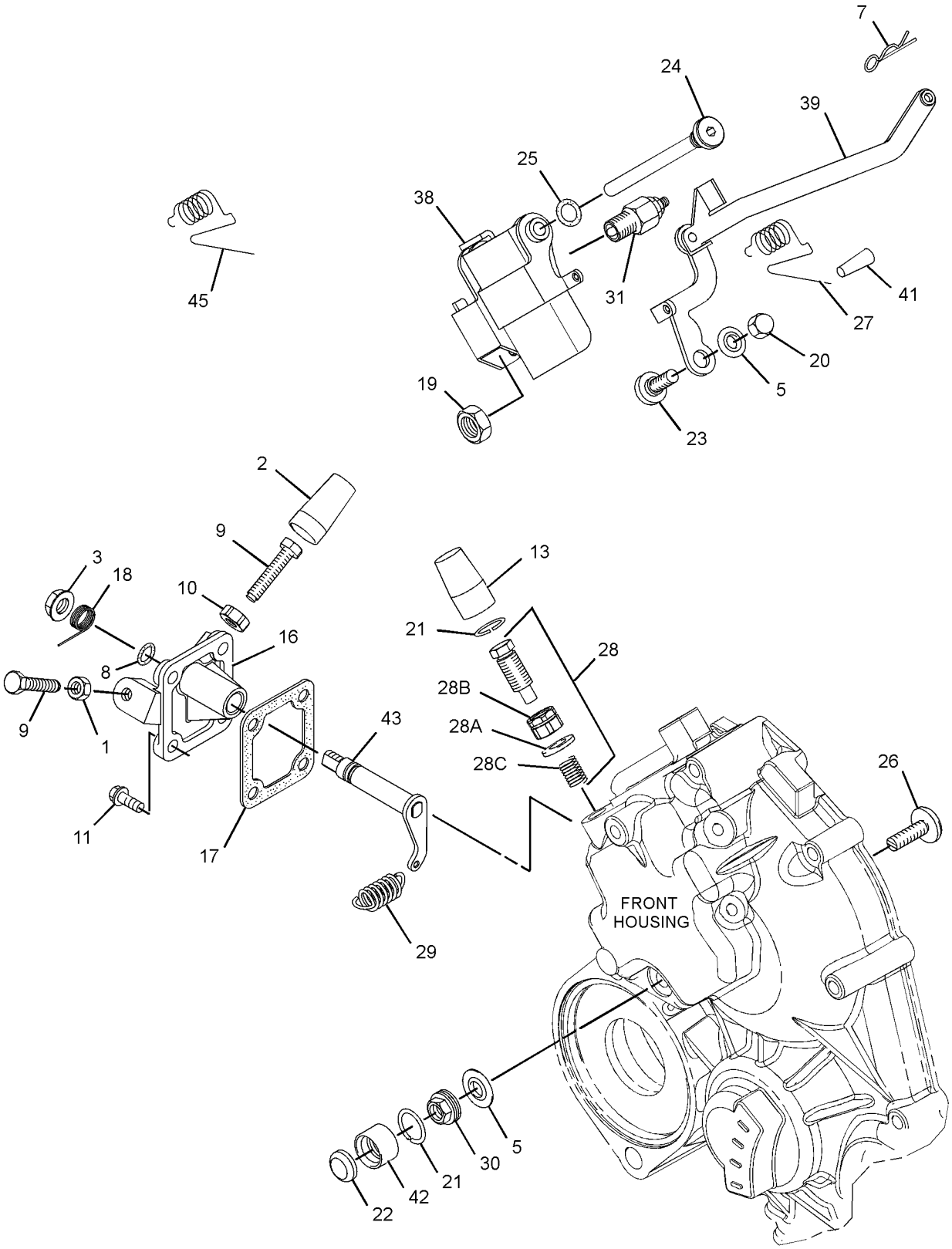

GRAPHIC #1 g02155922

328-3292 **CONTROL GP-GOVERNOR (**contd.**)** **i04370688**

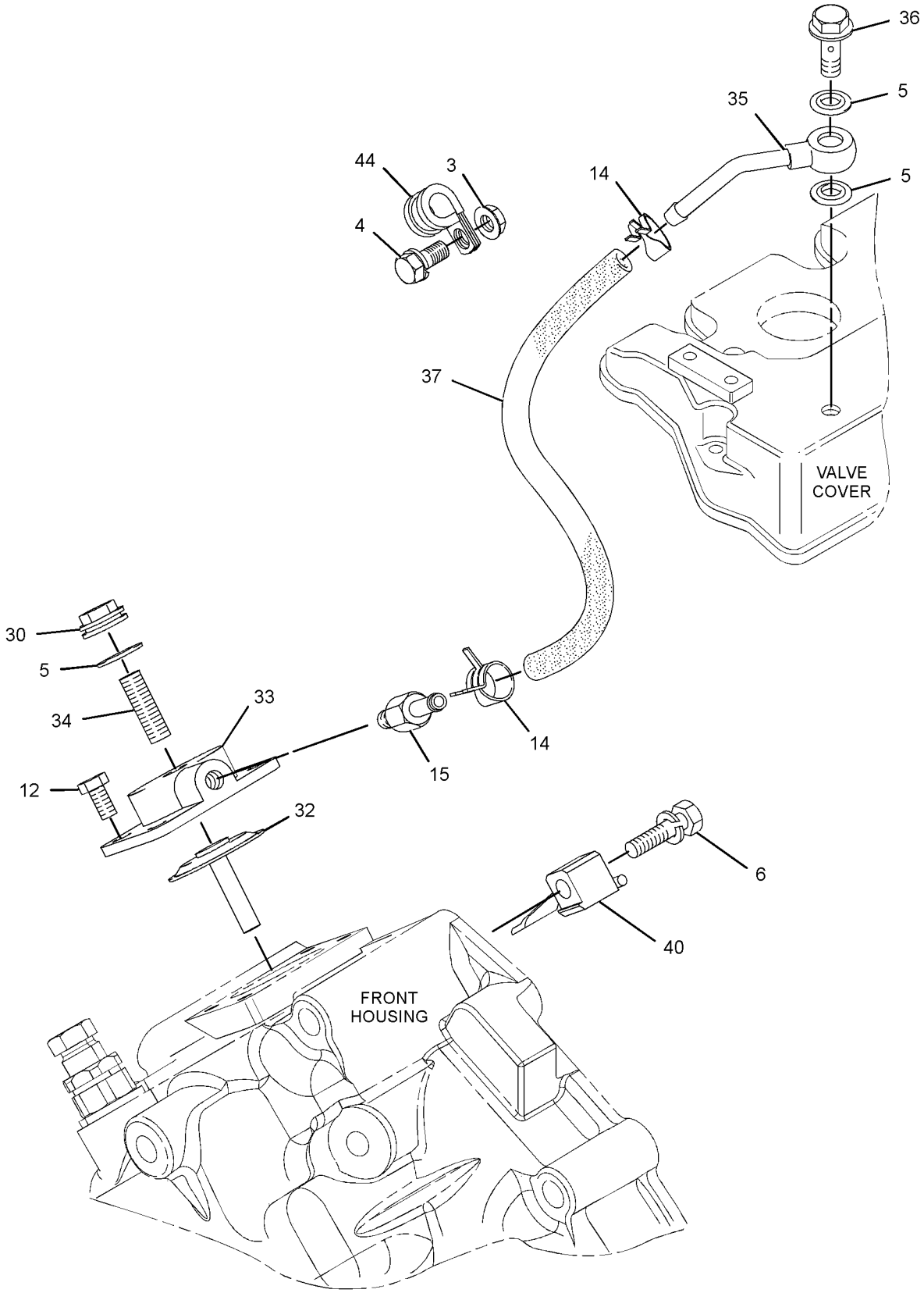

GRAPHIC #2 <END> g01890676

328-3292 CONTROL GP-GOVERNOR

S/N: G7L3967-UP

TYPE 1

SMCS-1265, 1276 **i05878003**

NOTE	REF NO	GRAPHIC REF	PART NUMBER	QTY	PART NAME 1 2 3 4 5 6 (PRODUCT LEVEL)	SEE PAGE
M	1	1	**5C-2890**	1	NUT (M6X1-THD)	
	2	1	**139-5511**	1	CAP (TAMPER RESISTANT)	
M	3	1,2	**153-5592**	2	NUT (M8X1.25-THD)	
	4	2	**153-6375**	1	BOLT AS	
	5	1,2	**153-6415**	5	WASHER (SEAL)	
	6	2	**153-6861**	1	BOLT AS	
	7	1	**153-7983**	1	PIN	
	8	1	**095-1574**	1	SEAL-O-RING	
M	9	1	**369-4486**	2	BOLT (M6X1X35-MM)	
M	10	1	**162-2207**	1	NUT (M6X1-THD)	
BM	11	1	**183-3572**	4	BOLT AS (M6X1X16-MM)	
					—OR—	
BM		1	**106-8916**	4	BOLT (M6X1X16-MM)	
M	12	2	**217-5860**	4	BOLT (M4XO.7X8-MM)	
	13	1	**217-7115**	1	CAP (TAMPER RESISTANT)	
	14	2	**232-0218**	2	CLAMP	
	15	2	**232-0290**	1	CONNECTOR	
	16	1	**335-5578**	1	BRACKET	
	17	1	**423-7724**	1	GASKET	
	18	1	**308-1882**	1	SPRING	
M	19	1	**308-1889**	1	NUT (M10X1.25-THD)	
M	20	1	**308-1892**	1	NUT (M6X1-THD)	
	21	1	**308-1897**	2	RING	
C	23	1	**377-2885**	1	SHAFT	
	24	1	**390-3731**	1	SHAFT	
	25	1	**309-6729**	1	SEAL-O-RING	
	26	1	**364-2755**	1	BOLT-SPECIAL	
	27	1	**311-0655**	1	SPRING	
	28	1	**313-5832**	1	BOLT AS	
	28A	1	**153-7987**	1	WASHER (9.2X17X1.8-MM THK)	
M	28B	1	**191-9297**	1	NUT (M10X1.25-THD)	
	28C	1	**313-5833**	1	SPRING	
	29	1	**317-7195**	1	SPRING	
	30	1,2	**321-4249**	2	NUT	
	31	1	**321-8209**	1	SENSOR AS-SPEED (TIMING, CAMSHAFT)	
	32	2	**321-8211**	1	DIAPHRAGM	
	33	2	**321-8212**	1	COVER	
	34	2	**321-8214**	1	BOLT	
	35	2	**321-8216**	1	TUBE	
	36	2	**321-8217**	1	BOLT	
	37	2	**321-8218**	1	HOSE	
	38	1	**390-3729**	1	LEVER-CONTROL	
	39	1	**322-7493**	1	LEVER AS-CONTROL	
	40	2	**328-5174**	1	LEVER-STOP	
	41	1	**330-9189**	1	PLUG	
	42	1	**425-7065**	1	CAP-TAMPER PROOF	
	43	1	**334-0732**	1	ARM AS (FRONT HOUSING)	

328-3292 **CONTROL GP-GOVERNOR (**contd.**)** **i05878003**

NOTE	REF NO	GRAPHIC REF	PART NUMBER	QTY	PART NAME 1 2 3 4 5 6 (PRODUCT LEVEL)	SEE PAGE
	44	2	**285-3555**	1	CLIP	
	45	1	**336-2965**	1	SPRING	
	46	1	**380-3715**	1	SHIM (0.2-MM THK)	
	47	1	**380-3716**	1	SHIM (0.15-MM THK)	
	48	1	**380-3717**	1	SHIM (0.1-MM THK)	

B - USE AS REQUIRED
C - CHANGE FROM PREVIOUS TYPE
M - METRIC PART

328-3292 **CONTROL GP-GOVERNOR (**contd.**)** **i05878003**

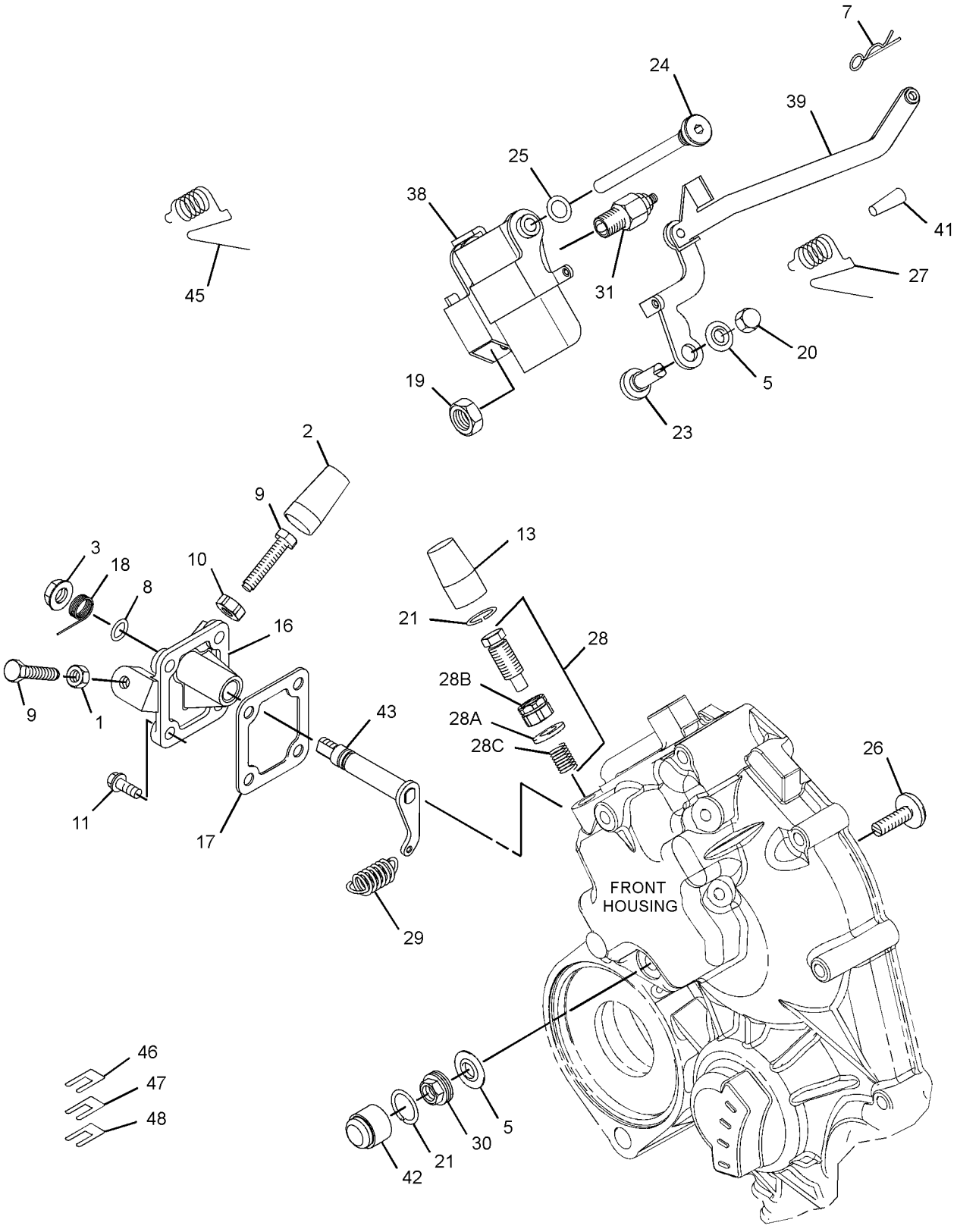

GRAPHIC #1 g03808273

328-3292 **CONTROL GP-GOVERNOR (**contd.**)** **i05878003**

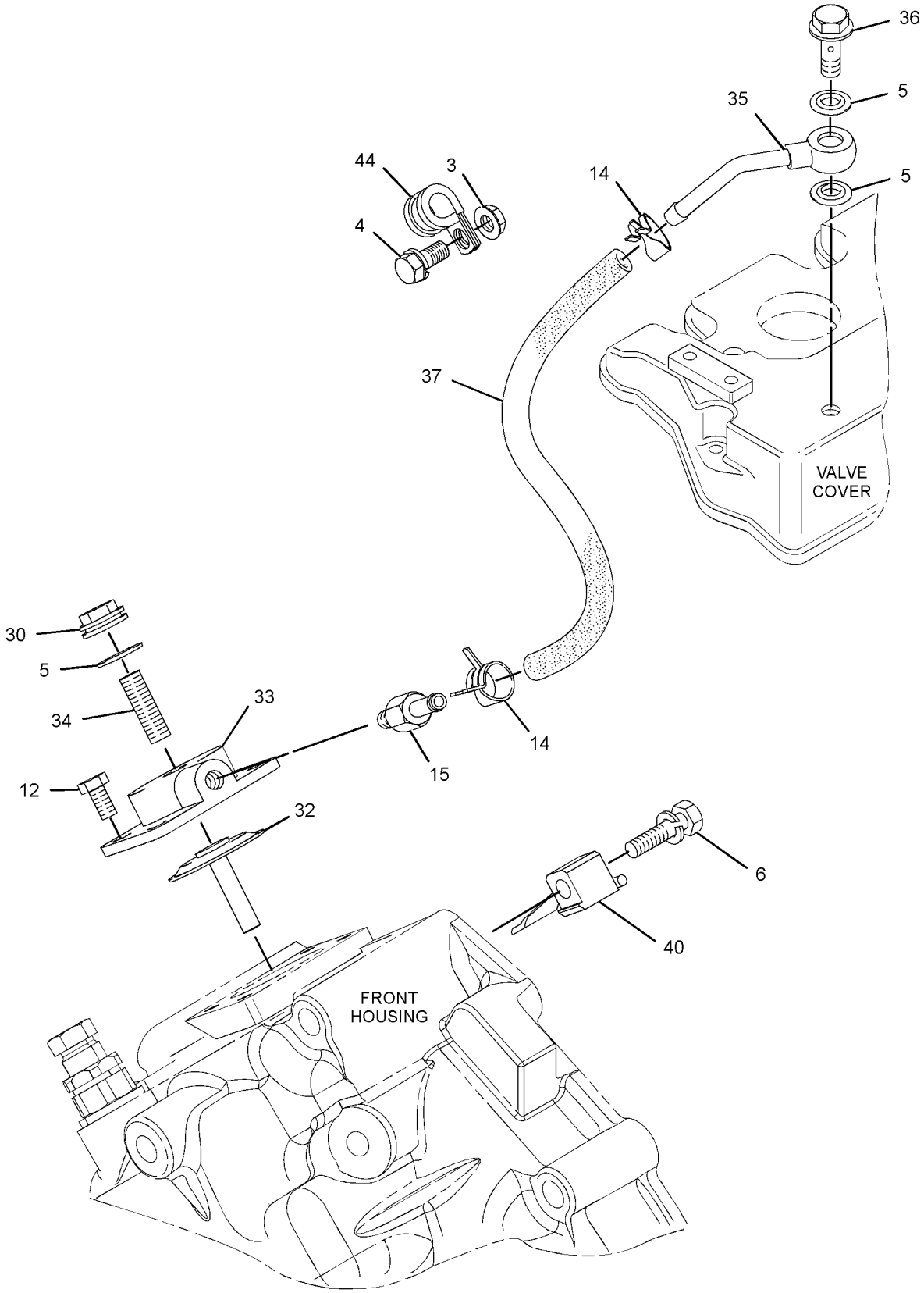

GRAPHIC #2 <END> g01890676

328-3292 CONTROL GP-GOVERNOR

S/N: G7L3967-UP

TYPE 2

SMCS-1265, 1276 **i07350727**

NOTE	REF NO	GRAPHIC REF	PART NUMBER	QTY	PART NAME 1 2 3 4 5 6 (PRODUCT LEVEL)	SEE PAGE
M	1	1	**5C-2890**	1	NUT (M6X1-THD)	
	2	1	**139-5511**	1	CAP (TAMPER RESISTANT)	
M	3	1,2	**153-5592**	2	NUT (M8X1.25-THD)	
	4	2	**153-6375**	1	BOLT AS	
	5	1,2	**153-6415**	5	WASHER (SEAL)	
	6	2	**153-6861**	1	BOLT AS	
	7	1	**153-7983**	1	PIN	
	8	1	**095-1574**	1	SEAL-O-RING	
M	9	1	**369-4486**	2	BOLT (M6X1X35-MM)	
M	10	1	**162-2207**	1	NUT (M6X1-THD) (M6X1X13-MM)	
BM	11	1	**183-3572**	4	BOLT AS (M6X1X16-MM) (M6X1X16-MM)	
					—OR—	
BM		1	**106-8916**	4	BOLT (M6X1X16-MM)	
M	12	2	**217-5860**	4	BOLT (M4X0.7X8-MM) (M4X0.7X8-MM)	
	13	1	**217-7115**	1	CAP (TAMPER RESISTANT)	
	14	2	**232-0218**	2	CLAMP	
	15	2	**232-0290**	1	CONNECTOR	
	16	1	**335-5578**	1	BRACKET	
	17	1	**423-7724**	1	GASKET	
	18	1	**308-1882**	1	SPRING	
M	19	1	**308-1889**	1	NUT (M10X1.25-THD)	
C	21	1,2	**308-1897**	2	RING	
	23	1	**377-2885**	1	SHAFT	
	24	1	**390-3731**	1	SHAFT	
	25	1	**309-6729**	1	SEAL-O-RING	
	26	1	**364-2755**	1	BOLT-SPECIAL (ADJUSTING)	
	27	1	**311-0655**	1	SPRING	
	28	1	**313-5832**	1	BOLT AS	
	28A	1	**153-7987**	1	WASHER (9.2X17X1.8-MM THK)	
M	28B	1	**191-9297**	1	NUT (M10X1.25-THD)	
	28C	1	**313-5833**	1	SPRING	
	29	1	**317-7195**	1	SPRING	
C	30	2	**321-4249**	2	NUT (HEX)	
	31	1	**321-8209**	1	SENSOR AS-SPEED (TIMING, CAMSHAFT)	
	32	2	**321-8211**	1	DIAPHRAGM	
	33	2	**321-8212**	1	COVER	
	34	2	**321-8214**	1	BOLT (ADJUSTING)	
	35	2	**321-8216**	1	TUBE	
	36	2	**321-8217**	1	BOLT	
	37	2	**321-8218**	1	HOSE	
	38	1	**390-3729**	1	LEVER-CONTROL	
	39	1	**322-7493**	1	LEVER AS-CONTROL	
	41	1	**330-9189**	1	PLUG	
C	42	2	**425-7065**	2	CAP-TAMPER PROOF	
	43	1	**334-0732**	1	ARM AS (FRONT HOUSING)	
	44	2	**285-3555**	1	CLIP	
	45	1	**336-2965**	1	SPRING	

328-3292 **CONTROL GP-GOVERNOR (**contd.**)** **i07350727**

NOTE	REF NO	GRAPHIC REF	PART NUMBER	QTY	PART NAME 1 2 3 4 5 6 (PRODUCT LEVEL)	SEE PAGE
	46	1	**380-3715**	1	SHIM (0.2-MM THK)	
	47	1	**380-3716**	1	SHIM (0.15-MM THK)	
	48	1	**380-3717**	1	SHIM (0.1-MM THK)	
	49	1	**502-5421**	1	PIN	
	50	1	**502-9478**	1	NUT (TAMPER RESISTANT) (HEX)	
	51	1	**503-9707**	1	CAP	
	52	1	**503-9731**	1	SHROUD	

B - USE AS REQUIRED
C - CHANGE FROM PREVIOUS TYPE
M - METRIC PART

328-3292 **CONTROL GP-GOVERNOR (**contd.**)** **i07350727**

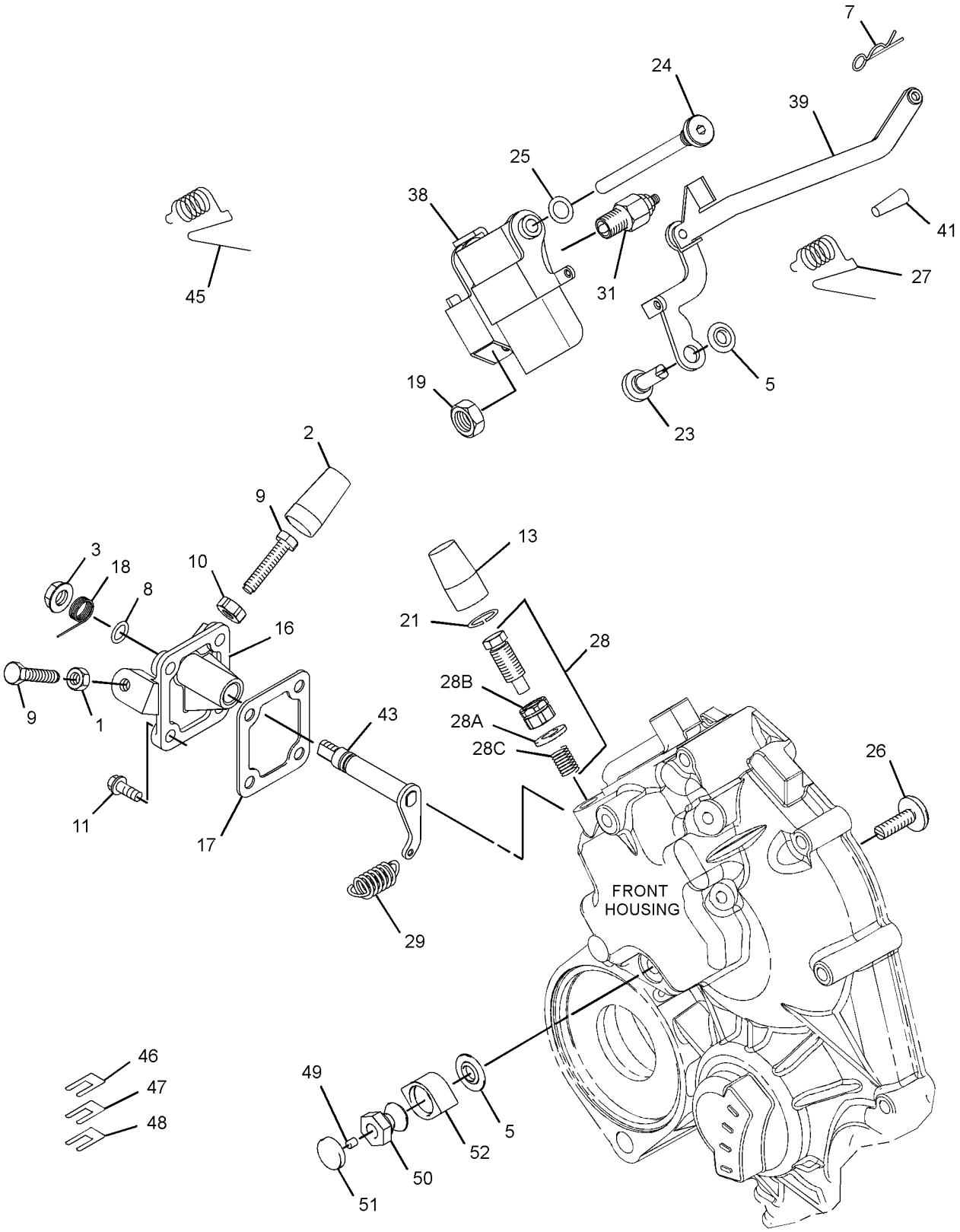

GRAPHIC #1 g06315469

328-3292 **CONTROL GP-GOVERNOR (**contd.**)** **i07350727**

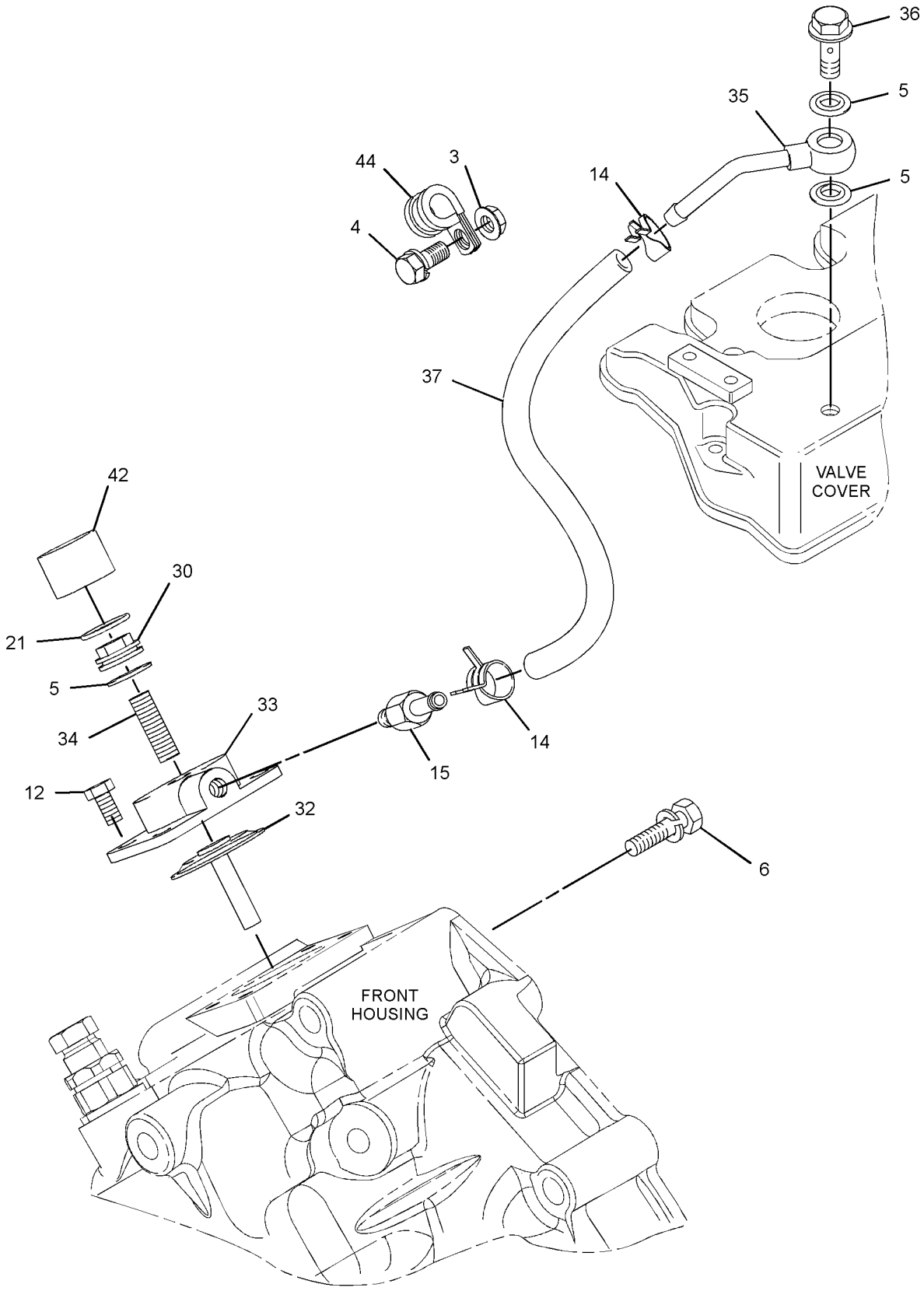

GRAPHIC #2 <END> g06315422

331-0215 CONTROL GP-GOVERNOR

PART OF 435-1637, 435-1638 ENGINE AR

TYPE 1

SMCS-1265, 1276 **i06841113**

NOTE	REF NO	GRAPHIC REF	PART NUMBER	QTY	PART NAME 1 2 3 4 5 6 (PRODUCT LEVEL)	SEE PAGE
M	1	1	**369-4486**	2	BOLT (M6X1X35-MM)	
M	2	1	**5C-2890**	1	NUT (M6X1-THD)	
	3	1	**139-5511**	1	CAP (TAMPER RESISTANT)	
M	4	1	**153-5592**	1	NUT (M8X1.25-THD)	
	5	1	**153-6415**	2	WASHER (SEAL)	
	6	1	**153-7983**	1	PIN	
	7	1	**095-1574**	1	SEAL-O-RING	
	8	1	**154-2715**	1	WASHER	
M	9	1	**162-2207**	1	NUT (M6X1-THD)	
	10	1	**183-3538**	4	BOLT	
	11	1	**217-7115**	1	CAP (TAMPER RESISTANT)	
	12	1	**335-5578**	1	BRACKET	
	13	1	**308-1878**	1	GASKET	
	14	1	**308-1882**	1	SPRING	
	15	1	**308-1888**	1	SENSOR-SPEED (ENGINE)	
M	16	1	**308-1889**	1	NUT (M10X1.25-THD)	
M	17	1	**308-1892**	1	NUT (M6X1-THD)	
	18	1	**308-1897**	2	RING	
	19	1	**308-1901**	1	CAP	
	20	1	**308-4266**	1	SHAFT	
	21	1	**309-6728**	1	SHAFT	
	22	1	**363-9784**	1	BOLT	
	23	1	**311-0655**	1	SPRING	
	24	1	**313-5832**	1	BOLT AS	
	24A	1	**153-7987**	1	WASHER (9.2X17X1.8-MM THK)	
M	24B	1	**191-9297**	1	NUT (M10X1.25-THD)	
	24C	1	**313-5833**	1	SPRING	
	25	1	**317-7195**	1	SPRING	
	26	1	**321-4249**	1	NUT	
	27	1	**332-1361**	1	CAP-PROTECTION	
	28	1	**334-0732**	1	ARM AS (FRONT HOUSING)	
	29	1	**322-7492**	1	LEVER-CONTROL	
	30	1	**322-7493**	1	LEVER AS-CONTROL	
	31	1	**336-2965**	1	SPRING	
	32	1	**330-9189**	1	PLUG	
	33	1	**308-1875**	1	SEAL-O-RING	
FM			**8T-4971**	2	BOLT (M6X1X30-MM)	

F - NOT SHOWN
M - METRIC PART

331-0215 **CONTROL GP-GOVERNOR (**contd.**)** **i06841113**

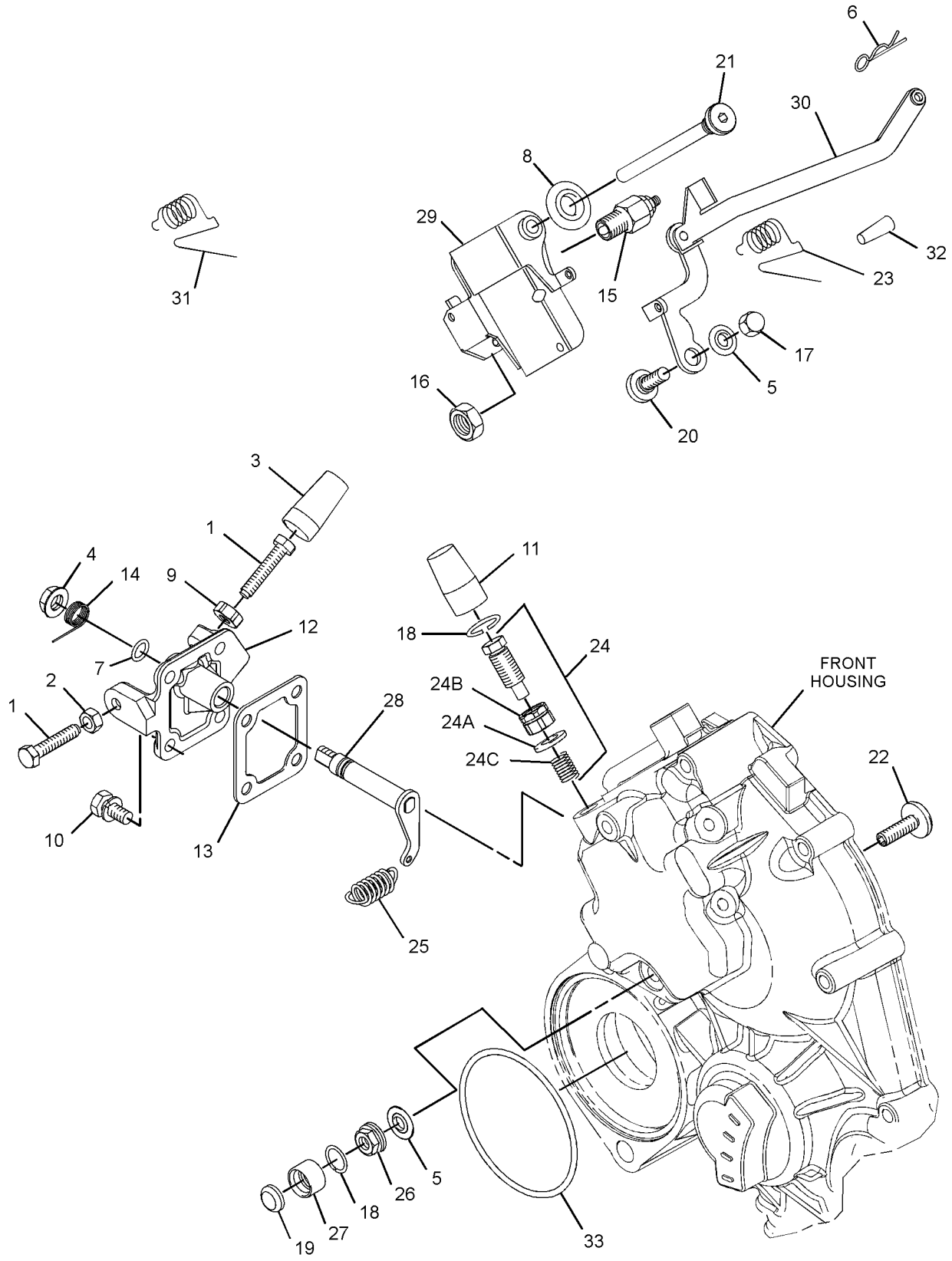

GRAPHIC #1 <END> g06197944

331-0215 CONTROL GP-GOVERNOR

PART OF 435-1637, 435-1638 ENGINE AR

TYPE 2

SMCS-1265, 1276 **i08307805**

NOTE	REF NO	GRAPHIC REF	PART NUMBER	QTY	PART NAME 1 2 3 4 5 6 (PRODUCT LEVEL)	SEE PAGE
M	1	1	**7X-2533**	1	BOLT (M6X1X35-MM)	
M	2	1	**5C-2890**	1	NUT (M6X1-THD)	
	3	1	**139-5511**	1	CAP (TAMPER RESISTANT)	
M	4	1	**153-5592**	1	NUT (M8X1.25-THD)	
	5	1	**153-6415**	2	WASHER (SEAL)	
	6	1	**153-7983**	1	PIN	
	7	1	**095-1574**	1	SEAL-O-RING	
	8	1	**154-2715**	1	WASHER	
M	9	1	**162-2207**	1	NUT (M6X1-THD) (SPECIAL)	
	10	1	**183-3538**	4	BOLT	
	11	1	**217-7115**	1	CAP (TAMPER RESISTANT)	
	12	1	**335-5578**	1	BRACKET	
	13	1	**423-7724**	1	GASKET	
	14	1	**308-1882**	1	SPRING	
M	16	1	**308-1889**	1	NUT (M10X1.25-THD)	
M	17	1	**308-1892**	1	NUT (M6X1-THD)	
C	18	1	**308-1897**	1	RING	
	19	1	**425-7065**	1	CAP-TAMPER PROOF	
	20	1	**308-4266**	1	SHAFT	
	21	1	**390-3731**	1	SHAFT	
	22	1	**364-2755**	1	BOLT-SPECIAL	
	23	1	**311-0655**	1	SPRING	
	24	1	**313-5832**	1	BOLT AS	
	24A	1	**153-7987**	1	WASHER (9.2X17X1.8-MM THK)	
M	24B	1	**191-9297**	1	NUT (M10X1.25-THD)	
	24C	1	**313-5833**	1	SPRING	
	25	1	**317-7195**	1	SPRING	
C	26	1	**502-9478**	1	NUT (TAMPER RESISTANT)	
C	27	1	**503-9707**	1	CAP	
	28	1	**334-0732**	1	ARM AS (FRONT HOUSING)	
	29	1	**580-0398**	1	LEVER AS-CONTROL	
	30	1	**322-7493**	1	LEVER AS-CONTROL	
	30A	1	**154-1400**	1	PIN	
	31	1	**336-2965**	1	SPRING	
	32	1	**330-9189**	1	PLUG	
	33	1	**308-1875**	1	SEAL-O-RING	
C	34	1	**503-9731**	1	SHROUD	
C	35	1	**502-5421**	1	PIN	
FM			**8T-4971**	2	BOLT (M6X1X30-MM)	
					PARTS SHOWN IN GRAPHIC(S) WITHOUT A REFERENCE NUMBER ARE NOT SERVICED SEPARATELY	

C - CHANGE FROM PREVIOUS TYPE
F - NOT SHOWN
M - METRIC PART

331-0215 **CONTROL GP-GOVERNOR (**contd.**)** **i08307805**

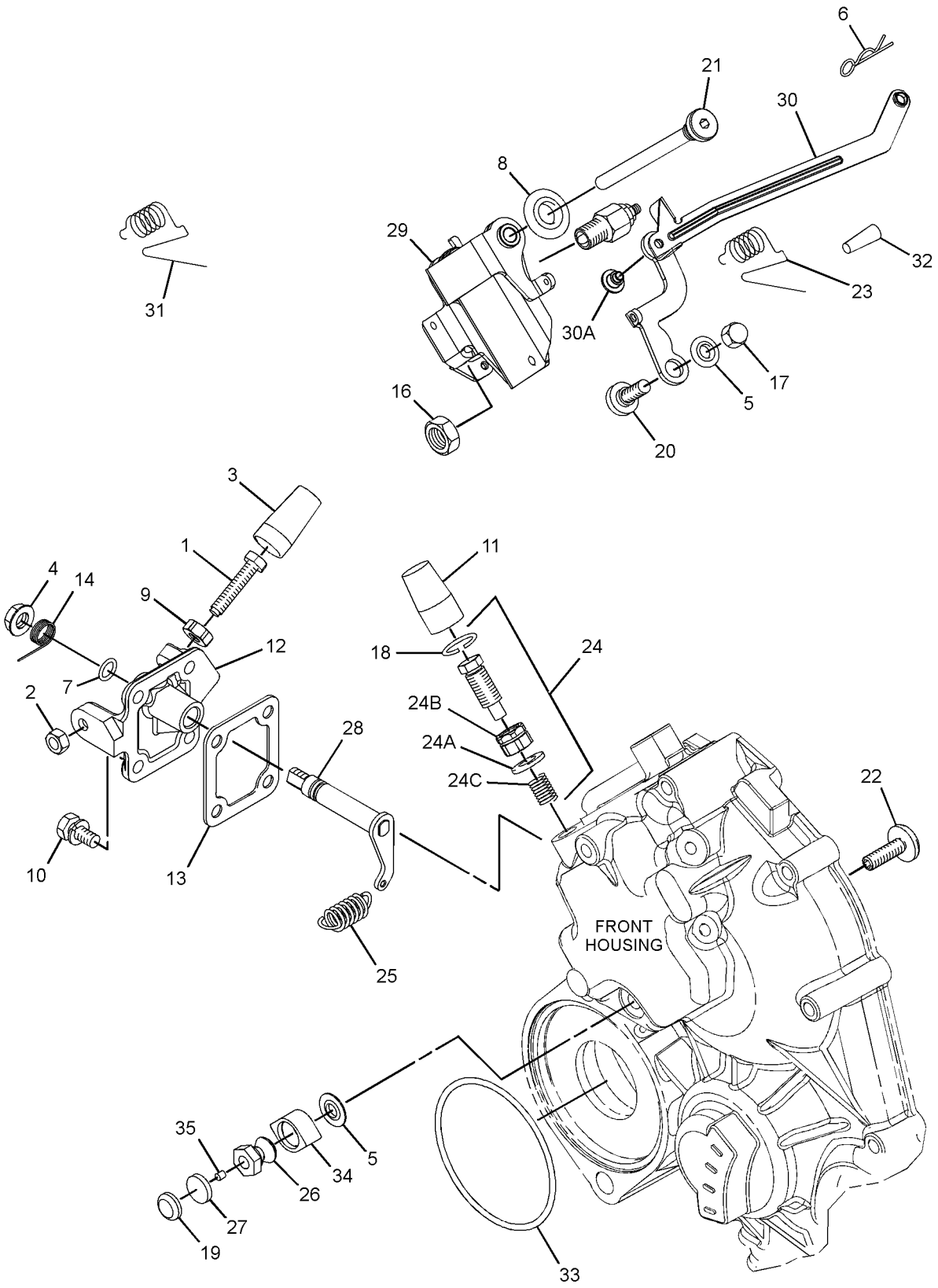

GRAPHIC #1 <END> g06754482

332-1363 CONTROL GP-GOVERNOR

PART OF 495-3121 ENGINE AR-PRIMARY

TYPE 1

SMCS-1265, 1276 **i06841112**

NOTE	REF NO	GRAPHIC REF	PART NUMBER	QTY	PART NAME 1 2 3 4 5 6 (PRODUCT LEVEL)	SEE PAGE
M	1	1	**5C-2890**	1	NUT (M6X1-THD)	
	2	1	**139-5511**	1	CAP (TAMPER RESISTANT)	
M	3	1	**153-5592**	1	NUT (M8X1.25-THD)	
	4	1	**153-6415**	2	WASHER (SEAL)	
	5	1	**153-7983**	1	PIN	
	6	1	**095-1574**	1	SEAL-O-RING	
M	7	1	**369-4486**	2	BOLT (M6X1X35-MM)	
M	8	1	**162-2207**	1	NUT (M6X1-THD)	
M	9	1	**106-8916**	4	BOLT (M6X1X16-MM)	
	10	1	**217-7115**	1	CAP (TAMPER RESISTANT)	
	11	1	**423-7724**	1	GASKET	
	12	1	**308-1882**	1	SPRING	
M	13	1	**308-1889**	1	NUT (M10X1.25-THD)	
M	14	1	**308-1892**	1	NUT (M6X1-THD)	
	15	1	**308-1897**	2	RING	
	16	1	**336-2965**	1	SPRING	
	17	1	**308-4266**	1	SHAFT	
	18	1	**390-3731**	1	SHAFT	
	19	1	**309-6729**	1	SEAL-O-RING	
	20	1	**364-2755**	1	BOLT-SPECIAL	
	21	1	**311-0655**	1	SPRING	
	22	1	**313-5832**	1	BOLT AS	
	22A	1	**153-7987**	1	WASHER (9.2X17X1.8-MM THK)	
M	22B	1	**191-9297**	1	NUT (M10X1.25-THD)	
	22C	1	**313-5833**	1	SPRING	
	23	1	**317-7195**	1	SPRING	
	24	1	**319-3250**	1	CONTROL GP-GOVERNOR (TIMING)	
	25	1	**321-4249**	1	NUT	
	26	1	**390-3729**	1	LEVER-CONTROL	
	27	1	**322-7493**	1	LEVER AS-CONTROL	
	28	1	**330-9189**	1	PLUG	
	29	1	**425-7065**	1	CAP-TAMPER PROOF	
	30	1	**334-0732**	1	ARM AS (FRONT HOUSING)	
	31	1	**335-5578**	1	BRACKET	
	32	1	**308-1875**	1	SEAL-O-RING	

M - METRIC PART

332-1363 **CONTROL GP-GOVERNOR (**contd.**)** **i06841112**

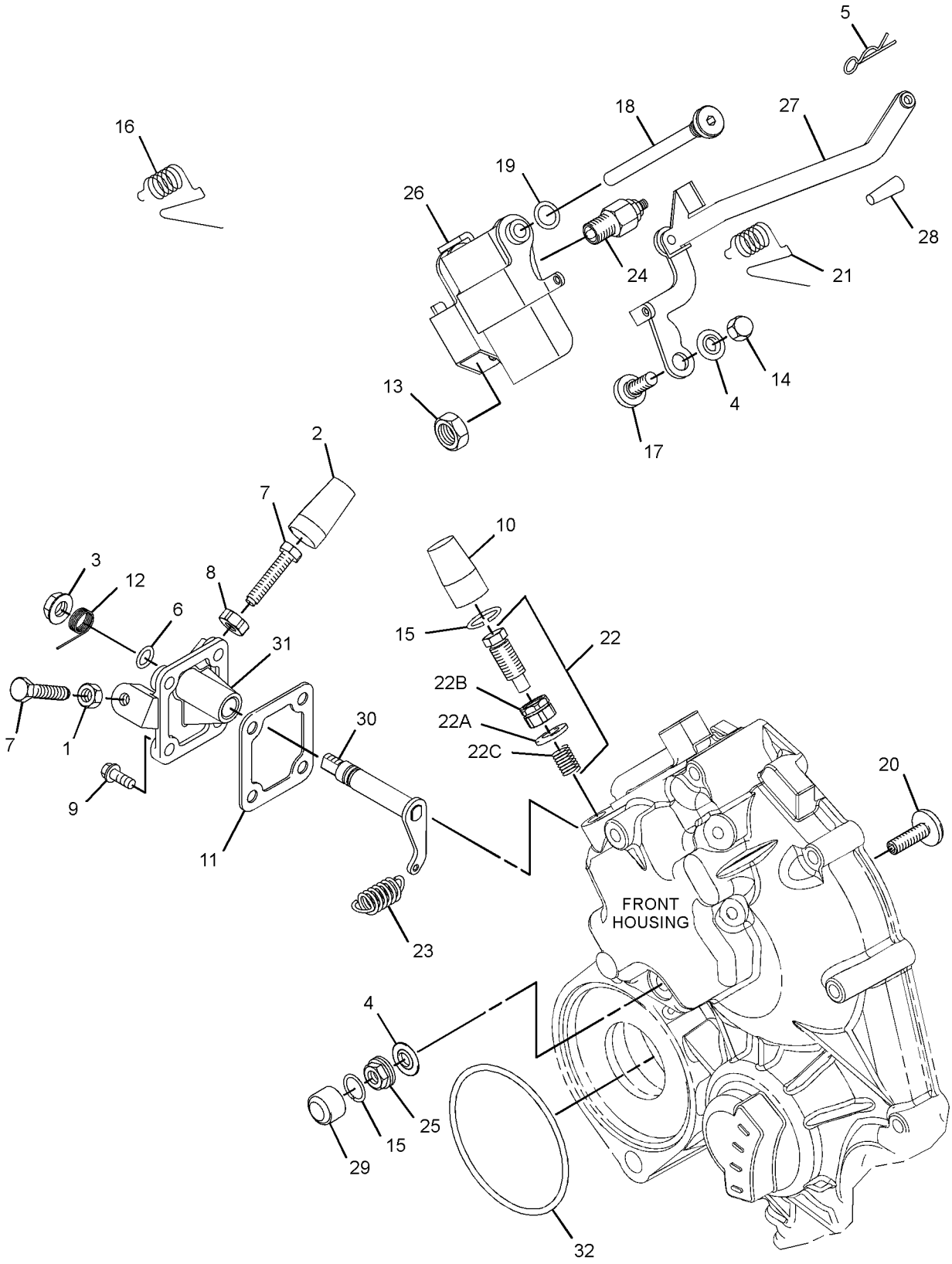

GRAPHIC #1 <END> g06197394

332-1363 CONTROL GP-GOVERNOR

PART OF 461-7892, 461-7894, 495-3121 ENGINE AR-PRIMARY
TYPE 2

SMCS-1265, 1276 **i08303114**

NOTE	REF NO	GRAPHIC REF	PART NUMBER	QTY	PART NAME 1 2 3 4 5 6 (PRODUCT LEVEL)	SEE PAGE
M	1	1	**5C-2890**	1	NUT (M6X1-THD)	
	2	1	**139-5511**	1	CAP (TAMPER RESISTANT)	
M	3	1	**153-5592**	1	NUT (M8X1.25-THD)	
	4	1	**153-6415**	2	WASHER (SEAL)	
	5	1	**153-7983**	1	PIN	
	6	1	**095-1574**	1	SEAL-O-RING	
M	7	1	**7X-2533**	2	BOLT (M6X1X35-MM)	
M	8	1	**162-2207**	1	NUT (M6X1-THD)	
M	9	1	**106-8916**	4	BOLT (M6X1X16-MM)	
	10	1	**217-7115**	1	CAP (TAMPER RESISTANT)	
	11	1	**423-7724**	1	GASKET	
	12	1	**308-1882**	1	SPRING	
M	13	1	**308-1889**	1	NUT (M10X1.25-THD)	
M	14	1	**308-1892**	1	NUT (M6X1-THD)	
C	15	1	**308-1897**	1	RING	
	16	1	**336-2965**	1	SPRING	
	17	1	**308-4266**	1	SHAFT	
	18	1	**390-3731**	1	SHAFT	
	19	1	**309-6729**	1	SEAL-O-RING	
	20	1	**364-2755**	1	BOLT-SPECIAL	
	21	1	**311-0655**	1	SPRING	
	22	1	**313-5832**	1	BOLT AS	
	22A	1	**153-7987**	1	WASHER (9.2X17X1.8-MM THK)	
M	22B	1	**191-9297**	1	NUT (M10X1.25-THD)	
	22C	1	**313-5833**	1	SPRING	
	23	1	**317-7195**	1	SPRING	
Y	24	1	**319-3250**	1	CONTROL GP-GOVERNOR (TIMING)	685
C	25	1	**502-9478**	1	NUT (TAMPER RESISTANT)	
	26	1	**580-0398**	1	LEVER AS-CONTROL	
	27	1	**322-7493**	1	LEVER AS-CONTROL	
	28	1	**330-9189**	1	PLUG	
C	29	1	**503-9707**	1	CAP	
	30	1	**334-0732**	1	ARM AS (FRONT HOUSING)	
	31	1	**335-5578**	1	BRACKET	
	32	1	**308-1875**	1	SEAL-O-RING	
C	33	1	**503-9731**	1	SHROUD	
C	34	1	**502-5421**	1	PIN	

C - CHANGE FROM PREVIOUS TYPE
M - METRIC PART
Y - SEPARATE ILLUSTRATION

332-1363 **CONTROL GP-GOVERNOR (**contd.**)** **i08303114**

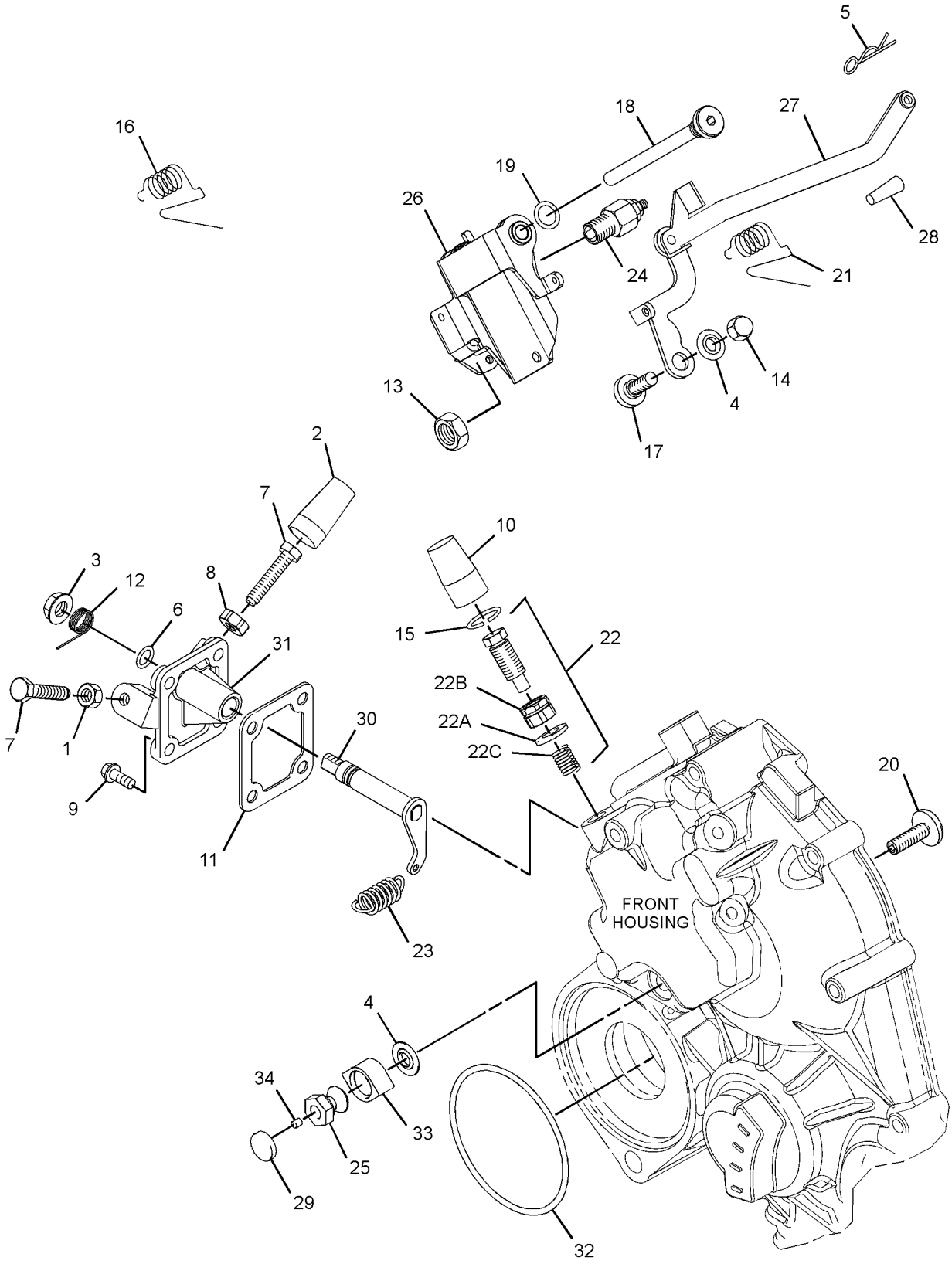

GRAPHIC #1 <END> g06753271

340-6911 CONTROL GP-GOVERNOR

SMCS-1265, 1276 **i06212335**

NOTE	REF NO	GRAPHIC REF	PART NUMBER	QTY	PART NAME 1 2 3 4 5 6 (PRODUCT LEVEL)	SEE PAGE
MR	1	1	**100-4838**	3	BOLT (M6X1X20-MM)	
M	2	1	**100-4841**	1	BOLT (M6X1X10-MM)	
M	3	1	**114-4363**	1	BOLT (M8X1.25X12-MM)	
	4	1	**153-6375**	2	BOLT AS	
	5	1	**153-6412**	1	WASHER	
	6	1	**308-1914**	1	LEVER-CONTROL	
	7	1	**338-3388**	1	SENSOR-SPEED	
	8	1	**338-3389**	1	HARNESS AS-WIRING	
	9	1	**338-3394**	1	BRACKET-MOUNTING	
	10	1	**338-3395**	1	ACTUATOR	
	11	1	**338-3399**	1	CLIP	
	12	1	**338-3400**	1	CONTROL GP-ENGINE ELECTRONIC	
	13	1	**338-3402**	1	ISOLATOR	

M - METRIC PART
R - REMANUFACTURED PART MAY BE AVAILABLE

340-6911 **CONTROL GP-GOVERNOR (**contd.**)** **i06212335**

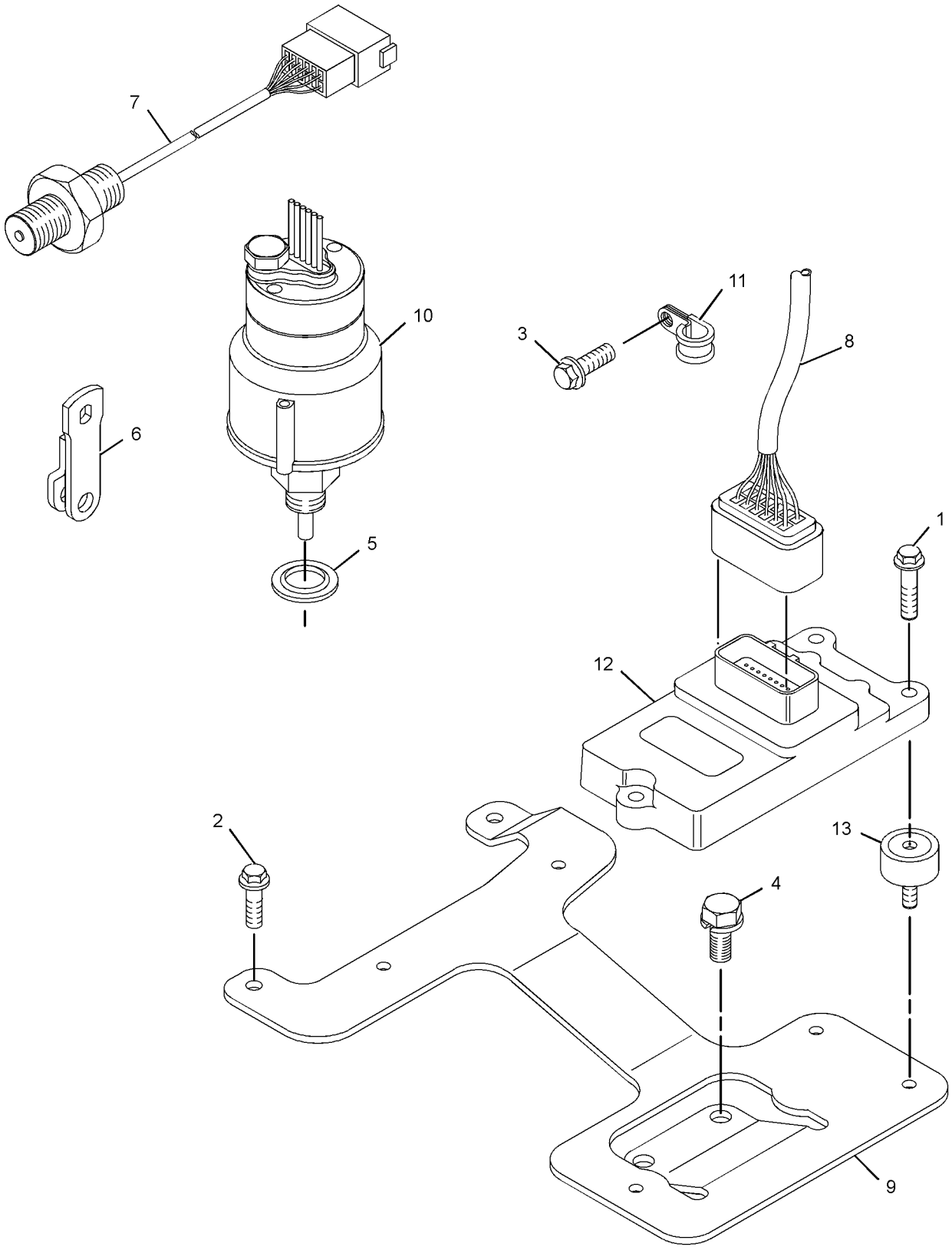

GRAPHIC #1 <END> g01963653

341-1358 CONTROL GP-GOVERNOR

PART OF 433-1380 ENGINE AR

SMCS-1265, 1276 **i06841117**

NOTE	REF NO	GRAPHIC REF	PART NUMBER	QTY	PART NAME 1 2 3 4 5 6 (PRODUCT LEVEL)	SEE PAGE
	1	1	**336-2965**	1	SPRING	
M	2	1	**5C-2890**	1	NUT (M6X1-THD)	
	3	1	**139-5511**	1	CAP (TAMPER RESISTANT)	
M	4	1	**153-5592**	1	NUT (M8X1.25-THD)	
	5	1	**153-6415**	2	WASHER (SEAL)	
	6	1	**153-7983**	1	PIN	
	7	1	**095-1574**	1	SEAL-O-RING	
M	8	1	**8T-4971**	2	BOLT (M6X1X30-MM)	
M	9	1	**162-2207**	1	NUT (M6X1-THD)	
M	10	1	**106-8916**	4	BOLT (M6X1X16-MM)	
	11	1	**217-7115**	1	CAP (TAMPER RESISTANT)	
	12	1	**423-7724**	1	GASKET	
	13	1	**308-1882**	1	SPRING	
M	14	1	**308-1889**	1	NUT (M10X1.25-THD)	
M	15	1	**308-1892**	1	NUT (M6X1-THD)	
	16	1	**308-1897**	2	RING	
	17	1	**335-5578**	1	BRACKET	
	18	1	**308-4266**	1	SHAFT	
	19	1	**390-3731**	1	SHAFT	
	20	1	**309-6729**	1	SEAL-O-RING	
M	21	1	**495-0737**	1	BOLT (M6X0.5X19.5-MM)	
	22	1	**311-0655**	1	SPRING	
	23	1	**313-5832**	1	BOLT AS	
	23A	1	**153-7987**	1	WASHER (9.2X17X1.8-MM THK)	
M	23B	1	**191-9297**	1	NUT (M10X1.25-THD)	
	23C	1	**313-5833**	1	SPRING	
	24	1	**317-7195**	1	SPRING	
	25	1	**319-3251**	1	GOVERNOR GP	
	26	1	**321-4249**	1	NUT	
	27	1	**390-3729**	1	LEVER-CONTROL	
	28	1	**322-7493**	1	LEVER AS-CONTROL	
	29	1	**330-9189**	1	PLUG	
	30	1	**425-7065**	1	CAP-TAMPER PROOF	
	31	1	**334-0732**	1	ARM AS (FRONT HOUSING)	
	32	1	**308-1875**	1	SEAL-O-RING	

M - METRIC PART

341-1358 **CONTROL GP-GOVERNOR (**contd.**)** **i06841117**

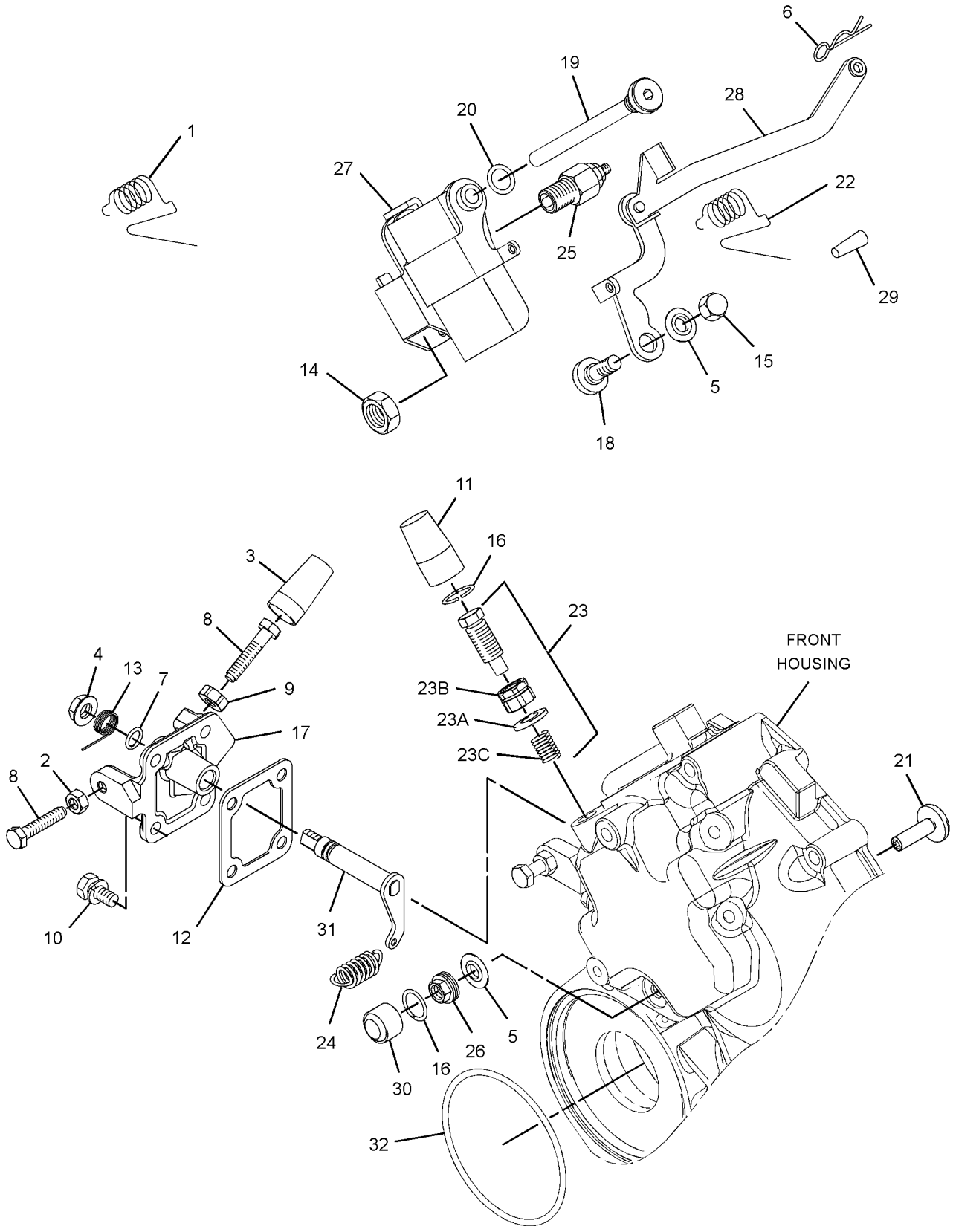

GRAPHIC #1 <END> g06198713

365-4283 CONTROL GP-GOVERNOR

SMCS-1265, 1276 **i06907877**

NOTE	REF NO	GRAPHIC REF	PART NUMBER	QTY	PART NAME 1 2 3 4 5 6 (PRODUCT LEVEL)	SEE PAGE
M	1	1	**5C-2890**	1	NUT (M6X1-THD)	
	2	1	**330-9189**	1	PLUG	
M	3	1	**153-5592**	1	NUT (M8X1.25-THD)	
	4	1	**153-6415**	2	WASHER (SEAL)	
	5	1	**153-7983**	1	PIN	
	6	1	**095-1574**	1	SEAL-O-RING	
M	7	1	**369-4486**	2	BOLT (M6X1X35-MM)	
M	8	1	**162-2207**	1	NUT (M6X1-THD)	
M	9	1	**106-8916**	4	BOLT (M6X1X16-MM)	
	10	1	**217-7115**	1	CAP (TAMPER RESISTANT)	
	11	1	**423-7724**	1	GASKET	
	12	1	**308-1882**	1	SPRING	
M	13	1	**308-1889**	1	NUT (M10X1.25-THD)	
M	14	1	**308-1892**	1	NUT (M6X1-THD)	
	15	1	**308-1897**	2	RING	
	17	1	**308-4266**	1	SHAFT	
	18	1	**390-3731**	1	SHAFT	
	19	1	**309-6729**	1	SEAL-O-RING	
M	20	1	**495-0737**	1	BOLT (M6X0.5X19.5-MM)	
	21	1	**311-0655**	1	SPRING	
	22	1	**313-5832**	1	BOLT AS	
	22A	1	**153-7987**	1	WASHER (9.2X17X1.8-MM THK)	
M	22B	1	**191-9297**	1	NUT (M10X1.25-THD)	
	22C	1	**313-5833**	1	SPRING	
	23	1	**317-7195**	1	SPRING	
	24	1	**319-3250**	1	CONTROL GP-GOVERNOR	
	25	1	**321-4249**	1	NUT	
	26	1	**390-3729**	1	LEVER-CONTROL	
	27	1	**322-7493**	1	LEVER AS-CONTROL	
	28	1	**139-5511**	1	CAP (TAMPER RESISTANT)	
	29	1	**425-7065**	1	CAP-TAMPER PROOF	
	30	1	**334-0732**	1	ARM AS (FRONT HOUSING)	
	31	1	**335-5578**	1	BRACKET	
	32	1	**336-2965**	1	SPRING	

M - METRIC PART

365-4283 **CONTROL GP-GOVERNOR (**contd.**)** **i06907877**

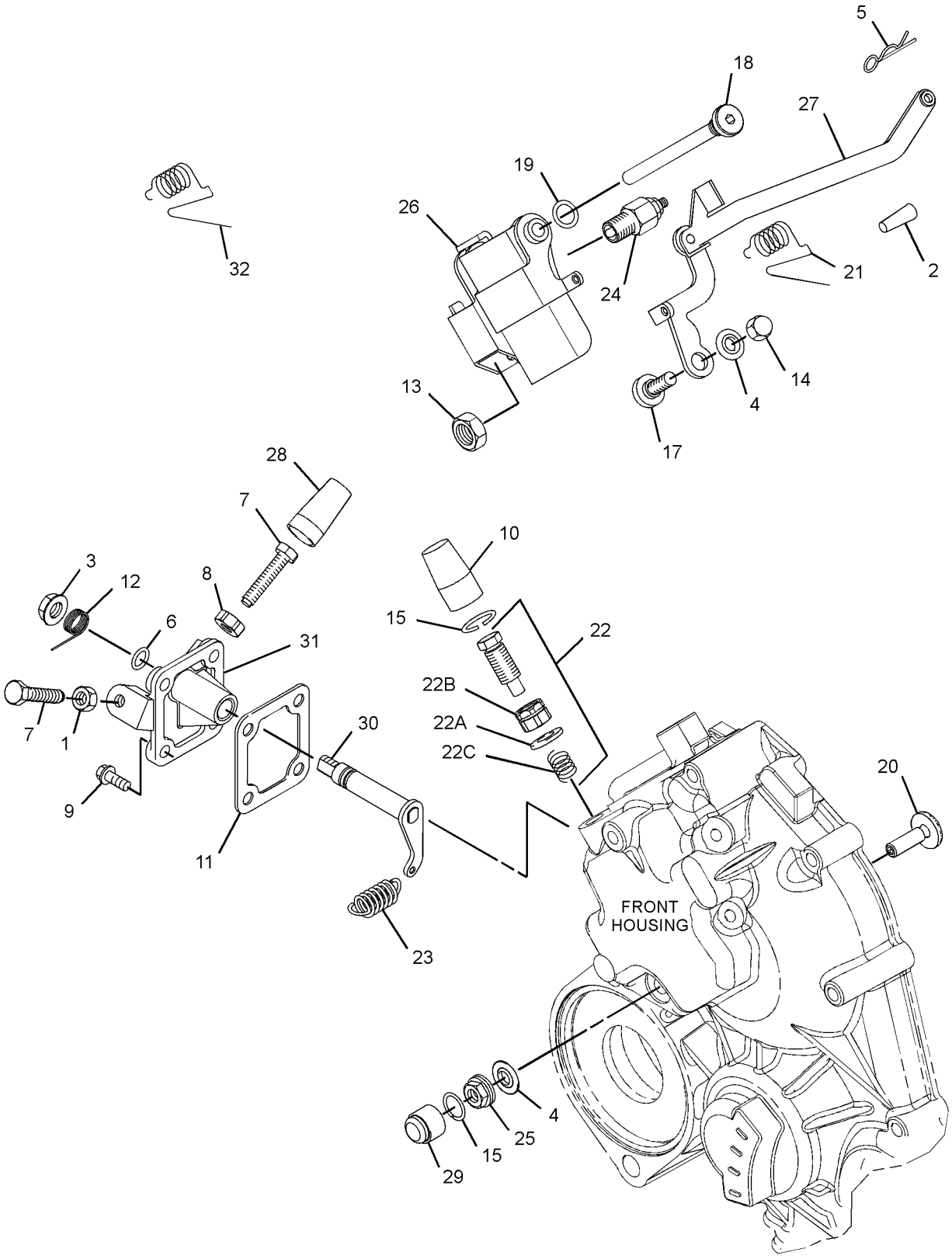

GRAPHIC #1 <END> g06204963

365-4286 CONTROL GP-GOVERNOR

TYPE 1

SMCS-1265, 1276 **i06907846**

NOTE	REF NO	GRAPHIC REF	PART NUMBER	QTY	PART NAME 1 2 3 4 5 6 (PRODUCT LEVEL)	SEE PAGE
M	1	1	**5C-2890**	1	NUT (M6X1-THD)	
	2	1	**330-9189**	1	PLUG	
M	3	1	**153-5592**	1	NUT (M8X1.25-THD)	
	4	1	**153-6415**	2	WASHER (SEAL)	
	5	1	**153-7983**	1	PIN	
	6	1	**095-1574**	1	SEAL-O-RING	
M	7	1	**369-4486**	2	BOLT (M6X1X35-MM)	
M	8	1	**162-2207**	1	NUT (M6X1-THD)	
M	9	1	**106-8916**	4	BOLT (M6X1X16-MM)	
	10	1	**217-7115**	1	CAP (TAMPER RESISTANT)	
	11	1	**423-7724**	1	GASKET	
	12	1	**308-1882**	1	SPRING	
M	13	1	**308-1889**	1	NUT (M10X1.25-THD)	
M	14	1	**308-1892**	1	NUT (M6X1-THD)	
	15	1	**308-1897**	2	RING	
	17	1	**308-4266**	1	SHAFT	
	18	1	**390-3731**	1	SHAFT	
	19	1	**309-6729**	1	SEAL-O-RING	
M	20	1	**495-0737**	1	BOLT (M6X0.5X19.5-MM)	
	21	1	**311-0655**	1	SPRING	
	22	1	**315-5236**	1	BOLT AS	
	22A	1	**153-7987**	1	WASHER (9.2X17X1.8-MM THK)	
M	22B	1	**191-9297**	1	NUT (M10X1.25-THD)	
	22C	1	**315-5235**	1	SPRING	
	23	1	**321-3145**	1	SPRING	
M	24	1	**313-2025**	1	BOLT-SPECIAL (M10X1.25-MM THD)	
	25	1	**321-4249**	1	NUT	
	26	1	**390-3729**	1	LEVER-CONTROL	
	27	1	**322-7493**	1	LEVER AS-CONTROL	
	28	1	**139-5511**	1	CAP (TAMPER RESISTANT)	
	29	1	**425-7065**	1	CAP-TAMPER PROOF	
	30	1	**334-0732**	1	ARM AS (FRONT HOUSING)	
	31	1	**335-5578**	1	BRACKET	
	32	1	**336-2965**	1	SPRING	

M - METRIC PART

365-4286 **CONTROL GP-GOVERNOR (**contd.**)** **i06907846**

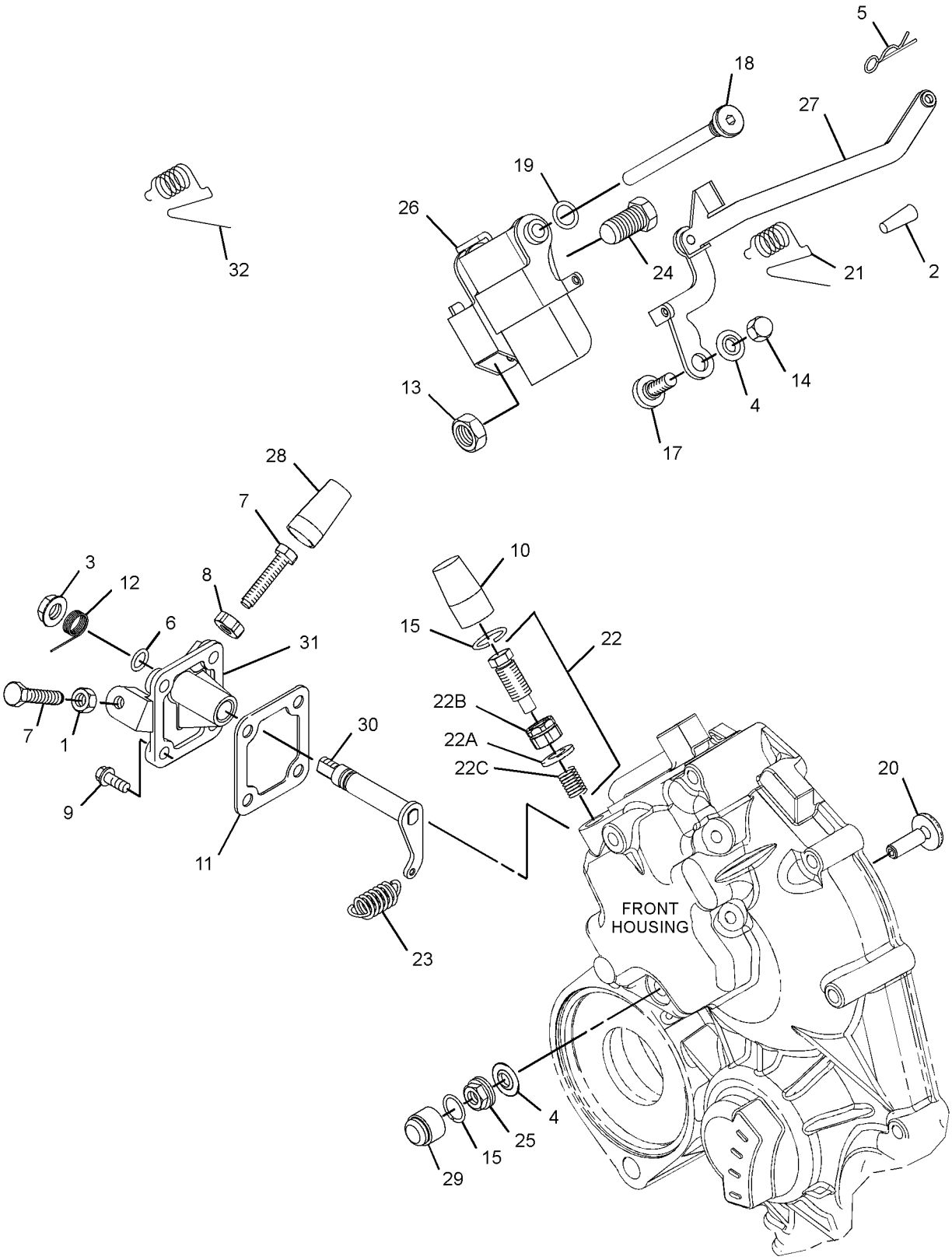

GRAPHIC #1 <END> g06204965

365-4286 CONTROL GP-GOVERNOR

TYPE 2

SMCS-1265, 1276 **i07157994**

NOTE	REF NO	GRAPHIC REF	PART NUMBER	QTY	PART NAME 1 2 3 4 5 6 (PRODUCT LEVEL)	SEE PAGE
M	1	1	**5C-2890**	1	NUT (M6X1-THD)	
	2	1	**330-9189**	1	PLUG	
M	3	1	**153-5592**	1	NUT (M8X1.25-THD)	
	4	1	**153-6415**	2	WASHER (SEAL)	
	5	1	**153-7983**	1	PIN	
	6	1	**095-1574**	1	SEAL-O-RING	
M	7	1	**369-4486**	2	BOLT (M6X1X35-MM)	
M	8	1	**162-2207**	1	NUT (M6X1-THD)	
M	9	1	**106-8916**	4	BOLT (M6X1X16-MM)	
	10	1	**217-7115**	1	CAP (TAMPER RESISTANT)	
	11	1	**423-7724**	1	GASKET	
	12	1	**308-1882**	1	SPRING	
M	13	1	**308-1889**	1	NUT (M10X1.25-THD)	
M	14	1	**308-1892**	1	NUT (M6X1-THD)	
C	15	1	**308-1897**	1	RING	
	17	1	**308-4266**	1	SHAFT	
	18	1	**390-3731**	1	SHAFT	
	19	1	**309-6729**	1	SEAL-O-RING	
M	20	1	**495-0737**	1	BOLT (M6X0.5X19.5-MM)	
	21	1	**311-0655**	1	SPRING	
	22	1	**315-5236**	1	BOLT AS	
	22A	1	**153-7987**	1	WASHER (9.2X17X1.8-MM THK)	
M	22B	1	**191-9297**	1	NUT (M10X1.25-THD)	
	22C	1	**315-5235**	1	SPRING	
	23	1	**321-3145**	1	SPRING	
M	24	1	**313-2025**	1	BOLT-SPECIAL (M10X1.25-MM THD)	
C	25	1	**502-9478**	1	NUT (TAMPER RESISTANT)	
	26	1	**390-3729**	1	LEVER-CONTROL	
	27	1	**322-7493**	1	LEVER AS-CONTROL	
	28	1	**139-5511**	1	CAP (TAMPER RESISTANT)	
C	29	1	**503-9707**	1	CAP	
	30	1	**334-0732**	1	ARM AS (FRONT HOUSING)	
	31	1	**335-5578**	1	BRACKET	
	32	1	**336-2965**	1	SPRING	
C	33	1	**503-9731**	1	SHROUD	
C	34	1	**502-5421**	1	PIN	

C - CHANGE FROM PREVIOUS TYPE
M - METRIC PART

365-4286 **CONTROL GP-GOVERNOR (**contd.**)** **i07157994**

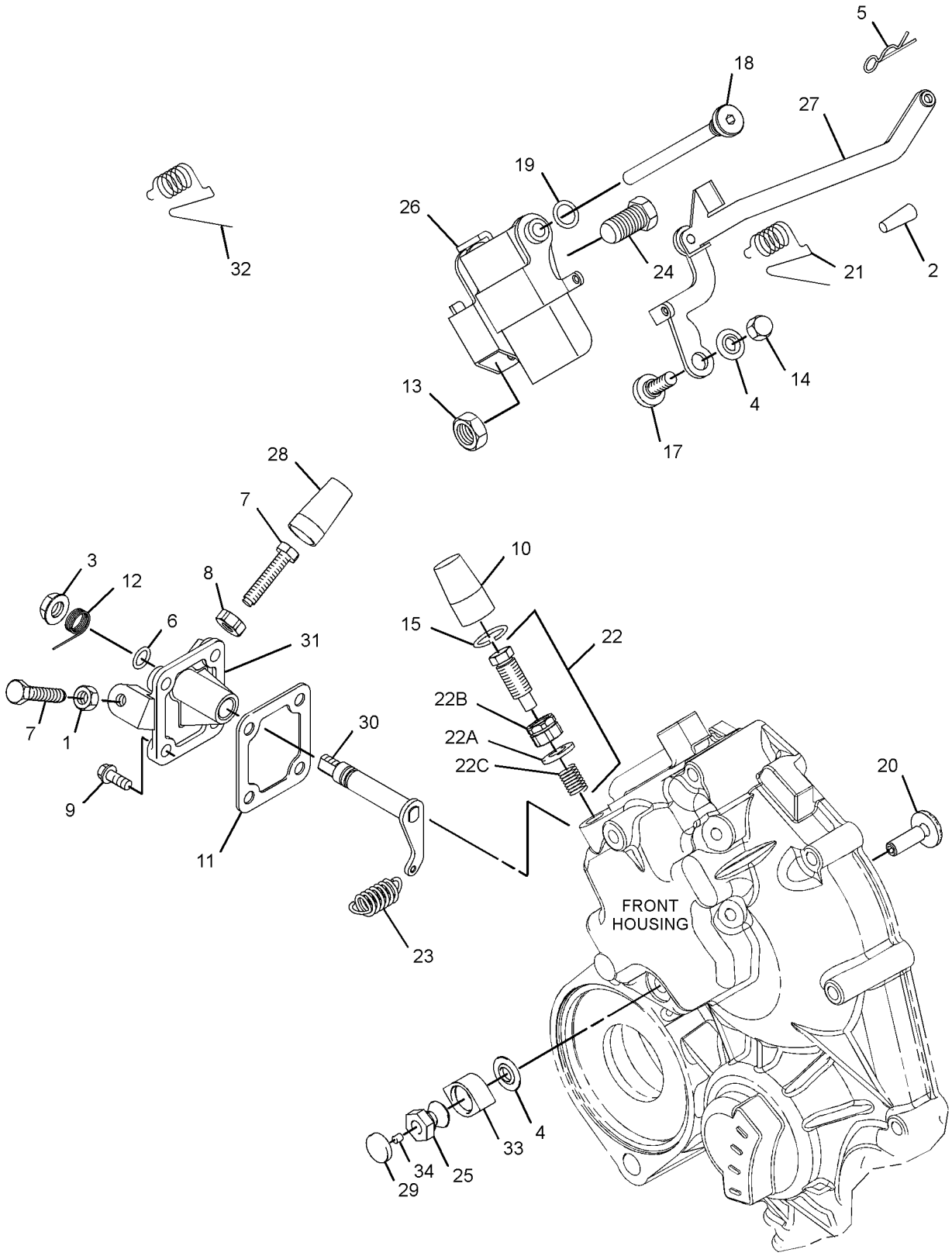

GRAPHIC #1 <END> g06239470

420-3211 CONTROL GP-GOVERNOR

TYPE 1

SMCS-1265, 1276 **i06841105**

NOTE	REF NO	GRAPHIC REF	PART NUMBER	QTY	PART NAME 1 2 3 4 5 6 (PRODUCT LEVEL)	SEE PAGE
M	1	1	**5C-2890**	1	NUT (M6X1-THD)	
	2	1	**139-5511**	1	CAP (TAMPER RESISTANT)	
M	3	1	**153-5592**	1	NUT (M8X1.25-THD)	
	4	1	**153-6415**	2	WASHER (SEAL)	
	5	1	**153-7983**	1	PIN	
	6	1	**095-1574**	1	SEAL-O-RING	
M	7	1	**369-4486**	2	BOLT (M6X1X35-MM)	
M	8	1	**162-2207**	1	NUT (M6X1-THD)	
M	9	1	**106-8916**	4	BOLT (M6X1X16-MM)	
	10	1	**217-7115**	1	CAP (TAMPER RESISTANT)	
	11	1	**423-7724**	1	GASKET	
	12	1	**308-1882**	1	SPRING	
M	13	1	**308-1889**	1	NUT (M10X1.25-THD)	
M	14	1	**308-1892**	1	NUT (M6X1-THD)	
	15	1	**308-1897**	2	RING	
	16	1	**336-2965**	1	SPRING	
	17	1	**308-4266**	1	SHAFT	
	18	1	**390-3731**	1	SHAFT	
	19	1	**309-6729**	1	SEAL-O-RING	
M	20	1	**495-0737**	1	BOLT (M6X0.5X19.5-MM)	
	21	1	**311-0655**	1	SPRING	
	22	1	**313-5832**	1	BOLT AS	
	22A	1	**153-7987**	1	WASHER (9.2X17X1.8-MM THK)	
M	22B	1	**191-9297**	1	NUT (M10X1.25-THD)	
	22C	1	**313-5833**	1	SPRING	
	23	1	**317-7195**	1	SPRING	
	24	1	**319-3252**	1	SENSOR AS-SPEED	
	25	1	**321-4249**	1	NUT	
	26	1	**390-3729**	1	LEVER-CONTROL	
	27	1	**322-7493**	1	LEVER AS-CONTROL	
	28	1	**330-9189**	1	PLUG	
	29	1	**425-7065**	1	CAP-TAMPER PROOF	
	30	1	**334-0732**	1	ARM AS (FRONT HOUSING)	
	31	1	**335-5578**	1	BRACKET	
	32	1	**308-1875**	1	SEAL-O-RING	

M - METRIC PART

420-3211 **CONTROL GP-GOVERNOR (**contd.**)** **i06841105**

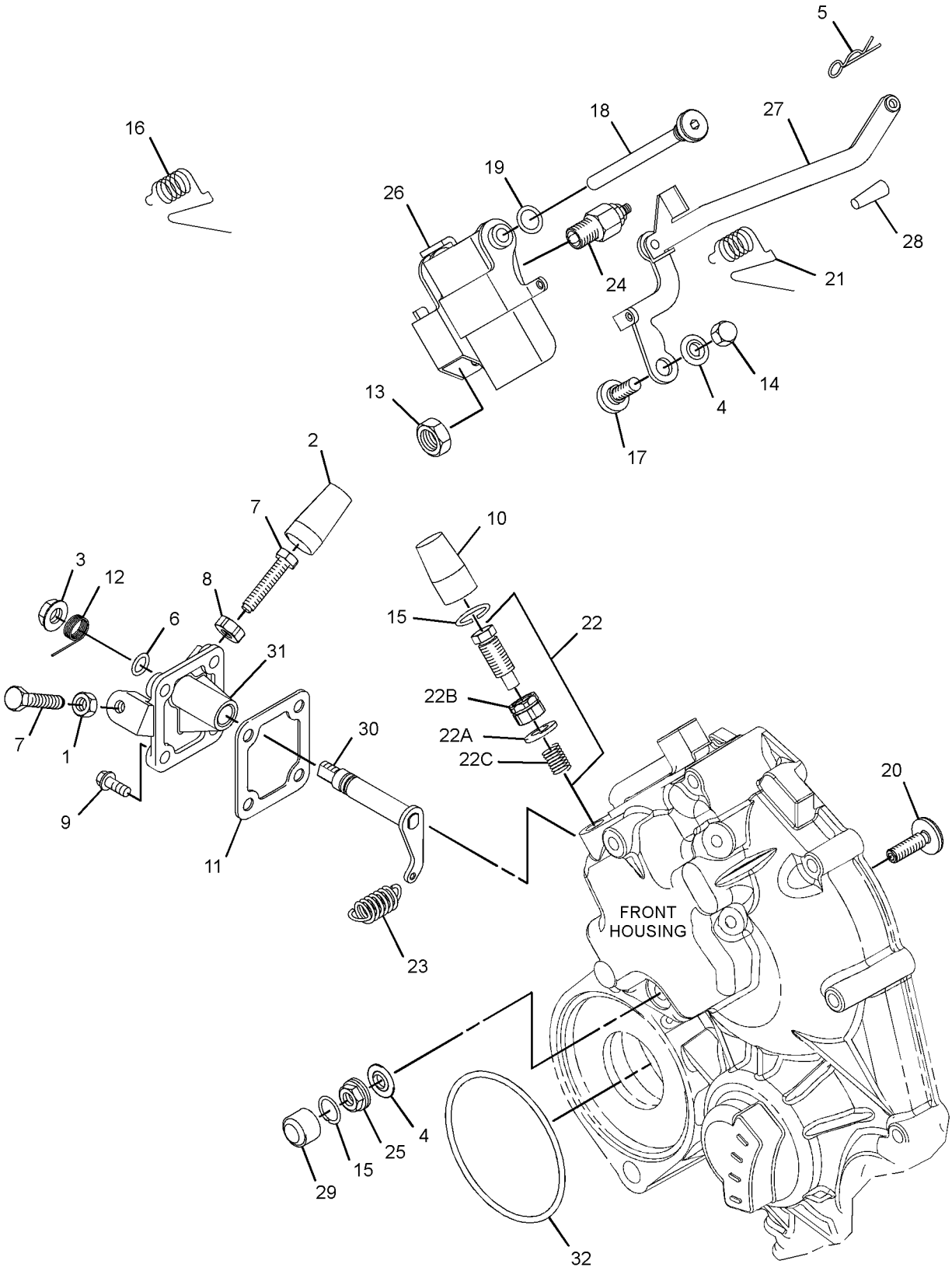

GRAPHIC #1 <END> g06197380

420-3211 CONTROL GP-GOVERNOR

TYPE 2

SMCS-1265, 1276 **i08315039**

NOTE	REF NO	GRAPHIC REF	PART NUMBER	QTY	PART NAME 1 2 3 4 5 6 (PRODUCT LEVEL)	SEE PAGE
M	1	1	**5C-2890**	1	NUT (M6X1-THD)	
	2	1	**139-5511**	1	CAP (TAMPER RESISTANT)	
M	3	1	**153-5592**	1	NUT (M8X1.25-THD)	
	4	1	**153-6415**	2	WASHER (SEAL)	
	5	1	**153-7983**	1	PIN	
	6	1	**095-1574**	1	SEAL-O-RING	
M	7	1	**7X-2533**	2	BOLT (M6X1X35-MM)	
M	8	1	**162-2207**	1	NUT (M6X1-THD)	
M	9	1	**106-8916**	4	BOLT (M6X1X16-MM)	
	10	1	**217-7115**	1	CAP (TAMPER RESISTANT)	
	11	1	**423-7724**	1	GASKET	
	12	1	**308-1882**	1	SPRING	
M	13	1	**308-1889**	1	NUT (M10X1.25-THD)	
M	14	1	**308-1892**	1	NUT (M6X1-THD)	
C	15	1	**308-1897**	1	RING	
	16	1	**336-2965**	1	SPRING	
	17	1	**308-4266**	1	SHAFT	
	18	1	**390-3731**	1	SHAFT	
	19	1	**309-6729**	1	SEAL-O-RING	
M	20	1	**495-0737**	1	BOLT (M6X0.5X19.5-MM)	
	21	1	**311-0655**	1	SPRING	
	22	1	**313-5832**	1	BOLT AS	
	22A	1	**153-7987**	1	WASHER (9.2X17X1.8-MM THK)	
M	22B	1	**191-9297**	1	NUT (M10X1.25-THD)	
	22C	1	**313-5833**	1	SPRING	
	23	1	**317-7195**	1	SPRING	
	24	1	**319-3252**	1	SENSOR AS-SPEED (ENGINE TIMING)	
M	24A	1	**155-8076**	1	NUT (M4X0.4-THD)	
C	25	1	**502-9478**	1	NUT (TAMPER RESISTANT)	
	26	1	**580-0398**	1	LEVER AS-CONTROL	
	27	1	**322-7493**	1	LEVER AS-CONTROL (FLOATING)	
	27A	1	**154-1400**	1	PIN	
	28	1	**330-9189**	1	PLUG	
C	29	1	**503-9707**	1	CAP	
	30	1	**334-0732**	1	ARM AS (FRONT HOUSING)	
	31	1	**335-5578**	1	BRACKET	
	32	1	**308-1875**	1	SEAL-O-RING	
C	33	1	**503-9731**	1	SHROUD	
C	34	1	**502-5421**	1	PIN	

C - CHANGE FROM PREVIOUS TYPE
M - METRIC PART

420-3211 **CONTROL GP-GOVERNOR (**contd.**)** **i08315039**

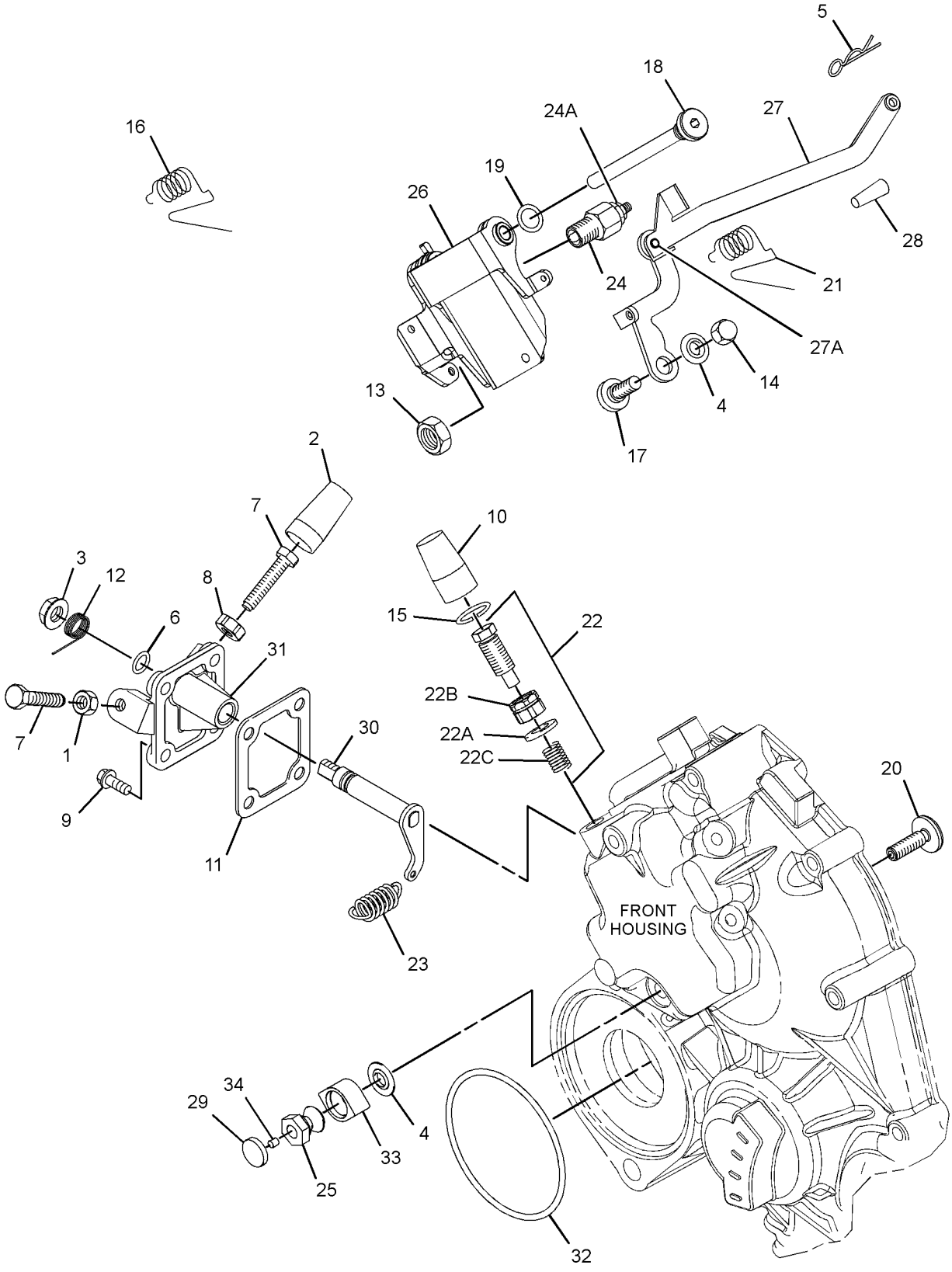

GRAPHIC #1 <END> g06755205

441-6513 CONTROL GP-GOVERNOR

SMCS-1265, 1276 **i05467520**

NOTE	REF NO	GRAPHIC REF	PART NUMBER	QTY	PART NAME 1 2 3 4 5 6 (PRODUCT LEVEL)	SEE PAGE
M	1	1	**106-8916**	4	BOLT (M6X1X16-MM)	
M	2	1	**5C-2890**	1	NUT (M6X1-THD)	
	3	1	**139-5511**	1	CAP (TAMPER RESISTANT)	
M	4	1	**153-5592**	1	NUT (M8X1.25-THD)	
	5	1	**153-6415**	2	WASHER (SEAL)	
	6	1	**153-7983**	1	PIN	
	7	1	**095-1574**	1	SEAL-O-RING	
M	8	1	**162-2207**	1	NUT (M6X1-THD)	
	9	1	**217-7115**	1	CAP (TAMPER RESISTANT)	
	10	1	**308-1882**	1	SPRING	
M	11	1	**308-1889**	1	NUT (M10X1.25-THD)	
M	12	1	**308-1892**	1	NUT (M6X1-THD)	
	13	1	**308-1897**	2	RING	
	14	1	**308-4266**	1	SHAFT	
	15	1	**309-6729**	1	SEAL-O-RING	
	16	1	**309-6732**	1	BOLT	
	17	1	**311-0655**	1	SPRING	
	18	1	**313-5832**	1	BOLT AS	
	18A	1	**153-7987**	1	WASHER (9.2X17X1.8-MM THK)	
M	18B	1	**191-9297**	1	NUT (M10X1.25-THD)	
	19	1	**317-7195**	1	SPRING	
	20	1	**319-3250**	1	CONTROL GP-GOVERNOR	
	21	1	**321-4249**	1	NUT	
	22	1	**322-7493**	1	LEVER AS-CONTROL	
	23	1	**330-9189**	1	PLUG	
	24	1	**334-0732**	1	ARM AS	
	25	1	**335-5578**	1	BRACKET	
M	26	1	**369-4486**	2	BOLT (M6X1X35-MM)	
	27	1	**390-3729**	1	LEVER-CONTROL	
	28	1	**390-3731**	1	SHAFT	
	29	1	**423-7724**	1	GASKET	
	30	1	**425-7065**	1	CAP-TAMPER PROOF	
	31	1	**336-2965**	1	SPRING	

M - METRIC PART

441-6513 **CONTROL GP-GOVERNOR (**contd.**)** **i05467520**

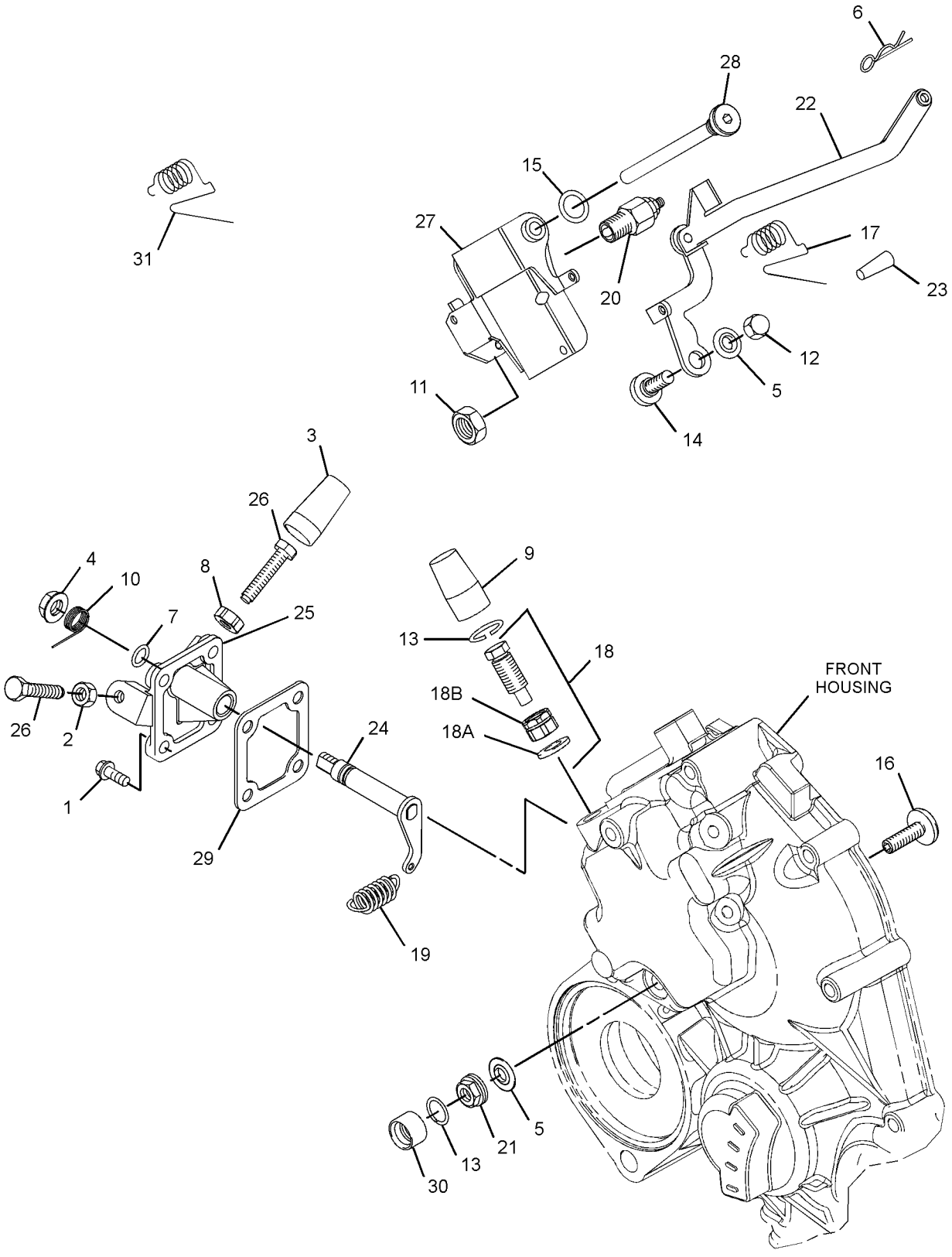

GRAPHIC #1 <END> g03702897

454-6143 CONTROL GP-GOVERNOR

PART OF 492-6602 ENGINE AR-PRIMARY

SMCS-1265, 1276 **i06841109**

NOTE	REF NO	GRAPHIC REF	PART NUMBER	QTY	PART NAME 1 2 3 4 5 6 (PRODUCT LEVEL)	SEE PAGE
M	1	1	**106-8916**	4	BOLT (M6X1X16-MM)	
M	2	1	**5C-2890**	1	NUT (M6X1-THD)	
	3	1	**139-5511**	1	CAP (TAMPER RESISTANT)	
M	4	1	**153-5592**	1	NUT (M8X1.25-THD)	
	5	1	**153-6415**	2	WASHER (SEAL)	
	6	1	**153-7983**	1	PIN	
	7	1	**095-1574**	1	SEAL-O-RING	
M	8	1	**162-2207**	1	NUT (M6X1-THD)	
	9	1	**217-7115**	1	CAP (TAMPER RESISTANT)	
	10	1	**308-1882**	1	SPRING	
M	11	1	**308-1889**	1	NUT (M10X1.25-THD)	
M	12	1	**308-1892**	1	NUT (M6X1-THD)	
	13	1	**308-1897**	2	RING	
	14	1	**308-4266**	1	SHAFT	
	15	1	**309-6729**	1	SEAL-O-RING	
M	16	1	**495-0737**	1	BOLT (M6X0.5X19.5-MM)	
	17	1	**311-0655**	1	SPRING	
	18	1	**313-5832**	1	BOLT AS	
	18A	1	**153-7987**	1	WASHER (9.2X17X1.8-MM THK)	
M	18B	1	**191-9297**	1	NUT (M10X1.25-THD)	
	18C	1	**313-5833**	1	SPRING	
	19	1	**317-7195**	1	SPRING	
	20	1	**319-3252**	1	SENSOR AS-SPEED	
	21	1	**321-4249**	1	NUT	
	22	1	**322-7493**	1	LEVER AS-CONTROL	
	23	1	**330-9189**	1	PLUG	
	24	1	**334-0732**	1	ARM AS (FRONT HOUSING)	
	25	1	**335-5578**	1	BRACKET	
M	26	1	**369-4486**	2	BOLT (M6X1X35-MM)	
	27	1	**390-3729**	1	LEVER-CONTROL	
	28	1	**390-3731**	1	SHAFT	
	29	1	**423-7724**	1	GASKET	
	30	1	**425-7065**	1	CAP-TAMPER PROOF	
	31	1	**336-2965**	1	SPRING	
	32	1	**308-1875**	1	SEAL-O-RING	

M - METRIC PART

454-6143 **CONTROL GP-GOVERNOR (**contd.**)** **i06841109**

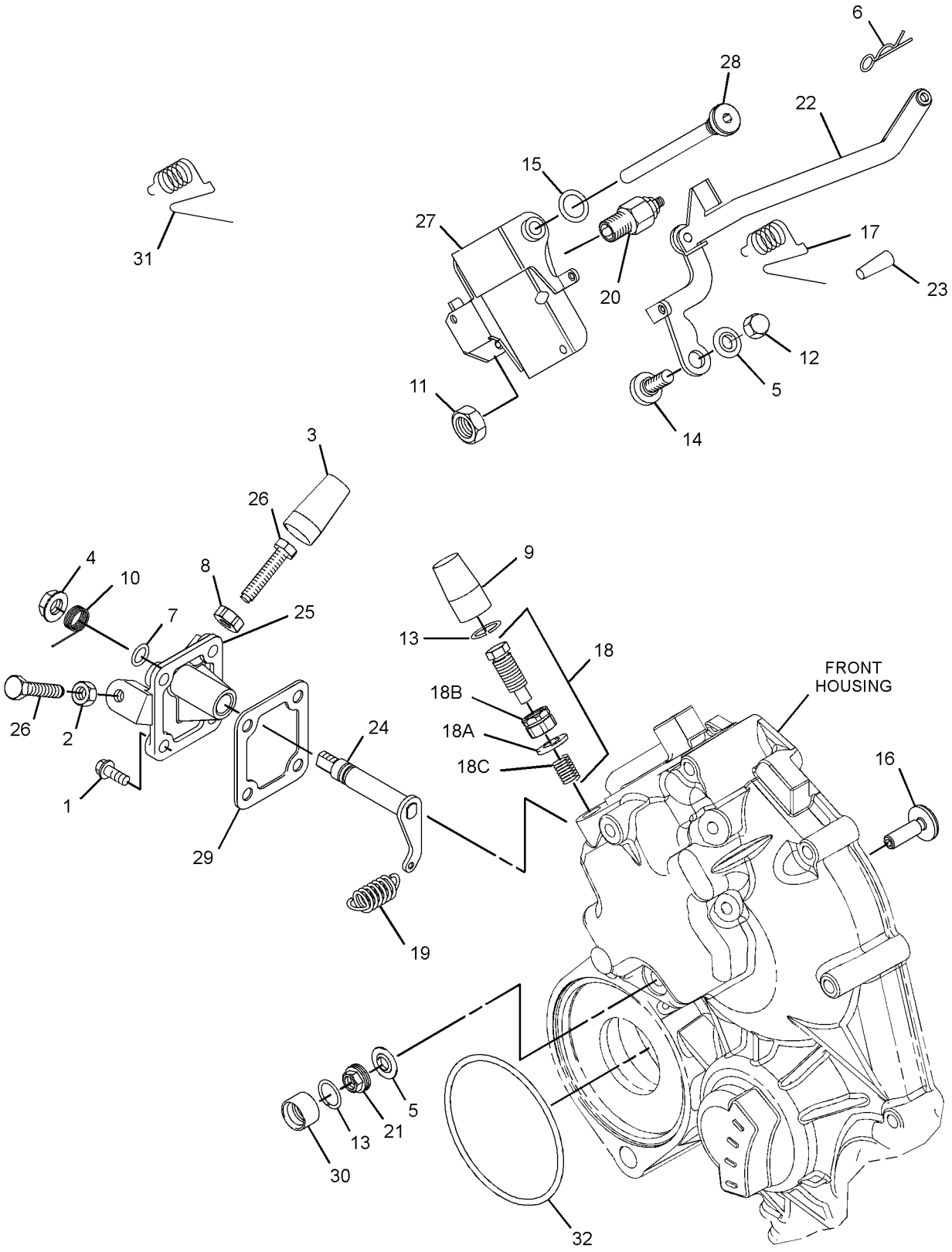

GRAPHIC #1 <END> g06197905

454-6143 CONTROL GP-GOVERNOR

PART OF 435-1642, 492-6602, 549-8284 ENGINE AR-PRIMARY

SMCS-1265, 1276 **i08293703**

NOTE	REF NO	GRAPHIC REF	PART NUMBER	QTY	PART NAME 1 2 3 4 5 6 (PRODUCT LEVEL)	SEE PAGE
M	1	1	**106-8916**	4	BOLT (M6X1X16-MM)	
M	2	1	**5C-2890**	1	NUT (M6X1-THD)	
	3	1	**139-5511**	1	CAP (TAMPER RESISTANT)	
M	4	1	**153-5592**	1	NUT (M8X1.25-THD)	
	5	1	**153-6415**	2	WASHER (SEAL)	
	6	1	**153-7983**	1	PIN	
	7	1	**095-1574**	1	SEAL-O-RING	
M	8	1	**162-2207**	1	NUT (M6X1-THD)	
	9	1	**217-7115**	1	CAP (TAMPER RESISTANT)	
	10	1	**308-1882**	1	SPRING	
M	11	1	**308-1889**	1	NUT (M10X1.25-THD)	
M	12	1	**308-1892**	1	NUT (M6X1-THD)	
C	13	1	**308-1897**	1	RING	
	14	1	**308-4266**	1	SHAFT	
	15	1	**309-6729**	1	SEAL-O-RING	
	16	1	**364-2755**	1	BOLT-SPECIAL	
	17	1	**311-0655**	1	SPRING	
	18	1	**313-5832**	1	BOLT AS	
	18A	1	**153-7987**	1	WASHER (9.2X17X1.8-MM THK)	
M	18B	1	**191-9297**	1	NUT (M10X1.25-THD)	
	18C	1	**313-5833**	1	SPRING	
	19	1	**317-7195**	1	SPRING	
	20	1	**319-3252**	1	SENSOR AS-SPEED (ENGINE TIMING)	
M	20A	1	**155-8076**	1	NUT (M4X0.4-THD)	
C	21	1	**502-9478**	1	NUT (TAMPER RESISTANT)	
	22	1	**322-7493**	1	LEVER AS-CONTROL	
	22A	1	**154-1400**	1	PIN	
	23	1	**330-9189**	1	PLUG	
	24	1	**334-0732**	1	ARM AS (FRONT HOUSING)	
	25	1	**335-5578**	1	BRACKET	
M	26	1	**7X-2533**	2	BOLT (M6X1X35-MM)	
	27	1	**580-0398**	1	LEVER AS-CONTROL	
	28	1	**390-3731**	1	SHAFT	
	29	1	**423-7724**	1	GASKET	
C	30	1	**503-9707**	1	CAP	
	31	1	**336-2965**	1	SPRING	
	32	1	**308-1875**	1	SEAL-O-RING	
C	33	1	**503-9731**	1	SHROUD	
C	34	1	**502-5421**	1	PIN	

C - CHANGE FROM PREVIOUS TYPE
M - METRIC PART

454-6143 **CONTROL GP-GOVERNOR (**contd.**)** **i08293703**

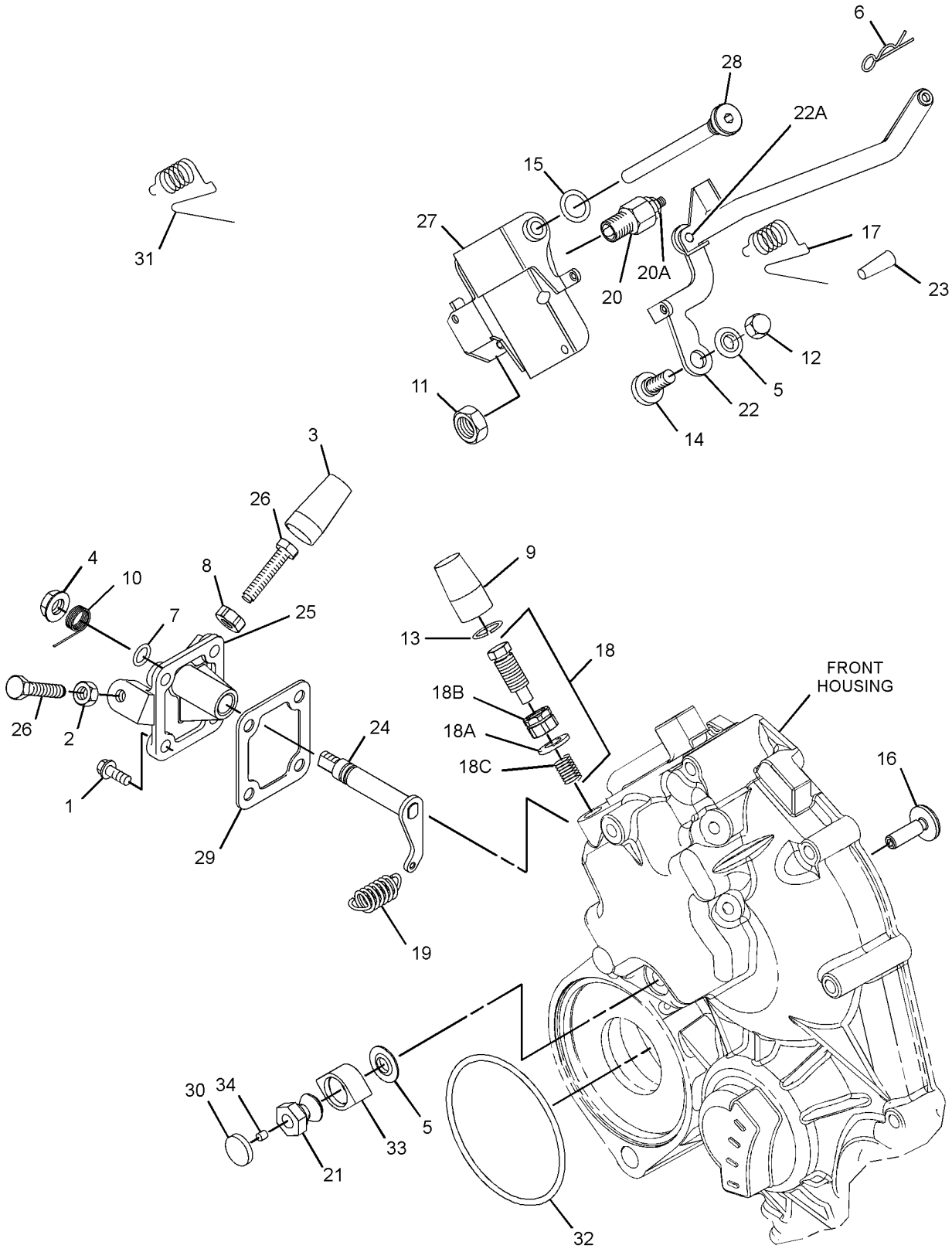

GRAPHIC #1 <END> g06791995

465-2207 CONTROL GP-GOVERNOR

PART OF 461-7895 ENGINE AR-PRIMARY

TYPE 1

SMCS-1265, 1276 **i07404328**

NOTE	REF NO	GRAPHIC REF	PART NUMBER	QTY	PART NAME 1 2 3 4 5 6 (PRODUCT LEVEL)	SEE PAGE
M	1	1	**106-8916**	4	BOLT (M6X1X16-MM)	
M	2	1	**5C-2890**	1	NUT (M6X1-THD)	
	3	1	**139-5511**	1	CAP (TAMPER RESISTANT)	
M	4	1	**153-5592**	1	NUT (M8X1.25-THD)	
	5	1	**153-6415**	2	WASHER (SEAL)	
	6	1	**153-7983**	1	PIN	
	7	1	**095-1574**	1	SEAL-O-RING	
M	8	1	**162-2207**	1	NUT (M6X1-THD)	
	9	1	**217-7115**	1	CAP (TAMPER RESISTANT)	
	10	1	**308-1882**	1	SPRING	
M	11	1	**308-1889**	1	NUT (M10X1.25-THD)	
M	12	1	**308-1892**	1	NUT (M6X1-THD)	
	13	1	**308-1897**	2	RING	
	14	1	**308-4266**	1	SHAFT	
	15	1	**309-6728**	1	SHAFT	
	16	1	**309-6729**	1	SEAL-O-RING	
	17	1	**364-2755**	1	BOLT-SPECIAL	
	18	1	**311-0655**	1	SPRING	
	19	1	**313-5832**	1	BOLT AS	
	19A	1	**153-7987**	1	WASHER (9.2X17X1.8-MM THK)	
M	19B	1	**191-9297**	1	NUT (M10X1.25-THD)	
	19C	1	**313-5833**	1	SPRING	
	20	1	**317-7195**	1	SPRING	
	21	1	**319-3250**	1	CONTROL GP-GOVERNOR	
	22	1	**321-4249**	1	NUT	
	23	1	**322-7492**	1	LEVER-CONTROL	
	24	1	**322-7493**	1	LEVER AS-CONTROL	
	25	1	**330-9189**	1	PLUG	
	26	1	**334-0732**	1	ARM AS	
	27	1	**335-5578**	1	BRACKET	
	28	1	**336-2965**	1	SPRING	
M	29	1	**369-4486**	2	BOLT (M6X1X35-MM)	
	30	1	**423-7724**	1	GASKET	
	31	1	**425-7065**	1	CAP-TAMPER PROOF	

M - METRIC PART

465-2207 **CONTROL GP-GOVERNOR (**contd.**)** **i07404328**

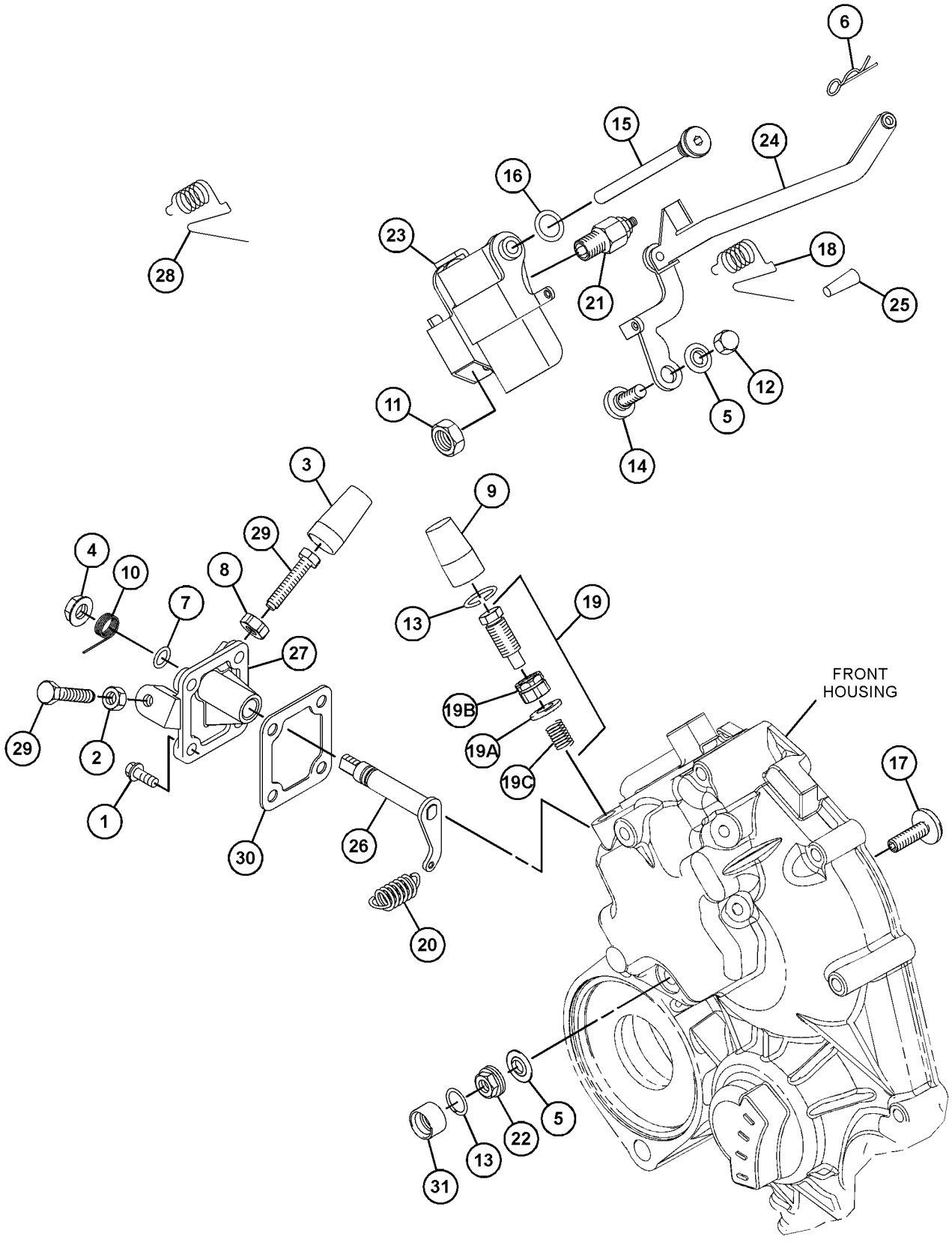

GRAPHIC #1 <END> g06202463

465-2207 CONTROL GP-GOVERNOR

PART OF 461-7895 ENGINE AR-PRIMARY

TYPE 2

SMCS-1265, 1276 **i08511660**

NOTE	REF NO	GRAPHIC REF	PART NUMBER	QTY	PART NAME 1 2 3 4 5 6 (PRODUCT LEVEL)	SEE PAGE
M	1	1	**106-8916**	4	BOLT (M6X1X16-MM)	
M	2	1	**5C-2890**	1	NUT (M6X1-THD)	
	3	1	**139-5511**	1	CAP (TAMPER RESISTANT)	
M	4	1	**153-5592**	1	NUT (M8X1.25-THD)	
	5	1	**153-6415**	2	WASHER (SEAL)	
	6	1	**153-7983**	1	PIN	
	7	1	**095-1574**	1	SEAL-O-RING	
M	8	1	**162-2207**	1	NUT (M6X1-THD)	
	9	1	**217-7115**	1	CAP (TAMPER RESISTANT)	
	10	1	**308-1882**	1	SPRING	
M	11	1	**308-1889**	1	NUT (M10X1.25-THD)	
M	12	1	**308-1892**	1	NUT (M6X1-THD)	
C	13	1	**308-1897**	1	RING	
	14	1	**308-4266**	1	SHAFT	
	15	1	**390-3731**	1	SHAFT	
	16	1	**309-6729**	1	SEAL-O-RING	
	17	1	**364-2755**	1	BOLT-SPECIAL	
	18	1	**311-0655**	1	SPRING	
	19	1	**313-5832**	1	BOLT AS	
	19A	1	**153-7987**	1	WASHER (9.2X17X1.8-MM THK)	
M	19B	1	**191-9297**	1	NUT (M10X1.25-THD)	
	19C	1	**313-5833**	1	SPRING	
	20	1	**317-7195**	1	SPRING	
Y	21	1	**319-3250**	1	CONTROL GP-GOVERNOR	685
C	22	1	**502-9478**	1	NUT (TAMPER RESISTANT)	
	23	1	**580-0398**	1	LEVER AS-CONTROL	
	24	1	**322-7493**	1	LEVER AS-CONTROL	
	24A	1	**154-1400**	1	PIN	
	25	1	**330-9189**	1	PLUG	
	26	1	**334-0732**	1	ARM AS (FRONT HOUSING)	
	27	1	**335-5578**	1	BRACKET	
	28	1	**336-2965**	1	SPRING	
M	29	1	**7X-2533**	2	BOLT (M6X1X35-MM)	
	30	1	**423-7724**	1	GASKET	
C	32	1	**503-9707**	1	CAP	
C	33	1	**503-9731**	1	SHROUD	
C	34	1	**502-5421**	1	PIN	

C - CHANGE FROM PREVIOUS TYPE
M - METRIC PART
Y - SEPARATE ILLUSTRATION

465-2207 **CONTROL GP-GOVERNOR (**contd.**)** **i08511660**

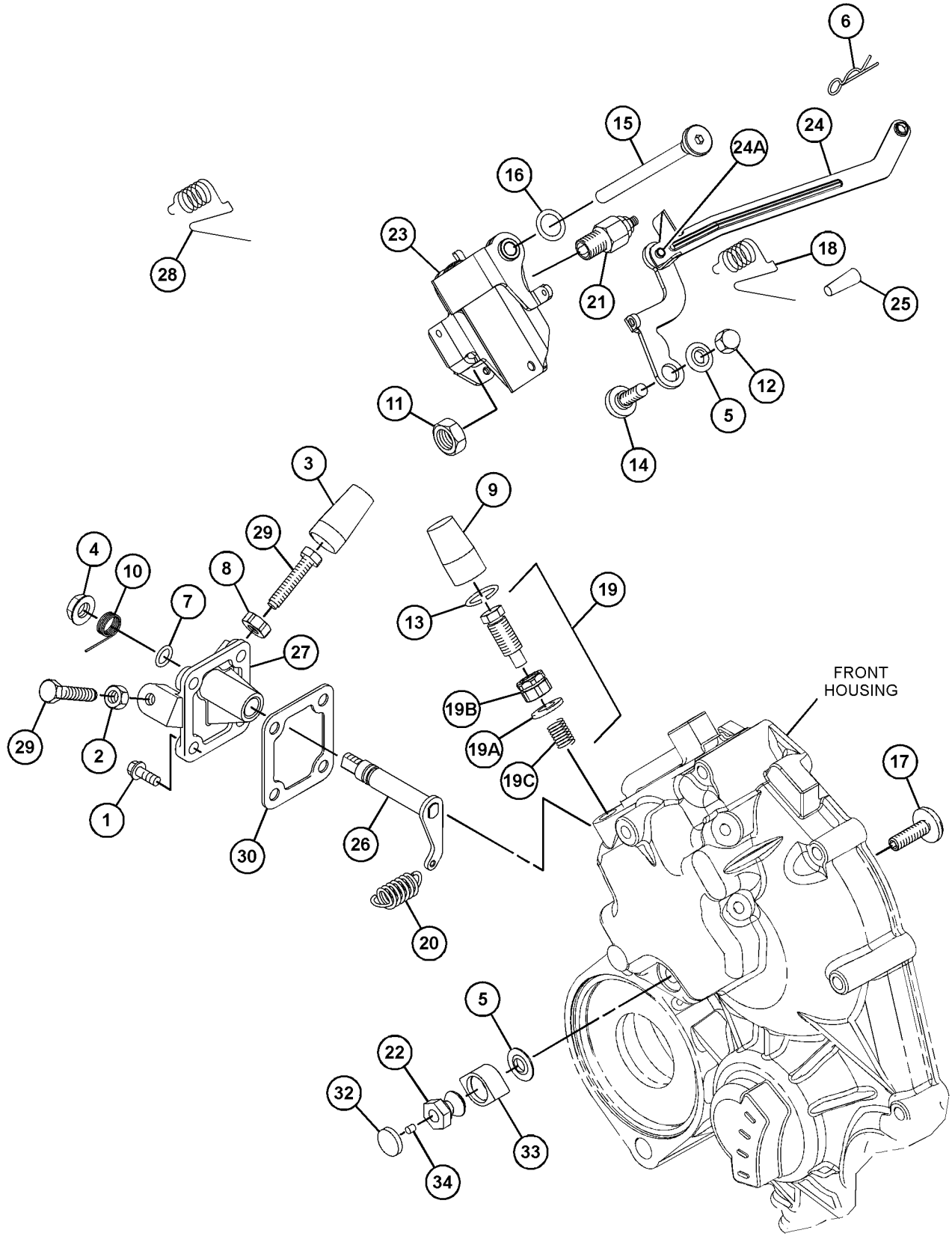

GRAPHIC #1 <END> g07487887

465-2493 CONTROL GP-GOVERNOR

PART OF 435-1642 ENGINE AR-PRIMARY

SMCS-1265, 1276 **i05908238**

NOTE	REF NO	GRAPHIC REF	PART NUMBER	QTY	PART NAME 1 2 3 4 5 6 (PRODUCT LEVEL)	SEE PAGE
M	1	1	**106-8916**	4	BOLT (M6X1X16-MM)	
M	2	1	**5C-2890**	1	NUT (M6X1-THD)	
	3	1	**139-5511**	1	CAP (TAMPER RESISTANT)	
M	4	1	**153-5592**	1	NUT (M8X1.25-THD)	
	5	1	**153-6415**	2	WASHER (SEAL)	
	6	1	**153-7983**	1	PIN	
	7	1	**095-1574**	1	SEAL-O-RING	
M	8	1	**162-2207**	1	NUT (M6X1-THD)	
	9	1	**217-7115**	1	CAP (TAMPER RESISTANT)	
	10	1	**308-1882**	1	SPRING	
M	11	1	**308-1889**	1	NUT (M10X1.25-THD)	
M	12	1	**308-1892**	1	NUT (M6X1-THD)	
	13	1	**308-1897**	2	RING	
	14	1	**308-4266**	1	SHAFT	
	15	1	**309-6729**	1	SEAL-O-RING	
	16	1	**309-6732**	1	BOLT	
	17	1	**311-0655**	1	SPRING	
	18	1	**313-5832**	1	BOLT AS	
	18A	1	**153-7987**	1	WASHER (9.2X17X1.8-MM THK)	
M	18B	1	**191-9297**	1	NUT (M10X1.25-THD)	
	19	1	**317-7195**	1	SPRING	
	20	1	**319-3252**	1	SENSOR AS-SPEED	
	21	1	**321-4249**	1	NUT	
	22	1	**322-7493**	1	LEVER AS-CONTROL	
	23	1	**330-9189**	1	PLUG	
	24	1	**334-0732**	1	ARM AS (FRONT HOUSING)	
	25	1	**335-5578**	1	BRACKET	
M	26	1	**369-4486**	2	BOLT (M6X1X35-MM)	
	27	1	**390-3729**	1	LEVER-CONTROL	
	28	1	**390-3731**	1	SHAFT	
	29	1	**423-7724**	1	GASKET	
	30	1	**425-7065**	1	CAP-TAMPER PROOF	
	31	1	**336-2965**	1	SPRING	

M - METRIC PART

465-2493 **CONTROL GP-GOVERNOR (**contd.**)** **i05908238**

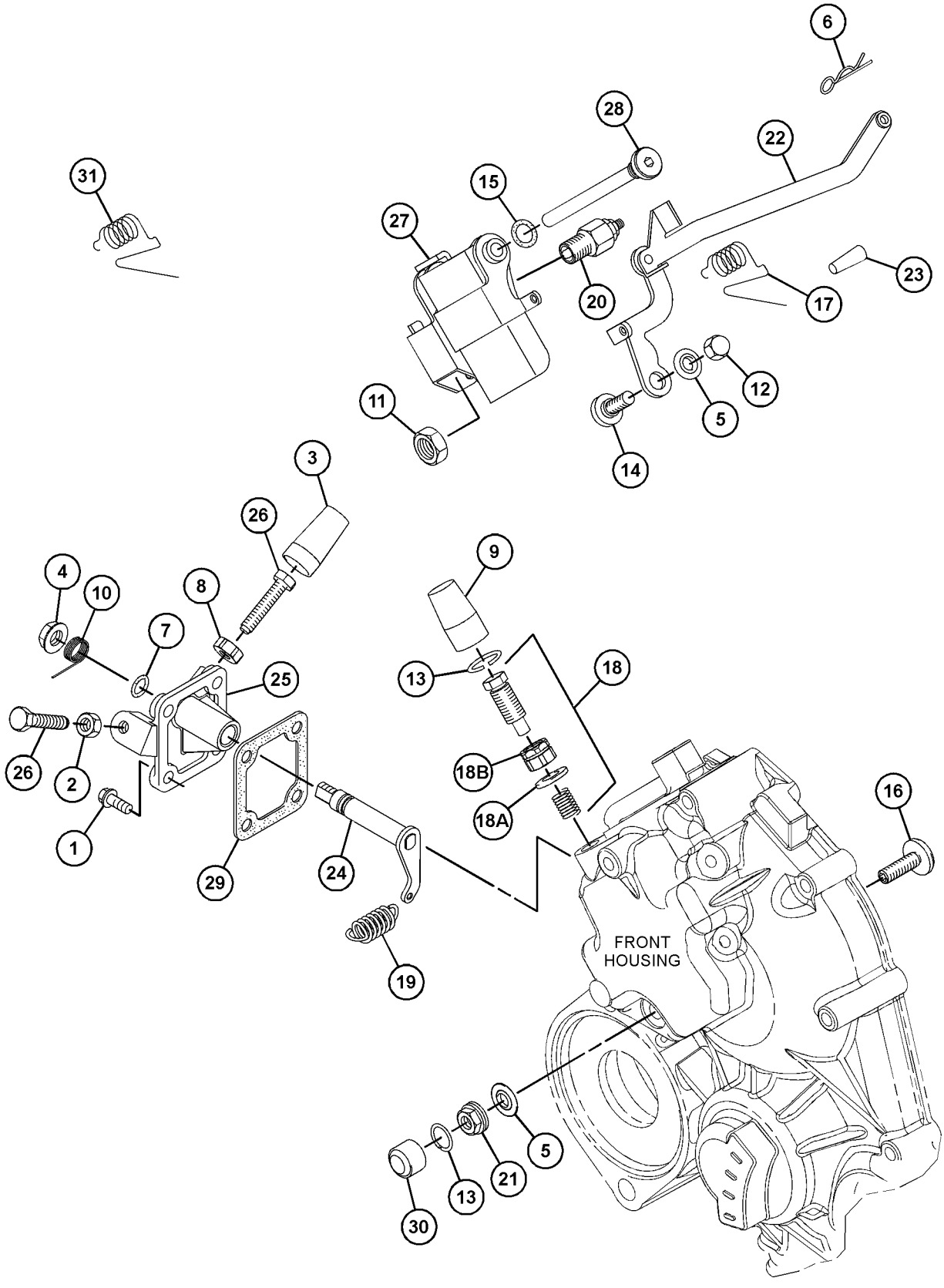

GRAPHIC #1 <END> g03723890

465-2493 CONTROL GP-GOVERNOR

S/N: G7L8312-12144

SMCS-1265, 1276 **i08295593**

NOTE	REF NO	GRAPHIC REF	PART NUMBER	QTY	PART NAME 1 2 3 4 5 6 (PRODUCT LEVEL)	SEE PAGE
M	1	1	**106-8916**	4	BOLT (M6X1X16-MM)	
M	2	1	**5C-2890**	1	NUT (M6X1-THD)	
	3	1	**139-5511**	1	CAP (TAMPER RESISTANT)	
M	4	1	**153-5592**	1	NUT (M8X1.25-THD)	
	5	1	**153-6415**	2	WASHER (SEAL)	
	6	1	**153-7983**	1	PIN	
	7	1	**095-1574**	1	SEAL-O-RING	
M	8	1	**162-2207**	1	NUT (M6X1-THD)	
	9	1	**217-7115**	1	CAP (TAMPER RESISTANT)	
	10	1	**308-1882**	1	SPRING	
M	11	1	**308-1889**	1	NUT (M10X1.25-THD)	
M	12	1	**308-1892**	1	NUT (M6X1-THD)	
C	13	1	**308-1897**	1	RING	
	14	1	**308-4266**	1	SHAFT	
	15	1	**309-6729**	1	SEAL-O-RING	
M	16	1	**495-0737**	1	BOLT (M6X0.5X19.5-MM)	
	17	1	**311-0655**	1	SPRING	
	18	1	**313-5832**	1	BOLT AS	
	18A	1	**153-7987**	1	WASHER (9.2X17X1.8-MM THK)	
M	18B	1	**191-9297**	1	NUT (M10X1.25-THD)	
	18C	1	**313-5833**	1	SPRING	
	19	1	**317-7195**	1	SPRING	
	20	1	**319-3252**	1	SENSOR AS-SPEED (ENGINE TIMING)	
M	20A	1	**155-8076**	1	NUT (M4X0.4-THD)	
C	21	1	**502-9478**	1	NUT (TAMPER RESISTANT)	
	22	1	**322-7493**	1	LEVER AS-CONTROL	
	22A	1	**154-1400**	1	PIN	
	23	1	**330-9189**	1	PLUG	
	24	1	**334-0732**	1	ARM AS (FRONT HOUSING)	
	25	1	**335-5578**	1	BRACKET	
M	26	1	**7X-2533**	2	BOLT (M6X1X35-MM)	
	27	1	**580-0398**	1	LEVER AS-CONTROL	
	28	1	**390-3731**	1	SHAFT	
	29	1	**423-7724**	1	GASKET	
C	30	1	**503-9707**	1	CAP	
	31	1	**336-2965**	1	SPRING	
C	32	1	**503-9731**	1	SHROUD	
C	33	1	**502-5421**	1	PIN	
	34	1	**308-1875**	1	SEAL-O-RING	

C - CHANGE FROM PREVIOUS TYPE
M - METRIC PART

465-2493 **CONTROL GP-GOVERNOR (**contd.**)** **i08295593**

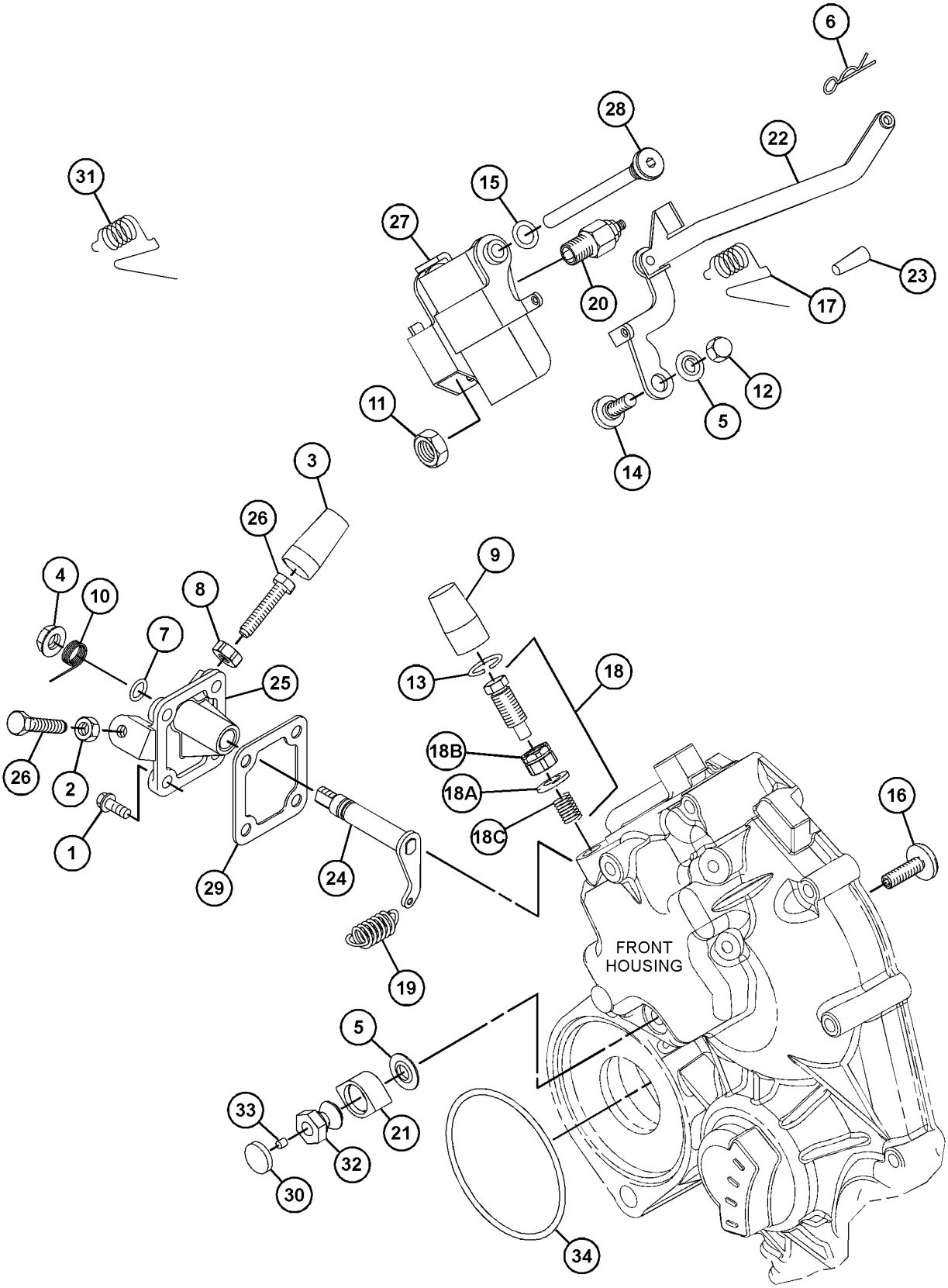

GRAPHIC #1 <END> g06243575

580-6290 CONTROL GP-GOVERNOR

PART OF 596-3472 GOVERNOR GP

SMCS-1265, 1276 **i08193403**

NOTE	REF NO	GRAPHIC REF	PART NUMBER	QTY	PART NAME 1 2 3 4 5 6 (PRODUCT LEVEL)	SEE PAGE
M	1	1	**308-1889**	1	NUT (M10X1.25-THD)	
	2	1	**319-3251**	1	GOVERNOR GP	
M		1	**155-8076**	1	NUT (M4X0.4-THD)	
	3	1	**390-3729**	1	LEVER-CONTROL	

M - METRIC PART

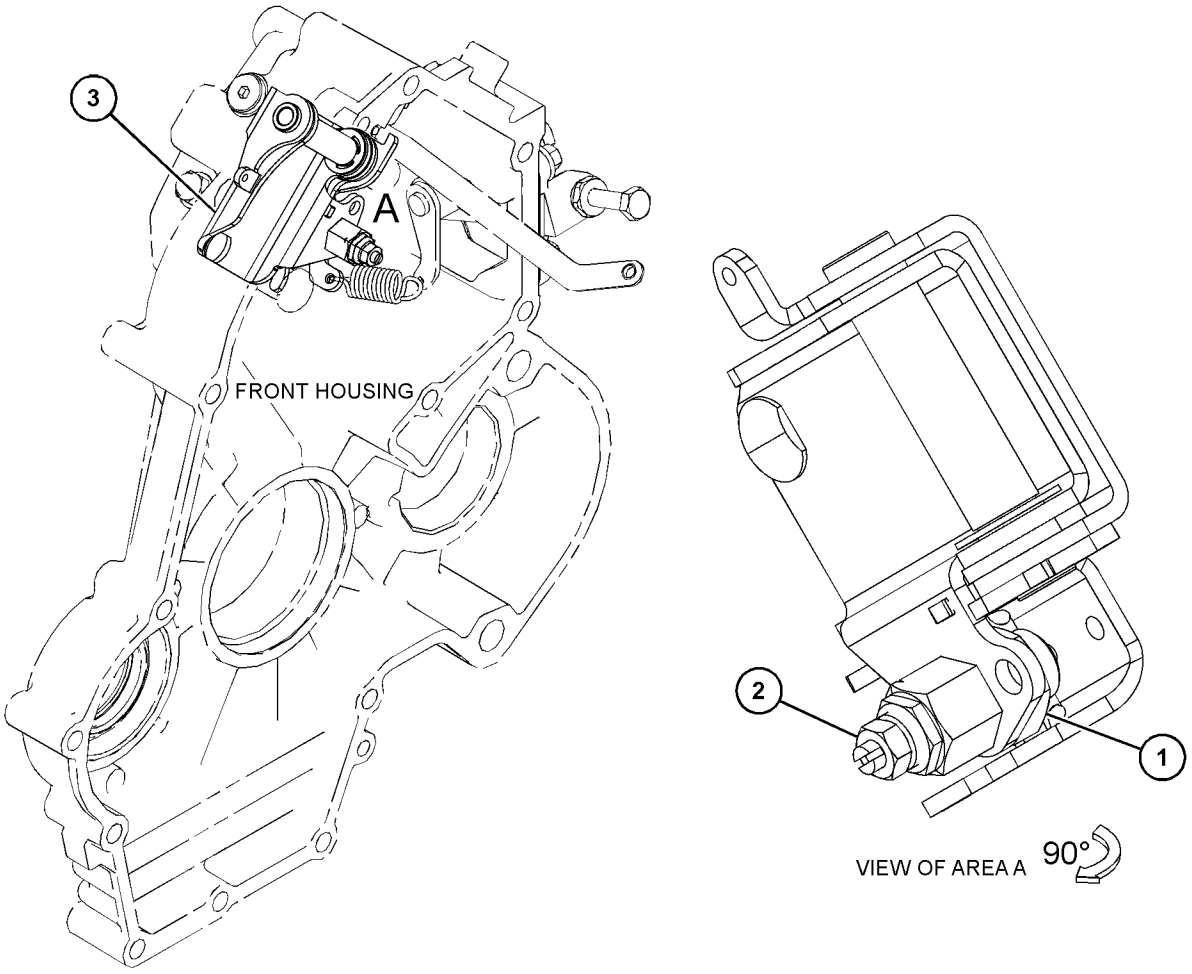

GRAPHIC #1 <END> g06579073

589-8341 CONTROL GP-GOVERNOR

PART OF 596-3470 CONTROL GP-GOVERNOR

SMCS-1265, 1276 **i08584979**

NOTE	REF NO	GRAPHIC REF	PART NUMBER	QTY	PART NAME 1 2 3 4 5 6 (PRODUCT LEVEL)	SEE PAGE
M	1	1	**308-1889**	1	NUT (M10X1.25-THD)	
	2	1	**342-9621**	1	GOVERNOR GP-ANGLEICH	
M	2A	1	**5C-8312**	1	NUT (M4X0.7-THD)	
	3	1	**580-0398**	1	LEVER AS-CONTROL	

M - METRIC PART

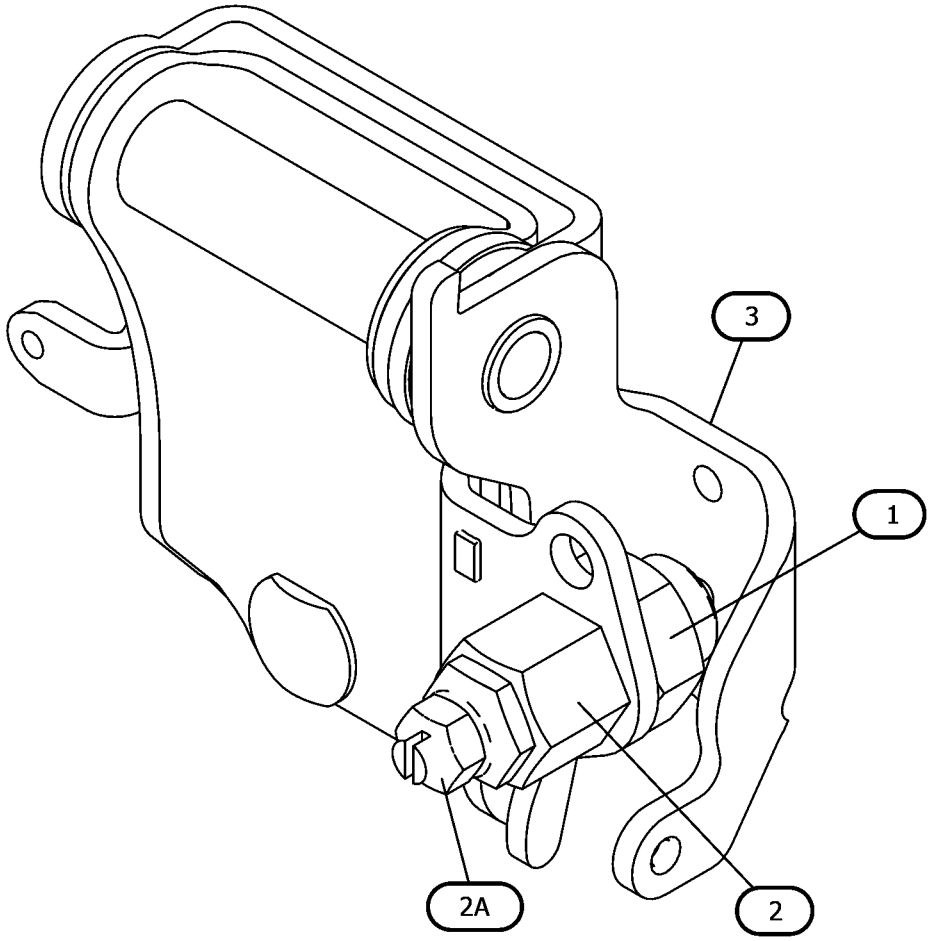

GRAPHIC #1 <END> g07503093

596-3463 CONTROL GP-GOVERNOR

PART OF 435-1647 ENGINE AR-PRIMARY

SMCS-1265, 1276 **i10430916**

NOTE	REF NO	GRAPHIC REF	PART NUMBER	QTY	PART NAME 1 2 3 4 5 6 (PRODUCT LEVEL)	SEE PAGE
	1	2	**153-6415**	1	WASHER (SEAL)	
	2	2	**153-7983**	1	PIN	
M	3	2	**308-1892**	1	NUT (M6X1-THD)	
	4	2	**308-4266**	1	SHAFT	
	5	2	**309-6729**	1	SEAL-O-RING	
	6	2	**309-6728**	1	SHAFT	
	7	2	**311-0655**	1	SPRING	
	8	2	**322-7493**	1	LEVER AS-CONTROL	
	8A	2	**154-1400**	1	PIN	
	9	1	**315-5236**	1	BOLT AS	
	9A	1	**153-7987**	1	WASHER (9.2X17X1.8-MM THK)	
M	9B	1	**191-9297**	1	NUT (M10X1.25-THD)	
	9C	1	**315-5235**	1	SPRING	
	10	2	**321-3145**	1	SPRING	
	11	1	**363-8409**	1	SLIDER	
	12	1	**217-7115**	1	CAP (TAMPER RESISTANT)	
Y	13	2	*560-7819*	1	LEVER GP-GOVERNOR CONTROL	794

M - METRIC PART
Y - SEPARATE ILLUSTRATION

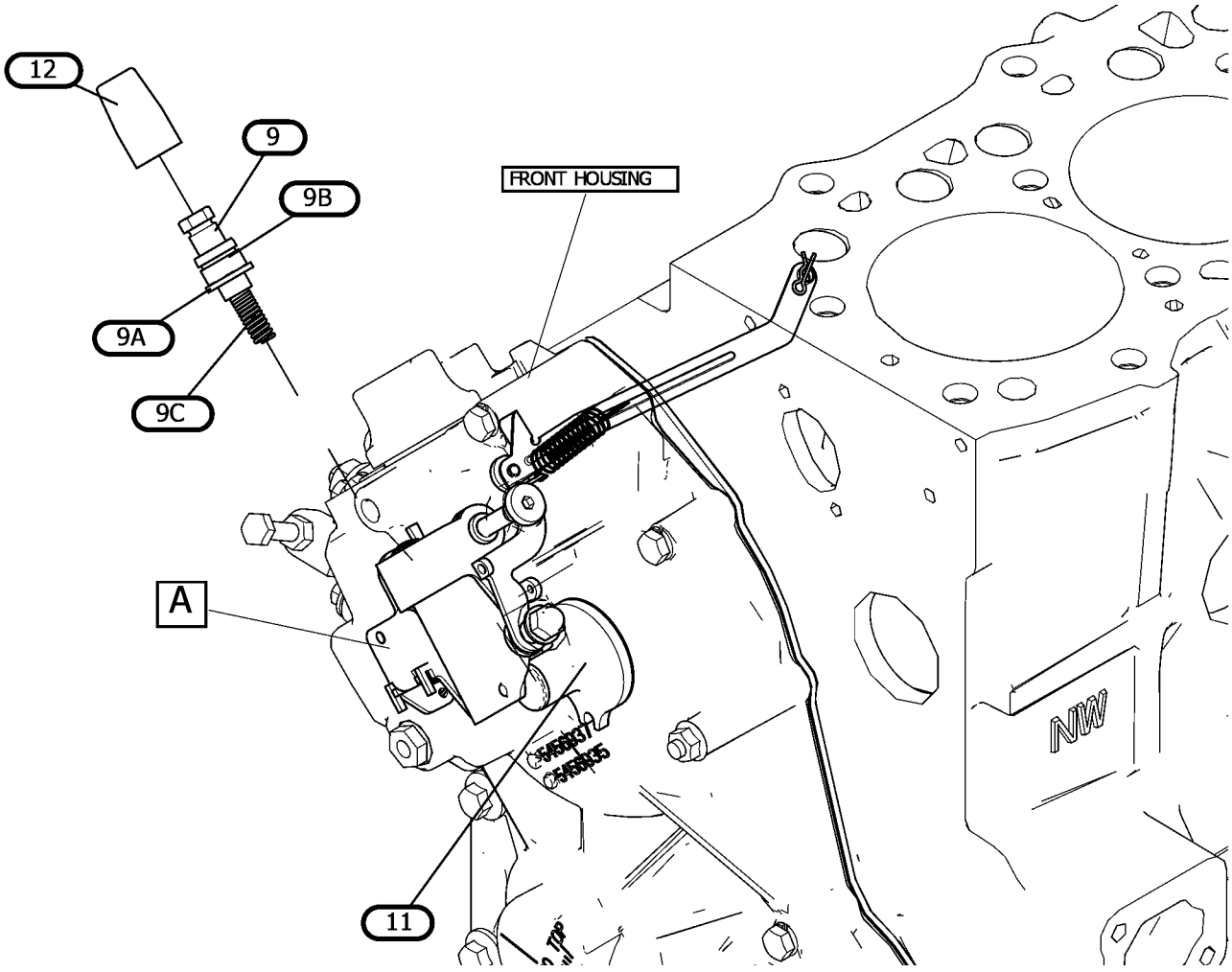

GRAPHIC #1 g07888547

596-3463 **CONTROL GP-GOVERNOR (**contd.**)** **i10430916**

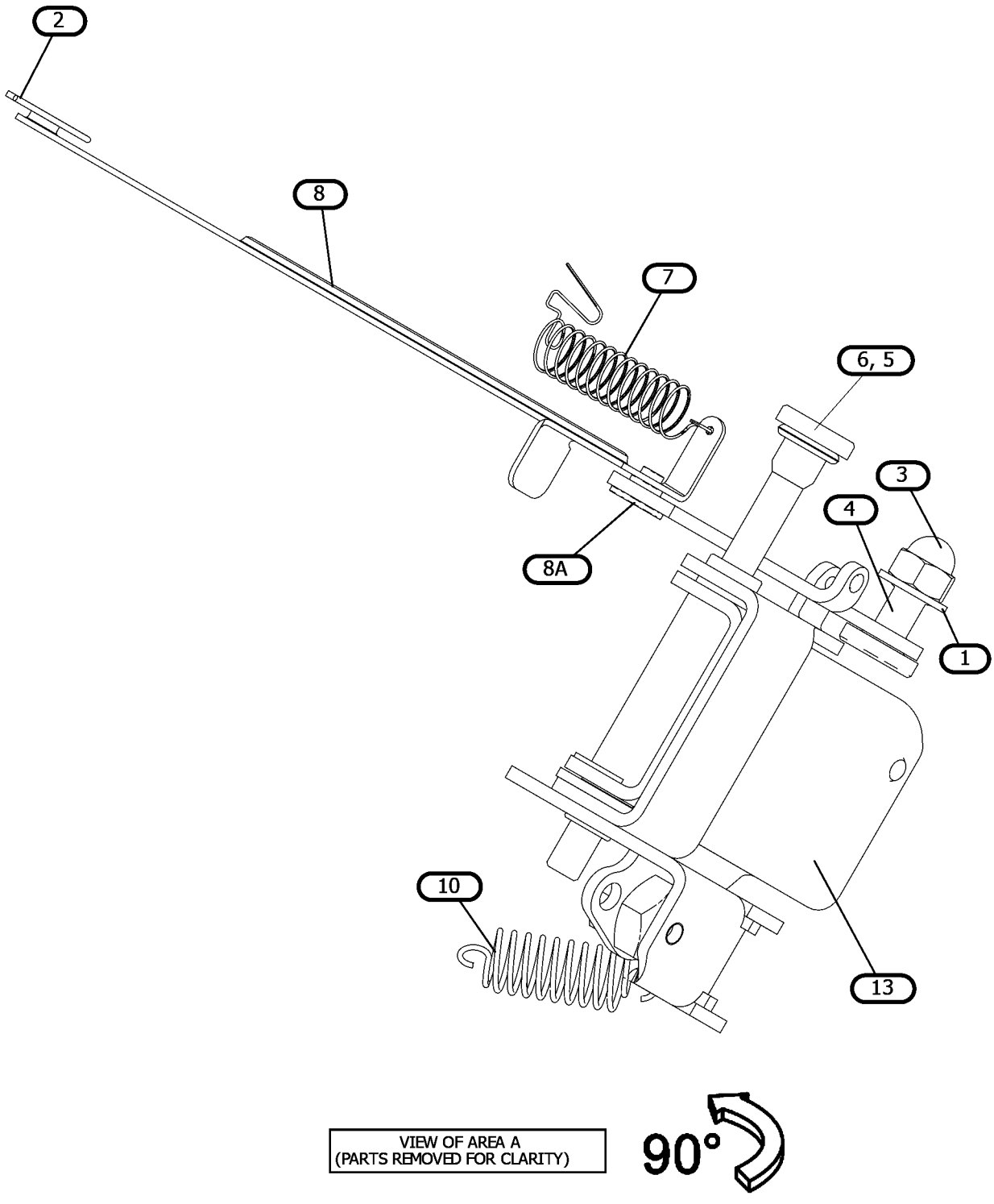

GRAPHIC #2 <END> g07888547_01

596-3466 CONTROL GP-GOVERNOR

SMCS-1265, 1276 **i08993777**

NOTE	REF NO	GRAPHIC REF	PART NUMBER	QTY	PART NAME 1 2 3 4 5 6 (PRODUCT LEVEL)	SEE PAGE
M	1	1	**308-1892**	1	NUT (M6X1-THD)	
	2	1	**153-6415**	1	WASHER (SEAL)	
	3	1	**153-7983**	1	PIN	
	4	1	**308-4266**	1	SHAFT	
	5	1	**309-6729**	1	SEAL-O-RING	
	6	2	**311-0655**	1	SPRING	
	7	2	**313-5832**	1	BOLT AS	
	7A	2	**153-7987**	1	WASHER (9.2X17X1.8-MM THK)	
M	7B	2	**191-9297**	1	NUT (M10X1.25-THD)	
	7C	2	**313-5833**	1	SPRING	
	8	2	**317-7195**	1	SPRING	
	9	2	**322-7493**	1	LEVER AS-CONTROL	
	9A	2	**154-1400**	1	PIN	
	10	1	**363-8409**	1	SLIDER	
	11	1	**390-3731**	1	SHAFT	
	12	2	**217-7115**	1	CAP (TAMPER RESISTANT)	
	13	2	*573-6681*	1	CONTROL GP-GOVERNOR	
M	13A	2	**308-1889**	1	NUT (M10X1.25-THD)	
	13B	2	**319-3252**	1	SENSOR AS-SPEED	
M	13C	2	**5C-8312**	1	NUT (M4X0.7-THD)	
	13D	2	**580-0398**	1	LEVER AS-CONTROL	

M - METRIC PART

596-3466 **CONTROL GP-GOVERNOR (**contd.**)** **i08993777**

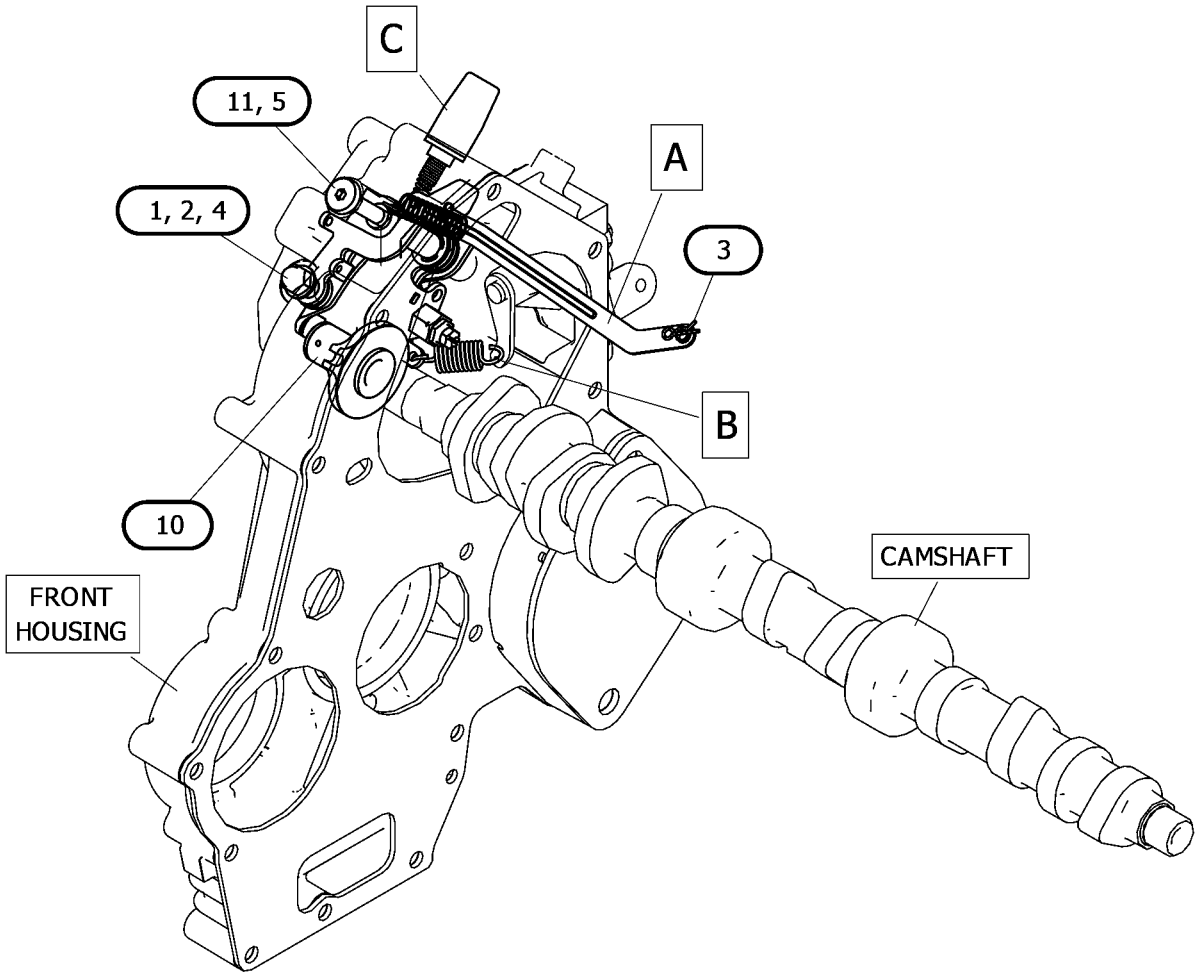

GRAPHIC #1 g07506613

596-3466 **CONTROL GP-GOVERNOR (**contd.**)** **i08993777**

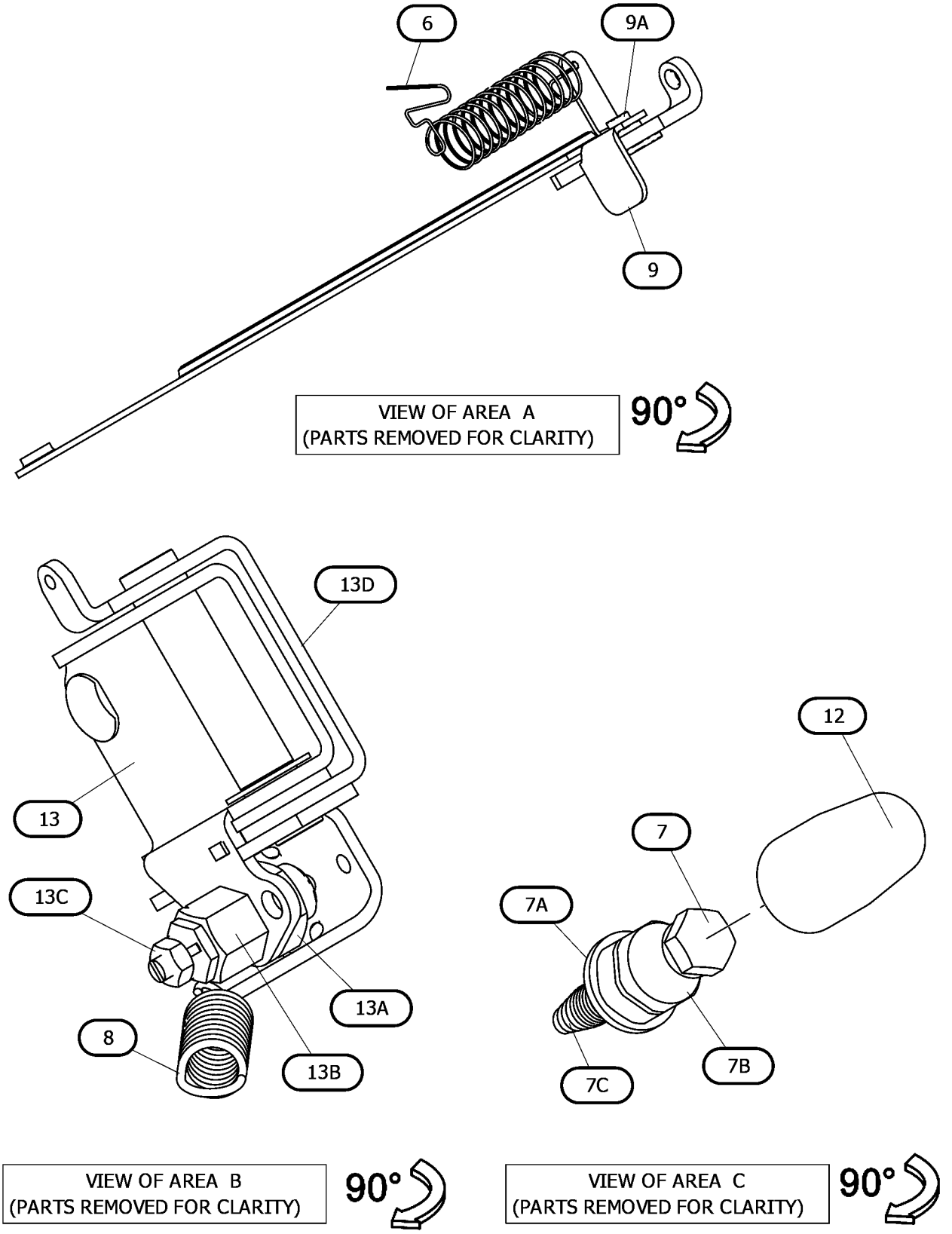

GRAPHIC #2 <END> g07506613_01

596-3470 CONTROL GP-GOVERNOR

PART OF 435-1641 ENGINE AR-PRIMARY

SMCS-1265, 1276 **i08579737**

NOTE	REF NO	GRAPHIC REF	PART NUMBER	QTY	PART NAME 1 2 3 4 5 6 (PRODUCT LEVEL)	SEE PAGE
M	1	3	**308-1892**	1	NUT (M6X1-THD)	
	2	3	**153-6415**	1	WASHER (SEAL)	
	3	3	**153-7983**	1	PIN	
	4	2	**308-1904**	1	SLIDER	
	5	3	**308-4266**	1	SHAFT	
	6	3	**309-6729**	1	SEAL-O-RING	
	7	3	**311-0655**	1	SPRING	
	8	3	**322-7493**	1	LEVER AS-CONTROL	
	8A	3	**154-1400**	1	PIN	
	9	2	**340-4756**	1	BOLT AS	
	9A	2	**153-7987**	1	WASHER (9.2X17X1.8-MM THK)	
M	9B	2	**191-9297**	1	NUT (M10X1.25-THD)	
	9C	2	**340-4755**	1	SPRING	
	10	3	**342-9620**	1	SPRING	
	11	3	**390-3731**	1	SHAFT	
	12	1	**217-7115**	1	CAP (TAMPER RESISTANT)	
Y	13	3	*589-8341*	1	CONTROL GP-GOVERNOR	741

M - METRIC PART
Y - SEPARATE ILLUSTRATION

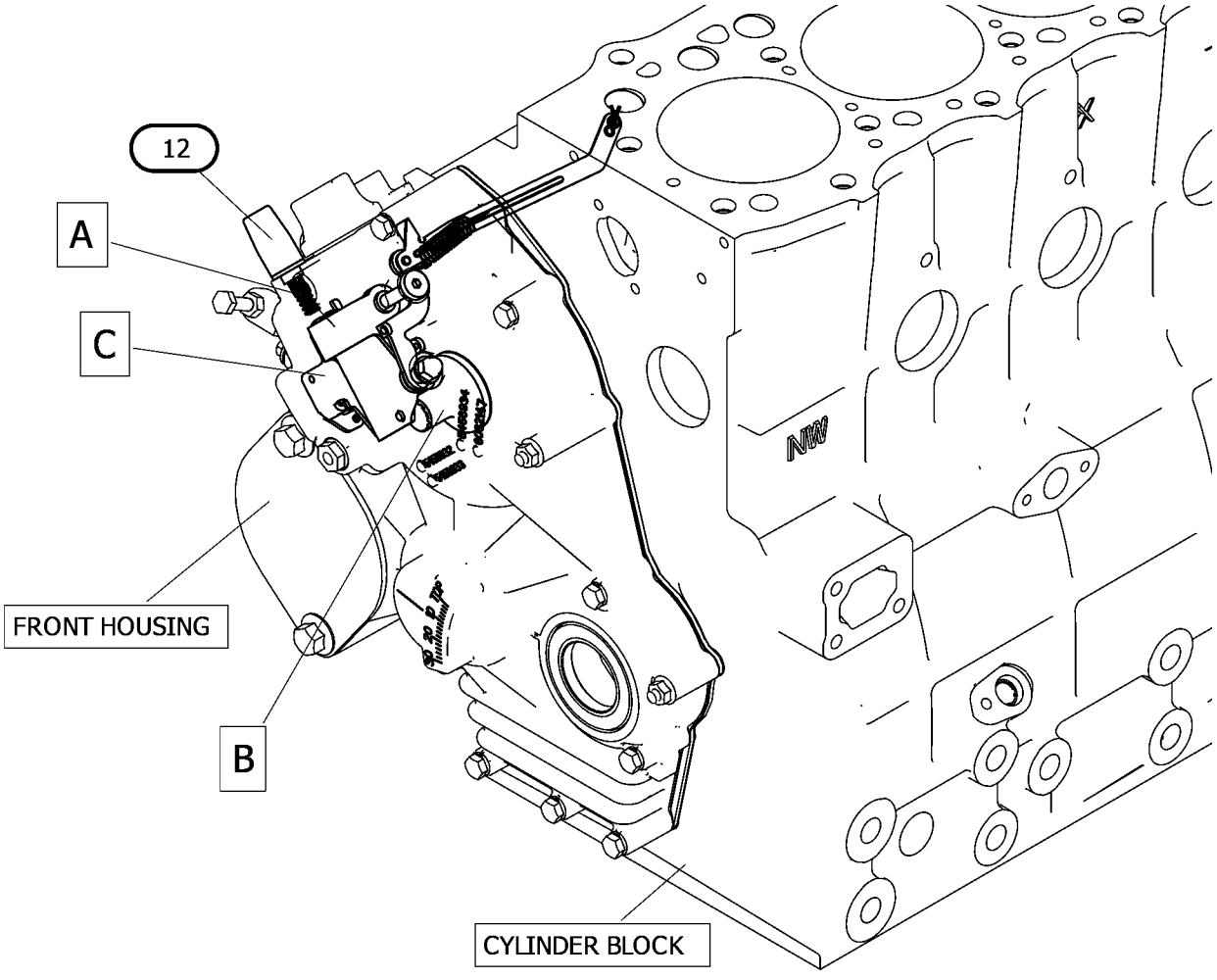

GRAPHIC #1 g07499871

596-3470 **CONTROL GP-GOVERNOR (**contd.**)** **i08579737**

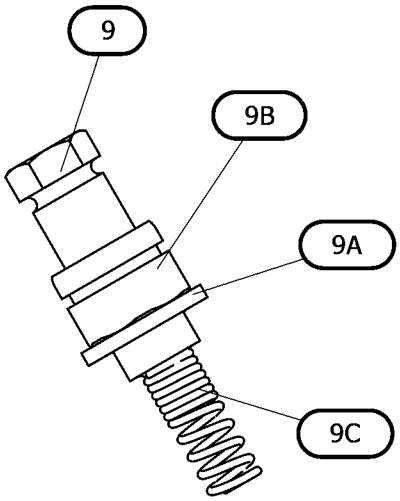

VIEW OF AREA A
(PARTS REMOVED FOR CLARITY)

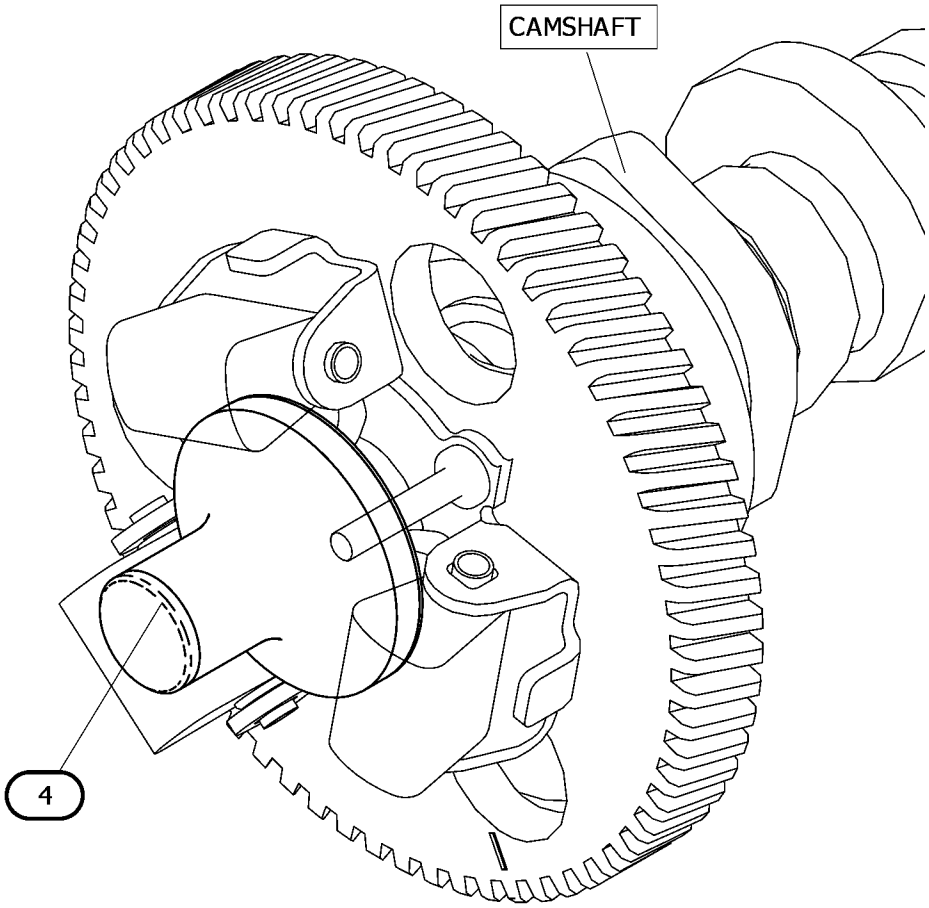

VIEW OF AREA B

GRAPHIC #2 g07499871_01

596-3470 **CONTROL GP-GOVERNOR (**contd.**)** **i08579737**

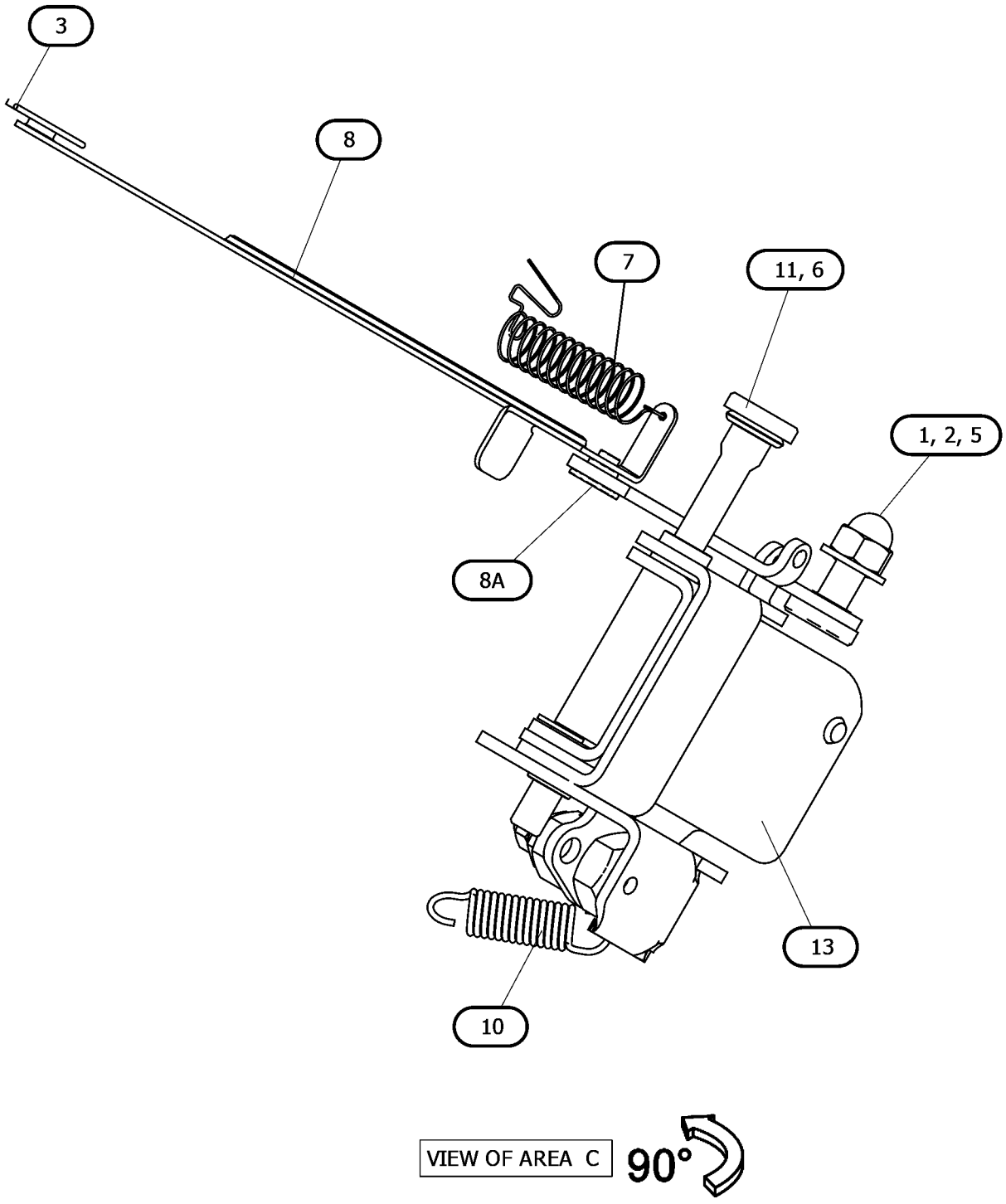

GRAPHIC #3 <END> g07499871_02

442-9881 CONTROL GP-THROTTLE

PART OF 433-1380, 435-1637, 435-1638 ENGINE AR, 435-1636, 459-2953, 495-6243 ENGINE AR-PRIMARY

SMCS-1269 **i06944042**

NOTE	REF NO	GRAPHIC REF	PART NUMBER	QTY	PART NAME 1 2 3 4 5 6 (PRODUCT LEVEL)	SEE PAGE
	1	1	**153-6412**	1	WASHER	
	2	1	**308-1914**	1	LEVER-CONTROL	

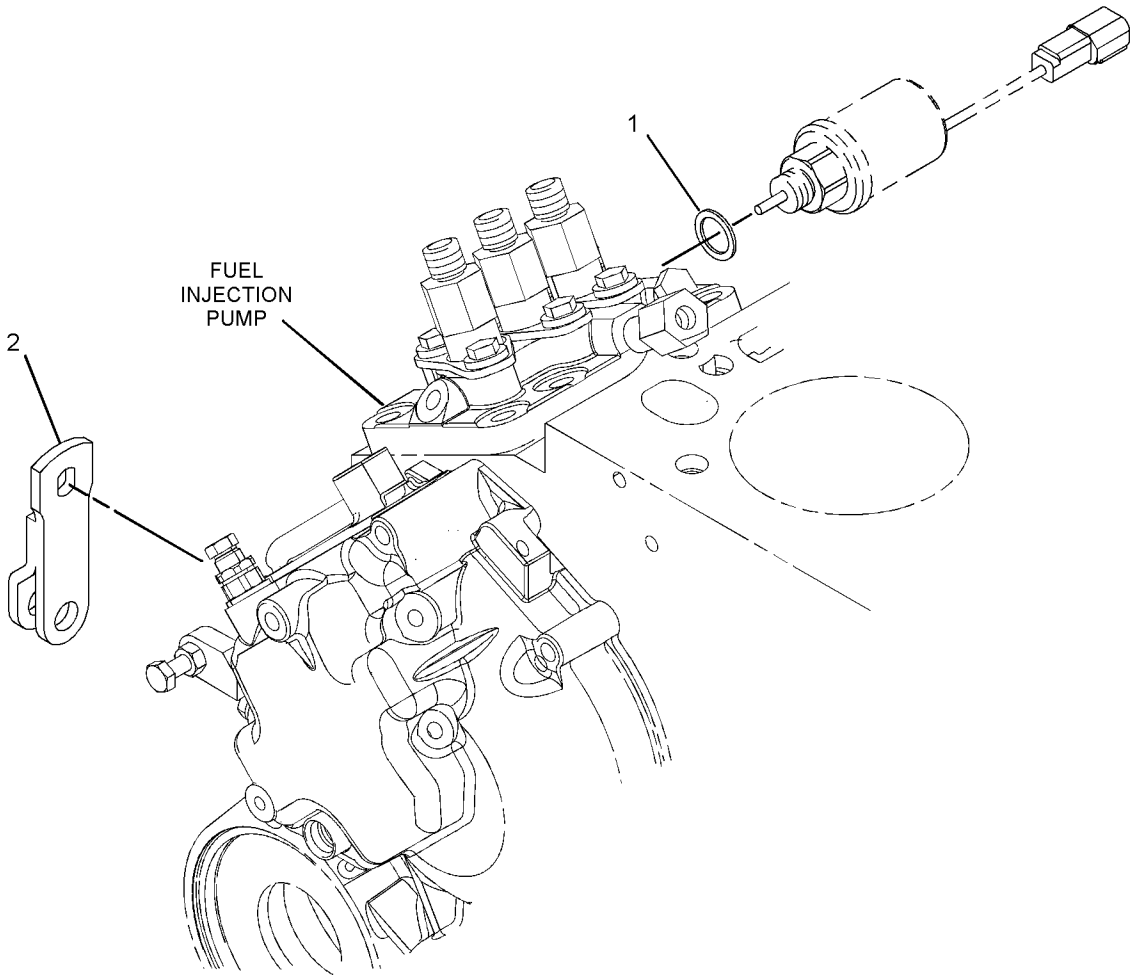

GRAPHIC #1 <END> g03427672

599-9801 FILTER & MTG GP-FUEL

S/N: G7L27560-UP

SMCS-1261, 1274 **i10726952**

NOTE	REF NO	GRAPHIC REF	PART NUMBER	QTY	PART NAME 1 2 3 4 5 6 (PRODUCT LEVEL)	SEE PAGE
M	1	1	**138-7162**	2	BOLT (M10X1.5X30-MM)	
	2	1	**7X-0796**	2	LOCKWASHER (10.2X18.4X2.5-MM THK)	
	3	1	**155-7984**	1	WASHER (8.4X16X1.6-MM THK)	
	4	1	**101-3917**	2	WASHER (10.5X21X2-MM THK)	
M	5	1	**155-8085**	2	NUT (M10X1.5-THD)	
	6	1	**165-2141**	1	BOLT AS	
	7	1	**223-8182**	1	BRACKET	
	8	1	**295-4070**	1	PUMP AS-FUEL TRANSFER	
M	9	1	**6I-0846**	2	BOLT (M6X1X14-MM)	
Y	10	1	*599-9696*	1	FILTER AS-FUEL	753

M - METRIC PART
Y - SEPARATE ILLUSTRATION

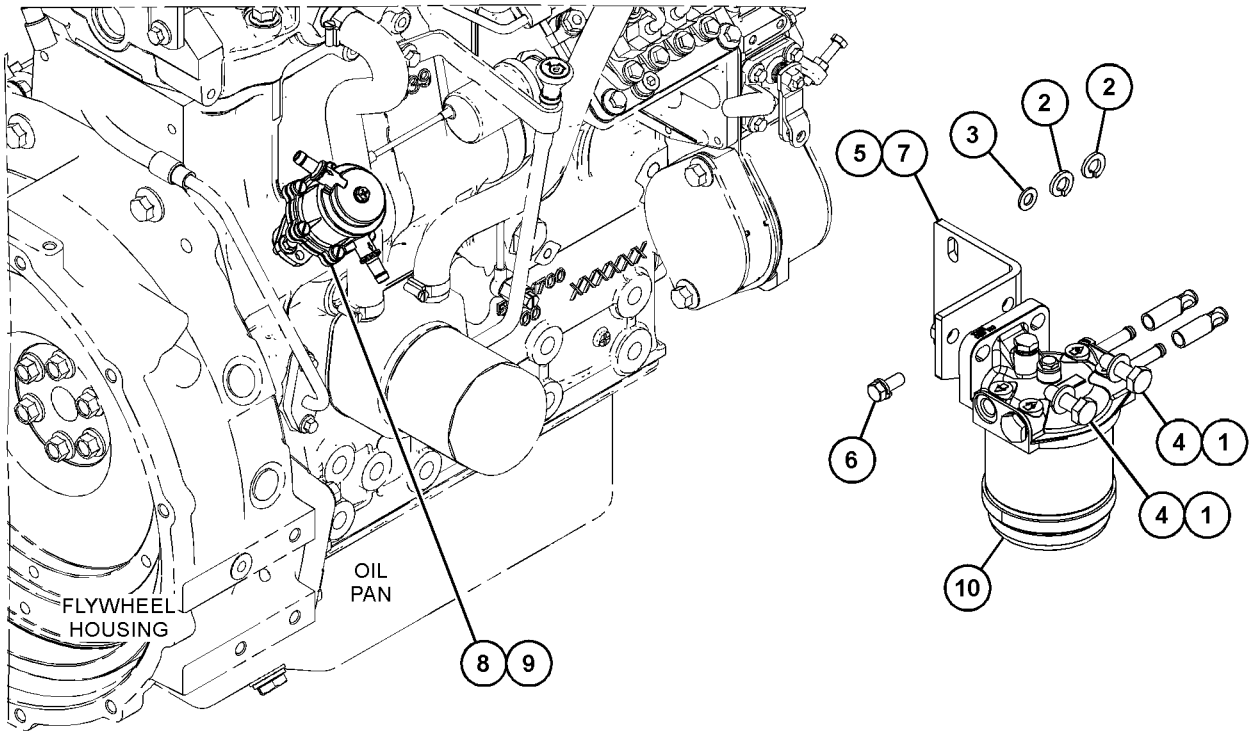

GRAPHIC #1 <END> g07977476

481-2063 FILTER AS-FUEL

FIELD REPLACEMENT ORDER 624-8784—PAGE: 762

PART OF 599-9696 FILTER AS-FUEL, 599-9665 FILTER GP-FUEL

SMCS-1261 **i10274262**

NOTE	REF NO	GRAPHIC REF	PART NUMBER	QTY	PART NAME 1 2 3 4 5 6 (PRODUCT LEVEL)	SEE PAGE
	1	1	**484-9225**	1	SEAL	
	2	1	**484-9223**	1	SEAL	
	3	1	**484-9224**	1	SEAL	
	4	1	**484-9222**	1	SEAL	

PARTS SHOWN IN GRAPHIC(S) WITHOUT A REFERENCE NUMBER ARE NOT SERVICED SEPARATELY

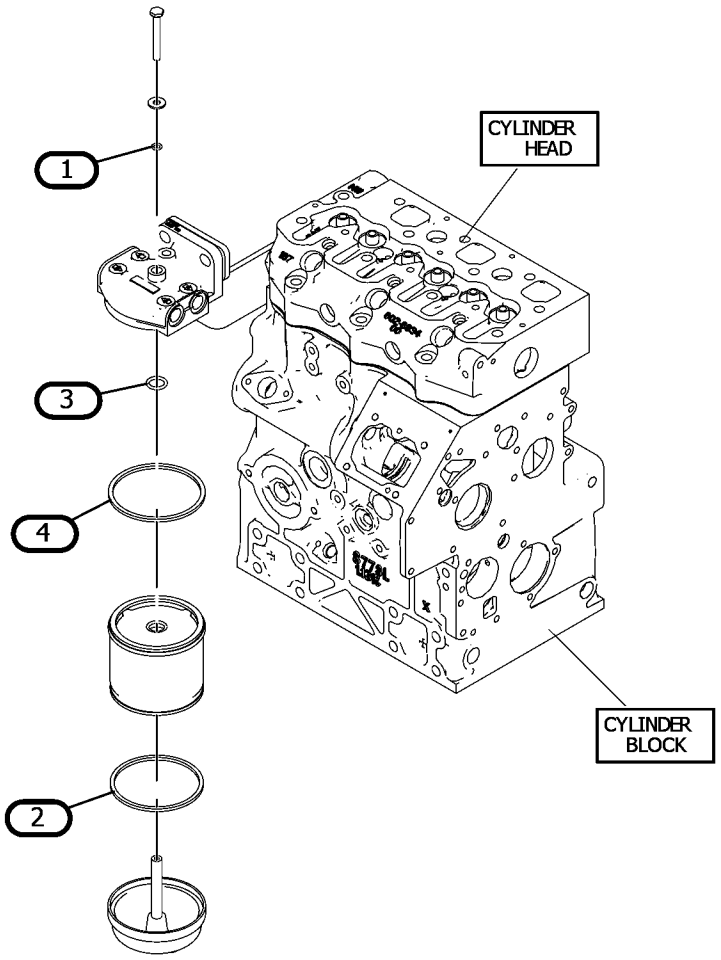

GRAPHIC #1 <END> g07822526

599-9696 FILTER AS-FUEL

S/N: G7L27560-UP

PART OF 599-9801 FILTER & MTG GP-FUEL

SMCS-1261 **i10733048**

NOTE	REF NO	GRAPHIC REF	PART NUMBER	QTY	PART NAME 1 2 3 4 5 6 (PRODUCT LEVEL)	SEE PAGE
	1	1	**7W-4694**	1	PLUG	
	2	1	**067-6269**	2	FERRULE	
	3	1	**246-4361**	1	WASHER (10.5X14X1.5-MM THK)	
	4	1	**033-7849**	1	PLUG	
	5	1	**302-4187**	2	TUBE	
	6	1	**311-9048**	1	WASHER	
Y	7	1	*481-2063*	1	FILTER AS-FUEL	752

Y - SEPARATE ILLUSTRATION

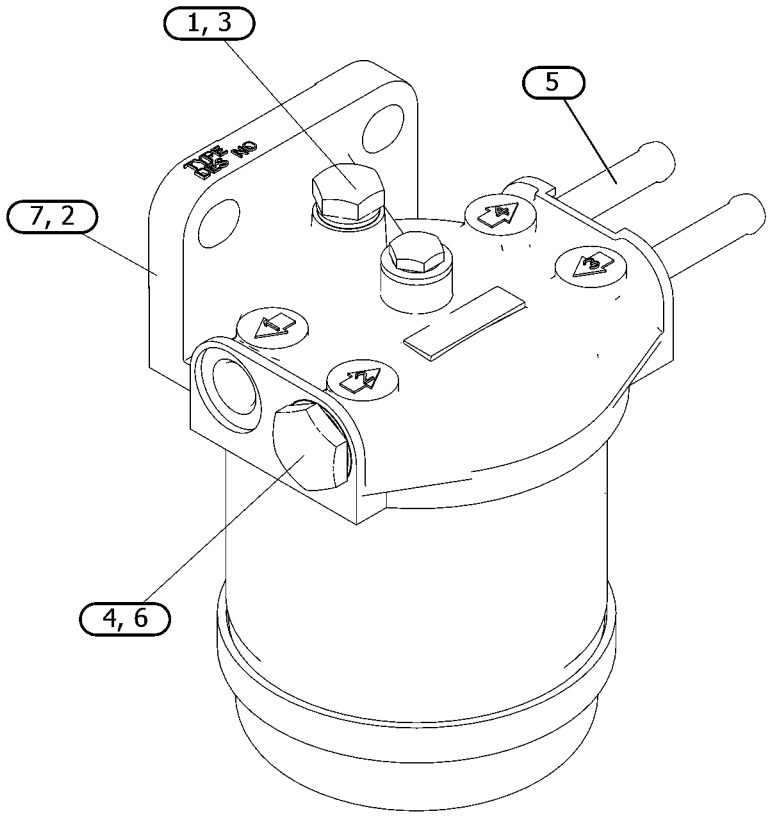

GRAPHIC #1 <END> g07972815

276-1804 FILTER GP-FUEL

PART OF 532-9922 FILTER GP-FUEL, 565-2286, 579-9465 PUMP GP-FUEL PRM & PRIM FILTER

SMCS-1261 **i05982383**

NOTE	REF NO	GRAPHIC REF	PART NUMBER	QTY	PART NAME 1 2 3 4 5 6 (PRODUCT LEVEL)	SEE PAGE
	1	1	**276-1806**	1	FILTER ELEMENT-FUEL	
	2	1	**302-7776**	1	BOWL-FUEL FILTER	
	3	1	**302-7777**	3	PLUG-DRAIN (WATER SEPARATOR)	
	4	1	**302-7778**	1	SEAL	

276-1804 **FILTER GP-FUEL (**contd.**)** **i05982383**

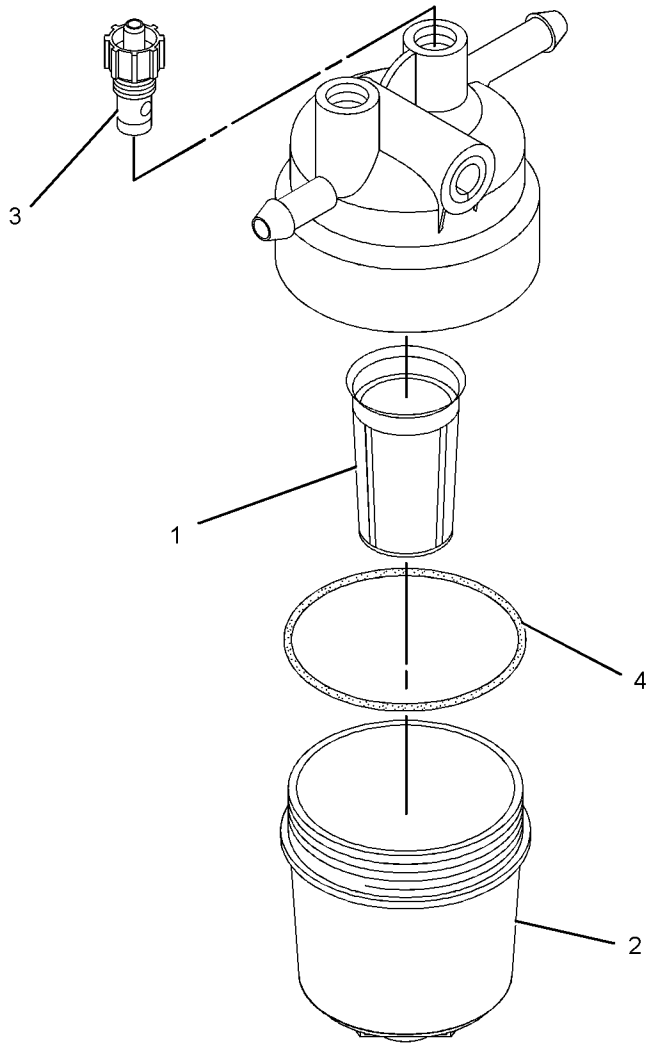

GRAPHIC #1 <END> g01625379

308-5704 FILTER GP-FUEL

PART OF 587-9328 ENGINE AR-PRIMARY

SMCS-1261 **i02979432**

NOTE	REF NO	GRAPHIC REF	PART NUMBER	QTY	PART NAME 1 2 3 4 5 6 (PRODUCT LEVEL)	SEE PAGE
	1	1	**276-1804**	1	FILTER GP-FUEL	
	1A	1	**276-1806**	1	FILTER ELEMENT-FUEL (FILTER)	
	1B	1	**302-7776**	1	BOWL-FUEL FILTER	
	1C	1	**302-7777**	3	PLUG-DRAIN (FUEL FILTER)	
	1D	1	**302-7778**	1	SEAL	

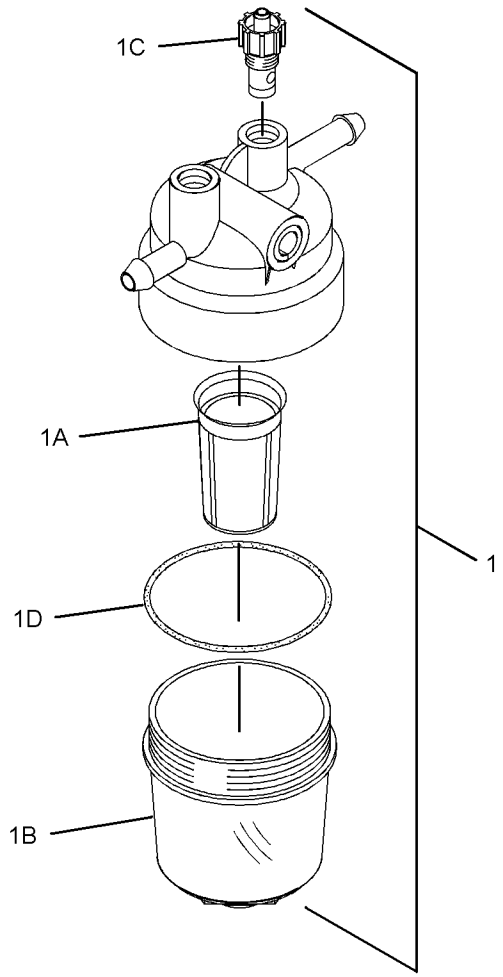

GRAPHIC #1 <END> g01363080

325-5671 FILTER GP-FUEL

SMCS-1261 **i02962248**

NOTE	REF NO	GRAPHIC REF	PART NUMBER	QTY	PART NAME 1 2 3 4 5 6 (PRODUCT LEVEL)	SEE PAGE
	1	1	**155-8080**	1	FILTER GP-FUEL	
	1A	1	**150-4142**	1	FILTER-FUEL	
	1B	1	**160-3547**	1	PLUG	
	1C	1	**160-3548**	5	WASHER (14.3X22.8X1.5-MM THK)	
	1D	1	**160-3549**	2	BOLT	
	2	1	**155-8082**	2	CONNECTOR	

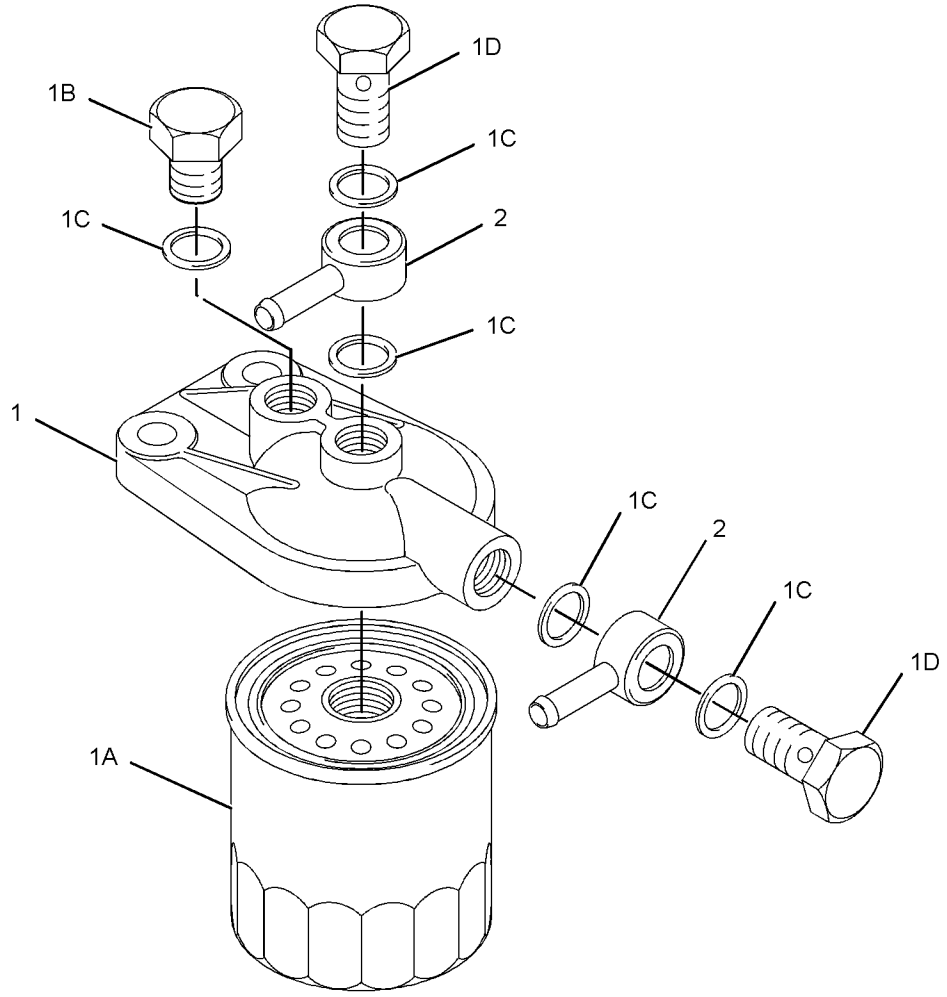

GRAPHIC #1 <END> g01538963

532-9922 FILTER GP-FUEL

PART OF 587-9328 ENGINE AR-PRIMARY

SMCS-1261 **i10428780**

NOTE	REF NO	GRAPHIC REF	PART NUMBER	QTY	PART NAME 1 2 3 4 5 6 (PRODUCT LEVEL)	SEE PAGE
Y	1	1	**276-1804**	1	FILTER GP-FUEL	754

Y - SEPARATE ILLUSTRATION

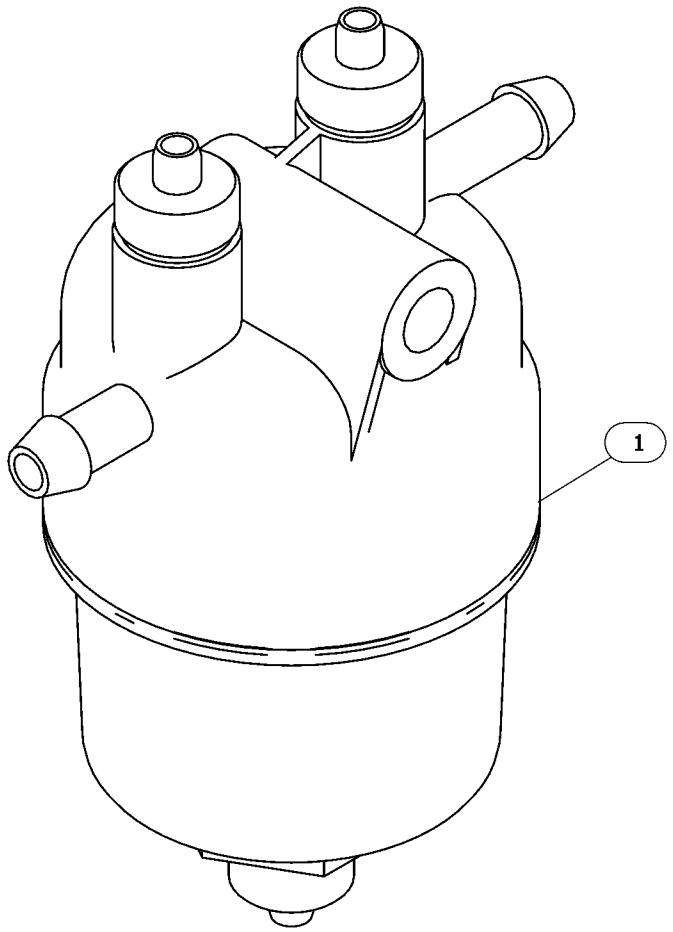

GRAPHIC #1 <END> g06646274

599-9665 FILTER GP-FUEL

PART OF 599-9741, 599-9743 FILTER GP-FUEL, 599-9752 PUMP GP-FILTER & FUEL TRANSFER

SMCS-1261 **i09318857**

NOTE	REF NO	GRAPHIC REF	PART NUMBER	QTY	PART NAME 1 2 3 4 5 6 (PRODUCT LEVEL)	SEE PAGE
	1	1	**7W-4694**	1	PLUG	
	2	1	**067-6269**	2	FERRULE	
	3	1	**246-4361**	1	WASHER (10.5X14X1.5-MM THK)	
	4	1	**033-7849**	2	PLUG	
	5	1	**7X-0796**	2	LOCKWASHER (10.2X18.4X2.5-MM THK)	
M	6	1	**155-8085**	2	NUT (M10X1.5-THD)	
	7	1	**302-4187**	2	TUBE	
	8	1	**311-9048**	2	WASHER	
Y	9	1	*481-2063*	1	FILTER AS-FUEL	752
	10	1	**311-1174**	1	BRACKET	
M	11	1	**6I-0593**	2	BOLT (M10X1.5X30-MM)	

M - METRIC PART
Y - SEPARATE ILLUSTRATION

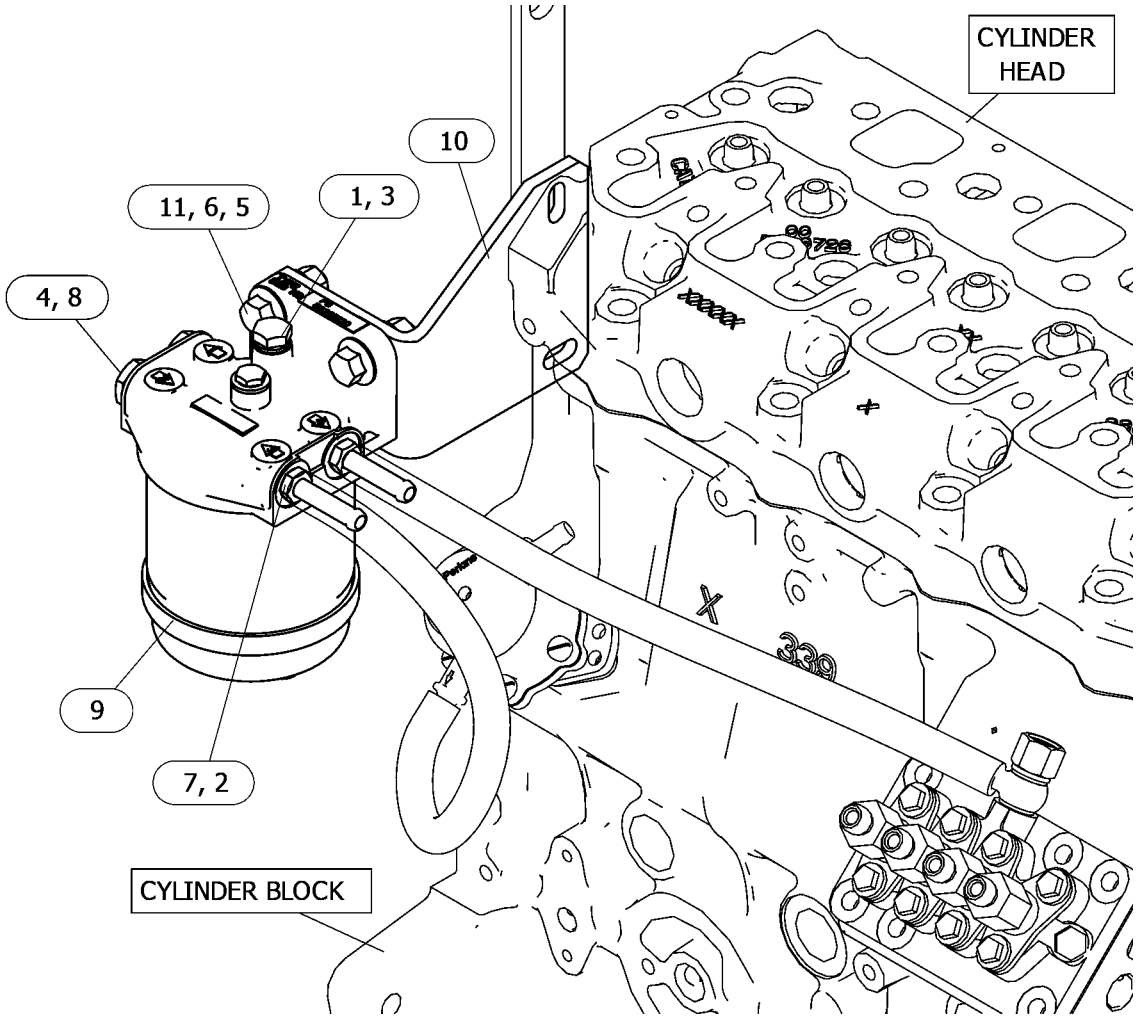

GRAPHIC #1 <END> g06769553

599-9741 FILTER GP-FUEL

SMCS-1261 **i10682296**

NOTE	REF NO	GRAPHIC REF	PART NUMBER	QTY	PART NAME 1 2 3 4 5 6 (PRODUCT LEVEL)	SEE PAGE
M	1	1	**6I-0846**	2	BOLT (M6X1X14-MM)	
	2	1	**295-4070**	1	PUMP AS-FUEL TRANSFER	
Y	3	1	*599-9665*	1	FILTER GP-FUEL	759
	4	1	**262-0491**	4	CLAMP	
	5	1	**423-5665**	1	HOSE	
	6	1	**423-5661**	1	HOSE	

M - METRIC PART
Y - SEPARATE ILLUSTRATION

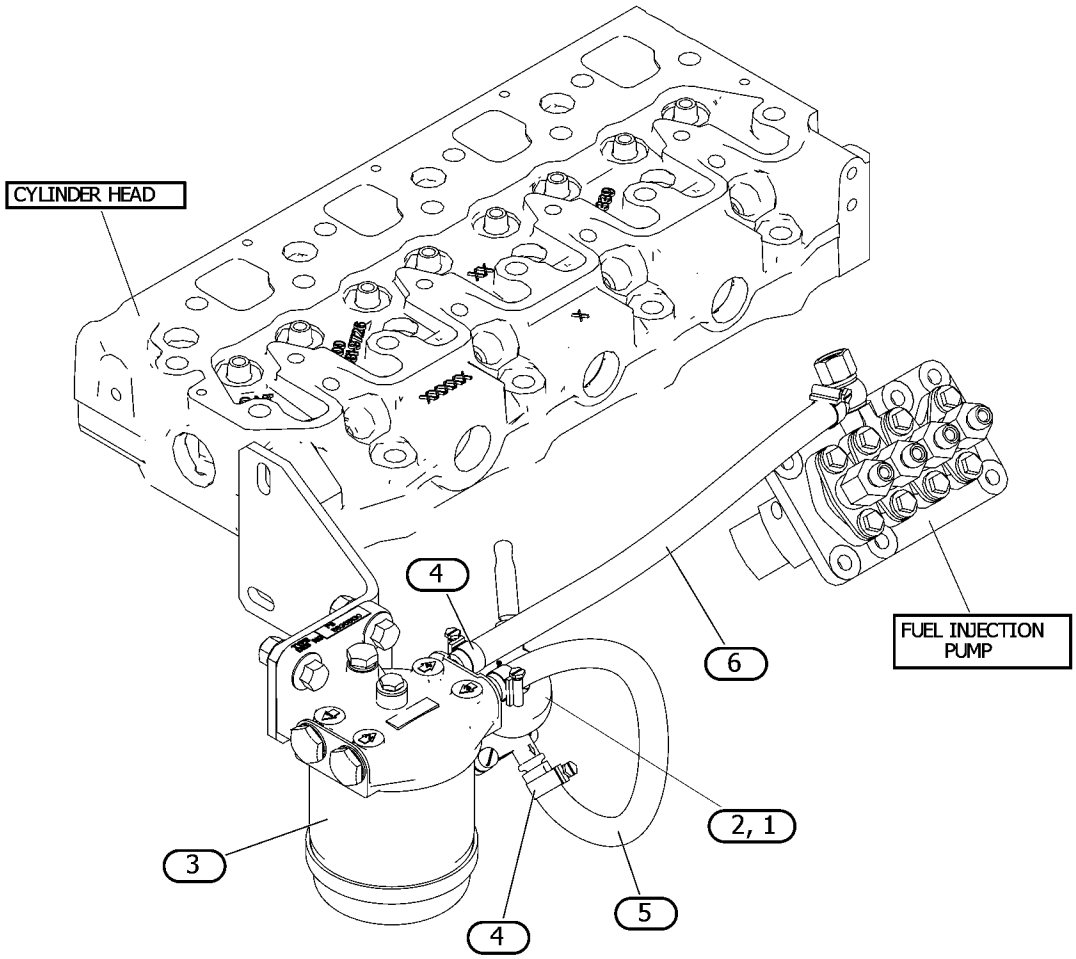

GRAPHIC #1 <END> g07817971

599-9743 FILTER GP-FUEL

PART OF 587-9328 ENGINE AR-PRIMARY

SMCS-1261 **i10428787**

NOTE	REF NO	GRAPHIC REF	PART NUMBER	QTY	PART NAME 1 2 3 4 5 6 (PRODUCT LEVEL)	SEE PAGE
Y	1	1	**599-9665**	1	FILTER GP-FUEL	759
M	2	1	**124-3815**	1	BOLT (M8X1.25X16-MM)	
	3	1	**423-5661**	1	HOSE	
	4	1	**476-2680**	1	BRACKET	
M	5	1	**178-3336**	1	NUT-HEX FLANGE (M8X1.25-THD)	
	6	1	**183-4036**	1	CONNECTOR	
	7	1	**183-4320**	1	PUMP AS-FUEL TRANSFER	
	8	1	**243-6411**	1	FILTER AS-FUEL	
	9	1	**262-0491**	2	CLAMP	

M - METRIC PART
Y - SEPARATE ILLUSTRATION

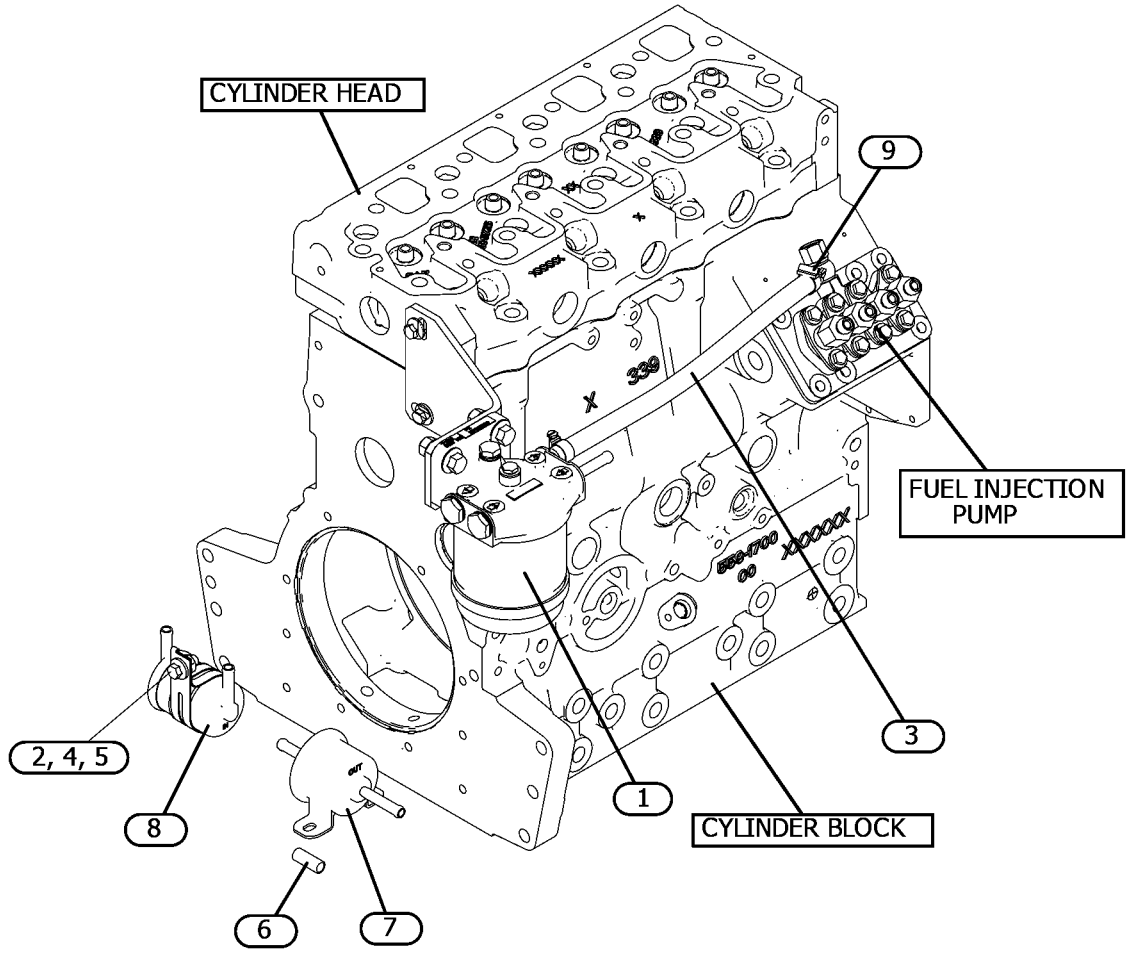

GRAPHIC #1 <END> g07896978

624-8784 FILTER GP-FUEL

FIELD REPLACEMENT FOR 481-2063—PAGE: 752

SMCS-1261 **i10274247**

NOTE	REF NO	GRAPHIC REF	PART NUMBER	QTY	PART NAME 1 2 3 4 5 6 (PRODUCT LEVEL)	SEE PAGE
	1	1	**624-7998**	1	SCREW (1/4-20X2-IN)	
	2	1	**067-6987**	1	FILTER-FUEL	
	3	1	**616-5021**	1	SEAL-O-RING	
	4	1	**619-1625**	1	WASHER (6.5X15X1.5-MM THK)	
	5	1	**624-7996**	1	BOWL-FILTER	
	6	1	**624-7997**	1	SHAFT	

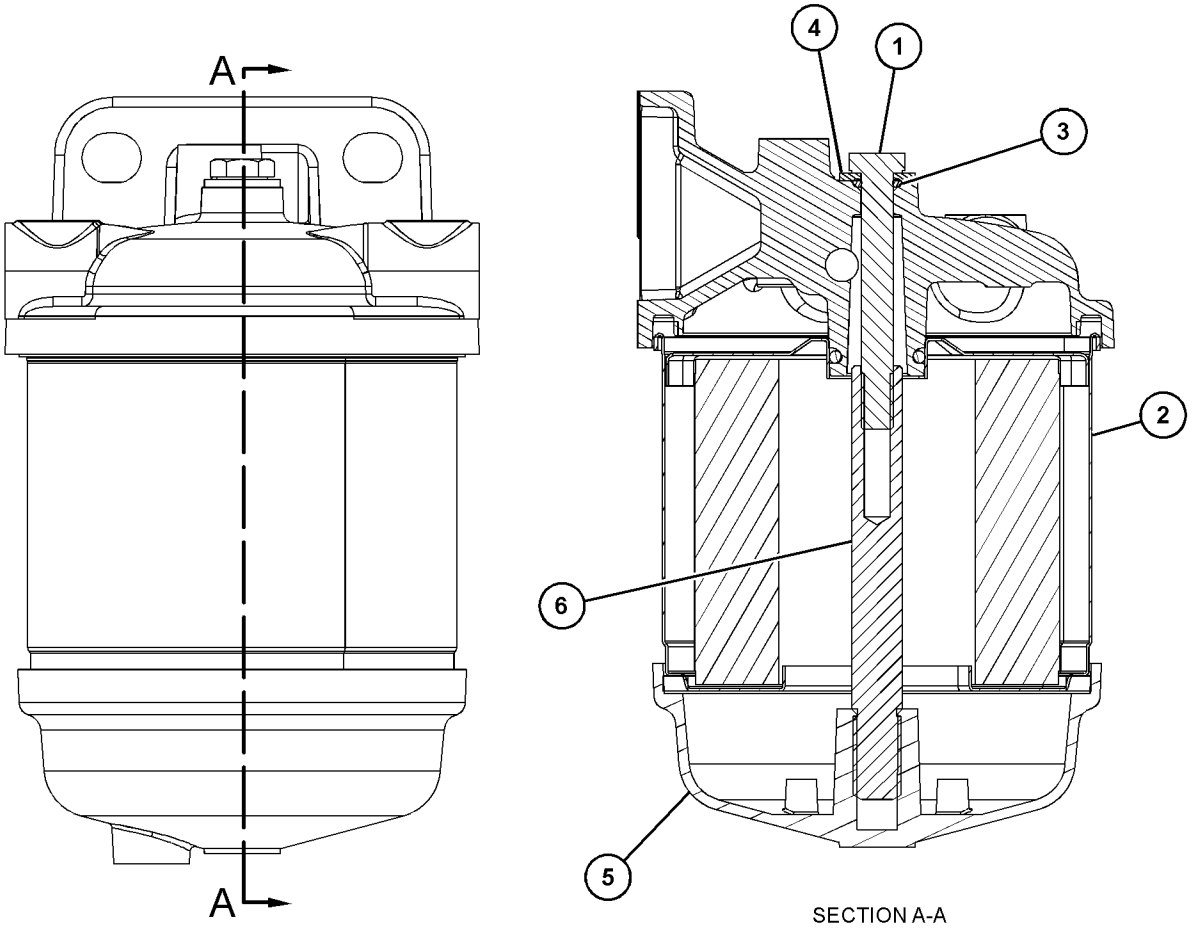

SECTION A-A

GRAPHIC #1 <END> g07821659

311-9024 GOVERNOR GP

PART OF 435-1641 ENGINE AR-PRIMARY

TYPE 1

SMCS-1264, 1908 **i07358102**

NOTE	REF NO	GRAPHIC REF	PART NUMBER	QTY	PART NAME 1 2 3 4 5 6 (PRODUCT LEVEL)	SEE PAGE
M	1	1	**5C-2890**	1	NUT (M6X1-THD)	
	2	1	**139-5511**	1	CAP (TAMPER RESISTANT)	
M	3	1	**153-5592**	1	NUT (M8X1.25-THD)	
	4	1	**153-6415**	2	WASHER (SEAL)	
	5	1	**153-7983**	1	PIN	
	6	1	**095-1574**	1	SEAL-O-RING	
M	7	1	**369-4486**	2	BOLT (M6X1X35-MM)	
M	8	1	**162-2207**	1	NUT (M6X1-THD)	
M	9	1	**106-8916**	4	BOLT (M6X1X16-MM)	
	10	1	**217-7115**	1	CAP (TAMPER RESISTANT)	
	11	1	**335-5578**	1	BRACKET	
	12	1	**423-7724**	1	GASKET	
	13	1	**334-0732**	1	ARM AS (FRONT HOUSING)	
	14	1	**308-1882**	1	SPRING	
	15	1	**390-3729**	1	LEVER-CONTROL	
M	16	1	**308-1889**	1	NUT (M10X1.25-THD)	
	17	1	**322-7493**	1	LEVER AS-CONTROL	
M	18	1	**308-1892**	1	NUT (M6X1-THD)	
	19	1	**308-1897**	2	RING	
	20	1	**425-7065**	1	CAP-TAMPER PROOF	
	21	1	**321-4249**	1	NUT	
	22	1	**330-9189**	1	PLUG	
	23	1	**308-4266**	1	SHAFT	
	24	1	**390-3731**	1	SHAFT	
	25	1	**309-6729**	1	SEAL-O-RING	
	26	1	**319-3252**	1	SENSOR AS-SPEED (ENGINE TIMING)	
	27	1	**340-4756**	1	BOLT AS	
	27A	1	**153-7987**	1	WASHER (9.2X17X1.8-MM THK)	
M	27B	1	**191-9297**	1	NUT (M10X1.25-THD)	
	27C	1	**340-4755**	1	SPRING	
M	28	1	**495-0737**	1	BOLT (M6X0.5X19.5-MM)	
	29	1	**317-7195**	1	SPRING	
	30	1	**311-0655**	1	SPRING	
	31	1	**336-2965**	1	SPRING	
	32	1	**308-1875**	1	SEAL-O-RING	

M - METRIC PART

311-9024 **GOVERNOR GP** (contd.) **i07358102**

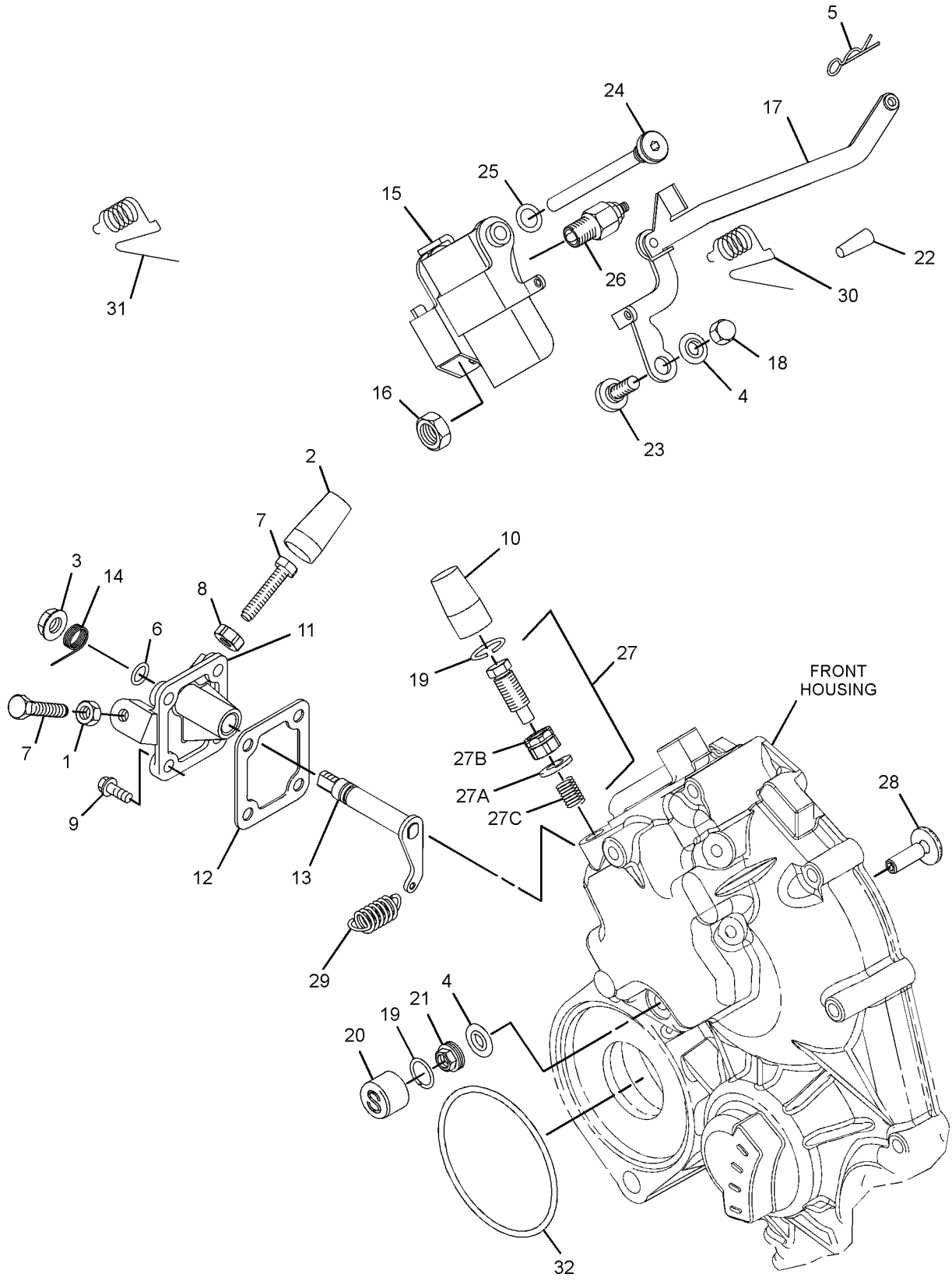

GRAPHIC #1 <END> g06175107

311-9024 GOVERNOR GP

PART OF 435-1641 ENGINE AR-PRIMARY

TYPE 2

SMCS-1264, 1908 **i08611894**

NOTE	REF NO	GRAPHIC REF	PART NUMBER	QTY	PART NAME 1 2 3 4 5 6 (PRODUCT LEVEL)	SEE PAGE
M	1	1	**5C-2890**	1	NUT (M6X1-THD)	
	2	1	**139-5511**	1	CAP (TAMPER RESISTANT)	
M	3	1	**153-5592**	1	NUT (M8X1.25-THD)	
	4	1	**153-6415**	2	WASHER (SEAL)	
	5	1	**153-7983**	1	PIN	
	6	1	**095-1574**	1	SEAL-O-RING	
M	7	1	**7X-2533**	2	BOLT (M6X1X35-MM)	
M	8	1	**162-2207**	1	NUT (M6X1-THD)	
M	9	1	**106-8916**	4	BOLT (M6X1X16-MM)	
	10	1	**217-7115**	1	CAP (TAMPER RESISTANT)	
	11	1	**335-5578**	1	BRACKET	
	12	1	**423-7724**	1	GASKET	
	13	1	**334-0732**	1	ARM AS (FRONT HOUSING)	
	14	1	**308-1882**	1	SPRING	
	15	1	**580-0398**	1	LEVER AS-CONTROL	
M	16	1	**308-1889**	1	NUT (M10X1.25-THD)	
	17	1	**322-7493**	1	LEVER AS-CONTROL	
		1	**154-1400**	1	PIN	
M	18	1	**308-1892**	1	NUT (M6X1-THD)	
C	19	1	**308-1897**	1	RING	
C	21	1	**502-9478**	1	NUT (TAMPER RESISTANT)	
	22	1	**330-9189**	1	PLUG	
	23	1	**308-4266**	1	SHAFT	
	24	1	**390-3731**	1	SHAFT	
	25	1	**309-6729**	1	SEAL-O-RING	
	26	1	**319-3252**	1	SENSOR AS-SPEED (ENGINE TIMING)	
M	26A	1	**5C-8312**	1	NUT (M4X0.7-THD)	
	27	1	**340-4756**	1	BOLT AS	
	27A	1	**153-7987**	1	WASHER (9.2X17X1.8-MM THK)	
M	27B	1	**191-9297**	1	NUT (M10X1.25-THD)	
	27C	1	**340-4755**	1	SPRING	
M	28	1	**495-0737**	1	BOLT (M6X0.5X19.5-MM)	
	29	1	**317-7195**	1	SPRING	
	30	1	**311-0655**	1	SPRING	
	31	1	**336-2965**	1	SPRING	
	32	1	**308-1875**	1	SEAL-O-RING	
C	33	1	**502-5421**	1	PIN	
C	34	1	**503-9707**	1	CAP	
C	35	1	**503-9731**	1	SHROUD	

C - CHANGE FROM PREVIOUS TYPE
M - METRIC PART

311-9024 **GOVERNOR GP** (contd.) **i08611894**

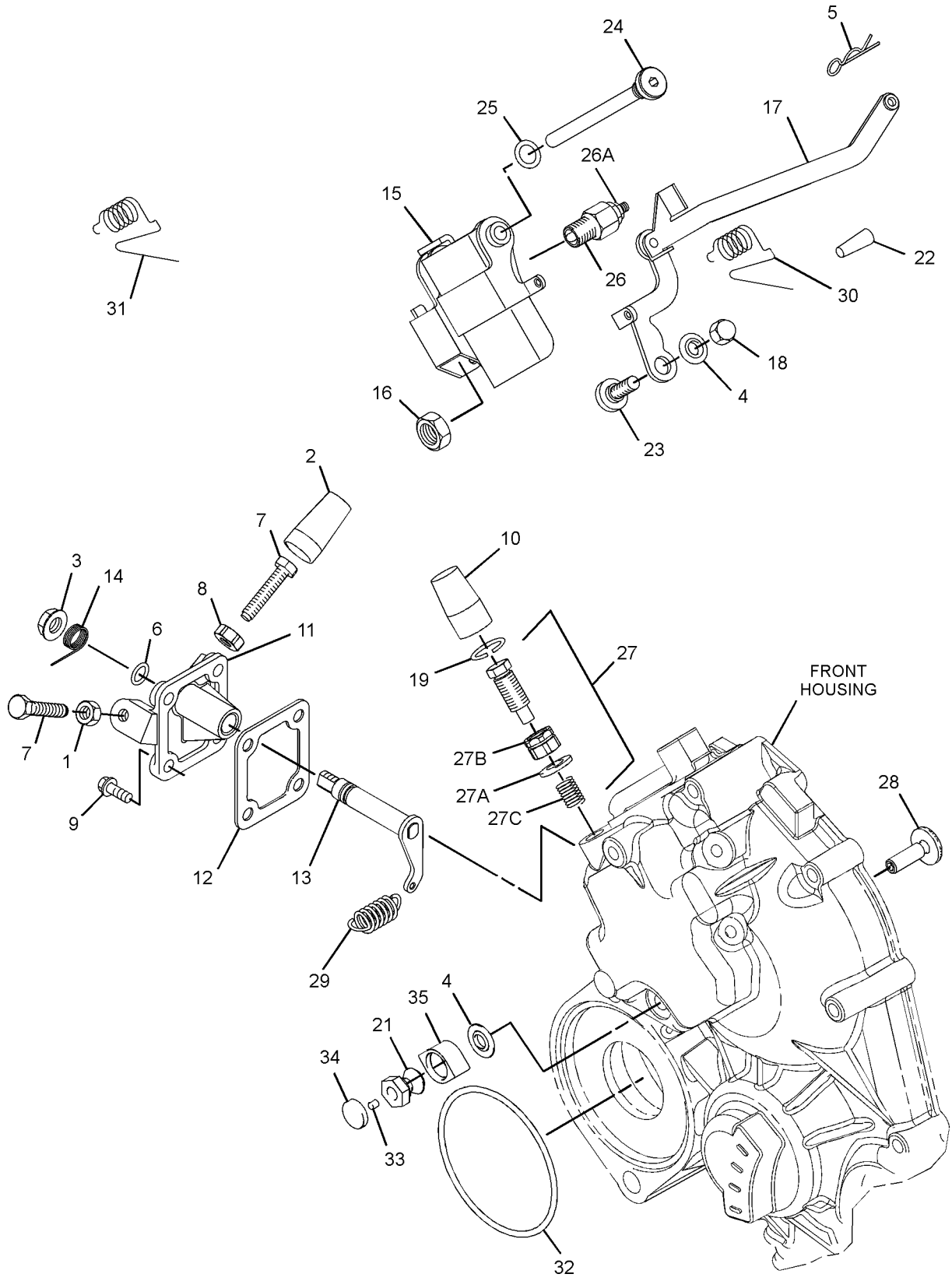

GRAPHIC #1 <END> g07539577

317-0967 GOVERNOR GP

TYPE 1

SMCS-1264, 1908 **i06880218**

NOTE	REF NO	GRAPHIC REF	PART NUMBER	QTY	PART NAME 1 2 3 4 5 6 (PRODUCT LEVEL)	SEE PAGE
M	1	1	**5C-2890**	1	NUT (M6X1-THD)	
	2	1	**139-5511**	1	CAP (TAMPER RESISTANT)	
M	3	1	**153-5592**	1	NUT (M8X1.25-THD)	
	4	1	**153-6415**	2	WASHER (SEAL)	
	5	1	**153-7983**	1	PIN	
	6	1	**095-1574**	1	SEAL-O-RING	
	7	1	**309-6729**	1	SEAL-O-RING	
M	8	1	**369-4486**	2	BOLT (M6X1X35-MM)	
M	9	1	**162-2207**	1	NUT (M6X1-THD)	
M	10	1	**249-7263**	4	BOLT (M6X1X16-MM)	
	11	1	**217-7115**	1	CAP (TAMPER RESISTANT)	
	12	1	**335-5578**	1	BRACKET	
	13	1	**423-7724**	1	GASKET	
C	14	1	**334-0732**	1	ARM AS (FRONT HOUSING)	
	15	1	**308-1882**	1	SPRING	
M	16	1	**308-1889**	1	NUT (M10X1.25-THD)	
C	17	1	**322-7493**	1	LEVER AS-CONTROL	
M	18	1	**308-1892**	1	NUT (M6X1-THD)	
	19	1	**308-1897**	1	RING	
	20	1	**425-7065**	1	CAP-TAMPER PROOF	
	21	1	**321-4249**	1	NUT	
	22	1	**330-9189**	1	PLUG	
	23	1	**308-4266**	1	SHAFT	
	24	1	**309-6728**	1	SHAFT	
	25	1	**364-2755**	1	BOLT-SPECIAL	
	26	1	**317-7195**	1	SPRING	
	27	1	**311-0655**	1	SPRING	
	28	1	**313-5832**	1	BOLT AS	
	28A	1	**153-7987**	1	WASHER (9.2X17X1.8-MM THK)	
M	28B	1	**191-9297**	1	NUT (M10X1.25-THD)	
	28C	1	**313-5833**	1	SPRING	
	29	1	**336-2965**	1	SPRING	
	30	1	**319-3251**	1	GOVERNOR GP (ENGINE TIMING)	
	31	1	**322-7492**	1	LEVER-CONTROL	

C - CHANGE FROM PREVIOUS TYPE
M - METRIC PART

317-0967 **GOVERNOR GP** (contd.) **i06880218**

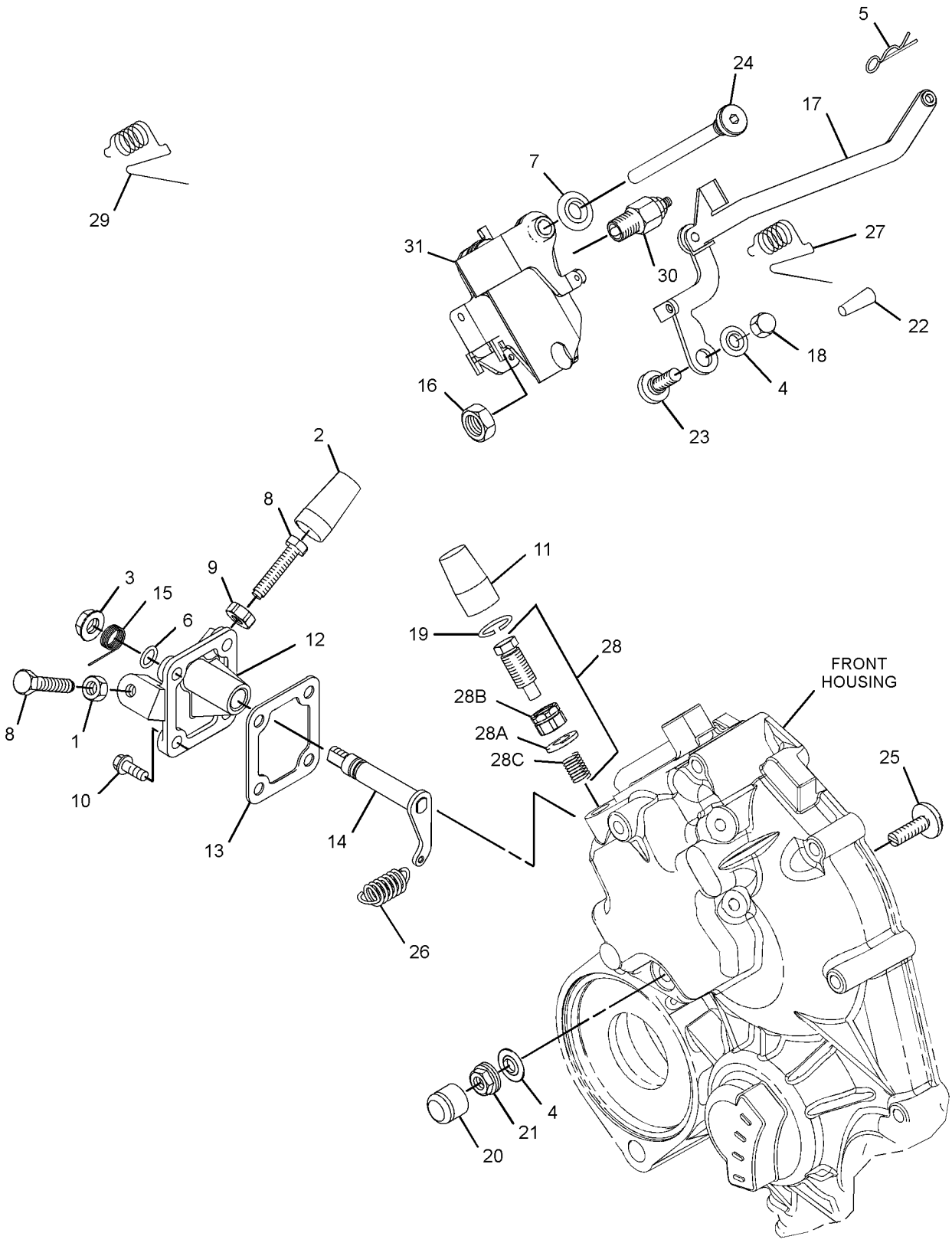

GRAPHIC #1 <END> g06113605

317-0967 GOVERNOR GP

TYPE 2

SMCS-1264, 1908 **i08309088**

NOTE	REF NO	GRAPHIC REF	PART NUMBER	QTY	PART NAME 1 2 3 4 5 6 (PRODUCT LEVEL)	SEE PAGE
M	1	1	**5C-2890**	1	NUT (M6X1-THD)	
	2	1	**139-5511**	1	CAP (TAMPER RESISTANT)	
M	3	1	**153-5592**	1	NUT (M8X1.25-THD)	
	4	1	**153-6415**	2	WASHER (SEAL)	
	5	1	**153-7983**	1	PIN	
	6	1	**095-1574**	1	SEAL-O-RING	
	7	1	**309-6729**	1	SEAL-O-RING	
M	8	1	**7X-2533**	2	BOLT (M6X1X35-MM)	
M	9	1	**162-2207**	1	NUT (M6X1-THD)	
M	10	1	**249-7263**	4	BOLT (M6X1X16-MM)	
	11	1	**217-7115**	1	CAP (TAMPER RESISTANT)	
	12	1	**335-5578**	1	BRACKET	
	13	1	**423-7724**	1	GASKET	
	14	1	**334-0732**	1	ARM AS (FRONT HOUSING)	
	15	1	**308-1882**	1	SPRING	
M	16	1	**308-1889**	1	NUT (M10X1.25-THD)	
	17	1	**322-7493**	1	LEVER AS-CONTROL	
M	18	1	**308-1892**	1	NUT (M6X1-THD)	
C	20	1	**503-9707**	1	CAP	
C	21	1	**502-9478**	1	NUT (TAMPER RESISTANT)	
	22	1	**330-9189**	1	PLUG	
	23	1	**308-4266**	1	SHAFT	
	24	1	**390-3731**	1	SHAFT	
	25	1	**364-2755**	1	BOLT-SPECIAL	
	26	1	**317-7195**	1	SPRING	
	27	1	**311-0655**	1	SPRING	
	28	1	**313-5832**	1	BOLT AS	
	28A	1	**153-7987**	1	WASHER (9.2X17X1.8-MM THK)	
M	28B	1	**191-9297**	1	NUT (M10X1.25-THD)	
	28C	1	**313-5833**	1	SPRING	
	29	1	**336-2965**	1	SPRING	
	30	1	**319-3251**	1	GOVERNOR GP (ENGINE TIMING)	
M		1	**155-8076**	1	NUT (M4X0.4-THD)	
	31	1	**580-0398**	1	LEVER AS-CONTROL	
C	32	1	**503-9731**	1	SHROUD	
C	33	1	**502-5421**	1	PIN	

C - CHANGE FROM PREVIOUS TYPE
M - METRIC PART

317-0967 **GOVERNOR GP** (contd.) **i08309088**

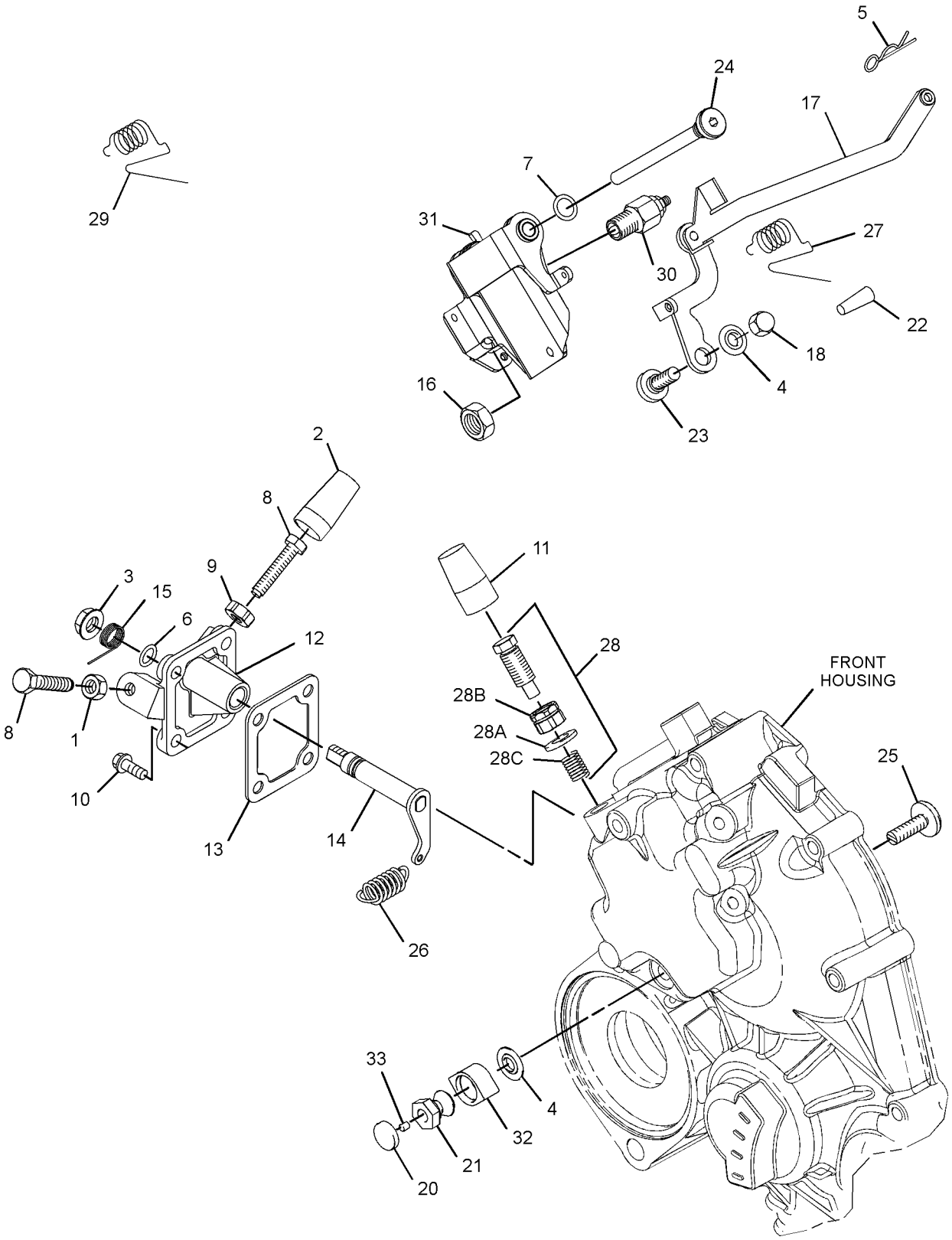

GRAPHIC #1 <END> g06756199

323-9146 GOVERNOR GP

TYPE 1

SMCS-1264, 1908 **i05877889**

NOTE	REF NO	GRAPHIC REF	PART NUMBER	QTY	PART NAME 1 2 3 4 5 6 (PRODUCT LEVEL)	SEE PAGE
M	1	1	**5C-2890**	1	NUT (M6X1-THD)	
	2	1	**139-5511**	1	CAP (TAMPER RESISTANT)	
M	3	1	**153-5592**	2	NUT (M8X1.25-THD)	
	4	1	**153-6415**	5	WASHER (SEAL)	
	5	1	**153-6861**	1	BOLT AS	
	6	1	**153-7983**	1	PIN	
	7	1	**095-1574**	1	SEAL-O-RING	
	8	1	**154-2715**	1	WASHER	
M	9	1	**369-4486**	2	BOLT (M6X1X35-MM)	
M	10	1	**162-2207**	1	NUT (M6X1-THD)	
BJM	11	1	**106-8916**	4	BOLT (M6X1X16-MM)	
					—OR—	
BLM		1	**183-3572**	4	BOLT AS (M6X1X16-MM)	
M	12	1	**217-5860**	4	BOLT (M4X0.7X8-MM)	
	13	1	**217-7115**	1	CAP (TAMPER RESISTANT)	
	14	1	**232-0218**	2	CLAMP	
	15	1	**232-0290**	1	CONNECTOR	
	16	1	**335-5578**	1	BRACKET	
	17	1	**423-7724**	1	GASKET	
	18	1	**334-0732**	1	ARM AS (FRONT HOUSING)	
	19	1	**308-1882**	1	SPRING	
M	20	1	**308-1889**	1	NUT (M10X1.25-THD)	
	21	1	**322-7493**	1	LEVER AS-CONTROL	
M	22	1	**308-1892**	1	NUT (M6X1-THD)	
	23	1	**308-1897**	2	RING	
	25	1	**377-2885**	1	SHAFT	
	26	1	**390-3731**	1	SHAFT	
	27	1	**364-2755**	1	BOLT-SPECIAL	
	28	1	**311-0655**	1	SPRING	
	29	1	**313-5832**	1	BOLT AS	
	29A	1	**153-7987**	1	WASHER (9.2X17X1.8-MM THK)	
M	29B	1	**191-9297**	1	NUT (M10X1.25-THD)	
	29C	1	**313-5833**	1	SPRING	
	30	1	**390-3729**	1	LEVER-CONTROL	
	31	1	**317-7195**	1	SPRING	
	32	1	**321-4249**	2	NUT	
	33	1	**321-8209**	1	SENSOR AS-SPEED (ENGINE TIMING)	
	34	1	**425-7065**	1	CAP-TAMPER PROOF	
	35	1	**321-8211**	1	DIAPHRAGM	
	36	1	**321-8212**	1	COVER	
	37	1	**321-8214**	1	BOLT	
	38	1	**328-5174**	1	LEVER-STOP	
	39	1	**321-8216**	1	TUBE	
	40	1	**321-8217**	1	BOLT	
	41	1	**321-8218**	1	HOSE	
	42	1	**336-2965**	1	SPRING	
	43	1	**330-9189**	1	PLUG	
	44	1	**285-3555**	1	CLIP	

323-9146 **GOVERNOR GP (**contd.**)** **i05877889**

NOTE	REF NO	GRAPHIC REF	PART NUMBER	QTY	PART NAME 1 2 3 4 5 6 (PRODUCT LEVEL)	SEE PAGE
	45	1	**153-6375**	1	BOLT AS	
	46	1	**380-3717**	1	SHIM (0.1-MM THK)	
	47	1	**380-3716**	1	SHIM (0.15-MM THK)	
	48	1	**380-3715**	1	SHIM (0.2-MM THK)	

B - USE AS REQUIRED
J - FOR USE WITH PSEL & PSEA BUILT ENGINES ONLY
L - FOR USE WITH ISM BUILT ENGINES ONLY
M - METRIC PART

323-9146 **GOVERNOR GP (**contd.**)** **i05877889**

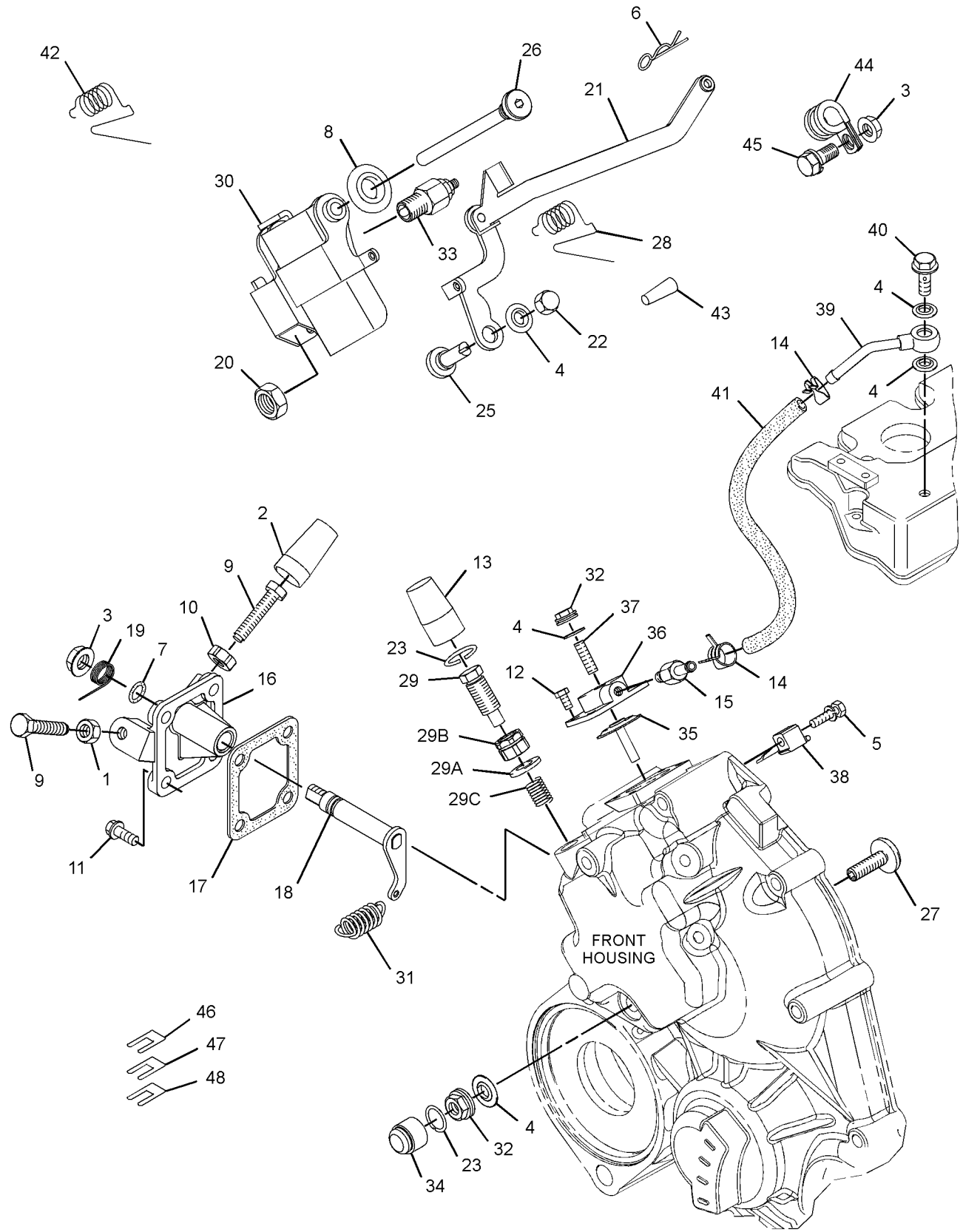

GRAPHIC #1 <END> g03808216

323-9146 GOVERNOR GP

TYPE 2

SMCS-1264, 1908 **i07350685**

NOTE	REF NO	GRAPHIC REF	PART NUMBER	QTY	PART NAME 1 2 3 4 5 6 (PRODUCT LEVEL)	SEE PAGE
M	1	1	**5C-2890**	1	NUT (M6X1-THD)	
	2	1	**139-5511**	1	CAP (TAMPER RESISTANT)	
M	3	1	**153-5592**	2	NUT (M8X1.25-THD)	
	4	1	**153-6415**	5	WASHER (SEAL)	
	5	1	**153-6861**	1	BOLT AS	
	6	1	**153-7983**	1	PIN	
	7	1	**095-1574**	1	SEAL-O-RING	
	8	1	**154-2715**	1	WASHER	
M	9	1	**369-4486**	2	BOLT (M6X1X35-MM)	
M	10	1	**162-2207**	1	NUT (M6X1-THD)	
BJM	11	1	**106-8916**	4	BOLT (M6X1X16-MM)	
					—OR—	
BLM		1	**183-3572**	4	BOLT AS (M6X1X16-MM) (M6X1X16-MM)	
M	12	1	**217-5860**	4	BOLT (M4X0.7X8-MM) (M4X0.7X8-MM)	
	13	1	**217-7115**	1	CAP (TAMPER RESISTANT)	
	14	1	**232-0218**	2	CLAMP	
	15	1	**232-0290**	1	CONNECTOR	
	16	1	**335-5578**	1	BRACKET	
	17	1	**423-7724**	1	GASKET	
	18	1	**334-0732**	1	ARM AS (FRONT HOUSING)	
	19	1	**308-1882**	1	SPRING	
M	20	1	**308-1889**	1	NUT (M10X1.25-THD)	
	21	1	**322-7493**	1	LEVER AS-CONTROL	
C	23	1	**308-1897**	2	RING	
	25	1	**377-2885**	1	SHAFT	
	26	1	**390-3731**	1	SHAFT	
	27	1	**364-2755**	1	BOLT-SPECIAL (ADJUSTING)	
	28	1	**311-0655**	1	SPRING	
	29	1	**313-5832**	1	BOLT AS	
	29A	1	**153-7987**	1	WASHER (9.2X17X1.8-MM THK)	
M	29B	1	**191-9297**	1	NUT (M10X1.25-THD)	
	29C	1	**313-5833**	1	SPRING	
	30	1	**390-3729**	1	LEVER-CONTROL	
	31	1	**317-7195**	1	SPRING	
C	32	1	**321-4249**	2	NUT (HEX)	
	33	1	**321-8209**	1	SENSOR AS-SPEED (ENGINE TIMING)	
C	34	1	**425-7065**	2	CAP-TAMPER PROOF	
	35	1	**321-8211**	1	DIAPHRAGM	
	36	1	**321-8212**	1	COVER	
	37	1	**321-8214**	1	BOLT	
	39	1	**321-8216**	1	TUBE	
	40	1	**321-8217**	1	BOLT	
	41	1	**321-8218**	1	HOSE	
	42	1	**336-2965**	1	SPRING	
	43	1	**330-9189**	1	PLUG	
	44	1	**285-3555**	1	CLIP	
	45	1	**153-6375**	1	BOLT AS	
	46	1	**380-3717**	1	SHIM (0.1-MM THK)	

323-9146 **GOVERNOR GP (**contd.**)** **i07350685**

NOTE	REF NO	GRAPHIC REF	PART NUMBER	QTY	PART NAME 1 2 3 4 5 6 (PRODUCT LEVEL)	SEE PAGE
	47	1	**380-3716**	1	SHIM (0.15-MM THK)	
	48	1	**380-3715**	1	SHIM (0.2-MM THK)	
	49	1	**502-5421**	1	PIN	
	50	1	**502-9478**	1	NUT (TAMPER RESISTANT) (HEX)	
	51	1	**503-9707**	1	CAP	
	52	1	**503-9731**	1	SHROUD	

B - USE AS REQUIRED
C - CHANGE FROM PREVIOUS TYPE
J - FOR USE WITH PSEL & PSEA BUILT ENGINES ONLY
L - FOR USE WITH ISM BUILT ENGINES ONLY
M - METRIC PART

323-9146 **GOVERNOR GP** (contd.) **i07350685**

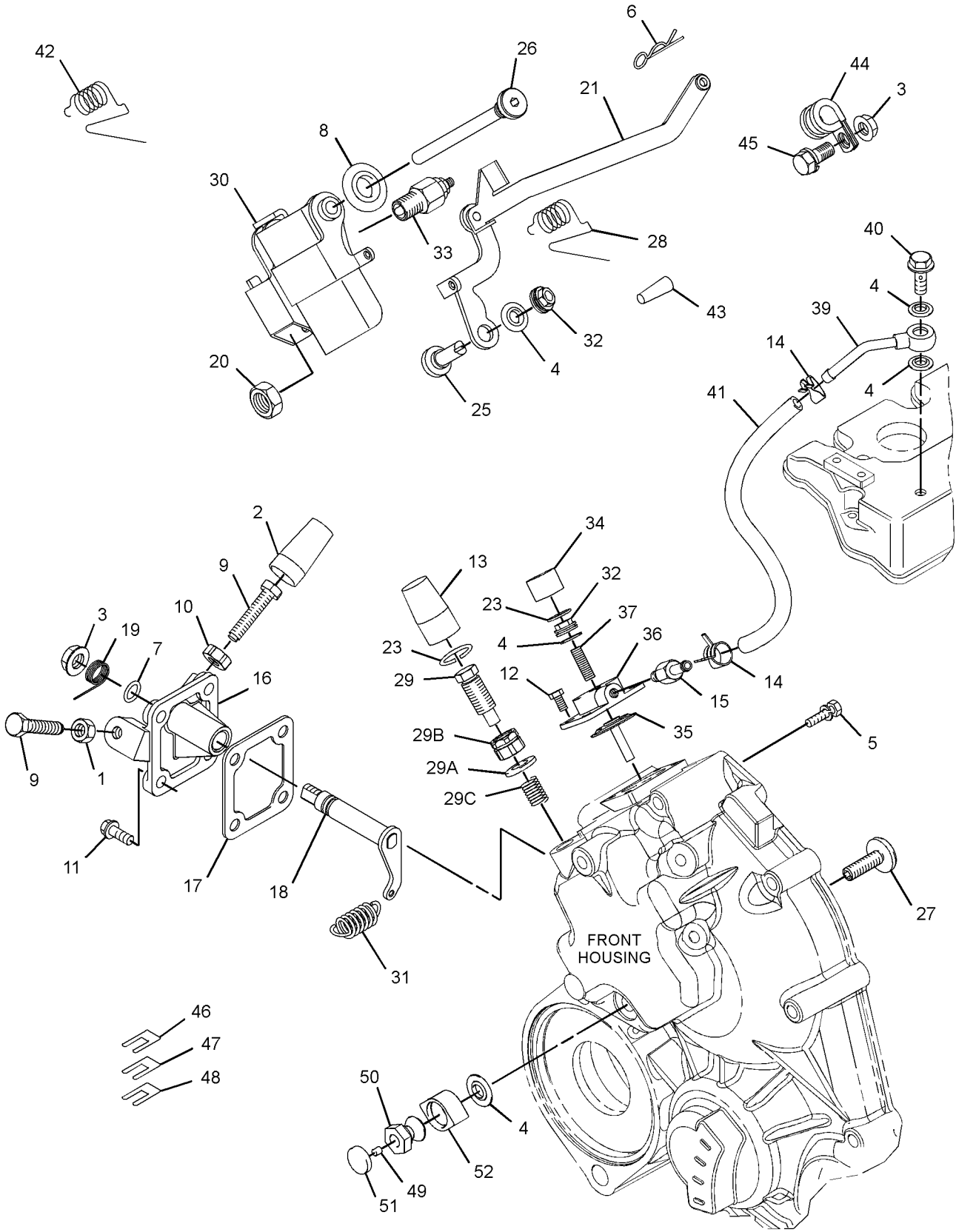

GRAPHIC #1 <END> g06315415

373-7283 GOVERNOR GP

PART OF 435-1658, 557-9727 ENGINE AR-PRIMARY

SMCS-1264, 1908 **i08301363**

NOTE	REF NO	GRAPHIC REF	PART NUMBER	QTY	PART NAME 1 2 3 4 5 6 (PRODUCT LEVEL)	SEE PAGE
M	1	1	**5C-2890**	1	NUT (M6X1-THD)	
	2	1	**095-1574**	1	SEAL-O-RING	
M	3	1	**106-8916**	4	BOLT (M6X1X16-MM)	
	4	1	**139-5511**	1	CAP (TAMPER RESISTANT)	
M	5	1	**153-5592**	1	NUT (M8X1.25-THD)	
	6	1	**153-6415**	2	WASHER (SEAL)	
	7	1	**153-7983**	1	PIN	
M	8	1	**162-2207**	1	NUT (M6X1-THD)	
	9	1	**217-7115**	1	CAP (TAMPER RESISTANT)	
	10	1	**423-7724**	1	GASKET	
	11	1	**308-1882**	1	SPRING	
M	12	1	**308-1889**	1	NUT (M10X1.25-THD)	
M	13	1	**308-1892**	1	NUT (M6X1-THD)	
	14	1	**308-1897**	1	RING	
	16	1	**308-4266**	1	SHAFT	
	17	1	**390-3731**	1	SHAFT	
	18	1	**311-0655**	1	SPRING	
	19	1	**313-5832**	1	BOLT AS	
	19A	1	**153-7987**	1	WASHER (9.2X17X1.8-MM THK)	
M	19B	1	**191-9297**	1	NUT (M10X1.25-THD)	
	19C	1	**313-5833**	1	SPRING	
	20	1	**317-7195**	1	SPRING	
	21	1	**319-3253**	1	SENSOR AS-SPEED (TIMING)	
M		1	**155-8076**	1	NUT (M4X0.4-THD)	
	22	1	**502-9478**	1	NUT (TAMPER RESISTANT)	
	23	1	**580-0398**	1	LEVER AS-CONTROL	
	24	1	**322-7493**	1	LEVER AS-CONTROL (FLOATING)	
	25	1	**330-9189**	1	PLUG	
	26	1	**503-9707**	1	CAP	
	27	1	**334-0732**	1	ARM AS (FRONT HOUSING)	
	28	1	**335-5578**	1	BRACKET	
	29	1	**336-2965**	1	SPRING	
	30	1	**364-2755**	1	BOLT-SPECIAL	
M	31	1	**7X-2533**	2	BOLT (M6X1X35-MM)	
	32	1	**308-1875**	1	SEAL-O-RING	
	33	1	**503-9731**	1	SHROUD	
	34	1	**502-5421**	1	PIN	

M - METRIC PART

373-7283 **GOVERNOR GP** (contd.) **i08301363**

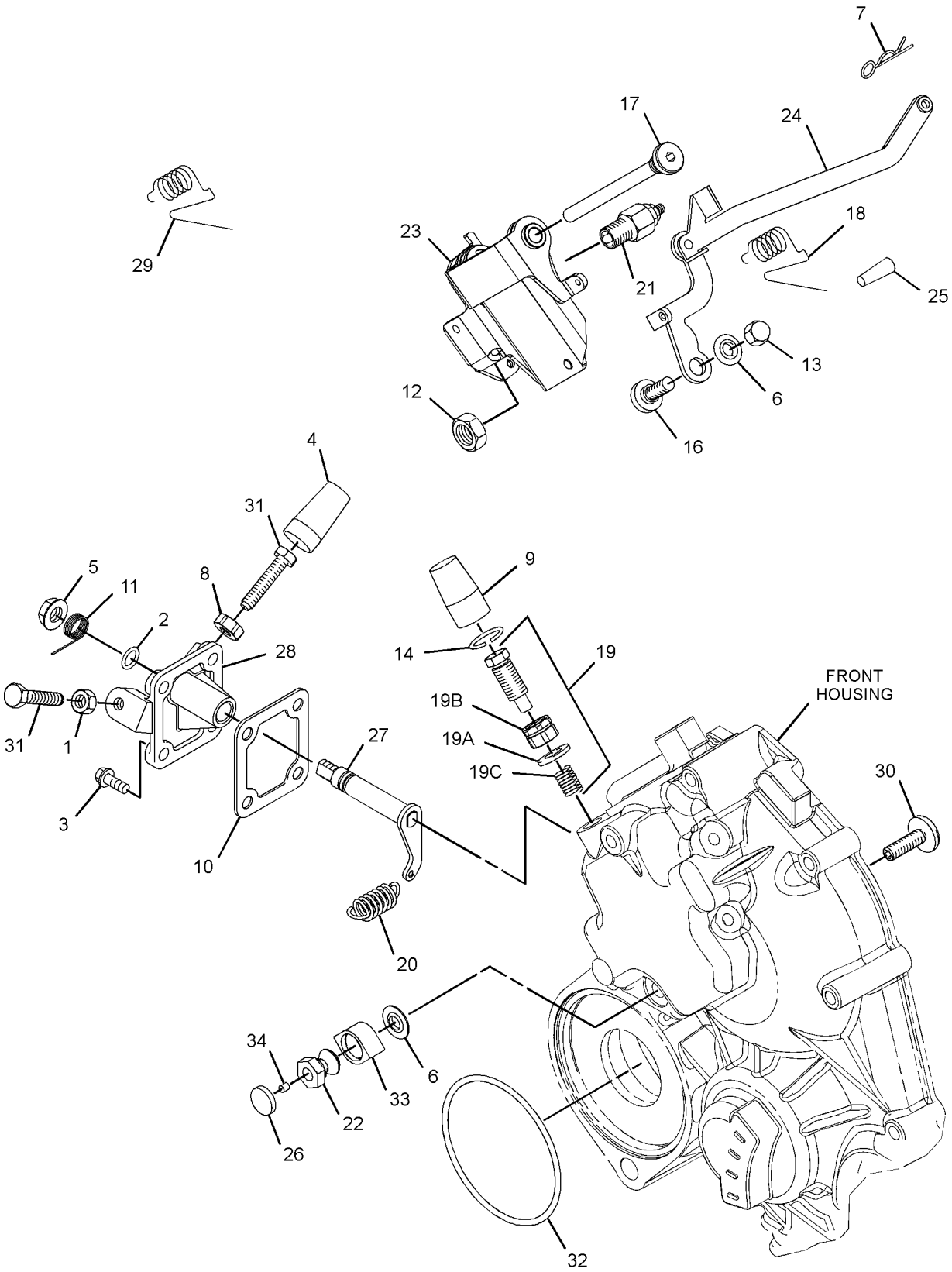

GRAPHIC #1 <END> g06751827

481-5623 GOVERNOR GP

PART OF 465-1477 ENGINE AR-PRIMARY

SMCS-1264, 1908 **i06107537**

NOTE	REF NO	GRAPHIC REF	PART NUMBER	QTY	PART NAME 1 2 3 4 5 6 (PRODUCT LEVEL)	SEE PAGE
M	1	1	**6I-0846**	1	BOLT (M6X1X14-MM)	
M	2	1	**106-8916**	4	BOLT (M6X1X16-MM)	
M	3	1	**5C-2890**	1	NUT (M6X1-THD)	
	4	1	**139-5511**	1	CAP (TAMPER RESISTANT)	
M	5	1	**153-5592**	1	NUT (M8X1.25-THD)	
	6	1	**153-6415**	3	WASHER (SEAL)	
	7	1	**153-7983**	1	PIN	
	8	1	**095-1574**	1	SEAL-O-RING	
M	9	1	**162-2207**	1	NUT (M6X1-THD)	
	10	1	**217-7115**	1	CAP (TAMPER RESISTANT)	
	11	1	**308-1882**	1	SPRING	
M	12	1	**308-1889**	1	NUT (M10X1.25-THD)	
M	13	1	**308-1892**	1	NUT (M6X1-THD)	
	14	1	**308-1897**	2	RING	
	15	1	**308-4266**	1	SHAFT	
	16	1	**309-6729**	1	SEAL-O-RING	
	17	1	**311-0655**	1	SPRING	
	18	1	**313-5832**	1	BOLT AS	
		1	**153-7987**	1	WASHER (9.2X17X1.8-MM THK)	
M		1	**191-9297**	1	NUT (M10X1.25-THD)	
		1	**313-5833**	1	SPRING	
	19	1	**317-7195**	1	SPRING	
	20	1	**319-3253**	1	SENSOR AS-SPEED	
	21	1	**321-4249**	1	NUT	
	22	1	**322-7493**	1	LEVER AS-CONTROL	
	23	1	**330-9189**	1	PLUG	
	24	1	**334-0732**	1	ARM AS (FRONT HOUSING)	
	25	1	**335-5578**	1	BRACKET	
	26	1	**336-2965**	1	SPRING	
	27	1	**364-2755**	1	BOLT-SPECIAL	
M	28	1	**369-4486**	2	BOLT (M6X1X35-MM)	
	29	1	**390-3729**	1	LEVER-CONTROL	
	30	1	**390-3731**	1	SHAFT	
	31	1	**423-7724**	1	GASKET	
	32	1	**425-7065**	1	CAP-TAMPER PROOF	

M - METRIC PART

481-5623 **GOVERNOR GP** (contd.) **i06107537**

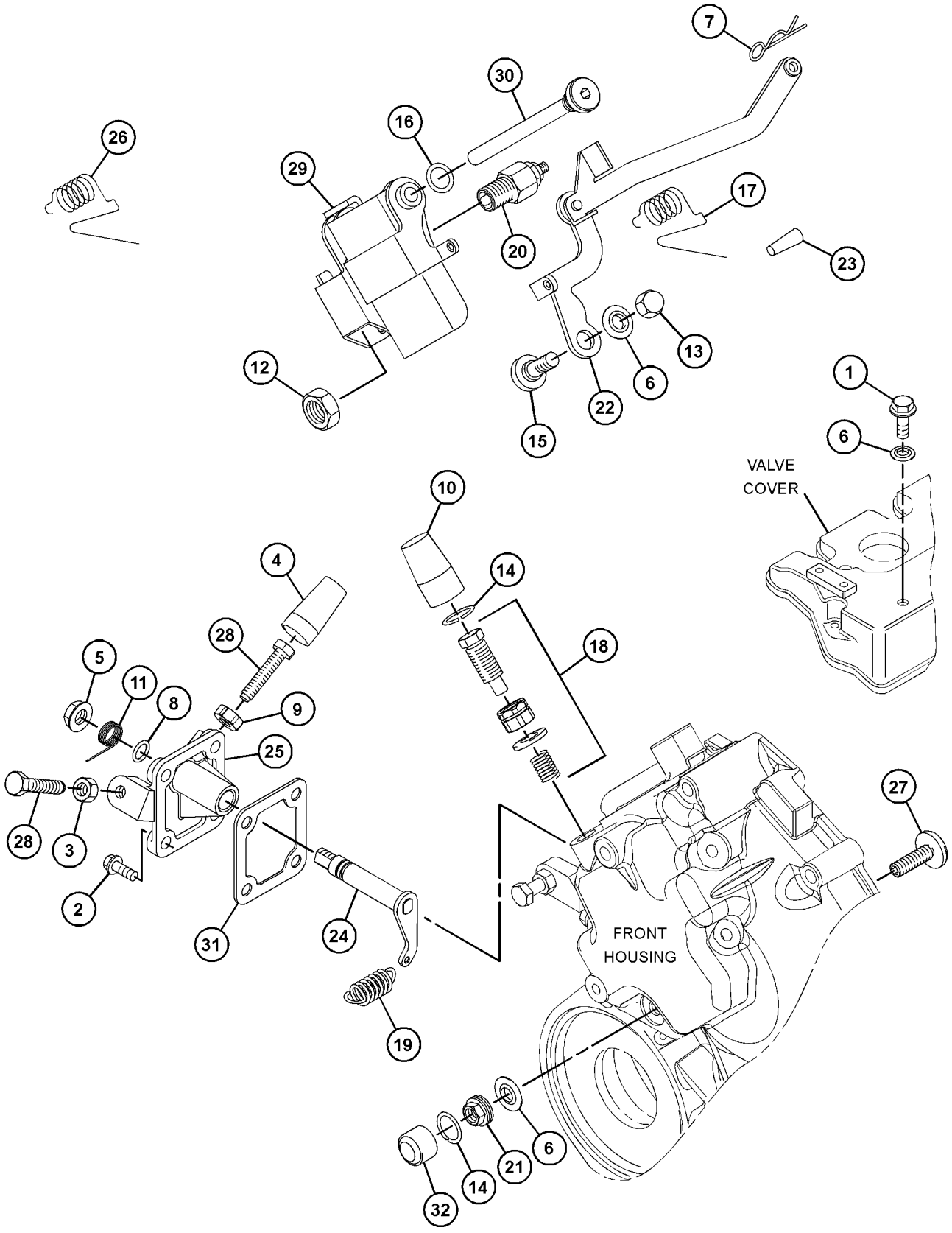

GRAPHIC #1 <END> g03812905

492-4924 GOVERNOR GP

SMCS-1264, 1908 **i09781093**

NOTE	REF NO	GRAPHIC REF	PART NUMBER	QTY	PART NAME 1 2 3 4 5 6 (PRODUCT LEVEL)	SEE PAGE
	1	1	**308-1914**	1	LEVER-CONTROL	
	2	1	**357-3053**	1	SENSOR GP-SPEED (MAGNETIC, HIGH OUTPUT)	
	2A	1	**171-5349**	1	STRAP-MARKER	
	2B	1	**102-8802**	1	KIT-RECEPTACLE (2-PIN)	
					(INCLUDES RECEPTACLE AS & WEDGE)	
	2C	1	**8T-8729**	2	PIN-CONNECTOR (16-GA TO 20-GA)	
E	2D	1	**9X-1813**		SLEEVE (14-CM)	
	3	1	**380-2680**	1	WASHER	
	4	1	**550-9113**	1	ACTUATOR AS	

E - ORDER BY THE CENTIMETER

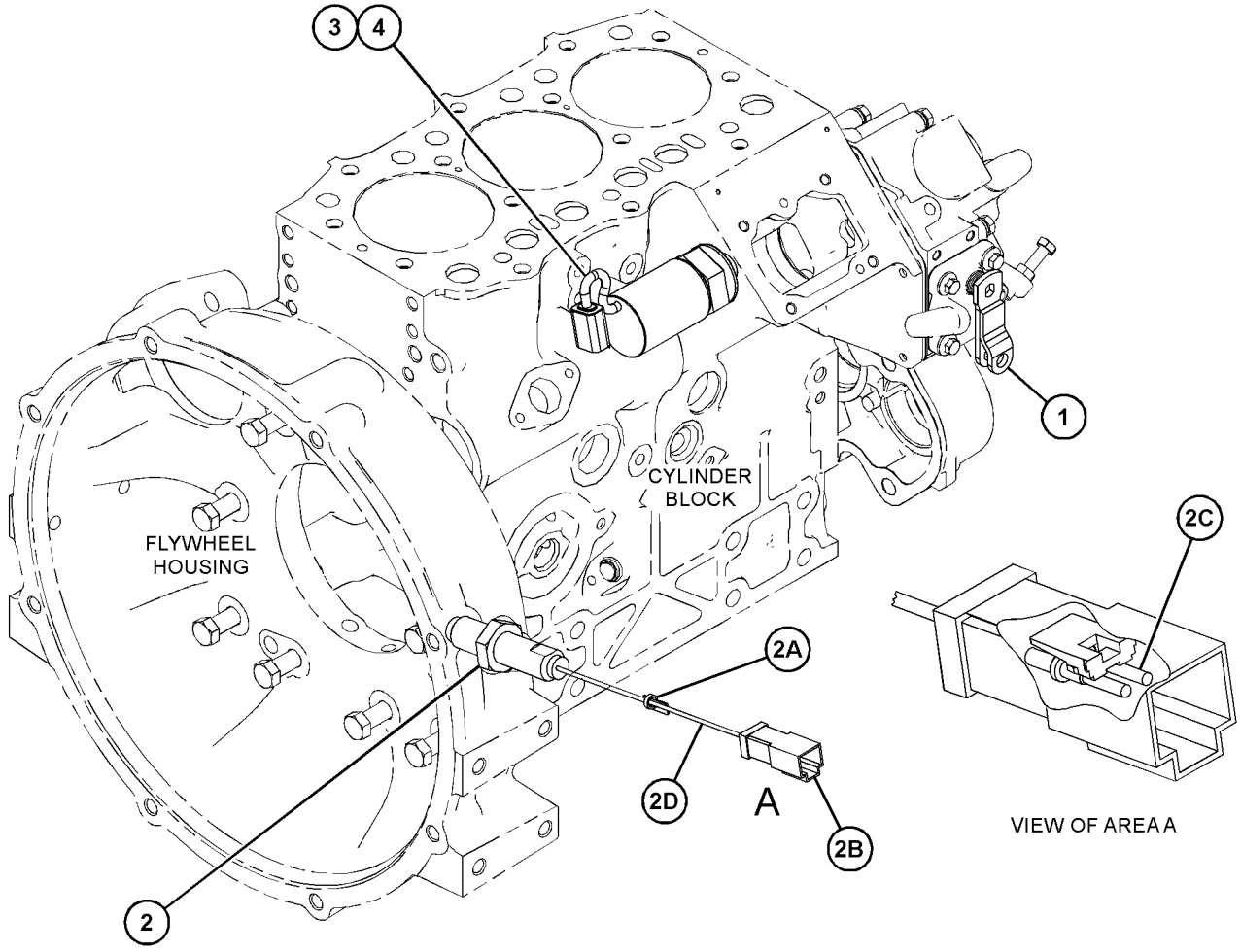

GRAPHIC #1 <END> g07487532

596-3460 GOVERNOR GP

PART OF 435-1636, 587-9328, 610-7721 ENGINE AR-PRIMARY

SMCS-1264, 1908 **i08838959**

NOTE	REF NO	GRAPHIC REF	PART NUMBER	QTY	PART NAME 1 2 3 4 5 6 (PRODUCT LEVEL)	SEE PAGE
	1	1	**153-6415**	1	WASHER (SEAL)	
	2	1	**153-7983**	1	PIN	
M	3	1	**308-1892**	1	NUT (M6X1-THD)	
	4	1	**308-4266**	1	SHAFT	
	5	1	**309-6729**	1	SEAL-O-RING	
	6	1	**308-1904**	1	SLIDER	
	7	1	**311-0655**	1	SPRING	
	8	1	**322-7493**	1	LEVER AS-CONTROL	
	8A	1	**154-1400**	1	PIN	
	9	1	**390-3731**	1	SHAFT	
	10	1	**313-5832**	1	BOLT AS	
M	10A	1	**191-9297**	1	NUT (M10X1.25-THD)	
	10B	1	**313-5833**	1	SPRING	
	10C	1	**153-7987**	1	WASHER (9.2X17X1.8-MM THK)	
	11	1	**317-7195**	1	SPRING	
	12	1	**217-7115**	1	CAP (TAMPER RESISTANT)	
	13	1	*580-6241*	1	LEVER GP-GOVERNOR	
	13A	1	**319-3253**	1	SENSOR AS-SPEED	
M	13B	1	**5C-8312**	1	NUT (M4X0.7-THD)	
	13C	1	**580-0398**	1	LEVER AS-CONTROL	
M	13D	1	**308-1889**	1	NUT (M10X1.25-THD)	

M - METRIC PART

596-3460 **GOVERNOR GP (**contd.**)** **i08838959**

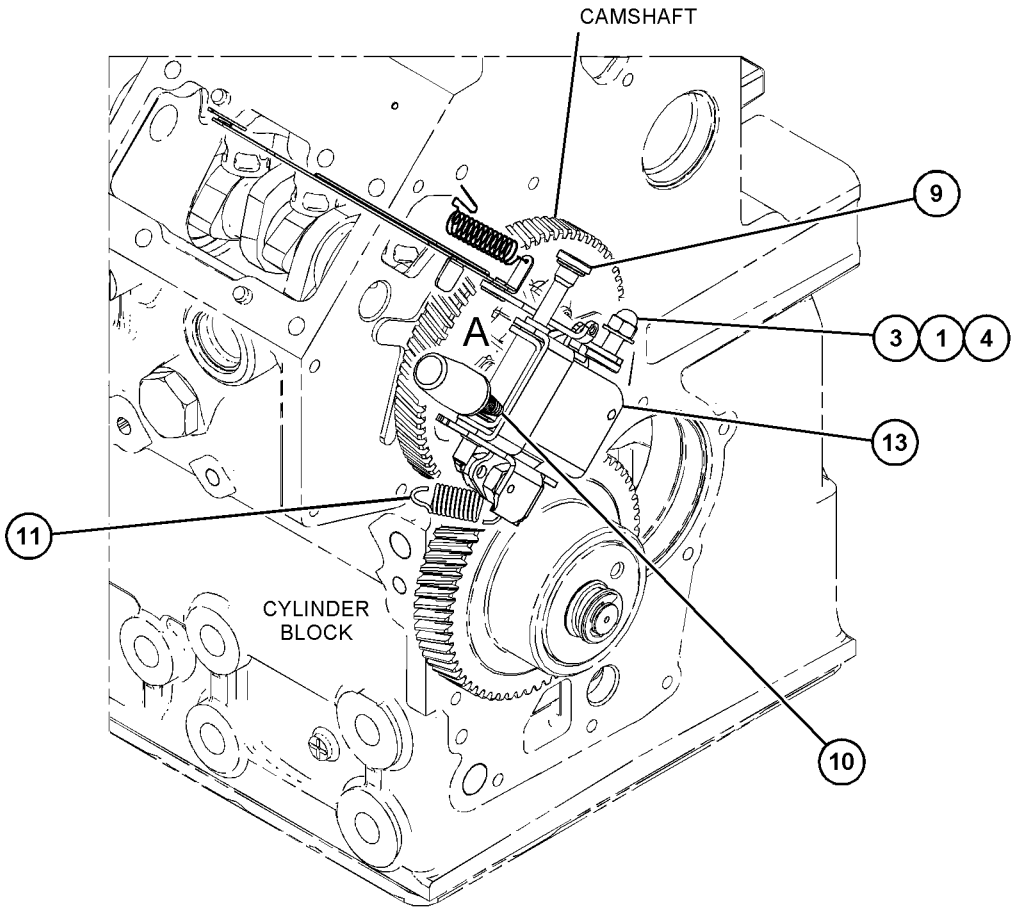

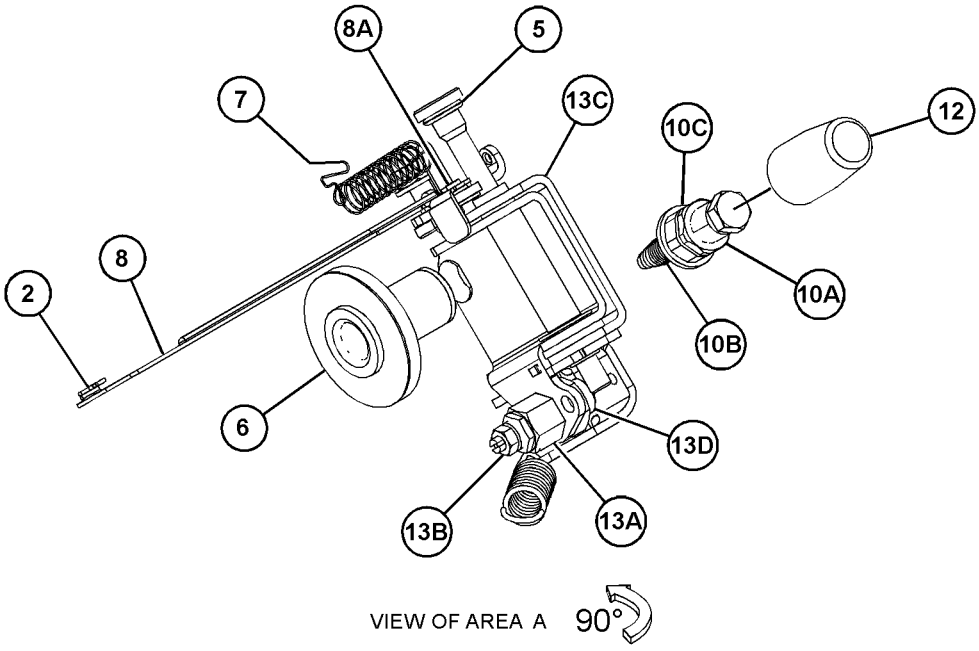

GRAPHIC #1 <END> g07516037

596-3462 GOVERNOR GP

PART OF 433-1379 ENGINE AR, 610-7720 ENGINE AR-PRIMARY

SMCS-1264, 1908 **i08697175**

NOTE	REF NO	GRAPHIC REF	PART NUMBER	QTY	PART NAME 1 2 3 4 5 6 (PRODUCT LEVEL)	SEE PAGE
	1	1	**153-6415**	1	WASHER (SEAL)	
	2	2	**153-7983**	1	PIN	
M	3	1	**308-1892**	1	NUT (M6X1-THD)	
	4	1	**308-4266**	1	SHAFT	
	5	1	**309-6729**	1	SEAL-O-RING	
	6	2	**308-1904**	1	SLIDER	
	7	2	**311-0655**	1	SPRING	
	8	2	**322-7493**	1	LEVER AS-CONTROL	
	8A	2	**154-1400**	1	PIN	
	9	1	**390-3731**	1	SHAFT	
	10	1	**313-5832**	1	BOLT AS	
		1	**153-7987**	1	WASHER (9.2X17X1.8-MM THK)	
M		1	**191-9297**	1	NUT (M10X1.25-THD)	
		1	**313-5833**	1	SPRING	
	11	1	**317-7195**	1	SPRING	
	12	1	**423-7554**	1	CAP	
Y	13	2	**598-5603**	1	LEVER GP-CONTROL	793

M - METRIC PART
Y - SEPARATE ILLUSTRATION

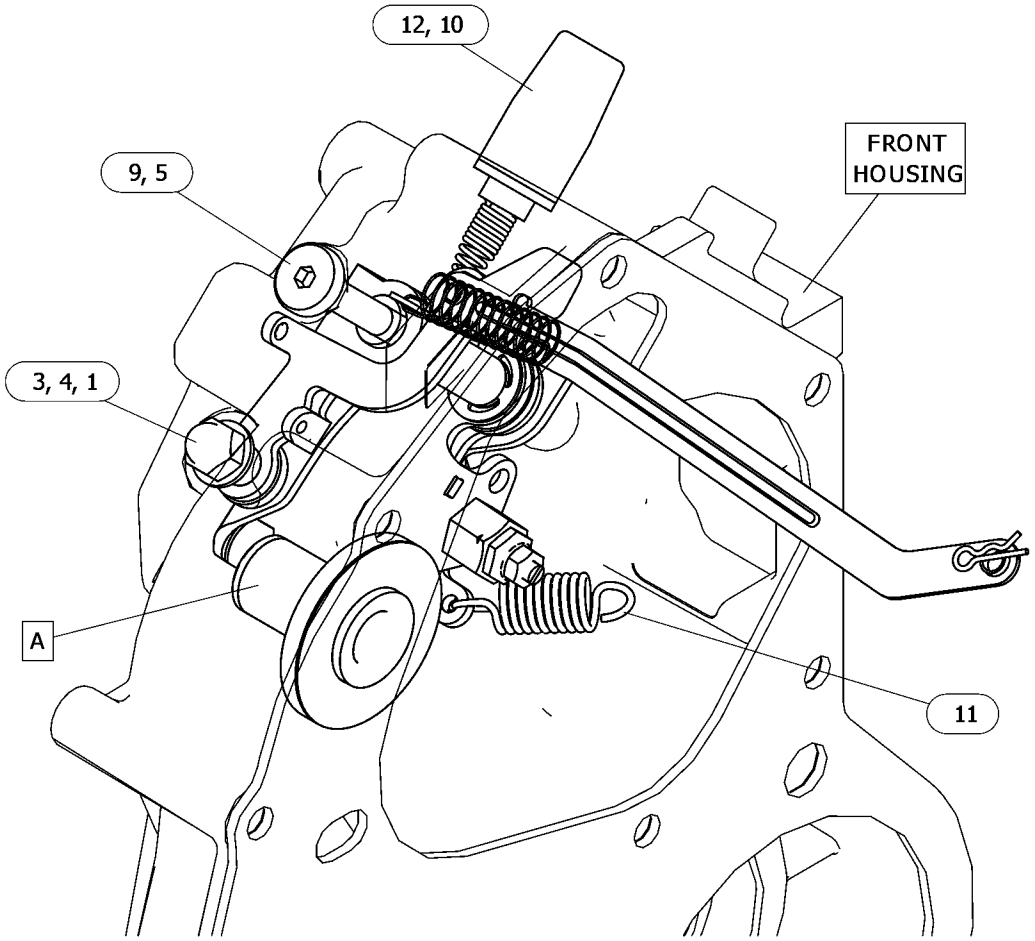

GRAPHIC #1 g06758932

596-3462 **GOVERNOR GP (**contd.**)** **i08697175**

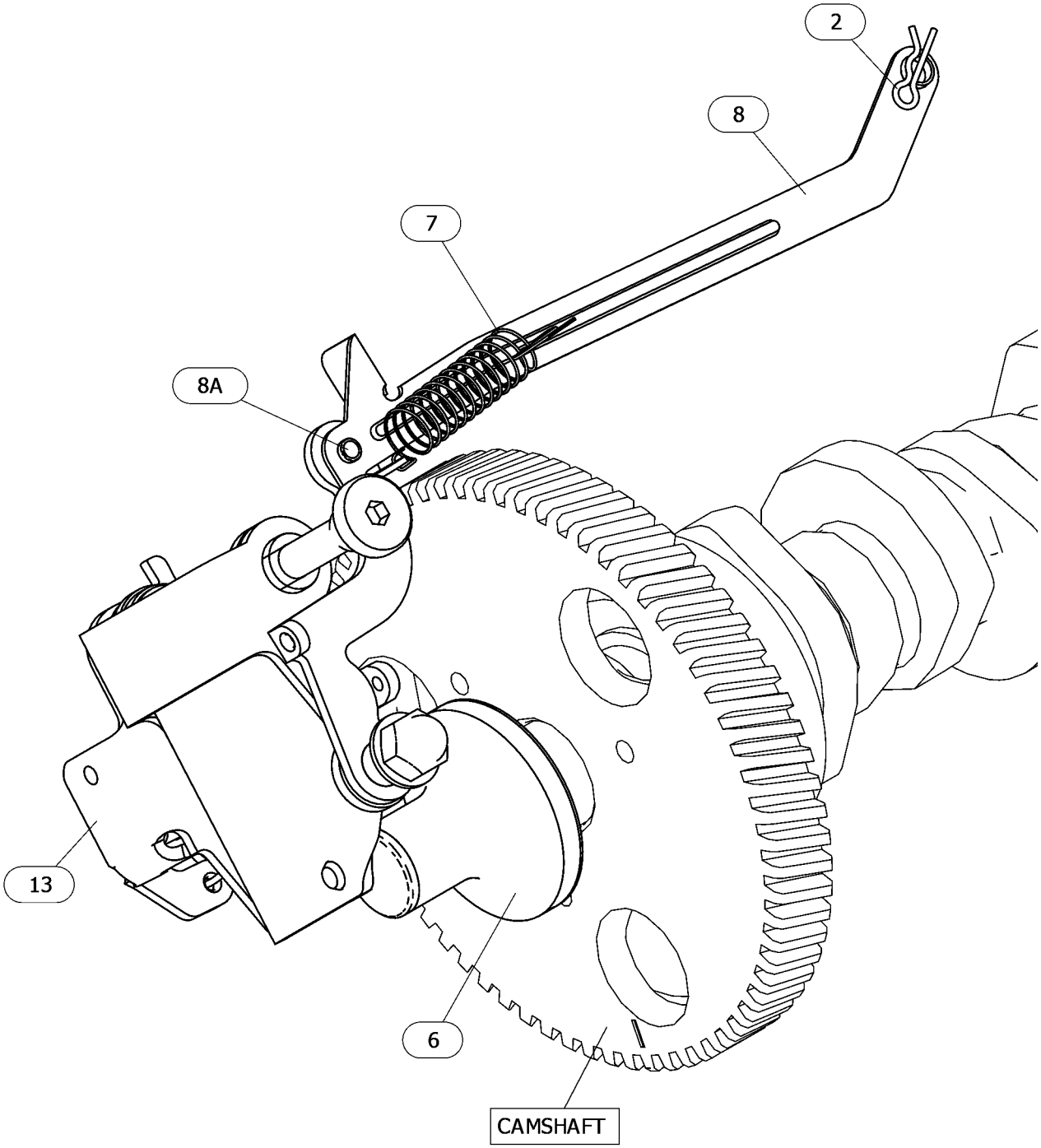

VIEW OF AREA A
(ROTATED 90° COUNTERCLOCKWISE)

GRAPHIC #2 <END> g06758932_01

596-3472 GOVERNOR GP

PART OF 433-1380 ENGINE AR

SMCS-1264, 1908 **i08572808**

NOTE	REF NO	GRAPHIC REF	PART NUMBER	QTY	PART NAME 1 2 3 4 5 6 (PRODUCT LEVEL)	SEE PAGE
	1	2	**153-6415**	1	WASHER (SEAL)	
	2	1	**153-7983**	1	PIN	
M	3	2	**308-1892**	1	NUT (M6X1-THD)	
	4	2	**308-4266**	1	SHAFT	
	5	2	**309-6729**	1	SEAL-O-RING	
	6	2	**308-1904**	1	SLIDER	
	7	2	**311-0655**	1	SPRING	
	8	2	**322-7493**	1	LEVER AS-CONTROL	
	8A	2	**154-1400**	1	PIN	
	9	2	**390-3731**	1	SHAFT	
	10	2	**313-5832**	1	BOLT AS	
	10A	2	**153-7987**	1	WASHER (9.2X17X1.8-MM THK)	
M	10B	2	**191-9297**	1	NUT (M10X1.25-THD)	
	10C	2	**313-5833**	1	SPRING	
	11	2	**317-7195**	1	SPRING	
	12	2	**217-7115**	1	CAP (TAMPER RESISTANT)	
Y	13	1	*580-6290*	1	CONTROL GP-GOVERNOR	740

M - METRIC PART
Y - SEPARATE ILLUSTRATION

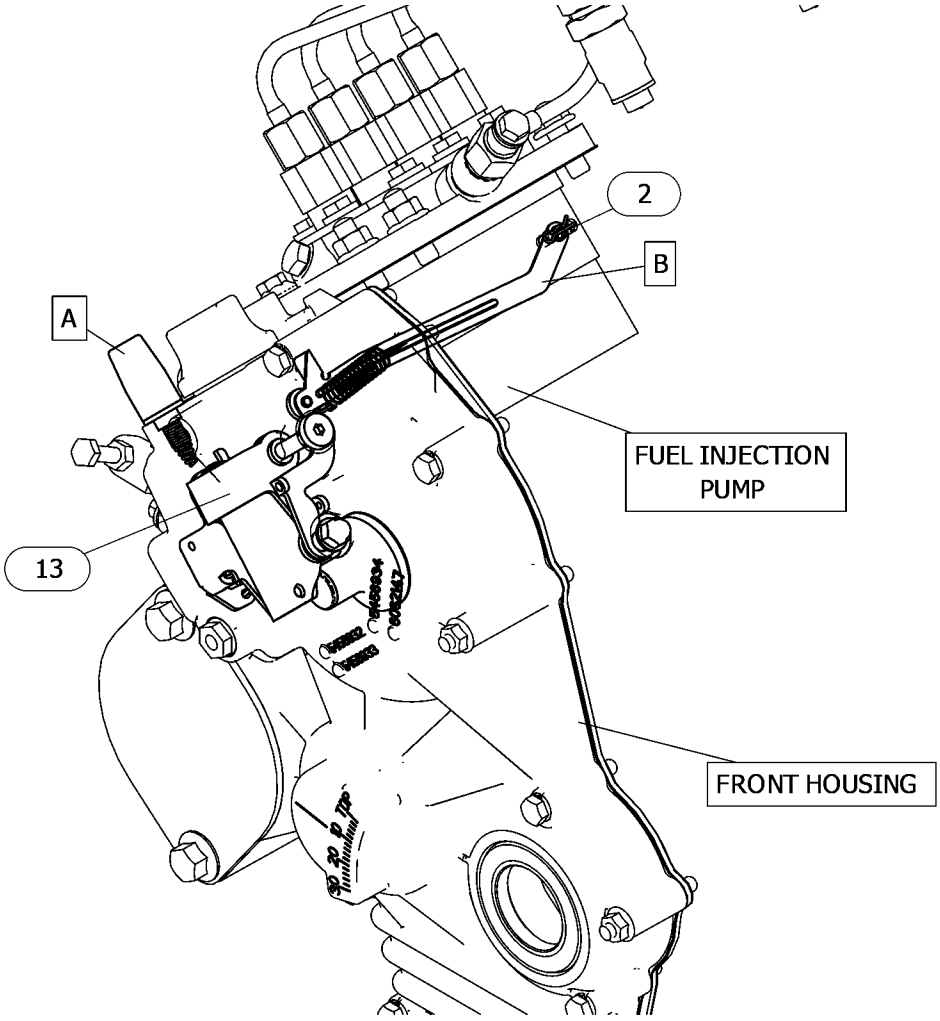

GRAPHIC #1 g07492574

596-3472 **GOVERNOR GP (**contd.**)** **i08572808**

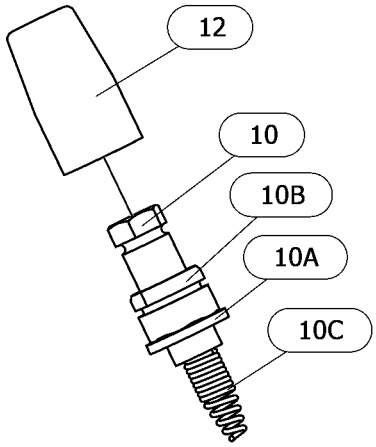

VIEW AREA OF A

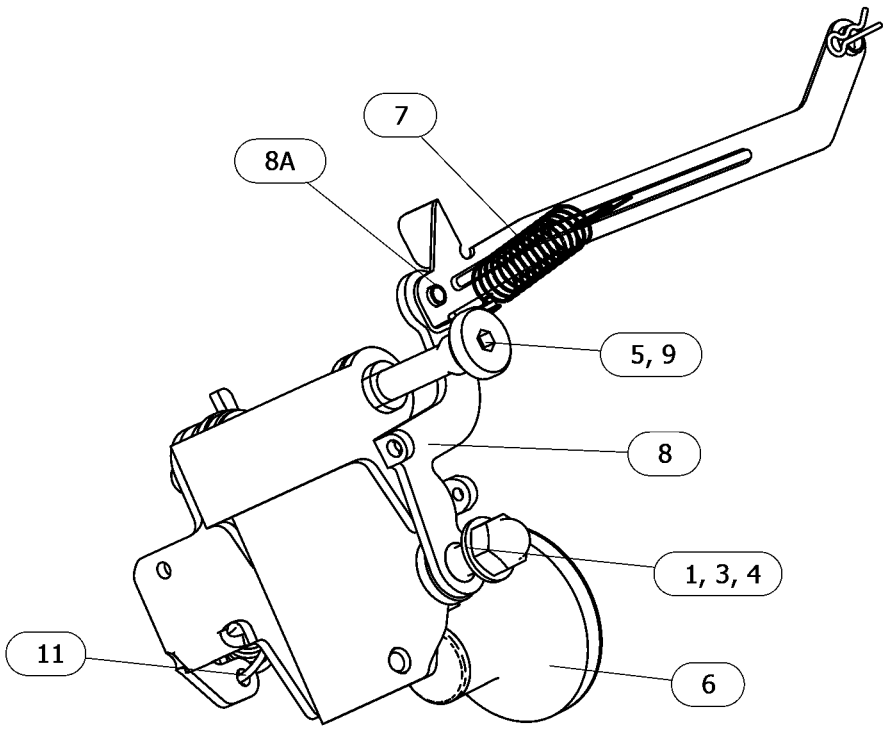

VIEW AREA OF B

GRAPHIC #2 <END> g07492574_01

626-7887 GOVERNOR GP

S/N: G7L8318-UP

SMCS-1264, 1908 **i09575363**

NOTE	REF NO	GRAPHIC REF	PART NUMBER	QTY	PART NAME 1 2 3 4 5 6 (PRODUCT LEVEL)	SEE PAGE
M	1	3	**106-8916**	4	BOLT (M6X1X16-MM)	
M	2	3	**5C-2890**	1	NUT (M6X1-THD)	
	3	3	**139-5511**	1	CAP (TAMPER RESISTANT)	
M	4	3	**153-5592**	1	NUT (M8X1.25-THD)	
	5	4	**153-6415**	2	WASHER (SEAL)	
	6	4	**153-7983**	1	PIN	
	7	3	**095-1574**	1	SEAL-O-RING	
	8	1	**5D-1319**	1	PIN-SPRING	
	9	1	**154-1675**	1	SEAL	
M	10	3	**162-2207**	1	NUT (M6X1-THD)	
	11	2	**217-7115**	1	CAP (TAMPER RESISTANT)	
	12	3	**308-1882**	1	SPRING	
M	13	4	**308-1889**	1	NUT (M10X1.25-THD)	
M	14	4	**308-1892**	1	NUT (M6X1-THD)	
	15	2	**308-1897**	1	RING	
	16	4	**309-6729**	1	SEAL-O-RING	
	17	4	**311-0655**	1	SPRING	
	18	2	**313-5832**	1	BOLT AS	
		2	**153-7987**	1	WASHER (9.2X17X1.8-MM THK)	
M		2	**191-9297**	1	NUT (M10X1.25-THD)	
		2	**313-5833**	1	SPRING	
	19	3	**317-7195**	1	SPRING	
	20	4	*321-8209*	1	SENSOR AS-SPEED	
M		4	**5C-8312**	1	NUT (M4X0.7-THD)	
	21	4	**322-7493**	1	LEVER AS-CONTROL	
		4	**154-1400**	1	PIN	
	22	1	**328-3226**	1	HOUSING-FRONT	
	23	4	**330-9189**	1	PLUG	
	24	3	**334-0732**	1	ARM AS	
	25	3	**335-5578**	1	BRACKET	
	26	2	**364-2755**	1	BOLT-SPECIAL	
M	27	3	**7X-2533**	2	BOLT (M6X1X35-MM)	
	28	4	**377-2885**	1	SHAFT	
	29	4	**390-3731**	1	SHAFT	
	30	3	**423-7724**	1	GASKET	
	31	2	**502-5421**	1	PIN	
	32	2	**502-9478**	1	NUT (TAMPER RESISTANT)	
	33	2	**503-9707**	1	CAP	
	34	2	**503-9731**	1	SHROUD	
	35	4	**580-0398**	1	LEVER AS-CONTROL	
	36	2	**336-2965**	1	SPRING	

M - METRIC PART

626-7887 **GOVERNOR GP (**contd.**)** **i09575363**

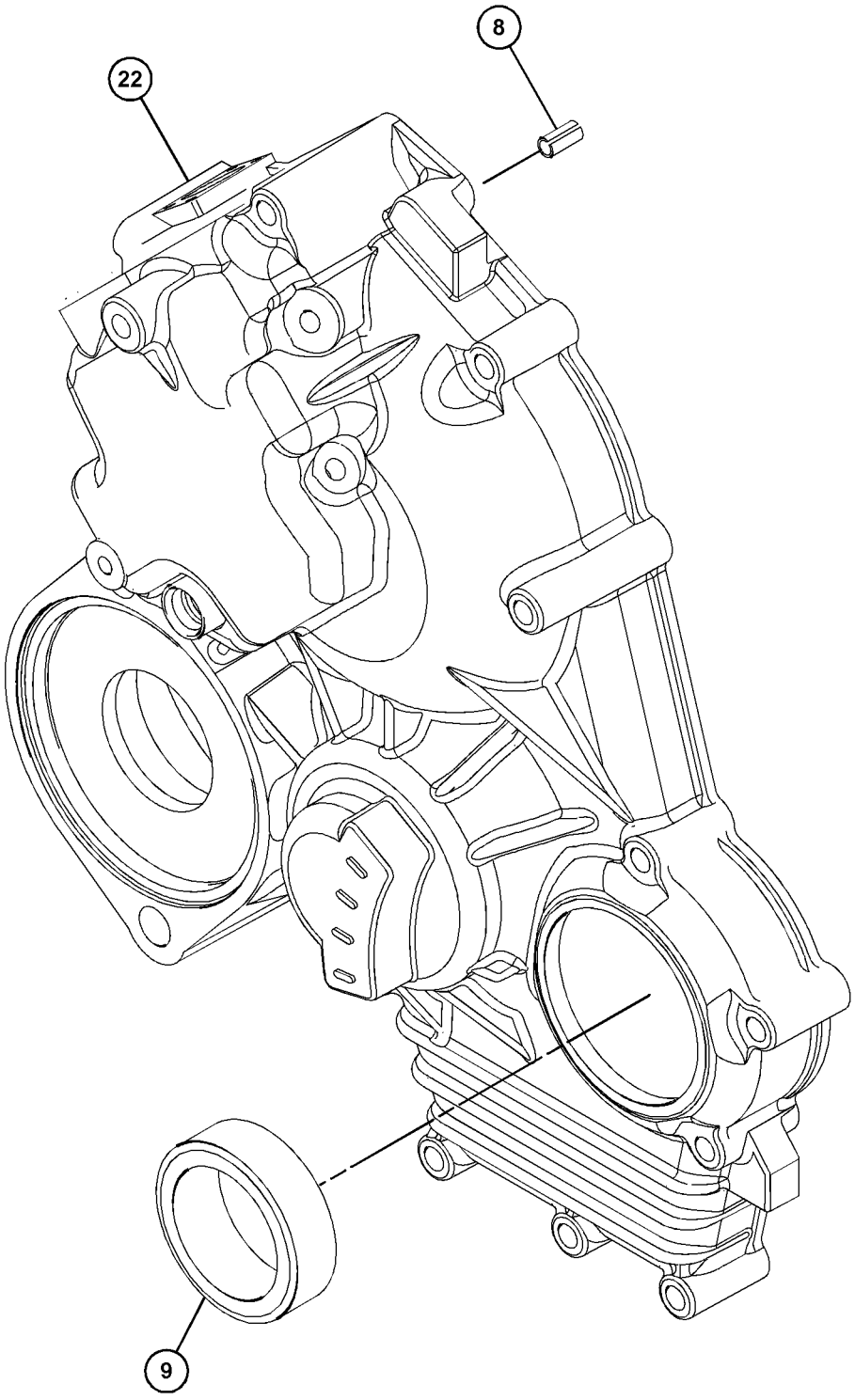

GRAPHIC #1 g07505598

626-7887 **GOVERNOR GP** (contd.) **i09575363**

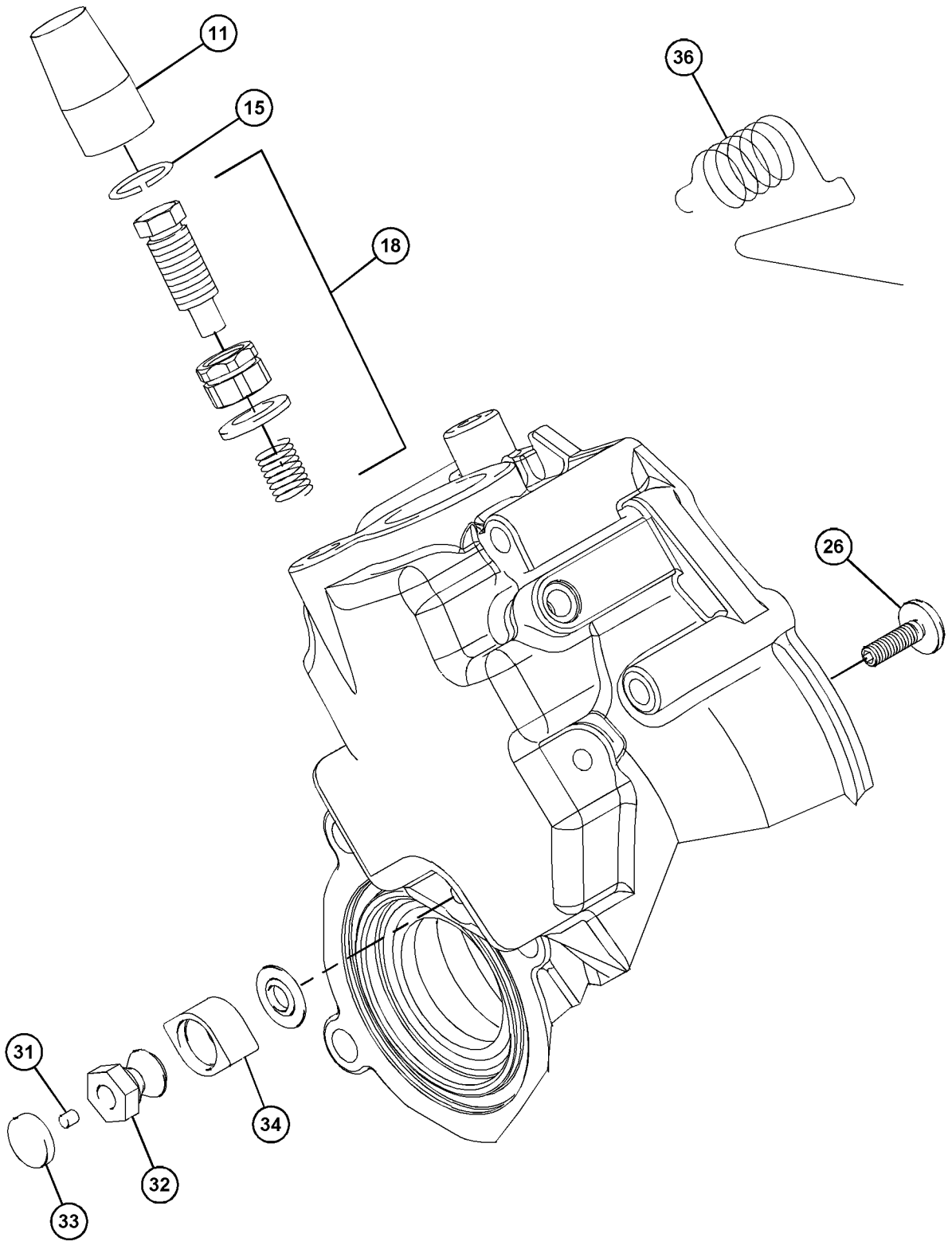

GRAPHIC #2 g07496923

626-7887 **GOVERNOR GP (**contd.**)** **i09575363**

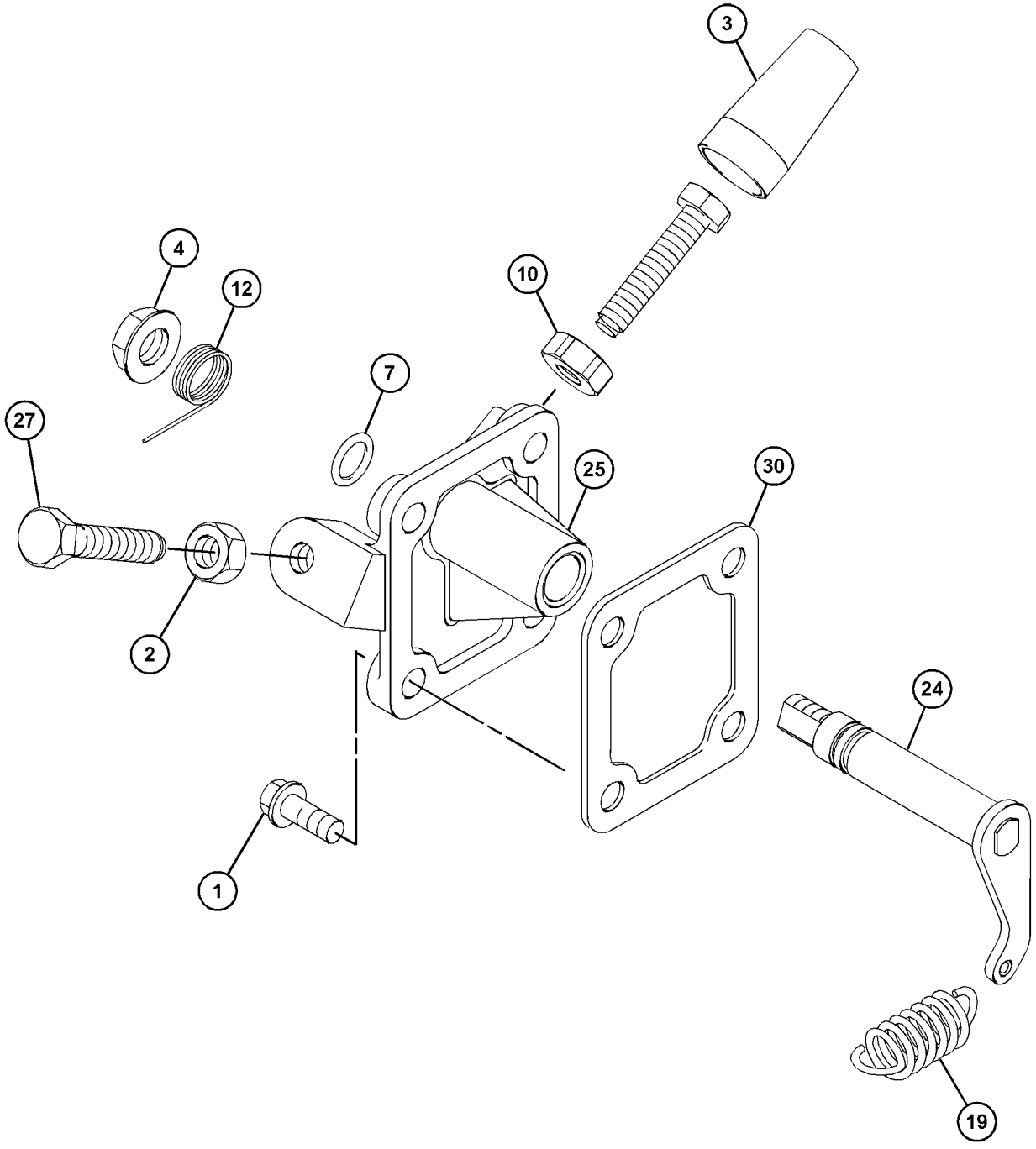

GRAPHIC #3 g07505600

626-7887 **GOVERNOR GP (**contd.**)** **i09575363**

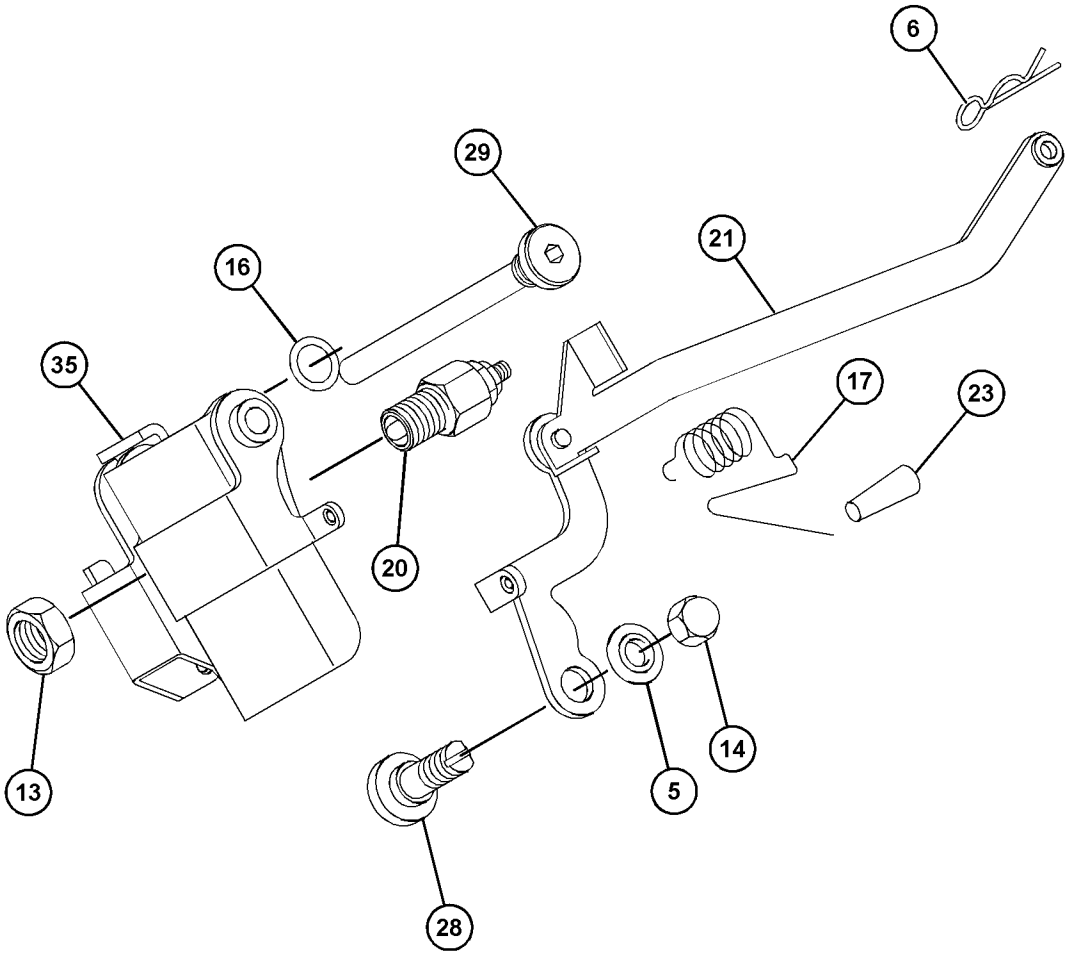

GRAPHIC #4 <END> g07505599

598-5603 LEVER GP-CONTROL

PART OF 596-3462 GOVERNOR GP

SMCS-1264 **i08731494**

NOTE	REF NO	GRAPHIC REF	PART NUMBER	QTY	PART NAME 1 2 3 4 5 6 (PRODUCT LEVEL)	SEE PAGE
M	1	1	**308-1889**	1	NUT (M10X1.25-THD)	
Y	2	1	**319-3250**	1	CONTROL GP-GOVERNOR	685
	3	1	**580-0398**	1	LEVER AS-CONTROL	

M - METRIC PART
Y - SEPARATE ILLUSTRATION

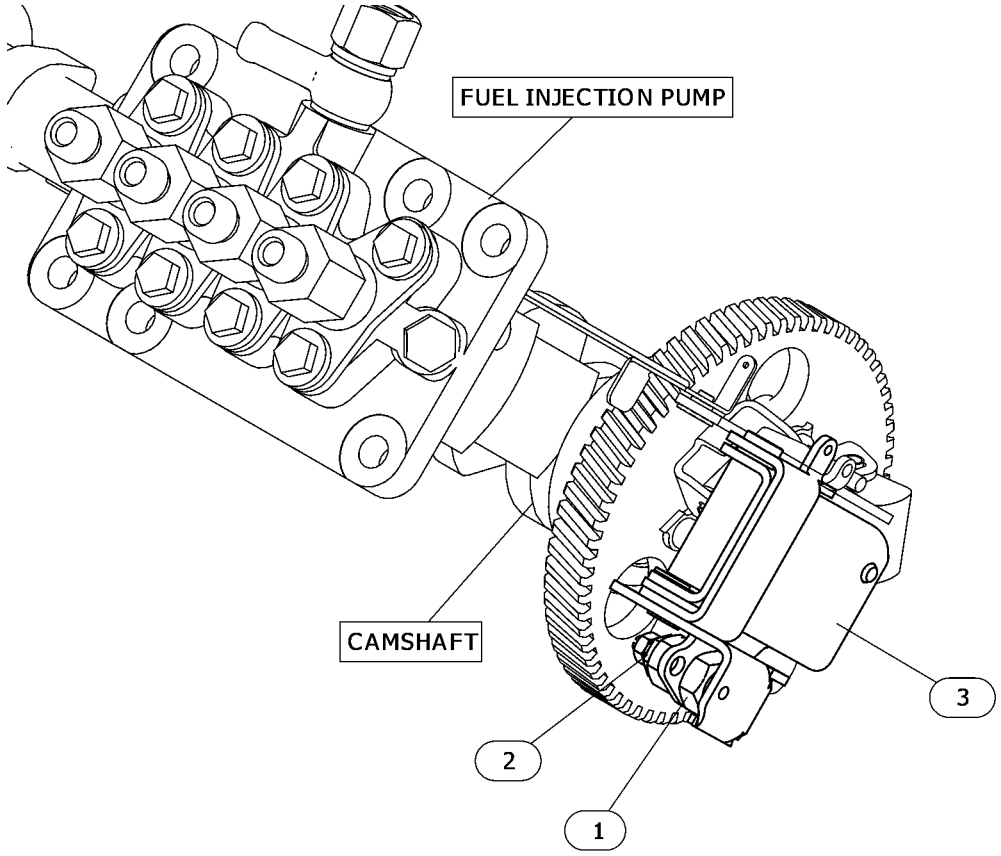

GRAPHIC #1 <END> g06761102

560-7819 LEVER GP-GOVERNOR CONTROL

PART OF 596-3463 CONTROL GP-GOVERNOR

SMCS-1265 **i08587951**

NOTE	REF NO	GRAPHIC REF	PART NUMBER	QTY	PART NAME 1 2 3 4 5 6 (PRODUCT LEVEL)	SEE PAGE
M	1	1	**308-1889**	1	NUT (M10X1.25-THD)	
	2	1	**523-5815**	1	LEVER AS	
	2A	1	**154-1396**	1	CLIP	
	2B	1	**154-1399**	1	WASHER (10.5X18X1.6-MM THK)	
M	3	1	**313-2025**	1	BOLT-SPECIAL (M10X1.25-MM THD)	

M - METRIC PART

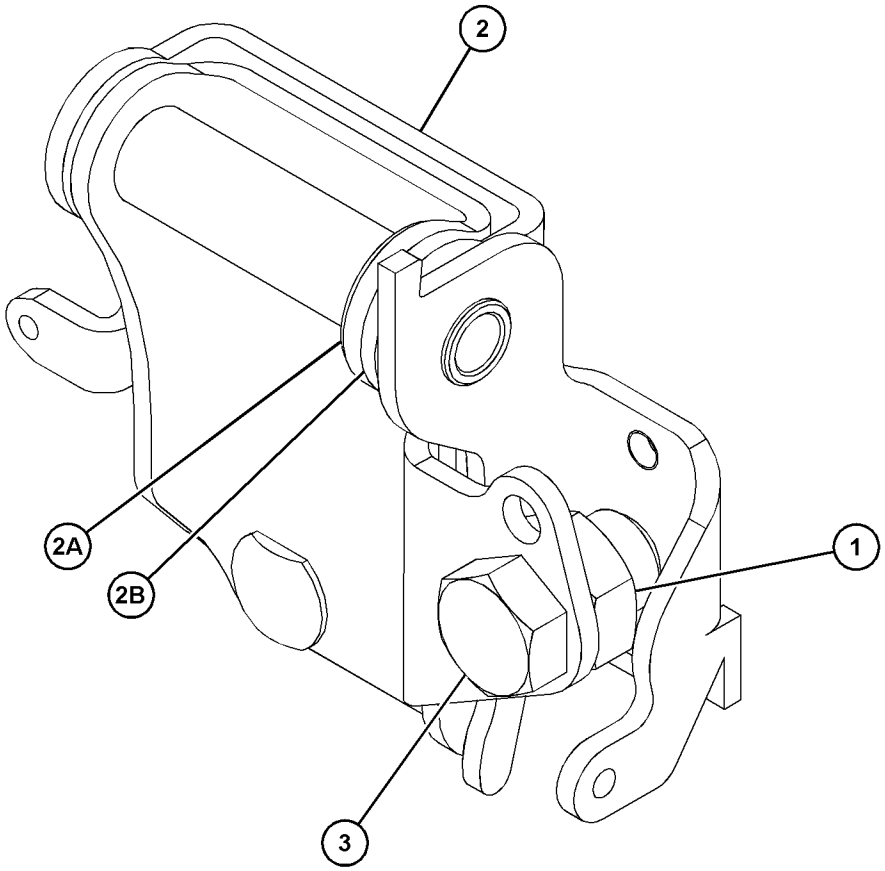

GRAPHIC #1 <END> g06718281

315-7814 PUMP & MTG GP-FUEL TRANSFER

PART OF 461-7895 ENGINE AR-PRIMARY

SMCS-1256 **i06642297**

NOTE	REF NO	GRAPHIC REF	PART NUMBER	QTY	PART NAME 1 2 3 4 5 6 (PRODUCT LEVEL)	SEE PAGE
M	1	1	**6I-0846**	2	BOLT (M6X1X14-MM)	
	2	1	**295-4070**	1	PUMP AS-FUEL TRANSFER	
	3	1	**176-7719**	1	SEAL-O-RING	
M	4	1	**124-3815**	1	BOLT (M8X1.25X16-MM)	

M - METRIC PART

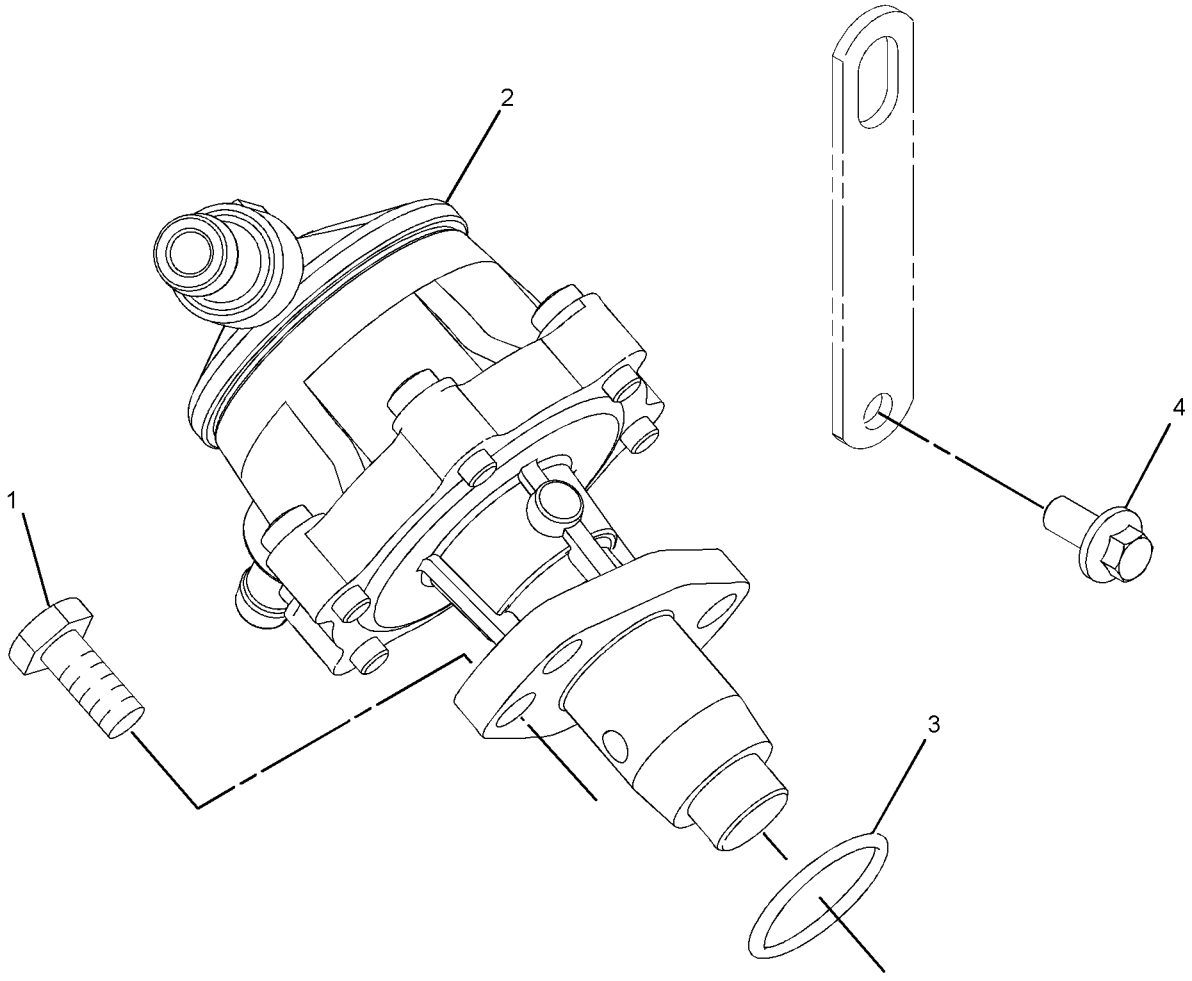

GRAPHIC #1 <END> g06068950

308-2310 PUMP GP-FILTER & FUEL TRANSFER

PART OF 491-3396, 495-3121 ENGINE AR-PRIMARY

TYPE 1

SMCS-1256, 1261 **i06545708**

NOTE	REF NO	GRAPHIC REF	PART NUMBER	QTY	PART NAME 1 2 3 4 5 6 (PRODUCT LEVEL)	SEE PAGE
M	1	2	**6I-0846**	2	BOLT (M6X1X14-MM)	
	2	1	**7W-4694**	1	PLUG	
	3	1	**032-8100**	2	WASHER (0.531X0.718X0.064-IN THK)	
	4	1	**033-7849**	2	PLUG	
	5	1	**358-9226**	1	FILTER AS-FUEL	
	5A	1	**067-6987**	1	FILTER-FUEL	
	5B	1	**069-2922**	2	GASKET (FUEL FILTER)	
	5C	1	**6F-4855**	2	SEAL-O-RING	
	6	1	**067-6269**	2	FERRULE	
	7	1	**067-6317**	1	WASHER (0.4X0.566X0.04-IN THK)	
	8	1	**302-4187**	2	TUBE	
M	9	1	**138-7162**	2	BOLT (M10X1.5X30-MM)	
	10	1	**154-1399**	2	WASHER (10.5X18X1.6-MM THK)	
	11	1	**154-2403**	2	WASHER	
	12	1	**423-5665**	1	HOSE	
	13	1	**155-7984**	2	WASHER (8.4X16X1.6-MM THK)	
M	14	1	**155-8085**	2	NUT (M10X1.5-THD)	
	16	1	**165-2141**	1	BOLT AS	
	17	2	**176-7719**	1	SEAL-O-RING	
	18	1	**168-9001**	1	BOLT AS	
	19	1	**311-1174**	1	BRACKET	
	20	1	**423-5661**	1	HOSE	
	21	2	**295-4070**	1	PUMP AS-FUEL TRANSFER	
	22	1	**329-1292**	4	CLIP-HOSE	

M - METRIC PART

308-2310 **PUMP GP-FILTER & FUEL TRANSFER (**contd.**)** **i06545708**

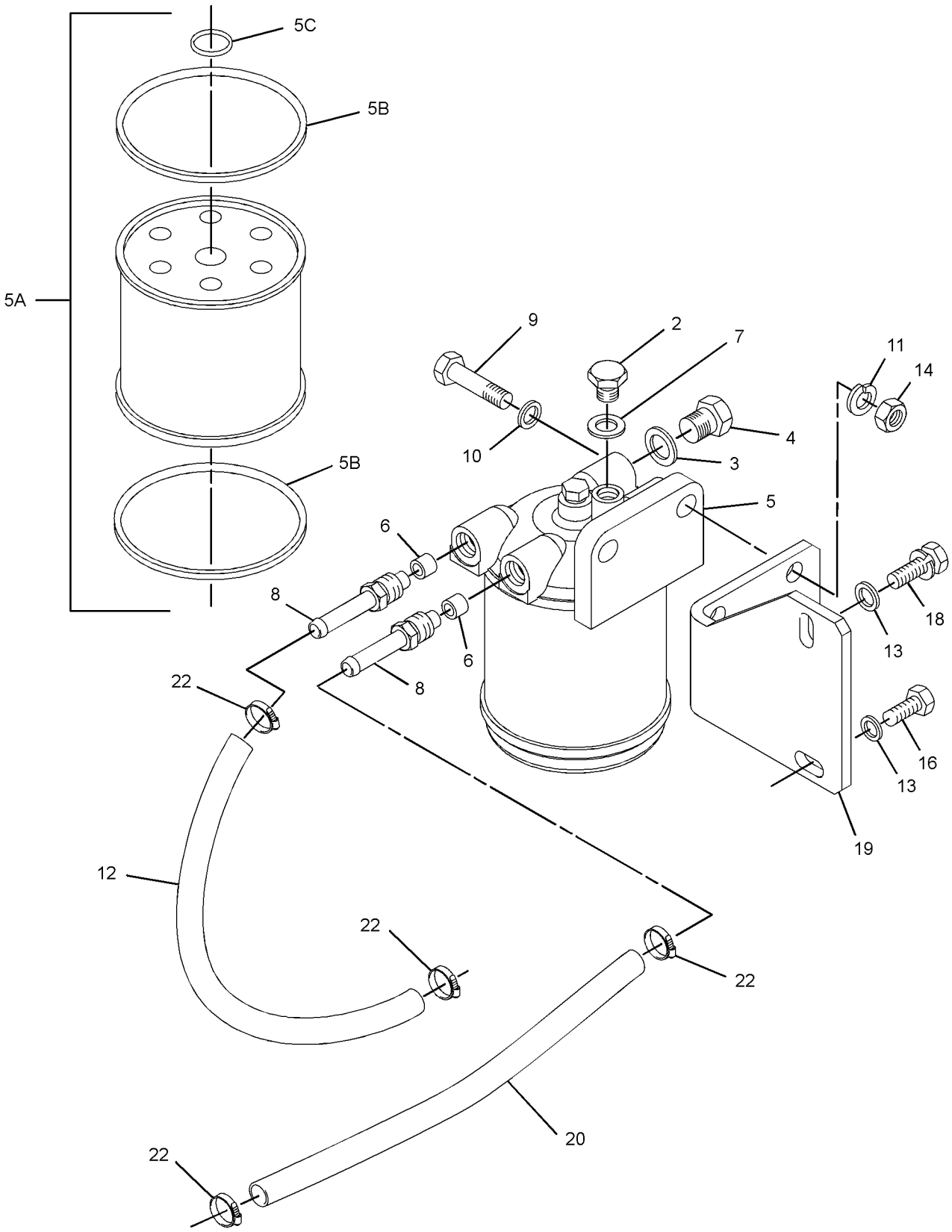

GRAPHIC #1 g06101917

308-2310 **PUMP GP-FILTER & FUEL TRANSFER (**contd.**)** **i06545708**

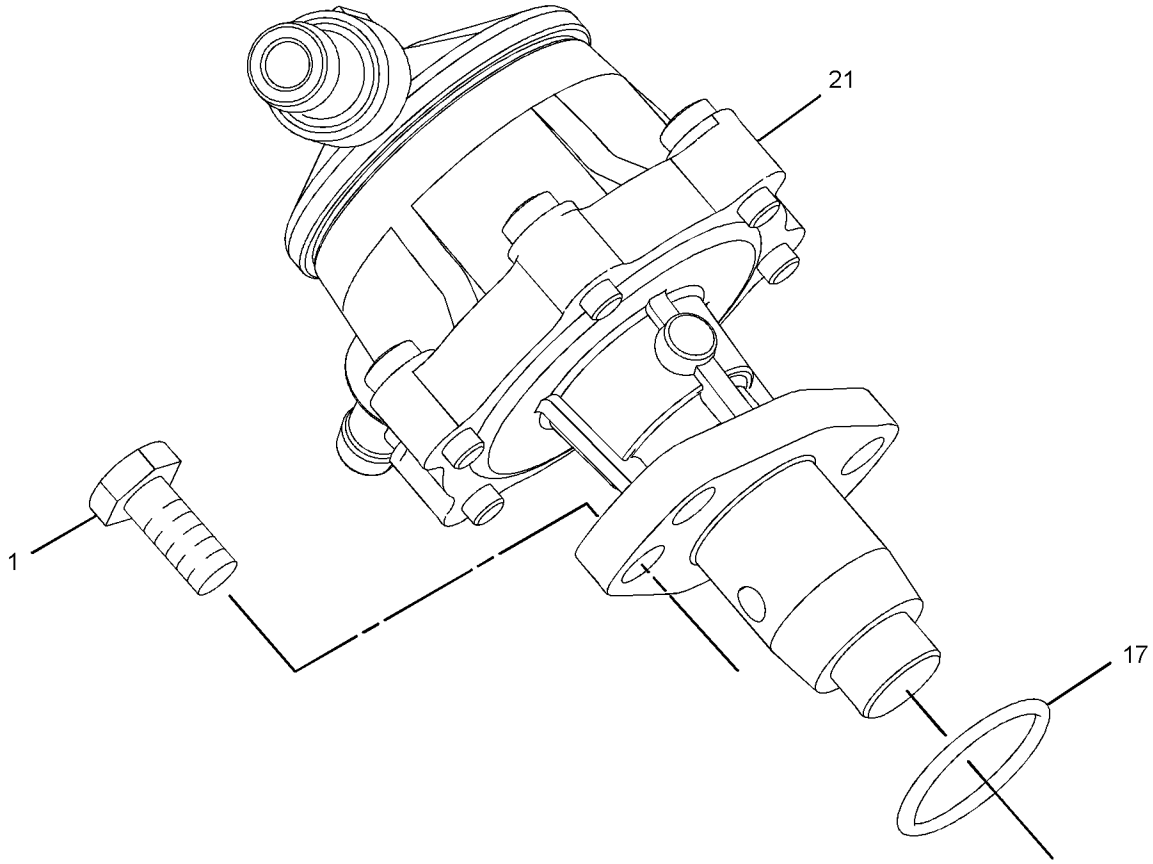

GRAPHIC #2 <END> g06101929

308-2310 PUMP GP-FILTER & FUEL TRANSFER

PART OF 491-3396, 495-3121, 541-9277, 557-9727 ENGINE AR-PRIMARY
TYPE 2

SMCS-1256, 1261 **i07184385**

NOTE	REF NO	GRAPHIC REF	PART NUMBER	QTY	PART NAME 1 2 3 4 5 6 (PRODUCT LEVEL)	SEE PAGE
M	1	2	**6I-0846**	2	BOLT (M6X1X14-MM)	
	2	1	**7W-4694**	1	PLUG	
	3	1	**032-8100**	2	WASHER (0.531X0.718X0.064-IN THK)	
	4	1	**033-7849**	2	PLUG	
	5	1	**358-9226**	1	FILTER AS-FUEL	
	5A	1	**067-6987**	1	FILTER-FUEL	
	6	1	**067-6269**	2	FERRULE	
	7	1	**067-6317**	1	WASHER (0.4X0.566X0.04-IN THK)	
	8	1	**302-4187**	2	TUBE	
M	9	1	**138-7162**	2	BOLT (M10X1.5X30-MM)	
	10	1	**154-1399**	2	WASHER (10.5X18X1.6-MM THK)	
	11	1	**154-2403**	2	WASHER	
	12	1	**423-5665**	1	HOSE	
C	13	1	**155-7984**	1	WASHER (8.4X16X1.6-MM THK)	
M	14	1	**155-8085**	2	NUT (M10X1.5-THD)	
	16	1	**165-2141**	1	BOLT AS	
	17	2	**176-7719**	1	SEAL-O-RING	
CM	18	1	**6I-0217**	1	BOLT (M8X1.25X20-MM)	
	19	1	**311-1174**	1	BRACKET	
	20	1	**423-5661**	1	HOSE	
	21	2	**295-4070**	1	PUMP AS-FUEL TRANSFER	
	22	1	**329-1292**	4	CLIP-HOSE	

C - CHANGE FROM PREVIOUS TYPE
M - METRIC PART

308-2310 **PUMP GP-FILTER & FUEL TRANSFER (**contd.**)** **i07184385**

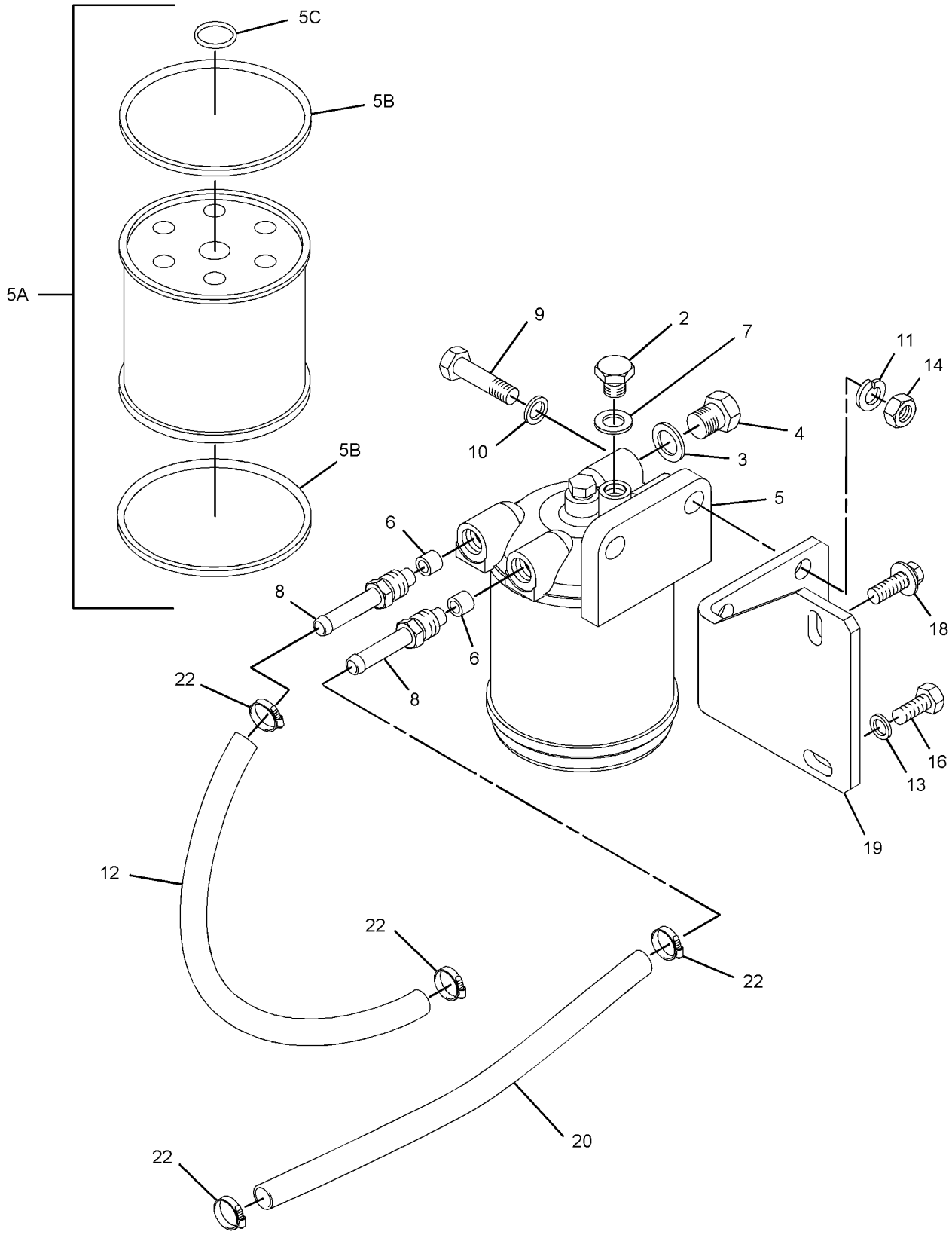

GRAPHIC #1 g06200147

308-2310 **PUMP GP-FILTER & FUEL TRANSFER (**contd.**)** **i07184385**

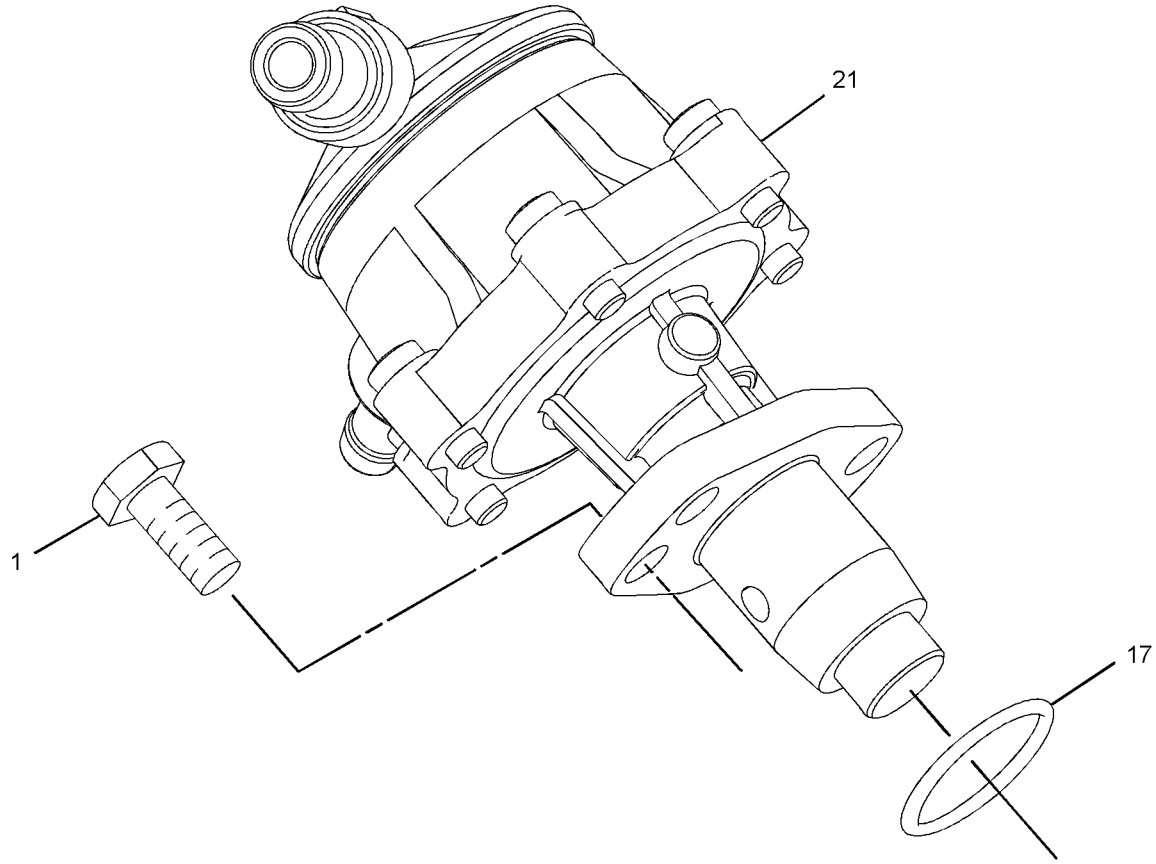

GRAPHIC #2 <END> g06101929

308-2310 PUMP GP-FILTER & FUEL TRANSFER

PART OF 491-3396, 495-3121, 516-9335, 541-9277, 557-9727 ENGINE AR-PRIMARY
TYPE 3

SMCS-1256, 1261 **i08067401**

NOTE	REF NO	GRAPHIC REF	PART NUMBER	QTY	PART NAME 1 2 3 4 5 6 (PRODUCT LEVEL)	SEE PAGE
M	1	2	**6I-0846**	2	BOLT (M6X1X14-MM)	
	2	1	**7W-4694**	1	PLUG	
	3	1	**311-9048**	2	WASHER	
	4	1	**033-7849**	2	PLUG	
	5	1	**358-9226**	1	FILTER AS-FUEL	
	5A	1	**067-6987**	1	FILTER-FUEL	
	5B	1	**484-9224**	1	SEAL	
	5C	1	**484-9225**	1	SEAL	
	6	1	**067-6269**	2	FERRULE	
	7	1	**067-6317**	1	WASHER (0.4X0.566X0.04-IN THK)	
	8	1	**302-4187**	2	TUBE	
M	9	1	**6I-0593**	2	BOLT (M10X1.5X30-MM)	
	10	1	**423-5661**	1	HOSE	
	11	1	**7X-0796**	2	LOCKWASHER (10.2X18.4X2.5-MM THK)	
	12	1	**423-5665**	1	HOSE	
	13	1	**329-1292**	4	CLIP-HOSE	
M	14	1	**155-8085**	2	NUT (M10X1.5-THD)	
	15	2	**295-4070**	1	PUMP AS-FUEL TRANSFER	
CM	16	1	**124-3815**	1	BOLT (M8X1.25X16-MM)	
	17	2	**176-7719**	1	SEAL-O-RING	
M	18	1	**6I-0217**	1	BOLT (M8X1.25X20-MM)	
	19	1	**311-1174**	1	BRACKET	

C - CHANGE FROM PREVIOUS TYPE
M - METRIC PART

308-2310 **PUMP GP-FILTER & FUEL TRANSFER (**contd.**)** **i08067401**

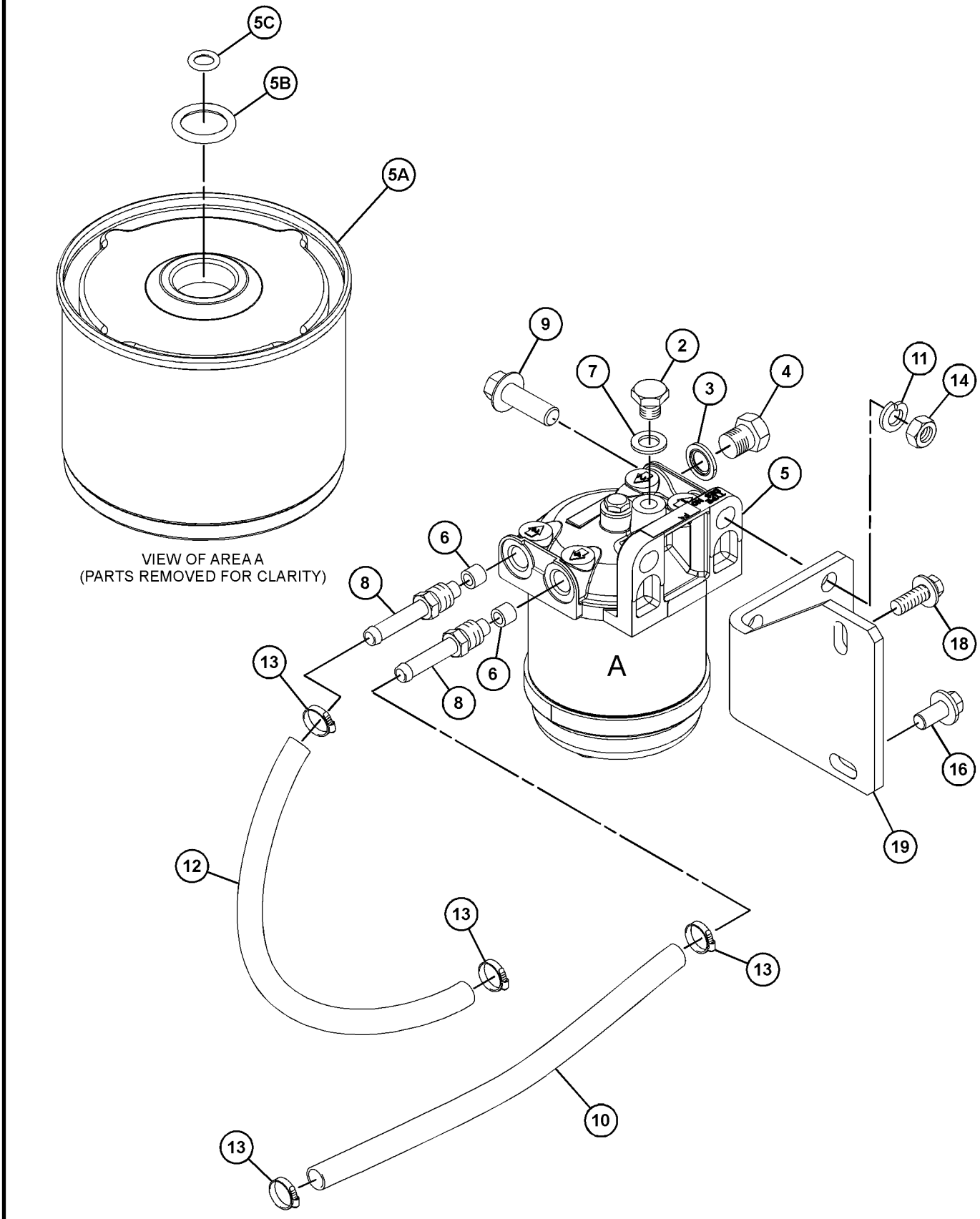

GRAPHIC #1 g06582947

308-2310 **PUMP GP-FILTER & FUEL TRANSFER (**contd.**)** **i08067401**

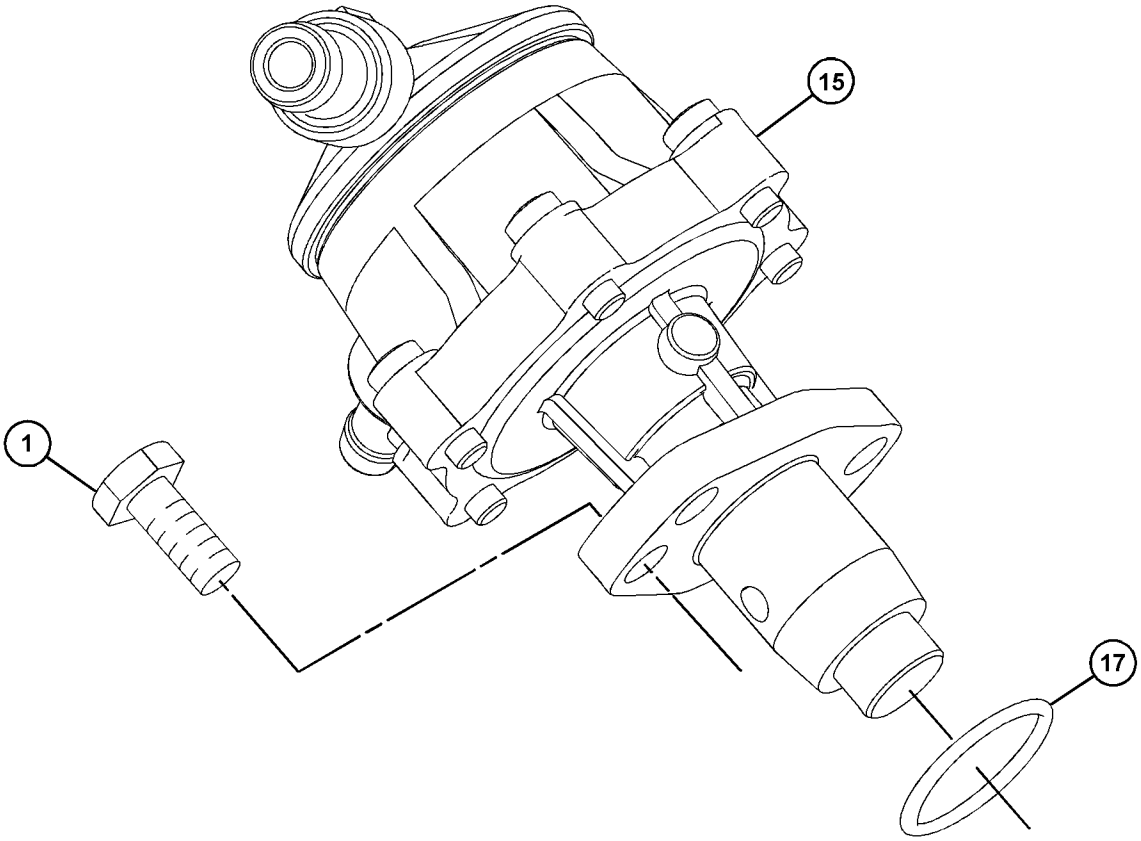

GRAPHIC #2 <END> g06582948

324-8999 PUMP GP-FILTER & FUEL TRANSFER

TYPE 1

SMCS-1256, 1261 **i06547103**

NOTE	REF NO	GRAPHIC REF	PART NUMBER	QTY	PART NAME 1 2 3 4 5 6 (PRODUCT LEVEL)	SEE PAGE
M	1	1	**6I-0846**	2	BOLT (M6X1X14-MM)	
	2	2	**7W-4724**	2	WASHER	
	3	2	**150-4142**	1	FILTER-FUEL	
M	4	2	**153-5592**	2	NUT (M8X1.25-THD)	
	5	2	**153-6375**	1	BOLT AS	
	6	2	**154-1399**	2	WASHER (10.5X18X1.6-MM THK)	
	7	2	**154-2403**	2	WASHER	
	8	2	**423-5665**	1	HOSE	
	9	2	**155-8082**	1	CONNECTOR	
M	10	2	**155-8085**	2	NUT (M10X1.5-THD)	
	11	2	**155-8086**	1	BRACKET	
	12	2	**155-8087**	1	BRACKET	
	13	2	**329-1292**	4	CLIP-HOSE	
	14	2	**165-2144**	2	BOLT	
	15	1	**176-7719**	1	SEAL-O-RING	
	16	2	**197-8004**	2	BOLT	
	17	2	**423-5661**	1	HOSE	
	18	1	**295-4070**	1	PUMP AS-FUEL TRANSFER	
	19	2	**296-0888**	1	FILTER AS-FUEL	
	20	2	**296-0889**	1	BOLT	
	21	2	**324-8998**	1	TUBE-FUEL	
	22	2	**340-5975**	1	WASHER-SEALING	
F		2	**155-7984**	1	WASHER (8.4X16X1.6-MM THK)	
FM		2	**6I-0217**	1	BOLT (M8X1.25X20-MM)	

F - NOT SHOWN
M - METRIC PART

324-8999 **PUMP GP-FILTER & FUEL TRANSFER (**contd.**)** **i06547103**

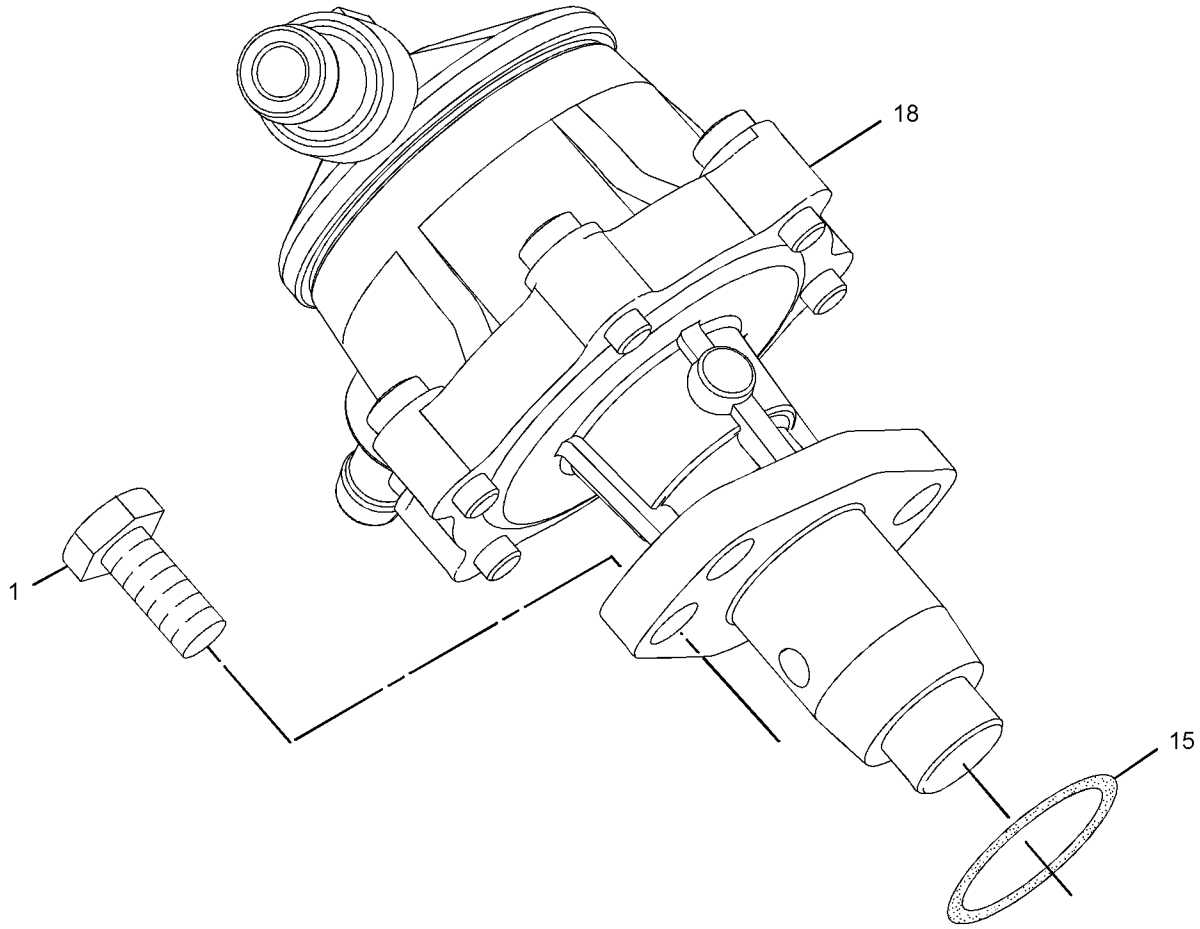

GRAPHIC #1 g01635253

324-8999 **PUMP GP-FILTER & FUEL TRANSFER (**contd.**)** **i06547103**

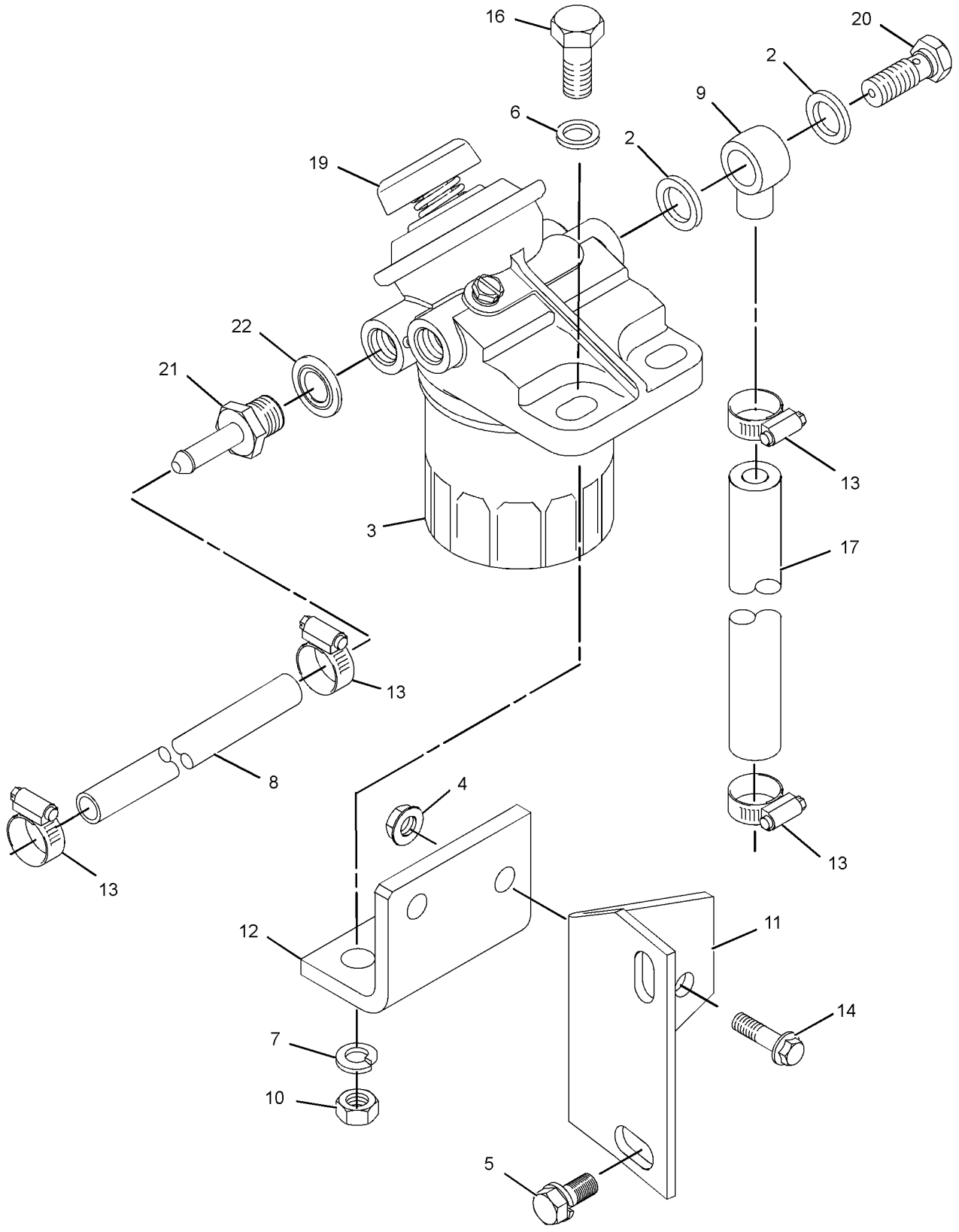

GRAPHIC #2 <END> g06037638

324-8999 PUMP GP-FILTER & FUEL TRANSFER

TYPE 2

SMCS-1256, 1261 **i08846941**

NOTE	REF NO	GRAPHIC REF	PART NUMBER	QTY	PART NAME 1 2 3 4 5 6 (PRODUCT LEVEL)	SEE PAGE
M	1	1	**6I-0846**	2	BOLT (M6X1X14-MM)	
	2	2	**7W-4724**	2	WASHER	
	3	2	**150-4142**	1	FILTER-FUEL (PUMP)	
M	4	2	**153-5592**	2	NUT (M8X1.25-THD)	
	5	2	**153-6375**	1	BOLT AS	
	7	2	**7X-0796**	2	LOCKWASHER (10.2X18.4X2.5-MM THK)	
	8	2	**423-5665**	1	HOSE	
	9	2	**155-8082**	1	CONNECTOR	
M	10	2	**155-8085**	2	NUT (M10X1.5-THD)	
	11	2	**581-9703**	1	BRACKET	
	12	2	**581-9742**	1	BRACKET	
	13	2	**329-1292**	4	CLIP-HOSE	
	14	2	**165-2144**	2	BOLT	
	15	1	**176-7719**	1	SEAL-O-RING	
	17	2	**423-5661**	1	HOSE	
	18	1	**295-4070**	1	PUMP AS-FUEL TRANSFER	
	19	2	**296-0888**	1	FILTER AS-FUEL (FUEL TRANSFER)	
	20	2	**296-0889**	1	BOLT	
	21	2	**324-8998**	1	TUBE-FUEL	
	22	2	**340-5975**	1	WASHER-SEALING	
CM	23	2	**6I-0593**	2	BOLT (M10X1.5X30-MM)	
F			**155-7984**	1	WASHER (8.4X16X1.6-MM THK)	
FM			**6I-0217**	1	BOLT (M8X1.25X20-MM)	

C - CHANGE FROM PREVIOUS TYPE
F - NOT SHOWN
M - METRIC PART

324-8999 **PUMP GP-FILTER & FUEL TRANSFER (**contd.**)** **i08846941**

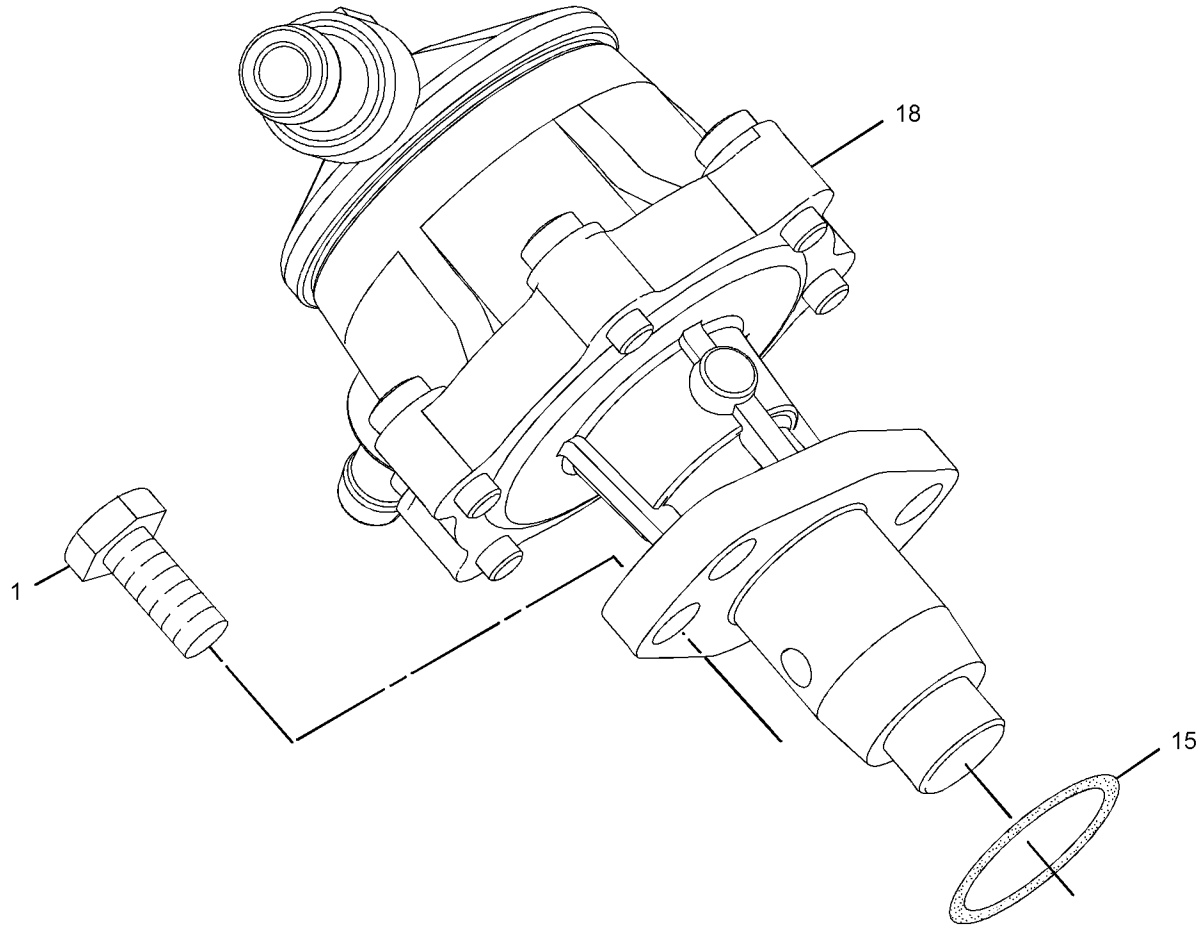

GRAPHIC #1 g01635253

324-8999 **PUMP GP-FILTER & FUEL TRANSFER (**contd.**)** **i08846941**

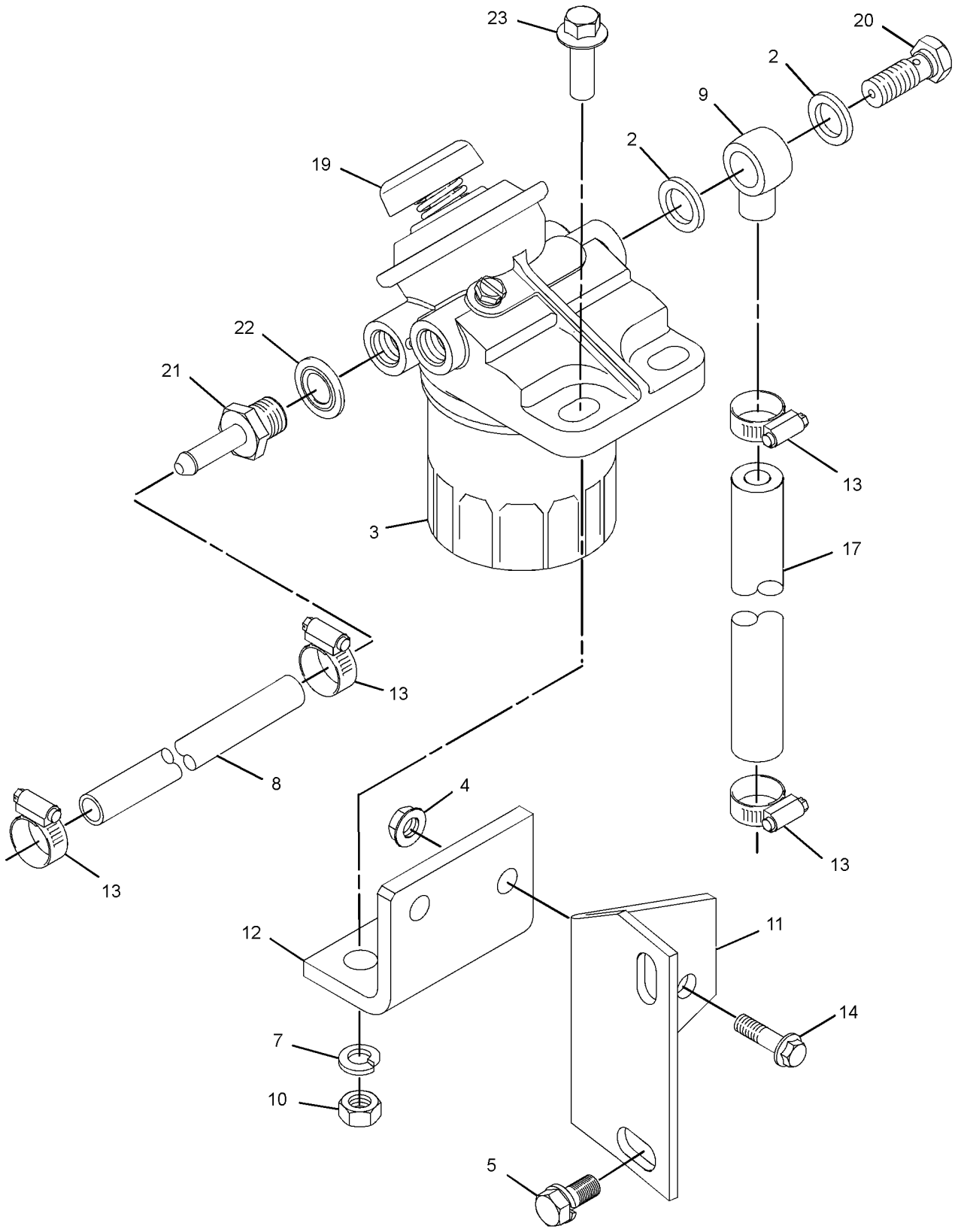

GRAPHIC #2 <END> g06194574

599-9752 PUMP GP-FILTER & FUEL TRANSFER

PART OF 610-7720, 610-7721 ENGINE AR-PRIMARY

SMCS-1256, 1261 **i09613787**

NOTE	REF NO	GRAPHIC REF	PART NUMBER	QTY	PART NAME 1 2 3 4 5 6 (PRODUCT LEVEL)	SEE PAGE
M	1	1	**6I-0217**	1	BOLT (M8X1.25X20-MM)	
M	2	1	**6I-0846**	2	BOLT (M6X1X14-MM)	
M	3	1	**124-3815**	1	BOLT (M8X1.25X16-MM)	
	4	1	**295-4070**	1	PUMP AS-FUEL TRANSFER	
	5	1	**329-1292**	4	CLIP-HOSE	
Y	6	1	*599-9665*	1	FILTER GP-FUEL	759
	7	1	**423-5661**	1	HOSE	
	8	1	**423-5665**	1	HOSE	

M - METRIC PART
Y - SEPARATE ILLUSTRATION

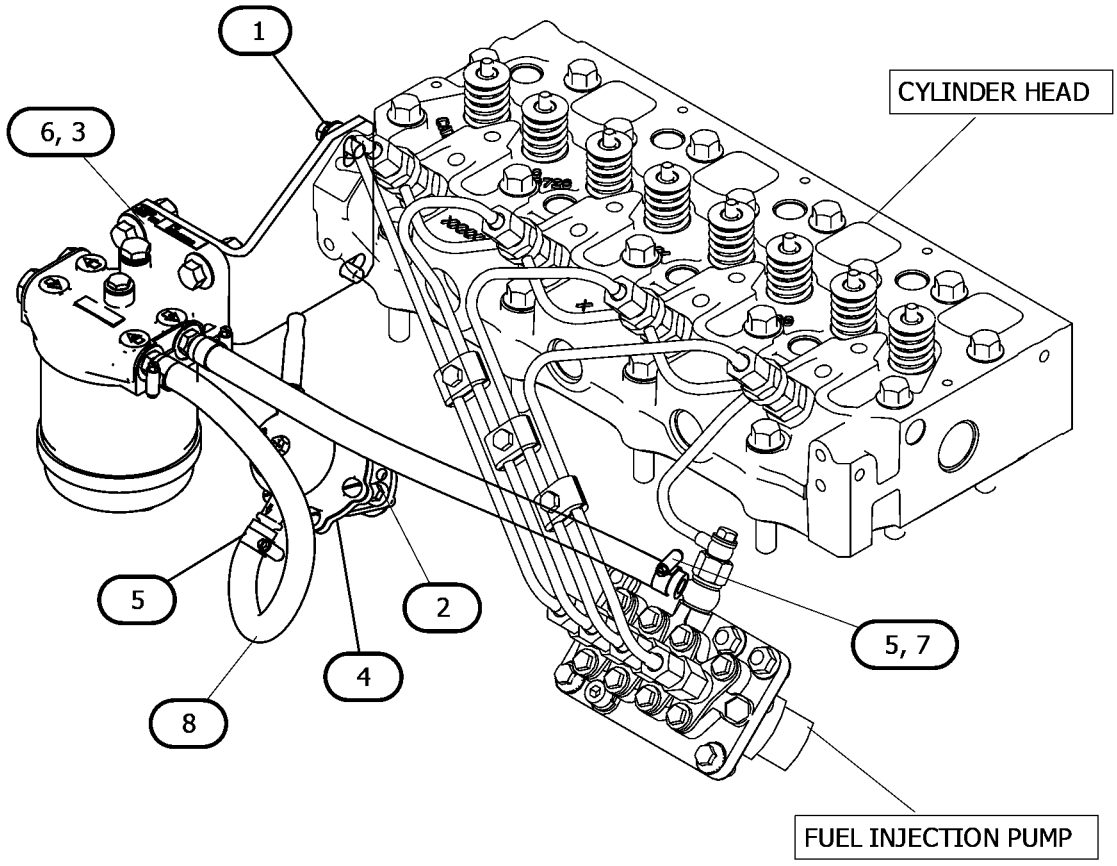

GRAPHIC #1 <END> g07515348

306-6346 PUMP GP-FUEL INJECTION

PART OF 321-4258, 325-5665, 596-2826 PUMP GP-FUEL INJECTION

SMCS-1251, 1290

i02703814

NOTE	REF NO	GRAPHIC REF	PART NUMBER	QTY	PART NAME 1 2 3 4 5 6 (PRODUCT LEVEL)	SEE PAGE
	1	1	**205-4726**	1	BOLT-SPECIAL (BANJO)	
	2	1	**205-4727**	2	WASHER	
	3	1	**205-4728**	1	CONNECTOR	

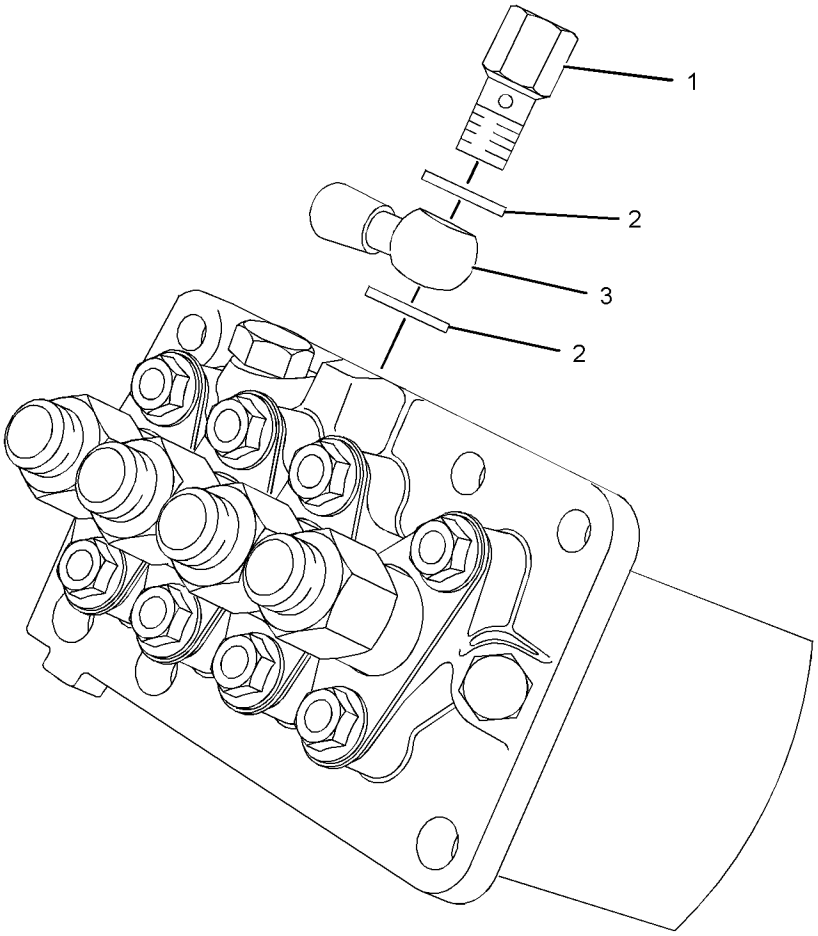

GRAPHIC #1 <END> g01281336

308-2289 PUMP GP-FUEL INJECTION

PART OF 435-1636, 459-2953, 461-7892, 461-7894, 465-1477, 491-3396, 495-3121, 495-6243, 541-9277, 587-9328 ENGINE AR-PRIMARY

SMCS-1251, 1290 **i10389186**

NOTE	REF NO	GRAPHIC REF	PART NUMBER	QTY	PART NAME 1 2 3 4 5 6 (PRODUCT LEVEL)	SEE PAGE
M	1	1	**8T-1158**	1	BOLT-SOCKET HEAD (M8X1.25X20-MM)	
M	2	1	**178-3336**	3	NUT-HEX FLANGE (M8X1.25-THD)	
M	3	1	**099-6418**	3	NUT (M6X1-THD)	
M	4	1	**319-6358**	3	STUD (M8X1.25X31-MM)	
M	5	1	**6I-0217**	2	BOLT (M8X1.25X20-MM)	
	6	1	**154-2715**	2	WASHER	
	7	1	**3B-4505**	1	LOCKWASHER	
M	8	1	**6V-7357**	3	BOLT (M6X1X25-MM)	
M	9	1	**190-3803**	1	BOLT (M8X1X20-MM)	
	10	1	**217-2760**	1	TUBE AS (CYL NO. 1)	
	11	1	**217-2761**	1	TUBE AS (CYL NO. 2)	
	12	1	**217-2762**	1	TUBE AS (CYL NO. 3)	
	13	1	**217-2763**	1	TUBE AS (CYL NO. 4)	
	14	1	**290-8014**	6	CLAMP	
	15	1	**308-1905**	1	PUMP-FUEL INJECTION	
	16	1	**308-1906**	4	INJECTOR AS-FUEL	
					(EACH INCLUDES)	
	16A	1	**202-1196**	1	WASHER-SPECIAL	
B	17	1	**351-2617**	1	SHIM (0.25-MM THK, BEADED)	
B		1	**351-2618**	1	SHIM (0.50-MM THK, FLAT)	
B		1	**351-2619**	1	SHIM (0.50-MM THK, BEADED)	
B		1	**351-2620**	1	SHIM (0.40-MM THK, BEADED)	
B		1	**351-2621**	1	SHIM (0.30-MM THK, BEADED)	
B		1	**351-2622**	1	SHIM (0.20-MM THK, BEADED)	
B		1	**351-3132**	1	SHIM (0.35-MM THK, BEADED)	
	18	1	**426-4357**	4	GASKET	
	19	1	**486-8879**	1	PIPE-FUEL	

B - USE AS REQUIRED
M - METRIC PART

308-2289 **PUMP GP-FUEL INJECTION (**contd.**)** **i10389186**

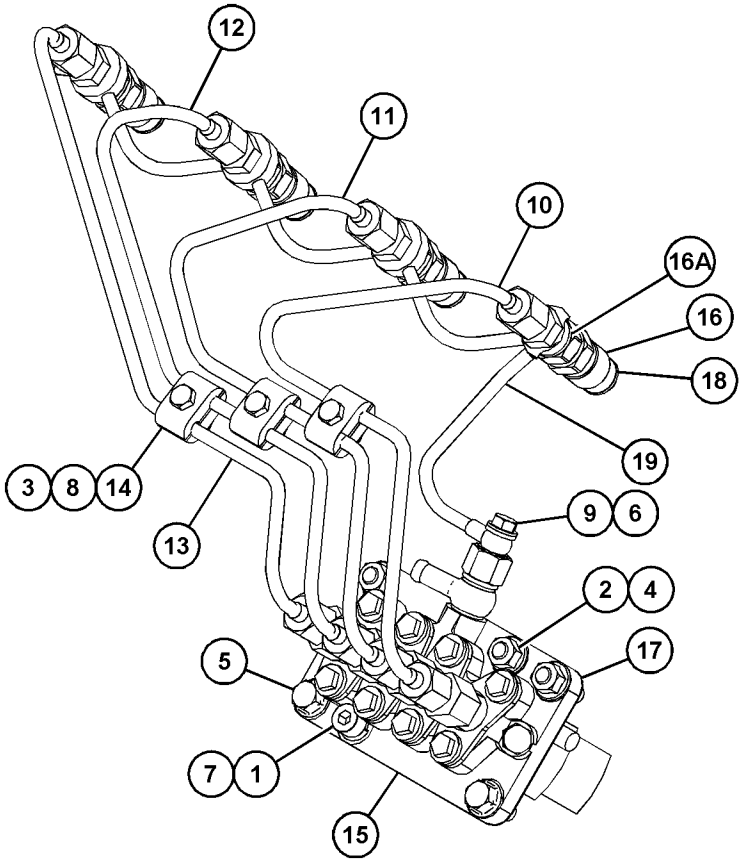

GRAPHIC #1 <END> g06171010

308-3330 PUMP GP-FUEL INJECTION

PART OF 435-1658, 557-9727 ENGINE AR-PRIMARY

SMCS-1251, 1290 **i10580013**

NOTE	REF NO	GRAPHIC REF	PART NUMBER	QTY	PART NAME 1 2 3 4 5 6 (PRODUCT LEVEL)	SEE PAGE
M	1	1	**153-5592**	3	NUT (M8X1.25-THD)	
M	2	1	**153-5960**	3	NUT (M6X1-THD)	
M	3	1	**6I-0217**	2	BOLT (M8X1.25X20-MM)	
	4	1	**154-2715**	2	WASHER	
	5	1	**426-4357**	4	GASKET	
B	6	1	**351-2622**	1	SHIM (0.20-MM THK, BEADED)	
B		1	**351-2617**	1	SHIM (0.25-MM THK, BEADED)	
B		1	**351-2621**	1	SHIM (0.30-MM THK, BEADED)	
B		1	**351-3132**	1	SHIM (0.35-MM THK, BEADED)	
B		1	**351-2620**	1	SHIM (0.40-MM THK, BEADED)	
B		1	**351-2619**	1	SHIM (0.50-MM THK, BEADED)	
B		1	**351-2618**	1	SHIM (0.50-MM THK, FLAT)	
	7	1	**163-5372**	1	WASHER (8X15.4X4-MM THK)	
M	8	1	**183-3353**	3	BOLT (M6X1X25-MM)	
M	9	1	**190-3803**	1	BOLT (M8X1X20-MM)	
	10	1	**217-2760**	1	TUBE AS (CYL NO. 1)	
	11	1	**217-2761**	1	TUBE AS (CYL NO. 2)	
	12	1	**217-2762**	1	TUBE AS (CYL NO. 3)	
	13	1	**217-2763**	1	TUBE AS (CYL NO. 4)	
M	14	1	**8T-1158**	1	BOLT-SOCKET HEAD (M8X1.25X20-MM)	
	15	1	**290-8014**	6	CLAMP	
	16	1	**308-1905**	1	PUMP-FUEL INJECTION	
	17	1	**308-1906**	4	INJECTOR AS-FUEL	
					(EACH INCLUDES)	
	17A	1	**202-1196**	1	WASHER-SPECIAL	
	18	1	**311-7561**	1	TUBE	
M	19	1	**319-6358**	3	STUD (M8X1.25X31-MM)	

B - USE AS REQUIRED
M - METRIC PART

308-3330 **PUMP GP-FUEL INJECTION (**contd.**)** **i10580013**

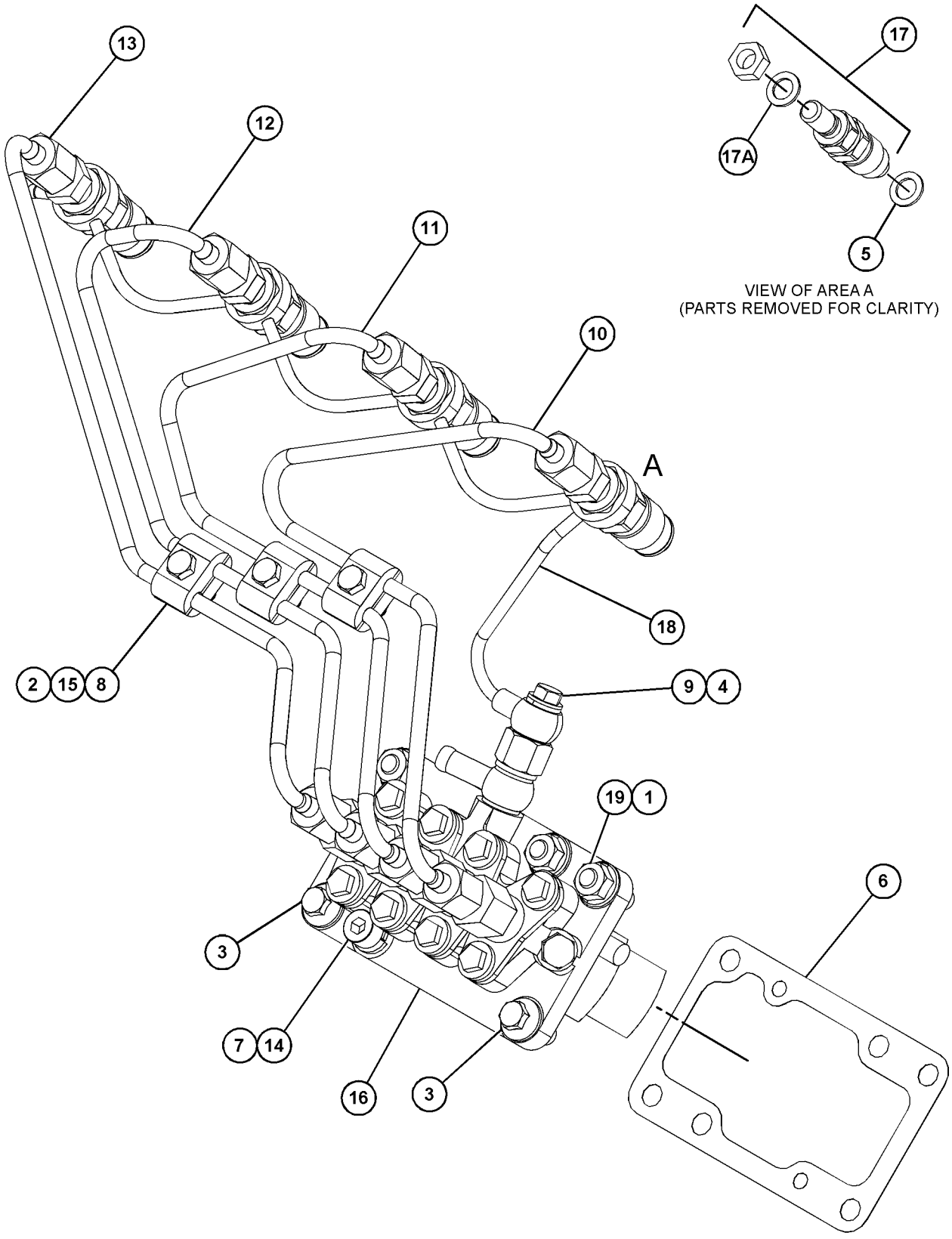

GRAPHIC #1 <END> g07957900

309-6719 PUMP GP-FUEL INJECTION

PART OF 435-1642, 435-1646, 435-1656, 461-7895, 492-6602, 549-8284 ENGINE AR-PRIMARY

SMCS-1251, 1290 **i10501911**

NOTE	REF NO	GRAPHIC REF	PART NUMBER	QTY	PART NAME 1 2 3 4 5 6 (PRODUCT LEVEL)	SEE PAGE
M	1	1	**8T-1158**	1	BOLT-SOCKET HEAD (M8X1.25X20-MM)	
M	2	1	**178-3336**	3	NUT-HEX FLANGE (M8X1.25-THD)	
M	3	1	**099-6418**	3	NUT (M6X1-THD)	
M	4	1	**319-6358**	3	STUD (M8X1.25X31-MM)	
M	5	1	**6I-0217**	2	BOLT (M8X1.25X20-MM)	
	6	1	**154-2715**	2	WASHER	
	7	1	**3B-4505**	1	LOCKWASHER	
M	8	1	**6V-7357**	3	BOLT (M6X1X25-MM)	
M	9	1	**190-3803**	1	BOLT (M8X1X20-MM)	
	10	1	**252-1446**	4	INJECTOR AS-FUEL	
					(EACH INCLUDES)	
	10A	1	**202-1196**	1	WASHER-SPECIAL	
	10B	1	**205-4731**	1	NUT	
	11	1	**290-8014**	6	CLAMP	
	12	1	**342-4187**	1	PUMP AS-FUEL INJECTION	
		1	**205-4726**	1	BOLT-SPECIAL (BANJO)	
		1	**205-4727**	2	WASHER	
		1	**205-4728**	1	CONNECTOR	
B	13	1	**351-2622**	1	SHIM (0.20-MM THK, BEADED)	
B		1	**351-2617**	1	SHIM (0.25-MM THK, BEADED)	
B		1	**351-2621**	1	SHIM (0.30-MM THK, BEADED)	
B		1	**351-3132**	1	SHIM (0.35-MM THK, BEADED)	
B		1	**351-2620**	1	SHIM (0.40-MM THK, BEADED)	
B		1	**351-2619**	1	SHIM (0.50-MM THK, BEADED)	
B		1	**351-2618**	1	SHIM (0.50-MM THK, FLAT)	
	14	1	**486-8879**	1	PIPE-FUEL	
	15	1	**426-4357**	4	GASKET	
	16	1	**383-4113**	1	TUBE AS (CYL NO. 4)	
	17	1	**383-4112**	1	TUBE AS (CYL NO. 3)	
	18	1	**383-4111**	1	TUBE AS (CYL NO. 2)	
	19	1	**383-4110**	1	TUBE AS (CYL NO. 1)	

B - USE AS REQUIRED
M - METRIC PART

309-6719 **PUMP GP-FUEL INJECTION (**contd.**)** **i10501911**

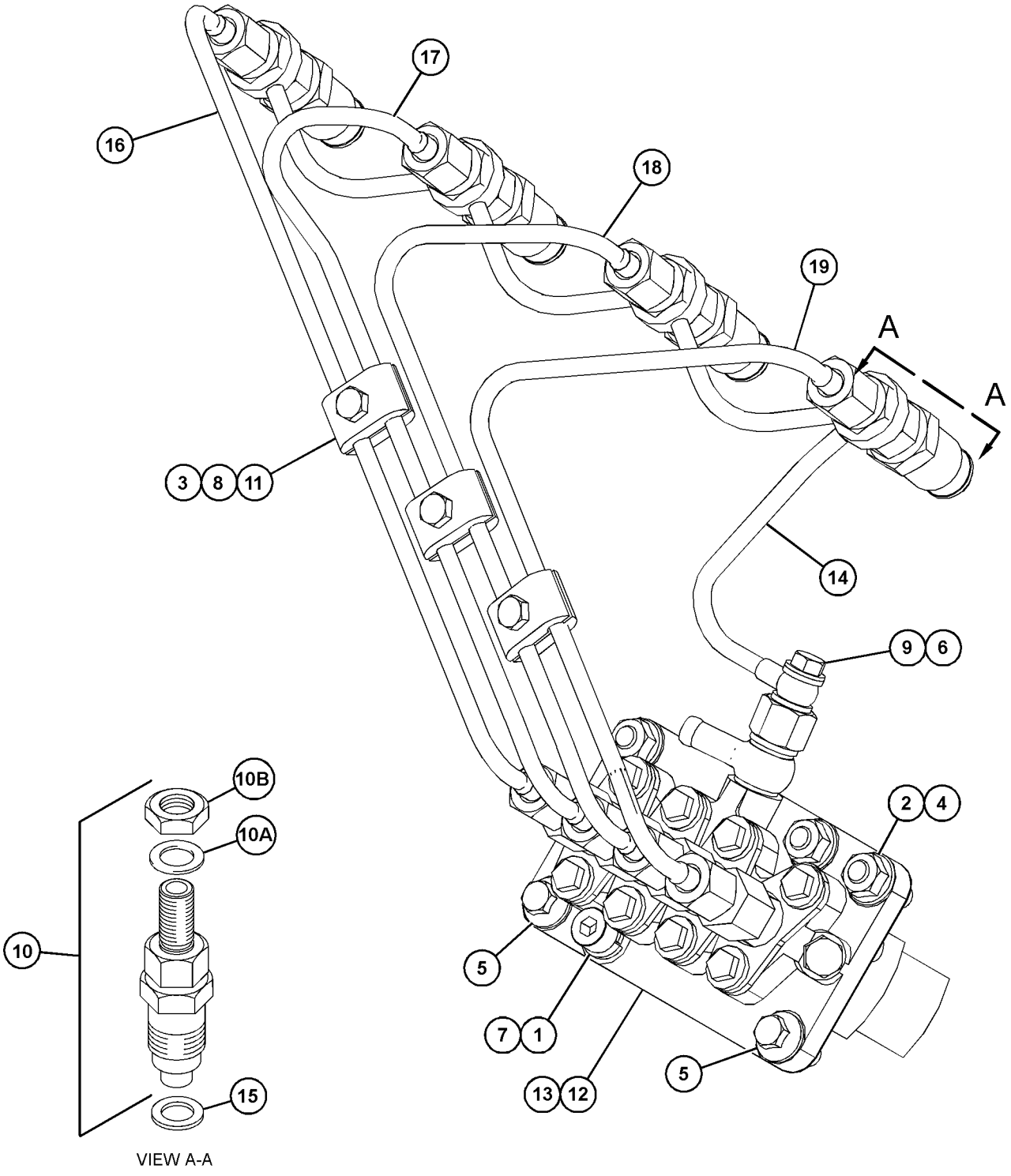

VIEW A-A

GRAPHIC #1 <END> g07888878

311-1683 PUMP GP-FUEL INJECTION

PART OF 433-1379 ENGINE AR, 516-9335 ENGINE AR-PRIMARY

SMCS-1251, 1290 **i10381230**

NOTE	REF NO	GRAPHIC REF	PART NUMBER	QTY	PART NAME 1 2 3 4 5 6 (PRODUCT LEVEL)	SEE PAGE
M	1	1	**153-5592**	3	NUT (M8X1.25-THD)	
M	2	1	**153-5960**	3	NUT (M6X1-THD)	
M	3	1	**6I-0217**	2	BOLT (M8X1.25X20-MM)	
	4	1	**154-2715**	2	WASHER	
	5	1	**426-4357**	4	GASKET	
	6	1	**252-1446**	4	INJECTOR AS-FUEL	
					(EACH INCLUDES)	
	6A	1	**202-1196**	1	WASHER-SPECIAL	
	6B	1	**205-4731**	1	NUT	
B	7	1	**351-2622**	1	SHIM (0.20-MM THK, BEADED)	
B		1	**351-2617**	1	SHIM (0.25-MM THK, BEADED)	
B		1	**351-2621**	1	SHIM (0.30-MM THK, BEADED)	
B		1	**351-3132**	1	SHIM (0.35-MM THK, BEADED)	
B		1	**351-2620**	1	SHIM (0.40-MM THK, BEADED)	
B		1	**351-2619**	1	SHIM (0.50-MM THK, BEADED)	
B		1	**351-2618**	1	SHIM (0.50-MM THK, FLAT)	
	8	1	**163-5372**	1	WASHER (8X15.4X4-MM THK)	
M	9	1	**183-3353**	3	BOLT (M6X1X25-MM)	
M	10	1	**190-3803**	1	BOLT (M8X1X20-MM)	
	11	1	**383-4110**	1	TUBE AS (CYL NO. 1)	
	12	1	**383-4111**	1	TUBE AS (CYL NO. 2)	
	13	1	**383-4112**	1	TUBE AS (CYL NO. 3)	
	14	1	**383-4113**	1	TUBE AS (CYL NO. 4)	
	15	1	**486-8879**	1	PIPE-FUEL	
M	16	1	**8T-1158**	1	BOLT-SOCKET HEAD (M8X1.25X20-MM)	
	17	1	**290-8014**	6	CLAMP	
	18	1	**342-4187**	1	PUMP AS-FUEL INJECTION	
		1	**205-4726**	1	BOLT-SPECIAL (BANJO)	
		1	**205-4727**	2	WASHER	
		1	**205-4728**	1	CONNECTOR	
M	19	1	**319-6358**	3	STUD (M8X1.25X31-MM)	

B - USE AS REQUIRED
M - METRIC PART

311-1683 **PUMP GP-FUEL INJECTION (**contd.**)** **i10381230**

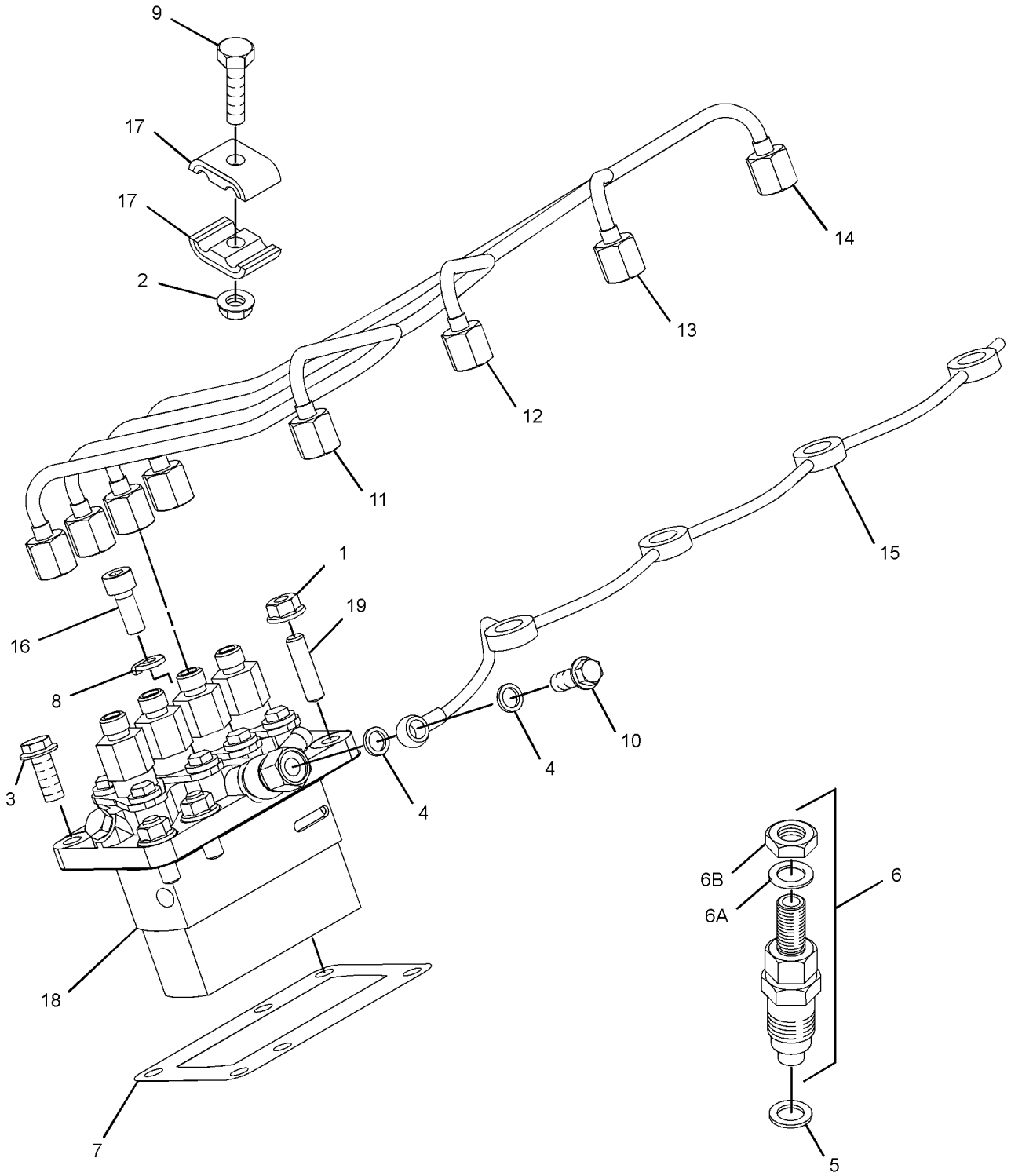

GRAPHIC #1 <END> g06196133

311-9026 PUMP GP-FUEL INJECTION

PART OF 435-1641 ENGINE AR-PRIMARY

SMCS-1251, 1290 **i10381234**

NOTE	REF NO	GRAPHIC REF	PART NUMBER	QTY	PART NAME 1 2 3 4 5 6 (PRODUCT LEVEL)	SEE PAGE
M	1	1	**153-5592**	3	NUT (M8X1.25-THD)	
M	2	1	**153-5960**	3	NUT (M6X1-THD)	
M	3	1	**6I-0217**	2	BOLT (M8X1.25X20-MM)	
	4	1	**154-2715**	2	WASHER	
	5	1	**426-4357**	4	GASKET	
	6	1	**252-1446**	4	INJECTOR AS-FUEL	
					(EACH INCLUDES)	
	6A	1	**202-1196**	1	WASHER-SPECIAL	
	6B	1	**205-4731**	1	NUT	
B	7	1	**351-2622**	1	SHIM (0.20-MM THK, BEADED)	
B		1	**351-2617**	1	SHIM (0.25-MM THK, BEADED)	
B		1	**351-2621**	1	SHIM (0.30-MM THK, BEADED)	
B		1	**351-3132**	1	SHIM (0.35-MM THK, BEADED)	
B		1	**351-2620**	1	SHIM (0.40-MM THK, BEADED)	
B		1	**351-2619**	1	SHIM (0.50-MM THK, BEADED)	
B		1	**351-2618**	1	SHIM (0.50-MM THK, FLAT)	
	8	1	**3B-4505**	1	LOCKWASHER	
M	9	1	**183-3353**	3	BOLT (M6X1X25-MM)	
M	10	1	**190-3803**	1	BOLT (M8X1X20-MM)	
	11	1	**383-4110**	1	TUBE AS (CYL NO. 1)	
	12	1	**383-4111**	1	TUBE AS (CYL NO. 2)	
	13	1	**383-4112**	1	TUBE AS (CYL NO. 3)	
	14	1	**383-4113**	1	TUBE AS (CYL NO. 4)	
	15	1	**486-8879**	1	PIPE-FUEL	
M	16	1	**8T-1158**	1	BOLT-SOCKET HEAD (M8X1.25X20-MM)	
	17	1	**290-8014**	6	CLAMP	
	18	1	**342-4187**	1	PUMP AS-FUEL INJECTION	
	18A	1	**205-4726**	1	BOLT-SPECIAL (BANJO)	
	18B	1	**205-4727**	2	WASHER	
	18C	1	**205-4728**	1	CONNECTOR	
M	19	1	**319-6358**	3	STUD (M8X1.25X31-MM)	

B - USE AS REQUIRED
M - METRIC PART

311-9026 **PUMP GP-FUEL INJECTION (**contd.**)** **i10381234**

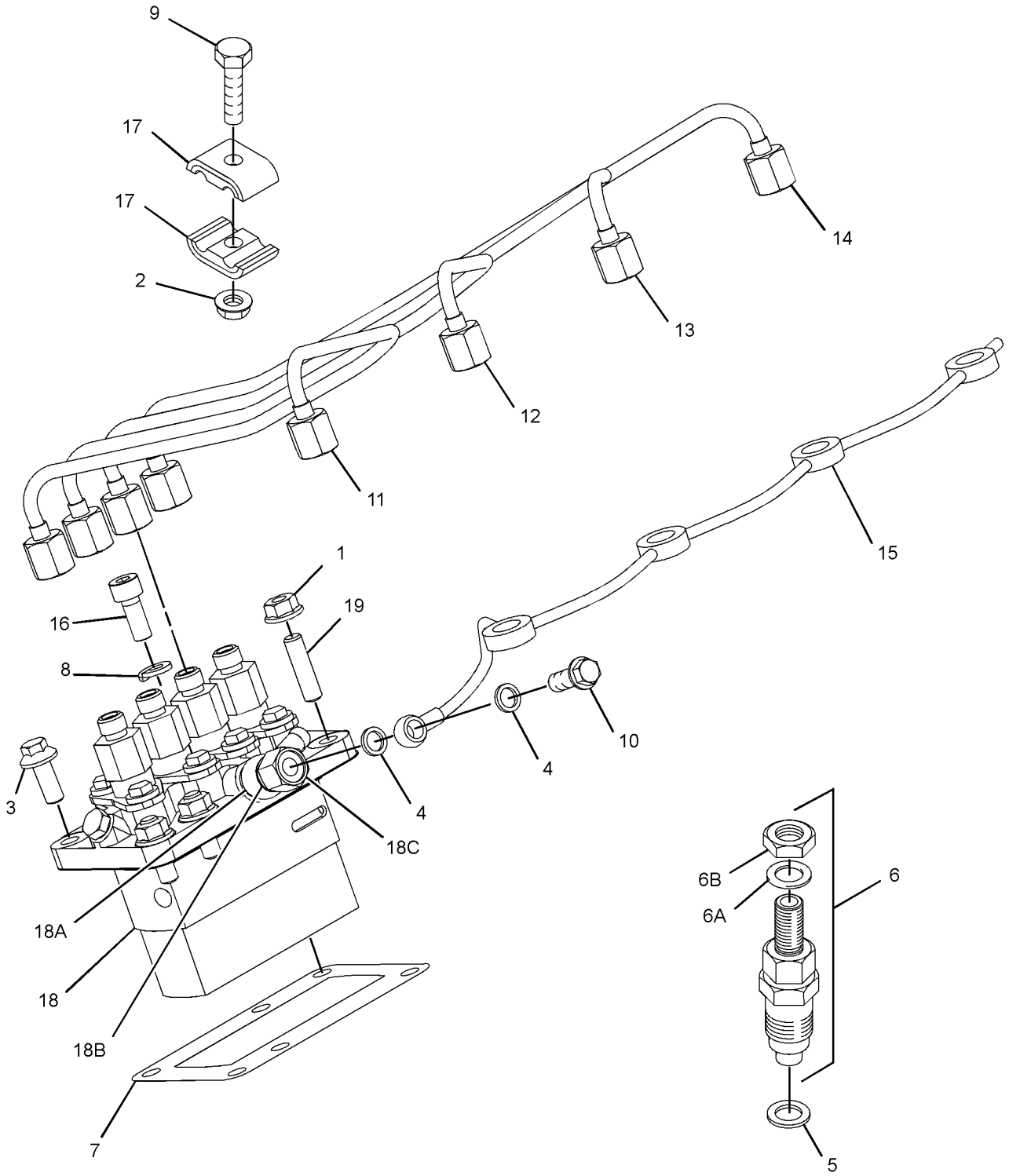

GRAPHIC #1 <END> g07846389

317-0977 PUMP GP-FUEL INJECTION

PART OF 433-1380 ENGINE AR

SMCS-1251, 1290 **i10599051**

NOTE	REF NO	GRAPHIC REF	PART NUMBER	QTY	PART NAME 1 2 3 4 5 6 (PRODUCT LEVEL)	SEE PAGE
M	1	1	**153-5592**	3	NUT (M8X1.25-THD)	
M	2	1	**153-5960**	3	NUT (M6X1-THD)	
M	3	1	**6I-0217**	2	BOLT (M8X1.25X20-MM)	
	4	1	**154-2715**	2	WASHER	
	5	1	**426-4357**	4	GASKET	
B	6	1	**351-2622**	1	SHIM (0.20-MM THK, BEADED)	
B		1	**351-2617**	1	SHIM (0.25-MM THK, BEADED) (0.25-MM THK)	
B		1	**351-2621**	1	SHIM (0.30-MM THK, BEADED)	
B		1	**351-3132**	1	SHIM (0.35-MM THK, BEADED) (0.35-MM THK)	
B		1	**351-2620**	1	SHIM (0.40-MM THK, BEADED)	
B		1	**351-2619**	1	SHIM (0.50-MM THK, BEADED)	
B		1	**351-2618**	1	SHIM (0.50-MM THK, FLAT)	
	7	1	**163-5372**	1	WASHER (8X15.4X4-MM THK)	
M	8	1	**183-3353**	3	BOLT (M6X1X25-MM)	
M	9	1	**190-3803**	1	BOLT (M8X1X20-MM)	
	10	1	**217-2760**	1	TUBE AS (CYL NO. 1)	
	11	1	**217-2761**	1	TUBE AS (CYL NO. 2)	
	12	1	**217-2762**	1	TUBE AS (CYL NO. 3)	
	13	1	**217-2763**	1	TUBE AS (CYL NO. 4)	
M	14	1	**8T-1158**	1	BOLT-SOCKET HEAD (M8X1.25X20-MM)	
	15	1	**290-8014**	6	CLAMP	
	16	1	**308-1905**	1	PUMP-FUEL INJECTION	
	17	1	**308-1906**	4	INJECTOR AS-FUEL	
					(EACH INCLUDES)	
	17A	1	**202-1196**	1	WASHER-SPECIAL	
	18	1	**311-7561**	1	TUBE	
M	19	1	**319-6358**	3	STUD (M8X1.25X31-MM)	

B - USE AS REQUIRED
M - METRIC PART

317-0977 **PUMP GP-FUEL INJECTION (**contd.**)** **i10599051**

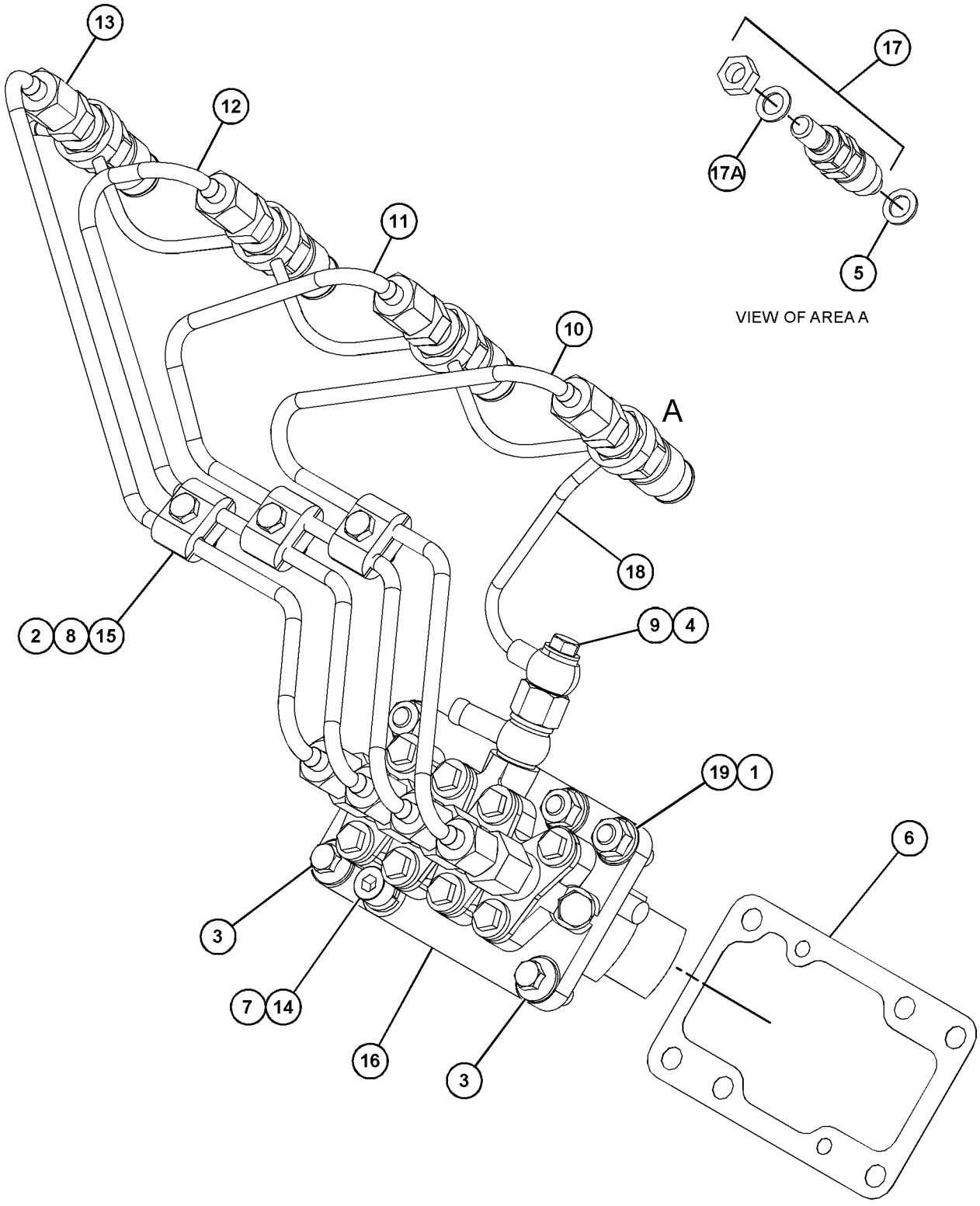

GRAPHIC #1 <END> g07958446

317-7190 PUMP GP-FUEL INJECTION

PART OF 435-1645 CYLINDER BLOCK GP-LONG

SMCS-1251, 1290 **i10561476**

NOTE	REF NO	GRAPHIC REF	PART NUMBER	QTY	PART NAME 1 2 3 4 5 6 (PRODUCT LEVEL)	SEE PAGE
M	1	1	**153-5592**	3	NUT (M8X1.25-THD)	
M	2	1	**153-5960**	3	NUT (M6X1-THD)	
M	3	1	**6I-0217**	2	BOLT (M8X1.25X20-MM)	
	4	1	**154-2715**	2	WASHER	
	5	1	**426-4357**	4	GASKET	
	6	1	**252-1446**	4	INJECTOR AS-FUEL	
					(EACH INCLUDES)	
	6A	1	**202-1196**	1	WASHER-SPECIAL	
	6B	1	**205-4731**	1	NUT	
B	7	1	**351-2622**	1	SHIM (0.20-MM THK, BEADED)	
B		1	**351-2617**	1	SHIM (0.25-MM THK, BEADED)	
B		1	**351-2621**	1	SHIM (0.30-MM THK, BEADED)	
B		1	**351-3132**	1	SHIM (0.35-MM THK, BEADED)	
B		1	**351-2620**	1	SHIM (0.40-MM THK, BEADED)	
B		1	**351-2619**	1	SHIM (0.50-MM THK, BEADED)	
B		1	**351-2618**	1	SHIM (0.50-MM THK, FLAT)	
	8	1	**163-5372**	2	WASHER (8X15.4X4-MM THK)	
M	9	1	**183-3353**	3	BOLT (M6X1X25-MM)	
M	10	1	**190-3803**	1	BOLT (M8X1X20-MM)	
	11	1	**383-4110**	1	TUBE AS (CYL NO. 1)	
	12	1	**383-4111**	1	TUBE AS (CYL NO. 2)	
	13	1	**383-4112**	1	TUBE AS (CYL NO. 3)	
	14	1	**383-4113**	1	TUBE AS (CYL NO. 4)	
	15	1	**486-8879**	1	PIPE-FUEL	
M	16	1	**8T-1158**	2	BOLT-SOCKET HEAD (M8X1.25X20-MM)	
	17	1	**290-8014**	6	CLAMP	
	18	1	**342-4187**	1	PUMP AS-FUEL INJECTION	
M	19	1	**319-6358**	3	STUD (M8X1.25X31-MM)	

B - USE AS REQUIRED
M - METRIC PART

317-7190 **PUMP GP-FUEL INJECTION (**contd.**)** **i10561476**

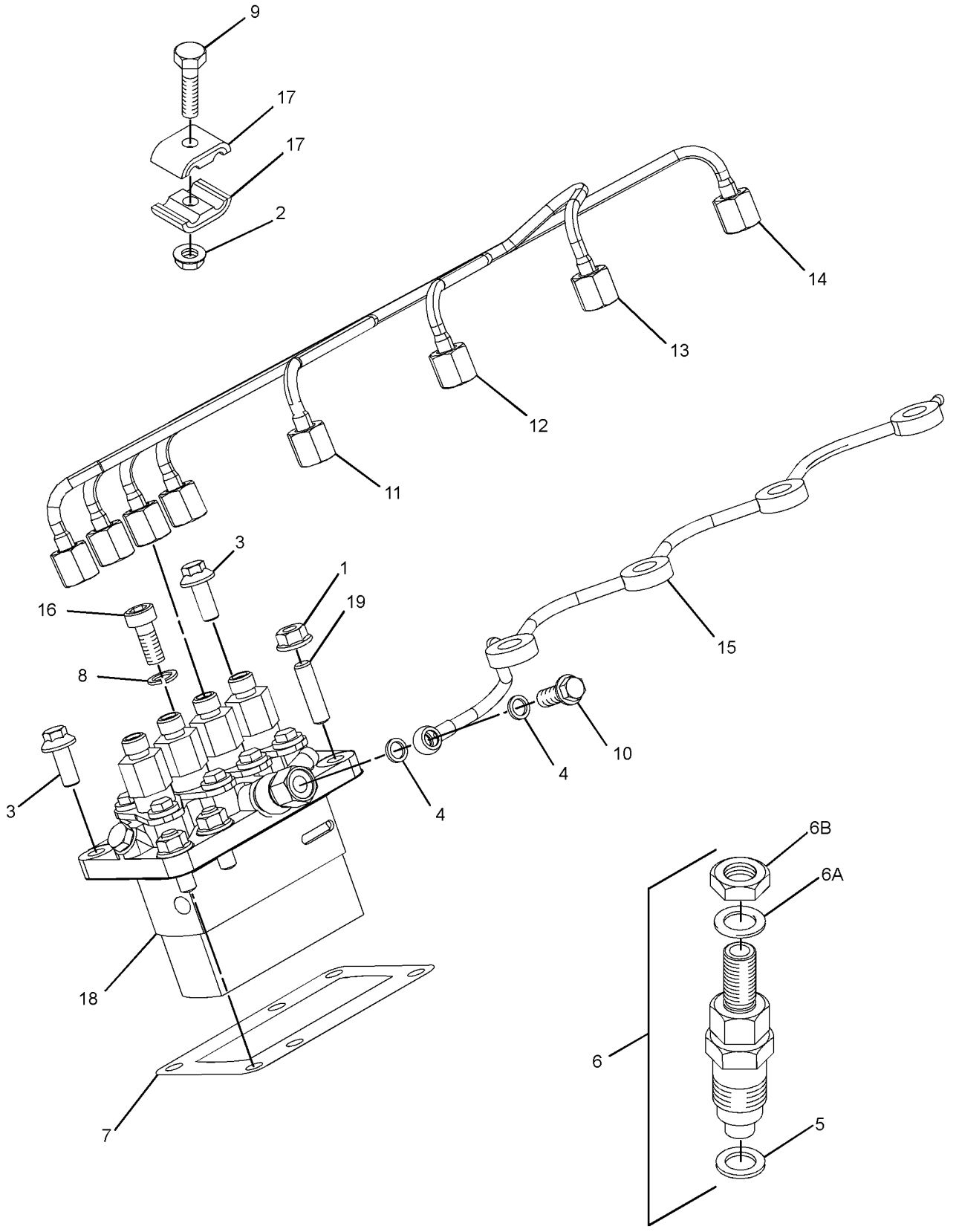

GRAPHIC #1 <END> g07952217

321-4258 PUMP GP-FUEL INJECTION

PART OF 435-1647 ENGINE AR-PRIMARY

SMCS-1251, 1290 **i10383523**

NOTE	REF NO	GRAPHIC REF	PART NUMBER	QTY	PART NAME 1 2 3 4 5 6 (PRODUCT LEVEL)	SEE PAGE
M	1	1	**153-5592**	3	NUT (M8X1.25-THD)	
M	2	1	**153-5960**	3	NUT (M6X1-THD)	
	3	1	**290-8014**	6	CLAMP	
	4	1	**252-1466**	4	INJECTOR AS-FUEL	
					(EACH INCLUDES)	
	4A	1	**202-1196**	1	WASHER-SPECIAL	
M	5	1	**6I-0217**	2	BOLT (M8X1.25X20-MM)	
	6	1	**154-2715**	2	WASHER	
	7	1	**426-4357**	4	GASKET	
	8	1	**154-2722**	1	LINE AS-FUEL INJECTION (CYL NO. 1)	
	9	1	**154-2723**	1	LINE AS-FUEL INJECTION (CYL NO. 2)	
	10	1	**154-2724**	1	LINE AS-FUEL INJECTION (CYL NO. 3)	
	11	1	**154-2725**	1	LINE AS-FUEL INJECTION (CYL NO. 4)	
	12	1	**351-2622**	1	SHIM (0.20-MM THK, BEADED)	
B		1	**351-2617**	1	SHIM (0.25-MM THK, BEADED)	
B		1	**351-2621**	1	SHIM (0.30-MM THK, BEADED)	
B		1	**351-3132**	1	SHIM (0.35-MM THK, BEADED)	
B		1	**351-2620**	1	SHIM (0.40-MM THK, BEADED)	
B		1	**351-2618**	1	SHIM (0.50-MM THK, FLAT)	
B		1	**351-2619**	1	SHIM (0.50-MM THK, BEADED)	
	13	1	**163-5372**	1	WASHER (8X15.4X4-MM THK)	
M	14	1	**183-3353**	3	BOLT (M6X1X25-MM)	
M	15	1	**190-3803**	1	BOLT (M8X1X20-MM)	
	16	1	**486-8879**	1	PIPE-FUEL	
Y	17	1	**306-6346**	1	PUMP GP-FUEL INJECTION	812
M	18	1	**8T-1158**	1	BOLT-SOCKET HEAD (M8X1.25X20-MM)	
M	19	1	**319-6358**	3	STUD (M8X1.25X31-MM)	

B - USE AS REQUIRED
M - METRIC PART
Y - SEPARATE ILLUSTRATION

321-4258 **PUMP GP-FUEL INJECTION (**contd.**)** **i10383523**

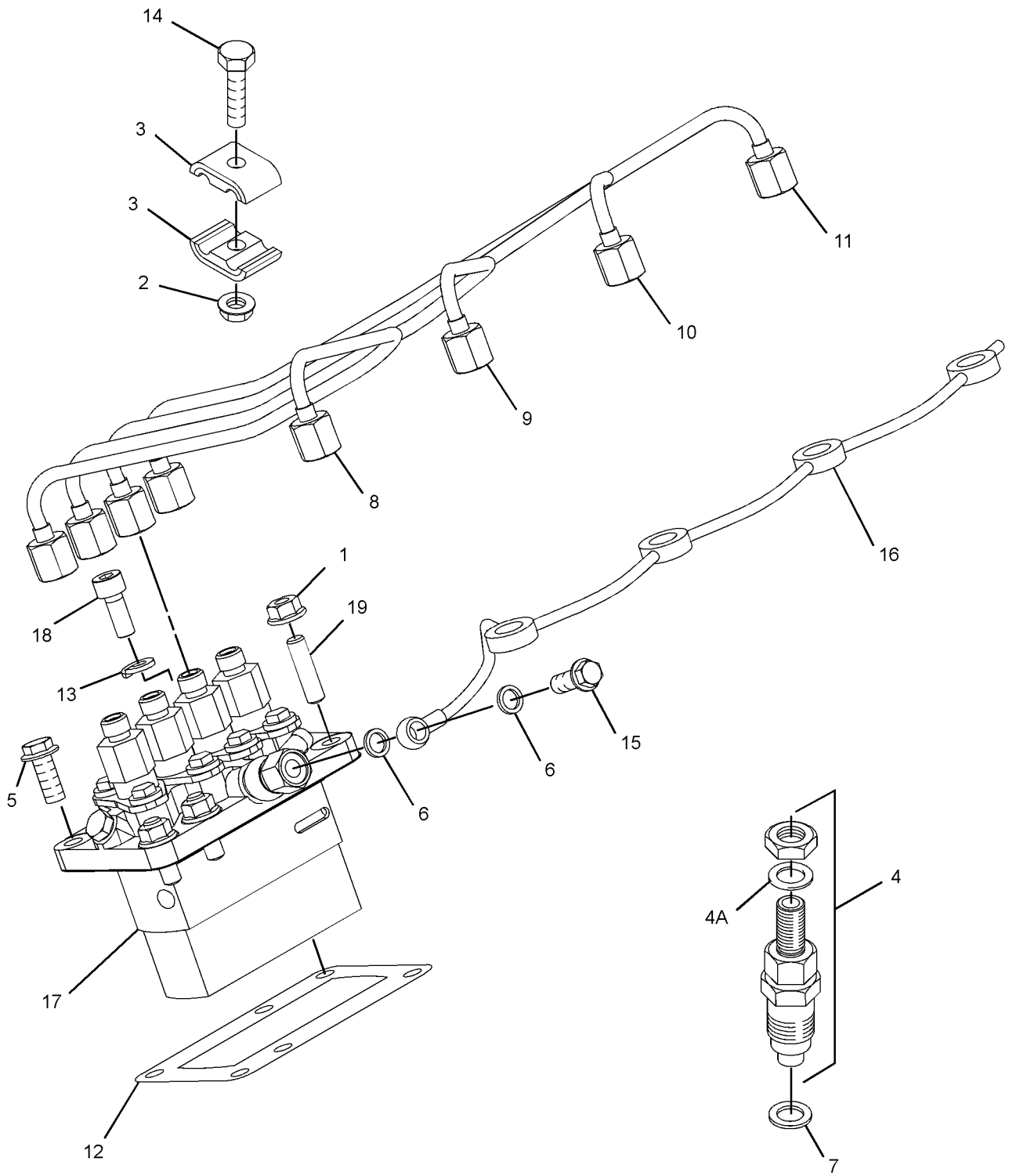

GRAPHIC #1 <END> g06196085

325-5665 PUMP GP-FUEL INJECTION

SMCS-1251, 1290 **i10599047**

NOTE	REF NO	GRAPHIC REF	PART NUMBER	QTY	PART NAME 1 2 3 4 5 6 (PRODUCT LEVEL)	SEE PAGE
M	1	1	**153-5592**	3	NUT (M8X1.25-THD)	
M	2	1	**153-5960**	3	NUT (M6X1-THD)	
M	3	1	**6I-0217**	2	BOLT (M8X1.25X20-MM)	
	4	1	**154-2715**	2	WASHER	
	5	1	**426-4357**	4	GASKET	
	6	1	**154-2722**	1	LINE AS-FUEL INJECTION (CYL NO. 1)	
	7	1	**154-2723**	1	LINE AS-FUEL INJECTION (CYL NO. 2)	
	8	1	**154-2724**	1	LINE AS-FUEL INJECTION (CYL NO. 3)	
	9	1	**154-2725**	1	LINE AS-FUEL INJECTION (CYL NO. 4)	
	10	1	**351-2622**	1	SHIM (0.20-MM THK, BEADED)	
B		1	**351-2621**	1	SHIM (0.30-MM THK, BEADED)	
B		1	**351-2620**	1	SHIM (0.40-MM THK, BEADED)	
B		1	**351-2619**	1	SHIM (0.50-MM THK, BEADED)	
B		1	**351-2618**	1	SHIM (0.50-MM THK, FLAT)	
B		1	**351-2617**	1	SHIM (0.25-MM THK, BEADED)	
B		1	**351-3132**	1	SHIM (0.35-MM THK, BEADED)	
	14	1	**163-5372**	1	WASHER (8X15.4X4-MM THK)	
M	15	1	**183-3353**	3	BOLT (M6X1X25-MM)	
M	16	1	**190-3803**	1	BOLT (M8X1X20-MM)	
	17	1	**252-1466**	4	INJECTOR AS-FUEL	
					(EACH INCLUDES)	
	17A	1	**202-1196**	1	WASHER-SPECIAL	
M	18	1	**8T-1158**	1	BOLT-SOCKET HEAD (M8X1.25X20-MM)	
	19	1	**290-8014**	6	CLAMP	
Y	22	1	**306-6346**	1	PUMP GP-FUEL INJECTION	812
	23	1	**486-8879**	1	PIPE-FUEL	
M	24	1	**319-6358**	3	STUD (M8X1.25X31-MM)	

B - USE AS REQUIRED
M - METRIC PART
Y - SEPARATE ILLUSTRATION

325-5665 **PUMP GP-FUEL INJECTION (**contd.**)** **i10599047**

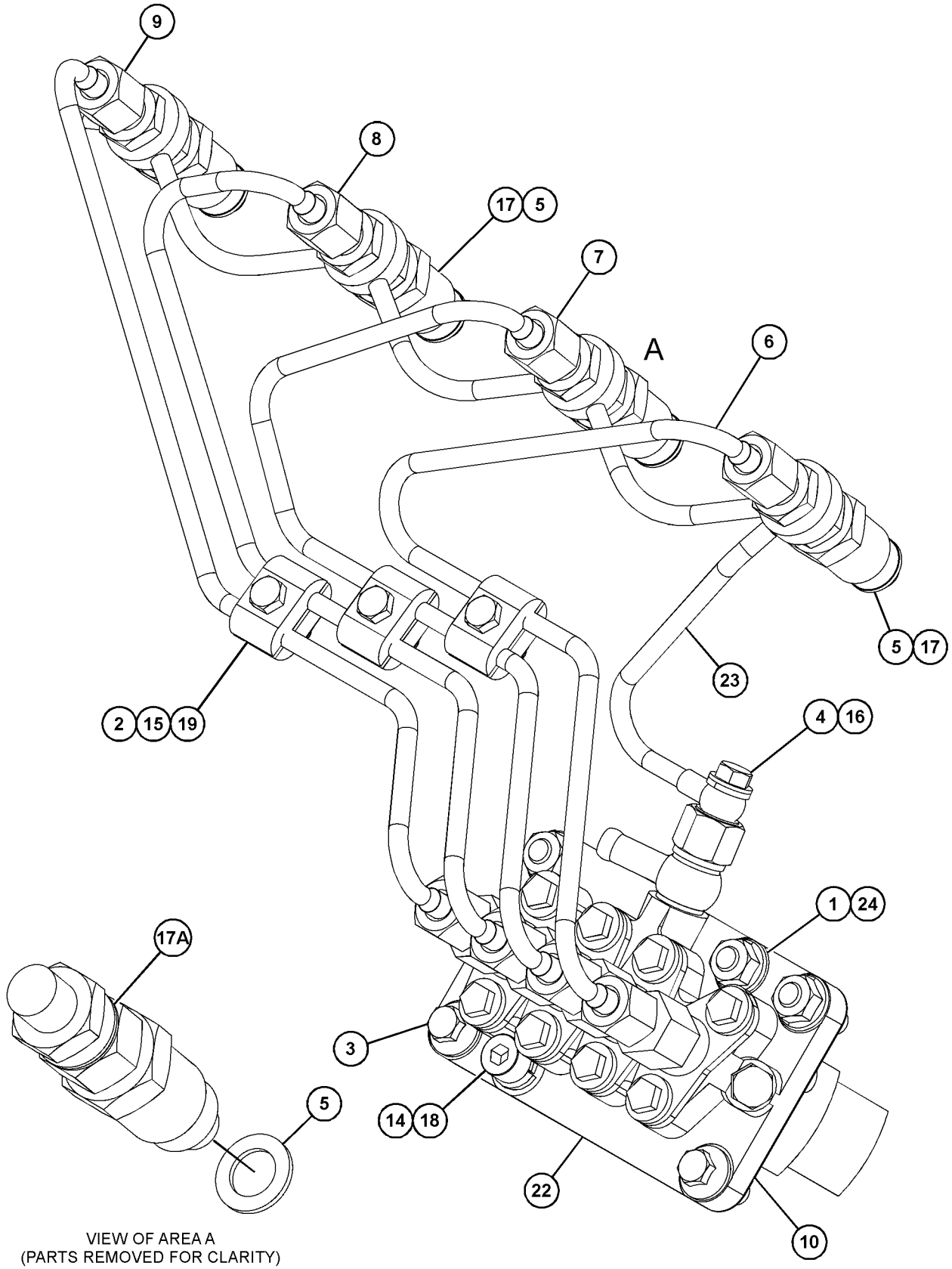

VIEW OF AREA A
(PARTS REMOVED FOR CLARITY)

GRAPHIC #1 <END> g07959024

328-3294 PUMP GP-FUEL INJECTION

PART OF 435-1637, 435-1638 ENGINE AR

SMCS-1251, 1290 **i10561522**

NOTE	REF NO	GRAPHIC REF	PART NUMBER	QTY	PART NAME 1 2 3 4 5 6 (PRODUCT LEVEL)	SEE PAGE
M	1	1	**8T-1158**	1	BOLT-SOCKET HEAD (M8X1.25X20-MM)	
M	2	1	**153-5592**	3	NUT (M8X1.25-THD)	
M	3	1	**153-5960**	3	NUT (M6X1-THD)	
M	4	1	**319-6358**	3	STUD (M8X1.25X31-MM)	
M	5	1	**6I-0217**	2	BOLT (M8X1.25X20-MM)	
	6	1	**154-2715**	2	WASHER	
	7	1	**163-5372**	1	WASHER (8X15.4X4-MM THK)	
M	8	1	**183-3353**	3	BOLT (M6X1X25-MM)	
M	9	1	**190-3803**	1	BOLT (M8X1X20-MM)	
	10	1	**217-2760**	1	TUBE AS (CYL NO. 1)	
	11	1	**217-2761**	1	TUBE AS (CYL NO. 2)	
	12	1	**217-2762**	1	TUBE AS (CYL NO. 3)	
	13	1	**217-2763**	1	TUBE AS (CYL NO. 4)	
	14	1	**290-8014**	6	CLAMP	
	15	1	**308-1905**	1	PUMP-FUEL INJECTION	
	16	1	**308-1906**	4	INJECTOR AS-FUEL	
					(EACH INCLUDES)	
	16A	1	**202-1196**	1	WASHER-SPECIAL	
B	17	1	**351-2617**	1	SHIM (0.25-MM THK, BEADED)	
B		1	**351-2618**	1	SHIM (0.50-MM THK, FLAT)	
B		1	**351-2619**	1	SHIM (0.50-MM THK, BEADED)	
B		1	**351-2620**	1	SHIM (0.40-MM THK, BEADED)	
B		1	**351-2621**	1	SHIM (0.30-MM THK, BEADED)	
B		1	**351-2622**	1	SHIM (0.20-MM THK, BEADED)	
B		1	**351-3132**	1	SHIM (0.35-MM THK, BEADED)	
	18	1	**426-4357**	4	GASKET	
	19	1	**486-8879**	1	PIPE-FUEL	

B - USE AS REQUIRED
M - METRIC PART

328-3294 **PUMP GP-FUEL INJECTION (**contd.**)** **i10561522**

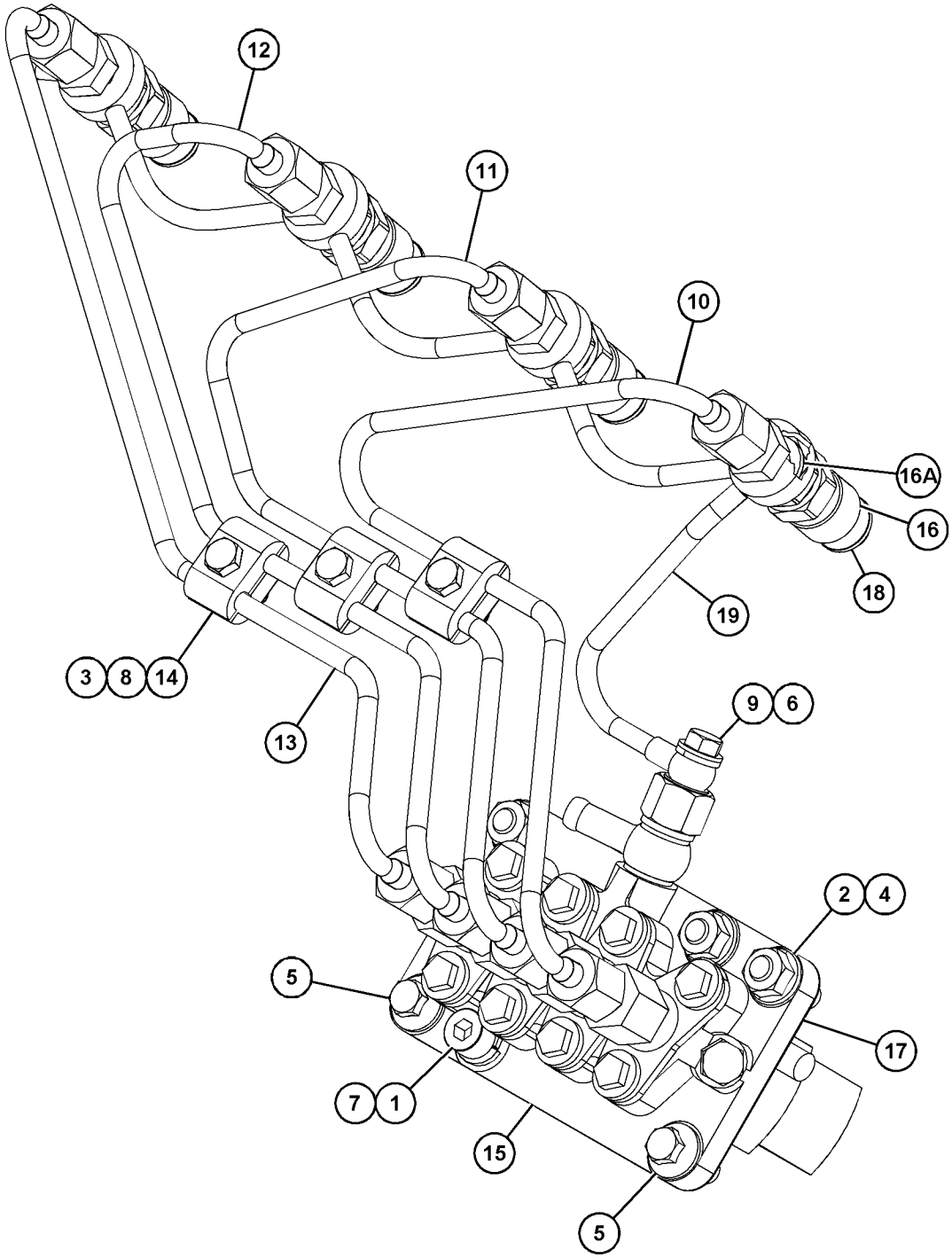

GRAPHIC #1 <END> g07952965

596-2825 PUMP GP-FUEL INJECTION

PART OF 433-1379 ENGINE AR, 435-1641, 435-1646, 610-7720 ENGINE AR-PRIMARY

SMCS-1251, 1290 **i10686133**

NOTE	REF NO	GRAPHIC REF	PART NUMBER	QTY	PART NAME 1 2 3 4 5 6 (PRODUCT LEVEL)	SEE PAGE
M	1	1	**8T-1158**	1	BOLT-SOCKET HEAD (M8X1.25X20-MM)	
M	2	1	**153-5592**	3	NUT (M8X1.25-THD)	
M	3	1	**099-6418**	3	NUT (M6X1-THD)	
M	4	1	**319-6358**	3	STUD (M8X1.25X31-MM)	
	5	1	**154-2715**	2	WASHER	
M	6	1	**6I-0217**	2	BOLT (M8X1.25X20-MM)	
	7	1	**163-5372**	1	WASHER (8X15.4X4-MM THK)	
M	8	1	**183-3353**	3	BOLT (M6X1X25-MM)	
M	9	1	**190-3803**	1	BOLT (M8X1X20-MM)	
	10	1	**252-1446**	4	INJECTOR AS-FUEL	
					(EACH INCLUDES)	
	10A	1	**202-1196**	1	WASHER-SPECIAL	
	10B	1	**205-4731**	1	NUT	
	11	1	**290-8014**	6	CLAMP	
	12	1	**342-4187**	1	PUMP AS-FUEL INJECTION	
	12A	1	**205-4726**	1	BOLT-SPECIAL (BANJO)	
	12B	1	**205-4727**	2	WASHER	
	12C	1	**205-4728**	1	CONNECTOR	
B	13	1	**351-2617**	1	SHIM (0.25-MM THK, BEADED)	
B	14	1	**351-2618**	1	SHIM (0.50-MM THK, FLAT)	
B	15	1	**351-2619**	1	SHIM (0.50-MM THK, BEADED)	
B	16	1	**351-2620**	1	SHIM (0.40-MM THK, BEADED)	
B	17	1	**351-2621**	1	SHIM (0.30-MM THK, BEADED)	
B	18	1	**351-2622**	1	SHIM (0.20-MM THK, BEADED)	
B	19	1	**351-3132**	1	SHIM (0.35-MM THK, BEADED)	
	21	1	**383-4110**	1	TUBE AS (CYL NO. 1)	
	22	1	**383-4111**	1	TUBE AS (CYL NO. 2)	
	23	1	**383-4112**	1	TUBE AS (CYL NO. 3)	
	24	1	**383-4113**	1	TUBE AS (CYL NO. 4)	
	25	1	**426-4357**	4	GASKET	
	26	1	**486-8879**	1	PIPE-FUEL	

B - USE AS REQUIRED
M - METRIC PART

596-2825 **PUMP GP-FUEL INJECTION (**contd.**)** **i10686133**

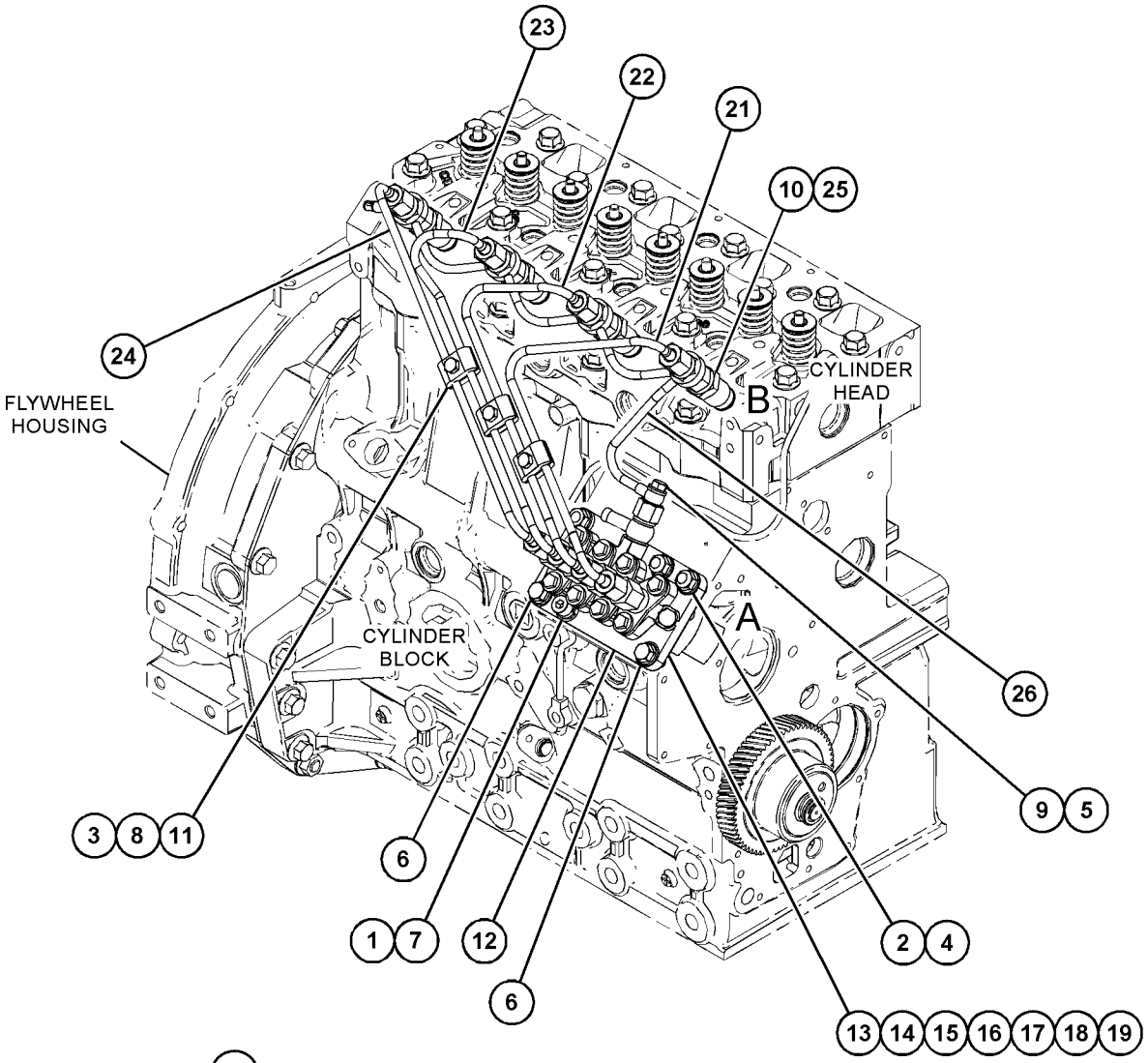

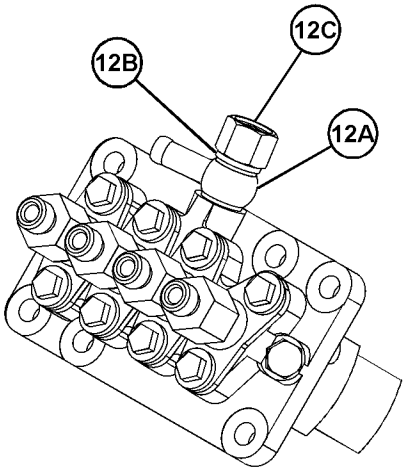

VIEW OF AREA A
(PARTS REMOVED FOR CLARITY)

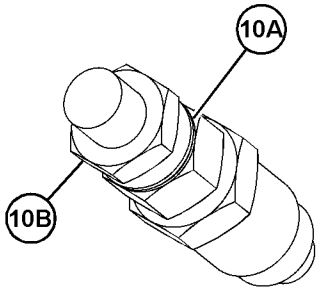

VIEW OF AREA B
(PARTS REMOVED FOR CLARITY)

GRAPHIC #1 <END> g06759175

596-2826 PUMP GP-FUEL INJECTION

PART OF 435-1647 ENGINE AR-PRIMARY

SMCS-1251, 1290 **i09855631**

NOTE	REF NO	GRAPHIC REF	PART NUMBER	QTY	PART NAME 1 2 3 4 5 6 (PRODUCT LEVEL)	SEE PAGE
M	1	2	**102-2079**	1	BOLT (M8X1.25X20-MM)	
M	2	2	**153-5592**	3	NUT (M8X1.25-THD)	
M	3	2	**153-5960**	3	NUT (M6X1-THD)	
M	4	2	**319-6358**	3	STUD (M8X1.25X31-MM)	
	5	2	**154-2715**	2	WASHER	
	6	2	**154-2722**	1	LINE AS-FUEL INJECTION (CYL NO. 1)	
	7	2	**163-5372**	1	WASHER (8X15.4X4-MM THK)	
M	8	2	**183-3353**	3	BOLT (M6X1X25-MM)	
M	9	2	**190-3803**	1	BOLT (M8X1X20-MM)	
	10	2	**154-2723**	1	LINE AS-FUEL INJECTION (CYL NO. 2)	
	11	2	**290-8014**	6	CLAMP	
	12	2	**154-2724**	1	LINE AS-FUEL INJECTION (CYL NO. 3)	
	13	3	**351-2617**	1	SHIM (0.25-MM THK, BEADED)	
	14	3	**351-2618**	1	SHIM (0.50-MM THK, FLAT)	
	15	3	**351-2619**	1	SHIM (0.50-MM THK, BEADED)	
	16	3	**351-2620**	1	SHIM (0.40-MM THK, BEADED)	
	17	3	**351-2621**	1	SHIM (0.30-MM THK, BEADED)	
	18	3	**351-2622**	1	SHIM (0.20-MM THK, BEADED)	
	19	3	**351-3132**	1	SHIM (0.35-MM THK, BEADED)	
	21	2	**154-2725**	1	LINE AS-FUEL INJECTION (CYL NO. 4)	
	22	2	**252-1466**	4	INJECTOR AS-FUEL	
					(EACH INCLUDES)	
	22A	2	**202-1196**	1	WASHER-SPECIAL	
Y	23	2	**306-6346**	1	PUMP GP-FUEL INJECTION	812
	25	2	**426-4357**	4	GASKET	
	26	1	**486-8879**	1	PIPE-FUEL	
M	27	2	**6I-0217**	2	BOLT (M8X1.25X20-MM)	

M - METRIC PART
Y - SEPARATE ILLUSTRATION

596-2826 **PUMP GP-FUEL INJECTION (**contd.**)** **i09855631**

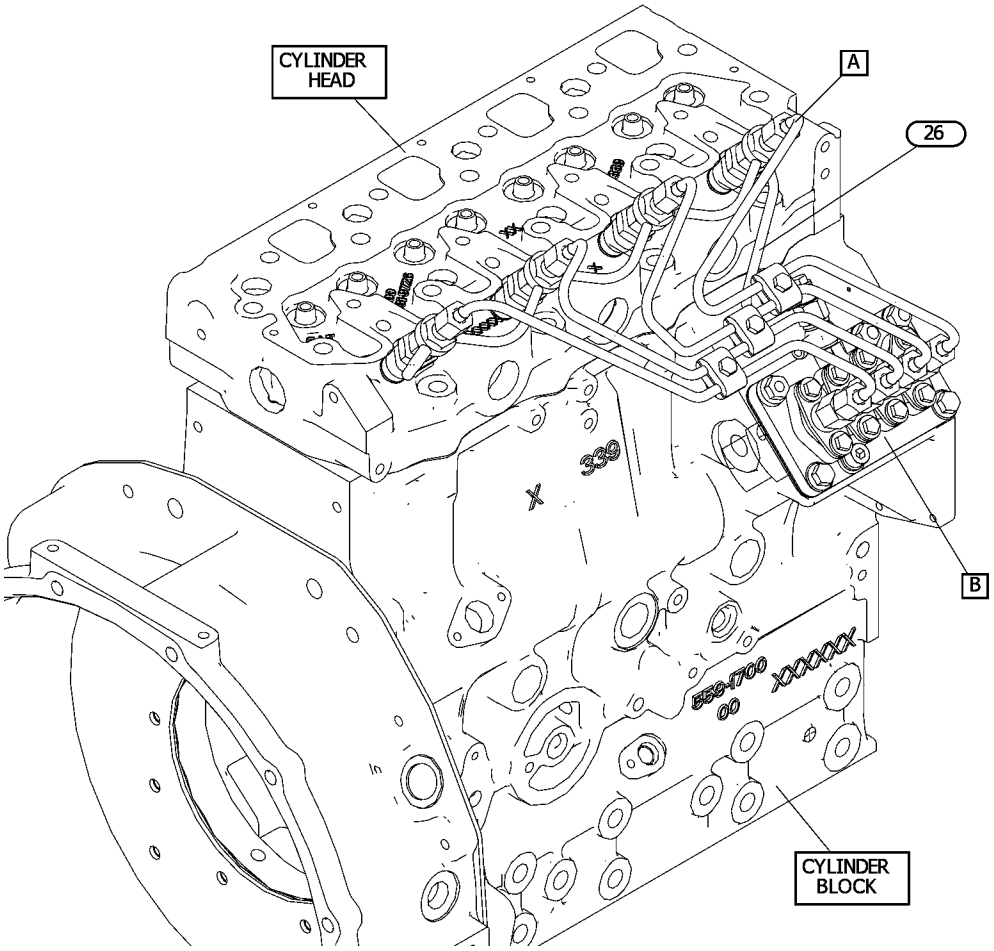

GRAPHIC #1 g07607718

596-2826 **PUMP GP-FUEL INJECTION** (contd.) **i09855631**

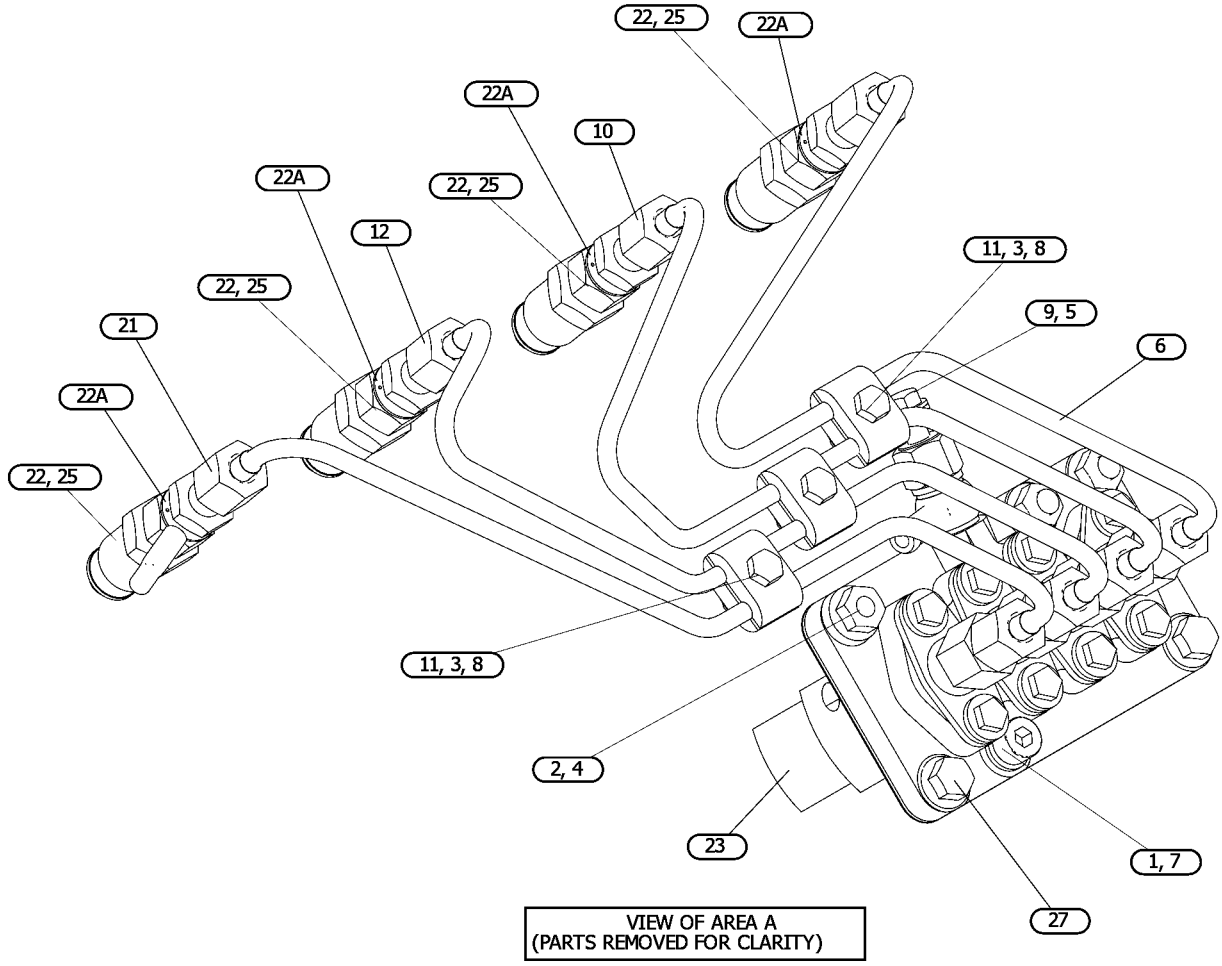

GRAPHIC #2 g07607718_01

596-2826 **PUMP GP-FUEL INJECTION (**contd.**)** **i09855631**

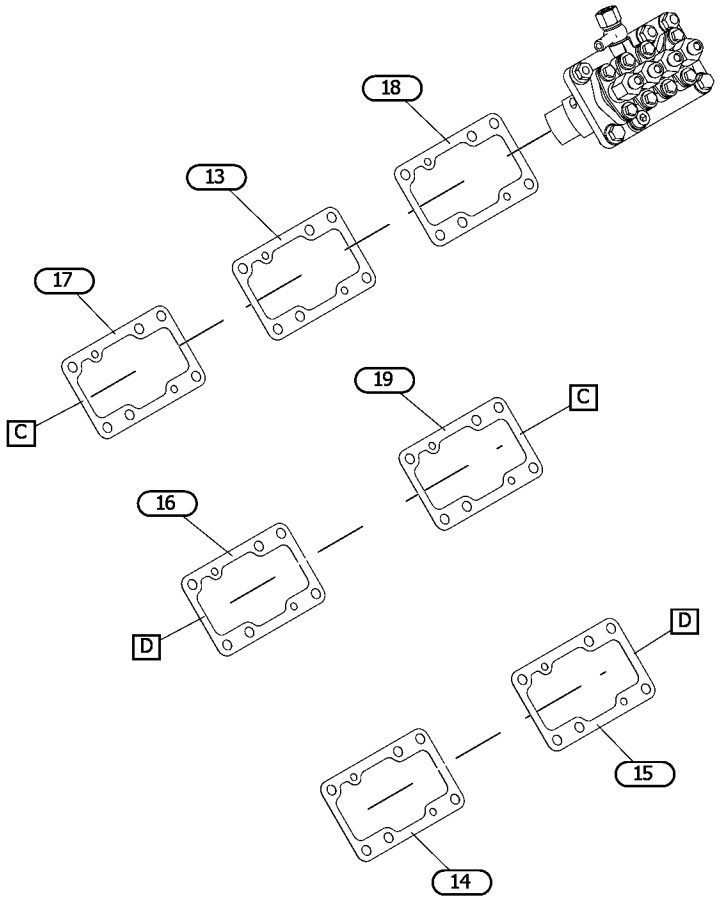

VIEW OF AREA B
(PARTS REMOVED FOR CLARITY)

GRAPHIC #3 <END> g07607718_02

596-2828 PUMP GP-FUEL INJECTION

PART OF 433-1380 ENGINE AR, 435-1636, 587-9328, 610-7721 ENGINE AR-PRIMARY

SMCS-1251, 1290 **i10671843**

NOTE	REF NO	GRAPHIC REF	PART NUMBER	QTY	PART NAME 1 2 3 4 5 6 (PRODUCT LEVEL)	SEE PAGE
M	1	1	**8T-1158**	1	BOLT-SOCKET HEAD (M8X1.25X20-MM)	
M	2	1	**178-3336**	3	NUT-HEX FLANGE (M8X1.25-THD)	
M	3	1	**099-6418**	3	NUT (M6X1-THD)	
M	4	1	**319-6358**	3	STUD (M8X1.25X31-MM)	
	5	1	**154-2715**	2	WASHER	
	6	1	**3B-4505**	1	LOCKWASHER	
M	7	1	**6V-7357**	3	BOLT (M6X1X25-MM)	
M	8	1	**190-3803**	1	BOLT (M8X1X20-MM)	
	9	1	**217-2760**	1	TUBE AS (CYL NO. 1)	
	10	1	**217-2761**	1	TUBE AS (CYL NO. 2)	
	11	1	**217-2762**	1	TUBE AS (CYL NO. 3)	
	12	1	**217-2763**	1	TUBE AS (CYL NO. 4)	
	13	1	**290-8014**	6	CLAMP	
	14	1	**308-1905**	1	PUMP-FUEL INJECTION	
	15	1	**308-1906**	4	INJECTOR AS-FUEL	
					(EACH INCLUDES)	
	15A	1	**202-1196**	1	WASHER-SPECIAL	
	16	1	**351-2617**	1	SHIM (0.25-MM THK, BEADED)	
	17	1	**351-2618**	1	SHIM (0.50-MM THK, FLAT)	
	18	1	**351-2619**	1	SHIM (0.50-MM THK, BEADED)	
	19	1	**351-2620**	1	SHIM (0.40-MM THK, BEADED)	
	20	1	**351-2621**	1	SHIM (0.30-MM THK, BEADED)	
	21	1	**351-2622**	1	SHIM (0.20-MM THK, BEADED)	
	22	1	**351-3132**	1	SHIM (0.35-MM THK, BEADED)	
	23	1	**486-8879**	1	PIPE-FUEL	
	25	1	**426-4357**	4	GASKET	
M	26	1	**6I-0217**	2	BOLT (M8X1.25X20-MM)	

M - METRIC PART

596-2828 **PUMP GP-FUEL INJECTION (**contd.**)** **i10671843**

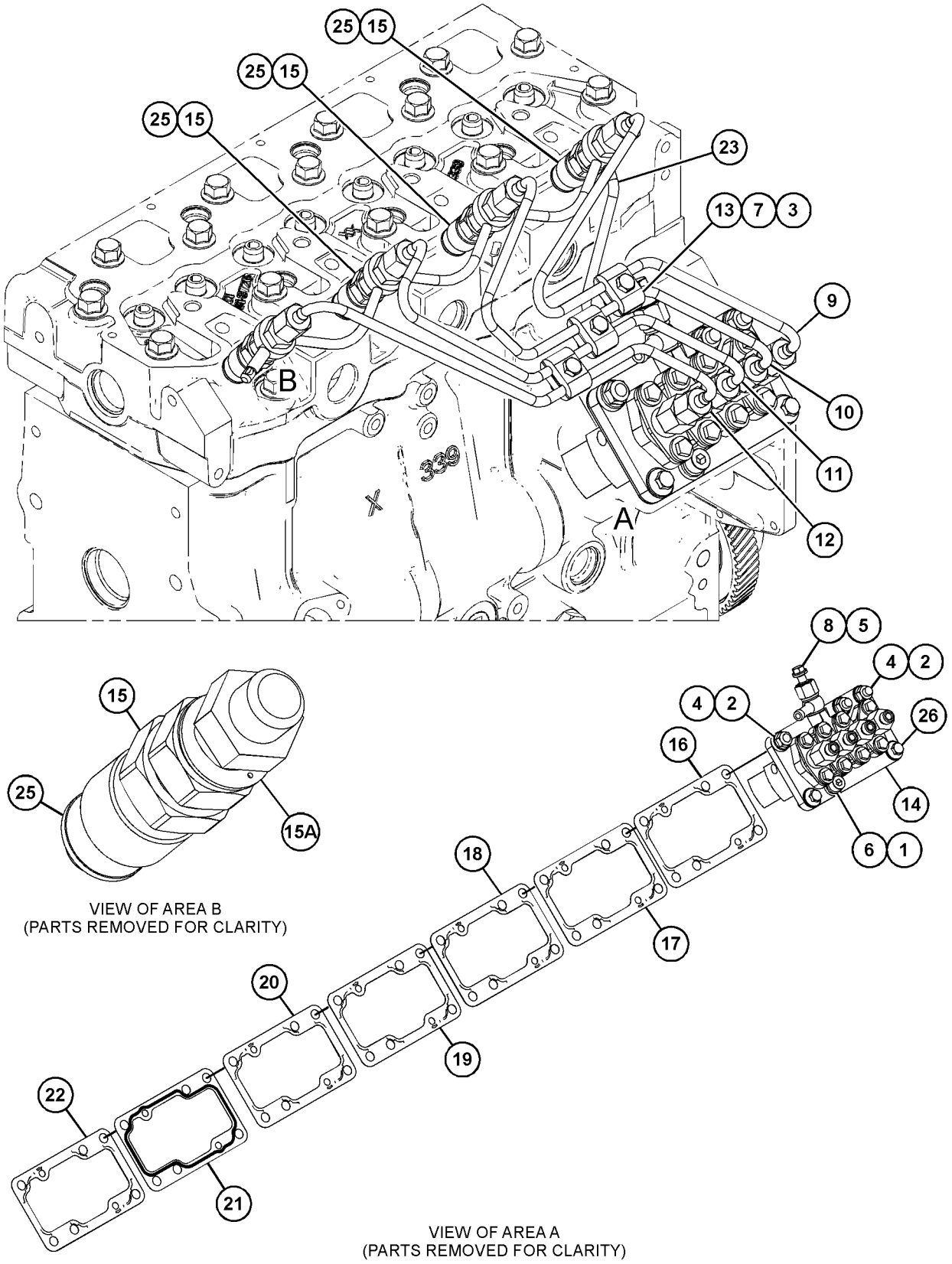

VIEW OF AREA B
(PARTS REMOVED FOR CLARITY)

VIEW OF AREA A
(PARTS REMOVED FOR CLARITY)

GRAPHIC #1 <END> g07900626

308-2320 PUMP GP-FUEL PRIMING

TYPE 1

SMCS-1258 **i05815393**

NOTE	REF NO	GRAPHIC REF	PART NUMBER	QTY	PART NAME 1 2 3 4 5 6 (PRODUCT LEVEL)	SEE PAGE
	1	1	**197-8540**	1	PUMP GP-FUEL PRIMING	

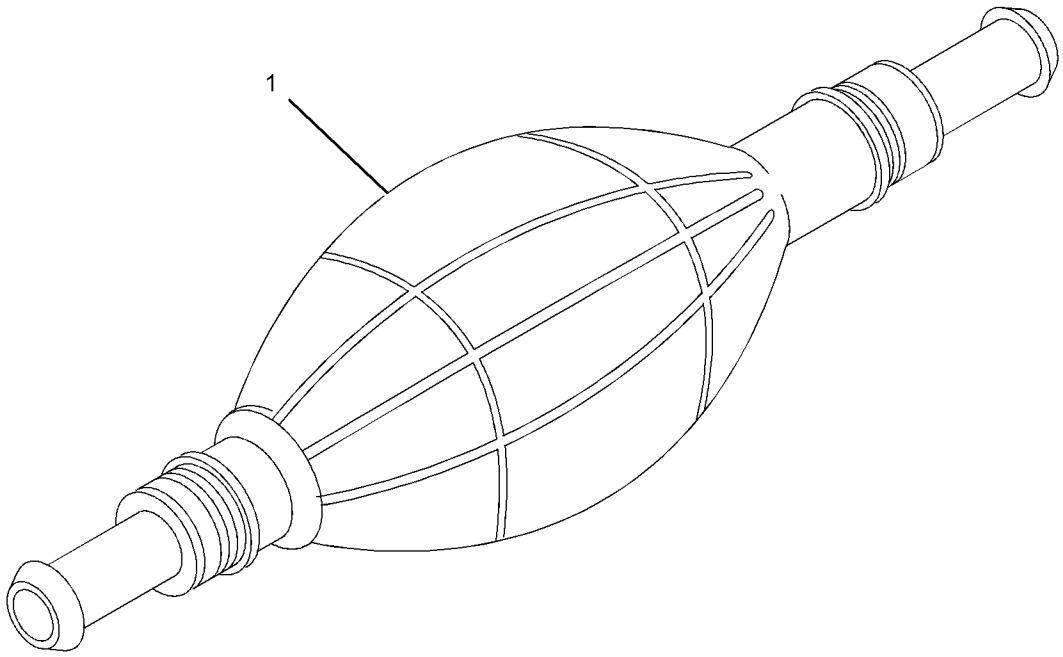

GRAPHIC #1 <END> g01912002

308-2320 PUMP GP-FUEL PRIMING

TYPE 2

SMCS-1258 **i07769311**

NOTE	REF NO	GRAPHIC REF	PART NUMBER	QTY	PART NAME 1 2 3 4 5 6 (PRODUCT LEVEL)	SEE PAGE
C	1	1	**559-0028**	1	PUMP AS-FUEL PRIMING	

C - CHANGE FROM PREVIOUS TYPE

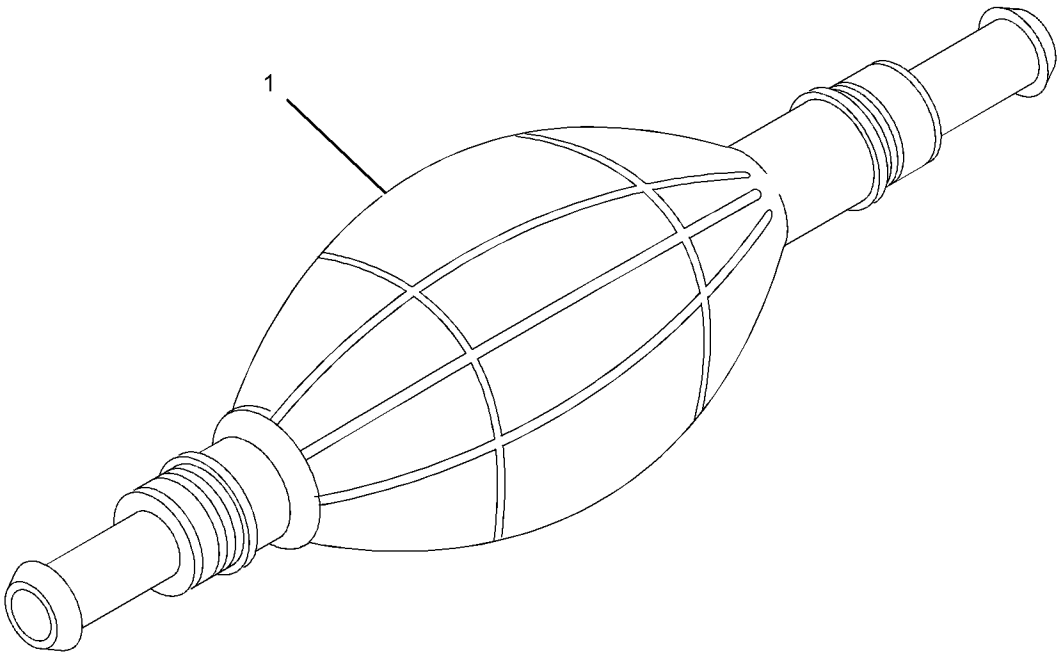

GRAPHIC #1 <END> g01912002

565-2285 PUMP GP-FUEL PRIMING

PART OF 610-7720 ENGINE AR-PRIMARY

SMCS-1258 **i09606893**

NOTE	REF NO	GRAPHIC REF	PART NUMBER	QTY	PART NAME 1 2 3 4 5 6 (PRODUCT LEVEL)	SEE PAGE
	1	1	**526-5212**	1	PUMP AS-HAND (PRIMER)	

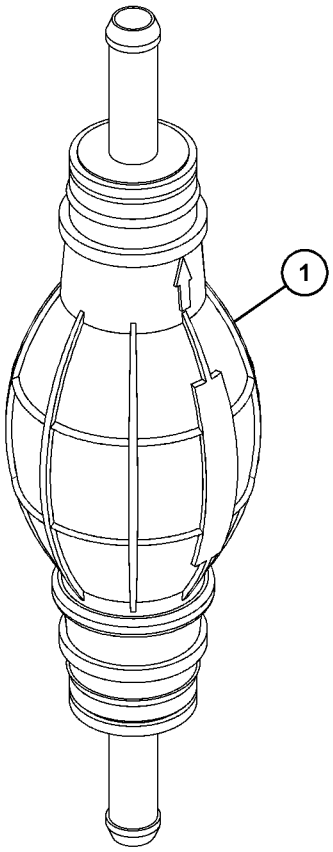

GRAPHIC #1 <END> g06406016

579-9444 PUMP GP-FUEL PRIMING

PART OF 516-9335 ENGINE AR-PRIMARY

SMCS-1258 **i07772732**

NOTE	REF NO	GRAPHIC REF	PART NUMBER	QTY	PART NAME 1 2 3 4 5 6 (PRODUCT LEVEL)	SEE PAGE
	1	1	**526-5212**	1	PUMP AS-HAND	

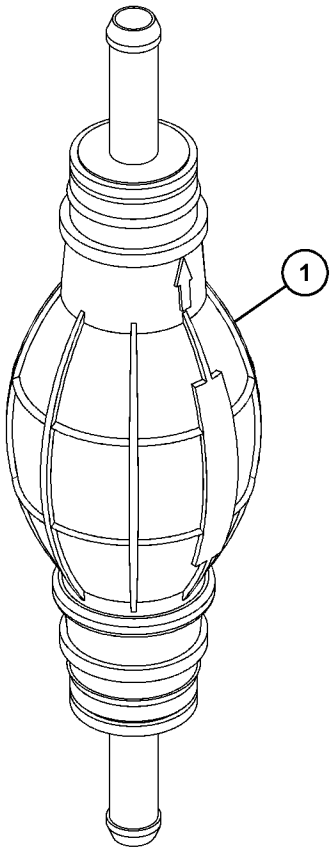

GRAPHIC #1 <END> g06406016

317-6706 PUMP GP-FUEL PRM & PRIM FILTER

PART OF 491-3396, 495-3121, 541-9277, 557-9727 ENGINE AR-PRIMARY

SMCS-1256, 1258, 1260 **i07767903**

NOTE	REF NO	GRAPHIC REF	PART NUMBER	QTY	PART NAME 1 2 3 4 5 6 (PRODUCT LEVEL)	SEE PAGE
	1	1	**276-1804**	1	FILTER GP-FUEL (WATER SEPARATOR)	
	1A	1	**276-1806**	1	FILTER ELEMENT-FUEL	
	1B	1	**302-7776**	1	BOWL-FUEL FILTER	
	1C	1	**302-7777**	3	PLUG-DRAIN (WATER SEPARATOR)	
	1D	1	**302-7778**	1	SEAL	
	2	1	**559-0028**	1	PUMP AS-FUEL PRIMING	

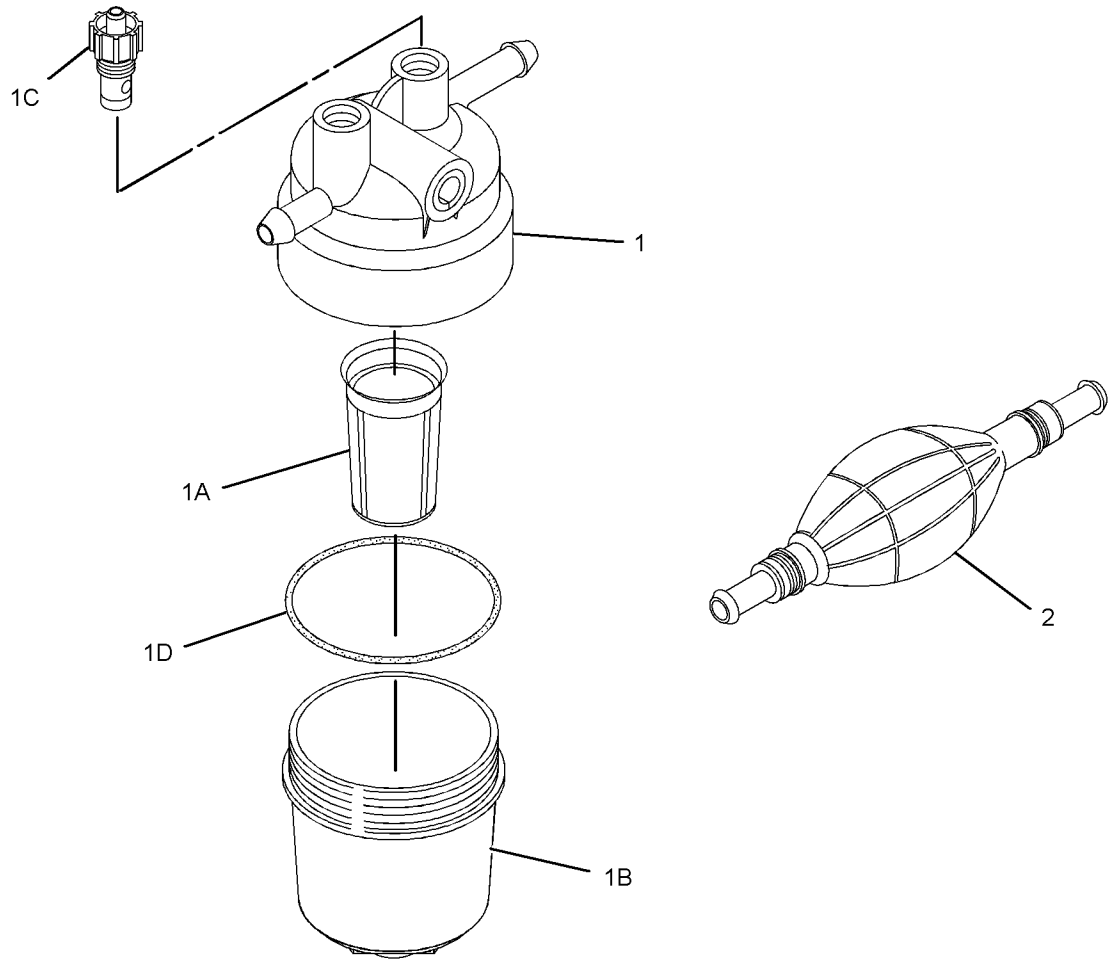

GRAPHIC #1 <END> g01915154

447-2702 PUMP GP-FUEL PRM & PRIM FILTER

PART OF 461-7892, 461-7894, 465-1477 ENGINE AR-PRIMARY

SMCS-1256, 1258, 1260 **i05934164**

NOTE	REF NO	GRAPHIC REF	PART NUMBER	QTY	PART NAME 1 2 3 4 5 6 (PRODUCT LEVEL)	SEE PAGE
M	1	1	**6I-0846**	2	BOLT (M6X1X14-MM)	
	2	1	**033-7849**	2	PLUG	
M	3	1	**138-7162**	2	BOLT (M10X1.5X30-MM)	
	4	1	**154-1399**	2	WASHER (10.5X18X1.6-MM THK)	
	5	1	**154-2403**	2	WASHER	
	6	1	**155-7984**	2	WASHER (8.4X16X1.6-MM THK)	
M	7	1	**155-8085**	2	NUT (M10X1.5-THD)	
	8	1	**165-2141**	2	BOLT AS	
	9	1	**176-7719**	1	SEAL-O-RING	
	10	1	**223-8182**	1	BRACKET	
	11	1	**295-4070**	1	PUMP AS-FUEL TRANSFER	
	12	1	**358-9226**	1	FILTER AS-FUEL	
	12A	1	**067-6987**	1	FILTER-FUEL	
	13	1	**7W-4694**	1	PLUG	
	14	1	**067-6269**	2	FERRULE	
	15	1	**246-4361**	1	WASHER (10.5X14X1.5-MM THK)	
	16	1	**302-4187**	2	TUBE	
	17	1	**311-9048**	2	WASHER	

M - METRIC PART

447-2702 **PUMP GP-FUEL PRM & PRIM FILTER (**contd.**)** **i05934164**

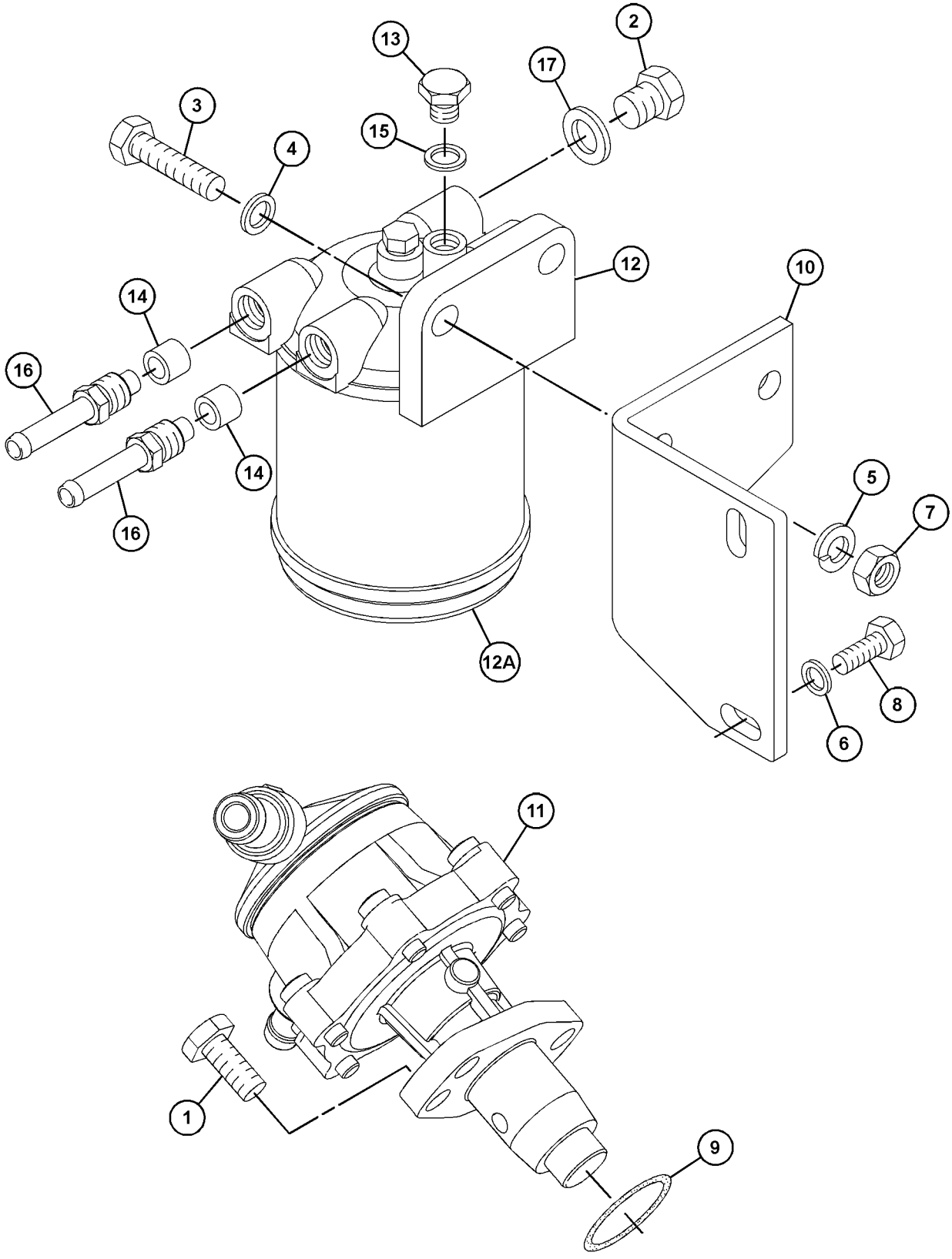

GRAPHIC #1 <END> g03733333

565-2286 PUMP GP-FUEL PRM & PRIM FILTER

PART OF 610-7721 ENGINE AR-PRIMARY

SMCS-1256, 1258, 1260 **i08796339**

NOTE	REF NO	GRAPHIC REF	PART NUMBER	QTY	PART NAME 1 2 3 4 5 6 (PRODUCT LEVEL)	SEE PAGE
	1	1	**526-5212**	1	PUMP AS-HAND	
Y	2	1	**276-1804**	1	FILTER GP-FUEL (WATER SEPARATOR)	754

Y - SEPARATE ILLUSTRATION

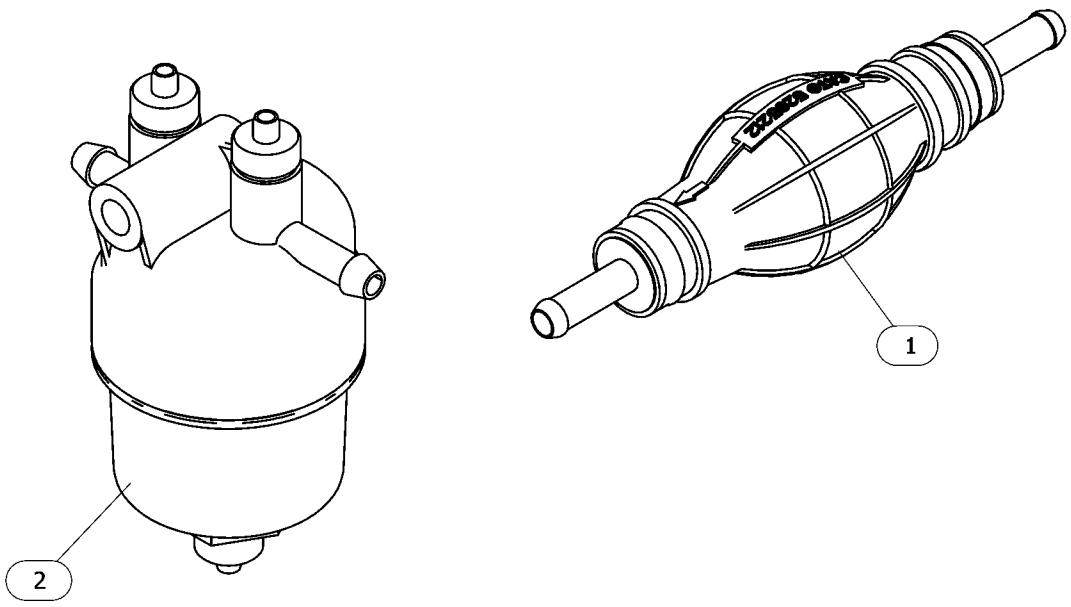

GRAPHIC #1 <END> g06626585

579-9465 PUMP GP-FUEL PRM & PRIM FILTER

PART OF 541-9277, 557-9727 ENGINE AR-PRIMARY

SMCS-1256, 1258, 1260 **i07772647**

NOTE	REF NO	GRAPHIC REF	PART NUMBER	QTY	PART NAME 1 2 3 4 5 6 (PRODUCT LEVEL)	SEE PAGE
Y	1	1	**276-1804**	1	FILTER GP-FUEL (WATER SEPARATOR)	754
	2	1	**526-5212**	1	PUMP AS-HAND (PRIMER)	

Y - SEPARATE ILLUSTRATION

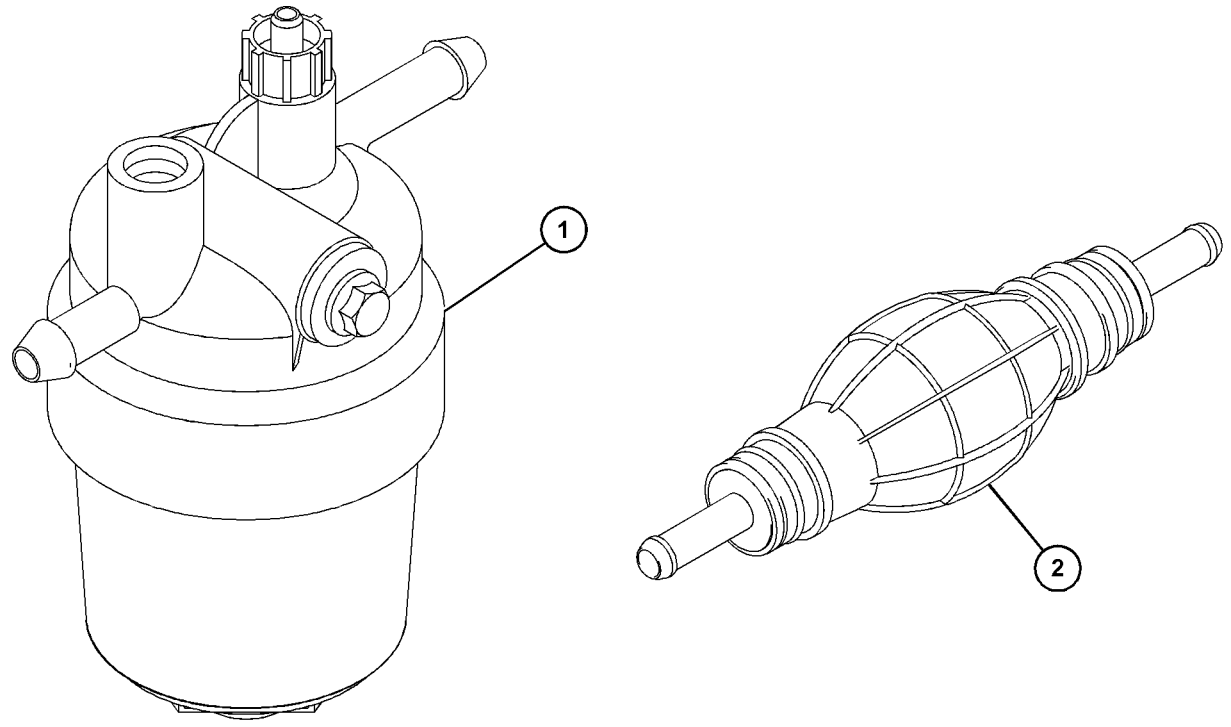

GRAPHIC #1 <END> g06484996

311-9028 PUMP GP-FUEL TRANSFER

PART OF 459-2953, 492-6602, 495-6243, 549-8284, 587-9328 ENGINE AR-PRIMARY

SMCS-1256 **i07044344**

NOTE	REF NO	GRAPHIC REF	PART NUMBER	QTY	PART NAME 1 2 3 4 5 6 (PRODUCT LEVEL)	SEE PAGE
	1	1	**7W-4694**	1	PLUG	
	2	1	**033-7849**	2	PLUG	
	3	1	**358-9226**	1	FILTER AS-FUEL	
	3A	1	**067-6987**	1	FILTER-FUEL	
					(INCLUDES FLAT CUT SEALS & SEAL-O-RING)	
	4	1	**067-6269**	3	FERRULE	
	5	1	**067-6317**	1	WASHER (0.4X0.566X0.04-IN THK)	
M	6	1,2	**124-3815**	2	BOLT (M8X1.25X16-MM)	
M	7	1	**6I-0593**	2	BOLT (M10X1.5X30-MM)	
M	8	2	**153-5592**	1	NUT (M8X1.25-THD)	
	11	1	**154-2403**	2	WASHER	
M	13	1	**155-8085**	2	NUT (M10X1.5-THD)	
	14	1	**329-1292**	2	CLIP-HOSE	
	16	2	**183-4036**	1	CONNECTOR	
	17	2	**183-4320**	1	PUMP AS-FUEL TRANSFER	
	18	2	**476-2680**	1	BRACKET	
	21	1	**311-9048**	1	WASHER	
	22	1	**423-5661**	1	HOSE	
	23	2	**243-6411**	1	FILTER AS-FUEL	
	24	1	**302-4187**	2	TUBE	
	25	1	**311-1174**	1	BRACKET	
M	26	1	**6I-0217**	1	BOLT (M8X1.25X20-MM)	

M - METRIC PART

311-9028 **PUMP GP-FUEL TRANSFER (**contd.**)** **i07044344**

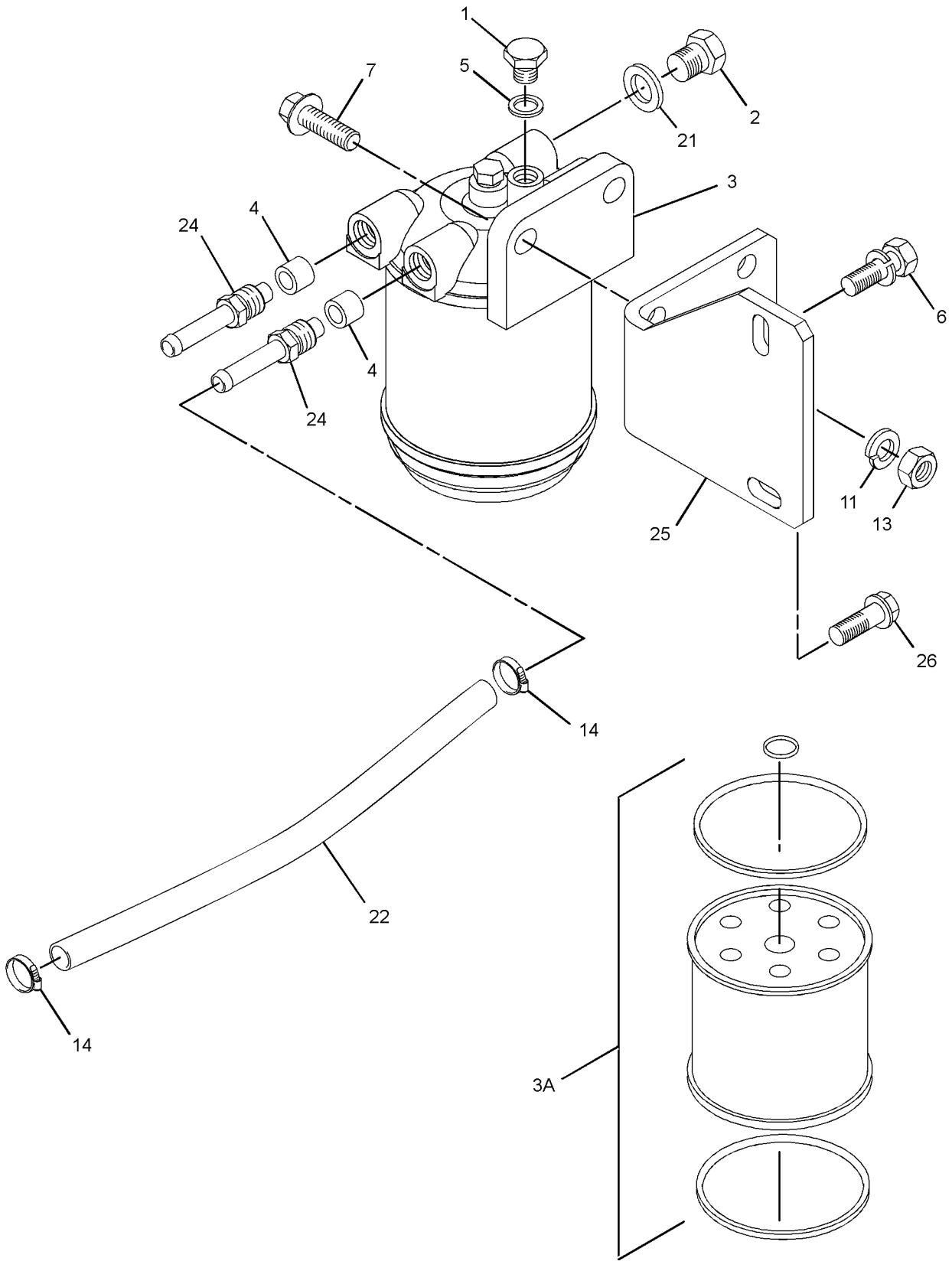

GRAPHIC #1 g06206376

311-9028 **PUMP GP-FUEL TRANSFER (**contd.**)** **i07044344**

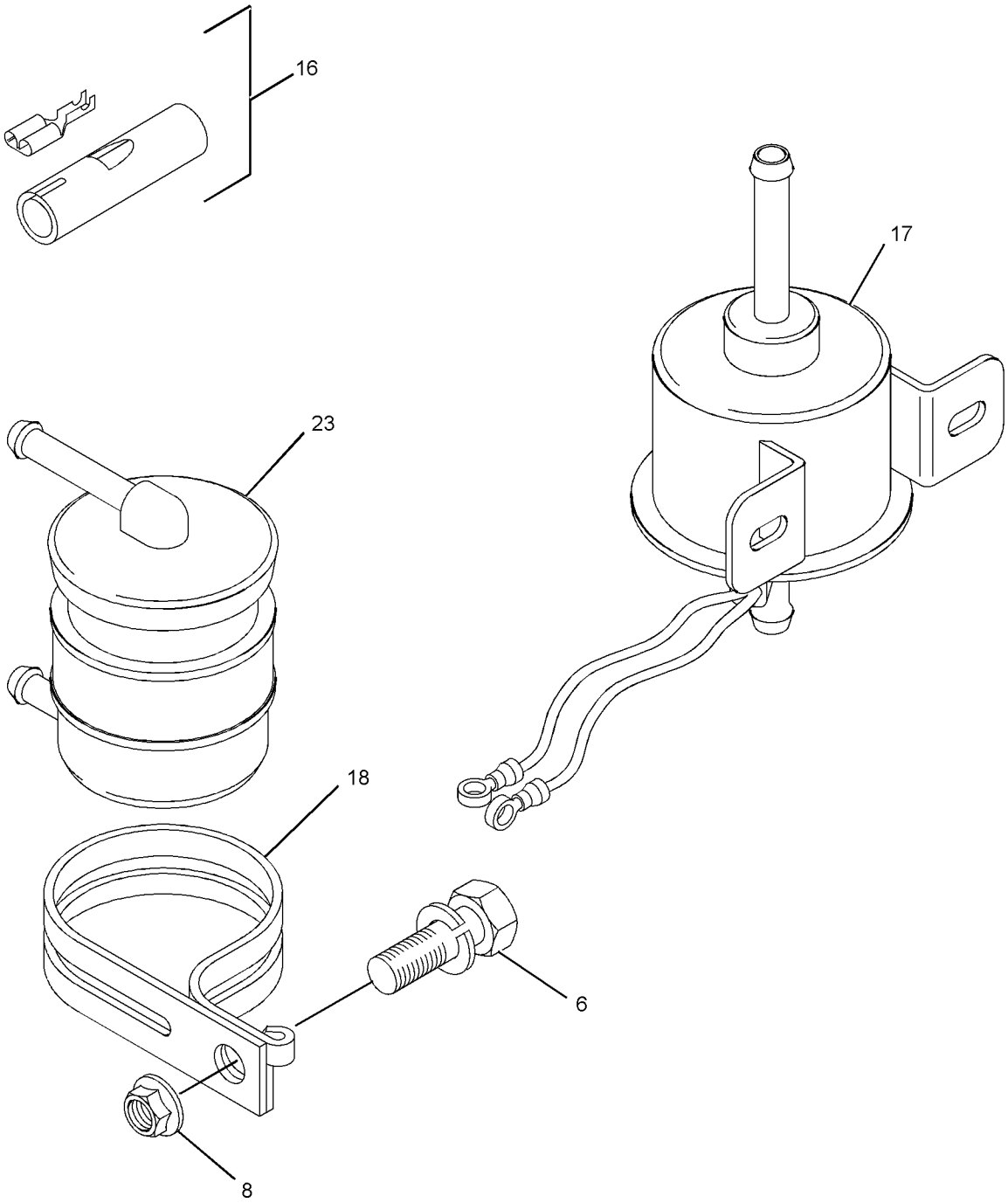

GRAPHIC #2 <END> g03877455

325-5670 PUMP GP-FUEL TRANSFER

SMCS-1256 **i06692719**

NOTE	REF NO	GRAPHIC REF	PART NUMBER	QTY	PART NAME 1 2 3 4 5 6 (PRODUCT LEVEL)	SEE PAGE
M	1	1	**153-5592**	1	NUT (M8X1.25-THD)	
	2	1	**183-4036**	1	CONNECTOR	
	3	1	**243-6411**	1	FILTER AS-FUEL	
M	4	1	**124-3815**	2	BOLT (M8X1.25X16-MM)	
	5	1	**183-4320**	1	PUMP AS-FUEL TRANSFER	
	6	1	**476-2680**	1	BRACKET	

M - METRIC PART

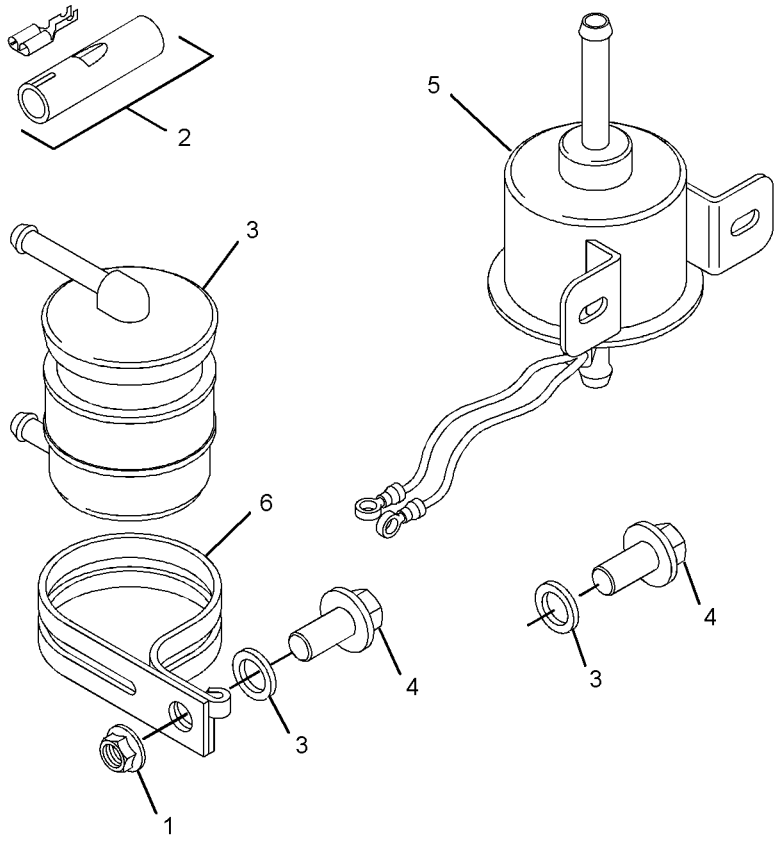

GRAPHIC #1 <END> g06110777

327-7633 PUMP GP-FUEL TRANSFER

SMCS-1256 **i06692733**

NOTE	REF NO	GRAPHIC REF	PART NUMBER	QTY	PART NAME 1 2 3 4 5 6 (PRODUCT LEVEL)	SEE PAGE
M	1	1	**6I-0846**	2	BOLT (M6X1X14-MM)	
	2	1	**7W-4694**	1	PLUG	
	3	1	**033-7849**	2	PLUG	
	4	1	**358-9226**	1	FILTER AS-FUEL	
	4A	1	**067-6987**	1	FILTER-FUEL	
	5	1	**067-6269**	2	FERRULE	
	6	1	**067-6317**	1	WASHER (0.4X0.566X0.04-IN THK)	
	7	1	**302-4187**	2	TUBE	
M	8	1	**138-7162**	2	BOLT (M10X1.5X30-MM)	
	9	1	**154-1399**	2	WASHER (10.5X18X1.6-MM THK)	
	10	1	**154-2403**	2	WASHER	
M	11	1	**155-8085**	2	NUT (M10X1.5-THD)	
	12	1	**176-7719**	1	SEAL-O-RING	
	13	1	**311-9048**	1	WASHER	
	14	1	**223-8182**	1	BRACKET	
	15	1	**295-4070**	1	PUMP AS-FUEL TRANSFER	
M	16	1	**124-3815**	1	BOLT (M8X1.25X16-MM)	

M - METRIC PART

327-7633 **PUMP GP-FUEL TRANSFER (**contd.**)** **i06692733**

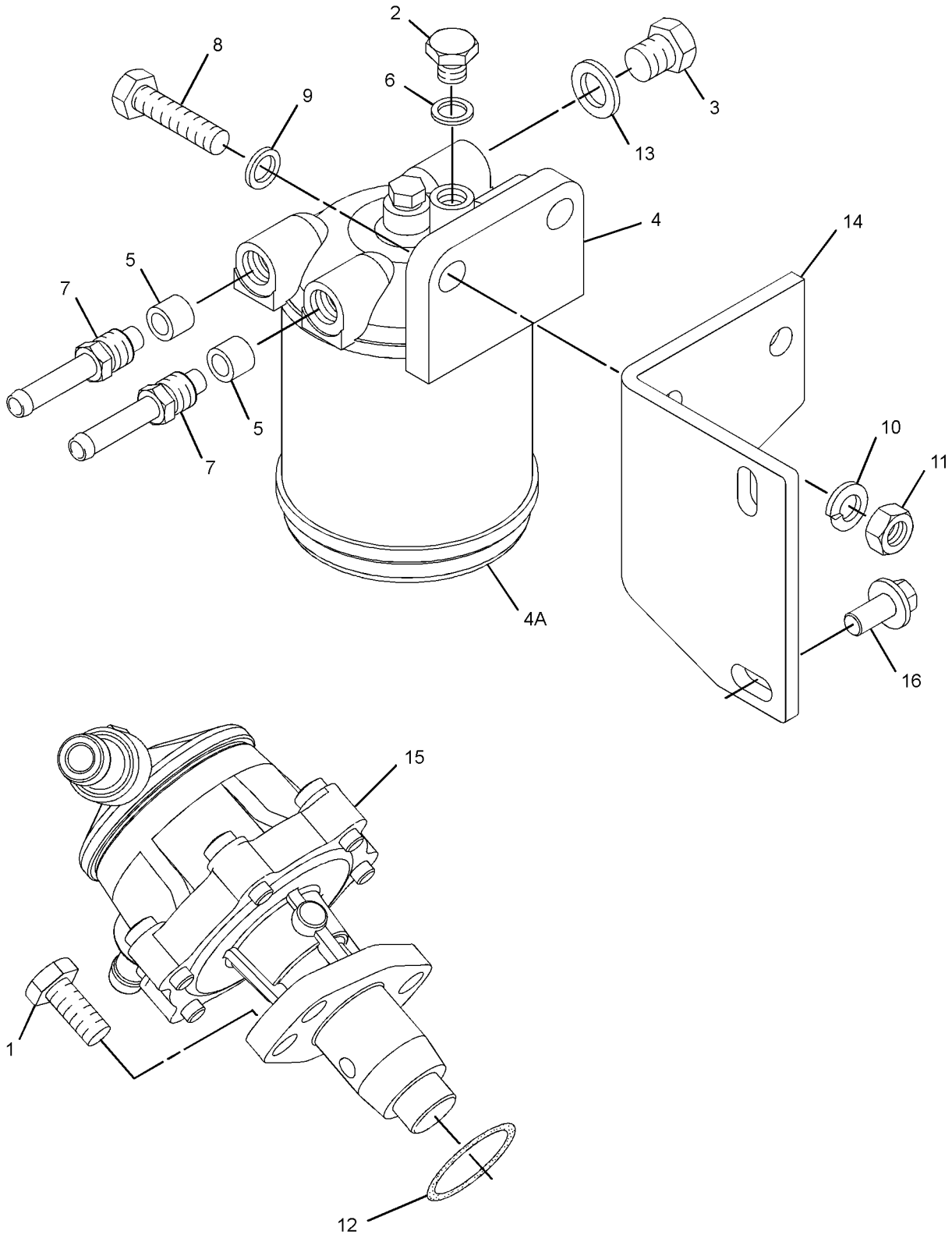

GRAPHIC #1 <END> g06110324

328-1882 PUMP GP-FUEL TRANSFER

TYPE 1

SMCS-1256 **i06713126**

NOTE	REF NO	GRAPHIC REF	PART NUMBER	QTY	PART NAME 1 2 3 4 5 6 (PRODUCT LEVEL)	SEE PAGE
	1	1	**7W-4694**	1	PLUG	
	2	1	**033-7849**	2	PLUG	
	3	1	**358-9226**	1	FILTER AS-FUEL	
	3A	1	**067-6987**	1	FILTER-FUEL	
	4	1	**067-6269**	2	FERRULE	
	5	1	**067-6317**	1	WASHER (0.4X0.566X0.04-IN THK)	
M	7	1	**138-7162**	2	BOLT (M10X1.5X30-MM)	
M	8	1	**153-5592**	1	NUT (M8X1.25-THD)	
	9	1	**154-1399**	2	WASHER (10.5X18X1.6-MM THK)	
	10	1	**154-2403**	2	WASHER	
M	12	1	**155-8085**	2	NUT (M10X1.5-THD)	
	13	1	**329-1292**	2	CLIP-HOSE	
M	14	1	**124-3815**	2	BOLT (M8X1.25X16-MM)	
	16	1	**183-4320**	1	PUMP AS-FUEL TRANSFER	
	17	1	**476-2680**	1	BRACKET	
	18	1	**223-8182**	1	BRACKET	
	19	1	**423-5661**	1	HOSE	
	20	1	**243-6411**	1	FILTER AS-FUEL	
	21	1	**302-4187**	2	TUBE	
	22	1	**311-9048**	1	WASHER	
	23	1	**183-4036**	1	CONNECTOR	
FM		1	**6I-0217**	1	BOLT (M8X1.25X20-MM)	

F - NOT SHOWN
M - METRIC PART

328-1882 **PUMP GP-FUEL TRANSFER (**contd.**)** **i06713126**

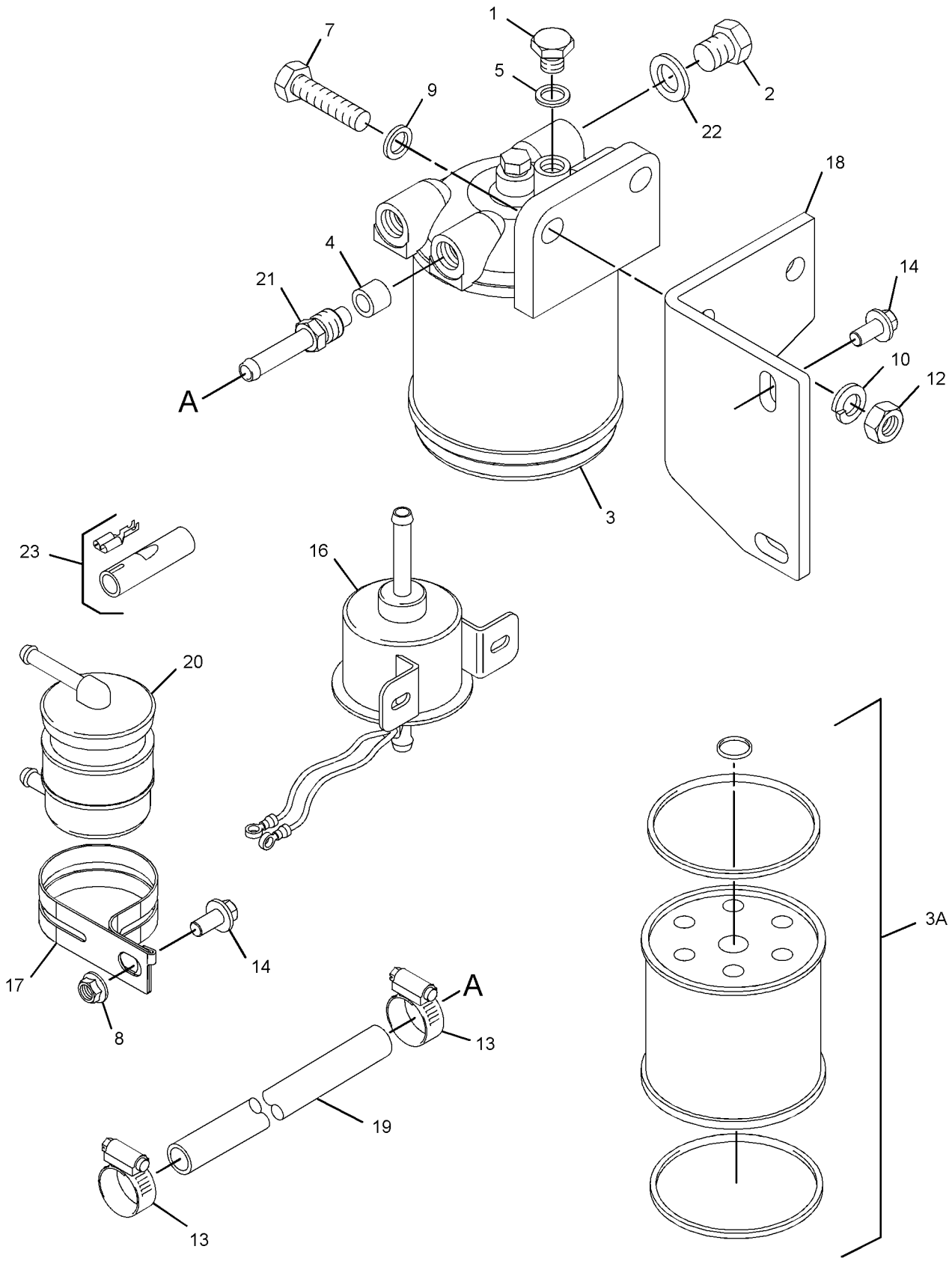

GRAPHIC #1 <END> g06088354

328-1882 PUMP GP-FUEL TRANSFER

TYPE 2

SMCS-1256 **i08063446**

NOTE	REF NO	GRAPHIC REF	PART NUMBER	QTY	PART NAME 1 2 3 4 5 6 (PRODUCT LEVEL)	SEE PAGE
	1	1	**7W-4694**	1	PLUG (M10X1.5-MM THD)	
	2	1	**033-7849**	2	PLUG (DRAIN)	
	3	1	**358-9226**	1	FILTER AS-FUEL	
	3A	1	**067-6987**	1	FILTER-FUEL	
		1	**484-9224**	1	SEAL	
		1	**484-9225**	1	SEAL	
	4	1	**067-6269**	2	FERRULE	
	5	1	**067-6317**	1	WASHER (0.4X0.566X0.04-IN THK)	
CM	7	1	**6I-0593**	2	BOLT (M10X1.5X30-MM)	
M	8	1	**153-5592**	1	NUT (M8X1.25-THD)	
	10	1	**7X-0796**	2	LOCKWASHER (10.2X18.4X2.5-MM THK)	
M	12	1	**155-8085**	2	NUT (M10X1.5-THD)	
	13	1	**329-1292**	2	CLIP-HOSE	
M	14	1	**124-3815**	2	BOLT (M8X1.25X16-MM)	
	16	1	**183-4320**	1	PUMP AS-FUEL TRANSFER	
	17	1	**476-2680**	1	BRACKET	
	18	1	**223-8182**	1	BRACKET	
	19	1	**423-5661**	1	HOSE	
	20	1	**243-6411**	1	FILTER AS-FUEL	
	21	1	**302-4187**	2	TUBE	
	22	1	**311-9048**	1	WASHER (20.6-MM THK)	
	23	1	**183-4036**	1	CONNECTOR	
M	24	1	**6I-0217**	1	BOLT (M8X1.25X20-MM)	

C - CHANGE FROM PREVIOUS TYPE
M - METRIC PART

328-1882 **PUMP GP-FUEL TRANSFER (**contd.**)** **i08063446**

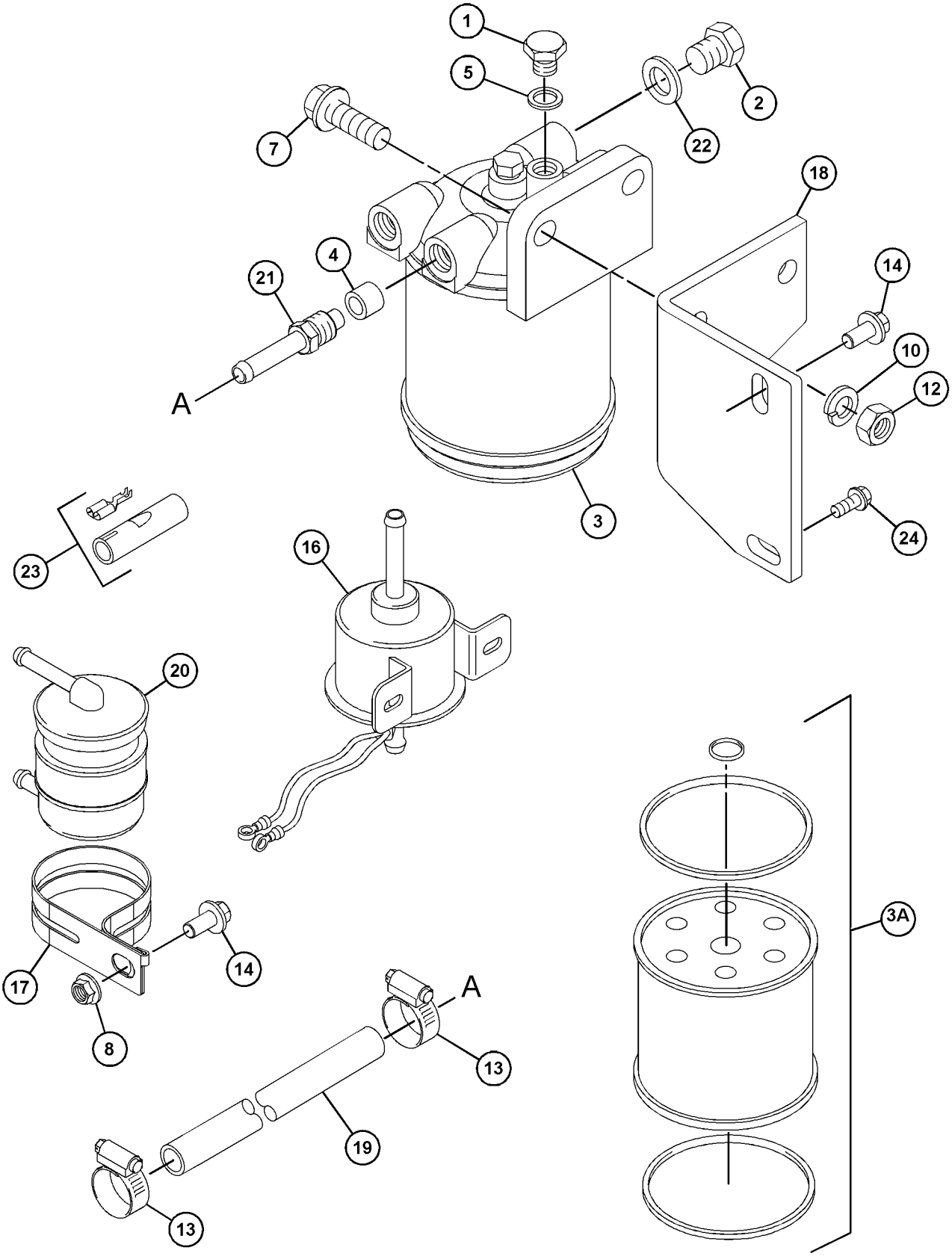

GRAPHIC #1 <END> g06582207

340-5967 PUMP GP-FUEL TRANSFER

TYPE 1

SMCS-1256 **i06244702**

NOTE	REF NO	GRAPHIC REF	PART NUMBER	QTY	PART NAME 1 2 3 4 5 6 (PRODUCT LEVEL)	SEE PAGE
M	1	1	**6I-0846**	2	BOLT (M6X1X14-MM)	
	2	2	**150-4142**	1	FILTER-FUEL	
M	3	2	**153-5592**	2	NUT (M8X1.25-THD)	
	5	2	**154-1399**	2	WASHER (10.5X18X1.6-MM THK)	
	6	2	**154-2403**	2	WASHER	
	7	2	**423-5665**	1	HOSE	
	8	2	**155-8082**	1	CONNECTOR	
M	9	2	**155-8085**	2	NUT (M10X1.5-THD)	
	10	2	**155-8086**	1	BRACKET	
	11	2	**155-8087**	1	BRACKET	
	12	2	**329-1292**	4	CLIP-HOSE	
	13	2	**165-2144**	2	BOLT	
	14	1	**176-7719**	1	SEAL-O-RING	
	15	2	**197-8004**	2	BOLT	
	16	2	**423-5661**	1	HOSE	
	17	1	**295-4070**	1	PUMP AS-FUEL TRANSFER	
	18	2	**296-0888**	1	FILTER AS-FUEL	
	19	2	**296-0889**	1	BOLT	
	20	2	**324-8998**	1	TUBE-FUEL	
	21	2	**340-5975**	3	WASHER-SEALING	

M - METRIC PART

340-5967 **PUMP GP-FUEL TRANSFER (**contd.**)** **i06244702**

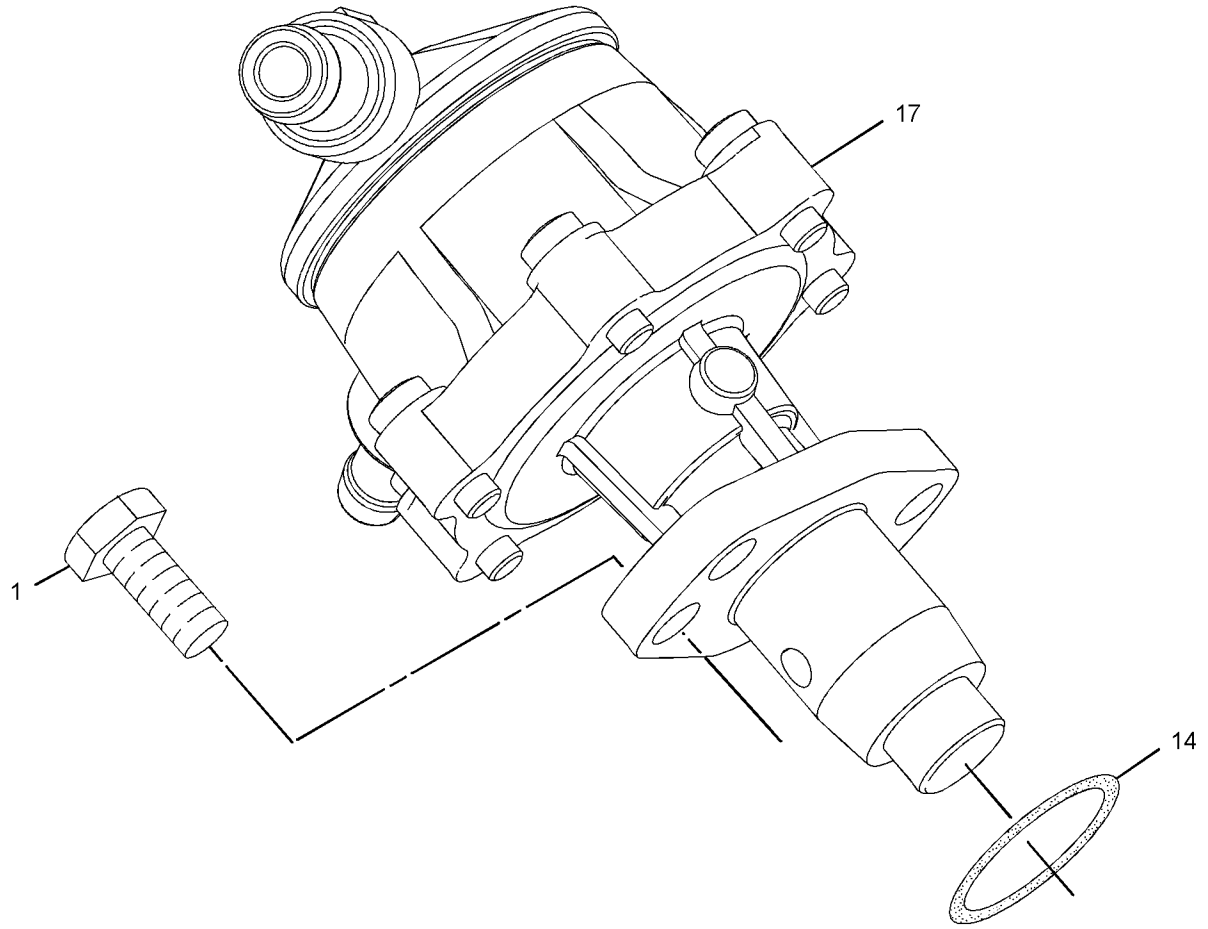

GRAPHIC #1 g01903273

340-5967 **PUMP GP-FUEL TRANSFER (**contd.**)** **i06244702**

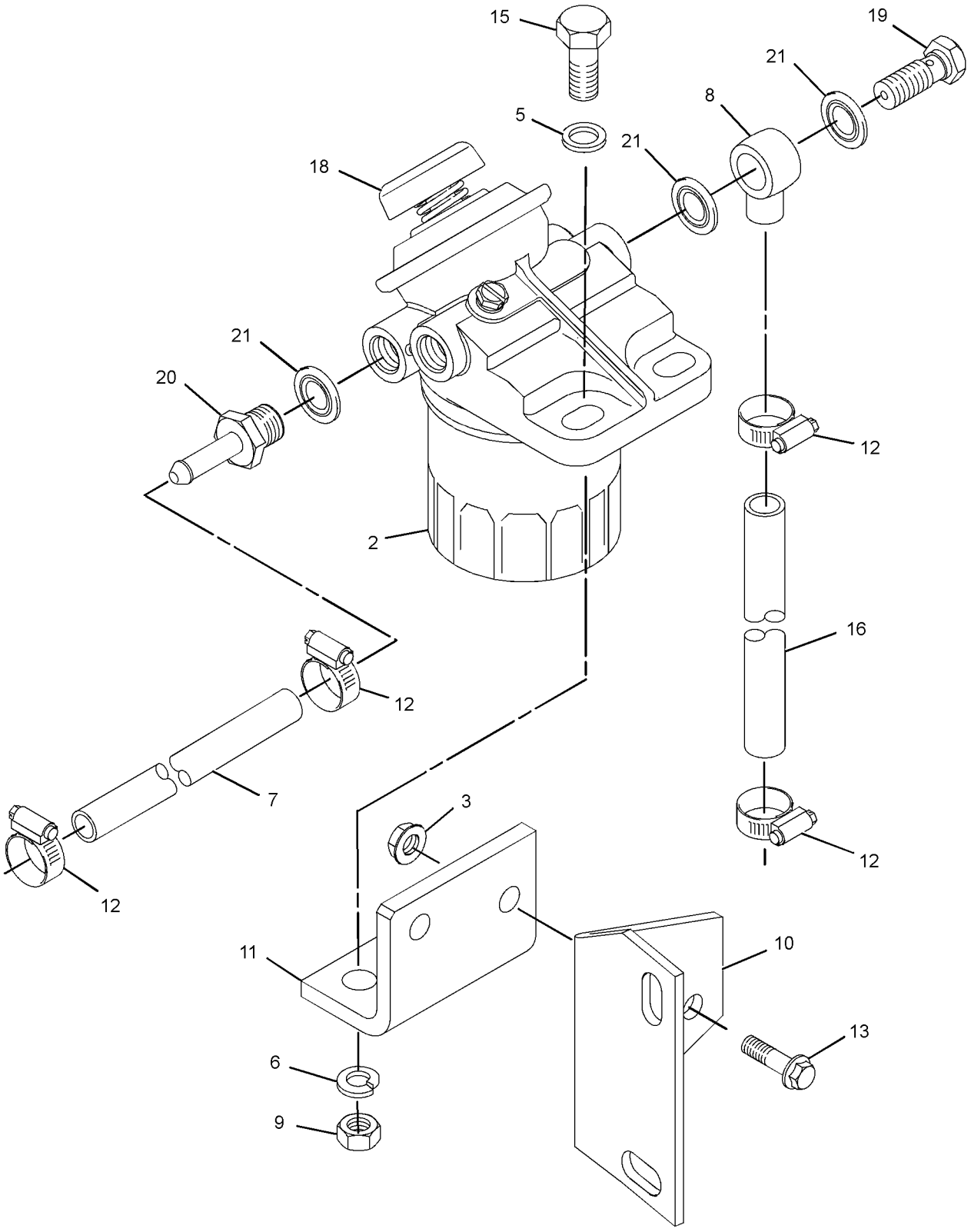

GRAPHIC #2 <END> g06039762

340-5967 PUMP GP-FUEL TRANSFER

TYPE 2

SMCS-1256 **i08705990**

NOTE	REF NO	GRAPHIC REF	PART NUMBER	QTY	PART NAME 1 2 3 4 5 6 (PRODUCT LEVEL)	SEE PAGE
M	1	1	**6I-0846**	2	BOLT (M6X1X14-MM)	
	2	2	**150-4142**	1	FILTER-FUEL (PUMP)	
M	3	2	**153-5592**	2	NUT (M8X1.25-THD)	
CM	4	2	**6I-0593**	2	BOLT (M10X1.5X30-MM)	
	5	2	**340-5975**	3	WASHER-SEALING	
	6	2	**7X-0796**	2	LOCKWASHER (10.2X18.4X2.5-MM THK)	
	7	2	**423-5665**	1	HOSE	
	8	2	**155-8082**	1	CONNECTOR	
M	9	2	**155-8085**	2	NUT (M10X1.5-THD)	
	10	2	**581-9703**	1	BRACKET	
	11	2	**581-9742**	1	BRACKET	
	12	2	**329-1292**	4	CLIP-HOSE	
	13	2	**165-2144**	2	BOLT	
	14	1	**176-7719**	1	SEAL-O-RING	
	16	2	**423-5661**	1	HOSE	
	17	1	**295-4070**	1	PUMP AS-FUEL TRANSFER	
	18	2	**296-0888**	1	FILTER AS-FUEL (FUEL TRANSFER)	
	19	2	**296-0889**	1	BOLT	
	20	2	**324-8998**	1	TUBE-FUEL	

C - CHANGE FROM PREVIOUS TYPE
M - METRIC PART

340-5967 **PUMP GP-FUEL TRANSFER (**contd.**)** **i08705990**

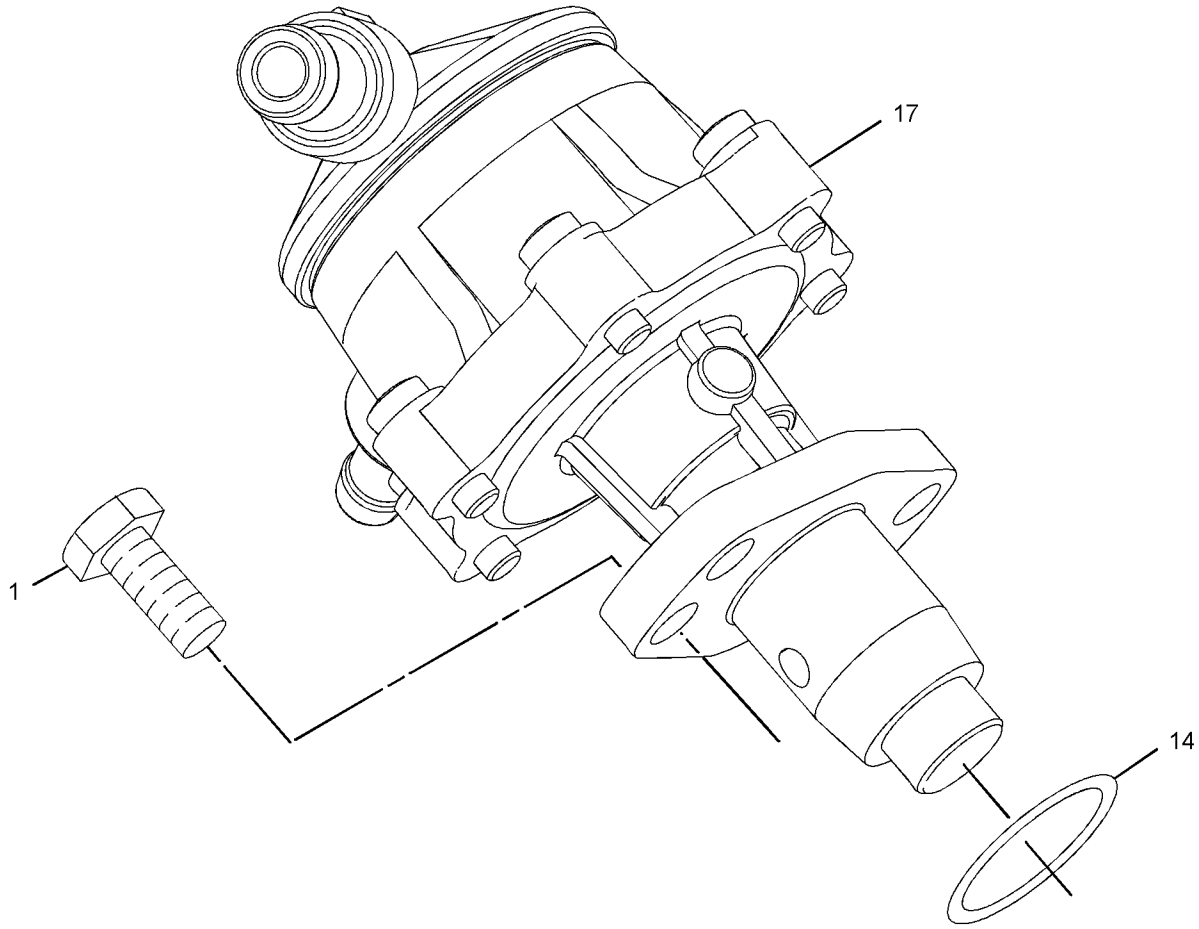

GRAPHIC #1 g07606758

340-5967 **PUMP GP-FUEL TRANSFER (**contd.**)** **i08705990**

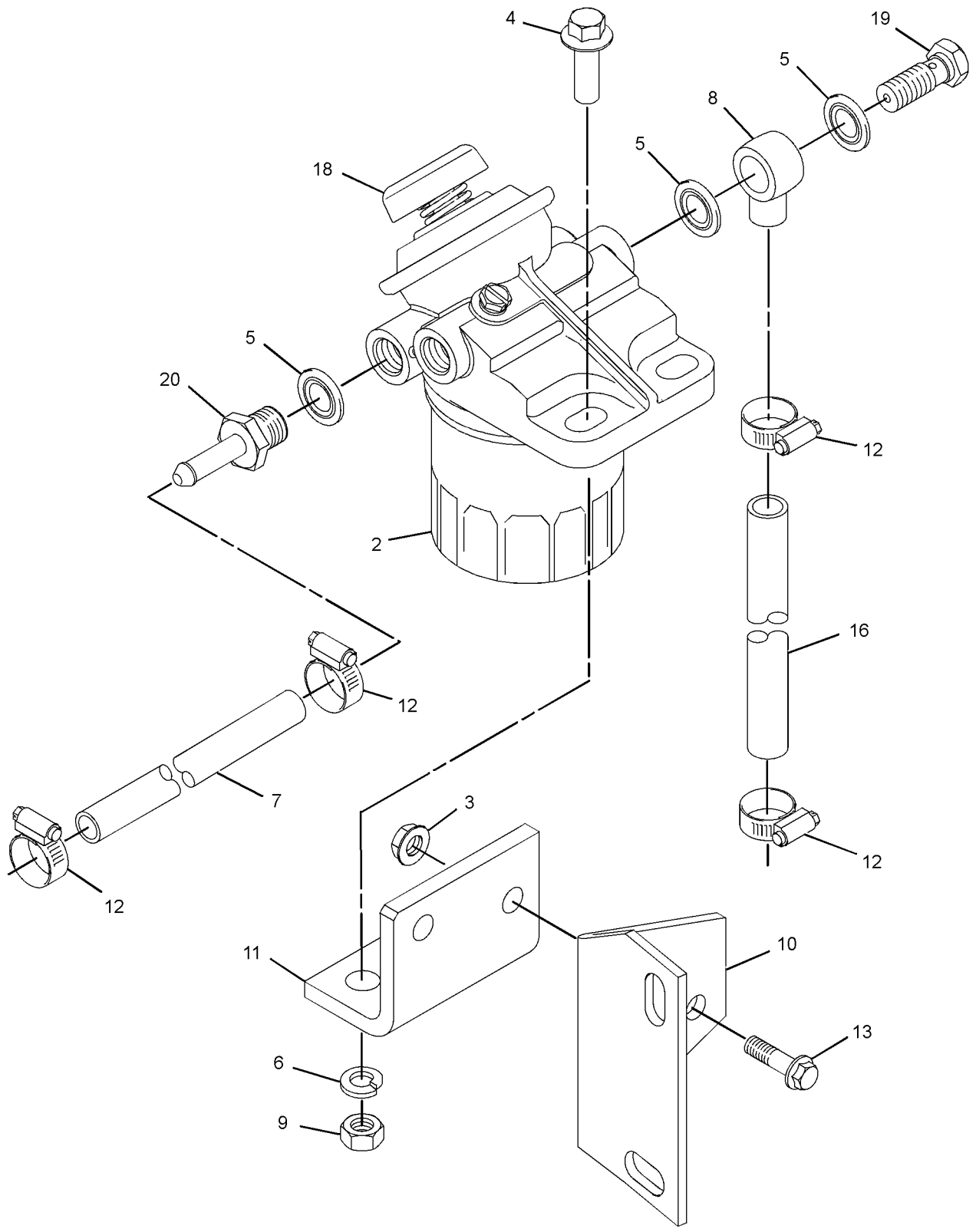

GRAPHIC #2 <END> g07606759

308-2305 ALTERNATOR GP-CHARGING

12-VOLT, 65-AMPERE

SMCS-1405 **i04390372**

NOTE	REF NO	GRAPHIC REF	PART NUMBER	QTY	PART NAME 1 2 3 4 5 6 (PRODUCT LEVEL)	SEE PAGE
M	1	1	**359-9666**	1	BOLT-FLANGE HEAD (M8X1.25X130-MM)	
M	2	1	**180-8579**	1	NUT (M8X1.25-MM THD)	
	3	1	**155-7984**	1	WASHER (8.4X16X1.6-MM THK)	
	4	1	**165-2141**	3	BOLT AS	
	5	1	**168-8999**	1	LEVER	
	6	1	**168-9001**	2	BOLT AS	
	7	1	**168-9002**	1	WASHER (8.4X26X3.2-MM THK)	
	8	1	**246-4267**	1	BRACKET	
	9	1	**349-1368**	1	ALTERNATOR GP-CHARGING	
	10	1	**163-5372**	1	WASHER (8X15.4X4-MM THK)	

M - METRIC PART

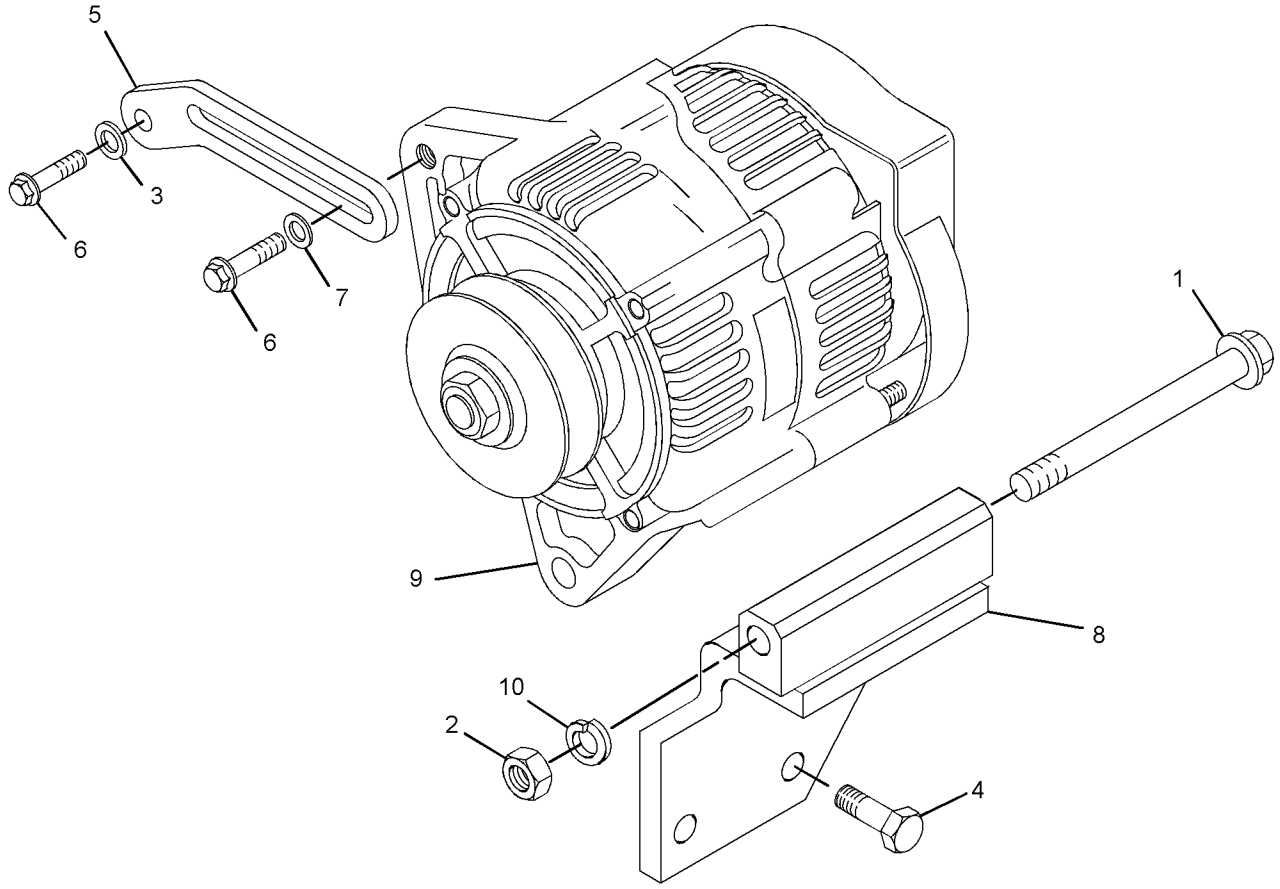

GRAPHIC #1 <END> g02153167

308-2305 ALTERNATOR GP-CHARGING

12-VOLT, 65-AMPERE

PART OF 459-2953, 461-7892, 461-7894, 461-7895, 465-1477, 491-3396, 492-6602, 495-3121, 495-6243, 516-9335, 541-9277, 549-8284, 557-9727 ENGINE AR-PRIMARY

SMCS-1405 **i10682321**

NOTE	REF NO	GRAPHIC REF	PART NUMBER	QTY	PART NAME 1 2 3 4 5 6 (PRODUCT LEVEL)	SEE PAGE
M	1	1	**359-9666**	1	BOLT-FLANGE HEAD (M8X1.25X130-MM)	
M	2	1	**6I-0217**	3	BOLT (M8X1.25X20-MM)	
	3	1	**168-8999**	1	LEVER	
M	4	1	**6I-0260**	2	BOLT (M8X1.25X25-MM)	
	5	1	**168-9002**	1	WASHER (8.4X26X3.2-MM THK)	
	6	1	**540-4157**	1	BRACKET	
C	7	1	**614-1867**	1	ALTERNATOR AS (12-VOLT, 65-AMPERE)	
		1	**451-7225**	1	FILM-IDENTIFICATION (CAT)	
M	8	1	**178-3336**	1	NUT-HEX FLANGE (M8X1.25-THD)	

PARTS SHOWN IN GRAPHIC(S) WITHOUT A REFERENCE NUMBER ARE NOT SERVICED SEPARATELY

C - CHANGE FROM PREVIOUS TYPE
M - METRIC PART

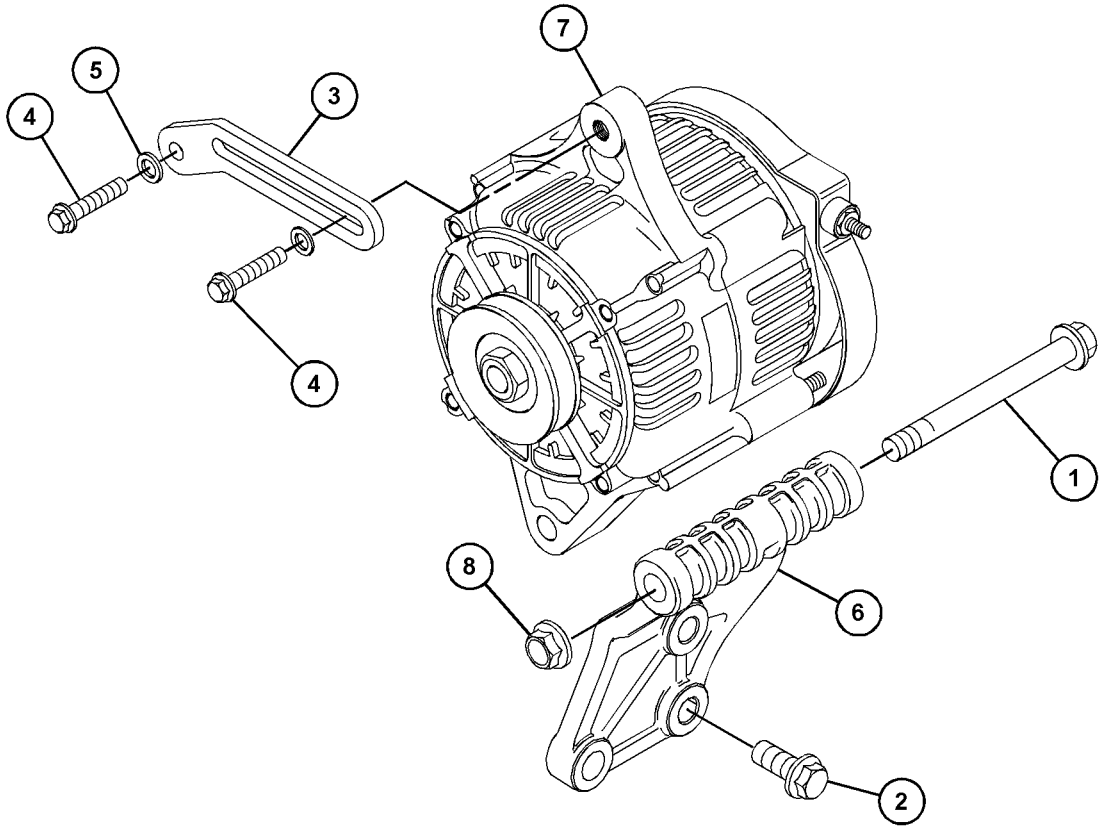

GRAPHIC #1 <END> g07268841

340-5947 ALTERNATOR GP-CHARGING

12-VOLT, 85-AMPERE

SMCS-1405 **i10363225**

NOTE	REF NO	GRAPHIC REF	PART NUMBER	QTY	PART NAME 1 2 3 4 5 6 (PRODUCT LEVEL)	SEE PAGE
M	1	1	**359-9666**	1	BOLT-FLANGE HEAD (M8X1.25X130-MM)	
M	2	1	**153-5592**	1	NUT (M8X1.25-THD)	
	3	1	**168-8999**	1	LEVER	
M	4	1	**6I-0260**	5	BOLT (M8X1.25X25-MM)	
	5	1	**168-9002**	1	WASHER (8.4X26X3.2-MM THK)	
	6	1	**338-3396**	1	BRACKET-ALTERNATOR	
	7	1	**630-8955**	1	ALTERNATOR AS (12-VOLT, 85-AMPERE)	
		1	**451-7225**	1	FILM-IDENTIFICATION (CAT)	
	8	1	**246-3198**	1	PULLEY-ALTERNATOR	

M - METRIC PART

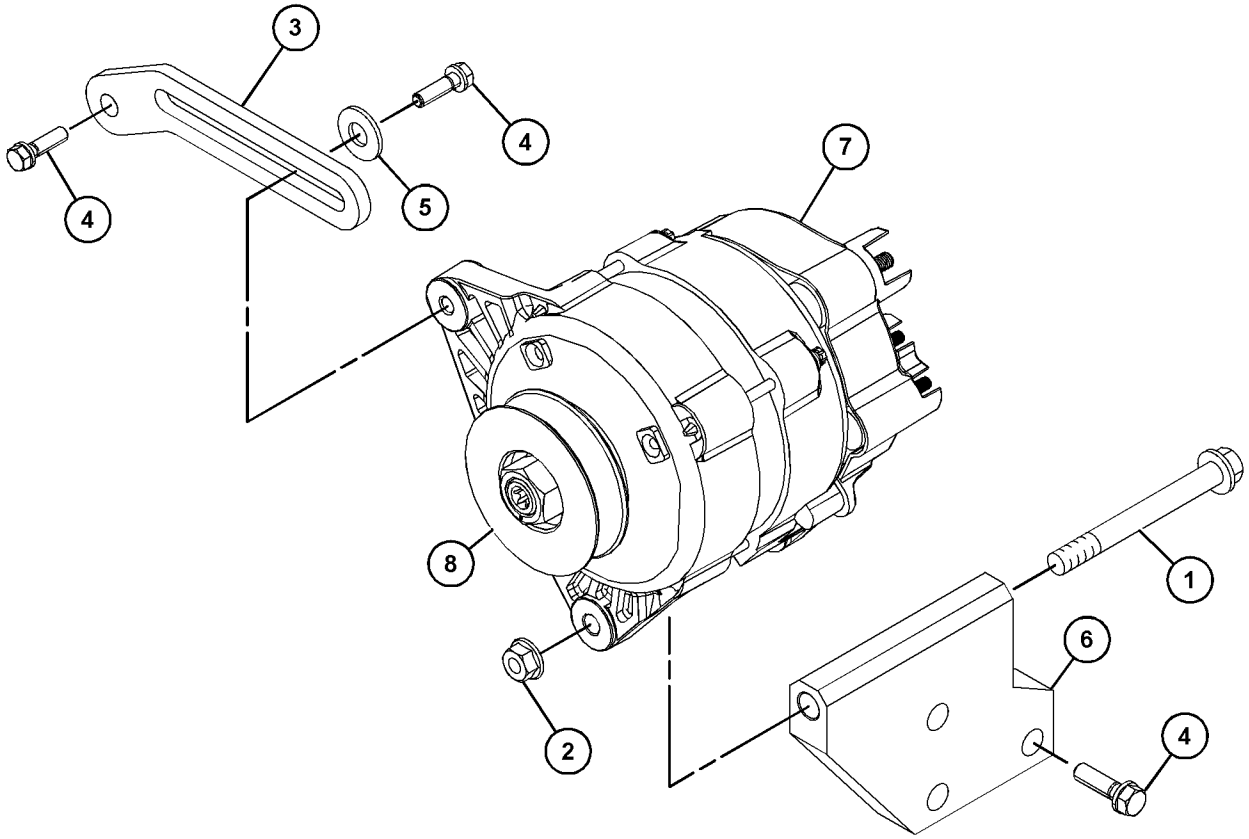

GRAPHIC #1 <END> g07886046

399-2625 ALTERNATOR GP-CHARGING

12 VOLTS, 85 AMPERES

PART OF 587-9328 ENGINE AR-PRIMARY

SMCS-1405 **i10363231**

NOTE	REF NO	GRAPHIC REF	PART NUMBER	QTY	PART NAME 1 2 3 4 5 6 (PRODUCT LEVEL)	SEE PAGE
M	1	1	**178-3336**	1	NUT-HEX FLANGE (M8X1.25-THD)	
M	2	1	**359-9666**	1	BOLT-FLANGE HEAD (M8X1.25X130-MM)	
M	3	1	**6I-0217**	3	BOLT (M8X1.25X20-MM)	
	4	1	**168-8999**	1	LEVER	
M	5	1	**6I-0260**	2	BOLT (M8X1.25X25-MM)	
	6	1	**168-9002**	1	WASHER (8.4X26X3.2-MM THK)	
	7	1	**630-8955**	1	ALTERNATOR AS (12-VOLT, 85-AMPERE)	
		1	**451-7225**	1	FILM-IDENTIFICATION (CAT)	
	8	1	**540-4157**	1	BRACKET	
	9	1	**246-3198**	1	PULLEY-ALTERNATOR	

M - METRIC PART

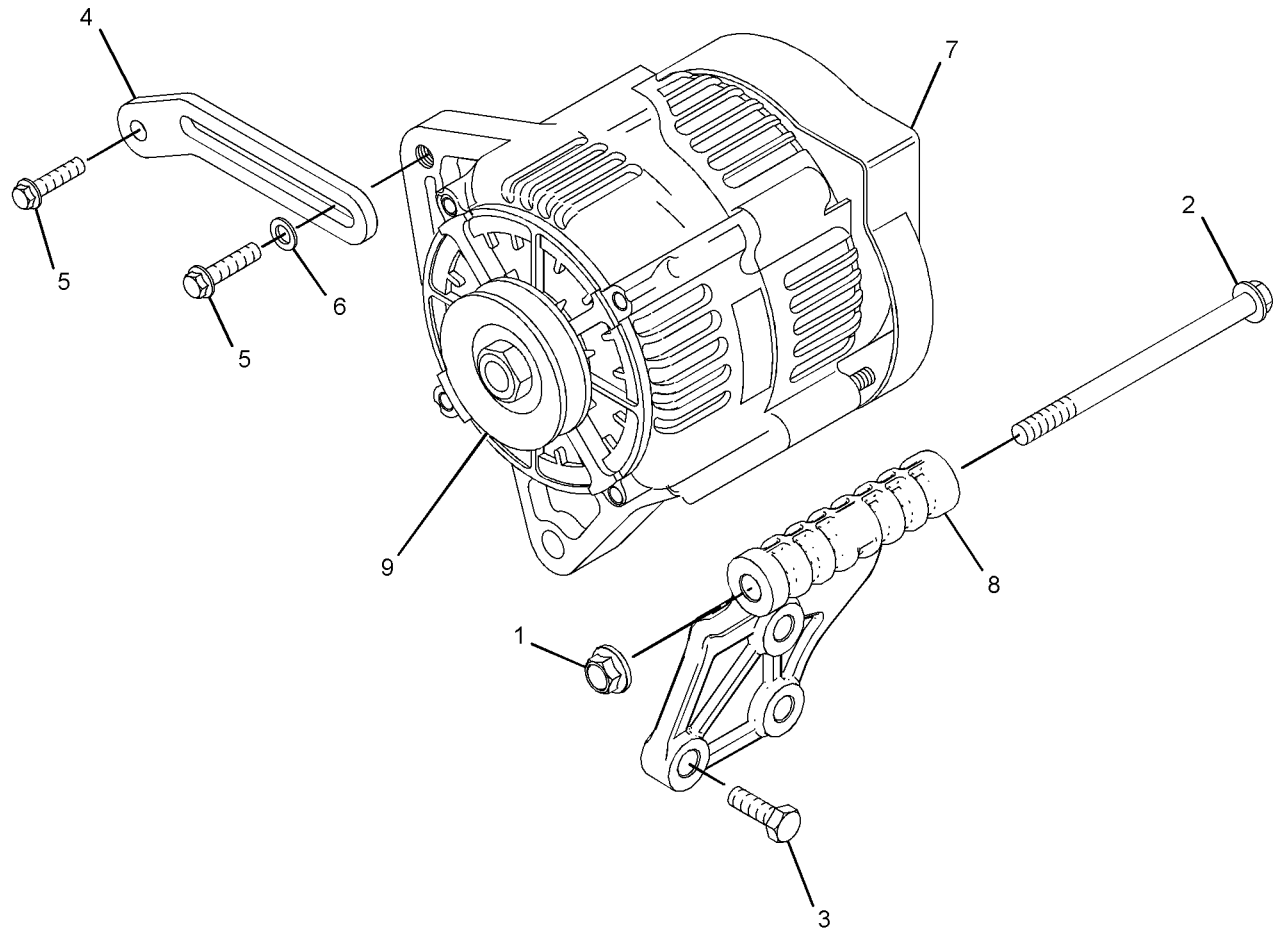

GRAPHIC #1 <END> g07886037

458-3287 ALTERNATOR GP-CHARGING

SMCS-1405 **i08482917**

NOTE	REF NO	GRAPHIC REF	PART NUMBER	QTY	PART NAME 1 2 3 4 5 6 (PRODUCT LEVEL)	SEE PAGE
M	1	1	**153-5592**	1	NUT (M8X1.25-THD)	
	2	1	**394-3492**	1	ALTERNATOR AS (12-VOLT, 40-AMPERE)	
M	3	1	**6I-0217**	3	BOLT (M8X1.25X20-MM)	
	4	1	**168-8999**	1	LEVER	
	5	1	**168-9001**	2	BOLT AS	
	6	1	**168-9002**	1	WASHER (8.4X26X3.2-MM THK)	
M	7	1	**359-9666**	1	BOLT-FLANGE HEAD (M8X1.25X130-MM)	
	8	1	**540-4157**	1	BRACKET	

M - METRIC PART

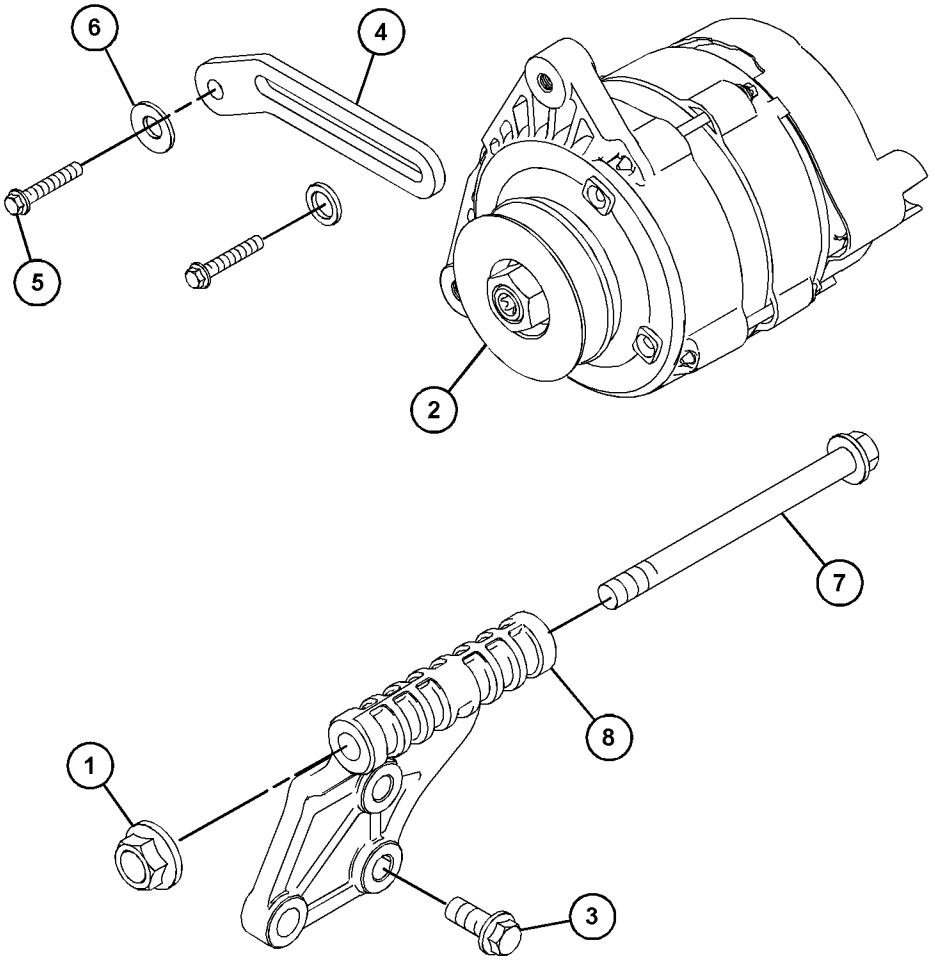

GRAPHIC #1 <END> g06719790

518-9064 ALTERNATOR GP-CHARGING

PART OF 610-7720, 610-7721 ENGINE AR-PRIMARY

SMCS-1405 **i10132067**

NOTE	REF NO	GRAPHIC REF	PART NUMBER	QTY	PART NAME 1 2 3 4 5 6 (PRODUCT LEVEL)	SEE PAGE
	1	1	**246-3198**	1	PULLEY-ALTERNATOR	
M	2	1	**359-9666**	1	BOLT-FLANGE HEAD (M8X1.25X130-MM)	
	3	1	**168-8999**	1	LEVER	
M	4	1	**153-5592**	1	NUT (M8X1.25-THD)	
	5	1	**630-8953**	1	ALTERNATOR AS (12-VOLT, 65-AMPERE)	
	5A	1	**451-7225**	1	FILM-IDENTIFICATION (CAT)	
M	6	1	**6I-0217**	3	BOLT (M8X1.25X20-MM)	
	7	1	**155-7984**	1	WASHER (8.4X16X1.6-MM THK)	
M	8	1	**6I-0260**	2	BOLT (M8X1.25X25-MM)	
	9	1	**168-9002**	1	WASHER (8.4X26X3.2-MM THK)	
	10	1	**540-4157**	1	BRACKET	

M - METRIC PART

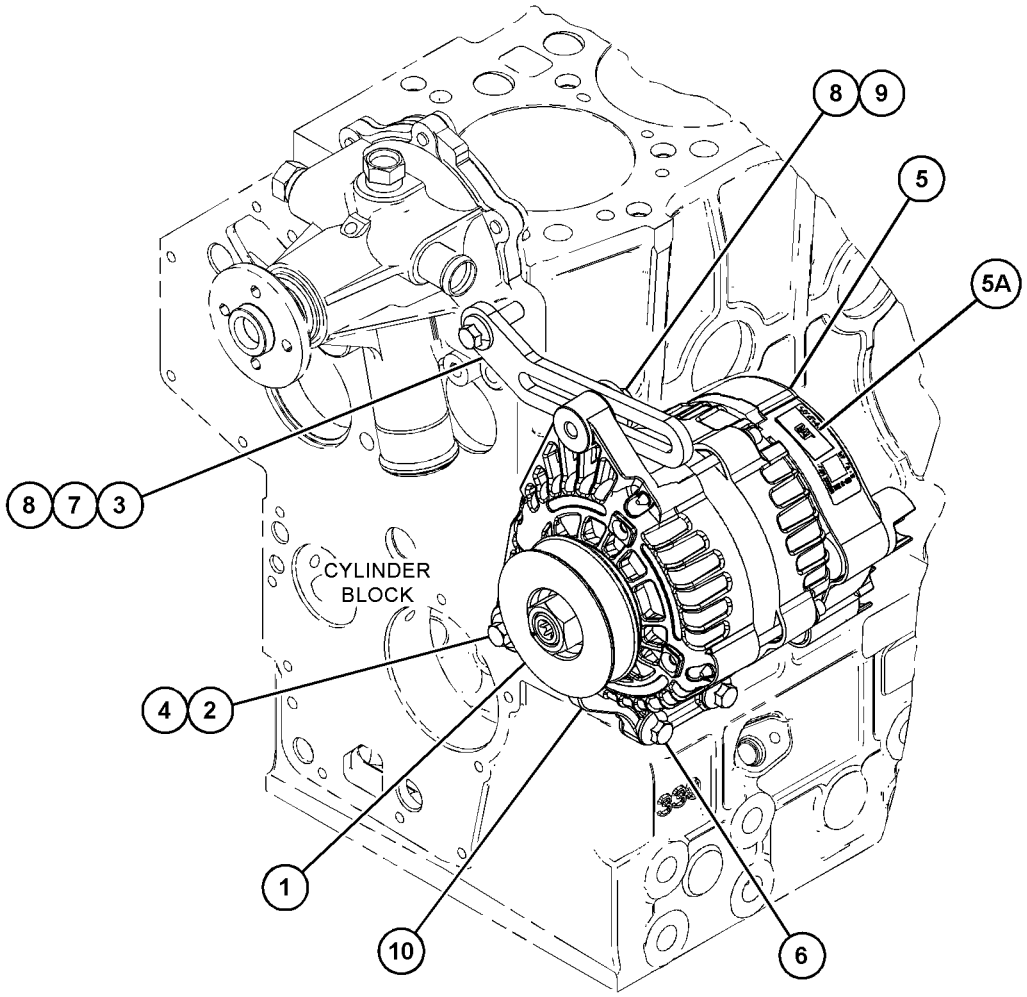

GRAPHIC #1 <END> g07807595

584-9497 ALTERNATOR GP-CHARGING

12 VOLT, 85 AMPERE

PART OF 587-9328 ENGINE AR-PRIMARY

SMCS-1405 **i10428781**

NOTE	REF NO	GRAPHIC REF	PART NUMBER	QTY	PART NAME 1 2 3 4 5 6 (PRODUCT LEVEL)	SEE PAGE
	1	1	**246-3198**	1	PULLEY-ALTERNATOR	
M	2	1	**153-5592**	1	NUT (M8X1.25-THD)	
	3	1	**155-7984**	1	WASHER (8.4X16X1.6-MM THK)	
	4	1	**168-8999**	1	LEVER	
	5	1	**168-9002**	1	WASHER (8.4X26X3.2-MM THK)	
M	6	1	**359-9666**	1	BOLT-FLANGE HEAD (M8X1.25X130-MM)	
	7	1	**540-4157**	1	BRACKET	
	8	1	**630-8955**	1	ALTERNATOR AS	
M	9	1	**6I-0217**	3	BOLT (M8X1.25X20-MM)	
M	10	1	**6I-0260**	2	BOLT (M8X1.25X25-MM)	

M - METRIC PART

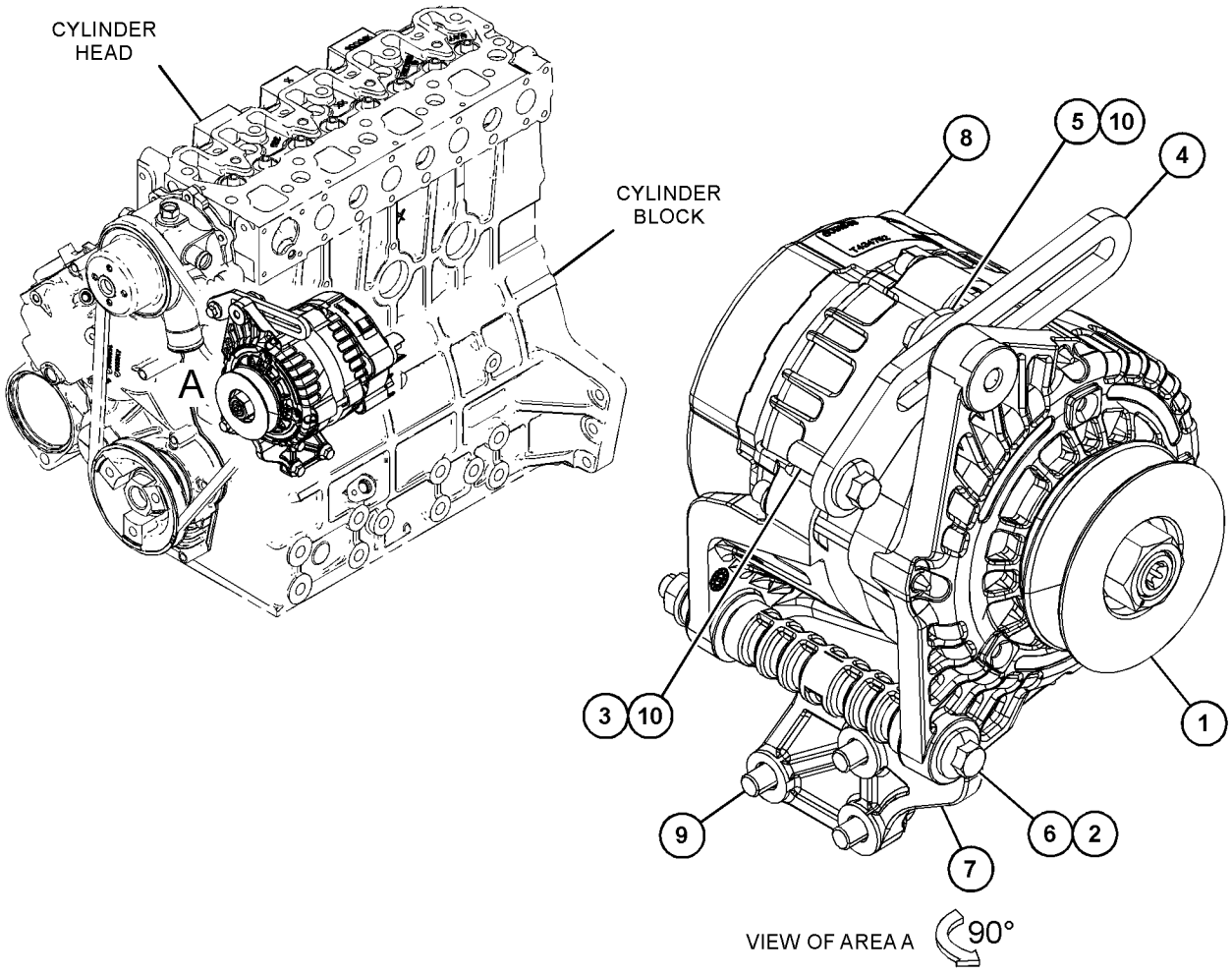

GRAPHIC #1 <END> g07711805

308-2319 CONNECTION GP-ELECTRICAL

SMCS-1408 **i05815179**

NOTE	REF NO	GRAPHIC REF	PART NUMBER	QTY	PART NAME 1 2 3 4 5 6 (PRODUCT LEVEL)	SEE PAGE
	1	1	**254-5541**	1	CONNECTION AS	
	2	1	**197-8555**	1	CONNECTION	

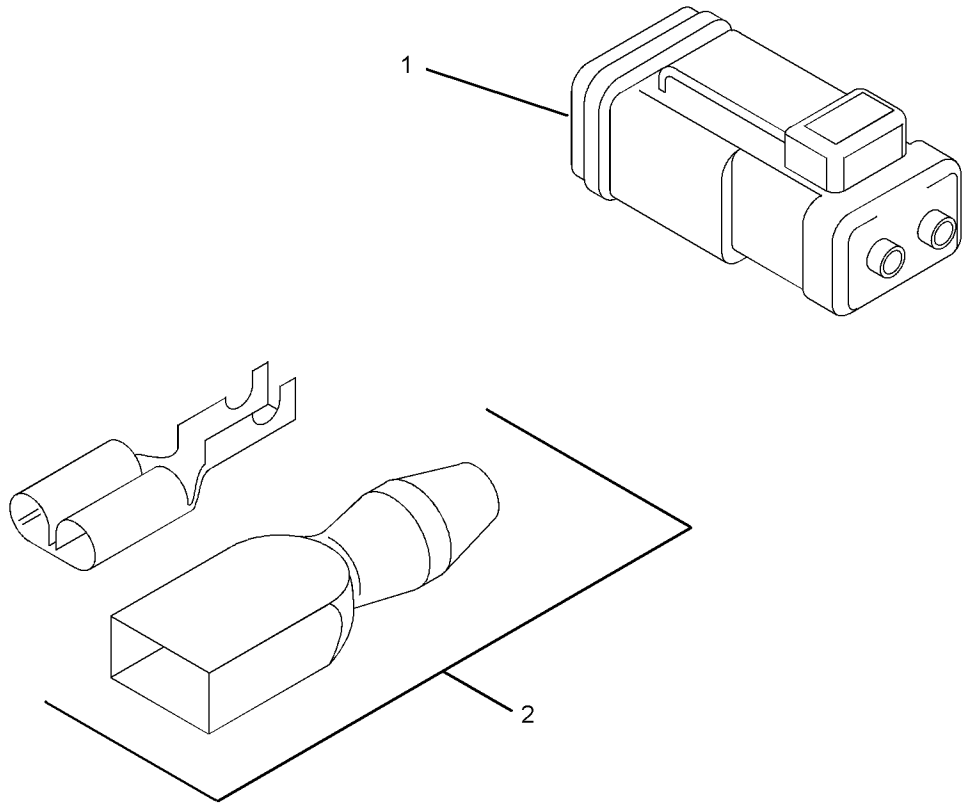

GRAPHIC #1 <END> g01389483

321-6741 CONNECTION GP-ELECTRICAL

PART OF 461-7892, 491-3396, 495-3121, 516-9335, 541-9277, 557-9727 ENGINE AR-PRIMARY

SMCS-1408 **i02905403**

NOTE	REF NO	GRAPHIC REF	PART NUMBER	QTY	PART NAME 1 2 3 4 5 6 (PRODUCT LEVEL)	SEE PAGE
	1	1	**254-5541**	1	CONNECTION AS	

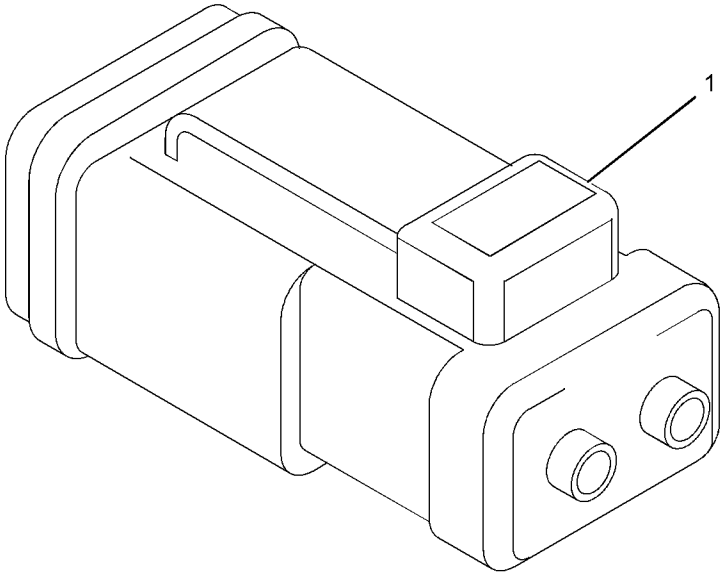

GRAPHIC #1 <END> g01513229

392-8657 CONNECTION GP-ELECTRICAL

SMCS-1408 **i05090171**

NOTE	REF NO	GRAPHIC REF	PART NUMBER	QTY	PART NAME 1 2 3 4 5 6 (PRODUCT LEVEL)	SEE PAGE
	1	1	**183-4037**	1	CONNECTOR AS	
	2	1	**238-0265**	1	HOSE-RADIATOR	

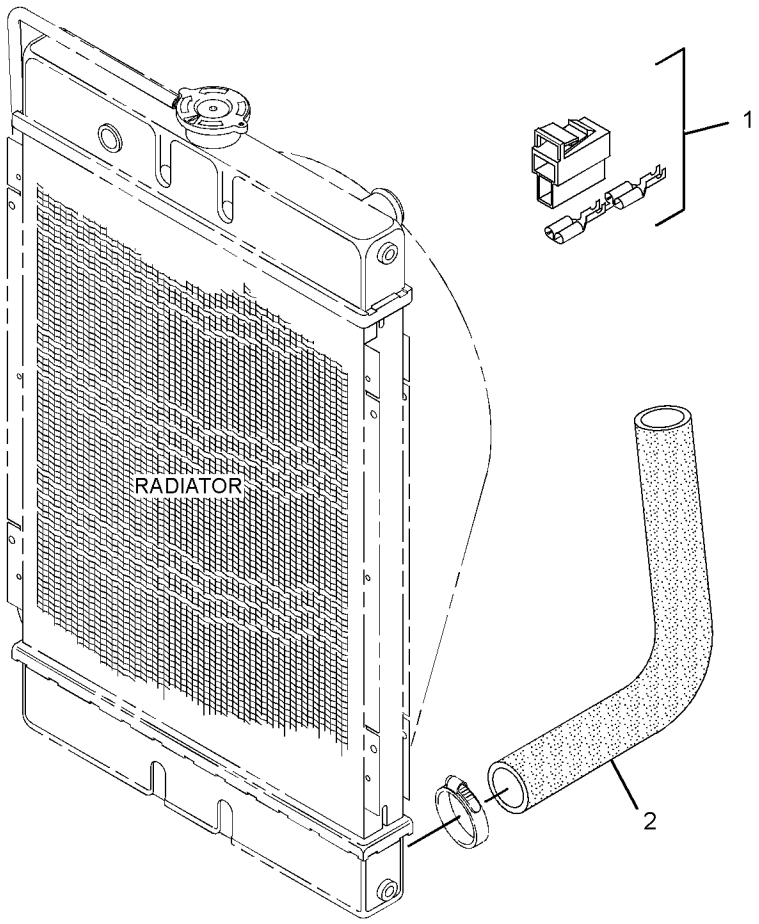

GRAPHIC #1 <END> g03325897

541-6343 CONNECTION GP-ELECTRICAL

PART OF 610-7720, 610-7721 ENGINE AR-PRIMARY

SMCS-1408 **i09606885**

NOTE	REF NO	GRAPHIC REF	PART NUMBER	QTY	PART NAME 1 2 3 4 5 6 (PRODUCT LEVEL)	SEE PAGE
	1	1	**254-5541**	1	CONNECTION AS	
		1	**9X-3402**	6	SOCKET-CONNECTOR (16-GA TO 18-GA)	
		1	**331-4226**	3	KIT-CONNECTING PLUG (2-PIN)	
					(INCLUDES PLUG AS, WEDGE, & INTERFACE SEAL)	

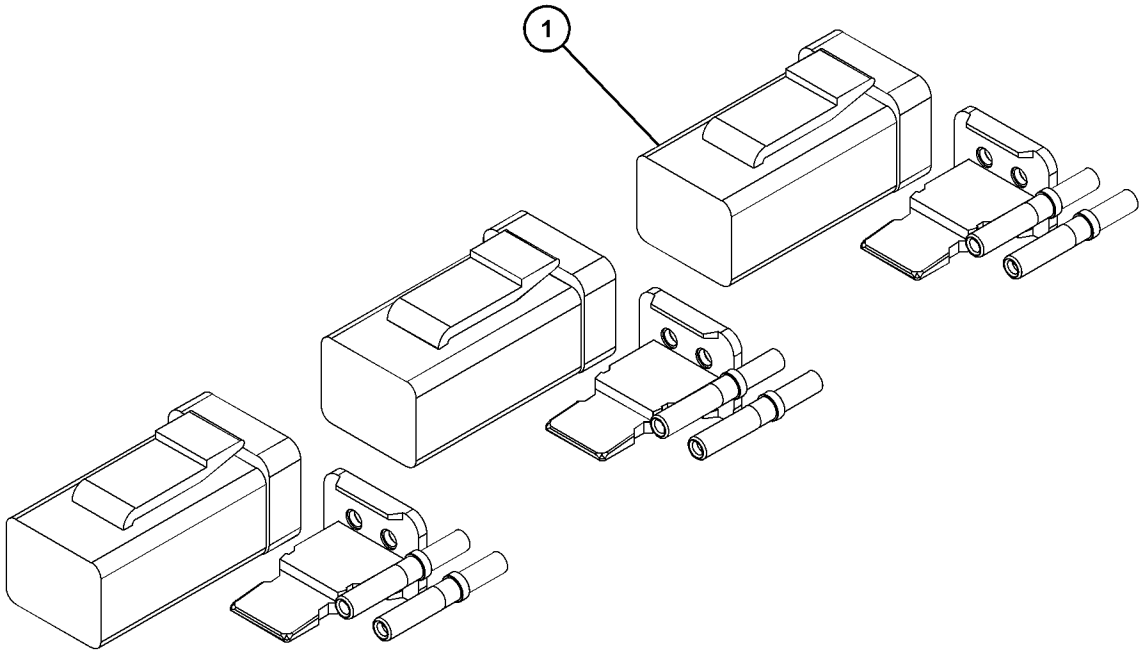

GRAPHIC #1 <END> g06403237

502-4820 CONTROL GP-ELECTRONIC

SMCS-1410, 1917, 1924, 4490 **i10689998**

NOTE	REF NO	GRAPHIC REF	PART NUMBER	QTY	PART NAME 1 2 3 4 5 6 (PRODUCT LEVEL)	SEE PAGE
	1	1	**502-3824**	1	CONTROL GP-ELECTRONIC (PROGRAMMED)	

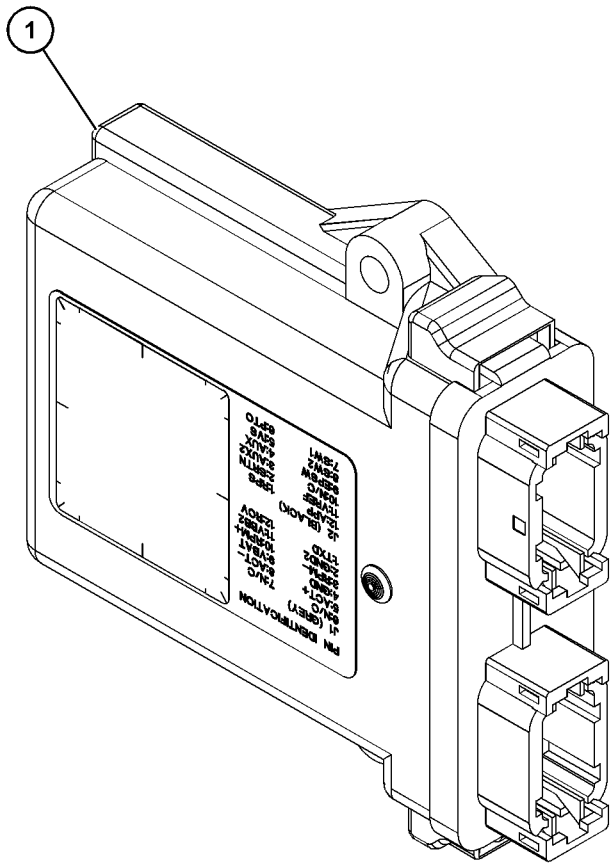

GRAPHIC #1 <END> g06299129

364-2521 CONTROL GP-ENGINE ELECTRONIC

PART OF 435-1647 ENGINE AR-PRIMARY

TYPE 1

SMCS-1901 **i06907868**

NOTE	REF NO	GRAPHIC REF	PART NUMBER	QTY	PART NAME 1 2 3 4 5 6 (PRODUCT LEVEL)	SEE PAGE
	1	1	**095-1574**	1	SEAL-O-RING	
M	2	1	**106-8916**	4	BOLT (M6X1X16-MM)	
M	3	1	**5C-2890**	1	NUT (M6X1-THD)	
	4	1	**139-5511**	1	CAP (TAMPER RESISTANT)	
M	5	1	**153-5592**	1	NUT (M8X1.25-THD)	
	6	1	**153-6415**	2	WASHER (SEAL)	
	7	1	**153-7983**	1	PIN	
M	8	1	**162-2207**	1	NUT (M6X1-THD)	
	9	1	**217-7115**	1	CAP (TAMPER RESISTANT)	
	10	1	**423-7724**	1	GASKET	
	11	1	**308-1882**	1	SPRING	
M	12	1	**308-1889**	1	NUT (M10X1.25-THD)	
M	13	1	**308-1892**	1	NUT (M6X1-THD)	
	14	1	**308-1897**	2	RING	
M	15	1	**369-4486**	2	BOLT (M6X1X35-MM)	
	16	1	**308-4266**	1	SHAFT	
	17	1	**390-3731**	1	SHAFT	
	18	1	**309-6729**	1	SEAL-O-RING	
M	19	1	**495-0737**	1	BOLT (M6X0.5X19.5-MM)	
	20	1	**311-0655**	1	SPRING	
M	21	1	**313-2025**	1	BOLT-SPECIAL (M10X1.25-MM THD)	
	22	1	**315-5236**	1	BOLT AS	
	22A	1	**153-7987**	1	WASHER (9.2X17X1.8-MM THK)	
M	22B	1	**191-9297**	1	NUT (M10X1.25-THD)	
	22C	1	**315-5235**	1	SPRING	
	23	1	**321-3145**	1	SPRING	
	24	1	**321-4249**	1	NUT	
	25	1	**390-3729**	1	LEVER-CONTROL	
	26	1	**322-7493**	1	LEVER AS-CONTROL	
	27	1	**330-9189**	1	PLUG	
	28	1	**425-7065**	1	CAP-TAMPER PROOF	
	29	1	**334-0732**	1	ARM AS (FRONT HOUSING)	
	30	1	**335-5578**	1	BRACKET	
	31	1	**336-2965**	1	SPRING	

M - METRIC PART

364-2521 **CONTROL GP-ENGINE ELECTRONIC (**contd.**)** **i06907868**

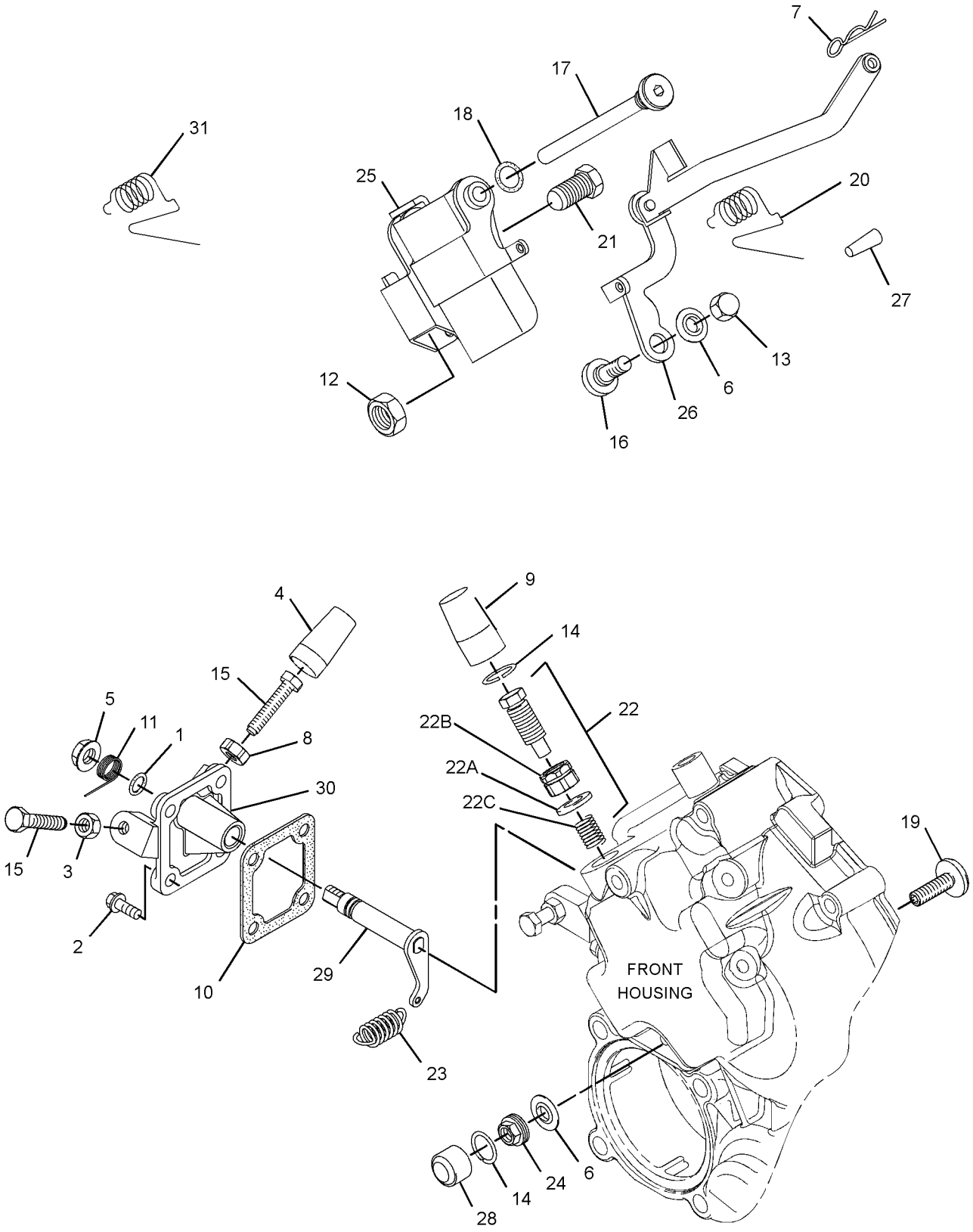

GRAPHIC #1 <END> g06163960

364-2521 CONTROL GP-ENGINE ELECTRONIC

PART OF 435-1647 ENGINE AR-PRIMARY

TYPE 2

SMCS-1901 **i07160676**

NOTE	REF NO	GRAPHIC REF	PART NUMBER	QTY	PART NAME 1 2 3 4 5 6 (PRODUCT LEVEL)	SEE PAGE
	1	1	**095-1574**	1	SEAL-O-RING	
M	2	1	**106-8916**	4	BOLT (M6X1X16-MM)	
M	3	1	**5C-2890**	1	NUT (M6X1-THD)	
	4	1	**139-5511**	1	CAP (TAMPER RESISTANT)	
M	5	1	**153-5592**	1	NUT (M8X1.25-THD)	
	6	1	**153-6415**	2	WASHER (SEAL)	
	7	1	**153-7983**	1	PIN	
M	8	1	**162-2207**	1	NUT (M6X1-THD)	
	9	1	**217-7115**	1	CAP (TAMPER RESISTANT)	
	10	1	**423-7724**	1	GASKET	
	11	1	**308-1882**	1	SPRING	
M	12	1	**308-1889**	1	NUT (M10X1.25-THD)	
M	13	1	**308-1892**	1	NUT (M6X1-THD)	
C	14	1	**308-1897**	1	RING	
M	15	1	**369-4486**	2	BOLT (M6X1X35-MM)	
	16	1	**308-4266**	1	SHAFT	
	17	1	**390-3731**	1	SHAFT	
	18	1	**309-6729**	1	SEAL-O-RING	
M	19	1	**495-0737**	1	BOLT (M6X0.5X19.5-MM)	
	20	1	**311-0655**	1	SPRING	
M	21	1	**313-2025**	1	BOLT-SPECIAL (M10X1.25-MM THD)	
	22	1	**315-5236**	1	BOLT AS	
	22A	1	**153-7987**	1	WASHER (9.2X17X1.8-MM THK)	
M	22B	1	**191-9297**	1	NUT (M10X1.25-THD)	
	22C	1	**315-5235**	1	SPRING	
	23	1	**321-3145**	1	SPRING	
C	24	1	**502-9478**	1	NUT (TAMPER RESISTANT)	
	25	1	**390-3729**	1	LEVER-CONTROL	
	26	1	**322-7493**	1	LEVER AS-CONTROL	
	27	1	**330-9189**	1	PLUG	
C	28	1	**503-9707**	1	CAP	
	29	1	**334-0732**	1	ARM AS (FRONT HOUSING)	
	30	1	**335-5578**	1	BRACKET	
	31	1	**336-2965**	1	SPRING	
C	32	1	**502-5421**	1	PIN	
C	33	1	**503-9731**	1	SHROUD	

C - CHANGE FROM PREVIOUS TYPE
M - METRIC PART

364-2521 **CONTROL GP-ENGINE ELECTRONIC (**contd.**)** **i07160676**

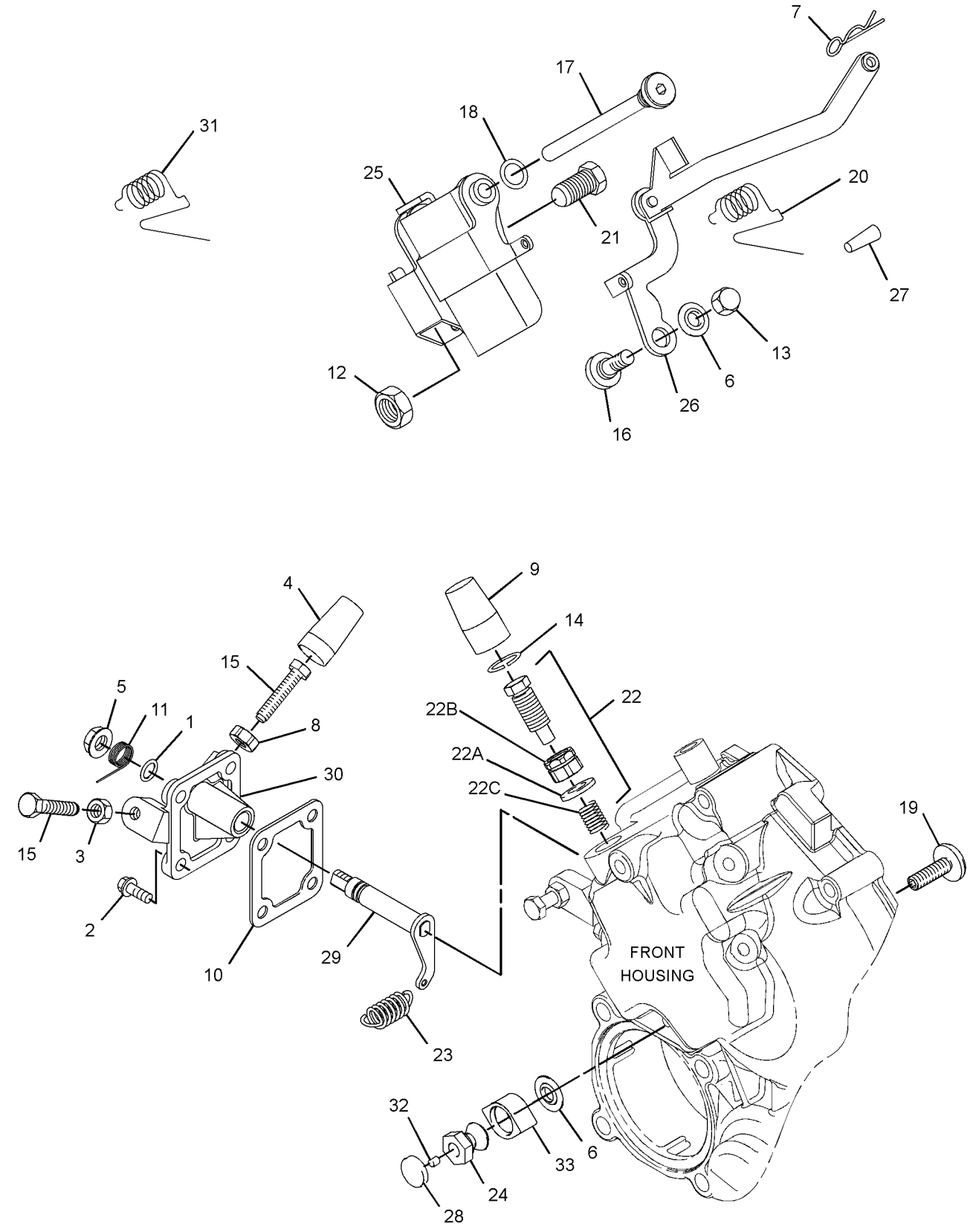

GRAPHIC #1 <END> g06239341

365-4290 CONTROL GP-ENGINE SPEED

SMCS-1901 **i08583463**

NOTE	REF NO	GRAPHIC REF	PART NUMBER	QTY	PART NAME 1 2 3 4 5 6 (PRODUCT LEVEL)	SEE PAGE
	1	1	**502-5421**	1	PIN	
	2	1	**139-5511**	1	CAP (TAMPER RESISTANT)	
M	3	1	**308-1889**	1	NUT (M10X1.25-THD)	
	4	1	**153-7983**	1	PIN	
	5	1	**217-7115**	1	CAP (TAMPER RESISTANT)	
	6	1	**319-3253**	1	SENSOR AS-SPEED (TIMING)	
M	6A	1	**5C-8312**	1	NUT (M4X0.7-THD)	
	7	1	**580-0398**	1	LEVER AS-CONTROL	
	8	1	**313-5832**	1	BOLT AS	
	8A	1	**153-7987**	1	WASHER (9.2X17X1.8-MM THK)	
M	8B	1	**191-9297**	1	NUT (M10X1.25-THD)	
	8C	1	**313-5833**	1	SPRING	
Y	9	1	*486-9344*	1	HOUSING GP-FRONT	367
	10	1	**336-2965**	1	SPRING	
	11	1	**503-9707**	1	CAP	
	12	1	**308-1897**	1	RING	

PARTS SHOWN IN GRAPHIC(S) WITHOUT A REFERENCE NUMBER ARE NOT SERVICED SEPARATELY

M - METRIC PART
Y - SEPARATE ILLUSTRATION

365-4290 **CONTROL GP-ENGINE SPEED (**contd.**)** **i08583463**

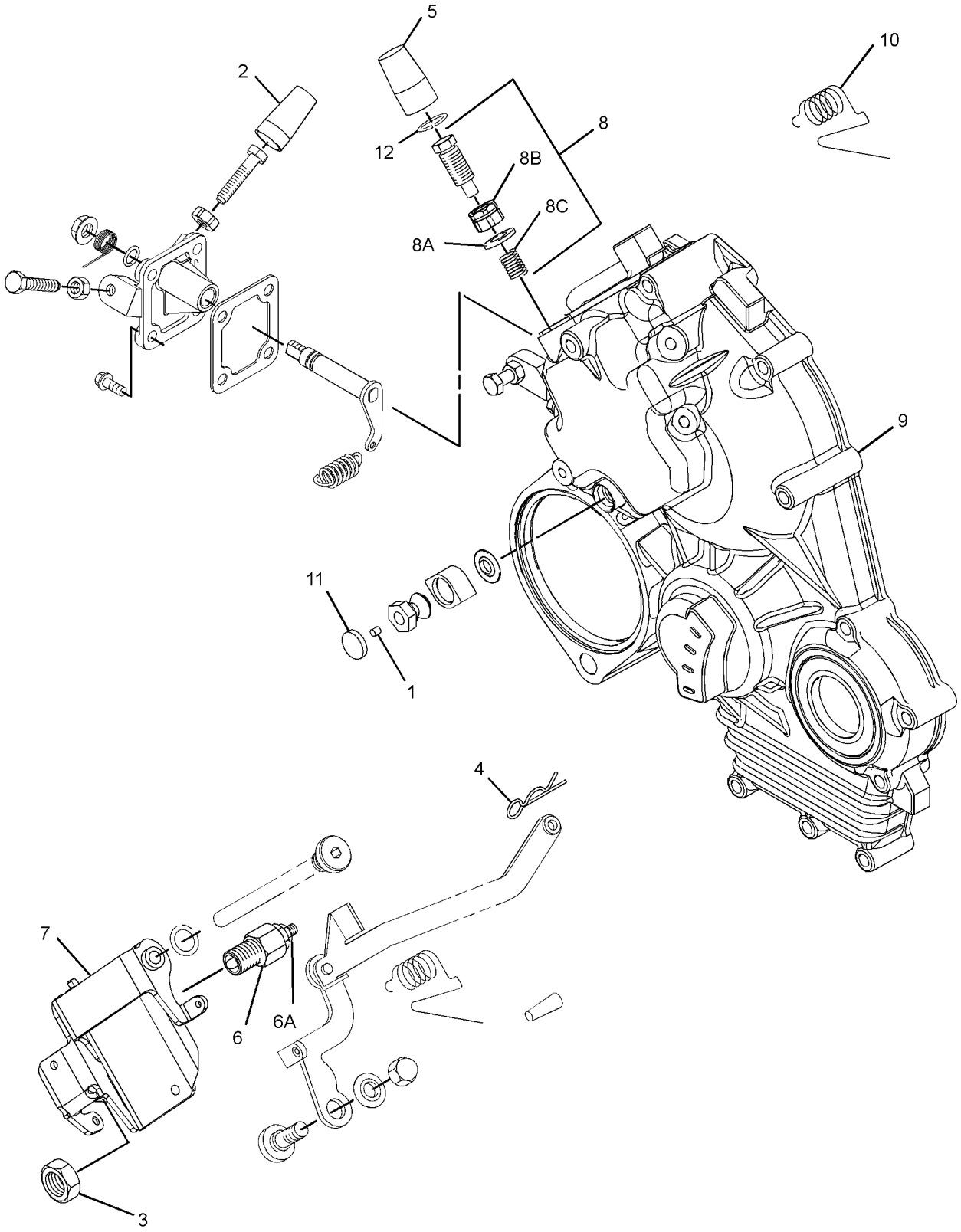

GRAPHIC #1 <END> g07505151

331-9611 CONTROL GP-MANUAL START/STOP

SMCS-1426, 7418 **i03135536**

NOTE	REF NO	GRAPHIC REF	PART NUMBER	QTY	PART NAME 1 2 3 4 5 6 (PRODUCT LEVEL)	SEE PAGE
	1	1	**153-6412**	1	WASHER	
	2	1	**275-0493**	1	SOLENOID (24-VOLT)	
	3	1	**308-1914**	1	LEVER-CONTROL	

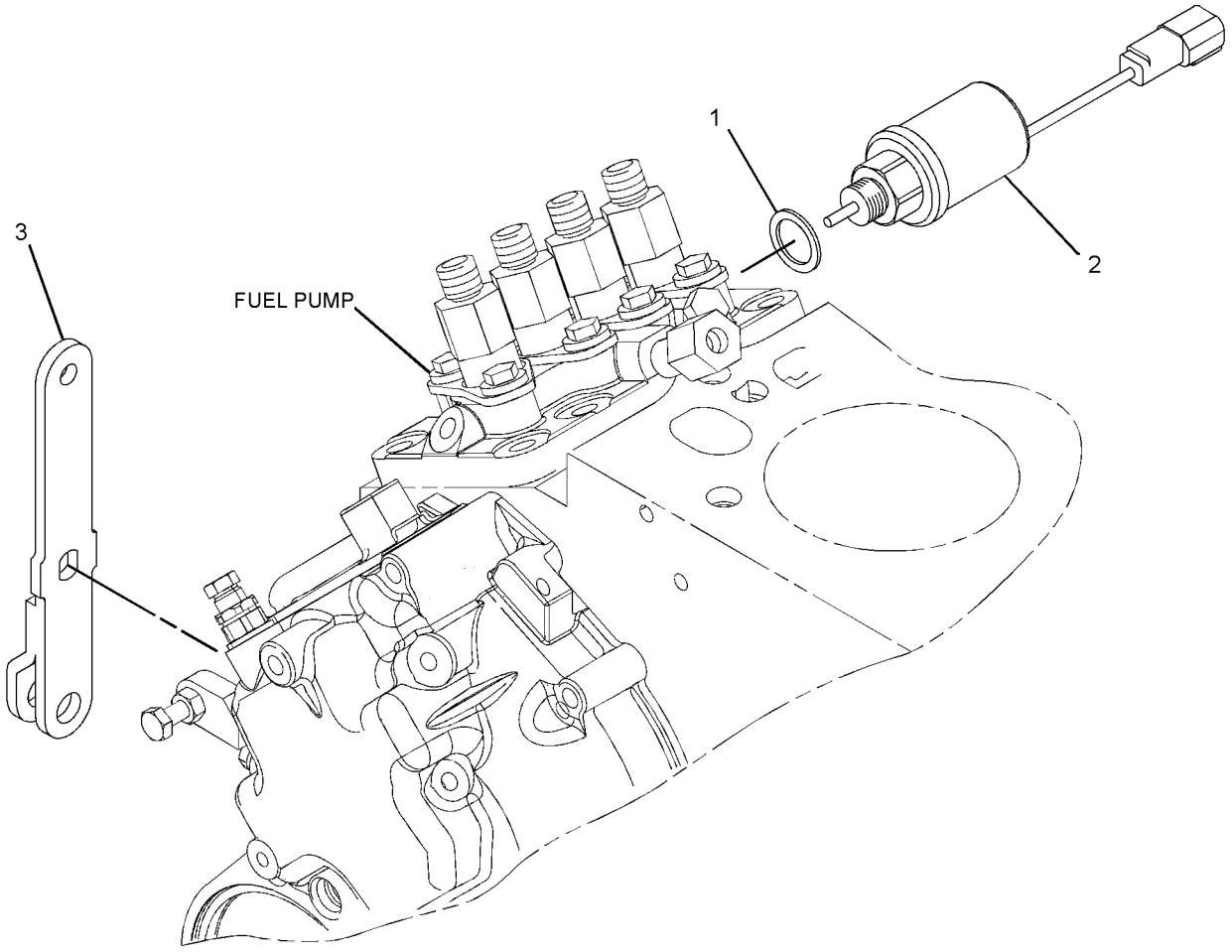

GRAPHIC #1 <END> g01641376

542-8638 CONTROL GP-MANUAL START/STOP

SMCS-1426, 7418 **i08796348**

NOTE	REF NO	GRAPHIC REF	PART NUMBER	QTY	PART NAME 1 2 3 4 5 6 (PRODUCT LEVEL)	SEE PAGE
	1	1	**308-1914**	1	LEVER-CONTROL	
	2	1	**550-9113**	1	ACTUATOR AS	
	3	1	**380-2680**	1	WASHER	
Y	4	1	**357-3053**	1	SENSOR GP-SPEED (MAGNETIC, HIGH OUTPUT)	890

Y - SEPARATE ILLUSTRATION

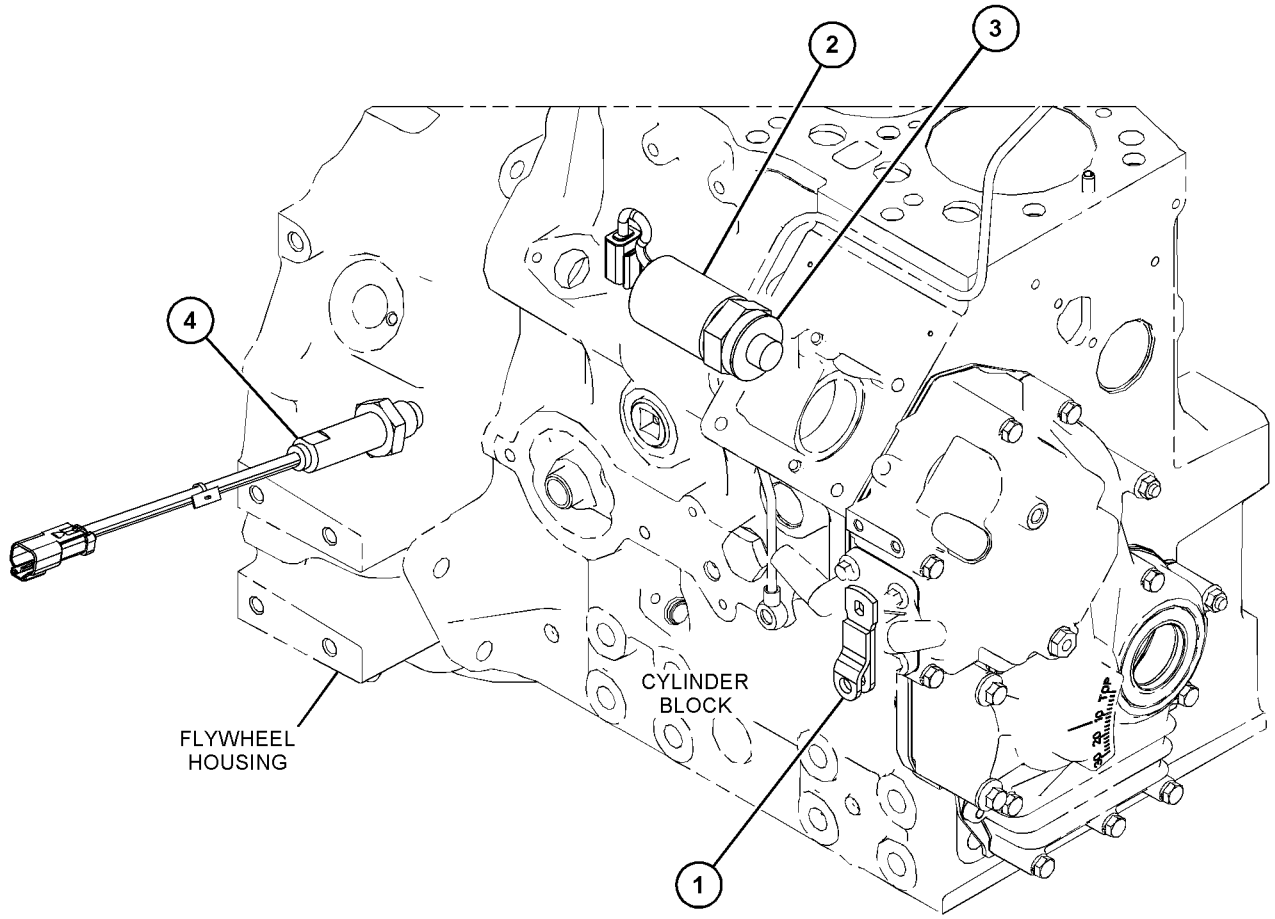

GRAPHIC #1 <END> g06680610

308-2311 GLOW PLUG GP

12-VOLT

PART OF 435-1645 CYLINDER BLOCK GP-LONG, 433-1379, 433-1380, 435-1637, 435-1638 ENGINE AR, 435-1636, 435-1641, 435-1642, 435-1646, 435-1647, 435-1656, 435-1658, 459-2953, 461-7892, 461-7894, 461-7895, 465-1477, 491-3396, 492-6602, 495-3121, 495-6243, 516-9335, 541-9277, 549-8284, 557-9727, 587-9328 ENGINE AR-PRIMARY

SMCS-1412 **i10518883**

NOTE	REF NO	GRAPHIC REF	PART NUMBER	QTY	PART NAME 1 2 3 4 5 6 (PRODUCT LEVEL)	SEE PAGE
	1	1	**593-5245**	4	PLUG-GLOW (12-VOLT)	
	2	1	**154-1935**	1	BUS BAR AS	
M	3	1	**291-1744**	1	NUT (M4X0.7-THD)	

M - METRIC PART

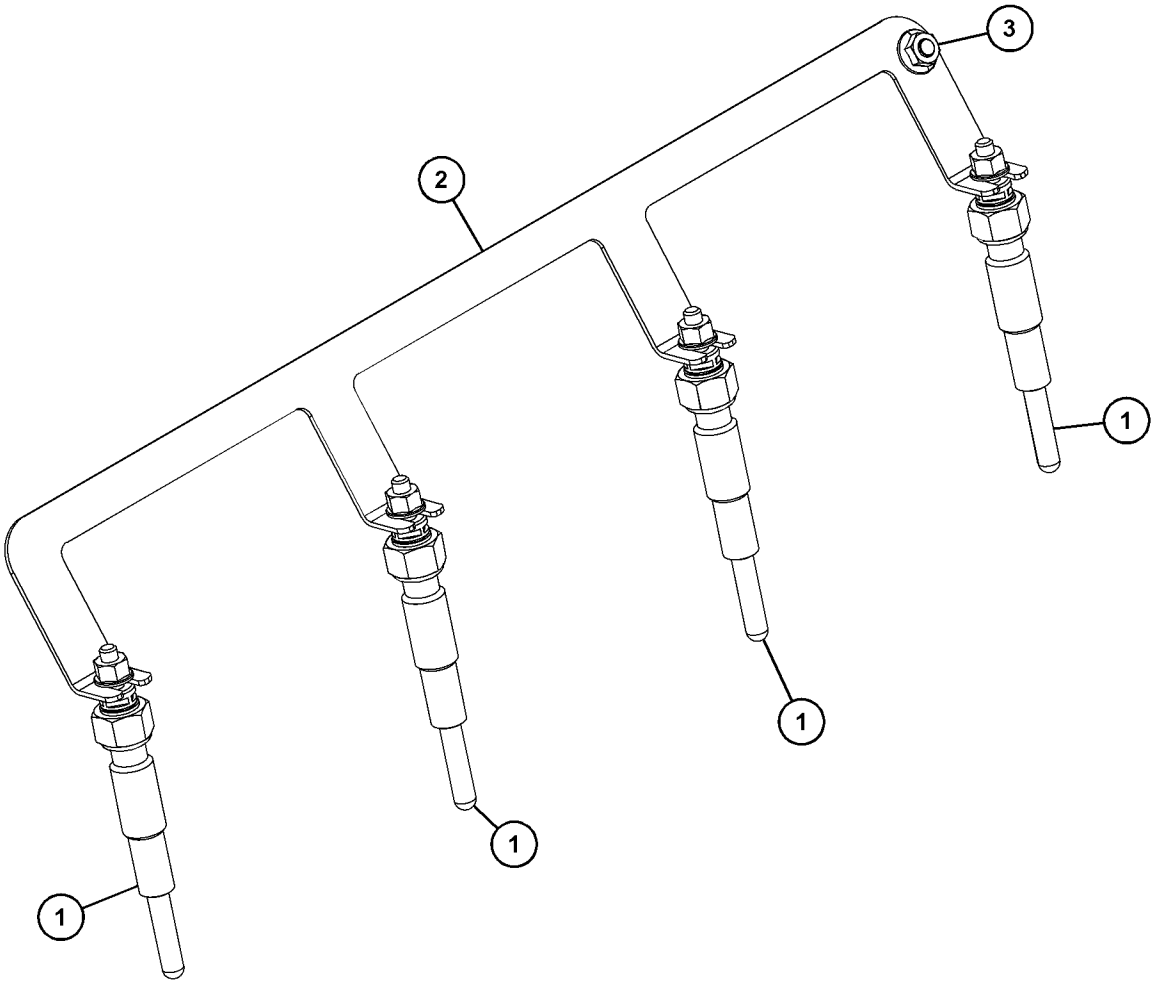

GRAPHIC #1 <END> g07892355

317-3040 GLOW PLUG GP

TYPE 1

SMCS-1412 **i07419384**

NOTE	REF NO	GRAPHIC REF	PART NUMBER	QTY	PART NAME 1 2 3 4 5 6 (PRODUCT LEVEL)	SEE PAGE
M	1	1	**231-2839**	1	NUT-FLANGE (M4X0.7-THD)	
	2	1	**154-1935**	1	BUS BAR AS	
	3	1	**243-4402**	4	GLOW PLUG	
	4	1	**096-6166**	1	WASHER-HARD (4.5X9X1-MM THK)	

M - METRIC PART

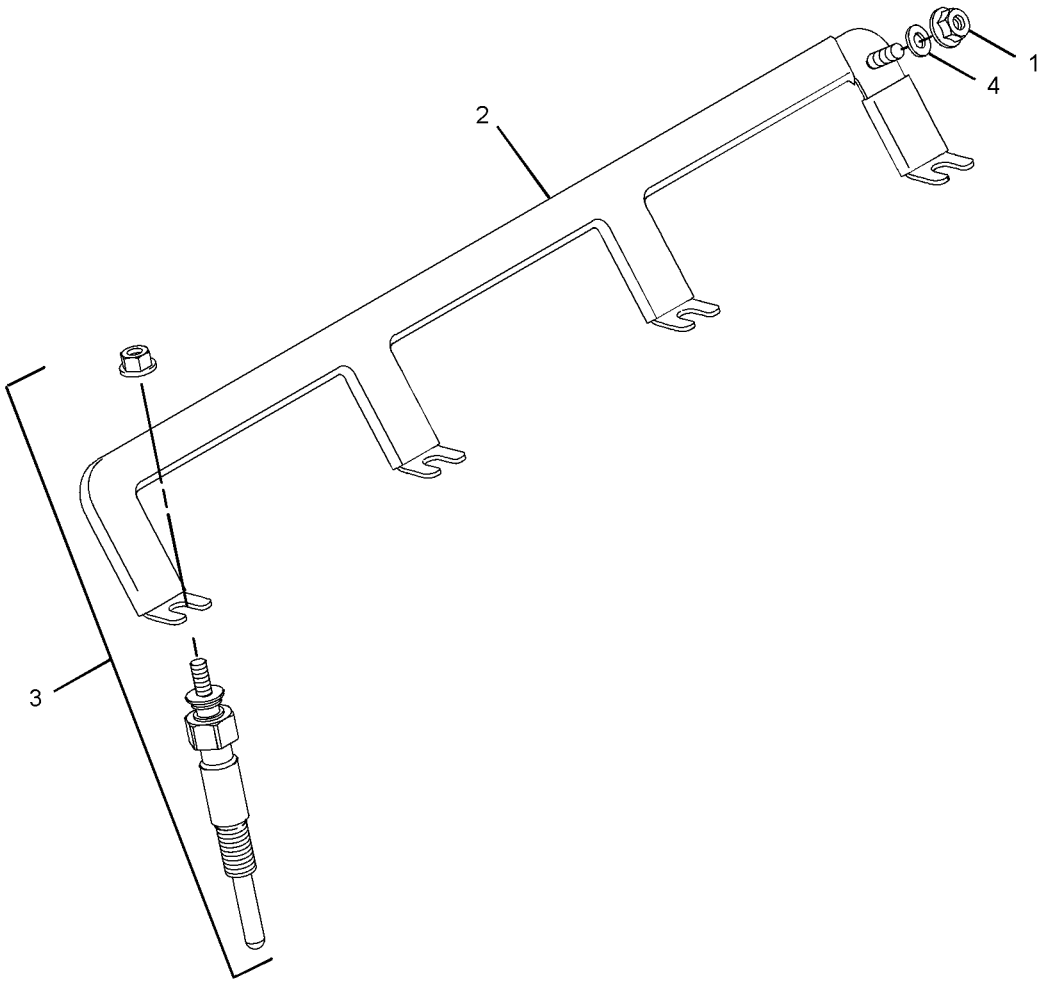

GRAPHIC #1 <END> g06321799

317-3040 GLOW PLUG GP

TYPE 2

SMCS-1412 **i10697862**

NOTE	REF NO	GRAPHIC REF	PART NUMBER	QTY	PART NAME 1 2 3 4 5 6 (PRODUCT LEVEL)	SEE PAGE
M	1	1	**291-1744**	1	NUT (M4X0.7-THD)	
	2	1	**154-1935**	1	BUS BAR AS	
	3	1	**243-4402**	4	GLOW PLUG	

M - METRIC PART

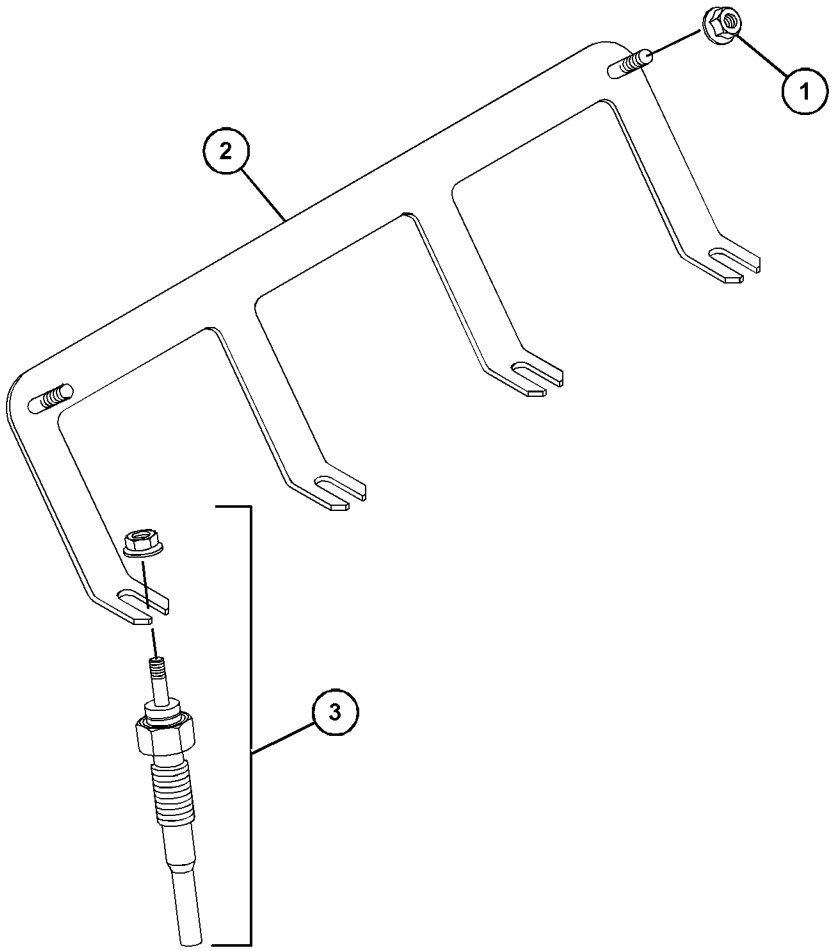

GRAPHIC #1 <END> g07961135

587-0270 GLOW PLUG GP

PART OF 433-1379, 433-1380 ENGINE AR, 435-1636, 435-1641, 435-1646, 435-1647, 587-9328, 610-7720, 610-7721 ENGINE AR-PRIMARY

SMCS-1412 **i10383593**

NOTE	REF NO	GRAPHIC REF	PART NUMBER	QTY	PART NAME 1 2 3 4 5 6 (PRODUCT LEVEL)	SEE PAGE
	1	1	**154-1935**	1	BUS BAR AS	
M	2	1	**291-1744**	1	NUT (M4X0.7-THD)	
	3	1	**593-5245**	4	PLUG-GLOW (12-VOLT)	

M - METRIC PART

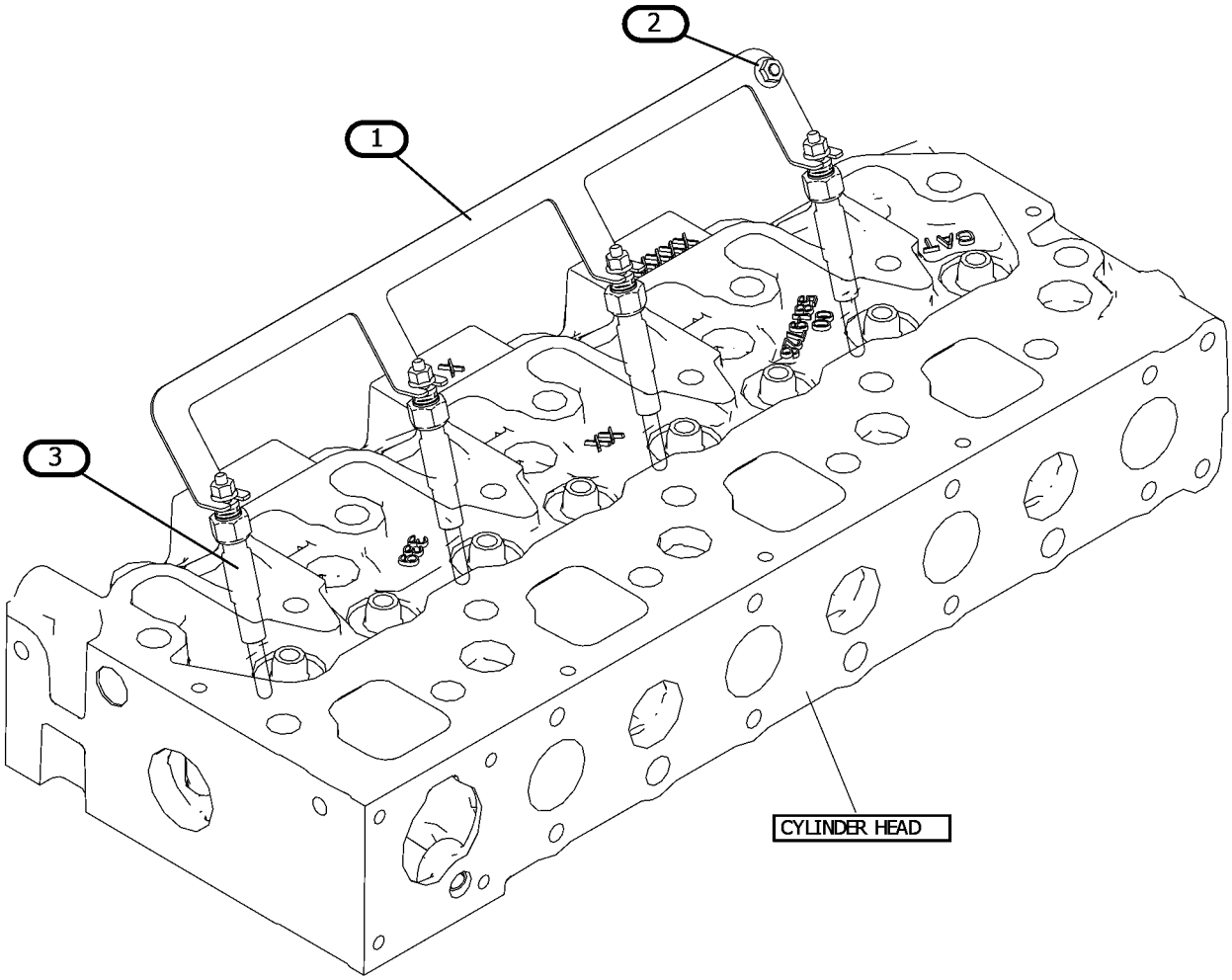

GRAPHIC #1 <END> g07846604

357-3053 SENSOR GP-SPEED

MAGNETIC, HIGH OUTPUT

PART OF 542-8638 CONTROL GP-MANUAL START/STOP

SMCS-1907 **i10140542**

NOTE	REF NO	GRAPHIC REF	PART NUMBER	QTY	PART NAME 1 2 3 4 5 6 (PRODUCT LEVEL)	SEE PAGE
	1	1	**171-5349**	1	STRAP-MARKER	
E	2	1	**9X-1813**		SLEEVE (13.5-CM)	
	3	1	**8T-8729**	2	PIN-CONNECTOR (16-GA TO 20-GA)	

E - ORDER BY THE CENTIMETER

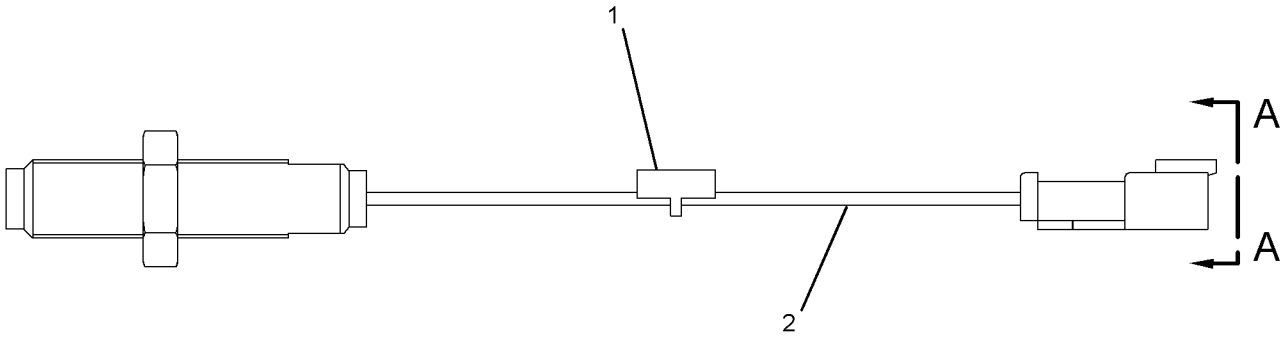

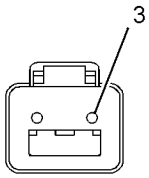

VIEW A-A

GRAPHIC #1 <END> g07763935

311-9030 SENSOR GP-TEMPERATURE

SMCS-1906, 1919, 1921, 1922, 1928, 1929 **i02770525**

NOTE	REF NO	GRAPHIC REF	PART NUMBER	QTY	PART NAME 1 2 3 4 5 6 (PRODUCT LEVEL)	SEE PAGE
	1	1	**271-6700**	1	SWITCH-TEMPERATURE (ENGINE COOLANT)	

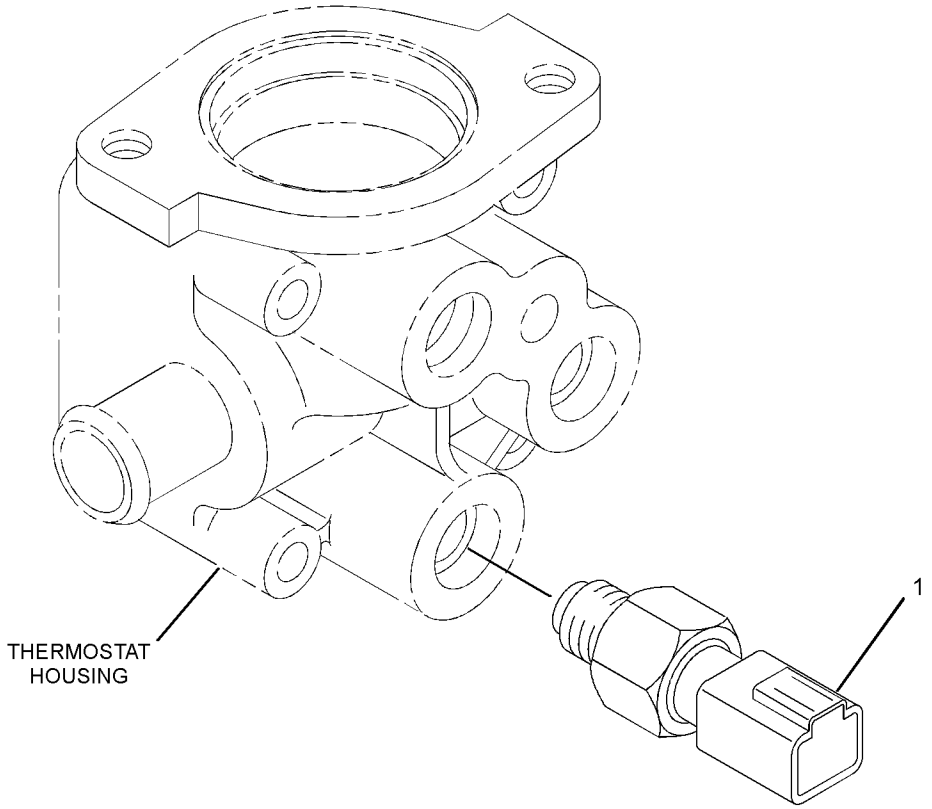

GRAPHIC #1 <END> g01416429

442-7794 SENSOR GP-TEMPERATURE

PART OF 465-1477 ENGINE AR-PRIMARY

SMCS-1906, 1919, 1921, 1922, 1928, 1929 **i05436991**

NOTE	REF NO	GRAPHIC REF	PART NUMBER	QTY	PART NAME 1 2 3 4 5 6 (PRODUCT LEVEL)	SEE PAGE
	1	1	**252-1749**	1	SWITCH AS-TEMPERATURE (WATER)	

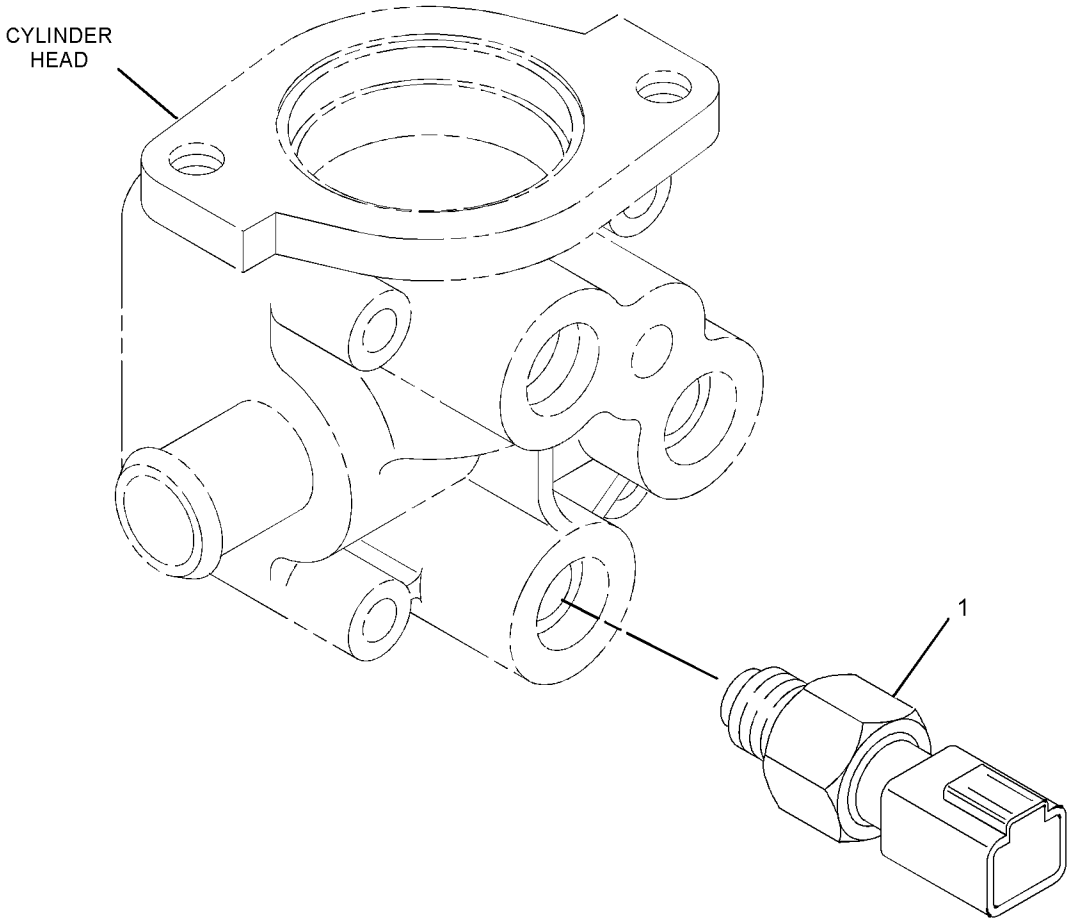

GRAPHIC #1 <END> g01529854

601-4322 SENSOR GP-TEMPERATURE

PART OF 433-1379, 433-1380 ENGINE AR, 435-1636, 435-1641, 435-1646, 435-1647, 587-9328, 610-7720, 610-7721 ENGINE AR-PRIMARY

SMCS-1906, 1919, 1921, 1922, 1928, 1929 **i08697163**

NOTE	REF NO	GRAPHIC REF	PART NUMBER	QTY	PART NAME 1 2 3 4 5 6 (PRODUCT LEVEL)	SEE PAGE
	1	1	**154-1817**	2	PLUG	
	2	1	**341-3600**	1	SWITCH-TEMPERATURE (12-VOLT) (WATER)	

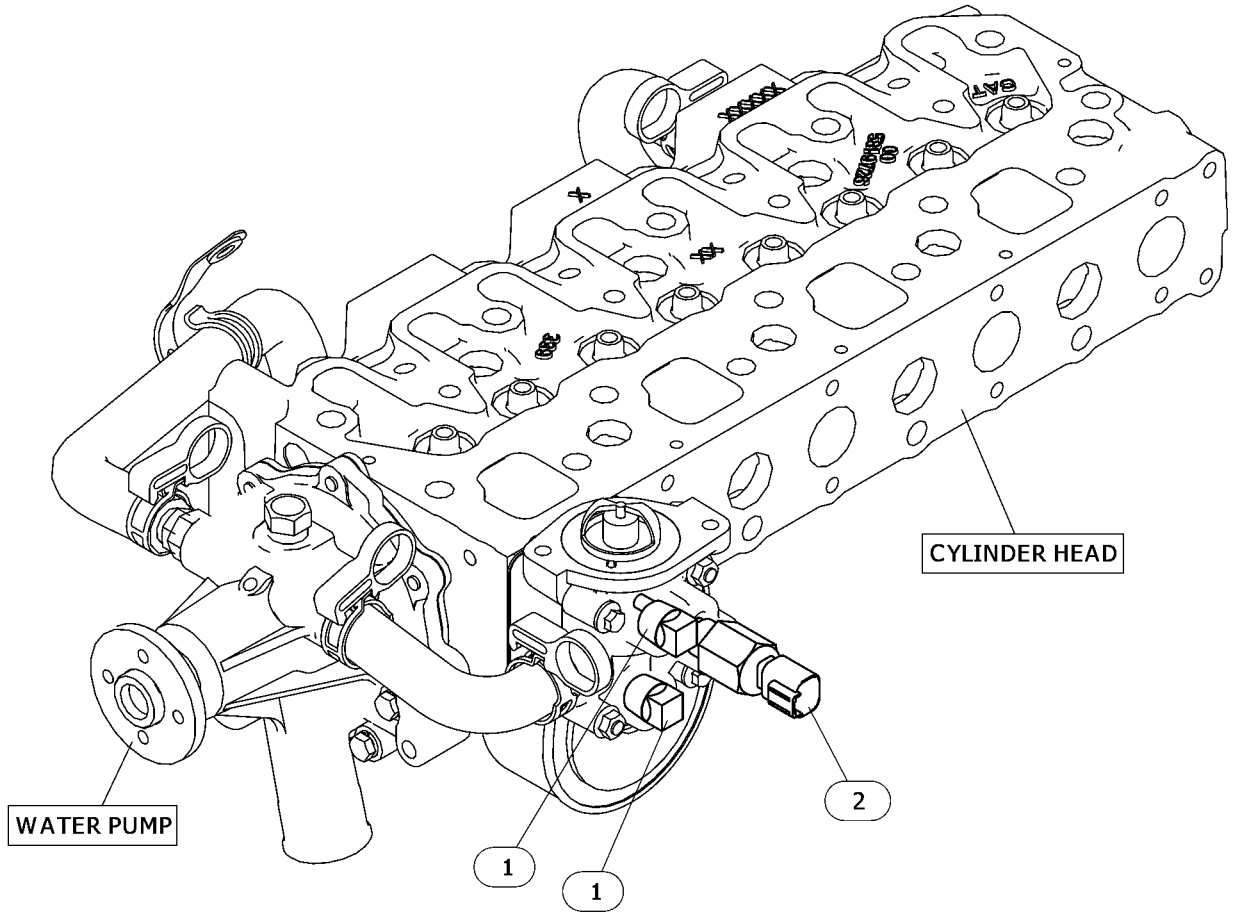

GRAPHIC #1 <END> g06720979

320-9114 SHUTOFF GP-ELECTRICAL

PART OF 495-3121, 557-9727 ENGINE AR-PRIMARY

SMCS-7418 **i03384232**

NOTE	REF NO	GRAPHIC REF	PART NUMBER	QTY	PART NAME 1 2 3 4 5 6 (PRODUCT LEVEL)	SEE PAGE
	1	1	**340-0199**	1	SHUTOFF GP-ELECTRICAL	
	1A	1	**234-8762**	1	CONNECTOR	
	1B	1	**318-5038**	1	BOX	

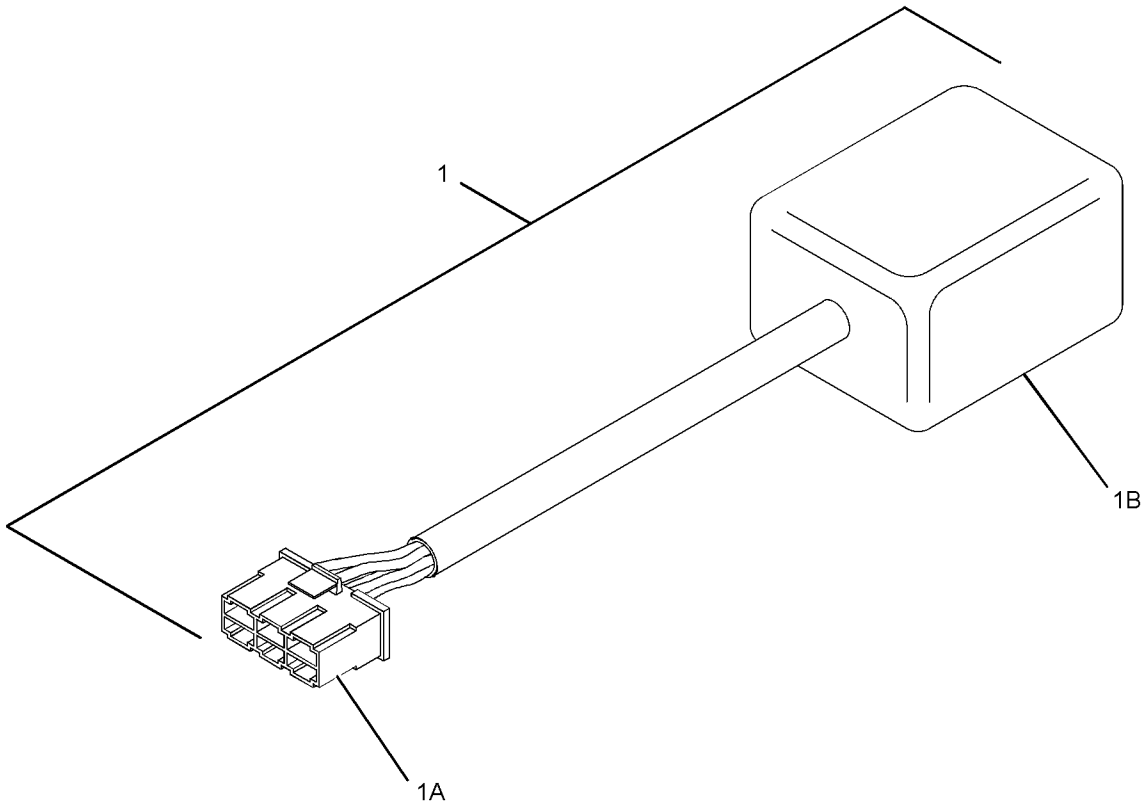

GRAPHIC #1 <END> g01504753

308-2313 SOLENOID GP-SHUTOFF

FUEL

PART OF 435-1645 CYLINDER BLOCK GP-LONG, 433-1379, 433-1380, 435-1637, 435-1638 ENGINE AR, 435-1636, 435-1641, 435-1642, 435-1646, 435-1647, 435-1656, 435-1658, 459-2953, 461-7892, 461-7894, 465-1477, 491-3396, 492-6602, 495-6243, 516-9335, 541-9277, 549-8284, 587-9328 ENGINE AR-PRIMARY

SMCS-1259 **i06895654**

NOTE	REF NO	GRAPHIC REF	PART NUMBER	QTY	PART NAME 1 2 3 4 5 6 (PRODUCT LEVEL)	SEE PAGE
	1	1	**153-6412**	1	WASHER	
	2	1	**419-7640**	1	SOLENOID AS (12-VOLT) (FUEL SHUTOFF)	
	3	1	**308-1914**	1	LEVER-CONTROL	

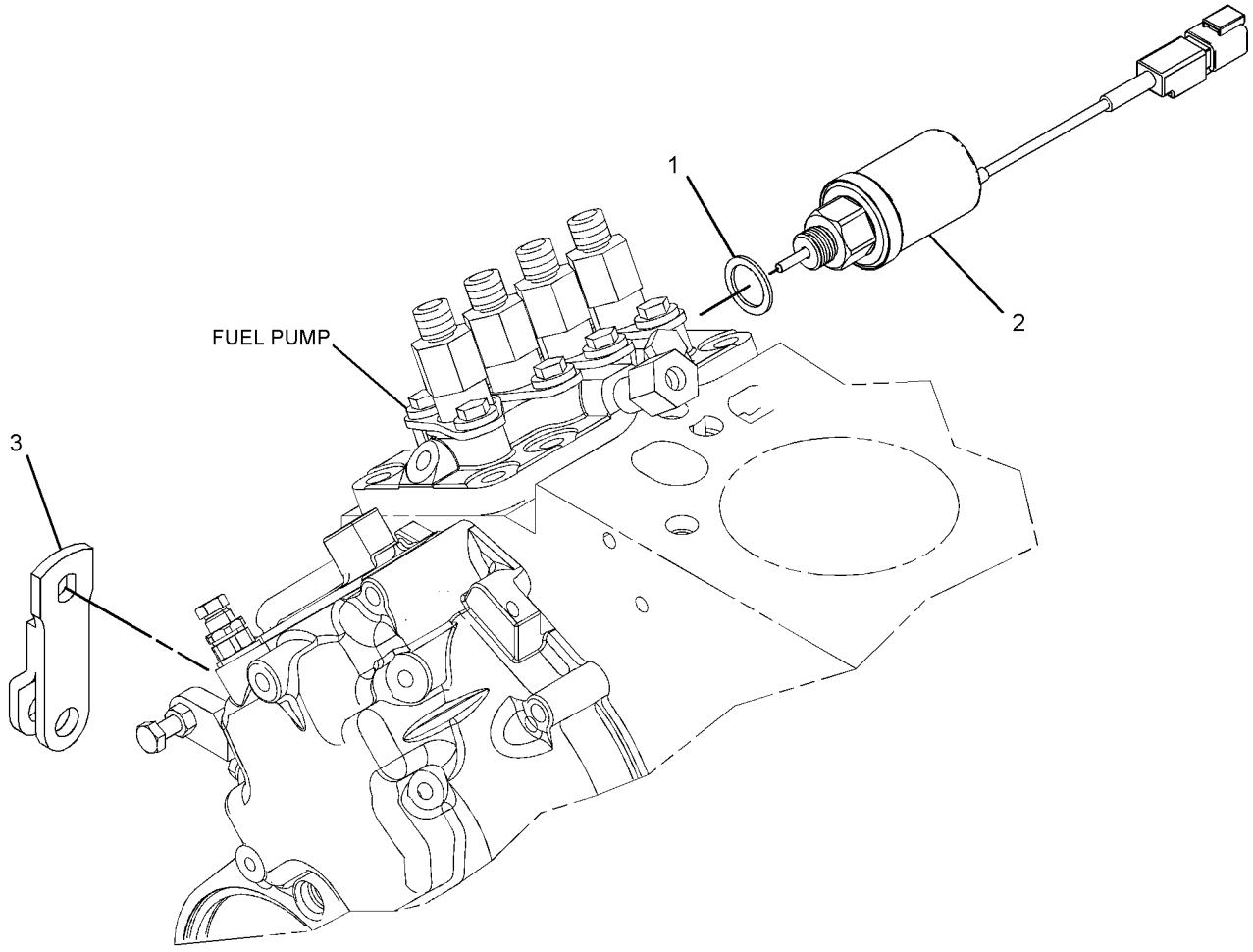

GRAPHIC #1 <END> g06160711

315-7817 SOLENOID GP-SHUTOFF–FUEL

PART OF 461-7895, 495-3121, 557-9727 ENGINE AR-PRIMARY

SMCS-1259 **i06895635**

NOTE	REF NO	GRAPHIC REF	PART NUMBER	QTY	PART NAME 1 2 3 4 5 6 (PRODUCT LEVEL)	SEE PAGE
	1	1	**153-6412**	1	WASHER	
	2	1	**419-7640**	1	SOLENOID AS (12-VOLT) (FUEL SHUTOFF)	
	3	1	**315-5237**	1	LEVER-CONTROL	

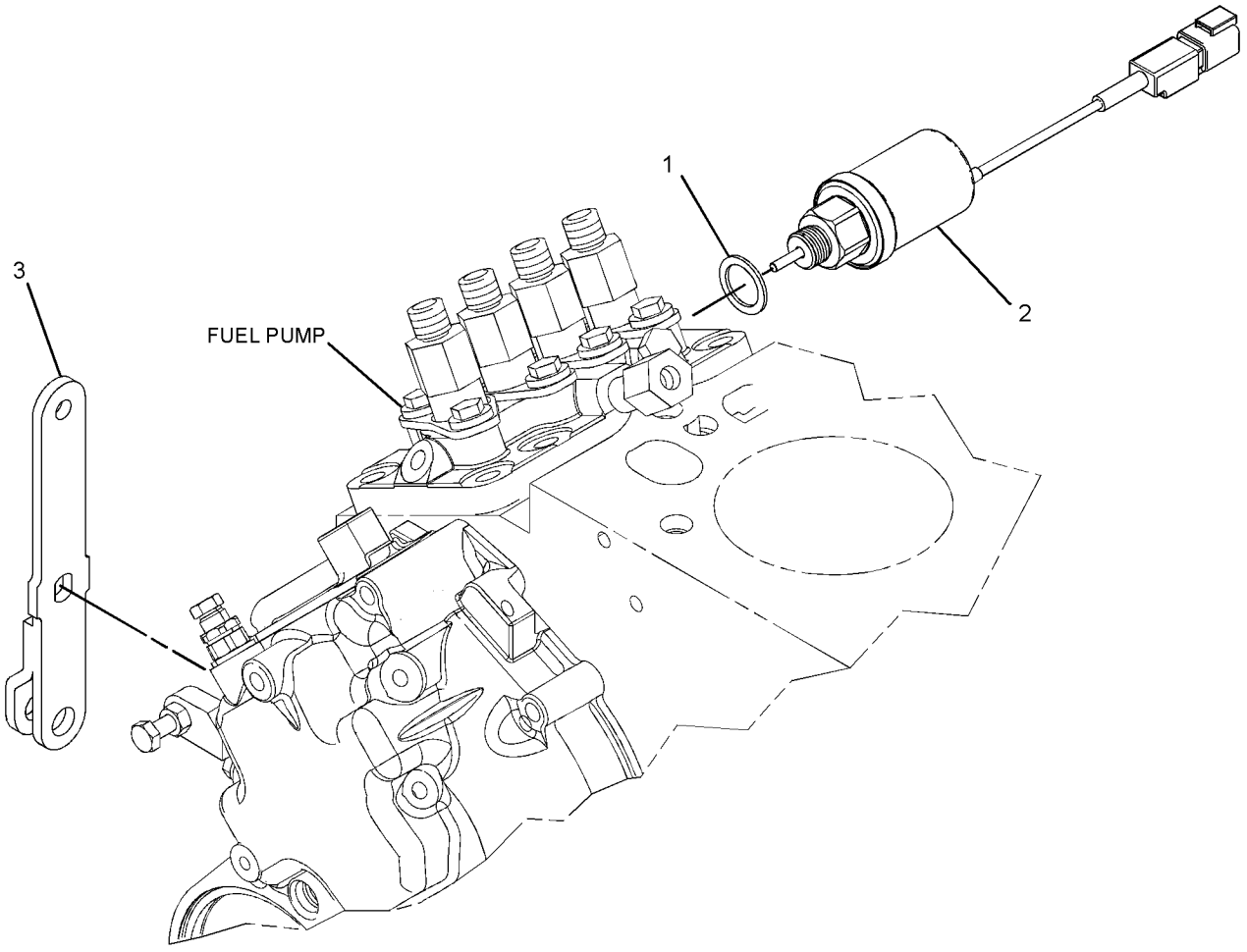

GRAPHIC #1 <END> g06160695

519-4412 SOLENOID GP-SHUTOFF

PART OF 433-1379, 433-1380 ENGINE AR, 435-1636, 435-1641, 435-1646, 435-1647, 587-9328, 610-7720, 610-7721 ENGINE AR-PRIMARY

SMCS-1259 **i08697205**

NOTE	REF NO	GRAPHIC REF	PART NUMBER	QTY	PART NAME 1 2 3 4 5 6 (PRODUCT LEVEL)	SEE PAGE
	1	1	**153-6412**	1	WASHER	
	2	1	**308-1914**	1	LEVER-CONTROL (THROTTLE)	
	3	1	**419-7640**	1	SOLENOID AS (12-VOLT) (FUEL SHUTOFF)	

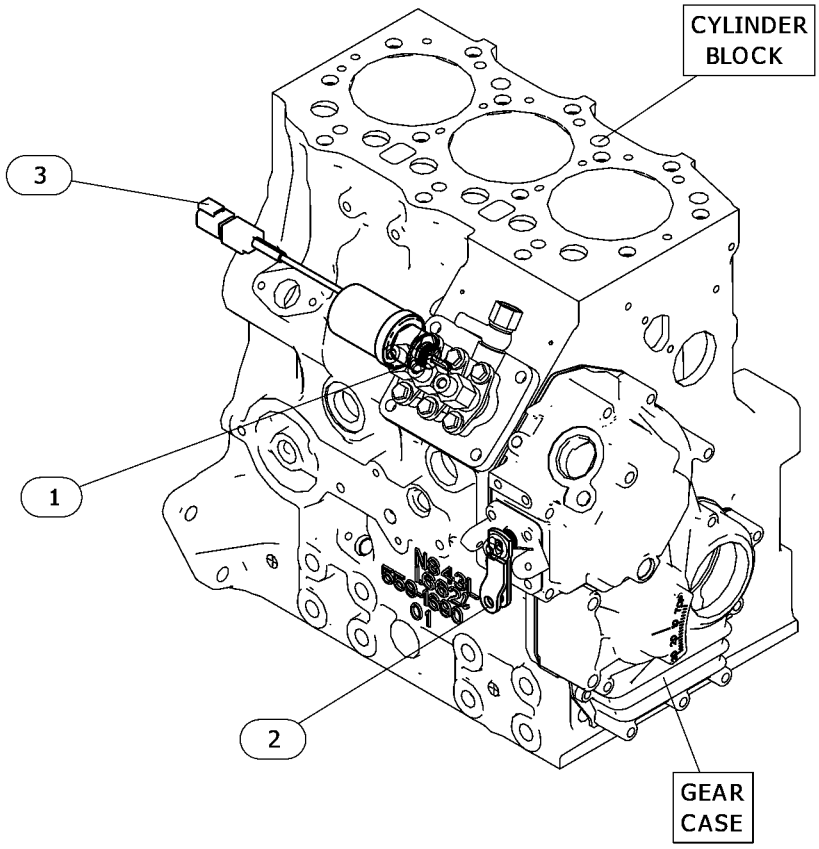

GRAPHIC #1 <END> g06616079

163-3361 STARTING MOTOR GP-ELECTRIC

12-VOLT

FIELD REPLACEMENT ORDER 339-2900—PAGE: 906, 333-5930—PAGE: 905

PART OF 308-2293 STARTING MOTOR GP-ELECTRIC

SMCS-1453 **i02385155**

NOTE	REF NO	GRAPHIC REF	PART NUMBER	QTY	PART NAME 1 2 3 4 5 6 (PRODUCT LEVEL)	SEE PAGE
	1	1	**242-7070**	1	BUSHING	
	2	1	**242-7071**	1	SOLENOID (STARTING MOTOR)	
	3	1	**242-7073**	1	BUSHING	
	4	1	**242-7074**	1	DRIVE-MOTOR	
	5	1	**242-7075**	1	HOLDER	
	6	1	**242-7076**	1	BUSHING	
	7	1	**242-7077**	1	KIT-STARTING MOTOR	
	8	1	**242-7078**	1	ARMATURE	

163-3361 **STARTING MOTOR GP-ELECTRIC (**contd.**)** **i02385155**

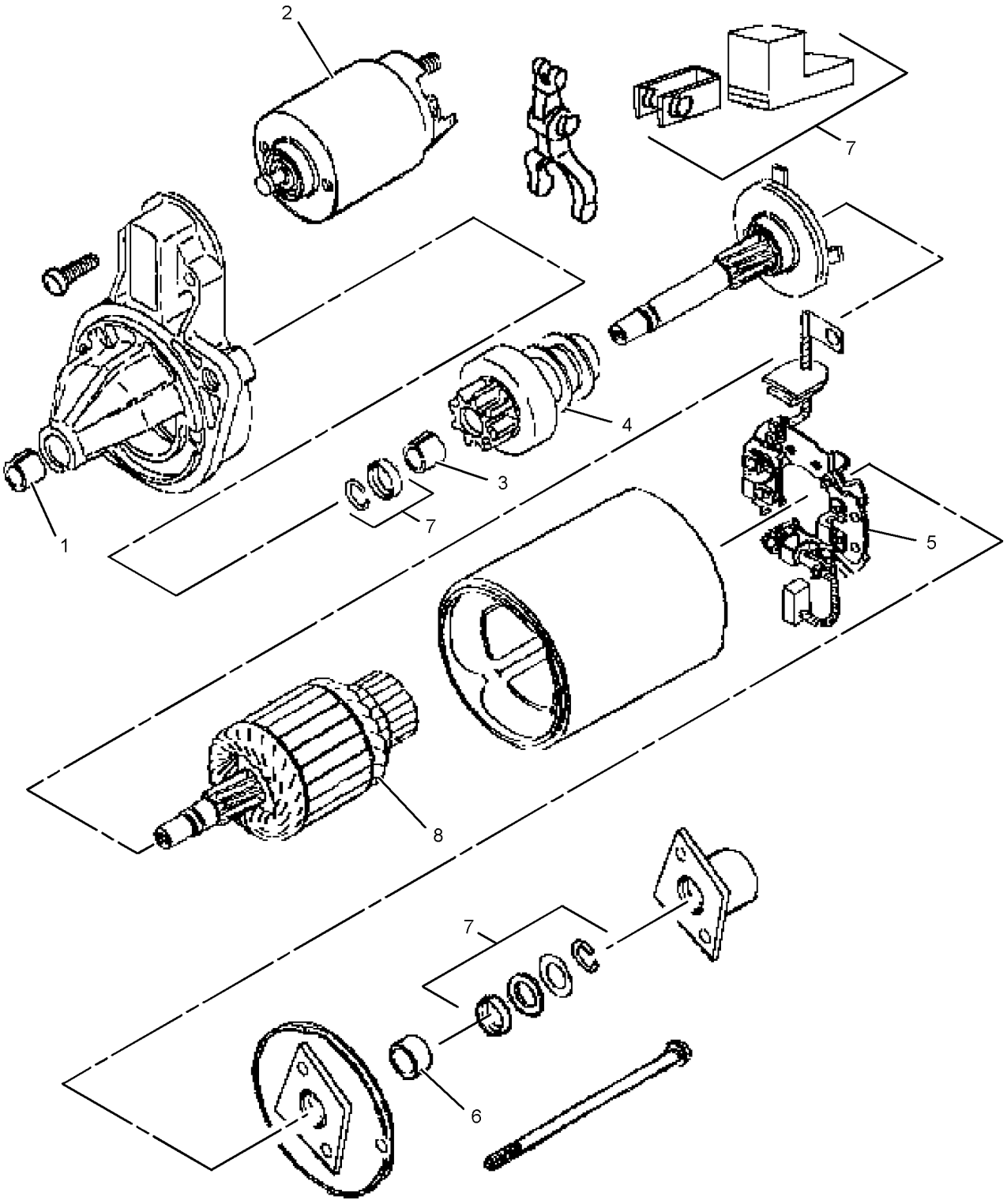

GRAPHIC #1 <END> g01158306

308-2293 STARTING MOTOR GP-ELECTRIC

TYPE 1

SMCS-1453 **i02743439**

NOTE	REF NO	GRAPHIC REF	PART NUMBER	QTY	PART NAME 1 2 3 4 5 6 (PRODUCT LEVEL)	SEE PAGE
Y	1	1	**163-3361**	1	STARTING MOTOR GP-ELECTRIC	898

Y - SEPARATE ILLUSTRATION

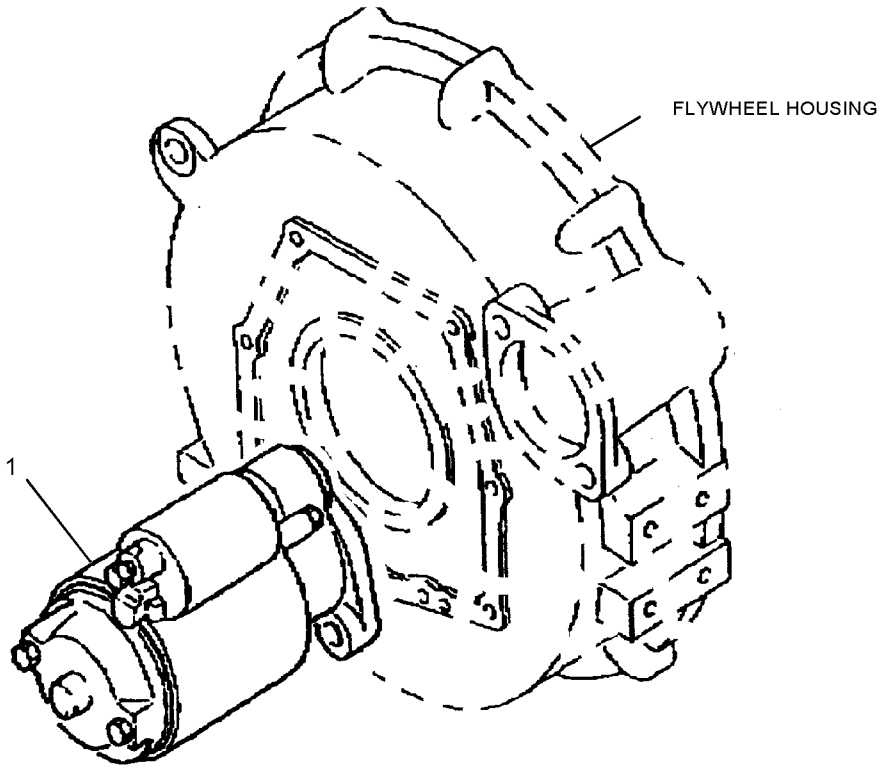

GRAPHIC #1 <END> g01140591

308-2293 STARTING MOTOR GP-ELECTRIC

TYPE 2

SMCS-1453 **i03395473**

NOTE	REF NO	GRAPHIC REF	PART NUMBER	QTY	PART NAME 1 2 3 4 5 6 (PRODUCT LEVEL)	SEE PAGE
CY	1	1	**333-5930**	1	STARTING MOTOR GP-ELECTRIC (12-VOLT)	905

C - CHANGE FROM PREVIOUS TYPE
Y - SEPARATE ILLUSTRATION

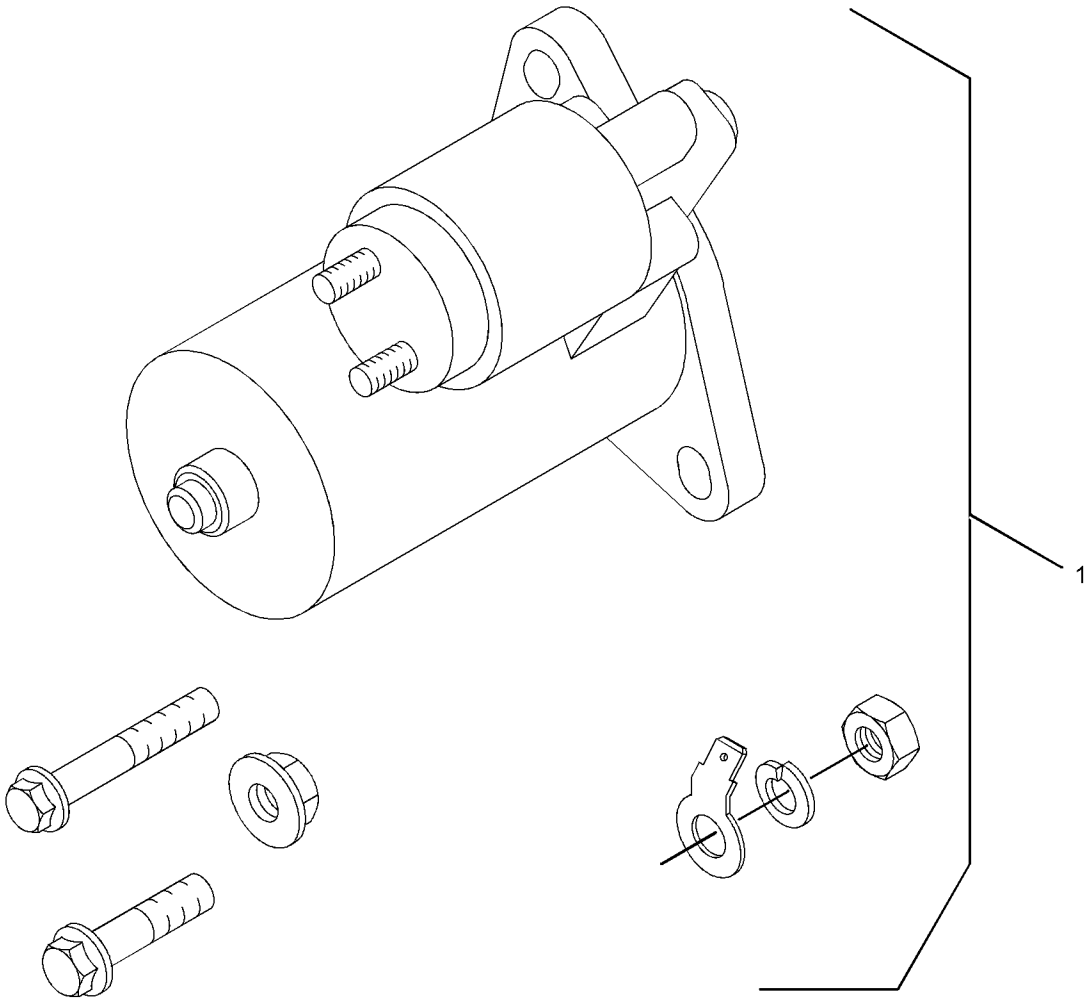

GRAPHIC #1 <END> g01762613

308-2293 STARTING MOTOR GP-ELECTRIC

PART OF 459-2953 ENGINE AR-PRIMARY

TYPE 3

SMCS-1453 **i05815111**

NOTE	REF NO	GRAPHIC REF	PART NUMBER	QTY	PART NAME 1 2 3 4 5 6 (PRODUCT LEVEL)	SEE PAGE
CY	1	1	*383-2725*	1	STARTING MOTOR GP-ELECTRIC	907

C - CHANGE FROM PREVIOUS TYPE
Y - SEPARATE ILLUSTRATION

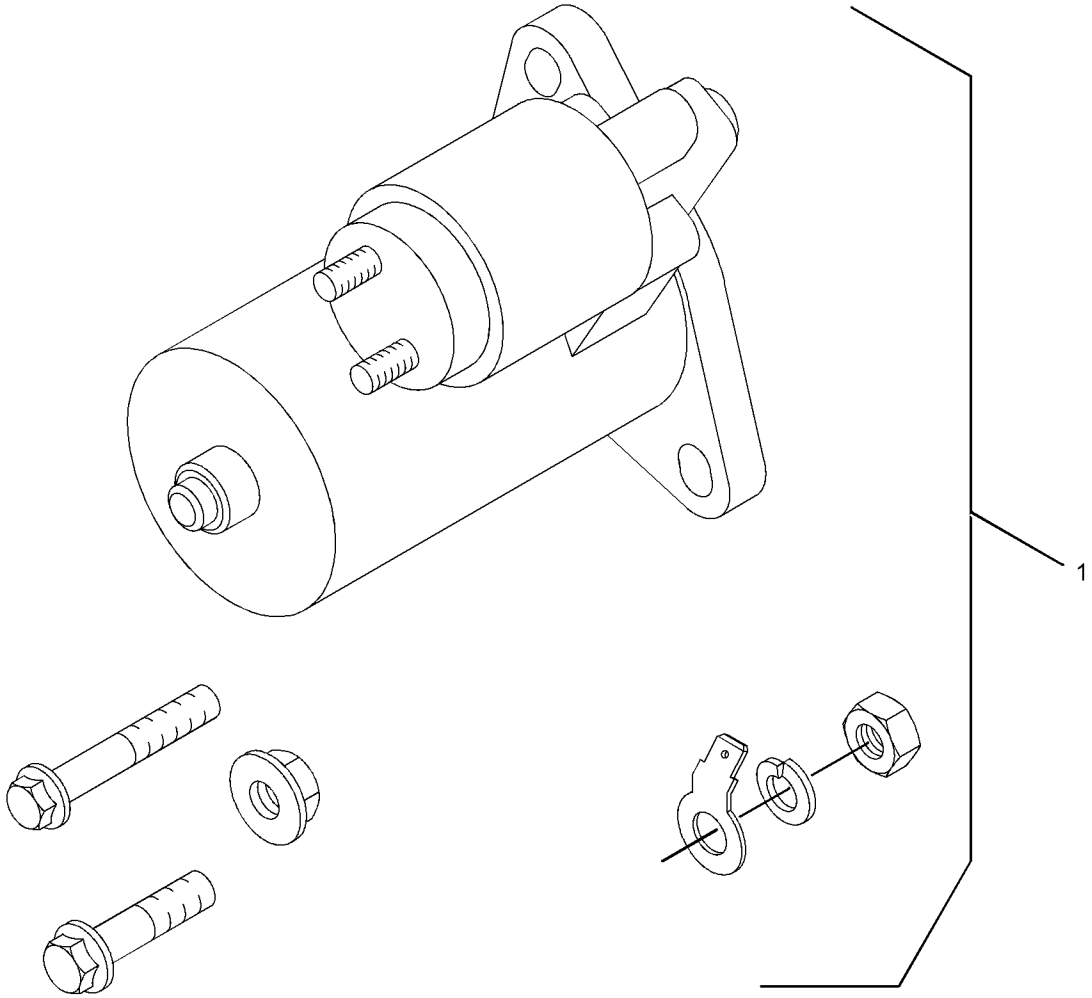

GRAPHIC #1 <END> g01762613

308-2293 STARTING MOTOR GP-ELECTRIC

PART OF 459-2953, 461-7892, 461-7894, 461-7895, 465-1477, 491-3396, 492-6602, 495-3121, 495-6243, 516-9335, 541-9277, 549-8284, 557-9727, 587-9328 ENGINE AR-PRIMARY

SMCS-1453 **i07668693**

NOTE	REF NO	GRAPHIC REF	PART NUMBER	QTY	PART NAME 1 2 3 4 5 6 (PRODUCT LEVEL)	SEE PAGE
C	1	1	**461-8764**	1	STARTING MOTOR-ELECTRIC (12-VOLT)	

C - CHANGE FROM PREVIOUS TYPE

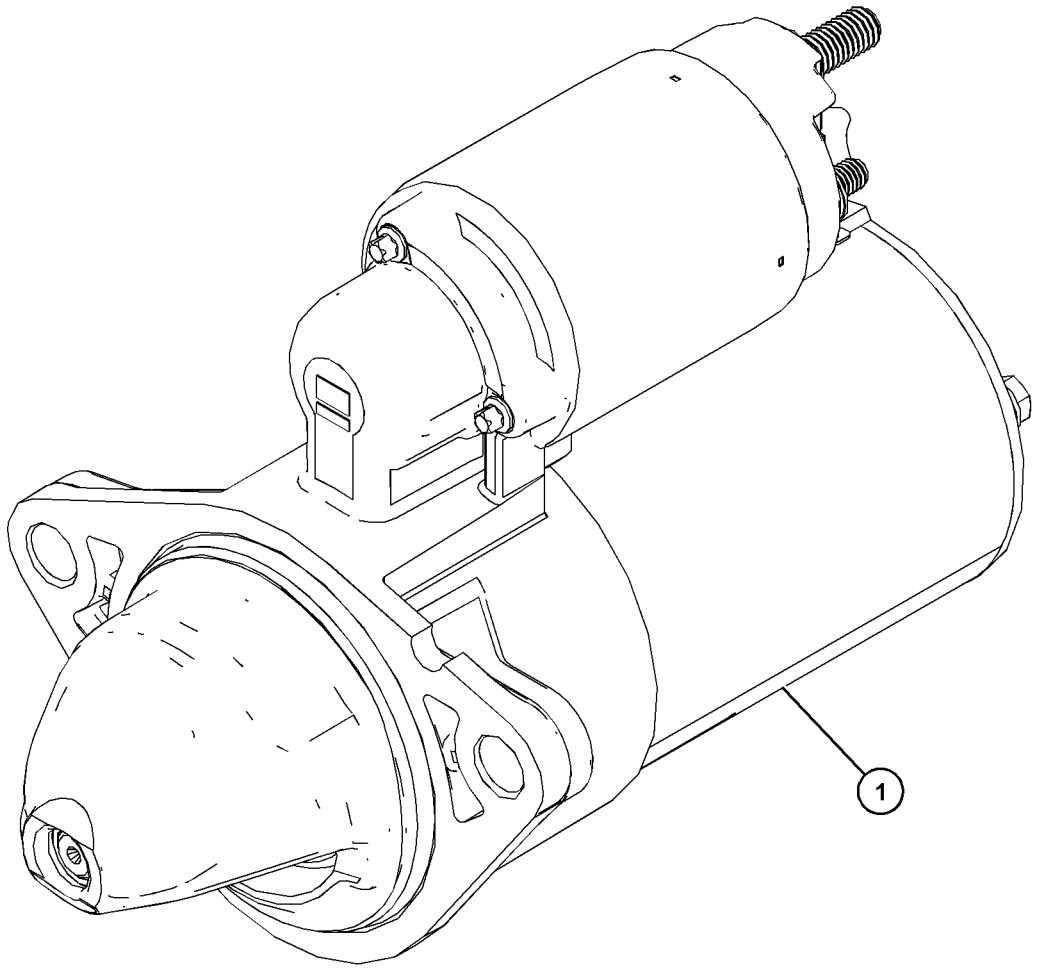

GRAPHIC #1 <END> g06390694

317-3036 STARTING MOTOR GP-ELECTRIC

S/N: G7L1-8317

SMCS-1453 **i06944133**

NOTE	REF NO	GRAPHIC REF	PART NUMBER	QTY	PART NAME 1 2 3 4 5 6 (PRODUCT LEVEL)	SEE PAGE
	1	1	**283-4752**	1	MOTOR AS-ELECTRIC (24-VOLT, 2.5-KW)	

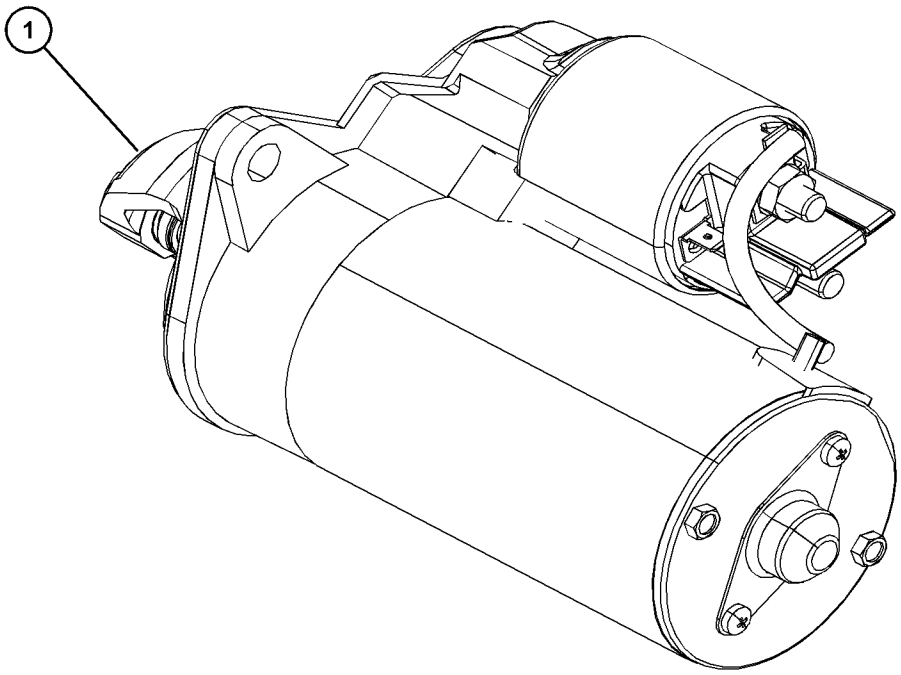

GRAPHIC #1 <END> g06207393

333-5930 STARTING MOTOR GP-ELECTRIC

12-VOLT

PART OF 308-2293 STARTING MOTOR GP-ELECTRIC

SMCS-1453 **i10708830**

NOTE	REF NO	GRAPHIC REF	PART NUMBER	QTY	PART NAME 1 2 3 4 5 6 (PRODUCT LEVEL)	SEE PAGE
M	1	1	**6I-0593**	2	BOLT (M10X1.5X30-MM)	
M	2	1	**175-7141**	2	NUT-HEX FLANGE (M10X1.5-THD)	
M	3	1	**140-8783**	2	BOLT (M10X1.5X45-MM)	
	4	1	**650-6035**	1	STARTING MOTOR GP-ELECTRIC (12-VOLT)	
		1	**451-7225**	1	FILM-IDENTIFICATION (CAT)	
					AVAILABLE REPAIR KIT(S):	
			333-7903	1	KIT-TERMINAL	
					(INCLUDES PARTS MARKED "J" IN THE GRAPHIC)	

M - METRIC PART

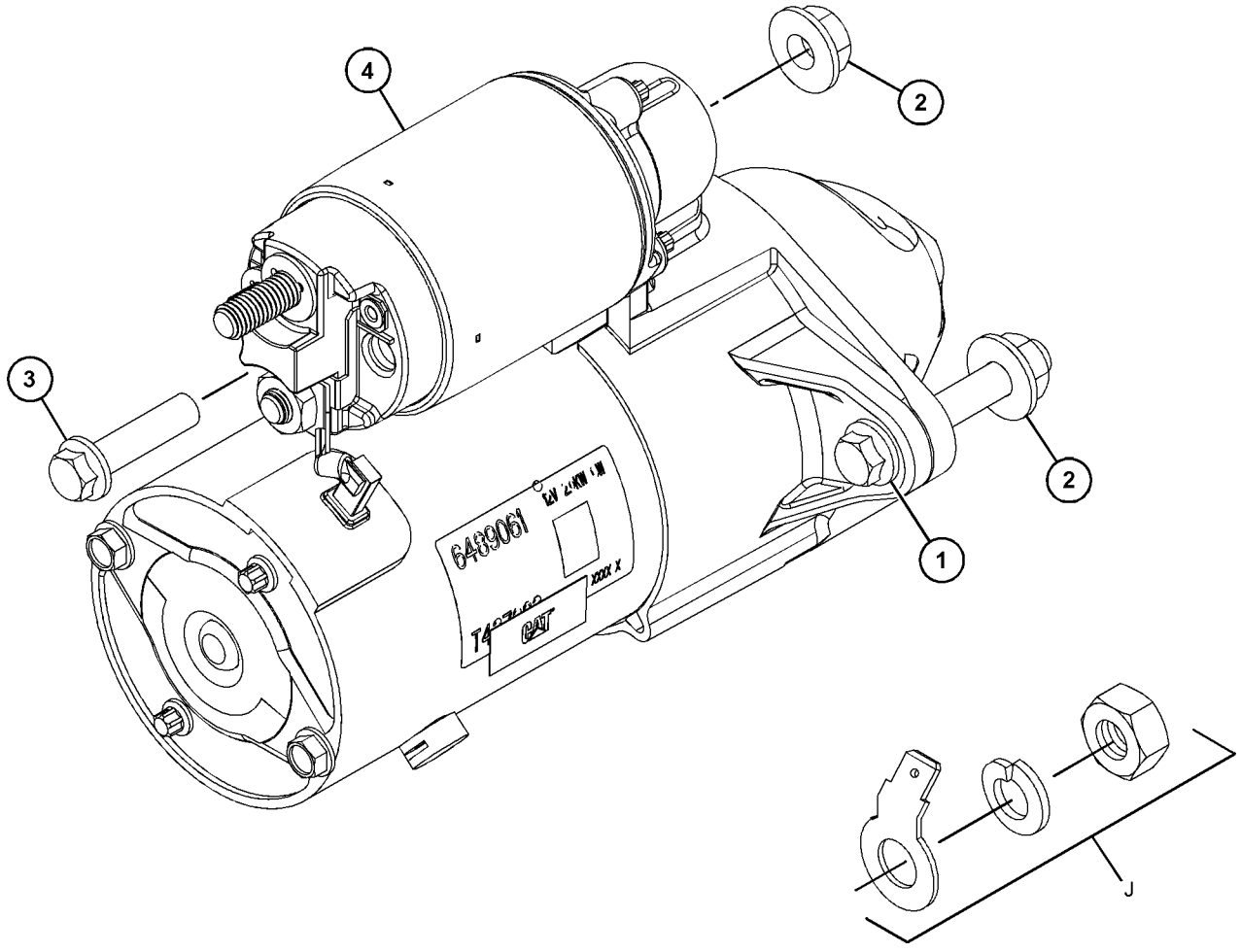

GRAPHIC #1 <END> g07963109

339-2900 STARTING MOTOR GP-ELECTRIC

FOR USE WITH SALES MODELS C1.5, 3013, & 3013C ONLY

SMCS-1453 **i10383533**

NOTE	REF NO	GRAPHIC REF	PART NUMBER	QTY	PART NAME 1 2 3 4 5 6 (PRODUCT LEVEL)	SEE PAGE
M	1	1	**6I-0593**	2	BOLT (M10X1.5X30-MM)	
M	2	1	**175-7141**	2	NUT-HEX FLANGE (M10X1.5-THD)	
M	3	1	**140-8783**	2	BOLT (M10X1.5X45-MM)	
	4	1	**333-7903**	1	KIT-TERMINAL	
					(INCLUDES TERMINAL, NUT & WASHER SPRING)	
	5	1	*650-6038*	1	STARTING MOTOR GP-ELECTRIC	
		1	**451-7225**	1	FILM-IDENTIFICATION (CAT)	

M - METRIC PART

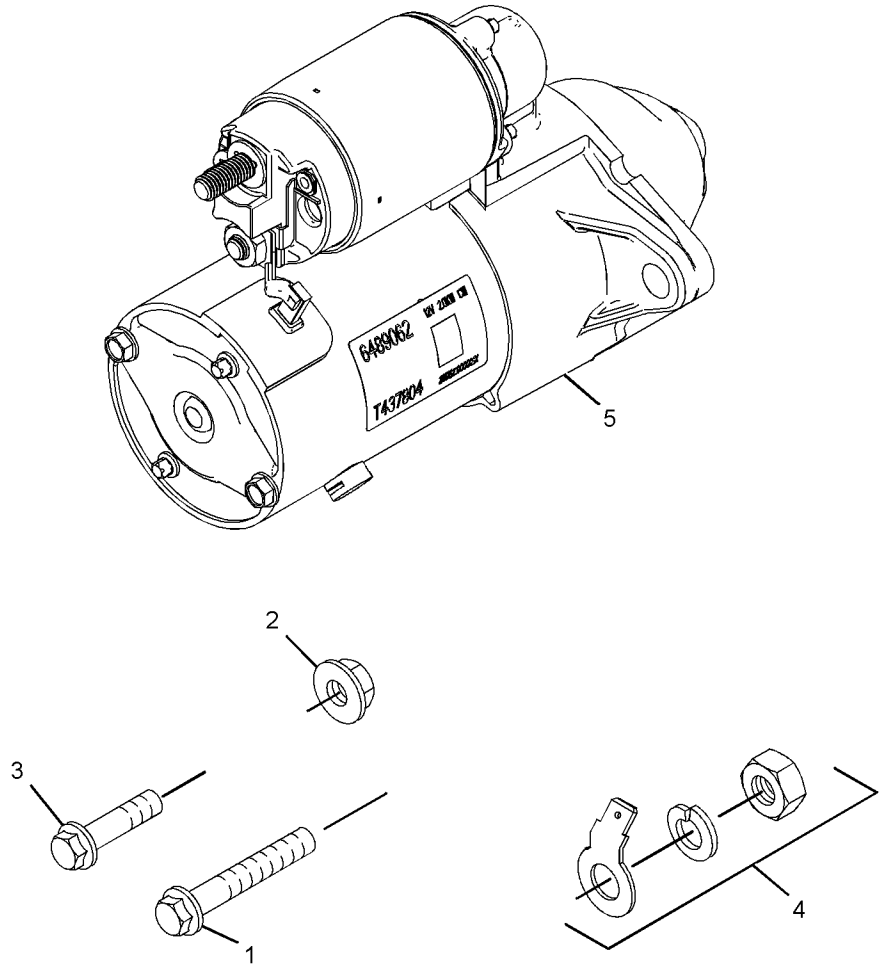

GRAPHIC #1 <END> g07893162

383-2725 STARTING MOTOR GP-ELECTRIC

FIELD REPLACEMENT ORDER 333-5930—PAGE: 905

PART OF 308-2293 STARTING MOTOR GP-ELECTRIC

SMCS-1453 **i04593136**

NOTE	REF NO	GRAPHIC REF	PART NUMBER	QTY	PART NAME 1 2 3 4 5 6 (PRODUCT LEVEL)	SEE PAGE
			(NO SERVICED PARTS)			

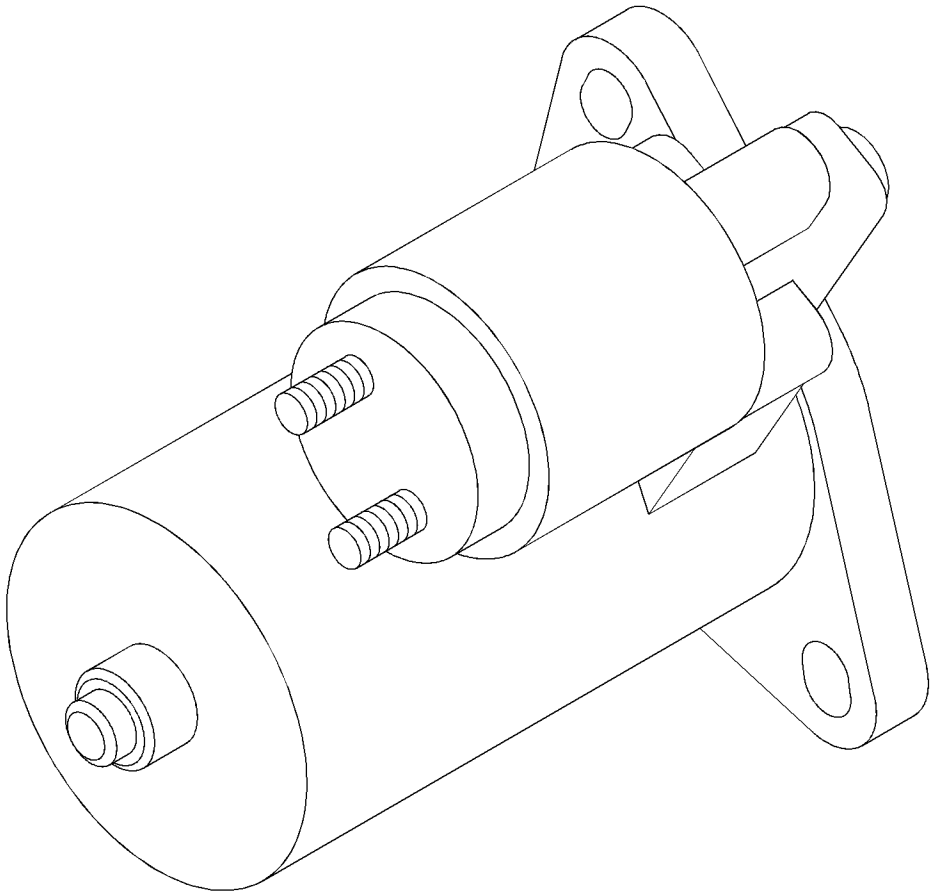

GRAPHIC #1 <END> g02157919

398-4818 STARTING MOTOR GP-ELECTRIC

PART OF 587-9328, 610-7720, 610-7721 ENGINE AR-PRIMARY

SMCS-1453 **i07638384**

NOTE	REF NO	GRAPHIC REF	PART NUMBER	QTY	PART NAME 1 2 3 4 5 6 (PRODUCT LEVEL)	SEE PAGE
M	1	1	**6I-0593**	2	BOLT (M10X1.5X30-MM)	
	2	1	**461-8764**	1	STARTING MOTOR-ELECTRIC (12-VOLT)	

M - METRIC PART

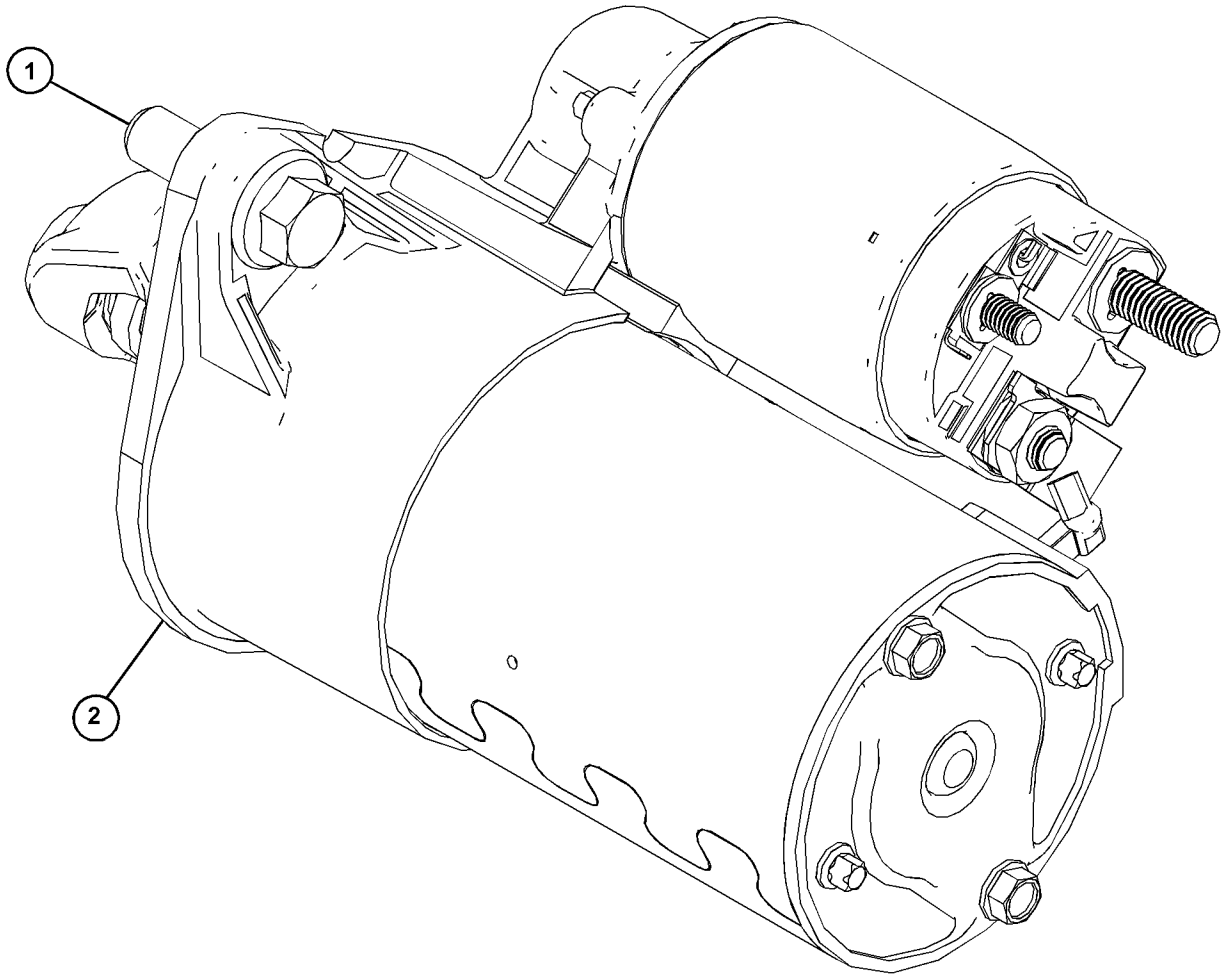

GRAPHIC #1 <END> g06392376

443-9113 STARTING MOTOR GP-ELECTRIC

S/N: G7L27601-UP

12-VOLT

SMCS-1453 **i10682366**

NOTE	REF NO	GRAPHIC REF	PART NUMBER	QTY	PART NAME 1 2 3 4 5 6 (PRODUCT LEVEL)	SEE PAGE
	1	1	**648-9061**	1	MOTOR GP-ELECTRIC	
M	2	1	**175-7141**	2	NUT-HEX FLANGE (M10X1.5-THD)	
M	3	1	**6I-0593**	2	BOLT (M10X1.5X30-MM)	

M - METRIC PART

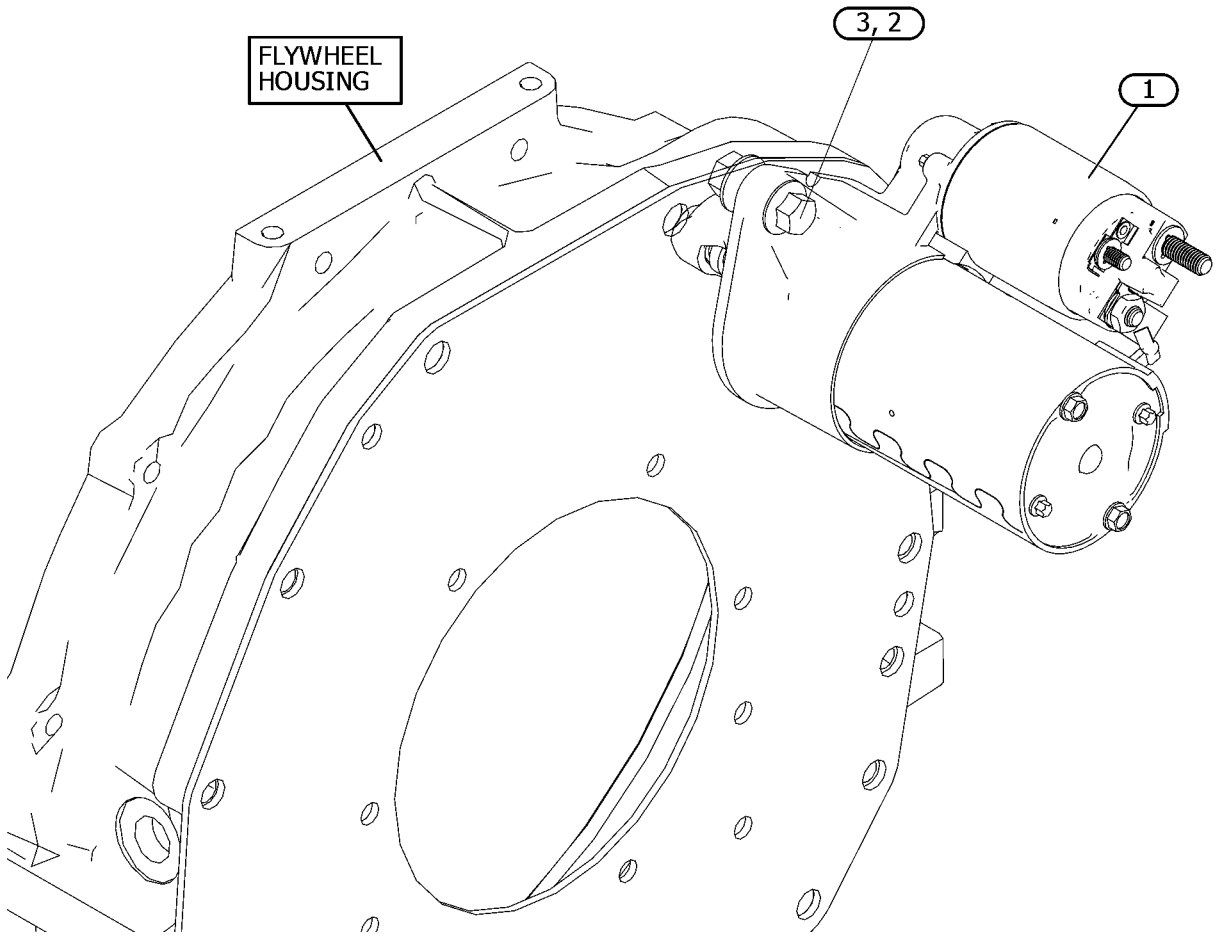

GRAPHIC #1 <END> g07953762

499-5166 STARTING MOTOR GP-ELECTRIC

S/N: G7L8318-UP

SMCS-1453 **i06944152**

NOTE	REF NO	GRAPHIC REF	PART NUMBER	QTY	PART NAME 1 2 3 4 5 6 (PRODUCT LEVEL)	SEE PAGE
	1	1	**283-4752**	1	MOTOR AS-ELECTRIC (24-VOLT, 2.5-KW)	
	2	1	**434-1868**	1	FILM-IDENTIFICATION (CAT)	

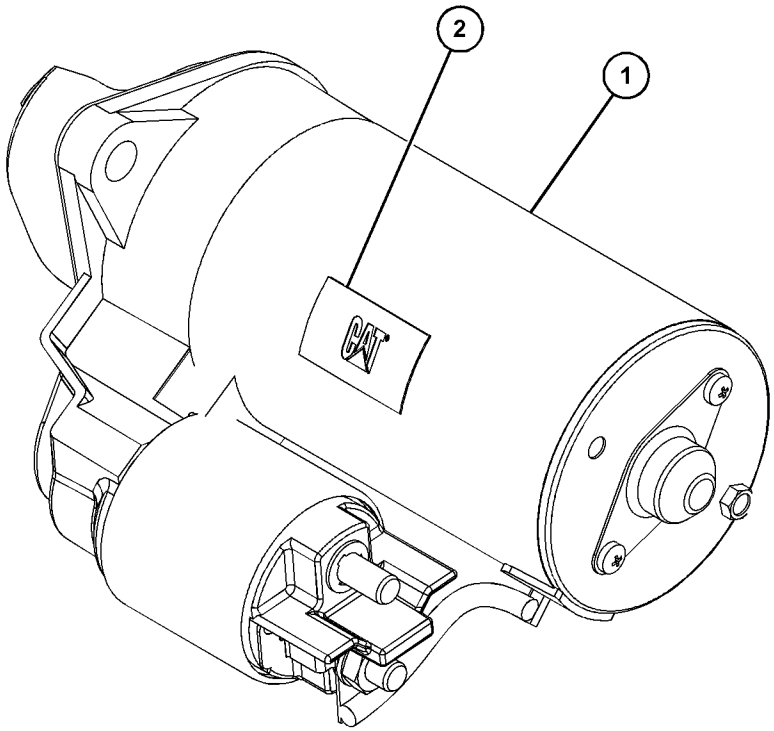

GRAPHIC #1 <END> g06206134

308-2312 SWITCH GP-PRESSURE—ENGINE OIL

PART OF 587-9328 ENGINE AR-PRIMARY

SMCS-7400, 7421 **i05735781**

NOTE	REF NO	GRAPHIC REF	PART NUMBER	QTY	PART NAME 1 2 3 4 5 6 (PRODUCT LEVEL)	SEE PAGE
	1	1	**153-5936**	2	WASHER (8.2X14.5X1-MM)	
M	2	1	**153-6881**	1	BOLT (M8X1.25X18-MM)	
	3	1	**452-3668**	1	SWITCH-PRESSURE (ENGINE OIL)	

M - METRIC PART

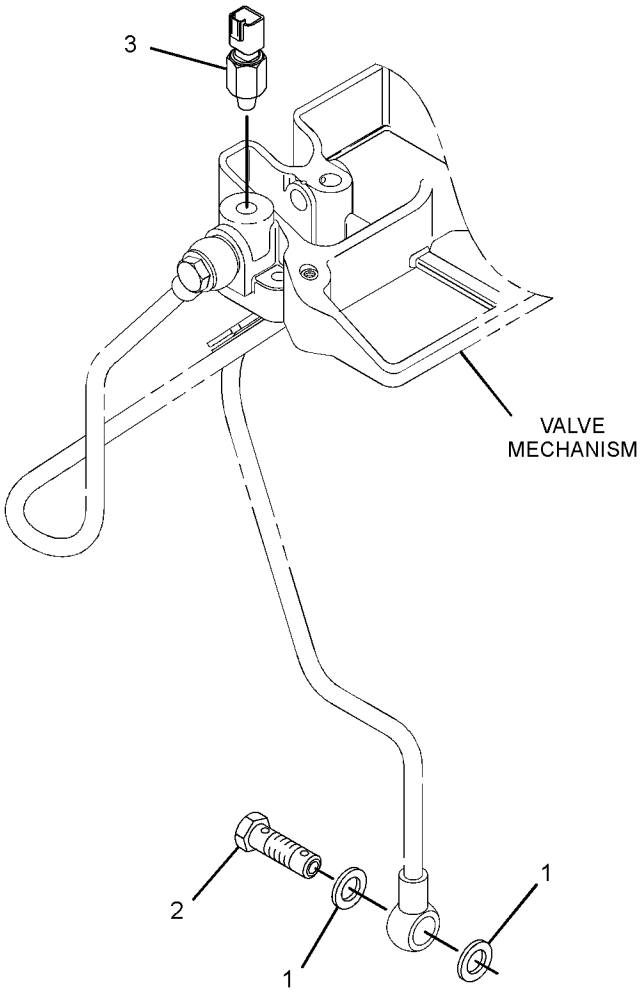

GRAPHIC #1 <END> g03651562

315-7819 SWITCH GP-PRESSURE—ENGINE OIL

PART OF 435-1645 CYLINDER BLOCK GP-LONG, 433-1379, 433-1380, 435-1637, 435-1638 ENGINE AR, 435-1636, 435-1641, 435-1642, 435-1646, 435-1647, 435-1656, 435-1658, 459-2953, 461-7892, 491-3396, 495-3121, 495-6243, 516-9335, 541-9277, 557-9727 ENGINE AR-PRIMARY

SMCS-7400, 7421 **i06299942**

NOTE	REF NO	GRAPHIC REF	PART NUMBER	QTY	PART NAME 1 2 3 4 5 6 (PRODUCT LEVEL)	SEE PAGE
	1	1	**153-5936**	2	WASHER (8.2X14.5X1-MM)	
	2	1	**183-1165**	1	PLUG	
	3	1	**456-7377**	1	SWITCH (OIL PRESSURE) (ENGINE OIL)	
	4	1	**438-1431**	1	ADAPTER	

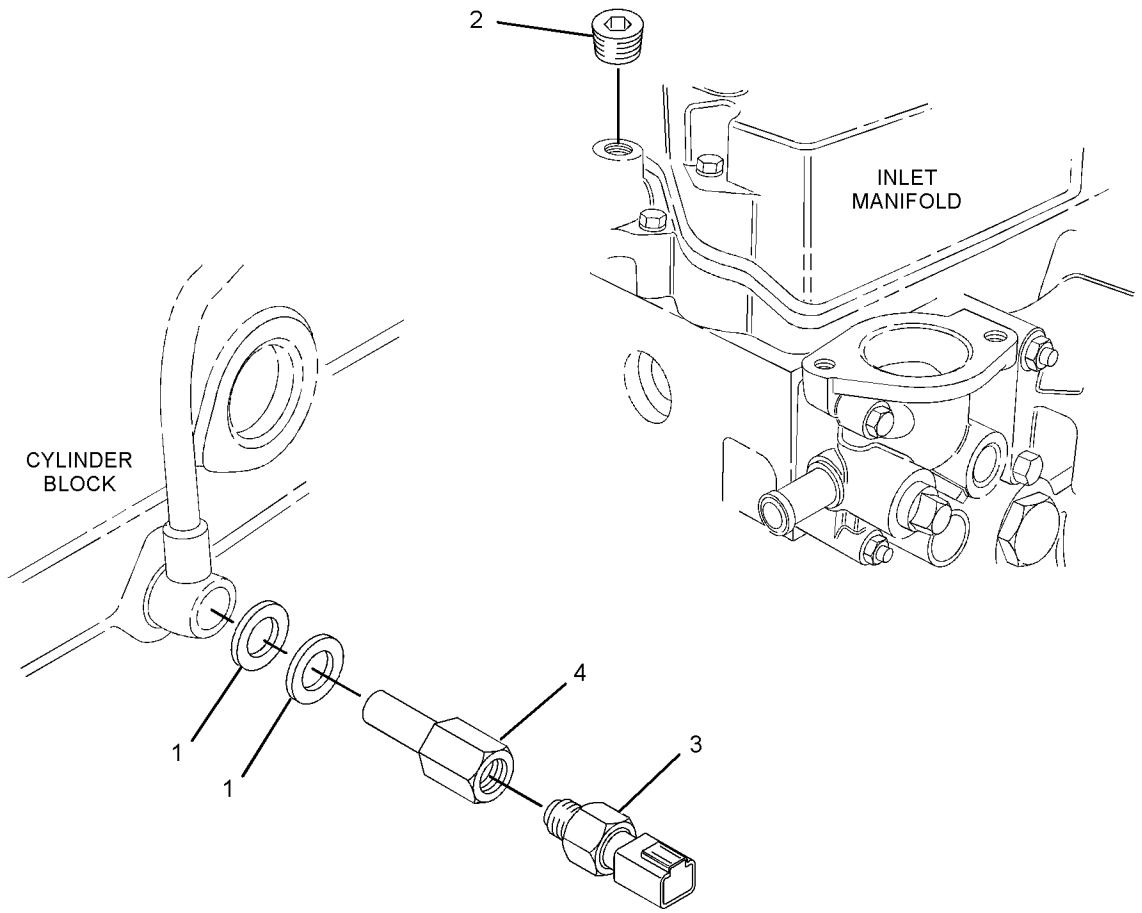

GRAPHIC #1 <END> g03505824

316-6890 SWITCH GP-PRESSURE

TYPE 1

SMCS-7400, 7421 **i06619172**

NOTE	REF NO	GRAPHIC REF	PART NUMBER	QTY	PART NAME 1 2 3 4 5 6 (PRODUCT LEVEL)	SEE PAGE
	1	1	**153-5936**	2	WASHER (8.2X14.5X1-MM)	
	2	1	**183-1165**	1	PLUG	
	3	1	**456-7377**	1	SWITCH (OIL PRESSURE) (ENGINE OIL)	
	4	1	**438-1431**	1	ADAPTER	

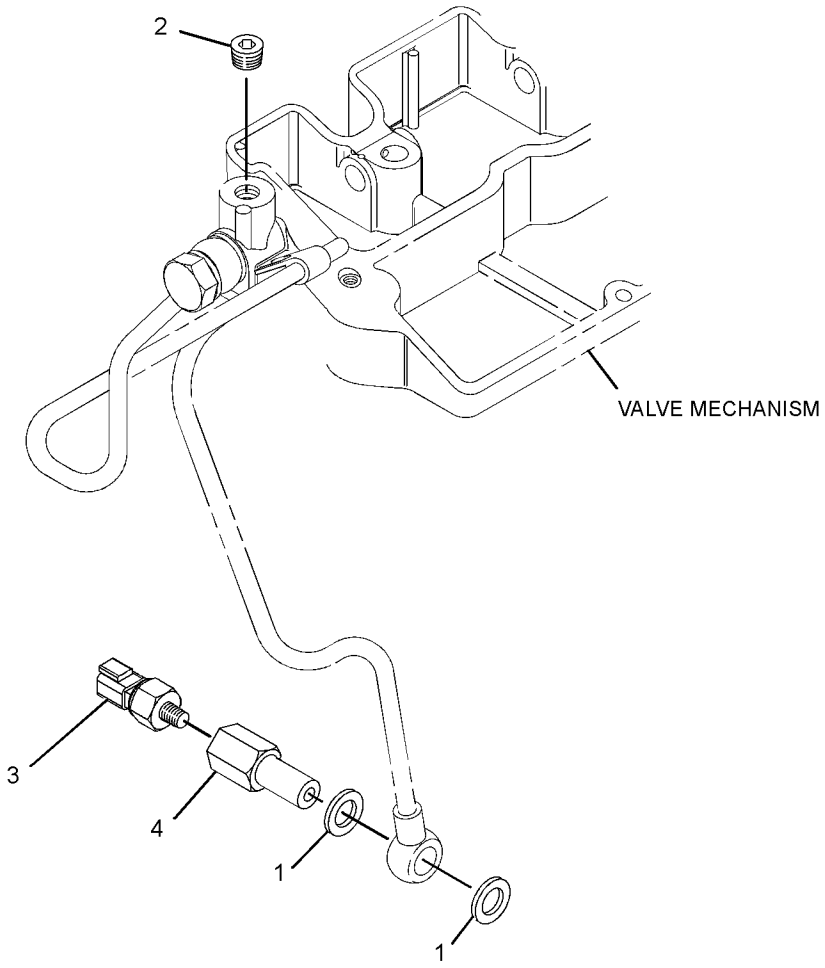

GRAPHIC #1 <END> g03505978

316-6890 SWITCH GP-PRESSURE

TYPE 2

SMCS-7400, 7421 **i07052865**

NOTE	REF NO	GRAPHIC REF	PART NUMBER	QTY	PART NAME 1 2 3 4 5 6 (PRODUCT LEVEL)	SEE PAGE
	1	1	**153-5936**	2	WASHER (8.2X14.5X1-MM)	
	2	1	**183-1165**	1	PLUG	
C	3	1	**484-0882**	1	SWITCH-OIL PRESSURE (ENGINE OIL)	

C - CHANGE FROM PREVIOUS TYPE

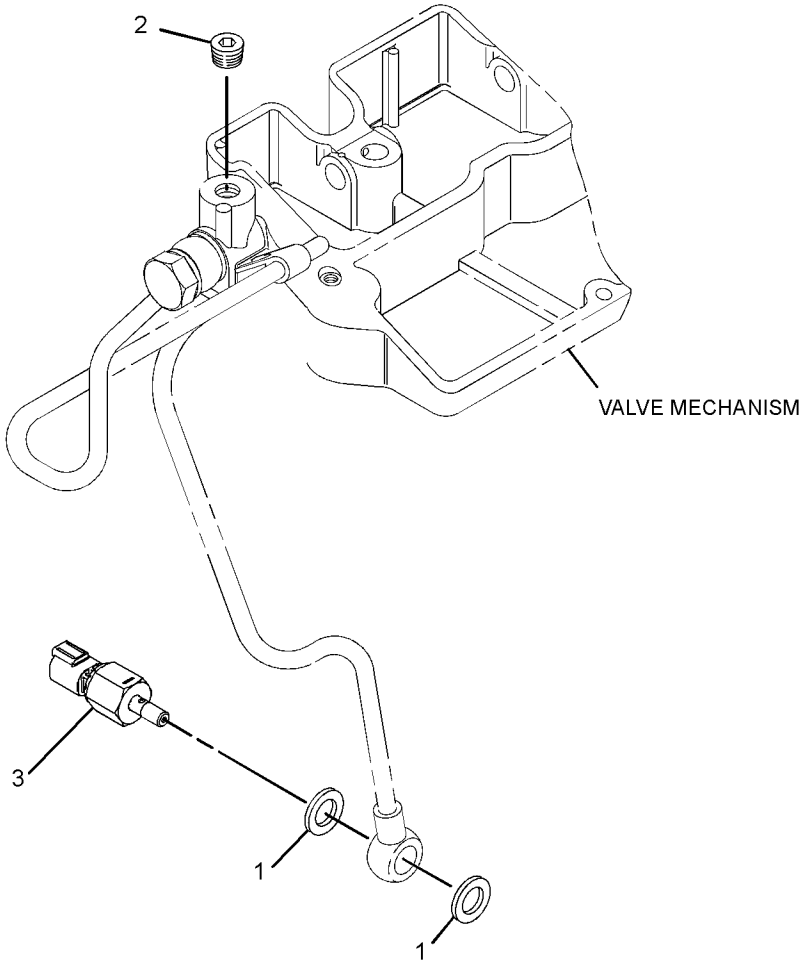

GRAPHIC #1 <END> g06210509

321-4261 SWITCH GP-PRESSURE

TYPE 1

SMCS-7400, 7421 **i06586165**

NOTE	REF NO	GRAPHIC REF	PART NUMBER	QTY	PART NAME 1 2 3 4 5 6 (PRODUCT LEVEL)	SEE PAGE
	1	1	**153-5936**	2	WASHER (8.2X14.5X1-MM)	
	2	1	**183-1165**	1	PLUG	
	3	1	**271-5018**	1	SWITCH-PRESSURE (ENGINE OIL)	
	4	1	**438-1431**	1	ADAPTER	

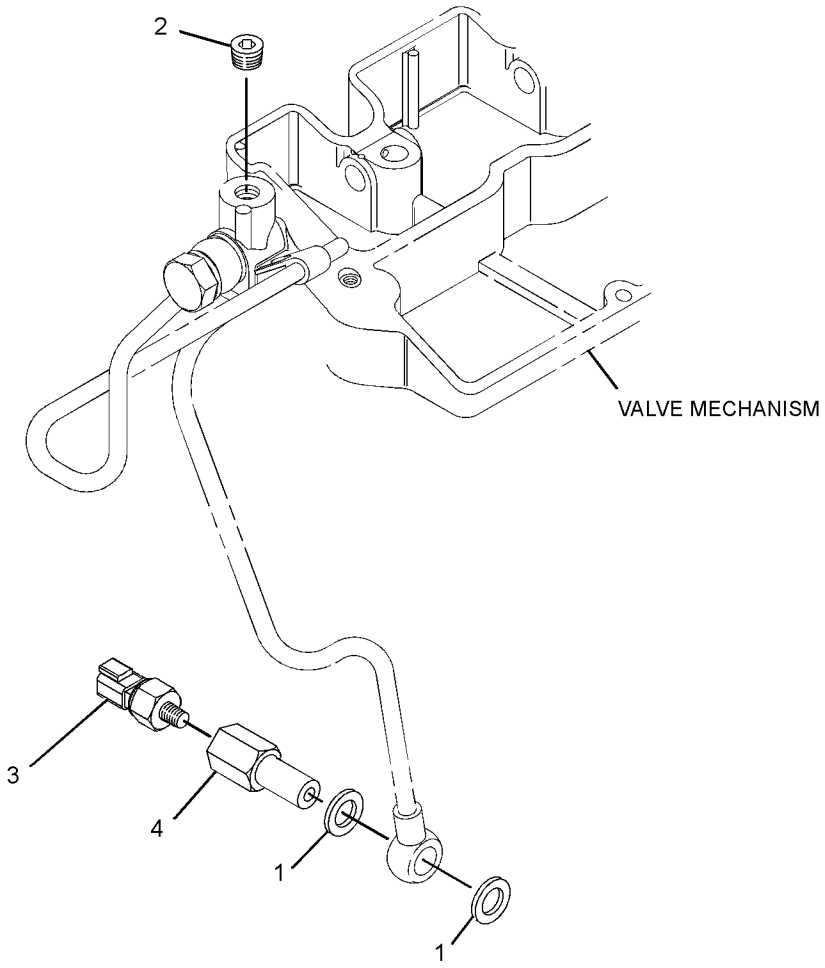

GRAPHIC #1 <END> g03505978

321-4261 SWITCH GP-PRESSURE

TYPE 2

SMCS-7400, 7421 **i06991815**

NOTE	REF NO	GRAPHIC REF	PART NUMBER	QTY	PART NAME 1 2 3 4 5 6 (PRODUCT LEVEL)	SEE PAGE
	1	1	**153-5936**	2	WASHER (8.2X14.5X1-MM)	
	2	1	**183-1165**	1	PLUG	
C	3	1	**484-0884**	1	SWITCH-OIL PRESSURE	

C - CHANGE FROM PREVIOUS TYPE

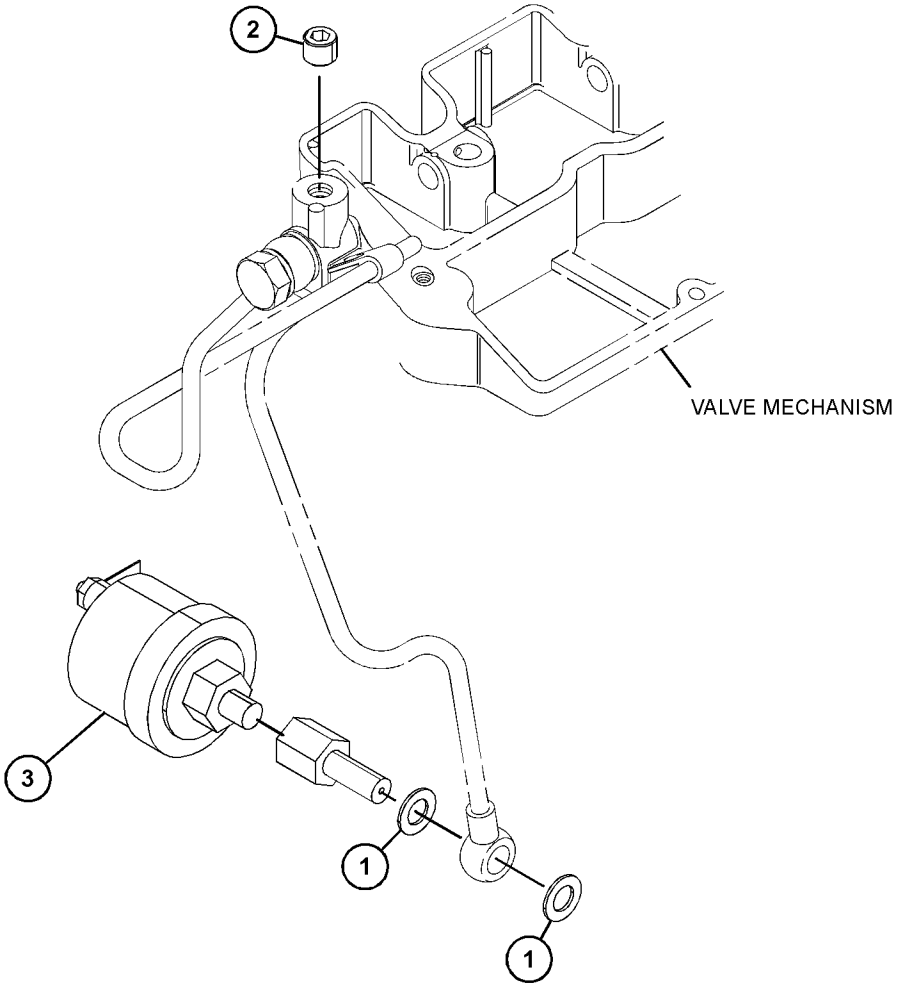

GRAPHIC #1 <END> g06206662

334-0268 SWITCH GP-PRESSURE

PART OF 461-7895 ENGINE AR-PRIMARY

SMCS-7400, 7421 **i04562512**

NOTE	REF NO	GRAPHIC REF	PART NUMBER	QTY	PART NAME 1 2 3 4 5 6 (PRODUCT LEVEL)	SEE PAGE
	1	1	**153-5936**	2	WASHER (8.2X14.5X1-MM)	
M	2	1	**153-6881**	1	BOLT (M8X1.25X18-MM)	
	3	1	**252-1747**	1	SWITCH-PRESSURE (ENGINE OIL)	

M - METRIC PART

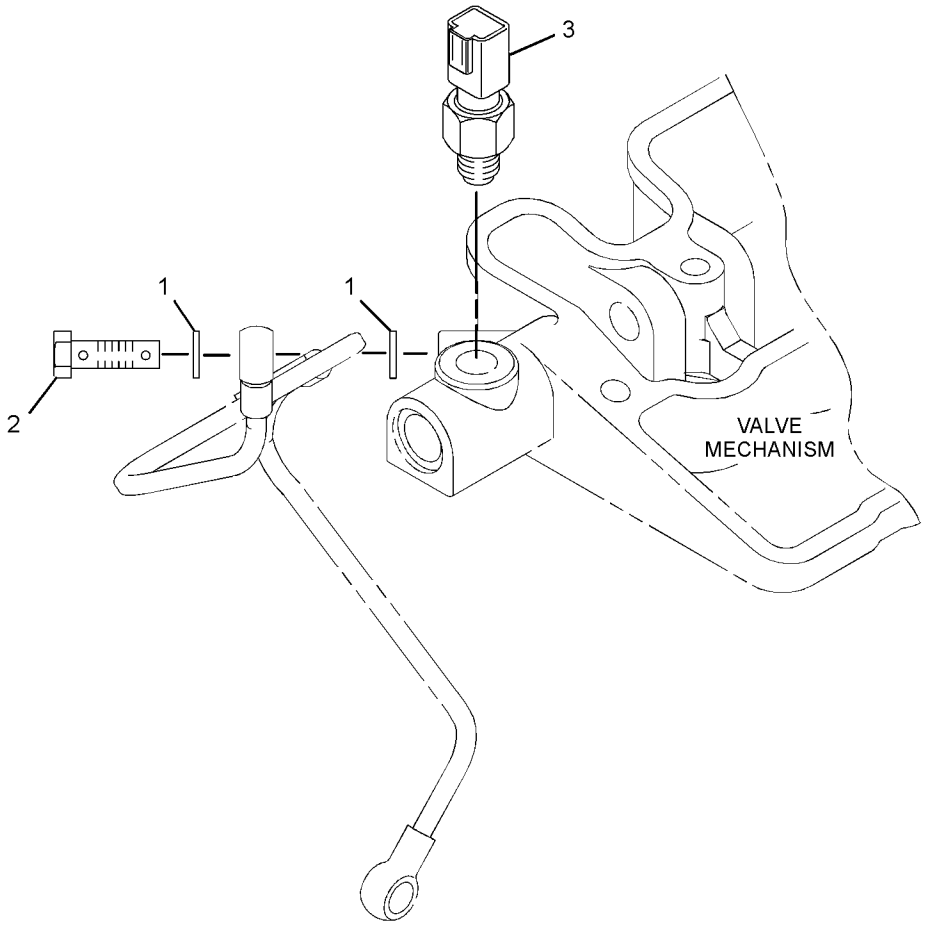

GRAPHIC #1 <END> g01650813

520-0722 SWITCH GP-PRESSURE

PART OF 461-7894, 465-1477 ENGINE AR-PRIMARY

SMCS-7400, 7421 **i06991902**

NOTE	REF NO	GRAPHIC REF	PART NUMBER	QTY	PART NAME 1 2 3 4 5 6 (PRODUCT LEVEL)	SEE PAGE
	1	1	**153-5936**	2	WASHER (8.2X14.5X1-MM)	
	2	1	**183-1165**	1	PLUG	
	3	1	**438-1431**	1	ADAPTER	

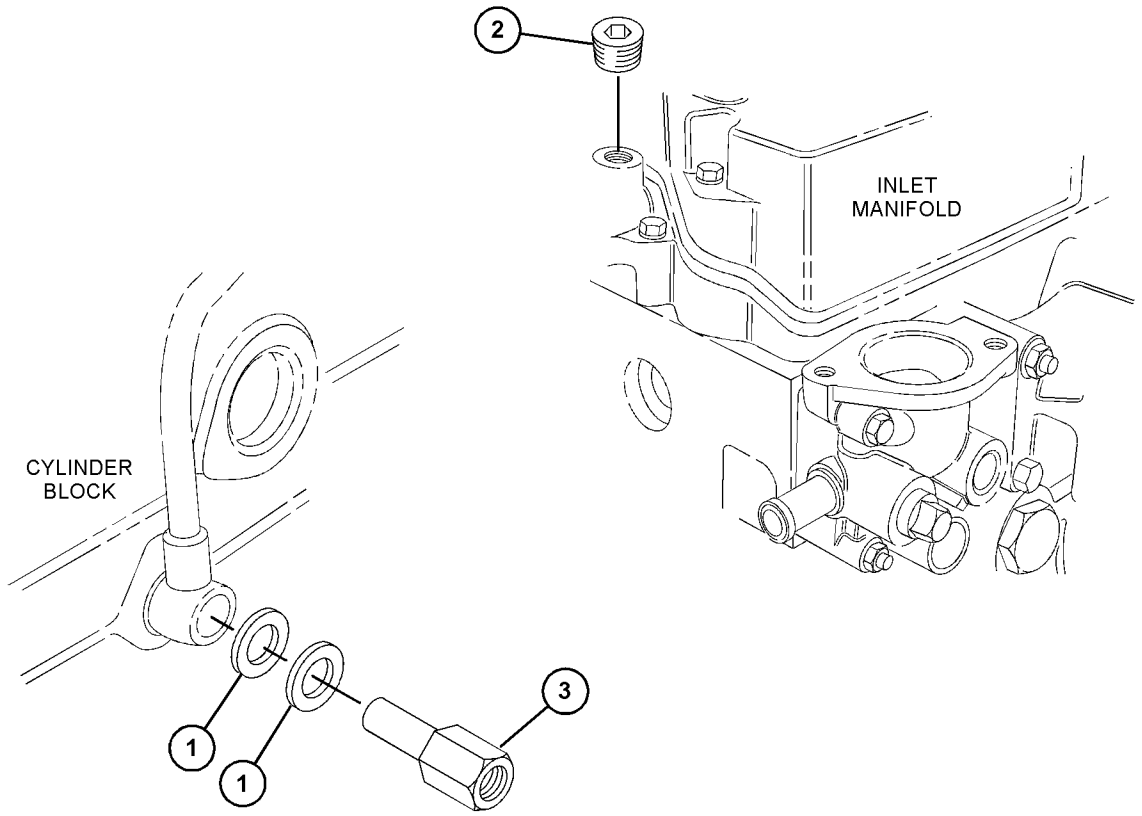

GRAPHIC #1 <END> g06205218

532-8314 SWITCH GP-PRESSURE

PART OF 587-9328 ENGINE AR-PRIMARY

SMCS-7400, 7421 **i10318283**

NOTE	REF NO	GRAPHIC REF	PART NUMBER	QTY	PART NAME 1 2 3 4 5 6 (PRODUCT LEVEL)	SEE PAGE
	1	1	**153-5936**	4	WASHER (8.2X14.5X1-MM)	
M	2	1	**153-6881**	2	BOLT (M8X1.25X18-MM)	
	3	1	**452-3668**	1	SWITCH-PRESSURE (OIL PRESSURE)	

M - METRIC PART

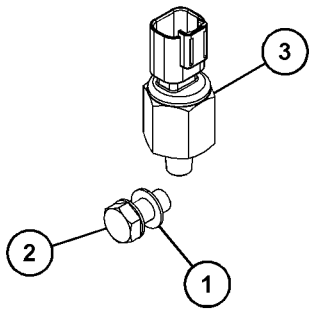

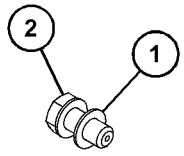

GRAPHIC #1 <END> g06315249

584-9822 SWITCH GP-PRESSURE–ALARM

PART OF 433-1379, 433-1380 ENGINE AR, 435-1636, 435-1641, 435-1646, 435-1647, 610-7720, 610-7721 ENGINE AR-PRIMARY

SMCS-7400, 7421 **i09694009**

NOTE	REF NO	GRAPHIC REF	PART NUMBER	QTY	PART NAME 1 2 3 4 5 6 (PRODUCT LEVEL)	SEE PAGE
	1	1	**153-5936**	4	WASHER (8.2X14.5X1-MM)	
M	2	1	**153-6881**	1	BOLT (M8X1.25X18-MM)	
	3	1	**458-6608**	1	PLUG-SEAL	
	4	1	**484-0882**	1	SWITCH-OIL PRESSURE	

M - METRIC PART

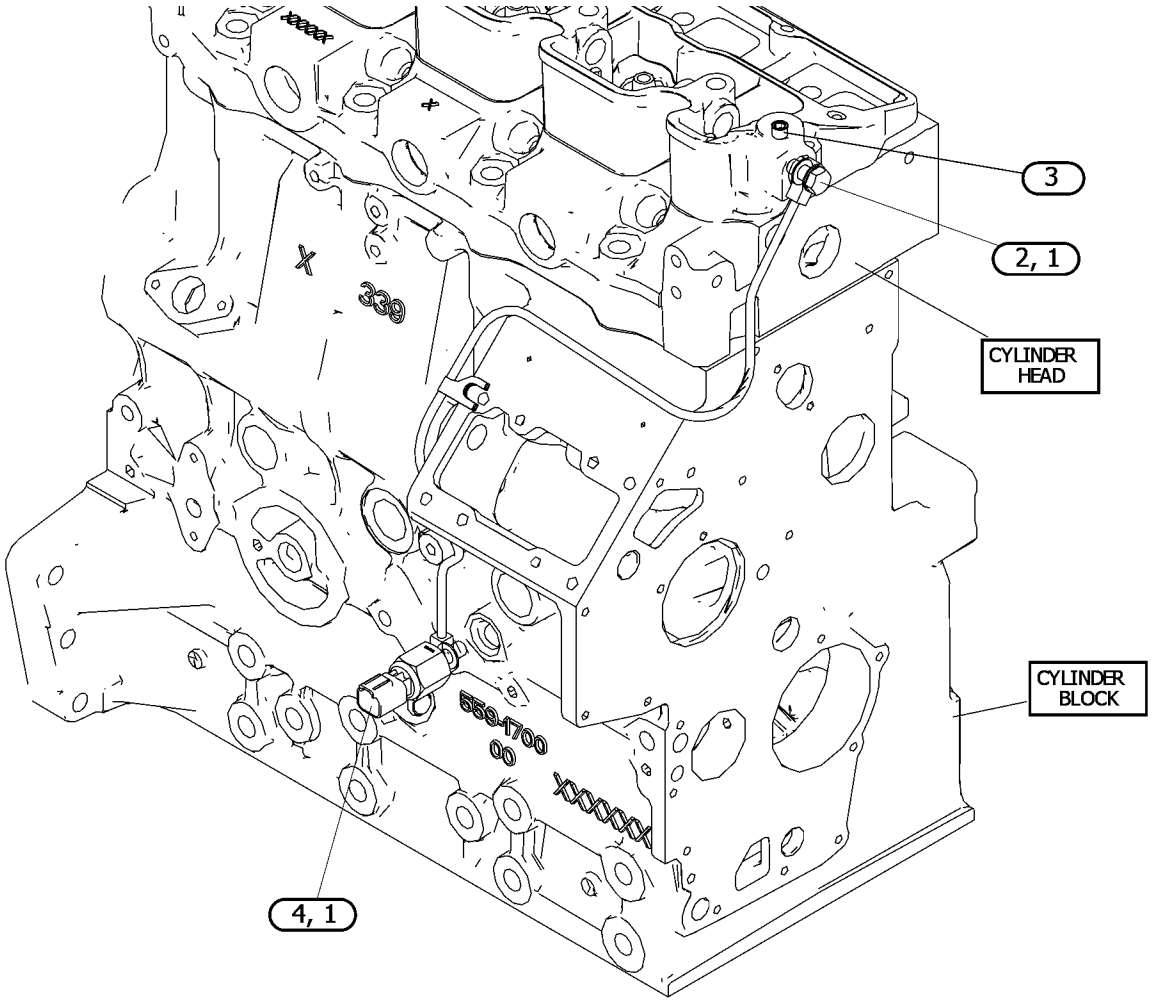

GRAPHIC #1 <END> g07554174

308-2314 SWITCH GP-START

PART OF 459-2953, 491-3396, 495-6243, 516-9335, 541-9277 ENGINE AR-PRIMARY

SMCS-1416 **i05815178**

NOTE	REF NO	GRAPHIC REF	PART NUMBER	QTY	PART NAME 1 2 3 4 5 6 (PRODUCT LEVEL)	SEE PAGE
	1	1	**183-5460**	1	PLATE	
	2	1	**359-6000**	1	SWITCH AS-START	
	2A	1	**183-5458**	1	CAP	
	2B	1	**361-3925**	1	KEY-IGNITION	

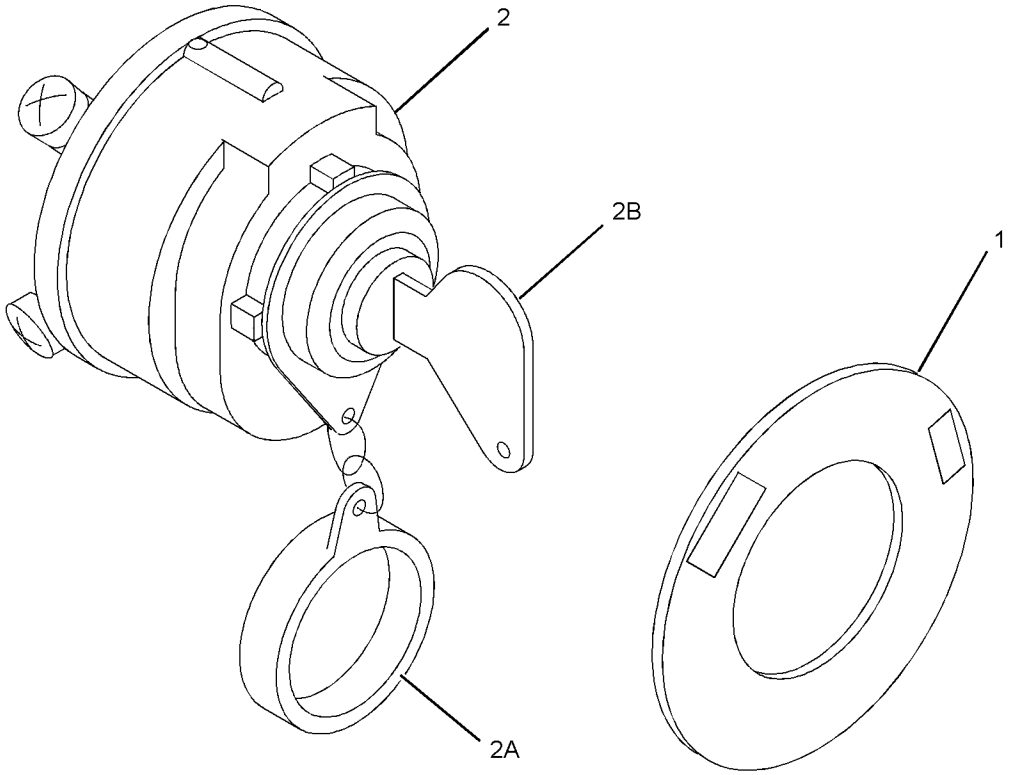

GRAPHIC #1 <END> g01389581

308-2317 SWITCH GP-TEMPERATURE–COOLANT

PART OF 435-1645 CYLINDER BLOCK GP-LONG, 433-1379, 433-1380, 435-1637, 435-1638 ENGINE AR, 435-1636, 435-1641, 435-1642, 435-1646, 435-1647, 435-1656, 435-1658, 459-2953, 461-7892, 461-7894, 491-3396, 495-3121, 495-6243, 516-9335, 541-9277, 557-9727, 587-9328 ENGINE AR-PRIMARY

SMCS-7400 **i05815386**

NOTE	REF NO	GRAPHIC REF	PART NUMBER	QTY	PART NAME 1 2 3 4 5 6 (PRODUCT LEVEL)	SEE PAGE
	1	1	**341-3600**	1	SWITCH-TEMPERATURE (12-VOLT) (ENGINE COOLANT)	

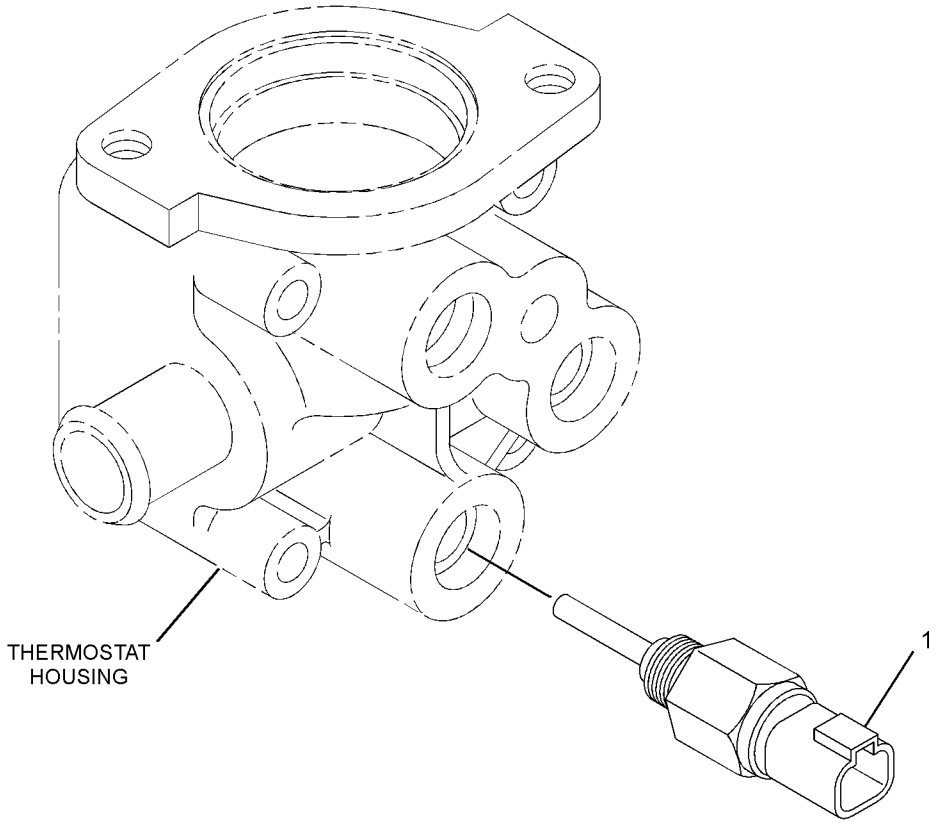

GRAPHIC #1 <END> g03076259

340-6913 SWITCH GP-TEMPERATURE

SMCS-7400 **i06016144**

NOTE	REF NO	GRAPHIC REF	PART NUMBER	QTY	PART NAME 1 2 3 4 5 6 (PRODUCT LEVEL)	SEE PAGE
	1	1	**338-3392**	1	SWITCH-TEMPERATURE	
	2	1	**153-6412**	1	WASHER	

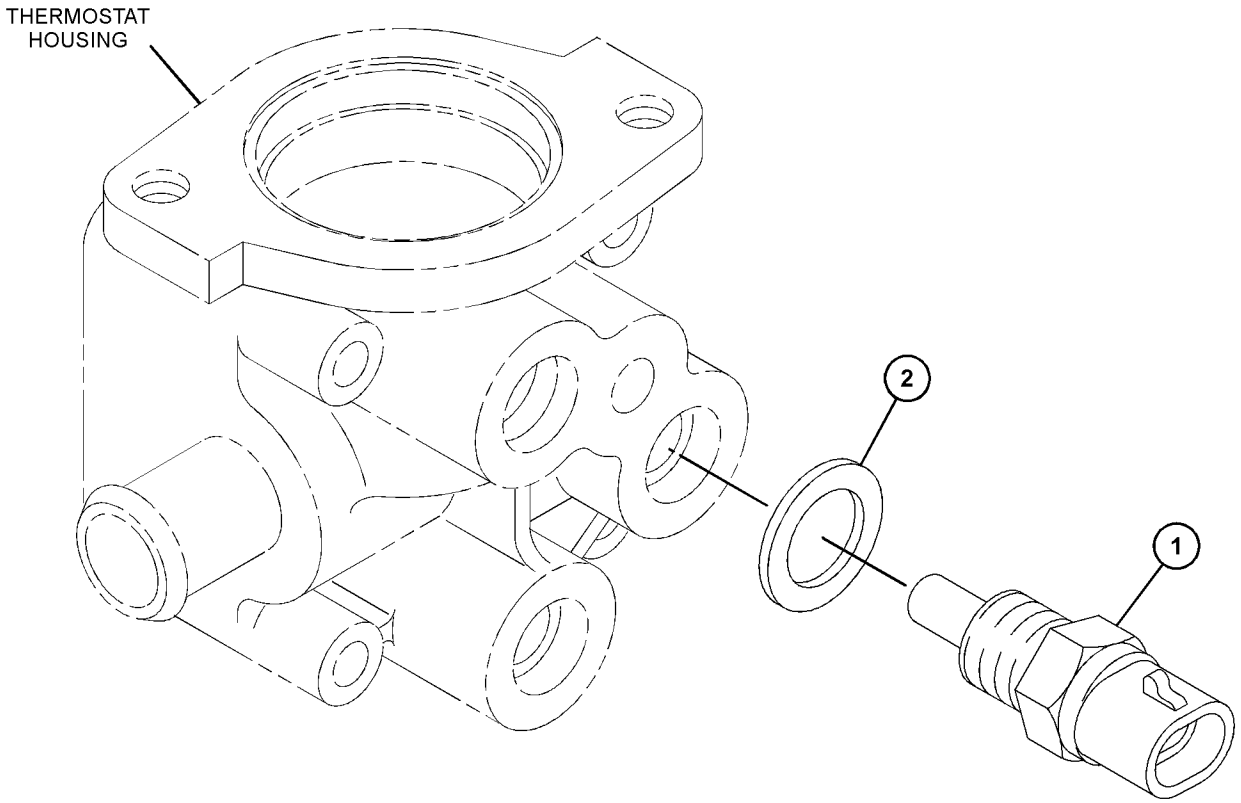

GRAPHIC #1 <END> g03831770

OPERATOR STATION

308-2321 LAMP GP

SMCS-4490, 7451 **i02752322**

NOTE	REF NO	GRAPHIC REF	PART NUMBER	QTY	PART NAME 1 2 3 4 5 6 (PRODUCT LEVEL)	SEE PAGE
	1	1	**198-5310**	1	LAMP (INDICATORS)	

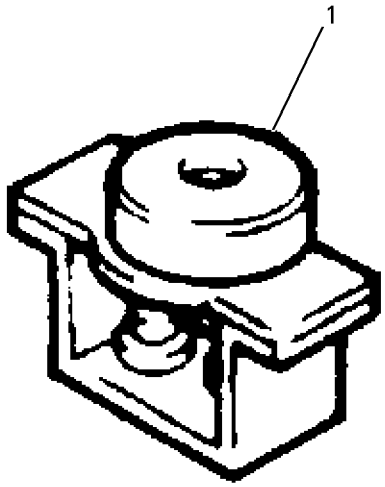

GRAPHIC #1 <END> g00768663

331-9614 LAMP GP

S/N: G7L1-5158

SMCS-4490, 7451 **i03135386**

NOTE	REF NO	GRAPHIC REF	PART NUMBER	QTY	PART NAME 1 2 3 4 5 6 (PRODUCT LEVEL)	SEE PAGE
	1	1	**291-4755**	1	LAMP (INDICATOR)	

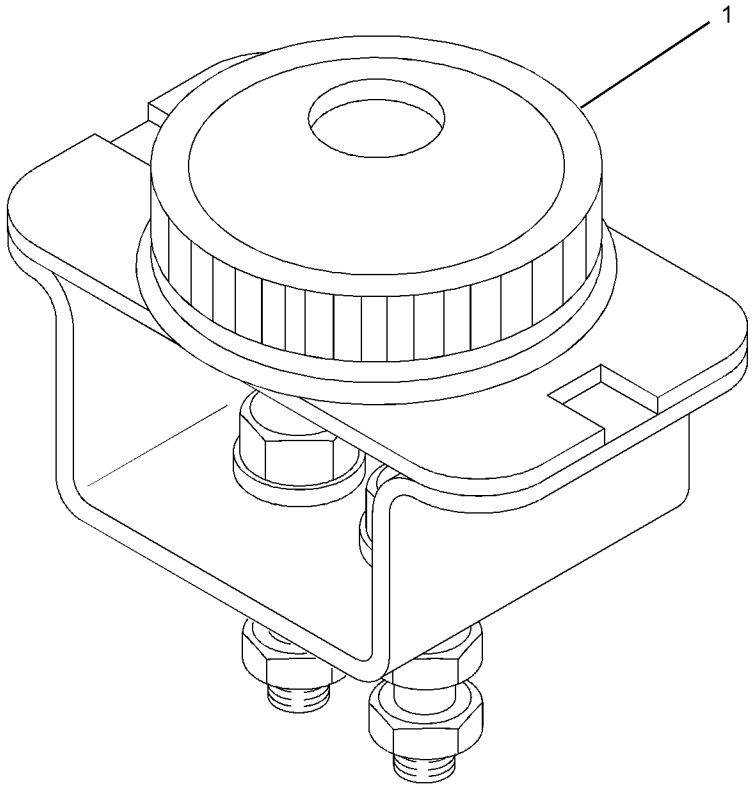

GRAPHIC #1 <END> g01267785

559-9084 CAP GP-PROTECTION

PART OF 433-1379, 433-1380 ENGINE AR, 435-1636, 435-1641, 435-1646 ENGINE AR-PRIMARY

SMCS-0663 **i08697193**

NOTE	REF NO	GRAPHIC REF	PART NUMBER	QTY	PART NAME 1 2 3 4 5 6 (PRODUCT LEVEL)	SEE PAGE
	1	1	**370-7052**	1	CAP	

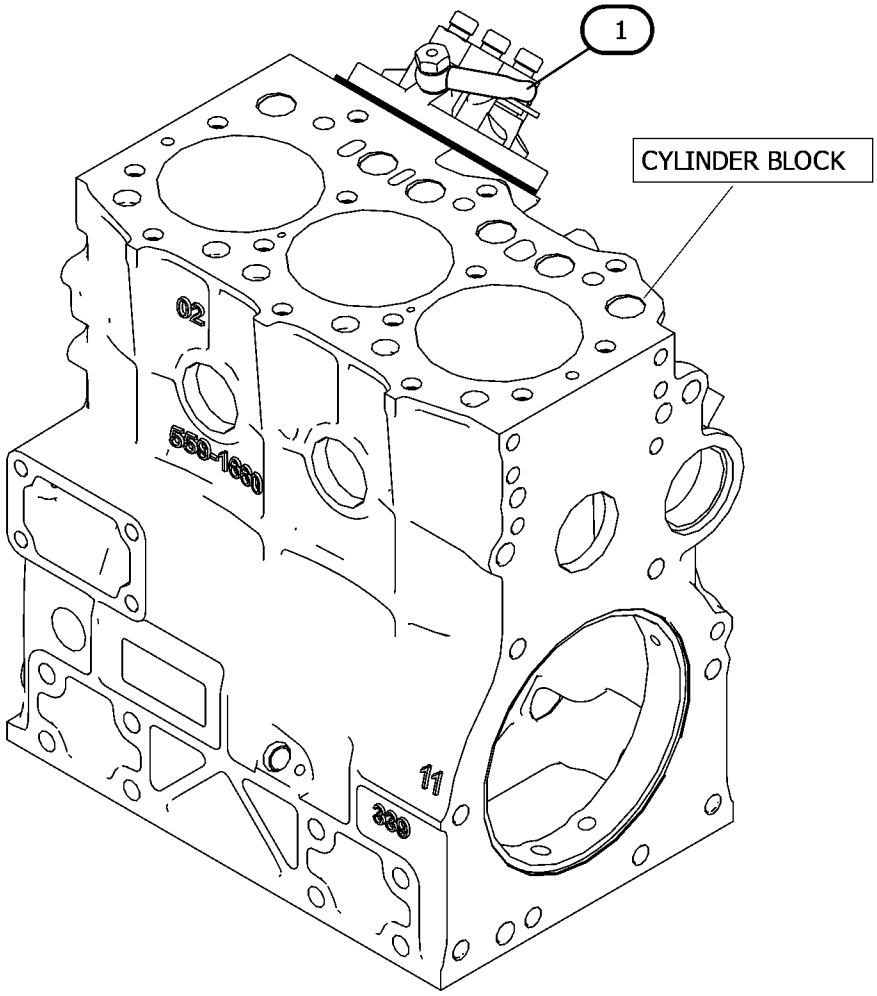

GRAPHIC #1 <END> g07515170

398-4274 FILM GP

PART OF 433-1379, 433-1380 ENGINE AR, 435-1636, 435-1641, 435-1646, 435-1647, 587-9328 ENGINE AR-PRIMARY

SMCS-7405, 7557

i10522753

NOTE	REF NO	GRAPHIC REF	PART NUMBER	QTY	PART NAME 1 2 3 4 5 6 (PRODUCT LEVEL)	SEE PAGE
	1	1	**326-9052**	1	FILM-WARNING (ETHER)	
					(EXPLOSION HAZARD. COULD CAUSE PERSONAL INJURY OR DEATH. DO NOT USE ETHER. READ THE OPERATOR'S MANUAL.)	

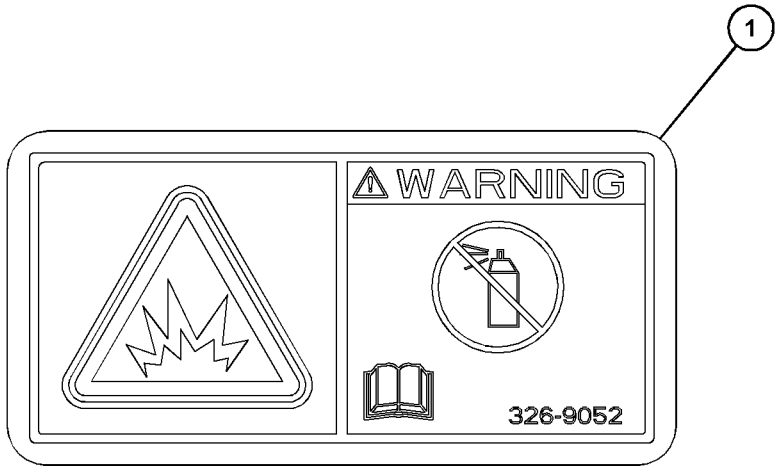

GRAPHIC #1 <END> g07869960

516-8900 FILM GP

PART OF 587-9328 ENGINE AR-PRIMARY

SMCS-7405, 7557 **i10131029**

NOTE	REF NO	GRAPHIC REF	PART NUMBER	QTY	PART NAME 1 2 3 4 5 6 (PRODUCT LEVEL)	SEE PAGE
	1	1	**326-9052**	1	FILM-WARNING (ETHER)	
					(EXPLOSION HAZARD COULD CAUSE PERSONAL INJURY OR DEATH. DO NOT USE ETHER. READ THE OPERATOR'S MANUAL.)	

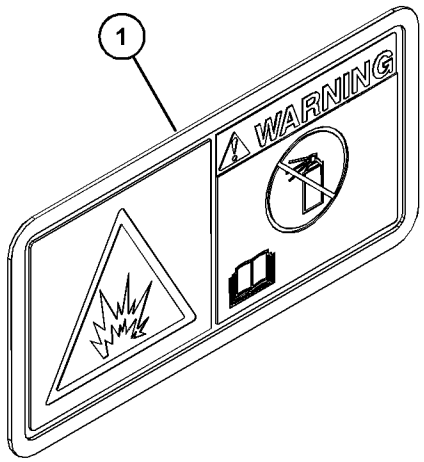

GRAPHIC #1 <END> g06201827

604-4574 FILM GP

ALTERNATOR

PART OF 587-9328, 610-7720, 610-7721 ENGINE AR-PRIMARY

SMCS-7405, 7557

i09664418

NOTE	REF NO	GRAPHIC REF	PART NUMBER	QTY	PART NAME 1 2 3 4 5 6 (PRODUCT LEVEL)	SEE PAGE
	1	1	**451-7225**	1	FILM-IDENTIFICATION (CAT)	

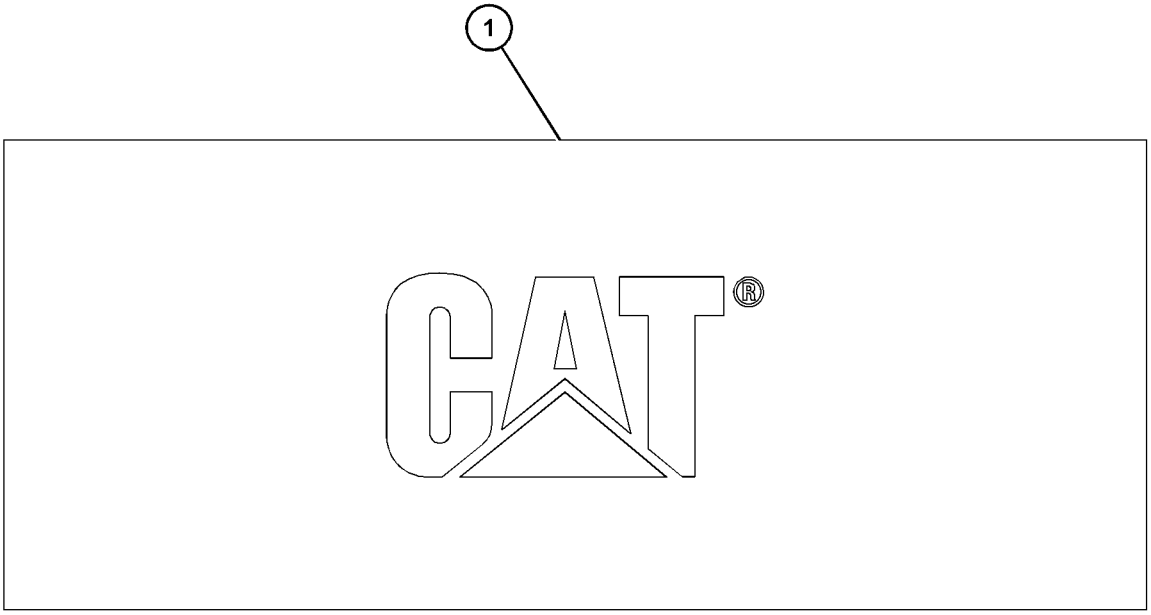

GRAPHIC #1 <END> g07541758

607-7117 FILM GP–RADIATOR

PART OF 610-7720, 610-7721 ENGINE AR-PRIMARY

SMCS-7405, 7557 **i08692664**

NOTE	REF NO	GRAPHIC REF	PART NUMBER	QTY	PART NAME 1 2 3 4 5 6 (PRODUCT LEVEL)	SEE PAGE
	1	1	**451-7225**	1	FILM-IDENTIFICATION (CAT)	

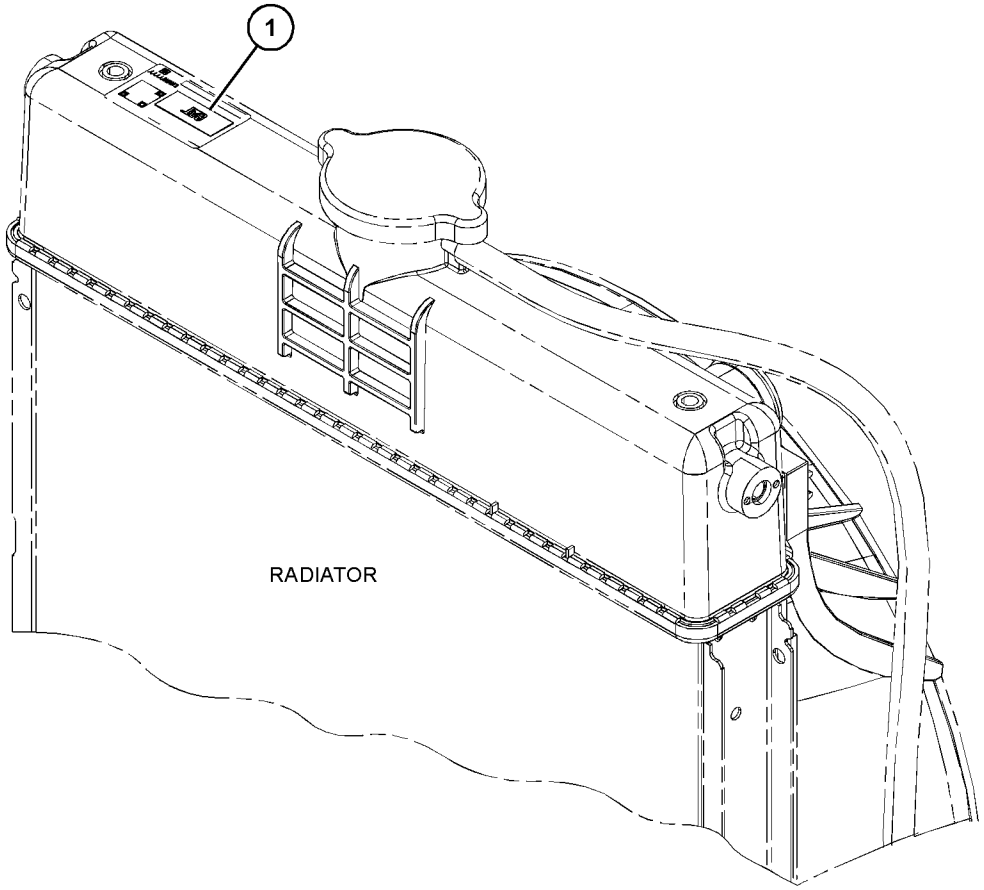

GRAPHIC #1 <END> g06769118

328-3297 PARTS GP-MISCELLANEOUS

SMCS-1000, 7950

i03103988

NOTE	REF NO	GRAPHIC REF	PART NUMBER	QTY	PART NAME 1 2 3 4 5 6 (PRODUCT LEVEL)	SEE PAGE
	1	1	**095-1708**	1	SEAL-O-RING	

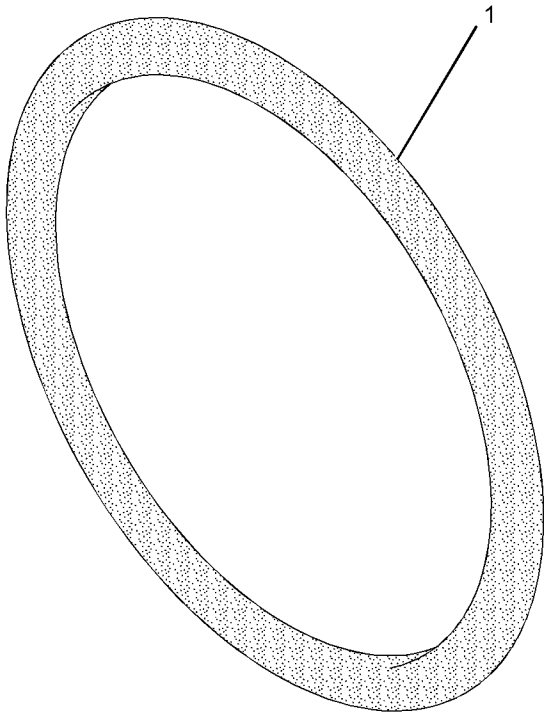

GRAPHIC #1

<END>

g01629473

342-9607 PARTS GP-MISCELLANEOUS

PART OF 435-1645 CYLINDER BLOCK GP-LONG, 433-1379, 433-1380, 435-1637, 435-1638 ENGINE AR, 435-1636, 435-1641, 435-1642, 435-1646, 435-1647, 435-1656, 435-1658 ENGINE AR-PRIMARY

SMCS-1000, 7950

i03434172

NOTE	REF NO	GRAPHIC REF	PART NUMBER	QTY	PART NAME 1 2 3 4 5 6 (PRODUCT LEVEL)	SEE PAGE
	1	1	**154-2427**	1	GASKET-EXHAUST MANIFOLD	
	2	1	**183-1165**	1	PLUG	
	3	1	**233-0695**	1	SEAL-VALVE COVER	

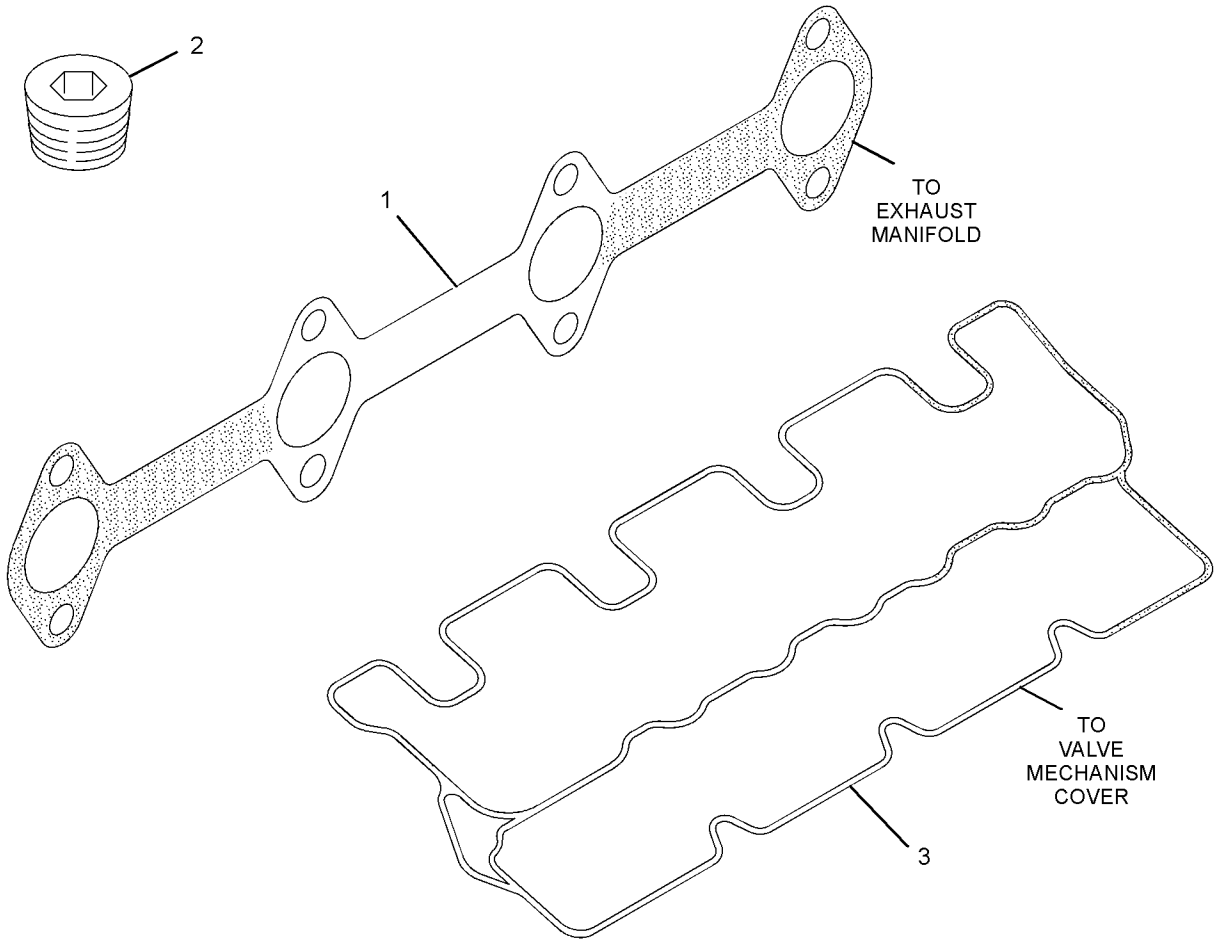

GRAPHIC #1

<END>

g01954568

518-9053 PLATE & FILM GP

PART OF 587-9328, 610-7720, 610-7721 ENGINE AR-PRIMARY

SMCS-7405, 7557 **i10132060**

NOTE	REF NO	GRAPHIC REF	PART NUMBER	QTY	PART NAME 1 2 3 4 5 6 (PRODUCT LEVEL)	SEE PAGE
	1	1	**346-8219**	2	FILM-WARNING (UNIVERSAL WARNING)	
					(COULD CAUSE SERIOUS INJURY OR DEATH. DO NOT OPERATE OR WORK ON THIS EQUIPMENT UNLESS YOU HAVE READ AND UNDERSTAND THE OPERATION AND MAINTENANCE MANUALS)	
	2	1	**630-0387**	1	FILM-IDENTIFICATION (QR CODE)	
	3	1	**576-1156**	1	FILM-IDENTIFICATION (CAT)	
	4	1	**153-8532**	1	FILM-INFORMATION (FUEL FILTER)	
	5	1	**246-4291**	1	PLATE-SERIAL NUMBER (ENGINE)	
	6	1	**419-0074**	2	SCREW-DRIVE (NO 2X0.16-IN)	

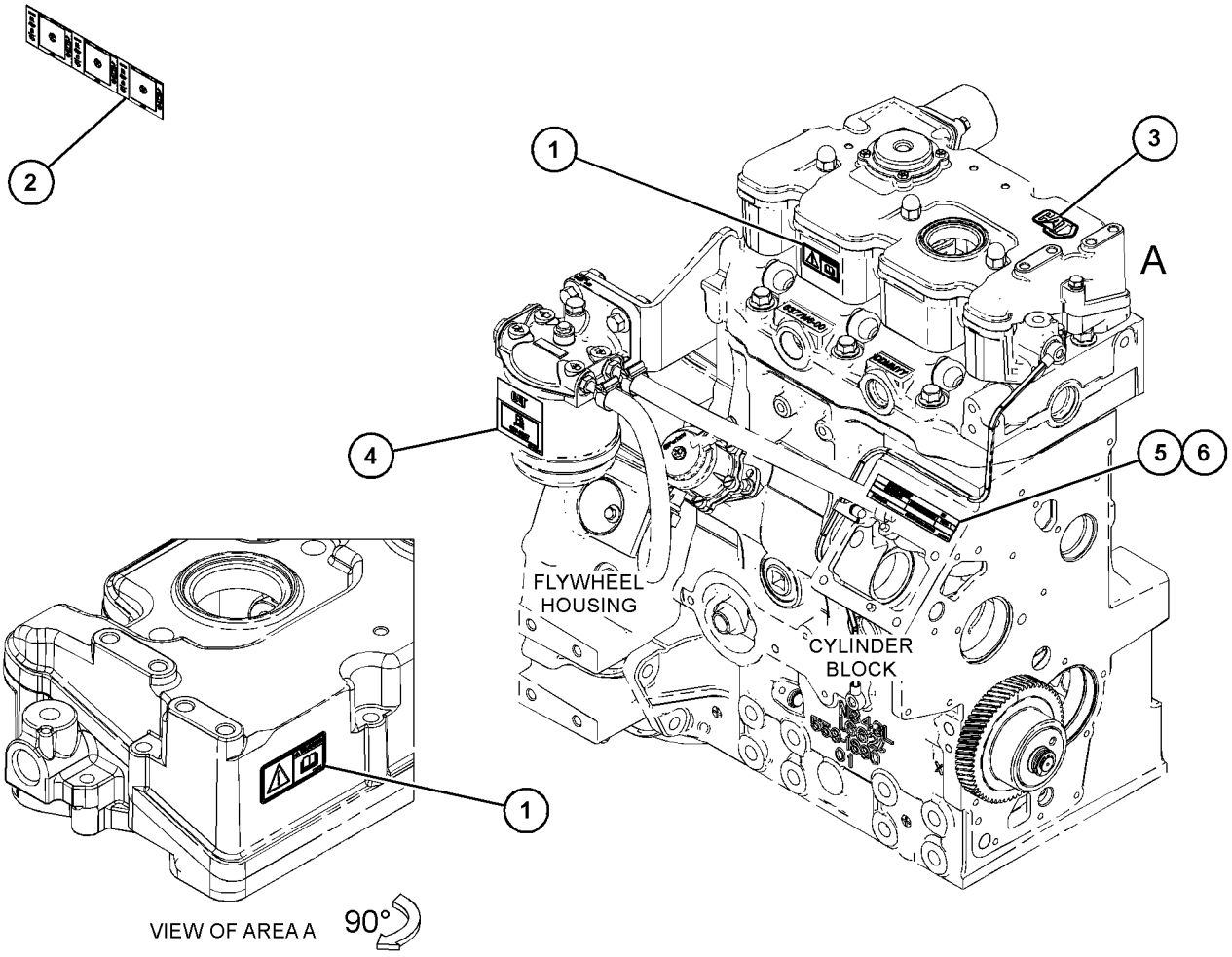

GRAPHIC #1 <END> g07758818

612-8795 PLATE & FILM GP

PART OF 433-1379, 433-1380 ENGINE AR, 435-1636, 435-1641, 435-1647 ENGINE AR-PRIMARY

SMCS-7405, 7557 **i10530837**

NOTE	REF NO	GRAPHIC REF	PART NUMBER	QTY	PART NAME 1 2 3 4 5 6 (PRODUCT LEVEL)	SEE PAGE
	1	1	**246-4291**	1	PLATE-SERIAL NUMBER (ENGINE)	
	2	1	**346-8219**	2	FILM-WARNING (UNIVERSAL WARNING)	
					(COULD CAUSE SERIOUS INJURY OR DEATH. DO NOT OPERATE OR WORK ON THIS EQUIPMENT UNLESS YOU HAVE READ AND UNDERSTAND THE OPERATION & MAINTENANCE MANUALS)	
	3	1	**419-0074**	2	SCREW-DRIVE (NO 2X0.16-IN)	
	4	1	**630-0387**	1	FILM-IDENTIFICATION (QR CODE)	
	5	1	**576-1156**	1	FILM-IDENTIFICATION (CAT)	

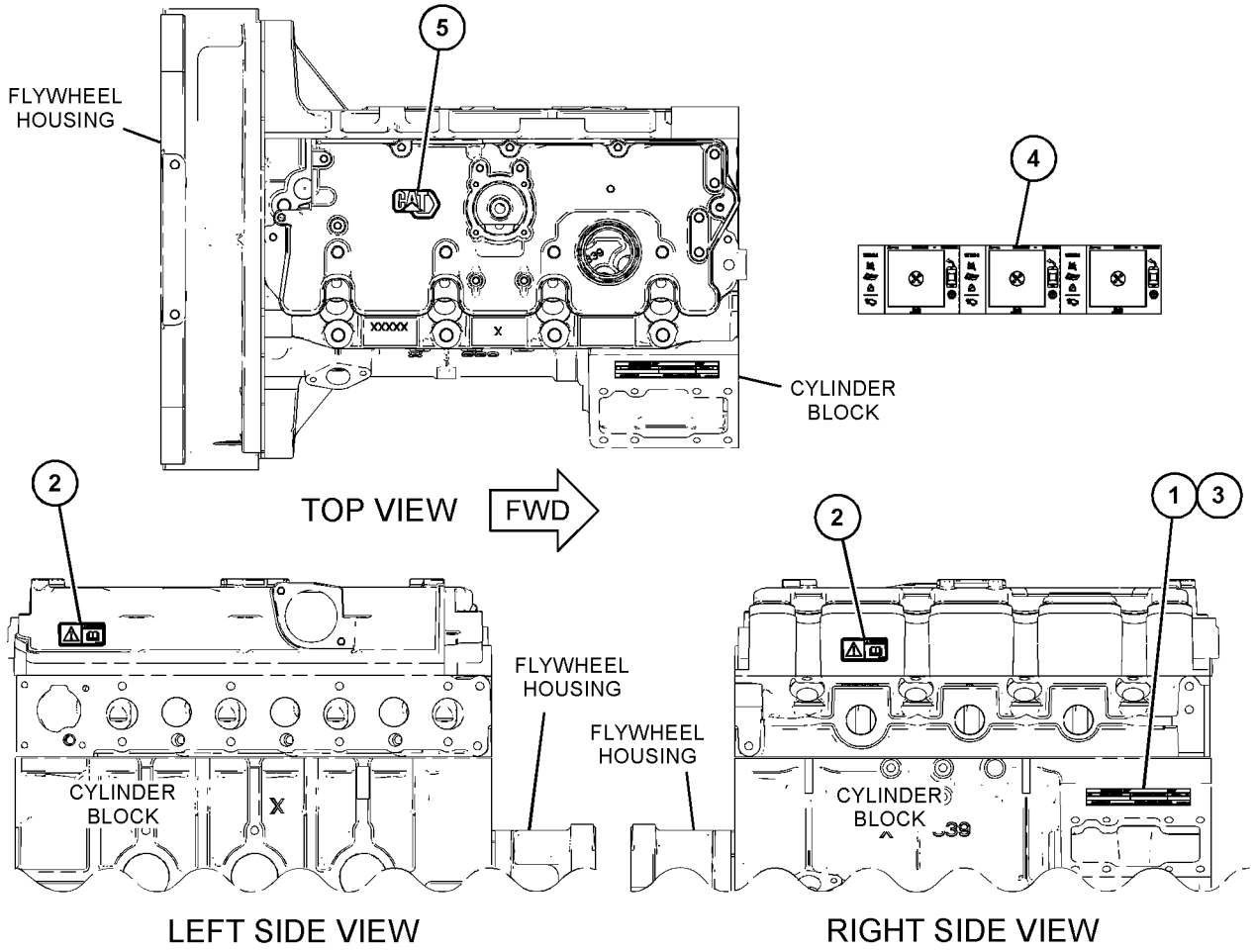

GRAPHIC #1 <END> g07903391

PART NUMBER INDEX

Part	Page
3	
3B-4504	164
	312
3B-4505	598
	626
	813
	817
	821
	839
5	
5A-3604	609
	610
	612
	616
	620
	623
	626
	629
	632
	637
	642
	645
	648
	651
	658
	662
	666
5C-2890	313
	318
	332
	364
	367
	369
	370
	373
	375
	377
	379
	383
	387
	681
	683
	686
	688
	690
	692
	696
	700
	704
	706
	708
	710
	714
	716
	718
	720
	722
	724
	726
	728
	730
	732
	734
	736
	738
	763
	765
	767
	769
	771
	774
	777
	779
	788
	878
	880
5C-8312	344
	377
	685
	741
	744
	765
	782
	788
	882
5D-1026	517
	521
	524
	531
5D-1319	312
	318
	323
	326
	328
	329
	330
	332
	336
	337
	340
	341
	348
	349
	352
	353
	354
	355
	356
	358
	360
	361
	362
	364
	367
	369
	370
	373
	375
	377
	379
	383
	387
	788
5P-7970	611
6	
6F-4855	796
6I-0217	394
	395
	506
	507
	508
	540
	543
	547
	556
	559
	562
	565
	569
	573
	575
	577
	579
	580
	582
	584
	589
	590
	592
	594
	612
	616
	620
	642
	645
	648
	651
	654
	662
	666
	669
	672
	679
	799
	802
	805
	808
	811
	813
	815
	817
	819
	821
	823
	825
	827
	829
	831
	833
	835
	839
	850
	856
	858
	867
	869
	870
	871
	872
6I-0254	547
	551
	559
	562
	569
	573
	575
	577
	579
	580
	582
	584
	589
	590
	592
	594
	623
	626
	629
	632
	637
	658
	674
6I-0260	867
	868
	869
	871
	872
6I-0454	193
6I-0455	194
6I-0593	298
	300
	301
	304
	305
	308
	309
	339
	759
	802
	808
	850
	858
	863
	905
	906
	908
	909
6I-0594	192
	193
	300
	342
	343
6I-0650	219
	221
	223
	225
	227
6I-0654	551
	556
	559
	562
6I-0846	154
	158
	162
	328
	551
	612
	616
	620
	623
	626
	632
	637
	642
	645
	648
	651
	654
	658
	666
	669
	672
	674
	676
	677
	679
	751
	760
	779
	795
	796
	799
	802
	805
	808
	811
	846

► PRIMARY REFERENCE

PART NUMBER INDEX

Part	Page
	854
	860
	863
6I-0917	275
	281
	540
	556
	559
	562
	565
	569
6I-4200	298
	301
	308
	309
6V-5221	611
6V-7357	813
	817
	839
7	
7W-2601	551
7W-4694	753
	759
	796
	799
	802
	846
	850
	854
	856
	858
7W-4724	805
	808
7X-0796	751
	759
	802
	808
	858
	863
7X-2533	318
	375
	377
	379
	383
	387
	683
	690
	706
	710
	724
	730
	734
	738
	765
	769
	777
	788
8	
8C-3347	241
8C-8451	312
8F-7242	600
	654
	669
8T-1158	813
	815
	817
	819
	821
	823
	825
	827
	829
	831
	833
	839
8T-4171	164
8T-4971	313
	704
	706
	714
8T-8729	781
	890
8T-9535	223
	227
9	
9M-7959	551
	575
	577
	579
9X-1813	781
	890
9X-3402	876
9X-8256	484
0	
032-8100	796
	799
032-9020	514
	519
	527
	530
	534
	537
	539
033-7849	753
	759
	796
	799
	802
	846
	850
	854
	856
	858
039-2281	612
	629
	632
	637
	642
	651
	662
067-6269	753
	759
	796
	799
	802
	846
	850
	854
	856
	858
067-6317	796
	799
	802
	850
	854
	856
	858
067-6987	762
	796
	799
	802
	846
	850
	854
	856
	858
069-2922	796
095-1574	318
	332
	364
	367
	369
	370
	373
	375
	377
	379
	383
	387
	681
	683
	686
	688
	690
	692
	696
	700
	704
	706
	708
	710
	714
	716
	718
	720
	722
	724
	726
	728
	730
	732
	734
	736
	738
	763
	765
	767
	769
	771
	774
	777
	779
	788
	878
	880
095-1708	931
096-6166	887
099-6418	214
	387
	519
	674
	813
	817
	833
	839
1	
100-4458	669
100-4463	192
	342
	343
100-4838	712
100-4841	175
	182
	184
	185
	379
	387
	404
	408
	412
	414
	416
	418
	420
	422
	423
	425
	712
101-3917	751
101-7178	543
	547
	551
	573
101-7540	551
101-7541	543
	547
	551
102-2079	835
102-8802	781
102-9941	305
103-1067	547
	573
	577
	579
	582
	584
	589
	590
	592
	594
103-6714	575
	580
106-8916	279
	280
	318
	332
	364
	367
	369
	370
	373
	375
	377
	379
	383
	387
	681
	683
	686
	688
	690
	692
	696
	700
	708
	710
	714
	716

PART NUMBER INDEX

Part	Page
	718
	720
	722
	724
	726
	728
	730
	732
	734
	736
	738
	763
	765
	771
	774
	777
	779
	788
	878
	880
106-8954	298
	301
	308
	309
	447
114-4363	298
	300
	301
	302
	303
	306
	308
	309
	416
	423
	527
	540
	547
	551
	565
	569
	573
	712
123-2899	298
	301
	308
	309
124-3815	283
	304
	391
	393
	394
	395
	396
	540
	543
	547
	551
	556
	559
	562
	565
	569
	573
	602
	609
	610
	612
	616
	620
	623
	626
	632
	637
	642
	645
	648
	658
	662
	666
	761
	795
	802
	811
	850
	853
	854
	856
	858
127-8281	521
138-7162	297
	299
	338
	751
	796
	799
	846
	854
	856
138-7171	299
	302
138-7401	297
139-5511	313
	318
	332
	344
	346
	369
	370
	373
	375
	377
	379
	383
	387
	681
	683
	686
	688
	690
	692
	696
	700
	704
	706
	708
	710
	714
	716
	718
	720
	722
	724
	726
	728
	730
	732
	734
	736
	738
	763
	765
	767
	769
	771
	774
	777
	779
	788
	878
	880
	882
140-8783	905
	906
141-5453	540
	565
	569
148-7140	599
	600
	654
	669
150-4142	757
	805
	808
	860
	863
152-6581	514
153-5387	229
	231
	233
	235
	237
	239
	241
	243
153-5390	229
	231
	233
	235
	237
	239
	241
	243
153-5391	229
	231
	233
	235
	237
	239
	241
	243
153-5394	229
	231
	233
	235
	237
	239
	241
	243
153-5395	229
	231
	233
	235
	237
	239
	241
	243
153-5402	219
	221
	223
	225
	227
	229
	231
	233
	235
	237
	239
	241
	243
153-5518	219
	221
	223
	225
	227
153-5556	249
	250
	251
	264
	269
	271
153-5557	249
	250
	251
	264
	269
	271
153-5587	479
153-5590	456
	479
153-5592	231
	235
	239
	313
	318
	332
	364
	367
	369
	370
	373
	375
	377
	379
	383
	459
	540
	543
	547
	551
	556
	559
	562
	565
	569
	573
	575
	577
	579
	580
	582
	584
	589
	590
	592
	594
	599
	600
	604
	605
	608
	612
	616
	620
	623
	626
	629
	632
	637
	642
	645
	648
	651
	654

► PRIMARY REFERENCE

PART NUMBER INDEX

Part	Page
	658
	662
	666
	669
	672
	676
	677
	679
	681
	683
	686
	688
	690
	692
	696
	700
	704
	706
	708
	710
	714
	716
	718
	720
	722
	724
	726
	728
	730
	732
	734
	736
	738
	763
	765
	767
	769
	771
	774
	777
	779
	788
	805
	808
	815
	819
	821
	823
	825
	827
	829
	831
	833
	835
	850
	853
	856
	858
	860
	863
	868
	870
	871
	872
	878
	880
153-5936	106
	443
	481
	493
	494
	496
	911
	912
	913
	914
	915
	916
	917
	918
	919
	920
153-5939	188
	190
	195
	198
	201
	204
	206
	208
	210
	212
	214
	216
	612
	616
	620
	623
	626
	629
	632
	637
	642
	645
	648
	651
	654
	658
	662
	666
	669
153-5960	198
	201
	204
	206
	208
	210
	212
	216
	284
	285
	286
	312
	313
	318
	323
	326
	328
	329
	330
	332
	336
	337
	340
	341
	348
	349
	352
	353
	354
	355
	356
	358
	360
	361
	362
	363
	366
	379
	383
	514
	517
	521
	524
	527
	530
	531
	534
	537
	539
	551
	612
	616
	620
	629
	642
	645
	648
	651
	654
	658
	662
	666
	669
	672
	679
	815
	819
	821
	823
	825
	827
	829
	831
	835
153-5961	458
	467
	469
	471
	473
	475
	477
	514
	517
	519
	521
	524
	527
	530
	531
	534
	537
	539
	543
	551
153-5962	195
	198
	201
	204
	206
	208
	210
	212
	214
	216
	284
	285
	286
	312
	313
	318
	323
	326
	328
	329
	330
	332
	336
	337
	340
	341
	348
	349
	352
	353
	354
	355
	356
	358
	360
	361
	362
	363
	366
	379
	383
	514
	517
	521
	524
	527
	530
	531
	534
	537
	539
	551
	612
	616
	620
	629
	642
	645
	648
	651
	654
	658
	662
	666
	669
	672
	674
	679
153-6374	392
153-6375	297
	299
	392
	629
	692
	696
	700
	712
	772
	774
	805
	808
153-6412	441
	444
	446
	466
	712
	750
	884
	895
	896
	897
	923
153-6415	154
	158
	162
	313
	318

PART NUMBER INDEX

Part	Page
	326
	328
	332
	364
	367
	369
	370
	373
	375
	377
	379
	383
	387
	626
	681
	683
	686
	688
	690
	692
	696
	700
	704
	706
	708
	710
	714
	716
	718
	720
	722
	724
	726
	728
	730
	732
	734
	736
	738
	742
	744
	747
	763
	765
	767
	769
	771
	774
	777
	779
	782
	784
	786
	788
	878
	880
153-6492	145
	146
	147
	148
	149
	150
	151
	152
	153
	154
	156
	158
	160
	162
	164
	167
	170
	171
	173
	174
	175
	176
	177
	178
	181
	182
	313
	318
	448
	449
	450
153-6497	193
153-6832	445
153-6833	398
	400
	402
	406
	410
153-6835	398
	400
	402
	404
	406
	408
	410
	412
	414
	416
	418
	420
	422
	423
	425
	479
153-6838	147
	148
	149
	150
	151
	152
	153
	154
	156
	158
	160
	162
	164
	166
	167
	168
	169
	170
	171
	173
	174
	176
	177
	178
	179
	180
	181
	186
	229
	231
	233
	235
	237
	239
	241
	313
	318
	332
	383
	398
	400
	402
	404
	406
	408
	410
	412
	414
	416
	418
	420
	422
	423
	425
	482
	489
153-6841	398
	400
	402
	406
	410
153-6849	243
153-6850	243
153-6851	243
153-6853	243
	493
	494
	496
	612
	616
	620
	623
	626
	629
	632
	637
	642
	645
	648
	651
	654
	658
	662
	666
	669
	672
	674
	679
153-6861	556
	559
	562
	692
	696
	700
	771
	774
153-6868	297
153-6879	243
	495
	512
	513
153-6881	106
	443
	481
	493
	494
	496
	911
	917
	919
	920
153-7640	188
	190
	195
	198
	201
	204
	206
	208
	210
	212
	214
	216
	484
	629
	658
	662
	666
	669
153-7983	313
	318
	332
	344
	346
	369
	370
	373
	375
	377
	681
	683
	686
	688
	690
	692
	696
	700
	704
	706
	708
	710
	714
	716
	718
	720
	722
	724
	726
	728
	730
	732
	734
	736
	738
	742
	744
	747
	763
	765
	767
	769
	771
	774
	777
	779
	782
	784
	786
	788
	878
	880
	882
153-7987	313
	318
	332
	346

► PRIMARY REFERENCE

PART NUMBER INDEX

Part	Page
	369
	370
	373
	375
	377
	681
	683
	686
	688
	690
	692
	696
	700
	704
	706
	708
	710
	714
	716
	718
	720
	722
	724
	726
	728
	730
	732
	734
	736
	738
	742
	744
	747
	763
	765
	767
	769
	771
	774
	777
	779
	782
	784
	786
	788
	878
	880
	882
153-7988	458
	467
	469
	471
	473
	475
	477
153-8532	933
154-0175	214
	216
	229
	231
	233
	235
	237
	239
	241
	243
154-0176	229
	231
	233
	235
	237
	239
	241
	243
154-0177	229
	231
	233
	235
	237
	239
	241
	243
154-0178	229
	231
	233
	235
	237
	239
	241
	243
154-0181	219
	221
	223
	225
	227
154-0385	219
	221
	223
	225
	227
154-0386	219
	221
	223
	225
	227
154-0388	219
	221
	223
	225
	227
154-0389	219
	221
	223
	225
	227
154-0393	231
	233
	235
	239
154-0867	426
	429
	432
154-0869	426
	429
	432
154-0870	426
	427
	429
	430
	432
	433
	435
	439
	440
154-0871	426
	427
	429
	430
	432
	433
	435
	439
	440
154-0873	426
	427
	429
	430
	432
	433
	435
	439
	440
154-0874	426
	427
	429
	430
	432
	433
	435
	439
	440
154-1230	219
	221
	223
	225
	227
154-1231	219
	221
	223
	225
154-1240	479
154-1241	479
154-1242	479
154-1243	456
	479
154-1246	458
	467
	469
	471
	473
	475
	477
154-1347	195
	198
	208
	612
	629
	642
	662
154-1396	312
	314
	319
	794
154-1399	297
	299
	338
	794
	796
	799
	805
	846
	854
	856
	860
154-1400	318
	375
	377
	683
	706
	724
	730
	734
	738
	742
	744
	747
	765
	782
	784
	786
	788
154-1403	313
154-1673	313
154-1675	312
	313
	318
	323
	326
	328
	329
	330
	332
	336
	337
	340
	341
	348
	349
	352
	353
	354
	355
	356
	358
	360
	361
	362
	364
	367
	369
	370
	373
	375
	377
	379
	383
	387
	788
154-1680	147
	148
	149
	150
	151
	152
	153
	154
	156
	158
	160
	162
	164
	166
	167
	168
	169
	170
	171
	173
	174
	175
	176
	177
	178
	179
	180
	181
	182
	184
	185
	186
	313
	318
	332
154-1817	441
	514
	517

PART NUMBER INDEX

Part	Page
	519
	521
	524
	527
	530
	531
	534
	893
154-1831	517
154-1880	448
	449
	450
154-1935	886
	887
	888
	889
154-1942	496
154-1947	398
154-1948	398
154-2353	243
	493
	494
	496
154-2394	297
	298
	299
	300
	301
	302
	303
	304
	306
	307
	308
	309
154-2395	297
154-2403	297
	299
	338
	397
	796
	799
	805
	846
	850
	854
	856
	860
154-2405	104
	287
	288
	289
	291
	292
	293
	294
	295
154-2406	104
	287
	288
	289
	290
	291
	292
	293
	294
	295
	296
154-2426	604
154-2427	144
	604
	605
	608
	612
	616
	620
	623
	626
	629
	632
	637
	642
	645
	648
	651
	654
	658
	662
	666
	669
	672
	674
	679
	932
154-2428	604
	605
	608
	612
	616
	620
	623
	626
	629
	632
	637
	642
	645
	648
	651
	654
	658
	662
	666
	669
	672
	674
	679
154-2715	332
	344
	346
	681
	683
	686
	688
	690
	704
	706
	771
	774
	813
	815
	817
	819
	821
	823
	825
	827
	829
	831
	833
	835
	839
154-2722	827
	829
	835
154-2723	827
	829
	835
154-2724	827
	829
	835
154-2725	827
	829
	835
154-4505	145
	146
	147
	148
	149
	150
	151
	152
	153
	154
	156
	158
	160
	162
	164
	167
	170
	171
	173
	174
	175
	176
	177
	178
	181
	182
	314
	318
155-7984	391
	521
	524
	527
	537
	611
	612
	616
	629
	666
	669
	751
	796
	799
	805
	808
	846
	866
	871
	872
155-8076	375
	683
	724
	730
	738
	740
	769
	777
155-8080	757
155-8082	757
	805
	808
	860
	863
155-8085	299
	751
	759
	796
	799
	802
	805
	808
	846
	850
	854
	856
	858
	860
	863
155-8086	805
	860
155-8087	805
	860
156-6988	261
156-6989	261
160-3547	757
160-3548	757
160-3549	757
160-3562	416
160-4150	243
160-4151	243
160-4152	243
160-4153	243
160-4826	512
	513
	537
161-8260	275
	281
	540
	556
	559
	562
	565
162-2207	313
	318
	332
	364
	367
	369
	370
	373
	375
	377
	379
	383
	387
	681
	683
	686
	688
	690
	692
	696
	700
	704
	706
	708
	710
	714
	716
	718
	720
	722
	724
	726
	728
	730
	732
	734
	736
	738
	763
	765
	767

► PRIMARY REFERENCE

PART NUMBER INDEX

Part	Page
	769
	771
	774
	777
	779
	788
	878
	880
163-3361	▶898
	▶900
163-5371	605
163-5372	596
	600
	605
	609
	610
	612
	616
	620
	623
	629
	632
	637
	642
	645
	648
	651
	654
	658
	662
	666
	669
	815
	819
	823
	825
	827
	829
	831
	833
	835
	866
164-7468	274
	310
	311
	350
	351
	379
	383
	387
165-2140	195
	198
	201
	204
	206
	208
	210
	212
	214
	216
	284
	285
	286
	312
	313
	318
	323
	326
	328
	329
	330
	332
	336
	337
	340
	341
	348
	349
	352
	353
	354
	355
	356
	358
	360
	361
	362
	363
	366
	379
	383
	387
	612
	616
	620
	623
	626
	629
	632
	637
	642
	645
	648
	651
	654
	658
	662
	666
	669
	672
	674
	679
165-2141	307
	629
	751
	796
	799
	846
	866
165-2142	297
165-2144	805
	808
	860
	863
165-3605	445
166-2338	297
168-8999	866
	867
	868
	869
	870
	871
	872
168-9001	305
	338
	339
	391
	497
	498
	499
	500
	511
	595
	596
	597
	598
	601
	606
	611
	623
	632
	637
	658
	796
	866
	870
168-9002	866
	867
	868
	869
	870
	871
	872
171-5349	781
	890
174-3877	573
175-7141	274
	298
	301
	304
	308
	309
	310
	311
	350
	351
	379
	383
	387
	905
	906
	909
176-7719	795
	796
	799
	802
	805
	808
	846
	854
	860
	863
178-2510	277
178-3336	387
	674
	761
	813
	817
	839
	867
	869
180-6118	410
	412
	521
	524
	543
	556
	559
	562
180-8579	866
183-1163	231
	233
	235
	239
183-1164	231
	233
	235
	239
183-1165	188
	443
	612
	616
	620
	629
	632
	642
	658
	645
	662
	669
	912
	913
	914
	915
	916
	918
	932
183-1336	219
	221
	225
183-3213	257
	261
	263
	265
	267
183-3353	815
	819
	821
	823
	825
	827
	829
	831
	833
	835
183-3538	313
	704
	706
183-3547	278
	282
183-3551	506
	507
	508
183-3552	505
183-3572	692
	696
	700
	771
	774
183-4035	305
183-4036	761
	850
	853
	856
	858
183-4037	875
183-4320	761
	850
	853
	856
	858
183-4323	482
	489
183-4335	596
183-5458	921
183-5460	921
188-9644	573
189-9763	404
	408
	412
	414
	416

▶ PRIMARY REFERENCE

PART NUMBER INDEX

Part	Page
	418
	420
	422
	423
	425
190-3762	195
	629
190-3803	813
	815
	817
	819
	821
	823
	825
	827
	829
	831
	833
	835
	839
191-0563	596
191-9297	313
	318
	332
	346
	369
	370
	373
	375
	377
	681
	683
	686
	688
	690
	692
	696
	700
	704
	706
	708
	710
	714
	716
	718
	720
	722
	724
	726
	728
	730
	732
	734
	736
	738
	742
	744
	747
	763
	765
	767
	769
	771
	774
	777
	779
	782
	784
	786
	788
	878
	880
	882
195-3699	573
197-8004	805
	860
197-8540	841
197-8555	873
198-2663	397
198-2664	543
	547
	551
	556
	559
	562
198-5310	924
2	
202-0528	608
202-1196	813
	815
	817
	819
	821
	823
	825
	827
	829
	831
	833
	835
	839
202-6616	554
	556
	559
	562
205-4726	812
	817
	819
	821
	833
205-4727	812
	817
	819
	821
	833
205-4728	812
	817
	819
	821
	833
205-4731	817
	819
	821
	825
	833
205-7709	605
205-7713	488
206-3499	479
208-9295	540
	565
	569
209-1355	484
209-7084	406
	408
	422
209-7088	410
	412
	416
	423
210-9587	338
	339
211-6574	555
211-8559	484
215-2605	398
	400
	402
	406
	410
215-2617	517
215-2620	231
	233
	235
	239
217-0099	579
	584
	589
	590
	592
	594
217-1456	429
	430
	432
217-2760	813
	815
	823
	831
	839
217-2761	813
	815
	823
	831
	839
217-2762	813
	815
	823
	831
	839
217-2763	813
	815
	823
	831
	839
217-5770	229
	231
	233
	235
	237
	239
	241
	243
217-5859	188
	190
	195
	198
	201
	204
	206
	208
	210
	212
	214
	216
	612
	616
	620
	623
	626
	629
	632
	637
	642
	645
	648
	651
	654
	658
	662
	666
	669
217-5860	195
	198
	201
	204
	206
	208
	210
	212
	214
	216
	692
	696
	700
	771
	774
217-5861	654
217-5862	188
	190
	195
	198
	201
	204
	206
	208
	210
	212
	214
	216
	612
	616
	620
	623
	626
	629
	632
	637
	642
	645
	648
	651
	654
	658
	662
	666
	669
217-5864	195
217-7115	313
	318
	323
	332
	344
	346
	369
	370
	373
	375
	377
	681
	683
	686
	688
	690
	692
	696
	700
	704
	706
	708
	710
	714
	716
	718
	720

► PRIMARY REFERENCE

PART NUMBER INDEX

Part	Page
	722
	724
	726
	728
	730
	732
	734
	736
	738
	742
	744
	747
	763
	765
	767
	769
	771
	774
	777
	779
	782
	786
	788
	878
	880
	882
217-7358	482
	484
	486
	489
	490
218-2254	373
	375
	377
218-2333	398
	400
	402
	406
	410
220-1523	104
	491
	492
221-1136	229
	231
	233
	235
	237
	239
	241
	243
223-8182	751
	846
	854
	856
	858
225-8526	612
	616
	620
	623
	626
	629
	632
	637
	642
	648
	658
	662
	669
	672
	674
	679
225-8533	195
	612
	616
	620
	623
	626
	629
	632
	637
	642
	645
226-4918	611
226-4919	611
226-4922	611
226-4923	611
228-7472	410
	416
	423
229-5150	398
	400
	402
	404
	414
	420
	425
229-5151	398
	400
	402
	420
231-2839	887
232-0218	692
	696
	700
	771
	774
232-0290	692
	696
	700
	771
	774
232-7823	404
	408
	412
	418
	420
	422
	423
	425
233-0695	144
	188
	190
	195
	198
	201
	204
	206
	208
	210
	212
	214
	216
	612
	616
	620
	623
	626
	629
	632
	637
	642
	645
233-7061	195
234-8762	894
236-3983	406
	422
236-7734	551
236-7735	551
236-7764	568
236-9987	612
	616
	620
	623
	626
	629
	632
	637
	642
	645
	648
	651
	654
	658
	662
	666
	669
	676
	677
237-9315	229
	231
	233
	235
	239
	243
	252
238-0245	575
	577
	579
	590
	594
238-0265	540
	556
	559
	562
	565
	569
	875
238-0266	540
	556
	559
	562
	565
	569
238-0271	556
	559
	562
238-9137	501
	503
	514
	521
	524
	527
	531
	537
238-9145	512
	513
	537
238-9196	612
	616
	620
	623
	626
	629
	632
	637
	642
	648
	651
	654
	658
	662
	666
	669
	932
238-9198	609
	612
	616
	629
	632
	637
	648
	658
	662
	666
238-9295	188
	190
	612
	616
	620
	623
	626
	629
	632
	637
	642
	645
	648
	651
	654
	658
	662
	669
238-9349	612
	629
238-9621	447
238-9628	397
239-0169	612
	616
	620
	642
	662
	669
239-0187	609
	610
	612
	616
	620
	623
	626
	629
	632
	637
	642
	645
	648
	654
	658
	662
	666
239-0227	612
	616

PART NUMBER INDEX

Part	Page
	620
	662
239-0228	612
	616
	620
	642
	645
	648
	651
	654
	662
	666
	669
	672
	679
239-0229	616
	620
	623
	626
	645
	648
	654
	658
	666
	669
	672
	674
	679
239-0232	612
	616
	620
	623
	626
	629
	632
	637
	642
	645
	648
	651
	654
	658
	662
	666
	669
	676
	677
239-0743	556
	559
	562
242-7070	898
242-7071	898
242-7073	898
242-7074	898
242-7075	898
242-7076	898
242-7077	898
242-7078	898
243-4402	887
	888
243-6411	761
	850
	853
	856
	858
244-3259	540
	543
	547
	551
	556
	559
	562
	565
	569
	573
245-1361	514
	521
	524
	527
	531
	534
	537
245-1362	514
	521
	524
	527
	531
	534
	537
245-1364	514
	521
	524
	527
	531
	534
	537
246-3198	868
	869
	871
	872
246-4267	866
246-4291	933
	934
246-4361	198
	201
	204
	206
	208
	210
	212
	214
	216
	612
	616
	620
	623
	626
	632
	637
	642
	645
	648
	651
	654
	658
	662
	666
	669
	672
	674
	679
246-9218	498
	499
247-1378	575
	577
	580
	582
247-1380	575
	577
	580
	582
248-2714	375
	683
249-1532	612
	616
	620
	623
	629
	632
	637
	642
	645
	648
	651
	658
	662
	669
	672
	674
	679
249-5541	514
	517
	519
	521
	524
	527
	530
	531
	534
	537
	539
249-7263	195
	629
	662
	767
	769
252-1446	817
	819
	821
	825
	833
252-1466	827
	829
	835
252-1747	917
252-1749	892
252-1802	297
252-8372	596
	598
254-5541	873
	874
	876
255-1297	504
	543
	547
	551
256-2084	252
	253
	254
	256
	264
256-2085	252
	253
	254
	256
	264
262-0491	760
	761
268-3421	620
	632
	642
	645
270-6968	426
	427
270-6970	426
	427
271-2877	397
271-5018	915
271-5059	575
	577
	580
	582
	586
	587
271-5062	575
	577
	580
	582
	586
	587
271-6700	891
272-0483	573
273-9253	504
	547
275-0493	884
276-1804	►754
	►756
	►758
	►845
	►848
	►849
276-1806	754
	756
	845
283-4752	904
	910
285-3555	693
	697
	700
	771
	774
286-7495	517
286-7496	514
	517
	519
	521
	524
	527
	531
	534
	537
	539
288-6537	252
288-6539	198
	201
	204
	206
	208
	210
	212
	214
	216
288-6593	29
288-8814	414
289-6119	416
290-8014	813
	815
	817
	819
	821
	823
	825
	827
	829
	831
	833
	835
	839
290-8043	397
291-1744	886
	888
	889
291-1808	252

► PRIMARY REFERENCE

PART NUMBER INDEX

Part	Page
291-4755	925
292-1992	551
	575
	580
293-0582	338
293-4785	416
293-4786	416
294-4916	231
	233
	235
	239
295-4070	751
	760
	795
	796
	799
	802
	805
	808
	811
	846
	854
	860
	863
295-5876	554
	556
	559
	562
296-0888	805
	808
	860
	863
296-0889	805
	808
	860
	863
297-3080	429
	430
	432
298-4543	648
	672
	679
	756
	845
303-0307	517
303-0338	252
303-4099	▶10
303-4225	▶11
303-4226	▶13
304-5061	612
	616
	620
	623
	626
	629
	632
	637
	642
	645
	648
	651
	654
	658
	662
	666
	669
	676
	677
305-0584	400
	402
	406
	410
306-2347	300
	303
	304
	306
	307
306-6346	▶812
	▶827
	▶829
	▶835
306-9226	▶14
307-9833	▶16
307-9834	▶17
307-9835	▶19
308-1852	219
	221
	223
	225
	227
308-1853	219
	221
	223
	225
	227
308-1854	225
	227
308-1859	▶249
	250
	251
	▶259
	▶273
308-1862	261
	263
	265
308-1867	243
308-1869	243
308-1871	313
308-1874	310
	312
	313
	350
308-1875	192
	310
	312
	313
	319
	326
	342
	343
	344
	346
	350
	379
	383
	387
	681
	683
	688
	690
	704
	706
	708
	710
	714
	722
	724
	728
	730
	738
	763
	765
	777
308-1877	313
308-1878	313
	686
	692
	704
308-1882	313
	318
	332
	364
	367
	369
	370
	373
	375
	377
	379
	383
	387
	681
	683
	686
	688
	690
	704
	706
	708
	710
	714
	716
	718
	720
	722
	724
	726
	728
	730
	732
	734
	736
	738
	740
	741
	744
	763
	765
	767
	769
	771
	774
	777
	779
	788
	878
	880
308-1888	704
308-1889	313
	318
	332
	344
	346
	369
	370
	373
	375
	377
	681
	683
	686
	688
	690
	692
	696
	700
	704
	706
	708
	710
	714
	716
	718
	720
	722
	724
	726
	728
	730
	732
	734
	736
	738
	740
	741
	744
	763
	765
	767
	769
	771
	774
	777
	779
	782
	788
	793
	794
	878
	880
	882
308-1892	313
	318
	332
	364
	367
	369
	370
	373
	377
	681
	686
	688
	690

3

Part	Page
301-2948	▶7
302-1820	▶8
302-4181	231
	233
	235
	239
302-4182	231
	233
	235
	239
302-4187	753
	759
	796
	799
	802
	846
	850
	854
	856
	858
302-7776	754
	756
	845
302-7777	754
	756
	845
302-7778	754

▶ PRIMARY REFERENCE

PART NUMBER INDEX

Part	Page
	692
	696
	704
	706
	708
	710
	714
	716
	718
	720
	722
	724
	726
	728
	730
	732
	734
	736
	738
	742
	744
	747
	763
	765
	767
	769
	771
	777
	779
	782
	784
	786
	788
	878
	880
308-1897	313
	318
	332
	340
	344
	346
	369
	370
	373
	375
	377
	681
	683
	686
	688
	690
	692
	696
	700
	704
	706
	708
	710
	714
	716
	718
	720
	722
	724
	726
	728
	730
	732
	734
	736
	738
	763
	765
	767
	771
	774
	777
	779
	788
	878
	880
	882
308-1901	313
	686
	692
	704
308-1902	▶145
	▶148
	▶150
	▶153
	▶154
	▶156
	▶158
	▶160
	▶162
	▶164
	▶170
	▶171
	▶178
	▶185
	▶186
308-1903	145
	147
	148
	149
	150
	152
	153
	154
	156
	158
	160
	162
	164
	167
	170
	171
	173
	174
	175
	176
	177
	178
	181
	182
	314
	319
308-1904	147
	148
	150
	152
	153
	154
	156
	158
	160
	162
	164
	170
	171
	178
	181
	186
	313
	747
	782
	784
	786
308-1905	813
	815
	823
	831
	839
308-1906	813
	815
	823
	831
	839
308-1907	517
	521
	524
	530
	531
	534
308-1914	712
	750
	781
	884
	885
	895
	897
308-2281	3
	5
	6
	7
	14
	19
	21
	23
	33
	37
	39
	41
	42
	44
	46
	47
	48
	52
	54
	57
	60
	61
	70
	76
	77
	78
	80
	81
	82
	84
	88
	89
	92
	103
	104
	107
	108
	113
	115
	118
	120
	121
	122
	123
	124
	126
	127
	128
	130
	132
	133
	135
	137
	139
	229
	231
308-2283	3
	5
	6
	7
	14
	19
	21
	23
	33
	37
	39
	41
	42
	44
	46
	47
	48
	52
	54
	57
	60
	61
	70
	76
	77
	78
	80
	81
	82
	84
	88
	89
	92
	103
	104
	107
	108
	113
	115
	118
	120
	121
	122
	123
	124
	126
	127
	128
	130
	132
	133
	135
	137
	139
	219
	221
308-2284	3
	5
	6
	7
	14
	19
	21
	23
	33
	37
	39
	41
	42
	44
	46

▶ PRIMARY REFERENCE

PART NUMBER INDEX

Part	Page
	47
	48
	52
	54
	57
	60
	61
	70
	76
	78
	81
	82
	84
	88
	89
	92
	103
	104
	107
	108
	113
	115
	118
	120
	121
	122
	123
	124
	126
	127
	128
	130
	132
	133
	135
	137
	139
	257
	259
308-2285	4
	5
	6
	7
	15
	20
	22
	24
	34
	38
	40
	41
	42
	45
	46
	47
	49
	53
	55
	57
	60
	62
	71
	76
	78
	81
	82
	84
	88
	91
	94
	103
	106
	107
	108
	113
	115
	118
	120
	121
	122
	123
	124
	126
	127
	128
	130
	132
	133
	135
	137
	140
	426
	427
308-2286	4
	5
	6
	7
	14
	19
	21
	23
	33
	37
	39
	41
	42
	44
	46
	47
	48
	52
	54
	57
	60
	61
	70
	76
	78
	81
	82
	84
	88
	90
	93
	103
	105
	107
	108
	113
	115
	118
	120
	121
	122
	123
	124
	126
	127
	128
	130
	132
	133
	135
	137
	140
	493
308-2287	4
	5
	6
	7
	14
	19
	21
	23
	33
	37
	39
	41
	42
	44
	46
	47
	48
	52
	54
	57
	60
	61
	70
	76
	78
	81
	82
	84
	88
	90
	93
	103
	105
	107
	108
	113
	115
	118
	120
	121
	122
	123
	124
	126
	127
	128
	130
	132
	133
	135
	137
	140
	493
308-2288	14
	19
	21
	23
	33
	37
	39
	41
	44
	61
	76
	84
	88
	89
	93
	108
	113
	115
	118
	120
	121
	128
	130
	133
	135
	139
	284
308-2289	15
	19
	24
	33
	37
	39
	41
	44
	48
	52
	54
	60
	61
	76
	77
	78
	80
	81
	82
	84
	88
	90
	93
	105
	107
	108
	113
	115
	118
	120
	121
	122
	123
	124
	126
	127
	128
	130
	132
	133
	135
	140
	813
308-2290	7
	8
	10
	11
	16
	21
	25
	27
	32
	35
	39
	56
	57
	109
	111
	112
	113
	115
	130
	134
	135
	297
	298
308-2291	7
	8

PART NUMBER INDEX

Part	Page
	10
	11
	16
	21
	25
	27
	32
	35
	39
	50
	56
	57
	67
	75
	79
	83
	109
	111
	112
	113
	115
	125
	129
	130
	131
	134
	135
	136
	287
308-2293	7
	8
	10
	12
	13
	15
	16
	21
	24
	25
	28
	30
	31
	32
	33
	35
	37
	39
	41
	42
	44
	46
	47
	50
	52
	54
	56
	57
	58
	59
	60
	62
	64
	65
	69
	70
	74
	75
	76
	77
	78
	79
	80
	81
	82
	83
	84
	85
	86
	88
	106
	107
	108
	109
	111
	112
	113
	115
	117
	118
	119
	120
	121
	122
	123
	124
	125
	126
	127
	128
	129
	130
	131
	132
	133
	134
	135
	136
	137
	140
	900
	901
	902
	903
308-2294	7
	8
	10
	11
	13
	14
	16
	17
	19
	27
	30
	31
	33
	35
	37
	39
	41
	42
	44
	46
	47
	48
	50
	54
	56
	57
	58
	59
	60
	61
	63
	65
	68
	70
	73
	75
	76
	77
	78
	79
	80
	83
	84
	85
	86
	88
	108
	109
	111
	112
	113
	115
	117
	118
	119
	120
	121
	125
	127
	128
	129
	130
	131
	132
	133
	134
	135
	136
	451
308-2295	2
	4
	5
	6
	7
	8
	10
	11
	13
	21
	27
	29
	31
	37
	39
	41
	42
	44
	54
	58
	61
	63
	65
	70
	73
	76
	78
	84
	85
	86
	88
	90
	93
	96
	97
	99
	101
	102
	103
	108
	109
	111
	112
	113
	115
	117
	119
	127
	130
	132
	134
	135
	137
	248
	398
	400
	402
	404
308-2297	2
	3
	5
	6
	8
	10
	11
	13
	14
	16
	17
	19
	23
	25
	31
	33
	35
	44
	48
	50
	52
	58
	59
	63
	67
	77
	79
	80
	83
	89
	93
	95
	97
	98
	100
	102
	103
	118
	121
	128
	131
	133
	136
	139
	248
	482
308-2298	1
	3
	5
	6
	7
	8
	10
	11
	13
	14

► PRIMARY REFERENCE

PART NUMBER INDEX

Part	Page
	16
	17
	19
	21
	23
	25
	27
	29
	31
	32
	33
	35
	37
	39
	41
	42
	44
	46
	47
	48
	50
	52
	54
	56
	57
	58
	59
	60
	61
	63
	65
	67
	70
	72
	75
	76
	77
	78
	79
	80
	81
	82
	83
	84
	85
	86
	88
	89
	92
	95
	97
	98
	100
	102
	103
	104
	107
	108
	109
	111
	112
	113
	115
	117
	118
	119
	120
	121
	122
	123
	124
	125
	126
	127
	128
	129
	130
	131
	132
	133
	134
	135
	136
	137
	139
	248
	491
308-2299	3
	5
	7
	14
	19
	21
	23
	33
	46
	48
	52
	54
	70
	93
	512
308-2300	2
	8
	10
	11
	13
	16
	17
	25
	27
	30
	31
	32
	35
	50
	58
	59
	63
	65
	68
	73
	75
	79
	83
	85
	86
	96
	97
	99
	101
	102
	109
	111
	112
	117
	119
	125
	129
	131
	134
	136
	248
	448
308-2301	10
	11
	13
	30
	58
	64
	73
	86
	109
	111
	112
	117
	119
	134
	514
308-2302	1
	3
	5
	6
	8
	10
	11
	13
	14
	16
	19
	21
	23
	25
	29
	31
	32
	33
	35
	37
	39
	41
	42
	44
	46
	47
	50
	52
	54
	56
	57
	58
	59
	60
	61
	63
	65
	70
	72
	75
	76
	77
	78
	79
	80
	81
	82
	83
	84
	85
	86
	88
	89
	92
	95
	97
	98
	100
	102
	103
	104
	107
	108
	109
	111
	112
	113
	115
	117
	118
	119
	120
	121
	122
	123
	124
	125
	126
	127
	128
	129
	130
	131
	132
	133
	134
	135
	136
	137
	139
	248
	497
308-2303	7
	8
	14
	16
	17
	21
	25
	26
	33
	56
	57
	59
	60
	67
	70
	77
	79
	80
	83
	113
	120
	131
	136
	506
308-2304	7
	8
	14
	16
	17
	21
	25
	26
	33
	56
	59
	67
	70
	77
	79
	80
	83
	113
	118
	120
	121

PART NUMBER INDEX

Part	Page
	128
	131
	133
	136
	139
	278
308-2305	7
	8
	10
	11
	13
	14
	16
	21
	23
	25
	26
	29
	31
	32
	33
	37
	39
	41
	42
	44
	46
	47
	50
	52
	54
	56
	57
	58
	59
	60
	61
	63
	65
	67
	70
	72
	75
	76
	77
	78
	79
	80
	81
	82
	83
	84
	86
	88
	104
	107
	108
	109
	111
	112
	113
	115
	117
	118
	119
	120
	121
	122
	123
	124
	125
	126
	127
	128
	129
	130
	131
	132
	133
	134
	135
	136
	137
	866
	867
308-2306	7
	9
	10
	12
	13
	15
	16
	22
	28
	30
	31
	34
	38
	40
	41
	42
	45
	46
	47
	51
	55
	56
	57
	58
	59
	60
	62
	64
	66
	69
	71
	74
	75
	76
	77
	78
	79
	80
	83
	84
	85
	87
	88
	108
	110
	111
	112
	113
	115
	117
	118
	119
	120
	121
	125
	127
	128
	129
	130
	131
	132
	133
	134
	135
	136
	460
308-2307	7
	8
	10
	13
	14
	16
	17
	19
	21
	23
	25
	26
	31
	32
	33
	35
	37
	39
	41
	42
	44
	48
	50
	52
	54
	58
	60
	61
	63
	65
	72
	75
	76
	78
	81
	82
	84
	85
	86
	88
	100
	105
	107
	108
	109
	111
	112
	113
	115
	117
	119
	120
	122
	123
	124
	125
	126
	127
	129
	130
	132
	134
	135
	140
	310
	311
308-2308	15
	20
	22
	24
	34
	49
	52
	57
	70
	118
	121
	128
	612
	616
308-2309	7
	8
	10
	11
	16
	21
	23
	29
	32
	37
	39
	41
	42
	44
	48
	52
	54
	57
	58
	61
	63
	65
	70
	72
	76
	78
	81
	82
	84
	86
	88
	107
	108
	109
	111
	112
	113
	115
	117
	119
	122
	123
	127
	130
	132
	134
	135
	595
308-2310	7
	8
	10
	11
	13
	15
	17
	19
	21
	27
	32
	33
	37
	39
	41
	42
	44

► PRIMARY REFERENCE

PART NUMBER INDEX

Part	Page
	48
	52
	54
	56
	57
	58
	60
	61
	63
	65
	70
	73
	76
	78
	84
	85
	86
	88
	108
	109
	111
	112
	113
	115
	117
	119
	120
	127
	130
	132
	134
	135
	137
	796
	799
	802
308-2311	1
	3
	5
	6
	7
	8
	10
	11
	13
	14
	16
	17
	19
	21
	23
	25
	27
	29
	31
	32
	33
	35
	37
	39
	41
	42
	44
	46
	47
	50
	52
	54
	56
	57
	58
	59
	60
	61
	63
	65
	68
	70
	73
	75
	76
	77
	78
	79
	80
	81
	82
	83
	84
	85
	86
	88
	89
	93
	95
	97
	98
	100
	102
	103
	104
	107
	108
	109
	111
	112
	113
	115
	117
	118
	119
	120
	121
	122
	123
	124
	125
	126
	127
	128
	129
	130
	131
	132
	133
	134
	135
	136
	137
	139
	248
	886
308-2312	7
	9
	21
	25
	34
	46
	47
	70
	113
	120
	140
	911
308-2313	2
	3
	5
	6
	7
	8
	10
	12
	13
	15
	16
	17
	20
	21
	24
	25
	29
	31
	32
	33
	37
	39
	41
	42
	46
	47
	52
	56
	57
	58
	59
	60
	61
	64
	65
	69
	70
	73
	77
	79
	80
	81
	82
	83
	84
	85
	86
	88
	89
	92
	96
	97
	99
	101
	102
	103
	105
	107
	108
	109
	111
	112
	113
	115
	117
	118
	119
	120
	121
	122
	123
	124
	126
	128
	130
	131
	133
	134
	135
	136
	140
	248
	895
308-2314	7
	9
	12
	13
	15
	17
	20
	21
	30
	34
	37
	39
	41
	42
	56
	57
	58
	62
	64
	65
	70
	74
	77
	80
	84
	85
	86
	88
	108
	109
	111
	112
	113
	115
	117
	118
	119
	120
	121
	128
	130
	133
	134
	135
	921
308-2315	7
	21
	57
	391
308-2317	2
	4
	5
	6
	7
	9
	10
	12
	13
	15
	16
	17
	20
	21
	24
	28
	30
	31
	32
	34

PART NUMBER INDEX

Part	Page
	37
	40
	41
	42
	44
	49
	52
	54
	56
	57
	58
	59
	60
	62
	64
	65
	70
	74
	76
	77
	78
	80
	81
	84
	85
	86
	88
	90
	94
	96
	97
	99
	101
	102
	103
	107
	108
	109
	111
	112
	113
	115
	117
	118
	119
	120
	121
	122
	124
	127
	128
	130
	132
	133
	134
	135
	137
	141
	248
	922
308-2319	7
	8
	10
	11
	13
	21
	33
	37
	39
	41
	44
	54
	56
	57
	58
	61
	63
	65
	70
	78
	84
	85
	86
	88
	108
	109
	111
	113
	873
308-2320	7
	8
	10
	11
	13
	15
	17
	19
	21
	30
	58
	60
	63
	65
	70
	73
	85
	86
	109
	111
	112
	113
	117
	119
	841
	842
308-2321	7
	8
	11
	13
	14
	17
	19
	21
	29
	33
	37
	39
	44
	58
	59
	61
	63
	924
308-2362	225
	227
308-3329	7
	42
	103
	137
	312
308-3330	7
	42
	103
	137
	815
308-4266	313
	318
	332
	364
	367
	369
	370
	373
	375
	377
	681
	683
	686
	688
	690
	692
	704
	706
	708
	710
	714
	716
	718
	720
	722
	724
	726
	728
	730
	732
	734
	736
	738
	742
	744
	747
	763
	765
	767
	769
	777
	779
	782
	784
	786
	878
	880
308-4735	2
	8
	16
	17
	25
	27
	31
	32
	35
	50
	56
	59
	65
	68
	75
	79
	83
	85
	96
	97
	99
	100
	102
	125
	129
	131
	136
	248
	495
308-5610	14
	67
	77
	79
	80
	83
	118
	121
	128
	131
	133
	136
	137
	596
308-5704	25
	54
	139
	756
308-6563	►21
309-6712	2
	8
	10
	11
	13
	16
	17
	25
	26
	29
	31
	32
	50
	56
	58
	59
	63
	65
	67
	72
	75
	79
	83
	85
	86
	95
	97
	98
	100
	102
	109
	111
	112
	117
	119
	125
	129
	131
	134
	136
	233
	235
	237
	248
309-6713	1
	8
	10
	11
	13
	16
	17
	25
	26
	29
	31
	32

► PRIMARY REFERENCE

PART NUMBER INDEX

Part	Page
	50
	56
	58
	59
	63
	65
	67
	75
	79
	83
	85
	86
	95
	97
	98
	100
	102
	109
	111
	112
	117
	119
	125
	129
	131
	134
	136
	223
	248
309-6714	2
	8
	10
	11
	13
	16
	17
	25
	27
	29
	31
	32
	50
	56
	58
	59
	63
	65
	68
	75
	79
	83
	85
	86
	96
	97
	99
	101
	102
	109
	111
	112
	117
	119
	125
	129
	131
	134
	136
	248
	429
	430
309-6715	1
	8
	10
	11
	13
	16
	17
	25
	26
	29
	31
	32
	50
	56
	58
	59
	63
	65
	67
	75
	79
	83
	85
	86
	95
	97
	98
	100
	102
	109
	111
	112
	117
	119
309-6716	1
	9
	10
	12
	13
	16
	17
	25
	28
	30
	31
	32
	51
	56
	58
	59
	64
	66
	69
	75
	79
	83
	85
	87
	96
	97
	99
	101
	102
	110
	111
	112
	117
	119
	125
	129
	131
	134
	136
	248
	473
	475
309-6717	1
	8
	10
	11
	13
	16
	17
	25
	27
	30
	31
	32
	50
	56
	58
	59
	63
	65
	68
	75
	79
	83
	85
	86
	96
	97
	99
	101
	102
	109
	111
	112
	117
	119
	125
	129
	131
	134
	136
	248
	494
309-6718	8
	11
	13
	16
	17
	32
	50
	58
	59
	63
	79
	98
	102
	313
	318
309-6719	8
	11
	13
	16
	17
	32
	35
	50
	58
	59
	63
	68
	73
	75
	79
	83
	86
	97
	99
	102
	109
	117
	119
	125
	129
	131
	136
	817
309-6720	2
	4
	5
	6
	7
	8
	10
	11
	13
	14
	16
	17
	19
	21
	23
	25
	27
	29
	31
	33
	37
	39
	41
	44
	50
	52
	54
	56
	58
	59
	60
	61
	63
	68
	70
	73
	75
	76
	77
	78
	79
	80
	81
	82
	83
	84
	86
	88
	90
	93
	96
	97
	99
	101
	102
	103

PART NUMBER INDEX

Part	Page
	105
	107
	108
	109
	111
	112
	113
	115
	117
	118
	119
	120
	121
	122
	123
	124
	125
	126
	127
	128
	129
	130
	131
	132
	133
	134
	135
	136
	140
	248
	444
309-6721	2
	8
	16
	17
	25
	28
	31
	32
	50
	56
	59
	65
	68
	75
	79
	83
	85
	96
	97
	99
	101
	102
	125
	129
	131
	136
	248
	517
	519
309-6722	1
	10
	11
	13
	25
	26
	29
	56
	58
	63
	72
	86
	95
	97
	98
	100
	102
	109
	111
	112
	117
	119
	134
	195
	198
	201
	248
309-6724	8
	10
	11
	13
	16
	17
	25
	27
	29
	31
	35
	50
	56
	58
	59
	63
	65
	68
	73
	75
	79
	83
	85
	86
	109
	111
	112
	117
	119
	125
	129
	131
	134
	136
	604
309-6725	2
	3
	5
	6
	7
	8
	10
	11
	13
	14
	16
	17
	19
	23
	25
	27
	29
	31
	32
	33
	37
	39
	41
	42
	44
	46
	47
	48
	50
	52
	54
	56
	58
	59
	60
	61
	63
	65
	68
	70
	73
	75
	76
	77
	78
	79
	80
	81
	82
	83
	84
	85
	86
	88
	90
	93
	95
	97
	98
	100
	102
	103
	105
	107
	108
	109
	111
	112
	113
	115
	117
	118
	119
	120
	121
	122
	123
	124
	125
	126
	127
	128
	129
	130
	131
	132
	133
	134
	135
	136
	137
	140
	248
	392
	393
309-6728	313
	686
	692
	704
	732
	742
	767
309-6729	313
	318
	323
	364
	367
	369
	370
	373
	375
	377
	692
	696
	700
	708
	710
	714
	716
	718
	720
	722
	724
	726
	728
	730
	732
	734
	736
	738
	742
	744
	747
	763
	765
	767
	769
	779
	782
	784
	786
	788
	878
	880
309-6732	313
	726
	736
309-6733	147
	149
	152
	167
	173
	174
	175
	176
	177
	181
	182
	313
	318
309-6735	195
	198
	206
	208
	210
309-6736	195
309-6737	392
310-7852	►23
311-0023	517
311-0655	313
	318
	332
	364
	367

► PRIMARY REFERENCE

PART NUMBER INDEX

Part	Page
	369
	370
	373
	375
	377
	681
	683
	686
	688
	690
	692
	696
	700
	704
	706
	708
	710
	714
	716
	718
	720
	722
	724
	726
	728
	730
	732
	734
	736
	738
	742
	744
	747
	763
	765
	767
	769
	771
	774
	777
	779
	784
	786
	788
	878
	880
311-1119	26
	32
	65
	85
	275
311-1174	759
	796
	799
	802
	850
311-1682	1
	10
	111
	112
	134
	323
311-1683	2
	10
	56
	111
	112
	134
	819
311-1883	14
	17
	19
	37
	46
	47
	50
	59
	60
	77
	80
	299
	300
311-1884	17
	37
	121
	128
	133
	288
311-1886	14
	16
	17
	19
	25
	56
	57
	59
	60
	68
	77
	79
	80
	83
	118
	121
	123
	124
	126
	128
	131
	133
	136
	140
	406
	408
311-2714	►25
311-3840	►26
311-5852	193
311-5853	193
311-7561	815
	823
311-9023	25
	95
	326
311-9024	25
	95
	763
	765
311-9025	25
	95
	147
311-9026	25
	96
	821
311-9027	14
	24
	25
	32
	42
	52
	61
	81
	82
	105
	107
	122
	123
	124
	126
	140
	454
311-9028	15
	25
	59
	68
	77
	79
	80
	83
	118
	121
	128
	131
	133
	136
	140
	850
311-9029	15
	24
	25
	32
	42
	53
	62
	81
	82
	106
	107
	122
	123
	124
	126
	141
	461
311-9030	25
	61
	64
	891
311-9048	753
	759
	802
	846
	850
	854
	856
	858
313-2025	332
	369
	370
	686
	718
	720
	794
	878
	880
313-5832	313
	318
	344
	346
	373
	375
	377
	681
	683
	688
	690
	692
	696
	700
	704
	706
	708
	710
	714
	716
	722
	724
	726
	728
	730
	732
	734
	738
	744
	767
	769
	771
	774
	777
	779
	782
	784
	786
	788
	882
313-5833	313
	318
	346
	373
	375
	377
	681
	683
	688
	690
	692
	696
	700
	704
	706
	708
	710
	714
	716
	722
	724
	728
	730
	732
	734
	738
	744
	767
	769
	771
	774
	777
	779
	782
	784
	786
	788
	882
313-9323	145
	146
	147
	148
	149
	150
	151
	152
	153
	154
	156
	158
	160
	162
	164

► PRIMARY REFERENCE

PART NUMBER INDEX

Part	Page
	167
	170
	171
	173
	174
	175
	176
	177
	178
	181
	182
	314
	319
315-5235	332
	370
	686
	718
	720
	742
	878
	880
315-5236	332
	369
	370
	686
	718
	720
	742
	878
	880
315-5237	896
315-5252	35
	42
	65
	85
	137
	466
315-5256	31
	46
	47
	104
	107
	124
	126
	603
315-7813	19
	23
	26
	35
	44
	48
	50
	52
	54
	75
	76
	78
	81
	82
	104
	107
	122
	123
	124
	125
	126
	127
	129
	132
	279
315-7814	16
	50
	75
	125
	129
	795
315-7817	28
	44
	50
	54
	75
	76
	78
	125
	127
	129
	132
	137
	896
315-7819	2
	4
	5
	6
	10
	12
	13
	15
	16
	17
	20
	24
	28
	30
	32
	35
	37
	39
	41
	42
	44
	52
	54
	56
	57
	58
	59
	60
	62
	64
	65
	74
	76
	77
	78
	80
	81
	82
	84
	85
	86
	88
	90
	94
	96
	97
	99
	101
	102
	103
	107
	108
	109
	111
	112
	115
	117
	118
	119
	121
	122
	123
	127
	128
	130
	132
	133
	134
	135
	137
	248
	912
316-1016	400
316-2275	402
	406
	410
316-6890	31
	913
	914
316-8411	►29
317-0586	13
	29
	33
	41
	42
	48
	58
	65
	72
	84
	85
	86
	88
	108
	117
	119
	120
	139
	289
317-0588	13
	23
	29
	33
	41
	42
	44
	48
	52
	54
	58
	61
	63
	65
	70
	73
	76
	78
	81
	82
	84
	85
	86
	88
	105
	107
	108
	117
	118
	119
	120
	121
	122
	123
	124
	126
	127
	128
	132
	133
	137
	139
	301
317-0590	8
	16
	17
	31
	32
	35
	50
	59
	67
	75
	79
	83
	125
	129
	131
	136
	204
317-0649	10
	11
	13
	29
	58
	63
	72
	86
	109
	111
	112
	117
	119
	134
	575
	577
	579
317-0960	623
	626
	629
	632
	637
	658
	674
317-0961	623
	626
	629
	632
	637
	642
	648
	658
	669
	672
	674
	679
317-0962	612
	616
	620
	623
	626
	629
	632
	637
	642
	645
	648
	651

► PRIMARY REFERENCE

PART NUMBER INDEX

Part	Page
	654
	658
	662
	666
	669
	676
	677
317-0965	3
	57
	70
	328
	329
317-0967	57
	70
	767
	769
317-0971	3
	57
	70
	148
317-0977	4
	57
	70
	823
317-0979	4
	5
	6
	15
	20
	21
	24
	33
	37
	39
	41
	42
	46
	48
	52
	54
	61
	70
	84
	88
	90
	94
	103
	108
	115
	118
	121
	128
	130
	133
	135
	137
	140
	521
	524
	527
317-0980	17
	511
317-3036	49
	904
317-3037	23
	33
	50
	52
	75
	81
	82
	105
	107
	120
	122
	123
	124
	125
	126
	129
	410
	412
317-3040	48
	887
	888
317-4987	▶31
317-6706	28
	33
	37
	39
	41
	42
	44
	54
	56
	57
	61
	76
	78
	84
	88
	108
	115
	120
	127
	130
	132
	135
	137
	845
317-7186	248
	330
317-7187	248
	681
	683
317-7188	▶149
	▶248
317-7190	27
	248
	825
317-7191	27
	37
	48
	498
317-7192	27
	32
	63
	605
317-7193	27
	611
317-7194	26
	501
317-7195	313
	318
	364
	367
	681
	683
	688
	690
	692
	696
	700
	704
	706
	708
	710
	714
	716
	722
	724
	726
	728
	730
	732
	734
	736
	738
	744
	763
	765
	767
	769
	771
	774
	777
	779
	782
	784
	786
	788
318-5038	894
318-8442	▶32
318-8497	▶33
319-1623	26
	31
	65
	85
	505
319-3250	313
	318
	685
	688
	690
	708
	710
	716
	726
	732
	734
	793
319-3251	714
	740
	767
	769
319-3252	681
	683
	722
	724
	728
	730
	736
	738
	744
	763
	765
319-3253	344
	346
	777
	779
	782
	882
319-5616	▶35
319-6358	229
	237
	241
	813
	815
	817
	819
	821
	823
	825
	827
	829
	831
	833
	835
	839
319-7216	▶37
319-7366	398
	400
	402
	406
	410
320-0290	▶39
320-0291	▶41
320-0337	▶42
320-3618	▶44
320-8401	188
	190
	195
	198
	201
	204
	206
	208
	210
	212
	214
	216
	612
	616
	620
	623
	626
	629
	632
	637
	642
	645
	648
	651
	658
	662
	666
	669
320-9114	30
	33
	44
	54
	65
	76
	78
	85
	120
	127
	132
	137
	894
321-3145	332
	369
	370
	686
	718
	720
	742
	878
	880
321-4061	261
	262
	263
	264
	265
	272
321-4249	313

▶ PRIMARY REFERENCE

PART NUMBER INDEX

Part	Page
	318
	332
	364
	369
	373
	681
	686
	688
	692
	696
	700
	704
	708
	714
	716
	718
	722
	726
	728
	732
	736
	763
	767
	771
	774
	779
	878
321-4252	149
	167
	168
	173
	174
	175
	176
	177
	179
	318
321-4257	29
	65
	85
	332
321-4258	30
	65
	85
	101
	827
321-4261	62
	64
	915
	916
321-5906	193
321-5907	274
	350
	351
	379
	383
	387
321-6711	►46
321-6712	►47
321-6738	448
	449
	450
321-6740	4
	5
	6
	7
	14
	19
	21
	23
	33
	37
	39
	41
	42
	44
	46
	47
	48
	52
	54
	56
	57
	60
	61
	70
	76
	77
	78
	80
	81
	82
	84
	88
	90
	93
	103
	105
	107
	108
	113
	115
	118
	120
	121
	122
	123
	124
	126
	127
	128
	130
	132
	133
	135
	137
	140
	449
321-6741	7
	8
	10
	11
	21
	23
	29
	33
	37
	39
	42
	44
	46
	47
	52
	54
	56
	57
	58
	61
	63
	65
	70
	72
	76
	78
	81
	82
	84
	85
	86
	88
	107
	108
	109
	111
	112
	113
	115
	117
	119
	120
	122
	123
	127
	130
	132
	134
	135
	137
	874
321-7701	575
	577
	580
	582
	586
	587
321-8209	692
	696
	700
	771
	774
	788
321-8211	692
	696
	700
	771
	774
321-8212	692
	696
	700
	771
	774
321-8214	692
	696
	700
	771
	774
321-8216	692
	696
	700
	771
	774
321-8217	692
	696
	700
	771
	774
321-8218	692
	696
	700
	771
	774
322-2412	1
	3
	5
	6
	14
	19
	46
	47
	59
	60
	77
	80
	89
	93
	95
	97
	98
	100
	102
	103
	248
	290
322-2416	32
	46
	47
	414
322-2420	32
	46
	47
	48
	57
	445
322-2421	46
	47
	484
322-2422	46
	47
	137
	447
322-2423	137
	276
322-2424	65
	206
322-2426	46
	47
	50
	68
	75
	79
	83
	125
	129
	131
	136
	442
322-2427	46
	47
	502
322-2430	276
322-6874	231
	233
	235
	239
322-7485	261
322-7486	257
	259
	261
	262
	263
	265
	267
	272
	273
322-7487	257
	259
	261
	262
	263
	265
	267
	272
	273
322-7488	257
	259
	261

► PRIMARY REFERENCE

PART NUMBER INDEX

Part	Page
	262
	263
	265
	267
	272
	273
322-7490	313
322-7491	313
322-7492	313
	686
	692
	704
	732
	767
322-7493	313
	318
	332
	364
	367
	369
	370
	373
	375
	377
	681
	683
	686
	688
	690
	692
	696
	700
	704
	706
	708
	710
	714
	716
	718
	720
	722
	724
	726
	728
	730
	732
	734
	736
	738
	742
	744
	747
	763
	765
	767
	769
	771
	774
	777
	779
	782
	784
	786
	788
	878
	880
323-9145	21
	23
	37
	39
	44
	48
	60
	61
	771
	774
323-9147	21
	23
	33
	37
	39
	44
	48
	60
	61
	150
323-9157	48
	68
	79
	83
	131
	136
	443
324-8998	805
	808
	860
	863
324-8999	30
	805
	808
325-4339	▶48
325-5661	31
	337
325-5662	31
	686
325-5663	31
	151
325-5665	31
	829
325-5667	31
	338
	339
325-5668	31
	291
325-5669	31
	46
	47
	277
325-5670	31
	853
325-5671	31
	757
325-5672	291
325-5944	540
	543
	547
	556
	559
	562
	565
	569
	573
325-5946	543
	556
	559
325-5948	540
	543
	547
	551
	556
	559
	562
	565
	569
	573
325-9415	404
	408
	412
	418
	420
	422
	423
	425
325-9475	1
	10
	111
	112
	134
	688
	690
325-9476	1
	10
	111
	112
	134
	152
326-0081	229
	237
	241
	243
326-1010	580
	582
	584
	589
	590
	592
	594
326-1872	▶50
326-5052	288
326-6416	▶52
326-7873	▶54
326-8542	44
	46
	54
	620
326-8543	37
	39
	41
	42
	61
	84
	88
	108
	115
	130
	135
	137
	580
	582
	584
326-8547	575
	577
	579
	580
	582
	584
	589
	590
	592
	594
326-8551	543
	547
	555
326-8552	543
326-8553	543
326-8554	543
	555
	568
326-8555	543
	547
	573
326-8556	543
	547
	573
326-8557	543
326-8559	543
	547
326-8561	543
326-8562	543
	547
	573
326-8564	543
	547
	573
326-9052	577
	579
	582
	584
	589
	590
	592
	594
	602
	927
	928
327-5154	287
	293
327-5241	289
	294
327-5608	104
	292
	295
327-7632	23
	44
	52
	54
	61
	63
	70
	76
	78
	81
	82
	104
	107
	118
	122
	123
	124
	126
	127
	132
	137
	292
327-7633	24
	52
	82
	854
328-1882	46
	47
	856
	858
328-2488	137
	455
328-3226	336
	340

▶ PRIMARY REFERENCE

PART NUMBER INDEX

Part	Page
	341
	788
328-3229	192
	274
	310
	311
	342
	350
	351
	379
	383
	387
328-3230	274
	350
	351
	387
328-3291	46
	47
	340
	341
328-3292	46
	47
	692
	696
	700
328-3293	46
	47
	153
328-3294	5
	6
	46
	47
	831
328-3296	46
	47
	274
328-3297	46
	47
	931
328-5174	692
	696
	771
328-6606	556
	559
328-6607	540
	556
	559
	562
	565
	569
329-1292	580
	582
	584
	589
	592
	796
	799
	802
	805
	808
	811
	850
	856
	858
	860
	863
329-2157	▶56
329-2159	▶57
329-3694	192
	342
	343
329-3695	192
	342
	343
329-3696	29
	342
	343
329-4424	35
	140
	606
329-8576	193
329-8577	11
	193
329-9277	14
	19
	21
	23
	33
	37
	39
	41
	44
	61
	76
	84
	88
	89
	93
	108
	113
	115
	118
	120
	121
	128
	130
	133
	135
	140
	344
	346
329-9278	14
	19
	21
	23
	33
	37
	39
	41
	44
	61
	76
	84
	88
	89
	92
	108
	113
	115
	118
	120
	121
	128
	130
	133
	135
	139
	154
	156
330-9189	318
	332
	364
	367
	369
	370
	373
	375
	377
	379
	383
	387
	681
	683
	686
	688
	690
	692
	696
	700
	704
	706
	708
	710
	714
	716
	718
	720
	722
	724
	726
	728
	730
	732
	734
	736
	738
	763
	765
	767
	769
	771
	774
	777
	779
	788
	878
	880
331-0214	5
	6
	348
331-0215	5
	6
	704
	706
331-0216	5
	6
	158
	160
331-2552	▶540
331-2553	556
	559
331-2589	3
	5
	6
	10
	11
	13
	14
	19
	21
	23
	29
	33
	37
	39
	41
	42
	44
	46
	47
	48
	52
	54
	57
	58
	60
	61
	63
	70
	73
	76
	77
	78
	80
	81
	82
	84
	86
	88
	90
	93
	103
	105
	107
	108
	109
	111
	112
	113
	115
	117
	118
	119
	120
	121
	122
	123
	124
	126
	127
	128
	130
	132
	133
	134
	135
	137
	140
	513
331-2590	512
	513
	537
331-3270	10
	11
	13
	30
	58
	64
	73
	86
	109
	111
	112
	117
	119
	134
	556
	559
	562
	565
331-4226	876
331-9610	48
	136
	416
331-9611	48
	884

PART NUMBER INDEX

Part	Page
331-9614	48
	925
332-1361	313
	686
	692
	704
332-1362	52
	54
	78
	81
	89
	107
	122
	124
	127
	132
	349
332-1363	52
	54
	78
	81
	89
	107
	122
	124
	127
	132
	708
	710
332-1364	52
	54
	78
	81
	89
	107
	122
	124
	127
	132
	162
	164
333-5930	901
	905
333-7903	905
	906
334-0267	▶58
334-0268	50
	75
	125
	129
	917
334-0272	29
	383
	482
	484
334-0732	318
	332
	364
	367
	369
	370
	373
	375
	377
	379
	383
	387
	681
	683
	686
	688
	690
	692
	696
	700
	704
	706
	708
	710
	714
	716
	718
	720
	722
	724
	726
	728
	730
	732
	734
	736
	738
	763
	765
	767
	769
	771
	774
	777
	779
	788
	878
	880
334-7304	556
334-7306	556
334-7436	556
	559
334-7437	540
	543
	547
	551
	556
	559
	562
	565
	569
	573
335-5578	318
	332
	364
	367
	369
	370
	373
	375
	377
	379
	383
	387
	681
	683
	686
	688
	690
	692
	696
	700
	704
	706
	708
	710
	714
	716
	718
	720
	722
	724
	726
	728
	730
	732
	734
	736
	738
	763
	765
	767
	769
	771
	774
	777
	779
	788
	878
	880
336-2965	319
	332
	344
	346
	369
	370
	373
	375
	377
	681
	683
	686
	688
	690
	693
	697
	700
	704
	706
	708
	710
	714
	716
	718
	720
	722
	724
	726
	728
	730
	732
	734
	736
	738
	763
	765
	767
	769
	771
	774
	777
	779
	788
	878
	880
	882
336-4079	575
	580
338-3377	394
338-3388	712
338-3389	712
338-3391	394
338-3392	923
338-3393	418
338-3394	712
338-3395	712
338-3396	868
338-3397	530
338-3398	462
338-3399	712
338-3400	712
338-3402	712
339-2900	▶906
340-0199	894
340-4755	747
	763
	765
340-4756	747
	763
	765
340-5781	35
	239
	241
340-5782	35
	225
340-5783	35
	432
	433
340-5784	35
	265
	267
340-5785	35
	477
340-5786	35
	496
340-5864	35
	418
340-5886	35
	530
340-5947	35
	868
340-5966	35
	462
340-5967	35
	860
	863
340-5975	805
	808
	860
	863
340-6069	35
	394
340-6911	35
	712
340-6913	35
	923
341-1358	3
	714
341-3600	893
	922
341-6637	38
	137
	463
341-6641	623
	626
	629
	632
	637
	658
	674
341-6642	37
	40
	41
	623
341-6649	543
	547
	573
341-6653	543
	551
341-6658	37
	39

▶ PRIMARY REFERENCE

PART NUMBER INDEX

Part	Page
	41
	61
	84
	88
	108
	115
	130
	135
	543
	547
342-0407	▶59
342-0408	▶60
342-1268	1
	3
	5
	6
	89
	92
	95
	97
	98
	100
	102
	103
	248
	283
342-4187	817
	819
	821
	825
	833
342-4356	551
342-4357	551
342-4358	551
342-4359	551
342-4360	551
342-4362	551
342-4364	551
342-4365	551
342-4366	551
342-4367	551
342-4368	551
342-4370	551
342-4422	543
342-8499	146
	151
342-9604	1
	3
	5
	6
	46
	47
	90
	93
	95
	97
	98
	100
	102
	103
	248
	302
	303
342-9607	2
	4
	5
	6
	90
	93
	96
	97
	99
	101
	102
	103
	248
	932
342-9620	747
342-9621	741
343-2871	▶146
	▶151
	▶166
	▶168
	▶169
	▶179
	▶180
	▶184
	▶332
344-5515	42
	626
344-5517	662
344-5868	540
	551
	556
	559
	562
	565
	569
	573
344-5880	551
344-5881	42
	551
344-8934	▶61
345-0355	▶63
345-4149	▶65
346-8219	933
	934
348-2243	▶67
348-8502	▶70
349-1368	866
351-2617	813
	815
	817
	819
	821
	823
	825
	827
	829
	831
	833
	835
	839
351-2618	813
	815
	817
	819
	821
	823
	825
	827
	829
	831
	833
	835
	839
351-2619	813
	815
	817
	819
	821
	823
	825
	827
	829
	831
	833
	835
	839
351-2620	813
	815
	817
	819
	821
	823
	825
	827
	829
	831
	833
	835
	839
351-2621	813
	815
	817
	819
	821
	823
	825
	827
	829
	831
	833
	835
	839
351-2622	813
	815
	817
	819
	821
	823
	825
	827
	829
	831
	833
	835
	839
351-3132	813
	815
	817
	819
	821
	823
	825
	827
	829
	831
	833
	835
	839
353-3477	632
	637
	642
	645
	648
	654
354-1245	1
	3
	5
	6
	14
	59
	67
	70
	77
	79
	80
	83
	89
	93
	95
	97
	98
	102
	103
	118
	121
	128
	131
	133
	136
	137
	248
	350
	351
354-4846	68
	79
	83
	131
	136
	304
357-3053	781
	885
	890
357-9895	551
357-9896	551
357-9897	551
358-4256	301
358-9226	796
	799
	802
	846
	850
	854
	856
	858
359-6000	921
359-9666	866
	867
	868
	869
	870
	871
	872
360-9545	198
	201
	204
	206
	208
	210
	212
	214
	216
	612
	616
	620
	629
	642
	645
	648
	651
	654
	658
	662
	666
	669
	672
	674
	679
361-3925	921
362-8050	547
	559
	562
	569
363-3165	7

▶ PRIMARY REFERENCE

PART NUMBER INDEX

Part	Page
	8
	10
	11
	13
	14
	17
	19
	21
	23
	26
	29
	32
	33
	35
	37
	39
	41
	42
	44
	48
	50
	52
	54
	56
	57
	58
	60
	61
	63
	65
	70
	72
	75
	76
	78
	81
	82
	84
	85
	86
	88
	104
	107
	108
	109
	111
	112
	113
	115
	117
	119
	120
	122
	123
	124
	125
	126
	127
	129
	130
	132
	134
	135
	137
	486
363-5813	540
	543
	547
	551
	556
	559
	562
	565
	569
363-6307	305
363-6308	50
	75
	125
	129
	305
363-7274	543
363-8409	151
	166
	169
	180
	332
	742
	744
363-9784	704
364-2520	29
	100
	352
364-2521	29
	100
	878
	880
364-2522	29
	100
	166
364-2523	353
364-2755	332
	364
	367
	370
	373
	375
	377
	379
	383
	387
	686
	692
	696
	700
	706
	708
	710
	730
	732
	734
	767
	769
	771
	774
	777
	779
	788
364-2827	57
	192
364-7487	373
	375
	377
364-8947	298
	308
	309
	543
	551
	556
	559
365-4125	188
	190
	612
	616
	620
	623
	626
	629
	632
	637
	642
	645
	648
	651
	654
	658
	662
	666
	669
365-4282	16
	17
	50
	353
365-4283	16
	17
	50
	716
365-4284	16
	17
	50
	167
365-4285	31
	354
365-4286	31
	718
	720
365-4287	31
	168
	169
365-4288	14
	19
	23
	77
	80
	82
	355
365-4290	14
	19
	23
	77
	80
	82
	882
365-4292	14
	19
	23
	77
	80
	82
	170
365-5278	467
	469
	473
	479
365-5317	274
	311
	351
	379
	383
	387
365-5515	580
	582
	584
	589
	592
366-0164	551
366-2656	540
	559
	562
	565
366-2658	540
	559
	562
	565
	569
366-3055	188
	190
	612
	616
	620
	623
	629
	632
	637
	642
	645
	648
	651
	654
	658
	662
	666
	669
366-3065	595
	596
	597
	598
366-4251	229
	231
	233
	235
	237
	239
	241
	243
368-4106	62
	629
368-4112	70
	397
369-4486	332
	364
	367
	369
	370
	373
	681
	686
	688
	692
	696
	700
	704
	708
	716
	718
	720
	722
	726
	728

PART NUMBER INDEX

Part	Page
	732
	736
	763
	767
	771
	774
	779
	878
	880
369-8010	404
	408
	412
	414
	416
	418
	420
	422
	423
	425
370-6544	391
	393
	395
	396
370-7052	926
371-0183	521
	524
	531
373-7283	42
	103
	137
	777
373-7284	42
	103
	137
	171
377-2885	696
	700
	771
	774
	788
380-0279	418
380-2680	781
	885
380-3715	697
	701
	772
	775
380-3716	697
	701
	772
	775
380-3717	697
	701
	772
	774
383-2725	902
	907
383-4110	817
	819
	821
	825
	833
383-4111	817
	819
	821
	825
	833
383-4112	817
	819
	821
	825
	833
383-4113	817
	819
	821
	825
	833
383-9577	632
	642
	658
	662
	666
384-8063	442
390-3729	332
	346
	369
	370
	373
	681
	688
	696
	700
	708
	714
	716
	718
	720
	722
	726
	728
	736
	740
	763
	771
	774
	779
	878
	880
390-3731	318
	332
	364
	367
	369
	370
	373
	375
	377
	681
	683
	688
	690
	696
	700
	706
	708
	710
	714
	716
	718
	720
	722
	724
	726
	728
	730
	734
	736
	738
	744
	747
	763
	765
	769
	771
	774
	777
	779
	782
	784
	786
	788
	878
	880
392-8657	65
	85
	875
394-3492	870
398-3408	27
	499
398-4274	1
	3
	26
	67
	89
	92
	95
	98
	100
	104
	139
	927
398-4795	1
	3
	90
	93
	95
	98
	100
	306
398-4803	27
	67
	142
	293
398-4807	72
	139
	143
	294
398-4810	104
	295
398-4818	28
	74
	106
	140
	142
	143
	908
398-4866	27
	68
	73
	142
	452
398-4900	105
	140
	143
	453
398-4951	142
	143
	420
398-4953	68
	140
	422
398-5865	2
	4
	27
	68
	73
	90
	93
	96
	99
	101
	105
	140
	142
	143
	446
398-5884	1
	3
	67
	72
	89
	92
	96
	98
	100
	104
	139
	142
	143
	500
398-8178	1
	3
	27
	67
	72
	90
	93
	95
	98
	100
	104
	139
	142
	143
	492
398-9092	26
	104
	280
398-9095	72
	142
	281
399-2625	139
	869
399-4716	1
	3
	26
	67
	72
	89
	92
	95
	98
	100
	104
	139
	142
	143
	227
4	
417-7274	►72
418-3614	►435
	►436
419-0074	933
	934
419-7640	895
	896
	897
420-0321	208
	210
420-0328	29
	208
	210

► PRIMARY REFERENCE

PART NUMBER INDEX

Part	Page
420-3210	27
	356
420-3211	26
	722
	724
420-3212	26
	173
420-8944	511
422-6385	551
422-6388	551
422-6389	555
422-6430	555
	568
423-5607	404
	408
	412
	414
	416
	418
	420
	422
	423
	425
423-5611	514
	519
	521
	524
	527
	530
	531
	534
	537
	539
423-5661	760
	761
	796
	799
	802
	805
	808
	811
	850
	856
	858
	860
	863
423-5665	760
	796
	799
	802
	805
	808
	811
	860
	863
423-6224	444
	446
	466
423-6342	569
423-6343	569
423-7554	784
423-7666	252
	253
423-7697	301
	309
423-7720	194
423-7723	328
	336
	340
	341
	353
	366
423-7724	318
	332
	364
	367
	369
	370
	373
	375
	377
	379
	383
	387
	681
	683
	688
	690
	696
	700
	706
	708
	710
	714
	716
	718
	720
	722
	724
	726
	728
	730
	732
	734
	736
	738
	763
	765
	767
	769
	771
	774
	777
	779
	788
	878
	880
423-8167	612
	629
423-8282	512
	513
423-8330	440
423-8335	440
423-8370	194
423-8419	439
424-3213	440
424-5615	435
424-8611	461
	465
424-9881	276
425-2286	537
425-3801	▶75
425-3806	▶76
425-3807	▶77
425-3808	▶78
425-3809	▶79
425-3810	▶80
425-6360	404
	408
	412
	418
	420
	422
	423
	425
425-6407	514
	519
	521
	524
	527
	530
	531
	534
	537
	539
425-7065	318
	332
	340
	346
	369
	373
	681
	688
	696
	700
	706
	708
	714
	716
	718
	722
	726
	728
	732
	736
	763
	767
	771
	774
	779
	878
425-7985	▶81
425-7986	▶82
425-7991	▶83
426-3438	249
	252
426-4357	813
	815
	817
	819
	821
	823
	825
	827
	829
	831
	833
	835
	839
426-5345	547
	573
428-5948	28
	69
	74
	142
	464
428-5949	106
	141
	143
	465
430-5926	540
	547
	562
	565
	569
	573
431-1759	▶84
431-1762	▶85
431-7089	547
432-6536	339
432-6548	277
433-1379	▶1
	524
	527
	530
	531
	534
	537
	539
	332
	340
	346
	369
	373
	681
	688
	696
	700
	706
	708
	714
	716
	718
	722
	726
	728
	732
	736
	763
	767
	771
	774
	779
	878
433-1380	▶3
434-1868	910
434-2165	▶86
434-2170	▶88
435-0208	104
	595
	596
	597
	598
	601
	603
	606
435-1634	▶89
	▶107
435-1636	▶92
	▶104
435-1637	▶5
435-1638	▶6
435-1641	▶95
435-1642	▶97
435-1645	▶248
435-1646	▶98
435-1647	▶100
435-1656	▶102
435-1658	▶103
435-9544	249
	250
	251
	264
	269
	271
435-9546	249
	251
	264
	269
435-9547	250
	271
436-6741	▶104
436-6742	▶107
436-6747	▶108
437-2599	67
	507
437-2623	67
	139
	282
437-2624	143
	504
437-5210	629
438-1393	458
	467
	469
	471
	473
	475
	477
438-1431	106
	443
	912
	913
	915
	918
438-1597	460
	463
	464
438-7868	▶109
438-7869	▶111
438-7873	▶112
438-8534	540
	565
	569
438-9109	182
	184
	185
	467

▶ PRIMARY REFERENCE

PART NUMBER INDEX

Part	Page
	469
	471
	473
	475
	477
438-9362	188
	190
	612
	616
	620
	623
	626
	629
	632
	637
	642
	645
	648
	651
	654
	658
	662
	666
	669
439-0945	497
	498
	499
	500
	511
439-3372	430
439-3373	225
439-4992	514
	527
	530
	534
439-4993	521
	524
	531
440-5104	249
	250
	251
	264
	269
	271
441-5692	29
	480
441-6512	8
	11
	32
	63
	86
	109
	358
441-6513	8
	11
	32
	63
	86
	109
	726
441-6514	8
	11
	32
	63
	86
	109
	174
441-8101	38
	40
	41
	62
	84
	88
	108
	115
	130
	135
	632
	637
442-6206	45
	46
	47
	54
	76
	78
	127
	132
	141
	642
	645
442-7729	15
	20
	21
	24
	33
	44
	46
	47
	49
	52
	54
	57
	60
	70
	76
	77
	78
	80
	81
	82
	105
	107
	113
	120
	122
	123
	124
	126
	127
	132
	531
	534
442-7759	15
	20
	22
	24
	34
	49
	53
	57
	60
	71
	77
	80
	81
	82
	106
	107
	113
	118
	120
	121
	122
	123
	124
	126
	133
	648
442-7794	82
	105
	123
	126
	892
442-9826	4
	5
	6
	90
	94
	651
442-9881	3
	5
	6
	89
	92
	118
	121
	128
	133
	750
443-9113	69
	909
444-7301	562
445-9988	2
	4
	27
	68
	73
	90
	93
	96
	99
	101
	105
	140
	142
	143
	450
446-5401	414
446-7440	▶113
447-2702	52
	81
	82
	105
	107
	122
	123
	124
	126
	846
447-7691	547
448-8575	298
	308
450-7277	103
	654
451-7225	554
	867
	868
	869
	871
	905
	906
	929
	930
452-3668	911
	919
453-2805	▶114
453-4800	279
	280
454-0472	441
454-6141	8
	11
	32
	35
	63
	73
	79
	83
	86
	97
	109
	117
	119
	131
	136
	360
454-6143	8
	11
	32
	35
	63
	68
	72
	79
	83
	86
	97
	109
	117
	119
	131
	136
	728
	730
454-6144	8
	11
	32
	35
	63
	67
	72
	79
	83
	86
	97
	119
	131
	136
	175
454-6672	418
455-3021	▶115
455-3592	▶116
455-3599	▶116
456-6973	▶117
456-7377	912
	913
458-3287	29
	65
	85
	870
458-6608	106
	144
	190
	481
	623
	626
	637
	920
459-2953	▶118
459-8934	▶119
460-1334	▶120
461-5602	▶121
461-7892	▶122
461-7893	▶123
461-7894	▶124

► PRIMARY REFERENCE

PART NUMBER INDEX

Part	Page
461-7895	▶125
461-8764	903
	908
463-1972	433
464-2090	323
	328
	330
	332
	348
	349
	356
	364
	383
465-1477	▶126
465-2205	16
	17
	50
	75
	125
	129
	361
465-2207	16
	17
	50
	75
	125
	129
	732
	734
465-2209	16
	17
	50
	75
	125
	129
	176
465-2420	▶126
465-2421	▶127
465-2492	35
	79
	83
	97
	362
465-2493	35
	68
	79
	83
	97
	736
	738
465-2494	35
	67
	79
	83
	97
	177
465-6710	369
	370
	373
465-7011	29
	56
	194
466-1519	65
	85
	212
466-7112	137
	488
468-7382	577
	579
	582
	584
	589
	590
	592
	594
469-4426	551
469-4427	540
	562
	565
	569
472-2214	501
	502
	514
	521
	524
	527
	531
	534
	537
472-2215	243
	514
	519
	527
	530
	534
	539
475-7281	598
476-2680	761
	850
	853
	856
	858
476-5579	551
476-5582	198
476-5586	206
477-0679	274
477-6922	62
	658
477-8793	521
	524
	530
	531
	534
477-8828	249
	250
	251
	264
	269
	271
481-1650	482
	489
481-2063	▶752
	▶753
	▶759
481-5621	14
	19
	23
	77
	80
	82
	105
	126
	363
481-5623	14
	19
	23
	77
	80
	82
	105
	123
	126
	779
481-5624	14
	19
	23
	77
	80
	82
	104
	123
	126
	178
482-8655	▶128
483-1210	352
	354
	361
	367
483-1372	344
	346
	364
483-1373	48
	366
483-3937	451
	452
483-3938	453
	454
483-3939	455
483-4031	466
484-0882	914
	920
484-0884	916
484-4145	▶129
484-9222	752
484-9223	752
484-9224	752
	802
	858
484-9225	752
	802
	858
484-9910	430
	433
484-9911	430
485-0005	427
485-9426	7
	662
486-8879	813
	817
	819
	821
	825
	827
	829
	831
	833
	835
	839
486-9344	▶367
	▶882
487-0157	229
	231
	233
	235
	237
	239
	243
487-9902	540
	562
	565
	569
488-0405	350
	351
	387
488-1898	7
	56
	666
491-3396	▶130
492-4924	28
	781
492-6602	▶131
493-7109	104
	107
494-9569	188
	190
	198
	201
	204
	206
	208
	210
	212
	214
	216
	612
	616
	620
	623
	626
	632
	637
	642
	645
	648
	651
	654
	658
	662
	666
	669
495-0737	312
	318
	369
	681
	683
	688
	690
	714
	716
	718
	720
	722
	724
	728
	738
	763
	765
	878
	880
495-3121	▶132
495-6243	▶133
497-9115	278
	282
499-5166	49
	910
499-5184	137
	508
501-1055	105
502-3824	877
502-4820	26
	877
502-5421	344
	370
	375
	377
	379
	383
	387
	683
	690
	701

5

▶ PRIMARY REFERENCE

PART NUMBER INDEX

Part	Page
	706
	710
	720
	724
	730
	734
	738
	765
	769
	775
	777
	788
	880
	882
502-9478	367
	370
	375
	377
	379
	383
	387
	683
	690
	701
	706
	710
	720
	724
	730
	734
	738
	765
	769
	775
	777
	788
	880
503-9707	370
	375
	383
	683
	690
	701
	706
	710
	720
	724
	730
	734
	738
	765
	769
	775
	777
	788
	880
	882
503-9731	367
	370
	375
	383
	683
	690
	701
	706
	710
	720
	724
	730
	734
	738
	765
	769
	775
	777
	788
	880
	882
504-3838	257
	259
	262
	263
	265
	267
	458
504-9775	253
	254
	255
504-9785	253
	254
	255
504-9786	237
	241
	253
	254
	255
504-9787	253
	254
	255
505-8353	547
508-8740	4
	5
	6
	91
	94
	669
508-9041	29
	285
508-9043	29
	369
	370
508-9044	29
	179
	180
509-0007	56
	286
509-0008	56
	373
	375
	377
509-0009	56
	181
510-1244	547
	573
513-6822	626
	654
	666
513-6823	616
	620
	623
	632
	637
	642
	645
	648
	651
	658
	669
	676
	677
514-7719	433
516-8900	139
	928
516-9335	▶134
518-9053	27
	68
	73
	90
	94
	105
	140
	142
	143
	933
518-9064	26
	72
	104
	142
	143
	871
519-4412	2
	3
	69
	73
	89
	92
	96
	99
	101
	105
	140
	142
	143
	897
520-0722	106
	107
	124
	126
	918
521-2896	251
	253
521-8165	72
	142
	509
523-5815	794
524-3347	257
	259
	267
	272
	273
524-3348	257
	259
	267
	272
	273
525-7106	225
526-2333	555
	568
526-2334	555
	568
526-5212	843
	844
	848
	849
527-9209	547
	573
528-6882	182
	184
	185
	467
	469
	471
	473
	475
	477
532-6841	257
	259
	262
	263
	265
	267
	272
	273
532-6842	257
	259
	262
	263
	265
	267
	272
	273
532-8293	1
	3
	67
	89
	93
	95
	98
	100
	139
	489
532-8309	140
	601
532-8314	141
	919
532-9705	72
	142
	143
	597
532-9707	67
	598
532-9837	104
532-9922	139
	758
533-3936	26
	72
	104
	142
	143
	490
533-4971	229
	237
	241
	243
	459
536-9734	231
	235
	239
539-0439	201
	204
	206
	210
	212
	214
	216
	616
	620
	623
	626
	632
	637
	645
	648
	651
	654
	658
	666
	669
	672
	674
	679
540-4157	867
	869
	870
	871
	872
541-6343	72

► PRIMARY REFERENCE

PART NUMBER INDEX

Part	Page
	142
	143
	876
541-9277	▶135
542-8638	28
	885
542-8640	26
	503
549-8284	▶136
550-9113	781
	885
551-6183	586
	587
551-6187	▶586
	▶594
553-4376	379
	383
	387
	480
	482
	484
	486
553-4377	482
	484
	486
	488
	489
	490
554-3084	579
	584
	587
	589
	590
	592
555-8348	589
	590
	592
557-7240	▶456
	▶458
	▶471
	▶475
	▶477
557-7242	456
557-7246	456
557-7247	456
557-7249	456
557-7250	456
557-7254	456
557-8814	414
557-9727	▶137
559-0028	842
	845
559-1702	243
559-9084	1
	3
	89
	92
	95
	98
	926
560-7819	742
	794
560-8837	201
	204
	212
	214
	216
	626
560-8843	497
	500
561-9498	▶568
	▶573
561-9509	554
565-2285	73
	142
	843
565-2286	143
	848
566-9450	1
	3
	89
	93
	95
	98
	100
	296
568-8653	510
568-8661	540
568-8664	509
	565
573-6681	744
575-5055	344
	377
	379
	387
576-1156	933
	934
579-9444	10
	11
	17
	20
	63
	65
	70
	73
	86
	109
	111
	113
	117
	119
	134
	844
579-9465	28
	33
	39
	41
	42
	54
	61
	84
	88
	115
	127
	135
	137
	849
580-0398	318
	344
	375
	377
	683
	690
	706
	710
	724
	730
	734
	738
	741
	744
	765
	769
	777
	782
	788
	793
	882
580-6241	782
580-6290	▶740
	▶786
581-9703	808
	863
581-9723	▶254
	▶264
	▶269
581-9724	250
	255
	271
581-9742	808
	863
583-6088	188
	190
	637
	645
	648
	658
	666
	669
583-6089	626
583-6090	616
	620
	623
	651
	654
583-6830	201
	214
583-6831	204
	216
583-6832	212
584-3179	2
	3
	26
	67
	72
	90
	92
	95
	98
	100
	104
	139
	142
	143
	243
584-3189	1
	4
	26
	69
	73
	90
	94
	96
	101
	105
	140
	142
	143
	458
584-9471	105
	423
584-9497	26
	67
	139
	872
584-9800	1
	96
	100
	607
584-9801	27
	68
	73
	142
	608
584-9814	27
	68
	73
	105
	140
	142
	143
	395
584-9822	2
	4
	28
	74
	90
	94
	96
	99
	101
	142
	143
	920
584-9829	73
	142
	569
585-0737	514
	519
	527
	537
	539
585-1921	427
	430
	435
	439
	440
586-4228	440
586-6654	1
	26
	72
	95
	98
	100
	142
	214
586-6656	67
	216
587-0189	90
	93
	140
	143
	436
587-0270	1
	3
	27
	68
	73
	90
	93
	95
	98
	100
	105
	139
	142
	143
	889
587-3846	229
	237
	241
	537
	539
587-3847	229
	237
	241

PART NUMBER INDEX

Part	Page
	379
	383
	387
587-3848	229
	237
	241
	379
	383
	387
587-3850	257
	259
	262
	267
	537
	539
587-8006	433
587-9328	▶139
588-1967	68
	307
588-9925	2
	4
	27
	73
	90
	93
	96
	99
	101
	425
589-6469	227
589-8060	267
	269
589-8341	▶741
	▶747
590-0692	229
	237
	241
	243
590-0693	227
590-0696	227
590-0697	440
590-2500	257
	271
591-2135	27
	142
	308
591-2138	73
	105
	140
	143
	309
592-3239	285
	286
592-3241	284
	312
	318
	323
	326
	329
	330
	332
	337
	348
	349
	352
	354
	355
	356
	358
	360
	361
	362
	363
	379
	383
	387
592-3246	229
	237
	241
	379
	383
	387
592-7636	274
	311
	351
	379
	383
	387
593-5245	886
	889
594-3935	610
	623
	626
	637
595-5217	272
	273
595-7167	254
596-2825	2
	27
	68
	73
	96
	99
	142
	833
596-2826	101
	835
596-2828	4
	90
	94
	105
	140
	143
	839
596-2861	1
	26
	67
	72
	95
	98
	100
	142
	272
596-2862	3
	89
	93
	104
	139
	143
	273
596-2865	4
	90
	93
	105
	140
	437
596-2866	2
	27
	68
	73
	96
	99
	101
	142
	438
596-3428	1
	26
	67
	72
	95
	142
	182
596-3440	100
	184
596-3442	3
	89
	92
	104
	139
	143
	185
596-3460	89
	92
	104
	139
	143
	782
596-3462	1
	142
	784
596-3463	100
	742
596-3466	26
	68
	72
	744
596-3470	95
	747
596-3472	3
	786
596-4180	437
	439
596-4181	438
	440
596-4209	637
	658
	674
596-4237	255
	256
598-5603	784
	793
598-5724	4
	73
	90
	94
	105
	140
	142
	143
	537
598-5726	2
	28
	68
	95
	96
	99
	101
	539
599-4589	243
	493
	494
599-4957	259
	262
	607
	608
	672
	674
	679
599-8820	219
	223
	437
	438
599-8821	219
	223
	437
	438
599-8823	219
	223
	437
	438
599-8880	219
	221
	223
599-8881	219
	221
	223
599-8882	219
	221
	223
599-9665	▶759
	760
	761
	▶811
599-9696	751
	753
599-9741	28
	760
599-9743	68
	140
	761
599-9752	28
	73
	142
	143
	811
599-9801	105
	751
599-9816	26
	72
	100
	105
	140
	142
	143
	379
	383
599-9836	1
	3
	67
	89
	93
	95
	98
	387

6

Part	Page
600-1135	39
	42
	61
	108
	137
	589
600-5115	4
	91
	94
	141
	672
600-5117	143
	674
600-5135	4
	90
	93
	599

PART NUMBER INDEX

Part	Page
	600
600-5139	105
	609
600-5140	141
	143
	610
600-5149	72
	142
	590
600-5153	143
	592
600-5786	106
600-5821	105
600-6119	143
	573
600-6923	2
	4
	90
	93
	95
	98
	101
	144
601-0472	672
	676
	679
601-0474	▶188
	▶672
	▶674
601-0476	674
	677
601-4317	68
	441
601-4322	2
	4
	28
	74
	90
	94
	96
	99
	101
	141
	142
	143
	893
603-1463	2
	4
	90
	93
	95
	99
	100
	396
604-4574	27
	67
	72
	104
	139
	142
	143
	929
607-1257	106
	679
607-1324	▶190
	▶679
607-4843	540
	554
	565
	569
607-7117	72
	142
	143
	930
608-8936	143
	510
609-9565	375
	377
609-9566	312
	318
	326
	329
	337
	358
	360
	362
	379
	383
	387
610-3545	68
	481
610-7720	▶142
610-7721	▶143
611-4942	404
	414
	425
611-6891	72
	594
611-8499	408
611-8501	412
612-7549	379
	387
	480
	486
612-8165	404
	408
	412
	414
	425
612-8795	1
	4
	90
	94
	96
	101
	934
614-1867	867
615-3292	430
615-8547	440
616-5021	762
619-1625	762
624-7996	762
624-7997	762
624-7998	762
624-8784	▶762
626-6718	440
626-7887	48
	788
626-7889	48
	186
627-6877	221
629-5293	27
	67
	139
	602
630-0387	933
	934
630-8953	871
630-8955	868
	869
	872
632-1229	519
	527
	537
	539
636-6709	221
636-6712	221
648-9061	909
650-6035	905
650-6038	906
660-0868	519
	537
	539

▶ PRIMARY REFERENCE

©2025 Caterpillar
All Rights Reserved

CAT, CATERPILLAR, LET'S DO THE WORK, their respective logos, “Caterpillar Corporate Yellow”, the "Power Edge" and Cat "Modern Hex" trade dress as well as corporate and product identity used herein, are trademarks of Caterpillar and may not be used without permission.