SEBP5546-26 (en-us)
April 2019

Parts Manual

C1.1 Industrial Engine

C7Y1-UP (Engine)

Product and Dealer Information

Note: For product identification plate locations, see the section “Product Identification Information” in the Operation and Maintenance Manual.

Delivery Date: _____

Product Information

Model: _____

Product Identification Number: _____

Engine Serial Number: _____

Transmission Serial Number: _____

Generator Serial Number: _____

Attachment Serial Numbers: _____

Attachment Information: _____

Customer Equipment Number: _____

Dealer Equipment Number: _____

Dealer Information

Name: _____ Branch: _____

Address: _____

_____

_____

	Dealer Contact	Phone Number	Hours
Sales:	_____	_____	_____
Parts:	_____	_____	_____
Service:	_____	_____	_____

MEMORANDA

TABLE OF CONTENTS

NAME	PAGE
GENERAL INFORMATION	A2
REPAIR ALTERNATIVES	A4
SUPPLEMENTAL COOLANT ADDITIVES	A5
MAINTENANCE PARTS	A6
INDEX	A8
ENGINE ARRANGEMENT	1
ENGINE AR	1
ENGINE AR-PRIMARY	6
BASIC ENGINE	15
CAMSHAFT GP	15
COVER GP-ENGINE	22
COVER GP-FRONT HOUSING	26
COVER GP-VALVE MECHANISM	27
CRANKSHAFT GP	31
CYLINDER BLOCK GP	33
CYLINDER HEAD AS	36
CYLINDER HEAD GP	38
DRIVE GP-FAN	39
DRIVE GP-POWER TAKE-OFF	41
DRIVE GP-PUMP	43
FLYWHEEL GP	44
HOUSING GP-FLYWHEEL	48
HOUSING GP-FRONT	53
LIFTING GP-ENGINE	60
PAN GP-OIL	62
PISTON & ROD GP	66
PLUG GP-OIL PAN	67
PULLEY GP-CRANKSHAFT	68
PULLEY GP-WATER PUMP	69
ROCKER ARM GP	70
V-BELT GP	71
VALVE MECHANISM GP	74
LUBRICATION SYSTEM	76
FILLER GP-ENGINE OIL	76
FILTER GP-ENGINE OIL	78
MOUNTING GP-ENGINE OIL FILTER	79
PUMP GP-ENGINE OIL	80
COOLING SYSTEM	81
FAN GP-SUCTION	81
HOUSING GP-WATER REGULATOR	82
PUMP GP-WATER	83
RADIATOR & FAN GP	88
RADIATOR GP	102
AIR INLET AND EXHAUST SYSTEM	106
CONNECTION GP-EXHAUST	106
FILTER ELEMENT AS-AIR	108
FILTER GP-AIR	109
MANIFOLD GP-EXHAUST	111
FUEL SYSTEM	112
CONTROL GP-GOVERNOR	112
GOVERNOR GP	116
INJECTOR GP-FUEL	128
PUMP GP-FUEL INJECTION	129
PUMP GP-FUEL PRIMING	140
PUMP GP-FUEL PRM & PRIM FILTER	142
PUMP GP-FUEL TRANSFER	143
ELECTRICAL AND STARTING SYSTEM	145
ALTERNATOR GP-CHARGING	145
CONNECTION GP-ELECTRICAL	150
GLOW PLUG GP	152
SHUTOFF GP-ELECTRICAL	153
SOLENOID GP-SHUTOFF	154
STARTING MOTOR GP-ELECTRIC	155
SWITCH GP-PRESSURE	164
SWITCH GP-START	167
SWITCH GP-TEMPERATURE	168
OPERATOR STATION	169
LAMP GP-INDICATOR	169
SERVICE EQUIPMENT AND SUPPLIES	170
PARTS GP-MISCELLANEOUS	170
PART NUMBER INDEX	B1

GENERAL INFORMATION

1. ENGINE IDENTIFICATION

Cat engines are identified with Serial Numbers and Arrangement Numbers. In some cases, Modification Numbers are also used. The serial number plate which shows these numbers is mounted on the engine.

Cat dealers need this information to determine which components were included on the engine when it was assembled at the factory. This permits accurate identification of replacement part numbers.

2. ORDERING PARTS

⚠ WARNING

When replacement parts are required for this product Caterpillar recommends using Caterpillar replacement parts or parts with equivalent specifications including, but not limited to, physical dimensions, type, strength and material.

Failure to heed this warning can lead to premature failures, product damage, personal injury or death.

Quality Cat replacement parts are available from Cat dealers throughout the world. Their parts inventories are up to date and include all parts normally required to protect your investment in Cat Engines. Dealers may offer repair kits or remanufactured parts to allow selection of the most effective repair alternative for a particular situation. When ordering parts, your order should specify the quantity, part number, part name, and the serial number/product identification number of the engine for which the parts are needed.

3. PARTS MANUAL ORGANIZATION

Product information in this manual is presented as "information elements" that represent all of the components for the specific model. An Engine Arrangement is an example of an information element. The information elements are organized alphabetically by part name and secondarily by part number within each major section of the manual.

4. TABLE OF CONTENTS

A table of contents (TOC) is found at the beginning of the manual. The TOC lists each section of the manual with a complete list of all information elements organized as they appear in the manual. Page numbers are provided for quick reference to detailed parts identification illustrations and serviceable consist lists.

5. MAINTENANCE PARTS INDEX

The Maintenance Parts Index, located near the beginning of the manual, references most frequently used maintenance part numbers, providing description, quantity, usage and page number. This information is organized alphabetically by part description.

6. INDEX

The index located near the front of the manual is an alphabetical listing of all information elements included in the manual. Page numbers are provided for quick reference to detailed parts identification illustrations and serviceable consist lists.

7. PART NUMBER INDEX

A numerical index listing all part numbers and the corresponding page number(s) appears at the back of the manual.

8. CAPTIONS

Captions located at the beginning each information element identify the part number and part name along with additional descriptive information. S/N information found in each caption should be used to select correct information for a specific engine. Field replacement options, identification of optional attachment components, and where used ("part of") information is also provided.

The first line of a caption is shown in larger type font to indicate the beginning of an information element. Captions for additional pages that may be required to illustrate an information element will be shown in standard type font and will include the term (contd.) .

9. NON-SERVICED PARTS

In some instances it is necessary to display non-serviced parts that are a link to lower level serviceable consist lists. These non-serviced part numbers are shown in italic type indicating that they are not available. All consist lists have not been converted to reflect this enhancement.

10. PARTS LIST REFERENCE NUMBERS

Numbers shown in the Ref No column correspond to numbers used in the associated graphic(s). An alphabetic suffix may be added to a reference number to identify lower level consist items. Numbers shown in the Graphic Ref column refer to the graphic number identifier displayed in the lower left corner of each illustration. The Graphic Ref number may be used in combination with the item Ref No to determine the correct part number. There may be intentional omission of a Ref No in a consist list as information is updated to reflect the latest serviceable part numbers.

11. INDENTED PART NAMES

When a part name is indented in a parts list, it is part of (included in) the group or assembly under which it is indented.

12. ILLUSTRATION REFERENCE LETTERS

When necessary, illustrations contain reference letters (A, B, C etc.) that are intended to track lines and harnesses from one point to another. They are also used to show where to reconnect illustrations that have been separated.

13. ABBREVIATIONS AND SYMBOLS

O.D. – Outside Diameter
I.D. – Inside Diameter
A – Not Part Of This Group
B – Use As Required
C – Change From Previous Type
D – Order By The Meter
E – Order By The Centimeter
F – Not Shown
G – Order By The Inch
I – Refer To Hydraulic Information System
M – Metric Part
R – Remfg Part May Be Available
Y – Separate Illustration
Z – Not Serviced Separately

14. DESCRIPTION OF TYPE CHANGES

Type - A type is defined as any configuration change that requires an additional Information Element for an Arrangement, Group, or Assembly. If serial number breaks for types are not available, a type # (Type 1, Type 2, etc.) will be displayed in the caption. These "type" changes are identified with a "C" note (change from previous type) in the Parts List. Only the "types" that apply to this Parts Manual will be included. Additional types may exist causing "C" notes to appear on an Information Element when no other types are shown.

15. <END>

This symbol indicates the end of an information element.

NOTE:

Continuing improvement and advancement of product design may cause changes to your engine which may not be included in this publication. Whenever a question arises regarding your Cat product or this publication, please consult your Cat dealer for the latest available information.

REMANUFACTURED COMPONENTS

As an option when making repairs consider Cat Remanufactured Components. Components that are available through the Cat Remanufactured Program are identified three ways in the parts book:

- with the letter R in the note field of the parts list
- with an R* at the beginning of the first line of the caption
- with an *R at the end of the first line of the caption

Typical components included in the Remanufacturing Program include:

ALTERNATORS
CONNECTING RODS
CRANKSHAFTS - UNDERSIZE
CRANKSHAFTS - UPGRADE TO NEW
CYLINDER HEADS
ELECTRONIC CONTROL MODULES (ECM)
ELECTRONIC SENSORS
FUEL INJECTORS
FUEL NOZZLES
FUEL PUMPS
GOVERNORS
OIL PUMPS
PISTONS
SHORT BLOCKS
STARTERS
TURBOCHARGERS - COMPLETE
TURBOCHARGER CARTRIDGES
WATER PUMPS

Cat Remanufactured engines for many engine arrangements are also available.

SUPPLEMENTAL COOLANT ADDITIVES

CUSTOMER BENEFITS:

Protects against cavitation, foam, erosion, corrosion, and scale buildup in cooling systems.

- Provides measured coolant conditioner.

DESCRIPTION:

Additives deplete from the coolant with normal operation. For this reason, Supplemental Coolant Additives (SCA) must be added to all heavy duty coolants at regular intervals. In addition, when not using a fully formulated, pre-charged antifreeze, like Cat DEAC, an initial charge of SCA must be added to the cooling system. The amount of SCA added to the system is dependent on the capacity of the system.

The SCA for initial fill is provided as a liquid. SCA's for maintenance intervals are available in liquid form and as a spin-on element. (No Spin-on available for 3600 Family of Engines)

NOTE:

The amount of SCA added at initial fill is not the same as the amount added at maintenance intervals.

The coolant additive elements can be used with any ethylene or propylene glycol type antifreeze which meets ASTM D4985 or ASTM D5345 Specifications.

NOTE:

For use with standard heavy duty coolant only, not for use with Extended Life Coolant.

PARTS NEEDED:

Cooling System Capacity		Liquid SCA at Initial Fill	Liquid SCA at Maintenance*	Spin-on SCA Maintenance Element*
Liters	Gallons			
22-30	(6-8)	3P-2044 (1)	6V-3542 (1)	111-2370 (1)
30-38	(8-10)	3P-2044 (1) 6V-3542 (1)	111-2372 (1)	111-2369 (1)
38-49	(10-13)	3P-2044 (1) 8T-1589 (1)	111-2372 (1)	111-2369 (1)
49-64	(13-17)	3P-2044 (2)	8T-1589 (1)	9N-3368 (1)
64-83	(17-22)	3P-2044 (2) 8T-1589 (1)	111-2372 (1) 6V-3542 (1)	111-2371 (1)
83-114	(22-30)	3P-2044 (3) 8T-1589 (1)	3P-2044 (1)	9N-3718 (1)
114-163	(30-43)	3P-2044 (5)	3P-2044 (1) 6V-3542 (1)	111-2371 (2)
163-242	(43-64)	3P-2044 (8)	3P-2044 (2)	9N-3718 (2)

* Normal maintenance period is 250 hrs. See your Operation and Maintenance Manual for complete coolant maintenance instructions.

( ) Indicates quantity required.

MAINTENANCE PARTS

DESCRIPTION	PART NUMBER	QTY	WHERE USED	PAGE
AIR INLET AND EXHAUST SYSTEM				
FILTER ELEMENT AS-AIR	244-0514	1	FILTER GP-AIR	109
FILTER ELEMENT-AIR	246-5011	1	FILTER ELEMENT AS-AIR	108
BASIC ENGINE				
FILTER ELEMENT-BREATHER	153-5939	1	COVER GP-VALVE MECHANISM	27
		1	COVER GP-VALVE MECHANISM	29
GASKET-COVER	444-7398	1	COVER GP-VALVE MECHANISM	27
		1	COVER GP-VALVE MECHANISM	29
PLUG (DRAIN) (ENGINE OIL PAN)	423-6224	2	PLUG GP-OIL PAN	67
STRAINER	488-8416	1	PAN GP-OIL	62
		1	PAN GP-OIL	64
V-BELT (ALTERNATOR, WATER PUMP)	183-3942	1	V-BELT GP	72
V-BELT (ALTERNATOR)	365-5827	1	V-BELT GP	73
V-BELT (DRIVE)	183-3942	1	V-BELT GP	71
COOLING SYSTEM				
CAP-RADIATOR	202-6616	1	RADIATOR & FAN GP	92
HOSE-RADIATOR	244-0503	1	RADIATOR & FAN GP	88
		1	RADIATOR & FAN GP	92
		1	RADIATOR & FAN GP	96
		1	RADIATOR & FAN GP	99
		1	RADIATOR GP	102
	258-4520	1	RADIATOR & FAN GP	88
		1	RADIATOR & FAN GP	92
		1	RADIATOR & FAN GP	96
		1	RADIATOR & FAN GP	99
		1	RADIATOR GP	102
REGULATOR-WATER TEMPERATURE	231-7859	1	PUMP GP-WATER	84
ELECTRICAL AND STARTING SYSTEM				
GLOW PLUG	307-8672	3	GLOW PLUG GP	152
KEY-IGNITION	361-3925	1	SWITCH GP-START	167
FUEL SYSTEM				
FILTER	514-6554	1	PUMP GP-FUEL PRIMING	141
FILTER AS-FUEL	358-9226	1	PUMP GP-FUEL TRANSFER	143
	514-6544	1	PUMP GP-FUEL PRIMING	141
FILTER ELEMENT-FUEL	276-1806	1	PUMP GP-FUEL PRM & PRIM FILTER	142
FILTER-FUEL	067-6987	1	PUMP GP-FUEL TRANSFER	143
PLUG (DRAIN)	033-7849	2	PUMP GP-FUEL TRANSFER	143
PLUG-DRAIN (WATER SEPARATOR)	302-7777	3	PUMP GP-FUEL PRM & PRIM FILTER	142
LUBRICATION SYSTEM				
CAP-FILLER (ENGINE)	334-0272	1	FILLER GP-ENGINE OIL	76
		1	FILLER GP-ENGINE OIL	77
CAP-OIL FILLER (ENGINE)	217-7358	1	FILLER GP-ENGINE OIL	76
		1	FILLER GP-ENGINE OIL	77
FILTER AS-ENGINE OIL	220-1523	1	FILTER GP-ENGINE OIL	78

MAINTENANCE PARTS

DESCRIPTION	PART NUMBER	QTY	WHERE USED	PAGE
SEAL (ENGINE OIL FILLER)	153-5933	1	FILLER GP-ENGINE OIL	77
OPERATOR STATION				
LAMP (GLOW PLUG INDICATOR)	197-8547	1	LAMP GP-INDICATOR	169
SERVICE EQUIPMENT AND SUPPLIES				
GASKET-COVER	444-7398	1	PARTS GP-MISCELLANEOUS	170

INDEX

NAME PAGE

A

ALTERNATOR GP-CHARGING 145
146
148
149

B

BOLT 44
45
46
47

C

CAMSHAFT GP 15
16
17
18
19
20
21
CAP-FILLER (ENGINE). 76
77
CAP-OIL FILLER (ENGINE) 76
77
CAP-RADIATOR 92
CONNECTION GP-ELECTRICAL. 150
151
CONNECTION GP-EXHAUST. 106
107
CONTROL GP-GOVERNOR 112
114
COVER GP-ENGINE. 22
23
24
25
COVER GP-FRONT HOUSING 26
COVER GP-VALVE MECHANISM. 27
29
CRANKSHAFT GP. 31
CYLINDER BLOCK GP 33
35
CYLINDER HEAD AS. 36
CYLINDER HEAD GP. 38

D

DRIVE GP-FAN 39
40
DRIVE GP-POWER TAKE-OFF 41
42
DRIVE GP-PUMP. 43

NAME PAGE

E

ENGINE AR. 1
3
4
5
ENGINE AR-PRIMARY 6
7
8
10
12
13
14

F

FAN GP-SUCTION. 81
FILLER GP-ENGINE OIL. 76
77
FILM-WARNING (DO NOT SPRAY, READ OMM). 109
FILTER 141
FILTER AS-ENGINE OIL 78
FILTER AS-FUEL. 141
143
FILTER ELEMENT AS-AIR 108
109
FILTER ELEMENT-AIR. 108
FILTER ELEMENT-BREATHER 27
29
FILTER ELEMENT-FUEL 142
FILTER GP-AIR 109
FILTER GP-ENGINE OIL. 78
FILTER-FUEL 143
FLYWHEEL GP 44
45
46
47

G

GASKET-COVER 27
29
170
GAUGE AS 64
GAUGE GP-OIL LEVEL (DIPSTICK) 64
GAUGE-OIL LEVEL (DIPSTICK) 62
GLOW PLUG. 152
GLOW PLUG GP. 152
GOVERNOR GP. 116
118
120
122
124
126

INDEX

NAME PAGE

H

HOSE-RADIATOR 88
92
96
99
102
HOUSING GP-FLYWHEEL 48
49
50
51
52
HOUSING GP-FRONT 53
55
57
59
HOUSING GP-WATER REGULATOR. 82

I

INDICATOR (AIR FILTER SERVICE). 108
INJECTOR GP-FUEL 128

K

KEY-IGNITION. 167

L

LAMP (GLOW PLUG INDICATOR). 169
LAMP GP-INDICATOR 169
LIFTING GP-ENGINE 60
61

M

MANIFOLD GP-EXHAUST. 111
MOUNTING GP-ENGINE OIL FILTER. 79

P

PAN GP-OIL 62
64
PARTS GP-MISCELLANEOUS 170
PISTON & ROD GP 66
PLUG (DRAIN) 143
PLUG (DRAIN) (ENGINE OIL PAN). 67
PLUG GP-OIL PAN. 67
PLUG-DRAIN (WATER SEPARATOR). 142
PULLEY GP-CRANKSHAFT 68
PULLEY GP-WATER PUMP 69
PUMP GP-ENGINE OIL. 80

NAME PAGE

PUMP GP-FUEL INJECTION 129
132
134
136
138
PUMP GP-FUEL PRIMING 140
141
142
PUMP GP-FUEL PRM & PRIM FILTER 142
PUMP GP-FUEL TRANSFER 143
PUMP GP-WATER. 83
84
86

R

RADIATOR & FAN GP. 88
92
96
99
RADIATOR GP 102
REGULATOR (ALTERNATOR VOLTAGE) 146
REGULATOR-WATER TEMPERATURE. 84
ROCKER ARM GP 70

S

SEAL (ENGINE OIL FILLER) 77
SHUTOFF GP-ELECTRICAL. 153
SOLENOID AS (12-VOLT) (FUEL SHUTOFF). . . 154
SOLENOID GP-SHUTOFF–FUEL. 154
STARTING MOTOR GP-ELECTRIC 155
157
158
159
160
161
162
STARTING MOTOR GP-ELECTRIC–12-VOLT . . . 163
STRAINER 62
64
SWITCH (ENGINE OIL) 166
SWITCH (OIL PRESSURE) (ENGINE OIL) 165
SWITCH AS-START 167
SWITCH GP-PRESSURE. 165
166
SWITCH GP-PRESSURE–ENGINE OIL. 164
SWITCH GP-START 2
4
6
7
9
10
12
13
167
SWITCH GP-TEMPERATURE–COOLANT 168
SWITCH-PRESSURE (ENGINE OIL) 164

NAME PAGE

SWITCH-TEMPERATURE (ENGINE COOLANT) 168

V

V-BELT (ALTERNATOR, WATER PUMP) 72
V-BELT (ALTERNATOR) 73
V-BELT (DRIVE) 71
V-BELT GP 71
72
73
VALVE MECHANISM GP 74

ENGINE ARRANGEMENT

318-1667 ENGINE AR

10 BRAKE KW (13 BHP) AT 1500 RPM

FIELD REPLACEMENT ORDER 435-1644—PAGE: 35

SMCS-1000 **i07048930**

NOTE	PART NUMBER	QTY	PART NAME 1 2 3 4 5 6 (PRODUCT LEVEL)	SEE PAGE
Y	*319-7354*	1	ALTERNATOR GP-CHARGING	148
Y	*323-2409*	1	CAMSHAFT GP	17
Y	*308-2319*	1	CONNECTION GP-ELECTRICAL	150
			—OR—	
Y	*321-6741*	1	CONNECTION GP-ELECTRICAL	151
Y	*308-5610*	1	CONNECTION GP-EXHAUST	107
Y	*329-8577*	1	COVER GP-FRONT HOUSING	26
			—OR—	
Y	*313-1984*	1	COVER GP-ENGINE	22
Y	*313-1986*	1	COVER GP-VALVE MECHANISM	27
			—OR—	
Y	*452-4278*	1	COVER GP-VALVE MECHANISM	29
Y	*313-1962*	1	CRANKSHAFT GP	31
Y	*313-1957*	1	CYLINDER BLOCK GP	33
Y	*313-1964*	1	CYLINDER HEAD GP	38
Y	*313-1966*	1	DRIVE GP-PUMP	43
Y	*313-1975*	1	FILLER GP-ENGINE OIL	76
			—OR—	
Y	*365-0486*	1	FILLER GP-ENGINE OIL	77
Y	*318-8804*	1	FILTER GP-AIR	109
Y	*308-2298*	1	FILTER GP-ENGINE OIL	78
Y	*318-8880*	1	FLYWHEEL GP	45
Y	*313-2021*	1	GLOW PLUG GP	152
Y	*323-2408*	1	GOVERNOR GP	122
Y	*318-8879*	1	HOUSING GP-FLYWHEEL	50
Y	*323-2407*	1	HOUSING GP-FRONT	57
Y	*313-1980*	1	HOUSING GP-WATER REGULATOR	82
Y	*313-2022*	1	LIFTING GP-ENGINE	60
Y	*313-1991*	1	MANIFOLD GP-EXHAUST	111
Y	*308-4735*	1	MOUNTING GP-ENGINE OIL FILTER	79
Y	*313-1973*	1	PAN GP-OIL	62
Y	*313-1963*	1	PISTON & ROD GP	66
Y	*309-6720*	1	PLUG GP-OIL PAN	67
Y	*313-1976*	1	PULLEY GP-CRANKSHAFT	68
Y	*313-1972*	1	PULLEY GP-WATER PUMP	69
Y	**339-3016**	1	PUMP GP-ENGINE OIL	80
Y	*323-2410*	1	PUMP GP-FUEL INJECTION	134
Y	*317-6706*	1	PUMP GP-FUEL PRM & PRIM FILTER	142
Y	*313-2009*	1	PUMP GP-FUEL TRANSFER	143
Y	*313-1978*	1	PUMP GP-WATER	84
Y	*318-8803*	1	RADIATOR GP	102
			—OR—	
Y	*445-0804*	1	RADIATOR & FAN GP	92
Y	*320-9114*	1	SHUTOFF GP-ELECTRICAL	153
Y	*313-2023*	1	SOLENOID GP-SHUTOFF	154
Y	*313-1971*	1	STARTING MOTOR GP-ELECTRIC	157
			—OR—	
Y	*319-7351*	1	STARTING MOTOR GP-ELECTRIC	161
Y	*313-2024*	1	SWITCH GP-PRESSURE	164

318-1667 **ENGINE AR (**contd.**)** **i07048930**

NOTE	PART NUMBER	QTY	PART NAME 1 2 3 4 5 6 (PRODUCT LEVEL)	SEE PAGE
Y	*308-2314*	1	SWITCH GP-START	167
Y	*313-2035*	1	SWITCH GP-TEMPERATURE	168
Y	*319-7355*	1	V-BELT GP (INCLUDES 1-BELT)	72
Y	*313-1965*	1	VALVE MECHANISM GP	74

Y - SEPARATE ILLUSTRATION

<END>

318-1670 ENGINE AR

12 BRAKE KW (16 BHP) AT 1800 RPM

FIELD REPLACEMENT ORDER 435-1632—PAGE: 4

SMCS-1000 **i07047525**

NOTE	PART NUMBER	QTY	PART NAME 1 2 3 4 5 6 (PRODUCT LEVEL)	SEE PAGE
Y	*313-1982*	1	ALTERNATOR GP-CHARGING (SHORT)	146
Y	*321-3143*	1	CAMSHAFT GP	16
Y	*308-2319*	1	CONNECTION GP-ELECTRICAL	150
			—OR—	
Y	*321-6741*	1	CONNECTION GP-ELECTRICAL	151
Y	*308-2309*	1	CONNECTION GP-EXHAUST	106
Y	*329-8577*	1	COVER GP-FRONT HOUSING	26
			—OR—	
Y	*313-1984*	1	COVER GP-ENGINE	22
Y	*313-1986*	1	COVER GP-VALVE MECHANISM	27
			—OR—	
Y	*452-4278*	1	COVER GP-VALVE MECHANISM	29
Y	*313-1962*	1	CRANKSHAFT GP	31
Y	*313-1957*	1	CYLINDER BLOCK GP	33
Y	*313-1964*	1	CYLINDER HEAD GP	38
Y	*313-1966*	1	DRIVE GP-PUMP	43
Y	*313-1975*	1	FILLER GP-ENGINE OIL	76
			—OR—	
Y	*365-0486*	1	FILLER GP-ENGINE OIL	77
Y	*318-8804*	1	FILTER GP-AIR	109
Y	*308-2298*	1	FILTER GP-ENGINE OIL	78
Y	*318-8880*	1	FLYWHEEL GP	45
Y	*313-2021*	1	GLOW PLUG GP	152
Y	*321-3142*	1	GOVERNOR GP	120
Y	*318-8879*	1	HOUSING GP-FLYWHEEL	50
Y	*321-3140*	1	HOUSING GP-FRONT	55
Y	*313-1980*	1	HOUSING GP-WATER REGULATOR	82
Y	*313-2026*	1	LAMP GP-INDICATOR	169
Y	*313-2022*	1	LIFTING GP-ENGINE	60
Y	*313-1991*	1	MANIFOLD GP-EXHAUST	111
Y	*308-4735*	1	MOUNTING GP-ENGINE OIL FILTER	79
Y	*313-1973*	1	PAN GP-OIL	62
Y	*313-1963*	1	PISTON & ROD GP	66
Y	*309-6720*	1	PLUG GP-OIL PAN	67
Y	*313-1976*	1	PULLEY GP-CRANKSHAFT	68
Y	*313-1972*	1	PULLEY GP-WATER PUMP	69
Y	*321-3334*	1	PUMP GP-FUEL INJECTION	132
Y	*317-6706*	1	PUMP GP-FUEL PRM & PRIM FILTER	142
Y	*313-2009*	1	PUMP GP-FUEL TRANSFER	143
Y	*313-1978*	1	PUMP GP-WATER	84
Y	*318-8803*	1	RADIATOR GP	102
			—OR—	
Y	*445-0804*	1	RADIATOR & FAN GP	92
Y	*320-9114*	1	SHUTOFF GP-ELECTRICAL	153
Y	*313-2023*	1	SOLENOID GP-SHUTOFF	154
Y	*313-1971*	1	STARTING MOTOR GP-ELECTRIC	157
			—OR—	
Y	*319-7351*	1	STARTING MOTOR GP-ELECTRIC	161
Y	*313-2024*	1	SWITCH GP-PRESSURE	164

318-1670 **ENGINE AR (**contd.**)** **i07047525**

NOTE	PART NUMBER	QTY	PART NAME 1 2 3 4 5 6 (PRODUCT LEVEL)	SEE PAGE
Y	*308-2314*	1	SWITCH GP-START	167
Y	*313-2035*	1	SWITCH GP-TEMPERATURE	168
Y	*313-1983*	1	V-BELT GP (INCLUDES 1-BELT) (ALTERNATOR)	71
Y	*313-1965*	1	VALVE MECHANISM GP	74
Y	**339-3016**	1	PUMP GP-ENGINE OIL	80

Y - SEPARATE ILLUSTRATION

<END>

435-1632 ENGINE AR

12 BRAKE KW (16 BHP) AT 1800 RPM

FIELD REPLACEMENT FOR 318-1670—PAGE: 3, 318-1668—PAGE: 8: FOR 516-9462—PAGE: 13

SMCS-1000 **i05392723**

NOTE	PART NUMBER	QTY	PART NAME 1 2 3 4 5 6 (PRODUCT LEVEL)	SEE PAGE
Y	*321-3143*	1	CAMSHAFT GP	16
Y	*342-1268*	1	COVER GP-ENGINE	24
Y	*329-8577*	1	COVER GP-FRONT HOUSING	26
Y	*313-1986*	1	COVER GP-VALVE MECHANISM	27
Y	*313-1962*	1	CRANKSHAFT GP	31
Y	*313-1957*	1	CYLINDER BLOCK GP	33
Y	*313-1964*	1	CYLINDER HEAD GP	38
Y	*313-1966*	1	DRIVE GP-PUMP	43
Y	*313-1975*	1	FILLER GP-ENGINE OIL	76
Y	*308-2298*	1	FILTER GP-ENGINE OIL	78
Y	*325-5586*	1	FLYWHEEL GP	47
Y	*313-2021*	1	GLOW PLUG GP	152
Y	*321-3142*	1	GOVERNOR GP	120
Y	*342-7619*	1	HOUSING GP-FLYWHEEL	52
Y	*321-3140*	1	HOUSING GP-FRONT	55
Y	*313-1980*	1	HOUSING GP-WATER REGULATOR	82
Y	**339-3016**	1	PUMP GP-ENGINE OIL	80
Y	*392-8729*	1	LIFTING GP-ENGINE	61
Y	*308-4735*	1	MOUNTING GP-ENGINE OIL FILTER	79
Y	*313-1973*	1	PAN GP-OIL	62
Y	*342-7622*	1	PARTS GP-MISCELLANEOUS	170
Y	*313-1963*	1	PISTON & ROD GP	66
Y	*309-6720*	1	PLUG GP-OIL PAN	67
Y	*313-1976*	1	PULLEY GP-CRANKSHAFT	68
Y	*321-3334*	1	PUMP GP-FUEL INJECTION	132
Y	*313-1978*	1	PUMP GP-WATER	84
Y	*313-2023*	1	SOLENOID GP-SHUTOFF	154
Y	*315-6638*	1	SWITCH GP-PRESSURE (ENGINE OIL)	165
Y	*313-2035*	1	SWITCH GP-TEMPERATURE	168
Y	*313-1965*	1	VALVE MECHANISM GP	74

Y - SEPARATE ILLUSTRATION

<END>

435-1643 ENGINE AR

20 BRAKE KW (26 BHP) AT 3000 RPM
PART OF 541-8320 ENGINE AR-PRIMARY

SMCS-1000 **i05398777**

NOTE	PART NUMBER	QTY	PART NAME 1 2 3 4 5 6 (PRODUCT LEVEL)	SEE PAGE
Y	*329-9765*	1	CAMSHAFT GP	19
Y	*329-9764*	1	CONTROL GP-GOVERNOR	112
Y	*342-1268*	1	COVER GP-ENGINE	24
Y	*313-1986*	1	COVER GP-VALVE MECHANISM	27
Y	*313-1962*	1	CRANKSHAFT GP	31
Y	*313-1957*	1	CYLINDER BLOCK GP	33
Y	*313-1964*	1	CYLINDER HEAD GP	38
Y	*367-9248*	1	DRIVE GP-POWER TAKE-OFF	41
Y	*313-1975*	1	FILLER GP-ENGINE OIL	76
Y	*308-2298*	1	FILTER GP-ENGINE OIL	78
Y	*325-5586*	1	FLYWHEEL GP	47
Y	*313-2021*	1	GLOW PLUG GP	152
Y	*342-7619*	1	HOUSING GP-FLYWHEEL	52
Y	*313-1967*	1	HOUSING GP-FRONT	53
Y	*313-1980*	1	HOUSING GP-WATER REGULATOR	82
Y	*392-8729*	1	LIFTING GP-ENGINE	61
Y	*308-4735*	1	MOUNTING GP-ENGINE OIL FILTER	79
Y	*313-1973*	1	PAN GP-OIL	62
Y	*342-7622*	1	PARTS GP-MISCELLANEOUS	170
Y	*313-1963*	1	PISTON & ROD GP	66
Y	*309-6720*	1	PLUG GP-OIL PAN	67
Y	*313-1976*	1	PULLEY GP-CRANKSHAFT	68
Y	*313-1968*	1	PUMP GP-FUEL INJECTION	129
Y	*313-1978*	1	PUMP GP-WATER	84
Y	*313-2023*	1	SOLENOID GP-SHUTOFF	154
Y	*313-2024*	1	SWITCH GP-PRESSURE	164
Y	*313-2035*	1	SWITCH GP-TEMPERATURE	168
Y	*313-1965*	1	VALVE MECHANISM GP	74
			AVAILABLE REPAIR KIT(S):	
Y	**339-3016**	1	PUMP GP-ENGINE OIL	80

Y - SEPARATE ILLUSTRATION

<END>

ENGINE ARRANGEMENT

303-4105 ENGINE AR-PRIMARY

19.7 BRAKE KW(26.4 BHP)@3000 RPM

SMCS-1000 **i07177703**

NOTE	PART NUMBER	QTY	PART NAME 1 2 3 4 5 6 (PRODUCT LEVEL)	SEE PAGE
Y	*313-1982*	1	ALTERNATOR GP-CHARGING (SHORT)	146
Y	*329-9765*	1	CAMSHAFT GP	19
Y	*308-2319*	1	CONNECTION GP-ELECTRICAL	150
			—OR—	
Y	*321-6741*	1	CONNECTION GP-ELECTRICAL	151
Y	*308-2309*	1	CONNECTION GP-EXHAUST	106
Y	*329-9764*	1	CONTROL GP-GOVERNOR	112
Y	*313-1986*	1	COVER GP-VALVE MECHANISM	27
Y	*313-1962*	1	CRANKSHAFT GP	31
Y	*313-1957*	1	CYLINDER BLOCK GP	33
Y	*313-1964*	1	CYLINDER HEAD GP	38
Y	*313-1966*	1	DRIVE GP-PUMP	43
Y	**435-1643**	1	ENGINE AR	5
Y	*365-0486*	1	FILLER GP-ENGINE OIL	77
Y	*318-8804*	1	FILTER GP-AIR	109
Y	*308-2298*	1	FILTER GP-ENGINE OIL	78
Y	*313-1970*	1	FLYWHEEL GP	44
Y	*313-2021*	1	GLOW PLUG GP	152
Y	*313-1969*	1	HOUSING GP-FLYWHEEL	48
Y	*313-1967*	1	HOUSING GP-FRONT	53
Y	*313-1980*	1	HOUSING GP-WATER REGULATOR	82
Y	*313-2022*	1	LIFTING GP-ENGINE	60
Y	*313-1991*	1	MANIFOLD GP-EXHAUST	111
Y	*308-4735*	1	MOUNTING GP-ENGINE OIL FILTER	79
Y	*313-1973*	1	PAN GP-OIL	62
Y	*313-1963*	1	PISTON & ROD GP	66
Y	*309-6720*	1	PLUG GP-OIL PAN	67
Y	*313-1976*	1	PULLEY GP-CRANKSHAFT	68
Y	*313-1972*	1	PULLEY GP-WATER PUMP	69
Y	*313-1968*	1	PUMP GP-FUEL INJECTION	129
Y	*308-2320*	1	PUMP GP-FUEL PRIMING	140
Y	*313-2009*	1	PUMP GP-FUEL TRANSFER	143
Y	*313-1978*	1	PUMP GP-WATER	84
Y	*318-8815*	1	RADIATOR & FAN GP	88
Y	*313-2023*	1	SOLENOID GP-SHUTOFF	154
Y	*319-7351*	1	STARTING MOTOR GP-ELECTRIC	161
Y	*313-2024*	1	SWITCH GP-PRESSURE	164
Y	*308-2314*	1	SWITCH GP-START	167
Y	*313-2035*	1	SWITCH GP-TEMPERATURE	168
Y	*313-1983*	1	V-BELT GP (INCLUDES 1-BELT) (ALTERNATOR)	71
Y	*313-1965*	1	VALVE MECHANISM GP	74
			PLEASE USE THE GASKET KIT LINK IN SIS OR CONTACT YOUR LOCAL DEALER FOR THE LATEST GASKET KIT INFORMATION	

Y - SEPARATE ILLUSTRATION

<END>

308-6555 ENGINE AR-PRIMARY

20 BRAKE KW (26 BHP) AT 3000 RPM

FIELD REPLACEMENT ORDER 435-1643—PAGE: 5

SMCS-1000 **i06999829**

NOTE	PART NUMBER	QTY	PART NAME 1 2 3 4 5 6 (PRODUCT LEVEL)	SEE PAGE
Y	*313-1982*	1	ALTERNATOR GP-CHARGING (SHORT)	146
Y	*329-9765*	1	CAMSHAFT GP	19
Y	*308-2319*	1	CONNECTION GP-ELECTRICAL	150
Y	*308-2309*	1	CONNECTION GP-EXHAUST	106
Y	*329-9764*	1	CONTROL GP-GOVERNOR	112
Y	*313-1984*	1	COVER GP-ENGINE	22
			—OR—	
Y	*371-1231*	1	COVER GP-ENGINE	25
Y	*313-1986*	1	COVER GP-VALVE MECHANISM	27
Y	*313-1962*	1	CRANKSHAFT GP	31
Y	*313-1957*	1	CYLINDER BLOCK GP	33
Y	*313-1964*	1	CYLINDER HEAD GP	38
Y	*322-3808*	1	DRIVE GP-FAN	39
Y	*313-1966*	1	DRIVE GP-PUMP	43
Y	*313-1981*	1	FAN GP-SUCTION	81
Y	*313-1975*	1	FILLER GP-ENGINE OIL	76
Y	*308-2298*	1	FILTER GP-ENGINE OIL	78
Y	*313-1970*	1	FLYWHEEL GP	44
Y	*313-2021*	1	GLOW PLUG GP	152
Y	*313-1969*	1	HOUSING GP-FLYWHEEL	48
Y	*313-1967*	1	HOUSING GP-FRONT	53
Y	*313-1980*	1	HOUSING GP-WATER REGULATOR	82
Y	**339-3016**	1	PUMP GP-ENGINE OIL	80
Y	*313-2026*	1	LAMP GP-INDICATOR	169
Y	*313-2022*	1	LIFTING GP-ENGINE	60
Y	*313-1991*	1	MANIFOLD GP-EXHAUST	111
Y	*308-4735*	1	MOUNTING GP-ENGINE OIL FILTER	79
Y	*313-1973*	1	PAN GP-OIL	62
Y	*313-1963*	1	PISTON & ROD GP	66
Y	*309-6720*	1	PLUG GP-OIL PAN	67
Y	*313-1976*	1	PULLEY GP-CRANKSHAFT	68
Y	*313-1972*	1	PULLEY GP-WATER PUMP	69
Y	*313-1968*	1	PUMP GP-FUEL INJECTION	129
Y	*308-2320*	1	PUMP GP-FUEL PRIMING	140
Y	*313-2009*	1	PUMP GP-FUEL TRANSFER	143
Y	*313-1978*	1	PUMP GP-WATER	84
Y	*313-2023*	1	SOLENOID GP-SHUTOFF	154
Y	*313-1971*	1	STARTING MOTOR GP-ELECTRIC	157
Y	*313-2024*	1	SWITCH GP-PRESSURE	164
Y	*308-2314*	1	SWITCH GP-START	167
Y	*313-2035*	1	SWITCH GP-TEMPERATURE	168
Y	*313-1983*	1	V-BELT GP (INCLUDES 1-BELT) (ALTERNATOR)	71
Y	*313-1965*	1	VALVE MECHANISM GP	74

Y - SEPARATE ILLUSTRATION

<END>

318-1668 ENGINE AR-PRIMARY

12 BRAKE KW (16 BHP) AT 1800 RPM

FIELD REPLACEMENT ORDER 435-1632—PAGE: 4

SMCS-1000 **i07000942**

NOTE	PART NUMBER	QTY	PART NAME 1 2 3 4 5 6 (PRODUCT LEVEL)	SEE PAGE
Y	*319-7354*	1	ALTERNATOR GP-CHARGING	148
Y	*321-3143*	1	CAMSHAFT GP	16
Y	*308-2319*	1	CONNECTION GP-ELECTRICAL	150
			—OR—	
Y	*321-6741*	1	CONNECTION GP-ELECTRICAL	151
Y	*308-5610*	1	CONNECTION GP-EXHAUST	107
Y	*329-8577*	1	COVER GP-FRONT HOUSING	26
			—OR—	
Y	*313-1984*	1	COVER GP-ENGINE	22
Y	*313-1986*	1	COVER GP-VALVE MECHANISM	27
			—OR—	
Y	*452-4278*	1	COVER GP-VALVE MECHANISM	29
Y	*313-1962*	1	CRANKSHAFT GP	31
Y	*313-1957*	1	CYLINDER BLOCK GP	33
Y	*313-1964*	1	CYLINDER HEAD GP	38
Y	*313-1966*	1	DRIVE GP-PUMP	43
Y	*313-1975*	1	FILLER GP-ENGINE OIL	76
			—OR—	
Y	*365-0486*	1	FILLER GP-ENGINE OIL	77
			—OR—	
	475-9554	1	FILLER GP-ENGINE OIL	
	288-6593	1	SEAL	
	334-6593	1	PLATE	
Y	*318-8804*	1	FILTER GP-AIR	109
Y	*308-2298*	1	FILTER GP-ENGINE OIL	78
Y	*318-8880*	1	FLYWHEEL GP	45
Y	*313-2021*	1	GLOW PLUG GP	152
Y	*321-3142*	1	GOVERNOR GP	120
Y	*318-8879*	1	HOUSING GP-FLYWHEEL	50
Y	*321-3140*	1	HOUSING GP-FRONT	55
Y	*313-1980*	1	HOUSING GP-WATER REGULATOR	82
Y	*313-2026*	1	LAMP GP-INDICATOR	169
Y	*313-2022*	1	LIFTING GP-ENGINE	60
Y	*313-1991*	1	MANIFOLD GP-EXHAUST	111
Y	*308-4735*	1	MOUNTING GP-ENGINE OIL FILTER	79
Y	*313-1973*	1	PAN GP-OIL	62
Y	*313-1963*	1	PISTON & ROD GP	66
Y	*309-6720*	1	PLUG GP-OIL PAN	67
Y	*313-1976*	1	PULLEY GP-CRANKSHAFT	68
Y	*313-1972*	1	PULLEY GP-WATER PUMP	69
Y	*321-3334*	1	PUMP GP-FUEL INJECTION	132
Y	*317-6706*	1	PUMP GP-FUEL PRM & PRIM FILTER	142
Y	*313-2009*	1	PUMP GP-FUEL TRANSFER	143
Y	*313-1978*	1	PUMP GP-WATER	84
Y	*318-8803*	1	RADIATOR GP	102
			—OR—	
Y	*445-0804*	1	RADIATOR & FAN GP	92
Y	*320-9114*	1	SHUTOFF GP-ELECTRICAL	153
Y	*313-2023*	1	SOLENOID GP-SHUTOFF	154

318-1668 **ENGINE AR-PRIMARY (**contd.**)** **i07000942**

NOTE	PART NUMBER	QTY	PART NAME 1 2 3 4 5 6 (PRODUCT LEVEL)	SEE PAGE
Y	*313-1971*	1	STARTING MOTOR GP-ELECTRIC	157
			—OR—	
Y	*319-7351*	1	STARTING MOTOR GP-ELECTRIC	161
Y	*313-2024*	1	SWITCH GP-PRESSURE	164
Y	*308-2314*	1	SWITCH GP-START	167
Y	*313-2035*	1	SWITCH GP-TEMPERATURE	168
Y	*319-7355*	1	V-BELT GP (INCLUDES 1-BELT)	72
Y	*313-1965*	1	VALVE MECHANISM GP	74
Y	**339-3016**	1	PUMP GP-ENGINE OIL	80

Y - SEPARATE ILLUSTRATION

<END>

318-1669 ENGINE AR-PRIMARY

10 BRAKE KW (13 BHP) AT 1500 RPM

FIELD REPLACEMENT ORDER 435-1644—PAGE: 35

SMCS-1000 **i07004940**

NOTE	PART NUMBER	QTY	PART NAME 1 2 3 4 5 6 (PRODUCT LEVEL)	SEE PAGE
Y	*313-1982*	1	ALTERNATOR GP-CHARGING (SHORT)	146
Y	*323-2409*	1	CAMSHAFT GP	17
Y	*308-2319*	1	CONNECTION GP-ELECTRICAL	150
			—OR—	
Y	*321-6741*	1	CONNECTION GP-ELECTRICAL	151
Y	*308-2309*	1	CONNECTION GP-EXHAUST	106
Y	*329-8577*	1	COVER GP-FRONT HOUSING	26
			—OR—	
Y	*313-1984*	1	COVER GP-ENGINE	22
Y	*313-1986*	1	COVER GP-VALVE MECHANISM	27
			—OR—	
Y	*452-4278*	1	COVER GP-VALVE MECHANISM	29
Y	*313-1962*	1	CRANKSHAFT GP	31
Y	*313-1957*	1	CYLINDER BLOCK GP	33
Y	*435-1644*	1	CYLINDER BLOCK GP (LONG)	35
Y	*313-1964*	1	CYLINDER HEAD GP	38
Y	*313-1966*	1	DRIVE GP-PUMP	43
Y	*365-0486*	1	FILLER GP-ENGINE OIL	77
Y	*318-8804*	1	FILTER GP-AIR	109
Y	*308-2298*	1	FILTER GP-ENGINE OIL	78
Y	*318-8880*	1	FLYWHEEL GP	45
Y	*313-2021*	1	GLOW PLUG GP	152
Y	*323-2408*	1	GOVERNOR GP	122
Y	*318-8879*	1	HOUSING GP-FLYWHEEL	50
Y	*323-2407*	1	HOUSING GP-FRONT	57
Y	*313-1980*	1	HOUSING GP-WATER REGULATOR	82
Y	*313-2022*	1	LIFTING GP-ENGINE	60
Y	*313-1991*	1	MANIFOLD GP-EXHAUST	111
Y	*308-4735*	1	MOUNTING GP-ENGINE OIL FILTER	79
Y	*313-1973*	1	PAN GP-OIL	62
Y	*313-1963*	1	PISTON & ROD GP	66
Y	*309-6720*	1	PLUG GP-OIL PAN	67
Y	*313-1976*	1	PULLEY GP-CRANKSHAFT	68
Y	*313-1972*	1	PULLEY GP-WATER PUMP	69
Y	**339-3016**	1	PUMP GP-ENGINE OIL	80
Y	*323-2410*	1	PUMP GP-FUEL INJECTION	134
Y	*317-6706*	1	PUMP GP-FUEL PRM & PRIM FILTER	142
Y	*313-2009*	1	PUMP GP-FUEL TRANSFER	143
Y	*313-1978*	1	PUMP GP-WATER	84
Y	*318-8803*	1	RADIATOR GP	102
			—OR—	
Y	*445-0804*	1	RADIATOR & FAN GP	92
Y	*320-9114*	1	SHUTOFF GP-ELECTRICAL	153
Y	*313-2023*	1	SOLENOID GP-SHUTOFF	154
Y	*313-1971*	1	STARTING MOTOR GP-ELECTRIC	157
			—OR—	
Y	*319-7351*	1	STARTING MOTOR GP-ELECTRIC	161
Y	*313-2024*	1	SWITCH GP-PRESSURE	164
Y	*308-2314*	1	SWITCH GP-START	167

318-1669 **ENGINE AR-PRIMARY (**contd.**)** **i07004940**

NOTE	PART NUMBER	QTY	PART NAME 1 2 3 4 5 6 (PRODUCT LEVEL)	SEE PAGE
Y	*313-2035*	1	SWITCH GP-TEMPERATURE	168
Y	*313-1983*	1	V-BELT GP (INCLUDES 1-BELT) (ALTERNATOR)	71
Y	*313-1965*	1	VALVE MECHANISM GP	74

Y - SEPARATE ILLUSTRATION

<END>

516-4466 ENGINE AR-PRIMARY

10 BRAKE KW (13 BHP) AT 1800 RPM

SMCS-1000 **i07323523**

NOTE	PART NUMBER	QTY	PART NAME 1 2 3 4 5 6 (PRODUCT LEVEL)	SEE PAGE
Y	*313-1982*	1	ALTERNATOR GP-CHARGING (SHORT)	146
Y	*457-8043*	1	CAMSHAFT GP	20
Y	*321-6741*	1	CONNECTION GP-ELECTRICAL	151
Y	*308-2309*	1	CONNECTION GP-EXHAUST	106
Y	*329-8577*	1	COVER GP-FRONT HOUSING	26
Y	*313-1986*	1	COVER GP-VALVE MECHANISM	27
Y	*313-1962*	1	CRANKSHAFT GP	31
Y	*313-1957*	1	CYLINDER BLOCK GP	33
Y	*313-1964*	1	CYLINDER HEAD GP	38
Y	*313-1966*	1	DRIVE GP-PUMP	43
Y	*365-0486*	1	FILLER GP-ENGINE OIL	77
Y	*318-8804*	1	FILTER GP-AIR	109
Y	*308-2298*	1	FILTER GP-ENGINE OIL	78
Y	*318-8880*	1	FLYWHEEL GP	45
Y	*313-2021*	1	GLOW PLUG GP	152
Y	*457-8042*	1	GOVERNOR GP	126
Y	*318-8879*	1	HOUSING GP-FLYWHEEL	50
Y	*457-8041*	1	HOUSING GP-FRONT	59
Y	*313-1980*	1	HOUSING GP-WATER REGULATOR	82
Y	*313-2022*	1	LIFTING GP-ENGINE	60
Y	*313-1991*	1	MANIFOLD GP-EXHAUST	111
Y	*308-4735*	1	MOUNTING GP-ENGINE OIL FILTER	79
Y	*523-6265*	1	PAN GP-OIL	64
Y	*313-1963*	1	PISTON & ROD GP	66
Y	*309-6720*	1	PLUG GP-OIL PAN	67
Y	*313-1976*	1	PULLEY GP-CRANKSHAFT	68
Y	*313-1972*	1	PULLEY GP-WATER PUMP	69
Y	**339-3016**	1	PUMP GP-ENGINE OIL	80
Y	*457-8076*	1	PUMP GP-FUEL INJECTION	138
Y	*541-1625*	1	PUMP GP-FUEL PRIMING	141
Y	*308-2320*	1	PUMP GP-FUEL PRIMING	140
Y	*313-1978*	1	PUMP GP-WATER	84
Y	*445-0804*	1	RADIATOR & FAN GP	92
Y	*313-2023*	1	SOLENOID GP-SHUTOFF	154
Y	*319-7351*	1	STARTING MOTOR GP-ELECTRIC	161
Y	*313-2024*	1	SWITCH GP-PRESSURE	164
Y	*308-2314*	1	SWITCH GP-START	167
Y	*313-2035*	1	SWITCH GP-TEMPERATURE	168
Y	*313-1983*	1	V-BELT GP (INCLUDES 1-BELT)	71
Y	*313-1965*	1	VALVE MECHANISM GP	74

Y - SEPARATE ILLUSTRATION

<END>

516-9462 ENGINE AR-PRIMARY

12 BRAKE KW (16 BHP) AT 1800 RPM

FIELD REPLACEMENT ORDER 435-1632—PAGE: 4

SMCS-1000 **i07695660**

NOTE	PART NUMBER	QTY	PART NAME 1 2 3 4 5 6 (PRODUCT LEVEL)	SEE PAGE
Y	*313-1982*	1	ALTERNATOR GP-CHARGING (SHORT)	146
Y	*321-3143*	1	CAMSHAFT GP	16
Y	*321-6741*	1	CONNECTION GP-ELECTRICAL	151
Y	*308-2309*	1	CONNECTION GP-EXHAUST	106
Y	*329-8577*	1	COVER GP-FRONT HOUSING	26
Y	*452-4278*	1	COVER GP-VALVE MECHANISM	29
Y	*313-1962*	1	CRANKSHAFT GP	31
Y	*313-1957*	1	CYLINDER BLOCK GP	33
Y	*313-1964*	1	CYLINDER HEAD GP	38
Y	*313-1966*	1	DRIVE GP-PUMP	43
Y	*365-0486*	1	FILLER GP-ENGINE OIL	77
Y	*318-8804*	1	FILTER GP-AIR	109
Y	*308-2298*	1	FILTER GP-ENGINE OIL	78
Y	*318-8880*	1	FLYWHEEL GP	45
Y	*313-2021*	1	GLOW PLUG GP	152
Y	*321-3142*	1	GOVERNOR GP	120
Y	*318-8879*	1	HOUSING GP-FLYWHEEL	50
Y	*321-3140*	1	HOUSING GP-FRONT	55
Y	*313-1980*	1	HOUSING GP-WATER REGULATOR	82
Y	*313-2022*	1	LIFTING GP-ENGINE	60
Y	*313-1991*	1	MANIFOLD GP-EXHAUST	111
Y	*308-4735*	1	MOUNTING GP-ENGINE OIL FILTER	79
Y	*523-6265*	1	PAN GP-OIL	64
Y	*313-1963*	1	PISTON & ROD GP	66
Y	*309-6720*	1	PLUG GP-OIL PAN	67
Y	*313-1976*	1	PULLEY GP-CRANKSHAFT	68
Y	*313-1972*	1	PULLEY GP-WATER PUMP	69
Y	**339-3016**	1	PUMP GP-ENGINE OIL	80
Y	*321-3334*	1	PUMP GP-FUEL INJECTION	132
Y	*541-1625*	1	PUMP GP-FUEL PRIMING	141
Y	*308-2320*	1	PUMP GP-FUEL PRIMING	140
Y	*313-1978*	1	PUMP GP-WATER	84
Y	*445-0804*	1	RADIATOR & FAN GP	92
Y	*313-2023*	1	SOLENOID GP-SHUTOFF	154
Y	*319-7351*	1	STARTING MOTOR GP-ELECTRIC	161
Y	*313-2024*	1	SWITCH GP-PRESSURE	164
Y	*308-2314*	1	SWITCH GP-START	167
Y	*313-2035*	1	SWITCH GP-TEMPERATURE	168
Y	*313-1983*	1	V-BELT GP (INCLUDES 1-BELT) (DRIVE)	71
Y	*313-1965*	1	VALVE MECHANISM GP	74

Y - SEPARATE ILLUSTRATION

<END>

541-8320 ENGINE AR-PRIMARY

SMCS-1000 **i07323521**

NOTE	PART NUMBER	QTY	PART NAME 1 2 3 4 5 6 (PRODUCT LEVEL)	SEE PAGE
Y	*313-1982*	1	ALTERNATOR GP-CHARGING (SHORT)	146
Y	*329-9765*	1	CAMSHAFT GP	19
Y	*321-6741*	1	CONNECTION GP-ELECTRICAL	151
Y	*308-2309*	1	CONNECTION GP-EXHAUST	106
Y	*329-9764*	1	CONTROL GP-GOVERNOR	112
Y	*313-1984*	1	COVER GP-ENGINE	22
Y	*313-1986*	1	COVER GP-VALVE MECHANISM	27
Y	*313-1962*	1	CRANKSHAFT GP	31
Y	*313-1957*	1	CYLINDER BLOCK GP	33
Y	*313-1964*	1	CYLINDER HEAD GP	38
Y	*313-1966*	1	DRIVE GP-PUMP	43
Y	**435-1643**	1	ENGINE AR	5
Y	*365-0486*	1	FILLER GP-ENGINE OIL	77
Y	*318-8804*	1	FILTER GP-AIR	109
Y	*308-2298*	1	FILTER GP-ENGINE OIL	78
Y	*313-1970*	1	FLYWHEEL GP	44
Y	*313-2021*	1	GLOW PLUG GP	152
Y	*313-1969*	1	HOUSING GP-FLYWHEEL	48
Y	*313-1967*	1	HOUSING GP-FRONT	53
Y	*313-1980*	1	HOUSING GP-WATER REGULATOR	82
Y	*313-2022*	1	LIFTING GP-ENGINE	60
Y	*313-1991*	1	MANIFOLD GP-EXHAUST	111
Y	*308-4735*	1	MOUNTING GP-ENGINE OIL FILTER	79
Y	*313-1973*	1	PAN GP-OIL	62
Y	*313-1963*	1	PISTON & ROD GP	66
Y	*309-6720*	1	PLUG GP-OIL PAN	67
Y	*313-1976*	1	PULLEY GP-CRANKSHAFT	68
Y	*313-1972*	1	PULLEY GP-WATER PUMP	69
Y	**339-3016**	1	PUMP GP-ENGINE OIL	80
Y	*313-1968*	1	PUMP GP-FUEL INJECTION	129
Y	*308-2320*	1	PUMP GP-FUEL PRIMING	140
Y	*313-2009*	1	PUMP GP-FUEL TRANSFER	143
Y	*313-1978*	1	PUMP GP-WATER	84
Y	*318-8803*	1	RADIATOR GP	102
Y	*313-2023*	1	SOLENOID GP-SHUTOFF	154
Y	*319-7351*	1	STARTING MOTOR GP-ELECTRIC	161
Y	*313-2024*	1	SWITCH GP-PRESSURE	164
Y	*313-2035*	1	SWITCH GP-TEMPERATURE	168
Y	*313-1983*	1	V-BELT GP (INCLUDES 1-BELT)	71
Y	*313-1965*	1	VALVE MECHANISM GP	74

Y - SEPARATE ILLUSTRATION

<END>

321-3143 CAMSHAFT GP

PART OF 435-1632 ENGINE AR, 516-9462 ENGINE AR-PRIMARY

SMCS-1210 **i07463372**

NOTE	REF NO	GRAPHIC REF	PART NUMBER	QTY	PART NAME 1 2 3 4 5 6 (PRODUCT LEVEL)	SEE PAGE
	1	1	**484-7540**	1	BOLT-FLANGE HEAD	
	2	1	**313-2038**	1	CAMSHAFT AS	
	2A	1	**153-6492**	1	KEY-WOODRUFF	
	2B	1	**183-3605**	1	BEARING	
	2C	1	**311-5847**	1	GEAR-CAMSHAFT (52-TEETH)	
	2D	1	**313-9323**	1	SPACER (20.5X28X9.3-MM THK)	
	3	1	**490-0367**	1	PLATE	
M	4	1	**9X-6153**	1	BOLT (M6X1X10-MM)	
C	5	1	**363-8409**	1	SLIDER	

C - CHANGE FROM PREVIOUS TYPE
M - METRIC PART

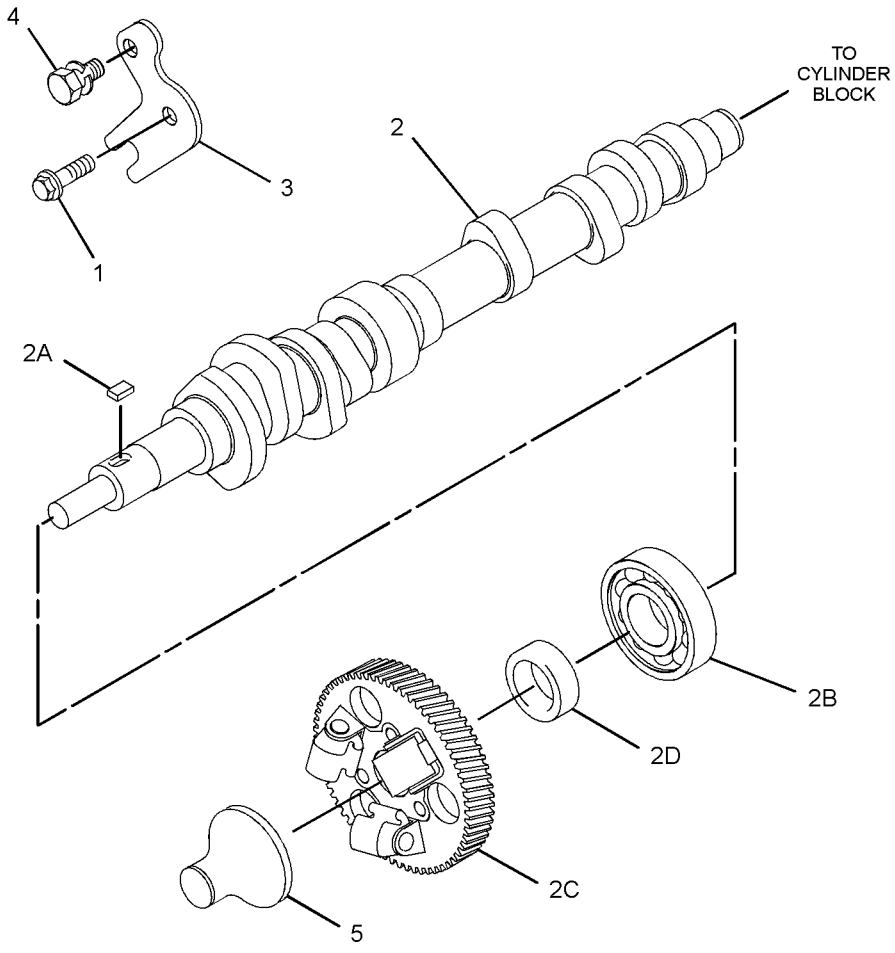

GRAPHIC #1 <END> g06161484

321-3143 CAMSHAFT GP

PART OF 516-9462 ENGINE AR-PRIMARY

SMCS-1210 **i06931571**

NOTE	REF NO	GRAPHIC REF	PART NUMBER	QTY	PART NAME 1 2 3 4 5 6 (PRODUCT LEVEL)	SEE PAGE
	1	1	**484-7540**	1	BOLT-FLANGE HEAD	
	2	1	**313-2038**	1	CAMSHAFT AS	
	2A	1	**153-6492**	1	KEY-WOODRUFF	
	2B	1	**183-3605**	1	BEARING	
	2C	1	**311-5847**	1	GEAR-CAMSHAFT (52-TEETH)	
	2D	1	**313-9323**	1	SPACER (20.5X28X9.3-MM THK)	
	3	1	**490-0367**	1	PLATE	
M	4	1	**9X-6153**	1	BOLT (M6X1X10-MM)	
	5	1	**308-1904**	1	SLIDER	

M - METRIC PART

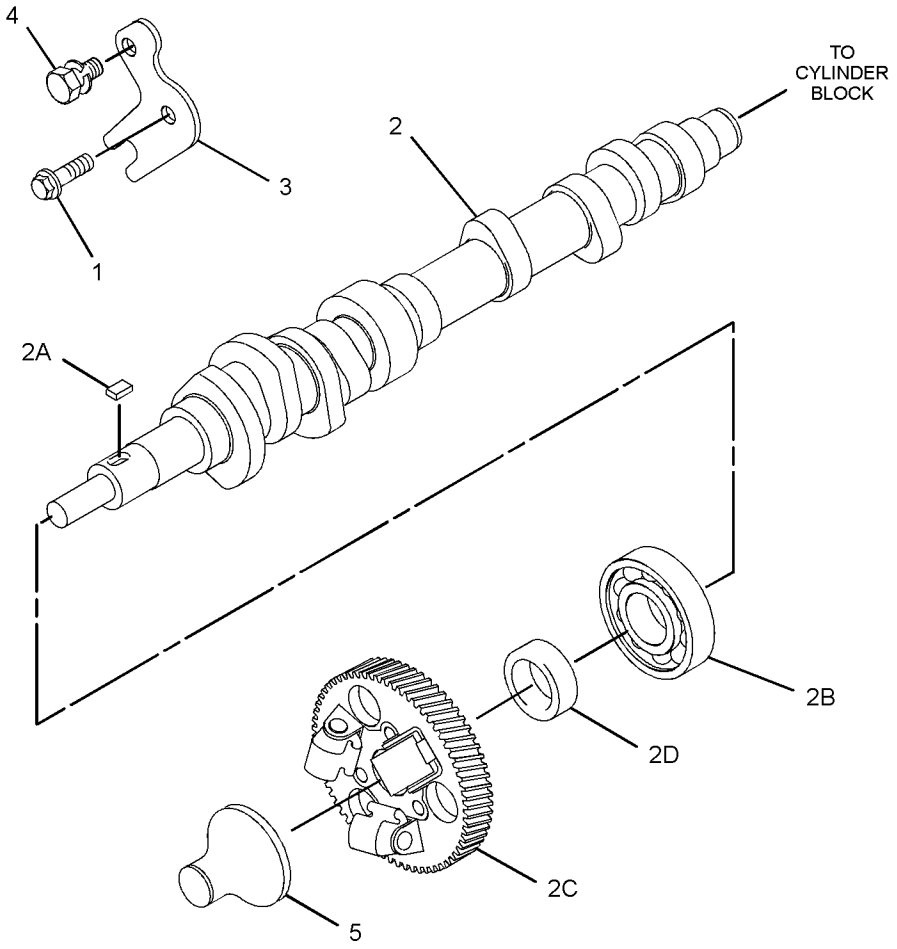

GRAPHIC #1 <END> g06161484

323-2409 CAMSHAFT GP

PART OF 435-1644 CYLINDER BLOCK GP

TYPE 1

SMCS-1210 **i03770797**

NOTE	REF NO	GRAPHIC REF	PART NUMBER	QTY	PART NAME 1 2 3 4 5 6 (PRODUCT LEVEL)	SEE PAGE
M	1	1	**153-6838**	1	BOLT (M6X1X12-MM)	
	2	1	**153-7990**	1	PLATE	
M	3	1	**9X-6153**	1	BOLT (M6X1X10-MM)	
	4	1	**308-1904**	1	SLIDER	
	5	1	**313-2038**	1	CAMSHAFT AS	
	5A	1	**153-6492**	1	KEY-WOODRUFF	
	5B	1	**183-3605**	1	BEARING	
	5C	1	**311-5847**	1	GEAR-CAMSHAFT (52-TEETH) (52-TEETH)	
	5D	1	**313-9323**	1	SPACER (20.5X28X9.3-MM THK)	

M - METRIC PART

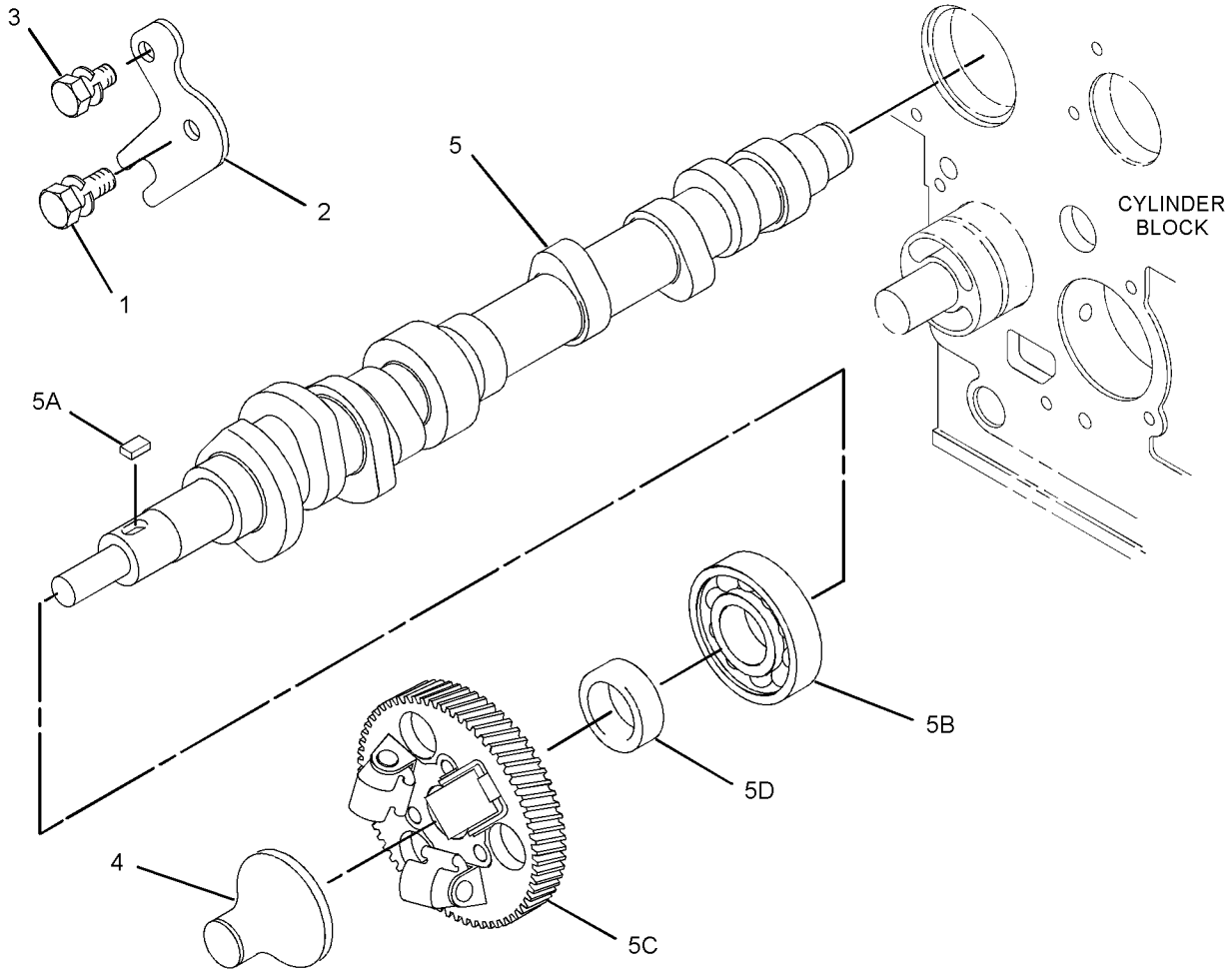

GRAPHIC #1 <END> g01991495

323-2409 CAMSHAFT GP

PART OF 435-1644 CYLINDER BLOCK GP

TYPE 2

SMCS-1210 **i06887228**

NOTE	REF NO	GRAPHIC REF	PART NUMBER	QTY	PART NAME 1 2 3 4 5 6 (PRODUCT LEVEL)	SEE PAGE
	1	1	**484-7540**	1	BOLT-FLANGE HEAD	
	2	1	**490-0367**	1	PLATE	
M	3	1	**9X-6153**	1	BOLT (M6X1X10-MM)	
C	4	1	**363-8409**	1	SLIDER	
C	5	1	**363-8410**	1	CAMSHAFT AS	
	5A	1	**153-6492**	1	KEY-WOODRUFF	
	5B	1	**183-3605**	1	BEARING	
	5C	1	**363-8408**	1	GEAR (52-TEETH)	
	5D	1	**313-9323**	1	SPACER (20.5X28X9.3-MM THK)	

C - CHANGE FROM PREVIOUS TYPE
M - METRIC PART

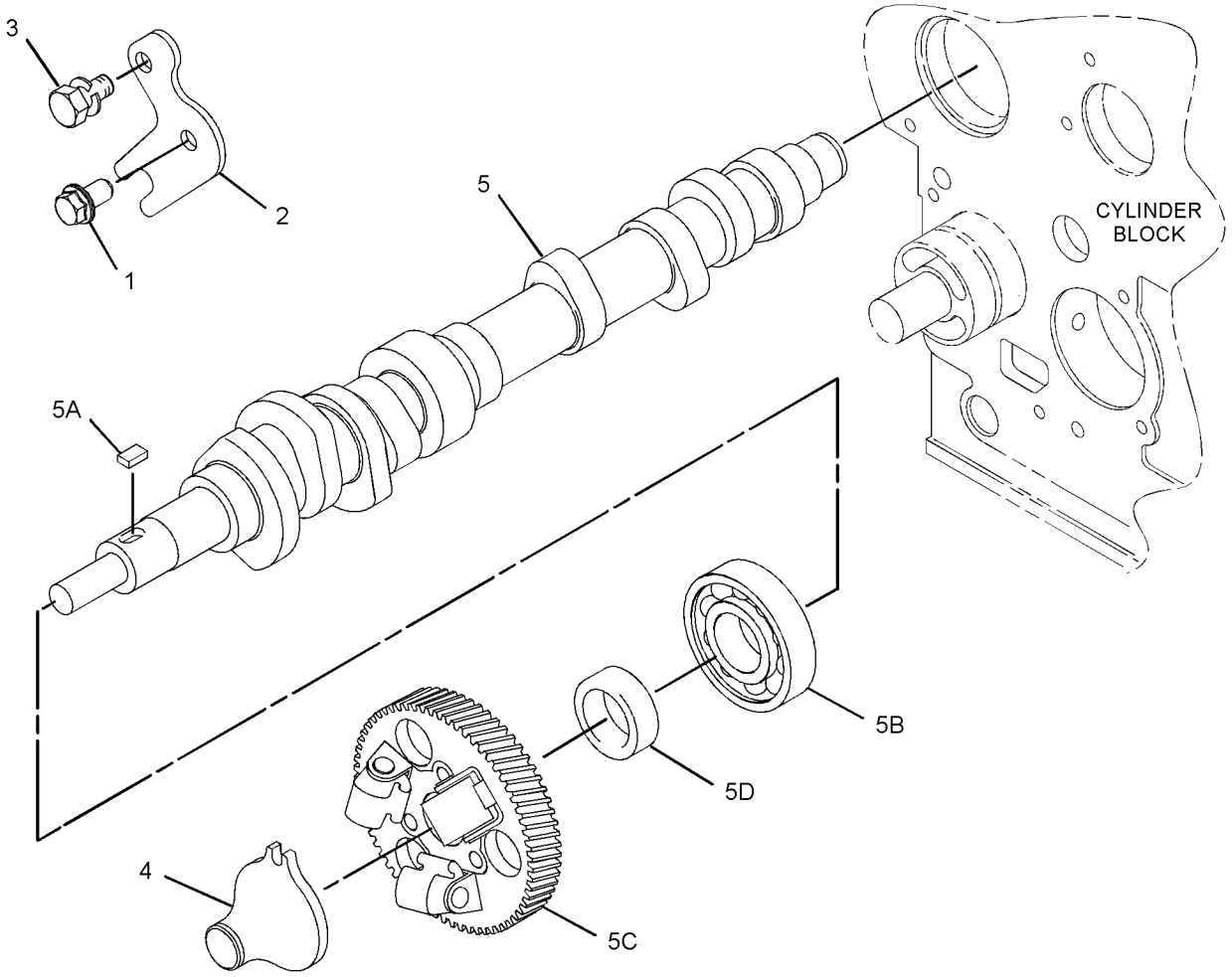

GRAPHIC #1 <END> g06150324

329-9765 CAMSHAFT GP

PART OF 435-1643 ENGINE AR, 541-8320 ENGINE AR-PRIMARY

SMCS-1210 **i06842567**

NOTE	REF NO	GRAPHIC REF	PART NUMBER	QTY	PART NAME 1 2 3 4 5 6 (PRODUCT LEVEL)	SEE PAGE
	1	1	**484-7540**	1	BOLT-FLANGE HEAD	
	2	1	**313-2038**	1	CAMSHAFT AS	
	2A	1	**153-6492**	1	KEY-WOODRUFF	
	2B	1	**183-3605**	1	BEARING	
	2C	1	**311-5847**	1	GEAR-CAMSHAFT (52-TEETH)	
	2D	1	**313-9323**	1	SPACER (20.5X28X9.3-MM THK)	
	3	1	**490-0367**	1	PLATE	
M	4	1	**9X-6153**	1	BOLT (M6X1X10-MM)	
	5	1	**308-1904**	1	SLIDER	

M - METRIC PART

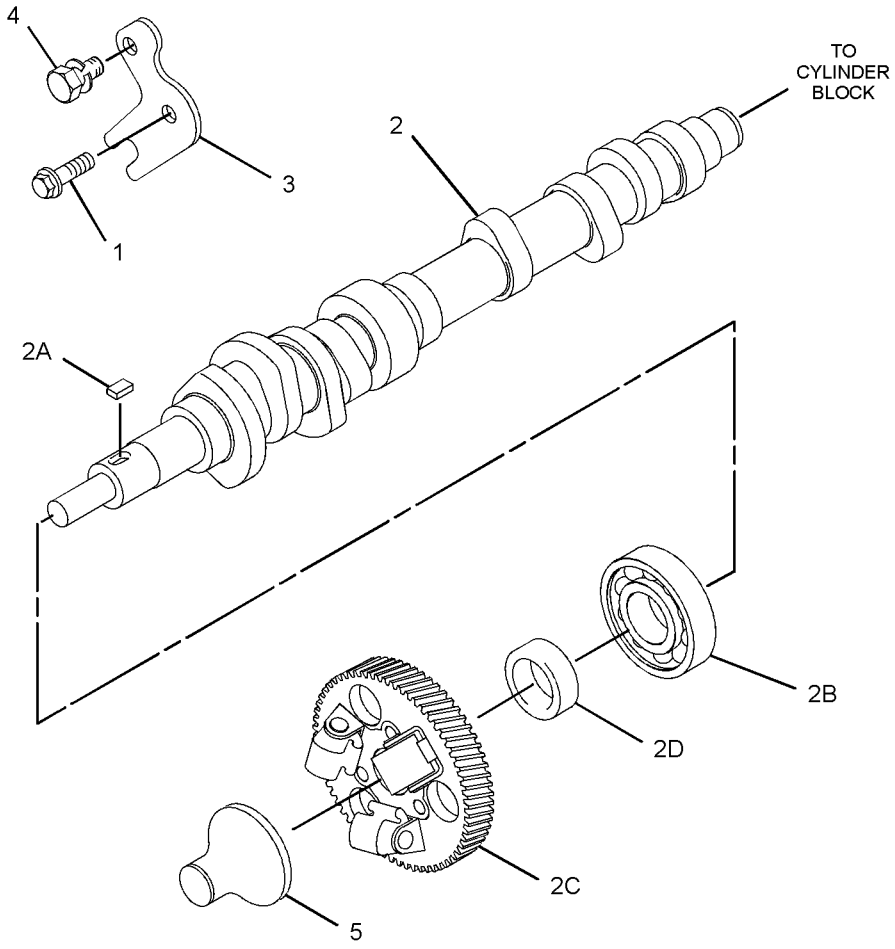

GRAPHIC #1 <END> g06158977

457-8043 CAMSHAFT GP

PART OF 516-4466 ENGINE AR-PRIMARY

TYPE 1

SMCS-1210 **i07326858**

NOTE	REF NO	GRAPHIC REF	PART NUMBER	QTY	PART NAME 1 2 3 4 5 6 (PRODUCT LEVEL)	SEE PAGE
	1	1	**484-7540**	1	BOLT-FLANGE HEAD	
	2	1	**153-7985**	1	WASHER	
	3	1	**490-0367**	1	PLATE	
M	4	1	**9X-6153**	1	BOLT (M6X1X10-MM)	
	5	1	**313-2038**	1	CAMSHAFT AS	
	5A	1	**153-6492**	1	KEY-WOODRUFF	
	5B	1	**183-3605**	1	BEARING	
	5C	1	**311-5847**	1	GEAR-CAMSHAFT (52-TEETH)	
	5D	1	**313-9323**	1	SPACER (20.5X28X9.3-MM THK)	
	6	1	**363-8409**	1	SLIDER	

M - METRIC PART

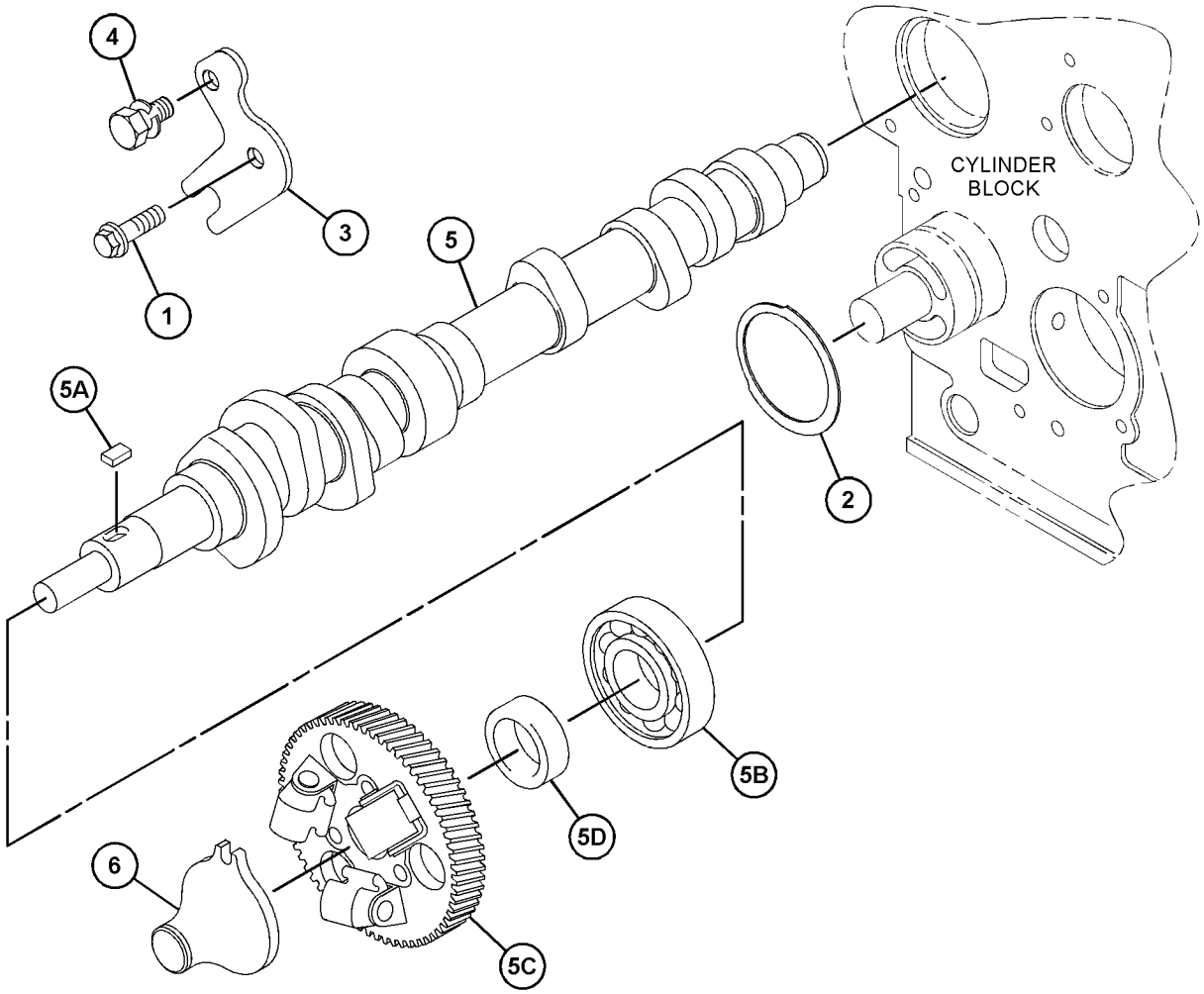

GRAPHIC #1 <END> g06152927

457-8043 CAMSHAFT GP

PART OF 516-4466 ENGINE AR-PRIMARY

TYPE 2

SMCS-1210 **i07690713**

NOTE	REF NO	GRAPHIC REF	PART NUMBER	QTY	PART NAME 1 2 3 4 5 6 (PRODUCT LEVEL)	SEE PAGE
	1	1	**484-7540**	1	BOLT-FLANGE HEAD	
	2	1	**153-7985**	1	WASHER	
	3	1	**490-0367**	1	PLATE	
M	4	1	**9X-6153**	1	BOLT (M6X1X10-MM)	
	5	1	**313-2038**	1	CAMSHAFT AS	
	5A	1	**153-6492**	1	KEY-WOODRUFF	
	5B	1	**183-3605**	1	BEARING	
	5C	1	**311-5847**	1	GEAR-CAMSHAFT (52-TEETH)	
	5D	1	**313-9323**	1	SPACER (20.5X28X9.3-MM THK)	
	6	1	**363-8409**	1	SLIDER	

M - METRIC PART

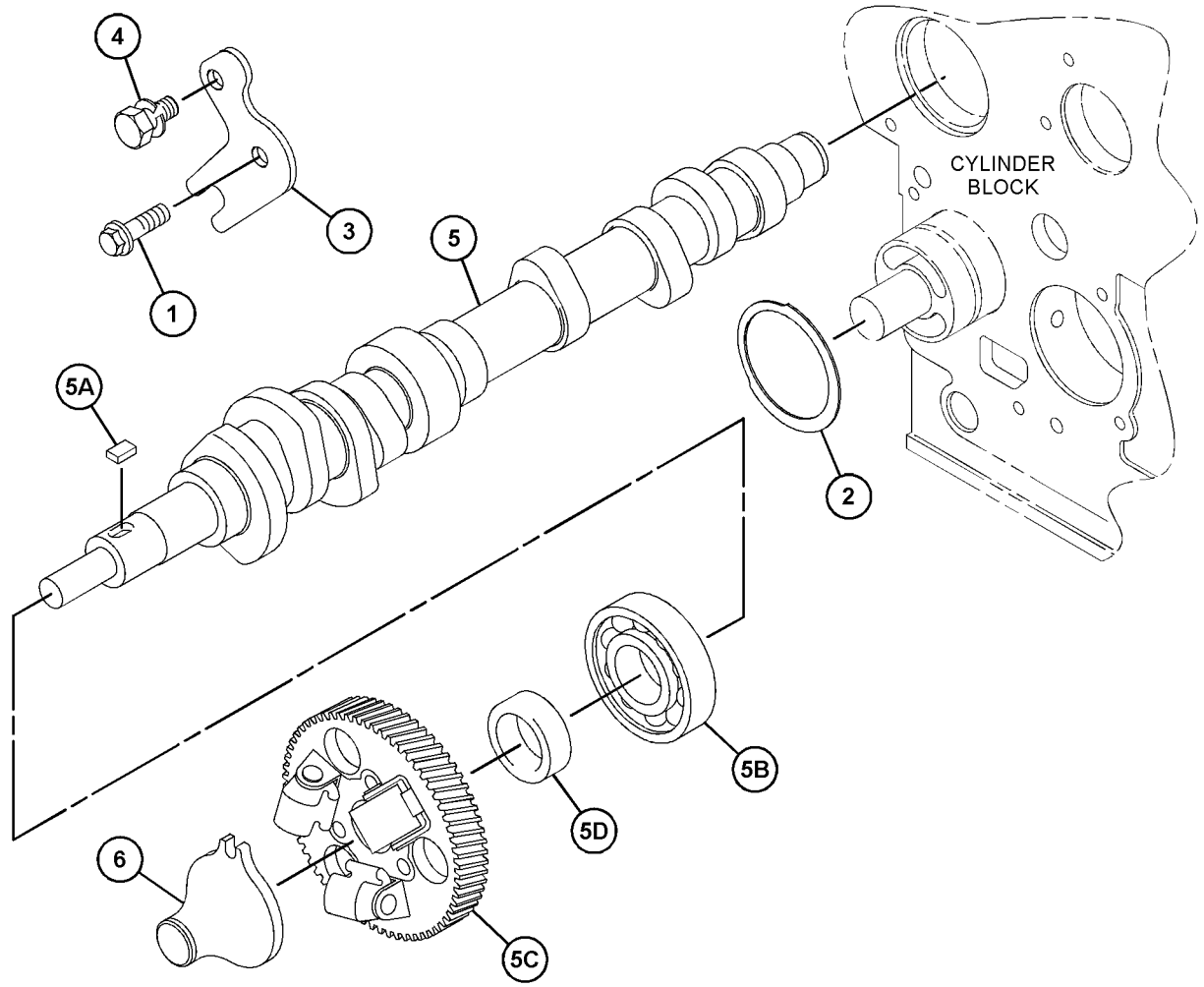

GRAPHIC #1 <END> g06152927

313-1984 COVER GP-ENGINE

PART OF 435-1644 CYLINDER BLOCK GP

TYPE 1

SMCS-795C **i03935994**

NOTE	REF NO	GRAPHIC REF	PART NUMBER	QTY	PART NAME 1 2 3 4 5 6 (PRODUCT LEVEL)	SEE PAGE
	1	1	**153-6497**	1	SEAL-O-RING	
	2	1	**311-1171**	2	NUT	
	3	1	**311-5852**	2	PLATE	
	4	1	**311-5853**	2	SEAL-O-RING	
	5	1	**311-5854**	2	BOLT	
	6	1	**313-2034**	1	RETAINER AS-BEARING	
	7	1	**154-2403**	2	WASHER	

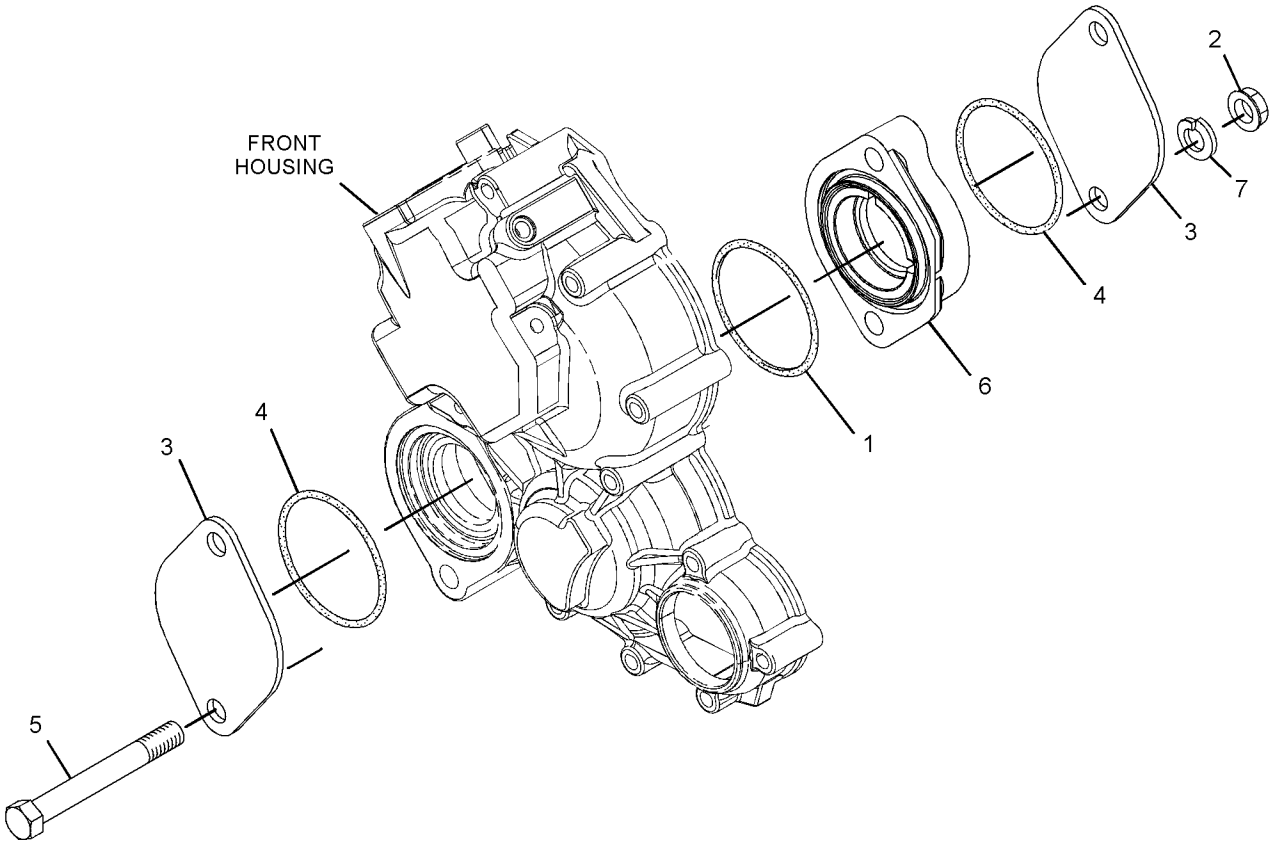

GRAPHIC #1 <END> g02158621

313-1984 COVER GP-ENGINE

PART OF 435-1644 CYLINDER BLOCK GP, 541-8320 ENGINE AR-PRIMARY
TYPE 2

SMCS-795C **i05407111**

NOTE	REF NO	GRAPHIC REF	PART NUMBER	QTY	PART NAME 1 2 3 4 5 6 (PRODUCT LEVEL)	SEE PAGE
	1	1	**153-6497**	1	SEAL-O-RING	
CM	2	1	**175-7141**	2	NUT-HEX FLANGE (M10X1.5-THD)	
	3	1	**311-5852**	2	PLATE	
	4	1	**311-5853**	2	SEAL-O-RING	
CM	5	1	**103-5687**	2	BOLT (M10X1.5X85-MM)	
	6	1	**313-2034**	1	RETAINER AS-BEARING	

C - CHANGE FROM PREVIOUS TYPE
M - METRIC PART

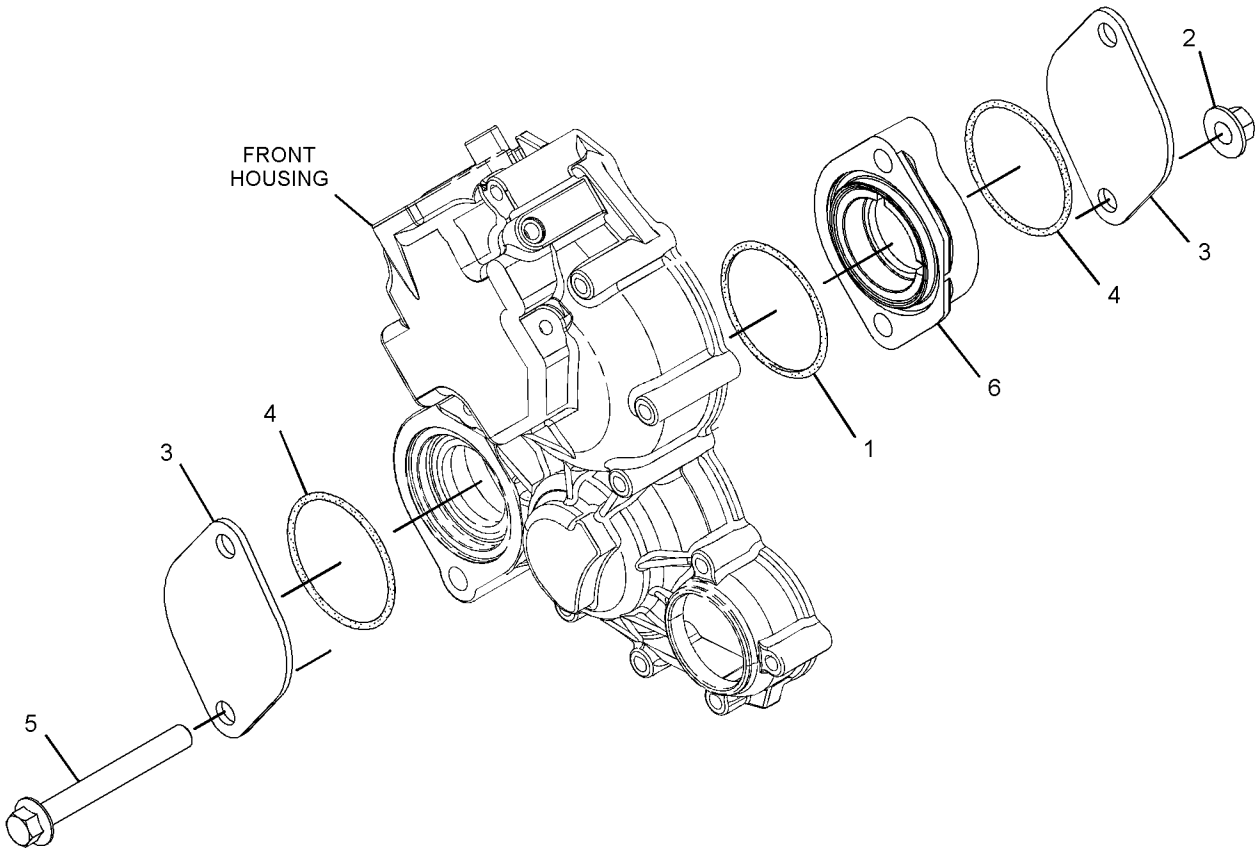

GRAPHIC #1 <END> g03471759

342-1268 COVER GP-ENGINE

PART OF 435-1644 CYLINDER BLOCK GP, 435-1632, 435-1643 ENGINE AR

SMCS-795C **i07591037**

NOTE	REF NO	GRAPHIC REF	PART NUMBER	QTY	PART NAME 1 2 3 4 5 6 (PRODUCT LEVEL)	SEE PAGE
M	1	1	**124-3815**	1	BOLT (M8X1.25X16-MM)	

M - METRIC PART

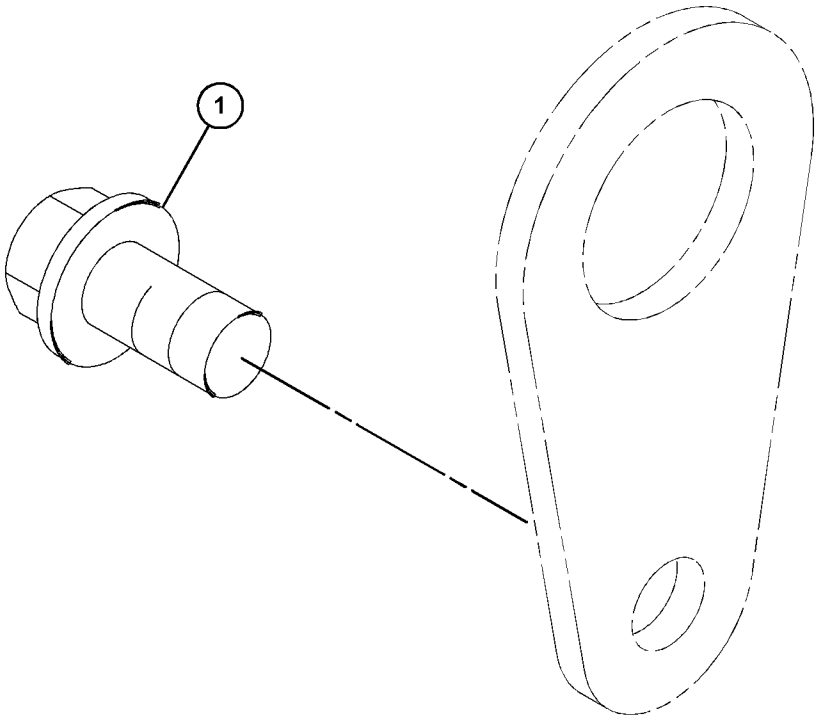

GRAPHIC #1 <END> g06393400

371-1231 COVER GP-ENGINE

SMCS-795C **i06999841**

NOTE	REF NO	GRAPHIC REF	PART NUMBER	QTY	PART NAME 1 2 3 4 5 6 (PRODUCT LEVEL)	SEE PAGE
M	1	1	**6I-0594**	2	NUT (M10X1.5-THD)	
	2	1	**153-6497**	1	SEAL-O-RING	
	3	1	**311-5852**	1	PLATE	
	4	1	**311-5853**	1	SEAL-O-RING	
	5	1	**313-2034**	1	RETAINER AS-BEARING	
	6	1	**371-1233**	2	BOLT	
	7	1	**371-1234**	1	PLATE	

M - METRIC PART

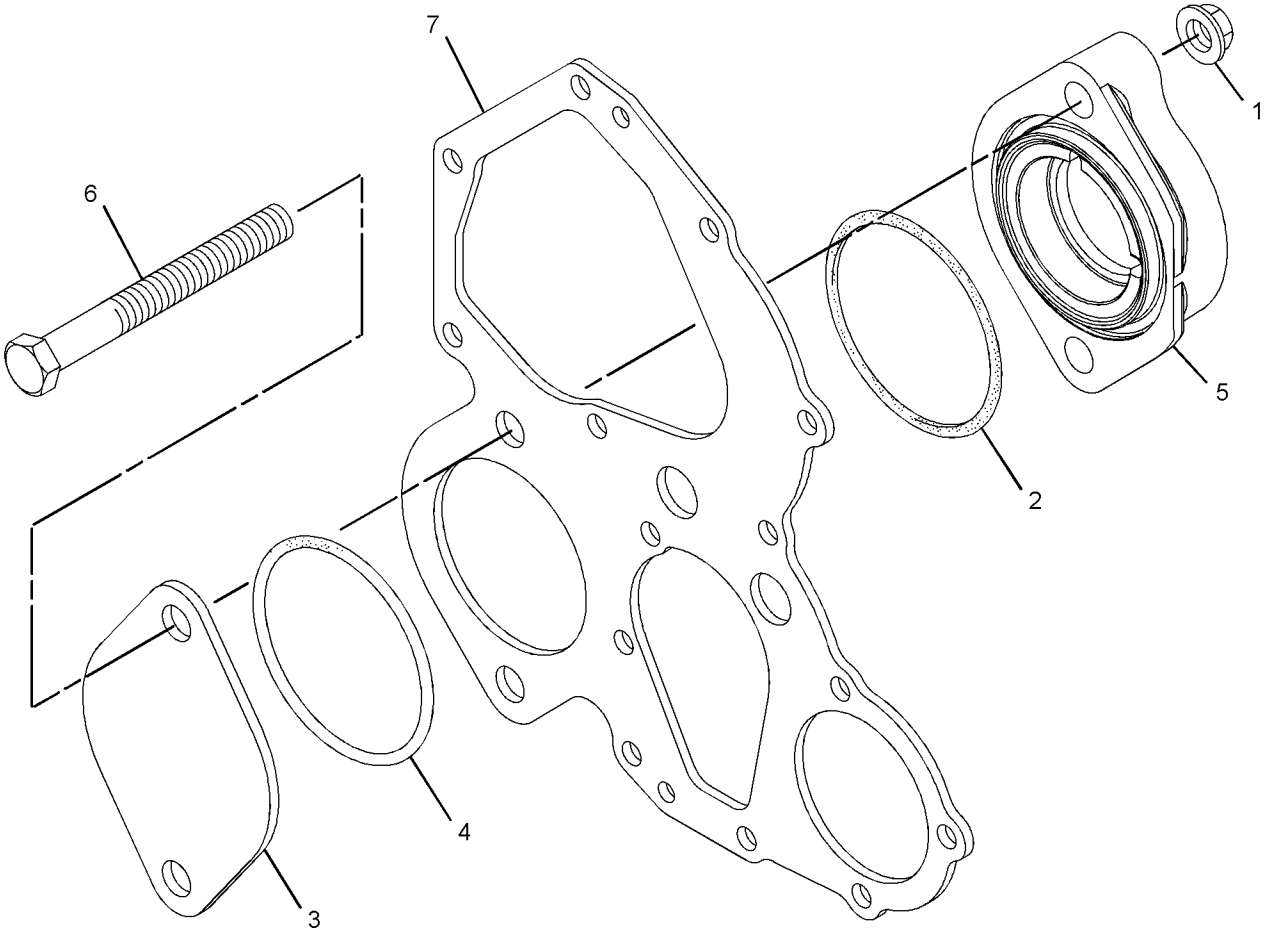

GRAPHIC #1 <END> g03113437

329-8577 COVER GP-FRONT HOUSING

PART OF 435-1632 ENGINE AR, 516-4466, 516-9462 ENGINE AR-PRIMARY

SMCS-1151, 1166 **i03384407**

NOTE	REF NO	GRAPHIC REF	PART NUMBER	QTY	PART NAME 1 2 3 4 5 6 (PRODUCT LEVEL)	SEE PAGE
M	1	1	**6I-0454**	2	BOLT (M10X1.5X70-MM)	
M	2	1	**6I-0594**	2	NUT (M10X1.5-THD)	
	3	1	**153-6497**	1	SEAL-O-RING	
	4	1	**311-5852**	1	PLATE	
	5	1	**311-5853**	1	SEAL-O-RING	
	6	1	**321-5906**	1	PLATE	
	7	1	**329-8576**	1	PLATE	

M - METRIC PART

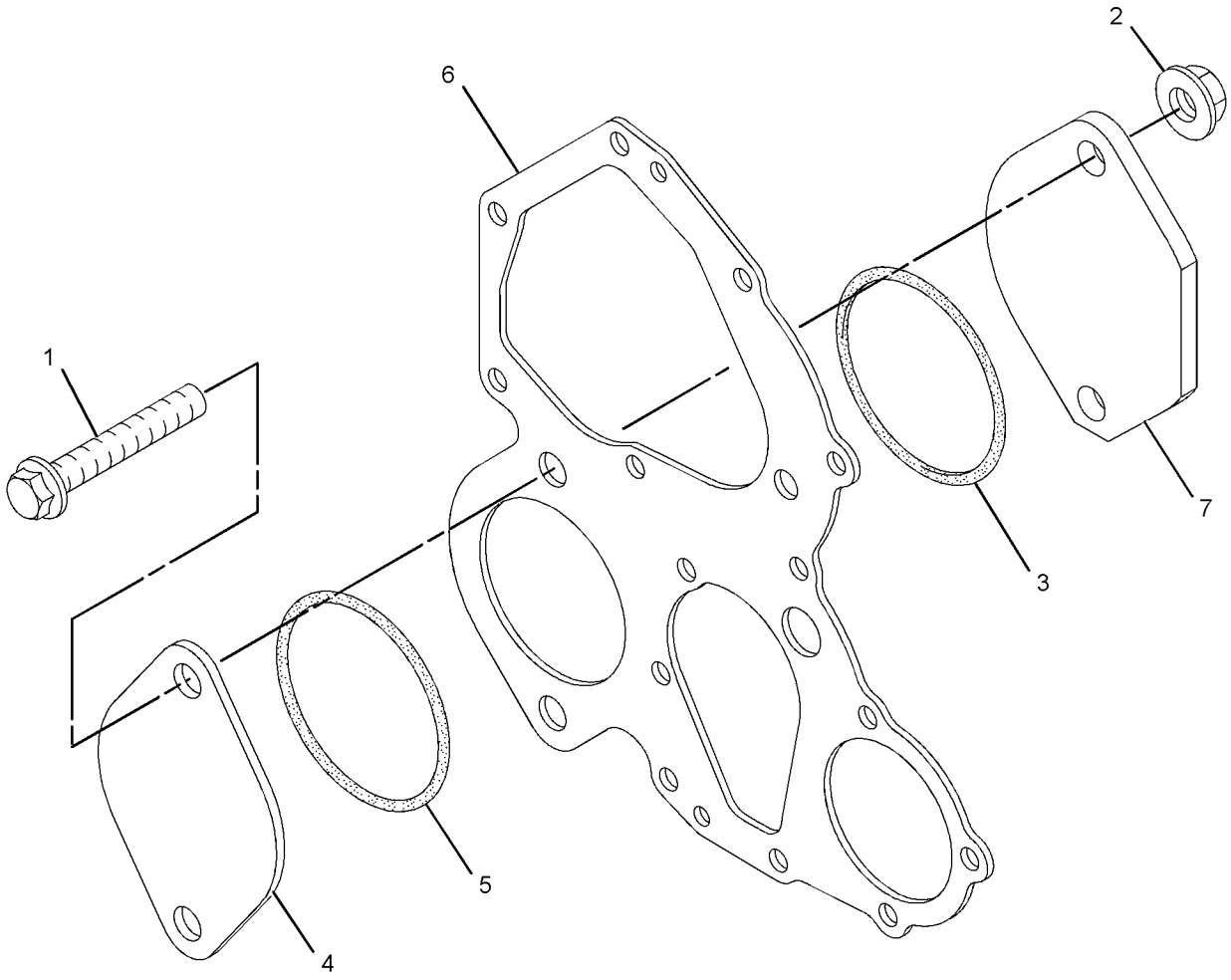

GRAPHIC #1 <END> g01614834

313-1986 COVER GP-VALVE MECHANISM

PART OF 435-1644 CYLINDER BLOCK GP, 435-1632, 435-1643 ENGINE AR, 516-4466, 541-8320 ENGINE AR-PRIMARY

SMCS-1107 **i06066874**

NOTE	REF NO	GRAPHIC REF	PART NUMBER	QTY	PART NAME 1 2 3 4 5 6 (PRODUCT LEVEL)	SEE PAGE
	1	1	**153-5934**	3	NUT	
	2	1	**153-5936**	3	WASHER	
	3	1	**153-5939**	1	FILTER ELEMENT-BREATHER	
	4	1	**153-6840**	1	BOLT	
M	5	1	**153-7640**	2	BOLT (M6X1X20-MM)	
	6	1	**165-2139**	3	BOLT	
	7	1	**217-5859**	1	VALVE-BREATHER (CRANKCASE)	
	8	1	**217-5860**	4	BOLT	
	9	1	**217-5862**	6	BOLT	
	10	1	**231-3009**	1	COVER-VALVE	
	11	1	**231-3010**	1	PLATE-RETAINING	
	12	1	**231-3013**	1	CONNECTION-AIR	
	13	1	**432-8339**	1	GASKET (AIR INTAKE)	
	14	1	**444-7398**	1	GASKET-COVER	
	15	1	**153-5944**	1	STUD	
M	16	1	**153-5960**	1	NUT (M6X1-THD)	

M - METRIC PART

313-1986 **COVER GP-VALVE MECHANISM (**contd.**)** **i06066874**

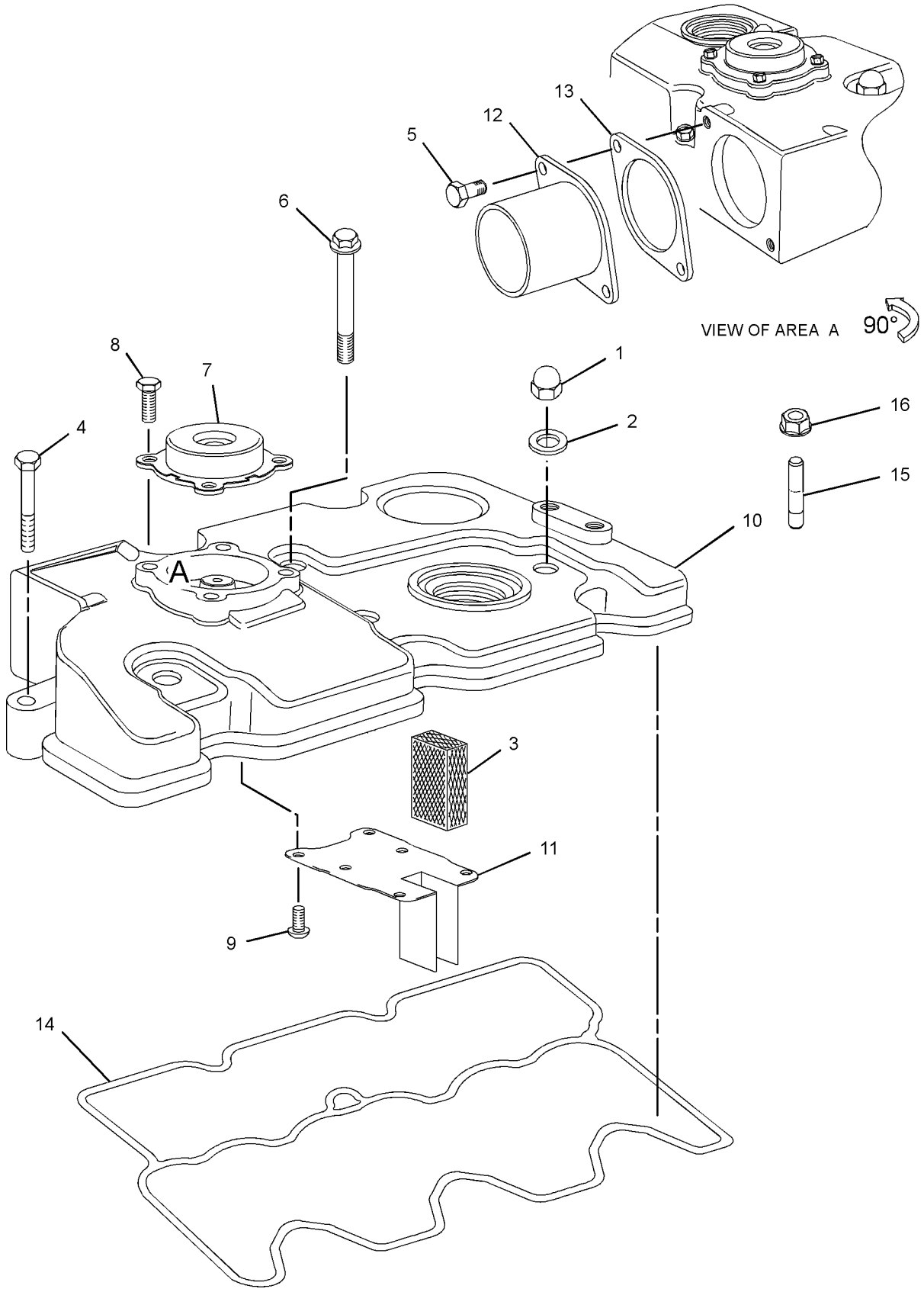

GRAPHIC #1 <END> g03811275

452-4278 COVER GP-VALVE MECHANISM

PART OF 516-9462 ENGINE AR-PRIMARY

SMCS-1107 **i06991498**

NOTE	REF NO	GRAPHIC REF	PART NUMBER	QTY	PART NAME 1 2 3 4 5 6 (PRODUCT LEVEL)	SEE PAGE
M	1	1	**195-3699**	3	NUT (M8X1.25-THD)	
	2	1	**153-5936**	3	WASHER	
	3	1	**153-5939**	1	FILTER ELEMENT-BREATHER	
	4	1	**153-5944**	2	STUD	
M	5	1	**153-5960**	2	NUT (M6X1-THD)	
	6	1	**153-6840**	2	BOLT	
					(EACH INCLUDES)	
		1	**3B-4504**	1	LOCKWASHER	
M		1	**8T-4971**	1	BOLT (M6X1X30-MM)	
M	7	1	**153-7640**	2	BOLT (M6X1X20-MM)	
					(EACH INCLUDES)	
		1	**3B-4504**	1	LOCKWASHER	
M		1	**8T-4138**	1	BOLT (M6X1X20-MM)	
	8	1	**165-2139**	3	BOLT	
					(EACH INCLUDES)	
		1	**3B-4504**	1	LOCKWASHER	
M		1	**8T-6974**	1	BOLT (M6X1X80-MM)	
	9	1	**217-5859**	1	VALVE-BREATHER (CRANKCASE)	
	10	1	**217-5860**	4	BOLT	
	11	1	**217-5862**	4	BOLT	
	12	1	**231-3010**	1	PLATE-RETAINING	
	13	1	**231-3013**	1	CONNECTION-AIR	
	14	1	**499-0368**	1	GASKET (AIR INTAKE)	
	15	1	**444-7398**	1	GASKET-COVER	
	16	1	**452-4684**	1	COVER-HEAD	

M - METRIC PART

452-4278 **COVER GP-VALVE MECHANISM (**contd.**)** **i06991498**

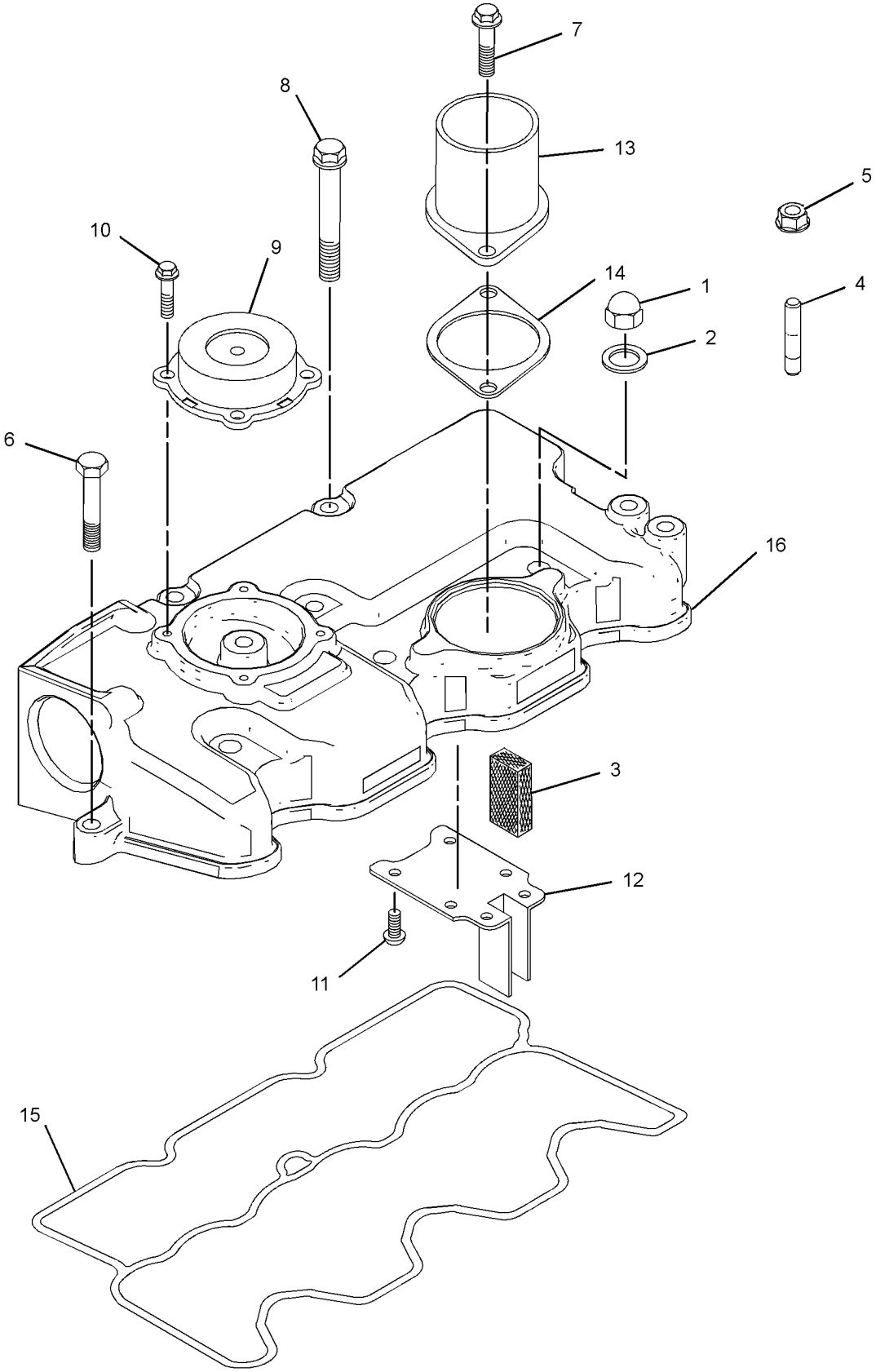

GRAPHIC #1 <END> g03702147

313-1962 CRANKSHAFT GP

PART OF 435-1644 CYLINDER BLOCK GP, 435-1632, 435-1643 ENGINE AR, 516-4466, 516-9462, 541-8320 ENGINE AR-PRIMARY

SMCS-1202 **i05755572**

NOTE	REF NO	GRAPHIC REF	PART NUMBER	QTY	PART NAME 1 2 3 4 5 6 (PRODUCT LEVEL)	SEE PAGE
	1	1	**153-5397**	2	BOLT (M16X1.5-THD)	
	2	1	**153-5408**	2	BOLT	
	3	1	**231-2801**	1	CAP AS-BEARING	
	3A	1	**153-5402**	2	DOWEL	
	3B	1	**153-5403**	2	BOLT	
	4	1	**231-2802**	1	CAP AS-BEARING	
	4A	1	**153-5402**	2	DOWEL	
	4B	1	**153-5403**	4	BOLT	
	5	1	**231-2803**	1	CAP AS-BEARING	
M	5A	1	**8T-0276**	2	BOLT (M8X1.25X45-MM)	
	5B	1	**153-5402**	2	DOWEL	
	6	1	**304-4764**	1	KIT-BEARING	
B	7	1	**304-4766**	1	KIT-CRANKSHAFT BEARING	
AB		1	**304-4767**		KIT-CRANKSHAFT BEARING	
	8	1	**313-2027**	1	CRANKSHAFT AS	
	8A	1	**153-5518**	1	KEY	
	8B	1	**153-5519**	1	PIN	
	8C	1	**356-3225**	1	GEAR-CRANKSHAFT (26-TEETH)	

A - NOT PART OF THIS GROUP
B - USE AS REQUIRED
M - METRIC PART

313-1962 **CRANKSHAFT GP** (contd.) **i05755572**

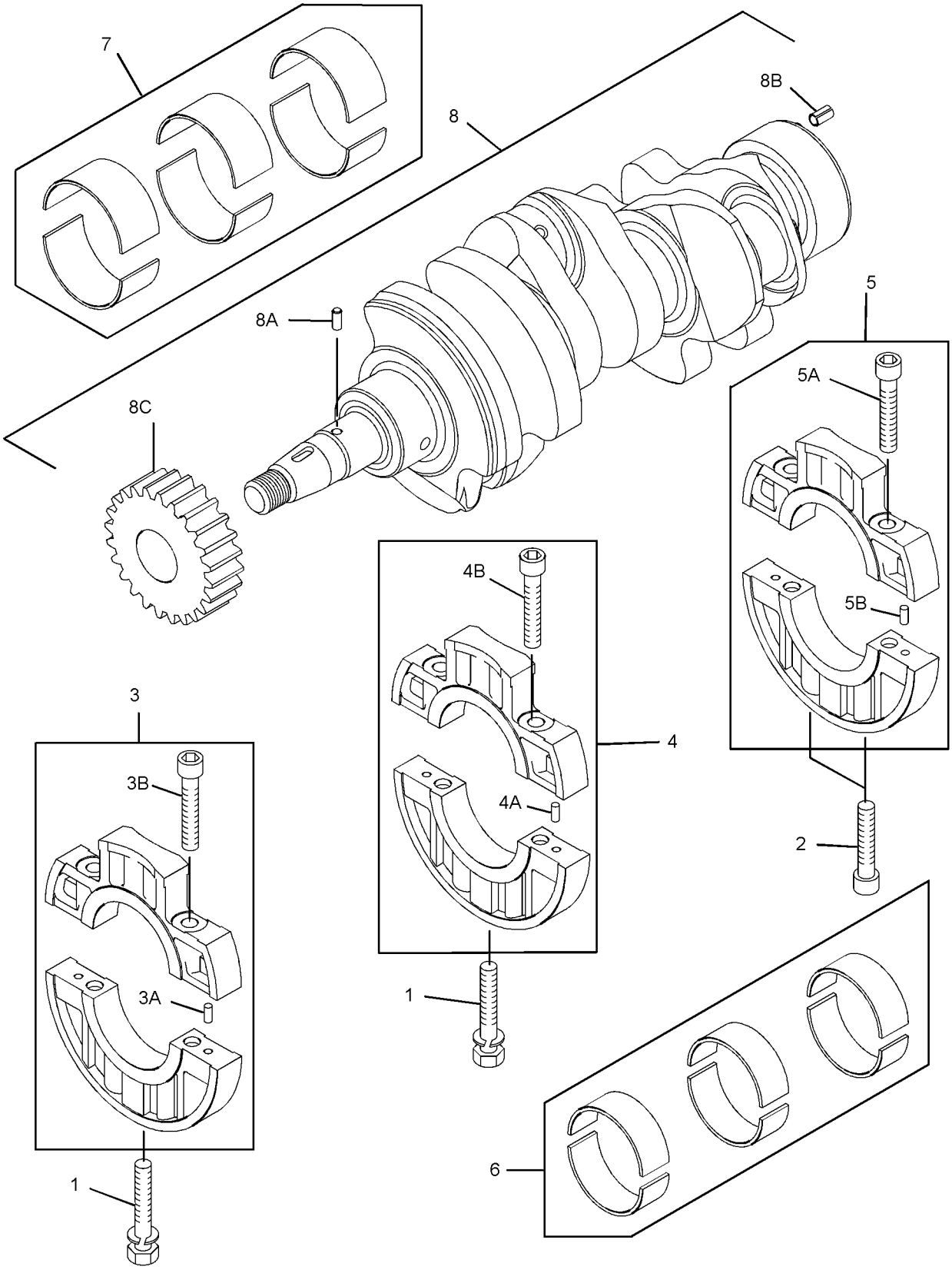

GRAPHIC #1 <END> g01389555

313-1957 CYLINDER BLOCK GP

PART OF 435-1644 CYLINDER BLOCK GP, 435-1632, 435-1643 ENGINE AR, 516-4466, 516-9462, 541-8320 ENGINE AR-PRIMARY

SMCS-1201 **i06914963**

NOTE	REF NO	GRAPHIC REF	PART NUMBER	QTY	PART NAME 1 2 3 4 5 6 (PRODUCT LEVEL)	SEE PAGE
	1	1	**153-5385**	1	PLUG	
	2	1	**153-5387**	4	PLUG	
	3	1	**153-5390**	1	BALL BEARING	
	4	1	**153-5391**	1	PLUG	
	5	1	**153-5392**	1	BEARING	
	6	1	**153-5393**	2	DOWEL	
	7	1	**153-5394**	2	DOWEL	
	8	1	**153-5395**	2	DOWEL	
	9	1	**487-0157**	2	PIN-SPRING	
	10	1	**153-5407**	2	STUD (M6X1X28-MM)	
	11	1	**153-5409**	1	CLIP	
	12	1	**484-7540**	3	BOLT-FLANGE HEAD	
	13	1	**183-1163**	1	STUD	
	14	1	**183-1164**	1	STUD	
	15	1	**452-4518**	1	GASKET	
	16	1	**221-1136**	4	PLUG	
	17	1	**231-8819**	1	SEAL AS	
	18	1	**304-3560**	1	BUSHING	
	19	1	**237-9315**	1	PLUG (SEALING)	
	20	1	**366-4251**	2	PLUG-SEAL	
	21	1	**288-6538**	1	PLUG	
	22	1	**288-6539**	1	CAP	

313-1957 **CYLINDER BLOCK GP (**contd.**)** **i06914963**

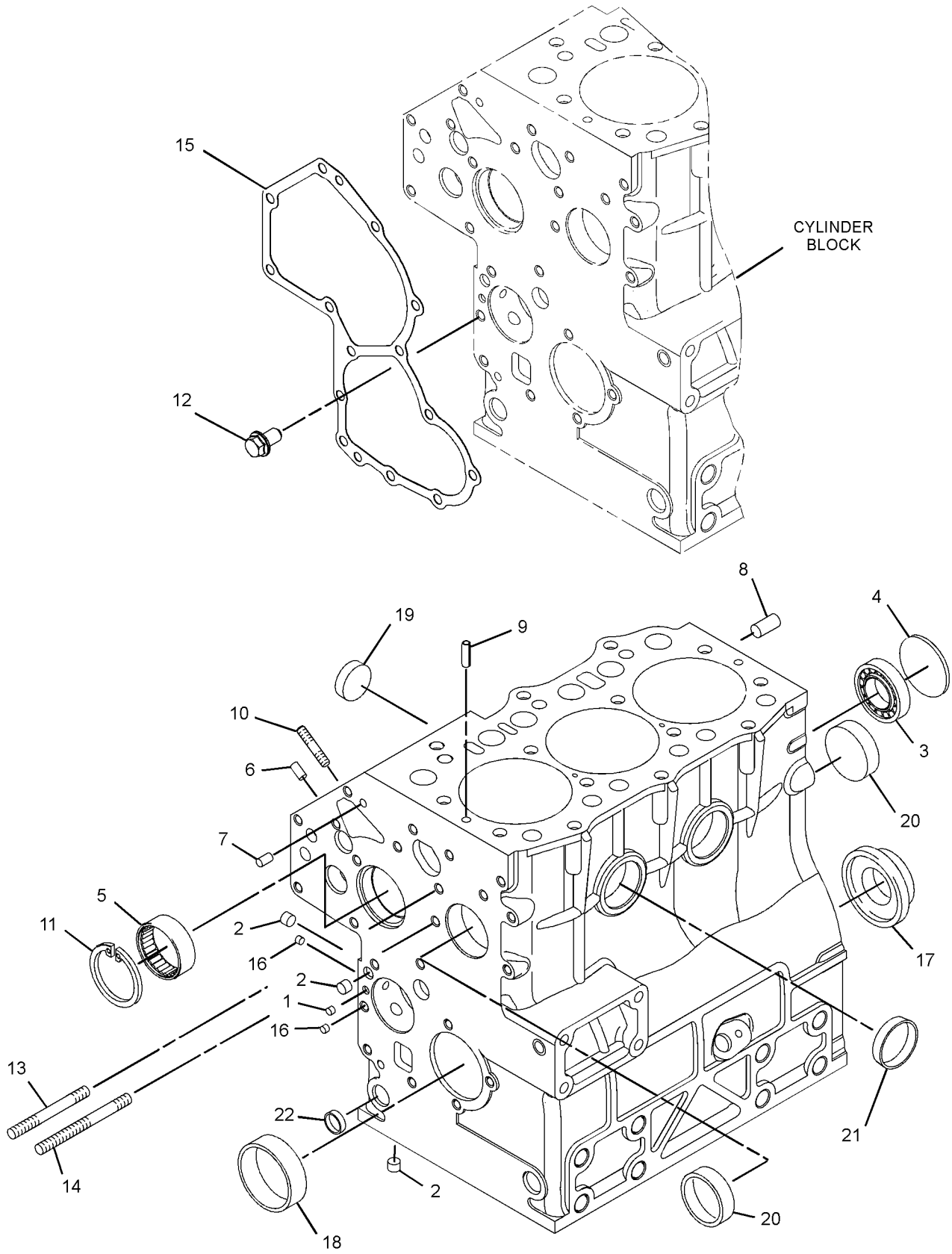

GRAPHIC #1 <END> g06174288

435-1644 CYLINDER BLOCK GP

10 BRAKE KW (13 BHP) AT 1500 RPM

FIELD REPLACEMENT FOR 318-1669—PAGE: 10: FOR 318-1667—PAGE: 1

SMCS-1201 **i05432635**

NOTE	PART NUMBER	QTY	PART NAME 1 2 3 4 5 6 (PRODUCT LEVEL)	SEE PAGE
Y	*323-2409*	1	CAMSHAFT GP	17
Y	*313-1984*	1	COVER GP-ENGINE	22
Y	*342-1268*	1	COVER GP-ENGINE	24
Y	*313-1986*	1	COVER GP-VALVE MECHANISM	27
Y	*313-1962*	1	CRANKSHAFT GP	31
Y	*313-1957*	1	CYLINDER BLOCK GP	33
Y	*313-1964*	1	CYLINDER HEAD GP	38
Y	*313-1966*	1	DRIVE GP-PUMP	43
Y	*313-1975*	1	FILLER GP-ENGINE OIL	76
Y	*308-2298*	1	FILTER GP-ENGINE OIL	78
Y	*325-5586*	1	FLYWHEEL GP	47
Y	*313-2021*	1	GLOW PLUG GP	152
Y	*323-2408*	1	GOVERNOR GP	122
Y	*342-7619*	1	HOUSING GP-FLYWHEEL	52
Y	*323-2407*	1	HOUSING GP-FRONT	57
Y	*313-1980*	1	HOUSING GP-WATER REGULATOR	82
Y	**339-3016**	1	PUMP GP-ENGINE OIL	80
Y	*392-8729*	1	LIFTING GP-ENGINE	61
Y	*308-4735*	1	MOUNTING GP-ENGINE OIL FILTER	79
Y	*313-1973*	1	PAN GP-OIL	62
Y	*342-7622*	1	PARTS GP-MISCELLANEOUS	170
Y	*313-1963*	1	PISTON & ROD GP	66
Y	*309-6720*	1	PLUG GP-OIL PAN	67
Y	*313-1976*	1	PULLEY GP-CRANKSHAFT	68
Y	*323-2410*	1	PUMP GP-FUEL INJECTION	134
Y	*313-1978*	1	PUMP GP-WATER	84
Y	*313-2023*	1	SOLENOID GP-SHUTOFF	154
Y	*313-2024*	1	SWITCH GP-PRESSURE	164
Y	*313-2035*	1	SWITCH GP-TEMPERATURE	168
Y	*313-1965*	1	VALVE MECHANISM GP	74

Y - SEPARATE ILLUSTRATION

<END>

319-7268 CYLINDER HEAD AS

PART OF 313-1964 CYLINDER HEAD GP

SMCS-1100, 1101 **i06781586**

NOTE	REF NO	GRAPHIC REF	PART NUMBER	QTY	PART NAME 1 2 3 4 5 6 (PRODUCT LEVEL)	SEE PAGE
	1	1	**440-5104**	6	SEAL	
	2	1	**153-5555**	3	VALVE-EXHAUST	
	3	1	**153-5556**	12	RETAINER	
	4	1	**153-5557**	6	CAP	
	5	1	**477-8828**	6	SPRING	
	6	1	**291-1808**	2	CAP	
	7	1	**231-2070**	3	VALVE-INLET	
	8	1	**256-2085**	1	INSERT-VALVE SEAT	
	9	1	**288-6537**	8	CAP	

319-7268 **CYLINDER HEAD AS (**contd.**)** **i06781586**

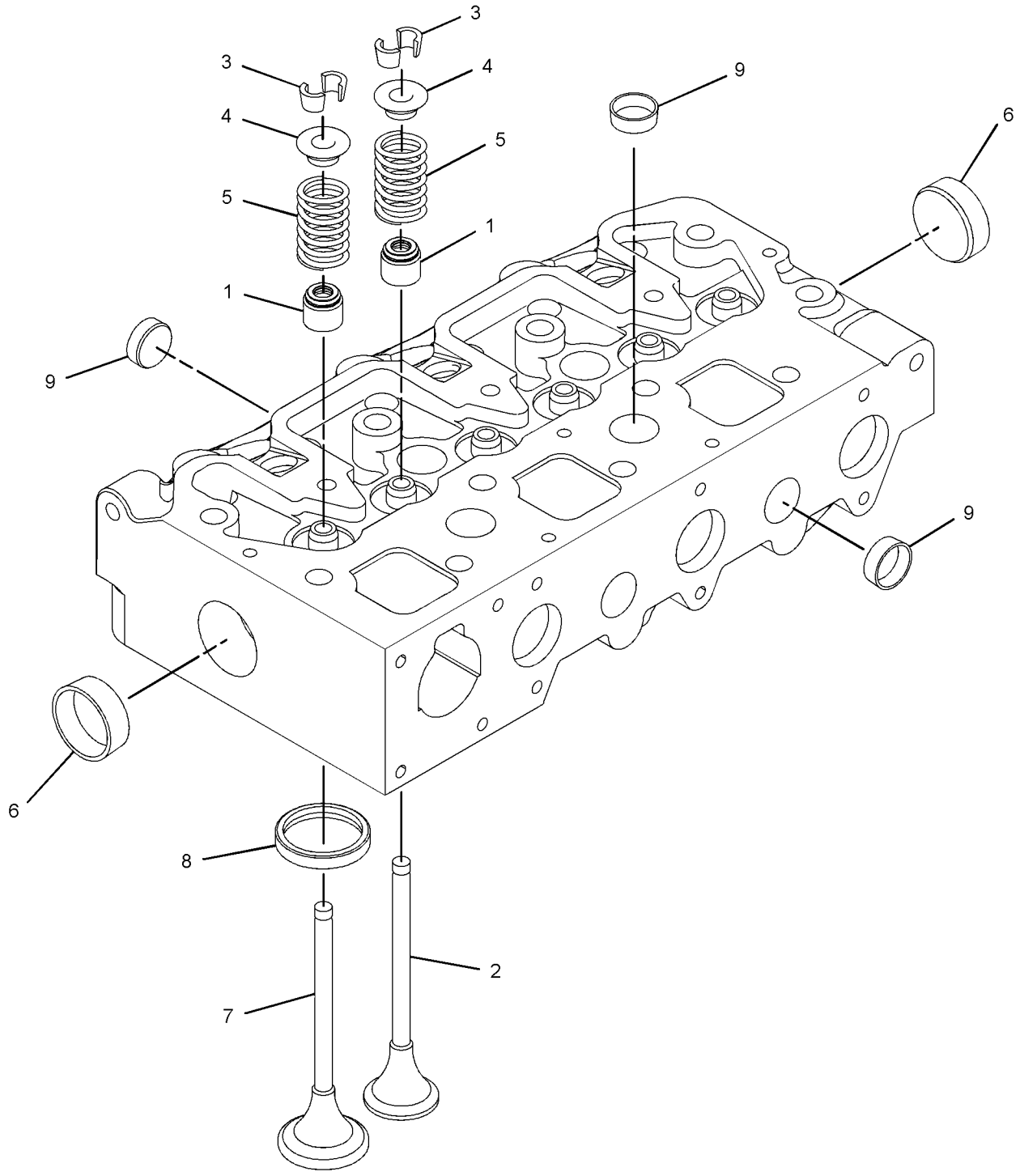

GRAPHIC #1 <END> g03679057

313-1964 CYLINDER HEAD GP

PART OF 435-1644 CYLINDER BLOCK GP, 435-1632, 435-1643 ENGINE AR, 516-4466, 516-9462, 541-8320 ENGINE AR-PRIMARY

SMCS-1100 **i06915611**

NOTE	REF NO	GRAPHIC REF	PART NUMBER	QTY	PART NAME 1 2 3 4 5 6 (PRODUCT LEVEL)	SEE PAGE
	1	1	**504-3838**	6	CAP	
	2	1	**153-5575**	11	BOLT	
	3	1	**153-5578**	3	BOLT	
	4	1	**153-5944**	2	STUD	
B	5	1	**231-2073**	1	GASKET-HEAD (1.3-MM THK)	
B		1	**254-4504**	1	GASKET-HEAD (1.2-MM THK)	
Y	6	1	**319-7268**	1	CYLINDER HEAD AS	36

B - USE AS REQUIRED
Y - SEPARATE ILLUSTRATION

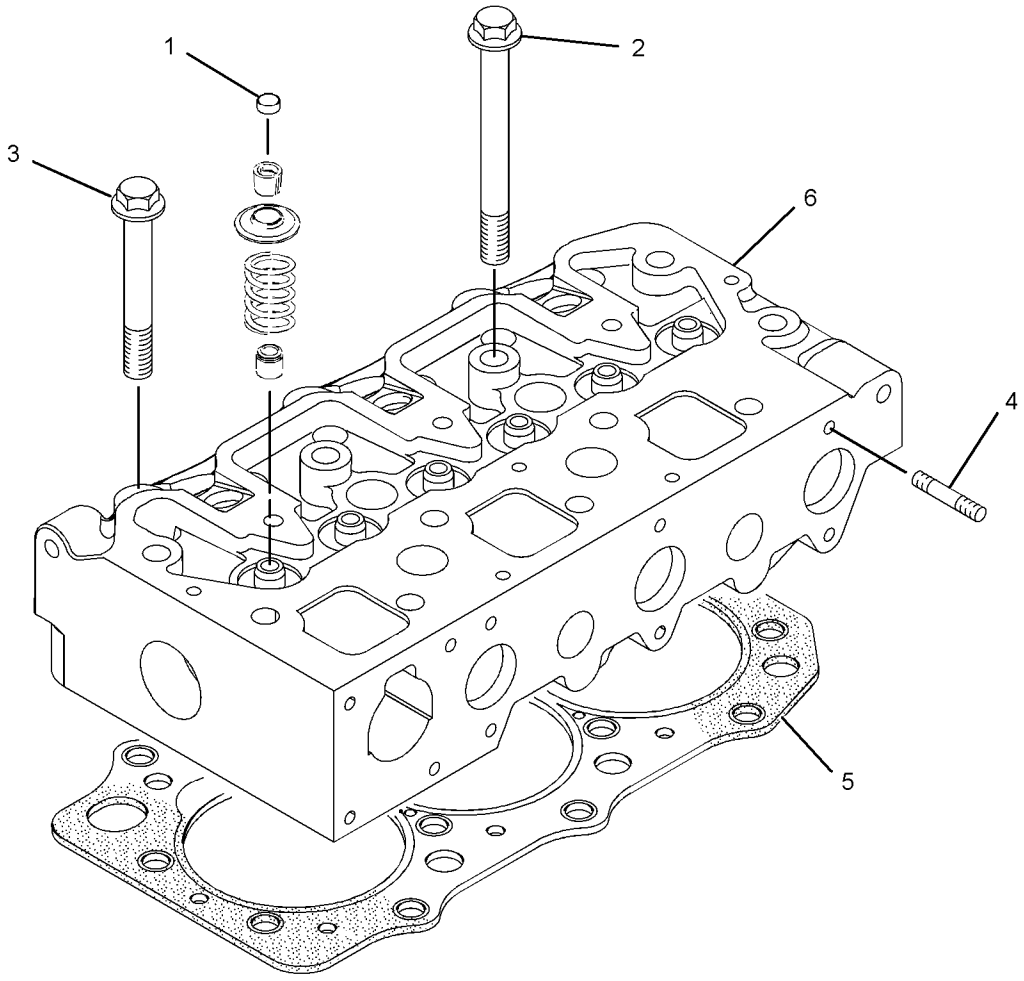

GRAPHIC #1 <END> g01388603

322-3808 DRIVE GP-FAN

TYPE 1

SMCS-1359 **i03390529**

NOTE	REF NO	GRAPHIC REF	PART NUMBER	QTY	PART NAME 1 2 3 4 5 6 (PRODUCT LEVEL)	SEE PAGE
M	1	1	**249-7263**	4	BOLT (M6X1X16-MM)	

M - METRIC PART

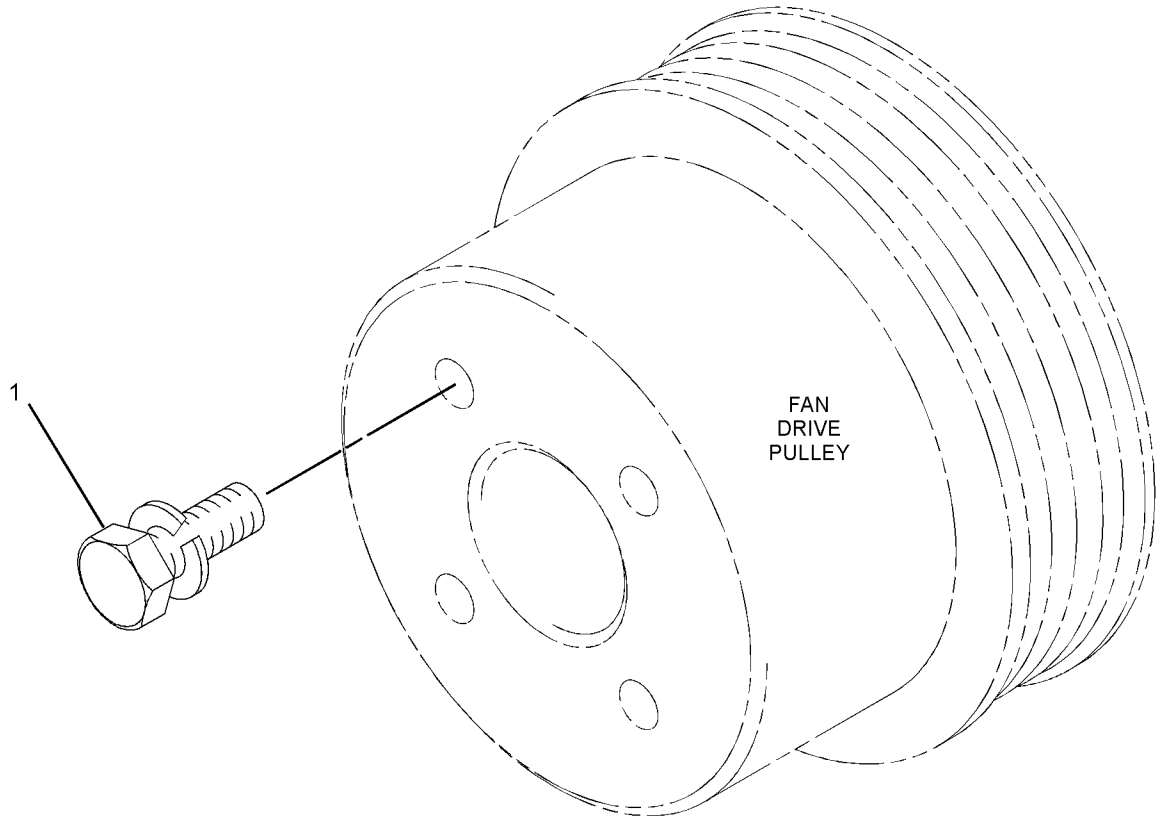

GRAPHIC #1 <END> g01514615

322-3808 DRIVE GP-FAN

TYPE 2

SMCS-1359 **i07091009**

NOTE	REF NO	GRAPHIC REF	PART NUMBER	QTY	PART NAME 1 2 3 4 5 6 (PRODUCT LEVEL)	SEE PAGE
CM	1	1	**6I-0846**	4	BOLT (M6X1X14-MM)	

C - CHANGE FROM PREVIOUS TYPE
M - METRIC PART

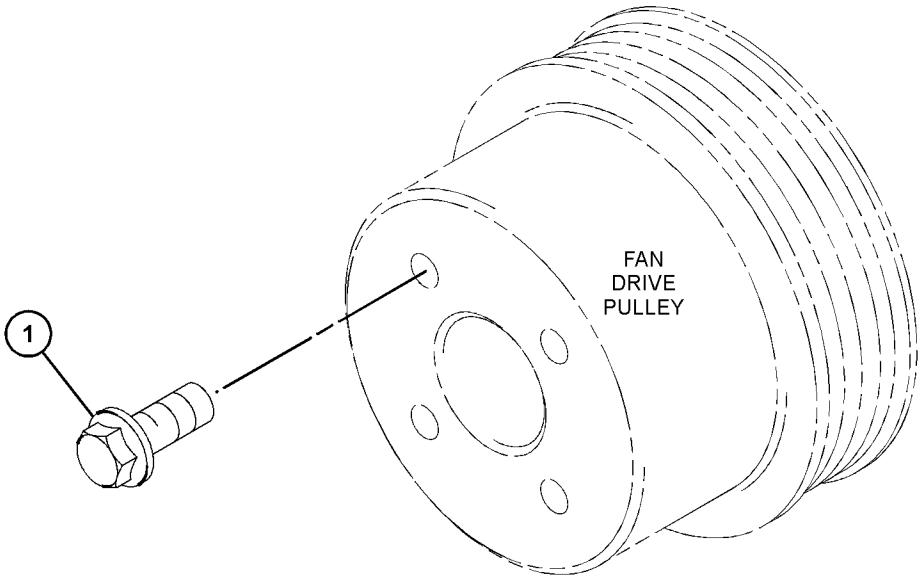

GRAPHIC #1 <END> g06224605

367-9248 DRIVE GP-POWER TAKE-OFF

PART OF 435-1643 ENGINE AR

TYPE 1

SMCS-1165 **i05398784**

NOTE	REF NO	GRAPHIC REF	PART NUMBER	QTY	PART NAME 1 2 3 4 5 6 (PRODUCT LEVEL)	SEE PAGE
M	1	1	**6I-0594**	2	NUT (M10X1.5-THD)	
	2	1	**153-6497**	1	SEAL-O-RING	
M	3	1	**198-5842**	2	BOLT-WASHER HEAD (M10X1.5X90-MM)	
	4	1	**311-5852**	2	PLATE	
	5	1	**311-5853**	2	SEAL-O-RING	
	6	1	**313-2034**	1	RETAINER AS-BEARING	
	7	1	**321-5906**	1	PLATE	
	8	1	**331-9381**	2	BALL BEARING	
	9	1	**335-8323**	1	GEAR (33-TEETH)	

M - METRIC PART

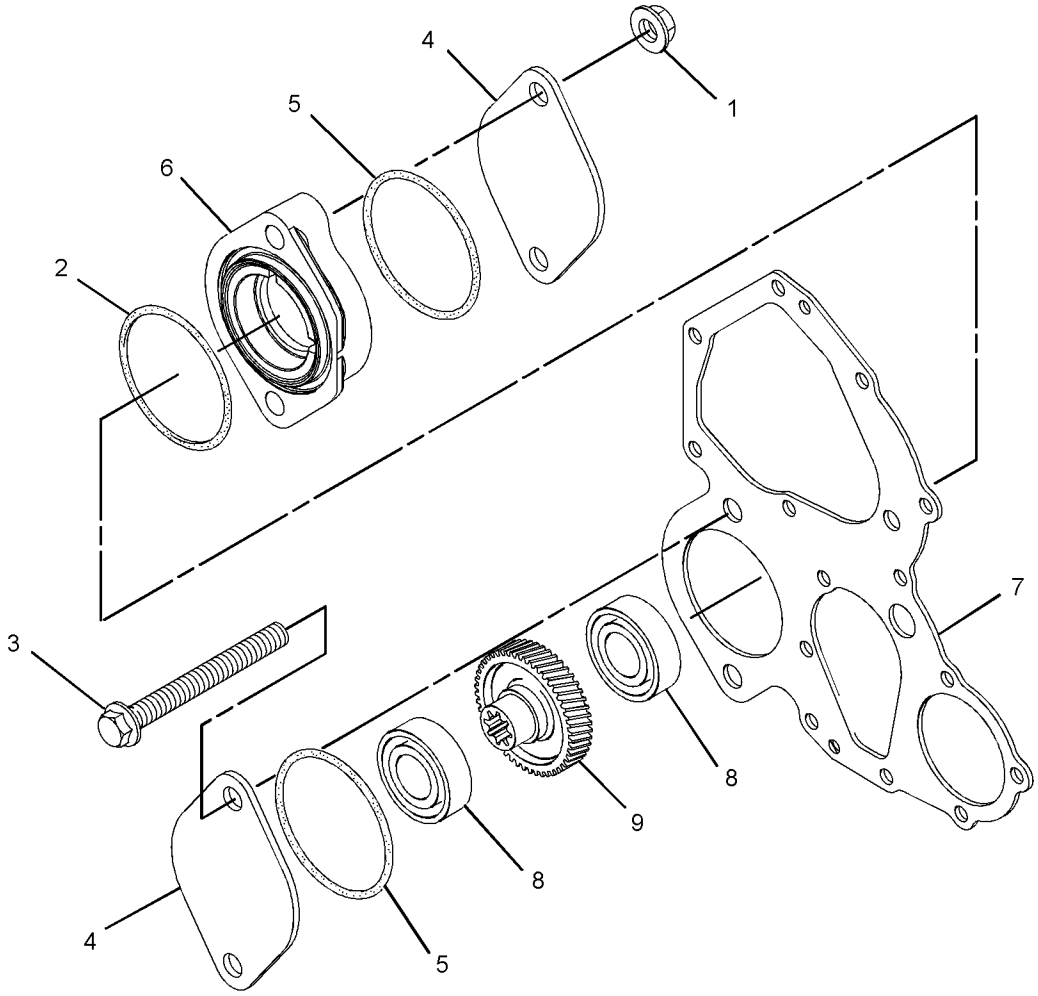

GRAPHIC #1 <END> g02406350

367-9248 DRIVE GP-POWER TAKE-OFF

PART OF 435-1643 ENGINE AR

TYPE 2

SMCS-1165 **i07165790**

NOTE	REF NO	GRAPHIC REF	PART NUMBER	QTY	PART NAME 1 2 3 4 5 6 (PRODUCT LEVEL)	SEE PAGE
M	1	1	**175-7141**	2	NUT-HEX FLANGE (M10X1.5-THD)	
	2	1	**153-6497**	1	SEAL-O-RING	
M	3	1	**103-5687**	2	BOLT (M10X1.5X85-MM)	
	4	1	**311-5852**	2	PLATE	
	5	1	**311-5853**	2	SEAL-O-RING	
	6	1	**313-2034**	1	RETAINER AS-BEARING	
	7	1	**321-5906**	1	PLATE	
	8	1	**331-9381**	2	BALL BEARING	
					PARTS SHOWN IN GRAPHIC(S) WITHOUT A REFERENCE NUMBER ARE NOT SERVICED SEPARATELY	

M - METRIC PART

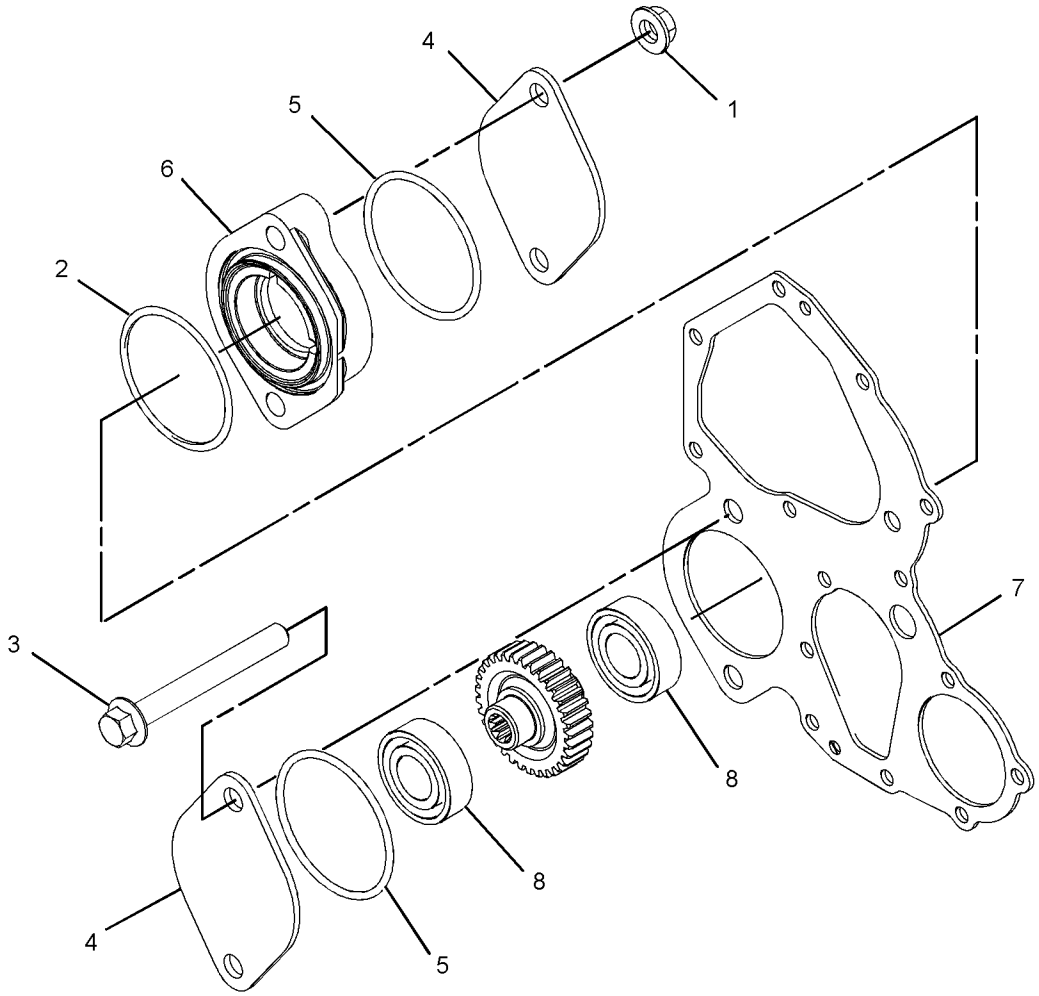

GRAPHIC #1 <END> g06218694

313-1966 DRIVE GP-PUMP

PART OF 435-1644 CYLINDER BLOCK GP, 435-1632 ENGINE AR, 516-4466, 516-9462, 541-8320 ENGINE AR-PRIMARY

SMCS-3108 **i03705547**

NOTE	REF NO	GRAPHIC REF	PART NUMBER	QTY	PART NAME 1 2 3 4 5 6 (PRODUCT LEVEL)	SEE PAGE
	1	1	**153-5936**	2	WASHER	
	2	1	**153-6853**	1	SEAL-O-RING	
M	3	1	**153-6881**	1	BOLT (M8X1.25X18-MM)	
	4	1	**154-1942**	1	VALVE-RELIEF (ENGINE OIL PRESSURE)	
	5	1	**231-7864**	1	TUBE-OIL	

M - METRIC PART

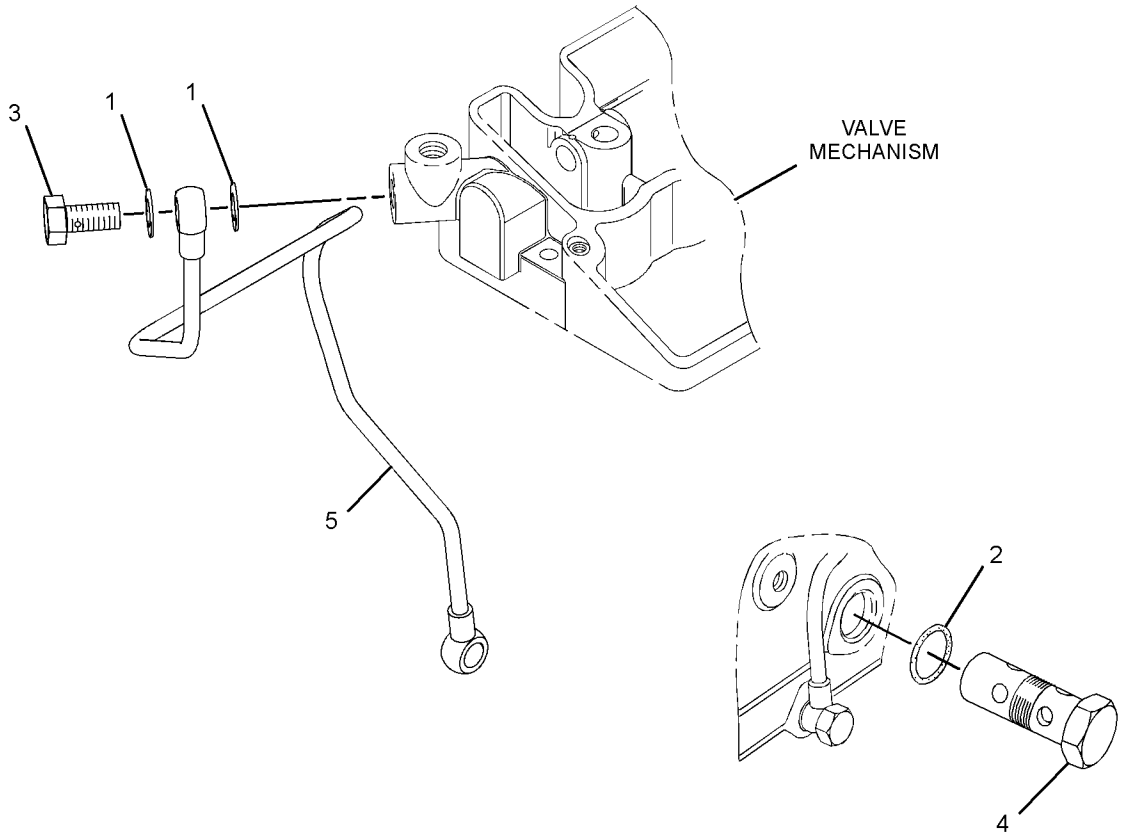

GRAPHIC #1 <END> g02005853

313-1970 FLYWHEEL GP

PART OF 541-8320 ENGINE AR-PRIMARY

SMCS-1156 **i03390527**

NOTE	REF NO	GRAPHIC REF	PART NUMBER	QTY	PART NAME 1 2 3 4 5 6 (PRODUCT LEVEL)	SEE PAGE
	1		**327-4311**	1	FLYWHEEL GP	
	1A		**153-6865**	1	GEAR-STARTER (96-TEETH)	
	2		**153-6866**	6	BOLT	

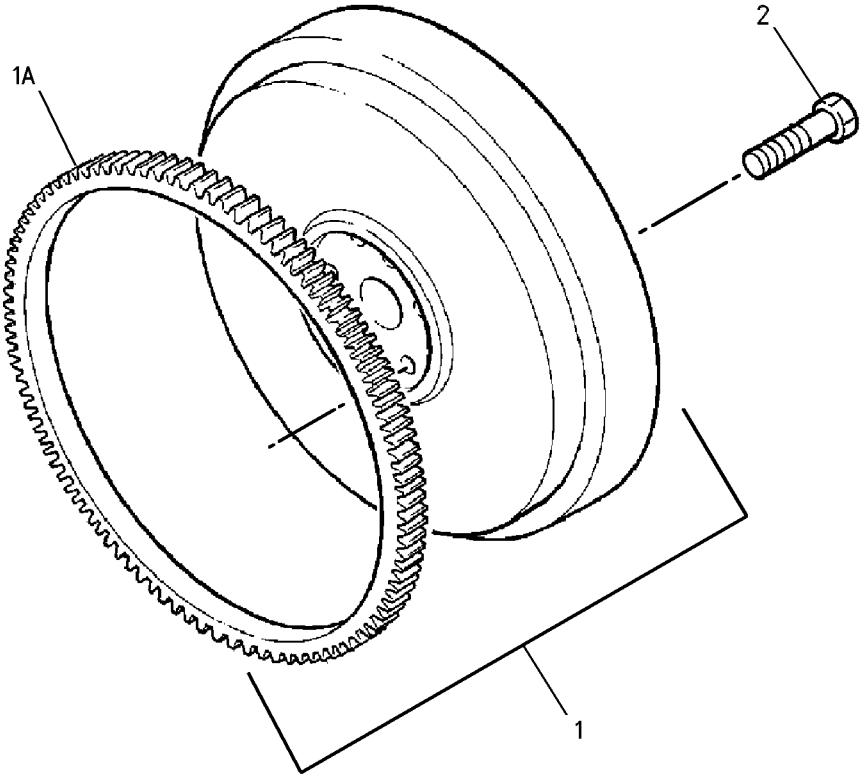

GRAPHIC #1 <END> g00640580

318-8880 FLYWHEEL GP

TYPE 1

SMCS-1156 **i03384415**

NOTE	REF NO	GRAPHIC REF	PART NUMBER	QTY	PART NAME 1 2 3 4 5 6 (PRODUCT LEVEL)	SEE PAGE
	1	1	**327-5149**	1	FLYWHEEL GP	
	1A	1	**153-6865**	1	GEAR-STARTER (96-TEETH)	
	2	1	**153-6866**	6	BOLT	

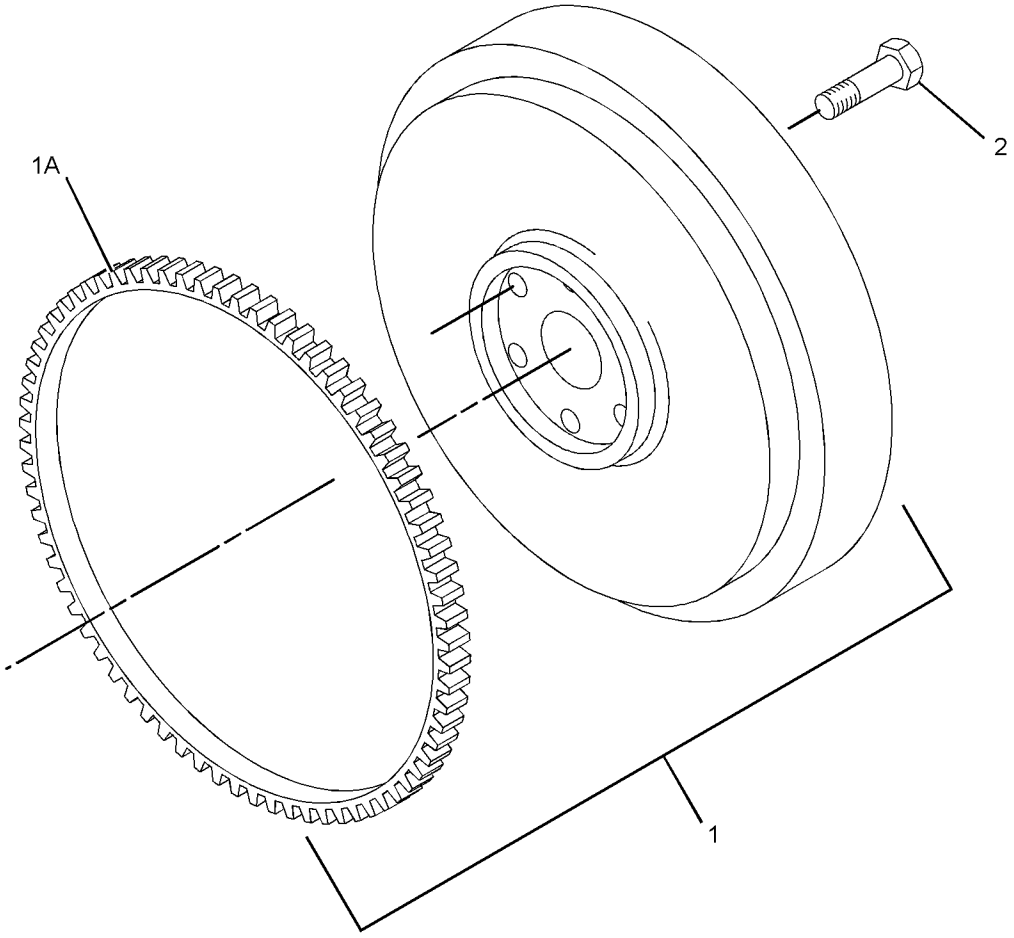

GRAPHIC #1 <END> g01502339

318-8880 FLYWHEEL GP

PART OF 516-4466, 516-9462 ENGINE AR-PRIMARY

TYPE 2

SMCS-1156 **i07071674**

NOTE	REF NO	GRAPHIC REF	PART NUMBER	QTY	PART NAME 1 2 3 4 5 6 (PRODUCT LEVEL)	SEE PAGE
	1	1	**153-6866**	6	BOLT	
C	2	1	**476-5584**	1	FLYWHEEL	

C - CHANGE FROM PREVIOUS TYPE

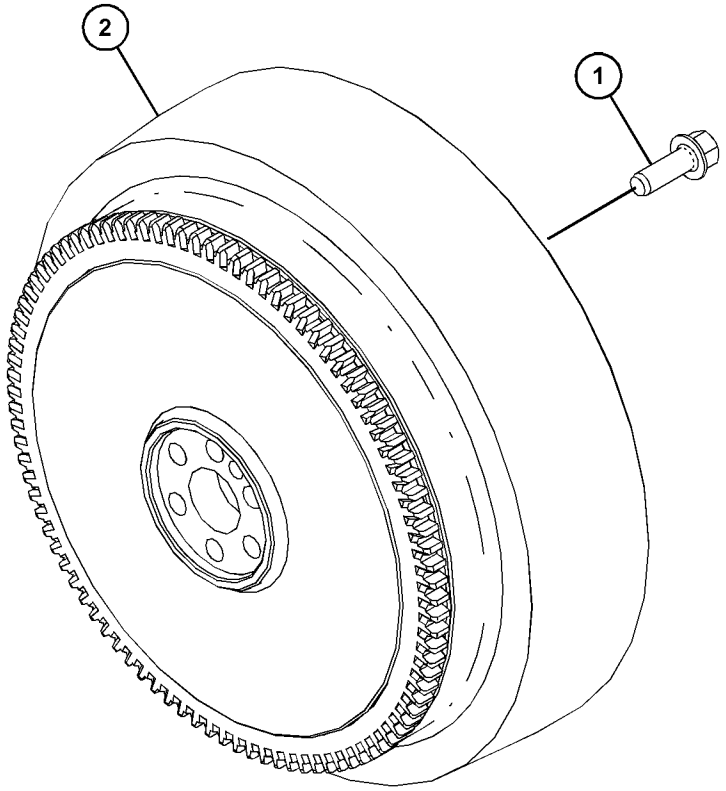

GRAPHIC #1 <END> g06235582

325-5586 FLYWHEEL GP

PART OF 435-1644 CYLINDER BLOCK GP, 435-1632, 435-1643 ENGINE AR

SMCS-1156 **i05392889**

NOTE	REF NO	GRAPHIC REF	PART NUMBER	QTY	PART NAME 1 2 3 4 5 6 (PRODUCT LEVEL)	SEE PAGE
	1	1	**153-6866**	6	BOLT	

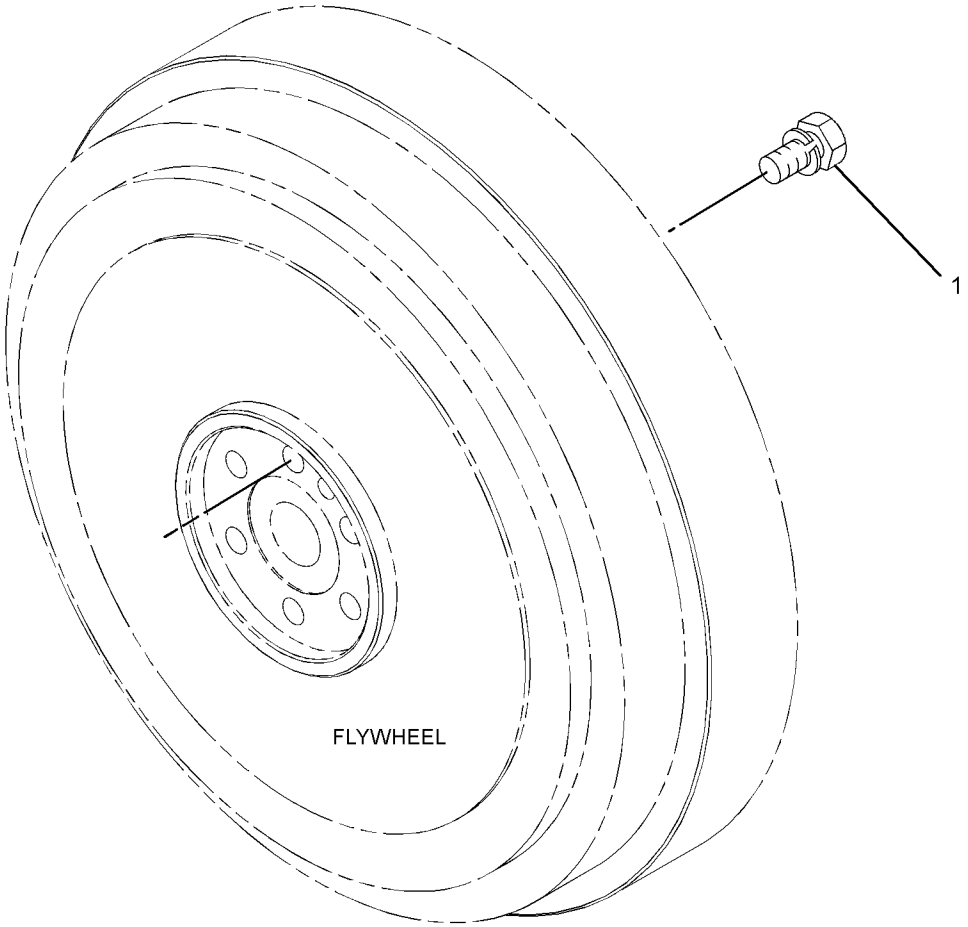

GRAPHIC #1 <END> g01502245

313-1969 HOUSING GP-FLYWHEEL

TYPE 1

SMCS-1157 **i03390526**

NOTE	REF NO	GRAPHIC REF	PART NUMBER	QTY	PART NAME 1 2 3 4 5 6 (PRODUCT LEVEL)	SEE PAGE
	1	1	**138-7146**	8	BOLT	
	2	1	**138-7166**	1	HOUSING-FLYWHEEL	
	3	1	**138-7142**	2	BOLT	
	4	1	**154-1399**	2	WASHER	
	5	1	**154-2403**	2	WASHER	
	6	1	**155-8085**	2	NUT (M10X1.25-THD)	
	7	1	**154-2395**	1	PLUG	

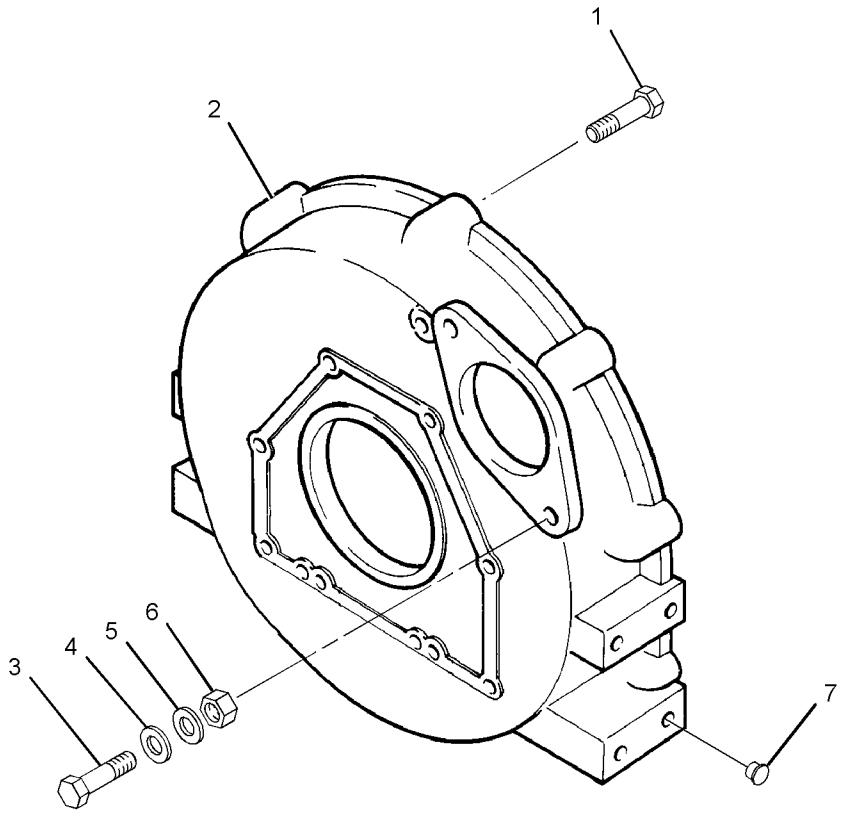

GRAPHIC #1 <END> g01141591

313-1969 HOUSING GP-FLYWHEEL

PART OF 541-8320 ENGINE AR-PRIMARY

TYPE 2

SMCS-1157 **i07005632**

NOTE	REF NO	GRAPHIC REF	PART NUMBER	QTY	PART NAME 1 2 3 4 5 6 (PRODUCT LEVEL)	SEE PAGE
CM	1	1	**175-7141**	2	NUT-HEX FLANGE (M10X1.5-THD)	
	2	1	**138-7146**	8	BOLT	
CM	3	1	**140-8783**	2	BOLT (M10X1.5X45-MM)	
	4	1	**358-4256**	1	PLUG	
	5	1	**483-1215**	1	HOUSING-FLYWHEEL	

C - CHANGE FROM PREVIOUS TYPE
M - METRIC PART

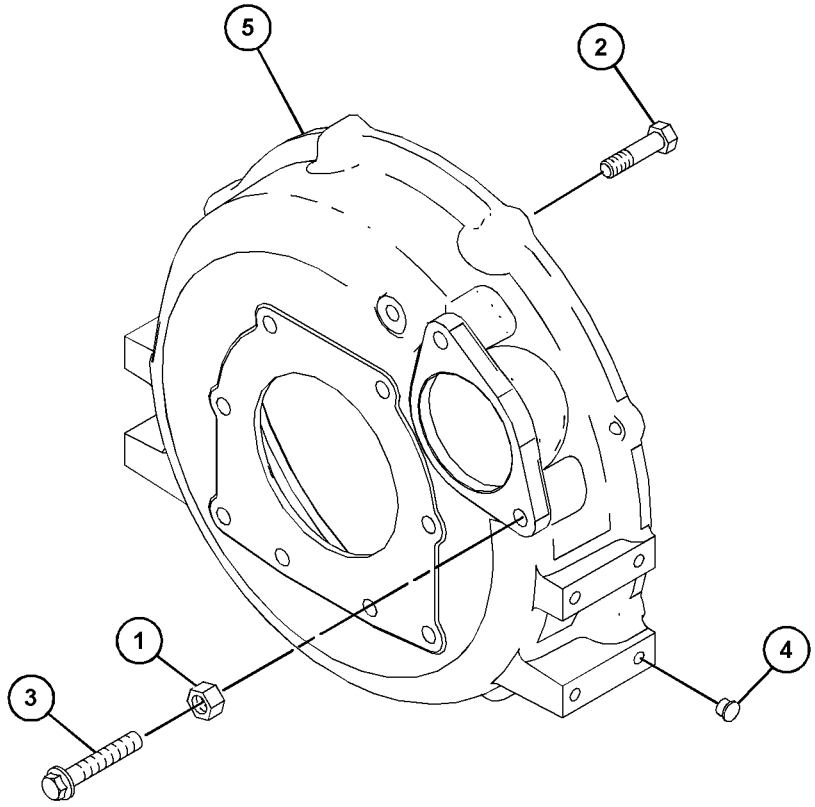

GRAPHIC #1 <END> g06210447

318-8879 HOUSING GP-FLYWHEEL

TYPE 1

SMCS-1157 **i07254911**

NOTE	REF NO	GRAPHIC REF	PART NUMBER	QTY	PART NAME 1 2 3 4 5 6 (PRODUCT LEVEL)	SEE PAGE
	1	1	**154-1399**	2	WASHER	
	2	1	**138-7146**	8	BOLT	
	3	1	**138-7142**	2	BOLT	
	4	1	**358-4256**	4	PLUG	
	5	1	**138-7149**	1	HOUSING-FLYWHEEL	
F			**154-2403**	2	WASHER	
F			**155-8085**	2	NUT (M10X1.25-THD)	

F - NOT SHOWN

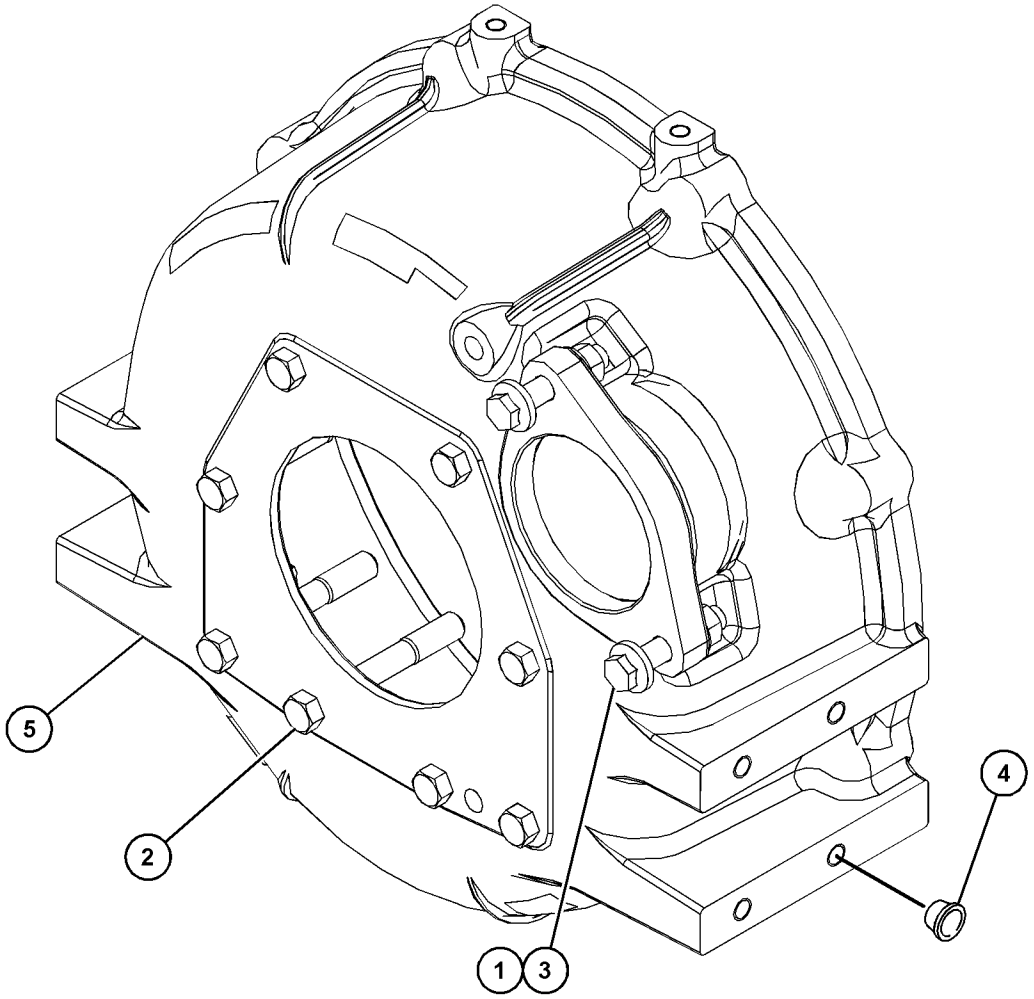

GRAPHIC #1 <END> g06009631

318-8879 HOUSING GP-FLYWHEEL

PART OF 516-4466, 516-9462 ENGINE AR-PRIMARY

TYPE 2

SMCS-1157 **i06660350**

NOTE	REF NO	GRAPHIC REF	PART NUMBER	QTY	PART NAME 1 2 3 4 5 6 (PRODUCT LEVEL)	SEE PAGE
	1	1	**138-7146**	8	BOLT	
	2	1	**476-5583**	1	HOUSING-FLYWHEEL	
	3	1	**154-2395**	4	PLUG	
CM	4	1	**6I-0594**	2	NUT (M10X1.5-THD)	
CM	5	1	**140-8783**	2	BOLT (M10X1.5X45-MM)	

C - CHANGE FROM PREVIOUS TYPE
M - METRIC PART

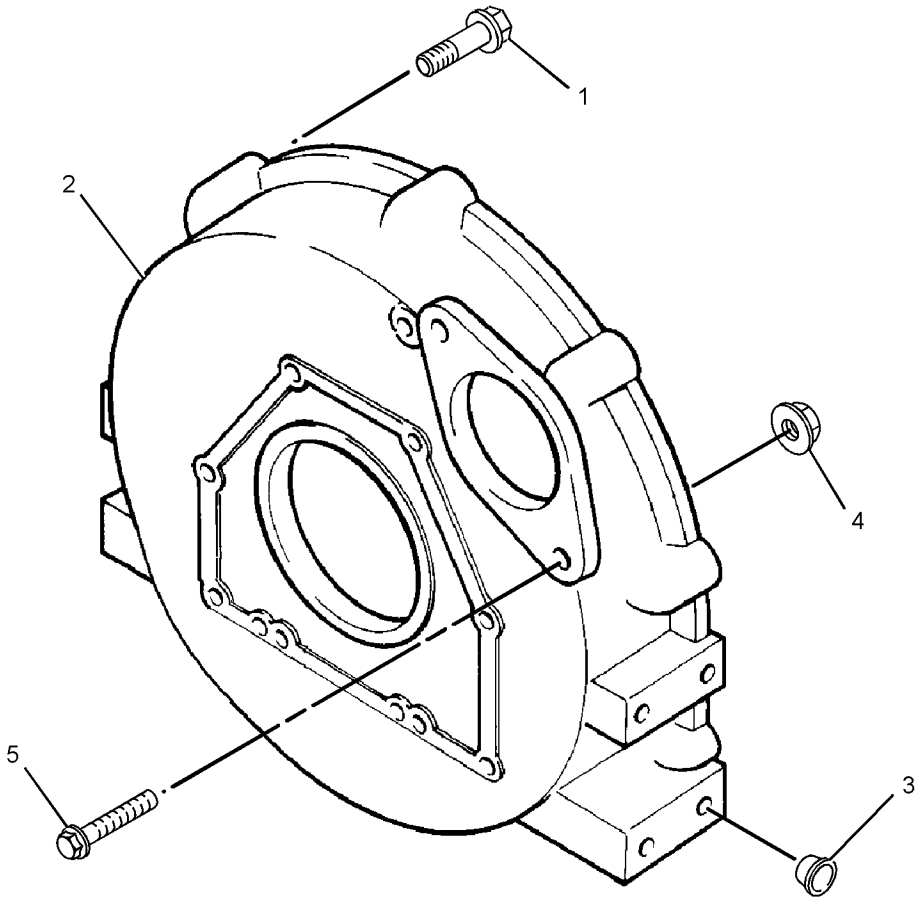

GRAPHIC #1 <END> g01953447

342-7619 HOUSING GP-FLYWHEEL

PART OF 435-1644 CYLINDER BLOCK GP, 435-1632, 435-1643 ENGINE AR

SMCS-1157 **i06740066**

NOTE	REF NO	GRAPHIC REF	PART NUMBER	QTY	PART NAME 1 2 3 4 5 6 (PRODUCT LEVEL)	SEE PAGE
M	1	1	**114-4363**	2	BOLT (M8X1.25X12-MM)	
	2	1	**153-6867**	1	PLATE	
M	3	1	**6I-4200**	8	BOLT (M10X1.5X16-MM)	

M - METRIC PART

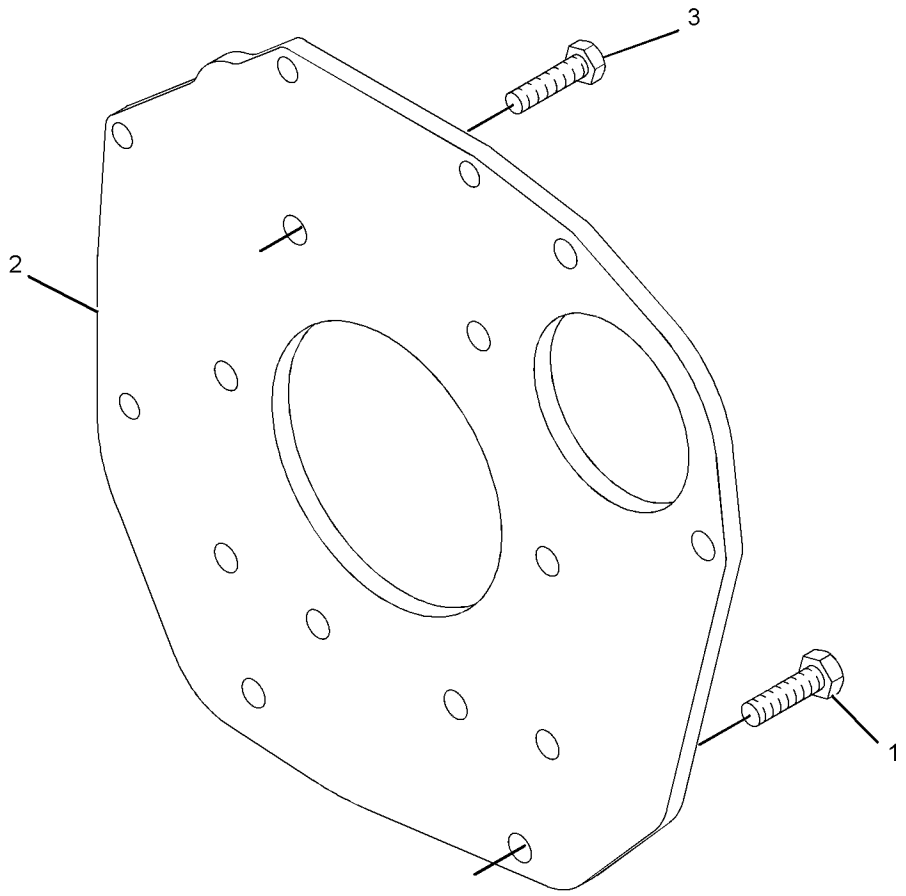

GRAPHIC #1 <END> g01975833

313-1967 HOUSING GP-FRONT

PART OF 435-1643 ENGINE AR, 541-8320 ENGINE AR-PRIMARY

SMCS-1151, 1162, 1206 **i05948539**

NOTE	REF NO	GRAPHIC REF	PART NUMBER	QTY	PART NAME 1 2 3 4 5 6 (PRODUCT LEVEL)	SEE PAGE
M	1	1	**153-5960**	1	NUT (M6X1-THD)	
M	2	1	**153-5962**	5	BOLT (M6X1X60-MM)	
	3	1	**153-7978**	1	SEAL	
	4	1	**5D-1319**	1	PIN-SPRING	
M	5	1	**165-2140**	5	BOLT (M6X1X40-MM)	
	6	1	**454-7980**	1	GASKET	
	7	1	**359-5135**	1	HOUSING-FRONT	

M - METRIC PART

313-1967 **HOUSING GP-FRONT (**contd.**)** **i05948539**

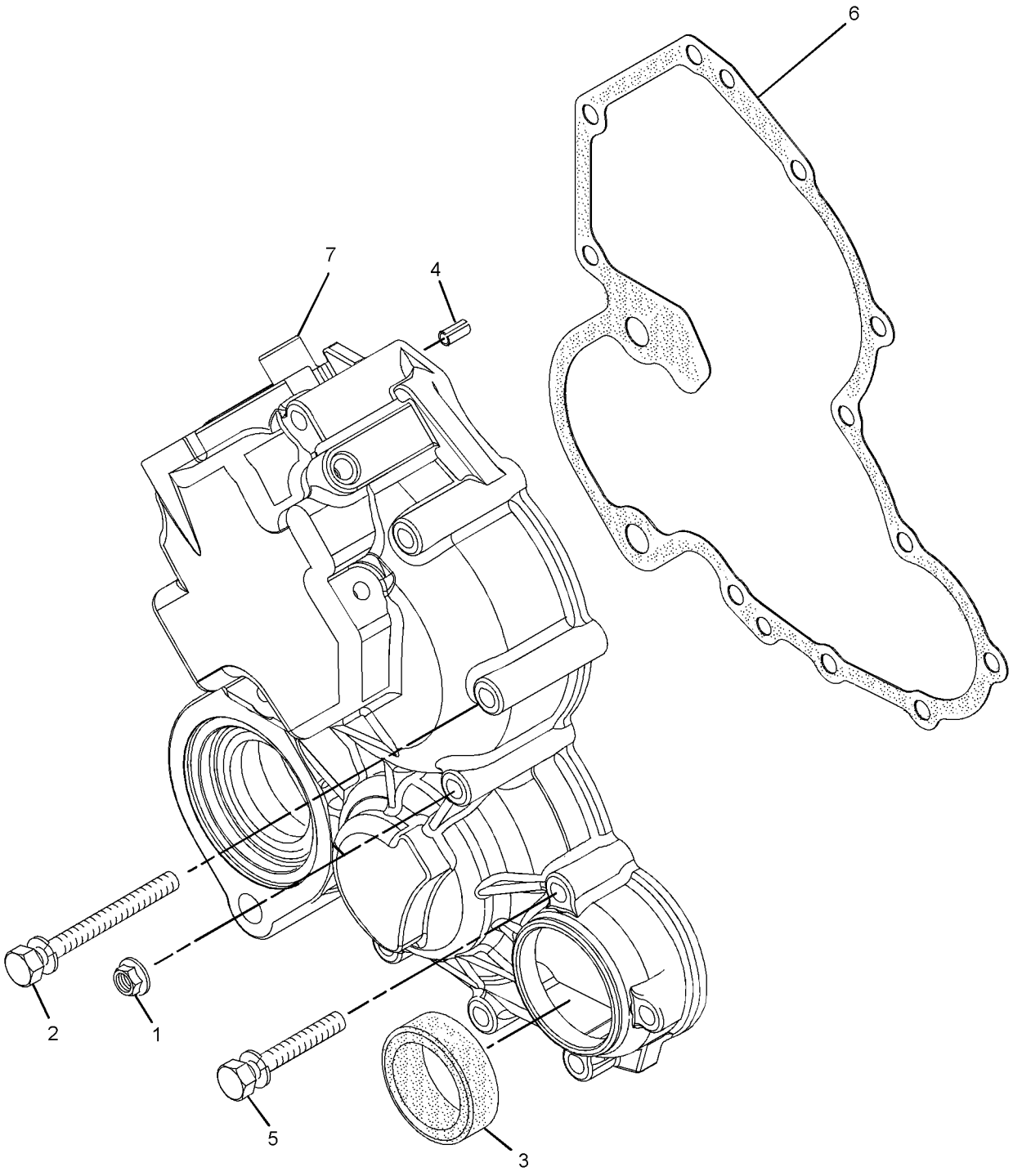

GRAPHIC #1 <END> g01652173

321-3140 HOUSING GP-FRONT

PART OF 435-1632 ENGINE AR, 516-9462 ENGINE AR-PRIMARY

SMCS-1151, 1162, 1206 **i05948551**

NOTE	REF NO	GRAPHIC REF	PART NUMBER	QTY	PART NAME 1 2 3 4 5 6 (PRODUCT LEVEL)	SEE PAGE
M	1	1	**153-5960**	1	NUT (M6X1-THD)	
M	2	1	**153-5962**	5	BOLT (M6X1X60-MM)	
	3	1	**359-5135**	1	HOUSING-FRONT	
	4	1	**153-7978**	1	SEAL	
	5	1	**5D-1319**	1	PIN-SPRING	
M	6	1	**165-2140**	5	BOLT (M6X1X40-MM)	
	7	1	**454-7980**	1	GASKET	

M - METRIC PART

321-3140 **HOUSING GP-FRONT (**contd.**)** **i05948551**

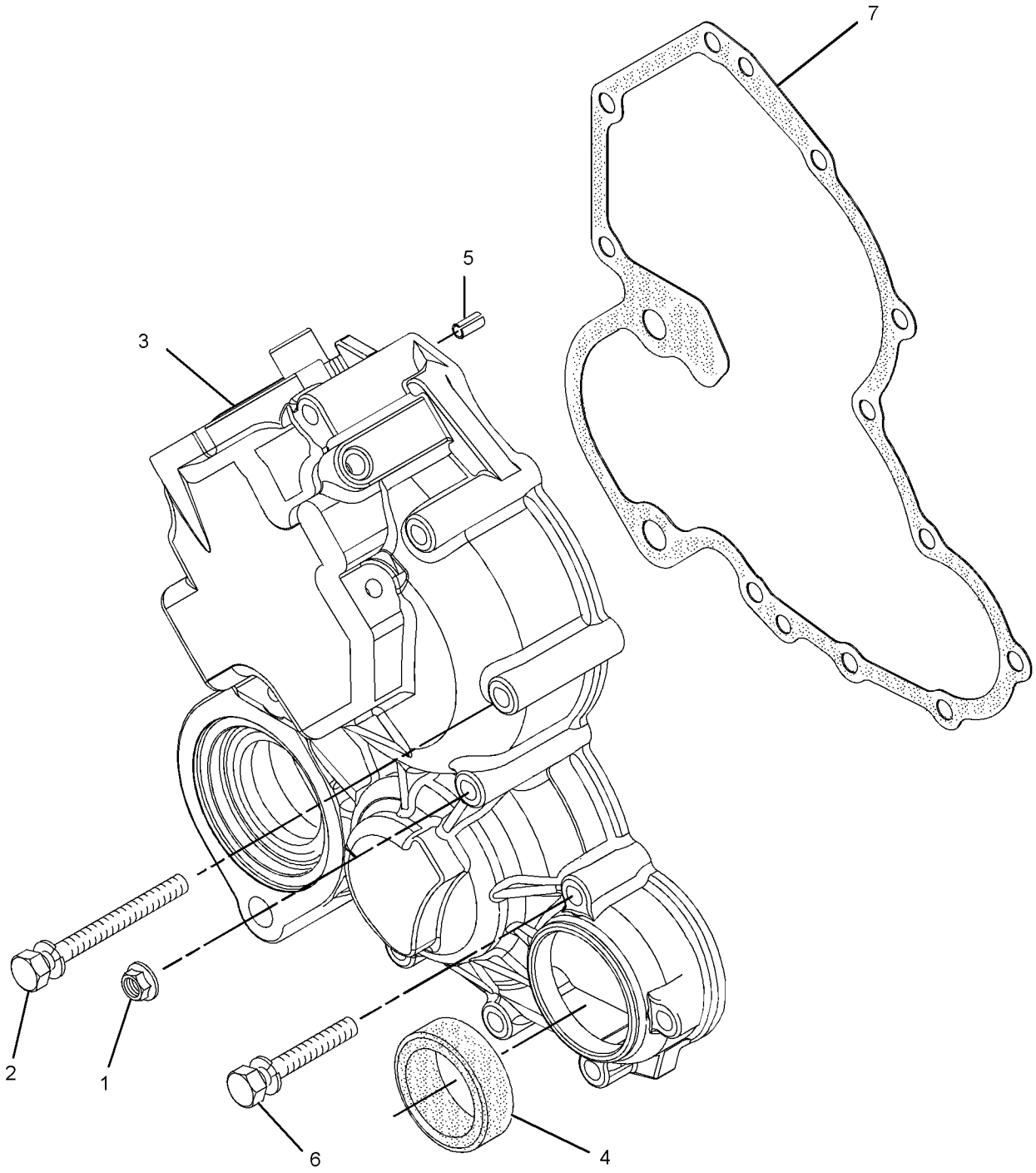

GRAPHIC #1 <END> g03734956

323-2407 HOUSING GP-FRONT

PART OF 435-1644 CYLINDER BLOCK GP

SMCS-1151, 1162, 1206 **i05948573**

NOTE	REF NO	GRAPHIC REF	PART NUMBER	QTY	PART NAME 1 2 3 4 5 6 (PRODUCT LEVEL)	SEE PAGE
M	1	1	**153-5960**	1	NUT (M6X1-THD)	
M	2	1	**153-5962**	5	BOLT (M6X1X60-MM)	
	3	1	**359-5135**	1	HOUSING-FRONT	
	4	1	**153-7978**	1	SEAL	
	5	1	**5D-1319**	1	PIN-SPRING	
M	6	1	**165-2140**	5	BOLT (M6X1X40-MM)	
	7	1	**454-7980**	1	GASKET	

M - METRIC PART

323-2407 **HOUSING GP-FRONT (**contd.**)** **i05948573**

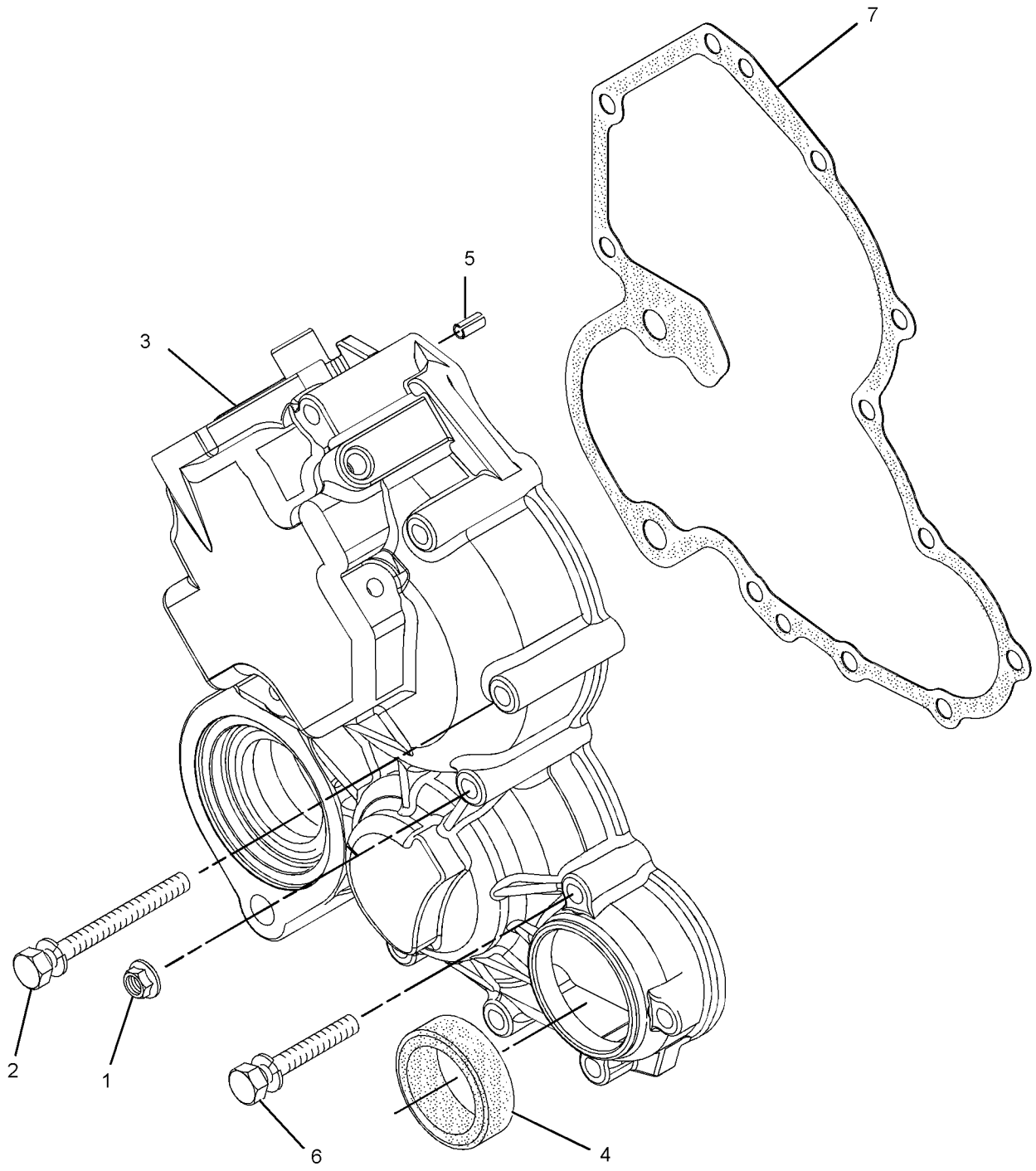

GRAPHIC #1 <END> g03735025

457-8041 HOUSING GP-FRONT

PART OF 516-4466 ENGINE AR-PRIMARY

SMCS-1151, 1162, 1206 **i07326865**

NOTE	REF NO	GRAPHIC REF	PART NUMBER	QTY	PART NAME 1 2 3 4 5 6 (PRODUCT LEVEL)	SEE PAGE
M	1	1	**153-5960**	1	NUT (M6X1-THD)	
M	2	1	**153-5962**	4	BOLT (M6X1X60-MM)	
	3	1	**153-7978**	1	SEAL	
	4	1	**5D-1319**	1	PIN-SPRING	
M	5	1	**165-2140**	7	BOLT (M6X1X40-MM)	
	6	1	**359-5135**	1	HOUSING-FRONT	
	7	1	**454-7980**	1	GASKET	

M - METRIC PART

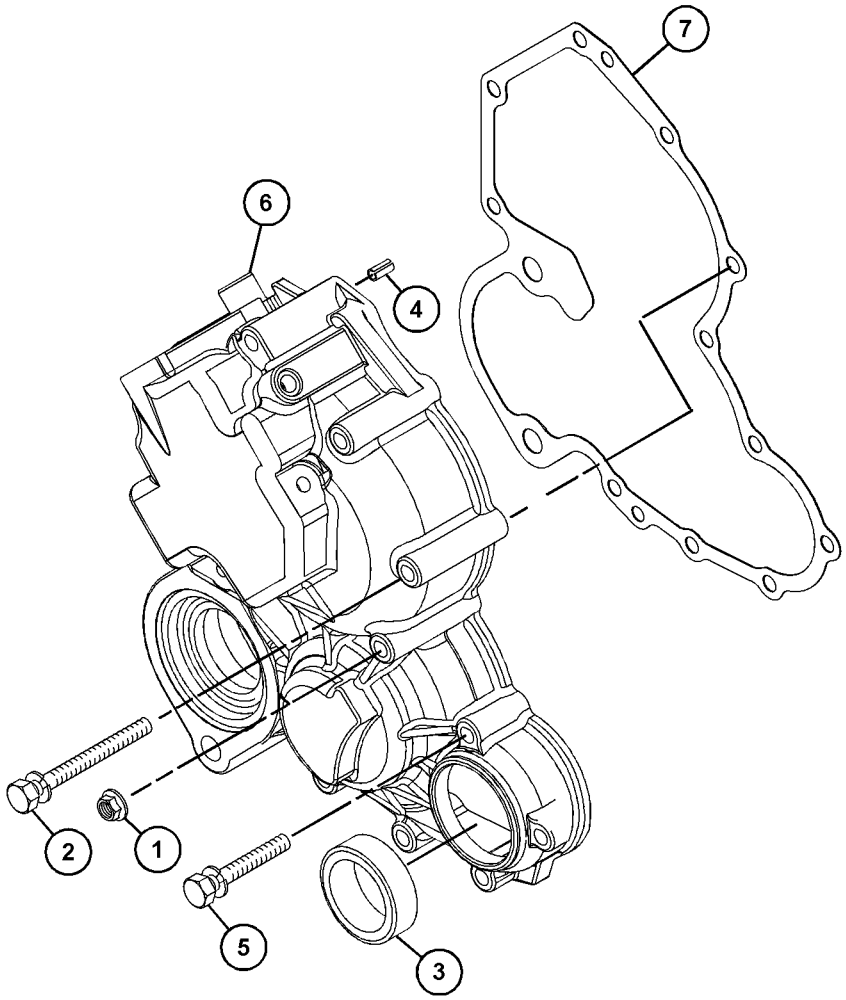

GRAPHIC #1 <END> g06171645

313-2022 LIFTING GP-ENGINE

PART OF 516-4466, 516-9462, 541-8320 ENGINE AR-PRIMARY

SMCS-1122 **i03384423**

NOTE	REF NO	GRAPHIC REF	PART NUMBER	QTY	PART NAME 1 2 3 4 5 6 (PRODUCT LEVEL)	SEE PAGE
	1	1	**191-0573**	1	PLATE (FRONT)	
	2	1	**191-0574**	1	PLATE (REAR)	
M	3	1	**153-6375**	2	BOLT (M8X1.25X16-MM)	

M - METRIC PART

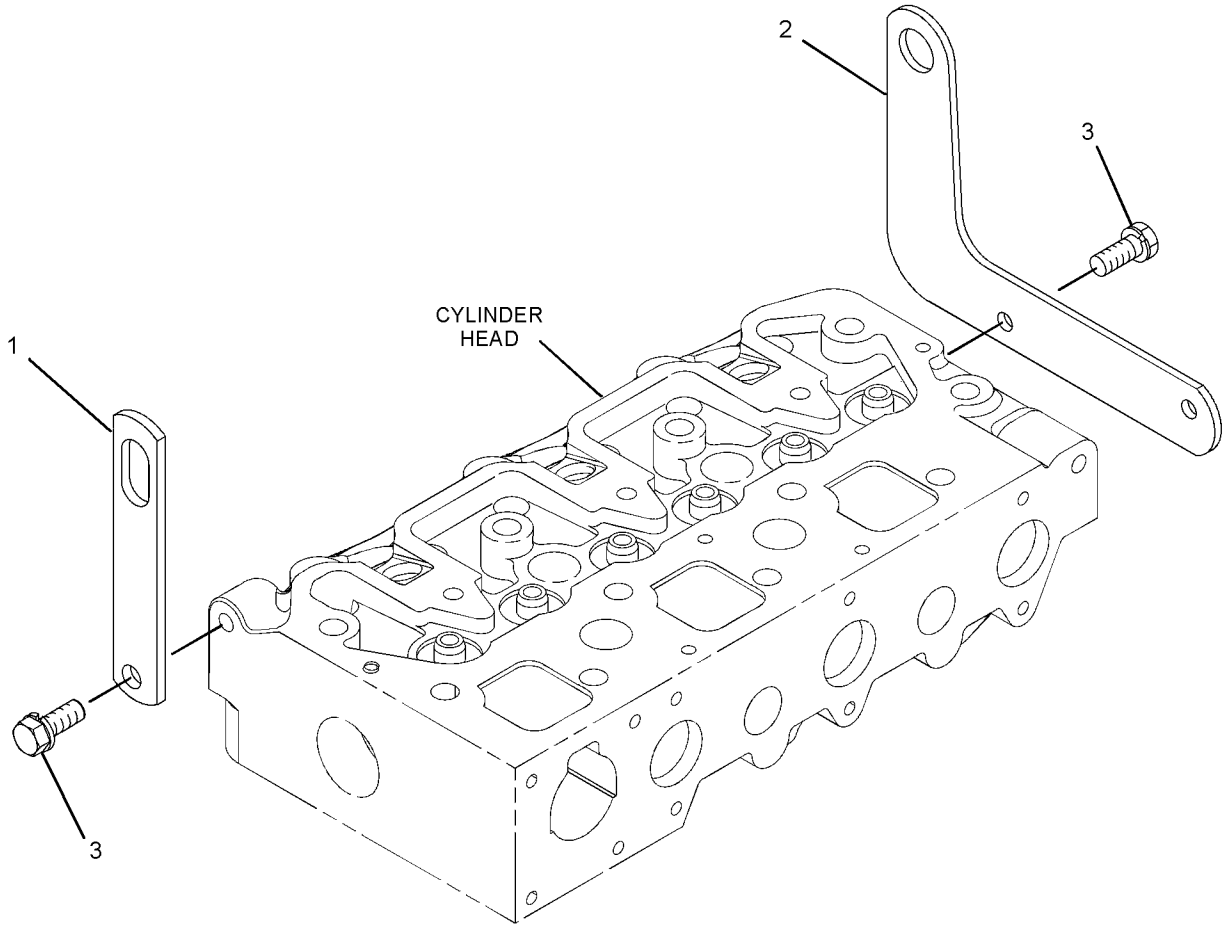

GRAPHIC #1 <END> g01389539

392-8729 LIFTING GP-ENGINE

PART OF 435-1644 CYLINDER BLOCK GP, 435-1632, 435-1643 ENGINE AR

SMCS-1122 **i06693621**

NOTE	REF NO	GRAPHIC REF	PART NUMBER	QTY	PART NAME 1 2 3 4 5 6 (PRODUCT LEVEL)	SEE PAGE
M	1	1	**124-3815**	2	BOLT (M8X1.25X16-MM)	
	2	1	**370-6544**	2	PLATE-LIFTING	

M - METRIC PART

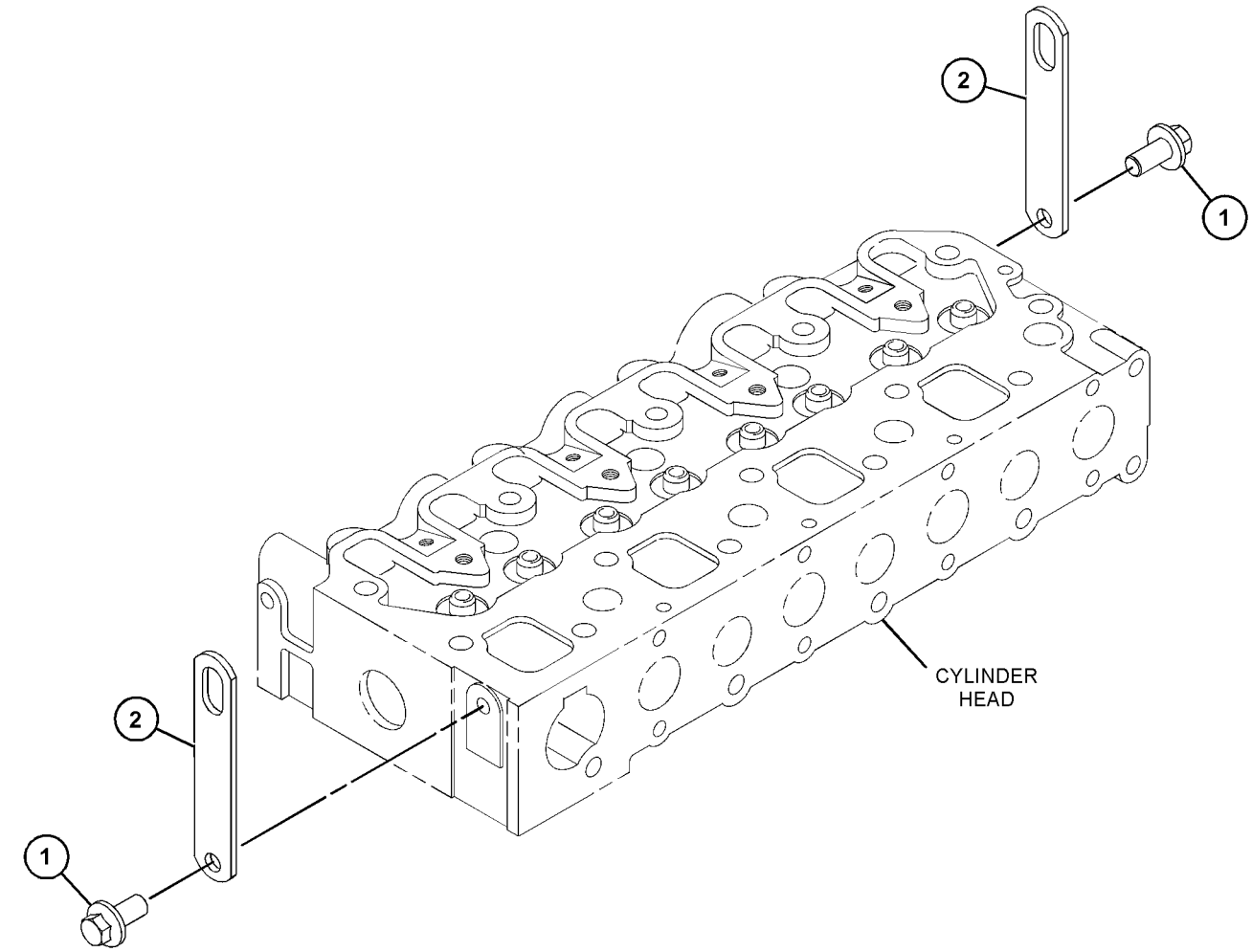

GRAPHIC #1 <END> g06145582

313-1973 PAN GP-OIL

PART OF 435-1644 CYLINDER BLOCK GP, 435-1632, 435-1643 ENGINE AR, 541-8320 ENGINE AR-PRIMARY

SMCS-1302 **i07030524**

NOTE	REF NO	GRAPHIC REF	PART NUMBER	QTY	PART NAME 1 2 3 4 5 6 (PRODUCT LEVEL)	SEE PAGE
M	1	1,2	**100-4841**	22	BOLT (M6X1X10-MM)	
	2	2	**153-6835**	1	SEAL-O-RING	
M	3	2	**153-6838**	2	BOLT (M6X1X12-MM)	
	4	1	**153-6841**	4	SEAL-O-RING	
	5	2	**229-5150**	1	TUBE AS	
	6	1	**238-1294**	1	PAN-OIL	
	7	2	**238-1295**	1	GAUGE-OIL LEVEL (DIPSTICK)	
	8	2	**369-8010**	1	PLUG	
	9	2	**453-6804**	1	GASKET	
	10	1	**454-7986**	1	PIPE-OIL	
	11	1	**488-8416**	1	STRAINER	

M - METRIC PART

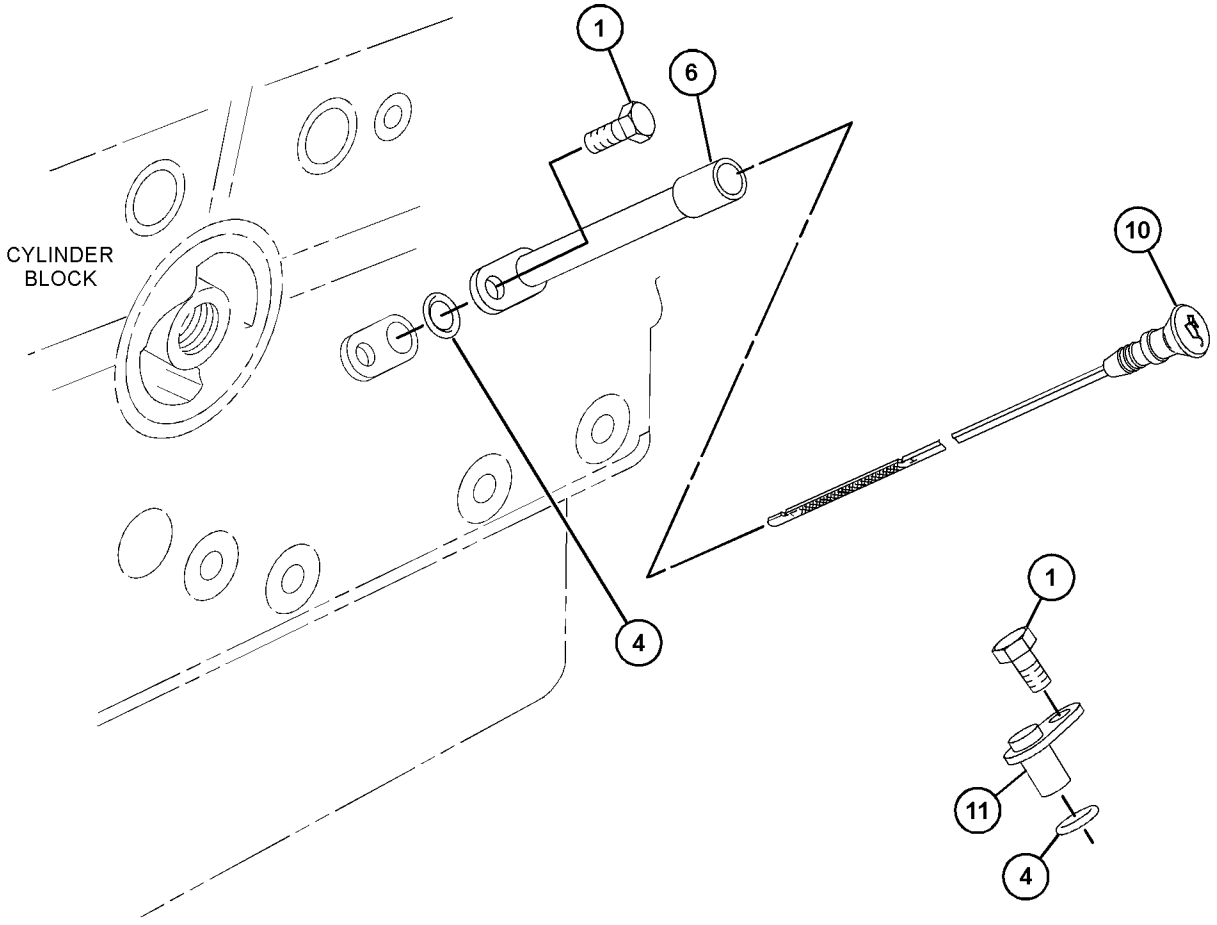

GRAPHIC #1 g06199086

313-1973 **PAN GP-OIL (**contd.**)** **i07030524**

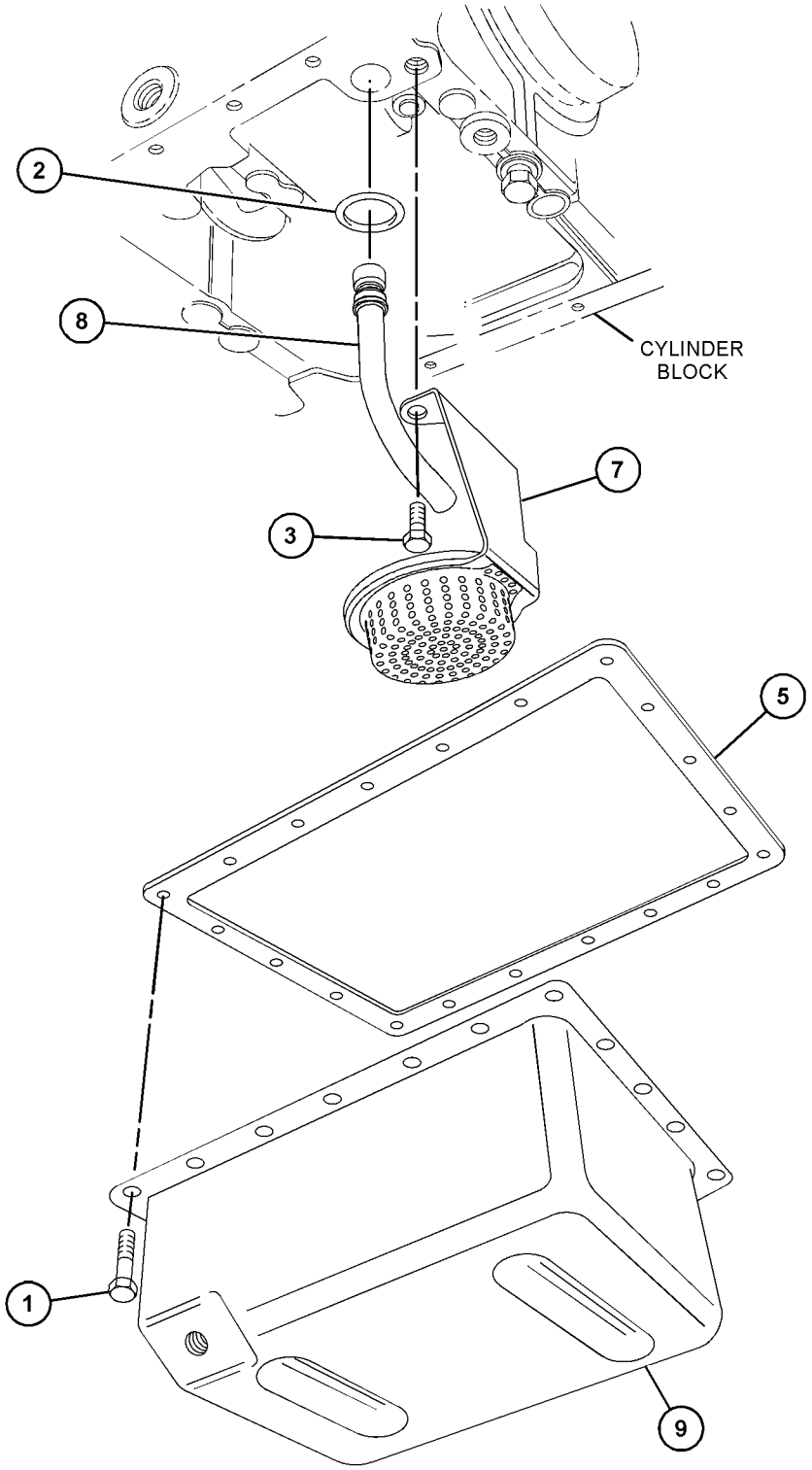

GRAPHIC #2 <END> g06199087

523-6265 PAN GP-OIL

PART OF 516-4466, 516-9462 ENGINE AR-PRIMARY

SMCS-1302 **i07323524**

NOTE	REF NO	GRAPHIC REF	PART NUMBER	QTY	PART NAME 1 2 3 4 5 6 (PRODUCT LEVEL)	SEE PAGE
M	1	1	**100-4841**	22	BOLT (M6X1X10-MM)	
	2	1	**153-6835**	1	SEAL-O-RING	
M	3	1	**153-6838**	2	BOLT (M6X1X12-MM)	
	4	1	**153-6841**	4	SEAL-O-RING	
	5	1	**238-1294**	1	PAN-OIL	
	6	1	**369-8010**	1	PLUG	
	7	1	**453-6804**	1	GASKET	
	8	1	**454-7986**	1	PIPE-OIL	
	9	1	**488-8416**	1	STRAINER	
	10	1	**509-5977**	1	GAUGE GP-OIL LEVEL (DIPSTICK)	
	10A	1	**229-5150**	1	TUBE AS	
	10B	1	**507-9476**	1	GAUGE AS	

M - METRIC PART

523-6265 **PAN GP-OIL (**contd.**)** **i07323524**

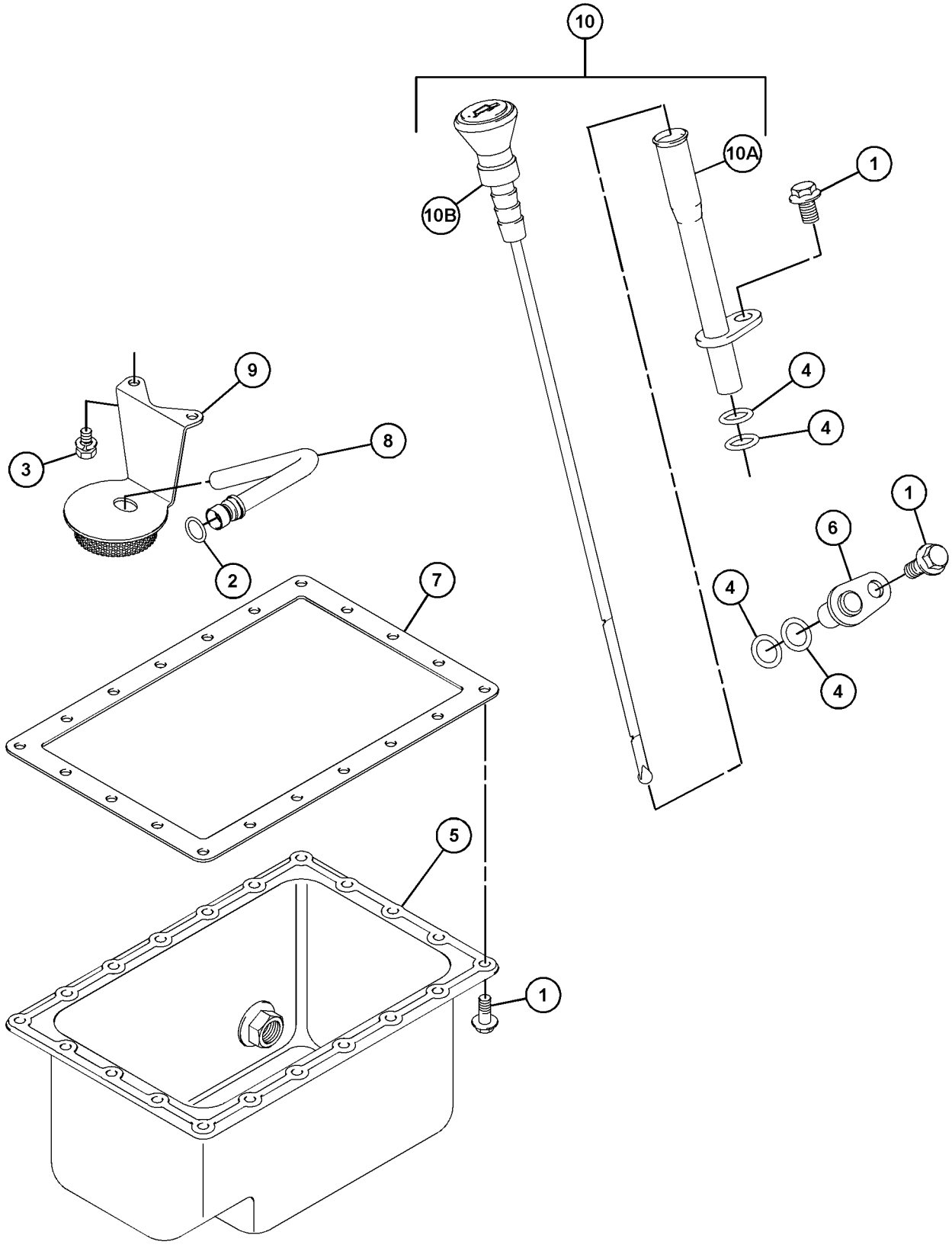

GRAPHIC #1 <END> g06218230

313-1963 PISTON & ROD GP

PART OF 435-1644 CYLINDER BLOCK GP, 435-1632, 435-1643 ENGINE AR, 516-4466, 516-9462, 541-8320 ENGINE AR-PRIMARY

SMCS-1225 **i05787394**

NOTE	REF NO	GRAPHIC REF	PART NUMBER	QTY	PART NAME 1 2 3 4 5 6 (PRODUCT LEVEL)	SEE PAGE
	1	1	**153-5540**	3	PIN	
	2	1	**153-5541**	6	CLIP	
	3	1	**231-3870**	3	ROD AS-CONNECTING	
					(EACH INCLUDES)	
	3A	1	**153-5536**	1	BUSHING	
	3B	1	**153-5537**	2	BOLT	
	3C	1	**153-5538**	2	NUT	
	4	1	**444-7907**	3	KIT-PISTON RING	
					(EACH INCLUDES)	
	4A	1	**290-8458**	1	KIT-PISTON RING	

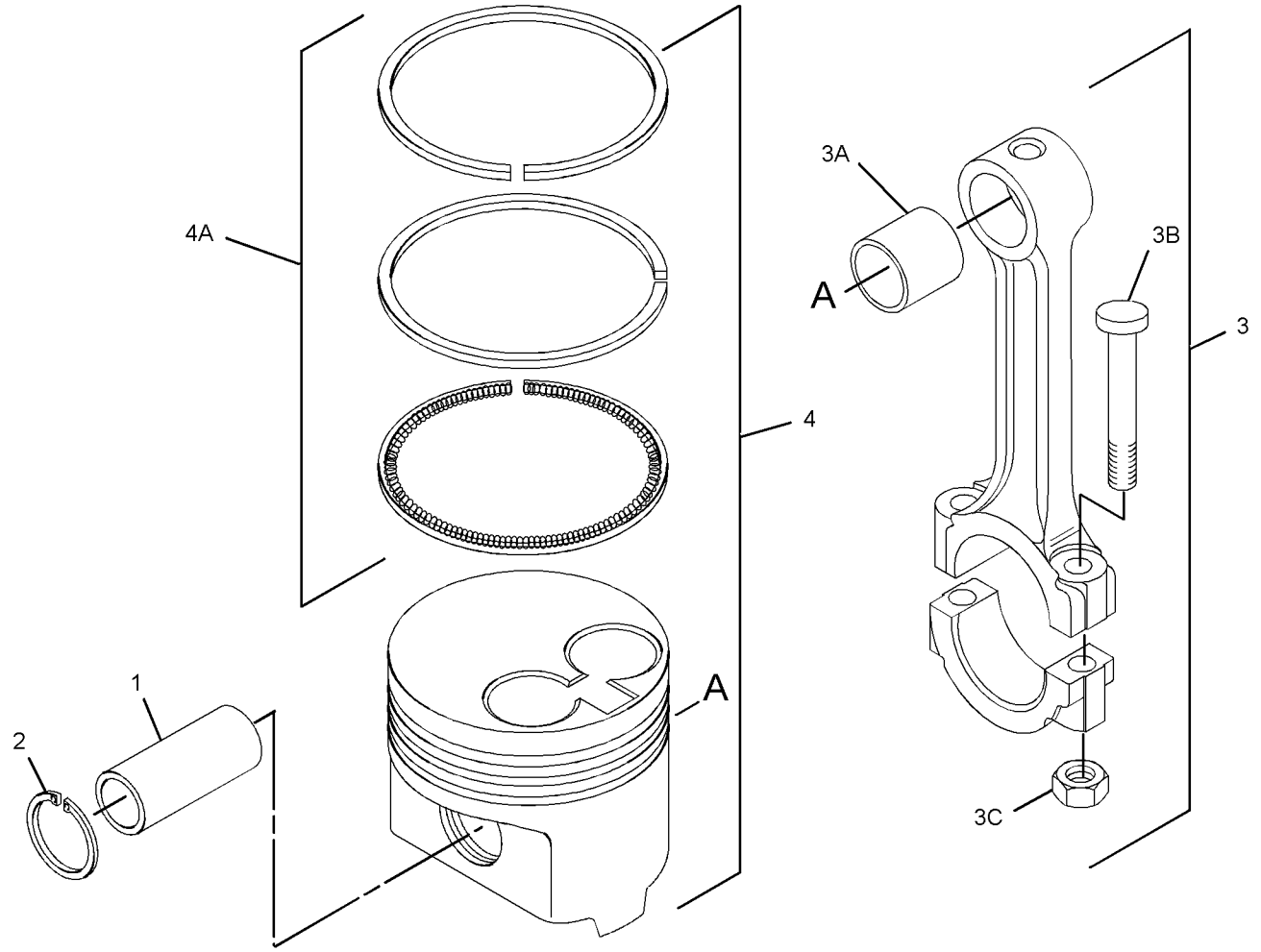

GRAPHIC #1 <END> g03675117

309-6720 PLUG GP-OIL PAN

PART OF 435-1644 CYLINDER BLOCK GP, 435-1632, 435-1643 ENGINE AR, 516-4466, 516-9462, 541-8320 ENGINE AR-PRIMARY

SMCS-1302 **i05401225**

NOTE	REF NO	GRAPHIC REF	PART NUMBER	QTY	PART NAME 1 2 3 4 5 6 (PRODUCT LEVEL)	SEE PAGE
	1	1	**153-6412**	2	WASHER	
	2	1	**423-6224**	2	PLUG (DRAIN) (ENGINE OIL PAN)	

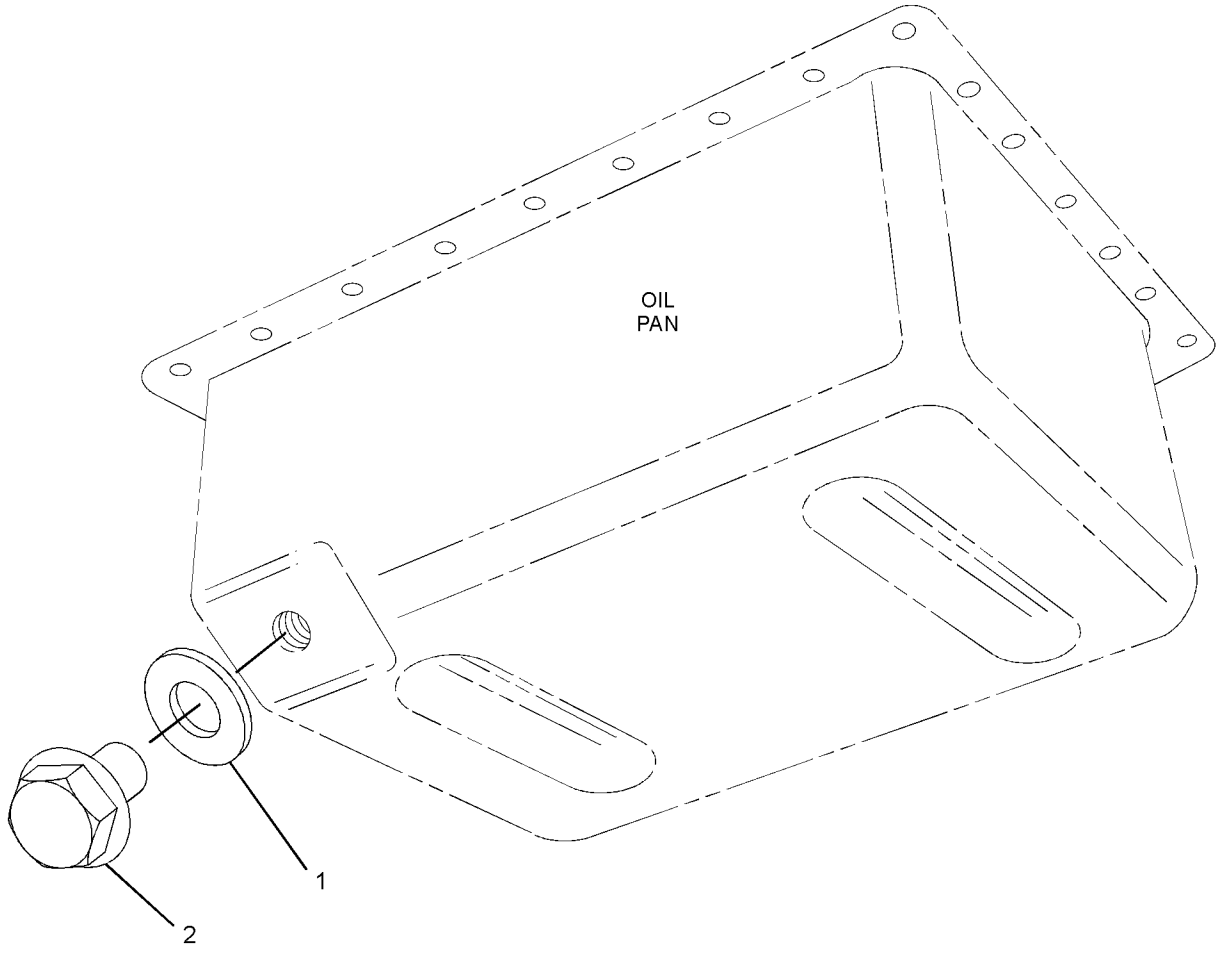

GRAPHIC #1 <END> g03428832

313-1976 PULLEY GP-CRANKSHAFT

PART OF 435-1644 CYLINDER BLOCK GP, 435-1632, 435-1643 ENGINE AR, 516-4466, 516-9462, 541-8320 ENGINE AR-PRIMARY

SMCS-1205 **i05416780**

NOTE	REF NO	GRAPHIC REF	PART NUMBER	QTY	PART NAME 1 2 3 4 5 6 (PRODUCT LEVEL)	SEE PAGE
	1	1	**153-6492**	1	KEY-WOODRUFF	
	2	1	**153-6496**	1	NUT	
	3	1	**177-3308**	1	PULLEY-CRANKSHAFT	

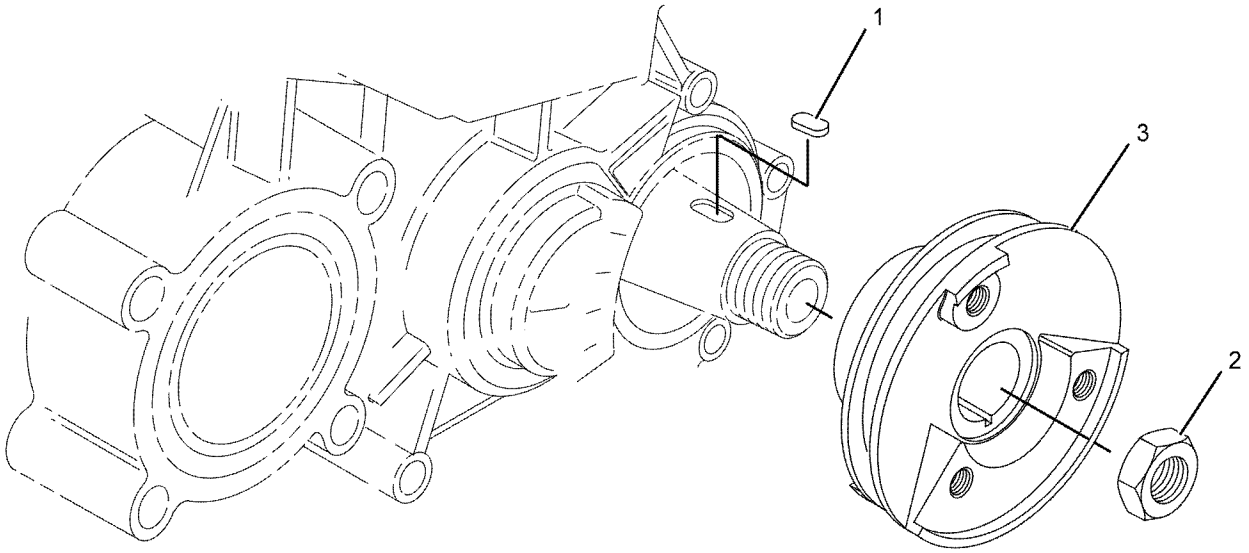

GRAPHIC #1 <END> g01142574

313-1972 PULLEY GP-WATER PUMP

PART OF 516-4466, 516-9462, 541-8320 ENGINE AR-PRIMARY

SMCS-1384 **i03384434**

NOTE	REF NO	GRAPHIC REF	PART NUMBER	QTY	PART NAME 1 2 3 4 5 6 (PRODUCT LEVEL)	SEE PAGE
	1	1	**153-5963**	1	PULLEY-WATER PUMP	

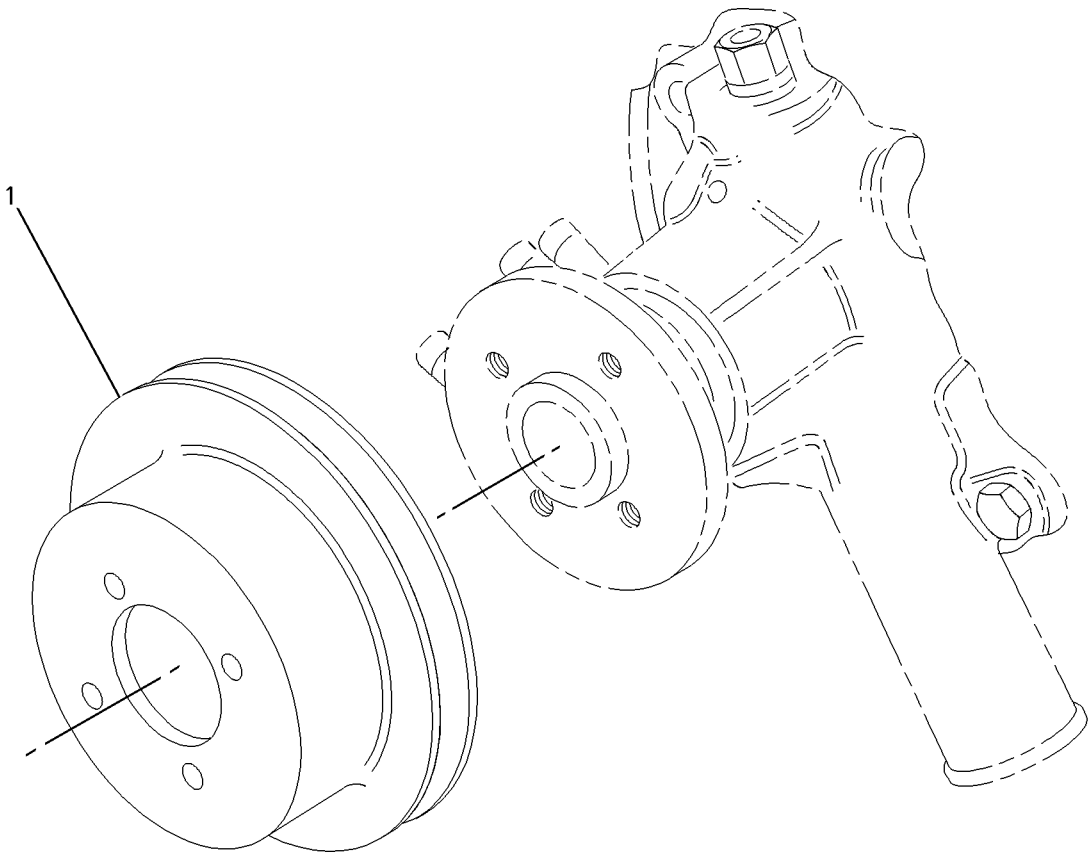

GRAPHIC #1 <END> g00852560

386-1972 ROCKER ARM GP

PART OF 313-1965 VALVE MECHANISM GP

SMCS-1123 **i05610032**

NOTE	REF NO	GRAPHIC REF	PART NUMBER	QTY	PART NAME 1 2 3 4 5 6 (PRODUCT LEVEL)	SEE PAGE
	1	1	**153-5577**	3	LEVER	
	2	1	**153-5579**	3	LEVER	
	3	1	**153-5586**	2	SPRING	
	4	1	**153-5587**	6	SCREW-ADJUSTMENT	
M	5	1	**153-5590**	6	NUT (M7X1-THD)	
	6	1	**153-5595**	4	WASHER	
	7	1	**156-6948**	1	PLUG	
	8	1	**156-6950**	1	SEAL-O-RING	
	9	1	**231-2183**	1	SHAFT	
	10	1	**291-1799**	1	BOLT	

M - METRIC PART

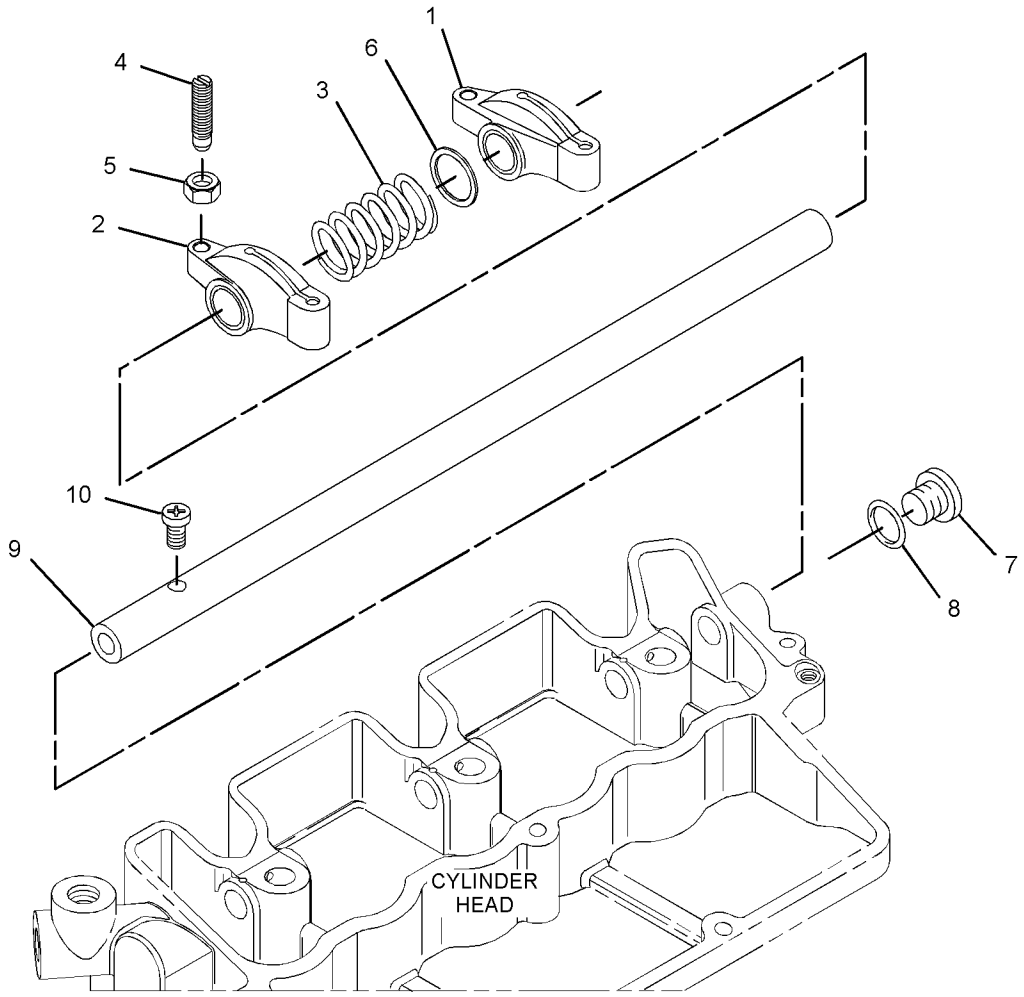

GRAPHIC #1 <END> g03334895

313-1983 V-BELT GP

PART OF 516-4466, 516-9462, 541-8320 ENGINE AR-PRIMARY

SMCS-1357 **i03390268**

NOTE	REF NO	GRAPHIC REF	PART NUMBER	QTY	PART NAME 1 2 3 4 5 6 (PRODUCT LEVEL)	SEE PAGE
	1	1	**183-3942**	1	V-BELT (DRIVE)	

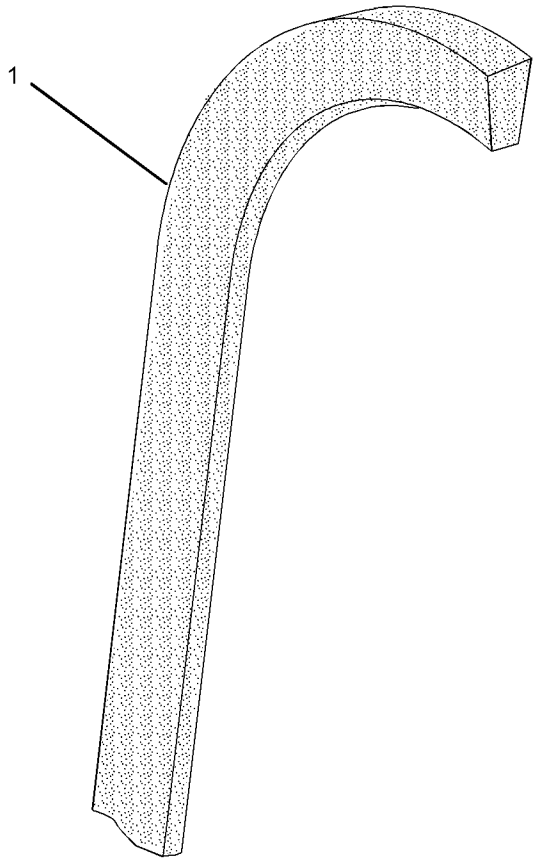

GRAPHIC #1 <END> g01389438

319-7355 V-BELT GP

TYPE 1

SMCS-1357 **i03384494**

NOTE	REF NO	GRAPHIC REF	PART NUMBER	QTY	PART NAME 1 2 3 4 5 6 (PRODUCT LEVEL)	SEE PAGE
	1	1	**183-3942**	1	V-BELT (ALTERNATOR, WATER PUMP)	

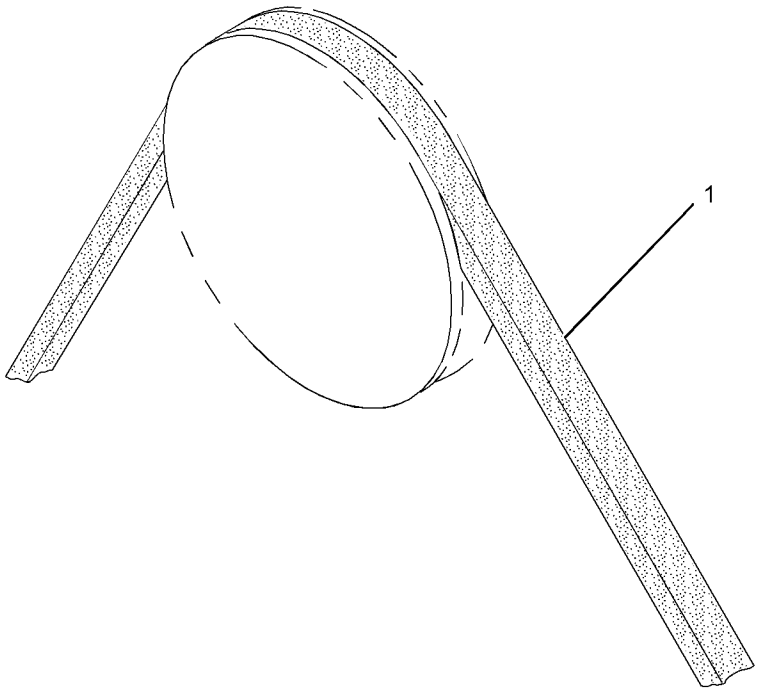

GRAPHIC #1 <END> g01321905

319-7355 V-BELT GP

TYPE 2

SMCS-1357 **i05320089**

NOTE	REF NO	GRAPHIC REF	PART NUMBER	QTY	PART NAME 1 2 3 4 5 6 (PRODUCT LEVEL)	SEE PAGE
C	1	1	**365-5827**	1	V-BELT (ALTERNATOR)	

C - CHANGE FROM PREVIOUS TYPE

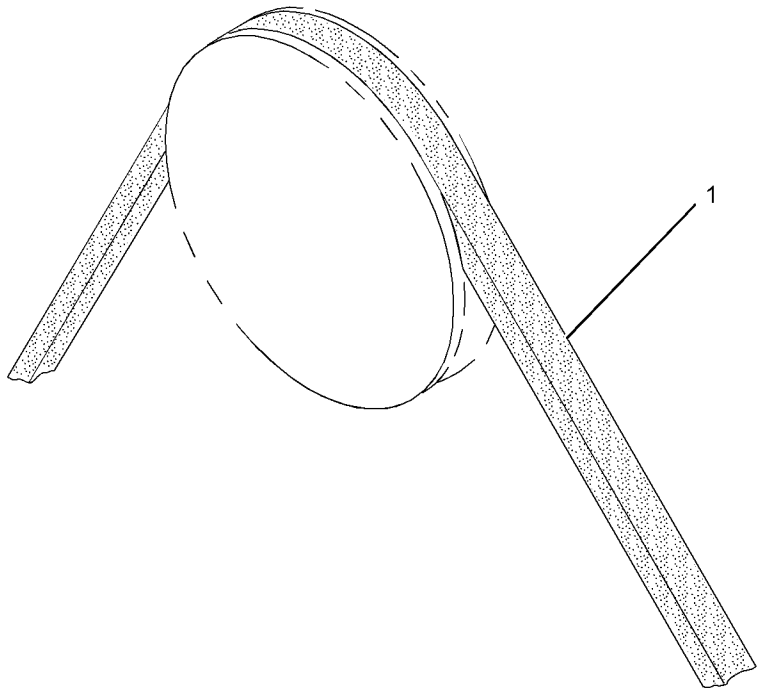

GRAPHIC #1 <END> g01321905

313-1965 VALVE MECHANISM GP

PART OF 435-1644 CYLINDER BLOCK GP, 435-1632, 435-1643 ENGINE AR, 516-4466, 516-9462, 541-8320 ENGINE AR-PRIMARY

SMCS-1102, 1121, 1123, 1209 **i07496441**

NOTE	REF NO	GRAPHIC REF	PART NUMBER	QTY	PART NAME 1 2 3 4 5 6 (PRODUCT LEVEL)	SEE PAGE
	1	1	**153-5591**	3	STUD	
M	2	1	**153-5592**	3	NUT (M8X1.25-THD)	
M	3	1	**153-6861**	2	BOLT (M6X1X25-MM)	
	4	1	**438-9109**	6	TAPPET	
Y	5	1	**386-1972**	1	ROCKER ARM GP	70
	6	1	**454-7979**	1	GASKET	
	7	1	**528-6884**	6	PUSHROD AS	

M - METRIC PART
Y - SEPARATE ILLUSTRATION

313-1965 **VALVE MECHANISM GP (**contd.**)** **i07496441**

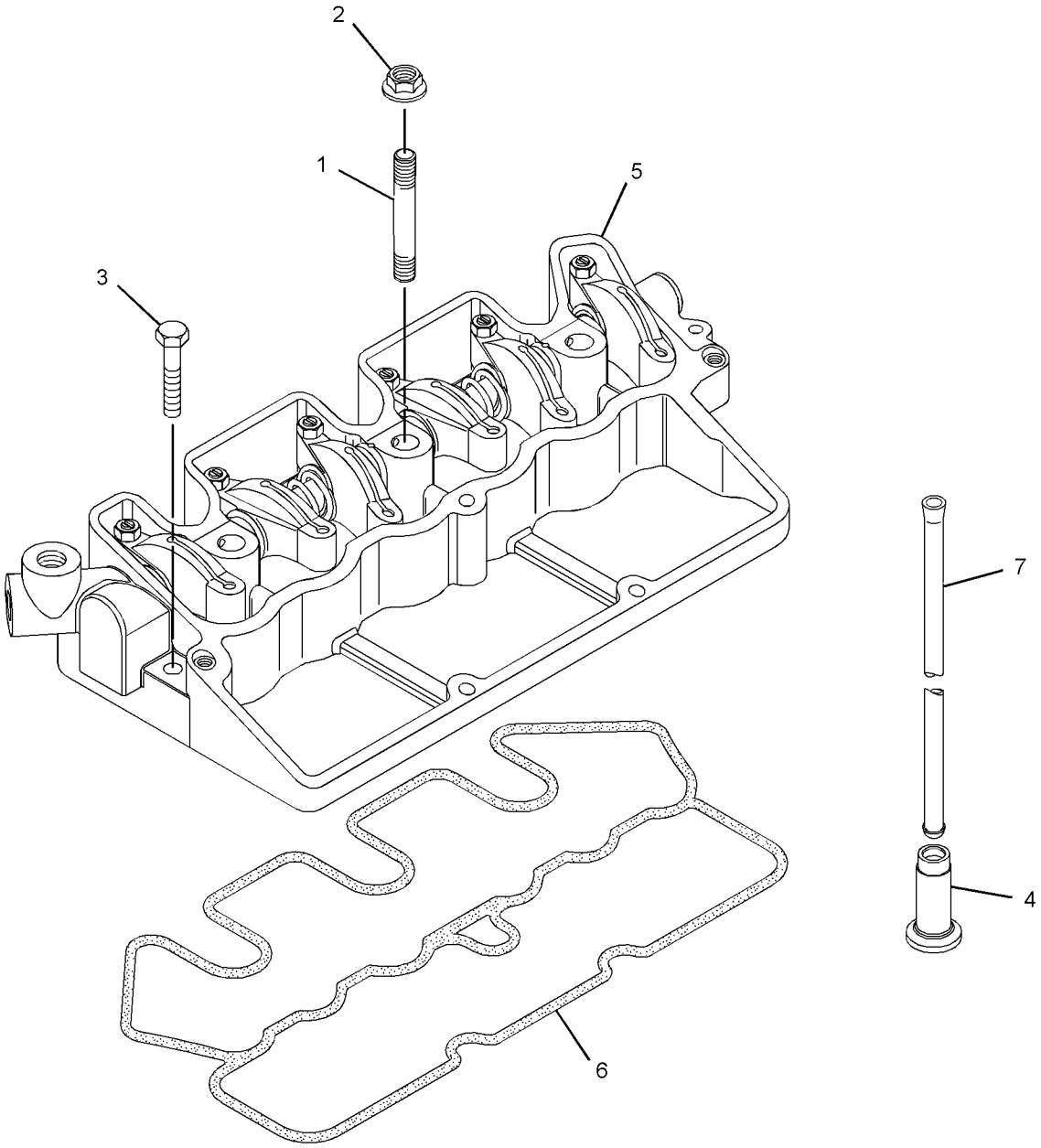

GRAPHIC #1 <END> g03331295

313-1975 FILLER GP-ENGINE OIL

PART OF 435-1644 CYLINDER BLOCK GP, 435-1632, 435-1643 ENGINE AR

SMCS-1316 **i06618078**

NOTE	REF NO	GRAPHIC REF	PART NUMBER	QTY	PART NAME 1 2 3 4 5 6 (PRODUCT LEVEL)	SEE PAGE
	1	1	**095-1604**	1	SEAL-O-RING (ENGINE OIL FILLER)	
	2	1	**217-7358**	1	CAP-OIL FILLER (ENGINE)	
	3	1	**288-6593**	1	SEAL (ENGINE OIL FILLER)	
	4	1	**334-0272**	1	CAP-FILLER (ENGINE)	
M	5	1	**153-6838**	2	BOLT (M6X1X12-MM)	
	6	1	**183-4323**	1	COVER	
	7	1	**481-1650**	1	GASKET	

M - METRIC PART

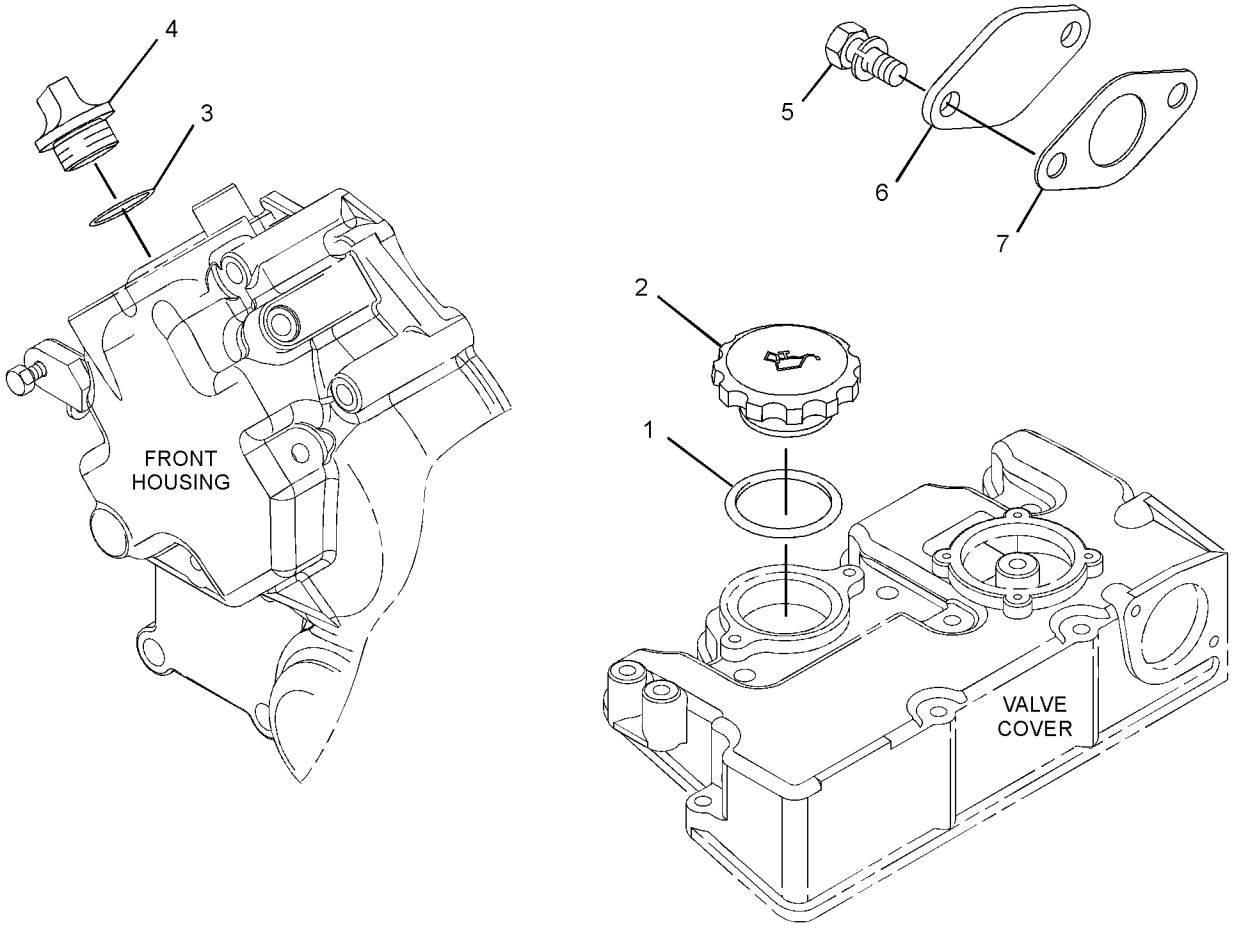

GRAPHIC #1 <END> g03338050

365-0486 FILLER GP-ENGINE OIL

PART OF 516-4466, 516-9462, 541-8320 ENGINE AR-PRIMARY

SMCS-1316 **i04093371**

NOTE	REF NO	GRAPHIC REF	PART NUMBER	QTY	PART NAME 1 2 3 4 5 6 (PRODUCT LEVEL)	SEE PAGE
	1	1	**153-5933**	1	SEAL (ENGINE OIL FILLER)	
	2	1	**217-7358**	1	CAP-OIL FILLER (ENGINE)	
	3	1	**288-6593**	1	SEAL (ENGINE OIL FILLER)	
	4	1	**334-0272**	1	CAP-FILLER (ENGINE)	

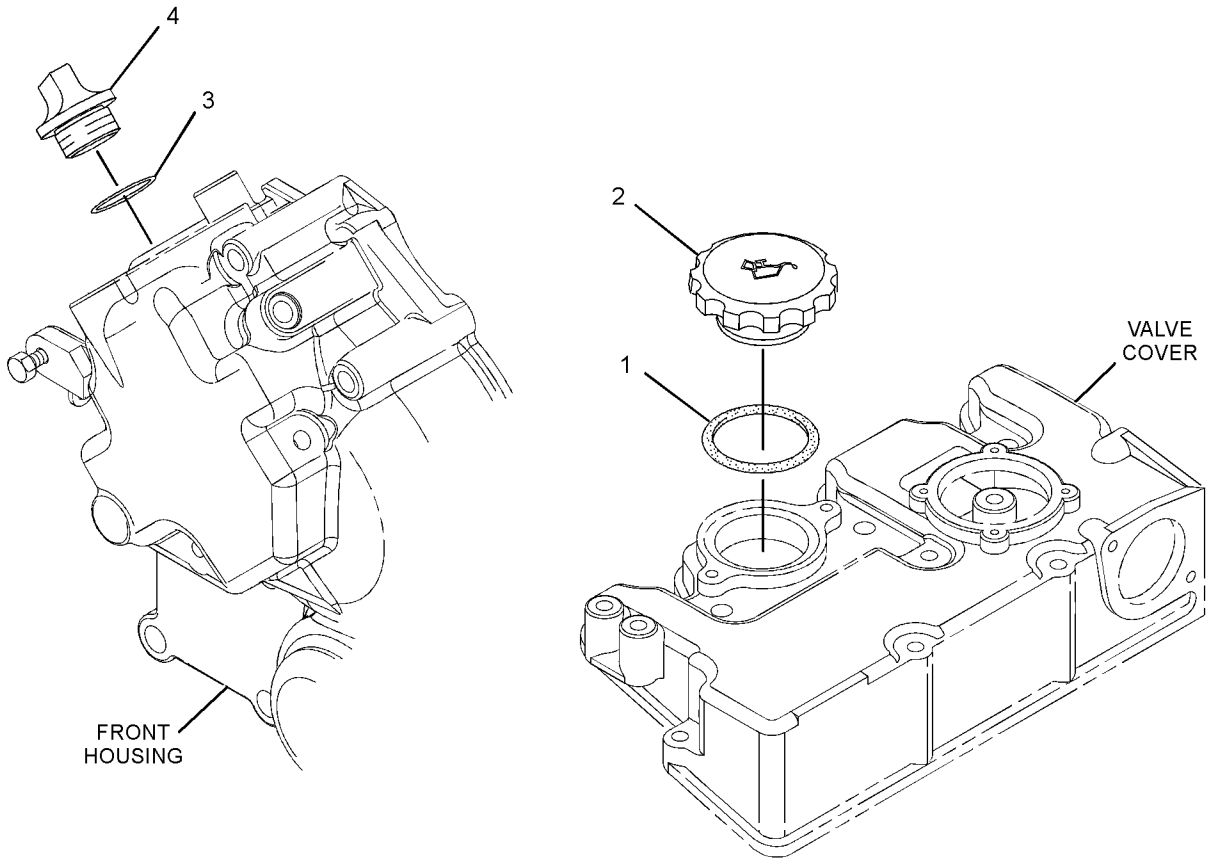

GRAPHIC #1 <END> g01388692

308-2298 FILTER GP-ENGINE OIL

PART OF 435-1644 CYLINDER BLOCK GP, 435-1632, 435-1643 ENGINE AR, 516-4466, 516-9462, 541-8320 ENGINE AR-PRIMARY

SMCS-1306, 1308 **i03384414**

NOTE	REF NO	GRAPHIC REF	PART NUMBER	QTY	PART NAME 1 2 3 4 5 6 (PRODUCT LEVEL)	SEE PAGE
	1	1	**220-1523**	1	FILTER AS-ENGINE OIL	

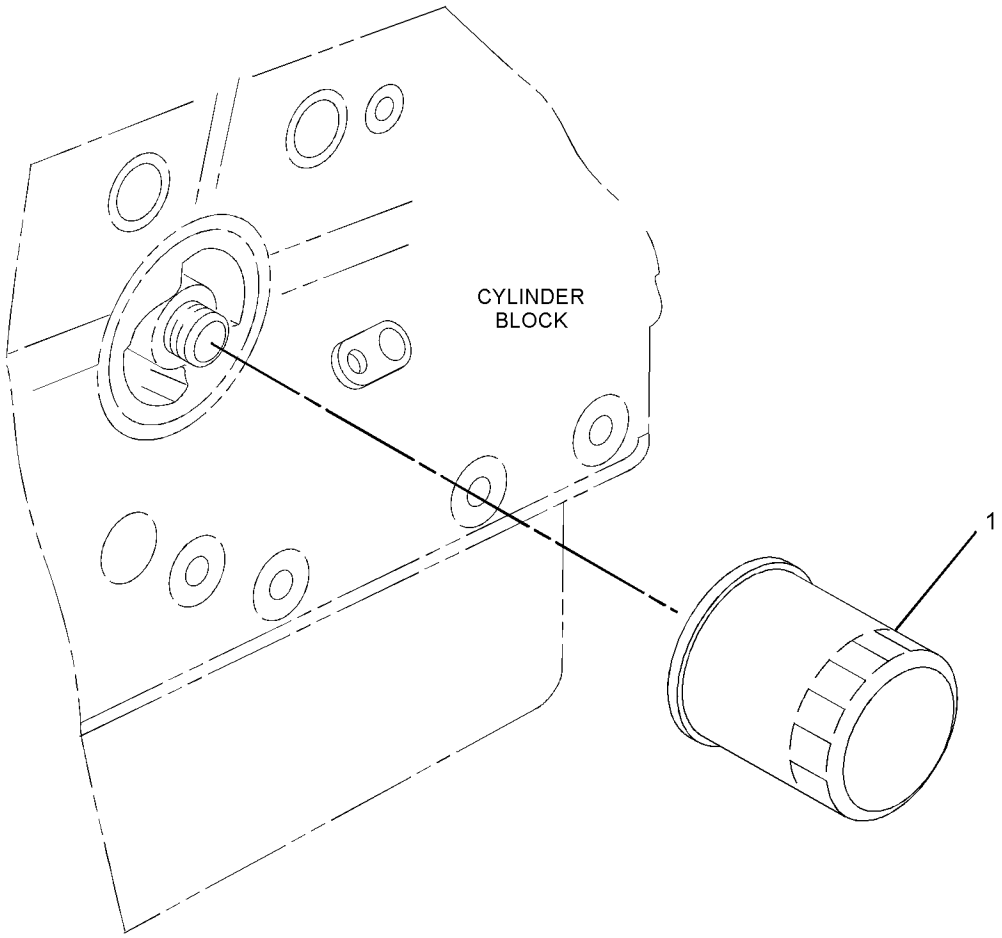

GRAPHIC #1 <END> g01389723

308-4735 MOUNTING GP-ENGINE OIL FILTER

PART OF 435-1644 CYLINDER BLOCK GP, 435-1632, 435-1643 ENGINE AR, 516-4466, 516-9462, 541-8320 ENGINE AR-PRIMARY

SMCS-1306, 1308

i03384424

NOTE	REF NO	GRAPHIC REF	PART NUMBER	QTY	PART NAME 1 2 3 4 5 6 (PRODUCT LEVEL)	SEE PAGE
	1	1	**153-6879**	1	STUD-HOLLOW	

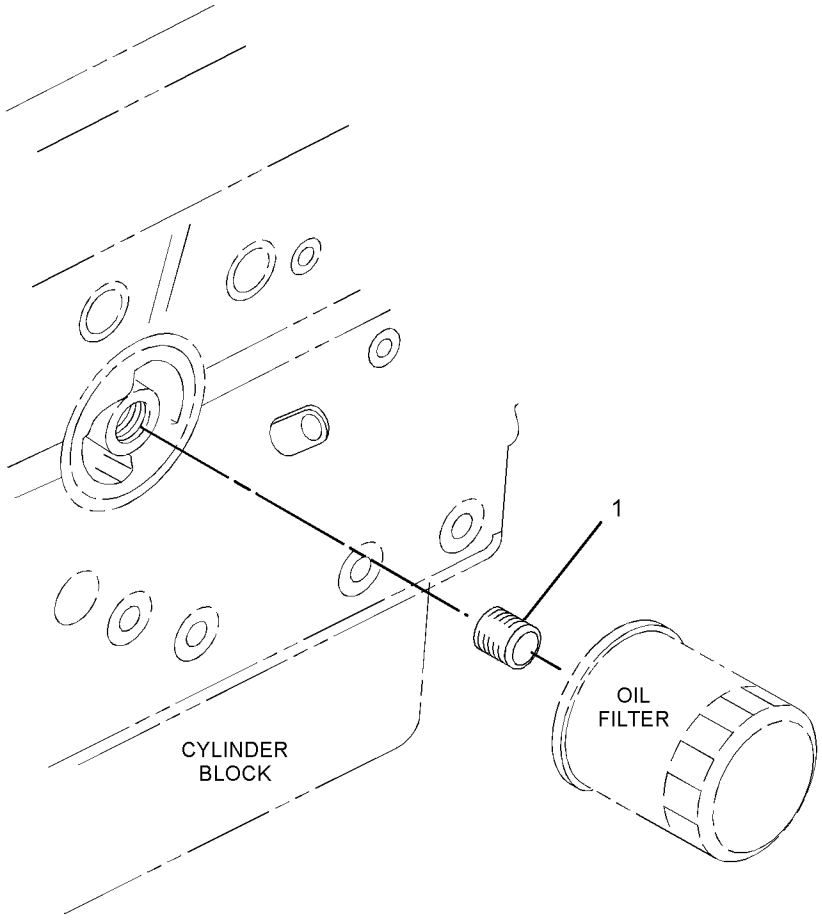

GRAPHIC #1 <END> g01355707

339-3016 PUMP GP-ENGINE OIL

PART OF 435-1644 CYLINDER BLOCK GP, 435-1632, 435-1643 ENGINE AR, 516-4466, 516-9462, 541-8320 ENGINE AR-PRIMARY

SMCS-1304, 1315 **i07643822**

NOTE	REF NO	GRAPHIC REF	PART NUMBER	QTY	PART NAME 1 2 3 4 5 6 (PRODUCT LEVEL)	SEE PAGE
	1	1	**153-6848**	1	COVER	
	2	1	**153-6849**	1	SPRING	
	3	1	**153-6850**	1	COLLAR	
	4	1	**153-6851**	1	CLIP	
	5	1	**153-7985**	1	WASHER	
B	6	1	**160-4150**	1	SHIM (0.1-MM THK)	
B		1	**160-4151**	1	SHIM (0.15-MM THK)	
B		1	**160-4152**	1	SHIM (0.2-MM THK)	
B		1	**160-4153**	1	SHIM (0.5-MM THK)	
	7	1	**339-3008**	1	SHAFT	

B - USE AS REQUIRED

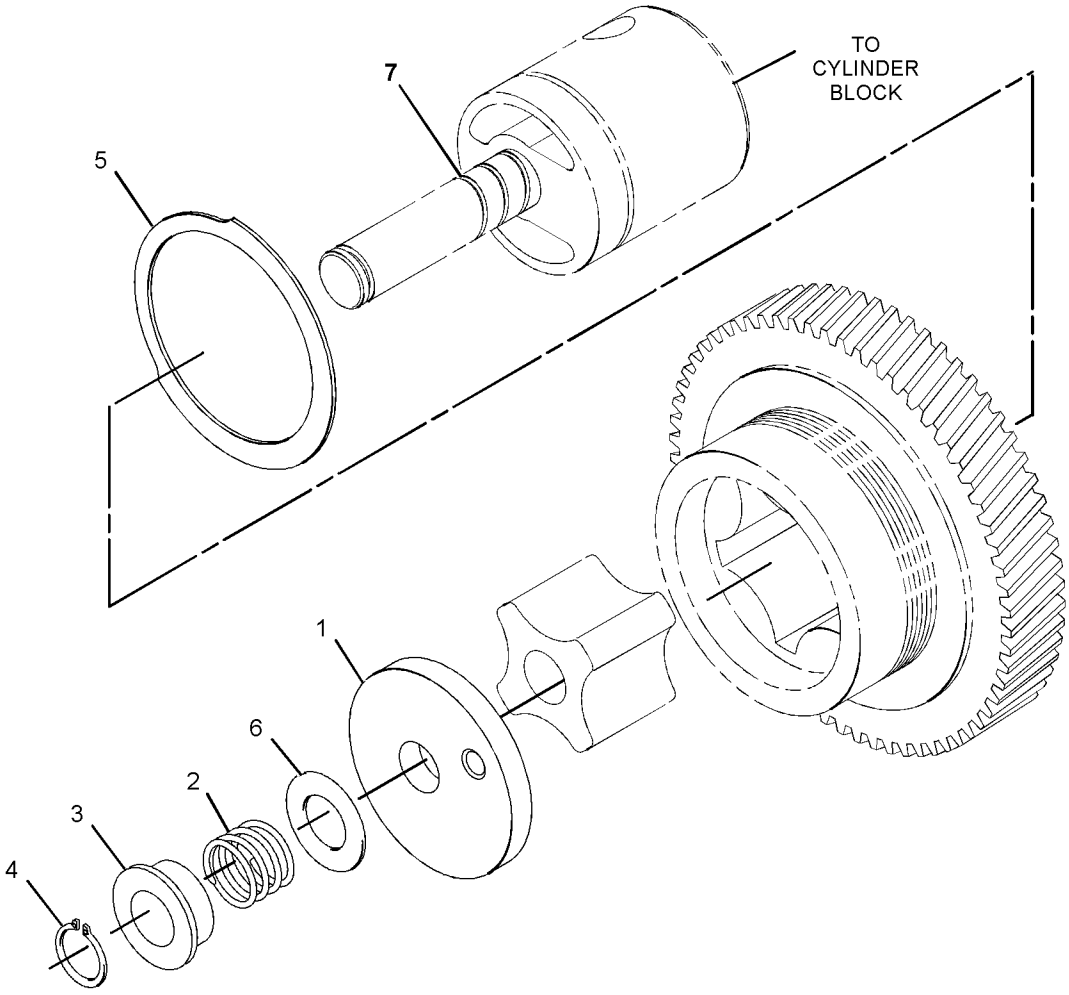

GRAPHIC #1 <END> g06385638

313-1981 FAN GP-SUCTION

SMCS-1356 **i03390528**

NOTE	REF NO	GRAPHIC REF	PART NUMBER	QTY	PART NAME 1 2 3 4 5 6 (PRODUCT LEVEL)	SEE PAGE
	1	1	**183-3539**	1	FAN-SUCTION	

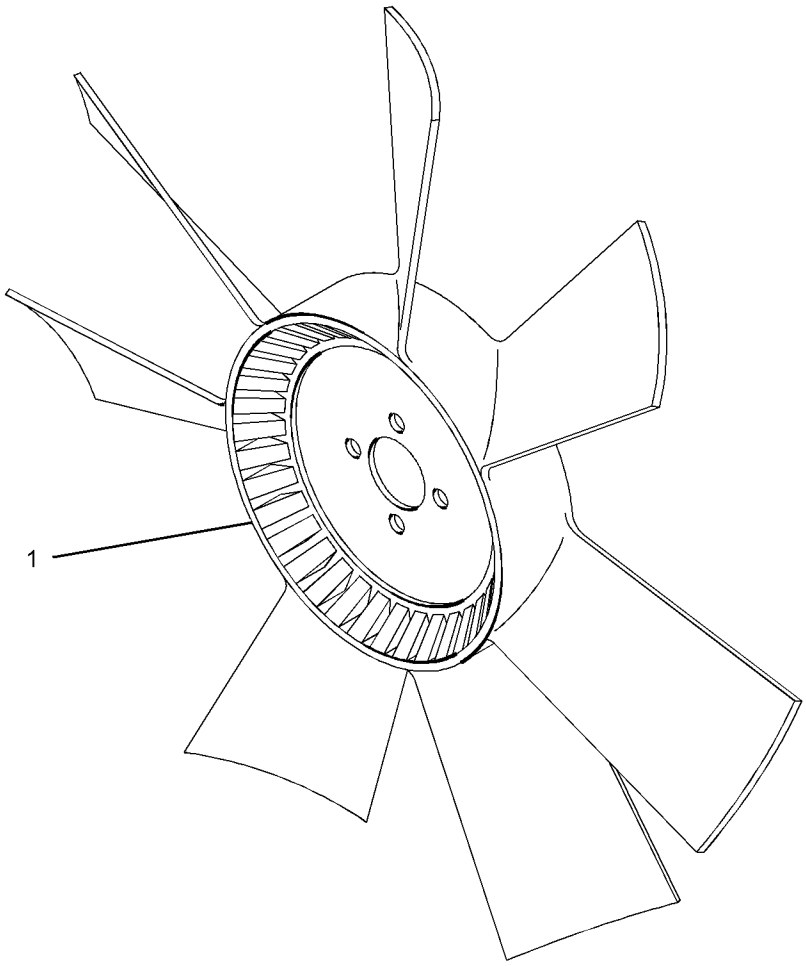

GRAPHIC #1 <END> g01387103

313-1980 HOUSING GP-WATER REGULATOR

PART OF 435-1644 CYLINDER BLOCK GP, 435-1632, 435-1643 ENGINE AR, 516-4466, 516-9462, 541-8320 ENGINE AR-PRIMARY

SMCS-1393 **i06236267**

NOTE	REF NO	GRAPHIC REF	PART NUMBER	QTY	PART NAME 1 2 3 4 5 6 (PRODUCT LEVEL)	SEE PAGE
M	1	1	**153-7640**	1	BOLT (M6X1X20-MM)	
	2	1	**476-5578**	1	GASKET (TEMPERATURE REGULATOR)	
	3	1	**311-5851**	1	HOUSING-WATER REGULATOR	
M	4	1	**153-5960**	1	NUT (M6X1-THD)	
	5	1	**153-5407**	1	STUD (M6X1X28-MM)	

M - METRIC PART

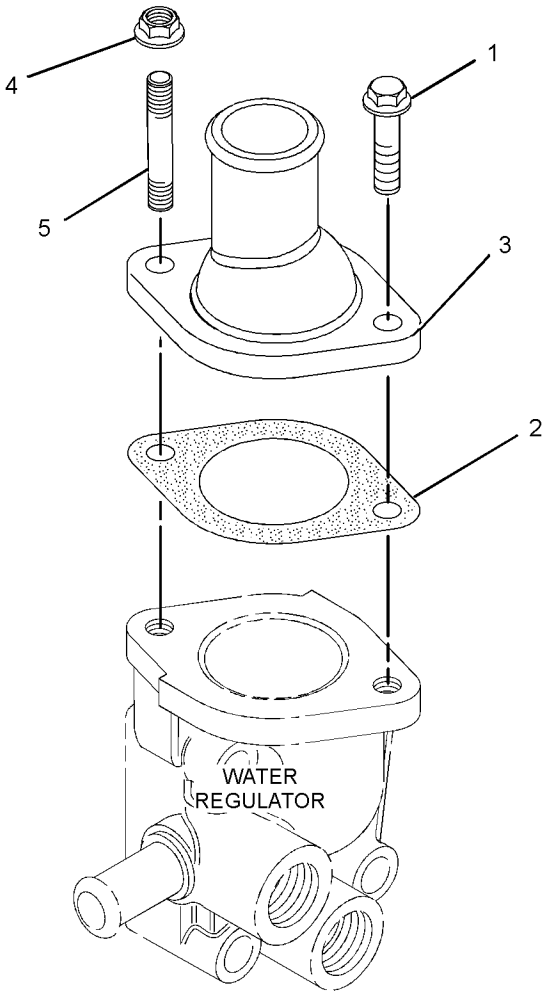

GRAPHIC #1 <END> g02207174

231-7854 PUMP GP-WATER

PART OF 313-1978 PUMP GP-WATER

SMCS-1361 **i03386566**

NOTE	REF NO	GRAPHIC REF	PART NUMBER	QTY	PART NAME 1 2 3 4 5 6 (PRODUCT LEVEL)	SEE PAGE
	1	1	**154-1817**	1	PLUG	
	2	1	**154-1820**	3	BOLT	
	3	1	**292-1994**	1	PLATE	
	4	1	**292-1995**	1	GASKET	

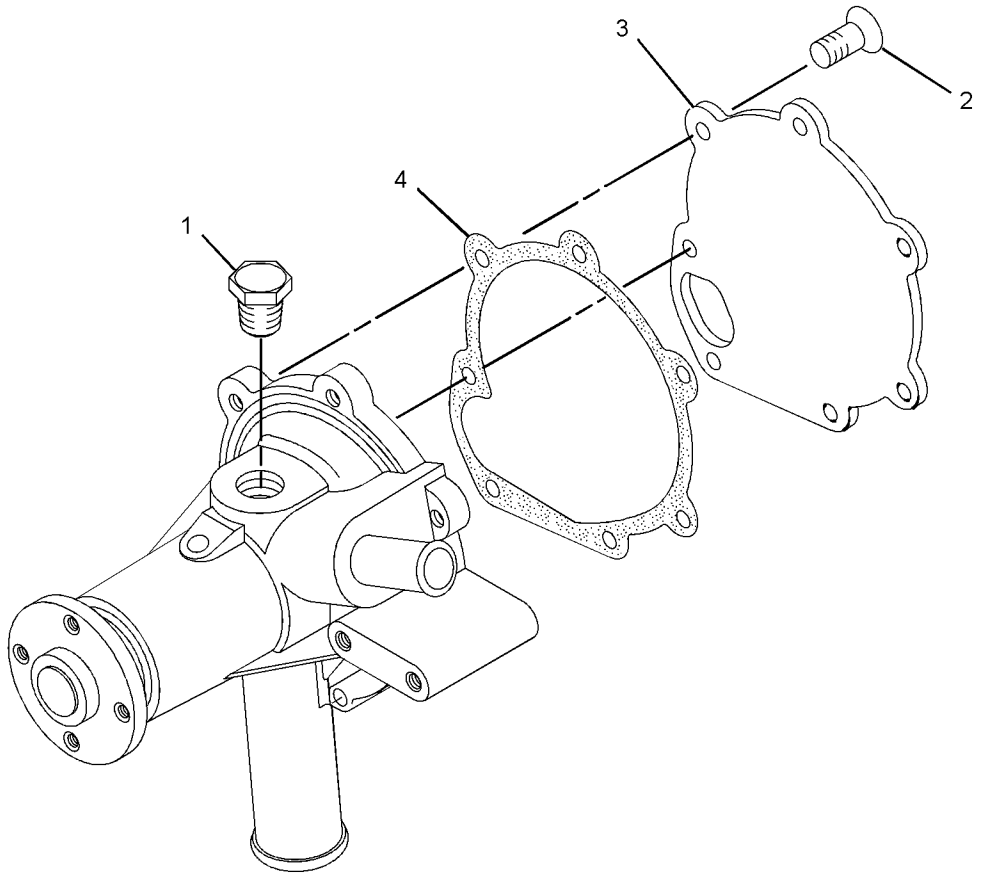

GRAPHIC #1 <END> g01370196

313-1978 PUMP GP-WATER

PART OF 435-1644 CYLINDER BLOCK GP, 435-1632, 435-1643 ENGINE AR
TYPE 1

SMCS-1361 **i03384486**

NOTE	REF NO	GRAPHIC REF	PART NUMBER	QTY	PART NAME 1 2 3 4 5 6 (PRODUCT LEVEL)	SEE PAGE
M	1	1	**153-5960**	1	NUT (M6X1-THD)	
M	2	1	**153-5962**	4	BOLT (M6X1X60-MM)	
	3	1	**154-1817**	2	PLUG	
	4	1	**154-1824**	2	CLAMP-HOSE	
	5	1	**154-1831**	1	PLUG	
	6	1	**231-7853**	1	GASKET-WATER PUMP	
	7	1	**231-7857**	1	HOUSING-REGULATOR	
	8	1	**231-7859**	1	REGULATOR-WATER TEMPERATURE	
	9	1	**231-7861**	1	GASKET	
	10	1	**267-0328**	1	HOSE	
Y	11	1	**231-7854**	1	PUMP GP-WATER	83

M - METRIC PART
Y - SEPARATE ILLUSTRATION

313-1978 **PUMP GP-WATER (**contd.**)** **i03384486**

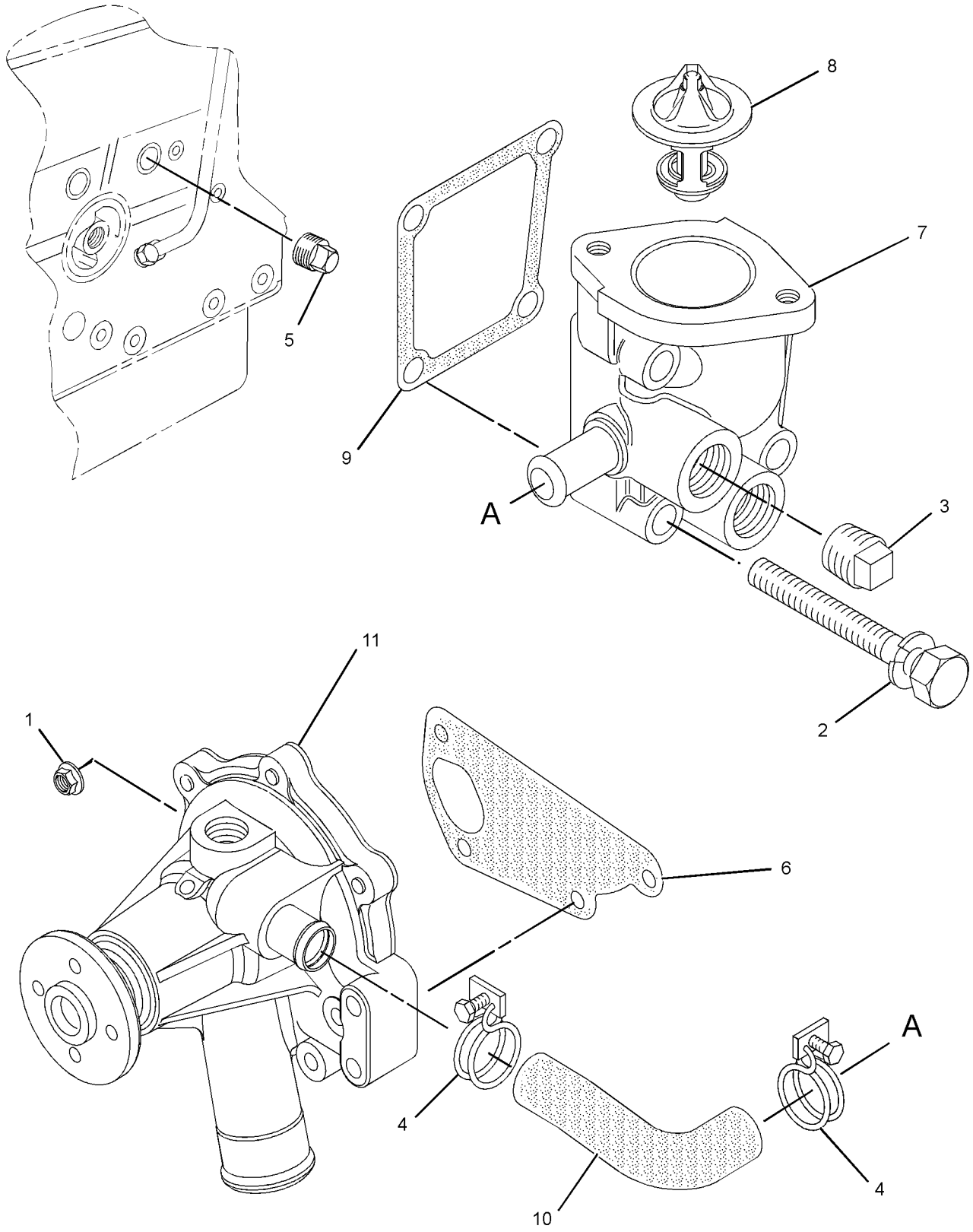

GRAPHIC #1 <END> g01387759

313-1978 PUMP GP-WATER

PART OF 435-1644 CYLINDER BLOCK GP, 435-1632, 435-1643 ENGINE AR, 516-4466, 516-9462, 541-8320 ENGINE AR-PRIMARY

TYPE 2

SMCS-1361 **i07165676**

NOTE	REF NO	GRAPHIC REF	PART NUMBER	QTY	PART NAME 1 2 3 4 5 6 (PRODUCT LEVEL)	SEE PAGE
M	1	1	**153-5960**	1	NUT (M6X1-THD)	
M	2	1	**153-5962**	4	BOLT (M6X1X60-MM)	
	3	1	**154-1817**	2	PLUG	
	4	1	**329-1292**	2	CLIP-HOSE	
	5	1	**472-2215**	1	PLUG	
	6	1	**500-3814**	1	GASKET	
	7	1	**494-9566**	1	CASE	
	8	1	**508-6591**	1	THERMOSTAT	
	9	1	**486-8880**	1	GASKET (WATER PUMP)	
	10	1	**267-0328**	1	HOSE	
	11	1	**500-8345**	1	PUMP AS-WATER	

M - METRIC PART

313-1978 **PUMP GP-WATER (**contd.**)** **i07165676**

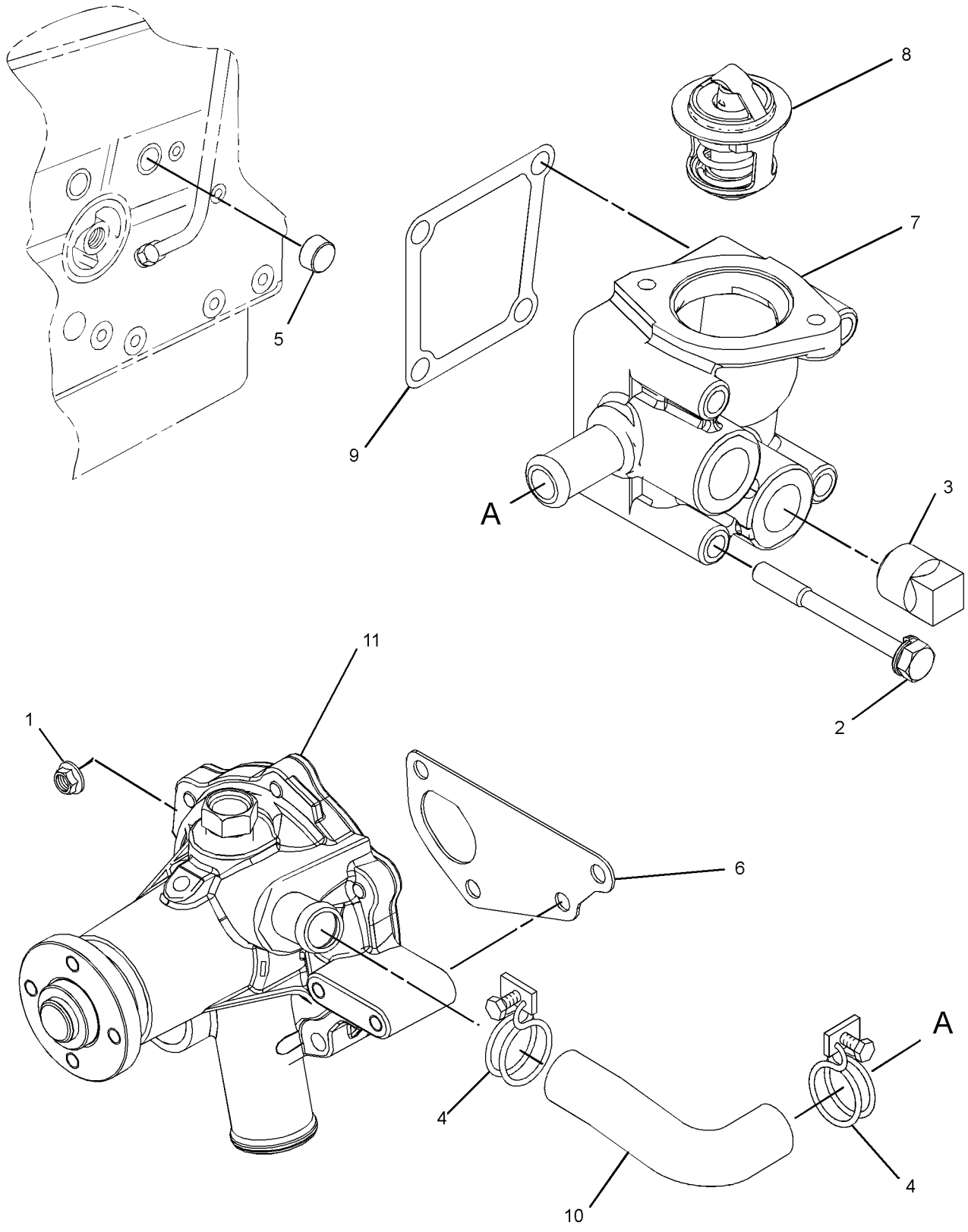

GRAPHIC #1 <END> g06214004

318-8815 RADIATOR & FAN GP

SMCS-1353, 1356 **i07478922**

NOTE	REF NO	GRAPHIC REF	PART NUMBER	QTY	PART NAME 1 2 3 4 5 6 (PRODUCT LEVEL)	SEE PAGE
M	1	1	**6I-0217**	4	BOLT (M8X1.25X20-MM)	
M	2	1	**123-2899**	2	BOLT (M10X1.5X40-MM)	
M	3	1	**6I-0917**	2	BOLT (M6X1X25-MM)	
M	4	2	**114-4363**	10	BOLT (M8X1.25X12-MM)	
M	5	2	**124-3815**	8	BOLT (M8X1.25X16-MM)	
	6	1	**2S-3440**	2	CLAMP-HOSE	
					—OR—	
		1	**9M-7958**	2	CLAMP-HOSE	
M	7	2	**153-5592**	2	NUT (M8X1.25-THD)	
M	8	1,3	**150-3715**	15	BOLT (M12X1.25X25-MM)	
	9	1	**244-0495**	1	SUPPORT	
	10	1	**244-0503**	1	HOSE-RADIATOR	
	11	2	**244-0509**	1	GUARD	
	12	2	**244-3259**	1	CLIP	
	13	3	**255-1297**	1	PLATE	
	14	1	**258-4520**	1	HOSE-RADIATOR	
M	15	3	**273-9253**	4	BOLT (M6X1X35-MM)	
	16	2	**325-5924**	1	GUARD-FAN	
	17	2	**325-5932**	1	BRACKET	
	18	1	**325-5938**	1	BRACKET	
	19	3	**325-5940**	2	BRACKET	
	20	2	**334-7437**	1	BRACKET	
	21	2	**344-5868**	1	MOUNT (RUBBER)	
	22	1	**363-5813**	2	CLAMP-HOSE	
	23	2	**366-2614**	1	GUARD-ALTERNATOR	
	24	2	**366-2615**	1	GUARD AS-FAN	
	24A	2	**362-8050**	3	NUT	
M	24B	2	**6I-0254**	3	BOLT (M8X1.25X30-MM)	
	25	3	**444-7301**	1	FAN-SUCTION	
C	26	1	**476-5580**	1	RADIATOR AS	
	27	1	**483-1366**	1	MOUNT AS-RADIATOR	

C - CHANGE FROM PREVIOUS TYPE
M - METRIC PART

318-8815 **RADIATOR & FAN GP (**contd.**)** **i07478922**

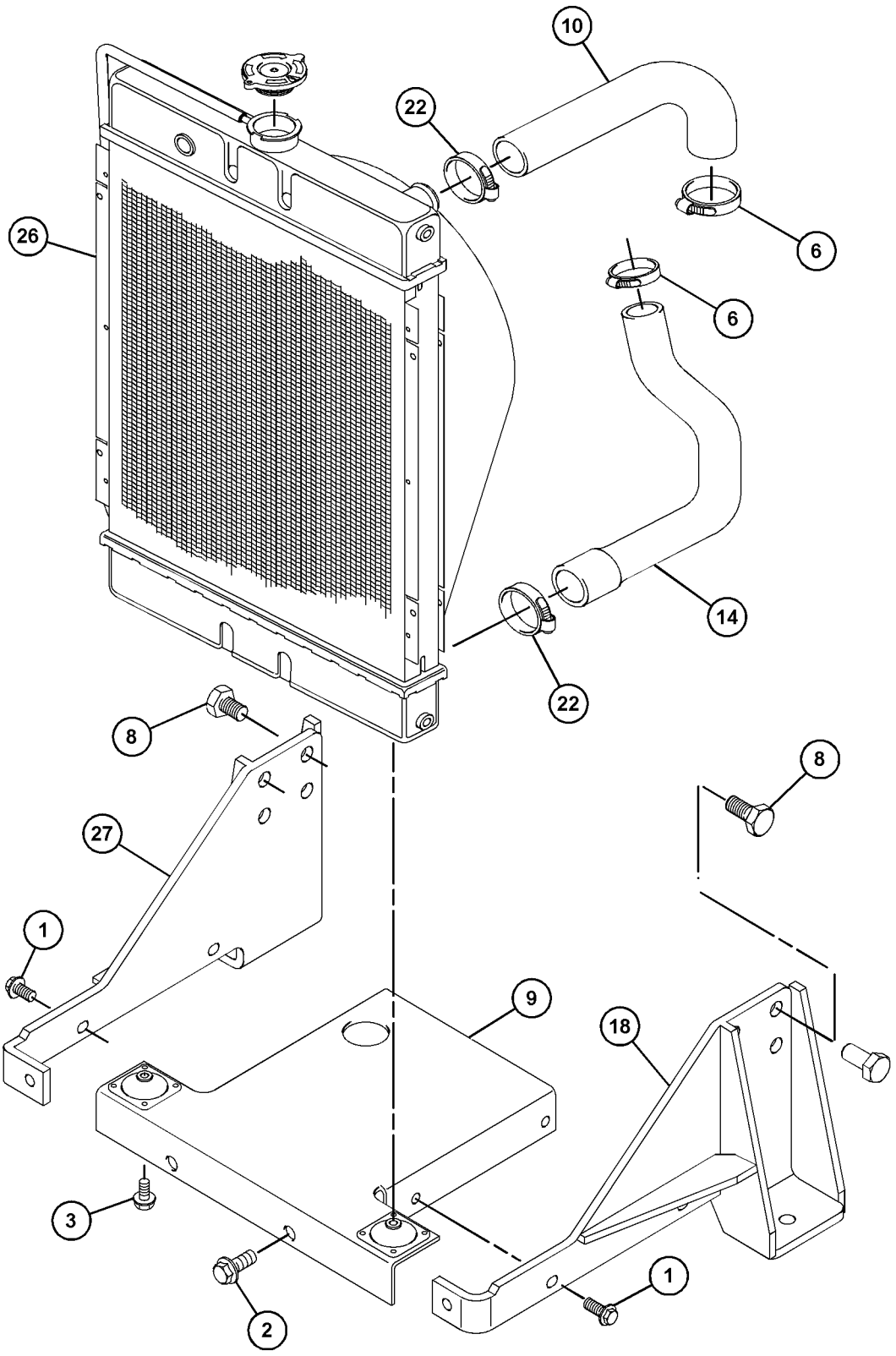

GRAPHIC #1 g06369989

318-8815 **RADIATOR & FAN GP (**contd.**)** **i07478922**

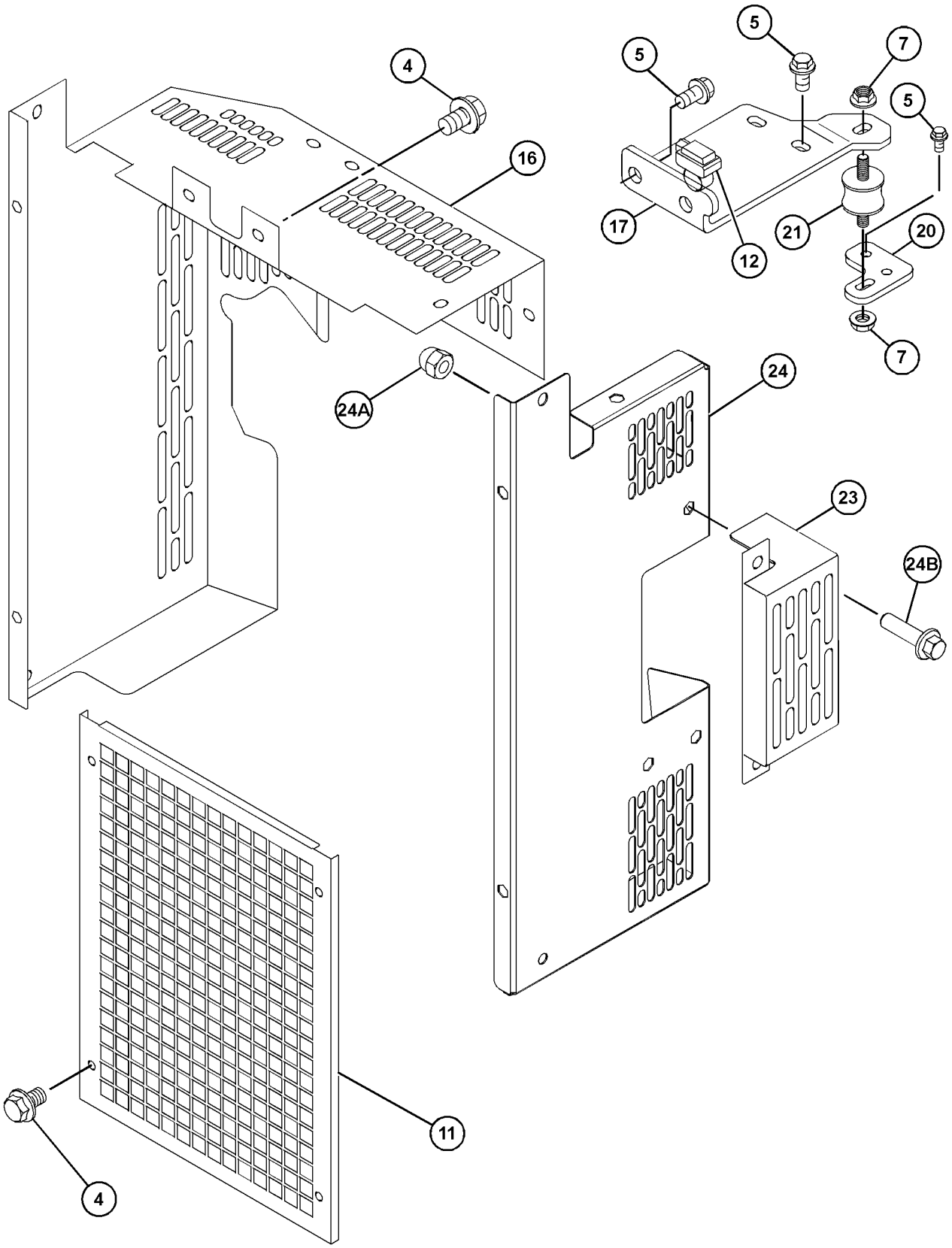

GRAPHIC #2 g06369990

318-8815 **RADIATOR & FAN GP (**contd.**)** **i07478922**

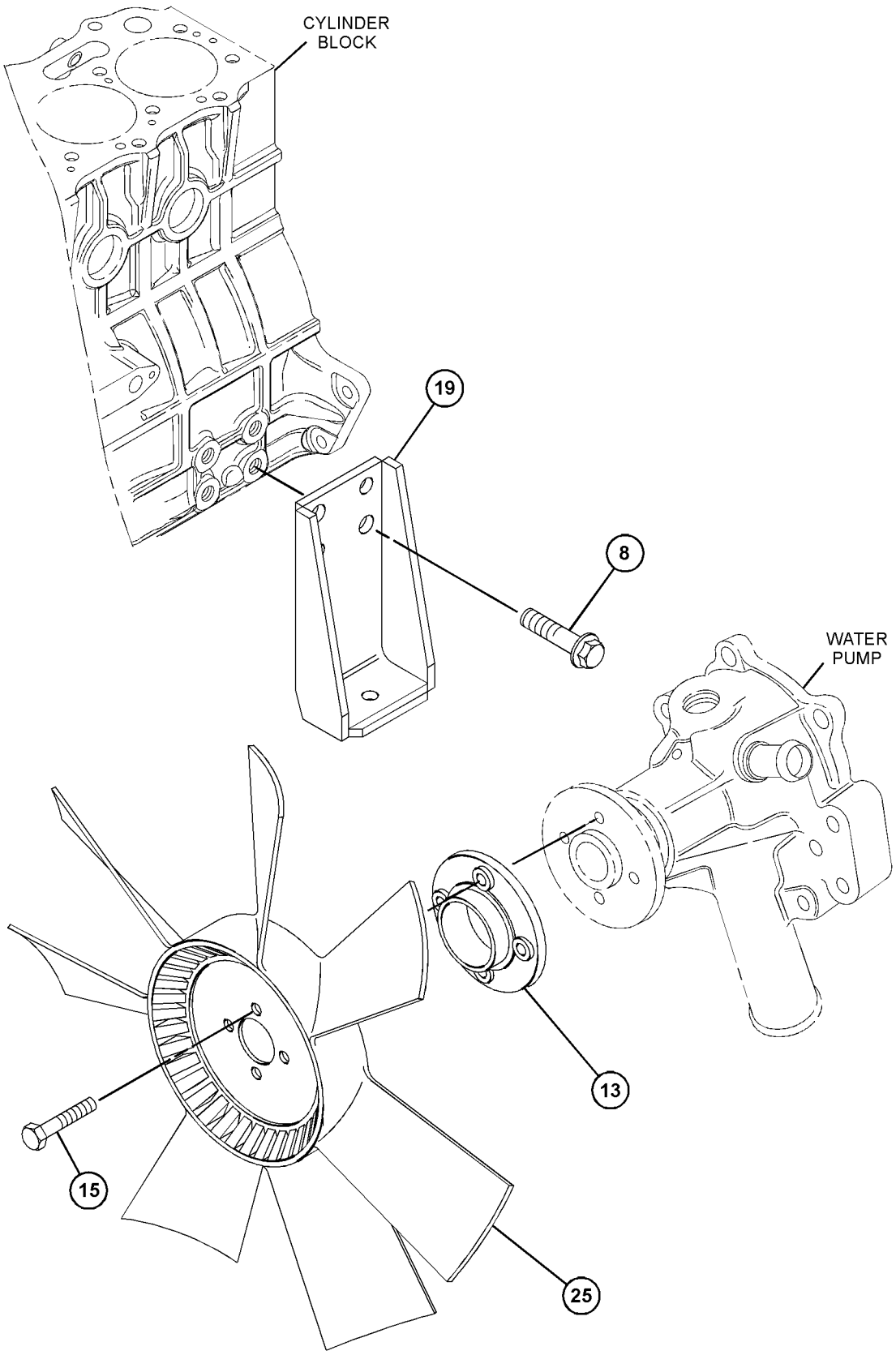

GRAPHIC #3 <END> g06369904

445-0804 RADIATOR & FAN GP

TYPE 1

SMCS-1353, 1356 **i05683395**

NOTE	REF NO	GRAPHIC REF	PART NUMBER	QTY	PART NAME 1 2 3 4 5 6 (PRODUCT LEVEL)	SEE PAGE
M	1	1	**6I-0217**	6	BOLT (M8X1.25X20-MM)	
M	2	1	**6I-0917**	2	BOLT (M6X1X25-MM)	
	3	1	**239-1137**	2	BOLT (M10X1.25X25-MM)	
	4	1	**363-5813**	4	CLAMP-HOSE	
M	5	2	**124-3815**	6	BOLT (M8X1.25X16-MM)	
M	6	2	**153-5592**	2	NUT (M8X1.25-THD)	
M	7	3	**153-6861**	4	BOLT (M6X1X25-MM)	
	8	3	**161-8260**	1	PLATE	
	9	2	**180-6118**	10	BOLT	
	10	1	**197-8448**	8	BOLT	
	11	3	**238-0128**	1	FAN-BLOWER	
	12	1	**244-0494**	1	RADIATOR AS	
	12A	1	**202-6616**	1	CAP-RADIATOR	
	13	1	**244-0495**	1	SUPPORT	
	14	1	**244-0503**	1	HOSE-RADIATOR	
	15	2	**244-0509**	1	GUARD	
	16	2	**244-3259**	1	CLIP	
	17	1	**258-4520**	1	HOSE-RADIATOR	
	18	2	**325-5924**	1	GUARD-FAN	
	19	2	**325-5932**	1	BRACKET	
	20	1	**325-5938**	1	BRACKET	
	21	1	**325-5939**	1	BRACKET	
	22	2	**334-7437**	1	BRACKET	
	23	2	**344-5868**	1	MOUNT	
	25	2	**366-2614**	1	GUARD-ALTERNATOR	
	26	2	**366-2615**	1	GUARD AS-FAN	
M	26A	2	**6I-0254**	3	BOLT (M8X1.25X30-MM)	
	26B	2	**362-8050**	3	NUT	

M - METRIC PART

445-0804 **RADIATOR & FAN GP (**contd.**)** **i05683395**

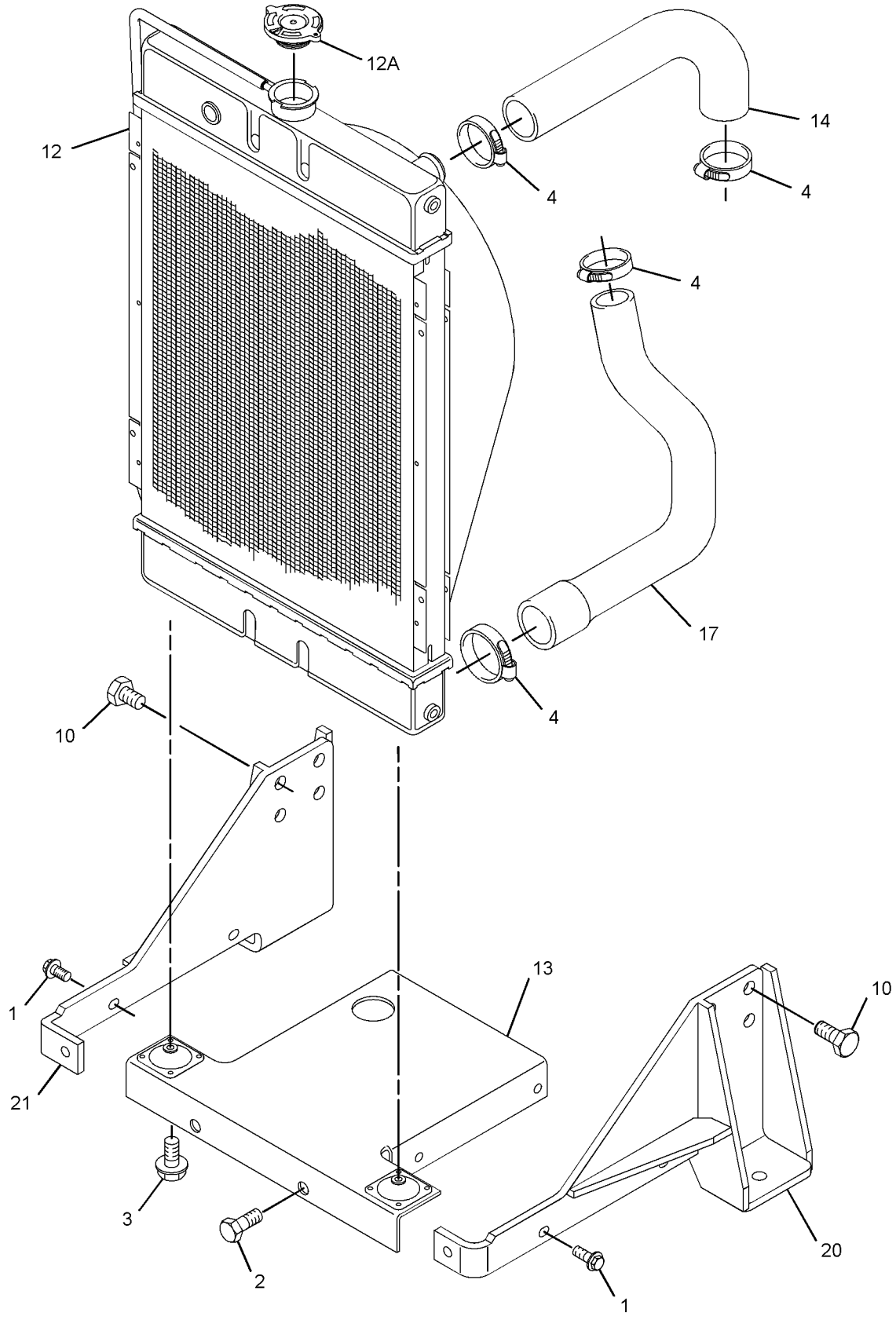

GRAPHIC #1 g03334849

445-0804 **RADIATOR & FAN GP (**contd.**)** **i05683395**

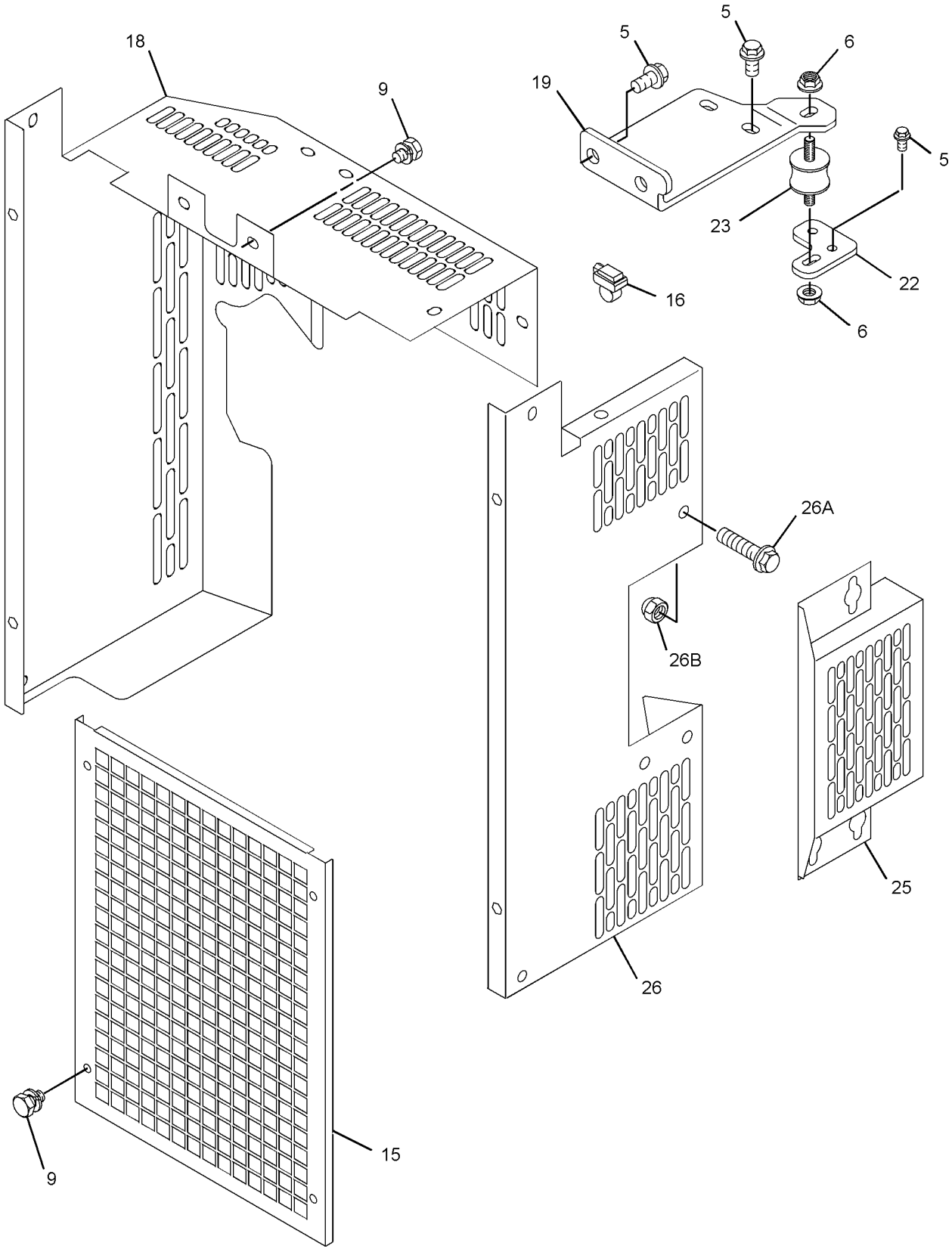

GRAPHIC #2 g03334851

445-0804 **RADIATOR & FAN GP (**contd.**)** **i05683395**

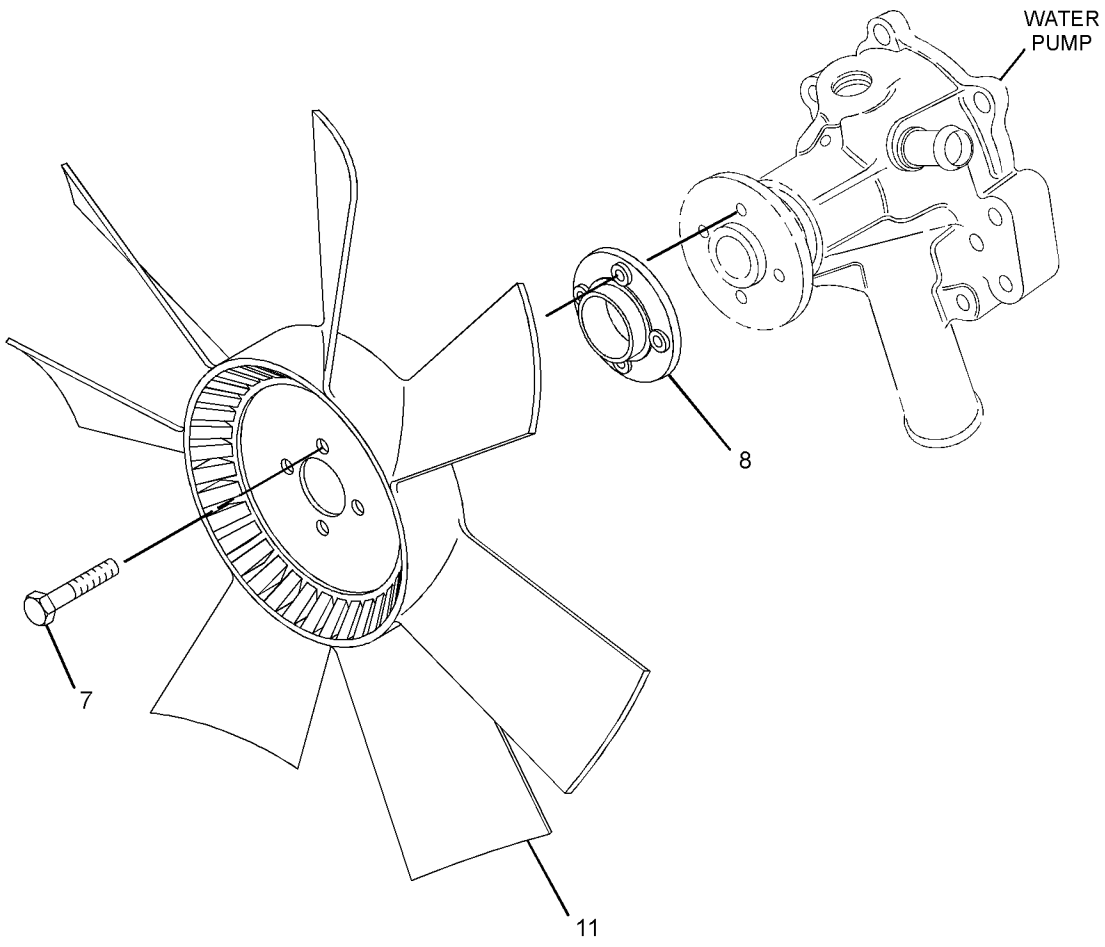

GRAPHIC #3 <END> g03334852

445-0804 RADIATOR & FAN GP

TYPE 2

SMCS-1353, 1356 **i07043341**

NOTE	REF NO	GRAPHIC REF	PART NUMBER	QTY	PART NAME 1 2 3 4 5 6 (PRODUCT LEVEL)	SEE PAGE
M	1	1,2	**6I-0217**	6	BOLT (M8X1.25X20-MM)	
M	2	1	**6I-0917**	2	BOLT (M6X1X25-MM)	
M	3	1	**6I-0654**	2	BOLT (M10X1.5X25-MM)	
	4	1	**363-5813**	2	CLAMP-HOSE	
M	5	2	**124-3815**	4	BOLT (M8X1.25X16-MM)	
M	6	2	**153-5592**	2	NUT (M8X1.25-THD)	
	8	2	**255-1297**	1	PLATE	
	9	2	**180-6118**	10	BOLT	
	10	1	**197-8448**	7	BOLT	
	11	2	**423-5640**	1	FAN	
	12	1	**476-5580**	1	RADIATOR AS	
	13	1	**244-0495**	1	SUPPORT	
	14	1	**244-0503**	1	HOSE-RADIATOR	
	15	2	**244-0509**	1	GUARD	
	16	2	**244-3259**	2	CLIP	
	17	1	**258-4520**	1	HOSE-RADIATOR	
	18	2	**325-5924**	1	GUARD-FAN	
	19	2	**325-5932**	1	BRACKET	
	20	1	**452-5051**	1	BRACKET	
	21	1	**452-5052**	1	BRACKET	
	22	2	**334-7437**	1	BRACKET	
	23	2	**344-5868**	1	MOUNT	
M	24	2	**273-9253**	4	BOLT (M6X1X35-MM)	
	25	2	**366-2614**	1	GUARD-ALTERNATOR	
	26	2	**366-2615**	1	GUARD AS-FAN	
M	26A	2	**6I-0254**	3	BOLT (M8X1.25X30-MM)	
	26B	2	**362-8050**	3	NUT	
F		2	**9M-7958**	2	CLAMP-HOSE	

F - NOT SHOWN
M - METRIC PART

445-0804 **RADIATOR & FAN GP (**contd.**)** **i07043341**

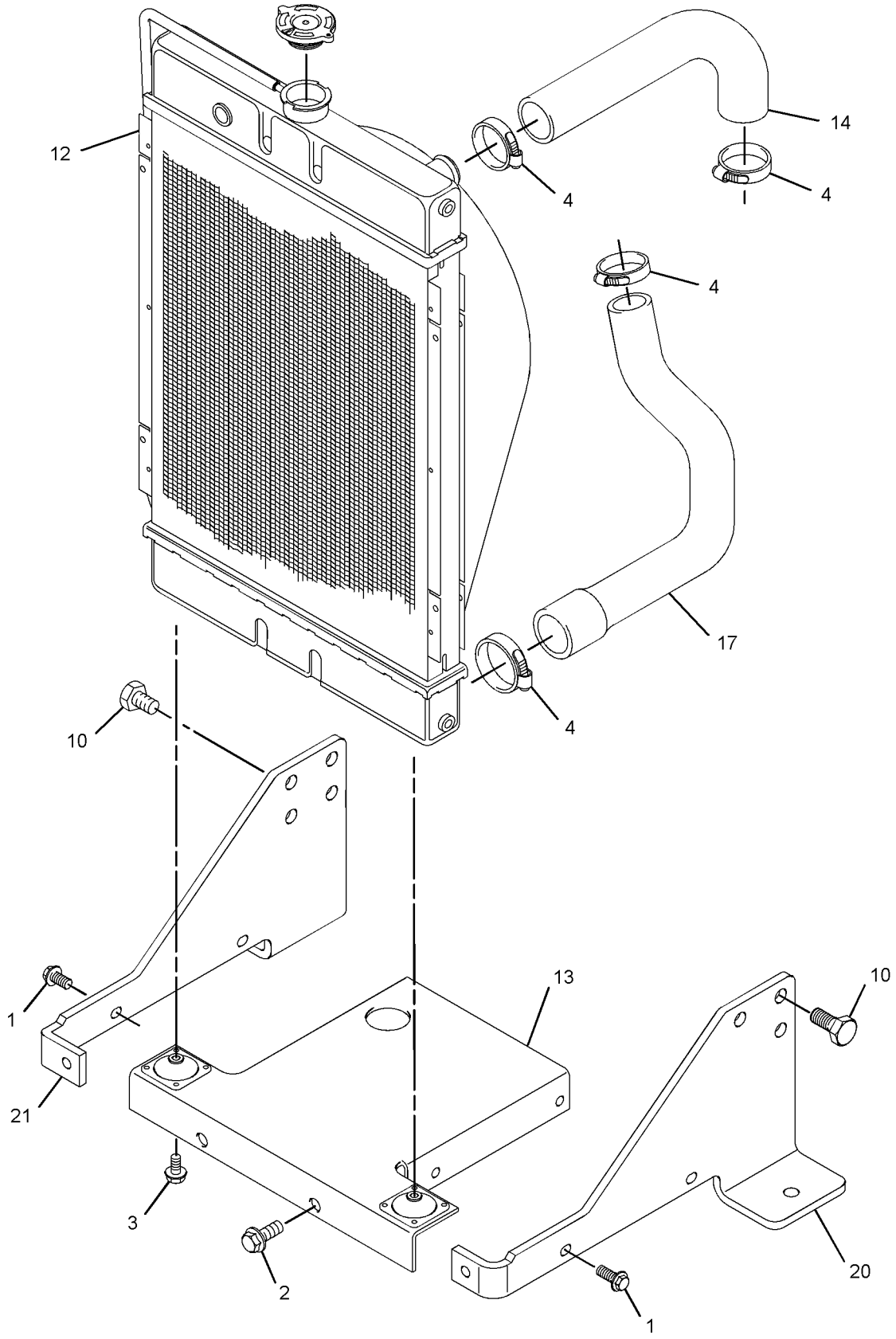

GRAPHIC #1 g06017123

445-0804 **RADIATOR & FAN GP (**contd.**)** **i07043341**

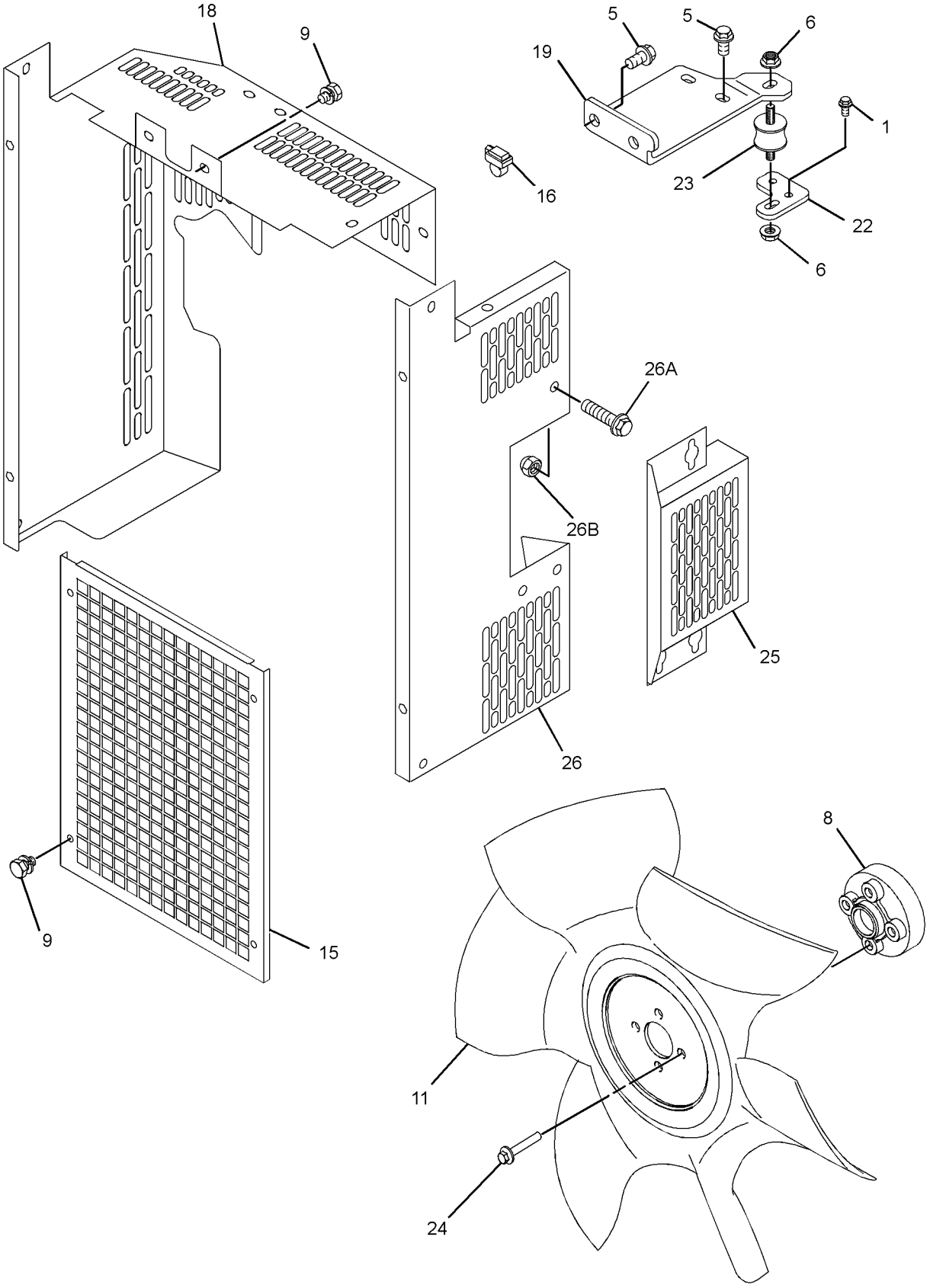

GRAPHIC #2 <END> g06201699

445-0804 RADIATOR & FAN GP

PART OF 516-4466, 516-9462 ENGINE AR-PRIMARY

TYPE 3

SMCS-1353, 1356 **i07489922**

NOTE	REF NO	GRAPHIC REF	PART NUMBER	QTY	PART NAME 1 2 3 4 5 6 (PRODUCT LEVEL)	SEE PAGE
M	1	1,2	**6I-0217**	6	BOLT (M8X1.25X20-MM)	
M	2	1	**6I-0917**	2	BOLT (M6X1X25-MM)	
M	3	1	**123-2899**	2	BOLT (M10X1.5X40-MM)	
	4	1	**363-5813**	2	CLAMP-HOSE	
M	5	2	**124-3815**	4	BOLT (M8X1.25X16-MM)	
M	6	2	**153-5592**	2	NUT (M8X1.25-THD)	
	8	2	**255-1297**	1	PLATE	
CM	9	2	**114-4363**	6	BOLT (M8X1.25X12-MM)	
	10	1	**197-8448**	7	BOLT	
	11	2	**423-5640**	1	FAN	
	12	1	**476-5580**	1	RADIATOR AS	
	13	1	**244-0495**	1	SUPPORT	
	14	1	**244-0503**	1	HOSE-RADIATOR	
	16	2	**244-3259**	2	CLIP	
	17	1	**258-4520**	1	HOSE-RADIATOR	
	18	2	**325-5924**	1	GUARD-FAN	
	19	2	**325-5932**	1	BRACKET	
	20	1	**452-5051**	1	BRACKET	
	21	1	**452-5052**	1	BRACKET	
	22	2	**334-7437**	1	BRACKET	
	23	2	**344-5868**	1	MOUNT	
M	24	2	**273-9253**	4	BOLT (M6X1X35-MM)	
	25	2	**366-2614**	1	GUARD-ALTERNATOR	
	26	2	**366-2615**	1	GUARD AS-FAN	
M	26A	2	**6I-0254**	3	BOLT (M8X1.25X30-MM)	
	26B	2	**362-8050**	3	NUT	
F		2	**9M-7958**	2	CLAMP-HOSE	

C - CHANGE FROM PREVIOUS TYPE
F - NOT SHOWN
M - METRIC PART

445-0804 **RADIATOR & FAN GP (**contd.**)** **i07489922**

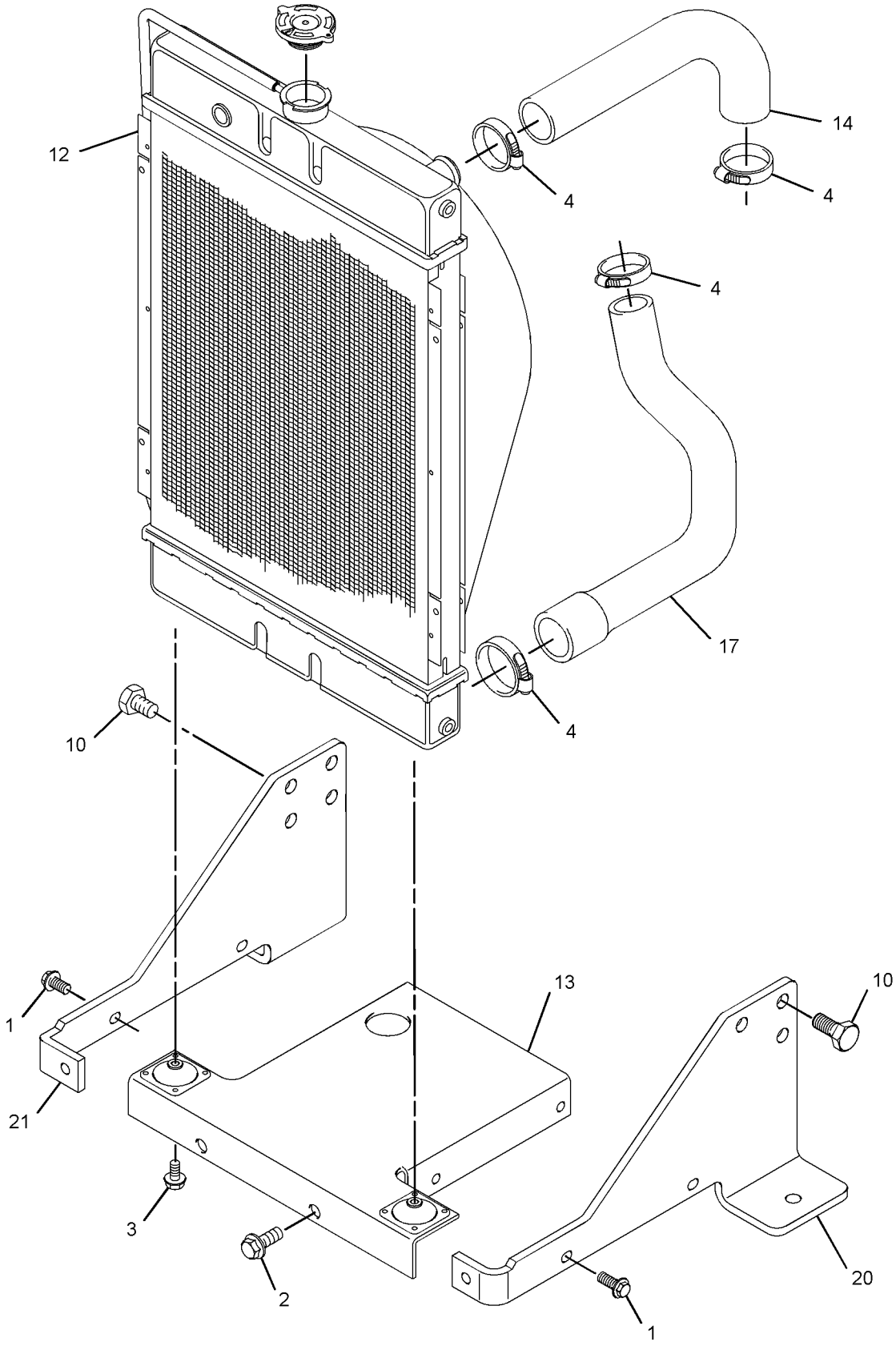

GRAPHIC #1 g06315639

445-0804 **RADIATOR & FAN GP (**contd.**)** **i07489922**

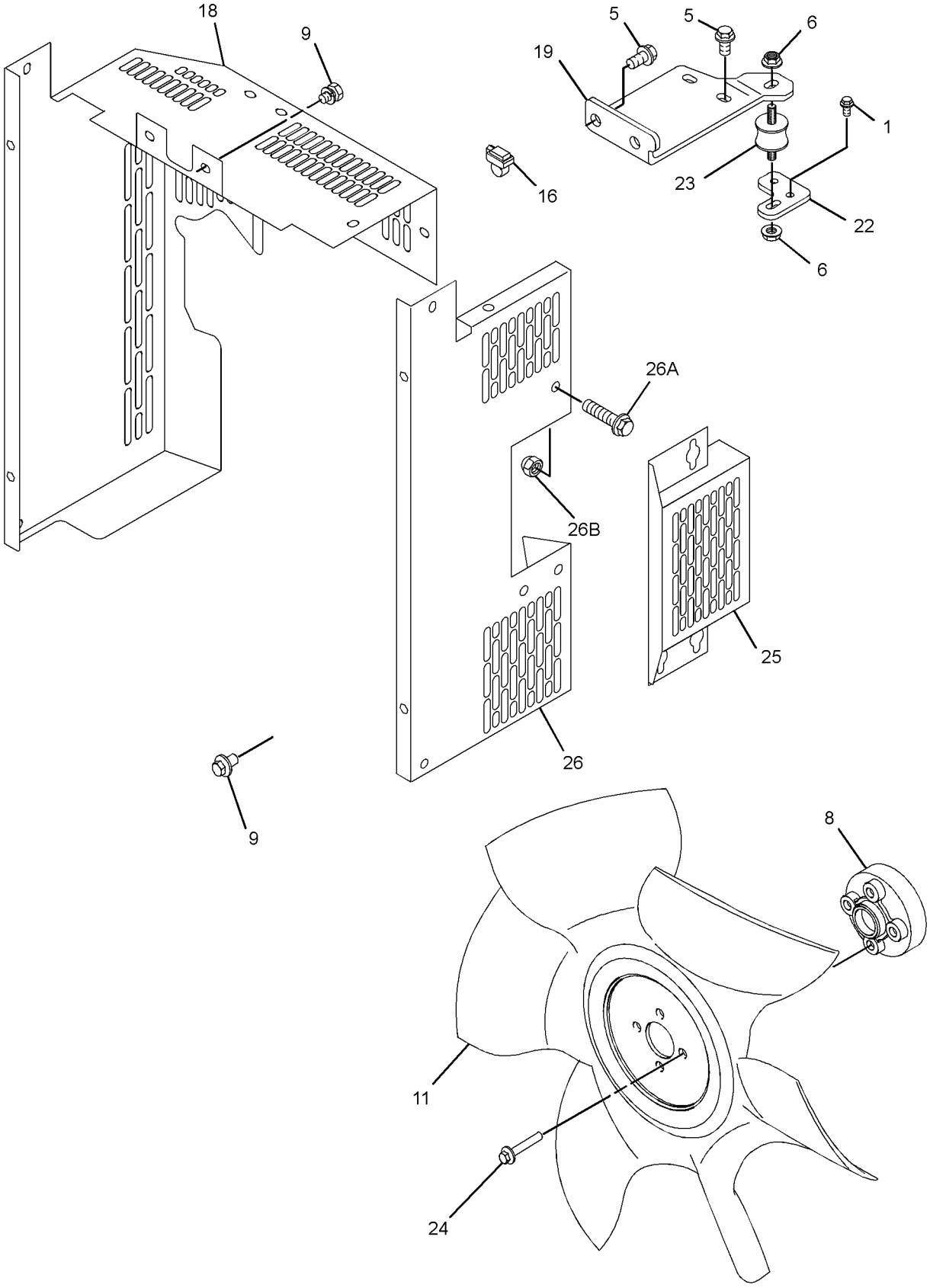

GRAPHIC #2 <END> g06315637

318-8803 RADIATOR GP

PART OF 541-8320 ENGINE AR-PRIMARY

SMCS-1353 **i07478911**

NOTE	REF NO	GRAPHIC REF	PART NUMBER	QTY	PART NAME 1 2 3 4 5 6 (PRODUCT LEVEL)	SEE PAGE
M	1	1	**6I-0217**	4	BOLT (M8X1.25X20-MM)	
M	2	1	**123-2899**	2	BOLT (M10X1.5X40-MM)	
M	3	1	**6I-0917**	2	BOLT (M6X1X25-MM)	
M	4	2	**114-4363**	10	BOLT (M8X1.25X12-MM)	
M	5	2	**124-3815**	8	BOLT (M8X1.25X16-MM)	
	6	1	**2S-3440**	2	CLAMP-HOSE	
					—OR—	
		1	**9M-7958**	2	CLAMP-HOSE	
M	7	2	**153-5592**	2	NUT (M8X1.25-THD)	
M	8	1,3	**150-3715**	15	BOLT (M12X1.25X25-MM)	
	9	1	**244-0495**	1	SUPPORT	
	10	1	**244-0503**	1	HOSE-RADIATOR	
	11	2	**244-0509**	1	GUARD	
	12	2	**244-3259**	2	CLIP	
	13	3	**255-1297**	1	PLATE	
	14	1	**258-4520**	1	HOSE-RADIATOR	
M	15	3	**273-9253**	4	BOLT (M6X1X35-MM)	
	16	2	**325-5924**	1	GUARD-FAN (RH)	
	17	2	**325-5932**	1	BRACKET (TOP)	
	18	1	**325-5938**	1	BRACKET (LH)	
	19	3	**325-5940**	2	BRACKET (REAR)	
	20	2	**334-7437**	1	BRACKET	
	21	2	**344-5868**	1	MOUNT (RUBBER)	
	22	1	**363-5813**	2	CLAMP-HOSE	
	23	2	**366-2614**	1	GUARD-ALTERNATOR	
	24	2	**366-2615**	1	GUARD AS-FAN	
M	24A	2	**6I-0254**	3	BOLT (M8X1.25X30-MM)	
	24B	2	**362-8050**	3	NUT	
	25	3	**423-5640**	1	FAN	
C	26	1	**476-5580**	1	RADIATOR AS	
	27	1	**483-1366**	1	MOUNT AS-RADIATOR	

C - CHANGE FROM PREVIOUS TYPE
M - METRIC PART

318-8803 **RADIATOR GP (**contd.**)** **i07478911**

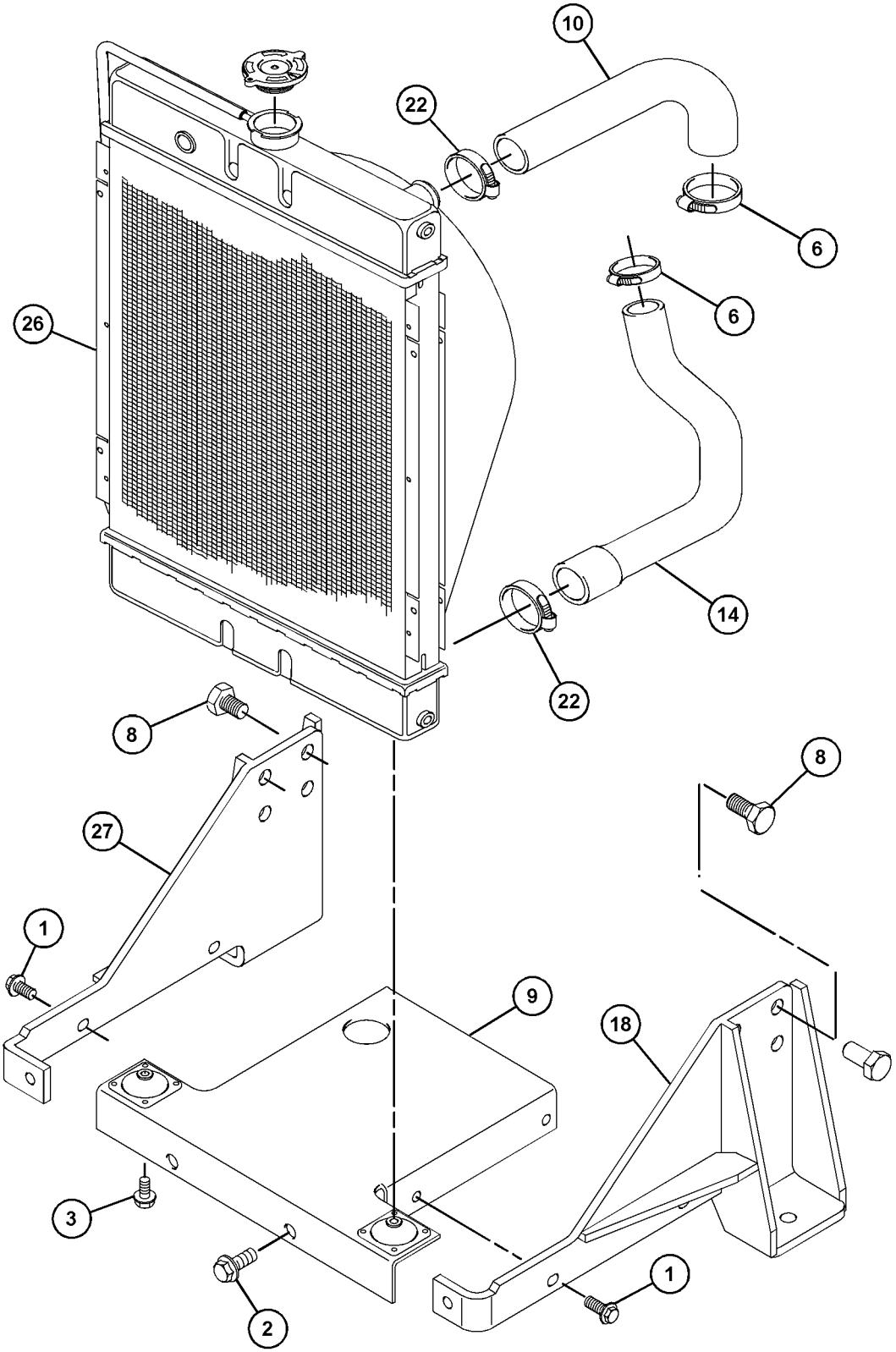

GRAPHIC #1 g06370020

318-8803 **RADIATOR GP** (contd.) **i07478911**

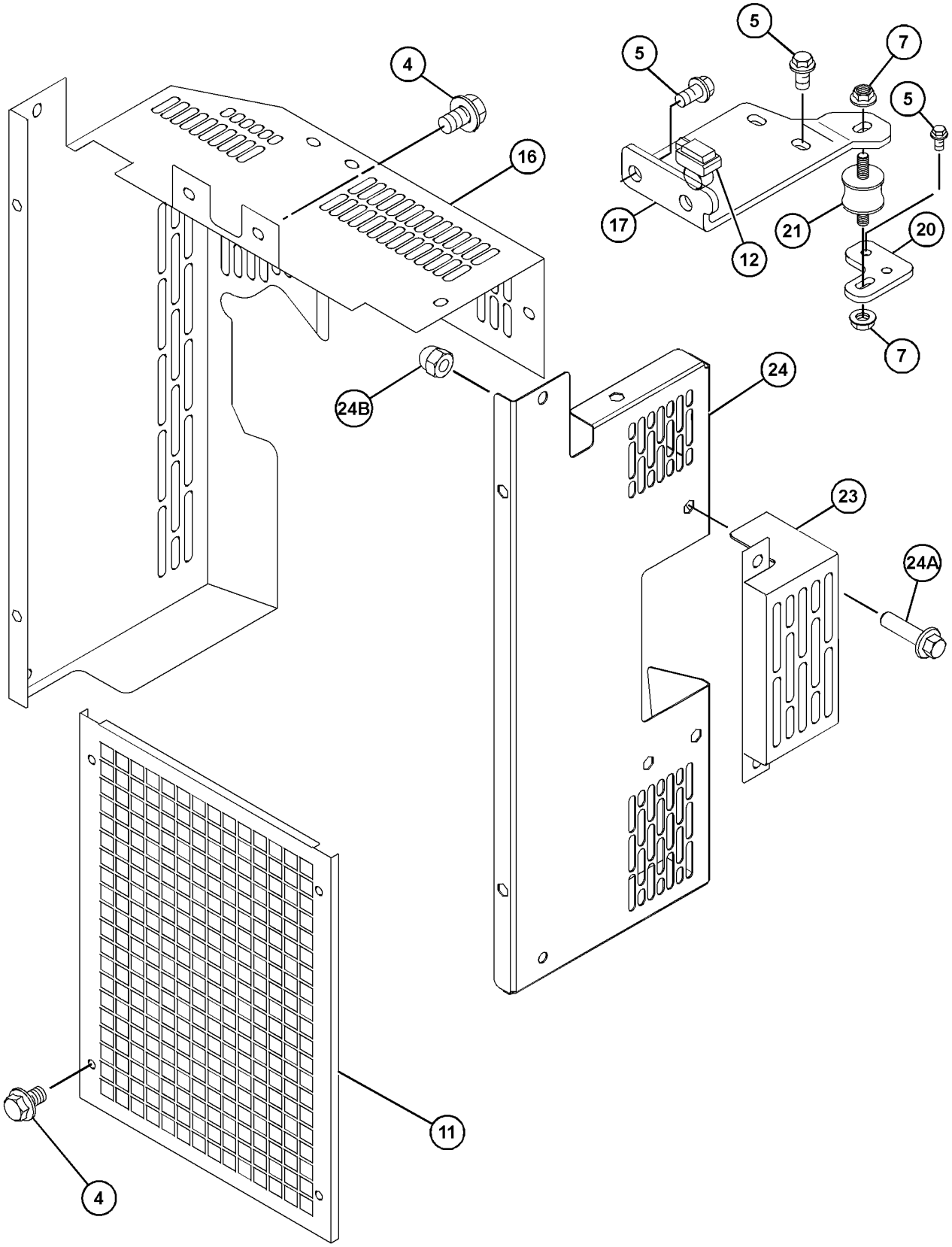

GRAPHIC #2 g06370021

318-8803 **RADIATOR GP (**contd.**)** **i07478911**

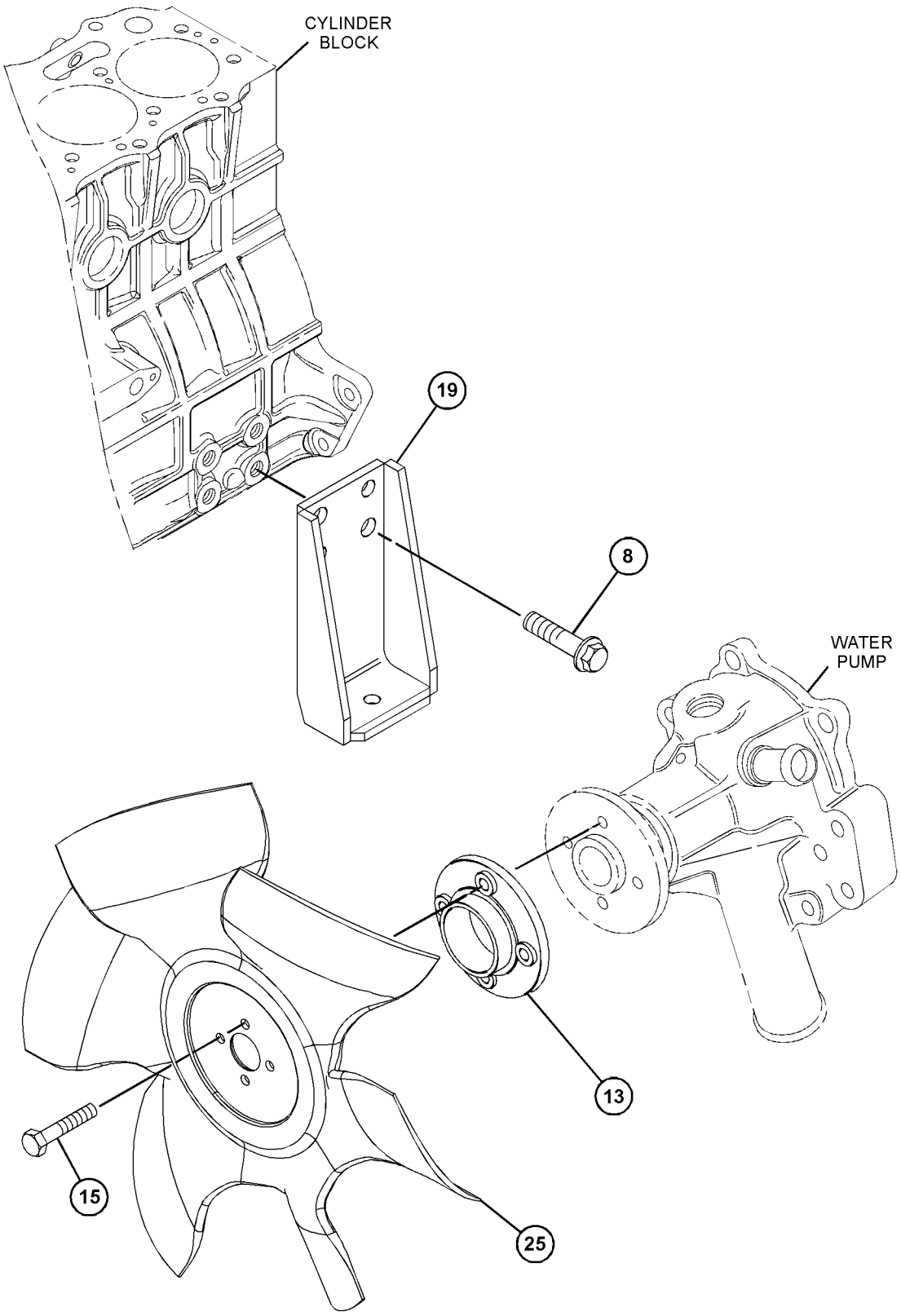

GRAPHIC #3 <END> g06370022

308-2309 CONNECTION GP-EXHAUST

PART OF 516-4466, 516-9462, 541-8320 ENGINE AR-PRIMARY

SMCS-1061 **i07176208**

NOTE	REF NO	GRAPHIC REF	PART NUMBER	QTY	PART NAME 1 2 3 4 5 6 (PRODUCT LEVEL)	SEE PAGE
	1	1	**435-0208**	2	GASKET	
M	2	1	**168-9001**	8	BOLT (M8X1.25X25-MM)	
	3	1	**366-3065**	2	FLANGE	

M - METRIC PART

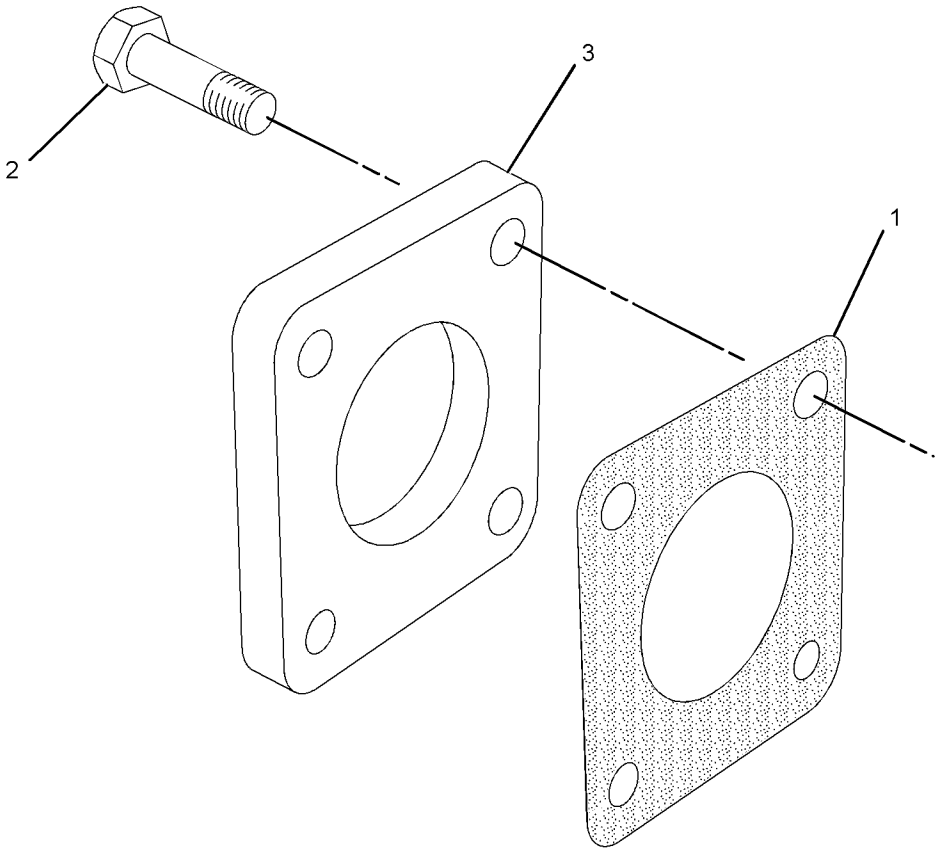

GRAPHIC #1 <END> g01388832

308-5610 CONNECTION GP-EXHAUST

SMCS-1061 **i07075825**

NOTE	REF NO	GRAPHIC REF	PART NUMBER	QTY	PART NAME 1 2 3 4 5 6 (PRODUCT LEVEL)	SEE PAGE
M	1	1	**168-9001**	1	BOLT (M8X1.25X25-MM)	
	2	1	**252-8372**	1	ELBOW AS-EXHAUST	
	2A	1	**163-5372**	4	WASHER (8X15.4X4-MM THK)	
	2B	1	**435-0208**	1	GASKET	
	2C	1	**191-0563**	1	ELBOW-EXHAUST	
	2D	1	**183-4335**	4	BOLT	
	3	1	**366-3065**	1	FLANGE	
	4	1	**435-0208**	1	GASKET	

M - METRIC PART

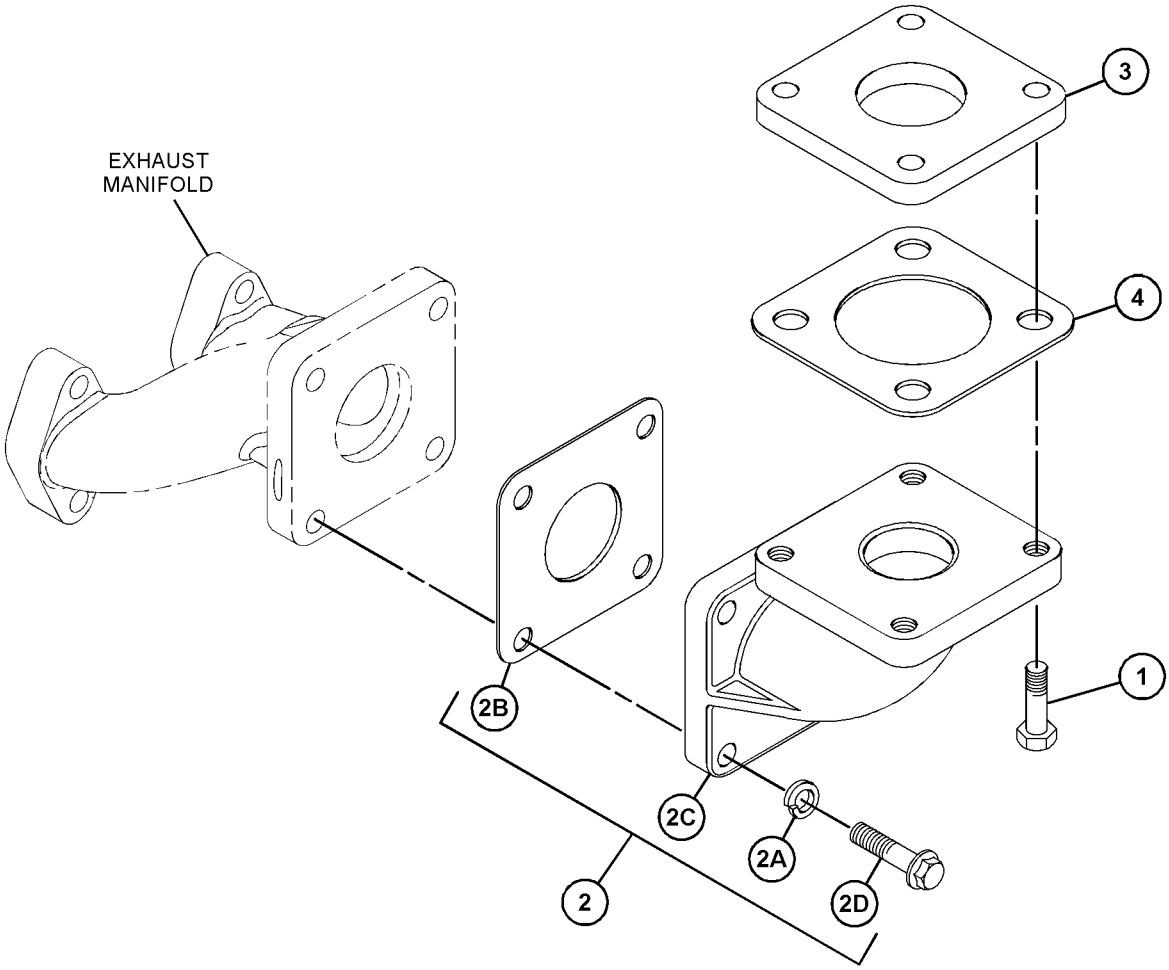

GRAPHIC #1 <END> g06220272

244-0514 FILTER ELEMENT AS-AIR

PART OF 318-8804 FILTER GP-AIR

SMCS-1054 **i03399368**

NOTE	REF NO	GRAPHIC REF	PART NUMBER	QTY	PART NAME 1 2 3 4 5 6 (PRODUCT LEVEL)	SEE PAGE
	1	1	**246-5011**	1	FILTER ELEMENT-AIR	
	2	1	**271-5059**	1	INDICATOR (AIR FILTER SERVICE)	
	3	1	**271-5062**	1	VALVE-DUST	

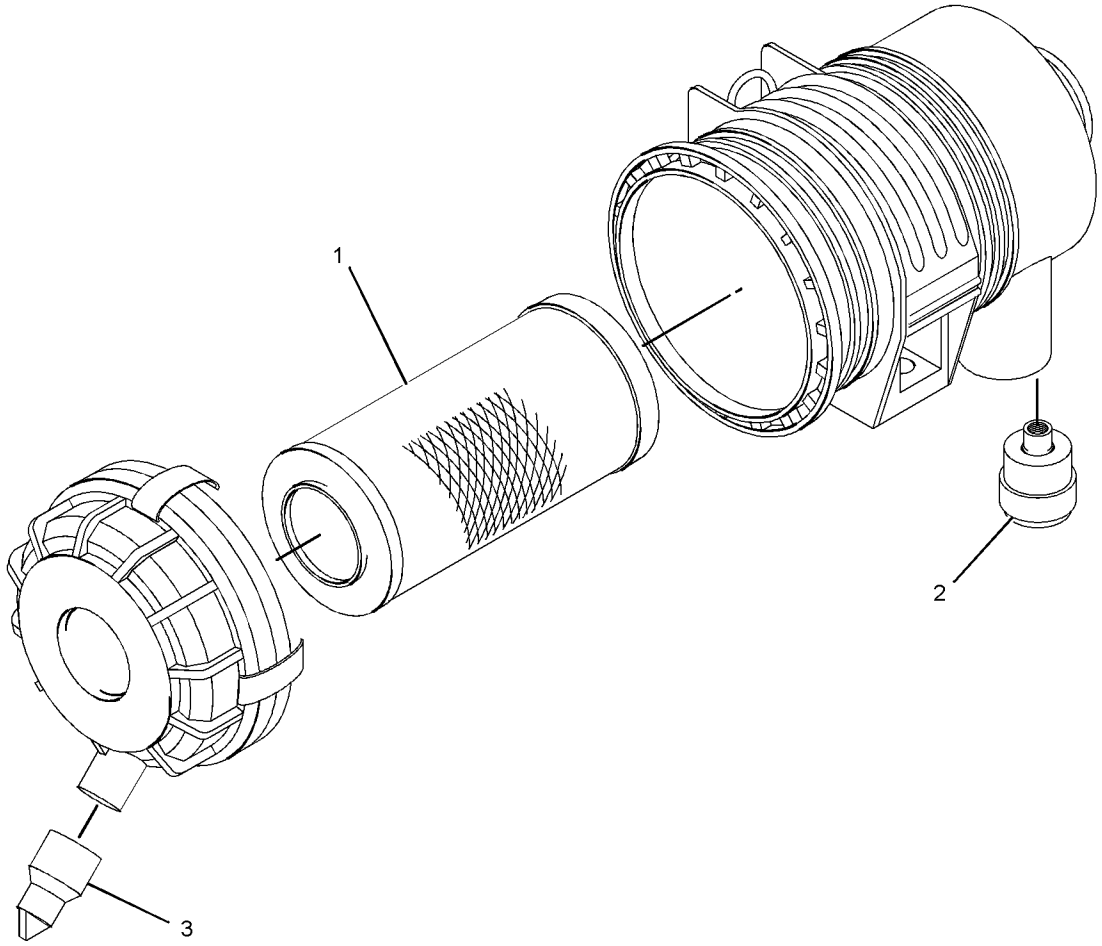

GRAPHIC #1 <END> g01196605

318-8804 FILTER GP-AIR

PART OF 516-4466, 516-9462, 541-8320 ENGINE AR-PRIMARY

SMCS-1051, 1054 **i06849204**

NOTE	REF NO	GRAPHIC REF	PART NUMBER	QTY	PART NAME 1 2 3 4 5 6 (PRODUCT LEVEL)	SEE PAGE
M	1	1	**6I-0217**	2	BOLT (M8X1.25X20-MM)	
M	2	1	**6I-0254**	2	BOLT (M8X1.25X30-MM)	
	3	1	**103-1067**	1	CLAMP-HOSE	
M	4	1	**153-5592**	2	NUT (M8X1.25-THD)	
	5	1	**244-0508**	1	HOSE	
Y	6	1	**244-0514**	1	FILTER ELEMENT AS-AIR	108
	7	1	**247-1376**	1	BRACKET-FILTER	
	8	1	**468-7382**	1	SPACER	
	9	1	**318-8805**	1	BRACKET	
	10	1	**326-9052**	1	FILM-WARNING (DO NOT SPRAY, READ OMM)	
	11	1	**103-6714**	1	CLIP	

M - METRIC PART
Y - SEPARATE ILLUSTRATION

318-8804 **FILTER GP-AIR (**contd.**)** **i06849204**

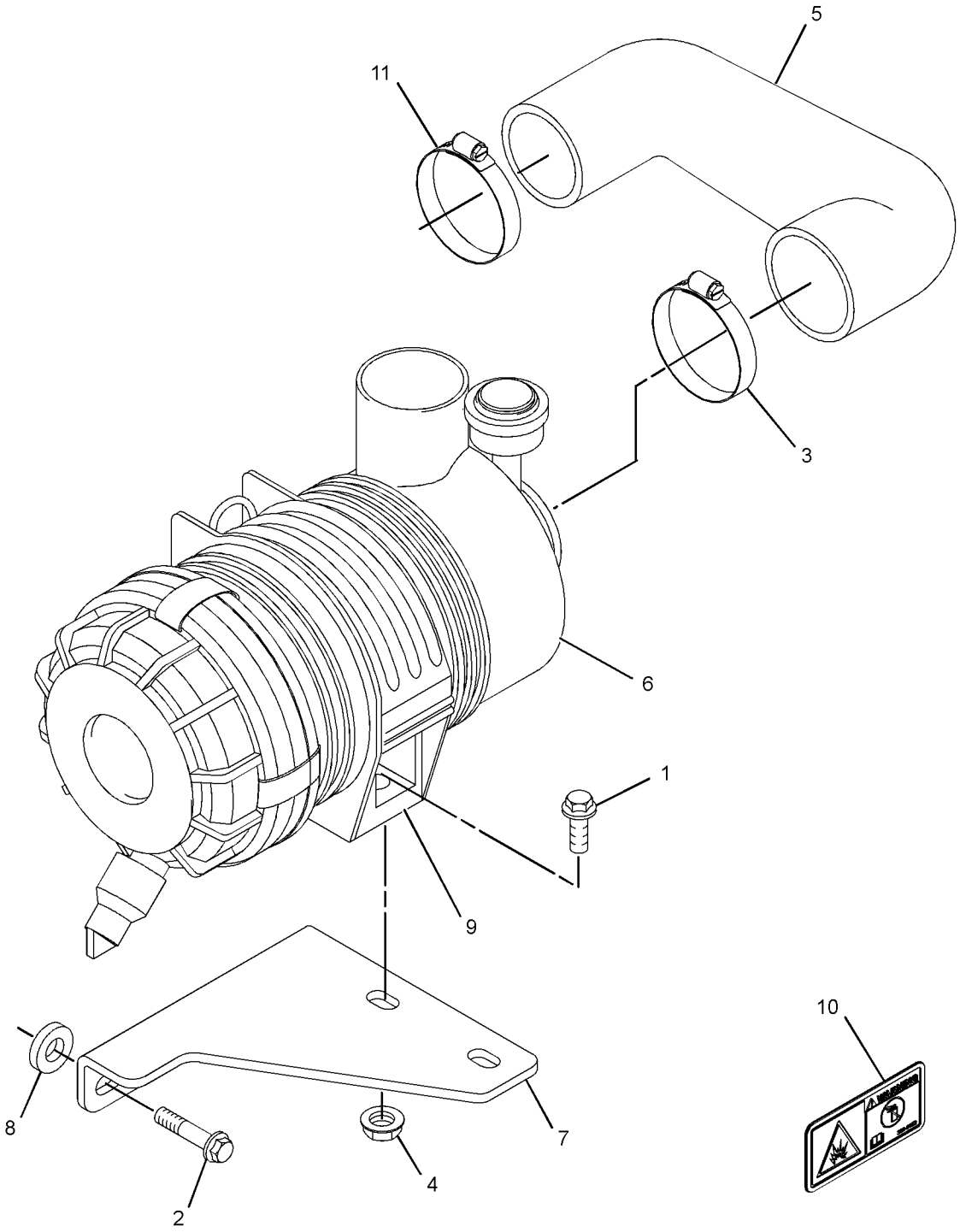

GRAPHIC #1 <END> g06104499

313-1991 MANIFOLD GP-EXHAUST

PART OF 516-4466, 516-9462, 541-8320 ENGINE AR-PRIMARY

SMCS-1059 **i03384421**

NOTE	REF NO	GRAPHIC REF	PART NUMBER	QTY	PART NAME 1 2 3 4 5 6 (PRODUCT LEVEL)	SEE PAGE
M	1	1	**153-5960**	2	NUT (M6X1-THD)	
	2	1	**153-6859**	1	MANIFOLD-EXHAUST	
	3	1	**153-6860**	1	GASKET	
M	4	1	**153-6861**	4	BOLT (M6X1X25-MM)	

M - METRIC PART

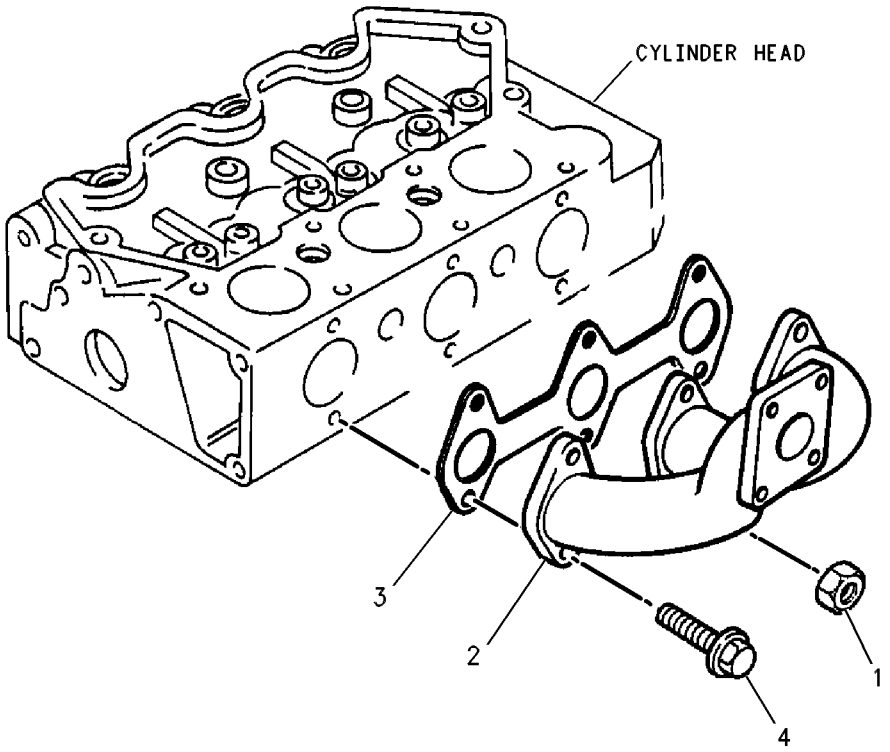

GRAPHIC #1 <END> g00461596

329-9764 CONTROL GP-GOVERNOR

PART OF 435-1643 ENGINE AR

TYPE 1

SMCS-1265, 1276 **i06907886**

NOTE	REF NO	GRAPHIC REF	PART NUMBER	QTY	PART NAME 1 2 3 4 5 6 (PRODUCT LEVEL)	SEE PAGE
M	1	1	**5C-2890**	1	NUT (M6X1-THD)	
	2	1	**139-5511**	1	CAP (TAMPER RESISTANT)	
M	3	1	**153-5592**	1	NUT (M8X1.25-THD)	
	4	1	**153-6415**	2	WASHER	
	5	1	**153-7983**	1	PIN	
	6	1	**095-1574**	1	SEAL-O-RING	
	7	1	**154-2715**	1	WASHER	
M	8	1	**369-4486**	2	BOLT (M6X1X35-MM)	
M	9	1	**162-2207**	1	NUT	
M	10	1	**106-8916**	4	BOLT (M6X16-MM)	
	11	1	**423-7724**	1	GASKET	
	12	1	**308-1882**	1	SPRING	
M	13	1	**308-1889**	1	NUT (M10X1.25-THD)	
M	14	1	**308-1892**	1	NUT (M6X1-THD)	
	15	1	**308-1897**	1	RING	
	16	1	**336-2965**	1	SPRING	
	17	1	**308-4266**	1	SHAFT	
	18	1	**390-3731**	1	SHAFT	
	19	1	**495-0737**	1	BOLT	
	20	1	**311-0655**	1	SPRING	
	21	1	**311-9622**	1	SPRING	
M	22	1	**313-2025**	1	BOLT-SPECIAL (M10X1.25-MM THD)	
	23	1	**313-5832**	1	BOLT AS	
	23A	1	**153-7987**	1	WASHER	
M	23B	1	**191-9297**	1	NUT (M10X1.25-THD)	
	23C	1	**313-5833**	1	SPRING	
	24	1	**321-4249**	1	NUT	
	25	1	**390-3729**	1	LEVER-CONTROL	
	26	1	**324-3398**	1	LEVER-CONTROL	
	27	1	**330-9189**	1	PLUG	
	28	1	**425-7065**	1	CAP-TAMPER PROOF	
	29	1	**334-0732**	1	ARM (FRONT HOUSING)	
	30	1	**335-5578**	1	BRACKET	

M - METRIC PART

329-9764 **CONTROL GP-GOVERNOR (**contd.**)** **i06907886**

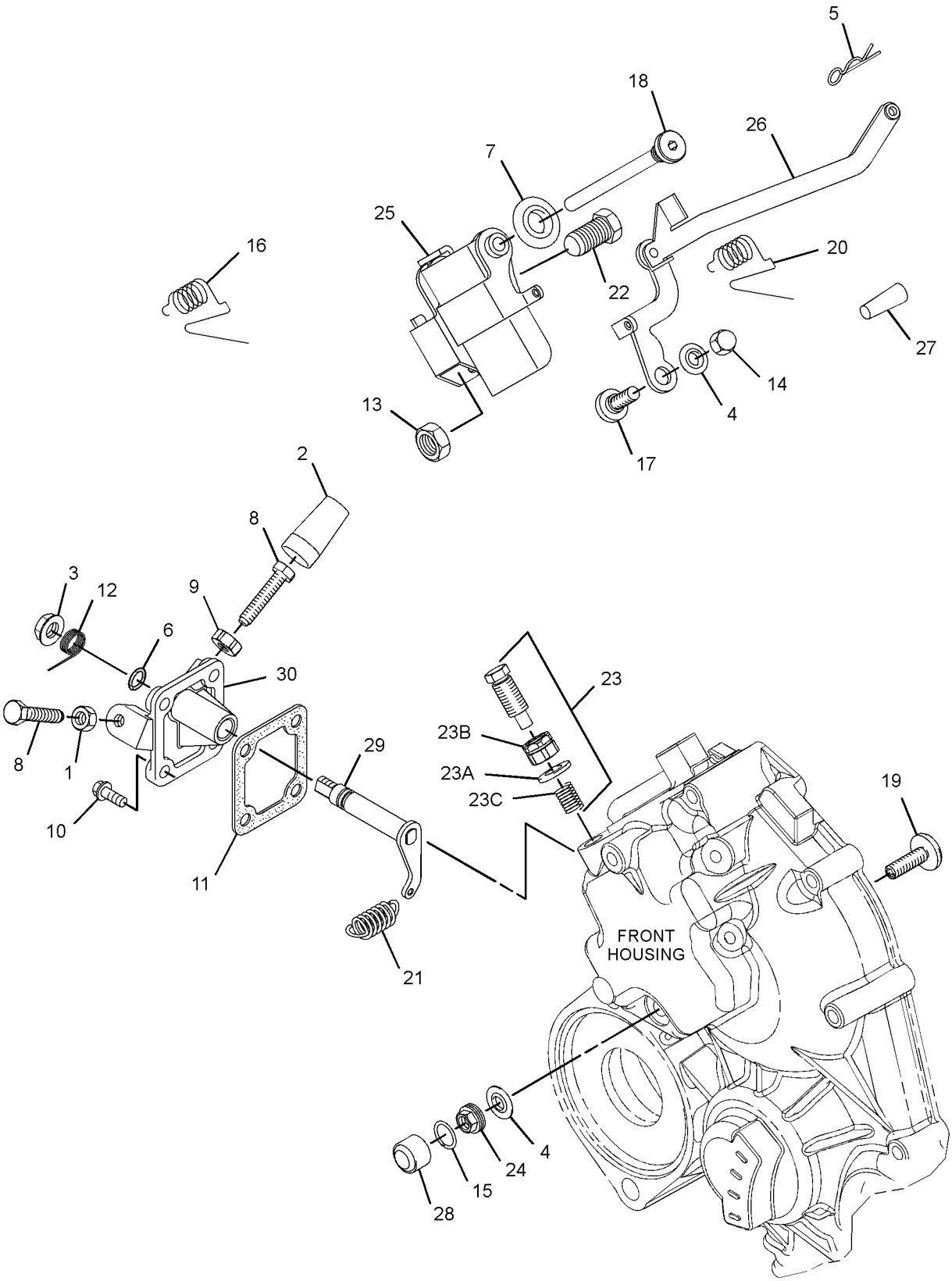

GRAPHIC #1 <END> g03725335

329-9764 CONTROL GP-GOVERNOR

PART OF 435-1643 ENGINE AR, 541-8320 ENGINE AR-PRIMARY

TYPE 2

SMCS-1265, 1276 **i07152976**

NOTE	REF NO	GRAPHIC REF	PART NUMBER	QTY	PART NAME 1 2 3 4 5 6 (PRODUCT LEVEL)	SEE PAGE
M	1	1	**5C-2890**	1	NUT (M6X1-THD)	
	2	1	**139-5511**	1	CAP (TAMPER RESISTANT)	
M	3	1	**153-5592**	1	NUT (M8X1.25-THD)	
	4	1	**153-6415**	2	WASHER	
	5	1	**153-7983**	1	PIN	
	6	1	**095-1574**	1	SEAL-O-RING	
	7	1	**154-2715**	1	WASHER	
M	8	1	**369-4486**	2	BOLT (M6X1X35-MM)	
M	9	1	**162-2207**	1	NUT	
M	10	1	**106-8916**	4	BOLT (M6X16-MM)	
	11	1	**423-7724**	1	GASKET	
	12	1	**308-1882**	1	SPRING	
M	13	1	**308-1889**	1	NUT (M10X1.25-THD)	
M	14	1	**308-1892**	1	NUT (M6X1-THD)	
	15	1	**336-2965**	1	SPRING	
	16	1	**308-4266**	1	SHAFT	
	17	1	**390-3731**	1	SHAFT	
	18	1	**495-0737**	1	BOLT	
	19	1	**311-0655**	1	SPRING	
	20	1	**311-9622**	1	SPRING	
M	21	1	**313-2025**	1	BOLT-SPECIAL (M10X1.25-MM THD)	
	22	1	**313-5832**	1	BOLT AS	
		1	**153-7987**	1	WASHER	
M		1	**191-9297**	1	NUT (M10X1.25-THD)	
		1	**313-5833**	1	SPRING	
C	23	1	**502-9478**	1	NUT	
	24	1	**390-3729**	1	LEVER-CONTROL	
	25	1	**324-3398**	1	LEVER-CONTROL	
	26	1	**330-9189**	1	PLUG	
	27	1	**334-0732**	1	ARM (FRONT HOUSING)	
	28	1	**335-5578**	1	BRACKET	
C	29	1	**502-5421**	1	PIN	
C	30	1	**503-9707**	1	CAP	
C	31	1	**503-9731**	1	SHROUD	

C - CHANGE FROM PREVIOUS TYPE
M - METRIC PART

329-9764 **CONTROL GP-GOVERNOR (**contd.**)** **i07152976**

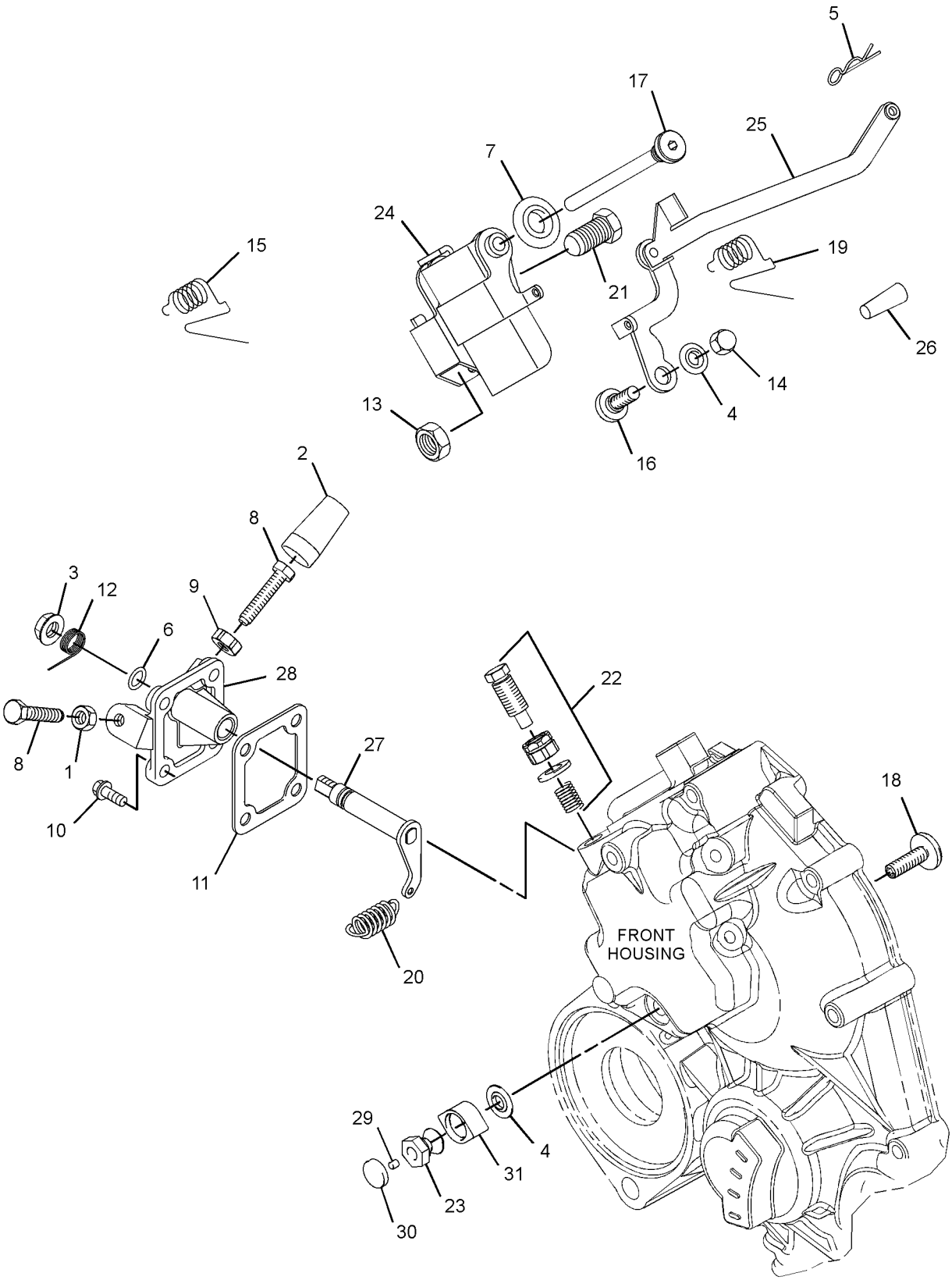

GRAPHIC #1 <END> g06247025

321-3142 GOVERNOR GP

PART OF 435-1632 ENGINE AR

TYPE 1

SMCS-1264, 1908 **i06907881**

NOTE	REF NO	GRAPHIC REF	PART NUMBER	QTY	PART NAME 1 2 3 4 5 6 (PRODUCT LEVEL)	SEE PAGE
M	1	1	**5C-2890**	1	NUT (M6X1-THD)	
	2	1	**139-5511**	1	CAP (TAMPER RESISTANT)	
M	3	1	**153-5592**	1	NUT (M8X1.25-THD)	
	4	1	**153-6415**	2	WASHER	
	5	1	**153-7983**	1	PIN	
	6	1	**095-1574**	1	SEAL-O-RING	
M	7	1	**369-4486**	2	BOLT (M6X1X35-MM)	
M	8	1	**162-2207**	1	NUT	
M	9	1	**106-8916**	4	BOLT (M6X16-MM)	
	10	1	**217-7115**	1	CAP (TAMPER RESISTANT)	
	11	1	**335-5578**	1	BRACKET	
	12	1	**423-7724**	1	GASKET	
	13	1	**334-0732**	1	ARM (FRONT HOUSING)	
	14	1	**308-1882**	1	SPRING	
M	15	1	**308-1889**	1	NUT (M10X1.25-THD)	
M	16	1	**308-1892**	1	NUT (M6X1-THD)	
	17	1	**308-1897**	2	RING	
	18	1	**425-7065**	1	CAP-TAMPER PROOF	
	19	1	**321-4249**	1	NUT	
	20	1	**330-9189**	1	PLUG	
	21	1	**308-4266**	1	SHAFT	
	22	1	**390-3731**	1	SHAFT	
	23	1	**154-2715**	1	WASHER	
	24	1	**495-0737**	1	BOLT	
	25	1	**311-0655**	1	SPRING	
M	26	1	**313-2025**	1	BOLT-SPECIAL (M10X1.25-MM THD)	
	27	1	**324-3396**	1	LEVER AS-CONTROL	
	28	1	**313-5832**	1	BOLT AS	
	28A	1	**153-7987**	1	WASHER	
M	28B	1	**191-9297**	1	NUT (M10X1.25-THD)	
	28C	1	**313-5833**	1	SPRING	
	29	1	**390-3729**	1	LEVER-CONTROL	
	30	1	**321-3145**	1	SPRING	
	32	1	**336-2965**	1	SPRING	

M - METRIC PART

321-3142 **GOVERNOR GP (**contd.**)** **i06907881**

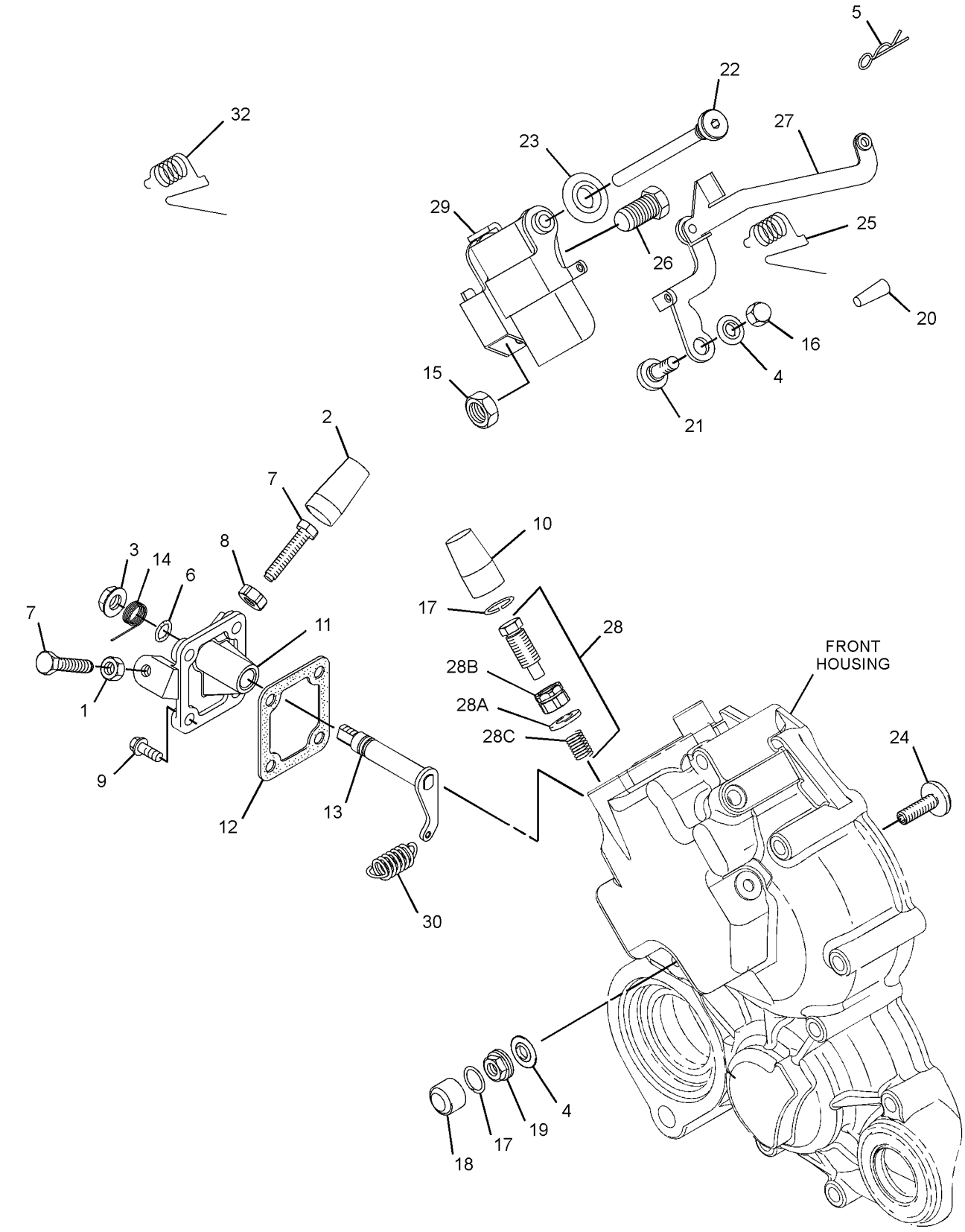

GRAPHIC #1 <END> g03711333

321-3142 GOVERNOR GP

PART OF 435-1632 ENGINE AR

TYPE 2

SMCS-1264, 1908 **i07157326**

NOTE	REF NO	GRAPHIC REF	PART NUMBER	QTY	PART NAME 1 2 3 4 5 6 (PRODUCT LEVEL)	SEE PAGE
M	1	1	**5C-2890**	1	NUT (M6X1-THD)	
	2	1	**139-5511**	1	CAP (TAMPER RESISTANT)	
M	3	1	**153-5592**	1	NUT (M8X1.25-THD)	
	4	1	**153-6415**	2	WASHER	
	5	1	**153-7983**	1	PIN	
	6	1	**095-1574**	1	SEAL-O-RING	
M	7	1	**369-4486**	2	BOLT (M6X1X35-MM)	
M	8	1	**162-2207**	1	NUT	
M	9	1	**106-8916**	4	BOLT (M6X16-MM)	
	10	1	**217-7115**	1	CAP (TAMPER RESISTANT)	
	11	1	**335-5578**	1	BRACKET	
	12	1	**423-7724**	1	GASKET	
	13	1	**334-0732**	1	ARM (FRONT HOUSING)	
	14	1	**308-1882**	1	SPRING	
M	15	1	**308-1889**	1	NUT (M10X1.25-THD)	
M	16	1	**308-1892**	1	NUT (M6X1-THD)	
C	17	1	**308-1897**	1	RING	
C	18	1	**503-9707**	1	CAP	
C	19	1	**502-9478**	1	NUT	
	20	1	**330-9189**	1	PLUG	
	21	1	**308-4266**	1	SHAFT	
	22	1	**390-3731**	1	SHAFT	
	23	1	**154-2715**	1	WASHER	
	24	1	**495-0737**	1	BOLT	
	25	1	**311-0655**	1	SPRING	
M	26	1	**313-2025**	1	BOLT-SPECIAL (M10X1.25-MM THD)	
	27	1	**324-3396**	1	LEVER AS-CONTROL	
	28	1	**313-5832**	1	BOLT AS	
	28A	1	**153-7987**	1	WASHER	
M	28B	1	**191-9297**	1	NUT (M10X1.25-THD)	
	28C	1	**313-5833**	1	SPRING	
	29	1	**390-3729**	1	LEVER-CONTROL	
	30	1	**321-3145**	1	SPRING	
	32	1	**336-2965**	1	SPRING	
C	33	1	**503-9731**	1	SHROUD	
C	34	1	**502-5421**	1	PIN	

C - CHANGE FROM PREVIOUS TYPE
M - METRIC PART

321-3142 **GOVERNOR GP (**contd.**)** **i07157326**

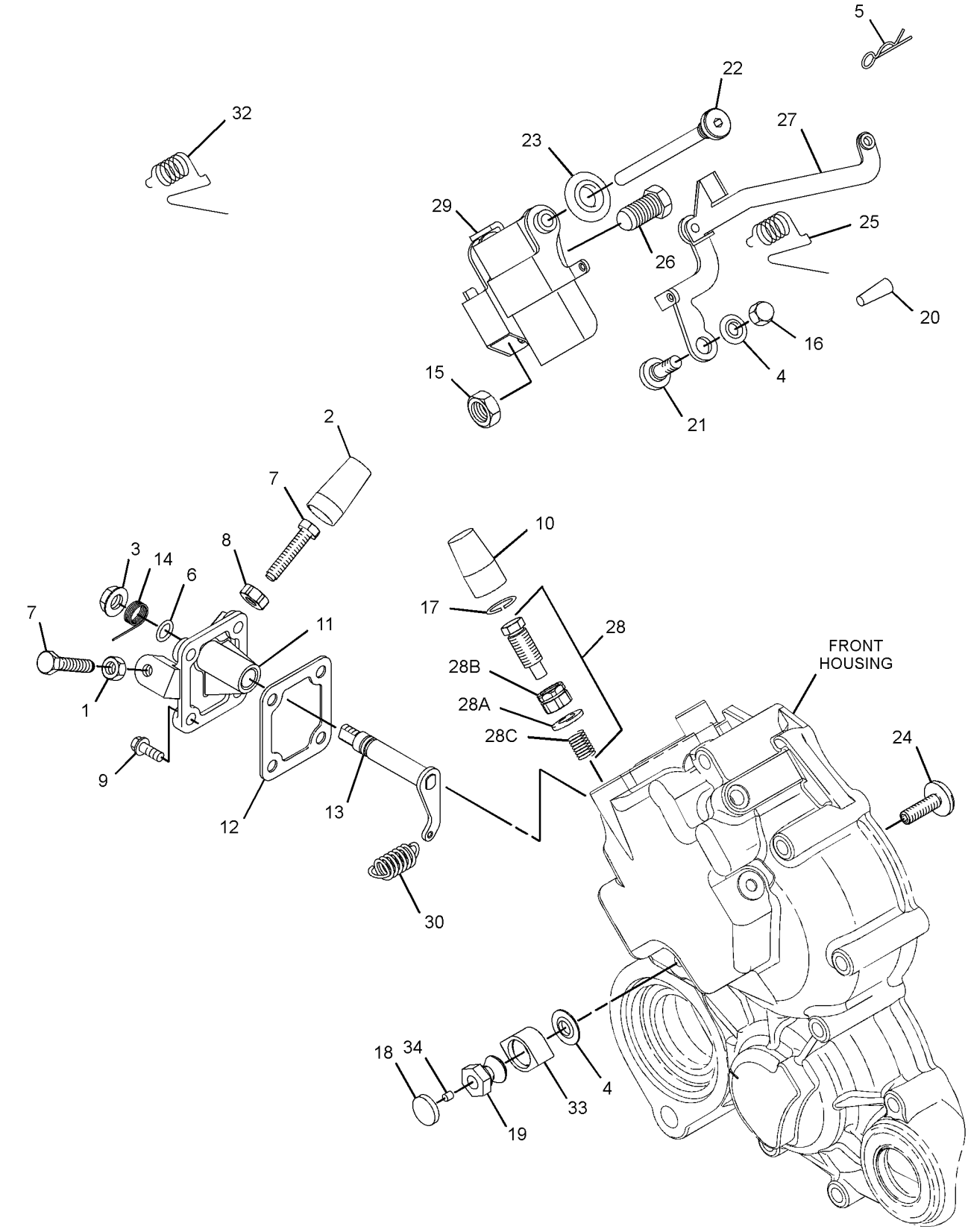

GRAPHIC #1 <END> g06239335

321-3142 GOVERNOR GP

PART OF 435-1632 ENGINE AR, 516-9462 ENGINE AR-PRIMARY
TYPE 3

SMCS-1264, 1908 **i07191669**

NOTE	REF NO	GRAPHIC REF	PART NUMBER	QTY	PART NAME 1 2 3 4 5 6 (PRODUCT LEVEL)	SEE PAGE
M	1	1	**5C-2890**	1	NUT (M6X1-THD)	
	2	1	**139-5511**	1	CAP (TAMPER RESISTANT)	
M	3	1	**153-5592**	1	NUT (M8X1.25-THD)	
	4	1	**153-6415**	2	WASHER	
	5	1	**153-7983**	1	PIN	
	6	1	**095-1574**	1	SEAL-O-RING	
M	7	1	**369-4486**	2	BOLT (M6X1X35-MM)	
M	8	1	**162-2207**	1	NUT	
M	9	1	**106-8916**	4	BOLT (M6X16-MM)	
	10	1	**217-7115**	1	CAP (TAMPER RESISTANT)	
	11	1	**335-5578**	1	BRACKET	
	12	1	**423-7724**	1	GASKET	
	13	1	**334-0732**	1	ARM (FRONT HOUSING)	
	14	1	**308-1882**	1	SPRING	
M	15	1	**308-1889**	1	NUT (M10X1.25-THD)	
M	16	1	**308-1892**	1	NUT (M6X1-THD)	
C	17	1	**308-1897**	1	RING	
C	18	1	**503-9707**	1	CAP	
C	19	1	**502-9478**	1	NUT	
	20	1	**330-9189**	1	PLUG	
	21	1	**308-4266**	1	SHAFT	
	22	1	**390-3731**	1	SHAFT	
	23	1	**154-2715**	1	WASHER	
	24	1	**495-0737**	1	BOLT	
	25	1	**311-0655**	1	SPRING	
M	26	1	**313-2025**	1	BOLT-SPECIAL (M10X1.25-MM THD)	
	27	1	**324-3396**	1	LEVER AS-CONTROL	
	28	1	**313-5832**	1	BOLT AS	
	28A	1	**153-7987**	1	WASHER	
M	28B	1	**191-9297**	1	NUT (M10X1.25-THD)	
	28C	1	**313-5833**	1	SPRING	
	29	1	**390-3729**	1	LEVER-CONTROL	
	30	1	**321-3145**	1	SPRING	
	32	1	**336-2965**	1	SPRING	
C	33	1	**503-9731**	1	SHROUD	
C	34	1	**502-5421**	1	PIN	

C - CHANGE FROM PREVIOUS TYPE
M - METRIC PART

321-3142 **GOVERNOR GP (**contd.**)** **i07191669**

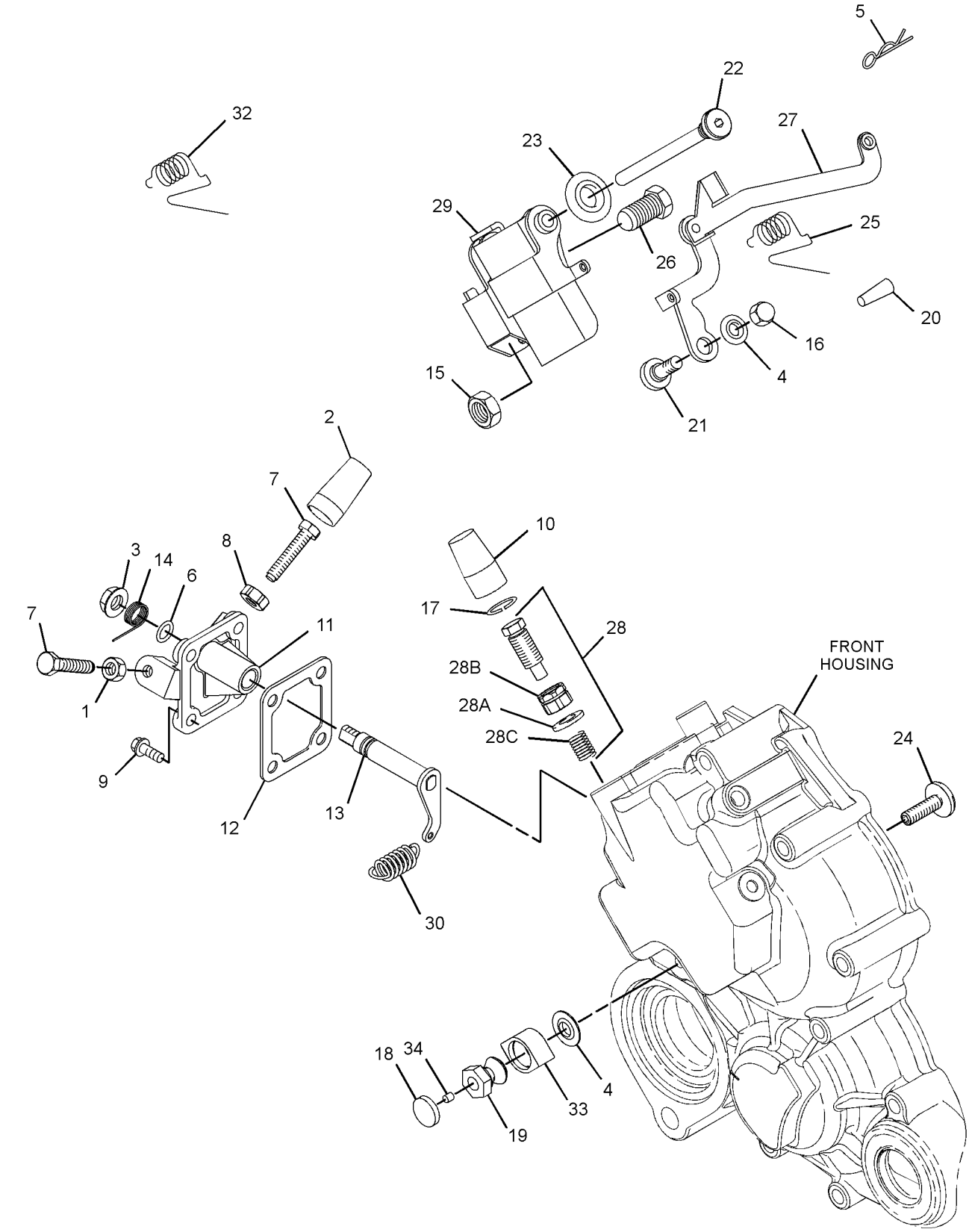

GRAPHIC #1 <END> g06239335

323-2408 GOVERNOR GP

PART OF 435-1644 CYLINDER BLOCK GP

TYPE 1

SMCS-1264, 1908 **i06907902**

NOTE	REF NO	GRAPHIC REF	PART NUMBER	QTY	PART NAME 1 2 3 4 5 6 (PRODUCT LEVEL)	SEE PAGE
M	1	1	**5C-2890**	1	NUT (M6X1-THD)	
	2	1	**139-5511**	1	CAP (TAMPER RESISTANT)	
M	3	1	**153-5592**	1	NUT (M8X1.25-THD)	
	4	1	**153-6415**	2	WASHER	
	5	1	**153-7983**	1	PIN	
	6	1	**095-1574**	1	SEAL-O-RING	
M	7	1	**369-4486**	2	BOLT (M6X1X35-MM)	
M	8	1	**162-2207**	1	NUT	
M	9	1	**106-8916**	4	BOLT (M6X16-MM)	
	10	1	**217-7115**	1	CAP (TAMPER RESISTANT)	
	11	1	**335-5578**	1	BRACKET	
	12	1	**423-7724**	1	GASKET	
	13	1	**334-0732**	1	ARM (FRONT HOUSING)	
	14	1	**308-1882**	1	SPRING	
M	15	1	**308-1889**	1	NUT (M10X1.25-THD)	
M	16	1	**308-1892**	1	NUT (M6X1-THD)	
	17	1	**308-1897**	2	RING	
	18	1	**425-7065**	1	CAP-TAMPER PROOF	
	19	1	**321-4249**	1	NUT	
	20	1	**330-9189**	1	PLUG	
	21	1	**308-4266**	1	SHAFT	
	22	1	**390-3731**	1	SHAFT	
	23	1	**309-6729**	1	SEAL-O-RING	
	24	1	**495-0737**	1	BOLT	
	25	1	**311-0655**	1	SPRING	
M	26	1	**313-2025**	1	BOLT-SPECIAL (M10X1.25-MM THD)	
	27	1	**324-3398**	1	LEVER-CONTROL	
	28	1	**313-5832**	1	BOLT AS	
	28A	1	**153-7987**	1	WASHER	
M	28B	1	**191-9297**	1	NUT (M10X1.25-THD)	
	28C	1	**313-5833**	1	SPRING	
	29	1	**390-3729**	1	LEVER-CONTROL	
	30	1	**364-1817**	1	SPRING	
	31	1	**336-2965**	1	SPRING	

M - METRIC PART

323-2408 **GOVERNOR GP (**contd.**)** **i06907902**

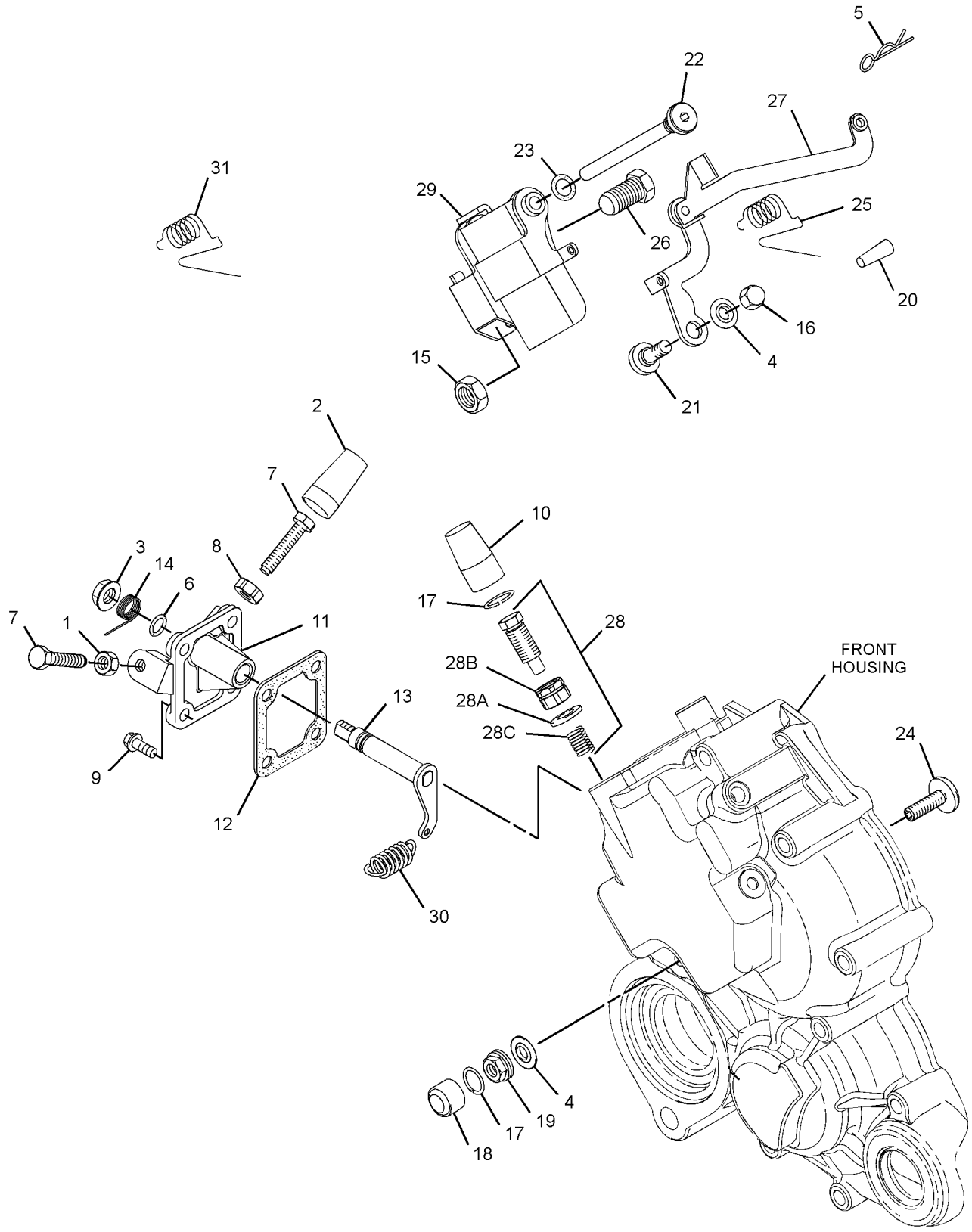

GRAPHIC #1 <END> g03710445

323-2408 GOVERNOR GP

PART OF 435-1644 CYLINDER BLOCK GP

TYPE 2

SMCS-1264, 1908 **i07152958**

NOTE	REF NO	GRAPHIC REF	PART NUMBER	QTY	PART NAME 1 2 3 4 5 6 (PRODUCT LEVEL)	SEE PAGE
M	1	1	**5C-2890**	1	NUT (M6X1-THD)	
	2	1	**139-5511**	1	CAP (TAMPER RESISTANT)	
M	3	1	**153-5592**	1	NUT (M8X1.25-THD)	
	4	1	**153-6415**	2	WASHER	
	5	1	**153-7983**	1	PIN	
	6	1	**095-1574**	1	SEAL-O-RING	
M	7	1	**369-4486**	2	BOLT (M6X1X35-MM)	
M	8	1	**162-2207**	1	NUT	
M	9	1	**106-8916**	4	BOLT (M6X16-MM)	
	10	1	**217-7115**	1	CAP (TAMPER RESISTANT)	
	11	1	**335-5578**	1	BRACKET	
	12	1	**423-7724**	1	GASKET	
	13	1	**334-0732**	1	ARM (FRONT HOUSING)	
	14	1	**308-1882**	1	SPRING	
M	15	1	**308-1889**	1	NUT (M10X1.25-THD)	
M	16	1	**308-1892**	1	NUT (M6X1-THD)	
C	17	1	**308-1897**	1	RING	
C	18	1	**503-9707**	1	CAP	
C	19	1	**502-9478**	1	NUT	
	20	1	**330-9189**	1	PLUG	
	21	1	**308-4266**	1	SHAFT	
	22	1	**390-3731**	1	SHAFT	
	23	1	**309-6729**	1	SEAL-O-RING	
	24	1	**495-0737**	1	BOLT	
	25	1	**311-0655**	1	SPRING	
M	26	1	**313-2025**	1	BOLT-SPECIAL (M10X1.25-MM THD)	
	27	1	**324-3398**	1	LEVER-CONTROL	
	28	1	**313-5832**	1	BOLT AS	
	28A	1	**153-7987**	1	WASHER	
M	28B	1	**191-9297**	1	NUT (M10X1.25-THD)	
	28C	1	**313-5833**	1	SPRING	
	29	1	**390-3729**	1	LEVER-CONTROL	
	30	1	**364-1817**	1	SPRING	
	31	1	**336-2965**	1	SPRING	
C	32	1	**503-9731**	1	SHROUD	
C	33	1	**502-5421**	1	PIN	

C - CHANGE FROM PREVIOUS TYPE
M - METRIC PART

323-2408 **GOVERNOR GP (**contd.**)** **i07152958**

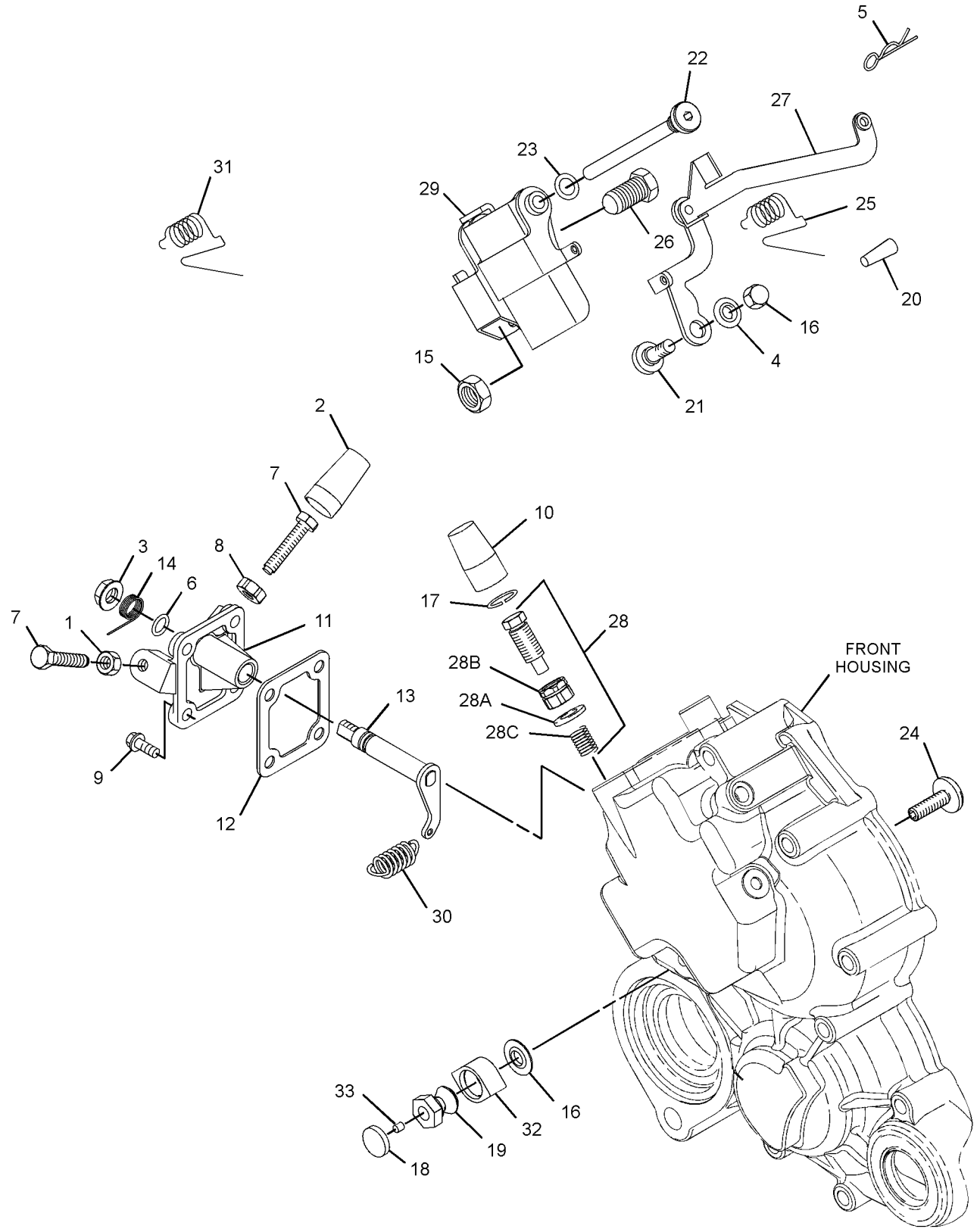

GRAPHIC #1 <END> g06241685

457-8042 GOVERNOR GP

PART OF 516-4466 ENGINE AR-PRIMARY

SMCS-1264, 1908 **i07326864**

NOTE	REF NO	GRAPHIC REF	PART NUMBER	QTY	PART NAME 1 2 3 4 5 6 (PRODUCT LEVEL)	SEE PAGE
M	1	1	**5C-2890**	1	NUT (M6X1-THD)	
	2	1	**139-5511**	1	CAP (TAMPER RESISTANT)	
M	3	1	**153-5592**	1	NUT (M8X1.25-THD)	
	4	1	**153-6415**	2	WASHER	
	5	1	**153-7983**	1	PIN	
	6	1	**095-1574**	1	SEAL-O-RING	
M	7	1	**369-4486**	1	BOLT (M6X1X35-MM)	
M	8	1	**162-2207**	1	NUT	
M	9	1	**106-8916**	4	BOLT (M6X16-MM)	
	10	1	**217-7115**	1	CAP (TAMPER RESISTANT)	
	11	1	**335-5578**	1	BRACKET	
	12	1	**423-7724**	1	GASKET	
	13	1	**334-0732**	1	ARM (FRONT HOUSING)	
	14	1	**308-1882**	1	SPRING	
M	15	1	**308-1889**	1	NUT (M10X1.25-THD)	
M	16	1	**308-1892**	1	NUT (M6X1-THD)	
C	18	1	**503-9707**	1	CAP	
C	19	1	**502-9478**	1	NUT	
	20	1	**330-9189**	1	PLUG	
	21	1	**308-4266**	1	SHAFT	
	22	1	**390-3731**	1	SHAFT	
	23	1	**309-6729**	1	SEAL-O-RING	
	24	1	**495-0737**	1	BOLT	
	25	1	**311-0655**	1	SPRING	
M	26	1	**313-2025**	1	BOLT-SPECIAL (M10X1.25-MM THD)	
	27	1	**324-3398**	1	LEVER-CONTROL	
	28	1	**313-5832**	1	BOLT AS	
	28A	1	**153-7987**	1	WASHER	
M	28B	1	**191-9297**	1	NUT (M10X1.25-THD)	
	28C	1	**313-5833**	1	SPRING	
	29	1	**390-3729**	1	LEVER-CONTROL	
	30	1	**364-1817**	1	SPRING	
	31	1	**336-2965**	1	SPRING	
M	32	1	**8C-8451**	1	BOLT (M6X1X40-MM)	
C	33	1	**503-9731**	1	SHROUD	
C	34	1	**502-5421**	1	PIN	
	35	1	**153-7987**	1	WASHER	
	36	1	**313-2037**	1	PLUG	

C - CHANGE FROM PREVIOUS TYPE
M - METRIC PART

457-8042 **GOVERNOR GP (**contd.**)** **i07326864**

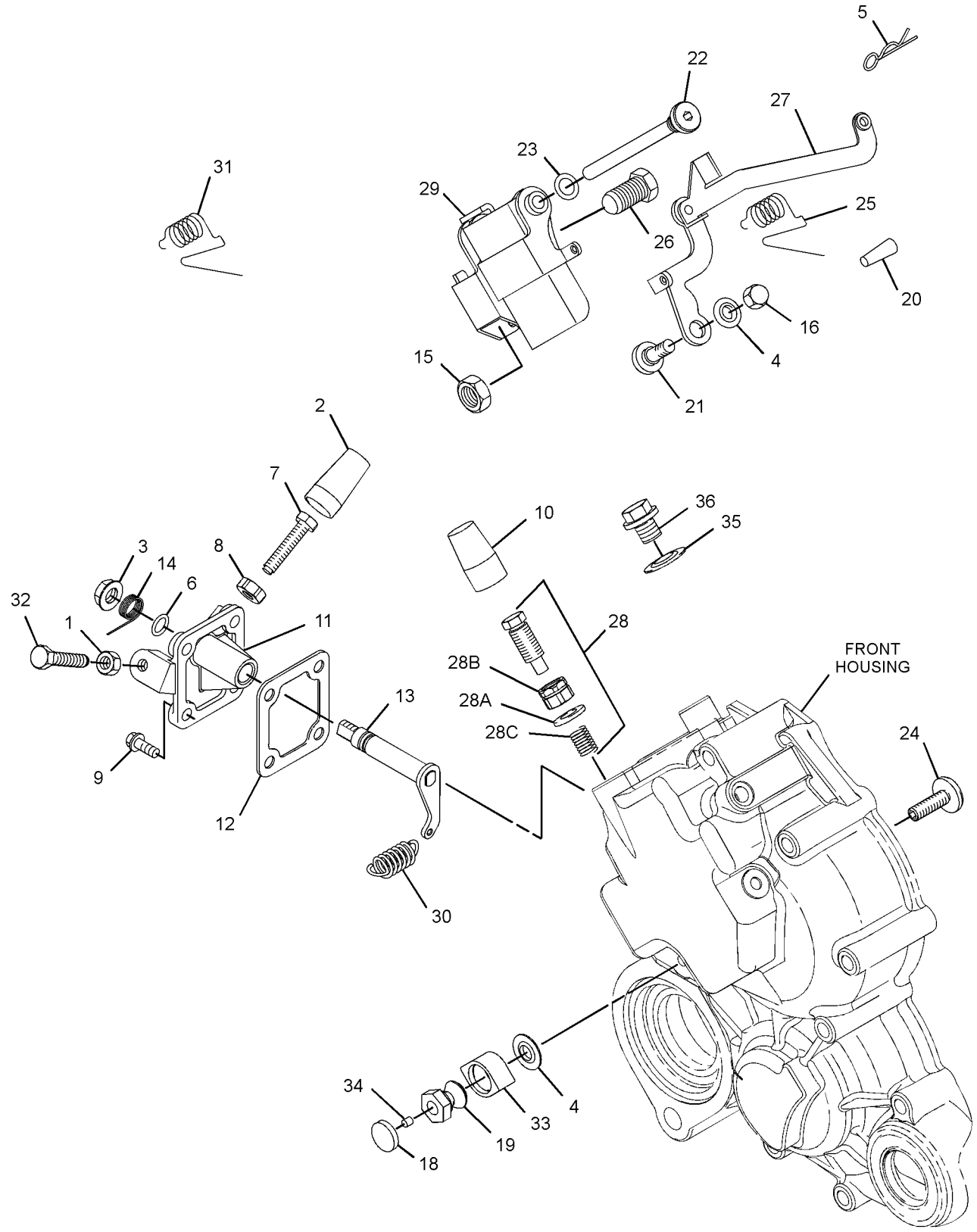

GRAPHIC #1 <END> g06240422

366-1272 INJECTOR GP-FUEL

PART OF 323-2410, 457-8076 PUMP GP-FUEL INJECTION

SMCS-1251, 1254, 1290, 1713 **i07423248**

NOTE	REF NO	GRAPHIC REF	PART NUMBER	QTY	PART NAME 1 2 3 4 5 6 (PRODUCT LEVEL)	SEE PAGE
	1	1	**232-0792**	1	NUT	
	2	1	**232-0793**	1	WASHER-SPECIAL	

PARTS SHOWN IN GRAPHIC(S) WITHOUT A REFERENCE NUMBER ARE NOT SERVICED SEPARATELY

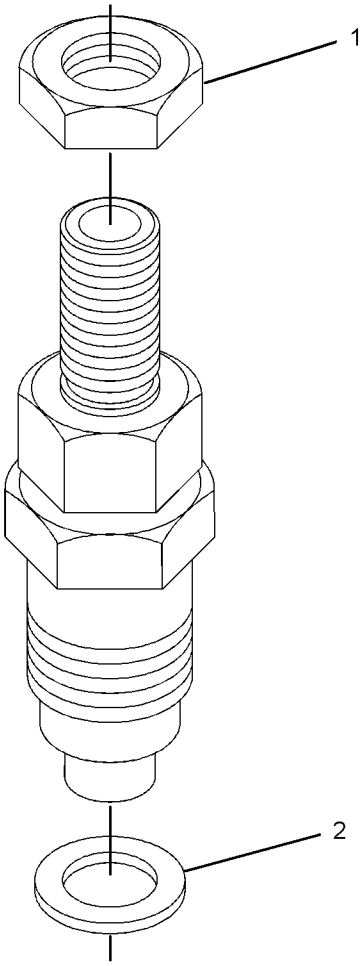

GRAPHIC #1 <END> g03118980

313-1968 PUMP GP-FUEL INJECTION

PART OF 435-1643 ENGINE AR, 541-8320 ENGINE AR-PRIMARY

SMCS-1251, 1290 **i06151676**

NOTE	REF NO	GRAPHIC REF	PART NUMBER	QTY	PART NAME 1 2 3 4 5 6 (PRODUCT LEVEL)	SEE PAGE
M	1	1,2	**153-5960**	4	NUT (M6X1-THD)	
	2	2	**153-6415**	1	WASHER	
M	3	1	**153-7640**	2	BOLT (M6X1X20-MM)	
	4	2	**426-4357**	3	GASKET	
B	5	1	**153-6385**	1	SHIM (0.2-MM THK)	
B		1	**161-1432**	1	SHIM (0.3-MM THK)	
B		1	**161-1433**	1	SHIM (0.4-MM THK)	
B		1	**161-1434**	1	SHIM (0.5-MM THK)	
B		1	**161-1435**	1	SHIM (0.9-MM THK)	
B		1	**312-1583**	1	SHIM (0.25-MM THK)	
B		1	**312-1582**	1	SHIM (0.35-MM THK)	
M	6	2	**183-3353**	2	BOLT (M6X1X25-MM)	
	7	2	**231-7702**	1	TUBE AS (CYL NO. 1)	
	8	2	**231-7703**	1	TUBE AS (CYL NO. 2)	
	9	2	**231-7704**	1	TUBE AS (CYL NO. 3)	
	10	2	**231-7739**	1	LINE AS	
	11	2	**232-0218**	2	CLAMP	
	12	2	**232-0290**	1	CONNECTOR	
	13	2	**252-9229**	3	INJECTOR AS-FUEL	
					(EACH INCLUDES)	
	13A	2	**232-0793**	1	WASHER-SPECIAL	
	14	2	**290-8014**	4	CLAMP	
	15	1	**313-2039**	1	PUMP AS-FUEL INJECTION	
	16	2	**313-2040**	1	HOSE	

B - USE AS REQUIRED
M - METRIC PART

313-1968 **PUMP GP-FUEL INJECTION (**contd.**)** **i06151676**

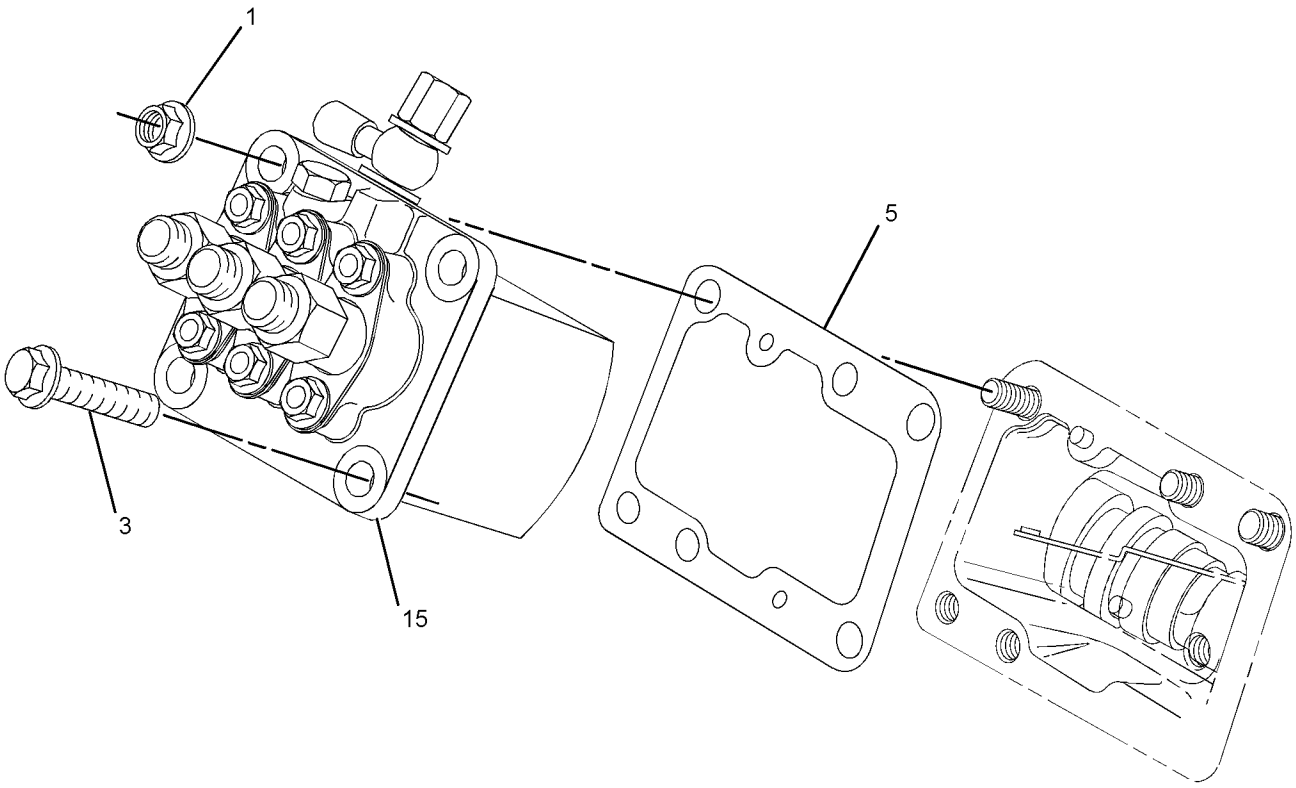

GRAPHIC #1 g01387217

313-1968 **PUMP GP-FUEL INJECTION (**contd.**)** **i06151676**

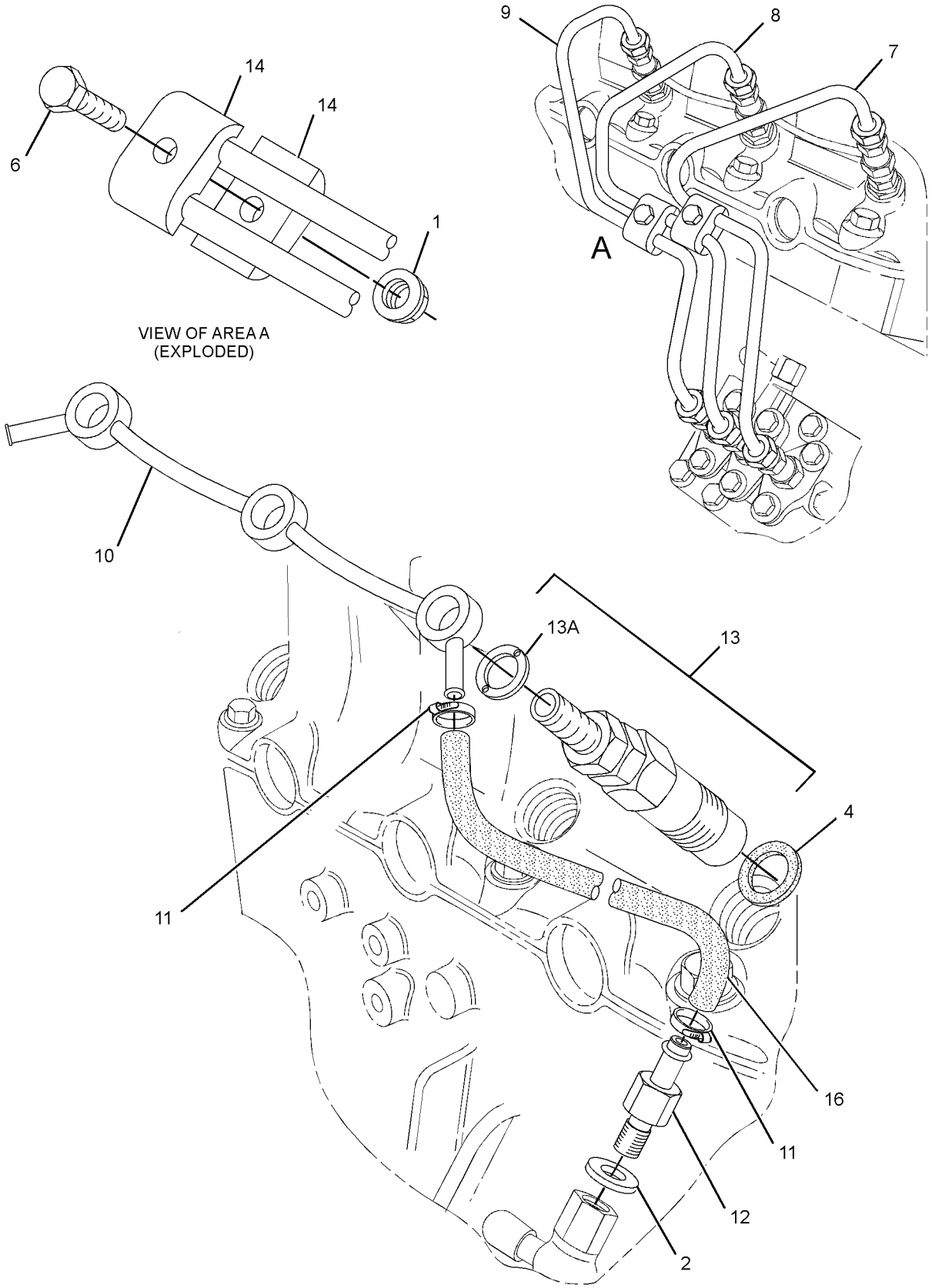

GRAPHIC #2 <END> g01387219

321-3334 PUMP GP-FUEL INJECTION

PART OF 435-1632 ENGINE AR, 516-9462 ENGINE AR-PRIMARY

SMCS-1251, 1290 **i06233692**

NOTE	REF NO	GRAPHIC REF	PART NUMBER	QTY	PART NAME 1 2 3 4 5 6 (PRODUCT LEVEL)	SEE PAGE
	1	1	**153-6415**	1	WASHER	
M	2	1	**153-7640**	2	BOLT (M6X1X20-MM)	
	3	1	**426-4357**	3	GASKET	
M	4	1	**183-3353**	2	BOLT (M6X1X25-MM)	
	5	1	**231-7702**	1	TUBE AS (CYL NO. 1)	
	6	1	**231-7703**	1	TUBE AS (CYL NO. 2)	
	7	1	**231-7704**	1	TUBE AS (CYL NO. 3)	
	8	1	**231-7739**	1	LINE AS	
	9	1	**232-0218**	2	CLAMP	
	10	1	**232-0290**	1	CONNECTOR	
	11	1	**252-9229**	3	INJECTOR AS-FUEL	
	11A	1	**232-0793**	1	WASHER-SPECIAL	
	12	1	**290-8014**	4	CLAMP	
	13	1	**293-3230**	1	PUMP GP-FUEL INJECTION	
	14	1	**313-2040**	1	HOSE	
	15	1	**153-6385**	1	SHIM (0.2-MM THK)	
AB		1	**161-1432**	1	SHIM (0.3-MM THK)	
AB		1	**161-1433**	1	SHIM (0.4-MM THK)	
AB		1	**161-1434**	1	SHIM (0.5-MM THK)	
AB		1	**161-1435**	1	SHIM (0.9-MM THK)	
AB		1	**312-1582**	1	SHIM (0.35-MM THK)	
AB		1	**312-1583**	1	SHIM (0.25-MM THK)	
M	16	1	**153-5960**	4	NUT (M6X1-THD)	

A - NOT PART OF THIS GROUP
B - USE AS REQUIRED
M - METRIC PART

321-3334 **PUMP GP-FUEL INJECTION (**contd.**)** **i06233692**

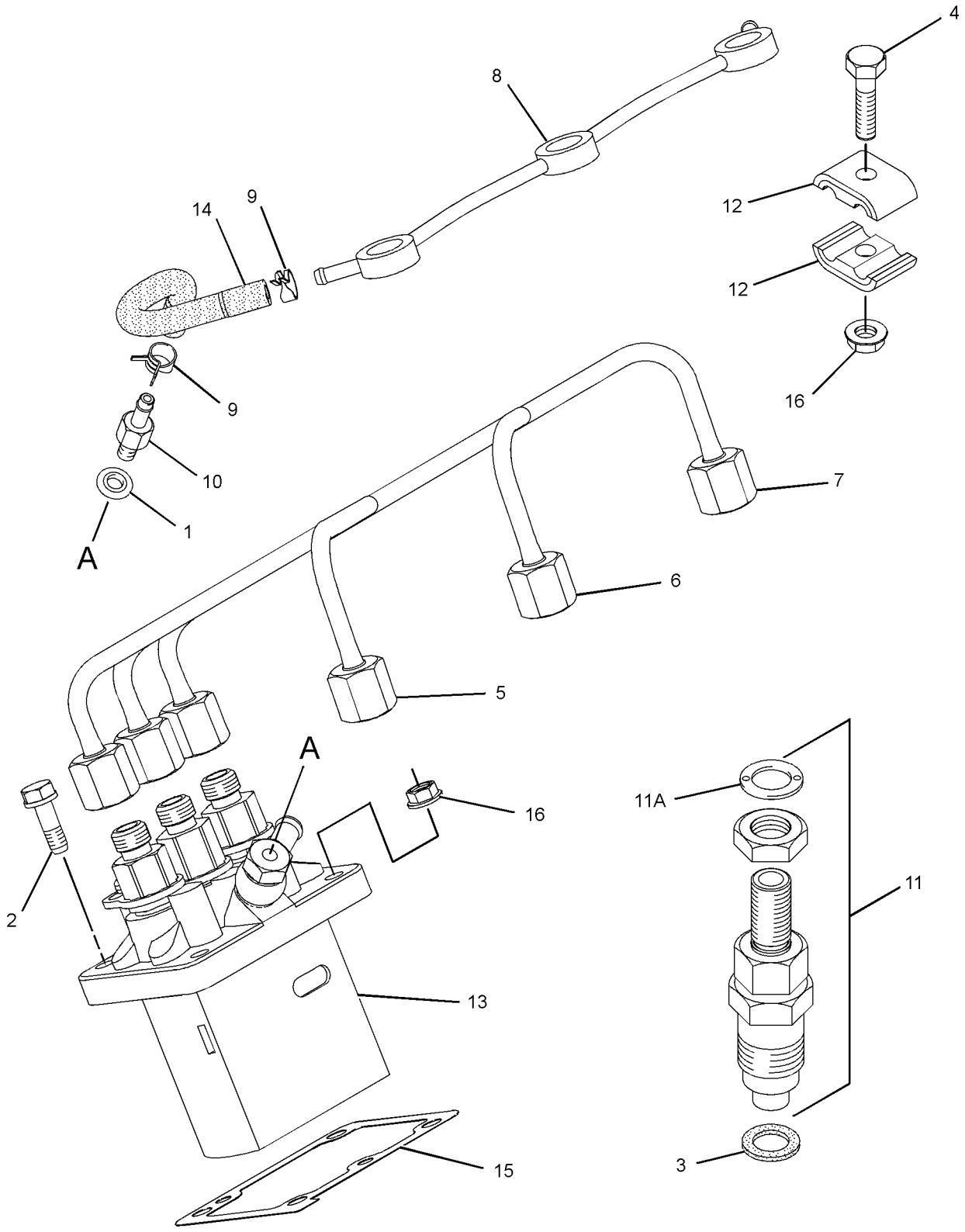

GRAPHIC #1 <END> g01433837

323-2410 PUMP GP-FUEL INJECTION

S/N: C7Y1-199

PART OF 435-1644 CYLINDER BLOCK GP

SMCS-1251, 1290 **i03384432**

NOTE	REF NO	GRAPHIC REF	PART NUMBER	QTY	PART NAME 1 2 3 4 5 6 (PRODUCT LEVEL)	SEE PAGE
	1	1	**153-6415**	1	WASHER	
M	2	1	**153-7640**	2	BOLT (M6X1X20-MM)	
	3	1	**154-2716**	3	SEAL	
M	4	1	**183-3353**	2	BOLT (M6X1X25-MM)	
	5	1	**231-7702**	1	TUBE AS (CYL NO. 1)	
	6	1	**231-7703**	1	TUBE AS (CYL NO. 2)	
	7	1	**231-7704**	1	TUBE AS (CYL NO. 3)	
	8	1	**231-7739**	1	LINE AS	
	9	1	**232-0218**	2	CLAMP	
	10	1	**232-0290**	1	CONNECTOR	
	11	1	**252-9229**	3	INJECTOR AS-FUEL	
	11A	1	**232-0793**	1	WASHER-SPECIAL	
	12	1	**290-8014**	4	CLAMP	
	13	1	**293-3230**	1	PUMP GP-FUEL INJECTION	
	14	1	**313-2040**	1	HOSE	
	15	1	**153-6385**	1	SHIM (0.2-MM THK)	
AB		1	**161-1432**	1	SHIM (0.3-MM THK)	
AB		1	**161-1433**	1	SHIM (0.4-MM THK)	
AB		1	**161-1434**	1	SHIM (0.5-MM THK)	
AB		1	**161-1435**	1	SHIM (0.9-MM THK)	
AB		1	**312-1582**	1	SHIM (0.35-MM THK) (0.35-MM OS)	
AB		1	**312-1583**	1	SHIM (0.25-MM THK) (0.25-MM OS)	
M	16	1	**153-5960**	4	NUT (M6X1-THD)	

A - NOT PART OF THIS GROUP
B - USE AS REQUIRED
M - METRIC PART

323-2410 **PUMP GP-FUEL INJECTION (**contd.**)** **i03384432**

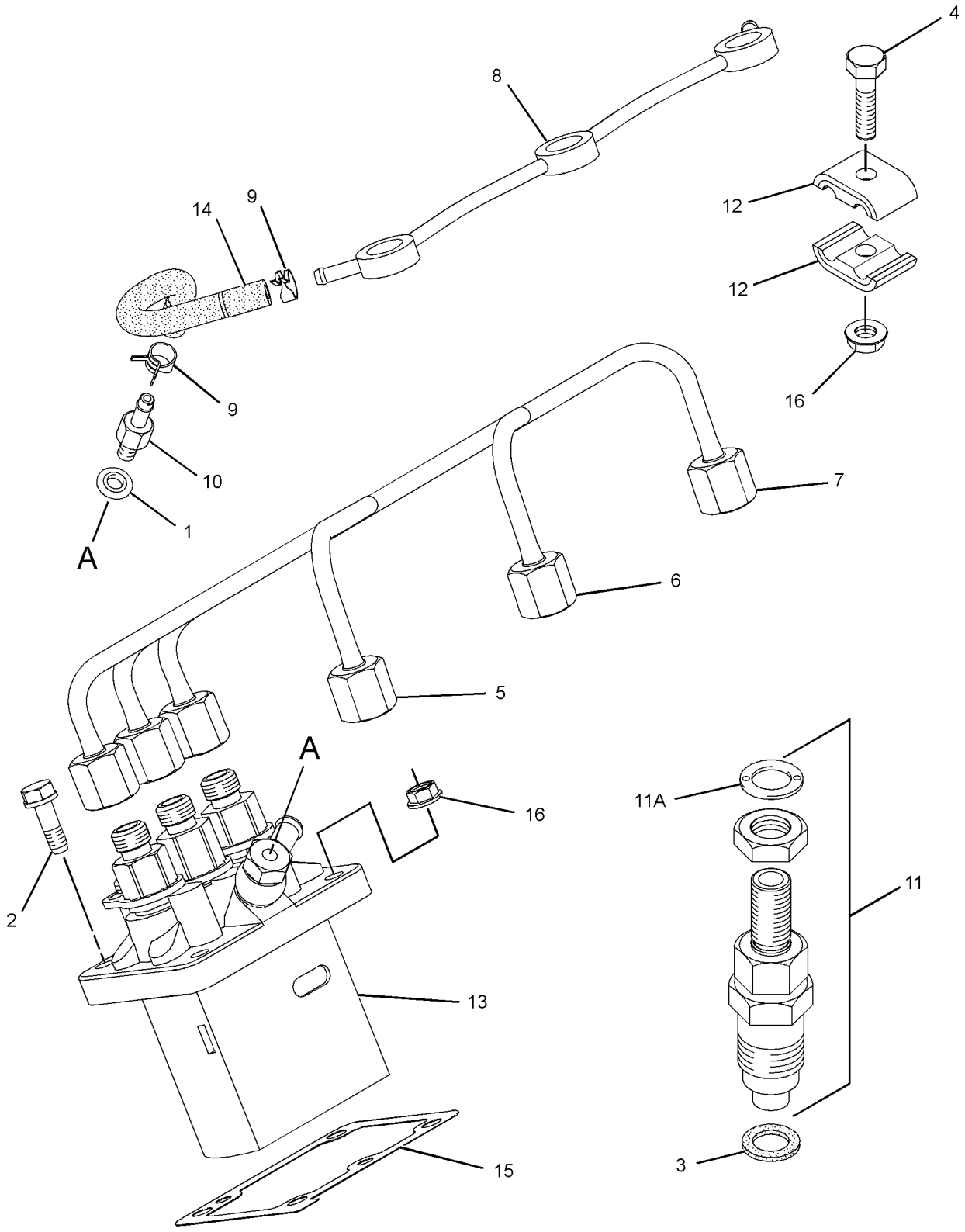

GRAPHIC #1 <END> g01433837

323-2410 PUMP GP-FUEL INJECTION

PART OF 435-1644 CYLINDER BLOCK GP

SMCS-1251, 1290 **i06097182**

NOTE	REF NO	GRAPHIC REF	PART NUMBER	QTY	PART NAME 1 2 3 4 5 6 (PRODUCT LEVEL)	SEE PAGE
	1	1	**153-6415**	1	WASHER	
M	2	1	**153-7640**	2	BOLT (M6X1X20-MM)	
	3	1	**426-4357**	3	GASKET	
M	4	1	**183-3353**	2	BOLT (M6X1X25-MM)	
	5	1	**231-7702**	1	TUBE AS (CYL NO. 1)	
	6	1	**231-7703**	1	TUBE AS (CYL NO. 2)	
	7	1	**231-7704**	1	TUBE AS (CYL NO. 3)	
	8	1	**231-7739**	1	LINE AS	
	9	1	**232-0218**	2	CLAMP	
	10	1	**232-0290**	1	CONNECTOR	
CY	11	1	**366-1272**	3	INJECTOR GP-FUEL	128
	12	1	**290-8014**	4	CLAMP	
	13	1	**293-3230**	1	PUMP GP-FUEL INJECTION	
	14	1	**313-2040**	1	HOSE	
	15	1	**153-6385**	1	SHIM (0.2-MM THK)	
AB		1	**161-1432**	1	SHIM (0.3-MM THK)	
AB		1	**161-1433**	1	SHIM (0.4-MM THK)	
AB		1	**161-1434**	1	SHIM (0.5-MM THK)	
AB		1	**161-1435**	1	SHIM (0.9-MM THK)	
AB		1	**312-1582**	1	SHIM (0.35-MM THK)	
AB		1	**312-1583**	1	SHIM (0.25-MM THK)	
M	16	1	**153-5960**	4	NUT (M6X1-THD)	

A - NOT PART OF THIS GROUP
B - USE AS REQUIRED
C - CHANGE FROM PREVIOUS TYPE
M - METRIC PART
Y - SEPARATE ILLUSTRATION

323-2410 **PUMP GP-FUEL INJECTION (**contd.**)** **i06097182**

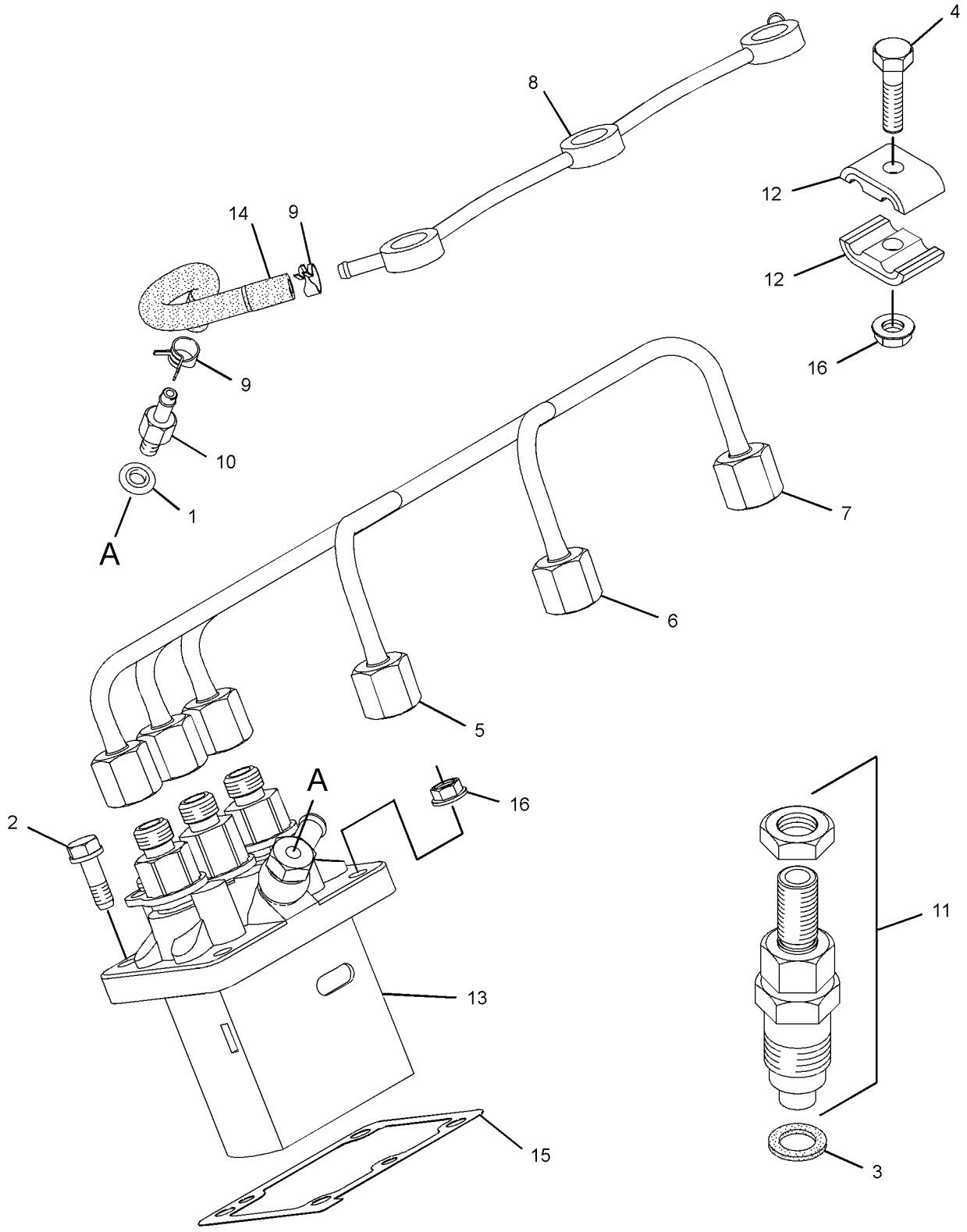

GRAPHIC #1 <END> g03067339

457-8076 PUMP GP-FUEL INJECTION

PART OF 516-4466 ENGINE AR-PRIMARY

SMCS-1251, 1290 **i07326866**

NOTE	REF NO	GRAPHIC REF	PART NUMBER	QTY	PART NAME 1 2 3 4 5 6 (PRODUCT LEVEL)	SEE PAGE
M	1	1	**153-5960**	2	NUT (M6X1-THD)	
	2	1	**153-6415**	1	WASHER	
M	3	1	**153-7640**	2	BOLT (M6X1X20-MM)	
	4	1	**426-4357**	3	GASKET	
M	5	1	**183-3353**	2	BOLT (M6X1X25-MM)	
	6	1	**231-7702**	1	TUBE AS (CYL NO. 1)	
	7	1	**231-7703**	1	TUBE AS (CYL NO. 2)	
	8	1	**231-7704**	1	TUBE AS (CYL NO. 3)	
	9	1	**231-7739**	1	LINE AS	
	10	1	**232-0218**	1	CLAMP	
	11	1	**232-0290**	1	CONNECTOR	
	12	1	**290-8014**	2	CLAMP	
	13	1	**293-3230**	1	PUMP GP-FUEL INJECTION	
	14	1	**313-2040**	1	HOSE	
Y	15	1	**366-1272**	3	INJECTOR GP-FUEL	128
B	16	1	**153-6385**	1	SHIM (0.2-MM THK)	
B			**161-1432**	1	SHIM (0.3-MM THK)	
B			**161-1433**	1	SHIM (0.4-MM THK)	
B			**161-1434**	1	SHIM (0.5-MM THK)	
B			**161-1435**	1	SHIM (0.9-MM THK)	
B			**312-1582**	1	SHIM (0.35-MM THK)	
B			**312-1583**	1	SHIM (0.25-MM THK)	

B - USE AS REQUIRED
M - METRIC PART
Y - SEPARATE ILLUSTRATION

457-8076 **PUMP GP-FUEL INJECTION (**contd.**)** **i07326866**

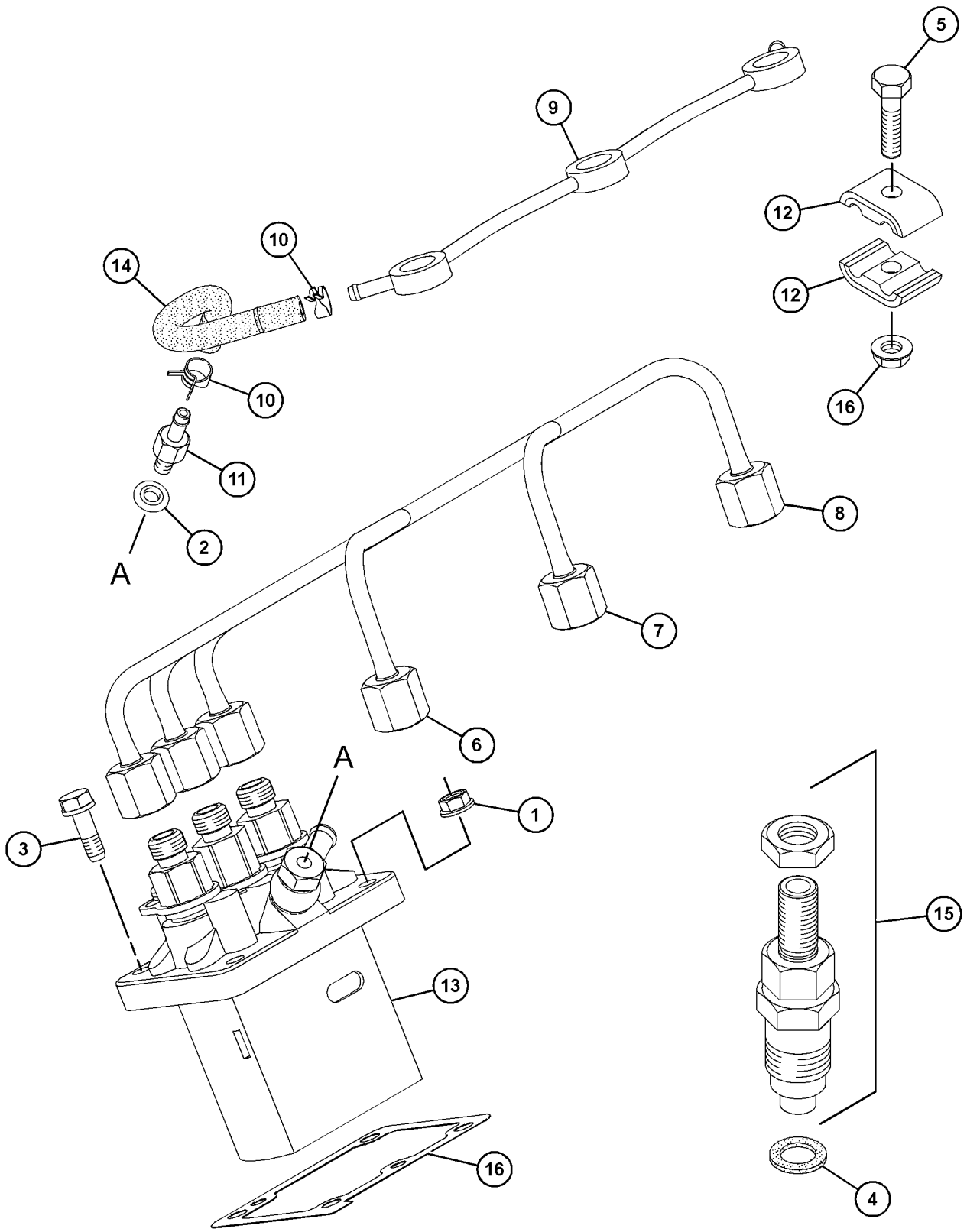

GRAPHIC #1 <END> g03708384

308-2320 PUMP GP-FUEL PRIMING

PART OF 516-4466, 516-9462, 541-8320 ENGINE AR-PRIMARY

SMCS-1258 **i05473660**

NOTE	REF NO	GRAPHIC REF	PART NUMBER	QTY	PART NAME 1 2 3 4 5 6 (PRODUCT LEVEL)	SEE PAGE
	1	1	**197-8540**	1	PUMP GP-FUEL PRIMING	

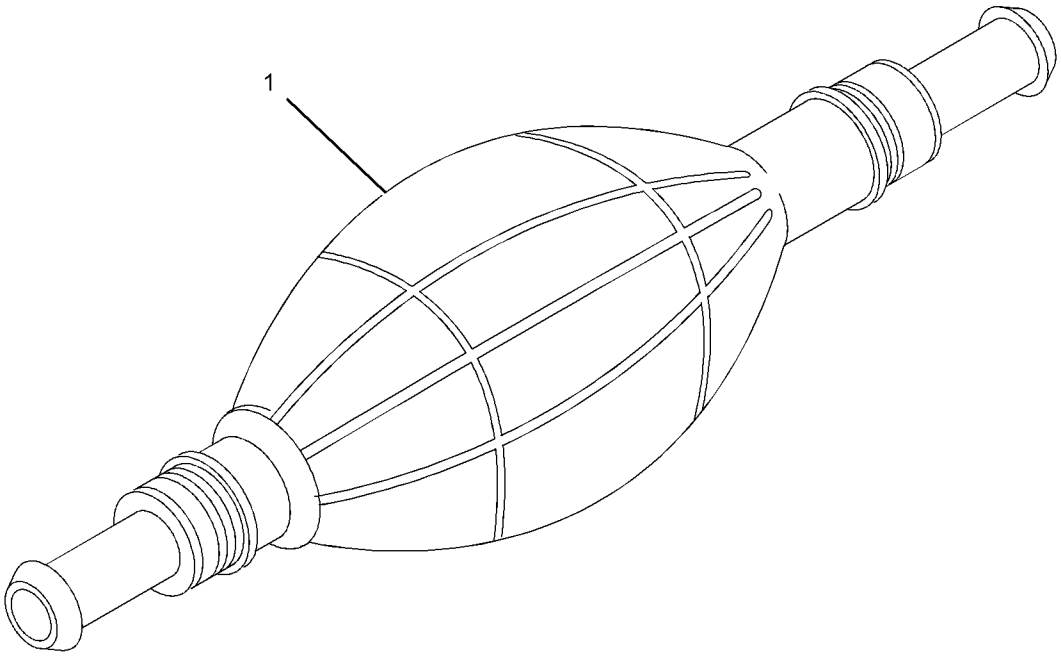

GRAPHIC #1 <END> g01912002

541-1625 PUMP GP-FUEL PRIMING

PART OF 516-4466, 516-9462 ENGINE AR-PRIMARY

SMCS-1258 **i07326826**

NOTE	REF NO	GRAPHIC REF	PART NUMBER	QTY	PART NAME 1 2 3 4 5 6 (PRODUCT LEVEL)	SEE PAGE
M	1	1	**6I-0593**	2	BOLT (M10X1.5X30-MM)	
M	2	1	**6I-0846**	2	BOLT (M6X1X14-MM)	
	3	1	**7X-0796**	2	LOCKWASHER (10.2X18.4X2.5-MM THK)	
M	4	1	**1R-6484**	2	NUT (M10X1.25-THD)	
	5	1	**176-7719**	1	SEAL-O-RING	
	6	1	**295-4070**	1	PUMP AS-FUEL TRANSFER	
	7	1	**329-1292**	4	CLIP-HOSE	
	8	1	**423-5661**	1	HOSE	
	9	1	**483-1369**	1	BRACKET	
	10	1	**514-6544**	1	FILTER AS-FUEL	
	10A	1	**514-6554**	1	FILTER	
	11	1	**516-5831**	1	HOSE	

M - METRIC PART

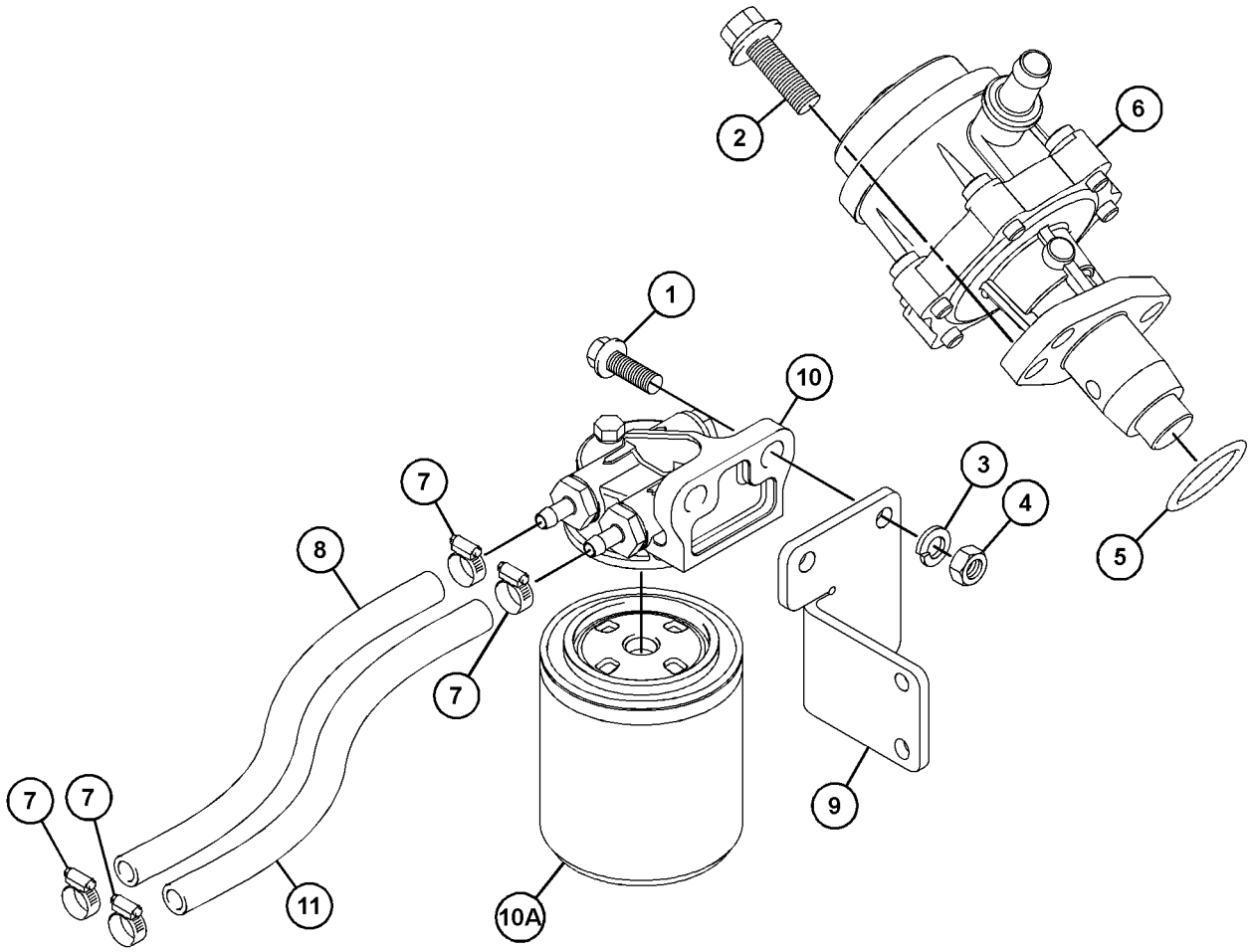

GRAPHIC #1 <END> g06287100

317-6706 PUMP GP-FUEL PRM & PRIM FILTER

SMCS-1256, 1258, 1260 **i03586464**

NOTE	REF NO	GRAPHIC REF	PART NUMBER	QTY	PART NAME 1 2 3 4 5 6 (PRODUCT LEVEL)	SEE PAGE
	1	1	**276-1804**	1	FILTER GP-FUEL (WATER SEPARATOR)	
	1A	1	**276-1806**	1	FILTER ELEMENT-FUEL	
	1B	1	**302-7776**	1	BOWL-FUEL FILTER	
	1C	1	**302-7777**	3	PLUG-DRAIN (WATER SEPARATOR)	
	1D	1	**302-7778**	1	SEAL	
	2	1	**197-8540**	1	PUMP GP-FUEL PRIMING	

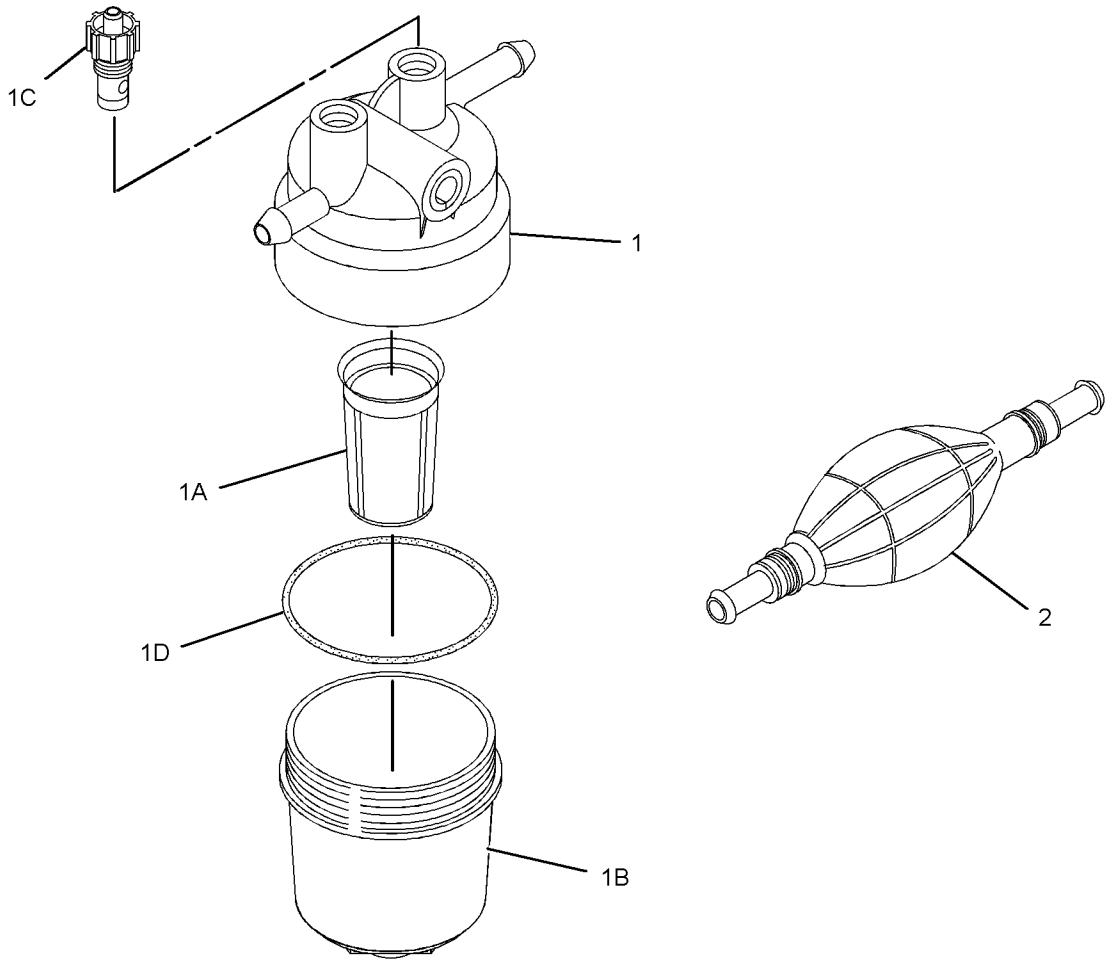

GRAPHIC #1 <END> g01915154

313-2009 PUMP GP-FUEL TRANSFER

SMCS-1256 **i07519370**

NOTE	REF NO	GRAPHIC REF	PART NUMBER	QTY	PART NAME 1 2 3 4 5 6 (PRODUCT LEVEL)	SEE PAGE
M	1	1	**6I-0846**	2	BOLT (M6X1X14-MM)	
	2	1	**7W-4694**	1	PLUG (M10X1.5-MM THD)	
	3	1	**032-8100**	2	WASHER (0.531X0.718X0.064-IN THK)	
	4	1	**033-7849**	2	PLUG (DRAIN)	
	5	1	**358-9226**	1	FILTER AS-FUEL	
	5A	1	**067-6987**	1	FILTER-FUEL	
	6	1	**067-6269**	2	FERRULE	
	7	1	**067-6317**	1	WASHER (0.4X0.566X0.04-IN THK)	
	8	1	**138-7162**	2	BOLT (M10X1.5X30-MM)	
	9	1	**154-1399**	2	WASHER	
	10	1	**7X-0796**	2	LOCKWASHER (10.2X18.4X2.5-MM THK)	
	11	1	**155-7984**	2	WASHER (8.4X16X1.6-MM THK)	
	12	1	**155-8085**	2	NUT (M10X1.25-THD)	
M	14	1	**165-2141**	2	BOLT (M8X1.25X20-MM)	
	15	1	**176-7719**	1	SEAL-O-RING	
	16	1	**454-7991**	1	PIPE	
	17	1	**302-4187**	2	TUBE	
	18	1	**483-1369**	1	BRACKET	
	19	1	**476-5585**	1	HOSE-FUEL	
	20	1	**295-4070**	1	PUMP AS-FUEL TRANSFER	
	21	1	**329-1292**	4	CLIP-HOSE	

M - METRIC PART

313-2009 **PUMP GP-FUEL TRANSFER (**contd.**)** **i07519370**

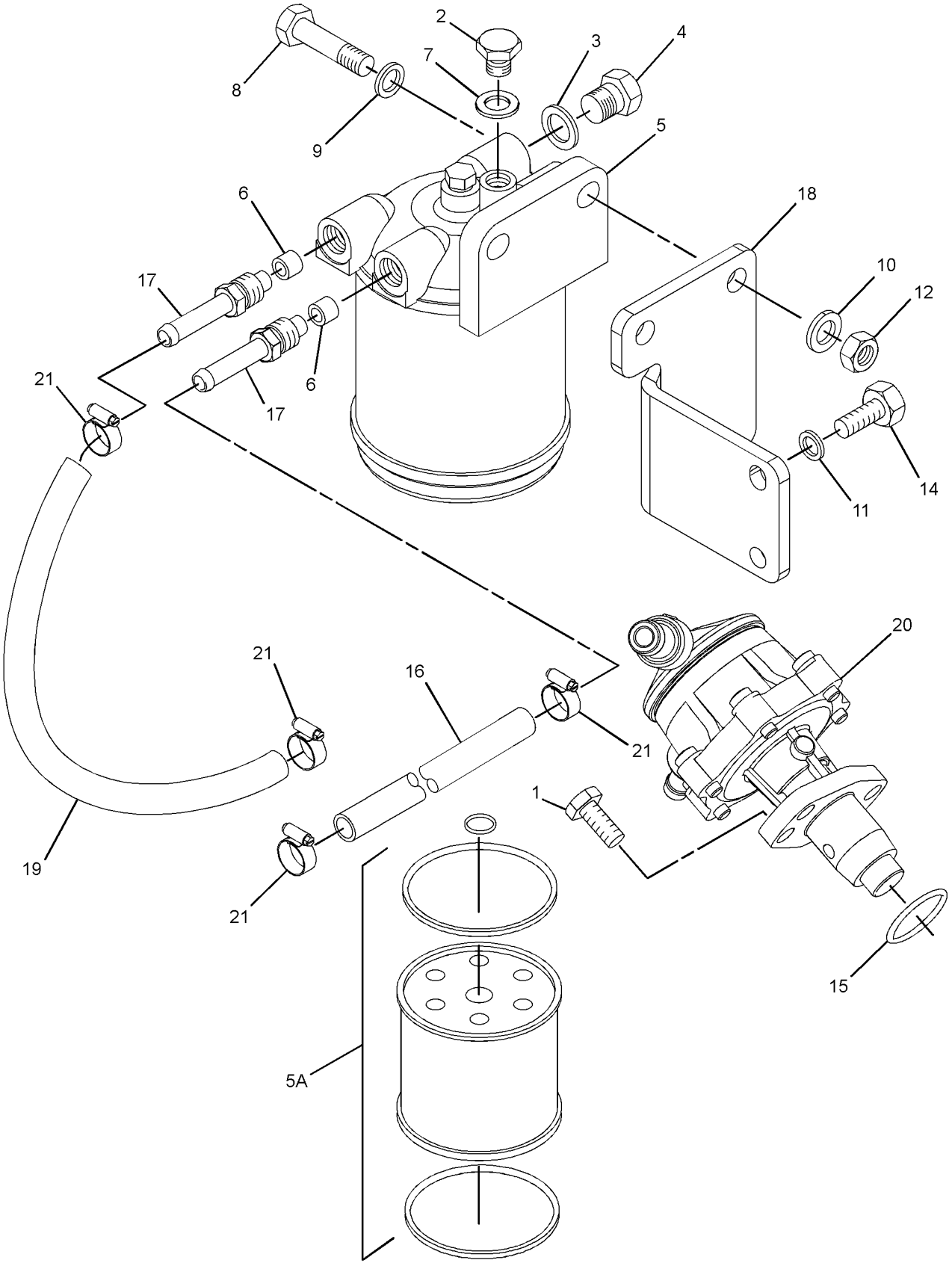

GRAPHIC #1 <END> g06386468

183-3938 ALTERNATOR GP-CHARGING

12-VOLT, 15-AMPERE

PART OF 313-1982 ALTERNATOR GP-CHARGING

SMCS-1405 **i07259026**

NOTE	REF NO	GRAPHIC REF	PART NUMBER	QTY	PART NAME 1 2 3 4 5 6 (PRODUCT LEVEL)	SEE PAGE
	1	1	**7X-0796**	1	LOCKWASHER (10.2X18.4X2.5-MM THK)	
	2	1	**101-3917**	1	WASHER (10.5X21X2-MM THK)	
	3	1	**295-8597**	1	PLATE AS	
	4	1	**295-8605**	1	PULLEY AS	
	5	1	**295-8606**	1	COLLAR	
	6	1	**295-8607**	1	NUT	
	7	1	**295-8608**	1	CAP	

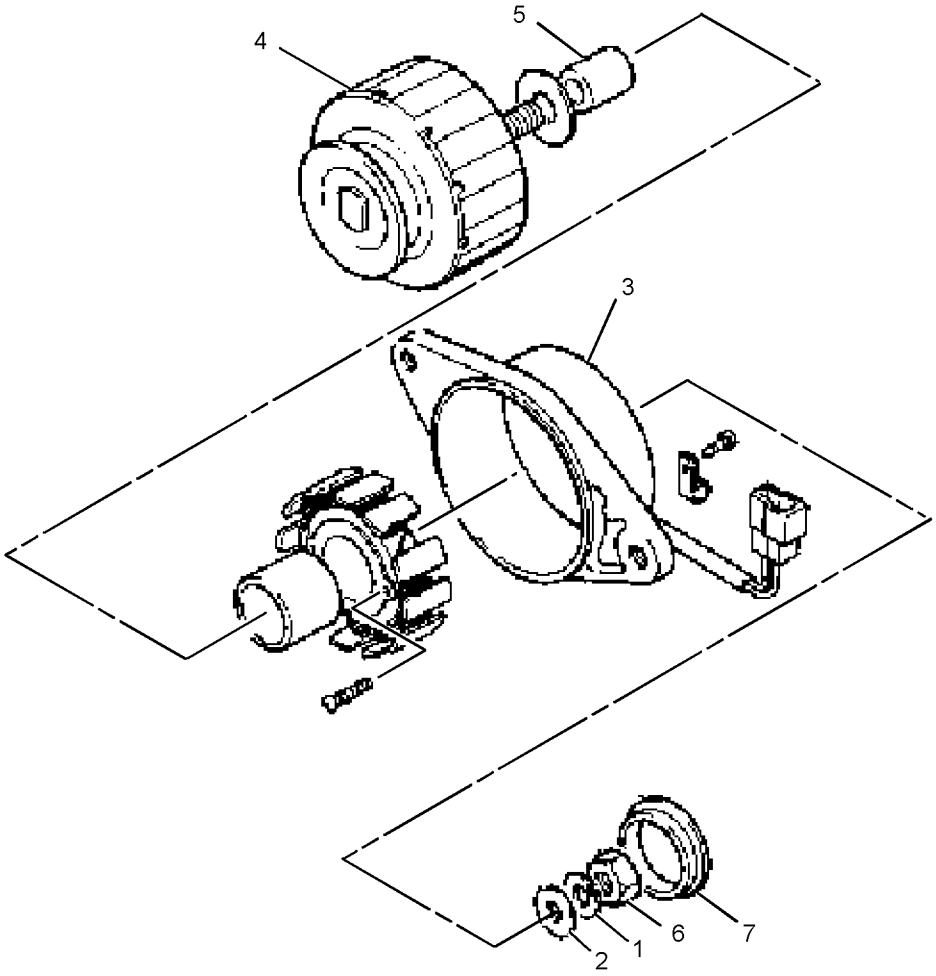

GRAPHIC #1 <END> g01380028

313-1982 ALTERNATOR GP-CHARGING

12-VOLT, 15-AMPERE

PART OF 516-4466, 516-9462, 541-8320 ENGINE AR-PRIMARY

SMCS-1405 **i06226847**

NOTE	REF NO	GRAPHIC REF	PART NUMBER	QTY	PART NAME 1 2 3 4 5 6 (PRODUCT LEVEL)	SEE PAGE
M	1	1	**153-5961**	1	BOLT (M6X1X35-MM)	
	2	1	**155-8084**	1	WASHER	
M	3	1	**165-2140**	2	BOLT (M6X1X40-MM)	
	4	1	**168-9002**	1	WASHER (8.4X26X3.2-MM THK)	
Y	5	1	**183-3938**	1	ALTERNATOR GP-CHARGING	145
M	6	1	**6I-0260**	1	BOLT (M8X1.25X25-MM)	
	7	1	**183-3940**	1	LEVER	
	8	1	**183-3941**	1	BOLT	
	9	1	**197-8816**	1	REGULATOR (ALTERNATOR VOLTAGE)	
	10	1	**234-8762**	1	CONNECTOR	

M - METRIC PART
Y - SEPARATE ILLUSTRATION

313-1982 **ALTERNATOR GP-CHARGING (**contd.**)** **i06226847**

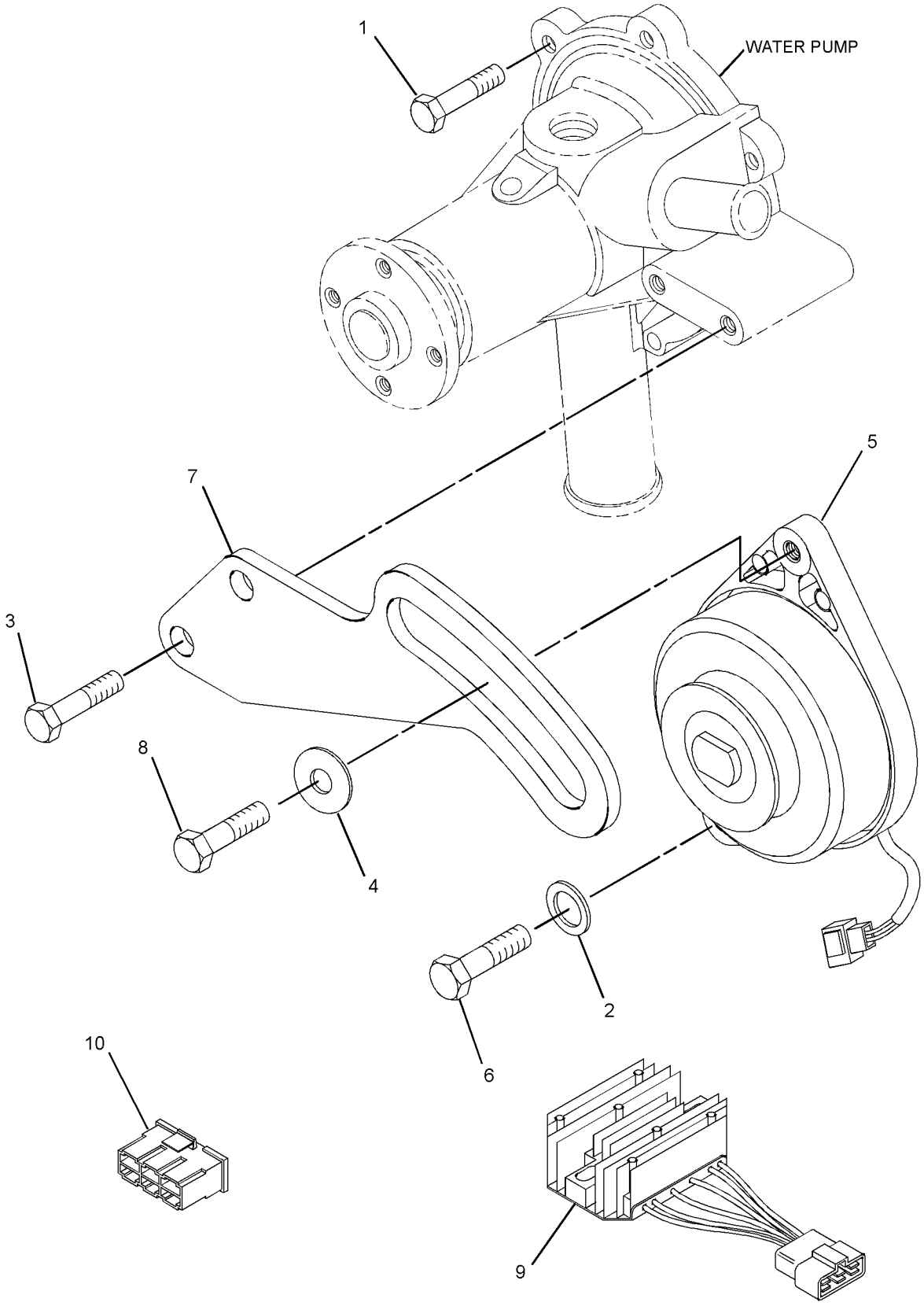

GRAPHIC #1 <END> g01389462

319-7354 ALTERNATOR GP-CHARGING

12-VOLT, 40-AMPERE
TYPE 1

SMCS-1405 **i06546100**

NOTE	REF NO	GRAPHIC REF	PART NUMBER	QTY	PART NAME 1 2 3 4 5 6 (PRODUCT LEVEL)	SEE PAGE
M	1	1	**153-7640**	2	BOLT (M6X1X20-MM)	
	2	1	**154-1399**	1	WASHER	
	3	1	**168-9002**	1	WASHER (8.4X26X3.2-MM THK)	
	4	1	**183-4029**	1	ALTERNATOR GP-CHARGING	
	5	1	**337-6523**	1	LEVER	
	6	1	**183-4031**	1	SPACER	
M	7	1	**101-3895**	1	BOLT (M8X1.25X35-MM)	
	8	1	**326-0053**	1	BRACKET	
	9	1	**183-4034**	2	BOLT	
	10	1	**183-4035**	1	BOLT	
	11	1	**183-4037**	1	CONNECTOR AS	
M	12	1	**153-5961**	3	BOLT (M6X1X35-MM)	

M - METRIC PART

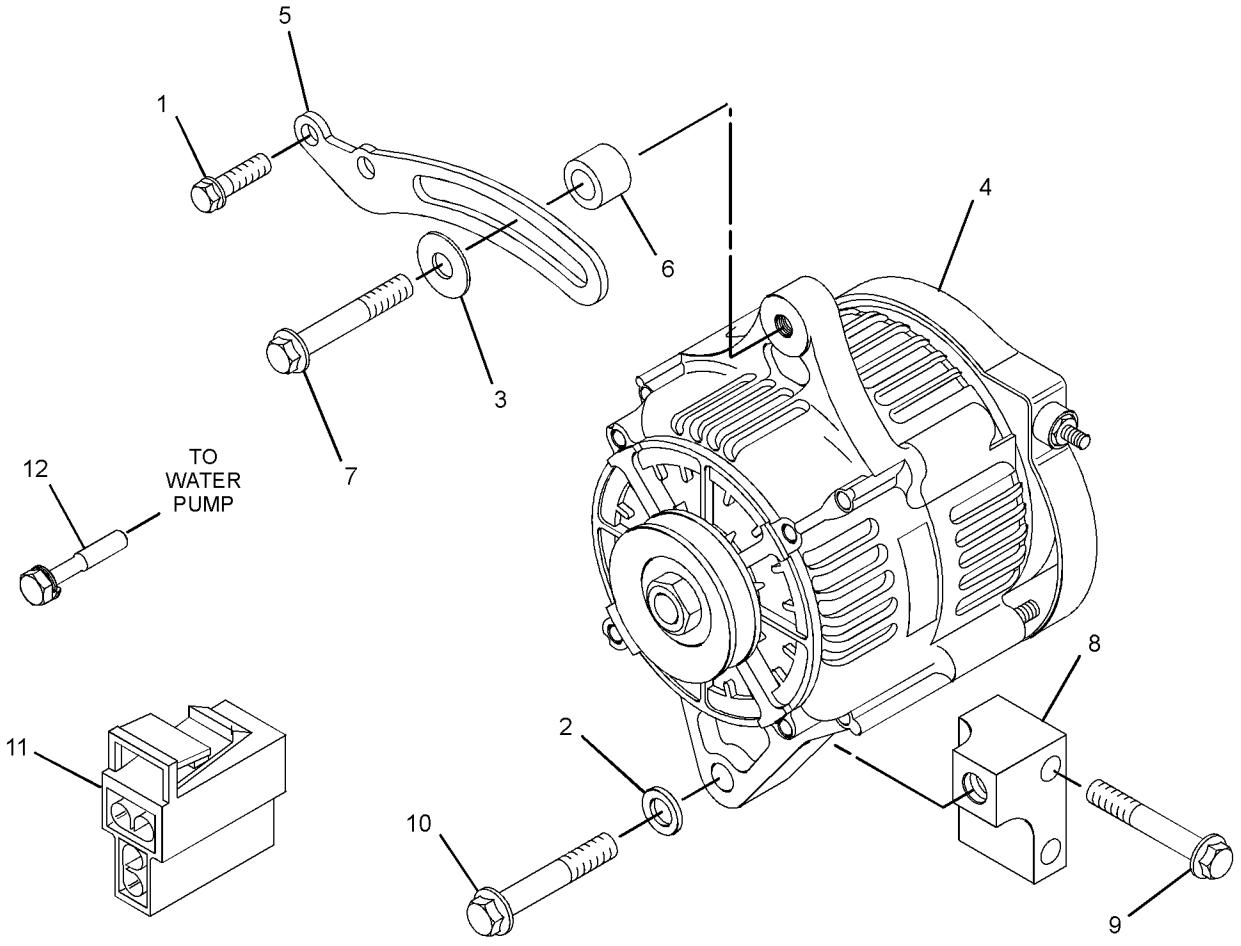

GRAPHIC #1 <END> g06035476

319-7354 ALTERNATOR GP-CHARGING

12-VOLT, 40-AMPERE
TYPE 2

SMCS-1405 **i06901467**

NOTE	REF NO	GRAPHIC REF	PART NUMBER	QTY	PART NAME 1 2 3 4 5 6 (PRODUCT LEVEL)	SEE PAGE
M	1	1	**153-7640**	2	BOLT (M6X1X20-MM)	
M	2	1	**153-5961**	3	BOLT (M6X1X35-MM)	
	3	1	**168-9002**	1	WASHER (8.4X26X3.2-MM THK)	
	4	1	**183-4029**	1	ALTERNATOR GP-CHARGING	
	5	1	**337-6523**	1	LEVER	
	6	1	**183-4031**	1	SPACER	
M	7	1	**101-3895**	1	BOLT (M8X1.25X35-MM)	
	8	1	**326-0053**	1	BRACKET	
	9	1	**183-4034**	2	BOLT	
CM	10	1	**111-0859**	1	BOLT (M10X1.5X35-MM)	
	11	1	**183-4037**	1	CONNECTOR AS	

C - CHANGE FROM PREVIOUS TYPE
M - METRIC PART

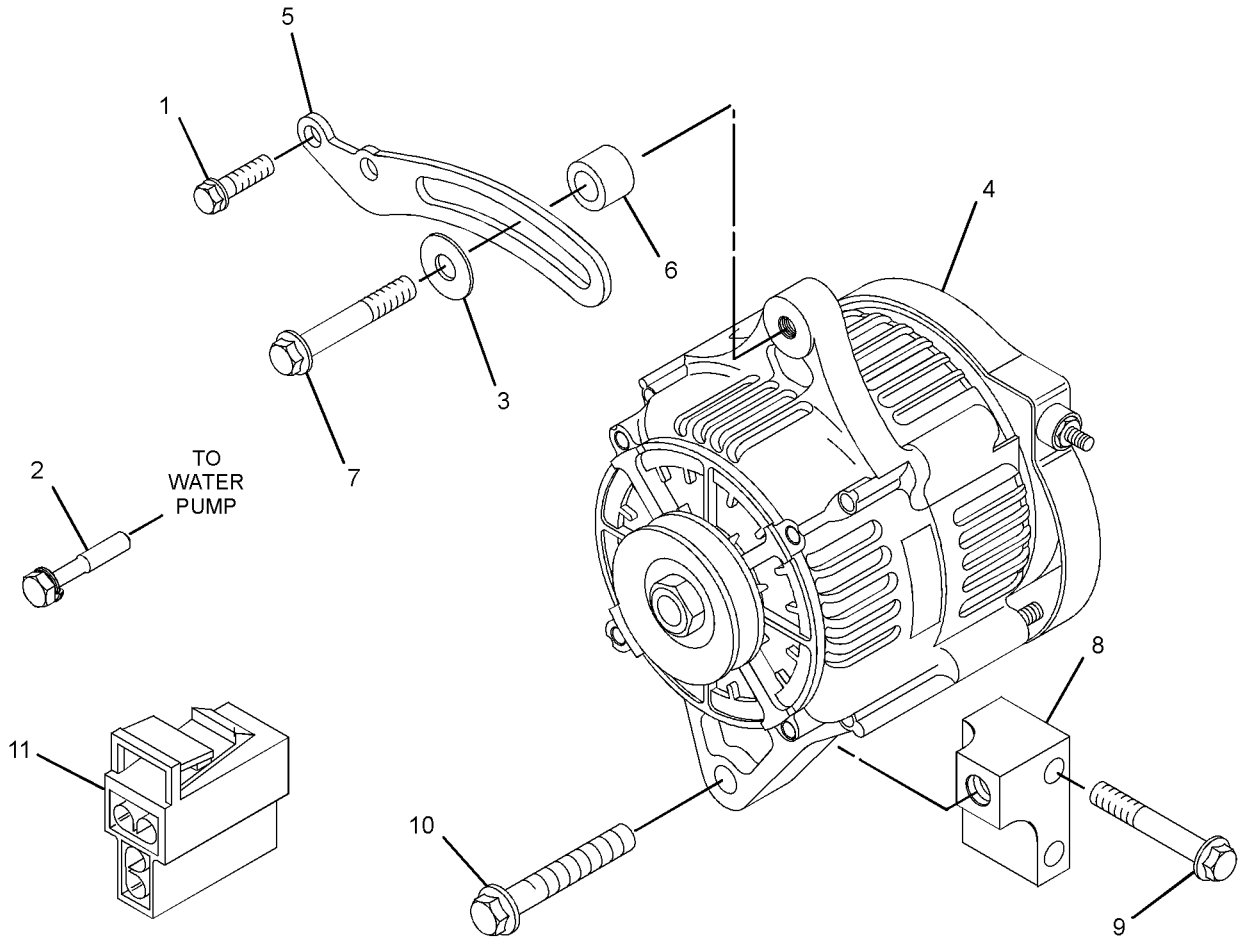

GRAPHIC #1 <END> g06154027

308-2319 CONNECTION GP-ELECTRICAL

SMCS-1408 **i03384405**

NOTE	REF NO	GRAPHIC REF	PART NUMBER	QTY	PART NAME 1 2 3 4 5 6 (PRODUCT LEVEL)	SEE PAGE
	1	1	**254-5541**	1	CONNECTION AS	
	2	1	**197-8555**	1	CONNECTION	

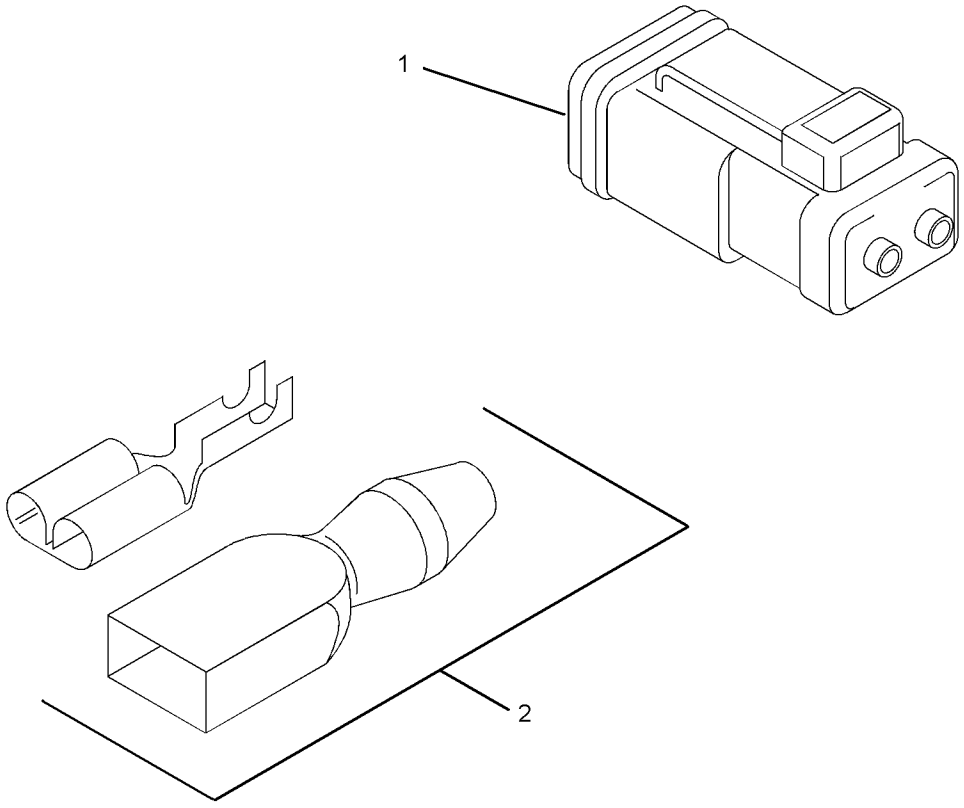

GRAPHIC #1 <END> g01389483

321-6741 CONNECTION GP-ELECTRICAL

PART OF 516-4466, 516-9462, 541-8320 ENGINE AR-PRIMARY

SMCS-1408 **i03395703**

NOTE	REF NO	GRAPHIC REF	PART NUMBER	QTY	PART NAME 1 2 3 4 5 6 (PRODUCT LEVEL)	SEE PAGE
	1	1	**254-5541**	1	CONNECTION AS	

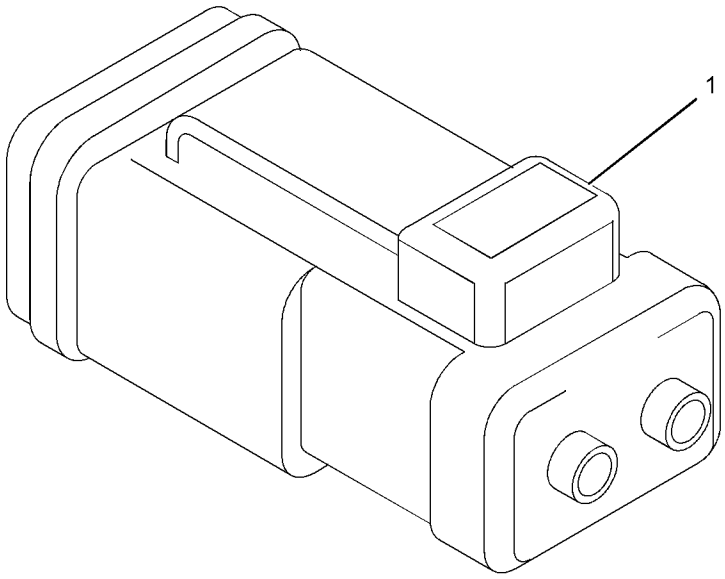

GRAPHIC #1 <END> g01513229

313-2021 GLOW PLUG GP

PART OF 435-1644 CYLINDER BLOCK GP, 435-1632, 435-1643 ENGINE AR, 516-4466, 516-9462, 541-8320 ENGINE AR-PRIMARY

SMCS-1412 **i05190660**

NOTE	REF NO	GRAPHIC REF	PART NUMBER	QTY	PART NAME 1 2 3 4 5 6 (PRODUCT LEVEL)	SEE PAGE
	1	1	**155-8075**	1	WIRE	
M	2	1	**231-2839**	3	NUT-FLANGE (M4X0.7-THD)	
	3	1	**307-8672**	3	GLOW PLUG	
	4	1	**393-5482**	1	BAR-BUS	

M - METRIC PART

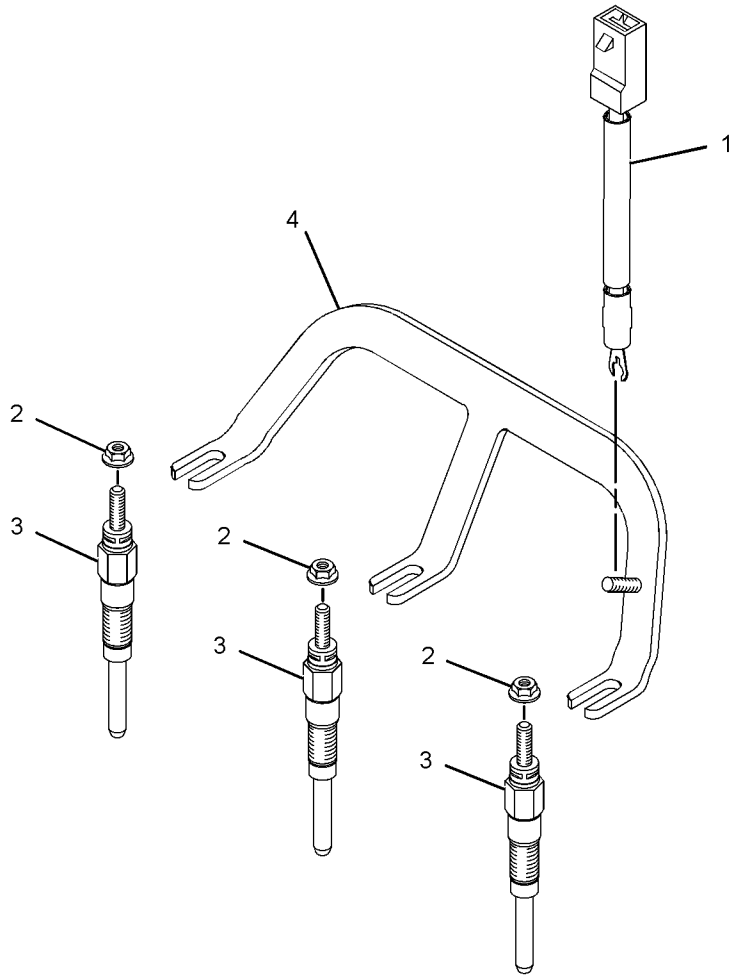

GRAPHIC #1 <END> g01387002

320-9114 SHUTOFF GP-ELECTRICAL

SMCS-7418 **i03384203**

NOTE	REF NO	GRAPHIC REF	PART NUMBER	QTY	PART NAME 1 2 3 4 5 6 (PRODUCT LEVEL)	SEE PAGE
	1	1	**340-0199**	1	SHUTOFF GP-ELECTRICAL	
	1A	1	**234-8762**	1	CONNECTOR	
	1B	1	**318-5038**	1	BOX	

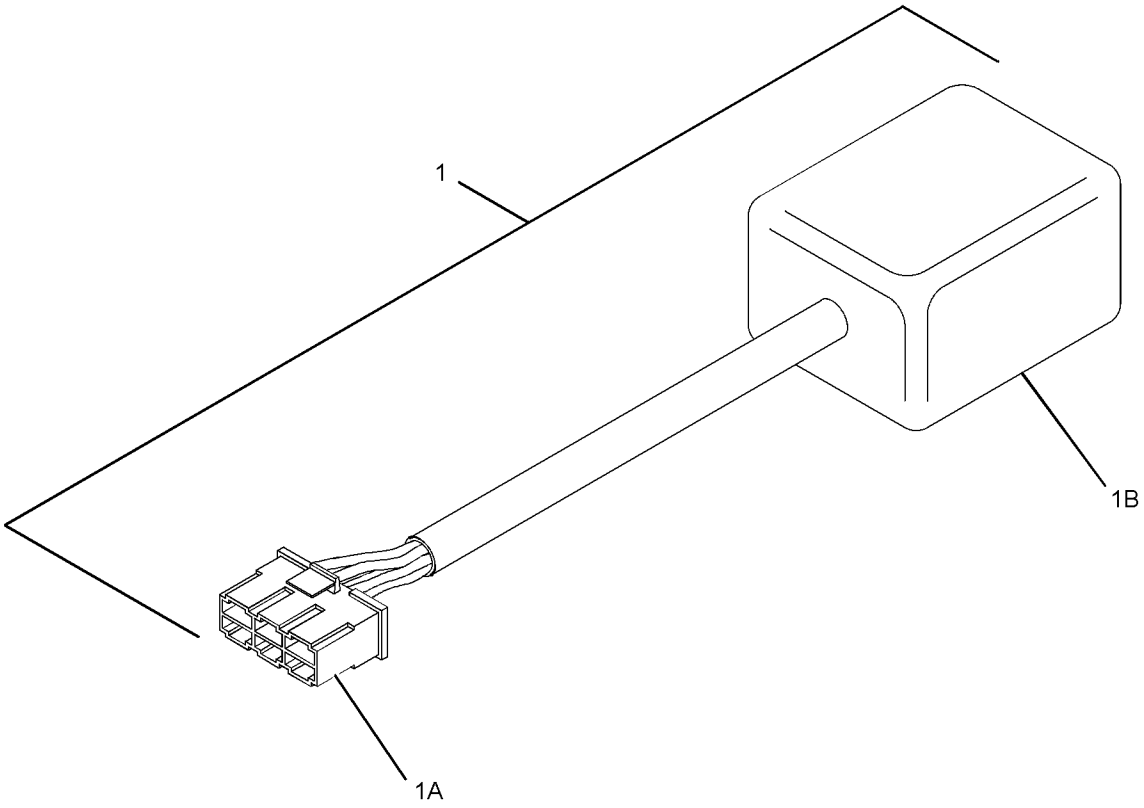

GRAPHIC #1 <END> g01504753

313-2023 SOLENOID GP-SHUTOFF–FUEL

PART OF 435-1644 CYLINDER BLOCK GP, 435-1632, 435-1643 ENGINE AR, 516-4466, 516-9462, 541-8320 ENGINE AR-PRIMARY

SMCS-1259 **i06930321**

NOTE	REF NO	GRAPHIC REF	PART NUMBER	QTY	PART NAME 1 2 3 4 5 6 (PRODUCT LEVEL)	SEE PAGE
	1	1	**153-6412**	1	WASHER	
	2	1	**419-7640**	1	SOLENOID AS (12-VOLT) (FUEL SHUTOFF)	
	3	1	**308-1914**	1	LEVER-CONTROL	

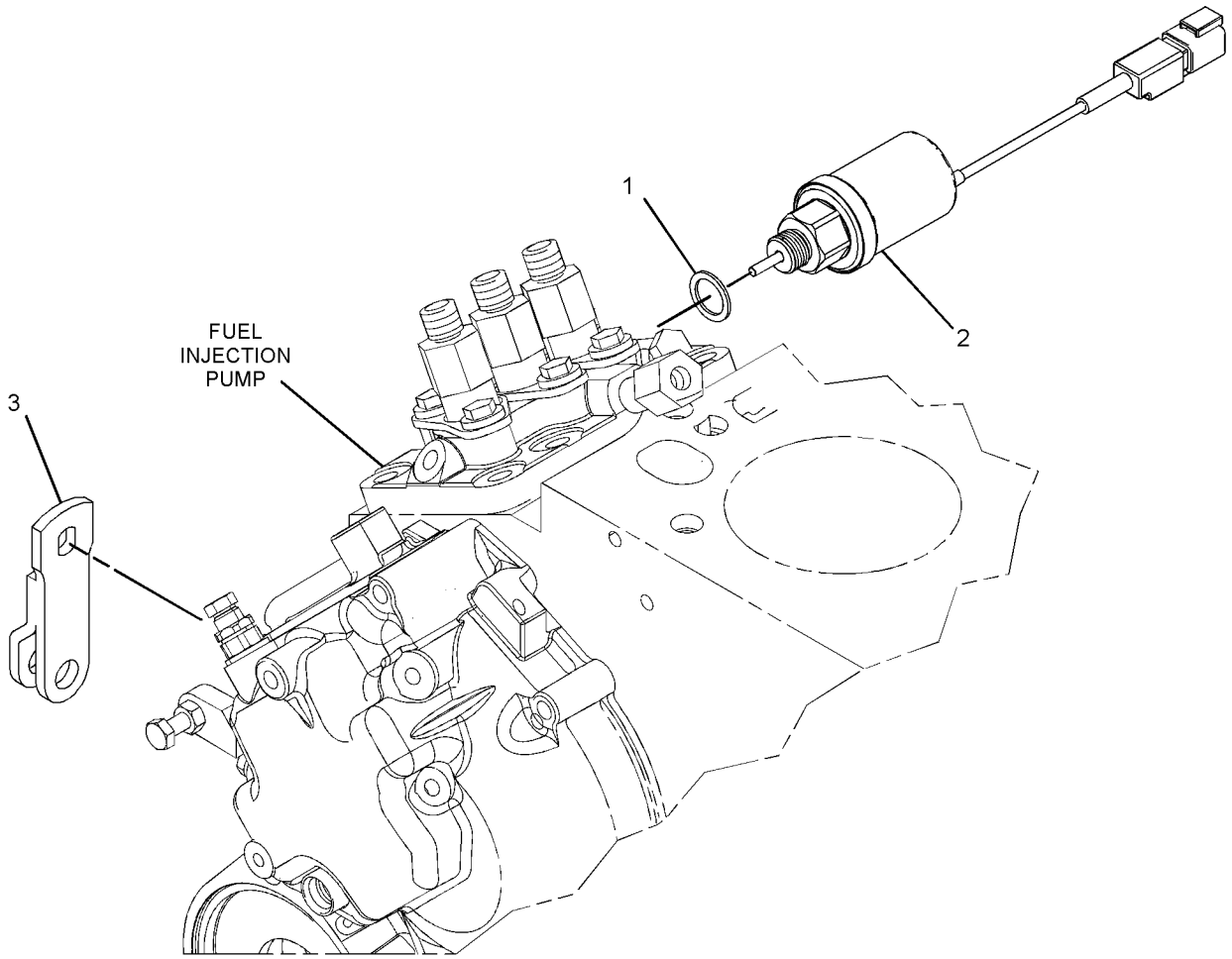

GRAPHIC #1 <END> g06160718

138-7454 STARTING MOTOR GP-ELECTRIC

12-VOLT, 1.1 KW

FIELD REPLACEMENT ORDER 340-8308—PAGE: 162

PART OF 313-1971 STARTING MOTOR GP-ELECTRIC

SMCS-1453 **i03386781**

NOTE	REF NO	GRAPHIC REF	PART NUMBER	QTY	PART NAME 1 2 3 4 5 6 (PRODUCT LEVEL)	SEE PAGE
	1	1	**242-7073**	1	BUSHING	
	2	1	**242-7076**	1	BUSHING	
	3	1	**242-7077**	1	KIT-STARTING MOTOR	
	4	1	**295-8592**	1	BUSHING	
	5	1	**295-8593**	1	SOLENOID	
	6	1	**295-8594**	1	DRIVE	
	7	1	**295-8595**	1	ARMATURE	
	8	1	**295-8596**	1	HOLDER	

138-7454 **STARTING MOTOR GP-ELECTRIC (**contd.**)** **i03386781**

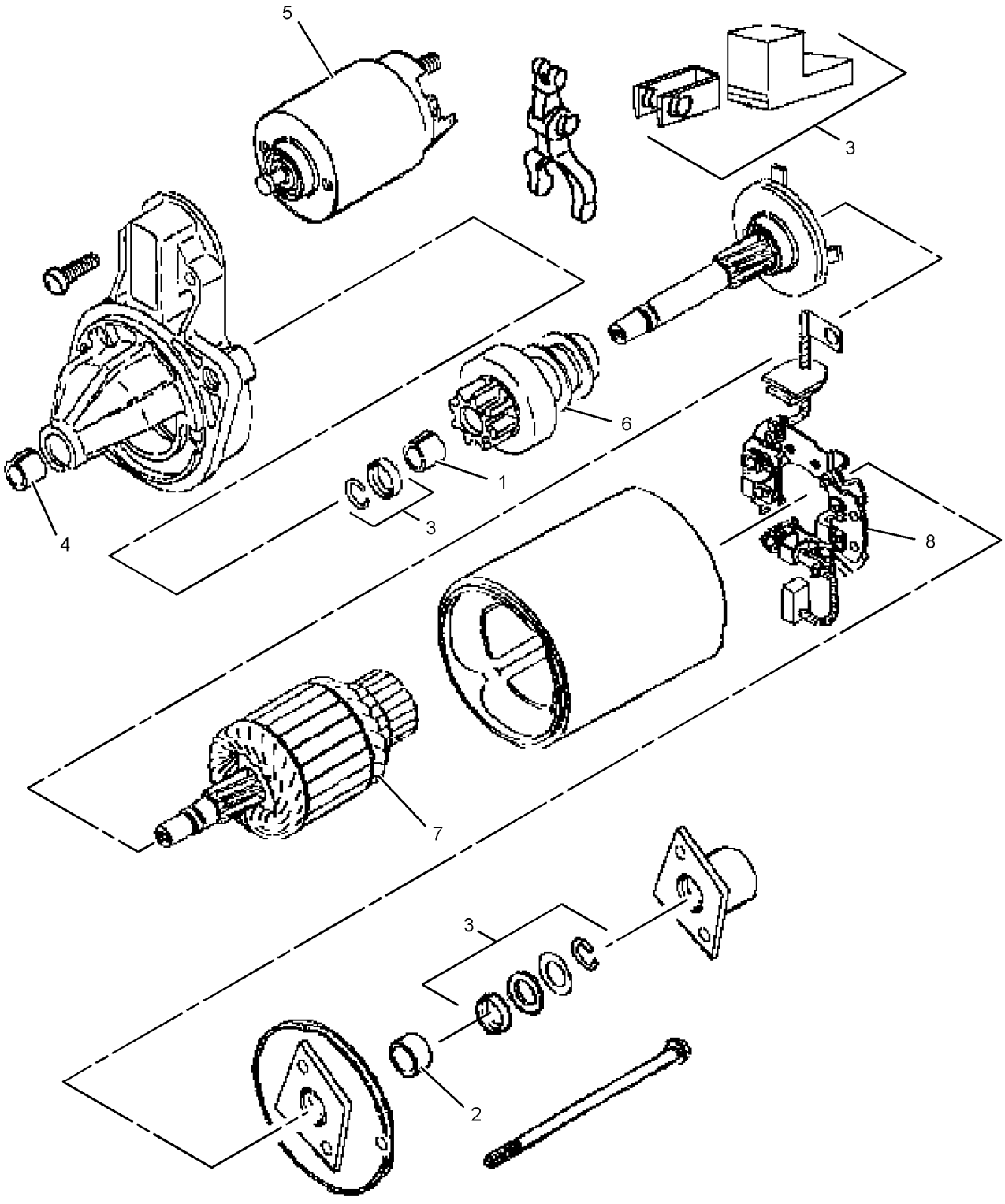

GRAPHIC #1 <END> g01376039

313-1971 STARTING MOTOR GP-ELECTRIC

12-VOLT, 1.1 KW
TYPE 1

SMCS-1453 **i03384489**

NOTE	REF NO	GRAPHIC REF	PART NUMBER	QTY	PART NAME 1 2 3 4 5 6 (PRODUCT LEVEL)	SEE PAGE
Y	1	1	**138-7454**	1	STARTING MOTOR GP-ELECTRIC	155

Y - SEPARATE ILLUSTRATION

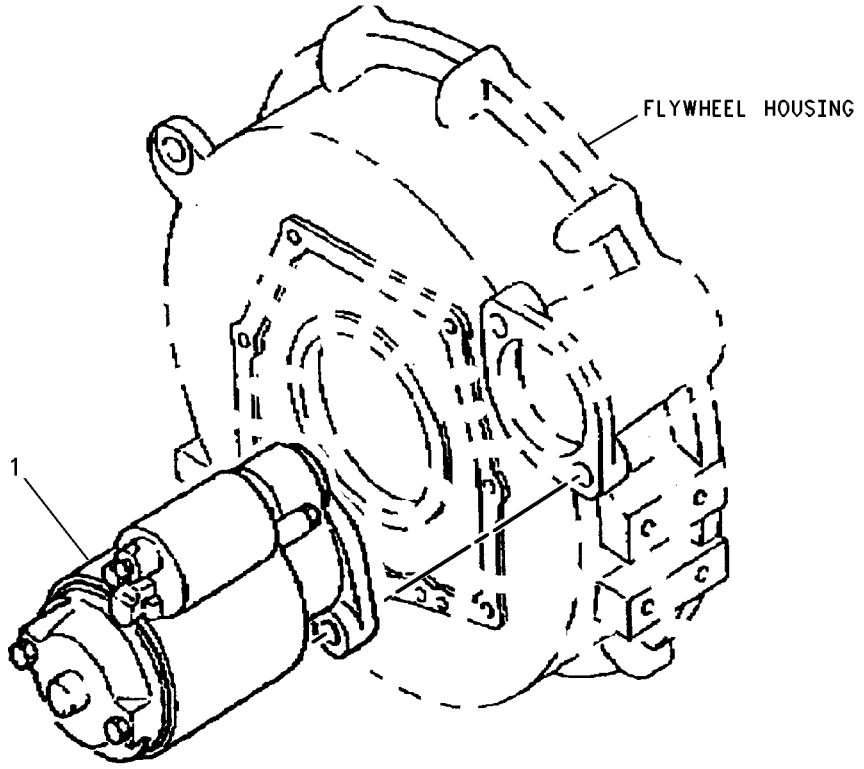

GRAPHIC #1 <END> g00640484

313-1971 STARTING MOTOR GP-ELECTRIC

12-VOLT, 1.1 KW
TYPE 2

SMCS-1453 **i03938374**

NOTE	REF NO	GRAPHIC REF	PART NUMBER	QTY	PART NAME 1 2 3 4 5 6 (PRODUCT LEVEL)	SEE PAGE
CY	1	1	*361-3767*	1	STARTING MOTOR GP-ELECTRIC	163

C - CHANGE FROM PREVIOUS TYPE
Y - SEPARATE ILLUSTRATION

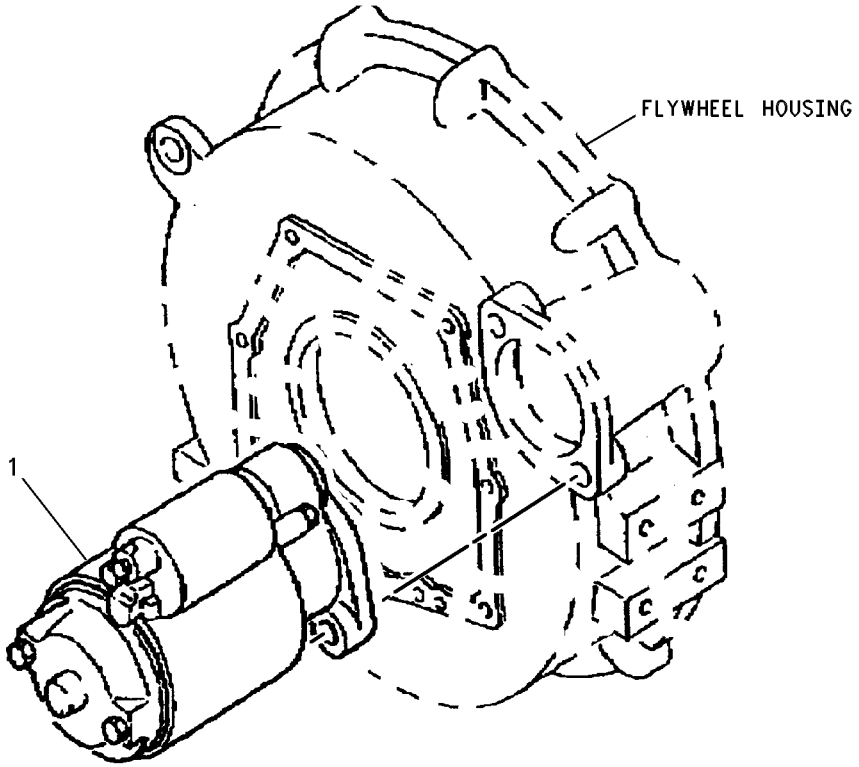

GRAPHIC #1 <END> g00640484

313-1971 STARTING MOTOR GP-ELECTRIC

12-VOLT, 1.1 KW
TYPE 3

SMCS-1453 **i05337777**

NOTE	REF NO	GRAPHIC REF	PART NUMBER	QTY	PART NAME 1 2 3 4 5 6 (PRODUCT LEVEL)	SEE PAGE
					(NO SERVICED PARTS)	

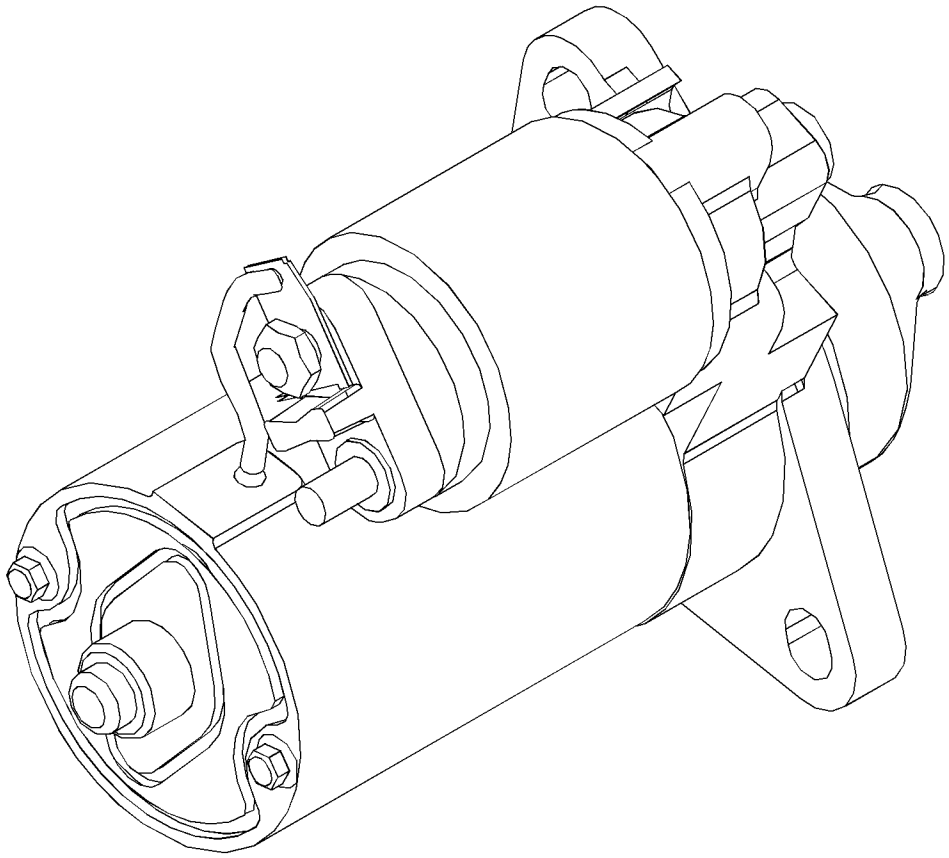

GRAPHIC #1 <END> g03385028

319-7351 STARTING MOTOR GP-ELECTRIC

PART OF 516-4466, 516-9462, 541-8320 ENGINE AR-PRIMARY

TYPE 1

SMCS-1453 **i07060759**

NOTE	REF NO	GRAPHIC REF	PART NUMBER	QTY	PART NAME 1 2 3 4 5 6 (PRODUCT LEVEL)	SEE PAGE
YR	1	1	**340-8308**	1	STARTING MOTOR GP-ELECTRIC	162

R - REMANUFACTURED PART MAY BE AVAILABLE
Y - SEPARATE ILLUSTRATION

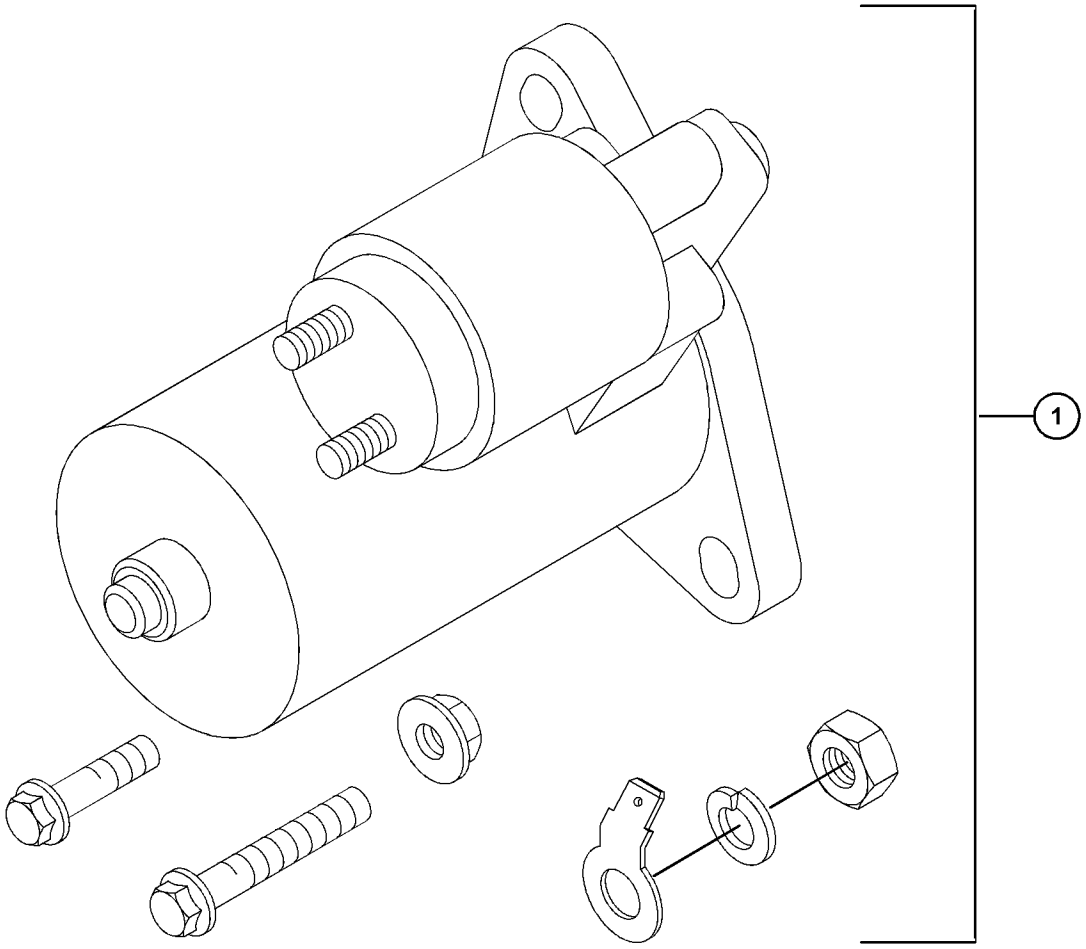

GRAPHIC #1 <END> g06213419

319-7351 STARTING MOTOR GP-ELECTRIC

TYPE 2

SMCS-1453 **i05260651**

NOTE	REF NO	GRAPHIC REF	PART NUMBER	QTY	PART NAME 1 2 3 4 5 6 (PRODUCT LEVEL)	SEE PAGE
CY	1	1	**361-3767**	1	STARTING MOTOR GP-ELECTRIC	163

C - CHANGE FROM PREVIOUS TYPE
Y - SEPARATE ILLUSTRATION

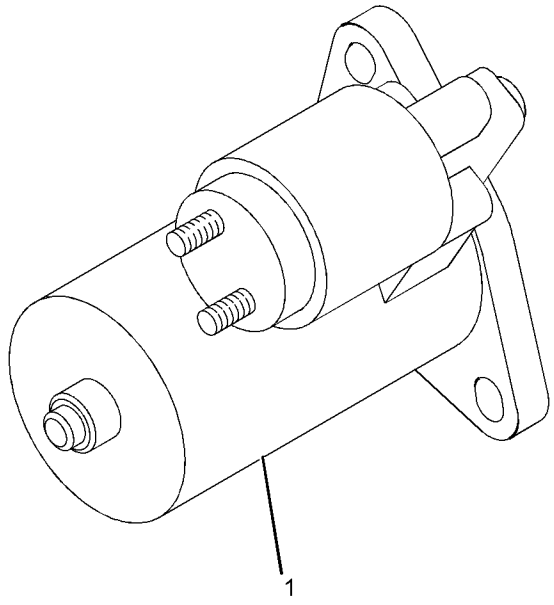

GRAPHIC #1 <END> g03349000

340-8308 STARTING MOTOR GP-ELECTRIC*R

12-VOLT, 1.4 KW

FIELD REPLACEMENT FOR 138-7454—PAGE: 155, 361-3767—PAGE: 163

PART OF 319-7351 STARTING MOTOR GP-ELECTRIC

SMCS-1453 **i03386947**

NOTE	REF NO	GRAPHIC REF	PART NUMBER	QTY	PART NAME 1 2 3 4 5 6 (PRODUCT LEVEL)	SEE PAGE
M	1	1	**6I-0593**	2	BOLT (M10X1.5X30-MM)	
M	2	1	**6I-0594**	2	NUT (M10X1.5-THD)	
M	3	1	**140-8783**	2	BOLT (M10X1.5X45-MM)	
	4	1	**333-7903**	1	KIT-TERMINAL	

M - METRIC PART

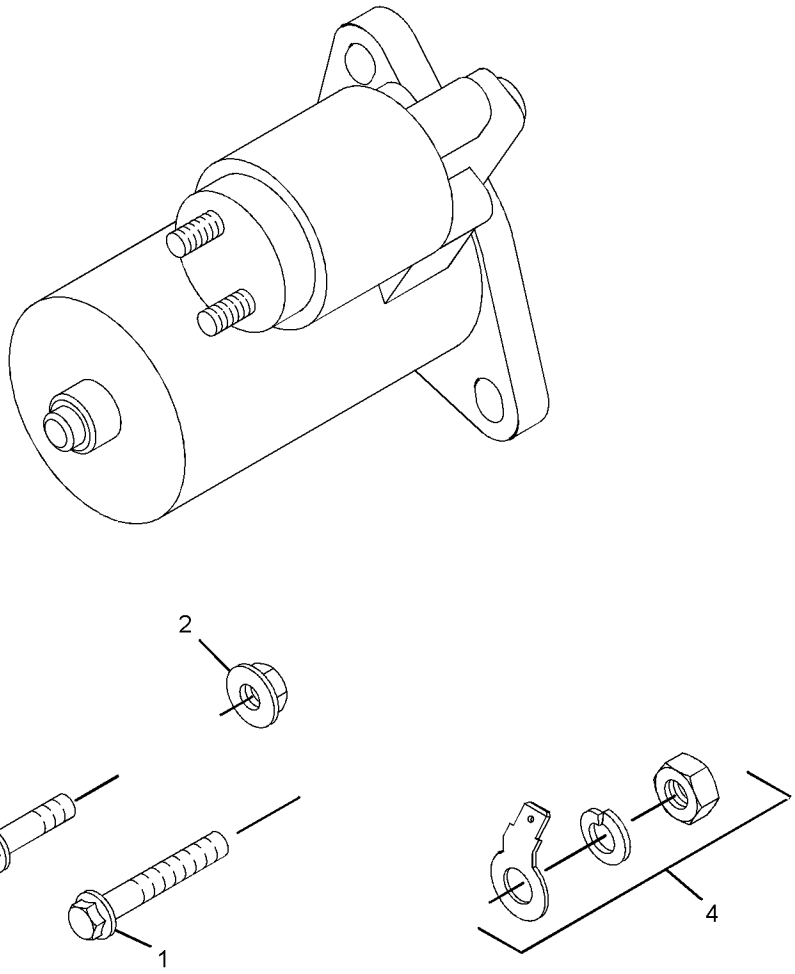

GRAPHIC #1 <END> g01755193

361-3767 STARTING MOTOR GP-ELECTRIC—12-VOLT

FIELD REPLACEMENT ORDER 340-8308—PAGE: 162

PART OF 313-1971, 319-7351 STARTING MOTOR GP-ELECTRIC

SMCS-1453 **i03938015**

NOTE	REF NO	GRAPHIC REF	PART NUMBER	QTY	PART NAME 1 2 3 4 5 6 (PRODUCT LEVEL)	SEE PAGE
					(NO SERVICED PARTS)	

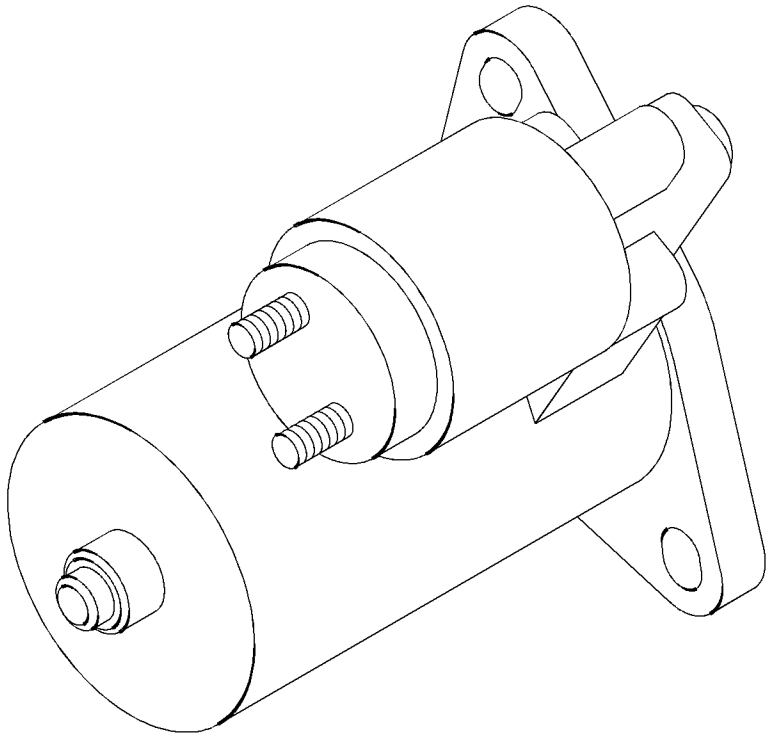

GRAPHIC #1 <END> g02158607

313-2024 SWITCH GP-PRESSURE—ENGINE OIL

PART OF 435-1644 CYLINDER BLOCK GP, 435-1643 ENGINE AR, 516-4466, 516-9462, 541-8320 ENGINE AR-PRIMARY

SMCS-7400, 7421 **i05533005**

NOTE	REF NO	GRAPHIC REF	PART NUMBER	QTY	PART NAME 1 2 3 4 5 6 (PRODUCT LEVEL)	SEE PAGE
	1	1	**153-5936**	2	WASHER	
	2	1	**183-1165**	1	PLUG	
	3	1	**438-1431**	1	ADAPTER	
	4	1	**292-1993**	1	SWITCH-PRESSURE (ENGINE OIL)	

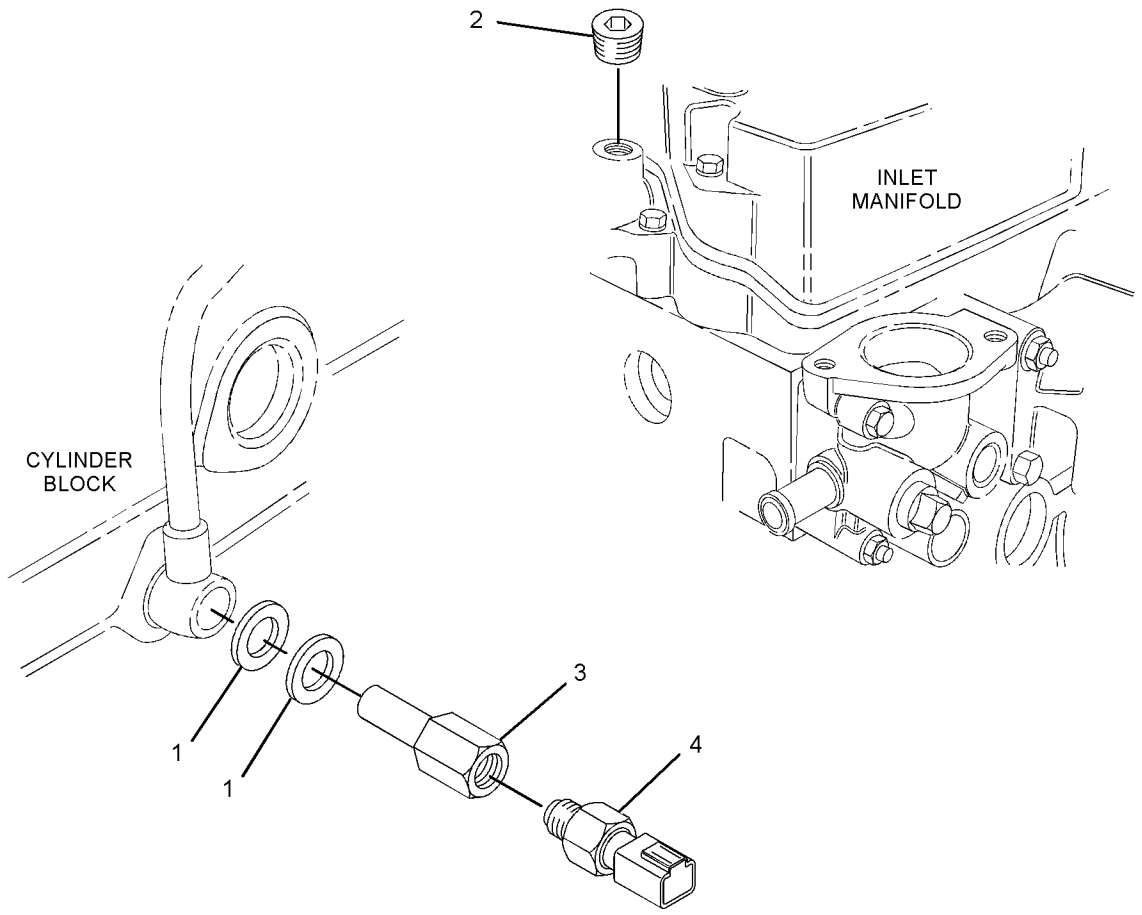

GRAPHIC #1 <END> g03505827

315-6638 SWITCH GP-PRESSURE

PART OF 435-1632 ENGINE AR

TYPE 1

SMCS-7400, 7421 **i06561740**

NOTE	REF NO	GRAPHIC REF	PART NUMBER	QTY	PART NAME 1 2 3 4 5 6 (PRODUCT LEVEL)	SEE PAGE
	1	1	**153-5936**	2	WASHER	
	2	1	**183-1165**	1	PLUG	
	3	1	**456-7377**	1	SWITCH (OIL PRESSURE) (ENGINE OIL)	
	4	1	**438-1431**	1	ADAPTER	

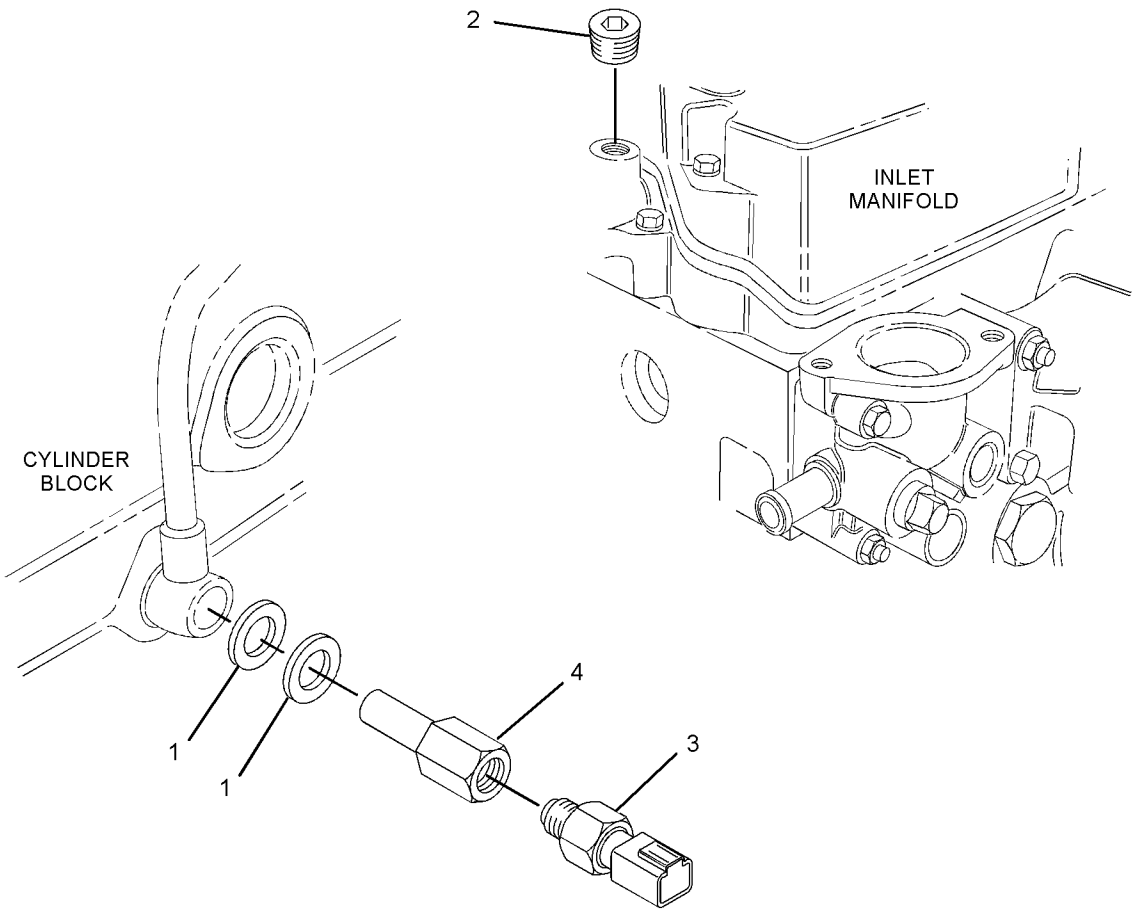

GRAPHIC #1 <END> g03505824

315-6638 SWITCH GP-PRESSURE

PART OF 435-1632 ENGINE AR

TYPE 2

SMCS-7400, 7421 **i07027060**

NOTE	REF NO	GRAPHIC REF	PART NUMBER	QTY	PART NAME 1 2 3 4 5 6 (PRODUCT LEVEL)	SEE PAGE
	1	1	**153-5936**	2	WASHER	
	2	1	**183-1165**	1	PLUG	
C	3	1	**484-0882**	1	SWITCH (ENGINE OIL)	

C - CHANGE FROM PREVIOUS TYPE

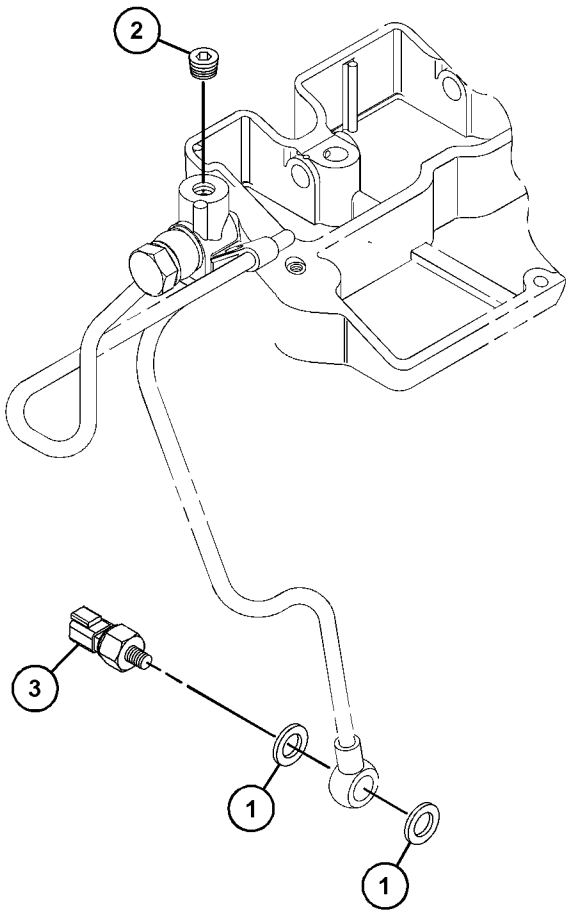

GRAPHIC #1 <END> g06199983

308-2314 SWITCH GP-START

PART OF 516-4466, 516-9462 ENGINE AR-PRIMARY

SMCS-1416 **i04840451**

NOTE	REF NO	GRAPHIC REF	PART NUMBER	QTY	PART NAME 1 2 3 4 5 6 (PRODUCT LEVEL)	SEE PAGE
	1	1	**183-5460**	1	PLATE	
	2	1	**359-6000**	1	SWITCH AS-START	
	2A	1	**183-5458**	1	CAP	
	2B	1	**361-3925**	1	KEY-IGNITION	

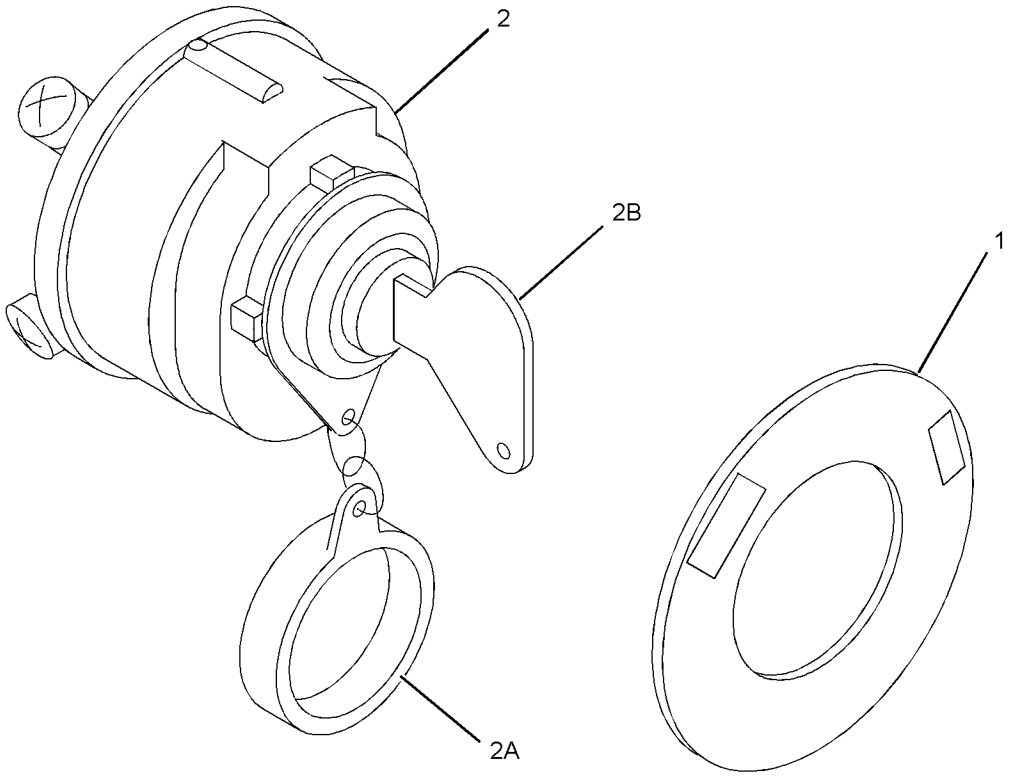

GRAPHIC #1 <END> g01389581

313-2035 SWITCH GP-TEMPERATURE–COOLANT

PART OF 435-1644 CYLINDER BLOCK GP, 435-1632, 435-1643 ENGINE AR, 516-4466, 516-9462, 541-8320 ENGINE AR-PRIMARY

SMCS-7400 **i04899477**

NOTE	REF NO	GRAPHIC REF	PART NUMBER	QTY	PART NAME 1 2 3 4 5 6 (PRODUCT LEVEL)	SEE PAGE
	1	1	**341-3600**	1	SWITCH-TEMPERATURE (ENGINE COOLANT)	

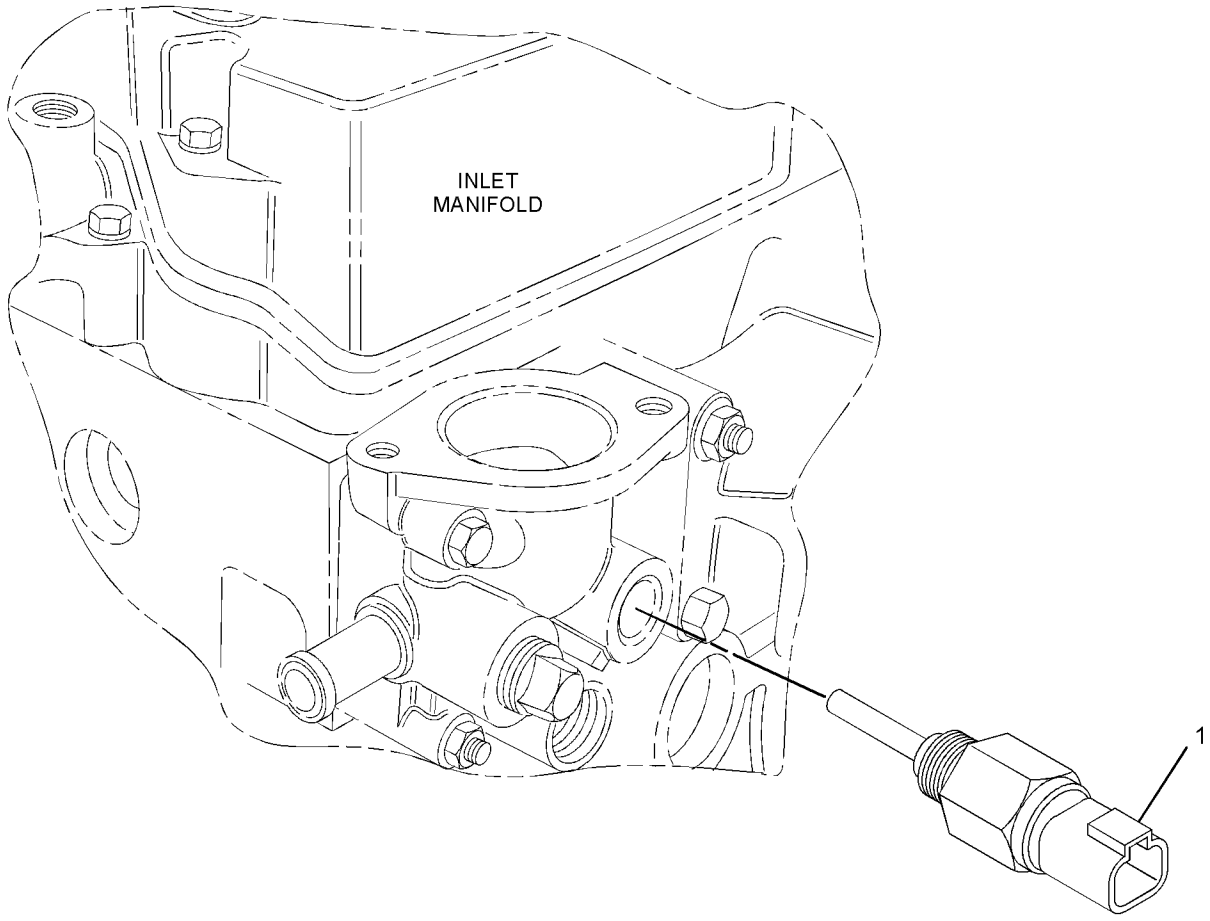

GRAPHIC #1 <END> g03076218

313-2026 LAMP GP-INDICATOR

SMCS-7451 **i03384420**

NOTE	REF NO	GRAPHIC REF	PART NUMBER	QTY	PART NAME 1 2 3 4 5 6 (PRODUCT LEVEL)	SEE PAGE
	1	1	**197-8547**	1	LAMP (GLOW PLUG INDICATOR)	

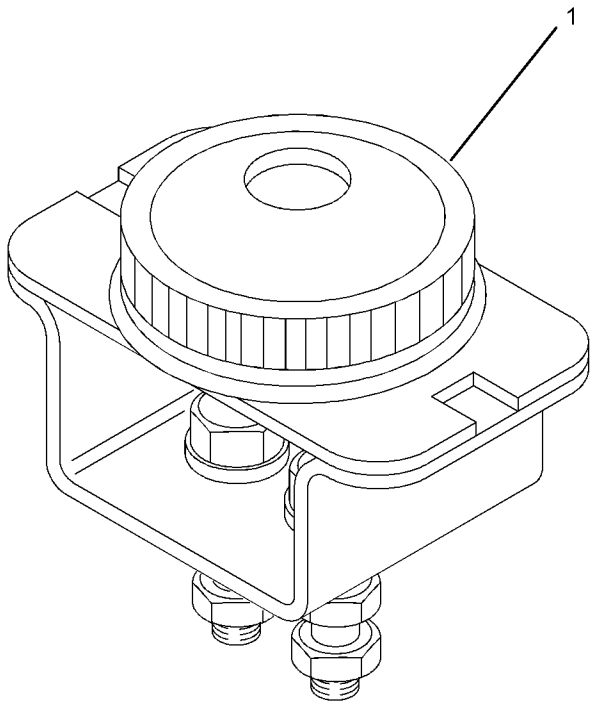

GRAPHIC #1 <END> g01389239

342-7622 PARTS GP-MISCELLANEOUS

PART OF 435-1644 CYLINDER BLOCK GP, 435-1632, 435-1643 ENGINE AR

SMCS-1000, 7950 **i05392969**

NOTE	REF NO	GRAPHIC REF	PART NUMBER	QTY	PART NAME 1 2 3 4 5 6 (PRODUCT LEVEL)	SEE PAGE
	1	1	**153-6860**	1	GASKET	
	2	1	**183-1165**	1	PLUG	
	3	1	**444-7398**	1	GASKET - COVER	

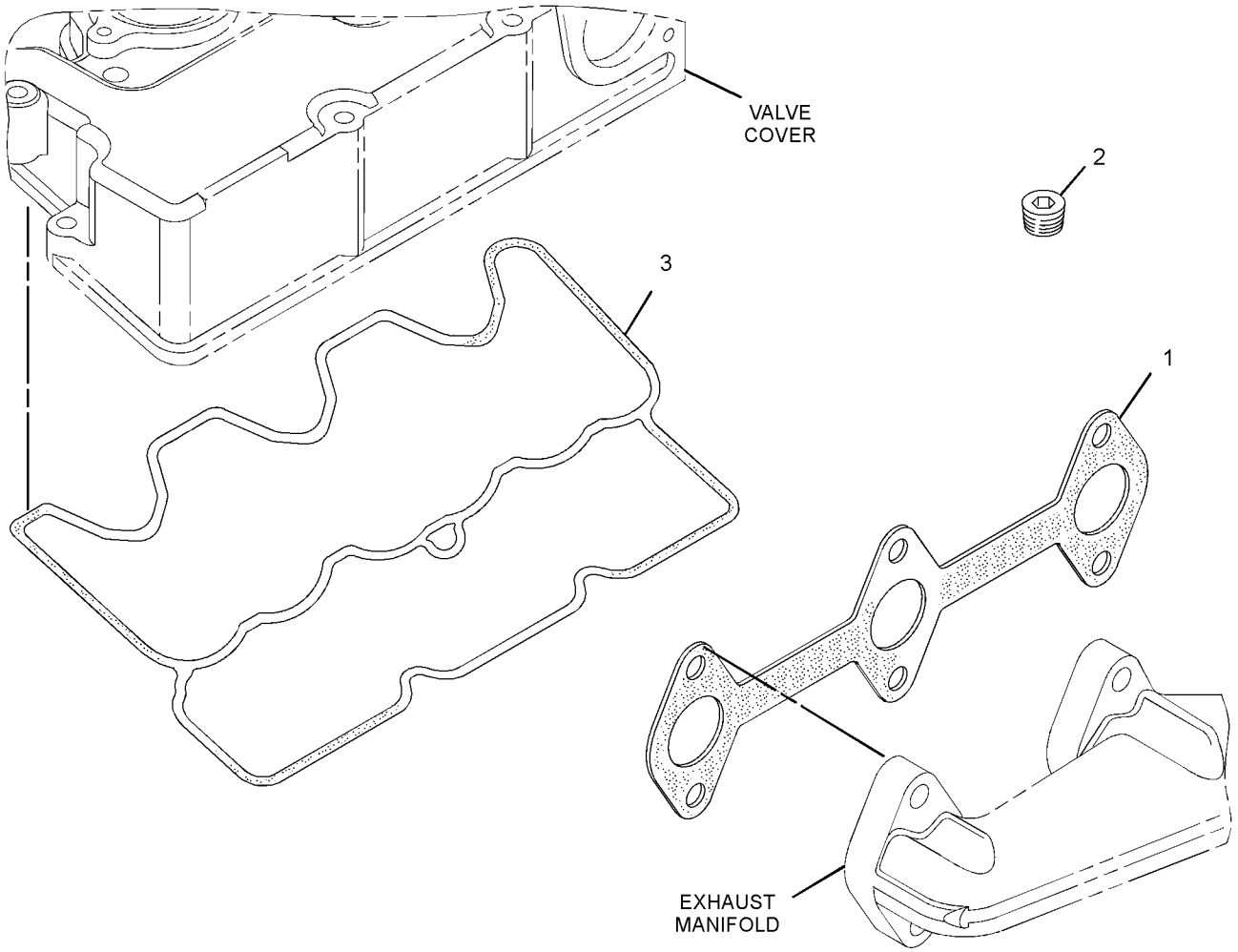

GRAPHIC #1 <END> g01972633

PART NUMBER INDEX

Part	Page
1	
1R-6484	141
2	
2S-3440	88
	102
3	
3B-4504	29
5	
5C-2890	112
	114
	116
	118
	120
	122
	124
	126
5D-1319	53
	55
	57
	59
6	
6I-0217	88
	92
	96
	99
	102
	109
6I-0254	88
	92
	96
	99
	102
	109
6I-0260	146
6I-0454	26
6I-0593	141
	162
6I-0594	25
	26
	41
	51
	162
6I-0654	96
6I-0846	40
	141
	143
6I-0917	88
	92
	96
	99
	102
6I-4200	52
7	
7W-4694	143
7X-0796	141
	143
	145
8	
8C-8451	126
8T-0276	31
8T-4138	29
8T-4971	29
8T-6974	29
9	
9M-7958	88
	96
	99
	102
9X-6153	15
	16
	17
	18
	19
	20
	21
0	
032-8100	143
033-7849	143
067-6269	143
067-6317	143
067-6987	143
095-1574	112
	114
	116
	118
	120
	122
	124
	126
095-1604	76
1	
100-4841	62
	64
101-3895	148
	149
101-3917	145
103-1067	109
103-5687	23
	42
103-6714	109
106-8916	112
	114
	116
	118
	120
	122
	124
	126
111-0859	149
114-4363	52
	88
	99
	102
123-2899	88
	99
	102
124-3815	24
	61
	88
	92
	96
	99
	102
138-7142	48
	50
138-7146	48
	49
	50
	51
138-7149	50
138-7162	143
138-7166	48
138-7454	▶155
	157
139-5511	112
	114
	116
	118
	120
	122
	124
	126
140-8783	49
	51
	162
150-3715	88
	102
153-5385	33
153-5387	33
153-5390	33
153-5391	33
153-5392	33
153-5393	33
153-5394	33
153-5395	33
153-5397	31
153-5402	31
153-5403	31
153-5407	33
	82
153-5408	31
153-5409	33
153-5518	31
153-5519	31
153-5536	66
153-5537	66
153-5538	66
153-5540	66
153-5541	66
153-5555	36
153-5556	36
153-5557	36
153-5575	38
153-5577	70
153-5578	38
153-5579	70
153-5586	70
153-5587	70
153-5590	70
153-5591	74
153-5592	74
	88
	92
	96
	99
	102
	109
	112
	114
	116
	118
	120
	122
	124
	126
153-5595	70
153-5933	77
153-5934	27
153-5936	27
	29
	43
	164
	165
	166
153-5939	27
	29
153-5944	27
	29
	38
153-5960	27
	29
	53
	55
	57
	59
	82
	84
	86
	111
	129
	132
	134
	136
	138
153-5961	146
	148
	149
153-5962	53
	55
	57
	59
	84
	86
153-5963	69
153-6375	60
153-6385	129
	132
	134
	136
	138
153-6412	67
	154
153-6415	112
	114
	116
	118
	120
	122
	124
	126
	129
	132
	134
	136
	138
153-6492	15
	16
	17
	18
	19
	20
	21

▶ PRIMARY REFERENCE

PART NUMBER INDEX

Part	Page
	68
153-6496	68
153-6497	22
	23
	25
	26
	41
	42
153-6835	62
	64
153-6838	17
	62
	64
	76
153-6840	27
	29
153-6841	62
	64
153-6848	80
153-6849	80
153-6850	80
153-6851	80
153-6853	43
153-6859	111
153-6860	111
	170
153-6861	74
	92
	111
153-6865	44
	45
153-6866	44
	45
	46
	47
153-6867	52
153-6879	79
153-6881	43
153-7640	27
	29
	82
	129
	132
	134
	136
	138
	148
	149
153-7978	53
	55
	57
	59
153-7983	112
	114
	116
	118
	120
	122
	124
	126
153-7985	20
	21
	80
153-7987	112
	114
	116
	118
	120
	122
	124
	126
153-7990	17
154-1399	48
	50
	143
	148
154-1817	83
	84
	86
154-1820	83
154-1824	84
154-1831	84
154-1942	43
154-2395	48
	51
154-2403	22
	48
	50
154-2715	112
	114
	116
	118
	120
154-2716	134
155-7984	143
155-8075	152
155-8084	146
155-8085	48
	50
	143
156-6948	70
156-6950	70
160-4150	80
160-4151	80
160-4152	80
160-4153	80
161-1432	129
	132
	134
	136
	138
161-1433	129
	132
	134
	136
	138
161-1434	129
	132
	134
	136
	138
161-1435	129
	132
	134
	136
	138
161-8260	92
162-2207	112
	114
	116
	118
	120
	122
	124
	126
163-5372	107
165-2139	27
	29
165-2140	53
	55
	57
	59
	146
165-2141	143
168-9001	106
	107
168-9002	146
	148
	149
175-7141	23
	42
	49
176-7719	141
	143
177-3308	68
180-6118	92
	96
183-1163	33
183-1164	33
183-1165	164
	165
	166
	170
183-3353	129
	132
	134
	136
	138
183-3539	81
183-3605	15
	16
	17
	18
	19
	20
	21
183-3938	▶145
	146
183-3940	146
183-3941	146
183-3942	71
	72
183-4029	148
	149
183-4031	148
	149
183-4034	148
	149
183-4035	148
183-4037	148
	149
183-4323	76
183-4335	107
183-5458	167
183-5460	167
191-0563	107
191-0573	60
191-0574	60
191-9297	112
	114
	116
	118
	120
	122
	124
	126
195-3699	29
197-8448	92
	96
	99
197-8540	140
	142
197-8547	169
197-8555	150
197-8816	146
198-5842	41
	2
202-6616	92
	134
	136
	138
217-5859	27
	29
217-5860	27
	29
217-5862	27
	29
217-7115	116
	118
	120
	122
	124
	126
217-7358	76
	77
220-1523	78
221-1136	33
229-5150	62
	64
231-2070	36
231-2073	38
231-2183	70
231-2801	31
231-2802	31
231-2803	31
231-2839	152
231-3009	27
231-3010	27
	29
231-3013	27
	29
231-3870	66
231-7702	129
	132
	134
	136
	138
231-7703	129
	132
	134
	136
	138
231-7704	129
	132
	134
	136
	138
231-7739	129
	132
	134
	136
	138
231-7853	84
231-7854	▶83
	84
231-7857	84
231-7859	84
231-7861	84
231-7864	43
231-8819	33
232-0218	129
	132
	134
	136
	138
232-0290	129
	132
	134
	136
	138
232-0792	128
232-0793	128
	129
	132
	134

▶ PRIMARY REFERENCE

PART NUMBER INDEX

Part	Page
234-8762	146
	153
237-9315	33
238-0128	92
238-1294	62
	64
238-1295	62
239-1137	92
242-7073	155
242-7076	155
242-7077	155
244-0494	92
244-0495	88
	92
	96
	99
	102
244-0503	88
	92
	96
	99
	102
244-0508	109
244-0509	88
	92
	96
	102
244-0514	▶108
	109
244-3259	88
	92
	96
	99
	102
246-5011	108
247-1376	109
249-7263	39
252-8372	107
252-9229	129
	132
	134
254-4504	38
254-5541	150
	151
255-1297	88
	96
	99
	102
256-2085	36
258-4520	88
	92
	96
	99
	102
267-0328	84
	86
271-5059	108
271-5062	108
273-9253	88
	96
	99
	102
276-1804	142
276-1806	142
288-6537	36
288-6538	33
288-6539	33
288-6593	8
	76
	77
290-8014	129
	132
	134
	136
	138
290-8458	66
291-1799	70
291-1808	36
292-1993	164
292-1994	83
292-1995	83
293-3230	132
	134
	136
	138
295-4070	141
	143
295-8592	155
295-8593	155
295-8594	155
295-8595	155
295-8596	155
295-8597	145
295-8605	145
295-8606	145
295-8607	145
295-8608	145

3

Part	Page
302-4187	143
302-7776	142
302-7777	142
302-7778	142
303-4105	▶6
304-3560	33
304-4764	31
304-4766	31
304-4767	31
307-8672	152
308-1882	112
	114
	116
	118
	120
	122
	124
	126
308-1889	112
	114
	116
	118
	120
	122
	124
	126
308-1892	112
	114
	116
	118
	120
	122
	124
	126
308-1897	112
	116
	118
	120
	122
	124
308-1904	16
	17
	19
308-1914	154
308-2298	1
	3
	4
	5
	6
	7
	8
	10
	12
	13
	14
	35
	▶78
308-2309	3
	6
	7
	10
	12
	13
	14
	▶106
308-2314	2
	4
	6
	7
	9
	10
	12
	13
	▶167
308-2319	1
	3
	6
	7
	8
	10
	▶150
308-2320	6
	7
	12
	13
	14
	▶140
308-4266	112
	114
	116
	118
	120
	122
	124
	126
308-4735	1
	3
	4
	5
	6
	7
	8
	10
	12
	13
	14
	35
	▶79
308-5610	1
	8
	▶107
308-6555	▶7
309-6720	1
	3
	4
	5
	6
	7
	8
	10
	12
	13
	14
	▶31
	12
	13
	14
	35
	▶67
309-6729	122
	124
	126
311-0655	112
	114
	116
	118
	120
	122
	124
	126
311-1171	22
311-5847	15
	16
	17
	19
	20
	21
311-5851	82
311-5852	22
	23
	25
	26
	41
	42
311-5853	22
	23
	25
	26
	41
	42
311-5854	22
311-9622	112
	114
312-1582	129
	132
	134
	136
	138
312-1583	129
	132
	134
	136
	138
313-1957	1
	3
	4
	5
	6
	7
	8
	10
	12
	13
	14
	▶33
	35
313-1962	1
	3
	4
	5
	6
	7
	8
	10
	12
	13
	14
	▶31

PART NUMBER INDEX

Part	Page
	35
313-1963	1
	3
	4
	5
	6
	7
	8
	10
	12
	13
	14
	35
	▶66
313-1964	1
	3
	4
	5
	6
	7
	8
	10
	12
	13
	14
	35
	▶38
313-1965	2
	4
	5
	6
	7
	9
	11
	12
	13
	14
	35
	▶74
313-1966	1
	3
	4
	6
	7
	8
	10
	12
	13
	14
	35
	▶43
313-1967	5
	6
	7
	14
	▶53
313-1968	5
	6
	7
	14
	▶129
313-1969	6
	7
	14
	▶48
	▶49
313-1970	6
	7
	14
	▶44
313-1971	1
	3
	7
	9
	10
	▶157
	158
	159
313-1972	1
	3
	6
	7
	8
	10
	12
	13
	14
	▶69
313-1973	1
	3
	4
	5
	6
	7
	8
	10
	14
	35
	▶62
313-1975	1
	3
	4
	5
	7
	8
	35
	▶76
313-1976	1
	3
	4
	5
	6
	7
	8
	10
	12
	13
	14
	35
	▶68
313-1978	1
	3
	4
	5
	6
	7
	8
	10
	12
	13
	14
	35
	▶84
	▶86
313-1980	1
	3
	4
	5
	6
	7
	8
	10
	12
	13
	14
	35
	▶82
313-1981	7
	▶81
313-1982	3
	6
	7
	10
	12
	13
	14
	▶146
313-1983	4
	6
	7
	11
	12
	13
	14
	▶71
313-1984	1
	3
	7
	8
	10
	14
	▶22
	▶23
	35
313-1986	1
	3
	4
	5
	6
	7
	8
	10
	12
	14
	▶27
	35
313-1991	1
	3
	6
	7
	8
	10
	12
	13
	14
	▶111
313-2009	1
	3
	6
	7
	8
	10
	14
	▶143
313-2021	1
	3
	4
	5
	6
	7
	8
	10
	12
	13
	14
	35
	▶152
313-2022	1
	3
	6
	7
	8
	10
	12
	13
	14
	▶60
313-2023	1
	3
	4
	5
	6
	7
	8
	10
	12
	13
	14
	35
	▶154
313-2024	1
	3
	5
	6
	7
	9
	10
	12
	13
	14
	35
	▶164
313-2025	112
	114
	116
	118
	120
	122
	124
	126
313-2026	3
	7
	8
	▶169
313-2027	31
313-2034	22
	23
	25
	41
	42
313-2035	2
	4
	5
	6
	7
	9
	11
	12
	13
	14
	35
	▶168
313-2037	126
313-2038	15
	16
	17
	19
	20
	21
313-2039	129
313-2040	129
	132
	134
	136
	138
313-5832	112

PART NUMBER INDEX

Part	Page
	114
	116
	118
	120
	122
	124
	126
313-5833	112
	114
	116
	118
	120
	122
	124
	126
313-9323	15
	16
	17
	18
	19
	20
	21
315-6638	4
	▶165
	▶166
317-6706	1
	3
	8
	10
	▶142
318-1667	▶1
318-1668	▶8
318-1669	▶10
318-1670	▶3
318-5038	153
318-8803	1
	3
	8
	10
	14
	▶102
318-8804	1
	3
	6
	8
	10
	12
	13
	14
	▶109
318-8805	109
318-8815	6
	▶88
318-8879	1
	3
	8
	10
	12
	13
	▶50
	▶51
318-8880	1
	3
	8
	10
	12
	13
	▶45
	▶46
319-7268	▶36
	38
319-7351	1
	3
	6
	9
	10
	12
	13
	14
	▶160
	▶161
319-7354	1
	8
	▶148
	▶149
319-7355	2
	9
	▶72
	▶73
320-9114	1
	3
	8
	10
	▶153
321-3140	3
	4
	8
	13
	▶55
321-3142	3
	4
	8
	13
	▶116
	▶118
	▶120
321-3143	3
	4
	8
	13
	▶15
	▶16
321-3145	116
	118
	120
321-3334	3
	4
	8
	13
	▶132
321-4249	112
	116
	122
321-5906	26
	41
	42
321-6741	1
	3
	6
	8
	10
	12
	13
	14
	▶151
322-3808	7
	▶39
	▶40
323-2407	1
	10
	35
	▶57
323-2408	1
	10
	35
	▶122
	▶124
323-2409	1
	10
	▶17
	▶18
	35
323-2410	1
	10
	35
	▶134
	▶136
324-3396	116
	118
	120
324-3398	112
	114
	122
	124
	126
325-5586	4
	5
	35
	▶47
325-5924	88
	92
	96
	99
	102
325-5932	88
	92
	96
	99
	102
325-5938	88
	92
	102
325-5939	92
325-5940	88
	102
326-0053	148
	149
326-9052	109
327-4311	44
327-5149	45
329-1292	86
	141
	143
329-8576	26
329-8577	1
	3
	4
	8
	10
	12
	13
	▶26
329-9764	5
	6
	7
	14
	▶112
	▶114
329-9765	5
	6
	7
	14
	▶19
330-9189	112
	114
	116
	118
	120
	122
	124
	126
331-9381	41
	42
333-7903	162
334-0272	76
	77
334-0732	112
	114
	116
	118
	120
	122
	124
	126
334-6593	8
334-7437	88
	92
	96
	99
	102
335-5578	112
	114
	116
	118
	120
	122
	124
	126
335-8323	41
336-2965	112
	114
	116
	118
	120
	122
	124
	126
337-6523	148
	149
339-3008	80
339-3016	1
	4
	5
	7
	9
	10
	12
	13
	14
	35
	▶80
340-0199	153
340-8308	160
	▶162
341-3600	168
342-1268	4
	5
	▶24
	35
342-7619	4
	5
	35
	▶52
342-7622	4
	5
	35
	▶170
344-5868	88
	92
	96
	99
	102
356-3225	31
358-4256	49
	50
358-9226	143

▶ PRIMARY REFERENCE

PART NUMBER INDEX

Part	Page
359-5135	53
	55
	57
	59
359-6000	167
361-3767	158
	161
	▶163
361-3925	167
362-8050	88
	92
	96
	99
	102
363-5813	88
	92
	96
	99
	102
363-8408	18
363-8409	15
	18
	20
	21
363-8410	18
364-1817	122
	124
	126
365-0486	1
	3
	6
	8
	10
	12
	13
	14
	▶77
365-5827	73
366-1272	▶128
	136
	138
366-2614	88
	92
	96
	99
	102
366-2615	88
	92
	96
	99
	102
366-3065	106
	107
366-4251	33
367-9248	5
	▶41
	▶42
369-4486	112
	114
	116
	118
	120
	122
	124
	126
369-8010	62
	64
370-6544	61
371-1231	7
	▶25
371-1233	25
371-1234	25
386-1972	▶70
	74
390-3729	112
	114
	116
	118
	120
	122
	124
	126
390-3731	112
	114
	116
	118
	120
	122
	124
	126
392-8729	4
	5
	35
	▶61
393-5482	152

4

419-7640	154
423-5640	96
	99
	102
423-5661	141
423-6224	67
423-7724	112
	114
	116
	118
	120
	122
	124
	126
425-7065	112
	116
	122
426-4357	129
	132
	136
	138
432-8339	27
435-0208	106
	107
435-1632	▶4
435-1643	▶5
	6
	14
435-1644	10
	▶35
438-1431	164
	165
438-9109	74
440-5104	36
444-7301	88
444-7398	27
	29
	170
444-7907	66
445-0804	1
	3
	8
	10
	12
	13
	▶92
	▶96
	▶99
452-4278	1
	3
	8
	10
	13
	▶29
452-4518	33
452-4684	29
452-5051	96
	99
452-5052	96
	99
453-6804	62
	64
454-7979	74
454-7980	53
	55
	57
	59
454-7986	62
	64
454-7991	143
456-7377	165
457-8041	12
	▶59
457-8042	12
	▶126
457-8043	12
	▶20
	▶21
457-8076	12
	▶138
468-7382	109
472-2215	86
475-9554	8
476-5578	82
476-5580	88
	96
	99
	102
476-5583	51
476-5584	46
476-5585	143
477-8828	36
481-1650	76
483-1215	49
483-1366	88
	102
483-1369	141
	143
484-0882	166
484-7540	15
	16
	18
	19
	20
	21
	33
486-8880	86
487-0157	33
488-8416	62
	64
490-0367	15
	16
	18
	19
	20
	21
494-9566	86
495-0737	112
	114
	116
	118
	120
	122
	124
	126
499-0368	29

5

500-3814	86
500-8345	86
502-5421	114
	118
	120
	124
	126
502-9478	114
	118
	120
	124
	126
503-9707	114
	118
	120
	124
	126
503-9731	114
	118
	120
	124
	126
504-3838	38
507-9476	64
508-6591	86
509-5977	64
514-6544	141
514-6554	141
516-4466	▶12
516-5831	141
516-9462	▶13
523-6265	12
	13
	▶64
528-6884	74
541-1625	12
	13
	▶141
541-8320	▶14



©2019 Caterpillar
All Rights Reserved

CAT, CATERPILLAR, their respective logos, “Caterpillar Yellow”, and the POWER EDGE trade dress as well as corporate and product identity used herein, are trademarks of Caterpillar and may not be used without permission.