SEBP5547-24 (en-us)
December 2019

Parts Manual

C1.5 Industrial Engine

C8W1-UP (Engine)

Scan to find and purchase genuine Cat® parts and related service information.

Product and Dealer Information

Note: For product identification plate locations, see the section “Product Identification Information” in the Operation and Maintenance Manual.

Delivery Date: _____

Product Information

Model: _____

Product Identification Number: _____

Engine Serial Number: _____

Transmission Serial Number: _____

Generator Serial Number: _____

Attachment Serial Numbers: _____

Attachment Information: _____

Customer Equipment Number: _____

Dealer Equipment Number: _____

Dealer Information

Name: _____ Branch: _____

Address: _____

_____

_____

	Dealer Contact	Phone Number	Hours
Sales:	_____	_____	_____
Parts:	_____	_____	_____
Service:	_____	_____	_____

MEMORANDA

TABLE OF CONTENTS

NAME	PAGE
GENERAL INFORMATION	A2
REPAIR ALTERNATIVES	A4
SUPPLEMENTAL COOLANT ADDITIVES	A5
MAINTENANCE PARTS	A6
INDEX	A7
ENGINE ARRANGEMENT	1
ENGINE AR	1
ENGINE AR-PRIMARY	3
BASIC ENGINE	5
CAMSHAFT GP	5
COVER GP-CYLINDER HEAD	10
FASTENER GP-COVER	14
COVER GP-FRONT HOUSING	15
HOUSING GP-FRONT	16
COVER GP-FRONT HOUSING	18
COVER GP-VALVE MECHANISM	19
CRANKSHAFT GP	21
CYLINDER BLOCK GP	23
ENGINE AR-PRIMARY	27
CYLINDER HEAD AS	28
CYLINDER HEAD GP	31
FASTENER GP-FRONT COVER	33
FLYWHEEL GP	34
HOUSING GP-FLYWHEEL	36
HOUSING GP-FRONT	39
KIT-FRONT GEAR	48
LIFTING GP-ENGINE	49
PAN GP-OIL	51
PISTON & ROD GP	55
PLUG GP-OIL PAN	56
PULLEY GP-CRANKSHAFT	57
PULLEY GP-FAN	58
ROCKER ARM GP	60
V-BELT GP	61
VALVE MECHANISM GP	63
LUBRICATION SYSTEM	65
FILLER GP-ENGINE OIL	65
FILTER GP-ENGINE OIL	69
LINES GP-ENGINE OIL	70
MOUNTING GP-ENGINE OIL FILTER	71
PUMP GP-ENGINE OIL	72
KIT-ENGINE OIL PUMP	73
COOLING SYSTEM	75
HOUSING GP-WATER REGULATOR	75
PUMP GP-WATER	76
RADIATOR GP	83
AIR INLET AND EXHAUST SYSTEM	114
AIR CLEANER GP	114
CONNECTION GP-EXHAUST	118
FILTER ELEMENT AS-AIR	119
MANIFOLD GP-EXHAUST	120
FUEL SYSTEM	121
CONTROL GP-GOVERNOR	121
FILTER GP-FUEL	127
GOVERNOR GP	129
PUMP GP-FUEL INJECTION	133
PUMP GP-FUEL PRIMING	138
PUMP GP-FUEL PRM & PRIM FILTER	140
PUMP GP-FILTER & FUEL TRANSFER	142
ELECTRICAL AND STARTING SYSTEM	145
ALTERNATOR GP-CHARGING	145
CONNECTION GP-ELECTRICAL	148
GLOW PLUG GP	150
SHUTOFF GP-ELECTRICAL	152
SOLENOID GP-SHUTOFF	153
STARTING MOTOR GP-ELECTRIC	154
SWITCH GP-PRESSURE	160
SWITCH GP-START	162
SWITCH GP-TEMPERATURE	163
OPERATOR STATION	164
LAMP GP	164
SERVICE EQUIPMENT AND SUPPLIES	165
PARTS GP-MISCELLANEOUS	165
PLATE & FILM GP	167
PART NUMBER INDEX	B1

GENERAL INFORMATION

1. ENGINE IDENTIFICATION

Cat engines are identified with Serial Numbers and Arrangement Numbers. In some cases, Modification Numbers are also used. The serial number plate which shows these numbers is mounted on the engine.

Cat dealers need this information to determine which components were included on the engine when it was assembled at the factory. This permits accurate identification of replacement part numbers.

2. ORDERING PARTS

⚠ WARNING

When replacement parts are required for this product Caterpillar recommends using Caterpillar replacement parts or parts with equivalent specifications including, but not limited to, physical dimensions, type, strength and material.

Failure to heed this warning can lead to premature failures, product damage, personal injury or death.

Quality Cat replacement parts are available from Cat dealers throughout the world. Their parts inventories are up to date and include all parts normally required to protect your investment in Cat Engines. Dealers may offer repair kits or remanufactured parts to allow selection of the most effective repair alternative for a particular situation. When ordering parts, your order should specify the quantity, part number, part name, and the serial number/product identification number of the engine for which the parts are needed.

3. PARTS MANUAL ORGANIZATION

Product information in this manual is presented as "information elements" that represent all of the components for the specific model. An Engine Arrangement is an example of an information element. The information elements are organized alphabetically by part name and secondarily by part number within each major section of the manual.

4. TABLE OF CONTENTS

A table of contents (TOC) is found at the beginning of the manual. The TOC lists each section of the manual with a complete list of all information elements organized as they appear in the manual. Page numbers are provided for quick reference to detailed parts identification illustrations and serviceable consist lists.

5. MAINTENANCE PARTS INDEX

The Maintenance Parts Index, located near the beginning of the manual, references most frequently used maintenance part numbers, providing description, quantity, usage and page number. This information is organized alphabetically by part description.

6. INDEX

The index located near the front of the manual is an alphabetical listing of all information elements included in the manual. Page numbers are provided for quick reference to detailed parts identification illustrations and serviceable consist lists.

7. PART NUMBER INDEX

A numerical index listing all part numbers and the corresponding page number(s) appears at the back of the manual.

8. CAPTIONS

Captions located at the beginning each information element identify the part number and part name along with additional descriptive information. S/N information found in each caption should be used to select correct information for a specific engine. Field replacement options, identification of optional attachment components, and where used ("part of") information is also provided.

The first line of a caption is shown in larger type font to indicate the beginning of an information element. Captions for additional pages that may be required to illustrate an information element will be shown in standard type font and will include the term (contd.) .

9. NON-SERVICED PARTS

In some instances it is necessary to display non-serviced parts that are a link to lower level serviceable consist lists. These non-serviced part numbers are shown in italic type indicating that they are not available. All consist lists have not been converted to reflect this enhancement.

10. PARTS LIST REFERENCE NUMBERS

Numbers shown in the Ref No column correspond to numbers used in the associated graphic(s). An alphabetic suffix may be added to a reference number to identify lower level consist items. Numbers shown in the Graphic Ref column refer to the graphic number identifier displayed in the lower left corner of each illustration. The Graphic Ref number may be used in combination with the item Ref No to determine the correct part number. There may be intentional omission of a Ref No in a consist list as information is updated to reflect the latest serviceable part numbers.

11. INDENTED PART NAMES

When a part name is indented in a parts list, it is part of (included in) the group or assembly under which it is indented.

12. ILLUSTRATION REFERENCE LETTERS

When necessary, illustrations contain reference letters (A, B, C etc.) that are intended to track lines and harnesses from one point to another. They are also used to show where to reconnect illustrations that have been separated.

13. ABBREVIATIONS AND SYMBOLS

O.D. – Outside Diameter
I.D. – Inside Diameter
A – Not Part Of This Group
B – Use As Required
C – Change From Previous Type
D – Order By The Meter
E – Order By The Centimeter
F – Not Shown
G – Order By The Inch
I – Refer To Hydraulic Information System
M – Metric Part
R – Remfg Part May Be Available
Y – Separate Illustration
Z – Not Serviced Separately

14. DESCRIPTION OF TYPE CHANGES

Type - A type is defined as any configuration change that requires an additional Information Element for an Arrangement, Group, or Assembly. If serial number breaks for types are not available, a type # (Type 1, Type 2, etc.) will be displayed in the caption. These "type" changes are identified with a "C" note (change from previous type) in the Parts List. Only the "types" that apply to this Parts Manual will be included. Additional types may exist causing "C" notes to appear on an Information Element when no other types are shown.

15. <END>

This symbol indicates the end of an information element.

NOTE:

Continuing improvement and advancement of product design may cause changes to your engine which may not be included in this publication. Whenever a question arises regarding your Cat product or this publication, please consult your Cat dealer for the latest available information.

REMANUFACTURED COMPONENTS

As an option when making repairs consider Cat Remanufactured Components. Components that are available through the Cat Remanufactured Program are identified three ways in the parts book:

- with the letter R in the note field of the parts list
- with an R* at the beginning of the first line of the caption
- with an *R at the end of the first line of the caption

Typical components included in the Remanufacturing Program include:

ALTERNATORS
CONNECTING RODS
CRANKSHAFTS - UNDERSIZE
CRANKSHAFTS - UPGRADE TO NEW
CYLINDER HEADS
ELECTRONIC CONTROL MODULES (ECM)
ELECTRONIC SENSORS
FUEL INJECTORS
FUEL NOZZLES
FUEL PUMPS
GOVERNORS
OIL PUMPS
PISTONS
SHORT BLOCKS
STARTERS
TURBOCHARGERS - COMPLETE
TURBOCHARGER CARTRIDGES
WATER PUMPS

Cat Remanufactured engines for many engine arrangements are also available.

SUPPLEMENTAL COOLANT ADDITIVES

CUSTOMER BENEFITS:

Protects against cavitation, foam, erosion, corrosion, and scale buildup in cooling systems.

- Provides measured coolant conditioner.

DESCRIPTION:

Additives deplete from the coolant with normal operation. For this reason, Supplemental Coolant Additives (SCA) must be added to all heavy duty coolants at regular intervals. In addition, when not using a fully formulated, pre-charged antifreeze, like Cat DEAC, an initial charge of SCA must be added to the cooling system. The amount of SCA added to the system is dependent on the capacity of the system.

The SCA for initial fill is provided as a liquid. SCA's for maintenance intervals are available in liquid form and as a spin-on element. (No Spin-on available for 3600 Family of Engines)

NOTE:

The amount of SCA added at initial fill is not the same as the amount added at maintenance intervals.

The coolant additive elements can be used with any ethylene or propylene glycol type antifreeze which meets ASTM D4985 or ASTM D5345 Specifications.

NOTE:

For use with standard heavy duty coolant only, not for use with Extended Life Coolant.

PARTS NEEDED:

Cooling System Capacity		Liquid SCA at Initial Fill	Liquid SCA at Maintenance*	Spin-on SCA Maintenance Element*
Liters	Gallons			
22-30	(6-8)	3P-2044 (1)	6V-3542 (1)	111-2370 (1)
30-38	(8-10)	3P-2044 (1) 6V-3542 (1)	111-2372 (1)	111-2369 (1)
38-49	(10-13)	3P-2044 (1) 8T-1589 (1)	111-2372 (1)	111-2369 (1)
49-64	(13-17)	3P-2044 (2)	8T-1589 (1)	9N-3368 (1)
64-83	(17-22)	3P-2044 (2) 8T-1589 (1)	111-2372 (1) 6V-3542 (1)	111-2371 (1)
83-114	(22-30)	3P-2044 (3) 8T-1589 (1)	3P-2044 (1)	9N-3718 (1)
114-163	(30-43)	3P-2044 (5)	3P-2044 (1) 6V-3542 (1)	111-2371 (2)
163-242	(43-64)	3P-2044 (8)	3P-2044 (2)	9N-3718 (2)

* Normal maintenance period is 250 hrs. See your Operation and Maintenance Manual for complete coolant maintenance instructions.

( ) Indicates quantity required.

MAINTENANCE PARTS

DESCRIPTION	PART NUMBER	QTY	WHERE USED	PAGE
AIR INLET AND EXHAUST SYSTEM				
FILTER ELEMENT AS-AIR	244-0514	1	AIR CLEANER GP	114
FILTER ELEMENT-AIR	246-5011	1	FILTER ELEMENT AS-AIR	119
BASIC ENGINE				
KEY	153-5518	1	CRANKSHAFT GP	21
PLUG-DRAIN (ENGINE OIL PAN)	423-6224	2	PLUG GP-OIL PAN	56
SEAL-VALVE COVER	235-5531	1	COVER GP-CYLINDER HEAD	10
STRAINER (ENGINE OIL)	425-6360	1	PAN GP-OIL	51
V-BELT (WATER PUMP)	162-2468	1	V-BELT GP	61
	292-9620	1	V-BELT GP	62
COOLING SYSTEM				
CAP-RADIATOR	202-6616	1	RADIATOR GP	83
HOSE-RADIATOR	238-0265	1	RADIATOR GP	110
	238-0266	1	RADIATOR GP	110
HOSE-RADIATOR (LOWER)	238-0265	1	RADIATOR GP	83
HOSE-RADIATOR (UPPER)	238-0266	1	RADIATOR GP	83
REGULATOR-TEMPERATURE (82-DEG C)	249-5541	1	PUMP GP-WATER	76
ELECTRICAL AND STARTING SYSTEM				
GLOW PLUG	172-4585	3	GLOW PLUG GP	150
KEY-IGNITION	361-3925	1	SWITCH GP-START	162
FUEL SYSTEM				
FILTER AS-FUEL	358-9226	1	PUMP GP-FILTER & FUEL TRANSFER	142
FILTER ELEMENT-FUEL	276-1806	1	FILTER GP-FUEL	127
		1	PUMP GP-FUEL PRM & PRIM FILTER	140
FILTER-FUEL	067-6987	1	PUMP GP-FILTER & FUEL TRANSFER	142
PLUG-DRAIN (WATER SEPARATOR)	302-7777	3	FILTER GP-FUEL	127
		3	PUMP GP-FUEL PRM & PRIM FILTER	140
LUBRICATION SYSTEM				
CAP-OIL FILLER (ENGINE)	217-7358	1	FILLER GP-ENGINE OIL	65
FILTER AS-ENGINE OIL	220-1523	1	FILTER GP-ENGINE OIL	69
OPERATOR STATION				
LAMP (GLOW PLUG INDICATOR)	197-8547	1	LAMP GP	164
SERVICE EQUIPMENT AND SUPPLIES				
SEAL-VALVE COVER	235-5531	1	PARTS GP-MISCELLANEOUS	165

INDEX

NAME PAGE

A

AIR CLEANER GP 114
116
ALTERNATOR GP-CHARGING 145
146
147

C

CAMSHAFT GP 5
7
8
9
CAP-OIL FILLER (ENGINE) 65
67
CAP-RADIATOR 83
87
91
95
99
102
106
110
CONNECTION GP-ELECTRICAL 148
149
CONNECTION GP-EXHAUST 118
CONTROL GP-GOVERNOR 121
123
125
CONTROL GP-GOVERNOR (ENGINE TIMING) 129
131
COVER GP-CYLINDER HEAD 10
12
COVER GP-FRONT HOUSING 15
18
COVER GP-VALVE MECHANISM 19
CRANKSHAFT GP 21
CYLINDER BLOCK GP 23
25
CYLINDER HEAD AS 28
30
CYLINDER HEAD GP 31
32

E

ENGINE AR 1
ENGINE AR-PRIMARY 3
27

F

FASTENER GP-COVER 14
FASTENER GP-FRONT COVER 33

NAME PAGE

FILLER GP-ENGINE OIL 65
67
68
FILM-IDENTIFICATION (CAT) 167
FILM-INFORMATION (FUEL FILTER) 167
FILM-WARNING (DO NOT SPRAY, READ OMM) 116
FILM-WARNING (UNIVERSAL) 167
FILTER AS-ENGINE OIL 69
FILTER AS-FUEL 142
FILTER ELEMENT AS-AIR 114
116
119
FILTER ELEMENT-AIR 119
FILTER ELEMENT-FUEL 127
140
FILTER GP-ENGINE OIL 69
FILTER GP-FUEL 127
FILTER GP-FUEL (WATER SEPARATOR) 140
141
FILTER-FUEL 142
FLYWHEEL GP 34
35

G

GAUGE AS 51
53
GAUGE AS-OIL LEVEL (DIPSTICK) 53
GAUGE AS-OIL LEVEL (DIPSTICK) (ENGINE) . . . 51
GLOW PLUG 150
151
GLOW PLUG GP 150
151
GOVERNOR GP 129
131

H

HOSE-RADIATOR 110
HOSE-RADIATOR (LOWER) 83
87
91
95
99
102
106
HOSE-RADIATOR (UPPER) 83
87
91
95
99
102
106
HOUSING GP-FLYWHEEL 36
37
38

INDEX

NAME PAGE

HOUSING GP-FRONT 16
17
39
40
41
42
45
HOUSING GP-WATER REGULATOR. 75

I

INDICATOR (AIR FILTER SERVICE). 119

K

KEY 21
KEY-IGNITION. 162
KIT-ENGINE OIL PUMP. 73
74
KIT-FRONT GEAR. 48

L

LAMP (GLOW PLUG INDICATOR). 164
LAMP GP. 164
LIFTING GP-ENGINE 49
50
LINES GP-ENGINE OIL. 70

M

MANIFOLD GP-EXHAUST. 120
MOUNTING GP-ENGINE OIL FILTER. 71

P

PAN GP-OIL 51
53
PARTS GP-MISCELLANEOUS 165
166
PISTON & ROD GP 55
PLATE & FILM GP 167
PLUG GP-OIL PAN. 56
PLUG-DRAIN (ENGINE OIL PAN) 56
PLUG-DRAIN (WATER SEPARATOR). 127
140
PULLEY GP-CRANKSHAFT 57
PULLEY GP-FAN. 58
59
PUMP GP-ENGINE OIL. 72
PUMP GP-FILTER & FUEL TRANSFER. 142
PUMP GP-FUEL INJECTION 133
134
136
PUMP GP-FUEL PRIMING 138
139

NAME PAGE

PUMP GP-FUEL PRM & PRIM FILTER. 140
141
PUMP GP-WATER. 76
78
80

R

RADIATOR GP 83
87
91
95
99
102
106
110
REGULATOR-TEMPERATURE (82-DEG C). 76
78
80
ROCKER ARM GP 60

S

SEAL-VALVE COVER. 10
165
SHAFT GP-IDLER 25
74
SHUTOFF GP-ELECTRICAL. 152
SOLENOID AS (12-VOLT) (FUEL SHUTOFF). . . 133
153
SOLENOID GP-SHUTOFF. 153
STARTING MOTOR GP-ELECTRIC 154
155
156
157
158
159
STRAINER (ENGINE OIL). 51
53
SWITCH (OIL PRESSURE) (ENGINE OIL) 160
SWITCH AS-START 162
SWITCH GP-PRESSURE. 160
161
SWITCH GP-START 2
162
SWITCH GP-START (HEATER). 3
SWITCH GP-TEMPERATURE. 2
163
SWITCH GP-TEMPERATURE (COOLANT). 4
27
SWITCH-OIL PRESSURE (ENGINE OIL) 161
SWITCH-TEMPERATURE (ENGINE COOLANT). 163

V

V-BELT (WATER PUMP). 61
62

INDEX

NAME	PAGE	NAME	PAGE
V-BELT GP	61		
	62		
VALVE MECHANISM GP	63		

MEMORANDA

ENGINE ARRANGEMENT

318-1672 ENGINE AR

16 BRAKE KW (22 BHP) AT 1800 RPM

SMCS-1000 **i07919556**

NOTE	PART NUMBER	QTY	PART NAME 1 2 3 4 5 6 (PRODUCT LEVEL)	SEE PAGE
Y	*316-9664*	1	AIR CLEANER GP	114
Y	*311-1120*	1	ALTERNATOR GP-CHARGING	145
			—OR—	
Y	*486-3293*	1	ALTERNATOR GP-CHARGING	147
Y	*330-3010*	1	CAMSHAFT GP	7
			—OR—	
Y	*364-2743*	1	CAMSHAFT GP	8
			—OR—	
Y	*508-5629*	1	CAMSHAFT GP	9
Y	*308-2319*	1	CONNECTION GP-ELECTRICAL	148
			—OR—	
Y	*321-6741*	1	CONNECTION GP-ELECTRICAL	149
Y	*308-2309*	1	CONNECTION GP-EXHAUST	118
Y	*311-1116*	1	HOUSING GP-WATER REGULATOR	75
Y	*330-3011*	1	CONTROL GP-GOVERNOR	121
			—OR—	
Y	*364-2742*	1	CONTROL GP-GOVERNOR	125
			—OR—	
Y	*465-7011*	1	COVER GP-FRONT HOUSING	18
Y	*329-3696*	1	HOUSING GP-FRONT	16
Y	*311-1123*	1	COVER GP-VALVE MECHANISM	19
			—OR—	
Y	*419-6642*	1	COVER GP-CYLINDER HEAD	10
Y	*311-1100*	1	CRANKSHAFT GP	21
Y	*311-1099*	1	CYLINDER BLOCK GP	23
Y	*311-1102*	1	CYLINDER HEAD GP	31
Y	*508-5627*	1	FASTENER GP-FRONT COVER	33
Y	*311-1113*	1	FILLER GP-ENGINE OIL	65
			—OR—	
Y	*365-0485*	1	FILLER GP-ENGINE OIL	67
			—OR—	
Y	*419-6687*	1	FILLER GP-ENGINE OIL	68
Y	*308-2298*	1	FILTER GP-ENGINE OIL	69
Y	*316-9548*	1	FLYWHEEL GP	34
Y	*311-1127*	1	GLOW PLUG GP	150
Y	*311-1107*	1	HOUSING GP-FLYWHEEL	36
Y	*322-3102*	1	HOUSING GP-FRONT	40
			—OR—	
Y	*364-2741*	1	HOUSING GP-FRONT	41
			—OR—	
Y	*508-5628*	1	HOUSING GP-FRONT	42
Y	*311-1131*	1	LAMP GP	164
Y	*320-9110*	1	LIFTING GP-ENGINE	49
Y	*311-1124*	1	MANIFOLD GP-EXHAUST	120
Y	*308-4735*	1	MOUNTING GP-ENGINE OIL FILTER	71
Y	*311-1112*	1	PAN GP-OIL	51
			—OR—	
Y	*552-5813*	1	PAN GP-OIL	53
Y	*311-1101*	1	PISTON & ROD GP	55

318-1672 **ENGINE AR (**contd.**)** **i07919556**

NOTE	PART NUMBER	QTY	PART NAME 1 2 3 4 5 6 (PRODUCT LEVEL)	SEE PAGE
Y	*588-5115*	1	PLATE & FILM GP	167
Y	*309-6720*	1	PLUG GP-OIL PAN	56
Y	*311-1114*	1	PULLEY GP-CRANKSHAFT	57
Y	*322-1392*	1	PULLEY GP-FAN	59
Y	**339-3017**	1	KIT-ENGINE OIL PUMP	73
			—OR—	
Y	**566-6594**	1	KIT-ENGINE OIL PUMP	74
Y	*311-1104*	1	PUMP GP-ENGINE OIL	72
Y	*322-3103*	1	PUMP GP-FUEL INJECTION	136
Y	*317-6706*	1	PUMP GP-FUEL PRM & PRIM FILTER	140
			—OR—	
Y	*579-9465*	1	PUMP GP-FUEL PRM & PRIM FILTER	141
Y	*311-1125*	1	PUMP GP-FILTER & FUEL TRANSFER	142
Y	*311-1115*	1	PUMP GP-WATER	76
Y	*316-9713*	1	RADIATOR GP	83
Y	*320-9114*	1	SHUTOFF GP-ELECTRICAL	152
Y	*311-1128*	1	SOLENOID GP-SHUTOFF	153
Y	*311-1109*	1	STARTING MOTOR GP-ELECTRIC	154
			—OR—	
Y	*568-8781*	1	STARTING MOTOR GP-ELECTRIC	159
Y	*315-6638*	1	SWITCH GP-PRESSURE (ENGINE OIL)	160
Y	*308-2314*	1	SWITCH GP-START	162
Y	*311-1130*	1	SWITCH GP-TEMPERATURE	163
Y	*322-0886*	1	V-BELT GP (WATER PUMP)	62
Y	*311-1103*	1	VALVE MECHANISM GP	63

Y - SEPARATE ILLUSTRATION

<END>

303-4100 ENGINE AR-PRIMARY

25 BRAKE KW (34 BHP) AT 3000 RPM

OPTIONAL FIELD REPLACEMENT ORDER 435-1654—PAGE: 27

SMCS-1000 **i07919179**

NOTE	PART NUMBER	QTY	PART NAME 1 2 3 4 5 6 (PRODUCT LEVEL)	SEE PAGE
Y	*316-9664*	1	AIR CLEANER GP	114
Y	*311-1120*	1	ALTERNATOR GP-CHARGING	145
Y	*322-0563*	1	CAMSHAFT GP	5
Y	*308-2319*	1	CONNECTION GP-ELECTRICAL	148
			—OR—	
Y	*321-6741*	1	CONNECTION GP-ELECTRICAL	149
Y	*308-2309*	1	CONNECTION GP-EXHAUST	118
Y	*311-1116*	1	HOUSING GP-WATER REGULATOR	75
Y	*311-1122*	1	COVER GP-FRONT HOUSING	15
Y	*311-1123*	1	COVER GP-VALVE MECHANISM	19
Y	*311-1100*	1	CRANKSHAFT GP	21
Y	*311-1099*	1	CYLINDER BLOCK GP	23
Y	*311-1102*	1	CYLINDER HEAD GP	31
Y	*365-0485*	1	FILLER GP-ENGINE OIL	67
Y	*308-2298*	1	FILTER GP-ENGINE OIL	69
Y	*316-9548*	1	FLYWHEEL GP	34
Y	*311-1127*	1	GLOW PLUG GP	150
Y	*322-0562*	1	GOVERNOR GP	129
Y	*311-1107*	1	HOUSING GP-FLYWHEEL	36
Y	*322-0561*	1	HOUSING GP-FRONT	39
Y	*320-9110*	1	LIFTING GP-ENGINE	49
Y	*334-7293*	1	LINES GP-ENGINE OIL	70
Y	*311-1124*	1	MANIFOLD GP-EXHAUST	120
Y	*311-1112*	1	PAN GP-OIL	51
			—OR—	
Y	*552-5813*	1	PAN GP-OIL	53
Y	*311-1101*	1	PISTON & ROD GP	55
Y	*588-5115*	1	PLATE & FILM GP	167
Y	*309-6720*	1	PLUG GP-OIL PAN	56
Y	*311-1114*	1	PULLEY GP-CRANKSHAFT	57
Y	*311-1111*	1	PULLEY GP-FAN	58
Y	*311-1104*	1	PUMP GP-ENGINE OIL	72
Y	**339-3017**	1	KIT-ENGINE OIL PUMP	73
			—OR—	
Y	**566-6594**	1	KIT-ENGINE OIL PUMP	74
Y	*322-0564*	1	PUMP GP-FUEL INJECTION	134
Y	*308-2320*	1	PUMP GP-FUEL PRIMING	138
			—OR—	
Y	*579-9444*	1	PUMP GP-FUEL PRIMING	139
Y	*311-1125*	1	PUMP GP-FILTER & FUEL TRANSFER	142
Y	*334-7294*	1	PUMP GP-WATER	78
Y	*336-5517*	1	RADIATOR GP	102
Y	*311-1128*	1	SOLENOID GP-SHUTOFF	153
Y	*311-1109*	1	STARTING MOTOR GP-ELECTRIC	154
			—OR—	
Y	*568-8781*	1	STARTING MOTOR GP-ELECTRIC	159
Y	*315-6638*	1	SWITCH GP-PRESSURE (ENGINE OIL)	160
Y	*308-2314*	1	SWITCH GP-START (HEATER)	162

303-4100 **ENGINE AR-PRIMARY (**contd.**)** **i07919179**

NOTE	PART NUMBER	QTY	PART NAME 1 2 3 4 5 6 (PRODUCT LEVEL)	SEE PAGE
Y	*311-1130*	1	SWITCH GP-TEMPERATURE (COOLANT)	163
Y	*311-1121*	1	V-BELT GP (WATER PUMP)	61
Y	*311-1103*	1	VALVE MECHANISM GP	63

Y - SEPARATE ILLUSTRATION

<END>

322-0563 CAMSHAFT GP

PART OF 435-1654 ENGINE AR-PRIMARY

SMCS-1210 **i06887240**

NOTE	REF NO	GRAPHIC REF	PART NUMBER	QTY	PART NAME 1 2 3 4 5 6 (PRODUCT LEVEL)	SEE PAGE
	1	1	**153-6838**	2	BOLT AS	
	2	1	**490-0367**	1	PLATE	
	3	1	**308-1904**	1	SLIDER	
	4	1	**311-1165**	1	CAMSHAFT AS	
	4A	1	**153-6492**	1	KEY-WOODRUFF	
	4B	1	**156-6997**	1	BEARING	
	4C	1	**308-1903**	1	GEAR-CAMSHAFT (66-TEETH)	
	4D	1	**313-9323**	1	SPACER (20.5X28X9.3-MM THK)	

322-0563 **CAMSHAFT GP** (contd.) **i06887240**

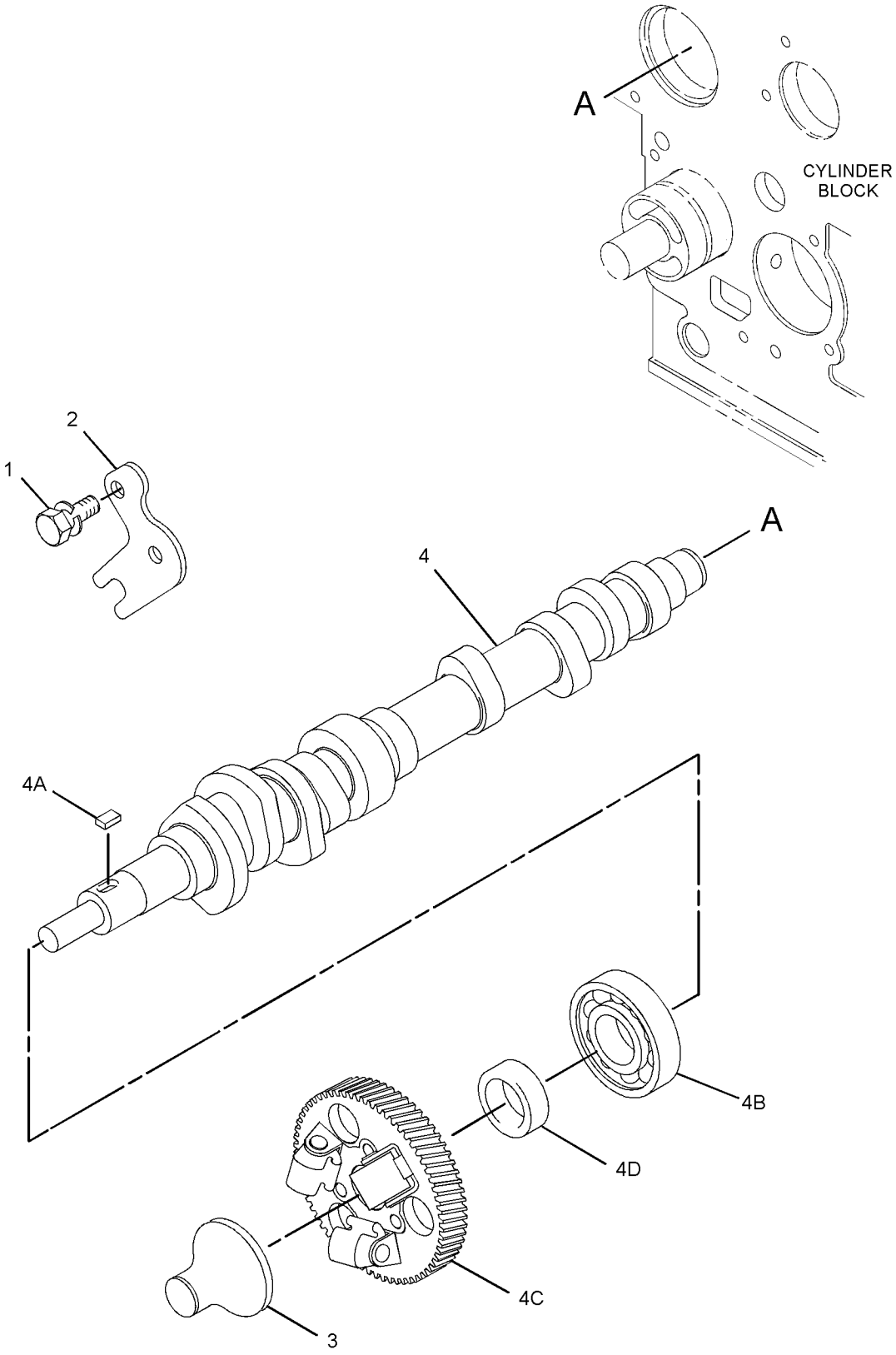

GRAPHIC #1 <END> g01516086

330-3010 CAMSHAFT GP

SMCS-1210 **i06759240**

NOTE	REF NO	GRAPHIC REF	PART NUMBER	QTY	PART NAME 1 2 3 4 5 6 (PRODUCT LEVEL)	SEE PAGE
	1	1	**490-0367**	1	PLATE	
	2	1	**363-8409**	1	SLIDER	
	3	1	**342-8500**	1	CAMSHAFT AS	
	3A	1	**153-6492**	1	KEY-WOODRUFF	
	3B	1	**156-6997**	1	BEARING	
	3C	1	**313-9323**	1	SPACER (20.5X28X9.3-MM THK)	
	3D	1	**342-8499**	1	GEAR-CAMSHAFT (62-TEETH)	
	4	1	**153-6838**	2	BOLT AS	

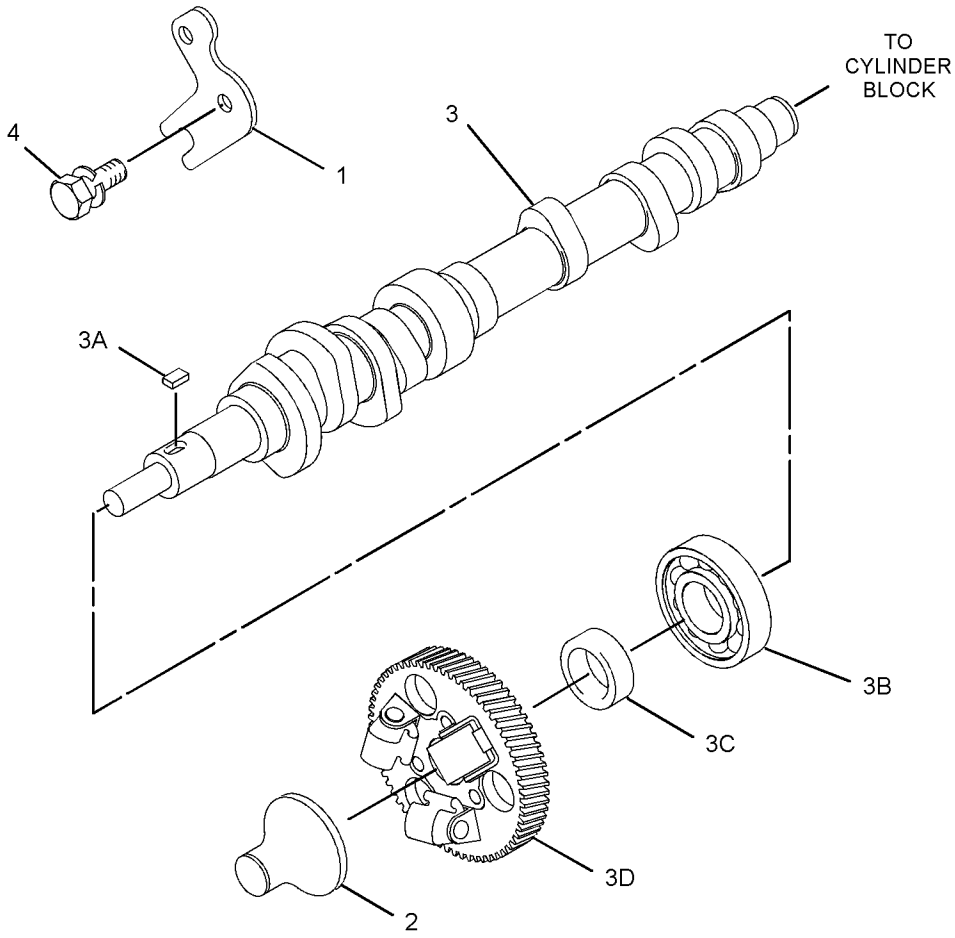

GRAPHIC #1 <END> g02046155

364-2743 CAMSHAFT GP

SMCS-1210 **i06619096**

NOTE	REF NO	GRAPHIC REF	PART NUMBER	QTY	PART NAME 1 2 3 4 5 6 (PRODUCT LEVEL)	SEE PAGE
	1	1	**490-0367**	1	PLATE	
	2	1	**363-8409**	1	SLIDER	
	3	1	**342-8500**	1	CAMSHAFT AS	
	3A	1	**153-6492**	1	KEY-WOODRUFF	
	3B	1	**156-6997**	1	BEARING	
	3C	1	**313-9323**	1	SPACER (20.5X28X9.3-MM THK)	
	3D	1	**342-8499**	1	GEAR-CAMSHAFT (62-TEETH)	
	4	1	**153-6838**	2	BOLT AS	

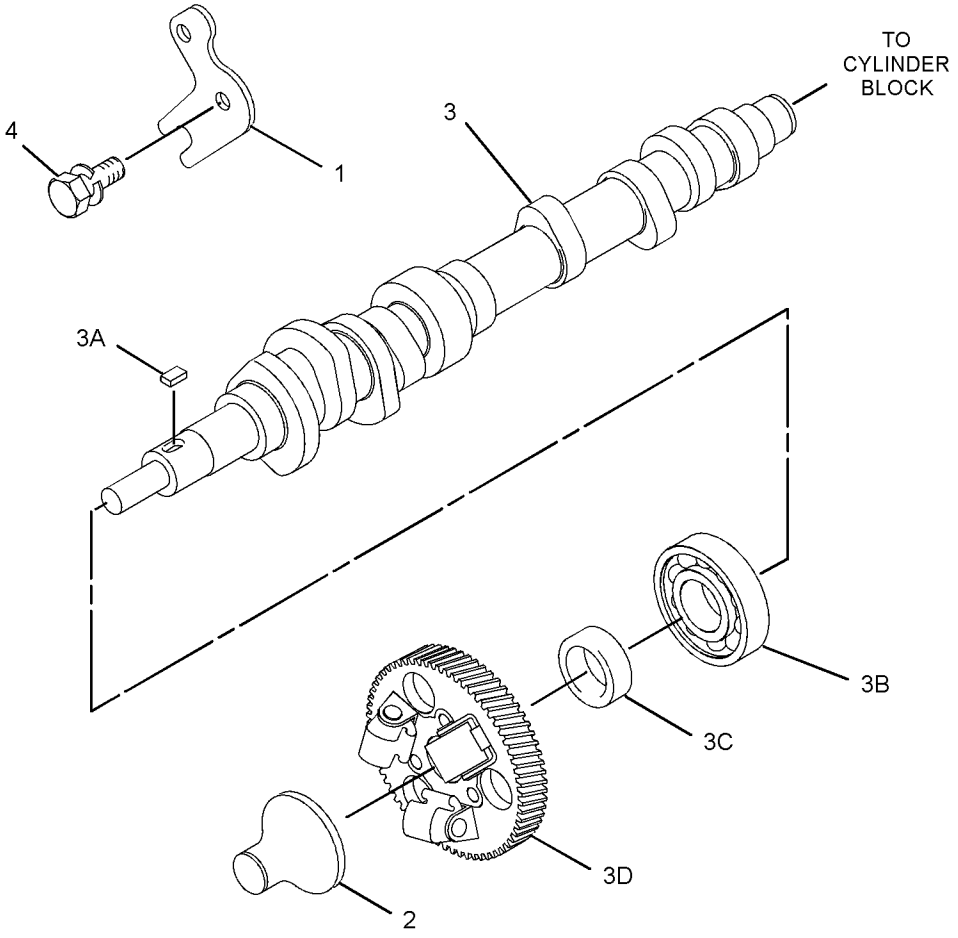

GRAPHIC #1 <END> g02046155

508-5629 CAMSHAFT GP

SMCS-1210 **i07103528**

NOTE	REF NO	GRAPHIC REF	PART NUMBER	QTY	PART NAME 1 2 3 4 5 6 (PRODUCT LEVEL)	SEE PAGE
	1	1	**153-6838**	2	BOLT AS	
	2	1	**490-0367**	1	PLATE	
	3	1	**363-8409**	1	SLIDER	
	4	1	**342-8500**	1	CAMSHAFT AS	
	4A	1	**153-6492**	1	KEY-WOODRUFF	
	4B	1	**156-6997**	1	BEARING	
	4C	1	**313-9323**	1	SPACER (20.5X28X9.3-MM THK)	
	4D	1	**342-8499**	1	GEAR-CAMSHAFT (62-TEETH)	

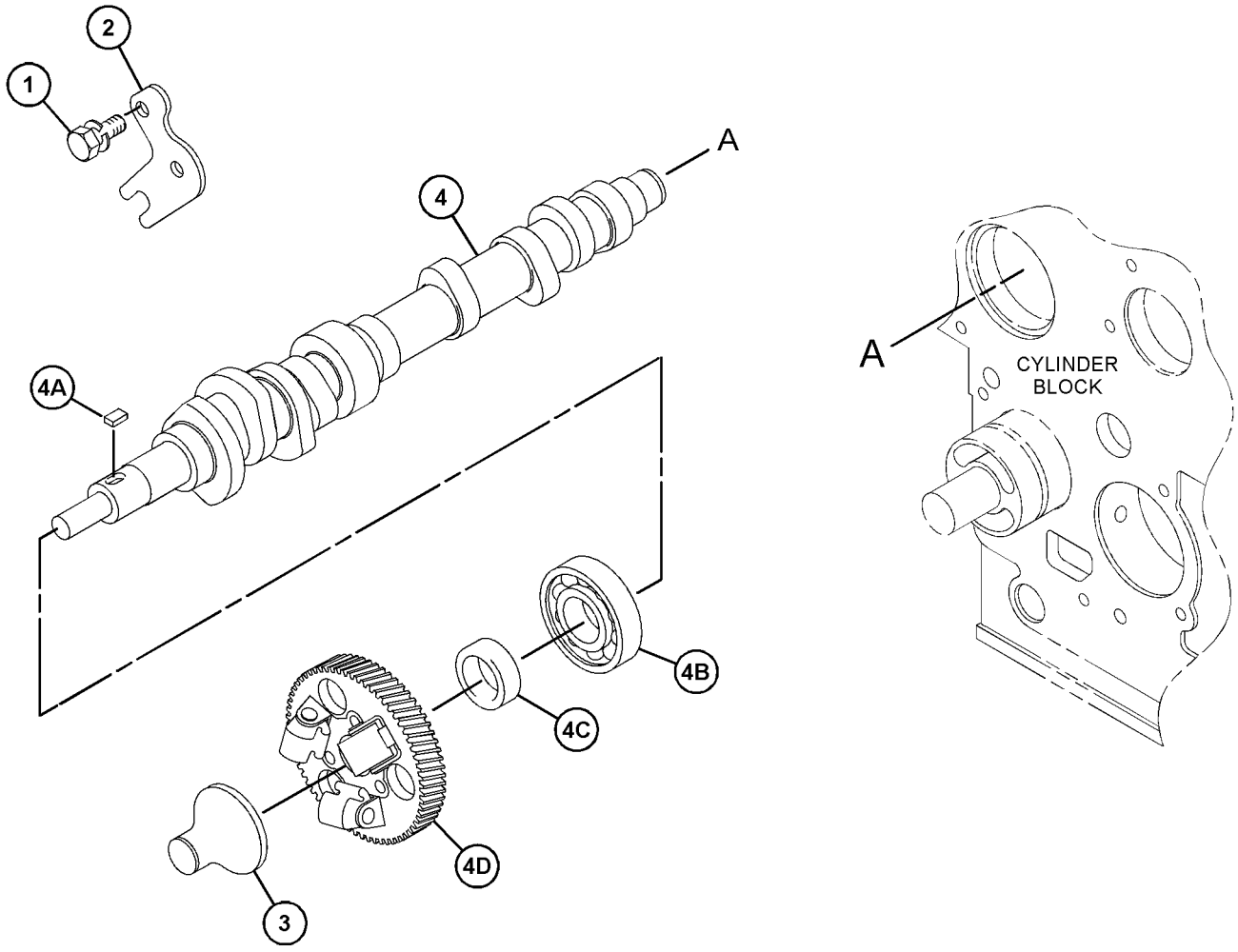

GRAPHIC #1 <END> g06125348

419-6642 COVER GP-CYLINDER HEAD

TYPE 1

SMCS-1100 **i05563394**

NOTE	REF NO	GRAPHIC REF	PART NUMBER	QTY	PART NAME 1 2 3 4 5 6 (PRODUCT LEVEL)	SEE PAGE
	1	1	**153-5939**	1	STOPPER (OIL)	
	2	1	**153-5962**	2	BOLT AS	
	3	1	**153-7640**	2	BOLT AS	
M	4	1	**154-1347**	3	NUT (M10X1.25-THD)	
	5	1	**165-2140**	2	BOLT AS	
	6	1	**190-3762**	3	WASHER	
	7	1	**217-5859**	1	VALVE-BREATHER (CRANKCASE)	
M	8	1	**217-5860**	4	BOLT (M4X0.7X8-MM)	
	9	1	**217-5861**	1	PLATE-RETAINING	
	10	1	**217-5862**	6	SCREW (SELF-TAPPING)	
	11	1	**288-6539**	1	CAP	
	12	1	**309-6735**	1	TUBE-AIR	
	13	1	**396-6868**	1	GASKET	
	14	1	**419-6641**	1	COVER-CYLINDER HEAD	
	15	1	**235-5531**	1	SEAL-VALVE COVER	

M - METRIC PART

419-6642 **COVER GP-CYLINDER HEAD (**contd.**)** **i05563394**

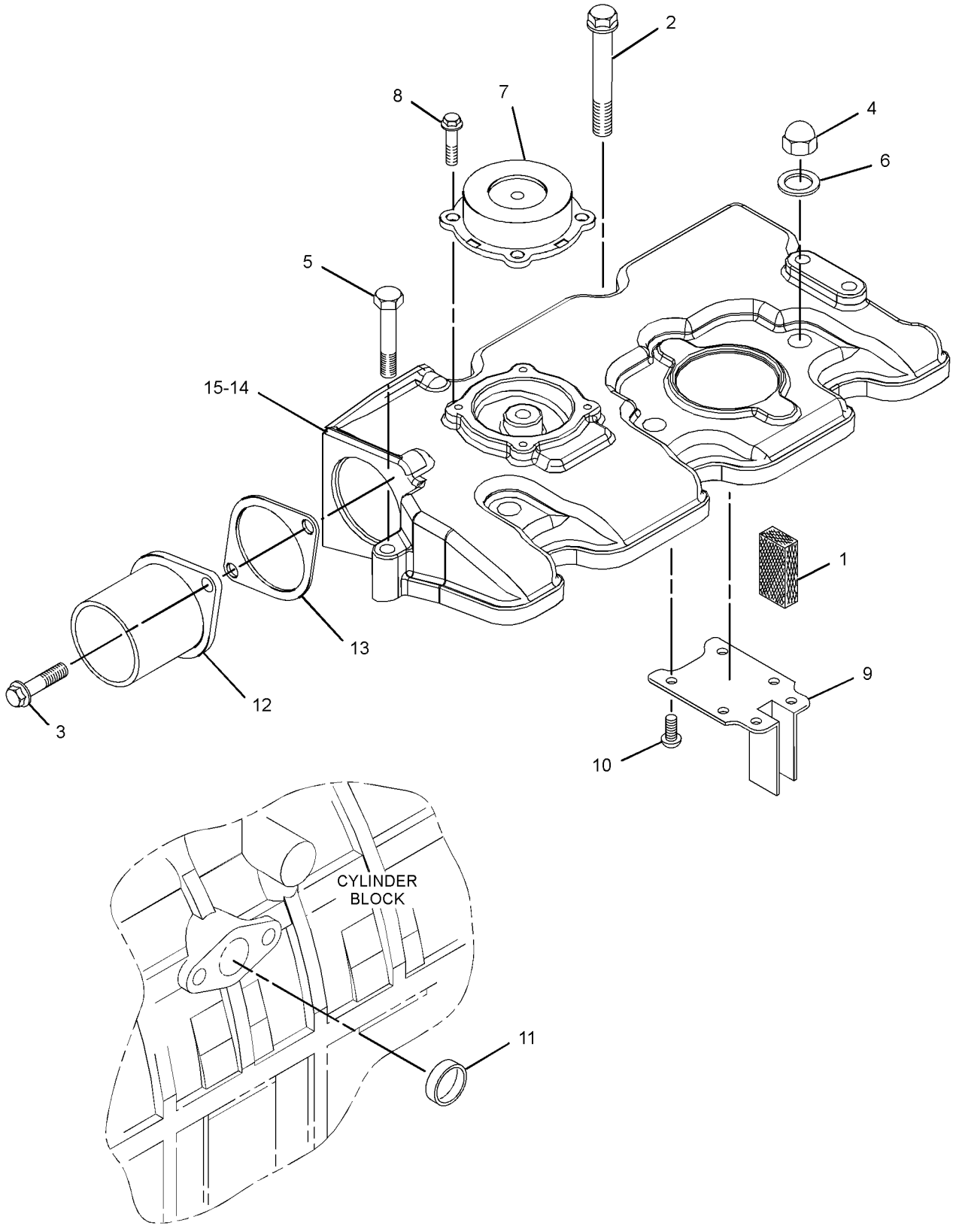

GRAPHIC #1 <END> g03702188

419-6642 COVER GP-CYLINDER HEAD

TYPE 2

SMCS-1100 **i07719623**

NOTE	REF NO	GRAPHIC REF	PART NUMBER	QTY	PART NAME 1 2 3 4 5 6 (PRODUCT LEVEL)	SEE PAGE
	1	1	**153-5939**	1	STOPPER (OIL)	
	2	1	**153-5962**	2	BOLT AS	
	3	1	**153-7640**	2	BOLT AS	
M	4	1	**539-0439**	3	NUT (M10X1.25-THD)	
	5	1	**165-2140**	2	BOLT AS	
	6	1	**246-4361**	3	WASHER (10.5X14X1.5-MM THK)	
	7	1	**217-5859**	1	VALVE-BREATHER (CRANKCASE)	
M	8	1	**217-5860**	4	BOLT (M4X0.7X8-MM)	
	9	1	**217-5861**	1	PLATE-RETAINING	
	10	1	**217-5862**	6	SCREW (SELF-TAPPING)	
	11	1	**288-6539**	1	CAP	
	12	1	**309-6735**	1	TUBE-AIR	
	13	1	**494-9569**	1	GASKET	
	14	1	**419-6641**	1	COVER-CYLINDER HEAD	
	15	1	**447-3735**	1	GASKET-COVER	

M - METRIC PART

419-6642 **COVER GP-CYLINDER HEAD (**contd.**)** **i07719623**

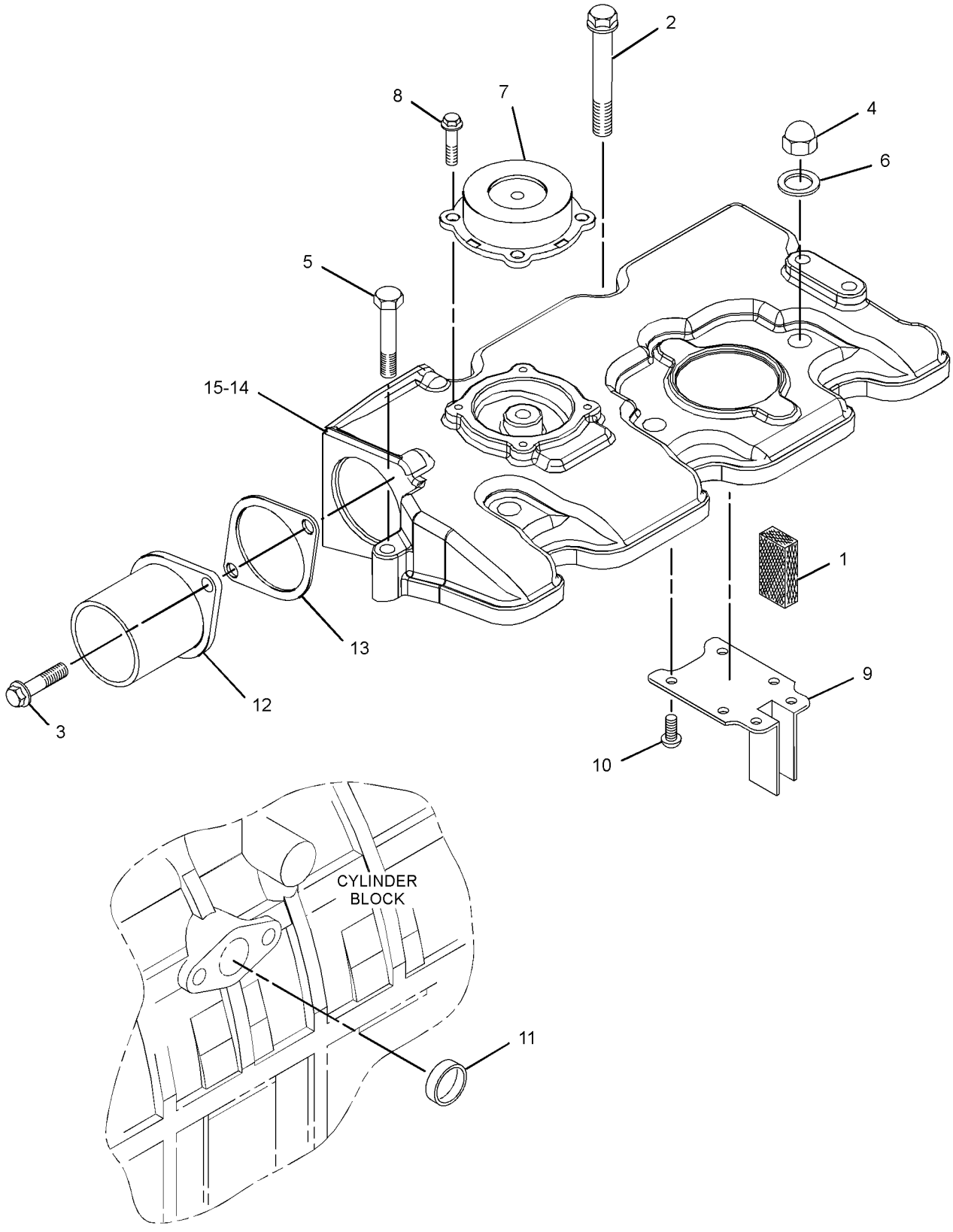

GRAPHIC #1 <END> g03702188

342-1268 FASTENER GP-COVER

PART OF 435-1654 ENGINE AR-PRIMARY

SMCS-795C **i07591037**

NOTE	REF NO	GRAPHIC REF	PART NUMBER	QTY	PART NAME 1 2 3 4 5 6 (PRODUCT LEVEL)	SEE PAGE
M	1	1	**124-3815**	1	BOLT (M8X1.25X16-MM)	

M - METRIC PART

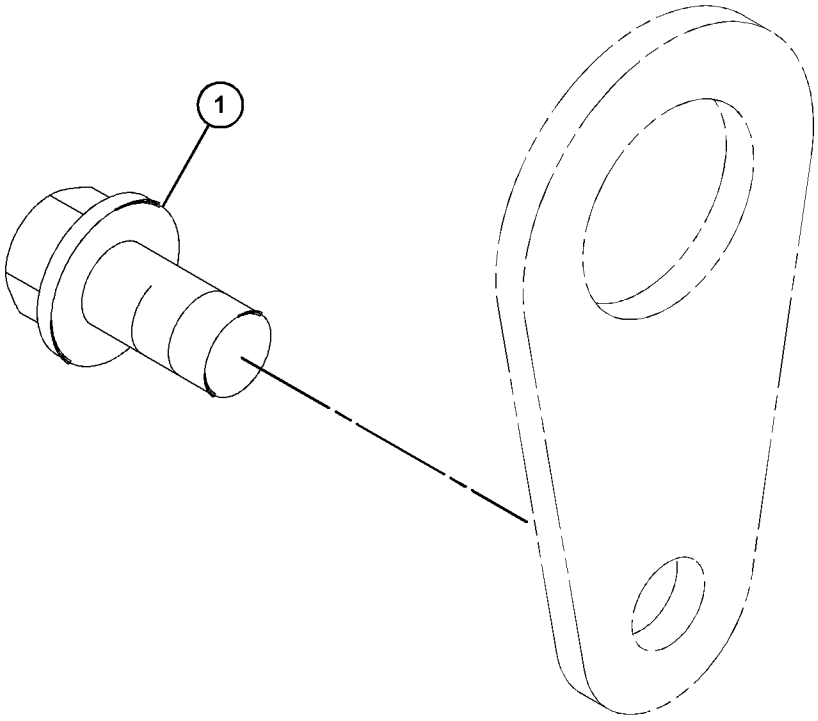

GRAPHIC #1 <END> g06393400

311-1122 COVER GP-FRONT HOUSING

PART OF 435-1654 ENGINE AR-PRIMARY

SMCS-1151, 1166 **i05537877**

NOTE	REF NO	GRAPHIC REF	PART NUMBER	QTY	PART NAME 1 2 3 4 5 6 (PRODUCT LEVEL)	SEE PAGE
M	1	1	**6I-0594**	2	NUT (M10X1.5-THD)	
M	2	1	**164-7468**	2	BOLT (M10X1.5X95-MM)	
	3	1	**308-1874**	1	HOLDER (BEARING)	
	4	1	**308-1875**	2	SEAL-O-RING	
	5	1	**328-3229**	2	COVER	

M - METRIC PART

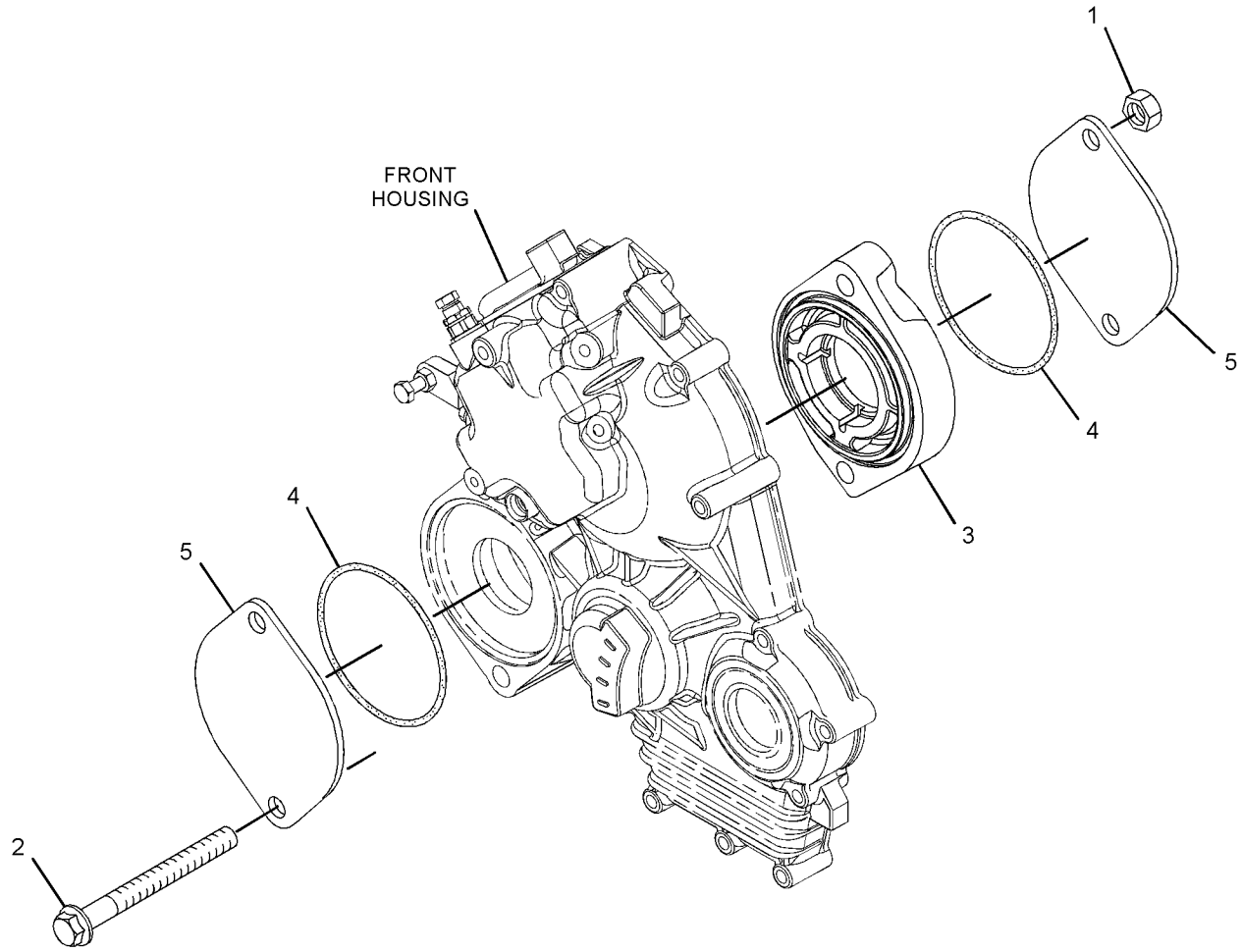

GRAPHIC #1 <END> g03352869

329-3696 HOUSING GP-FRONT

TYPE 1

SMCS-1151, 1166 **i05031430**

NOTE	REF NO	GRAPHIC REF	PART NUMBER	QTY	PART NAME 1 2 3 4 5 6 (PRODUCT LEVEL)	SEE PAGE
M	1	1	**6I-0594**	2	NUT (M10X1.5-THD)	
M	2	1	**100-4463**	2	BOLT (M10X1.5X80-MM)	
	3	1	**308-1875**	1	SEAL-O-RING	
	4	1	**328-3229**	1	COVER	
	5	1	**329-3694**	1	PLATE	
	6	1	**329-3695**	1	COVER	

M - METRIC PART

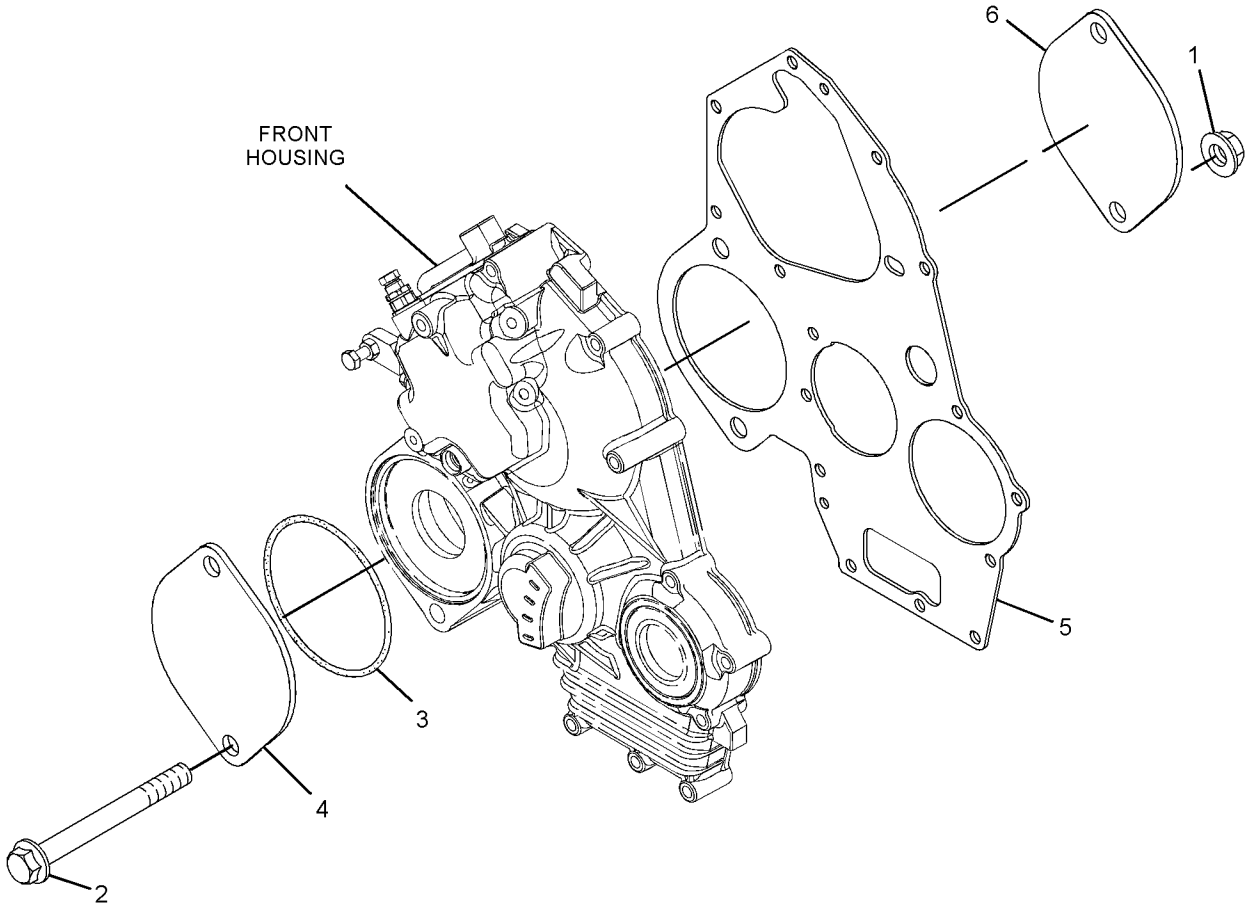

GRAPHIC #1 <END> g03202837

329-3696 HOUSING GP-FRONT

TYPE 2

SMCS-1151, 1166 **i05414127**

NOTE	REF NO	GRAPHIC REF	PART NUMBER	QTY	PART NAME 1 2 3 4 5 6 (PRODUCT LEVEL)	SEE PAGE
M	1	1	**6I-0594**	2	NUT (M10X1.5-THD)	
M	2	1	**100-4463**	2	BOLT (M10X1.5X80-MM)	
	3	1	**308-1875**	1	SEAL-O-RING	
	4	1	**329-3694**	1	PLATE	
	5	1	**329-3695**	1	COVER	

M - METRIC PART

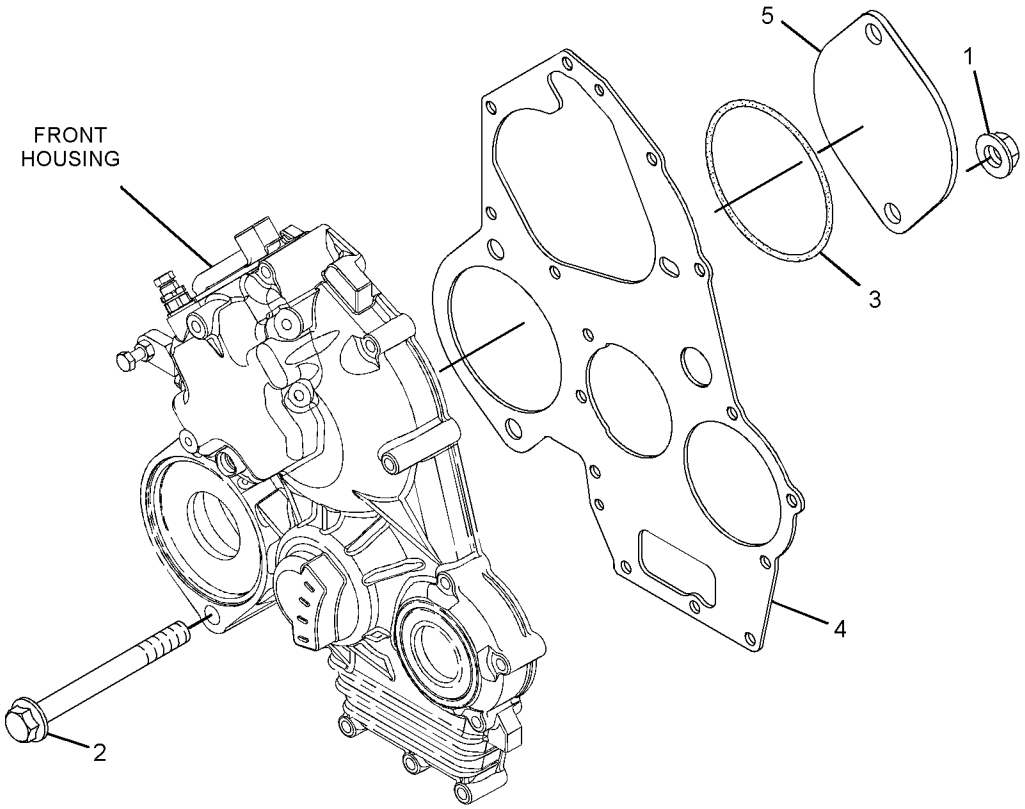

GRAPHIC #1 <END> g03417853

465-7011 COVER GP-FRONT HOUSING

SMCS-1151, 1166 **i06918692**

NOTE	REF NO	GRAPHIC REF	PART NUMBER	QTY	PART NAME 1 2 3 4 5 6 (PRODUCT LEVEL)	SEE PAGE
M	1	1	**6I-0455**	2	BOLT (M8X1.25X55-MM)	
	2	1	**423-7720**	1	PLATE-FRONT	
	3	1	**423-8370**	1	PLATE-THREADED	

M - METRIC PART

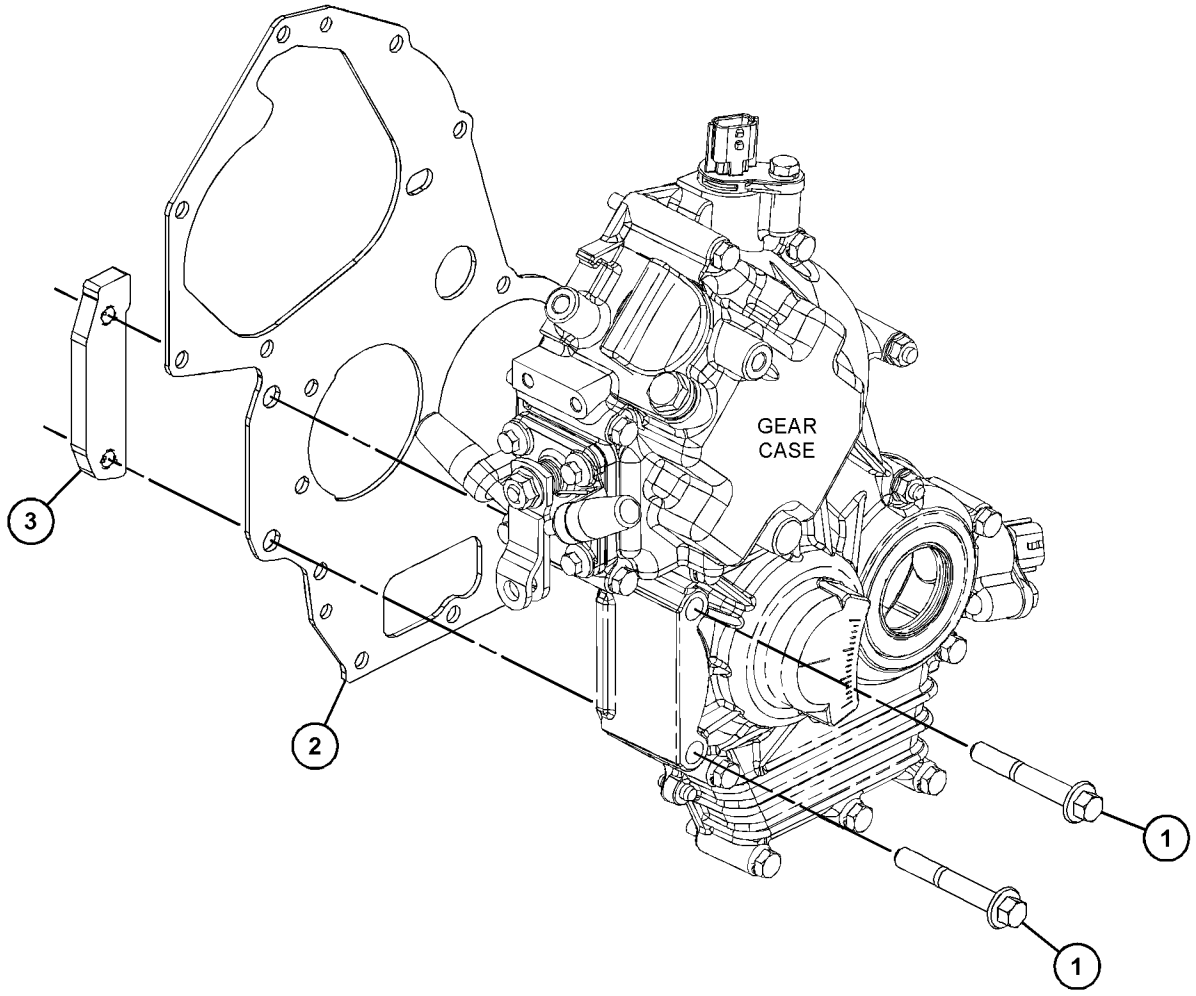

GRAPHIC #1 <END> g03852348

311-1123 COVER GP-VALVE MECHANISM

PART OF 435-1654 ENGINE AR-PRIMARY

SMCS-1107 **i07668919**

NOTE	REF NO	GRAPHIC REF	PART NUMBER	QTY	PART NAME 1 2 3 4 5 6 (PRODUCT LEVEL)	SEE PAGE
	1	2	**153-5939**	1	STOPPER (OIL) (CRANKCASE)	
	2	2	**153-5962**	2	BOLT AS	
	3	1	**153-7640**	2	BOLT AS	
M	4	2	**539-0439**	3	NUT (M10X1.25-THD)	
	6	2	**165-2140**	2	BOLT AS	
	7	2	**246-4361**	3	WASHER (10.5X14X1.5-MM THK)	
	8	2	**217-5859**	1	VALVE-BREATHER (CRANKCASE)	
M	9	2	**217-5860**	4	BOLT (M4X0.7X8-MM)	
	10	2	**217-5861**	1	PLATE-RETAINING	
	11	2	**217-5862**	6	SCREW (SELF-TAPPING)	
	12	1	**494-9569**	1	GASKET	
	14	2	**447-3735**	1	GASKET-COVER	
	15	2	**422-4226**	1	COVER-VALVE	
	16	1	**309-6735**	1	TUBE-AIR	
	18	1	**288-6539**	1	CAP	

M - METRIC PART

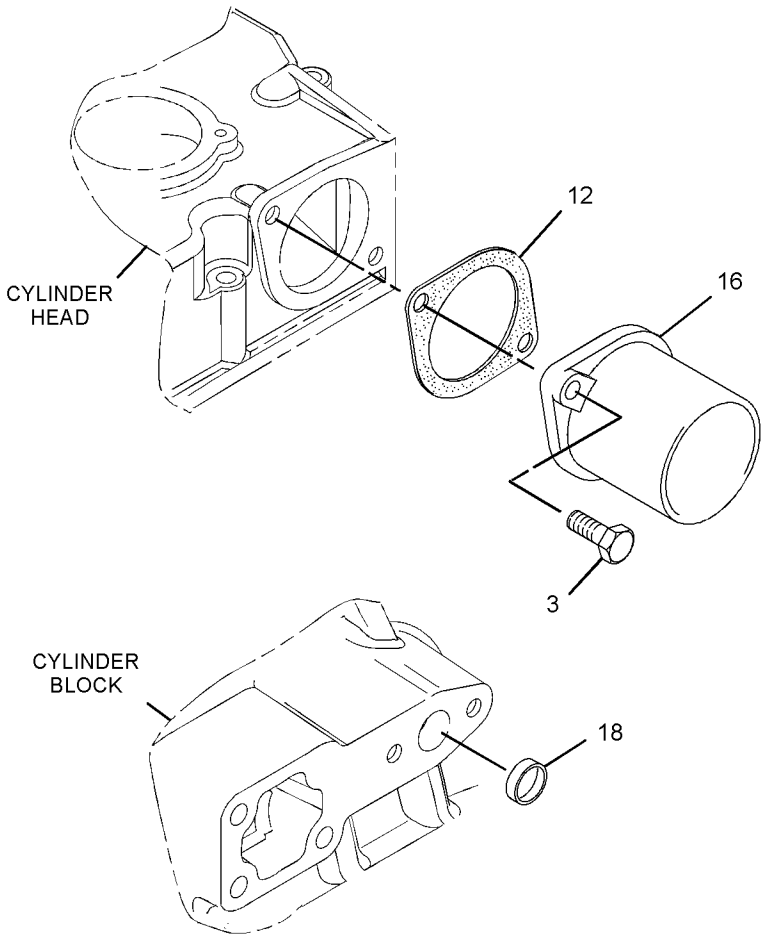

GRAPHIC #1 g01758394

311-1123 **COVER GP-VALVE MECHANISM (**contd.**)** **i07668919**

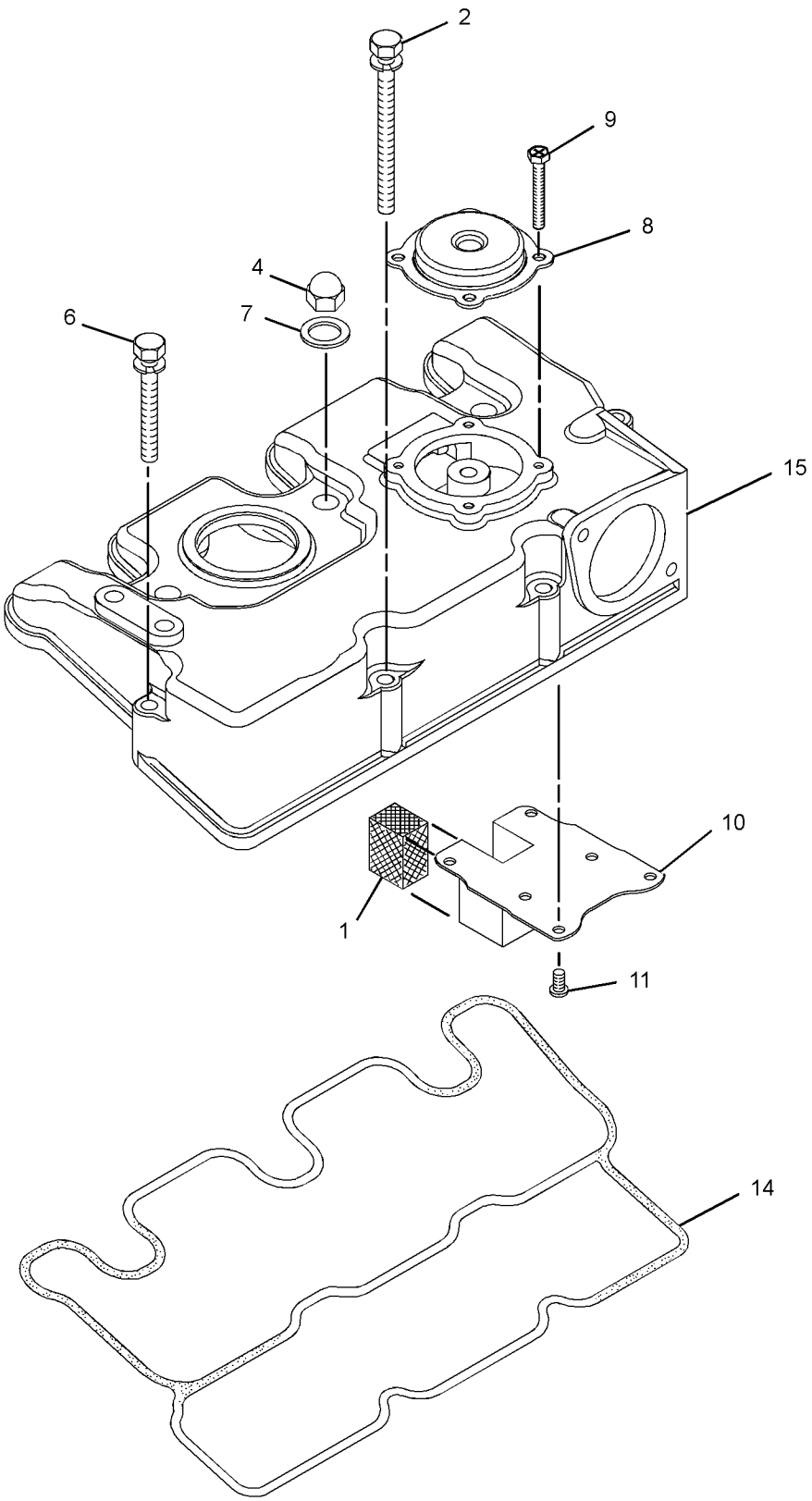

GRAPHIC #2 <END> g01758413

311-1100 CRANKSHAFT GP

PART OF 435-1654 ENGINE AR-PRIMARY

SMCS-1202 **i07624592**

NOTE	REF NO	GRAPHIC REF	PART NUMBER	QTY	PART NAME 1 2 3 4 5 6 (PRODUCT LEVEL)	SEE PAGE
	1	1	**183-1336**	2	BOLT	
	2	1	**154-1231**	2	WASHER-THRUST	
	3	1	**156-6967**	1	BEARING AS	
	3A	1	**153-5402**	2	DOWEL	
M	3B	1	**154-0385**	2	BOLT (M10X1.5X55-MM)	
	4	1	**156-6968**	1	BEARING AS	
	4A	1	**153-5402**	2	DOWEL	
M	4B	1	**154-0385**	2	BOLT (M10X1.5X55-MM)	
	5	1	**156-6970**	1	BEARING AS	
	5A	1	**153-5402**	2	DOWEL	
M	5B	1	**154-0385**	2	BOLT (M10X1.5X55-MM)	
M	6	1	**6I-0650**	2	BOLT (M10X1.5X65-MM)	
	7	1	**156-6977**	1	KIT-CRANKSHAFT BEARING (MAIN)	
AB		1	**161-2628**		KIT-CRANKSHAFT BEARING (0.25-MM)	
AB		1	**161-2629**		KIT-CRANKSHAFT BEARING (0.5-MM)	
	8	1	**524-3340**	1	KIT-BEARING (STANDARD) (ROD)	
AB		1	**161-2630**		KIT-CRANKSHAFT BEARING (0.25-MM US) (0.25-MM)	
AB		1	**161-2631**		KIT-CRANKSHAFT BEARING (0.5-MM US) (0.5-MM)	
	9	1	**311-1157**	1	CRANKSHAFT AS	
	9A	1	**153-5518**	1	KEY	
	9B	1	**153-5519**	1	PIN	
	9C	1	**308-1853**	1	GEAR-CRANKSHAFT (33-TEETH)	

A - NOT PART OF THIS GROUP
B - USE AS REQUIRED
M - METRIC PART

311-1100 **CRANKSHAFT GP** (contd.) **i07624592**

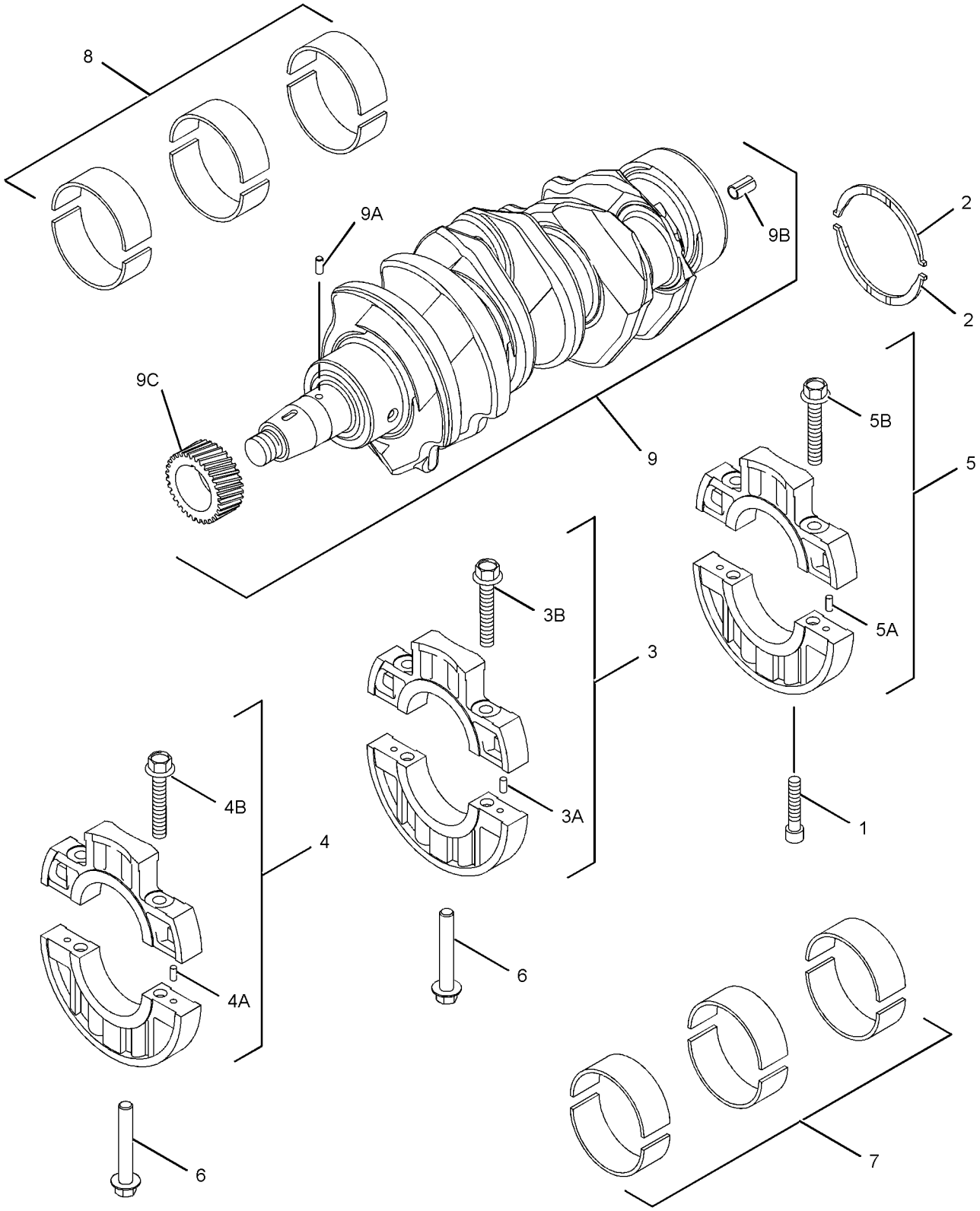

GRAPHIC #1 <END> g06035388

311-1099 CYLINDER BLOCK GP

PART OF 435-1654 ENGINE AR-PRIMARY

TYPE 1

SMCS-1201 **i06618036**

NOTE	REF NO	GRAPHIC REF	PART NUMBER	QTY	PART NAME 1 2 3 4 5 6 (PRODUCT LEVEL)	SEE PAGE
	1	1	**153-5387**	2	PLUG	
	2	1	**6B-0924**	1	BALL BEARING	
	3	1	**153-5391**	1	PLUG	
	4	1	**153-5394**	2	DOWEL	
	5	1	**153-5395**	2	DOWEL	
	6	1	**487-0157**	2	PIN-SPRING	
	7	1	**153-5402**	2	DOWEL	
	8	1	**153-6838**	2	BOLT AS	
	9	1	**154-0175**	5	PLUG	
M	10	1	**154-0393**	2	STUD (M8X1.25X31-MM)	
	11	1	**156-6969**	1	BEARING	
J	12	1	**156-6973**	1	SEAL AS	
M	13	1	**183-1163**	1	STUD (M6X1X43-MM)	
M	14	1	**183-1164**	1	STUD (M6X1X68-MM)	
	15	1	**215-2620**	1	GASKET	
	16	1	**221-1136**	4	PLUG (BLANKING)	
	17	1	**237-9315**	1	PLUG (SEALING)	
	18	1	**366-4251**	4	PLUG-SEAL	
	19	1	**294-4916**	1	BUSHING (STANDARD) (STANDARD)	
AB		1	**302-4181**	1	BUSHING (0.25-MM US)	
AB		1	**302-4182**	1	BUSHING (0.50-MM US)	
	20	1	**338-3403**	1	SHAFT	
	21	1	**322-6874**	1	STUD	

A - NOT PART OF THIS GROUP
B - USE AS REQUIRED
J - ALSO ORDER WEAR SLEEVE 326-0081
M - METRIC PART

311-1099 **CYLINDER BLOCK GP (**contd.**)** **i06618036**

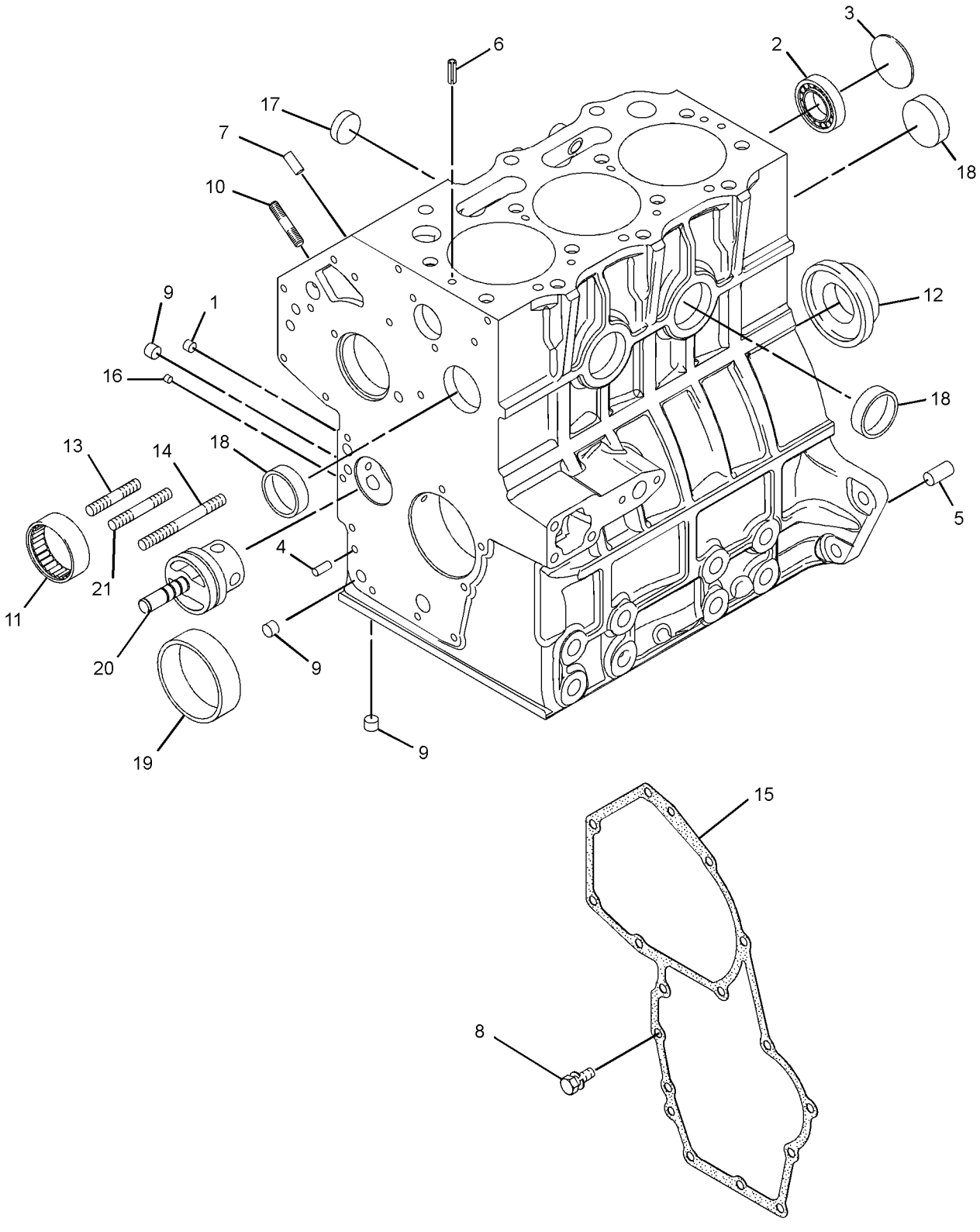

GRAPHIC #1 <END> g02037373

311-1099 CYLINDER BLOCK GP

PART OF 435-1654 ENGINE AR-PRIMARY

TYPE 2

SMCS-1201 **i07684476**

NOTE	REF NO	GRAPHIC REF	PART NUMBER	QTY	PART NAME 1 2 3 4 5 6 (PRODUCT LEVEL)	SEE PAGE
	1	1	**153-5387**	2	PLUG	
	2	1	**153-5390**	1	BALL BEARING	
	3	1	**153-5391**	1	PLUG	
	4	1	**153-5394**	2	DOWEL	
	5	1	**153-5395**	2	DOWEL	
	6	1	**487-0157**	2	PIN-SPRING	
	7	1	**153-5402**	2	DOWEL	
	8	1	**153-6838**	2	BOLT AS	
	9	1	**154-0175**	5	PLUG	
M	10	1	**154-0393**	2	STUD (M8X1.25X31-MM)	
	11	1	**156-6969**	1	BEARING	
J	12	1	**156-6973**	1	SEAL AS	
M	13	1	**183-1163**	1	STUD (M6X1X43-MM)	
M	14	1	**183-1164**	1	STUD (M6X1X68-MM)	
	15	1	**215-2620**	1	GASKET	
	16	1	**221-1136**	4	PLUG (BLANKING)	
	17	1	**237-9315**	1	PLUG (SEALING)	
	18	1	**366-4251**	4	PLUG-SEAL	
	19	1	**294-4916**	1	BUSHING (STANDARD) (STANDARD)	
AB		1	**302-4181**	1	BUSHING (0.25-MM US)	
AB		1	**302-4182**	1	BUSHING (0.50-MM US)	
C	20	1	*536-9734*	1	SHAFT GP-IDLER	
M		1	**153-5592**	1	NUT (M8X1.25-THD)	
	21	1	**322-6874**	1	STUD	

A - NOT PART OF THIS GROUP
B - USE AS REQUIRED
C - CHANGE FROM PREVIOUS TYPE
J - ALSO ORDER WEAR SLEEVE 326-0081
M - METRIC PART

311-1099 **CYLINDER BLOCK GP (**contd.**)** **i07684476**

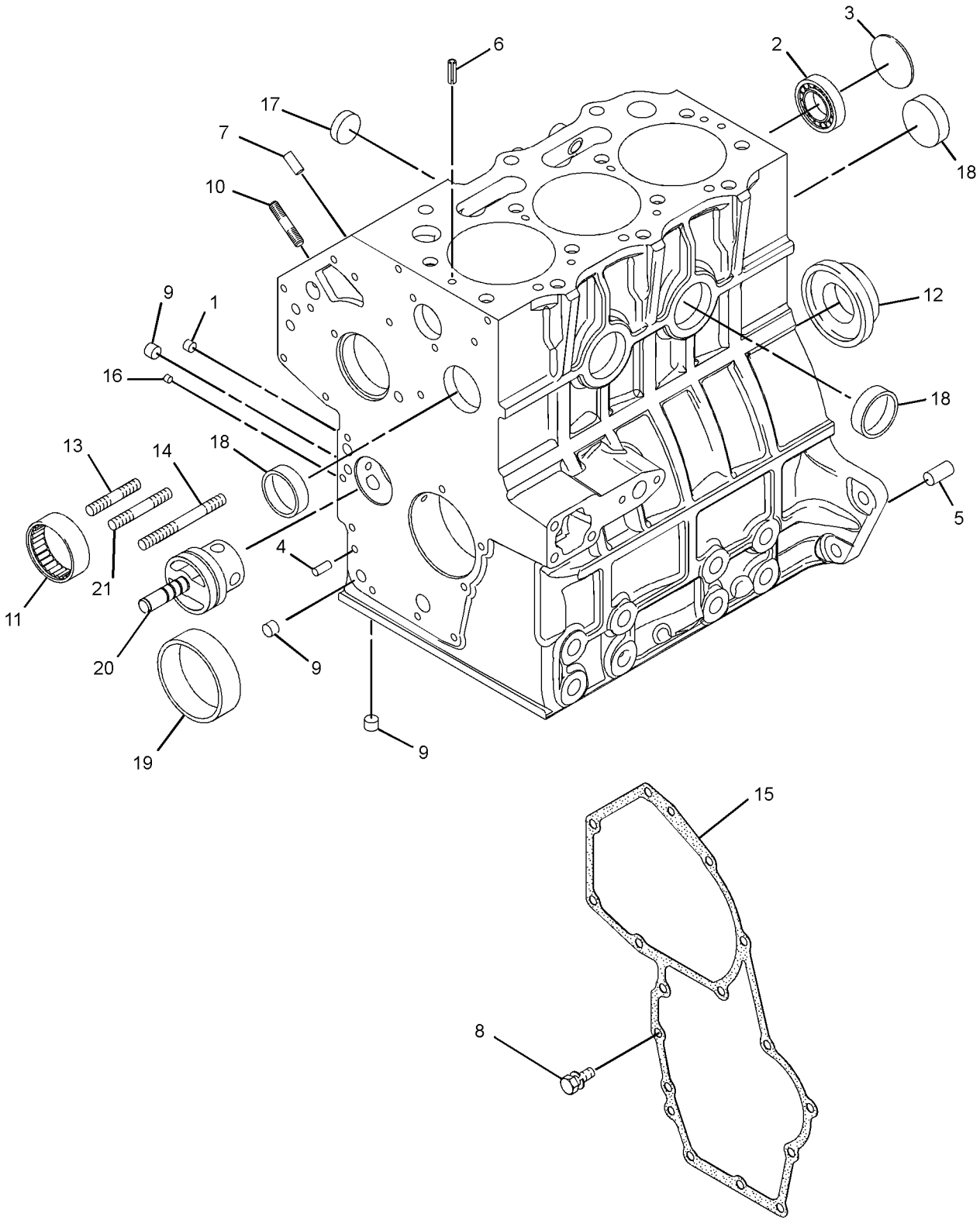

GRAPHIC #1 <END> g02037373

435-1654 ENGINE AR-PRIMARY

25 BRAKE KW (34 BHP) AT 3000 RPM

FIELD REPLACEMENT FOR 303-4100—PAGE: 3

SMCS-1020 **i07822024**

NOTE	PART NUMBER	QTY	PART NAME 1 2 3 4 5 6 (PRODUCT LEVEL)	SEE PAGE
Y	*322-0563*	1	CAMSHAFT GP	5
Y	*311-1116*	1	HOUSING GP-WATER REGULATOR	75
Y	*342-1268*	1	FASTENER GP-COVER	14
Y	*311-1122*	1	COVER GP-FRONT HOUSING	15
Y	*311-1123*	1	COVER GP-VALVE MECHANISM	19
Y	*311-1100*	1	CRANKSHAFT GP	21
Y	*311-1099*	1	CYLINDER BLOCK GP	23
Y	*311-1102*	1	CYLINDER HEAD GP	31
Y	*311-1113*	1	FILLER GP-ENGINE OIL	65
Y	*308-2298*	1	FILTER GP-ENGINE OIL	69
Y	*327-0061*	1	FLYWHEEL GP	35
Y	*311-1127*	1	GLOW PLUG GP	150
Y	*322-0562*	1	GOVERNOR GP	129
Y	*342-1226*	1	HOUSING GP-FLYWHEEL	38
Y	*322-0561*	1	HOUSING GP-FRONT	39
Y	**339-3017**	1	KIT-ENGINE OIL PUMP	73
Y	*442-8532*	1	LIFTING GP-ENGINE	50
Y	*308-4735*	1	MOUNTING GP-ENGINE OIL FILTER	71
Y	*311-1112*	1	PAN GP-OIL	51
Y	*342-1324*	1	PARTS GP-MISCELLANEOUS	165
Y	*311-1101*	1	PISTON & ROD GP	55
Y	*309-6720*	1	PLUG GP-OIL PAN	56
Y	*311-1114*	1	PULLEY GP-CRANKSHAFT	57
Y	*311-1104*	1	PUMP GP-ENGINE OIL	72
Y	*322-0564*	1	PUMP GP-FUEL INJECTION	134
Y	*311-1115*	1	PUMP GP-WATER	76
Y	*311-1128*	1	SOLENOID GP-SHUTOFF	153
Y	*315-6638*	1	SWITCH GP-PRESSURE (ENGINE OIL) (ENGINE OIL)	160
Y	*311-1130*	1	SWITCH GP-TEMPERATURE (COOLANT)	163
Y	*311-1103*	1	VALVE MECHANISM GP	63

Y - SEPARATE ILLUSTRATION

<END>

311-1158 CYLINDER HEAD AS

PART OF 311-1102 CYLINDER HEAD GP

SMCS-1100, 1101 **i07504173**

NOTE	REF NO	GRAPHIC REF	PART NUMBER	QTY	PART NAME 1 2 3 4 5 6 (PRODUCT LEVEL)	SEE PAGE
	1	1	**308-1861**	3	VALVE-EXHAUST	
	2	1	**153-5556**	12	RETAINER	
	3	1	**153-5557**	6	RETAINER	
	4	1	**440-5104**	6	SEAL	
	5	1	**477-8828**	6	SPRING	
	6	1	**237-9315**	3	PLUG (SEALING)	
	7	1	**256-2084**	3	INSERT-INLET VALVE	
	8	1	**256-2085**	3	INSERT-VALVE SEAT	
	9	1	**288-6537**	5	CAP	
	10	1	**291-1808**	2	CAP	
	11	1	**303-0338**	2	PLUG	
	12	1	**435-9544**	3	VALVE-INLET	

311-1158 **CYLINDER HEAD AS (**contd.**)** **i07504173**

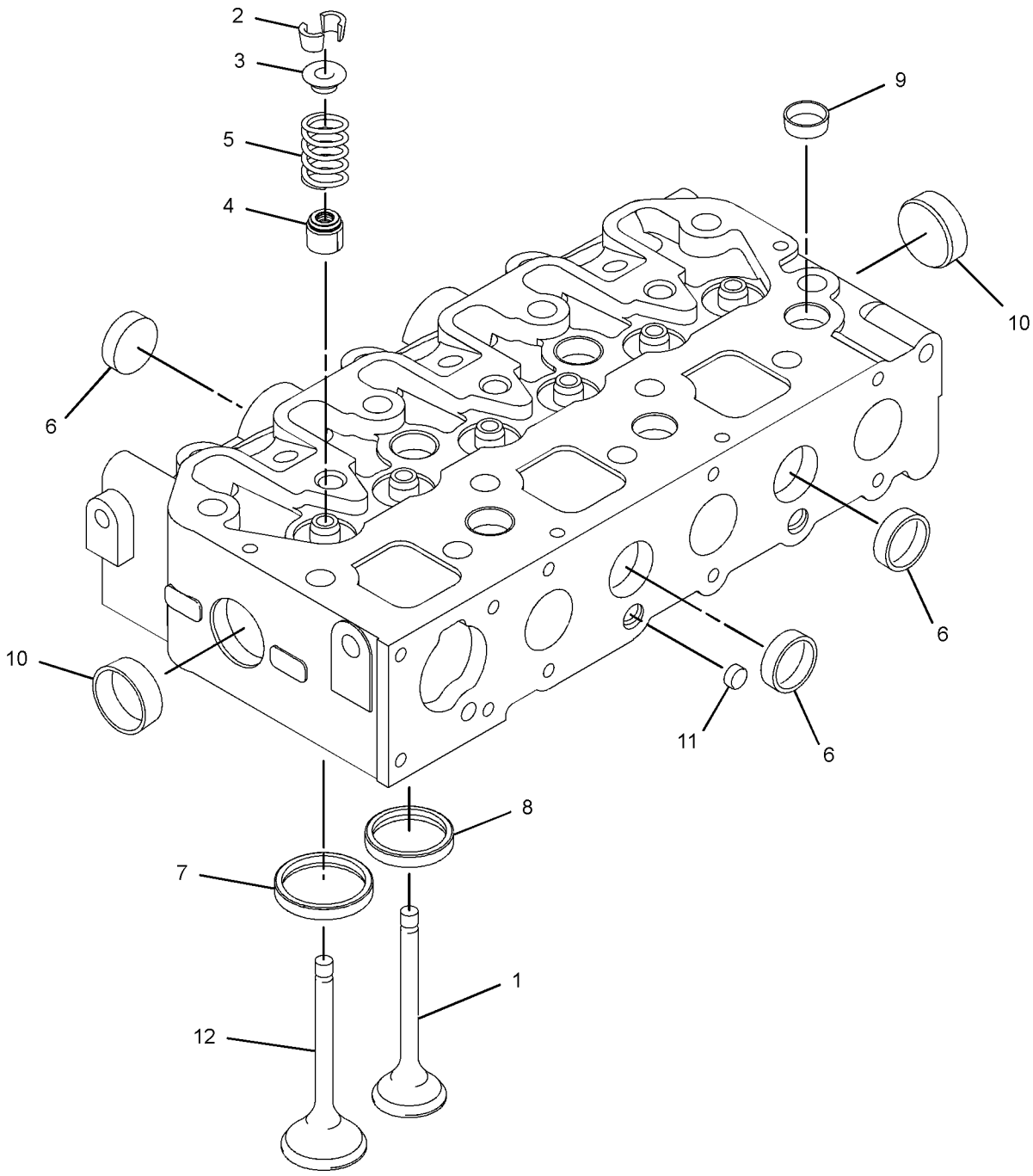

GRAPHIC #1 <END> g03653429

540-0594 CYLINDER HEAD AS

PART OF 540-0595 CYLINDER HEAD GP

SMCS-1100, 1101 **i07523715**

NOTE	REF NO	GRAPHIC REF	PART NUMBER	QTY	PART NAME 1 2 3 4 5 6 (PRODUCT LEVEL)	SEE PAGE
	1	1	**237-9315**	3	PLUG (SEALING)	
	2	1	**288-6537**	5	CAP	
	3	1	**291-1808**	2	CAP	
	4	1	**303-0338**	2	PLUG	
	5	1	*423-7663*	1	CYLINDER HEAD AS	
		1	**256-2084**	3	INSERT-INLET VALVE	
		1	**256-2085**	3	INSERT-VALVE SEAT	

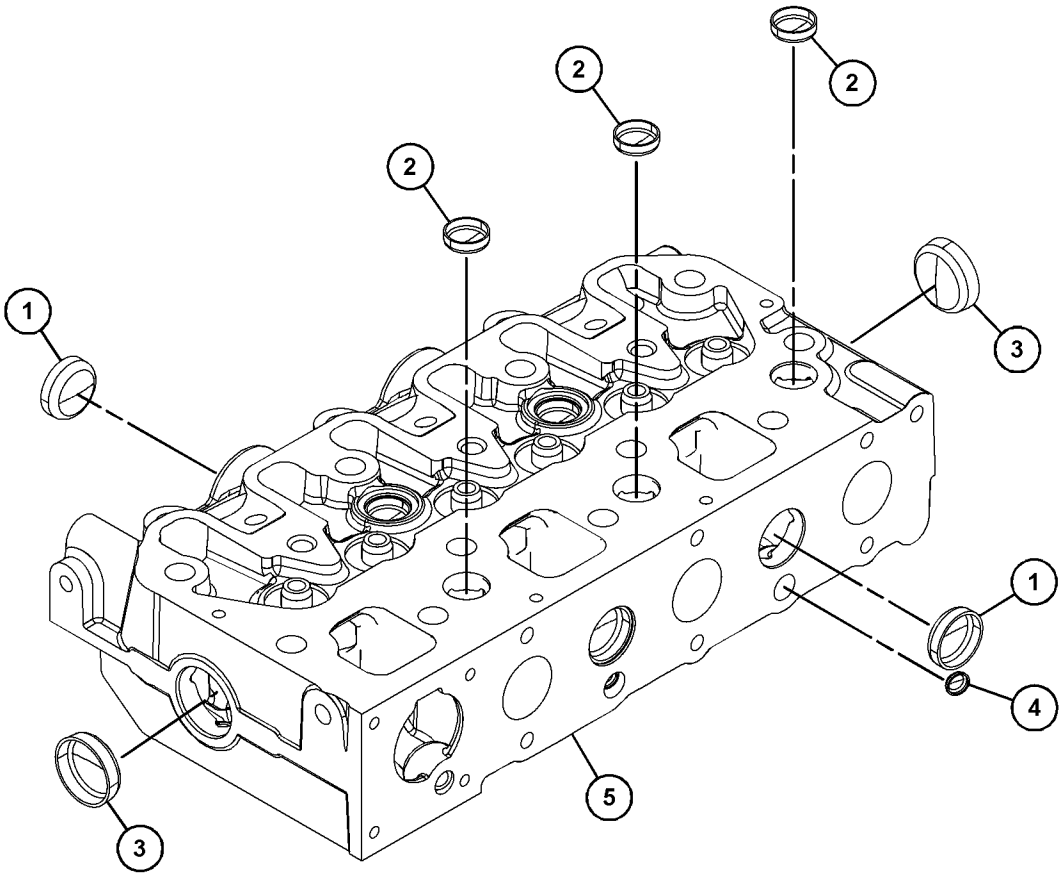

GRAPHIC #1 <END> g06371345

311-1102 CYLINDER HEAD GP

PART OF 435-1654 ENGINE AR-PRIMARY

SMCS-1100 **i07496430**

NOTE	REF NO	GRAPHIC REF	PART NUMBER	QTY	PART NAME 1 2 3 4 5 6 (PRODUCT LEVEL)	SEE PAGE
	1	1	**504-3838**	6	CAP	
M	2	1	**457-5872**	11	BOLT (M11X1.25X91-MM)	
M	3	1	**457-5876**	3	BOLT (M11X1.25X72-MM)	
M	4	1	**183-3213**	2	STUD (M8X1.25X71-MM)	
B	5	1	**218-8533**	1	GASKET (1.3-MM THK)	
B		1	**218-8537**	1	GASKET (1.4-MM THK)	
M	7	1	**308-1862**	2	STUD (M6X1X63-MM)	
Y	8	1	*311-1158*	1	CYLINDER HEAD AS	28

B - USE AS REQUIRED
M - METRIC PART
Y - SEPARATE ILLUSTRATION

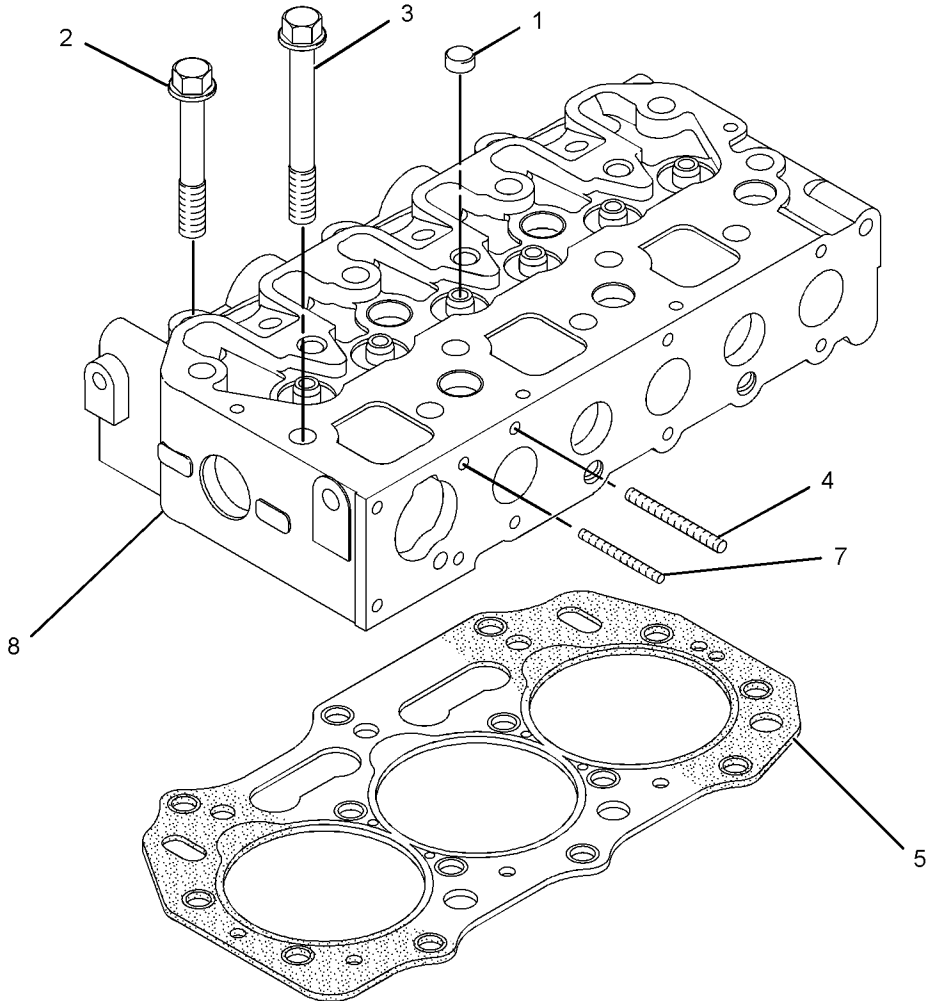

GRAPHIC #1 <END> g01412519

540-0595 CYLINDER HEAD GP

PART OF 311-1102 CYLINDER HEAD GP

SMCS-1100 **i07523748**

NOTE	REF NO	GRAPHIC REF	PART NUMBER	QTY	PART NAME 1 2 3 4 5 6 (PRODUCT LEVEL)	SEE PAGE
	1	1	**153-5557**	6	RETAINER	
	2	1	**435-9544**	3	VALVE-INLET	
	3	1	**435-9546**	3	VALVE-EXHAUST	
	4	1	**477-8828**	6	SPRING	
Y	5	1	**540-0594**	1	CYLINDER HEAD AS	30
	6	1	**153-5556**	12	RETAINER	
	7	1	**440-5104**	6	SEAL	

Y - SEPARATE ILLUSTRATION

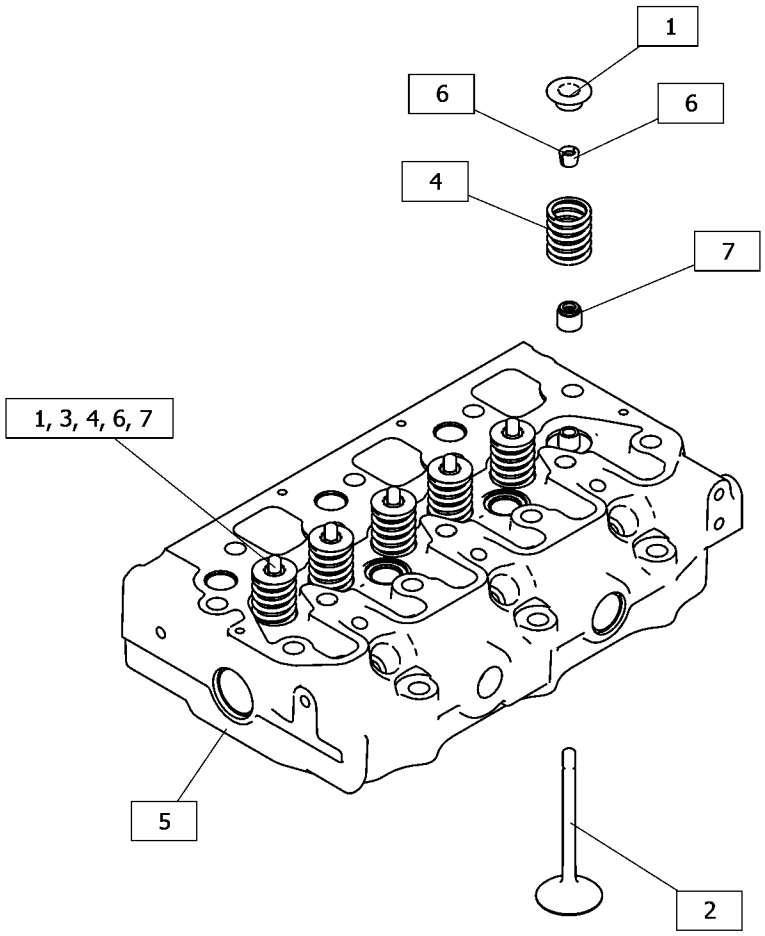

GRAPHIC #1 <END> g06348225

508-5627 FASTENER GP-FRONT COVER

SMCS-1151 **i06811620**

NOTE	REF NO	GRAPHIC REF	PART NUMBER	QTY	PART NAME 1 2 3 4 5 6 (PRODUCT LEVEL)	SEE PAGE
M	1	1	**153-5960**	2	NUT (M6X1-THD)	
	2	1	**153-5962**	4	BOLT AS	
	3	1	**165-2140**	7	BOLT AS	
	4	1	**425-6417**	1	GASKET	

M - METRIC PART

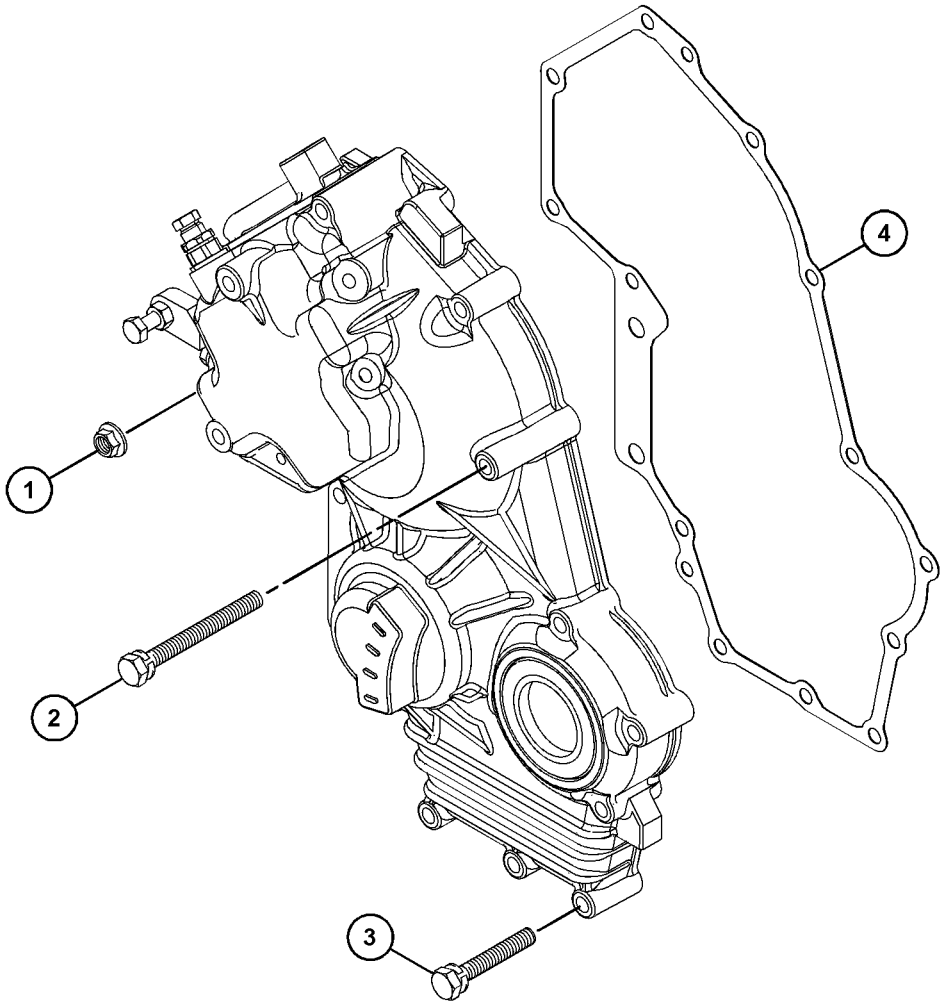

GRAPHIC #1 <END> g06122334

316-9548 FLYWHEEL GP

SMCS-1156 **i03393523**

NOTE	REF NO	GRAPHIC REF	PART NUMBER	QTY	PART NAME 1 2 3 4 5 6 (PRODUCT LEVEL)	SEE PAGE
M	1	1	**154-2406**	6	BOLT (M10X1.25X34-MM)	
	2	1	**138-7421**	1	FLYWHEEL AS	
	2A	1	**156-6960**	1	GEAR-STARTING MOTOR (109-TEETH)	

M - METRIC PART

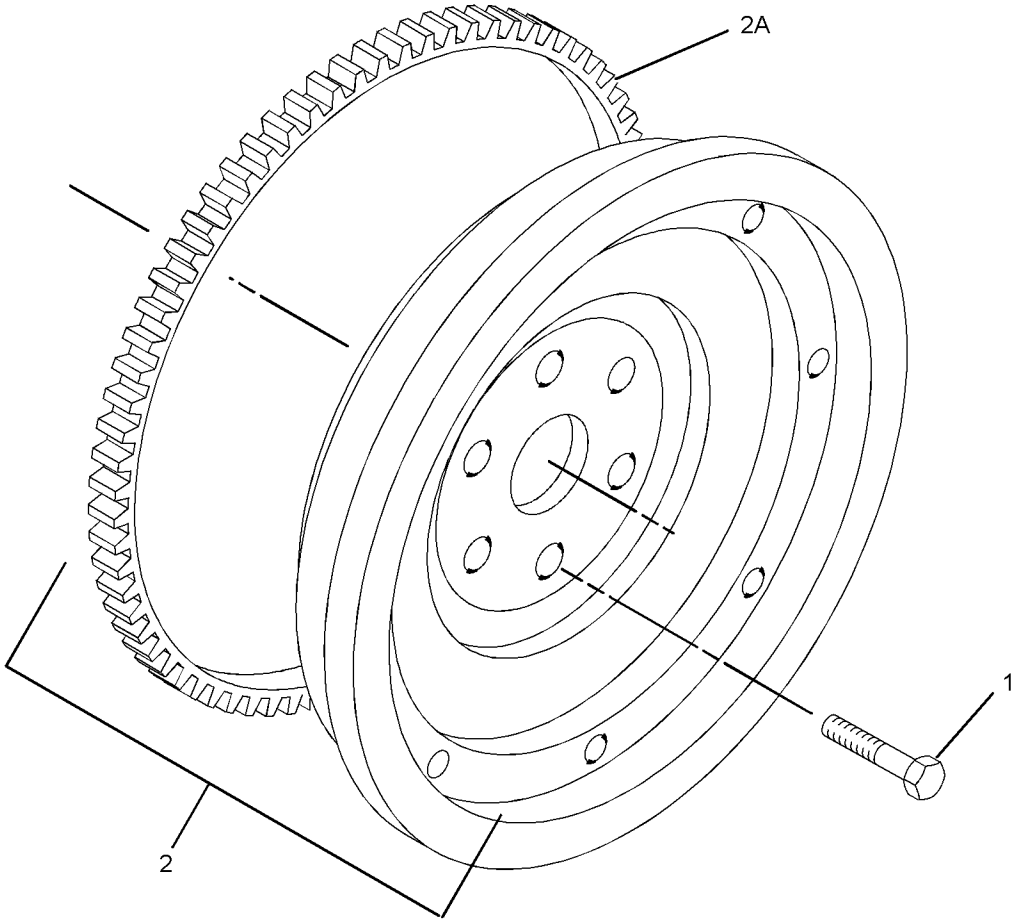

GRAPHIC #1 <END> g01161248

327-0061 FLYWHEEL GP

PART OF 435-1654 ENGINE AR-PRIMARY

SMCS-1156 **i05537883**

NOTE	REF NO	GRAPHIC REF	PART NUMBER	QTY	PART NAME 1 2 3 4 5 6 (PRODUCT LEVEL)	SEE PAGE
M	1	1	**154-2406**	6	BOLT (M10X1.25X34-MM)	

M - METRIC PART

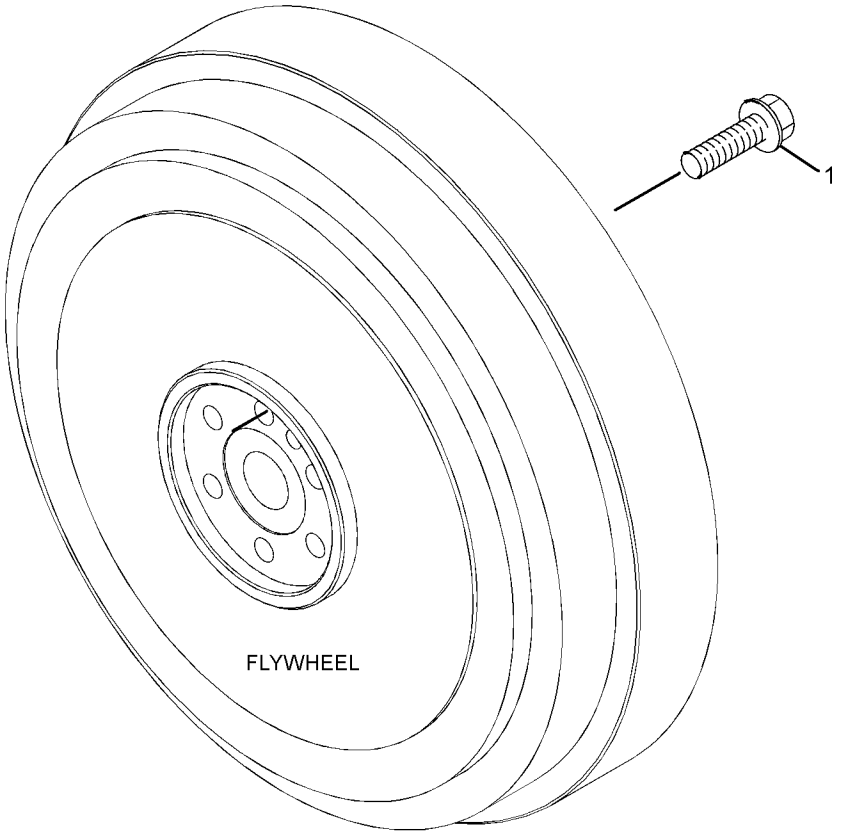

GRAPHIC #1 <END> g01517266

311-1107 HOUSING GP-FLYWHEEL

TYPE 1

SMCS-1157 **i04547849**

NOTE	REF NO	GRAPHIC REF	PART NUMBER	QTY	PART NAME 1 2 3 4 5 6 (PRODUCT LEVEL)	SEE PAGE
M	1	1	**138-7162**	2	BOLT (M10X1.5X30-MM)	
	2	1	**138-7172**	1	HOUSING-FLYWHEEL	
	3	1	**154-1399**	2	WASHER (10.5X18X1.6-MM THK)	
	4	1	**154-2395**	2	PLUG	
	5	1	**154-2403**	2	WASHER	
	6	1	**165-2141**	10	BOLT AS	

M - METRIC PART

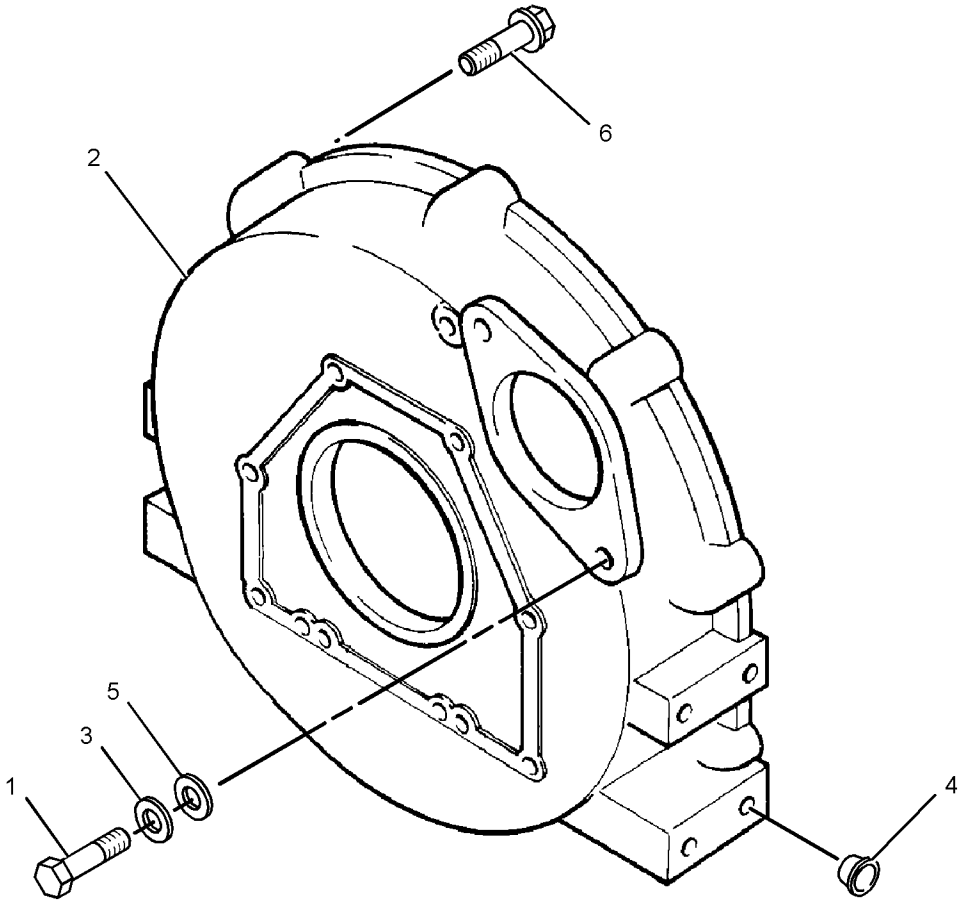

GRAPHIC #1 <END> g01421877

311-1107 HOUSING GP-FLYWHEEL

TYPE 2

SMCS-1157 **i04898731**

NOTE	REF NO	GRAPHIC REF	PART NUMBER	QTY	PART NAME 1 2 3 4 5 6 (PRODUCT LEVEL)	SEE PAGE
CM	1	1	**6I-0593**	2	BOLT (M10X1.5X30-MM)	
	2	1	**383-1331**	1	HOUSING-FLYWHEEL	
	3	1	**165-2141**	10	BOLT AS	
	4	1	**358-4256**	2	PLUG	

C - CHANGE FROM PREVIOUS TYPE
M - METRIC PART

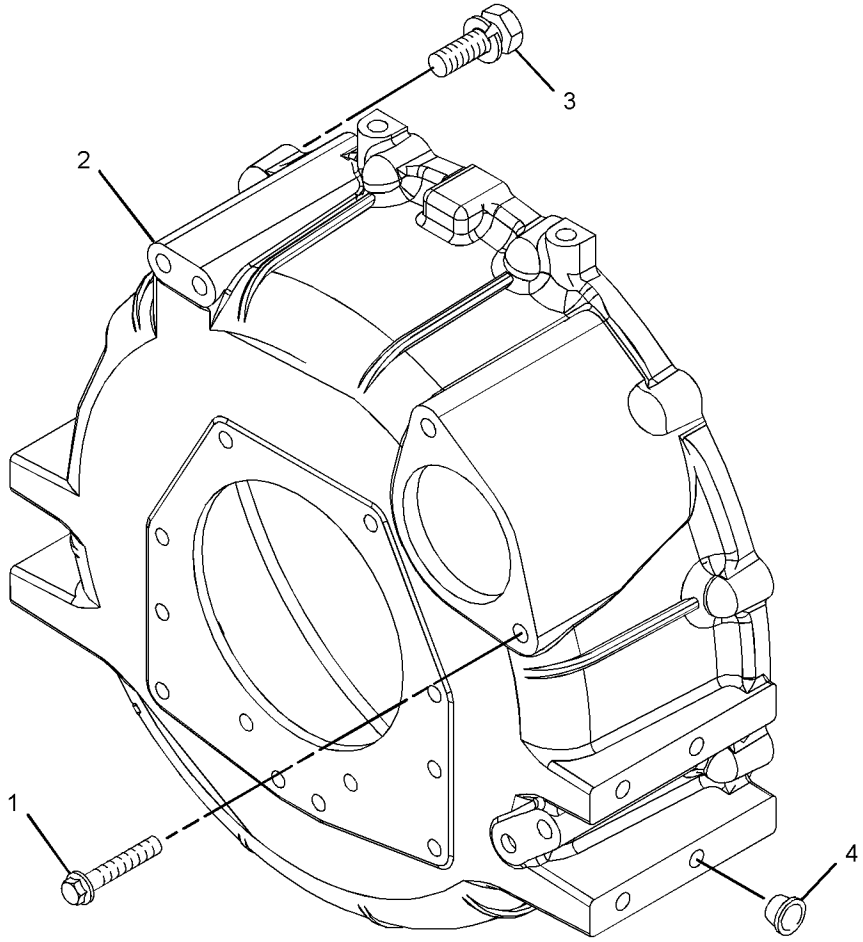

GRAPHIC #1 <END> g03056796

342-1226 HOUSING GP-FLYWHEEL

PART OF 435-1654 ENGINE AR-PRIMARY

SMCS-1157 **i07164115**

NOTE	REF NO	GRAPHIC REF	PART NUMBER	QTY	PART NAME 1 2 3 4 5 6 (PRODUCT LEVEL)	SEE PAGE
M	1	1	**114-4363**	10	BOLT (M8X1.25X12-MM)	
M	2	1	**6I-4200**	2	BOLT (M10X1.5X16-MM)	
	3	1	**226-7902**	1	PLATE	

M - METRIC PART

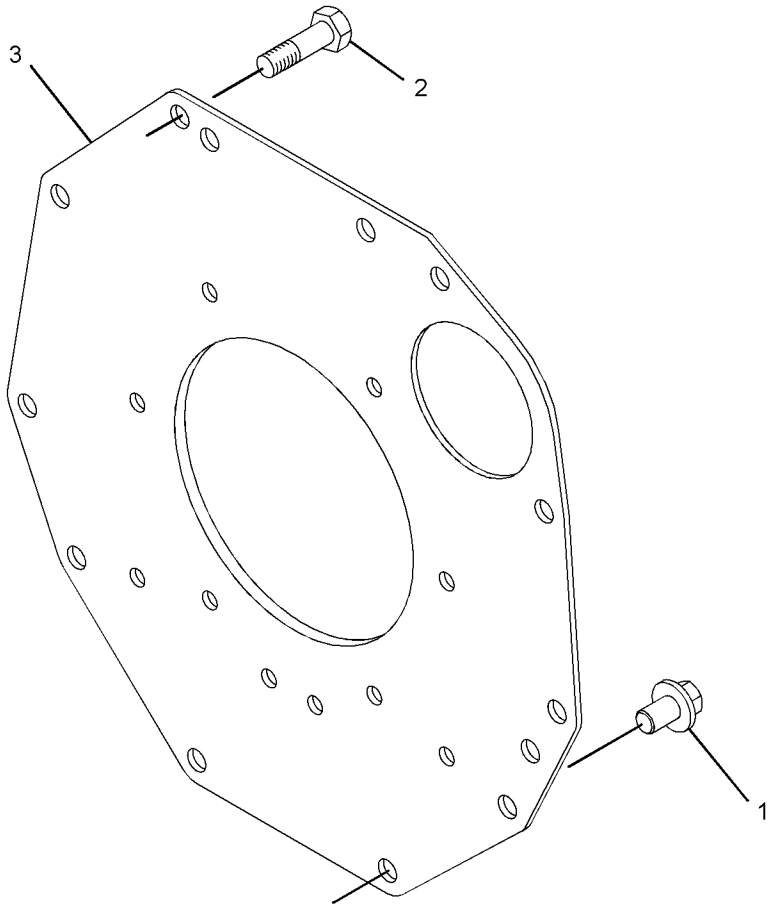

GRAPHIC #1 <END> g06243462

322-0561 HOUSING GP-FRONT

PART OF 435-1654 ENGINE AR-PRIMARY

SMCS-1151, 1162, 1206 **i06217402**

NOTE	REF NO	GRAPHIC REF	PART NUMBER	QTY	PART NAME 1 2 3 4 5 6 (PRODUCT LEVEL)	SEE PAGE
M	1	1	**153-5960**	2	NUT (M6X1-THD)	
	2	1	**153-5962**	4	BOLT AS	
	3	1	**5D-1319**	1	PIN-SPRING	
	4	1	**154-1675**	1	SEAL	
	5	1	**165-2140**	7	BOLT AS	
	6	1	**423-7723**	1	GASKET	
	7	1	**464-2090**	1	HOUSING-FRONT	
	8	1	**336-2965**	1	SPRING	

M - METRIC PART

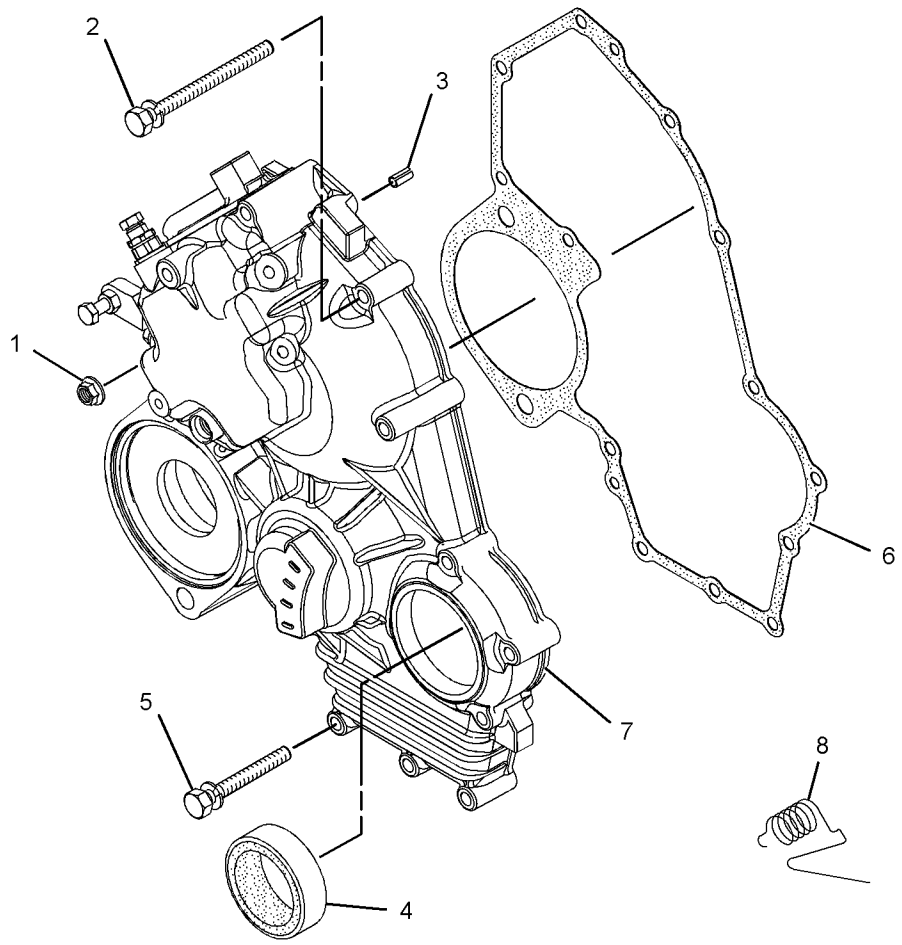

GRAPHIC #1 <END> g01701620

322-3102 HOUSING GP-FRONT

SMCS-1151, 1162, 1206 **i06217952**

NOTE	REF NO	GRAPHIC REF	PART NUMBER	QTY	PART NAME 1 2 3 4 5 6 (PRODUCT LEVEL)	SEE PAGE
M	1	1	**153-5960**	2	NUT (M6X1-THD)	
	2	1	**153-5962**	4	BOLT AS	
	3	1	**5D-1319**	1	PIN-SPRING	
	4	1	**154-1675**	1	SEAL	
	5	1	**165-2140**	7	BOLT AS	
	6	1	**423-7723**	1	GASKET	
	7	1	**464-2090**	1	HOUSING-FRONT	

M - METRIC PART

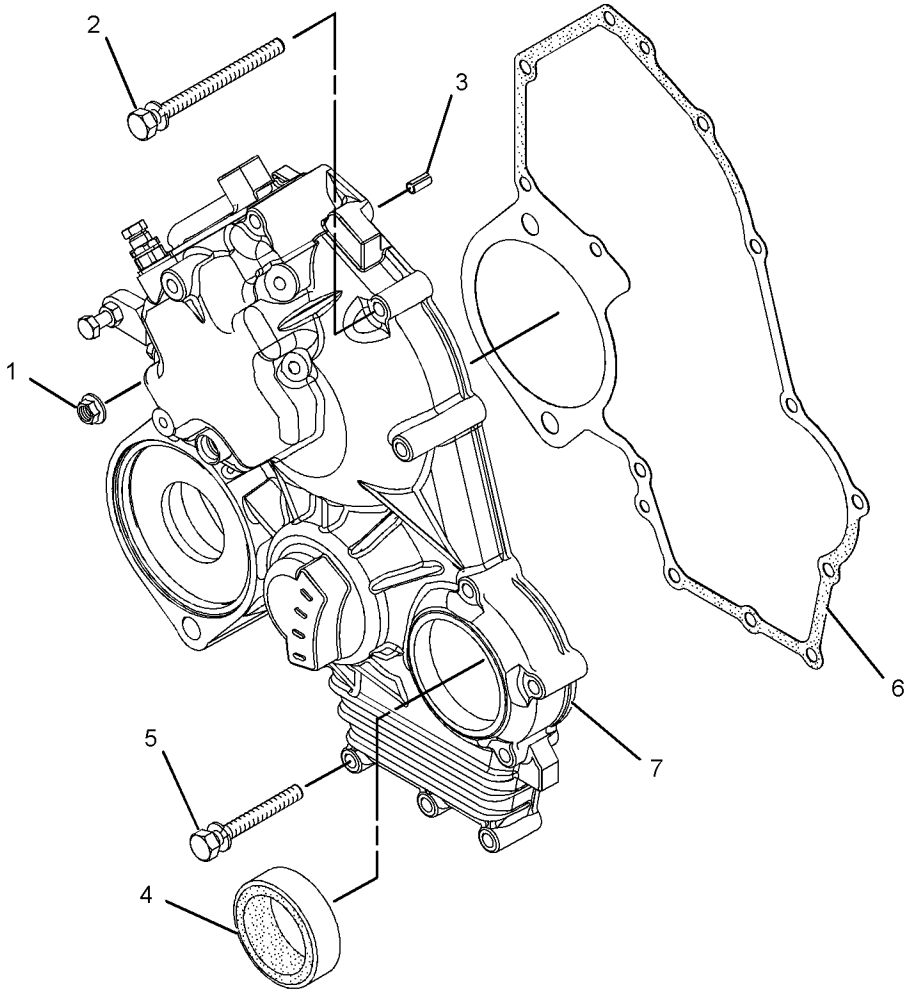

GRAPHIC #1 <END> g01542613

364-2741 HOUSING GP-FRONT

SMCS-1151, 1162, 1206 **i06909405**

NOTE	REF NO	GRAPHIC REF	PART NUMBER	QTY	PART NAME 1 2 3 4 5 6 (PRODUCT LEVEL)	SEE PAGE
M	1	1	**153-5960**	2	NUT (M6X1-THD)	
	2	1	**153-5962**	4	BOLT AS	
	3	1	**5D-1319**	1	PIN-SPRING	
	4	1	**154-1675**	1	SEAL	
	5	1	**165-2140**	7	BOLT AS	
	6	1	**423-7723**	1	GASKET	
	7	1	**483-1210**	1	CASE-GEAR	

M - METRIC PART

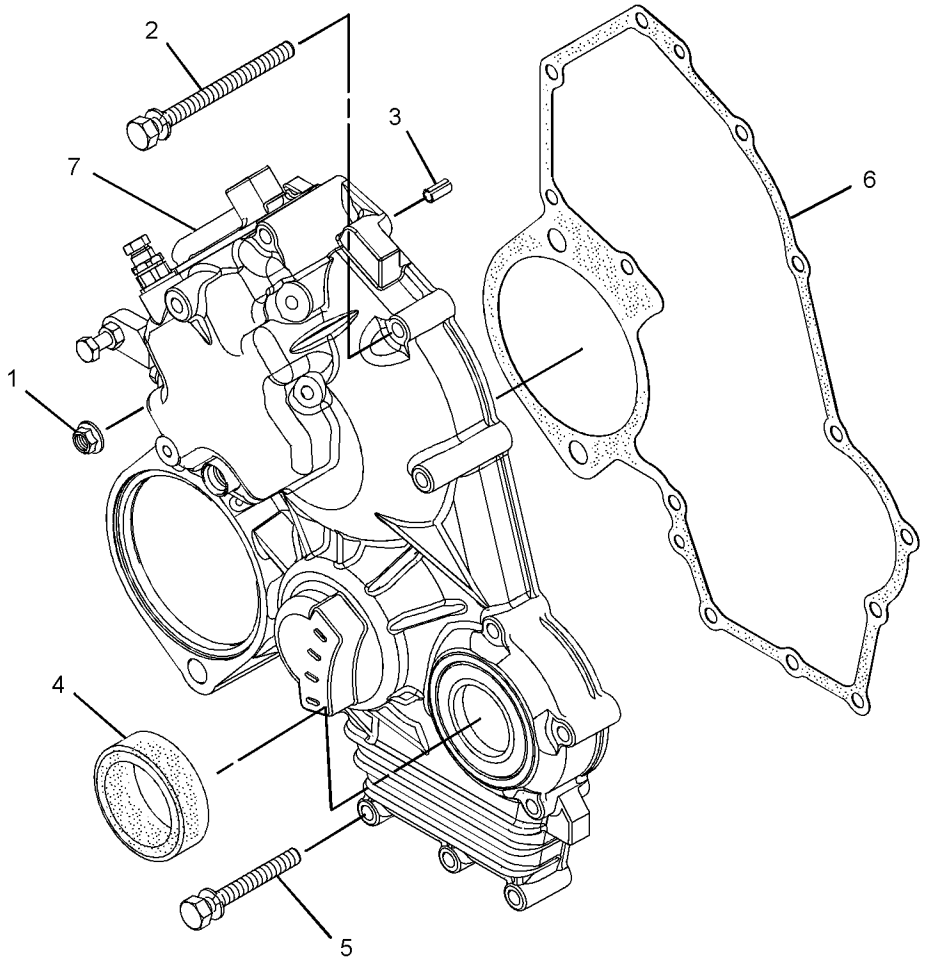

GRAPHIC #1 <END> g02334639

508-5628 HOUSING GP-FRONT

TYPE 1

SMCS-1151, 1162, 1206 **i07103537**

NOTE	REF NO	GRAPHIC REF	PART NUMBER	QTY	PART NAME 1 2 3 4 5 6 (PRODUCT LEVEL)	SEE PAGE
M	1	2	**106-8916**	4	BOLT (M6X1X16-MM)	
M	2	2	**5C-2890**	1	NUT (M6X1-THD)	
	3	2	**139-5511**	1	CAP (TAMPER RESISTANT)	
M	4	2	**153-5592**	1	NUT (M8X1.25-THD)	
	5	2	**153-6415**	2	WASHER (SEAL)	
	6	2	**153-7983**	1	PIN	
	7	2	**095-1574**	1	SEAL-O-RING	
	8	1	**5D-1319**	1	PIN-SPRING	
	9	1	**154-1675**	1	SEAL	
M	10	2	**162-2207**	1	NUT (M6X1-THD)	
	11	2	**217-7115**	1	CAP (TAMPER RESISTANT)	
	12	2	**308-1882**	1	SPRING	
M	13	2	**308-1889**	1	NUT (M10X1.25-THD)	
M	14	2	**308-1892**	1	NUT (M6X1-THD)	
	15	2	**308-1897**	2	RING	
	16	2	**308-4266**	1	SHAFT	
	17	2	**309-6729**	1	SEAL-O-RING	
	18	2	**309-6732**	1	BOLT	
	19	2	**311-0655**	1	SPRING	
M	20	2	**313-2025**	1	BOLT-SPECIAL (M10X1.25-MM THD)	
	21	2	**315-5236**	1	BOLT AS	
	21A	2	**153-7987**	1	WASHER (9.2X17X1.8-MM THK)	
M	21B	2	**191-9297**	1	NUT (M10X1.25-THD)	
	21C	2	**315-5235**	1	SPRING	
	22	2	**321-4249**	1	NUT	
	23	2	**324-3400**	1	LEVER AS-CONTROL	
	24	2	**330-9189**	1	PLUG	
	25	2	**334-0732**	1	ARM (FRONT HOUSING)	
	26	2	**335-5578**	1	BRACKET	
	27	2	**364-7487**	1	SPRING	
M	28	2	**369-4486**	2	BOLT (M6X1X35-MM)	
	29	2	**390-3729**	1	LEVER-CONTROL	
	30	2	**390-3731**	1	SHAFT	
	31	2	**423-7724**	1	GASKET	
	32	2	**425-7065**	1	CAP-TAMPER PROOF	
	33	1	**465-6710**	1	HOUSING	
	34	2	**336-2965**	1	SPRING	

M - METRIC PART

508-5628 **HOUSING GP-FRONT (**contd.**)** **i07103537**

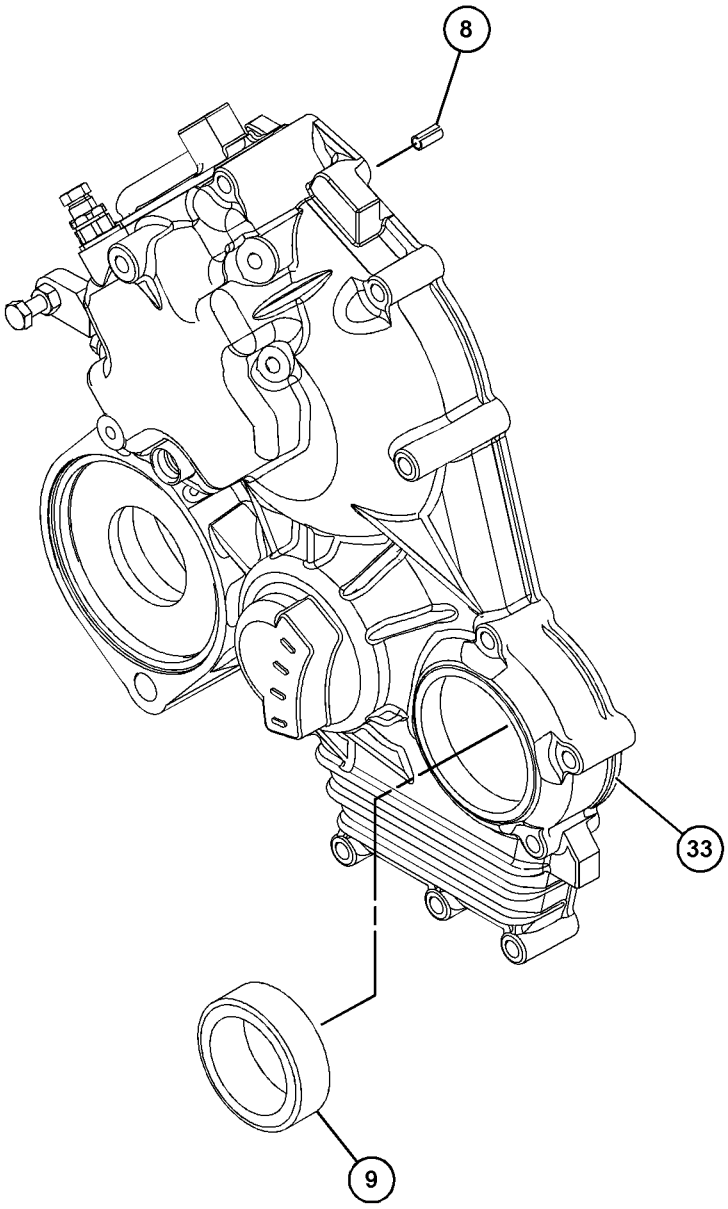

GRAPHIC #1 g06125416

508-5628 **HOUSING GP-FRONT (**contd.**)** **i07103537**

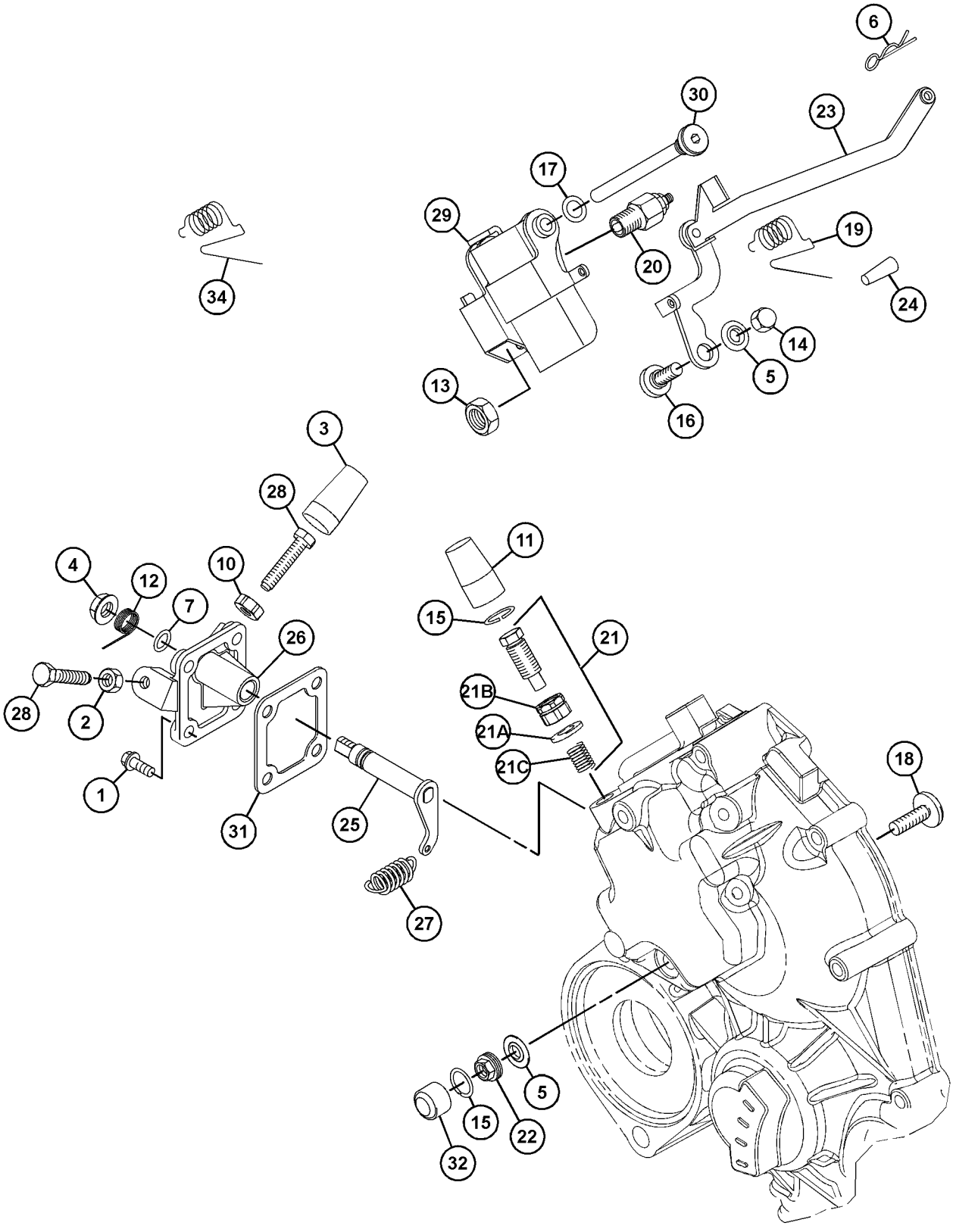

GRAPHIC #2 <END> g06125417

508-5628 HOUSING GP-FRONT

TYPE 2

SMCS-1151, 1162, 1206 **i07445398**

NOTE	REF NO	GRAPHIC REF	PART NUMBER	QTY	PART NAME 1 2 3 4 5 6 (PRODUCT LEVEL)	SEE PAGE
M	1	2	**106-8916**	4	BOLT (M6X1X16-MM)	
M	2	2	**5C-2890**	1	NUT (M6X1-THD)	
	3	2	**139-5511**	1	CAP (TAMPER RESISTANT)	
M	4	2	**153-5592**	1	NUT (M8X1.25-THD)	
	5	2	**153-6415**	2	WASHER (SEAL)	
	6	2	**153-7983**	1	PIN	
	7	2	**095-1574**	1	SEAL-O-RING	
	8	1	**5D-1319**	1	PIN-SPRING	
	9	1	**154-1675**	1	SEAL	
M	10	2	**162-2207**	1	NUT (M6X1-THD)	
	11	2	**217-7115**	1	CAP (TAMPER RESISTANT)	
	12	2	**308-1882**	1	SPRING	
M	13	2	**308-1889**	1	NUT (M10X1.25-THD)	
M	14	2	**308-1892**	1	NUT (M6X1-THD)	
C	15	2	**308-1897**	1	RING	
	16	2	**308-4266**	1	SHAFT	
	17	2	**309-6729**	1	SEAL-O-RING	
	18	2	**364-2755**	1	BOLT-SPECIAL	
	19	2	**311-0655**	1	SPRING	
M	20	2	**313-2025**	1	BOLT-SPECIAL (M10X1.25-MM THD)	
	21	2	**315-5236**	1	BOLT AS	
	21A	2	**153-7987**	1	WASHER (9.2X17X1.8-MM THK)	
M	21B	2	**191-9297**	1	NUT (M10X1.25-THD)	
	21C	2	**315-5235**	1	SPRING	
C	22	2	**502-9478**	1	NUT (TAMPER RESISTANT)	
	23	2	**324-3400**	1	LEVER AS-CONTROL	
	24	2	**330-9189**	1	PLUG	
	25	2	**334-0732**	1	ARM (FRONT HOUSING)	
	26	2	**335-5578**	1	BRACKET	
	27	2	**364-7487**	1	SPRING	
M	28	2	**369-4486**	2	BOLT (M6X1X35-MM)	
	29	2	**390-3729**	1	LEVER-CONTROL	
	30	2	**390-3731**	1	SHAFT	
	31	2	**423-7724**	1	GASKET	
C	32	2	**503-9707**	1	CAP	
	33	1	**465-6710**	1	HOUSING	
	34	2	**336-2965**	1	SPRING	
C	35	2	**503-9731**	1	SHROUD	
C	36	2	**502-5421**	1	PIN	

C - CHANGE FROM PREVIOUS TYPE
M - METRIC PART

508-5628 **HOUSING GP-FRONT (**contd.**)** **i07445398**

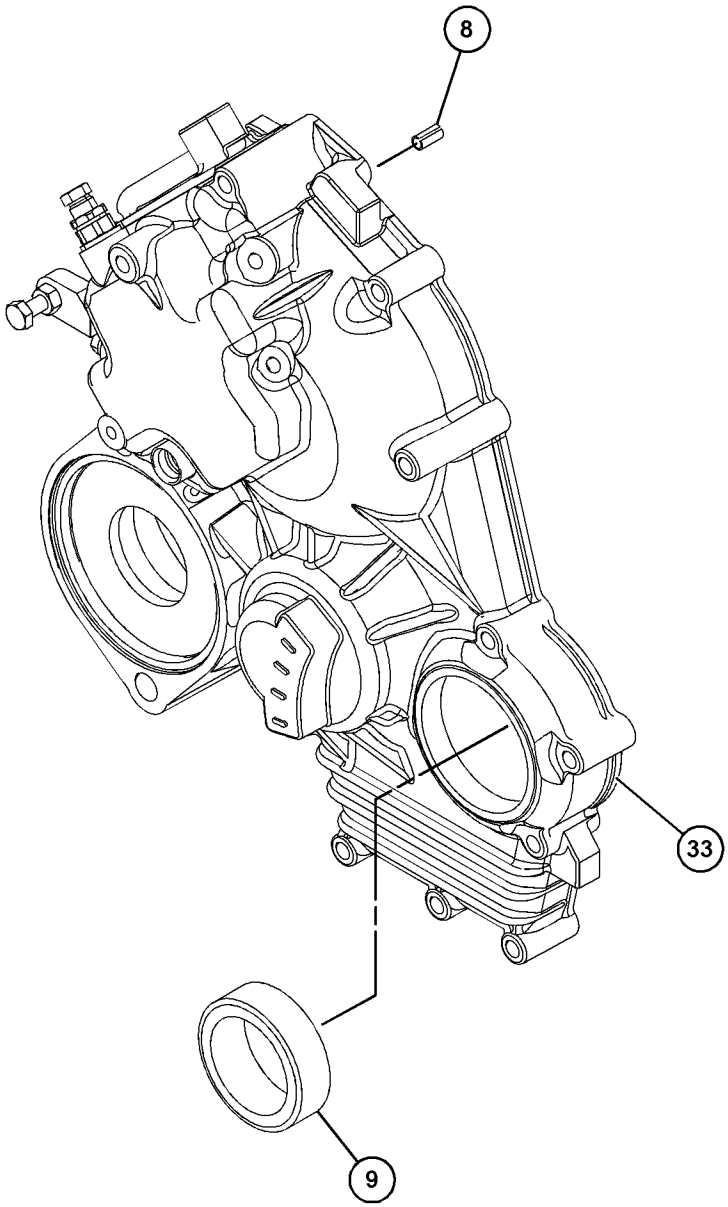

GRAPHIC #1 g06125416

508-5628 **HOUSING GP-FRONT (**contd.**)** **i07445398**

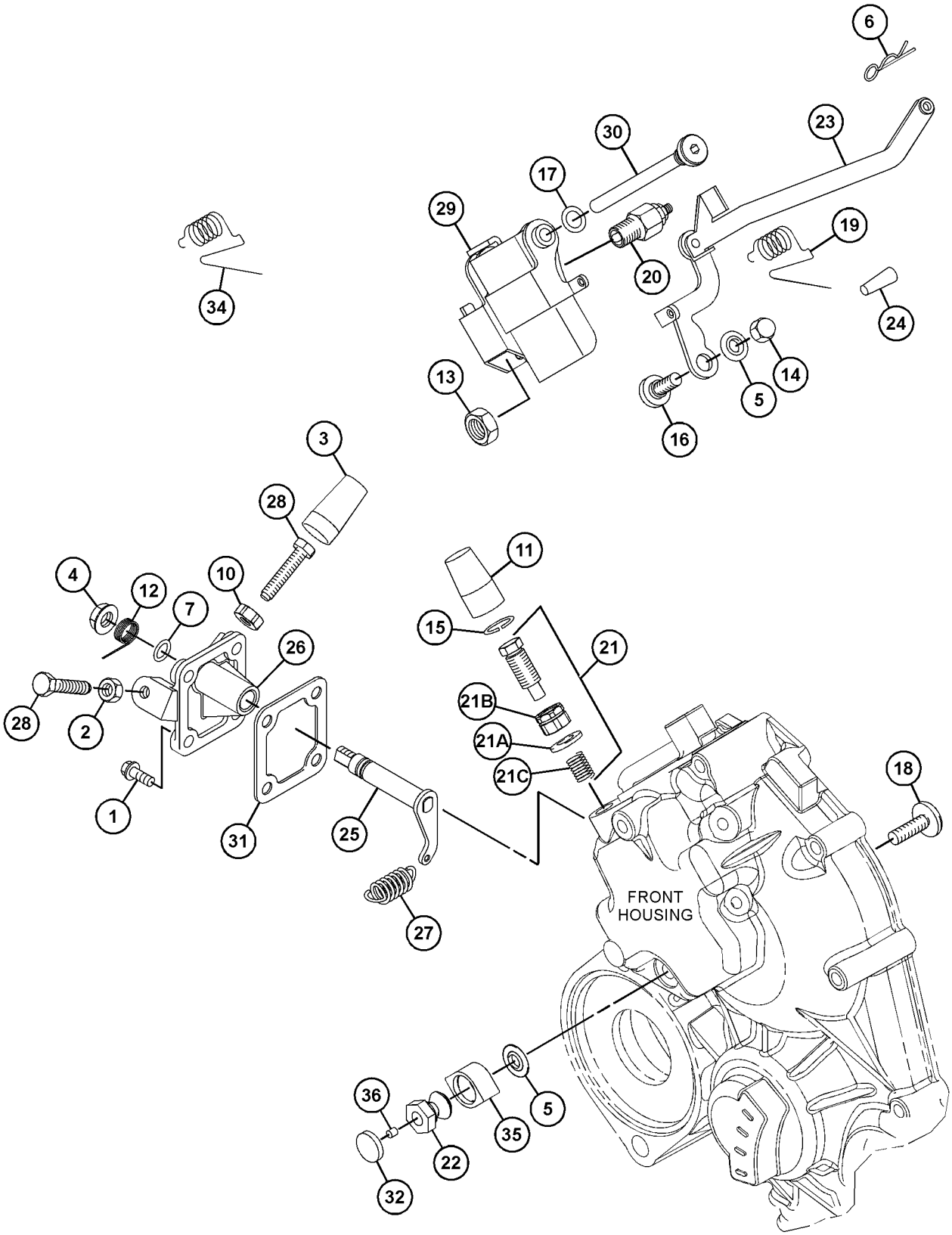

GRAPHIC #2 <END> g06243619

355-1393 KIT-FRONT GEAR

AN ATTACHMENT

SMCS-1204, 1212, 1234 **i07606315**

NOTE	PART NUMBER	QTY	PART NAME 1 2 3 4 5 6 (PRODUCT LEVEL)	SEE PAGE
	423-7723	1	GASKET	
	536-6619	1	GEAR AS-IDLER	
B	**160-4150**	1	SHIM (0.1-MM THK)	
B	**160-4151**	1	SHIM (0.15-MM THK)	
B	**160-4152**	1	SHIM (0.2-MM THK)	
B	**160-4153**	1	SHIM (0.5-MM THK)	

B - USE AS REQUIRED

<END>

320-9110 LIFTING GP-ENGINE

SMCS-1122 **i07532640**

NOTE	REF NO	GRAPHIC REF	PART NUMBER	QTY	PART NAME 1 2 3 4 5 6 (PRODUCT LEVEL)	SEE PAGE
	1	1	**370-6544**	2	PLATE-LIFTING	
BM	2	1	**6I-4200**	1	BOLT (M10X1.5X16-MM)	
BM	3	1	**515-3138**	1	BOLT-FLANGE HEAD (M10X1.5X20-MM)	

B - USE AS REQUIRED
M - METRIC PART

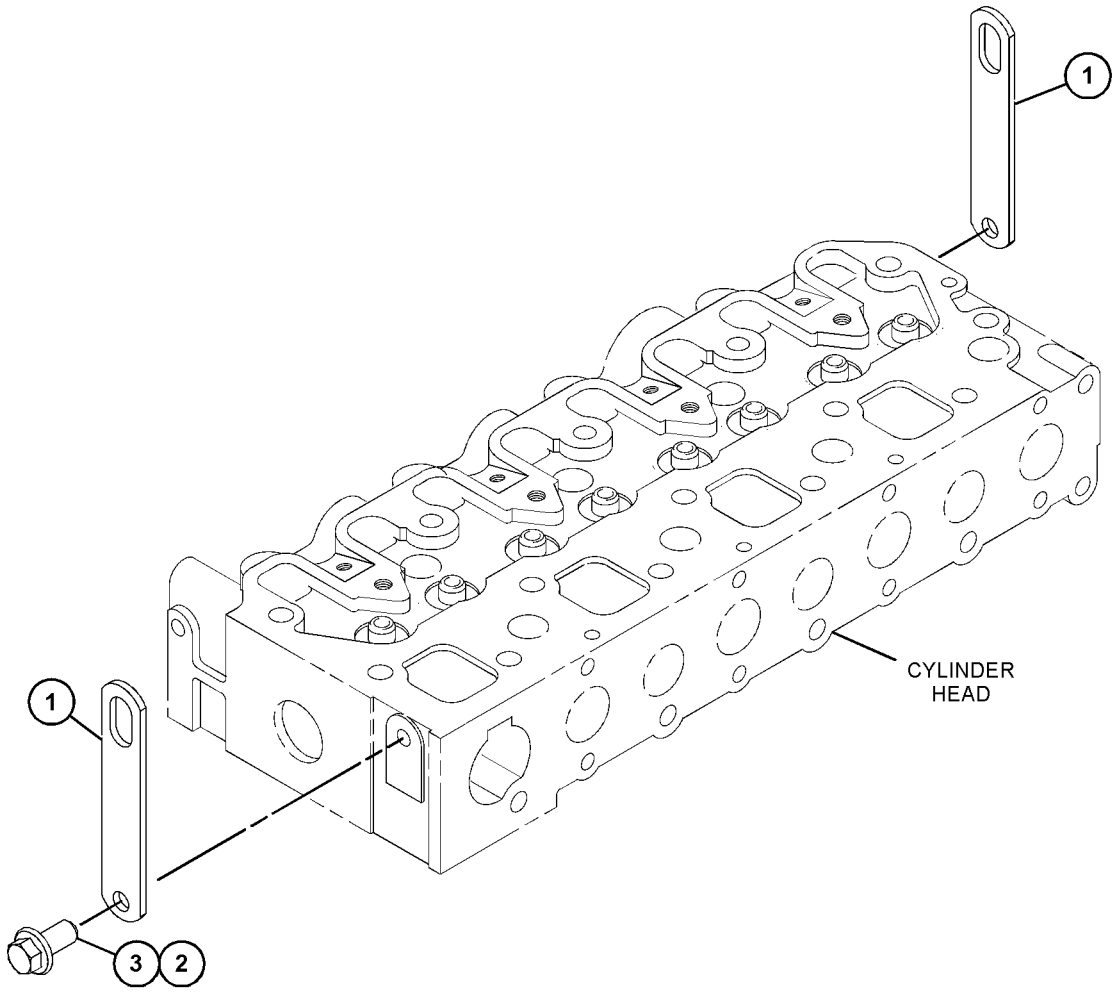

GRAPHIC #1 <END> g06386769

442-8532 LIFTING GP-ENGINE

PART OF 435-1654 ENGINE AR-PRIMARY

SMCS-1122 **i07425069**

NOTE	REF NO	GRAPHIC REF	PART NUMBER	QTY	PART NAME 1 2 3 4 5 6 (PRODUCT LEVEL)	SEE PAGE
M	1	1	**124-3815**	1	BOLT (M8X1.25X16-MM)	
	2	1	**370-6544**	2	PLATE-LIFTING	
BM	3	1	**6I-4200**	1	BOLT (M10X1.5X16-MM)	
BM	4	1	**515-3138**	1	BOLT-FLANGE HEAD (M10X1.5X20-MM)	

B - USE AS REQUIRED
M - METRIC PART

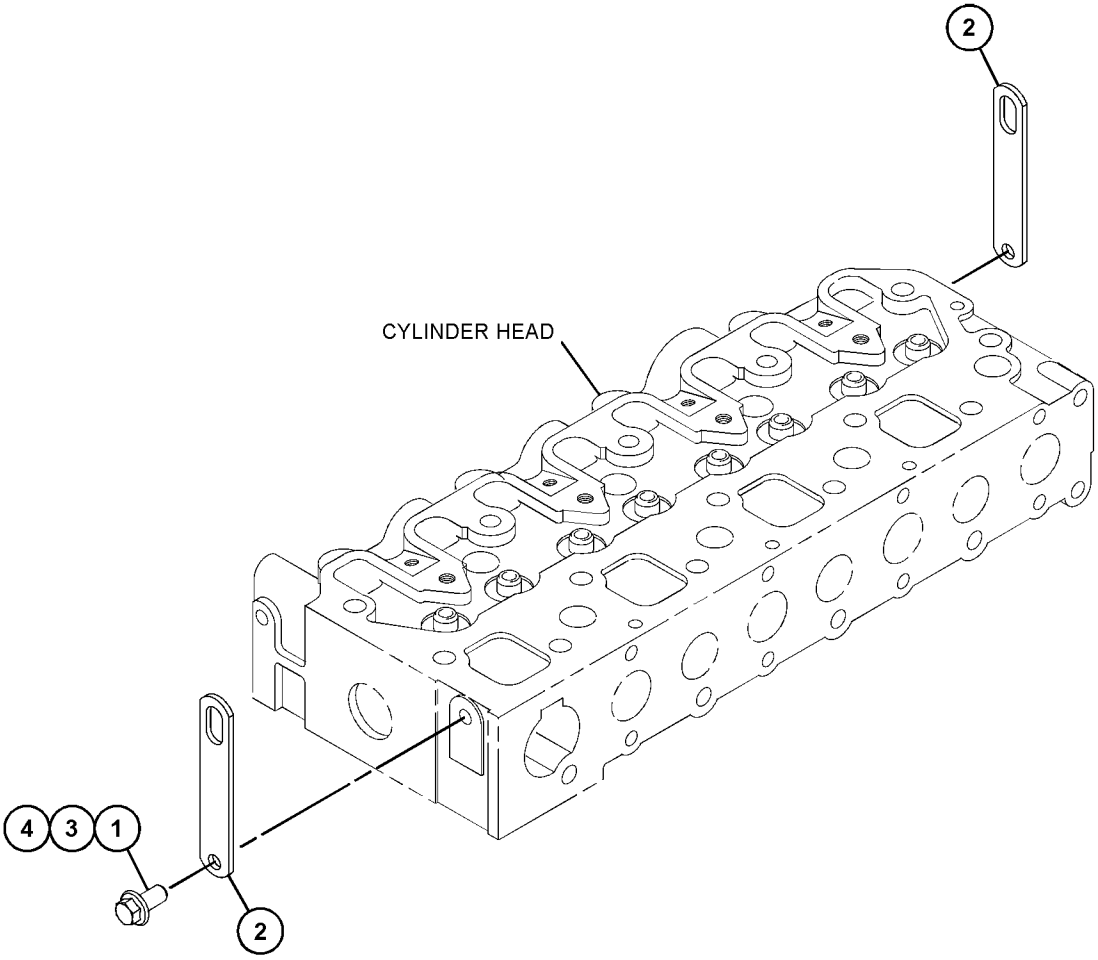

GRAPHIC #1 <END> g06345899

311-1112 PAN GP-OIL

PART OF 435-1654 ENGINE AR-PRIMARY

SMCS-1302 **i07519384**

NOTE	REF NO	GRAPHIC REF	PART NUMBER	QTY	PART NAME 1 2 3 4 5 6 (PRODUCT LEVEL)	SEE PAGE
M	1	1,2	**100-4841**	28	BOLT (M6X1X10-MM)	
	2	2	**153-6835**	1	SEAL-O-RING	
	3	1,2	**153-6838**	2	BOLT AS	
	4	1	**153-6841**	4	SEAL-O-RING	
CP	5	2	**425-6360**	1	STRAINER (ENGINE OIL)	
	6	2	**423-7722**	1	GASKET-OIL PAN	
	7	1	**229-5150**	1	GAUGE AS	
	8	1	**235-7123**	1	GAUGE AS-OIL LEVEL (DIPSTICK) (ENGINE)	
	9	2	**310-7063**	1	PAN-OIL	
CL	10	2	**325-9415**	1	TUBE-OIL SUCTION	
	11	1	**369-8010**	1	PLUG	

C - CHANGE FROM PREVIOUS TYPE
L - USED ONLY WITH 325-9416
M - METRIC PART
P - USED ONLY WITH 325-9415

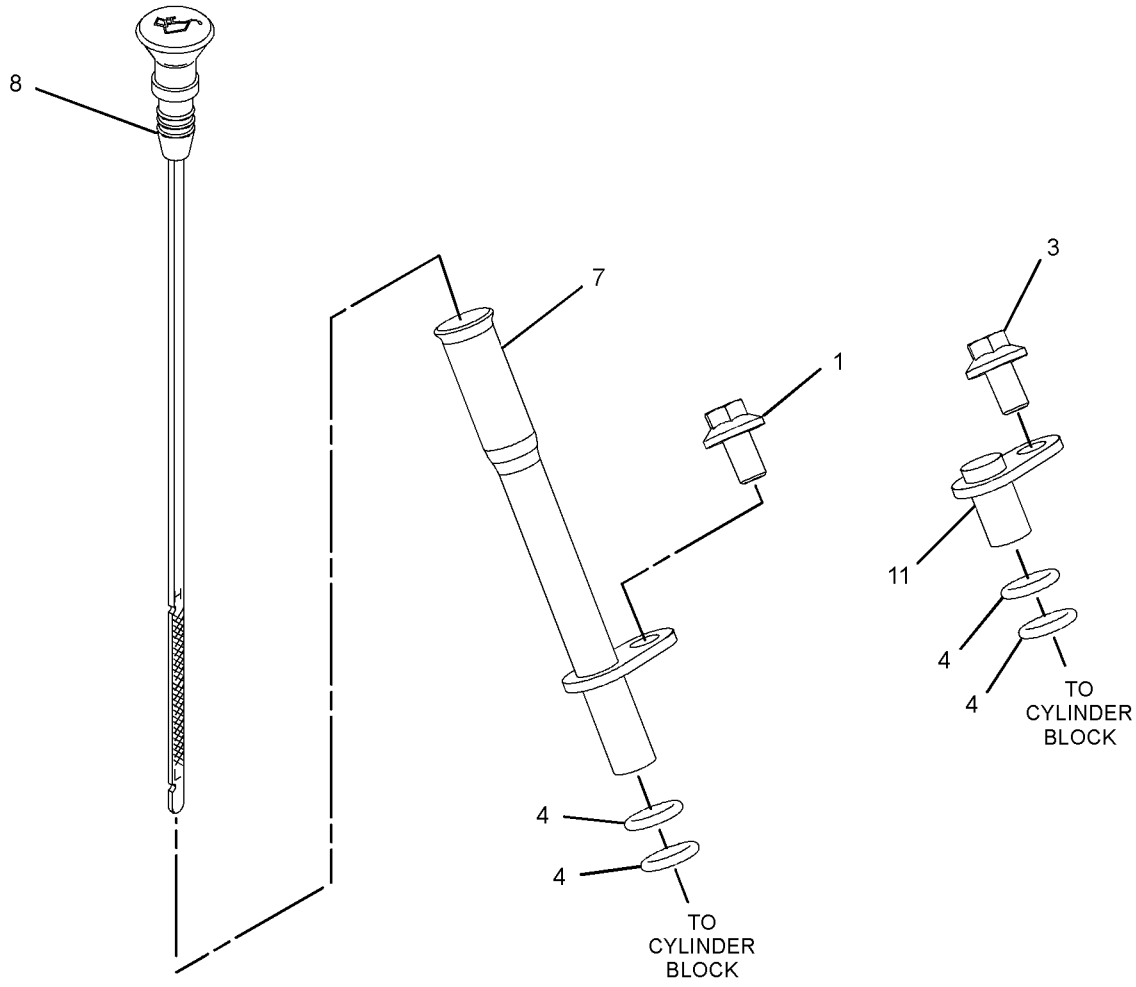

GRAPHIC #1 g06128478

311-1112 **PAN GP-OIL (**contd.**)** **i07519384**

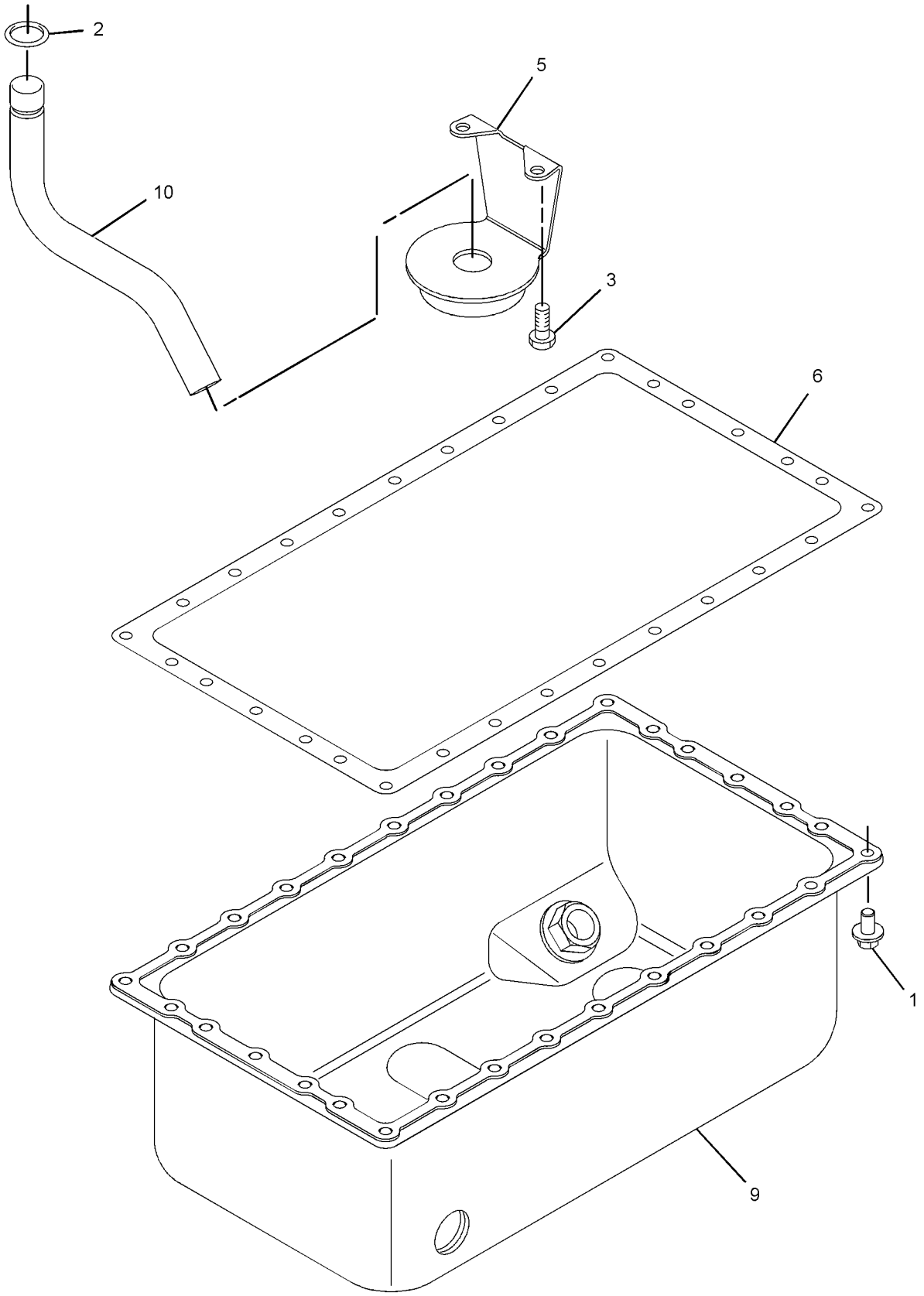

GRAPHIC #2 <END> g06128479

552-5813 PAN GP-OIL

SMCS-1302 **i07574942**

NOTE	REF NO	GRAPHIC REF	PART NUMBER	QTY	PART NAME 1 2 3 4 5 6 (PRODUCT LEVEL)	SEE PAGE
M	1	1,2	**100-4841**	28	BOLT (M6X1X10-MM)	
	2	2	**153-6835**	1	SEAL-O-RING	
	3	1,2	**153-6838**	2	BOLT AS	
	4	1	**153-6841**	4	SEAL-O-RING	
	5	1	**235-7123**	1	GAUGE AS-OIL LEVEL (DIPSTICK)	
	6	1	**369-8010**	1	PLUG	
	7	2	**423-7722**	1	GASKET-OIL PAN	
	8	2	**310-7063**	1	PAN-OIL	
	9	1	**229-5150**	1	GAUGE AS	
L	10	2	**325-9415**	1	TUBE-OIL SUCTION	
J	11	2	**425-6360**	1	STRAINER (ENGINE OIL)	

J - USED ONLY WITH 325-9415
L - USED ONLY WITH 325-9416
M - METRIC PART

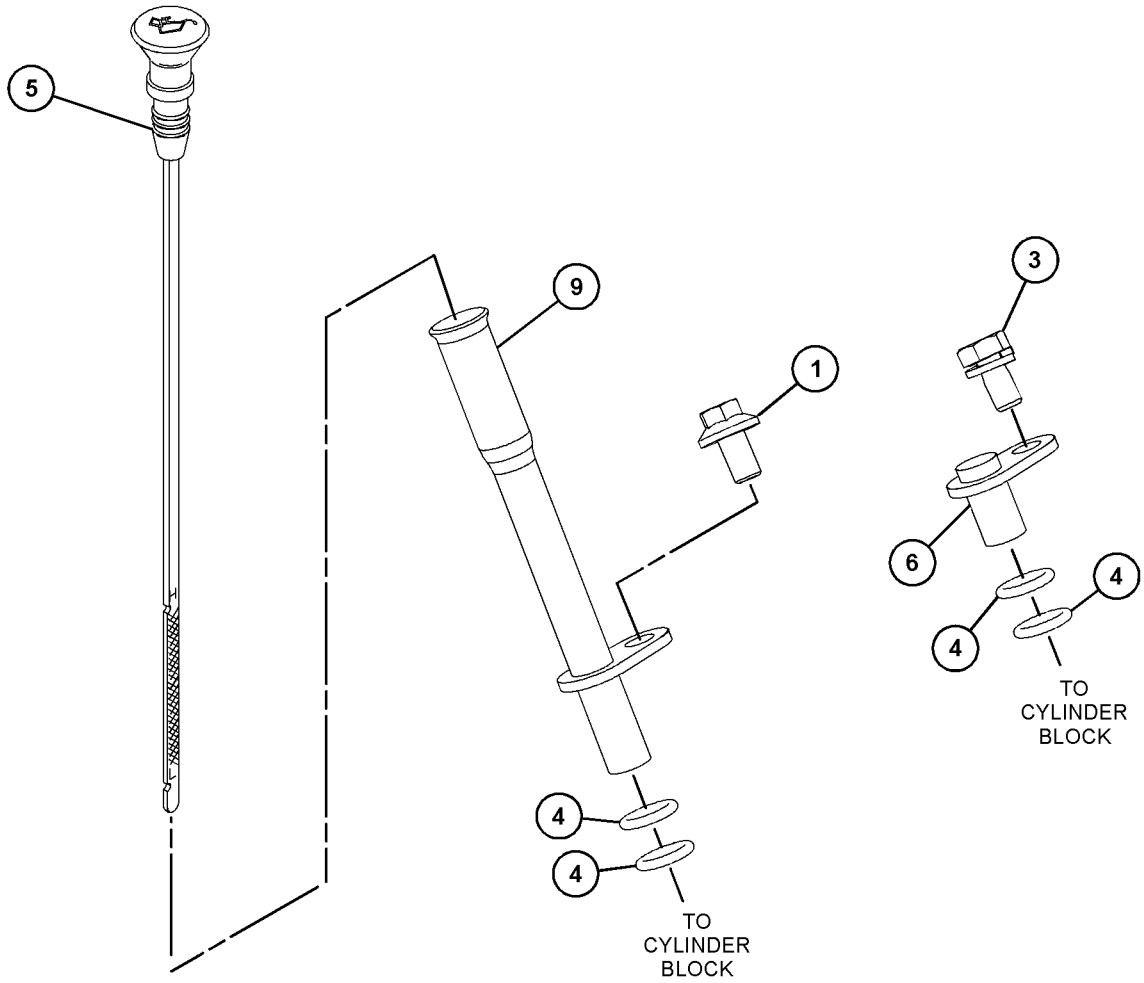

GRAPHIC #1 g06390023

552-5813 **PAN GP-OIL (**contd.**)** **i07574942**

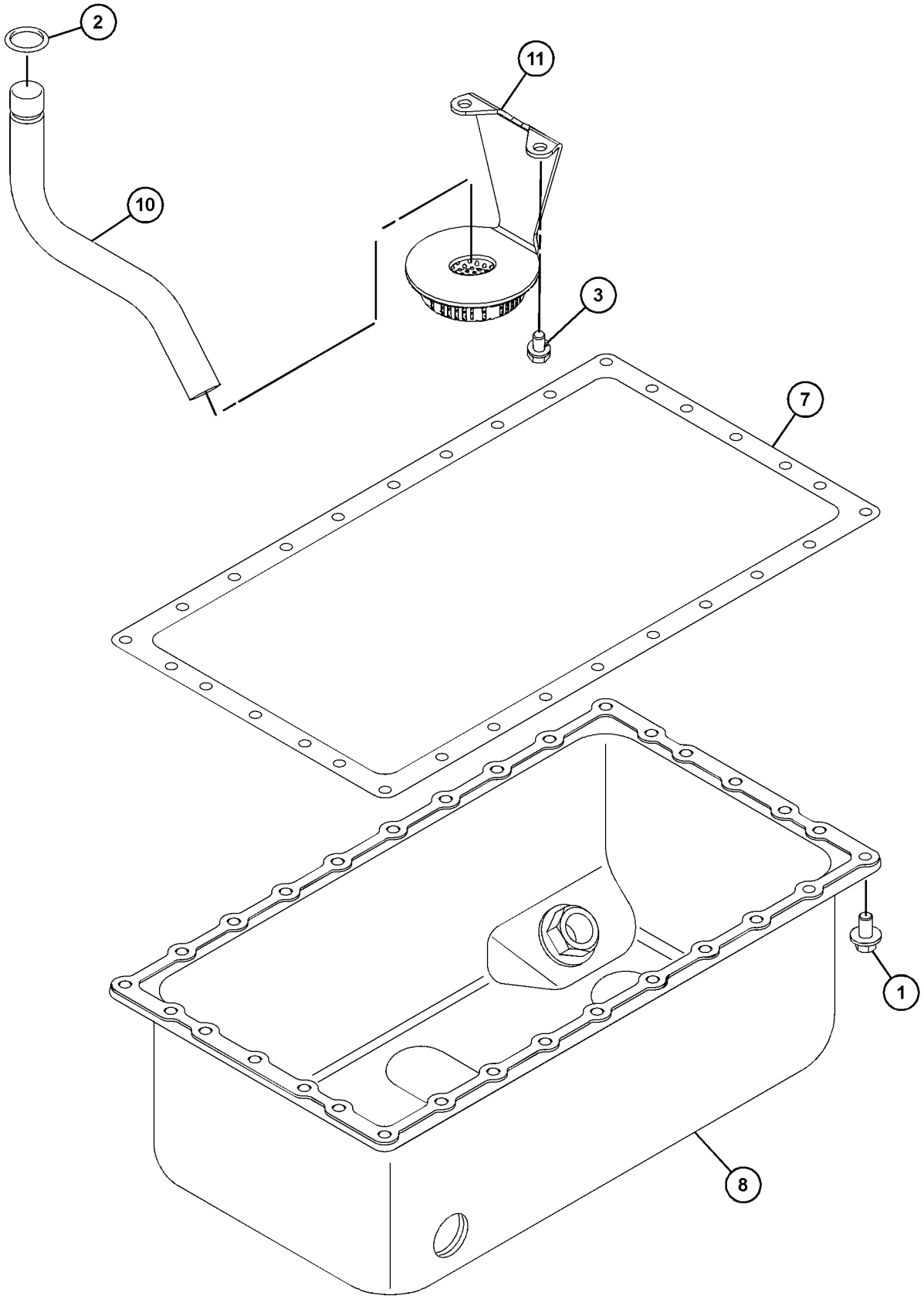

GRAPHIC #2 <END> g06390024

311-1101 PISTON & ROD GP

PART OF 435-1654 ENGINE AR-PRIMARY

SMCS-1225 **i07134246**

NOTE	REF NO	GRAPHIC REF	PART NUMBER	QTY	PART NAME 1 2 3 4 5 6 (PRODUCT LEVEL)	SEE PAGE
	1	1	**154-0873**	3	PIN	
	2	1	**154-0874**	6	RING-RETAINING (INTERNAL)	
	3	1	**156-6980**	3	ROD AS-CONNECTING	
					(EACH INCLUDES)	
	3A	1	**154-0869**	1	BUSHING	
M	3B	1	**154-0870**	2	BOLT (M10X1.25X57.5-MM)	
M	3C	1	**154-0871**	2	NUT (M10X1.25X10-MM)	
	4	1	**515-3484**	3	PISTON AS	
					(EACH INCLUDES)	
	4A	1	**217-1456**	1	KIT-PISTON RING	

M - METRIC PART

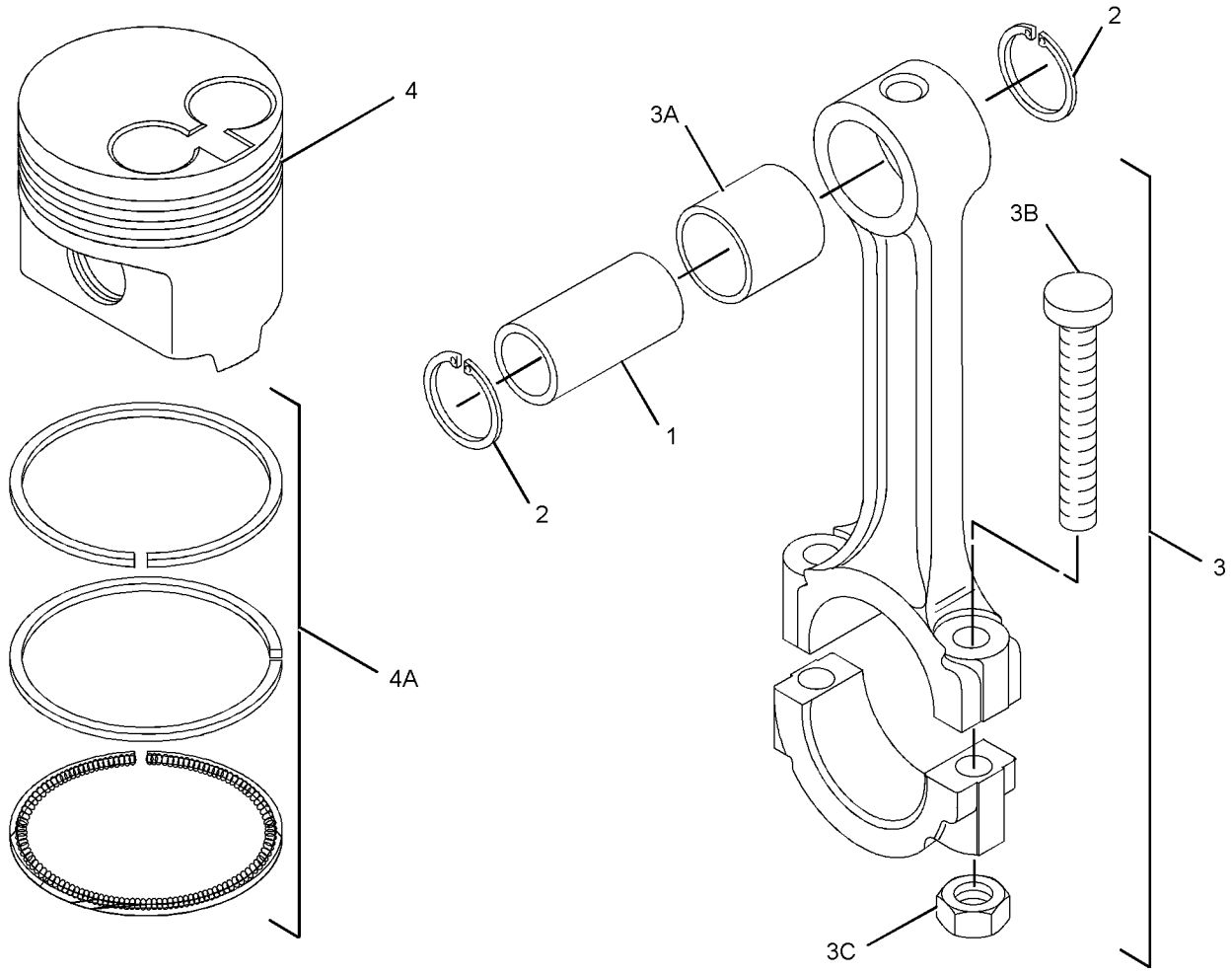

GRAPHIC #1 <END> g01412457

309-6720 PLUG GP-OIL PAN

PART OF 435-1654 ENGINE AR-PRIMARY

SMCS-1302 **i05401225**

NOTE	REF NO	GRAPHIC REF	PART NUMBER	QTY	PART NAME 1 2 3 4 5 6 (PRODUCT LEVEL)	SEE PAGE
	1	1	**153-6412**	2	WASHER	
	2	1	**423-6224**	2	PLUG-DRAIN (ENGINE OIL PAN)	

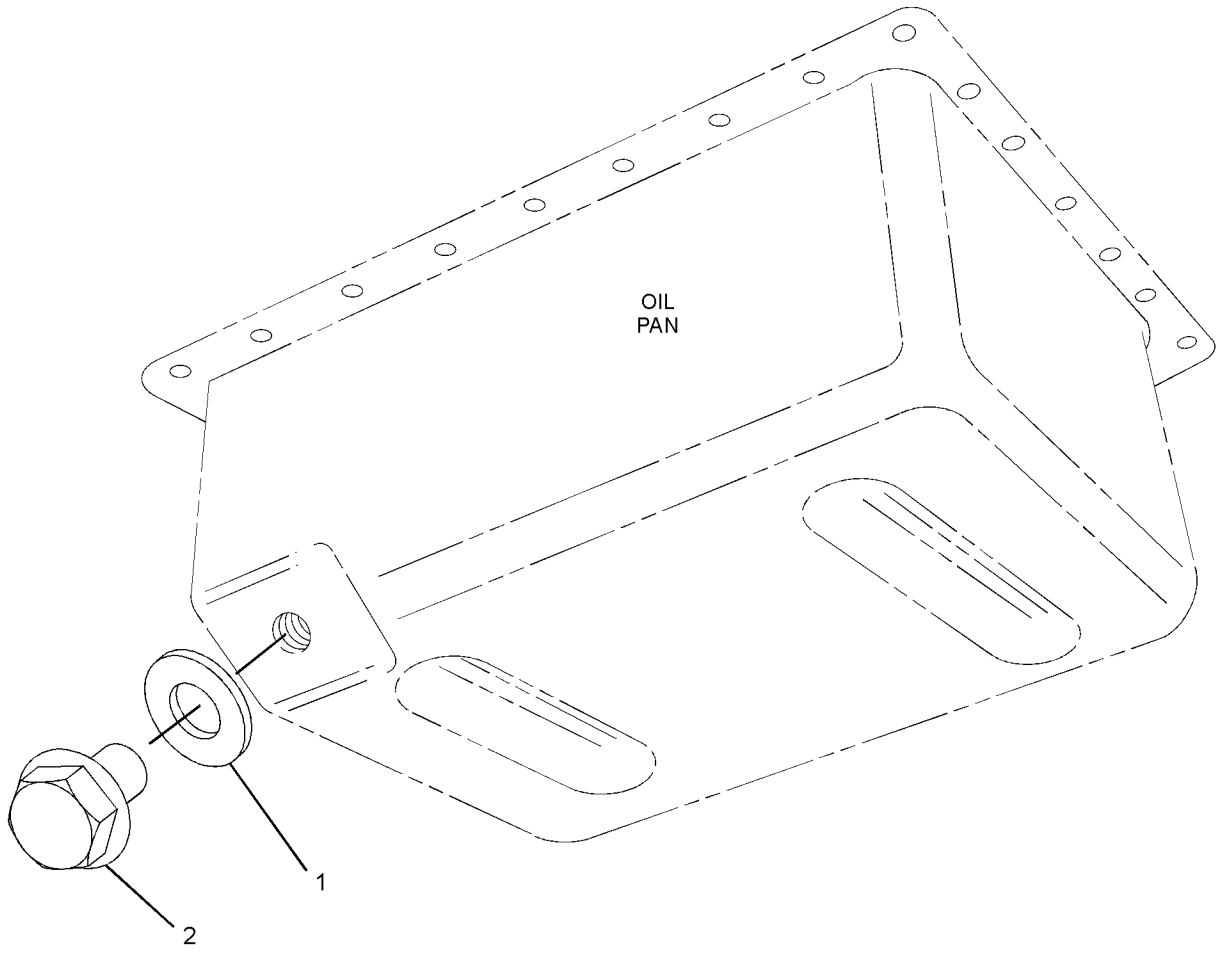

GRAPHIC #1 <END> g03428832

311-1114 PULLEY GP-CRANKSHAFT

PART OF 435-1654 ENGINE AR-PRIMARY

SMCS-1205 **i06097179**

NOTE	REF NO	GRAPHIC REF	PART NUMBER	QTY	PART NAME 1 2 3 4 5 6 (PRODUCT LEVEL)	SEE PAGE
	1	1	**153-6492**	1	KEY-WOODRUFF	
M	2	1	**154-1880**	1	NUT (M24X1.5-THD)	
	3	1	**324-7849**	1	PULLEY-CRANKSHAFT	

M - METRIC PART

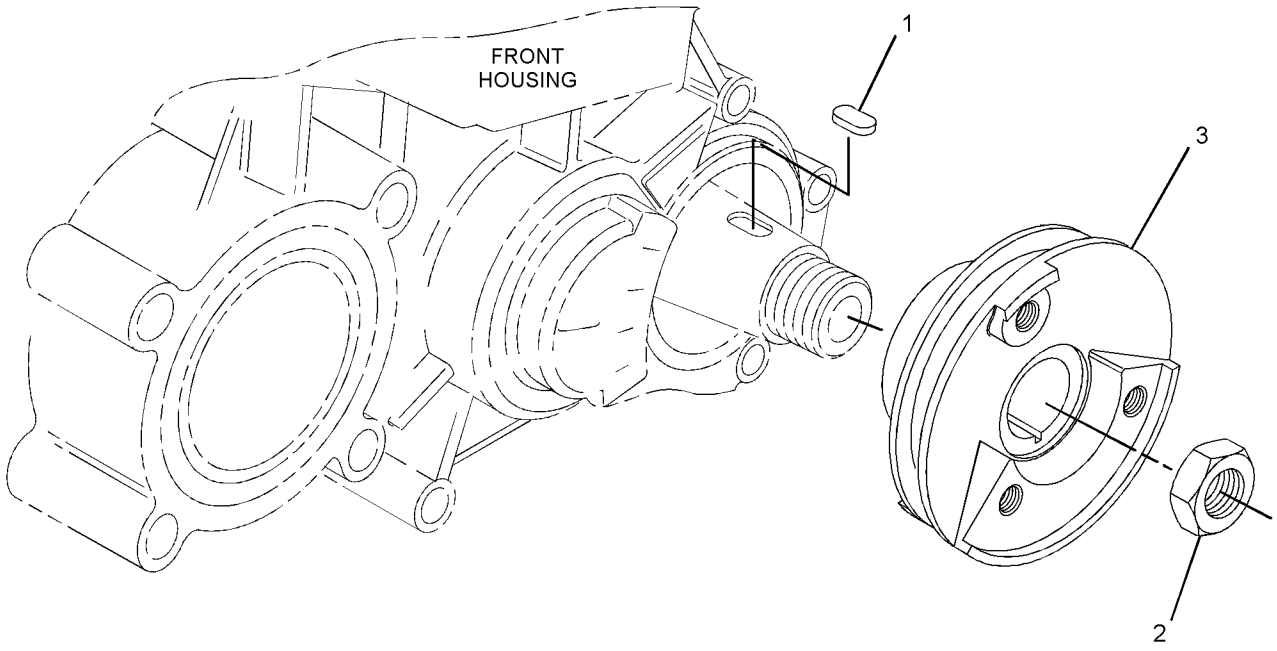

GRAPHIC #1 <END> g01725155

311-1111 PULLEY GP-FAN

SMCS-1384 **i07577285**

NOTE	REF NO	GRAPHIC REF	PART NUMBER	QTY	PART NAME 1 2 3 4 5 6 (PRODUCT LEVEL)	SEE PAGE
	1	1	**483-3937**	1	PULLEY-FAN	

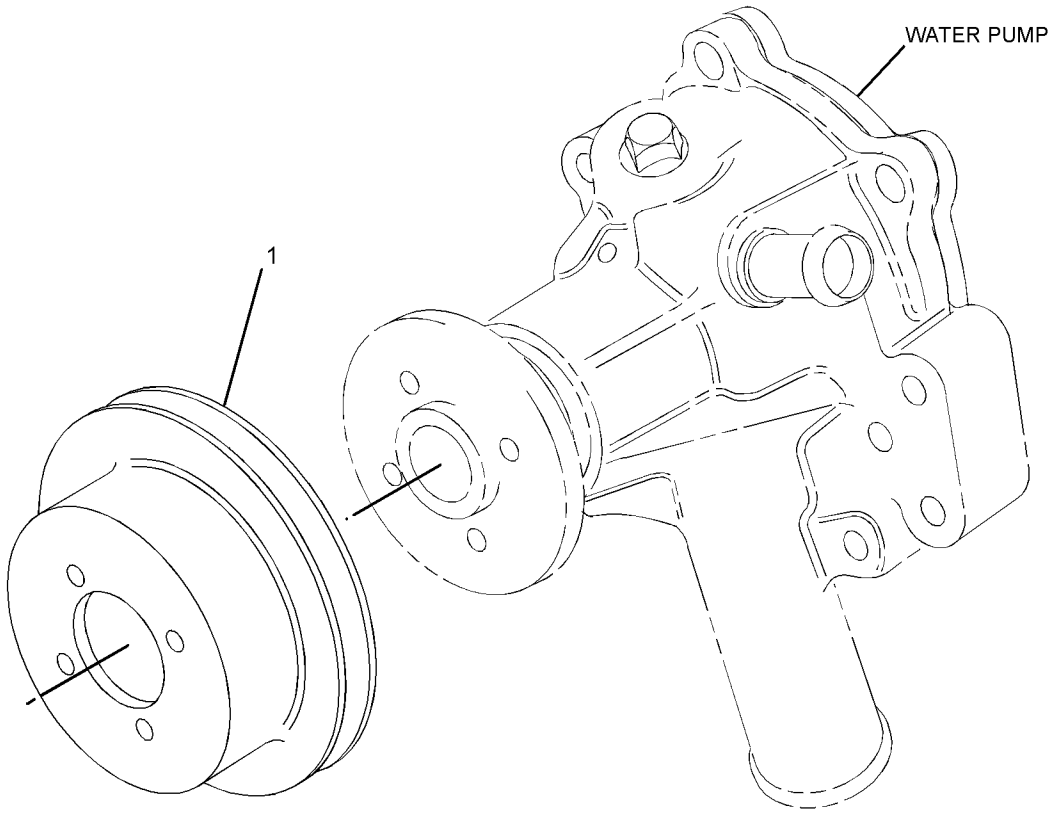

GRAPHIC #1 <END> g01412305

322-1392 PULLEY GP-FAN

SMCS-1384 **i07573688**

NOTE	REF NO	GRAPHIC REF	PART NUMBER	QTY	PART NAME 1 2 3 4 5 6 (PRODUCT LEVEL)	SEE PAGE
	1	1	**483-3939**	1	PULLEY-FAN	

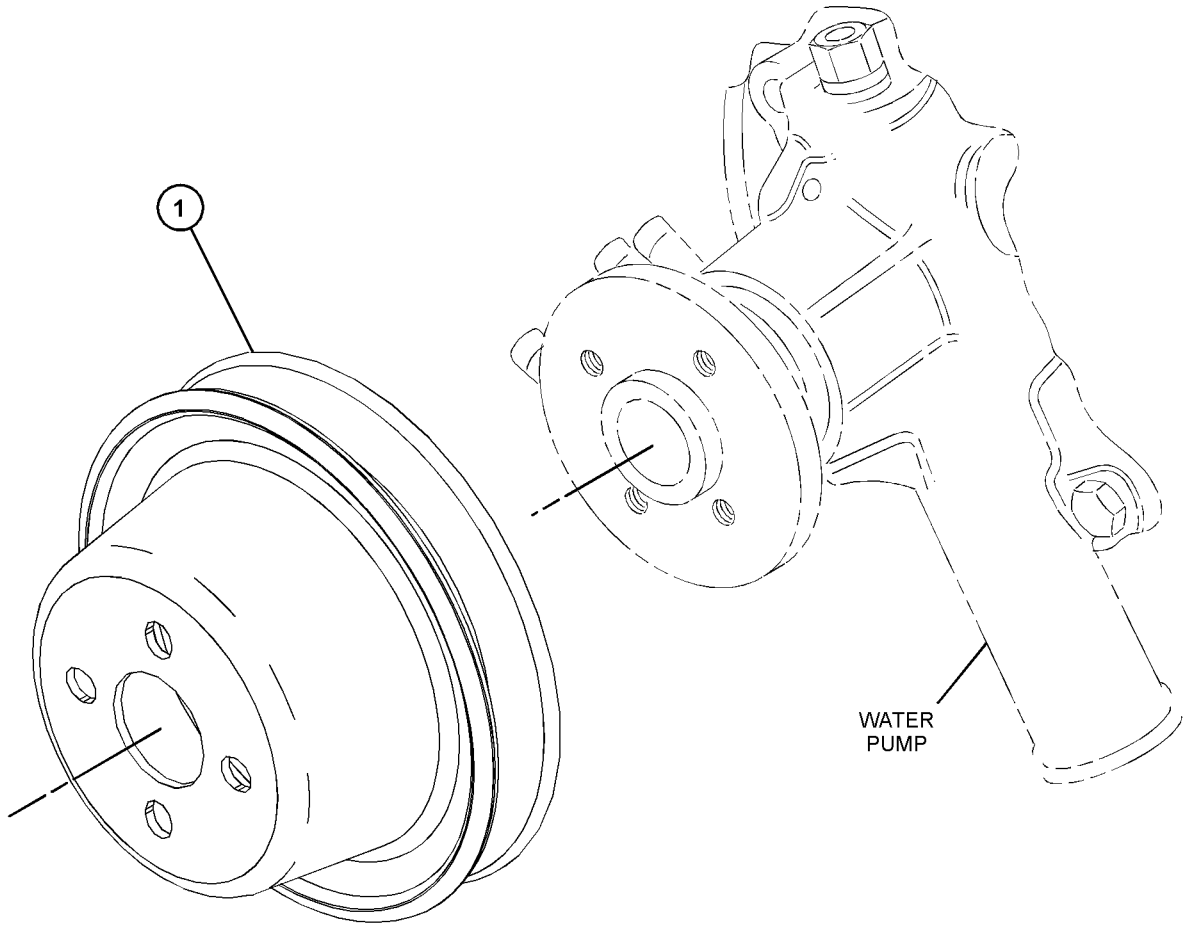

GRAPHIC #1 <END> g06386767

311-1160 ROCKER ARM GP

PART OF 311-1103 VALVE MECHANISM GP

SMCS-1123 **i03393640**

NOTE	REF NO	GRAPHIC REF	PART NUMBER	QTY	PART NAME 1 2 3 4 5 6 (PRODUCT LEVEL)	SEE PAGE
	1	1	**153-5587**	6	SCREW-ADJUSTMENT	
M	2	1	**153-5590**	6	NUT (M7X1-THD)	
	3	1	**153-6835**	1	SEAL-O-RING	
	4	1	**154-1240**	3	LEVER (RH)	
	5	1	**154-1241**	3	LEVER (LH)	
	6	1	**154-1242**	2	SPRING	
	7	1	**154-1243**	4	WASHER (15.2X21X0.5-MM THK)	
	8	1	**235-6984**	1	SHAFT-ROCKER ARM	

M - METRIC PART

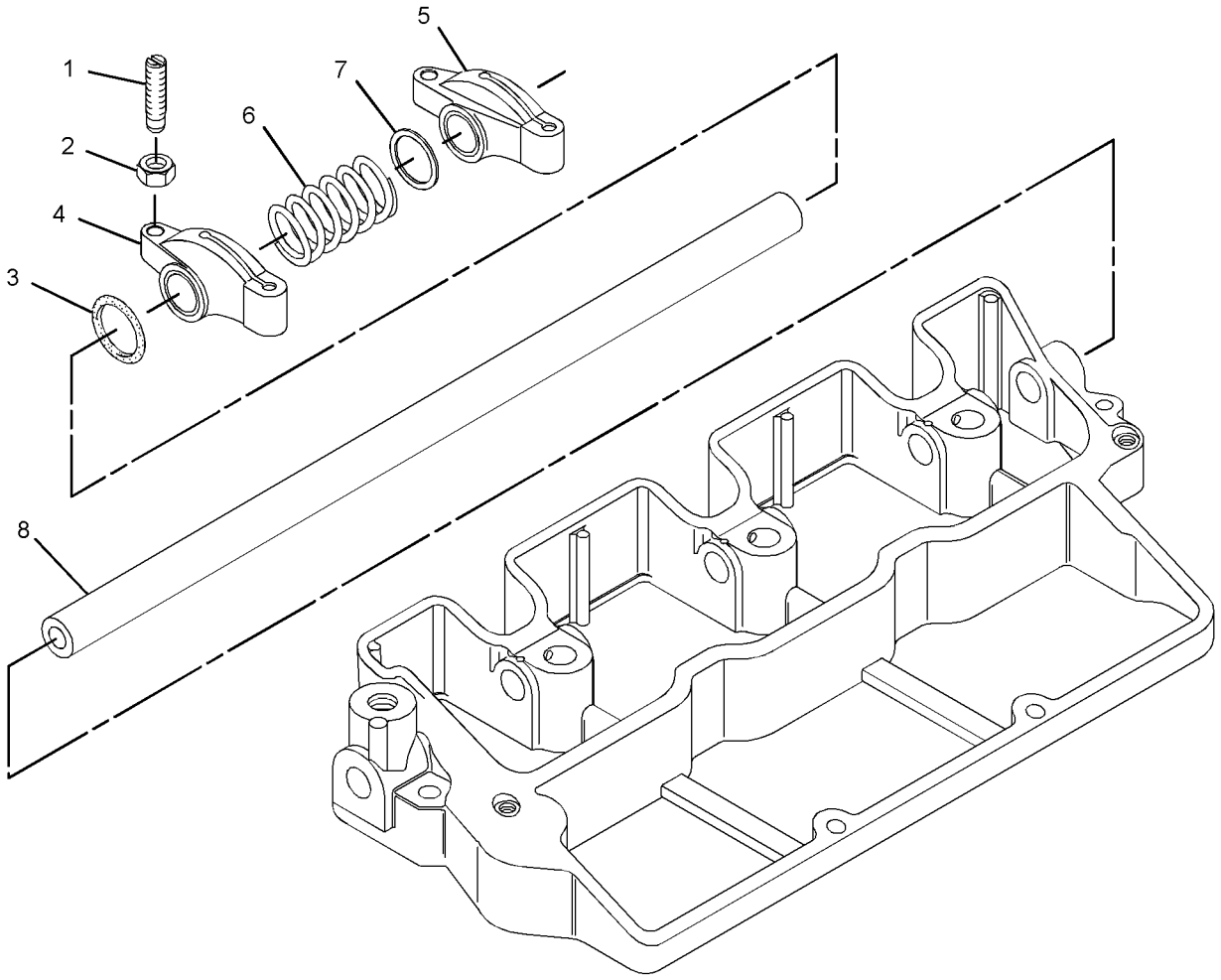

GRAPHIC #1 <END> g01413170

311-1121 V-BELT GP

SMCS-1357 **i04905119**

NOTE	REF NO	GRAPHIC REF	PART NUMBER	QTY	PART NAME 1 2 3 4 5 6 (PRODUCT LEVEL)	SEE PAGE
	1	1	**162-2468**	1	V-BELT (WATER PUMP)	

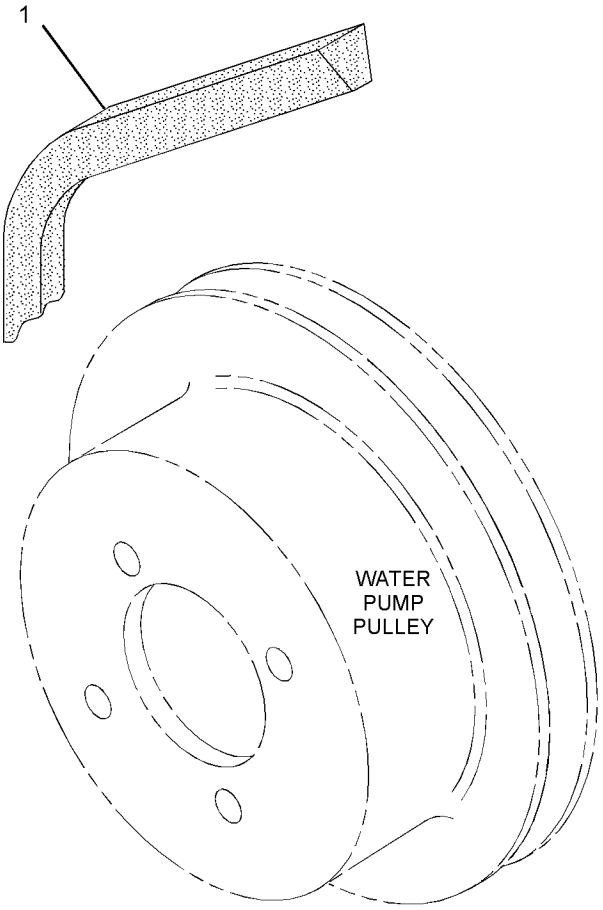

GRAPHIC #1 <END> g01407842

322-0886 V-BELT GP

SMCS-1357 **i03393394**

NOTE	REF NO	GRAPHIC REF	PART NUMBER	QTY	PART NAME 1 2 3 4 5 6 (PRODUCT LEVEL)	SEE PAGE
	1	1	**292-9620**	1	V-BELT (WATER PUMP)	

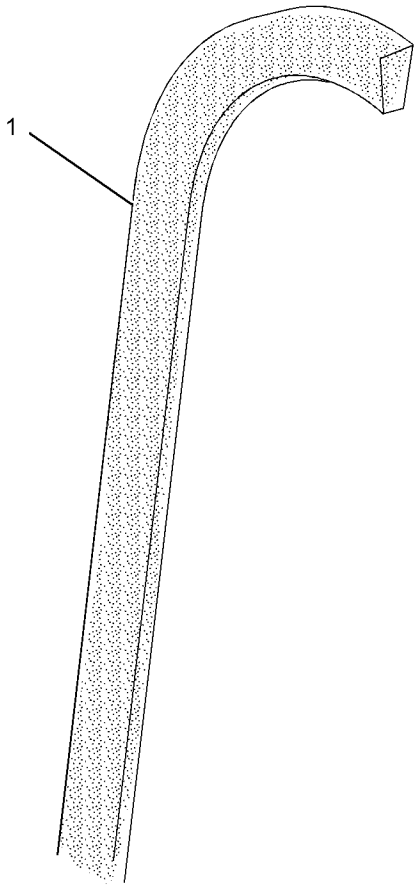

GRAPHIC #1 <END> g01448298

311-1103 VALVE MECHANISM GP

PART OF 435-1654 ENGINE AR-PRIMARY

SMCS-1102, 1121, 1123, 1209 **i07561694**

NOTE	REF NO	GRAPHIC REF	PART NUMBER	QTY	PART NAME 1 2 3 4 5 6 (PRODUCT LEVEL)	SEE PAGE
	1	1	**153-5961**	2	BOLT AS	
M	2	1	**153-7988**	3	NUT (M10X1.25-THD)	
M	3	1	**154-1246**	3	STUD (M10X1.5X95-MM)	
	4	1	**438-9109**	6	TAPPET	
	5	1	**528-6883**	6	PUSHROD AS	
	6	1	**447-5255**	1	SEAL	
Y	7	1	**311-1160**	1	ROCKER ARM GP	60

M - METRIC PART
Y - SEPARATE ILLUSTRATION

311-1103 **VALVE MECHANISM GP (**contd.**)** **i07561694**

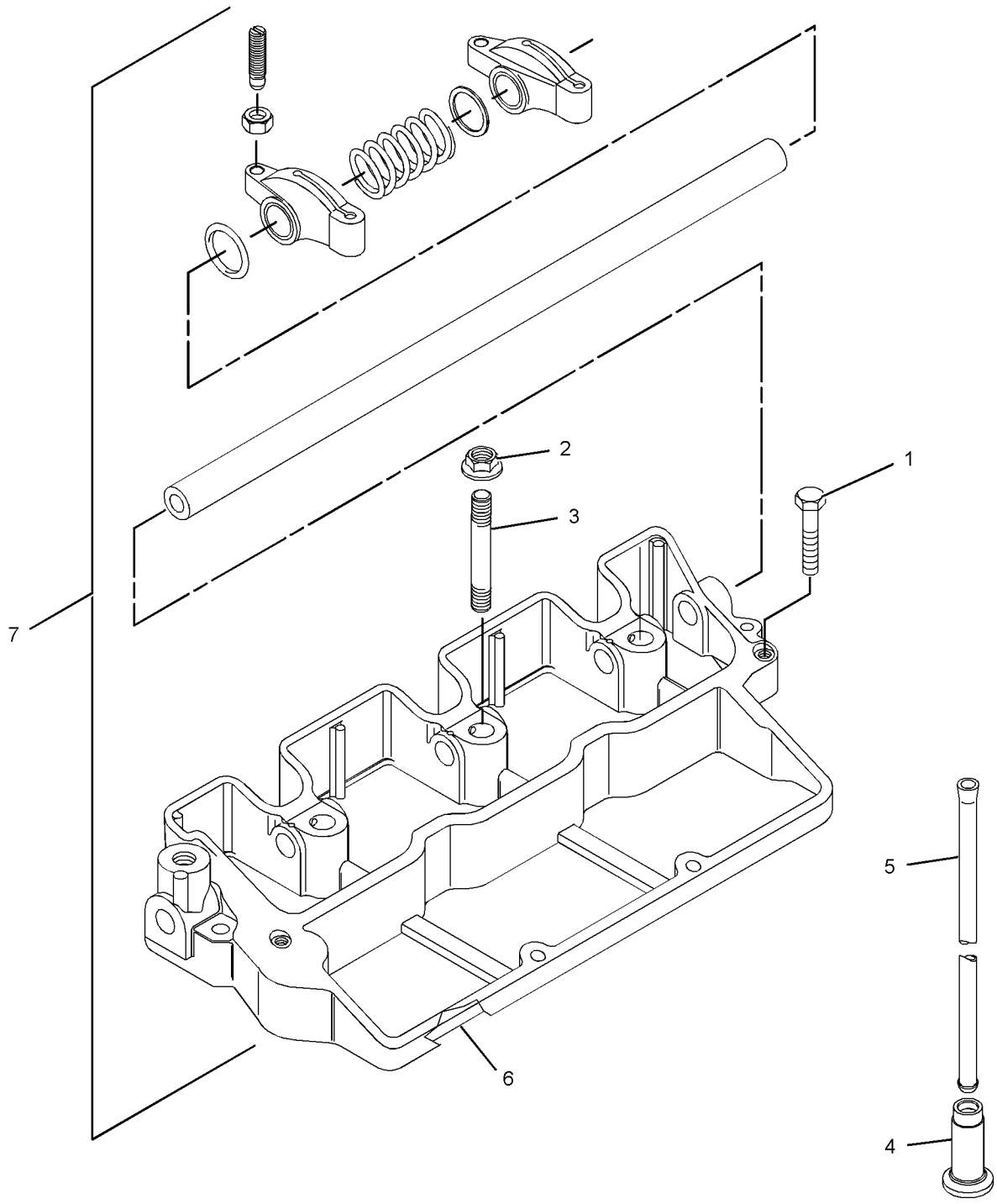

GRAPHIC #1 <END> g03415927

311-1113 FILLER GP-ENGINE OIL

PART OF 435-1654 ENGINE AR-PRIMARY

SMCS-1316 **i07747994**

NOTE	REF NO	GRAPHIC REF	PART NUMBER	QTY	PART NAME 1 2 3 4 5 6 (PRODUCT LEVEL)	SEE PAGE
	1	1	**553-4377**	1	SEAL-O-RING (ENGINE OIL FILL CAP)	
	2	1	**217-7358**	1	CAP-OIL FILLER (ENGINE)	
	3	1	**553-4376**	1	SEAL-O-RING (ENGINE OIL FILL CAP)	
	4	1	**334-0272**	1	PLUG-OIL FILLER (ENGINE)	
	5	1	**481-1650**	1	GASKET	
	6	1	**183-4323**	1	COVER	
	7	1	**153-6838**	2	BOLT AS	

311-1113 **FILLER GP-ENGINE OIL (**contd.**)** **i07747994**

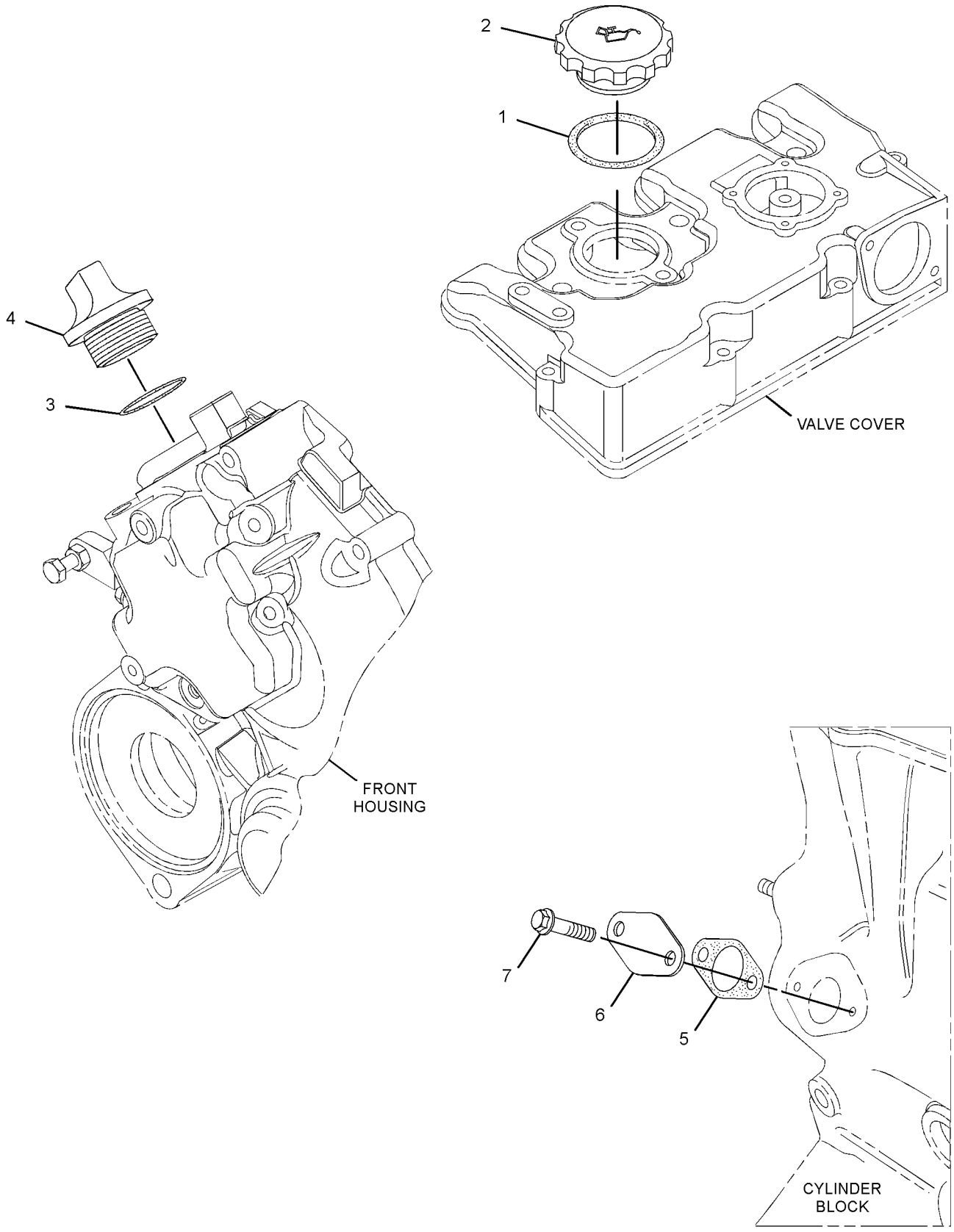

GRAPHIC #1 <END> g02712709

365-0485 FILLER GP-ENGINE OIL

SMCS-1316 **i07747987**

NOTE	REF NO	GRAPHIC REF	PART NUMBER	QTY	PART NAME 1 2 3 4 5 6 (PRODUCT LEVEL)	SEE PAGE
	1	1	**553-4377**	1	SEAL-O-RING (ENGINE OIL FILL CAP)	
	2	1	**217-7358**	1	CAP-OIL FILLER (ENGINE)	
	3	1	**553-4376**	1	SEAL-O-RING (ENGINE OIL FILLER)	
	4	1	**334-0272**	1	PLUG-OIL FILLER (ENGINE OIL)	

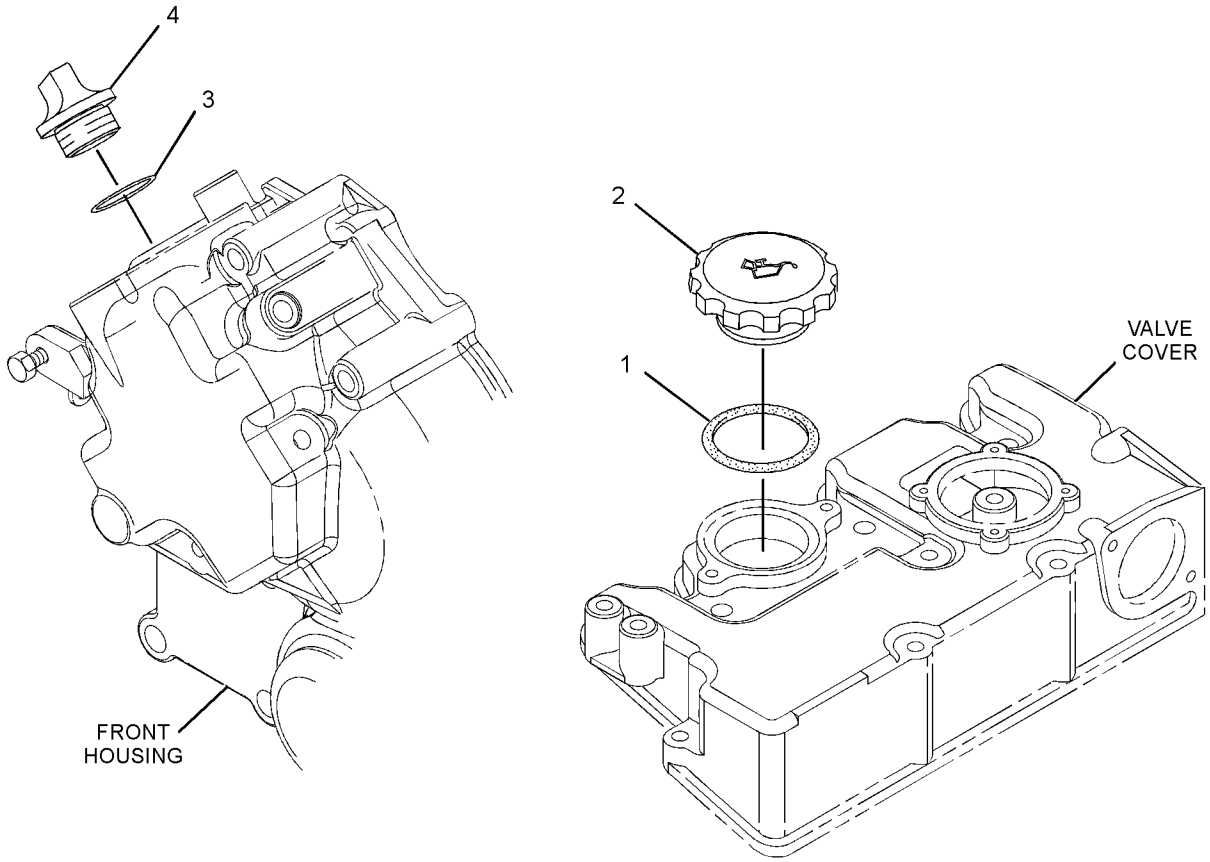

GRAPHIC #1 <END> g01388692

419-6687 FILLER GP-ENGINE OIL

SMCS-1316 **i07749026**

NOTE	REF NO	GRAPHIC REF	PART NUMBER	QTY	PART NAME 1 2 3 4 5 6 (PRODUCT LEVEL)	SEE PAGE
	1	1	**553-4376**	1	SEAL-O-RING (ENGINE OIL FILLER)	
	2	1	**334-0272**	1	PLUG-OIL FILLER (ENGINE OIL)	

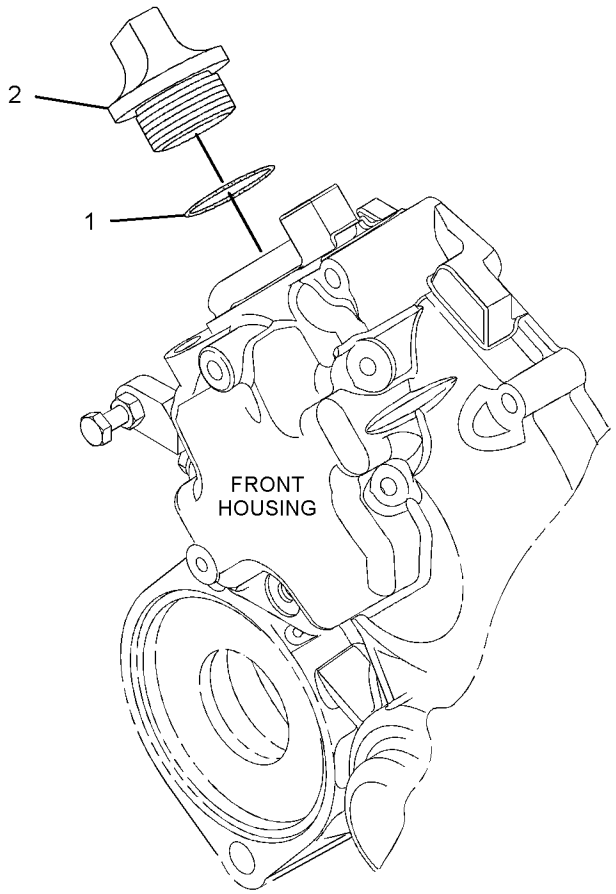

GRAPHIC #1 <END> g03644808

308-2298 FILTER GP-ENGINE OIL

PART OF 435-1654 ENGINE AR-PRIMARY

SMCS-1306, 1308 **i03384414**

NOTE	REF NO	GRAPHIC REF	PART NUMBER	QTY	PART NAME 1 2 3 4 5 6 (PRODUCT LEVEL)	SEE PAGE
	1	1	**220-1523**	1	FILTER AS-ENGINE OIL	

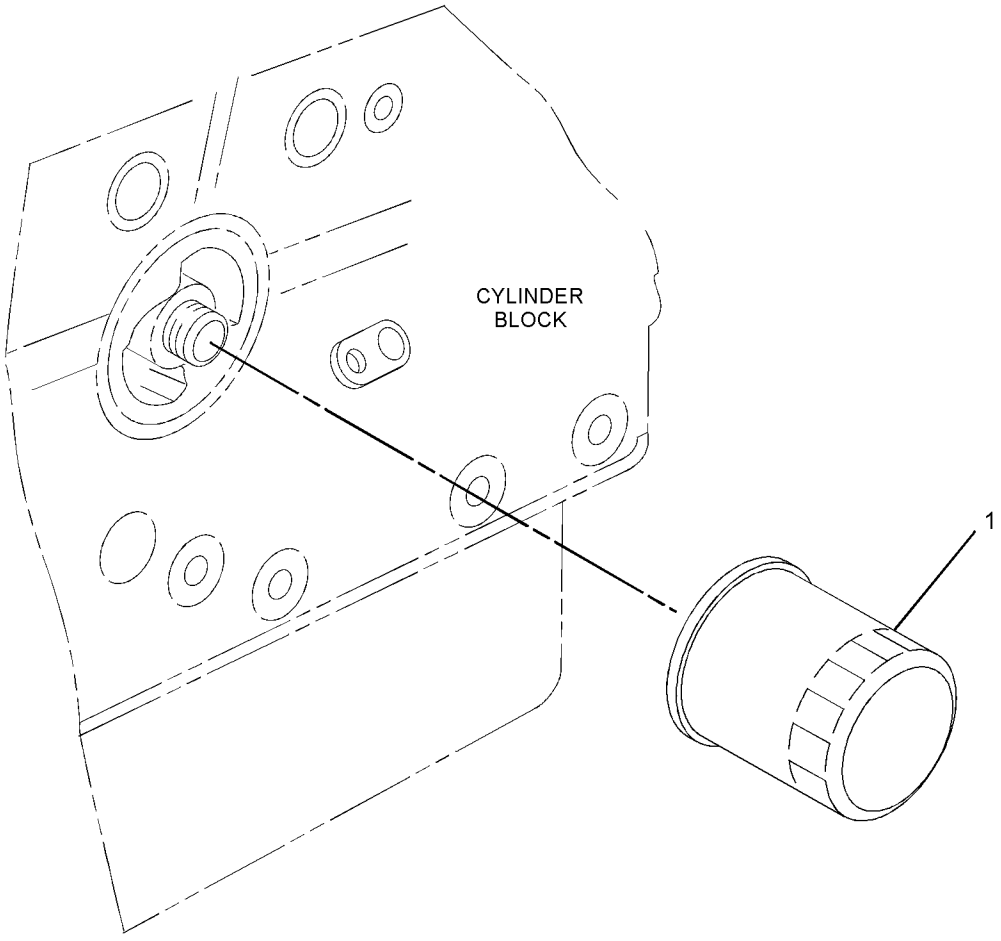

GRAPHIC #1 <END> g01389723

334-7293 LINES GP-ENGINE OIL

SMCS-1307 **i07000048**

NOTE	REF NO	GRAPHIC REF	PART NUMBER	QTY	PART NAME 1 2 3 4 5 6 (PRODUCT LEVEL)	SEE PAGE
	1	1	**127-8281**	1	CLIP	
	2	1	**334-7291**	1	CLIP-HOSE	
	3	1	**153-6879**	1	STUD-HOLLOW	
	4	1	**331-3872**	1	HOSE	
	5	1	**160-4826**	4	CLAMP-HOSE	
	6	1	**331-2590**	1	HOSE	

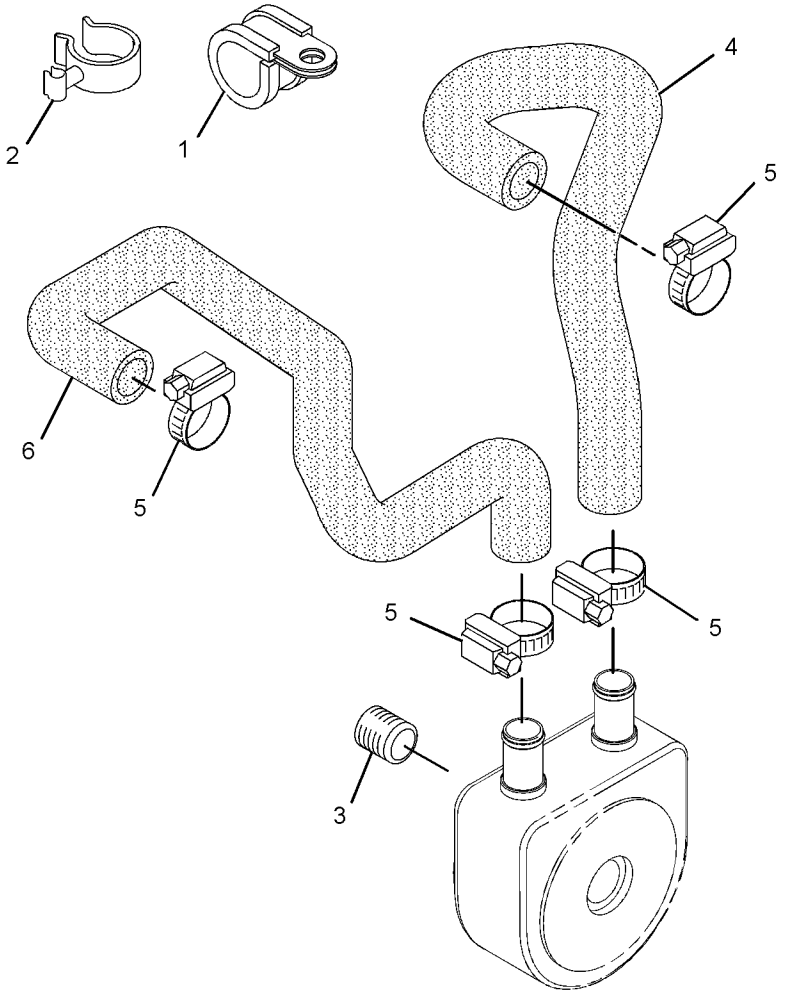

GRAPHIC #1 <END> g01964537

308-4735 MOUNTING GP-ENGINE OIL FILTER

PART OF 435-1654 ENGINE AR-PRIMARY

SMCS-1306, 1308 **i03384424**

NOTE	REF NO	GRAPHIC REF	PART NUMBER	QTY	PART NAME 1 2 3 4 5 6 (PRODUCT LEVEL)	SEE PAGE
	1	1	**153-6879**	1	STUD-HOLLOW	

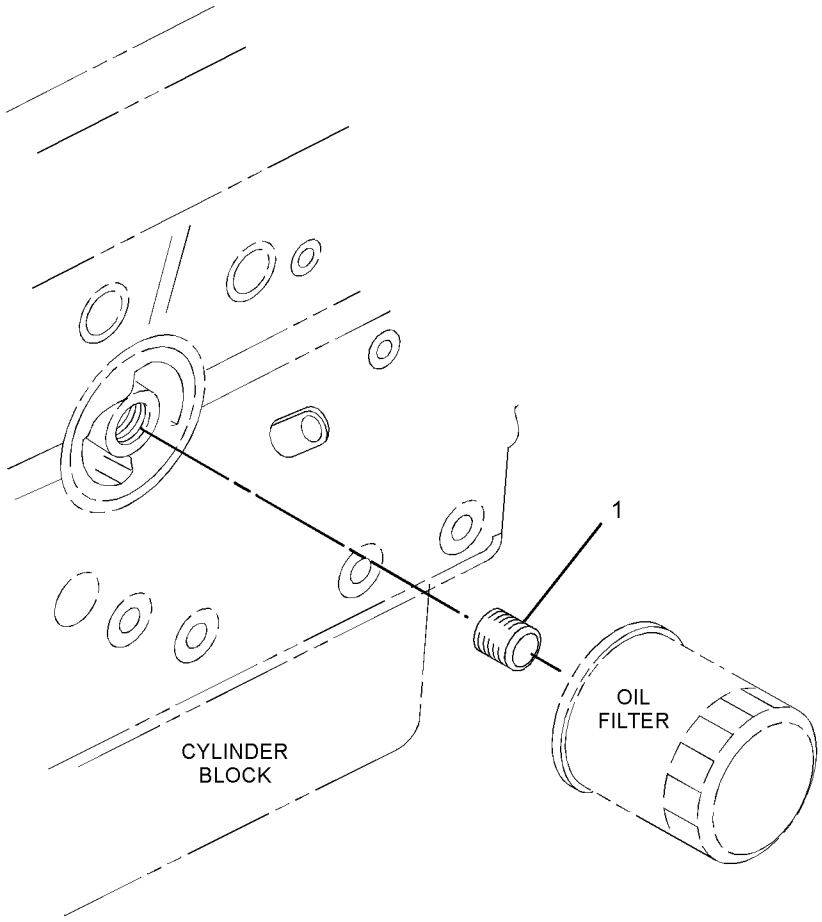

GRAPHIC #1 <END> g01355707

311-1104 PUMP GP-ENGINE OIL

PART OF 435-1654 ENGINE AR-PRIMARY

SMCS-1304, 1315 **i03691413**

NOTE	REF NO	GRAPHIC REF	PART NUMBER	QTY	PART NAME 1 2 3 4 5 6 (PRODUCT LEVEL)	SEE PAGE
	1	1	**153-5936**	2	WASHER (8.2X14.5X1-MM)	
	2	1	**153-6853**	1	SEAL-O-RING	
M	3	1	**153-6881**	1	BOLT (M8X1.25X18-MM)	
	4	1	**154-1942**	1	VALVE-RELIEF (ENGINE OIL PRESSURE)	
	5	1	**190-3828**	1	TUBE AS-OIL	

M - METRIC PART

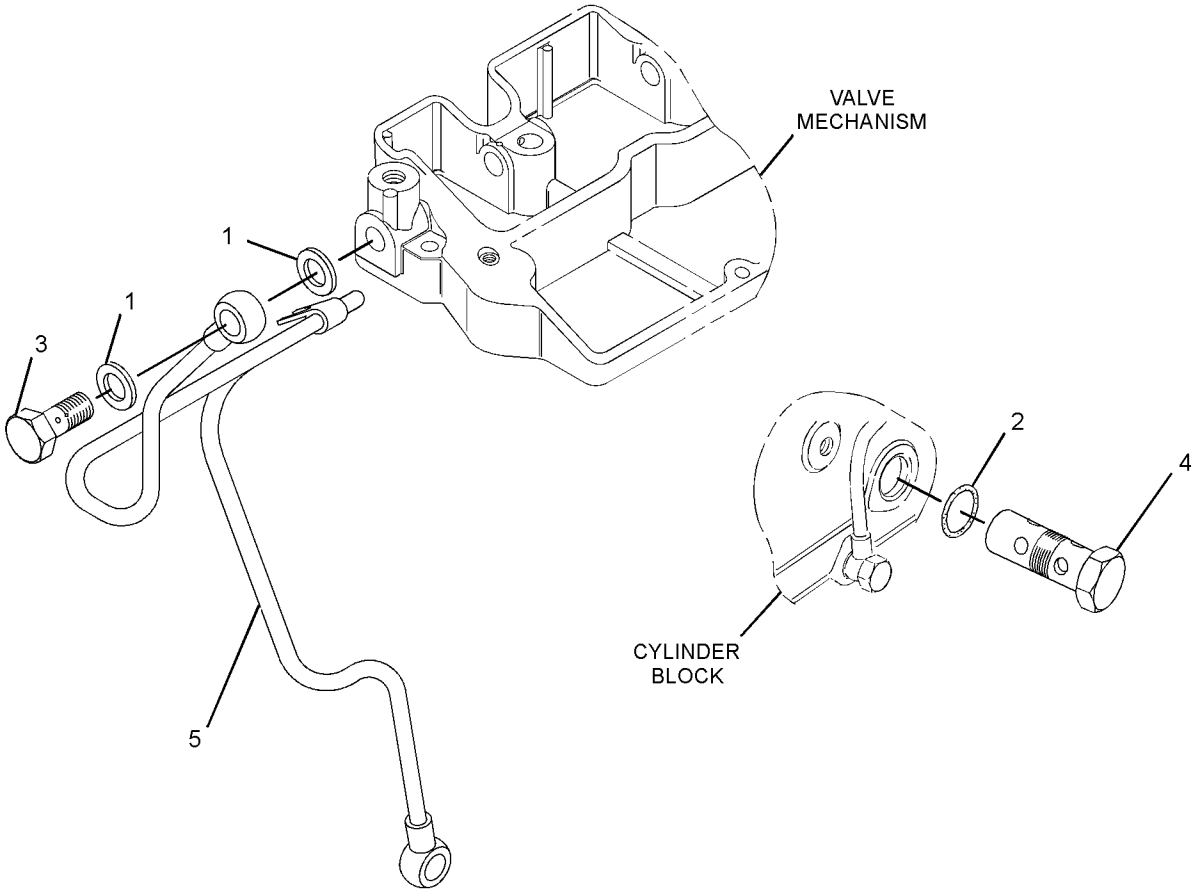

GRAPHIC #1 <END> g01992093

339-3017 KIT-ENGINE OIL PUMP

OIL PUMP

PART OF 435-1654 ENGINE AR-PRIMARY

SMCS-1304, 1315

i07409232

NOTE	REF NO	GRAPHIC REF	PART NUMBER	QTY	PART NAME 1 2 3 4 5 6 (PRODUCT LEVEL)	SEE PAGE
	1	1	**153-6849**	1	SPRING	
	2	1	**153-6850**	1	COLLAR	
	3	1	**153-6851**	1	CLIP	
B	4	1	**160-4150**	1	SHIM (0.1-MM THK)	
B		1	**160-4151**	1	SHIM (0.15-MM THK)	
B		1	**160-4152**	1	SHIM (0.2-MM THK)	
B		1	**160-4153**	1	SHIM (0.5-MM THK)	
	5	1	**308-1867**	1	WASHER-THRUST	
	6	1	**308-1869**	1	COVER	

B - USE AS REQUIRED

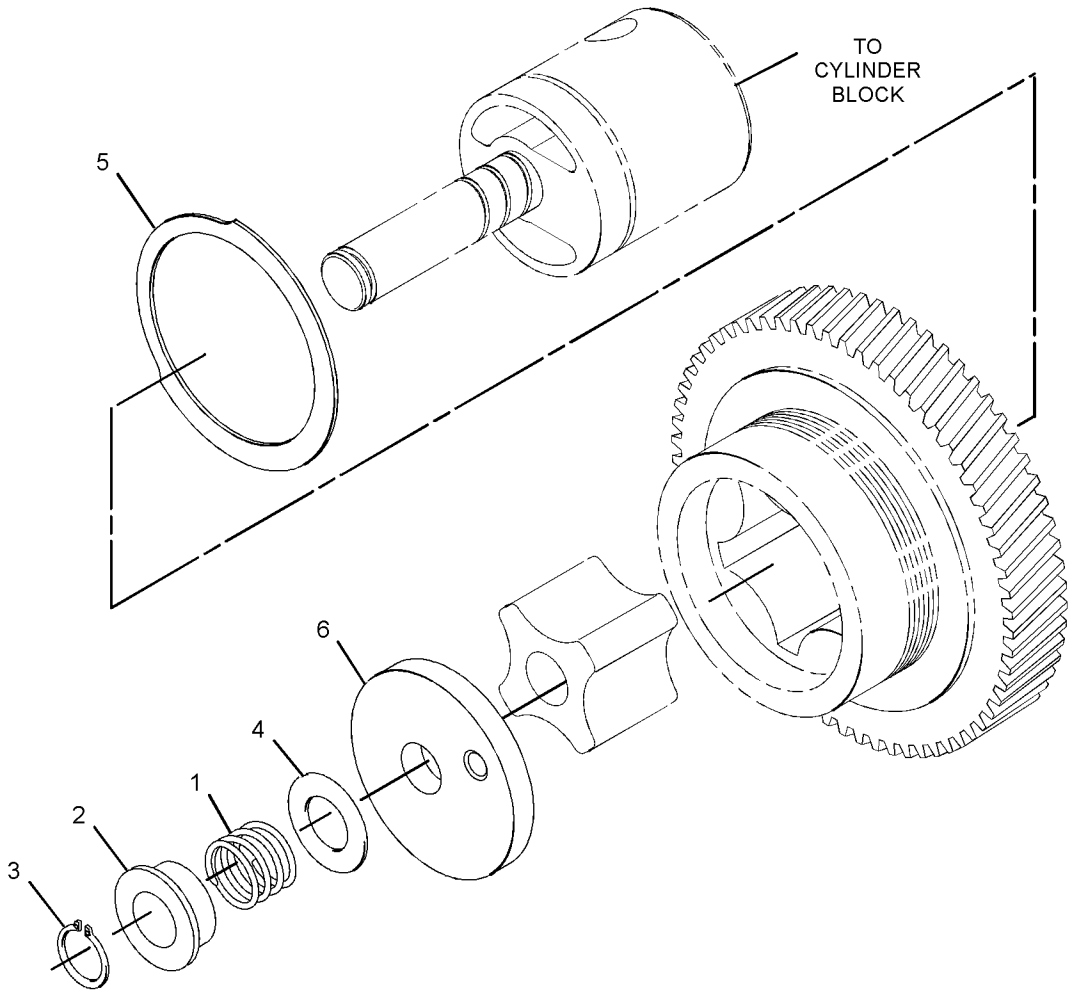

GRAPHIC #1 <END> g02013953

566-6594 KIT-ENGINE OIL PUMP

SMCS-1304, 1315 **i07964229**

NOTE	REF NO	GRAPHIC REF	PART NUMBER	QTY	PART NAME 1 2 3 4 5 6 (PRODUCT LEVEL)	SEE PAGE
	1	1	**153-6849**	1	SPRING	
	2	1	**153-6850**	1	COLLAR	
	3	1	**153-6851**	1	CLIP	
	4	1	**308-1867**	1	WASHER-THRUST	
	5	1	**308-1869**	1	COVER	
	6	1	**472-4722**	1	KIT-SHIM (ENGINE OIL PUMP)	
B		1	**160-4150**	1	SHIM (0.1-MM THK)	
B		1	**160-4151**	1	SHIM (0.15-MM THK)	
B		1	**160-4152**	1	SHIM (0.2-MM THK)	
B		1	**160-4153**	1	SHIM (0.5-MM THK)	
	7	1	*536-9734*	1	SHAFT GP-IDLER	
M		1	**153-5592**	1	NUT (M8X1.25-THD)	
					PARTS SHOWN IN GRAPHIC(S) WITHOUT A REFERENCE NUMBER ARE NOT SERVICED SEPARATELY	

B - USE AS REQUIRED
M - METRIC PART

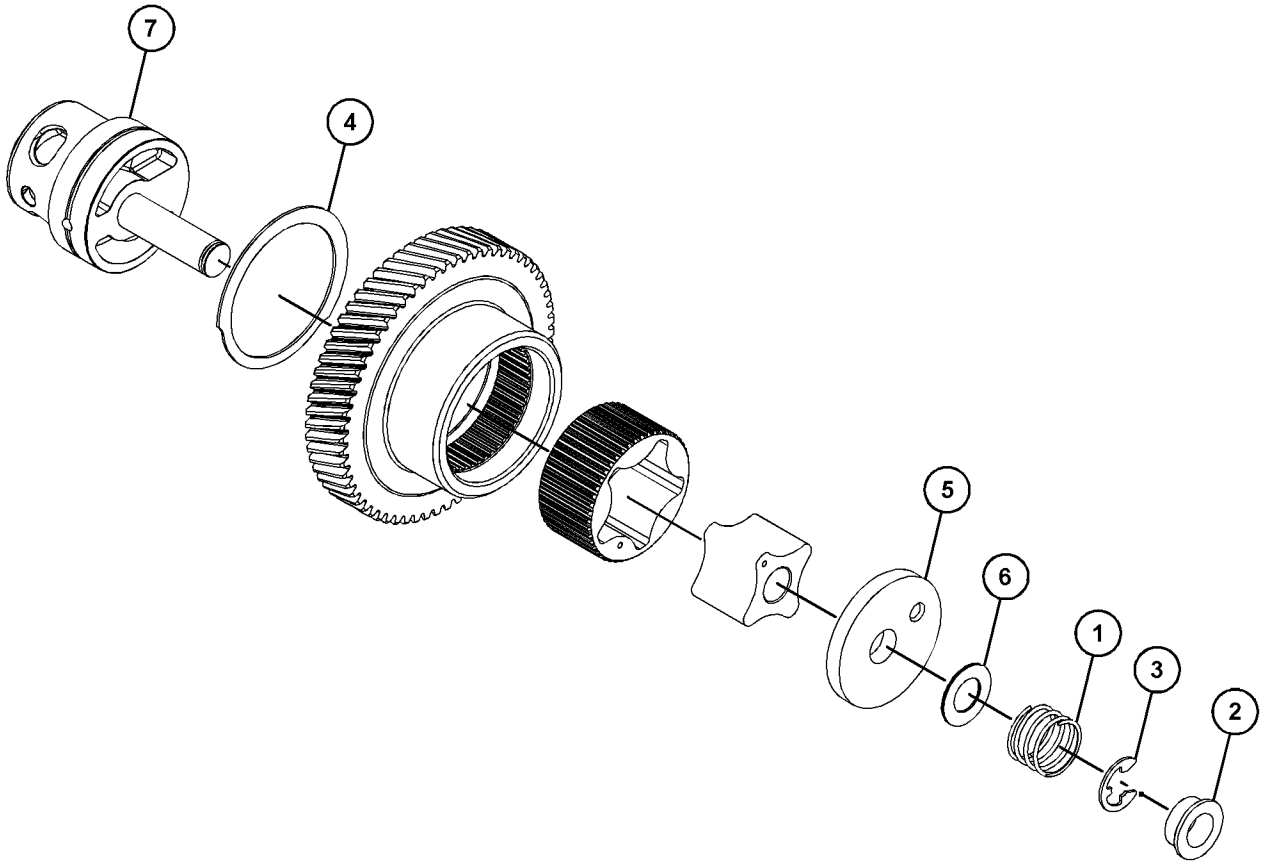

GRAPHIC #1 <END> g06402725

311-1116 HOUSING GP-WATER REGULATOR

PART OF 435-1654 ENGINE AR-PRIMARY

SMCS-1380 **i05425287**

NOTE	REF NO	GRAPHIC REF	PART NUMBER	QTY	PART NAME 1 2 3 4 5 6 (PRODUCT LEVEL)	SEE PAGE
	1	1	**439-0945**	1	GASKET (WATER TEMPERATURE REGULATOR)	
	2	1	**168-9001**	2	BOLT AS	
	3	1	**297-2996**	1	COVER-HOUSING	

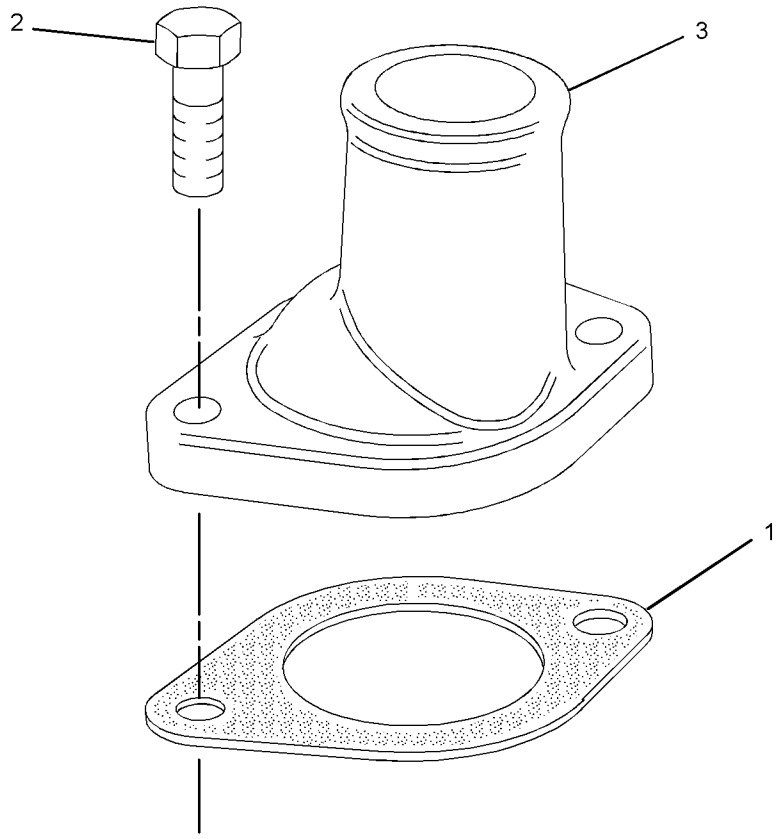

GRAPHIC #1 <END> g01407997

311-1115 PUMP GP-WATER

PART OF 435-1654 ENGINE AR-PRIMARY

SMCS-1361 **i06999632**

NOTE	REF NO	GRAPHIC REF	PART NUMBER	QTY	PART NAME 1 2 3 4 5 6 (PRODUCT LEVEL)	SEE PAGE
M	1	1	**153-5960**	3	NUT (M6X1-THD)	
	2	1	**153-5961**	4	BOLT AS	
	3	1	**154-1817**	1	PLUG	
	4	1	**472-2215**	2	PLUG	
	5	1	**425-6407**	1	GASKET (HOUSING)	
	6	1	**249-5541**	1	REGULATOR-TEMPERATURE (82-DEG C)	
	7	1	**477-8793**	1	HOUSING (THERMOSTAT)	
	8	1	**286-7496**	1	HOSE-WATER	
	9	1	**308-1907**	2	BOLT AS	
	10	1	**423-5611**	1	GASKET	
	11	1	**032-9020**	2	CLIP	
	12	1	**439-4992**	1	PUMP AS-WATER	

M - METRIC PART

311-1115 **PUMP GP-WATER (**contd.**)** **i06999632**

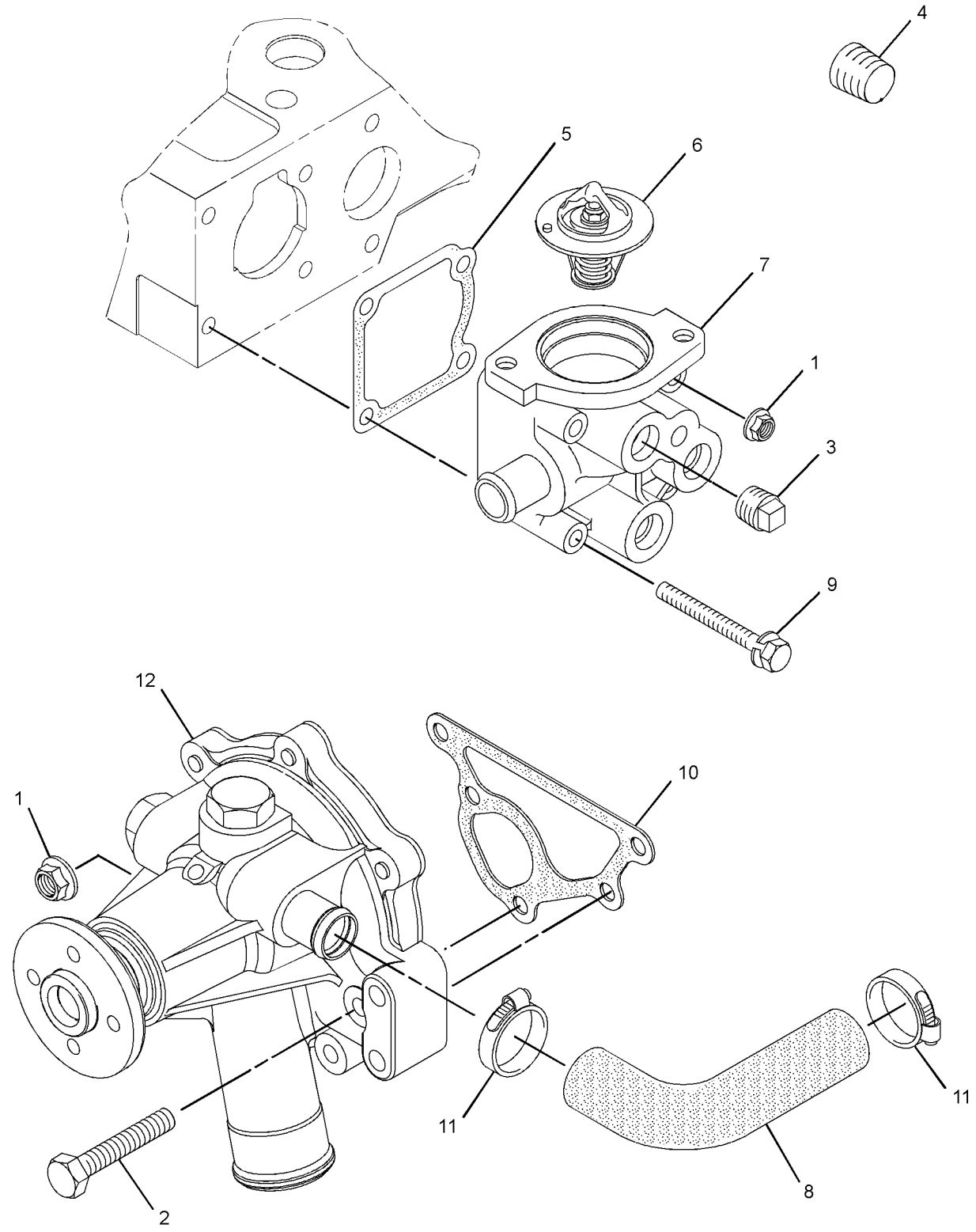

GRAPHIC #1 <END> g02683118

334-7294 PUMP GP-WATER

TYPE 1

SMCS-1361 **i07000053**

NOTE	REF NO	GRAPHIC REF	PART NUMBER	QTY	PART NAME 1 2 3 4 5 6 (PRODUCT LEVEL)	SEE PAGE
M	1	1,2	**153-5960**	3	NUT (M6X1-THD)	
	2	1	**153-5961**	4	BOLT AS	
	3	2	**154-1817**	1	PLUG	
	4	2	**439-4993**	1	PLUG	
	5	1	**5D-1026**	2	CLAMP-BAND	
	6	2	**425-6407**	1	GASKET	
	7	1	**238-9137**	1	CONNECTION	
	8	2	**472-2214**	1	CONNECTOR	
	9	2	**245-1361**	1	COOLER AS-OIL	
	9A	2	**245-1362**	1	CONNECTOR	
	9B	2	**245-1364**	1	SEAL	
	10	2	**249-5541**	1	REGULATOR-TEMPERATURE (82-DEG C)	
	11	2	**477-8793**	1	HOUSING (THERMOSTAT)	
	12	1	**286-7496**	1	HOSE-WATER	
	13	1	**423-5611**	1	GASKET	
	14	2	**308-1907**	2	BOLT AS	
	15	1	**439-4992**	1	PUMP AS-WATER	

M - METRIC PART

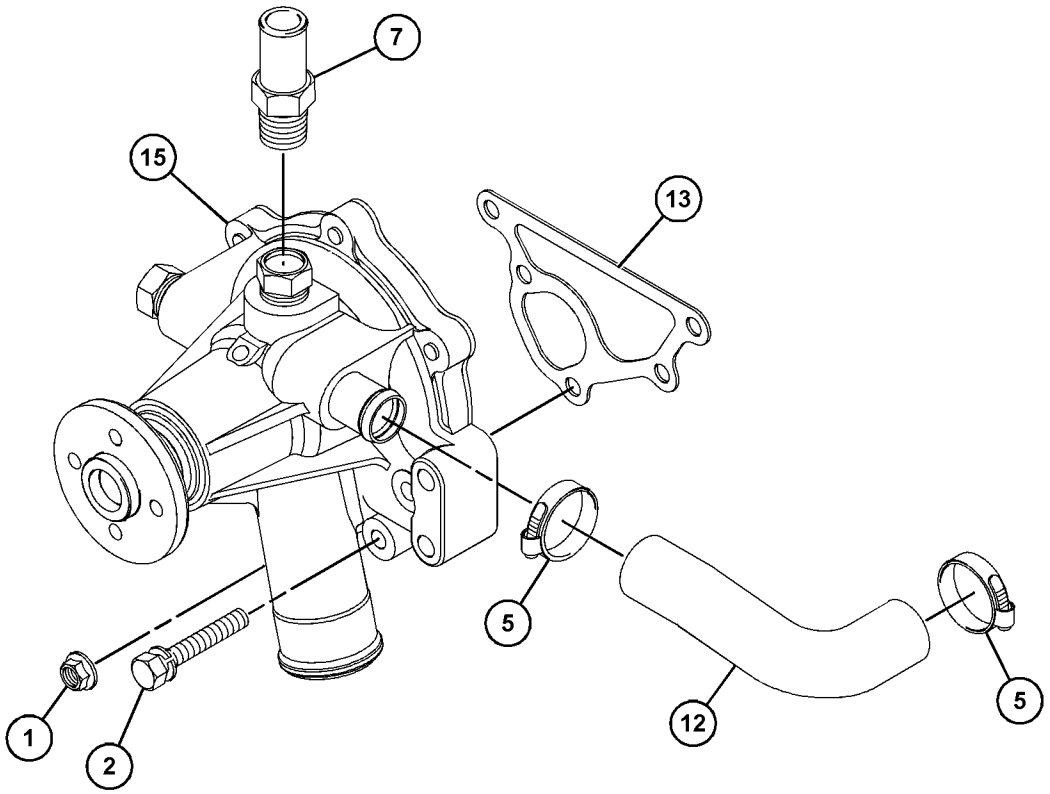

GRAPHIC #1 g06142249

334-7294 **PUMP GP-WATER (**contd.**)** **i07000053**

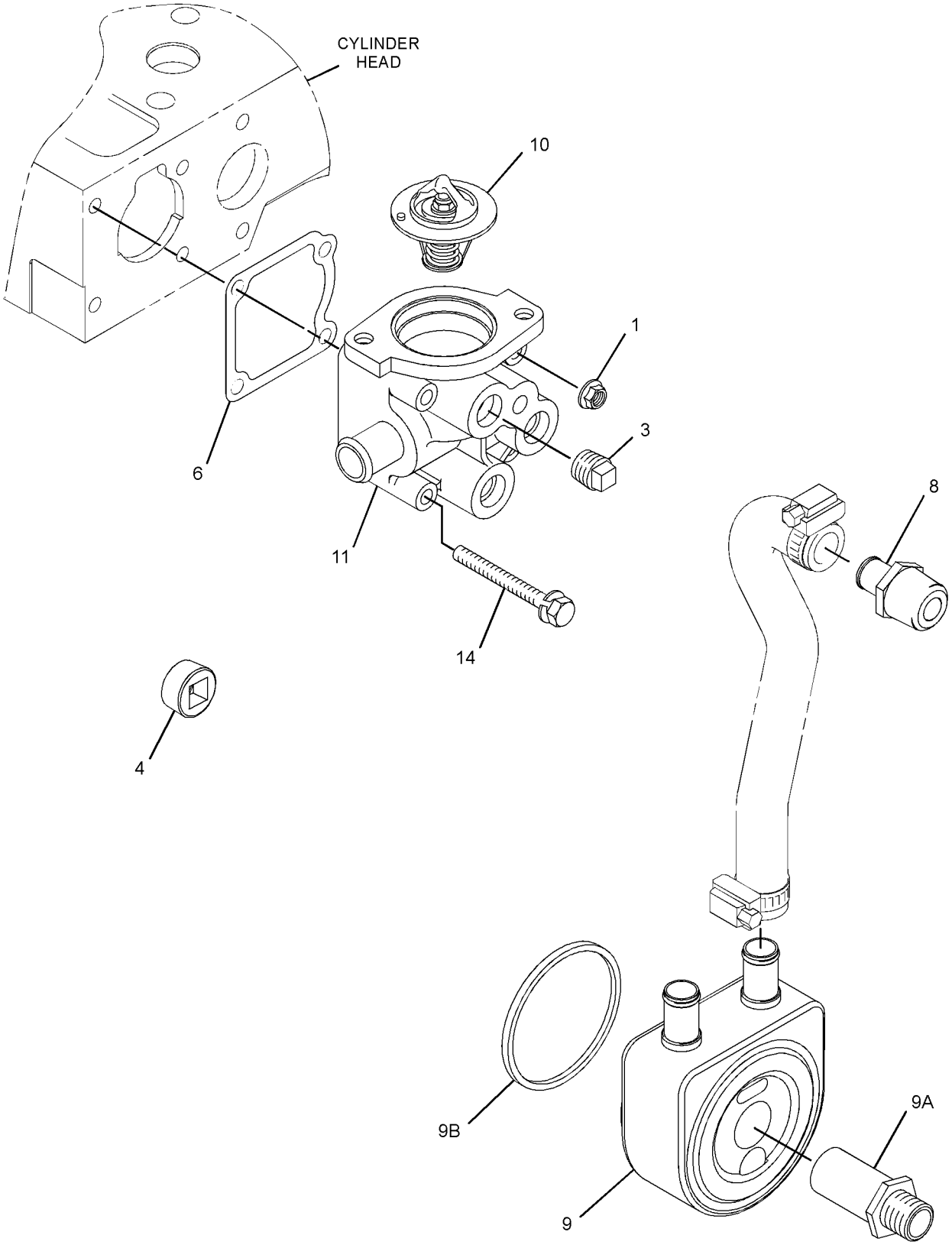

GRAPHIC #2 <END> g06142258

334-7294 PUMP GP-WATER

TYPE 2

SMCS-1361 **i07053033**

NOTE	REF NO	GRAPHIC REF	PART NUMBER	QTY	PART NAME 1 2 3 4 5 6 (PRODUCT LEVEL)	SEE PAGE
	1	2	**032-9020**	2	CLIP	
M	2	1,2	**153-5960**	3	NUT (M6X1-THD)	
	3	2	**153-5961**	4	BOLT AS	
	4	1	**154-1817**	1	PLUG	
	5	1	**245-1361**	1	COOLER AS-OIL	
		1	**245-1362**	1	CONNECTOR	
		1	**245-1364**	1	SEAL	
	6	1	**249-5541**	1	REGULATOR-TEMPERATURE (82-DEG C)	
	7	2	**286-7496**	1	HOSE-WATER	
	8	1	**308-1907**	2	BOLT AS	
	9	2	**423-5611**	1	GASKET	
	10	1	**425-6407**	1	GASKET	
	11	2	**439-4992**	1	PUMP AS-WATER	
	12	1	**472-2214**	1	CONNECTOR	
	13	1	**472-2215**	1	PLUG	
	14	1	**477-8793**	1	HOUSING	

M - METRIC PART

334-7294 **PUMP GP-WATER (**contd.**)** **i07053033**

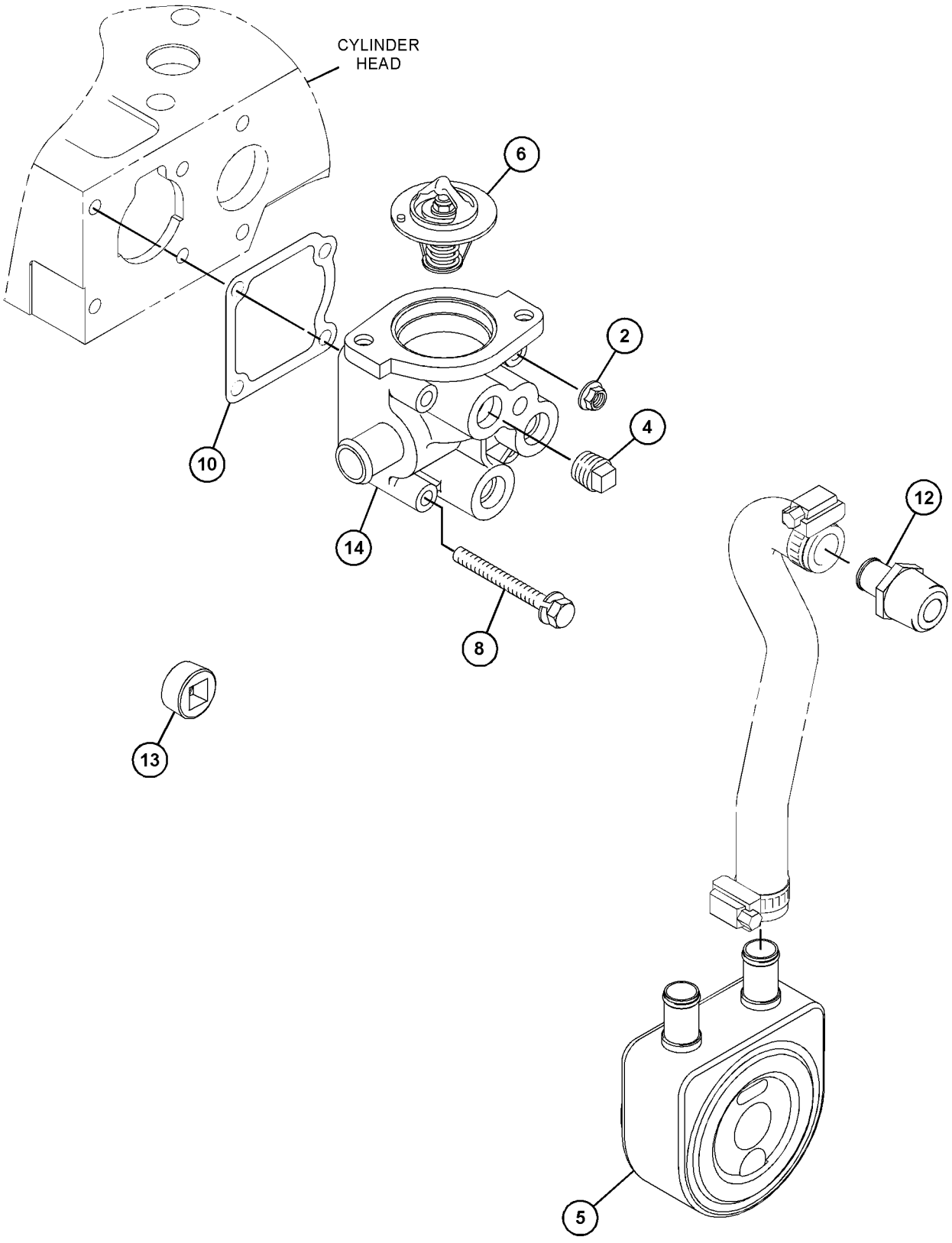

GRAPHIC #1 g06208572

334-7294 **PUMP GP-WATER (**contd.**)** **i07053033**

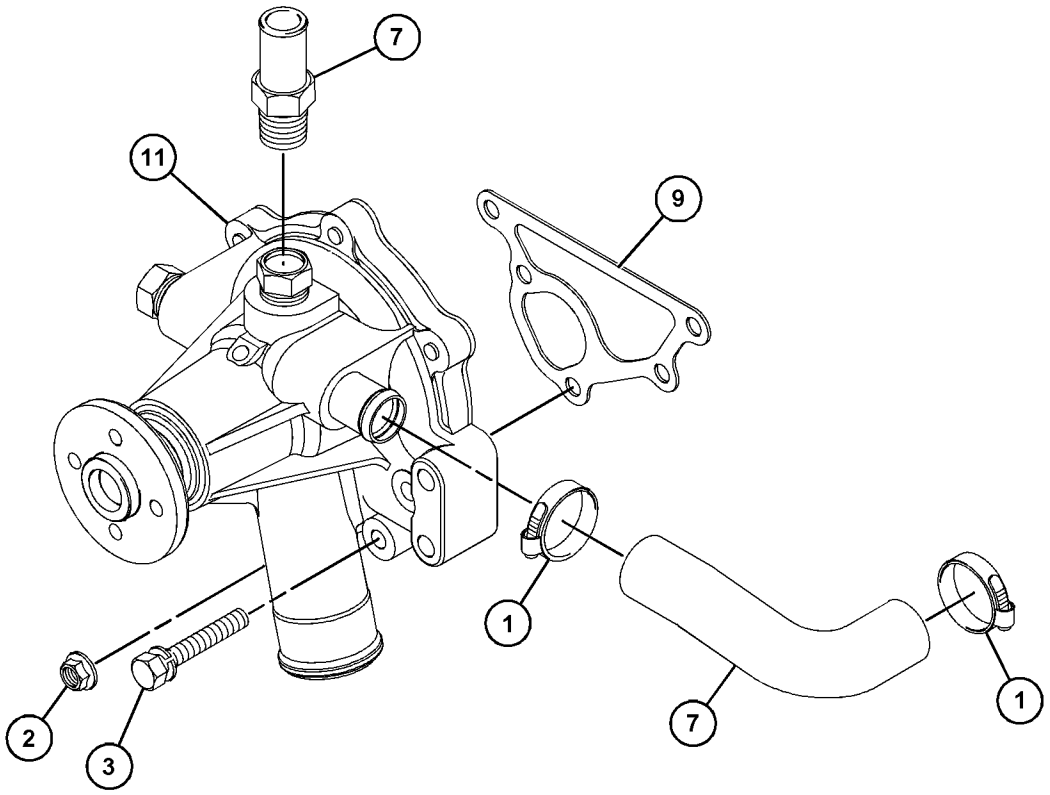

GRAPHIC #2 <END> g06208571

316-9713 RADIATOR GP

TYPE 1

SMCS-1353 **i04391363**

NOTE	REF NO	GRAPHIC REF	PART NUMBER	QTY	PART NAME 1 2 3 4 5 6 (PRODUCT LEVEL)	SEE PAGE
M	1	1,2	**6I-0217**	6	BOLT (M8X1.25X20-MM)	
M	2	1	**6I-0917**	2	BOLT (M6X1X25-MM)	
M	3	2	**124-3815**	4	BOLT (M8X1.25X16-MM)	
M	4	2	**153-5592**	2	NUT (M8X1.25-THD)	
M	5	3	**249-7263**	4	BOLT (M6X1X16-MM)	
M	7	2	**180-6118**	10	BOLT (M8X1.25X12-MM)	
M	8	1	**198-2664**	6	BOLT-HEAD (M14X1.5X25-MM)	
	9	2	**344-5868**	1	MOUNT	
	10	3	**238-0128**	1	FAN-BLOWER	
	11	1	**238-0265**	1	HOSE-RADIATOR (LOWER)	
	12	1	**238-0266**	1	HOSE-RADIATOR (UPPER)	
	13	1	**238-0271**	1	RADIATOR AS	
	13A	1	**202-6616**	1	CAP-RADIATOR	
	13B	1	**295-5876**	1	SHROUD	
	14	1	**334-7297**	1	BRACKET-SUPPORT	
M	15	1	**239-1137**	2	BOLT (M10X1.25X25-MM)	
	16	1	**363-5813**	4	CLAMP-HOSE	
	17	2	**334-7304**	1	GUARD-FAN (LH)	
	18	2	**337-3107**	1	GUARD-FAN (RH)	
	19	2	**334-7306**	1	GUARD-ALTERNATOR	
	20	2	**334-7436**	1	BRACKET	
	21	2	**325-5935**	1	BRACKET	
	22	1	**325-5941**	1	BRACKET AS	
	23	1	**325-5942**	1	BRACKET	
	24	2	**244-3259**	2	CLIP	
	25	2	**292-1988**	1	GUARD	
M	26	1	**334-7300**	4	BOLT (M6X1X20-MM)	
	27	1	**334-7299**	2	MOUNT	

M - METRIC PART

316-9713 **RADIATOR GP** (contd.) **i04391363**

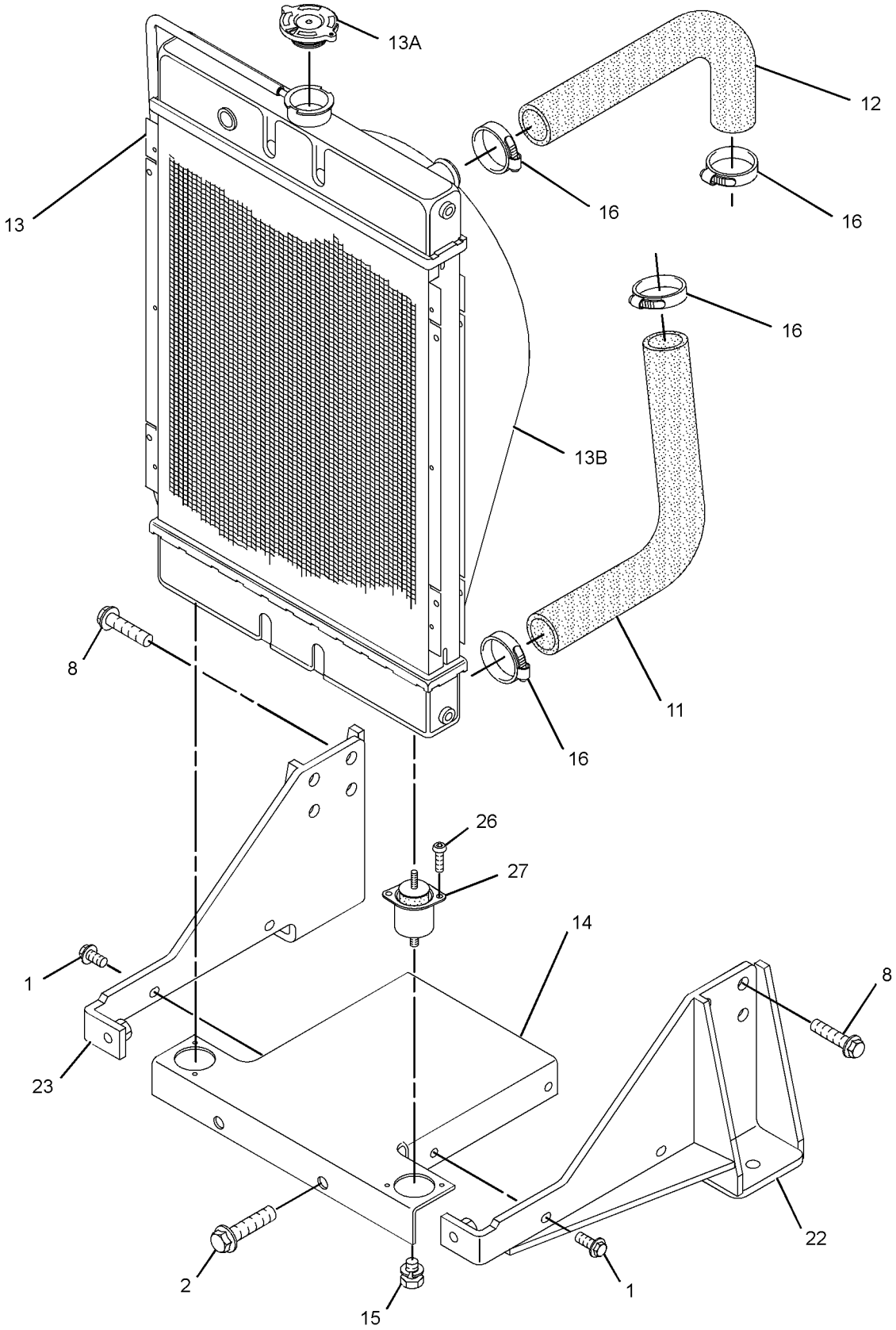

GRAPHIC #1 g01950005

316-9713 **RADIATOR GP (**contd.**)** **i04391363**

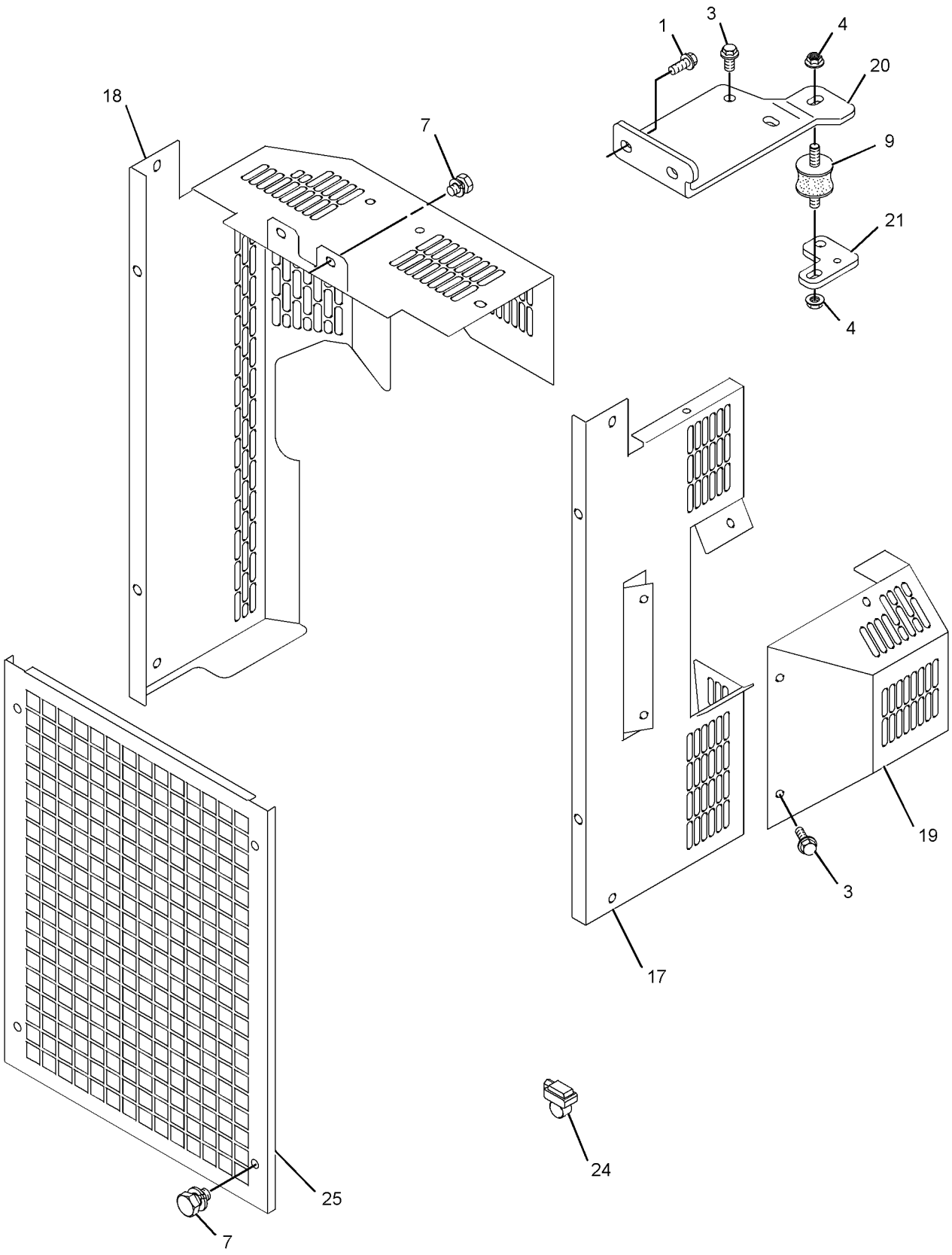

GRAPHIC #2 g01951509

316-9713 **RADIATOR GP (**contd.**)** **i04391363**

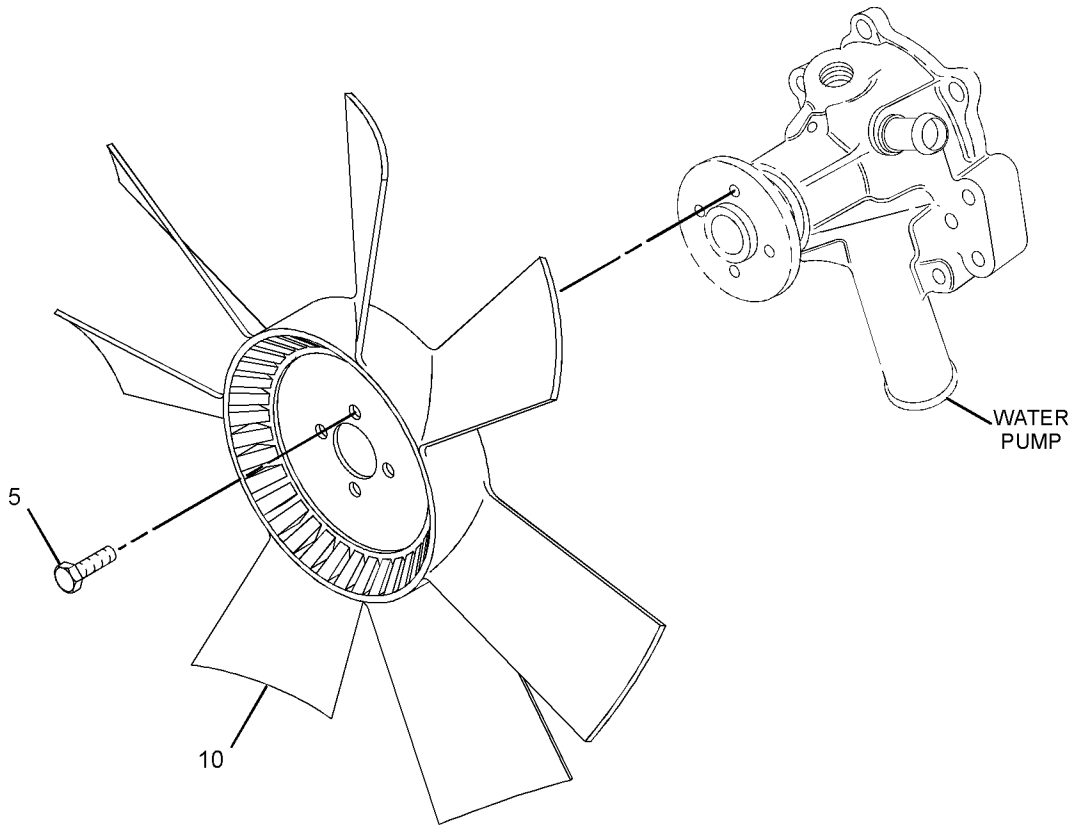

GRAPHIC #3 <END> g01950006

316-9713 RADIATOR GP

TYPE 2

SMCS-1353 **i06092425**

NOTE	REF NO	GRAPHIC REF	PART NUMBER	QTY	PART NAME 1 2 3 4 5 6 (PRODUCT LEVEL)	SEE PAGE
M	1	1,2	**6I-0217**	6	BOLT (M8X1.25X20-MM)	
M	2	1	**6I-0917**	2	BOLT (M6X1X25-MM)	
	3	2	**292-1988**	1	GUARD	
M	4	2	**153-5592**	2	NUT (M8X1.25-THD)	
M	5	3	**249-7263**	4	BOLT (M6X1X16-MM)	
M	7	2	**180-6118**	10	BOLT (M8X1.25X12-MM)	
M	8	1	**198-2664**	6	BOLT-HEAD (M14X1.5X25-MM)	
	9	2	**344-5868**	1	MOUNT	
	10	3	**238-0128**	1	FAN-BLOWER	
	11	1	**238-0265**	1	HOSE-RADIATOR (LOWER)	
	12	1	**238-0266**	1	HOSE-RADIATOR (UPPER)	
	13	1	**238-0271**	1	RADIATOR AS	
	13A	1	**202-6616**	1	CAP-RADIATOR	
	13B	1	**295-5876**	1	SHROUD	
CM	14	1	**6I-0654**	2	BOLT (M10X1.5X25-MM)	
	15	1	**239-0743**	1	SUPPORT	
	16	1	**363-5813**	4	CLAMP-HOSE	
	17	2	**366-2656**	1	GUARD AS-FAN (LH)	
M	17A	2	**6I-0254**	2	BOLT (M8X1.25X30-MM)	
M	17B	2	**362-8050**	2	NUT (M8X1.25-THD)	
	18	2	**337-3107**	1	GUARD-FAN (RH)	
	19	2	**366-2658**	1	GUARD-ALTERNATOR	
	20	2	**423-6334**	1	BRACKET	
	21	2	**334-7437**	1	BRACKET	
	22	1	**325-5941**	1	BRACKET AS	
	23	1	**325-5942**	1	BRACKET	
	24	2	**244-3259**	2	CLIP	
	25	1	**364-8947**	1	PLUG	

C - CHANGE FROM PREVIOUS TYPE
M - METRIC PART

316-9713 **RADIATOR GP** (contd.) **i06092425**

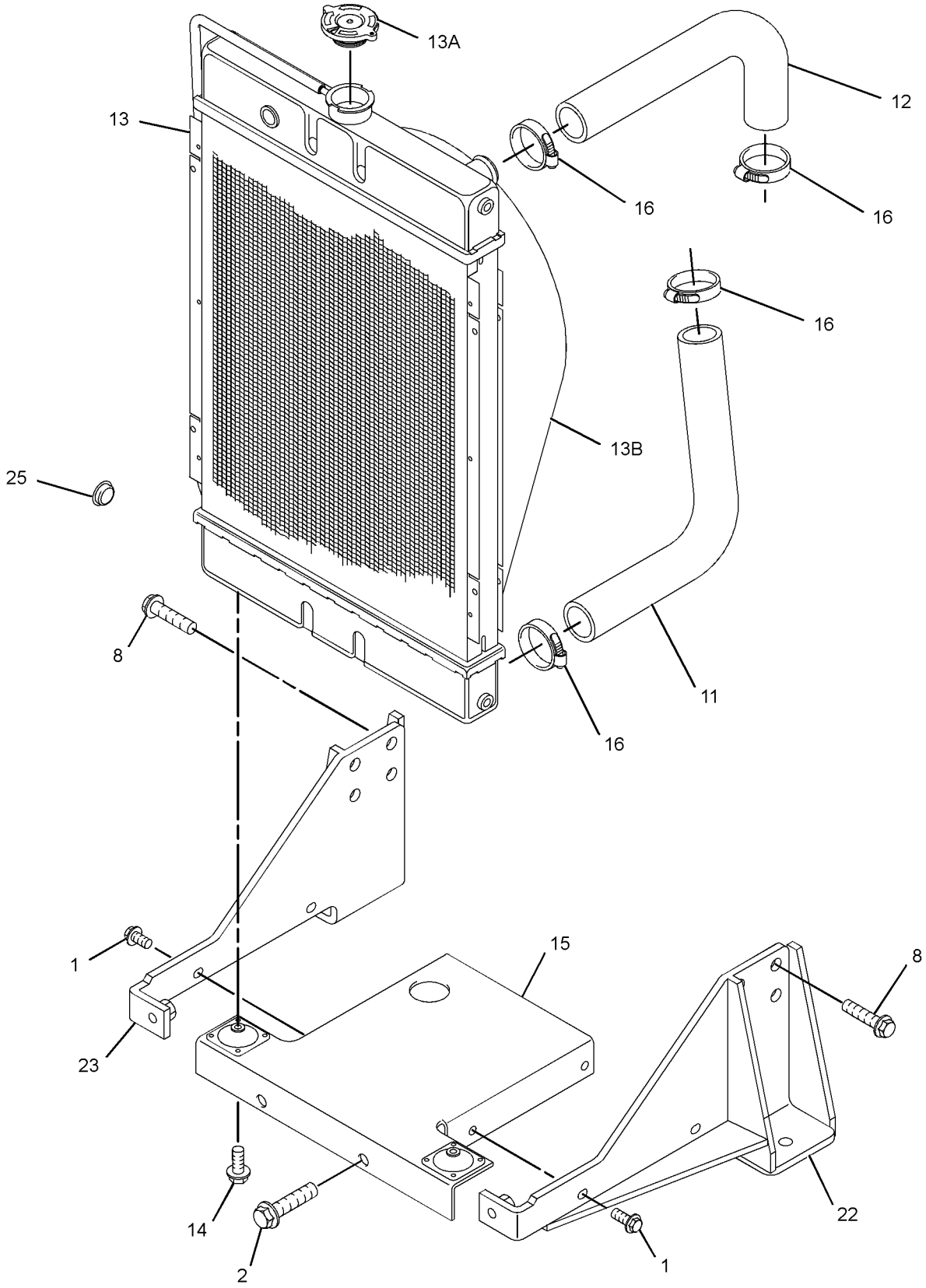

GRAPHIC #1 g03811756

316-9713 **RADIATOR GP (**contd.**)** **i06092425**

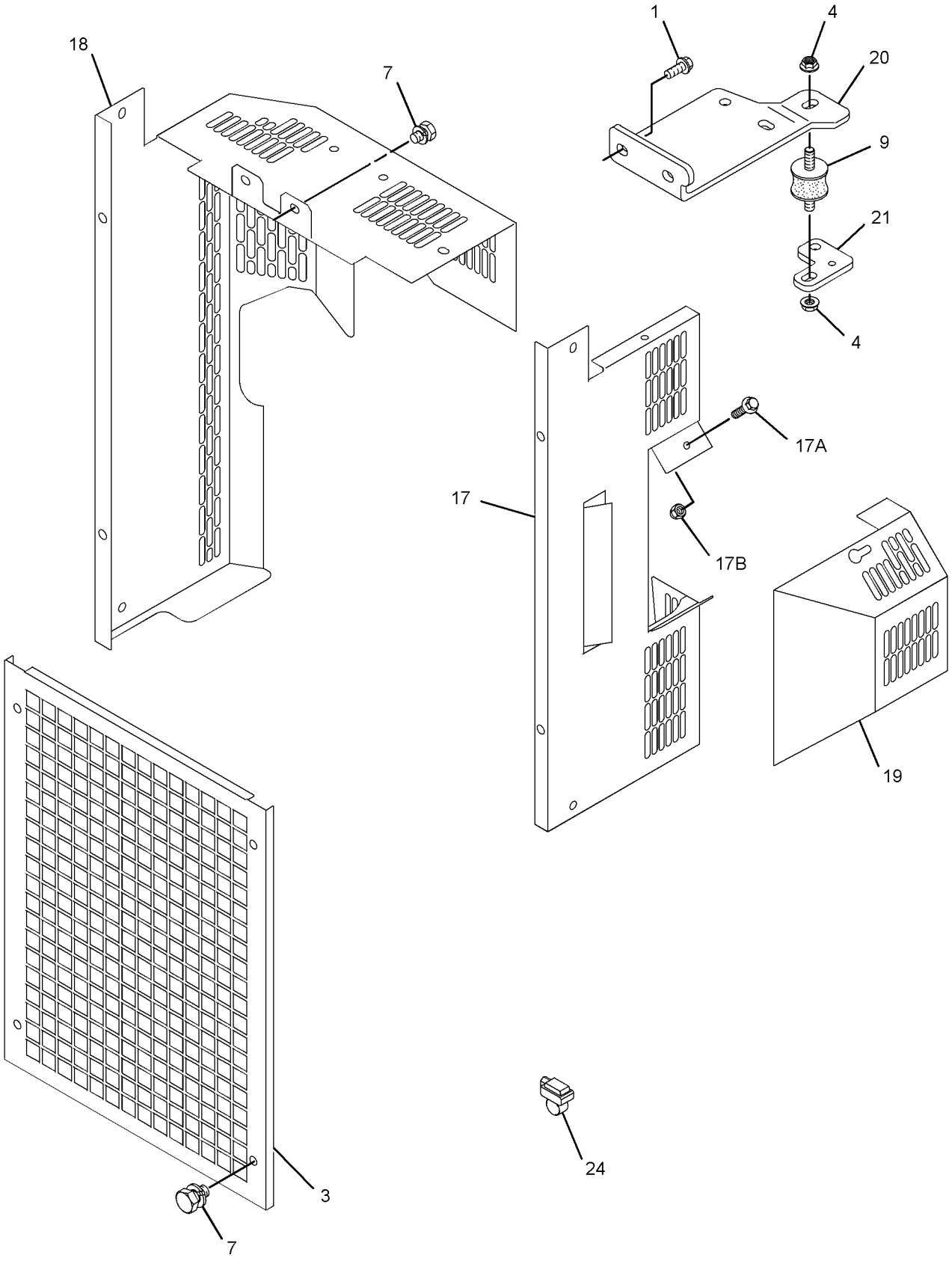

GRAPHIC #2 g03375922

316-9713 **RADIATOR GP (**contd.**)** **i06092425**

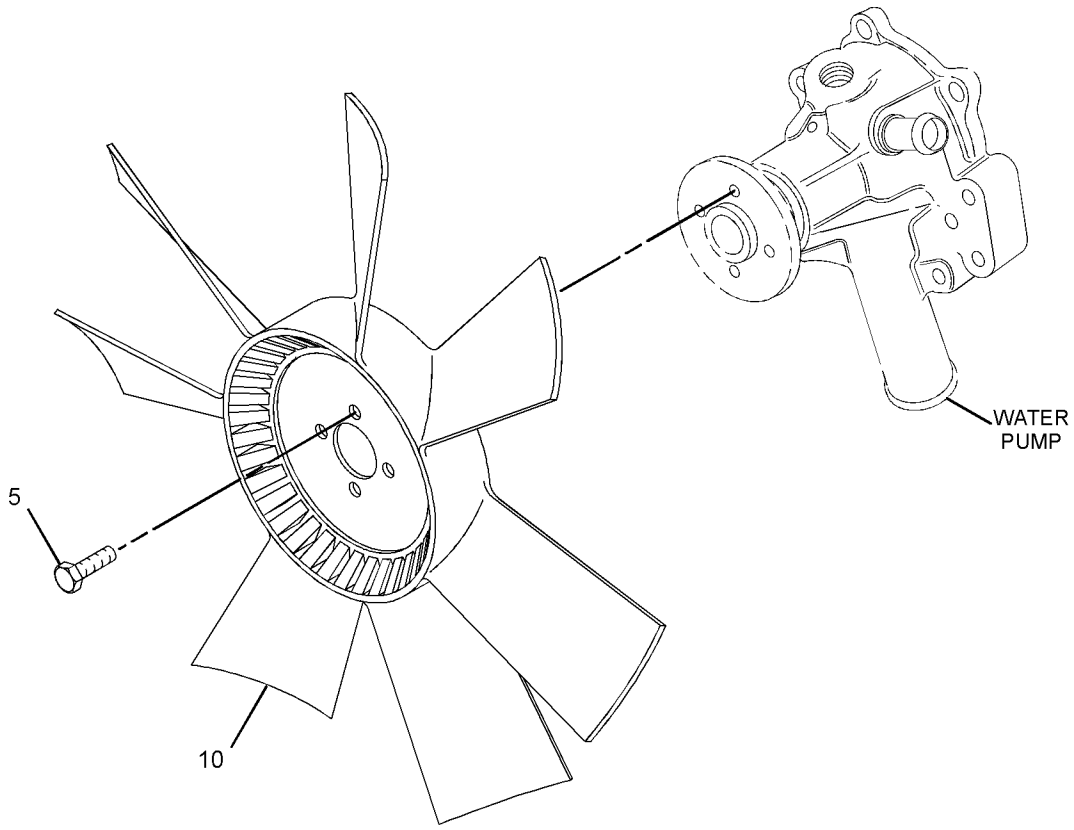

GRAPHIC #3 <END> g01950006

316-9713 RADIATOR GP

TYPE 3

SMCS-1353 **i07037488**

NOTE	REF NO	GRAPHIC REF	PART NUMBER	QTY	PART NAME 1 2 3 4 5 6 (PRODUCT LEVEL)	SEE PAGE
M	1	1,2	**6I-0217**	6	BOLT (M8X1.25X20-MM)	
M	2	1	**6I-0917**	2	BOLT (M6X1X25-MM)	
	3	2	**292-1988**	1	GUARD	
M	4	2	**153-5592**	2	NUT (M8X1.25-THD)	
M	5	3	**249-7263**	4	BOLT (M6X1X16-MM)	
M	7	2	**180-6118**	10	BOLT (M8X1.25X12-MM)	
M	8	1	**198-2664**	6	BOLT-HEAD (M14X1.5X25-MM)	
	9	2	**344-5868**	1	MOUNT	
	10	3	**423-5640**	1	FAN (6-BLADE) (6-BLADE)	
	11	1	**238-0265**	1	HOSE-RADIATOR (LOWER)	
	12	1	**238-0266**	1	HOSE-RADIATOR (UPPER)	
	13	1	**238-0271**	1	RADIATOR AS	
	13A	1	**202-6616**	1	CAP-RADIATOR	
	13B	1	**295-5876**	1	SHROUD	
CM	14	1	**6I-0654**	2	BOLT (M10X1.5X25-MM)	
	15	1	**239-0743**	1	SUPPORT	
	16	1	**363-5813**	4	CLAMP-HOSE	
	17	2	**366-2656**	1	GUARD AS-FAN (LH)	
M	17A	2	**6I-0254**	2	BOLT (M8X1.25X30-MM)	
M	17B	2	**362-8050**	2	NUT (M8X1.25-THD)	
	18	2	**337-3107**	1	GUARD-FAN (RH)	
	19	2	**366-2658**	1	GUARD-ALTERNATOR	
	20	2	**423-6334**	1	BRACKET	
	21	2	**334-7437**	1	BRACKET	
	22	1	**325-5941**	1	BRACKET AS	
C	23	1	**476-5581**	1	BRACKET AS	
	24	2	**244-3259**	2	CLIP	

C - CHANGE FROM PREVIOUS TYPE
M - METRIC PART

316-9713 **RADIATOR GP** (contd.) **i07037488**

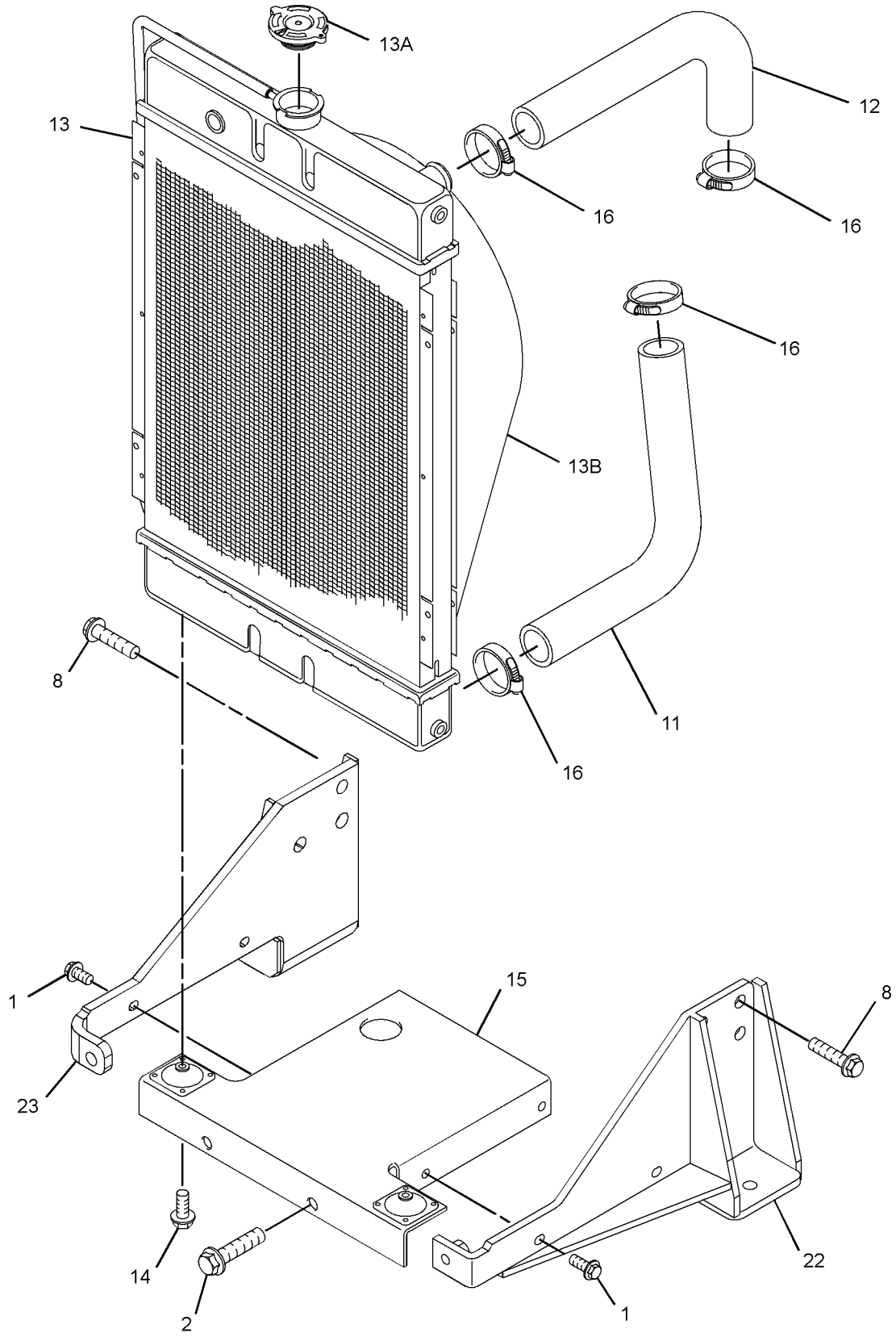

GRAPHIC #1 g06200256

316-9713 **RADIATOR GP (**contd.**)** **i07037488**

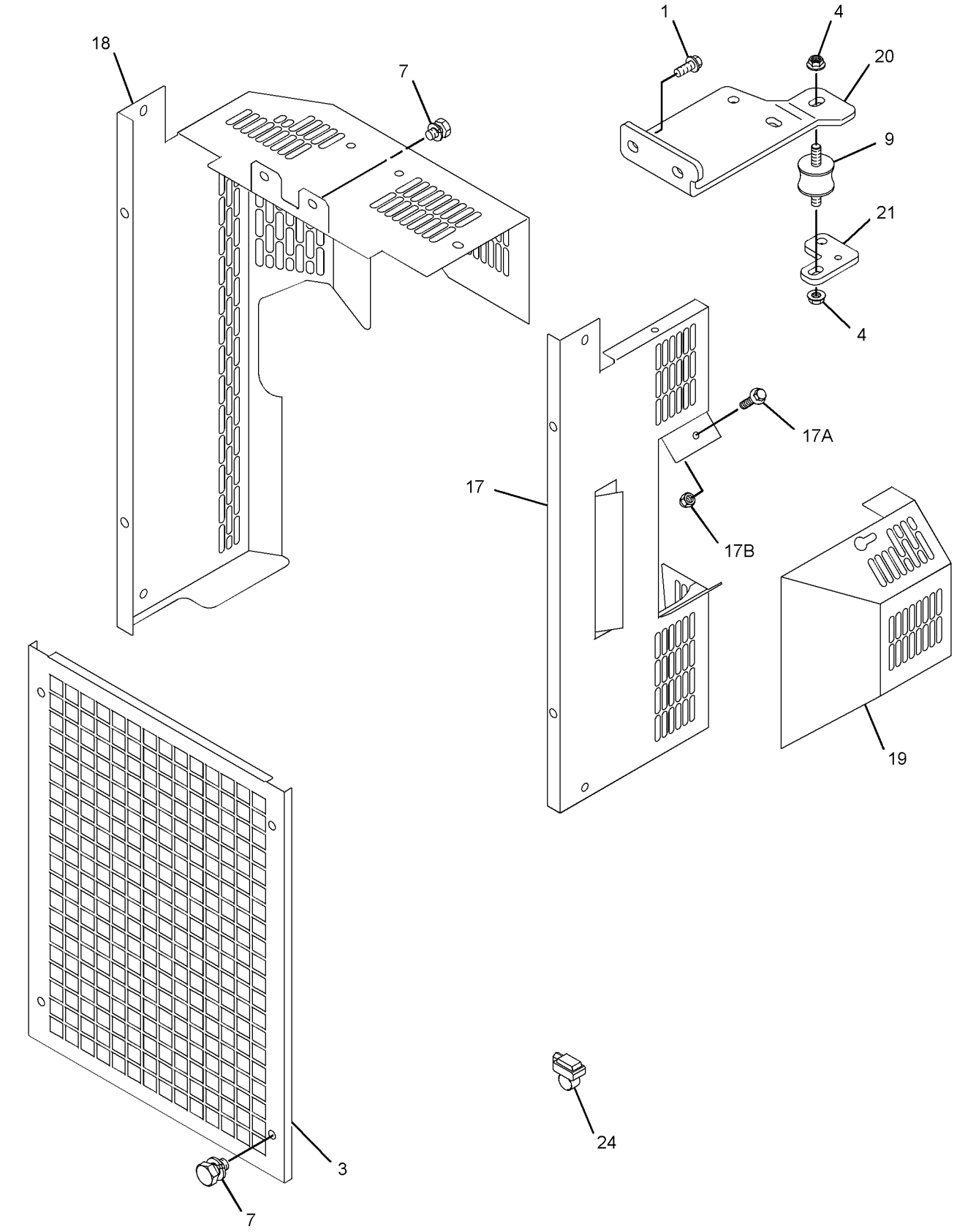

GRAPHIC #2 g06200257

316-9713 **RADIATOR GP (**contd.**)** **i07037488**

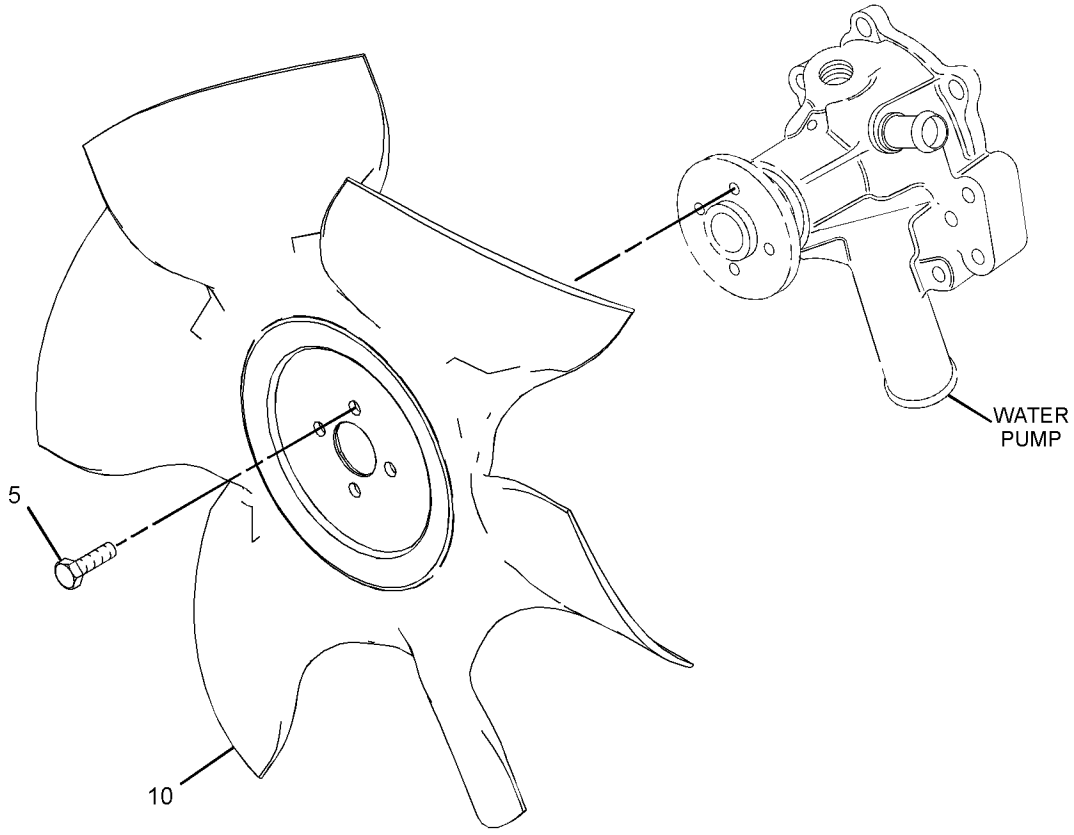

GRAPHIC #3 <END> g06200258

316-9713 RADIATOR GP

TYPE 4

SMCS-1353 **i07323099**

NOTE	REF NO	GRAPHIC REF	PART NUMBER	QTY	PART NAME 1 2 3 4 5 6 (PRODUCT LEVEL)	SEE PAGE
M	1	1,2	**6I-0217**	6	BOLT (M8X1.25X20-MM)	
CM	2	1,3	**6I-0917**	6	BOLT (M6X1X25-MM)	
	3	2	**328-6607**	1	GUARD	
M	4	2	**153-5592**	2	NUT (M8X1.25-THD)	
M	7	2	**180-6118**	10	BOLT (M8X1.25X12-MM)	
M	8	1	**198-2664**	6	BOLT-HEAD (M14X1.5X25-MM)	
	9	2	**344-5868**	1	MOUNT	
	10	3	**423-5640**	1	FAN (6-BLADE) (6-BLADE)	
	11	1	**238-0265**	1	HOSE-RADIATOR (LOWER)	
	12	1	**238-0266**	1	HOSE-RADIATOR (UPPER)	
	13	1	**238-0271**	1	RADIATOR AS	
	13A	1	**202-6616**	1	CAP-RADIATOR	
	13B	1	**295-5876**	1	SHROUD	
M	14	1	**6I-0654**	2	BOLT (M10X1.5X25-MM)	
	15	1	**239-0743**	1	SUPPORT	
	16	1	**363-5813**	4	CLAMP-HOSE	
	17	2	**366-2656**	1	GUARD AS-FAN (LH)	
M	17A	2	**6I-0254**	2	BOLT (M8X1.25X30-MM)	
M	17B	2	**362-8050**	2	NUT (M8X1.25-THD)	
	18	2	**337-3107**	1	GUARD-FAN (RH)	
	19	2	**366-2658**	1	GUARD-ALTERNATOR	
	20	2	**487-9902**	1	BRACKET	
	21	2	**334-7437**	1	BRACKET	
	22	1	**325-5941**	1	BRACKET AS	
	23	1	**476-5581**	1	BRACKET AS	
	24	2	**244-3259**	2	CLIP	
C	25	3	**161-8260**	1	PLATE	

C - CHANGE FROM PREVIOUS TYPE
M - METRIC PART

316-9713 **RADIATOR GP** (contd.) **i07323099**

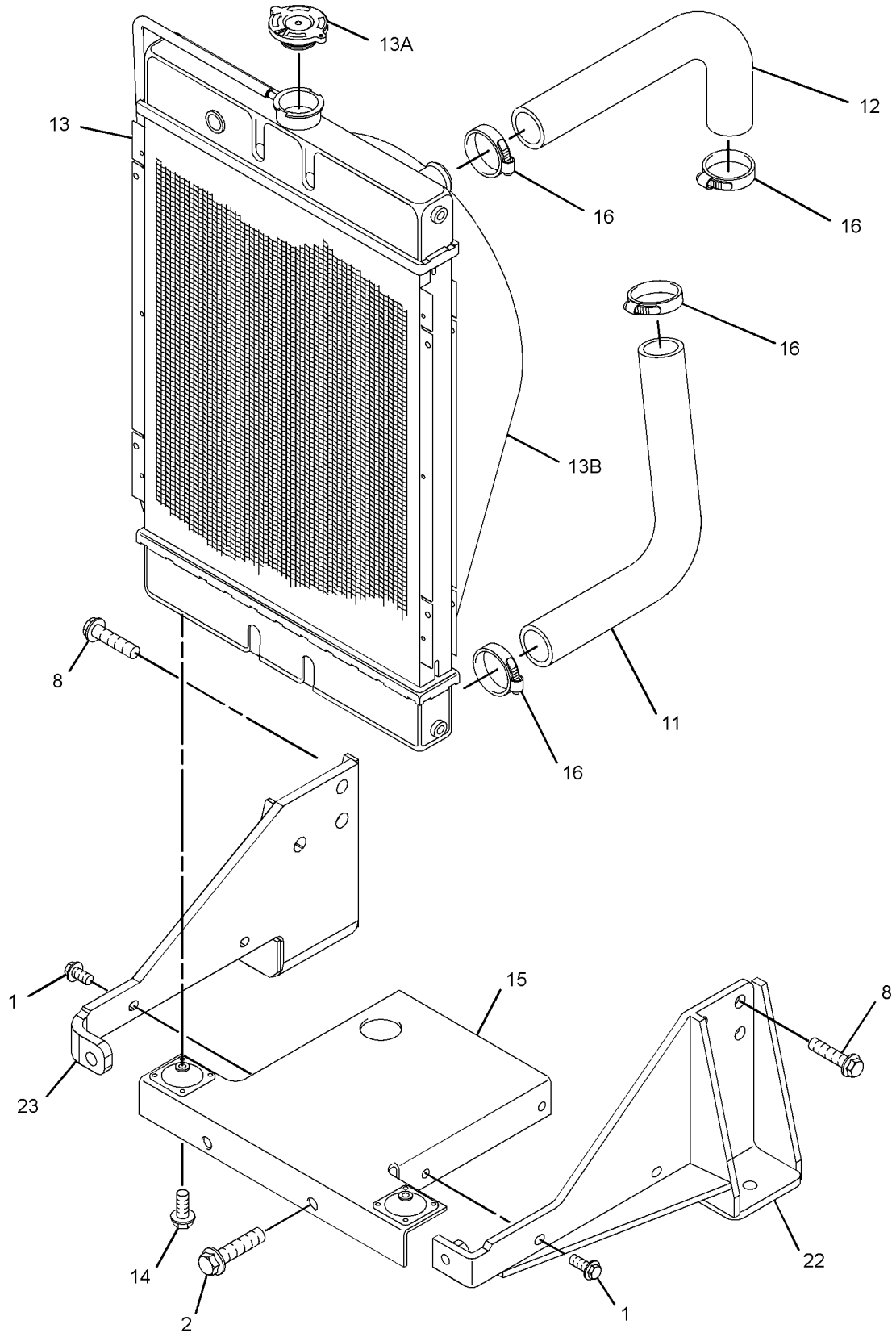

GRAPHIC #1 g06200256

316-9713 **RADIATOR GP (**contd.**)** **i07323099**

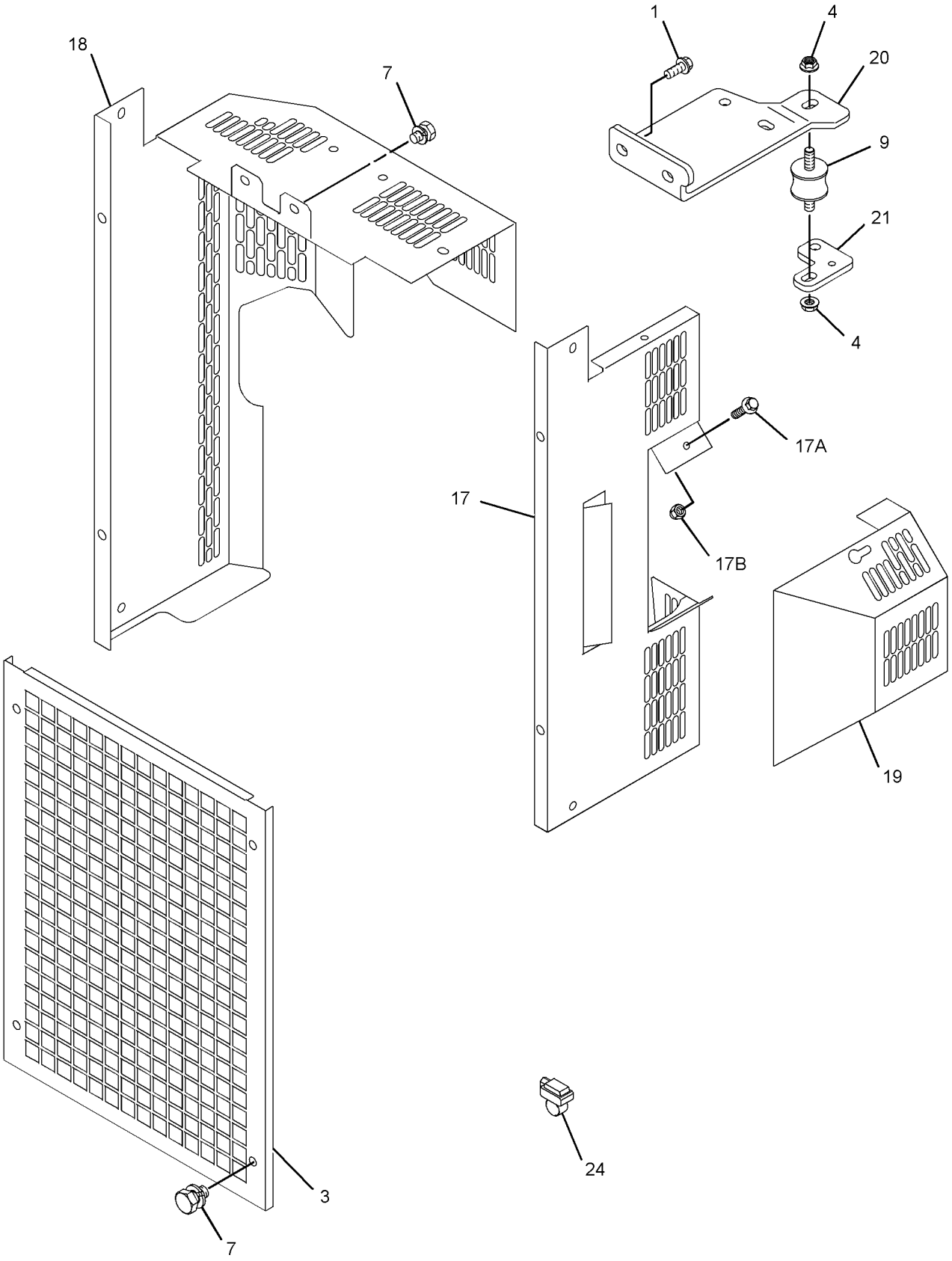

GRAPHIC #2 g06200257

316-9713 **RADIATOR GP (**contd.**)** **i07323099**

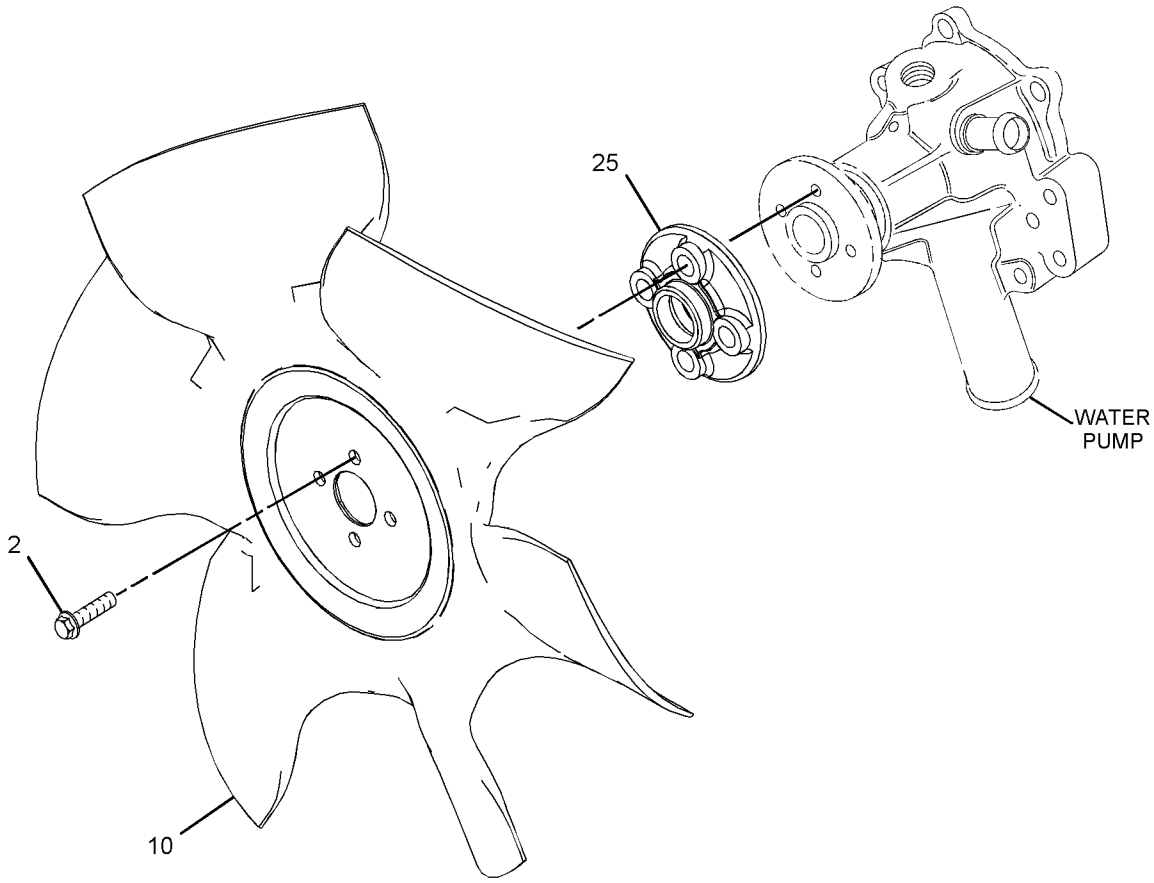

GRAPHIC #3 <END> g06246245

316-9713 RADIATOR GP

TYPE 5

SMCS-1353 **i07501869**

NOTE	REF NO	GRAPHIC REF	PART NUMBER	QTY	PART NAME 1 2 3 4 5 6 (PRODUCT LEVEL)	SEE PAGE
M	1	1,2	**6I-0217**	6	BOLT (M8X1.25X20-MM)	
M	2	1,2	**6I-0917**	6	BOLT (M6X1X25-MM)	
M	4	2	**153-5592**	2	NUT (M8X1.25-THD)	
CM	7	2	**114-4363**	6	BOLT (M8X1.25X12-MM)	
M	8	1	**198-2664**	6	BOLT-HEAD (M14X1.5X25-MM)	
	9	2	**344-5868**	1	MOUNT	
	10	2	**423-5640**	1	FAN (6-BLADE) (6-BLADE)	
	11	1	**238-0265**	1	HOSE-RADIATOR (LOWER)	
	12	1	**238-0266**	1	HOSE-RADIATOR (UPPER)	
	13	1	**238-0271**	1	RADIATOR AS	
	13A	1	**202-6616**	1	CAP-RADIATOR	
	13B	1	**295-5876**	1	SHROUD	
M	14	1	**123-2899**	2	BOLT (M10X1.5X40-MM)	
	15	1	**438-8534**	1	BRACKET AS	
	16	1	**363-5813**	4	CLAMP-HOSE	
	17	2	**366-2656**	1	GUARD AS-FAN (LH)	
M	17A	2	**6I-0254**	2	BOLT (M8X1.25X30-MM)	
M	17B	2	**362-8050**	2	NUT (M8X1.25-THD)	
	18	2	**337-3107**	1	GUARD-FAN (RH)	
	19	2	**366-2658**	1	GUARD-ALTERNATOR	
	20	2	**487-9902**	1	BRACKET	
	21	2	**334-7437**	1	BRACKET	
	22	1	**325-5941**	1	BRACKET AS (LH)	
M		1	**8T-3490**	1	NUT-WELD (M10X1.5-THD)	
	23	1	**476-5581**	1	BRACKET AS (RH)	
M		1	**8T-3490**	1	NUT-WELD (M10X1.5-THD)	
	24	2	**244-3259**	2	CLIP	
	25	2	**161-8260**	1	PLATE	

C - CHANGE FROM PREVIOUS TYPE
M - METRIC PART

316-9713 **RADIATOR GP** (contd.) **i07501869**

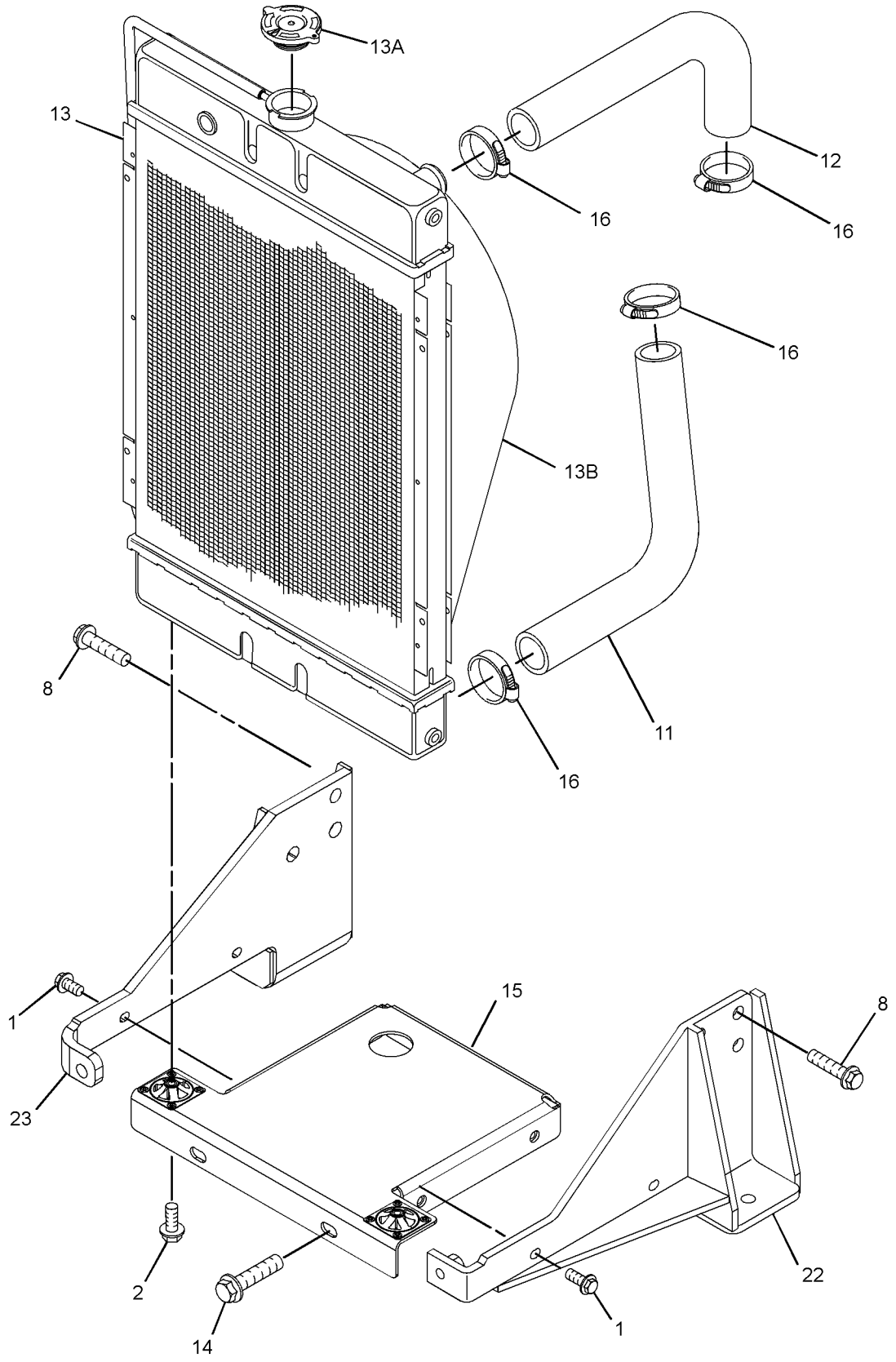

GRAPHIC #1 g06385898

316-9713 **RADIATOR GP (**contd.**)** **i07501869**

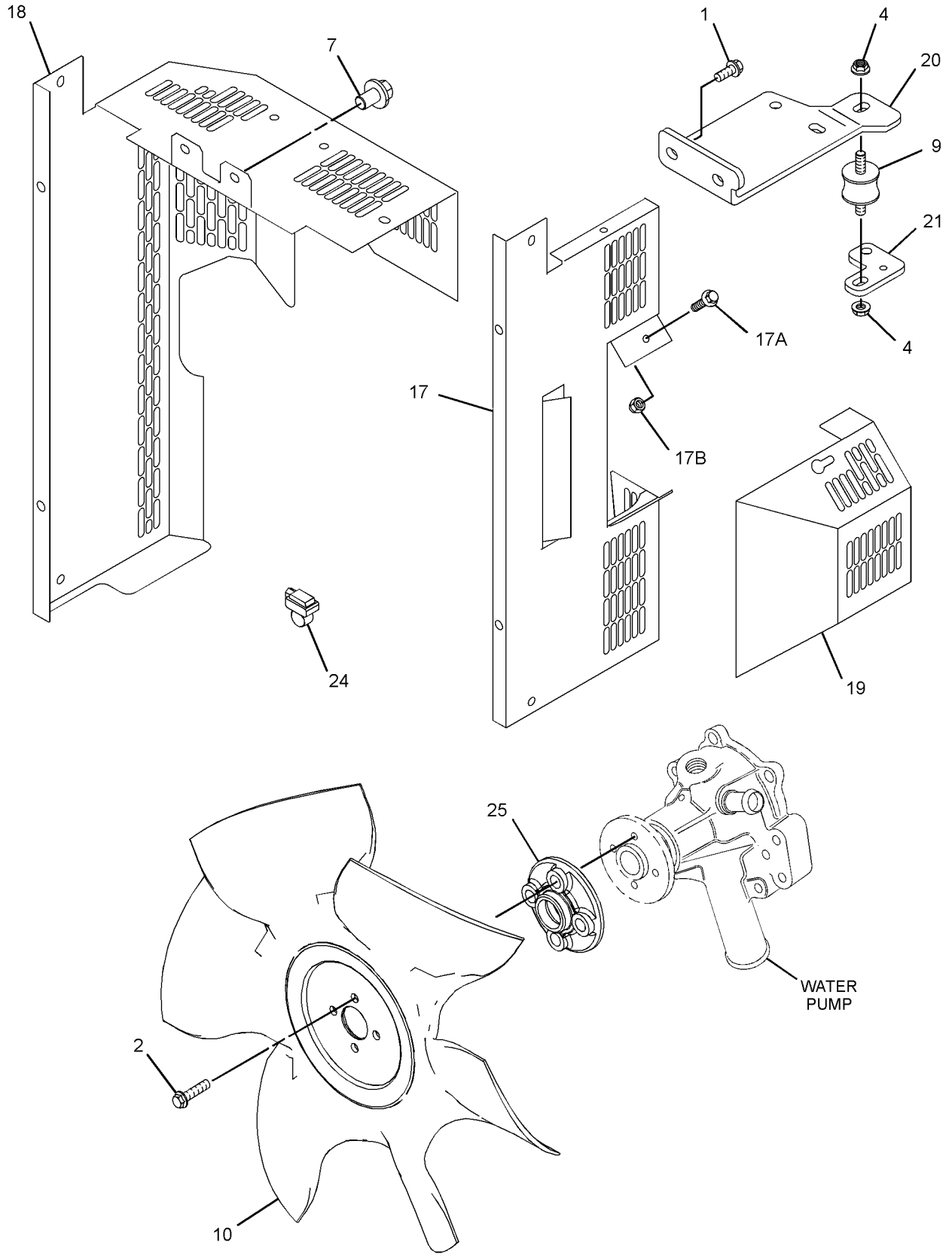

GRAPHIC #2 <END> g06385900

336-5517 RADIATOR GP

TYPE 1

SMCS-1353 **i07042180**

NOTE	REF NO	GRAPHIC REF	PART NUMBER	QTY	PART NAME 1 2 3 4 5 6 (PRODUCT LEVEL)	SEE PAGE
M	1	1,2	**6I-0217**	10	BOLT (M8X1.25X20-MM)	
	2	1	**363-5813**	4	CLAMP-HOSE	
M	4	2	**153-5592**	2	NUT (M8X1.25-THD)	
	5	3	**153-6861**	4	BOLT AS	
	6	3	**161-8260**	1	PLATE	
M	7	2	**180-6118**	10	BOLT (M8X1.25X12-MM)	
M	8	1,3	**198-2664**	15	BOLT-HEAD (M14X1.5X25-MM)	
	9	2	**344-5868**	1	MOUNT	
	10	1	**238-0265**	1	HOSE-RADIATOR (LOWER)	
	11	1	**238-0266**	1	HOSE-RADIATOR (UPPER)	
	12	1	**238-0271**	1	RADIATOR AS	
	12A	1	**202-6616**	1	CAP-RADIATOR	
	12B	1	**295-5876**	1	SHROUD	
M	13	1	**6I-0654**	2	BOLT (M10X1.5X25-MM)	
	14	1,2	**244-3259**	2	CLIP	
	15	2	**328-6607**	1	GUARD	
	16	1	**325-5941**	1	BRACKET AS	
	17	1	**325-5942**	1	BRACKET	
	18	3	**325-5943**	2	BRACKET	
	19	3	**328-6606**	1	FAN	
	20	1	**334-7297**	1	BRACKET-SUPPORT	
	21	1	**334-7299**	2	MOUNT	
M	22	1	**334-7300**	4	BOLT (M6X1X20-MM)	
C	23	2	**366-2656**	1	GUARD AS-FAN	
M	23A	2	**6I-0254**	2	BOLT (M8X1.25X30-MM)	
M	23B	2	**362-8050**	2	NUT (M8X1.25-THD)	
	24	2	**334-7305**	1	GUARD-FAN	
C	25	2	**366-2658**	1	GUARD-ALTERNATOR	
	26	2	**423-6334**	1	BRACKET	
	27	2	**334-7437**	1	BRACKET	
	28	1	**364-8947**	1	PLUG	

C - CHANGE FROM PREVIOUS TYPE
M - METRIC PART

336-5517 **RADIATOR GP (**contd.**)** **i07042180**

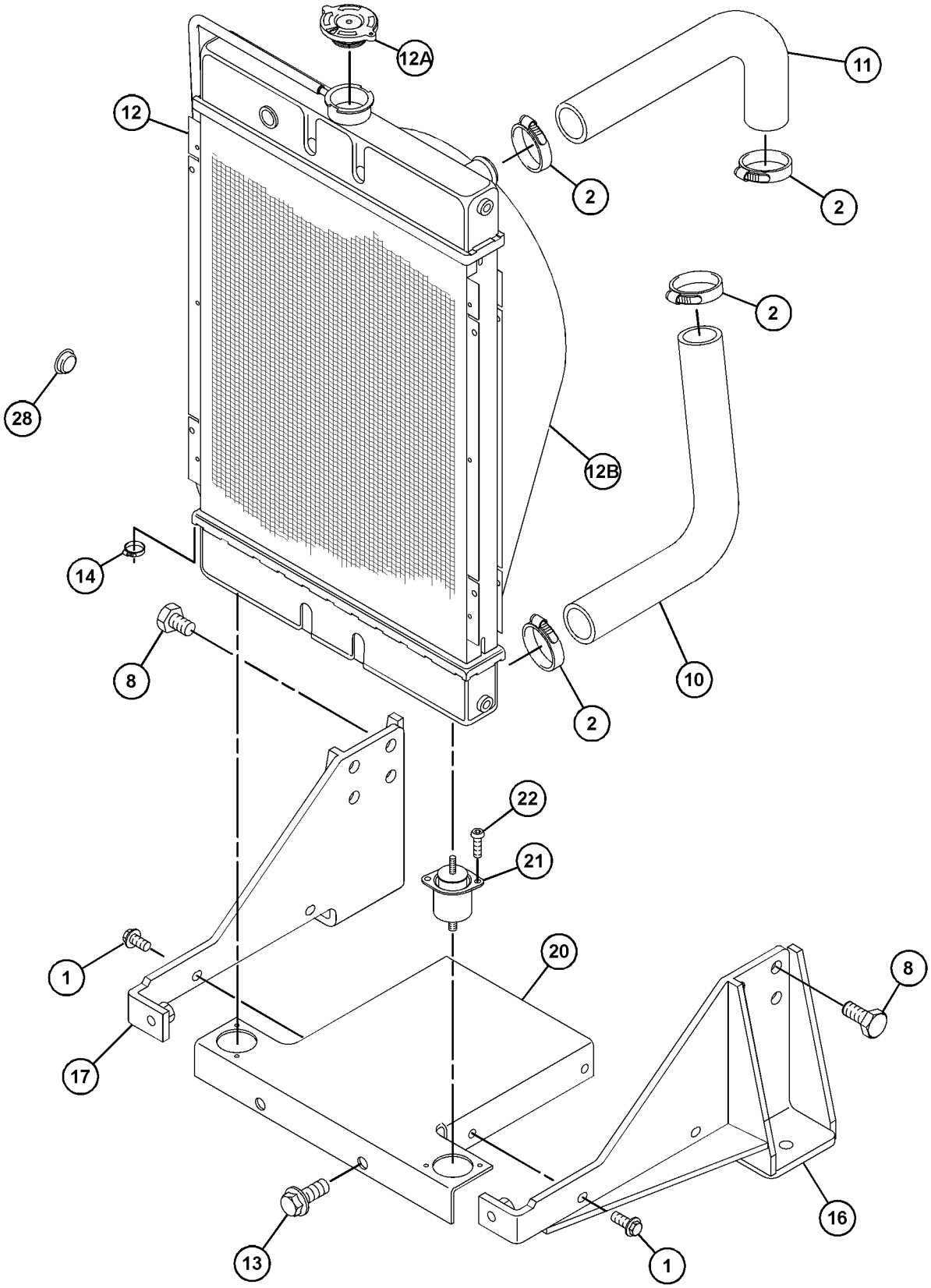

GRAPHIC #1 g06205824

336-5517 **RADIATOR GP** (contd.) **i07042180**

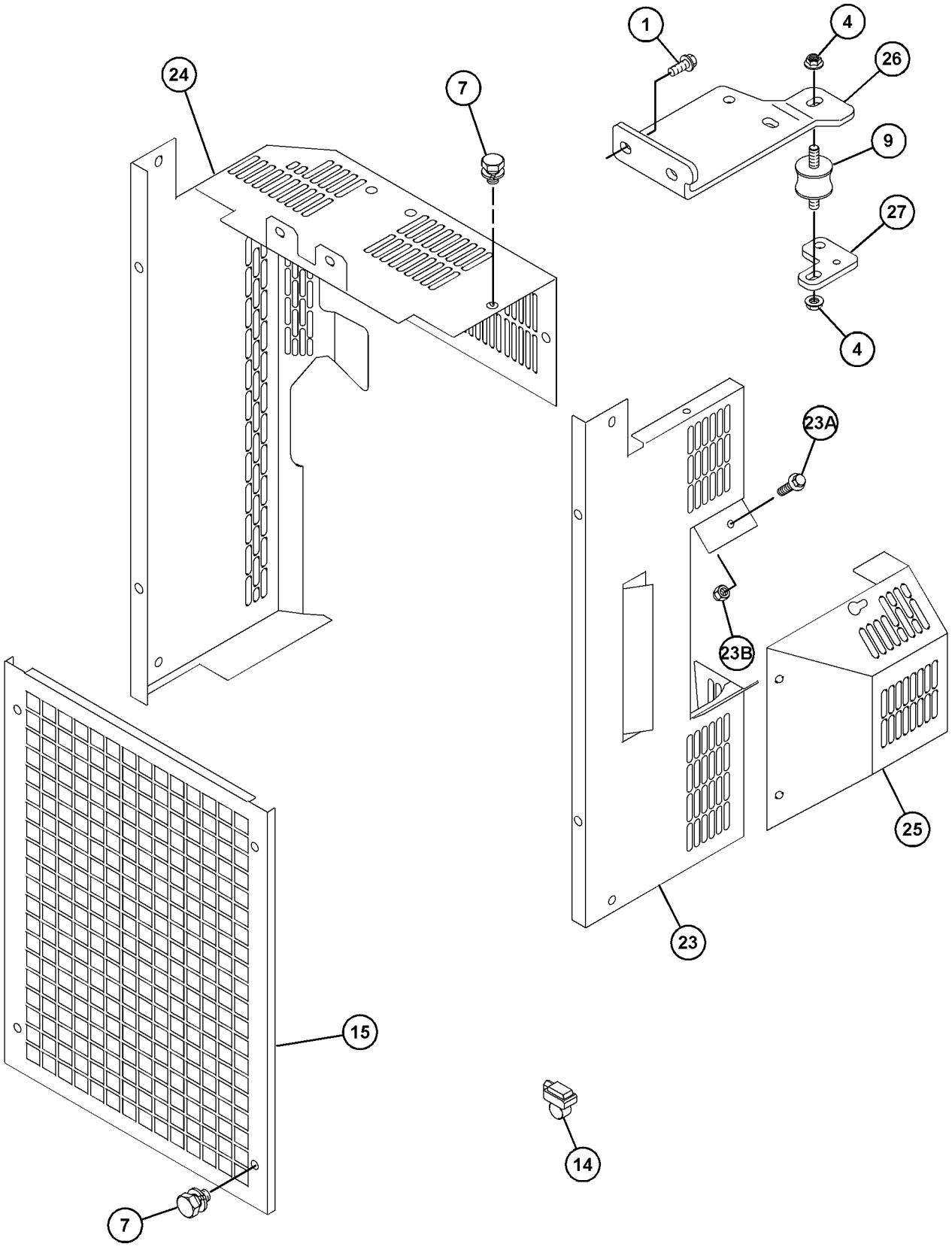

GRAPHIC #2 g06205852

336-5517 **RADIATOR GP (**contd.**)** **i07042180**

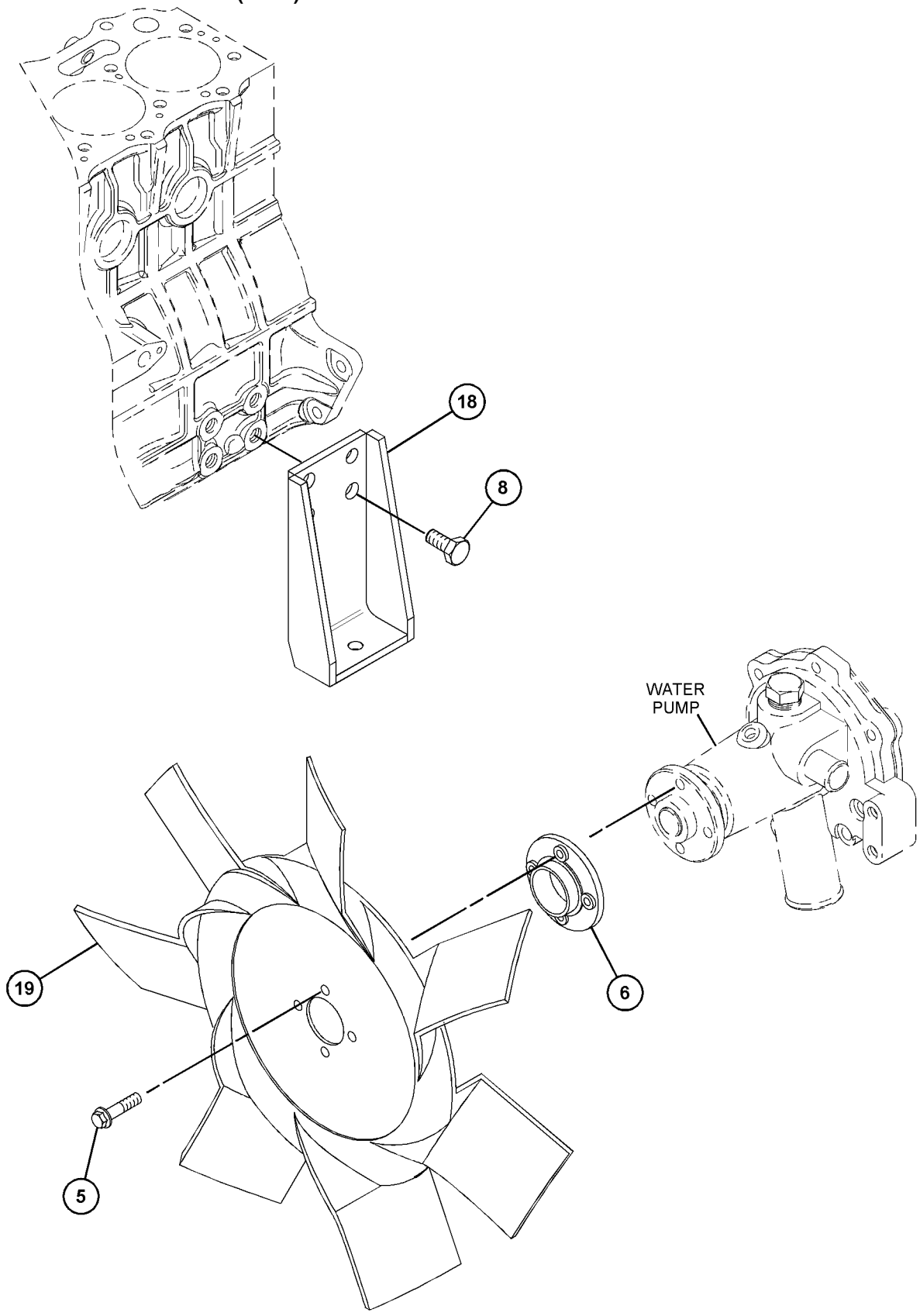

GRAPHIC #3 <END> g06205826

336-5517 RADIATOR GP

TYPE 2

SMCS-1353 **i07240665**

NOTE	REF NO	GRAPHIC REF	PART NUMBER	QTY	PART NAME 1 2 3 4 5 6 (PRODUCT LEVEL)	SEE PAGE
M	1	1,2	**6I-0217**	10	BOLT (M8X1.25X20-MM)	
M	2	1	**6I-0654**	2	BOLT (M10X1.5X25-MM)	
M	3	3	**6I-0917**	4	BOLT (M6X1X25-MM)	
M	4	2	**153-5592**	2	NUT (M8X1.25-THD)	
	5	3	**161-8260**	1	PLATE	
M	6	2	**180-6118**	10	BOLT (M8X1.25X12-MM)	
M	7	1,3	**198-2664**	15	BOLT-HEAD (M14X1.5X25-MM)	
	8	1	**238-0265**	1	HOSE-RADIATOR (LOWER)	
	9	1	**238-0266**	1	HOSE-RADIATOR (UPPER)	
	10	1	**238-0271**	1	RADIATOR AS	
	10A	1	**202-6616**	1	CAP-RADIATOR	
	10B	1	**295-5876**	1	SHROUD	
	11	1,2	**244-3259**	2	CLIP	
	12	1	**325-5941**	1	BRACKET AS	
	13	3	**325-5943**	2	BRACKET	
	14	2	**328-6607**	1	GUARD	
	15	1	**439-2614**	1	BRACKET AS	
	16	1	**334-7299**	2	MOUNT	
M	17	1	**334-7300**	4	BOLT (M6X1X20-MM)	
	18	2	**334-7437**	1	BRACKET	
	19	2	**344-5868**	1	MOUNT	
	20	1	**363-5813**	4	CLAMP-HOSE	
	21	2	**366-2656**	1	GUARD AS-FAN	
M	21A	2	**6I-0254**	2	BOLT (M8X1.25X30-MM)	
M	21B	2	**362-8050**	2	NUT (M8X1.25-THD)	
	22	2	**366-2658**	1	GUARD-ALTERNATOR	
	23	3	**444-7301**	1	FAN-SUCTION	
	24	2	**469-4428**	1	GUARD AS-FAN	
C	25	1	**476-5581**	1	BRACKET AS	
	26	2	**487-9902**	1	BRACKET	

C - CHANGE FROM PREVIOUS TYPE
M - METRIC PART

336-5517 **RADIATOR GP (**contd.**)** **i07240665**

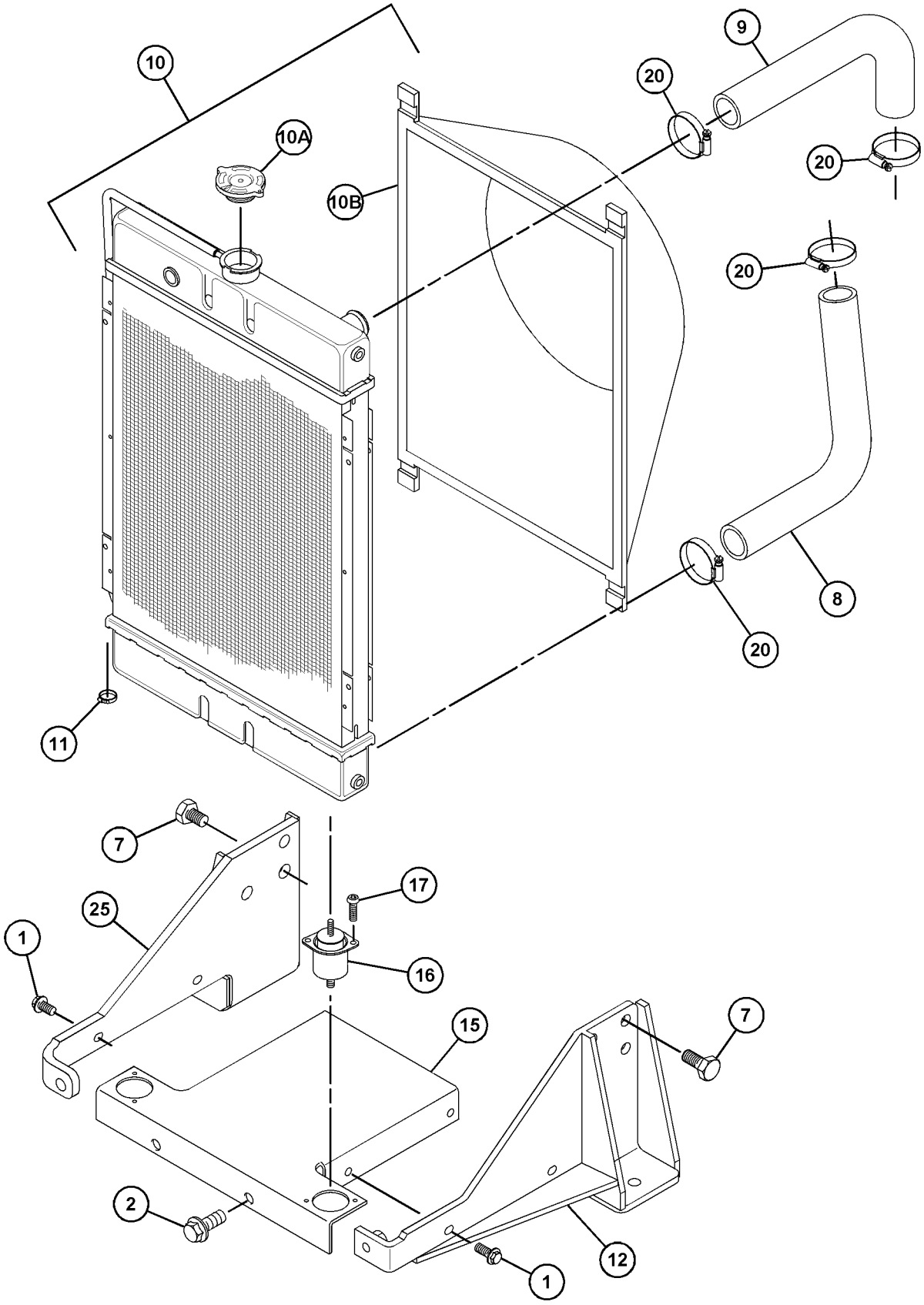

GRAPHIC #1 g06205558

336-5517 **RADIATOR GP** (contd.) **i07240665**

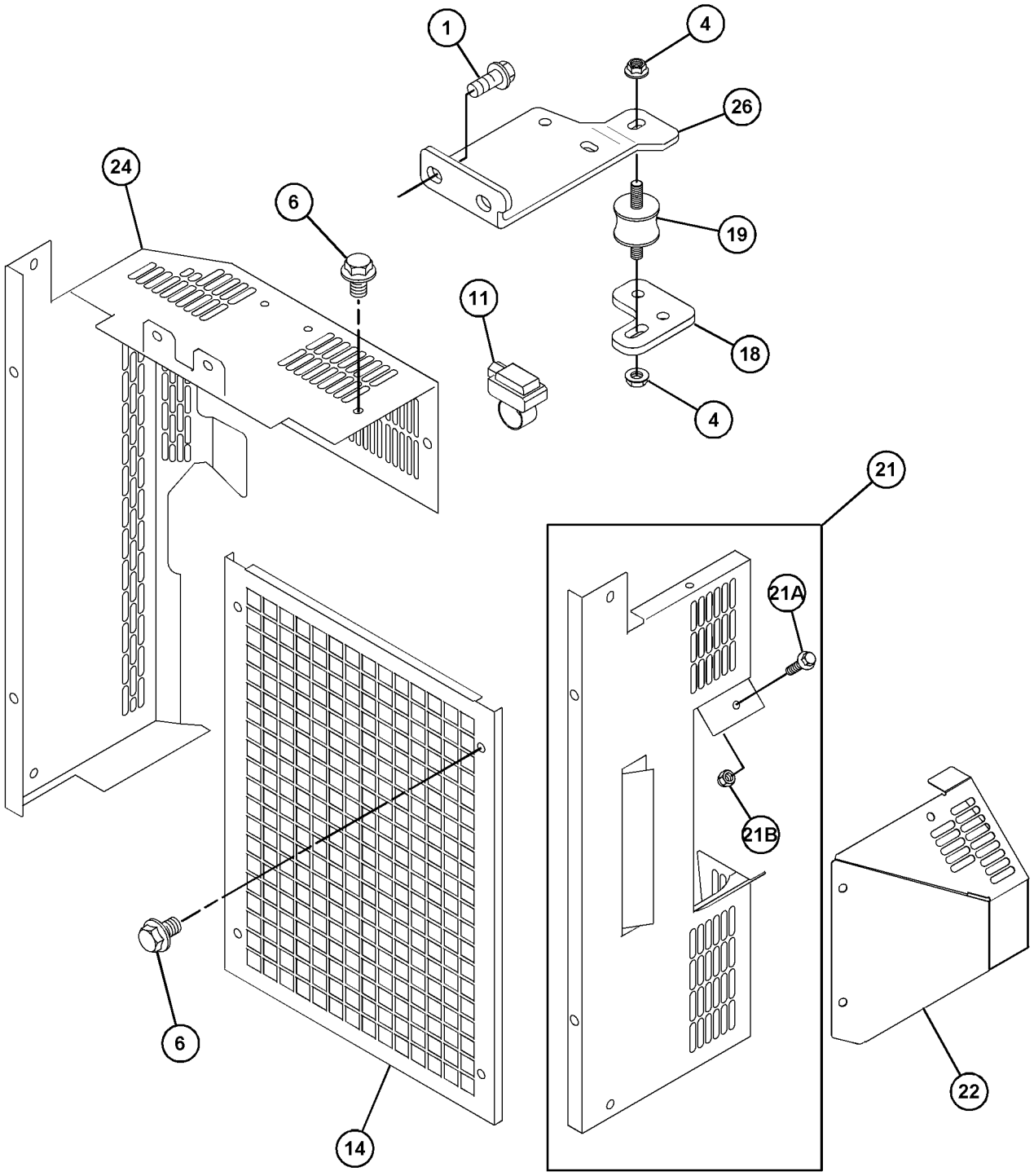

GRAPHIC #2 g06205559

336-5517 **RADIATOR GP (**contd.**)** **i07240665**

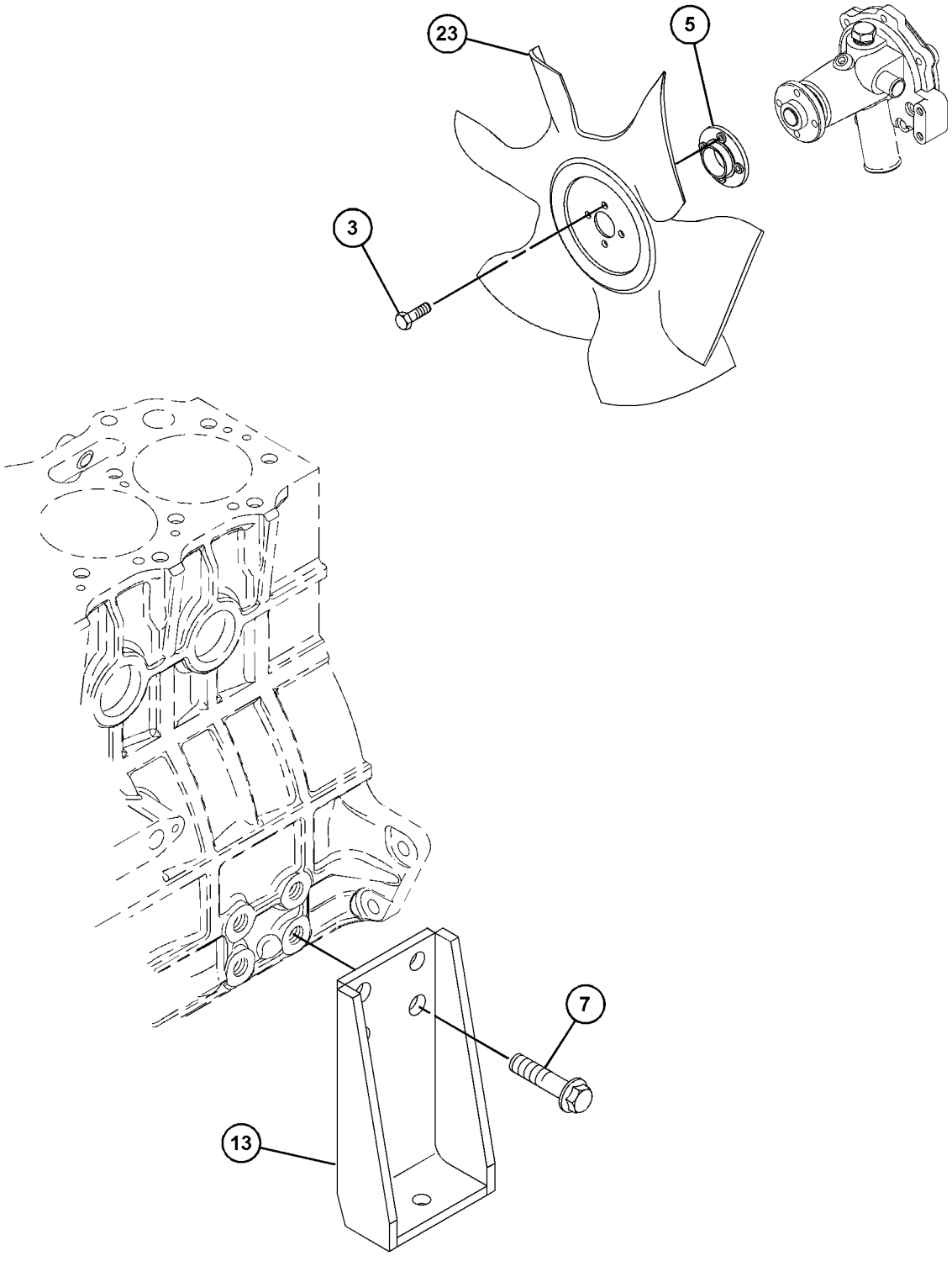

GRAPHIC #3 <END> g06205560

336-5517 RADIATOR GP

TYPE 3

SMCS-1353 **i07577435**

NOTE	REF NO	GRAPHIC REF	PART NUMBER	QTY	PART NAME 1 2 3 4 5 6 (PRODUCT LEVEL)	SEE PAGE
M	1	1,2	**6I-0217**	10	BOLT (M8X1.25X20-MM)	
M	2	1	**123-2899**	2	BOLT (M10X1.5X40-MM)	
CM	3	3	**6I-0917**	2	BOLT (M6X1X25-MM)	
M	4	2	**153-5592**	2	NUT (M8X1.25-THD)	
	5	3	**161-8260**	1	PLATE	
M	6	2	**114-4363**	10	BOLT (M8X1.25X12-MM)	
M	7	1,3	**198-2664**	15	BOLT-HEAD (M14X1.5X25-MM)	
	8	1	**238-0265**	1	HOSE-RADIATOR	
	9	1	**238-0266**	1	HOSE-RADIATOR	
	10	1	**238-0271**	1	RADIATOR AS	
	10A	1	**202-6616**	1	CAP-RADIATOR	
	10B	1	**295-5876**	1	SHROUD	
	11	1,2	**244-3259**	2	CLIP	
	12	1	**325-5941**	1	BRACKET AS	
M	12A	1	**8T-3490**	1	NUT-WELD (M10X1.5-THD)	
	13	3	**325-5943**	2	BRACKET	
	14	2	**328-6607**	1	GUARD	
	15	1	**439-2614**	1	BRACKET AS	
	16	1	**543-5898**	2	MOUNT AS	
M	17	1	**334-7300**	4	BOLT (M6X1X20-MM)	
	18	2	**334-7437**	1	BRACKET	
	19	2	**344-5868**	1	MOUNT	
	20	1	**363-5813**	4	CLAMP-HOSE	
	21	2	**366-2656**	1	GUARD AS-FAN	
M	21A	2	**6I-0254**	2	BOLT (M8X1.25X30-MM)	
M	21B	2	**362-8050**	2	NUT (M8X1.25-THD)	
	22	2	**366-2658**	1	GUARD-ALTERNATOR	
	23	3	**444-7301**	1	FAN-SUCTION (6-BLADE)	
	24	2	**469-4428**	1	GUARD AS-FAN	
	25	1	**476-5581**	1	BRACKET AS	
M	25A	1	**8T-3490**	1	NUT-WELD (M10X1.5-THD)	
	26	2	**487-9902**	1	BRACKET	

C - CHANGE FROM PREVIOUS TYPE
M - METRIC PART

336-5517 **RADIATOR GP (**contd.**)** **i07577435**

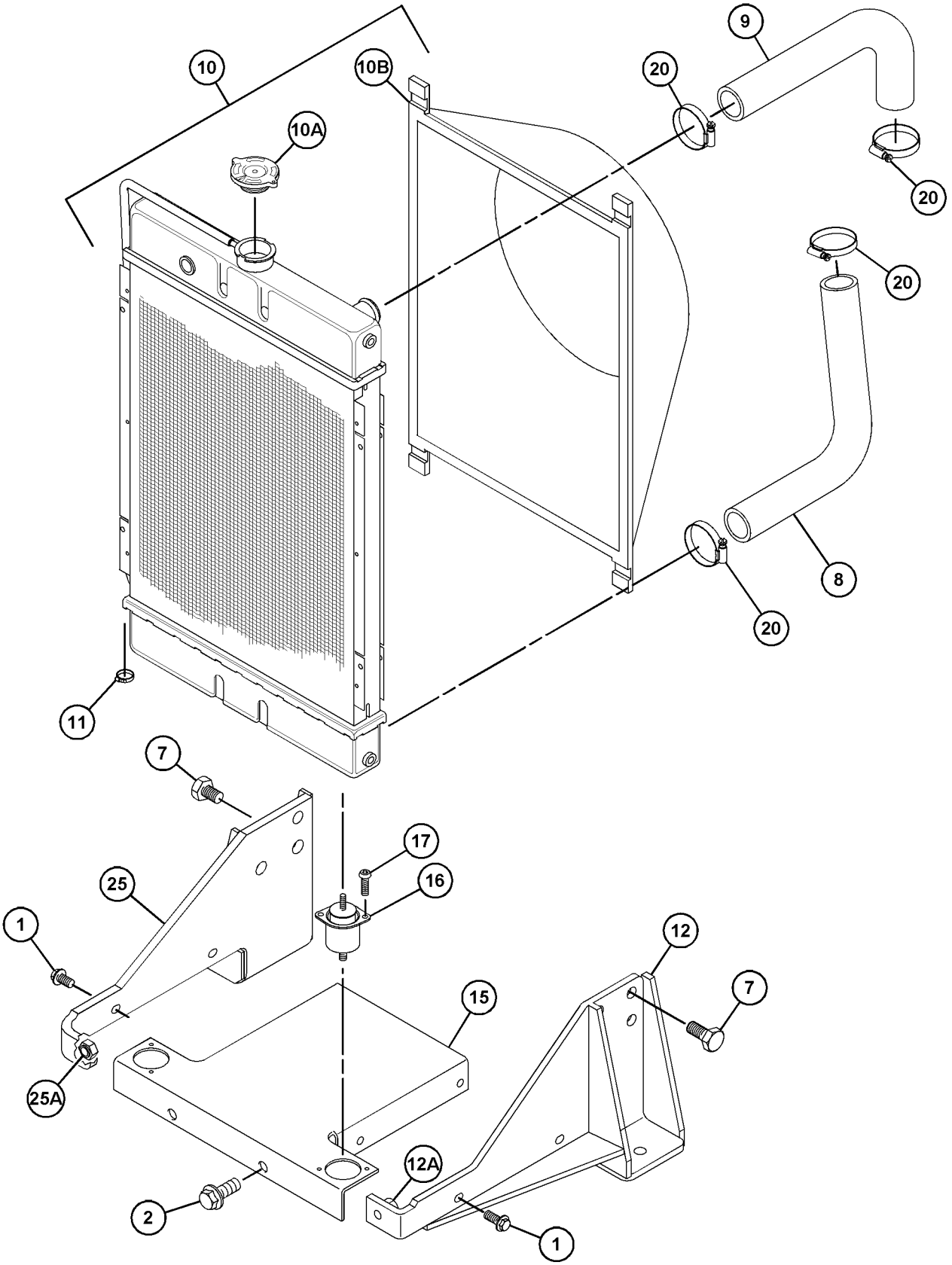

GRAPHIC #1 g06306087

336-5517 **RADIATOR GP** (contd.) **i07577435**

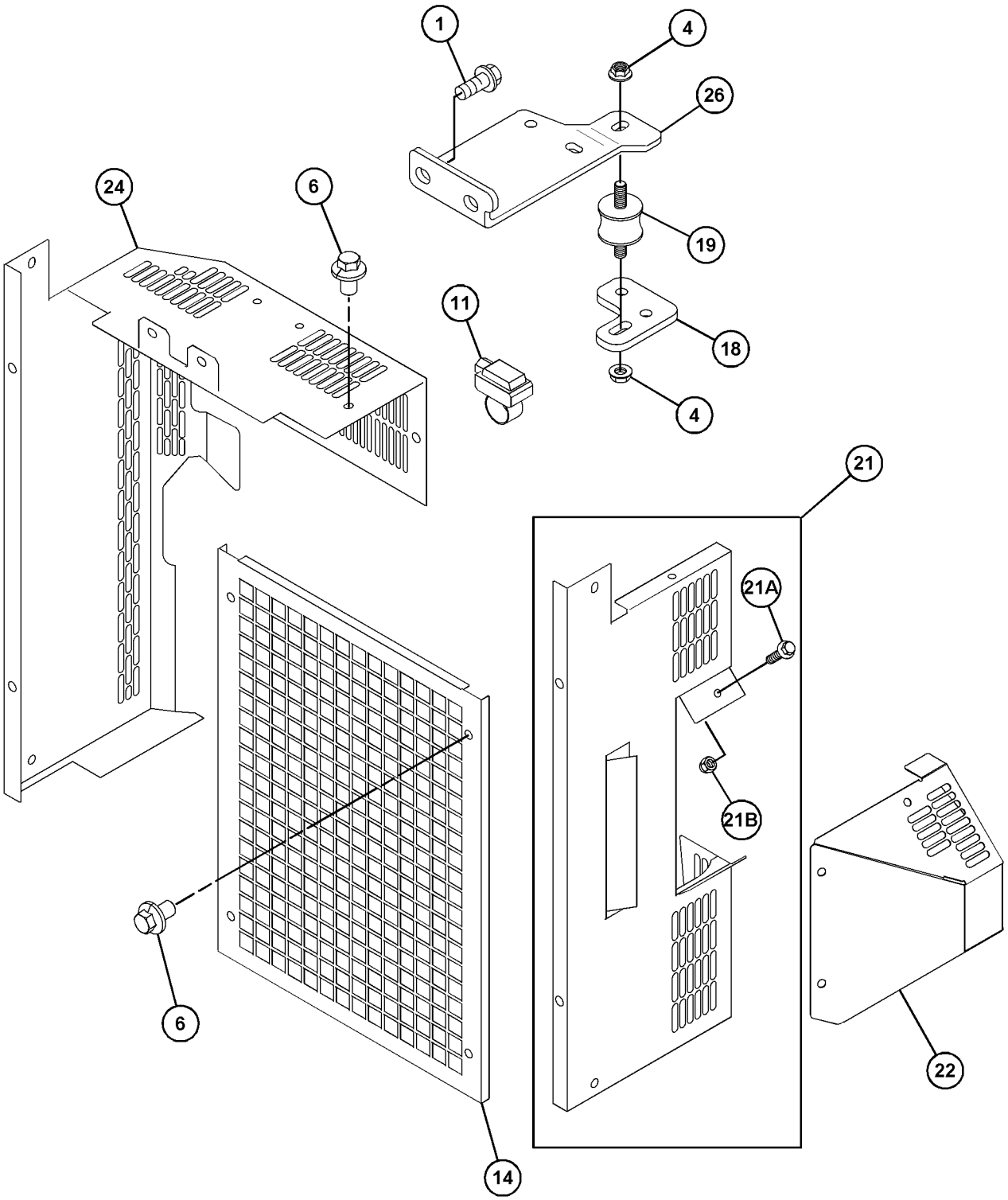

GRAPHIC #2 g06306088

336-5517 **RADIATOR GP (**contd.**)** **i07577435**

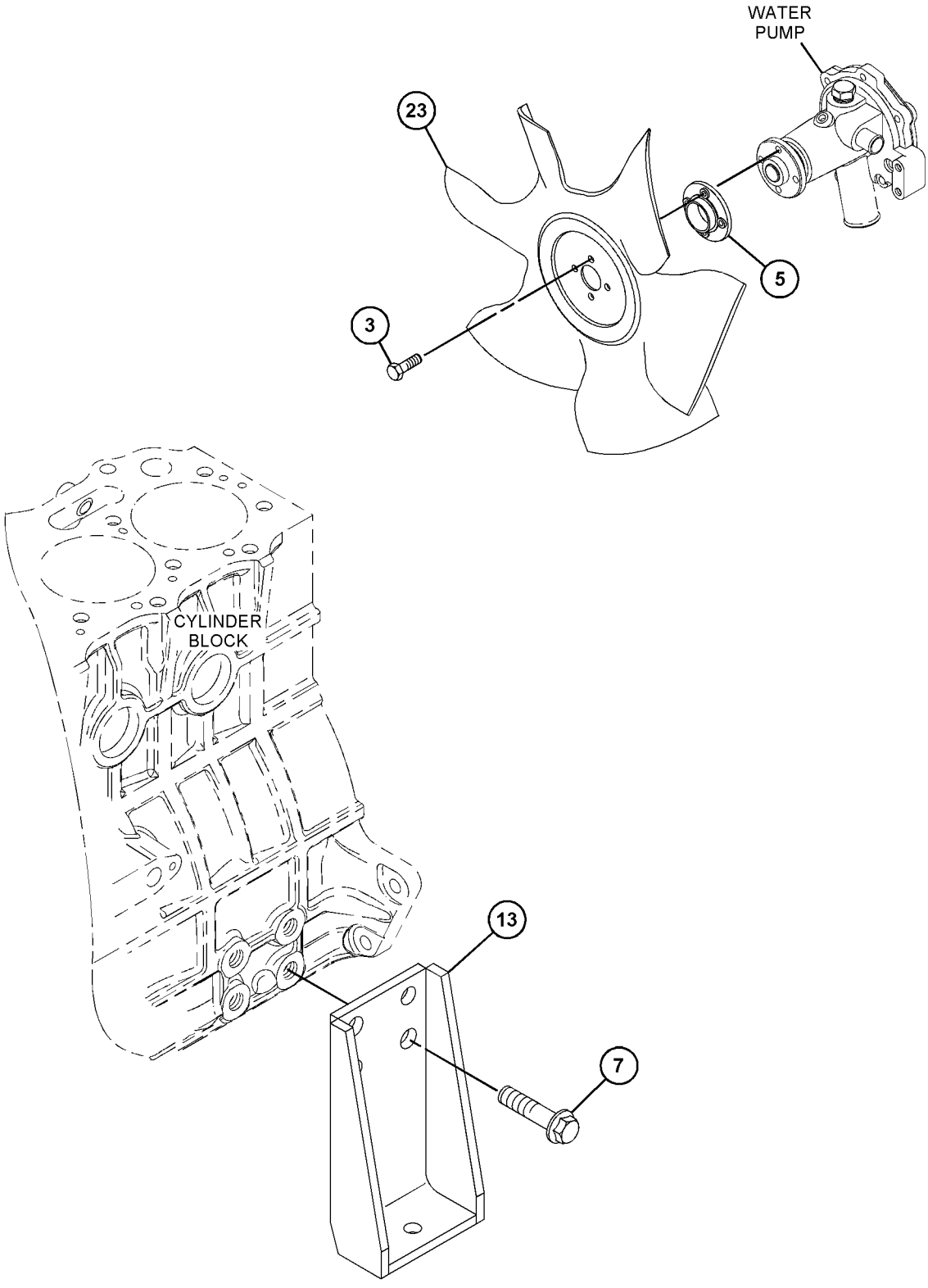

GRAPHIC #3 <END> g06306089

316-9664 AIR CLEANER GP

TYPE 1

SMCS-1051, 1054 **i04490233**

NOTE	REF NO	GRAPHIC REF	PART NUMBER	QTY	PART NAME 1 2 3 4 5 6 (PRODUCT LEVEL)	SEE PAGE
M	1	1	**6I-0217**	2	BOLT (M8X1.25X20-MM)	
M	2	1	**6I-0254**	2	BOLT (M8X1.25X30-MM)	
	3	1	**103-6714**	2	CLIP	
M	4	1	**153-5592**	2	NUT (M8X1.25-THD)	
	5	1	**241-6747**	1	HOSE	
Y	6	1	**244-0514**	1	FILTER ELEMENT AS-AIR	119
	7	1	**326-8547**	1	BRACKET	
	8	1	**292-1992**	1	SPACER	
	9	1	**334-7295**	1	CAP-RAIN	

M - METRIC PART
Y - SEPARATE ILLUSTRATION

316-9664 **AIR CLEANER GP (**contd.**)** **i04490233**

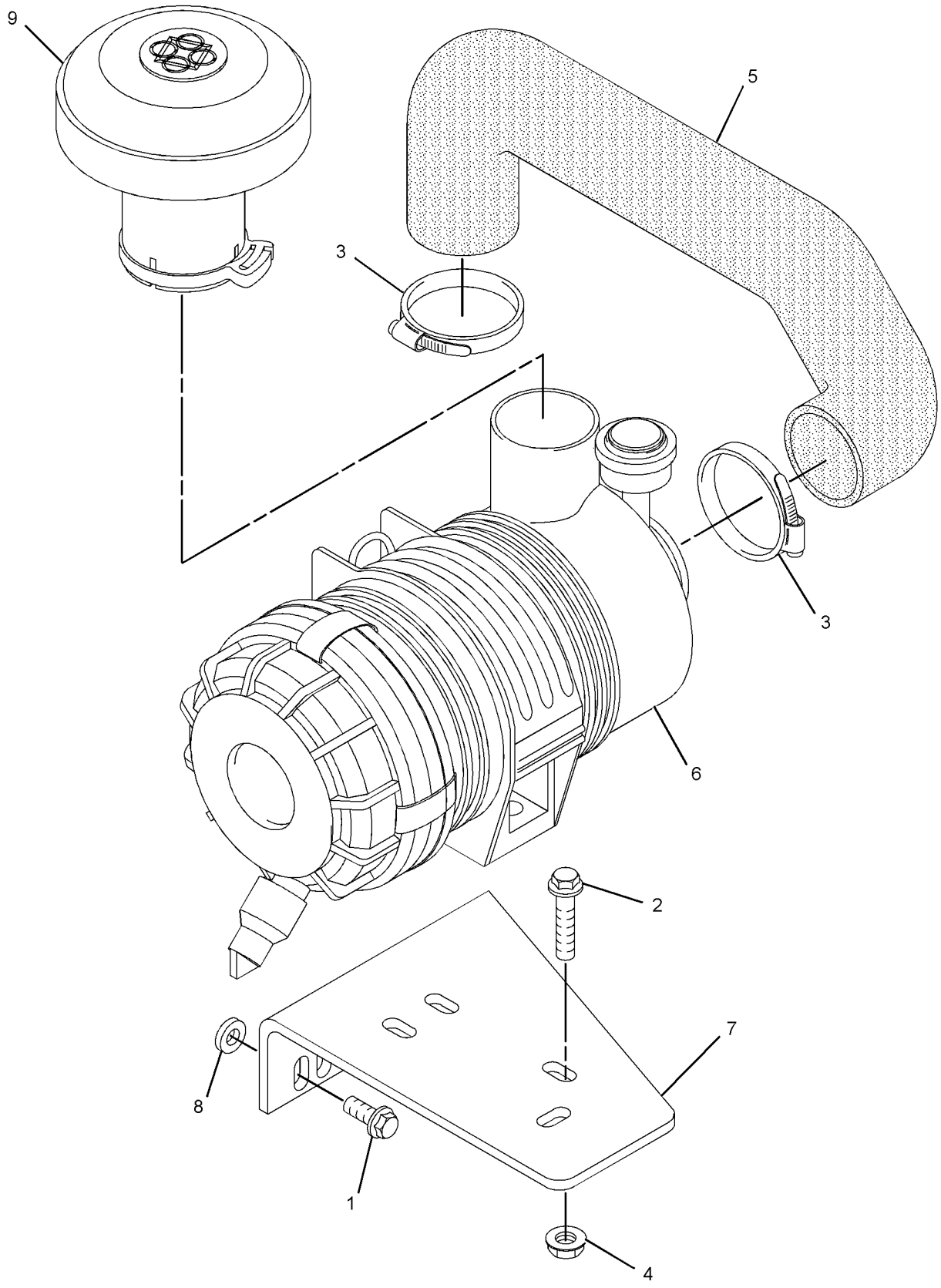

GRAPHIC #1 <END> g01948357

316-9664 AIR CLEANER GP

TYPE 2

SMCS-1051, 1054 **i06833929**

NOTE	REF NO	GRAPHIC REF	PART NUMBER	QTY	PART NAME 1 2 3 4 5 6 (PRODUCT LEVEL)	SEE PAGE
M	1	1	**6I-0217**	2	BOLT (M8X1.25X20-MM)	
M	2	1	**6I-0254**	2	BOLT (M8X1.25X30-MM)	
	3	1	**103-6714**	2	CLIP	
M	4	1	**153-5592**	2	NUT (M8X1.25-THD)	
	5	1	**241-6747**	1	HOSE	
Y	6	1	**244-0514**	1	FILTER ELEMENT AS-AIR	119
	7	1	**326-8547**	1	BRACKET	
	8	1	**468-7382**	1	SPACER (8.8X25.4X6-MM THK)	
	9	1	**326-9052**	1	FILM-WARNING (DO NOT SPRAY, READ OMM)	

M - METRIC PART
Y - SEPARATE ILLUSTRATION

316-9664 **AIR CLEANER GP (**contd.**)** **i06833929**

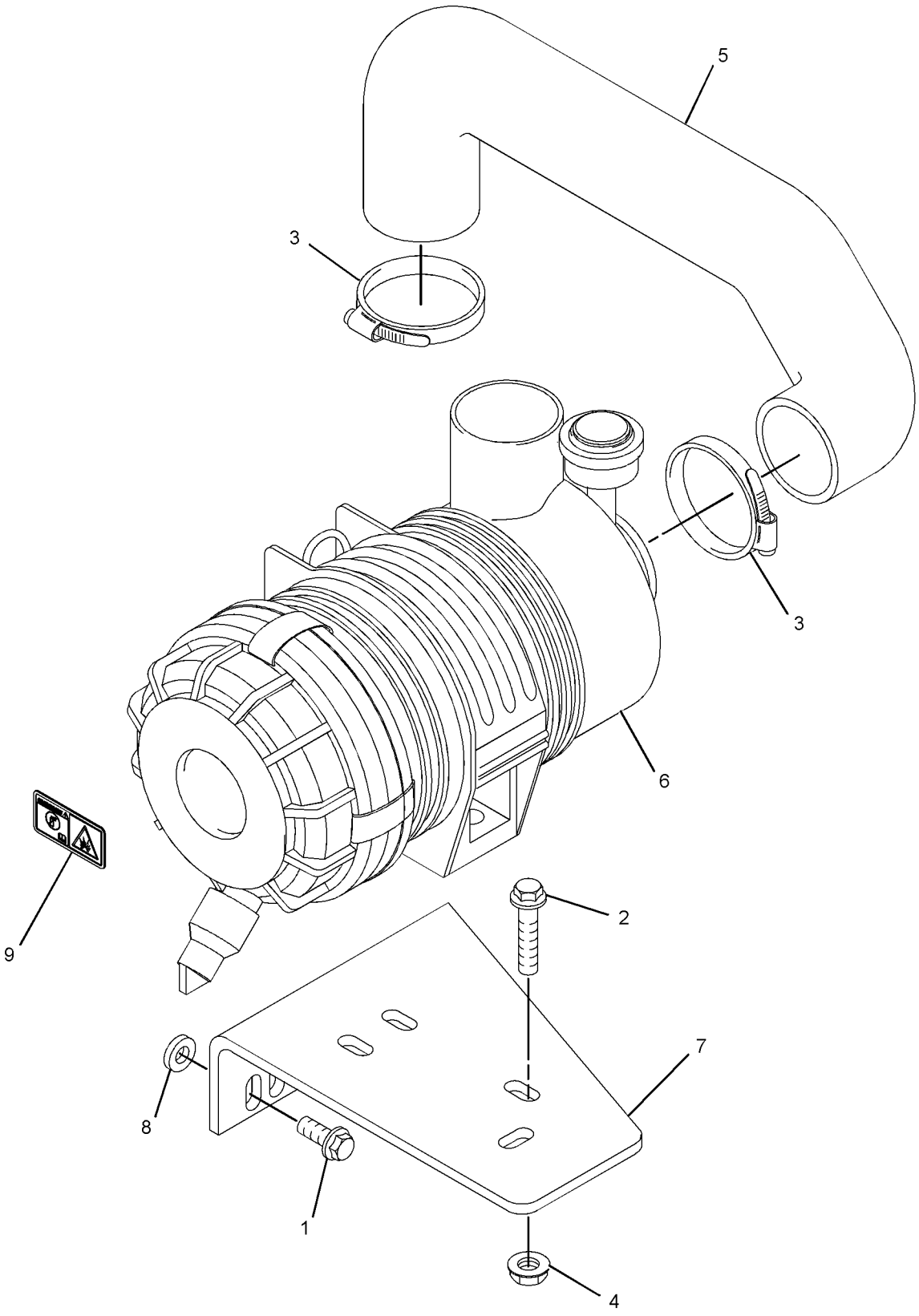

GRAPHIC #1 <END> g03869699

308-2309 CONNECTION GP-EXHAUST

SMCS-1061 **i07176208**

NOTE	REF NO	GRAPHIC REF	PART NUMBER	QTY	PART NAME 1 2 3 4 5 6 (PRODUCT LEVEL)	SEE PAGE
	1	1	**435-0208**	2	GASKET	
	2	1	**168-9001**	8	BOLT AS	
	3	1	**366-3065**	2	FLANGE	

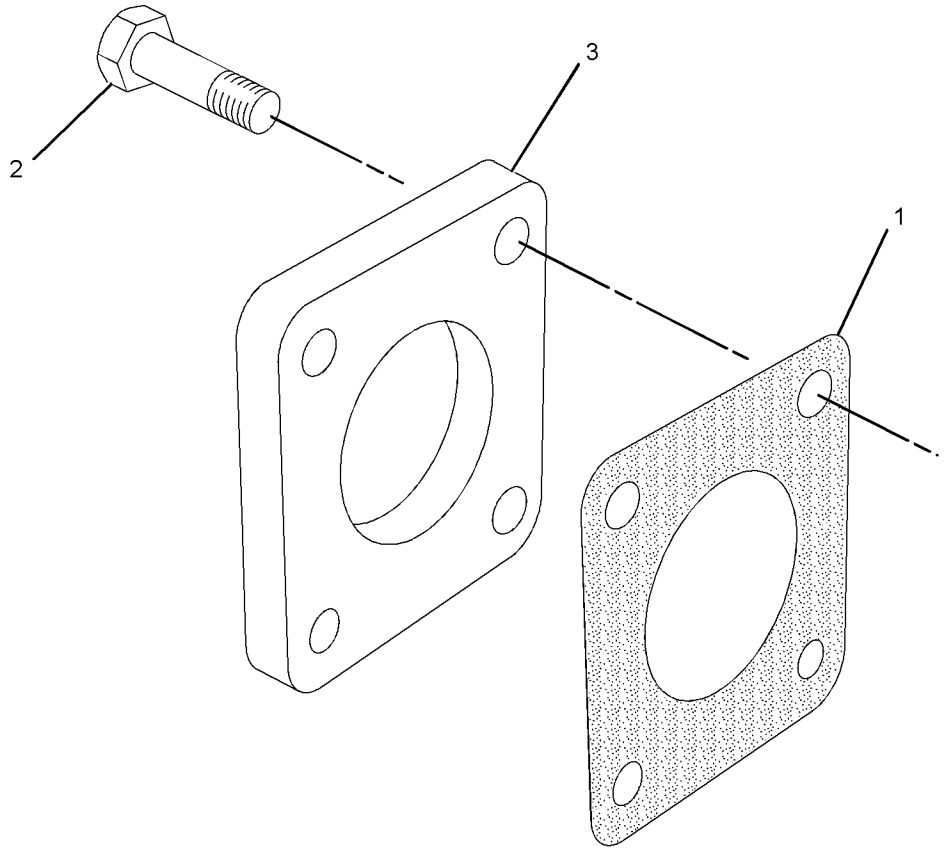

GRAPHIC #1 <END> g01388832

244-0514 FILTER ELEMENT AS-AIR

PART OF 316-9664 AIR CLEANER GP

SMCS-1054 **i03399368**

NOTE	REF NO	GRAPHIC REF	PART NUMBER	QTY	PART NAME 1 2 3 4 5 6 (PRODUCT LEVEL)	SEE PAGE
	1	1	**246-5011**	1	FILTER ELEMENT-AIR	
	2	1	**271-5059**	1	INDICATOR (AIR FILTER SERVICE)	
	3	1	**271-5062**	1	VALVE-DUST	

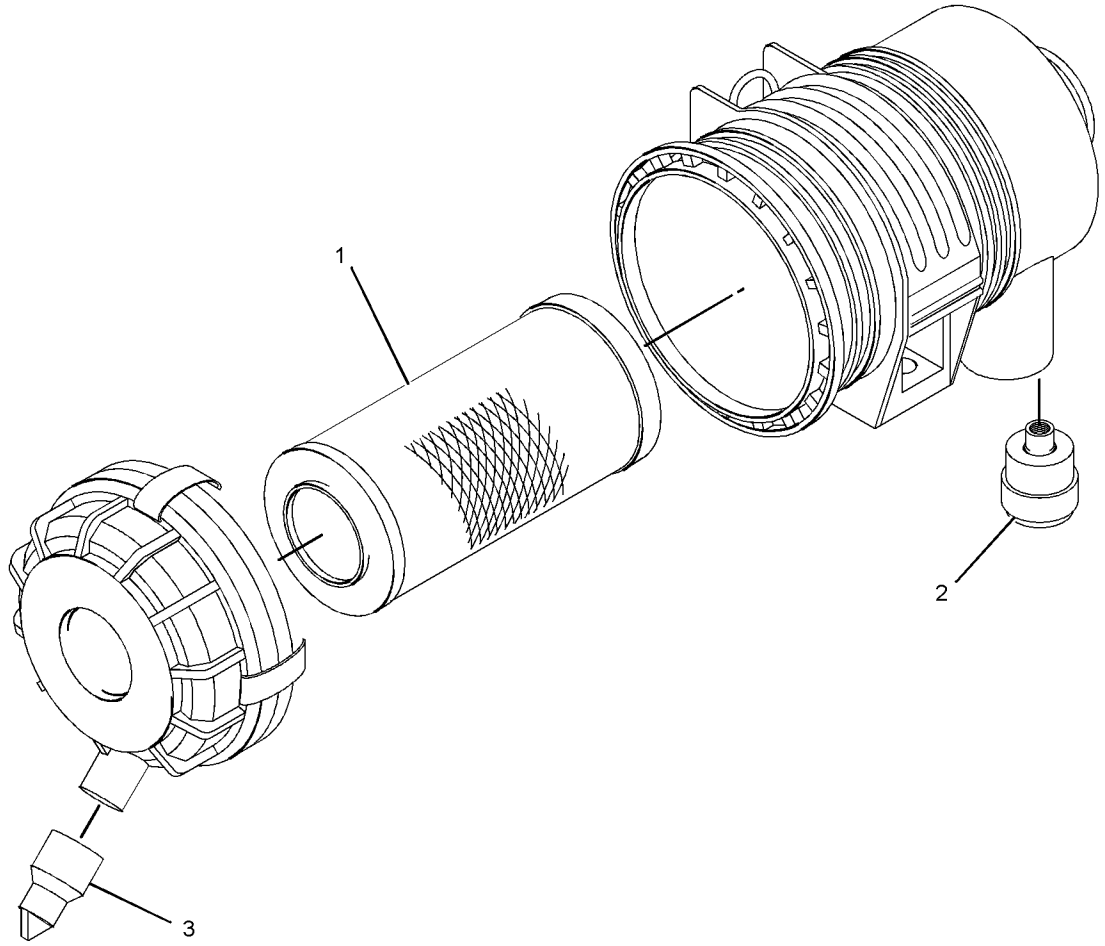

GRAPHIC #1 <END> g01196605

311-1124 MANIFOLD GP-EXHAUST

SMCS-1059 **i03393474**

NOTE	REF NO	GRAPHIC REF	PART NUMBER	QTY	PART NAME 1 2 3 4 5 6 (PRODUCT LEVEL)	SEE PAGE
M	1	1	**153-5592**	2	NUT (M8X1.25-THD)	
	2	1	**154-2428**	4	BOLT AS	
	3	1	**311-1172**	1	MANIFOLD-EXHAUST	
	4	1	**311-1173**	1	GASKET-MANIFOLD	

M - METRIC PART

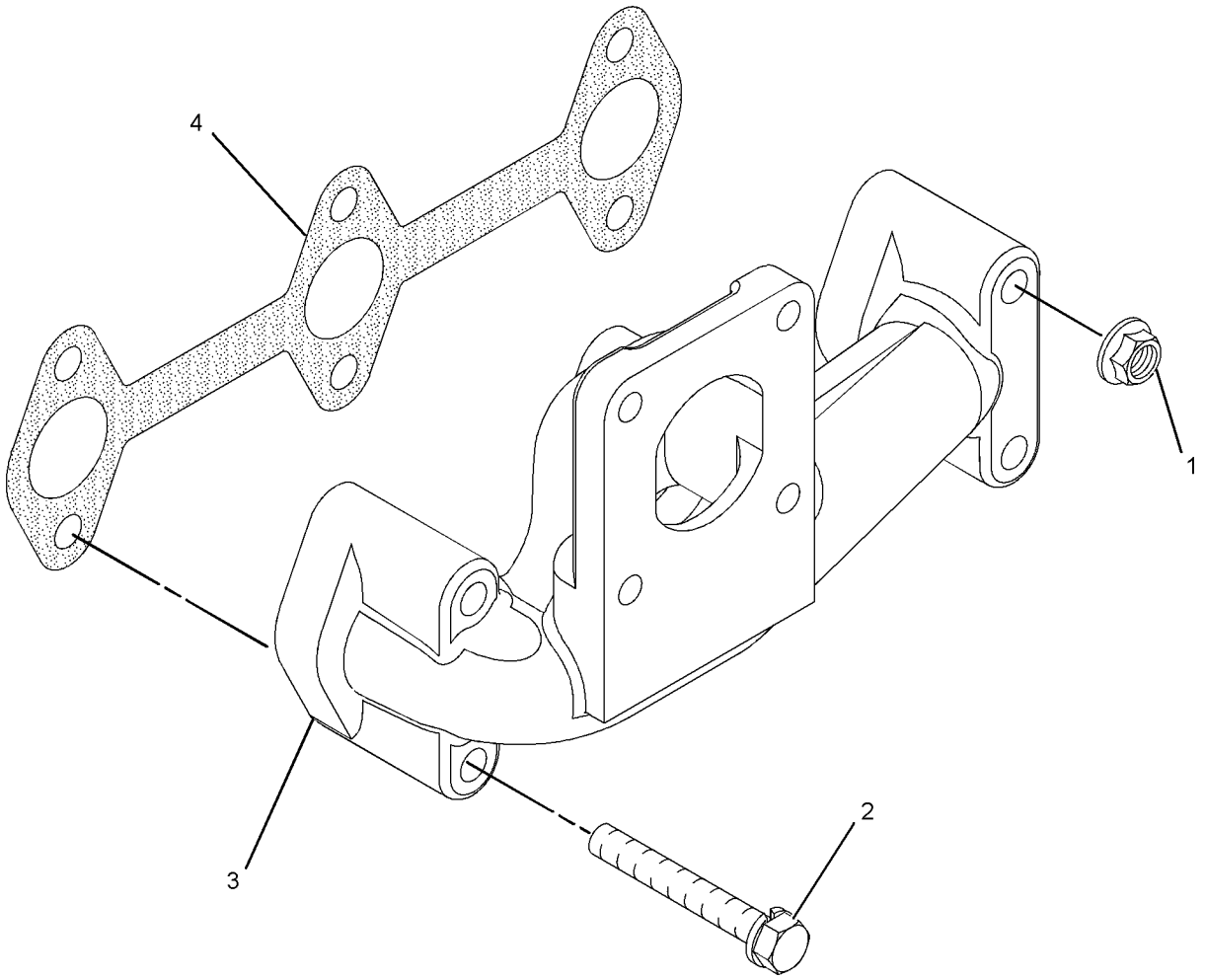

GRAPHIC #1 <END> g01408517

330-3011 CONTROL GP-GOVERNOR

TYPE 1

SMCS-1265, 1276 **i06950376**

NOTE	REF NO	GRAPHIC REF	PART NUMBER	QTY	PART NAME 1 2 3 4 5 6 (PRODUCT LEVEL)	SEE PAGE
M	1	1	**5C-2890**	1	NUT (M6X1-THD)	
	2	1	**139-5511**	1	CAP (TAMPER RESISTANT)	
M	3	1	**153-5592**	1	NUT (M8X1.25-THD)	
	4	1	**153-6415**	2	WASHER (SEAL)	
	5	1	**153-7983**	1	PIN	
	6	1	**095-1574**	1	SEAL-O-RING	
	7	1	**309-6729**	1	SEAL-O-RING	
M	8	1	**369-4486**	2	BOLT (M6X1X35-MM)	
M	9	1	**162-2207**	1	NUT (M6X1-THD)	
M	10	1	**106-8916**	4	BOLT (M6X1X16-MM)	
	11	1	**217-7115**	1	CAP (TAMPER RESISTANT)	
	12	1	**335-5578**	1	BRACKET	
	13	1	**423-7724**	1	GASKET	
	14	1	**308-1882**	1	SPRING	
M	15	1	**308-1892**	1	NUT (M6X1-THD)	
	16	1	**308-1897**	2	RING	
	17	1	**425-7065**	1	CAP-TAMPER PROOF	
	18	1	**321-4249**	1	NUT	
	19	1	**330-9189**	1	PLUG	
	20	1	**308-4266**	1	SHAFT	
	21	1	**309-6728**	1	SHAFT	
	22	1	**311-0655**	1	SPRING	
	23	1	**315-5236**	1	BOLT AS	
	23A	1	**153-7987**	1	WASHER (9.2X17X1.8-MM THK)	
M	23B	1	**191-9297**	1	NUT (M10X1.25-THD)	
	23C	1	**315-5235**	1	SPRING	
	24	1	**364-7487**	1	SPRING	
	26	1	**334-0732**	1	ARM (FRONT HOUSING)	
	27	1	**322-7492**	1	LEVER-CONTROL	
	28	1	**324-3400**	1	LEVER AS-CONTROL	
M	29	1	**308-1889**	1	NUT (M10X1.25-THD)	
M	30	1	**495-0737**	1	BOLT (M6X0.5X19.5-MM)	
M	31	1	**313-2025**	1	BOLT-SPECIAL (M10X1.25-MM THD)	
	32	1	**336-2965**	1	SPRING	
	33	1	**308-1875**	1	SEAL-O-RING	

M - METRIC PART

330-3011 **CONTROL GP-GOVERNOR (**contd.**)** **i06950376**

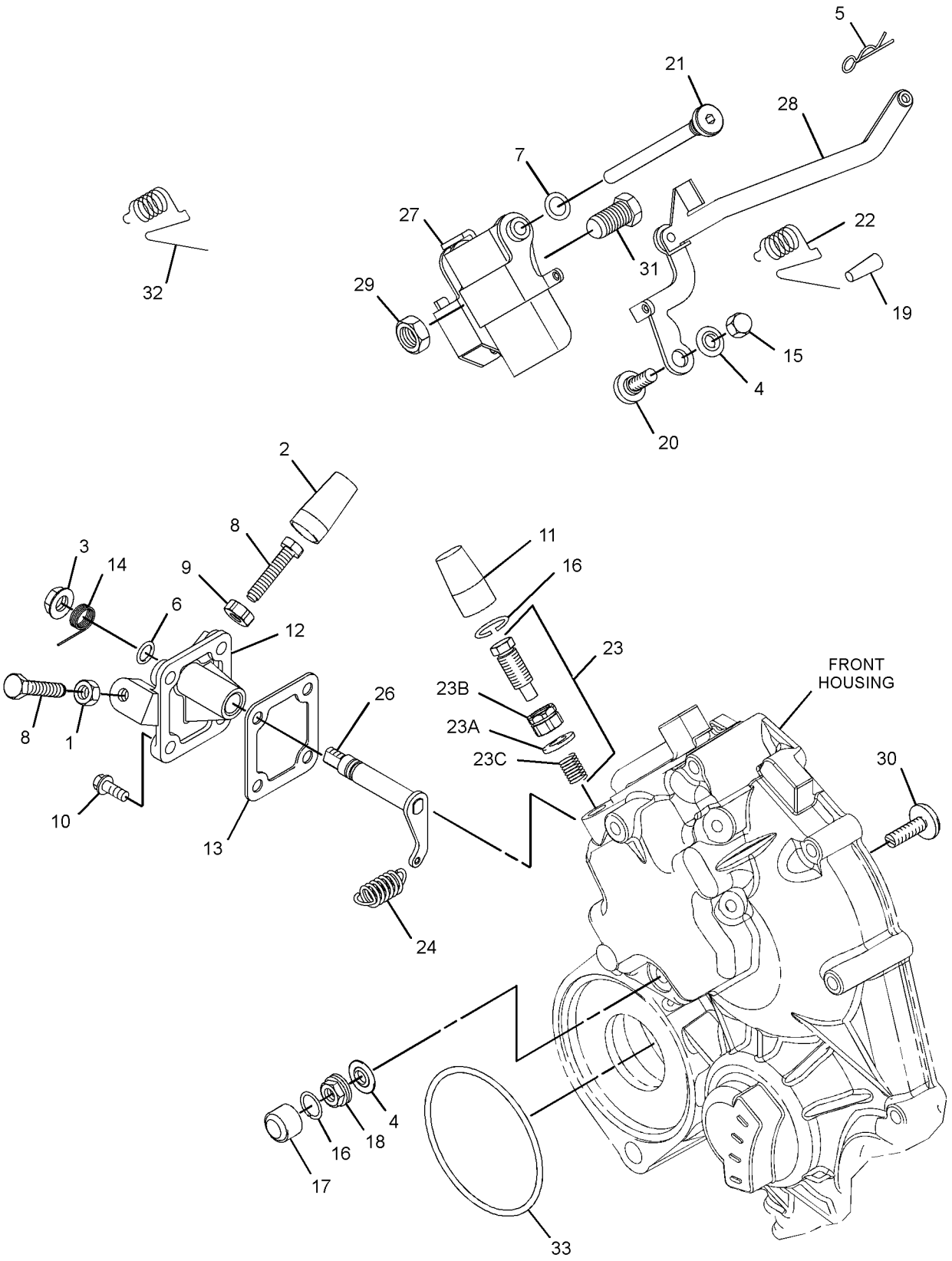

GRAPHIC #1 <END> g06205250

330-3011 CONTROL GP-GOVERNOR

TYPE 2

SMCS-1265, 1276 **i07203794**

NOTE	REF NO	GRAPHIC REF	PART NUMBER	QTY	PART NAME 1 2 3 4 5 6 (PRODUCT LEVEL)	SEE PAGE
M	1	1	**5C-2890**	1	NUT (M6X1-THD)	
	2	1	**139-5511**	1	CAP (TAMPER RESISTANT)	
M	3	1	**153-5592**	1	NUT (M8X1.25-THD)	
	4	1	**153-6415**	2	WASHER (SEAL)	
	5	1	**153-7983**	1	PIN	
	6	1	**095-1574**	1	SEAL-O-RING	
	7	1	**309-6729**	1	SEAL-O-RING	
M	8	1	**369-4486**	2	BOLT (M6X1X35-MM)	
M	9	1	**162-2207**	1	NUT (M6X1-THD)	
M	10	1	**106-8916**	4	BOLT (M6X1X16-MM)	
	11	1	**217-7115**	1	CAP (TAMPER RESISTANT)	
	12	1	**335-5578**	1	BRACKET	
	13	1	**423-7724**	1	GASKET	
	14	1	**308-1882**	1	SPRING	
M	15	1	**308-1892**	1	NUT (M6X1-THD)	
C	16	1	**308-1897**	1	RING	
C	17	1	**503-9707**	1	CAP	
C	18	1	**502-9478**	1	NUT (TAMPER RESISTANT)	
	19	1	**330-9189**	1	PLUG	
	20	1	**308-4266**	1	SHAFT	
	21	1	**309-6728**	1	SHAFT	
	22	1	**311-0655**	1	SPRING	
	23	1	**315-5236**	1	BOLT AS	
	23A	1	**153-7987**	1	WASHER (9.2X17X1.8-MM THK)	
M	23B	1	**191-9297**	1	NUT (M10X1.25-THD)	
	23C	1	**315-5235**	1	SPRING	
	24	1	**364-7487**	1	SPRING	
	26	1	**334-0732**	1	ARM (FRONT HOUSING)	
	27	1	**322-7492**	1	LEVER-CONTROL	
	28	1	**324-3400**	1	LEVER AS-CONTROL	
M	29	1	**308-1889**	1	NUT (M10X1.25-THD)	
M	30	1	**495-0737**	1	BOLT (M6X0.5X19.5-MM)	
M	31	1	**313-2025**	1	BOLT-SPECIAL (M10X1.25-MM THD)	
	32	1	**336-2965**	1	SPRING	
	33	1	**308-1875**	1	SEAL-O-RING	
C	34	1	**503-9731**	1	SHROUD	
C	35	1	**502-5421**	1	PIN	

C - CHANGE FROM PREVIOUS TYPE
M - METRIC PART

330-3011 **CONTROL GP-GOVERNOR (**contd.**)** **i07203794**

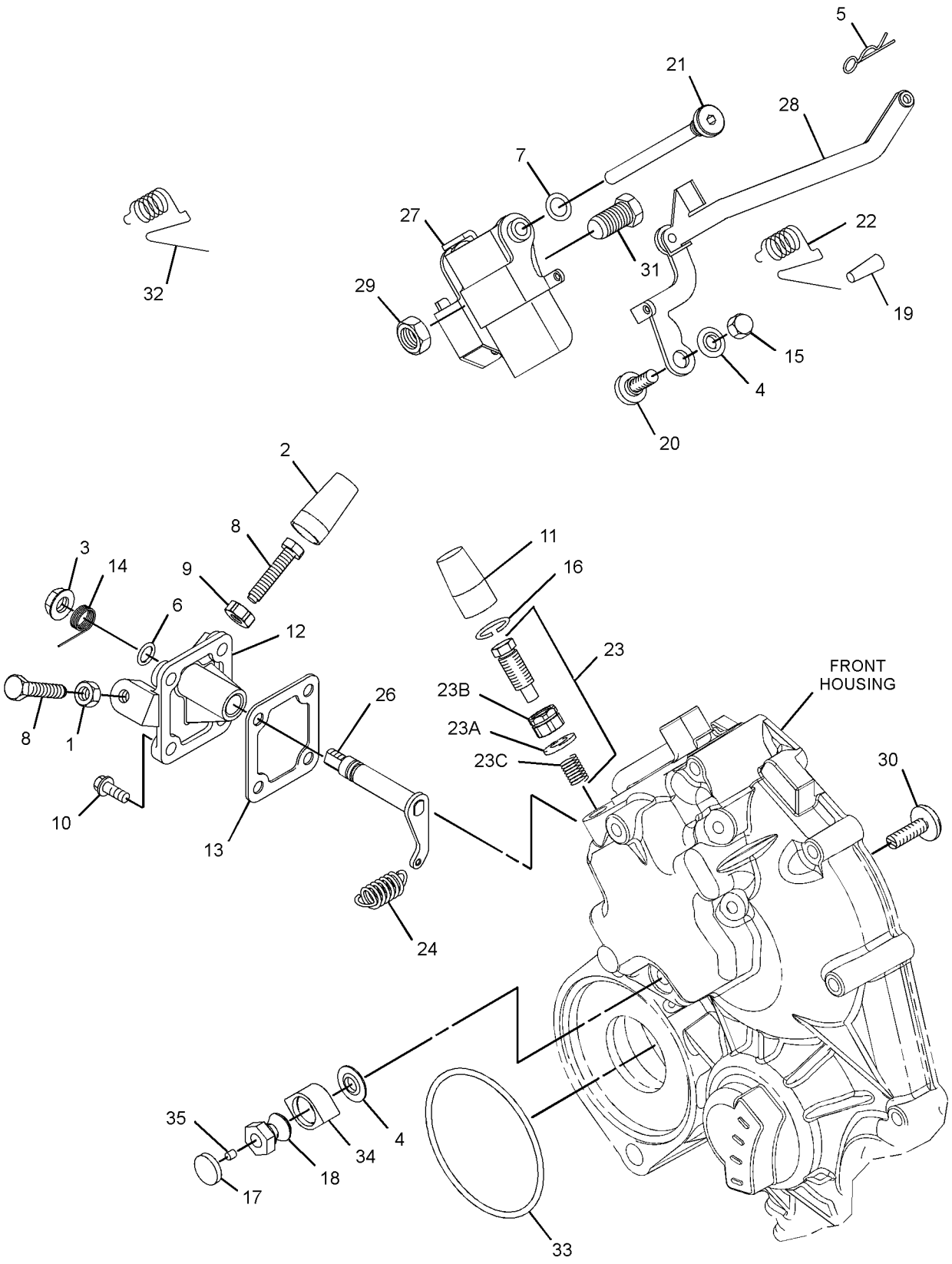

GRAPHIC #1 <END> g06254611

364-2742 CONTROL GP-GOVERNOR

SMCS-1265, 1276 **i06907859**

NOTE	REF NO	GRAPHIC REF	PART NUMBER	QTY	PART NAME 1 2 3 4 5 6 (PRODUCT LEVEL)	SEE PAGE
M	1	1	**106-8916**	4	BOLT (M6X1X16-MM)	
M	2	1	**5C-2890**	1	NUT (M6X1-THD)	
	3	1	**139-5511**	1	CAP (TAMPER RESISTANT)	
M	4	1	**153-5592**	1	NUT (M8X1.25-THD)	
	5	1	**153-6415**	2	WASHER (SEAL)	
	6	1	**153-7983**	1	PIN	
	7	1	**095-1574**	1	SEAL-O-RING	
M	8	1	**162-2207**	1	NUT (M6X1-THD)	
	9	1	**217-7115**	1	CAP (TAMPER RESISTANT)	
	10	1	**423-7724**	1	GASKET	
	11	1	**308-1882**	1	SPRING	
M	12	1	**308-1889**	1	NUT (M10X1.25-THD)	
M	13	1	**308-1892**	1	NUT (M6X1-THD)	
	14	1	**308-1897**	2	RING	
	15	1	**336-2965**	1	SPRING	
	16	1	**308-4266**	1	SHAFT	
	17	1	**309-6729**	1	SEAL-O-RING	
M	18	1	**495-0737**	1	BOLT (M6X0.5X19.5-MM)	
	19	1	**311-0655**	1	SPRING	
M	20	1	**313-2025**	1	BOLT-SPECIAL (M10X1.25-MM THD)	
	21	1	**315-5236**	1	BOLT AS	
	21A	1	**153-7987**	1	WASHER (9.2X17X1.8-MM THK)	
M	21B	1	**191-9297**	1	NUT (M10X1.25-THD)	
	21C	1	**315-5235**	1	SPRING	
	22	1	**364-7487**	1	SPRING	
	23	1	**321-4249**	1	NUT	
	24	1	**324-3400**	1	LEVER AS-CONTROL	
	25	1	**330-9189**	1	PLUG	
	26	1	**334-0732**	1	ARM (FRONT HOUSING)	
	27	1	**335-5578**	1	BRACKET	
M	28	1	**369-4486**	2	BOLT (M6X1X35-MM)	
	29	1	**390-3729**	1	LEVER-CONTROL	
	30	1	**390-3731**	1	SHAFT	
	31	1	**425-7065**	1	CAP-TAMPER PROOF	

M - METRIC PART

364-2742 **CONTROL GP-GOVERNOR (**contd.**)** **i06907859**

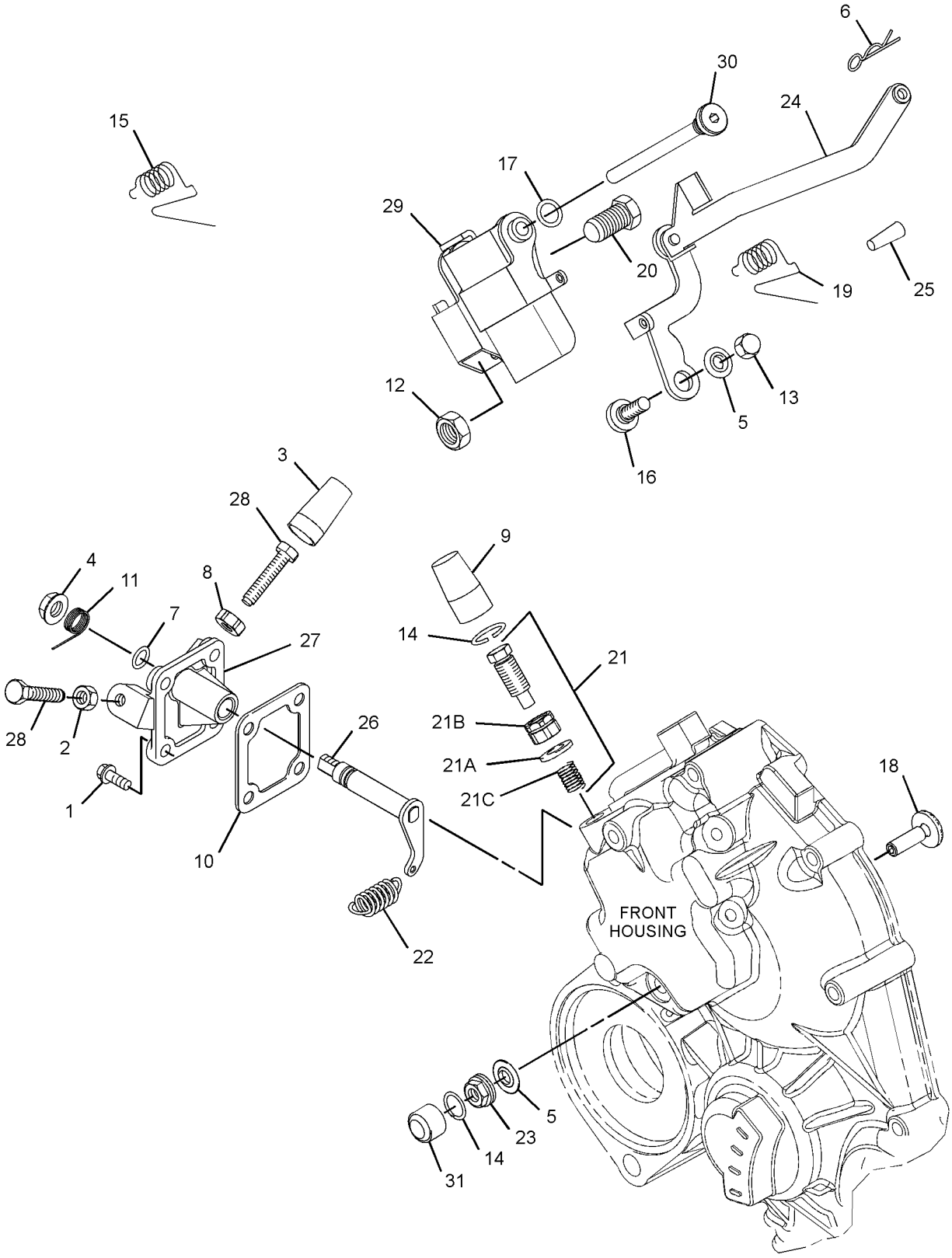

GRAPHIC #1 <END> g06174310

276-1804 FILTER GP-FUEL

PART OF 579-9465 PUMP GP-FUEL PRM & PRIM FILTER

SMCS-1261 **i07772655**

NOTE	REF NO	GRAPHIC REF	PART NUMBER	QTY	PART NAME 1 2 3 4 5 6 (PRODUCT LEVEL)	SEE PAGE
	1	1	**276-1806**	1	FILTER ELEMENT-FUEL	
	2	1	**302-7776**	1	BOWL-FUEL FILTER	
	3	1	**302-7777**	3	PLUG-DRAIN (WATER SEPARATOR)	
	4	1	**302-7778**	1	SEAL	

276-1804 **FILTER GP-FUEL (**contd.**)** **i07772655**

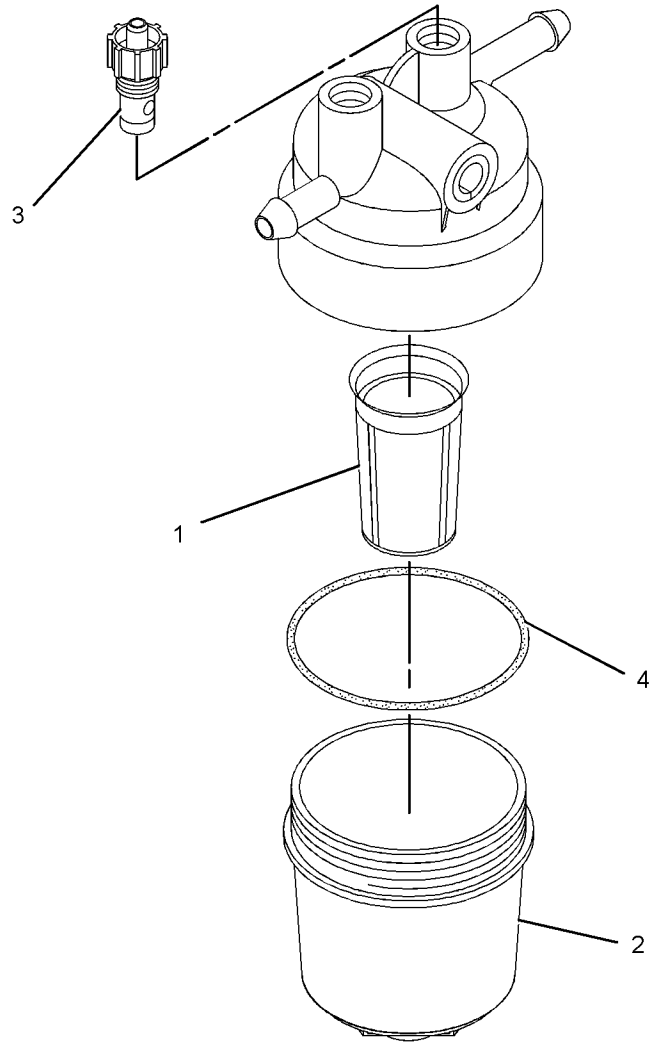

GRAPHIC #1 <END> g01625379

322-0562 GOVERNOR GP

PART OF 435-1654 ENGINE AR-PRIMARY

TYPE 1

SMCS-1264, 1908 **i07053013**

NOTE	REF NO	GRAPHIC REF	PART NUMBER	QTY	PART NAME 1 2 3 4 5 6 (PRODUCT LEVEL)	SEE PAGE
M	1	1	**5C-2890**	1	NUT (M6X1-THD)	
	2	1	**139-5511**	1	CAP (TAMPER RESISTANT)	
M	3	1	**153-5592**	1	NUT (M8X1.25-THD)	
	4	1	**153-6415**	2	WASHER (SEAL)	
	5	1	**153-7983**	1	PIN	
	6	1	**095-1574**	1	SEAL-O-RING	
	7	1	**154-2715**	1	WASHER	
M	8	1	**369-4486**	2	BOLT (M6X1X35-MM)	
M	9	1	**162-2207**	1	NUT (M6X1-THD)	
M	10	1	**106-8916**	4	BOLT (M6X1X16-MM)	
	11	1	**217-7115**	1	CAP (TAMPER RESISTANT)	
	12	1	**335-5578**	1	BRACKET	
	13	1	**423-7724**	1	GASKET	
	14	1	**334-0732**	1	ARM (FRONT HOUSING)	
	15	1	**308-1882**	1	SPRING	
M	16	1	**308-1889**	1	NUT (M10X1.25-THD)	
M	17	1	**308-1892**	1	NUT (M6X1-THD)	
	18	1	**308-1897**	2	RING	
	19	1	**425-7065**	2	CAP-TAMPER PROOF	
	20	1	**321-4249**	1	NUT	
	21	1	**330-9189**	1	PLUG	
	22	1	**308-4266**	1	SHAFT	
	23	1	**390-3731**	1	SHAFT	
M	24	1	**495-0737**	1	BOLT (M6X0.5X19.5-MM)	
	25	1	**319-3250**	1	CONTROL GP-GOVERNOR (ENGINE TIMING)	
	26	1	**324-3400**	1	LEVER AS-CONTROL	
	27	1	**390-3729**	1	LEVER-CONTROL	
	28	1	**315-5236**	1	BOLT AS	
	28A	1	**153-7987**	1	WASHER (9.2X17X1.8-MM THK)	
M	28B	1	**191-9297**	1	NUT (M10X1.25-THD)	
	28C	1	**315-5235**	1	SPRING	
	29	1	**317-7195**	1	SPRING	
	30	1	**308-1875**	1	SEAL-O-RING	

M - METRIC PART

322-0562 **GOVERNOR GP** (contd.) **i07053013**

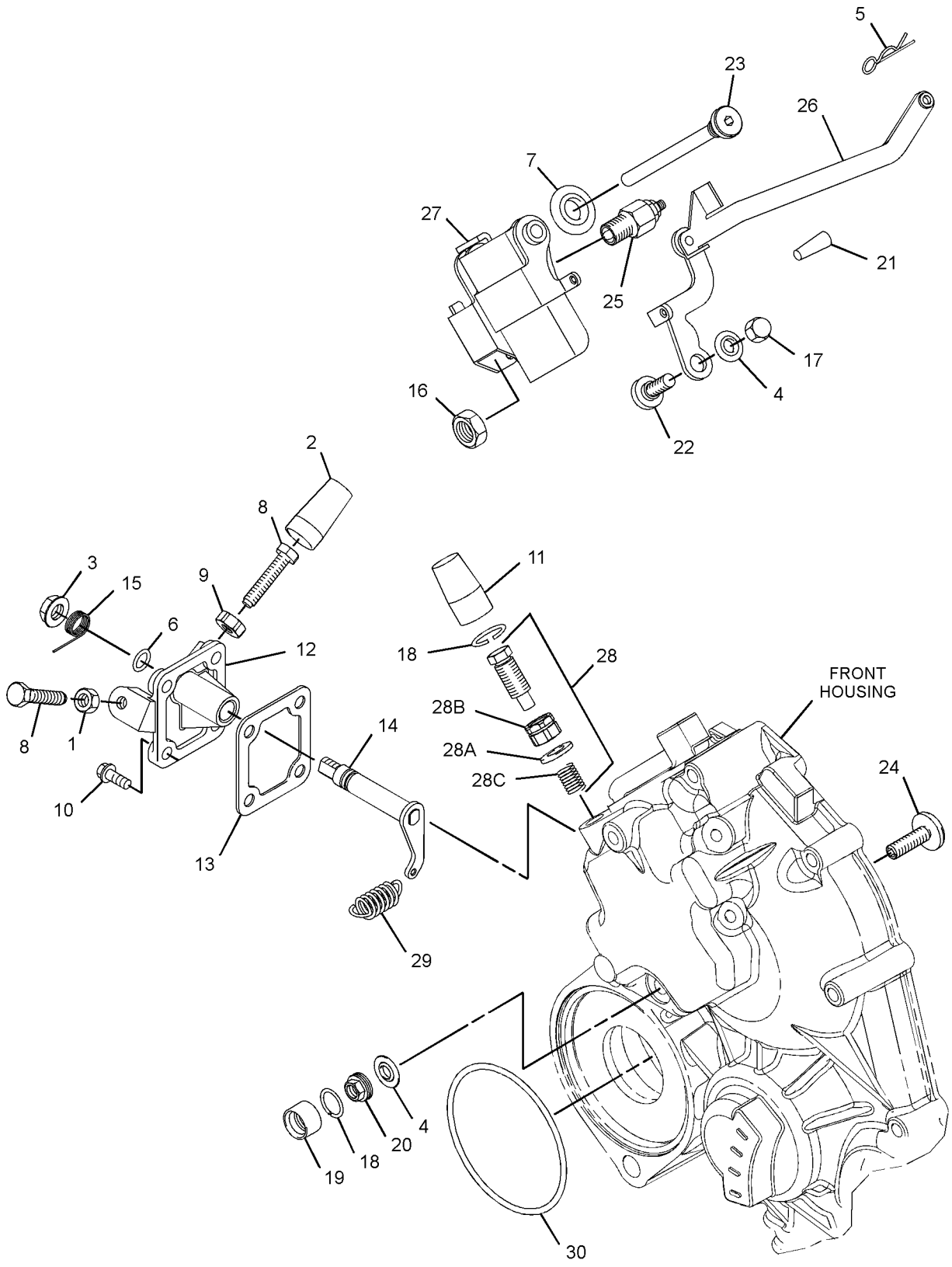

GRAPHIC #1 <END> g06206493

322-0562 GOVERNOR GP

PART OF 435-1654 ENGINE AR-PRIMARY

TYPE 2

SMCS-1264, 1908 **i07562959**

NOTE	REF NO	GRAPHIC REF	PART NUMBER	QTY	PART NAME 1 2 3 4 5 6 (PRODUCT LEVEL)	SEE PAGE
M	1	1	**133-5512**	1	NUT (M6X1-THD)	
	2	1	**139-5511**	1	CAP (TAMPER RESISTANT)	
M	3	1	**153-5592**	1	NUT (M8X1.25-THD)	
	4	1	**153-6415**	2	WASHER (SEAL)	
	5	1	**153-7983**	1	PIN	
	6	1	**154-1403**	1	SEAL-O-RING	
	7	1	**154-2715**	1	WASHER	
M	8	1	**369-4486**	2	BOLT (M6X1X35-MM)	
M	9	1	**162-2207**	1	NUT (M6X1-THD)	
M	10	1	**106-8916**	4	BOLT (M6X1X16-MM)	
	11	1	**217-7115**	1	CAP (TAMPER RESISTANT)	
	12	1	**335-5578**	1	BRACKET	
	13	1	**423-7724**	1	GASKET	
	14	1	**334-0732**	1	ARM (FRONT HOUSING)	
	15	1	**308-1882**	1	SPRING	
M	16	1	**308-1889**	1	NUT (M10X1.25-THD)	
M	17	1	**308-1892**	1	NUT (M6X1-THD)	
	18	1	**308-1897**	1	RING	
	19	1	**503-9707**	1	CAP	
	20	1	**502-9478**	1	NUT (TAMPER RESISTANT)	
	21	1	**330-9189**	1	PLUG	
	22	1	**308-4266**	1	SHAFT	
	23	1	**390-3731**	1	SHAFT	
	24	1	**364-2755**	1	BOLT-SPECIAL	
	25	1	**319-3250**	1	CONTROL GP-GOVERNOR (ENGINE TIMING)	
	26	1	**324-3400**	1	LEVER AS-CONTROL	
	27	1	**390-3729**	1	LEVER-CONTROL	
	28	1	**315-5236**	1	BOLT AS	
	28A	1	**153-7987**	1	WASHER (9.2X17X1.8-MM THK)	
M	28B	1	**191-9297**	1	NUT (M10X1.25-THD)	
	28C	1	**315-5235**	1	SPRING	
	29	1	**317-7195**	1	SPRING	
	30	1	**308-1875**	1	SEAL-O-RING	
	31	1	**503-9731**	1	SHROUD	
	32	1	**502-5421**	1	PIN	

M - METRIC PART

322-0562 **GOVERNOR GP** (contd.) **i07562959**

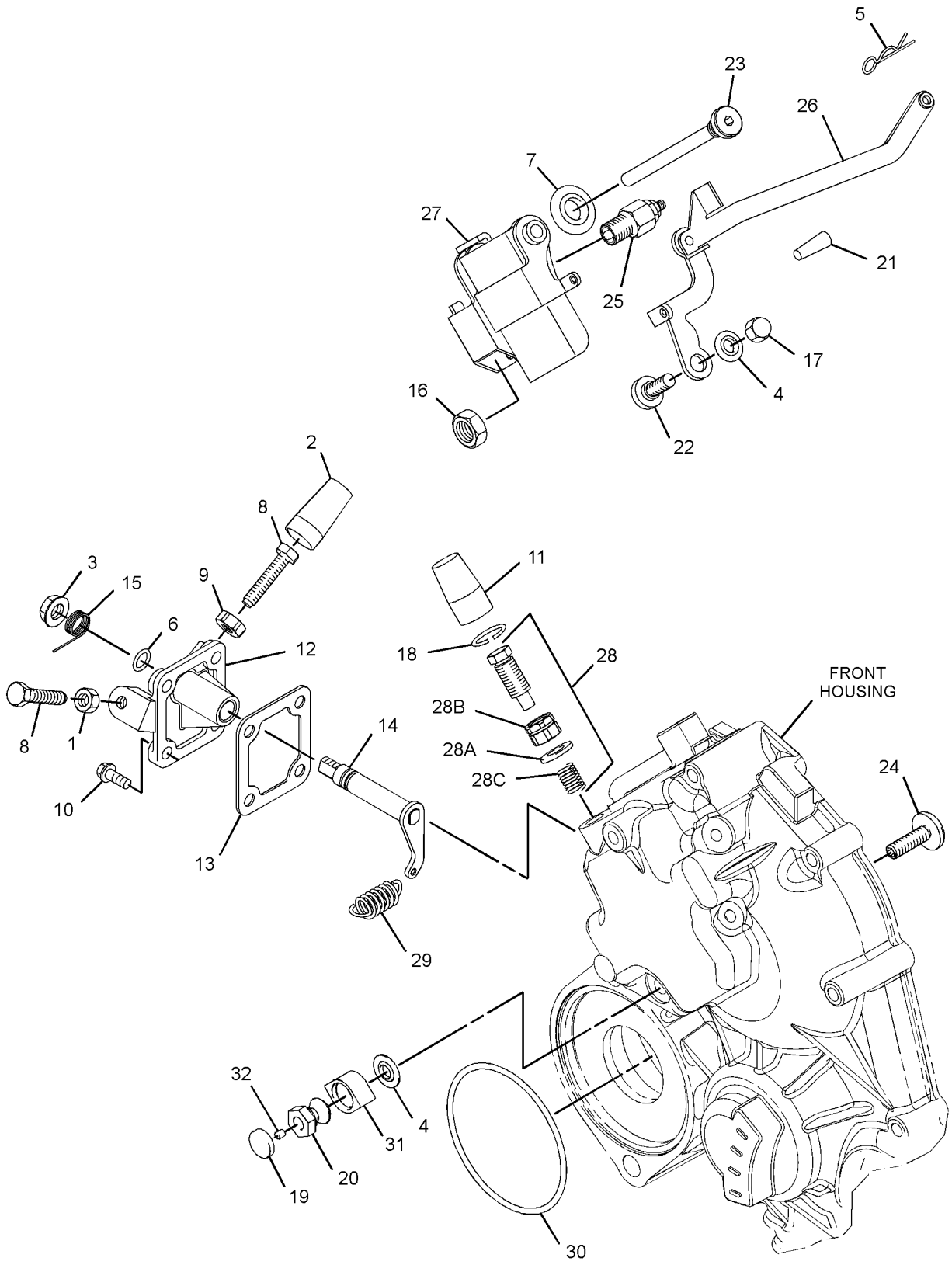

GRAPHIC #1 <END> g06245245

293-3246 PUMP GP-FUEL INJECTION

PART OF 322-3103 PUMP GP-FUEL INJECTION

SMCS-1251, 1290 **i06909468**

NOTE	REF NO	GRAPHIC REF	PART NUMBER	QTY	PART NAME 1 2 3 4 5 6 (PRODUCT LEVEL)	SEE PAGE
	1	1	**205-4726**	1	BOLT-SPECIAL (BANJO)	
	2	1	**205-4727**	2	WASHER	
	3	1	**205-4728**	1	CONNECTOR	
	4	1	**419-7640**	1	SOLENOID AS (12-VOLT) (FUEL SHUTOFF)	

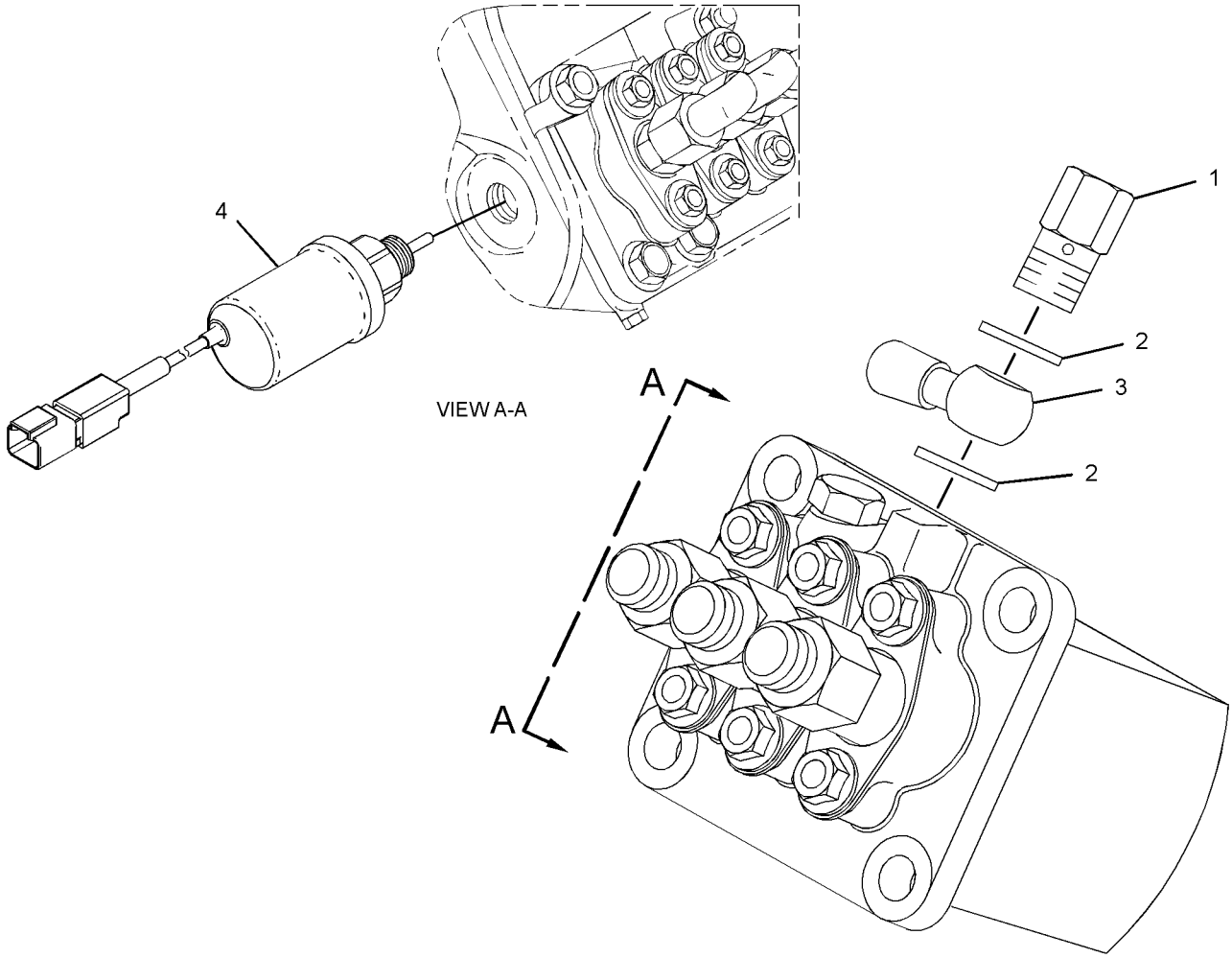

GRAPHIC #1 <END> g06160088

322-0564 PUMP GP-FUEL INJECTION

PART OF 435-1654 ENGINE AR-PRIMARY

SMCS-1251, 1290 **i06151679**

NOTE	REF NO	GRAPHIC REF	PART NUMBER	QTY	PART NAME 1 2 3 4 5 6 (PRODUCT LEVEL)	SEE PAGE
M	1	1	**153-5592**	2	NUT (M8X1.25-THD)	
M	2	1	**153-5960**	2	NUT (M6X1-THD)	
M	3	1	**154-2713**	2	BOLT (M8X1.25X20-MM)	
	4	1	**154-2715**	2	WASHER	
	5	1	**426-4357**	3	GASKET	
	6	1	**252-1446**	3	INJECTOR AS-FUEL	
					(EACH INCLUDES)	
	6A	1	**202-1196**	1	WASHER-SPECIAL	
	6B	1	**205-4731**	1	NUT	
M	7	1	**183-3353**	2	BOLT (M6X1X25-MM)	
	8	1	**190-3801**	1	LINE	
M	9	1	**190-3803**	1	BOLT (M8X1X20-MM)	
	10	1	**235-5523**	1	LINE AS-FUEL INJECTION (CYL NO. 1)	
	11	1	**235-5524**	1	LINE AS-FUEL INJECTION (CYL NO. 2)	
	12	1	**235-5525**	1	LINE AS-FUEL INJECTION (CYL NO. 3)	
	13	1	**290-8014**	4	CLAMP	
	14	1	**311-3326**	1	PUMP-FUEL INJECTION	
B	15	1	**160-7034**	1	SHIM (0.9-MM THK)	
B		1	**236-4952**	1	SHIM (0.5-MM THK)	
B		1	**236-4954**	1	SHIM (0.4-MM THK)	
B		1	**236-4959**	1	SHIM (0.3-MM THK)	
B		1	**236-4961**	1	SHIM (0.2-MM THK)	
B		1	**311-1168**	1	SHIM (0.25-MM THK) (0.25-MM THK)	
B		1	**311-1169**	1	SHIM (0.35-MM THK) (0.35-MM THK)	

B - USE AS REQUIRED
M - METRIC PART

322-0564 **PUMP GP-FUEL INJECTION (**contd.**)** **i06151679**

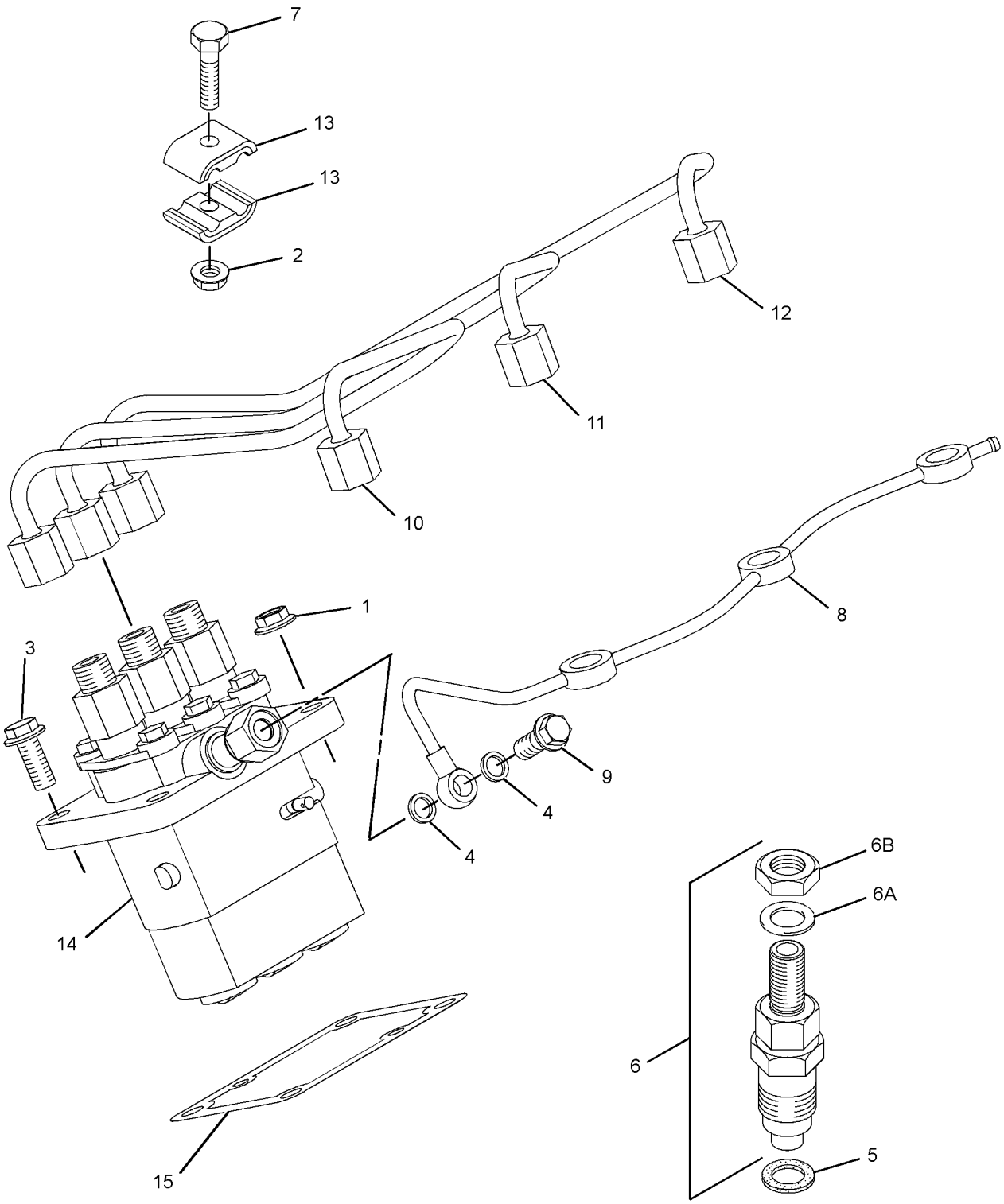

GRAPHIC #1 <END> g01515246

322-3103 PUMP GP-FUEL INJECTION

SMCS-1251, 1290 **i06097183**

NOTE	REF NO	GRAPHIC REF	PART NUMBER	QTY	PART NAME 1 2 3 4 5 6 (PRODUCT LEVEL)	SEE PAGE
M	1	1	**153-5592**	2	NUT (M8X1.25-THD)	
M	2	1	**153-5960**	2	NUT (M6X1-THD)	
M	3	1	**154-2713**	2	BOLT (M8X1.25X20-MM)	
	4	1	**154-2715**	2	WASHER	
	5	1	**426-4357**	3	GASKET	
M	6	1	**183-3353**	2	BOLT (M6X1X25-MM)	
	7	1	**190-3801**	1	LINE	
M	8	1	**190-3803**	1	BOLT (M8X1X20-MM)	
	9	1	**229-2288**	1	LINE AS-FUEL INJECTION (CYL NO. 1)	
	10	1	**229-2289**	1	LINE AS-FUEL INJECTION (CYL NO. 2)	
	11	1	**229-2290**	1	LINE AS-FUEL INJECTION (CYL NO. 3)	
	12	1	**252-1466**	3	INJECTOR AS-FUEL	
					(EACH INCLUDES)	
	12A	1	**202-1196**	1	WASHER-SPECIAL	
	12B	1	**205-4731**	1	NUT	
	13	1	**290-8014**	4	CLAMP	
Y	14	1	**293-3246**	1	PUMP GP-FUEL INJECTION	133
B	15	1	**160-7034**	1	SHIM (0.9-MM THK)	
B		1	**236-4952**	1	SHIM (0.5-MM THK)	
B		1	**236-4954**	1	SHIM (0.4-MM THK)	
B		1	**236-4959**	1	SHIM (0.3-MM THK)	
B		1	**236-4961**	1	SHIM (0.2-MM THK)	
B		1	**311-1168**	1	SHIM (0.25-MM THK) (0.25-MM THK)	
B		1	**311-1169**	1	SHIM (0.35-MM THK) (0.35-MM THK)	

B - USE AS REQUIRED
M - METRIC PART
Y - SEPARATE ILLUSTRATION

322-3103 **PUMP GP-FUEL INJECTION (**contd.**)** **i06097183**

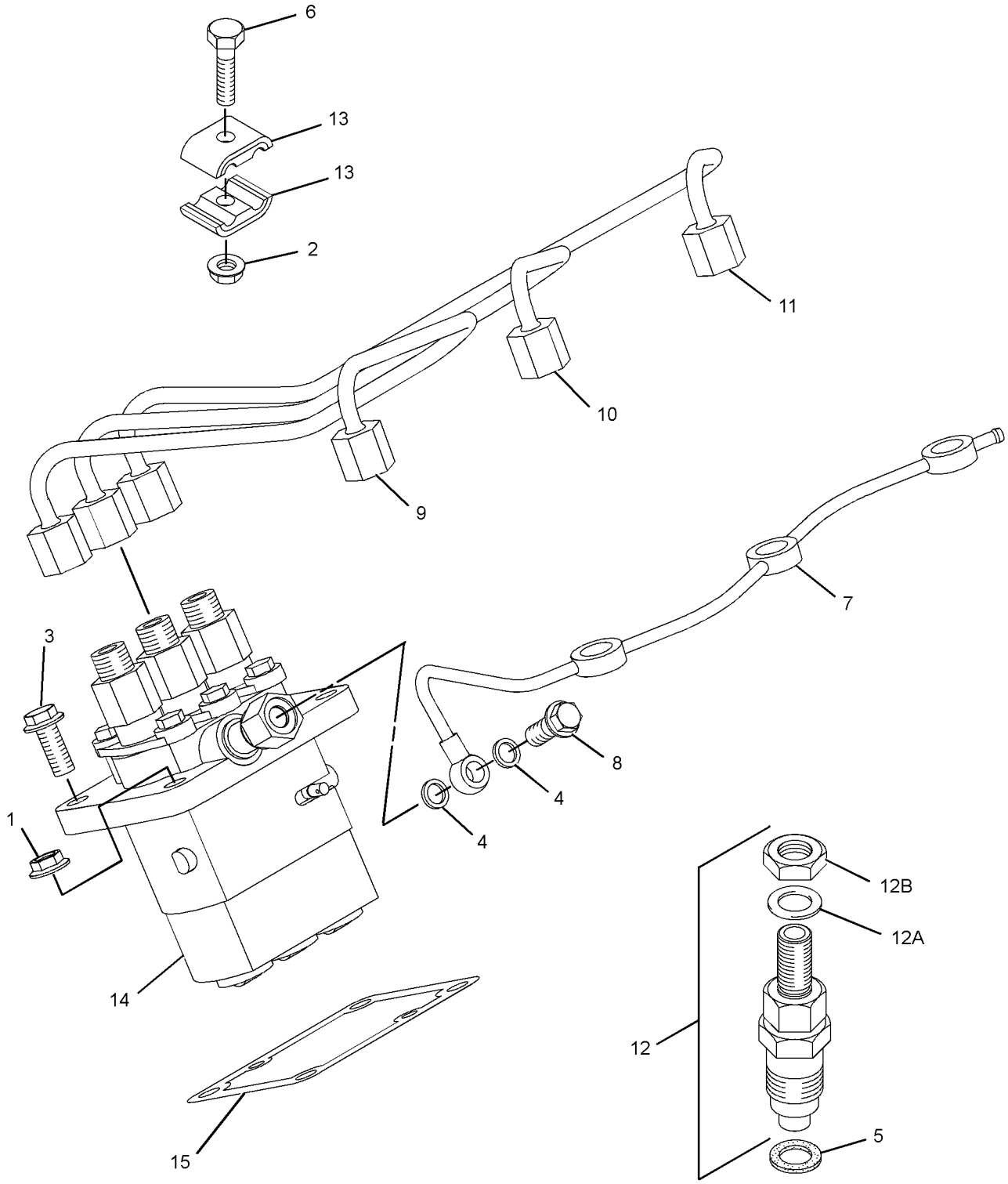

GRAPHIC #1 <END> g01710593

308-2320 PUMP GP-FUEL PRIMING

SMCS-1258 **i05473660**

NOTE	REF NO	GRAPHIC REF	PART NUMBER	QTY	PART NAME 1 2 3 4 5 6 (PRODUCT LEVEL)	SEE PAGE
	1	1	**197-8540**	1	PUMP GP-FUEL PRIMING	

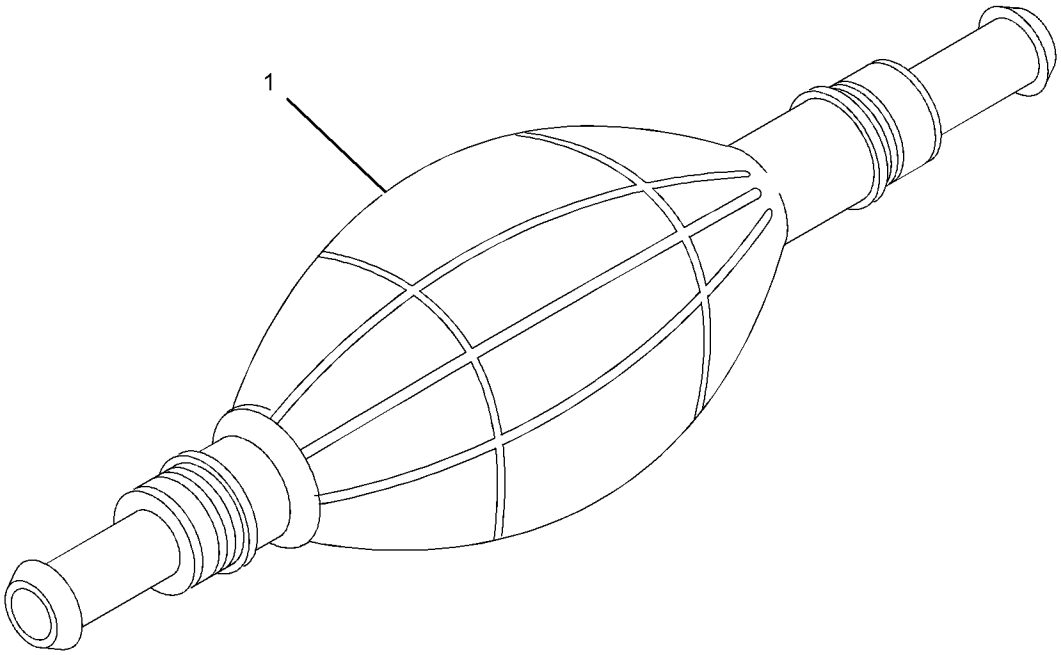

GRAPHIC #1 <END> g01912002

579-9444 PUMP GP-FUEL PRIMING

SMCS-1258 **i07793086**

NOTE	REF NO	GRAPHIC REF	PART NUMBER	QTY	PART NAME 1 2 3 4 5 6 (PRODUCT LEVEL)	SEE PAGE
	1	1	**526-5212**	1	PUMP AS-HAND	

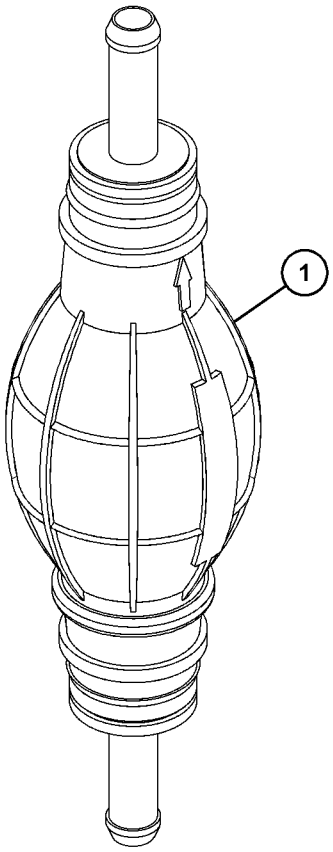

GRAPHIC #1 <END> g06406016

317-6706 PUMP GP-FUEL PRM & PRIM FILTER

SMCS-1256, 1258, 1260 **i07767912**

NOTE	REF NO	GRAPHIC REF	PART NUMBER	QTY	PART NAME 1 2 3 4 5 6 (PRODUCT LEVEL)	SEE PAGE
	1	1	**276-1804**	1	FILTER GP-FUEL (WATER SEPARATOR)	
	1A	1	**276-1806**	1	FILTER ELEMENT-FUEL	
	1B	1	**302-7776**	1	BOWL-FUEL FILTER	
	1C	1	**302-7777**	3	PLUG-DRAIN (WATER SEPARATOR)	
	1D	1	**302-7778**	1	SEAL	
	2	1	**559-0028**	1	PUMP AS-FUEL PRIMING	

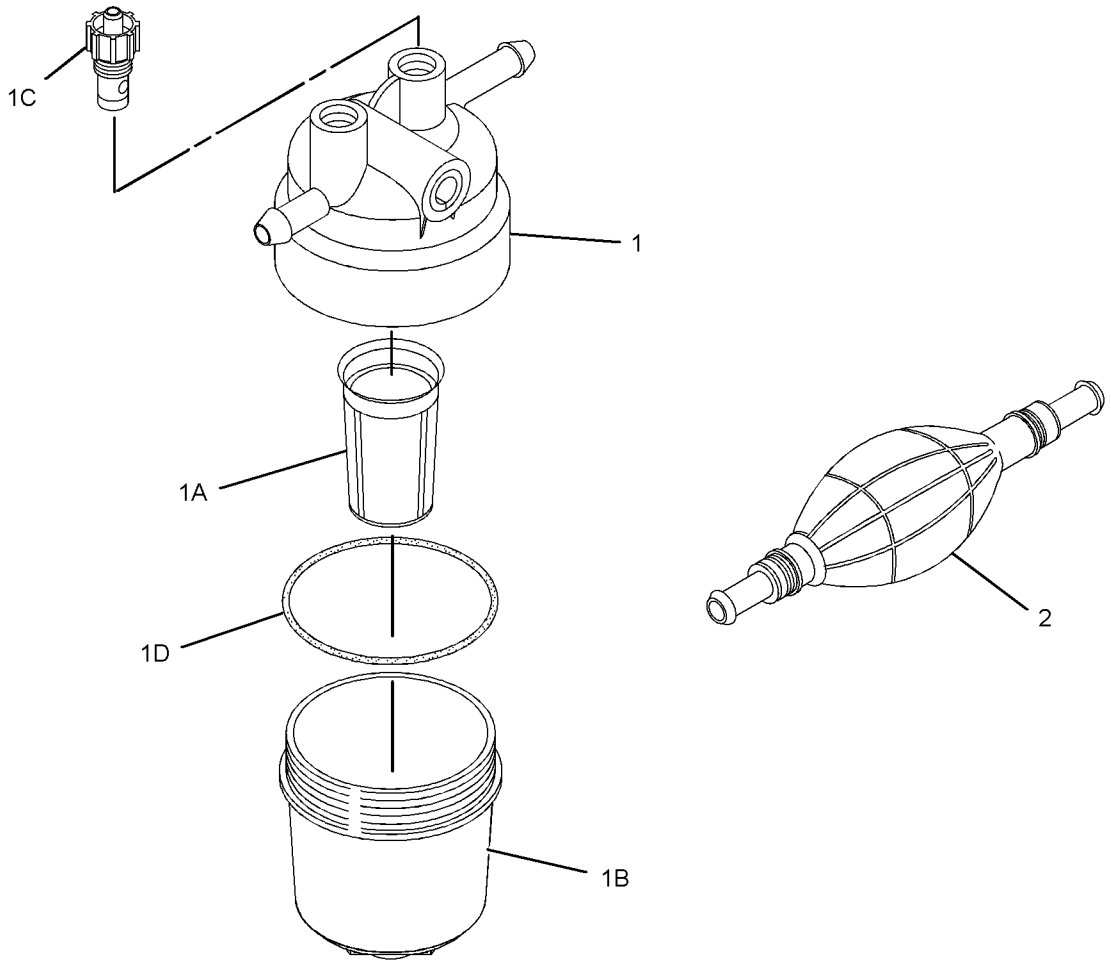

GRAPHIC #1 <END> g01915154

579-9465 PUMP GP-FUEL PRM & PRIM FILTER

SMCS-1256, 1258, 1260 **i07772648**

NOTE	REF NO	GRAPHIC REF	PART NUMBER	QTY	PART NAME 1 2 3 4 5 6 (PRODUCT LEVEL)	SEE PAGE
Y	1	1	**276-1804**	1	FILTER GP-FUEL (WATER SEPARATOR)	127
	2	1	**526-5212**	1	PUMP AS-HAND (PRIMER)	

Y - SEPARATE ILLUSTRATION

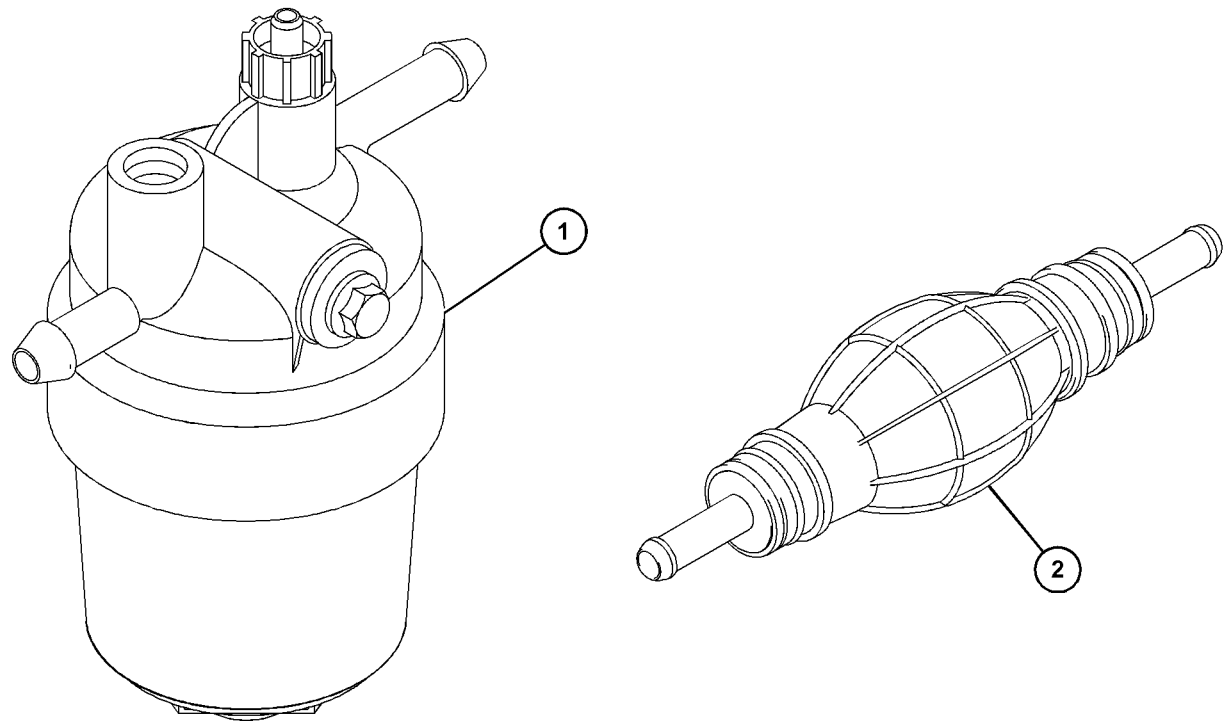

GRAPHIC #1 <END> g06484996

311-1125 PUMP GP-FILTER & FUEL TRANSFER

SMCS-1256 **i07141009**

NOTE	REF NO	GRAPHIC REF	PART NUMBER	QTY	PART NAME 1 2 3 4 5 6 (PRODUCT LEVEL)	SEE PAGE
M	1	1	**6I-0846**	2	BOLT (M6X1X14-MM)	
	2	1	**7W-4694**	1	PLUG	
	3	1	**032-8100**	2	WASHER (0.531X0.718X0.064-IN THK)	
	4	1	**033-7849**	2	PLUG	
	5	2	**358-9226**	1	FILTER AS-FUEL	
	5A	2	**067-6987**	1	FILTER-FUEL	
	6	1	**067-6269**	2	FERRULE	
	7	1	**067-6317**	1	WASHER (0.4X0.566X0.04-IN THK)	
M	8	1	**6I-0593**	2	BOLT (M10X1.5X30-MM)	
	9	1	**311-1174**	1	BRACKET	
	10	1	**154-2403**	2	WASHER	
	11	1	**423-5665**	1	HOSE	
M	12	1	**124-3815**	1	BOLT (M8X1.25X16-MM)	
M	13	1	**155-8085**	2	NUT (M10X1.5-THD)	
	14	1	**329-1292**	4	CLIP-HOSE	
	16	1	**176-7719**	1	SEAL-O-RING	
	17	1	**454-7991**	1	PIPE	
M	18	1	**6I-0217**	1	BOLT (M8X1.25X20-MM)	
	19	1	**295-4070**	1	PUMP AS-FUEL TRANSFER	
	20	1	**302-4187**	2	TUBE	

M - METRIC PART

311-1125 **PUMP GP-FILTER & FUEL TRANSFER (**contd.**)** **i07141009**

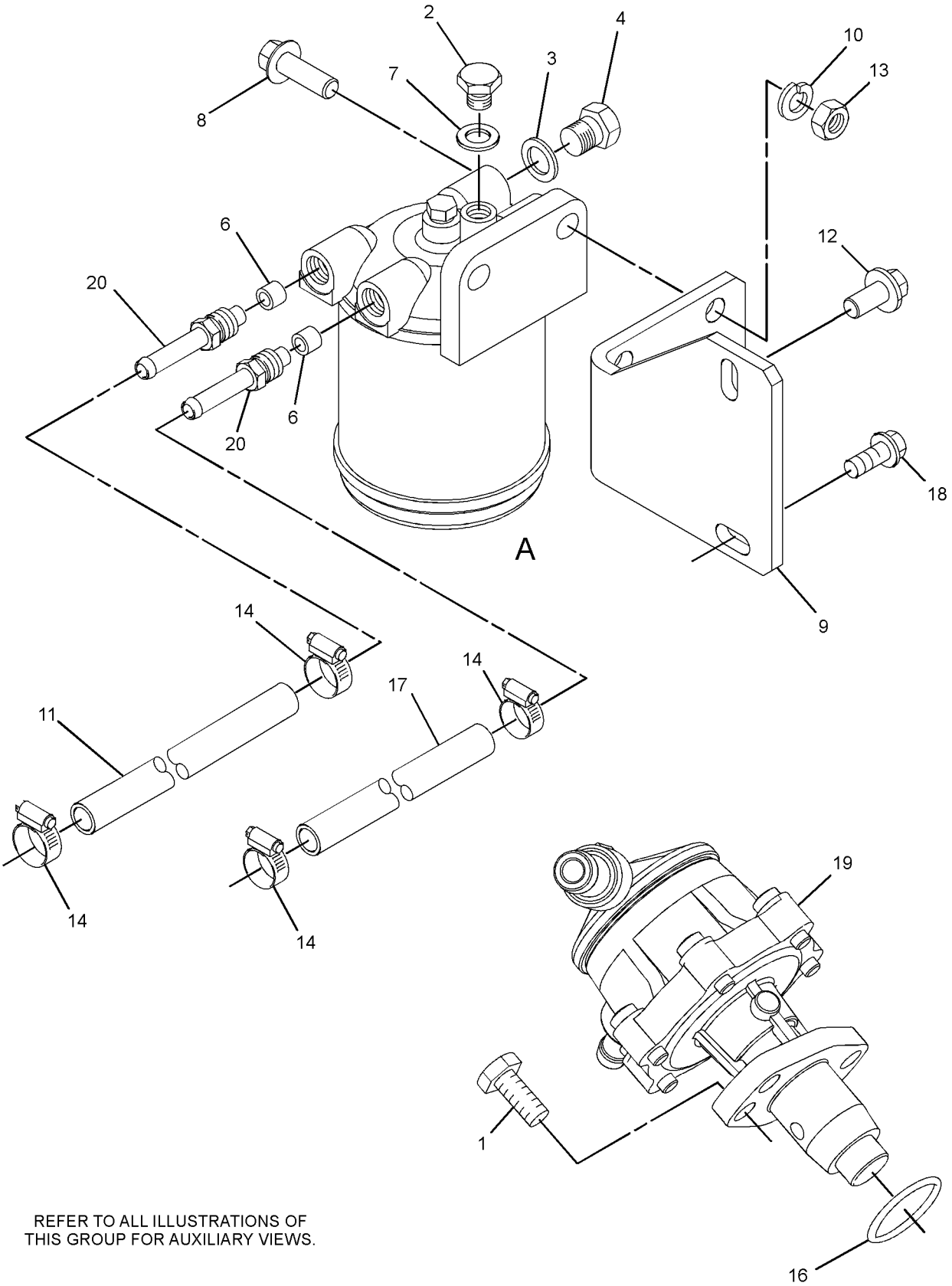

REFER TO ALL ILLUSTRATIONS OF
THIS GROUP FOR AUXILIARY VIEWS.

GRAPHIC #1 g06236858

311-1125 **PUMP GP-FILTER & FUEL TRANSFER (**contd.**)** **i07141009**

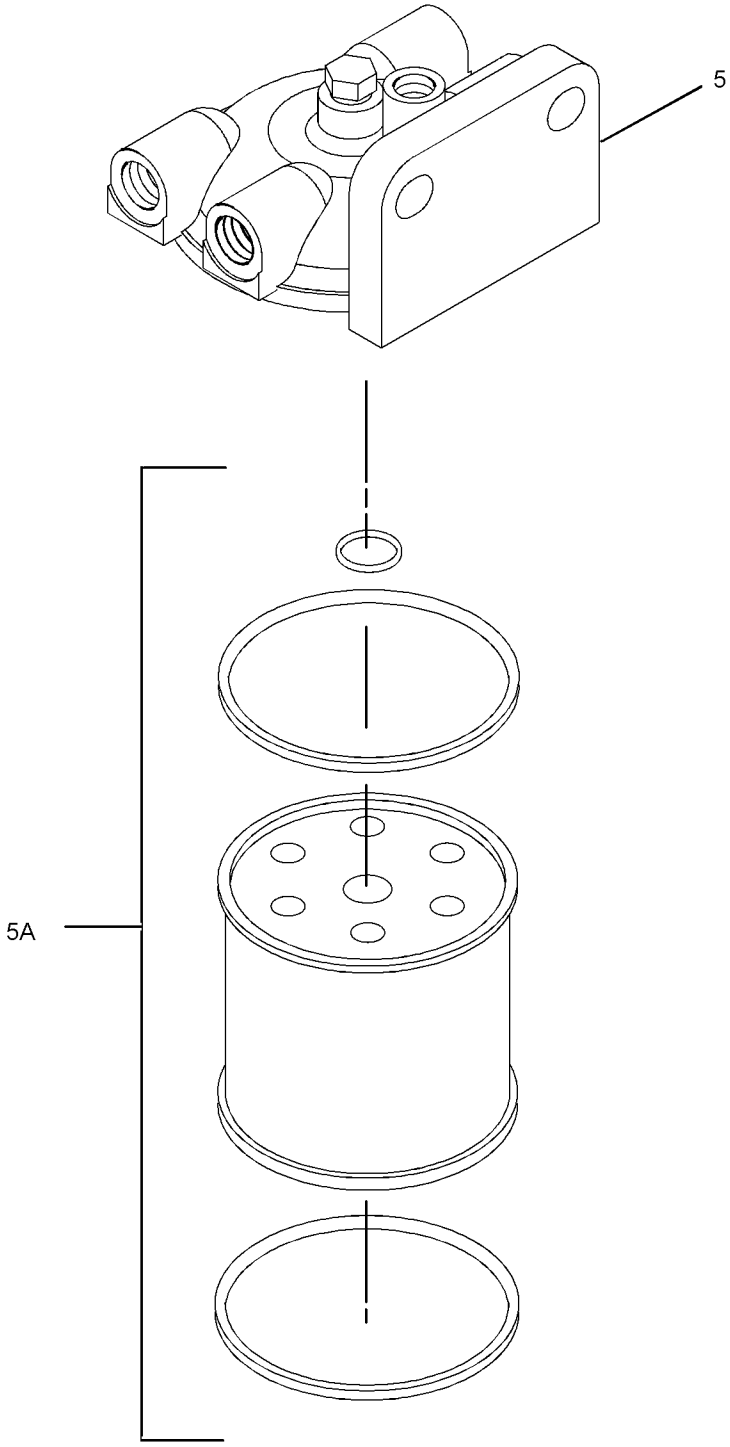

EXPLODED VIEW OF AREA A

GRAPHIC #2 <END> g06145823

311-1120 ALTERNATOR GP-CHARGING

TYPE 1

SMCS-1405 **i04525442**

NOTE	REF NO	GRAPHIC REF	PART NUMBER	QTY	PART NAME 1 2 3 4 5 6 (PRODUCT LEVEL)	SEE PAGE
M	1	1	**359-9666**	1	BOLT-FLANGE HEAD (M8X1.25X130-MM)	
M	2	1	**180-8579**	1	NUT (M8X1.25-MM THD)	
	3	1	**155-7984**	1	WASHER (8.4X16X1.6-MM THK)	
	4	1	**165-2141**	3	BOLT AS	
	5	1	**168-8999**	1	LEVER	
	6	1	**168-9001**	2	BOLT AS	
	7	1	**168-9002**	1	WASHER (8.4X26X3.2-MM THK)	
	8	1	**246-4267**	1	BRACKET	
	9	1	**349-1368**	1	ALTERNATOR GP-CHARGING	
	10	1	**163-5372**	1	WASHER (8X15.4X4-MM THK)	

M - METRIC PART

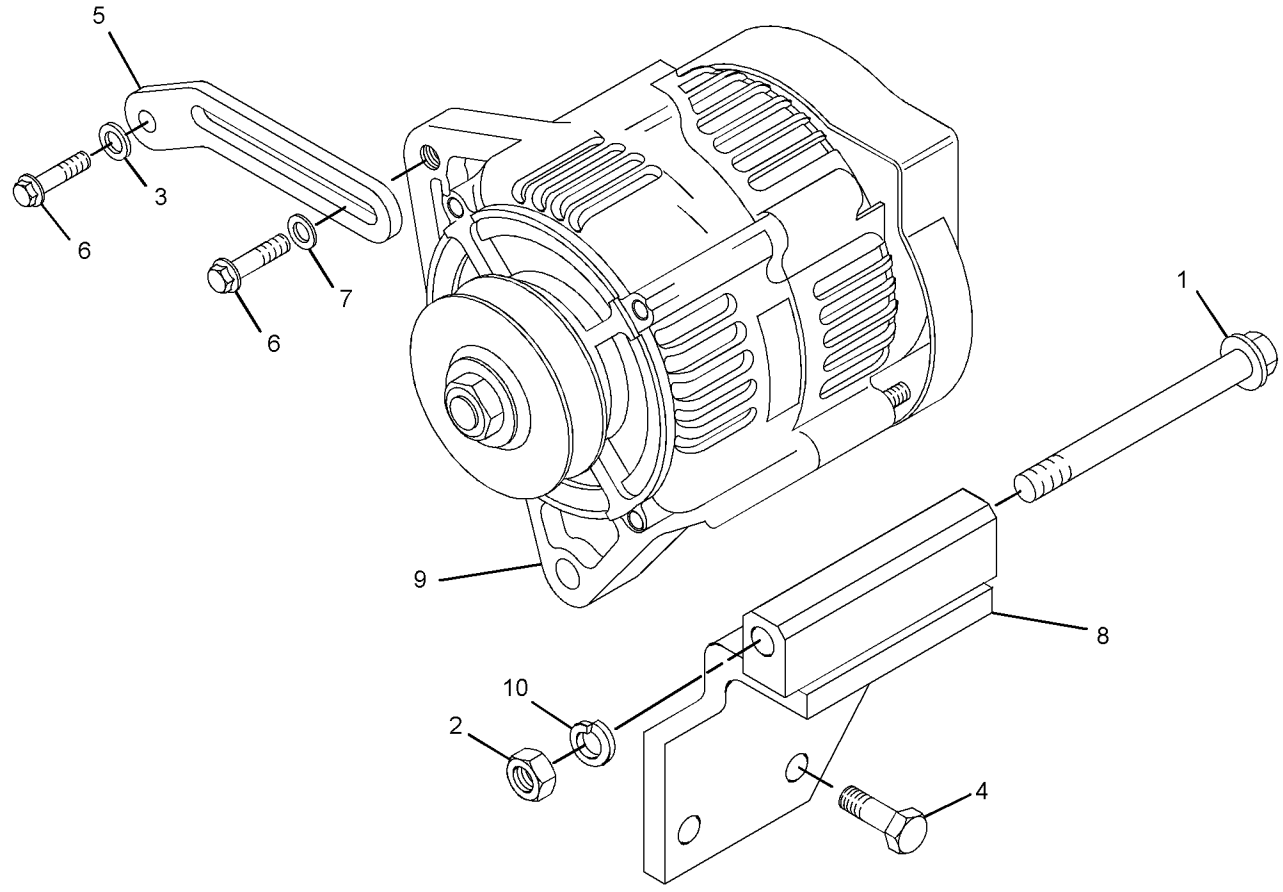

GRAPHIC #1 <END> g02153167

311-1120 ALTERNATOR GP-CHARGING

TYPE 2

SMCS-1405 **i07590968**

NOTE	REF NO	GRAPHIC REF	PART NUMBER	QTY	PART NAME 1 2 3 4 5 6 (PRODUCT LEVEL)	SEE PAGE
M	1	1	**359-9666**	1	BOLT-FLANGE HEAD (M8X1.25X130-MM)	
M	2	1	**180-8579**	1	NUT (M8X1.25-MM THD)	
	3	1	**155-7984**	1	WASHER (8.4X16X1.6-MM THK)	
M	4	1	**6I-0217**	3	BOLT (M8X1.25X20-MM)	
	5	1	**168-8999**	1	LEVER	
M	6	1	**6I-0260**	1	BOLT (M8X1.25X25-MM)	
	7	1	**168-9002**	1	WASHER (8.4X26X3.2-MM THK)	
	8	1	**540-4157**	1	BRACKET	
C	9	1	**394-3494**	1	ALTERNATOR AS (12-VOLT, 65-AMPERE)	
	10	1	**163-5372**	1	WASHER (8X15.4X4-MM THK)	
	11	1	**168-9001**	1	BOLT AS	

C - CHANGE FROM PREVIOUS TYPE
M - METRIC PART

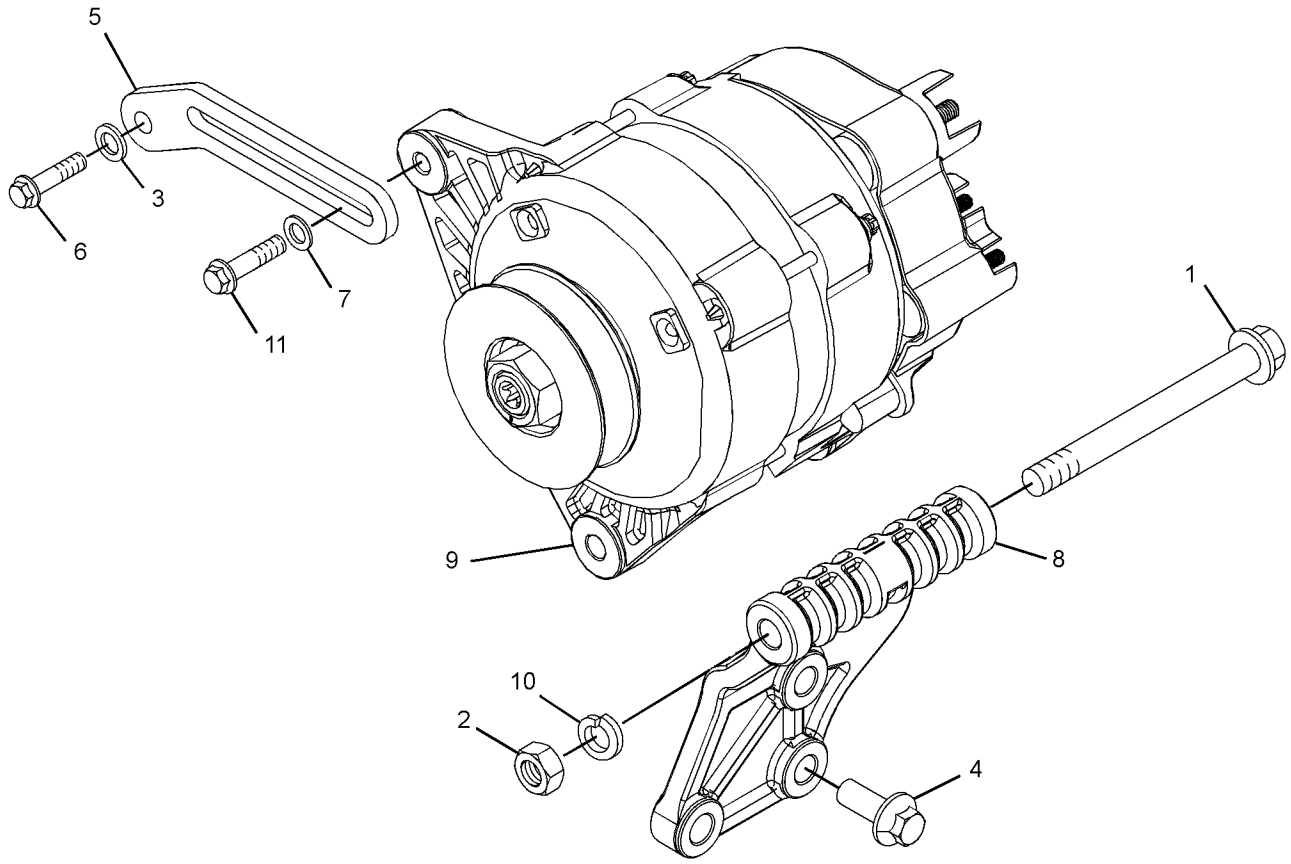

GRAPHIC #1 <END> g06228615

486-3293 ALTERNATOR GP-CHARGING

SMCS-1405 **i07462641**

NOTE	REF NO	GRAPHIC REF	PART NUMBER	QTY	PART NAME 1 2 3 4 5 6 (PRODUCT LEVEL)	SEE PAGE
	1	1	**155-7984**	1	WASHER (8.4X16X1.6-MM THK)	
	2	1	**163-5372**	1	WASHER (8X15.4X4-MM THK)	
M	3	1	**6I-0217**	3	BOLT (M8X1.25X20-MM)	
	4	1	**168-8999**	1	LEVER	
	5	1	**168-9001**	2	BOLT AS	
	6	1	**168-9002**	1	WASHER (8.4X26X3.2-MM THK)	
M	7	1	**180-8579**	1	NUT (M8X1.25-MM THD)	
	8	1	**540-4157**	1	BRACKET	
M	9	1	**359-9666**	1	BOLT-FLANGE HEAD (M8X1.25X130-MM)	
	10	1	**394-3492**	1	ALTERNATOR AS (12-VOLT, 40-AMPERE)	

M - METRIC PART

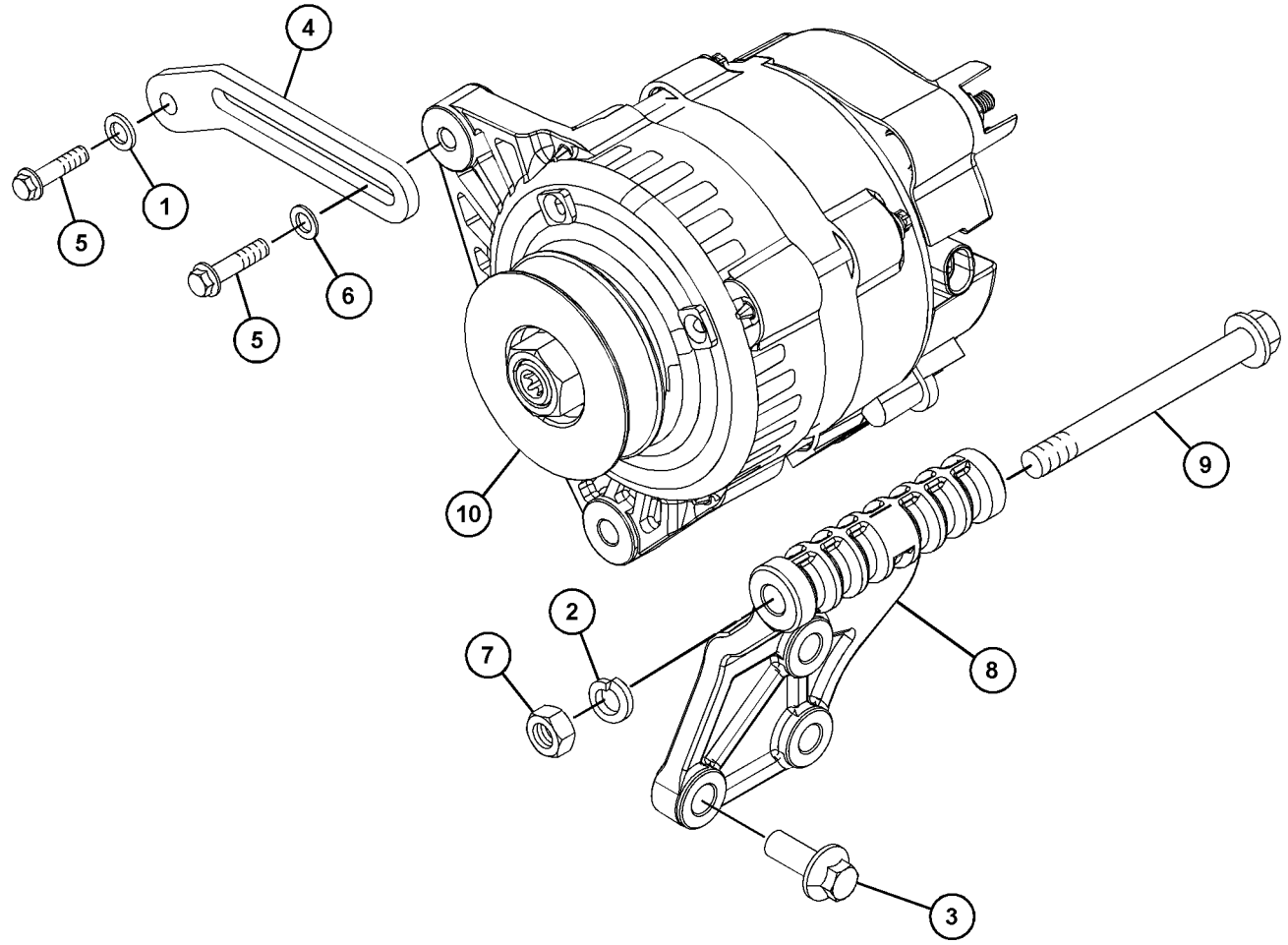

GRAPHIC #1 <END> g06243572

308-2319 CONNECTION GP-ELECTRICAL

SMCS-1408 **i03384405**

NOTE	REF NO	GRAPHIC REF	PART NUMBER	QTY	PART NAME 1 2 3 4 5 6 (PRODUCT LEVEL)	SEE PAGE
	1	1	**254-5541**	1	CONNECTION AS	
	2	1	**197-8555**	1	CONNECTION	

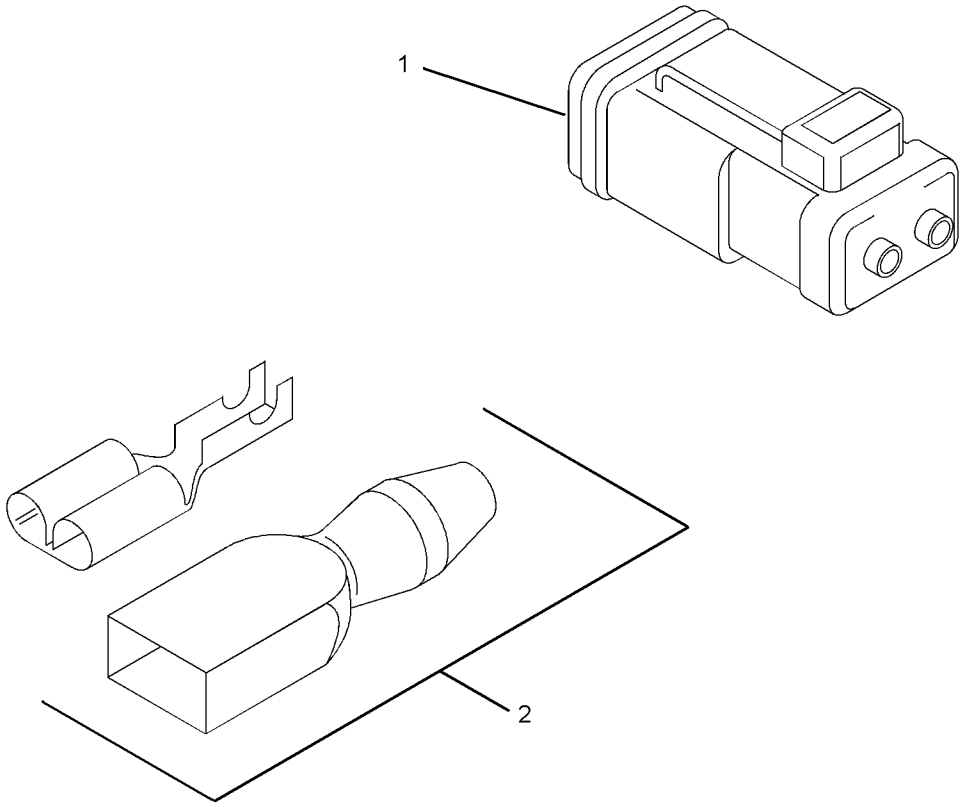

GRAPHIC #1 <END> g01389483

321-6741 CONNECTION GP-ELECTRICAL

SMCS-1408 **i03395703**

NOTE	REF NO	GRAPHIC REF	PART NUMBER	QTY	PART NAME 1 2 3 4 5 6 (PRODUCT LEVEL)	SEE PAGE
	1	1	**254-5541**	1	CONNECTION AS	

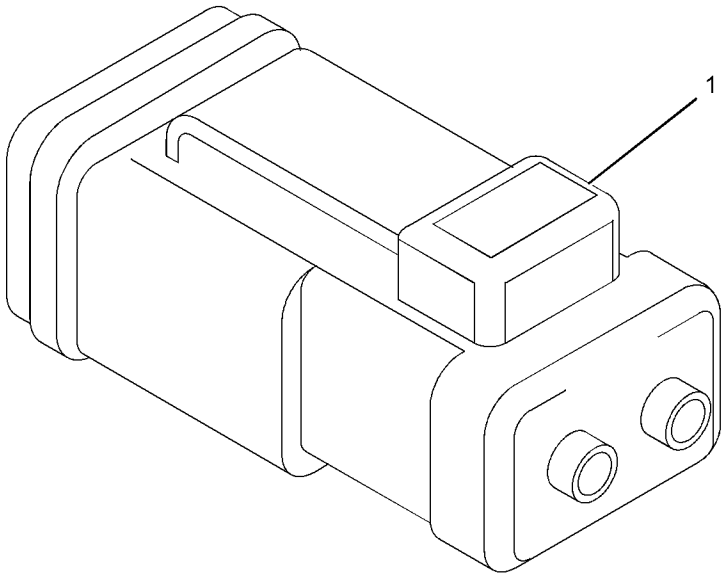

GRAPHIC #1 <END> g01513229

311-1127 GLOW PLUG GP

SMCS-1412 **i03393520**

NOTE	REF NO	GRAPHIC REF	PART NUMBER	QTY	PART NAME 1 2 3 4 5 6 (PRODUCT LEVEL)	SEE PAGE
	1	1	**172-4585**	3	GLOW PLUG	
	2	1	**155-8073**	1	BUS BAR AS	
	3	1	**155-8075**	1	WIRE	
M	4	1	**155-8076**	1	NUT (M4X0.4-THD)	
	5	1	**155-8077**	1	WASHER	

M - METRIC PART

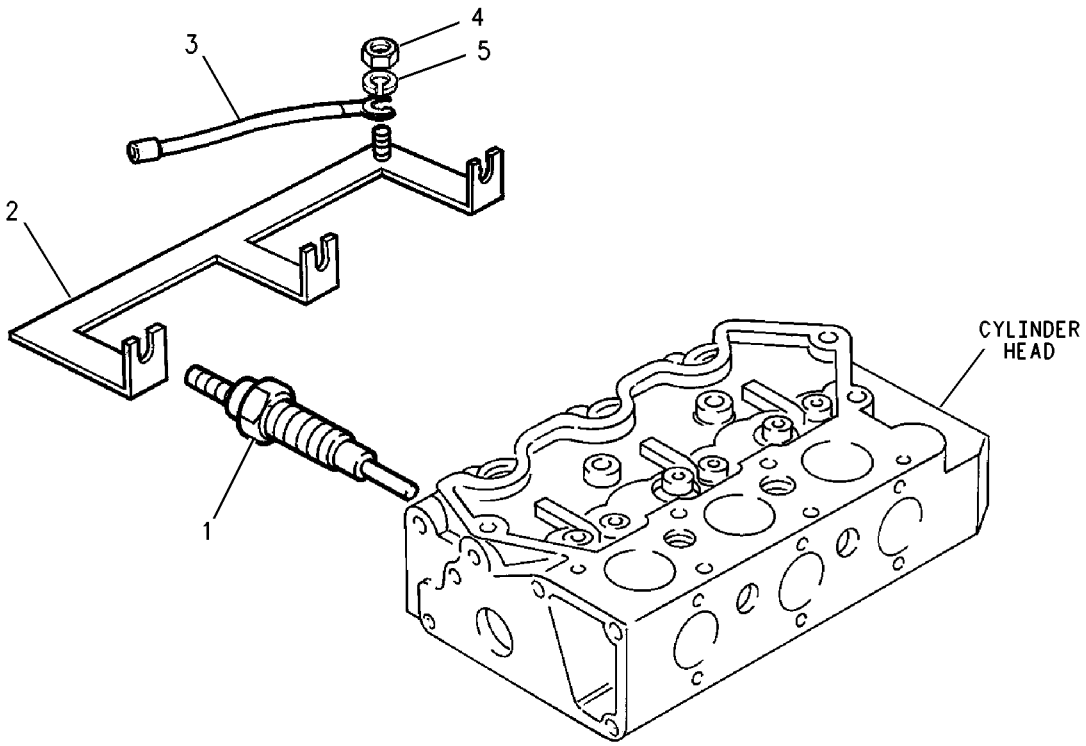

GRAPHIC #1 <END> g00459173

311-1127 GLOW PLUG GP

PART OF 435-1654 ENGINE AR-PRIMARY

SMCS-1412 **i04899348**

NOTE	REF NO	GRAPHIC REF	PART NUMBER	QTY	PART NAME 1 2 3 4 5 6 (PRODUCT LEVEL)	SEE PAGE
	1	1	**172-4585**	3	GLOW PLUG	
	2	1	**155-8073**	1	BUS BAR AS	
	3	1	**155-8075**	1	WIRE	
M	4	1	**231-2839**	1	NUT-FLANGE (M4X0.7-THD)	

M - METRIC PART

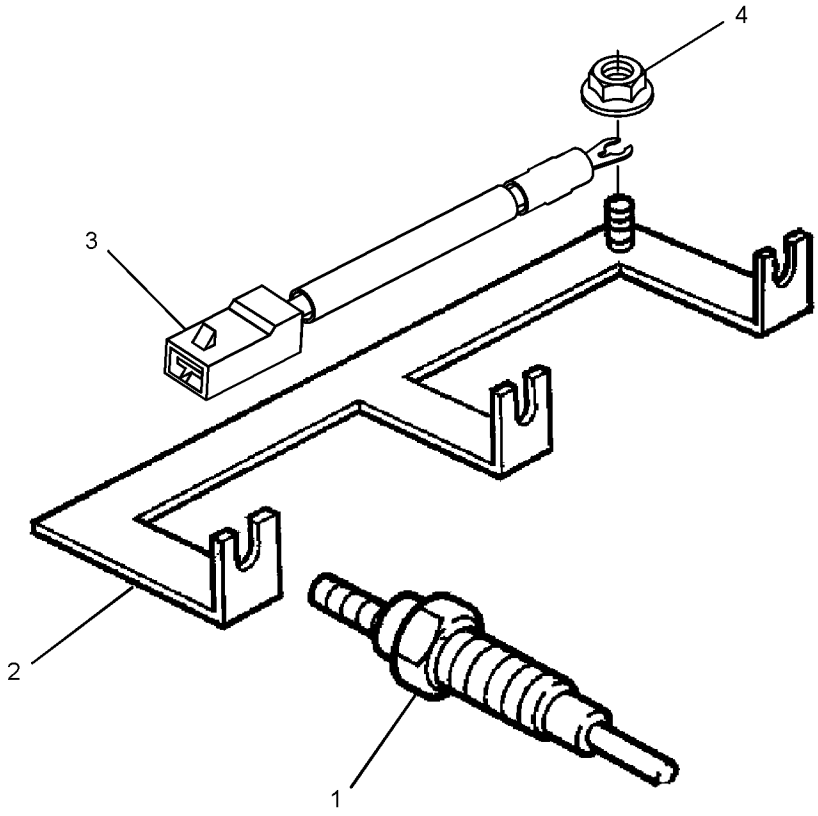

GRAPHIC #1 <END> g03078337

320-9114 SHUTOFF GP-ELECTRICAL

SMCS-7418 **i03384203**

NOTE	REF NO	GRAPHIC REF	PART NUMBER	QTY	PART NAME 1 2 3 4 5 6 (PRODUCT LEVEL)	SEE PAGE
	1	1	**340-0199**	1	SHUTOFF GP-ELECTRICAL	
	1A	1	**234-8762**	1	CONNECTOR	
	1B	1	**318-5038**	1	BOX	

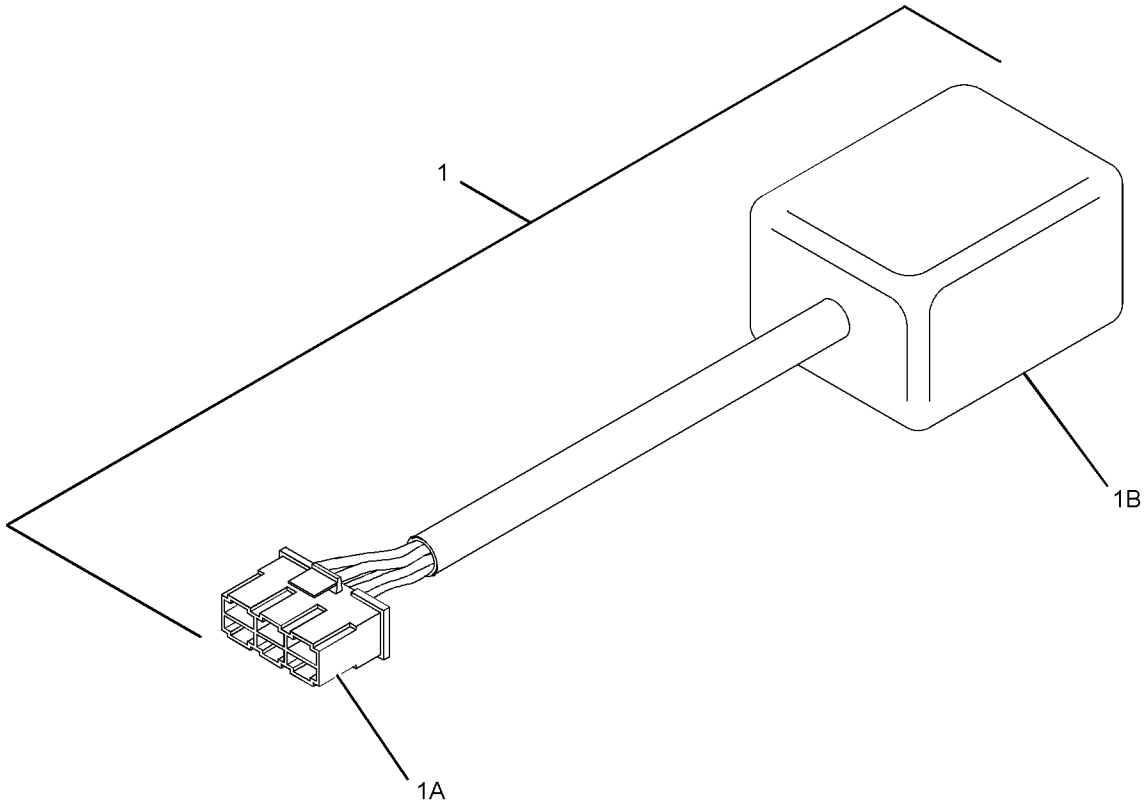

GRAPHIC #1 <END> g01504753

311-1128 SOLENOID GP-SHUTOFF

PART OF 435-1654 ENGINE AR-PRIMARY

SMCS-1259 **i06931542**

NOTE	REF NO	GRAPHIC REF	PART NUMBER	QTY	PART NAME 1 2 3 4 5 6 (PRODUCT LEVEL)	SEE PAGE
	1	1	**153-6412**	1	WASHER	
	2	1	**419-7640**	1	SOLENOID AS (12-VOLT) (FUEL SHUTOFF)	
	3	1	**308-1914**	1	LEVER-CONTROL (THROTTLE)	

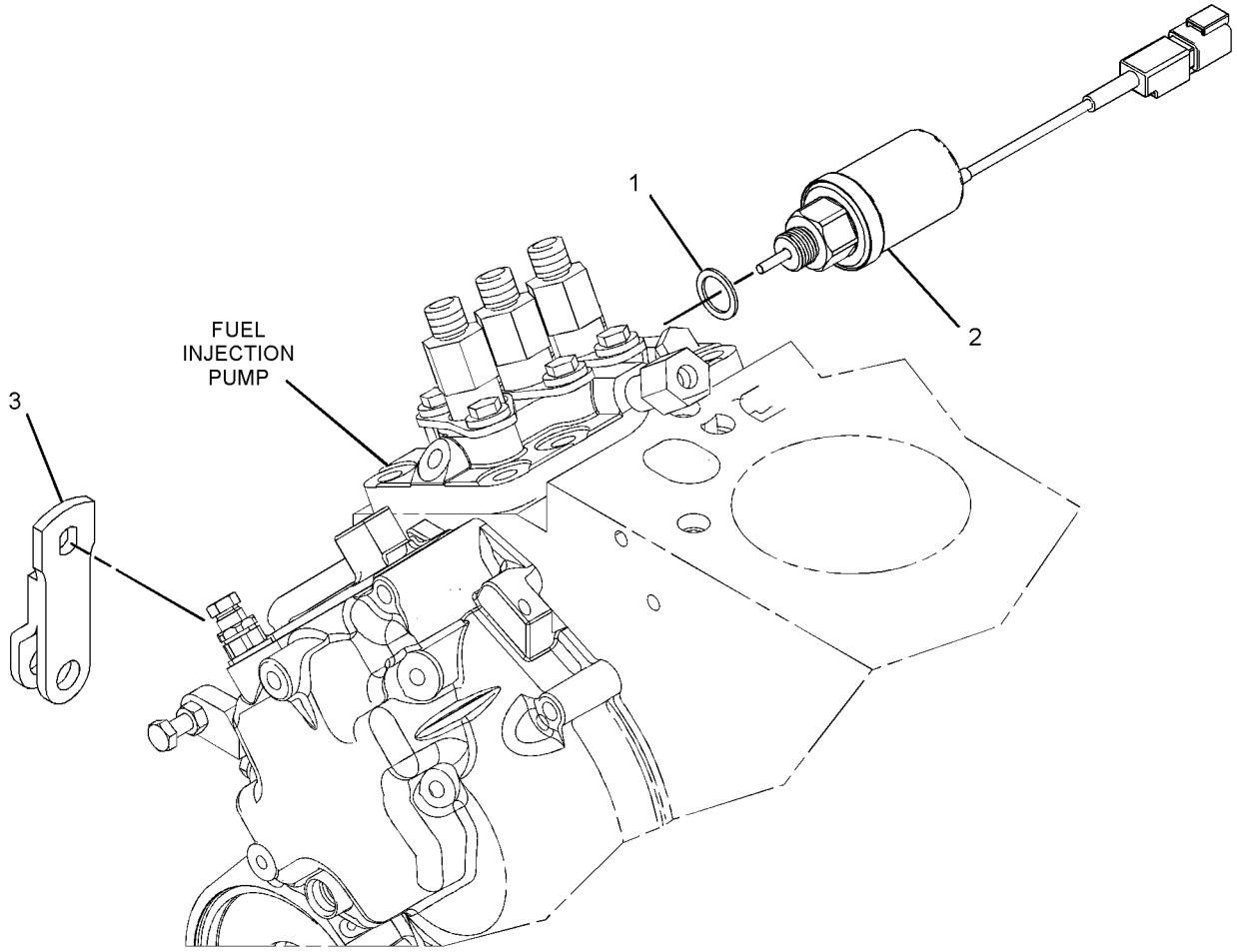

GRAPHIC #1 <END> g06160704

311-1109 STARTING MOTOR GP-ELECTRIC

TYPE 1

SMCS-1453 **i03392681**

NOTE	REF NO	GRAPHIC REF	PART NUMBER	QTY	PART NAME 1 2 3 4 5 6 (PRODUCT LEVEL)	SEE PAGE
CY	1	1	**339-2900**	1	STARTING MOTOR GP-ELECTRIC	157

C - CHANGE FROM PREVIOUS TYPE
Y - SEPARATE ILLUSTRATION

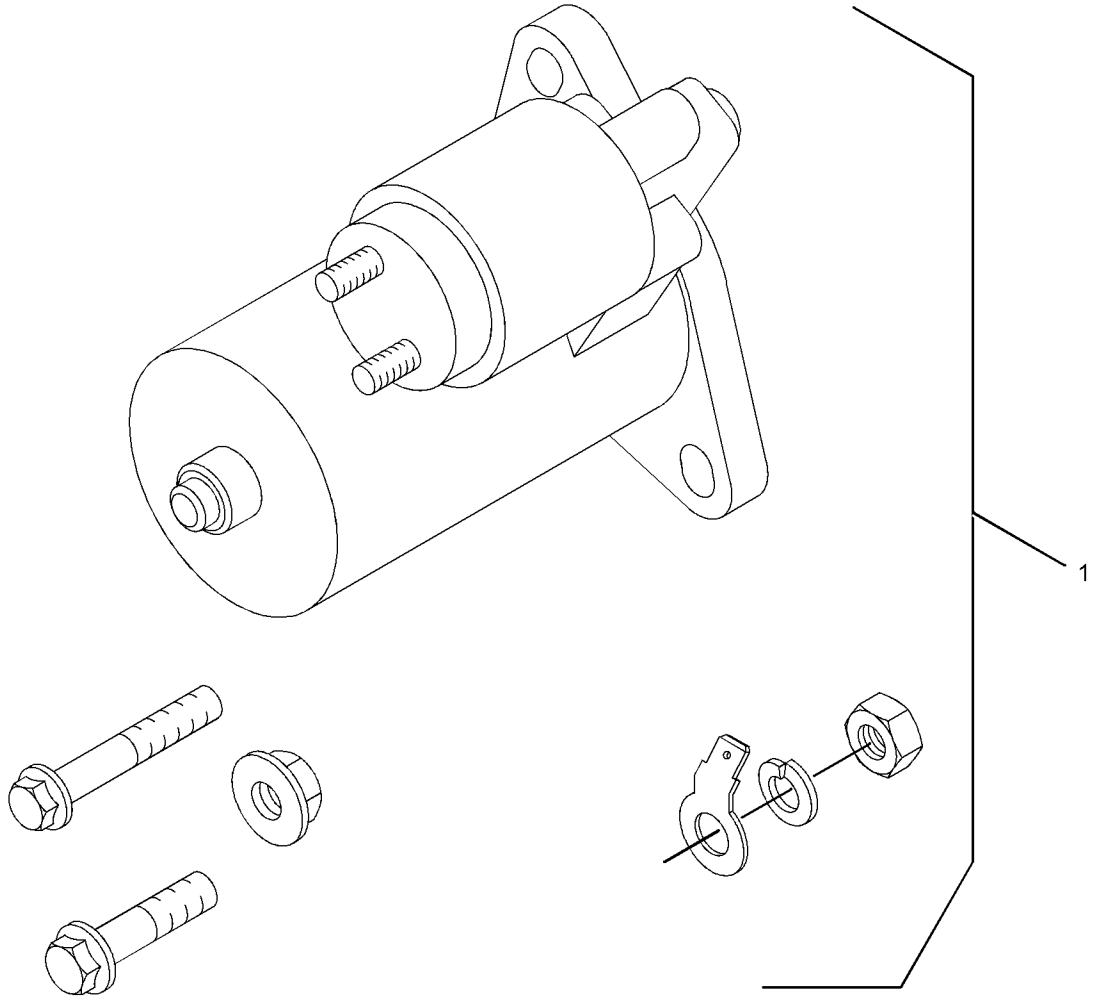

GRAPHIC #1 <END> g01761833

311-1109 STARTING MOTOR GP-ELECTRIC

TYPE 2

SMCS-1453 **i04856643**

NOTE	REF NO	GRAPHIC REF	PART NUMBER	QTY	PART NAME 1 2 3 4 5 6 (PRODUCT LEVEL)	SEE PAGE
CY	1	1	**385-5356**	1	STARTING MOTOR GP-ELECTRIC	158

C - CHANGE FROM PREVIOUS TYPE
Y - SEPARATE ILLUSTRATION

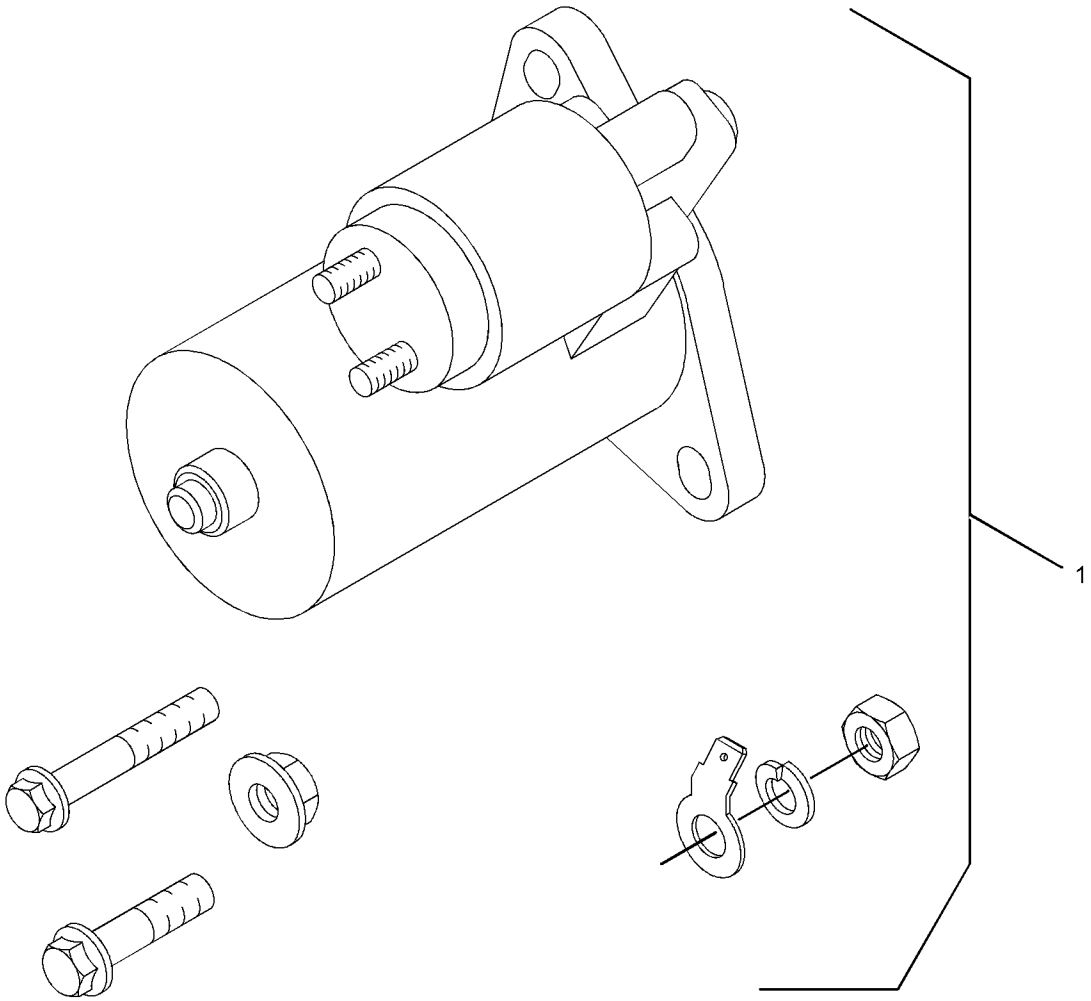

GRAPHIC #1 <END> g01761833

311-1109 STARTING MOTOR GP-ELECTRIC

TYPE 3

SMCS-1453 **i07767098**

NOTE	REF NO	GRAPHIC REF	PART NUMBER	QTY	PART NAME 1 2 3 4 5 6 (PRODUCT LEVEL)	SEE PAGE
	1	1	**461-8765**	1	STARTING MOTOR-ELECTRIC (12-VOLT)	

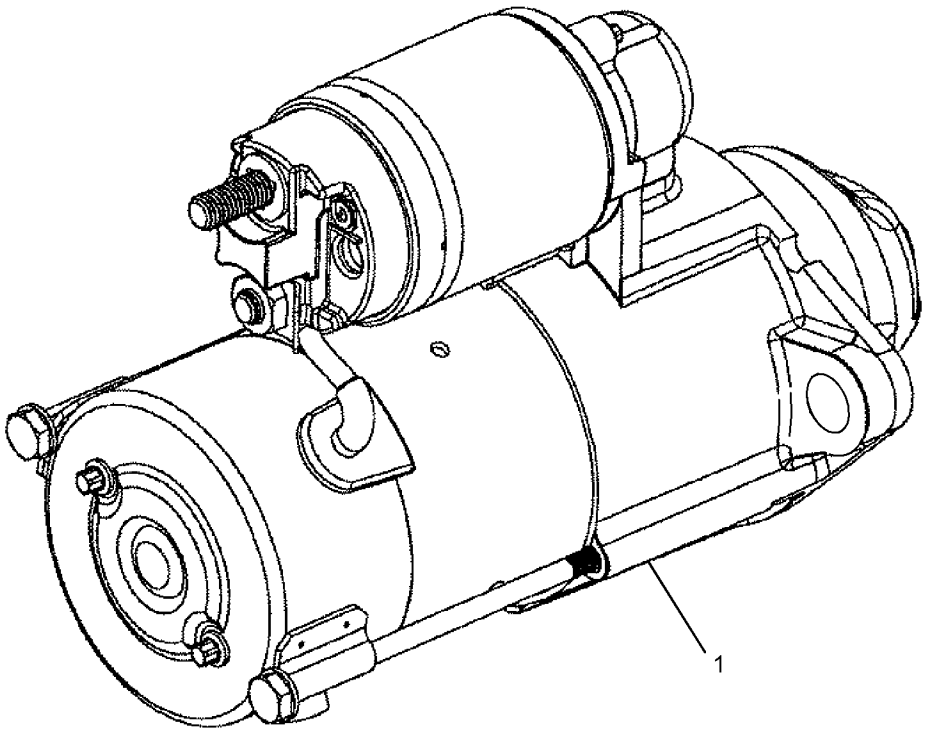

GRAPHIC #1 <END> g03873286

339-2900 STARTING MOTOR GP-ELECTRIC

PART OF 311-1109 STARTING MOTOR GP-ELECTRIC

SMCS-1453 **i07710277**

NOTE	REF NO	GRAPHIC REF	PART NUMBER	QTY	PART NAME 1 2 3 4 5 6 (PRODUCT LEVEL)	SEE PAGE
M	1	1	**6I-0593**	2	BOLT (M10X1.5X30-MM)	
M	2	1	**175-7141**	2	NUT-HEX FLANGE (M10X1.5-THD)	
M	3	1	**140-8783**	2	BOLT (M10X1.5X45-MM)	
	4	1	**333-7903**	1	KIT-TERMINAL	
					(INCLUDES TERMINAL, NUT & WASHER SPRING)	
	5	1	**461-8765**	1	STARTING MOTOR-ELECTRIC (12-VOLT)	

M - METRIC PART

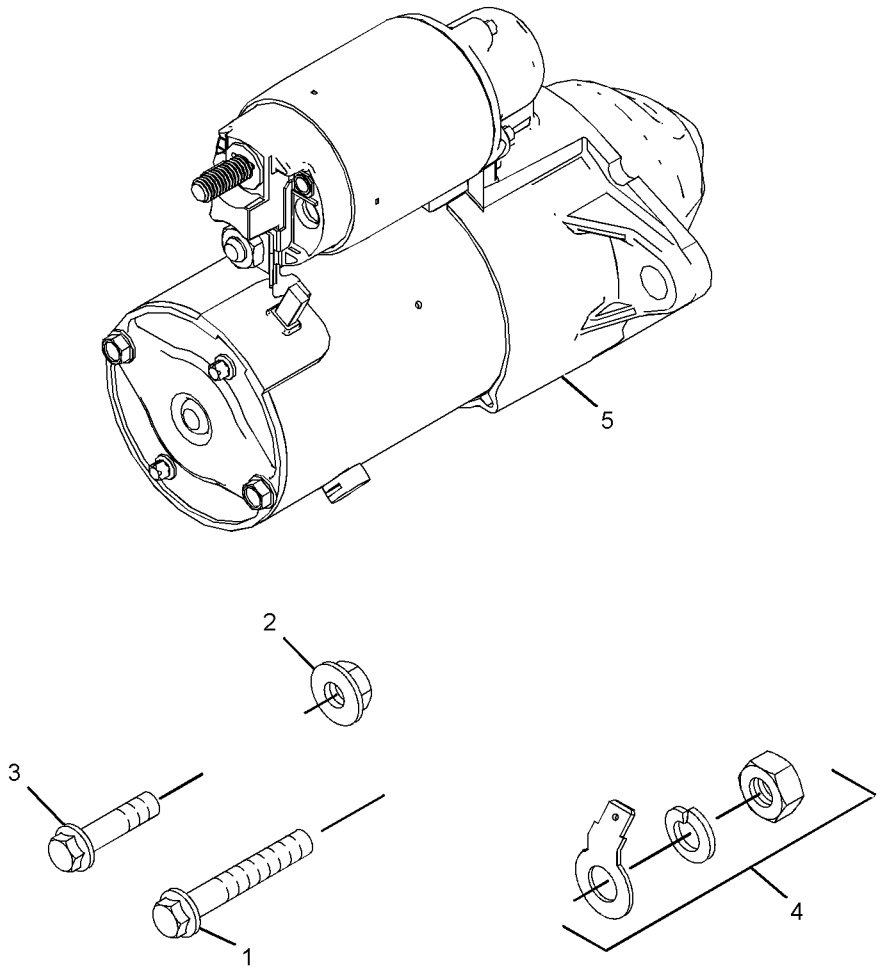

GRAPHIC #1 <END> g06419377

385-5356 STARTING MOTOR GP-ELECTRIC

FIELD REPLACEMENT ORDER 339-2900—PAGE: 157

PART OF 311-1109 STARTING MOTOR GP-ELECTRIC

SMCS-1453 **i04857715**

NOTE	REF NO	GRAPHIC REF	PART NUMBER	QTY	PART NAME 1 2 3 4 5 6 (PRODUCT LEVEL)	SEE PAGE
			(NO SERVICED PARTS)			

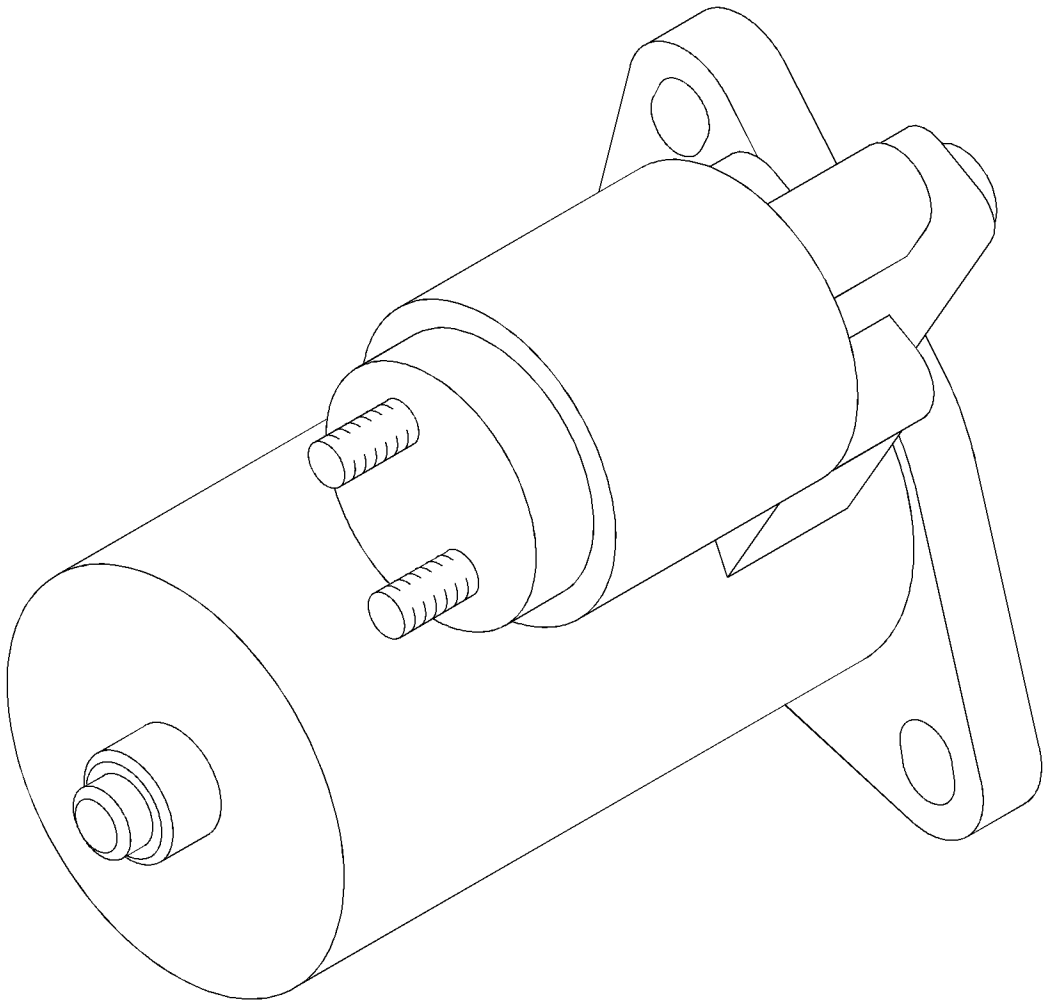

GRAPHIC #1 <END> g03025757

568-8781 STARTING MOTOR GP-ELECTRIC

SMCS-1453 **i07700634**

NOTE	REF NO	GRAPHIC REF	PART NUMBER	QTY	PART NAME 1 2 3 4 5 6 (PRODUCT LEVEL)	SEE PAGE
	1	1	**461-8765**	1	STARTING MOTOR-ELECTRIC (12-VOLT)	

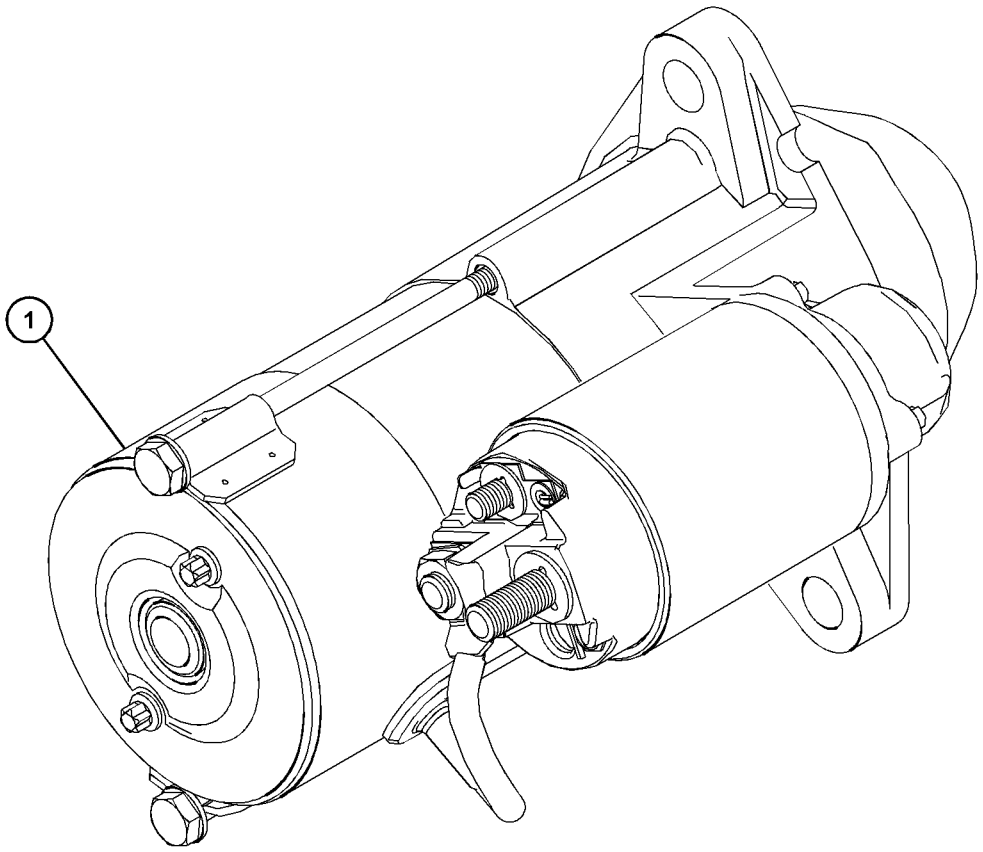

GRAPHIC #1 <END> g06472234

315-6638 SWITCH GP-PRESSURE

PART OF 435-1654 ENGINE AR-PRIMARY

TYPE 1

SMCS-7400, 7421 **i06561740**

NOTE	REF NO	GRAPHIC REF	PART NUMBER	QTY	PART NAME 1 2 3 4 5 6 (PRODUCT LEVEL)	SEE PAGE
	1	1	**153-5936**	2	WASHER (8.2X14.5X1-MM)	
	2	1	**183-1165**	1	PLUG	
	3	1	**456-7377**	1	SWITCH (OIL PRESSURE) (ENGINE OIL)	
	4	1	**438-1431**	1	ADAPTER	

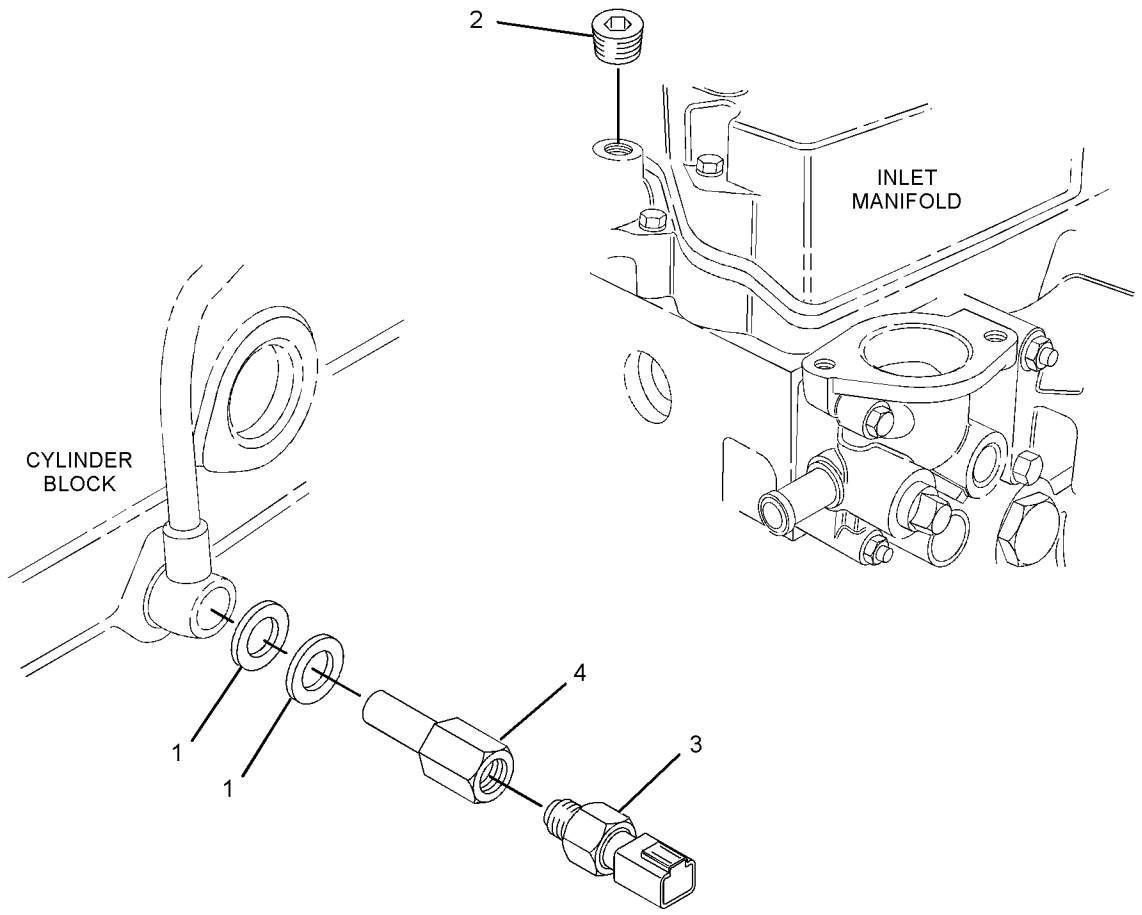

GRAPHIC #1 <END> g03505824

315-6638 SWITCH GP-PRESSURE

PART OF 435-1654 ENGINE AR-PRIMARY

TYPE 2

SMCS-7400, 7421 **i07027060**

NOTE	REF NO	GRAPHIC REF	PART NUMBER	QTY	PART NAME 1 2 3 4 5 6 (PRODUCT LEVEL)	SEE PAGE
	1	1	**153-5936**	2	WASHER (8.2X14.5X1-MM)	
	2	1	**183-1165**	1	PLUG	
C	3	1	**484-0882**	1	SWITCH-OIL PRESSURE (ENGINE OIL)	

C - CHANGE FROM PREVIOUS TYPE

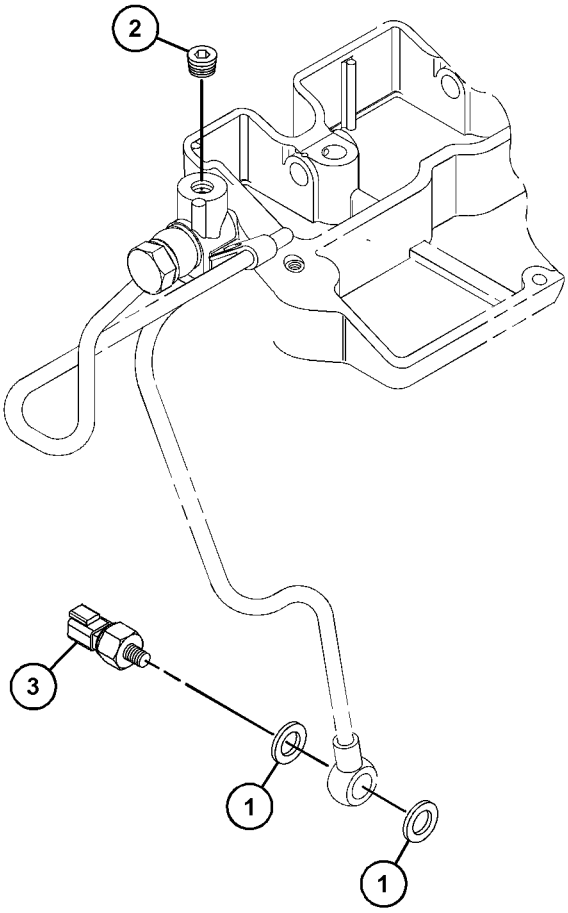

GRAPHIC #1 <END> g06199983

308-2314 SWITCH GP-START

SMCS-1416 **i04840451**

NOTE	REF NO	GRAPHIC REF	PART NUMBER	QTY	PART NAME 1 2 3 4 5 6 (PRODUCT LEVEL)	SEE PAGE
	1	1	**183-5460**	1	PLATE	
	2	1	**359-6000**	1	SWITCH AS-START	
	2A	1	**183-5458**	1	CAP	
	2B	1	**361-3925**	1	KEY-IGNITION	

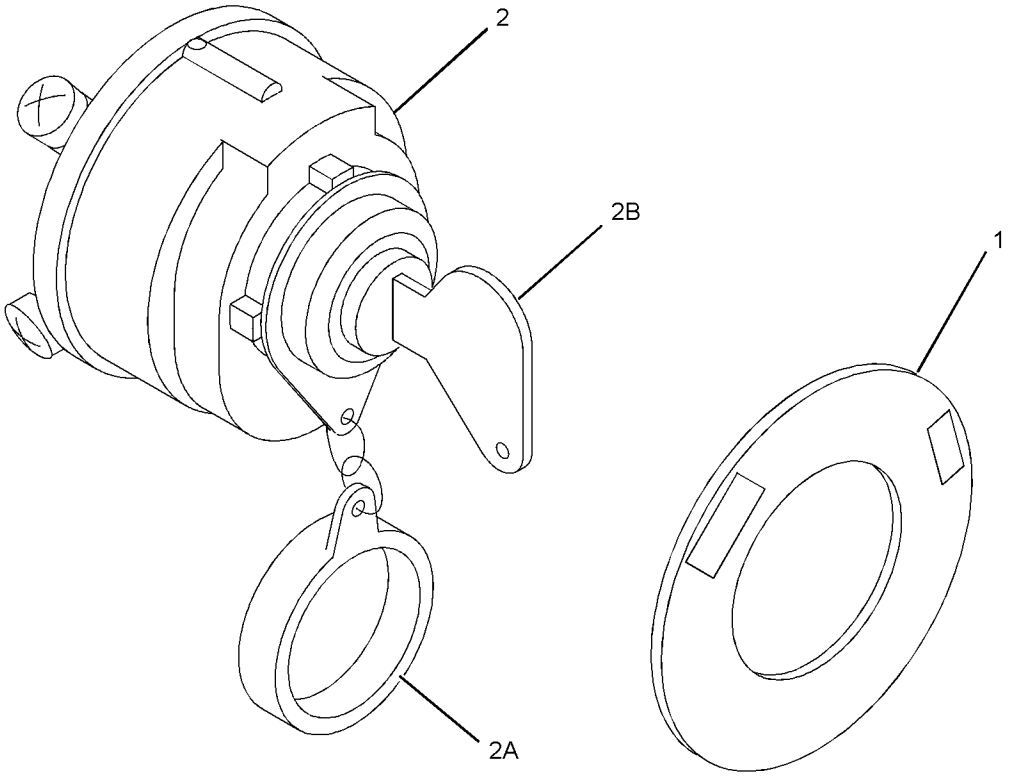

GRAPHIC #1 <END> g01389581

311-1130 SWITCH GP-TEMPERATURE

PART OF 435-1654 ENGINE AR-PRIMARY

SMCS-7400 **i04899180**

NOTE	REF NO	GRAPHIC REF	PART NUMBER	QTY	PART NAME 1 2 3 4 5 6 (PRODUCT LEVEL)	SEE PAGE
	1	1	**341-3600**	1	SWITCH-TEMPERATURE (ENGINE COOLANT)	

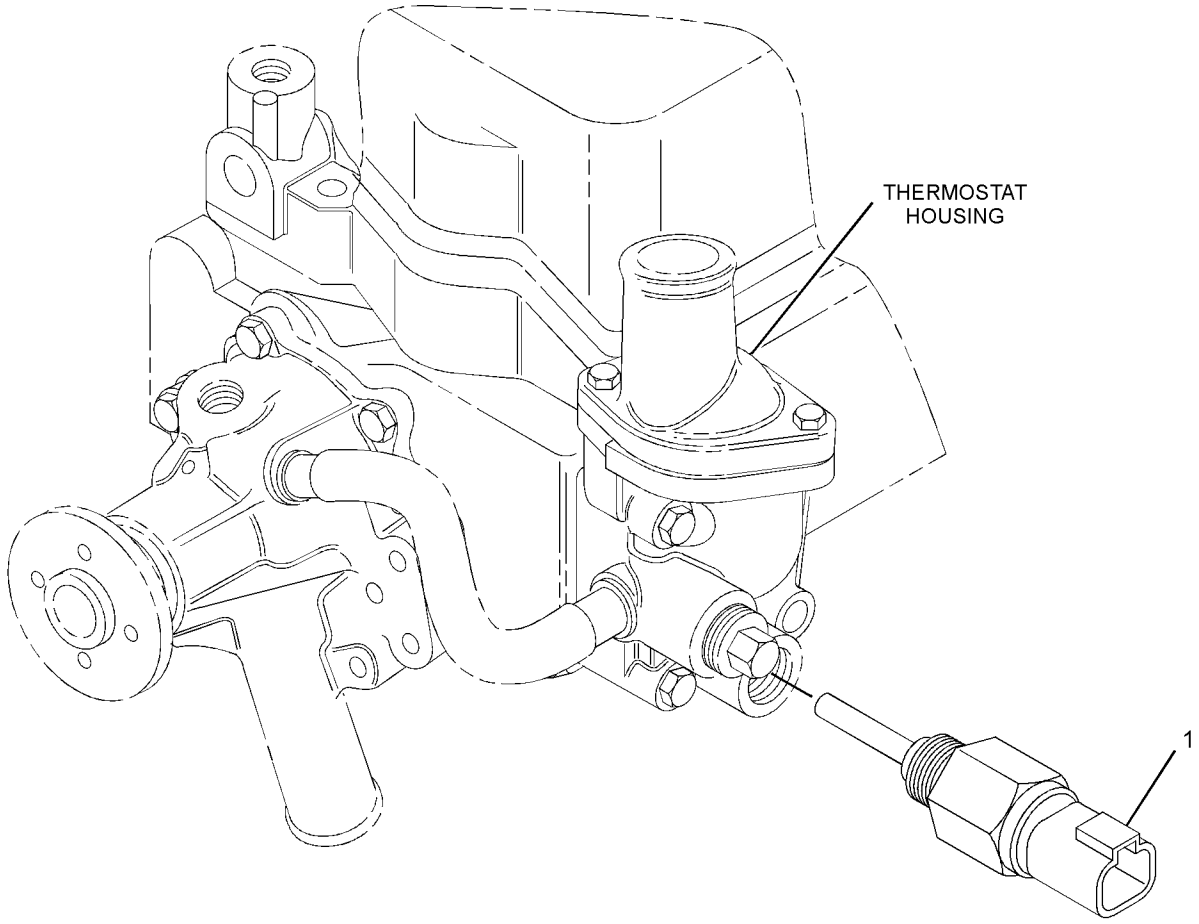

GRAPHIC #1 <END> g03076158

311-1131 LAMP GP

SMCS-4490, 7451 **i03393503**

NOTE	REF NO	GRAPHIC REF	PART NUMBER	QTY	PART NAME 1 2 3 4 5 6 (PRODUCT LEVEL)	SEE PAGE
	1	1	**197-8547**	1	LAMP (GLOW PLUG INDICATOR)	

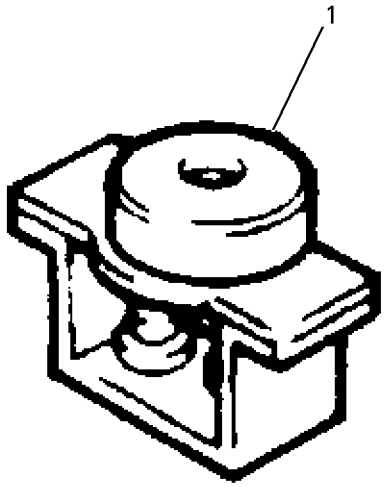

GRAPHIC #1 <END> g00758433

342-1324 PARTS GP-MISCELLANEOUS

PART OF 435-1654 ENGINE AR-PRIMARY

TYPE 1

SMCS-1000, 7950

i05537886

NOTE	REF NO	GRAPHIC REF	PART NUMBER	QTY	PART NAME 1 2 3 4 5 6 (PRODUCT LEVEL)	SEE PAGE
	1	1	**183-1165**	1	PLUG	
	2	1	**235-5531**	1	SEAL-VALVE COVER	
	3	1	**311-1173**	1	GASKET-MANIFOLD	

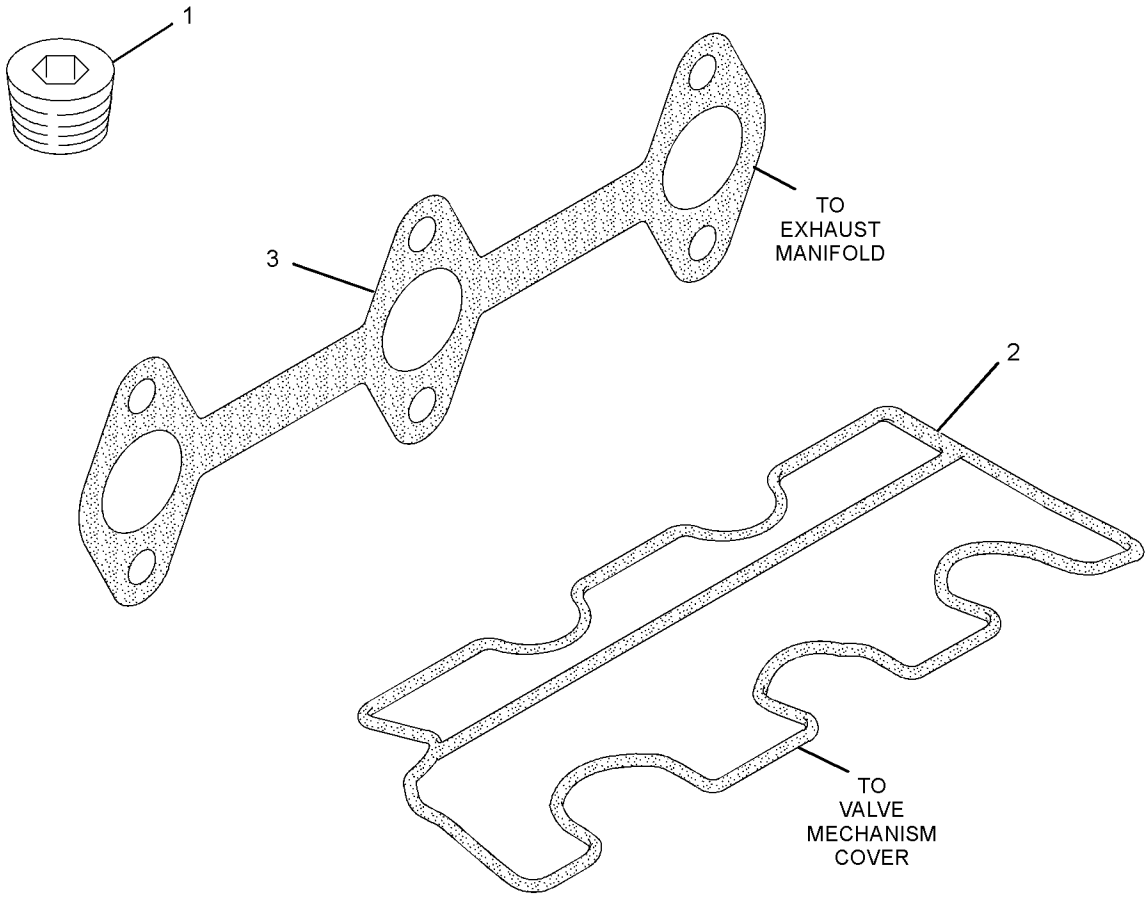

GRAPHIC #1

<END>

g01954499

342-1324 PARTS GP-MISCELLANEOUS

PART OF 435-1654 ENGINE AR-PRIMARY

TYPE 2

SMCS-1000, 7950 **i05735653**

NOTE	REF NO	GRAPHIC REF	PART NUMBER	QTY	PART NAME 1 2 3 4 5 6 (PRODUCT LEVEL)	SEE PAGE
	1	1	**183-1165**	1	PLUG	
	2	1	**311-1173**	1	GASKET-MANIFOLD	
	3	1	**447-3735**	1	GASKET-COVER	

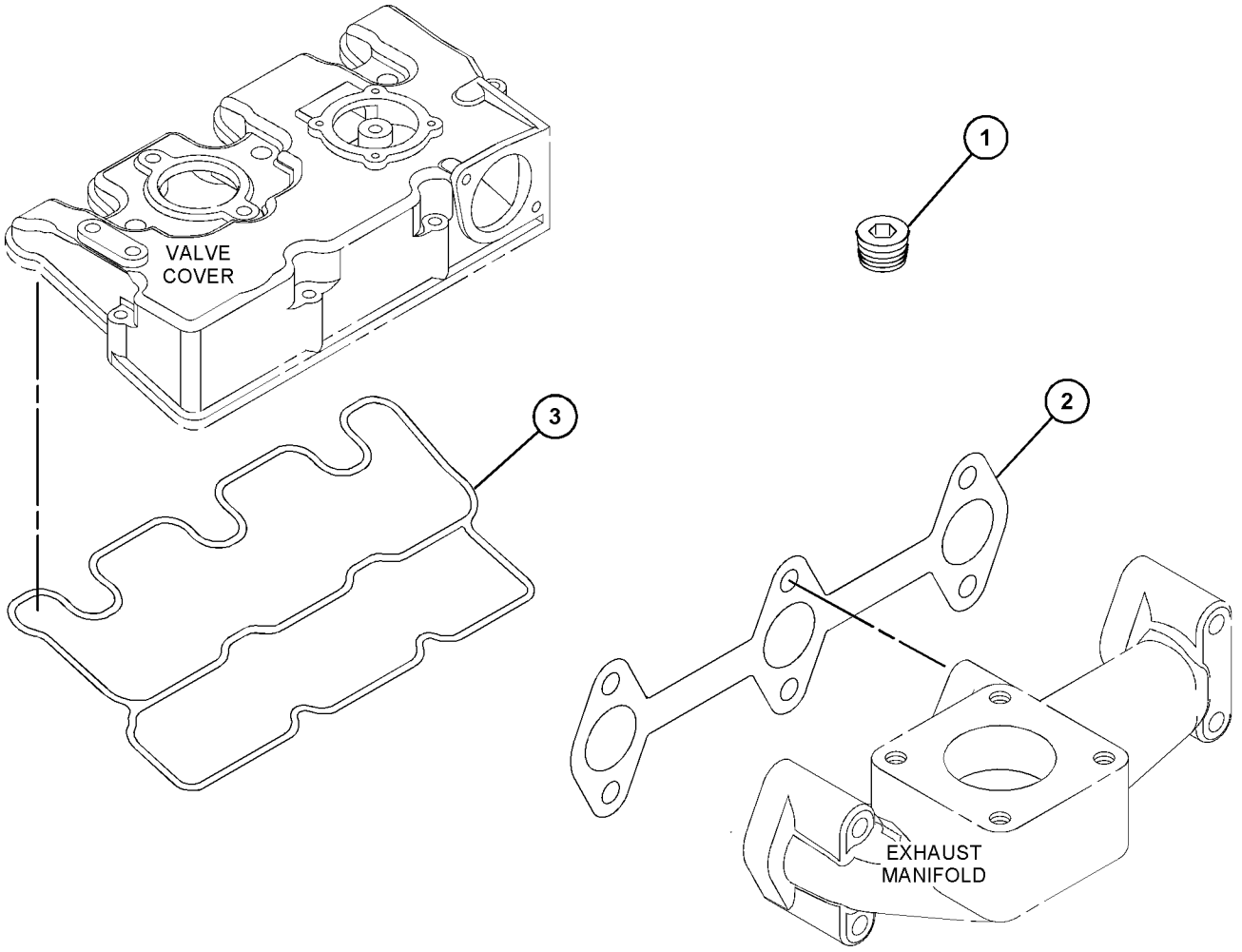

GRAPHIC #1 <END> g03665858

588-5115 PLATE & FILM GP

SMCS-7405, 7557

i07940357

NOTE	PART NUMBER	QTY	PART NAME 1 2 3 4 5 6 (PRODUCT LEVEL)	SEE PAGE
	153-8532	1	FILM-INFORMATION (FUEL FILTER)	
	346-8220	1	FILM-WARNING (UNIVERSAL)	
	450-9772	1	FILM-IDENTIFICATION (CAT)	
	419-0074	2	SCREW-DRIVE (NO 2X0.16-IN)	

<END>

MEMORANDA

PART NUMBER INDEX

Part	Page
5	
5C-2890	42
	45
	121
	123
	125
	129
5D-1026	78
5D-1319	39
	40
	41
	42
	45
6	
6B-0924	23
6I-0217	83
	87
	91
	95
	99
	102
	106
	110
	114
	116
	142
	146
	147
6I-0254	87
	91
	95
	99
	102
	106
	110
	114
	116
6I-0260	146
6I-0455	18
6I-0593	37
	142
	157
6I-0594	15
	16
	17
6I-0650	21
6I-0654	87
	91
	95
	102
	106
6I-0846	142
6I-0917	83
	87
	91
	95
	99
	106
	110
6I-4200	38
	49
	50
7	
7W-4694	142
8	
8T-3490	99
	110
0	
032-8100	142
032-9020	76
	80
033-7849	142
067-6269	142
067-6317	142
067-6987	142
095-1574	42
	45
	121
	123
	125
	129
1	
100-4463	16
	17
100-4841	51
	53
103-6714	114
	116
106-8916	42
	45
	121
	123
	125
	129
	131
114-4363	38
	99
	110
123-2899	99
	110
124-3815	14
	50
	83
	142
127-8281	70
133-5512	131
138-7162	36
138-7172	36
138-7421	34
139-5511	42
	45
	121
	123
	125
	129
	131
140-8783	157
153-5387	23
	25
153-5390	25
153-5391	23
	25
153-5394	23
	25
153-5395	23
	25
153-5402	21
	23
	25
153-5518	21
153-5519	21
153-5556	28
	32
153-5557	28
	32
153-5587	60
153-5590	60
153-5592	25
	42
	45
	74
	83
	87
	91
	95
	99
	102
	106
	110
	114
	116
	120
	121
	123
	125
	129
	131
	134
	136
153-5936	72
	160
	161
153-5939	10
	12
	19
153-5960	33
	39
	40
	41
	76
	78
	80
	134
	136
153-5961	63
	76
	78
	80
153-5962	10
	12
	19
	33
	39
	40
	41
153-6412	56
	153
153-6415	42
	45
	121
	123
	125
	129
	131
153-6492	5
	7
	8
	9
	57
153-6835	51
	53
	60
153-6838	5
	7
	8
	9
	23
	25
	51
	53
	65
153-6841	51
	53
153-6849	73
	74
153-6850	73
	74
153-6851	73
	74
153-6853	72
153-6861	102
153-6879	70
	71
153-6881	72
153-7640	10
	12
	19
153-7983	42
	45
	121
	123
	125
	129
	131
153-7987	42
	45
	121
	123
	125
	129
	131
153-7988	63
153-8532	167
154-0175	23
	25
154-0385	21
154-0393	23
	25
154-0869	55
154-0870	55
154-0871	55
154-0873	55
154-0874	55
154-1231	21
154-1240	60
154-1241	60
154-1242	60
154-1243	60
154-1246	63
154-1347	10
154-1399	36
154-1403	131
154-1675	39
	40
	41
	42
	45
154-1817	76
	78
	80
154-1880	57
154-1942	72
154-2395	36
154-2403	36
	142
154-2406	34
	35

► PRIMARY REFERENCE

PART NUMBER INDEX

Part	Page
154-2428	120
154-2713	134
	136
154-2715	129
	131
	134
	136
155-7984	145
	146
	147
155-8073	150
	151
155-8075	150
	151
155-8076	150
155-8077	150
155-8085	142
156-6960	34
156-6967	21
156-6968	21
156-6969	23
	25
156-6970	21
156-6973	23
	25
156-6977	21
156-6980	55
156-6997	5
	7
	8
	9
160-4150	48
	73
	74
160-4151	48
	73
	74
160-4152	48
	73
	74
160-4153	48
	73
	74
160-4826	70
160-7034	134
	136
161-2628	21
161-2629	21
161-2630	21
161-2631	21
161-8260	95
	99
	102
	106
	110
162-2207	42
	45
	121
	123
	125
	129
	131
162-2468	61
163-5372	145
	146
	147
164-7468	15
165-2140	10
	12
	19
	33
	39
	40
	41
165-2141	36
	37
	145
168-8999	145
	146
	147
168-9001	75
	118
	145
	146
	147
168-9002	145
	146
	147
172-4585	150
	151
175-7141	157
176-7719	142
180-6118	83
	87
	91
	95
	102
	106
180-8579	145
	146
	147
183-1163	23
	25
183-1164	23
	25
183-1165	160
	161
	165
	166
183-1336	21
183-3213	31
183-3353	134
	136
183-4323	65
183-5458	162
183-5460	162
190-3762	10
190-3801	134
	136
190-3803	134
	136
190-3828	72
191-9297	42
	45
	121
	123
	125
	129
	131
197-8540	138
197-8547	164
197-8555	148
198-2664	83
	87
	91
	95
	99
	102
	106
	110

2

Part	Page
202-1196	134
	136
202-6616	83
	87
	91
	95
	99
	102
	106
	110
205-4726	133
205-4727	133
205-4728	133
205-4731	134
	136
215-2620	23
	25
217-1456	55
217-5859	10
	12
	19
217-5860	10
	12
	19
217-5861	10
	12
	19
217-5862	10
	12
	19
217-7115	42
	45
	121
	123
	125
	129
	131
217-7358	65
	67
218-8533	31
218-8537	31
220-1523	69
221-1136	23
	25
226-7902	38
229-2288	136
229-2289	136
229-2290	136
229-5150	51
	53
231-2839	151
234-8762	152
235-5523	134
235-5524	134
235-5525	134
235-5531	10
	165
235-6984	60
235-7123	51
	53
236-4952	134
	136
236-4954	134
	136
236-4959	134
	136
236-4961	134
	136
237-9315	23
	25
	28
	30
238-0128	83
	87
238-0265	83
	87
	91
	95
	99
	102
	106
	110
238-0266	83
	87
	91
	95
	99
	102
	106
	110
238-0271	83
	87
	91
	95
238-9137	78
239-0743	87
	91
	95
239-1137	83
241-6747	114
	116
244-0514	114
	116
	119
244-3259	83
	87
	91
	95
	99
	102
	106
	110
245-1361	78
	80
245-1362	78
	80
245-1364	78
	80
246-4267	145
246-4361	12
	19
246-5011	119
249-5541	76
	78
	80
249-7263	83
	87
	91
252-1446	134
252-1466	136
254-5541	148
	149
256-2084	28
	30
256-2085	28
	30
271-5059	119
271-5062	119
276-1804	►127
	►140
	►141
276-1806	127
	140
286-7496	76
	78
	80
288-6537	28

► PRIMARY REFERENCE

PART NUMBER INDEX

Part Page

30
288-6539 10
12
19
290-8014 134
136
291-1808 28
30
292-1988 83
87
91
292-1992 114
292-9620 62
293-3246 . . . . . ▶133
▶136
294-4916 23
25
295-4070 142
295-5876 83
87
91
95
99
102
106
110
297-2996 75

3

302-4181 23
25
302-4182 23
25
302-4187 142
302-7776 127
140
302-7777 127
140
302-7778 127
140
303-0338 28
30
303-4100 . . . . . ▶3
308-1853 21
308-1861 28
308-1862 31
308-1867 73
74
308-1869 73
74
308-1874 15
308-1875 15
16
17
121
123
129
131
308-1882 42
45
121
123
125
129
131
308-1889 42
45
121
123
125
129

Part Page

131
308-1892 42
45
121
123
125
129
131
308-1897 42
45
121
123
125
129
131
308-1903 5
308-1904 5
308-1907 76
78
80
308-1914 153
308-2298 1
3
27
69
308-2309 1
3
118
308-2314 2
3
162
308-2319 1
3
148
308-2320 3
138
308-4266 42
45
121
123
125
129
131
308-4735 1
27
71
309-6720 2
3
27
56
309-6728 121
123
309-6729 42
45
121
123
125
309-6732 42
309-6735 10
12
19
310-7063 51
53
311-0655 42
45
121
123
125
311-1099 1
3
23
25
27
311-1100 1

Part Page

3
21
27
311-1101 1
3
27
55
311-1102 1
3
27
31
311-1103 2
4
27
63
311-1104 2
3
27
72
311-1107 1
3
36
37
311-1109 2
3
154
155
156
311-1111 3
58
311-1112 1
3
27
51
311-1113 1
27
65
311-1114 2
3
27
57
311-1115 2
27
76
311-1116 1
3
27
75
311-1120 1
3
145
146
311-1121 4
61
311-1122 3
15
27
311-1123 1
3
19
27
311-1124 1
3
120
311-1125 2
3
142
311-1127 1
3
27
150
151
311-1128 2
3

Part Page

27
153
311-1130 2
4
27
163
311-1131 1
164
311-1157 21
311-1158 . . . . . ▶28
▶31
311-1160 . . . . . ▶60
▶63
311-1165 5
311-1168 134
136
311-1169 134
136
311-1172 120
311-1173 120
165
166
311-1174 142
311-3326 134
313-2025 42
45
121
123
125
313-9323 5
7
8
9
315-5235 42
45
121
123
125
129
131
315-5236 42
45
121
123
125
129
131
315-6638 2
3
27
160
161
316-9548 1
3
34
316-9664 1
3
114
116
316-9713 2
83
87
91
95
99
317-6706 2
140
317-7195 129
131
318-1672 . . . . . ▶1
318-5038 152
319-3250 129
131
320-9110 1

PART NUMBER INDEX

Part Page

3
49
320-9114 2
152
321-4249 42
121
125
129
321-6741 1
3
149
322-0561 3
27
39
322-0562 3
27
129
131
322-0563 3
5
27
322-0564 3
27
134
322-0886 2
62
322-1392 2
59
322-3102 1
40
322-3103 2
136
322-6874 23
25
322-7492 121
123
324-3400 42
45
121
123
125
129
131
324-7849 57
325-5935 83
325-5941 83
87
91
95
99
102
106
110
325-5942 83
87
102
325-5943 102
106
110
325-9415 51
53
326-8547 114
116
326-9052 116
327-0061 27
35
328-3229 15
16
328-6606 102
328-6607 95
102
106
110
329-1292 142

Part Page

329-3694 16
17
329-3695 16
17
329-3696 1
16
17
330-3010 1
7
330-3011 1
121
123
330-9189 42
45
121
123
125
129
131
331-2590 70
331-3872 70
333-7903 157
334-0272 65
67
68
334-0732 42
45
121
123
125
129
131
334-7291 70
334-7293 3
70
334-7294 3
78
80
334-7295 114
334-7297 83
102
334-7299 83
102
106
334-7300 83
102
106
110
334-7304 83
334-7305 102
334-7306 83
334-7436 83
334-7437 87
91
95
99
102
106
106
110
335-5578 42
45
121
123
125
129
131
336-2965 39
42
45
121
123
125
336-5517 3
102

Part Page

106
110
337-3107 83
87
91
95
99
338-3403 23
339-2900 154
157
339-3017 2
3
27
73
340-0199 152
341-3600 163
342-1226 27
38
342-1268 . . . . . ►14
►27
342-1324 27
165
166
342-8499 7
8
9
342-8500 7
8
9
344-5868 83
87
91
95
99
102
106
110
346-8220 167
349-1368 145
355-1393 . . . . . ►48
358-4256 37
358-9226 142
359-6000 162
359-9666 145
146
147
361-3925 162
362-8050 87
91
95
99
102
106
110
363-5813 83
87
91
95
99
102
106
110
363-8409 7
8
9
364-2741 1
41
364-2742 1
125
364-2743 1
8
364-2755 45
131
364-7487 42

Part Page

45
121
123
125
364-8947 87
102
365-0485 1
3
67
366-2656 87
91
95
99
102
106
110
366-2658 87
91
95
99
102
106
110
366-3065 118
366-4251 23
25
369-4486 42
45
121
123
125
129
131
369-8010 51
53
370-6544 49
50
383-1331 37
385-5356 155
158
390-3729 42
45
125
129
131
390-3731 42
45
125
129
131
394-3492 147
394-3494 146
396-6868 10

4

419-0074 167
419-6641 10
12
419-6642 1
10
12
419-6687 1
68
419-7640 133
153
422-4226 19
423-5611 76
78
80
423-5640 91
95

► PRIMARY REFERENCE

PART NUMBER INDEX

Part	Page
	99
423-5665	142
423-6224	56
423-6334	87
	91
	102
423-7663	30
423-7720	18
423-7722	51
	53
423-7723	39
	40
	41
	48
423-7724	42
	45
	121
	123
	125
	129
	131
423-8370	18
425-6360	51
	53
425-6407	76
	78
	80
425-6417	33
425-7065	42
	121
	125
	129
426-4357	134
	136
435-0208	118
435-1654	▶27
435-9544	28
	32
435-9546	32
438-1431	160
438-8534	99
438-9109	63
439-0945	75
439-2614	106
	110
439-4992	76
	78
	80
439-4993	78
440-5104	28
	32
442-8532	27
	50
444-7301	106
	110
447-3735	12
	19
	166
447-5255	63
450-9772	167
454-7991	142
456-7377	160
457-5872	31
457-5876	31
461-8765	156
	157
	159
464-2090	39
	40
465-6710	42
	45
465-7011	1
	18
468-7382	116
469-4428	106
	110
472-2214	78
	80
472-2215	76
	80
472-4722	74
476-5581	91
	95
	99
	106
	110
477-8793	76
	78
	80
477-8828	28
	32
481-1650	65
483-1210	41
483-3937	58
483-3939	59
484-0882	161
486-3293	1
	147
487-0157	23
	25
487-9902	95
	99
	106
	110
490-0367	5
	7
	8
	9
494-9569	12
	19
495-0737	121
	123
	125
	129
	74
539-0439	12
	19
540-0594	▶30
	▶32
540-0595	▶32
540-4157	146
	147
543-5898	110
552-5813	1
	3
	53
553-4376	65
	67
	68
553-4377	65
	67
559-0028	140
566-6594	2
	3
	74
568-8781	2
	3
	159
579-9444	3
	139
579-9465	2
	141
588-5115	2
	3
	167

5

Part	Page
502-5421	45
	123
	131
502-9478	45
	123
	131
503-9707	45
	123
	131
503-9731	45
	123
	131
504-3838	31
508-5627	1
	33
508-5628	1
	42
	45
508-5629	1
	9
515-3138	49
	50
515-3484	55
524-3340	21
526-5212	139
	141
528-6883	63
536-6619	48
536-9734	25

MEMORANDA

©2019 Caterpillar
All Rights Reserved

CAT, CATERPILLAR, LET'S DO THE WORK, their respective logos, “Caterpillar Corporate Yellow”, the "Power Edge" and Cat "Modern Hex" trade dress as well as corporate and product identity used herein, are trademarks of Caterpillar and may not be used without permission.