CATERPILLAR®

SEBP5548
December 2008

Parts Manual

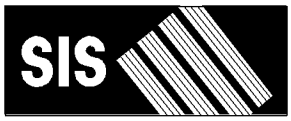

See “General Information” for New Parts Manual Features.

C2.2 Industrial Engine

C8Y1-Up (Engine)

This Parts Manual is also Available in PDF Format on Compact Disk (CD-ROM)- Caterpillar Form No. SERP55448

Product and Dealer Information

Note: For product identification plate locations, see the section “Product Identification Information” in the Operation and Maintenance Manual.

Delivery Date: _____

Product Information

Model: _____

Product Identification Number: _____

Engine Serial Number: _____

Transmission Serial Number: _____

Generator Serial Number: _____

Attachment Serial Numbers: _____

Attachment Information: _____

Customer Equipment Number: _____

Dealer Equipment Number: _____

Dealer Information

Name: _____ Branch: _____

Address: _____

_____

_____

	Dealer Contact	Phone Number	Hours
Sales:	_____	_____	_____
Parts:	_____	_____	_____
Service:	_____	_____	_____

MEMORANDA

TABLE OF CONTENTS

Name	Page
GENERAL INFORMATION	A2
REPAIR ALTERNATIVES	A4
SUPPLEMENTAL COOLANT ADDITIVES	A5
MAINTENANCE PARTS	A6
INDEX	A7
ENGINE ARRANGEMENT	1
ENGINE AR-PRIMARY	1
BASIC ENGINE	4
COVER GP-FRONT HOUSING	4
COVER GP-VALVE MECHANISM	5
CRANKSHAFT GP	11
CYLINDER BLOCK GP	13
CYLINDER HEAD GP	15
DRIVE GP-AUXILIARY	17
DRIVE GP-FAN	18
FLYWHEEL GP	19
HOUSING GP-FLYWHEEL	21
HOUSING GP-FRONT	23
LIFTING GP-ENGINE	31
PAN GP-OIL	32
PISTON & ROD GP	37
PLUG GP-ENGINE	38
PLUG GP-OIL PAN	39
PULLEY GP-AUXILIARY DRIVE	41
PULLEY GP-CRANKSHAFT	42
PULLEY GP-WATER PUMP	43
V-BELT GP	44
VALVE MECHANISM GP	45
LUBRICATION SYSTEM	48
FILLER GP-ENGINE OIL	48
FILTER GP-ENGINE OIL	52
MOUNTING GP-ENGINE OIL FILTER	53
PUMP GP-ENGINE OIL	54
COOLING SYSTEM	57
CONNECTION GP-WATER	57
CONNECTOR GP-CAB HEATER LINES	58
FAN GP-SUCTION	60
LINES GP-COOLANT	61
PUMP GP-WATER	62
RADIATOR & FAN GP	67
AIR INLET AND EXHAUST SYSTEM	70
AIR CLEANER GP	70
MANIFOLD GP-EXHAUST	71
FUEL SYSTEM	73
PUMP GP-FILTER & FUEL TRANSFER	73
PUMP GP-FUEL INJECTION	76
PUMP GP-FUEL PRIMING	80
PUMP GP-FUEL TRANSFER	81
ELECTRICAL AND STARTING SYSTEM	83
ALTERNATOR GP-CHARGING	83
CONNECTION GP-ELECTRICAL	84
GLOW PLUG GP	86
SOLENOID GP-SHUTOFF	87
STARTING MOTOR GP-ELECTRIC	88
SWITCH GP-PRESSURE	90
SWITCH GP-START	92
SWITCH GP-TEMPERATURE	93
OPERATOR STATION	94
LAMP GP	94
PART NUMBER INDEX	B1

GENERAL INFORMATION

1. ENGINE IDENTIFICATION

Caterpillar engines are identified with Serial Numbers and Arrangement Numbers. In some cases, Modification Numbers are also used. The serial number plate which shows these numbers is mounted on the engine.

Caterpillar dealers need this information to determine which components were included on the engine when it was assembled at the factory. This permits accurate identification of replacement part numbers.

2. ORDERING PARTS

⚠ WARNING

When replacement parts are required for this product Caterpillar recommends using Caterpillar replacement parts or parts with equivalent specifications including, but not limited to, physical dimensions, type, strength and material.

Failure to heed this warning can lead to premature failures, product damage, personal injury or death.

Quality Caterpillar replacement parts are available from Caterpillar dealers throughout the world. Their parts inventories are up to date and include all parts normally required to protect your investment in Caterpillar Engines. Dealers may offer repair kits or remanufactured parts to allow selection of the most effective repair alternative for a particular situation. When ordering parts, your order should specify the quantity, part number, part name, and the serial number/product identification number of the engine for which the parts are needed.

3. PARTS MANUAL ORGANIZATION

Product information in this manual is presented as "information elements" that represent all of the components for the specific model. An Engine Arrangement is an example of an information element. The information elements are organized alphabetically by part name and secondarily by part number within each major section of the manual.

4. TABLE OF CONTENTS

A table of contents (TOC) is found at the beginning of the manual. The TOC lists each section of the manual with a complete list of all information elements organized as they appear in the manual. Page numbers are provided for quick reference to detailed parts identification illustrations and serviceable consist lists.

5. MAINTENANCE PARTS INDEX

The Maintenance Parts Index, located near the beginning of the manual, references most frequently used maintenance part numbers, providing description, quantity, usage and page number. This information is organized alphabetically by part description.

6. INDEX

The index located near the front of the manual is an alphabetical listing of all information elements included in the manual. Page numbers are provided for quick reference to detailed parts identification illustrations and serviceable consist lists.

7. PART NUMBER INDEX

A numerical index listing all part numbers and the corresponding page number(s) appears at the back of the manual.

8. CAPTIONS

Captions located at the beginning each information element identify the part number and part name along with additional descriptive information. S/N information found in each caption should be used to select correct information for a specific engine. Field replacement options, identification of optional attachment components, and where used ("part of") information is also provided.

The first line of a caption is shown in larger type font to indicate the beginning of an information element. Captions for additional pages that may be required to illustrate an information element will be shown in standard type font and will include the term *(contd.)* .

9. NON-SERVICED PARTS

In some instances it is necessary to display non-serviced parts that are a link to lower level serviceable consist lists. These non-serviced part numbers are shown in *italic* type indicating that they are not available. All consist lists have not been converted to reflect this enhancement.

10. PARTS LIST REFERENCE NUMBERS

Numbers shown in the Ref No column correspond to numbers used in the associated graphic(s). An alphabetic suffix may be added to a reference number to identify lower level consist items. Numbers shown in the Graphic Ref column refer to the graphic number identifier displayed in the lower left corner of each illustration. The Graphic Ref number may be used in combination with the item Ref No to determine the correct part number. There may be intentional omission of a Ref No in a consist list as information is updated to reflect the latest serviceable part numbers.

11. INDENTED PART NAMES

When a part name is indented in a parts list, it is part of (included in) the group or assembly under which it is indented.

12. ILLUSTRATION REFERENCE LETTERS

When necessary, illustrations contain reference letters (A, B, C etc.) that are intended to track lines and harnesses from one point to another. They are also used to show where to reconnect illustrations that have been separated.

13. ABBREVIATIONS AND SYMBOLS

O.D. – Outside Diameter
I.D. – Inside Diameter
A – Not Part Of This Group
B – Use As Required
C – Change From Previous Type
D – Order By The Meter
E – Order By The Centimeter
F – Not Shown
G – Order By The Inch
I – Refer To Hydraulic Information System
M – Metric Part
R – Remfg Part May Be Available
Y – Separate Illustration
Z – Not Serviced Separately

SIS *New Feature*

14. DESCRIPTION OF TYPE CHANGES

Type - A type is defined as any configuration change that requires an additional Information Element for an Arrangement, Group, or Assembly. If serial number breaks for types are not available, a type # (Type 1, Type 2, etc.) will be displayed in the caption. These "type" changes are identified with a "C" note (change from previous type) in the Parts List. Only the "types" that apply to this Parts Manual will be included. Additional types may exist causing "C" notes to appear on an Information Element when no other types are shown.

15. <END>

This symbol indicates the end of an information element.

NOTE:

Continuing improvement and advancement of product design may cause changes to your engine which may not be included in this publication. Whenever a question arises regarding your Caterpillar product or this publication, please consult your Caterpillar dealer for the latest available information.

REPAIR ALTERNATIVES

REMANUFACTURED COMPONENTS

As an option when making repairs consider Caterpillar Remanufactured Components. Components that are available through the Caterpillar Remanufactured Program are identified three ways in the parts book:

- with the letter R in the note field of the parts list
- with an R* at the beginning of the first line of the caption
- with an *R at the end of the first line of the caption

Typical components included in the Remanufacturing Program include:

ALTERNATORS
CONNECTING RODS
CRANKSHAFTS - UNDERSIZE
CRANKSHAFTS - UPGRADE TO NEW
CYLINDER HEADS
ELECTRONIC CONTROL MODULES (ECM)
ELECTRONIC SENSORS
FUEL INJECTORS
FUEL NOZZLES
FUEL PUMPS
GOVERNORS
OIL PUMPS
PISTONS
SHORT BLOCKS
STARTERS
TURBOCHARGERS - COMPLETE
TURBOCHARGER CARTRIDGES
WATER PUMPS

Caterpillar Remanufactured engines for many engine arrangements are also available.

SUPPLEMENTAL COOLANT ADDITIVES

CUSTOMER BENEFITS:

Protects against cavitation, foam, erosion, corrosion, and scale buildup in cooling systems.

- Provides measured coolant conditioner.

DESCRIPTION:

Additives deplete from the coolant with normal operation. For this reason, Supplemental Coolant Additives (SCA) must be added to all heavy duty coolants at regular intervals. In addition, when not using a fully formulated, pre-charged antifreeze, like Caterpillar's DEAC, an initial charge of SCA must be added to the cooling system. The amount of SCA added to the system is dependent on the capacity of the system.

The SCA for initial fill is provided as a liquid. SCA's for maintenance intervals are available in liquid form and as a spin-on element. (No Spin-on available for 3600 Family of Engines)

NOTE:

The amount of SCA added at initial fill is not the same as the amount added at maintenance intervals.

The coolant additive elements can be used with any ethylene or propylene glycol type antifreeze which meets ASTM D4985 or ASTM D5345 Specifications.

NOTE:

For use with standard heavy duty coolant only, not for use with Extended Life Coolant.

PARTS NEEDED:

Cooling System Capacity		Liquid SCA at Initial Fill	Liquid SCA at Maintenance*	Spin-on SCA Maintenance Element*
Liters	Gallons			
22-30	(6-8)	3P-2044 (1)	6V-3542 (1)	111-2370 (1)
30-38	(8-10)	3P-2044 (1) 6V-3542 (1)	111-2372 (1)	111-2369 (1)
38-49	(10-13)	3P-2044 (1) 8T-1589 (1)	111-2372 (1)	111-2369 (1)
49-64	(13-17)	3P-2044 (2)	8T-1589 (1)	9N-3368 (1)
64-83	(17-22)	3P-2044 (2) 8T-1589 (1)	111-2372 (1) 6V-3542 (1)	111-2371 (1)
83-114	(22-30)	3P-2044 (3) 8T-1589 (1)	3P-2044 (1)	9N-3718 (1)
114-163	(30-43)	3P-2044 (5)	3P-2044 (1) 6V-3542 (1)	111-2371 (2)
163-242	(43-64)	3P-2044 (8)	3P-2044 (2)	9N-3718 (2)

** Normal maintenance period is 250 hrs. See your Operation and Maintenance Manual for complete coolant maintenance instructions.*

( ) Indicates quantity required.

MAINTENANCE PARTS

DESCRIPTION	PART NUMBER	QTY	WHERE USED	PAGE
AIR INLET AND EXHAUST SYSTEM				
FILTER ELEMENT-AIR	247-1380	1	AIR CLEANER GP	70
BASIC ENGINE				
GAUZE (CRANKCASE BREATHER)	153-5939	1	COVER GP-VALVE MECHANISM	5
		1	COVER GP-VALVE MECHANISM	8
PLUG-DRAIN (ENGINE OIL DRAIN)	165-3605	2	PLUG GP-OIL PAN	40
PLUG-DRAIN (ENGINE OIL PAN)	218-2334	2	PLUG GP-OIL PAN	39
SEAL-VALVE COVER	233-0695	1	COVER GP-VALVE MECHANISM	5
		1	COVER GP-VALVE MECHANISM	8
V-BELT (WATER PUMP)	211-5172	1	V-BELT GP	44
COOLING SYSTEM				
CAP-RADIATOR	202-6616	1	RADIATOR & FAN GP	67
GASKET-COVER (WATER TEMPERATURE REGULATOR)	154-1828	1	CONNECTION GP-WATER	57
HOSE-RADIATOR (LOWER)	238-0265	1	RADIATOR & FAN GP	67
HOSE-RADIATOR (UPPER)	238-0266	1	RADIATOR & FAN GP	67
REGULATOR-WATER TEMPERATURE	249-5541	1	PUMP GP-WATER	62
		1	PUMP GP-WATER	65
ELECTRICAL AND STARTING SYSTEM				
GLOW PLUG	172-4585	4	GLOW PLUG GP	86
KEY-IGNITION	251-1871	1	SWITCH GP-START	92
FUEL SYSTEM				
FILTER AS-FUEL	243-6411	1	PUMP GP-FUEL TRANSFER	81
GASKET (FUEL FILTER)	069-2922	2	PUMP GP-FILTER & FUEL TRANSFER	73
		2	PUMP GP-FUEL TRANSFER	81
KIT-ELEMENT (FUEL FILTER)	067-6987	1	PUMP GP-FILTER & FUEL TRANSFER	73
		1	PUMP GP-FUEL TRANSFER	81
LUBRICATION SYSTEM				
CAP-OIL FILLER (ENGINE)	217-7358	1	FILLER GP-ENGINE OIL	48
		2	FILLER GP-ENGINE OIL	50
	289-6120	1	FILLER GP-ENGINE OIL	48
		1	FILLER GP-ENGINE OIL	50
FILTER AS-ENGINE OIL	220-1523	1	FILTER GP-ENGINE OIL	52
SEAL (ENGINE OIL FILL CAP)	153-5933	1	FILLER GP-ENGINE OIL	48
	288-6593	1	FILLER GP-ENGINE OIL	48
		1	FILLER GP-ENGINE OIL	50
SEAL (ENGINE OIL FILL)	153-5933	2	FILLER GP-ENGINE OIL	50
OPERATOR STATION				
LAMP (INDICATOR)	198-5310	1	LAMP GP	94

INDEX

Name	Page
A	
AIR CLEANER GP	70
ALTERNATOR GP-CHARGING	83
C	
CAP-OIL FILLER (ENGINE)	48, 50
CAP-RADIATOR	67
CONNECTION GP-ELECTRICAL	84, 85
CONNECTION GP-WATER	57
CONNECTOR GP-CAB HEATER LINES	58, 59
COVER GP-FRONT HOUSING	4
COVER GP-VALVE MECHANISM	5, 8
CRANKSHAFT GP	11
CYLINDER BLOCK GP	13
CYLINDER HEAD GP	15, 16
D	
DRIVE GP-AUXILIARY	17
DRIVE GP-FAN	18
E	
ENGINE AR-PRIMARY	1, 2, 3
F	
FAN GP-SUCTION	60
FILLER GP-ENGINE OIL	48, 50
FILTER AS-ENGINE OIL	52
FILTER AS-FUEL	81
FILTER ELEMENT-AIR	70
FILTER GP-ENGINE OIL	52
FLYWHEEL GP	19, 20
G	
GASKET (FUEL FILTER)	73, 81
GASKET-COVER (WATER TEMPERATURE REGULATOR)	57
GAUGE-OIL LEVEL (DIPSTICK) (ENGINE)	32, 34
GAUZE (CRANKCASE BREATHER)	5, 8
GEAR GP (62-TEETH)	54
GLOW PLUG	86
GLOW PLUG GP	86
H	
HOSE-RADIATOR (LOWER)	67
HOSE-RADIATOR (UPPER)	67
HOUSING GP-FLYWHEEL	21, 22
HOUSING GP-FRONT	23, 27
K	
KEY-IGNITION	92
KIT-ELEMENT (FUEL FILTER)	73, 81
L	
LAMP (INDICATOR)	94
LAMP GP–INDICATOR	94
LIFTING GP-ENGINE	31
LINES GP-COOLANT	61
M	
MANIFOLD GP-EXHAUST	71, 72
MOUNTING GP-ENGINE OIL FILTER	53
P	
PAN GP-OIL	32, 34
PISTON & ROD GP	37
PLUG GP-ENGINE	38
PLUG GP-OIL PAN	39, 40
PLUG-DRAIN (ENGINE OIL DRAIN)	40
PLUG-DRAIN (ENGINE OIL PAN)	39
PULLEY GP-AUXILIARY DRIVE	41
PULLEY GP-CRANKSHAFT	42
PULLEY GP-WATER PUMP	43
PUMP AS-FUEL TRANSFER	81
PUMP GP-ENGINE OIL	54
PUMP GP-FILTER & FUEL TRANSFER	73
PUMP GP-FUEL INJECTION	76, 78
PUMP GP-FUEL PRIMING	80
PUMP GP-FUEL TRANSFER	81
PUMP GP-WATER	62, 65

INDEX

Name	Page
R	
RADIATOR & FAN GP	67
REGULATOR-WATER TEMPERATURE	62, 65
S	
SEAL (ENGINE OIL FILL CAP)	48, 50
SEAL (ENGINE OIL FILL)	50
SEAL-VALVE COVER	5, 8
SENSOR-SPEED (ENGINE TIMING)	27
SOLENOID (FUEL SHUTOFF)	87
SOLENOID GP-SHUTOFF	87
STARTING MOTOR GP-ELECTRIC	88, 89
STRAINER-OIL (ENGINE OIL)	32
SWITCH AS-START	92
SWITCH GP-PRESSURE–ENGINE OIL	90, 91
SWITCH GP-START	92
SWITCH GP-TEMPERATURE–COOLANT	93
SWITCH-PRESSURE (ENGINE OIL)	90, 91
SWITCH-TEMPERATURE (COOLANT)	93
V	
V-BELT (WATER PUMP)	44
V-BELT GP	44
VALVE MECHANISM GP	45, 46
VALVE-BREATHER (CRANKCASE)	5, 8

ENGINE ARRANGEMENT

303-4226 ENGINE AR-PRIMARY

37 BRAKE KW (50 BHP) AT 2800 RPM

SMCS-1000 **i03394544**

NOTE	PART NUMBER	QTY	PART NAME 1 2 3 4 5 6 (PRODUCT LEVEL)	SEE PAGE
Y	*317-0649*	1	AIR CLEANER GP	70
Y	*308-2305*	1	ALTERNATOR GP-CHARGING	83
Y	*308-2319*	1	CONNECTION GP-ELECTRICAL	84
Y	*308-2302*	1	CONNECTION GP-WATER	57
Y	*308-2313*	1	SOLENOID GP-SHUTOFF	87
Y	*308-2307*	1	COVER GP-FRONT HOUSING	4
Y	*309-6722*	1	COVER GP-VALVE MECHANISM	5
Y	*309-6713*	1	CRANKSHAFT GP	11
Y	*309-6712*	1	CYLINDER BLOCK GP	13
Y	*309-6715*	1	CYLINDER HEAD GP	15
Y	*308-2297*	1	FILLER GP-ENGINE OIL	48
Y	*308-2298*	1	FILTER GP-ENGINE OIL	52
Y	*317-0586*	1	FLYWHEEL GP	19
Y	*308-2311*	1	GLOW PLUG GP	86
Y	*317-0588*	1	HOUSING GP-FLYWHEEL	22
Y	*309-6718*	1	HOUSING GP-FRONT	23
Y	*308-2321*	1	LAMP GP	94
Y	*309-6725*	1	LIFTING GP-ENGINE	31
Y	*331-2589*	1	LINES GP-COOLANT	61
Y	*309-6724*	1	MANIFOLD GP-EXHAUST	71
Y	*308-2295*	1	PAN GP-OIL	32
Y	*309-6714*	1	PISTON & ROD GP	37
Y	*309-6720*	1	PLUG GP-OIL PAN	39
Y	*308-2300*	1	PULLEY GP-CRANKSHAFT	42
Y	*308-2294*	1	PULLEY GP-WATER PUMP	43
Y	*309-6717*	1	PUMP GP-ENGINE OIL	54
Y	*308-2310*	1	PUMP GP-FILTER & FUEL TRANSFER	73
Y	*309-6719*	1	PUMP GP-FUEL INJECTION	76
Y	*308-2320*	1	PUMP GP-FUEL PRIMING	80
Y	*308-2301*	1	PUMP GP-WATER	62
Y	*331-3270*	1	RADIATOR & FAN GP	67
Y	*308-2293*	1	STARTING MOTOR GP-ELECTRIC	88
Y	*315-7819*	1	SWITCH GP-PRESSURE (ENGINE OIL)	91
Y	*308-2314*	1	SWITCH GP-START	92
Y	*308-2317*	1	SWITCH GP-TEMPERATURE (ENGINE COOLANT)	93
Y	*308-2306*	1	V-BELT GP (WATER PUMP)	44
Y	*309-6716*	1	VALVE MECHANISM GP	46

Y-SEPARATE ILLUSTRATION

ENGINE ARRANGEMENT

318-1706 ENGINE AR-PRIMARY

37 BRAKE KW (50 BHP) AT 2800 RPM

SMCS-1000 **i03394542**

NOTE	PART NUMBER	QTY	PART NAME 1 2 3 4 5 6 (PRODUCT LEVEL)	SEE PAGE
Y	*308-2305*	1	ALTERNATOR GP-CHARGING	83
Y	*321-6741*	1	CONNECTION GP-ELECTRICAL	85
Y	*308-2302*	1	CONNECTION GP-WATER	57
Y	*322-2427*	1	CONNECTOR GP-CAB HEATER LINES	59
Y	*308-2313*	1	SOLENOID GP-SHUTOFF	87
Y	*322-2424*	1	COVER GP-VALVE MECHANISM	8
Y	*309-6713*	1	CRANKSHAFT GP	11
Y	*309-6712*	1	CYLINDER BLOCK GP	13
Y	*309-6715*	1	CYLINDER HEAD GP	15
Y	*328-3296*	1	DRIVE GP-AUXILIARY	17
Y	*325-5669*	1	DRIVE GP-FAN	18
Y	*322-2425*	1	FAN GP-SUCTION	60
Y	*322-2421*	1	FILLER GP-ENGINE OIL	50
Y	*308-2298*	1	FILTER GP-ENGINE OIL	52
Y	*322-2412*	1	FLYWHEEL GP	20
Y	*308-2311*	1	GLOW PLUG GP	86
Y	*311-1883*	1	HOUSING GP-FLYWHEEL	21
Y	*309-6718*	1	HOUSING GP-FRONT	23
Y	*309-6725*	1	LIFTING GP-ENGINE	31
Y	*309-6724*	1	MANIFOLD GP-EXHAUST	71
Y	*315-5256*	1	MANIFOLD GP-EXHAUST	72
Y	*308-4735*	1	MOUNTING GP-ENGINE OIL FILTER	53
Y	*322-2416*	1	PAN GP-OIL	34
Y	*309-6714*	1	PISTON & ROD GP	37
Y	*322-2426*	1	PLUG GP-ENGINE	38
Y	*322-2420*	1	PLUG GP-OIL PAN	40
Y	*322-2422*	1	PULLEY GP-AUXILIARY DRIVE	41
Y	*308-2300*	1	PULLEY GP-CRANKSHAFT	42
Y	*308-2294*	1	PULLEY GP-WATER PUMP	43
Y	*309-6717*	1	PUMP GP-ENGINE OIL	54
Y	*309-6719*	1	PUMP GP-FUEL INJECTION	76
Y	*328-1882*	1	PUMP GP-FUEL TRANSFER	81
Y	*309-6721*	1	PUMP GP-WATER	65
Y	*308-2293*	1	STARTING MOTOR GP-ELECTRIC	88
Y	*308-2312*	1	SWITCH GP-PRESSURE	90
Y	*308-2306*	1	V-BELT GP (WATER PUMP)	44
Y	*309-6716*	1	VALVE MECHANISM GP	46

Y-SEPARATE ILLUSTRATION

ENGINE ARRANGEMENT

318-1707 ENGINE AR-PRIMARY

31 BRAKE KW (42 BHP) AT 2600 RPM

SMCS-1000 **i03394540**

NOTE	PART NUMBER	QTY	PART NAME 1 2 3 4 5 6 (PRODUCT LEVEL)	SEE PAGE
Y	*308-2305*	1	ALTERNATOR GP-CHARGING	83
Y	*321-6741*	1	CONNECTION GP-ELECTRICAL	85
Y	*308-2302*	1	CONNECTION GP-WATER	57
Y	*317-7194*	1	CONNECTOR GP-CAB HEATER LINES	58
Y	*308-2313*	1	SOLENOID GP-SHUTOFF	87
Y	*322-2424*	1	COVER GP-VALVE MECHANISM	8
Y	*309-6713*	1	CRANKSHAFT GP	11
Y	*309-6712*	1	CYLINDER BLOCK GP	13
Y	*309-6715*	1	CYLINDER HEAD GP	15
Y	*328-3296*	1	DRIVE GP-AUXILIARY	17
Y	*325-5669*	1	DRIVE GP-FAN	18
Y	*322-2425*	1	FAN GP-SUCTION	60
Y	*322-2421*	1	FILLER GP-ENGINE OIL	50
Y	*308-2298*	1	FILTER GP-ENGINE OIL	52
Y	*322-2412*	1	FLYWHEEL GP	20
Y	*308-2311*	1	GLOW PLUG GP	86
Y	*311-1883*	1	HOUSING GP-FLYWHEEL	21
Y	*322-3074*	1	HOUSING GP-FRONT	27
Y	*309-6725*	1	LIFTING GP-ENGINE	31
Y	*309-6724*	1	MANIFOLD GP-EXHAUST	71
Y	*315-5256*	1	MANIFOLD GP-EXHAUST	72
Y	*308-4735*	1	MOUNTING GP-ENGINE OIL FILTER	53
Y	*322-2416*	1	PAN GP-OIL	34
Y	*309-6714*	1	PISTON & ROD GP	37
Y	*322-2426*	1	PLUG GP-ENGINE	38
Y	*322-2420*	1	PLUG GP-OIL PAN	40
Y	*322-2422*	1	PULLEY GP-AUXILIARY DRIVE	41
Y	*308-2300*	1	PULLEY GP-CRANKSHAFT	42
Y	*308-2294*	1	PULLEY GP-WATER PUMP	43
Y	*309-6717*	1	PUMP GP-ENGINE OIL	54
Y	*322-3075*	1	PUMP GP-FUEL INJECTION	78
Y	*328-1882*	1	PUMP GP-FUEL TRANSFER	81
Y	*309-6721*	1	PUMP GP-WATER	65
Y	*308-2293*	1	STARTING MOTOR GP-ELECTRIC	88
Y	*308-2312*	1	SWITCH GP-PRESSURE	90
Y	*308-2306*	1	V-BELT GP (WATER PUMP)	44
Y	*309-6716*	1	VALVE MECHANISM GP	46

Y-SEPARATE ILLUSTRATION

BASIC ENGINE

308-2307 COVER GP-FRONT HOUSING

SMCS-1151, 1166 **i03398002**

NOTE	REF NO	GRAPHIC REF	PART NUMBER	QTY	PART NAME 1 2 3 4 5 6 (PRODUCT LEVEL)	SEE PAGE
	1	1	**6I-0594**	2	NUT (M10X1.15-THD)	
	3	1	**164-7468**	2	BOLT	
	4	1	**308-1874**	1	HOLDER	
	5	1	**308-1875**	3	SEAL-O-RING	
	6	1	**328-3229**	2	COVER	

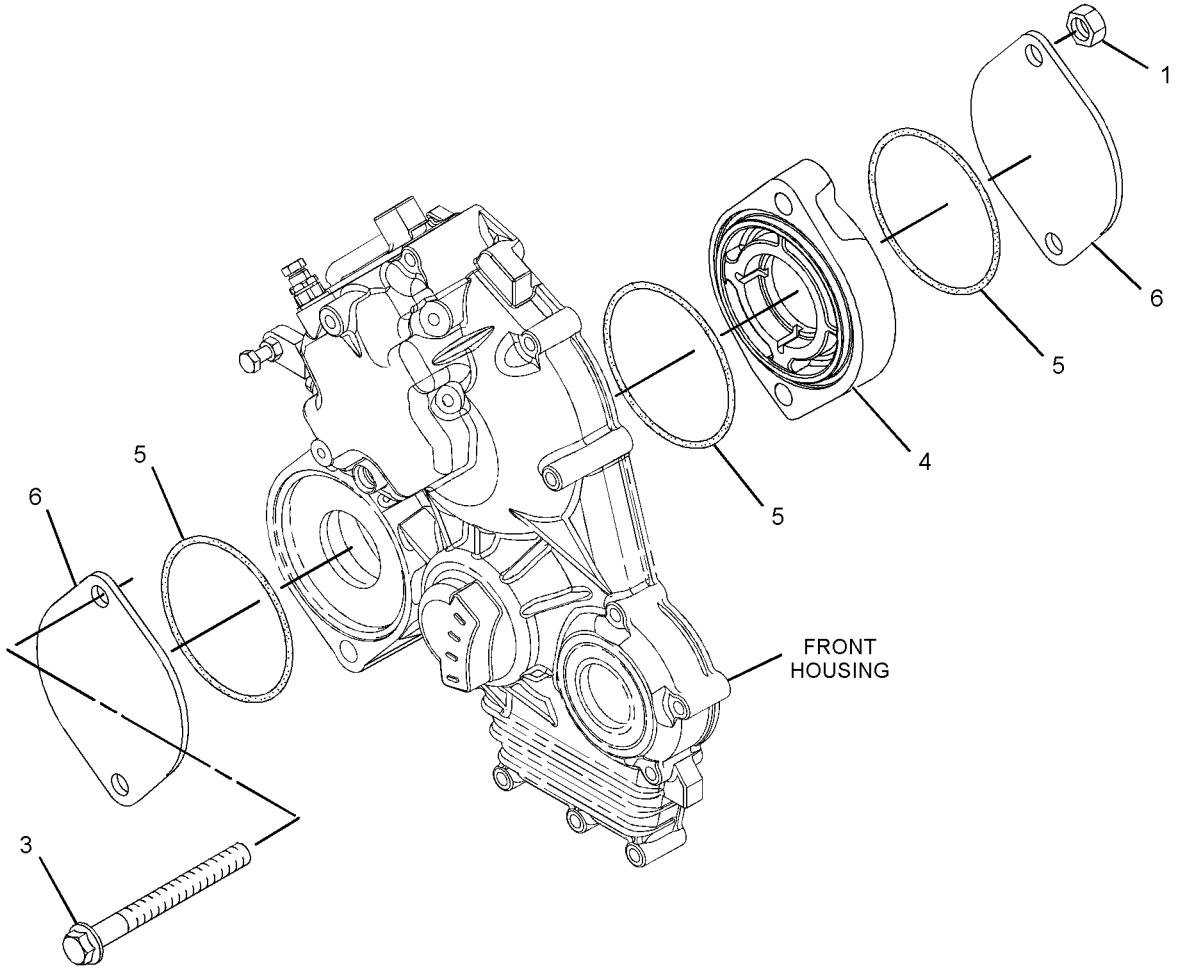

GRAPHIC #1 **<END>** g01643053

BASIC ENGINE

309-6722 COVER GP-VALVE MECHANISM

SMCS-1107 **i03402000**

NOTE	REF NO	GRAPHIC REF	PART NUMBER	QTY	PART NAME 1 2 3 4 5 6 (PRODUCT LEVEL)	SEE PAGE
	1	2	**153-5939**	1	GAUZE (CRANKCASE BREATHER)	
	2	2	**153-5962**	3	BOLT	
	3	2	**153-7640**	2	BOLT	
	4	2	**154-1347**	4	NUT	
	6	2	**165-2140**	2	BOLT	
	7	2	**190-3762**	4	WASHER	
	8	2	**217-5859**	1	VALVE-BREATHER (CRANKCASE)	
	9	2	**217-5860**	4	BOLT	
	10	2	**320-8401**	1	PLATE-RETAINING	
	11	2	**217-5862**	6	BOLT	
	12	2	**217-5864**	1	GASKET	
	14	2	**233-0695**	1	SEAL-VALVE COVER	
	15	2	**233-7061**	1	COVER-VALVE	
	16	2	**309-6735**	1	TUBE-AIR	
C	17	1	**288-6539**	1	CAP	

C-CHANGE FROM PREVIOUS TYPE

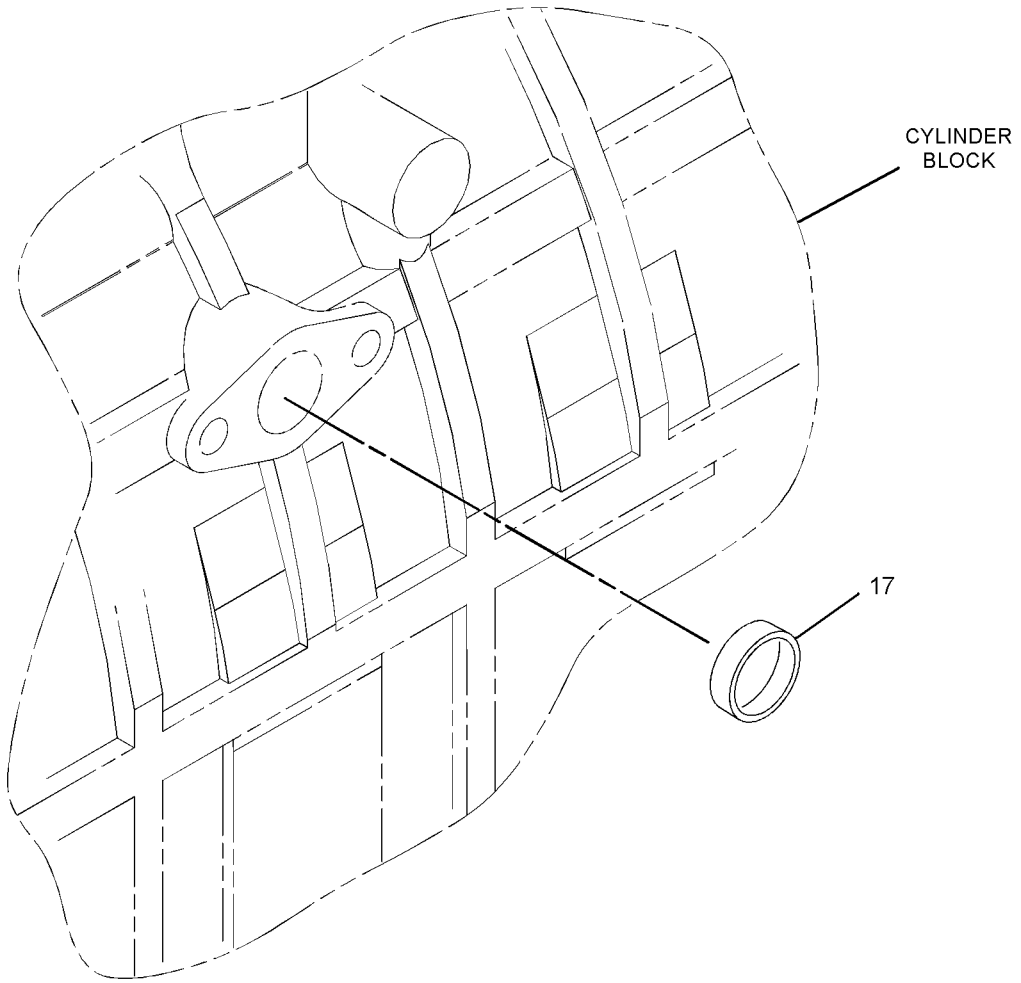

GRAPHIC #1 g01766194

309-6722 **COVER GP-VALVE MECHANISM** *(contd.)* **i03402000**

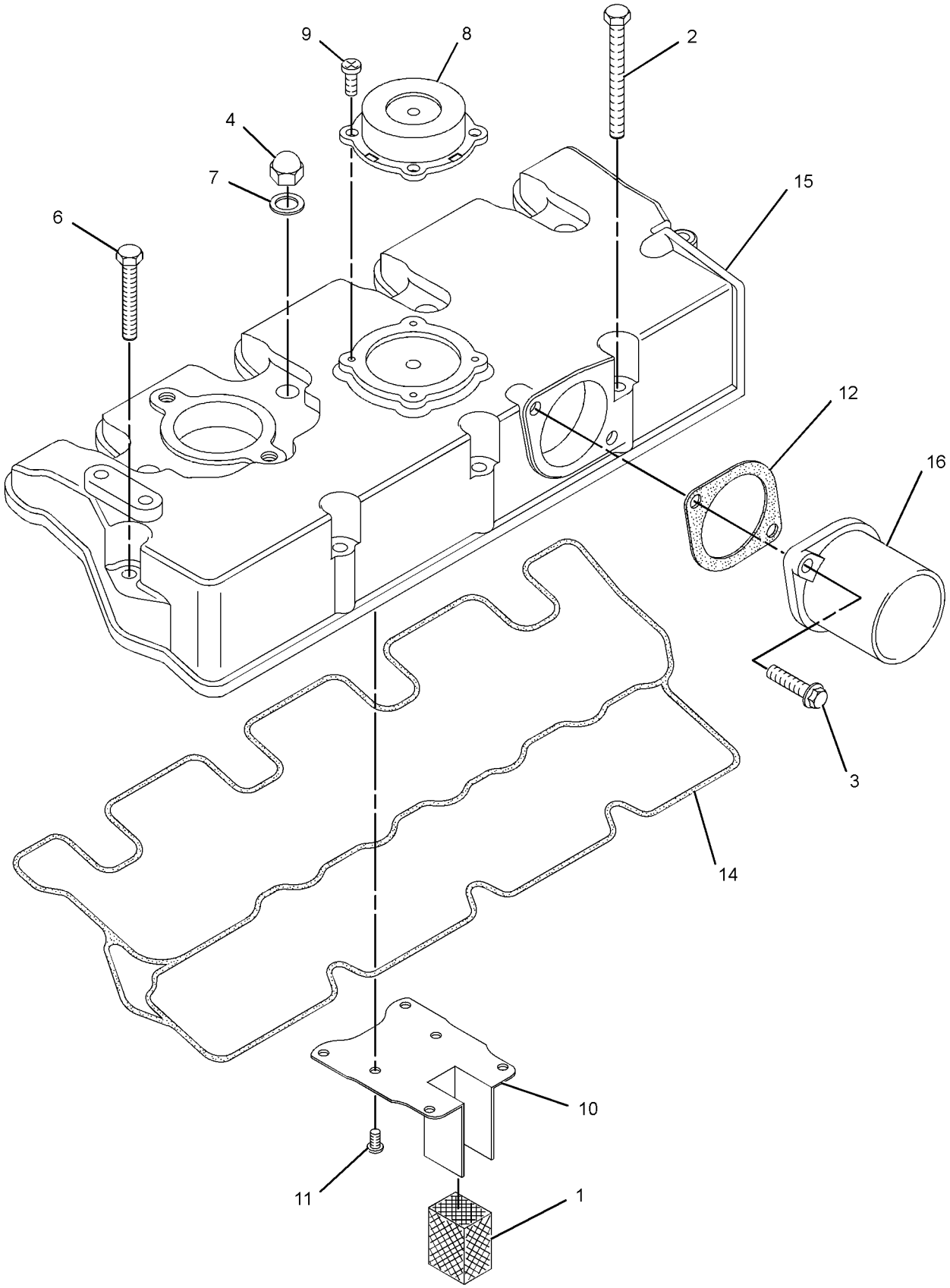

GRAPHIC #2

<END>

g01397236

BASIC ENGINE

322-2424 COVER GP-VALVE MECHANISM

SMCS-1107 **i03395661**

NOTE	REF NO	GRAPHIC REF	PART NUMBER	QTY	PART NAME 1 2 3 4 5 6 (PRODUCT LEVEL)	SEE PAGE
	1	2	**153-5939**	1	GAUZE (CRANKCASE BREATHER)	
	2	2	**153-5962**	3	BOLT	
	3	2	**153-7640**	2	BOLT	
	4	2	**154-1347**	4	NUT	
	5	2	**165-2140**	2	BOLT	
	6	2	**190-3762**	4	WASHER	
	7	2	**217-5859**	1	VALVE-BREATHER (CRANKCASE)	
	8	2	**217-5860**	4	BOLT	
	9	2	**217-5861**	1	PLATE-RETAINING	
	10	2	**217-5862**	6	BOLT	
	11	2	**217-5864**	1	GASKET	
	13	2	**233-0693**	1	COVER-VALVE	
	14	2	**233-0695**	1	SEAL-VALVE COVER	
	16	2	**309-6735**	1	TUBE-AIR	
	18	1	**288-6539**	1	CAP	

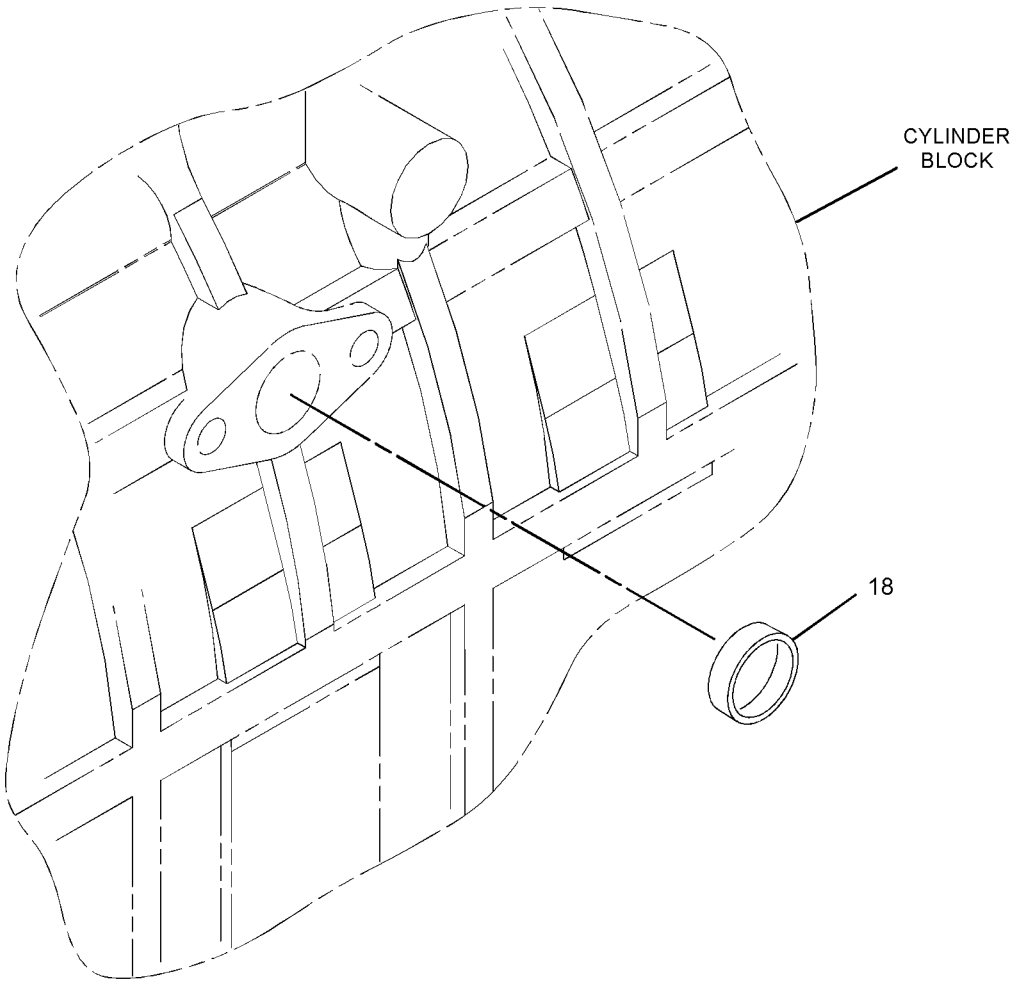

GRAPHIC #1 g01762195

322-2424 **COVER GP-VALVE MECHANISM** *(contd.)* **i03395661**

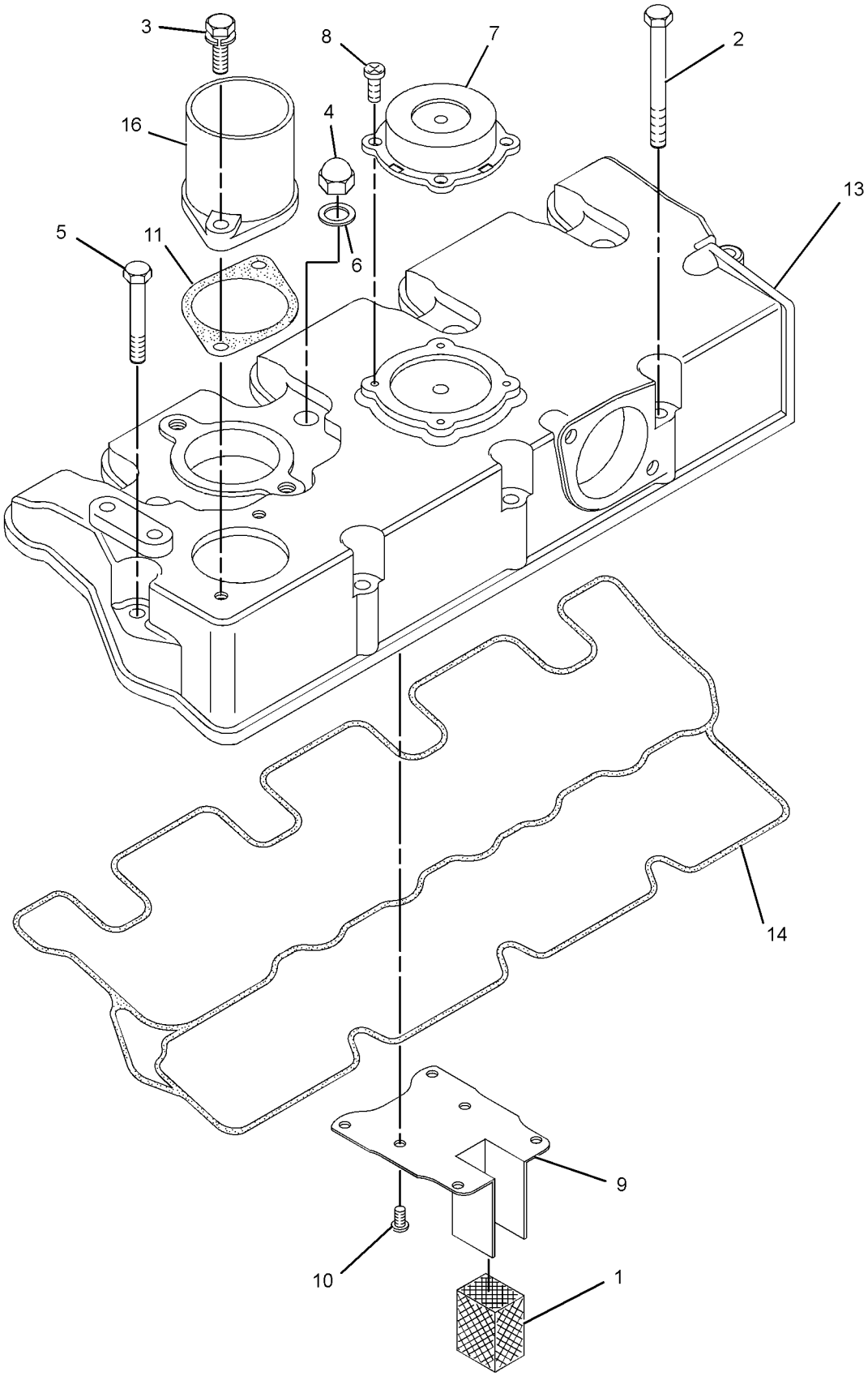

GRAPHIC #2

<END>

g01758774

BASIC ENGINE

309-6713 CRANKSHAFT GP

SMCS-1202 **i03395820**

NOTE	REF NO	GRAPHIC REF	PART NUMBER	QTY	PART NAME 1 2 3 4 5 6 (PRODUCT LEVEL)	SEE PAGE
	1	1	**154-0181**	1	CAP AS-BEARING	
	1A	1	**153-5402**	2	DOWEL	
	1B	1	**154-0385**	2	BOLT	
	2	1	**154-0386**	1	CAP AS-BEARING	
	2A	1	**153-5402**	2	DOWEL	
	2B	1	**154-0385**	2	BOLT	
	3	1	**154-0388**	1	CAP AS-BEARING	
	3A	1	**153-5402**	2	DOWEL	
	3B	1	**154-0385**	2	BOLT	
	4	1	**154-0389**	1	CAP AS-BEARING	
	4A	1	**153-5402**	2	DOWEL	
	4B	1	**154-0385**	2	BOLT	
	5	1	**154-1230**	1	WASHER-THRUST	
	6	1	**154-1231**	2	WASHER-THRUST	
	7	1	**156-6971**	3	BOLT	
	8	1	**183-1336**	2	BOLT	
	9	1	**308-1852**	1	CRANKSHAFT AS	
	9A	1	**153-5518**	1	KEY	
	9B	1	**308-1853**	1	GEAR-CRANKSHAFT (62-TEETH)	
	10	1	**308-1855**	1	KIT-BEARING (ROD) (0.52-MM THK)	
	11	1	**308-1854**	1	KIT-BEARING (MAIN) (0.68-MM THK)	

309-6713 **CRANKSHAFT GP** *(contd.)* **i03395820**

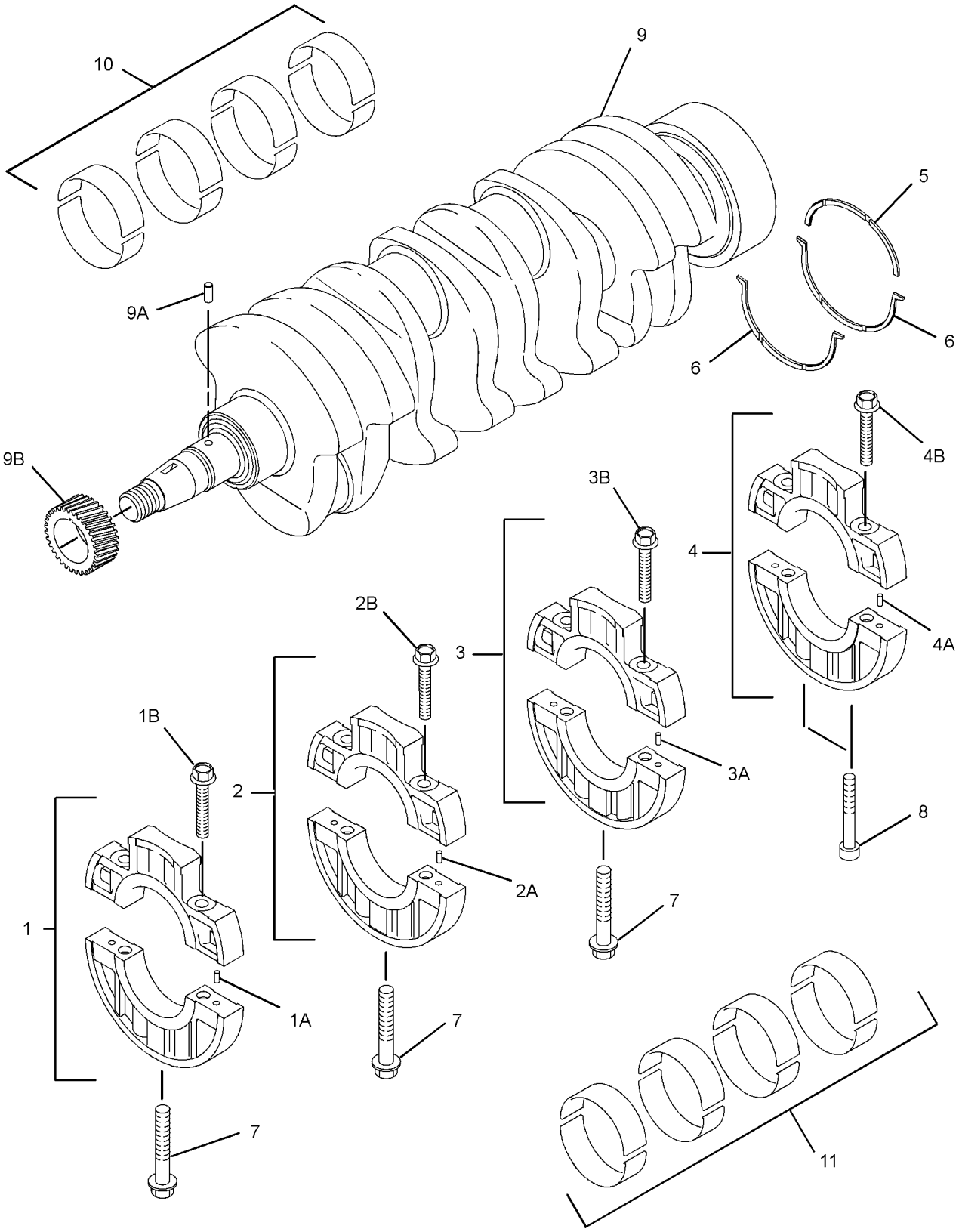

GRAPHIC #1 **<END>** g01406829

BASIC ENGINE

309-6712 CYLINDER BLOCK GP

SMCS-1201 **i03395821**

NOTE	REF NO	GRAPHIC REF	PART NUMBER	QTY	PART NAME 1 2 3 4 5 6 (PRODUCT LEVEL)	SEE PAGE
	1	1	**153-5387**	3	PLUG	
	2	1	**6B-0924**	1	BALL BEARING	
	3	1	**153-5391**	1	PLUG	
	4	1	**153-5394**	2	DOWEL	
	5	1	**153-5395**	2	DOWEL	
	6	1	**153-5396**	2	PIN	
	7	1	**153-5402**	2	DOWEL	
	8	1	**153-6838**	2	BOLT	
	9	1	**154-0175**	2	PLUG	
	10	1	**154-0176**	1	BUSHING	
	11	1	**154-0177**	1	BUSHING	
	12	1	**154-0178**	1	SEAL	
	13	1	**154-0393**	3	STUD	
	14	1	**183-1163**	1	STUD	
	15	1	**183-1164**	1	STUD	
	16	1	**215-2620**	1	GASKET	
	17	1	**217-5770**	3	PLUG	
	18	1	**221-1136**	4	PLUG	
	19	1	**237-9315**	2	PLUG (SEALING)	
	20	1	**237-9316**	5	PLUG (SEALING)	
	21	1	**294-4916**	1	BUSHING (STANDARD)	
AB		1	**302-4181**	1	BUSHING (0.25-MM US)	
AB		1	**302-4182**	1	BUSHING (0.50-MM US)	
	22	1	**308-1850**	1	SHAFT	
	24	1	**322-6874**	1	STUD	

A-NOT PART OF THIS GROUP
B-USE AS REQUIRED

309-6712 **CYLINDER BLOCK GP** *(contd.)* **i03395821**

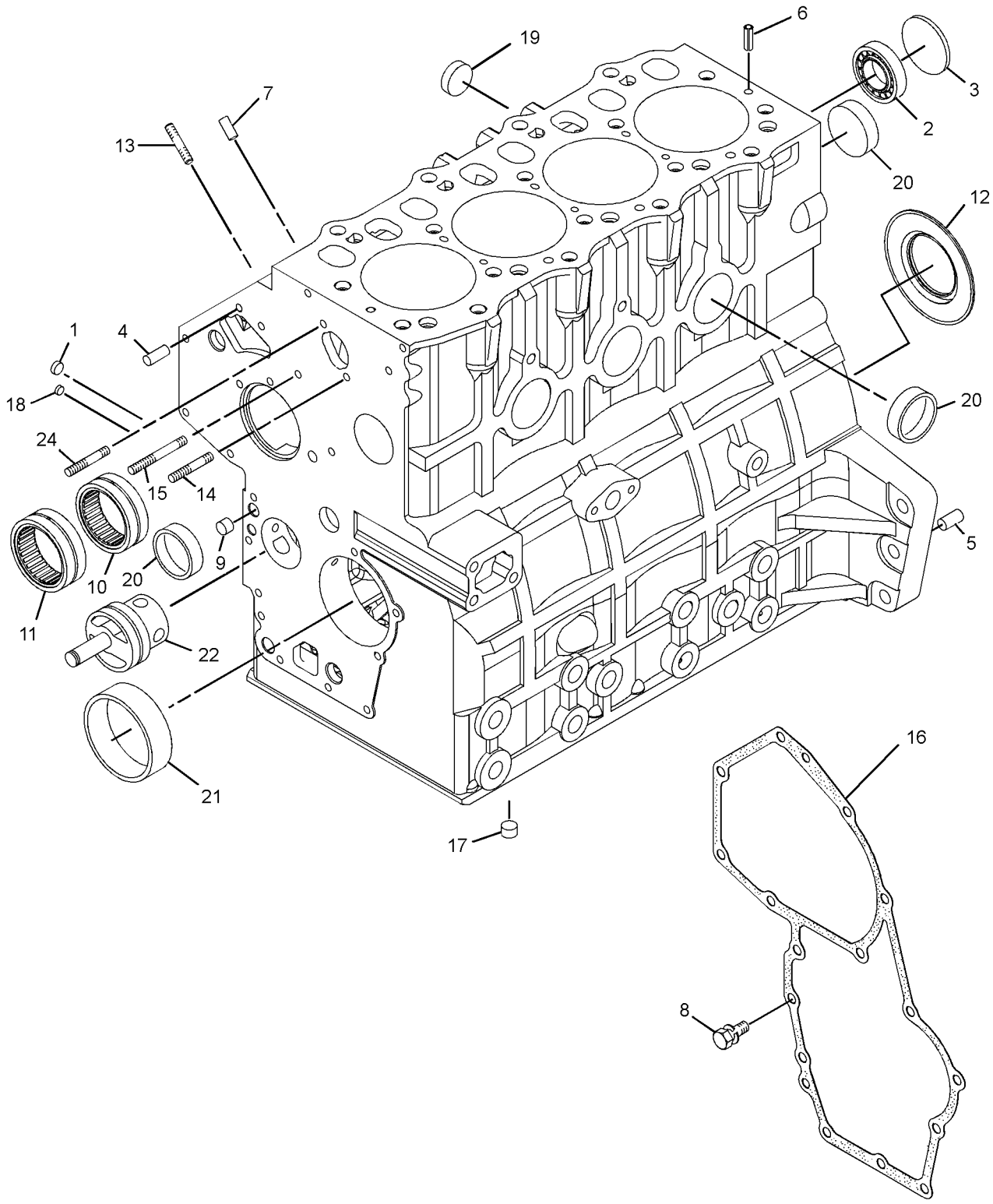

GRAPHIC #1 **<END>** g01635633

BASIC ENGINE

309-6715 CYLINDER HEAD GP

SMCS-1100 **i03395822**

NOTE	REF NO	GRAPHIC REF	PART NUMBER	QTY	PART NAME 1 2 3 4 5 6 (PRODUCT LEVEL)	SEE PAGE
	1	1	**322-7485**	8	CAP-VALVE SPRING	
	2	1	**156-6988**	14	BOLT	
	3	1	**156-6989**	4	BOLT	
	4	1	**183-3213**	2	STUD	
	5	1	**308-1862**	2	STUD	
Y	6	1	**321-4061**	1	CYLINDER HEAD GP	16
B	7	1	**322-7488**	1	GASKET (1.1-MM THK)	
B		1	**322-7487**	1	GASKET (1.2-MM THK)	
B		1	**322-7486**	1	GASKET (1.3-MM THK)	

B-USE AS REQUIRED
Y-SEPARATE ILLUSTRATION

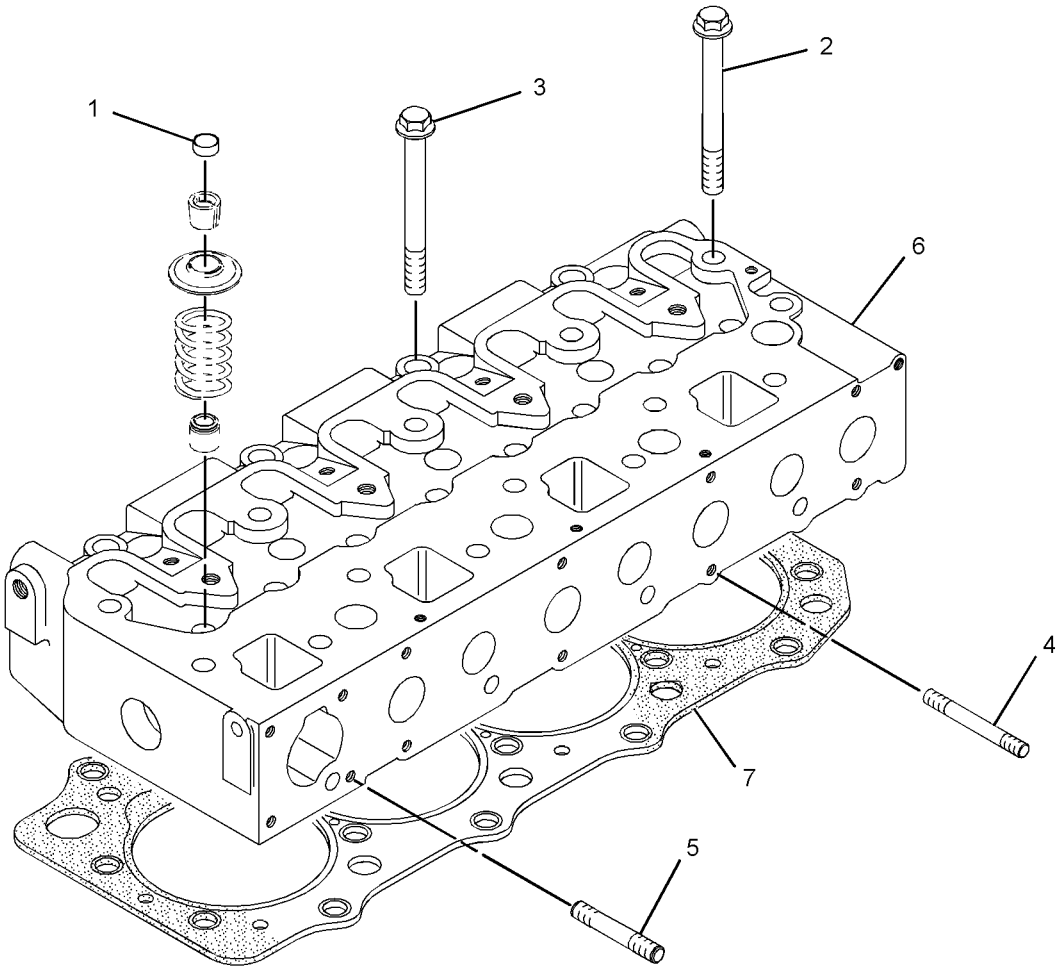

GRAPHIC #1 **<END>** g01394446

BASIC ENGINE

321-4061 CYLINDER HEAD GP

PART OF 309-6715 CYLINDER HEAD GP

SMCS-1100 **i03395841**

NOTE	REF NO	GRAPHIC REF	PART NUMBER	QTY	PART NAME 1 2 3 4 5 6 (PRODUCT LEVEL)	SEE PAGE
	1	1	**153-5554**	4	SEAL	
	2	1	**153-5556**	8	RETAINER	
	3	1	**153-5557**	8	CAP	
	4	1	**153-5558**	8	SPRING	
	5	1	**153-5559**	4	SEAL	
	6	1	**237-9315**	6	PLUG (SEALING)	
	7	1	**256-2084**	4	INSERT-INLET VALVE	
	8	1	**256-2085**	4	INSERT-EXHAUST VALVE	
	9	1	**288-6537**	7	CAP	
	10	1	**291-1808**	2	CAP	
	11	1	**303-0338**	3	PLUG	
	12	1	**308-1860**	4	VALVE-INLET	
	13	1	**308-1861**	4	VALVE-EXHAUST	

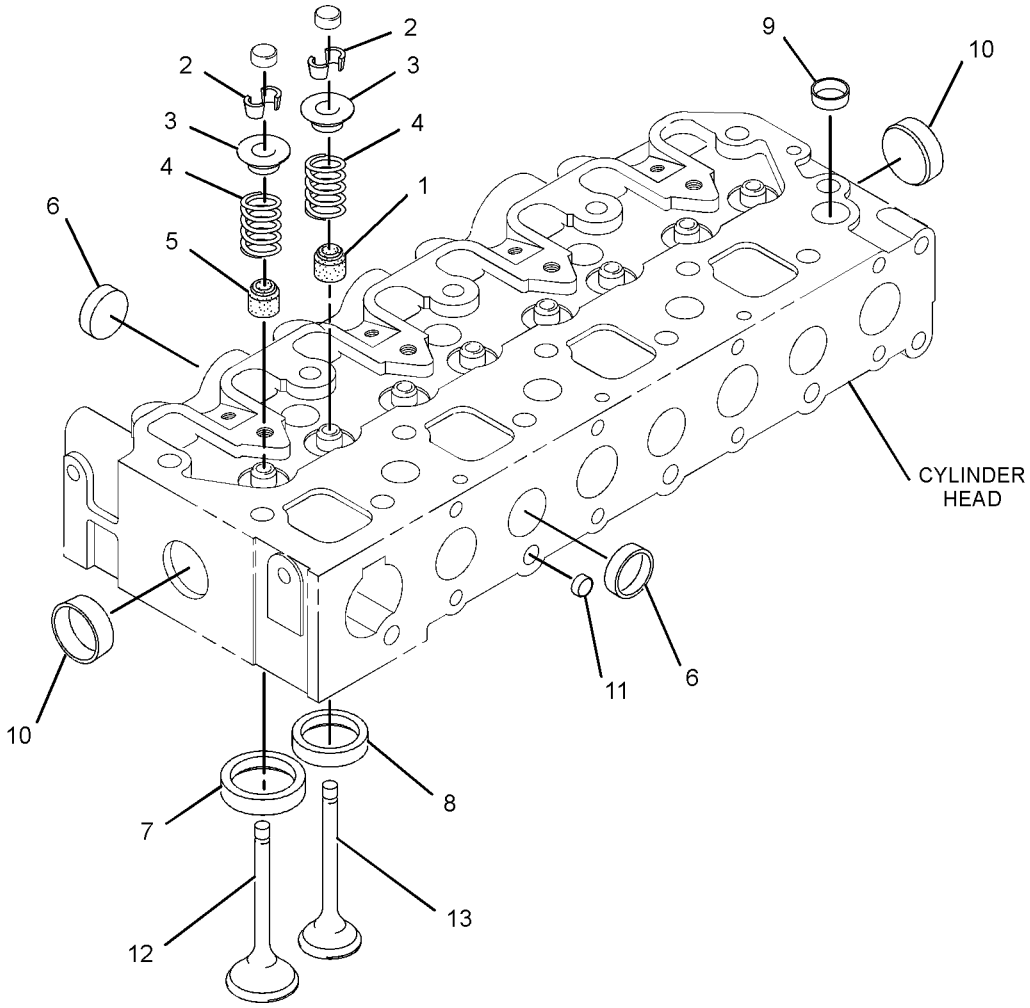

GRAPHIC #1 **<END>** g01395917

328-3296 DRIVE GP-AUXILIARY

SMCS-1207, 3108 **i03395825**

NOTE	REF NO	GRAPHIC REF	PART NUMBER	QTY	PART NAME 1 2 3 4 5 6 (PRODUCT LEVEL)	SEE PAGE
	1	1	**6I-0594**	2	NUT (M10X1.15-THD)	
	2	1	**164-7468**	2	BOLT	
	3	1	**308-1874**	1	HOLDER	
	4	1	**308-1875**	3	SEAL-O-RING	
	5	1	**321-5907**	1	PLATE	
	6	1	**328-3229**	2	COVER	
	7	1	**328-3230**	2	BALL BEARING	
	8	1	**328-3299**	1	GEAR	

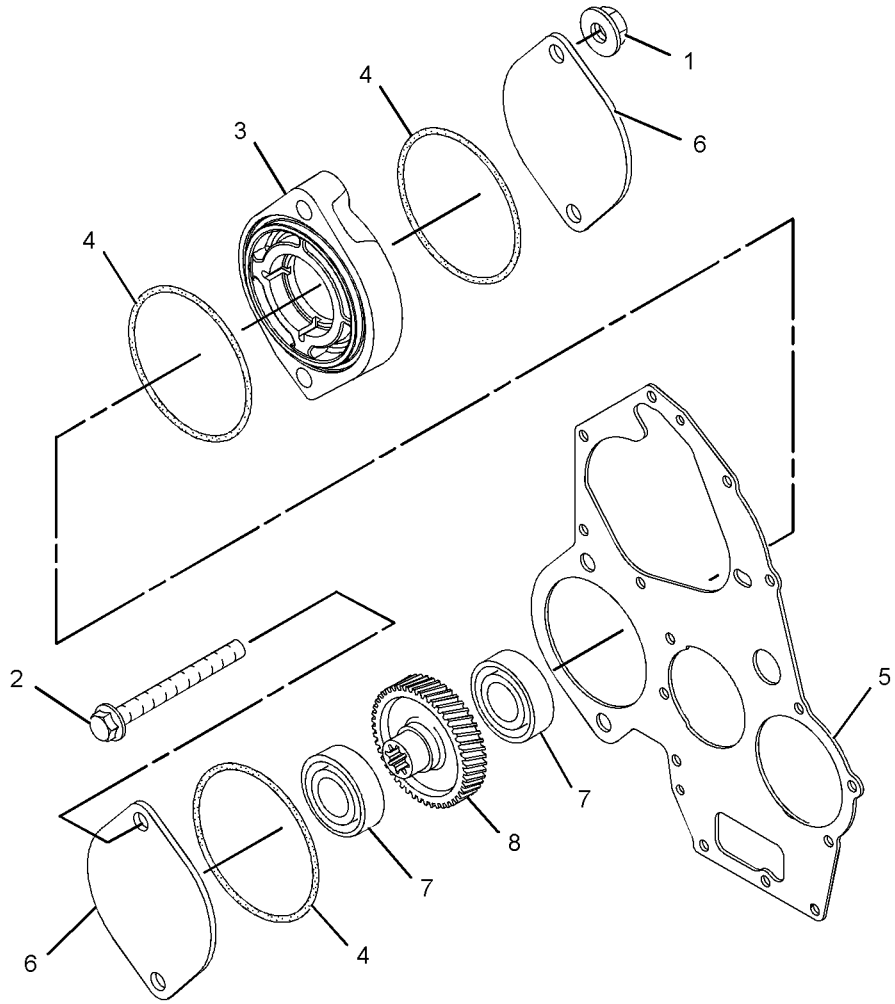

GRAPHIC #1 **<END>** g01644041

BASIC ENGINE

325-5669 DRIVE GP-FAN

SMCS-1359 **i03395824**

NOTE	REF NO	GRAPHIC REF	PART NUMBER	QTY	PART NAME 1 2 3 4 5 6 (PRODUCT LEVEL)	SEE PAGE
	1	1	**153-6856**	4	BOLT	
	2	1	**207-3697**	1	EXTENSION	

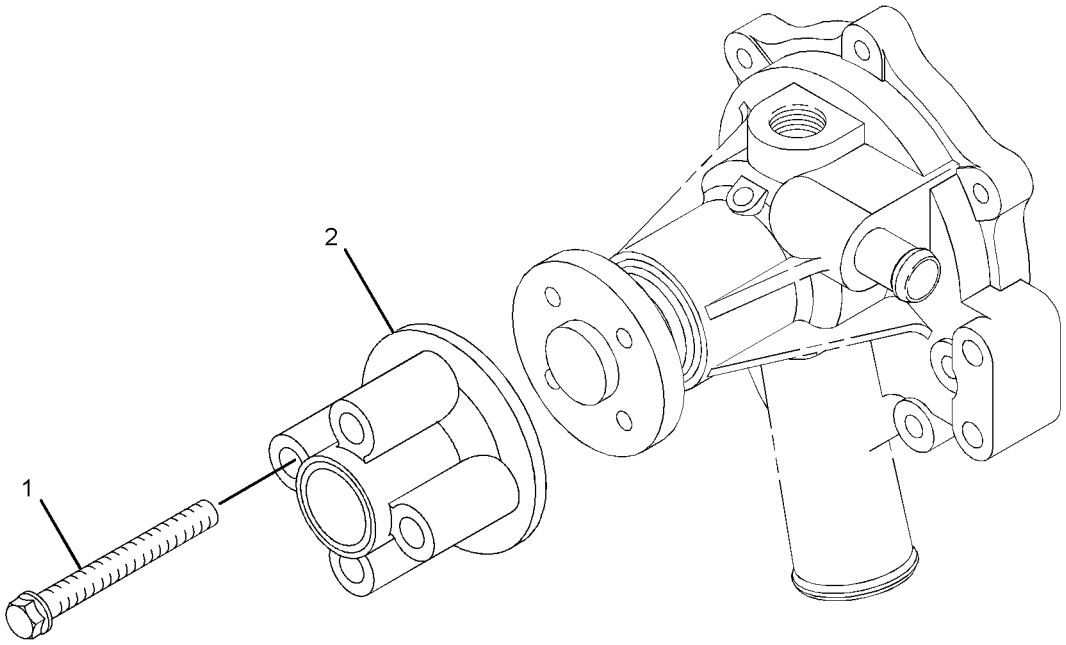

GRAPHIC #1 **<END>** g01538533

BASIC ENGINE

317-0586 FLYWHEEL GP

SMCS-1156 **i03398004**

NOTE	REF NO	GRAPHIC REF	PART NUMBER	QTY	PART NAME 1 2 3 4 5 6 (PRODUCT LEVEL)	SEE PAGE
	1	1	**327-5241**	1	FLYWHEEL GP	
	1A	1	**154-2405**	1	GEAR-STARTER (126-TEETH)	
	2	1	**154-2406**	6	BOLT	

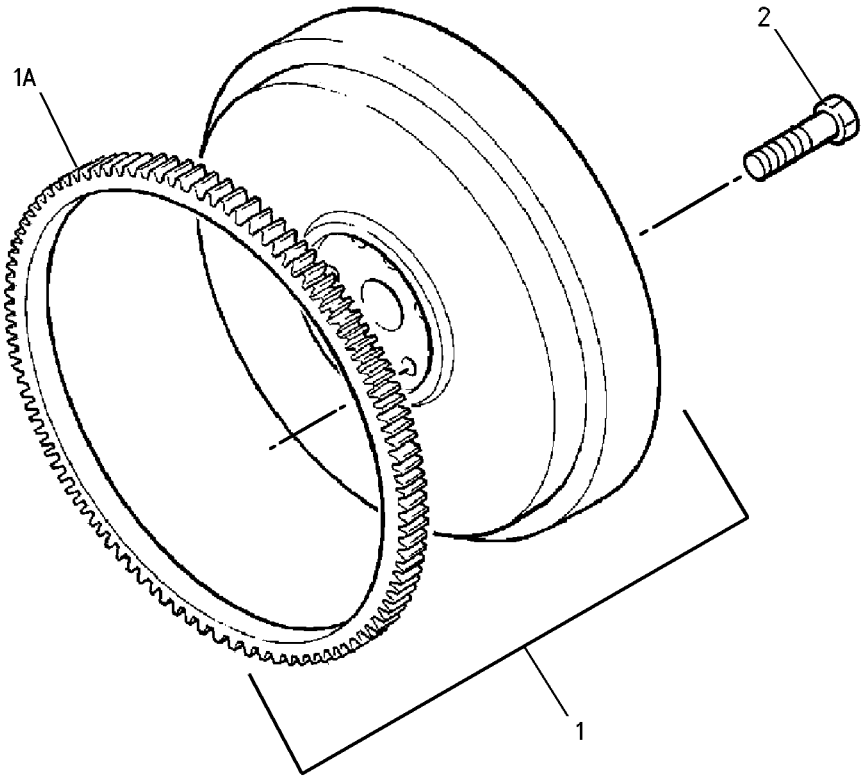

GRAPHIC #1 **<END>** g00640766

BASIC ENGINE

322-2412 FLYWHEEL GP

SMCS-1156 **i03396022**

NOTE	REF NO	GRAPHIC REF	PART NUMBER	QTY	PART NAME 1 2 3 4 5 6 (PRODUCT LEVEL)	SEE PAGE
	1	1	**154-2406**	6	BOLT	

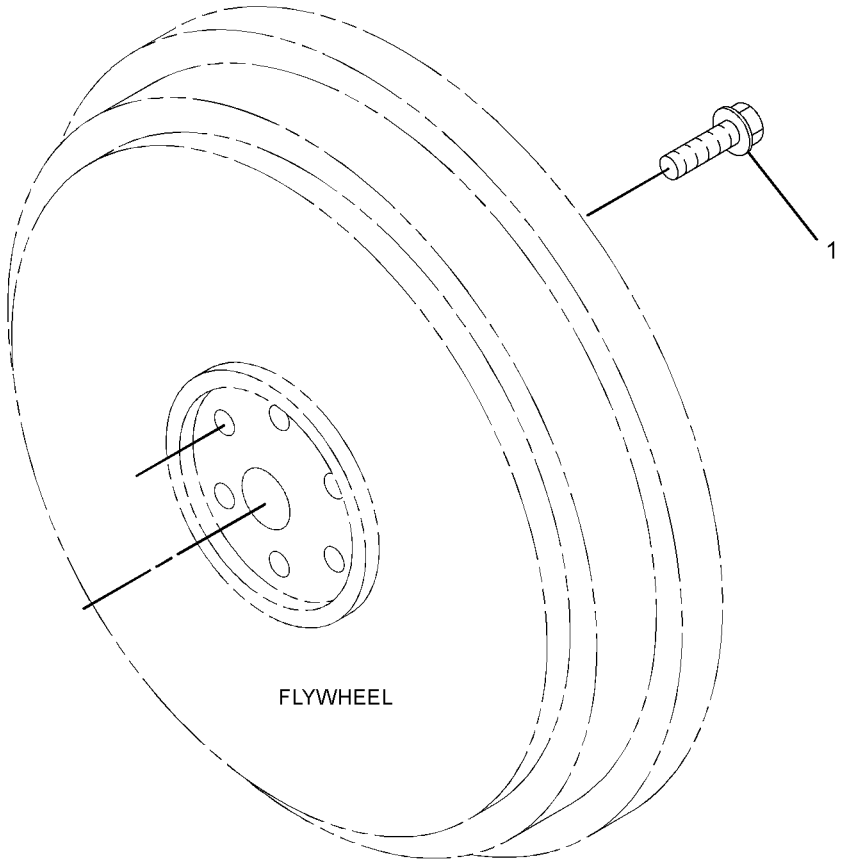

GRAPHIC #1 **<END>** g01640274

BASIC ENGINE

311-1883 HOUSING GP-FLYWHEEL

SMCS-1157 **i03396026**

NOTE	REF NO	GRAPHIC REF	PART NUMBER	QTY	PART NAME 1 2 3 4 5 6 (PRODUCT LEVEL)	SEE PAGE
	1	1	**138-7162**	2	BOLT	
	2	1	**138-7171**	2	BOLT	
	3	1	**153-6375**	10	BOLT	
	4	1	**154-1399**	2	WASHER	
	5	1	**154-2394**	1	PLATE	
	6	1	**154-2403**	2	WASHER	
	7	1	**155-8085**	2	NUT	

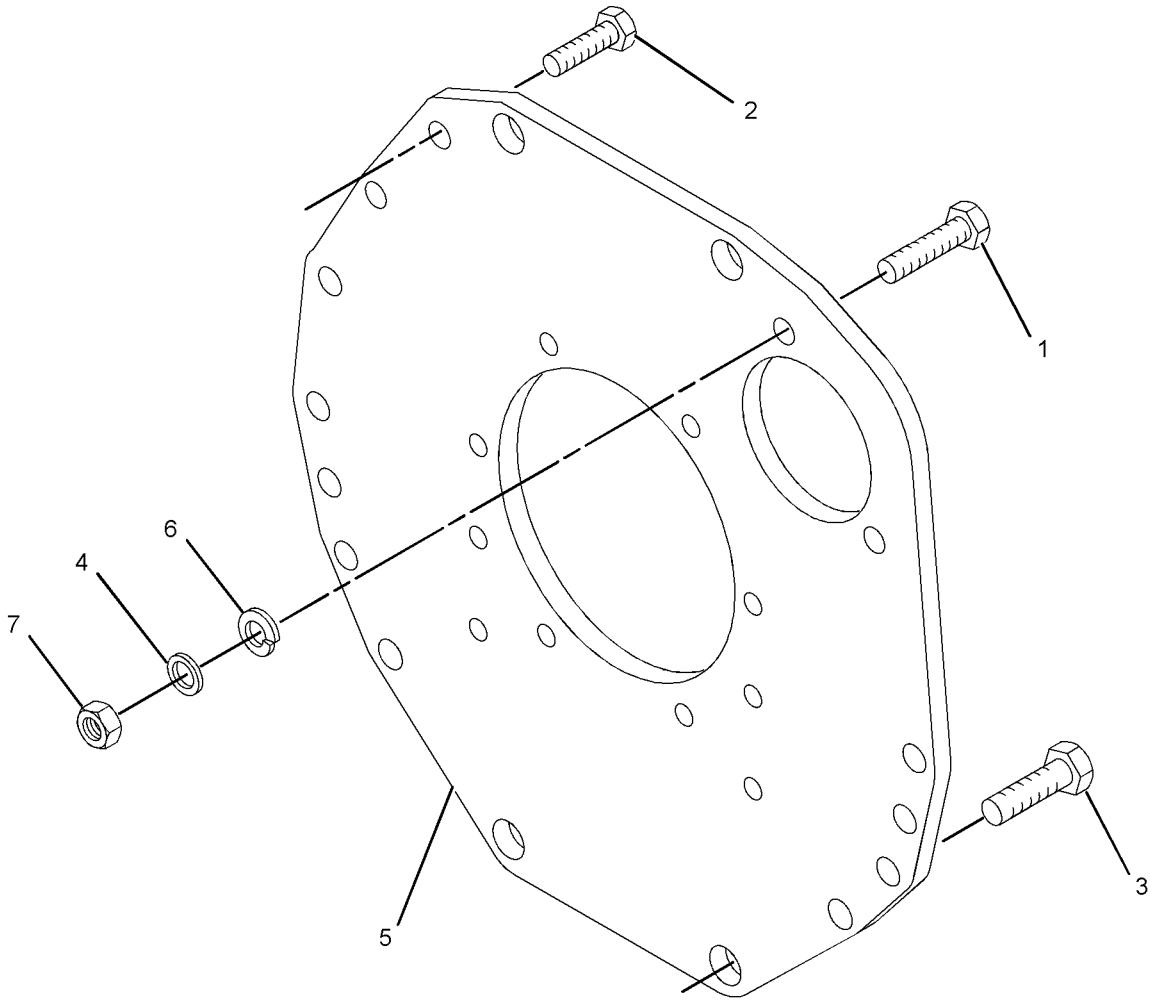

GRAPHIC #1 **<END>** g01414247

BASIC ENGINE

317-0588 HOUSING GP-FLYWHEEL

SMCS-1157 **i03398005**

NOTE	REF NO	GRAPHIC REF	PART NUMBER	QTY	PART NAME 1 2 3 4 5 6 (PRODUCT LEVEL)	SEE PAGE
	1	1	**138-7162**	6	BOLT	
	2	1	**252-1802**	6	BOLT	
	3	1	**153-6375**	10	BOLT	
	4	1	**153-6868**	2	BOLT	
	5	1	**154-1399**	2	WASHER	
	6	1	**154-2394**	1	PLATE	
	7	1	**154-2395**	2	PLUG	
	8	1	**154-2403**	6	WASHER	
	9	1	**165-2142**	2	BOLT	
	10	1	**166-2338**	4	NUT	
	11	1	**318-5011**	1	HOUSING-FLYWHEEL	

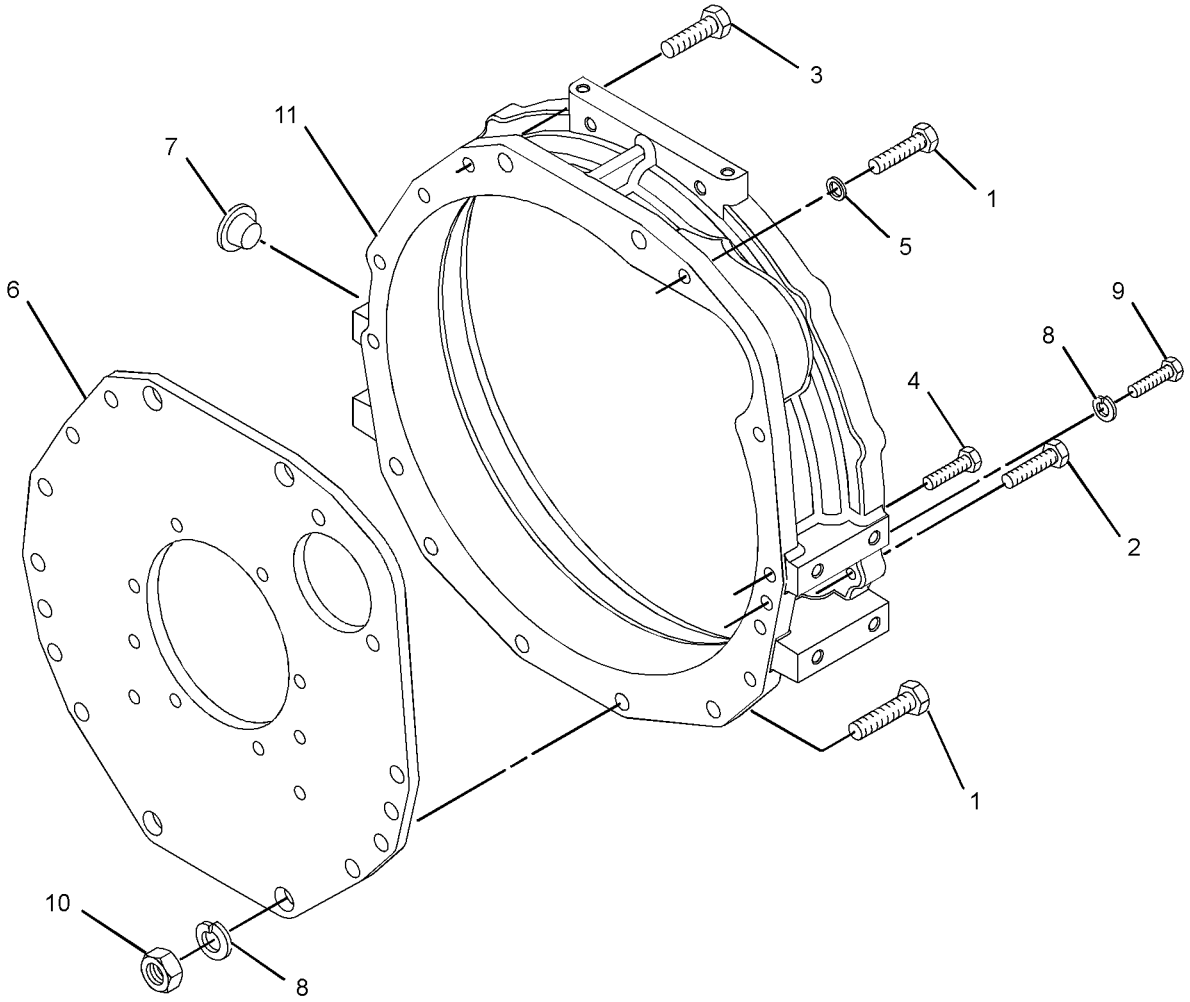

GRAPHIC #1 **<END>** g01414805

BASIC ENGINE

309-6718 HOUSING GP-FRONT

SMCS-1151, 1162, 1206 **i03398006**

NOTE	REF NO	GRAPHIC REF	PART NUMBER	QTY	PART NAME 1 2 3 4 5 6 (PRODUCT LEVEL)	SEE PAGE
M	1	2	**5C-2890**	1	NUT (M6X1-THD)	
	2	2	**139-5511**	1	CAP (TAMPER RESISTANT)	
	3	2	**153-5592**	1	NUT	
	4	1	**153-5960**	2	NUT	
	5	1	**153-5962**	4	BOLT	
	6	2	**153-6415**	2	WASHER	
	7	3	**153-6838**	2	BOLT	
	8	2	**153-7983**	1	PIN	
	10	2	**154-1403**	1	SEAL-O-RING	
	11	1	**154-1673**	1	PIN	
	12	1	**154-1675**	1	SEAL	
	13	3	**154-1680**	1	PLATE	
M	14	2	**8T-4971**	2	BOLT (M6X1X30-MM)	
	15	2	**162-2207**	1	NUT	
	16	1	**165-2140**	7	BOLT	
	17	2	**183-3538**	4	BOLT	
	18	2	**217-7115**	1	CAP (TAMPER RESISTANT)	
	19	1	**308-1871**	1	GASKET	
	20	1	**322-7490**	1	HOUSING-FRONT	
C	23	2	**335-5578**	1	BRACKET	
	24	2	**308-1878**	1	GASKET	
C	25	2	**334-0732**	1	ARM (FRONT HOUSING)	
	26	2	**317-7195**	1	SPRING	
	27	2	**308-1882**	1	SPRING	
	28	2	**322-7492**	1	LEVER-CONTROL	
	29	2	**308-1889**	1	NUT	
	30	2	**322-7493**	1	LEVER-CONTROL	
	31	2	**308-1892**	1	NUT	
	32	2	**311-0655**	1	SPRING	
C	33	2	**308-1897**	2	RING	
C	34	2	**332-1361**	1	CAP-PROTECTION	
	35	2	**321-4249**	1	NUT	
	36	2	**308-1901**	1	CAP	
	37	3	**308-1904**	1	SLIDER	
	38	2	**308-4266**	1	SHAFT	
	39	2	**309-6728**	1	SHAFT	
	40	2	**309-6729**	1	SEAL-O-RING	
	41	2	**319-3250**	1	SENSOR-SPEED (ENGINE TIMING)	
	42	2	**313-5832**	1	BOLT AS	
	42A	2	**153-7987**	1	WASHER	
	42B	2	**191-9297**	1	NUT	
	42C	2	**313-5833**	1	SPRING	
	43	2	**309-6732**	1	BOLT	
	44	3	**309-6733**	1	CAMSHAFT AS	
	44A	3	**153-6492**	1	KEY-WOODRUFF	
	44B	3	**154-4505**	1	BEARING	
	44C	3	**308-1903**	1	GEAR-CAMSHAFT (66-TEETH)	
	44D	3	**313-9323**	1	SPACER	
	45	2	**336-2965**	1	TOOL	
	46	2	**330-9189**	1	PLUG	
F			**154-1396**	1	CLIP	

C-CHANGE FROM PREVIOUS TYPE
F-NOT SHOWN
M-METRIC PART

309-6718 **HOUSING GP-FRONT** *(contd.)* **i03398006**

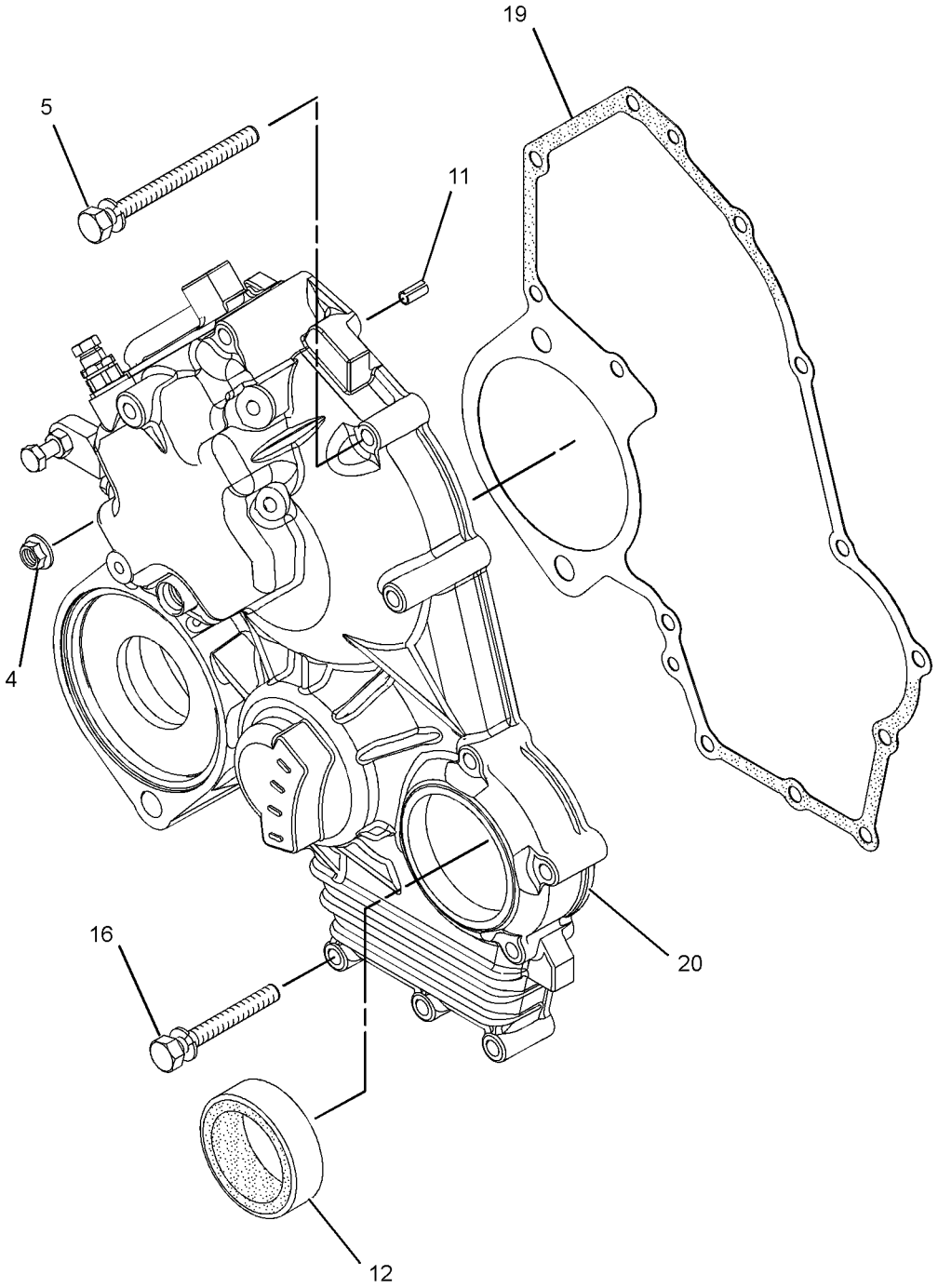

GRAPHIC #1 g01636998

309-6718 **HOUSING GP-FRONT** *(contd.)* **i03398006**

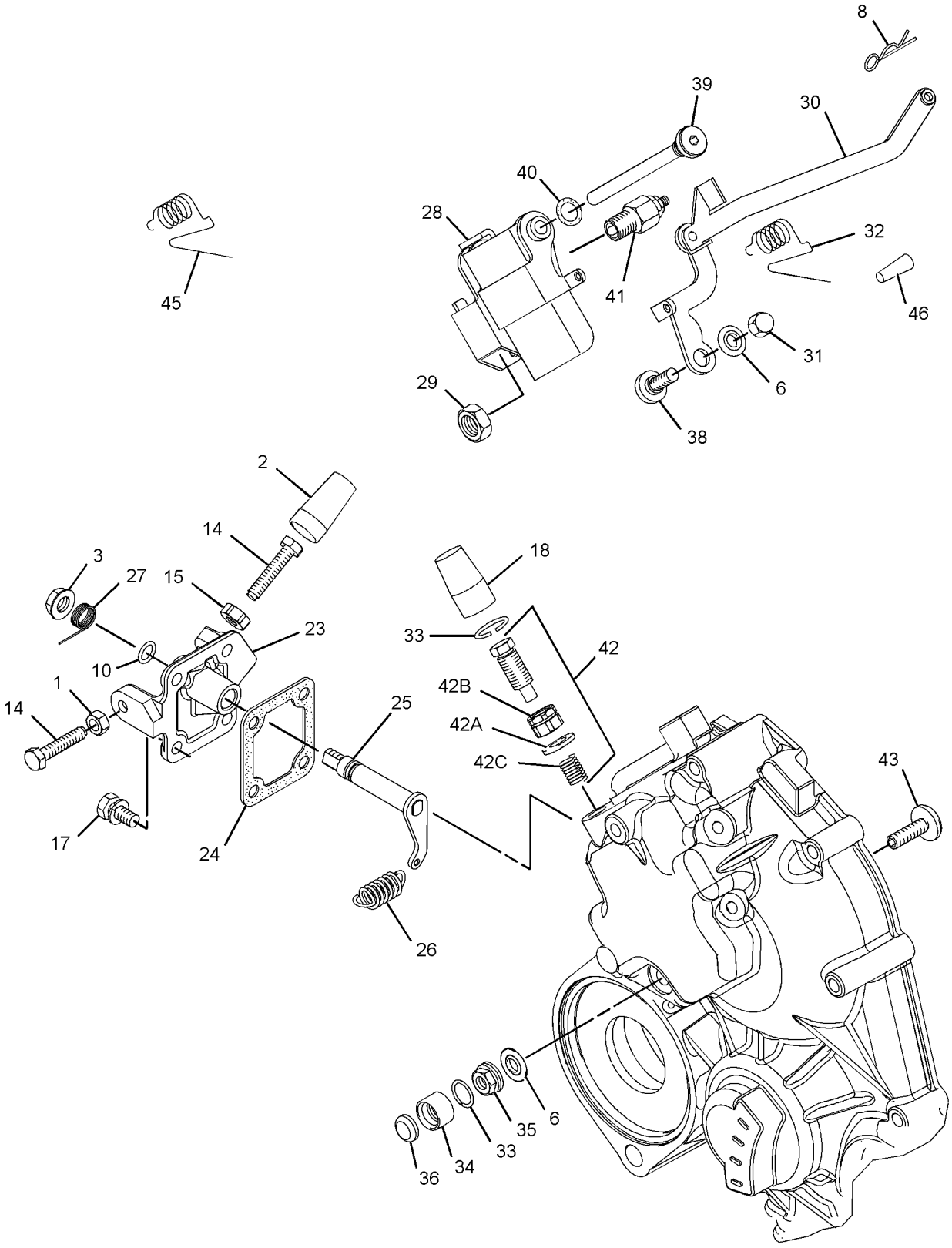

GRAPHIC #2 g01693333

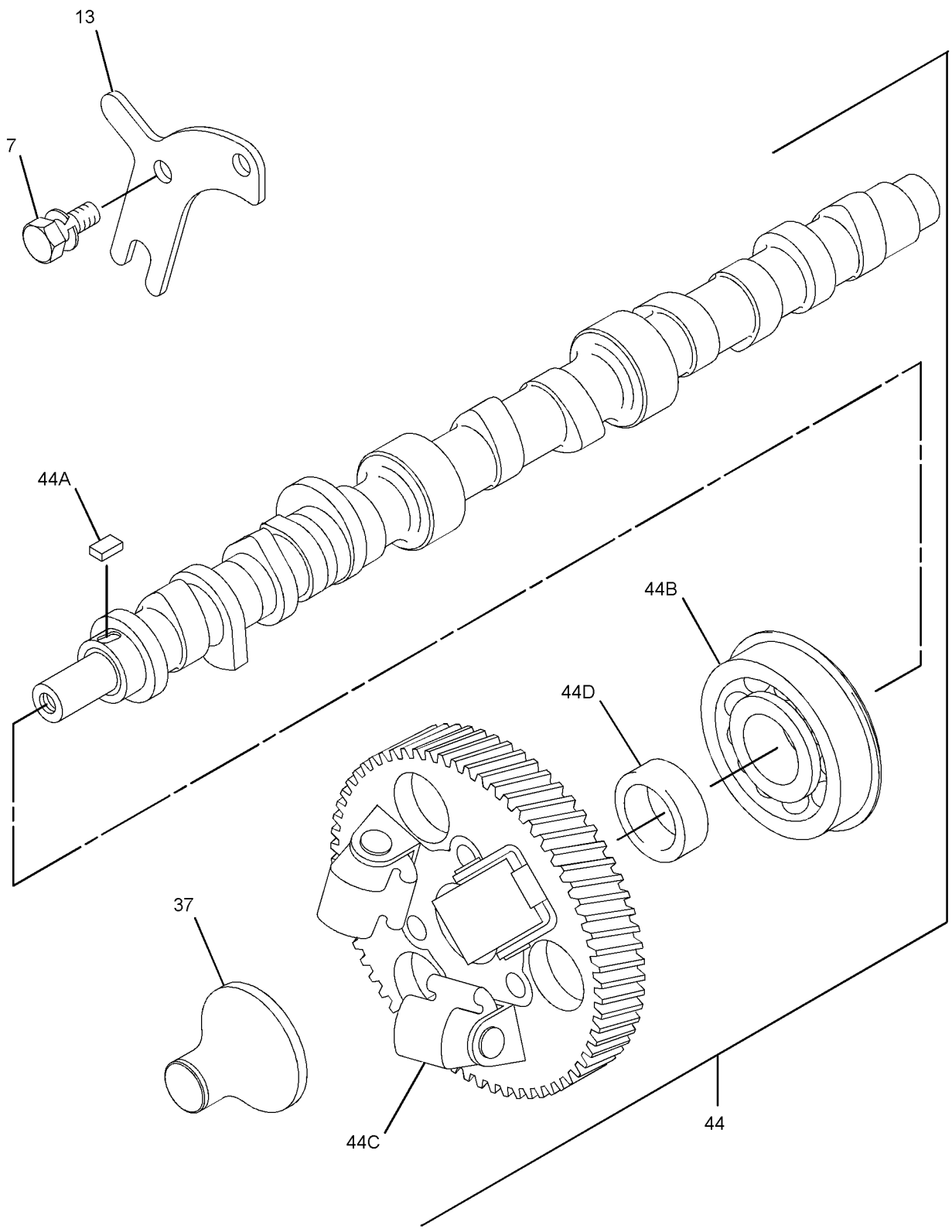

GRAPHIC #3 **<END>** g01415341

BASIC ENGINE

322-3074 HOUSING GP-FRONT

SMCS-1151, 1162, 1206 **i03406019**

NOTE	REF NO	GRAPHIC REF	PART NUMBER	QTY	PART NAME 1 2 3 4 5 6 (PRODUCT LEVEL)	SEE PAGE
M	1	2	**5C-2890**	1	NUT (M6X1-THD)	
	2	2	**139-5511**	1	CAP (TAMPER RESISTANT)	
	3	2	**153-5592**	1	NUT	
	4	1	**153-5960**	2	NUT	
	5	1	**153-5962**	4	BOLT	
	6	2	**153-6415**	2	WASHER	
	7	3	**153-6838**	2	BOLT	
	8	2	**153-7983**	1	PIN	
	9	2	**154-1403**	1	SEAL-O-RING	
	10	1	**154-1673**	1	PIN	
	11	1	**154-1675**	1	SEAL	
	12	3	**154-1680**	1	PLATE	
M	13	2	**8T-4971**	2	BOLT (M6X1X30-MM)	
	14	2	**162-2207**	1	NUT	
	15	1	**165-2140**	6	BOLT	
	16	2	**183-3538**	4	BOLT	
	17	2	**217-7115**	1	CAP (TAMPER RESISTANT)	
	18	1	**308-1871**	1	GASKET	
	19	2	**335-5578**	1	BRACKET	
	20	2	**308-1878**	1	GASKET	
	21	2	**308-1882**	1	SPRING	
	22	2	**308-1889**	1	NUT	
	23	2	**308-1892**	1	NUT	
	24	2	**308-1897**	2	RING	
	25	2	**308-1901**	1	CAP	
	26	3	**308-1904**	1	SLIDER	
	27	2	**308-4266**	1	SHAFT	
	28	2	**309-6728**	1	SHAFT	
	29	2	**309-6729**	1	SEAL-O-RING	
	30	2	**309-6732**	1	BOLT	
	31	3	**309-6733**	1	CAMSHAFT AS	
	31A	3	**153-6492**	1	KEY-WOODRUFF	
	31B	3	**154-4505**	1	BEARING	
	31C	3	**308-1903**	1	GEAR-CAMSHAFT (66-TEETH)	
	31D	3	**313-9323**	1	SPACER	
	32	2	**311-0655**	1	SPRING	
	33	2	**313-5832**	1	BOLT AS	
	33A	2	**153-7987**	1	WASHER	
	33B	2	**191-9297**	1	NUT	
	33C	2	**313-5833**	1	SPRING	
	34	2	**317-7195**	1	SPRING	
	35	2	**319-3252**	1	SENSOR-SPEED (ENGINE TIMING)	
	36	2	**321-4249**	1	NUT	
	37	1	**322-7490**	1	HOUSING-FRONT	
	38	2	**322-7492**	1	LEVER-CONTROL	
	39	2	**322-7493**	1	LEVER-CONTROL	
	40	2	**332-1361**	1	CAP-PROTECTION	
	41	2	**334-0732**	1	ARM	
	42	2	**336-2965**	1	TOOL	
	43	2	**330-9189**	1	PLUG	

M-METRIC PART

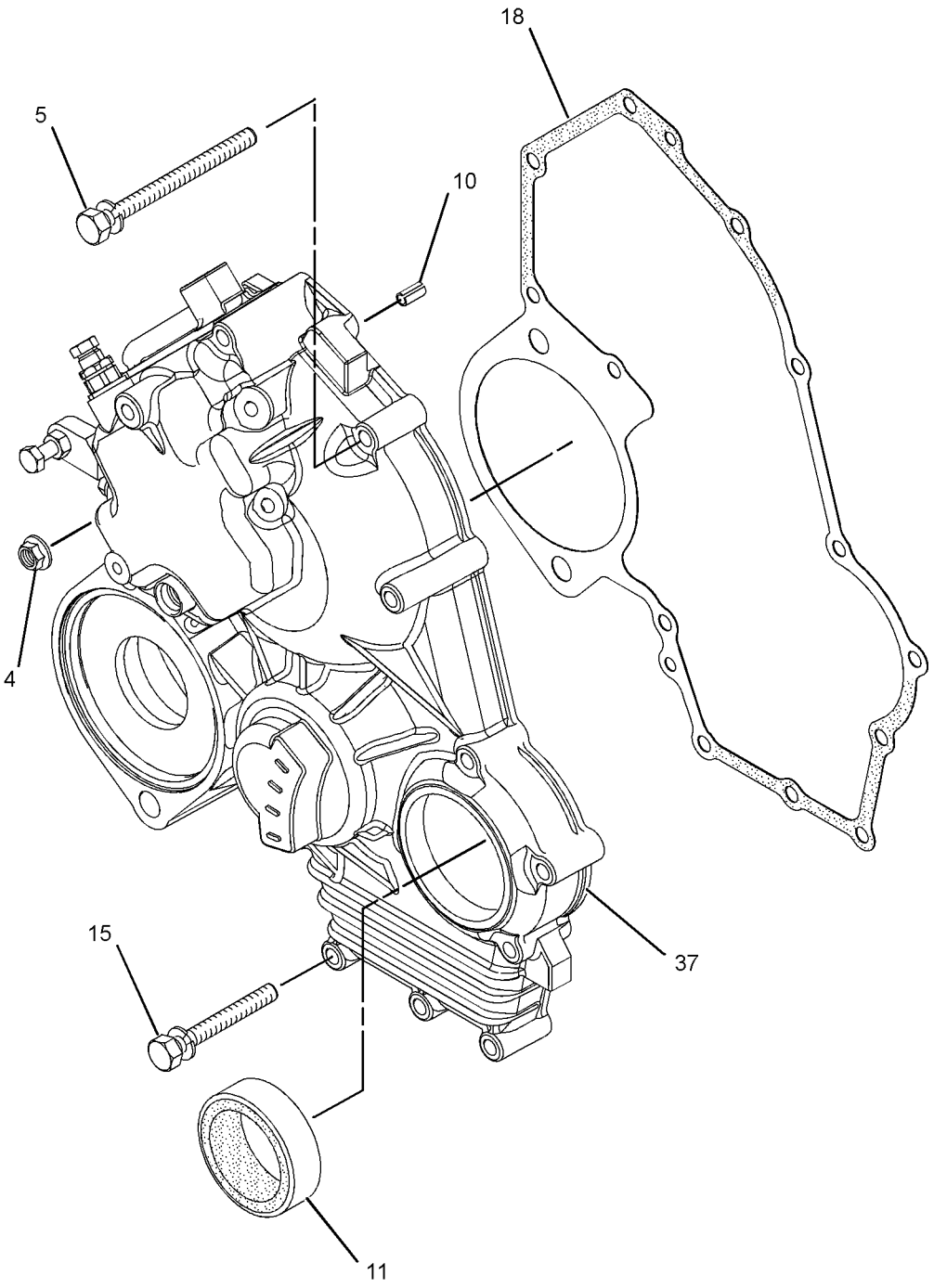

GRAPHIC #1 g01635382

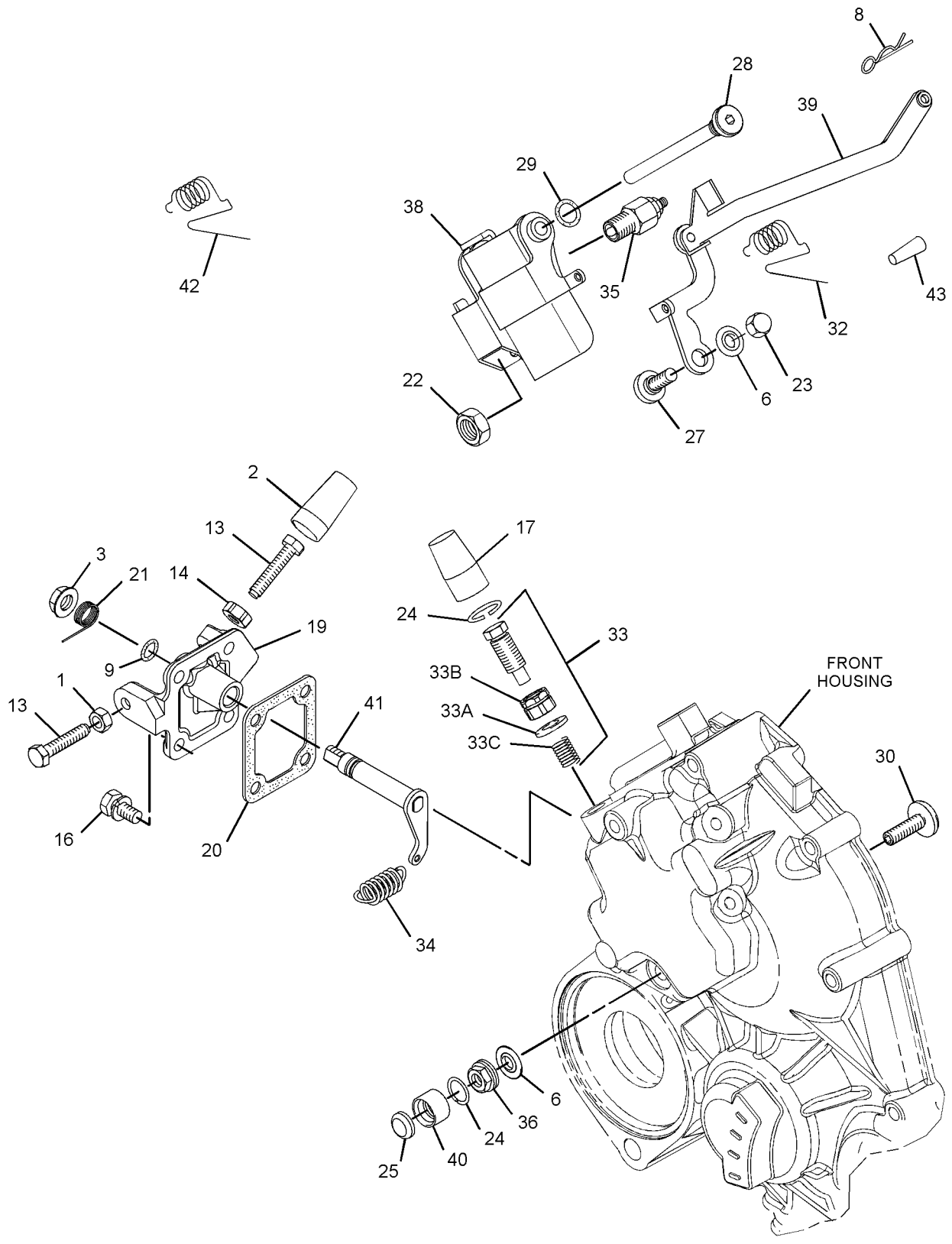

GRAPHIC #2

g01758994

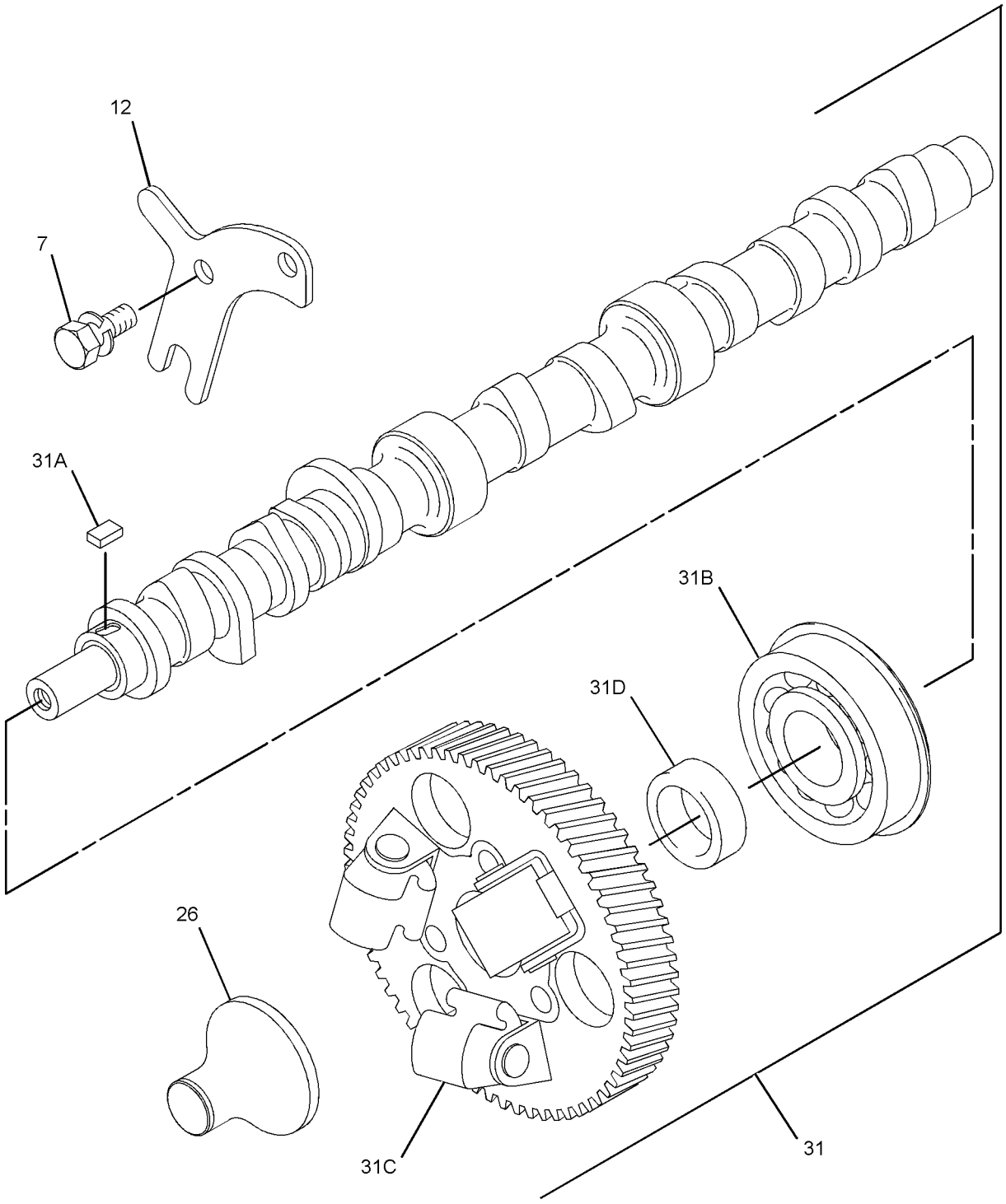

GRAPHIC #3 **<END>** g01635385

BASIC ENGINE

309-6725 LIFTING GP-ENGINE

SMCS-1122 **i03396027**

NOTE	REF NO	GRAPHIC REF	PART NUMBER	QTY	PART NAME 1 2 3 4 5 6 (PRODUCT LEVEL)	SEE PAGE
	1	1	**153-6375**	3	BOLT	
	2	1	**309-6737**	1	EYE-LIFTING	
	3	1	**153-6374**	1	PLATE	

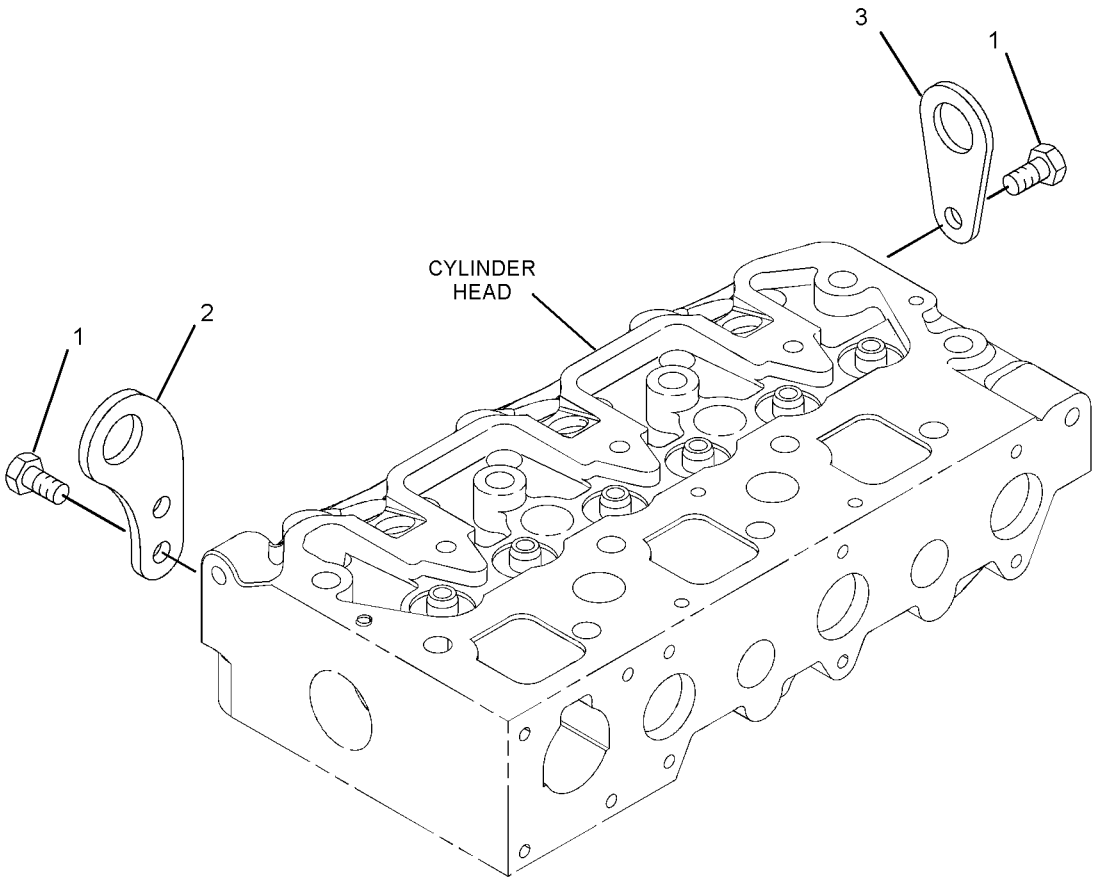

GRAPHIC #1 **<END>** g01389556

BASIC ENGINE

308-2295 PAN GP-OIL

SMCS-1302 **i03406542**

NOTE	REF NO	GRAPHIC REF	PART NUMBER	QTY	PART NAME 1 2 3 4 5 6 (PRODUCT LEVEL)	SEE PAGE
	1	1	**153-6833**	31	BOLT	
	2	1	**153-6835**	1	SEAL-O-RING	
	3	1	**153-6838**	3	BOLT	
	4	1	**153-6841**	4	SEAL-O-RING	
C	5	1	**325-9415**	1	TUBE-OIL SUCTION	
C	6	1	**325-9416**	1	STRAINER-OIL (ENGINE OIL)	
	7	1	**215-2605**	1	GASKET	
	8	1	**218-2333**	1	PAN-OIL	
	9	1	**229-5150**	1	TUBE AS (GAUGE)	
	10	1	**229-5151**	1	GAUGE-OIL LEVEL (DIPSTICK) (ENGINE)	
	11	1	**319-7366**	1	PLUG	

C-CHANGE FROM PREVIOUS TYPE

308-2295 **PAN GP-OIL** *(contd.)* **i03406542**

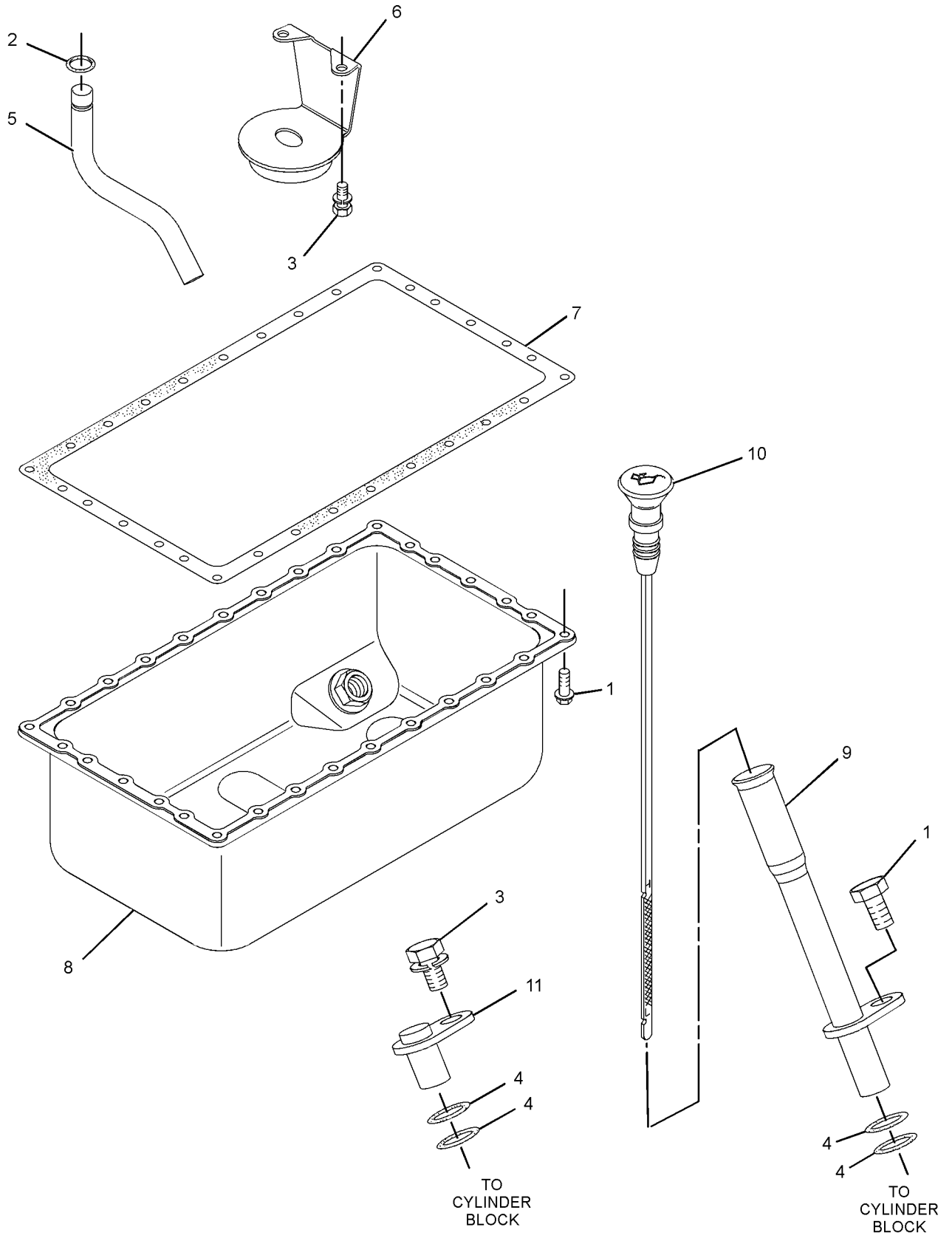

GRAPHIC #1 **<END>** g01762133

BASIC ENGINE

322-2416 PAN GP-OIL

SMCS-1302 **i03396120**

NOTE	REF NO	GRAPHIC REF	PART NUMBER	QTY	PART NAME 1 2 3 4 5 6 (PRODUCT LEVEL)	SEE PAGE
	1	1,2	**153-6833**	31	BOLT	
	2	2	**153-6835**	1	SEAL-O-RING	
	3	1,2	**153-6838**	3	BOLT	
	4	1	**153-6841**	4	SEAL-O-RING	
	5	2	**288-8814**	1	PIPE-OIL	
	6	2	**288-8813**	1	STRAINER (OIL PAN)	
	7	2	**215-2605**	1	GASKET	
	8	1	**229-5150**	1	TUBE AS (GAUGE)	
	9	1	**229-5151**	1	GAUGE-OIL LEVEL (DIPSTICK) (ENGINE)	
	10	2	**288-8812**	1	PAN (OIL)	
	11	1	**319-7366**	1	PLUG	

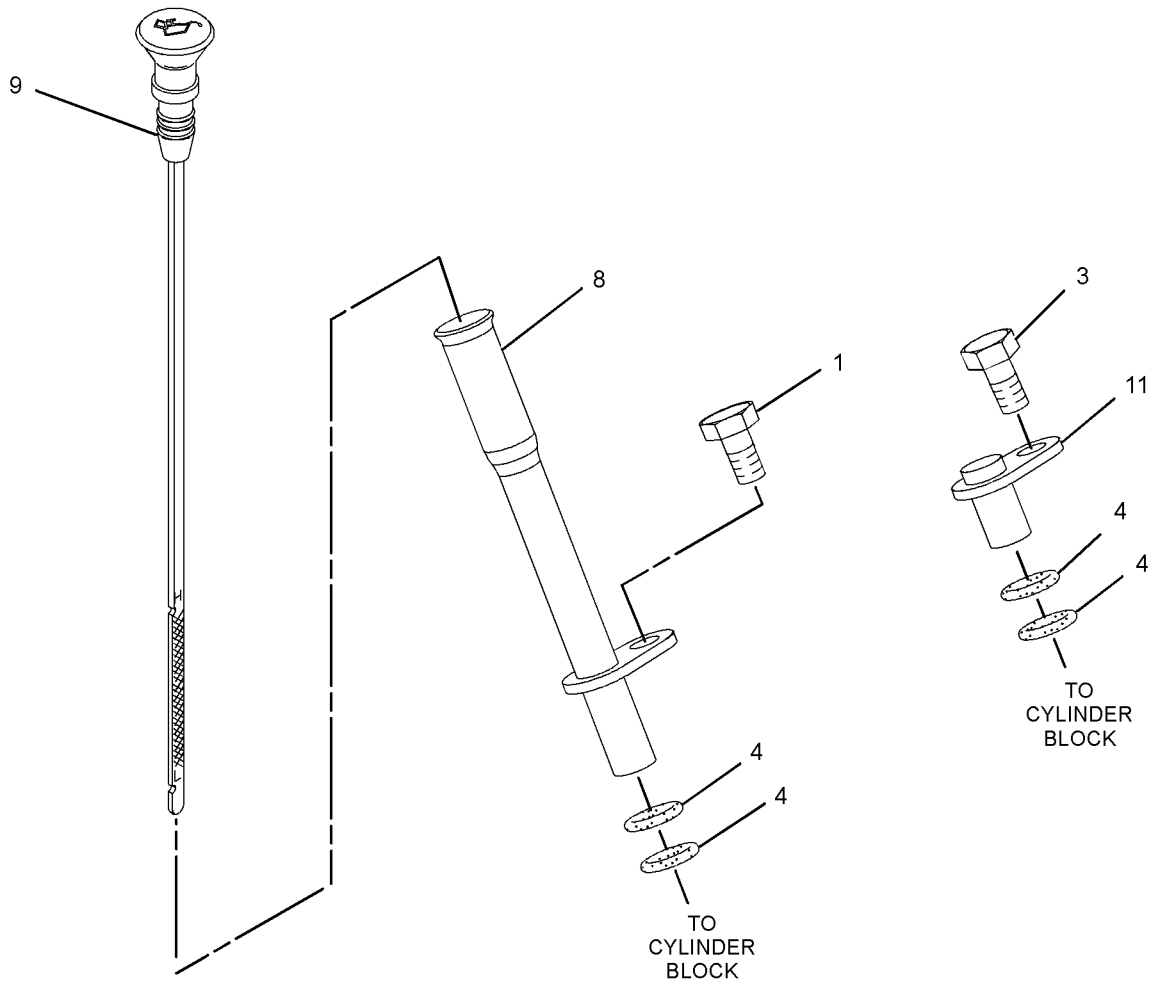

GRAPHIC #1 g01640340

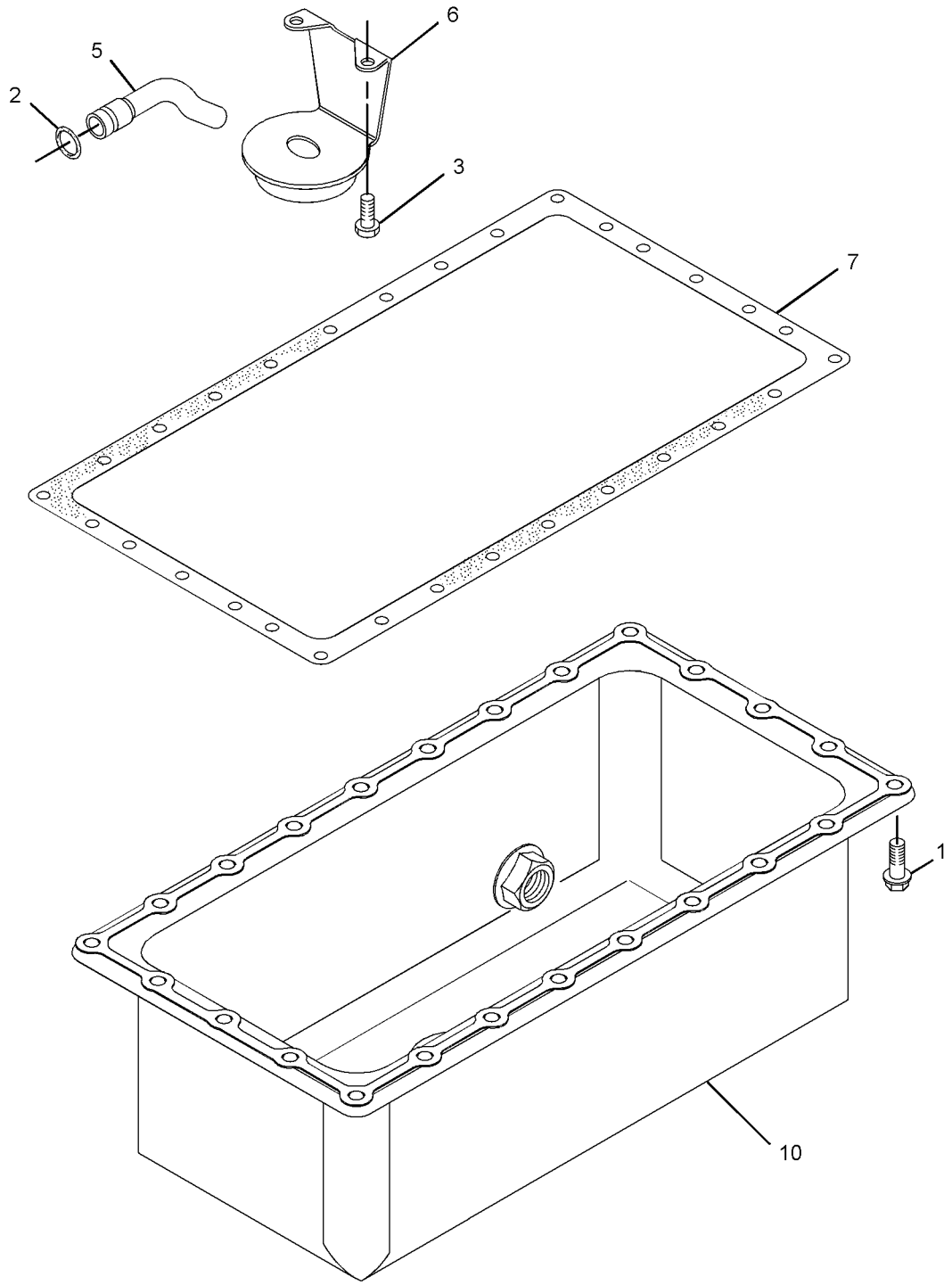

GRAPHIC #2 **<END>** g01640342

BASIC ENGINE

309-6714 PISTON & ROD GP

SMCS-1225 **i03396121**

NOTE	REF NO	GRAPHIC REF	PART NUMBER	QTY	PART NAME 1 2 3 4 5 6 (PRODUCT LEVEL)	SEE PAGE
	1	1	**154-0867**	4	ROD AS-CONNECTING	
					(EACH INCLUDES)	
	1A	1	**154-0869**	1	BUSHING	
	1B	1	**154-0870**	2	BOLT	
	1C	1	**154-0871**	2	NUT	
	2	1	**154-0873**	4	PIN	
	3	1	**154-0874**	8	CLIP	
	4	1	**297-3080**	4	PISTON AS	
					(EACH INCLUDES)	
	4A	1	**217-1456**	1	KIT-PISTON RING	

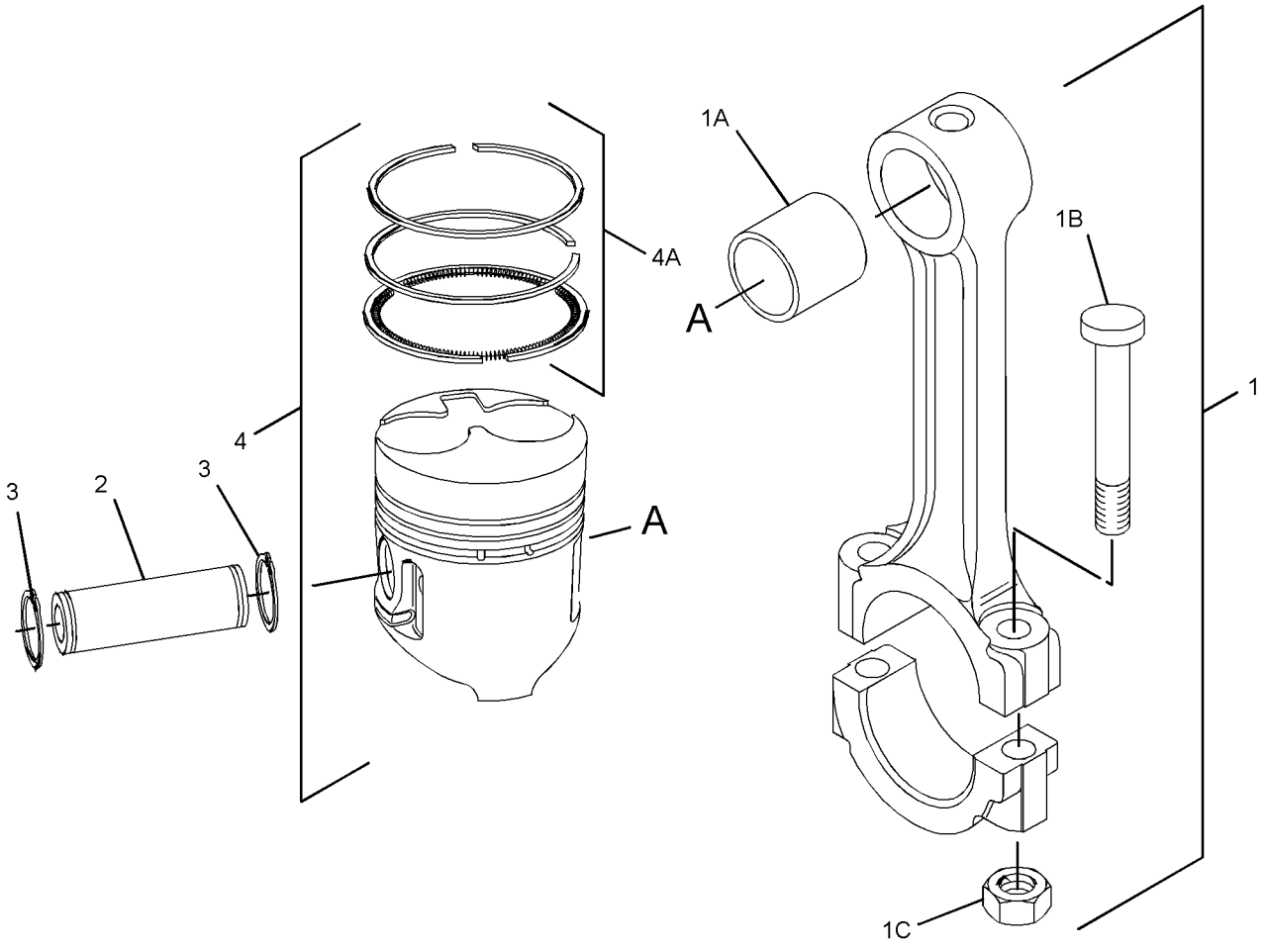

GRAPHIC #1 **<END>** g01415430

BASIC ENGINE

322-2426 PLUG GP-ENGINE

SMCS-1100 **i03396122**

NOTE	REF NO	GRAPHIC REF	PART NUMBER	QTY	PART NAME 1 2 3 4 5 6 (PRODUCT LEVEL)	SEE PAGE
	1	1	**153-6835**	1	SEAL-O-RING	
	2	1	**161-8273**	1	PLUG	

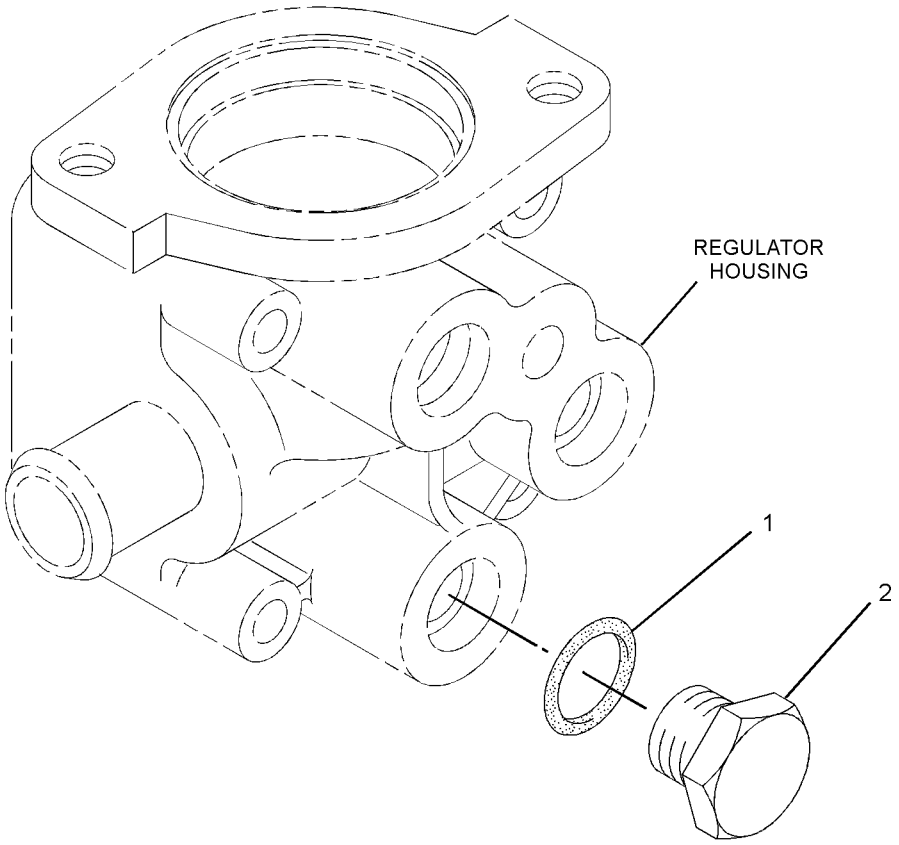

GRAPHIC #1 **<END>** g01514601

309-6720 PLUG GP-OIL PAN

SMCS-1302 **i03384429**

NOTE	REF NO	GRAPHIC REF	PART NUMBER	QTY	PART NAME 1 2 3 4 5 6 (PRODUCT LEVEL)	SEE PAGE
	1	1	**153-6412**	2	WASHER	
	2	1	**218-2334**	2	PLUG-DRAIN (ENGINE OIL PAN)	

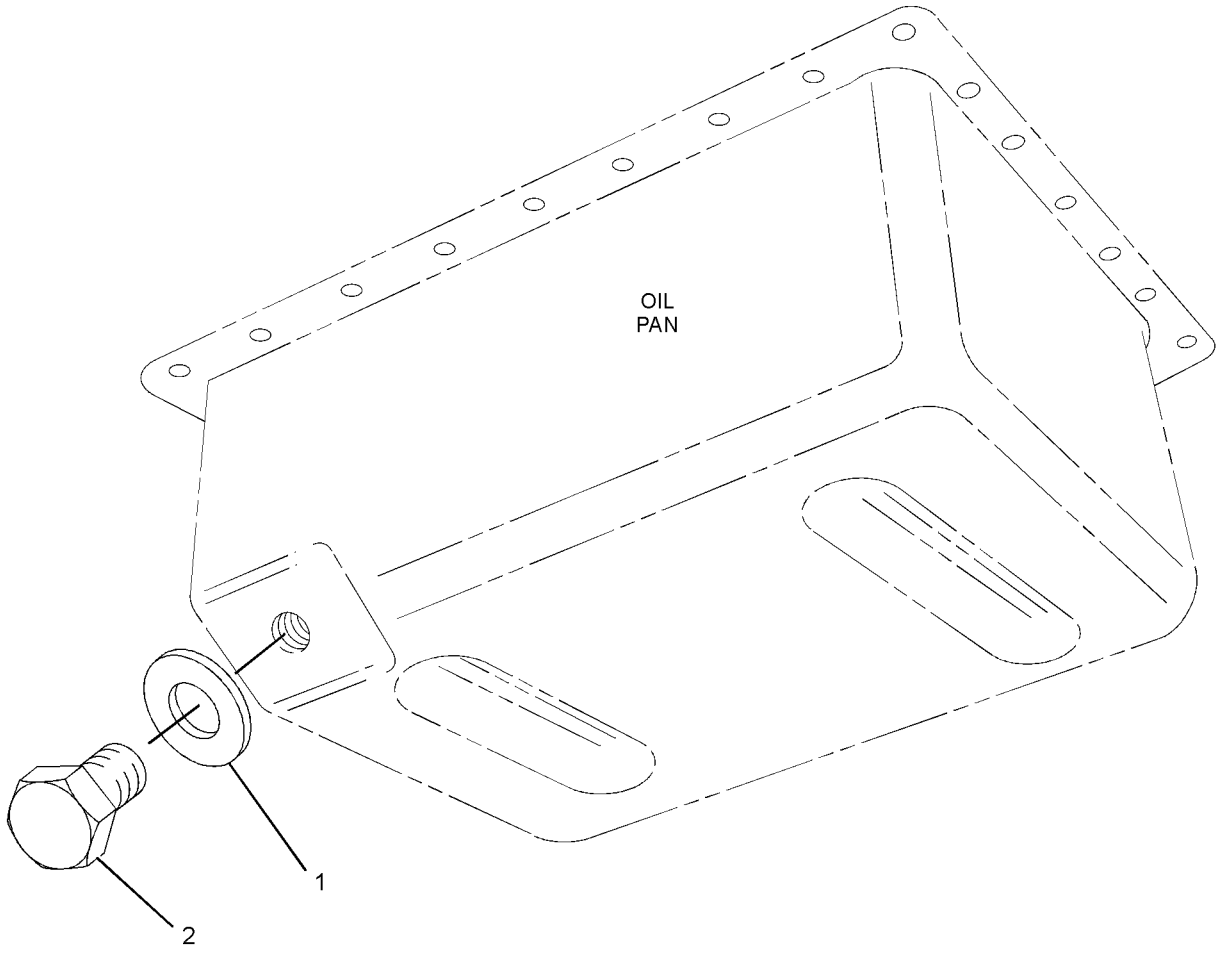

GRAPHIC #1 **<END>** g01347011

BASIC ENGINE

322-2420 PLUG GP-OIL PAN

SMCS-1302 **i03396123**

NOTE	REF NO	GRAPHIC REF	PART NUMBER	QTY	PART NAME 1 2 3 4 5 6 (PRODUCT LEVEL)	SEE PAGE
	1	1	**153-6832**	2	WASHER	
	2	1	**165-3605**	2	PLUG-DRAIN (ENGINE OIL DRAIN)	

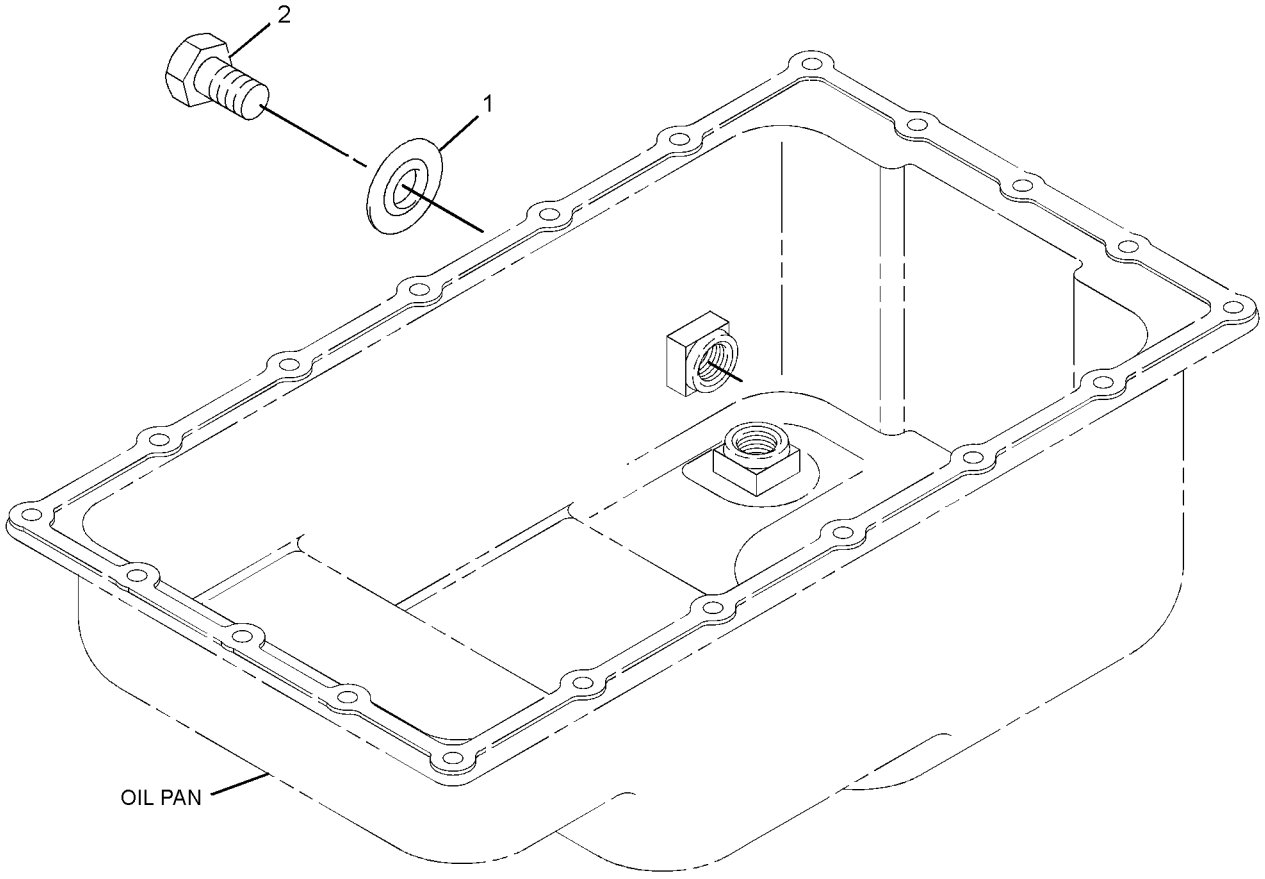

GRAPHIC #1 **<END>** g01513429

322-2422 PULLEY GP-AUXILIARY DRIVE

SMCS-1205, 1207 **i03396124**

NOTE	REF NO	GRAPHIC REF	PART NUMBER	QTY	PART NAME 1 2 3 4 5 6 (PRODUCT LEVEL)	SEE PAGE
	1	1	**165-2142**	3	BOLT	
	2	1	**238-9621**	1	PULLEY	

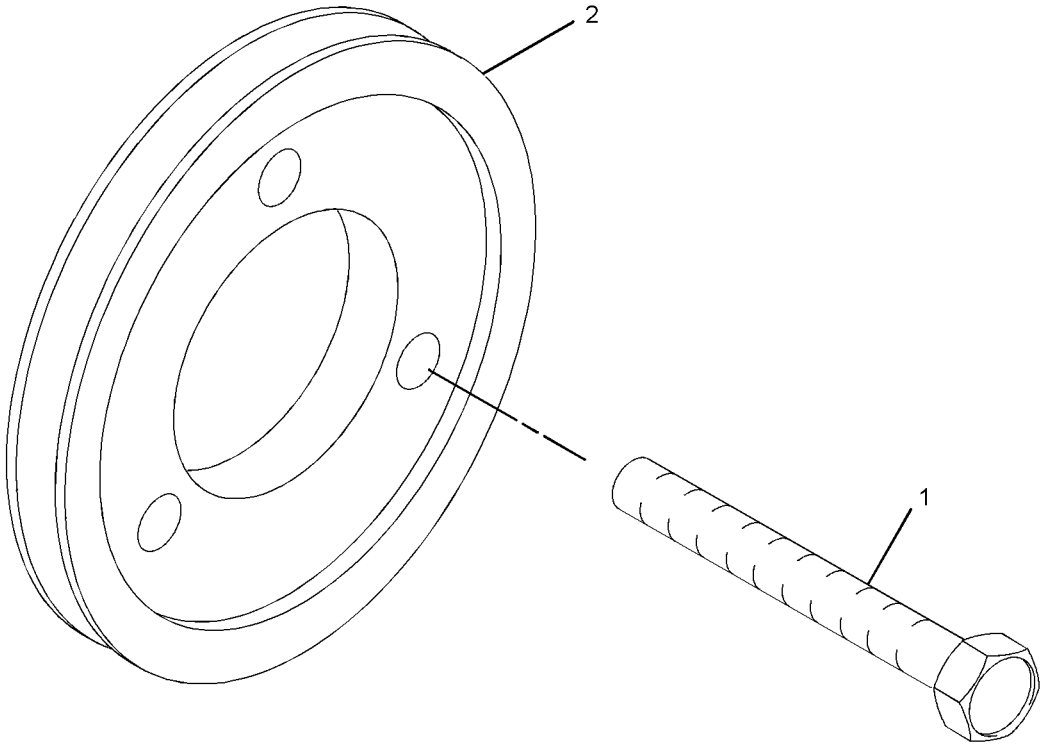

GRAPHIC #1 **<END>** g01636445

BASIC ENGINE

308-2300 PULLEY GP-CRANKSHAFT

SMCS-1205 **i03396125**

NOTE	REF NO	GRAPHIC REF	PART NUMBER	QTY	PART NAME 1 2 3 4 5 6 (PRODUCT LEVEL)	SEE PAGE
	1	1	**153-6492**	1	KEY-WOODRUFF	
	2	1	**154-1880**	1	NUT	
	3	1	**321-6738**	1	PULLEY-CRANKSHAFT	

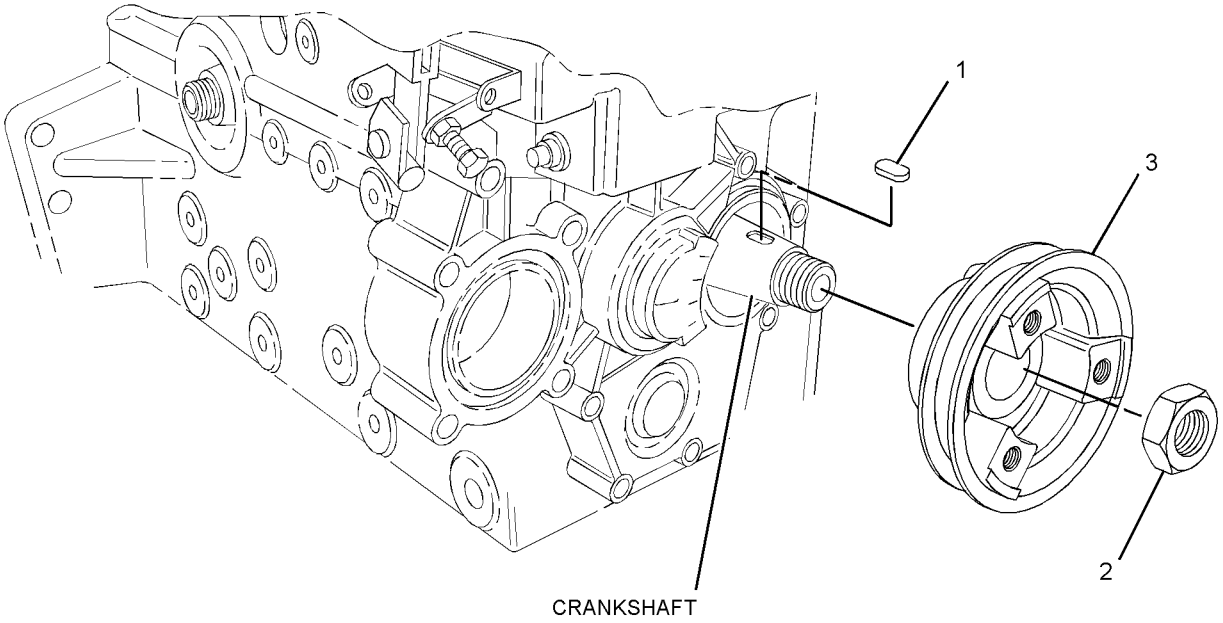

GRAPHIC #1 **<END>** g01390599

308-2294 PULLEY GP-WATER PUMP

SMCS-1384 **i03396126**

NOTE	REF NO	GRAPHIC REF	PART NUMBER	QTY	PART NAME 1 2 3 4 5 6 (PRODUCT LEVEL)	SEE PAGE
	1	1	**154-1822**	1	PULLEY-WATER PUMP	

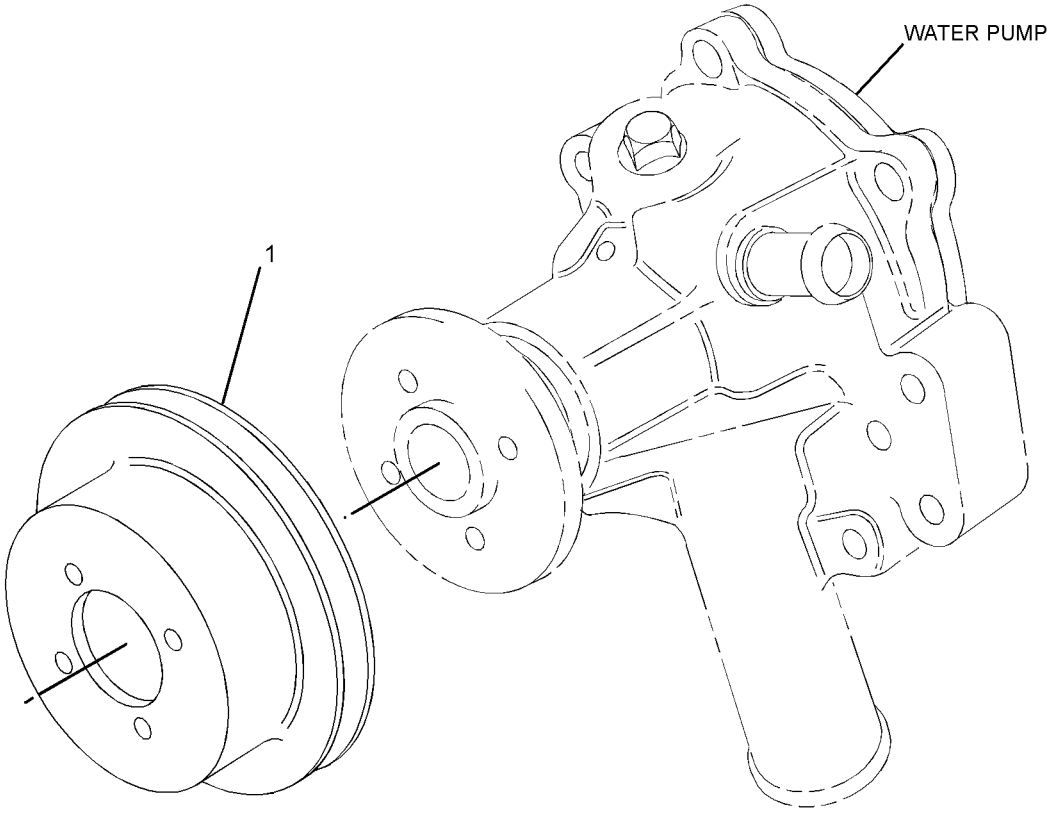

GRAPHIC #1 **<END>** g01412305

BASIC ENGINE

308-2306 V-BELT GP

SMCS-1357 **i03396133**

NOTE	REF NO	GRAPHIC REF	PART NUMBER	QTY	PART NAME 1 2 3 4 5 6 (PRODUCT LEVEL)	SEE PAGE
	1	1	**211-5172**	1	V-BELT (WATER PUMP)	

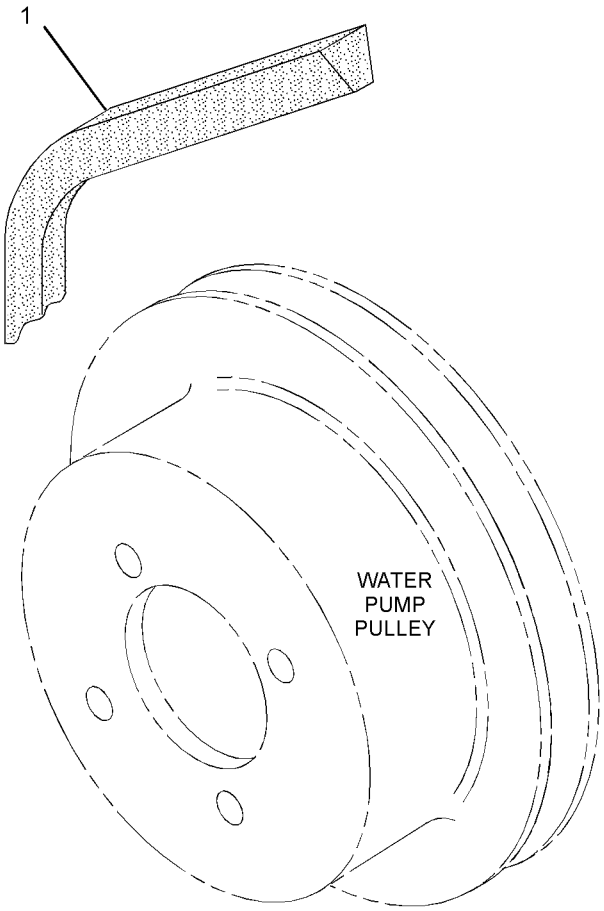

GRAPHIC #1 **<END>** g01407842

BASIC ENGINE

293-2167 VALVE MECHANISM GP

PART OF 309-6716 VALVE MECHANISM GP

SMCS-1102, 1121, 1123, 1209 **i03396140**

NOTE	REF NO	GRAPHIC REF	PART NUMBER	QTY	PART NAME 1 2 3 4 5 6 (PRODUCT LEVEL)	SEE PAGE
	1	1	**154-1243**	6	WASHER	
	2	1	**153-5587**	8	SCREW-ADJUSTMENT	
	3	1	**153-5590**	8	NUT	
	4	1	**153-6835**	1	SEAL-O-RING	
	5	1	**206-3499**	1	SHAFT-ROCKER ARM	
	7	1	**154-1240**	4	LEVER-RH	
	8	1	**154-1241**	4	LEVER-LH	
	9	1	**154-1242**	3	SPRING	

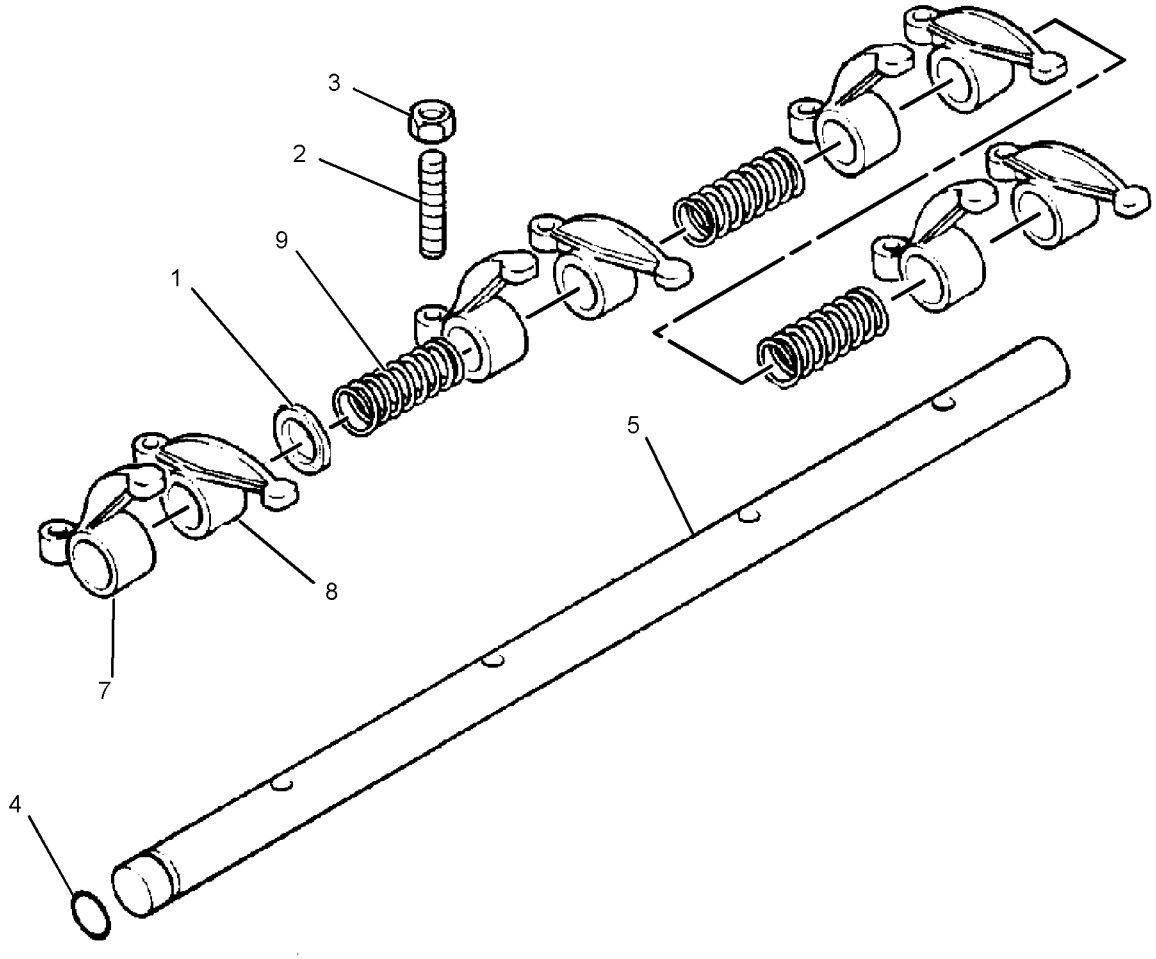

GRAPHIC #1 **<END>** g01395519

BASIC ENGINE

309-6716 VALVE MECHANISM GP

SMCS-1102, 1121, 1123, 1209 **i03396134**

NOTE	REF NO	GRAPHIC REF	PART NUMBER	QTY	PART NAME 1 2 3 4 5 6 (PRODUCT LEVEL)	SEE PAGE
	1	1	**153-5961**	2	BOLT	
	2	1	**153-7988**	4	NUT	
	3	1	**154-1246**	4	STUD	
	4	1	**154-1248**	8	ROD	
	5	1	**154-1249**	8	TAPPET	
	6	1	**217-2752**	1	GASKET (VALVE BRACKET)	
Y	7	1	**293-2167**	1	VALVE MECHANISM GP	45

Y-SEPARATE ILLUSTRATION

309-6716 **VALVE MECHANISM GP** *(contd.)* **i03396134**

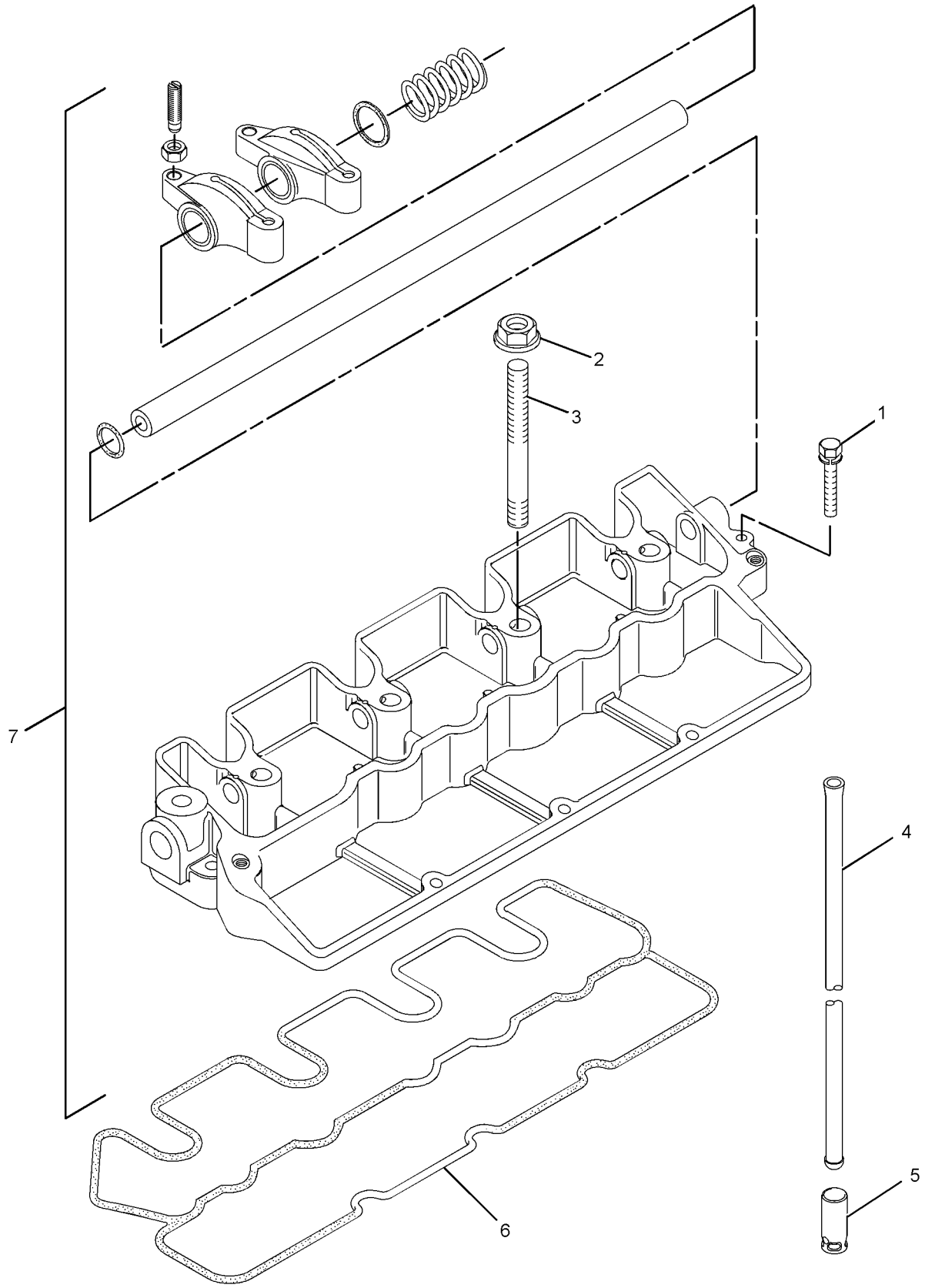

GRAPHIC #1 **<END>** g01419056

LUBRICATION SYSTEM

308-2297 FILLER GP-ENGINE OIL

SMCS-1316 **i03398003**

NOTE	REF NO	GRAPHIC REF	PART NUMBER	QTY	PART NAME 1 2 3 4 5 6 (PRODUCT LEVEL)	SEE PAGE
	1	1	**153-5933**	1	SEAL (ENGINE OIL FILL CAP)	
	2	1	**217-7358**	1	CAP-OIL FILLER (ENGINE)	
	3	1	**288-6593**	1	SEAL (ENGINE OIL FILL CAP)	
	4	1	**289-6120**	1	CAP-OIL FILLER (ENGINE)	

308-2297 **FILLER GP-ENGINE OIL** *(contd.)* **i03398003**

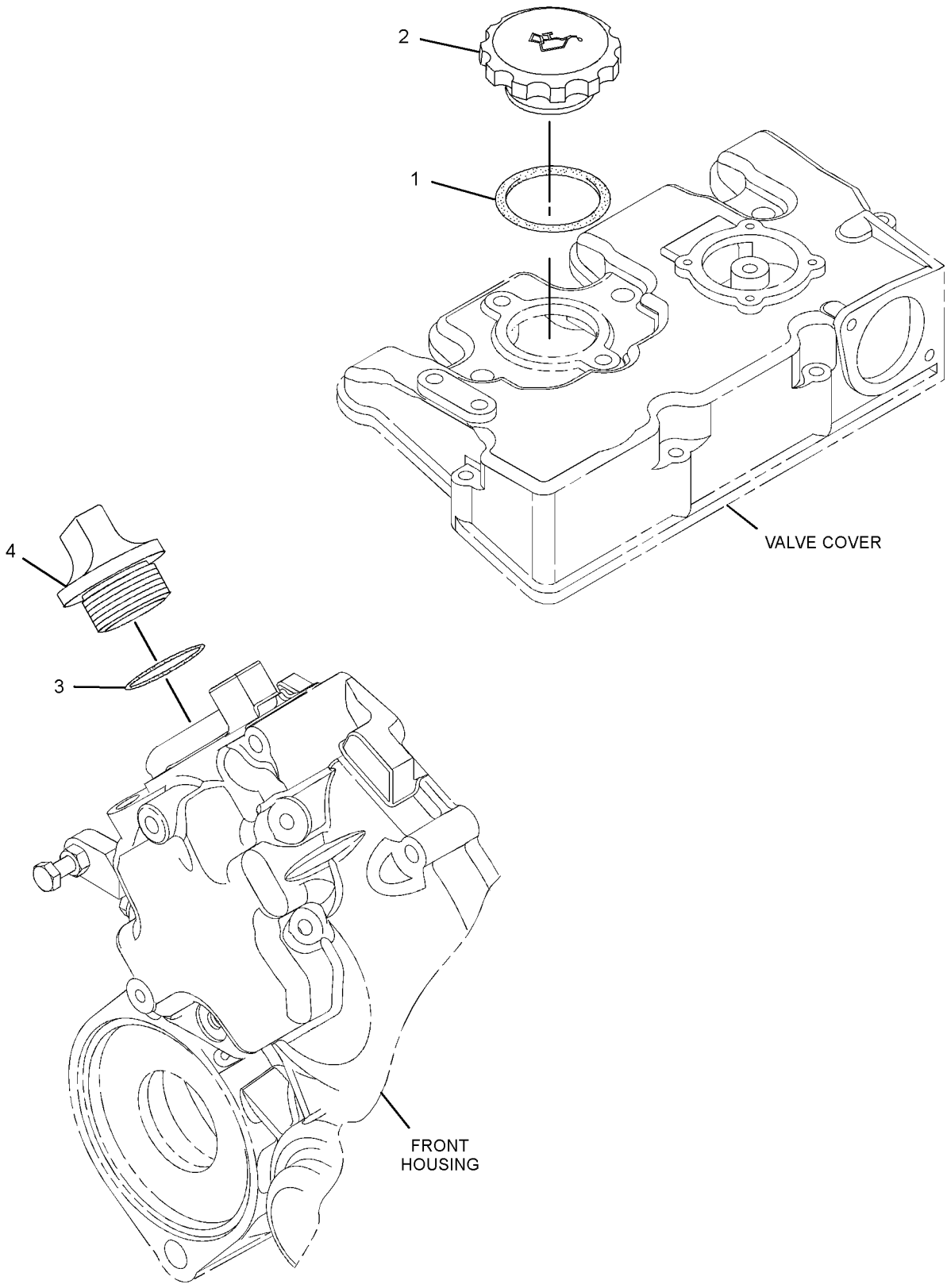

GRAPHIC #1 **<END>** g01412730

LUBRICATION SYSTEM

322-2421 FILLER GP-ENGINE OIL

SMCS-1316 **i03396021**

NOTE	REF NO	GRAPHIC REF	PART NUMBER	QTY	PART NAME 1 2 3 4 5 6 (PRODUCT LEVEL)	SEE PAGE
	1	1	**153-5933**	2	SEAL (ENGINE OIL FILL)	
	2	1	**153-7640**	2	BOLT	
	3	1	**209-1355**	1	FILLER-OIL	
	4	1	**9X-8256**	2	WASHER (6.6X12X2-MM THK)	
	5	1	**211-8559**	1	SEAL-O-RING	
	6	1	**217-7358**	2	CAP-OIL FILLER (ENGINE)	
	7	1	**288-6593**	1	SEAL (ENGINE OIL FILL CAP)	
	8	1	**289-6120**	1	CAP-OIL FILLER (ENGINE)	

322-2421 **FILLER GP-ENGINE OIL** *(contd.)* **i03396021**

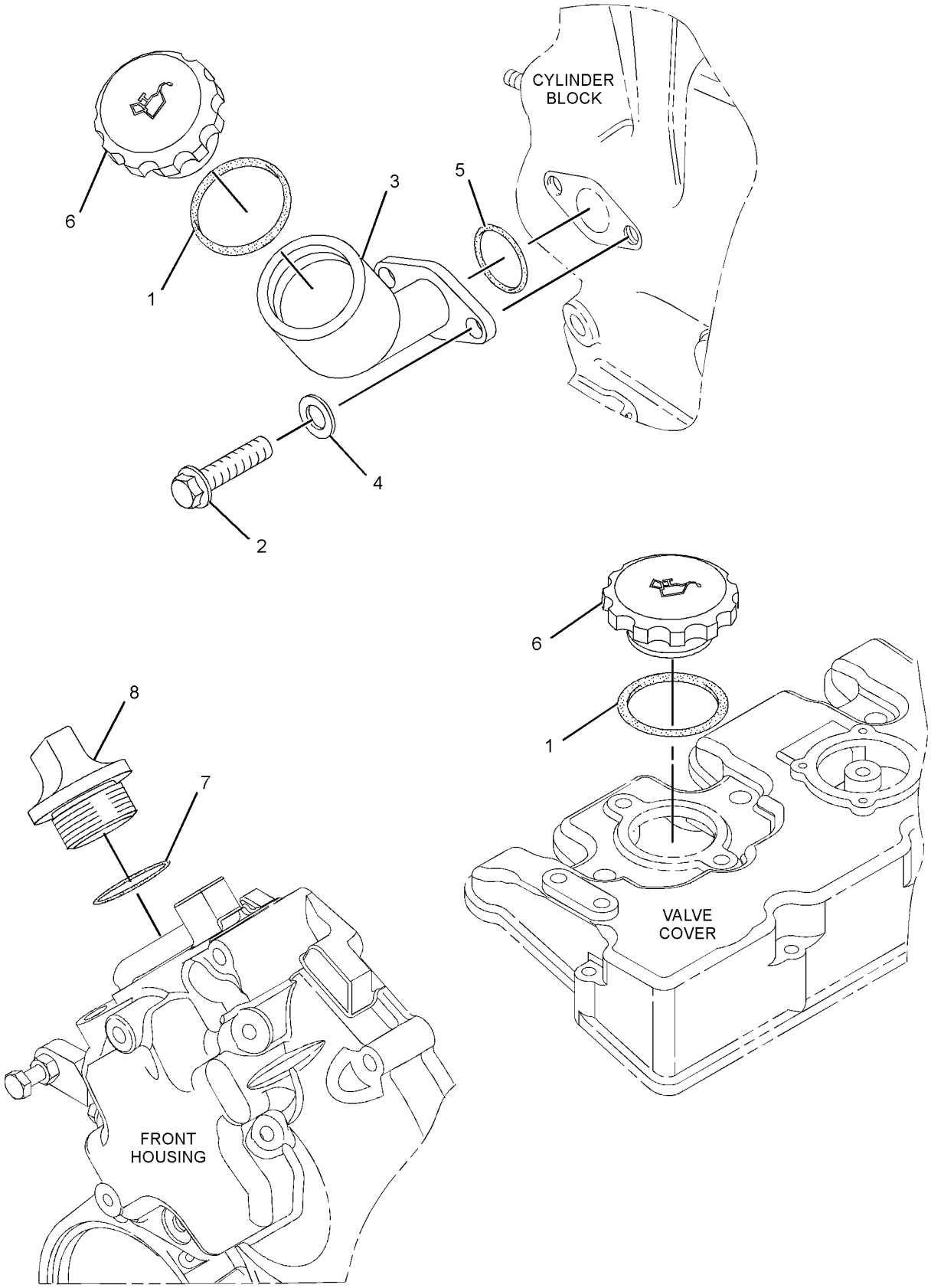

GRAPHIC #1 **<END>** g01660474

LUBRICATION SYSTEM

308-2298 FILTER GP-ENGINE OIL

SMCS-1306, 1308 **i03384414**

NOTE	REF NO	GRAPHIC REF	PART NUMBER	QTY	PART NAME 1 2 3 4 5 6 (PRODUCT LEVEL)	SEE PAGE
	1	1	**220-1523**	1	FILTER AS-ENGINE OIL	

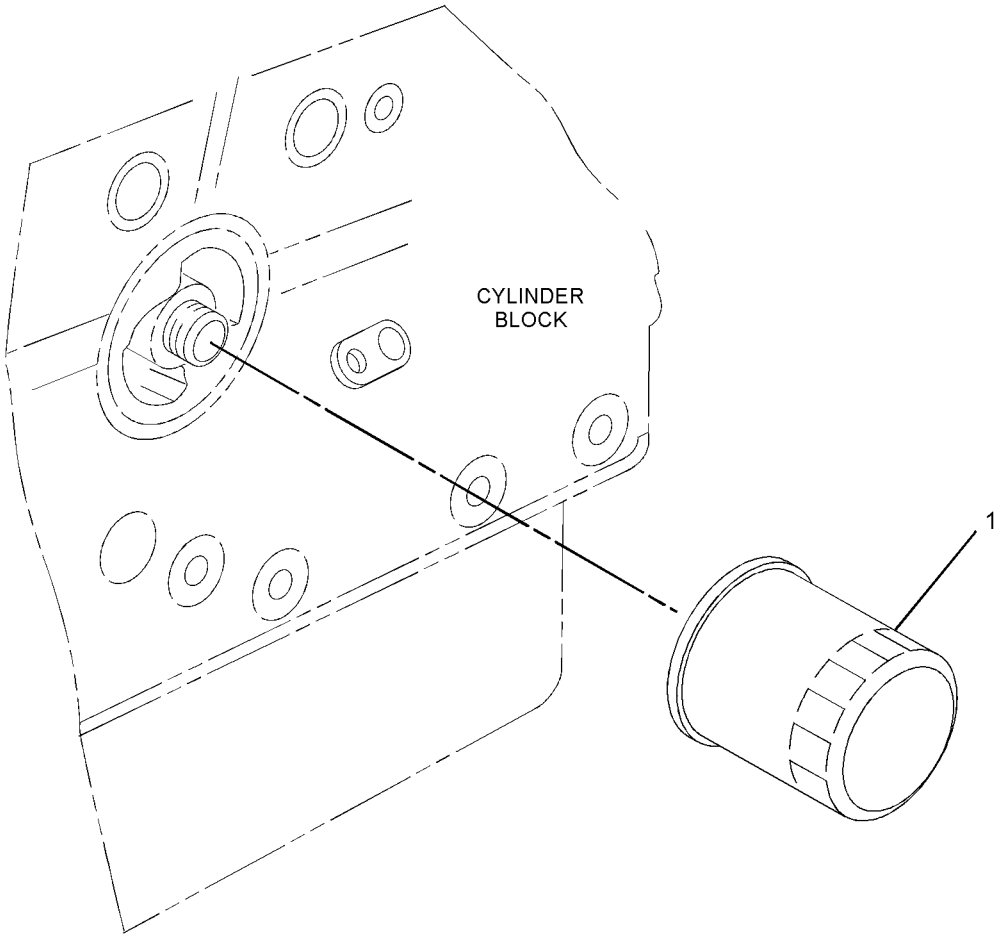

GRAPHIC #1 **<END>** g01389723

308-4735 MOUNTING GP-ENGINE OIL FILTER

SMCS-1306, 1308 **i03384424**

NOTE	REF NO	GRAPHIC REF	PART NUMBER	QTY	PART NAME 1 2 3 4 5 6 (PRODUCT LEVEL)	SEE PAGE
	1	1	**153-6879**	1	STUD-HOLLOW	

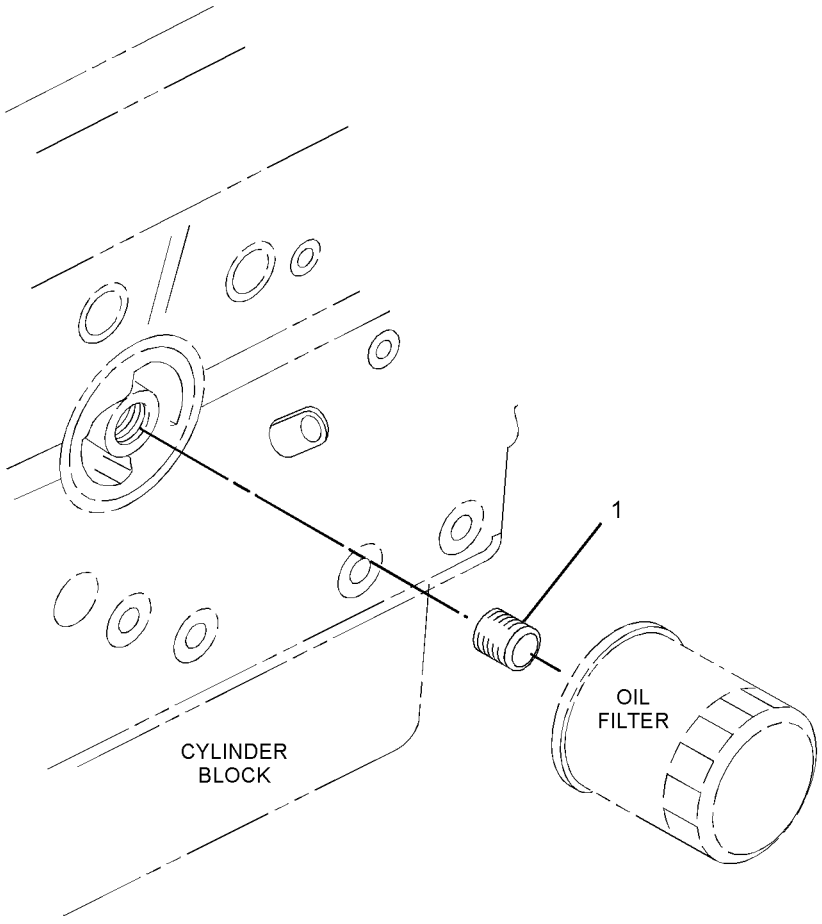

GRAPHIC #1 **<END>** g01355707

LUBRICATION SYSTEM

309-6717 PUMP GP-ENGINE OIL

SMCS-1304, 1315 **i03396127**

NOTE	REF NO	GRAPHIC REF	PART NUMBER	QTY	PART NAME 1 2 3 4 5 6 (PRODUCT LEVEL)	SEE PAGE
	1	2	**153-5936**	2	WASHER	
	2	1	**153-6849**	1	SPRING	
	3	1	**153-6850**	1	COLLAR	
	4	1	**153-6851**	1	CLIP	
	5	1	**153-6853**	1	SEAL-O-RING	
	6	2	**153-6881**	1	BOLT	
	7	1	**154-1942**	1	VALVE-RELIEF (ENGINE OIL PRESSURE)	
	8	2	**154-2353**	1	TUBE AS-OIL	
B	9	1	**160-4150**	1	SHIM (0.1-MM THK)	
B			**160-4151**	1	SHIM (0.15-MM THK)	
B			**160-4152**	1	SHIM (0.2-MM THK)	
B			**160-4153**	1	SHIM (0.5-MM THK)	
	10	1	**318-8382**	1	GEAR GP (62-TEETH)	
	10A	1	**154-1677**	1	BUSHING	
	10B	1	**154-1678**	1	DOWEL	
	10C	1	**308-1984**	1	SPRING	
	11	1	**308-1867**	1	WASHER-THRUST	
	12	1	**308-1869**	1	COVER	

B-USE AS REQUIRED

309-6717 **PUMP GP-ENGINE OIL** *(contd.)* **i03396127**

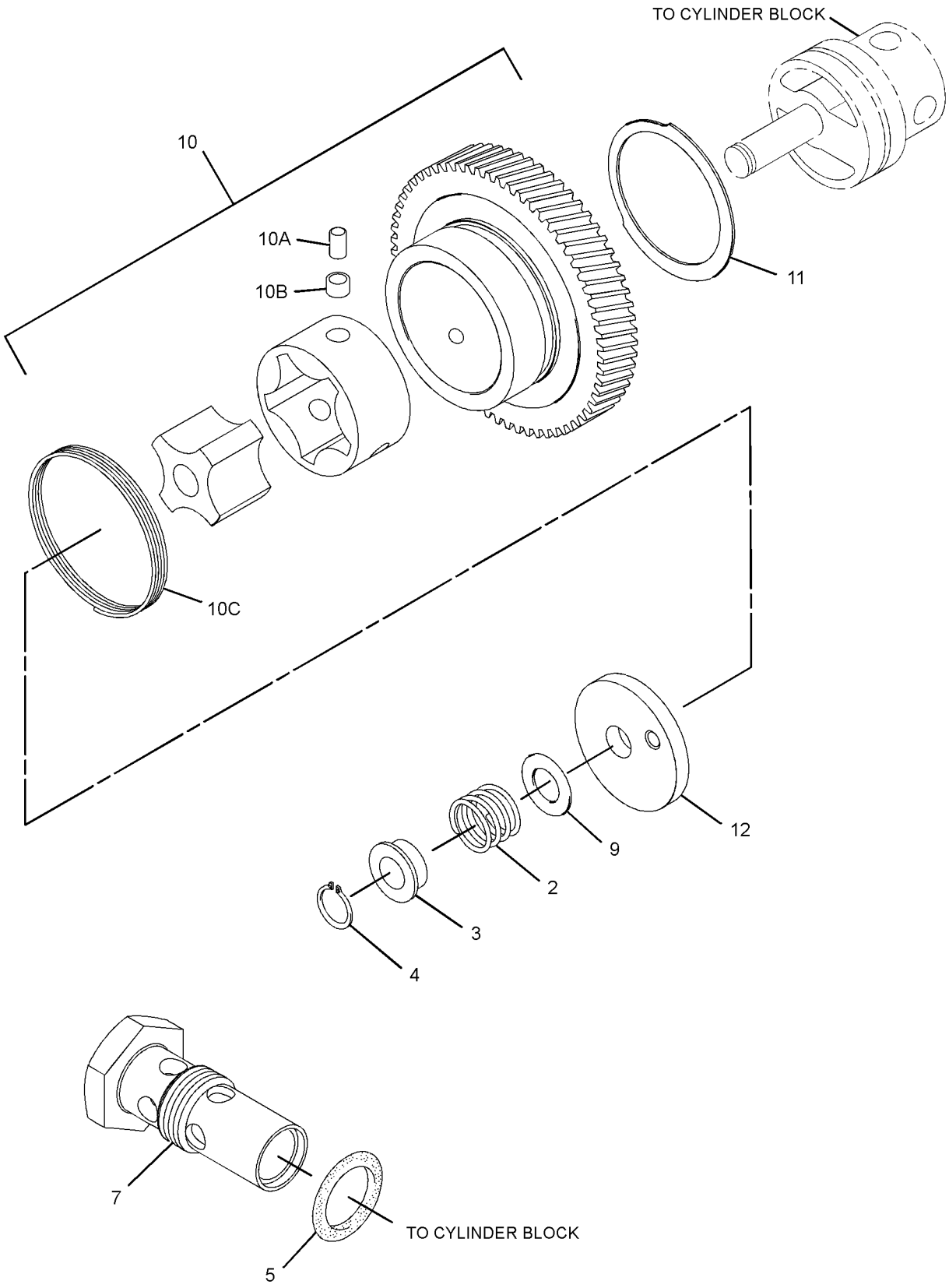

GRAPHIC #1 g01410345

309-6717 **PUMP GP-ENGINE OIL** *(contd.)* **i03396127**

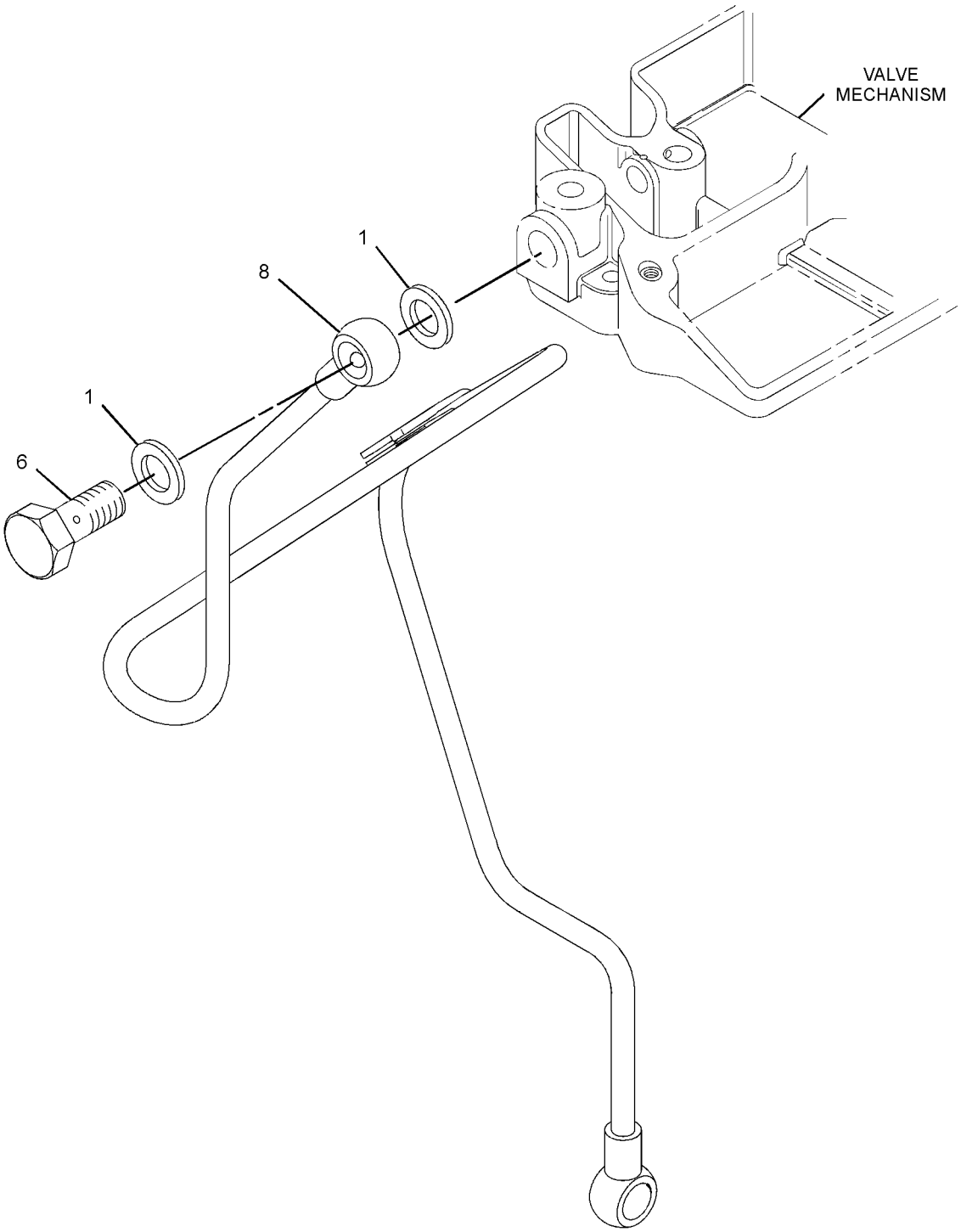

GRAPHIC #2 **<END>** g01410346

308-2302 CONNECTION GP-WATER

SMCS-1380 **i03406546**

NOTE	REF NO	GRAPHIC REF	PART NUMBER	QTY	PART NAME 1 2 3 4 5 6 (PRODUCT LEVEL)	SEE PAGE
	1	1	**154-1828**	1	GASKET-COVER (WATER TEMPERATURE REGULATOR)	
	2	1	**168-9001**	2	BOLT	
	3	1	**297-2996**	1	COVER-HOUSING	

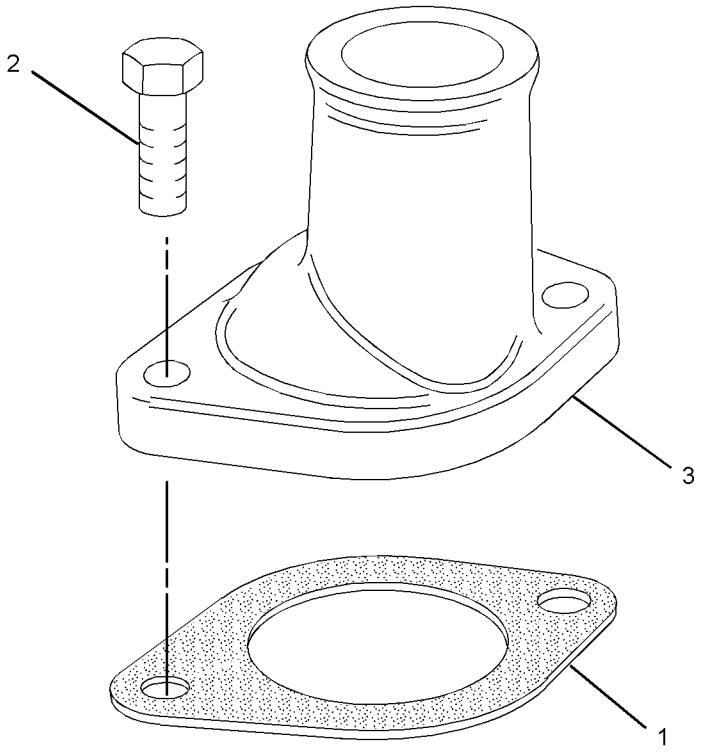

GRAPHIC #1 **<END>** g01419372

COOLING SYSTEM

317-7194 CONNECTOR GP-CAB HEATER LINES

SMCS-1380 **i03395704**

NOTE	REF NO	GRAPHIC REF	PART NUMBER	QTY	PART NAME 1 2 3 4 5 6 (PRODUCT LEVEL)	SEE PAGE
	1	1	**205-1133**	2	CONNECTOR	

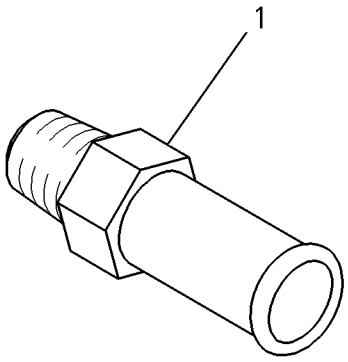

GRAPHIC #1 **<END>** g00785852

322-2427 CONNECTOR GP-CAB HEATER LINES

SMCS-1380 **i03398016**

NOTE	REF NO	GRAPHIC REF	PART NUMBER	QTY	PART NAME 1 2 3 4 5 6 (PRODUCT LEVEL)	SEE PAGE
	1	1	**205-1133**	1	CONNECTOR	

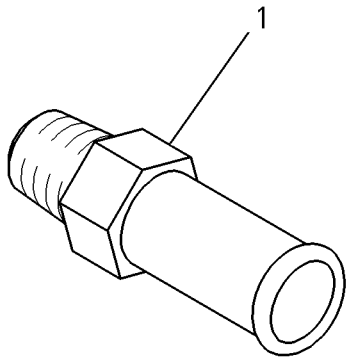

GRAPHIC #1 **<END>** g00785852

COOLING SYSTEM

322-2425 FAN GP-SUCTION

SMCS-1356 **i03395823**

NOTE	REF NO	GRAPHIC REF	PART NUMBER	QTY	PART NAME 1 2 3 4 5 6 (PRODUCT LEVEL)	SEE PAGE
	1	1	**153-7920**	1	GASKET	
	2	1	**095-1708**	1	SEAL-O-RING	
	3	1	**183-3551**	1	FAN-SUCTION	

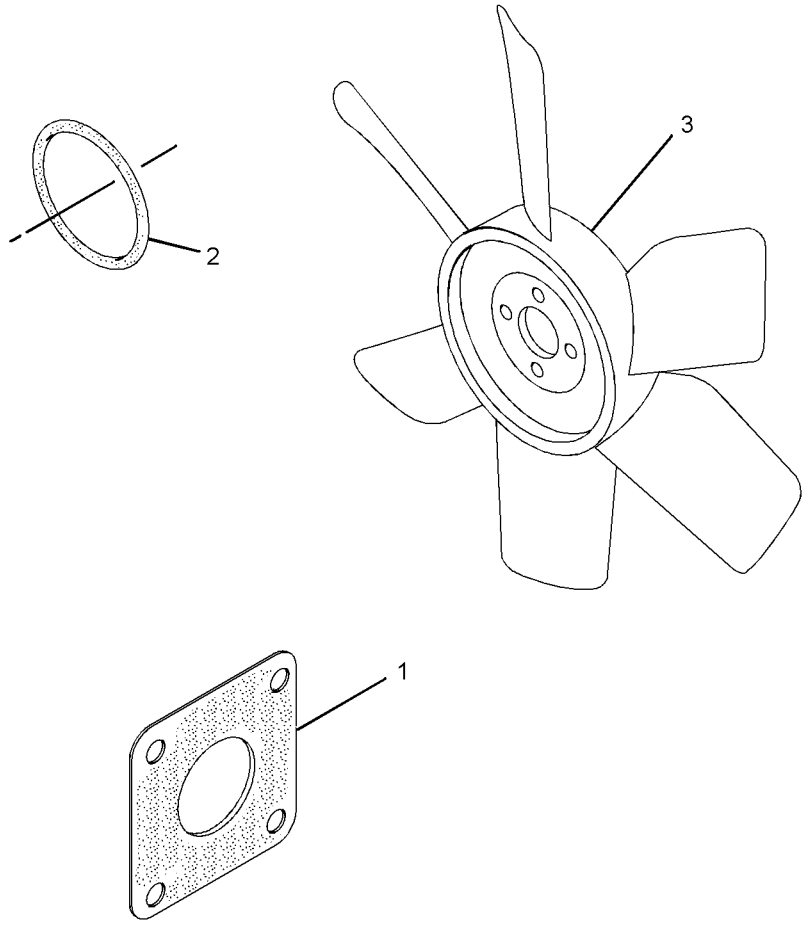

GRAPHIC #1 **<END>** g01627829

COOLING SYSTEM

331-2589 LINES GP-COOLANT

SMCS-1380 **i03398010**

NOTE	REF NO	GRAPHIC REF	PART NUMBER	QTY	PART NAME 1 2 3 4 5 6 (PRODUCT LEVEL)	SEE PAGE
	1	1	**153-6879**	1	STUD-HOLLOW	
	2	1	**160-4826**	4	CLAMP-HOSE	
	3	1	**238-9145**	1	HOSE (OIL COOLER)	
	4	1	**331-2590**	1	HOSE	

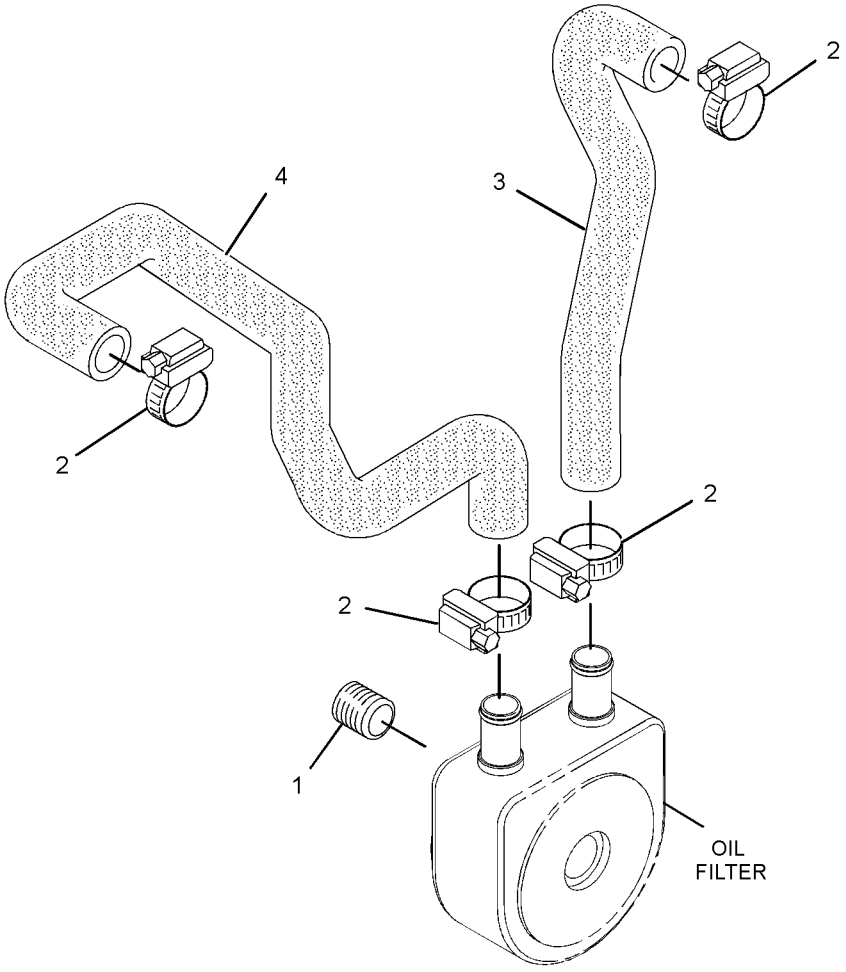

GRAPHIC #1 **<END>** g01627946

COOLING SYSTEM

308-2301 PUMP GP-WATER

SMCS-1361 **i03398013**

NOTE	REF NO	GRAPHIC REF	PART NUMBER	QTY	PART NAME 1 2 3 4 5 6 (PRODUCT LEVEL)	SEE PAGE
	1	1	**308-1907**	2	BOLT	
	2	1	**153-5960**	3	NUT	
	3	1	**153-5961**	4	BOLT	
	4	1	**154-1817**	1	PLUG	
	5	1	**154-1831**	1	PLUG	
	6	1	**308-1908**	1	GASKET-WATER PUMP	
	7	1	**5D-1026**	2	CLAMP-HOSE	
	8	1	**215-2617**	1	GASKET (HOUSING)	
	9	1	**238-9137**	1	CONNECTION	
	10	2	**238-9143**	1	CONNECTION	
	11	2	**245-1361**	1	COOLER AS-OIL (ENGINE)	
	11A	2	**245-1362**	1	CONNECTOR	
	11B	2	**245-1364**	1	SEAL	
	12	1	**249-5541**	1	REGULATOR-WATER TEMPERATURE	
	13	1	**286-7495**	1	HOUSING-THERMOSTAT	
	14	1	**286-7496**	1	HOSE-WATER	
	15	1	**286-7497**	1	PUMP-WATER	

308-2301 **PUMP GP-WATER** *(contd.)* **i03398013**

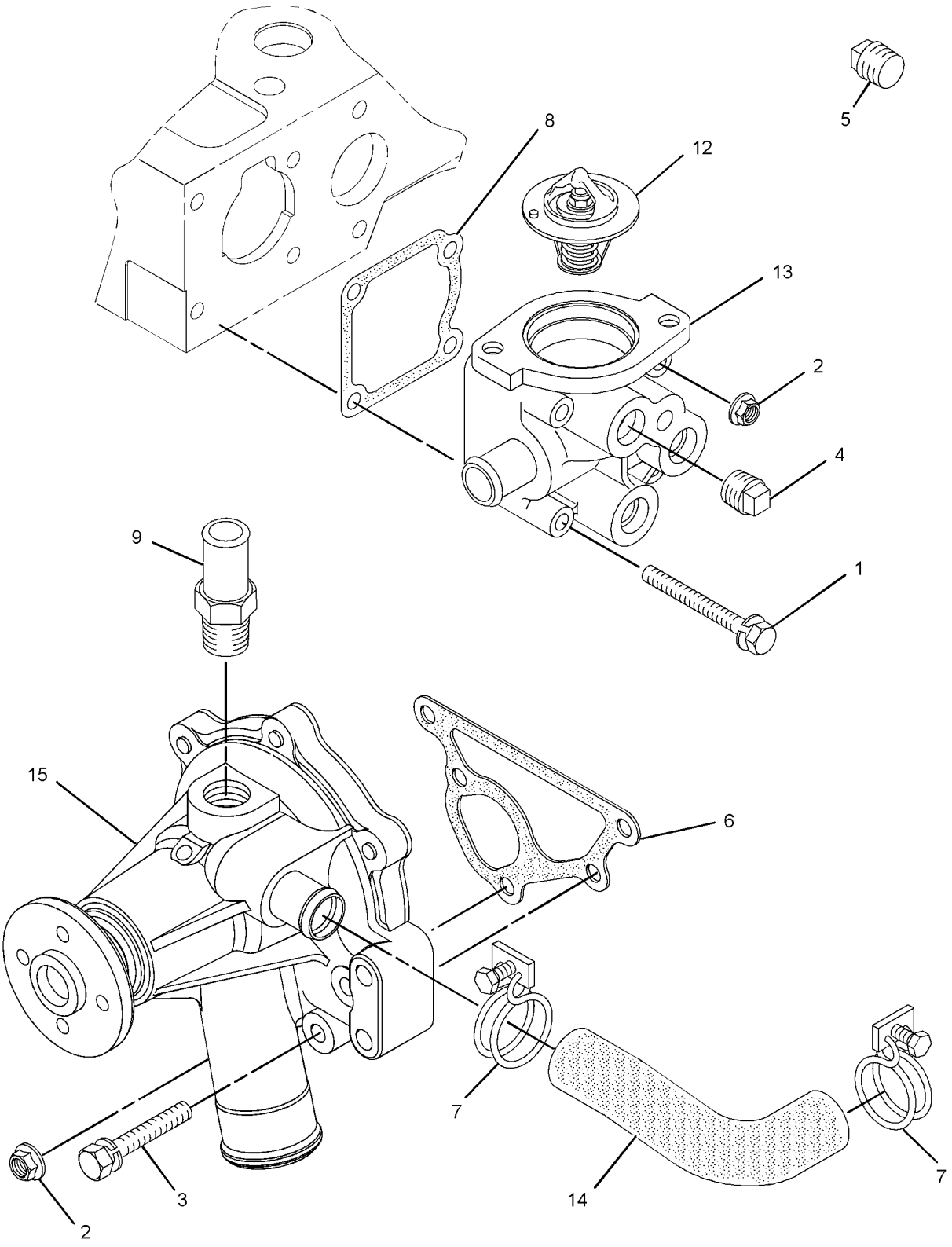

GRAPHIC #1 g01626853

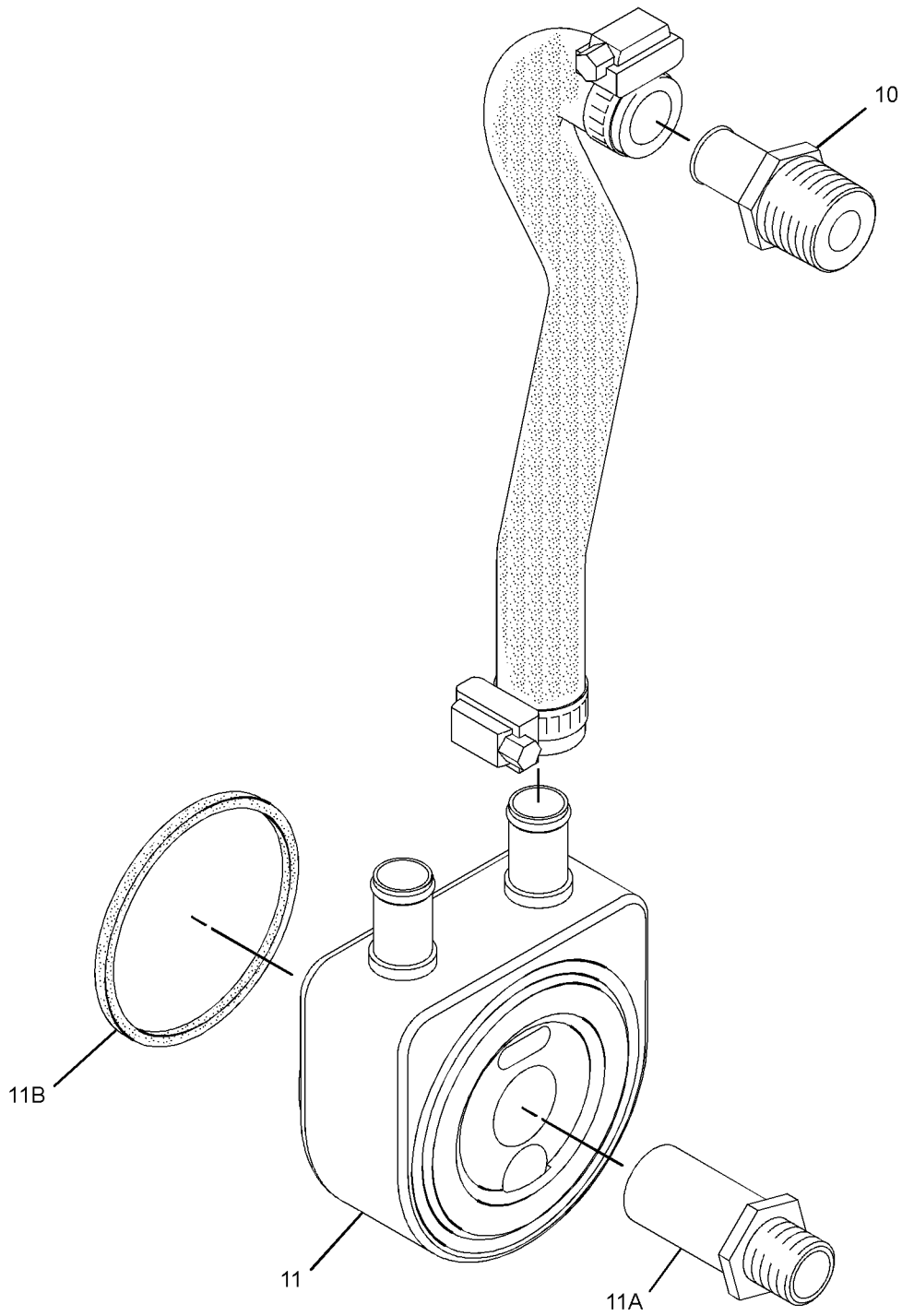

GRAPHIC #2 **<END>** g01626854

COOLING SYSTEM

309-6721 PUMP GP-WATER

SMCS-1361 **i03396130**

NOTE	REF NO	GRAPHIC REF	PART NUMBER	QTY	PART NAME 1 2 3 4 5 6 (PRODUCT LEVEL)	SEE PAGE
	1	1	**153-5960**	3	NUT	
	2	1	**153-5961**	4	BOLT	
	3	1	**154-1817**	1	PLUG	
	4	1	**154-1831**	2	PLUG	
	5	1	**215-2617**	1	GASKET (HOUSING)	
	6	1	**249-5541**	1	REGULATOR-WATER TEMPERATURE	
	7	1	**286-7495**	1	HOUSING-THERMOSTAT	
	8	1	**286-7496**	1	HOSE-WATER	
	9	1	**286-7497**	1	PUMP-WATER	
	10	1	**303-0307**	1	GASKET (WATER PUMP)	
	11	1	**308-1907**	2	BOLT	
	12	1	**5D-1026**	2	CLAMP-HOSE	

309-6721 **PUMP GP-WATER** *(contd.)* **i03396130**

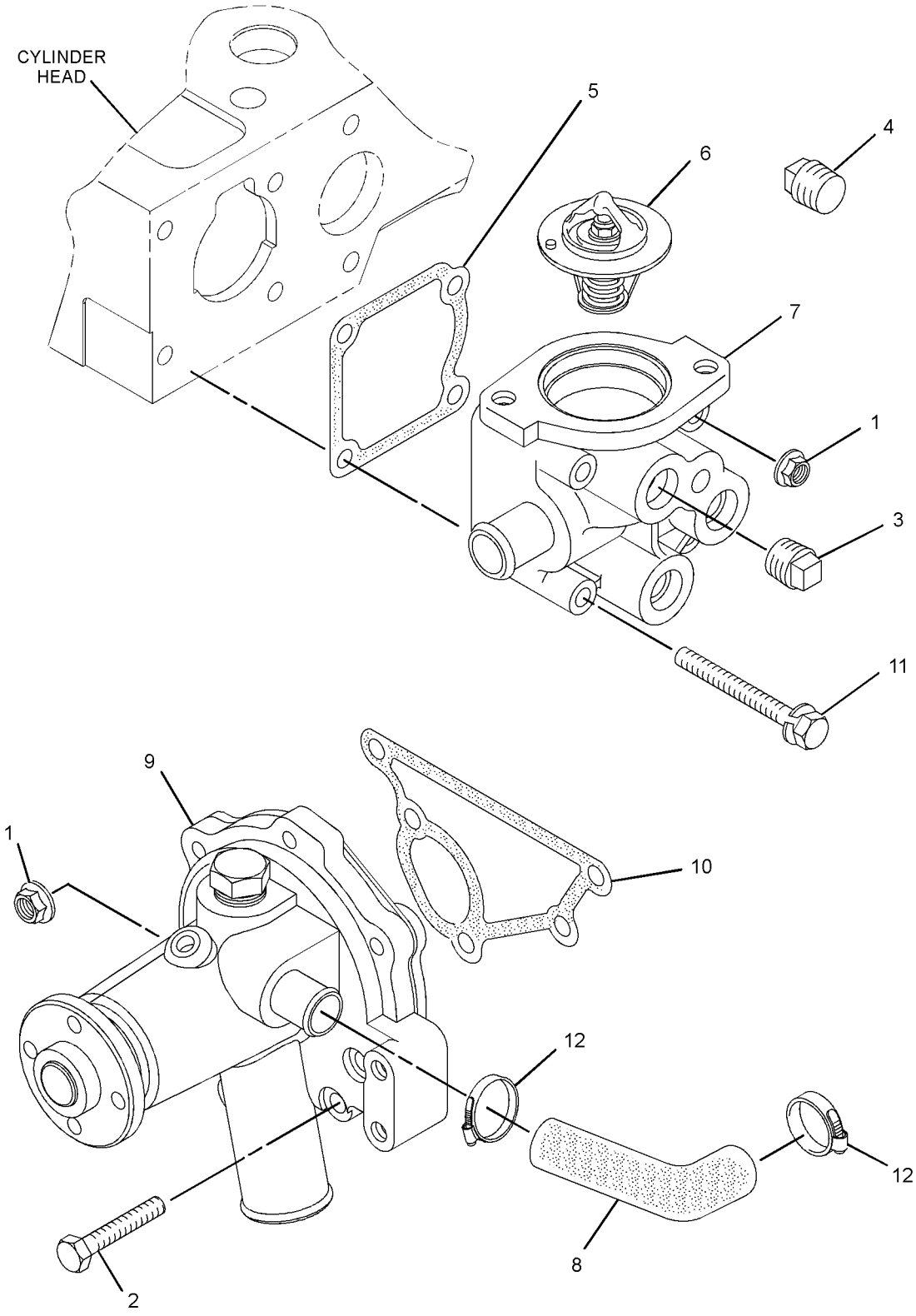

GRAPHIC #1 **<END>** g01699713

COOLING SYSTEM

331-3270 RADIATOR & FAN GP

SMCS-1353, 1356 **i03398163**

NOTE	REF NO	GRAPHIC REF	PART NUMBER	QTY	PART NAME 1 2 3 4 5 6 (PRODUCT LEVEL)	SEE PAGE
M	1	1,2	**6I-0217**	6	BOLT (M8X1.25X20-MM)	
	2	1	**6I-0917**	2	BOLT (M6X1X25-MM)	
M	3	2	**124-3815**	6	BOLT (M8X16X1.25-MM)	
	4	2	**153-5592**	2	NUT	
	5	2	**153-6861**	4	BOLT	
	6	2	**161-8260**	1	PLATE	
	7	2	**180-6118**	10	BOLT	
	8	1	**198-2664**	16	BOLT	
	9	2	**236-6610**	1	MOUNT	
	10	1	**238-0265**	1	HOSE-RADIATOR (LOWER)	
	11	1	**238-0266**	1	HOSE-RADIATOR (UPPER)	
	12	1	**238-0271**	1	RADIATOR AS	
	12A	1	**202-6616**	1	CAP-RADIATOR	
	12B	1	**295-5876**	1	SHROUD	
	13	1	**239-0743**	1	SUPPORT	
	14	1	**239-1137**	2	BOLT (M10X1.25X25-MM)	
	15	2	**241-5821**	1	FAN-SUCTION	
	16	1	**316-9550**	4	CLAMP-HOSE	
C	17	2	**334-7304**	1	GUARD-FAN	
C	18	2	**334-7306**	1	GUARD-ALTERNATOR	
C	19	2	**334-7436**	1	BRACKET	
	20	2	**334-7437**	1	BRACKET	
	21	1	**325-5944**	1	BRACKET (LH)	
	22	1	**325-5946**	1	BRACKET (RH)	
	23	1	**325-5948**	2	BRACKET (REAR RH)	
	24	2	**292-1988**	1	GUARD	
	25	2	**331-2553**	1	GUARD-FAN	

C-CHANGE FROM PREVIOUS TYPE
M-METRIC PART

331-3270 **RADIATOR & FAN GP** *(contd.)* **i03398163**

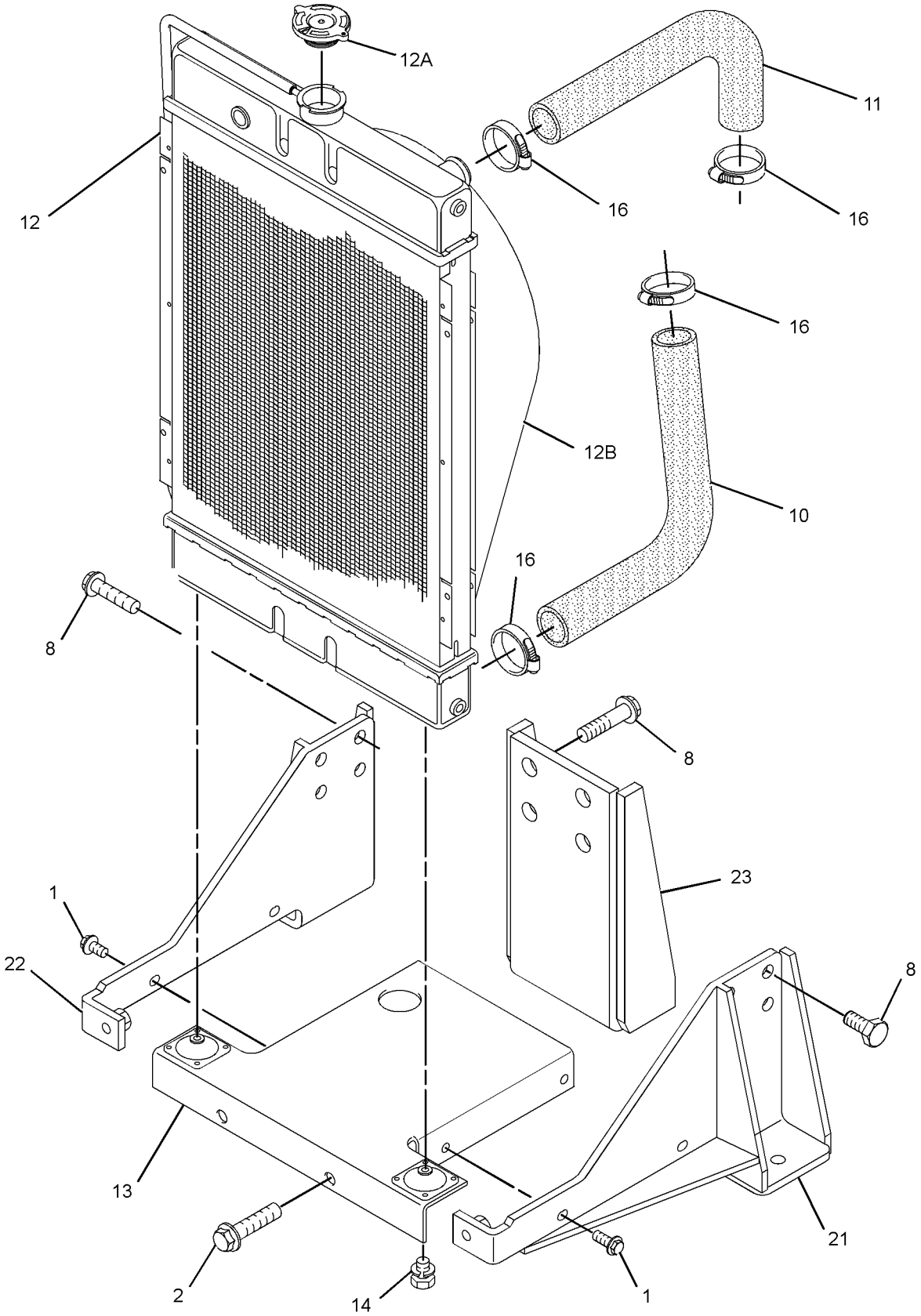

GRAPHIC #1 g01629513

331-3270 **RADIATOR & FAN GP** *(contd.)* **i03398163**

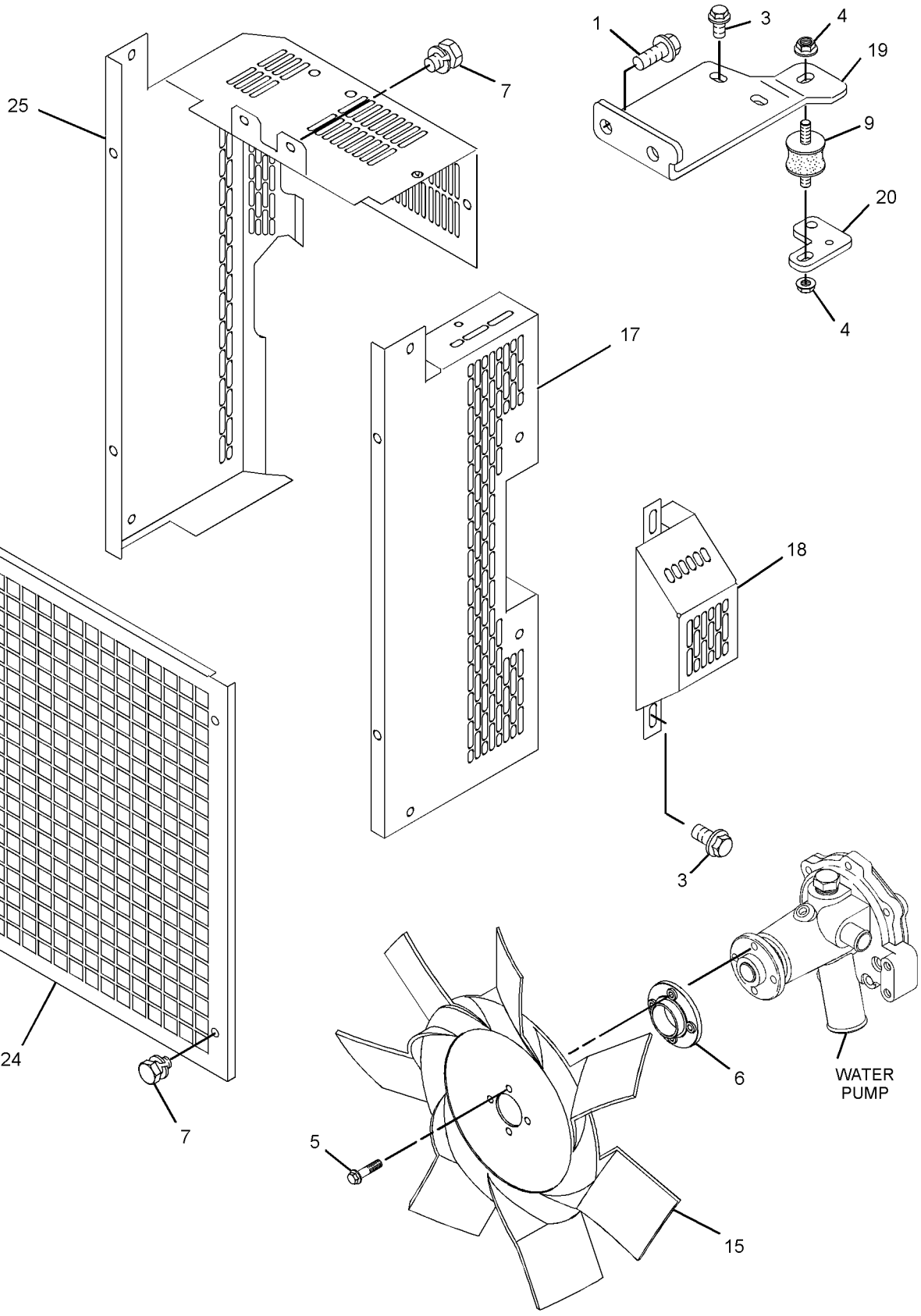

GRAPHIC #2 **<END>** g01629514

AIR INLET AND EXHAUST SYSTEM

317-0649 AIR CLEANER GP

SMCS-1051, 1054 **i03402381**

NOTE	REF NO	GRAPHIC REF	PART NUMBER	QTY	PART NAME 1 2 3 4 5 6 (PRODUCT LEVEL)	SEE PAGE
M	1	1	**6I-0217**	2	BOLT (M8X1.25X20-MM)	
M	2	1	**6I-0254**	2	BOLT (M8X1.25X30-MM)	
	3	1	**9M-7959**	1	CLAMP-HOSE	
	4	1	**103-6714**	1	CLIP	
	5	1	**153-5592**	2	NUT	
	6	1	**238-0245**	1	HOSE-AIR CLEANER	
	7	1	**247-1377**	1	BRACKET-FILTER	
	8	1	**247-1378**	1	FILTER ELEMENT AS-AIR	
	8A	1	**247-1380**	1	FILTER ELEMENT-AIR	

M-METRIC PART

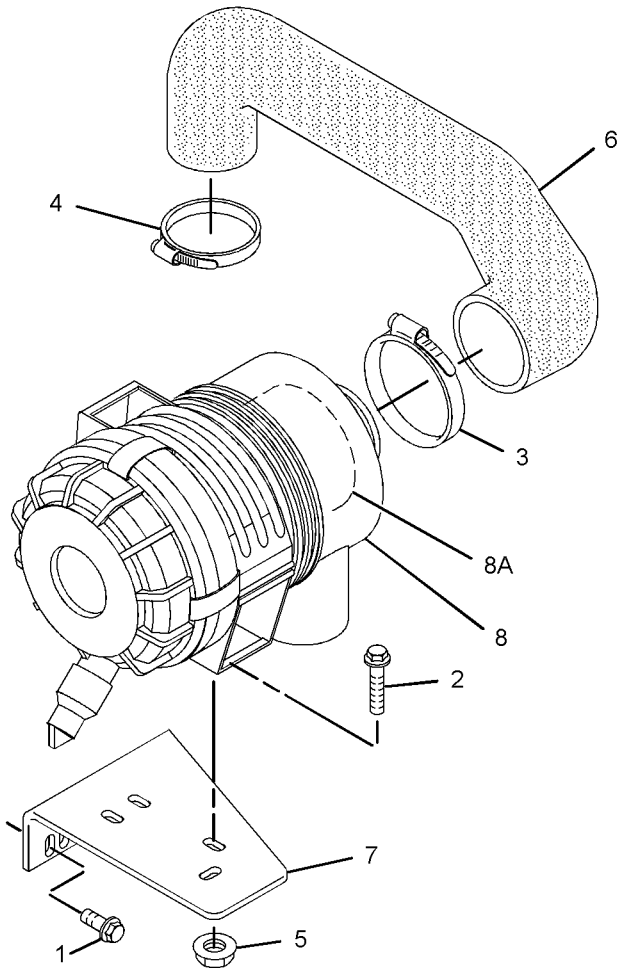

GRAPHIC #1 **<END>** g01415831

AIR INLET AND EXHAUST SYSTEM

309-6724 MANIFOLD GP-EXHAUST

SMCS-1059 **i03396028**

NOTE	REF NO	GRAPHIC REF	PART NUMBER	QTY	PART NAME 1 2 3 4 5 6 (PRODUCT LEVEL)	SEE PAGE
	1	1	**153-5592**	2	NUT	
	2	1	**154-2426**	1	MANIFOLD-EXHAUST	
	3	1	**154-2427**	1	GASKET-EXHAUST	
	4	1	**154-2428**	6	BOLT	

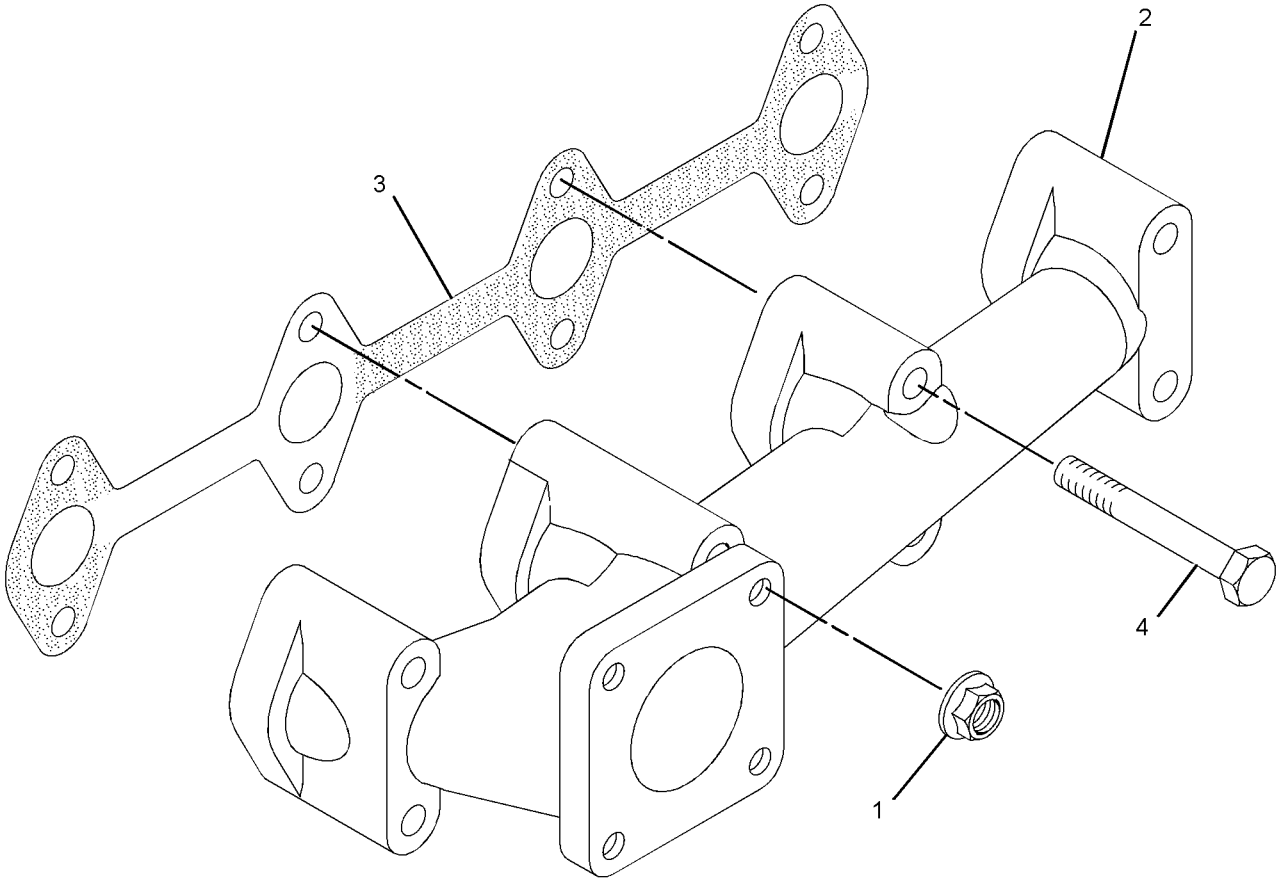

GRAPHIC #1 **<END>** g01419140

AIR INLET AND EXHAUST SYSTEM

315-5256 MANIFOLD GP-EXHAUST

SMCS-1059 **i03396029**

NOTE	REF NO	GRAPHIC REF	PART NUMBER	QTY	PART NAME 1 2 3 4 5 6 (PRODUCT LEVEL)	SEE PAGE
	1	1	**153-7920**	1	GASKET	

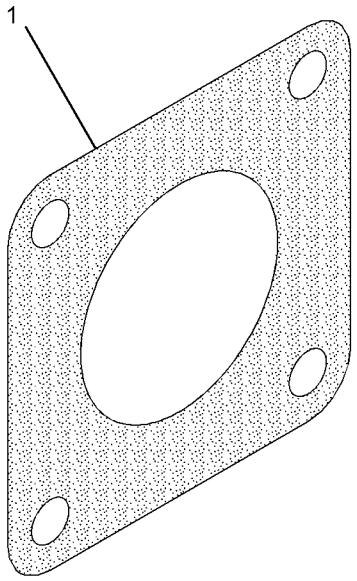

GRAPHIC #1 **<END>** g01413953

308-2310 PUMP GP-FILTER & FUEL TRANSFER

SMCS-1256, 1261 **i03398011**

NOTE	REF NO	GRAPHIC REF	PART NUMBER	QTY	PART NAME 1 2 3 4 5 6 (PRODUCT LEVEL)	SEE PAGE
	1	2	**6I-0846**	2	BOLT (M6X1X14-MM)	
	2	1	**7W-4694**	1	PLUG	
	3	1	**032-8100**	2	WASHER (0.531X0.718X0.064-IN THK)	
	4	1	**033-7849**	2	PLUG	
	5	1	**033-7854**	1	FILTER AS-FUEL	
	5A	1	**067-6987**	1	KIT-ELEMENT (FUEL FILTER)	
	5B	1	**069-2922**	2	GASKET (FUEL FILTER)	
	5C	1	**6F-4855**	1	SEAL-O-RING	
	6	1	**067-6269**	2	FERRULE	
	7	1	**067-6317**	1	WASHER (0.4X0.566X0.04-IN THK)	
	8	1	**302-4187**	1	TUBE	
	9	1	**138-7162**	2	BOLT	
	10	1	**154-1399**	2	WASHER	
	11	1	**154-2403**	2	WASHER	
	12	1	**155-7983**	1	LINE-FUEL	
	13	1	**155-7984**	2	WASHER	
	14	1	**155-8085**	2	NUT	
	15	1	**160-3550**	4	CLAMP-HOSE	
	16	1	**165-2141**	1	BOLT	
	17	2	**176-7719**	1	SEAL-O-RING	
	18	1	**218-2355**	1	LINE-FUEL	
	19	1	**311-1174**	1	BRACKET	
	20	1	**234-9556**	1	HOSE-FUEL	
	21	2	**295-4070**	1	PUMP AS-FUEL TRANSFER	
	22	1	**168-9001**	1	BOLT	

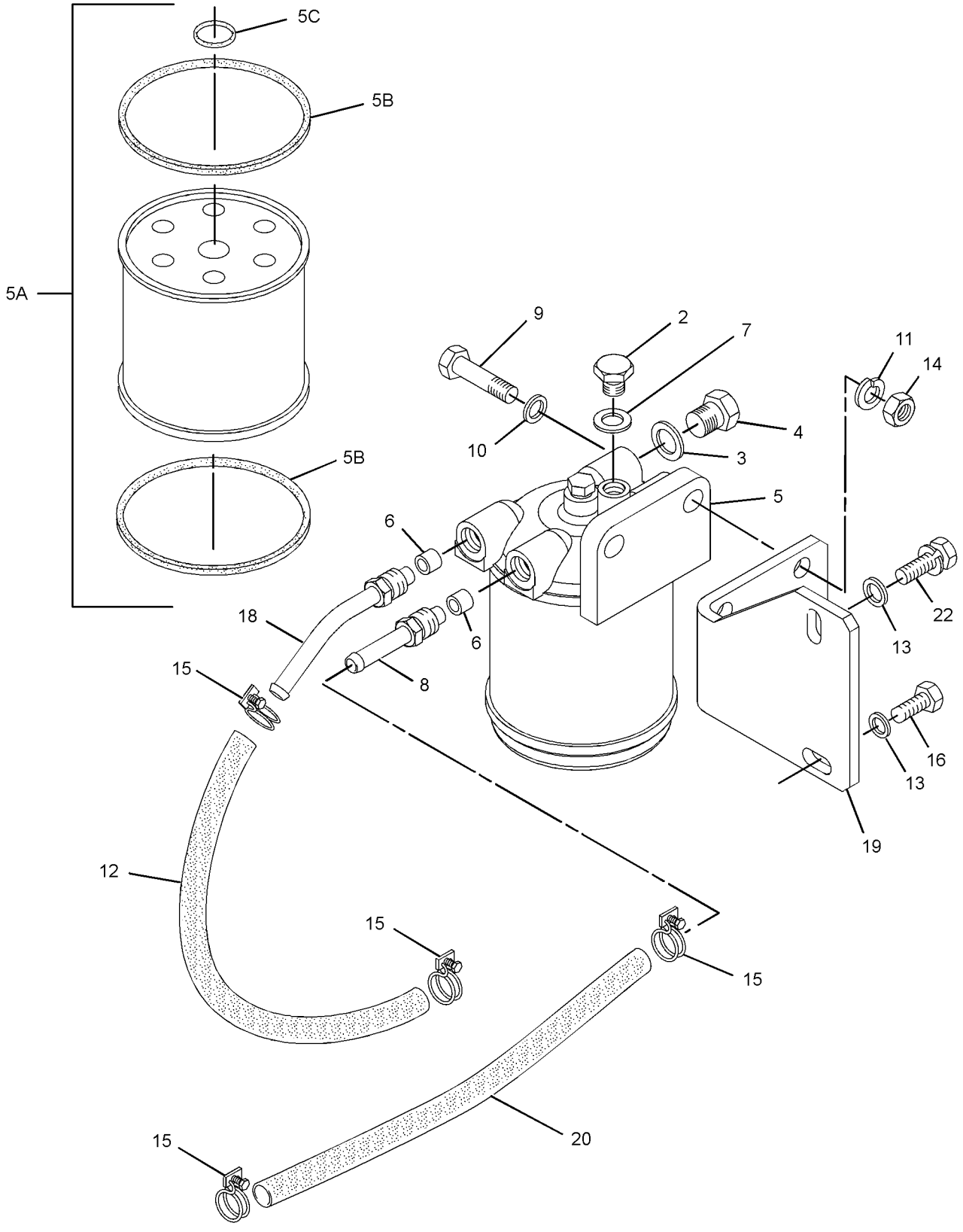

GRAPHIC #1

g01627960

308-2310 **PUMP GP-FILTER & FUEL TRANSFER** *(contd.)* **i03398011**

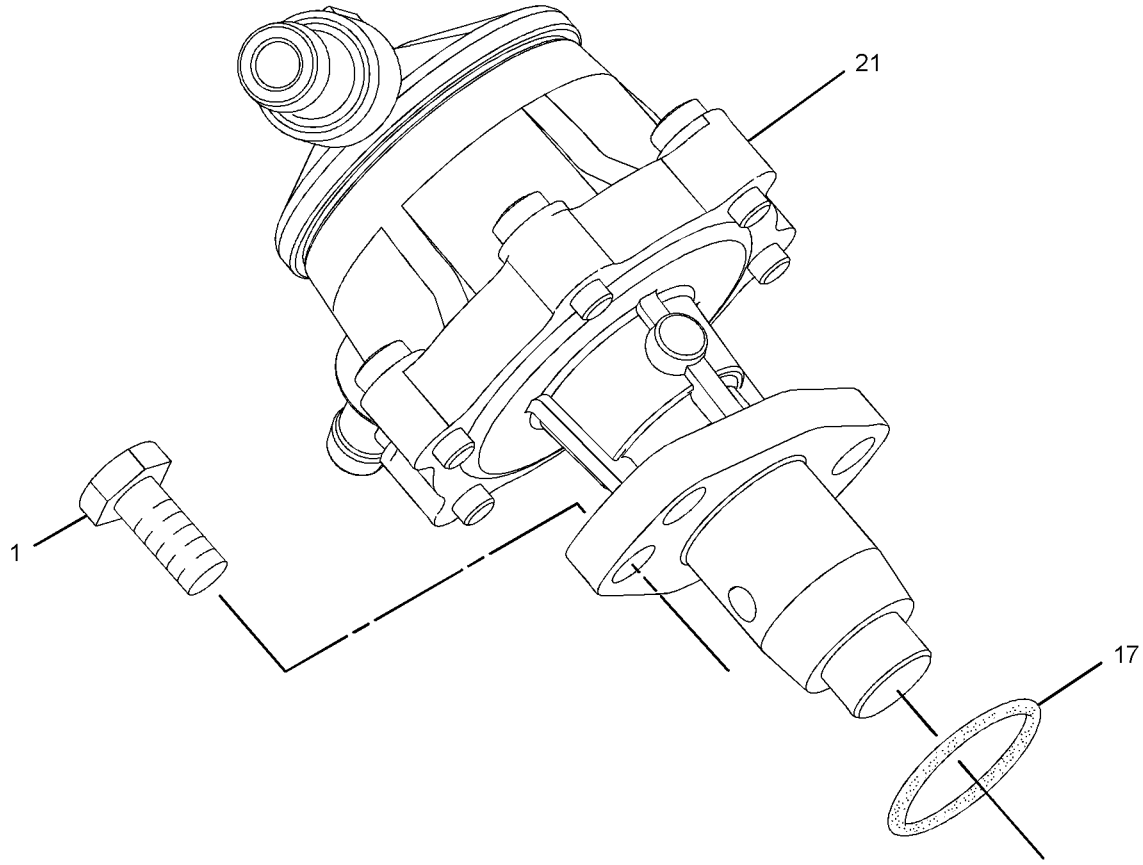

GRAPHIC #2 **<END>** g01398195

FUEL SYSTEM

309-6719 PUMP GP-FUEL INJECTION

SMCS-1251, 1290 **i03398012**

NOTE	REF NO	GRAPHIC REF	PART NUMBER	QTY	PART NAME 1 2 3 4 5 6 (PRODUCT LEVEL)	SEE PAGE
	1	1	**153-5592**	3	NUT	
	2	1	**153-5960**	3	NUT	
	3	1	**154-2713**	2	BOLT	
	4	1	**154-2715**	2	WASHER	
	5	1	**154-2716**	4	SEAL	
B	6	1	**154-3017**	1	SHIM (0.2-MM THK)	
B		1	**302-7822**	1	SHIM (0.25-MM THK)	
B		1	**160-3555**	1	SHIM (0.3-MM THK)	
B		1	**302-7823**	1	SHIM (0.35-MM THK)	
B		1	**160-3556**	1	SHIM (0.4-MM THK)	
B		1	**160-3557**	1	SHIM (0.5-MM THK)	
B		1	**160-3558**	1	SHIM (0.5-MM THK)	
	7	1	**163-5372**	1	WASHER (8X15.4X4-MM THK)	
	8	1	**183-3353**	3	BOLT	
	9	1	**190-3803**	1	BOLT	
	10	1	**217-2760**	1	TUBE AS (CYL NO. 1)	
	11	1	**217-2761**	1	TUBE AS (CYL NO. 2)	
	12	1	**217-2762**	1	TUBE AS (CYL NO. 3)	
	13	1	**217-2763**	1	TUBE AS (CYL NO. 4)	
M	14	1	**8T-4189**	1	BOLT (M8X1.25X20-MM)	
	15	1	**290-8014**	6	CLAMP	
	16	1	**309-6734**	1	PUMP GP-FUEL INJECTION	
	17	1	**252-1446**	4	INJECTOR AS-FUEL	
					(EACH INCLUDES)	
	17A	1	**202-1196**	1	WASHER-SPECIAL	
	17B	1	**205-4731**	1	NUT	
	18	1	**311-7561**	1	TUBE	

B-USE AS REQUIRED
M-METRIC PART

309-6719 **PUMP GP-FUEL INJECTION** *(contd.)* **i03398012**

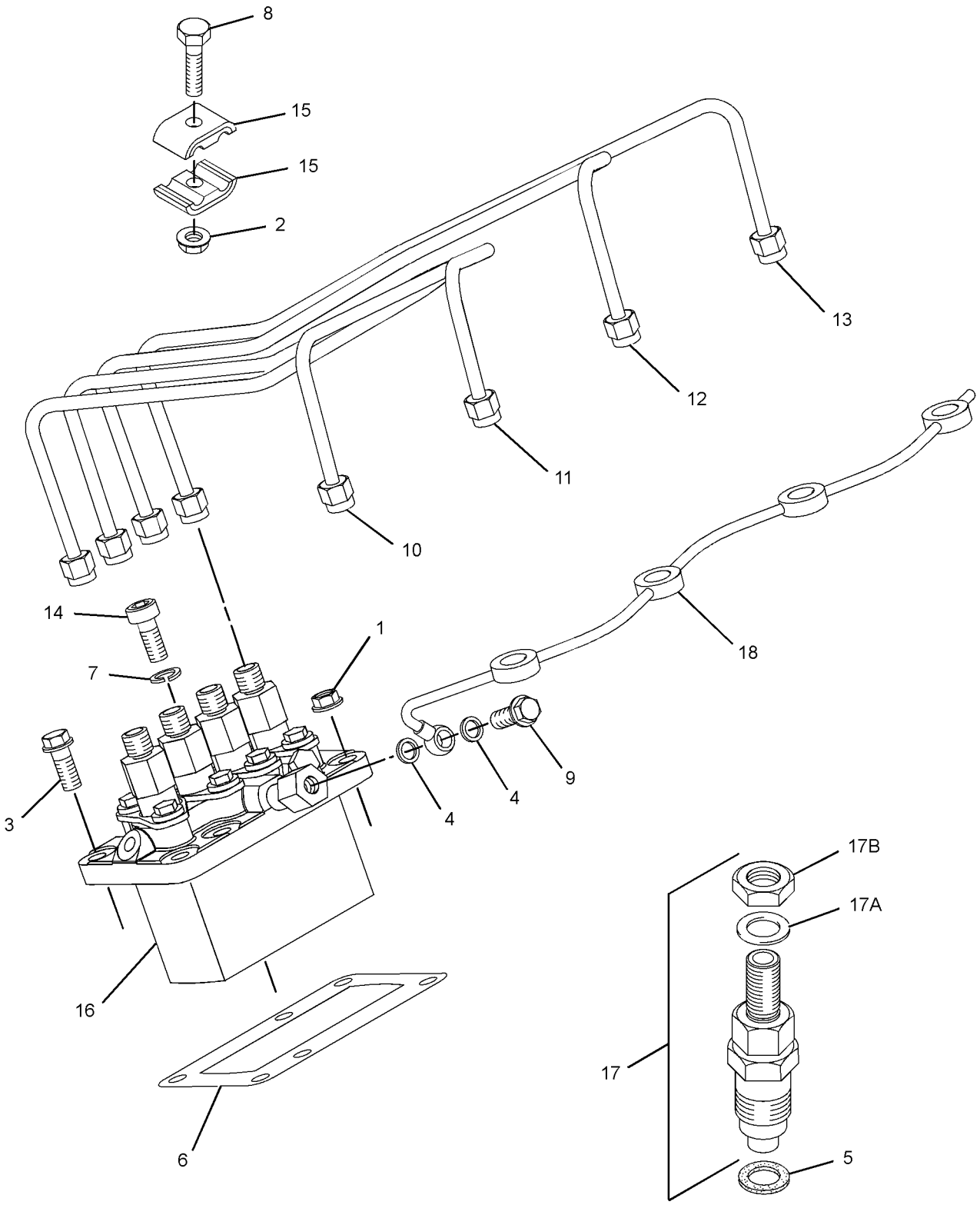

GRAPHIC #1 **<END>** g01414308

FUEL SYSTEM

322-3075 PUMP GP-FUEL INJECTION

SMCS-1251, 1290 **i03396128**

NOTE	REF NO	GRAPHIC REF	PART NUMBER	QTY	PART NAME 1 2 3 4 5 6 (PRODUCT LEVEL)	SEE PAGE
	1	1	**153-5592**	3	NUT	
	2	1	**153-5960**	3	NUT	
	3	1	**154-2713**	2	BOLT	
	4	1	**154-2715**	2	WASHER	
	5	1	**154-2716**	4	SEAL	
B	6	1	**154-3017**	1	SHIM (0.2-MM THK)	
B		1	**302-7822**	1	SHIM (0.25-MM THK) (0.25-MM THK)	
B		1	**160-3555**	1	SHIM (0.3-MM THK)	
B		1	**302-7823**	1	SHIM (0.35-MM THK) (0.35-MM THK)	
B		1	**160-3556**	1	SHIM (0.4-MM THK)	
B		1	**160-3557**	1	SHIM (0.5-MM THK)	
B		1	**160-3558**	1	SHIM (0.5-MM THK)	
	7	1	**163-5372**	1	WASHER (8X15.4X4-MM THK)	
	8	1	**183-3353**	3	BOLT	
	9	1	**190-3803**	1	BOLT	
	10	1	**217-2760**	1	TUBE AS (CYL NO. 1)	
	11	1	**217-2761**	1	TUBE AS (CYL NO. 2)	
	12	1	**217-2762**	1	TUBE AS (CYL NO. 3)	
	13	1	**217-2763**	1	TUBE AS (CYL NO. 4)	
M	14	1	**8T-4189**	1	BOLT (M8X1.25X20-MM)	
	15	1	**290-8014**	6	CLAMP	
	16	1	**309-6734**	1	PUMP GP-FUEL INJECTION	
	17	1	**252-1446**	4	INJECTOR AS-FUEL	
					(EACH INCLUDES)	
	17A	1	**202-1196**	1	WASHER-SPECIAL	
	17B	1	**205-4731**	1	NUT	
	18	1	**311-7561**	1	TUBE	

B-USE AS REQUIRED
M-METRIC PART

322-3075 **PUMP GP-FUEL INJECTION** *(contd.)* **i03396128**

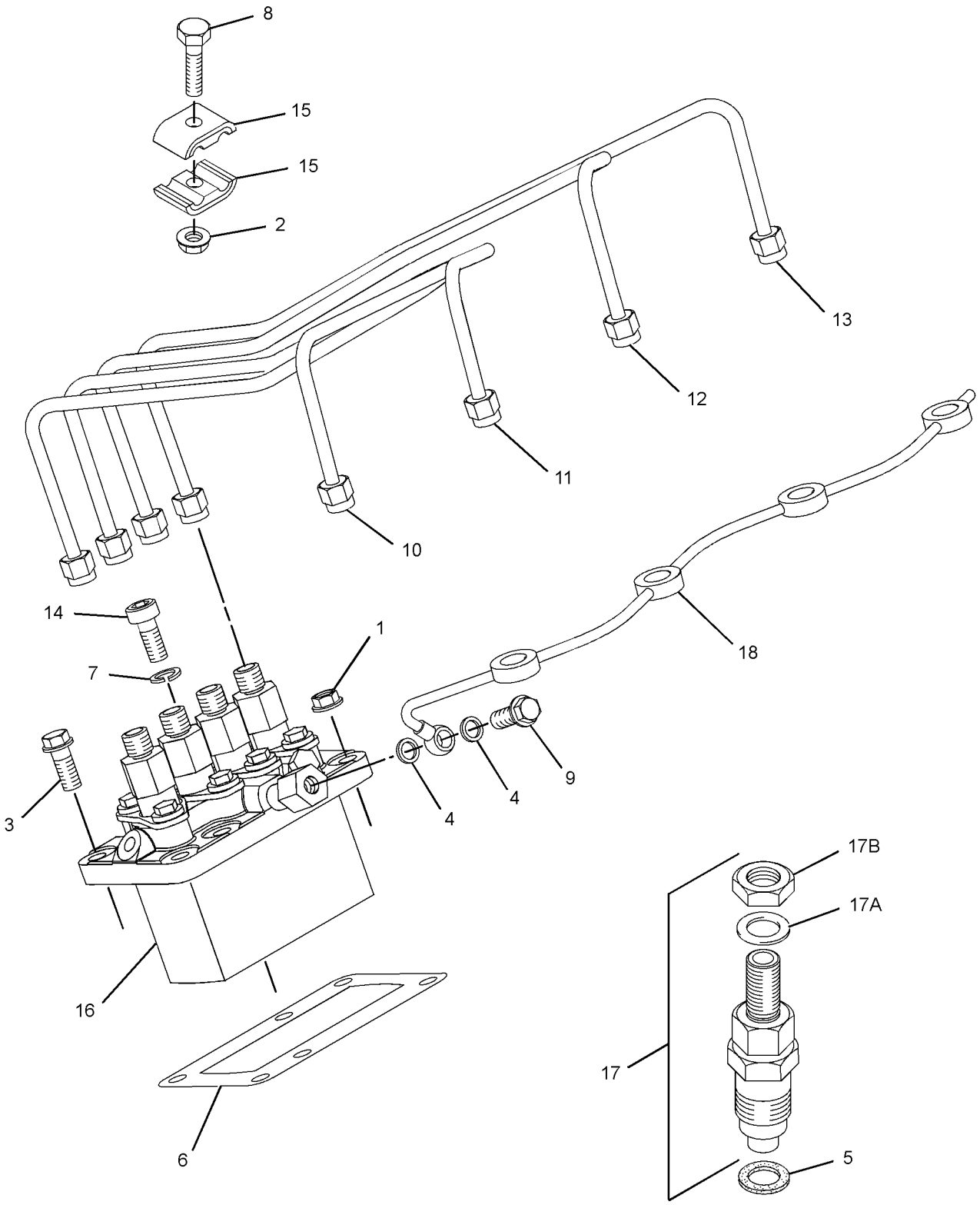

GRAPHIC #1 **<END>** g01414308

FUEL SYSTEM

308-2320 PUMP GP-FUEL PRIMING

SMCS-1258 **i03390521**

NOTE	REF NO	GRAPHIC REF	PART NUMBER	QTY	PART NAME 1 2 3 4 5 6 (PRODUCT LEVEL)	SEE PAGE
	1	1	**197-8540**	1	PUMP GP-FUEL PRIMING	

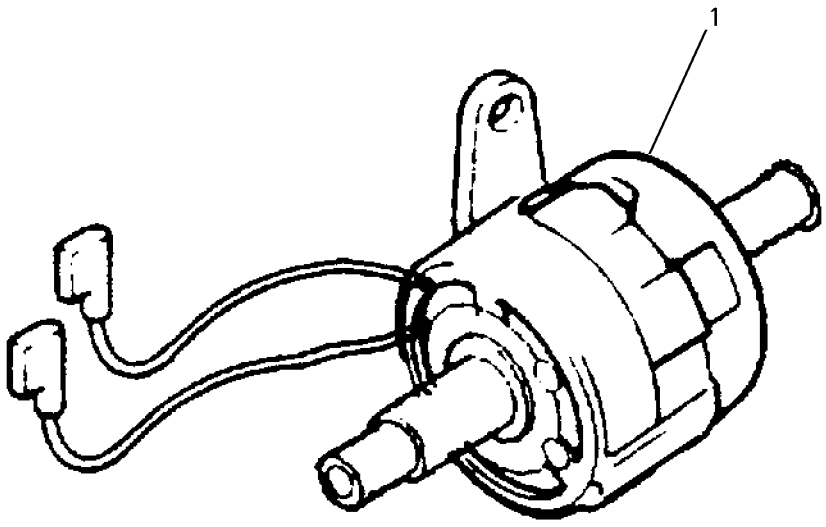

GRAPHIC #1 **<END>** g00758447

328-1882 PUMP GP-FUEL TRANSFER

SMCS-1256 **i03396129**

NOTE	REF NO	GRAPHIC REF	PART NUMBER	QTY	PART NAME 1 2 3 4 5 6 (PRODUCT LEVEL)	SEE PAGE
	1	1	**7W-4694**	1	PLUG	
	2	1	**033-7849**	2	PLUG	
	3	1	**033-7854**	1	FILTER AS-FUEL	
	4	1	**067-6269**	2	FERRULE	
	5	1	**067-6317**	1	WASHER (0.4X0.566X0.04-IN THK)	
	6	1	**067-6987**	1	KIT-ELEMENT (FUEL FILTER)	
	6A	1	**6F-4855**	2	SEAL-O-RING	
	6B	1	**069-2922**	2	GASKET (FUEL FILTER)	
	7	1	**138-7162**	2	BOLT	
	8	1	**153-5592**	1	NUT	
	9	1	**154-1399**	2	WASHER	
	10	1	**154-2403**	2	WASHER	
	11	1	**155-7984**	3	WASHER	
	12	1	**155-8085**	2	NUT	
	13	1	**160-3550**	2	CLAMP-HOSE	
	14	1	**165-2141**	2	BOLT	
	15	1	**168-9001**	1	BOLT	
	16	1	**183-4320**	1	PUMP AS-FUEL TRANSFER	
	17	1	**183-4321**	1	BRACKET	
	18	1	**223-8182**	1	BRACKET	
	19	1	**234-9556**	1	HOSE-FUEL	
	20	1	**243-6411**	1	FILTER AS-FUEL	
	21	1	**302-4187**	2	TUBE	
	22	1	**311-9048**	1	WASHER	
	23	1	**183-4036**	1	CONNECTOR	

328-1882 **PUMP GP-FUEL TRANSFER** *(contd.)* **i03396129**

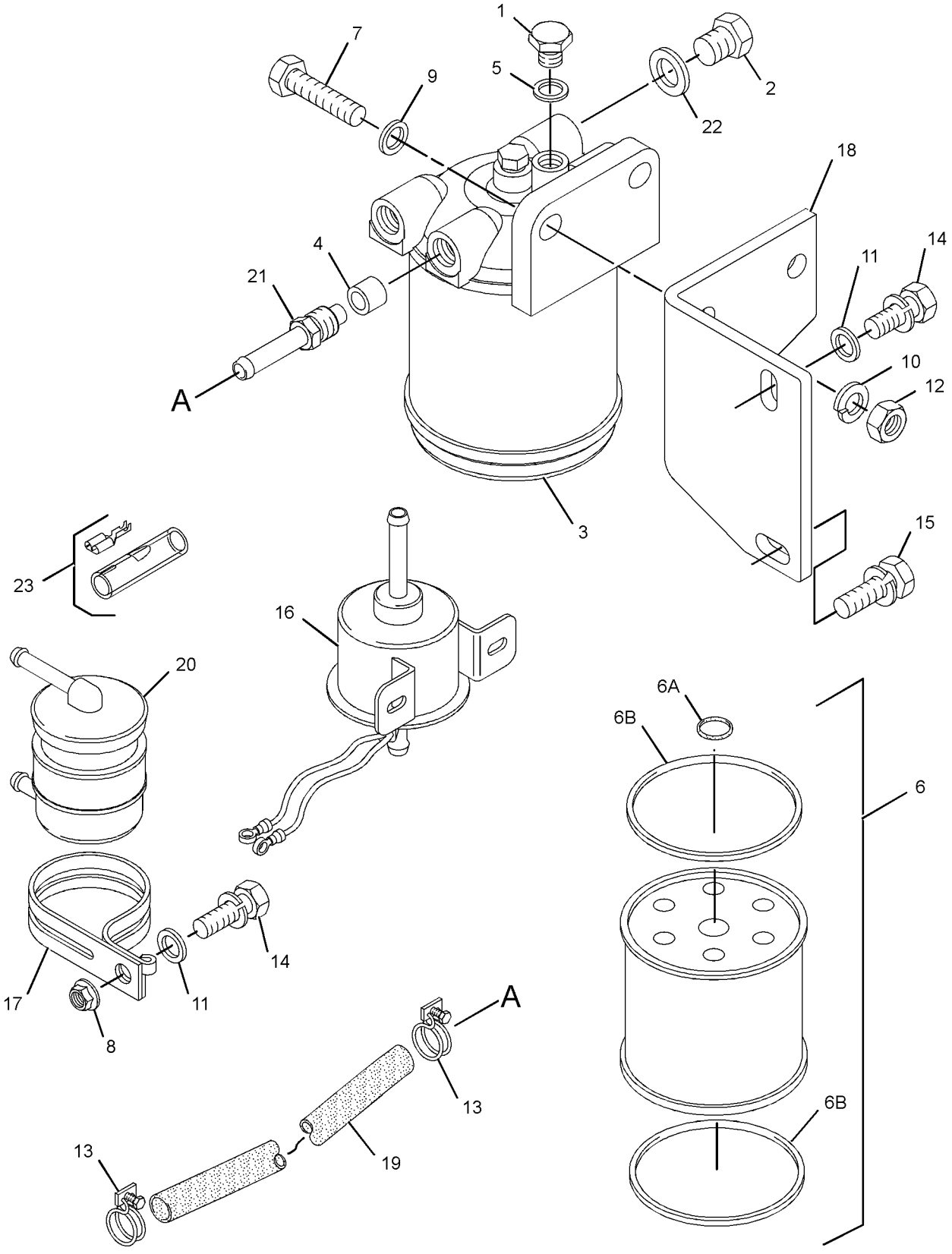

GRAPHIC #1 **<END>** g01661074

308-2305 ALTERNATOR GP-CHARGING

SMCS-1405 **i03395702**

NOTE	REF NO	GRAPHIC REF	PART NUMBER	QTY	PART NAME 1 2 3 4 5 6 (PRODUCT LEVEL)	SEE PAGE
	1	1	**100-8451**	1	BOLT (M8X1.25X130-MM)	
	2	1	**153-5592**	1	NUT	
	3	1	**155-7984**	1	WASHER	
	4	1	**165-2141**	3	BOLT	
	5	1	**168-8999**	1	LEVER-ADJUSTING	
	6	1	**168-9001**	2	BOLT	
	7	1	**168-9002**	1	WASHER	
	8	1	**246-4267**	1	BRACKET	
	9	1	**305-3660**	1	ALTERNATOR GP-CHARGING	

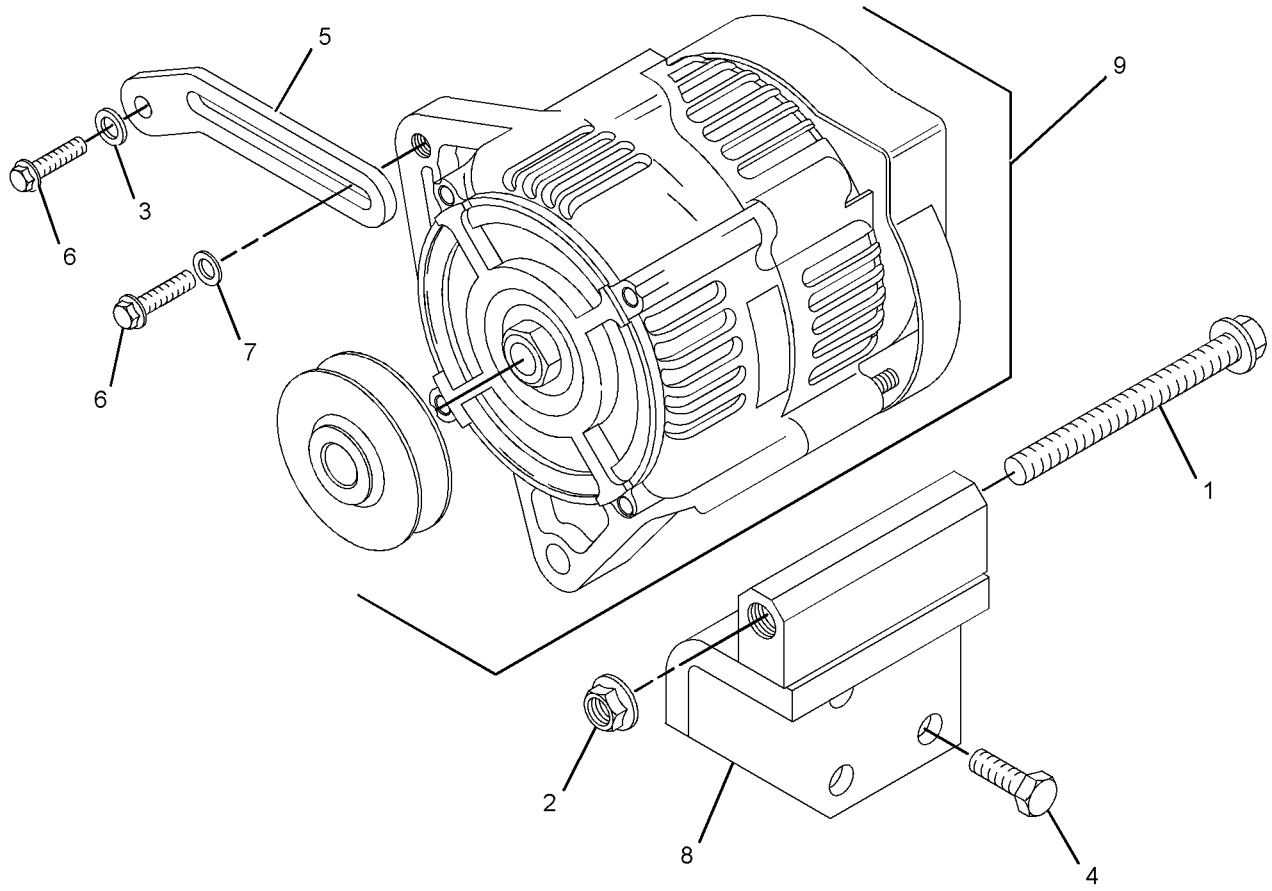

GRAPHIC #1 **<END>** g01397418

308-2319 CONNECTION GP-ELECTRICAL

SMCS-1408 **i03384405**

NOTE	REF NO	GRAPHIC REF	PART NUMBER	QTY	PART NAME 1 2 3 4 5 6 (PRODUCT LEVEL)	SEE PAGE
	1	1	**254-5541**	1	CONNECTION AS	
	2	1	**197-8555**	1	CONNECTION	

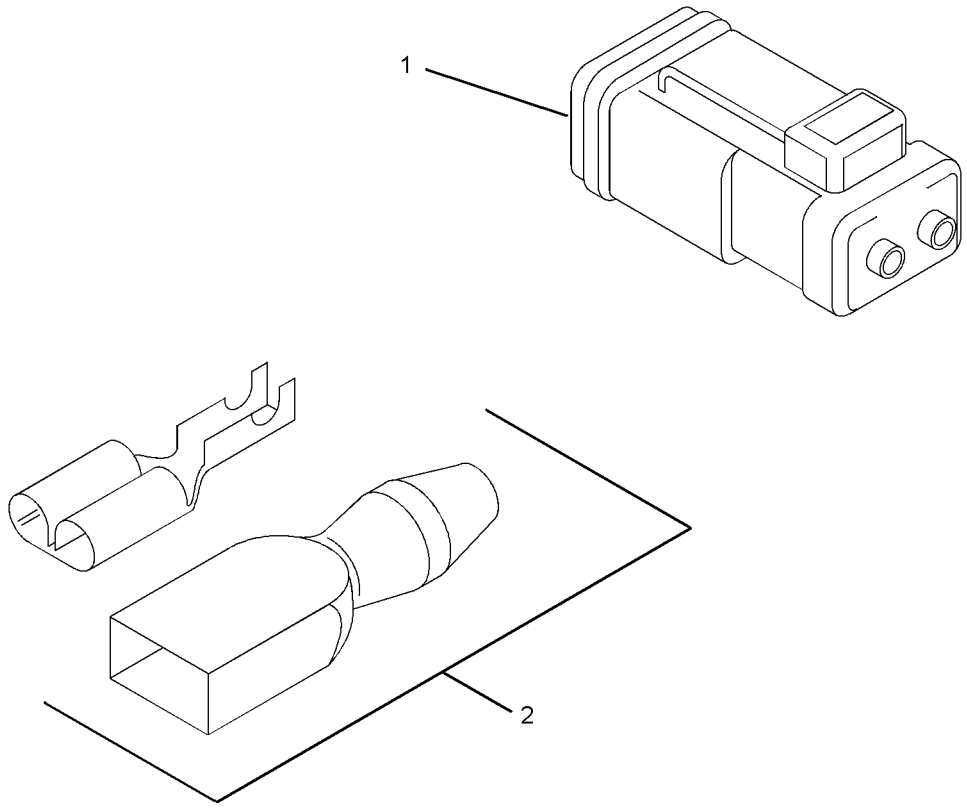

GRAPHIC #1 **<END>** g01389483

ELECTRICAL AND STARTING SYSTEM

321-6741 CONNECTION GP-ELECTRICAL

SMCS-1408 **i03395703**

NOTE	REF NO	GRAPHIC REF	PART NUMBER	QTY	PART NAME 1 2 3 4 5 6 (PRODUCT LEVEL)	SEE PAGE
	1	1	**254-5541**	1	CONNECTION AS	

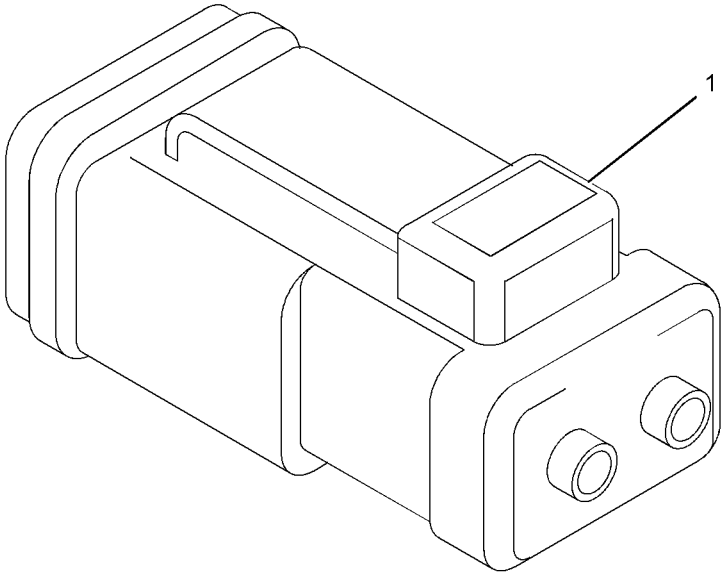

GRAPHIC #1 **<END>** g01513229

ELECTRICAL AND STARTING SYSTEM

308-2311 GLOW PLUG GP

SMCS-1412 **i03396024**

NOTE	REF NO	GRAPHIC REF	PART NUMBER	QTY	PART NAME 1 2 3 4 5 6 (PRODUCT LEVEL)	SEE PAGE
	1	1	**155-8076**	2	NUT	
	2	1	**155-8077**	2	WASHER	
	3	1	**172-4585**	4	GLOW PLUG	
	4	1	**154-1935**	1	SUPPORT-PLUG	

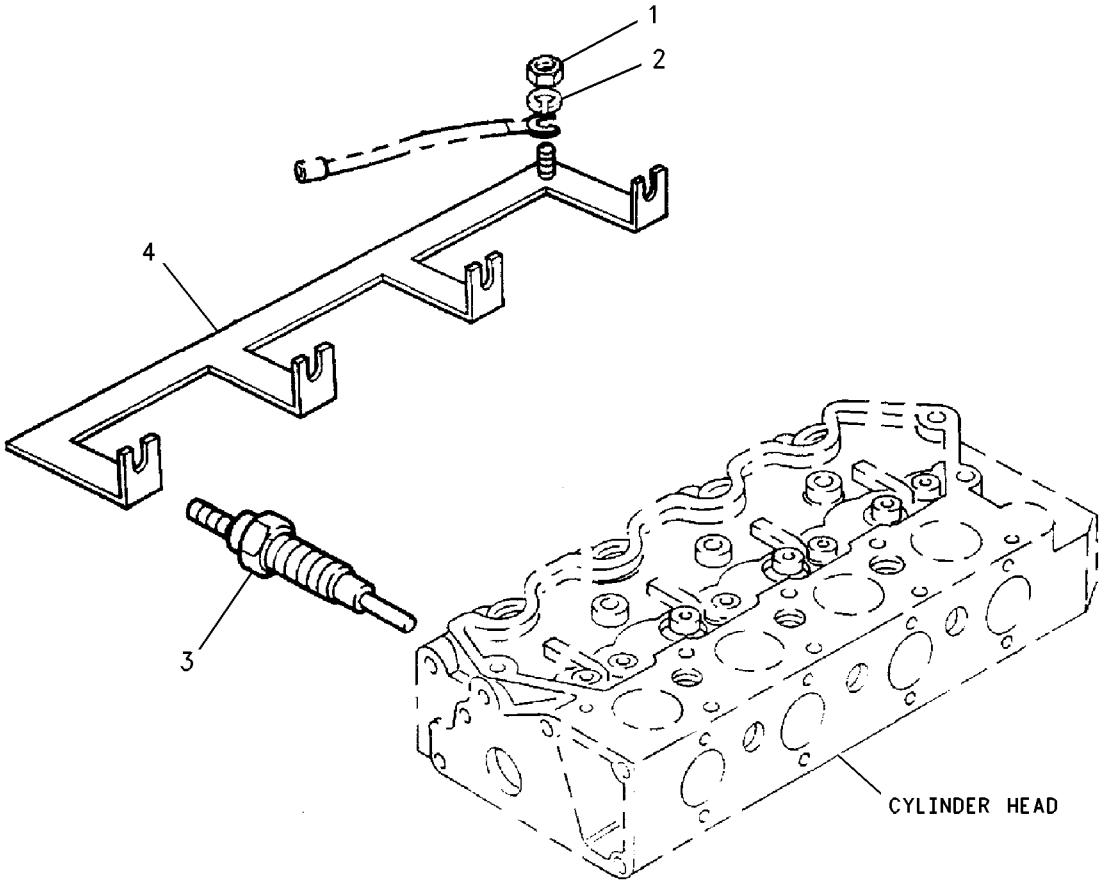

GRAPHIC #1 **<END>** g00708690

308-2313 SOLENOID GP-SHUTOFF

SMCS-1259 **i03395705**

NOTE	REF NO	GRAPHIC REF	PART NUMBER	QTY	PART NAME 1 2 3 4 5 6 (PRODUCT LEVEL)	SEE PAGE
	1	1	**153-6412**	1	WASHER	
	2	1	**324-4598**	1	SOLENOID (FUEL SHUTOFF)	
	3	1	**308-1914**	1	LEVER-CONTROL	

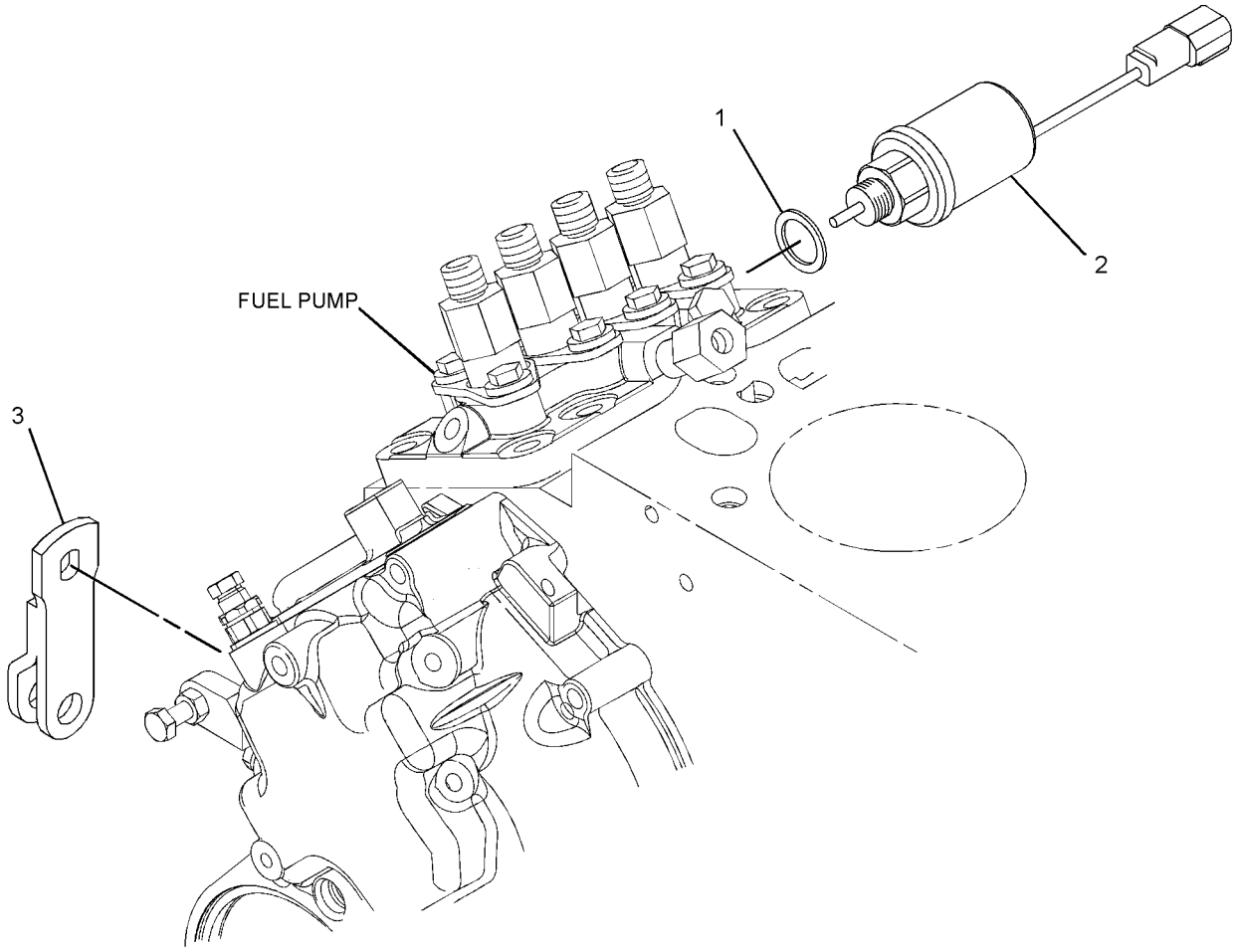

GRAPHIC #1 **<END>** g01420648

ELECTRICAL AND STARTING SYSTEM

308-2293 STARTING MOTOR GP-ELECTRIC

SMCS-1453 **i03395528**

NOTE	REF NO	GRAPHIC REF	PART NUMBER	QTY	PART NAME 1 2 3 4 5 6 (PRODUCT LEVEL)	SEE PAGE
Y	1	1	**333-5930**	1	STARTING MOTOR GP-ELECTRIC	89

Y-SEPARATE ILLUSTRATION

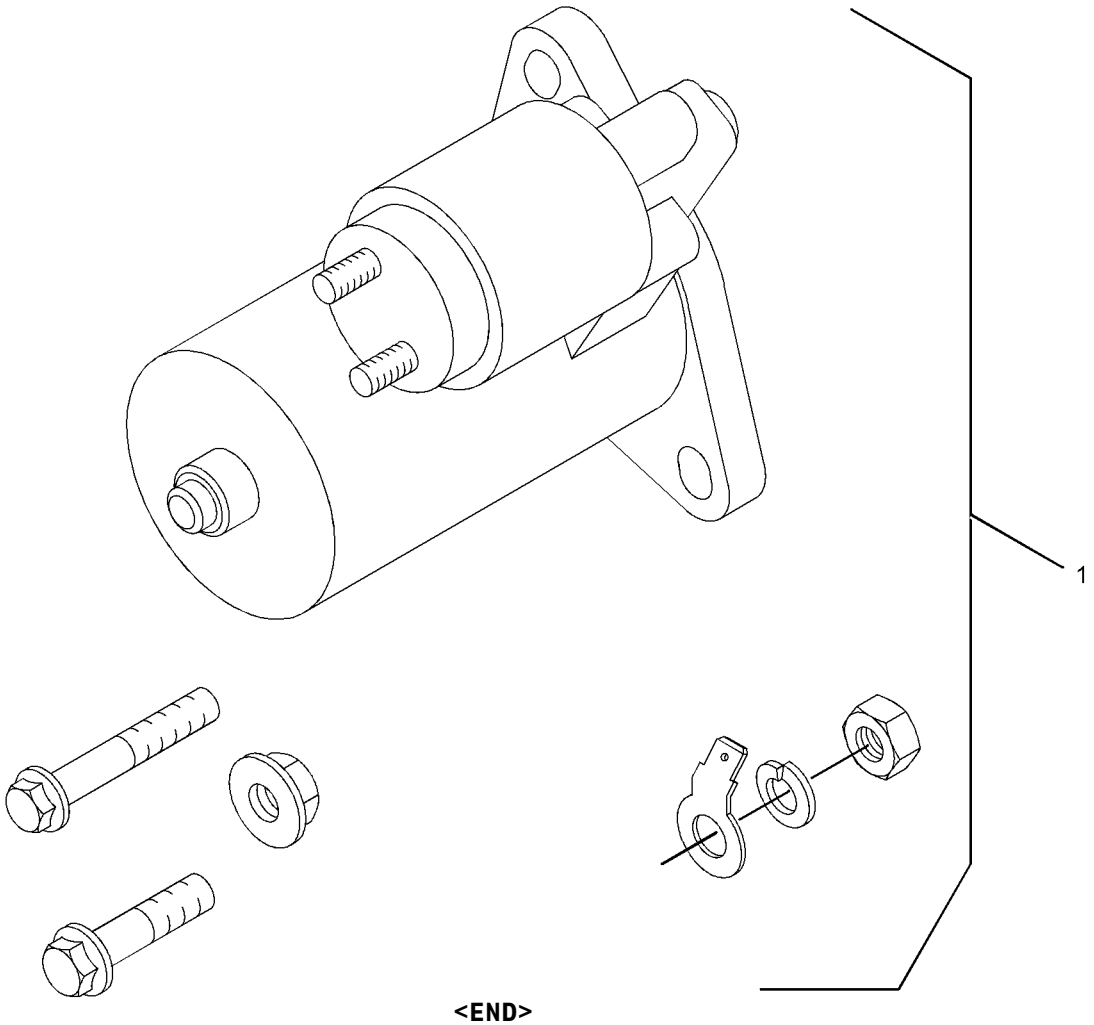

GRAPHIC #1 **<END>** g01762613

333-5930 STARTING MOTOR GP-ELECTRIC

PART OF 308-2293 STARTING MOTOR GP-ELECTRIC

SMCS-1453 **i03397703**

NOTE	REF NO	GRAPHIC REF	PART NUMBER	QTY	PART NAME 1 2 3 4 5 6 (PRODUCT LEVEL)	SEE PAGE
M	1	1	**6I-0593**	2	BOLT (M10X1.5X30-MM)	
	2	1	**6I-0594**	2	NUT (M10X1.15-THD)	
M	3	1	**140-8783**	2	BOLT (M10X45-THD)	
	4	1	**333-7903**	1	KIT-TERMINAL	

M-METRIC PART

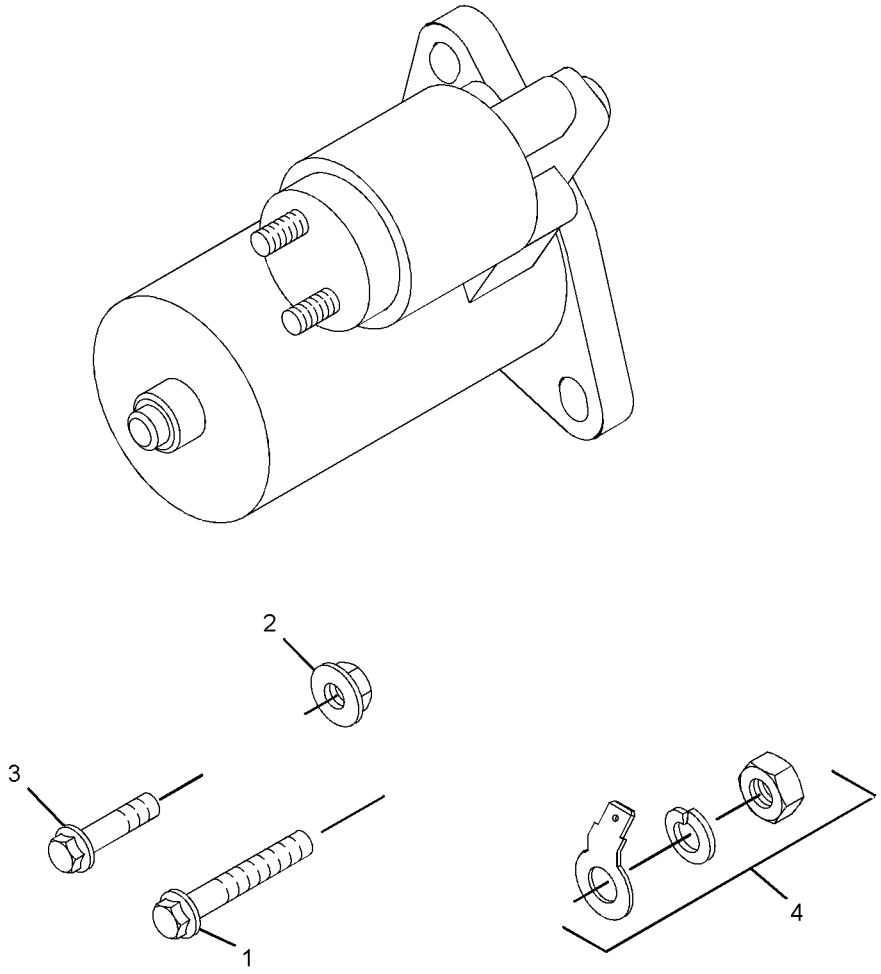

GRAPHIC #1 **<END>** g01755193

308-2312 SWITCH GP-PRESSURE–ENGINE OIL

SMCS-7400, 7421 **i03396131**

NOTE	REF NO	GRAPHIC REF	PART NUMBER	QTY	PART NAME 1 2 3 4 5 6 (PRODUCT LEVEL)	SEE PAGE
	1	1	**153-5936**	2	WASHER	
	2	1	**153-6881**	1	BOLT	
	3	1	**231-2998**	1	SWITCH-PRESSURE (ENGINE OIL)	

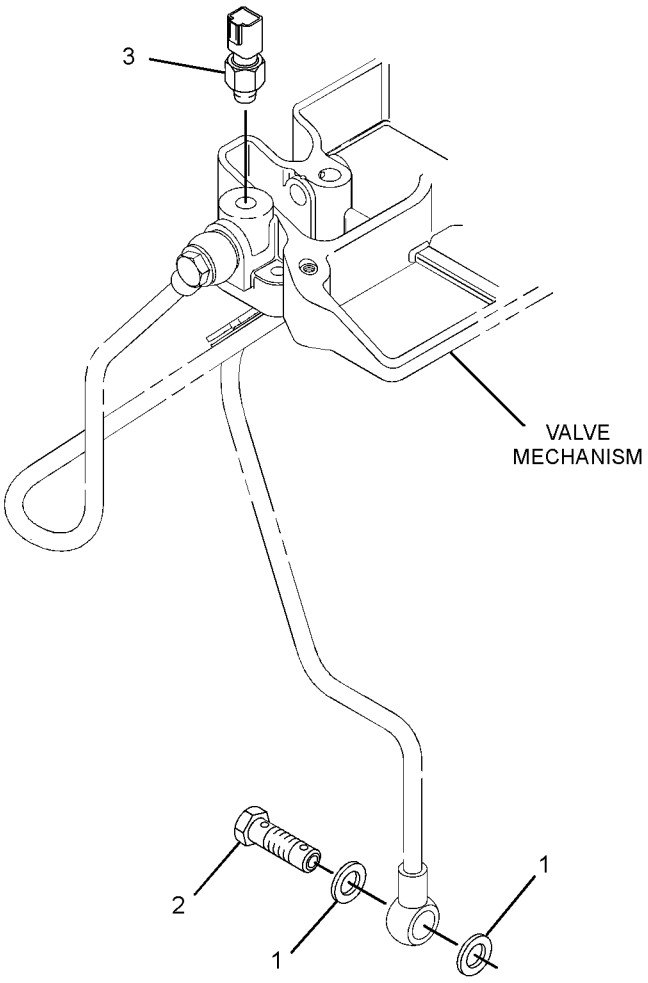

GRAPHIC #1 **<END>** g01416331

315-7819 SWITCH GP-PRESSURE–ENGINE OIL

SMCS-7400, 7421 **i03398015**

NOTE	REF NO	GRAPHIC REF	PART NUMBER	QTY	PART NAME 1 2 3 4 5 6 (PRODUCT LEVEL)	SEE PAGE
	1	1	**153-5936**	2	WASHER	
	2	1	**183-1165**	1	PLUG	
	3	1	**291-1265**	1	SWITCH-PRESSURE (ENGINE OIL)	
	4	1	**308-1222**	1	ADAPTER	

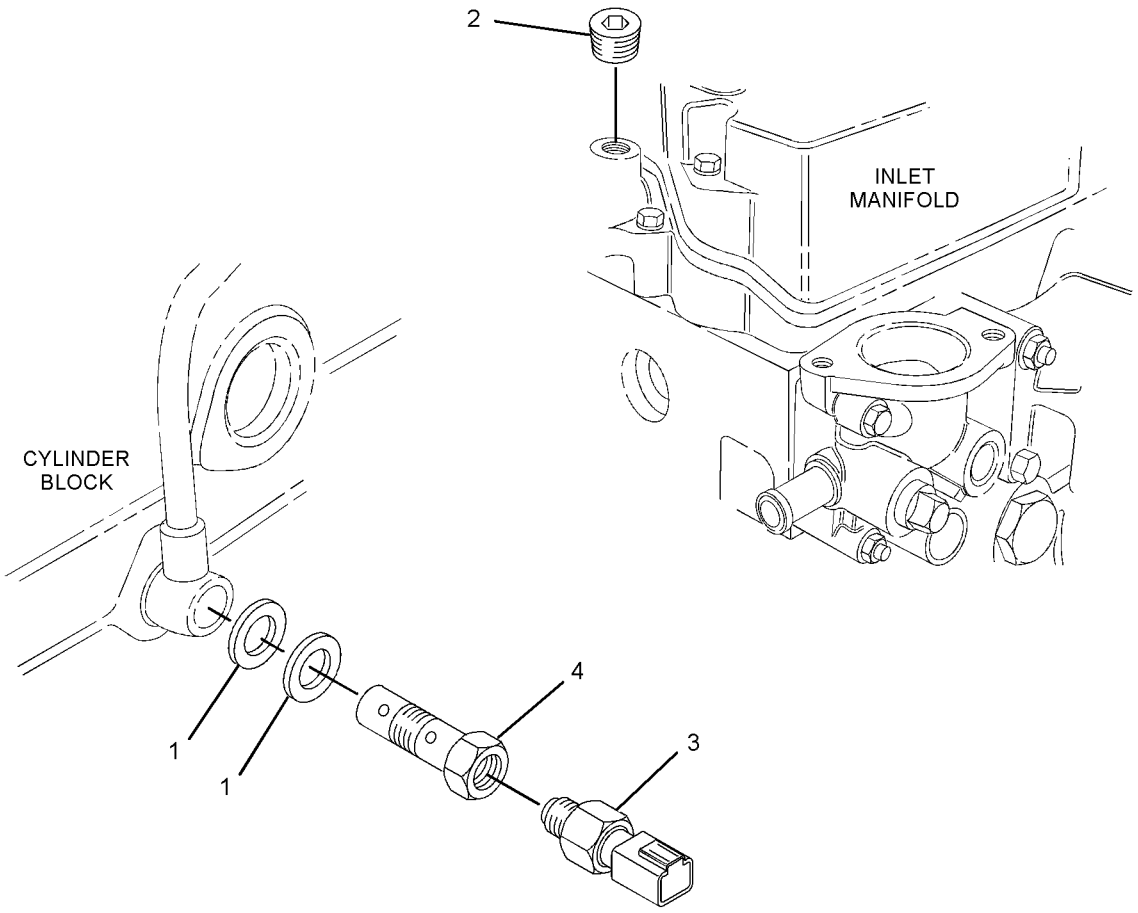

GRAPHIC #1 **<END>** g01380272

308-2314 SWITCH GP-START

SMCS-1416 **i03384492**

NOTE	REF NO	GRAPHIC REF	PART NUMBER	QTY	PART NAME 1 2 3 4 5 6 (PRODUCT LEVEL)	SEE PAGE
	1	1	**183-5460**	1	PLATE	
	2	1	**235-0977**	1	SWITCH AS-START	
	2A	1	**183-5458**	1	CAP	
	2B	1	**251-1871**	1	KEY-IGNITION	

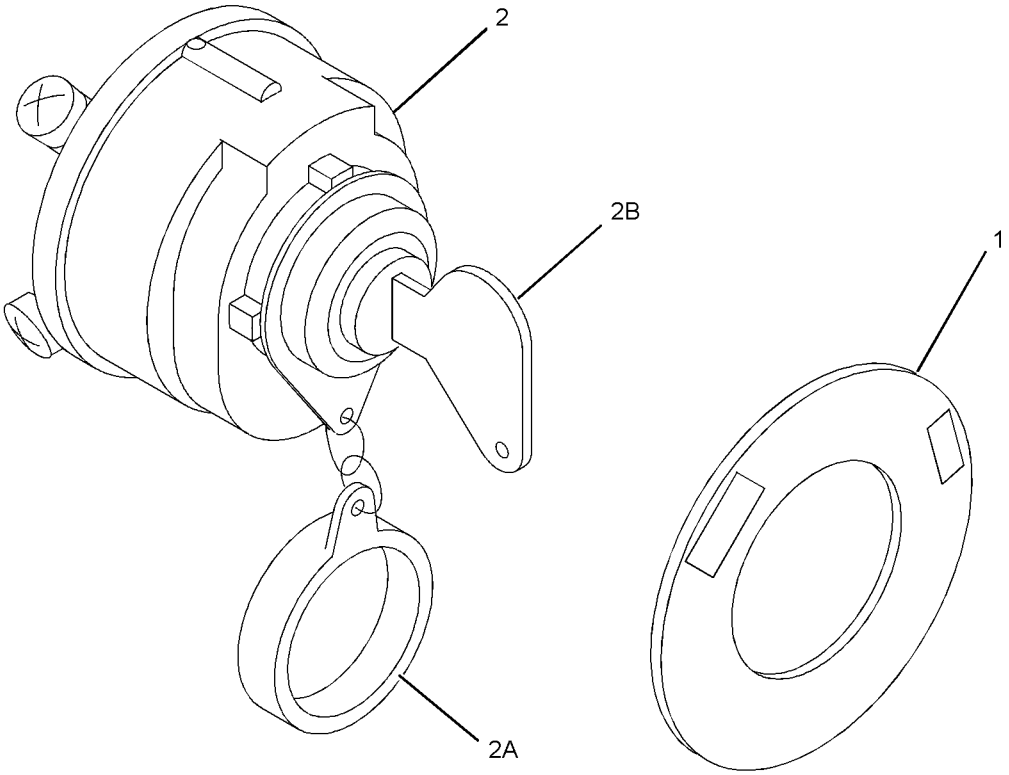

GRAPHIC #1 **<END>** g01389581

308-2317 SWITCH GP-TEMPERATURE–COOLANT

SMCS-7400 **i03406732**

NOTE	REF NO	GRAPHIC REF	PART NUMBER	QTY	PART NAME 1 2 3 4 5 6 (PRODUCT LEVEL)	SEE PAGE
C	1	1	**341-3600**	1	SWITCH-TEMPERATURE (COOLANT)	

C-CHANGE FROM PREVIOUS TYPE

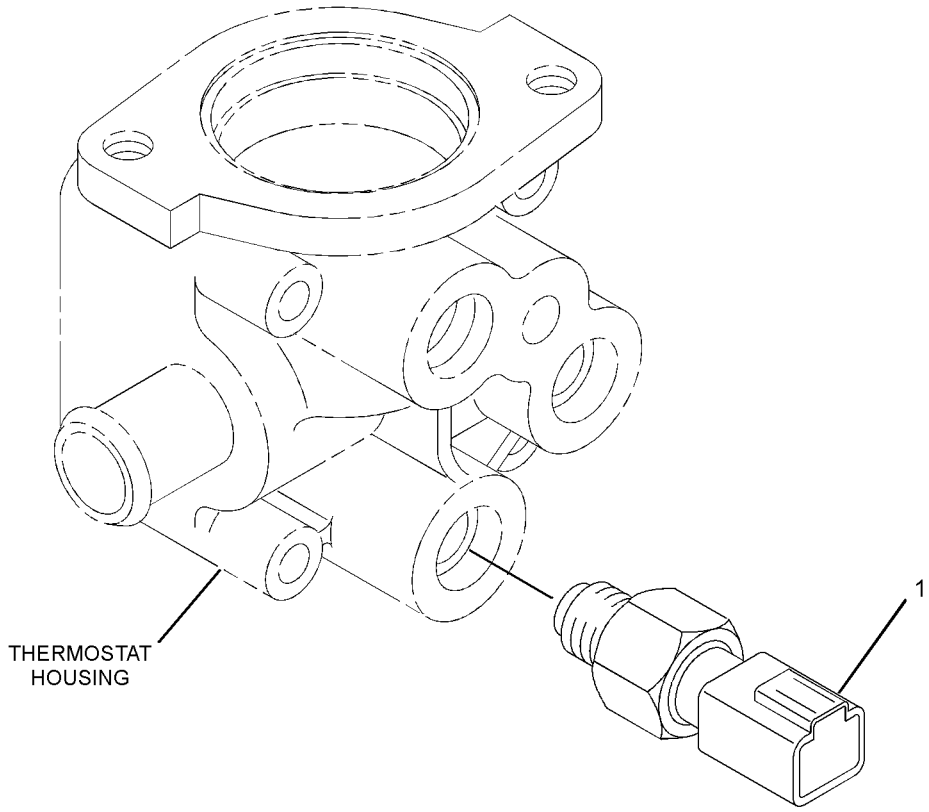

GRAPHIC #1 **<END>** g01416429

OPERATOR STATION

308-2321 LAMP GP–INDICATOR

SMCS-4490, 7451 **i03406789**

NOTE	REF NO	GRAPHIC REF	PART NUMBER	QTY	PART NAME 1 2 3 4 5 6 (PRODUCT LEVEL)	SEE PAGE
	1	1	**198-5310**	1	LAMP (INDICATOR)	

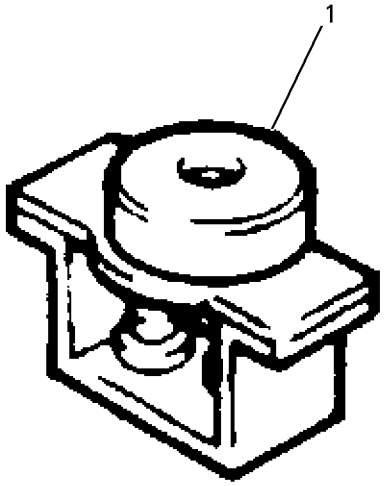

GRAPHIC #1 **<END>** g00768663

PART NUMBER INDEX

Part	Page
5	
5C-2890	23
	27
5D-1026	62
	65
6	
6B-0924	13
6F-4855	73
	81
6I-0217	67
	70
6I-0254	70
6I-0593	89
6I-0594	4
	17
	89
6I-0846	73
6I-0917	67
7	
7W-4694	73
	81
8	
8T-4189	76
	78
8T-4971	23
	27
9	
9M-7959	70
9X-8256	50
0	
032-8100	73
033-7849	73
	81
033-7854	73
	81
067-6269	73
	81
067-6317	73
	81
067-6987	73
	81
069-2922	73
	81
095-1708	60
1	
100-8451	83
103-6714	70
124-3815	67
138-7162	21
	22
	73
	81
138-7171	21
139-5511	23
	27
140-8783	89
153-5387	13
153-5391	13
153-5394	13
153-5395	13
153-5396	13
153-5402	11
	13
153-5518	11
153-5554	16
153-5556	16
153-5557	16
153-5558	16
153-5559	16
153-5587	45
153-5590	45
153-5592	23
	27
	67
	70
	71
	76
	78
	81
	83
153-5933	48
	50
153-5936	54
	90
	91
153-5939	5
	8
153-5960	23
	27
	62
	65
	76
	78
153-5961	46
	62
	65
153-5962	5
	8
	23
	27
153-6374	31
153-6375	21
	22
	31
153-6412	39
	87
153-6415	23
	27
153-6492	23
	27
	42
153-6832	40
153-6833	32
	34
153-6835	32
	34
	38
	45
153-6838	13
	23
	27
	89
	13
	13
	13
153-6841	32
	34
153-6849	54
153-6850	54
153-6851	54
153-6853	54
153-6856	18
153-6861	67
153-6868	22
153-6879	53
	61
153-6881	54
	90
153-7640	5
	8
	50
153-7920	60
	72
153-7983	23
	27
153-7987	23
	27
153-7988	46
154-0175	13
154-0176	13
154-0177	13
154-0178	13
154-0181	11
154-0385	11
154-0386	11
154-0388	11
154-0389	11
154-0393	13
154-0867	37
154-0869	37
154-0870	37
154-0871	37
154-0873	37
154-0874	37
154-1230	11
154-1231	11
154-1240	45
154-1241	45
154-1242	45
154-1243	45
154-1246	46
154-1248	46
154-1249	46
154-1347	5
	8
154-1396	23
154-1399	21
	22
	73
	81
154-1403	23
	27
154-1673	23
	27
154-1675	23
	27
154-1677	54
154-1678	54
154-1680	23
	27
154-1817	62
	65
154-1822	43
154-1828	57
154-1831	62
	65
154-1880	42
154-1935	86
154-1942	54
154-2353	54
154-2394	21
	22
154-2395	22
154-2403	21
	22
	73
	81
154-2405	19
154-2406	19
	20
154-2426	71
154-2427	71
154-2428	71
154-2713	76
	78
154-2715	76
	78
154-2716	76
	78
154-3017	76
	78
154-4505	23
	27
155-7983	73
155-7984	73
	81
	83
155-8076	86
155-8077	86
155-8085	21
	73
	81
156-6971	11
156-6988	15
156-6989	15
160-3550	73
	81
160-3555	76
	78
160-3556	76
	78
160-3557	76
	78
160-3558	76
	78

► **PRIMARY REFERENCE**

PART NUMBER INDEX

Part	Page
160-4150	54
160-4151	54
160-4152	54
160-4153	54
160-4826	61
161-8260	67
161-8273	38
162-2207	23
	27
163-5372	76
	78
164-7468	4
	17
165-2140	5
	8
	23
	27
165-2141	73
	81
	83
165-2142	22
	41
165-3605	40
166-2338	22
168-8999	83
168-9001	57
	73
	81
	83
168-9002	83
172-4585	86
176-7719	73
180-6118	67
183-1163	13
183-1164	13
183-1165	91
183-1336	11
183-3213	15
183-3353	76
	78
183-3538	23
	27
183-3551	60
183-4036	81
183-4320	81
183-4321	81
183-5458	92
183-5460	92
190-3762	5
	8
190-3803	76
	78
191-9297	23
	27
197-8540	80
197-8555	84
198-2664	67
198-5310	94

2

Part	Page
202-1196	76
	78
202-6616	67
205-1133	58
	59
205-4731	76
	78
206-3499	45
207-3697	18
209-1355	50
211-5172	44
211-8559	50
215-2605	32
	34
215-2617	62
	65
215-2620	13
217-1456	37
217-2752	46
217-2760	76
	78
217-2761	76
	78
217-2762	76
	78
217-2763	76
	78
217-5770	13
217-5859	5
	8
217-5860	5
	8
217-5861	8
217-5862	5
	8
217-5864	5
	8
217-7115	23
	27
217-7358	48
	50
218-2333	32
218-2334	39
218-2355	73
220-1523	52
221-1136	13
223-8182	81
229-5150	32
	34
229-5151	32
	34
231-2998	90
233-0693	8
233-0695	5
	8
233-7061	5
234-9556	73
	81
235-0977	92
236-6610	67
237-9315	13
	16
237-9316	13
238-0245	70
238-0265	67
238-0266	67
238-0271	67
238-9137	62
238-9143	62
238-9145	61
238-9621	41
239-0743	67
239-1137	67
241-5821	67
243-6411	81
245-1361	62
245-1362	62
245-1364	62
246-4267	83
247-1377	70
247-1378	70
247-1380	70
249-5541	62
	65
251-1871	92
252-1446	76
	78
252-1802	22
254-5541	84
	85
256-2084	16
256-2085	16
286-7495	62
	65
286-7496	62
	65
286-7497	62
	65
288-6537	16
288-6539	5
	8
288-6593	48
	50
288-8812	34
288-8813	34
288-8814	34
289-6120	48
	50
290-8014	76
	78
291-1265	91
291-1808	16
292-1988	67
293-2167	▶45
	46
294-4916	13
295-4070	73
295-5876	67
297-2996	57
297-3080	37

3

Part	Page
302-4181	13
302-4182	13
302-4187	73
	81
302-7822	76
	78
302-7823	76
	78
303-0307	65
303-0338	16
303-4226	▶1
305-3660	83
308-1222	91
308-1850	13
308-1852	11
308-1853	11
308-1854	11
308-1855	11
308-1860	16
308-1861	16
308-1862	15
308-1867	54
308-1869	54
308-1871	23
	27
308-1874	4
	17
308-1875	4
	17
308-1878	23
	27
308-1882	23
	27
308-1889	23
	27
308-1892	23
	27
308-1897	23
	27
308-1901	23
	27
308-1903	23
	27
308-1904	23
	27
308-1907	62
	65
308-1908	62
308-1914	87
308-1984	54
308-2293	1
	2
	3
	▶88
308-2294	1
	2
	3
	▶43
308-2295	1
	▶32
308-2297	1
	▶48
308-2298	1
	2
	3
	▶52
308-2300	1
	2
	3
	▶42
308-2301	1
	▶62
308-2302	1
	2

▶ **PRIMARY REFERENCE**

PART NUMBER INDEX

Part	Page
	3
	▶57
308-2305	1
	2
	3
	▶83
308-2306	1
	2
	3
	▶44
308-2307	1
	▶4
308-2310	1
	▶73
308-2311	1
	2
	3
	▶86
308-2312	2
	3
	▶90
308-2313	1
	2
	3
	▶87
308-2314	1
	▶92
308-2317	1
	▶93
308-2319	1
	▶84
308-2320	1
	▶80
308-2321	1
	▶94
308-4266	23
	27
308-4735	2
	3
	▶53
309-6712	1
	2
	3
	▶13
309-6713	1
	2
	3
	▶11
309-6714	1
	2
	3
	▶37
309-6715	1
	2
	3
	▶15
309-6716	1
	2
	3
	▶46
309-6717	1
	2
	3
	▶54
309-6718	1
309-6719	1
	2
	▶76
309-6720	1
	▶39
309-6721	2
	3
	▶65
309-6722	1
	▶5
309-6724	1
	2
	3
	▶71
309-6725	1
	2
	3
	▶31
309-6728	23
	27
309-6729	23
	27
309-6732	23
	27
309-6733	23
	27
309-6734	76
	78
309-6735	5
	8
309-6737	31
311-0655	23
	27
311-1174	73
311-1883	2
	3
	▶21
311-7561	76
	78
311-9048	81
313-5832	23
	27
313-5833	23
	27
313-9323	23
	27
315-5256	2
	3
	▶72
315-7819	1
	▶91
316-9550	67
317-0586	1
	▶19
317-0588	1
	▶22
317-0649	1
	▶70
317-7194	3
	▶58
317-7195	23
	27
318-1706	▶2
318-1707	▶3
318-5011	22
318-8382	54
319-3250	23
319-3252	27
319-7366	32
	34
320-8401	5
321-4061	15
	▶16
321-4249	23
	27
321-5907	17
321-6738	42
321-6741	2
	3
	▶85
322-2412	2
	3
	▶20
322-2416	2
	3
	▶34
322-2420	2
	3
	▶40
322-2421	2
	3
	▶50
322-2422	2
	3
	▶41
322-2424	2
	3
	▶8
322-2425	2
	3
	▶60
322-2426	2
	3
	▶38
322-2427	2
	▶59
322-3074	3
	▶27
322-3075	3
	▶78
322-6874	13
322-7485	15
322-7486	15
322-7487	15
322-7488	15
322-7490	23
	27
322-7492	23
	27
322-7493	23
	27
324-4598	87
325-5669	2
	3
	▶18
325-5944	67
325-5946	67
325-5948	67
325-9415	32
325-9416	32
327-5241	19
328-1882	2
	3
	▶81
328-3229	4
	17
328-3230	17
328-3296	2
	3
	▶17
328-3299	17
330-9189	23
	27
331-2553	67
331-2589	1
	▶61
331-2590	61
331-3270	1
	▶67
332-1361	23
	27
333-5930	88
	▶89
333-7903	89
334-0732	23
	27
334-7304	67
334-7306	67
334-7436	67
334-7437	67
335-5578	23
	27
336-2965	23
	27
341-3600	93

▶ **PRIMARY REFERENCE**

MEMORANDA



© 2008 CATERPILLAR
ALL RIGHTS
RESERVED

CAT, CATERPILLAR, THEIR RESPECTIVE LOGOS, “CATERPILLAR YELLOW” AND THE POWER EDGE TRADE DRESS, AS WELL AS CORPORATE AND PRODUCT IDENTITY USED HEREIN, ARE TRADEMARKS OF CATERPILLAR AND MAY NOT BE USED WITHOUT PERMISSION.

PRINTED IN
U.S.A.