SEBP6136
April 2014

Parts Manual

C7.1 Industrial Engine

6731-Up (Engine)

Product and Dealer Information

Note: For product identification plate locations, see the section “Product Identification Information” in the Operation and Maintenance Manual.

Delivery Date: _____

Product Information

Model: _____

Product Identification Number: _____

Engine Serial Number: _____

Transmission Serial Number: _____

Generator Serial Number: _____

Attachment Serial Numbers: _____

Attachment Information: _____

Customer Equipment Number: _____

Dealer Equipment Number: _____

Dealer Information

Name: _____ Branch: _____

Address: _____

_____

_____

	Dealer Contact	Phone Number	Hours
Sales:	_____	_____	_____
Parts:	_____	_____	_____
Service:	_____	_____	_____

MEMORANDA

TABLE OF CONTENTS

NAME	PAGE
GENERAL INFORMATION	**A2**
REPAIR ALTERNATIVES	**A4**
SUPPLEMENTAL COOLANT ADDITIVES	A5
MAINTENANCE PARTS	**A6**
INDEX	**A7**
ENGINE ARRANGEMENT	**1**
ENGINE AR-PRIMARY	1
BASIC ENGINE	**2**
CAMSHAFT GP	2
COVER GP-VALVE MECHANISM	3
CRANKSHAFT GP	4
CYLINDER BLOCK AS	5
CYLINDER BLOCK GP	6
CYLINDER HEAD AS	7
CYLINDER HEAD GP	8
DRAIN GP-ENGINE OIL	9
FASTENER GP-FAN DRIVE	10
FLYWHEEL GP	11
HOUSING GP-FLYWHEEL	12
HOUSING GP-FRONT	13
JET GP-PISTON COOLING	15
LIFTING GP-ENGINE	16
MOUNTING GP-ENGINE	17
PAN GP-OIL	18
PISTON & ROD GP	19
PLUG GP-CYLINDER HEAD	20
PLUG GP-ENGINE	21
PULLEY GP-CRANKSHAFT	22
ROCKER ARM GP	23
VALVE MECHANISM GP	24
LUBRICATION SYSTEM	**25**
BREATHER GP	25
FILLER GP-ENGINE OIL	26
FILTER GP-ENGINE OIL	27
PUMP GP-ENGINE OIL	29
COOLING SYSTEM	**30**
COOLER GP-ENGINE OIL	30
PUMP GP-WATER	33
AIR INLET AND EXHAUST SYSTEM	**34**
MANIFOLD GP-INLET	34
TURBOCHARGER GP	35
FUEL SYSTEM	**36**
FILTER GP-FUEL	36
PUMP GP-FUEL INJECTION	38
THROTTLE GP	39

NAME	PAGE
ELECTRICAL AND STARTING SYSTEM	40
CONTACTOR GP-ALARM	40
STARTING AID GP	41
STARTING MOTOR GP-ELECTRIC	42
SERVICE EQUIPMENT AND SUPPLIES	43
PLATE & FILM GP	43
PART NUMBER INDEX	**B1**

GENERAL INFORMATION

1. ENGINE IDENTIFICATION

Cat engines are identified with Serial Numbers and Arrangement Numbers. In some cases, Modification Numbers are also used. The serial number plate which shows these numbers is mounted on the engine.

Cat dealers need this information to determine which components were included on the engine when it was assembled at the factory. This permits accurate identification of replacement part numbers.

2. ORDERING PARTS

⚠ WARNING

When replacement parts are required for this product Caterpillar recommends using Caterpillar replacement parts or parts with equivalent specifications including, but not limited to, physical dimensions, type, strength and material.

Failure to heed this warning can lead to premature failures, product damage, personal injury or death.

Quality Cat replacement parts are available from Cat dealers throughout the world. Their parts inventories are up to date and include all parts normally required to protect your investment in Cat Engines. Dealers may offer repair kits or remanufactured parts to allow selection of the most effective repair alternative for a particular situation. When ordering parts, your order should specify the quantity, part number, part name, and the serial number/product identification number of the engine for which the parts are needed.

3. PARTS MANUAL ORGANIZATION

Product information in this manual is presented as "information elements" that represent all of the components for the specific model. An Engine Arrangement is an example of an information element. The information elements are organized alphabetically by part name and secondarily by part number within each major section of the manual.

4. TABLE OF CONTENTS

A table of contents (TOC) is found at the beginning of the manual. The TOC lists each section of the manual with a complete list of all information elements organized as they appear in the manual. Page numbers are provided for quick reference to detailed parts identification illustrations and serviceable consist lists.

5. MAINTENANCE PARTS INDEX

The Maintenance Parts Index, located near the beginning of the manual, references most frequently used maintenance part numbers, providing description, quantity, usage and page number. This information is organized alphabetically by part description.

6. INDEX

The index located near the front of the manual is an alphabetical listing of all information elements included in the manual. Page numbers are provided for quick reference to detailed parts identification illustrations and serviceable consist lists.

7. PART NUMBER INDEX

A numerical index listing all part numbers and the corresponding page number(s) appears at the back of the manual.

8. CAPTIONS

Captions located at the beginning each information element identify the part number and part name along with additional descriptive information. S/N information found in each caption should be used to select correct information for a specific engine. Field replacement options, identification of optional attachment components, and where used ("part of") information is also provided.

The first line of a caption is shown in larger type font to indicate the beginning of an information element. Captions for additional pages that may be required to illustrate an information element will be shown in standard type font and will include the term *(contd.)* .

9. NON-SERVICED PARTS

In some instances it is necessary to display non-serviced parts that are a link to lower level serviceable consist lists. These non-serviced part numbers are shown in *italic* type indicating that they are not available. All consist lists have not been converted to reflect this enhancement.

10. PARTS LIST REFERENCE NUMBERS

Numbers shown in the Ref No column correspond to numbers used in the associated graphic(s). An alphabetic suffix may be added to a reference number to identify lower level consist items. Numbers shown in the Graphic Ref column refer to the graphic number identifier displayed in the lower left corner of each illustration. The Graphic Ref number may be used in combination with the item Ref No to determine the correct part number. There may be intentional omission of a Ref No in a consist list as information is updated to reflect the latest serviceable part numbers.

11. INDENTED PART NAMES

When a part name is indented in a parts list, it is part of (included in) the group or assembly under which it is indented.

12. ILLUSTRATION REFERENCE LETTERS

When necessary, illustrations contain reference letters (A, B, C etc.) that are intended to track lines and harnesses from one point to another. They are also used to show where to reconnect illustrations that have been separated.

13. ABBREVIATIONS AND SYMBOLS

O.D. – Outside Diameter
I.D. – Inside Diameter
A – Not Part Of This Group
B – Use As Required
C – Change From Previous Type
D – Order By The Meter
E – Order By The Centimeter
F – Not Shown
G – Order By The Inch
I – Refer To Hydraulic Information System
M – Metric Part
R – Remfg Part May Be Available
Y – Separate Illustration
Z – Not Serviced Separately

14. DESCRIPTION OF TYPE CHANGES

Type - A type is defined as any configuration change that requires an additional Information Element for an Arrangement, Group, or Assembly. If serial number breaks for types are not available, a type # (Type 1, Type 2, etc.) will be displayed in the caption. These "type" changes are identified with a "C" note (change from previous type) in the Parts List. Only the "types" that apply to this Parts Manual will be included. Additional types may exist causing "C" notes to appear on an Information Element when no other types are shown.

15. <END>

This symbol indicates the end of an information element.

NOTE:

Continuing improvement and advancement of product design may cause changes to your engine which may not be included in this publication. Whenever a question arises regarding your Cat product or this publication, please consult your Cat dealer for the latest available information.

REMANUFACTURED COMPONENTS

As an option when making repairs consider Cat Remanufactured Components. Components that are available through the Cat Remanufactured Program are identified three ways in the parts book:

- with the letter R in the note field of the parts list
- with an R* at the beginning of the first line of the caption
- with an *R at the end of the first line of the caption

Typical components included in the Remanufacturing Program include:

ALTERNATORS
CONNECTING RODS
CRANKSHAFTS - UNDERSIZE
CRANKSHAFTS - UPGRADE TO NEW
CYLINDER HEADS
ELECTRONIC CONTROL MODULES (ECM)
ELECTRONIC SENSORS
FUEL INJECTORS
FUEL NOZZLES
FUEL PUMPS
GOVERNORS
OIL PUMPS
PISTONS
SHORT BLOCKS
STARTERS
TURBOCHARGERS - COMPLETE
TURBOCHARGER CARTRIDGES
WATER PUMPS

Cat Remanufactured engines for many engine arrangements are also available.

SUPPLEMENTAL COOLANT ADDITIVES

CUSTOMER BENEFITS:

Protects against cavitation, foam, erosion, corrosion, and scale buildup in cooling systems.

- Provides measured coolant conditioner.

DESCRIPTION:

Additives deplete from the coolant with normal operation. For this reason, Supplemental Coolant Additives (SCA) must be added to all heavy duty coolants at regular intervals. In addition, when not using a fully formulated, pre-charged antifreeze, like Cat DEAC, an initial charge of SCA must be added to the cooling system. The amount of SCA added to the system is dependent on the capacity of the system.

The SCA for initial fill is provided as a liquid. SCA's for maintenance intervals are available in liquid form and as a spin-on element. (No Spin-on available for 3600 Family of Engines)

NOTE:

The amount of SCA added at initial fill is not the same as the amount added at maintenance intervals.

The coolant additive elements can be used with any ethylene or propylene glycol type antifreeze which meets ASTM D4985 or ASTM D5345 Specifications.

NOTE:

For use with standard heavy duty coolant only, not for use with Extended Life Coolant.

PARTS NEEDED:

Cooling System Capacity		Liquid SCA at Initial Fill	Liquid SCA at Maintenance*	Spin-on SCA Maintenance Element*
Liters	Gallons			
22-30	(6-8)	3P-2044 (1)	6V-3542 (1)	111-2370 (1)
30-38	(8-10)	3P-2044 (1) 6V-3542 (1)	111-2372 (1)	111-2369 (1)
38-49	(10-13)	3P-2044 (1) 8T-1589 (1)	111-2372 (1)	111-2369 (1)
49-64	(13-17)	3P-2044 (2)	8T-1589 (1)	9N-3368 (1)
64-83	(17-22)	3P-2044 (2) 8T-1589 (1)	111-2372 (1) 6V-3542 (1)	111-2371 (1)
83-114	(22-30)	3P-2044 (3) 8T-1589 (1)	3P-2044 (1)	9N-3718 (1)
114-163	(30-43)	3P-2044 (5)	3P-2044 (1) 6V-3542 (1)	111-2371 (2)
163-242	(43-64)	3P-2044 (8)	3P-2044 (2)	9N-3718 (2)

** Normal maintenance period is 250 hrs. See your Operation and Maintenance Manual for complete coolant maintenance instructions.*

( ) Indicates quantity required.

MAINTENANCE PARTS

DESCRIPTION	PART NUMBER	QTY	WHERE USED	PAGE
BASIC ENGINE				
BREATHER (CRANKCASE)	326-7288	1	COVER GP-VALVE MECHANISM	3
GASKET-OIL PAN	351-4749	1	PAN GP-OIL	18
SEAL-VALVE COVER	256-7704	1	COVER GP-VALVE MECHANISM	3
COOLING SYSTEM				
GASKET-WATER REGULATOR	281-8744	1	PUMP GP-WATER	33
REGULATOR AS-WATER TEMPERATURE (INCLUDES CONNECTOR) (WATER TEMPERATURE)	417-7782	1	PUMP GP-WATER	33
ELECTRICAL AND STARTING SYSTEM				
GLOW PLUG (24-VOLT)	226-8770	6	STARTING AID GP	41
FUEL SYSTEM				
FILTER ELEMENT-WTR SEP & FUEL	252-6338	1	FILTER GP-FUEL	36
LUBRICATION SYSTEM				
CAP-OIL FILLER (ENGINE)	130-9888	1	FILLER GP-ENGINE OIL	26
FILTER-ENGINE OIL	269-8325	1	FILTER GP-ENGINE OIL	27
FILTER-FUMES DISPOSAL	273-5711	1	FILTER GP-ENGINE OIL	28

INDEX

NAME PAGE

B

BASE GP-BREATHER 25
BREATHER (CRANKCASE) 3
BREATHER GP 25

C

CAMSHAFT GP 2
CAP-OIL FILLER (ENGINE) 26
CONNECTING ROD GP 19
CONTACTOR GP-ALARM 40
COOLER GP-ENGINE OIL 30
32
COVER GP-VALVE MECHANISM 3
CRANKSHAFT GP 4
CYLINDER BLOCK AS 5
CYLINDER BLOCK GP 6
CYLINDER HEAD AS 7
CYLINDER HEAD GP 8

D

DRAIN GP-ENGINE OIL 9

E

ENGINE AR-PRIMARY 1

F

FASTENER GP-FAN DRIVE 10
FILLER GP-ENGINE OIL 26
FILM-WARNING (DO NOT SPRAY, READ OMM) 43
FILTER ELEMENT-WTR SEP & FUEL 36
FILTER GP-ENGINE OIL 27
28
FILTER GP-FUEL 36
37
FILTER-ENGINE OIL 27
FILTER-FUMES DISPOSAL 28
FLYWHEEL GP 11

G

GASKET-OIL PAN 18
GASKET-WATER REGULATOR 33
GAUGE AS-OIL LEVEL (DIPSTICK) (ENGINE) . . . 18
GLOW PLUG (24-VOLT) 41

H

HOUSING GP-FLYWHEEL 12
HOUSING GP-FRONT 13

NAME PAGE

J

JET GP-PISTON COOLING 15

L

LIFTING GP-ENGINE 16

M

MANIFOLD GP-INLET 34
MOUNTING GP-ENGINE 17

P

PAN GP-OIL 18
PISTON & ROD GP 19
PLATE & FILM GP 43
PLUG GP-CYLINDER HEAD 20
PLUG GP-ENGINE 21
PULLEY GP-CRANKSHAFT 22
PUMP GP-ENGINE OIL 29
PUMP GP-FUEL INJECTION 38
PUMP GP-WATER 33

R

REGULATOR AS-WATER TEMPERATURE (INCLUDES CONNECTOR) (WATER TEMPERATURE) 33
ROCKER ARM GP 23

S

SEAL-VALVE COVER 3
STARTING AID GP 41
STARTING MOTOR GP-ELECTRIC–24-VOLT, 4-KW 42
SWITCH-TEMPERATURE 38

T

THROTTLE GP–24-VOLT 39
TURBOCHARGER GP 35

V

VALVE MECHANISM GP 24

MEMORANDA

ENGINE ARRANGEMENT

450-1930 ENGINE AR-PRIMARY

162 BRAKE KW (217 BHP) AT 2200 RPM

SMCS-1000 **i05642009**

NOTE	PART NUMBER	QTY	PART NAME 1 2 3 4 5 6 (PRODUCT LEVEL)	SEE PAGE
Y	*425-0181*	1	BREATHER GP	25
Y	*343-0701*	1	CAMSHAFT GP	2
Y	*346-1822*	1	CONTACTOR GP-ALARM	40
Y	*346-0097*	1	COOLER GP-ENGINE OIL	32
Y	*348-3285*	1	CRANKSHAFT GP	4
Y	*348-3283*	1	CYLINDER BLOCK GP	6
Y	*391-3193*	1	CYLINDER HEAD GP	8
Y	*346-1819*	1	DRAIN GP-ENGINE OIL	9
Y	*435-1889*	1	FASTENER GP-FAN DRIVE	10
Y	*419-6486*	1	FILLER GP-ENGINE OIL	26
Y	*346-0220*	1	FILTER GP-ENGINE OIL	27
Y	*424-1869*	1	FILTER GP-ENGINE OIL	28
Y	*423-5411*	1	FILTER GP-FUEL	36
Y	*433-8929*	1	FILTER GP-FUEL	37
Y	*345-8964*	1	FLYWHEEL GP	11
Y	*345-8840*	1	HOUSING GP-FLYWHEEL	12
Y	*346-0507*	1	HOUSING GP-FRONT	13
Y	*348-3503*	1	JET GP-PISTON COOLING	15
Y	*346-0818*	1	LIFTING GP-ENGINE	16
Y	*346-0773*	1	MANIFOLD GP-INLET	34
Y	*346-1510*	1	MOUNTING GP-ENGINE	17
Y	*345-9659*	1	PAN GP-OIL	18
Y	*393-5558*	1	PISTON & ROD GP	19
Y	*346-1967*	1	PLATE & FILM GP	43
Y	*346-2908*	1	PLUG GP-ENGINE	21
Y	*358-3097*	1	PULLEY GP-CRANKSHAFT	22
Y	*346-0737*	1	PUMP GP-ENGINE OIL	29
Y	*393-7672*	1	PUMP GP-FUEL INJECTION	38
Y	*346-0411*	1	PUMP GP-WATER	33
Y	*391-3197*	1	ROCKER ARM GP	23
Y	*346-1841*	1	PLUG GP-CYLINDER HEAD	20
Y	*393-0879*	1	STARTING AID GP	41
Y	*392-2020*	1	STARTING MOTOR GP-ELECTRIC	42
Y	*450-1309*	1	THROTTLE GP	39
Y	*419-9129*	1	TURBOCHARGER GP	35
	376-6464	1	PLATE GP	

Y - SEPARATE ILLUSTRATION

<END>

BASIC ENGINE

343-0701 CAMSHAFT GP

SMCS-1210 **i05644574**

NOTE	REF NO	GRAPHIC REF	PART NUMBER	QTY	PART NAME 1 2 3 4 5 6 (PRODUCT LEVEL)	SEE PAGE
	1	1	**138-2053**	12	TAPPET	
	2	1	**350-0637**	1	CAMSHAFT GP	
		1	**067-6135**	1	KEY-WOODRUFF	
	3	1	**067-6095**	12	ROD	

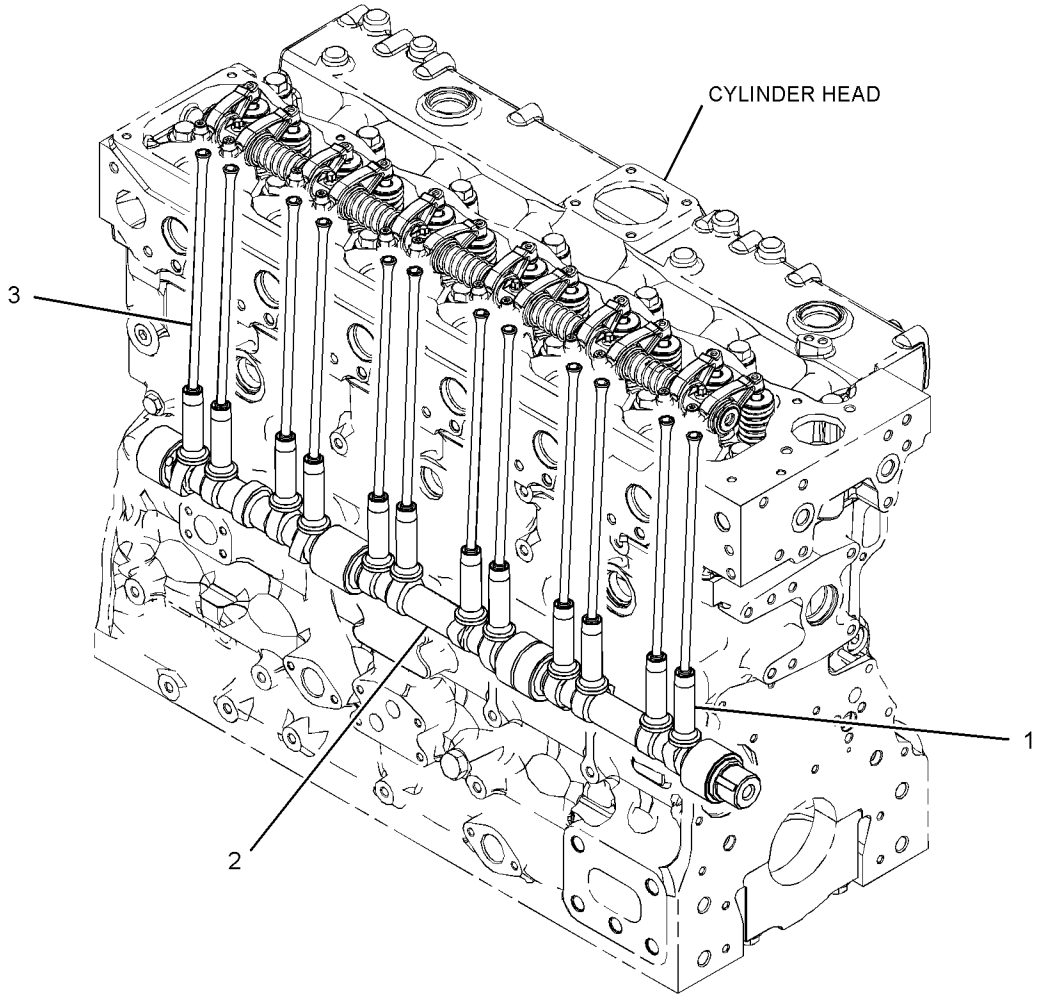

GRAPHIC #1 **<END>** g03320144

424-9429 COVER GP-VALVE MECHANISM

PART OF 425-0181 BREATHER GP

SMCS-1107 **i05644568**

NOTE	REF NO	GRAPHIC REF	PART NUMBER	QTY	PART NAME 1 2 3 4 5 6 (PRODUCT LEVEL)	SEE PAGE
	1	1	**256-7704**	1	SEAL-VALVE COVER	
	2	1	**367-5394**	1	COVER	
	3	1	**326-7288**	1	BREATHER (CRANKCASE)	
	4	1	**326-7289**	1	SEAL-O-RING	
M	5	1	**8T-0337**	4	SCREW-MACHINE (M4X0.7X12-MM)	

M - METRIC PART

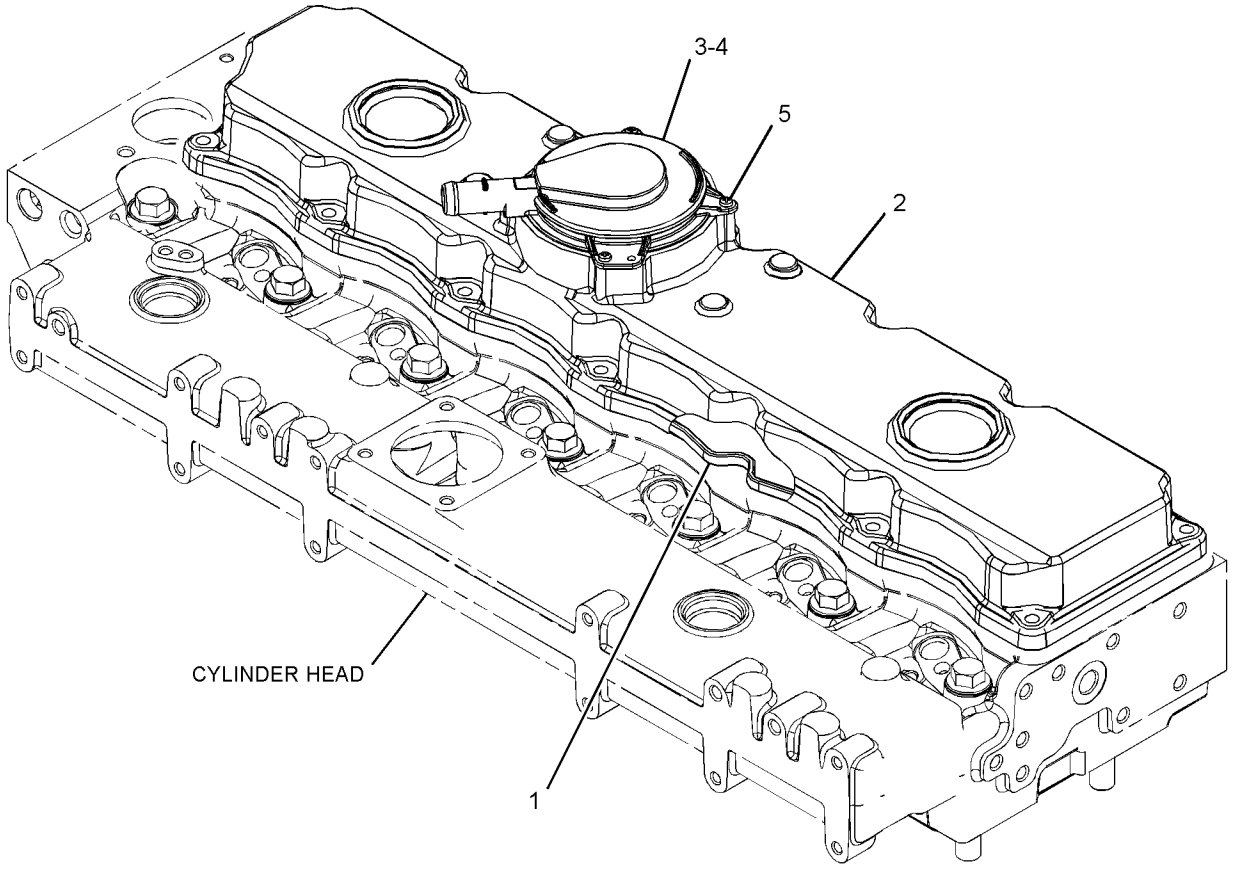

GRAPHIC #1 **<END>** g03589664

348-3285 CRANKSHAFT GP

SMCS-1202 **i05644591**

NOTE	REF NO	GRAPHIC REF	PART NUMBER	QTY	PART NAME 1 2 3 4 5 6 (PRODUCT LEVEL)	SEE PAGE
L	1	1	*317-5485*	7	BEARING (CRANKSHAFT)	
L	2	1	*317-5486*	7	BEARING (CRANKSHAFT)	
J	3	1	**363-0559**	2	WASHER-THRUST	
	4	1	**376-4074**	1	CRANKSHAFT	
	5	1	**067-6135**	1	KEY-WOODRUFF	
	6	1	**276-7391**	1	GEAR (34-TEETH)	
					AVAILABLE REPAIR KIT(S):	
L			**360-1978**	1	KIT-BEARING (CRANKSHAFT)	
J			**364-5145**	1	KIT-WASHER (CRANKSHAFT)	

J - KIT MARKED J SERVICES PARTS MARKED J
L - KIT MARKED L SERVICES PARTS MARKED L

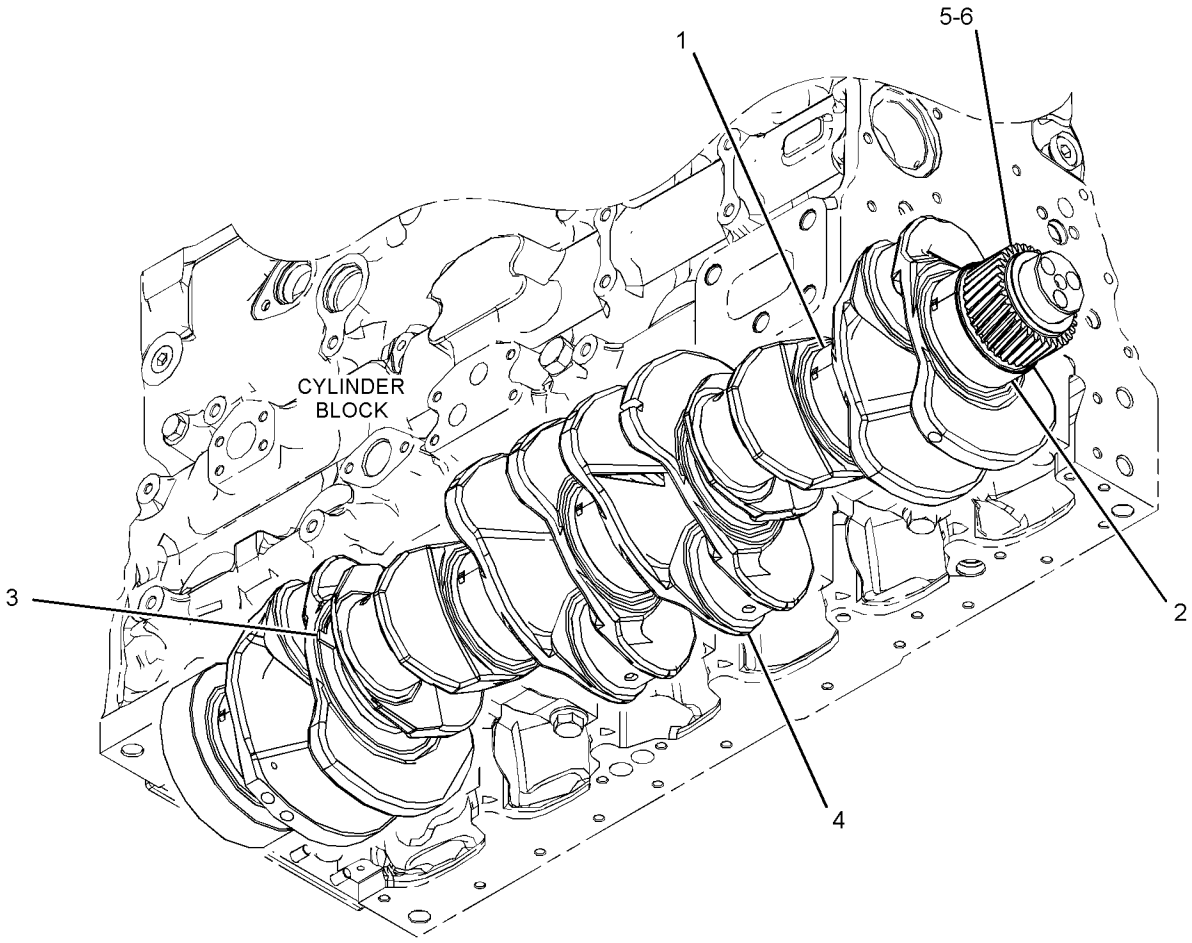

GRAPHIC #1 **<END>** g03320275

331-1682 CYLINDER BLOCK AS

PART OF 348-3283 CYLINDER BLOCK GP

SMCS-1201 **i05664397**

NOTE	REF NO	GRAPHIC REF	PART NUMBER	QTY	PART NAME 1 2 3 4 5 6 (PRODUCT LEVEL)	SEE PAGE
	1	1	**067-6043**	7	PLUG-SIDE	
	2	1	**185-0884**	2	DOWEL	
	3	1	**225-8858**	2	PLUG	
	4	1	**232-7597**	2	PLUG	
	5	1	**232-7599**	2	PLUG	
	6	1	**276-5602**	2	PLUG-CORE	
	7	1	**232-7596**	1	PLUG	
	8	1	**067-6823**	1	PLUG	
	9	1	**276-5600**	14	BOLT-SPECIAL (BEARING CAP)	

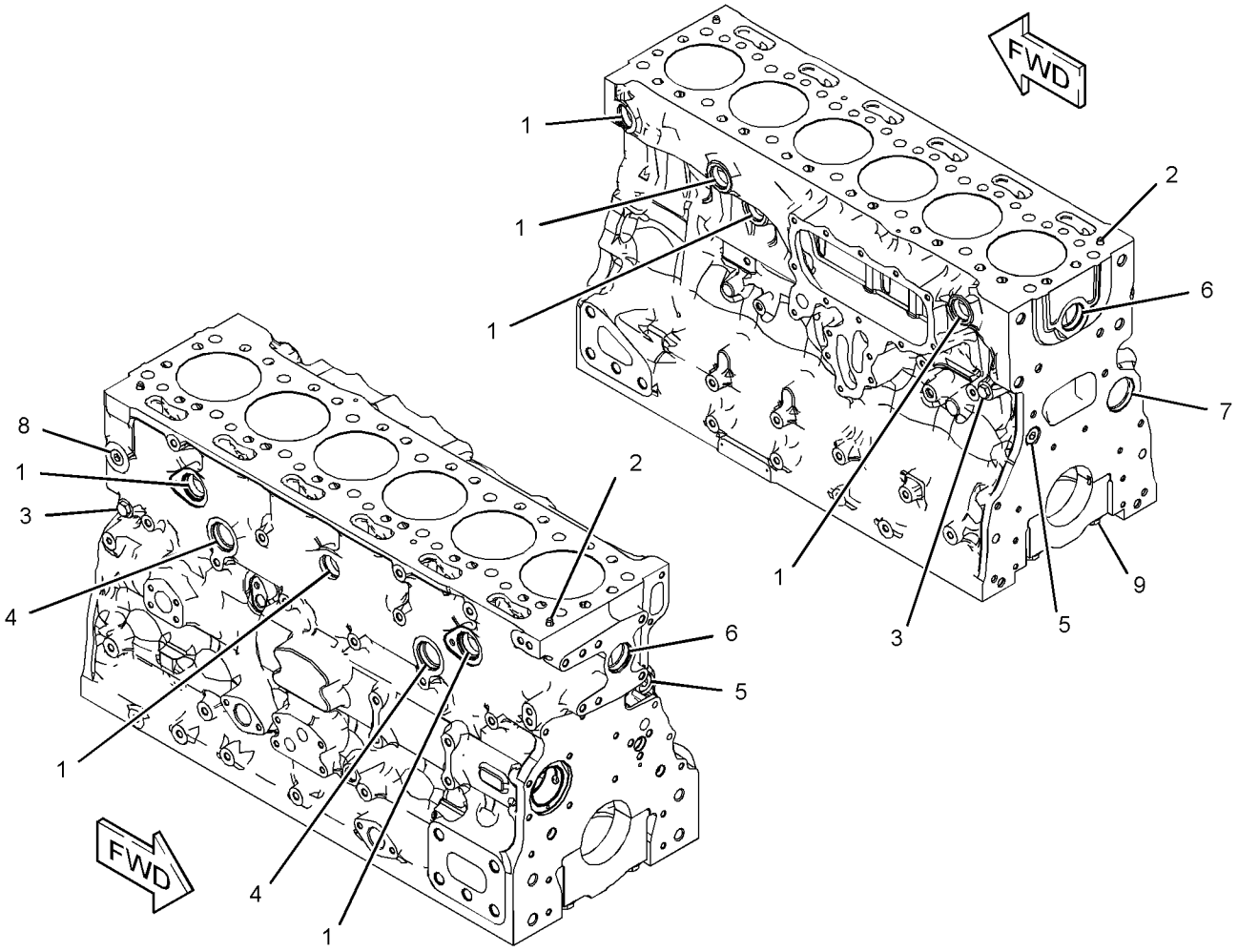

GRAPHIC #1 **<END>** g03320206

BASIC ENGINE

348-3283 CYLINDER BLOCK GP

SMCS-1201 **i05644594**

NOTE	REF NO	GRAPHIC REF	PART NUMBER	QTY	PART NAME 1 2 3 4 5 6 (PRODUCT LEVEL)	SEE PAGE
M	1	1	**209-9219**	10	BOLT (M8X1.25X16-MM)	
	2	1	**232-1322**	1	PLUG	
	3	1	**276-5603**	1	SEAL-O-RING	
Y	4	1	*331-1682*	1	CYLINDER BLOCK AS	5
	5	1	**232-7449**	1	HOUSING AS	

M - METRIC PART
Y - SEPARATE ILLUSTRATION

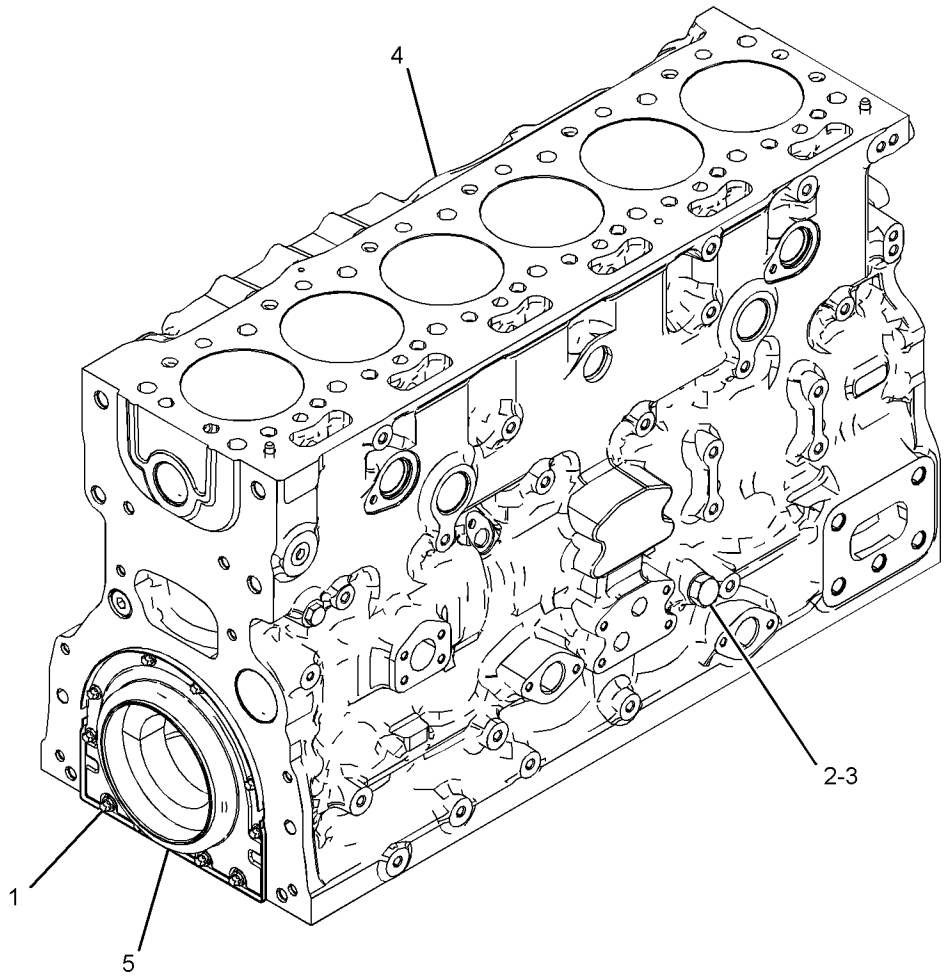

GRAPHIC #1 **<END>** g03318997

382-5079 CYLINDER HEAD AS

PART OF 391-3193 CYLINDER HEAD GP

SMCS-1100, 1101 **i05664401**

NOTE	REF NO	GRAPHIC REF	PART NUMBER	QTY	PART NAME 1 2 3 4 5 6 (PRODUCT LEVEL)	SEE PAGE
	1	1	**067-6006**	6	PLUG	
	2	1	**105-5761**	6	PLUG	
	3	1	**343-4295**	8	PLUG	
	4	1	**335-6264**	12	GUIDE-VALVE	
	5	1	**152-2886**	1	BOLT	

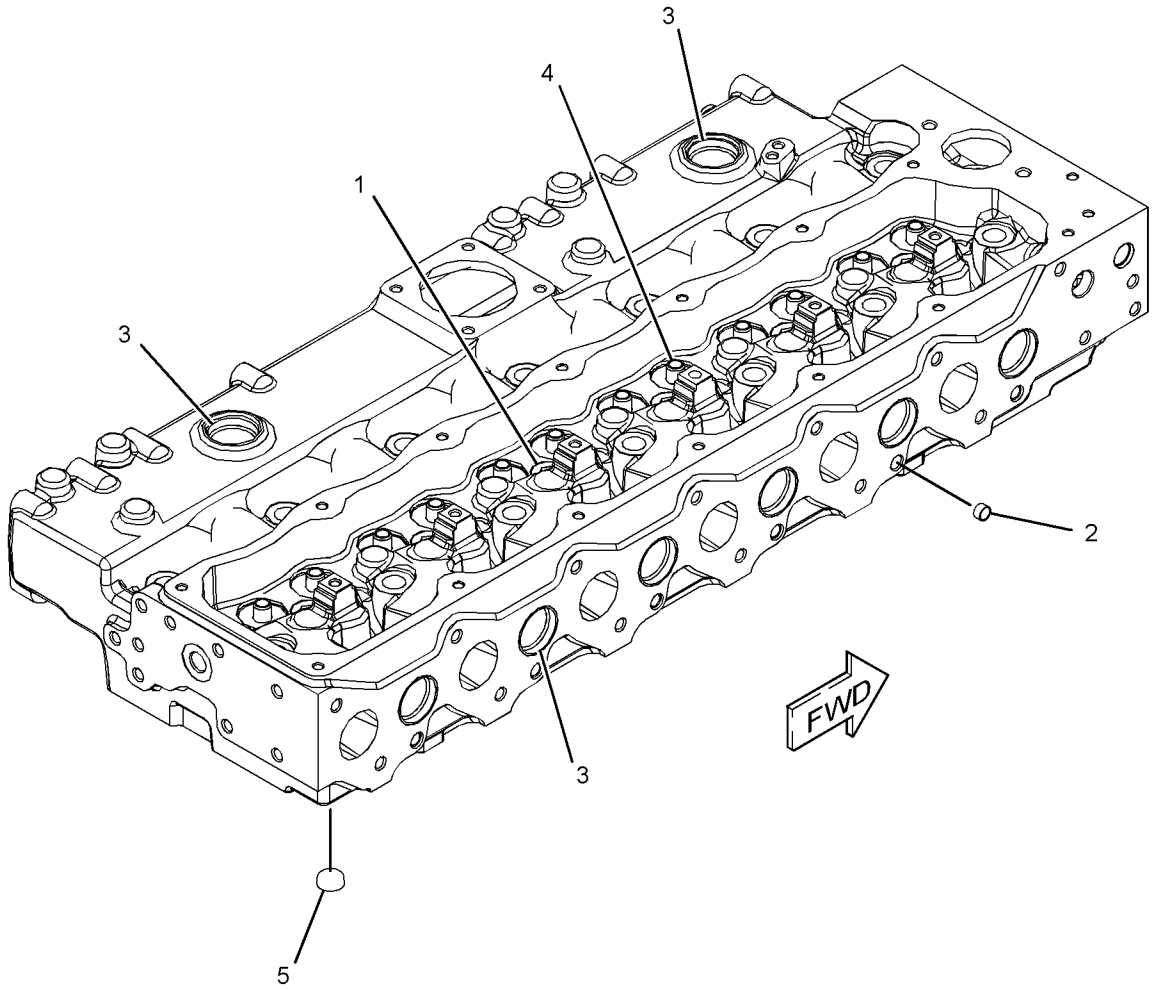

GRAPHIC #1 **<END>** g03320524

391-3193 CYLINDER HEAD GP

SMCS-1100 **i05644670**

NOTE	PART NUMBER	QTY	PART NAME 1 2 3 4 5 6 (PRODUCT LEVEL)	SEE PAGE
Y	*382-5079*	1	CYLINDER HEAD AS	7
	335-7055	14	BOLT	
	359-6616	1	GASKET	

Y - SEPARATE ILLUSTRATION

<END>

346-1819 DRAIN GP-ENGINE OIL

SMCS-1302 **i05644753**

NOTE	REF NO	GRAPHIC REF	PART NUMBER	QTY	PART NAME 1 2 3 4 5 6 (PRODUCT LEVEL)	SEE PAGE
	1	1	**291-4184**	1	ADAPTER AS	
	1A	1	**275-9883**	1	SEAL	
	2	1	*170-0967*	1	ELBOW AS	
	2A	1	**3K-0360**	1	SEAL-O-RING	
	2B	1	**5P-4906**	1	ELBOW	
	3	1	**372-8247**	1	CAP-PROTECTION	

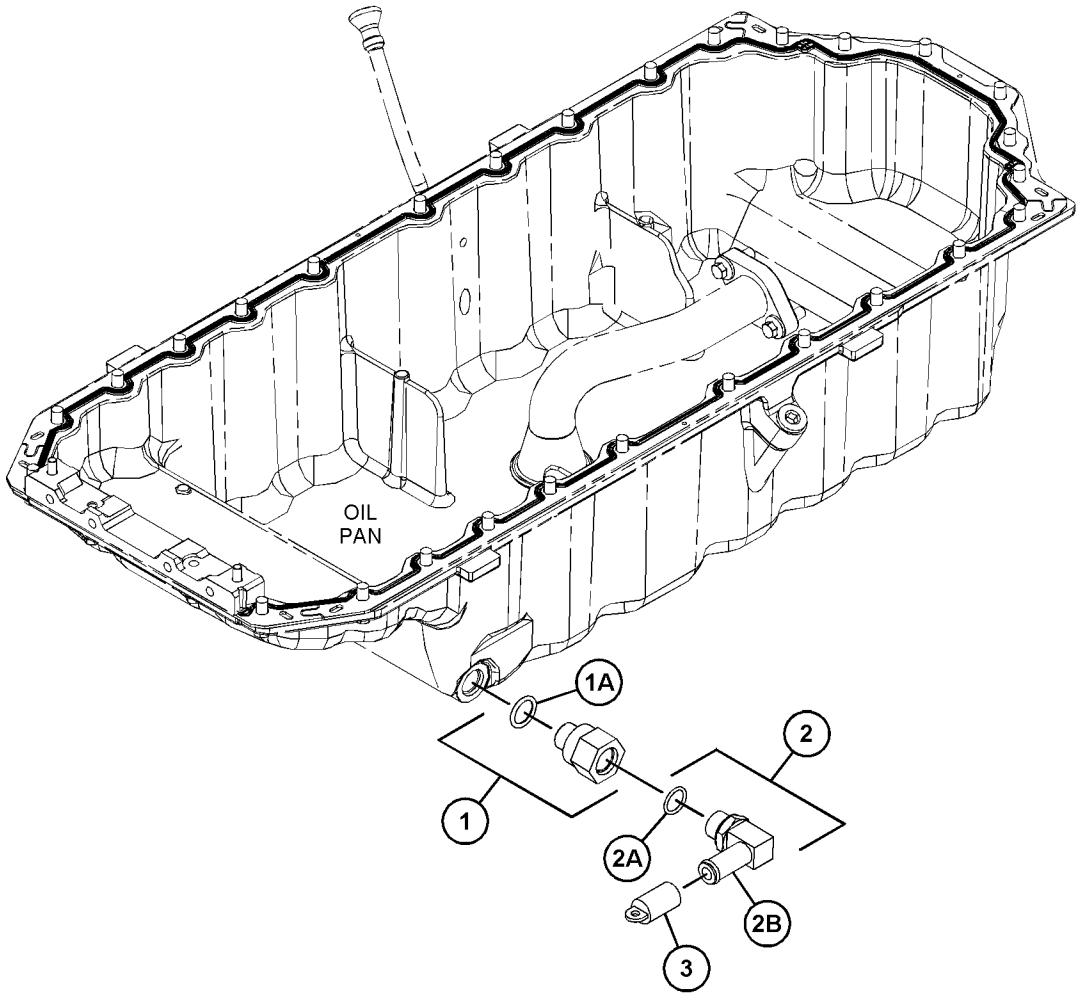

GRAPHIC #1 **<END>** g03591397

BASIC ENGINE

435-1889 FASTENER GP-FAN DRIVE

SMCS-1359 **i05644771**

NOTE	REF NO	GRAPHIC REF	PART NUMBER	QTY	PART NAME 1 2 3 4 5 6 (PRODUCT LEVEL)	SEE PAGE
	1	1	**179-7071**	4	BOLT (M8X1.25X20-MM)	

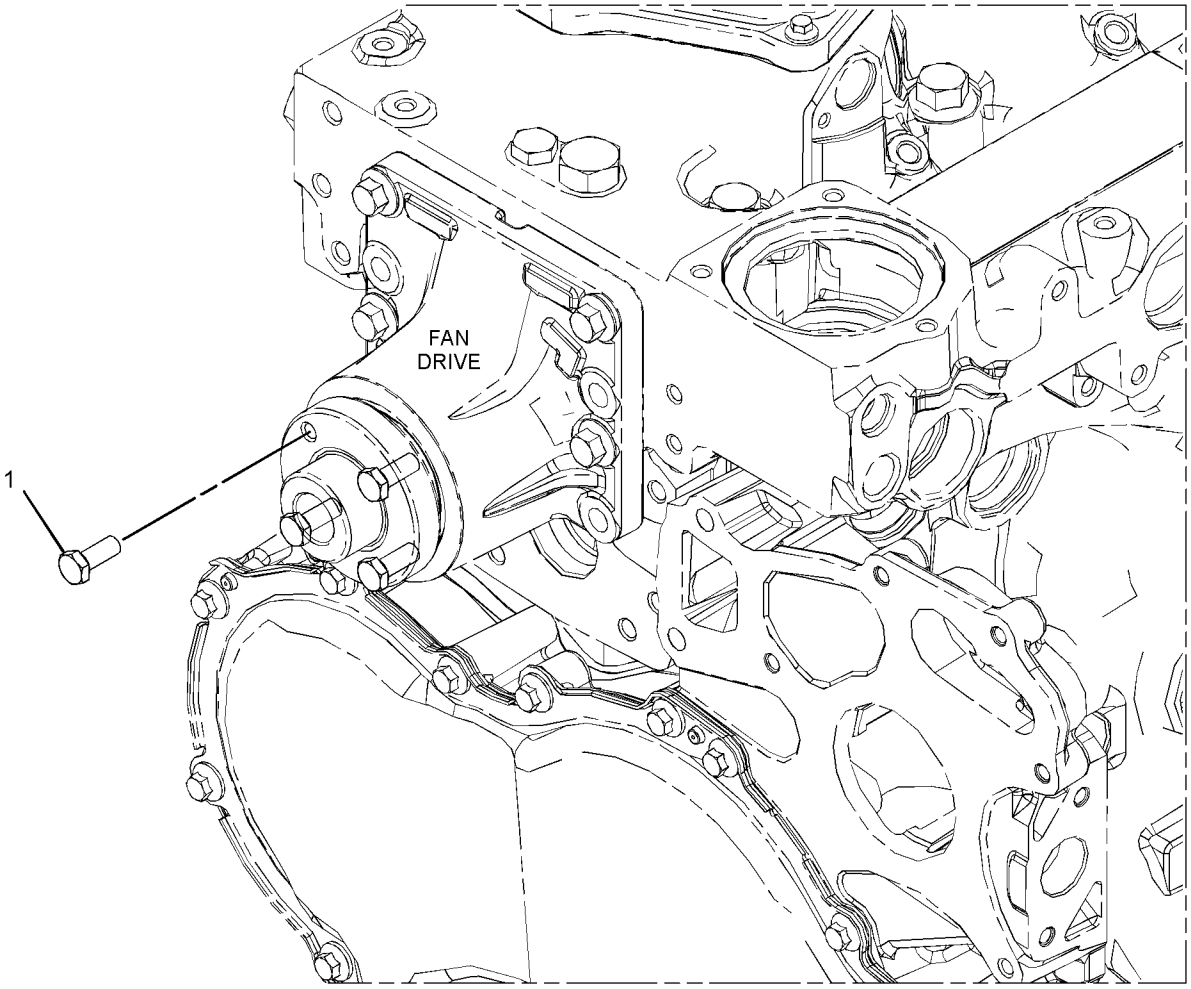

GRAPHIC #1 **<END>** g02564805

345-8964 FLYWHEEL GP

SMCS-1156 **i05645449**

NOTE	REF NO	GRAPHIC REF	PART NUMBER	QTY	PART NAME 1 2 3 4 5 6 (PRODUCT LEVEL)	SEE PAGE
	1	1	**233-2492**	1	FLYWHEEL AS	
	1A	1	**033-7687**	1	RING-STARTING MOTOR (126-TEETH)	
	2	1	**279-9254**	12	BOLT	
	3	1	**5P-8245**	12	WASHER-HARD (13.5X25.5X3-MM THK)	

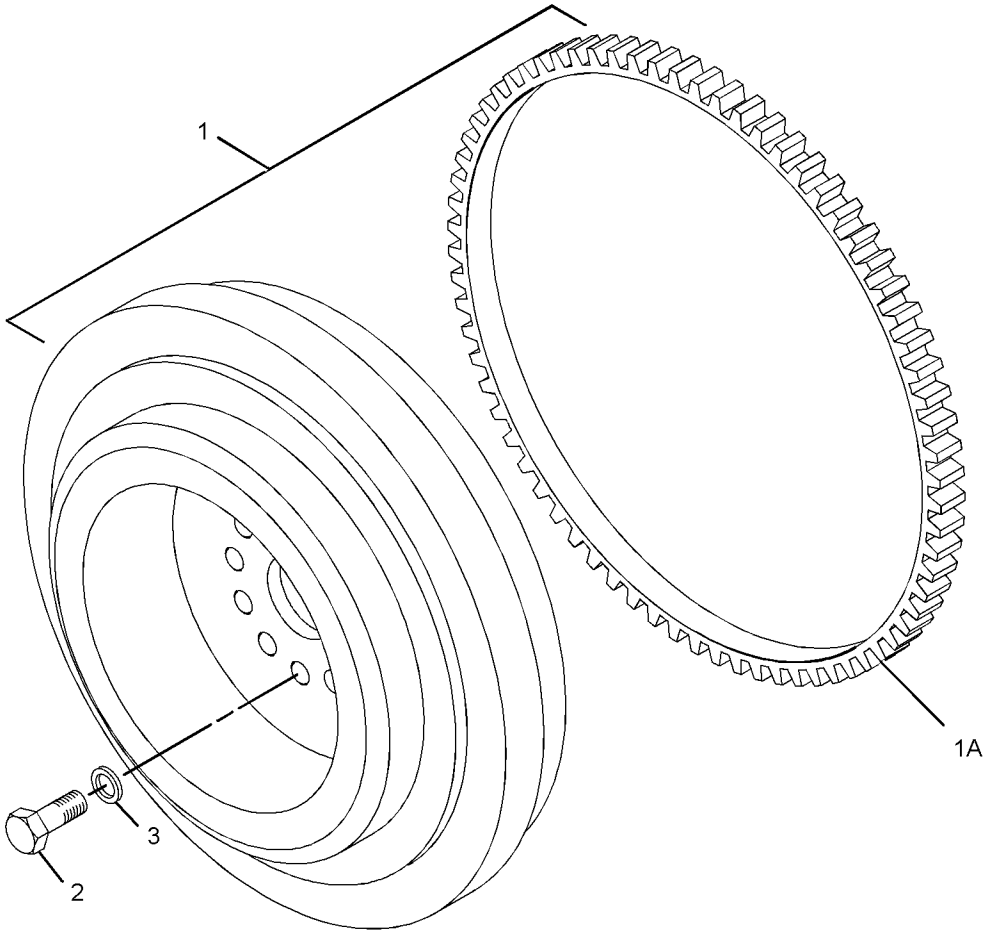

GRAPHIC #1 **<END>** g01402882

345-8840 HOUSING GP-FLYWHEEL

SMCS-1157 **i05649597**

NOTE	REF NO	GRAPHIC REF	PART NUMBER	QTY	PART NAME 1 2 3 4 5 6 (PRODUCT LEVEL)	SEE PAGE
M	1	1	**6I-0423**	2	BOLT (M12X1.75X30-MM)	
M	2	1	**121-0883**	6	BOLT (M10X1.5X30-MM)	
	3	1	**199-3109**	1	PLUG	
	4	1	**287-8597**	2	DOWEL	
	5	1	**341-5724**	1	HOUSING-FLYWHEEL	
	6	1	**375-9272**	1	PLUG	
	7	1	**393-4006**	1	GASKET	

M - METRIC PART

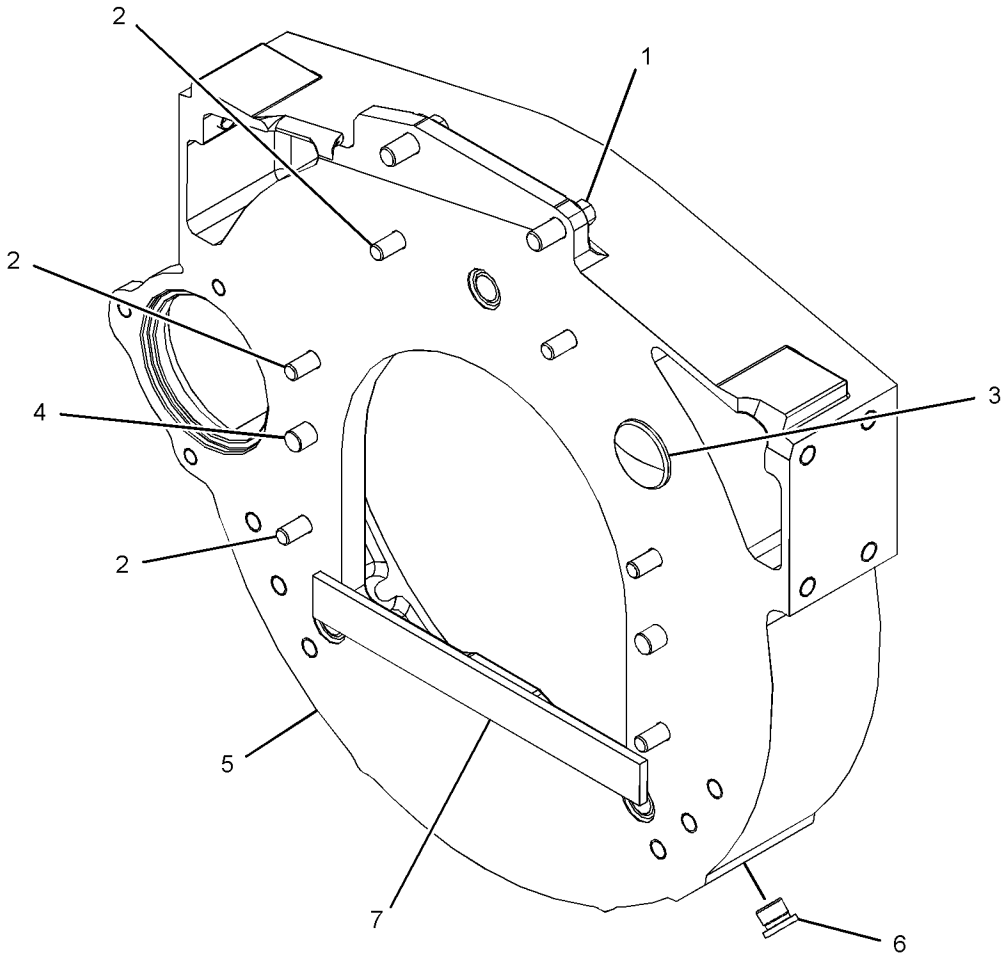

GRAPHIC #1 **<END>** g03589703

346-0507 HOUSING GP-FRONT

SMCS-1151, 1162, 1206 **i05645636**

NOTE	REF NO	GRAPHIC REF	PART NUMBER	QTY	PART NAME 1 2 3 4 5 6 (PRODUCT LEVEL)	SEE PAGE
M	1	1	**6I-0217**	6	BOLT (M8X1.25X20-MM)	
M	2	1	**6I-0254**	3	BOLT (M8X1.25X30-MM)	
M	3	1	**6I-0260**	9	BOLT (M8X1.25X25-MM)	
M	4	1	**6I-0454**	6	BOLT (M10X1.5X70-MM)	
M	5	1	**6I-0645**	4	BOLT (M8X1.25X25-MM)	
	6	1	**7C-4616**	1	BOLT (M12X1.75X45-MM)	
	7	1	**067-6179**	1	DOWEL	
M	8	1	**100-3751**	5	BOLT (M8X1.25X65-MM)	
M	9	1	**101-3895**	2	BOLT (M8X1.25X35-MM)	
M	10	1	**102-9941**	2	BOLT (M12X1.75X25-MM)	
	11	1	**133-1011**	1	WASHER	
	12	1	**216-8634**	1	GEAR-CAMSHAFT (68-TEETH)	
	13	1	**232-3666**	1	WASHER-THRUST	
	14	1	**277-3012**	1	GASKET-COVER	
	15	1	**277-3013**	1	SEAL	
	16	1	**277-4223**	1	PLUG	
	17	1	**291-6515**	1	HOUSING-FRONT	
	18	1	**291-6517**	1	PLATE	
	19	1	**291-6519**	1	GEAR-IDLER	
	20	1	**291-6521**	1	TUBE	
	21	1	**291-6522**	2	CLIP	
	22	1	**291-6523**	1	COVER-FRONT	
	23	1	**291-6524**	1	GASKET	
	24	1	**291-6526**	1	BEARING-NEEDLE	
	25	1	**291-6528**	1	CLIP	
	26	1	**291-6529**	1	CLIP	
	27	1	**293-9737**	1	GEAR (34-TEETH)	
	28	1	**302-6780**	1	BALL BEARING	
	29	1	**369-6810**	1	COVER GP	
	30	1	**381-9252**	1	GEAR-IDLER	

M - METRIC PART

346-0507 **HOUSING GP-FRONT (*contd.*)** **i05645636**

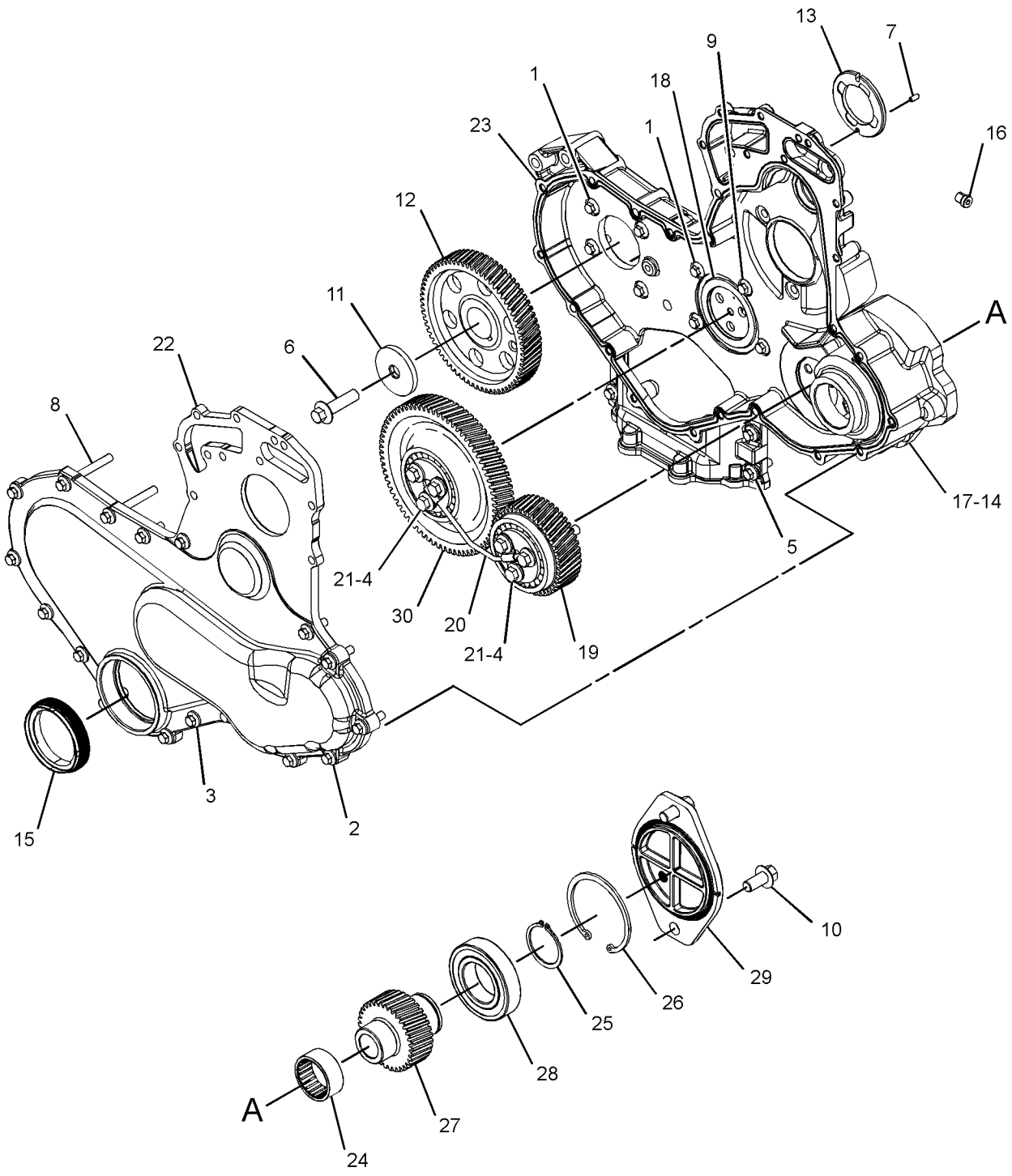

GRAPHIC #1 **<END>** g03590555

348-3503 JET GP-PISTON COOLING

SMCS-1331 **i05645496**

NOTE	REF NO	GRAPHIC REF	PART NUMBER	QTY	PART NAME 1 2 3 4 5 6 (PRODUCT LEVEL)	SEE PAGE
M	1	1	**100-4841**	6	BOLT (M6X1X10-MM)	
	2	1	**329-3796**	6	TUBE AS-OIL JET	

M - METRIC PART

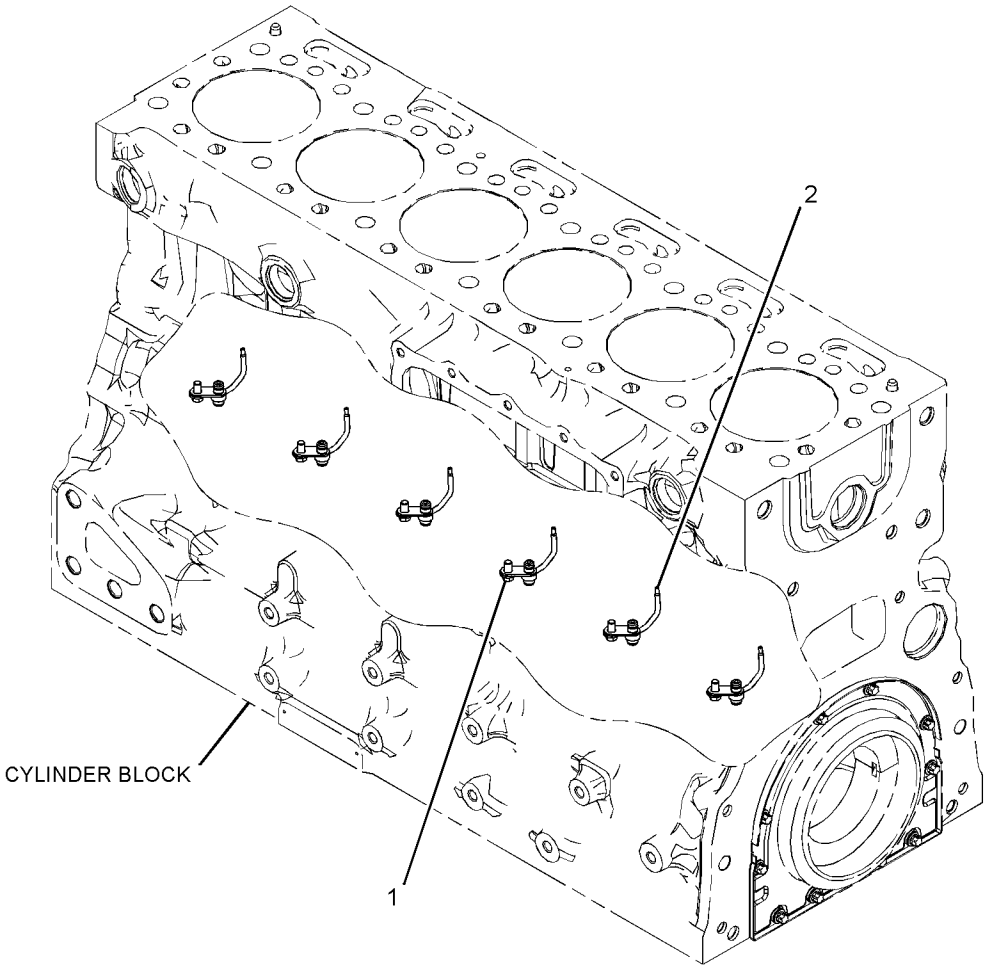

GRAPHIC #1 **<END>** g03316934

BASIC ENGINE

346-0818 LIFTING GP-ENGINE

SMCS-1122 **i05645661**

NOTE	REF NO	GRAPHIC REF	PART NUMBER	QTY	PART NAME 1 2 3 4 5 6 (PRODUCT LEVEL)	SEE PAGE
	1	1	**277-4444**	1	PLATE-LIFTING	
	2	1	**277-4445**	1	PLATE-LIFTING	
M	3	1	**6I-0654**	4	BOLT (M10X1.5X25-MM)	

M - METRIC PART

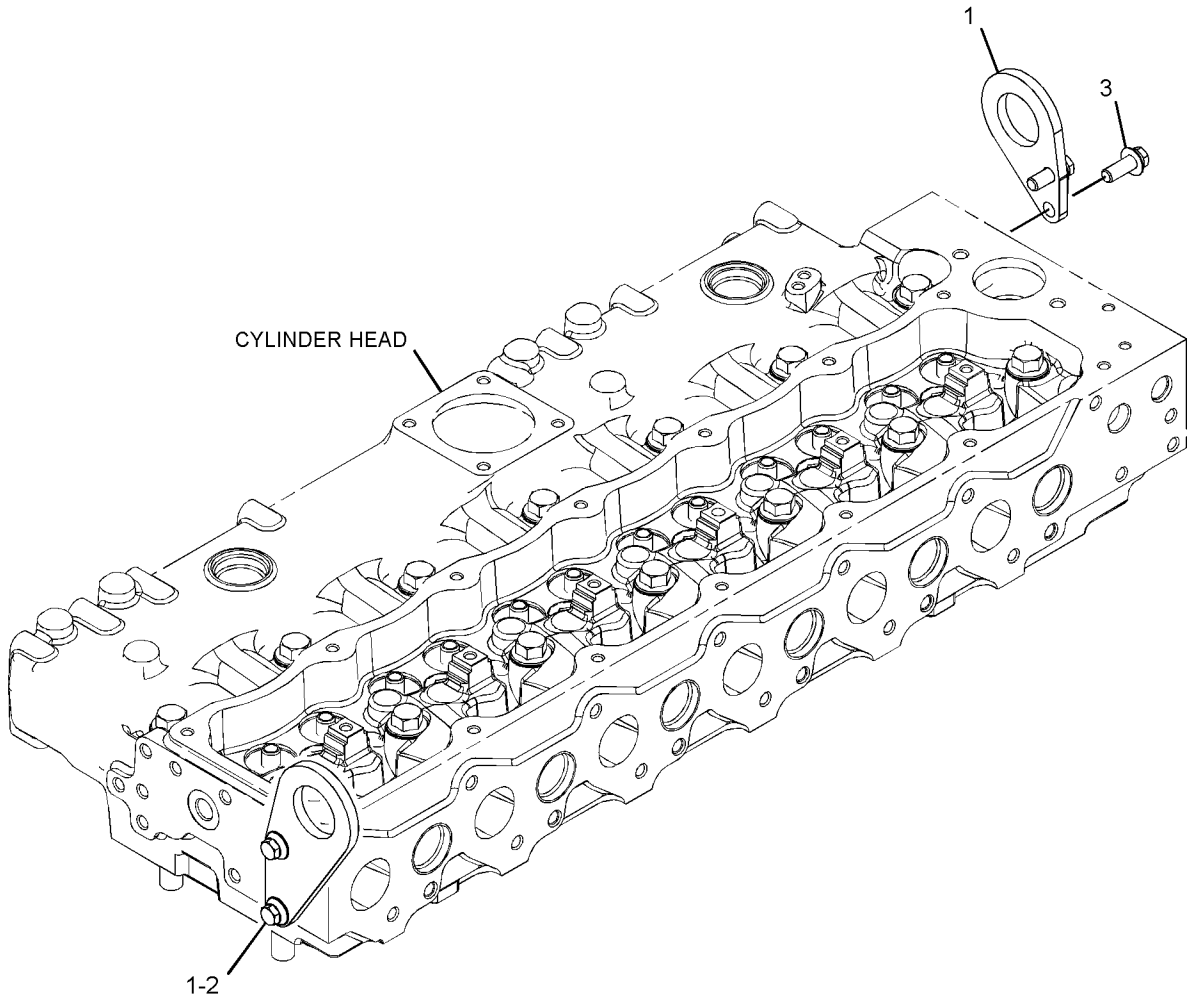

GRAPHIC #1 **<END>** g03587256

346-1510 MOUNTING GP-ENGINE

SMCS-1152, 1153, 1154 **i05582991**

NOTE	REF NO	GRAPHIC REF	PART NUMBER	QTY	PART NAME 1 2 3 4 5 6 (PRODUCT LEVEL)	SEE PAGE
	1	1	**283-8301**	2	BOLT	
	2	1	**283-8302**	6	BOLT	
	3	1	**277-4490**	2	BRACKET-MOUNTING	

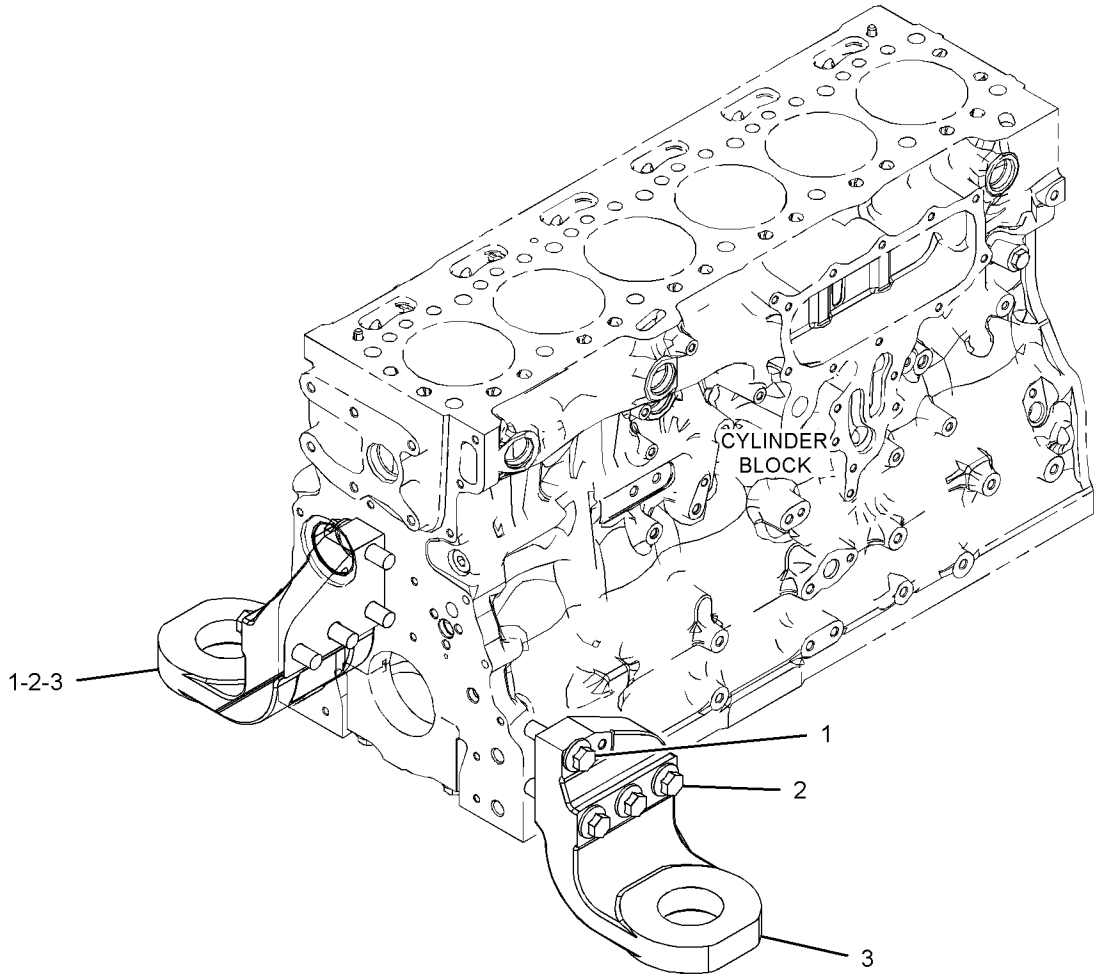

GRAPHIC #1 **<END>** g03507641

BASIC ENGINE

345-9659 PAN GP-OIL

SMCS-1302 **i05646893**

NOTE	REF NO	GRAPHIC REF	PART NUMBER	QTY	PART NAME 1 2 3 4 5 6 (PRODUCT LEVEL)	SEE PAGE
M	1	1	**6I-0217**	28	BOLT (M8X1.25X20-MM)	
M	2	1	**6I-0260**	2	BOLT (M8X1.25X25-MM)	
M	3	1	**8T-0269**	2	BOLT-SOCKET HEAD (M6X1X20-MM)	
	4	1	**6I-0572**	2	BOLT (M8X1.25X20-MM)	
	5	1	**230-8094**	1	BRIDGE	
	6	1	**283-4283**	1	GAUGE AS-OIL LEVEL (DIPSTICK) (ENGINE)	
	6A	1	**275-9891**	2	SEAL-O-RING	
	7	1	**283-4302**	1	TUBE-OIL SUCTION	
	8	1	**351-4749**	1	GASKET-OIL PAN	
	9	1	**354-8322**	1	PLUG	
	10	1	**354-8538**	1	PAN AS-OIL	
	10A	1	**8L-2786**	2	SEAL-O-RING	
	10B	1	**9S-4185**	2	PLUG-O-RING	
	11	1	**6I-4681**	1	GASKET	
	12	1	**251-8336**	1	TUBE AS	
	13	1	**6I-1497**	1	SEAL	

M - METRIC PART

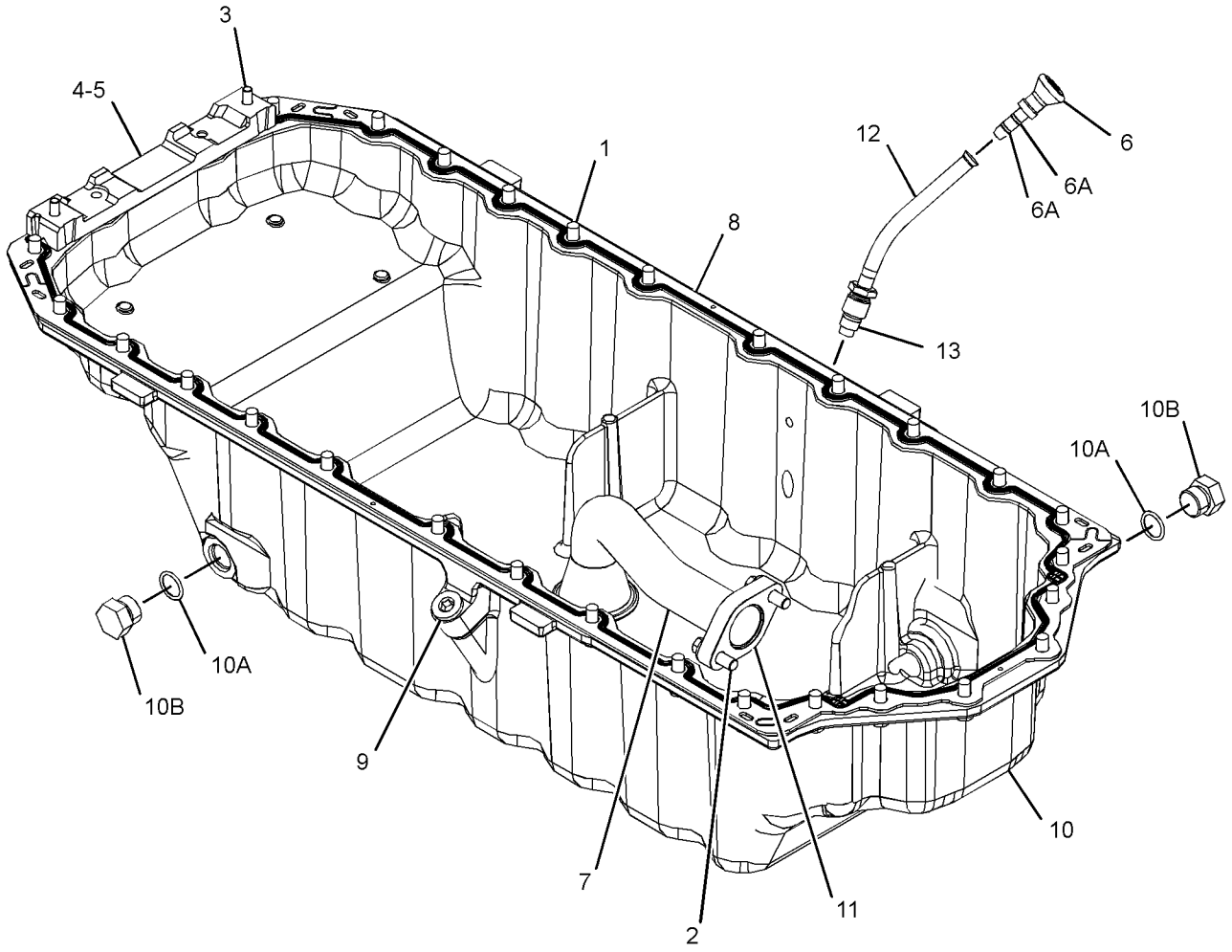

GRAPHIC #1 **<END>** g03590343

393-5558 PISTON & ROD GP

SMCS-1225 **i05646970**

NOTE	REF NO	GRAPHIC REF	PART NUMBER	QTY	PART NAME 1 2 3 4 5 6 (PRODUCT LEVEL)	SEE PAGE
	1	1	**331-0290**	6	CONNECTING ROD GP	
		1	**276-7478**	1	BUSHING	
		1	**323-9312**	2	BOLT (M10X1X50-MM)	
	2	1	**380-4838**	6	PISTON GP	
L	3	1	*317-5482*	6	BEARING	
L	4	1	*317-5483*	6	BEARING	
N	5	1	**124-3536**	12	RING-RETAINING	
					AVAILABLE REPAIR KIT(S):	
L			**360-1564**	1	KIT-BEARING (PISTON)	
					(KIT INCLUDES BEARINGS)	
			389-7188	1	KIT-RING	
					(KIT INCLUDES RINGS-PISTON)	
N			**418-0876**	1	KIT-PISTON	
					(KIT INCLUDES RINGS-PISTON, RING-RETAINING, PIN, AND PISTON)	

L - KIT MARKED L SERVICES PARTS MARKED L
N - KIT MARKED N SERVICES PARTS MARKED N

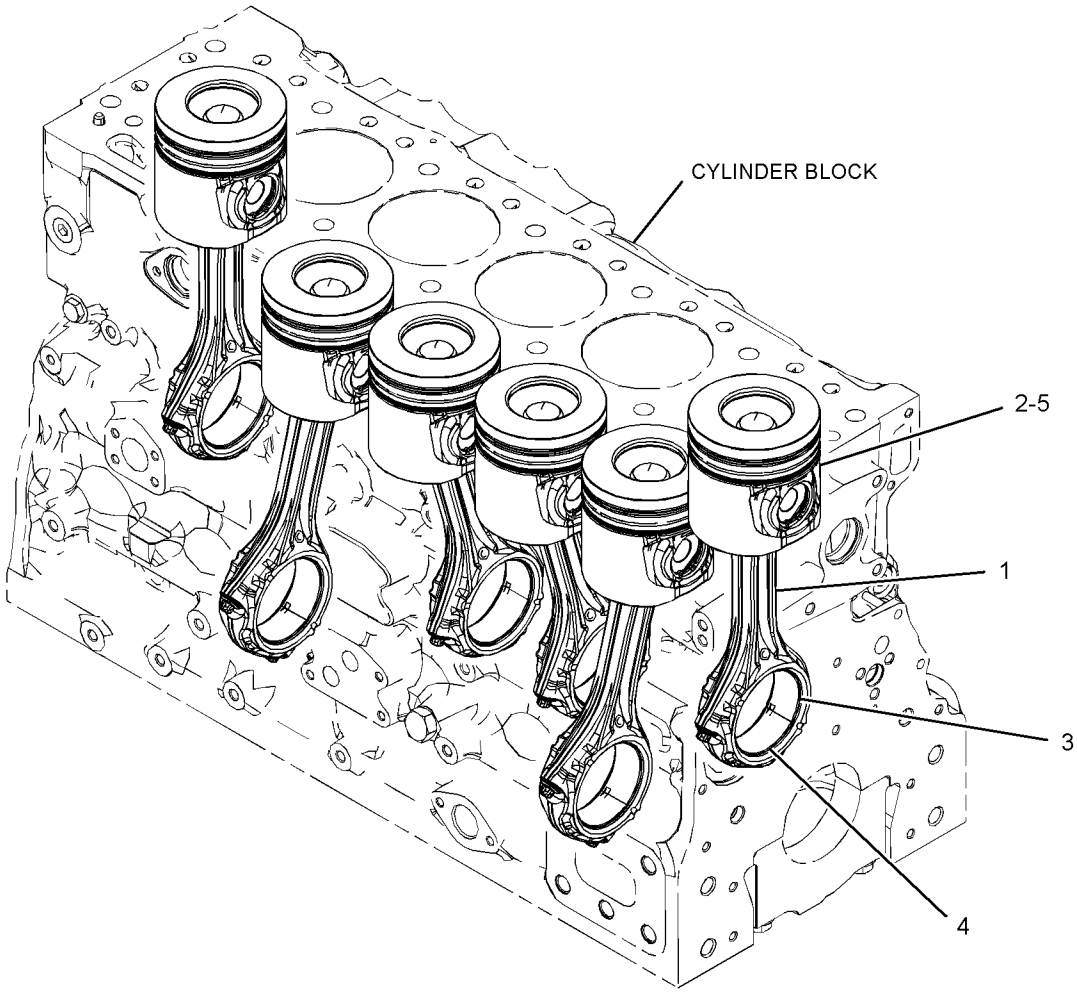

GRAPHIC #1 **<END>** g03320328

346-1841 PLUG GP-CYLINDER HEAD

SMCS-1100 **i05662826**

NOTE	REF NO	GRAPHIC REF	PART NUMBER	QTY	PART NAME 1 2 3 4 5 6 (PRODUCT LEVEL)	SEE PAGE
	1	1	**199-9751**	1	SEAL-O-RING	
	2	1	**232-1322**	1	PLUG	

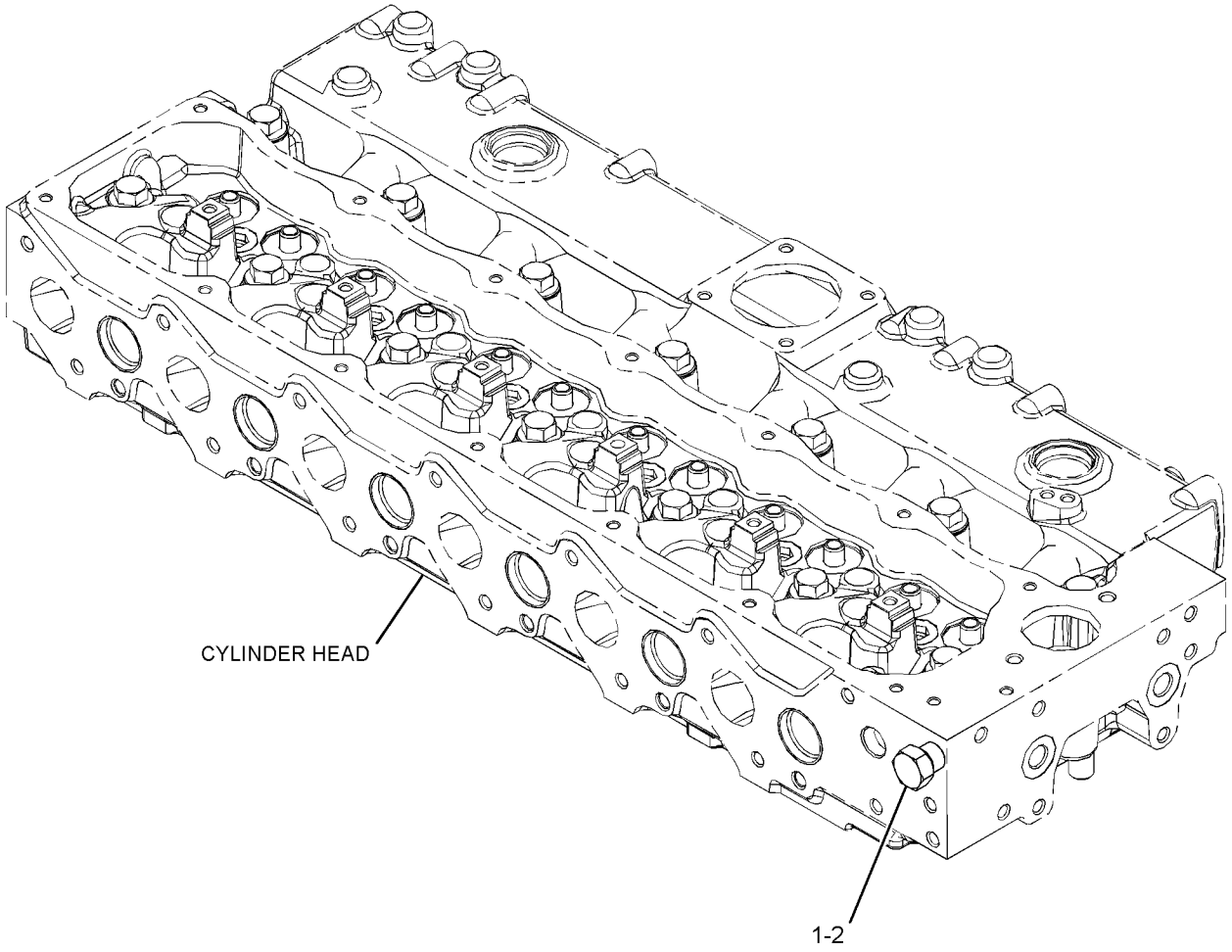

GRAPHIC #1 **<END>** g03316905

346-2908 PLUG GP-ENGINE

SMCS-1100, 1201 **i05723850**

NOTE	REF NO	GRAPHIC REF	PART NUMBER	QTY	PART NAME 1 2 3 4 5 6 (PRODUCT LEVEL)	SEE PAGE
	1	1	**067-6823**	3	PLUG	

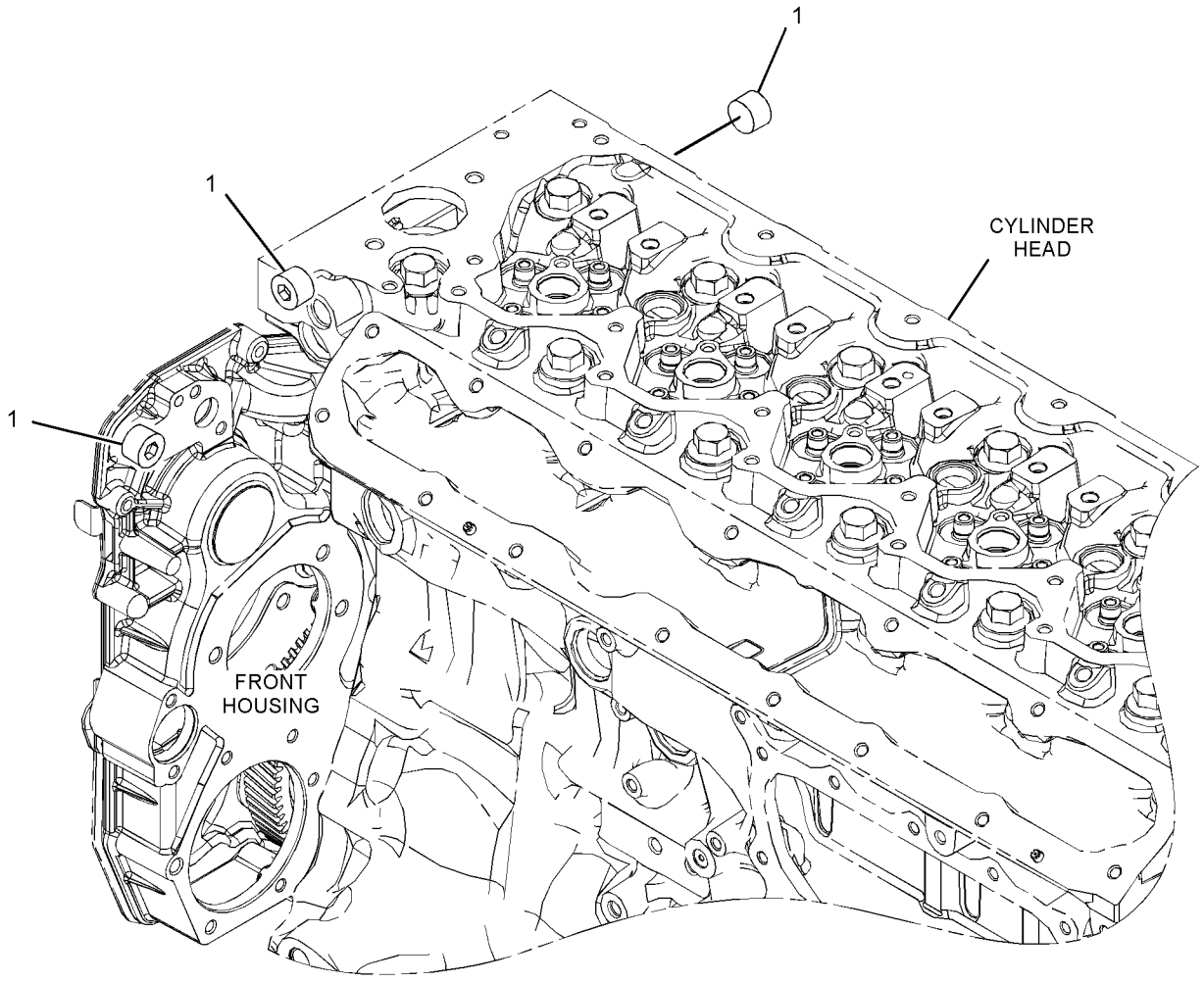

GRAPHIC #1 **<END>** g03380722

358-3097 PULLEY GP-CRANKSHAFT

SMCS-1205 **i05648635**

NOTE	REF NO	GRAPHIC REF	PART NUMBER	QTY	PART NAME 1 2 3 4 5 6 (PRODUCT LEVEL)	SEE PAGE
	1	1	**274-1935**	6	BOLT	
	2	1	**342-6510**	3	BOLT-TORX (M14X1.5X70-MM)	
	3	1	**351-1724**	1	DAMPER	
	4	1	**355-2243**	1	PULLEY	

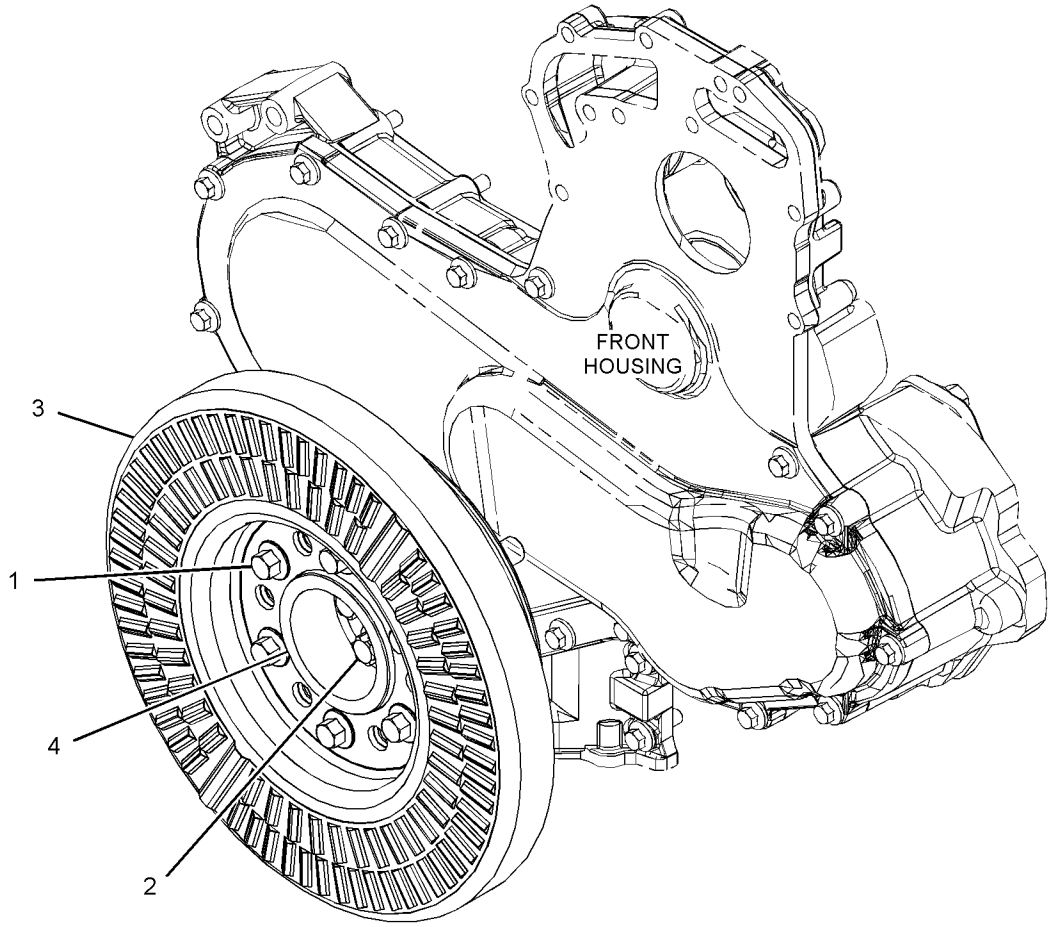

GRAPHIC #1 **<END>** g03591676

391-3197 ROCKER ARM GP

SMCS-1123 **i05648645**

NOTE	REF NO	GRAPHIC REF	PART NUMBER	QTY	PART NAME 1 2 3 4 5 6 (PRODUCT LEVEL)	SEE PAGE
	1	1	**252-6438**	6	SEAL-INLET VALVE	
	2	1	**254-3954**	6	SEAL-EXHAUST VALVE	
	3	1	**315-3393**	24	COLLET	
	4	1	**315-3394**	6	VALVE-EXHAUST	
Y	5	1	**335-5602**	1	VALVE MECHANISM GP	24
	6	1	**335-5606**	12	SPRING-VALVE	
	7	1	**335-5607**	12	RETAINER-SPRING	
	8	1	**381-6235**	6	VALVE-INLET	

Y - SEPARATE ILLUSTRATION

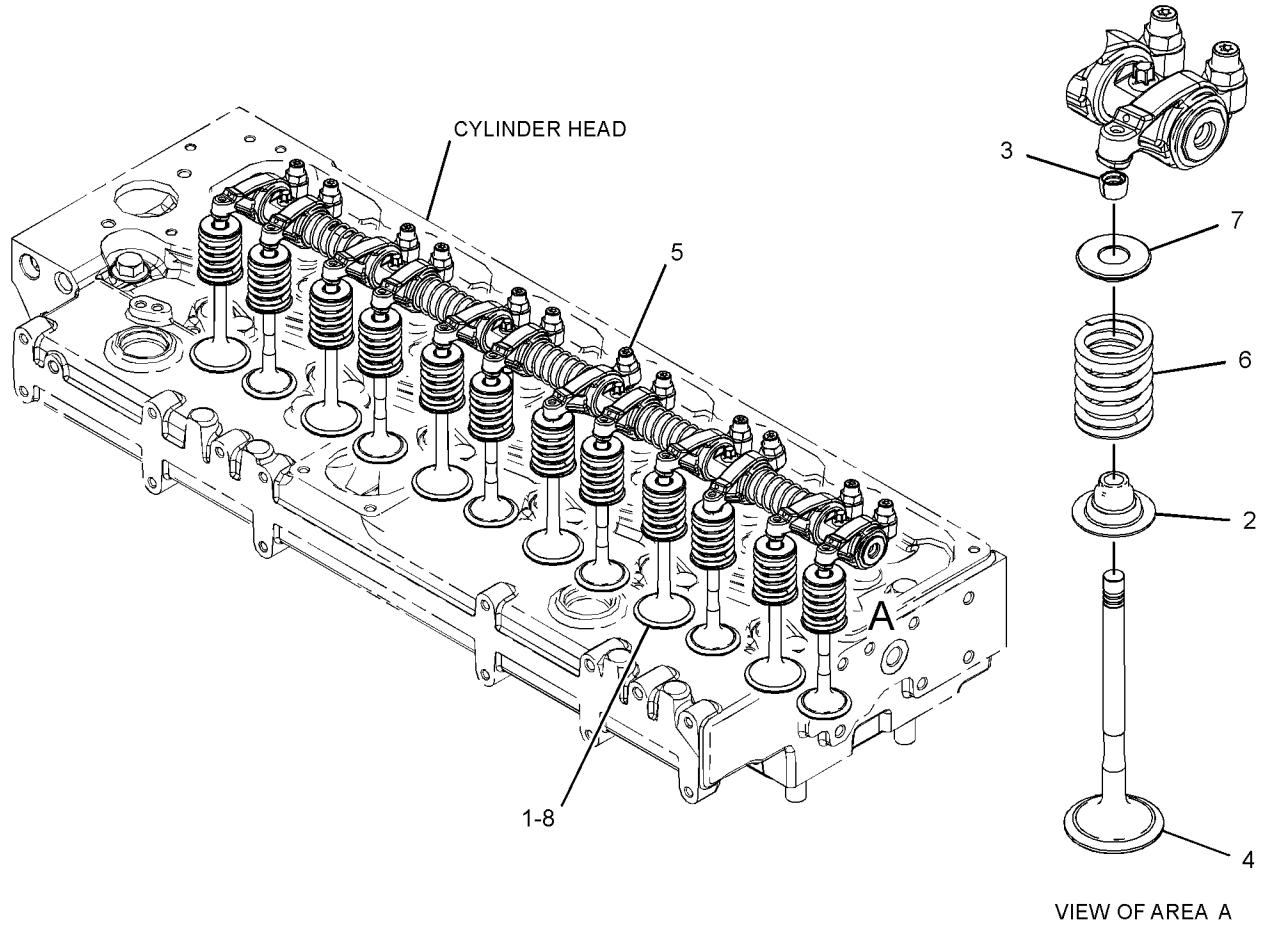

GRAPHIC #1 **<END>** g03317583

335-5602 VALVE MECHANISM GP

PART OF 391-3197 ROCKER ARM GP

SMCS-1102, 1121, 1123, 1209 **i05664405**

NOTE	REF NO	GRAPHIC REF	PART NUMBER	QTY	PART NAME 1 2 3 4 5 6 (PRODUCT LEVEL)	SEE PAGE
	1	1	**335-5604**	1	SHAFT AS-ROCKER ARM	
		1	**276-9200**	2	PLUG-SHAFT END	
		1	**335-5605**	1	SHAFT-ROCKER ARM	
	2	1	**225-5961**	2	WASHER (26.7X34.32X0.38-MM THK)	
M	3	1	**8T-9535**	1	BOLT-SOCKET HEAD (M8X1.25X60-MM)	
	4	1	**225-5962**	5	BOLT (M8X1.25X30-MM)	
	5	1	**225-5959**	2	CLIP	
	6	1	**225-5638**	5	SPRING	
	7	1	**225-5625**	6	LEVER AS	
		1	**5B-9079**	1	NUT-JAM (3/8-24-THD)	
		1	**185-1546**	1	SCREW	
	8	1	**225-5640**	6	LEVER AS	
		1	**5B-9079**	1	NUT-JAM (3/8-24-THD)	
		1	**185-1546**	1	SCREW	

M - METRIC PART

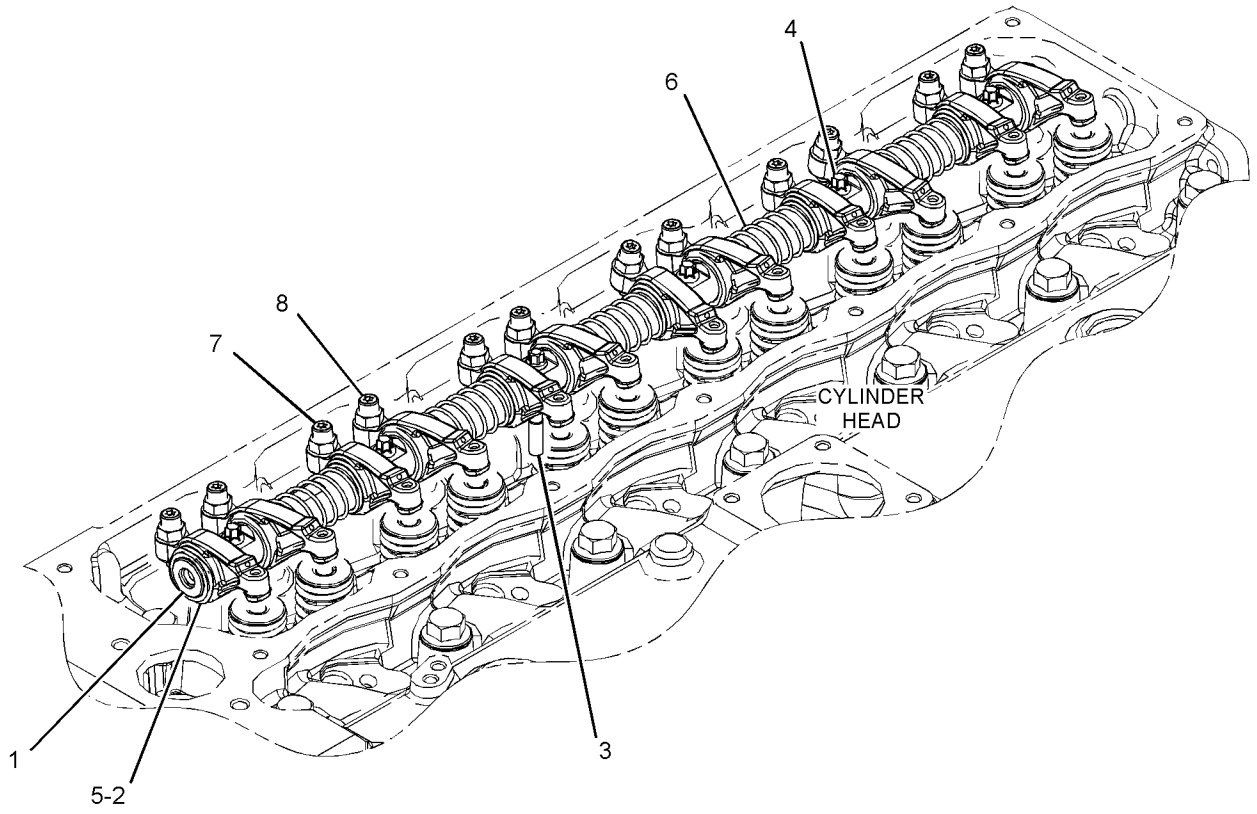

GRAPHIC #1 **<END>** g03319968

425-0181 BREATHER GP

SMCS-1317 **i05644559**

NOTE	REF NO	GRAPHIC REF	PART NUMBER	QTY	PART NAME 1 2 3 4 5 6 (PRODUCT LEVEL)	SEE PAGE
	1	1	**422-0508**	1	BRACKET	
	2	1	**422-7707**	1	HOSE	
Y	3	1	*424-9429*	1	COVER GP-VALVE MECHANISM	3
M	4	1	**6I-0217**	3	BOLT (M8X1.25X20-MM)	
M	5	1	**6I-0254**	16	BOLT (M8X1.25X30-MM)	
M	6	1	**178-3336**	2	NUT-HEX FLANGE (M8X1.25-THD)	
	7	1	**032-9020**	1	CLIP	
	8	1	**280-2023**	1	HOSE	
	9	1	**306-2333**	1	BASE GP-BREATHER	
	10	1	**2S-3440**	2	CLAMP-HOSE	
	11	1	**7C-1281**	1	BRACKET	

M - METRIC PART
Y - SEPARATE ILLUSTRATION

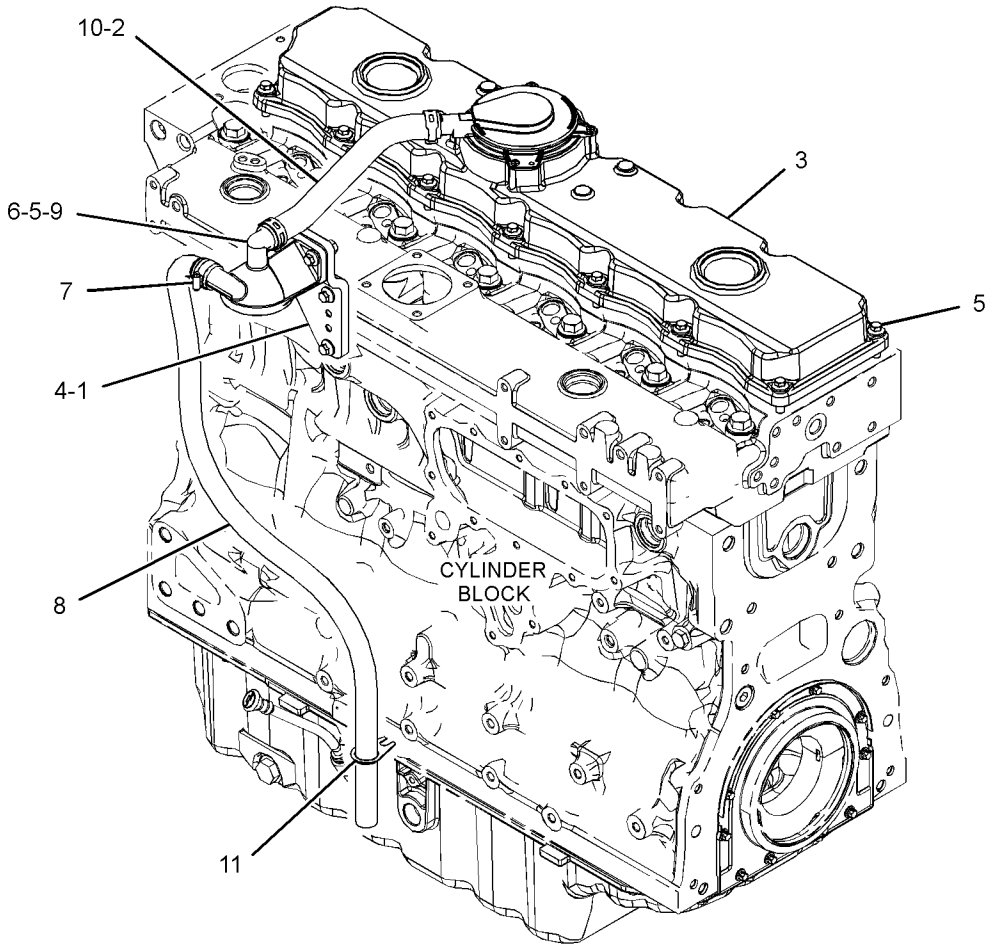

GRAPHIC #1 **<END>** g03589312

419-6486 FILLER GP-ENGINE OIL

SMCS-1316 **i05644809**

NOTE	REF NO	GRAPHIC REF	PART NUMBER	QTY	PART NAME 1 2 3 4 5 6 (PRODUCT LEVEL)	SEE PAGE
	1	1	**225-6522**	1	PLUG-CUP	
	2	1	**285-3058**	1	FILLER AS-OIL	
	2A	1	**234-6171**	1	SEAL-O-RING	
	2B	1	**130-9888**	1	CAP-OIL FILLER (ENGINE)	
	2C	1	**113-1504**	1	SEAL-O-RING	
M	3	1	**6I-0217**	2	BOLT (M8X1.25X20-MM)	

M - METRIC PART

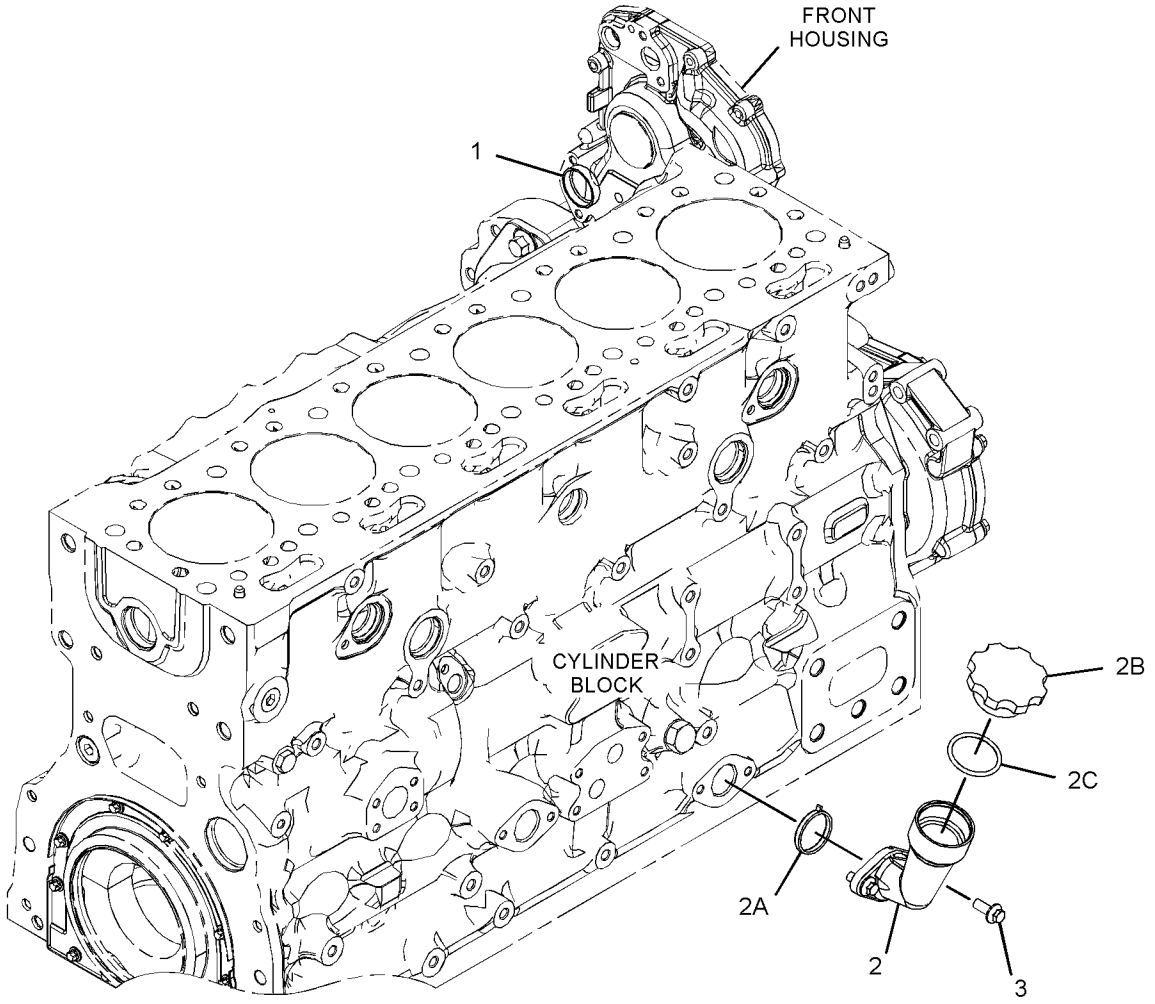

GRAPHIC #1 **<END>** g03596564

346-0220 FILTER GP-ENGINE OIL

SMCS-1306, 1308 **i05723838**

NOTE	REF NO	GRAPHIC REF	PART NUMBER	QTY	PART NAME 1 2 3 4 5 6 (PRODUCT LEVEL)	SEE PAGE
	1	1	**269-8325**	1	FILTER-ENGINE OIL	

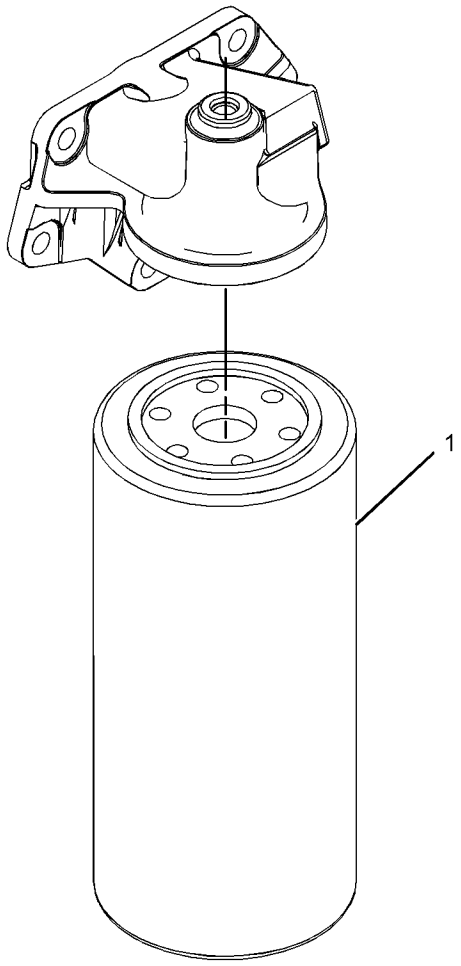

GRAPHIC #1 **<END>** g01198493

424-1869 FILTER GP-ENGINE OIL

SMCS-1306, 1308 **i05649596**

NOTE	REF NO	GRAPHIC REF	PART NUMBER	QTY	PART NAME 1 2 3 4 5 6 (PRODUCT LEVEL)	SEE PAGE
	1	1	**273-5711**	1	FILTER-FUMES DISPOSAL	

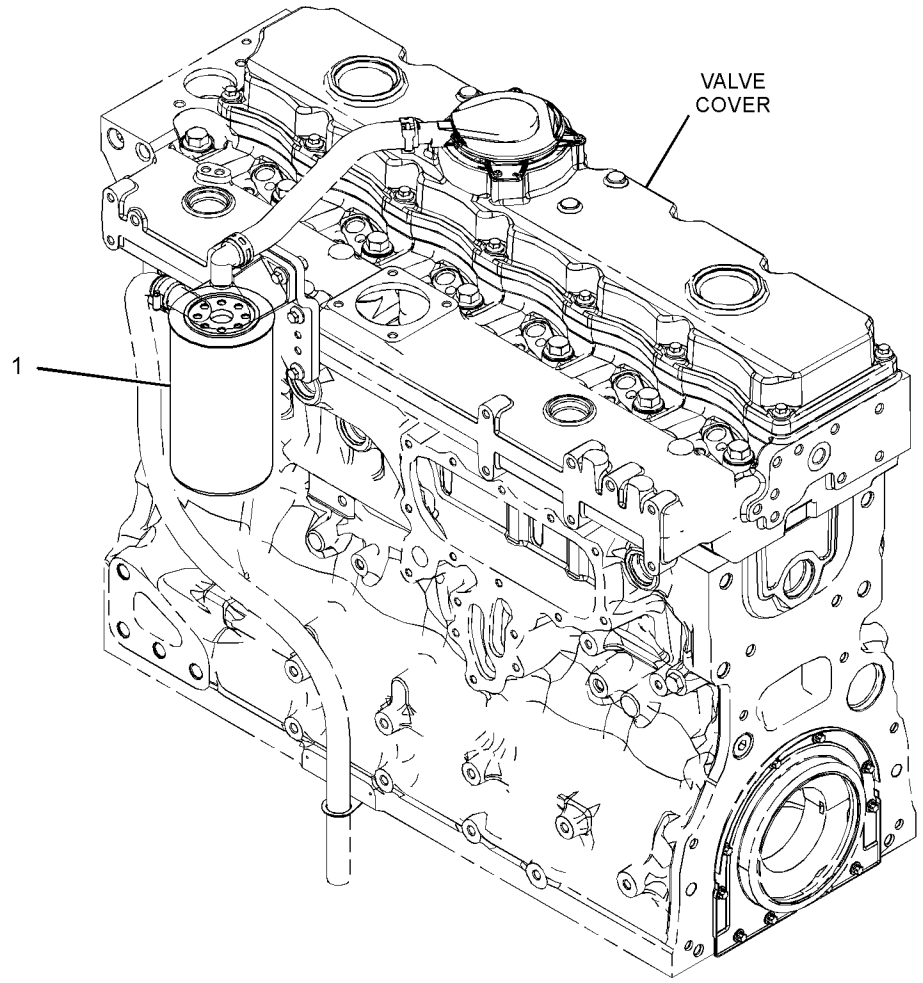

GRAPHIC #1 **<END>** g03596205

346-0737 PUMP GP-ENGINE OIL

SMCS-1304, 1315 **i05723741**

NOTE	REF NO	GRAPHIC REF	PART NUMBER	QTY	PART NAME 1 2 3 4 5 6 (PRODUCT LEVEL)	SEE PAGE
	1	1	**373-8014**	1	PUMP-OIL	
	2	1	**6I-1090**	4	BOLT (M8X1.25X40-MM)	

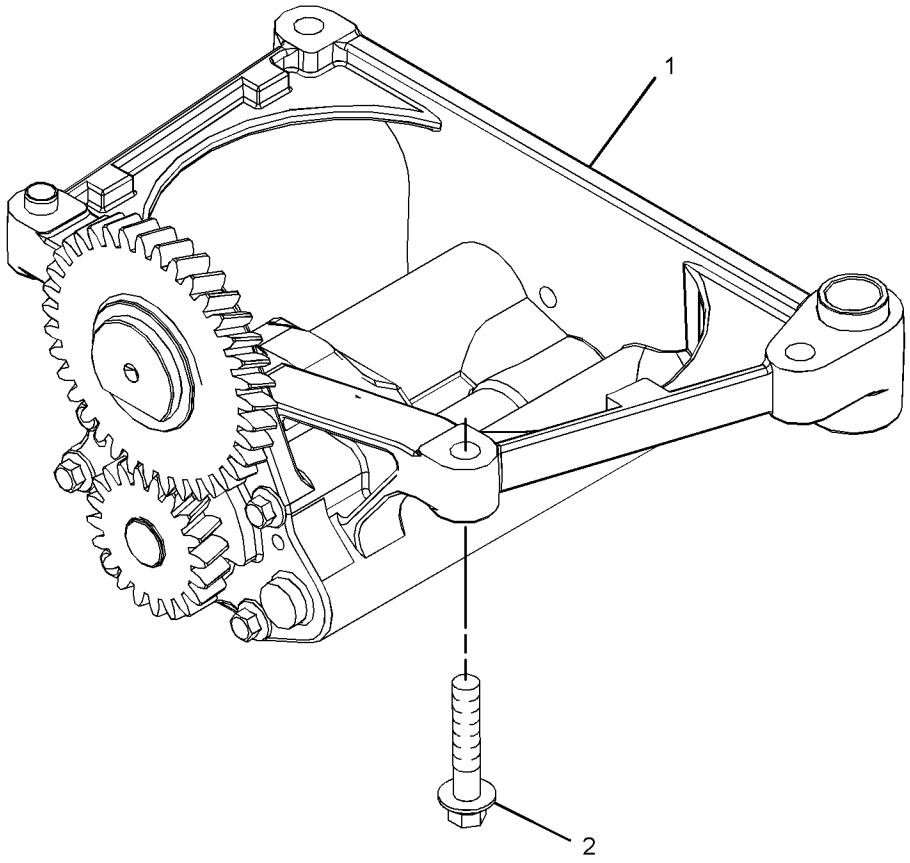

GRAPHIC #1 **<END>** g02815299

326-7401 COOLER GP-ENGINE OIL

PART OF 346-0097 COOLER GP-ENGINE OIL

SMCS-1378 **i05644584**

NOTE	REF NO	GRAPHIC REF	PART NUMBER	QTY	PART NAME 1 2 3 4 5 6 (PRODUCT LEVEL)	SEE PAGE
M	1	1	**6I-0260**	1	BOLT (M8X1.25X25-MM)	
	2	1	**6I-4793**	6	BOLT (M8X1.25X50-MM)	
	3	1	**277-2500**	1	GASKET	
	4	1	**281-7039**	1	COOLER-OIL (ENGINE)	
	5	1	**281-7040**	1	GASKET	

M - METRIC PART

326-7401 **COOLER GP-ENGINE OIL (*contd.*)** **i05644584**

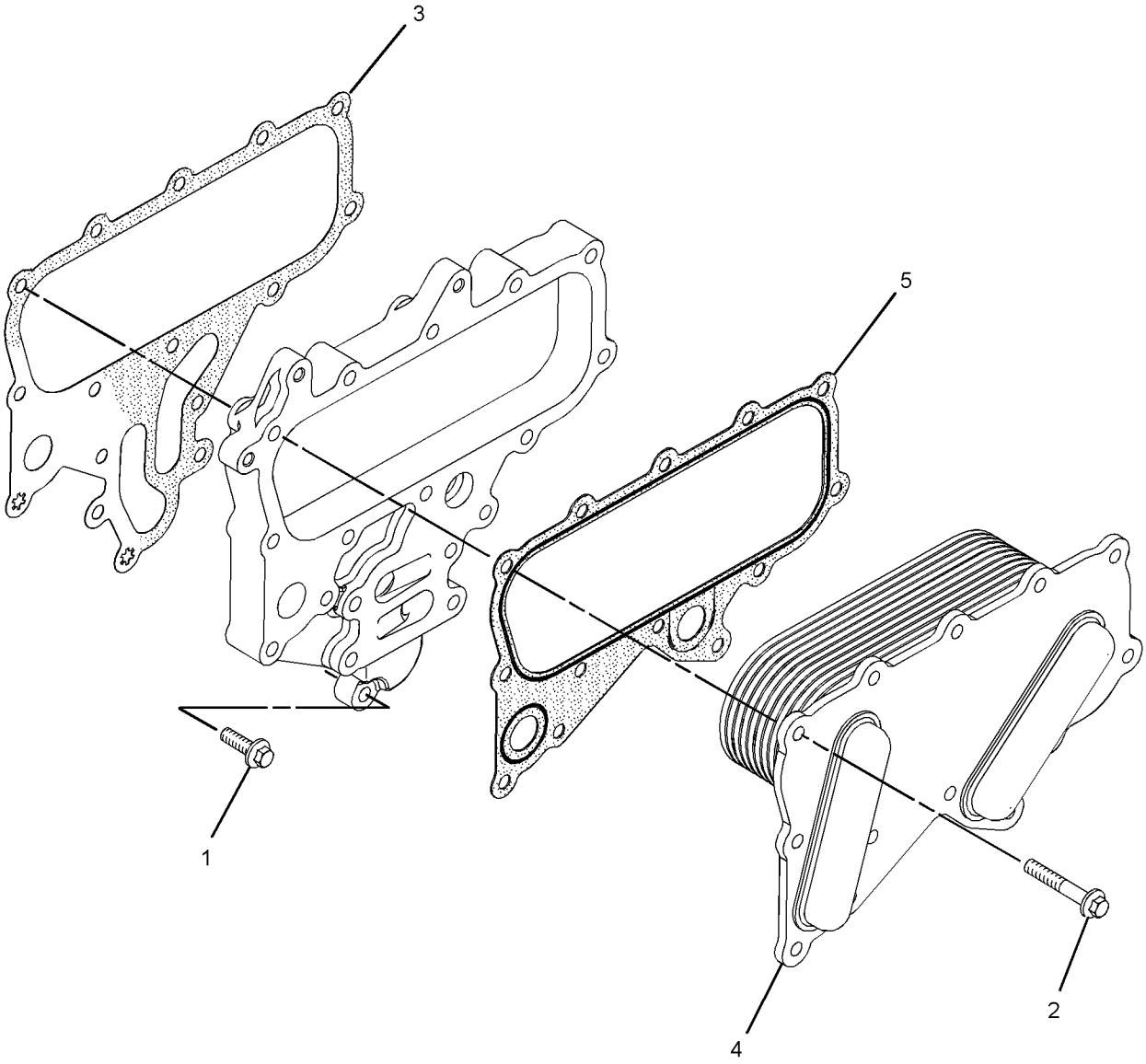

GRAPHIC #1 **<END>** g01508024

346-0097 COOLER GP-ENGINE OIL

SMCS-1378 **i05644588**

NOTE	REF NO	GRAPHIC REF	PART NUMBER	QTY	PART NAME 1 2 3 4 5 6 (PRODUCT LEVEL)	SEE PAGE
	1	1	**225-7944**	2	GASKET	
	2	1	**232-3751**	1	PLATE	
	3	1	**277-2538**	2	GASKET	
	4	1	**283-4559**	1	HEAD AS-OIL FILTER	
Y	5	1	**326-7401**	1	COOLER GP-ENGINE OIL	30
	6	1	**367-7142**	1	TUBE AS-OIL	
M	7	1	**6I-0260**	4	BOLT (M8X1.25X25-MM)	
	8	1	**6I-0456**	4	BOLT (M8X1.25X45-MM)	
	9	1	**6I-4793**	11	BOLT (M8X1.25X50-MM)	

M - METRIC PART
Y - SEPARATE ILLUSTRATION

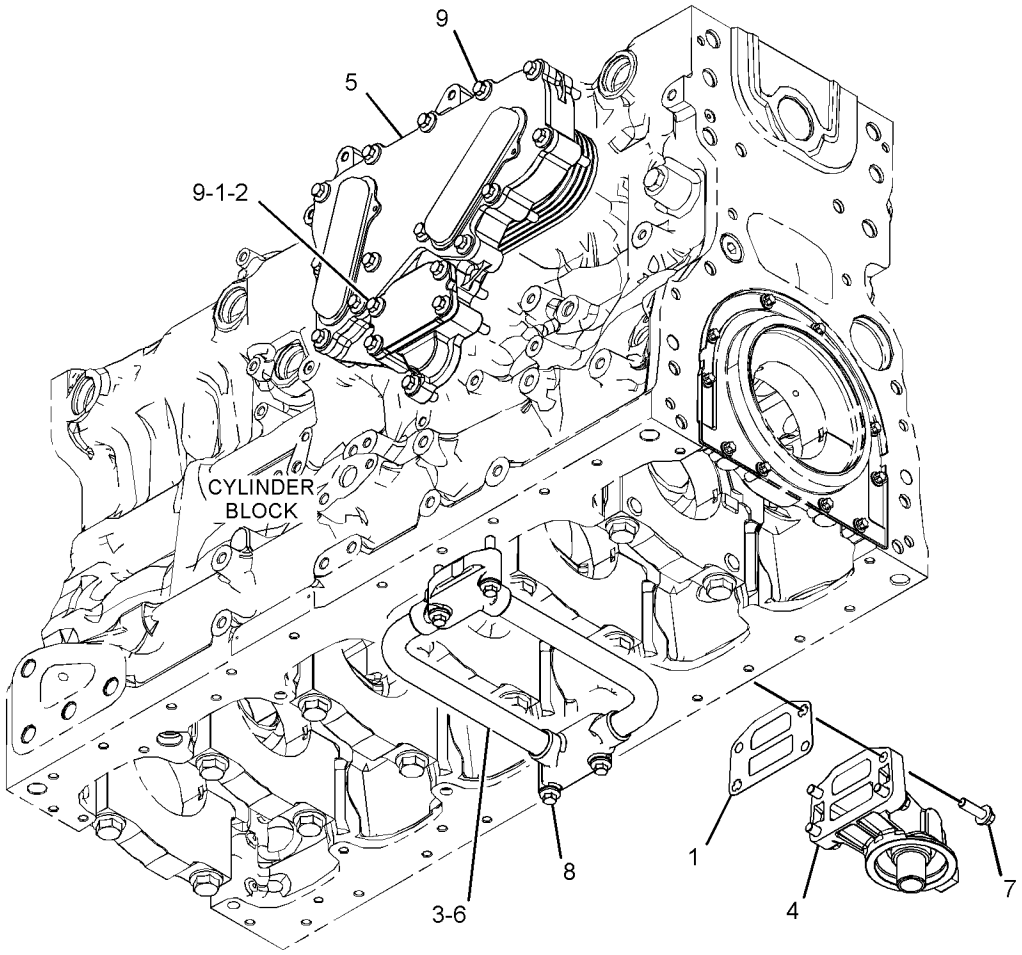

GRAPHIC #1 **<END>** g03588877

346-0411 PUMP GP-WATER

SMCS-1361 **i05648641**

NOTE	REF NO	GRAPHIC REF	PART NUMBER	QTY	PART NAME 1 2 3 4 5 6 (PRODUCT LEVEL)	SEE PAGE
	1	1	**113-8129**	2	BOLT (M8X1.25X75-MM)	
	2	1	**123-2899**	2	BOLT (M10X1.5X40-MM)	
	4	1	**277-2925**	1	CONNECTION AS	
		1	**225-7738**	1	SEAL-O-RING	
		1	**277-2923**	1	GASKET	
	5	1	**281-8744**	1	GASKET-WATER REGULATOR	
	6	1	**354-4754**	1	KIT-WATER PUMP	
					(KIT INCLUDES GASKET & PUMP GP)	
	7	1	**417-7782**	1	REGULATOR AS-WATER TEMPERATURE (INCLUDES CONNECTOR) (WATER TEMPERATURE)	
M	8	1	**6I-0217**	2	BOLT (M8X1.25X20-MM)	
M	9	1	**6I-0254**	2	BOLT (M8X1.25X30-MM)	
	10	1	**6I-0839**	5	BOLT (M8X1.25X70-MM)	
	11	1	**225-8019**	1	GASKET	

M - METRIC PART

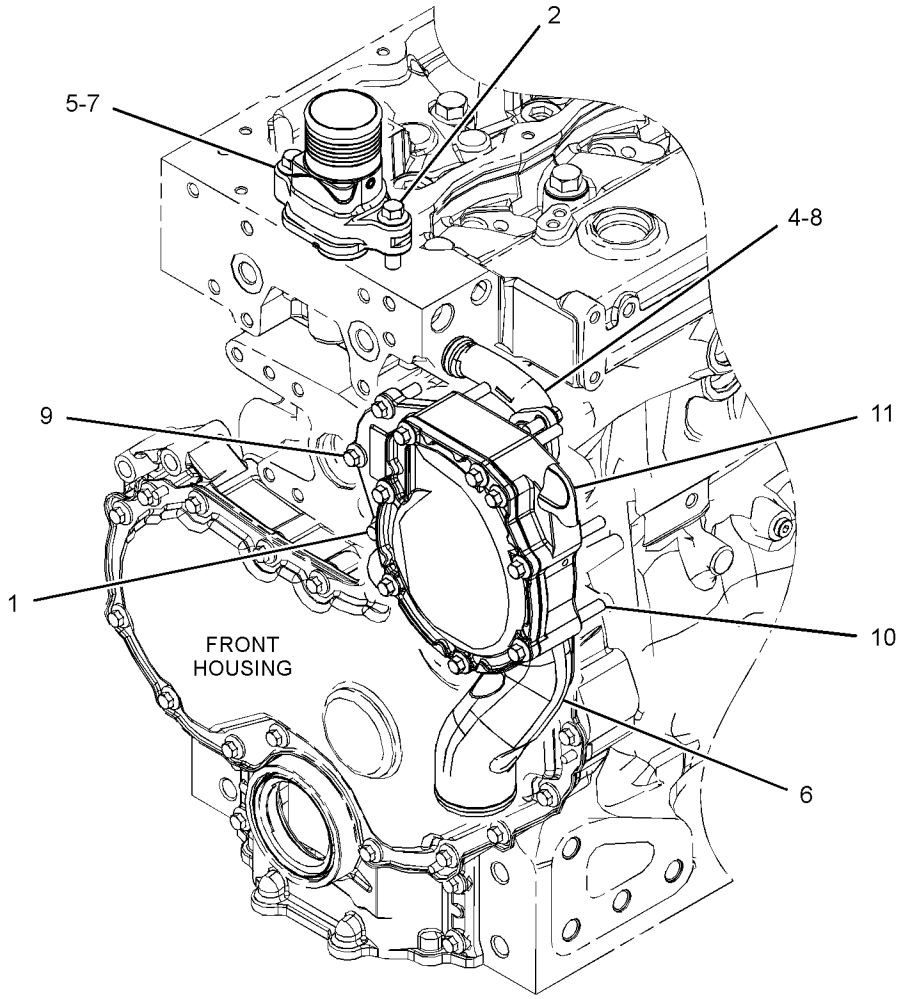

GRAPHIC #1 **<END>** g03357993

AIR INLET AND EXHAUST SYSTEM

346-0773 MANIFOLD GP-INLET

SMCS-1058 **i05645670**

NOTE	REF NO	GRAPHIC REF	PART NUMBER	QTY	PART NAME 1 2 3 4 5 6 (PRODUCT LEVEL)	SEE PAGE
	1	1	**277-4374**	1	ELBOW AS-AIR INLET	
		1	**238-8288**	1	GASKET-INLET	
M	2	1	**6I-0645**	4	BOLT (M8X1.25X25-MM)	

M - METRIC PART

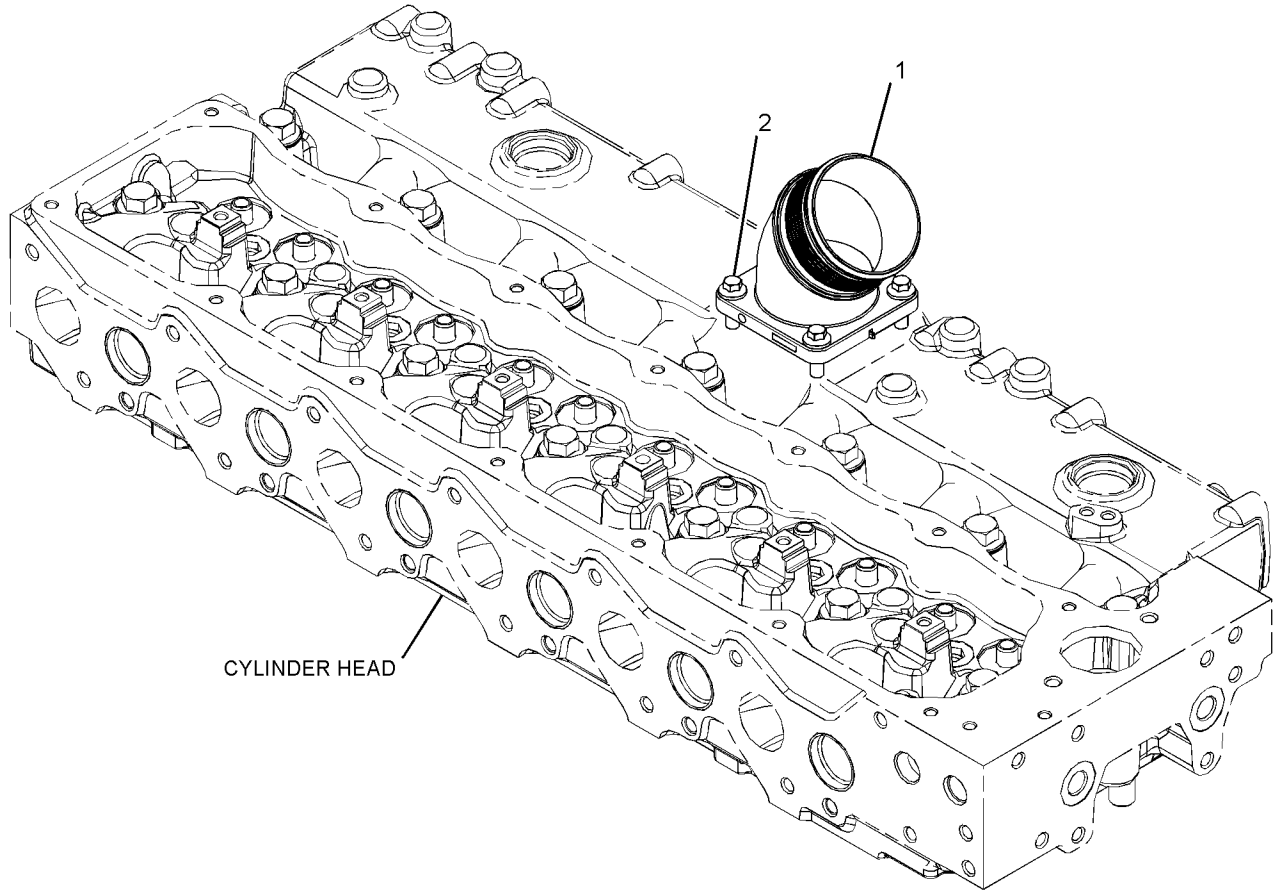

GRAPHIC #1 **<END>** g03316898

419-9129 TURBOCHARGER GP

SMCS-1052, 1053 **i05649574**

NOTE	REF NO	GRAPHIC REF	PART NUMBER	QTY	PART NAME 1 2 3 4 5 6 (PRODUCT LEVEL)	SEE PAGE
	1	1	**6I-0563**	4	NUT (M10X1.5-THD)	
M	2	1	**6I-0217**	5	BOLT (M8X1.25X20-MM)	
	3	1	**238-8292**	12	BOLT-FLANGE HEAD	
	4	1	**278-0017**	1	GASKET	
	5	1	**279-9361**	2	GASKET-EXHAUST	
	6	1	**286-7851**	12	SPACER	
	7	1	**336-9839**	1	MANIFOLD-EXHAUST	
	8	1	**350-2375**	1	TUBE AS	
	9	1	**350-2377**	1	LINES GP-TURBOCHARGER	
M	9A	1	**277-9938**	1	BOLT-SPECIAL (BANJO)	
	9B	1	**277-9939**	2	WASHER	
	9C	1	**277-9940**	1	SEAL-O-RING	
	10	1	**361-7519**	4	ROD-THREADED	
	11	1	**431-4574**	1	TURBOCHARGER	
	12	1	**437-4170**	1	GASKET	

M - METRIC PART

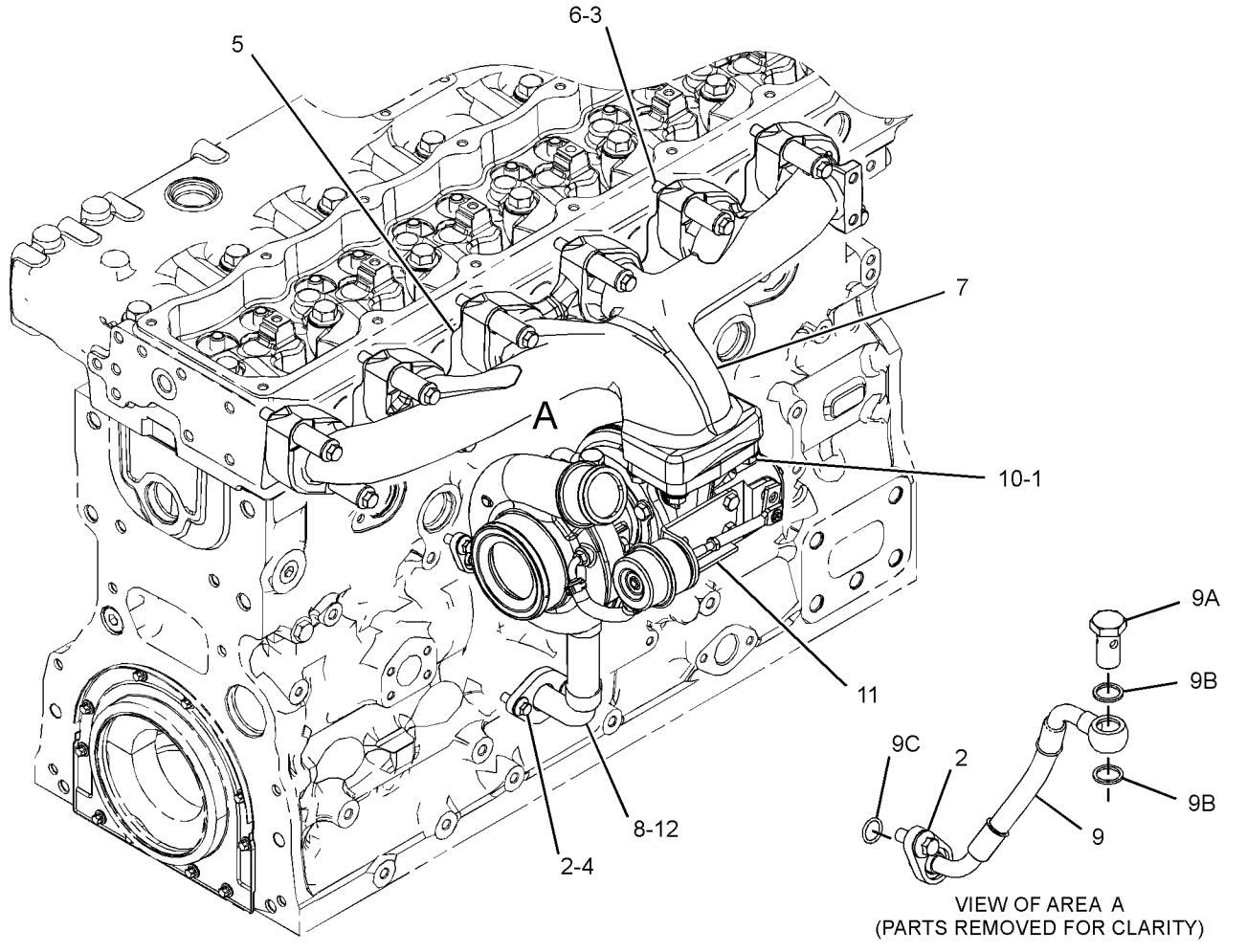

GRAPHIC #1 **<END>** g03593460

423-5411 FILTER GP-FUEL

SMCS-1261 **i05645271**

NOTE	REF NO	GRAPHIC REF	PART NUMBER	QTY	PART NAME 1 2 3 4 5 6 (PRODUCT LEVEL)	SEE PAGE
	1	1	**252-6334**	1	FILTER GP-WATER SEP & FUEL	
	1A	1	**252-6338**	1	FILTER ELEMENT-WTR SEP & FUEL	

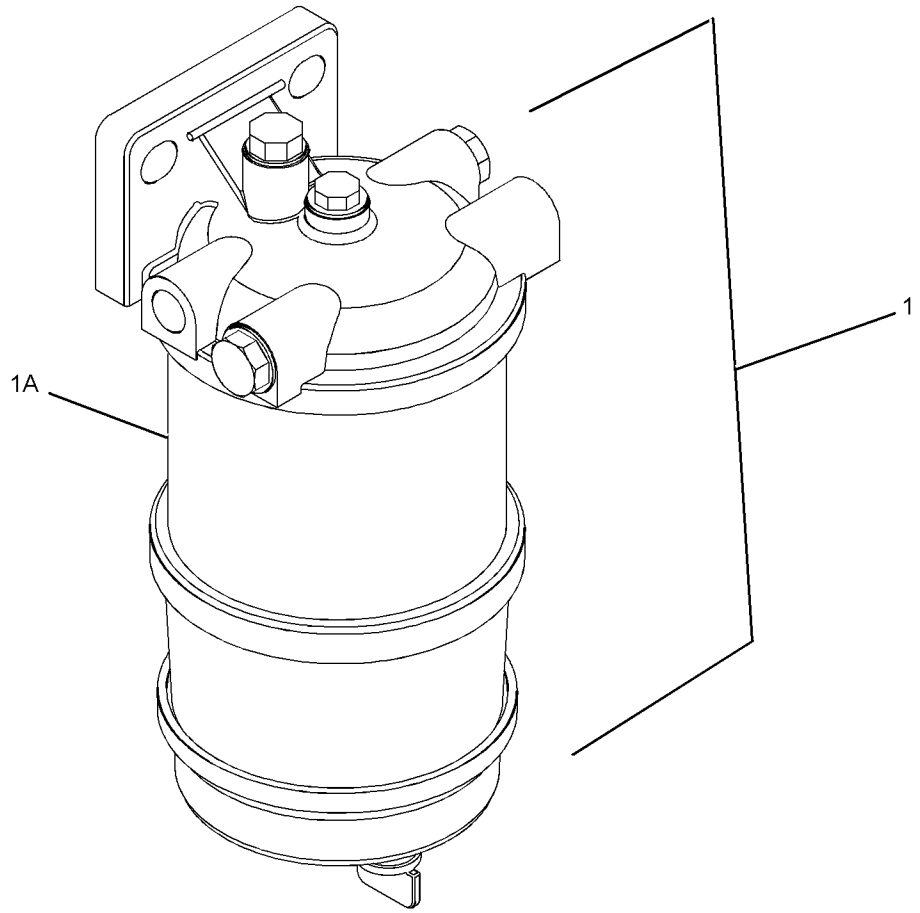

GRAPHIC #1 **<END>** g01398258

433-8929 FILTER GP-FUEL

SMCS-1261 **i05645200**

NOTE	REF NO	GRAPHIC REF	PART NUMBER	QTY	PART NAME 1 2 3 4 5 6 (PRODUCT LEVEL)	SEE PAGE
	1	1	**100-4458**	4	BOLT (M8X1.25X14-MM)	
	2	1	**111-8222**	1	BOLT (M8X16-MM)	
	3	1	**231-4457**	1	GASKET	
	4	1	**240-5571**	1	BRACKET	
	5	1	**243-3811**	3	BOLT-FLANGE HEAD	
	6	1	**246-4383**	1	PLATE	
	7	1	**232-9758**	3	WASHER (6.51X17.785X1.6-MM THK)	
	8	1	**232-3126**	1	CLIP	
	9	1	**357-4187**	1	KIT-FUEL PRIMING PUMP	
	10	1	**398-3877**	1	LINE AS-FUEL	
	11	1	**215-9508**	1	FITTING (QUICK DISCONNECT, MALE)	

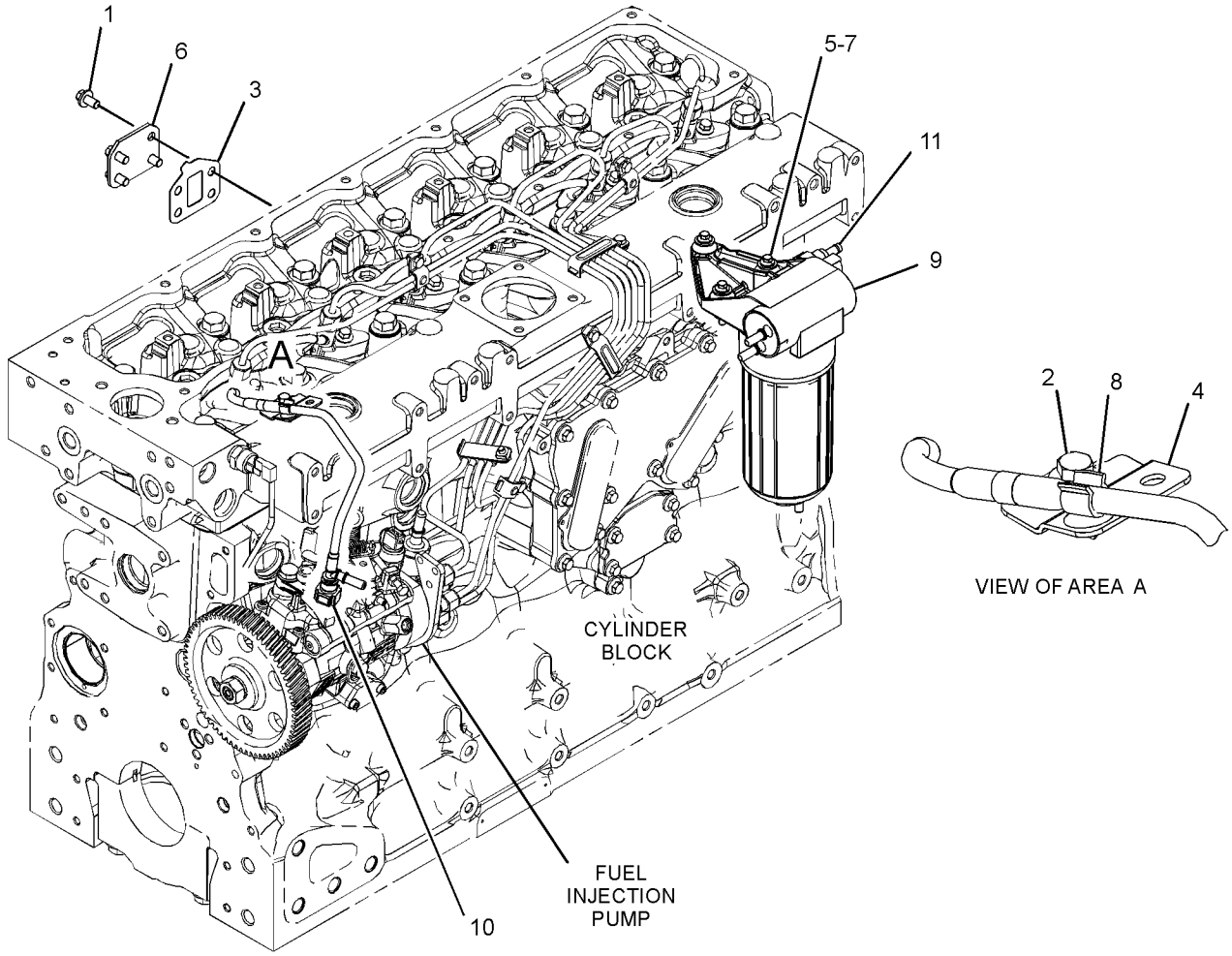

GRAPHIC #1 **<END>** g03585177

FUEL SYSTEM

393-7672 PUMP GP-FUEL INJECTION

SMCS-1251, 1290 **i05648632**

NOTE	REF NO	GRAPHIC REF	PART NUMBER	QTY	PART NAME 1 2 3 4 5 6 (PRODUCT LEVEL)	SEE PAGE
M	1	1	**100-4830**	1	BOLT (M10X1.5X20-MM)	
	2	1	**169-5326**	1	SWITCH-TEMPERATURE	
	3	1	**230-8989**	1	GEAR-FUEL PUMP (68-TEETH)	
	4	1	**232-1794**	5	HOSE	
	5	1	**336-4757**	1	BRACKET	
	6	1	**364-2901**	1	LINES GP-FUEL INJECTION	
	7	1	**396-5218**	6	INJECTION GP-CETANE	
	8	1	**396-8257**	1	CAP	
	9	1	**399-3526**	1	PUMP AS-FUEL INJECTION	
M	10	1	**6I-0260**	4	BOLT (M8X1.25X25-MM)	
M	11	1	**178-3336**	1	NUT-HEX FLANGE (M8X1.25-THD)	
	12	1	**232-1793**	1	CABLE	
	13	1	**232-3149**	3	WASHER (8.35X16.85X1.55-MM THK)	
	14	1	**232-3274**	6	BOLT (M8X1.25X48.1-MM)	
	15	1	**238-8671**	6	CLAMP-INJECTOR	

M - METRIC PART

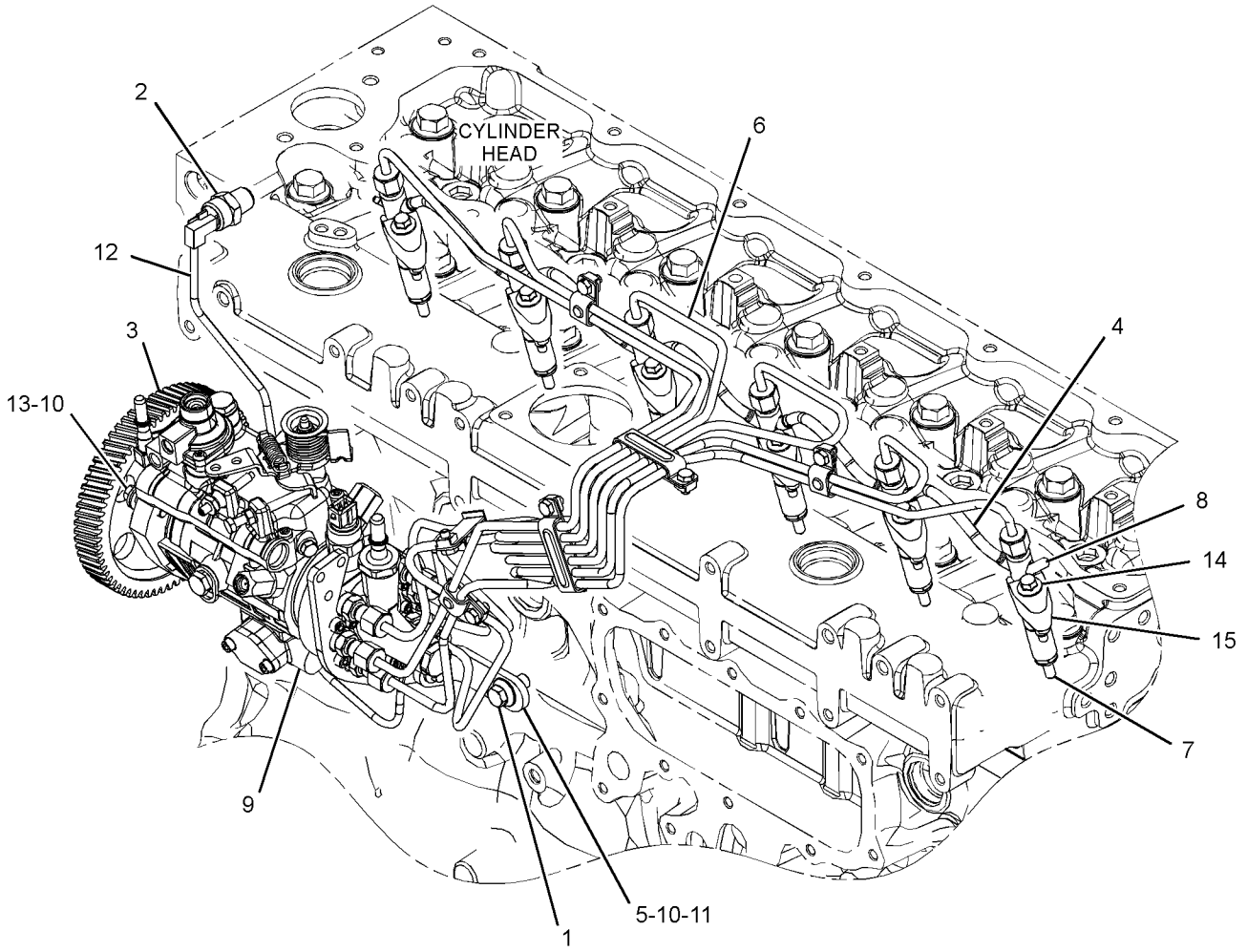

GRAPHIC #1 **<END>** g03595316

450-1309 THROTTLE GP–24-VOLT

SMCS-1265 **i05649502**

NOTE	REF NO	GRAPHIC REF	PART NUMBER	QTY	PART NAME 1 2 3 4 5 6 (PRODUCT LEVEL)	SEE PAGE
	1	1	**300-5183**	1	RESISTOR AS (24-VOLT)	

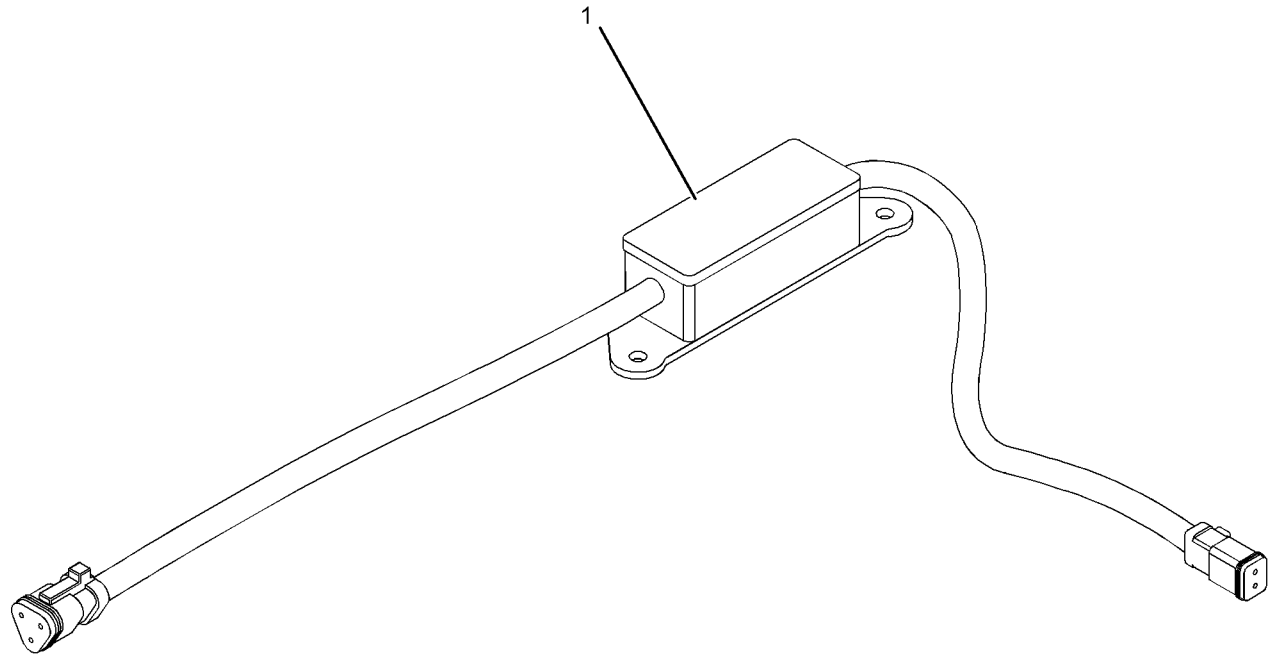

GRAPHIC #1

<END>

g01029709

346-1822 CONTACTOR GP-ALARM

SMCS-7400 **i05649591**

NOTE	REF NO	GRAPHIC REF	PART NUMBER	QTY	PART NAME 1 2 3 4 5 6 (PRODUCT LEVEL)	SEE PAGE
	1	1	**199-9267**	1	SEAL-O-RING	
	2	1	**216-9633**	1	VALVE AS-FLUID SAMPLING	
	3	1	**232-3861**	1	PLUG (BLANKING)	
	4	1	**8C-3445**	1	CAP-DUST	

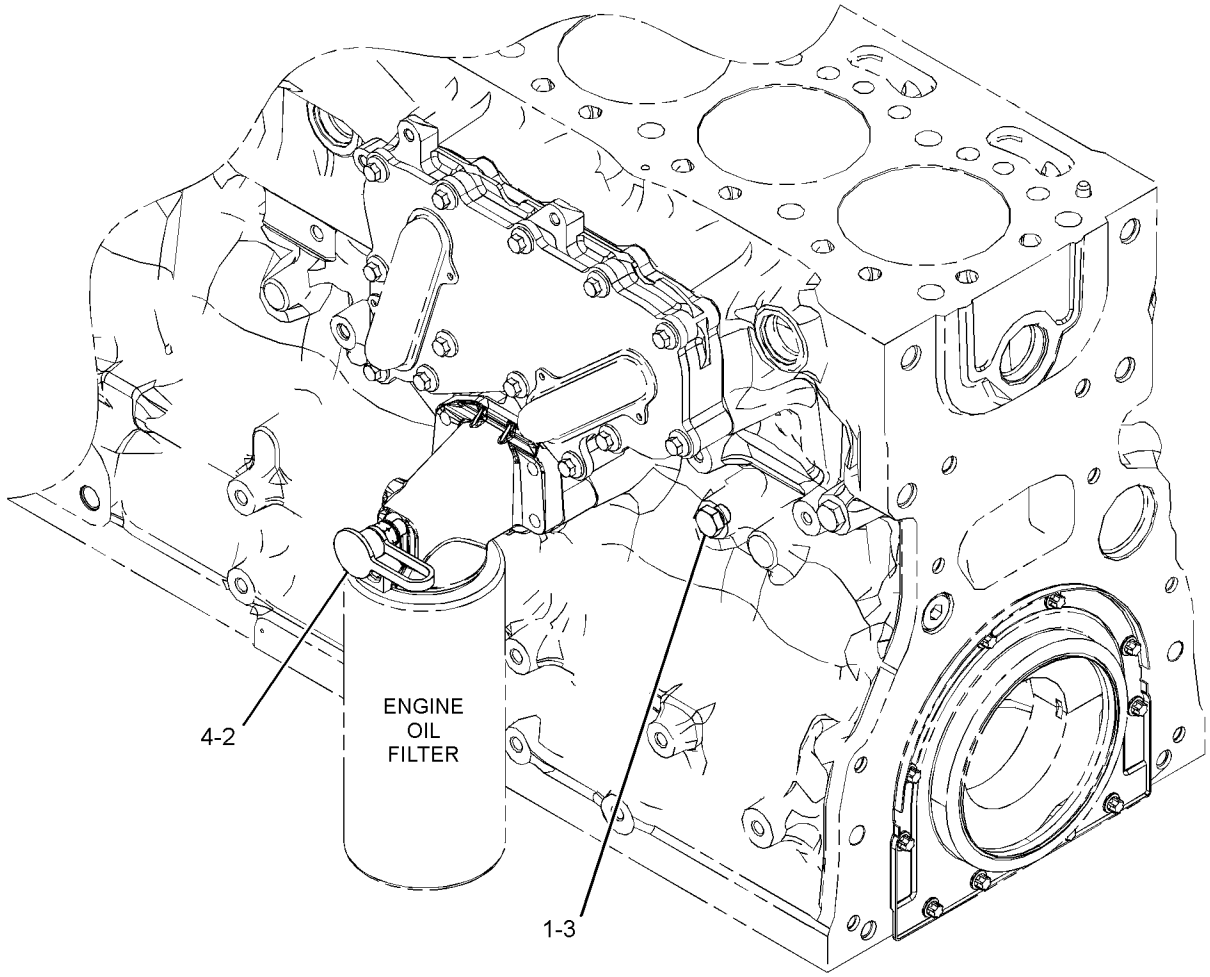

GRAPHIC #1 **<END>** g03587904

393-0879 STARTING AID GP

SMCS-1090 **i05649196**

NOTE	REF NO	GRAPHIC REF	PART NUMBER	QTY	PART NAME 1 2 3 4 5 6 (PRODUCT LEVEL)	SEE PAGE
	1	1	**337-2958**	1	CONNECTION AS	
	2	1	**226-8770**	6	GLOW PLUG (24-VOLT)	

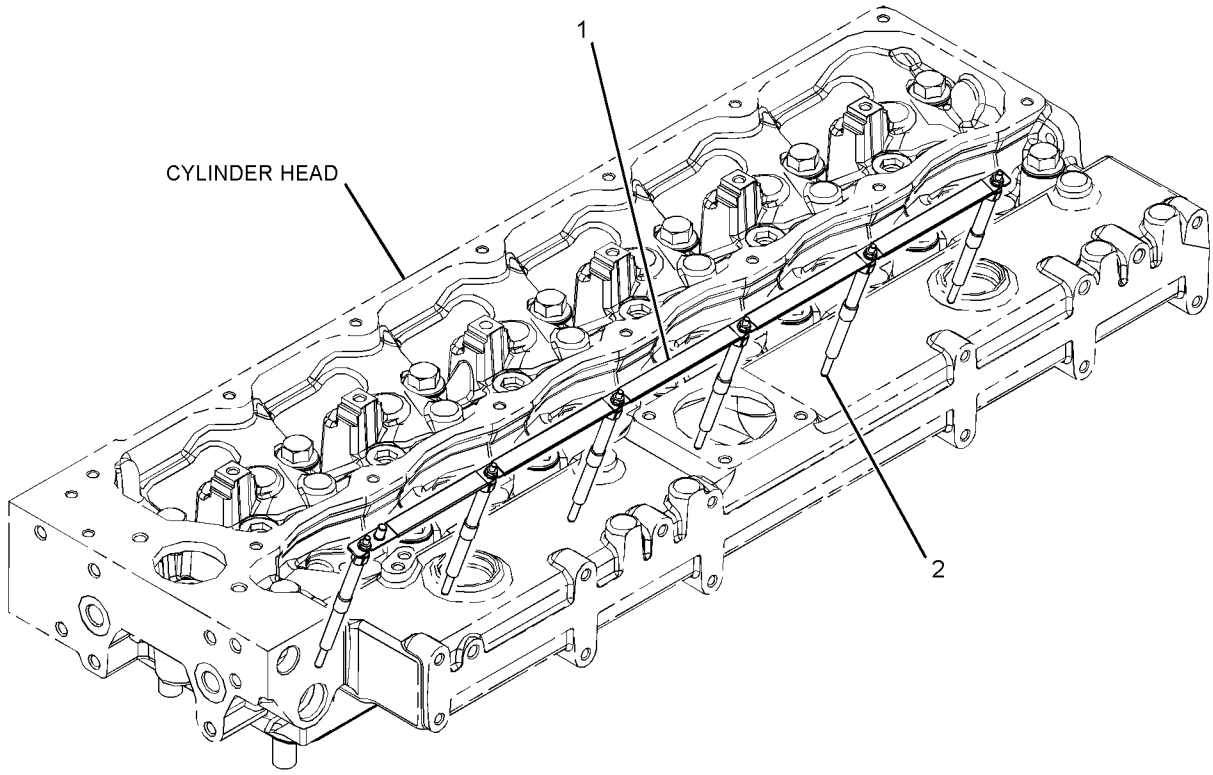

GRAPHIC #1 **<END>** g03317493

392-2020 STARTING MOTOR GP-ELECTRIC–24-VOLT, 4-KW

SMCS-1453 **i05649334**

NOTE	REF NO	GRAPHIC REF	PART NUMBER	QTY	PART NAME 1 2 3 4 5 6 (PRODUCT LEVEL)	SEE PAGE
	1	1	**6I-4012**	3	STUD	
M	2	1	**175-7141**	1	NUT-HEX FLANGE (M10X1.5-THD)	
	3	1	**357-5205**	1	STARTER	

M - METRIC PART

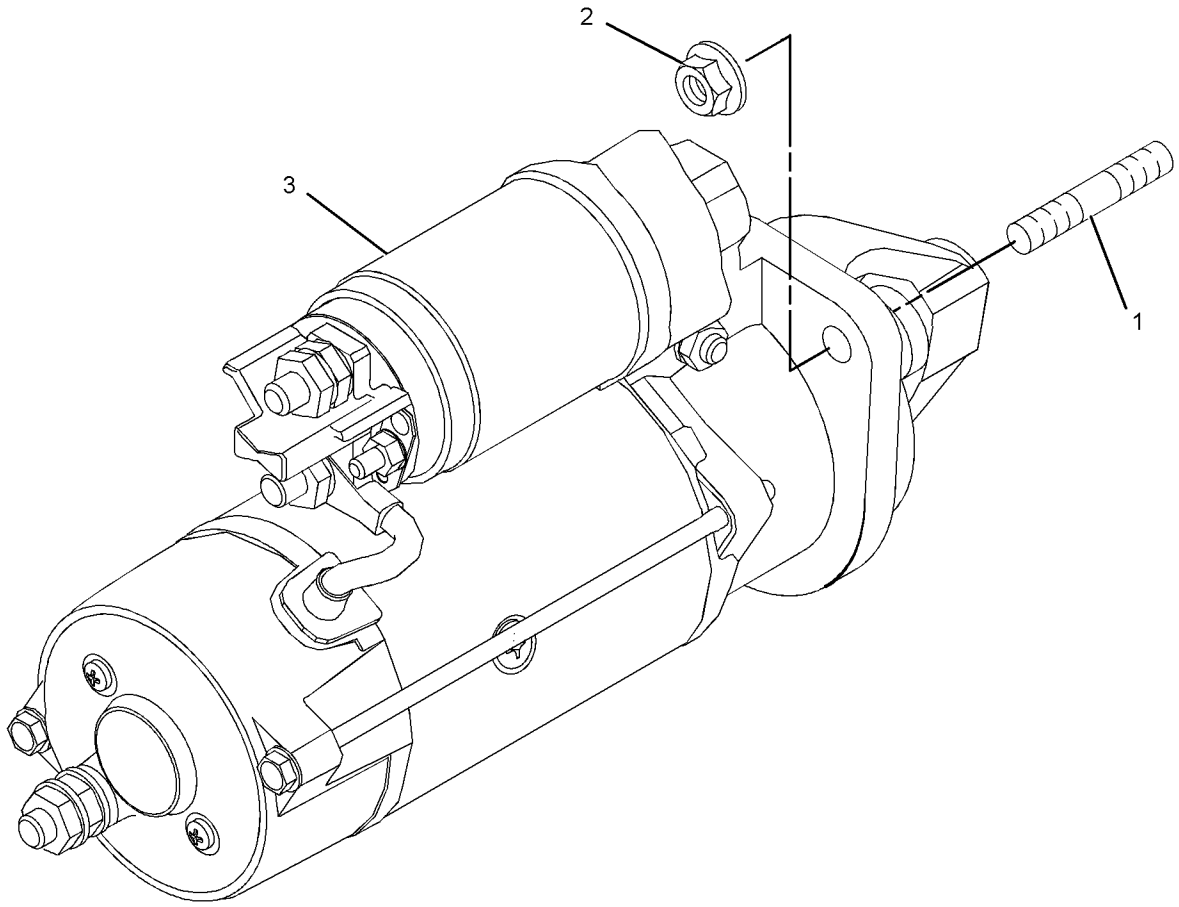

GRAPHIC #1 **<END>** g01526684

346-1967 PLATE & FILM GP

SMCS-7405, 7557 **i05646993**

NOTE	REF NO	GRAPHIC REF	PART NUMBER	QTY	PART NAME 1 2 3 4 5 6 (PRODUCT LEVEL)	SEE PAGE
	1	1	**298-5630**	1	PLATE-IDENTIFICATION (CAT)	
	2	1	**326-9052**	1	FILM-WARNING (DO NOT SPRAY, READ OMM)	

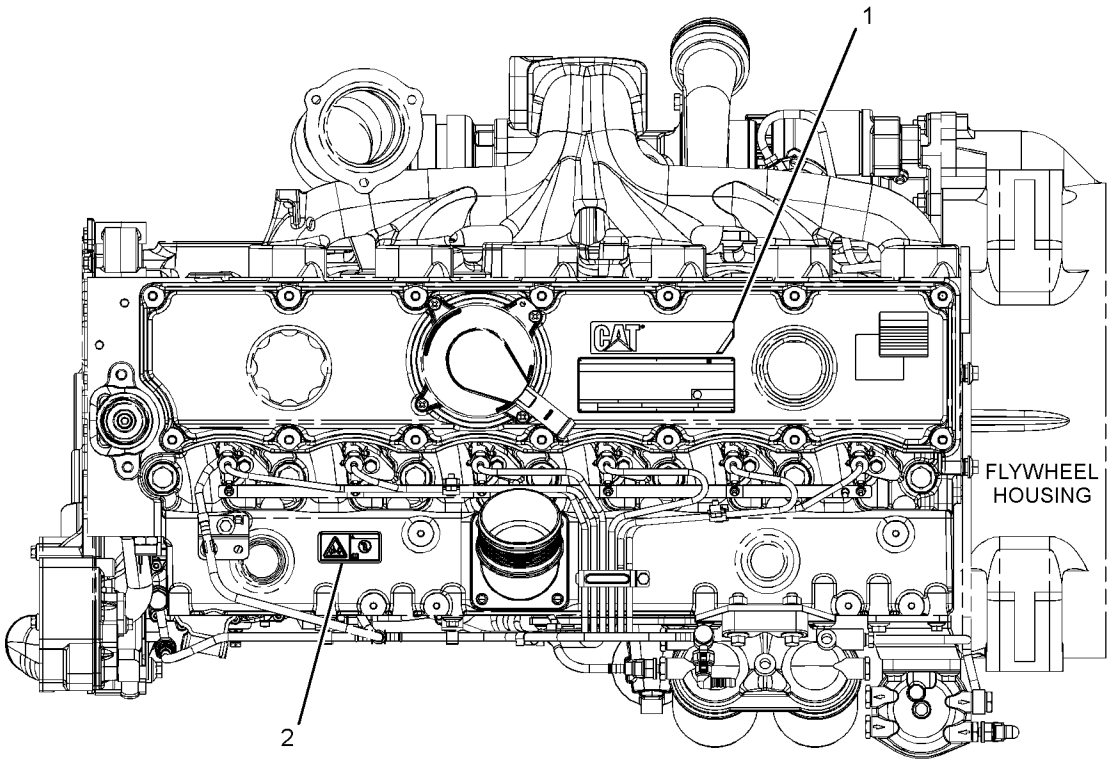

TOP VIEW OF ENGINE

GRAPHIC #1 **<END>** g03318790

PART NUMBER INDEX

Part	Page
2	
2S-3440	25
3	
3K-0360	9
5	
5B-9079	24
5P-4906	9
5P-8245	11
6	
6I-0217	13
	18
	25
	26
	33
	35
6I-0254	13
	25
	33
6I-0260	13
	18
	30
	32
	38
6I-0423	12
6I-0454	13
6I-0456	32
6I-0563	35
6I-0572	18
6I-0645	13
	34
6I-0654	16
6I-0839	33
6I-1090	29
6I-1497	18
6I-4012	42
6I-4681	18
6I-4793	30
	32
7	
7C-1281	25
7C-4616	13
8	
8C-3445	40
8L-2786	18
8T-0269	18
8T-0337	3
8T-9535	24
9	
9S-4185	18
0	
032-9020	25
033-7687	11
067-6006	7
067-6043	5
067-6095	2
067-6135	2
	4
067-6179	13
067-6823	5
	21
1	
100-3751	13
100-4458	37
100-4830	38
100-4841	15
101-3895	13
102-9941	13
105-5761	7
111-8222	37
113-1504	26
113-8129	33
121-0883	12
123-2899	33
124-3536	19
130-9888	26
133-1011	13
138-2053	2
152-2886	7
169-5326	38
170-0967	9
175-7141	42
178-3336	25
	38
179-7071	10
185-0884	5
185-1546	24
199-3109	12
199-9267	40
199-9751	20
2	
209-9219	6
215-9508	37
216-8634	13
216-9633	40
225-5625	24
225-5638	24
225-5640	24
225-5959	24
225-5961	24
225-5962	24
225-6522	26
225-7738	33
225-7944	32
225-8019	33
225-8858	5
226-8770	41
230-8094	18
230-8989	38
231-4457	37
232-1322	6
	20
232-1793	38
232-1794	38
232-3126	37
232-3149	38
232-3274	38
232-3666	13
232-3751	32
232-3861	40
232-7449	6
232-7596	5
232-7597	5
232-7599	5
232-9758	37
233-2492	11
234-6171	26
238-8288	34
238-8292	35
238-8671	38
240-5571	37
243-3811	37
246-4383	37
251-8336	18
252-6334	36
252-6338	36
252-6438	23
254-3954	23
256-7704	3
269-8325	27
273-5711	28
274-1935	22
275-9883	9
275-9891	18
276-5600	5
276-5602	5
276-5603	6
276-7391	4
276-7478	19
276-9200	24
277-2500	30
277-2538	32
277-2923	33
277-2925	33
277-3012	13
277-3013	13
277-4223	13
277-4374	34
277-4444	16
277-4445	16
277-4490	17
277-9938	35
277-9939	35
277-9940	35
278-0017	35
279-9254	11
279-9361	35
280-2023	25
281-7039	30
281-7040	30
281-8744	33
283-4283	18
283-4302	18
283-4559	32
283-8301	17
283-8302	17
285-3058	26
286-7851	35
287-8597	12
291-4184	9
291-6515	13
291-6517	13
291-6519	13
291-6521	13
291-6522	13
291-6523	13
291-6524	13
291-6526	13
291-6528	13
291-6529	13
293-9737	13
298-5630	43
3	
300-5183	39
302-6780	13
306-2333	25
315-3393	23
315-3394	23
317-5482	19
317-5483	19
317-5485	4
317-5486	4
323-9312	19
326-7288	3
326-7289	3
326-7401	►30
	32
326-9052	43
329-3796	15
331-0290	19
331-1682	►5
	6
335-5602	23
	►24
335-5604	24
335-5605	24
335-5606	23
335-5607	23
335-6264	7
335-7055	8
336-4757	38
336-9839	35
337-2958	41
341-5724	12
342-6510	22
343-0701	1
	►2
343-4295	7
345-8840	1
	►12
345-8964	1
	►11
345-9659	1
	►18
346-0097	1
	►32
346-0220	1
	►27
346-0411	1
	►33
346-0507	1
	►13
346-0737	1
	►29
346-0773	1
	►34
346-0818	1
	►16
346-1510	1
	►17
346-1819	1
	►9
346-1822	1
	►40
346-1841	1
	►20
346-1967	1
	►43
346-2908	1

► **PRIMARY REFERENCE**

PART NUMBER INDEX

Part	Page
	►21
348-3283	1
	►6
348-3285	1
	►4
348-3503	1
	►15
350-0637	2
350-2375	35
350-2377	35
351-1724	22
351-4749	18
354-4754	33
354-8322	18
354-8538	18
355-2243	22
357-4187	37
357-5205	42
358-3097	1
	►22
359-6616	8
360-1564	19
360-1978	4
361-7519	35
363-0559	4
364-2901	38
364-5145	4
367-5394	3
367-7142	32
369-6810	13
372-8247	9
373-8014	29
375-9272	12
376-4074	4
376-6464	1
380-4838	19
381-6235	23
381-9252	13
382-5079	►7
	8
389-7188	19
391-3193	1
	►8
391-3197	1
	►23
392-2020	1
	►42
393-0879	1
	►41
393-4006	12
393-5558	1
	►19
393-7672	1
	►38
396-5218	38
396-8257	38
398-3877	37
399-3526	38

4

Part	Page
417-7782	33
418-0876	19
419-6486	1
	►26
419-9129	1
	►35
422-0508	25
422-7707	25
423-5411	1
	►36
424-1869	1
	►28
424-9429	►3
	25
425-0181	1
	►25
431-4574	35
433-8929	1
	►37
435-1889	1
	►10
437-4170	35
450-1309	1
	►39
450-1930	►1

► PRIMARY REFERENCE



©2014 Caterpillar
All Rights Reserved

CAT, CATERPILLAR, their respective logos, “Caterpillar Yellow”, and the POWER EDGE trade dress as well as corporate and product identity used herein, are trademarks of Caterpillar and may not be used without permission.