SEBP7151-72 (en-us)
October 2025

Parts Manual

C7.1 Industrial Engine

G9R1-UP (Engine)

Scan to find and purchase genuine Cat® parts and related service information.

Product and Dealer Information

Note: For product identification plate locations, see the section “Product Identification Information” in the Operation and Maintenance Manual.

Delivery Date: _____

Product Information

Model: _____

Product Identification Number: _____

Engine Serial Number: _____

Transmission Serial Number: _____

Generator Serial Number: _____

Attachment Serial Numbers: _____

Attachment Information: _____

Customer Equipment Number: _____

Dealer Equipment Number: _____

Dealer Information

Name: _____ Branch: _____

Address: _____

_____

_____

	Dealer Contact	Phone Number	Hours
Sales:	_____	_____	_____
Parts:	_____	_____	_____
Service:	_____	_____	_____

MEMORANDA

TABLE OF CONTENTS

NAME	PAGE
GENERAL INFORMATION	A3
REPAIR ALTERNATIVES	A5
SUPPLEMENTAL COOLANT ADDITIVES	A6
MAINTENANCE PARTS	A7
INDEX	A9
ENGINE ARRANGEMENT	1
CONFIGURATION AR-ENGINE	1
ENGINE AR	21
ENGINE AR-COMPLETE	24
ENGINE AR-PRIMARY	39
BASIC ENGINE	408
ACCESSORY GP-ENGINE	408
ADAPTER GP-AIR COMPRESSOR	409
AIR COMPRESSOR GP	410
BELT TENSIONER GP	416
BRACKET GP-MOUNTING	423
CAMSHAFT GP	426
COMPRESSOR & MTG GP-REFRIGERANT	429
COMPRESSOR GP-REFRIGERANT	430
CONNECTING ROD GP	432
COVER GP-ACCESSORY DRIVE	433
COVER GP-VALVE MECHANISM	434
CRANKSHAFT GP	447
CYLINDER BLOCK AS	449
CYLINDER BLOCK GP	450
CYLINDER BLOCK GP-SHORT	452
CYLINDER HEAD AS	457
CYLINDER HEAD GP	458
DRAIN GP-ENGINE OIL	466
DRIVE GP-FAN	469
DRIVE GP-POWER TAKE-OFF	499
EXTENSION GP-FAN	500
FASTENER GP-DAMPER & PULLEY	505
FLYWHEEL GP	506
HOUSING GP-FLYWHEEL	517
HOUSING GP-FRONT	530
JET GP-PISTON COOLING	543
LIFTING GP-ENGINE	544
MOUNTING GP-ALTERNATOR	547
MOUNTING GP-ENGINE	548
MOUNTING GP-REFRIGERANT COMPR	555
PAN GP-OIL	556
PISTON & ROD GP	566
PISTON GP	587
PLUG GP-CYLINDER BLOCK	591
PLUG GP-ENGINE	592
PLUG GP-FLYWHEEL HOUSING	593
PLUG GP-OIL PAN	596
POWER TAKE-OFF GP	597
PULLEY GP-ALTERNATOR	599
PULLEY GP-AUXILIARY DRIVE	600
PULLEY GP-CRANKSHAFT	601
ROCKER ARM GP	604
SUPPORT GP-POWER TAKE-OFF	608
VALVE GP-CYLINDER HEAD	609
LUBRICATION SYSTEM	610
BASE GP-OIL COOLER & FILTER	610
BREATHER GP	611
COVER GP-OIL FILLER	615
DRAIN GP-OIL	616
FILLER GP-ENGINE OIL	618
FILTER GP-ENGINE OIL	629
FILTER GP-FUMES DISPOSAL	630
GAUGE GP-OIL LEVEL (DIPSTICK)	631
LINES GP-TURBOCHARGER OIL	643
PLUG GP-OIL FILTER MOUNTING	644
PUMP GP-ENGINE OIL	645
VALVE GP-FLUID SAMPLING	647
COOLING SYSTEM	648
CONNECTION GP-HEATER	648
CONNECTION GP-WATER	649
CONNECTOR GP-CAB HEATER LINES	652
COOLER GP-ENGINE OIL	653
FAN GP	669
FAN GP-ENGINE	676
FITTING GP-WATER LINES	677
PUMP GP-WATER	678
RADIATOR AS	680
RADIATOR GP	686
AIR INLET AND EXHAUST SYSTEM	713
AIR CLEANER GP	713
CLAMP AS-EXHAUST	717
FLANGE GP-EXHAUST	719
LINES GP-TURBOCHARGER AIR	720
MANIFOLD GP-EXHAUST	723
MANIFOLD GP-INLET	725
TURBOCHARGER GP	728
FUEL SYSTEM	749
FILTER GP-FUEL	749
FILTER GP-WATER SEP & FUEL	761
INJECTOR GP-FUEL	763
LINES GP-FUEL	767
LINES GP-FUEL FILTER	778
LINES GP-FUEL INJECTION	785
PUMP GP-FUEL INJECTION	789
RAIL GP-FUEL	794

TABLE OF CONTENTS

NAME	PAGE	NAME	PAGE
ELECTRICAL AND STARTING SYSTEM	796		
ALTERNATOR GP-CHARGING	796		
CONTROL GP-ELECTRONIC	808		
CONTROL GP-ENGINE ELECTRONIC	811		
HARNESS AS-ENGINE	812		
HARNESS AS-POWER	816		
HARNESS AS-SENSOR	817		
HARNESS AS-WIRING	818		
MOUNTING GP-ELECTRONIC CONTROL	819		
SENSOR GP-ENGINE	820		
STARTING AID GP	823		
STARTING MOTOR GP-ELECTRIC	828		
WIRING GP-ENGINE	841		
ENCLOSURES, GUARDS AND BASES	855		
MOUNTING GP-ACCESSORY MODULE	855		
OPERATOR STATION	858		
PLUG AS	858		
SERVICE EQUIPMENT AND SUPPLIES	859		
FILM GP	859		
PLATE & FILM GP	867		
PLATE GP-IDENTIFICATION	869		
PART NUMBER INDEX	B1		

1. ENGINE IDENTIFICATION

Cat engines are identified with Serial Numbers and Arrangement Numbers. In some cases, Modification Numbers are also used. The serial number plate which shows these numbers is mounted on the engine.

Cat dealers need this information to determine which components were included on the engine when it was assembled at the factory. This permits accurate identification of replacement part numbers.

2. ORDERING PARTS

⚠ WARNING

When replacement parts are required for this product Caterpillar recommends using Caterpillar replacement parts or parts with equivalent specifications including, but not limited to, physical dimensions, type, strength and material.

Failure to heed this warning can lead to premature failures, product damage, personal injury or death.

Quality Cat replacement parts are available from Cat dealers throughout the world. Their parts inventories are up to date and include all parts normally required to protect your investment in Cat Engines. Dealers may offer repair kits or remanufactured parts to allow selection of the most effective repair alternative for a particular situation. When ordering parts, your order should specify the quantity, part number, part name, and the serial number/product identification number of the engine for which the parts are needed.

3. PARTS MANUAL ORGANIZATION

Product information in this manual is presented as "information elements" that represent all of the components for the specific model. An Engine Arrangement is an example of an information element. The information elements are organized alphabetically by part name and secondarily by part number within each major section of the manual.

4. TABLE OF CONTENTS

A table of contents (TOC) is found at the beginning of the manual. The TOC lists each section of the manual with a complete list of all information elements organized as they appear in the manual. Page numbers are provided for quick reference to detailed parts identification illustrations and serviceable consist lists.

5. MAINTENANCE PARTS INDEX

The Maintenance Parts Index, located near the beginning of the manual, references most frequently used maintenance part numbers, providing description, quantity, usage and page number. This information is organized alphabetically by part description.

6. INDEX

The index located near the front of the manual is an alphabetical listing of all information elements included in the manual. Page numbers are provided for quick reference to detailed parts identification illustrations and serviceable consist lists.

7. PART NUMBER INDEX

A numerical index listing all part numbers and the corresponding page number(s) appears at the back of the manual.

8. CAPTIONS

Captions located at the beginning each information element identify the part number and part name along with additional descriptive information. S/N information found in each caption should be used to select correct information for a specific engine. Field replacement options, identification of optional attachment components, and where used ("part of") information is also provided.

The first line of a caption is shown in larger type font to indicate the beginning of an information element. Captions for additional pages that may be required to illustrate an information element will be shown in standard type font and will include the term (contd.).

9. NON-SERVICED PARTS

In some instances it is necessary to display non-serviced parts that are a link to lower level serviceable consist lists. These non-serviced part numbers are shown in italic type indicating that they are not available. All consist lists have not been converted to reflect this enhancement.

10. PARTS LIST REFERENCE NUMBERS

Numbers shown in the Ref No column correspond to numbers used in the associated graphic(s). An alphabetic suffix may be added to a reference number to identify lower level consist items. Numbers shown in the Graphic Ref column refer to the graphic number identifier displayed in the lower left corner of each illustration. The Graphic Ref number may be used in combination with the item Ref No to determine the correct part number. There may be intentional omission of a Ref No in a consist list as information is updated to reflect the latest serviceable part numbers.

11. INDENTED PART NAMES

When a part name is indented in a parts list, it is part of (included in) the group or assembly under which it is indented.

12. ILLUSTRATION REFERENCE LETTERS

When necessary, illustrations contain reference letters (A, B, C etc.) that are intended to track lines and harnesses from one point to another. They are also used to show where to reconnect illustrations that have been separated.

13. ABBREVIATIONS AND SYMBOLS

O.D. – Outside Diameter
I.D. – Inside Diameter
A – Not Part Of This Group
B – Use As Required
C – Change From Previous Type
D – Order By The Meter
E – Order By The Centimeter
F – Not Shown
G – Order By The Inch
I – Refer To Hydraulic Information System
M – Metric Part
R – Remfg Part May Be Available
Y – Separate Illustration
Z – Not Serviced Separately

14. DESCRIPTION OF TYPE CHANGES

Type - A type is defined as any configuration change that requires an additional Information Element for an Arrangement, Group, or Assembly. If serial number breaks for types are not available, a type # (Type 1, Type 2, etc.) will be displayed in the caption. These "type" changes are identified with a "C" note (change from previous type) in the Parts List. Only the "types" that apply to this Parts Manual will be included. Additional types may exist causing "C" notes to appear on an Information Element when no other types are shown.

15. <END>

This symbol indicates the end of an information element.

16. SUPPLEMENTAL COOLANT ADDITIVES

Information for Supplemental Coolant Additives is no longer included in this manual. See your Operation and Maintenance Manual for coolant maintenance information.

NOTE:

Continuing improvement and advancement of product design may cause changes to your engine which may not be included in this publication. Whenever a question arises regarding your Cat product or this publication, please consult your Cat dealer for the latest available information.

REMANUFACTURED COMPONENTS

As an option when making repairs consider Cat Remanufactured Components. Components that are available through the Cat Remanufactured Program are identified three ways in the parts book:

- with the letter R in the note field of the parts list
- with an R* at the beginning of the first line of the caption
- with an *R at the end of the first line of the caption

Typical components included in the Remanufacturing Program include:

ALTERNATORS
CONNECTING RODS
CRANKSHAFTS - UNDERSIZE
CRANKSHAFTS - UPGRADE TO NEW
CYLINDER HEADS
ELECTRONIC CONTROL MODULES (ECM)
ELECTRONIC SENSORS
FUEL INJECTORS
FUEL NOZZLES
FUEL PUMPS
GOVERNORS
OIL PUMPS
PISTONS
SHORT BLOCKS
STARTERS
TURBOCHARGERS - COMPLETE
TURBOCHARGER CARTRIDGES
WATER PUMPS

Cat Remanufactured engines for many engine arrangements are also available.

SUPPLEMENTAL COOLANT ADDITIVES

CUSTOMER BENEFITS:

Protects against cavitation, foam, erosion, corrosion, and scale buildup in cooling systems.

- Provides measured coolant conditioner.

DESCRIPTION:

Additives deplete from the coolant with normal operation. For this reason, Supplemental Coolant Additives (SCA) must be added to all heavy duty coolants at regular intervals. In addition, when not using a fully formulated, pre-charged antifreeze, like Cat DEAC, an initial charge of SCA must be added to the cooling system. The amount of SCA added to the system is dependent on the capacity of the system.

The SCA for initial fill is provided as a liquid. SCA's for maintenance intervals are available in liquid form and as a spin-on element. (No Spin-on available for 3600 Family of Engines)

NOTE:

The amount of SCA added at initial fill is not the same as the amount added at maintenance intervals.

The coolant additive elements can be used with any ethylene or propylene glycol type antifreeze which meets ASTM D4985 or ASTM D5345 Specifications.

NOTE:

For use with standard heavy duty coolant only, not for use with Extended Life Coolant.

PARTS NEEDED:

Cooling System Capacity		Liquid SCA at Initial Fill	Liquid SCA at Maintenance*	Spin-on SCA Maintenance Element*
Liters	Gallons			
22-30	(6-8)	3P-2044 (1)	6V-3542 (1)	111-2370 (1)
30-38	(8-10)	3P-2044 (1) 6V-3542 (1)	111-2372 (1)	111-2369 (1)
38-49	(10-13)	3P-2044 (1) 8T-1589 (1)	111-2372 (1)	111-2369 (1)
49-64	(13-17)	3P-2044 (2)	8T-1589 (1)	9N-3368 (1)
64-83	(17-22)	3P-2044 (2) 8T-1589 (1)	111-2372 (1) 6V-3542 (1)	111-2371 (1)
83-114	(22-30)	3P-2044 (3) 8T-1589 (1)	3P-2044 (1)	9N-3718 (1)
114-163	(30-43)	3P-2044 (5)	3P-2044 (1) 6V-3542 (1)	111-2371 (2)
163-242	(43-64)	3P-2044 (8)	3P-2044 (2)	9N-3718 (2)

* Normal maintenance period is 250 hrs. See your Operation and Maintenance Manual for complete coolant maintenance instructions.

( ) Indicates quantity required.

MAINTENANCE PARTS

DESCRIPTION	PART NUMBER	QTY	WHERE USED	PAGE
AIR INLET AND EXHAUST SYSTEM				
FILTER	356-9627	1	AIR CLEANER GP	713
FILTER AS-AIR	289-2347	1	AIR CLEANER GP	715
FILTER ELEMENT-AIR (PRIMARY)	289-2348	1	AIR CLEANER GP	714
FILTER ELEMENT-AIR (SECONDARY)	289-2349	1	AIR CLEANER GP	715
BASIC ENGINE				
BELT-DRIVE	382-7383	1	DRIVE GP-FAN	481
BELT-SERPENTINE	283-1171	1	DRIVE GP-FAN	480
	286-7845	1	DRIVE GP-FAN	495
	287-6842	1	DRIVE GP-FAN	497
	291-5837	1	DRIVE GP-FAN	490
	293-5248	1	DRIVE GP-FAN	484
	298-5880	1	DRIVE GP-FAN	494
	309-6666	1	DRIVE GP-FAN	496
	350-8741	1	DRIVE GP-FAN	491
	350-8742	1	DRIVE GP-FAN	469
	365-2968	1	DRIVE GP-FAN	474
	365-2985	1	DRIVE GP-FAN	472
	365-3002	1	DRIVE GP-FAN	488
	371-8058	1	DRIVE GP-FAN	492
	372-4204	1	DRIVE GP-FAN	489
	372-5850	1	DRIVE GP-FAN	486
	380-2619	1	DRIVE GP-FAN	493
	382-7387	1	DRIVE GP-FAN	498
	382-8827	1	DRIVE GP-FAN	482
	383-0675	1	DRIVE GP-FAN	487
BELT-SERPENTINE (DRIVE FAN)	298-5873	1	DRIVE GP-FAN	483
BELT-SERPENTINE (FAN PULLEY)	298-5872	1	DRIVE GP-FAN	485
CAP AS-ENGINE OIL FILLER	369-3869	1	COVER GP-VALVE MECHANISM	444
CAP AS-FILLER (ENGINE OIL)	359-1310	1	COVER GP-VALVE MECHANISM	434
GASKET (VALVE COVER)	388-0536	1	COVER GP-VALVE MECHANISM	440
SEAL (VALVE COVER)	376-4761	1	COVER GP-VALVE MECHANISM	434
COOLING SYSTEM				
CAP-RADIATOR (16-PSI)	211-6574	1	RADIATOR AS	684
CONNECTION AS (INCLUDES TEMPERATURE REGULATOR)	367-1817	1	CONNECTION GP-WATER	649
GASKET-FILTER	277-2526	1	COOLER GP-ENGINE OIL	662
GASKET-WATER REGULATOR	281-8744	1	CONNECTION GP-WATER	649
GASKET-WATER REGULATOR (TEMPERATURE)	281-8744	1	CONNECTION GP-WATER	650
HOSE-WATER	293-8080	1	RADIATOR GP	686
	303-6191	1	RADIATOR GP	686
REGULATOR AS-WATER TEMPERATURE (INCLUDES CONNECTOR)	417-7782	1	CONNECTION GP-WATER	650
SCREEN AS	442-5177	1	RADIATOR AS	684

MAINTENANCE PARTS

DESCRIPTION	PART NUMBER	QTY	WHERE USED	PAGE
SCREEN AS (RADIATOR)	442-5177	1	RADIATOR AS	682
		1	RADIATOR GP	708
ELECTRICAL AND STARTING SYSTEM				
GLOW PLUG	299-6953	6	STARTING AID GP	823
GLOW PLUG (12-VOLT)	452-3112	6	STARTING AID GP	824
GLOW PLUG (24-VOLT)	462-2235	6	STARTING AID GP	826
FUEL SYSTEM				
FILTER AS-WATER SEP & FUEL	416-7740	1	FILTER GP-FUEL	752
	439-5037	1	FILTER GP-FUEL	755
		1	FILTER GP-WATER SEP & FUEL	761
FILTER ELEMENT-FUEL	360-8960	1	FILTER GP-FUEL	749
LUBRICATION SYSTEM				
CAP AS-OIL FILLER (ENGINE OIL)	359-1309	1	FILLER GP-ENGINE OIL	619
CAP AS-OIL FILLER (ENGINE OIL) (CAT)	369-3867	1	FILLER GP-ENGINE OIL	622
CAP AS-OIL FILLER (ENGINE OIL) (ENGINE)	369-3867	1	FILLER GP-ENGINE OIL	621
CAP AS-OIL FILLER (ENGINE)	130-9888	1	FILLER GP-ENGINE OIL	618
FILTER-ENGINE OIL	462-1171	1	FILTER GP-ENGINE OIL	629
FILTER-FUMES DISPOSAL	273-5711	1	FILTER GP-FUMES DISPOSAL	630
GASKET-FILTER (ENGINE OIL)	277-2526	1	BASE GP-OIL COOLER & FILTER	610

INDEX

NAME PAGE

A

ACCESSORY GP-ENGINE 408
ADAPTER GP-AIR COMPRESSOR 409
AIR CLEANER GP 713
714
715
716
AIR COMPRESSOR GP 410
412
414
ALTERNATOR GP-CHARGING 796
799
800
801
802
803
804
805
806
ALTERNATOR GP-CHARGING (24-VOLT, 115-AMPERE) 800
ALTERNATOR GP-CHARGING–12-VOLT, 100-AMPERE. 798

B

BASE GP-OIL COOLER & FILTER 610
BELT TENSIONER GP. 416
417
418
419
420
421
422
BELT-DRIVE 481
BELT-SERPENTINE. 469
472
474
480
482
484
486
487
488
489
490
491
492
493
494
495
496
497
498
BELT-SERPENTINE (DRIVE FAN) 483
BELT-SERPENTINE (FAN PULLEY). 485
BRACKET GP-MOUNTING 423
424

NAME PAGE

BREATHER GP 611
612
613
BRIDGE GP-VALVE 606

C

CAMSHAFT GP 426
427
428
CAP AS-ENGINE OIL FILLER. 444
445
446
CAP AS-FILLER (ENGINE OIL). 434
CAP AS-OIL FILLER (ENGINE OIL) 619
622
CAP AS-OIL FILLER (ENGINE OIL) (CAT) 622
CAP AS-OIL FILLER (ENGINE OIL) (ENGINE) 621
CAP AS-OIL FILLER (ENGINE). 618
620
625
626
627
CAP-RADIATOR (16-PSI). 684
CLAMP AS-EXHAUST 717
718
COMPRESSOR & MTG GP-REFRIGERANT 429
COMPRESSOR GP-REFRIGERANT. 430
431
CONFIGURATION AR-ENGINE 1
2
4
5
6
7
8
9
10
11
12
13
14
15
16
17
18
19
20
21
CONNECTING ROD GP 432
CONNECTING ROD GP (GRADE B). 574
578
583
585

INDEX

NAME	PAGE
CONNECTING ROD GP (GRADE G)	566
	568
	570
	572
	574
	576
	578
	581
	583
	585
CONNECTING ROD GP (GRADE R)	574
	578
	583
	585
CONNECTING ROD GP (STANDARD)	574
	578
	583
	585
CONNECTION AS (INCLUDES TEMPERATURE REGULATOR)	649
CONNECTION GP-AIR	725
	726
CONNECTION GP-HEATER	648
CONNECTION GP-WATER	649
	650
	651
CONNECTOR GP-CAB HEATER LINES	652
CONTROL GP-ELECTRONIC	808
	810
CONTROL GP-ENGINE ELECTRONIC	811
CONTROL GP-UNPROGRAMMED	808
COOLER AS-OIL	656
COOLER GP-ENGINE OIL	653
	654
	656
	657
	658
	659
	661
	662
	663
	664
	665
	667
COVER GP	499
	540
COVER GP-ACCESSORY DRIVE	433
COVER GP-OIL FILLER	615
COVER GP-VALVE MECHANISM	434
	435
	436
	438
	440
	441
	442
	444
	445
	446
CRANKSHAFT GP	447
CYLINDER BLOCK AS	449
CYLINDER BLOCK GP	450
CYLINDER BLOCK GP-SHORT	452
	455
CYLINDER HEAD AS	457
CYLINDER HEAD GP	458
	460
	462
	465

D

DRAIN GP-ENGINE OIL	466
	467
	468
DRAIN GP-OIL	616
	617
DRIVE GP-FAN	469-498
DRIVE GP-POWER TAKE-OFF	499

E

ELECTRONICS GP	40
	50
	57
	62
	68
	86
	88
	90
	92
	108
	128
	136
	148
	150
	152
	154
	170
	172
	178
	190
	202
	208
	210
	212
	218
	223
	225
	238
	263
	267
	269
	271
	305
	309
	321
	365
	381
	385

INDEX

NAME	PAGE	NAME	PAGE
ELECTRONICS GP-ENGINE.	38		307
	46		315
	48		317
	52		319
	56		323
	64		325
	72		329
	74		331
	78		333
	80		335
	82		337
	84		339
	100		341
	102		345
	110		347
	114		349
	116		351
	118		353
	124		355
	130		361
	134		363
	138		367
	140		369
	144		371
	146		375
	158		379
	164		383
	166		387
	168		397
	180		399
	184		401
	186		403
	188		405
	192		
	198		
	200		
	204		
	206		
	219		
	221		
	227		
	234		
	236		
	240		
	242		
	244		
	250		
	257		
	259		
	261		
	265		
	273		
	275		
	279		
	281		
	283		
	289		
	293		
	297		
	299		
	301		

INDEX

NAME	PAGE
ELECTRONICS GP-ENGINE RATINGS	44
	54
	60
	66
	94
	96
	98
	104
	112
	120
	126
	156
	174
	176
	182
	194
	196
	214
	233
	246
	248
	251
	255
	277
	285
	287
	291
	295
	303
	311
	313
	327
	357
	359
	377
	393
ELECTRONICS-ARC	194
ENGINE AR	21
	22
	23
	24
ENGINE AR-COMPLETE	24
	25
	26
	27
	28
	29
	30
	31
	32
	33
	34
	35
	36
	37

NAME	PAGE
ENGINE AR-PRIMARY	39
	41
	43
	45
	47
	49
	51
	53
	55
	57
	59
	61
	63
	65
	67
	69
	71
	73
	75
	77
	79
	81
	83
	85
	87
	89
	91
	93
	95
	97
	99
	101
	103
	105
	107
	109
	111
	113
	115
	117
	119
	121
	123
	125
	127
	129
	131
	133
	135
	137
	139
	141
	143
	145
	147
	149
	151
	153
	155
	157
	159

INDEX

NAME	PAGE	NAME	PAGE
	161		274
	163		276
	165		278
	167		280
	169		282
	171		284
	173		286
	175		288
	177		290
	179		292
	181		294
	183		296
	185		298
	187		300
	189		302
	191		304
	193		306
	195		308
	197		310
	199		312
	201		314
	203		316
	205		318
	207		320
	209		322
	211		324
	213		326
	215		328
	217		330
	219		332
	220		334
	222		336
	224		338
	226		340
	228		342
	230		344
	232		346
	233		348
	234		350
	235		352
	237		354
	239		356
	241		358
	243		360
	245		362
	247		364
	249		366
	250		368
	251		370
	252		372
	254		374
	256		376
	258		378
	260		380
	262		382
	263		384
	264		386
	266		388
	268		390
	270		392
	272		394

INDEX

NAME	PAGE
	396
	398
	400
	402
	404
	406
EXTENSION GP-FAN	500
	501
	502
	503
	504
F	
FAN GP	669
	670
	671
	672
	673
	674
	675
FAN GP-ENGINE	676
FASTENER GP-DAMPER & PULLEY	505
FILLER GP-ENGINE OIL	618
	619
	620
	621
	622
	623
	624
	625
	626
	627
	628
FILM GP	859
	862
	863
	864
	865
	866
FILM GP–ENGINE	861
FILM-IDENTIFICATION (CAT)	710
	711
	712
	799
	834
	859
	861
	862
	863
	864
	865
	866
	868
FILM-IDENTIFICATION (ENGINE SERIAL NUMBER)	866
FILM-IDENTIFICATION (OIL FILL, READ OMM)	444
	445
	446
	621
	622
FILM-IDENTIFICATION (QR CODE)	76
	94
	393
	867
FILM-WARNING (DO NOT SPRAY, READ OMM)	714
	859
	861
	864
	866
	868
FILM-WARNING (HAND, ANSI)	859
	861
	864
	866
	868
FILM-WARNING (UNIVERSAL WARNING)	859
	861
	864
	866
	868
FILTER	713
FILTER AS-AIR	715
FILTER AS-WATER SEP & FUEL	752
	755
	761
	762
FILTER ELEMENT-AIR (PRIMARY)	714
	715
FILTER ELEMENT-AIR (SECONDARY)	715
FILTER ELEMENT-FUEL	749
FILTER GP-AIR	714
FILTER GP-AIR (TURBOCHARGER, AIR CLEANER)	716
FILTER GP-ENGINE OIL	629
FILTER GP-FUEL	749
	750
	751
	752
	753
	754
	755
	756
	757
	758
	759
	760
FILTER GP-FUMES DISPOSAL	630
FILTER GP-WATER SEP & FUEL	752
	761
	762
FILTER-ENGINE OIL	629
FILTER-FUMES DISPOSAL	630
FITTING GP-WATER LINES	677
FLANGE GP-EXHAUST	719

INDEX

NAME PAGE

FLYWHEEL GP 506 507 508 509 510 511 512 513 514 515

G

GASKET (VALVE COVER) 440
GASKET-FILTER 662
GASKET-FILTER (ENGINE OIL) 610
GASKET-WATER REGULATOR. 649 651
GASKET-WATER REGULATOR (TEMPERATURE). 650
GAUGE GP-OIL LEVEL (DIPSTICK) 631 632 633 634 635 636 637 638 639 640 642
GAUGE GP-OIL LEVEL (DIPSTICK) (ENGINE) 633
GAUGE GP-OIL LEVEL (DIPSTICK)–ENGINE. . . 641
GLOW PLUG. 823
GLOW PLUG (12-VOLT) 824
GLOW PLUG (24-VOLT) 826

H

HARNESS AS-ENGINE 812 813 814
HARNESS AS-POWER. 816
HARNESS AS-SENSOR. 817
HARNESS AS-STARTING AID. 824 826
HARNESS AS-WIRING. 818
HOSE-WATER. 686 689 690 695 697 700 701 703

NAME PAGE

HOUSING GP-FLYWHEEL 517 518 519 520 521 522 523 525 526 527 528 529
HOUSING GP-FRONT 530 532 534 536 538 540 541

I

INDICATOR-AIR FILTER CHANGE. 713 714
INDICATOR-AIR FILTER SERVICE 715
INJECTOR GP-FUEL 763 764 765 766

J

JET GP-PISTON COOLING 543

L

LIFTING GP-ENGINE 544 545 546
LINES GP-FUEL. 767 769 770 771 772 773 775 777 778 783 787
LINES GP-FUEL FILTER. 778 781 783
LINES GP-FUEL INJECTION 410 785 786 787

INDEX

NAME PAGE

LINES GP-TURBOCHARGER AIR 720
721
722
LINES GP-TURBOCHARGER OIL. 643

M

MANIFOLD GP-EXHAUST 723
724
MANIFOLD GP-INLET. 725
726
MOUNTING GP-ACCESSORY MODULE. 855
856
857
MOUNTING GP-ALTERNATOR 547
MOUNTING GP-ELECTRONIC CONTROL 819
MOUNTING GP-ENGINE 548
549
550
551
552
553
554
MOUNTING GP-REFRIGERANT COMPR 555

P

PAN GP-OIL 454
556
557
559
560
561
562
563
564
565
PISTON & ROD GP 566
568
570
572
574
576
578
581
583
585
PISTON GP 566
568
572
576
578
581
583
587
589
PLATE & FILM GP 867
868
PLATE GP-IDENTIFICATION 869

NAME PAGE

PLUG AS 858
PLUG GP-CYLINDER BLOCK 591
PLUG GP-ENGINE 592
PLUG GP-ENGINE OIL LINES 612
PLUG GP-FLYWHEEL HOUSING 593
594
595
PLUG GP-OIL FILTER MOUNTING 644
PLUG GP-OIL PAN. 596
POWER TAKE-OFF GP 597
PULLEY GP-ALTERNATOR 599
PULLEY GP-AUXILIARY DRIVE 600
PULLEY GP-CRANKSHAFT 601
602
603
PUMP GP-ENGINE OIL 645
646
PUMP GP-FUEL INJECTION 789
790
792
793
PUMP GP-WATER. 678

R

RADIATOR AS 680
681
682
683
684
RADIATOR GP 686
689
690
695
697
700
701
703
708
709
710
711
712
RAIL GP-FUEL 794
REGULATOR AS-VOLTAGE (24-VOLT) 806
REGULATOR AS-VOLTAGE (24-VOLT)
(ALTERNATOR) 796
REGULATOR AS-WATER TEMPERATURE
(INCLUDES CONNECTOR). 650
ROCKER ARM GP 604
606

S

SCREEN AS 684
SCREEN AS (RADIATOR) 682
683
708
SEAL (VALVE COVER) 434

INDEX

NAME PAGE

SEAL-CRANKSHAFT (REAR) 519
520
523
SENSOR (FUEL RAIL PRESSURE) 794
SENSOR AS-LIQUID LEVEL (FUEL) 762
SENSOR AS-LIQUID LEVEL (WATER IN FUEL) 755
761
SENSOR GP-ENGINE 820
822
SENSOR GP-LEVEL (WATER SEPARATOR) . . . 752
SENSOR GP-PRESSURE (3-PIN) (ENGINE OIL) 820
822
SENSOR GP-PRESSURE (INLET MANIFOLD AIR) 820
SENSOR GP-PRESSURE (INTAKE MANIFOLD AIR) 822
SENSOR GP-SPEED (ENGINE) 820
SENSOR GP-SPEED (PRIMARY, TIMING) 822
SENSOR GP-SPEED (SECONDARY, TIMING) 822
SENSOR-TEMPERATURE (2-PIN) (AIR INLET MANIFOLD) 820
SENSOR-TEMPERATURE (2-PIN) (COOLANT) 820
822
SENSOR-TEMPERATURE (2-PIN) (INTAKE MANIFOLD AIR) 822
SOLENOID (12/24-VOLT) 725
726
STARTING AID GP 823
824
826
STARTING MOTOR GP-ELECTRIC 828
829
830
831
832
834
835
836
837
838
839
840
STARTING MOTOR GP-ELECTRIC (24-VOLT) 829
831
840
SUPPORT GP-LINES 773
775
778
781
783
787
SUPPORT GP-POWER TAKE-OFF 608
SWITCH AS-LIQUID LEVEL 564
565
SWITCH AS-RELAY 828

NAME PAGE

T

TURBOCHARGER GP 728
729
730
731
732
734
736
737
738
739
740
741
743
744
746
748

V

VALVE AS-PRESSURE RELIEF (REFRIGERANT COMPRESSOR) 430
431
VALVE GP-CYLINDER HEAD 609
VALVE GP-FLUID SAMPLING 647

W

WIRING GP-ENGINE 841
842
843
844
846
848
850
852
854

MEMORANDA

ENGINE ARRANGEMENT

454-5366 CONFIGURATION AR-ENGINE

SMCS-1000 **i08194649**

NOTE	PART NUMBER	QTY	PART NAME 1 2 3 4 5 6 (PRODUCT LEVEL)	SEE PAGE
Y	*451-8385*	1	CYLINDER BLOCK GP-SHORT	455
Y	*452-6582*	1	CYLINDER HEAD GP (SHORT)	460
Y	**451-5272**	1	ENGINE AR-PRIMARY	57

Y - SEPARATE ILLUSTRATION

<END>

455-4836 CONFIGURATION AR-ENGINE

SMCS-1000 **i08246113**

NOTE	PART NUMBER	QTY	PART NAME 1 2 3 4 5 6 (PRODUCT LEVEL)	SEE PAGE
Y	*451-8385*	1	CYLINDER BLOCK GP-SHORT	455
Y	*452-6582*	1	CYLINDER HEAD GP (SHORT)	460
Y	*453-7804*	1	ENGINE AR-PRIMARY	61

Y - SEPARATE ILLUSTRATION

<END>

461-3814 CONFIGURATION AR-ENGINE

SMCS-1000 **i08257496**

NOTE	PART NUMBER	QTY	PART NAME 1 2 3 4 5 6 (PRODUCT LEVEL)	SEE PAGE
Y	*451-8385*	1	CYLINDER BLOCK GP-SHORT	455
Y	*452-6582*	1	CYLINDER HEAD GP (SHORT)	460
Y	**455-9383**	1	ENGINE AR-PRIMARY	65

Y - SEPARATE ILLUSTRATION

<END>

461-5828 CONFIGURATION AR-ENGINE

SMCS-1000 **i08266149**

NOTE	PART NUMBER	QTY	PART NAME 1 2 3 4 5 6 (PRODUCT LEVEL)	SEE PAGE
Y	*451-8385*	1	CYLINDER BLOCK GP-SHORT	455
Y	*452-6582*	1	CYLINDER HEAD GP (SHORT)	460
Y	**456-7962**	1	ENGINE AR-PRIMARY	67

Y - SEPARATE ILLUSTRATION

<END>

462-9442 CONFIGURATION AR-ENGINE

SMCS-1000 **i09094602**

NOTE	PART NUMBER	QTY	PART NAME 1 2 3 4 5 6 (PRODUCT LEVEL)	SEE PAGE
Y	*451-8385*	1	CYLINDER BLOCK GP-SHORT	455
Y	*452-6582*	1	CYLINDER HEAD GP (SHORT)	460
Y	**461-4662**	1	ENGINE AR-PRIMARY	103

Y - SEPARATE ILLUSTRATION

<END>

464-9337 CONFIGURATION AR-ENGINE

SMCS-1000 **i09866497**

NOTE	PART NUMBER	QTY	PART NAME 1 2 3 4 5 6 (PRODUCT LEVEL)	SEE PAGE
Y	*451-8385*	1	CYLINDER BLOCK GP-SHORT	455
Y	*452-6582*	1	CYLINDER HEAD GP (SHORT)	460
Y	*449-0783*	1	ENGINE AR-PRIMARY	51

Y - SEPARATE ILLUSTRATION

<END>

467-2150 CONFIGURATION AR-ENGINE

SMCS-1000 **i08583002**

NOTE	PART NUMBER	QTY	PART NAME 1 2 3 4 5 6 (PRODUCT LEVEL)	SEE PAGE
Y	*451-8385*	1	CYLINDER BLOCK GP-SHORT	455
Y	*452-6582*	1	CYLINDER HEAD GP (SHORT)	460
Y	**464-8580**	1	ENGINE AR-PRIMARY	119

Y - SEPARATE ILLUSTRATION

<END>

467-8361 CONFIGURATION AR-ENGINE

PART OF 466-1162 ENGINE AR-PRIMARY

SMCS-1000 **i08116249**

NOTE	PART NUMBER	QTY	PART NAME 1 2 3 4 5 6 (PRODUCT LEVEL)	SEE PAGE
Y	*451-8385*	1	CYLINDER BLOCK GP-SHORT	455
Y	*452-6582*	1	CYLINDER HEAD GP (SHORT)	460

Y - SEPARATE ILLUSTRATION

<END>

467-9663 CONFIGURATION AR-ENGINE

PART OF 466-1161 ENGINE AR-PRIMARY

SMCS-1000 **i08106169**

NOTE	PART NUMBER	QTY	PART NAME 1 2 3 4 5 6 (PRODUCT LEVEL)	SEE PAGE
Y	*451-8385*	1	CYLINDER BLOCK GP-SHORT	455
Y	*452-6582*	1	CYLINDER HEAD GP (SHORT)	460

Y - SEPARATE ILLUSTRATION

<END>

467-9808 CONFIGURATION AR-ENGINE

SMCS-1000 **i09107274**

NOTE	PART NUMBER	QTY	PART NAME 1 2 3 4 5 6 (PRODUCT LEVEL)	SEE PAGE
Y	*451-8385*	1	CYLINDER BLOCK GP-SHORT	455
Y	*452-6582*	1	CYLINDER HEAD GP (SHORT)	460
Y	**461-4655**	1	ENGINE AR-PRIMARY	91

Y - SEPARATE ILLUSTRATION

<END>

468-0460 CONFIGURATION AR-ENGINE

SMCS-1000 **i09866499**

NOTE	PART NUMBER	QTY	PART NAME 1 2 3 4 5 6 (PRODUCT LEVEL)	SEE PAGE
Y	*451-8385*	1	CYLINDER BLOCK GP-SHORT	455
Y	*452-6582*	1	CYLINDER HEAD GP (SHORT)	460
Y	**461-4643**	1	ENGINE AR-PRIMARY	73

Y - SEPARATE ILLUSTRATION

<END>

468-0462 CONFIGURATION AR-ENGINE

PART OF 461-4638 ENGINE AR-PRIMARY

SMCS-1000 **i09094588**

NOTE	PART NUMBER	QTY	PART NAME 1 2 3 4 5 6 (PRODUCT LEVEL)	SEE PAGE
Y	*451-8385*	1	CYLINDER BLOCK GP-SHORT	455
Y	*452-6582*	1	CYLINDER HEAD GP (SHORT)	460
Y	**461-4638**	1	ENGINE AR-PRIMARY	69

Y - SEPARATE ILLUSTRATION

<END>

468-2231 CONFIGURATION AR-ENGINE

PART OF 468-0461 ENGINE AR-PRIMARY

SMCS-1000 **i09140639**

NOTE	PART NUMBER	QTY	PART NAME 1 2 3 4 5 6 (PRODUCT LEVEL)	SEE PAGE
Y	*451-8385*	1	CYLINDER BLOCK GP-SHORT	455
Y	*452-6582*	1	CYLINDER HEAD GP (SHORT)	460
Y	*468-0461*	1	ENGINE AR-PRIMARY	131

Y - SEPARATE ILLUSTRATION

<END>

468-3190 CONFIGURATION AR-ENGINE

PART OF 461-4649 ENGINE AR-PRIMARY

SMCS-1000 **i08730089**

NOTE	PART NUMBER	QTY	PART NAME 1 2 3 4 5 6 (PRODUCT LEVEL)	SEE PAGE
Y	**451-1222**	1	CYLINDER BLOCK GP-SHORT	452
Y	**452-6582**	1	CYLINDER HEAD GP (SHORT)	460
Y	**461-4649**	1	ENGINE AR-PRIMARY	81

Y - SEPARATE ILLUSTRATION

<END>

468-5324 CONFIGURATION AR-ENGINE

PART OF 466-1160 ENGINE AR-PRIMARY

SMCS-1000 **i08116406**

NOTE	PART NUMBER	QTY	PART NAME 1 2 3 4 5 6 (PRODUCT LEVEL)	SEE PAGE
Y	*451-8385*	1	CYLINDER BLOCK GP-SHORT	455
Y	*452-6582*	1	CYLINDER HEAD GP (SHORT)	460

Y - SEPARATE ILLUSTRATION

<END>

468-5349 CONFIGURATION AR-ENGINE

SMCS-1000 **i09027776**

NOTE	PART NUMBER	QTY	PART NAME 1 2 3 4 5 6 (PRODUCT LEVEL)	SEE PAGE
Y	*451-8385*	1	CYLINDER BLOCK GP-SHORT	455
Y	*452-6582*	1	CYLINDER HEAD GP (SHORT)	460
Y	**461-4648**	1	ENGINE AR-PRIMARY	79

Y - SEPARATE ILLUSTRATION

<END>

474-9782 CONFIGURATION AR-ENGINE

PART OF 474-7299 ENGINE AR-PRIMARY

SMCS-1000 **i09170126**

NOTE	PART NUMBER	QTY	PART NAME 1 2 3 4 5 6 (PRODUCT LEVEL)	SEE PAGE
Y	*451-8385*	1	CYLINDER BLOCK GP-SHORT	455
Y	*452-6582*	1	CYLINDER HEAD GP (SHORT)	460
Y	*474-7299*	1	ENGINE AR-PRIMARY	151

Y - SEPARATE ILLUSTRATION

<END>

476-7489 CONFIGURATION AR-ENGINE

PART OF 471-0541 ENGINE AR-PRIMARY

SMCS-1000 **i08106134**

NOTE	PART NUMBER	QTY	PART NAME 1 2 3 4 5 6 (PRODUCT LEVEL)	SEE PAGE
Y	*451-8385*	1	CYLINDER BLOCK GP-SHORT	455
Y	*452-6582*	1	CYLINDER HEAD GP (SHORT)	460

Y - SEPARATE ILLUSTRATION

<END>

477-1981 CONFIGURATION AR-ENGINE

SMCS-1000 **i08585531**

NOTE	PART NUMBER	QTY	PART NAME 1 2 3 4 5 6 (PRODUCT LEVEL)	SEE PAGE
Y	*451-8385*	1	CYLINDER BLOCK GP-SHORT	455
Y	*452-6582*	1	CYLINDER HEAD GP (SHORT)	460
Y	*477-1865*	1	ENGINE AR-PRIMARY	163

Y - SEPARATE ILLUSTRATION

<END>

477-1982 CONFIGURATION AR-ENGINE

SMCS-1000 **i09158517**

NOTE	PART NUMBER	QTY	PART NAME 1 2 3 4 5 6 (PRODUCT LEVEL)	SEE PAGE
Y	*451-8385*	1	CYLINDER BLOCK GP-SHORT	455
Y	*452-6582*	1	CYLINDER HEAD GP (SHORT)	460
Y	*477-1869*	1	ENGINE AR-PRIMARY	165

Y - SEPARATE ILLUSTRATION

<END>

477-1983 CONFIGURATION AR-ENGINE

SMCS-1000 **i09211219**

NOTE	PART NUMBER	QTY	PART NAME 1 2 3 4 5 6 (PRODUCT LEVEL)	SEE PAGE
Y	*451-8385*	1	CYLINDER BLOCK GP-SHORT	455
Y	*452-6582*	1	CYLINDER HEAD GP (SHORT)	460
Y	*477-1870*	1	ENGINE AR-PRIMARY	167

Y - SEPARATE ILLUSTRATION

<END>

477-3353 CONFIGURATION AR-ENGINE

SMCS-1000 **i09219324**

NOTE	PART NUMBER	QTY	PART NAME 1 2 3 4 5 6 (PRODUCT LEVEL)	SEE PAGE
Y	*451-8385*	1	CYLINDER BLOCK GP-SHORT	455
Y	*452-6582*	1	CYLINDER HEAD GP (SHORT)	460
Y	*477-2658*	1	ENGINE AR-PRIMARY	175

Y - SEPARATE ILLUSTRATION

<END>

477-6348 CONFIGURATION AR-ENGINE

SMCS-1000 **i09169871**

NOTE	PART NUMBER	QTY	PART NAME 1 2 3 4 5 6 (PRODUCT LEVEL)	SEE PAGE
Y	*451-8385*	1	CYLINDER BLOCK GP-SHORT	455
Y	*452-6582*	1	CYLINDER HEAD GP (SHORT)	460
Y	**475-3388**	1	ENGINE AR-PRIMARY	153

Y - SEPARATE ILLUSTRATION

<END>

477-6774 CONFIGURATION AR-ENGINE

PART OF 468-8218 ENGINE AR-PRIMARY

SMCS-1000 **i09158004**

NOTE	PART NUMBER	QTY	PART NAME 1 2 3 4 5 6 (PRODUCT LEVEL)	SEE PAGE
Y	*451-8385*	1	CYLINDER BLOCK GP-SHORT	455
Y	*452-6582*	1	CYLINDER HEAD GP (SHORT)	460
Y	*468-8218*	1	ENGINE AR-PRIMARY	135

Y - SEPARATE ILLUSTRATION

<END>

477-8829 CONFIGURATION AR-ENGINE

SMCS-1000 **i09713046**

NOTE	PART NUMBER	QTY	PART NAME 1 2 3 4 5 6 (PRODUCT LEVEL)	SEE PAGE
Y	*451-8385*	1	CYLINDER BLOCK GP-SHORT	455
Y	*452-6582*	1	CYLINDER HEAD GP (SHORT)	460
Y	**465-2766**	1	ENGINE AR-PRIMARY	121

Y - SEPARATE ILLUSTRATION

<END>

478-7619 CONFIGURATION AR-ENGINE

PART OF 470-8667 ENGINE AR-PRIMARY

SMCS-1000 **i08116510**

NOTE	PART NUMBER	QTY	PART NAME 1 2 3 4 5 6 (PRODUCT LEVEL)	SEE PAGE
Y	*451-8385*	1	CYLINDER BLOCK GP-SHORT	455
Y	*452-6582*	1	CYLINDER HEAD GP (SHORT)	460

Y - SEPARATE ILLUSTRATION

<END>

481-1530 CONFIGURATION AR-ENGINE

SMCS-1000 **i09157686**

NOTE	PART NUMBER	QTY	PART NAME 1 2 3 4 5 6 (PRODUCT LEVEL)	SEE PAGE
Y	*451-8385*	1	CYLINDER BLOCK GP-SHORT	455
Y	*452-6582*	1	CYLINDER HEAD GP (SHORT)	460
Y	**481-0144**	1	ENGINE AR-PRIMARY	193

Y - SEPARATE ILLUSTRATION

<END>

481-4143 CONFIGURATION AR-ENGINE

SMCS-1000 **i09157811**

NOTE	PART NUMBER	QTY	PART NAME 1 2 3 4 5 6 (PRODUCT LEVEL)	SEE PAGE
Y	*451-8385*	1	CYLINDER BLOCK GP-SHORT	455
Y	*452-6582*	1	CYLINDER HEAD GP (SHORT)	460
Y	**479-9389**	1	ENGINE AR-PRIMARY	187

Y - SEPARATE ILLUSTRATION

<END>

481-4234 CONFIGURATION AR-ENGINE

PART OF 480-2181 ENGINE AR-PRIMARY

SMCS-1000 **i09157666**

NOTE	PART NUMBER	QTY	PART NAME 1 2 3 4 5 6 (PRODUCT LEVEL)	SEE PAGE
Y	*451-8385*	1	CYLINDER BLOCK GP-SHORT	455
Y	*452-6582*	1	CYLINDER HEAD GP (SHORT)	460
Y	*480-2181*	1	ENGINE AR-PRIMARY	191

Y - SEPARATE ILLUSTRATION

<END>

482-8581 CONFIGURATION AR-ENGINE

SMCS-1000 **i09211213**

NOTE	PART NUMBER	QTY	PART NAME 1 2 3 4 5 6 (PRODUCT LEVEL)	SEE PAGE
Y	*451-8385*	1	CYLINDER BLOCK GP-SHORT	455
Y	*452-6582*	1	CYLINDER HEAD GP (SHORT)	460
Y	*482-0209*	1	ENGINE AR-PRIMARY	197

Y - SEPARATE ILLUSTRATION

<END>

482-9210 CONFIGURATION AR-ENGINE

PART OF 482-0212 ENGINE AR-PRIMARY

SMCS-1000 **i09169476**

NOTE	PART NUMBER	QTY	PART NAME 1 2 3 4 5 6 (PRODUCT LEVEL)	SEE PAGE
Y	*451-8385*	1	CYLINDER BLOCK GP-SHORT	455
Y	*452-6582*	1	CYLINDER HEAD GP (SHORT)	460
Y	*482-0212*	1	ENGINE AR-PRIMARY	199

Y - SEPARATE ILLUSTRATION

<END>

483-9391 CONFIGURATION AR-ENGINE

SMCS-1000 **i09158003**

NOTE	PART NUMBER	QTY	PART NAME 1 2 3 4 5 6 (PRODUCT LEVEL)	SEE PAGE
Y	*451-8385*	1	CYLINDER BLOCK GP-SHORT	455
Y	*452-6582*	1	CYLINDER HEAD GP (SHORT)	460
Y	*483-9334*	1	ENGINE AR-PRIMARY	203

Y - SEPARATE ILLUSTRATION

<END>

492-7341 CONFIGURATION AR-ENGINE

PART OF 492-3169 ENGINE AR-PRIMARY

SMCS-1000 **i09157789**

NOTE	PART NUMBER	QTY	PART NAME 1 2 3 4 5 6 (PRODUCT LEVEL)	SEE PAGE
Y	*451-8385*	1	CYLINDER BLOCK GP-SHORT	455
Y	*452-6582*	1	CYLINDER HEAD GP (SHORT)	460
Y	*492-3169*	1	ENGINE AR-PRIMARY	232

Y - SEPARATE ILLUSTRATION

<END>

493-0138 CONFIGURATION AR-ENGINE

PART OF 491-7124 ENGINE AR-PRIMARY

SMCS-1000 **i09219281**

NOTE	PART NUMBER	QTY	PART NAME 1 2 3 4 5 6 (PRODUCT LEVEL)	SEE PAGE
Y	*451-8385*	1	CYLINDER BLOCK GP-SHORT	455
Y	*452-6582*	1	CYLINDER HEAD GP (SHORT)	460
Y	**491-7124**	1	ENGINE AR-PRIMARY	226

Y - SEPARATE ILLUSTRATION

<END>

493-2720 CONFIGURATION AR-ENGINE

PART OF 493-1038 ENGINE AR-PRIMARY

SMCS-1000 **i09248602**

NOTE	PART NUMBER	QTY	PART NAME 1 2 3 4 5 6 (PRODUCT LEVEL)	SEE PAGE
Y	*451-8385*	1	CYLINDER BLOCK GP-SHORT	455
Y	*452-6582*	1	CYLINDER HEAD GP (SHORT)	460
Y	*493-1038*	1	ENGINE AR-PRIMARY	234

Y - SEPARATE ILLUSTRATION

<END>

504-6342 CONFIGURATION AR-ENGINE

PART OF 504-5365 ENGINE AR-PRIMARY

SMCS-1000 **i09248997**

NOTE	PART NUMBER	QTY	PART NAME 1 2 3 4 5 6 (PRODUCT LEVEL)	SEE PAGE
Y	*451-8385*	1	CYLINDER BLOCK GP-SHORT	455
Y	*452-6582*	1	CYLINDER HEAD GP (SHORT)	460
Y	*504-5365*	1	ENGINE AR-PRIMARY	250

Y - SEPARATE ILLUSTRATION

<END>

504-8142 CONFIGURATION AR-ENGINE

PART OF 504-8134 ENGINE AR-PRIMARY

SMCS-1000 **i09318348**

NOTE	PART NUMBER	QTY	PART NAME 1 2 3 4 5 6 (PRODUCT LEVEL)	SEE PAGE
Y	*451-8385*	1	CYLINDER BLOCK GP-SHORT	455
Y	*452-6582*	1	CYLINDER HEAD GP (SHORT)	460
Y	*504-8134*	1	ENGINE AR-PRIMARY	251

Y - SEPARATE ILLUSTRATION

<END>

506-5125 CONFIGURATION AR-ENGINE

PART OF 506-5035 ENGINE AR-PRIMARY

SMCS-1000 **i09235248**

NOTE	PART NUMBER	QTY	PART NAME 1 2 3 4 5 6 (PRODUCT LEVEL)	SEE PAGE
Y	*451-8385*	1	CYLINDER BLOCK GP-SHORT	455
Y	*452-6582*	1	CYLINDER HEAD GP (SHORT)	460
Y	*506-5035*	1	ENGINE AR-PRIMARY	254

Y - SEPARATE ILLUSTRATION

<END>

507-6552 CONFIGURATION AR-ENGINE

PART OF 506-9918 ENGINE AR-PRIMARY

SMCS-1000 **i09324313**

NOTE	PART NUMBER	QTY	PART NAME 1 2 3 4 5 6 (PRODUCT LEVEL)	SEE PAGE
Y	*451-8385*	1	CYLINDER BLOCK GP-SHORT	455
Y	*452-6582*	1	CYLINDER HEAD GP (SHORT)	460
Y	**506-9918**	1	ENGINE AR-PRIMARY	256

Y - SEPARATE ILLUSTRATION

<END>

507-8031 CONFIGURATION AR-ENGINE

PART OF 507-8016 ENGINE AR-PRIMARY

SMCS-1000 **i06796478**

NOTE	PART NUMBER	QTY	PART NAME 1 2 3 4 5 6 (PRODUCT LEVEL)	SEE PAGE
Y	*451-8385*	1	CYLINDER BLOCK GP-SHORT	455
Y	*452-6582*	1	CYLINDER HEAD GP (SHORT)	460
Y	*507-8016*	1	ENGINE AR-PRIMARY	258

Y - SEPARATE ILLUSTRATION

<END>

508-0306 CONFIGURATION AR-ENGINE

PART OF 508-0270 ENGINE AR-PRIMARY

SMCS-1000 **i09414924**

NOTE	PART NUMBER	QTY	PART NAME 1 2 3 4 5 6 (PRODUCT LEVEL)	SEE PAGE
Y	*451-8385*	1	CYLINDER BLOCK GP-SHORT	455
Y	*452-6582*	1	CYLINDER HEAD GP (SHORT)	460
Y	*508-0270*	1	ENGINE AR-PRIMARY	260

Y - SEPARATE ILLUSTRATION

<END>

513-0877 CONFIGURATION AR-ENGINE

PART OF 513-0851 ENGINE AR-PRIMARY

SMCS-1000 **i09402677**

NOTE	PART NUMBER	QTY	PART NAME 1 2 3 4 5 6 (PRODUCT LEVEL)	SEE PAGE
Y	*451-8385*	1	CYLINDER BLOCK GP-SHORT	455
Y	*452-6582*	1	CYLINDER HEAD GP (SHORT)	460
Y	*513-0851*	1	ENGINE AR-PRIMARY	266

Y - SEPARATE ILLUSTRATION

<END>

513-0924 CONFIGURATION AR-ENGINE

PART OF 512-9858 ENGINE AR-PRIMARY

SMCS-1000 **i09402665**

NOTE	PART NUMBER	QTY	PART NAME 1 2 3 4 5 6 (PRODUCT LEVEL)	SEE PAGE
Y	*451-8385*	1	CYLINDER BLOCK GP-SHORT	455
Y	*452-6582*	1	CYLINDER HEAD GP (SHORT)	460
Y	*512-9858*	1	ENGINE AR-PRIMARY	264

Y - SEPARATE ILLUSTRATION

<END>

513-8514 CONFIGURATION AR-ENGINE

PART OF 513-8513 ENGINE AR-PRIMARY

SMCS-1000 **i09402661**

NOTE	PART NUMBER	QTY	PART NAME 1 2 3 4 5 6 (PRODUCT LEVEL)	SEE PAGE
Y	*451-8385*	1	CYLINDER BLOCK GP-SHORT	455
Y	*452-6582*	1	CYLINDER HEAD GP (SHORT)	460
Y	*513-8513*	1	ENGINE AR-PRIMARY	268

Y - SEPARATE ILLUSTRATION

<END>

515-1814 CONFIGURATION AR-ENGINE

PART OF 514-9367 ENGINE AR-PRIMARY

SMCS-1000 **i09414941**

NOTE	PART NUMBER	QTY	PART NAME 1 2 3 4 5 6 (PRODUCT LEVEL)	SEE PAGE
Y	*451-8385*	1	CYLINDER BLOCK GP-SHORT	455
Y	*452-6582*	1	CYLINDER HEAD GP (SHORT)	460
Y	*514-9367*	1	ENGINE AR-PRIMARY	270

Y - SEPARATE ILLUSTRATION

<END>

519-4236 CONFIGURATION AR-ENGINE

PART OF 519-4128 ENGINE AR-PRIMARY

SMCS-1000 **i09415008**

NOTE	PART NUMBER	QTY	PART NAME 1 2 3 4 5 6 (PRODUCT LEVEL)	SEE PAGE
Y	**451-1222**	1	CYLINDER BLOCK GP-SHORT	452
Y	**452-6584**	1	CYLINDER HEAD GP (SHORT)	462
Y	**519-4128**	1	ENGINE AR-PRIMARY	274

Y - SEPARATE ILLUSTRATION

<END>

524-9915 CONFIGURATION AR-ENGINE

PART OF 524-8271 ENGINE AR-PRIMARY

SMCS-1000 **i09415591**

NOTE	PART NUMBER	QTY	PART NAME 1 2 3 4 5 6 (PRODUCT LEVEL)	SEE PAGE
Y	*451-8385*	1	CYLINDER BLOCK GP-SHORT	455
Y	*452-6582*	1	CYLINDER HEAD GP (SHORT)	460
Y	*524-8271*	1	ENGINE AR-PRIMARY	280

Y - SEPARATE ILLUSTRATION

<END>

525-9134 CONFIGURATION AR-ENGINE

PART OF 525-8759 ENGINE AR-PRIMARY

SMCS-1000 **i09415596**

NOTE	PART NUMBER	QTY	PART NAME 1 2 3 4 5 6 (PRODUCT LEVEL)	SEE PAGE
Y	*451-8385*	1	CYLINDER BLOCK GP-SHORT	455
Y	*452-6582*	1	CYLINDER HEAD GP (SHORT)	460
Y	*525-8759*	1	ENGINE AR-PRIMARY	282

Y - SEPARATE ILLUSTRATION

<END>

527-9187 CONFIGURATION AR-ENGINE

PART OF 527-7106 ENGINE AR-PRIMARY

SMCS-1000 **i08609189**

NOTE	PART NUMBER	QTY	PART NAME 1 2 3 4 5 6 (PRODUCT LEVEL)	SEE PAGE
Y	*451-8385*	1	CYLINDER BLOCK GP-SHORT	455
Y	*452-6582*	1	CYLINDER HEAD GP (SHORT)	460
Y	**527-7106**	1	ENGINE AR-PRIMARY	290

Y - SEPARATE ILLUSTRATION

<END>

528-3387 CONFIGURATION AR-ENGINE

PART OF 527-9686 ENGINE AR-PRIMARY

SMCS-1000 **i08730142**

NOTE	PART NUMBER	QTY	PART NAME 1 2 3 4 5 6 (PRODUCT LEVEL)	SEE PAGE
Y	*451-8385*	1	CYLINDER BLOCK GP-SHORT	455
Y	*452-6582*	1	CYLINDER HEAD GP (SHORT)	460
Y	**527-9686**	1	ENGINE AR-PRIMARY	292

Y - SEPARATE ILLUSTRATION

<END>

529-8781 CONFIGURATION AR-ENGINE

PART OF 528-9920 ENGINE AR-PRIMARY

SMCS-1000 **i09415592**

NOTE	PART NUMBER	QTY	PART NAME 1 2 3 4 5 6 (PRODUCT LEVEL)	SEE PAGE
Y	*451-8385*	1	CYLINDER BLOCK GP-SHORT	455
Y	*452-6582*	1	CYLINDER HEAD GP (SHORT)	460
Y	*528-9920*	1	ENGINE AR-PRIMARY	298

Y - SEPARATE ILLUSTRATION

<END>

532-0514 CONFIGURATION AR-ENGINE

PART OF 530-2601 ENGINE AR-PRIMARY

SMCS-1000 **i09415606**

NOTE	PART NUMBER	QTY	PART NAME 1 2 3 4 5 6 (PRODUCT LEVEL)	SEE PAGE
Y	*451-8385*	1	CYLINDER BLOCK GP-SHORT	455
Y	*452-6582*	1	CYLINDER HEAD GP (SHORT)	460
Y	*530-2601*	1	ENGINE AR-PRIMARY	302

Y - SEPARATE ILLUSTRATION

<END>

532-5863 CONFIGURATION AR-ENGINE

PART OF 531-2492 ENGINE AR-PRIMARY

SMCS-1000 **i09415584**

NOTE	PART NUMBER	QTY	PART NAME 1 2 3 4 5 6 (PRODUCT LEVEL)	SEE PAGE
Y	*451-8385*	1	CYLINDER BLOCK GP-SHORT	455
Y	*452-6582*	1	CYLINDER HEAD GP (SHORT)	460
Y	**531-2492**	1	ENGINE AR-PRIMARY	304

Y - SEPARATE ILLUSTRATION

<END>

535-8566 CONFIGURATION AR-ENGINE

PART OF 535-8060 ENGINE AR-PRIMARY

SMCS-1000 **i09415603**

NOTE	PART NUMBER	QTY	PART NAME 1 2 3 4 5 6 (PRODUCT LEVEL)	SEE PAGE
Y	*451-8385*	1	CYLINDER BLOCK GP-SHORT	455
Y	*452-6582*	1	CYLINDER HEAD GP (SHORT)	460
Y	*535-8060*	1	ENGINE AR-PRIMARY	310

Y - SEPARATE ILLUSTRATION

<END>

552-9638 CONFIGURATION AR-ENGINE

PART OF 552-8869 ENGINE AR-PRIMARY

SMCS-1000 **i09415685**

NOTE	PART NUMBER	QTY	PART NAME 1 2 3 4 5 6 (PRODUCT LEVEL)	SEE PAGE
Y	*451-8385*	1	CYLINDER BLOCK GP-SHORT	455
Y	*452-6582*	1	CYLINDER HEAD GP (SHORT)	460
Y	*552-8869*	1	ENGINE AR-PRIMARY	322

Y - SEPARATE ILLUSTRATION

<END>

553-6396 CONFIGURATION AR-ENGINE

PART OF 553-3730 ENGINE AR-PRIMARY

SMCS-1000 **i09415719**

NOTE	PART NUMBER	QTY	PART NAME 1 2 3 4 5 6 (PRODUCT LEVEL)	SEE PAGE
Y	*451-8385*	1	CYLINDER BLOCK GP-SHORT	455
Y	*452-6582*	1	CYLINDER HEAD GP (SHORT)	460
Y	*553-3730*	1	ENGINE AR-PRIMARY	326

Y - SEPARATE ILLUSTRATION

<END>

555-5057 CONFIGURATION AR-ENGINE

PART OF 555-4669 ENGINE AR-PRIMARY

SMCS-1000 **i09415613**

NOTE	PART NUMBER	QTY	PART NAME 1 2 3 4 5 6 (PRODUCT LEVEL)	SEE PAGE
Y	*451-8385*	1	CYLINDER BLOCK GP-SHORT	455
Y	*452-6582*	1	CYLINDER HEAD GP (SHORT)	460
Y	*555-4669*	1	ENGINE AR-PRIMARY	328

Y - SEPARATE ILLUSTRATION

<END>

567-8621 CONFIGURATION AR-ENGINE

PART OF 565-1247 ENGINE AR-PRIMARY

SMCS-1000 **i09415588**

NOTE	PART NUMBER	QTY	PART NAME 1 2 3 4 5 6 (PRODUCT LEVEL)	SEE PAGE
Y	*451-8385*	1	CYLINDER BLOCK GP-SHORT	455
Y	*452-6582*	1	CYLINDER HEAD GP (SHORT)	460
Y	*565-1247*	1	ENGINE AR-PRIMARY	338

Y - SEPARATE ILLUSTRATION

<END>

585-3037 CONFIGURATION AR-ENGINE

PART OF 583-8352 ENGINE AR-PRIMARY

SMCS-1000 **i08708992**

NOTE	PART NUMBER	QTY	PART NAME 1 2 3 4 5 6 (PRODUCT LEVEL)	SEE PAGE
Y	*451-8385*	1	CYLINDER BLOCK GP-SHORT	455
Y	*452-6582*	1	CYLINDER HEAD GP (SHORT)	460
Y	**583-8352**	1	ENGINE AR-PRIMARY	346

Y - SEPARATE ILLUSTRATION

<END>

585-7897 CONFIGURATION AR-ENGINE

PART OF 575-2879 ENGINE AR-PRIMARY

SMCS-1000 **i09415581**

NOTE	PART NUMBER	QTY	PART NAME 1 2 3 4 5 6 (PRODUCT LEVEL)	SEE PAGE
Y	*451-8385*	1	CYLINDER BLOCK GP-SHORT	455
Y	*452-6582*	1	CYLINDER HEAD GP (SHORT)	460
Y	**575-2879**	1	ENGINE AR-PRIMARY	342

Y - SEPARATE ILLUSTRATION

<END>

585-7898 CONFIGURATION AR-ENGINE

PART OF 575-2880 ENGINE AR-PRIMARY

SMCS-1000 **i09415593**

NOTE	PART NUMBER	QTY	PART NAME 1 2 3 4 5 6 (PRODUCT LEVEL)	SEE PAGE
Y	*451-8385*	1	CYLINDER BLOCK GP-SHORT	455
Y	*452-6582*	1	CYLINDER HEAD GP (SHORT)	460
Y	**575-2880**	1	ENGINE AR-PRIMARY	344

Y - SEPARATE ILLUSTRATION

<END>

591-4607 CONFIGURATION AR-ENGINE

PART OF 591-1266 ENGINE AR-PRIMARY

SMCS-1000 **i08709734**

NOTE	PART NUMBER	QTY	PART NAME 1 2 3 4 5 6 (PRODUCT LEVEL)	SEE PAGE
Y	*451-8385*	1	CYLINDER BLOCK GP-SHORT	455
Y	*452-6582*	1	CYLINDER HEAD GP (SHORT)	460
Y	**591-1266**	1	ENGINE AR-PRIMARY	348

Y - SEPARATE ILLUSTRATION

<END>

592-3194 CONFIGURATION AR-ENGINE

PART OF 591-9440 ENGINE AR-PRIMARY

SMCS-1000 **i09415681**

NOTE	PART NUMBER	QTY	PART NAME 1 2 3 4 5 6 (PRODUCT LEVEL)	SEE PAGE
Y	*451-8385*	1	CYLINDER BLOCK GP-SHORT	455
Y	*452-6582*	1	CYLINDER HEAD GP (SHORT)	460
Y	**591-9440**	1	ENGINE AR-PRIMARY	350

Y - SEPARATE ILLUSTRATION

<END>

594-0211 CONFIGURATION AR-ENGINE

PART OF 593-7287 ENGINE AR-PRIMARY

SMCS-1000 **i09415739**

NOTE	PART NUMBER	QTY	PART NAME 1 2 3 4 5 6 (PRODUCT LEVEL)	SEE PAGE
Y	*451-8385*	1	CYLINDER BLOCK GP-SHORT	455
Y	*452-6582*	1	CYLINDER HEAD GP (SHORT)	460
Y	**593-7287**	1	ENGINE AR-PRIMARY	352

Y - SEPARATE ILLUSTRATION

<END>

594-0218 CONFIGURATION AR-ENGINE

PART OF 593-7288 ENGINE AR-PRIMARY

SMCS-1000 **i09415720**

NOTE	PART NUMBER	QTY	PART NAME 1 2 3 4 5 6 (PRODUCT LEVEL)	SEE PAGE
Y	*451-8385*	1	CYLINDER BLOCK GP-SHORT	455
Y	*452-6582*	1	CYLINDER HEAD GP (SHORT)	460
Y	**593-7288**	1	ENGINE AR-PRIMARY	354

Y - SEPARATE ILLUSTRATION

<END>

594-3037 CONFIGURATION AR-ENGINE

PART OF 594-2125 ENGINE AR-PRIMARY

SMCS-1000 **i09415731**

NOTE	PART NUMBER	QTY	PART NAME 1 2 3 4 5 6 (PRODUCT LEVEL)	SEE PAGE
Y	*451-8385*	1	CYLINDER BLOCK GP-SHORT	455
Y	*452-6582*	1	CYLINDER HEAD GP (SHORT)	460
Y	**594-2125**	1	ENGINE AR-PRIMARY	356

Y - SEPARATE ILLUSTRATION

<END>

596-2621 CONFIGURATION AR-ENGINE

PART OF 596-2071 ENGINE AR-COMPLETE

SMCS-1000 **i08171439**

NOTE	PART NUMBER	QTY	PART NAME 1 2 3 4 5 6 (PRODUCT LEVEL)	SEE PAGE
Y	*451-8385*	1	CYLINDER BLOCK GP-SHORT	455
Y	*452-6582*	1	CYLINDER HEAD GP (SHORT)	460
Y	**596-2071**	1	ENGINE AR-COMPLETE	37

Y - SEPARATE ILLUSTRATION

<END>

596-6452 CONFIGURATION AR-ENGINE

PART OF 596-4834 ENGINE AR-PRIMARY

SMCS-1000 **i09415580**

NOTE	PART NUMBER	QTY	PART NAME 1 2 3 4 5 6 (PRODUCT LEVEL)	SEE PAGE
Y	*451-8385*	1	CYLINDER BLOCK GP-SHORT	455
Y	*452-6582*	1	CYLINDER HEAD GP (SHORT)	460
Y	**596-4834**	1	ENGINE AR-PRIMARY	358

Y - SEPARATE ILLUSTRATION

<END>

596-7092 CONFIGURATION AR-ENGINE

PART OF 596-7090 ENGINE AR-PRIMARY

SMCS-1000 **i08171167**

NOTE	PART NUMBER	QTY	PART NAME 1 2 3 4 5 6 (PRODUCT LEVEL)	SEE PAGE
Y	*451-8385*	1	CYLINDER BLOCK GP-SHORT	455
Y	*452-6582*	1	CYLINDER HEAD GP (SHORT)	460
Y	**596-7090**	1	ENGINE AR-PRIMARY	360

Y - SEPARATE ILLUSTRATION

<END>

596-8930 CONFIGURATION AR-ENGINE

PART OF 596-8905 ENGINE AR-PRIMARY

SMCS-1000 **i08171275**

NOTE	PART NUMBER	QTY	PART NAME 1 2 3 4 5 6 (PRODUCT LEVEL)	SEE PAGE
Y	*451-8385*	1	CYLINDER BLOCK GP-SHORT	455
Y	*452-6582*	1	CYLINDER HEAD GP (SHORT)	460
Y	**596-8905**	1	ENGINE AR-PRIMARY	364

Y - SEPARATE ILLUSTRATION

<END>

598-0764 CONFIGURATION AR-ENGINE

PART OF 597-9248 ENGINE AR-PRIMARY

SMCS-1000 **i09415576**

NOTE	PART NUMBER	QTY	PART NAME 1 2 3 4 5 6 (PRODUCT LEVEL)	SEE PAGE
Y	*451-8385*	1	CYLINDER BLOCK GP-SHORT	455
Y	*452-6582*	1	CYLINDER HEAD GP (SHORT)	460
Y	**597-9248**	1	ENGINE AR-PRIMARY	366

Y - SEPARATE ILLUSTRATION

<END>

599-2201 CONFIGURATION AR-ENGINE

PART OF 598-9881 ENGINE AR-PRIMARY

SMCS-1000 **i09415729**

NOTE	PART NUMBER	QTY	PART NAME 1 2 3 4 5 6 (PRODUCT LEVEL)	SEE PAGE
Y	*451-8385*	1	CYLINDER BLOCK GP-SHORT	455
Y	*452-6582*	1	CYLINDER HEAD GP (SHORT)	460
Y	**598-9881**	1	ENGINE AR-PRIMARY	368

Y - SEPARATE ILLUSTRATION

<END>

603-1127 CONFIGURATION AR-ENGINE

PART OF 602-8721 ENGINE AR-PRIMARY

SMCS-1000 **i09318278**

NOTE	PART NUMBER	QTY	PART NAME 1 2 3 4 5 6 (PRODUCT LEVEL)	SEE PAGE
Y	*451-8385*	1	CYLINDER BLOCK GP-SHORT	455
Y	*452-6582*	1	CYLINDER HEAD GP (SHORT)	460
Y	**602-8721**	1	ENGINE AR-PRIMARY	370

Y - SEPARATE ILLUSTRATION

<END>

603-6833 CONFIGURATION AR-ENGINE

PART OF 603-5300 ENGINE AR-PRIMARY

SMCS-1000 **i09239977**

NOTE	PART NUMBER	QTY	PART NAME 1 2 3 4 5 6 (PRODUCT LEVEL)	SEE PAGE
Y	*451-8385*	1	CYLINDER BLOCK GP-SHORT	455
Y	*452-6582*	1	CYLINDER HEAD GP (SHORT)	460
Y	**603-5300**	1	ENGINE AR-PRIMARY	372

Y - SEPARATE ILLUSTRATION

<END>

609-4201 CONFIGURATION AR-ENGINE

PART OF 608-9261 ENGINE AR-PRIMARY

SMCS-1000 **i09235210**

NOTE	PART NUMBER	QTY	PART NAME 1 2 3 4 5 6 (PRODUCT LEVEL)	SEE PAGE
Y	*451-8385*	1	CYLINDER BLOCK GP-SHORT	455
Y	*452-6582*	1	CYLINDER HEAD GP (SHORT)	460
Y	**608-9261**	1	ENGINE AR-PRIMARY	374

Y - SEPARATE ILLUSTRATION

<END>

610-0876 CONFIGURATION AR-ENGINE

PART OF 609-9819 ENGINE AR-PRIMARY

SMCS-1000 **i09240064**

NOTE	PART NUMBER	QTY	PART NAME 1 2 3 4 5 6 (PRODUCT LEVEL)	SEE PAGE
Y	*451-8385*	1	CYLINDER BLOCK GP-SHORT	455
Y	*452-6582*	1	CYLINDER HEAD GP (SHORT)	460
Y	**609-9819**	1	ENGINE AR-PRIMARY	376

Y - SEPARATE ILLUSTRATION

<END>

614-1611 CONFIGURATION AR-ENGINE

PART OF 613-9482 ENGINE AR-PRIMARY

SMCS-1000 **i09240001**

NOTE	PART NUMBER	QTY	PART NAME 1 2 3 4 5 6 (PRODUCT LEVEL)	SEE PAGE
Y	*451-8385*	1	CYLINDER BLOCK GP-SHORT	455
Y	*452-6582*	1	CYLINDER HEAD GP (SHORT)	460
Y	**613-9482**	1	ENGINE AR-PRIMARY	380

Y - SEPARATE ILLUSTRATION

<END>

614-6389 CONFIGURATION AR-ENGINE

PART OF 614-5795 ENGINE AR-PRIMARY

SMCS-1000 **i09239811**

NOTE	PART NUMBER	QTY	PART NAME 1 2 3 4 5 6 (PRODUCT LEVEL)	SEE PAGE
Y	*451-8385*	1	CYLINDER BLOCK GP-SHORT	455
Y	*452-6582*	1	CYLINDER HEAD GP (SHORT)	460
Y	**614-5795**	1	ENGINE AR-PRIMARY	382

Y - SEPARATE ILLUSTRATION

<END>

614-9585 CONFIGURATION AR-ENGINE

PART OF 614-9555 ENGINE AR-PRIMARY

SMCS-1000 **i08846925**

NOTE	PART NUMBER	QTY	PART NAME 1 2 3 4 5 6 (PRODUCT LEVEL)	SEE PAGE
Y	*451-8385*	1	CYLINDER BLOCK GP-SHORT	455
Y	*452-6582*	1	CYLINDER HEAD GP (SHORT)	460
Y	**614-9555**	1	ENGINE AR-PRIMARY	384

Y - SEPARATE ILLUSTRATION

<END>

623-1349 CONFIGURATION AR-ENGINE

PART OF 623-1309 ENGINE AR-PRIMARY

SMCS-1000 **i08838682**

NOTE	PART NUMBER	QTY	PART NAME 1 2 3 4 5 6 (PRODUCT LEVEL)	SEE PAGE
Y	*451-8385*	1	CYLINDER BLOCK GP-SHORT	455
Y	*452-6582*	1	CYLINDER HEAD GP (SHORT)	460
Y	**623-1309**	1	ENGINE AR-PRIMARY	388

Y - SEPARATE ILLUSTRATION

<END>

623-3489 CONFIGURATION AR-ENGINE

PART OF 622-6239 ENGINE AR-PRIMARY

SMCS-1000 **i09240053**

NOTE	PART NUMBER	QTY	PART NAME 1 2 3 4 5 6 (PRODUCT LEVEL)	SEE PAGE
Y	*451-8385*	1	CYLINDER BLOCK GP-SHORT	455
Y	*452-6582*	1	CYLINDER HEAD GP (SHORT)	460
Y	**622-6239**	1	ENGINE AR-PRIMARY	386

Y - SEPARATE ILLUSTRATION

<END>

624-0794 CONFIGURATION AR-ENGINE

PART OF 624-0698 ENGINE AR-PRIMARY

SMCS-1000 **i09248553**

NOTE	PART NUMBER	QTY	PART NAME 1 2 3 4 5 6 (PRODUCT LEVEL)	SEE PAGE
Y	*451-8385*	1	CYLINDER BLOCK GP-SHORT	455
Y	*452-6582*	1	CYLINDER HEAD GP (SHORT)	460
Y	**624-0698**	1	ENGINE AR-PRIMARY	390

Y - SEPARATE ILLUSTRATION

<END>

627-8148 CONFIGURATION AR-ENGINE

PART OF 627-8129 ENGINE AR-PRIMARY

SMCS-1000 **i09248560**

NOTE	PART NUMBER	QTY	PART NAME 1 2 3 4 5 6 (PRODUCT LEVEL)	SEE PAGE
Y	*451-8385*	1	CYLINDER BLOCK GP-SHORT	455
Y	*452-6582*	1	CYLINDER HEAD GP (SHORT)	460
Y	**627-8129**	1	ENGINE AR-PRIMARY	396

Y - SEPARATE ILLUSTRATION

<END>

628-3916 CONFIGURATION AR-ENGINE

PART OF 627-8019 ENGINE AR-PRIMARY

SMCS-1000 **i09235250**

NOTE	PART NUMBER	QTY	PART NAME 1 2 3 4 5 6 (PRODUCT LEVEL)	SEE PAGE
Y	*451-8385*	1	CYLINDER BLOCK GP-SHORT	455
Y	*452-6582*	1	CYLINDER HEAD GP (SHORT)	460
Y	**627-8019**	1	ENGINE AR-PRIMARY	392

Y - SEPARATE ILLUSTRATION

<END>

629-0211 CONFIGURATION AR-ENGINE

PART OF 628-4345 ENGINE AR-PRIMARY

SMCS-1000 **i09239995**

NOTE	PART NUMBER	QTY	PART NAME 1 2 3 4 5 6 (PRODUCT LEVEL)	SEE PAGE
Y	*451-8385*	1	CYLINDER BLOCK GP-SHORT	455
Y	*452-6582*	1	CYLINDER HEAD GP (SHORT)	460
Y	**628-4345**	1	ENGINE AR-PRIMARY	398

Y - SEPARATE ILLUSTRATION

<END>

629-0552 CONFIGURATION AR-ENGINE

PART OF 627-8054 ENGINE AR-PRIMARY

SMCS-1000 **i09235067**

NOTE	PART NUMBER	QTY	PART NAME 1 2 3 4 5 6 (PRODUCT LEVEL)	SEE PAGE
Y	*451-8385*	1	CYLINDER BLOCK GP-SHORT	455
Y	*452-6582*	1	CYLINDER HEAD GP (SHORT)	460
Y	**627-8054**	1	ENGINE AR-PRIMARY	394

Y - SEPARATE ILLUSTRATION

<END>

633-4834 CONFIGURATION AR-ENGINE

PART OF 633-4335 ENGINE AR-PRIMARY

SMCS-1000 **i09932221**

NOTE	PART NUMBER	QTY	PART NAME 1 2 3 4 5 6 (PRODUCT LEVEL)	SEE PAGE
Y	*451-8385*	1	CYLINDER BLOCK GP-SHORT	455
Y	*452-6582*	1	CYLINDER HEAD GP (SHORT)	460
Y	**633-4335**	1	ENGINE AR-PRIMARY	400

Y - SEPARATE ILLUSTRATION

<END>

467-6747 ENGINE AR

SMCS-1000 **i08111579**

NOTE	PART NUMBER	QTY	PART NAME 1 2 3 4 5 6 (PRODUCT LEVEL)	SEE PAGE
Y	*451-8385*	1	CYLINDER BLOCK GP-SHORT	455
Y	*452-6582*	1	CYLINDER HEAD GP (SHORT)	460

Y - SEPARATE ILLUSTRATION

<END>

467-8280 ENGINE AR

SMCS-1000 **i08116521**

NOTE	PART NUMBER	QTY	PART NAME 1 2 3 4 5 6 (PRODUCT LEVEL)	SEE PAGE
Y	*451-8385*	1	CYLINDER BLOCK GP-SHORT	455
Y	*452-6582*	1	CYLINDER HEAD GP (SHORT)	460

Y - SEPARATE ILLUSTRATION

<END>

467-8303 ENGINE AR

SMCS-1000 **i07898913**

NOTE	PART NUMBER	QTY	PART NAME 1 2 3 4 5 6 (PRODUCT LEVEL)	SEE PAGE
Y	*451-8385*	1	CYLINDER BLOCK GP-SHORT	455
Y	*452-6582*	1	CYLINDER HEAD GP (SHORT)	460

Y - SEPARATE ILLUSTRATION

<END>

467-8314 ENGINE AR

SMCS-1000 **i06796361**

NOTE	PART NUMBER	QTY	PART NAME 1 2 3 4 5 6 (PRODUCT LEVEL)	SEE PAGE
Y	*451-8385*	1	CYLINDER BLOCK GP-SHORT	455
Y	*452-6582*	1	CYLINDER HEAD GP (SHORT)	460
Y	**461-5422**	1	ENGINE AR-PRIMARY	105

Y - SEPARATE ILLUSTRATION

<END>

ENGINE ARRANGEMENT

472-6931 ENGINE AR

SMCS-1000 **i06796494**

NOTE	PART NUMBER	QTY	PART NAME 1 2 3 4 5 6 (PRODUCT LEVEL)	SEE PAGE
Y	*451-8385*	1	CYLINDER BLOCK GP-SHORT	455
Y	*452-6582*	1	CYLINDER HEAD GP (SHORT)	460
Y	*472-5560*	1	ENGINE AR-PRIMARY	143

Y - SEPARATE ILLUSTRATION

<END>

473-3757 ENGINE AR

SMCS-1000 **i06796359**

NOTE	PART NUMBER	QTY	PART NAME 1 2 3 4 5 6 (PRODUCT LEVEL)	SEE PAGE
Y	*451-8385*	1	CYLINDER BLOCK GP-SHORT	455
Y	*452-6582*	1	CYLINDER HEAD GP (SHORT)	460
Y	**461-5460**	1	ENGINE AR-PRIMARY	109

Y - SEPARATE ILLUSTRATION

<END>

473-4993 ENGINE AR

SMCS-1000 **i06796413**

NOTE	PART NUMBER	QTY	PART NAME 1 2 3 4 5 6 (PRODUCT LEVEL)	SEE PAGE
Y	*451-8385*	1	CYLINDER BLOCK GP-SHORT	455
Y	*452-6582*	1	CYLINDER HEAD GP (SHORT)	460
Y	**461-8772**	1	ENGINE AR-PRIMARY	111

Y - SEPARATE ILLUSTRATION

<END>

477-1986 ENGINE AR

SMCS-1000 **i06796347**

NOTE	PART NUMBER	QTY	PART NAME 1 2 3 4 5 6 (PRODUCT LEVEL)	SEE PAGE
Y	*451-8385*	1	CYLINDER BLOCK GP-SHORT	455
Y	*452-6582*	1	CYLINDER HEAD GP (SHORT)	460
Y	*477-1874*	1	ENGINE AR-PRIMARY	173

Y - SEPARATE ILLUSTRATION

<END>

477-6201 ENGINE AR

SMCS-1000 **i08522674**

NOTE	PART NUMBER	QTY	PART NAME 1 2 3 4 5 6 (PRODUCT LEVEL)	SEE PAGE
Y	*451-8385*	1	CYLINDER BLOCK GP-SHORT	455
Y	*452-6582*	1	CYLINDER HEAD GP (SHORT)	460

Y - SEPARATE ILLUSTRATION

<END>

ENGINE ARRANGEMENT

479-0926 ENGINE AR

SMCS-1000 **i06796488**

NOTE	PART NUMBER	QTY	PART NAME 1 2 3 4 5 6 (PRODUCT LEVEL)	SEE PAGE
Y	*451-8385*	1	CYLINDER BLOCK GP-SHORT	455
Y	*452-6582*	1	CYLINDER HEAD GP (SHORT)	460
Y	**473-3373**	1	ENGINE AR-PRIMARY	147

Y - SEPARATE ILLUSTRATION

<END>

492-2212 ENGINE AR

SMCS-1000 **i06796436**

NOTE	PART NUMBER	QTY	PART NAME 1 2 3 4 5 6 (PRODUCT LEVEL)	SEE PAGE
Y	*451-8385*	1	CYLINDER BLOCK GP-SHORT	455
Y	*452-6582*	1	CYLINDER HEAD GP (SHORT)	460
Y	*491-4973*	1	ENGINE AR-PRIMARY	220

Y - SEPARATE ILLUSTRATION

<END>

493-2708 ENGINE AR

SMCS-1000 **i07593081**

NOTE	PART NUMBER	QTY	PART NAME 1 2 3 4 5 6 (PRODUCT LEVEL)	SEE PAGE
Y	*451-8385*	1	CYLINDER BLOCK GP-SHORT	455
Y	*452-6582*	1	CYLINDER HEAD GP (SHORT)	460
Y	**493-1019**	1	ENGINE AR-PRIMARY	233

Y - SEPARATE ILLUSTRATION

<END>

494-6712 ENGINE AR

SMCS-1000 **i07025579**

NOTE	PART NUMBER	QTY	PART NAME 1 2 3 4 5 6 (PRODUCT LEVEL)	SEE PAGE
Y	*451-8385*	1	CYLINDER BLOCK GP-SHORT	455
Y	*452-6582*	1	CYLINDER HEAD GP (SHORT)	460
Y	**494-2073**	1	ENGINE AR-PRIMARY	235

Y - SEPARATE ILLUSTRATION

<END>

494-7261 ENGINE AR

SMCS-1000 **i06614305**

NOTE	PART NUMBER	QTY	PART NAME 1 2 3 4 5 6 (PRODUCT LEVEL)	SEE PAGE
Y	*451-8385*	1	CYLINDER BLOCK GP-SHORT	455
Y	*452-6582*	1	CYLINDER HEAD GP (SHORT)	460
Y	*494-6807*	1	ENGINE AR-PRIMARY	237

Y - SEPARATE ILLUSTRATION

<END>

ENGINE ARRANGEMENT

502-5350 ENGINE AR

SMCS-1000 **i07593091**

NOTE	PART NUMBER	QTY	PART NAME 1 2 3 4 5 6 (PRODUCT LEVEL)	SEE PAGE
Y	*451-8385*	1	CYLINDER BLOCK GP-SHORT	455
Y	*452-6582*	1	CYLINDER HEAD GP (SHORT)	460
Y	**501-2466**	1	ENGINE AR-PRIMARY	243
Y - SEPARATE ILLUSTRATION				

<END>

503-0943 ENGINE AR

SMCS-1000 **i06725444**

NOTE	PART NUMBER	QTY	PART NAME 1 2 3 4 5 6 (PRODUCT LEVEL)	SEE PAGE
Y	*451-8385*	1	CYLINDER BLOCK GP-SHORT	455
Y	*452-6582*	1	CYLINDER HEAD GP (SHORT)	460
Y	*502-9462*	1	ENGINE AR-PRIMARY	245
Y - SEPARATE ILLUSTRATION				

<END>

504-4551 ENGINE AR

SMCS-1000 **i06715506**

NOTE	PART NUMBER	QTY	PART NAME 1 2 3 4 5 6 (PRODUCT LEVEL)	SEE PAGE
Y	*504-3629*	1	ENGINE AR-PRIMARY	247
	451-8385	1	CYLINDER BLOCK GP-SHORT	
	452-6582	1	CYLINDER HEAD GP (SHORT)	
Y - SEPARATE ILLUSTRATION				

<END>

504-5163 ENGINE AR

SMCS-1000 **i06719891**

NOTE	PART NUMBER	QTY	PART NAME 1 2 3 4 5 6 (PRODUCT LEVEL)	SEE PAGE
Y	*451-8385*	1	CYLINDER BLOCK GP-SHORT	455
Y	*452-6582*	1	CYLINDER HEAD GP (SHORT)	460
Y	*504-4575*	1	ENGINE AR-PRIMARY	249
Y - SEPARATE ILLUSTRATION				

<END>

455-0703 ENGINE AR-COMPLETE

SMCS-1000 **i08111572**

NOTE	PART NUMBER	QTY	PART NAME 1 2 3 4 5 6 (PRODUCT LEVEL)	SEE PAGE
Y	*451-8385*	1	CYLINDER BLOCK GP-SHORT	455
Y	*452-6582*	1	CYLINDER HEAD GP (SHORT)	460
Y - SEPARATE ILLUSTRATION				

<END>

455-9421 ENGINE AR-COMPLETE

SMCS-1000 **i08019231**

NOTE	PART NUMBER	QTY	PART NAME 1 2 3 4 5 6 (PRODUCT LEVEL)	SEE PAGE
Y	*451-8385*	1	CYLINDER BLOCK GP-SHORT	455
Y	*452-6582*	1	CYLINDER HEAD GP (SHORT)	460

Y - SEPARATE ILLUSTRATION

<END>

461-9682 ENGINE AR-COMPLETE

SMCS-1000 **i06124385**

NOTE	PART NUMBER	QTY	PART NAME 1 2 3 4 5 6 (PRODUCT LEVEL)	SEE PAGE
Y	*451-8385*	1	CYLINDER BLOCK GP-SHORT	455
Y	*452-6582*	1	CYLINDER HEAD GP (SHORT)	460
Y	**461-4650**	1	ENGINE AR-PRIMARY	83

Y - SEPARATE ILLUSTRATION

<END>

462-0854 ENGINE AR-COMPLETE

SMCS-1000 **i05845509**

NOTE	PART NUMBER	QTY	PART NAME 1 2 3 4 5 6 (PRODUCT LEVEL)	SEE PAGE
Y	*451-8385*	1	CYLINDER BLOCK GP-SHORT	455
Y	*452-6582*	1	CYLINDER HEAD GP (SHORT)	460
Y	*461-4657*	1	ENGINE AR-PRIMARY	95

Y - SEPARATE ILLUSTRATION

<END>

462-3105 ENGINE AR-COMPLETE

SMCS-1000 **i05849433**

NOTE	PART NUMBER	QTY	PART NAME 1 2 3 4 5 6 (PRODUCT LEVEL)	SEE PAGE
Y	*451-8385*	1	CYLINDER BLOCK GP-SHORT	455
Y	*452-6582*	1	CYLINDER HEAD GP (SHORT)	460
Y	*461-4661*	1	ENGINE AR-PRIMARY	101

Y - SEPARATE ILLUSTRATION

<END>

462-6732 ENGINE AR-COMPLETE

SMCS-1000 **i05849434**

NOTE	PART NUMBER	QTY	PART NAME 1 2 3 4 5 6 (PRODUCT LEVEL)	SEE PAGE
Y	*451-8385*	1	CYLINDER BLOCK GP-SHORT	455
Y	*452-6582*	1	CYLINDER HEAD GP (SHORT)	460
Y	*461-4645*	1	ENGINE AR-PRIMARY	77

Y - SEPARATE ILLUSTRATION

<END>

462-8110 ENGINE AR-COMPLETE

SMCS-1000 **i06102488**

NOTE	PART NUMBER	QTY	PART NAME 1 2 3 4 5 6 (PRODUCT LEVEL)	SEE PAGE
Y	*451-8385*	1	CYLINDER BLOCK GP-SHORT	455
Y	*452-6582*	1	CYLINDER HEAD GP (SHORT)	460
Y	*461-4651*	1	ENGINE AR-PRIMARY	85

Y - SEPARATE ILLUSTRATION

<END>

462-8972 ENGINE AR-COMPLETE

SMCS-1000 **i05849435**

NOTE	PART NUMBER	QTY	PART NAME 1 2 3 4 5 6 (PRODUCT LEVEL)	SEE PAGE
Y	*451-8385*	1	CYLINDER BLOCK GP-SHORT	455
Y	*452-6582*	1	CYLINDER HEAD GP (SHORT)	460
Y	*461-4653*	1	ENGINE AR-PRIMARY	89

Y - SEPARATE ILLUSTRATION

<END>

467-7437 ENGINE AR-COMPLETE

SMCS-1000 **i07331033**

NOTE	PART NUMBER	QTY	PART NAME 1 2 3 4 5 6 (PRODUCT LEVEL)	SEE PAGE
Y	*451-8385*	1	CYLINDER BLOCK GP-SHORT	455
Y	*452-6582*	1	CYLINDER HEAD GP (SHORT)	460
Y	**462-6028**	1	ENGINE AR-PRIMARY	113

Y - SEPARATE ILLUSTRATION

<END>

468-1595 ENGINE AR-COMPLETE

SMCS-1000 **i07282637**

NOTE	PART NUMBER	QTY	PART NAME 1 2 3 4 5 6 (PRODUCT LEVEL)	SEE PAGE
Y	*451-8385*	1	CYLINDER BLOCK GP-SHORT	455
Y	*452-6582*	1	CYLINDER HEAD GP (SHORT)	460
Y	**461-4658**	1	ENGINE AR-PRIMARY	97

Y - SEPARATE ILLUSTRATION

<END>

468-2471 ENGINE AR-COMPLETE

SMCS-1000 **i07282638**

NOTE	PART NUMBER	QTY	PART NAME 1 2 3 4 5 6 (PRODUCT LEVEL)	SEE PAGE
Y	*451-8385*	1	CYLINDER BLOCK GP-SHORT	455
Y	*452-6582*	1	CYLINDER HEAD GP (SHORT)	460
Y	**461-4640**	1	ENGINE AR-PRIMARY	71

Y - SEPARATE ILLUSTRATION

<END>

468-3189 ENGINE AR-COMPLETE

SMCS-1000 **i06124387**

NOTE	PART NUMBER	QTY	PART NAME 1 2 3 4 5 6 (PRODUCT LEVEL)	SEE PAGE
Y	*451-8385*	1	CYLINDER BLOCK GP-SHORT	455
Y	*452-6582*	1	CYLINDER HEAD GP (SHORT)	460
Y	**461-4644**	1	ENGINE AR-PRIMARY	75

Y - SEPARATE ILLUSTRATION

<END>

468-4398 ENGINE AR-COMPLETE

SMCS-1000 **i06554408**

NOTE	PART NUMBER	QTY	PART NAME 1 2 3 4 5 6 (PRODUCT LEVEL)	SEE PAGE
Y	*451-8385*	1	CYLINDER BLOCK GP-SHORT	455
Y	*452-6582*	1	CYLINDER HEAD GP (SHORT)	460
Y	**461-4656**	1	ENGINE AR-PRIMARY	93

Y - SEPARATE ILLUSTRATION

<END>

468-7018 ENGINE AR-COMPLETE

SMCS-1000 **i06124383**

NOTE	PART NUMBER	QTY	PART NAME 1 2 3 4 5 6 (PRODUCT LEVEL)	SEE PAGE
Y	*451-8385*	1	CYLINDER BLOCK GP-SHORT	455
Y	*452-6582*	1	CYLINDER HEAD GP (SHORT)	460
Y	**463-0313**	1	ENGINE AR-PRIMARY	117

Y - SEPARATE ILLUSTRATION

<END>

468-7019 ENGINE AR-COMPLETE

SMCS-1000 **i06124386**

NOTE	PART NUMBER	QTY	PART NAME 1 2 3 4 5 6 (PRODUCT LEVEL)	SEE PAGE
Y	*451-8385*	1	CYLINDER BLOCK GP-SHORT	455
Y	*452-6582*	1	CYLINDER HEAD GP (SHORT)	460
Y	**461-4652**	1	ENGINE AR-PRIMARY	87

Y - SEPARATE ILLUSTRATION

<END>

475-7307 ENGINE AR-COMPLETE

SMCS-1000 **i06796352**

NOTE	PART NUMBER	QTY	PART NAME 1 2 3 4 5 6 (PRODUCT LEVEL)	SEE PAGE
Y	*451-8385*	1	CYLINDER BLOCK GP-SHORT	455
Y	*452-6582*	1	CYLINDER HEAD GP (SHORT)	460
Y	*475-6719*	1	ENGINE AR-PRIMARY	155

Y - SEPARATE ILLUSTRATION

<END>

ENGINE ARRANGEMENT

476-4938 ENGINE AR-COMPLETE

SMCS-1000 **i07236314**

NOTE	PART NUMBER	QTY	PART NAME 1 2 3 4 5 6 (PRODUCT LEVEL)	SEE PAGE
Y	*451-8385*	1	CYLINDER BLOCK GP-SHORT	455
Y	*452-6582*	1	CYLINDER HEAD GP (SHORT)	460
Y	**470-8814**	1	ENGINE AR-PRIMARY	139

Y - SEPARATE ILLUSTRATION

<END>

477-1984 ENGINE AR-COMPLETE

SMCS-1000 **i07247013**

NOTE	PART NUMBER	QTY	PART NAME 1 2 3 4 5 6 (PRODUCT LEVEL)	SEE PAGE
Y	*451-8385*	1	CYLINDER BLOCK GP-SHORT	455
Y	*452-6582*	1	CYLINDER HEAD GP (SHORT)	460
Y	*477-1871*	1	ENGINE AR-PRIMARY	169

Y - SEPARATE ILLUSTRATION

<END>

477-1985 ENGINE AR-COMPLETE

SMCS-1000 **i07236262**

NOTE	PART NUMBER	QTY	PART NAME 1 2 3 4 5 6 (PRODUCT LEVEL)	SEE PAGE
Y	*451-8385*	1	CYLINDER BLOCK GP-SHORT	455
Y	*452-6582*	1	CYLINDER HEAD GP (SHORT)	460
Y	*477-1873*	1	ENGINE AR-PRIMARY	171

Y - SEPARATE ILLUSTRATION

<END>

477-3355 ENGINE AR-COMPLETE

SMCS-1000 **i07236348**

NOTE	PART NUMBER	QTY	PART NAME 1 2 3 4 5 6 (PRODUCT LEVEL)	SEE PAGE
Y	*451-8385*	1	CYLINDER BLOCK GP-SHORT	455
Y	*452-6582*	1	CYLINDER HEAD GP (SHORT)	460
Y	*477-2660*	1	ENGINE AR-PRIMARY	177

Y - SEPARATE ILLUSTRATION

<END>

477-6401 ENGINE AR-COMPLETE

SMCS-1000 **i06124390**

NOTE	PART NUMBER	QTY	PART NAME 1 2 3 4 5 6 (PRODUCT LEVEL)	SEE PAGE
Y	*451-8385*	1	CYLINDER BLOCK GP-SHORT	455
Y	*452-6582*	1	CYLINDER HEAD GP (SHORT)	460
Y	**461-4659**	1	ENGINE AR-PRIMARY	99

Y - SEPARATE ILLUSTRATION

<END>

479-2167 ENGINE AR-COMPLETE

SMCS-1000 **i06212090**

NOTE	PART NUMBER	QTY	PART NAME 1 2 3 4 5 6 (PRODUCT LEVEL)	SEE PAGE
Y	*451-8385*	1	CYLINDER BLOCK GP-SHORT	455
Y	*452-6582*	1	CYLINDER HEAD GP (SHORT)	460
Y	**473-3375**	1	ENGINE AR-PRIMARY	149

Y - SEPARATE ILLUSTRATION

<END>

479-6190 ENGINE AR-COMPLETE

SMCS-1000 **i07592150**

NOTE	PART NUMBER	QTY	PART NAME 1 2 3 4 5 6 (PRODUCT LEVEL)	SEE PAGE
Y	*451-8385*	1	CYLINDER BLOCK GP-SHORT	455
Y	*452-6582*	1	CYLINDER HEAD GP (SHORT)	460
Y	*478-4257*	1	ENGINE AR-PRIMARY	179

Y - SEPARATE ILLUSTRATION

<END>

479-6192 ENGINE AR-COMPLETE

SMCS-1000 **i07592201**

NOTE	PART NUMBER	QTY	PART NAME 1 2 3 4 5 6 (PRODUCT LEVEL)	SEE PAGE
Y	*451-8385*	1	CYLINDER BLOCK GP-SHORT	455
Y	*452-6582*	1	CYLINDER HEAD GP (SHORT)	460
Y	*478-4257*	1	ENGINE AR-PRIMARY	179

Y - SEPARATE ILLUSTRATION

<END>

479-7004 ENGINE AR-COMPLETE

SMCS-1000 **i07331579**

NOTE	PART NUMBER	QTY	PART NAME 1 2 3 4 5 6 (PRODUCT LEVEL)	SEE PAGE
Y	*451-8385*	1	CYLINDER BLOCK GP-SHORT	455
Y	*452-6582*	1	CYLINDER HEAD GP (SHORT)	460
Y	*479-6973*	1	ENGINE AR-PRIMARY	183

Y - SEPARATE ILLUSTRATION

<END>

479-7773 ENGINE AR-COMPLETE

SMCS-1000 **i07281540**

NOTE	PART NUMBER	QTY	PART NAME 1 2 3 4 5 6 (PRODUCT LEVEL)	SEE PAGE
Y	*451-8385*	1	CYLINDER BLOCK GP-SHORT	455
Y	*452-6582*	1	CYLINDER HEAD GP (SHORT)	460
Y	*479-7682*	1	ENGINE AR-PRIMARY	185

Y - SEPARATE ILLUSTRATION

<END>

479-9390 ENGINE AR-COMPLETE

SMCS-1000 **i08116241**

NOTE	PART NUMBER	QTY	PART NAME 1 2 3 4 5 6 (PRODUCT LEVEL)	SEE PAGE
Y	*451-8385*	1	CYLINDER BLOCK GP-SHORT	455
Y	*452-6582*	1	CYLINDER HEAD GP (SHORT)	460

Y - SEPARATE ILLUSTRATION

<END>

481-4235 ENGINE AR-COMPLETE

SMCS-1000 **i07331586**

NOTE	PART NUMBER	QTY	PART NAME 1 2 3 4 5 6 (PRODUCT LEVEL)	SEE PAGE
Y	*451-8385*	1	CYLINDER BLOCK GP-SHORT	455
Y	*452-6582*	1	CYLINDER HEAD GP (SHORT)	460
Y	**473-3372**	1	ENGINE AR-PRIMARY	145

Y - SEPARATE ILLUSTRATION

<END>

483-5308 ENGINE AR-COMPLETE

SMCS-1000 **i06796395**

NOTE	PART NUMBER	QTY	PART NAME 1 2 3 4 5 6 (PRODUCT LEVEL)	SEE PAGE
Y	*451-8385*	1	CYLINDER BLOCK GP-SHORT	455
Y	*452-6582*	1	CYLINDER HEAD GP (SHORT)	460
Y	*483-5155*	1	ENGINE AR-PRIMARY	201

Y - SEPARATE ILLUSTRATION

<END>

486-1539 ENGINE AR-COMPLETE

SMCS-1000 **i06558716**

NOTE	PART NUMBER	QTY	PART NAME 1 2 3 4 5 6 (PRODUCT LEVEL)	SEE PAGE
Y	*451-8385*	1	CYLINDER BLOCK GP-SHORT	455
Y	*452-6582*	1	CYLINDER HEAD GP (SHORT)	460
Y	**485-8027**	1	ENGINE AR-PRIMARY	207

Y - SEPARATE ILLUSTRATION

<END>

486-3231 ENGINE AR-COMPLETE

SMCS-1000 **i07592720**

NOTE	PART NUMBER	QTY	PART NAME 1 2 3 4 5 6 (PRODUCT LEVEL)	SEE PAGE
Y	*451-8385*	1	CYLINDER BLOCK GP-SHORT	455
Y	*452-6582*	1	CYLINDER HEAD GP (SHORT)	460

Y - SEPARATE ILLUSTRATION

<END>

486-7179 ENGINE AR-COMPLETE

SMCS-1000 **i06555725**

NOTE	PART NUMBER	QTY	PART NAME 1 2 3 4 5 6 (PRODUCT LEVEL)	SEE PAGE
Y	*451-8385*	1	CYLINDER BLOCK GP-SHORT	455
Y	*452-6582*	1	CYLINDER HEAD GP (SHORT)	460
Y	**486-4250**	1	ENGINE AR-PRIMARY	211

Y - SEPARATE ILLUSTRATION

<END>

488-0428 ENGINE AR-COMPLETE

SMCS-1000 **i06558462**

NOTE	PART NUMBER	QTY	PART NAME 1 2 3 4 5 6 (PRODUCT LEVEL)	SEE PAGE
Y	*451-8385*	1	CYLINDER BLOCK GP-SHORT	455
Y	*452-6582*	1	CYLINDER HEAD GP (SHORT)	460
Y	**484-2939**	1	ENGINE AR-PRIMARY	205

Y - SEPARATE ILLUSTRATION

<END>

491-9765 ENGINE AR-COMPLETE

SMCS-1000 **i06558032**

NOTE	PART NUMBER	QTY	PART NAME 1 2 3 4 5 6 (PRODUCT LEVEL)	SEE PAGE
Y	*451-8385*	1	CYLINDER BLOCK GP-SHORT	455
Y	*452-6582*	1	CYLINDER HEAD GP (SHORT)	460
Y	*491-4980*	1	ENGINE AR-PRIMARY	222

Y - SEPARATE ILLUSTRATION

<END>

492-1388 ENGINE AR-COMPLETE

SMCS-1000 **i06553997**

NOTE	PART NUMBER	QTY	PART NAME 1 2 3 4 5 6 (PRODUCT LEVEL)	SEE PAGE
Y	*451-8385*	1	CYLINDER BLOCK GP-SHORT	455
Y	*452-6582*	1	CYLINDER HEAD GP (SHORT)	460
Y	*491-4993*	1	ENGINE AR-PRIMARY	224

Y - SEPARATE ILLUSTRATION

<END>

492-2161 ENGINE AR-COMPLETE

SMCS-1000 **i07592736**

NOTE	PART NUMBER	QTY	PART NAME 1 2 3 4 5 6 (PRODUCT LEVEL)	SEE PAGE
Y	*451-8385*	1	CYLINDER BLOCK GP-SHORT	455
Y	*452-6582*	1	CYLINDER HEAD GP (SHORT)	460
Y	*489-9006*	1	ENGINE AR-PRIMARY	217

Y - SEPARATE ILLUSTRATION

<END>

492-5692 ENGINE AR-COMPLETE

SMCS-1000 **i07331560**

NOTE	PART NUMBER	QTY	PART NAME 1 2 3 4 5 6 (PRODUCT LEVEL)	SEE PAGE
Y	*451-8385*	1	CYLINDER BLOCK GP-SHORT	455
Y	*452-6582*	1	CYLINDER HEAD GP (SHORT)	460
Y	**491-2606**	1	ENGINE AR-PRIMARY	219

Y - SEPARATE ILLUSTRATION

<END>

492-6555 ENGINE AR-COMPLETE

SMCS-1000 **i07331565**

NOTE	PART NUMBER	QTY	PART NAME 1 2 3 4 5 6 (PRODUCT LEVEL)	SEE PAGE
Y	*451-8385*	1	CYLINDER BLOCK GP-SHORT	455
Y	*452-6582*	1	CYLINDER HEAD GP (SHORT)	460
Y	**488-6687**	1	ENGINE AR-PRIMARY	215

Y - SEPARATE ILLUSTRATION

<END>

495-3004 ENGINE AR-COMPLETE

SMCS-1000 **i07570520**

NOTE	PART NUMBER	QTY	PART NAME 1 2 3 4 5 6 (PRODUCT LEVEL)	SEE PAGE
Y	*451-8385*	1	CYLINDER BLOCK GP-SHORT	455
Y	*452-6582*	1	CYLINDER HEAD GP (SHORT)	460
Y	**492-3021**	1	ENGINE AR-PRIMARY	228

Y - SEPARATE ILLUSTRATION

<END>

495-4475 ENGINE AR-COMPLETE

SMCS-1000 **i07592780**

NOTE	PART NUMBER	QTY	PART NAME 1 2 3 4 5 6 (PRODUCT LEVEL)	SEE PAGE
Y	*451-8385*	1	CYLINDER BLOCK GP-SHORT	455
Y	*452-6582*	1	CYLINDER HEAD GP (SHORT)	460
Y	*492-3072*	1	ENGINE AR-PRIMARY	230

Y - SEPARATE ILLUSTRATION

<END>

497-9665 ENGINE AR-COMPLETE

SMCS-1000 **i07282636**

NOTE	PART NUMBER	QTY	PART NAME 1 2 3 4 5 6 (PRODUCT LEVEL)	SEE PAGE
Y	*451-8385*	1	CYLINDER BLOCK GP-SHORT	455
Y	*452-6582*	1	CYLINDER HEAD GP (SHORT)	460
Y	**495-8349**	1	ENGINE AR-PRIMARY	239

Y - SEPARATE ILLUSTRATION

<END>

500-4376 ENGINE AR-COMPLETE

SMCS-1000 **i07568751**

NOTE	PART NUMBER	QTY	PART NAME 1 2 3 4 5 6 (PRODUCT LEVEL)	SEE PAGE
Y	*451-8385*	1	CYLINDER BLOCK GP-SHORT	455
Y	*452-6582*	1	CYLINDER HEAD GP (SHORT)	460
Y	**499-7181**	1	ENGINE AR-PRIMARY	241

Y - SEPARATE ILLUSTRATION

<END>

512-1002 ENGINE AR-COMPLETE

SMCS-1000 **i07569716**

NOTE	PART NUMBER	QTY	PART NAME 1 2 3 4 5 6 (PRODUCT LEVEL)	SEE PAGE
Y	*451-8385*	1	CYLINDER BLOCK GP-SHORT	455
Y	*452-6582*	1	CYLINDER HEAD GP (SHORT)	460
Y	**510-1088**	1	ENGINE AR-PRIMARY	262

Y - SEPARATE ILLUSTRATION

<END>

521-0449 ENGINE AR-COMPLETE

SMCS-1000 **i06888917**

NOTE	PART NUMBER	QTY	PART NAME 1 2 3 4 5 6 (PRODUCT LEVEL)	SEE PAGE
Y	*451-8385*	1	CYLINDER BLOCK GP-SHORT	455
Y	*452-6582*	1	CYLINDER HEAD GP (SHORT)	460
Y	**520-3152**	1	ENGINE AR-PRIMARY	276

Y - SEPARATE ILLUSTRATION

<END>

521-2171 ENGINE AR-COMPLETE

SMCS-1000 **i07581601**

NOTE	PART NUMBER	QTY	PART NAME 1 2 3 4 5 6 (PRODUCT LEVEL)	SEE PAGE
Y	*451-8385*	1	CYLINDER BLOCK GP-SHORT	455
Y	*452-6582*	1	CYLINDER HEAD GP (SHORT)	460
Y	*520-4644*	1	ENGINE AR-PRIMARY	278

Y - SEPARATE ILLUSTRATION

<END>

526-1772 ENGINE AR-COMPLETE

SMCS-1000 **i07345038**

NOTE	PART NUMBER	QTY	PART NAME 1 2 3 4 5 6 (PRODUCT LEVEL)	SEE PAGE
Y	*451-8385*	1	CYLINDER BLOCK GP-SHORT	455
Y	*452-6582*	1	CYLINDER HEAD GP (SHORT)	460
Y	**526-0511**	1	ENGINE AR-PRIMARY	284

Y - SEPARATE ILLUSTRATION

<END>

ENGINE ARRANGEMENT

527-0497 ENGINE AR-COMPLETE

SMCS-1000 **i07569369**

NOTE	PART NUMBER	QTY	PART NAME 1 2 3 4 5 6 (PRODUCT LEVEL)	SEE PAGE
Y	*451-8385*	1	CYLINDER BLOCK GP-SHORT	455
Y	*452-6582*	1	CYLINDER HEAD GP (SHORT)	460
Y	**526-7210**	1	ENGINE AR-PRIMARY	286

Y - SEPARATE ILLUSTRATION

<END>

528-3699 ENGINE AR-COMPLETE

SMCS-1000 **i07331611**

NOTE	PART NUMBER	QTY	PART NAME 1 2 3 4 5 6 (PRODUCT LEVEL)	SEE PAGE
Y	*451-8385*	1	CYLINDER BLOCK GP-SHORT	455
Y	*452-6582*	1	CYLINDER HEAD GP (SHORT)	460
Y	*528-3358*	1	ENGINE AR-PRIMARY	294

Y - SEPARATE ILLUSTRATION

<END>

529-8780 ENGINE AR-COMPLETE

SMCS-1000 **i07581667**

NOTE	PART NUMBER	QTY	PART NAME 1 2 3 4 5 6 (PRODUCT LEVEL)	SEE PAGE
Y	*451-8385*	1	CYLINDER BLOCK GP-SHORT	455
Y	*452-6582*	1	CYLINDER HEAD GP (SHORT)	460
Y	*528-9866*	1	ENGINE AR-PRIMARY	296

Y - SEPARATE ILLUSTRATION

<END>

535-8565 ENGINE AR-COMPLETE

SMCS-1000 **i07282151**

NOTE	PART NUMBER	QTY	PART NAME 1 2 3 4 5 6 (PRODUCT LEVEL)	SEE PAGE
Y	*451-8385*	1	CYLINDER BLOCK GP-SHORT	455
Y	*452-6582*	1	CYLINDER HEAD GP (SHORT)	460
Y	**533-3588**	1	ENGINE AR-PRIMARY	308

Y - SEPARATE ILLUSTRATION

<END>

536-9153 ENGINE AR-COMPLETE

SMCS-1000 **i07282622**

NOTE	PART NUMBER	QTY	PART NAME 1 2 3 4 5 6 (PRODUCT LEVEL)	SEE PAGE
Y	*451-8385*	1	CYLINDER BLOCK GP-SHORT	455
Y	*452-6582*	1	CYLINDER HEAD GP (SHORT)	460
Y	**536-6675**	1	ENGINE AR-PRIMARY	312

Y - SEPARATE ILLUSTRATION

<END>

543-9476 ENGINE AR-COMPLETE

SMCS-1000 **i07581678**

NOTE	PART NUMBER	QTY	PART NAME 1 2 3 4 5 6 (PRODUCT LEVEL)	SEE PAGE
Y	*451-8385*	1	CYLINDER BLOCK GP-SHORT	455
Y	*452-6582*	1	CYLINDER HEAD GP (SHORT)	460
Y	*543-4255*	1	ENGINE AR-PRIMARY	318

Y - SEPARATE ILLUSTRATION

<END>

553-5214 ENGINE AR-COMPLETE

SMCS-1000 **i07581305**

NOTE	PART NUMBER	QTY	PART NAME 1 2 3 4 5 6 (PRODUCT LEVEL)	SEE PAGE
Y	*451-8385*	1	CYLINDER BLOCK GP-SHORT	455
Y	*452-6582*	1	CYLINDER HEAD GP (SHORT)	460
Y	*552-3506*	1	ENGINE AR-PRIMARY	320

Y - SEPARATE ILLUSTRATION

<END>

564-2349 ENGINE AR-COMPLETE

SMCS-1000 **i07570541**

NOTE	PART NUMBER	QTY	PART NAME 1 2 3 4 5 6 (PRODUCT LEVEL)	SEE PAGE
Y	*451-8385*	1	CYLINDER BLOCK GP-SHORT	455
Y	*452-6582*	1	CYLINDER HEAD GP (SHORT)	460
Y	**562-8873**	1	ENGINE AR-PRIMARY	330

Y - SEPARATE ILLUSTRATION

<END>

567-8167 ENGINE AR-COMPLETE

SMCS-1000 **i07581310**

NOTE	PART NUMBER	QTY	PART NAME 1 2 3 4 5 6 (PRODUCT LEVEL)	SEE PAGE
Y	*451-8385*	1	CYLINDER BLOCK GP-SHORT	455
Y	*452-6582*	1	CYLINDER HEAD GP (SHORT)	460
Y	*563-6728*	1	ENGINE AR-PRIMARY	332

Y - SEPARATE ILLUSTRATION

<END>

567-8852 ENGINE AR-COMPLETE

SMCS-1000 **i07581313**

NOTE	PART NUMBER	QTY	PART NAME 1 2 3 4 5 6 (PRODUCT LEVEL)	SEE PAGE
Y	*451-8385*	1	CYLINDER BLOCK GP-SHORT	455
Y	*452-6582*	1	CYLINDER HEAD GP (SHORT)	460
Y	*563-6730*	1	ENGINE AR-PRIMARY	336

Y - SEPARATE ILLUSTRATION

<END>

569-8968 ENGINE AR-COMPLETE

SMCS-1000 **i07581316**

NOTE	PART NUMBER	QTY	PART NAME 1 2 3 4 5 6 (PRODUCT LEVEL)	SEE PAGE
Y	*451-8385*	1	CYLINDER BLOCK GP-SHORT	455
Y	*452-6582*	1	CYLINDER HEAD GP (SHORT)	460
Y	*569-7846*	1	ENGINE AR-PRIMARY	340

Y - SEPARATE ILLUSTRATION

<END>

596-2071 ENGINE AR-COMPLETE

130 BRAKE KW (174 BHP) AT 2500 RPM

OPTIONAL FIELD REPLACEMENT ORDER 451-1222—PAGE: 452, 452-6584—PAGE: 462

FIELD REPLACEMENT FOR 461-4643—PAGE: 73

SMCS-1000 **i08839178**

NOTE	PART NUMBER	QTY	PART NAME 1 2 3 4 5 6 (PRODUCT LEVEL)	SEE PAGE
Y	*478-4234*	1	AIR CLEANER GP	715
Y	*377-0720*	1	ALTERNATOR GP-CHARGING	798
Y	*371-2693*	1	BELT TENSIONER GP	416
Y	*425-0196*	1	BREATHER GP (CRANKCASE)	612
Y	*396-2615*	1	CAMSHAFT GP	427
AY	*596-2621*	1	CONFIGURATION AR-ENGINE	16
Y	*373-3607*	1	CONNECTION GP-WATER	650
Y	*371-2536*	1	CONTROL GP-ELECTRONIC	808
Y	*346-0091*	1	COOLER GP-ENGINE OIL	657
Y	*389-3346*	1	COVER GP-VALVE MECHANISM	435
Y	*374-6300*	1	CRANKSHAFT GP	447
Y	*390-0854*	1	CYLINDER BLOCK GP	450
Y	*385-2572*	1	CYLINDER HEAD GP	458
Y	*393-2180*	1	DRIVE GP-FAN	484
Y	*375-8320*	1	EXTENSION GP-FAN	501
Y	*454-5203*	1	FAN GP	674
Y	*375-0098*	1	FASTENER GP-DAMPER & PULLEY	505
Y	*390-3737*	1	FILLER GP-ENGINE OIL	620
Y	*415-5625*	1	FILM GP (ALTERNATOR)	862
Y	*423-8803*	1	FILM GP (STARTING MOTOR)	863
Y	*611-2653*	1	FILM GP (RADIATOR)	865
Y	*346-0220*	1	FILTER GP-ENGINE OIL	629
Y	*441-1215*	1	FILTER GP-FUEL (WATER SEPARATOR)	756
Y	*453-7163*	1	FILTER GP-FUEL	760
Y	*425-0197*	1	FILTER GP-FUMES DISPOSAL	630
Y	*346-0769*	1	FLANGE GP-EXHAUST	719
Y	*345-8902*	1	FLYWHEEL GP	507
Y	*439-3432*	1	GAUGE GP-OIL LEVEL (DIPSTICK) (ENGINE)	640
Y	*345-8838*	1	HOUSING GP-FLYWHEEL	517
Y	*375-5838*	1	HOUSING GP-FRONT	536
Y	*371-2483*	1	INJECTOR GP-FUEL	763
Y	*371-2478*	1	JET GP-PISTON COOLING	543
Y	*416-2470*	1	LIFTING GP-ENGINE	546
Y	*426-3310*	1	LINES GP-FUEL INJECTION	787
Y	*416-7808*	1	MANIFOLD GP-EXHAUST	724
Y	*391-5523*	1	MANIFOLD GP-INLET	726
Y	*346-1528*	1	MOUNTING GP-ACCESSORY MODULE	856
Y	*395-0112*	1	MOUNTING GP-ELECTRONIC CONTROL	819
Y	*375-4499*	1	PAN GP-OIL	557
Y	*374-6301*	1	PISTON & ROD GP	576
Y	*378-8167*	1	PLATE & FILM GP	868
Y	*346-2908*	1	PLUG GP-ENGINE	592
Y	*440-0026*	1	PLUG GP-OIL FILTER MOUNTING	644
Y	*379-6629*	1	PULLEY GP-CRANKSHAFT	603
Y	*462-6685*	1	PUMP GP-ENGINE OIL	646
Y	*391-4811*	1	PUMP GP-FUEL INJECTION	790
Y	*372-2297*	1	PUMP GP-WATER	678

596-2071 **ENGINE AR-COMPLETE (**contd.**)** **i08839178**

NOTE	PART NUMBER	QTY	PART NAME 1 2 3 4 5 6 (PRODUCT LEVEL)	SEE PAGE
Y	*454-6966*	1	RADIATOR GP	
Y	*394-9639*	1	RAIL GP-FUEL	794
Y	*371-2480*	1	ROCKER ARM GP	606
Y	*395-0110*	1	SENSOR GP-ENGINE	820
Y	*380-9279*	1	STARTING AID GP	824
Y	*415-4870*	1	STARTING MOTOR GP-ELECTRIC	837
Y	*371-2719*	1	SUPPORT GP-POWER TAKE-OFF	608
Y	*375-5002*	1	TURBOCHARGER GP	732
Y	*424-5516*	1	WIRING GP-ENGINE	846
	464-0721	1	ELECTRONICS GP-ENGINE	
	376-6464	1	PLATE & FILM GP	

A - NOT PART OF THIS GROUP
Y - SEPARATE ILLUSTRATION

<END>

440-8198 ENGINE AR-PRIMARY

168 BRAKE KW (225 BHP) AT 2200 RPM

FIELD REPLACEMENT ORDER 451-1222—PAGE: 452, 452-6584—PAGE: 462

SMCS-1000 **i10183354**

NOTE	PART NUMBER	QTY	PART NAME 1 2 3 4 5 6 (PRODUCT LEVEL)	SEE PAGE
Y	*377-0721*	1	ALTERNATOR GP-CHARGING	799
			—OR—	
Y	*440-6724*	1	ALTERNATOR GP-CHARGING	802
Y	*391-9611*	1	BELT TENSIONER GP	421
			—OR—	
Y	*375-4479*	1	BELT TENSIONER GP	417
Y	*379-6637*	1	BRACKET GP-MOUNTING	423
Y	*392-0632*	1	BREATHER GP	611
Y	*396-2617*	1	CAMSHAFT GP	428
Y	*390-5132*	1	CLAMP AS-EXHAUST	718
Y	*373-3606*	1	CONNECTION GP-WATER	649
Y	*371-2536*	1	CONTROL GP-ELECTRONIC	808
Y	*378-8280*	1	COOLER GP-ENGINE OIL	661
Y	*389-3348*	1	COVER GP-VALVE MECHANISM	440
Y	*374-6300*	1	CRANKSHAFT GP	447
			S/N: G9R10140-UP	
Y	*390-0854*	1	CYLINDER BLOCK GP	450
Y	*385-2572*	1	CYLINDER HEAD GP	458
Y	*378-8166*	1	DRAIN GP-ENGINE OIL	467
Y	*375-3937*	1	DRIVE GP-FAN	470
Y	*379-6626*	1	FILLER GP-ENGINE OIL	619
Y	*346-0220*	1	FILTER GP-ENGINE OIL	629
Y	*426-3292*	1	FILTER GP-FUEL	753
			—OR—	
Y	*453-7163*	1	FILTER GP-FUEL	760
Y	*441-1215*	1	FILTER GP-FUEL (WATER SEPARATOR)	756
Y	*426-3290*	1	FILTER GP-FUEL	752
Y	*423-8803*	1	FILM GP (STARTING MOTOR)	863
Y	*635-3313*	1	PLATE GP-IDENTIFICATION	869
Y	*345-8961*	1	FLYWHEEL GP	508
Y	*439-3378*	1	GAUGE GP-OIL LEVEL (DIPSTICK) (ENGINE)	637
Y	*380-2587*	1	HOUSING GP-FLYWHEEL	525
Y	*375-4645*	1	HOUSING GP-FRONT	534
Y	*375-4606*	1	DRIVE GP-POWER TAKE-OFF	499
Y	*416-8908*	1	INJECTOR GP-FUEL	766
Y	*371-2478*	1	JET GP-PISTON COOLING	543
Y	*371-2735*	1	LIFTING GP-ENGINE	544
Y	*426-3310*	1	LINES GP-FUEL INJECTION	787
			—OR—	
Y	*448-0935*	1	LINES GP-FUEL FILTER	783
Y	*393-7694*	1	MANIFOLD GP-EXHAUST	723
Y	*391-5523*	1	MANIFOLD GP-INLET	726
Y	*395-0112*	1	MOUNTING GP-ELECTRONIC CONTROL	819
Y	*371-2544*	1	PAN GP-OIL	556
Y	*369-7304*	1	PISTON & ROD GP	566
Y	*378-8167*	1	PLATE & FILM GP	868

440-8198 **ENGINE AR-PRIMARY (**contd.**)** **i10183354**

NOTE	PART NUMBER	QTY	PART NAME 1 2 3 4 5 6 (PRODUCT LEVEL)	SEE PAGE
			S/N: G9R1-10139	
Y	*390-0060*	1	FILM GP	859
			S/N: G9R10140-UP	
Y	*346-2908*	1	PLUG GP-ENGINE	592
Y	*375-0098*	1	FASTENER GP-DAMPER & PULLEY	505
Y	*371-2555*	1	PULLEY GP-CRANKSHAFT	602
Y	*346-0737*	1	PUMP GP-ENGINE OIL	645
			—OR—	
Y	*462-6685*	1	PUMP GP-ENGINE OIL	646
Y	*391-4811*	1	PUMP GP-FUEL INJECTION	790
Y	*372-2297*	1	PUMP GP-WATER	678
Y	*394-9639*	1	RAIL GP-FUEL	794
Y	*371-2480*	1	ROCKER ARM GP	606
Y	*395-0110*	1	SENSOR GP-ENGINE	820
Y	*395-0114*	1	STARTING AID GP	826
Y	*458-3684*	1	STARTING MOTOR GP-ELECTRIC	839
Y	*416-6968*	1	TURBOCHARGER GP	738
Y	*371-2745*	1	VALVE GP-FLUID SAMPLING	647
Y	*424-5516*	1	WIRING GP-ENGINE	846
	448-4768	1	ELECTRONICS GP	

Y - SEPARATE ILLUSTRATION

<END>

445-2586 ENGINE AR-PRIMARY

186 BRAKE KW (249 BHP) AT 2200 RPM

OPTIONAL FIELD REPLACEMENT ORDER 451-1222—PAGE: 452, 452-6584—PAGE: 462

SMCS-1000 **i06922378**

NOTE	PART NUMBER	QTY	PART NAME 1 2 3 4 5 6 (PRODUCT LEVEL)	SEE PAGE
Y	*377-0721*	1	ALTERNATOR GP-CHARGING	799
Y	*371-2693*	1	BELT TENSIONER GP	416
Y	*392-0632*	1	BREATHER GP (CRANKCASE)	611
Y	*396-2617*	1	CAMSHAFT GP	428
Y	*373-3607*	1	CONNECTION GP-WATER	650
Y	*371-2536*	1	CONTROL GP-ELECTRONIC	808
Y	*378-8280*	1	COOLER GP-ENGINE OIL	661
Y	*389-3346*	1	COVER GP-VALVE MECHANISM	435
Y	*374-6300*	1	CRANKSHAFT GP	447
Y	*390-0854*	1	CYLINDER BLOCK GP	450
Y	*385-2572*	1	CYLINDER HEAD GP	458
Y	*391-5560*	1	DRIVE GP-FAN	480
Y	*371-2694*	1	EXTENSION GP-FAN	500
Y	*390-3737*	1	FILLER GP-ENGINE OIL	620
Y	*346-0220*	1	FILTER GP-ENGINE OIL	629
Y	*426-3292*	1	FILTER GP-FUEL	753
			—OR—	
Y	*453-7163*	1	FILTER GP-FUEL	760
Y	*441-1215*	1	FILTER GP-FUEL (WATER SEPARATOR)	756
Y	*377-0692*	1	FLYWHEEL GP	511
Y	*439-3432*	1	GAUGE GP-OIL LEVEL (DIPSTICK)	640
Y	*393-3369*	1	HOUSING GP-FLYWHEEL	526
Y	*371-2725*	1	HOUSING GP-FRONT	532
Y	*416-8908*	1	INJECTOR GP-FUEL	766
Y	*371-2478*	1	JET GP-PISTON COOLING	543
Y	*416-2470*	1	LIFTING GP-ENGINE	546
Y	*426-3310*	1	LINES GP-FUEL INJECTION	787
Y	*416-7808*	1	MANIFOLD GP-EXHAUST	724
Y	*391-5523*	1	MANIFOLD GP-INLET	726
Y	*395-0112*	1	MOUNTING GP-ELECTRONIC CONTROL	819
Y	*375-4499*	1	PAN GP-OIL	557
Y	*369-7304*	1	PISTON & ROD GP	566
Y	*378-8167*	1	PLATE & FILM GP	868
Y	*346-2908*	1	PLUG GP-ENGINE	592
Y	*440-0026*	1	PLUG GP-OIL FILTER MOUNTING	644
Y	*375-0098*	1	FASTENER GP-DAMPER & PULLEY	505
Y	*379-6629*	1	PULLEY GP-CRANKSHAFT	603
Y	*346-0737*	1	PUMP GP-ENGINE OIL	645
			—OR—	
Y	*462-6685*	1	PUMP GP-ENGINE OIL	646
Y	*391-4811*	1	PUMP GP-FUEL INJECTION	790
Y	*372-2297*	1	PUMP GP-WATER	678
Y	*394-9639*	1	RAIL GP-FUEL	794
Y	*371-2480*	1	ROCKER ARM GP	606
Y	*395-0110*	1	SENSOR GP-ENGINE	820
Y	*395-0114*	1	STARTING AID GP	826
Y	*385-8000*	1	STARTING MOTOR GP-ELECTRIC	832

445-2586 **ENGINE AR-PRIMARY (**contd.**)** **i06922378**

NOTE	PART NUMBER	QTY	PART NAME 1 2 3 4 5 6 (PRODUCT LEVEL)	SEE PAGE
Y	*371-2719*	1	SUPPORT GP-POWER TAKE-OFF	608
Y	*431-6516*	1	TURBOCHARGER GP	
Y	*424-5516*	1	WIRING GP-ENGINE	846
	464-1142	1	ELECTRONICS GP-ENGINE	

Y - SEPARATE ILLUSTRATION

<END>

445-2599 ENGINE AR-PRIMARY

186 BRAKE KW (249 BHP) AT 2200 RPM

OPTIONAL FIELD REPLACEMENT ORDER 451-1222—PAGE: 452, 452-6584—PAGE: 462

SMCS-1000 **i07777884**

NOTE	PART NUMBER	QTY	PART NAME 1 2 3 4 5 6 (PRODUCT LEVEL)	SEE PAGE
Y	*377-0721*	1	ALTERNATOR GP-CHARGING	799
Y	*391-9611*	1	BELT TENSIONER GP	421
Y	*392-0632*	1	BREATHER GP	611
Y	*396-2617*	1	CAMSHAFT GP	428
Y	*390-5132*	1	CLAMP AS-EXHAUST	718
Y	*374-7094*	1	COMPRESSOR & MTG GP-REFRIGERANT	429
Y	*373-3607*	1	CONNECTION GP-WATER	650
Y	*371-2536*	1	CONTROL GP-ELECTRONIC	808
Y	*378-8280*	1	COOLER GP-ENGINE OIL	661
Y	*389-3346*	1	COVER GP-VALVE MECHANISM	435
Y	*374-6300*	1	CRANKSHAFT GP	447
Y	*390-0854*	1	CYLINDER BLOCK GP	450
Y	*385-2572*	1	CYLINDER HEAD GP	458
Y	*378-8166*	1	DRAIN GP-ENGINE OIL	467
Y	*379-0957*	1	DRIVE GP-FAN	472
Y	*375-0098*	1	FASTENER GP-DAMPER & PULLEY	505
Y	*415-1646*	1	FILLER GP-ENGINE OIL	621
Y	*415-5625*	1	FILM GP (ALTERNATOR)	862
Y	*423-8803*	1	FILM GP (STARTING MOTOR)	863
Y	*346-0220*	1	FILTER GP-ENGINE OIL	629
Y	*426-3292*	1	FILTER GP-FUEL	753
Y	*441-1222*	1	FILTER GP-FUEL (WATER SEPARATOR)	758
Y	*345-8901*	1	FLYWHEEL GP	506
Y	*439-3377*	1	GAUGE GP-OIL LEVEL (DIPSTICK)	636
Y	*345-8838*	1	HOUSING GP-FLYWHEEL	517
Y	*371-2716*	1	HOUSING GP-FRONT	530
Y	*416-8908*	1	INJECTOR GP-FUEL	766
Y	*371-2478*	1	JET GP-PISTON COOLING	543
Y	*371-2740*	1	LIFTING GP-ENGINE	545
Y	*478-8523*	1	LINES GP-FUEL	773
Y	*393-7694*	1	MANIFOLD GP-EXHAUST	723
Y	*378-8582*	1	MANIFOLD GP-INLET	725
Y	*395-0112*	1	MOUNTING GP-ELECTRONIC CONTROL	819
Y	*378-0593*	1	PAN GP-OIL	560
Y	*369-7304*	1	PISTON & ROD GP	566
Y	*378-8167*	1	PLATE & FILM GP	868
Y	*374-9295*	1	PLUG GP-CYLINDER BLOCK	591
Y	*346-2908*	1	PLUG GP-ENGINE	592
Y	*327-0675*	1	PLUG GP-FLYWHEEL HOUSING	593
Y	*371-2554*	1	PULLEY GP-CRANKSHAFT	601
Y	*346-0737*	1	PUMP GP-ENGINE OIL	645
Y	*391-4811*	1	PUMP GP-FUEL INJECTION	790
Y	*372-2297*	1	PUMP GP-WATER	678
Y	*394-9639*	1	RAIL GP-FUEL	794
Y	*371-2480*	1	ROCKER ARM GP	606
Y	*395-0110*	1	SENSOR GP-ENGINE	820
Y	*395-0114*	1	STARTING AID GP	826
Y	*392-2020*	1	STARTING MOTOR GP-ELECTRIC	835

445-2599 **ENGINE AR-PRIMARY (**contd.**)** **i07777884**

NOTE	PART NUMBER	QTY	PART NAME 1 2 3 4 5 6 (PRODUCT LEVEL)	SEE PAGE
Y	*416-6969*	1	TURBOCHARGER GP	739
Y	*371-2745*	1	VALVE GP-FLUID SAMPLING	647
Y	*395-0113*	1	WIRING GP-ENGINE	841
	440-1796	1	ELECTRONICS GP-ENGINE RATINGS	

Y - SEPARATE ILLUSTRATION

<END>

445-8905 ENGINE AR-PRIMARY

205 BRAKE KW (275 BHP) AT 2200 RPM

FIELD REPLACEMENT ORDER 451-1222—PAGE: 452, 452-6584—PAGE: 462

SMCS-1000 **i10235626**

NOTE	PART NUMBER	QTY	PART NAME 1 2 3 4 5 6 (PRODUCT LEVEL)	SEE PAGE
Y	*374-7094*	1	COMPRESSOR & MTG GP-REFRIGERANT	429
Y	*385-8001*	1	ALTERNATOR GP-CHARGING	800
Y	*379-5585*	1	BELT TENSIONER GP	419
			—OR—	
Y	*375-4479*	1	BELT TENSIONER GP	417
Y	*392-0632*	1	BREATHER GP	611
Y	*396-2617*	1	CAMSHAFT GP	428
Y	*390-5130*	1	CLAMP AS-EXHAUST	717
Y	*346-2911*	1	CONNECTION GP-HEATER	648
			—OR—	
Y	*448-9710*	1	CONNECTOR GP-CAB HEATER LINES	652
Y	*373-3607*	1	CONNECTION GP-WATER	650
			—OR—	
Y	*373-3606*	1	CONNECTION GP-WATER	649
Y	*371-2536*	1	CONTROL GP-ELECTRONIC	808
Y	*443-3790*	1	COOLER GP-ENGINE OIL	664
Y	*389-3348*	1	COVER GP-VALVE MECHANISM	440
Y	*374-6300*	1	CRANKSHAFT GP	447
Y	*390-0854*	1	CYLINDER BLOCK GP	450
Y	*385-2572*	1	CYLINDER HEAD GP	458
Y	*378-8166*	1	DRAIN GP-ENGINE OIL	467
Y	*374-7093*	1	DRIVE GP-FAN	469
Y	*379-6626*	1	FILLER GP-ENGINE OIL	619
			—OR—	
Y	*438-5978*	1	FILLER GP-ENGINE OIL	623
Y	*415-5625*	1	FILM GP (ALTERNATOR)	862
Y	*426-3296*	1	FILTER GP-FUEL	754
			—OR—	
Y	*453-7163*	1	FILTER GP-FUEL	760
Y	*441-1215*	1	FILTER GP-FUEL (WATER SEPARATOR)	756
Y	*398-7221*	1	LINES GP-FUEL FILTER	778
Y	*437-2723*	1	FLYWHEEL GP	513
			—OR—	
Y	*377-0692*	1	FLYWHEEL GP	511
Y	*439-3378*	1	GAUGE GP-OIL LEVEL (DIPSTICK)	637
			—OR—	
Y	*375-8851*	1	GAUGE GP-OIL LEVEL (DIPSTICK)	632
Y	*437-2721*	1	HOUSING GP-FLYWHEEL	529
			—OR—	
Y	*393-3369*	1	HOUSING GP-FLYWHEEL	526
Y	*378-0630*	1	AIR COMPRESSOR GP	410
Y	*416-8908*	1	INJECTOR GP-FUEL	766
Y	*371-2478*	1	JET GP-PISTON COOLING	543
Y	*416-2470*	1	LIFTING GP-ENGINE	546
			—OR—	
Y	*371-2735*	1	LIFTING GP-ENGINE	544

445-8905 **ENGINE AR-PRIMARY (**contd.**)** **i10235626**

NOTE	PART NUMBER	QTY	PART NAME 1 2 3 4 5 6 (PRODUCT LEVEL)	SEE PAGE
Y	*393-7694*	1	MANIFOLD GP-EXHAUST	723
Y	*391-5523*	1	MANIFOLD GP-INLET	726
Y	*395-0112*	1	MOUNTING GP-ELECTRONIC CONTROL	819
Y	*346-1510*	1	MOUNTING GP-ENGINE	548
Y	*371-2544*	1	PAN GP-OIL	556
Y	*369-7304*	1	PISTON & ROD GP	566
Y	*378-8167*	1	PLATE & FILM GP	868
Y	*375-0098*	1	FASTENER GP-DAMPER & PULLEY	505
Y	*371-2555*	1	PULLEY GP-CRANKSHAFT	602
Y	*346-0737*	1	PUMP GP-ENGINE OIL	645
			—OR—	
Y	*462-6685*	1	PUMP GP-ENGINE OIL	646
Y	*391-4811*	1	PUMP GP-FUEL INJECTION	790
Y	*372-2297*	1	PUMP GP-WATER	678
Y	*394-9639*	1	RAIL GP-FUEL	794
Y	*371-2480*	1	ROCKER ARM GP	606
Y	*395-0110*	1	SENSOR GP-ENGINE	820
Y	*395-0114*	1	STARTING AID GP	826
Y	*371-2541*	1	STARTING MOTOR GP-ELECTRIC	829
Y	*416-6968*	1	TURBOCHARGER GP	738
			—OR—	
Y	*416-6969*	1	TURBOCHARGER GP	739
Y	*424-5516*	1	WIRING GP-ENGINE	846
Y	*476-7558*	1	HOUSING GP-FRONT	541
	376-6464	1	PLATE & FILM GP	
	350-8958	1	PLATE-SERIAL NUMBER (ENGINE)	
	635-3313	1	PLATE GP-IDENTIFICATION	
	549-5430	1	PLATE-IDENTIFICATION (CAT)	
	449-3320	1	ELECTRONICS GP-ENGINE	
			SOFTWARE MUST BE PROCURED LOCALLY FROM YOUR CAT DEALER	

Y - SEPARATE ILLUSTRATION

<END>

446-1005 ENGINE AR-PRIMARY

205 BRAKE KW (274 BHP) AT 1800 RPM

OPTIONAL FIELD REPLACEMENT ORDER 451-1222—PAGE: 452, 452-6584—PAGE: 462

SMCS-1000 **i07755727**

NOTE	PART NUMBER	QTY	PART NAME 1 2 3 4 5 6 (PRODUCT LEVEL)	SEE PAGE
Y	*450-4794*	1	ACCESSORY GP-ENGINE	408
Y	*392-2023*	1	ALTERNATOR GP-CHARGING	801
Y	*379-5585*	1	BELT TENSIONER GP	419
Y	*425-0196*	1	BREATHER GP (CRANKCASE)	612
Y	*396-2617*	1	CAMSHAFT GP	428
Y	*390-5130*	1	CLAMP AS-EXHAUST	717
Y	*373-3607*	1	CONNECTION GP-WATER	650
Y	*371-2536*	1	CONTROL GP-ELECTRONIC	808
Y	*378-8280*	1	COOLER GP-ENGINE OIL	661
Y	*389-3347*	1	COVER GP-VALVE MECHANISM	436
Y	*374-6300*	1	CRANKSHAFT GP	447
Y	*390-0854*	1	CYLINDER BLOCK GP	450
Y	*385-2572*	1	CYLINDER HEAD GP	458
Y	*392-6911*	1	DRIVE GP-FAN	483
Y	*375-8320*	1	EXTENSION GP-FAN	501
Y	*501-7442*	1	FAN GP	675
Y	*375-0098*	1	FASTENER GP-DAMPER & PULLEY	505
Y	*438-5978*	1	FILLER GP-ENGINE OIL	623
Y	*415-5625*	1	FILM GP (ALTERNATOR)	862
Y	*423-8803*	1	FILM GP (STARTING MOTOR)	863
Y	*346-0220*	1	FILTER GP-ENGINE OIL	629
Y	*426-3292*	1	FILTER GP-FUEL	753
			—OR—	
Y	*453-7163*	1	FILTER GP-FUEL	760
Y	*441-1215*	1	FILTER GP-FUEL (WATER SEPARATOR)	756
Y	*425-0197*	1	FILTER GP-FUMES DISPOSAL	630
Y	*345-8901*	1	FLYWHEEL GP	506
Y	*439-3431*	1	GAUGE GP-OIL LEVEL (DIPSTICK) (ENGINE)	639
Y	*345-8839*	1	HOUSING GP-FLYWHEEL	518
Y	*375-4645*	1	HOUSING GP-FRONT	534
Y	*448-2107*	1	AIR COMPRESSOR GP	414
Y	*416-8908*	1	INJECTOR GP-FUEL	766
Y	*371-2478*	1	JET GP-PISTON COOLING	543
Y	*371-2735*	1	LIFTING GP-ENGINE	544
Y	*398-7221*	1	LINES GP-FUEL FILTER	778
Y	*393-7694*	1	MANIFOLD GP-EXHAUST	723
Y	*391-5523*	1	MANIFOLD GP-INLET	726
Y	*395-0112*	1	MOUNTING GP-ELECTRONIC CONTROL	819
Y	*374-7090*	1	MOUNTING GP-REFRIGERANT COMPR	555
Y	*378-0593*	1	PAN GP-OIL	560
Y	*369-7304*	1	PISTON & ROD GP	566
Y	*378-8167*	1	PLATE & FILM GP	868
Y	*332-9106*	1	PLUG GP-FLYWHEEL HOUSING	594
Y	*371-2554*	1	PULLEY GP-CRANKSHAFT	601
Y	*346-0737*	1	PUMP GP-ENGINE OIL	645
			—OR—	
Y	*462-6685*	1	PUMP GP-ENGINE OIL	646

446-1005 **ENGINE AR-PRIMARY (**contd.**)** **i07755727**

NOTE	PART NUMBER	QTY	PART NAME 1 2 3 4 5 6 (PRODUCT LEVEL)	SEE PAGE
Y	*391-4811*	1	PUMP GP-FUEL INJECTION	790
Y	*372-2297*	1	PUMP GP-WATER	678
Y	*394-9639*	1	RAIL GP-FUEL	794
Y	*371-2480*	1	ROCKER ARM GP	606
Y	*395-0110*	1	SENSOR GP-ENGINE	820
Y	*380-9279*	1	STARTING AID GP	824
Y	*415-4870*	1	STARTING MOTOR GP-ELECTRIC	837
Y	*416-6969*	1	TURBOCHARGER GP	739
Y	*371-2745*	1	VALVE GP-FLUID SAMPLING	647
Y	*424-5516*	1	WIRING GP-ENGINE	846
	447-7816	1	ELECTRONICS GP-ENGINE	

Y - SEPARATE ILLUSTRATION

<END>

446-7567 ENGINE AR-PRIMARY

168 BRAKE (225 BHP) AT 2200 RPM

OPTIONAL FIELD REPLACEMENT ORDER 452-6584—PAGE: 462, 451-1222—PAGE: 452

SMCS-1000 **i05584509**

NOTE	PART NUMBER	QTY	PART NAME 1 2 3 4 5 6 (PRODUCT LEVEL)	SEE PAGE
Y	*374-7094*	1	COMPRESSOR & MTG GP-REFRIGERANT	429
Y	*377-0721*	1	ALTERNATOR GP-CHARGING	799
Y	*391-9611*	1	BELT TENSIONER GP	421
Y	*392-0632*	1	BREATHER GP	611
Y	*396-2617*	1	CAMSHAFT GP	428
Y	*373-3607*	1	CONNECTION GP-WATER	650
Y	*371-2536*	1	CONTROL GP-ELECTRONIC	808
Y	*378-8280*	1	COOLER GP-ENGINE OIL	661
Y	*389-3346*	1	COVER GP-VALVE MECHANISM	435
Y	*374-6300*	1	CRANKSHAFT GP	447
Y	*390-0854*	1	CYLINDER BLOCK GP	450
Y	*385-2572*	1	CYLINDER HEAD GP	458
Y	*378-8166*	1	DRAIN GP-ENGINE OIL	467
Y	*379-0957*	1	DRIVE GP-FAN	472
Y	*390-5132*	1	CLAMP AS-EXHAUST	718
Y	*415-1646*	1	FILLER GP-ENGINE OIL	621
Y	*415-5625*	1	FILM GP (ALTERNATOR)	862
Y	*346-0220*	1	FILTER GP-ENGINE OIL	629
Y	*426-3292*	1	FILTER GP-FUEL	753
Y	*398-7221*	1	LINES GP-FUEL FILTER	778
Y	*441-1222*	1	FILTER GP-FUEL (WATER SEPARATOR)	758
Y	*345-8901*	1	FLYWHEEL GP	506
Y	*345-8838*	1	HOUSING GP-FLYWHEEL	517
Y	*371-2716*	1	HOUSING GP-FRONT	530
Y	*416-8908*	1	INJECTOR GP-FUEL	766
Y	*371-2478*	1	JET GP-PISTON COOLING	543
Y	*371-2740*	1	LIFTING GP-ENGINE	545
Y	*393-7694*	1	MANIFOLD GP-EXHAUST	723
Y	*378-8582*	1	MANIFOLD GP-INLET	725
Y	*395-0112*	1	MOUNTING GP-ELECTRONIC CONTROL	819
Y	*378-0593*	1	PAN GP-OIL	560
Y	*439-3377*	1	GAUGE GP-OIL LEVEL (DIPSTICK)	636
Y	*369-7304*	1	PISTON & ROD GP	566
Y	*378-8167*	1	PLATE & FILM GP	868
Y	*374-9295*	1	PLUG GP-CYLINDER BLOCK	591
Y	*346-2908*	1	PLUG GP-ENGINE	592
Y	*327-0675*	1	PLUG GP-FLYWHEEL HOUSING	593
Y	*375-0098*	1	FASTENER GP-DAMPER & PULLEY	505
Y	*371-2554*	1	PULLEY GP-CRANKSHAFT	601
Y	*346-0737*	1	PUMP GP-ENGINE OIL	645
Y	*391-4811*	1	PUMP GP-FUEL INJECTION	790
Y	*372-2297*	1	PUMP GP-WATER	678
Y	*394-9639*	1	RAIL GP-FUEL	794
Y	*371-2480*	1	ROCKER ARM GP	606
Y	*395-0110*	1	SENSOR GP-ENGINE	820
Y	*395-0114*	1	STARTING AID GP	826
Y	*392-2020*	1	STARTING MOTOR GP-ELECTRIC	835
Y	*423-8803*	1	FILM GP (STARTING MOTOR)	863

446-7567 **ENGINE AR-PRIMARY (**contd.**)** **i05584509**

NOTE	PART NUMBER	QTY	PART NAME 1 2 3 4 5 6 (PRODUCT LEVEL)	SEE PAGE
Y	*416-6969*	1	TURBOCHARGER GP	739
Y	*371-2745*	1	VALVE GP-FLUID SAMPLING	647
Y	*395-0113*	1	WIRING GP-ENGINE	841
	448-4768	1	ELECTRONICS GP	

Y - SEPARATE ILLUSTRATION

<END>

449-0783 ENGINE AR-PRIMARY

151 BRAKE KW (203 BHP) AT 2200 RPM

OPTIONAL FIELD REPLACEMENT ORDER 451-1222—PAGE: 452, 452-6584—PAGE: 462

SMCS-1000 **i09863815**

NOTE	PART NUMBER	QTY	PART NAME 1 2 3 4 5 6 (PRODUCT LEVEL)	SEE PAGE
Y	*375-5006*	1	AIR CLEANER GP	713
			—OR—	
Y	*467-1940*	1	AIR CLEANER GP	714
Y	*377-0720*	1	ALTERNATOR GP-CHARGING	798
Y	*371-2693*	1	BELT TENSIONER GP	416
Y	*425-0196*	1	BREATHER GP (CRANKCASE)	612
			—OR—	
Y	*392-0632*	1	BREATHER GP	611
Y	*396-2615*	1	CAMSHAFT GP	427
AY	*464-9337*	1	CONFIGURATION AR-ENGINE	2
Y	*373-3607*	1	CONNECTION GP-WATER	650
Y	*371-2536*	1	CONTROL GP-ELECTRONIC	808
Y	*346-0097*	1	COOLER GP-ENGINE OIL	658
Y	*389-3348*	1	COVER GP-VALVE MECHANISM	440
Y	*374-6300*	1	CRANKSHAFT GP	447
Y	*390-0854*	1	CYLINDER BLOCK GP	450
Y	*385-2572*	1	CYLINDER HEAD GP	458
Y	*371-2742*	1	DRAIN GP-ENGINE OIL	466
Y	*393-2180*	1	DRIVE GP-FAN	484
Y	*375-4606*	1	DRIVE GP-POWER TAKE-OFF	499
Y	*375-8320*	1	EXTENSION GP-FAN	501
Y	*375-0098*	1	FASTENER GP-DAMPER & PULLEY	505
Y	*452-3651*	1	FAN GP	673
Y	*390-3737*	1	FILLER GP-ENGINE OIL	620
			—OR—	
Y	*448-0944*	1	FILLER GP-ENGINE OIL	627
Y	*425-0197*	1	FILTER GP-FUMES DISPOSAL	630
Y	*415-5625*	1	FILM GP (ALTERNATOR)	862
Y	*423-8803*	1	FILM GP (STARTING MOTOR)	863
Y	*390-0060*	1	FILM GP (EMISSION)	859
Y	*611-2653*	1	FILM GP (RADIATOR)	865
Y	*346-0220*	1	FILTER GP-ENGINE OIL	629
Y	*441-1215*	1	FILTER GP-FUEL (WATER SEPARATOR)	756
Y	*453-7163*	1	FILTER GP-FUEL	760
Y	*346-0769*	1	FLANGE GP-EXHAUST	719
Y	*345-8961*	1	FLYWHEEL GP	508
Y	*439-3432*	1	GAUGE GP-OIL LEVEL (DIPSTICK) (ENGINE)	640
Y	*345-8839*	1	HOUSING GP-FLYWHEEL	518
Y	*375-4645*	1	HOUSING GP-FRONT	534
Y	*371-2483*	1	INJECTOR GP-FUEL	763
Y	*371-2478*	1	JET GP-PISTON COOLING	543
Y	*416-2470*	1	LIFTING GP-ENGINE	546
Y	*398-7221*	1	LINES GP-FUEL FILTER	778
			—OR—	
Y	*426-3310*	1	LINES GP-FUEL INJECTION	787
Y	*416-7808*	1	MANIFOLD GP-EXHAUST	724
Y	*391-5523*	1	MANIFOLD GP-INLET	726

449-0783 **ENGINE AR-PRIMARY (**contd.**)** **i09863815**

NOTE	PART NUMBER	QTY	PART NAME 1 2 3 4 5 6 (PRODUCT LEVEL)	SEE PAGE
Y	*373-5023*	1	MOUNTING GP-ACCESSORY MODULE	857
Y	*395-0112*	1	MOUNTING GP-ELECTRONIC CONTROL	819
Y	*375-4499*	1	PAN GP-OIL	557
Y	*374-6301*	1	PISTON & ROD GP	576
Y	*346-2908*	1	PLUG GP-ENGINE	592
Y	*440-0026*	1	PLUG GP-OIL FILTER MOUNTING	644
Y	*379-6629*	1	PULLEY GP-CRANKSHAFT	603
Y	*346-0737*	1	PUMP GP-ENGINE OIL	645
			—OR—	
Y	*462-6685*	1	PUMP GP-ENGINE OIL	646
Y	*391-4811*	1	PUMP GP-FUEL INJECTION	790
Y	*372-2297*	1	PUMP GP-WATER	678
Y	*456-4299*	1	RADIATOR GP	700
			—OR—	
Y	*456-4296*	1	RADIATOR GP	689
Y	*394-9639*	1	RAIL GP-FUEL	794
Y	*371-2480*	1	ROCKER ARM GP	606
Y	*395-0110*	1	SENSOR GP-ENGINE	820
Y	*380-9279*	1	STARTING AID GP	824
Y	*415-4870*	1	STARTING MOTOR GP-ELECTRIC	837
Y	*375-5002*	1	TURBOCHARGER GP	732
Y	*424-5516*	1	WIRING GP-ENGINE	846
	453-1370	1	ELECTRONICS GP-ENGINE	
	376-6464	1	PLATE & FILM GP	

A - NOT PART OF THIS GROUP
Y - SEPARATE ILLUSTRATION

<END>

449-5818 ENGINE AR-PRIMARY

186 BRAKE KW (249 BHP) AT 2200 RPM

OPTIONAL FIELD REPLACEMENT ORDER 451-1222—PAGE: 452, 452-6584—PAGE: 462

SMCS-1000 **i06674317**

NOTE	PART NUMBER	QTY	PART NAME 1 2 3 4 5 6 (PRODUCT LEVEL)	SEE PAGE
Y	*377-0721*	1	ALTERNATOR GP-CHARGING	799
Y	*371-2693*	1	BELT TENSIONER GP	416
Y	*392-0632*	1	BREATHER GP	611
Y	*396-2617*	1	CAMSHAFT GP	428
Y	*373-3607*	1	CONNECTION GP-WATER	650
Y	*371-2536*	1	CONTROL GP-ELECTRONIC	808
Y	*378-8283*	1	COOLER GP-ENGINE OIL	662
Y	*389-3347*	1	COVER GP-VALVE MECHANISM	436
Y	*374-6300*	1	CRANKSHAFT GP	447
Y	*390-0854*	1	CYLINDER BLOCK GP	450
Y	*385-2572*	1	CYLINDER HEAD GP	458
Y	*371-2742*	1	DRAIN GP-ENGINE OIL	466
Y	*415-3083*	1	DRIVE GP-FAN	497
Y	*375-8320*	1	EXTENSION GP-FAN	501
Y	*378-0627*	1	FAN GP	670
Y	*452-0776*	1	FILLER GP-ENGINE OIL	628
Y	*415-5625*	1	FILM GP (ALTERNATOR)	862
Y	*346-0220*	1	FILTER GP-ENGINE OIL	629
Y	*426-3292*	1	FILTER GP-FUEL	753
			—OR—	
Y	*453-7163*	1	FILTER GP-FUEL	760
Y	*441-1215*	1	FILTER GP-FUEL (WATER SEPARATOR)	756
Y	*437-2723*	1	FLYWHEEL GP	513
Y	*439-3432*	1	GAUGE GP-OIL LEVEL (DIPSTICK) (ENGINE)	640
Y	*437-2721*	1	HOUSING GP-FLYWHEEL	529
Y	*375-5838*	1	HOUSING GP-FRONT	536
Y	*416-8908*	1	INJECTOR GP-FUEL	766
Y	*371-2478*	1	JET GP-PISTON COOLING	543
Y	*371-2735*	1	LIFTING GP-ENGINE	544
Y	*426-3310*	1	LINES GP-FUEL INJECTION	787
Y	*393-7694*	1	MANIFOLD GP-EXHAUST	723
Y	*391-5523*	1	MANIFOLD GP-INLET	726
Y	*395-0112*	1	MOUNTING GP-ELECTRONIC CONTROL	819
Y	*495-6156*	1	MOUNTING GP-ENGINE	551
Y	*375-4499*	1	PAN GP-OIL	557
Y	*369-7304*	1	PISTON & ROD GP	566
Y	*378-8167*	1	PLATE & FILM GP	868
Y	*346-2908*	1	PLUG GP-ENGINE	592
Y	*440-0026*	1	PLUG GP-OIL FILTER MOUNTING	644
Y	*378-0629*	1	COVER GP-ACCESSORY DRIVE	433
Y	*375-0098*	1	FASTENER GP-DAMPER & PULLEY	505
Y	*379-6629*	1	PULLEY GP-CRANKSHAFT	603
Y	*346-0737*	1	PUMP GP-ENGINE OIL	645
			—OR—	
Y	*462-6685*	1	PUMP GP-ENGINE OIL	646
Y	*391-4811*	1	PUMP GP-FUEL INJECTION	790
Y	*372-2297*	1	PUMP GP-WATER	678

449-5818 **ENGINE AR-PRIMARY (**contd.**)** **i06674317**

NOTE	PART NUMBER	QTY	PART NAME 1 2 3 4 5 6 (PRODUCT LEVEL)	SEE PAGE
Y	*394-9639*	1	RAIL GP-FUEL	794
Y	*371-2480*	1	ROCKER ARM GP	606
Y	*395-0110*	1	SENSOR GP-ENGINE	820
Y	*395-0114*	1	STARTING AID GP	826
Y	*371-2541*	1	STARTING MOTOR GP-ELECTRIC	829
Y	*416-6969*	1	TURBOCHARGER GP	739
Y	*424-5516*	1	WIRING GP-ENGINE	846
	440-1796	1	ELECTRONICS GP-ENGINE RATINGS	

Y - SEPARATE ILLUSTRATION

<END>

450-7535 ENGINE AR-PRIMARY

205 BRAKE KW (275 BHP) AT 2200 RPM

OPTIONAL FIELD REPLACEMENT ORDER 451-1222—PAGE: 452, 452-6584—PAGE: 462

SMCS-1000 **i06002280**

NOTE	PART NUMBER	QTY	PART NAME 1 2 3 4 5 6 (PRODUCT LEVEL)	SEE PAGE
Y	*377-0721*	1	ALTERNATOR GP-CHARGING	799
Y	*371-2692*	1	PULLEY GP-ALTERNATOR	599
Y	*392-0632*	1	BREATHER GP	611
Y	*396-2617*	1	CAMSHAFT GP	428
Y	*373-3607*	1	CONNECTION GP-WATER	650
Y	*371-2536*	1	CONTROL GP-ELECTRONIC	808
Y	*378-8276*	1	COOLER GP-ENGINE OIL	659
Y	*389-3346*	1	COVER GP-VALVE MECHANISM	435
Y	*374-6300*	1	CRANKSHAFT GP	447
Y	*390-0854*	1	CYLINDER BLOCK GP	450
Y	*385-2572*	1	CYLINDER HEAD GP	458
Y	*380-2602*	1	DRIVE GP-FAN	475
Y	*393-9542*	1	EXTENSION GP-FAN	502
Y	*415-1646*	1	FILLER GP-ENGINE OIL	621
Y	*426-3292*	1	FILTER GP-FUEL	753
			—OR—	
Y	*453-7163*	1	FILTER GP-FUEL	760
Y	*345-9037*	1	FLYWHEEL GP	510
Y	*393-3369*	1	HOUSING GP-FLYWHEEL	526
Y	*371-2716*	1	HOUSING GP-FRONT	530
Y	*416-8908*	1	INJECTOR GP-FUEL	766
Y	*371-2478*	1	JET GP-PISTON COOLING	543
Y	*371-2735*	1	LIFTING GP-ENGINE	544
Y	*426-3310*	1	LINES GP-FUEL INJECTION	787
Y	*416-7808*	1	MANIFOLD GP-EXHAUST	724
Y	*391-5523*	1	MANIFOLD GP-INLET	726
Y	*395-0112*	1	MOUNTING GP-ELECTRONIC CONTROL	819
Y	*378-0593*	1	PAN GP-OIL	560
Y	*439-3377*	1	GAUGE GP-OIL LEVEL (DIPSTICK)	636
Y	*369-7304*	1	PISTON & ROD GP	566
Y	*378-8167*	1	PLATE & FILM GP	868
Y	*374-9295*	1	PLUG GP-CYLINDER BLOCK	591
Y	*346-2908*	1	PLUG GP-ENGINE	592
Y	*375-0098*	1	FASTENER GP-DAMPER & PULLEY	505
Y	*371-2554*	1	PULLEY GP-CRANKSHAFT	601
Y	*346-0737*	1	PUMP GP-ENGINE OIL	645
			—OR—	
Y	*462-6685*	1	PUMP GP-ENGINE OIL	646
Y	*391-4811*	1	PUMP GP-FUEL INJECTION	790
Y	*372-2297*	1	PUMP GP-WATER	678
Y	*394-9639*	1	RAIL GP-FUEL	794
Y	*371-2480*	1	ROCKER ARM GP	606
Y	*395-0110*	1	SENSOR GP-ENGINE	820
Y	*395-0114*	1	STARTING AID GP	826
Y	*385-8000*	1	STARTING MOTOR GP-ELECTRIC	832
Y	*448-9777*	1	TURBOCHARGER GP	748
Y	*371-2745*	1	VALVE GP-FLUID SAMPLING	647

450-7535 **ENGINE AR-PRIMARY (**contd.**)** **i06002280**

NOTE	PART NUMBER	QTY	PART NAME 1 2 3 4 5 6 (PRODUCT LEVEL)	SEE PAGE
Y	*424-5516*	1	WIRING GP-ENGINE	846
	447-7816	1	ELECTRONICS GP-ENGINE	

Y - SEPARATE ILLUSTRATION

<END>

451-5272 ENGINE AR-PRIMARY

168 BRAKE KW (225 BHP) AT 2200 RPM

OPTIONAL FIELD REPLACEMENT ORDER 452-6584—PAGE: 462, 451-1222—PAGE: 452

SMCS-1000 **i08363133**

NOTE	PART NUMBER	QTY	PART NAME 1 2 3 4 5 6 (PRODUCT LEVEL)	SEE PAGE
Y	*379-6637*	1	BRACKET GP-MOUNTING	423
Y	*392-0632*	1	BREATHER GP	611
Y	*396-2617*	1	CAMSHAFT GP	428
Y	*390-5130*	1	CLAMP AS-EXHAUST	717
AY	*454-5366*	1	CONFIGURATION AR-ENGINE	1
Y	*346-2911*	1	CONNECTION GP-HEATER	648
Y	*371-2536*	1	CONTROL GP-ELECTRONIC	808
Y	*378-8280*	1	COOLER GP-ENGINE OIL	661
Y	*378-0629*	1	COVER GP-ACCESSORY DRIVE	433
Y	*389-3347*	1	COVER GP-VALVE MECHANISM	436
Y	*374-6300*	1	CRANKSHAFT GP	447
Y	*390-0854*	1	CYLINDER BLOCK GP	450
Y	*385-2572*	1	CYLINDER HEAD GP	458
Y	*378-8166*	1	DRAIN GP-ENGINE OIL	467
Y	*375-3937*	1	DRIVE GP-FAN	470
Y	*375-0098*	1	FASTENER GP-DAMPER & PULLEY	505
Y	*438-5978*	1	FILLER GP-ENGINE OIL	623
Y	*423-8803*	1	FILM GP (STARTING MOTOR) (STARTING MOTOR)	863
Y	*415-5625*	1	FILM GP (ALTERNATOR) (ALTERNATOR)	862
Y	*346-0220*	1	FILTER GP-ENGINE OIL	629
Y	*426-3296*	1	FILTER GP-FUEL	754
			—OR—	
Y	*453-7163*	1	FILTER GP-FUEL	760
Y	*441-1215*	1	FILTER GP-FUEL (WATER SEPARATOR)	756
Y	*345-8901*	1	FLYWHEEL GP	506
Y	*375-5838*	1	HOUSING GP-FRONT	536
Y	*416-8908*	1	INJECTOR GP-FUEL	766
Y	*371-2478*	1	JET GP-PISTON COOLING	543
Y	*393-7694*	1	MANIFOLD GP-EXHAUST	723
Y	*378-8582*	1	MANIFOLD GP-INLET	725
Y	*395-0112*	1	MOUNTING GP-ELECTRONIC CONTROL	819
Y	*378-0594*	1	PAN GP-OIL	561
Y	*369-7304*	1	PISTON & ROD GP	566
Y	*378-8167*	1	PLATE & FILM GP	868
Y	*371-2554*	1	PULLEY GP-CRANKSHAFT	601
Y	*346-0737*	1	PUMP GP-ENGINE OIL	645
			—OR—	
Y	*462-6685*	1	PUMP GP-ENGINE OIL	646
Y	*391-4811*	1	PUMP GP-FUEL INJECTION	790
Y	*372-2297*	1	PUMP GP-WATER	678
Y	*394-9639*	1	RAIL GP-FUEL	794
Y	*371-2480*	1	ROCKER ARM GP	606
Y	*395-0110*	1	SENSOR GP-ENGINE	820
Y	*380-9279*	1	STARTING AID GP	824
Y	*416-6969*	1	TURBOCHARGER GP	739
Y	*424-5516*	1	WIRING GP-ENGINE	846
	448-4768	1	ELECTRONICS GP	

451-5272 **ENGINE AR-PRIMARY (**contd.**)** **i08363133**

NOTE	PART NUMBER	QTY	PART NAME 1 2 3 4 5 6 (PRODUCT LEVEL)	SEE PAGE
	376-6464	1	PLATE & FILM GP	
	332-0905	1	RIVET-DRIVE	
	350-8958	1	PLATE-SERIAL NUMBER (ENGINE)	

A - NOT PART OF THIS GROUP
Y - SEPARATE ILLUSTRATION

<END>

451-8343 ENGINE AR-PRIMARY

186 BRAKE KW (249 BHP) AT 2200 RPM

OPTIONAL FIELD REPLACEMENT ORDER 451-1222—PAGE: 452, 452-6584—PAGE: 462

SMCS-1000 **i07588076**

NOTE	PART NUMBER	QTY	PART NAME 1 2 3 4 5 6 (PRODUCT LEVEL)	SEE PAGE
Y	*478-4234*	1	AIR CLEANER GP	715
Y	*377-0721*	1	ALTERNATOR GP-CHARGING	799
Y	*371-2693*	1	BELT TENSIONER GP	416
Y	*392-0632*	1	BREATHER GP	611
Y	*396-2617*	1	CAMSHAFT GP	428
Y	*373-3607*	1	CONNECTION GP-WATER	650
Y	*371-2536*	1	CONTROL GP-ELECTRONIC	808
Y	*443-3790*	1	COOLER GP-ENGINE OIL	664
Y	*374-0427*	1	COVER GP-OIL FILLER	615
Y	*389-3348*	1	COVER GP-VALVE MECHANISM	440
Y	*374-6300*	1	CRANKSHAFT GP	447
Y	*390-0854*	1	CYLINDER BLOCK GP	450
Y	*385-2572*	1	CYLINDER HEAD GP	458
Y	*393-3349*	1	DRIVE GP-FAN	486
Y	*371-2694*	1	EXTENSION GP-FAN	500
Y	*375-0098*	1	FASTENER GP-DAMPER & PULLEY	505
Y	*415-5625*	1	FILM GP (ALTERNATOR) (ALTERNATOR)	862
Y	*441-1215*	1	FILTER GP-FUEL (WATER SEPARATOR)	756
Y	*448-0935*	1	LINES GP-FUEL FILTER	783
Y	*453-7163*	1	FILTER GP-FUEL	760
Y	*437-2723*	1	FLYWHEEL GP	513
Y	*439-3432*	1	GAUGE GP-OIL LEVEL (DIPSTICK)	640
Y	*437-2721*	1	HOUSING GP-FLYWHEEL	529
Y	*371-2716*	1	HOUSING GP-FRONT	530
Y	*416-8908*	1	INJECTOR GP-FUEL	766
Y	*371-2478*	1	JET GP-PISTON COOLING	543
Y	*416-2470*	1	LIFTING GP-ENGINE	546
Y	*416-7808*	1	MANIFOLD GP-EXHAUST	724
Y	*391-5523*	1	MANIFOLD GP-INLET	726
Y	*395-0112*	1	MOUNTING GP-ELECTRONIC CONTROL	819
Y	*495-6162*	1	MOUNTING GP-ENGINE	552
Y	*375-4499*	1	PAN GP-OIL	557
Y	*369-7304*	1	PISTON & ROD GP	566
Y	*378-8167*	1	PLATE & FILM GP	868
Y	*374-9295*	1	PLUG GP-CYLINDER BLOCK	591
Y	*346-2908*	1	PLUG GP-ENGINE	592
Y	*379-6629*	1	PULLEY GP-CRANKSHAFT	603
Y	*462-6685*	1	PUMP GP-ENGINE OIL	646
Y	*391-4811*	1	PUMP GP-FUEL INJECTION	790
Y	*372-2297*	1	PUMP GP-WATER	678
Y	*394-9639*	1	RAIL GP-FUEL	794
Y	*371-2480*	1	ROCKER ARM GP	606
Y	*395-0110*	1	SENSOR GP-ENGINE	820
Y	*395-0114*	1	STARTING AID GP	826
Y	*371-2541*	1	STARTING MOTOR GP-ELECTRIC	829
Y	*448-9777*	1	TURBOCHARGER GP	748
Y	*424-5516*	1	WIRING GP-ENGINE	846

451-8343 **ENGINE AR-PRIMARY (**contd.**)** **i07588076**

NOTE	PART NUMBER	QTY	PART NAME 1 2 3 4 5 6 (PRODUCT LEVEL)	SEE PAGE
	440-1796	1	ELECTRONICS GP-ENGINE RATINGS	
	376-6464	1	PLATE & FILM GP	

Y - SEPARATE ILLUSTRATION

<END>

453-7804 ENGINE AR-PRIMARY

168 BRAKE KW (225 BHP) AT 2200 RPM

FIELD REPLACEMENT ORDER 451-1222—PAGE: 452, 452-6584—PAGE: 462

SMCS-1000 **i10183889**

NOTE	PART NUMBER	QTY	PART NAME 1 2 3 4 5 6 (PRODUCT LEVEL)	SEE PAGE
Y	*374-7094*	1	COMPRESSOR & MTG GP-REFRIGERANT	429
Y	*378-0632*	1	AIR COMPRESSOR GP	412
Y	*440-6724*	1	ALTERNATOR GP-CHARGING	802
Y	*379-5585*	1	BELT TENSIONER GP	419
Y	*392-0632*	1	BREATHER GP	611
Y	*396-2617*	1	CAMSHAFT GP	428
AY	*455-4836*	1	CONFIGURATION AR-ENGINE	1
Y	*390-5130*	1	CLAMP AS-EXHAUST	717
Y	*378-8581*	1	CONNECTION GP-WATER	651
Y	*371-2536*	1	CONTROL GP-ELECTRONIC	808
Y	*378-8280*	1	COOLER GP-ENGINE OIL	661
Y	*389-3348*	1	COVER GP-VALVE MECHANISM	440
Y	*374-6300*	1	CRANKSHAFT GP	447
Y	*390-0854*	1	CYLINDER BLOCK GP	450
Y	*385-2572*	1	CYLINDER HEAD GP	458
Y	*393-2183*	1	DRIVE GP-FAN	485
Y	*371-2694*	1	EXTENSION GP-FAN	500
Y	*375-0098*	1	FASTENER GP-DAMPER & PULLEY	505
Y	*438-5978*	1	FILLER GP-ENGINE OIL	623
Y	*415-5625*	1	FILM GP (ALTERNATOR)	862
Y	*346-0220*	1	FILTER GP-ENGINE OIL	629
Y	*453-7163*	1	FILTER GP-FUEL	760
Y	*441-1215*	1	FILTER GP-FUEL (WATER SEPARATOR)	756
Y	*448-2106*	1	FITTING GP-WATER LINES	677
Y	*439-3377*	1	GAUGE GP-OIL LEVEL (DIPSTICK)	636
Y	*437-2720*	1	HOUSING GP-FLYWHEEL	527
Y	*375-4645*	1	HOUSING GP-FRONT	534
Y	*416-8908*	1	INJECTOR GP-FUEL	766
Y	*371-2478*	1	JET GP-PISTON COOLING	543
Y	*416-2470*	1	LIFTING GP-ENGINE	546
Y	*478-8524*	1	LINES GP-FUEL	775
Y	*393-7694*	1	MANIFOLD GP-EXHAUST	723
Y	*378-8582*	1	MANIFOLD GP-INLET	725
Y	*395-0112*	1	MOUNTING GP-ELECTRONIC CONTROL	819
Y	*378-0593*	1	PAN GP-OIL	560
Y	*369-7304*	1	PISTON & ROD GP	566
Y	*378-8167*	1	PLATE & FILM GP	868
Y	*635-3313*	1	PLATE GP-IDENTIFICATION	869
Y	*379-6629*	1	PULLEY GP-CRANKSHAFT	603
Y	*346-0737*	1	PUMP GP-ENGINE OIL	645
			—OR—	
Y	*462-6685*	1	PUMP GP-ENGINE OIL	646
Y	*391-4811*	1	PUMP GP-FUEL INJECTION	790
Y	*372-2297*	1	PUMP GP-WATER	678
Y	*394-9639*	1	RAIL GP-FUEL	794
Y	*371-2480*	1	ROCKER ARM GP	606
Y	*395-0110*	1	SENSOR GP-ENGINE	820
Y	*371-2733*	1	STARTING AID GP	823

453-7804 **ENGINE AR-PRIMARY (**contd.**)** **i10183889**

NOTE	PART NUMBER	QTY	PART NAME 1 2 3 4 5 6 (PRODUCT LEVEL)	SEE PAGE
Y	*378-0590*	1	STARTING MOTOR GP-ELECTRIC	831
Y	*416-6968*	1	TURBOCHARGER GP	738
Y	*371-2745*	1	VALVE GP-FLUID SAMPLING	647
Y	*424-5516*	1	WIRING GP-ENGINE	846
	448-4768	1	ELECTRONICS GP	

A - NOT PART OF THIS GROUP
Y - SEPARATE ILLUSTRATION

<END>

454-3965 ENGINE AR-PRIMARY

205 BRAKE (275 BHP) AT 2200RPM

SMCS-1000 **i07749335**

NOTE	PART NUMBER	QTY	PART NAME 1 2 3 4 5 6 (PRODUCT LEVEL)	SEE PAGE
Y	*377-0721*	1	ALTERNATOR GP-CHARGING	799
Y	*371-2693*	1	BELT TENSIONER GP	416
Y	*392-0632*	1	BREATHER GP	611
Y	*396-2617*	1	CAMSHAFT GP	428
Y	*373-3607*	1	CONNECTION GP-WATER	650
Y	*371-2536*	1	CONTROL GP-ELECTRONIC	808
Y	*378-8283*	1	COOLER GP-ENGINE OIL	662
Y	*389-3347*	1	COVER GP-VALVE MECHANISM	436
Y	*374-6300*	1	CRANKSHAFT GP	447
Y	*390-0854*	1	CYLINDER BLOCK GP	450
Y	*385-2572*	1	CYLINDER HEAD GP	458
Y	*371-2742*	1	DRAIN GP-ENGINE OIL	466
Y	*392-0468*	1	DRIVE GP-FAN	481
Y	*371-2694*	1	EXTENSION GP-FAN	500
Y	*419-6603*	1	FILLER GP-ENGINE OIL	622
Y	*415-5625*	1	FILM GP (ALTERNATOR)	862
Y	*346-0220*	1	FILTER GP-ENGINE OIL	629
Y	*426-3292*	1	FILTER GP-FUEL	753
			—OR—	
Y	*453-7163*	1	FILTER GP-FUEL	760
Y	*441-1215*	1	FILTER GP-FUEL (WATER SEPARATOR)	756
Y	*377-0692*	1	FLYWHEEL GP	511
Y	*393-3369*	1	HOUSING GP-FLYWHEEL	526
Y	*371-2716*	1	HOUSING GP-FRONT	530
Y	*416-8908*	1	INJECTOR GP-FUEL	766
Y	*371-2478*	1	JET GP-PISTON COOLING	543
Y	*371-2735*	1	LIFTING GP-ENGINE	544
Y	*426-3310*	1	LINES GP-FUEL INJECTION	787
Y	*416-7808*	1	MANIFOLD GP-EXHAUST	724
Y	*391-5523*	1	MANIFOLD GP-INLET	726
Y	*395-0112*	1	MOUNTING GP-ELECTRONIC CONTROL	819
Y	*378-0593*	1	PAN GP-OIL	560
Y	*439-3431*	1	GAUGE GP-OIL LEVEL (DIPSTICK)	639
Y	*369-7304*	1	PISTON & ROD GP	566
Y	*378-8167*	1	PLATE & FILM GP	868
Y	*374-9295*	1	PLUG GP-CYLINDER BLOCK	591
Y	*346-2908*	1	PLUG GP-ENGINE	592
Y	*375-0098*	1	FASTENER GP-DAMPER & PULLEY	505
Y	*379-6629*	1	PULLEY GP-CRANKSHAFT	603
Y	*346-0737*	1	PUMP GP-ENGINE OIL	645
			—OR—	
Y	*462-6685*	1	PUMP GP-ENGINE OIL	646
Y	*391-4811*	1	PUMP GP-FUEL INJECTION	790
Y	*372-2297*	1	PUMP GP-WATER	678
Y	*394-9639*	1	RAIL GP-FUEL	794
Y	*371-2480*	1	ROCKER ARM GP	606
Y	*395-0110*	1	SENSOR GP-ENGINE	820
Y	*395-0114*	1	STARTING AID GP	826

454-3965 **ENGINE AR-PRIMARY (**contd.**)** **i07749335**

NOTE	PART NUMBER	QTY	PART NAME 1 2 3 4 5 6 (PRODUCT LEVEL)	SEE PAGE
Y	*371-2541*	1	STARTING MOTOR GP-ELECTRIC	829
Y	*448-9777*	1	TURBOCHARGER GP	748
Y	*371-2745*	1	VALVE GP-FLUID SAMPLING	647
Y	*424-5516*	1	WIRING GP-ENGINE	846
	449-3320	1	ELECTRONICS GP-ENGINE	
			FOR GASKET KIT INFORMATION, PLEASE REFERENCE THE KIT INFORMATION IN SIS OR CONTACT YOUR LOCAL DEALER	

Y - SEPARATE ILLUSTRATION

<END>

455-9383 ENGINE AR-PRIMARY

186 BRAKE KW (249BHP) AT 2200 RPM

FIELD REPLACEMENT ORDER 451-1222—PAGE: 452, 452-6584—PAGE: 462

SMCS-1000 **i10340156**

NOTE	PART NUMBER	QTY	PART NAME 1 2 3 4 5 6 (PRODUCT LEVEL)	SEE PAGE
Y	*375-5006*	1	AIR CLEANER GP	713
			—OR—	
Y	*467-1940*	1	AIR CLEANER GP	714
			—OR—	
Y	*478-4234*	1	AIR CLEANER GP	715
Y	*378-0630*	1	AIR COMPRESSOR GP	410
Y	*377-0721*	1	ALTERNATOR GP-CHARGING	799
Y	*371-2693*	1	BELT TENSIONER GP	416
Y	*392-0632*	1	BREATHER GP	611
Y	*396-2617*	1	CAMSHAFT GP	428
AY	*461-3814*	1	CONFIGURATION AR-ENGINE	1
Y	*373-3607*	1	CONNECTION GP-WATER	650
Y	*448-9710*	1	CONNECTOR GP-CAB HEATER LINES	652
Y	*371-2536*	1	CONTROL GP-ELECTRONIC	808
Y	*378-8280*	1	COOLER GP-ENGINE OIL	661
Y	*389-3347*	1	COVER GP-VALVE MECHANISM	436
Y	*374-6300*	1	CRANKSHAFT GP	447
Y	*390-0854*	1	CYLINDER BLOCK GP	450
Y	*385-2572*	1	CYLINDER HEAD GP	458
Y	*393-2180*	1	DRIVE GP-FAN	484
Y	*375-8320*	1	EXTENSION GP-FAN	501
Y	*375-4574*	1	FAN GP	669
Y	*375-0098*	1	FASTENER GP-DAMPER & PULLEY	505
Y	*390-3737*	1	FILLER GP-ENGINE OIL	620
Y	*415-5625*	1	FILM GP (ALTERNATOR)	862
Y	*611-2653*	1	FILM GP (RADIATOR)	865
Y	*346-0220*	1	FILTER GP-ENGINE OIL	629
Y	*441-1215*	1	FILTER GP-FUEL (WATER SEPARATOR)	756
Y	*426-3296*	1	FILTER GP-FUEL	754
			—OR—	
Y	*453-7163*	1	FILTER GP-FUEL	760
Y	*346-0769*	1	FLANGE GP-EXHAUST	719
Y	*345-9037*	1	FLYWHEEL GP	510
Y	*439-3432*	1	GAUGE GP-OIL LEVEL (DIPSTICK)	640
Y	*357-1915*	1	HOUSING GP-FLYWHEEL	521
Y	*448-9719*	1	HOUSING GP-FRONT	538
Y	*416-8908*	1	INJECTOR GP-FUEL	766
Y	*371-2478*	1	JET GP-PISTON COOLING	543
Y	*416-2470*	1	LIFTING GP-ENGINE	546
Y	*448-0935*	1	LINES GP-FUEL FILTER	783
Y	*416-7808*	1	MANIFOLD GP-EXHAUST	724
Y	*391-5523*	1	MANIFOLD GP-INLET	726
Y	*346-1512*	1	MOUNTING GP-ACCESSORY MODULE	855
Y	*395-0112*	1	MOUNTING GP-ELECTRONIC CONTROL	819
Y	*375-4499*	1	PAN GP-OIL	557
Y	*369-7304*	1	PISTON & ROD GP	566
Y	*378-8167*	1	PLATE & FILM GP	868

455-9383 **ENGINE AR-PRIMARY (**contd.**)** **i10340156**

NOTE	PART NUMBER	QTY	PART NAME 1 2 3 4 5 6 (PRODUCT LEVEL)	SEE PAGE
Y	*635-3313*	1	PLATE GP-IDENTIFICATION	869
Y	*440-0026*	1	PLUG GP-OIL FILTER MOUNTING	644
Y	*379-6629*	1	PULLEY GP-CRANKSHAFT	603
Y	*462-6685*	1	PUMP GP-ENGINE OIL	646
Y	*391-4811*	1	PUMP GP-FUEL INJECTION	790
Y	*372-2297*	1	PUMP GP-WATER	678
Y	*452-5153*	1	RADIATOR GP	686
Y	*394-9639*	1	RAIL GP-FUEL	794
Y	*371-2480*	1	ROCKER ARM GP	606
Y	*395-0110*	1	SENSOR GP-ENGINE	820
Y	*395-0114*	1	STARTING AID GP	826
Y	*378-0590*	1	STARTING MOTOR GP-ELECTRIC	831
Y	*416-6971*	1	TURBOCHARGER GP	741
Y	*424-5516*	1	WIRING GP-ENGINE	846
	440-1796	1	ELECTRONICS GP-ENGINE RATINGS	
	376-6464	1	PLATE & FILM GP	
			SOFTWARE MUST BE PROCURED LOCALLY FROM YOUR CAT DEALER	

A - NOT PART OF THIS GROUP
Y - SEPARATE ILLUSTRATION

<END>

456-7962 ENGINE AR-PRIMARY

168 BRAKE KW (225 BHP) AT 2200 RPM

FIELD REPLACEMENT ORDER 614-9555—PAGE: 384

OPTIONAL FIELD REPLACEMENT ORDER 451-1222—PAGE: 452, 452-6584—PAGE: 462

SMCS-1000 **i10573622**

NOTE	PART NUMBER	QTY	PART NAME 1 2 3 4 5 6 (PRODUCT LEVEL)	SEE PAGE
Y	*375-5006*	1	AIR CLEANER GP	713
			—OR—	
Y	*467-1940*	1	AIR CLEANER GP	714
			—OR—	
Y	*478-4234*	1	AIR CLEANER GP	715
Y	*377-0721*	1	ALTERNATOR GP-CHARGING	799
Y	*371-2693*	1	BELT TENSIONER GP	416
Y	*425-0196*	1	BREATHER GP (CRANKCASE)	612
Y	*396-2617*	1	CAMSHAFT GP	428
Y	*390-5132*	1	CLAMP AS-EXHAUST	718
			—OR—	
Y	*346-0769*	1	FLANGE GP-EXHAUST	719
AY	*461-5828*	1	CONFIGURATION AR-ENGINE	1
Y	*373-3607*	1	CONNECTION GP-WATER	650
Y	*371-2536*	1	CONTROL GP-ELECTRONIC	808
Y	*378-8276*	1	COOLER GP-ENGINE OIL	659
Y	*389-3346*	1	COVER GP-VALVE MECHANISM	435
Y	*374-6300*	1	CRANKSHAFT GP	447
Y	*390-0854*	1	CYLINDER BLOCK GP	450
Y	*385-2572*	1	CYLINDER HEAD GP	458
Y	*393-2180*	1	DRIVE GP-FAN	484
Y	*375-8320*	1	EXTENSION GP-FAN	501
Y	*375-4574*	1	FAN GP	669
Y	*375-0098*	1	FASTENER GP-DAMPER & PULLEY	505
Y	*390-3737*	1	FILLER GP-ENGINE OIL	620
Y	*415-5625*	1	FILM GP (ALTERNATOR)	862
Y	*611-2653*	1	FILM GP (RADIATOR)	865
Y	*346-0220*	1	FILTER GP-ENGINE OIL	629
Y	*441-1215*	1	FILTER GP-FUEL (WATER SEPARATOR)	756
Y	*425-0197*	1	FILTER GP-FUMES DISPOSAL	630
Y	*426-3292*	1	FILTER GP-FUEL	753
			—OR—	
Y	*453-7163*	1	FILTER GP-FUEL	760
Y	*345-9037*	1	FLYWHEEL GP	510
Y	*439-3432*	1	GAUGE GP-OIL LEVEL (DIPSTICK)	640
Y	*393-3369*	1	HOUSING GP-FLYWHEEL	526
Y	*375-5838*	1	HOUSING GP-FRONT	536
Y	*416-8908*	1	INJECTOR GP-FUEL	766
Y	*371-2478*	1	JET GP-PISTON COOLING	543
Y	*416-2470*	1	LIFTING GP-ENGINE	546
Y	*426-3310*	1	LINES GP-FUEL INJECTION	787
Y	*416-7808*	1	MANIFOLD GP-EXHAUST	724
Y	*391-5523*	1	MANIFOLD GP-INLET	726
Y	*346-1512*	1	MOUNTING GP-ACCESSORY MODULE	855
Y	*395-0112*	1	MOUNTING GP-ELECTRONIC CONTROL	819
Y	*375-4499*	1	PAN GP-OIL	557

456-7962 **ENGINE AR-PRIMARY (**contd.**)** **i10573622**

NOTE	PART NUMBER	QTY	PART NAME 1 2 3 4 5 6 (PRODUCT LEVEL)	SEE PAGE
Y	*369-7304*	1	PISTON & ROD GP	566
Y	*376-6464*	1	PLATE & FILM GP	867
Y	*378-8167*	1	PLATE & FILM GP (EMISSION)	868
Y	*635-3313*	1	PLATE GP-IDENTIFICATION (TURBOCHARGER)	869
Y	*346-2908*	1	PLUG GP-ENGINE	592
Y	*440-0026*	1	PLUG GP-OIL FILTER MOUNTING	644
Y	*379-6629*	1	PULLEY GP-CRANKSHAFT	603
Y	*391-4811*	1	PUMP GP-FUEL INJECTION	790
Y	*372-2297*	1	PUMP GP-WATER	678
Y	*346-0737*	1	PUMP GP-ENGINE OIL	645
			—OR—	
Y	*462-6685*	1	PUMP GP-ENGINE OIL	646
Y	*452-5153*	1	RADIATOR GP	686
Y	*394-9639*	1	RAIL GP-FUEL	794
Y	*371-2480*	1	ROCKER ARM GP	606
Y	*395-0110*	1	SENSOR GP-ENGINE	820
Y	*395-0114*	1	STARTING AID GP	826
Y	*385-8000*	1	STARTING MOTOR GP-ELECTRIC	832
Y	*371-2719*	1	SUPPORT GP-POWER TAKE-OFF	608
Y	*416-6971*	1	TURBOCHARGER GP	741
Y	*424-5516*	1	WIRING GP-ENGINE	846
	448-4768	1	ELECTRONICS GP	
			SOFTWARE MUST BE PROCURED LOCALLY FROM YOUR CAT DEALER	

A - NOT PART OF THIS GROUP
Y - SEPARATE ILLUSTRATION

<END>

461-4638 ENGINE AR-PRIMARY

117 BRAKE KW (156 BHP) AT 2200 RPM

OPTIONAL FIELD REPLACEMENT ORDER 451-1222—PAGE: 452, 452-6584—PAGE: 462

SMCS-1000 **i10085992**

NOTE	PART NUMBER	QTY	PART NAME 1 2 3 4 5 6 (PRODUCT LEVEL)	SEE PAGE
Y	*478-4234*	1	AIR CLEANER GP	715
Y	*377-0720*	1	ALTERNATOR GP-CHARGING	798
Y	*371-2693*	1	BELT TENSIONER GP	416
Y	*425-0196*	1	BREATHER GP (CRANKCASE)	612
Y	*396-2615*	1	CAMSHAFT GP	427
AY	*468-0462*	1	CONFIGURATION AR-ENGINE	3
Y	*373-3607*	1	CONNECTION GP-WATER	650
Y	*371-2536*	1	CONTROL GP-ELECTRONIC	808
Y	*346-0091*	1	COOLER GP-ENGINE OIL	657
Y	*389-3346*	1	COVER GP-VALVE MECHANISM	435
Y	*374-6300*	1	CRANKSHAFT GP	447
Y	*390-0854*	1	CYLINDER BLOCK GP	450
Y	*385-2572*	1	CYLINDER HEAD GP	458
Y	*393-2180*	1	DRIVE GP-FAN	484
Y	*375-8320*	1	EXTENSION GP-FAN	501
Y	*454-5203*	1	FAN GP	674
Y	*375-0098*	1	FASTENER GP-DAMPER & PULLEY	505
Y	*390-3737*	1	FILLER GP-ENGINE OIL	620
Y	*611-2653*	1	FILM GP (RADIATOR)	865
Y	*415-5625*	1	FILM GP (ALTERNATOR)	862
Y	*423-8803*	1	FILM GP (STARTING MOTOR)	863
Y	*346-0220*	1	FILTER GP-ENGINE OIL	629
Y	*441-1215*	1	FILTER GP-FUEL (WATER SEPARATOR)	756
Y	*453-7163*	1	FILTER GP-FUEL	760
Y	*425-0197*	1	FILTER GP-FUMES DISPOSAL	630
Y	*346-0769*	1	FLANGE GP-EXHAUST	719
Y	*345-8902*	1	FLYWHEEL GP	507
Y	*439-3432*	1	GAUGE GP-OIL LEVEL (DIPSTICK)	640
Y	*345-8838*	1	HOUSING GP-FLYWHEEL	517
Y	*375-5838*	1	HOUSING GP-FRONT	536
Y	*371-2483*	1	INJECTOR GP-FUEL	763
Y	*371-2478*	1	JET GP-PISTON COOLING	543
Y	*416-2470*	1	LIFTING GP-ENGINE	546
Y	*426-3310*	1	LINES GP-FUEL INJECTION	787
Y	*416-7808*	1	MANIFOLD GP-EXHAUST	724
Y	*391-5523*	1	MANIFOLD GP-INLET	726
Y	*346-1528*	1	MOUNTING GP-ACCESSORY MODULE	856
Y	*395-0112*	1	MOUNTING GP-ELECTRONIC CONTROL	819
Y	*375-4499*	1	PAN GP-OIL	557
Y	*374-6301*	1	PISTON & ROD GP	576
Y	*378-8167*	1	PLATE & FILM GP	868
Y	*346-2908*	1	PLUG GP-ENGINE	592
Y	*440-0026*	1	PLUG GP-OIL FILTER MOUNTING	644
Y	*379-6629*	1	PULLEY GP-CRANKSHAFT	603
Y	*462-6685*	1	PUMP GP-ENGINE OIL	646
Y	*391-4811*	1	PUMP GP-FUEL INJECTION	790
Y	*372-2297*	1	PUMP GP-WATER	678
Y	*454-6966*	1	RADIATOR GP	

461-4638 **ENGINE AR-PRIMARY (**contd.**)** **i10085992**

NOTE	PART NUMBER	QTY	PART NAME 1 2 3 4 5 6 (PRODUCT LEVEL)	SEE PAGE
Y	*394-9639*	1	RAIL GP-FUEL	794
Y	*371-2480*	1	ROCKER ARM GP	606
Y	*395-0110*	1	SENSOR GP-ENGINE	820
Y	*380-9279*	1	STARTING AID GP	824
Y	*415-4870*	1	STARTING MOTOR GP-ELECTRIC	837
Y	*371-2719*	1	SUPPORT GP-POWER TAKE-OFF	608
Y	*375-5002*	1	TURBOCHARGER GP	732
Y	*424-5516*	1	WIRING GP-ENGINE	846
	376-6464	1	PLATE & FILM GP	
			SOFTWARE MUST BE PROCURED LOCALLY FROM YOUR CAT DEALER	

A - NOT PART OF THIS GROUP
Y - SEPARATE ILLUSTRATION

<END>

461-4640 ENGINE AR-PRIMARY

117 BRAKE KW (156 BHP) AT 2200 RPM

OPTIONAL FIELD REPLACEMENT ORDER 451-1222—PAGE: 452, 452-6584—PAGE: 462

PART OF 468-2471 ENGINE AR-COMPLETE

SMCS-1000 **i08714228**

NOTE	PART NUMBER	QTY	PART NAME 1 2 3 4 5 6 (PRODUCT LEVEL)	SEE PAGE
Y	*467-1940*	1	AIR CLEANER GP	714
Y	*377-0721*	1	ALTERNATOR GP-CHARGING	799
Y	*371-2693*	1	BELT TENSIONER GP	416
Y	*425-0196*	1	BREATHER GP (CRANKCASE)	612
Y	*396-2615*	1	CAMSHAFT GP	427
Y	*373-3607*	1	CONNECTION GP-WATER	650
Y	*371-2536*	1	CONTROL GP-ELECTRONIC	808
Y	*346-0091*	1	COOLER GP-ENGINE OIL	657
Y	*389-3346*	1	COVER GP-VALVE MECHANISM	435
Y	*374-6300*	1	CRANKSHAFT GP	447
Y	*390-0854*	1	CYLINDER BLOCK GP	450
Y	*385-2572*	1	CYLINDER HEAD GP	458
Y	*393-2180*	1	DRIVE GP-FAN	484
Y	*375-8320*	1	EXTENSION GP-FAN	501
Y	*454-5203*	1	FAN GP	674
Y	*375-0098*	1	FASTENER GP-DAMPER & PULLEY	505
Y	*390-3737*	1	FILLER GP-ENGINE OIL	620
Y	*415-5625*	1	FILM GP (ALTERNATOR)	862
Y	*423-8803*	1	FILM GP (STARTING MOTOR) (STARTING MOTOR)	863
Y	*611-2653*	1	FILM GP (RADIATOR)	865
Y	*346-0220*	1	FILTER GP-ENGINE OIL	629
Y	*441-1215*	1	FILTER GP-FUEL (WATER SEPARATOR)	756
Y	*453-7163*	1	FILTER GP-FUEL	760
Y	*425-0197*	1	FILTER GP-FUMES DISPOSAL	630
Y	*346-0769*	1	FLANGE GP-EXHAUST	719
Y	*345-8902*	1	FLYWHEEL GP	507
Y	*439-3432*	1	GAUGE GP-OIL LEVEL (DIPSTICK)	640
Y	*345-8838*	1	HOUSING GP-FLYWHEEL	517
Y	*375-5838*	1	HOUSING GP-FRONT	536
Y	*371-2483*	1	INJECTOR GP-FUEL	763
Y	*371-2478*	1	JET GP-PISTON COOLING	543
Y	*416-2470*	1	LIFTING GP-ENGINE	546
Y	*426-3310*	1	LINES GP-FUEL INJECTION	787
Y	*416-7808*	1	MANIFOLD GP-EXHAUST	724
Y	*391-5523*	1	MANIFOLD GP-INLET	726
Y	*346-1528*	1	MOUNTING GP-ACCESSORY MODULE	856
Y	*395-0112*	1	MOUNTING GP-ELECTRONIC CONTROL	819
Y	*375-4499*	1	PAN GP-OIL	557
Y	*374-6301*	1	PISTON & ROD GP	576
Y	*378-8167*	1	PLATE & FILM GP	868
Y	*346-2908*	1	PLUG GP-ENGINE	592
Y	*440-0026*	1	PLUG GP-OIL FILTER MOUNTING	644
Y	*379-6629*	1	PULLEY GP-CRANKSHAFT	603
Y	*462-6685*	1	PUMP GP-ENGINE OIL	646
Y	*391-4811*	1	PUMP GP-FUEL INJECTION	790
Y	*372-2297*	1	PUMP GP-WATER	678
Y	*454-6966*	1	RADIATOR GP	

461-4640 **ENGINE AR-PRIMARY (**contd.**)** **i08714228**

NOTE	PART NUMBER	QTY	PART NAME 1 2 3 4 5 6 (PRODUCT LEVEL)	SEE PAGE
Y	*394-9639*	1	RAIL GP-FUEL	794
Y	*371-2480*	1	ROCKER ARM GP	606
Y	*395-0110*	1	SENSOR GP-ENGINE	820
Y	*395-0114*	1	STARTING AID GP	826
Y	*392-2020*	1	STARTING MOTOR GP-ELECTRIC	835
Y	*371-2719*	1	SUPPORT GP-POWER TAKE-OFF	608
Y	*375-5002*	1	TURBOCHARGER GP	732
Y	*424-5516*	1	WIRING GP-ENGINE	846
	464-0722	1	ELECTRONICS GP-ENGINE	

Y - SEPARATE ILLUSTRATION

<END>

461-4643 ENGINE AR-PRIMARY

129 BRAKE KW (173 BHP)@ 2500-RPM

FIELD REPLACEMENT ORDER 596-2071—PAGE: 37, 627-8129—PAGE: 396

OPTIONAL FIELD REPLACEMENT ORDER 451-1222—PAGE: 452, 452-6584—PAGE: 462

SMCS-1000 **i09796420**

NOTE	PART NUMBER	QTY	PART NAME 1 2 3 4 5 6 (PRODUCT LEVEL)	SEE PAGE
Y	*478-4234*	1	AIR CLEANER GP	715
Y	*377-0720*	1	ALTERNATOR GP-CHARGING	798
Y	*371-2693*	1	BELT TENSIONER GP	416
Y	*425-0196*	1	BREATHER GP (CRANKCASE)	612
Y	*396-2615*	1	CAMSHAFT GP	427
AY	*468-0460*	1	CONFIGURATION AR-ENGINE	3
Y	*373-3607*	1	CONNECTION GP-WATER	650
Y	*371-2536*	1	CONTROL GP-ELECTRONIC	808
Y	*346-0091*	1	COOLER GP-ENGINE OIL	657
Y	*389-3346*	1	COVER GP-VALVE MECHANISM	435
Y	*374-6300*	1	CRANKSHAFT GP	447
Y	*390-0854*	1	CYLINDER BLOCK GP	450
Y	*385-2572*	1	CYLINDER HEAD GP	458
Y	*393-2180*	1	DRIVE GP-FAN	484
Y	*375-8320*	1	EXTENSION GP-FAN	501
Y	*454-5203*	1	FAN GP	674
Y	*375-0098*	1	FASTENER GP-DAMPER & PULLEY	505
Y	*390-3737*	1	FILLER GP-ENGINE OIL	620
Y	*415-5625*	1	FILM GP (ALTERNATOR)	862
Y	*423-8803*	1	FILM GP (STARTING MOTOR)	863
Y	*611-2653*	1	FILM GP (RADIATOR)	865
Y	*346-0220*	1	FILTER GP-ENGINE OIL	629
Y	*441-1215*	1	FILTER GP-FUEL (WATER SEPARATOR)	756
Y	*453-7163*	1	FILTER GP-FUEL	760
Y	*425-0197*	1	FILTER GP-FUMES DISPOSAL	630
Y	*346-0769*	1	FLANGE GP-EXHAUST	719
Y	*345-8902*	1	FLYWHEEL GP	507
Y	*439-3432*	1	GAUGE GP-OIL LEVEL (DIPSTICK)	640
Y	*345-8838*	1	HOUSING GP-FLYWHEEL	517
Y	*375-5838*	1	HOUSING GP-FRONT	536
Y	*371-2483*	1	INJECTOR GP-FUEL	763
Y	*371-2478*	1	JET GP-PISTON COOLING	543
Y	*416-2470*	1	LIFTING GP-ENGINE	546
Y	*426-3310*	1	LINES GP-FUEL INJECTION	787
Y	*416-7808*	1	MANIFOLD GP-EXHAUST	724
Y	*391-5523*	1	MANIFOLD GP-INLET	726
Y	*346-1528*	1	MOUNTING GP-ACCESSORY MODULE	856
Y	*395-0112*	1	MOUNTING GP-ELECTRONIC CONTROL	819
Y	*375-4499*	1	PAN GP-OIL	557
Y	*374-6301*	1	PISTON & ROD GP	576
Y	*378-8167*	1	PLATE & FILM GP	868
Y	*346-2908*	1	PLUG GP-ENGINE	592
Y	*440-0026*	1	PLUG GP-OIL FILTER MOUNTING	644
Y	*379-6629*	1	PULLEY GP-CRANKSHAFT	603
Y	*462-6685*	1	PUMP GP-ENGINE OIL	646
Y	*391-4811*	1	PUMP GP-FUEL INJECTION	790
Y	*372-2297*	1	PUMP GP-WATER	678

461-4643 **ENGINE AR-PRIMARY (**contd.**)** **i09796420**

NOTE	PART NUMBER	QTY	PART NAME 1 2 3 4 5 6 (PRODUCT LEVEL)	SEE PAGE
Y	*454-6966*	1	RADIATOR GP	
Y	*394-9639*	1	RAIL GP-FUEL	794
Y	*371-2480*	1	ROCKER ARM GP	606
Y	*395-0110*	1	SENSOR GP-ENGINE	820
Y	*380-9279*	1	STARTING AID GP	824
Y	*415-4870*	1	STARTING MOTOR GP-ELECTRIC	837
Y	*371-2719*	1	SUPPORT GP-POWER TAKE-OFF	608
Y	*375-5002*	1	TURBOCHARGER GP	732
Y	*424-5516*	1	WIRING GP-ENGINE	846
	464-0721	1	ELECTRONICS GP-ENGINE	

A - NOT PART OF THIS GROUP
Y - SEPARATE ILLUSTRATION

<END>

461-4644 ENGINE AR-PRIMARY

129 BRAKE KW (173 BHP) AT 2500 RPM

PART OF 468-3189 ENGINE AR-COMPLETE

SMCS-1000 **i10092194**

NOTE	PART NUMBER	QTY	PART NAME 1 2 3 4 5 6 (PRODUCT LEVEL)	SEE PAGE
Y	*467-1940*	1	AIR CLEANER GP	714
			—OR—	
Y	*478-4234*	1	AIR CLEANER GP	715
Y	*377-0721*	1	ALTERNATOR GP-CHARGING	799
Y	*371-2693*	1	BELT TENSIONER GP	416
Y	*425-0196*	1	BREATHER GP (CRANKCASE)	612
Y	*396-2615*	1	CAMSHAFT GP	427
Y	*373-3607*	1	CONNECTION GP-WATER	650
Y	*371-2536*	1	CONTROL GP-ELECTRONIC	808
Y	*346-0091*	1	COOLER GP-ENGINE OIL	657
Y	*389-3346*	1	COVER GP-VALVE MECHANISM	435
Y	*374-6300*	1	CRANKSHAFT GP	447
Y	*390-0854*	1	CYLINDER BLOCK GP	450
Y	*385-2572*	1	CYLINDER HEAD GP	458
Y	*393-2180*	1	DRIVE GP-FAN	484
Y	*375-8320*	1	EXTENSION GP-FAN	501
Y	*454-5203*	1	FAN GP	674
Y	*390-3737*	1	FILLER GP-ENGINE OIL	620
Y	*425-0197*	1	FILTER GP-FUMES DISPOSAL	630
Y	*415-5625*	1	FILM GP (ALTERNATOR)	862
Y	*611-2653*	1	FILM GP (RADIATOR)	865
Y	*423-8803*	1	FILM GP (STARTING MOTOR)	863
Y	*346-0220*	1	FILTER GP-ENGINE OIL	629
Y	*441-1215*	1	FILTER GP-FUEL (WATER SEPARATOR)	756
Y	*453-7163*	1	FILTER GP-FUEL	760
Y	*346-0769*	1	FLANGE GP-EXHAUST	719
Y	*345-8902*	1	FLYWHEEL GP	507
Y	*439-3432*	1	GAUGE GP-OIL LEVEL (DIPSTICK)	640
Y	*345-8838*	1	HOUSING GP-FLYWHEEL	517
Y	*375-5838*	1	HOUSING GP-FRONT	536
Y	*371-2483*	1	INJECTOR GP-FUEL	763
Y	*371-2478*	1	JET GP-PISTON COOLING	543
Y	*416-2470*	1	LIFTING GP-ENGINE	546
Y	*426-3310*	1	LINES GP-FUEL INJECTION	787
Y	*416-7808*	1	MANIFOLD GP-EXHAUST	724
Y	*391-5523*	1	MANIFOLD GP-INLET	726
Y	*346-1528*	1	MOUNTING GP-ACCESSORY MODULE	856
Y	*395-0112*	1	MOUNTING GP-ELECTRONIC CONTROL	819
Y	*375-4499*	1	PAN GP-OIL	557
Y	*374-6301*	1	PISTON & ROD GP	576
Y	*378-8167*	1	PLATE & FILM GP	868
Y	*346-2908*	1	PLUG GP-ENGINE	592
Y	*440-0026*	1	PLUG GP-OIL FILTER MOUNTING	644
Y	*375-0098*	1	FASTENER GP-DAMPER & PULLEY	505
Y	*379-6629*	1	PULLEY GP-CRANKSHAFT	603
Y	*462-6685*	1	PUMP GP-ENGINE OIL	646
Y	*391-4811*	1	PUMP GP-FUEL INJECTION	790
Y	*372-2297*	1	PUMP GP-WATER	678

461-4644 **ENGINE AR-PRIMARY (**contd.**)** **i10092194**

NOTE	PART NUMBER	QTY	PART NAME 1 2 3 4 5 6 (PRODUCT LEVEL)	SEE PAGE
Y	*454-6966*	1	RADIATOR GP	
Y	*394-9639*	1	RAIL GP-FUEL	794
Y	*371-2480*	1	ROCKER ARM GP	606
Y	*395-0110*	1	SENSOR GP-ENGINE	820
Y	*395-0114*	1	STARTING AID GP	826
Y	*392-2020*	1	STARTING MOTOR GP-ELECTRIC	835
Y	*371-2719*	1	SUPPORT GP-POWER TAKE-OFF	608
Y	*375-5002*	1	TURBOCHARGER GP	732
Y	*424-5516*	1	WIRING GP-ENGINE	846
	376-6464	1	PLATE & FILM GP	
	630-0387	1	FILM-IDENTIFICATION (QR CODE)	
			SOFTWARE MUST BE PROCURED LOCALLY FROM YOUR CAT DEALER	

Y - SEPARATE ILLUSTRATION

<END>

461-4645 ENGINE AR-PRIMARY

151 BRAKE KW (202 BHP) AT 2200 RPM

FIELD REPLACEMENT ORDER 451-1222—PAGE: 452, 452-6584—PAGE: 462, 612-1735—PAGE: 378

SMCS-1000 **i08714030**

NOTE	PART NUMBER	QTY	PART NAME 1 2 3 4 5 6 (PRODUCT LEVEL)	SEE PAGE
Y	*375-5006*	1	AIR CLEANER GP	713
			—OR—	
Y	*467-1940*	1	AIR CLEANER GP	714
			—OR—	
Y	*478-4234*	1	AIR CLEANER GP	715
Y	*377-0720*	1	ALTERNATOR GP-CHARGING	798
Y	*371-2693*	1	BELT TENSIONER GP	416
Y	*425-0196*	1	BREATHER GP (CRANKCASE)	612
Y	*396-2615*	1	CAMSHAFT GP	427
Y	*373-3607*	1	CONNECTION GP-WATER	650
Y	*371-2536*	1	CONTROL GP-ELECTRONIC	808
Y	*346-0091*	1	COOLER GP-ENGINE OIL	657
Y	*389-3346*	1	COVER GP-VALVE MECHANISM	435
Y	*374-6300*	1	CRANKSHAFT GP	447
Y	*390-0854*	1	CYLINDER BLOCK GP	450
Y	*385-2572*	1	CYLINDER HEAD GP	458
Y	*393-2180*	1	DRIVE GP-FAN	484
Y	*375-8320*	1	EXTENSION GP-FAN	501
Y	*454-5203*	1	FAN GP	674
Y	*375-0098*	1	FASTENER GP-DAMPER & PULLEY	505
Y	*390-3737*	1	FILLER GP-ENGINE OIL	620
Y	*425-0197*	1	FILTER GP-FUMES DISPOSAL	630
Y	*415-5625*	1	FILM GP (ALTERNATOR)	862
Y	*423-8803*	1	FILM GP (STARTING MOTOR) (STARTING MOTOR)	863
Y	*611-2653*	1	FILM GP (RADIATOR)	865
Y	*346-0220*	1	FILTER GP-ENGINE OIL	629
Y	*441-1215*	1	FILTER GP-FUEL (WATER SEPARATOR)	756
Y	*453-7163*	1	FILTER GP-FUEL	760
Y	*346-0769*	1	FLANGE GP-EXHAUST	719
Y	*345-8902*	1	FLYWHEEL GP	507
Y	*439-3432*	1	GAUGE GP-OIL LEVEL (DIPSTICK)	640
Y	*345-8838*	1	HOUSING GP-FLYWHEEL	517
Y	*375-5838*	1	HOUSING GP-FRONT	536
Y	*371-2483*	1	INJECTOR GP-FUEL	763
Y	*371-2478*	1	JET GP-PISTON COOLING	543
Y	*416-2470*	1	LIFTING GP-ENGINE	546
Y	*426-3310*	1	LINES GP-FUEL INJECTION	787
Y	*416-7808*	1	MANIFOLD GP-EXHAUST	724
Y	*391-5523*	1	MANIFOLD GP-INLET	726
Y	*346-1528*	1	MOUNTING GP-ACCESSORY MODULE	856
Y	*395-0112*	1	MOUNTING GP-ELECTRONIC CONTROL	819
Y	*375-4499*	1	PAN GP-OIL	557
Y	*374-6301*	1	PISTON & ROD GP	576
Y	*378-8167*	1	PLATE & FILM GP	868
Y	*346-2908*	1	PLUG GP-ENGINE	592
Y	*440-0026*	1	PLUG GP-OIL FILTER MOUNTING	644
Y	*379-6629*	1	PULLEY GP-CRANKSHAFT	603

461-4645 **ENGINE AR-PRIMARY (**contd.**)** **i08714030**

NOTE	PART NUMBER	QTY	PART NAME 1 2 3 4 5 6 (PRODUCT LEVEL)	SEE PAGE
Y	*462-6685*	1	PUMP GP-ENGINE OIL	646
Y	*391-4811*	1	PUMP GP-FUEL INJECTION	790
Y	*372-2297*	1	PUMP GP-WATER	678
Y	*454-6966*	1	RADIATOR GP	
Y	*394-9639*	1	RAIL GP-FUEL	794
Y	*371-2480*	1	ROCKER ARM GP	606
Y	*395-0110*	1	SENSOR GP-ENGINE	820
Y	*380-9279*	1	STARTING AID GP	824
Y	*415-4870*	1	STARTING MOTOR GP-ELECTRIC	837
Y	*371-2719*	1	SUPPORT GP-POWER TAKE-OFF	608
Y	*375-5002*	1	TURBOCHARGER GP	732
Y	*424-5516*	1	WIRING GP-ENGINE	846
	453-1370	1	ELECTRONICS GP-ENGINE	

Y - SEPARATE ILLUSTRATION

<END>

461-4648 ENGINE AR-PRIMARY

151 BRAKE KW (203 BHP) AT 2200 RPM

OPTIONAL FIELD REPLACEMENT ORDER 451-1222—PAGE: 452, 452-6584—PAGE: 462

SMCS-1000 **i09041117**

NOTE	PART NUMBER	QTY	PART NAME 1 2 3 4 5 6 (PRODUCT LEVEL)	SEE PAGE
Y	*478-4234*	1	AIR CLEANER GP	715
Y	*377-0721*	1	ALTERNATOR GP-CHARGING	799
Y	*371-2693*	1	BELT TENSIONER GP	416
Y	*425-0196*	1	BREATHER GP (CRANKCASE)	612
Y	*396-2615*	1	CAMSHAFT GP	427
AY	*468-5349*	1	CONFIGURATION AR-ENGINE	4
Y	*373-3607*	1	CONNECTION GP-WATER	650
Y	*371-2536*	1	CONTROL GP-ELECTRONIC	808
Y	*346-0091*	1	COOLER GP-ENGINE OIL	657
Y	*389-3346*	1	COVER GP-VALVE MECHANISM	435
Y	*374-6300*	1	CRANKSHAFT GP	447
Y	*390-0854*	1	CYLINDER BLOCK GP	450
Y	*385-2572*	1	CYLINDER HEAD GP	458
Y	*393-2180*	1	DRIVE GP-FAN	484
Y	*375-8320*	1	EXTENSION GP-FAN	501
Y	*454-5203*	1	FAN GP	674
Y	*375-0098*	1	FASTENER GP-DAMPER & PULLEY	505
Y	*390-3737*	1	FILLER GP-ENGINE OIL	620
Y	*415-5625*	1	FILM GP (ALTERNATOR)	862
Y	*611-2653*	1	FILM GP (RADIATOR)	865
Y	*423-8803*	1	FILM GP (STARTING MOTOR)	863
Y	*346-0220*	1	FILTER GP-ENGINE OIL	629
Y	*441-1215*	1	FILTER GP-FUEL (WATER SEPARATOR)	756
Y	*453-7163*	1	FILTER GP-FUEL	760
Y	*425-0197*	1	FILTER GP-FUMES DISPOSAL	630
Y	*346-0769*	1	FLANGE GP-EXHAUST	719
Y	*345-8902*	1	FLYWHEEL GP	507
Y	*439-3432*	1	GAUGE GP-OIL LEVEL (DIPSTICK)	640
Y	*345-8838*	1	HOUSING GP-FLYWHEEL	517
Y	*375-5838*	1	HOUSING GP-FRONT	536
Y	*371-2483*	1	INJECTOR GP-FUEL	763
Y	*371-2478*	1	JET GP-PISTON COOLING	543
Y	*416-2470*	1	LIFTING GP-ENGINE	546
Y	*426-3310*	1	LINES GP-FUEL INJECTION	787
Y	*416-7808*	1	MANIFOLD GP-EXHAUST	724
Y	*391-5523*	1	MANIFOLD GP-INLET	726
Y	*346-1528*	1	MOUNTING GP-ACCESSORY MODULE	856
Y	*395-0112*	1	MOUNTING GP-ELECTRONIC CONTROL	819
Y	*375-4499*	1	PAN GP-OIL	557
Y	*374-6301*	1	PISTON & ROD GP	576
Y	*378-8167*	1	PLATE & FILM GP	868
Y	*346-2908*	1	PLUG GP-ENGINE	592
Y	*440-0026*	1	PLUG GP-OIL FILTER MOUNTING	644
Y	*379-6629*	1	PULLEY GP-CRANKSHAFT	603
Y	*462-6685*	1	PUMP GP-ENGINE OIL	646
Y	*391-4811*	1	PUMP GP-FUEL INJECTION	790
Y	*372-2297*	1	PUMP GP-WATER	678
Y	*454-6966*	1	RADIATOR GP	

461-4648 **ENGINE AR-PRIMARY (**contd.**)** **i09041117**

NOTE	PART NUMBER	QTY	PART NAME 1 2 3 4 5 6 (PRODUCT LEVEL)	SEE PAGE
Y	*394-9639*	1	RAIL GP-FUEL	794
Y	*371-2480*	1	ROCKER ARM GP	606
Y	*395-0110*	1	SENSOR GP-ENGINE	820
Y	*395-0114*	1	STARTING AID GP	826
Y	*392-2020*	1	STARTING MOTOR GP-ELECTRIC	835
Y	*371-2719*	1	SUPPORT GP-POWER TAKE-OFF	608
Y	*375-5002*	1	TURBOCHARGER GP	732
Y	*424-5516*	1	WIRING GP-ENGINE	846
	453-1370	1	ELECTRONICS GP-ENGINE	
	376-6464	1	PLATE & FILM GP	

A - NOT PART OF THIS GROUP
Y - SEPARATE ILLUSTRATION

<END>

461-4649 ENGINE AR-PRIMARY

151 BRAKE KW (203 BHP) AT 2200 RPM

OPTIONAL FIELD REPLACEMENT ORDER 451-1222—PAGE: 452, 452-6584—PAGE: 462

SMCS-1000 **i08714206**

NOTE	PART NUMBER	QTY	PART NAME 1 2 3 4 5 6 (PRODUCT LEVEL)	SEE PAGE
Y	*478-4234*	1	AIR CLEANER GP	715
Y	*377-0720*	1	ALTERNATOR GP-CHARGING	798
Y	*371-2693*	1	BELT TENSIONER GP	416
Y	*425-0196*	1	BREATHER GP (CRANKCASE)	612
Y	*396-2615*	1	CAMSHAFT GP	427
AY	*468-3190*	1	CONFIGURATION AR-ENGINE	3
Y	*373-3607*	1	CONNECTION GP-WATER	650
Y	*371-2536*	1	CONTROL GP-ELECTRONIC	808
Y	*346-0091*	1	COOLER GP-ENGINE OIL	657
Y	*389-3346*	1	COVER GP-VALVE MECHANISM	435
Y	*374-6300*	1	CRANKSHAFT GP	447
Y	*390-0854*	1	CYLINDER BLOCK GP	450
Y	*385-2572*	1	CYLINDER HEAD GP	458
Y	*393-2180*	1	DRIVE GP-FAN	484
Y	*375-8320*	1	EXTENSION GP-FAN	501
Y	*454-5203*	1	FAN GP	674
Y	*375-0098*	1	FASTENER GP-DAMPER & PULLEY	505
Y	*390-3737*	1	FILLER GP-ENGINE OIL	620
Y	*415-5625*	1	FILM GP (ALTERNATOR)	862
Y	*423-8803*	1	FILM GP (STARTING MOTOR)	863
Y	*611-2653*	1	FILM GP (RADIATOR)	865
Y	*346-0220*	1	FILTER GP-ENGINE OIL	629
Y	*441-1215*	1	FILTER GP-FUEL (WATER SEPARATOR)	756
Y	*453-7163*	1	FILTER GP-FUEL	760
Y	*425-0197*	1	FILTER GP-FUMES DISPOSAL	630
Y	*346-0769*	1	FLANGE GP-EXHAUST	719
Y	*345-9037*	1	FLYWHEEL GP	510
Y	*439-3432*	1	GAUGE GP-OIL LEVEL (DIPSTICK) (ENGINE)	640
Y	*393-3369*	1	HOUSING GP-FLYWHEEL	526
Y	*375-5838*	1	HOUSING GP-FRONT	536
Y	*371-2483*	1	INJECTOR GP-FUEL	763
Y	*371-2478*	1	JET GP-PISTON COOLING	543
Y	*416-2470*	1	LIFTING GP-ENGINE	546
Y	*426-3310*	1	LINES GP-FUEL INJECTION	787
Y	*416-7808*	1	MANIFOLD GP-EXHAUST	724
Y	*391-5523*	1	MANIFOLD GP-INLET	726
Y	*346-1512*	1	MOUNTING GP-ACCESSORY MODULE	855
Y	*395-0112*	1	MOUNTING GP-ELECTRONIC CONTROL	819
Y	*375-4499*	1	PAN GP-OIL	557
Y	*374-6301*	1	PISTON & ROD GP	576
Y	*378-8167*	1	PLATE & FILM GP	868
Y	*346-2908*	1	PLUG GP-ENGINE	592
Y	*440-0026*	1	PLUG GP-OIL FILTER MOUNTING	644
Y	*379-6629*	1	PULLEY GP-CRANKSHAFT	603
Y	*462-6685*	1	PUMP GP-ENGINE OIL	646
Y	*391-4811*	1	PUMP GP-FUEL INJECTION	790
Y	*372-2297*	1	PUMP GP-WATER	678
Y	*454-6966*	1	RADIATOR GP	

461-4649 **ENGINE AR-PRIMARY (**contd.**)** **i08714206**

NOTE	PART NUMBER	QTY	PART NAME 1 2 3 4 5 6 (PRODUCT LEVEL)	SEE PAGE
Y	*394-9639*	1	RAIL GP-FUEL	794
Y	*371-2480*	1	ROCKER ARM GP	606
Y	*395-0110*	1	SENSOR GP-ENGINE	820
Y	*380-9279*	1	STARTING AID GP	824
Y	*378-0589*	1	STARTING MOTOR GP-ELECTRIC	830
Y	*371-2719*	1	SUPPORT GP-POWER TAKE-OFF	608
Y	*375-5002*	1	TURBOCHARGER GP	732
Y	*424-5516*	1	WIRING GP-ENGINE	846
	453-1370	1	ELECTRONICS GP-ENGINE	
	376-6464	1	PLATE & FILM GP	

A - NOT PART OF THIS GROUP
Y - SEPARATE ILLUSTRATION

<END>

461-4650 ENGINE AR-PRIMARY

151 BRAKE KW (203 BHP) AT 2200 RPM

PART OF 461-9682 ENGINE AR-COMPLETE

SMCS-1000 **i08714102**

NOTE	PART NUMBER	QTY	PART NAME 1 2 3 4 5 6 (PRODUCT LEVEL)	SEE PAGE
Y	*467-1940*	1	AIR CLEANER GP	714
			—OR—	
Y	*478-4234*	1	AIR CLEANER GP	715
Y	*377-0721*	1	ALTERNATOR GP-CHARGING	799
Y	*371-2693*	1	BELT TENSIONER GP	416
Y	*425-0196*	1	BREATHER GP (CRANKCASE)	612
Y	*396-2615*	1	CAMSHAFT GP	427
Y	*373-3607*	1	CONNECTION GP-WATER	650
Y	*371-2536*	1	CONTROL GP-ELECTRONIC	808
Y	*346-0091*	1	COOLER GP-ENGINE OIL	657
Y	*389-3346*	1	COVER GP-VALVE MECHANISM	435
Y	*374-6300*	1	CRANKSHAFT GP	447
Y	*390-0854*	1	CYLINDER BLOCK GP	450
Y	*385-2572*	1	CYLINDER HEAD GP	458
Y	*393-2180*	1	DRIVE GP-FAN	484
Y	*375-8320*	1	EXTENSION GP-FAN	501
Y	*454-5203*	1	FAN GP	674
Y	*375-0098*	1	FASTENER GP-DAMPER & PULLEY	505
Y	*390-3737*	1	FILLER GP-ENGINE OIL	620
Y	*425-0197*	1	FILTER GP-FUMES DISPOSAL	630
Y	*415-5625*	1	FILM GP (ALTERNATOR)	862
Y	*611-2653*	1	FILM GP (RADIATOR)	865
Y	*346-0220*	1	FILTER GP-ENGINE OIL	629
Y	*441-1215*	1	FILTER GP-FUEL (WATER SEPARATOR)	756
Y	*453-7163*	1	FILTER GP-FUEL	760
Y	*346-0769*	1	FLANGE GP-EXHAUST	719
Y	*345-9037*	1	FLYWHEEL GP	510
Y	*439-3432*	1	GAUGE GP-OIL LEVEL (DIPSTICK)	640
Y	*393-3369*	1	HOUSING GP-FLYWHEEL	526
Y	*375-5838*	1	HOUSING GP-FRONT	536
Y	*371-2483*	1	INJECTOR GP-FUEL	763
Y	*371-2478*	1	JET GP-PISTON COOLING	543
Y	*416-2470*	1	LIFTING GP-ENGINE	546
Y	*426-3310*	1	LINES GP-FUEL INJECTION	787
Y	*416-7808*	1	MANIFOLD GP-EXHAUST	724
Y	*391-5523*	1	MANIFOLD GP-INLET	726
Y	*346-1512*	1	MOUNTING GP-ACCESSORY MODULE	855
Y	*395-0112*	1	MOUNTING GP-ELECTRONIC CONTROL	819
Y	*375-4499*	1	PAN GP-OIL	557
Y	*374-6301*	1	PISTON & ROD GP	576
Y	*378-8167*	1	PLATE & FILM GP	868
Y	*346-2908*	1	PLUG GP-ENGINE	592
Y	*440-0026*	1	PLUG GP-OIL FILTER MOUNTING	644
Y	*379-6629*	1	PULLEY GP-CRANKSHAFT	603
Y	*462-6685*	1	PUMP GP-ENGINE OIL	646
Y	*391-4811*	1	PUMP GP-FUEL INJECTION	790
Y	*372-2297*	1	PUMP GP-WATER	678
Y	*454-6966*	1	RADIATOR GP	

461-4650 **ENGINE AR-PRIMARY (**contd.**)** **i08714102**

NOTE	PART NUMBER	QTY	PART NAME 1 2 3 4 5 6 (PRODUCT LEVEL)	SEE PAGE
Y	*394-9639*	1	RAIL GP-FUEL	794
Y	*371-2480*	1	ROCKER ARM GP	606
Y	*395-0110*	1	SENSOR GP-ENGINE	820
Y	*395-0114*	1	STARTING AID GP	826
Y	*385-8000*	1	STARTING MOTOR GP-ELECTRIC	832
Y	*371-2719*	1	SUPPORT GP-POWER TAKE-OFF	608
Y	*375-5002*	1	TURBOCHARGER GP	732
Y	*424-5516*	1	WIRING GP-ENGINE	846
	453-1370	1	ELECTRONICS GP-ENGINE	

Y - SEPARATE ILLUSTRATION

<END>

461-4651 ENGINE AR-PRIMARY

168 BRAKE KW (225 BHP) AT 2200 RPM

PART OF 462-8110 ENGINE AR-COMPLETE

SMCS-1000 **i10340103**

NOTE	PART NUMBER	QTY	PART NAME 1 2 3 4 5 6 (PRODUCT LEVEL)	SEE PAGE
Y	*375-5006*	1	AIR CLEANER GP	713
			—OR—	
Y	*467-1940*	1	AIR CLEANER GP	714
			—OR—	
Y	*478-4234*	1	AIR CLEANER GP	715
Y	*377-0720*	1	ALTERNATOR GP-CHARGING	798
Y	*371-2693*	1	BELT TENSIONER GP	416
Y	*425-0196*	1	BREATHER GP (CRANKCASE)	612
Y	*396-2617*	1	CAMSHAFT GP	428
Y	*373-3607*	1	CONNECTION GP-WATER	650
Y	*371-2536*	1	CONTROL GP-ELECTRONIC	808
Y	*378-8276*	1	COOLER GP-ENGINE OIL	659
Y	*389-3346*	1	COVER GP-VALVE MECHANISM	435
Y	*374-6300*	1	CRANKSHAFT GP	447
Y	*390-0854*	1	CYLINDER BLOCK GP	450
Y	*385-2572*	1	CYLINDER HEAD GP	458
Y	*393-2180*	1	DRIVE GP-FAN	484
Y	*375-8320*	1	EXTENSION GP-FAN	501
Y	*454-5203*	1	FAN GP	674
			—OR—	
Y	*378-0627*	1	FAN GP	670
Y	*390-3737*	1	FILLER GP-ENGINE OIL	620
Y	*425-0197*	1	FILTER GP-FUMES DISPOSAL	630
Y	*415-5625*	1	FILM GP (ALTERNATOR)	862
Y	*423-8803*	1	FILM GP (STARTING MOTOR)	863
Y	*611-2653*	1	FILM GP (RADIATOR)	865
Y	*346-0220*	1	FILTER GP-ENGINE OIL	629
Y	*441-1215*	1	FILTER GP-FUEL (WATER SEPARATOR)	756
Y	*453-7163*	1	FILTER GP-FUEL	760
Y	*346-0769*	1	FLANGE GP-EXHAUST	719
Y	*345-8902*	1	FLYWHEEL GP	507
Y	*439-3432*	1	GAUGE GP-OIL LEVEL (DIPSTICK)	640
Y	*345-8838*	1	HOUSING GP-FLYWHEEL	517
Y	*375-5838*	1	HOUSING GP-FRONT	536
Y	*416-8908*	1	INJECTOR GP-FUEL	766
Y	*371-2478*	1	JET GP-PISTON COOLING	543
Y	*416-2470*	1	LIFTING GP-ENGINE	546
Y	*426-3310*	1	LINES GP-FUEL INJECTION	787
Y	*416-7808*	1	MANIFOLD GP-EXHAUST	724
Y	*391-5523*	1	MANIFOLD GP-INLET	726
Y	*346-1528*	1	MOUNTING GP-ACCESSORY MODULE	856
Y	*395-0112*	1	MOUNTING GP-ELECTRONIC CONTROL	819
Y	*375-4499*	1	PAN GP-OIL	557
Y	*369-7304*	1	PISTON & ROD GP	566
Y	*378-8167*	1	PLATE & FILM GP	868
Y	*635-3313*	1	PLATE GP-IDENTIFICATION	869
Y	*346-2908*	1	PLUG GP-ENGINE	592

461-4651 **ENGINE AR-PRIMARY (**contd.**)** **i10340103**

NOTE	PART NUMBER	QTY	PART NAME 1 2 3 4 5 6 (PRODUCT LEVEL)	SEE PAGE
Y	*440-0026*	1	PLUG GP-OIL FILTER MOUNTING	644
Y	*375-0098*	1	FASTENER GP-DAMPER & PULLEY	505
Y	*379-6629*	1	PULLEY GP-CRANKSHAFT	603
Y	*462-6685*	1	PUMP GP-ENGINE OIL	646
Y	*391-4811*	1	PUMP GP-FUEL INJECTION	790
Y	*372-2297*	1	PUMP GP-WATER	678
Y	*452-5153*	1	RADIATOR GP	686
Y	*394-9639*	1	RAIL GP-FUEL	794
Y	*371-2480*	1	ROCKER ARM GP	606
Y	*395-0110*	1	SENSOR GP-ENGINE	820
Y	*380-9279*	1	STARTING AID GP	824
Y	*415-4870*	1	STARTING MOTOR GP-ELECTRIC	837
Y	*371-2719*	1	SUPPORT GP-POWER TAKE-OFF	608
Y	*416-6971*	1	TURBOCHARGER GP	741
Y	*424-5516*	1	WIRING GP-ENGINE	846
	448-4768	1	ELECTRONICS GP	
			SOFTWARE MUST BE PROCURED LOCALLY FROM YOUR CAT DEALER	

Y - SEPARATE ILLUSTRATION

<END>

461-4652 ENGINE AR-PRIMARY

168 BRAKE KW (225 BHP) AT2200 RPM

OPTIONAL FIELD REPLACEMENT ORDER 451-1222—PAGE: 452, 452-6584—PAGE: 462

PART OF 468-7019 ENGINE AR-COMPLETE

SMCS-1000 **i10262622**

NOTE	PART NUMBER	QTY	PART NAME 1 2 3 4 5 6 (PRODUCT LEVEL)	SEE PAGE
Y	*467-1940*	1	AIR CLEANER GP	714
			—OR—	
Y	*478-4234*	1	AIR CLEANER GP	715
Y	*377-0721*	1	ALTERNATOR GP-CHARGING	799
Y	*371-2693*	1	BELT TENSIONER GP	416
Y	*425-0196*	1	BREATHER GP (CRANKCASE)	612
Y	*396-2617*	1	CAMSHAFT GP	428
Y	*373-3607*	1	CONNECTION GP-WATER	650
Y	*371-2536*	1	CONTROL GP-ELECTRONIC	808
Y	*378-8276*	1	COOLER GP-ENGINE OIL	659
Y	*389-3346*	1	COVER GP-VALVE MECHANISM	435
Y	*374-6300*	1	CRANKSHAFT GP	447
Y	*390-0854*	1	CYLINDER BLOCK GP	450
Y	*385-2572*	1	CYLINDER HEAD GP	458
Y	*393-2180*	1	DRIVE GP-FAN	484
Y	*375-8320*	1	EXTENSION GP-FAN	501
Y	*378-0627*	1	FAN GP	670
Y	*375-0098*	1	FASTENER GP-DAMPER & PULLEY	505
Y	*390-3737*	1	FILLER GP-ENGINE OIL	620
Y	*415-5625*	1	FILM GP (ALTERNATOR)	862
Y	*611-2653*	1	FILM GP (RADIATOR)	865
Y	*423-8803*	1	FILM GP (STARTING MOTOR)	863
Y	*346-0220*	1	FILTER GP-ENGINE OIL	629
Y	*441-1215*	1	FILTER GP-FUEL (WATER SEPARATOR)	756
Y	*453-7163*	1	FILTER GP-FUEL	760
Y	*425-0197*	1	FILTER GP-FUMES DISPOSAL	630
Y	*346-0769*	1	FLANGE GP-EXHAUST	719
Y	*345-8902*	1	FLYWHEEL GP	507
Y	*439-3432*	1	GAUGE GP-OIL LEVEL (DIPSTICK)	640
Y	*345-8838*	1	HOUSING GP-FLYWHEEL	517
Y	*375-5838*	1	HOUSING GP-FRONT	536
Y	*416-8908*	1	INJECTOR GP-FUEL	766
Y	*371-2478*	1	JET GP-PISTON COOLING	543
Y	*416-2470*	1	LIFTING GP-ENGINE	546
Y	*426-3310*	1	LINES GP-FUEL INJECTION	787
Y	*416-7808*	1	MANIFOLD GP-EXHAUST	724
Y	*391-5523*	1	MANIFOLD GP-INLET	726
Y	*346-1528*	1	MOUNTING GP-ACCESSORY MODULE	856
Y	*395-0112*	1	MOUNTING GP-ELECTRONIC CONTROL	819
Y	*375-4499*	1	PAN GP-OIL	557
Y	*369-7304*	1	PISTON & ROD GP	566
Y	*378-8167*	1	PLATE & FILM GP	868
Y	*346-2908*	1	PLUG GP-ENGINE	592
Y	*440-0026*	1	PLUG GP-OIL FILTER MOUNTING	644
Y	*379-6629*	1	PULLEY GP-CRANKSHAFT	603
Y	*462-6685*	1	PUMP GP-ENGINE OIL	646
Y	*391-4811*	1	PUMP GP-FUEL INJECTION	790

461-4652 **ENGINE AR-PRIMARY (**contd.**)** **i10262622**

NOTE	PART NUMBER	QTY	PART NAME 1 2 3 4 5 6 (PRODUCT LEVEL)	SEE PAGE
Y	*372-2297*	1	PUMP GP-WATER	678
Y	*452-5153*	1	RADIATOR GP	686
Y	*394-9639*	1	RAIL GP-FUEL	794
Y	*371-2480*	1	ROCKER ARM GP	606
Y	*395-0110*	1	SENSOR GP-ENGINE	820
Y	*395-0114*	1	STARTING AID GP	826
Y	*392-2020*	1	STARTING MOTOR GP-ELECTRIC	835
Y	*371-2719*	1	SUPPORT GP-POWER TAKE-OFF	608
Y	*416-6971*	1	TURBOCHARGER GP	741
Y	*424-5516*	1	WIRING GP-ENGINE	846
	448-4768	1	ELECTRONICS GP	
	635-3313	1	PLATE GP-IDENTIFICATION	
			SOFTWARE MUST BE PROCURED LOCALLY FROM YOUR CAT DEALER	

Y - SEPARATE ILLUSTRATION

<END>

461-4653 ENGINE AR-PRIMARY

168 BRAKE KW (225 BHP) AT 2200 RPM

FIELD REPLACEMENT ORDER 451-1222—PAGE: 452, 452-6584—PAGE: 462

SMCS-1000 **i08705366**

NOTE	PART NUMBER	QTY	PART NAME 1 2 3 4 5 6 (PRODUCT LEVEL)	SEE PAGE
Y	*375-5006*	1	AIR CLEANER GP	713
			—OR—	
Y	*467-1940*	1	AIR CLEANER GP	714
			—OR—	
Y	*478-4234*	1	AIR CLEANER GP	715
Y	*377-0720*	1	ALTERNATOR GP-CHARGING	798
Y	*371-2693*	1	BELT TENSIONER GP	416
Y	*425-0196*	1	BREATHER GP (CRANKCASE)	612
Y	*396-2617*	1	CAMSHAFT GP	428
Y	*373-3607*	1	CONNECTION GP-WATER	650
Y	*371-2536*	1	CONTROL GP-ELECTRONIC	808
Y	*378-8276*	1	COOLER GP-ENGINE OIL	659
Y	*389-3346*	1	COVER GP-VALVE MECHANISM	435
Y	*374-6300*	1	CRANKSHAFT GP	447
Y	*390-0854*	1	CYLINDER BLOCK GP	450
Y	*385-2572*	1	CYLINDER HEAD GP	458
Y	*393-2180*	1	DRIVE GP-FAN	484
Y	*375-8320*	1	EXTENSION GP-FAN	501
Y	*454-5203*	1	FAN GP	674
			—OR—	
Y	*378-0627*	1	FAN GP	670
Y	*375-0098*	1	FASTENER GP-DAMPER & PULLEY	505
Y	*390-3737*	1	FILLER GP-ENGINE OIL	620
Y	*425-0197*	1	FILTER GP-FUMES DISPOSAL	630
Y	*415-5625*	1	FILM GP (ALTERNATOR) (ALTERNATOR)	862
Y	*611-2653*	1	FILM GP (RADIATOR)	865
Y	*423-8803*	1	FILM GP (STARTING MOTOR) (STARTING MOTOR)	863
Y	*346-0220*	1	FILTER GP-ENGINE OIL	629
Y	*441-1215*	1	FILTER GP-FUEL (WATER SEPARATOR)	756
Y	*453-7163*	1	FILTER GP-FUEL	760
Y	*346-0769*	1	FLANGE GP-EXHAUST	719
Y	*345-9037*	1	FLYWHEEL GP	510
Y	*439-3432*	1	GAUGE GP-OIL LEVEL (DIPSTICK)	640
Y	*393-3369*	1	HOUSING GP-FLYWHEEL	526
Y	*375-5838*	1	HOUSING GP-FRONT	536
Y	*416-8908*	1	INJECTOR GP-FUEL	766
Y	*371-2478*	1	JET GP-PISTON COOLING	543
Y	*416-2470*	1	LIFTING GP-ENGINE	546
Y	*426-3310*	1	LINES GP-FUEL INJECTION	787
Y	*416-7808*	1	MANIFOLD GP-EXHAUST	724
Y	*391-5523*	1	MANIFOLD GP-INLET	726
Y	*346-1512*	1	MOUNTING GP-ACCESSORY MODULE	855
Y	*395-0112*	1	MOUNTING GP-ELECTRONIC CONTROL	819
Y	*375-4499*	1	PAN GP-OIL	557
Y	*369-7304*	1	PISTON & ROD GP	566
Y	*378-8167*	1	PLATE & FILM GP	868
Y	*346-2908*	1	PLUG GP-ENGINE	592

461-4653 **ENGINE AR-PRIMARY (**contd.**)** **i08705366**

NOTE	PART NUMBER	QTY	PART NAME 1 2 3 4 5 6 (PRODUCT LEVEL)	SEE PAGE
Y	*440-0026*	1	PLUG GP-OIL FILTER MOUNTING	644
Y	*379-6629*	1	PULLEY GP-CRANKSHAFT	603
Y	*462-6685*	1	PUMP GP-ENGINE OIL	646
Y	*391-4811*	1	PUMP GP-FUEL INJECTION	790
Y	*372-2297*	1	PUMP GP-WATER	678
Y	*452-5153*	1	RADIATOR GP	686
Y	*394-9639*	1	RAIL GP-FUEL	794
Y	*371-2480*	1	ROCKER ARM GP	606
Y	*395-0110*	1	SENSOR GP-ENGINE	820
Y	*380-9279*	1	STARTING AID GP	824
Y	*378-0589*	1	STARTING MOTOR GP-ELECTRIC	830
Y	*371-2719*	1	SUPPORT GP-POWER TAKE-OFF	608
Y	*416-6971*	1	TURBOCHARGER GP	741
Y	*424-5516*	1	WIRING GP-ENGINE	846
	448-4768	1	ELECTRONICS GP	
	376-6464	1	PLATE & FILM GP	

Y - SEPARATE ILLUSTRATION

<END>

461-4655 ENGINE AR-PRIMARY

168 BRAKE KW (225 BHP) AT 2200 RPM

OPTIONAL FIELD REPLACEMENT ORDER 451-1222—PAGE: 452, 452-6584—PAGE: 462

SMCS-1000 **i10262613**

NOTE	PART NUMBER	QTY	PART NAME 1 2 3 4 5 6 (PRODUCT LEVEL)	SEE PAGE
Y	*467-1940*	1	AIR CLEANER GP	714
			—OR—	
Y	*478-4234*	1	AIR CLEANER GP	715
Y	*377-0721*	1	ALTERNATOR GP-CHARGING	799
Y	*371-2693*	1	BELT TENSIONER GP	416
Y	*425-0196*	1	BREATHER GP (CRANKCASE)	612
Y	*396-2617*	1	CAMSHAFT GP	428
AY	*467-9808*	1	CONFIGURATION AR-ENGINE	2
Y	*373-3607*	1	CONNECTION GP-WATER	650
Y	*371-2536*	1	CONTROL GP-ELECTRONIC	808
Y	*378-8276*	1	COOLER GP-ENGINE OIL	659
Y	*389-3346*	1	COVER GP-VALVE MECHANISM	435
Y	*374-6300*	1	CRANKSHAFT GP	447
Y	*390-0854*	1	CYLINDER BLOCK GP	450
Y	*385-2572*	1	CYLINDER HEAD GP	458
Y	*393-2180*	1	DRIVE GP-FAN	484
Y	*375-8320*	1	EXTENSION GP-FAN	501
Y	*378-0627*	1	FAN GP	670
Y	*375-0098*	1	FASTENER GP-DAMPER & PULLEY	505
Y	*390-3737*	1	FILLER GP-ENGINE OIL	620
Y	*415-5625*	1	FILM GP (ALTERNATOR)	862
Y	*611-2653*	1	FILM GP (RADIATOR)	865
Y	*346-0220*	1	FILTER GP-ENGINE OIL	629
Y	*441-1215*	1	FILTER GP-FUEL (WATER SEPARATOR)	756
Y	*453-7163*	1	FILTER GP-FUEL	760
Y	*425-0197*	1	FILTER GP-FUMES DISPOSAL	630
Y	*346-0769*	1	FLANGE GP-EXHAUST	719
Y	*345-9037*	1	FLYWHEEL GP	510
Y	*439-3432*	1	GAUGE GP-OIL LEVEL (DIPSTICK)	640
Y	*393-3369*	1	HOUSING GP-FLYWHEEL	526
Y	*375-5838*	1	HOUSING GP-FRONT	536
Y	*416-8908*	1	INJECTOR GP-FUEL	766
Y	*371-2478*	1	JET GP-PISTON COOLING	543
Y	*416-2470*	1	LIFTING GP-ENGINE	546
Y	*426-3310*	1	LINES GP-FUEL INJECTION	787
Y	*416-7808*	1	MANIFOLD GP-EXHAUST	724
Y	*391-5523*	1	MANIFOLD GP-INLET	726
Y	*346-1512*	1	MOUNTING GP-ACCESSORY MODULE	855
Y	*395-0112*	1	MOUNTING GP-ELECTRONIC CONTROL	819
Y	*375-4499*	1	PAN GP-OIL	557
Y	*369-7304*	1	PISTON & ROD GP	566
Y	*378-8167*	1	PLATE & FILM GP	868
Y	*346-2908*	1	PLUG GP-ENGINE	592
Y	*440-0026*	1	PLUG GP-OIL FILTER MOUNTING	644
Y	*379-6629*	1	PULLEY GP-CRANKSHAFT	603
Y	*462-6685*	1	PUMP GP-ENGINE OIL	646
Y	*391-4811*	1	PUMP GP-FUEL INJECTION	790
Y	*372-2297*	1	PUMP GP-WATER	678

461-4655 **ENGINE AR-PRIMARY (**contd.**)** **i10262613**

NOTE	PART NUMBER	QTY	PART NAME 1 2 3 4 5 6 (PRODUCT LEVEL)	SEE PAGE
Y	*452-5153*	1	RADIATOR GP	686
Y	*394-9639*	1	RAIL GP-FUEL	794
Y	*371-2480*	1	ROCKER ARM GP	606
Y	*395-0110*	1	SENSOR GP-ENGINE	820
Y	*395-0114*	1	STARTING AID GP	826
Y	*385-8000*	1	STARTING MOTOR GP-ELECTRIC	832
Y	*371-2719*	1	SUPPORT GP-POWER TAKE-OFF	608
Y	*416-6971*	1	TURBOCHARGER GP	741
Y	*424-5516*	1	WIRING GP-ENGINE	846
	448-4768	1	ELECTRONICS GP	
	376-6464	1	PLATE & FILM GP	
	635-3313	1	PLATE GP-IDENTIFICATION	
			SOFTWARE MUST BE PROCURED LOCALLY FROM YOUR CAT DEALER	

A - NOT PART OF THIS GROUP
Y - SEPARATE ILLUSTRATION

<END>

461-4656 ENGINE AR-PRIMARY

186 BRAKE KW (249 BHP) AT 2200-RPM

PART OF 468-4398 ENGINE AR-COMPLETE

SMCS-1000 **i10235238**

NOTE	PART NUMBER	QTY	PART NAME 1 2 3 4 5 6 (PRODUCT LEVEL)	SEE PAGE
Y	*467-1940*	1	AIR CLEANER GP	714
			—OR—	
Y	*478-4234*	1	AIR CLEANER GP	715
Y	*377-0720*	1	ALTERNATOR GP-CHARGING	798
Y	*371-2693*	1	BELT TENSIONER GP	416
Y	*425-0196*	1	BREATHER GP (CRANKCASE)	612
Y	*396-2617*	1	CAMSHAFT GP	428
Y	*373-3607*	1	CONNECTION GP-WATER	650
Y	*371-2536*	1	CONTROL GP-ELECTRONIC	808
Y	*378-8276*	1	COOLER GP-ENGINE OIL	659
Y	*389-3346*	1	COVER GP-VALVE MECHANISM	435
Y	*374-6300*	1	CRANKSHAFT GP	447
Y	*390-0854*	1	CYLINDER BLOCK GP	450
Y	*385-2572*	1	CYLINDER HEAD GP	458
Y	*393-2180*	1	DRIVE GP-FAN	484
Y	*375-8320*	1	EXTENSION GP-FAN	501
Y	*378-0627*	1	FAN GP	670
Y	*375-0098*	1	FASTENER GP-DAMPER & PULLEY	505
Y	*390-3737*	1	FILLER GP-ENGINE OIL	620
Y	*425-0197*	1	FILTER GP-FUMES DISPOSAL	630
Y	*415-5625*	1	FILM GP (ALTERNATOR)	862
Y	*423-8803*	1	FILM GP (STARTING MOTOR)	863
Y	*611-2653*	1	FILM GP (RADIATOR)	865
Y	*346-0220*	1	FILTER GP-ENGINE OIL	629
Y	*441-1215*	1	FILTER GP-FUEL (WATER SEPARATOR)	756
Y	*453-7163*	1	FILTER GP-FUEL	760
Y	*346-0769*	1	FLANGE GP-EXHAUST	719
Y	*345-9037*	1	FLYWHEEL GP	510
Y	*439-3432*	1	GAUGE GP-OIL LEVEL (DIPSTICK)	640
Y	*393-3369*	1	HOUSING GP-FLYWHEEL	526
Y	*375-5838*	1	HOUSING GP-FRONT	536
Y	*416-8908*	1	INJECTOR GP-FUEL	766
Y	*371-2478*	1	JET GP-PISTON COOLING	543
Y	*416-2470*	1	LIFTING GP-ENGINE	546
Y	*426-3310*	1	LINES GP-FUEL INJECTION	787
Y	*416-7808*	1	MANIFOLD GP-EXHAUST	724
Y	*391-5523*	1	MANIFOLD GP-INLET	726
Y	*346-1512*	1	MOUNTING GP-ACCESSORY MODULE	855
Y	*395-0112*	1	MOUNTING GP-ELECTRONIC CONTROL	819
Y	*375-4499*	1	PAN GP-OIL	557
Y	*369-7304*	1	PISTON & ROD GP	566
Y	*378-8167*	1	PLATE & FILM GP	868
Y	*346-2908*	1	PLUG GP-ENGINE	592
Y	*440-0026*	1	PLUG GP-OIL FILTER MOUNTING	644
Y	*379-6629*	1	PULLEY GP-CRANKSHAFT	603
Y	*462-6685*	1	PUMP GP-ENGINE OIL	646
Y	*391-4811*	1	PUMP GP-FUEL INJECTION	790
Y	*372-2297*	1	PUMP GP-WATER	678

461-4656 **ENGINE AR-PRIMARY (**contd.**)** **i10235238**

NOTE	PART NUMBER	QTY	PART NAME 1 2 3 4 5 6 (PRODUCT LEVEL)	SEE PAGE
Y	*452-5153*	1	RADIATOR GP	686
Y	*394-9639*	1	RAIL GP-FUEL	794
Y	*371-2480*	1	ROCKER ARM GP	606
Y	*395-0110*	1	SENSOR GP-ENGINE	820
Y	*380-9279*	1	STARTING AID GP	824
Y	*378-0589*	1	STARTING MOTOR GP-ELECTRIC	830
Y	*371-2719*	1	SUPPORT GP-POWER TAKE-OFF	608
Y	*416-6971*	1	TURBOCHARGER GP	741
Y	*424-5516*	1	WIRING GP-ENGINE	846
	440-1796	1	ELECTRONICS GP-ENGINE RATINGS	
	376-6464	1	PLATE & FILM GP	
	630-0387	1	FILM-IDENTIFICATION (QR CODE)	
	635-3313	1	PLATE GP-IDENTIFICATION	
	549-5430	1	PLATE-IDENTIFICATION (CAT)	
			SOFTWARE MUST BE PROCURED LOCALLY FROM YOUR CAT DEALER	

Y - SEPARATE ILLUSTRATION

<END>

461-4657 ENGINE AR-PRIMARY

186 BRAKE KW (249 BHP) AT 2200 RPM

FIELD REPLACEMENT ORDER 451-1222—PAGE: 452, 452-6584—PAGE: 462

SMCS-1000 **i08714100**

NOTE	PART NUMBER	QTY	PART NAME 1 2 3 4 5 6 (PRODUCT LEVEL)	SEE PAGE
Y	*375-5006*	1	AIR CLEANER GP	713
			—OR—	
Y	*467-1940*	1	AIR CLEANER GP	714
			—OR—	
Y	*478-4234*	1	AIR CLEANER GP	715
Y	*377-0721*	1	ALTERNATOR GP-CHARGING	799
Y	*371-2693*	1	BELT TENSIONER GP	416
Y	*425-0196*	1	BREATHER GP (CRANKCASE)	612
Y	*396-2617*	1	CAMSHAFT GP	428
Y	*373-3607*	1	CONNECTION GP-WATER	650
Y	*371-2536*	1	CONTROL GP-ELECTRONIC	808
Y	*378-8276*	1	COOLER GP-ENGINE OIL	659
Y	*389-3346*	1	COVER GP-VALVE MECHANISM	435
Y	*374-6300*	1	CRANKSHAFT GP	447
Y	*390-0854*	1	CYLINDER BLOCK GP	450
Y	*385-2572*	1	CYLINDER HEAD GP	458
Y	*393-2180*	1	DRIVE GP-FAN	484
Y	*375-8320*	1	EXTENSION GP-FAN	501
Y	*454-5203*	1	FAN GP	674
			—OR—	
Y	*378-0627*	1	FAN GP	670
Y	*375-0098*	1	FASTENER GP-DAMPER & PULLEY	505
Y	*425-0197*	1	FILTER GP-FUMES DISPOSAL	630
Y	*390-3737*	1	FILLER GP-ENGINE OIL	620
Y	*415-5625*	1	FILM GP (ALTERNATOR)	862
Y	*611-2653*	1	FILM GP (RADIATOR)	865
Y	*346-0220*	1	FILTER GP-ENGINE OIL	629
Y	*453-7163*	1	FILTER GP-FUEL	760
Y	*441-1215*	1	FILTER GP-FUEL (WATER SEPARATOR)	756
Y	*346-0769*	1	FLANGE GP-EXHAUST	719
Y	*345-9037*	1	FLYWHEEL GP	510
Y	*439-3432*	1	GAUGE GP-OIL LEVEL (DIPSTICK)	640
Y	*393-3369*	1	HOUSING GP-FLYWHEEL	526
Y	*375-5838*	1	HOUSING GP-FRONT	536
Y	*416-8908*	1	INJECTOR GP-FUEL	766
Y	*371-2478*	1	JET GP-PISTON COOLING	543
Y	*416-2470*	1	LIFTING GP-ENGINE	546
Y	*426-3310*	1	LINES GP-FUEL INJECTION	787
Y	*416-7808*	1	MANIFOLD GP-EXHAUST	724
Y	*391-5523*	1	MANIFOLD GP-INLET	726
Y	*346-1512*	1	MOUNTING GP-ACCESSORY MODULE	855
Y	*395-0112*	1	MOUNTING GP-ELECTRONIC CONTROL	819
Y	*375-4499*	1	PAN GP-OIL	557
Y	*369-7304*	1	PISTON & ROD GP	566
Y	*378-8167*	1	PLATE & FILM GP	868
Y	*346-2908*	1	PLUG GP-ENGINE	592
Y	*440-0026*	1	PLUG GP-OIL FILTER MOUNTING	644

461-4657 **ENGINE AR-PRIMARY (**contd.**)** **i08714100**

NOTE	PART NUMBER	QTY	PART NAME 1 2 3 4 5 6 (PRODUCT LEVEL)	SEE PAGE
Y	*379-6629*	1	PULLEY GP-CRANKSHAFT	603
Y	*462-6685*	1	PUMP GP-ENGINE OIL	646
Y	*391-4811*	1	PUMP GP-FUEL INJECTION	790
Y	*372-2297*	1	PUMP GP-WATER	678
Y	*452-5153*	1	RADIATOR GP	686
Y	*394-9639*	1	RAIL GP-FUEL	794
Y	*371-2480*	1	ROCKER ARM GP	606
Y	*395-0110*	1	SENSOR GP-ENGINE	820
Y	*395-0114*	1	STARTING AID GP	826
Y	*385-8000*	1	STARTING MOTOR GP-ELECTRIC	832
Y	*371-2719*	1	SUPPORT GP-POWER TAKE-OFF	608
Y	*416-6971*	1	TURBOCHARGER GP	741
Y	*424-5516*	1	WIRING GP-ENGINE	846
	440-1796	1	ELECTRONICS GP-ENGINE RATINGS	
	376-6464	1	PLATE & FILM GP	

Y - SEPARATE ILLUSTRATION

<END>

461-4658 ENGINE AR-PRIMARY

186 BRAKE KW (249 BHP) AT 2200-RPM

OPTIONAL FIELD REPLACEMENT ORDER 451-1222—PAGE: 452, 452-6584—PAGE: 462

PART OF 468-1595 ENGINE AR-COMPLETE

SMCS-1000 **i10262628**

NOTE	PART NUMBER	QTY	PART NAME 1 2 3 4 5 6 (PRODUCT LEVEL)	SEE PAGE
Y	*478-4234*	1	AIR CLEANER GP	715
Y	*377-0721*	1	ALTERNATOR GP-CHARGING	799
Y	*371-2693*	1	BELT TENSIONER GP	416
Y	*425-0196*	1	BREATHER GP (CRANKCASE)	612
Y	*396-2617*	1	CAMSHAFT GP	428
Y	*373-3607*	1	CONNECTION GP-WATER	650
Y	*371-2536*	1	CONTROL GP-ELECTRONIC	808
Y	*378-8276*	1	COOLER GP-ENGINE OIL	659
Y	*389-3346*	1	COVER GP-VALVE MECHANISM	435
Y	*374-6300*	1	CRANKSHAFT GP	447
Y	*390-0854*	1	CYLINDER BLOCK GP	450
Y	*385-2572*	1	CYLINDER HEAD GP	458
Y	*393-2180*	1	DRIVE GP-FAN	484
Y	*375-8320*	1	EXTENSION GP-FAN	501
Y	*378-0627*	1	FAN GP	670
Y	*375-0098*	1	FASTENER GP-DAMPER & PULLEY	505
Y	*390-3737*	1	FILLER GP-ENGINE OIL	620
Y	*415-5625*	1	FILM GP (ALTERNATOR)	862
Y	*611-2653*	1	FILM GP (RADIATOR)	865
Y	*346-0220*	1	FILTER GP-ENGINE OIL	629
Y	*441-1215*	1	FILTER GP-FUEL (WATER SEPARATOR)	756
Y	*453-7163*	1	FILTER GP-FUEL	760
Y	*425-0197*	1	FILTER GP-FUMES DISPOSAL	630
Y	*346-0769*	1	FLANGE GP-EXHAUST	719
Y	*437-2723*	1	FLYWHEEL GP	513
Y	*439-3432*	1	GAUGE GP-OIL LEVEL (DIPSTICK) (ENGINE)	640
Y	*437-2721*	1	HOUSING GP-FLYWHEEL	529
Y	*375-5838*	1	HOUSING GP-FRONT	536
Y	*416-8908*	1	INJECTOR GP-FUEL	766
Y	*371-2478*	1	JET GP-PISTON COOLING	543
Y	*416-2470*	1	LIFTING GP-ENGINE	546
Y	*426-3310*	1	LINES GP-FUEL INJECTION	787
Y	*416-7808*	1	MANIFOLD GP-EXHAUST	724
Y	*391-5523*	1	MANIFOLD GP-INLET	726
Y	*395-0112*	1	MOUNTING GP-ELECTRONIC CONTROL	819
Y	*458-2242*	1	MOUNTING GP-ENGINE	550
Y	*375-4499*	1	PAN GP-OIL	557
Y	*369-7304*	1	PISTON & ROD GP	566
Y	*378-8167*	1	PLATE & FILM GP	868
Y	*346-2908*	1	PLUG GP-ENGINE	592
Y	*440-0026*	1	PLUG GP-OIL FILTER MOUNTING	644
Y	*379-6629*	1	PULLEY GP-CRANKSHAFT	603
Y	*462-6685*	1	PUMP GP-ENGINE OIL	646
Y	*391-4811*	1	PUMP GP-FUEL INJECTION	790
Y	*372-2297*	1	PUMP GP-WATER	678
Y	*452-5153*	1	RADIATOR GP	686
Y	*394-9639*	1	RAIL GP-FUEL	794

461-4658 **ENGINE AR-PRIMARY (**contd.**)** **i10262628**

NOTE	PART NUMBER	QTY	PART NAME 1 2 3 4 5 6 (PRODUCT LEVEL)	SEE PAGE
Y	*371-2480*	1	ROCKER ARM GP	606
Y	*395-0110*	1	SENSOR GP-ENGINE	820
Y	*395-0114*	1	STARTING AID GP	826
Y	*385-8000*	1	STARTING MOTOR GP-ELECTRIC	832
Y	*371-2719*	1	SUPPORT GP-POWER TAKE-OFF	608
Y	*416-6971*	1	TURBOCHARGER GP	741
Y	*424-5516*	1	WIRING GP-ENGINE	846
	440-1796	1	ELECTRONICS GP-ENGINE RATINGS	
	635-3313	1	PLATE GP-IDENTIFICATION	
			SOFTWARE MUST BE PROCURED LOCALLY FROM YOUR CAT DEALER	

Y - SEPARATE ILLUSTRATION

<END>

461-4659 ENGINE AR-PRIMARY

FIELD REPLACEMENT ORDER 591-1266—PAGE: 348

PART OF 477-6401 ENGINE AR-COMPLETE

SMCS-1000 **i10537082**

NOTE	PART NUMBER	QTY	PART NAME 1 2 3 4 5 6 (PRODUCT LEVEL)	SEE PAGE
Y	*467-1940*	1	AIR CLEANER GP	714
			—OR—	
Y	*478-4234*	1	AIR CLEANER GP	715
Y	*377-0720*	1	ALTERNATOR GP-CHARGING	798
Y	*371-2693*	1	BELT TENSIONER GP	416
Y	*425-0196*	1	BREATHER GP (CRANKCASE)	612
Y	*396-2617*	1	CAMSHAFT GP	428
Y	*373-3607*	1	CONNECTION GP-WATER	650
Y	*371-2536*	1	CONTROL GP-ELECTRONIC	808
Y	*378-8276*	1	COOLER GP-ENGINE OIL	659
Y	*389-3346*	1	COVER GP-VALVE MECHANISM	435
Y	*374-6300*	1	CRANKSHAFT GP	447
Y	*390-0854*	1	CYLINDER BLOCK GP	450
Y	*385-2572*	1	CYLINDER HEAD GP	458
Y	*393-2180*	1	DRIVE GP-FAN	484
Y	*375-8320*	1	EXTENSION GP-FAN	501
Y	*378-0627*	1	FAN GP	670
Y	*390-3737*	1	FILLER GP-ENGINE OIL	620
Y	*425-0197*	1	FILTER GP-FUMES DISPOSAL	630
Y	*415-5625*	1	FILM GP (ALTERNATOR)	862
Y	*611-2653*	1	FILM GP (RADIATOR)	865
Y	*423-8803*	1	FILM GP (STARTING MOTOR)	863
Y	*346-0220*	1	FILTER GP-ENGINE OIL	629
Y	*441-1215*	1	FILTER GP-FUEL (WATER SEPARATOR)	756
Y	*453-7163*	1	FILTER GP-FUEL	760
Y	*346-0769*	1	FLANGE GP-EXHAUST	719
Y	*437-2723*	1	FLYWHEEL GP	513
Y	*439-3432*	1	GAUGE GP-OIL LEVEL (DIPSTICK)	640
Y	*437-2721*	1	HOUSING GP-FLYWHEEL	529
Y	*375-5838*	1	HOUSING GP-FRONT	536
Y	*416-8908*	1	INJECTOR GP-FUEL	766
Y	*371-2478*	1	JET GP-PISTON COOLING	543
Y	*416-2470*	1	LIFTING GP-ENGINE	546
Y	*426-3310*	1	LINES GP-FUEL INJECTION	787
Y	*416-7808*	1	MANIFOLD GP-EXHAUST	724
Y	*391-5523*	1	MANIFOLD GP-INLET	726
Y	*395-0112*	1	MOUNTING GP-ELECTRONIC CONTROL	819
Y	*458-2242*	1	MOUNTING GP-ENGINE	550
Y	*375-4499*	1	PAN GP-OIL	557
Y	*369-7304*	1	PISTON & ROD GP	566
Y	*378-8167*	1	PLATE & FILM GP	868
Y	*376-6464*	1	PLATE & FILM GP	867
Y	*635-3313*	1	PLATE GP-IDENTIFICATION	869
Y	*346-2908*	1	PLUG GP-ENGINE	592
Y	*440-0026*	1	PLUG GP-OIL FILTER MOUNTING	644
Y	*375-0098*	1	FASTENER GP-DAMPER & PULLEY	505
Y	*379-6629*	1	PULLEY GP-CRANKSHAFT	603
Y	*462-6685*	1	PUMP GP-ENGINE OIL	646

461-4659 **ENGINE AR-PRIMARY (**contd.**)** **i10537082**

NOTE	PART NUMBER	QTY	PART NAME 1 2 3 4 5 6 (PRODUCT LEVEL)	SEE PAGE
Y	*391-4811*	1	PUMP GP-FUEL INJECTION	790
Y	*372-2297*	1	PUMP GP-WATER	678
Y	*452-5153*	1	RADIATOR GP	686
Y	*394-9639*	1	RAIL GP-FUEL	794
Y	*371-2480*	1	ROCKER ARM GP	606
Y	*395-0110*	1	SENSOR GP-ENGINE	820
Y	*380-9279*	1	STARTING AID GP	824
Y	*378-0589*	1	STARTING MOTOR GP-ELECTRIC	830
Y	*371-2719*	1	SUPPORT GP-POWER TAKE-OFF	608
Y	*416-6971*	1	TURBOCHARGER GP	741
Y	*424-5516*	1	WIRING GP-ENGINE	846
	449-3320	1	ELECTRONICS GP-ENGINE	
			SOFTWARE MUST BE PROCURED LOCALLY FROM YOUR CAT DEALER	

Y - SEPARATE ILLUSTRATION

<END>

461-4661 ENGINE AR-PRIMARY

205 BRAKE KW (275 BHP) AT 2200 RPM

FIELD REPLACEMENT ORDER 451-1222—PAGE: 452, 452-6584—PAGE: 462

SMCS-1000 **i10340108**

NOTE	PART NUMBER	QTY	PART NAME 1 2 3 4 5 6 (PRODUCT LEVEL)	SEE PAGE
Y	*375-5006*	1	AIR CLEANER GP	713
			—OR—	
Y	*467-1940*	1	AIR CLEANER GP	714
			—OR—	
Y	*478-4234*	1	AIR CLEANER GP	715
Y	*377-0721*	1	ALTERNATOR GP-CHARGING	799
Y	*371-2693*	1	BELT TENSIONER GP	416
Y	*425-0196*	1	BREATHER GP (CRANKCASE)	612
Y	*396-2617*	1	CAMSHAFT GP	428
Y	*373-3607*	1	CONNECTION GP-WATER	650
Y	*371-2536*	1	CONTROL GP-ELECTRONIC	808
Y	*378-8276*	1	COOLER GP-ENGINE OIL	659
Y	*389-3346*	1	COVER GP-VALVE MECHANISM	435
Y	*374-6300*	1	CRANKSHAFT GP	447
Y	*390-0854*	1	CYLINDER BLOCK GP	450
Y	*385-2572*	1	CYLINDER HEAD GP	458
Y	*393-2180*	1	DRIVE GP-FAN	484
Y	*375-8320*	1	EXTENSION GP-FAN	501
Y	*454-5203*	1	FAN GP	674
			—OR—	
Y	*378-0627*	1	FAN GP	670
Y	*390-3737*	1	FILLER GP-ENGINE OIL	620
Y	*425-0197*	1	FILTER GP-FUMES DISPOSAL	630
Y	*415-5625*	1	FILM GP (ALTERNATOR)	862
Y	*611-2653*	1	FILM GP (RADIATOR)	865
Y	*346-0220*	1	FILTER GP-ENGINE OIL	629
Y	*441-1215*	1	FILTER GP-FUEL (WATER SEPARATOR)	756
Y	*453-7163*	1	FILTER GP-FUEL	760
Y	*346-0769*	1	FLANGE GP-EXHAUST	719
Y	*437-2723*	1	FLYWHEEL GP	513
Y	*439-3432*	1	GAUGE GP-OIL LEVEL (DIPSTICK)	640
Y	*437-2721*	1	HOUSING GP-FLYWHEEL	529
Y	*375-5838*	1	HOUSING GP-FRONT	536
Y	*416-8908*	1	INJECTOR GP-FUEL	766
Y	*371-2478*	1	JET GP-PISTON COOLING	543
Y	*416-2470*	1	LIFTING GP-ENGINE	546
Y	*426-3310*	1	LINES GP-FUEL INJECTION	787
Y	*416-7808*	1	MANIFOLD GP-EXHAUST	724
Y	*391-5523*	1	MANIFOLD GP-INLET	726
Y	*395-0112*	1	MOUNTING GP-ELECTRONIC CONTROL	819
Y	*458-2242*	1	MOUNTING GP-ENGINE	550
Y	*375-4499*	1	PAN GP-OIL	557
Y	*369-7304*	1	PISTON & ROD GP	566
Y	*378-8167*	1	PLATE & FILM GP	868
Y	*635-3313*	1	PLATE GP-IDENTIFICATION	869
Y	*346-2908*	1	PLUG GP-ENGINE	592
Y	*440-0026*	1	PLUG GP-OIL FILTER MOUNTING	644

461-4661 **ENGINE AR-PRIMARY (**contd.**)** **i10340108**

NOTE	PART NUMBER	QTY	PART NAME 1 2 3 4 5 6 (PRODUCT LEVEL)	SEE PAGE
Y	*375-0098*	1	FASTENER GP-DAMPER & PULLEY	505
Y	*379-6629*	1	PULLEY GP-CRANKSHAFT	603
Y	*462-6685*	1	PUMP GP-ENGINE OIL	646
Y	*391-4811*	1	PUMP GP-FUEL INJECTION	790
Y	*372-2297*	1	PUMP GP-WATER	678
Y	*452-5153*	1	RADIATOR GP	686
Y	*394-9639*	1	RAIL GP-FUEL	794
Y	*371-2480*	1	ROCKER ARM GP	606
Y	*395-0110*	1	SENSOR GP-ENGINE	820
Y	*395-0114*	1	STARTING AID GP	826
Y	*385-8000*	1	STARTING MOTOR GP-ELECTRIC	832
Y	*371-2719*	1	SUPPORT GP-POWER TAKE-OFF	608
Y	*416-6971*	1	TURBOCHARGER GP	741
Y	*424-5516*	1	WIRING GP-ENGINE	846
	449-3320	1	ELECTRONICS GP-ENGINE	
			SOFTWARE MUST BE PROCURED LOCALLY FROM YOUR CAT DEALER	

Y - SEPARATE ILLUSTRATION

<END>

461-4662 ENGINE AR-PRIMARY

186 BRAKE KW (249 BHP) AT 2200 RPM

OPTIONAL FIELD REPLACEMENT ORDER 451-1222—PAGE: 452, 452-6584—PAGE: 462

SMCS-1000 **i10262616**

NOTE	PART NUMBER	QTY	PART NAME 1 2 3 4 5 6 (PRODUCT LEVEL)	SEE PAGE
Y	*375-5006*	1	AIR CLEANER GP	713
			—OR—	
Y	*467-1940*	1	AIR CLEANER GP	714
			—OR—	
Y	*478-4234*	1	AIR CLEANER GP	715
Y	*377-0720*	1	ALTERNATOR GP-CHARGING	798
Y	*371-2693*	1	BELT TENSIONER GP	416
Y	*425-0196*	1	BREATHER GP (CRANKCASE)	612
Y	*396-2617*	1	CAMSHAFT GP	428
AY	*462-9442*	1	CONFIGURATION AR-ENGINE	1
Y	*373-3607*	1	CONNECTION GP-WATER	650
Y	*371-2536*	1	CONTROL GP-ELECTRONIC	808
Y	*378-8276*	1	COOLER GP-ENGINE OIL	659
Y	*389-3346*	1	COVER GP-VALVE MECHANISM	435
Y	*374-6300*	1	CRANKSHAFT GP	447
Y	*390-0854*	1	CYLINDER BLOCK GP	450
Y	*385-2572*	1	CYLINDER HEAD GP	458
Y	*393-2180*	1	DRIVE GP-FAN	484
Y	*375-8320*	1	EXTENSION GP-FAN	501
Y	*454-5203*	1	FAN GP	674
			—OR—	
Y	*378-0627*	1	FAN GP	670
Y	*375-0098*	1	FASTENER GP-DAMPER & PULLEY	505
Y	*390-3737*	1	FILLER GP-ENGINE OIL	620
Y	*415-5625*	1	FILM GP (ALTERNATOR)	862
Y	*611-2653*	1	FILM GP (RADIATOR)	865
Y	*423-8803*	1	FILM GP (STARTING MOTOR)	863
Y	*346-0220*	1	FILTER GP-ENGINE OIL	629
Y	*441-1215*	1	FILTER GP-FUEL (WATER SEPARATOR)	756
Y	*453-7163*	1	FILTER GP-FUEL	760
Y	*425-0197*	1	FILTER GP-FUMES DISPOSAL	630
Y	*346-0769*	1	FLANGE GP-EXHAUST	719
Y	*437-2723*	1	FLYWHEEL GP	513
Y	*439-3432*	1	GAUGE GP-OIL LEVEL (DIPSTICK)	640
Y	*437-2721*	1	HOUSING GP-FLYWHEEL	529
Y	*375-5838*	1	HOUSING GP-FRONT	536
Y	*416-8908*	1	INJECTOR GP-FUEL	766
Y	*371-2478*	1	JET GP-PISTON COOLING	543
Y	*416-2470*	1	LIFTING GP-ENGINE	546
Y	*426-3310*	1	LINES GP-FUEL INJECTION	787
Y	*416-7808*	1	MANIFOLD GP-EXHAUST	724
Y	*391-5523*	1	MANIFOLD GP-INLET	726
Y	*395-0112*	1	MOUNTING GP-ELECTRONIC CONTROL	819
Y	*458-2242*	1	MOUNTING GP-ENGINE	550
Y	*375-4499*	1	PAN GP-OIL	557
Y	*369-7304*	1	PISTON & ROD GP	566
Y	*378-8167*	1	PLATE & FILM GP	868

461-4662 **ENGINE AR-PRIMARY (**contd.**)** **i10262616**

NOTE	PART NUMBER	QTY	PART NAME 1 2 3 4 5 6 (PRODUCT LEVEL)	SEE PAGE
Y	*346-2908*	1	PLUG GP-ENGINE	592
Y	*440-0026*	1	PLUG GP-OIL FILTER MOUNTING	644
Y	*379-6629*	1	PULLEY GP-CRANKSHAFT	603
Y	*462-6685*	1	PUMP GP-ENGINE OIL	646
Y	*391-4811*	1	PUMP GP-FUEL INJECTION	790
Y	*372-2297*	1	PUMP GP-WATER	678
Y	*394-9639*	1	RAIL GP-FUEL	794
Y	*452-5153*	1	RADIATOR GP	686
Y	*371-2480*	1	ROCKER ARM GP	606
Y	*395-0110*	1	SENSOR GP-ENGINE	820
Y	*380-9279*	1	STARTING AID GP	824
Y	*378-0589*	1	STARTING MOTOR GP-ELECTRIC	830
Y	*371-2719*	1	SUPPORT GP-POWER TAKE-OFF	608
Y	*416-6971*	1	TURBOCHARGER GP	741
Y	*424-5516*	1	WIRING GP-ENGINE	846
	440-1796	1	ELECTRONICS GP-ENGINE RATINGS	
	376-6464	1	PLATE & FILM GP	
	635-3313	1	PLATE GP-IDENTIFICATION	
			SOFTWARE MUST BE PROCURED LOCALLY FROM YOUR CAT DEALER	

A - NOT PART OF THIS GROUP
Y - SEPARATE ILLUSTRATION

<END>

461-5422 ENGINE AR-PRIMARY

186 BRAKE KW (249 BHP) AT 2200 RPM
OPTIONAL FIELD REPLACEMENT ORDER 451-1222—PAGE: 452, 452-6584—PAGE: 462
PART OF 467-8314 ENGINE AR

SMCS-1000 **i10604084**

NOTE	PART NUMBER	QTY	PART NAME 1 2 3 4 5 6 (PRODUCT LEVEL)	SEE PAGE
Y	*377-0721*	1	ALTERNATOR GP-CHARGING	799
Y	*371-2693*	1	BELT TENSIONER GP	416
Y	*392-0632*	1	BREATHER GP	611
Y	*396-2617*	1	CAMSHAFT GP	428
Y	*373-3607*	1	CONNECTION GP-WATER	650
Y	*371-2536*	1	CONTROL GP-ELECTRONIC	808
Y	*378-8280*	1	COOLER GP-ENGINE OIL	661
Y	*389-3346*	1	COVER GP-VALVE MECHANISM	435
Y	*374-6300*	1	CRANKSHAFT GP	447
Y	*390-0854*	1	CYLINDER BLOCK GP	450
Y	*385-2572*	1	CYLINDER HEAD GP	458
Y	*391-5560*	1	DRIVE GP-FAN	480
Y	*371-2694*	1	EXTENSION GP-FAN	500
Y	*375-0098*	1	FASTENER GP-DAMPER & PULLEY	505
Y	*390-3737*	1	FILLER GP-ENGINE OIL	620
Y	*415-5625*	1	FILM GP (ALTERNATOR)	862
Y	*346-0220*	1	FILTER GP-ENGINE OIL	629
Y	*441-1215*	1	FILTER GP-FUEL (WATER SEPARATOR)	756
Y	*453-7163*	1	FILTER GP-FUEL	760
Y	*437-2723*	1	FLYWHEEL GP	513
Y	*439-3432*	1	GAUGE GP-OIL LEVEL (DIPSTICK)	640
Y	*437-2721*	1	HOUSING GP-FLYWHEEL	529
Y	*371-2725*	1	HOUSING GP-FRONT	532
Y	*416-8908*	1	INJECTOR GP-FUEL	766
Y	*371-2478*	1	JET GP-PISTON COOLING	543
Y	*416-2470*	1	LIFTING GP-ENGINE	546
Y	*426-3310*	1	LINES GP-FUEL INJECTION	787
Y	*416-7808*	1	MANIFOLD GP-EXHAUST	724
Y	*391-5523*	1	MANIFOLD GP-INLET	726
Y	*395-0112*	1	MOUNTING GP-ELECTRONIC CONTROL	819
Y	*495-6156*	1	MOUNTING GP-ENGINE	551
Y	*375-4499*	1	PAN GP-OIL	557
Y	*369-7304*	1	PISTON & ROD GP	566
Y	*378-8167*	1	PLATE & FILM GP	868
Y	*376-6464*	1	PLATE & FILM GP	867
Y	*346-2908*	1	PLUG GP-ENGINE	592
Y	*440-0026*	1	PLUG GP-OIL FILTER MOUNTING	644
Y	*379-6629*	1	PULLEY GP-CRANKSHAFT	603
Y	*462-6685*	1	PUMP GP-ENGINE OIL	646
Y	*391-4811*	1	PUMP GP-FUEL INJECTION	790
Y	*372-2297*	1	PUMP GP-WATER	678
Y	*394-9639*	1	RAIL GP-FUEL	794
Y	*371-2480*	1	ROCKER ARM GP	606
Y	*395-0110*	1	SENSOR GP-ENGINE	820
Y	*395-0114*	1	STARTING AID GP	826
Y	*385-8000*	1	STARTING MOTOR GP-ELECTRIC	832
Y	*371-2719*	1	SUPPORT GP-POWER TAKE-OFF	608

461-5422 **ENGINE AR-PRIMARY (**contd.**)** **i10604084**

NOTE	PART NUMBER	QTY	PART NAME 1 2 3 4 5 6 (PRODUCT LEVEL)	SEE PAGE
Y	*431-6516*	1	TURBOCHARGER GP	
Y	*424-5516*	1	WIRING GP-ENGINE	846
	464-1142	1	ELECTRONICS GP-ENGINE	
			SOFTWARE MUST BE PROCURED LOCALLY FROM YOUR CAT DEALER	

Y - SEPARATE ILLUSTRATION

<END>

461-5454 ENGINE AR-PRIMARY

168 BRAKE KW (225 BHP) AT 2200 RPM

OPTIONAL FIELD REPLACEMENT ORDER 451-1222—PAGE: 452, 452-6584—PAGE: 462

SMCS-1000 **i06679021**

NOTE	PART NUMBER	QTY	PART NAME 1 2 3 4 5 6 (PRODUCT LEVEL)	SEE PAGE
Y	*385-8001*	1	ALTERNATOR GP-CHARGING	800
Y	*391-9610*	1	BELT TENSIONER GP	420
Y	*425-0196*	1	BREATHER GP (CRANKCASE)	612
Y	*396-2617*	1	CAMSHAFT GP	428
Y	*390-5130*	1	CLAMP AS-EXHAUST	717
Y	*378-8581*	1	CONNECTION GP-WATER	651
Y	*371-2536*	1	CONTROL GP-ELECTRONIC	808
Y	*378-8280*	1	COOLER GP-ENGINE OIL	661
Y	*389-3348*	1	COVER GP-VALVE MECHANISM	440
Y	*374-6300*	1	CRANKSHAFT GP	447
Y	*390-0854*	1	CYLINDER BLOCK GP	450
Y	*385-2572*	1	CYLINDER HEAD GP	458
Y	*438-5983*	1	FILLER GP-ENGINE OIL	625
Y	*425-0197*	1	FILTER GP-FUMES DISPOSAL	630
Y	*346-0220*	1	FILTER GP-ENGINE OIL	629
Y	*441-1215*	1	FILTER GP-FUEL (WATER SEPARATOR)	756
Y	*453-7163*	1	FILTER GP-FUEL	760
Y	*345-8901*	1	FLYWHEEL GP	506
Y	*439-3432*	1	GAUGE GP-OIL LEVEL (DIPSTICK) (ENGINE)	640
Y	*345-8839*	1	HOUSING GP-FLYWHEEL	518
Y	*375-5838*	1	HOUSING GP-FRONT	536
Y	*416-8908*	1	INJECTOR GP-FUEL	766
Y	*371-2478*	1	JET GP-PISTON COOLING	543
Y	*416-2470*	1	LIFTING GP-ENGINE	546
Y	*426-3310*	1	LINES GP-FUEL INJECTION	787
Y	*393-7694*	1	MANIFOLD GP-EXHAUST	723
Y	*391-5523*	1	MANIFOLD GP-INLET	726
Y	*395-0112*	1	MOUNTING GP-ELECTRONIC CONTROL	819
Y	*375-4499*	1	PAN GP-OIL	557
Y	*369-7304*	1	PISTON & ROD GP	566
Y	*378-8167*	1	PLATE & FILM GP	868
Y	*380-1084*	1	PLUG AS	858
Y	*346-2908*	1	PLUG GP-ENGINE	592
Y	*440-0026*	1	PLUG GP-OIL FILTER MOUNTING	644
Y	*378-0629*	1	COVER GP-ACCESSORY DRIVE	433
Y	*375-0098*	1	FASTENER GP-DAMPER & PULLEY	505
Y	*379-6629*	1	PULLEY GP-CRANKSHAFT	603
Y	*462-6685*	1	PUMP GP-ENGINE OIL	646
Y	*391-4811*	1	PUMP GP-FUEL INJECTION	790
Y	*372-2297*	1	PUMP GP-WATER	678
Y	*394-9639*	1	RAIL GP-FUEL	794
Y	*371-2480*	1	ROCKER ARM GP	606
Y	*395-0110*	1	SENSOR GP-ENGINE	820
Y	*395-0114*	1	STARTING AID GP	826
Y	*392-2020*	1	STARTING MOTOR GP-ELECTRIC	835
Y	*416-6969*	1	TURBOCHARGER GP	739

461-5454 **ENGINE AR-PRIMARY (**contd.**)** **i06679021**

NOTE	PART NUMBER	QTY	PART NAME 1 2 3 4 5 6 (PRODUCT LEVEL)	SEE PAGE
Y	*424-5516*	1	WIRING GP-ENGINE	846
	448-4768	1	ELECTRONICS GP	

Y - SEPARATE ILLUSTRATION

<END>

461-5460 ENGINE AR-PRIMARY

151 BRAKE KW (203 BHP) AT 2200 RPM

OPTIONAL FIELD REPLACEMENT ORDER 451-1222—PAGE: 452, 452-6584—PAGE: 462

PART OF 473-3757 ENGINE AR

SMCS-1000 **i08716608**

NOTE	PART NUMBER	QTY	PART NAME 1 2 3 4 5 6 (PRODUCT LEVEL)	SEE PAGE
Y	*467-1940*	1	AIR CLEANER GP	714
			—OR—	
Y	*478-4234*	1	AIR CLEANER GP	715
Y	*378-0630*	1	AIR COMPRESSOR GP	410
Y	*377-0721*	1	ALTERNATOR GP-CHARGING	799
Y	*371-2693*	1	BELT TENSIONER GP	416
Y	*392-0632*	1	BREATHER GP	611
Y	*396-2615*	1	CAMSHAFT GP	427
Y	*373-3607*	1	CONNECTION GP-WATER	650
Y	*448-9710*	1	CONNECTOR GP-CAB HEATER LINES	652
Y	*371-2536*	1	CONTROL GP-ELECTRONIC	808
Y	*346-0097*	1	COOLER GP-ENGINE OIL	658
Y	*389-3346*	1	COVER GP-VALVE MECHANISM	435
			—OR—	
Y	*389-3347*	1	COVER GP-VALVE MECHANISM	436
Y	*374-6300*	1	CRANKSHAFT GP	447
Y	*390-0854*	1	CYLINDER BLOCK GP	450
Y	*385-2572*	1	CYLINDER HEAD GP	458
Y	*393-2180*	1	DRIVE GP-FAN	484
Y	*375-8320*	1	EXTENSION GP-FAN	501
Y	*452-3651*	1	FAN GP	673
Y	*375-0098*	1	FASTENER GP-DAMPER & PULLEY	505
Y	*390-3737*	1	FILLER GP-ENGINE OIL	620
Y	*415-5625*	1	FILM GP (ALTERNATOR)	862
Y	*611-2653*	1	FILM GP (RADIATOR)	865
Y	*346-0220*	1	FILTER GP-ENGINE OIL	629
Y	*441-1215*	1	FILTER GP-FUEL (WATER SEPARATOR)	756
Y	*453-7163*	1	FILTER GP-FUEL	760
Y	*346-0769*	1	FLANGE GP-EXHAUST	719
Y	*345-9037*	1	FLYWHEEL GP	510
Y	*439-3432*	1	GAUGE GP-OIL LEVEL (DIPSTICK)	640
Y	*357-1915*	1	HOUSING GP-FLYWHEEL	521
Y	*476-7558*	1	HOUSING GP-FRONT	541
Y	*371-2483*	1	INJECTOR GP-FUEL	763
Y	*371-2478*	1	JET GP-PISTON COOLING	543
Y	*416-2470*	1	LIFTING GP-ENGINE	546
Y	*448-0935*	1	LINES GP-FUEL FILTER	783
Y	*416-7808*	1	MANIFOLD GP-EXHAUST	724
Y	*391-5523*	1	MANIFOLD GP-INLET	726
Y	*346-1512*	1	MOUNTING GP-ACCESSORY MODULE	855
Y	*395-0112*	1	MOUNTING GP-ELECTRONIC CONTROL	819
Y	*375-4499*	1	PAN GP-OIL	557
Y	*374-6301*	1	PISTON & ROD GP	576
Y	*378-8167*	1	PLATE & FILM GP	868
Y	*440-0026*	1	PLUG GP-OIL FILTER MOUNTING	644
Y	*379-6629*	1	PULLEY GP-CRANKSHAFT	603
Y	*462-6685*	1	PUMP GP-ENGINE OIL	646

461-5460 **ENGINE AR-PRIMARY (**contd.**)** **i08716608**

NOTE	PART NUMBER	QTY	PART NAME 1 2 3 4 5 6 (PRODUCT LEVEL)	SEE PAGE
Y	*391-4811*	1	PUMP GP-FUEL INJECTION	790
Y	*372-2297*	1	PUMP GP-WATER	678
Y	*454-6966*	1	RADIATOR GP	
Y	*394-9639*	1	RAIL GP-FUEL	794
Y	*371-2480*	1	ROCKER ARM GP	606
Y	*395-0110*	1	SENSOR GP-ENGINE	820
Y	*395-0114*	1	STARTING AID GP	826
Y	*378-0590*	1	STARTING MOTOR GP-ELECTRIC	831
Y	*375-5002*	1	TURBOCHARGER GP	732
Y	*424-5516*	1	WIRING GP-ENGINE	846
	453-1370	1	ELECTRONICS GP-ENGINE	

Y - SEPARATE ILLUSTRATION

<END>

461-8772 ENGINE AR-PRIMARY

186 BRAKE KW (250 BHP) AT 2200 RPM
PART OF 473-4993 ENGINE AR

SMCS-1000 **i06664646**

NOTE	PART NUMBER	QTY	PART NAME 1 2 3 4 5 6 (PRODUCT LEVEL)	SEE PAGE
Y	*374-7094*	1	COMPRESSOR & MTG GP-REFRIGERANT	429
Y	*385-8001*	1	ALTERNATOR GP-CHARGING	800
Y	*375-4479*	1	BELT TENSIONER GP	417
Y	*392-0632*	1	BREATHER GP	611
Y	*396-2617*	1	CAMSHAFT GP	428
Y	*390-5130*	1	CLAMP AS-EXHAUST	717
Y	*346-2911*	1	CONNECTION GP-HEATER	648
Y	*373-3607*	1	CONNECTION GP-WATER	650
Y	*371-2536*	1	CONTROL GP-ELECTRONIC	808
Y	*378-8280*	1	COOLER GP-ENGINE OIL	661
Y	*378-0629*	1	COVER GP-ACCESSORY DRIVE	433
Y	*389-3346*	1	COVER GP-VALVE MECHANISM	435
Y	*374-6300*	1	CRANKSHAFT GP	447
Y	*390-0854*	1	CYLINDER BLOCK GP	450
Y	*385-2572*	1	CYLINDER HEAD GP	458
Y	*374-7093*	1	DRIVE GP-FAN	469
Y	*379-6626*	1	FILLER GP-ENGINE OIL	619
Y	*415-5625*	1	FILM GP (ALTERNATOR)	862
Y	*346-0220*	1	FILTER GP-ENGINE OIL	629
Y	*441-1215*	1	FILTER GP-FUEL (WATER SEPARATOR)	756
Y	*478-8523*	1	LINES GP-FUEL	773
Y	*453-7163*	1	FILTER GP-FUEL	760
Y	*437-2723*	1	FLYWHEEL GP	513
Y	*417-6007*	1	GAUGE GP-OIL LEVEL (DIPSTICK)	635
Y	*437-2721*	1	HOUSING GP-FLYWHEEL	529
Y	*371-2725*	1	HOUSING GP-FRONT	532
Y	*416-8908*	1	INJECTOR GP-FUEL	766
Y	*371-2478*	1	JET GP-PISTON COOLING	543
Y	*371-2735*	1	LIFTING GP-ENGINE	544
Y	*393-7694*	1	MANIFOLD GP-EXHAUST	723
Y	*378-8582*	1	MANIFOLD GP-INLET	725
Y	*395-0112*	1	MOUNTING GP-ELECTRONIC CONTROL	819
Y	*495-6168*	1	MOUNTING GP-ENGINE	553
Y	*375-4499*	1	PAN GP-OIL	557
Y	*369-7304*	1	PISTON & ROD GP	566
Y	*378-8167*	1	PLATE & FILM GP	868
Y	*440-0026*	1	PLUG GP-OIL FILTER MOUNTING	644
Y	*379-6633*	1	PULLEY GP-AUXILIARY DRIVE	600
Y	*371-2554*	1	PULLEY GP-CRANKSHAFT	601
Y	*462-6685*	1	PUMP GP-ENGINE OIL	646
Y	*391-4811*	1	PUMP GP-FUEL INJECTION	790
Y	*372-2297*	1	PUMP GP-WATER	678
Y	*394-9639*	1	RAIL GP-FUEL	794
Y	*371-2480*	1	ROCKER ARM GP	606
Y	*395-0110*	1	SENSOR GP-ENGINE	820
Y	*395-0114*	1	STARTING AID GP	826
Y	*371-2541*	1	STARTING MOTOR GP-ELECTRIC	829
Y	*416-6968*	1	TURBOCHARGER GP	738

461-8772 **ENGINE AR-PRIMARY (**contd.**)** **i06664646**

NOTE	PART NUMBER	QTY	PART NAME 1 2 3 4 5 6 (PRODUCT LEVEL)	SEE PAGE
Y	*424-5516*	1	WIRING GP-ENGINE	846
	440-1796	1	ELECTRONICS GP-ENGINE RATINGS	

Y - SEPARATE ILLUSTRATION

<END>

462-6028 ENGINE AR-PRIMARY

PART OF 467-7437 ENGINE AR-COMPLETE

SMCS-1000 **i07724876**

NOTE	PART NUMBER	QTY	PART NAME 1 2 3 4 5 6 (PRODUCT LEVEL)	SEE PAGE
Y	*377-0721*	1	ALTERNATOR GP-CHARGING	799
Y	*346-0099*	1	BASE GP-OIL COOLER & FILTER	610
Y	*371-2693*	1	BELT TENSIONER GP	416
Y	*392-0632*	1	BREATHER GP	611
Y	*396-2615*	1	CAMSHAFT GP	427
Y	*373-3607*	1	CONNECTION GP-WATER	650
Y	*371-2536*	1	CONTROL GP-ELECTRONIC	808
Y	*389-3346*	1	COVER GP-VALVE MECHANISM	435
Y	*374-6300*	1	CRANKSHAFT GP	447
Y	*390-0854*	1	CYLINDER BLOCK GP	450
Y	*385-2572*	1	CYLINDER HEAD GP	458
Y	*371-2742*	1	DRAIN GP-ENGINE OIL	466
Y	*379-0966*	1	DRIVE GP-FAN	474
Y	*443-4956*	1	FAN GP	672
Y	*375-0098*	1	FASTENER GP-DAMPER & PULLEY	505
Y	*390-3737*	1	FILLER GP-ENGINE OIL	620
Y	*390-0060*	1	FILM GP	859
Y	*415-5625*	1	FILM GP (ALTERNATOR)	862
Y	*423-8803*	1	FILM GP (STARTING MOTOR)	863
Y	*346-0220*	1	FILTER GP-ENGINE OIL	629
Y	*441-1222*	1	FILTER GP-FUEL (WATER SEPARATOR)	758
Y	*453-7163*	1	FILTER GP-FUEL	760
Y	*345-8902*	1	FLYWHEEL GP	507
Y	*439-3432*	1	GAUGE GP-OIL LEVEL (DIPSTICK)	640
Y	*380-2587*	1	HOUSING GP-FLYWHEEL	525
Y	*378-0630*	1	AIR COMPRESSOR GP	410
Y	*448-9719*	1	HOUSING GP-FRONT	538
Y	*371-2483*	1	INJECTOR GP-FUEL	763
Y	*371-2478*	1	JET GP-PISTON COOLING	543
Y	*416-2470*	1	LIFTING GP-ENGINE	546
Y	*398-7221*	1	LINES GP-FUEL FILTER	778
Y	*393-7694*	1	MANIFOLD GP-EXHAUST	723
Y	*391-5523*	1	MANIFOLD GP-INLET	726
Y	*448-9710*	1	CONNECTOR GP-CAB HEATER LINES	652
Y	*395-0112*	1	MOUNTING GP-ELECTRONIC CONTROL	819
Y	*375-4499*	1	PAN GP-OIL	557
Y	*374-6301*	1	PISTON & ROD GP	576
Y	*371-2554*	1	PULLEY GP-CRANKSHAFT	601
Y	*462-6685*	1	PUMP GP-ENGINE OIL	646
Y	*391-4811*	1	PUMP GP-FUEL INJECTION	790
Y	*372-2297*	1	PUMP GP-WATER	678
Y	*394-9639*	1	RAIL GP-FUEL	794
Y	*371-2480*	1	ROCKER ARM GP	606
Y	*395-0110*	1	SENSOR GP-ENGINE	820
Y	*395-0114*	1	STARTING AID GP	826
Y	*392-2021*	1	STARTING MOTOR GP-ELECTRIC	836
Y	*371-2720*	1	TURBOCHARGER GP	728
Y	*371-2745*	1	VALVE GP-FLUID SAMPLING	647

462-6028 **ENGINE AR-PRIMARY (**contd.**)** **i07724876**

NOTE	PART NUMBER	QTY	PART NAME 1 2 3 4 5 6 (PRODUCT LEVEL)	SEE PAGE
Y	*424-5516*	1	WIRING GP-ENGINE	846
	460-6435	1	ELECTRONICS GP-ENGINE	

Y - SEPARATE ILLUSTRATION

<END>

462-7245 ENGINE AR-PRIMARY

129 BRAKE KW (173 BHP) AT 2200 RPM

SMCS-1000 **i06664623**

NOTE	PART NUMBER	QTY	PART NAME 1 2 3 4 5 6 (PRODUCT LEVEL)	SEE PAGE
Y	*374-7094*	1	COMPRESSOR & MTG GP-REFRIGERANT	429
Y	*385-8001*	1	ALTERNATOR GP-CHARGING	800
Y	*379-5585*	1	BELT TENSIONER GP	419
Y	*392-0632*	1	BREATHER GP	611
Y	*396-2615*	1	CAMSHAFT GP	427
Y	*346-2911*	1	CONNECTION GP-HEATER	648
Y	*378-8581*	1	CONNECTION GP-WATER	651
Y	*371-2536*	1	CONTROL GP-ELECTRONIC	808
Y	*346-0091*	1	COOLER GP-ENGINE OIL	657
Y	*374-0427*	1	COVER GP-OIL FILLER	615
Y	*389-3347*	1	COVER GP-VALVE MECHANISM	436
Y	*374-6300*	1	CRANKSHAFT GP	447
Y	*390-0854*	1	CYLINDER BLOCK GP	450
Y	*385-2572*	1	CYLINDER HEAD GP	458
Y	*392-6911*	1	DRIVE GP-FAN	483
Y	*371-2694*	1	EXTENSION GP-FAN	500
Y	*415-5625*	1	FILM GP (ALTERNATOR)	862
Y	*423-8803*	1	FILM GP (STARTING MOTOR)	863
Y	*346-0220*	1	FILTER GP-ENGINE OIL	629
Y	*441-1215*	1	FILTER GP-FUEL (WATER SEPARATOR)	756
Y	*453-7163*	1	FILTER GP-FUEL	760
Y	*466-1010*	1	FLYWHEEL GP	514
Y	*476-1230*	1	GAUGE GP-OIL LEVEL (DIPSTICK)	642
Y	*345-8838*	1	HOUSING GP-FLYWHEEL	517
Y	*371-2716*	1	HOUSING GP-FRONT	530
Y	*371-2483*	1	INJECTOR GP-FUEL	763
Y	*371-2478*	1	JET GP-PISTON COOLING	543
Y	*416-2470*	1	LIFTING GP-ENGINE	546
Y	*426-3310*	1	LINES GP-FUEL INJECTION	787
Y	*416-7808*	1	MANIFOLD GP-EXHAUST	724
Y	*391-5523*	1	MANIFOLD GP-INLET	726
Y	*395-0112*	1	MOUNTING GP-ELECTRONIC CONTROL	819
Y	*374-6301*	1	PISTON & ROD GP	576
Y	*378-8167*	1	PLATE & FILM GP	868
Y	*374-9295*	1	PLUG GP-CYLINDER BLOCK	591
Y	*346-1478*	1	PLUG GP-FLYWHEEL HOUSING	595
Y	*440-0026*	1	PLUG GP-OIL FILTER MOUNTING	644
Y	*375-0098*	1	FASTENER GP-DAMPER & PULLEY	505
Y	*371-2554*	1	PULLEY GP-CRANKSHAFT	601
Y	*462-6685*	1	PUMP GP-ENGINE OIL	646
Y	*391-4811*	1	PUMP GP-FUEL INJECTION	790
Y	*372-2297*	1	PUMP GP-WATER	678
Y	*394-9639*	1	RAIL GP-FUEL	794
Y	*371-2480*	1	ROCKER ARM GP	606
Y	*395-0110*	1	SENSOR GP-ENGINE	820
Y	*395-0114*	1	STARTING AID GP	826
Y	*392-2020*	1	STARTING MOTOR GP-ELECTRIC	835
Y	*380-2016*	1	TURBOCHARGER GP	736

462-7245 **ENGINE AR-PRIMARY (**contd.**)** **i06664623**

NOTE	PART NUMBER	QTY	PART NAME 1 2 3 4 5 6 (PRODUCT LEVEL)	SEE PAGE
Y	*424-5516*	1	WIRING GP-ENGINE	846
	460-6435	1	ELECTRONICS GP-ENGINE	

Y - SEPARATE ILLUSTRATION

<END>

463-0313 ENGINE AR-PRIMARY

205 BRAKE KW (275 BHP) AT 2200 RPM
OPTIONAL FIELD REPLACEMENT ORDER 451-1222—PAGE: 452, 452-6584—PAGE: 462
PART OF 468-7018 ENGINE AR-COMPLETE

SMCS-1000 **i10421099**

NOTE	PART NUMBER	QTY	PART NAME 1 2 3 4 5 6 (PRODUCT LEVEL)	SEE PAGE
Y	*467-1940*	1	AIR CLEANER GP	714
			—OR—	
Y	*478-4234*	1	AIR CLEANER GP	715
Y	*377-0721*	1	ALTERNATOR GP-CHARGING	799
Y	*371-2693*	1	BELT TENSIONER GP	416
Y	*425-0196*	1	BREATHER GP (CRANKCASE)	612
Y	*396-2617*	1	CAMSHAFT GP	428
Y	*373-3607*	1	CONNECTION GP-WATER	650
Y	*371-2536*	1	CONTROL GP-ELECTRONIC	808
Y	*378-8280*	1	COOLER GP-ENGINE OIL	661
Y	*389-3346*	1	COVER GP-VALVE MECHANISM	435
Y	*374-6300*	1	CRANKSHAFT GP	447
Y	*390-0854*	1	CYLINDER BLOCK GP	450
Y	*385-2572*	1	CYLINDER HEAD GP	458
Y	*393-2180*	1	DRIVE GP-FAN	484
Y	*375-8320*	1	EXTENSION GP-FAN	501
Y	*378-0627*	1	FAN GP	670
Y	*375-0098*	1	FASTENER GP-DAMPER & PULLEY	505
Y	*390-3737*	1	FILLER GP-ENGINE OIL	620
Y	*425-0197*	1	FILTER GP-FUMES DISPOSAL	630
Y	*415-5625*	1	FILM GP (ALTERNATOR)	862
Y	*611-2653*	1	FILM GP (RADIATOR)	865
Y	*346-0220*	1	FILTER GP-ENGINE OIL	629
Y	*441-1215*	1	FILTER GP-FUEL (WATER SEPARATOR)	756
Y	*453-7163*	1	FILTER GP-FUEL	760
Y	*346-0769*	1	FLANGE GP-EXHAUST	719
Y	*345-9037*	1	FLYWHEEL GP	510
Y	*439-3432*	1	GAUGE GP-OIL LEVEL (DIPSTICK)	640
Y	*357-1915*	1	HOUSING GP-FLYWHEEL	521
Y	*375-5838*	1	HOUSING GP-FRONT	536
Y	*416-8908*	1	INJECTOR GP-FUEL	766
Y	*371-2478*	1	JET GP-PISTON COOLING	543
Y	*416-2470*	1	LIFTING GP-ENGINE	546
Y	*426-3310*	1	LINES GP-FUEL INJECTION	787
Y	*416-7808*	1	MANIFOLD GP-EXHAUST	724
Y	*391-5523*	1	MANIFOLD GP-INLET	726
Y	*346-1512*	1	MOUNTING GP-ACCESSORY MODULE	855
Y	*395-0112*	1	MOUNTING GP-ELECTRONIC CONTROL	819
Y	*375-4499*	1	PAN GP-OIL	557
Y	*369-7304*	1	PISTON & ROD GP	566
Y	*635-3313*	1	PLATE GP-IDENTIFICATION	869
Y	*378-8167*	1	PLATE & FILM GP	868
Y	*346-2908*	1	PLUG GP-ENGINE	592
Y	*440-0026*	1	PLUG GP-OIL FILTER MOUNTING	644
Y	*379-6629*	1	PULLEY GP-CRANKSHAFT	603
Y	*462-6685*	1	PUMP GP-ENGINE OIL	646
Y	*391-4811*	1	PUMP GP-FUEL INJECTION	790

463-0313 **ENGINE AR-PRIMARY (**contd.**)** **i10421099**

NOTE	PART NUMBER	QTY	PART NAME 1 2 3 4 5 6 (PRODUCT LEVEL)	SEE PAGE
Y	*372-2297*	1	PUMP GP-WATER	678
Y	*452-5153*	1	RADIATOR GP	686
Y	*394-9639*	1	RAIL GP-FUEL	794
Y	*371-2480*	1	ROCKER ARM GP	606
Y	*395-0110*	1	SENSOR GP-ENGINE	820
Y	*395-0114*	1	STARTING AID GP	826
Y	*378-0590*	1	STARTING MOTOR GP-ELECTRIC	831
Y	*371-2719*	1	SUPPORT GP-POWER TAKE-OFF	608
Y	*416-6971*	1	TURBOCHARGER GP	741
Y	*424-5516*	1	WIRING GP-ENGINE	846
	449-3320	1	ELECTRONICS GP-ENGINE	
	376-6464	1	PLATE & FILM GP	
			SOFTWARE MUST BE PROCURED LOCALLY FROM YOUR CAT DEALER	

Y - SEPARATE ILLUSTRATION

<END>

464-8580 ENGINE AR-PRIMARY

186 BRAKE KW (249 BHP) AT 2200 RPM

OPTIONAL FIELD REPLACEMENT ORDER 451-1222—PAGE: 452, 452-6584—PAGE: 462

SMCS-1000 **i10550110**

NOTE	PART NUMBER	QTY	PART NAME 1 2 3 4 5 6 (PRODUCT LEVEL)	SEE PAGE
Y	*377-0721*	1	ALTERNATOR GP-CHARGING	799
Y	*371-2693*	1	BELT TENSIONER GP	416
Y	*392-0632*	1	BREATHER GP	611
Y	*396-2617*	1	CAMSHAFT GP	428
AY	*467-2150*	1	CONFIGURATION AR-ENGINE	2
Y	*373-3607*	1	CONNECTION GP-WATER	650
Y	*371-2536*	1	CONTROL GP-ELECTRONIC	808
Y	*378-8280*	1	COOLER GP-ENGINE OIL	661
Y	*389-3347*	1	COVER GP-VALVE MECHANISM	436
Y	*374-6300*	1	CRANKSHAFT GP	447
Y	*390-0854*	1	CYLINDER BLOCK GP	450
Y	*385-2572*	1	CYLINDER HEAD GP	458
Y	*378-8166*	1	DRAIN GP-ENGINE OIL	467
Y	*393-2180*	1	DRIVE GP-FAN	484
Y	*375-4606*	1	DRIVE GP-POWER TAKE-OFF	499
Y	*375-8320*	1	EXTENSION GP-FAN	501
Y	*375-4574*	1	FAN GP	669
Y	*375-0098*	1	FASTENER GP-DAMPER & PULLEY	505
Y	*438-5978*	1	FILLER GP-ENGINE OIL	623
Y	*390-0060*	1	FILM GP (EMISSION)	859
Y	*415-5625*	1	FILM GP (ALTERNATOR)	862
Y	*611-2653*	1	FILM GP (RADIATOR)	865
Y	*346-0220*	1	FILTER GP-ENGINE OIL	629
Y	*441-1215*	1	FILTER GP-FUEL (WATER SEPARATOR)	756
Y	*453-7163*	1	FILTER GP-FUEL	760
Y	*346-0769*	1	FLANGE GP-EXHAUST	719
Y	*437-2723*	1	FLYWHEEL GP	513
Y	*439-3432*	1	GAUGE GP-OIL LEVEL (DIPSTICK)	640
Y	*437-2721*	1	HOUSING GP-FLYWHEEL	529
Y	*375-4645*	1	HOUSING GP-FRONT	534
Y	*416-8908*	1	INJECTOR GP-FUEL	766
Y	*371-2478*	1	JET GP-PISTON COOLING	543
Y	*416-2470*	1	LIFTING GP-ENGINE	546
Y	*426-3310*	1	LINES GP-FUEL INJECTION	787
Y	*416-7808*	1	MANIFOLD GP-EXHAUST	724
Y	*391-5523*	1	MANIFOLD GP-INLET	726
Y	*395-0112*	1	MOUNTING GP-ELECTRONIC CONTROL	819
Y	*458-2242*	1	MOUNTING GP-ENGINE	550
Y	*375-4499*	1	PAN GP-OIL	557
Y	*369-7304*	1	PISTON & ROD GP	566
Y	*376-6464*	1	PLATE & FILM GP	867
Y	*635-3313*	1	PLATE GP-IDENTIFICATION	869
Y	*346-2908*	1	PLUG GP-ENGINE	592
Y	*440-0026*	1	PLUG GP-OIL FILTER MOUNTING	644
Y	*379-6629*	1	PULLEY GP-CRANKSHAFT	603
Y	*462-6685*	1	PUMP GP-ENGINE OIL	646
Y	*391-4811*	1	PUMP GP-FUEL INJECTION	790
Y	*372-2297*	1	PUMP GP-WATER	678

464-8580 **ENGINE AR-PRIMARY (**contd.**)** **i10550110**

NOTE	PART NUMBER	QTY	PART NAME 1 2 3 4 5 6 (PRODUCT LEVEL)	SEE PAGE
Y	*456-4298*	1	RADIATOR GP	695
Y	*394-9639*	1	RAIL GP-FUEL	794
Y	*371-2480*	1	ROCKER ARM GP	606
Y	*395-0110*	1	SENSOR GP-ENGINE	820
Y	*395-0114*	1	STARTING AID GP	826
Y	*371-2541*	1	STARTING MOTOR GP-ELECTRIC	829
Y	*416-6971*	1	TURBOCHARGER GP	741
Y	*424-5516*	1	WIRING GP-ENGINE	846
	440-1796	1	ELECTRONICS GP-ENGINE RATINGS	
			SOFTWARE MUST BE PROCURED LOCALLY FROM YOUR CAT DEALER	

A - NOT PART OF THIS GROUP
Y - SEPARATE ILLUSTRATION

<END>

465-2766 ENGINE AR-PRIMARY

140 BRAKE KW (188 BHP) AT 2000 RPM

OPTIONAL FIELD REPLACEMENT ORDER 451-1222—PAGE: 452, 452-6584—PAGE: 462

SMCS-1000 **i09713043**

NOTE	PART NUMBER	QTY	PART NAME 1 2 3 4 5 6 (PRODUCT LEVEL)	SEE PAGE
Y	*377-0721*	1	ALTERNATOR GP-CHARGING	799
Y	*371-2693*	1	BELT TENSIONER GP	416
Y	*392-0632*	1	BREATHER GP	611
Y	*396-2615*	1	CAMSHAFT GP	427
AY	*477-8829*	1	CONFIGURATION AR-ENGINE	5
Y	*373-3607*	1	CONNECTION GP-WATER	650
Y	*371-2536*	1	CONTROL GP-ELECTRONIC	808
Y	*346-0097*	1	COOLER GP-ENGINE OIL	658
Y	*389-3347*	1	COVER GP-VALVE MECHANISM	436
Y	*374-6300*	1	CRANKSHAFT GP	447
Y	*390-0854*	1	CYLINDER BLOCK GP	450
Y	*385-2572*	1	CYLINDER HEAD GP	458
Y	*378-8166*	1	DRAIN GP-ENGINE OIL	467
Y	*393-2180*	1	DRIVE GP-FAN	484
Y	*375-4606*	1	DRIVE GP-POWER TAKE-OFF	499
Y	*375-8320*	1	EXTENSION GP-FAN	501
Y	*452-3651*	1	FAN GP	673
Y	*375-0098*	1	FASTENER GP-DAMPER & PULLEY	505
Y	*438-5978*	1	FILLER GP-ENGINE OIL	623
Y	*390-0060*	1	FILM GP (EMISSION)	859
Y	*415-5625*	1	FILM GP (ALTERNATOR)	862
Y	*611-2653*	1	FILM GP (RADIATOR)	865
Y	*346-0220*	1	FILTER GP-ENGINE OIL	629
Y	*441-1215*	1	FILTER GP-FUEL (WATER SEPARATOR)	756
Y	*453-7163*	1	FILTER GP-FUEL	760
Y	*346-0769*	1	FLANGE GP-EXHAUST	719
Y	*378-0585*	1	FLYWHEEL GP	512
Y	*357-1915*	1	HOUSING GP-FLYWHEEL	521
Y	*375-4645*	1	HOUSING GP-FRONT	534
Y	*371-2483*	1	INJECTOR GP-FUEL	763
Y	*371-2478*	1	JET GP-PISTON COOLING	543
Y	*416-2470*	1	LIFTING GP-ENGINE	546
Y	*426-3310*	1	LINES GP-FUEL INJECTION	787
Y	*416-7808*	1	MANIFOLD GP-EXHAUST	724
Y	*391-5523*	1	MANIFOLD GP-INLET	726
Y	*346-1512*	1	MOUNTING GP-ACCESSORY MODULE	855
Y	*395-0112*	1	MOUNTING GP-ELECTRONIC CONTROL	819
Y	*375-4499*	1	PAN GP-OIL	557
Y	*374-6301*	1	PISTON & ROD GP	576
Y	*346-2908*	1	PLUG GP-ENGINE	592
Y	*440-0026*	1	PLUG GP-OIL FILTER MOUNTING	644
Y	*458-9768*	1	PLUG GP-OIL PAN	596
Y	*379-6629*	1	PULLEY GP-CRANKSHAFT	603
Y	*462-6685*	1	PUMP GP-ENGINE OIL	646
Y	*391-4811*	1	PUMP GP-FUEL INJECTION	790
Y	*372-2297*	1	PUMP GP-WATER	678
Y	*456-4296*	1	RADIATOR GP	689
Y	*394-9639*	1	RAIL GP-FUEL	794

465-2766 **ENGINE AR-PRIMARY (**contd.**)** **i09713043**

NOTE	PART NUMBER	QTY	PART NAME 1 2 3 4 5 6 (PRODUCT LEVEL)	SEE PAGE
Y	*371-2480*	1	ROCKER ARM GP	606
Y	*395-0110*	1	SENSOR GP-ENGINE	820
Y	*395-0114*	1	STARTING AID GP	826
Y	*378-0590*	1	STARTING MOTOR GP-ELECTRIC	831
Y	*375-5002*	1	TURBOCHARGER GP	732
Y	*424-5516*	1	WIRING GP-ENGINE	846
	468-8374	1	ELECTRONICS GP-ENGINE	
	376-6464	1	PLATE & FILM GP	

A - NOT PART OF THIS GROUP
Y - SEPARATE ILLUSTRATION

<END>

466-1160 ENGINE AR-PRIMARY

129 BRAKE KW (173 BHP) AT 2200 RPM

OPTIONAL FIELD REPLACEMENT ORDER 451-1222—PAGE: 452, 452-6584—PAGE: 462

SMCS-1000 **i09124345**

NOTE	PART NUMBER	QTY	PART NAME 1 2 3 4 5 6 (PRODUCT LEVEL)	SEE PAGE
Y	*377-0721*	1	ALTERNATOR GP-CHARGING	799
Y	*371-2693*	1	BELT TENSIONER GP	416
Y	*425-0196*	1	BREATHER GP (CRANKCASE)	612
Y	*396-2615*	1	CAMSHAFT GP	427
AY	*468-5324*	1	CONFIGURATION AR-ENGINE	3
Y	*373-3607*	1	CONNECTION GP-WATER	650
Y	*371-2536*	1	CONTROL GP-ELECTRONIC	808
Y	*346-0091*	1	COOLER GP-ENGINE OIL	657
Y	*389-3348*	1	COVER GP-VALVE MECHANISM	440
Y	*374-6300*	1	CRANKSHAFT GP	447
Y	*390-0854*	1	CYLINDER BLOCK GP	450
Y	*385-2572*	1	CYLINDER HEAD GP	458
Y	*415-3076*	1	DRIVE GP-FAN	495
Y	*375-8320*	1	EXTENSION GP-FAN	501
Y	*438-5978*	1	FILLER GP-ENGINE OIL	623
Y	*390-0060*	1	FILM GP (EMISSION)	859
Y	*415-5625*	1	FILM GP (ALTERNATOR)	862
Y	*423-8803*	1	FILM GP (STARTING MOTOR)	863
Y	*346-0220*	1	FILTER GP-ENGINE OIL	629
Y	*441-1215*	1	FILTER GP-FUEL (WATER SEPARATOR)	756
Y	*453-7163*	1	FILTER GP-FUEL	760
Y	*425-0197*	1	FILTER GP-FUMES DISPOSAL	630
Y	*346-0769*	1	FLANGE GP-EXHAUST	719
Y	*345-8901*	1	FLYWHEEL GP	506
Y	*439-3432*	1	GAUGE GP-OIL LEVEL (DIPSTICK)	640
Y	*345-8838*	1	HOUSING GP-FLYWHEEL	517
Y	*375-5838*	1	HOUSING GP-FRONT	536
Y	*371-2483*	1	INJECTOR GP-FUEL	763
Y	*371-2478*	1	JET GP-PISTON COOLING	543
Y	*371-2735*	1	LIFTING GP-ENGINE	544
Y	*426-3310*	1	LINES GP-FUEL INJECTION	787
Y	*416-7808*	1	MANIFOLD GP-EXHAUST	724
Y	*391-5523*	1	MANIFOLD GP-INLET	726
Y	*395-0112*	1	MOUNTING GP-ELECTRONIC CONTROL	819
Y	*375-4499*	1	PAN GP-OIL	557
Y	*374-6301*	1	PISTON & ROD GP	576
Y	*346-2908*	1	PLUG GP-ENGINE	592
Y	*346-1478*	1	PLUG GP-FLYWHEEL HOUSING	595
Y	*440-0026*	1	PLUG GP-OIL FILTER MOUNTING	644
Y	*379-6633*	1	PULLEY GP-AUXILIARY DRIVE	600
Y	*379-6629*	1	PULLEY GP-CRANKSHAFT	603
Y	*462-6685*	1	PUMP GP-ENGINE OIL	646
Y	*391-4811*	1	PUMP GP-FUEL INJECTION	790
Y	*372-2297*	1	PUMP GP-WATER	678
Y	*394-9639*	1	RAIL GP-FUEL	794
Y	*371-2480*	1	ROCKER ARM GP	606
Y	*395-0110*	1	SENSOR GP-ENGINE	820
Y	*395-0114*	1	STARTING AID GP	826

466-1160 **ENGINE AR-PRIMARY (**contd.**)** **i09124345**

NOTE	PART NUMBER	QTY	PART NAME 1 2 3 4 5 6 (PRODUCT LEVEL)	SEE PAGE
Y	*392-2020*	1	STARTING MOTOR GP-ELECTRIC	835
Y	*371-2719*	1	SUPPORT GP-POWER TAKE-OFF	608
Y	*375-5002*	1	TURBOCHARGER GP	732
Y	*424-5516*	1	WIRING GP-ENGINE	846
	460-6435	1	ELECTRONICS GP-ENGINE	
	376-6464	1	PLATE & FILM GP	

A - NOT PART OF THIS GROUP
Y - SEPARATE ILLUSTRATION

<END>

466-1161 ENGINE AR-PRIMARY

186 BRAKE KW (249 BHP) 2200 RPM

OPTIONAL FIELD REPLACEMENT ORDER 451-1222—PAGE: 452, 452-6584—PAGE: 462

SMCS-1000 **i09389897**

NOTE	PART NUMBER	QTY	PART NAME 1 2 3 4 5 6 (PRODUCT LEVEL)	SEE PAGE
Y	*377-0721*	1	ALTERNATOR GP-CHARGING	799
Y	*371-2693*	1	BELT TENSIONER GP	416
Y	*425-0196*	1	BREATHER GP (CRANKCASE)	612
Y	*396-2617*	1	CAMSHAFT GP	428
AY	*467-9663*	1	CONFIGURATION AR-ENGINE	2
Y	*373-3607*	1	CONNECTION GP-WATER	650
Y	*371-2536*	1	CONTROL GP-ELECTRONIC	808
Y	*378-8276*	1	COOLER GP-ENGINE OIL	659
Y	*389-3348*	1	COVER GP-VALVE MECHANISM	440
Y	*374-6300*	1	CRANKSHAFT GP	447
Y	*390-0854*	1	CYLINDER BLOCK GP	450
Y	*385-2572*	1	CYLINDER HEAD GP	458
Y	*415-2163*	1	DRIVE GP-FAN	493
Y	*375-8320*	1	EXTENSION GP-FAN	501
Y	*438-5978*	1	FILLER GP-ENGINE OIL	623
Y	*415-5625*	1	FILM GP (ALTERNATOR)	862
Y	*423-8803*	1	FILM GP (STARTING MOTOR)	863
Y	*346-0220*	1	FILTER GP-ENGINE OIL	629
Y	*441-1215*	1	FILTER GP-FUEL (WATER SEPARATOR)	756
Y	*453-7163*	1	FILTER GP-FUEL	760
Y	*425-0197*	1	FILTER GP-FUMES DISPOSAL	630
Y	*346-0769*	1	FLANGE GP-EXHAUST	719
Y	*345-8901*	1	FLYWHEEL GP	506
Y	*439-3432*	1	GAUGE GP-OIL LEVEL (DIPSTICK)	640
Y	*345-8838*	1	HOUSING GP-FLYWHEEL	517
Y	*375-5838*	1	HOUSING GP-FRONT	536
Y	*416-8908*	1	INJECTOR GP-FUEL	766
Y	*371-2478*	1	JET GP-PISTON COOLING	543
Y	*371-2735*	1	LIFTING GP-ENGINE	544
Y	*426-3310*	1	LINES GP-FUEL INJECTION	787
Y	*416-7808*	1	MANIFOLD GP-EXHAUST	724
Y	*391-5523*	1	MANIFOLD GP-INLET	726
Y	*395-0112*	1	MOUNTING GP-ELECTRONIC CONTROL	819
Y	*375-4499*	1	PAN GP-OIL	557
Y	*369-7304*	1	PISTON & ROD GP	566
Y	*378-8167*	1	PLATE & FILM GP	868
Y	*346-2908*	1	PLUG GP-ENGINE	592
Y	*346-1478*	1	PLUG GP-FLYWHEEL HOUSING	595
Y	*440-0026*	1	PLUG GP-OIL FILTER MOUNTING	644
Y	*379-6633*	1	PULLEY GP-AUXILIARY DRIVE	600
Y	*371-2554*	1	PULLEY GP-CRANKSHAFT	601
Y	*462-6685*	1	PUMP GP-ENGINE OIL	646
Y	*391-4811*	1	PUMP GP-FUEL INJECTION	790
Y	*372-2297*	1	PUMP GP-WATER	678
Y	*394-9639*	1	RAIL GP-FUEL	794
Y	*371-2480*	1	ROCKER ARM GP	606
Y	*395-0110*	1	SENSOR GP-ENGINE	820
Y	*395-0114*	1	STARTING AID GP	826

466-1161 **ENGINE AR-PRIMARY (**contd.**)** **i09389897**

NOTE	PART NUMBER	QTY	PART NAME 1 2 3 4 5 6 (PRODUCT LEVEL)	SEE PAGE
Y	*392-2020*	1	STARTING MOTOR GP-ELECTRIC	835
Y	*371-2719*	1	SUPPORT GP-POWER TAKE-OFF	608
Y	*416-6971*	1	TURBOCHARGER GP	741
Y	*424-5516*	1	WIRING GP-ENGINE	846
	440-1796	1	ELECTRONICS GP-ENGINE RATINGS	
	376-6464	1	PLATE & FILM GP	

A - NOT PART OF THIS GROUP
Y - SEPARATE ILLUSTRATION

<END>

466-1162 ENGINE AR-PRIMARY

168 BRAKE KW (225 BHP) AT 2200 RPM

OPTIONAL FIELD REPLACEMENT ORDER 451-1222—PAGE: 452, 452-6584—PAGE: 462

SMCS-1000 **i09402659**

NOTE	PART NUMBER	QTY	PART NAME 1 2 3 4 5 6 (PRODUCT LEVEL)	SEE PAGE
Y	*377-0721*	1	ALTERNATOR GP-CHARGING	799
Y	*371-2693*	1	BELT TENSIONER GP	416
Y	*425-0196*	1	BREATHER GP (CRANKCASE)	612
Y	*396-2617*	1	CAMSHAFT GP	428
AY	*467-8361*	1	CONFIGURATION AR-ENGINE	2
Y	*373-3607*	1	CONNECTION GP-WATER	650
Y	*371-2536*	1	CONTROL GP-ELECTRONIC	808
Y	*378-8276*	1	COOLER GP-ENGINE OIL	659
Y	*389-3348*	1	COVER GP-VALVE MECHANISM	440
Y	*374-6300*	1	CRANKSHAFT GP	447
Y	*390-0854*	1	CYLINDER BLOCK GP	450
Y	*385-2572*	1	CYLINDER HEAD GP	458
Y	*415-2163*	1	DRIVE GP-FAN	493
Y	*375-8320*	1	EXTENSION GP-FAN	501
Y	*438-5978*	1	FILLER GP-ENGINE OIL	623
Y	*415-5625*	1	FILM GP (ALTERNATOR)	862
Y	*423-8803*	1	FILM GP (STARTING MOTOR)	863
Y	*346-0220*	1	FILTER GP-ENGINE OIL	629
Y	*441-1215*	1	FILTER GP-FUEL (WATER SEPARATOR)	756
Y	*453-7163*	1	FILTER GP-FUEL	760
Y	*425-0197*	1	FILTER GP-FUMES DISPOSAL	630
Y	*346-0769*	1	FLANGE GP-EXHAUST	719
Y	*345-8901*	1	FLYWHEEL GP	506
Y	*439-3432*	1	GAUGE GP-OIL LEVEL (DIPSTICK)	640
Y	*345-8838*	1	HOUSING GP-FLYWHEEL	517
Y	*375-5838*	1	HOUSING GP-FRONT	536
Y	*416-8908*	1	INJECTOR GP-FUEL	766
Y	*371-2478*	1	JET GP-PISTON COOLING	543
Y	*371-2735*	1	LIFTING GP-ENGINE	544
Y	*426-3310*	1	LINES GP-FUEL INJECTION	787
Y	*416-7808*	1	MANIFOLD GP-EXHAUST	724
Y	*391-5523*	1	MANIFOLD GP-INLET	726
Y	*395-0112*	1	MOUNTING GP-ELECTRONIC CONTROL	819
Y	*375-4499*	1	PAN GP-OIL	557
Y	*369-7304*	1	PISTON & ROD GP	566
Y	*378-8167*	1	PLATE & FILM GP	868
Y	*346-2908*	1	PLUG GP-ENGINE	592
Y	*346-1478*	1	PLUG GP-FLYWHEEL HOUSING	595
Y	*440-0026*	1	PLUG GP-OIL FILTER MOUNTING	644
Y	*379-6633*	1	PULLEY GP-AUXILIARY DRIVE	600
Y	*371-2554*	1	PULLEY GP-CRANKSHAFT	601
Y	*462-6685*	1	PUMP GP-ENGINE OIL	646
Y	*391-4811*	1	PUMP GP-FUEL INJECTION	790
Y	*372-2297*	1	PUMP GP-WATER	678
Y	*394-9639*	1	RAIL GP-FUEL	794
Y	*371-2480*	1	ROCKER ARM GP	606
Y	*395-0110*	1	SENSOR GP-ENGINE	820
Y	*395-0114*	1	STARTING AID GP	826

466-1162 **ENGINE AR-PRIMARY (**contd.**)** **i09402659**

NOTE	PART NUMBER	QTY	PART NAME 1 2 3 4 5 6 (PRODUCT LEVEL)	SEE PAGE
Y	*392-2020*	1	STARTING MOTOR GP-ELECTRIC	835
Y	*371-2719*	1	SUPPORT GP-POWER TAKE-OFF	608
Y	*416-6971*	1	TURBOCHARGER GP	741
Y	*424-5516*	1	WIRING GP-ENGINE	846
	448-4768	1	ELECTRONICS GP	
	376-6464	1	PLATE & FILM GP	

A - NOT PART OF THIS GROUP
Y - SEPARATE ILLUSTRATION

<END>

466-1163 ENGINE AR-PRIMARY

205 BRAKE KW (275 BHP) AT 2200 RPM

OPTIONAL FIELD REPLACEMENT ORDER 451-1222—PAGE: 452, 452-6584—PAGE: 462

SMCS-1000 **i07883376**

NOTE	PART NUMBER	QTY	PART NAME 1 2 3 4 5 6 (PRODUCT LEVEL)	SEE PAGE
Y	*377-0721*	1	ALTERNATOR GP-CHARGING	799
Y	*371-2693*	1	BELT TENSIONER GP	416
Y	*425-0196*	1	BREATHER GP (CRANKCASE)	612
Y	*396-2617*	1	CAMSHAFT GP	428
Y	*373-3607*	1	CONNECTION GP-WATER	650
Y	*371-2536*	1	CONTROL GP-ELECTRONIC	808
Y	*378-8276*	1	COOLER GP-ENGINE OIL	659
Y	*389-3348*	1	COVER GP-VALVE MECHANISM	440
Y	*374-6300*	1	CRANKSHAFT GP	447
Y	*390-0854*	1	CYLINDER BLOCK GP	450
Y	*385-2572*	1	CYLINDER HEAD GP	458
Y	*415-2163*	1	DRIVE GP-FAN	493
Y	*375-8320*	1	EXTENSION GP-FAN	501
Y	*438-5978*	1	FILLER GP-ENGINE OIL	623
Y	*415-5625*	1	FILM GP (ALTERNATOR) (ALTERNATOR)	862
Y	*423-8803*	1	FILM GP (STARTING MOTOR) (STARTING MOTOR)	863
Y	*346-0220*	1	FILTER GP-ENGINE OIL	629
Y	*441-1215*	1	FILTER GP-FUEL (WATER SEPARATOR)	756
Y	*453-7163*	1	FILTER GP-FUEL	760
Y	*425-0197*	1	FILTER GP-FUMES DISPOSAL	630
Y	*346-0769*	1	FLANGE GP-EXHAUST	719
Y	*345-8901*	1	FLYWHEEL GP	506
Y	*439-3432*	1	GAUGE GP-OIL LEVEL (DIPSTICK)	640
Y	*345-8838*	1	HOUSING GP-FLYWHEEL	517
Y	*375-5838*	1	HOUSING GP-FRONT	536
Y	*416-8908*	1	INJECTOR GP-FUEL	766
Y	*371-2478*	1	JET GP-PISTON COOLING	543
Y	*371-2735*	1	LIFTING GP-ENGINE	544
Y	*426-3310*	1	LINES GP-FUEL INJECTION	787
Y	*416-7808*	1	MANIFOLD GP-EXHAUST	724
Y	*391-5523*	1	MANIFOLD GP-INLET	726
Y	*395-0112*	1	MOUNTING GP-ELECTRONIC CONTROL	819
Y	*375-4499*	1	PAN GP-OIL	557
Y	*369-7304*	1	PISTON & ROD GP	566
Y	*378-8167*	1	PLATE & FILM GP	868
Y	*346-2908*	1	PLUG GP-ENGINE	592
Y	*346-1478*	1	PLUG GP-FLYWHEEL HOUSING	595
Y	*440-0026*	1	PLUG GP-OIL FILTER MOUNTING	644
Y	*379-6633*	1	PULLEY GP-AUXILIARY DRIVE	600
Y	*371-2554*	1	PULLEY GP-CRANKSHAFT	601
Y	*462-6685*	1	PUMP GP-ENGINE OIL	646
Y	*391-4811*	1	PUMP GP-FUEL INJECTION	790
Y	*372-2297*	1	PUMP GP-WATER	678
Y	*394-9639*	1	RAIL GP-FUEL	794
Y	*371-2480*	1	ROCKER ARM GP	606
Y	*395-0110*	1	SENSOR GP-ENGINE	820
Y	*395-0114*	1	STARTING AID GP	826
Y	*392-2020*	1	STARTING MOTOR GP-ELECTRIC	835

466-1163 **ENGINE AR-PRIMARY (**contd.**)** **i07883376**

NOTE	PART NUMBER	QTY	PART NAME 1 2 3 4 5 6 (PRODUCT LEVEL)	SEE PAGE
Y	*371-2719*	1	SUPPORT GP-POWER TAKE-OFF	608
Y	*416-6971*	1	TURBOCHARGER GP	741
Y	*424-5516*	1	WIRING GP-ENGINE	846
	449-3320	1	ELECTRONICS GP-ENGINE	
	376-6464	1	PLATE & FILM GP	

Y - SEPARATE ILLUSTRATION

<END>

468-0461 ENGINE AR-PRIMARY

205 BRAKE KW (275 BHP) AT 2200 RPM

OPTIONAL FIELD REPLACEMENT ORDER 451-1222—PAGE: 452, 452-6584—PAGE: 462

SMCS-1000 **i10086772**

NOTE	PART NUMBER	QTY	PART NAME 1 2 3 4 5 6 (PRODUCT LEVEL)	SEE PAGE
Y	*478-4234*	1	AIR CLEANER GP	715
Y	*378-0630*	1	AIR COMPRESSOR GP	410
Y	*377-0721*	1	ALTERNATOR GP-CHARGING	799
Y	*371-2693*	1	BELT TENSIONER GP	416
Y	*392-0632*	1	BREATHER GP	611
Y	*396-2617*	1	CAMSHAFT GP	428
AY	*468-2231*	1	CONFIGURATION AR-ENGINE	3
Y	*373-3607*	1	CONNECTION GP-WATER	650
Y	*448-9710*	1	CONNECTOR GP-CAB HEATER LINES	652
Y	*371-2536*	1	CONTROL GP-ELECTRONIC	808
Y	*378-8276*	1	COOLER GP-ENGINE OIL	659
Y	*389-3346*	1	COVER GP-VALVE MECHANISM	435
Y	*374-6300*	1	CRANKSHAFT GP	447
Y	*390-0854*	1	CYLINDER BLOCK GP	450
Y	*385-2572*	1	CYLINDER HEAD GP	458
Y	*378-8166*	1	DRAIN GP-ENGINE OIL	467
Y	*393-2180*	1	DRIVE GP-FAN	484
Y	*375-8320*	1	EXTENSION GP-FAN	501
Y	*378-0627*	1	FAN GP	670
Y	*375-0098*	1	FASTENER GP-DAMPER & PULLEY	505
Y	*390-3737*	1	FILLER GP-ENGINE OIL	620
Y	*415-5625*	1	FILM GP (ALTERNATOR)	862
Y	*611-2653*	1	FILM GP (RADIATOR)	865
Y	*346-0220*	1	FILTER GP-ENGINE OIL	629
Y	*441-1215*	1	FILTER GP-FUEL (WATER SEPARATOR)	756
Y	*453-7163*	1	FILTER GP-FUEL	760
Y	*346-0769*	1	FLANGE GP-EXHAUST	719
Y	*437-2723*	1	FLYWHEEL GP	513
Y	*439-3432*	1	GAUGE GP-OIL LEVEL (DIPSTICK)	640
Y	*437-2721*	1	HOUSING GP-FLYWHEEL	529
Y	*476-7558*	1	HOUSING GP-FRONT	541
Y	*416-8908*	1	INJECTOR GP-FUEL	766
Y	*371-2478*	1	JET GP-PISTON COOLING	543
Y	*416-2470*	1	LIFTING GP-ENGINE	546
Y	*448-0935*	1	LINES GP-FUEL FILTER	783
Y	*416-7808*	1	MANIFOLD GP-EXHAUST	724
Y	*391-5523*	1	MANIFOLD GP-INLET	726
Y	*395-0112*	1	MOUNTING GP-ELECTRONIC CONTROL	819
Y	*458-2242*	1	MOUNTING GP-ENGINE	550
Y	*375-4499*	1	PAN GP-OIL	557
Y	*369-7304*	1	PISTON & ROD GP	566
Y	*378-8167*	1	PLATE & FILM GP	868
Y	*635-3313*	1	PLATE GP-IDENTIFICATION	869
Y	*440-0026*	1	PLUG GP-OIL FILTER MOUNTING	644
Y	*379-6629*	1	PULLEY GP-CRANKSHAFT	603
Y	*462-6685*	1	PUMP GP-ENGINE OIL	646
Y	*391-4811*	1	PUMP GP-FUEL INJECTION	790
Y	*372-2297*	1	PUMP GP-WATER	678

468-0461 **ENGINE AR-PRIMARY (**contd.**)** **i10086772**

NOTE	PART NUMBER	QTY	PART NAME 1 2 3 4 5 6 (PRODUCT LEVEL)	SEE PAGE
Y	*452-5153*	1	RADIATOR GP	686
Y	*394-9639*	1	RAIL GP-FUEL	794
Y	*371-2480*	1	ROCKER ARM GP	606
Y	*395-0110*	1	SENSOR GP-ENGINE	820
Y	*395-0114*	1	STARTING AID GP	826
Y	*385-8000*	1	STARTING MOTOR GP-ELECTRIC	832
Y	*416-6971*	1	TURBOCHARGER GP	741
Y	*424-5516*	1	WIRING GP-ENGINE	846
	376-6464	1	PLATE & FILM GP	
			SOFTWARE MUST BE PROCURED LOCALLY FROM YOUR CAT DEALER	

A - NOT PART OF THIS GROUP
Y - SEPARATE ILLUSTRATION

<END>

468-8148 ENGINE AR-PRIMARY

129 BRAKE KW (173 BHP) AT 2200 RPM

SMCS-1000 **i07883371**

NOTE	PART NUMBER	QTY	PART NAME 1 2 3 4 5 6 (PRODUCT LEVEL)	SEE PAGE
Y	*377-0721*	1	ALTERNATOR GP-CHARGING	799
Y	*391-9612*	1	BELT TENSIONER GP	422
Y	*379-6637*	1	BRACKET GP-MOUNTING	423
Y	*392-0632*	1	BREATHER GP	611
Y	*396-2615*	1	CAMSHAFT GP	427
Y	*373-3607*	1	CONNECTION GP-WATER	650
Y	*371-2536*	1	CONTROL GP-ELECTRONIC	808
Y	*346-0097*	1	COOLER GP-ENGINE OIL	658
Y	*389-3348*	1	COVER GP-VALVE MECHANISM	440
Y	*374-6300*	1	CRANKSHAFT GP	447
Y	*390-0854*	1	CYLINDER BLOCK GP	450
Y	*385-2572*	1	CYLINDER HEAD GP	458
Y	*380-2616*	1	DRIVE GP-FAN	476
Y	*393-9541*	1	FAN GP	671
Y	*438-5978*	1	FILLER GP-ENGINE OIL	623
Y	*415-5625*	1	FILM GP (ALTERNATOR)	862
Y	*346-0220*	1	FILTER GP-ENGINE OIL	629
Y	*441-1215*	1	FILTER GP-FUEL (WATER SEPARATOR)	756
Y	*448-0935*	1	LINES GP-FUEL FILTER	783
Y	*453-7163*	1	FILTER GP-FUEL	760
Y	*346-0769*	1	FLANGE GP-EXHAUST	719
Y	*345-9037*	1	FLYWHEEL GP	510
Y	*417-6007*	1	GAUGE GP-OIL LEVEL (DIPSTICK)	635
Y	*393-3369*	1	HOUSING GP-FLYWHEEL	526
Y	*378-0630*	1	AIR COMPRESSOR GP	410
Y	*476-7558*	1	HOUSING GP-FRONT	541
Y	*371-2483*	1	INJECTOR GP-FUEL	763
Y	*371-2478*	1	JET GP-PISTON COOLING	543
Y	*416-2470*	1	LIFTING GP-ENGINE	546
Y	*416-7808*	1	MANIFOLD GP-EXHAUST	724
Y	*391-5523*	1	MANIFOLD GP-INLET	726
Y	*448-9710*	1	CONNECTOR GP-CAB HEATER LINES	652
Y	*395-0112*	1	MOUNTING GP-ELECTRONIC CONTROL	819
Y	*375-4499*	1	PAN GP-OIL	557
Y	*374-6301*	1	PISTON & ROD GP	576
Y	*378-8167*	1	PLATE & FILM GP	868
Y	*375-0098*	1	FASTENER GP-DAMPER & PULLEY	505
Y	*379-6629*	1	PULLEY GP-CRANKSHAFT	603
Y	*462-6685*	1	PUMP GP-ENGINE OIL	646
Y	*391-4811*	1	PUMP GP-FUEL INJECTION	790
Y	*372-2297*	1	PUMP GP-WATER	678
Y	*394-9639*	1	RAIL GP-FUEL	794
Y	*371-2480*	1	ROCKER ARM GP	606
Y	*395-0110*	1	SENSOR GP-ENGINE	820
Y	*395-0114*	1	STARTING AID GP	826
Y	*371-2541*	1	STARTING MOTOR GP-ELECTRIC	829
Y	*375-5002*	1	TURBOCHARGER GP	732
Y	*371-2745*	1	VALVE GP-FLUID SAMPLING	647

468-8148 **ENGINE AR-PRIMARY (**contd.**)** **i07883371**

NOTE	PART NUMBER	QTY	PART NAME 1 2 3 4 5 6 (PRODUCT LEVEL)	SEE PAGE
Y	*424-5516*	1	WIRING GP-ENGINE	846
	460-6435	1	ELECTRONICS GP-ENGINE	

Y - SEPARATE ILLUSTRATION

<END>

468-8218 ENGINE AR-PRIMARY

168 BRAKE KW (225 BHP) AT 2200 RPM

OPTIONAL FIELD REPLACEMENT ORDER 451-1222—PAGE: 452, 452-6584—PAGE: 462

SMCS-1000 **i09219314**

NOTE	PART NUMBER	QTY	PART NAME 1 2 3 4 5 6 (PRODUCT LEVEL)	SEE PAGE
Y	*377-0721*	1	ALTERNATOR GP-CHARGING	799
Y	*391-9611*	1	BELT TENSIONER GP	421
Y	*425-0196*	1	BREATHER GP (CRANKCASE)	612
Y	*396-2617*	1	CAMSHAFT GP	428
Y	*390-5130*	1	CLAMP AS-EXHAUST	717
AY	*477-6774*	1	CONFIGURATION AR-ENGINE	5
Y	*346-2911*	1	CONNECTION GP-HEATER	648
Y	*373-3606*	1	CONNECTION GP-WATER	649
Y	*371-2536*	1	CONTROL GP-ELECTRONIC	808
Y	*378-8283*	1	COOLER GP-ENGINE OIL	662
Y	*436-1195*	1	COVER GP-VALVE MECHANISM	442
Y	*374-6300*	1	CRANKSHAFT GP	447
Y	*390-0854*	1	CYLINDER BLOCK GP	450
Y	*385-2572*	1	CYLINDER HEAD GP	458
Y	*371-2742*	1	DRAIN GP-ENGINE OIL	466
Y	*375-3937*	1	DRIVE GP-FAN	470
Y	*375-0098*	1	FASTENER GP-DAMPER & PULLEY	505
Y	*390-3737*	1	FILLER GP-ENGINE OIL	620
Y	*415-5625*	1	FILM GP (ALTERNATOR)	862
Y	*346-0220*	1	FILTER GP-ENGINE OIL	629
Y	*441-1222*	1	FILTER GP-FUEL (WATER SEPARATOR)	758
Y	*453-7163*	1	FILTER GP-FUEL	760
Y	*425-0197*	1	FILTER GP-FUMES DISPOSAL	630
Y	*345-9028*	1	FLYWHEEL GP	509
Y	*439-3432*	1	GAUGE GP-OIL LEVEL (DIPSTICK)	640
Y	*378-0582*	1	HOUSING GP-FLYWHEEL	523
Y	*371-2725*	1	HOUSING GP-FRONT	532
Y	*416-8908*	1	INJECTOR GP-FUEL	766
Y	*371-2478*	1	JET GP-PISTON COOLING	543
Y	*371-2740*	1	LIFTING GP-ENGINE	545
Y	*426-3310*	1	LINES GP-FUEL INJECTION	787
Y	*393-7694*	1	MANIFOLD GP-EXHAUST	723
Y	*391-5523*	1	MANIFOLD GP-INLET	726
Y	*395-0112*	1	MOUNTING GP-ELECTRONIC CONTROL	819
Y	*375-4499*	1	PAN GP-OIL	557
Y	*369-7304*	1	PISTON & ROD GP	566
Y	*378-8167*	1	PLATE & FILM GP	868
Y	*379-6629*	1	PULLEY GP-CRANKSHAFT	603
Y	*462-6685*	1	PUMP GP-ENGINE OIL	646
Y	*391-4811*	1	PUMP GP-FUEL INJECTION	790
Y	*372-2297*	1	PUMP GP-WATER	678
Y	*394-9639*	1	RAIL GP-FUEL	794
Y	*371-2480*	1	ROCKER ARM GP	606
Y	*395-0110*	1	SENSOR GP-ENGINE	820
Y	*371-2733*	1	STARTING AID GP	823
Y	*445-4703*	1	STARTING MOTOR GP-ELECTRIC	838
Y	*371-2719*	1	SUPPORT GP-POWER TAKE-OFF	608
Y	*416-6970*	1	TURBOCHARGER GP	740

468-8218 **ENGINE AR-PRIMARY (**contd.**)** **i09219314**

NOTE	PART NUMBER	QTY	PART NAME 1 2 3 4 5 6 (PRODUCT LEVEL)	SEE PAGE
Y	*371-2745*	1	VALVE GP-FLUID SAMPLING	647
Y	*418-0928*	1	WIRING GP-ENGINE	844
	448-4768	1	ELECTRONICS GP	
	376-6464	1	PLATE & FILM GP	

A - NOT PART OF THIS GROUP
Y - SEPARATE ILLUSTRATION

<END>

470-8667 ENGINE AR-PRIMARY

205 BRAKE KW (275 BHP) AT 2200 RPM

OPTIONAL FIELD REPLACEMENT ORDER 451-1222—PAGE: 452, 452-6584—PAGE: 462

SMCS-1000 **i09402680**

NOTE	PART NUMBER	QTY	PART NAME 1 2 3 4 5 6 (PRODUCT LEVEL)	SEE PAGE
Y	*378-0632*	1	AIR COMPRESSOR GP	412
Y	*377-0721*	1	ALTERNATOR GP-CHARGING	799
Y	*391-9612*	1	BELT TENSIONER GP	422
Y	*379-6637*	1	BRACKET GP-MOUNTING	423
Y	*392-0632*	1	BREATHER GP	611
Y	*396-2617*	1	CAMSHAFT GP	428
Y	*390-5130*	1	CLAMP AS-EXHAUST	717
AY	*478-7619*	1	CONFIGURATION AR-ENGINE	6
Y	*373-3607*	1	CONNECTION GP-WATER	650
Y	*371-2536*	1	CONTROL GP-ELECTRONIC	808
Y	*378-8280*	1	COOLER GP-ENGINE OIL	661
Y	*389-3347*	1	COVER GP-VALVE MECHANISM	436
Y	*371-2477*	1	CRANKSHAFT GP	
Y	*390-0854*	1	CYLINDER BLOCK GP	450
Y	*385-2572*	1	CYLINDER HEAD GP	458
Y	*378-8166*	1	DRAIN GP-ENGINE OIL	467
Y	*375-4495*	1	DRIVE GP-FAN	471
Y	*375-8320*	1	EXTENSION GP-FAN	501
Y	*378-0627*	1	FAN GP	670
Y	*375-0098*	1	FASTENER GP-DAMPER & PULLEY	505
Y	*438-5978*	1	FILLER GP-ENGINE OIL	623
Y	*415-5625*	1	FILM GP (ALTERNATOR)	862
Y	*346-0220*	1	FILTER GP-ENGINE OIL	629
Y	*441-1222*	1	FILTER GP-FUEL (WATER SEPARATOR)	758
Y	*453-7163*	1	FILTER GP-FUEL	760
Y	*448-2106*	1	FITTING GP-WATER LINES	677
Y	*437-2723*	1	FLYWHEEL GP	513
Y	*439-3431*	1	GAUGE GP-OIL LEVEL (DIPSTICK)	639
Y	*437-2721*	1	HOUSING GP-FLYWHEEL	529
Y	*375-4645*	1	HOUSING GP-FRONT	534
Y	*416-8908*	1	INJECTOR GP-FUEL	766
Y	*371-2478*	1	JET GP-PISTON COOLING	543
Y	*416-2470*	1	LIFTING GP-ENGINE	546
Y	*398-7221*	1	LINES GP-FUEL FILTER	778
Y	*393-7694*	1	MANIFOLD GP-EXHAUST	723
Y	*391-5523*	1	MANIFOLD GP-INLET	726
Y	*395-0112*	1	MOUNTING GP-ELECTRONIC CONTROL	819
Y	*504-6359*	1	MOUNTING GP-ENGINE	554
Y	*378-0593*	1	PAN GP-OIL	560
Y	*369-7304*	1	PISTON & ROD GP	566
Y	*378-8167*	1	PLATE & FILM GP	868
Y	*371-2555*	1	PULLEY GP-CRANKSHAFT	602
Y	*462-6685*	1	PUMP GP-ENGINE OIL	646
Y	*391-4811*	1	PUMP GP-FUEL INJECTION	790
Y	*372-2297*	1	PUMP GP-WATER	678
Y	*394-9639*	1	RAIL GP-FUEL	794
Y	*371-2480*	1	ROCKER ARM GP	606
Y	*395-0110*	1	SENSOR GP-ENGINE	820

470-8667 **ENGINE AR-PRIMARY (**contd.**)** **i09402680**

NOTE	PART NUMBER	QTY	PART NAME 1 2 3 4 5 6 (PRODUCT LEVEL)	SEE PAGE
Y	*395-0114*	1	STARTING AID GP	826
Y	*385-8000*	1	STARTING MOTOR GP-ELECTRIC	832
Y	*431-6518*	1	TURBOCHARGER GP	743
Y	*371-2745*	1	VALVE GP-FLUID SAMPLING	647
Y	*424-5516*	1	WIRING GP-ENGINE	846
	449-3320	1	ELECTRONICS GP-ENGINE	
	376-6464	1	PLATE & FILM GP	

A - NOT PART OF THIS GROUP
Y - SEPARATE ILLUSTRATION

<END>

470-8814 ENGINE AR-PRIMARY

204 BRAKE KW (274 BHP) AT 2200 RPM
FIELD REPLACEMENT ORDER 645-2039—PAGE: 404
OPTIONAL FIELD REPLACEMENT ORDER 451-1222—PAGE: 452, 452-6584—PAGE: 462
PART OF 476-4938 ENGINE AR-COMPLETE

SMCS-1000 **i10230504**

NOTE	PART NUMBER	QTY	PART NAME 1 2 3 4 5 6 (PRODUCT LEVEL)	SEE PAGE
Y	*385-8001*	1	ALTERNATOR GP-CHARGING	800
Y	*375-4479*	1	BELT TENSIONER GP	417
Y	*392-0632*	1	BREATHER GP	611
Y	*396-2617*	1	CAMSHAFT GP	428
Y	*374-7094*	1	COMPRESSOR & MTG GP-REFRIGERANT	429
Y	*346-2911*	1	CONNECTION GP-HEATER	648
Y	*373-3607*	1	CONNECTION GP-WATER	650
Y	*371-2537*	1	CONTROL GP-ENGINE ELECTRONIC	811
Y	*378-8283*	1	COOLER GP-ENGINE OIL	662
Y	*389-3346*	1	COVER GP-VALVE MECHANISM	435
Y	*374-6300*	1	CRANKSHAFT GP	447
Y	*390-0854*	1	CYLINDER BLOCK GP	450
Y	*385-2572*	1	CYLINDER HEAD GP	458
Y	*394-7014*	1	DRAIN GP-ENGINE OIL	468
Y	*374-7093*	1	DRIVE GP-FAN	469
Y	*375-4606*	1	DRIVE GP-POWER TAKE-OFF	499
Y	*375-0098*	1	FASTENER GP-DAMPER & PULLEY	505
Y	*448-0944*	1	FILLER GP-ENGINE OIL	627
Y	*415-5625*	1	FILM GP (ALTERNATOR)	862
Y	*390-0060*	1	FILM GP	859
Y	*346-0220*	1	FILTER GP-ENGINE OIL	629
Y	*441-1222*	1	FILTER GP-FUEL (WATER SEPARATOR)	758
Y	*453-7163*	1	FILTER GP-FUEL	760
Y	*377-0692*	1	FLYWHEEL GP	511
Y	*460-1570*	1	GAUGE GP-OIL LEVEL (DIPSTICK)	641
Y	*393-3369*	1	HOUSING GP-FLYWHEEL	526
Y	*375-4645*	1	HOUSING GP-FRONT	534
Y	*416-8908*	1	INJECTOR GP-FUEL	766
Y	*371-2478*	1	JET GP-PISTON COOLING	543
Y	*371-2740*	1	LIFTING GP-ENGINE	545
Y	*426-3312*	1	LINES GP-FUEL FILTER	781
Y	*393-7694*	1	MANIFOLD GP-EXHAUST	723
Y	*391-5523*	1	MANIFOLD GP-INLET	726
Y	*395-0112*	1	MOUNTING GP-ELECTRONIC CONTROL	819
Y	*346-1510*	1	MOUNTING GP-ENGINE	548
Y	*393-5466*	1	PAN GP-OIL	563
Y	*369-7304*	1	PISTON & ROD GP	566
Y	*635-3313*	1	PLATE GP-IDENTIFICATION	869
Y	*371-2554*	1	PULLEY GP-CRANKSHAFT	601
Y	*462-6685*	1	PUMP GP-ENGINE OIL	646
Y	*391-4811*	1	PUMP GP-FUEL INJECTION	790
Y	*372-2297*	1	PUMP GP-WATER	678
Y	*394-9639*	1	RAIL GP-FUEL	794
Y	*371-2480*	1	ROCKER ARM GP	606
Y	*395-0110*	1	SENSOR GP-ENGINE	820
Y	*395-0114*	1	STARTING AID GP	826

470-8814 **ENGINE AR-PRIMARY (**contd.**)** **i10230504**

NOTE	PART NUMBER	QTY	PART NAME 1 2 3 4 5 6 (PRODUCT LEVEL)	SEE PAGE
Y	*371-2541*	1	STARTING MOTOR GP-ELECTRIC	829
Y	*416-6969*	1	TURBOCHARGER GP	739
Y	*371-2745*	1	VALVE GP-FLUID SAMPLING	647
Y	*395-0113*	1	WIRING GP-ENGINE	841
	468-8412	1	ELECTRONICS GP-ENGINE	
			SOFTWARE MUST BE PROCURED LOCALLY FROM YOUR CAT DEALER	

Y - SEPARATE ILLUSTRATION

<END>

471-0541 ENGINE AR-PRIMARY

129 BRAKE KW (173 BHP) AT 2200 RPM

OPTIONAL FIELD REPLACEMENT ORDER 451-1222—PAGE: 452, 452-6584—PAGE: 462

SMCS-1000 **i09402666**

NOTE	PART NUMBER	QTY	PART NAME 1 2 3 4 5 6 (PRODUCT LEVEL)	SEE PAGE
Y	*377-0720*	1	ALTERNATOR GP-CHARGING	798
Y	*371-2693*	1	BELT TENSIONER GP	416
Y	*392-0632*	1	BREATHER GP	611
Y	*396-2615*	1	CAMSHAFT GP	427
AY	*476-7489*	1	CONFIGURATION AR-ENGINE	4
Y	*373-3607*	1	CONNECTION GP-WATER	650
Y	*371-2536*	1	CONTROL GP-ELECTRONIC	808
Y	*346-0091*	1	COOLER GP-ENGINE OIL	657
Y	*389-3348*	1	COVER GP-VALVE MECHANISM	440
Y	*374-6300*	1	CRANKSHAFT GP	447
Y	*390-0854*	1	CYLINDER BLOCK GP	450
Y	*385-2572*	1	CYLINDER HEAD GP	458
Y	*393-2180*	1	DRIVE GP-FAN	484
Y	*375-8320*	1	EXTENSION GP-FAN	501
Y	*454-5203*	1	FAN GP	674
Y	*375-0098*	1	FASTENER GP-DAMPER & PULLEY	505
Y	*390-3737*	1	FILLER GP-ENGINE OIL	620
Y	*390-0060*	1	FILM GP (EMISSION)	859
Y	*415-5625*	1	FILM GP (ALTERNATOR)	862
Y	*423-8803*	1	FILM GP (STARTING MOTOR)	863
Y	*346-0220*	1	FILTER GP-ENGINE OIL	629
Y	*441-1215*	1	FILTER GP-FUEL (WATER SEPARATOR)	756
Y	*453-7163*	1	FILTER GP-FUEL	760
Y	*346-0769*	1	FLANGE GP-EXHAUST	719
Y	*482-7703*	1	FLYWHEEL GP	515
Y	*439-3432*	1	GAUGE GP-OIL LEVEL (DIPSTICK)	640
Y	*345-8839*	1	HOUSING GP-FLYWHEEL	518
Y	*371-2725*	1	HOUSING GP-FRONT	532
Y	*371-2483*	1	INJECTOR GP-FUEL	763
Y	*371-2478*	1	JET GP-PISTON COOLING	543
Y	*416-2470*	1	LIFTING GP-ENGINE	546
Y	*426-3310*	1	LINES GP-FUEL INJECTION	787
Y	*416-7808*	1	MANIFOLD GP-EXHAUST	724
Y	*391-5523*	1	MANIFOLD GP-INLET	726
Y	*373-5023*	1	MOUNTING GP-ACCESSORY MODULE	857
Y	*395-0112*	1	MOUNTING GP-ELECTRONIC CONTROL	819
Y	*375-4499*	1	PAN GP-OIL	557
Y	*374-6301*	1	PISTON & ROD GP	576
Y	*346-2908*	1	PLUG GP-ENGINE	592
Y	*440-0026*	1	PLUG GP-OIL FILTER MOUNTING	644
Y	*379-6629*	1	PULLEY GP-CRANKSHAFT	603
Y	*462-6685*	1	PUMP GP-ENGINE OIL	646
Y	*391-4811*	1	PUMP GP-FUEL INJECTION	790
Y	*372-2297*	1	PUMP GP-WATER	678
Y	*394-9639*	1	RAIL GP-FUEL	794
Y	*371-2480*	1	ROCKER ARM GP	606
Y	*395-0110*	1	SENSOR GP-ENGINE	820
Y	*380-9279*	1	STARTING AID GP	824

471-0541 **ENGINE AR-PRIMARY (**contd.**)** **i09402666**

NOTE	PART NUMBER	QTY	PART NAME 1 2 3 4 5 6 (PRODUCT LEVEL)	SEE PAGE
Y	*415-4870*	1	STARTING MOTOR GP-ELECTRIC	837
Y	*371-2719*	1	SUPPORT GP-POWER TAKE-OFF	608
Y	*375-5002*	1	TURBOCHARGER GP	732
Y	*424-5516*	1	WIRING GP-ENGINE	846
	468-8413	1	ELECTRONICS GP-ENGINE	
	376-6464	1	PLATE & FILM GP	

A - NOT PART OF THIS GROUP
Y - SEPARATE ILLUSTRATION

<END>

472-5560 ENGINE AR-PRIMARY

PART OF 472-6931 ENGINE AR

SMCS-1000 **i06180244**

NOTE	PART NUMBER	QTY	PART NAME 1 2 3 4 5 6 (PRODUCT LEVEL)	SEE PAGE
Y	*377-0721*	1	ALTERNATOR GP-CHARGING	799
Y	*346-0099*	1	BASE GP-OIL COOLER & FILTER	610
Y	*371-2693*	1	BELT TENSIONER GP	416
Y	*392-0632*	1	BREATHER GP	611
Y	*396-2615*	1	CAMSHAFT GP	427
Y	*373-3607*	1	CONNECTION GP-WATER	650
Y	*371-2536*	1	CONTROL GP-ELECTRONIC	808
Y	*389-3346*	1	COVER GP-VALVE MECHANISM	435
Y	*374-6300*	1	CRANKSHAFT GP	447
Y	*390-0854*	1	CYLINDER BLOCK GP	450
Y	*385-2572*	1	CYLINDER HEAD GP	458
Y	*371-2742*	1	DRAIN GP-ENGINE OIL	466
Y	*379-0966*	1	DRIVE GP-FAN	474
Y	*443-4956*	1	FAN GP	672
Y	*439-3441*	1	FILLER GP-ENGINE OIL	626
Y	*390-0060*	1	FILM GP	859
Y	*415-5625*	1	FILM GP (ALTERNATOR)	862
Y	*423-8803*	1	FILM GP (STARTING MOTOR)	863
Y	*346-0220*	1	FILTER GP-ENGINE OIL	629
Y	*398-7221*	1	LINES GP-FUEL FILTER	778
Y	*441-1222*	1	FILTER GP-FUEL (WATER SEPARATOR)	758
Y	*453-7163*	1	FILTER GP-FUEL	760
Y	*345-8902*	1	FLYWHEEL GP	507
Y	*439-3432*	1	GAUGE GP-OIL LEVEL (DIPSTICK)	640
Y	*380-2587*	1	HOUSING GP-FLYWHEEL	525
Y	*378-0630*	1	AIR COMPRESSOR GP	410
Y	*448-9719*	1	HOUSING GP-FRONT	538
Y	*371-2483*	1	INJECTOR GP-FUEL	763
Y	*371-2478*	1	JET GP-PISTON COOLING	543
Y	*416-2470*	1	LIFTING GP-ENGINE	546
Y	*393-7694*	1	MANIFOLD GP-EXHAUST	723
Y	*391-5523*	1	MANIFOLD GP-INLET	726
Y	*448-9710*	1	CONNECTOR GP-CAB HEATER LINES	652
Y	*395-0112*	1	MOUNTING GP-ELECTRONIC CONTROL	819
Y	*375-4499*	1	PAN GP-OIL	557
Y	*374-6301*	1	PISTON & ROD GP	576
Y	*375-0098*	1	FASTENER GP-DAMPER & PULLEY	505
Y	*371-2554*	1	PULLEY GP-CRANKSHAFT	601
Y	*462-6685*	1	PUMP GP-ENGINE OIL	646
Y	*391-4811*	1	PUMP GP-FUEL INJECTION	790
Y	*372-2297*	1	PUMP GP-WATER	678
Y	*394-9639*	1	RAIL GP-FUEL	794
Y	*371-2480*	1	ROCKER ARM GP	606
Y	*395-0110*	1	SENSOR GP-ENGINE	820
Y	*395-0114*	1	STARTING AID GP	826
Y	*392-2021*	1	STARTING MOTOR GP-ELECTRIC	836
Y	*371-2720*	1	TURBOCHARGER GP	728
Y	*371-2745*	1	VALVE GP-FLUID SAMPLING	647

472-5560 **ENGINE AR-PRIMARY (**contd.**)** **i06180244**

NOTE	PART NUMBER	QTY	PART NAME 1 2 3 4 5 6 (PRODUCT LEVEL)	SEE PAGE
Y	*424-5516*	1	WIRING GP-ENGINE	846
	460-6435	1	ELECTRONICS GP-ENGINE	

Y - SEPARATE ILLUSTRATION

<END>

473-3372 ENGINE AR-PRIMARY

PART OF 481-4235 ENGINE AR-COMPLETE

SMCS-1000 **i06238811**

NOTE	PART NUMBER	QTY	PART NAME 1 2 3 4 5 6 (PRODUCT LEVEL)	SEE PAGE
Y	*377-0721*	1	ALTERNATOR GP-CHARGING	799
Y	*371-2693*	1	BELT TENSIONER GP	416
Y	*392-0632*	1	BREATHER GP	611
Y	*396-2615*	1	CAMSHAFT GP	427
Y	*373-3606*	1	CONNECTION GP-WATER	649
Y	*371-2536*	1	CONTROL GP-ELECTRONIC	808
Y	*346-0091*	1	COOLER GP-ENGINE OIL	657
Y	*389-3348*	1	COVER GP-VALVE MECHANISM	440
Y	*374-6300*	1	CRANKSHAFT GP	447
Y	*390-0854*	1	CYLINDER BLOCK GP	450
Y	*385-2572*	1	CYLINDER HEAD GP	458
Y	*415-3083*	1	DRIVE GP-FAN	497
Y	*371-2694*	1	EXTENSION GP-FAN	500
Y	*390-3737*	1	FILLER GP-ENGINE OIL	620
Y	*415-5625*	1	FILM GP (ALTERNATOR)	862
Y	*346-0220*	1	FILTER GP-ENGINE OIL	629
Y	*441-1215*	1	FILTER GP-FUEL (WATER SEPARATOR)	756
Y	*448-0935*	1	LINES GP-FUEL FILTER	783
Y	*453-7163*	1	FILTER GP-FUEL	760
Y	*346-0769*	1	FLANGE GP-EXHAUST	719
Y	*345-9037*	1	FLYWHEEL GP	510
Y	*439-3432*	1	GAUGE GP-OIL LEVEL (DIPSTICK)	640
Y	*345-8846*	1	HOUSING GP-FLYWHEEL	519
Y	*378-0630*	1	AIR COMPRESSOR GP	410
Y	*476-7558*	1	HOUSING GP-FRONT	541
Y	*371-2483*	1	INJECTOR GP-FUEL	763
Y	*371-2478*	1	JET GP-PISTON COOLING	543
Y	*371-2735*	1	LIFTING GP-ENGINE	544
Y	*416-7808*	1	MANIFOLD GP-EXHAUST	724
Y	*391-5523*	1	MANIFOLD GP-INLET	726
Y	*448-9710*	1	CONNECTOR GP-CAB HEATER LINES	652
Y	*395-0112*	1	MOUNTING GP-ELECTRONIC CONTROL	819
Y	*346-1510*	1	MOUNTING GP-ENGINE	548
Y	*375-4499*	1	PAN GP-OIL	557
Y	*374-6301*	1	PISTON & ROD GP	576
Y	*378-8167*	1	PLATE & FILM GP	868
Y	*375-0098*	1	FASTENER GP-DAMPER & PULLEY	505
Y	*379-6629*	1	PULLEY GP-CRANKSHAFT	603
Y	*462-6685*	1	PUMP GP-ENGINE OIL	646
Y	*391-4811*	1	PUMP GP-FUEL INJECTION	790
Y	*372-2297*	1	PUMP GP-WATER	678
Y	*394-9639*	1	RAIL GP-FUEL	794
Y	*371-2480*	1	ROCKER ARM GP	606
Y	*395-0110*	1	SENSOR GP-ENGINE	820
Y	*395-0114*	1	STARTING AID GP	826
Y	*448-9771*	1	TURBOCHARGER GP	744
Y	*371-2745*	1	VALVE GP-FLUID SAMPLING	647

473-3372 **ENGINE AR-PRIMARY (**contd.**)** **i06238811**

NOTE	PART NUMBER	QTY	PART NAME 1 2 3 4 5 6 (PRODUCT LEVEL)	SEE PAGE
Y	*424-5516*	1	WIRING GP-ENGINE	846
	460-6435	1	ELECTRONICS GP-ENGINE	

Y - SEPARATE ILLUSTRATION

<END>

473-3373 ENGINE AR-PRIMARY

PART OF 479-0926 ENGINE AR

SMCS-1000 **i06238812**

NOTE	PART NUMBER	QTY	PART NAME 1 2 3 4 5 6 (PRODUCT LEVEL)	SEE PAGE
Y	*377-0721*	1	ALTERNATOR GP-CHARGING	799
Y	*371-2693*	1	BELT TENSIONER GP	416
Y	*392-0632*	1	BREATHER GP	611
Y	*396-2617*	1	CAMSHAFT GP	428
Y	*373-3606*	1	CONNECTION GP-WATER	649
Y	*371-2536*	1	CONTROL GP-ELECTRONIC	808
Y	*378-8276*	1	COOLER GP-ENGINE OIL	659
Y	*389-3348*	1	COVER GP-VALVE MECHANISM	440
Y	*374-6300*	1	CRANKSHAFT GP	447
Y	*390-0854*	1	CYLINDER BLOCK GP	450
Y	*385-2572*	1	CYLINDER HEAD GP	458
Y	*415-3083*	1	DRIVE GP-FAN	497
Y	*371-2694*	1	EXTENSION GP-FAN	500
Y	*390-3737*	1	FILLER GP-ENGINE OIL	620
Y	*415-5625*	1	FILM GP (ALTERNATOR)	862
Y	*346-0220*	1	FILTER GP-ENGINE OIL	629
Y	*441-1215*	1	FILTER GP-FUEL (WATER SEPARATOR)	756
Y	*448-0935*	1	LINES GP-FUEL FILTER	783
Y	*453-7163*	1	FILTER GP-FUEL	760
Y	*346-0769*	1	FLANGE GP-EXHAUST	719
Y	*345-9037*	1	FLYWHEEL GP	510
Y	*439-3432*	1	GAUGE GP-OIL LEVEL (DIPSTICK)	640
Y	*345-8846*	1	HOUSING GP-FLYWHEEL	519
Y	*378-0630*	1	AIR COMPRESSOR GP	410
Y	*476-7558*	1	HOUSING GP-FRONT	541
Y	*416-8908*	1	INJECTOR GP-FUEL	766
Y	*371-2478*	1	JET GP-PISTON COOLING	543
Y	*371-2735*	1	LIFTING GP-ENGINE	544
Y	*416-7808*	1	MANIFOLD GP-EXHAUST	724
Y	*391-5523*	1	MANIFOLD GP-INLET	726
Y	*448-9710*	1	CONNECTOR GP-CAB HEATER LINES	652
Y	*395-0112*	1	MOUNTING GP-ELECTRONIC CONTROL	819
Y	*346-1510*	1	MOUNTING GP-ENGINE	548
Y	*375-4499*	1	PAN GP-OIL	557
Y	*369-7304*	1	PISTON & ROD GP	566
Y	*378-8167*	1	PLATE & FILM GP	868
Y	*375-0098*	1	FASTENER GP-DAMPER & PULLEY	505
Y	*379-6629*	1	PULLEY GP-CRANKSHAFT	603
Y	*462-6685*	1	PUMP GP-ENGINE OIL	646
Y	*391-4811*	1	PUMP GP-FUEL INJECTION	790
Y	*372-2297*	1	PUMP GP-WATER	678
Y	*394-9639*	1	RAIL GP-FUEL	794
Y	*371-2480*	1	ROCKER ARM GP	606
Y	*395-0110*	1	SENSOR GP-ENGINE	820
Y	*395-0114*	1	STARTING AID GP	826
Y	*448-9777*	1	TURBOCHARGER GP	748
Y	*371-2745*	1	VALVE GP-FLUID SAMPLING	647

473-3373 **ENGINE AR-PRIMARY (**contd.**)** **i06238812**

NOTE	PART NUMBER	QTY	PART NAME 1 2 3 4 5 6 (PRODUCT LEVEL)	SEE PAGE
Y	*424-5516*	1	WIRING GP-ENGINE	846
	448-4768	1	ELECTRONICS GP	

Y - SEPARATE ILLUSTRATION

<END>

473-3375 ENGINE AR-PRIMARY

168 BRAKE KW (225.3 BHP) AT 2200-RPM

PART OF 479-2167 ENGINE AR-COMPLETE

SMCS-1000 **i06926362**

NOTE	PART NUMBER	QTY	PART NAME 1 2 3 4 5 6 (PRODUCT LEVEL)	SEE PAGE
Y	*478-4234*	1	AIR CLEANER GP	715
Y	*377-0721*	1	ALTERNATOR GP-CHARGING	799
Y	*371-2693*	1	BELT TENSIONER GP	416
Y	*392-0632*	1	BREATHER GP	611
Y	*396-2617*	1	CAMSHAFT GP	428
Y	*373-3607*	1	CONNECTION GP-WATER	650
Y	*371-2536*	1	CONTROL GP-ELECTRONIC	808
Y	*378-8280*	1	COOLER GP-ENGINE OIL	661
Y	*389-3346*	1	COVER GP-VALVE MECHANISM	435
Y	*374-6300*	1	CRANKSHAFT GP	447
Y	*390-0854*	1	CYLINDER BLOCK GP	450
Y	*385-2572*	1	CYLINDER HEAD GP	458
Y	*415-3076*	1	DRIVE GP-FAN	495
Y	*443-4956*	1	FAN GP	672
Y	*375-0098*	1	FASTENER GP-DAMPER & PULLEY	505
Y	*452-0776*	1	FILLER GP-ENGINE OIL	628
Y	*390-0060*	1	FILM GP (EMISSION)	859
Y	*415-5625*	1	FILM GP (ALTERNATOR) (ALTERNATOR)	862
Y	*423-8803*	1	FILM GP (STARTING MOTOR) (STARTING MOTOR)	863
Y	*346-0220*	1	FILTER GP-ENGINE OIL	629
Y	*398-7221*	1	LINES GP-FUEL FILTER	778
Y	*441-1215*	1	FILTER GP-FUEL (WATER SEPARATOR) (WATER SEPARATOR)	756
Y	*453-7163*	1	FILTER GP-FUEL	760
Y	*346-0769*	1	FLANGE GP-EXHAUST	719
Y	*345-8901*	1	FLYWHEEL GP	506
Y	*439-3432*	1	GAUGE GP-OIL LEVEL (DIPSTICK) (ENGINE)	640
Y	*345-8838*	1	HOUSING GP-FLYWHEEL	517
Y	*375-5838*	1	HOUSING GP-FRONT	536
Y	*416-8908*	1	INJECTOR GP-FUEL	766
Y	*371-2478*	1	JET GP-PISTON COOLING	543
Y	*416-2470*	1	LIFTING GP-ENGINE	546
Y	*416-7808*	1	MANIFOLD GP-EXHAUST	724
Y	*391-5523*	1	MANIFOLD GP-INLET	726
Y	*346-1528*	1	MOUNTING GP-ACCESSORY MODULE	856
Y	*395-0112*	1	MOUNTING GP-ELECTRONIC CONTROL	819
Y	*375-4499*	1	PAN GP-OIL	557
Y	*369-7304*	1	PISTON & ROD GP	566
Y	*346-2908*	1	PLUG GP-ENGINE	592
Y	*379-6629*	1	PULLEY GP-CRANKSHAFT	603
Y	*462-6685*	1	PUMP GP-ENGINE OIL	646
Y	*391-4811*	1	PUMP GP-FUEL INJECTION	790
Y	*372-2297*	1	PUMP GP-WATER	678
Y	*394-9639*	1	RAIL GP-FUEL	794
Y	*371-2480*	1	ROCKER ARM GP	606
Y	*395-0110*	1	SENSOR GP-ENGINE	820
Y	*395-0114*	1	STARTING AID GP	826
Y	*392-2020*	1	STARTING MOTOR GP-ELECTRIC	835

473-3375 **ENGINE AR-PRIMARY (**contd.**)** **i06926362**

NOTE	PART NUMBER	QTY	PART NAME 1 2 3 4 5 6 (PRODUCT LEVEL)	SEE PAGE
Y	*371-2719*	1	SUPPORT GP-POWER TAKE-OFF	608
Y	*416-6971*	1	TURBOCHARGER GP	741
Y	*371-2745*	1	VALVE GP-FLUID SAMPLING	647
Y	*424-5516*	1	WIRING GP-ENGINE	846
	448-4768	1	ELECTRONICS GP	

Y - SEPARATE ILLUSTRATION

<END>

474-7299 ENGINE AR-PRIMARY

168 BRAKE KW(225 BHP) AT 2200 RPM

OPTIONAL FIELD REPLACEMENT ORDER 451-1222—PAGE: 452, 452-6584—PAGE: 462

SMCS-1000 **i09170128**

NOTE	PART NUMBER	QTY	PART NAME 1 2 3 4 5 6 (PRODUCT LEVEL)	SEE PAGE
Y	*440-6724*	1	ALTERNATOR GP-CHARGING	802
Y	*375-4479*	1	BELT TENSIONER GP	417
Y	*379-6637*	1	BRACKET GP-MOUNTING	423
Y	*392-0632*	1	BREATHER GP	611
Y	*396-2617*	1	CAMSHAFT GP	428
Y	*390-5132*	1	CLAMP AS-EXHAUST	718
AY	*474-9782*	1	CONFIGURATION AR-ENGINE	4
Y	*373-3606*	1	CONNECTION GP-WATER	649
Y	*371-2536*	1	CONTROL GP-ELECTRONIC	808
Y	*378-8280*	1	COOLER GP-ENGINE OIL	661
Y	*389-3348*	1	COVER GP-VALVE MECHANISM	440
Y	*371-2477*	1	CRANKSHAFT GP	
Y	*390-0854*	1	CYLINDER BLOCK GP	450
Y	*385-2572*	1	CYLINDER HEAD GP	458
Y	*378-8166*	1	DRAIN GP-ENGINE OIL	467
Y	*375-3937*	1	DRIVE GP-FAN	470
Y	*375-4606*	1	DRIVE GP-POWER TAKE-OFF	499
Y	*375-0098*	1	FASTENER GP-DAMPER & PULLEY	505
Y	*379-6626*	1	FILLER GP-ENGINE OIL	619
Y	*390-0060*	1	FILM GP (EMISSION)	859
Y	*415-5625*	1	FILM GP (ALTERNATOR)	862
Y	*346-0220*	1	FILTER GP-ENGINE OIL	629
Y	*441-1215*	1	FILTER GP-FUEL (WATER SEPARATOR)	756
Y	*453-7163*	1	FILTER GP-FUEL	760
Y	*345-8961*	1	FLYWHEEL GP	508
Y	*439-3378*	1	GAUGE GP-OIL LEVEL (DIPSTICK)	637
Y	*380-2587*	1	HOUSING GP-FLYWHEEL	525
Y	*375-4645*	1	HOUSING GP-FRONT	534
Y	*416-8908*	1	INJECTOR GP-FUEL	766
Y	*371-2478*	1	JET GP-PISTON COOLING	543
Y	*371-2735*	1	LIFTING GP-ENGINE	544
Y	*448-0935*	1	LINES GP-FUEL FILTER	783
Y	*393-7694*	1	MANIFOLD GP-EXHAUST	723
Y	*391-5523*	1	MANIFOLD GP-INLET	726
Y	*395-0112*	1	MOUNTING GP-ELECTRONIC CONTROL	819
Y	*371-2544*	1	PAN GP-OIL	556
Y	*369-7304*	1	PISTON & ROD GP	566
Y	*346-2908*	1	PLUG GP-ENGINE	592
Y	*371-2555*	1	PULLEY GP-CRANKSHAFT	602
Y	*462-6685*	1	PUMP GP-ENGINE OIL	646
Y	*391-4811*	1	PUMP GP-FUEL INJECTION	790
Y	*372-2297*	1	PUMP GP-WATER	678
Y	*394-9639*	1	RAIL GP-FUEL	794
Y	*371-2480*	1	ROCKER ARM GP	606
Y	*395-0110*	1	SENSOR GP-ENGINE	820
Y	*395-0114*	1	STARTING AID GP	826
Y	*458-3684*	1	STARTING MOTOR GP-ELECTRIC	839
Y	*416-6968*	1	TURBOCHARGER GP	738

474-7299 **ENGINE AR-PRIMARY (**contd.**)** **i09170128**

NOTE	PART NUMBER	QTY	PART NAME 1 2 3 4 5 6 (PRODUCT LEVEL)	SEE PAGE
Y	*371-2745*	1	VALVE GP-FLUID SAMPLING	647
Y	*424-5516*	1	WIRING GP-ENGINE	846
	448-4768	1	ELECTRONICS GP	
	376-6464	1	PLATE & FILM GP	

A - NOT PART OF THIS GROUP
Y - SEPARATE ILLUSTRATION

<END>

475-3388 ENGINE AR-PRIMARY

168 BRAKE KW (225 BHP) AT 2200 RPM

OPTIONAL FIELD REPLACEMENT ORDER 451-1222—PAGE: 452, 452-6584—PAGE: 462

SMCS-1000 **i10420340**

NOTE	PART NUMBER	QTY	PART NAME 1 2 3 4 5 6 (PRODUCT LEVEL)	SEE PAGE
Y	*467-1940*	1	AIR CLEANER GP	714
			—OR—	
Y	*478-4234*	1	AIR CLEANER GP	715
Y	*377-0721*	1	ALTERNATOR GP-CHARGING	799
Y	*371-2693*	1	BELT TENSIONER GP	416
Y	*392-0632*	1	BREATHER GP	611
Y	*396-2617*	1	CAMSHAFT GP	428
AY	*477-6348*	1	CONFIGURATION AR-ENGINE	5
Y	*373-3607*	1	CONNECTION GP-WATER	650
Y	*371-2536*	1	CONTROL GP-ELECTRONIC	808
Y	*378-8276*	1	COOLER GP-ENGINE OIL	659
Y	*389-3346*	1	COVER GP-VALVE MECHANISM	435
Y	*374-6300*	1	CRANKSHAFT GP	447
Y	*390-0854*	1	CYLINDER BLOCK GP	450
Y	*385-2572*	1	CYLINDER HEAD GP	458
Y	*371-2742*	1	DRAIN GP-ENGINE OIL	466
Y	*393-2180*	1	DRIVE GP-FAN	484
Y	*375-8320*	1	EXTENSION GP-FAN	501
Y	*378-0627*	1	FAN GP	670
Y	*375-0098*	1	FASTENER GP-DAMPER & PULLEY	505
Y	*390-3737*	1	FILLER GP-ENGINE OIL	620
Y	*415-5625*	1	FILM GP (ALTERNATOR)	862
Y	*611-2653*	1	FILM GP (RADIATOR)	865
Y	*635-3313*	1	PLATE GP-IDENTIFICATION	869
Y	*346-0220*	1	FILTER GP-ENGINE OIL	629
Y	*441-1215*	1	FILTER GP-FUEL (WATER SEPARATOR)	756
Y	*453-7163*	1	FILTER GP-FUEL	760
Y	*346-0769*	1	FLANGE GP-EXHAUST	719
Y	*345-9037*	1	FLYWHEEL GP	510
Y	*439-3432*	1	GAUGE GP-OIL LEVEL (DIPSTICK)	640
Y	*393-3369*	1	HOUSING GP-FLYWHEEL	526
Y	*375-5838*	1	HOUSING GP-FRONT	536
Y	*416-8908*	1	INJECTOR GP-FUEL	766
Y	*371-2478*	1	JET GP-PISTON COOLING	543
Y	*416-2470*	1	LIFTING GP-ENGINE	546
Y	*426-3310*	1	LINES GP-FUEL INJECTION	787
Y	*416-7808*	1	MANIFOLD GP-EXHAUST	724
Y	*391-5523*	1	MANIFOLD GP-INLET	726
Y	*346-1512*	1	MOUNTING GP-ACCESSORY MODULE	855
Y	*395-0112*	1	MOUNTING GP-ELECTRONIC CONTROL	819
Y	*375-4499*	1	PAN GP-OIL	557
Y	*369-7304*	1	PISTON & ROD GP	566
Y	*378-8167*	1	PLATE & FILM GP	868
Y	*346-2908*	1	PLUG GP-ENGINE	592
Y	*440-0026*	1	PLUG GP-OIL FILTER MOUNTING	644
Y	*379-6629*	1	PULLEY GP-CRANKSHAFT	603
Y	*462-6685*	1	PUMP GP-ENGINE OIL	646
Y	*391-4811*	1	PUMP GP-FUEL INJECTION	790

475-3388 **ENGINE AR-PRIMARY (**contd.**)** **i10420340**

NOTE	PART NUMBER	QTY	PART NAME 1 2 3 4 5 6 (PRODUCT LEVEL)	SEE PAGE
Y	*372-2297*	1	PUMP GP-WATER	678
Y	*452-5153*	1	RADIATOR GP	686
Y	*394-9639*	1	RAIL GP-FUEL	794
Y	*371-2480*	1	ROCKER ARM GP	606
Y	*395-0110*	1	SENSOR GP-ENGINE	820
Y	*395-0114*	1	STARTING AID GP	826
Y	*385-8000*	1	STARTING MOTOR GP-ELECTRIC	832
Y	*371-2719*	1	SUPPORT GP-POWER TAKE-OFF	608
Y	*416-6971*	1	TURBOCHARGER GP	741
Y	*424-5516*	1	WIRING GP-ENGINE	846
	448-4768	1	ELECTRONICS GP	
Y	*376-6464*	1	PLATE & FILM GP	867
			SOFTWARE MUST BE PROCURED LOCALLY FROM YOUR CAT DEALER	

A - NOT PART OF THIS GROUP
Y - SEPARATE ILLUSTRATION

<END>

ENGINE ARRANGEMENT

475-6719 ENGINE AR-PRIMARY

SMCS-1000 **i06250937**

NOTE	PART NUMBER	QTY	PART NAME 1 2 3 4 5 6 (PRODUCT LEVEL)	SEE PAGE
Y	*478-4234*	1	AIR CLEANER GP	715
Y	*377-0721*	1	ALTERNATOR GP-CHARGING	799
Y	*371-2693*	1	BELT TENSIONER GP	416
Y	*425-0196*	1	BREATHER GP (CRANKCASE)	612
Y	*396-2617*	1	CAMSHAFT GP	428
Y	*373-3607*	1	CONNECTION GP-WATER	650
Y	*371-2536*	1	CONTROL GP-ELECTRONIC	808
Y	*378-8276*	1	COOLER GP-ENGINE OIL	659
Y	*389-3346*	1	COVER GP-VALVE MECHANISM	435
Y	*374-6300*	1	CRANKSHAFT GP	447
Y	*390-0854*	1	CYLINDER BLOCK GP	450
Y	*385-2572*	1	CYLINDER HEAD GP	458
Y	*393-2180*	1	DRIVE GP-FAN	484
Y	*375-8320*	1	EXTENSION GP-FAN	501
Y	*378-0627*	1	FAN GP	670
Y	*390-3737*	1	FILLER GP-ENGINE OIL	620
Y	*425-0197*	1	FILTER GP-FUMES DISPOSAL	630
Y	*415-5625*	1	FILM GP (ALTERNATOR)	862
Y	*346-0220*	1	FILTER GP-ENGINE OIL	629
Y	*441-1215*	1	FILTER GP-FUEL (WATER SEPARATOR)	756
Y	*453-7163*	1	FILTER GP-FUEL	760
Y	*346-0769*	1	FLANGE GP-EXHAUST	719
Y	*345-9037*	1	FLYWHEEL GP	510
Y	*439-3432*	1	GAUGE GP-OIL LEVEL (DIPSTICK)	640
Y	*393-3369*	1	HOUSING GP-FLYWHEEL	526
Y	*375-5838*	1	HOUSING GP-FRONT	536
Y	*416-8908*	1	INJECTOR GP-FUEL	766
Y	*371-2478*	1	JET GP-PISTON COOLING	543
Y	*416-2470*	1	LIFTING GP-ENGINE	546
Y	*426-3310*	1	LINES GP-FUEL INJECTION	787
Y	*416-7808*	1	MANIFOLD GP-EXHAUST	724
Y	*391-5523*	1	MANIFOLD GP-INLET	726
Y	*346-1512*	1	MOUNTING GP-ACCESSORY MODULE	855
Y	*395-0112*	1	MOUNTING GP-ELECTRONIC CONTROL	819
Y	*375-4499*	1	PAN GP-OIL	557
Y	*369-7304*	1	PISTON & ROD GP	566
Y	*378-8167*	1	PLATE & FILM GP	868
Y	*346-2908*	1	PLUG GP-ENGINE	592
Y	*440-0026*	1	PLUG GP-OIL FILTER MOUNTING	644
Y	*375-0098*	1	FASTENER GP-DAMPER & PULLEY	505
Y	*379-6629*	1	PULLEY GP-CRANKSHAFT	603
Y	*462-6685*	1	PUMP GP-ENGINE OIL	646
Y	*391-4811*	1	PUMP GP-FUEL INJECTION	790
Y	*372-2297*	1	PUMP GP-WATER	678
Y	*452-5153*	1	RADIATOR GP	686
Y	*394-9639*	1	RAIL GP-FUEL	794
Y	*371-2480*	1	ROCKER ARM GP	606
Y	*395-0110*	1	SENSOR GP-ENGINE	820
Y	*395-0114*	1	STARTING AID GP	826
Y	*385-8000*	1	STARTING MOTOR GP-ELECTRIC	832

475-6719 **ENGINE AR-PRIMARY (**contd.**)** **i06250937**

NOTE	PART NUMBER	QTY	PART NAME 1 2 3 4 5 6 (PRODUCT LEVEL)	SEE PAGE
Y	*371-2719*	1	SUPPORT GP-POWER TAKE-OFF	608
Y	*416-6971*	1	TURBOCHARGER GP	741
Y	*424-5516*	1	WIRING GP-ENGINE	846
	440-1796	1	ELECTRONICS GP-ENGINE RATINGS	

Y - SEPARATE ILLUSTRATION

<END>

475-8297 ENGINE AR-PRIMARY

129 BRAKE KW (173 BHP) AT 2200 RPM

SMCS-1000 **i07592063**

NOTE	PART NUMBER	QTY	PART NAME 1 2 3 4 5 6 (PRODUCT LEVEL)	SEE PAGE
Y	*392-2023*	1	ALTERNATOR GP-CHARGING	801
Y	*379-5585*	1	BELT TENSIONER GP	419
Y	*392-0632*	1	BREATHER GP	611
Y	*396-2615*	1	CAMSHAFT GP	427
Y	*373-3607*	1	CONNECTION GP-WATER	650
Y	*371-2536*	1	CONTROL GP-ELECTRONIC	808
Y	*346-0097*	1	COOLER GP-ENGINE OIL	658
Y	*389-3348*	1	COVER GP-VALVE MECHANISM	440
Y	*374-6300*	1	CRANKSHAFT GP	447
Y	*390-0854*	1	CYLINDER BLOCK GP	450
Y	*385-2572*	1	CYLINDER HEAD GP	458
Y	*415-3086*	1	DRIVE GP-FAN	498
Y	*371-2694*	1	EXTENSION GP-FAN	500
Y	*375-0098*	1	FASTENER GP-DAMPER & PULLEY	505
Y	*438-5978*	1	FILLER GP-ENGINE OIL	623
Y	*390-0060*	1	FILM GP (EMISSION)	859
Y	*415-5625*	1	FILM GP (ALTERNATOR) (ALTERNATOR)	862
Y	*423-8803*	1	FILM GP (STARTING MOTOR) (STARTING MOTOR)	863
Y	*346-0220*	1	FILTER GP-ENGINE OIL	629
Y	*441-1215*	1	FILTER GP-FUEL (WATER SEPARATOR)	756
Y	*448-0935*	1	LINES GP-FUEL FILTER	783
Y	*453-7163*	1	FILTER GP-FUEL	760
Y	*345-8901*	1	FLYWHEEL GP	506
Y	*439-3430*	1	GAUGE GP-OIL LEVEL (DIPSTICK)	638
Y	*345-8838*	1	HOUSING GP-FLYWHEEL	517
Y	*378-0630*	1	AIR COMPRESSOR GP	410
Y	*448-9719*	1	HOUSING GP-FRONT	538
Y	*371-2483*	1	INJECTOR GP-FUEL	763
Y	*371-2478*	1	JET GP-PISTON COOLING	543
Y	*416-2470*	1	LIFTING GP-ENGINE	546
Y	*416-7808*	1	MANIFOLD GP-EXHAUST	724
Y	*391-5523*	1	MANIFOLD GP-INLET	726
Y	*448-9710*	1	CONNECTOR GP-CAB HEATER LINES	652
Y	*395-0112*	1	MOUNTING GP-ELECTRONIC CONTROL	819
Y	*374-7090*	1	MOUNTING GP-REFRIGERANT COMPR	555
Y	*378-0594*	1	PAN GP-OIL	561
Y	*374-6301*	1	PISTON & ROD GP	576
Y	*346-1478*	1	PLUG GP-FLYWHEEL HOUSING	595
Y	*379-6629*	1	PULLEY GP-CRANKSHAFT	603
Y	*462-6685*	1	PUMP GP-ENGINE OIL	646
Y	*391-4811*	1	PUMP GP-FUEL INJECTION	790
Y	*372-2297*	1	PUMP GP-WATER	678
Y	*394-9639*	1	RAIL GP-FUEL	794
Y	*371-2480*	1	ROCKER ARM GP	606
Y	*395-0110*	1	SENSOR GP-ENGINE	820
Y	*380-9279*	1	STARTING AID GP	824
Y	*415-4870*	1	STARTING MOTOR GP-ELECTRIC	837
Y	*375-5002*	1	TURBOCHARGER GP	732
Y	*371-2745*	1	VALVE GP-FLUID SAMPLING	647

475-8297 **ENGINE AR-PRIMARY (**contd.**)** **i07592063**

NOTE	PART NUMBER	QTY	PART NAME 1 2 3 4 5 6 (PRODUCT LEVEL)	SEE PAGE
Y	*424-5516*	1	WIRING GP-ENGINE	846
	460-6435	1	ELECTRONICS GP-ENGINE	
	376-6464	1	PLATE & FILM GP	

Y - SEPARATE ILLUSTRATION

<END>

475-9060 ENGINE AR-PRIMARY

168 BRAKE KW (225 BHP) AT 2200 RPM

SMCS-1000 **i10086771**

NOTE	PART NUMBER	QTY	PART NAME 1 2 3 4 5 6 (PRODUCT LEVEL)	SEE PAGE
Y	*378-0630*	1	AIR COMPRESSOR GP	410
Y	*392-2023*	1	ALTERNATOR GP-CHARGING	801
Y	*379-5585*	1	BELT TENSIONER GP	419
Y	*392-0632*	1	BREATHER GP	611
Y	*396-2617*	1	CAMSHAFT GP	428
Y	*373-3607*	1	CONNECTION GP-WATER	650
Y	*448-9710*	1	CONNECTOR GP-CAB HEATER LINES	652
Y	*371-2536*	1	CONTROL GP-ELECTRONIC	808
Y	*378-8280*	1	COOLER GP-ENGINE OIL	661
Y	*389-3348*	1	COVER GP-VALVE MECHANISM	440
Y	*374-6300*	1	CRANKSHAFT GP	447
Y	*390-0854*	1	CYLINDER BLOCK GP	450
Y	*385-2572*	1	CYLINDER HEAD GP	458
Y	*415-3086*	1	DRIVE GP-FAN	498
Y	*371-2694*	1	EXTENSION GP-FAN	500
Y	*375-0098*	1	FASTENER GP-DAMPER & PULLEY	505
Y	*438-5978*	1	FILLER GP-ENGINE OIL	623
Y	*390-0060*	1	FILM GP (EMISSION)	859
Y	*415-5625*	1	FILM GP (ALTERNATOR)	862
Y	*423-8803*	1	FILM GP (STARTING MOTOR)	863
Y	*346-0220*	1	FILTER GP-ENGINE OIL	629
Y	*441-1215*	1	FILTER GP-FUEL (WATER SEPARATOR)	756
Y	*453-7163*	1	FILTER GP-FUEL	760
Y	*345-8901*	1	FLYWHEEL GP	506
Y	*439-3430*	1	GAUGE GP-OIL LEVEL (DIPSTICK)	638
Y	*345-8838*	1	HOUSING GP-FLYWHEEL	517
Y	*448-9719*	1	HOUSING GP-FRONT	538
Y	*416-8908*	1	INJECTOR GP-FUEL	766
Y	*371-2478*	1	JET GP-PISTON COOLING	543
Y	*416-2470*	1	LIFTING GP-ENGINE	546
Y	*448-0935*	1	LINES GP-FUEL FILTER	783
Y	*416-7808*	1	MANIFOLD GP-EXHAUST	724
Y	*391-5523*	1	MANIFOLD GP-INLET	726
Y	*395-0112*	1	MOUNTING GP-ELECTRONIC CONTROL	819
Y	*374-7090*	1	MOUNTING GP-REFRIGERANT COMPR	555
Y	*378-0594*	1	PAN GP-OIL	561
Y	*369-7304*	1	PISTON & ROD GP	566
Y	*635-3313*	1	PLATE GP-IDENTIFICATION	869
Y	*346-1478*	1	PLUG GP-FLYWHEEL HOUSING	595
Y	*379-6629*	1	PULLEY GP-CRANKSHAFT	603
Y	*462-6685*	1	PUMP GP-ENGINE OIL	646
Y	*391-4811*	1	PUMP GP-FUEL INJECTION	790
Y	*372-2297*	1	PUMP GP-WATER	678
Y	*394-9639*	1	RAIL GP-FUEL	794
Y	*371-2480*	1	ROCKER ARM GP	606
Y	*395-0110*	1	SENSOR GP-ENGINE	820
Y	*380-9279*	1	STARTING AID GP	824
Y	*415-4870*	1	STARTING MOTOR GP-ELECTRIC	837
Y	*416-6971*	1	TURBOCHARGER GP	741

475-9060 **ENGINE AR-PRIMARY (**contd.**)** **i10086771**

NOTE	PART NUMBER	QTY	PART NAME 1 2 3 4 5 6 (PRODUCT LEVEL)	SEE PAGE
Y	*371-2745*	1	VALVE GP-FLUID SAMPLING	647
Y	*424-5516*	1	WIRING GP-ENGINE	846
	376-6464	1	PLATE & FILM GP	
			SOFTWARE MUST BE PROCURED LOCALLY FROM YOUR CAT DEALER	

Y - SEPARATE ILLUSTRATION

<END>

476-9752 ENGINE AR-PRIMARY

130 BRAKE KW (174 BHP) AT 2500 RPM

OPTIONAL FIELD REPLACEMENT ORDER 451-1222—PAGE: 452, 452-6584—PAGE: 462

SMCS-1000 **i08132350**

NOTE	PART NUMBER	QTY	PART NAME 1 2 3 4 5 6 (PRODUCT LEVEL)	SEE PAGE
Y	*377-0720*	1	ALTERNATOR GP-CHARGING	798
Y	*371-2693*	1	BELT TENSIONER GP	416
Y	*392-0632*	1	BREATHER GP	611
Y	*396-2615*	1	CAMSHAFT GP	427
Y	*557-7811*	1	AIR CLEANER GP	716
Y	*373-3607*	1	CONNECTION GP-WATER	650
Y	*371-2536*	1	CONTROL GP-ELECTRONIC	808
Y	*346-0091*	1	COOLER GP-ENGINE OIL	657
Y	*389-3348*	1	COVER GP-VALVE MECHANISM	440
Y	*374-6300*	1	CRANKSHAFT GP	447
Y	*390-0854*	1	CYLINDER BLOCK GP	450
Y	*385-2572*	1	CYLINDER HEAD GP	458
Y	*393-2180*	1	DRIVE GP-FAN	484
Y	*375-8320*	1	EXTENSION GP-FAN	501
Y	*454-5203*	1	FAN GP	674
Y	*375-0098*	1	FASTENER GP-DAMPER & PULLEY	505
Y	*390-3737*	1	FILLER GP-ENGINE OIL	620
Y	*390-0060*	1	FILM GP (EMISSION)	859
Y	*415-5625*	1	FILM GP (ALTERNATOR) (ALTERNATOR)	862
Y	*423-8803*	1	FILM GP (STARTING MOTOR) (STARTING MOTOR)	863
Y	*346-0220*	1	FILTER GP-ENGINE OIL	629
Y	*441-1215*	1	FILTER GP-FUEL (WATER SEPARATOR) (WATER SEPARATOR)	756
Y	*453-7163*	1	FILTER GP-FUEL	760
Y	*346-0769*	1	FLANGE GP-EXHAUST	719
Y	*482-7703*	1	FLYWHEEL GP	515
Y	*439-3432*	1	GAUGE GP-OIL LEVEL (DIPSTICK)	640
Y	*345-8839*	1	HOUSING GP-FLYWHEEL	518
Y	*371-2725*	1	HOUSING GP-FRONT	532
Y	*371-2483*	1	INJECTOR GP-FUEL	763
Y	*371-2478*	1	JET GP-PISTON COOLING	543
Y	*416-2470*	1	LIFTING GP-ENGINE	546
Y	*426-3310*	1	LINES GP-FUEL INJECTION	787
Y	*416-7808*	1	MANIFOLD GP-EXHAUST	724
Y	*391-5523*	1	MANIFOLD GP-INLET	726
Y	*373-5023*	1	MOUNTING GP-ACCESSORY MODULE	857
Y	*395-0112*	1	MOUNTING GP-ELECTRONIC CONTROL	819
Y	*375-4499*	1	PAN GP-OIL	557
Y	*374-6301*	1	PISTON & ROD GP	576
Y	*346-2908*	1	PLUG GP-ENGINE	592
Y	*440-0026*	1	PLUG GP-OIL FILTER MOUNTING	644
Y	*379-6629*	1	PULLEY GP-CRANKSHAFT	603
Y	*462-6685*	1	PUMP GP-ENGINE OIL	646
Y	*391-4811*	1	PUMP GP-FUEL INJECTION	790
Y	*372-2297*	1	PUMP GP-WATER	678
Y	*394-9639*	1	RAIL GP-FUEL	794
Y	*371-2480*	1	ROCKER ARM GP	606
Y	*395-0110*	1	SENSOR GP-ENGINE	820

476-9752 **ENGINE AR-PRIMARY (**contd.**)** **i08132350**

NOTE	PART NUMBER	QTY	PART NAME 1 2 3 4 5 6 (PRODUCT LEVEL)	SEE PAGE
Y	*380-9279*	1	STARTING AID GP	824
Y	*415-4870*	1	STARTING MOTOR GP-ELECTRIC	837
Y	*371-2719*	1	SUPPORT GP-POWER TAKE-OFF	608
Y	*375-5002*	1	TURBOCHARGER GP	732
Y	*424-5516*	1	WIRING GP-ENGINE	846
	533-3524	1	ELECTRONICS GP-ENGINE	

Y - SEPARATE ILLUSTRATION

<END>

477-1865 ENGINE AR-PRIMARY

129 BRAKE KW (173 BHP) AT 2500 RPM

OPTIONAL FIELD REPLACEMENT ORDER 451-1222—PAGE: 452, 452-6584—PAGE: 462

SMCS-1000 **i08585544**

NOTE	PART NUMBER	QTY	PART NAME 1 2 3 4 5 6 (PRODUCT LEVEL)	SEE PAGE
Y	*478-4234*	1	AIR CLEANER GP	715
Y	*377-0720*	1	ALTERNATOR GP-CHARGING	798
Y	*371-2693*	1	BELT TENSIONER GP	416
Y	*425-0196*	1	BREATHER GP (CRANKCASE)	612
Y	*396-2615*	1	CAMSHAFT GP	427
AY	*477-1981*	1	CONFIGURATION AR-ENGINE	4
Y	*373-3607*	1	CONNECTION GP-WATER	650
Y	*371-2536*	1	CONTROL GP-ELECTRONIC	808
Y	*346-0091*	1	COOLER GP-ENGINE OIL	657
Y	*389-3346*	1	COVER GP-VALVE MECHANISM	435
Y	*374-6300*	1	CRANKSHAFT GP	447
Y	*390-0854*	1	CYLINDER BLOCK GP	450
Y	*385-2572*	1	CYLINDER HEAD GP	458
Y	*393-2180*	1	DRIVE GP-FAN	484
Y	*375-8320*	1	EXTENSION GP-FAN	501
Y	*454-5203*	1	FAN GP	674
Y	*375-0098*	1	FASTENER GP-DAMPER & PULLEY	505
Y	*390-3737*	1	FILLER GP-ENGINE OIL	620
Y	*415-5625*	1	FILM GP (ALTERNATOR) (ALTERNATOR)	862
Y	*423-8803*	1	FILM GP (STARTING MOTOR) (STARTING MOTOR)	863
Y	*346-0220*	1	FILTER GP-ENGINE OIL	629
Y	*441-1215*	1	FILTER GP-FUEL (WATER SEPARATOR)	756
Y	*453-7163*	1	FILTER GP-FUEL	760
Y	*425-0197*	1	FILTER GP-FUMES DISPOSAL	630
Y	*346-0769*	1	FLANGE GP-EXHAUST	719
Y	*345-8902*	1	FLYWHEEL GP	507
Y	*439-3432*	1	GAUGE GP-OIL LEVEL (DIPSTICK)	640
Y	*345-8838*	1	HOUSING GP-FLYWHEEL	517
Y	*375-5838*	1	HOUSING GP-FRONT	536
Y	*371-2483*	1	INJECTOR GP-FUEL	763
Y	*371-2478*	1	JET GP-PISTON COOLING	543
Y	*416-2470*	1	LIFTING GP-ENGINE	546
Y	*426-3310*	1	LINES GP-FUEL INJECTION	787
Y	*416-7808*	1	MANIFOLD GP-EXHAUST	724
Y	*391-5523*	1	MANIFOLD GP-INLET	726
Y	*346-1528*	1	MOUNTING GP-ACCESSORY MODULE	856
Y	*395-0112*	1	MOUNTING GP-ELECTRONIC CONTROL	819
Y	*375-4499*	1	PAN GP-OIL	557
Y	*374-6301*	1	PISTON & ROD GP	576
Y	*378-8167*	1	PLATE & FILM GP	868
Y	*346-2908*	1	PLUG GP-ENGINE	592
Y	*440-0026*	1	PLUG GP-OIL FILTER MOUNTING	644
Y	*379-6629*	1	PULLEY GP-CRANKSHAFT	603
Y	*462-6685*	1	PUMP GP-ENGINE OIL	646
Y	*391-4811*	1	PUMP GP-FUEL INJECTION	790
Y	*372-2297*	1	PUMP GP-WATER	678
Y	*454-6966*	1	RADIATOR GP	
Y	*394-9639*	1	RAIL GP-FUEL	794

477-1865 **ENGINE AR-PRIMARY (**contd.**)** **i08585544**

NOTE	PART NUMBER	QTY	PART NAME 1 2 3 4 5 6 (PRODUCT LEVEL)	SEE PAGE
Y	*371-2480*	1	ROCKER ARM GP	606
Y	*395-0110*	1	SENSOR GP-ENGINE	820
Y	*380-9279*	1	STARTING AID GP	824
Y	*415-4870*	1	STARTING MOTOR GP-ELECTRIC	837
Y	*371-2719*	1	SUPPORT GP-POWER TAKE-OFF	608
Y	*375-5002*	1	TURBOCHARGER GP	732
Y	*424-5516*	1	WIRING GP-ENGINE	846
	464-0721	1	ELECTRONICS GP-ENGINE	
	376-6464	1	PLATE & FILM GP	

A - NOT PART OF THIS GROUP
Y - SEPARATE ILLUSTRATION

<END>

477-1869 ENGINE AR-PRIMARY

151 BRAKE KW (203 BHP) AT 2200 RPM

OPTIONAL FIELD REPLACEMENT ORDER 451-1222—PAGE: 452, 452-6584—PAGE: 462

SMCS-1000 **i09158515**

NOTE	PART NUMBER	QTY	PART NAME 1 2 3 4 5 6 (PRODUCT LEVEL)	SEE PAGE
Y	*478-4234*	1	AIR CLEANER GP	715
Y	*377-0720*	1	ALTERNATOR GP-CHARGING	798
Y	*371-2693*	1	BELT TENSIONER GP	416
Y	*425-0196*	1	BREATHER GP (CRANKCASE)	612
Y	*396-2615*	1	CAMSHAFT GP	427
AY	*477-1982*	1	CONFIGURATION AR-ENGINE	4
Y	*373-3607*	1	CONNECTION GP-WATER	650
Y	*371-2536*	1	CONTROL GP-ELECTRONIC	808
Y	*346-0091*	1	COOLER GP-ENGINE OIL	657
Y	*389-3346*	1	COVER GP-VALVE MECHANISM	435
Y	*374-6300*	1	CRANKSHAFT GP	447
Y	*390-0854*	1	CYLINDER BLOCK GP	450
Y	*385-2572*	1	CYLINDER HEAD GP	458
Y	*393-2180*	1	DRIVE GP-FAN	484
Y	*375-8320*	1	EXTENSION GP-FAN	501
Y	*454-5203*	1	FAN GP	674
Y	*375-0098*	1	FASTENER GP-DAMPER & PULLEY	505
Y	*390-3737*	1	FILLER GP-ENGINE OIL	620
Y	*415-5625*	1	FILM GP (ALTERNATOR)	862
Y	*423-8803*	1	FILM GP (STARTING MOTOR)	863
Y	*346-0220*	1	FILTER GP-ENGINE OIL	629
Y	*441-1215*	1	FILTER GP-FUEL (WATER SEPARATOR)	756
Y	*453-7163*	1	FILTER GP-FUEL	760
Y	*425-0197*	1	FILTER GP-FUMES DISPOSAL	630
Y	*346-0769*	1	FLANGE GP-EXHAUST	719
Y	*345-8902*	1	FLYWHEEL GP	507
Y	*439-3432*	1	GAUGE GP-OIL LEVEL (DIPSTICK)	640
Y	*345-8838*	1	HOUSING GP-FLYWHEEL	517
Y	*375-5838*	1	HOUSING GP-FRONT	536
Y	*371-2483*	1	INJECTOR GP-FUEL	763
Y	*371-2478*	1	JET GP-PISTON COOLING	543
Y	*416-2470*	1	LIFTING GP-ENGINE	546
Y	*426-3310*	1	LINES GP-FUEL INJECTION	787
Y	*416-7808*	1	MANIFOLD GP-EXHAUST	724
Y	*391-5523*	1	MANIFOLD GP-INLET	726
Y	*346-1528*	1	MOUNTING GP-ACCESSORY MODULE	856
Y	*395-0112*	1	MOUNTING GP-ELECTRONIC CONTROL	819
Y	*375-4499*	1	PAN GP-OIL	557
Y	*374-6301*	1	PISTON & ROD GP	576
Y	*378-8167*	1	PLATE & FILM GP	868
Y	*346-2908*	1	PLUG GP-ENGINE	592
Y	*440-0026*	1	PLUG GP-OIL FILTER MOUNTING	644
Y	*379-6629*	1	PULLEY GP-CRANKSHAFT	603
Y	*462-6685*	1	PUMP GP-ENGINE OIL	646
Y	*391-4811*	1	PUMP GP-FUEL INJECTION	790
Y	*372-2297*	1	PUMP GP-WATER	678
Y	*454-6966*	1	RADIATOR GP	
Y	*394-9639*	1	RAIL GP-FUEL	794

477-1869 **ENGINE AR-PRIMARY (**contd.**)** **i09158515**

NOTE	PART NUMBER	QTY	PART NAME 1 2 3 4 5 6 (PRODUCT LEVEL)	SEE PAGE
Y	*371-2480*	1	ROCKER ARM GP	606
Y	*395-0110*	1	SENSOR GP-ENGINE	820
Y	*380-9279*	1	STARTING AID GP	824
Y	*415-4870*	1	STARTING MOTOR GP-ELECTRIC	837
Y	*371-2719*	1	SUPPORT GP-POWER TAKE-OFF	608
Y	*375-5002*	1	TURBOCHARGER GP	732
Y	*424-5516*	1	WIRING GP-ENGINE	846
	453-1370	1	ELECTRONICS GP-ENGINE	
	376-6464	1	PLATE & FILM GP	

A - NOT PART OF THIS GROUP
Y - SEPARATE ILLUSTRATION

<END>

477-1870 ENGINE AR-PRIMARY

151 BRAKE KW (203 BHP) AT 2200 RPM

OPTIONAL FIELD REPLACEMENT ORDER 451-1222—PAGE: 452, 452-6584—PAGE: 462

SMCS-1000 **i09161852**

NOTE	PART NUMBER	QTY	PART NAME 1 2 3 4 5 6 (PRODUCT LEVEL)	SEE PAGE
Y	*478-4234*	1	AIR CLEANER GP	715
Y	*377-0720*	1	ALTERNATOR GP-CHARGING	798
Y	*371-2693*	1	BELT TENSIONER GP	416
Y	*425-0196*	1	BREATHER GP (CRANKCASE)	612
Y	*396-2615*	1	CAMSHAFT GP	427
AY	*477-1983*	1	CONFIGURATION AR-ENGINE	5
Y	*373-3607*	1	CONNECTION GP-WATER	650
Y	*371-2536*	1	CONTROL GP-ELECTRONIC	808
Y	*346-0091*	1	COOLER GP-ENGINE OIL	657
Y	*389-3346*	1	COVER GP-VALVE MECHANISM	435
Y	*374-6300*	1	CRANKSHAFT GP	447
Y	*390-0854*	1	CYLINDER BLOCK GP	450
Y	*385-2572*	1	CYLINDER HEAD GP	458
Y	*393-2180*	1	DRIVE GP-FAN	484
Y	*375-8320*	1	EXTENSION GP-FAN	501
Y	*454-5203*	1	FAN GP	674
Y	*375-0098*	1	FASTENER GP-DAMPER & PULLEY	505
Y	*390-3737*	1	FILLER GP-ENGINE OIL	620
Y	*415-5625*	1	FILM GP (ALTERNATOR)	862
Y	*423-8803*	1	FILM GP (STARTING MOTOR)	863
Y	*346-0220*	1	FILTER GP-ENGINE OIL	629
Y	*441-1215*	1	FILTER GP-FUEL (WATER SEPARATOR)	756
Y	*453-7163*	1	FILTER GP-FUEL	760
Y	*425-0197*	1	FILTER GP-FUMES DISPOSAL	630
Y	*346-0769*	1	FLANGE GP-EXHAUST	719
Y	*345-9037*	1	FLYWHEEL GP	510
Y	*439-3432*	1	GAUGE GP-OIL LEVEL (DIPSTICK)	640
Y	*393-3369*	1	HOUSING GP-FLYWHEEL	526
Y	*375-5838*	1	HOUSING GP-FRONT	536
Y	*371-2483*	1	INJECTOR GP-FUEL	763
Y	*371-2478*	1	JET GP-PISTON COOLING	543
Y	*416-2470*	1	LIFTING GP-ENGINE	546
Y	*426-3310*	1	LINES GP-FUEL INJECTION	787
Y	*416-7808*	1	MANIFOLD GP-EXHAUST	724
Y	*391-5523*	1	MANIFOLD GP-INLET	726
Y	*346-1512*	1	MOUNTING GP-ACCESSORY MODULE	855
Y	*395-0112*	1	MOUNTING GP-ELECTRONIC CONTROL	819
Y	*375-4499*	1	PAN GP-OIL	557
Y	*374-6301*	1	PISTON & ROD GP	576
Y	*378-8167*	1	PLATE & FILM GP	868
Y	*346-2908*	1	PLUG GP-ENGINE	592
Y	*440-0026*	1	PLUG GP-OIL FILTER MOUNTING	644
Y	*379-6629*	1	PULLEY GP-CRANKSHAFT	603
Y	*462-6685*	1	PUMP GP-ENGINE OIL	646
Y	*391-4811*	1	PUMP GP-FUEL INJECTION	790
Y	*372-2297*	1	PUMP GP-WATER	678
Y	*454-6966*	1	RADIATOR GP	
Y	*394-9639*	1	RAIL GP-FUEL	794

477-1870 **ENGINE AR-PRIMARY (**contd.**)** **i09161852**

NOTE	PART NUMBER	QTY	PART NAME 1 2 3 4 5 6 (PRODUCT LEVEL)	SEE PAGE
Y	*371-2480*	1	ROCKER ARM GP	606
Y	*395-0110*	1	SENSOR GP-ENGINE	820
Y	*380-9279*	1	STARTING AID GP	824
Y	*378-0589*	1	STARTING MOTOR GP-ELECTRIC	830
Y	*371-2719*	1	SUPPORT GP-POWER TAKE-OFF	608
Y	*375-5002*	1	TURBOCHARGER GP	732
Y	*424-5516*	1	WIRING GP-ENGINE	846
	453-1370	1	ELECTRONICS GP-ENGINE	
	376-6464	1	PLATE & FILM GP	

A - NOT PART OF THIS GROUP
Y - SEPARATE ILLUSTRATION

<END>

477-1871 ENGINE AR-PRIMARY

PART OF 477-1984 ENGINE AR-COMPLETE

SMCS-1000 **i06180233**

NOTE	PART NUMBER	QTY	PART NAME 1 2 3 4 5 6 (PRODUCT LEVEL)	SEE PAGE
Y	*478-4234*	1	AIR CLEANER GP	715
Y	*377-0720*	1	ALTERNATOR GP-CHARGING	798
Y	*371-2693*	1	BELT TENSIONER GP	416
Y	*425-0196*	1	BREATHER GP (CRANKCASE)	612
Y	*396-2617*	1	CAMSHAFT GP	428
Y	*373-3607*	1	CONNECTION GP-WATER	650
Y	*371-2536*	1	CONTROL GP-ELECTRONIC	808
Y	*378-8276*	1	COOLER GP-ENGINE OIL	659
Y	*389-3346*	1	COVER GP-VALVE MECHANISM	435
Y	*374-6300*	1	CRANKSHAFT GP	447
Y	*390-0854*	1	CYLINDER BLOCK GP	450
Y	*385-2572*	1	CYLINDER HEAD GP	458
Y	*393-2180*	1	DRIVE GP-FAN	484
Y	*375-8320*	1	EXTENSION GP-FAN	501
Y	*378-0627*	1	FAN GP	670
Y	*390-3737*	1	FILLER GP-ENGINE OIL	620
Y	*425-0197*	1	FILTER GP-FUMES DISPOSAL	630
Y	*415-5625*	1	FILM GP (ALTERNATOR)	862
Y	*423-8803*	1	FILM GP (STARTING MOTOR)	863
Y	*346-0220*	1	FILTER GP-ENGINE OIL	629
Y	*441-1215*	1	FILTER GP-FUEL (WATER SEPARATOR)	756
Y	*453-7163*	1	FILTER GP-FUEL	760
Y	*346-0769*	1	FLANGE GP-EXHAUST	719
Y	*345-8902*	1	FLYWHEEL GP	507
Y	*439-3432*	1	GAUGE GP-OIL LEVEL (DIPSTICK)	640
Y	*345-8838*	1	HOUSING GP-FLYWHEEL	517
Y	*375-5838*	1	HOUSING GP-FRONT	536
Y	*416-8908*	1	INJECTOR GP-FUEL	766
Y	*371-2478*	1	JET GP-PISTON COOLING	543
Y	*416-2470*	1	LIFTING GP-ENGINE	546
Y	*426-3310*	1	LINES GP-FUEL INJECTION	787
Y	*416-7808*	1	MANIFOLD GP-EXHAUST	724
Y	*391-5523*	1	MANIFOLD GP-INLET	726
Y	*346-1528*	1	MOUNTING GP-ACCESSORY MODULE	856
Y	*395-0112*	1	MOUNTING GP-ELECTRONIC CONTROL	819
Y	*375-4499*	1	PAN GP-OIL	557
Y	*369-7304*	1	PISTON & ROD GP	566
Y	*378-8167*	1	PLATE & FILM GP	868
Y	*346-2908*	1	PLUG GP-ENGINE	592
Y	*440-0026*	1	PLUG GP-OIL FILTER MOUNTING	644
Y	*375-0098*	1	FASTENER GP-DAMPER & PULLEY	505
Y	*379-6629*	1	PULLEY GP-CRANKSHAFT	603
Y	*462-6685*	1	PUMP GP-ENGINE OIL	646
Y	*391-4811*	1	PUMP GP-FUEL INJECTION	790
Y	*372-2297*	1	PUMP GP-WATER	678
Y	*452-5153*	1	RADIATOR GP	686
Y	*394-9639*	1	RAIL GP-FUEL	794
Y	*371-2480*	1	ROCKER ARM GP	606
Y	*395-0110*	1	SENSOR GP-ENGINE	820

477-1871 **ENGINE AR-PRIMARY (**contd.**)** **i06180233**

NOTE	PART NUMBER	QTY	PART NAME 1 2 3 4 5 6 (PRODUCT LEVEL)	SEE PAGE
Y	*380-9279*	1	STARTING AID GP	824
Y	*415-4870*	1	STARTING MOTOR GP-ELECTRIC	837
Y	*371-2719*	1	SUPPORT GP-POWER TAKE-OFF	608
Y	*416-6971*	1	TURBOCHARGER GP	741
Y	*424-5516*	1	WIRING GP-ENGINE	846
	448-4768	1	ELECTRONICS GP	

Y - SEPARATE ILLUSTRATION

<END>

477-1873 ENGINE AR-PRIMARY

PART OF 477-1985 ENGINE AR-COMPLETE

SMCS-1000 **i06180174**

NOTE	PART NUMBER	QTY	PART NAME 1 2 3 4 5 6 (PRODUCT LEVEL)	SEE PAGE
Y	*478-4234*	1	AIR CLEANER GP	715
Y	*377-0720*	1	ALTERNATOR GP-CHARGING	798
Y	*371-2693*	1	BELT TENSIONER GP	416
Y	*425-0196*	1	BREATHER GP (CRANKCASE)	612
Y	*396-2617*	1	CAMSHAFT GP	428
Y	*373-3607*	1	CONNECTION GP-WATER	650
Y	*371-2536*	1	CONTROL GP-ELECTRONIC	808
Y	*378-8276*	1	COOLER GP-ENGINE OIL	659
Y	*389-3346*	1	COVER GP-VALVE MECHANISM	435
Y	*374-6300*	1	CRANKSHAFT GP	447
Y	*390-0854*	1	CYLINDER BLOCK GP	450
Y	*385-2572*	1	CYLINDER HEAD GP	458
Y	*393-2180*	1	DRIVE GP-FAN	484
Y	*375-8320*	1	EXTENSION GP-FAN	501
Y	*378-0627*	1	FAN GP	670
Y	*390-3737*	1	FILLER GP-ENGINE OIL	620
Y	*425-0197*	1	FILTER GP-FUMES DISPOSAL	630
Y	*415-5625*	1	FILM GP (ALTERNATOR)	862
Y	*423-8803*	1	FILM GP (STARTING MOTOR)	863
Y	*346-0220*	1	FILTER GP-ENGINE OIL	629
Y	*441-1215*	1	FILTER GP-FUEL (WATER SEPARATOR)	756
Y	*453-7163*	1	FILTER GP-FUEL	760
Y	*346-0769*	1	FLANGE GP-EXHAUST	719
Y	*345-9037*	1	FLYWHEEL GP	510
Y	*439-3432*	1	GAUGE GP-OIL LEVEL (DIPSTICK)	640
Y	*393-3369*	1	HOUSING GP-FLYWHEEL	526
Y	*375-5838*	1	HOUSING GP-FRONT	536
Y	*416-8908*	1	INJECTOR GP-FUEL	766
Y	*371-2478*	1	JET GP-PISTON COOLING	543
Y	*416-2470*	1	LIFTING GP-ENGINE	546
Y	*426-3310*	1	LINES GP-FUEL INJECTION	787
Y	*416-7808*	1	MANIFOLD GP-EXHAUST	724
Y	*391-5523*	1	MANIFOLD GP-INLET	726
Y	*346-1512*	1	MOUNTING GP-ACCESSORY MODULE	855
Y	*395-0112*	1	MOUNTING GP-ELECTRONIC CONTROL	819
Y	*375-4499*	1	PAN GP-OIL	557
Y	*369-7304*	1	PISTON & ROD GP	566
Y	*378-8167*	1	PLATE & FILM GP	868
Y	*346-2908*	1	PLUG GP-ENGINE	592
Y	*440-0026*	1	PLUG GP-OIL FILTER MOUNTING	644
Y	*375-0098*	1	FASTENER GP-DAMPER & PULLEY	505
Y	*379-6629*	1	PULLEY GP-CRANKSHAFT	603
Y	*462-6685*	1	PUMP GP-ENGINE OIL	646
Y	*391-4811*	1	PUMP GP-FUEL INJECTION	790
Y	*372-2297*	1	PUMP GP-WATER	678
Y	*452-5153*	1	RADIATOR GP	686
Y	*394-9639*	1	RAIL GP-FUEL	794
Y	*371-2480*	1	ROCKER ARM GP	606
Y	*395-0110*	1	SENSOR GP-ENGINE	820

477-1873 **ENGINE AR-PRIMARY (**contd.**)** **i06180174**

NOTE	PART NUMBER	QTY	PART NAME 1 2 3 4 5 6 (PRODUCT LEVEL)	SEE PAGE
Y	*380-9279*	1	STARTING AID GP	824
Y	*378-0589*	1	STARTING MOTOR GP-ELECTRIC	830
Y	*371-2719*	1	SUPPORT GP-POWER TAKE-OFF	608
Y	*416-6971*	1	TURBOCHARGER GP	741
Y	*424-5516*	1	WIRING GP-ENGINE	846
	448-4768	1	ELECTRONICS GP	

Y - SEPARATE ILLUSTRATION

<END>

477-1874 ENGINE AR-PRIMARY

PART OF 477-1986 ENGINE AR

SMCS-1000 **i06180173**

NOTE	PART NUMBER	QTY	PART NAME 1 2 3 4 5 6 (PRODUCT LEVEL)	SEE PAGE
Y	*478-4234*	1	AIR CLEANER GP	715
Y	*377-0720*	1	ALTERNATOR GP-CHARGING	798
Y	*371-2693*	1	BELT TENSIONER GP	416
Y	*425-0196*	1	BREATHER GP (CRANKCASE)	612
Y	*396-2617*	1	CAMSHAFT GP	428
Y	*373-3607*	1	CONNECTION GP-WATER	650
Y	*371-2536*	1	CONTROL GP-ELECTRONIC	808
Y	*378-8276*	1	COOLER GP-ENGINE OIL	659
Y	*389-3346*	1	COVER GP-VALVE MECHANISM	435
Y	*374-6300*	1	CRANKSHAFT GP	447
Y	*390-0854*	1	CYLINDER BLOCK GP	450
Y	*385-2572*	1	CYLINDER HEAD GP	458
Y	*393-2180*	1	DRIVE GP-FAN	484
Y	*375-8320*	1	EXTENSION GP-FAN	501
Y	*378-0627*	1	FAN GP	670
Y	*390-3737*	1	FILLER GP-ENGINE OIL	620
Y	*425-0197*	1	FILTER GP-FUMES DISPOSAL	630
Y	*415-5625*	1	FILM GP (ALTERNATOR)	862
Y	*423-8803*	1	FILM GP (STARTING MOTOR)	863
Y	*346-0220*	1	FILTER GP-ENGINE OIL	629
Y	*441-1215*	1	FILTER GP-FUEL (WATER SEPARATOR)	756
Y	*453-7163*	1	FILTER GP-FUEL	760
Y	*346-0769*	1	FLANGE GP-EXHAUST	719
Y	*345-9037*	1	FLYWHEEL GP	510
Y	*439-3432*	1	GAUGE GP-OIL LEVEL (DIPSTICK)	640
Y	*393-3369*	1	HOUSING GP-FLYWHEEL	526
Y	*375-5838*	1	HOUSING GP-FRONT	536
Y	*416-8908*	1	INJECTOR GP-FUEL	766
Y	*371-2478*	1	JET GP-PISTON COOLING	543
Y	*416-2470*	1	LIFTING GP-ENGINE	546
Y	*426-3310*	1	LINES GP-FUEL INJECTION	787
Y	*416-7808*	1	MANIFOLD GP-EXHAUST	724
Y	*391-5523*	1	MANIFOLD GP-INLET	726
Y	*346-1512*	1	MOUNTING GP-ACCESSORY MODULE	855
Y	*395-0112*	1	MOUNTING GP-ELECTRONIC CONTROL	819
Y	*375-4499*	1	PAN GP-OIL	557
Y	*369-7304*	1	PISTON & ROD GP	566
Y	*378-8167*	1	PLATE & FILM GP	868
Y	*346-2908*	1	PLUG GP-ENGINE	592
Y	*440-0026*	1	PLUG GP-OIL FILTER MOUNTING	644
Y	*375-0098*	1	FASTENER GP-DAMPER & PULLEY	505
Y	*379-6629*	1	PULLEY GP-CRANKSHAFT	603
Y	*462-6685*	1	PUMP GP-ENGINE OIL	646
Y	*391-4811*	1	PUMP GP-FUEL INJECTION	790
Y	*372-2297*	1	PUMP GP-WATER	678
Y	*452-5153*	1	RADIATOR GP	686
Y	*394-9639*	1	RAIL GP-FUEL	794
Y	*371-2480*	1	ROCKER ARM GP	606
Y	*395-0110*	1	SENSOR GP-ENGINE	820

477-1874 **ENGINE AR-PRIMARY (**contd.**)** **i06180173**

NOTE	PART NUMBER	QTY	PART NAME 1 2 3 4 5 6 (PRODUCT LEVEL)	SEE PAGE
Y	*380-9279*	1	STARTING AID GP	824
Y	*378-0589*	1	STARTING MOTOR GP-ELECTRIC	830
Y	*371-2719*	1	SUPPORT GP-POWER TAKE-OFF	608
Y	*416-6971*	1	TURBOCHARGER GP	741
Y	*424-5516*	1	WIRING GP-ENGINE	846
	440-1796	1	ELECTRONICS GP-ENGINE RATINGS	

Y - SEPARATE ILLUSTRATION

<END>

477-2658 ENGINE AR-PRIMARY

186 BRAKE KW (249 BHP) AT 2200 RPM

OPTIONAL FIELD REPLACEMENT ORDER 451-1222—PAGE: 452, 452-6584—PAGE: 462

SMCS-1000 **i09219300**

NOTE	PART NUMBER	QTY	PART NAME 1 2 3 4 5 6 (PRODUCT LEVEL)	SEE PAGE
Y	*478-4234*	1	AIR CLEANER GP	715
Y	*377-0720*	1	ALTERNATOR GP-CHARGING	798
Y	*371-2693*	1	BELT TENSIONER GP	416
Y	*425-0196*	1	BREATHER GP (CRANKCASE)	612
Y	*396-2617*	1	CAMSHAFT GP	428
AY	*477-3353*	1	CONFIGURATION AR-ENGINE	5
Y	*373-3607*	1	CONNECTION GP-WATER	650
Y	*371-2536*	1	CONTROL GP-ELECTRONIC	808
Y	*378-8276*	1	COOLER GP-ENGINE OIL	659
Y	*389-3346*	1	COVER GP-VALVE MECHANISM	435
Y	*374-6300*	1	CRANKSHAFT GP	447
Y	*390-0854*	1	CYLINDER BLOCK GP	450
Y	*385-2572*	1	CYLINDER HEAD GP	458
Y	*393-2180*	1	DRIVE GP-FAN	484
Y	*375-8320*	1	EXTENSION GP-FAN	501
Y	*378-0627*	1	FAN GP	670
Y	*375-0098*	1	FASTENER GP-DAMPER & PULLEY	505
Y	*390-3737*	1	FILLER GP-ENGINE OIL	620
Y	*415-5625*	1	FILM GP (ALTERNATOR)	862
Y	*423-8803*	1	FILM GP (STARTING MOTOR)	863
Y	*346-0220*	1	FILTER GP-ENGINE OIL	629
Y	*441-1215*	1	FILTER GP-FUEL (WATER SEPARATOR)	756
Y	*453-7163*	1	FILTER GP-FUEL	760
Y	*425-0197*	1	FILTER GP-FUMES DISPOSAL	630
Y	*346-0769*	1	FLANGE GP-EXHAUST	719
Y	*437-2723*	1	FLYWHEEL GP	513
Y	*439-3432*	1	GAUGE GP-OIL LEVEL (DIPSTICK)	640
Y	*437-2721*	1	HOUSING GP-FLYWHEEL	529
Y	*375-5838*	1	HOUSING GP-FRONT	536
Y	*416-8908*	1	INJECTOR GP-FUEL	766
Y	*371-2478*	1	JET GP-PISTON COOLING	543
Y	*416-2470*	1	LIFTING GP-ENGINE	546
Y	*426-3310*	1	LINES GP-FUEL INJECTION	787
Y	*416-7808*	1	MANIFOLD GP-EXHAUST	724
Y	*391-5523*	1	MANIFOLD GP-INLET	726
Y	*395-0112*	1	MOUNTING GP-ELECTRONIC CONTROL	819
Y	*458-2242*	1	MOUNTING GP-ENGINE	550
Y	*375-4499*	1	PAN GP-OIL	557
Y	*369-7304*	1	PISTON & ROD GP	566
Y	*378-8167*	1	PLATE & FILM GP	868
Y	*346-2908*	1	PLUG GP-ENGINE	592
Y	*440-0026*	1	PLUG GP-OIL FILTER MOUNTING	644
Y	*379-6629*	1	PULLEY GP-CRANKSHAFT	603
Y	*462-6685*	1	PUMP GP-ENGINE OIL	646
Y	*391-4811*	1	PUMP GP-FUEL INJECTION	790
Y	*372-2297*	1	PUMP GP-WATER	678
Y	*452-5153*	1	RADIATOR GP	686
Y	*394-9639*	1	RAIL GP-FUEL	794

477-2658 **ENGINE AR-PRIMARY (**contd.**)** **i09219300**

NOTE	PART NUMBER	QTY	PART NAME 1 2 3 4 5 6 (PRODUCT LEVEL)	SEE PAGE
Y	*371-2480*	1	ROCKER ARM GP	606
Y	*395-0110*	1	SENSOR GP-ENGINE	820
Y	*380-9279*	1	STARTING AID GP	824
Y	*378-0589*	1	STARTING MOTOR GP-ELECTRIC	830
Y	*371-2719*	1	SUPPORT GP-POWER TAKE-OFF	608
Y	*416-6971*	1	TURBOCHARGER GP	741
Y	*424-5516*	1	WIRING GP-ENGINE	846
	440-1796	1	ELECTRONICS GP-ENGINE RATINGS	
	376-6464	1	PLATE & FILM GP	

A - NOT PART OF THIS GROUP
Y - SEPARATE ILLUSTRATION

<END>

477-2660 ENGINE AR-PRIMARY

168 BRAKE KW (225 BHP) AT 2200RPM

PART OF 477-3355 ENGINE AR-COMPLETE

SMCS-1000 **i06664694**

NOTE	PART NUMBER	QTY	PART NAME 1 2 3 4 5 6 (PRODUCT LEVEL)	SEE PAGE
Y	*478-4234*	1	AIR CLEANER GP	715
Y	*377-0721*	1	ALTERNATOR GP-CHARGING	799
Y	*371-2693*	1	BELT TENSIONER GP	416
Y	*425-0196*	1	BREATHER GP (CRANKCASE)	612
Y	*396-2617*	1	CAMSHAFT GP	428
Y	*373-3607*	1	CONNECTION GP-WATER	650
Y	*371-2536*	1	CONTROL GP-ELECTRONIC	808
Y	*378-8276*	1	COOLER GP-ENGINE OIL	659
Y	*389-3346*	1	COVER GP-VALVE MECHANISM	435
Y	*374-6300*	1	CRANKSHAFT GP	447
Y	*390-0854*	1	CYLINDER BLOCK GP	450
Y	*385-2572*	1	CYLINDER HEAD GP	458
Y	*393-2180*	1	DRIVE GP-FAN	484
Y	*375-8320*	1	EXTENSION GP-FAN	501
Y	*375-4574*	1	FAN GP	669
Y	*375-0098*	1	FASTENER GP-DAMPER & PULLEY	505
Y	*390-3737*	1	FILLER GP-ENGINE OIL	620
Y	*425-0197*	1	FILTER GP-FUMES DISPOSAL	630
Y	*415-5625*	1	FILM GP (ALTERNATOR)	862
Y	*346-0220*	1	FILTER GP-ENGINE OIL	629
Y	*441-1215*	1	FILTER GP-FUEL (WATER SEPARATOR)	756
Y	*453-7163*	1	FILTER GP-FUEL	760
Y	*346-0769*	1	FLANGE GP-EXHAUST	719
Y	*345-9037*	1	FLYWHEEL GP	510
Y	*439-3432*	1	GAUGE GP-OIL LEVEL (DIPSTICK)	640
Y	*393-3369*	1	HOUSING GP-FLYWHEEL	526
Y	*375-5838*	1	HOUSING GP-FRONT	536
Y	*416-8908*	1	INJECTOR GP-FUEL	766
Y	*371-2478*	1	JET GP-PISTON COOLING	543
Y	*416-2470*	1	LIFTING GP-ENGINE	546
Y	*426-3310*	1	LINES GP-FUEL INJECTION	787
Y	*416-7808*	1	MANIFOLD GP-EXHAUST	724
Y	*391-5523*	1	MANIFOLD GP-INLET	726
Y	*346-1512*	1	MOUNTING GP-ACCESSORY MODULE	855
Y	*395-0112*	1	MOUNTING GP-ELECTRONIC CONTROL	819
Y	*375-4499*	1	PAN GP-OIL	557
Y	*369-7304*	1	PISTON & ROD GP	566
Y	*378-8167*	1	PLATE & FILM GP	868
Y	*346-2908*	1	PLUG GP-ENGINE	592
Y	*440-0026*	1	PLUG GP-OIL FILTER MOUNTING	644
Y	*379-6629*	1	PULLEY GP-CRANKSHAFT	603
Y	*462-6685*	1	PUMP GP-ENGINE OIL	646
Y	*391-4811*	1	PUMP GP-FUEL INJECTION	790
Y	*372-2297*	1	PUMP GP-WATER	678
Y	*452-5153*	1	RADIATOR GP	686
Y	*394-9639*	1	RAIL GP-FUEL	794
Y	*371-2480*	1	ROCKER ARM GP	606
Y	*395-0110*	1	SENSOR GP-ENGINE	820

477-2660 **ENGINE AR-PRIMARY (**contd.**)** **i06664694**

NOTE	PART NUMBER	QTY	PART NAME 1 2 3 4 5 6 (PRODUCT LEVEL)	SEE PAGE
Y	*395-0114*	1	STARTING AID GP	826
Y	*385-8000*	1	STARTING MOTOR GP-ELECTRIC	832
Y	*371-2719*	1	SUPPORT GP-POWER TAKE-OFF	608
Y	*416-6971*	1	TURBOCHARGER GP	741
Y	*424-5516*	1	WIRING GP-ENGINE	846
	448-4768	1	ELECTRONICS GP	

Y - SEPARATE ILLUSTRATION

<END>

478-4257 ENGINE AR-PRIMARY

205 BRAKE KW (275 BHP) AT 2200 RPM
OPTIONAL FIELD REPLACEMENT ORDER 451-1222—PAGE: 452, 452-6584—PAGE: 462
PART OF 479-6190, 479-6192 ENGINE AR-COMPLETE

SMCS-1000 **i07592153**

NOTE	PART NUMBER	QTY	PART NAME 1 2 3 4 5 6 (PRODUCT LEVEL)	SEE PAGE
Y	*456-1351*	1	ALTERNATOR GP-CHARGING	804
Y	*391-9611*	1	BELT TENSIONER GP	421
Y	*379-6637*	1	BRACKET GP-MOUNTING	423
Y	*392-0632*	1	BREATHER GP	611
Y	*396-2617*	1	CAMSHAFT GP	428
Y	*390-5130*	1	CLAMP AS-EXHAUST	717
Y	*346-2911*	1	CONNECTION GP-HEATER	648
Y	*373-3607*	1	CONNECTION GP-WATER	650
Y	*371-2536*	1	CONTROL GP-ELECTRONIC	808
Y	*378-8280*	1	COOLER GP-ENGINE OIL	661
Y	*378-0629*	1	COVER GP-ACCESSORY DRIVE	433
Y	*389-3347*	1	COVER GP-VALVE MECHANISM	436
Y	*374-6300*	1	CRANKSHAFT GP	447
Y	*390-0854*	1	CYLINDER BLOCK GP	450
Y	*385-2572*	1	CYLINDER HEAD GP	458
Y	*378-8166*	1	DRAIN GP-ENGINE OIL	467
Y	*375-3937*	1	DRIVE GP-FAN	470
Y	*375-0098*	1	FASTENER GP-DAMPER & PULLEY	505
Y	*438-5978*	1	FILLER GP-ENGINE OIL	623
Y	*415-5625*	1	FILM GP (ALTERNATOR)	862
Y	*423-8803*	1	FILM GP (STARTING MOTOR)	863
Y	*393-0367*	1	FILM GP	861
Y	*346-0220*	1	FILTER GP-ENGINE OIL	629
Y	*441-1215*	1	FILTER GP-FUEL (WATER SEPARATOR)	756
Y	*453-7163*	1	FILTER GP-FUEL	760
Y	*345-8901*	1	FLYWHEEL GP	506
Y	*378-3484*	1	GAUGE GP-OIL LEVEL (DIPSTICK)	634
Y	*380-2587*	1	HOUSING GP-FLYWHEEL	525
Y	*375-5838*	1	HOUSING GP-FRONT	536
Y	*416-8908*	1	INJECTOR GP-FUEL	766
Y	*371-2478*	1	JET GP-PISTON COOLING	543
Y	*371-2740*	1	LIFTING GP-ENGINE	545
Y	*478-8523*	1	LINES GP-FUEL	773
Y	*393-7694*	1	MANIFOLD GP-EXHAUST	723
Y	*378-8582*	1	MANIFOLD GP-INLET	725
Y	*395-0112*	1	MOUNTING GP-ELECTRONIC CONTROL	819
Y	*378-0594*	1	PAN GP-OIL	561
Y	*369-7304*	1	PISTON & ROD GP	566
Y	*371-2554*	1	PULLEY GP-CRANKSHAFT	601
Y	*462-6685*	1	PUMP GP-ENGINE OIL	646
Y	*391-4811*	1	PUMP GP-FUEL INJECTION	790
Y	*372-2297*	1	PUMP GP-WATER	678
Y	*394-9639*	1	RAIL GP-FUEL	794
Y	*371-2480*	1	ROCKER ARM GP	606
Y	*395-0110*	1	SENSOR GP-ENGINE	820
Y	*380-9279*	1	STARTING AID GP	824
Y	*392-2019*	1	STARTING MOTOR GP-ELECTRIC	834

478-4257 **ENGINE AR-PRIMARY (**contd.**)** **i07592153**

NOTE	PART NUMBER	QTY	PART NAME 1 2 3 4 5 6 (PRODUCT LEVEL)	SEE PAGE
Y	*416-6969*	1	TURBOCHARGER GP	739
Y	*371-2745*	1	VALVE GP-FLUID SAMPLING	647
Y	*424-5516*	1	WIRING GP-ENGINE	846
	449-3320	1	ELECTRONICS GP-ENGINE	
	376-6464	1	PLATE & FILM GP	

Y - SEPARATE ILLUSTRATION

<END>

478-4261 ENGINE AR-PRIMARY

SMCS-1000 **i06180216**

NOTE	PART NUMBER	QTY	PART NAME 1 2 3 4 5 6 (PRODUCT LEVEL)	SEE PAGE
Y	*456-1351*	1	ALTERNATOR GP-CHARGING	804
Y	*391-9611*	1	BELT TENSIONER GP	421
Y	*379-6637*	1	BRACKET GP-MOUNTING	423
Y	*392-0632*	1	BREATHER GP	611
Y	*396-2617*	1	CAMSHAFT GP	428
Y	*390-5130*	1	CLAMP AS-EXHAUST	717
Y	*346-2911*	1	CONNECTION GP-HEATER	648
Y	*373-3607*	1	CONNECTION GP-WATER	650
Y	*371-2536*	1	CONTROL GP-ELECTRONIC	808
Y	*378-8280*	1	COOLER GP-ENGINE OIL	661
Y	*378-0629*	1	COVER GP-ACCESSORY DRIVE	433
Y	*389-3347*	1	COVER GP-VALVE MECHANISM	436
Y	*374-6300*	1	CRANKSHAFT GP	447
Y	*390-0854*	1	CYLINDER BLOCK GP	450
Y	*385-2572*	1	CYLINDER HEAD GP	458
Y	*378-8166*	1	DRAIN GP-ENGINE OIL	467
Y	*375-3937*	1	DRIVE GP-FAN	470
Y	*438-5978*	1	FILLER GP-ENGINE OIL	623
Y	*415-5625*	1	FILM GP (ALTERNATOR)	862
Y	*423-8803*	1	FILM GP (STARTING MOTOR)	863
Y	*346-0220*	1	FILTER GP-ENGINE OIL	629
Y	*441-1215*	1	FILTER GP-FUEL (WATER SEPARATOR)	756
Y	*478-8523*	1	LINES GP-FUEL	773
Y	*453-7163*	1	FILTER GP-FUEL	760
Y	*345-8901*	1	FLYWHEEL GP	506
Y	*378-3484*	1	GAUGE GP-OIL LEVEL (DIPSTICK)	634
Y	*380-2587*	1	HOUSING GP-FLYWHEEL	525
Y	*375-5838*	1	HOUSING GP-FRONT	536
Y	*416-8908*	1	INJECTOR GP-FUEL	766
Y	*371-2478*	1	JET GP-PISTON COOLING	543
Y	*371-2740*	1	LIFTING GP-ENGINE	545
Y	*393-7694*	1	MANIFOLD GP-EXHAUST	723
Y	*378-8582*	1	MANIFOLD GP-INLET	725
Y	*395-0112*	1	MOUNTING GP-ELECTRONIC CONTROL	819
Y	*378-0594*	1	PAN GP-OIL	561
Y	*369-7304*	1	PISTON & ROD GP	566
Y	*375-0098*	1	FASTENER GP-DAMPER & PULLEY	505
Y	*371-2554*	1	PULLEY GP-CRANKSHAFT	601
Y	*462-6685*	1	PUMP GP-ENGINE OIL	646
Y	*391-4811*	1	PUMP GP-FUEL INJECTION	790
Y	*372-2297*	1	PUMP GP-WATER	678
Y	*394-9639*	1	RAIL GP-FUEL	794
Y	*371-2480*	1	ROCKER ARM GP	606
Y	*395-0110*	1	SENSOR GP-ENGINE	820
Y	*380-9279*	1	STARTING AID GP	824
Y	*392-2019*	1	STARTING MOTOR GP-ELECTRIC	834
Y	*416-6969*	1	TURBOCHARGER GP	739
Y	*371-2745*	1	VALVE GP-FLUID SAMPLING	647

478-4261 **ENGINE AR-PRIMARY (**contd.**)** **i06180216**

NOTE	PART NUMBER	QTY	PART NAME 1 2 3 4 5 6 (PRODUCT LEVEL)	SEE PAGE
Y	*424-5516*	1	WIRING GP-ENGINE	846
	440-1796	1	ELECTRONICS GP-ENGINE RATINGS	

Y - SEPARATE ILLUSTRATION

<END>

479-6973 ENGINE AR-PRIMARY

151 BRAKE KW (202 BHP) AT 2200 RPM

PART OF 479-7004 ENGINE AR-COMPLETE

SMCS-1000 **i08714026**

NOTE	PART NUMBER	QTY	PART NAME 1 2 3 4 5 6 (PRODUCT LEVEL)	SEE PAGE
Y	*478-4234*	1	AIR CLEANER GP	715
Y	*377-0721*	1	ALTERNATOR GP-CHARGING	799
Y	*371-2693*	1	BELT TENSIONER GP	416
Y	*425-0196*	1	BREATHER GP (CRANKCASE)	612
Y	*396-2615*	1	CAMSHAFT GP	427
Y	*373-3607*	1	CONNECTION GP-WATER	650
Y	*371-2536*	1	CONTROL GP-ELECTRONIC	808
Y	*346-0091*	1	COOLER GP-ENGINE OIL	657
Y	*389-3346*	1	COVER GP-VALVE MECHANISM	435
Y	*374-6300*	1	CRANKSHAFT GP	447
Y	*390-0854*	1	CYLINDER BLOCK GP	450
Y	*385-2572*	1	CYLINDER HEAD GP	458
Y	*393-2180*	1	DRIVE GP-FAN	484
Y	*375-8320*	1	EXTENSION GP-FAN	501
Y	*454-5203*	1	FAN GP	674
Y	*375-0098*	1	FASTENER GP-DAMPER & PULLEY	505
Y	*390-3737*	1	FILLER GP-ENGINE OIL	620
Y	*415-5625*	1	FILM GP (ALTERNATOR)	862
Y	*423-8803*	1	FILM GP (STARTING MOTOR) (STARTING MOTOR)	863
Y	*611-2653*	1	FILM GP (RADIATOR)	865
Y	*346-0220*	1	FILTER GP-ENGINE OIL	629
Y	*441-1215*	1	FILTER GP-FUEL (WATER SEPARATOR)	756
Y	*453-7163*	1	FILTER GP-FUEL	760
Y	*425-0197*	1	FILTER GP-FUMES DISPOSAL	630
Y	*346-0769*	1	FLANGE GP-EXHAUST	719
Y	*345-8902*	1	FLYWHEEL GP	507
Y	*439-3432*	1	GAUGE GP-OIL LEVEL (DIPSTICK)	640
Y	*345-8838*	1	HOUSING GP-FLYWHEEL	517
Y	*375-5838*	1	HOUSING GP-FRONT	536
Y	*371-2483*	1	INJECTOR GP-FUEL	763
Y	*371-2478*	1	JET GP-PISTON COOLING	543
Y	*416-2470*	1	LIFTING GP-ENGINE	546
Y	*426-3310*	1	LINES GP-FUEL INJECTION	787
Y	*416-7808*	1	MANIFOLD GP-EXHAUST	724
Y	*391-5523*	1	MANIFOLD GP-INLET	726
Y	*346-1528*	1	MOUNTING GP-ACCESSORY MODULE	856
Y	*395-0112*	1	MOUNTING GP-ELECTRONIC CONTROL	819
Y	*375-4499*	1	PAN GP-OIL	557
Y	*374-6301*	1	PISTON & ROD GP	576
Y	*378-8167*	1	PLATE & FILM GP	868
Y	*346-2908*	1	PLUG GP-ENGINE	592
Y	*440-0026*	1	PLUG GP-OIL FILTER MOUNTING	644
Y	*379-6629*	1	PULLEY GP-CRANKSHAFT	603
Y	*462-6685*	1	PUMP GP-ENGINE OIL	646
Y	*391-4811*	1	PUMP GP-FUEL INJECTION	790
Y	*372-2297*	1	PUMP GP-WATER	678
Y	*454-6966*	1	RADIATOR GP	
Y	*394-9639*	1	RAIL GP-FUEL	794

479-6973 **ENGINE AR-PRIMARY (**contd.**)** **i08714026**

NOTE	PART NUMBER	QTY	PART NAME 1 2 3 4 5 6 (PRODUCT LEVEL)	SEE PAGE
Y	*371-2480*	1	ROCKER ARM GP	606
Y	*395-0110*	1	SENSOR GP-ENGINE	820
Y	*395-0114*	1	STARTING AID GP	826
Y	*392-2020*	1	STARTING MOTOR GP-ELECTRIC	835
Y	*371-2719*	1	SUPPORT GP-POWER TAKE-OFF	608
Y	*375-5002*	1	TURBOCHARGER GP	732
Y	*424-5516*	1	WIRING GP-ENGINE	846
	453-1370	1	ELECTRONICS GP-ENGINE	

Y - SEPARATE ILLUSTRATION

<END>

479-7682 ENGINE AR-PRIMARY

205 BRAKE KW (274.9 BHP) AT 2200-RPM

PART OF 479-7773 ENGINE AR-COMPLETE

SMCS-1000 **i06615991**

NOTE	PART NUMBER	QTY	PART NAME 1 2 3 4 5 6 (PRODUCT LEVEL)	SEE PAGE
Y	*478-4234*	1	AIR CLEANER GP	715
Y	*377-0720*	1	ALTERNATOR GP-CHARGING	798
Y	*371-2693*	1	BELT TENSIONER GP	416
Y	*425-0196*	1	BREATHER GP (CRANKCASE)	612
Y	*396-2617*	1	CAMSHAFT GP	428
Y	*373-3607*	1	CONNECTION GP-WATER	650
Y	*371-2536*	1	CONTROL GP-ELECTRONIC	808
Y	*378-8276*	1	COOLER GP-ENGINE OIL	659
Y	*389-3346*	1	COVER GP-VALVE MECHANISM	435
Y	*374-6300*	1	CRANKSHAFT GP	447
Y	*390-0854*	1	CYLINDER BLOCK GP	450
Y	*385-2572*	1	CYLINDER HEAD GP	458
Y	*393-2180*	1	DRIVE GP-FAN	484
Y	*375-8320*	1	EXTENSION GP-FAN	501
Y	*378-0627*	1	FAN GP	670
Y	*375-0098*	1	FASTENER GP-DAMPER & PULLEY	505
Y	*390-3737*	1	FILLER GP-ENGINE OIL	620
Y	*425-0197*	1	FILTER GP-FUMES DISPOSAL	630
Y	*415-5625*	1	FILM GP (ALTERNATOR) (ALTERNATOR)	862
Y	*423-8803*	1	FILM GP (STARTING MOTOR) (STARTING MOTOR)	863
Y	*346-0220*	1	FILTER GP-ENGINE OIL	629
Y	*441-1215*	1	FILTER GP-FUEL (WATER SEPARATOR)	756
Y	*453-7163*	1	FILTER GP-FUEL	760
Y	*346-0769*	1	FLANGE GP-EXHAUST	719
Y	*437-2723*	1	FLYWHEEL GP	513
Y	*439-3432*	1	GAUGE GP-OIL LEVEL (DIPSTICK) (ENGINE)	640
Y	*437-2721*	1	HOUSING GP-FLYWHEEL	529
Y	*375-5838*	1	HOUSING GP-FRONT	536
Y	*416-8908*	1	INJECTOR GP-FUEL	766
Y	*371-2478*	1	JET GP-PISTON COOLING	543
Y	*416-2470*	1	LIFTING GP-ENGINE	546
Y	*426-3310*	1	LINES GP-FUEL INJECTION	787
Y	*416-7808*	1	MANIFOLD GP-EXHAUST	724
Y	*391-5523*	1	MANIFOLD GP-INLET	726
Y	*395-0112*	1	MOUNTING GP-ELECTRONIC CONTROL	819
Y	*458-2242*	1	MOUNTING GP-ENGINE	550
Y	*375-4499*	1	PAN GP-OIL	557
Y	*369-7304*	1	PISTON & ROD GP	566
Y	*378-8167*	1	PLATE & FILM GP	868
Y	*346-2908*	1	PLUG GP-ENGINE	592
Y	*440-0026*	1	PLUG GP-OIL FILTER MOUNTING	644
Y	*379-6629*	1	PULLEY GP-CRANKSHAFT	603
Y	*462-6685*	1	PUMP GP-ENGINE OIL	646
Y	*391-4811*	1	PUMP GP-FUEL INJECTION	790
Y	*372-2297*	1	PUMP GP-WATER	678
Y	*452-5153*	1	RADIATOR GP	686
Y	*394-9639*	1	RAIL GP-FUEL	794
Y	*371-2480*	1	ROCKER ARM GP	606

479-7682 **ENGINE AR-PRIMARY (**contd.**)** **i06615991**

NOTE	PART NUMBER	QTY	PART NAME 1 2 3 4 5 6 (PRODUCT LEVEL)	SEE PAGE
Y	*395-0110*	1	SENSOR GP-ENGINE	820
Y	*380-9279*	1	STARTING AID GP	824
Y	*378-0589*	1	STARTING MOTOR GP-ELECTRIC	830
Y	*371-2719*	1	SUPPORT GP-POWER TAKE-OFF	608
Y	*416-6971*	1	TURBOCHARGER GP	741
Y	*424-5516*	1	WIRING GP-ENGINE	846
	449-3320	1	ELECTRONICS GP-ENGINE	

Y - SEPARATE ILLUSTRATION

<END>

479-9389 ENGINE AR-PRIMARY

130 BRAKE KW (174 BHP) AT 2200 RPM

OPTIONAL FIELD REPLACEMENT ORDER 451-1222—PAGE: 452, 452-6584—PAGE: 462

SMCS-1000 **i09157817**

NOTE	PART NUMBER	QTY	PART NAME 1 2 3 4 5 6 (PRODUCT LEVEL)	SEE PAGE
Y	*478-4234*	1	AIR CLEANER GP	715
Y	*378-0630*	1	AIR COMPRESSOR GP	410
Y	*377-0721*	1	ALTERNATOR GP-CHARGING	799
Y	*371-2693*	1	BELT TENSIONER GP	416
Y	*392-0632*	1	BREATHER GP	611
Y	*396-2615*	1	CAMSHAFT GP	427
AY	*481-4143*	1	CONFIGURATION AR-ENGINE	6
Y	*373-3607*	1	CONNECTION GP-WATER	650
Y	*448-9710*	1	CONNECTOR GP-CAB HEATER LINES	652
Y	*371-2536*	1	CONTROL GP-ELECTRONIC	808
Y	*346-0091*	1	COOLER GP-ENGINE OIL	657
Y	*390-0854*	1	CYLINDER BLOCK GP	450
Y	*389-3346*	1	COVER GP-VALVE MECHANISM	435
Y	*374-6300*	1	CRANKSHAFT GP	447
Y	*385-2572*	1	CYLINDER HEAD GP	458
Y	*393-2180*	1	DRIVE GP-FAN	484
Y	*375-8320*	1	EXTENSION GP-FAN	501
Y	*452-3651*	1	FAN GP	673
Y	*375-0098*	1	FASTENER GP-DAMPER & PULLEY	505
Y	*390-3737*	1	FILLER GP-ENGINE OIL	620
Y	*415-5625*	1	FILM GP (ALTERNATOR)	862
Y	*611-2653*	1	FILM GP (RADIATOR)	865
Y	*346-0220*	1	FILTER GP-ENGINE OIL	629
Y	*441-1215*	1	FILTER GP-FUEL (WATER SEPARATOR)	756
Y	*453-7163*	1	FILTER GP-FUEL	760
Y	*437-2723*	1	FLYWHEEL GP	513
Y	*439-3432*	1	GAUGE GP-OIL LEVEL (DIPSTICK)	640
Y	*437-2721*	1	HOUSING GP-FLYWHEEL	529
Y	*476-7558*	1	HOUSING GP-FRONT	541
Y	*371-2483*	1	INJECTOR GP-FUEL	763
Y	*371-2478*	1	JET GP-PISTON COOLING	543
Y	*416-2470*	1	LIFTING GP-ENGINE	546
Y	*448-0935*	1	LINES GP-FUEL FILTER	783
Y	*416-7808*	1	MANIFOLD GP-EXHAUST	724
Y	*391-5523*	1	MANIFOLD GP-INLET	726
Y	*395-0112*	1	MOUNTING GP-ELECTRONIC CONTROL	819
Y	*458-2242*	1	MOUNTING GP-ENGINE	550
Y	*375-4499*	1	PAN GP-OIL	557
Y	*374-6301*	1	PISTON & ROD GP	576
Y	*378-8167*	1	PLATE & FILM GP	868
Y	*440-0026*	1	PLUG GP-OIL FILTER MOUNTING	644
Y	*379-6629*	1	PULLEY GP-CRANKSHAFT	603
Y	*462-6685*	1	PUMP GP-ENGINE OIL	646
Y	*391-4811*	1	PUMP GP-FUEL INJECTION	790
Y	*372-2297*	1	PUMP GP-WATER	678
Y	*454-6966*	1	RADIATOR GP	
Y	*394-9639*	1	RAIL GP-FUEL	794
Y	*371-2480*	1	ROCKER ARM GP	606

479-9389 **ENGINE AR-PRIMARY (**contd.**)** **i09157817**

NOTE	PART NUMBER	QTY	PART NAME 1 2 3 4 5 6 (PRODUCT LEVEL)	SEE PAGE
Y	*395-0110*	1	SENSOR GP-ENGINE	820
Y	*395-0114*	1	STARTING AID GP	826
Y	*385-8000*	1	STARTING MOTOR GP-ELECTRIC	832
Y	*375-5002*	1	TURBOCHARGER GP	732
Y	*424-5516*	1	WIRING GP-ENGINE	846
	464-0721	1	ELECTRONICS GP-ENGINE	
	376-6464	1	PLATE & FILM GP	

A - NOT PART OF THIS GROUP
Y - SEPARATE ILLUSTRATION

<END>

479-9398 ENGINE AR-PRIMARY

168 KW (225.3BHP) @ 2200RPM

SMCS-1000 **i07176363**

NOTE	PART NUMBER	QTY	PART NAME 1 2 3 4 5 6 (PRODUCT LEVEL)	SEE PAGE
Y	*377-0721*	1	ALTERNATOR GP-CHARGING	799
Y	*371-2693*	1	BELT TENSIONER GP	416
Y	*425-0196*	1	BREATHER GP (CRANKCASE)	612
Y	*396-2617*	1	CAMSHAFT GP	428
Y	*373-3607*	1	CONNECTION GP-WATER	650
Y	*371-2536*	1	CONTROL GP-ELECTRONIC	808
Y	*378-8276*	1	COOLER GP-ENGINE OIL	659
Y	*389-3346*	1	COVER GP-VALVE MECHANISM	435
Y	*374-6300*	1	CRANKSHAFT GP	447
Y	*390-0854*	1	CYLINDER BLOCK GP	450
Y	*385-2572*	1	CYLINDER HEAD GP	458
Y	*371-2742*	1	DRAIN GP-ENGINE OIL	466
Y	*393-2180*	1	DRIVE GP-FAN	484
Y	*375-8320*	1	EXTENSION GP-FAN	501
Y	*375-4574*	1	FAN GP	669
Y	*375-0098*	1	FASTENER GP-DAMPER & PULLEY	505
Y	*390-3737*	1	FILLER GP-ENGINE OIL	620
Y	*415-5625*	1	FILM GP (ALTERNATOR)	862
Y	*346-0220*	1	FILTER GP-ENGINE OIL	629
Y	*441-1215*	1	FILTER GP-FUEL (WATER SEPARATOR)	756
Y	*453-7163*	1	FILTER GP-FUEL	760
Y	*425-0197*	1	FILTER GP-FUMES DISPOSAL	630
Y	*346-0769*	1	FLANGE GP-EXHAUST	719
Y	*345-9037*	1	FLYWHEEL GP	510
Y	*439-3432*	1	GAUGE GP-OIL LEVEL (DIPSTICK)	640
Y	*393-3369*	1	HOUSING GP-FLYWHEEL	526
Y	*375-5838*	1	HOUSING GP-FRONT	536
Y	*416-8908*	1	INJECTOR GP-FUEL	766
Y	*371-2478*	1	JET GP-PISTON COOLING	543
Y	*416-2470*	1	LIFTING GP-ENGINE	546
Y	*426-3310*	1	LINES GP-FUEL INJECTION	787
Y	*416-7808*	1	MANIFOLD GP-EXHAUST	724
Y	*391-5523*	1	MANIFOLD GP-INLET	726
Y	*346-1512*	1	MOUNTING GP-ACCESSORY MODULE	855
Y	*395-0112*	1	MOUNTING GP-ELECTRONIC CONTROL	819
Y	*375-4499*	1	PAN GP-OIL	557
Y	*369-7304*	1	PISTON & ROD GP	566
Y	*378-8167*	1	PLATE & FILM GP	868
Y	*346-2908*	1	PLUG GP-ENGINE	592
Y	*440-0026*	1	PLUG GP-OIL FILTER MOUNTING	644
Y	*379-6629*	1	PULLEY GP-CRANKSHAFT	603
Y	*462-6685*	1	PUMP GP-ENGINE OIL	646
Y	*391-4811*	1	PUMP GP-FUEL INJECTION	790
Y	*372-2297*	1	PUMP GP-WATER	678
Y	*452-5153*	1	RADIATOR GP	686
Y	*394-9639*	1	RAIL GP-FUEL	794
Y	*371-2480*	1	ROCKER ARM GP	606
Y	*395-0110*	1	SENSOR GP-ENGINE	820
Y	*395-0114*	1	STARTING AID GP	826

479-9398 **ENGINE AR-PRIMARY (**contd.**)** **i07176363**

NOTE	PART NUMBER	QTY	PART NAME 1 2 3 4 5 6 (PRODUCT LEVEL)	SEE PAGE
Y	*385-8000*	1	STARTING MOTOR GP-ELECTRIC	832
Y	*371-2719*	1	SUPPORT GP-POWER TAKE-OFF	608
Y	*416-6971*	1	TURBOCHARGER GP	741
Y	*424-5516*	1	WIRING GP-ENGINE	846
	448-4768	1	ELECTRONICS GP	
	376-6464	1	PLATE & FILM GP	
	332-0905	2	RIVET-DRIVE	
	350-8958	1	PLATE-SERIAL NUMBER (ENGINE)	

Y - SEPARATE ILLUSTRATION

<END>

480-2181 ENGINE AR-PRIMARY

205 BRAKE KW (275 BHP) AT 2200 RPM

OPTIONAL FIELD REPLACEMENT ORDER 451-1222—PAGE: 452, 452-6584—PAGE: 462

SMCS-1000 **i09157661**

NOTE	PART NUMBER	QTY	PART NAME 1 2 3 4 5 6 (PRODUCT LEVEL)	SEE PAGE
Y	*478-4234*	1	AIR CLEANER GP	715
Y	*377-0721*	1	ALTERNATOR GP-CHARGING	799
Y	*371-2693*	1	BELT TENSIONER GP	416
Y	*425-0196*	1	BREATHER GP (CRANKCASE)	612
Y	*396-2617*	1	CAMSHAFT GP	428
AY	*481-4234*	1	CONFIGURATION AR-ENGINE	6
Y	*373-3607*	1	CONNECTION GP-WATER	650
Y	*371-2536*	1	CONTROL GP-ELECTRONIC	808
Y	*378-8276*	1	COOLER GP-ENGINE OIL	659
Y	*389-3347*	1	COVER GP-VALVE MECHANISM	436
Y	*374-6300*	1	CRANKSHAFT GP	447
Y	*390-0854*	1	CYLINDER BLOCK GP	450
Y	*385-2572*	1	CYLINDER HEAD GP	458
Y	*393-2180*	1	DRIVE GP-FAN	484
Y	*375-8320*	1	EXTENSION GP-FAN	501
Y	*378-0627*	1	FAN GP	670
Y	*375-0098*	1	FASTENER GP-DAMPER & PULLEY	505
Y	*438-5978*	1	FILLER GP-ENGINE OIL	623
Y	*415-5625*	1	FILM GP (ALTERNATOR)	862
Y	*346-0220*	1	FILTER GP-ENGINE OIL	629
Y	*441-1215*	1	FILTER GP-FUEL (WATER SEPARATOR)	756
Y	*453-7163*	1	FILTER GP-FUEL	760
Y	*425-0197*	1	FILTER GP-FUMES DISPOSAL	630
Y	*346-0769*	1	FLANGE GP-EXHAUST	719
Y	*437-2723*	1	FLYWHEEL GP	513
Y	*439-3432*	1	GAUGE GP-OIL LEVEL (DIPSTICK)	640
Y	*437-2721*	1	HOUSING GP-FLYWHEEL	529
Y	*375-4645*	1	HOUSING GP-FRONT	534
Y	*448-9788*	1	HOUSING GP-FRONT	540
Y	*416-8908*	1	INJECTOR GP-FUEL	766
Y	*371-2478*	1	JET GP-PISTON COOLING	543
Y	*416-2470*	1	LIFTING GP-ENGINE	546
Y	*426-3310*	1	LINES GP-FUEL INJECTION	787
Y	*416-7808*	1	MANIFOLD GP-EXHAUST	724
Y	*391-5523*	1	MANIFOLD GP-INLET	726
Y	*395-0112*	1	MOUNTING GP-ELECTRONIC CONTROL	819
Y	*458-2242*	1	MOUNTING GP-ENGINE	550
Y	*375-4499*	1	PAN GP-OIL	557
Y	*369-7304*	1	PISTON & ROD GP	566
Y	*378-8167*	1	PLATE & FILM GP	868
Y	*346-2908*	1	PLUG GP-ENGINE	592
Y	*440-0026*	1	PLUG GP-OIL FILTER MOUNTING	644
Y	*379-6629*	1	PULLEY GP-CRANKSHAFT	603
Y	*462-6685*	1	PUMP GP-ENGINE OIL	646
Y	*391-4811*	1	PUMP GP-FUEL INJECTION	790
Y	*372-2297*	1	PUMP GP-WATER	678
Y	*456-4302*	1	RADIATOR GP	701
Y	*394-9639*	1	RAIL GP-FUEL	794

480-2181 **ENGINE AR-PRIMARY (**contd.**)** **i09157661**

NOTE	PART NUMBER	QTY	PART NAME 1 2 3 4 5 6 (PRODUCT LEVEL)	SEE PAGE
Y	*371-2480*	1	ROCKER ARM GP	606
Y	*395-0110*	1	SENSOR GP-ENGINE	820
Y	*395-0114*	1	STARTING AID GP	826
Y	*385-8000*	1	STARTING MOTOR GP-ELECTRIC	832
Y	*416-6971*	1	TURBOCHARGER GP	741
Y	*424-5516*	1	WIRING GP-ENGINE	846
	449-3320	1	ELECTRONICS GP-ENGINE	
	376-6464	1	PLATE & FILM GP	

A - NOT PART OF THIS GROUP
Y - SEPARATE ILLUSTRATION

<END>

481-0144 ENGINE AR-PRIMARY

186 BRAKE KW(249 BHP) AT 2200 RPM

OPTIONAL FIELD REPLACEMENT ORDER 451-1222—PAGE: 452, 452-6584—PAGE: 462

SMCS-1000 **i10579997**

NOTE	PART NUMBER	QTY	PART NAME 1 2 3 4 5 6 (PRODUCT LEVEL)	SEE PAGE
Y	*377-0721*	1	ALTERNATOR GP-CHARGING	799
Y	*391-9612*	1	BELT TENSIONER GP	422
Y	*379-6637*	1	BRACKET GP-MOUNTING	423
Y	*392-0632*	1	BREATHER GP	611
Y	*396-2617*	1	CAMSHAFT GP	428
Y	*390-5132*	1	CLAMP AS-EXHAUST	718
AY	*481-1530*	1	CONFIGURATION AR-ENGINE	6
Y	*346-2911*	1	CONNECTION GP-HEATER	648
Y	*373-3607*	1	CONNECTION GP-WATER	650
Y	*371-2536*	1	CONTROL GP-ELECTRONIC	808
Y	*378-8280*	1	COOLER GP-ENGINE OIL	661
Y	*389-3348*	1	COVER GP-VALVE MECHANISM	440
Y	*374-6300*	1	CRANKSHAFT GP	447
Y	*390-0854*	1	CYLINDER BLOCK GP	450
Y	*385-2572*	1	CYLINDER HEAD GP	458
Y	*371-2743*	1	DRAIN GP-OIL	616
Y	*380-2638*	1	DRIVE GP-FAN	479
Y	*375-4606*	1	DRIVE GP-POWER TAKE-OFF	499
Y	*452-6700*	1	EXTENSION GP-FAN	504
Y	*375-0098*	1	FASTENER GP-DAMPER & PULLEY	505
Y	*379-6626*	1	FILLER GP-ENGINE OIL	619
Y	*390-0060*	1	FILM GP	859
Y	*415-5625*	1	FILM GP (ALTERNATOR)	862
Y	*423-8803*	1	FILM GP (STARTING MOTOR)	863
Y	*346-0220*	1	FILTER GP-ENGINE OIL	629
Y	*441-1215*	1	FILTER GP-FUEL (WATER SEPARATOR)	756
Y	*453-7163*	1	FILTER GP-FUEL	760
Y	*345-8901*	1	FLYWHEEL GP	506
Y	*417-6007*	1	GAUGE GP-OIL LEVEL (DIPSTICK)	635
Y	*380-2587*	1	HOUSING GP-FLYWHEEL	525
Y	*375-4645*	1	HOUSING GP-FRONT	534
Y	*416-8908*	1	INJECTOR GP-FUEL	766
Y	*371-2478*	1	JET GP-PISTON COOLING	543
Y	*416-2470*	1	LIFTING GP-ENGINE	546
Y	*448-0935*	1	LINES GP-FUEL FILTER	783
Y	*393-7694*	1	MANIFOLD GP-EXHAUST	723
Y	*391-5523*	1	MANIFOLD GP-INLET	726
Y	*395-0112*	1	MOUNTING GP-ELECTRONIC CONTROL	819
Y	*375-4499*	1	PAN GP-OIL	557
Y	*369-7304*	1	PISTON & ROD GP	566
Y	*635-3313*	1	PLATE GP-IDENTIFICATION	869
Y	*371-2554*	1	PULLEY GP-CRANKSHAFT	601
Y	*462-6685*	1	PUMP GP-ENGINE OIL	646
Y	*391-4811*	1	PUMP GP-FUEL INJECTION	790
Y	*372-2297*	1	PUMP GP-WATER	678
Y	*394-9639*	1	RAIL GP-FUEL	794
Y	*371-2480*	1	ROCKER ARM GP	606
Y	*395-0110*	1	SENSOR GP-ENGINE	820

481-0144 **ENGINE AR-PRIMARY (**contd.**)** **i10579997**

NOTE	PART NUMBER	QTY	PART NAME 1 2 3 4 5 6 (PRODUCT LEVEL)	SEE PAGE
Y	*395-0114*	1	STARTING AID GP	826
Y	*392-2021*	1	STARTING MOTOR GP-ELECTRIC	836
Y	*416-6968*	1	TURBOCHARGER GP	738
Y	*371-2745*	1	VALVE GP-FLUID SAMPLING	647
Y	*424-5516*	1	WIRING GP-ENGINE	846
	440-1796	1	ELECTRONICS GP-ENGINE RATINGS	
	356-7065	1	ELECTRONICS-ARC	
	376-6464	1	PLATE & FILM GP	

A - NOT PART OF THIS GROUP
Y - SEPARATE ILLUSTRATION

<END>

481-0811 ENGINE AR-PRIMARY

186 BRAKE (250 BHP) AT 2200 RPM

OPTIONAL FIELD REPLACEMENT ORDER 451-1222—PAGE: 452, 452-6584—PAGE: 462

SMCS-1000 **i07592222**

NOTE	PART NUMBER	QTY	PART NAME 1 2 3 4 5 6 (PRODUCT LEVEL)	SEE PAGE
Y	*392-2023*	1	ALTERNATOR GP-CHARGING	801
Y	*375-4479*	1	BELT TENSIONER GP	417
Y	*379-6637*	1	BRACKET GP-MOUNTING	423
Y	*392-0632*	1	BREATHER GP	611
Y	*396-2617*	1	CAMSHAFT GP	428
Y	*390-5130*	1	CLAMP AS-EXHAUST	717
Y	*346-2911*	1	CONNECTION GP-HEATER	648
Y	*378-8581*	1	CONNECTION GP-WATER	651
Y	*371-2536*	1	CONTROL GP-ELECTRONIC	808
Y	*378-8280*	1	COOLER GP-ENGINE OIL	661
Y	*378-0629*	1	COVER GP-ACCESSORY DRIVE	433
Y	*389-3347*	1	COVER GP-VALVE MECHANISM	436
Y	*374-6300*	1	CRANKSHAFT GP	447
Y	*390-0854*	1	CYLINDER BLOCK GP	450
Y	*385-2572*	1	CYLINDER HEAD GP	458
Y	*378-8166*	1	DRAIN GP-ENGINE OIL	467
Y	*375-3937*	1	DRIVE GP-FAN	470
Y	*375-0098*	1	FASTENER GP-DAMPER & PULLEY	505
Y	*438-5978*	1	FILLER GP-ENGINE OIL	623
Y	*390-0060*	1	FILM GP (EMISSION)	859
Y	*415-5625*	1	FILM GP (ALTERNATOR) (ALTERNATOR)	862
Y	*423-8803*	1	FILM GP (STARTING MOTOR) (STARTING MOTOR)	863
Y	*346-0220*	1	FILTER GP-ENGINE OIL	629
Y	*441-1215*	1	FILTER GP-FUEL (WATER SEPARATOR)	756
Y	*453-7163*	1	FILTER GP-FUEL	760
Y	*345-8901*	1	FLYWHEEL GP	506
Y	*439-3430*	1	GAUGE GP-OIL LEVEL (DIPSTICK)	638
Y	*345-8838*	1	HOUSING GP-FLYWHEEL	517
Y	*375-5838*	1	HOUSING GP-FRONT	536
Y	*416-8908*	1	INJECTOR GP-FUEL	766
Y	*371-2478*	1	JET GP-PISTON COOLING	543
Y	*416-2470*	1	LIFTING GP-ENGINE	546
Y	*478-8523*	1	LINES GP-FUEL	773
Y	*393-7694*	1	MANIFOLD GP-EXHAUST	723
Y	*378-8582*	1	MANIFOLD GP-INLET	725
Y	*395-0112*	1	MOUNTING GP-ELECTRONIC CONTROL	819
Y	*378-0594*	1	PAN GP-OIL	561
Y	*369-7304*	1	PISTON & ROD GP	566
Y	*346-1478*	1	PLUG GP-FLYWHEEL HOUSING	595
Y	*440-0026*	1	PLUG GP-OIL FILTER MOUNTING	644
Y	*371-2554*	1	PULLEY GP-CRANKSHAFT	601
Y	*462-6685*	1	PUMP GP-ENGINE OIL	646
Y	*391-4811*	1	PUMP GP-FUEL INJECTION	790
Y	*372-2297*	1	PUMP GP-WATER	678
Y	*394-9639*	1	RAIL GP-FUEL	794
Y	*371-2480*	1	ROCKER ARM GP	606
Y	*395-0110*	1	SENSOR GP-ENGINE	820
Y	*380-9279*	1	STARTING AID GP	824

481-0811 **ENGINE AR-PRIMARY (**contd.**)** **i07592222**

NOTE	PART NUMBER	QTY	PART NAME 1 2 3 4 5 6 (PRODUCT LEVEL)	SEE PAGE
Y	*415-4870*	1	STARTING MOTOR GP-ELECTRIC	837
Y	*416-6969*	1	TURBOCHARGER GP	739
Y	*424-5516*	1	WIRING GP-ENGINE	846
	440-1796	1	ELECTRONICS GP-ENGINE RATINGS	
	376-6464	1	PLATE & FILM GP	

Y - SEPARATE ILLUSTRATION

<END>

482-0209 ENGINE AR-PRIMARY

116 BRAKE KW (156 BHP) AT 2200 RPM

OPTIONAL FIELD REPLACEMENT ORDER 451-1222—PAGE: 452, 452-6584—PAGE: 462

SMCS-1000 **i09211212**

NOTE	PART NUMBER	QTY	PART NAME 1 2 3 4 5 6 (PRODUCT LEVEL)	SEE PAGE
Y	*478-4234*	1	AIR CLEANER GP	715
Y	*377-0721*	1	ALTERNATOR GP-CHARGING	799
Y	*371-2693*	1	BELT TENSIONER GP	416
Y	*425-0196*	1	BREATHER GP (CRANKCASE)	612
Y	*396-2615*	1	CAMSHAFT GP	427
AY	*482-8581*	1	CONFIGURATION AR-ENGINE	6
Y	*373-3607*	1	CONNECTION GP-WATER	650
Y	*371-2536*	1	CONTROL GP-ELECTRONIC	808
Y	*346-0091*	1	COOLER GP-ENGINE OIL	657
Y	*389-3346*	1	COVER GP-VALVE MECHANISM	435
Y	*374-6300*	1	CRANKSHAFT GP	447
Y	*390-0854*	1	CYLINDER BLOCK GP	450
Y	*385-2572*	1	CYLINDER HEAD GP	458
Y	*393-2180*	1	DRIVE GP-FAN	484
Y	*375-8320*	1	EXTENSION GP-FAN	501
Y	*454-5203*	1	FAN GP	674
Y	*375-0098*	1	FASTENER GP-DAMPER & PULLEY	505
Y	*390-3737*	1	FILLER GP-ENGINE OIL	620
Y	*415-5625*	1	FILM GP (ALTERNATOR)	862
Y	*423-8803*	1	FILM GP (STARTING MOTOR)	863
Y	*346-0220*	1	FILTER GP-ENGINE OIL	629
Y	*441-1215*	1	FILTER GP-FUEL (WATER SEPARATOR)	756
Y	*453-7163*	1	FILTER GP-FUEL	760
Y	*425-0197*	1	FILTER GP-FUMES DISPOSAL	630
Y	*346-0769*	1	FLANGE GP-EXHAUST	719
Y	*345-8902*	1	FLYWHEEL GP	507
Y	*439-3432*	1	GAUGE GP-OIL LEVEL (DIPSTICK)	640
Y	*345-8838*	1	HOUSING GP-FLYWHEEL	517
Y	*375-5838*	1	HOUSING GP-FRONT	536
Y	*371-2483*	1	INJECTOR GP-FUEL	763
Y	*371-2478*	1	JET GP-PISTON COOLING	543
Y	*416-2470*	1	LIFTING GP-ENGINE	546
Y	*426-3310*	1	LINES GP-FUEL INJECTION	787
Y	*416-7808*	1	MANIFOLD GP-EXHAUST	724
Y	*391-5523*	1	MANIFOLD GP-INLET	726
Y	*346-1528*	1	MOUNTING GP-ACCESSORY MODULE	856
Y	*395-0112*	1	MOUNTING GP-ELECTRONIC CONTROL	819
Y	*375-4499*	1	PAN GP-OIL	557
Y	*374-6301*	1	PISTON & ROD GP	576
Y	*378-8167*	1	PLATE & FILM GP	868
Y	*346-2908*	1	PLUG GP-ENGINE	592
Y	*440-0026*	1	PLUG GP-OIL FILTER MOUNTING	644
Y	*379-6629*	1	PULLEY GP-CRANKSHAFT	603
Y	*462-6685*	1	PUMP GP-ENGINE OIL	646
Y	*391-4811*	1	PUMP GP-FUEL INJECTION	790
Y	*372-2297*	1	PUMP GP-WATER	678
Y	*454-6966*	1	RADIATOR GP	
Y	*394-9639*	1	RAIL GP-FUEL	794

482-0209 **ENGINE AR-PRIMARY (**contd.**)** **i09211212**

NOTE	PART NUMBER	QTY	PART NAME 1 2 3 4 5 6 (PRODUCT LEVEL)	SEE PAGE
Y	*371-2480*	1	ROCKER ARM GP	606
Y	*395-0110*	1	SENSOR GP-ENGINE	820
Y	*395-0114*	1	STARTING AID GP	826
Y	*392-2020*	1	STARTING MOTOR GP-ELECTRIC	835
Y	*371-2719*	1	SUPPORT GP-POWER TAKE-OFF	608
Y	*375-5002*	1	TURBOCHARGER GP	732
Y	*424-5516*	1	WIRING GP-ENGINE	846
	464-0722	1	ELECTRONICS GP-ENGINE	
	376-6464	1	PLATE & FILM GP	

A - NOT PART OF THIS GROUP
Y - SEPARATE ILLUSTRATION

<END>

482-0212 ENGINE AR-PRIMARY

151 BRAKE KW (202 BHP) AT 2200 RPM

OPTIONAL FIELD REPLACEMENT ORDER 451-1222—PAGE: 452, 452-6584—PAGE: 462

SMCS-1000 **i09169268**

NOTE	PART NUMBER	QTY	PART NAME 1 2 3 4 5 6 (PRODUCT LEVEL)	SEE PAGE
Y	*478-4234*	1	AIR CLEANER GP	715
Y	*377-0721*	1	ALTERNATOR GP-CHARGING	799
Y	*371-2693*	1	BELT TENSIONER GP	416
Y	*425-0196*	1	BREATHER GP (CRANKCASE)	612
Y	*396-2615*	1	CAMSHAFT GP	427
AY	*482-9210*	1	CONFIGURATION AR-ENGINE	7
Y	*373-3607*	1	CONNECTION GP-WATER	650
Y	*371-2536*	1	CONTROL GP-ELECTRONIC	808
Y	*346-0091*	1	COOLER GP-ENGINE OIL	657
Y	*389-3346*	1	COVER GP-VALVE MECHANISM	435
Y	*374-6300*	1	CRANKSHAFT GP	447
Y	*390-0854*	1	CYLINDER BLOCK GP	450
Y	*385-2572*	1	CYLINDER HEAD GP	458
Y	*393-2180*	1	DRIVE GP-FAN	484
Y	*375-8320*	1	EXTENSION GP-FAN	501
Y	*454-5203*	1	FAN GP	674
Y	*375-0098*	1	FASTENER GP-DAMPER & PULLEY	505
Y	*390-3737*	1	FILLER GP-ENGINE OIL	620
Y	*415-5625*	1	FILM GP (ALTERNATOR)	862
Y	*423-8803*	1	FILM GP (STARTING MOTOR)	863
Y	*346-0220*	1	FILTER GP-ENGINE OIL	629
Y	*441-1215*	1	FILTER GP-FUEL (WATER SEPARATOR)	756
Y	*453-7163*	1	FILTER GP-FUEL	760
Y	*425-0197*	1	FILTER GP-FUMES DISPOSAL	630
Y	*346-0769*	1	FLANGE GP-EXHAUST	719
Y	*345-8902*	1	FLYWHEEL GP	507
Y	*439-3432*	1	GAUGE GP-OIL LEVEL (DIPSTICK)	640
Y	*345-8838*	1	HOUSING GP-FLYWHEEL	517
Y	*375-5838*	1	HOUSING GP-FRONT	536
Y	*371-2483*	1	INJECTOR GP-FUEL	763
Y	*371-2478*	1	JET GP-PISTON COOLING	543
Y	*416-2470*	1	LIFTING GP-ENGINE	546
Y	*426-3310*	1	LINES GP-FUEL INJECTION	787
Y	*416-7808*	1	MANIFOLD GP-EXHAUST	724
Y	*391-5523*	1	MANIFOLD GP-INLET	726
Y	*346-1528*	1	MOUNTING GP-ACCESSORY MODULE	856
Y	*395-0112*	1	MOUNTING GP-ELECTRONIC CONTROL	819
Y	*375-4499*	1	PAN GP-OIL	557
Y	*374-6301*	1	PISTON & ROD GP	576
Y	*378-8167*	1	PLATE & FILM GP	868
Y	*346-2908*	1	PLUG GP-ENGINE	592
Y	*440-0026*	1	PLUG GP-OIL FILTER MOUNTING	644
Y	*379-6629*	1	PULLEY GP-CRANKSHAFT	603
Y	*462-6685*	1	PUMP GP-ENGINE OIL	646
Y	*391-4811*	1	PUMP GP-FUEL INJECTION	790
Y	*372-2297*	1	PUMP GP-WATER	678
Y	*454-6966*	1	RADIATOR GP	
Y	*394-9639*	1	RAIL GP-FUEL	794

482-0212 **ENGINE AR-PRIMARY (**contd.**)** **i09169268**

NOTE	PART NUMBER	QTY	PART NAME 1 2 3 4 5 6 (PRODUCT LEVEL)	SEE PAGE
Y	*371-2480*	1	ROCKER ARM GP	606
Y	*395-0110*	1	SENSOR GP-ENGINE	820
Y	*395-0114*	1	STARTING AID GP	826
Y	*392-2020*	1	STARTING MOTOR GP-ELECTRIC	835
Y	*371-2719*	1	SUPPORT GP-POWER TAKE-OFF	608
Y	*375-5002*	1	TURBOCHARGER GP	732
Y	*424-5516*	1	WIRING GP-ENGINE	846
	453-1370	1	ELECTRONICS GP-ENGINE	
	376-6464	1	PLATE & FILM GP	

A - NOT PART OF THIS GROUP
Y - SEPARATE ILLUSTRATION

<END>

483-5155 ENGINE AR-PRIMARY

PART OF 483-5308 ENGINE AR-COMPLETE

SMCS-1000 **i06180333**

NOTE	PART NUMBER	QTY	PART NAME 1 2 3 4 5 6 (PRODUCT LEVEL)	SEE PAGE
Y	*456-1351*	1	ALTERNATOR GP-CHARGING	804
Y	*391-9611*	1	BELT TENSIONER GP	421
Y	*379-6637*	1	BRACKET GP-MOUNTING	423
Y	*392-0632*	1	BREATHER GP	611
Y	*396-2617*	1	CAMSHAFT GP	428
Y	*390-5130*	1	CLAMP AS-EXHAUST	717
Y	*346-2911*	1	CONNECTION GP-HEATER	648
Y	*373-3607*	1	CONNECTION GP-WATER	650
Y	*371-2536*	1	CONTROL GP-ELECTRONIC	808
Y	*378-8280*	1	COOLER GP-ENGINE OIL	661
Y	*378-0629*	1	COVER GP-ACCESSORY DRIVE	433
Y	*389-3347*	1	COVER GP-VALVE MECHANISM	436
Y	*374-6300*	1	CRANKSHAFT GP	447
Y	*390-0854*	1	CYLINDER BLOCK GP	450
Y	*385-2572*	1	CYLINDER HEAD GP	458
Y	*378-8166*	1	DRAIN GP-ENGINE OIL	467
Y	*375-3937*	1	DRIVE GP-FAN	470
Y	*438-5978*	1	FILLER GP-ENGINE OIL	623
Y	*390-0060*	1	FILM GP	859
Y	*415-5625*	1	FILM GP (ALTERNATOR)	862
Y	*423-8803*	1	FILM GP (STARTING MOTOR)	863
Y	*346-0220*	1	FILTER GP-ENGINE OIL	629
Y	*441-1215*	1	FILTER GP-FUEL (WATER SEPARATOR)	756
Y	*453-7163*	1	FILTER GP-FUEL	760
Y	*478-8523*	1	LINES GP-FUEL	773
Y	*345-8901*	1	FLYWHEEL GP	506
Y	*378-3484*	1	GAUGE GP-OIL LEVEL (DIPSTICK)	634
Y	*380-2587*	1	HOUSING GP-FLYWHEEL	525
Y	*375-5838*	1	HOUSING GP-FRONT	536
Y	*416-8908*	1	INJECTOR GP-FUEL	766
Y	*371-2478*	1	JET GP-PISTON COOLING	543
Y	*371-2740*	1	LIFTING GP-ENGINE	545
Y	*393-7694*	1	MANIFOLD GP-EXHAUST	723
Y	*378-8582*	1	MANIFOLD GP-INLET	725
Y	*395-0112*	1	MOUNTING GP-ELECTRONIC CONTROL	819
Y	*378-0594*	1	PAN GP-OIL	561
Y	*369-7304*	1	PISTON & ROD GP	566
Y	*375-0098*	1	FASTENER GP-DAMPER & PULLEY	505
Y	*371-2554*	1	PULLEY GP-CRANKSHAFT	601
Y	*462-6685*	1	PUMP GP-ENGINE OIL	646
Y	*391-4811*	1	PUMP GP-FUEL INJECTION	790
Y	*372-2297*	1	PUMP GP-WATER	678
Y	*394-9639*	1	RAIL GP-FUEL	794
Y	*371-2480*	1	ROCKER ARM GP	606
Y	*395-0110*	1	SENSOR GP-ENGINE	820
Y	*380-9279*	1	STARTING AID GP	824
Y	*392-2019*	1	STARTING MOTOR GP-ELECTRIC	834
Y	*416-6969*	1	TURBOCHARGER GP	739
Y	*371-2745*	1	VALVE GP-FLUID SAMPLING	647

483-5155 **ENGINE AR-PRIMARY (**contd.**)** **i06180333**

NOTE	PART NUMBER	QTY	PART NAME 1 2 3 4 5 6 (PRODUCT LEVEL)	SEE PAGE
Y	*424-5516*	1	WIRING GP-ENGINE	846
	448-4768	1	ELECTRONICS GP	

Y - SEPARATE ILLUSTRATION

<END>

483-9334 ENGINE AR-PRIMARY

205 BRAKE KW (275 BHP) AT 2200 RPM

OPTIONAL FIELD REPLACEMENT ORDER 451-1222—PAGE: 452, 452-6584—PAGE: 462

SMCS-1000 **i09158154**

NOTE	PART NUMBER	QTY	PART NAME 1 2 3 4 5 6 (PRODUCT LEVEL)	SEE PAGE
Y	*456-1351*	1	ALTERNATOR GP-CHARGING	804
Y	*391-9611*	1	BELT TENSIONER GP	421
Y	*379-6637*	1	BRACKET GP-MOUNTING	423
Y	*392-0632*	1	BREATHER GP	611
Y	*396-2617*	1	CAMSHAFT GP	428
Y	*390-5130*	1	CLAMP AS-EXHAUST	717
AY	*483-9391*	1	CONFIGURATION AR-ENGINE	7
Y	*346-2911*	1	CONNECTION GP-HEATER	648
Y	*373-3607*	1	CONNECTION GP-WATER	650
Y	*371-2536*	1	CONTROL GP-ELECTRONIC	808
Y	*378-8280*	1	COOLER GP-ENGINE OIL	661
Y	*378-0629*	1	COVER GP-ACCESSORY DRIVE	433
Y	*389-3347*	1	COVER GP-VALVE MECHANISM	436
Y	*374-6300*	1	CRANKSHAFT GP	447
Y	*390-0854*	1	CYLINDER BLOCK GP	450
Y	*385-2572*	1	CYLINDER HEAD GP	458
Y	*378-8166*	1	DRAIN GP-ENGINE OIL	467
Y	*375-3937*	1	DRIVE GP-FAN	470
Y	*375-0098*	1	FASTENER GP-DAMPER & PULLEY	505
Y	*438-5978*	1	FILLER GP-ENGINE OIL	623
Y	*415-5625*	1	FILM GP (ALTERNATOR)	862
Y	*423-8803*	1	FILM GP (STARTING MOTOR)	863
Y	*346-0220*	1	FILTER GP-ENGINE OIL	629
Y	*441-1215*	1	FILTER GP-FUEL (WATER SEPARATOR)	756
Y	*453-7163*	1	FILTER GP-FUEL	760
Y	*345-8901*	1	FLYWHEEL GP	506
Y	*378-3484*	1	GAUGE GP-OIL LEVEL (DIPSTICK)	634
Y	*380-2587*	1	HOUSING GP-FLYWHEEL	525
Y	*375-5838*	1	HOUSING GP-FRONT	536
Y	*416-8908*	1	INJECTOR GP-FUEL	766
Y	*371-2478*	1	JET GP-PISTON COOLING	543
Y	*371-2740*	1	LIFTING GP-ENGINE	545
Y	*478-8523*	1	LINES GP-FUEL	773
Y	*393-7694*	1	MANIFOLD GP-EXHAUST	723
Y	*378-8582*	1	MANIFOLD GP-INLET	725
Y	*395-0112*	1	MOUNTING GP-ELECTRONIC CONTROL	819
Y	*378-0594*	1	PAN GP-OIL	561
Y	*369-7304*	1	PISTON & ROD GP	566
Y	*371-2554*	1	PULLEY GP-CRANKSHAFT	601
Y	*462-6685*	1	PUMP GP-ENGINE OIL	646
Y	*391-4811*	1	PUMP GP-FUEL INJECTION	790
Y	*372-2297*	1	PUMP GP-WATER	678
Y	*394-9639*	1	RAIL GP-FUEL	794
Y	*371-2480*	1	ROCKER ARM GP	606
Y	*395-0110*	1	SENSOR GP-ENGINE	820
Y	*380-9279*	1	STARTING AID GP	824
Y	*392-2019*	1	STARTING MOTOR GP-ELECTRIC	834
Y	*416-6969*	1	TURBOCHARGER GP	739

483-9334 **ENGINE AR-PRIMARY (**contd.**)** **i09158154**

NOTE	PART NUMBER	QTY	PART NAME 1 2 3 4 5 6 (PRODUCT LEVEL)	SEE PAGE
Y	*371-2745*	1	VALVE GP-FLUID SAMPLING	647
Y	*424-5516*	1	WIRING GP-ENGINE	846
	449-3320	1	ELECTRONICS GP-ENGINE	
	376-6464	1	PLATE & FILM GP	

A - NOT PART OF THIS GROUP
Y - SEPARATE ILLUSTRATION

<END>

484-2939 ENGINE AR-PRIMARY

209.4 BRAKE KW (280.8 BHP) AT 1800-RPM

PART OF 488-0428 ENGINE AR-COMPLETE

SMCS-1000 **i08704786**

NOTE	PART NUMBER	QTY	PART NAME 1 2 3 4 5 6 (PRODUCT LEVEL)	SEE PAGE
Y	*377-0721*	1	ALTERNATOR GP-CHARGING	799
Y	*371-2693*	1	BELT TENSIONER GP	416
Y	*392-0632*	1	BREATHER GP	611
Y	*376-6871*	1	CAMSHAFT GP	426
Y	*373-3607*	1	CONNECTION GP-WATER	650
Y	*371-2536*	1	CONTROL GP-ELECTRONIC	808
Y	*378-8280*	1	COOLER GP-ENGINE OIL	661
Y	*389-3347*	1	COVER GP-VALVE MECHANISM	436
Y	*374-6300*	1	CRANKSHAFT GP	447
Y	*390-0854*	1	CYLINDER BLOCK GP	450
Y	*385-2572*	1	CYLINDER HEAD GP	458
Y	*371-2742*	1	DRAIN GP-ENGINE OIL	466
Y	*393-2180*	1	DRIVE GP-FAN	484
Y	*375-4606*	1	DRIVE GP-POWER TAKE-OFF	499
Y	*375-8320*	1	EXTENSION GP-FAN	501
Y	*375-4574*	1	FAN GP	669
Y	*375-0098*	1	FASTENER GP-DAMPER & PULLEY	505
Y	*448-0944*	1	FILLER GP-ENGINE OIL	627
Y	*390-0060*	1	FILM GP (EMISSION)	859
Y	*415-5625*	1	FILM GP (ALTERNATOR) (ALTERNATOR)	862
Y	*611-2653*	1	FILM GP (RADIATOR)	865
Y	*346-0220*	1	FILTER GP-ENGINE OIL	629
Y	*441-1215*	1	FILTER GP-FUEL (WATER SEPARATOR)	756
Y	*453-7163*	1	FILTER GP-FUEL	760
Y	*346-0769*	1	FLANGE GP-EXHAUST	719
Y	*378-0585*	1	FLYWHEEL GP	512
Y	*417-6007*	1	GAUGE GP-OIL LEVEL (DIPSTICK) (ENGINE)	635
Y	*357-1915*	1	HOUSING GP-FLYWHEEL	521
Y	*375-4645*	1	HOUSING GP-FRONT	534
Y	*416-8908*	1	INJECTOR GP-FUEL	766
Y	*371-2478*	1	JET GP-PISTON COOLING	543
Y	*416-2470*	1	LIFTING GP-ENGINE	546
Y	*426-3310*	1	LINES GP-FUEL INJECTION	787
Y	*416-7808*	1	MANIFOLD GP-EXHAUST	724
Y	*391-5523*	1	MANIFOLD GP-INLET	726
Y	*346-1512*	1	MOUNTING GP-ACCESSORY MODULE	855
Y	*395-0112*	1	MOUNTING GP-ELECTRONIC CONTROL	819
Y	*375-4499*	1	PAN GP-OIL	557
Y	*452-9761*	1	PISTON & ROD GP	581
Y	*346-2908*	1	PLUG GP-ENGINE	592
Y	*440-0026*	1	PLUG GP-OIL FILTER MOUNTING	644
Y	*379-6629*	1	PULLEY GP-CRANKSHAFT	603
Y	*462-6685*	1	PUMP GP-ENGINE OIL	646
Y	*391-4811*	1	PUMP GP-FUEL INJECTION	790
Y	*372-2297*	1	PUMP GP-WATER	678
Y	*456-4298*	1	RADIATOR GP	695
Y	*394-9639*	1	RAIL GP-FUEL	794
Y	*371-2480*	1	ROCKER ARM GP	606

484-2939 **ENGINE AR-PRIMARY (**contd.**)** **i08704786**

NOTE	PART NUMBER	QTY	PART NAME 1 2 3 4 5 6 (PRODUCT LEVEL)	SEE PAGE
Y	*395-0110*	1	SENSOR GP-ENGINE	820
Y	*395-0114*	1	STARTING AID GP	826
Y	*378-0590*	1	STARTING MOTOR GP-ELECTRIC	831
Y	*416-6971*	1	TURBOCHARGER GP	741
Y	*424-5516*	1	WIRING GP-ENGINE	846
	376-6464	1	PLATE & FILM GP	
	332-0905	2	RIVET-DRIVE	
	350-8958	1	PLATE-SERIAL NUMBER (ENGINE)	
	483-1223	1	ELECTRONICS GP-ENGINE	

Y - SEPARATE ILLUSTRATION

<END>

485-8027 ENGINE AR-PRIMARY

168 BRAKE KW(225 BHP) AT 2200 RPM

OPTIONAL FIELD REPLACEMENT ORDER 451-1222—PAGE: 452, 452-6584—PAGE: 462

PART OF 486-1539 ENGINE AR-COMPLETE

SMCS-1000 **i10419270**

NOTE	PART NUMBER	QTY	PART NAME 1 2 3 4 5 6 (PRODUCT LEVEL)	SEE PAGE
Y	*478-4234*	1	AIR CLEANER GP	715
Y	*377-0721*	1	ALTERNATOR GP-CHARGING	799
Y	*371-2693*	1	BELT TENSIONER GP	416
Y	*392-0632*	1	BREATHER GP	611
Y	*396-2617*	1	CAMSHAFT GP	428
Y	*373-3607*	1	CONNECTION GP-WATER	650
Y	*371-2536*	1	CONTROL GP-ELECTRONIC	808
Y	*378-8280*	1	COOLER GP-ENGINE OIL	661
Y	*389-3347*	1	COVER GP-VALVE MECHANISM	436
Y	*374-6300*	1	CRANKSHAFT GP	447
Y	*390-0854*	1	CYLINDER BLOCK GP	450
Y	*385-2572*	1	CYLINDER HEAD GP	458
Y	*371-2742*	1	DRAIN GP-ENGINE OIL	466
Y	*393-2180*	1	DRIVE GP-FAN	484
Y	*375-4606*	1	DRIVE GP-POWER TAKE-OFF	499
Y	*375-8320*	1	EXTENSION GP-FAN	501
Y	*375-4574*	1	FAN GP	669
Y	*375-0098*	1	FASTENER GP-DAMPER & PULLEY	505
Y	*448-0944*	1	FILLER GP-ENGINE OIL	627
Y	*415-5625*	1	FILM GP (ALTERNATOR)	862
Y	*611-2653*	1	FILM GP (RADIATOR)	865
Y	*346-0220*	1	FILTER GP-ENGINE OIL	629
Y	*441-1215*	1	FILTER GP-FUEL (WATER SEPARATOR)	756
Y	*453-7163*	1	FILTER GP-FUEL	760
Y	*346-0769*	1	FLANGE GP-EXHAUST	719
Y	*345-9037*	1	FLYWHEEL GP	510
Y	*439-3432*	1	GAUGE GP-OIL LEVEL (DIPSTICK)	640
Y	*393-3369*	1	HOUSING GP-FLYWHEEL	526
Y	*375-4645*	1	HOUSING GP-FRONT	534
Y	*416-8908*	1	INJECTOR GP-FUEL	766
Y	*371-2478*	1	JET GP-PISTON COOLING	543
Y	*416-2470*	1	LIFTING GP-ENGINE	546
Y	*426-3310*	1	LINES GP-FUEL INJECTION	787
Y	*416-7808*	1	MANIFOLD GP-EXHAUST	724
Y	*391-5523*	1	MANIFOLD GP-INLET	726
Y	*346-1512*	1	MOUNTING GP-ACCESSORY MODULE	855
Y	*395-0112*	1	MOUNTING GP-ELECTRONIC CONTROL	819
Y	*375-4499*	1	PAN GP-OIL	557
Y	*369-7304*	1	PISTON & ROD GP	566
Y	*378-8167*	1	PLATE & FILM GP	868
Y	*376-6464*	1	PLATE & FILM GP	867
Y	*635-3313*	1	PLATE GP-IDENTIFICATION	869
Y	*346-2908*	1	PLUG GP-ENGINE	592
Y	*440-0026*	1	PLUG GP-OIL FILTER MOUNTING	644
Y	*379-6629*	1	PULLEY GP-CRANKSHAFT	603
Y	*462-6685*	1	PUMP GP-ENGINE OIL	646
Y	*391-4811*	1	PUMP GP-FUEL INJECTION	790

485-8027 **ENGINE AR-PRIMARY (**contd.**)** **i10419270**

NOTE	PART NUMBER	QTY	PART NAME 1 2 3 4 5 6 (PRODUCT LEVEL)	SEE PAGE
Y	*372-2297*	1	PUMP GP-WATER	678
Y	*456-4298*	1	RADIATOR GP	695
Y	*394-9639*	1	RAIL GP-FUEL	794
Y	*371-2480*	1	ROCKER ARM GP	606
Y	*395-0110*	1	SENSOR GP-ENGINE	820
Y	*395-0114*	1	STARTING AID GP	826
Y	*385-8000*	1	STARTING MOTOR GP-ELECTRIC	832
Y	*416-6971*	1	TURBOCHARGER GP	741
Y	*424-5516*	1	WIRING GP-ENGINE	846
	448-4768	1	ELECTRONICS GP	
			SOFTWARE MUST BE PROCURED LOCALLY FROM YOUR CAT DEALER	

Y - SEPARATE ILLUSTRATION

<END>

486-2644 ENGINE AR-PRIMARY

168 BRAKE KW (226 BHP) AT 2200 RPM

OPTIONAL FIELD REPLACEMENT ORDER 451-1222—PAGE: 452, 452-6584—PAGE: 462

SMCS-1000 **i07592686**

NOTE	PART NUMBER	QTY	PART NAME 1 2 3 4 5 6 (PRODUCT LEVEL)	SEE PAGE
Y	*478-4234*	1	AIR CLEANER GP	715
Y	*377-0721*	1	ALTERNATOR GP-CHARGING	799
Y	*371-2693*	1	BELT TENSIONER GP	416
Y	*392-0632*	1	BREATHER GP	611
Y	*396-2617*	1	CAMSHAFT GP	428
Y	*373-3607*	1	CONNECTION GP-WATER	650
Y	*371-2536*	1	CONTROL GP-ELECTRONIC	808
Y	*378-8280*	1	COOLER GP-ENGINE OIL	661
Y	*389-3346*	1	COVER GP-VALVE MECHANISM	435
Y	*374-6300*	1	CRANKSHAFT GP	447
Y	*390-0854*	1	CYLINDER BLOCK GP	450
Y	*385-2572*	1	CYLINDER HEAD GP	458
Y	*393-2180*	1	DRIVE GP-FAN	484
Y	*375-8320*	1	EXTENSION GP-FAN	501
Y	*375-4574*	1	FAN GP	669
Y	*375-0098*	1	FASTENER GP-DAMPER & PULLEY	505
Y	*390-3737*	1	FILLER GP-ENGINE OIL	620
Y	*415-5625*	1	FILM GP (ALTERNATOR) (ALTERNATOR)	862
Y	*346-0220*	1	FILTER GP-ENGINE OIL	629
Y	*441-1215*	1	FILTER GP-FUEL (WATER SEPARATOR)	756
Y	*448-0935*	1	LINES GP-FUEL FILTER	783
Y	*453-7163*	1	FILTER GP-FUEL	760
Y	*346-0769*	1	FLANGE GP-EXHAUST	719
Y	*345-9037*	1	FLYWHEEL GP	510
Y	*439-3432*	1	GAUGE GP-OIL LEVEL (DIPSTICK)	640
Y	*357-1915*	1	HOUSING GP-FLYWHEEL	521
Y	*378-0630*	1	AIR COMPRESSOR GP	410
Y	*448-9719*	1	HOUSING GP-FRONT	538
Y	*416-8908*	1	INJECTOR GP-FUEL	766
Y	*371-2478*	1	JET GP-PISTON COOLING	543
Y	*416-2470*	1	LIFTING GP-ENGINE	546
Y	*416-7808*	1	MANIFOLD GP-EXHAUST	724
Y	*391-5523*	1	MANIFOLD GP-INLET	726
Y	*346-1512*	1	MOUNTING GP-ACCESSORY MODULE	855
Y	*448-9710*	1	CONNECTOR GP-CAB HEATER LINES	652
Y	*395-0112*	1	MOUNTING GP-ELECTRONIC CONTROL	819
Y	*375-4499*	1	PAN GP-OIL	557
Y	*369-7304*	1	PISTON & ROD GP	566
Y	*378-8167*	1	PLATE & FILM GP	868
Y	*440-0026*	1	PLUG GP-OIL FILTER MOUNTING	644
Y	*379-6629*	1	PULLEY GP-CRANKSHAFT	603
Y	*462-6685*	1	PUMP GP-ENGINE OIL	646
Y	*391-4811*	1	PUMP GP-FUEL INJECTION	790
Y	*372-2297*	1	PUMP GP-WATER	678
Y	*452-5153*	1	RADIATOR GP	686
Y	*394-9639*	1	RAIL GP-FUEL	794
Y	*371-2480*	1	ROCKER ARM GP	606
Y	*395-0110*	1	SENSOR GP-ENGINE	820

486-2644 **ENGINE AR-PRIMARY (**contd.**)** **i07592686**

NOTE	PART NUMBER	QTY	PART NAME 1 2 3 4 5 6 (PRODUCT LEVEL)	SEE PAGE
Y	*395-0114*	1	STARTING AID GP	826
Y	*378-0590*	1	STARTING MOTOR GP-ELECTRIC	831
Y	*416-6971*	1	TURBOCHARGER GP	741
Y	*424-5516*	1	WIRING GP-ENGINE	846
	448-4768	1	ELECTRONICS GP	
	376-6464	1	PLATE & FILM GP	

Y - SEPARATE ILLUSTRATION

<END>

486-4250 ENGINE AR-PRIMARY

168 BRAKE KW (225.3 BHP) AT 2200-RPM

PART OF 486-7179 ENGINE AR-COMPLETE

SMCS-1000 **i07014272**

NOTE	PART NUMBER	QTY	PART NAME 1 2 3 4 5 6 (PRODUCT LEVEL)	SEE PAGE
Y	*440-6724*	1	ALTERNATOR GP-CHARGING	802
Y	*379-5585*	1	BELT TENSIONER GP	419
Y	*379-6637*	1	BRACKET GP-MOUNTING	423
Y	*425-0196*	1	BREATHER GP (CRANKCASE)	612
Y	*396-2617*	1	CAMSHAFT GP	428
Y	*390-5132*	1	CLAMP AS-EXHAUST	718
Y	*373-3607*	1	CONNECTION GP-WATER	650
Y	*371-2536*	1	CONTROL GP-ELECTRONIC	808
Y	*378-8276*	1	COOLER GP-ENGINE OIL	659
Y	*389-3347*	1	COVER GP-VALVE MECHANISM	436
Y	*374-6300*	1	CRANKSHAFT GP	447
Y	*390-0854*	1	CYLINDER BLOCK GP	450
Y	*385-2572*	1	CYLINDER HEAD GP	458
Y	*380-2629*	1	DRIVE GP-FAN	478
Y	*443-4956*	1	FAN GP (EXTENSION)	672
Y	*390-3737*	1	FILLER GP-ENGINE OIL	620
Y	*390-0060*	1	FILM GP	859
Y	*415-5625*	1	FILM GP (ALTERNATOR) (ALTERNATOR)	862
Y	*346-0220*	1	FILTER GP-ENGINE OIL	629
Y	*441-1215*	1	FILTER GP-FUEL (WATER SEPARATOR)	756
Y	*453-7163*	1	FILTER GP-FUEL	760
Y	*425-0197*	1	FILTER GP-FUMES DISPOSAL	630
Y	*378-0585*	1	FLYWHEEL GP	512
Y	*439-3430*	1	GAUGE GP-OIL LEVEL (DIPSTICK) (ENGINE)	638
Y	*393-3369*	1	HOUSING GP-FLYWHEEL	526
Y	*371-2725*	1	HOUSING GP-FRONT	532
Y	*416-8908*	1	INJECTOR GP-FUEL	766
Y	*371-2478*	1	JET GP-PISTON COOLING	543
Y	*371-2740*	1	LIFTING GP-ENGINE	545
Y	*426-3310*	1	LINES GP-FUEL INJECTION	787
Y	*393-7694*	1	MANIFOLD GP-EXHAUST	723
Y	*391-5523*	1	MANIFOLD GP-INLET	726
Y	*395-0112*	1	MOUNTING GP-ELECTRONIC CONTROL	819
Y	*448-4757*	1	MOUNTING GP-ENGINE	549
Y	*378-0594*	1	PAN GP-OIL	561
Y	*369-7304*	1	PISTON & ROD GP	566
Y	*346-2908*	1	PLUG GP-ENGINE	592
Y	*440-0026*	1	PLUG GP-OIL FILTER MOUNTING	644
Y	*379-6633*	1	PULLEY GP-AUXILIARY DRIVE	600
Y	*371-2554*	1	PULLEY GP-CRANKSHAFT	601
Y	*462-6685*	1	PUMP GP-ENGINE OIL	646
Y	*391-4811*	1	PUMP GP-FUEL INJECTION	790
Y	*372-2297*	1	PUMP GP-WATER	678
Y	*394-9639*	1	RAIL GP-FUEL	794
Y	*371-2480*	1	ROCKER ARM GP	606
Y	*395-0110*	1	SENSOR GP-ENGINE	820
Y	*395-0114*	1	STARTING AID GP	826
Y	*371-2541*	1	STARTING MOTOR GP-ELECTRIC	829

486-4250 **ENGINE AR-PRIMARY (**contd.**)** **i07014272**

NOTE	PART NUMBER	QTY	PART NAME 1 2 3 4 5 6 (PRODUCT LEVEL)	SEE PAGE
Y	*371-2719*	1	SUPPORT GP-POWER TAKE-OFF	608
Y	*416-6969*	1	TURBOCHARGER GP	739
Y	*424-5516*	1	WIRING GP-ENGINE	846
	448-4768	1	ELECTRONICS GP	

Y - SEPARATE ILLUSTRATION

<END>

488-2691 ENGINE AR-PRIMARY

SMCS-1000 **i06218130**

NOTE	PART NUMBER	QTY	PART NAME 1 2 3 4 5 6 (PRODUCT LEVEL)	SEE PAGE
Y	*440-6724*	1	ALTERNATOR GP-CHARGING	802
Y	*375-4479*	1	BELT TENSIONER GP	417
Y	*379-6637*	1	BRACKET GP-MOUNTING	423
Y	*392-0632*	1	BREATHER GP	611
Y	*396-2617*	1	CAMSHAFT GP	428
Y	*390-5132*	1	CLAMP AS-EXHAUST	718
Y	*373-3606*	1	CONNECTION GP-WATER	649
Y	*371-2536*	1	CONTROL GP-ELECTRONIC	808
Y	*378-8280*	1	COOLER GP-ENGINE OIL	661
Y	*389-3348*	1	COVER GP-VALVE MECHANISM	440
Y	*371-2477*	1	CRANKSHAFT GP	
Y	*390-0854*	1	CYLINDER BLOCK GP	450
Y	*385-2572*	1	CYLINDER HEAD GP	458
Y	*378-8166*	1	DRAIN GP-ENGINE OIL	467
Y	*375-3937*	1	DRIVE GP-FAN	470
Y	*379-6626*	1	FILLER GP-ENGINE OIL	619
Y	*390-0060*	1	FILM GP	859
Y	*415-5625*	1	FILM GP (ALTERNATOR)	862
Y	*423-8803*	1	FILM GP (STARTING MOTOR)	863
Y	*346-0220*	1	FILTER GP-ENGINE OIL	629
Y	*441-1215*	1	FILTER GP-FUEL (WATER SEPARATOR)	756
Y	*448-0935*	1	LINES GP-FUEL FILTER	783
Y	*453-7163*	1	FILTER GP-FUEL	760
Y	*345-8961*	1	FLYWHEEL GP	508
Y	*439-3378*	1	GAUGE GP-OIL LEVEL (DIPSTICK)	637
Y	*380-2587*	1	HOUSING GP-FLYWHEEL	525
Y	*375-4606*	1	DRIVE GP-POWER TAKE-OFF	499
Y	*375-4645*	1	HOUSING GP-FRONT	534
Y	*416-8908*	1	INJECTOR GP-FUEL	766
Y	*371-2478*	1	JET GP-PISTON COOLING	543
Y	*371-2735*	1	LIFTING GP-ENGINE	544
Y	*393-7694*	1	MANIFOLD GP-EXHAUST	723
Y	*391-5523*	1	MANIFOLD GP-INLET	726
Y	*395-0112*	1	MOUNTING GP-ELECTRONIC CONTROL	819
Y	*371-2544*	1	PAN GP-OIL	556
Y	*369-7304*	1	PISTON & ROD GP	566
Y	*346-2908*	1	PLUG GP-ENGINE	592
Y	*375-0098*	1	FASTENER GP-DAMPER & PULLEY	505
Y	*371-2555*	1	PULLEY GP-CRANKSHAFT	602
Y	*462-6685*	1	PUMP GP-ENGINE OIL	646
Y	*391-4811*	1	PUMP GP-FUEL INJECTION	790
Y	*372-2297*	1	PUMP GP-WATER	678
Y	*394-9639*	1	RAIL GP-FUEL	794
Y	*371-2480*	1	ROCKER ARM GP	606
Y	*395-0110*	1	SENSOR GP-ENGINE	820
Y	*395-0114*	1	STARTING AID GP	826
Y	*458-3684*	1	STARTING MOTOR GP-ELECTRIC	839
Y	*416-6968*	1	TURBOCHARGER GP	738
Y	*371-2745*	1	VALVE GP-FLUID SAMPLING	647

488-2691 **ENGINE AR-PRIMARY (**contd.**)** **i06218130**

NOTE	PART NUMBER	QTY	PART NAME 1 2 3 4 5 6 (PRODUCT LEVEL)	SEE PAGE
Y	*424-5516*	1	WIRING GP-ENGINE	846
	440-1796	1	ELECTRONICS GP-ENGINE RATINGS	

Y - SEPARATE ILLUSTRATION

<END>

488-6687 ENGINE AR-PRIMARY

158.5 BRAKE KW (212.6 BHP) AT 2200-RPM

PART OF 492-6555 ENGINE AR-COMPLETE

SMCS-1000 **i06920266**

NOTE	PART NUMBER	QTY	PART NAME 1 2 3 4 5 6 (PRODUCT LEVEL)	SEE PAGE
Y	*456-1352*	1	ALTERNATOR GP-CHARGING	805
Y	*391-9612*	1	BELT TENSIONER GP	422
Y	*425-0196*	1	BREATHER GP (CRANKCASE)	612
Y	*396-2617*	1	CAMSHAFT GP	428
Y	*374-7094*	1	COMPRESSOR & MTG GP-REFRIGERANT	429
Y	*346-2911*	1	CONNECTION GP-HEATER	648
Y	*378-8581*	1	CONNECTION GP-WATER	651
Y	*371-2536*	1	CONTROL GP-ELECTRONIC	808
Y	*346-0097*	1	COOLER GP-ENGINE OIL	658
Y	*378-0629*	1	COVER GP-ACCESSORY DRIVE	433
Y	*389-3348*	1	COVER GP-VALVE MECHANISM	440
Y	*374-6300*	1	CRANKSHAFT GP	447
Y	*390-0854*	1	CYLINDER BLOCK GP	450
Y	*385-2572*	1	CYLINDER HEAD GP	458
Y	*378-8166*	1	DRAIN GP-ENGINE OIL	467
Y	*415-2165*	1	DRIVE GP-FAN	494
Y	*375-8320*	1	EXTENSION GP-FAN	501
Y	*378-0627*	1	FAN GP	670
Y	*375-0098*	1	FASTENER GP-DAMPER & PULLEY	505
Y	*438-5978*	1	FILLER GP-ENGINE OIL	623
Y	*415-5625*	1	FILM GP (ALTERNATOR)	862
Y	*346-0220*	1	FILTER GP-ENGINE OIL	629
Y	*441-1222*	1	FILTER GP-FUEL (WATER SEPARATOR)	758
Y	*448-0935*	1	LINES GP-FUEL FILTER	783
Y	*453-7163*	1	FILTER GP-FUEL	760
Y	*425-0197*	1	FILTER GP-FUMES DISPOSAL	630
Y	*345-9028*	1	FLYWHEEL GP	509
Y	*378-3484*	1	GAUGE GP-OIL LEVEL (DIPSTICK) (ENGINE)	634
Y	*345-8846*	1	HOUSING GP-FLYWHEEL	519
Y	*371-2725*	1	HOUSING GP-FRONT	532
Y	*416-8908*	1	INJECTOR GP-FUEL	766
Y	*371-2478*	1	JET GP-PISTON COOLING	543
Y	*416-2470*	1	LIFTING GP-ENGINE	546
Y	*393-7694*	1	MANIFOLD GP-EXHAUST	723
Y	*391-5523*	1	MANIFOLD GP-INLET	726
Y	*395-0112*	1	MOUNTING GP-ELECTRONIC CONTROL	819
Y	*378-0594*	1	PAN GP-OIL	561
Y	*369-7304*	1	PISTON & ROD GP	566
Y	*378-8167*	1	PLATE & FILM GP	868
Y	*371-2554*	1	PULLEY GP-CRANKSHAFT	601
Y	*462-6685*	1	PUMP GP-ENGINE OIL	646
Y	*391-4811*	1	PUMP GP-FUEL INJECTION	790
Y	*372-2297*	1	PUMP GP-WATER	678
Y	*394-9639*	1	RAIL GP-FUEL	794
Y	*371-2480*	1	ROCKER ARM GP	606
Y	*395-0110*	1	SENSOR GP-ENGINE	820
Y	*371-2733*	1	STARTING AID GP	823
Y	*378-0590*	1	STARTING MOTOR GP-ELECTRIC	831

488-6687 **ENGINE AR-PRIMARY (**contd.**)** **i06920266**

NOTE	PART NUMBER	QTY	PART NAME 1 2 3 4 5 6 (PRODUCT LEVEL)	SEE PAGE
Y	*416-6968*	1	TURBOCHARGER GP	738
Y	*371-2745*	1	VALVE GP-FLUID SAMPLING	647
Y	*424-5516*	1	WIRING GP-ENGINE	846
	468-8357	1	ELECTRONICS GP-ENGINE	

Y - SEPARATE ILLUSTRATION

<END>

489-9006 ENGINE AR-PRIMARY

168 BRAKE KW (225 BHP) AT 2200 RPM

OPTIONAL FIELD REPLACEMENT ORDER 451-1222—PAGE: 452, 452-6584—PAGE: 462

PART OF 492-2161 ENGINE AR-COMPLETE

SMCS-1000 **i08705367**

NOTE	PART NUMBER	QTY	PART NAME 1 2 3 4 5 6 (PRODUCT LEVEL)	SEE PAGE
Y	*478-4234*	1	AIR CLEANER GP	715
Y	*378-0630*	1	AIR COMPRESSOR GP	410
Y	*377-0721*	1	ALTERNATOR GP-CHARGING	799
Y	*371-2693*	1	BELT TENSIONER GP	416
Y	*392-0632*	1	BREATHER GP	611
Y	*396-2617*	1	CAMSHAFT GP	428
Y	*373-3607*	1	CONNECTION GP-WATER	650
Y	*448-9710*	1	CONNECTOR GP-CAB HEATER LINES	652
Y	*371-2536*	1	CONTROL GP-ELECTRONIC	808
Y	*378-8276*	1	COOLER GP-ENGINE OIL	659
Y	*389-3347*	1	COVER GP-VALVE MECHANISM	436
Y	*374-6300*	1	CRANKSHAFT GP	447
Y	*390-0854*	1	CYLINDER BLOCK GP	450
Y	*385-2572*	1	CYLINDER HEAD GP	458
Y	*393-2180*	1	DRIVE GP-FAN	484
Y	*375-8320*	1	EXTENSION GP-FAN	501
Y	*375-4574*	1	FAN GP	669
Y	*375-0098*	1	FASTENER GP-DAMPER & PULLEY	505
Y	*438-5978*	1	FILLER GP-ENGINE OIL	623
Y	*611-2653*	1	FILM GP (RADIATOR)	865
Y	*415-5625*	1	FILM GP (ALTERNATOR) (ALTERNATOR)	862
Y	*423-8803*	1	FILM GP (STARTING MOTOR) (STARTING MOTOR)	863
Y	*346-0220*	1	FILTER GP-ENGINE OIL	629
Y	*441-1215*	1	FILTER GP-FUEL (WATER SEPARATOR)	756
Y	*453-7163*	1	FILTER GP-FUEL	760
Y	*346-0769*	1	FLANGE GP-EXHAUST	719
Y	*345-8902*	1	FLYWHEEL GP	507
Y	*439-3432*	1	GAUGE GP-OIL LEVEL (DIPSTICK)	640
Y	*345-8838*	1	HOUSING GP-FLYWHEEL	517
Y	*476-7558*	1	HOUSING GP-FRONT	541
Y	*416-8908*	1	INJECTOR GP-FUEL	766
Y	*371-2478*	1	JET GP-PISTON COOLING	543
Y	*416-2470*	1	LIFTING GP-ENGINE	546
Y	*448-0935*	1	LINES GP-FUEL FILTER	783
Y	*416-7808*	1	MANIFOLD GP-EXHAUST	724
Y	*391-5523*	1	MANIFOLD GP-INLET	726
Y	*346-1528*	1	MOUNTING GP-ACCESSORY MODULE	856
Y	*395-0112*	1	MOUNTING GP-ELECTRONIC CONTROL	819
Y	*375-4499*	1	PAN GP-OIL	557
Y	*369-7304*	1	PISTON & ROD GP	566
Y	*378-8167*	1	PLATE & FILM GP	868
Y	*440-0026*	1	PLUG GP-OIL FILTER MOUNTING	644
Y	*379-6629*	1	PULLEY GP-CRANKSHAFT	603
Y	*462-6685*	1	PUMP GP-ENGINE OIL	646
Y	*391-4811*	1	PUMP GP-FUEL INJECTION	790
Y	*372-2297*	1	PUMP GP-WATER	678
Y	*452-5153*	1	RADIATOR GP	686

489-9006 **ENGINE AR-PRIMARY (**contd.**)** **i08705367**

NOTE	PART NUMBER	QTY	PART NAME 1 2 3 4 5 6 (PRODUCT LEVEL)	SEE PAGE
Y	*394-9639*	1	RAIL GP-FUEL	794
Y	*395-0110*	1	SENSOR GP-ENGINE	820
Y	*395-0114*	1	STARTING AID GP	826
Y	*392-2020*	1	STARTING MOTOR GP-ELECTRIC	835
Y	*416-6971*	1	TURBOCHARGER GP	741
Y	*424-5516*	1	WIRING GP-ENGINE	846
	448-4768	1	ELECTRONICS GP	
	376-6464	1	PLATE & FILM GP	

Y - SEPARATE ILLUSTRATION

<END>

491-2606 ENGINE AR-PRIMARY

205 BRAKE KW (274.9 BHP) AT 2200-RPM

PART OF 492-5692 ENGINE AR-COMPLETE

SMCS-1000 **i06627573**

NOTE	PART NUMBER	QTY	PART NAME 1 2 3 4 5 6 (PRODUCT LEVEL)	SEE PAGE
Y	*392-0632*	1	BREATHER GP	611
Y	*396-2617*	1	CAMSHAFT GP	428
Y	*373-3606*	1	CONNECTION GP-WATER	649
Y	*371-2536*	1	CONTROL GP-ELECTRONIC	808
Y	*378-8283*	1	COOLER GP-ENGINE OIL	662
Y	*389-3347*	1	COVER GP-VALVE MECHANISM	436
Y	*374-6300*	1	CRANKSHAFT GP	447
Y	*390-0854*	1	CYLINDER BLOCK GP	450
Y	*385-2572*	1	CYLINDER HEAD GP	458
Y	*390-0067*	1	DRAIN GP-OIL	617
Y	*375-0098*	1	FASTENER GP-DAMPER & PULLEY	505
Y	*448-0944*	1	FILLER GP-ENGINE OIL	627
Y	*346-0220*	1	FILTER GP-ENGINE OIL	629
Y	*441-1215*	1	FILTER GP-FUEL (WATER SEPARATOR)	756
Y	*453-7163*	1	FILTER GP-FUEL	760
Y	*345-9028*	1	FLYWHEEL GP	509
Y	*439-3432*	1	GAUGE GP-OIL LEVEL (DIPSTICK) (ENGINE)	640
Y	*437-2720*	1	HOUSING GP-FLYWHEEL	527
Y	*375-4606*	1	DRIVE GP-POWER TAKE-OFF	499
Y	*375-4645*	1	HOUSING GP-FRONT	534
Y	*416-8908*	1	INJECTOR GP-FUEL	766
Y	*371-2478*	1	JET GP-PISTON COOLING	543
Y	*371-2735*	1	LIFTING GP-ENGINE	544
Y	*426-3310*	1	LINES GP-FUEL INJECTION	787
Y	*393-7694*	1	MANIFOLD GP-EXHAUST	723
Y	*391-5523*	1	MANIFOLD GP-INLET	726
Y	*395-0112*	1	MOUNTING GP-ELECTRONIC CONTROL	819
Y	*346-1510*	1	MOUNTING GP-ENGINE	548
Y	*375-4499*	1	PAN GP-OIL	557
Y	*369-7304*	1	PISTON & ROD GP	566
Y	*378-8167*	1	PLATE & FILM GP	868
Y	*346-2908*	1	PLUG GP-ENGINE	592
Y	*371-2554*	1	PULLEY GP-CRANKSHAFT	601
Y	*462-6685*	1	PUMP GP-ENGINE OIL	646
Y	*391-4811*	1	PUMP GP-FUEL INJECTION	790
Y	*372-2297*	1	PUMP GP-WATER	678
Y	*394-9639*	1	RAIL GP-FUEL	794
Y	*371-2480*	1	ROCKER ARM GP	606
Y	*395-0110*	1	SENSOR GP-ENGINE	820
Y	*395-0114*	1	STARTING AID GP	826
Y	*378-0590*	1	STARTING MOTOR GP-ELECTRIC	831
Y	*416-6968*	1	TURBOCHARGER GP	738
Y	*371-2745*	1	VALVE GP-FLUID SAMPLING	647
Y	*424-5516*	1	WIRING GP-ENGINE	846
	449-3320	1	ELECTRONICS GP-ENGINE	

Y - SEPARATE ILLUSTRATION

<END>

491-4973 ENGINE AR-PRIMARY

129.6 BRAKE KW(173.8 BHP) AT 2500-RPM

PART OF 492-2212 ENGINE AR

SMCS-1000 **i06554042**

NOTE	PART NUMBER	QTY	PART NAME 1 2 3 4 5 6 (PRODUCT LEVEL)	SEE PAGE
Y	*478-4234*	1	AIR CLEANER GP	715
Y	*377-0721*	1	ALTERNATOR GP-CHARGING	799
Y	*371-2693*	1	BELT TENSIONER GP	416
Y	*425-0196*	1	BREATHER GP (CRANKCASE)	612
Y	*396-2615*	1	CAMSHAFT GP	427
Y	*373-3607*	1	CONNECTION GP-WATER	650
Y	*371-2536*	1	CONTROL GP-ELECTRONIC	808
Y	*346-0091*	1	COOLER GP-ENGINE OIL	657
Y	*389-3346*	1	COVER GP-VALVE MECHANISM	435
Y	*374-6300*	1	CRANKSHAFT GP	447
Y	*390-0854*	1	CYLINDER BLOCK GP	450
Y	*385-2572*	1	CYLINDER HEAD GP	458
Y	*393-2180*	1	DRIVE GP-FAN	484
Y	*375-8320*	1	EXTENSION GP-FAN	501
Y	*454-5203*	1	FAN GP	674
Y	*375-0098*	1	FASTENER GP-DAMPER & PULLEY	505
Y	*390-3737*	1	FILLER GP-ENGINE OIL	620
Y	*425-0197*	1	FILTER GP-FUMES DISPOSAL	630
Y	*415-5625*	1	FILM GP (ALTERNATOR) (ALTERNATOR)	862
Y	*423-8803*	1	FILM GP (STARTING MOTOR) (STARTING MOTOR)	863
Y	*346-0220*	1	FILTER GP-ENGINE OIL	629
Y	*441-1215*	1	FILTER GP-FUEL (WATER SEPARATOR)	756
Y	*453-7163*	1	FILTER GP-FUEL	760
Y	*346-0769*	1	FLANGE GP-EXHAUST	719
Y	*345-8902*	1	FLYWHEEL GP	507
Y	*439-3432*	1	GAUGE GP-OIL LEVEL (DIPSTICK) (ENGINE)	640
Y	*345-8838*	1	HOUSING GP-FLYWHEEL	517
Y	*375-5838*	1	HOUSING GP-FRONT	536
Y	*371-2483*	1	INJECTOR GP-FUEL	763
Y	*371-2478*	1	JET GP-PISTON COOLING	543
Y	*416-2470*	1	LIFTING GP-ENGINE	546
Y	*426-3310*	1	LINES GP-FUEL INJECTION	787
Y	*416-7808*	1	MANIFOLD GP-EXHAUST	724
Y	*391-5523*	1	MANIFOLD GP-INLET	726
Y	*346-1528*	1	MOUNTING GP-ACCESSORY MODULE	856
Y	*395-0112*	1	MOUNTING GP-ELECTRONIC CONTROL	819
Y	*375-4499*	1	PAN GP-OIL	557
Y	*374-6301*	1	PISTON & ROD GP	576
Y	*378-8167*	1	PLATE & FILM GP	868
Y	*346-2908*	1	PLUG GP-ENGINE	592
Y	*440-0026*	1	PLUG GP-OIL FILTER MOUNTING	644
Y	*379-6629*	1	PULLEY GP-CRANKSHAFT	603
Y	*462-6685*	1	PUMP GP-ENGINE OIL	646
Y	*391-4811*	1	PUMP GP-FUEL INJECTION	790
Y	*372-2297*	1	PUMP GP-WATER	678
Y	*454-6966*	1	RADIATOR GP	
Y	*394-9639*	1	RAIL GP-FUEL	794
Y	*371-2480*	1	ROCKER ARM GP	606

491-4973 **ENGINE AR-PRIMARY (**contd.**)** **i06554042**

NOTE	PART NUMBER	QTY	PART NAME 1 2 3 4 5 6 (PRODUCT LEVEL)	SEE PAGE
Y	*395-0110*	1	SENSOR GP-ENGINE	820
Y	*395-0114*	1	STARTING AID GP	826
Y	*392-2020*	1	STARTING MOTOR GP-ELECTRIC	835
Y	*371-2719*	1	SUPPORT GP-POWER TAKE-OFF	608
Y	*375-5002*	1	TURBOCHARGER GP	732
Y	*424-5516*	1	WIRING GP-ENGINE	846
	464-0721	1	ELECTRONICS GP-ENGINE	

Y - SEPARATE ILLUSTRATION

<END>

491-4980 ENGINE AR-PRIMARY

168 BRAKE KW (225.3 BHP) AT 2200-RPM

PART OF 491-9765 ENGINE AR-COMPLETE

SMCS-1000 **i06558042**

NOTE	PART NUMBER	QTY	PART NAME 1 2 3 4 5 6 (PRODUCT LEVEL)	SEE PAGE
Y	*478-4234*	1	AIR CLEANER GP	715
Y	*377-0721*	1	ALTERNATOR GP-CHARGING	799
Y	*371-2693*	1	BELT TENSIONER GP	416
Y	*425-0196*	1	BREATHER GP (CRANKCASE)	612
Y	*396-2617*	1	CAMSHAFT GP	428
Y	*373-3607*	1	CONNECTION GP-WATER	650
Y	*371-2536*	1	CONTROL GP-ELECTRONIC	808
Y	*378-8276*	1	COOLER GP-ENGINE OIL	659
Y	*389-3346*	1	COVER GP-VALVE MECHANISM	435
Y	*374-6300*	1	CRANKSHAFT GP	447
Y	*390-0854*	1	CYLINDER BLOCK GP	450
Y	*385-2572*	1	CYLINDER HEAD GP	458
Y	*393-2180*	1	DRIVE GP-FAN	484
Y	*375-8320*	1	EXTENSION GP-FAN	501
Y	*378-0627*	1	FAN GP	670
Y	*375-0098*	1	FASTENER GP-DAMPER & PULLEY	505
Y	*390-3737*	1	FILLER GP-ENGINE OIL	620
Y	*425-0197*	1	FILTER GP-FUMES DISPOSAL	630
Y	*415-5625*	1	FILM GP (ALTERNATOR) (ALTERNATOR)	862
Y	*423-8803*	1	FILM GP (STARTING MOTOR) (STARTING MOTOR)	863
Y	*346-0220*	1	FILTER GP-ENGINE OIL	629
Y	*441-1215*	1	FILTER GP-FUEL (WATER SEPARATOR)	756
Y	*453-7163*	1	FILTER GP-FUEL	760
Y	*346-0769*	1	FLANGE GP-EXHAUST	719
Y	*345-8902*	1	FLYWHEEL GP	507
Y	*439-3432*	1	GAUGE GP-OIL LEVEL (DIPSTICK) (ENGINE)	640
Y	*345-8838*	1	HOUSING GP-FLYWHEEL	517
Y	*375-5838*	1	HOUSING GP-FRONT	536
Y	*416-8908*	1	INJECTOR GP-FUEL	766
Y	*371-2478*	1	JET GP-PISTON COOLING	543
Y	*416-2470*	1	LIFTING GP-ENGINE	546
Y	*426-3310*	1	LINES GP-FUEL INJECTION	787
Y	*416-7808*	1	MANIFOLD GP-EXHAUST	724
Y	*391-5523*	1	MANIFOLD GP-INLET	726
Y	*346-1528*	1	MOUNTING GP-ACCESSORY MODULE	856
Y	*395-0112*	1	MOUNTING GP-ELECTRONIC CONTROL	819
Y	*375-4499*	1	PAN GP-OIL	557
Y	*369-7304*	1	PISTON & ROD GP	566
Y	*378-8167*	1	PLATE & FILM GP	868
Y	*346-2908*	1	PLUG GP-ENGINE	592
Y	*440-0026*	1	PLUG GP-OIL FILTER MOUNTING	644
Y	*379-6629*	1	PULLEY GP-CRANKSHAFT	603
Y	*462-6685*	1	PUMP GP-ENGINE OIL	646
Y	*391-4811*	1	PUMP GP-FUEL INJECTION	790
Y	*372-2297*	1	PUMP GP-WATER	678
Y	*452-5153*	1	RADIATOR GP	686
Y	*394-9639*	1	RAIL GP-FUEL	794
Y	*371-2480*	1	ROCKER ARM GP	606

491-4980 **ENGINE AR-PRIMARY (**contd.**)** **i06558042**

NOTE	PART NUMBER	QTY	PART NAME 1 2 3 4 5 6 (PRODUCT LEVEL)	SEE PAGE
Y	*395-0110*	1	SENSOR GP-ENGINE	820
Y	*395-0114*	1	STARTING AID GP	826
Y	*392-2020*	1	STARTING MOTOR GP-ELECTRIC	835
Y	*371-2719*	1	SUPPORT GP-POWER TAKE-OFF	608
Y	*416-6971*	1	TURBOCHARGER GP	741
Y	*424-5516*	1	WIRING GP-ENGINE	846
	448-4768	1	ELECTRONICS GP	

Y - SEPARATE ILLUSTRATION

<END>

491-4993 ENGINE AR-PRIMARY

168 BRAKE KW (225.3 BHP) AT 2200-RPM

PART OF 492-1388 ENGINE AR-COMPLETE

SMCS-1000 **i06554002**

NOTE	PART NUMBER	QTY	PART NAME 1 2 3 4 5 6 (PRODUCT LEVEL)	SEE PAGE
Y	*478-4234*	1	AIR CLEANER GP	715
Y	*377-0720*	1	ALTERNATOR GP-CHARGING	798
Y	*371-2693*	1	BELT TENSIONER GP	416
Y	*425-0196*	1	BREATHER GP (CRANKCASE)	612
Y	*396-2617*	1	CAMSHAFT GP	428
Y	*373-3607*	1	CONNECTION GP-WATER	650
Y	*371-2536*	1	CONTROL GP-ELECTRONIC	808
Y	*378-8276*	1	COOLER GP-ENGINE OIL	659
Y	*389-3346*	1	COVER GP-VALVE MECHANISM	435
Y	*374-6300*	1	CRANKSHAFT GP	447
Y	*390-0854*	1	CYLINDER BLOCK GP	450
Y	*385-2572*	1	CYLINDER HEAD GP	458
Y	*393-2180*	1	DRIVE GP-FAN	484
Y	*375-8320*	1	EXTENSION GP-FAN	501
Y	*378-0627*	1	FAN GP	670
Y	*375-0098*	1	FASTENER GP-DAMPER & PULLEY	505
Y	*390-3737*	1	FILLER GP-ENGINE OIL	620
Y	*425-0197*	1	FILTER GP-FUMES DISPOSAL	630
Y	*415-5625*	1	FILM GP (ALTERNATOR) (ALTERNATOR)	862
Y	*423-8803*	1	FILM GP (STARTING MOTOR) (STARTING MOTOR)	863
Y	*346-0220*	1	FILTER GP-ENGINE OIL	629
Y	*441-1215*	1	FILTER GP-FUEL (WATER SEPARATOR)	756
Y	*453-7163*	1	FILTER GP-FUEL	760
Y	*346-0769*	1	FLANGE GP-EXHAUST	719
Y	*345-9037*	1	FLYWHEEL GP	510
Y	*439-3432*	1	GAUGE GP-OIL LEVEL (DIPSTICK) (ENGINE)	640
Y	*393-3369*	1	HOUSING GP-FLYWHEEL	526
Y	*375-5838*	1	HOUSING GP-FRONT	536
Y	*416-8908*	1	INJECTOR GP-FUEL	766
Y	*371-2478*	1	JET GP-PISTON COOLING	543
Y	*416-2470*	1	LIFTING GP-ENGINE	546
Y	*426-3310*	1	LINES GP-FUEL INJECTION	787
Y	*416-7808*	1	MANIFOLD GP-EXHAUST	724
Y	*391-5523*	1	MANIFOLD GP-INLET	726
Y	*346-1512*	1	MOUNTING GP-ACCESSORY MODULE	855
Y	*395-0112*	1	MOUNTING GP-ELECTRONIC CONTROL	819
Y	*375-4499*	1	PAN GP-OIL	557
Y	*369-7304*	1	PISTON & ROD GP	566
Y	*378-8167*	1	PLATE & FILM GP	868
Y	*346-2908*	1	PLUG GP-ENGINE	592
Y	*440-0026*	1	PLUG GP-OIL FILTER MOUNTING	644
Y	*379-6629*	1	PULLEY GP-CRANKSHAFT	603
Y	*462-6685*	1	PUMP GP-ENGINE OIL	646
Y	*391-4811*	1	PUMP GP-FUEL INJECTION	790
Y	*372-2297*	1	PUMP GP-WATER	678
Y	*452-5153*	1	RADIATOR GP	686
Y	*394-9639*	1	RAIL GP-FUEL	794
Y	*371-2480*	1	ROCKER ARM GP	606

491-4993 **ENGINE AR-PRIMARY (**contd.**)** **i06554002**

NOTE	PART NUMBER	QTY	PART NAME 1 2 3 4 5 6 (PRODUCT LEVEL)	SEE PAGE
Y	*395-0110*	1	SENSOR GP-ENGINE	820
Y	*380-9279*	1	STARTING AID GP	824
Y	*378-0589*	1	STARTING MOTOR GP-ELECTRIC	830
Y	*371-2719*	1	SUPPORT GP-POWER TAKE-OFF	608
Y	*416-6971*	1	TURBOCHARGER GP	741
Y	*424-5516*	1	WIRING GP-ENGINE	846
	448-4768	1	ELECTRONICS GP	

Y - SEPARATE ILLUSTRATION

<END>

491-7124 ENGINE AR-PRIMARY

205 BRAKE KW (275 BHP) AT 2200 RPM

OPTIONAL FIELD REPLACEMENT ORDER 451-1222—PAGE: 452, 452-6584—PAGE: 462

SMCS-1000 **i09219276**

NOTE	PART NUMBER	QTY	PART NAME 1 2 3 4 5 6 (PRODUCT LEVEL)	SEE PAGE
Y	*478-4234*	1	AIR CLEANER GP	715
Y	*377-0721*	1	ALTERNATOR GP-CHARGING	799
Y	*371-2693*	1	BELT TENSIONER GP	416
Y	*425-0196*	1	BREATHER GP (CRANKCASE)	612
Y	*396-2617*	1	CAMSHAFT GP	428
AY	*493-0138*	1	CONFIGURATION AR-ENGINE	7
Y	*373-3607*	1	CONNECTION GP-WATER	650
Y	*371-2536*	1	CONTROL GP-ELECTRONIC	808
Y	*378-8276*	1	COOLER GP-ENGINE OIL	659
Y	*389-3346*	1	COVER GP-VALVE MECHANISM	435
Y	*374-6300*	1	CRANKSHAFT GP	447
Y	*390-0854*	1	CYLINDER BLOCK GP	450
Y	*385-2572*	1	CYLINDER HEAD GP	458
Y	*393-2180*	1	DRIVE GP-FAN	484
Y	*375-8320*	1	EXTENSION GP-FAN	501
Y	*378-0627*	1	FAN GP	670
Y	*375-0098*	1	FASTENER GP-DAMPER & PULLEY	505
Y	*390-3737*	1	FILLER GP-ENGINE OIL	620
Y	*415-5625*	1	FILM GP (ALTERNATOR)	862
Y	*346-0220*	1	FILTER GP-ENGINE OIL	629
Y	*441-1215*	1	FILTER GP-FUEL (WATER SEPARATOR)	756
Y	*453-7163*	1	FILTER GP-FUEL	760
Y	*425-0197*	1	FILTER GP-FUMES DISPOSAL	630
Y	*346-0769*	1	FLANGE GP-EXHAUST	719
Y	*437-2723*	1	FLYWHEEL GP	513
Y	*439-3432*	1	GAUGE GP-OIL LEVEL (DIPSTICK)	640
Y	*437-2721*	1	HOUSING GP-FLYWHEEL	529
Y	*375-5838*	1	HOUSING GP-FRONT	536
Y	*416-8908*	1	INJECTOR GP-FUEL	766
Y	*371-2478*	1	JET GP-PISTON COOLING	543
Y	*416-2470*	1	LIFTING GP-ENGINE	546
Y	*426-3310*	1	LINES GP-FUEL INJECTION	787
Y	*416-7808*	1	MANIFOLD GP-EXHAUST	724
Y	*391-5523*	1	MANIFOLD GP-INLET	726
Y	*395-0112*	1	MOUNTING GP-ELECTRONIC CONTROL	819
Y	*458-2242*	1	MOUNTING GP-ENGINE	550
Y	*375-4499*	1	PAN GP-OIL	557
Y	*369-7304*	1	PISTON & ROD GP	566
Y	*378-8167*	1	PLATE & FILM GP	868
Y	*346-2908*	1	PLUG GP-ENGINE	592
Y	*440-0026*	1	PLUG GP-OIL FILTER MOUNTING	644
Y	*379-6629*	1	PULLEY GP-CRANKSHAFT	603
Y	*462-6685*	1	PUMP GP-ENGINE OIL	646
Y	*391-4811*	1	PUMP GP-FUEL INJECTION	790
Y	*372-2297*	1	PUMP GP-WATER	678
Y	*452-5153*	1	RADIATOR GP	686
Y	*394-9639*	1	RAIL GP-FUEL	794
Y	*371-2480*	1	ROCKER ARM GP	606

491-7124 **ENGINE AR-PRIMARY (**contd.**)** **i09219276**

NOTE	PART NUMBER	QTY	PART NAME 1 2 3 4 5 6 (PRODUCT LEVEL)	SEE PAGE
Y	*395-0110*	1	SENSOR GP-ENGINE	820
Y	*395-0114*	1	STARTING AID GP	826
Y	*385-8000*	1	STARTING MOTOR GP-ELECTRIC	832
Y	*371-2719*	1	SUPPORT GP-POWER TAKE-OFF	608
Y	*416-6971*	1	TURBOCHARGER GP	741
Y	*424-5516*	1	WIRING GP-ENGINE	846
	449-3320	1	ELECTRONICS GP-ENGINE	
	376-6464	1	PLATE & FILM GP	

A - NOT PART OF THIS GROUP
Y - SEPARATE ILLUSTRATION

<END>

492-3021 ENGINE AR-PRIMARY

129 KW (173.0BHP) @ 2200RPM

OPTIONAL FIELD REPLACEMENT ORDER 451-8385—PAGE: 455, 452-6582—PAGE: 460

PART OF 495-3004 ENGINE AR-COMPLETE

SMCS-1000 **i08704736**

NOTE	PART NUMBER	QTY	PART NAME 1 2 3 4 5 6 (PRODUCT LEVEL)	SEE PAGE
Y	*478-4234*	1	AIR CLEANER GP	715
Y	*377-0720*	1	ALTERNATOR GP-CHARGING	798
Y	*371-2693*	1	BELT TENSIONER GP	416
Y	*425-0196*	1	BREATHER GP (CRANKCASE)	612
Y	*396-2615*	1	CAMSHAFT GP	427
Y	*373-3607*	1	CONNECTION GP-WATER	650
Y	*371-2536*	1	CONTROL GP-ELECTRONIC	808
Y	*346-0091*	1	COOLER GP-ENGINE OIL	657
Y	*389-3346*	1	COVER GP-VALVE MECHANISM	435
Y	*374-6300*	1	CRANKSHAFT GP	447
Y	*390-0854*	1	CYLINDER BLOCK GP	450
Y	*385-2572*	1	CYLINDER HEAD GP	458
Y	*393-2180*	1	DRIVE GP-FAN	484
Y	*375-8320*	1	EXTENSION GP-FAN	501
Y	*454-5203*	1	FAN GP	674
Y	*375-0098*	1	FASTENER GP-DAMPER & PULLEY	505
Y	*390-3737*	1	FILLER GP-ENGINE OIL	620
Y	*415-5625*	1	FILM GP (ALTERNATOR) (ALTERNATOR)	862
Y	*423-8803*	1	FILM GP (STARTING MOTOR) (STARTING MOTOR)	863
Y	*611-2653*	1	FILM GP (RADIATOR)	865
Y	*346-0220*	1	FILTER GP-ENGINE OIL	629
Y	*441-1215*	1	FILTER GP-FUEL (WATER SEPARATOR)	756
Y	*453-7163*	1	FILTER GP-FUEL	760
Y	*425-0197*	1	FILTER GP-FUMES DISPOSAL	630
Y	*346-0769*	1	FLANGE GP-EXHAUST	719
Y	*345-8902*	1	FLYWHEEL GP	507
Y	*439-3432*	1	GAUGE GP-OIL LEVEL (DIPSTICK)	640
Y	*345-8838*	1	HOUSING GP-FLYWHEEL	517
Y	*375-5838*	1	HOUSING GP-FRONT	536
Y	*371-2483*	1	INJECTOR GP-FUEL	763
Y	*371-2478*	1	JET GP-PISTON COOLING	543
Y	*416-2470*	1	LIFTING GP-ENGINE	546
Y	*426-3310*	1	LINES GP-FUEL INJECTION	787
Y	*416-7808*	1	MANIFOLD GP-EXHAUST	724
Y	*391-5523*	1	MANIFOLD GP-INLET	726
Y	*346-1528*	1	MOUNTING GP-ACCESSORY MODULE	856
Y	*395-0112*	1	MOUNTING GP-ELECTRONIC CONTROL	819
Y	*375-4499*	1	PAN GP-OIL	557
Y	*374-6301*	1	PISTON & ROD GP	576
Y	*378-8167*	1	PLATE & FILM GP	868
Y	*346-2908*	1	PLUG GP-ENGINE	592
Y	*440-0026*	1	PLUG GP-OIL FILTER MOUNTING	644
Y	*379-6629*	1	PULLEY GP-CRANKSHAFT	603
Y	*462-6685*	1	PUMP GP-ENGINE OIL	646
Y	*391-4811*	1	PUMP GP-FUEL INJECTION	790
Y	*372-2297*	1	PUMP GP-WATER	678
Y	*454-6966*	1	RADIATOR GP	

492-3021 **ENGINE AR-PRIMARY (**contd.**)** **i08704736**

NOTE	PART NUMBER	QTY	PART NAME 1 2 3 4 5 6 (PRODUCT LEVEL)	SEE PAGE
Y	*394-9639*	1	RAIL GP-FUEL	794
Y	*371-2480*	1	ROCKER ARM GP	606
Y	*395-0110*	1	SENSOR GP-ENGINE	820
Y	*380-9279*	1	STARTING AID GP	824
Y	*415-4870*	1	STARTING MOTOR GP-ELECTRIC	837
Y	*371-2719*	1	SUPPORT GP-POWER TAKE-OFF	608
Y	*375-5002*	1	TURBOCHARGER GP	732
Y	*424-5516*	1	WIRING GP-ENGINE	846
	490-4917	1	ELECTRONICS GP-ENGINE	
	376-6464	1	PLATE & FILM GP	

Y - SEPARATE ILLUSTRATION

<END>

492-3072 ENGINE AR-PRIMARY

129 BRAKE KW (173 BHP) AT 2200 RPM
OPTIONAL FIELD REPLACEMENT ORDER 451-1222—PAGE: 452, 452-6584—PAGE: 462
PART OF 495-4475 ENGINE AR-COMPLETE

SMCS-1000 **i07592785**

NOTE	PART NUMBER	QTY	PART NAME 1 2 3 4 5 6 (PRODUCT LEVEL)	SEE PAGE
Y	*478-4234*	1	AIR CLEANER GP	715
Y	*377-0721*	1	ALTERNATOR GP-CHARGING	799
Y	*371-2693*	1	BELT TENSIONER GP	416
Y	*425-0196*	1	BREATHER GP (CRANKCASE)	612
Y	*396-2615*	1	CAMSHAFT GP	427
Y	*373-3607*	1	CONNECTION GP-WATER	650
Y	*371-2536*	1	CONTROL GP-ELECTRONIC	808
Y	*346-0091*	1	COOLER GP-ENGINE OIL	657
Y	*389-3346*	1	COVER GP-VALVE MECHANISM	435
Y	*374-6300*	1	CRANKSHAFT GP	447
Y	*390-0854*	1	CYLINDER BLOCK GP	450
Y	*385-2572*	1	CYLINDER HEAD GP	458
Y	*393-2180*	1	DRIVE GP-FAN	484
Y	*375-8320*	1	EXTENSION GP-FAN	501
Y	*454-5203*	1	FAN GP	674
Y	*375-0098*	1	FASTENER GP-DAMPER & PULLEY	505
Y	*390-3737*	1	FILLER GP-ENGINE OIL	620
Y	*415-5625*	1	FILM GP (ALTERNATOR) (ALTERNATOR)	862
Y	*423-8803*	1	FILM GP (STARTING MOTOR) (STARTING MOTOR)	863
Y	*346-0220*	1	FILTER GP-ENGINE OIL	629
Y	*441-1215*	1	FILTER GP-FUEL (WATER SEPARATOR)	756
Y	*453-7163*	1	FILTER GP-FUEL	760
Y	*425-0197*	1	FILTER GP-FUMES DISPOSAL	630
Y	*346-0769*	1	FLANGE GP-EXHAUST	719
Y	*345-8902*	1	FLYWHEEL GP	507
Y	*439-3432*	1	GAUGE GP-OIL LEVEL (DIPSTICK)	640
Y	*345-8838*	1	HOUSING GP-FLYWHEEL	517
Y	*375-5838*	1	HOUSING GP-FRONT	536
Y	*371-2483*	1	INJECTOR GP-FUEL	763
Y	*371-2478*	1	JET GP-PISTON COOLING	543
Y	*416-2470*	1	LIFTING GP-ENGINE	546
Y	*426-3310*	1	LINES GP-FUEL INJECTION	787
Y	*416-7808*	1	MANIFOLD GP-EXHAUST	724
Y	*391-5523*	1	MANIFOLD GP-INLET	726
Y	*346-1528*	1	MOUNTING GP-ACCESSORY MODULE	856
Y	*395-0112*	1	MOUNTING GP-ELECTRONIC CONTROL	819
Y	*375-4499*	1	PAN GP-OIL	557
Y	*374-6301*	1	PISTON & ROD GP	576
Y	*378-8167*	1	PLATE & FILM GP	868
Y	*346-2908*	1	PLUG GP-ENGINE	592
Y	*440-0026*	1	PLUG GP-OIL FILTER MOUNTING	644
Y	*379-6629*	1	PULLEY GP-CRANKSHAFT	603
Y	*462-6685*	1	PUMP GP-ENGINE OIL	646
Y	*391-4811*	1	PUMP GP-FUEL INJECTION	790
Y	*372-2297*	1	PUMP GP-WATER	678
Y	*454-6966*	1	RADIATOR GP	
Y	*394-9639*	1	RAIL GP-FUEL	794

492-3072 **ENGINE AR-PRIMARY (**contd.**)** **i07592785**

NOTE	PART NUMBER	QTY	PART NAME 1 2 3 4 5 6 (PRODUCT LEVEL)	SEE PAGE
Y	*371-2480*	1	ROCKER ARM GP	606
Y	*395-0110*	1	SENSOR GP-ENGINE	820
Y	*395-0114*	1	STARTING AID GP	826
Y	*392-2020*	1	STARTING MOTOR GP-ELECTRIC	835
Y	*371-2719*	1	SUPPORT GP-POWER TAKE-OFF	608
Y	*375-5002*	1	TURBOCHARGER GP	732
Y	*424-5516*	1	WIRING GP-ENGINE	846
	490-4917	1	ELECTRONICS GP-ENGINE	
	376-6464	1	PLATE & FILM GP	

Y - SEPARATE ILLUSTRATION

<END>

492-3169 ENGINE AR-PRIMARY

159 BRAKE KW (213 BHP) AT 2200 RPM

OPTIONAL FIELD REPLACEMENT ORDER 451-1222—PAGE: 452, 452-6584—PAGE: 462

SMCS-1000 **i09157782**

NOTE	PART NUMBER	QTY	PART NAME 1 2 3 4 5 6 (PRODUCT LEVEL)	SEE PAGE
Y	*392-0632*	1	BREATHER GP	611
Y	*396-2617*	1	CAMSHAFT GP	428
AY	*492-7341*	1	CONFIGURATION AR-ENGINE	7
Y	*373-3607*	1	CONNECTION GP-WATER	650
Y	*371-2536*	1	CONTROL GP-ELECTRONIC	808
Y	*346-0091*	1	COOLER GP-ENGINE OIL	657
Y	*389-3346*	1	COVER GP-VALVE MECHANISM	435
Y	*374-6300*	1	CRANKSHAFT GP	447
Y	*390-0854*	1	CYLINDER BLOCK GP	450
Y	*385-2572*	1	CYLINDER HEAD GP	458
Y	*375-4495*	1	DRIVE GP-FAN	471
Y	*371-2694*	1	EXTENSION GP-FAN	500
Y	*390-3737*	1	FILLER GP-ENGINE OIL	620
Y	*390-0060*	1	FILM GP (EMISSION)	859
Y	*346-0220*	1	FILTER GP-ENGINE OIL	629
Y	*441-1215*	1	FILTER GP-FUEL (WATER SEPARATOR)	756
Y	*453-7163*	1	FILTER GP-FUEL	760
Y	*439-3432*	1	GAUGE GP-OIL LEVEL (DIPSTICK)	640
Y	*371-2725*	1	HOUSING GP-FRONT	532
Y	*416-8908*	1	INJECTOR GP-FUEL	766
Y	*371-2478*	1	JET GP-PISTON COOLING	543
Y	*416-2470*	1	LIFTING GP-ENGINE	546
Y	*426-3310*	1	LINES GP-FUEL INJECTION	787
Y	*416-7808*	1	MANIFOLD GP-EXHAUST	724
Y	*391-5523*	1	MANIFOLD GP-INLET	726
Y	*395-0112*	1	MOUNTING GP-ELECTRONIC CONTROL	819
Y	*375-4499*	1	PAN GP-OIL	557
Y	*369-7304*	1	PISTON & ROD GP	566
Y	*346-2908*	1	PLUG GP-ENGINE	592
Y	*440-0026*	1	PLUG GP-OIL FILTER MOUNTING	644
Y	*379-6633*	1	PULLEY GP-AUXILIARY DRIVE	600
Y	*371-2554*	1	PULLEY GP-CRANKSHAFT	601
Y	*462-6685*	1	PUMP GP-ENGINE OIL	646
Y	*391-4811*	1	PUMP GP-FUEL INJECTION	790
Y	*372-2297*	1	PUMP GP-WATER	678
Y	*394-9639*	1	RAIL GP-FUEL	794
Y	*371-2480*	1	ROCKER ARM GP	606
Y	*395-0110*	1	SENSOR GP-ENGINE	820
Y	*380-9279*	1	STARTING AID GP	824
Y	*371-2719*	1	SUPPORT GP-POWER TAKE-OFF	608
Y	*416-6971*	1	TURBOCHARGER GP	741
Y	*424-5516*	1	WIRING GP-ENGINE	846
	468-8357	1	ELECTRONICS GP-ENGINE	
	376-6464	1	PLATE & FILM GP	

A - NOT PART OF THIS GROUP
Y - SEPARATE ILLUSTRATION

<END>

493-1019 ENGINE AR-PRIMARY

PART OF 493-2708 ENGINE AR

SMCS-1000 **i07573033**

NOTE	PART NUMBER	QTY	PART NAME 1 2 3 4 5 6 (PRODUCT LEVEL)	SEE PAGE
Y	*392-0632*	1	BREATHER GP	611
Y	*396-2617*	1	CAMSHAFT GP	428
Y	*373-3607*	1	CONNECTION GP-WATER	650
Y	*371-2536*	1	CONTROL GP-ELECTRONIC	808
Y	*378-8276*	1	COOLER GP-ENGINE OIL	659
Y	*389-3346*	1	COVER GP-VALVE MECHANISM	435
Y	*374-6300*	1	CRANKSHAFT GP	447
Y	*390-0854*	1	CYLINDER BLOCK GP	450
Y	*385-2572*	1	CYLINDER HEAD GP	458
Y	*375-4495*	1	DRIVE GP-FAN	471
Y	*371-2694*	1	EXTENSION GP-FAN	500
Y	*448-0944*	1	FILLER GP-ENGINE OIL	627
Y	*390-0060*	1	FILM GP	859
Y	*346-0220*	1	FILTER GP-ENGINE OIL	629
Y	*441-1215*	1	FILTER GP-FUEL (WATER SEPARATOR)	756
Y	*453-7163*	1	FILTER GP-FUEL	760
Y	*439-3432*	1	GAUGE GP-OIL LEVEL (DIPSTICK)	640
Y	*375-4606*	1	DRIVE GP-POWER TAKE-OFF	499
Y	*375-4645*	1	HOUSING GP-FRONT	534
Y	*416-8908*	1	INJECTOR GP-FUEL	766
Y	*371-2478*	1	JET GP-PISTON COOLING	543
Y	*416-2470*	1	LIFTING GP-ENGINE	546
Y	*426-3310*	1	LINES GP-FUEL INJECTION	787
Y	*416-7808*	1	MANIFOLD GP-EXHAUST	724
Y	*391-5523*	1	MANIFOLD GP-INLET	726
Y	*395-0112*	1	MOUNTING GP-ELECTRONIC CONTROL	819
Y	*375-4499*	1	PAN GP-OIL	557
Y	*369-7304*	1	PISTON & ROD GP	566
Y	*346-2908*	1	PLUG GP-ENGINE	592
Y	*440-0026*	1	PLUG GP-OIL FILTER MOUNTING	644
Y	*379-6633*	1	PULLEY GP-AUXILIARY DRIVE	600
Y	*371-2554*	1	PULLEY GP-CRANKSHAFT	601
Y	*462-6685*	1	PUMP GP-ENGINE OIL	646
Y	*391-4811*	1	PUMP GP-FUEL INJECTION	790
Y	*372-2297*	1	PUMP GP-WATER	678
Y	*394-9639*	1	RAIL GP-FUEL	794
Y	*371-2480*	1	ROCKER ARM GP	606
Y	*395-0110*	1	SENSOR GP-ENGINE	820
Y	*380-9279*	1	STARTING AID GP	824
Y	*416-6971*	1	TURBOCHARGER GP	741
Y	*424-5516*	1	WIRING GP-ENGINE	846
	440-1796	1	ELECTRONICS GP-ENGINE RATINGS	
	376-6464	1	PLATE & FILM GP	

Y - SEPARATE ILLUSTRATION

<END>

493-1038 ENGINE AR-PRIMARY

130 BRAKE KW (175 BHP) AT 2500 RPM

OPTIONAL FIELD REPLACEMENT ORDER 451-1222—PAGE: 452, 452-6584—PAGE: 462

SMCS-1000 **i09248621**

NOTE	PART NUMBER	QTY	PART NAME 1 2 3 4 5 6 (PRODUCT LEVEL)	SEE PAGE
Y	*392-0632*	1	BREATHER GP	611
Y	*396-2615*	1	CAMSHAFT GP	427
AY	*493-2720*	1	CONFIGURATION AR-ENGINE	8
Y	*373-3607*	1	CONNECTION GP-WATER	650
Y	*371-2536*	1	CONTROL GP-ELECTRONIC	808
Y	*346-0091*	1	COOLER GP-ENGINE OIL	657
Y	*389-3346*	1	COVER GP-VALVE MECHANISM	435
Y	*374-6300*	1	CRANKSHAFT GP	447
Y	*390-0854*	1	CYLINDER BLOCK GP	450
Y	*385-2572*	1	CYLINDER HEAD GP	458
Y	*375-4495*	1	DRIVE GP-FAN	471
Y	*371-2694*	1	EXTENSION GP-FAN	500
Y	*448-0944*	1	FILLER GP-ENGINE OIL	627
Y	*390-0060*	1	FILM GP (EMISSION)	859
Y	*346-0220*	1	FILTER GP-ENGINE OIL	629
Y	*441-1215*	1	FILTER GP-FUEL (WATER SEPARATOR)	756
Y	*453-7163*	1	FILTER GP-FUEL	760
Y	*439-3432*	1	GAUGE GP-OIL LEVEL (DIPSTICK)	640
Y	*375-4606*	1	DRIVE GP-POWER TAKE-OFF	499
Y	*375-4645*	1	HOUSING GP-FRONT	534
Y	*371-2483*	1	INJECTOR GP-FUEL	763
Y	*371-2478*	1	JET GP-PISTON COOLING	543
Y	*416-2470*	1	LIFTING GP-ENGINE	546
Y	*426-3310*	1	LINES GP-FUEL INJECTION	787
Y	*416-7808*	1	MANIFOLD GP-EXHAUST	724
Y	*391-5523*	1	MANIFOLD GP-INLET	726
Y	*395-0112*	1	MOUNTING GP-ELECTRONIC CONTROL	819
Y	*375-4499*	1	PAN GP-OIL	557
Y	*374-6301*	1	PISTON & ROD GP	576
Y	*346-2908*	1	PLUG GP-ENGINE	592
Y	*440-0026*	1	PLUG GP-OIL FILTER MOUNTING	644
Y	*379-6633*	1	PULLEY GP-AUXILIARY DRIVE	600
Y	*371-2554*	1	PULLEY GP-CRANKSHAFT	601
Y	*462-6685*	1	PUMP GP-ENGINE OIL	646
Y	*391-4811*	1	PUMP GP-FUEL INJECTION	790
Y	*372-2297*	1	PUMP GP-WATER	678
Y	*394-9639*	1	RAIL GP-FUEL	794
Y	*371-2480*	1	ROCKER ARM GP	606
Y	*395-0110*	1	SENSOR GP-ENGINE	820
Y	*380-9279*	1	STARTING AID GP	824
Y	*375-5002*	1	TURBOCHARGER GP	732
Y	*424-5516*	1	WIRING GP-ENGINE	846
	464-0721	1	ELECTRONICS GP-ENGINE	
	376-6464	1	PLATE & FILM GP	

A - NOT PART OF THIS GROUP
Y - SEPARATE ILLUSTRATION

<END>

494-2073 ENGINE AR-PRIMARY

150.9 BRAKE KW (202.4 BHP) AT 2200-RPM
PART OF 494-6712 ENGINE AR

SMCS-1000 **i06554428**

NOTE	PART NUMBER	QTY	PART NAME 1 2 3 4 5 6 (PRODUCT LEVEL)	SEE PAGE
Y	*377-0721*	1	ALTERNATOR GP-CHARGING	799
Y	*371-2693*	1	BELT TENSIONER GP	416
Y	*425-0196*	1	BREATHER GP (CRANKCASE)	612
Y	*396-2615*	1	CAMSHAFT GP	427
Y	*390-5132*	1	CLAMP AS-EXHAUST	718
Y	*373-3606*	1	CONNECTION GP-WATER	649
Y	*371-2537*	1	CONTROL GP-ENGINE ELECTRONIC	811
Y	*346-0097*	1	COOLER GP-ENGINE OIL	658
Y	*389-3348*	1	COVER GP-VALVE MECHANISM	440
Y	*374-6300*	1	CRANKSHAFT GP	447
Y	*390-0854*	1	CYLINDER BLOCK GP	450
Y	*385-2572*	1	CYLINDER HEAD GP	458
Y	*399-0083*	1	DRIVE GP-FAN	492
Y	*375-0098*	1	FASTENER GP-DAMPER & PULLEY	505
Y	*425-0197*	1	FILTER GP-FUMES DISPOSAL	630
Y	*438-5978*	1	FILLER GP-ENGINE OIL	623
Y	*390-0060*	1	FILM GP	859
Y	*415-5625*	1	FILM GP (ALTERNATOR) (ALTERNATOR)	862
Y	*423-8803*	1	FILM GP (STARTING MOTOR) (STARTING MOTOR)	863
Y	*346-0220*	1	FILTER GP-ENGINE OIL	629
Y	*441-1215*	1	FILTER GP-FUEL (WATER SEPARATOR)	756
Y	*453-7163*	1	FILTER GP-FUEL	760
Y	*345-8901*	1	FLYWHEEL GP	506
Y	*417-6007*	1	GAUGE GP-OIL LEVEL (DIPSTICK) (ENGINE)	635
Y	*380-2587*	1	HOUSING GP-FLYWHEEL	525
Y	*375-5838*	1	HOUSING GP-FRONT	536
Y	*371-2483*	1	INJECTOR GP-FUEL	763
Y	*371-2478*	1	JET GP-PISTON COOLING	543
Y	*371-2740*	1	LIFTING GP-ENGINE	545
Y	*426-3312*	1	LINES GP-FUEL FILTER	781
Y	*393-7694*	1	MANIFOLD GP-EXHAUST	723
Y	*391-5523*	1	MANIFOLD GP-INLET	726
Y	*395-0112*	1	MOUNTING GP-ELECTRONIC CONTROL	819
Y	*375-4499*	1	PAN GP-OIL	557
Y	*374-6301*	1	PISTON & ROD GP	576
Y	*346-2908*	1	PLUG GP-ENGINE	592
Y	*378-0628*	1	POWER TAKE-OFF GP	597
Y	*371-2554*	1	PULLEY GP-CRANKSHAFT	601
Y	*462-6685*	1	PUMP GP-ENGINE OIL	646
Y	*391-4811*	1	PUMP GP-FUEL INJECTION	790
Y	*372-2297*	1	PUMP GP-WATER	678
Y	*394-9639*	1	RAIL GP-FUEL	794
Y	*371-2480*	1	ROCKER ARM GP	606
Y	*395-0110*	1	SENSOR GP-ENGINE	820
Y	*395-0114*	1	STARTING AID GP	826
Y	*392-2021*	1	STARTING MOTOR GP-ELECTRIC	836
Y	*374-0432*	1	TURBOCHARGER GP	730
Y	*371-2745*	1	VALVE GP-FLUID SAMPLING	647

494-2073 **ENGINE AR-PRIMARY (**contd.**)** **i06554428**

NOTE	PART NUMBER	QTY	PART NAME 1 2 3 4 5 6 (PRODUCT LEVEL)	SEE PAGE
Y	*424-5516*	1	WIRING GP-ENGINE	846
	453-1370	1	ELECTRONICS GP-ENGINE	

Y - SEPARATE ILLUSTRATION

<END>

494-6807 ENGINE AR-PRIMARY

168 BRAKE KW (225.3 BHP) AT 2200-RPM
PART OF 494-7261 ENGINE AR

SMCS-1000 **i06614315**

NOTE	PART NUMBER	QTY	PART NAME 1 2 3 4 5 6 (PRODUCT LEVEL)	SEE PAGE
Y	*478-4234*	1	AIR CLEANER GP	715
Y	*377-0721*	1	ALTERNATOR GP-CHARGING	799
Y	*371-2693*	1	BELT TENSIONER GP	416
Y	*392-0632*	1	BREATHER GP	611
Y	*396-2617*	1	CAMSHAFT GP	428
Y	*373-3607*	1	CONNECTION GP-WATER	650
Y	*371-2536*	1	CONTROL GP-ELECTRONIC	808
Y	*378-8280*	1	COOLER GP-ENGINE OIL	661
Y	*389-3347*	1	COVER GP-VALVE MECHANISM	436
Y	*374-6300*	1	CRANKSHAFT GP	447
Y	*390-0854*	1	CYLINDER BLOCK GP	450
Y	*385-2572*	1	CYLINDER HEAD GP	458
Y	*371-2742*	1	DRAIN GP-ENGINE OIL	466
Y	*393-2180*	1	DRIVE GP-FAN	484
Y	*375-8320*	1	EXTENSION GP-FAN	501
Y	*375-4574*	1	FAN GP	669
Y	*375-0098*	1	FASTENER GP-DAMPER & PULLEY	505
Y	*448-0944*	1	FILLER GP-ENGINE OIL	627
Y	*415-5625*	1	FILM GP (ALTERNATOR)	862
Y	*346-0220*	1	FILTER GP-ENGINE OIL	629
Y	*441-1215*	1	FILTER GP-FUEL (WATER SEPARATOR)	756
Y	*453-7163*	1	FILTER GP-FUEL	760
Y	*346-0769*	1	FLANGE GP-EXHAUST	719
Y	*345-9037*	1	FLYWHEEL GP	510
Y	*439-3432*	1	GAUGE GP-OIL LEVEL (DIPSTICK) (ENGINE)	640
Y	*393-3369*	1	HOUSING GP-FLYWHEEL	526
Y	*375-4606*	1	DRIVE GP-POWER TAKE-OFF	499
Y	*375-4645*	1	HOUSING GP-FRONT	534
Y	*416-8908*	1	INJECTOR GP-FUEL	766
Y	*371-2478*	1	JET GP-PISTON COOLING	543
Y	*416-2470*	1	LIFTING GP-ENGINE	546
Y	*426-3310*	1	LINES GP-FUEL INJECTION	787
Y	*416-7808*	1	MANIFOLD GP-EXHAUST	724
Y	*391-5523*	1	MANIFOLD GP-INLET	726
Y	*346-1512*	1	MOUNTING GP-ACCESSORY MODULE	855
Y	*395-0112*	1	MOUNTING GP-ELECTRONIC CONTROL	819
Y	*375-4499*	1	PAN GP-OIL	557
Y	*369-7304*	1	PISTON & ROD GP	566
Y	*378-8167*	1	PLATE & FILM GP	868
Y	*346-2908*	1	PLUG GP-ENGINE	592
Y	*440-0026*	1	PLUG GP-OIL FILTER MOUNTING	644
Y	*379-6629*	1	PULLEY GP-CRANKSHAFT	603
Y	*462-6685*	1	PUMP GP-ENGINE OIL	646
Y	*391-4811*	1	PUMP GP-FUEL INJECTION	790
Y	*372-2297*	1	PUMP GP-WATER	678
Y	*456-4298*	1	RADIATOR GP	695
Y	*394-9639*	1	RAIL GP-FUEL	794
Y	*371-2480*	1	ROCKER ARM GP	606

494-6807 **ENGINE AR-PRIMARY (**contd.**)** **i06614315**

NOTE	PART NUMBER	QTY	PART NAME 1 2 3 4 5 6 (PRODUCT LEVEL)	SEE PAGE
Y	*395-0110*	1	SENSOR GP-ENGINE	820
Y	*395-0114*	1	STARTING AID GP	826
Y	*385-8000*	1	STARTING MOTOR GP-ELECTRIC	832
Y	*416-6971*	1	TURBOCHARGER GP	741
Y	*424-5516*	1	WIRING GP-ENGINE	846
	448-4768	1	ELECTRONICS GP	

Y - SEPARATE ILLUSTRATION

<END>

495-8349 ENGINE AR-PRIMARY

205 BRAKE KW (275 BHP) AT 2200 RPM
OPTIONAL FIELD REPLACEMENT ORDER 451-1222—PAGE: 452, 452-6584—PAGE: 462
PART OF 497-9665 ENGINE AR-COMPLETE

SMCS-1000 **i06689142**

NOTE	PART NUMBER	QTY	PART NAME 1 2 3 4 5 6 (PRODUCT LEVEL)	SEE PAGE
Y	*478-4234*	1	AIR CLEANER GP	715
Y	*377-0721*	1	ALTERNATOR GP-CHARGING	799
Y	*371-2693*	1	BELT TENSIONER GP	416
Y	*392-0632*	1	BREATHER GP	611
Y	*396-2617*	1	CAMSHAFT GP	428
Y	*373-3607*	1	CONNECTION GP-WATER	650
Y	*371-2536*	1	CONTROL GP-ELECTRONIC	808
Y	*378-8276*	1	COOLER GP-ENGINE OIL	659
Y	*389-3346*	1	COVER GP-VALVE MECHANISM	435
Y	*374-6300*	1	CRANKSHAFT GP	447
Y	*390-0854*	1	CYLINDER BLOCK GP	450
Y	*385-2572*	1	CYLINDER HEAD GP	458
Y	*393-2180*	1	DRIVE GP-FAN	484
Y	*375-8320*	1	EXTENSION GP-FAN	501
Y	*375-4574*	1	FAN GP	669
Y	*375-0098*	1	FASTENER GP-DAMPER & PULLEY	505
Y	*390-3737*	1	FILLER GP-ENGINE OIL	620
Y	*415-5625*	1	FILM GP (ALTERNATOR)	862
Y	*346-0220*	1	FILTER GP-ENGINE OIL	629
Y	*441-1215*	1	FILTER GP-FUEL (WATER SEPARATOR)	756
Y	*448-0935*	1	LINES GP-FUEL FILTER	783
Y	*453-7163*	1	FILTER GP-FUEL	760
Y	*346-0769*	1	FLANGE GP-EXHAUST	719
Y	*439-3432*	1	GAUGE GP-OIL LEVEL (DIPSTICK)	640
Y	*393-3369*	1	HOUSING GP-FLYWHEEL	526
Y	*378-0630*	1	AIR COMPRESSOR GP	410
Y	*476-7558*	1	HOUSING GP-FRONT	541
Y	*416-8908*	1	INJECTOR GP-FUEL	766
Y	*371-2478*	1	JET GP-PISTON COOLING	543
Y	*416-2470*	1	LIFTING GP-ENGINE	546
Y	*416-7808*	1	MANIFOLD GP-EXHAUST	724
Y	*391-5523*	1	MANIFOLD GP-INLET	726
Y	*448-9710*	1	CONNECTOR GP-CAB HEATER LINES	652
Y	*395-0112*	1	MOUNTING GP-ELECTRONIC CONTROL	819
Y	*375-4499*	1	PAN GP-OIL	557
Y	*369-7304*	1	PISTON & ROD GP	566
Y	*378-8167*	1	PLATE & FILM GP	868
Y	*440-0026*	1	PLUG GP-OIL FILTER MOUNTING	644
Y	*379-6629*	1	PULLEY GP-CRANKSHAFT	603
Y	*462-6685*	1	PUMP GP-ENGINE OIL	646
Y	*391-4811*	1	PUMP GP-FUEL INJECTION	790
Y	*372-2297*	1	PUMP GP-WATER	678
Y	*452-5153*	1	RADIATOR GP	686
Y	*394-9639*	1	RAIL GP-FUEL	794
Y	*371-2480*	1	ROCKER ARM GP	606
Y	*395-0110*	1	SENSOR GP-ENGINE	820
Y	*395-0114*	1	STARTING AID GP	826

495-8349 **ENGINE AR-PRIMARY (**contd.**)** **i06689142**

NOTE	PART NUMBER	QTY	PART NAME 1 2 3 4 5 6 (PRODUCT LEVEL)	SEE PAGE
Y	*385-8000*	1	STARTING MOTOR GP-ELECTRIC	832
Y	*416-6971*	1	TURBOCHARGER GP	741
Y	*424-5516*	1	WIRING GP-ENGINE	846
	449-3320	1	ELECTRONICS GP-ENGINE	

Y - SEPARATE ILLUSTRATION

<END>

499-7181 ENGINE AR-PRIMARY

205 KW (274.9BHP) @ 2200RPM

OPTIONAL FIELD REPLACEMENT ORDER 451-8385—PAGE: 455, 452-6582—PAGE: 460

PART OF 500-4376 ENGINE AR-COMPLETE

SMCS-1000 **i10479339**

NOTE	PART NUMBER	QTY	PART NAME 1 2 3 4 5 6 (PRODUCT LEVEL)	SEE PAGE
Y	*478-4234*	1	AIR CLEANER GP	715
Y	*377-0721*	1	ALTERNATOR GP-CHARGING	799
Y	*371-2693*	1	BELT TENSIONER GP	416
Y	*425-0196*	1	BREATHER GP (CRANKCASE)	612
Y	*396-2617*	1	CAMSHAFT GP	428
Y	*373-3607*	1	CONNECTION GP-WATER	650
Y	*371-2536*	1	CONTROL GP-ELECTRONIC	808
Y	*378-8280*	1	COOLER GP-ENGINE OIL	661
Y	*389-3346*	1	COVER GP-VALVE MECHANISM	435
Y	*374-6300*	1	CRANKSHAFT GP	447
Y	*390-0854*	1	CYLINDER BLOCK GP	450
Y	*385-2572*	1	CYLINDER HEAD GP	458
Y	*393-2180*	1	DRIVE GP-FAN	484
Y	*375-4606*	1	DRIVE GP-POWER TAKE-OFF	499
Y	*375-8320*	1	EXTENSION GP-FAN	501
Y	*378-0627*	1	FAN GP	670
Y	*375-0098*	1	FASTENER GP-DAMPER & PULLEY	505
Y	*390-3737*	1	FILLER GP-ENGINE OIL	620
Y	*611-2653*	1	FILM GP (RADIATOR)	865
Y	*390-0060*	1	FILM GP (EMISSION)	859
Y	*415-5625*	1	FILM GP (ALTERNATOR)	862
Y	*423-8803*	1	FILM GP (STARTING MOTOR)	863
Y	*346-0220*	1	FILTER GP-ENGINE OIL	629
Y	*441-1215*	1	FILTER GP-FUEL (WATER SEPARATOR)	756
Y	*453-7163*	1	FILTER GP-FUEL (ULTRA HIGH EFFICIENCY)	760
Y	*425-0197*	1	FILTER GP-FUMES DISPOSAL	630
Y	*346-0769*	1	FLANGE GP-EXHAUST	719
Y	*345-8901*	1	FLYWHEEL GP	506
Y	*439-3432*	1	GAUGE GP-OIL LEVEL (DIPSTICK)	640
Y	*345-8838*	1	HOUSING GP-FLYWHEEL	517
Y	*375-4645*	1	HOUSING GP-FRONT	534
Y	*416-8908*	1	INJECTOR GP-FUEL	766
Y	*371-2478*	1	JET GP-PISTON COOLING	543
Y	*416-2470*	1	LIFTING GP-ENGINE	546
Y	*398-7221*	1	LINES GP-FUEL FILTER	778
Y	*416-7808*	1	MANIFOLD GP-EXHAUST	724
Y	*391-5523*	1	MANIFOLD GP-INLET	726
Y	*346-1528*	1	MOUNTING GP-ACCESSORY MODULE	856
Y	*395-0112*	1	MOUNTING GP-ELECTRONIC CONTROL	819
Y	*375-4499*	1	PAN GP-OIL	557
Y	*369-7304*	1	PISTON & ROD GP	566
Y	*376-6464*	1	PLATE & FILM GP	867
Y	*346-2908*	1	PLUG GP-ENGINE	592
Y	*379-6629*	1	PULLEY GP-CRANKSHAFT	603
Y	*462-6685*	1	PUMP GP-ENGINE OIL	646
Y	*391-4811*	1	PUMP GP-FUEL INJECTION	790
Y	*372-2297*	1	PUMP GP-WATER	678

499-7181 **ENGINE AR-PRIMARY (**contd.**)** **i10479339**

NOTE	PART NUMBER	QTY	PART NAME 1 2 3 4 5 6 (PRODUCT LEVEL)	SEE PAGE
Y	*456-4302*	1	RADIATOR GP	701
Y	*394-9639*	1	RAIL GP-FUEL	794
Y	*371-2480*	1	ROCKER ARM GP	606
Y	*395-0110*	1	SENSOR GP-ENGINE	820
Y	*395-0114*	1	STARTING AID GP	826
Y	*392-2020*	1	STARTING MOTOR GP-ELECTRIC	835
Y	*416-6971*	1	TURBOCHARGER GP	741
Y	*371-2745*	1	VALVE GP-FLUID SAMPLING	647
Y	*424-5516*	1	WIRING GP-ENGINE	846
	449-3320	1	ELECTRONICS GP-ENGINE	
			SOFTWARE MUST BE PROCURED LOCALLY FROM YOUR CAT DEALER	

Y - SEPARATE ILLUSTRATION

<END>

501-2466 ENGINE AR-PRIMARY

209 BRAKE KW (281 BHP) AT 1800 RPM

OPTIONAL FIELD REPLACEMENT ORDER 451-1222—PAGE: 452, 452-6584—PAGE: 462

PART OF 502-5350 ENGINE AR

SMCS-1000 **i10581188**

NOTE	PART NUMBER	QTY	PART NAME 1 2 3 4 5 6 (PRODUCT LEVEL)	SEE PAGE
Y	*478-4234*	1	AIR CLEANER GP	715
Y	*377-0721*	1	ALTERNATOR GP-CHARGING	799
Y	*371-2693*	1	BELT TENSIONER GP	416
Y	*392-0632*	1	BREATHER GP	611
Y	*376-6871*	1	CAMSHAFT GP	426
Y	*373-3607*	1	CONNECTION GP-WATER	650
Y	*371-2536*	1	CONTROL GP-ELECTRONIC	808
Y	*378-8276*	1	COOLER GP-ENGINE OIL	659
Y	*389-3346*	1	COVER GP-VALVE MECHANISM	435
Y	*374-6300*	1	CRANKSHAFT GP	447
Y	*390-0854*	1	CYLINDER BLOCK GP	450
Y	*385-2572*	1	CYLINDER HEAD GP	458
Y	*371-2742*	1	DRAIN GP-ENGINE OIL	466
Y	*393-2180*	1	DRIVE GP-FAN	484
Y	*375-8320*	1	EXTENSION GP-FAN	501
Y	*378-0627*	1	FAN GP	670
Y	*375-0098*	1	FASTENER GP-DAMPER & PULLEY	505
Y	*390-3737*	1	FILLER GP-ENGINE OIL	620
Y	*415-5625*	1	FILM GP (ALTERNATOR)	862
Y	*611-2653*	1	FILM GP (RADIATOR)	865
Y	*346-0220*	1	FILTER GP-ENGINE OIL	629
Y	*441-1215*	1	FILTER GP-FUEL (WATER SEPARATOR)	756
Y	*453-7163*	1	FILTER GP-FUEL	760
Y	*346-0769*	1	FLANGE GP-EXHAUST	719
Y	*345-9037*	1	FLYWHEEL GP	510
Y	*439-3432*	1	GAUGE GP-OIL LEVEL (DIPSTICK)	640
Y	*393-3369*	1	HOUSING GP-FLYWHEEL	526
Y	*375-5838*	1	HOUSING GP-FRONT	536
Y	*416-8908*	1	INJECTOR GP-FUEL	766
Y	*371-2478*	1	JET GP-PISTON COOLING	543
Y	*416-2470*	1	LIFTING GP-ENGINE	546
Y	*426-3310*	1	LINES GP-FUEL INJECTION	787
Y	*416-7808*	1	MANIFOLD GP-EXHAUST	724
Y	*391-5523*	1	MANIFOLD GP-INLET	726
Y	*346-1512*	1	MOUNTING GP-ACCESSORY MODULE	855
Y	*395-0112*	1	MOUNTING GP-ELECTRONIC CONTROL	819
Y	*375-4499*	1	PAN GP-OIL	557
Y	*452-9761*	1	PISTON & ROD GP	581
Y	*378-8167*	1	PLATE & FILM GP	868
Y	*635-3313*	1	PLATE GP-IDENTIFICATION	869
Y	*346-2908*	1	PLUG GP-ENGINE	592
Y	*440-0026*	1	PLUG GP-OIL FILTER MOUNTING	644
Y	*379-6629*	1	PULLEY GP-CRANKSHAFT	603
Y	*462-6685*	1	PUMP GP-ENGINE OIL	646
Y	*391-4811*	1	PUMP GP-FUEL INJECTION	790
Y	*372-2297*	1	PUMP GP-WATER	678
Y	*452-5153*	1	RADIATOR GP	686

501-2466 **ENGINE AR-PRIMARY (**contd.**)** **i10581188**

NOTE	PART NUMBER	QTY	PART NAME 1 2 3 4 5 6 (PRODUCT LEVEL)	SEE PAGE
Y	*394-9639*	1	RAIL GP-FUEL	794
Y	*371-2480*	1	ROCKER ARM GP	606
Y	*395-0110*	1	SENSOR GP-ENGINE	820
Y	*395-0114*	1	STARTING AID GP	826
Y	*385-8000*	1	STARTING MOTOR GP-ELECTRIC	832
Y	*371-2719*	1	SUPPORT GP-POWER TAKE-OFF	608
Y	*416-6971*	1	TURBOCHARGER GP	741
Y	*424-5516*	1	WIRING GP-ENGINE	846
	483-1223	1	ELECTRONICS GP-ENGINE	
	376-6464	1	PLATE & FILM GP	

Y - SEPARATE ILLUSTRATION

<END>

502-9462 ENGINE AR-PRIMARY

186 BRAKE KW (249 BHP) AT 2200 RPM

OPTIONAL FIELD REPLACEMENT ORDER 451-1222—PAGE: 452, 452-6584—PAGE: 462

PART OF 503-0943 ENGINE AR

SMCS-1000 **i06799323**

NOTE	PART NUMBER	QTY	PART NAME 1 2 3 4 5 6 (PRODUCT LEVEL)	SEE PAGE
Y	*478-4234*	1	AIR CLEANER GP	715
Y	*377-0721*	1	ALTERNATOR GP-CHARGING	799
Y	*371-2693*	1	BELT TENSIONER GP	416
Y	*425-0196*	1	BREATHER GP (CRANKCASE)	612
Y	*396-2617*	1	CAMSHAFT GP	428
Y	*373-3607*	1	CONNECTION GP-WATER	650
Y	*371-2536*	1	CONTROL GP-ELECTRONIC	808
Y	*378-8276*	1	COOLER GP-ENGINE OIL	659
Y	*389-3346*	1	COVER GP-VALVE MECHANISM	435
Y	*374-6300*	1	CRANKSHAFT GP	447
Y	*390-0854*	1	CYLINDER BLOCK GP	450
Y	*385-2572*	1	CYLINDER HEAD GP	458
Y	*393-2180*	1	DRIVE GP-FAN	484
Y	*375-8320*	1	EXTENSION GP-FAN	501
Y	*378-0627*	1	FAN GP	670
Y	*375-0098*	1	FASTENER GP-DAMPER & PULLEY	505
Y	*390-3737*	1	FILLER GP-ENGINE OIL	620
Y	*425-0197*	1	FILTER GP-FUMES DISPOSAL	630
Y	*415-5625*	1	FILM GP (ALTERNATOR)	862
Y	*346-0220*	1	FILTER GP-ENGINE OIL	629
Y	*441-1215*	1	FILTER GP-FUEL (WATER SEPARATOR)	756
Y	*453-7163*	1	FILTER GP-FUEL	760
Y	*346-0769*	1	FLANGE GP-EXHAUST	719
Y	*437-2723*	1	FLYWHEEL GP	513
Y	*439-3432*	1	GAUGE GP-OIL LEVEL (DIPSTICK)	640
Y	*437-2721*	1	HOUSING GP-FLYWHEEL	529
Y	*375-5838*	1	HOUSING GP-FRONT	536
Y	*416-8908*	1	INJECTOR GP-FUEL	766
Y	*371-2478*	1	JET GP-PISTON COOLING	543
Y	*416-2470*	1	LIFTING GP-ENGINE	546
Y	*426-3310*	1	LINES GP-FUEL INJECTION	787
Y	*416-7808*	1	MANIFOLD GP-EXHAUST	724
Y	*391-5523*	1	MANIFOLD GP-INLET	726
Y	*395-0112*	1	MOUNTING GP-ELECTRONIC CONTROL	819
Y	*458-2242*	1	MOUNTING GP-ENGINE	550
Y	*375-4499*	1	PAN GP-OIL	557
Y	*369-7304*	1	PISTON & ROD GP	566
Y	*378-8167*	1	PLATE & FILM GP	868
Y	*346-2908*	1	PLUG GP-ENGINE	592
Y	*440-0026*	1	PLUG GP-OIL FILTER MOUNTING	644
Y	*379-6629*	1	PULLEY GP-CRANKSHAFT	603
Y	*462-6685*	1	PUMP GP-ENGINE OIL	646
Y	*391-4811*	1	PUMP GP-FUEL INJECTION	790
Y	*372-2297*	1	PUMP GP-WATER	678
Y	*452-5153*	1	RADIATOR GP	686
Y	*394-9639*	1	RAIL GP-FUEL	794
Y	*371-2480*	1	ROCKER ARM GP	606

502-9462 **ENGINE AR-PRIMARY (**contd.**)** **i06799323**

NOTE	PART NUMBER	QTY	PART NAME 1 2 3 4 5 6 (PRODUCT LEVEL)	SEE PAGE
Y	*395-0110*	1	SENSOR GP-ENGINE	820
Y	*395-0114*	1	STARTING AID GP	826
Y	*385-8000*	1	STARTING MOTOR GP-ELECTRIC	832
Y	*371-2719*	1	SUPPORT GP-POWER TAKE-OFF	608
Y	*416-6971*	1	TURBOCHARGER GP	741
Y	*424-5516*	1	WIRING GP-ENGINE	846
	440-1796	1	ELECTRONICS GP-ENGINE RATINGS	

Y - SEPARATE ILLUSTRATION

<END>

504-3629 ENGINE AR-PRIMARY

186 BRAKE KW (249 BHP) AT 2200 RPM

OPTIONAL FIELD REPLACEMENT ORDER 451-1222—PAGE: 452, 452-6584—PAGE: 462

PART OF 504-4551 ENGINE AR

SMCS-1000 **i06715073**

NOTE	PART NUMBER	QTY	PART NAME 1 2 3 4 5 6 (PRODUCT LEVEL)	SEE PAGE
Y	*440-6724*	1	ALTERNATOR GP-CHARGING	802
Y	*375-4479*	1	BELT TENSIONER GP	417
Y	*379-6637*	1	BRACKET GP-MOUNTING	423
Y	*392-0632*	1	BREATHER GP	611
Y	*396-2617*	1	CAMSHAFT GP	428
Y	*390-5132*	1	CLAMP AS-EXHAUST	718
Y	*373-3606*	1	CONNECTION GP-WATER	649
Y	*371-2536*	1	CONTROL GP-ELECTRONIC	808
Y	*378-8280*	1	COOLER GP-ENGINE OIL	661
Y	*389-3348*	1	COVER GP-VALVE MECHANISM	440
Y	*371-2477*	1	CRANKSHAFT GP	
Y	*390-0854*	1	CYLINDER BLOCK GP	450
Y	*385-2572*	1	CYLINDER HEAD GP	458
Y	*378-8166*	1	DRAIN GP-ENGINE OIL	467
Y	*375-3937*	1	DRIVE GP-FAN	470
Y	*375-0098*	1	FASTENER GP-DAMPER & PULLEY	505
Y	*379-6626*	1	FILLER GP-ENGINE OIL	619
Y	*390-0060*	1	FILM GP	859
Y	*415-5625*	1	FILM GP (ALTERNATOR)	862
Y	*423-8803*	1	FILM GP (STARTING MOTOR)	863
Y	*346-0220*	1	FILTER GP-ENGINE OIL	629
Y	*441-1215*	1	FILTER GP-FUEL (WATER SEPARATOR)	756
Y	*448-0935*	1	LINES GP-FUEL FILTER	783
Y	*453-7163*	1	FILTER GP-FUEL	760
Y	*345-8961*	1	FLYWHEEL GP	508
Y	*439-3378*	1	GAUGE GP-OIL LEVEL (DIPSTICK)	637
Y	*380-2587*	1	HOUSING GP-FLYWHEEL	525
Y	*375-4606*	1	DRIVE GP-POWER TAKE-OFF	499
Y	*375-4645*	1	HOUSING GP-FRONT	534
Y	*416-8908*	1	INJECTOR GP-FUEL	766
Y	*371-2478*	1	JET GP-PISTON COOLING	543
Y	*371-2735*	1	LIFTING GP-ENGINE	544
Y	*393-7694*	1	MANIFOLD GP-EXHAUST	723
Y	*391-5523*	1	MANIFOLD GP-INLET	726
Y	*395-0112*	1	MOUNTING GP-ELECTRONIC CONTROL	819
Y	*371-2544*	1	PAN GP-OIL	556
Y	*369-7304*	1	PISTON & ROD GP	566
Y	*346-2908*	1	PLUG GP-ENGINE	592
Y	*371-2555*	1	PULLEY GP-CRANKSHAFT	602
Y	*462-6685*	1	PUMP GP-ENGINE OIL	646
Y	*391-4811*	1	PUMP GP-FUEL INJECTION	790
Y	*372-2297*	1	PUMP GP-WATER	678
Y	*394-9639*	1	RAIL GP-FUEL	794
Y	*371-2480*	1	ROCKER ARM GP	606
Y	*395-0110*	1	SENSOR GP-ENGINE	820
Y	*395-0114*	1	STARTING AID GP	826
Y	*458-3684*	1	STARTING MOTOR GP-ELECTRIC	839

504-3629 **ENGINE AR-PRIMARY (**contd.**)** **i06715073**

NOTE	PART NUMBER	QTY	PART NAME 1 2 3 4 5 6 (PRODUCT LEVEL)	SEE PAGE
Y	*416-6968*	1	TURBOCHARGER GP	738
Y	*371-2745*	1	VALVE GP-FLUID SAMPLING	647
Y	*424-5516*	1	WIRING GP-ENGINE	846
	440-1796	1	ELECTRONICS GP-ENGINE RATINGS	

Y - SEPARATE ILLUSTRATION

<END>

504-4575 ENGINE AR-PRIMARY

159 BRAKE KW (213 BHP) AT 2200 RPM
OPTIONAL FIELD REPLACEMENT ORDER 451-1222—PAGE: 452, 452-6584—PAGE: 462
PART OF 504-5163 ENGINE AR

SMCS-1000 **i06799071**

NOTE	PART NUMBER	QTY	PART NAME 1 2 3 4 5 6 (PRODUCT LEVEL)	SEE PAGE
Y	*392-0632*	1	BREATHER GP	611
Y	*396-2617*	1	CAMSHAFT GP	428
Y	*373-3607*	1	CONNECTION GP-WATER	650
Y	*371-2536*	1	CONTROL GP-ELECTRONIC	808
Y	*346-0091*	1	COOLER GP-ENGINE OIL	657
Y	*389-3346*	1	COVER GP-VALVE MECHANISM	435
Y	*374-6300*	1	CRANKSHAFT GP	447
Y	*390-0854*	1	CYLINDER BLOCK GP	450
Y	*385-2572*	1	CYLINDER HEAD GP	458
Y	*375-4495*	1	DRIVE GP-FAN	471
Y	*371-2694*	1	EXTENSION GP-FAN	500
Y	*390-3737*	1	FILLER GP-ENGINE OIL	620
Y	*390-0060*	1	FILM GP	859
Y	*346-0220*	1	FILTER GP-ENGINE OIL	629
Y	*441-1215*	1	FILTER GP-FUEL (WATER SEPARATOR)	756
Y	*453-7163*	1	FILTER GP-FUEL	760
Y	*439-3432*	1	GAUGE GP-OIL LEVEL (DIPSTICK)	640
Y	*371-2725*	1	HOUSING GP-FRONT	532
Y	*416-8908*	1	INJECTOR GP-FUEL	766
Y	*371-2478*	1	JET GP-PISTON COOLING	543
Y	*416-2470*	1	LIFTING GP-ENGINE	546
Y	*426-3310*	1	LINES GP-FUEL INJECTION	787
Y	*416-7808*	1	MANIFOLD GP-EXHAUST	724
Y	*391-5523*	1	MANIFOLD GP-INLET	726
Y	*395-0112*	1	MOUNTING GP-ELECTRONIC CONTROL	819
Y	*375-4499*	1	PAN GP-OIL	557
Y	*369-7304*	1	PISTON & ROD GP	566
Y	*346-2908*	1	PLUG GP-ENGINE	592
Y	*440-0026*	1	PLUG GP-OIL FILTER MOUNTING	644
Y	*379-6633*	1	PULLEY GP-AUXILIARY DRIVE	600
Y	*371-2554*	1	PULLEY GP-CRANKSHAFT	601
Y	*462-6685*	1	PUMP GP-ENGINE OIL	646
Y	*391-4811*	1	PUMP GP-FUEL INJECTION	790
Y	*372-2297*	1	PUMP GP-WATER	678
Y	*394-9639*	1	RAIL GP-FUEL	794
Y	*371-2480*	1	ROCKER ARM GP	606
Y	*395-0110*	1	SENSOR GP-ENGINE	820
Y	*380-9279*	1	STARTING AID GP	824
Y	*371-2719*	1	SUPPORT GP-POWER TAKE-OFF	608
Y	*416-6971*	1	TURBOCHARGER GP	741
Y	*424-5516*	1	WIRING GP-ENGINE	846
	468-8357	1	ELECTRONICS GP-ENGINE	

Y - SEPARATE ILLUSTRATION

<END>

504-5365 ENGINE AR-PRIMARY

130 BRAKE (174 BHP) AT 2500 RPM

OPTIONAL FIELD REPLACEMENT ORDER 451-1222—PAGE: 452, 452-6584—PAGE: 462

SMCS-1000 **i09248998**

NOTE	PART NUMBER	QTY	PART NAME 1 2 3 4 5 6 (PRODUCT LEVEL)	SEE PAGE
Y	*392-0632*	1	BREATHER GP	611
Y	*396-2615*	1	CAMSHAFT GP	427
AY	*504-6342*	1	CONFIGURATION AR-ENGINE	8
Y	*373-3607*	1	CONNECTION GP-WATER	650
Y	*371-2536*	1	CONTROL GP-ELECTRONIC	808
Y	*346-0091*	1	COOLER GP-ENGINE OIL	657
Y	*389-3346*	1	COVER GP-VALVE MECHANISM	435
Y	*374-6300*	1	CRANKSHAFT GP	447
Y	*390-0854*	1	CYLINDER BLOCK GP	450
Y	*385-2572*	1	CYLINDER HEAD GP	458
Y	*375-4495*	1	DRIVE GP-FAN	471
Y	*375-4606*	1	DRIVE GP-POWER TAKE-OFF	499
Y	*371-2694*	1	EXTENSION GP-FAN	500
Y	*448-0944*	1	FILLER GP-ENGINE OIL	627
Y	*390-0060*	1	FILM GP	859
Y	*346-0220*	1	FILTER GP-ENGINE OIL	629
Y	*441-1215*	1	FILTER GP-FUEL (WATER SEPARATOR)	756
Y	*453-7163*	1	FILTER GP-FUEL	760
Y	*439-3432*	1	GAUGE GP-OIL LEVEL (DIPSTICK)	640
Y	*375-4645*	1	HOUSING GP-FRONT	534
Y	*371-2483*	1	INJECTOR GP-FUEL	763
Y	*371-2478*	1	JET GP-PISTON COOLING	543
Y	*416-2470*	1	LIFTING GP-ENGINE	546
Y	*426-3310*	1	LINES GP-FUEL INJECTION	787
Y	*416-7808*	1	MANIFOLD GP-EXHAUST	724
Y	*391-5523*	1	MANIFOLD GP-INLET	726
Y	*395-0112*	1	MOUNTING GP-ELECTRONIC CONTROL	819
Y	*375-4499*	1	PAN GP-OIL	557
Y	*374-6301*	1	PISTON & ROD GP	576
Y	*346-2908*	1	PLUG GP-ENGINE	592
Y	*440-0026*	1	PLUG GP-OIL FILTER MOUNTING	644
Y	*379-6633*	1	PULLEY GP-AUXILIARY DRIVE	600
Y	*371-2554*	1	PULLEY GP-CRANKSHAFT	601
Y	*462-6685*	1	PUMP GP-ENGINE OIL	646
Y	*391-4811*	1	PUMP GP-FUEL INJECTION	790
Y	*372-2297*	1	PUMP GP-WATER	678
Y	*394-9639*	1	RAIL GP-FUEL	794
Y	*371-2480*	1	ROCKER ARM GP	606
Y	*395-0110*	1	SENSOR GP-ENGINE	820
Y	*380-9279*	1	STARTING AID GP	824
Y	*375-5002*	1	TURBOCHARGER GP	732
Y	*424-5516*	1	WIRING GP-ENGINE	846
	464-0721	1	ELECTRONICS GP-ENGINE	
	376-6464	1	PLATE & FILM GP	

A - NOT PART OF THIS GROUP
Y - SEPARATE ILLUSTRATION

<END>

504-8134 ENGINE AR-PRIMARY

186 BRAKE KW (249 BHP) AT 2200 RPM

OPTIONAL FIELD REPLACEMENT ORDER 451-1222—PAGE: 452, 452-6584—PAGE: 462

SMCS-1000 **i09318346**

NOTE	PART NUMBER	QTY	PART NAME 1 2 3 4 5 6 (PRODUCT LEVEL)	SEE PAGE
Y	*392-0632*	1	BREATHER GP	611
Y	*396-2617*	1	CAMSHAFT GP	428
AY	*504-8142*	1	CONFIGURATION AR-ENGINE	8
Y	*373-3607*	1	CONNECTION GP-WATER	650
Y	*371-2536*	1	CONTROL GP-ELECTRONIC	808
Y	*378-8276*	1	COOLER GP-ENGINE OIL	659
Y	*389-3346*	1	COVER GP-VALVE MECHANISM	435
Y	*374-6300*	1	CRANKSHAFT GP	447
Y	*390-0854*	1	CYLINDER BLOCK GP	450
Y	*385-2572*	1	CYLINDER HEAD GP	458
Y	*375-4495*	1	DRIVE GP-FAN	471
Y	*375-4606*	1	DRIVE GP-POWER TAKE-OFF	499
Y	*371-2694*	1	EXTENSION GP-FAN	500
Y	*448-0944*	1	FILLER GP-ENGINE OIL	627
Y	*390-0060*	1	FILM GP	859
Y	*346-0220*	1	FILTER GP-ENGINE OIL	629
Y	*441-1215*	1	FILTER GP-FUEL (WATER SEPARATOR)	756
Y	*453-7163*	1	FILTER GP-FUEL	760
Y	*439-3432*	1	GAUGE GP-OIL LEVEL (DIPSTICK)	640
Y	*375-4645*	1	HOUSING GP-FRONT	534
Y	*416-8908*	1	INJECTOR GP-FUEL	766
Y	*371-2478*	1	JET GP-PISTON COOLING	543
Y	*416-2470*	1	LIFTING GP-ENGINE	546
Y	*426-3310*	1	LINES GP-FUEL INJECTION	787
Y	*416-7808*	1	MANIFOLD GP-EXHAUST	724
Y	*391-5523*	1	MANIFOLD GP-INLET	726
Y	*395-0112*	1	MOUNTING GP-ELECTRONIC CONTROL	819
Y	*375-4499*	1	PAN GP-OIL	557
Y	*369-7304*	1	PISTON & ROD GP	566
Y	*346-2908*	1	PLUG GP-ENGINE	592
Y	*440-0026*	1	PLUG GP-OIL FILTER MOUNTING	644
Y	*379-6633*	1	PULLEY GP-AUXILIARY DRIVE	600
Y	*371-2554*	1	PULLEY GP-CRANKSHAFT	601
Y	*462-6685*	1	PUMP GP-ENGINE OIL	646
Y	*391-4811*	1	PUMP GP-FUEL INJECTION	790
Y	*372-2297*	1	PUMP GP-WATER	678
Y	*394-9639*	1	RAIL GP-FUEL	794
Y	*371-2480*	1	ROCKER ARM GP	606
Y	*395-0110*	1	SENSOR GP-ENGINE	820
Y	*380-9279*	1	STARTING AID GP	824
Y	*416-6971*	1	TURBOCHARGER GP	741
Y	*424-5516*	1	WIRING GP-ENGINE	846
	440-1796	1	ELECTRONICS GP-ENGINE RATINGS	
	376-6464	1	PLATE & FILM GP	

A - NOT PART OF THIS GROUP
Y - SEPARATE ILLUSTRATION

<END>

504-9579 ENGINE AR-PRIMARY

209 BRAKE KW (281 BHP) AT1800 RPM

FIELD REPLACEMENT ORDER 633-4335—PAGE: 400, 657-2370—PAGE: 406

OPTIONAL FIELD REPLACEMENT ORDER 451-1222—PAGE: 452, 452-6584—PAGE: 462

SMCS-1000 **i10363292**

NOTE	PART NUMBER	QTY	PART NAME 1 2 3 4 5 6 (PRODUCT LEVEL)	SEE PAGE
Y	*478-4234*	1	AIR CLEANER GP	715
Y	*377-0721*	1	ALTERNATOR GP-CHARGING	799
Y	*371-2693*	1	BELT TENSIONER GP	416
Y	*392-0632*	1	BREATHER GP	611
Y	*376-6871*	1	CAMSHAFT GP	426
Y	*373-3607*	1	CONNECTION GP-WATER	650
Y	*371-2536*	1	CONTROL GP-ELECTRONIC	808
Y	*378-8280*	1	COOLER GP-ENGINE OIL	661
Y	*389-3347*	1	COVER GP-VALVE MECHANISM	436
Y	*374-6300*	1	CRANKSHAFT GP	447
Y	*390-0854*	1	CYLINDER BLOCK GP	450
Y	*385-2572*	1	CYLINDER HEAD GP	458
Y	*371-2742*	1	DRAIN GP-ENGINE OIL	466
Y	*393-2180*	1	DRIVE GP-FAN	484
Y	*375-4606*	1	DRIVE GP-POWER TAKE-OFF	499
Y	*375-8320*	1	EXTENSION GP-FAN	501
Y	*375-4574*	1	FAN GP	669
Y	*375-0098*	1	FASTENER GP-DAMPER & PULLEY	505
Y	*448-0944*	1	FILLER GP-ENGINE OIL	627
Y	*611-2653*	1	FILM GP (RADIATOR)	865
Y	*415-5625*	1	FILM GP (ALTERNATOR)	862
Y	*346-0220*	1	FILTER GP-ENGINE OIL	629
Y	*441-1215*	1	FILTER GP-FUEL (WATER SEPARATOR)	756
Y	*453-7163*	1	FILTER GP-FUEL	760
Y	*346-0769*	1	FLANGE GP-EXHAUST	719
Y	*345-9037*	1	FLYWHEEL GP	510
Y	*439-3432*	1	GAUGE GP-OIL LEVEL (DIPSTICK)	640
Y	*393-3369*	1	HOUSING GP-FLYWHEEL	526
Y	*375-4645*	1	HOUSING GP-FRONT	534
Y	*416-8908*	1	INJECTOR GP-FUEL	766
Y	*371-2478*	1	JET GP-PISTON COOLING	543
Y	*416-2470*	1	LIFTING GP-ENGINE	546
Y	*426-3310*	1	LINES GP-FUEL INJECTION	787
Y	*416-7808*	1	MANIFOLD GP-EXHAUST	724
Y	*391-5523*	1	MANIFOLD GP-INLET	726
Y	*346-1512*	1	MOUNTING GP-ACCESSORY MODULE	855
Y	*395-0112*	1	MOUNTING GP-ELECTRONIC CONTROL	819
Y	*375-4499*	1	PAN GP-OIL	557
Y	*452-9761*	1	PISTON & ROD GP	581
Y	*378-8167*	1	PLATE & FILM GP	868
Y	*635-3313*	1	PLATE GP-IDENTIFICATION (TURBOCHARGER)	869
Y	*346-2908*	1	PLUG GP-ENGINE	592
Y	*440-0026*	1	PLUG GP-OIL FILTER MOUNTING	644
Y	*379-6629*	1	PULLEY GP-CRANKSHAFT	603
Y	*462-6685*	1	PUMP GP-ENGINE OIL	646
Y	*391-4811*	1	PUMP GP-FUEL INJECTION	790
Y	*372-2297*	1	PUMP GP-WATER	678

504-9579 **ENGINE AR-PRIMARY (**contd.**)** **i10363292**

NOTE	PART NUMBER	QTY	PART NAME 1 2 3 4 5 6 (PRODUCT LEVEL)	SEE PAGE
Y	*456-4298*	1	RADIATOR GP	695
Y	*394-9639*	1	RAIL GP-FUEL	794
Y	*371-2480*	1	ROCKER ARM GP	606
Y	*395-0110*	1	SENSOR GP-ENGINE	820
Y	*395-0114*	1	STARTING AID GP	826
Y	*385-8000*	1	STARTING MOTOR GP-ELECTRIC	832
Y	*416-6971*	1	TURBOCHARGER GP	741
Y	*424-5516*	1	WIRING GP-ENGINE	846
			SOFTWARE MUST BE PROCURED LOCALLY FROM YOUR CAT DEALER	

Y - SEPARATE ILLUSTRATION

<END>

506-5035 ENGINE AR-PRIMARY

186 BRAKE KW (249 BHP) AT 2200 RPM

OPTIONAL FIELD REPLACEMENT ORDER 451-1222—PAGE: 452, 452-6584—PAGE: 462

SMCS-1000 **i09235247**

NOTE	PART NUMBER	QTY	PART NAME 1 2 3 4 5 6 (PRODUCT LEVEL)	SEE PAGE
Y	*377-0721*	1	ALTERNATOR GP-CHARGING	799
Y	*391-9612*	1	BELT TENSIONER GP	422
Y	*379-6637*	1	BRACKET GP-MOUNTING	423
Y	*392-0632*	1	BREATHER GP	611
Y	*396-2617*	1	CAMSHAFT GP	428
Y	*390-5132*	1	CLAMP AS-EXHAUST	718
AY	*506-5125*	1	CONFIGURATION AR-ENGINE	8
Y	*373-3607*	1	CONNECTION GP-WATER	650
Y	*371-2536*	1	CONTROL GP-ELECTRONIC	808
Y	*378-8280*	1	COOLER GP-ENGINE OIL	661
Y	*389-3348*	1	COVER GP-VALVE MECHANISM	440
Y	*374-6300*	1	CRANKSHAFT GP	447
Y	*390-0854*	1	CYLINDER BLOCK GP	450
Y	*385-2572*	1	CYLINDER HEAD GP	458
Y	*371-2743*	1	DRAIN GP-OIL	616
Y	*380-2638*	1	DRIVE GP-FAN	479
Y	*375-4606*	1	DRIVE GP-POWER TAKE-OFF	499
Y	*452-6700*	1	EXTENSION GP-FAN	504
Y	*375-0098*	1	FASTENER GP-DAMPER & PULLEY	505
Y	*379-6626*	1	FILLER GP-ENGINE OIL	619
Y	*390-0060*	1	FILM GP (EMISSION)	859
Y	*415-5625*	1	FILM GP (ALTERNATOR)	862
Y	*423-8803*	1	FILM GP (STARTING MOTOR)	863
Y	*346-0220*	1	FILTER GP-ENGINE OIL	629
Y	*441-1215*	1	FILTER GP-FUEL (WATER SEPARATOR)	756
Y	*453-7163*	1	FILTER GP-FUEL	760
Y	*345-8901*	1	FLYWHEEL GP	506
Y	*417-6007*	1	GAUGE GP-OIL LEVEL (DIPSTICK)	635
Y	*380-2587*	1	HOUSING GP-FLYWHEEL	525
Y	*375-4645*	1	HOUSING GP-FRONT	534
Y	*416-8908*	1	INJECTOR GP-FUEL	766
Y	*371-2478*	1	JET GP-PISTON COOLING	543
Y	*416-2470*	1	LIFTING GP-ENGINE	546
Y	*448-0935*	1	LINES GP-FUEL FILTER	783
Y	*393-7694*	1	MANIFOLD GP-EXHAUST	723
Y	*391-5523*	1	MANIFOLD GP-INLET	726
Y	*395-0112*	1	MOUNTING GP-ELECTRONIC CONTROL	819
Y	*375-4499*	1	PAN GP-OIL	557
Y	*369-7304*	1	PISTON & ROD GP	566
Y	*346-2908*	1	PLUG GP-ENGINE	592
Y	*371-2554*	1	PULLEY GP-CRANKSHAFT	601
Y	*462-6685*	1	PUMP GP-ENGINE OIL	646
Y	*391-4811*	1	PUMP GP-FUEL INJECTION	790
Y	*372-2297*	1	PUMP GP-WATER	678
Y	*394-9639*	1	RAIL GP-FUEL	794
Y	*371-2480*	1	ROCKER ARM GP	606
Y	*395-0110*	1	SENSOR GP-ENGINE	820
Y	*395-0114*	1	STARTING AID GP	826

506-5035 **ENGINE AR-PRIMARY (**contd.**)** **i09235247**

NOTE	PART NUMBER	QTY	PART NAME 1 2 3 4 5 6 (PRODUCT LEVEL)	SEE PAGE
Y	*392-2021*	1	STARTING MOTOR GP-ELECTRIC	836
Y	*416-6968*	1	TURBOCHARGER GP	738
Y	*371-2745*	1	VALVE GP-FLUID SAMPLING	647
Y	*424-5516*	1	WIRING GP-ENGINE	846
	440-1796	1	ELECTRONICS GP-ENGINE RATINGS	
	376-6464	1	PLATE & FILM GP	

A - NOT PART OF THIS GROUP
Y - SEPARATE ILLUSTRATION

<END>

506-9918 ENGINE AR-PRIMARY

205 BRAKE KW (275 BHP) AT 2200 RPM

OPTIONAL FIELD REPLACEMENT ORDER 451-1222—PAGE: 452, 452-6584—PAGE: 462

SMCS-1000 **i10581192**

NOTE	PART NUMBER	QTY	PART NAME 1 2 3 4 5 6 (PRODUCT LEVEL)	SEE PAGE
Y	*378-0630*	1	AIR COMPRESSOR GP	410
Y	*377-0721*	1	ALTERNATOR GP-CHARGING	799
Y	*391-9611*	1	BELT TENSIONER GP	421
Y	*392-0632*	1	BREATHER GP	611
Y	*396-2617*	1	CAMSHAFT GP	428
Y	*390-5132*	1	CLAMP AS-EXHAUST	718
Y	*374-7094*	1	COMPRESSOR & MTG GP-REFRIGERANT	429
AY	*507-6552*	1	CONFIGURATION AR-ENGINE	9
Y	*373-3606*	1	CONNECTION GP-WATER	649
Y	*448-9710*	1	CONNECTOR GP-CAB HEATER LINES	652
Y	*371-2536*	1	CONTROL GP-ELECTRONIC	808
Y	*378-8283*	1	COOLER GP-ENGINE OIL	662
Y	*389-3347*	1	COVER GP-VALVE MECHANISM	436
Y	*374-6300*	1	CRANKSHAFT GP	447
Y	*390-0854*	1	CYLINDER BLOCK GP	450
Y	*385-2572*	1	CYLINDER HEAD GP	458
Y	*371-2743*	1	DRAIN GP-OIL	616
Y	*379-0957*	1	DRIVE GP-FAN	472
Y	*375-0098*	1	FASTENER GP-DAMPER & PULLEY	505
Y	*390-3737*	1	FILLER GP-ENGINE OIL	620
Y	*390-0060*	1	FILM GP	859
Y	*415-5625*	1	FILM GP (ALTERNATOR)	862
Y	*346-0220*	1	FILTER GP-ENGINE OIL	629
Y	*441-1222*	1	FILTER GP-FUEL (WATER SEPARATOR)	758
Y	*453-7163*	1	FILTER GP-FUEL	760
Y	*377-0692*	1	FLYWHEEL GP	511
Y	*371-2546*	1	GAUGE GP-OIL LEVEL (DIPSTICK)	631
Y	*357-1915*	1	HOUSING GP-FLYWHEEL	521
Y	*476-7558*	1	HOUSING GP-FRONT	541
Y	*416-8908*	1	INJECTOR GP-FUEL	766
Y	*371-2478*	1	JET GP-PISTON COOLING	543
Y	*371-2735*	1	LIFTING GP-ENGINE	544
Y	*478-8524*	1	LINES GP-FUEL	775
Y	*393-7694*	1	MANIFOLD GP-EXHAUST	723
Y	*378-8582*	1	MANIFOLD GP-INLET	725
Y	*395-0112*	1	MOUNTING GP-ELECTRONIC CONTROL	819
Y	*378-8260*	1	PAN GP-OIL	562
Y	*369-7304*	1	PISTON & ROD GP	566
Y	*376-6464*	1	PLATE & FILM GP	867
Y	*440-0026*	1	PLUG GP-OIL FILTER MOUNTING	644
Y	*371-2554*	1	PULLEY GP-CRANKSHAFT	601
Y	*462-6685*	1	PUMP GP-ENGINE OIL	646
Y	*391-4811*	1	PUMP GP-FUEL INJECTION	790
Y	*372-2297*	1	PUMP GP-WATER	678
Y	*394-9639*	1	RAIL GP-FUEL	794
Y	*371-2480*	1	ROCKER ARM GP	606
Y	*395-0110*	1	SENSOR GP-ENGINE	820
Y	*395-0114*	1	STARTING AID GP	826

506-9918 **ENGINE AR-PRIMARY (**contd.**)** **i10581192**

NOTE	PART NUMBER	QTY	PART NAME 1 2 3 4 5 6 (PRODUCT LEVEL)	SEE PAGE
Y	*378-0590*	1	STARTING MOTOR GP-ELECTRIC	831
Y	*416-6969*	1	TURBOCHARGER GP	739
Y	*424-5516*	1	WIRING GP-ENGINE	846
	449-3320	1	ELECTRONICS GP-ENGINE	
			SOFTWARE MUST BE PROCURED LOCALLY FROM YOUR CAT DEALER	

A - NOT PART OF THIS GROUP
Y - SEPARATE ILLUSTRATION

<END>

507-8016 ENGINE AR-PRIMARY

168 BRAKE KW (225 BHP) AT 2200 RPM

OPTIONAL FIELD REPLACEMENT ORDER 451-1222—PAGE: 452, 452-6584—PAGE: 462

SMCS-1000 **i09398181**

NOTE	PART NUMBER	QTY	PART NAME 1 2 3 4 5 6 (PRODUCT LEVEL)	SEE PAGE
Y	*478-4234*	1	AIR CLEANER GP	715
Y	*377-0721*	1	ALTERNATOR GP-CHARGING	799
Y	*371-2693*	1	BELT TENSIONER GP	416
Y	*425-0196*	1	BREATHER GP (CRANKCASE)	612
Y	*396-2617*	1	CAMSHAFT GP	428
AY	*507-8031*	1	CONFIGURATION AR-ENGINE	9
Y	*373-3607*	1	CONNECTION GP-WATER	650
Y	*371-2536*	1	CONTROL GP-ELECTRONIC	808
Y	*378-8276*	1	COOLER GP-ENGINE OIL	659
Y	*389-3346*	1	COVER GP-VALVE MECHANISM	435
Y	*374-6300*	1	CRANKSHAFT GP	447
Y	*390-0854*	1	CYLINDER BLOCK GP	450
Y	*385-2572*	1	CYLINDER HEAD GP	458
Y	*393-2180*	1	DRIVE GP-FAN	484
Y	*375-8320*	1	EXTENSION GP-FAN	501
Y	*375-4574*	1	FAN GP	669
Y	*375-0098*	1	FASTENER GP-DAMPER & PULLEY	505
Y	*390-3737*	1	FILLER GP-ENGINE OIL	620
Y	*415-5625*	1	FILM GP (ALTERNATOR)	862
Y	*346-0220*	1	FILTER GP-ENGINE OIL	629
Y	*441-1215*	1	FILTER GP-FUEL (WATER SEPARATOR)	756
Y	*453-7163*	1	FILTER GP-FUEL	760
Y	*425-0197*	1	FILTER GP-FUMES DISPOSAL	630
Y	*346-0769*	1	FLANGE GP-EXHAUST	719
Y	*345-9037*	1	FLYWHEEL GP	510
Y	*439-3432*	1	GAUGE GP-OIL LEVEL (DIPSTICK)	640
Y	*393-3369*	1	HOUSING GP-FLYWHEEL	526
Y	*375-5838*	1	HOUSING GP-FRONT	536
Y	*416-8908*	1	INJECTOR GP-FUEL	766
Y	*371-2478*	1	JET GP-PISTON COOLING	543
Y	*416-2470*	1	LIFTING GP-ENGINE	546
Y	*426-3310*	1	LINES GP-FUEL INJECTION	787
Y	*416-7808*	1	MANIFOLD GP-EXHAUST	724
Y	*391-5523*	1	MANIFOLD GP-INLET	726
Y	*346-1512*	1	MOUNTING GP-ACCESSORY MODULE	855
Y	*395-0112*	1	MOUNTING GP-ELECTRONIC CONTROL	819
Y	*375-4499*	1	PAN GP-OIL	557
Y	*369-7304*	1	PISTON & ROD GP	566
Y	*378-8167*	1	PLATE & FILM GP	868
Y	*346-2908*	1	PLUG GP-ENGINE	592
Y	*440-0026*	1	PLUG GP-OIL FILTER MOUNTING	644
Y	*379-6629*	1	PULLEY GP-CRANKSHAFT	603
Y	*462-6685*	1	PUMP GP-ENGINE OIL	646
Y	*391-4811*	1	PUMP GP-FUEL INJECTION	790
Y	*372-2297*	1	PUMP GP-WATER	678
Y	*452-5153*	1	RADIATOR GP	686
Y	*394-9639*	1	RAIL GP-FUEL	794
Y	*371-2480*	1	ROCKER ARM GP	606

507-8016 **ENGINE AR-PRIMARY (**contd.**)** **i09398181**

NOTE	PART NUMBER	QTY	PART NAME 1 2 3 4 5 6 (PRODUCT LEVEL)	SEE PAGE
Y	*395-0110*	1	SENSOR GP-ENGINE	820
Y	*395-0114*	1	STARTING AID GP	826
Y	*385-8000*	1	STARTING MOTOR GP-ELECTRIC	832
Y	*371-2719*	1	SUPPORT GP-POWER TAKE-OFF	608
Y	*416-6971*	1	TURBOCHARGER GP	741
Y	*424-5516*	1	WIRING GP-ENGINE	846
	503-9589	1	ELECTRONICS GP-ENGINE	
	376-6464	1	PLATE & FILM GP	

A - NOT PART OF THIS GROUP
Y - SEPARATE ILLUSTRATION

<END>

508-0270 ENGINE AR-PRIMARY

129 BRAKE KW (173 BHP) AT 2200 RPM

OPTIONAL FIELD REPLACEMENT ORDER 451-1222—PAGE: 452, 452-6584—PAGE: 462

SMCS-1000 **i09414917**

NOTE	PART NUMBER	QTY	PART NAME 1 2 3 4 5 6 (PRODUCT LEVEL)	SEE PAGE
Y	*378-0630*	1	AIR COMPRESSOR GP	410
Y	*377-0721*	1	ALTERNATOR GP-CHARGING	799
Y	*391-9612*	1	BELT TENSIONER GP	422
Y	*379-6637*	1	BRACKET GP-MOUNTING	423
Y	*392-0632*	1	BREATHER GP	611
Y	*396-2615*	1	CAMSHAFT GP	427
AY	*508-0306*	1	CONFIGURATION AR-ENGINE	9
Y	*373-3607*	1	CONNECTION GP-WATER	650
Y	*448-9710*	1	CONNECTOR GP-CAB HEATER LINES	652
Y	*371-2536*	1	CONTROL GP-ELECTRONIC	808
Y	*346-0097*	1	COOLER GP-ENGINE OIL	658
Y	*389-3348*	1	COVER GP-VALVE MECHANISM	440
Y	*374-6300*	1	CRANKSHAFT GP	447
Y	*390-0854*	1	CYLINDER BLOCK GP	450
Y	*385-2572*	1	CYLINDER HEAD GP	458
Y	*380-2616*	1	DRIVE GP-FAN	476
Y	*393-9541*	1	FAN GP	671
Y	*375-0098*	1	FASTENER GP-DAMPER & PULLEY	505
Y	*438-5978*	1	FILLER GP-ENGINE OIL	623
Y	*415-5625*	1	FILM GP (ALTERNATOR)	862
Y	*346-0220*	1	FILTER GP-ENGINE OIL	629
Y	*441-1215*	1	FILTER GP-FUEL (WATER SEPARATOR)	756
Y	*453-7163*	1	FILTER GP-FUEL	760
Y	*346-0769*	1	FLANGE GP-EXHAUST	719
Y	*345-9037*	1	FLYWHEEL GP	510
Y	*417-6007*	1	GAUGE GP-OIL LEVEL (DIPSTICK)	635
Y	*393-3369*	1	HOUSING GP-FLYWHEEL	526
Y	*476-7558*	1	HOUSING GP-FRONT	541
Y	*371-2483*	1	INJECTOR GP-FUEL	763
Y	*371-2478*	1	JET GP-PISTON COOLING	543
Y	*416-2470*	1	LIFTING GP-ENGINE	546
Y	*448-0935*	1	LINES GP-FUEL FILTER	783
Y	*416-7808*	1	MANIFOLD GP-EXHAUST	724
Y	*391-5523*	1	MANIFOLD GP-INLET	726
Y	*395-0112*	1	MOUNTING GP-ELECTRONIC CONTROL	819
Y	*375-4499*	1	PAN GP-OIL	557
Y	*374-6301*	1	PISTON & ROD GP	576
Y	*378-8167*	1	PLATE & FILM GP	868
Y	*379-6629*	1	PULLEY GP-CRANKSHAFT	603
Y	*462-6685*	1	PUMP GP-ENGINE OIL	646
Y	*391-4811*	1	PUMP GP-FUEL INJECTION	790
Y	*372-2297*	1	PUMP GP-WATER	678
Y	*394-9639*	1	RAIL GP-FUEL	794
Y	*371-2480*	1	ROCKER ARM GP	606
Y	*395-0110*	1	SENSOR GP-ENGINE	820
Y	*395-0114*	1	STARTING AID GP	826
Y	*371-2541*	1	STARTING MOTOR GP-ELECTRIC	829
Y	*375-5002*	1	TURBOCHARGER GP	732

508-0270 **ENGINE AR-PRIMARY (**contd.**)** **i09414917**

NOTE	PART NUMBER	QTY	PART NAME 1 2 3 4 5 6 (PRODUCT LEVEL)	SEE PAGE
Y	*371-2745*	1	VALVE GP-FLUID SAMPLING	647
Y	*424-5516*	1	WIRING GP-ENGINE	846
	460-6435	1	ELECTRONICS GP-ENGINE	
	376-6464	1	PLATE & FILM GP	

A - NOT PART OF THIS GROUP
Y - SEPARATE ILLUSTRATION

<END>

510-1088 ENGINE AR-PRIMARY

168 KW (225.3BHP) @ 2200RPM

OPTIONAL FIELD REPLACEMENT ORDER 451-8385—PAGE: 455, 452-6582—PAGE: 460

PART OF 512-1002 ENGINE AR-COMPLETE

SMCS-1000 **i07573054**

NOTE	PART NUMBER	QTY	PART NAME 1 2 3 4 5 6 (PRODUCT LEVEL)	SEE PAGE
Y	*478-4234*	1	AIR CLEANER GP	715
Y	*377-0721*	1	ALTERNATOR GP-CHARGING	799
Y	*371-2693*	1	BELT TENSIONER GP	416
Y	*425-0196*	1	BREATHER GP (CRANKCASE)	612
Y	*396-2617*	1	CAMSHAFT GP	428
Y	*373-3607*	1	CONNECTION GP-WATER	650
Y	*371-2536*	1	CONTROL GP-ELECTRONIC	808
Y	*378-8276*	1	COOLER GP-ENGINE OIL	659
Y	*389-3348*	1	COVER GP-VALVE MECHANISM	440
Y	*374-6300*	1	CRANKSHAFT GP	447
Y	*390-0854*	1	CYLINDER BLOCK GP	450
Y	*385-2572*	1	CYLINDER HEAD GP	458
Y	*415-2163*	1	DRIVE GP-FAN	493
Y	*375-8320*	1	EXTENSION GP-FAN	501
Y	*378-0627*	1	FAN GP	670
Y	*375-0098*	1	FASTENER GP-DAMPER & PULLEY	505
Y	*438-5978*	1	FILLER GP-ENGINE OIL	623
Y	*390-0060*	1	FILM GP	859
Y	*415-5625*	1	FILM GP (ALTERNATOR)	862
Y	*423-8803*	1	FILM GP (STARTING MOTOR)	863
Y	*346-0220*	1	FILTER GP-ENGINE OIL	629
Y	*441-1215*	1	FILTER GP-FUEL (WATER SEPARATOR)	756
Y	*453-7163*	1	FILTER GP-FUEL	760
Y	*425-0197*	1	FILTER GP-FUMES DISPOSAL	630
Y	*346-0769*	1	FLANGE GP-EXHAUST	719
Y	*345-8901*	1	FLYWHEEL GP	506
Y	*439-3432*	1	GAUGE GP-OIL LEVEL (DIPSTICK)	640
Y	*345-8838*	1	HOUSING GP-FLYWHEEL	517
Y	*375-5838*	1	HOUSING GP-FRONT	536
Y	*416-8908*	1	INJECTOR GP-FUEL	766
Y	*371-2478*	1	JET GP-PISTON COOLING	543
Y	*416-2470*	1	LIFTING GP-ENGINE	546
Y	*426-3310*	1	LINES GP-FUEL INJECTION	787
Y	*416-7808*	1	MANIFOLD GP-EXHAUST	724
Y	*391-5523*	1	MANIFOLD GP-INLET	726
Y	*395-0112*	1	MOUNTING GP-ELECTRONIC CONTROL	819
Y	*375-4499*	1	PAN GP-OIL	557
Y	*369-7304*	1	PISTON & ROD GP	566
Y	*346-2908*	1	PLUG GP-ENGINE	592
Y	*346-1478*	1	PLUG GP-FLYWHEEL HOUSING	595
Y	*440-0026*	1	PLUG GP-OIL FILTER MOUNTING	644
Y	*371-2554*	1	PULLEY GP-CRANKSHAFT	601
Y	*462-6685*	1	PUMP GP-ENGINE OIL	646
Y	*391-4811*	1	PUMP GP-FUEL INJECTION	790
Y	*372-2297*	1	PUMP GP-WATER	678
Y	*394-9639*	1	RAIL GP-FUEL	794
Y	*371-2480*	1	ROCKER ARM GP	606

510-1088 **ENGINE AR-PRIMARY (**contd.**)** **i07573054**

NOTE	PART NUMBER	QTY	PART NAME 1 2 3 4 5 6 (PRODUCT LEVEL)	SEE PAGE
Y	*395-0110*	1	SENSOR GP-ENGINE	820
Y	*395-0114*	1	STARTING AID GP	826
Y	*392-2020*	1	STARTING MOTOR GP-ELECTRIC	835
Y	*371-2719*	1	SUPPORT GP-POWER TAKE-OFF	608
Y	*416-6971*	1	TURBOCHARGER GP	741
Y	*424-5516*	1	WIRING GP-ENGINE	846
	448-4768	1	ELECTRONICS GP	
	376-6464	1	PLATE & FILM GP	

Y - SEPARATE ILLUSTRATION

<END>

512-4903 ENGINE AR-PRIMARY

186 BRAKE KW (250 BHP) AT 2200 RPM

SMCS-1000 **i07581926**

NOTE	PART NUMBER	QTY	PART NAME 1 2 3 4 5 6 (PRODUCT LEVEL)	SEE PAGE

(NO SERVICED PARTS)

<END>

ENGINE ARRANGEMENT

512-9858 ENGINE AR-PRIMARY

151 BRAKE KW(202 BHP) AT 2200 RPM

SMCS-1000 **i09402662**

NOTE	PART NUMBER	QTY	PART NAME 1 2 3 4 5 6 (PRODUCT LEVEL)	SEE PAGE
Y	*478-4234*	1	AIR CLEANER GP	715
Y	*377-0721*	1	ALTERNATOR GP-CHARGING	799
Y	*371-2693*	1	BELT TENSIONER GP	416
Y	*392-0632*	1	BREATHER GP	611
Y	*396-2615*	1	CAMSHAFT GP	427
AY	*513-0924*	1	CONFIGURATION AR-ENGINE	10
Y	*373-3607*	1	CONNECTION GP-WATER	650
Y	*371-2536*	1	CONTROL GP-ELECTRONIC	808
Y	*346-0097*	1	COOLER GP-ENGINE OIL	658
Y	*389-3346*	1	COVER GP-VALVE MECHANISM	435
Y	*374-6300*	1	CRANKSHAFT GP	447
Y	*390-0854*	1	CYLINDER BLOCK GP	450
Y	*385-2572*	1	CYLINDER HEAD GP	458
Y	*393-2180*	1	DRIVE GP-FAN	484
Y	*375-4606*	1	DRIVE GP-POWER TAKE-OFF	499
Y	*375-8320*	1	EXTENSION GP-FAN	501
Y	*452-3651*	1	FAN GP	673
Y	*375-0098*	1	FASTENER GP-DAMPER & PULLEY	505
Y	*390-3737*	1	FILLER GP-ENGINE OIL	620
Y	*415-5625*	1	FILM GP (ALTERNATOR)	862
Y	*423-8803*	1	FILM GP (STARTING MOTOR)	863
Y	*346-0220*	1	FILTER GP-ENGINE OIL	629
Y	*441-1215*	1	FILTER GP-FUEL (WATER SEPARATOR)	756
Y	*453-7163*	1	FILTER GP-FUEL	760
Y	*346-0769*	1	FLANGE GP-EXHAUST	719
Y	*345-8901*	1	FLYWHEEL GP	506
Y	*417-6007*	1	GAUGE GP-OIL LEVEL (DIPSTICK)	635
Y	*380-2587*	1	HOUSING GP-FLYWHEEL	525
Y	*375-4645*	1	HOUSING GP-FRONT	534
Y	*371-2483*	1	INJECTOR GP-FUEL	763
Y	*371-2478*	1	JET GP-PISTON COOLING	543
Y	*416-2470*	1	LIFTING GP-ENGINE	546
Y	*448-0935*	1	LINES GP-FUEL FILTER	783
Y	*416-7808*	1	MANIFOLD GP-EXHAUST	724
Y	*391-5523*	1	MANIFOLD GP-INLET	726
Y	*395-0112*	1	MOUNTING GP-ELECTRONIC CONTROL	819
Y	*375-4499*	1	PAN GP-OIL	557
Y	*374-6301*	1	PISTON & ROD GP	576
Y	*378-8167*	1	PLATE & FILM GP	868
Y	*346-2908*	1	PLUG GP-ENGINE	592
Y	*440-0026*	1	PLUG GP-OIL FILTER MOUNTING	644
Y	*379-6629*	1	PULLEY GP-CRANKSHAFT	603
Y	*462-6685*	1	PUMP GP-ENGINE OIL	646
Y	*391-4811*	1	PUMP GP-FUEL INJECTION	790
Y	*372-2297*	1	PUMP GP-WATER	678
Y	*456-4299*	1	RADIATOR GP	700
Y	*394-9639*	1	RAIL GP-FUEL	794
Y	*371-2480*	1	ROCKER ARM GP	606
Y	*395-0110*	1	SENSOR GP-ENGINE	820

512-9858 **ENGINE AR-PRIMARY (**contd.**)** **i09402662**

NOTE	PART NUMBER	QTY	PART NAME 1 2 3 4 5 6 (PRODUCT LEVEL)	SEE PAGE
Y	*395-0114*	1	STARTING AID GP	826
Y	*458-3684*	1	STARTING MOTOR GP-ELECTRIC	839
Y	*375-5002*	1	TURBOCHARGER GP	732
Y	*424-5516*	1	WIRING GP-ENGINE	846
	453-1370	1	ELECTRONICS GP-ENGINE	
	376-6464	1	PLATE & FILM GP	

A - NOT PART OF THIS GROUP
Y - SEPARATE ILLUSTRATION

<END>

513-0851 ENGINE AR-PRIMARY

168 BRAKE KW (225 BHP) AT 2200 RPM,

SMCS-1000 **i09402672**

NOTE	PART NUMBER	QTY	PART NAME 1 2 3 4 5 6 (PRODUCT LEVEL)	SEE PAGE
Y	*478-4234*	1	AIR CLEANER GP	715
Y	*377-0721*	1	ALTERNATOR GP-CHARGING	799
Y	*371-2693*	1	BELT TENSIONER GP	416
Y	*392-0632*	1	BREATHER GP	611
Y	*396-2617*	1	CAMSHAFT GP	428
AY	*513-0877*	1	CONFIGURATION AR-ENGINE	9
Y	*373-3607*	1	CONNECTION GP-WATER	650
Y	*371-2536*	1	CONTROL GP-ELECTRONIC	808
Y	*378-8280*	1	COOLER GP-ENGINE OIL	661
Y	*389-3347*	1	COVER GP-VALVE MECHANISM	436
Y	*374-6300*	1	CRANKSHAFT GP	447
Y	*390-0854*	1	CYLINDER BLOCK GP	450
Y	*385-2572*	1	CYLINDER HEAD GP	458
Y	*371-2742*	1	DRAIN GP-ENGINE OIL	466
Y	*393-2180*	1	DRIVE GP-FAN	484
Y	*375-4606*	1	DRIVE GP-POWER TAKE-OFF	499
Y	*375-8320*	1	EXTENSION GP-FAN	501
Y	*375-4574*	1	FAN GP	669
Y	*375-0098*	1	FASTENER GP-DAMPER & PULLEY	505
Y	*448-0944*	1	FILLER GP-ENGINE OIL	627
Y	*415-5625*	1	FILM GP (ALTERNATOR)	862
Y	*346-0220*	1	FILTER GP-ENGINE OIL	629
Y	*441-1215*	1	FILTER GP-FUEL (WATER SEPARATOR)	756
Y	*453-7163*	1	FILTER GP-FUEL	760
Y	*346-0769*	1	FLANGE GP-EXHAUST	719
Y	*345-9037*	1	FLYWHEEL GP	510
Y	*439-3432*	1	GAUGE GP-OIL LEVEL (DIPSTICK)	640
Y	*393-3369*	1	HOUSING GP-FLYWHEEL	526
Y	*375-4645*	1	HOUSING GP-FRONT	534
Y	*416-8908*	1	INJECTOR GP-FUEL	766
Y	*371-2478*	1	JET GP-PISTON COOLING	543
Y	*416-2470*	1	LIFTING GP-ENGINE	546
Y	*426-3310*	1	LINES GP-FUEL INJECTION	787
Y	*416-7808*	1	MANIFOLD GP-EXHAUST	724
Y	*391-5523*	1	MANIFOLD GP-INLET	726
Y	*346-1512*	1	MOUNTING GP-ACCESSORY MODULE	855
Y	*395-0112*	1	MOUNTING GP-ELECTRONIC CONTROL	819
Y	*375-4499*	1	PAN GP-OIL	557
Y	*369-7304*	1	PISTON & ROD GP	566
Y	*378-8167*	1	PLATE & FILM GP	868
Y	*346-2908*	1	PLUG GP-ENGINE	592
Y	*440-0026*	1	PLUG GP-OIL FILTER MOUNTING	644
Y	*379-6629*	1	PULLEY GP-CRANKSHAFT	603
Y	*462-6685*	1	PUMP GP-ENGINE OIL	646
Y	*391-4811*	1	PUMP GP-FUEL INJECTION	790
Y	*372-2297*	1	PUMP GP-WATER	678
Y	*456-4298*	1	RADIATOR GP	695
Y	*394-9639*	1	RAIL GP-FUEL	794
Y	*371-2480*	1	ROCKER ARM GP	606

513-0851 **ENGINE AR-PRIMARY (**contd.**)** **i09402672**

NOTE	PART NUMBER	QTY	PART NAME 1 2 3 4 5 6 (PRODUCT LEVEL)	SEE PAGE
Y	*395-0110*	1	SENSOR GP-ENGINE	820
Y	*395-0114*	1	STARTING AID GP	826
Y	*385-8000*	1	STARTING MOTOR GP-ELECTRIC	832
Y	*416-6971*	1	TURBOCHARGER GP	741
Y	*424-5516*	1	WIRING GP-ENGINE	846
	448-4768	1	ELECTRONICS GP	
	376-6464	1	PLATE & FILM GP	

A - NOT PART OF THIS GROUP
Y - SEPARATE ILLUSTRATION

<END>

513-8513 ENGINE AR-PRIMARY

168 BRAKE KW (225 BHP) AT 2200 RPM

OPTIONAL FIELD REPLACEMENT ORDER 451-1222—PAGE: 452, 452-6584—PAGE: 462

SMCS-1000 **i09402660**

NOTE	PART NUMBER	QTY	PART NAME 1 2 3 4 5 6 (PRODUCT LEVEL)	SEE PAGE
Y	*478-4234*	1	AIR CLEANER GP	715
Y	*377-0721*	1	ALTERNATOR GP-CHARGING	799
Y	*371-2693*	1	BELT TENSIONER GP	416
Y	*425-0196*	1	BREATHER GP (CRANKCASE)	612
Y	*396-2617*	1	CAMSHAFT GP	428
AY	*513-8514*	1	CONFIGURATION AR-ENGINE	10
Y	*373-3607*	1	CONNECTION GP-WATER	650
Y	*371-2536*	1	CONTROL GP-ELECTRONIC	808
Y	*378-8276*	1	COOLER GP-ENGINE OIL	659
Y	*389-3348*	1	COVER GP-VALVE MECHANISM	440
Y	*374-6300*	1	CRANKSHAFT GP	447
Y	*390-0854*	1	CYLINDER BLOCK GP	450
Y	*385-2572*	1	CYLINDER HEAD GP	458
Y	*415-2163*	1	DRIVE GP-FAN	493
Y	*375-8320*	1	EXTENSION GP-FAN	501
Y	*378-0627*	1	FAN GP	670
Y	*375-0098*	1	FASTENER GP-DAMPER & PULLEY	505
Y	*438-5978*	1	FILLER GP-ENGINE OIL	623
Y	*390-0060*	1	FILM GP	859
Y	*415-5625*	1	FILM GP (ALTERNATOR)	862
Y	*423-8803*	1	FILM GP (STARTING MOTOR)	863
Y	*346-0220*	1	FILTER GP-ENGINE OIL	629
Y	*441-1215*	1	FILTER GP-FUEL (WATER SEPARATOR)	756
Y	*453-7163*	1	FILTER GP-FUEL	760
Y	*425-0197*	1	FILTER GP-FUMES DISPOSAL	630
Y	*346-0769*	1	FLANGE GP-EXHAUST	719
Y	*345-8901*	1	FLYWHEEL GP	506
Y	*439-3432*	1	GAUGE GP-OIL LEVEL (DIPSTICK)	640
Y	*345-8838*	1	HOUSING GP-FLYWHEEL	517
Y	*375-5838*	1	HOUSING GP-FRONT	536
Y	*416-8908*	1	INJECTOR GP-FUEL	766
Y	*371-2478*	1	JET GP-PISTON COOLING	543
Y	*416-2470*	1	LIFTING GP-ENGINE	546
Y	*426-3310*	1	LINES GP-FUEL INJECTION	787
Y	*416-7808*	1	MANIFOLD GP-EXHAUST	724
Y	*391-5523*	1	MANIFOLD GP-INLET	726
Y	*395-0112*	1	MOUNTING GP-ELECTRONIC CONTROL	819
Y	*375-4499*	1	PAN GP-OIL	557
Y	*369-7304*	1	PISTON & ROD GP	566
Y	*346-2908*	1	PLUG GP-ENGINE	592
Y	*346-1478*	1	PLUG GP-FLYWHEEL HOUSING	595
Y	*440-0026*	1	PLUG GP-OIL FILTER MOUNTING	644
Y	*371-2554*	1	PULLEY GP-CRANKSHAFT	601
Y	*462-6685*	1	PUMP GP-ENGINE OIL	646
Y	*391-4811*	1	PUMP GP-FUEL INJECTION	790
Y	*372-2297*	1	PUMP GP-WATER	678
Y	*394-9639*	1	RAIL GP-FUEL	794
Y	*371-2480*	1	ROCKER ARM GP	606

513-8513 **ENGINE AR-PRIMARY (**contd.**)** **i09402660**

NOTE	PART NUMBER	QTY	PART NAME 1 2 3 4 5 6 (PRODUCT LEVEL)	SEE PAGE
Y	*395-0110*	1	SENSOR GP-ENGINE	820
Y	*395-0114*	1	STARTING AID GP	826
Y	*392-2020*	1	STARTING MOTOR GP-ELECTRIC	835
Y	*371-2719*	1	SUPPORT GP-POWER TAKE-OFF	608
Y	*416-6971*	1	TURBOCHARGER GP	741
Y	*424-5516*	1	WIRING GP-ENGINE	846
	448-4768	1	ELECTRONICS GP	
	376-6464		PLATE & FILM GP	

A - NOT PART OF THIS GROUP
Y - SEPARATE ILLUSTRATION

<END>

514-9367 ENGINE AR-PRIMARY

168 BRAKE KW (225 BHP) AT 2200 RPM

SMCS-1000 **i09414940**

NOTE	PART NUMBER	QTY	PART NAME 1 2 3 4 5 6 (PRODUCT LEVEL)	SEE PAGE
Y	*478-4234*	1	AIR CLEANER GP	715
Y	*377-0721*	1	ALTERNATOR GP-CHARGING	799
Y	*371-2693*	1	BELT TENSIONER GP	416
Y	*392-0632*	1	BREATHER GP	611
Y	*396-2617*	1	CAMSHAFT GP	428
AY	*515-1814*	1	CONFIGURATION AR-ENGINE	10
Y	*373-3607*	1	CONNECTION GP-WATER	650
Y	*371-2536*	1	CONTROL GP-ELECTRONIC	808
Y	*378-8280*	1	COOLER GP-ENGINE OIL	661
Y	*389-3346*	1	COVER GP-VALVE MECHANISM	435
Y	*374-6300*	1	CRANKSHAFT GP	447
Y	*390-0854*	1	CYLINDER BLOCK GP	450
Y	*385-2572*	1	CYLINDER HEAD GP	458
Y	*393-2180*	1	DRIVE GP-FAN	484
Y	*375-4606*	1	DRIVE GP-POWER TAKE-OFF	499
Y	*375-8320*	1	EXTENSION GP-FAN	501
Y	*375-4574*	1	FAN GP	669
Y	*375-0098*	1	FASTENER GP-DAMPER & PULLEY	505
Y	*390-3737*	1	FILLER GP-ENGINE OIL	620
Y	*415-5625*	1	FILM GP (ALTERNATOR)	862
Y	*423-8803*	1	FILM GP (STARTING MOTOR)	863
Y	*346-0220*	1	FILTER GP-ENGINE OIL	629
Y	*441-1215*	1	FILTER GP-FUEL (WATER SEPARATOR)	756
Y	*453-7163*	1	FILTER GP-FUEL	760
Y	*346-0769*	1	FLANGE GP-EXHAUST	719
Y	*345-8901*	1	FLYWHEEL GP	506
Y	*417-6007*	1	GAUGE GP-OIL LEVEL (DIPSTICK)	635
Y	*380-2587*	1	HOUSING GP-FLYWHEEL	525
Y	*375-4645*	1	HOUSING GP-FRONT	534
Y	*416-8908*	1	INJECTOR GP-FUEL	766
Y	*371-2478*	1	JET GP-PISTON COOLING	543
Y	*416-2470*	1	LIFTING GP-ENGINE	546
Y	*448-0935*	1	LINES GP-FUEL FILTER	783
Y	*416-7808*	1	MANIFOLD GP-EXHAUST	724
Y	*391-5523*	1	MANIFOLD GP-INLET	726
Y	*395-0112*	1	MOUNTING GP-ELECTRONIC CONTROL	819
Y	*375-4499*	1	PAN GP-OIL	557
Y	*369-7304*	1	PISTON & ROD GP	566
Y	*378-8167*	1	PLATE & FILM GP	868
Y	*346-2908*	1	PLUG GP-ENGINE	592
Y	*440-0026*	1	PLUG GP-OIL FILTER MOUNTING	644
Y	*379-6629*	1	PULLEY GP-CRANKSHAFT	603
Y	*462-6685*	1	PUMP GP-ENGINE OIL	646
Y	*391-4811*	1	PUMP GP-FUEL INJECTION	790
Y	*372-2297*	1	PUMP GP-WATER	678
Y	*456-4302*	1	RADIATOR GP	701
Y	*394-9639*	1	RAIL GP-FUEL	794
Y	*371-2480*	1	ROCKER ARM GP	606
Y	*395-0110*	1	SENSOR GP-ENGINE	820

514-9367 **ENGINE AR-PRIMARY (**contd.**)** **i09414940**

NOTE	PART NUMBER	QTY	PART NAME 1 2 3 4 5 6 (PRODUCT LEVEL)	SEE PAGE
Y	*395-0114*	1	STARTING AID GP	826
Y	*458-3684*	1	STARTING MOTOR GP-ELECTRIC	839
Y	*416-6971*	1	TURBOCHARGER GP	741
Y	*424-5516*	1	WIRING GP-ENGINE	846
	448-4768	1	ELECTRONICS GP	
	376-6464	1	PLATE & FILM GP	

A - NOT PART OF THIS GROUP
Y - SEPARATE ILLUSTRATION

<END>

515-9203 ENGINE AR-PRIMARY

275 BRAKE KW(205 BHP) AT 2200 RPM

SMCS-1000 **i07581583**

NOTE	PART NUMBER	QTY	PART NAME 1 2 3 4 5 6 (PRODUCT LEVEL)	SEE PAGE
Y	*456-1351*	1	ALTERNATOR GP-CHARGING	804
Y	*391-9611*	1	BELT TENSIONER GP	421
Y	*379-6637*	1	BRACKET GP-MOUNTING	423
Y	*392-0632*	1	BREATHER GP	611
Y	*396-2617*	1	CAMSHAFT GP	428
Y	*390-5130*	1	CLAMP AS-EXHAUST	717
Y	*346-2911*	1	CONNECTION GP-HEATER	648
Y	*373-3607*	1	CONNECTION GP-WATER	650
Y	*371-2536*	1	CONTROL GP-ELECTRONIC	808
Y	*378-8280*	1	COOLER GP-ENGINE OIL	661
Y	*378-0629*	1	COVER GP-ACCESSORY DRIVE	433
Y	*389-3347*	1	COVER GP-VALVE MECHANISM	436
Y	*374-6300*	1	CRANKSHAFT GP	447
Y	*390-0854*	1	CYLINDER BLOCK GP	450
Y	*385-2572*	1	CYLINDER HEAD GP	458
Y	*378-8166*	1	DRAIN GP-ENGINE OIL	467
Y	*375-3937*	1	DRIVE GP-FAN	470
Y	*375-0098*	1	FASTENER GP-DAMPER & PULLEY	505
Y	*438-5978*	1	FILLER GP-ENGINE OIL	623
Y	*390-0060*	1	FILM GP	859
Y	*415-5625*	1	FILM GP (ALTERNATOR)	862
Y	*423-8803*	1	FILM GP (STARTING MOTOR)	863
Y	*346-0220*	1	FILTER GP-ENGINE OIL	629
Y	*441-1215*	1	FILTER GP-FUEL (WATER SEPARATOR)	756
Y	*453-7163*	1	FILTER GP-FUEL	760
Y	*345-8901*	1	FLYWHEEL GP	506
Y	*378-3484*	1	GAUGE GP-OIL LEVEL (DIPSTICK)	634
Y	*380-2587*	1	HOUSING GP-FLYWHEEL	525
Y	*375-5838*	1	HOUSING GP-FRONT	536
Y	*416-8908*	1	INJECTOR GP-FUEL	766
Y	*371-2478*	1	JET GP-PISTON COOLING	543
Y	*371-2740*	1	LIFTING GP-ENGINE	545
Y	*478-8523*	1	LINES GP-FUEL	773
Y	*393-7694*	1	MANIFOLD GP-EXHAUST	723
Y	*378-8582*	1	MANIFOLD GP-INLET	725
Y	*395-0112*	1	MOUNTING GP-ELECTRONIC CONTROL	819
Y	*378-0594*	1	PAN GP-OIL	561
Y	*369-7304*	1	PISTON & ROD GP	566
Y	*371-2554*	1	PULLEY GP-CRANKSHAFT	601
Y	*462-6685*	1	PUMP GP-ENGINE OIL	646
Y	*391-4811*	1	PUMP GP-FUEL INJECTION	790
Y	*372-2297*	1	PUMP GP-WATER	678
Y	*394-9639*	1	RAIL GP-FUEL	794
Y	*371-2480*	1	ROCKER ARM GP	606
Y	*395-0110*	1	SENSOR GP-ENGINE	820
Y	*380-9279*	1	STARTING AID GP	824
Y	*392-2019*	1	STARTING MOTOR GP-ELECTRIC	834
Y	*416-6969*	1	TURBOCHARGER GP	739
Y	*371-2745*	1	VALVE GP-FLUID SAMPLING	647

515-9203 **ENGINE AR-PRIMARY (**contd.**)** **i07581583**

NOTE	PART NUMBER	QTY	PART NAME 1 2 3 4 5 6 (PRODUCT LEVEL)	SEE PAGE
Y	*424-5516*	1	WIRING GP-ENGINE	846
	449-3320	1	ELECTRONICS GP-ENGINE	
	376-6464	1	PLATE & FILM GP	

Y - SEPARATE ILLUSTRATION

<END>

519-4128 ENGINE AR-PRIMARY

205 BRAKE KW (275 BHP) AT 2200 RPM

OPTIONAL FIELD REPLACEMENT ORDER 451-1222—PAGE: 452, 452-6584—PAGE: 462

SMCS-1000 **i10421089**

NOTE	PART NUMBER	QTY	PART NAME 1 2 3 4 5 6 (PRODUCT LEVEL)	SEE PAGE
Y	*385-8001*	1	ALTERNATOR GP-CHARGING	800
Y	*391-9610*	1	BELT TENSIONER GP	420
Y	*425-0196*	1	BREATHER GP (CRANKCASE)	612
Y	*396-2617*	1	CAMSHAFT GP	428
AY	*519-4236*	1	CONFIGURATION AR-ENGINE	10
Y	*378-8581*	1	CONNECTION GP-WATER	651
Y	*371-2536*	1	CONTROL GP-ELECTRONIC	808
Y	*378-8280*	1	COOLER GP-ENGINE OIL	661
Y	*389-3347*	1	COVER GP-VALVE MECHANISM	436
Y	*374-6300*	1	CRANKSHAFT GP	447
			S/N: G9R9769-UP	
Y	*390-0854*	1	CYLINDER BLOCK GP	450
Y	*385-2572*	1	CYLINDER HEAD GP	458
Y	*399-0082*	1	DRIVE GP-FAN	491
Y	*375-4606*	1	DRIVE GP-POWER TAKE-OFF	499
Y	*375-0098*	1	FASTENER GP-DAMPER & PULLEY	505
Y	*438-5978*	1	FILLER GP-ENGINE OIL	623
Y	*415-5625*	1	FILM GP (ALTERNATOR)	862
Y	*635-3313*	1	PLATE GP-IDENTIFICATION	869
Y	*346-0220*	1	FILTER GP-ENGINE OIL	629
Y	*441-1215*	1	FILTER GP-FUEL (WATER SEPARATOR)	756
Y	*453-7163*	1	FILTER GP-FUEL	760
Y	*425-0197*	1	FILTER GP-FUMES DISPOSAL	630
Y	*346-0769*	1	FLANGE GP-EXHAUST	719
Y	*437-2723*	1	FLYWHEEL GP	513
Y	*439-3432*	1	GAUGE GP-OIL LEVEL (DIPSTICK)	640
Y	*437-2721*	1	HOUSING GP-FLYWHEEL	529
Y	*375-4645*	1	HOUSING GP-FRONT	534
Y	*416-8908*	1	INJECTOR GP-FUEL	766
Y	*371-2478*	1	JET GP-PISTON COOLING	543
Y	*416-2470*	1	LIFTING GP-ENGINE	546
Y	*448-0935*	1	LINES GP-FUEL FILTER	783
Y	*416-7808*	1	MANIFOLD GP-EXHAUST	724
Y	*391-5523*	1	MANIFOLD GP-INLET	726
Y	*395-0112*	1	MOUNTING GP-ELECTRONIC CONTROL	819
Y	*495-6156*	1	MOUNTING GP-ENGINE	551
Y	*375-4499*	1	PAN GP-OIL	557
Y	*369-7304*	1	PISTON & ROD GP	566
Y	*378-8167*	1	PLATE & FILM GP	868
Y	*346-2908*	1	PLUG GP-ENGINE	592
Y	*440-0026*	1	PLUG GP-OIL FILTER MOUNTING	644
Y	*371-2555*	1	PULLEY GP-CRANKSHAFT	602
Y	*462-6685*	1	PUMP GP-ENGINE OIL	646
Y	*391-4811*	1	PUMP GP-FUEL INJECTION	790
Y	*372-2297*	1	PUMP GP-WATER	678
Y	*394-9639*	1	RAIL GP-FUEL	794
Y	*371-2480*	1	ROCKER ARM GP	606
Y	*395-0110*	1	SENSOR GP-ENGINE	820

519-4128 **ENGINE AR-PRIMARY (**contd.**)** **i10421089**

NOTE	PART NUMBER	QTY	PART NAME 1 2 3 4 5 6 (PRODUCT LEVEL)	SEE PAGE
Y	*395-0114*	1	STARTING AID GP	826
Y	*371-2541*	1	STARTING MOTOR GP-ELECTRIC	829
Y	*448-9777*	1	TURBOCHARGER GP	748
Y	*424-5516*	1	WIRING GP-ENGINE	846
	449-3320	1	ELECTRONICS GP-ENGINE	
	376-6464	1	PLATE & FILM GP	
			SOFTWARE MUST BE PROCURED LOCALLY FROM YOUR CAT DEALER	

A - NOT PART OF THIS GROUP
Y - SEPARATE ILLUSTRATION

<END>

520-3152 ENGINE AR-PRIMARY

PART OF 521-0449 ENGINE AR-COMPLETE

SMCS-1000 **i06888918**

NOTE	PART NUMBER	QTY	PART NAME 1 2 3 4 5 6 (PRODUCT LEVEL)	SEE PAGE
Y	*478-4234*	1	AIR CLEANER GP	715
Y	*377-0721*	1	ALTERNATOR GP-CHARGING	799
Y	*371-2693*	1	BELT TENSIONER GP	416
Y	*425-0196*	1	BREATHER GP (CRANKCASE)	612
Y	*396-2617*	1	CAMSHAFT GP	428
Y	*373-3607*	1	CONNECTION GP-WATER	650
Y	*371-2536*	1	CONTROL GP-ELECTRONIC	808
Y	*378-8276*	1	COOLER GP-ENGINE OIL	659
Y	*389-3346*	1	COVER GP-VALVE MECHANISM	435
Y	*374-6300*	1	CRANKSHAFT GP	447
Y	*390-0854*	1	CYLINDER BLOCK GP	450
Y	*385-2572*	1	CYLINDER HEAD GP	458
Y	*371-2742*	1	DRAIN GP-ENGINE OIL	466
Y	*393-2180*	1	DRIVE GP-FAN	484
Y	*375-8320*	1	EXTENSION GP-FAN	501
Y	*375-0098*	1	FASTENER GP-DAMPER & PULLEY	505
Y	*379-6626*	1	FILLER GP-ENGINE OIL	619
Y	*425-0197*	1	FILTER GP-FUMES DISPOSAL	630
Y	*415-5625*	1	FILM GP (ALTERNATOR)	862
Y	*346-0220*	1	FILTER GP-ENGINE OIL	629
Y	*441-1215*	1	FILTER GP-FUEL (WATER SEPARATOR)	756
Y	*448-0935*	1	LINES GP-FUEL FILTER	783
Y	*453-7163*	1	FILTER GP-FUEL	760
Y	*448-2106*	1	FITTING GP-WATER LINES	677
Y	*346-0769*	1	FLANGE GP-EXHAUST	719
Y	*345-9037*	1	FLYWHEEL GP	510
Y	*439-3432*	1	GAUGE GP-OIL LEVEL (DIPSTICK)	640
Y	*393-3369*	1	HOUSING GP-FLYWHEEL	526
Y	*375-4645*	1	HOUSING GP-FRONT	534
Y	*378-0632*	1	AIR COMPRESSOR GP	412
Y	*416-8908*	1	INJECTOR GP-FUEL	766
Y	*371-2478*	1	JET GP-PISTON COOLING	543
Y	*416-2470*	1	LIFTING GP-ENGINE	546
Y	*416-7808*	1	MANIFOLD GP-EXHAUST	724
Y	*391-5523*	1	MANIFOLD GP-INLET	726
Y	*346-1512*	1	MOUNTING GP-ACCESSORY MODULE	855
Y	*395-0112*	1	MOUNTING GP-ELECTRONIC CONTROL	819
Y	*375-4499*	1	PAN GP-OIL	557
Y	*369-7304*	1	PISTON & ROD GP	566
Y	*378-8167*	1	PLATE & FILM GP	868
Y	*440-0026*	1	PLUG GP-OIL FILTER MOUNTING	644
Y	*379-6629*	1	PULLEY GP-CRANKSHAFT	603
Y	*462-6685*	1	PUMP GP-ENGINE OIL	646
Y	*391-4811*	1	PUMP GP-FUEL INJECTION	790
Y	*372-2297*	1	PUMP GP-WATER	678
Y	*394-9639*	1	RAIL GP-FUEL	794
Y	*371-2480*	1	ROCKER ARM GP	606
Y	*395-0110*	1	SENSOR GP-ENGINE	820
Y	*395-0114*	1	STARTING AID GP	826

520-3152 **ENGINE AR-PRIMARY (**contd.**)** **i06888918**

NOTE	PART NUMBER	QTY	PART NAME 1 2 3 4 5 6 (PRODUCT LEVEL)	SEE PAGE
Y	*385-8000*	1	STARTING MOTOR GP-ELECTRIC	832
Y	*416-6971*	1	TURBOCHARGER GP	741
Y	*424-5516*	1	WIRING GP-ENGINE	846
	440-1796	1	ELECTRONICS GP-ENGINE RATINGS	
	376-6464	1	PLATE & FILM GP	

Y - SEPARATE ILLUSTRATION

<END>

520-4644 ENGINE AR-PRIMARY

150.9 BRAKE KW (202.4 BHP) AT 2200-RPM

OPTIONAL FIELD REPLACEMENT ORDER 451-1222—PAGE: 452, 452-6584—PAGE: 462

PART OF 521-2171 ENGINE AR-COMPLETE

SMCS-1000 **i07349971**

NOTE	PART NUMBER	QTY	PART NAME 1 2 3 4 5 6 (PRODUCT LEVEL)	SEE PAGE
Y	*456-1351*	1	ALTERNATOR GP-CHARGING	804
Y	*371-2693*	1	BELT TENSIONER GP	416
Y	*392-0632*	1	BREATHER GP	611
Y	*396-2615*	1	CAMSHAFT GP	427
Y	*346-2911*	1	CONNECTION GP-HEATER	648
Y	*373-3607*	1	CONNECTION GP-WATER	650
Y	*371-2536*	1	CONTROL GP-ELECTRONIC	808
Y	*445-0303*	1	COOLER GP-ENGINE OIL	665
Y	*378-0629*	1	COVER GP-ACCESSORY DRIVE	433
Y	*389-3347*	1	COVER GP-VALVE MECHANISM	436
Y	*374-6300*	1	CRANKSHAFT GP	447
Y	*390-0854*	1	CYLINDER BLOCK GP	450
Y	*385-2572*	1	CYLINDER HEAD GP	458
Y	*378-8166*	1	DRAIN GP-ENGINE OIL	467
Y	*393-9570*	1	DRIVE GP-FAN	489
Y	*375-8320*	1	EXTENSION GP-FAN	501
Y	*375-0098*	1	FASTENER GP-DAMPER & PULLEY	505
Y	*379-6626*	1	FILLER GP-ENGINE OIL	619
Y	*415-5625*	1	FILM GP (ALTERNATOR) (ALTERNATOR)	862
Y	*423-8803*	1	FILM GP (STARTING MOTOR) (STARTING MOTOR)	863
Y	*346-0220*	1	FILTER GP-ENGINE OIL	629
Y	*441-1215*	1	FILTER GP-FUEL (WATER SEPARATOR)	756
Y	*453-7163*	1	FILTER GP-FUEL	760
Y	*346-0769*	1	FLANGE GP-EXHAUST	719
Y	*377-0692*	1	FLYWHEEL GP	511
Y	*439-3432*	1	GAUGE GP-OIL LEVEL (DIPSTICK)	640
Y	*393-3369*	1	HOUSING GP-FLYWHEEL	526
Y	*371-2725*	1	HOUSING GP-FRONT	532
Y	*371-2483*	1	INJECTOR GP-FUEL	763
Y	*371-2478*	1	JET GP-PISTON COOLING	543
Y	*416-2470*	1	LIFTING GP-ENGINE	546
Y	*398-7221*	1	LINES GP-FUEL FILTER	778
Y	*416-7808*	1	MANIFOLD GP-EXHAUST	724
Y	*391-5523*	1	MANIFOLD GP-INLET	726
Y	*395-0112*	1	MOUNTING GP-ELECTRONIC CONTROL	819
Y	*346-1510*	1	MOUNTING GP-ENGINE	548
Y	*375-4499*	1	PAN GP-OIL	557
Y	*374-6301*	1	PISTON & ROD GP	576
Y	*378-8167*	1	PLATE & FILM GP	868
Y	*371-2554*	1	PULLEY GP-CRANKSHAFT	601
Y	*462-6685*	1	PUMP GP-ENGINE OIL	646
Y	*391-4811*	1	PUMP GP-FUEL INJECTION	790
Y	*372-2297*	1	PUMP GP-WATER	678
Y	*394-9639*	1	RAIL GP-FUEL	794
Y	*371-2480*	1	ROCKER ARM GP	606
Y	*395-0110*	1	SENSOR GP-ENGINE	820
Y	*380-9279*	1	STARTING AID GP	824

520-4644 **ENGINE AR-PRIMARY (**contd.**)** **i07349971**

NOTE	PART NUMBER	QTY	PART NAME 1 2 3 4 5 6 (PRODUCT LEVEL)	SEE PAGE
Y	*378-0589*	1	STARTING MOTOR GP-ELECTRIC	830
Y	*448-9771*	1	TURBOCHARGER GP	744
Y	*424-5516*	1	WIRING GP-ENGINE	846
	453-1370	1	ELECTRONICS GP-ENGINE	
	376-6464	1	PLATE & FILM GP	
	332-0905	2	RIVET-DRIVE	
	350-8958	1	PLATE-SERIAL NUMBER (ENGINE)	

Y - SEPARATE ILLUSTRATION

<END>

524-8271 ENGINE AR-PRIMARY

205 BRAKE KW (275 BHP) AT 2200 RPM

SMCS-1000 **i09415590**

NOTE	PART NUMBER	QTY	PART NAME 1 2 3 4 5 6 (PRODUCT LEVEL)	SEE PAGE
Y	*377-0721*	1	ALTERNATOR GP-CHARGING	799
Y	*391-9611*	1	BELT TENSIONER GP	421
Y	*392-0632*	1	BREATHER GP	611
Y	*396-2617*	1	CAMSHAFT GP	428
Y	*374-7094*	1	COMPRESSOR & MTG GP-REFRIGERANT	429
AY	*524-9915*	1	CONFIGURATION AR-ENGINE	11
Y	*346-2911*	1	CONNECTION GP-HEATER	648
Y	*373-3607*	1	CONNECTION GP-WATER	650
Y	*371-2536*	1	CONTROL GP-ELECTRONIC	808
Y	*378-8280*	1	COOLER GP-ENGINE OIL	661
Y	*389-3346*	1	COVER GP-VALVE MECHANISM	435
Y	*374-6300*	1	CRANKSHAFT GP	447
Y	*390-0854*	1	CYLINDER BLOCK GP	450
Y	*385-2572*	1	CYLINDER HEAD GP	458
Y	*378-8166*	1	DRAIN GP-ENGINE OIL	467
Y	*379-0957*	1	DRIVE GP-FAN	472
Y	*375-0098*	1	FASTENER GP-DAMPER & PULLEY	505
Y	*346-0009*	1	FILLER GP-ENGINE OIL	618
Y	*415-5625*	1	FILM GP (ALTERNATOR)	862
Y	*423-8803*	1	FILM GP (STARTING MOTOR)	863
Y	*346-0220*	1	FILTER GP-ENGINE OIL	629
Y	*441-1215*	1	FILTER GP-FUEL (WATER SEPARATOR)	756
Y	*453-7163*	1	FILTER GP-FUEL	760
Y	*345-8901*	1	FLYWHEEL GP	506
Y	*378-0626*	1	GAUGE GP-OIL LEVEL (DIPSTICK)	633
Y	*345-8838*	1	HOUSING GP-FLYWHEEL	517
Y	*371-2716*	1	HOUSING GP-FRONT	530
Y	*416-8908*	1	INJECTOR GP-FUEL	766
Y	*371-2478*	1	JET GP-PISTON COOLING	543
Y	*371-2735*	1	LIFTING GP-ENGINE	544
Y	*426-3310*	1	LINES GP-FUEL INJECTION	787
Y	*416-7808*	1	MANIFOLD GP-EXHAUST	724
Y	*391-5523*	1	MANIFOLD GP-INLET	726
Y	*395-0112*	1	MOUNTING GP-ELECTRONIC CONTROL	819
Y	*375-4499*	1	PAN GP-OIL	557
Y	*369-7304*	1	PISTON & ROD GP	566
Y	*378-8167*	1	PLATE & FILM GP	868
Y	*374-9295*	1	PLUG GP-CYLINDER BLOCK	591
Y	*346-1478*	1	PLUG GP-FLYWHEEL HOUSING	595
Y	*371-2554*	1	PULLEY GP-CRANKSHAFT	601
Y	*462-6685*	1	PUMP GP-ENGINE OIL	646
Y	*391-4811*	1	PUMP GP-FUEL INJECTION	790
Y	*372-2297*	1	PUMP GP-WATER	678
Y	*394-9639*	1	RAIL GP-FUEL	794
Y	*371-2480*	1	ROCKER ARM GP	606
Y	*395-0110*	1	SENSOR GP-ENGINE	820
Y	*395-0114*	1	STARTING AID GP	826
Y	*392-2020*	1	STARTING MOTOR GP-ELECTRIC	835
Y	*431-6516*	1	TURBOCHARGER GP	

524-8271 **ENGINE AR-PRIMARY (**contd.**)** **i09415590**

NOTE	PART NUMBER	QTY	PART NAME 1 2 3 4 5 6 (PRODUCT LEVEL)	SEE PAGE
Y	*371-2745*	1	VALVE GP-FLUID SAMPLING	647
Y	*424-5516*	1	WIRING GP-ENGINE	846
	449-3320	1	ELECTRONICS GP-ENGINE	
	376-6464	1	PLATE & FILM GP	

A - NOT PART OF THIS GROUP
Y - SEPARATE ILLUSTRATION

<END>

525-8759 ENGINE AR-PRIMARY

205 BRAKE KW (275 BHP) AT 2200 RPM

SMCS-1000 **i09415597**

NOTE	PART NUMBER	QTY	PART NAME 1 2 3 4 5 6 (PRODUCT LEVEL)	SEE PAGE
Y	*378-0630*	1	AIR COMPRESSOR GP	410
Y	*377-0721*	1	ALTERNATOR GP-CHARGING	799
Y	*371-2693*	1	BELT TENSIONER GP	416
Y	*392-0632*	1	BREATHER GP	611
Y	*396-2617*	1	CAMSHAFT GP	428
AY	*525-9134*	1	CONFIGURATION AR-ENGINE	11
Y	*373-3607*	1	CONNECTION GP-WATER	650
Y	*448-9710*	1	CONNECTOR GP-CAB HEATER LINES	652
Y	*371-2536*	1	CONTROL GP-ELECTRONIC	808
Y	*378-8283*	1	COOLER GP-ENGINE OIL	662
Y	*389-3346*	1	COVER GP-VALVE MECHANISM	435
Y	*374-6300*	1	CRANKSHAFT GP	447
Y	*390-0854*	1	CYLINDER BLOCK GP	450
Y	*385-2572*	1	CYLINDER HEAD GP	458
Y	*371-2742*	1	DRAIN GP-ENGINE OIL	466
Y	*379-0966*	1	DRIVE GP-FAN	474
Y	*371-2694*	1	EXTENSION GP-FAN	500
Y	*375-0098*	1	FASTENER GP-DAMPER & PULLEY	505
Y	*439-3441*	1	FILLER GP-ENGINE OIL	626
Y	*390-0060*	1	FILM GP	859
Y	*415-5625*	1	FILM GP (ALTERNATOR)	862
Y	*346-0220*	1	FILTER GP-ENGINE OIL	629
Y	*441-1222*	1	FILTER GP-FUEL (WATER SEPARATOR)	758
Y	*453-7163*	1	FILTER GP-FUEL	760
Y	*437-2723*	1	FLYWHEEL GP	513
Y	*439-3432*	1	GAUGE GP-OIL LEVEL (DIPSTICK)	640
Y	*437-2721*	1	HOUSING GP-FLYWHEEL	529
Y	*448-9719*	1	HOUSING GP-FRONT	538
Y	*416-8908*	1	INJECTOR GP-FUEL	766
Y	*371-2478*	1	JET GP-PISTON COOLING	543
Y	*416-2470*	1	LIFTING GP-ENGINE	546
Y	*398-7221*	1	LINES GP-FUEL FILTER	778
Y	*416-7808*	1	MANIFOLD GP-EXHAUST	724
Y	*391-5523*	1	MANIFOLD GP-INLET	726
Y	*395-0112*	1	MOUNTING GP-ELECTRONIC CONTROL	819
Y	*495-6156*	1	MOUNTING GP-ENGINE	551
Y	*375-4499*	1	PAN GP-OIL	557
Y	*369-7304*	1	PISTON & ROD GP	566
Y	*440-0026*	1	PLUG GP-OIL FILTER MOUNTING	644
Y	*371-2554*	1	PULLEY GP-CRANKSHAFT	601
Y	*462-6685*	1	PUMP GP-ENGINE OIL	646
Y	*391-4811*	1	PUMP GP-FUEL INJECTION	790
Y	*372-2297*	1	PUMP GP-WATER	678
Y	*394-9639*	1	RAIL GP-FUEL	794
Y	*371-2480*	1	ROCKER ARM GP	606
Y	*395-0110*	1	SENSOR GP-ENGINE	820
Y	*395-0114*	1	STARTING AID GP	826
Y	*385-8000*	1	STARTING MOTOR GP-ELECTRIC	832
Y	*431-6516*	1	TURBOCHARGER GP	

525-8759 **ENGINE AR-PRIMARY (**contd.**)** **i09415597**

NOTE	PART NUMBER	QTY	PART NAME 1 2 3 4 5 6 (PRODUCT LEVEL)	SEE PAGE
Y	*424-5516*	1	WIRING GP-ENGINE	846
	449-3320	1	ELECTRONICS GP-ENGINE	
	376-6464	1	PLATE & FILM GP	

A - NOT PART OF THIS GROUP
Y - SEPARATE ILLUSTRATION

<END>

526-0511 ENGINE AR-PRIMARY

186 BRAKE KW (249 BHP) AT 2200 RPM
OPTIONAL FIELD REPLACEMENT ORDER 451-1222—PAGE: 452, 452-6584—PAGE: 462
PART OF 526-1772 ENGINE AR-COMPLETE

SMCS-1000 **i10448660**

NOTE	PART NUMBER	QTY	PART NAME 1 2 3 4 5 6 (PRODUCT LEVEL)	SEE PAGE
Y	*378-0630*	1	AIR COMPRESSOR GP	410
Y	*440-6724*	1	ALTERNATOR GP-CHARGING	802
Y	*379-5585*	1	BELT TENSIONER GP	419
Y	*379-6637*	1	BRACKET GP-MOUNTING	423
Y	*392-0632*	1	BREATHER GP	611
Y	*396-2617*	1	CAMSHAFT GP	428
Y	*390-5132*	1	CLAMP AS-EXHAUST	718
Y	*373-3607*	1	CONNECTION GP-WATER	650
Y	*448-9710*	1	CONNECTOR GP-CAB HEATER LINES	652
Y	*371-2536*	1	CONTROL GP-ELECTRONIC	808
Y	*378-8276*	1	COOLER GP-ENGINE OIL	659
Y	*389-3347*	1	COVER GP-VALVE MECHANISM	436
Y	*374-6300*	1	CRANKSHAFT GP	447
Y	*390-0854*	1	CYLINDER BLOCK GP	450
Y	*385-2572*	1	CYLINDER HEAD GP	458
Y	*380-2629*	1	DRIVE GP-FAN	478
Y	*443-4956*	1	FAN GP	672
Y	*390-3737*	1	FILLER GP-ENGINE OIL	620
Y	*390-0060*	1	FILM GP (EMISSION)	859
Y	*415-5625*	1	FILM GP (ALTERNATOR)	862
Y	*346-0220*	1	FILTER GP-ENGINE OIL	629
Y	*441-1215*	1	FILTER GP-FUEL (WATER SEPARATOR)	756
Y	*453-7163*	1	FILTER GP-FUEL	760
Y	*378-0585*	1	FLYWHEEL GP	512
Y	*371-2546*	1	GAUGE GP-OIL LEVEL (DIPSTICK) (ENGINE)	631
Y	*393-3369*	1	HOUSING GP-FLYWHEEL	526
Y	*476-7558*	1	HOUSING GP-FRONT	541
Y	*416-8908*	1	INJECTOR GP-FUEL	766
Y	*371-2478*	1	JET GP-PISTON COOLING	543
Y	*371-2740*	1	LIFTING GP-ENGINE	545
Y	*448-0935*	1	LINES GP-FUEL FILTER	783
Y	*393-7694*	1	MANIFOLD GP-EXHAUST	723
Y	*391-5523*	1	MANIFOLD GP-INLET	726
Y	*395-0112*	1	MOUNTING GP-ELECTRONIC CONTROL	819
Y	*448-4757*	1	MOUNTING GP-ENGINE	549
Y	*371-2544*	1	PAN GP-OIL	556
Y	*369-7304*	1	PISTON & ROD GP	566
Y	*376-6464*	1	PLATE & FILM GP	867
Y	*440-0026*	1	PLUG GP-OIL FILTER MOUNTING	644
Y	*379-6633*	1	PULLEY GP-AUXILIARY DRIVE	600
Y	*371-2554*	1	PULLEY GP-CRANKSHAFT	601
Y	*462-6685*	1	PUMP GP-ENGINE OIL	646
Y	*391-4811*	1	PUMP GP-FUEL INJECTION	790
Y	*372-2297*	1	PUMP GP-WATER	678
Y	*394-9639*	1	RAIL GP-FUEL	794
Y	*371-2480*	1	ROCKER ARM GP	606
Y	*395-0110*	1	SENSOR GP-ENGINE	820

526-0511 **ENGINE AR-PRIMARY (**contd.**)** **i10448660**

NOTE	PART NUMBER	QTY	PART NAME 1 2 3 4 5 6 (PRODUCT LEVEL)	SEE PAGE
Y	*395-0114*	1	STARTING AID GP	826
Y	*371-2541*	1	STARTING MOTOR GP-ELECTRIC	829
Y	*416-6969*	1	TURBOCHARGER GP	739
Y	*424-5516*	1	WIRING GP-ENGINE	846
	440-1796	1	ELECTRONICS GP-ENGINE RATINGS	
			SOFTWARE MUST BE PROCURED LOCALLY FROM YOUR CAT DEALER	

Y - SEPARATE ILLUSTRATION

<END>

526-7210 ENGINE AR-PRIMARY

185.9 KW (249.3BHP) @ 2200RPM

OPTIONAL FIELD REPLACEMENT ORDER 451-8385—PAGE: 455, 452-6582—PAGE: 460

PART OF 527-0497 ENGINE AR-COMPLETE

SMCS-1000 **i07573048**

NOTE	PART NUMBER	QTY	PART NAME 1 2 3 4 5 6 (PRODUCT LEVEL)	SEE PAGE
Y	*385-8001*	1	ALTERNATOR GP-CHARGING	800
Y	*375-4479*	1	BELT TENSIONER GP	417
Y	*392-0632*	1	BREATHER GP	611
Y	*396-2617*	1	CAMSHAFT GP	428
Y	*390-5130*	1	CLAMP AS-EXHAUST	717
Y	*374-7094*	1	COMPRESSOR & MTG GP-REFRIGERANT	429
Y	*346-2911*	1	CONNECTION GP-HEATER	648
Y	*373-3607*	1	CONNECTION GP-WATER	650
Y	*371-2536*	1	CONTROL GP-ELECTRONIC	808
Y	*378-8280*	1	COOLER GP-ENGINE OIL	661
Y	*389-3346*	1	COVER GP-VALVE MECHANISM	435
Y	*374-6300*	1	CRANKSHAFT GP	447
Y	*390-0854*	1	CYLINDER BLOCK GP	450
Y	*385-2572*	1	CYLINDER HEAD GP	458
Y	*374-7093*	1	DRIVE GP-FAN	469
Y	*375-0098*	1	FASTENER GP-DAMPER & PULLEY	505
Y	*379-6626*	1	FILLER GP-ENGINE OIL	619
Y	*415-5625*	1	FILM GP (ALTERNATOR)	862
Y	*346-0220*	1	FILTER GP-ENGINE OIL	629
Y	*441-1215*	1	FILTER GP-FUEL (WATER SEPARATOR)	756
Y	*453-7163*	1	FILTER GP-FUEL	760
Y	*437-2723*	1	FLYWHEEL GP	513
Y	*439-3432*	1	GAUGE GP-OIL LEVEL (DIPSTICK)	640
Y	*437-2721*	1	HOUSING GP-FLYWHEEL	529
Y	*375-4606*	1	DRIVE GP-POWER TAKE-OFF	499
Y	*375-4645*	1	HOUSING GP-FRONT	534
Y	*416-8908*	1	INJECTOR GP-FUEL	766
Y	*371-2478*	1	JET GP-PISTON COOLING	543
Y	*371-2740*	1	LIFTING GP-ENGINE	545
Y	*398-7221*	1	LINES GP-FUEL FILTER	778
Y	*393-7694*	1	MANIFOLD GP-EXHAUST	723
Y	*391-5523*	1	MANIFOLD GP-INLET	726
Y	*395-0112*	1	MOUNTING GP-ELECTRONIC CONTROL	819
Y	*495-6156*	1	MOUNTING GP-ENGINE	551
Y	*375-4499*	1	PAN GP-OIL	557
Y	*369-7304*	1	PISTON & ROD GP	566
Y	*378-8167*	1	PLATE & FILM GP	868
Y	*440-0026*	1	PLUG GP-OIL FILTER MOUNTING	644
Y	*371-2554*	1	PULLEY GP-CRANKSHAFT	601
Y	*462-6685*	1	PUMP GP-ENGINE OIL	646
Y	*391-4811*	1	PUMP GP-FUEL INJECTION	790
Y	*372-2297*	1	PUMP GP-WATER	678
Y	*394-9639*	1	RAIL GP-FUEL	794
Y	*371-2480*	1	ROCKER ARM GP	606
Y	*395-0110*	1	SENSOR GP-ENGINE	820
Y	*395-0114*	1	STARTING AID GP	826
Y	*371-2541*	1	STARTING MOTOR GP-ELECTRIC	829

526-7210 **ENGINE AR-PRIMARY (**contd.**)** **i07573048**

NOTE	PART NUMBER	QTY	PART NAME 1 2 3 4 5 6 (PRODUCT LEVEL)	SEE PAGE
Y	*416-6969*	1	TURBOCHARGER GP	739
Y	*424-5516*	1	WIRING GP-ENGINE	846
	440-1796	1	ELECTRONICS GP-ENGINE RATINGS	
	376-6464	1	PLATE & FILM GP	

Y - SEPARATE ILLUSTRATION

<END>

526-8888 ENGINE AR-PRIMARY

SMCS-1000 **i07158250**

NOTE	PART NUMBER	QTY	PART NAME 1 2 3 4 5 6 (PRODUCT LEVEL)	SEE PAGE
Y	*450-4794*	1	ACCESSORY GP-ENGINE	408
Y	*456-1351*	1	ALTERNATOR GP-CHARGING	804
Y	*391-9612*	1	BELT TENSIONER GP	422
Y	*379-6637*	1	BRACKET GP-MOUNTING	423
Y	*425-0196*	1	BREATHER GP (CRANKCASE)	612
Y	*396-2617*	1	CAMSHAFT GP	428
Y	*373-3607*	1	CONNECTION GP-WATER	650
Y	*371-2536*	1	CONTROL GP-ELECTRONIC	808
Y	*378-8276*	1	COOLER GP-ENGINE OIL	659
Y	*389-3346*	1	COVER GP-VALVE MECHANISM	435
Y	*374-6300*	1	CRANKSHAFT GP	447
Y	*390-0854*	1	CYLINDER BLOCK GP	450
Y	*451-8385*	1	CYLINDER BLOCK GP-SHORT	455
Y	*385-2572*	1	CYLINDER HEAD GP	458
Y	*452-6582*	1	CYLINDER HEAD GP (SHORT)	460
Y	*371-2742*	1	DRAIN GP-ENGINE OIL	466
Y	*380-2620*	1	DRIVE GP-FAN	477
Y	*443-4956*	1	FAN GP	672
Y	*439-3441*	1	FILLER GP-ENGINE OIL	626
Y	*415-5625*	1	FILM GP (ALTERNATOR)	862
Y	*423-8803*	1	FILM GP (STARTING MOTOR)	863
Y	*346-0220*	1	FILTER GP-ENGINE OIL	629
Y	*441-1215*	1	FILTER GP-FUEL (WATER SEPARATOR)	756
Y	*448-0935*	1	LINES GP-FUEL FILTER	783
Y	*453-7163*	1	FILTER GP-FUEL	760
Y	*425-0197*	1	FILTER GP-FUMES DISPOSAL	630
Y	*346-0769*	1	FLANGE GP-EXHAUST	719
Y	*439-3432*	1	GAUGE GP-OIL LEVEL (DIPSTICK)	640
Y	*393-3369*	1	HOUSING GP-FLYWHEEL	526
Y	*375-4645*	1	HOUSING GP-FRONT	534
Y	*448-2107*	1	AIR COMPRESSOR GP	414
Y	*416-8908*	1	INJECTOR GP-FUEL	766
Y	*371-2478*	1	JET GP-PISTON COOLING	543
Y	*416-2470*	1	LIFTING GP-ENGINE	546
Y	*416-7808*	1	MANIFOLD GP-EXHAUST	724
Y	*391-5523*	1	MANIFOLD GP-INLET	726
Y	*395-0112*	1	MOUNTING GP-ELECTRONIC CONTROL	819
Y	*375-4499*	1	PAN GP-OIL	557
Y	*369-7304*	1	PISTON & ROD GP	566
Y	*378-8167*	1	PLATE & FILM GP	868
Y	*440-0026*	1	PLUG GP-OIL FILTER MOUNTING	644
Y	*379-6633*	1	PULLEY GP-AUXILIARY DRIVE	600
Y	*371-2554*	1	PULLEY GP-CRANKSHAFT	601
Y	*462-6685*	1	PUMP GP-ENGINE OIL	646
Y	*391-4811*	1	PUMP GP-FUEL INJECTION	790
Y	*372-2297*	1	PUMP GP-WATER	678
Y	*394-9639*	1	RAIL GP-FUEL	794
Y	*371-2480*	1	ROCKER ARM GP	606
Y	*395-0110*	1	SENSOR GP-ENGINE	820
Y	*380-9279*	1	STARTING AID GP	824

526-8888 **ENGINE AR-PRIMARY (**contd.**)** **i07158250**

NOTE	PART NUMBER	QTY	PART NAME 1 2 3 4 5 6 (PRODUCT LEVEL)	SEE PAGE
Y	*378-0589*	1	STARTING MOTOR GP-ELECTRIC	830
Y	*448-9777*	1	TURBOCHARGER GP	748
Y	*424-5516*	1	WIRING GP-ENGINE	846
	449-3320	1	ELECTRONICS GP-ENGINE	
	376-6464	1	PLATE & FILM GP	
	332-0905	2	RIVET-DRIVE	
	350-8958	1	PLATE-SERIAL NUMBER (ENGINE)	

Y - SEPARATE ILLUSTRATION

<END>

527-7106 ENGINE AR-PRIMARY

186 BRAKE KW (249 BHP) AT 2200 RPM

OPTIONAL FIELD REPLACEMENT ORDER 451-1222—PAGE: 452, 452-6584—PAGE: 462

SMCS-1000 **i10420895**

NOTE	PART NUMBER	QTY	PART NAME 1 2 3 4 5 6 (PRODUCT LEVEL)	SEE PAGE
Y	*385-8001*	1	ALTERNATOR GP-CHARGING	800
Y	*391-9610*	1	BELT TENSIONER GP	420
Y	*425-0196*	1	BREATHER GP (CRANKCASE)	612
Y	*396-2617*	1	CAMSHAFT GP	428
Y	*390-5132*	1	CLAMP AS-EXHAUST	718
AY	*527-9187*	1	CONFIGURATION AR-ENGINE	11
Y	*373-3607*	1	CONNECTION GP-WATER	650
Y	*371-2536*	1	CONTROL GP-ELECTRONIC	808
Y	*378-8280*	1	COOLER GP-ENGINE OIL	661
Y	*378-0629*	1	COVER GP-ACCESSORY DRIVE	433
Y	*389-3346*	1	COVER GP-VALVE MECHANISM	435
Y	*374-6300*	1	CRANKSHAFT GP	447
Y	*390-0854*	1	CYLINDER BLOCK GP	450
Y	*385-2572*	1	CYLINDER HEAD GP	458
Y	*378-8166*	1	DRAIN GP-ENGINE OIL	467
Y	*393-9572*	1	DRIVE GP-FAN	490
Y	*371-2694*	1	EXTENSION GP-FAN	500
Y	*375-0098*	1	FASTENER GP-DAMPER & PULLEY	505
Y	*379-6626*	1	FILLER GP-ENGINE OIL	619
Y	*390-0060*	1	FILM GP	859
Y	*635-3313*	1	PLATE GP-IDENTIFICATION	869
Y	*415-5625*	1	FILM GP (ALTERNATOR)	862
Y	*346-0220*	1	FILTER GP-ENGINE OIL	629
Y	*441-1215*	1	FILTER GP-FUEL (WATER SEPARATOR)	756
			—OR—	
Y	*441-1222*	1	FILTER GP-FUEL (WATER SEPARATOR)	758
Y	*453-7163*	1	FILTER GP-FUEL	760
Y	*425-0197*	1	FILTER GP-FUMES DISPOSAL	630
Y	*437-2723*	1	FLYWHEEL GP	513
Y	*437-2721*	1	HOUSING GP-FLYWHEEL	529
Y	*375-5838*	1	HOUSING GP-FRONT	536
Y	*416-8908*	1	INJECTOR GP-FUEL	766
Y	*371-2478*	1	JET GP-PISTON COOLING	543
Y	*371-2740*	1	LIFTING GP-ENGINE	545
Y	*398-7221*	1	LINES GP-FUEL FILTER	778
Y	*393-7694*	1	MANIFOLD GP-EXHAUST	723
Y	*391-5523*	1	MANIFOLD GP-INLET	726
Y	*395-0112*	1	MOUNTING GP-ELECTRONIC CONTROL	819
Y	*495-6156*	1	MOUNTING GP-ENGINE	551
Y	*375-4499*	1	PAN GP-OIL	557
Y	*369-7304*	1	PISTON & ROD GP	566
Y	*346-2908*	1	PLUG GP-ENGINE	592
Y	*440-0026*	1	PLUG GP-OIL FILTER MOUNTING	644
Y	*458-9768*	1	PLUG GP-OIL PAN	596
Y	*371-2554*	1	PULLEY GP-CRANKSHAFT	601
Y	*462-6685*	1	PUMP GP-ENGINE OIL	646
Y	*391-4811*	1	PUMP GP-FUEL INJECTION	790
Y	*372-2297*	1	PUMP GP-WATER	678

527-7106 **ENGINE AR-PRIMARY (**contd.**)** **i10420895**

NOTE	PART NUMBER	QTY	PART NAME 1 2 3 4 5 6 (PRODUCT LEVEL)	SEE PAGE
Y	*394-9639*	1	RAIL GP-FUEL	794
Y	*371-2480*	1	ROCKER ARM GP	606
Y	*395-0110*	1	SENSOR GP-ENGINE	820
Y	*395-0114*	1	STARTING AID GP	826
Y	*385-8000*	1	STARTING MOTOR GP-ELECTRIC	832
Y	*416-6969*	1	TURBOCHARGER GP	739
Y	*424-5516*	1	WIRING GP-ENGINE	846
	440-1796	1	ELECTRONICS GP-ENGINE RATINGS	
	376-6464	1	PLATE & FILM GP	
			SOFTWARE MUST BE PROCURED LOCALLY FROM YOUR CAT DEALER	

A - NOT PART OF THIS GROUP
Y - SEPARATE ILLUSTRATION

<END>

527-9686 ENGINE AR-PRIMARY

129 BRAKE KW (173 BHP) AT 2200 RPM

OPTIONAL FIELD REPLACEMENT ORDER 451-1222—PAGE: 452, 452-6584—PAGE: 462

SMCS-1000 **i08716603**

NOTE	PART NUMBER	QTY	PART NAME 1 2 3 4 5 6 (PRODUCT LEVEL)	SEE PAGE
Y	*478-4234*	1	AIR CLEANER GP	715
Y	*377-0721*	1	ALTERNATOR GP-CHARGING	799
Y	*371-2693*	1	BELT TENSIONER GP	416
Y	*425-0196*	1	BREATHER GP (CRANKCASE)	612
Y	*396-2615*	1	CAMSHAFT GP	427
AY	*528-3387*	1	CONFIGURATION AR-ENGINE	11
Y	*373-3607*	1	CONNECTION GP-WATER	650
Y	*371-2536*	1	CONTROL GP-ELECTRONIC	808
Y	*346-0097*	1	COOLER GP-ENGINE OIL	658
Y	*389-3347*	1	COVER GP-VALVE MECHANISM	436
Y	*374-6300*	1	CRANKSHAFT GP	447
Y	*390-0854*	1	CYLINDER BLOCK GP	450
Y	*385-2572*	1	CYLINDER HEAD GP	458
Y	*393-2180*	1	DRIVE GP-FAN	484
Y	*375-8320*	1	EXTENSION GP-FAN	501
Y	*452-3651*	1	FAN GP	673
Y	*375-0098*	1	FASTENER GP-DAMPER & PULLEY	505
Y	*438-5978*	1	FILLER GP-ENGINE OIL	623
Y	*415-5625*	1	FILM GP (ALTERNATOR)	862
Y	*423-8803*	1	FILM GP (STARTING MOTOR)	863
Y	*611-2653*	1	FILM GP (RADIATOR)	865
Y	*346-0220*	1	FILTER GP-ENGINE OIL	629
Y	*441-1215*	1	FILTER GP-FUEL (WATER SEPARATOR)	756
Y	*453-7163*	1	FILTER GP-FUEL	760
Y	*425-0197*	1	FILTER GP-FUMES DISPOSAL	630
Y	*346-0769*	1	FLANGE GP-EXHAUST	719
Y	*345-8901*	1	FLYWHEEL GP	506
Y	*417-6007*	1	GAUGE GP-OIL LEVEL (DIPSTICK)	635
Y	*345-8838*	1	HOUSING GP-FLYWHEEL	517
Y	*375-5838*	1	HOUSING GP-FRONT	536
Y	*371-2483*	1	INJECTOR GP-FUEL	763
Y	*371-2478*	1	JET GP-PISTON COOLING	543
Y	*416-2470*	1	LIFTING GP-ENGINE	546
Y	*448-0935*	1	LINES GP-FUEL FILTER	783
Y	*416-7808*	1	MANIFOLD GP-EXHAUST	724
Y	*391-5523*	1	MANIFOLD GP-INLET	726
Y	*346-1528*	1	MOUNTING GP-ACCESSORY MODULE	856
Y	*395-0112*	1	MOUNTING GP-ELECTRONIC CONTROL	819
Y	*375-4499*	1	PAN GP-OIL	557
Y	*374-6301*	1	PISTON & ROD GP	576
Y	*378-8167*	1	PLATE & FILM GP	868
Y	*346-2908*	1	PLUG GP-ENGINE	592
Y	*440-0026*	1	PLUG GP-OIL FILTER MOUNTING	644
Y	*379-6629*	1	PULLEY GP-CRANKSHAFT	603
Y	*462-6685*	1	PUMP GP-ENGINE OIL	646
Y	*391-4811*	1	PUMP GP-FUEL INJECTION	790
Y	*372-2297*	1	PUMP GP-WATER	678
Y	*454-6966*	1	RADIATOR GP	

527-9686 **ENGINE AR-PRIMARY (**contd.**)** **i08716603**

NOTE	PART NUMBER	QTY	PART NAME 1 2 3 4 5 6 (PRODUCT LEVEL)	SEE PAGE
Y	*394-9639*	1	RAIL GP-FUEL	794
Y	*371-2480*	1	ROCKER ARM GP	606
Y	*395-0110*	1	SENSOR GP-ENGINE	820
Y	*395-0114*	1	STARTING AID GP	826
Y	*392-2020*	1	STARTING MOTOR GP-ELECTRIC	835
Y	*371-2719*	1	SUPPORT GP-POWER TAKE-OFF	608
Y	*375-5002*	1	TURBOCHARGER GP	732
Y	*424-5516*	1	WIRING GP-ENGINE	846
	460-6435	1	ELECTRONICS GP-ENGINE	
	376-6464	1	PLATE & FILM GP	

A - NOT PART OF THIS GROUP
Y - SEPARATE ILLUSTRATION

<END>

528-3358 ENGINE AR-PRIMARY

186 BRAKE (249 BHP) AT 2200 RPM

OPTIONAL FIELD REPLACEMENT ORDER 451-1222—PAGE: 452, 452-6584—PAGE: 462

PART OF 528-3699 ENGINE AR-COMPLETE

SMCS-1000 **i07923272**

NOTE	PART NUMBER	QTY	PART NAME 1 2 3 4 5 6 (PRODUCT LEVEL)	SEE PAGE
Y	*385-8001*	1	ALTERNATOR GP-CHARGING	800
Y	*391-9610*	1	BELT TENSIONER GP	420
Y	*425-0196*	1	BREATHER GP (CRANKCASE)	612
Y	*396-2617*	1	CAMSHAFT GP	428
Y	*390-5132*	1	CLAMP AS-EXHAUST	718
Y	*373-3607*	1	CONNECTION GP-WATER	650
Y	*371-2536*	1	CONTROL GP-ELECTRONIC	808
Y	*378-8280*	1	COOLER GP-ENGINE OIL	661
Y	*378-0629*	1	COVER GP-ACCESSORY DRIVE	433
Y	*389-3346*	1	COVER GP-VALVE MECHANISM	435
Y	*374-6300*	1	CRANKSHAFT GP	447
Y	*390-0854*	1	CYLINDER BLOCK GP	450
Y	*385-2572*	1	CYLINDER HEAD GP	458
Y	*378-8166*	1	DRAIN GP-ENGINE OIL	467
Y	*393-9572*	1	DRIVE GP-FAN	490
Y	*371-2694*	1	EXTENSION GP-FAN	500
Y	*375-0098*	1	FASTENER GP-DAMPER & PULLEY	505
Y	*379-6626*	1	FILLER GP-ENGINE OIL	619
Y	*390-0060*	1	FILM GP	859
Y	*415-5625*	1	FILM GP (ALTERNATOR) (ALTERNATOR)	862
Y	*346-0220*	1	FILTER GP-ENGINE OIL	629
Y	*441-1215*	1	FILTER GP-FUEL (WATER SEPARATOR)	756
Y	*453-7163*	1	FILTER GP-FUEL	760
Y	*425-0197*	1	FILTER GP-FUMES DISPOSAL	630
Y	*437-2723*	1	FLYWHEEL GP	513
Y	*437-2721*	1	HOUSING GP-FLYWHEEL	529
Y	*375-5838*	1	HOUSING GP-FRONT	536
Y	*416-8908*	1	INJECTOR GP-FUEL	766
Y	*371-2478*	1	JET GP-PISTON COOLING	543
Y	*371-2740*	1	LIFTING GP-ENGINE	545
Y	*398-7221*	1	LINES GP-FUEL FILTER	778
Y	*393-7694*	1	MANIFOLD GP-EXHAUST	723
Y	*391-5523*	1	MANIFOLD GP-INLET	726
Y	*395-0112*	1	MOUNTING GP-ELECTRONIC CONTROL	819
Y	*495-6156*	1	MOUNTING GP-ENGINE	551
Y	*375-4499*	1	PAN GP-OIL	557
Y	*369-7304*	1	PISTON & ROD GP	566
Y	*346-2908*	1	PLUG GP-ENGINE	592
Y	*440-0026*	1	PLUG GP-OIL FILTER MOUNTING	644
Y	*458-9768*	1	PLUG GP-OIL PAN	596
Y	*371-2554*	1	PULLEY GP-CRANKSHAFT	601
Y	*462-6685*	1	PUMP GP-ENGINE OIL	646
Y	*391-4811*	1	PUMP GP-FUEL INJECTION	790
Y	*372-2297*	1	PUMP GP-WATER	678
Y	*394-9639*	1	RAIL GP-FUEL	794
Y	*371-2480*	1	ROCKER ARM GP	606
Y	*395-0110*	1	SENSOR GP-ENGINE	820

528-3358 **ENGINE AR-PRIMARY (**contd.**)** **i07923272**

NOTE	PART NUMBER	QTY	PART NAME 1 2 3 4 5 6 (PRODUCT LEVEL)	SEE PAGE
Y	*395-0114*	1	STARTING AID GP	826
Y	*385-8000*	1	STARTING MOTOR GP-ELECTRIC	832
Y	*416-6969*	1	TURBOCHARGER GP	739
Y	*424-5516*	1	WIRING GP-ENGINE	846
	440-1796	1	ELECTRONICS GP-ENGINE RATINGS	
	376-6464	1	PLATE & FILM GP	

Y - SEPARATE ILLUSTRATION

<END>

528-9866 ENGINE AR-PRIMARY

205 BRAKE KW (275 BHP) AT 2200 RPM

PART OF 529-8780 ENGINE AR-COMPLETE

SMCS-1000 **i07581652**

NOTE	PART NUMBER	QTY	PART NAME 1 2 3 4 5 6 (PRODUCT LEVEL)	SEE PAGE
Y	*377-0721*	1	ALTERNATOR GP-CHARGING	799
Y	*391-9611*	1	BELT TENSIONER GP	421
Y	*392-0632*	1	BREATHER GP	611
Y	*396-2617*	1	CAMSHAFT GP	428
Y	*374-7094*	1	COMPRESSOR & MTG GP-REFRIGERANT	429
Y	*346-2911*	1	CONNECTION GP-HEATER	648
Y	*373-3607*	1	CONNECTION GP-WATER	650
Y	*371-2536*	1	CONTROL GP-ELECTRONIC	808
Y	*378-8280*	1	COOLER GP-ENGINE OIL	661
Y	*389-3346*	1	COVER GP-VALVE MECHANISM	435
Y	*374-6300*	1	CRANKSHAFT GP	447
Y	*390-0854*	1	CYLINDER BLOCK GP	450
Y	*385-2572*	1	CYLINDER HEAD GP	458
Y	*378-8166*	1	DRAIN GP-ENGINE OIL	467
Y	*379-0957*	1	DRIVE GP-FAN	472
Y	*375-0098*	1	FASTENER GP-DAMPER & PULLEY	505
Y	*346-0009*	1	FILLER GP-ENGINE OIL	618
Y	*415-5625*	1	FILM GP (ALTERNATOR)	862
Y	*423-8803*	1	FILM GP (STARTING MOTOR)	863
Y	*346-0220*	1	FILTER GP-ENGINE OIL	629
Y	*441-1215*	1	FILTER GP-FUEL (WATER SEPARATOR)	756
Y	*453-7163*	1	FILTER GP-FUEL	760
Y	*345-8901*	1	FLYWHEEL GP	506
Y	*378-0626*	1	GAUGE GP-OIL LEVEL (DIPSTICK)	633
Y	*345-8838*	1	HOUSING GP-FLYWHEEL	517
Y	*371-2716*	1	HOUSING GP-FRONT	530
Y	*416-8908*	1	INJECTOR GP-FUEL	766
Y	*371-2478*	1	JET GP-PISTON COOLING	543
Y	*371-2735*	1	LIFTING GP-ENGINE	544
Y	*426-3310*	1	LINES GP-FUEL INJECTION	787
Y	*416-7808*	1	MANIFOLD GP-EXHAUST	724
Y	*391-5523*	1	MANIFOLD GP-INLET	726
Y	*395-0112*	1	MOUNTING GP-ELECTRONIC CONTROL	819
Y	*375-4499*	1	PAN GP-OIL	557
Y	*369-7304*	1	PISTON & ROD GP	566
Y	*378-8167*	1	PLATE & FILM GP	868
Y	*374-9295*	1	PLUG GP-CYLINDER BLOCK	591
Y	*346-1478*	1	PLUG GP-FLYWHEEL HOUSING	595
Y	*371-2554*	1	PULLEY GP-CRANKSHAFT	601
Y	*462-6685*	1	PUMP GP-ENGINE OIL	646
Y	*391-4811*	1	PUMP GP-FUEL INJECTION	790
Y	*372-2297*	1	PUMP GP-WATER	678
Y	*394-9639*	1	RAIL GP-FUEL	794
Y	*371-2480*	1	ROCKER ARM GP	606
Y	*395-0110*	1	SENSOR GP-ENGINE	820
Y	*395-0114*	1	STARTING AID GP	826
Y	*392-2020*	1	STARTING MOTOR GP-ELECTRIC	835
Y	*431-6516*	1	TURBOCHARGER GP	

528-9866 **ENGINE AR-PRIMARY (**contd.**)** **i07581652**

NOTE	PART NUMBER	QTY	PART NAME 1 2 3 4 5 6 (PRODUCT LEVEL)	SEE PAGE
Y	*371-2745*	1	VALVE GP-FLUID SAMPLING	647
Y	*424-5516*	1	WIRING GP-ENGINE	846
	449-3320	1	ELECTRONICS GP-ENGINE	
	376-6464	1	PLATE & FILM GP	

Y - SEPARATE ILLUSTRATION

<END>

528-9920 ENGINE AR-PRIMARY

205 BRAKE KW (275 BHP) AT 2200 RPM

SMCS-1000 **i09415595**

NOTE	PART NUMBER	QTY	PART NAME 1 2 3 4 5 6 (PRODUCT LEVEL)	SEE PAGE
Y	*378-0630*	1	AIR COMPRESSOR GP	410
Y	*377-0721*	1	ALTERNATOR GP-CHARGING	799
Y	*391-9611*	1	BELT TENSIONER GP	421
Y	*392-0632*	1	BREATHER GP	611
Y	*396-2617*	1	CAMSHAFT GP	428
Y	*390-5132*	1	CLAMP AS-EXHAUST	718
Y	*374-7094*	1	COMPRESSOR & MTG GP-REFRIGERANT	429
AY	*529-8781*	1	CONFIGURATION AR-ENGINE	12
Y	*373-3606*	1	CONNECTION GP-WATER	649
Y	*448-9710*	1	CONNECTOR GP-CAB HEATER LINES	652
Y	*371-2536*	1	CONTROL GP-ELECTRONIC	808
Y	*378-8283*	1	COOLER GP-ENGINE OIL	662
Y	*389-3346*	1	COVER GP-VALVE MECHANISM	435
Y	*374-6300*	1	CRANKSHAFT GP	447
Y	*390-0854*	1	CYLINDER BLOCK GP	450
Y	*385-2572*	1	CYLINDER HEAD GP	458
Y	*371-2743*	1	DRAIN GP-OIL	616
Y	*379-0957*	1	DRIVE GP-FAN	472
Y	*375-0098*	1	FASTENER GP-DAMPER & PULLEY	505
Y	*390-3737*	1	FILLER GP-ENGINE OIL	620
Y	*390-0060*	1	FILM GP	859
Y	*415-5625*	1	FILM GP (ALTERNATOR)	862
Y	*346-0220*	1	FILTER GP-ENGINE OIL	629
Y	*441-1222*	1	FILTER GP-FUEL (WATER SEPARATOR)	758
Y	*453-7163*	1	FILTER GP-FUEL	760
Y	*377-0692*	1	FLYWHEEL GP	511
Y	*371-2546*	1	GAUGE GP-OIL LEVEL (DIPSTICK)	631
Y	*357-1915*	1	HOUSING GP-FLYWHEEL	521
Y	*476-7558*	1	HOUSING GP-FRONT	541
Y	*416-8908*	1	INJECTOR GP-FUEL	766
Y	*371-2478*	1	JET GP-PISTON COOLING	543
Y	*371-2735*	1	LIFTING GP-ENGINE	544
Y	*478-8524*	1	LINES GP-FUEL	775
Y	*393-7694*	1	MANIFOLD GP-EXHAUST	723
Y	*378-8582*	1	MANIFOLD GP-INLET	725
Y	*395-0112*	1	MOUNTING GP-ELECTRONIC CONTROL	819
Y	*378-8260*	1	PAN GP-OIL	562
Y	*369-7304*	1	PISTON & ROD GP	566
Y	*440-0026*	1	PLUG GP-OIL FILTER MOUNTING	644
Y	*371-2554*	1	PULLEY GP-CRANKSHAFT	601
Y	*462-6685*	1	PUMP GP-ENGINE OIL	646
Y	*391-4811*	1	PUMP GP-FUEL INJECTION	790
Y	*372-2297*	1	PUMP GP-WATER	678
Y	*394-9639*	1	RAIL GP-FUEL	794
Y	*371-2480*	1	ROCKER ARM GP	606
Y	*395-0110*	1	SENSOR GP-ENGINE	820
Y	*395-0114*	1	STARTING AID GP	826
Y	*378-0590*	1	STARTING MOTOR GP-ELECTRIC	831
Y	*416-6969*	1	TURBOCHARGER GP	739

528-9920 **ENGINE AR-PRIMARY (**contd.**)** **i09415595**

NOTE	PART NUMBER	QTY	PART NAME 1 2 3 4 5 6 (PRODUCT LEVEL)	SEE PAGE
Y	*424-5516*	1	WIRING GP-ENGINE	846
	449-3320	1	ELECTRONICS GP-ENGINE	
	376-6464	1	PLATE & FILM GP	

A - NOT PART OF THIS GROUP
Y - SEPARATE ILLUSTRATION

<END>

ENGINE ARRANGEMENT

530-1323 ENGINE AR-PRIMARY

205 BRAKE KW (275 BHP) AT 2200 RPM

SMCS-1000 **i07581927**

NOTE	PART NUMBER	QTY	PART NAME 1 2 3 4 5 6 (PRODUCT LEVEL)	SEE PAGE
Y	*478-4234*	1	AIR CLEANER GP	715
Y	*377-0721*	1	ALTERNATOR GP-CHARGING	799
Y	*371-2693*	1	BELT TENSIONER GP	416
Y	*392-0632*	1	BREATHER GP	611
Y	*396-2617*	1	CAMSHAFT GP	428
Y	*373-3607*	1	CONNECTION GP-WATER	650
Y	*371-2536*	1	CONTROL GP-ELECTRONIC	808
Y	*378-8276*	1	COOLER GP-ENGINE OIL	659
Y	*389-3347*	1	COVER GP-VALVE MECHANISM	436
Y	*374-6300*	1	CRANKSHAFT GP	447
Y	*390-0854*	1	CYLINDER BLOCK GP	450
Y	*385-2572*	1	CYLINDER HEAD GP	458
Y	*393-2180*	1	DRIVE GP-FAN	484
Y	*375-8320*	1	EXTENSION GP-FAN	501
Y	*375-4574*	1	FAN GP	669
Y	*375-0098*	1	FASTENER GP-DAMPER & PULLEY	505
Y	*438-5978*	1	FILLER GP-ENGINE OIL	623
Y	*415-5625*	1	FILM GP (ALTERNATOR)	862
Y	*423-8803*	1	FILM GP (STARTING MOTOR)	863
Y	*346-0220*	1	FILTER GP-ENGINE OIL	629
Y	*441-1215*	1	FILTER GP-FUEL (WATER SEPARATOR)	756
Y	*448-0935*	1	LINES GP-FUEL FILTER	783
Y	*453-7163*	1	FILTER GP-FUEL	760
Y	*346-0769*	1	FLANGE GP-EXHAUST	719
Y	*345-8902*	1	FLYWHEEL GP	507
Y	*439-3432*	1	GAUGE GP-OIL LEVEL (DIPSTICK)	640
Y	*345-8838*	1	HOUSING GP-FLYWHEEL	517
Y	*378-0630*	1	AIR COMPRESSOR GP	410
Y	*476-7558*	1	HOUSING GP-FRONT	541
Y	*416-8908*	1	INJECTOR GP-FUEL	766
Y	*371-2478*	1	JET GP-PISTON COOLING	543
Y	*416-2470*	1	LIFTING GP-ENGINE	546
Y	*416-7808*	1	MANIFOLD GP-EXHAUST	724
Y	*391-5523*	1	MANIFOLD GP-INLET	726
Y	*346-1528*	1	MOUNTING GP-ACCESSORY MODULE	856
Y	*448-9710*	1	CONNECTOR GP-CAB HEATER LINES	652
Y	*395-0112*	1	MOUNTING GP-ELECTRONIC CONTROL	819
Y	*375-4499*	1	PAN GP-OIL	557
Y	*369-7304*	1	PISTON & ROD GP	566
Y	*378-8167*	1	PLATE & FILM GP	868
Y	*440-0026*	1	PLUG GP-OIL FILTER MOUNTING	644
Y	*379-6629*	1	PULLEY GP-CRANKSHAFT	603
Y	*462-6685*	1	PUMP GP-ENGINE OIL	646
Y	*391-4811*	1	PUMP GP-FUEL INJECTION	790
Y	*372-2297*	1	PUMP GP-WATER	678
Y	*452-5153*	1	RADIATOR GP	686
Y	*394-9639*	1	RAIL GP-FUEL	794
Y	*371-2480*	1	ROCKER ARM GP	606
Y	*395-0110*	1	SENSOR GP-ENGINE	820

530-1323 **ENGINE AR-PRIMARY (**contd.**)** **i07581927**

NOTE	PART NUMBER	QTY	PART NAME 1 2 3 4 5 6 (PRODUCT LEVEL)	SEE PAGE
Y	*395-0114*	1	STARTING AID GP	826
Y	*392-2020*	1	STARTING MOTOR GP-ELECTRIC	835
Y	*416-6971*	1	TURBOCHARGER GP	741
Y	*424-5516*	1	WIRING GP-ENGINE	846
	449-3320	1	ELECTRONICS GP-ENGINE	
	376-6464	1	PLATE & FILM GP	

Y - SEPARATE ILLUSTRATION

<END>

530-2601 ENGINE AR-PRIMARY

186 BRAKE KW (250 BHP) AT 2200 RPM

SMCS-1000 **i09415607**

NOTE	PART NUMBER	QTY	PART NAME 1 2 3 4 5 6 (PRODUCT LEVEL)	SEE PAGE
Y	*478-4234*	1	AIR CLEANER GP	715
Y	*377-0720*	1	ALTERNATOR GP-CHARGING	798
Y	*371-2693*	1	BELT TENSIONER GP	416
Y	*425-0196*	1	BREATHER GP (CRANKCASE)	612
Y	*396-2617*	1	CAMSHAFT GP	428
AY	*532-0514*	1	CONFIGURATION AR-ENGINE	12
Y	*373-3607*	1	CONNECTION GP-WATER	650
Y	*371-2536*	1	CONTROL GP-ELECTRONIC	808
Y	*378-8276*	1	COOLER GP-ENGINE OIL	659
Y	*389-3346*	1	COVER GP-VALVE MECHANISM	435
Y	*374-6300*	1	CRANKSHAFT GP	447
Y	*390-0854*	1	CYLINDER BLOCK GP	450
Y	*385-2572*	1	CYLINDER HEAD GP	458
Y	*393-2180*	1	DRIVE GP-FAN	484
Y	*375-8320*	1	EXTENSION GP-FAN	501
Y	*378-0627*	1	FAN GP	670
Y	*375-0098*	1	FASTENER GP-DAMPER & PULLEY	505
Y	*390-3737*	1	FILLER GP-ENGINE OIL	620
Y	*415-5625*	1	FILM GP (ALTERNATOR)	862
Y	*423-8803*	1	FILM GP (STARTING MOTOR)	863
Y	*346-0220*	1	FILTER GP-ENGINE OIL	629
Y	*441-1215*	1	FILTER GP-FUEL (WATER SEPARATOR)	756
Y	*453-7163*	1	FILTER GP-FUEL	760
Y	*425-0197*	1	FILTER GP-FUMES DISPOSAL	630
Y	*346-0769*	1	FLANGE GP-EXHAUST	719
Y	*345-8902*	1	FLYWHEEL GP	507
Y	*439-3432*	1	GAUGE GP-OIL LEVEL (DIPSTICK)	640
Y	*345-8838*	1	HOUSING GP-FLYWHEEL	517
Y	*375-5838*	1	HOUSING GP-FRONT	536
Y	*416-8908*	1	INJECTOR GP-FUEL	766
Y	*371-2478*	1	JET GP-PISTON COOLING	543
Y	*416-2470*	1	LIFTING GP-ENGINE	546
Y	*426-3310*	1	LINES GP-FUEL INJECTION	787
Y	*416-7808*	1	MANIFOLD GP-EXHAUST	724
Y	*391-5523*	1	MANIFOLD GP-INLET	726
Y	*346-1528*	1	MOUNTING GP-ACCESSORY MODULE	856
Y	*395-0112*	1	MOUNTING GP-ELECTRONIC CONTROL	819
Y	*375-4499*	1	PAN GP-OIL	557
Y	*369-7304*	1	PISTON & ROD GP	566
Y	*378-8167*	1	PLATE & FILM GP	868
Y	*346-2908*	1	PLUG GP-ENGINE	592
Y	*440-0026*	1	PLUG GP-OIL FILTER MOUNTING	644
Y	*379-6629*	1	PULLEY GP-CRANKSHAFT	603
Y	*462-6685*	1	PUMP GP-ENGINE OIL	646
Y	*391-4811*	1	PUMP GP-FUEL INJECTION	790
Y	*372-2297*	1	PUMP GP-WATER	678
Y	*452-5153*	1	RADIATOR GP	686
Y	*394-9639*	1	RAIL GP-FUEL	794
Y	*371-2480*	1	ROCKER ARM GP	606

530-2601 **ENGINE AR-PRIMARY (**contd.**)** **i09415607**

NOTE	PART NUMBER	QTY	PART NAME 1 2 3 4 5 6 (PRODUCT LEVEL)	SEE PAGE
Y	*395-0110*	1	SENSOR GP-ENGINE	820
Y	*380-9279*	1	STARTING AID GP	824
Y	*415-4870*	1	STARTING MOTOR GP-ELECTRIC	837
Y	*371-2719*	1	SUPPORT GP-POWER TAKE-OFF	608
Y	*416-6971*	1	TURBOCHARGER GP	741
Y	*424-5516*	1	WIRING GP-ENGINE	846
	440-1796	1	ELECTRONICS GP-ENGINE RATINGS	
	376-6464	1	PLATE & FILM GP	

A - NOT PART OF THIS GROUP
Y - SEPARATE ILLUSTRATION

<END>

ENGINE ARRANGEMENT

531-2492 ENGINE AR-PRIMARY

168 BRAKE KW (225 BHP) AT 2200 RPM

OPTIONAL FIELD REPLACEMENT ORDER 451-1222—PAGE: 452, 452-6584—PAGE: 462

SMCS-1000 **i10579943**

NOTE	PART NUMBER	QTY	PART NAME 1 2 3 4 5 6 (PRODUCT LEVEL)	SEE PAGE
Y	*376-4062*	1	BELT TENSIONER GP	418
Y	*392-0632*	1	BREATHER GP	611
Y	*396-2617*	1	CAMSHAFT GP	428
Y	*390-5130*	1	CLAMP AS-EXHAUST	717
AY	*532-5863*	1	CONFIGURATION AR-ENGINE	12
Y	*373-3606*	1	CONNECTION GP-WATER	649
Y	*371-2536*	1	CONTROL GP-ELECTRONIC	808
Y	*378-8283*	1	COOLER GP-ENGINE OIL	662
Y	*436-1195*	1	COVER GP-VALVE MECHANISM	442
Y	*374-6300*	1	CRANKSHAFT GP	447
Y	*390-0854*	1	CYLINDER BLOCK GP	450
Y	*385-2572*	1	CYLINDER HEAD GP	458
Y	*371-2742*	1	DRAIN GP-ENGINE OIL	466
Y	*379-0965*	1	DRIVE GP-FAN	473
Y	*375-4606*	1	DRIVE GP-POWER TAKE-OFF	499
Y	*375-0098*	1	FASTENER GP-DAMPER & PULLEY	505
Y	*448-0944*	1	FILLER GP-ENGINE OIL	627
Y	*346-0220*	1	FILTER GP-ENGINE OIL	629
Y	*441-1222*	1	FILTER GP-FUEL (WATER SEPARATOR)	758
Y	*453-7163*	1	FILTER GP-FUEL	760
Y	*345-9028*	1	FLYWHEEL GP	509
Y	*378-0582*	1	HOUSING GP-FLYWHEEL	523
Y	*375-4645*	1	HOUSING GP-FRONT	534
Y	*416-8908*	1	INJECTOR GP-FUEL	766
Y	*371-2478*	1	JET GP-PISTON COOLING	543
Y	*371-2735*	1	LIFTING GP-ENGINE	544
Y	*426-3310*	1	LINES GP-FUEL INJECTION	787
Y	*393-7694*	1	MANIFOLD GP-EXHAUST	723
Y	*391-5523*	1	MANIFOLD GP-INLET	726
Y	*371-2558*	1	MOUNTING GP-ALTERNATOR	547
Y	*395-0112*	1	MOUNTING GP-ELECTRONIC CONTROL	819
Y	*346-1510*	1	MOUNTING GP-ENGINE	548
Y	*375-4499*	1	PAN GP-OIL	557
Y	*369-7304*	1	PISTON & ROD GP	566
Y	*378-8167*	1	PLATE & FILM GP	868
Y	*376-6464*	1	PLATE & FILM GP	867
Y	*635-3313*	1	PLATE GP-IDENTIFICATION	869
Y	*346-2908*	1	PLUG GP-ENGINE	592
Y	*458-9768*	1	PLUG GP-OIL PAN	596
Y	*371-2554*	1	PULLEY GP-CRANKSHAFT	601
Y	*462-6685*	1	PUMP GP-ENGINE OIL	646
Y	*391-4811*	1	PUMP GP-FUEL INJECTION	790
Y	*372-2297*	1	PUMP GP-WATER	678
Y	*394-9639*	1	RAIL GP-FUEL	794
Y	*371-2480*	1	ROCKER ARM GP	606
Y	*395-0110*	1	SENSOR GP-ENGINE	820
Y	*371-2733*	1	STARTING AID GP	823
Y	*445-4703*	1	STARTING MOTOR GP-ELECTRIC	838

531-2492 **ENGINE AR-PRIMARY (**contd.**)** **i10579943**

NOTE	PART NUMBER	QTY	PART NAME 1 2 3 4 5 6 (PRODUCT LEVEL)	SEE PAGE
Y	*416-6970*	1	TURBOCHARGER GP	740
Y	*371-2745*	1	VALVE GP-FLUID SAMPLING	647
Y	*418-0928*	1	WIRING GP-ENGINE	844
	448-4768	1	ELECTRONICS GP	
			SOFTWARE MUST BE PROCURED LOCALLY FROM YOUR CAT DEALER	

A - NOT PART OF THIS GROUP
Y - SEPARATE ILLUSTRATION

<END>

533-2797 ENGINE AR-PRIMARY

205 BRAKE KW (275 BHP) AT 2200 RPM

OPTIONAL FIELD REPLACEMENT ORDER 451-1222—PAGE: 452, 452-6584—PAGE: 462

SMCS-1000 **i09547822**

NOTE	PART NUMBER	QTY	PART NAME 1 2 3 4 5 6 (PRODUCT LEVEL)	SEE PAGE
Y	*478-4234*	1	AIR CLEANER GP	715
Y	*377-0721*	1	ALTERNATOR GP-CHARGING	799
Y	*371-2693*	1	BELT TENSIONER GP	416
Y	*425-0196*	1	BREATHER GP (CRANKCASE)	612
Y	*396-2617*	1	CAMSHAFT GP	428
Y	*373-3607*	1	CONNECTION GP-WATER	650
Y	*371-2536*	1	CONTROL GP-ELECTRONIC	808
Y	*378-8276*	1	COOLER GP-ENGINE OIL	659
Y	*389-3346*	1	COVER GP-VALVE MECHANISM	435
Y	*374-6300*	1	CRANKSHAFT GP	447
Y	*390-0854*	1	CYLINDER BLOCK GP	450
Y	*385-2572*	1	CYLINDER HEAD GP	458
Y	*393-2180*	1	DRIVE GP-FAN	484
Y	*375-8320*	1	EXTENSION GP-FAN	501
Y	*378-0627*	1	FAN GP	670
Y	*375-0098*	1	FASTENER GP-DAMPER & PULLEY	505
Y	*390-3737*	1	FILLER GP-ENGINE OIL	620
Y	*415-5625*	1	FILM GP (ALTERNATOR)	862
Y	*346-0220*	1	FILTER GP-ENGINE OIL	629
Y	*441-1215*	1	FILTER GP-FUEL (WATER SEPARATOR)	756
Y	*453-7163*	1	FILTER GP-FUEL	760
Y	*425-0197*	1	FILTER GP-FUMES DISPOSAL	630
Y	*346-0769*	1	FLANGE GP-EXHAUST	719
Y	*345-9037*	1	FLYWHEEL GP	510
Y	*439-3432*	1	GAUGE GP-OIL LEVEL (DIPSTICK)	640
Y	*393-3369*	1	HOUSING GP-FLYWHEEL	526
Y	*375-5838*	1	HOUSING GP-FRONT	536
Y	*416-8908*	1	INJECTOR GP-FUEL	766
Y	*371-2478*	1	JET GP-PISTON COOLING	543
Y	*416-2470*	1	LIFTING GP-ENGINE	546
Y	*426-3310*	1	LINES GP-FUEL INJECTION	787
Y	*416-7808*	1	MANIFOLD GP-EXHAUST	724
Y	*391-5523*	1	MANIFOLD GP-INLET	726
Y	*346-1512*	1	MOUNTING GP-ACCESSORY MODULE	855
Y	*395-0112*	1	MOUNTING GP-ELECTRONIC CONTROL	819
Y	*375-4499*	1	PAN GP-OIL	557
Y	*369-7304*	1	PISTON & ROD GP	566
Y	*378-8167*	1	PLATE & FILM GP	868
Y	*346-2908*	1	PLUG GP-ENGINE	592
Y	*440-0026*	1	PLUG GP-OIL FILTER MOUNTING	644
Y	*379-6629*	1	PULLEY GP-CRANKSHAFT	603
Y	*462-6685*	1	PUMP GP-ENGINE OIL	646
Y	*391-4811*	1	PUMP GP-FUEL INJECTION	790
Y	*372-2297*	1	PUMP GP-WATER	678
Y	*452-5153*	1	RADIATOR GP	686
Y	*394-9639*	1	RAIL GP-FUEL	794
Y	*371-2480*	1	ROCKER ARM GP	606
Y	*395-0110*	1	SENSOR GP-ENGINE	820

533-2797 **ENGINE AR-PRIMARY (**contd.**)** **i09547822**

NOTE	PART NUMBER	QTY	PART NAME 1 2 3 4 5 6 (PRODUCT LEVEL)	SEE PAGE
Y	*395-0114*	1	STARTING AID GP	826
Y	*385-8000*	1	STARTING MOTOR GP-ELECTRIC	832
Y	*371-2719*	1	SUPPORT GP-POWER TAKE-OFF	608
Y	*416-6971*	1	TURBOCHARGER GP	741
Y	*424-5516*	1	WIRING GP-ENGINE	846
	449-3320	1	ELECTRONICS GP-ENGINE	
	376-6464	1	PLATE & FILM GP	

Y - SEPARATE ILLUSTRATION

<END>

533-3588 ENGINE AR-PRIMARY

168 BRAKE KW (225 BHP) AT 2200 RPM

PART OF 535-8565 ENGINE AR-COMPLETE

SMCS-1000 **i10421127**

NOTE	PART NUMBER	QTY	PART NAME 1 2 3 4 5 6 (PRODUCT LEVEL)	SEE PAGE
Y	*456-1352*	1	ALTERNATOR GP-CHARGING	805
Y	*371-2693*	1	BELT TENSIONER GP	416
Y	*392-0632*	1	BREATHER GP	611
Y	*396-2617*	1	CAMSHAFT GP	428
Y	*373-3607*	1	CONNECTION GP-WATER	650
Y	*371-2536*	1	CONTROL GP-ELECTRONIC	808
Y	*378-8283*	1	COOLER GP-ENGINE OIL	662
Y	*389-3346*	1	COVER GP-VALVE MECHANISM	435
Y	*374-6300*	1	CRANKSHAFT GP	447
Y	*390-0854*	1	CYLINDER BLOCK GP	450
Y	*451-8385*	1	CYLINDER BLOCK GP-SHORT	455
Y	*452-6582*	1	CYLINDER HEAD GP (SHORT)	460
Y	*385-2572*	1	CYLINDER HEAD GP	458
Y	*393-4158*	1	DRIVE GP-FAN	487
Y	*375-4606*	1	DRIVE GP-POWER TAKE-OFF	499
Y	*393-9543*	1	EXTENSION GP-FAN	503
Y	*375-0098*	1	FASTENER GP-DAMPER & PULLEY	505
Y	*390-3737*	1	FILLER GP-ENGINE OIL	620
Y	*415-5625*	1	FILM GP (ALTERNATOR)	862
Y	*423-8803*	1	FILM GP (STARTING MOTOR)	863
Y	*346-0220*	1	FILTER GP-ENGINE OIL	629
Y	*441-1222*	1	FILTER GP-FUEL (WATER SEPARATOR)	758
Y	*453-7163*	1	FILTER GP-FUEL	760
Y	*345-8901*	1	FLYWHEEL GP	506
Y	*439-3430*	1	GAUGE GP-OIL LEVEL (DIPSTICK)	638
Y	*380-2587*	1	HOUSING GP-FLYWHEEL	525
Y	*375-4645*	1	HOUSING GP-FRONT	534
Y	*416-8908*	1	INJECTOR GP-FUEL	766
Y	*371-2478*	1	JET GP-PISTON COOLING	543
Y	*371-2735*	1	LIFTING GP-ENGINE	544
Y	*398-7221*	1	LINES GP-FUEL FILTER	778
Y	*416-7808*	1	MANIFOLD GP-EXHAUST	724
Y	*391-5523*	1	MANIFOLD GP-INLET	726
Y	*395-0112*	1	MOUNTING GP-ELECTRONIC CONTROL	819
Y	*378-0594*	1	PAN GP-OIL	561
Y	*369-7304*	1	PISTON & ROD GP	566
Y	*378-8167*	1	PLATE & FILM GP	868
Y	*346-2908*	1	PLUG GP-ENGINE	592
Y	*440-0026*	1	PLUG GP-OIL FILTER MOUNTING	644
Y	*371-2554*	1	PULLEY GP-CRANKSHAFT	601
Y	*462-6685*	1	PUMP GP-ENGINE OIL	646
Y	*391-4811*	1	PUMP GP-FUEL INJECTION	790
Y	*372-2297*	1	PUMP GP-WATER	678
Y	*394-9639*	1	RAIL GP-FUEL	794
Y	*371-2480*	1	ROCKER ARM GP	606
Y	*395-0110*	1	SENSOR GP-ENGINE	820
Y	*395-0114*	1	STARTING AID GP	826
Y	*392-2021*	1	STARTING MOTOR GP-ELECTRIC	836

533-3588 **ENGINE AR-PRIMARY (**contd.**)** **i10421127**

NOTE	PART NUMBER	QTY	PART NAME 1 2 3 4 5 6 (PRODUCT LEVEL)	SEE PAGE
Y	*416-6971*	1	TURBOCHARGER GP	741
Y	*424-5516*	1	WIRING GP-ENGINE	846
	448-4768	1	ELECTRONICS GP	
	376-6464	1	PLATE & FILM GP	
	635-3313	1	PLATE GP-IDENTIFICATION	
			SOFTWARE MUST BE PROCURED LOCALLY FROM YOUR CAT DEALER	

Y - SEPARATE ILLUSTRATION

<END>

535-8060 ENGINE AR-PRIMARY

186 BRAKE KW (249 BHP) AT 2200 RPM

SMCS-1000 **i09415605**

NOTE	PART NUMBER	QTY	PART NAME 1 2 3 4 5 6 (PRODUCT LEVEL)	SEE PAGE
Y	*478-4234*	1	AIR CLEANER GP	715
Y	*377-0720*	1	ALTERNATOR GP-CHARGING	798
Y	*371-2693*	1	BELT TENSIONER GP	416
Y	*425-0196*	1	BREATHER GP (CRANKCASE)	612
Y	*396-2617*	1	CAMSHAFT GP	428
AY	*535-8566*	1	CONFIGURATION AR-ENGINE	12
Y	*373-3607*	1	CONNECTION GP-WATER	650
Y	*371-2536*	1	CONTROL GP-ELECTRONIC	808
Y	*378-8276*	1	COOLER GP-ENGINE OIL	659
Y	*389-3346*	1	COVER GP-VALVE MECHANISM	435
Y	*374-6300*	1	CRANKSHAFT GP	447
Y	*390-0854*	1	CYLINDER BLOCK GP	450
Y	*385-2572*	1	CYLINDER HEAD GP	458
Y	*393-2180*	1	DRIVE GP-FAN	484
Y	*375-8320*	1	EXTENSION GP-FAN	501
Y	*378-0627*	1	FAN GP	670
Y	*375-0098*	1	FASTENER GP-DAMPER & PULLEY	505
Y	*390-3737*	1	FILLER GP-ENGINE OIL	620
Y	*415-5625*	1	FILM GP (ALTERNATOR)	862
Y	*423-8803*	1	FILM GP (STARTING MOTOR)	863
Y	*346-0220*	1	FILTER GP-ENGINE OIL	629
Y	*441-1215*	1	FILTER GP-FUEL (WATER SEPARATOR)	756
Y	*453-7163*	1	FILTER GP-FUEL	760
Y	*425-0197*	1	FILTER GP-FUMES DISPOSAL	630
Y	*346-0769*	1	FLANGE GP-EXHAUST	719
Y	*345-8902*	1	FLYWHEEL GP	507
Y	*439-3432*	1	GAUGE GP-OIL LEVEL (DIPSTICK)	640
Y	*345-8838*	1	HOUSING GP-FLYWHEEL	517
Y	*375-5838*	1	HOUSING GP-FRONT	536
Y	*416-8908*	1	INJECTOR GP-FUEL	766
Y	*371-2478*	1	JET GP-PISTON COOLING	543
Y	*416-2470*	1	LIFTING GP-ENGINE	546
Y	*426-3310*	1	LINES GP-FUEL INJECTION	787
Y	*416-7808*	1	MANIFOLD GP-EXHAUST	724
Y	*391-5523*	1	MANIFOLD GP-INLET	726
Y	*346-1528*	1	MOUNTING GP-ACCESSORY MODULE	856
Y	*395-0112*	1	MOUNTING GP-ELECTRONIC CONTROL	819
Y	*375-4499*	1	PAN GP-OIL	557
Y	*369-7304*	1	PISTON & ROD GP	566
Y	*378-8167*	1	PLATE & FILM GP	868
Y	*346-2908*	1	PLUG GP-ENGINE	592
Y	*440-0026*	1	PLUG GP-OIL FILTER MOUNTING	644
Y	*379-6629*	1	PULLEY GP-CRANKSHAFT	603
Y	*462-6685*	1	PUMP GP-ENGINE OIL	646
Y	*391-4811*	1	PUMP GP-FUEL INJECTION	790
Y	*372-2297*	1	PUMP GP-WATER	678
Y	*452-5153*	1	RADIATOR GP	686
Y	*394-9639*	1	RAIL GP-FUEL	794
Y	*371-2480*	1	ROCKER ARM GP	606

535-8060 **ENGINE AR-PRIMARY (**contd.**)** **i09415605**

NOTE	PART NUMBER	QTY	PART NAME 1 2 3 4 5 6 (PRODUCT LEVEL)	SEE PAGE
Y	*395-0110*	1	SENSOR GP-ENGINE	820
Y	*380-9279*	1	STARTING AID GP	824
Y	*415-4870*	1	STARTING MOTOR GP-ELECTRIC	837
Y	*371-2719*	1	SUPPORT GP-POWER TAKE-OFF	608
Y	*416-6971*	1	TURBOCHARGER GP	741
Y	*424-5516*	1	WIRING GP-ENGINE	846
	440-1796	1	ELECTRONICS GP-ENGINE RATINGS	
	376-6464	1	PLATE & FILM GP	

A - NOT PART OF THIS GROUP
Y - SEPARATE ILLUSTRATION

<END>

536-6675 ENGINE AR-PRIMARY

186 BRAKE KW (249 BHP) AT 2200 RPM
OPTIONAL FIELD REPLACEMENT ORDER 451-1222—PAGE: 452, 452-6584—PAGE: 462
PART OF 536-9153 ENGINE AR-COMPLETE

SMCS-1000 **i08714097**

NOTE	PART NUMBER	QTY	PART NAME 1 2 3 4 5 6 (PRODUCT LEVEL)	SEE PAGE
Y	*478-4234*	1	AIR CLEANER GP	715
Y	*377-0721*	1	ALTERNATOR GP-CHARGING	799
Y	*371-2693*	1	BELT TENSIONER GP	416
Y	*425-0196*	1	BREATHER GP (CRANKCASE)	612
Y	*396-2617*	1	CAMSHAFT GP	428
Y	*373-3607*	1	CONNECTION GP-WATER	650
Y	*371-2536*	1	CONTROL GP-ELECTRONIC	808
Y	*378-8280*	1	COOLER GP-ENGINE OIL	661
Y	*389-3348*	1	COVER GP-VALVE MECHANISM	440
Y	*374-6300*	1	CRANKSHAFT GP	447
Y	*390-0854*	1	CYLINDER BLOCK GP	450
Y	*385-2572*	1	CYLINDER HEAD GP	458
Y	*393-2180*	1	DRIVE GP-FAN	484
Y	*375-8320*	1	EXTENSION GP-FAN	501
Y	*378-0627*	1	FAN GP	670
Y	*375-0098*	1	FASTENER GP-DAMPER & PULLEY	505
Y	*390-3737*	1	FILLER GP-ENGINE OIL	620
Y	*415-5625*	1	FILM GP (ALTERNATOR) (ALTERNATOR)	862
Y	*423-8803*	1	FILM GP (STARTING MOTOR) (STARTING MOTOR)	863
Y	*611-2653*	1	FILM GP (RADIATOR)	865
Y	*346-0220*	1	FILTER GP-ENGINE OIL	629
Y	*441-1215*	1	FILTER GP-FUEL (WATER SEPARATOR)	756
Y	*453-7163*	1	FILTER GP-FUEL	760
Y	*425-0197*	1	FILTER GP-FUMES DISPOSAL	630
Y	*346-0769*	1	FLANGE GP-EXHAUST	719
Y	*345-8902*	1	FLYWHEEL GP	507
Y	*439-3377*	1	GAUGE GP-OIL LEVEL (DIPSTICK)	636
Y	*345-8838*	1	HOUSING GP-FLYWHEEL	517
Y	*375-5838*	1	HOUSING GP-FRONT	536
Y	*416-8908*	1	INJECTOR GP-FUEL	766
Y	*371-2478*	1	JET GP-PISTON COOLING	543
Y	*416-2470*	1	LIFTING GP-ENGINE	546
Y	*426-3310*	1	LINES GP-FUEL INJECTION	787
Y	*416-7808*	1	MANIFOLD GP-EXHAUST	724
Y	*391-5523*	1	MANIFOLD GP-INLET	726
Y	*346-1528*	1	MOUNTING GP-ACCESSORY MODULE	856
Y	*395-0112*	1	MOUNTING GP-ELECTRONIC CONTROL	819
Y	*378-0593*	1	PAN GP-OIL	560
Y	*369-7304*	1	PISTON & ROD GP	566
Y	*378-8167*	1	PLATE & FILM GP	868
Y	*346-2908*	1	PLUG GP-ENGINE	592
Y	*440-0026*	1	PLUG GP-OIL FILTER MOUNTING	644
Y	*379-6629*	1	PULLEY GP-CRANKSHAFT	603
Y	*462-6685*	1	PUMP GP-ENGINE OIL	646
Y	*391-4811*	1	PUMP GP-FUEL INJECTION	790
Y	*372-2297*	1	PUMP GP-WATER	678
Y	*452-5153*	1	RADIATOR GP	686

536-6675 **ENGINE AR-PRIMARY (**contd.**)** **i08714097**

NOTE	PART NUMBER	QTY	PART NAME 1 2 3 4 5 6 (PRODUCT LEVEL)	SEE PAGE
Y	*394-9639*	1	RAIL GP-FUEL	794
Y	*371-2480*	1	ROCKER ARM GP	606
Y	*395-0110*	1	SENSOR GP-ENGINE	820
Y	*395-0114*	1	STARTING AID GP	826
Y	*392-2020*	1	STARTING MOTOR GP-ELECTRIC	835
Y	*371-2719*	1	SUPPORT GP-POWER TAKE-OFF	608
Y	*416-6971*	1	TURBOCHARGER GP	741
Y	*424-5516*	1	WIRING GP-ENGINE	846
	440-1796	1	ELECTRONICS GP-ENGINE RATINGS	
	376-6464	1	PLATE & FILM GP	

Y - SEPARATE ILLUSTRATION

<END>

ENGINE ARRANGEMENT

539-6915 ENGINE AR-PRIMARY

205 BRAKE KW (275 BHP) AT 2200 RPM

SMCS-1000 **i08687066**

NOTE	PART NUMBER	QTY	PART NAME 1 2 3 4 5 6 (PRODUCT LEVEL)	SEE PAGE
Y	*478-4234*	1	AIR CLEANER GP	715
Y	*377-0721*	1	ALTERNATOR GP-CHARGING	799
Y	*371-2693*	1	BELT TENSIONER GP	416
Y	*425-0196*	1	BREATHER GP (CRANKCASE)	612
Y	*396-2617*	1	CAMSHAFT GP	428
Y	*373-3607*	1	CONNECTION GP-WATER	650
Y	*371-2536*	1	CONTROL GP-ELECTRONIC	808
Y	*378-8276*	1	COOLER GP-ENGINE OIL	659
Y	*389-3346*	1	COVER GP-VALVE MECHANISM	435
Y	*374-6300*	1	CRANKSHAFT GP	447
Y	*390-0854*	1	CYLINDER BLOCK GP	450
Y	*385-2572*	1	CYLINDER HEAD GP	458
Y	*393-2180*	1	DRIVE GP-FAN	484
Y	*375-8320*	1	EXTENSION GP-FAN	501
Y	*378-0627*	1	FAN GP	670
Y	*375-0098*	1	FASTENER GP-DAMPER & PULLEY	505
Y	*390-3737*	1	FILLER GP-ENGINE OIL	620
Y	*415-5625*	1	FILM GP (ALTERNATOR) (ALTERNATOR)	862
Y	*611-2653*	1	FILM GP (RADIATOR)	865
Y	*346-0220*	1	FILTER GP-ENGINE OIL	629
Y	*441-1215*	1	FILTER GP-FUEL (WATER SEPARATOR)	756
Y	*453-7163*	1	FILTER GP-FUEL	760
Y	*425-0197*	1	FILTER GP-FUMES DISPOSAL	630
Y	*346-0769*	1	FLANGE GP-EXHAUST	719
Y	*345-9037*	1	FLYWHEEL GP	510
Y	*439-3432*	1	GAUGE GP-OIL LEVEL (DIPSTICK)	640
Y	*393-3369*	1	HOUSING GP-FLYWHEEL	526
Y	*375-5838*	1	HOUSING GP-FRONT	536
Y	*416-8908*	1	INJECTOR GP-FUEL	766
Y	*371-2478*	1	JET GP-PISTON COOLING	543
Y	*416-2470*	1	LIFTING GP-ENGINE	546
Y	*426-3310*	1	LINES GP-FUEL INJECTION	787
Y	*416-7808*	1	MANIFOLD GP-EXHAUST	724
Y	*391-5523*	1	MANIFOLD GP-INLET	726
Y	*346-1512*	1	MOUNTING GP-ACCESSORY MODULE	855
Y	*395-0112*	1	MOUNTING GP-ELECTRONIC CONTROL	819
Y	*375-4499*	1	PAN GP-OIL	557
Y	*369-7304*	1	PISTON & ROD GP	566
Y	*378-8167*	1	PLATE & FILM GP	868
Y	*346-2908*	1	PLUG GP-ENGINE	592
Y	*440-0026*	1	PLUG GP-OIL FILTER MOUNTING	644
Y	*379-6629*	1	PULLEY GP-CRANKSHAFT	603
Y	*462-6685*	1	PUMP GP-ENGINE OIL	646
Y	*391-4811*	1	PUMP GP-FUEL INJECTION	790
Y	*372-2297*	1	PUMP GP-WATER	678
Y	*452-5153*	1	RADIATOR GP	686
Y	*394-9639*	1	RAIL GP-FUEL	794
Y	*371-2480*	1	ROCKER ARM GP	606
Y	*395-0110*	1	SENSOR GP-ENGINE	820

539-6915 **ENGINE AR-PRIMARY (**contd.**)** **i08687066**

NOTE	PART NUMBER	QTY	PART NAME 1 2 3 4 5 6 (PRODUCT LEVEL)	SEE PAGE
Y	*395-0114*	1	STARTING AID GP	826
Y	*385-8000*	1	STARTING MOTOR GP-ELECTRIC	832
Y	*371-2719*	1	SUPPORT GP-POWER TAKE-OFF	608
Y	*416-6971*	1	TURBOCHARGER GP	741
Y	*424-5516*	1	WIRING GP-ENGINE	846
	449-3320	1	ELECTRONICS GP-ENGINE	
	376-6464	1	PLATE & FILM GP	

Y - SEPARATE ILLUSTRATION

<END>

539-8582 ENGINE AR-PRIMARY

205 BRAKE KW (274 BHP) AT 2200 RPM

SMCS-1000 **i09675688**

NOTE	PART NUMBER	QTY	PART NAME 1 2 3 4 5 6 (PRODUCT LEVEL)	SEE PAGE
Y	*478-4234*	1	AIR CLEANER GP	715
Y	*378-0630*	1	AIR COMPRESSOR GP	410
Y	*377-0721*	1	ALTERNATOR GP-CHARGING	799
Y	*371-2693*	1	BELT TENSIONER GP	416
Y	*392-0632*	1	BREATHER GP	611
Y	*396-2617*	1	CAMSHAFT GP	428
Y	*373-3607*	1	CONNECTION GP-WATER	650
Y	*448-9710*	1	CONNECTOR GP-CAB HEATER LINES	652
Y	*371-2536*	1	CONTROL GP-ELECTRONIC	808
Y	*378-8276*	1	COOLER GP-ENGINE OIL	659
Y	*389-3347*	1	COVER GP-VALVE MECHANISM	436
Y	*374-6300*	1	CRANKSHAFT GP	447
Y	*390-0854*	1	CYLINDER BLOCK GP	450
Y	*385-2572*	1	CYLINDER HEAD GP	458
Y	*393-2180*	1	DRIVE GP-FAN	484
Y	*375-8320*	1	EXTENSION GP-FAN	501
Y	*375-4574*	1	FAN GP	669
Y	*375-0098*	1	FASTENER GP-DAMPER & PULLEY	505
Y	*438-5978*	1	FILLER GP-ENGINE OIL	623
Y	*415-5625*	1	FILM GP (ALTERNATOR)	862
Y	*423-8803*	1	FILM GP (STARTING MOTOR)	863
Y	*611-2653*	1	FILM GP (RADIATOR)	865
Y	*346-0220*	1	FILTER GP-ENGINE OIL	629
Y	*441-1215*	1	FILTER GP-FUEL (WATER SEPARATOR)	756
Y	*453-7163*	1	FILTER GP-FUEL	760
Y	*346-0769*	1	FLANGE GP-EXHAUST	719
Y	*345-8902*	1	FLYWHEEL GP	507
Y	*439-3432*	1	GAUGE GP-OIL LEVEL (DIPSTICK)	640
Y	*345-8838*	1	HOUSING GP-FLYWHEEL	517
Y	*476-7558*	1	HOUSING GP-FRONT	541
Y	*416-8908*	1	INJECTOR GP-FUEL	766
Y	*371-2478*	1	JET GP-PISTON COOLING	543
Y	*416-2470*	1	LIFTING GP-ENGINE	546
Y	*448-0935*	1	LINES GP-FUEL FILTER	783
Y	*416-7808*	1	MANIFOLD GP-EXHAUST	724
Y	*391-5523*	1	MANIFOLD GP-INLET	726
Y	*346-1528*	1	MOUNTING GP-ACCESSORY MODULE	856
Y	*395-0112*	1	MOUNTING GP-ELECTRONIC CONTROL	819
Y	*375-4499*	1	PAN GP-OIL	557
Y	*369-7304*	1	PISTON & ROD GP	566
Y	*378-8167*	1	PLATE & FILM GP	868
Y	*440-0026*	1	PLUG GP-OIL FILTER MOUNTING	644
Y	*379-6629*	1	PULLEY GP-CRANKSHAFT	603
Y	*462-6685*	1	PUMP GP-ENGINE OIL	646
Y	*391-4811*	1	PUMP GP-FUEL INJECTION	790
Y	*372-2297*	1	PUMP GP-WATER	678
Y	*452-5153*	1	RADIATOR GP	686
Y	*394-9639*	1	RAIL GP-FUEL	794
Y	*371-2480*	1	ROCKER ARM GP	606

539-8582 **ENGINE AR-PRIMARY (**contd.**)** **i09675688**

NOTE	PART NUMBER	QTY	PART NAME 1 2 3 4 5 6 (PRODUCT LEVEL)	SEE PAGE
Y	*395-0110*	1	SENSOR GP-ENGINE	820
Y	*395-0114*	1	STARTING AID GP	826
Y	*392-2020*	1	STARTING MOTOR GP-ELECTRIC	835
Y	*416-6971*	1	TURBOCHARGER GP	741
Y	*424-5516*	1	WIRING GP-ENGINE	846
	449-3320	1	ELECTRONICS GP-ENGINE	
	376-6464	1	PLATE & FILM GP	

Y - SEPARATE ILLUSTRATION

<END>

543-4255 ENGINE AR-PRIMARY

205 BRAKE KW (275 BHP) AT 2200 RPM

PART OF 543-9476 ENGINE AR-COMPLETE

SMCS-1000 **i08705354**

NOTE	PART NUMBER	QTY	PART NAME 1 2 3 4 5 6 (PRODUCT LEVEL)	SEE PAGE
Y	*478-4234*	1	AIR CLEANER GP	715
Y	*377-0721*	1	ALTERNATOR GP-CHARGING	799
Y	*371-2693*	1	BELT TENSIONER GP	416
Y	*425-0196*	1	BREATHER GP (CRANKCASE)	612
Y	*396-2617*	1	CAMSHAFT GP	428
Y	*373-3607*	1	CONNECTION GP-WATER	650
Y	*371-2536*	1	CONTROL GP-ELECTRONIC	808
Y	*378-8276*	1	COOLER GP-ENGINE OIL	659
Y	*389-3346*	1	COVER GP-VALVE MECHANISM	435
Y	*374-6300*	1	CRANKSHAFT GP	447
Y	*390-0854*	1	CYLINDER BLOCK GP	450
Y	*385-2572*	1	CYLINDER HEAD GP	458
Y	*371-2742*	1	DRAIN GP-ENGINE OIL	466
Y	*393-2180*	1	DRIVE GP-FAN	484
Y	*375-8320*	1	EXTENSION GP-FAN	501
Y	*378-0627*	1	FAN GP	670
Y	*375-0098*	1	FASTENER GP-DAMPER & PULLEY	505
Y	*390-3737*	1	FILLER GP-ENGINE OIL	620
Y	*415-5625*	1	FILM GP (ALTERNATOR)	862
Y	*611-2653*	1	FILM GP (RADIATOR)	865
Y	*346-0220*	1	FILTER GP-ENGINE OIL	629
Y	*441-1215*	1	FILTER GP-FUEL (WATER SEPARATOR)	756
Y	*453-7163*	1	FILTER GP-FUEL	760
Y	*425-0197*	1	FILTER GP-FUMES DISPOSAL	630
Y	*346-0769*	1	FLANGE GP-EXHAUST	719
Y	*345-9037*	1	FLYWHEEL GP	510
Y	*439-3432*	1	GAUGE GP-OIL LEVEL (DIPSTICK)	640
Y	*393-3369*	1	HOUSING GP-FLYWHEEL	526
Y	*375-5838*	1	HOUSING GP-FRONT	536
Y	*416-8908*	1	INJECTOR GP-FUEL	766
Y	*371-2478*	1	JET GP-PISTON COOLING	543
Y	*416-2470*	1	LIFTING GP-ENGINE	546
Y	*426-3310*	1	LINES GP-FUEL INJECTION	787
Y	*416-7808*	1	MANIFOLD GP-EXHAUST	724
Y	*391-5523*	1	MANIFOLD GP-INLET	726
Y	*346-1512*	1	MOUNTING GP-ACCESSORY MODULE	855
Y	*395-0112*	1	MOUNTING GP-ELECTRONIC CONTROL	819
Y	*375-4499*	1	PAN GP-OIL	557
Y	*369-7304*	1	PISTON & ROD GP	566
Y	*378-8167*	1	PLATE & FILM GP	868
Y	*346-2908*	1	PLUG GP-ENGINE	592
Y	*440-0026*	1	PLUG GP-OIL FILTER MOUNTING	644
Y	*379-6629*	1	PULLEY GP-CRANKSHAFT	603
Y	*462-6685*	1	PUMP GP-ENGINE OIL	646
Y	*391-4811*	1	PUMP GP-FUEL INJECTION	790
Y	*372-2297*	1	PUMP GP-WATER	678
Y	*452-5153*	1	RADIATOR GP	686
Y	*394-9639*	1	RAIL GP-FUEL	794

543-4255 **ENGINE AR-PRIMARY (**contd.**)** **i08705354**

NOTE	PART NUMBER	QTY	PART NAME 1 2 3 4 5 6 (PRODUCT LEVEL)	SEE PAGE
Y	*371-2480*	1	ROCKER ARM GP	606
Y	*395-0110*	1	SENSOR GP-ENGINE	820
Y	*395-0114*	1	STARTING AID GP	826
Y	*385-8000*	1	STARTING MOTOR GP-ELECTRIC	832
Y	*371-2719*	1	SUPPORT GP-POWER TAKE-OFF	608
Y	*416-6971*	1	TURBOCHARGER GP	741
Y	*424-5516*	1	WIRING GP-ENGINE	846
	449-3320	1	ELECTRONICS GP-ENGINE	
	376-6464	1	PLATE & FILM GP	
	331-0905	2	TRUNNION	
	350-8958	1	PLATE-SERIAL NUMBER (ENGINE)	

Y - SEPARATE ILLUSTRATION

<END>

552-3506 ENGINE AR-PRIMARY

168 BRAKE KW (225 BHP) AT 2200 RPM

PART OF 553-5214 ENGINE AR-COMPLETE

SMCS-1000 **i10421096**

NOTE	PART NUMBER	QTY	PART NAME 1 2 3 4 5 6 (PRODUCT LEVEL)	SEE PAGE
Y	*385-8001*	1	ALTERNATOR GP-CHARGING	800
Y	*391-9610*	1	BELT TENSIONER GP	420
Y	*425-0196*	1	BREATHER GP (CRANKCASE)	612
Y	*396-2617*	1	CAMSHAFT GP	428
Y	*390-5130*	1	CLAMP AS-EXHAUST	717
Y	*378-8581*	1	CONNECTION GP-WATER	651
Y	*371-2536*	1	CONTROL GP-ELECTRONIC	808
Y	*378-8280*	1	COOLER GP-ENGINE OIL	661
Y	*378-0629*	1	COVER GP-ACCESSORY DRIVE	433
Y	*389-3348*	1	COVER GP-VALVE MECHANISM	440
Y	*374-6300*	1	CRANKSHAFT GP	447
Y	*390-0854*	1	CYLINDER BLOCK GP	450
Y	*385-2572*	1	CYLINDER HEAD GP	458
Y	*415-3079*	1	DRIVE GP-FAN	496
Y	*375-8320*	1	EXTENSION GP-FAN	501
Y	*501-7441*	1	FAN GP-ENGINE	676
Y	*375-0098*	1	FASTENER GP-DAMPER & PULLEY	505
Y	*438-5983*	1	FILLER GP-ENGINE OIL	625
Y	*415-5625*	1	FILM GP (ALTERNATOR)	862
Y	*635-3313*	1	PLATE GP-IDENTIFICATION	869
Y	*346-0220*	1	FILTER GP-ENGINE OIL	629
Y	*441-1215*	1	FILTER GP-FUEL (WATER SEPARATOR)	756
Y	*453-7163*	1	FILTER GP-FUEL	760
Y	*425-0197*	1	FILTER GP-FUMES DISPOSAL	630
Y	*437-2723*	1	FLYWHEEL GP	513
Y	*439-3432*	1	GAUGE GP-OIL LEVEL (DIPSTICK)	640
Y	*437-2721*	1	HOUSING GP-FLYWHEEL	529
Y	*375-5838*	1	HOUSING GP-FRONT	536
Y	*416-8908*	1	INJECTOR GP-FUEL	766
Y	*371-2478*	1	JET GP-PISTON COOLING	543
Y	*416-2470*	1	LIFTING GP-ENGINE	546
Y	*426-3310*	1	LINES GP-FUEL INJECTION	787
Y	*393-7694*	1	MANIFOLD GP-EXHAUST	723
Y	*391-5523*	1	MANIFOLD GP-INLET	726
Y	*395-0112*	1	MOUNTING GP-ELECTRONIC CONTROL	819
Y	*495-6156*	1	MOUNTING GP-ENGINE	551
Y	*375-4499*	1	PAN GP-OIL	557
Y	*369-7304*	1	PISTON & ROD GP	566
Y	*378-8167*	1	PLATE & FILM GP	868
Y	*346-2908*	1	PLUG GP-ENGINE	592
Y	*440-0026*	1	PLUG GP-OIL FILTER MOUNTING	644
Y	*379-6629*	1	PULLEY GP-CRANKSHAFT	603
Y	*462-6685*	1	PUMP GP-ENGINE OIL	646
Y	*391-4811*	1	PUMP GP-FUEL INJECTION	790
Y	*372-2297*	1	PUMP GP-WATER	678
Y	*394-9639*	1	RAIL GP-FUEL	794
Y	*371-2480*	1	ROCKER ARM GP	606
Y	*395-0110*	1	SENSOR GP-ENGINE	820

552-3506 **ENGINE AR-PRIMARY (**contd.**)** **i10421096**

NOTE	PART NUMBER	QTY	PART NAME 1 2 3 4 5 6 (PRODUCT LEVEL)	SEE PAGE
Y	*395-0114*	1	STARTING AID GP	826
Y	*371-2541*	1	STARTING MOTOR GP-ELECTRIC	829
Y	*416-6969*	1	TURBOCHARGER GP	739
Y	*424-5516*	1	WIRING GP-ENGINE	846
	448-4768	1	ELECTRONICS GP	
	376-6464	1	PLATE & FILM GP	
			SOFTWARE MUST BE PROCURED LOCALLY FROM YOUR CAT DEALER	

Y - SEPARATE ILLUSTRATION

<END>

ENGINE ARRANGEMENT

552-8869 ENGINE AR-PRIMARY

205 BRAKE KW (275 BHP) AT 2200 RPM

OPTIONAL FIELD REPLACEMENT ORDER 451-1222—PAGE: 452, 452-6584—PAGE: 462

SMCS-1000 **i09415687**

NOTE	PART NUMBER	QTY	PART NAME 1 2 3 4 5 6 (PRODUCT LEVEL)	SEE PAGE
Y	*478-4234*	1	AIR CLEANER GP	715
Y	*377-0721*	1	ALTERNATOR GP-CHARGING	799
Y	*371-2693*	1	BELT TENSIONER GP	416
Y	*392-0632*	1	BREATHER GP	611
Y	*396-2617*	1	CAMSHAFT GP	428
AY	*552-9638*	1	CONFIGURATION AR-ENGINE	13
Y	*373-3607*	1	CONNECTION GP-WATER	650
Y	*371-2536*	1	CONTROL GP-ELECTRONIC	808
Y	*378-8280*	1	COOLER GP-ENGINE OIL	661
Y	*389-3347*	1	COVER GP-VALVE MECHANISM	436
Y	*374-6300*	1	CRANKSHAFT GP	447
Y	*390-0854*	1	CYLINDER BLOCK GP	450
Y	*385-2572*	1	CYLINDER HEAD GP	458
Y	*371-2742*	1	DRAIN GP-ENGINE OIL	466
Y	*393-2180*	1	DRIVE GP-FAN	484
Y	*375-4606*	1	DRIVE GP-POWER TAKE-OFF	499
Y	*375-8320*	1	EXTENSION GP-FAN	501
Y	*375-4574*	1	FAN GP	669
Y	*375-0098*	1	FASTENER GP-DAMPER & PULLEY	505
Y	*448-0944*	1	FILLER GP-ENGINE OIL	627
Y	*415-5625*	1	FILM GP (ALTERNATOR)	862
Y	*346-0220*	1	FILTER GP-ENGINE OIL	629
Y	*441-1215*	1	FILTER GP-FUEL (WATER SEPARATOR)	756
Y	*453-7163*	1	FILTER GP-FUEL	760
Y	*346-0769*	1	FLANGE GP-EXHAUST	719
Y	*345-9037*	1	FLYWHEEL GP	510
Y	*439-3432*	1	GAUGE GP-OIL LEVEL (DIPSTICK)	640
Y	*393-3369*	1	HOUSING GP-FLYWHEEL	526
Y	*375-4645*	1	HOUSING GP-FRONT	534
Y	*416-8908*	1	INJECTOR GP-FUEL	766
Y	*371-2478*	1	JET GP-PISTON COOLING	543
Y	*416-2470*	1	LIFTING GP-ENGINE	546
Y	*426-3310*	1	LINES GP-FUEL INJECTION	787
Y	*416-7808*	1	MANIFOLD GP-EXHAUST	724
Y	*391-5523*	1	MANIFOLD GP-INLET	726
Y	*346-1512*	1	MOUNTING GP-ACCESSORY MODULE	855
Y	*395-0112*	1	MOUNTING GP-ELECTRONIC CONTROL	819
Y	*375-4499*	1	PAN GP-OIL	557
Y	*369-7304*	1	PISTON & ROD GP	566
Y	*378-8167*	1	PLATE & FILM GP	868
Y	*346-2908*	1	PLUG GP-ENGINE	592
Y	*440-0026*	1	PLUG GP-OIL FILTER MOUNTING	644
Y	*379-6629*	1	PULLEY GP-CRANKSHAFT	603
Y	*462-6685*	1	PUMP GP-ENGINE OIL	646
Y	*391-4811*	1	PUMP GP-FUEL INJECTION	790
Y	*372-2297*	1	PUMP GP-WATER	678
Y	*456-4298*	1	RADIATOR GP	695
Y	*394-9639*	1	RAIL GP-FUEL	794

552-8869 **ENGINE AR-PRIMARY (**contd.**)** **i09415687**

NOTE	PART NUMBER	QTY	PART NAME 1 2 3 4 5 6 (PRODUCT LEVEL)	SEE PAGE
Y	*371-2480*	1	ROCKER ARM GP	606
Y	*395-0110*	1	SENSOR GP-ENGINE	820
Y	*395-0114*	1	STARTING AID GP	826
Y	*385-8000*	1	STARTING MOTOR GP-ELECTRIC	832
Y	*416-6971*	1	TURBOCHARGER GP	741
Y	*424-5516*	1	WIRING GP-ENGINE	846
	449-3320	1	ELECTRONICS GP-ENGINE	
	376-6464	1	PLATE & FILM GP	

A - NOT PART OF THIS GROUP
Y - SEPARATE ILLUSTRATION

<END>

553-1809 ENGINE AR-PRIMARY

SMCS-1000 **i07531043**

NOTE	PART NUMBER	QTY	PART NAME 1 2 3 4 5 6 (PRODUCT LEVEL)	SEE PAGE
Y	*377-0721*	1	ALTERNATOR GP-CHARGING	799
Y	*391-9612*	1	BELT TENSIONER GP	422
Y	*379-6637*	1	BRACKET GP-MOUNTING	423
Y	*392-0632*	1	BREATHER GP	611
Y	*396-2617*	1	CAMSHAFT GP	428
Y	*390-5132*	1	CLAMP AS-EXHAUST	718
Y	*373-3607*	1	CONNECTION GP-WATER	650
Y	*371-2536*	1	CONTROL GP-ELECTRONIC	808
Y	*378-8280*	1	COOLER GP-ENGINE OIL	661
Y	*389-3348*	1	COVER GP-VALVE MECHANISM	440
Y	*374-6300*	1	CRANKSHAFT GP	447
Y	*390-0854*	1	CYLINDER BLOCK GP	450
Y	*451-8385*	1	CYLINDER BLOCK GP-SHORT	455
Y	*385-2572*	1	CYLINDER HEAD GP	458
Y	*452-6582*	1	CYLINDER HEAD GP (SHORT)	460
Y	*371-2743*	1	DRAIN GP-OIL	616
Y	*380-2638*	1	DRIVE GP-FAN	479
Y	*452-6700*	1	EXTENSION GP-FAN	504
Y	*375-0098*	1	FASTENER GP-DAMPER & PULLEY	505
Y	*379-6626*	1	FILLER GP-ENGINE OIL	619
Y	*390-0060*	1	FILM GP	859
Y	*415-5625*	1	FILM GP (ALTERNATOR)	862
Y	*423-8803*	1	FILM GP (STARTING MOTOR)	863
Y	*346-0220*	1	FILTER GP-ENGINE OIL	629
Y	*441-1215*	1	FILTER GP-FUEL (WATER SEPARATOR)	756
Y	*448-0935*	1	LINES GP-FUEL FILTER	783
Y	*453-7163*	1	FILTER GP-FUEL	760
Y	*345-8901*	1	FLYWHEEL GP	506
Y	*417-6007*	1	GAUGE GP-OIL LEVEL (DIPSTICK)	635
Y	*380-2587*	1	HOUSING GP-FLYWHEEL	525
Y	*375-4606*	1	DRIVE GP-POWER TAKE-OFF	499
Y	*375-4645*	1	HOUSING GP-FRONT	534
Y	*416-8908*	1	INJECTOR GP-FUEL	766
Y	*371-2478*	1	JET GP-PISTON COOLING	543
Y	*416-2470*	1	LIFTING GP-ENGINE	546
Y	*393-7694*	1	MANIFOLD GP-EXHAUST	723
Y	*391-5523*	1	MANIFOLD GP-INLET	726
Y	*395-0112*	1	MOUNTING GP-ELECTRONIC CONTROL	819
Y	*375-4499*	1	PAN GP-OIL	557
Y	*369-7304*	1	PISTON & ROD GP	566
Y	*346-2908*	1	PLUG GP-ENGINE	592
Y	*371-2554*	1	PULLEY GP-CRANKSHAFT	601
Y	*462-6685*	1	PUMP GP-ENGINE OIL	646
Y	*391-4811*	1	PUMP GP-FUEL INJECTION	790
Y	*372-2297*	1	PUMP GP-WATER	678
Y	*394-9639*	1	RAIL GP-FUEL	794
Y	*371-2480*	1	ROCKER ARM GP	606
Y	*395-0110*	1	SENSOR GP-ENGINE	820
Y	*395-0114*	1	STARTING AID GP	826
Y	*392-2021*	1	STARTING MOTOR GP-ELECTRIC	836

553-1809 **ENGINE AR-PRIMARY (**contd.**)** **i07531043**

NOTE	PART NUMBER	QTY	PART NAME 1 2 3 4 5 6 (PRODUCT LEVEL)	SEE PAGE
Y	*416-6968*	1	TURBOCHARGER GP	738
Y	*371-2745*	1	VALVE GP-FLUID SAMPLING	647
Y	*424-5516*	1	WIRING GP-ENGINE	846
	449-3320	1	ELECTRONICS GP-ENGINE	
	376-6464	1	PLATE & FILM GP	

Y - SEPARATE ILLUSTRATION

<END>

553-3730 ENGINE AR-PRIMARY

186 BRAKE KW (249 BHP) AT 2200 RPM

OPTIONAL FIELD REPLACEMENT ORDER 451-1222—PAGE: 452, 452-6584—PAGE: 462

SMCS-1000 **i09415702**

NOTE	PART NUMBER	QTY	PART NAME 1 2 3 4 5 6 (PRODUCT LEVEL)	SEE PAGE
Y	*440-6724*	1	ALTERNATOR GP-CHARGING	802
Y	*379-5585*	1	BELT TENSIONER GP	419
Y	*392-0632*	1	BREATHER GP	611
Y	*396-2617*	1	CAMSHAFT GP	428
Y	*390-5132*	1	CLAMP AS-EXHAUST	718
Y	*374-7094*	1	COMPRESSOR & MTG GP-REFRIGERANT	429
AY	*553-6396*	1	CONFIGURATION AR-ENGINE	13
Y	*373-3606*	1	CONNECTION GP-WATER	649
Y	*371-2536*	1	CONTROL GP-ELECTRONIC	808
Y	*378-8280*	1	COOLER GP-ENGINE OIL	661
Y	*389-3348*	1	COVER GP-VALVE MECHANISM	440
Y	*371-2477*	1	CRANKSHAFT GP	
Y	*390-0854*	1	CYLINDER BLOCK GP	450
Y	*385-2572*	1	CYLINDER HEAD GP	458
Y	*378-8166*	1	DRAIN GP-ENGINE OIL	467
Y	*393-5973*	1	DRIVE GP-FAN	488
Y	*375-4606*	1	DRIVE GP-POWER TAKE-OFF	499
Y	*371-2694*	1	EXTENSION GP-FAN	500
Y	*375-0098*	1	FASTENER GP-DAMPER & PULLEY	505
Y	*379-6626*	1	FILLER GP-ENGINE OIL	619
Y	*390-0060*	1	FILM GP	859
Y	*415-5625*	1	FILM GP (ALTERNATOR)	862
Y	*423-8803*	1	FILM GP (STARTING MOTOR)	863
Y	*346-0220*	1	FILTER GP-ENGINE OIL	629
Y	*441-1215*	1	FILTER GP-FUEL (WATER SEPARATOR)	756
Y	*453-7163*	1	FILTER GP-FUEL	760
Y	*345-8961*	1	FLYWHEEL GP	508
Y	*439-3378*	1	GAUGE GP-OIL LEVEL (DIPSTICK)	637
Y	*380-2587*	1	HOUSING GP-FLYWHEEL	525
Y	*375-4645*	1	HOUSING GP-FRONT	534
Y	*416-8908*	1	INJECTOR GP-FUEL	766
Y	*371-2478*	1	JET GP-PISTON COOLING	543
Y	*371-2735*	1	LIFTING GP-ENGINE	544
Y	*448-0935*	1	LINES GP-FUEL FILTER	783
Y	*393-7694*	1	MANIFOLD GP-EXHAUST	723
Y	*391-5523*	1	MANIFOLD GP-INLET	726
Y	*395-0112*	1	MOUNTING GP-ELECTRONIC CONTROL	819
Y	*371-2544*	1	PAN GP-OIL	556
Y	*369-7304*	1	PISTON & ROD GP	566
Y	*346-2908*	1	PLUG GP-ENGINE	592
Y	*371-2555*	1	PULLEY GP-CRANKSHAFT	602
Y	*462-6685*	1	PUMP GP-ENGINE OIL	646
Y	*391-4811*	1	PUMP GP-FUEL INJECTION	790
Y	*372-2297*	1	PUMP GP-WATER	678
Y	*394-9639*	1	RAIL GP-FUEL	794
Y	*371-2480*	1	ROCKER ARM GP	606
Y	*395-0110*	1	SENSOR GP-ENGINE	820
Y	*395-0114*	1	STARTING AID GP	826

553-3730 **ENGINE AR-PRIMARY (**contd.**)** **i09415702**

NOTE	PART NUMBER	QTY	PART NAME 1 2 3 4 5 6 (PRODUCT LEVEL)	SEE PAGE
Y	*458-3684*	1	STARTING MOTOR GP-ELECTRIC	839
Y	*416-6968*	1	TURBOCHARGER GP	738
Y	*371-2745*	1	VALVE GP-FLUID SAMPLING	647
Y	*424-5516*	1	WIRING GP-ENGINE	846
	440-1796	1	ELECTRONICS GP-ENGINE RATINGS	
	376-6464		PLATE & FILM GP	

A - NOT PART OF THIS GROUP
Y - SEPARATE ILLUSTRATION

<END>

555-4669 ENGINE AR-PRIMARY

129 BRAKE KW (173 BHP) AT 2200 RPM

OPTIONAL FIELD REPLACEMENT ORDER 451-1222—PAGE: 452, 452-6584—PAGE: 462

SMCS-1000 **i09415614**

NOTE	PART NUMBER	QTY	PART NAME 1 2 3 4 5 6 (PRODUCT LEVEL)	SEE PAGE
Y	*478-4234*	1	AIR CLEANER GP	715
Y	*377-0721*	1	ALTERNATOR GP-CHARGING	799
Y	*371-2693*	1	BELT TENSIONER GP	416
Y	*425-0196*	1	BREATHER GP (CRANKCASE)	612
Y	*396-2615*	1	CAMSHAFT GP	427
AY	*555-5057*	1	CONFIGURATION AR-ENGINE	13
Y	*373-3607*	1	CONNECTION GP-WATER	650
Y	*371-2536*	1	CONTROL GP-ELECTRONIC	808
Y	*346-0097*	1	COOLER GP-ENGINE OIL	658
Y	*389-3347*	1	COVER GP-VALVE MECHANISM	436
Y	*374-6300*	1	CRANKSHAFT GP	447
Y	*390-0854*	1	CYLINDER BLOCK GP	450
Y	*385-2572*	1	CYLINDER HEAD GP	458
Y	*393-2180*	1	DRIVE GP-FAN	484
Y	*375-8320*	1	EXTENSION GP-FAN	501
Y	*452-3651*	1	FAN GP	673
Y	*375-0098*	1	FASTENER GP-DAMPER & PULLEY	505
Y	*438-5978*	1	FILLER GP-ENGINE OIL	623
Y	*415-5625*	1	FILM GP (ALTERNATOR)	862
Y	*423-8803*	1	FILM GP (STARTING MOTOR)	863
Y	*346-0220*	1	FILTER GP-ENGINE OIL	629
Y	*441-1215*	1	FILTER GP-FUEL (WATER SEPARATOR)	756
Y	*453-7163*	1	FILTER GP-FUEL	760
Y	*425-0197*	1	FILTER GP-FUMES DISPOSAL	630
Y	*346-0769*	1	FLANGE GP-EXHAUST	719
Y	*345-8901*	1	FLYWHEEL GP	506
Y	*417-6007*	1	GAUGE GP-OIL LEVEL (DIPSTICK)	635
Y	*345-8838*	1	HOUSING GP-FLYWHEEL	517
Y	*375-5838*	1	HOUSING GP-FRONT	536
Y	*371-2483*	1	INJECTOR GP-FUEL	763
Y	*371-2478*	1	JET GP-PISTON COOLING	543
Y	*416-2470*	1	LIFTING GP-ENGINE	546
Y	*448-0935*	1	LINES GP-FUEL FILTER	783
Y	*416-7808*	1	MANIFOLD GP-EXHAUST	724
Y	*391-5523*	1	MANIFOLD GP-INLET	726
Y	*346-1528*	1	MOUNTING GP-ACCESSORY MODULE	856
Y	*395-0112*	1	MOUNTING GP-ELECTRONIC CONTROL	819
Y	*375-4499*	1	PAN GP-OIL	557
Y	*374-6301*	1	PISTON & ROD GP	576
Y	*378-8167*	1	PLATE & FILM GP	868
Y	*346-2908*	1	PLUG GP-ENGINE	592
Y	*440-0026*	1	PLUG GP-OIL FILTER MOUNTING	644
Y	*379-6629*	1	PULLEY GP-CRANKSHAFT	603
Y	*462-6685*	1	PUMP GP-ENGINE OIL	646
Y	*391-4811*	1	PUMP GP-FUEL INJECTION	790
Y	*372-2297*	1	PUMP GP-WATER	678
Y	*454-6966*	1	RADIATOR GP	
Y	*394-9639*	1	RAIL GP-FUEL	794

555-4669 **ENGINE AR-PRIMARY (**contd.**)** **i09415614**

NOTE	PART NUMBER	QTY	PART NAME 1 2 3 4 5 6 (PRODUCT LEVEL)	SEE PAGE
Y	*371-2480*	1	ROCKER ARM GP	606
Y	*395-0110*	1	SENSOR GP-ENGINE	820
Y	*395-0114*	1	STARTING AID GP	826
Y	*392-2020*	1	STARTING MOTOR GP-ELECTRIC	835
Y	*371-2719*	1	SUPPORT GP-POWER TAKE-OFF	608
Y	*375-5002*	1	TURBOCHARGER GP	732
Y	*424-5516*	1	WIRING GP-ENGINE	846
	460-6435	1	ELECTRONICS GP-ENGINE	
	376-6464		PLATE & FILM GP	

A - NOT PART OF THIS GROUP
Y - SEPARATE ILLUSTRATION

<END>

562-8873 ENGINE AR-PRIMARY

209.4 KW (280.8BHP) @ 1800RPM

OPTIONAL FIELD REPLACEMENT ORDER 451-8385—PAGE: 455, 452-6582—PAGE: 460

PART OF 564-2349 ENGINE AR-COMPLETE

SMCS-1000 **i07573053**

NOTE	PART NUMBER	QTY	PART NAME 1 2 3 4 5 6 (PRODUCT LEVEL)	SEE PAGE
Y	*478-4234*	1	AIR CLEANER GP	715
Y	*377-0721*	1	ALTERNATOR GP-CHARGING	799
Y	*371-2693*	1	BELT TENSIONER GP	416
Y	*392-0632*	1	BREATHER GP	611
Y	*376-6871*	1	CAMSHAFT GP	426
Y	*373-3607*	1	CONNECTION GP-WATER	650
Y	*371-2536*	1	CONTROL GP-ELECTRONIC	808
Y	*378-8276*	1	COOLER GP-ENGINE OIL	659
Y	*389-3346*	1	COVER GP-VALVE MECHANISM	435
Y	*374-6300*	1	CRANKSHAFT GP	447
Y	*390-0854*	1	CYLINDER BLOCK GP	450
Y	*385-2572*	1	CYLINDER HEAD GP	458
Y	*371-2742*	1	DRAIN GP-ENGINE OIL	466
Y	*393-2180*	1	DRIVE GP-FAN	484
Y	*443-4956*	1	FAN GP	672
Y	*375-0098*	1	FASTENER GP-DAMPER & PULLEY	505
Y	*390-3737*	1	FILLER GP-ENGINE OIL	620
Y	*415-5625*	1	FILM GP (ALTERNATOR)	862
Y	*346-0220*	1	FILTER GP-ENGINE OIL	629
Y	*441-1215*	1	FILTER GP-FUEL (WATER SEPARATOR)	756
Y	*453-7163*	1	FILTER GP-FUEL	760
Y	*346-0769*	1	FLANGE GP-EXHAUST	719
Y	*345-9037*	1	FLYWHEEL GP	510
Y	*439-3432*	1	GAUGE GP-OIL LEVEL (DIPSTICK)	640
Y	*393-3369*	1	HOUSING GP-FLYWHEEL	526
Y	*375-5838*	1	HOUSING GP-FRONT	536
Y	*416-8908*	1	INJECTOR GP-FUEL	766
Y	*371-2478*	1	JET GP-PISTON COOLING	543
Y	*416-2470*	1	LIFTING GP-ENGINE	546
Y	*426-3310*	1	LINES GP-FUEL INJECTION	787
Y	*416-7808*	1	MANIFOLD GP-EXHAUST	724
Y	*391-5523*	1	MANIFOLD GP-INLET	726
Y	*346-1512*	1	MOUNTING GP-ACCESSORY MODULE	855
Y	*395-0112*	1	MOUNTING GP-ELECTRONIC CONTROL	819
Y	*375-4499*	1	PAN GP-OIL	557
Y	*452-9761*	1	PISTON & ROD GP	581
Y	*378-8167*	1	PLATE & FILM GP	868
Y	*346-2908*	1	PLUG GP-ENGINE	592
Y	*440-0026*	1	PLUG GP-OIL FILTER MOUNTING	644
Y	*379-6629*	1	PULLEY GP-CRANKSHAFT	603
Y	*462-6685*	1	PUMP GP-ENGINE OIL	646
Y	*391-4811*	1	PUMP GP-FUEL INJECTION	790
Y	*372-2297*	1	PUMP GP-WATER	678
Y	*394-9639*	1	RAIL GP-FUEL	794
Y	*371-2480*	1	ROCKER ARM GP	606
Y	*395-0110*	1	SENSOR GP-ENGINE	820
Y	*395-0114*	1	STARTING AID GP	826

562-8873 **ENGINE AR-PRIMARY (**contd.**)** **i07573053**

NOTE	PART NUMBER	QTY	PART NAME 1 2 3 4 5 6 (PRODUCT LEVEL)	SEE PAGE
Y	*385-8000*	1	STARTING MOTOR GP-ELECTRIC	832
Y	*371-2719*	1	SUPPORT GP-POWER TAKE-OFF	608
Y	*416-6971*	1	TURBOCHARGER GP	741
Y	*424-5516*	1	WIRING GP-ENGINE	846
	483-1223	1	ELECTRONICS GP-ENGINE	
	376-6464	1	PLATE & FILM GP	

Y - SEPARATE ILLUSTRATION

<END>

563-6728 ENGINE AR-PRIMARY

209 BRAKE KW (281 BHP) AT 1800 RPM
OPTIONAL FIELD REPLACEMENT ORDER 451-1222—PAGE: 452, 452-6584—PAGE: 462
PART OF 567-8167 ENGINE AR-COMPLETE

SMCS-1000 **i08704749**

NOTE	PART NUMBER	QTY	PART NAME 1 2 3 4 5 6 (PRODUCT LEVEL)	SEE PAGE
Y	*377-0721*	1	ALTERNATOR GP-CHARGING	799
Y	*371-2693*	1	BELT TENSIONER GP	416
Y	*560-7573*	1	BRACKET GP-MOUNTING	424
Y	*392-0632*	1	BREATHER GP	611
Y	*376-6871*	1	CAMSHAFT GP	426
Y	*373-3607*	1	CONNECTION GP-WATER	650
Y	*564-2826*	1	CONTROL GP-ELECTRONIC	810
Y	*378-8280*	1	COOLER GP-ENGINE OIL	661
Y	*389-3347*	1	COVER GP-VALVE MECHANISM	436
Y	*374-6300*	1	CRANKSHAFT GP	447
Y	*390-0854*	1	CYLINDER BLOCK GP	450
Y	*385-2572*	1	CYLINDER HEAD GP	458
Y	*371-2742*	1	DRAIN GP-ENGINE OIL	466
Y	*393-2180*	1	DRIVE GP-FAN	484
Y	*375-4606*	1	DRIVE GP-POWER TAKE-OFF	499
Y	*375-8320*	1	EXTENSION GP-FAN	501
Y	*375-4574*	1	FAN GP	669
Y	*375-0098*	1	FASTENER GP-DAMPER & PULLEY	505
Y	*448-0944*	1	FILLER GP-ENGINE OIL	627
Y	*390-0060*	1	FILM GP (EMISSION)	859
Y	*415-5625*	1	FILM GP (ALTERNATOR) (ALTERNATOR)	862
Y	*611-2653*	1	FILM GP (RADIATOR)	865
Y	*346-0220*	1	FILTER GP-ENGINE OIL	629
Y	*441-1215*	1	FILTER GP-FUEL (WATER SEPARATOR)	756
Y	*453-7163*	1	FILTER GP-FUEL	760
Y	*346-0769*	1	FLANGE GP-EXHAUST	719
Y	*378-0585*	1	FLYWHEEL GP	512
Y	*417-6007*	1	GAUGE GP-OIL LEVEL (DIPSTICK)	635
Y	*357-1915*	1	HOUSING GP-FLYWHEEL	521
Y	*375-4645*	1	HOUSING GP-FRONT (LH)	534
Y	*416-8908*	1	INJECTOR GP-FUEL	766
Y	*371-2478*	1	JET GP-PISTON COOLING	543
Y	*416-2470*	1	LIFTING GP-ENGINE	546
Y	*426-3312*	1	LINES GP-FUEL FILTER	781
Y	*416-7808*	1	MANIFOLD GP-EXHAUST	724
Y	*391-5523*	1	MANIFOLD GP-INLET	726
Y	*346-1512*	1	MOUNTING GP-ACCESSORY MODULE	855
Y	*375-4499*	1	PAN GP-OIL	557
Y	*452-9761*	1	PISTON & ROD GP	581
Y	*346-2908*	1	PLUG GP-ENGINE	592
Y	*440-0026*	1	PLUG GP-OIL FILTER MOUNTING	644
Y	*379-6629*	1	PULLEY GP-CRANKSHAFT	603
Y	*462-6685*	1	PUMP GP-ENGINE OIL	646
Y	*563-6186*	1	PUMP GP-FUEL INJECTION	793
Y	*372-2297*	1	PUMP GP-WATER	678
Y	*456-4298*	1	RADIATOR GP	695
Y	*394-9639*	1	RAIL GP-FUEL	794

563-6728 **ENGINE AR-PRIMARY (**contd.**)** **i08704749**

NOTE	PART NUMBER	QTY	PART NAME 1 2 3 4 5 6 (PRODUCT LEVEL)	SEE PAGE
Y	*371-2480*	1	ROCKER ARM GP	606
Y	*560-7572*	1	SENSOR GP-ENGINE	822
Y	*395-0114*	1	STARTING AID GP	826
Y	*378-0590*	1	STARTING MOTOR GP-ELECTRIC	831
Y	*416-6971*	1	TURBOCHARGER GP	741
Y	*560-7999*	1	WIRING GP-ENGINE	854
	555-7277	1	ELECTRONICS GP-ENGINE	
	376-6464	1	PLATE & FILM GP	

Y - SEPARATE ILLUSTRATION

<END>

563-6729 ENGINE AR-PRIMARY

209 BRAKE KW (281 BHP) AT 1800 RPM

OPTIONAL FIELD REPLACEMENT ORDER 451-1222—PAGE: 452, 452-6584—PAGE: 462

SMCS-1000 **i07907115**

NOTE	PART NUMBER	QTY	PART NAME 1 2 3 4 5 6 (PRODUCT LEVEL)	SEE PAGE
Y	*478-4234*	1	AIR CLEANER GP	715
Y	*377-0721*	1	ALTERNATOR GP-CHARGING	799
Y	*371-2693*	1	BELT TENSIONER GP	416
Y	*560-7573*	1	BRACKET GP-MOUNTING	424
Y	*392-0632*	1	BREATHER GP	611
Y	*376-6871*	1	CAMSHAFT GP	426
Y	*373-3607*	1	CONNECTION GP-WATER	650
Y	*564-2826*	1	CONTROL GP-ELECTRONIC	810
Y	*378-8280*	1	COOLER GP-ENGINE OIL	661
Y	*389-3347*	1	COVER GP-VALVE MECHANISM	436
Y	*374-6300*	1	CRANKSHAFT GP	447
Y	*390-0854*	1	CYLINDER BLOCK GP	450
Y	*385-2572*	1	CYLINDER HEAD GP	458
Y	*371-2742*	1	DRAIN GP-ENGINE OIL	466
Y	*393-2180*	1	DRIVE GP-FAN	484
Y	*375-8320*	1	EXTENSION GP-FAN	501
Y	*375-4574*	1	FAN GP	669
Y	*375-0098*	1	FASTENER GP-DAMPER & PULLEY	505
Y	*448-0944*	1	FILLER GP-ENGINE OIL	627
Y	*415-5625*	1	FILM GP (ALTERNATOR) (ALTERNATOR)	862
Y	*346-0220*	1	FILTER GP-ENGINE OIL	629
Y	*441-1215*	1	FILTER GP-FUEL (WATER SEPARATOR)	756
Y	*453-7163*	1	FILTER GP-FUEL	760
Y	*346-0769*	1	FLANGE GP-EXHAUST	719
Y	*345-9037*	1	FLYWHEEL GP	510
Y	*439-3432*	1	GAUGE GP-OIL LEVEL (DIPSTICK)	640
Y	*393-3369*	1	HOUSING GP-FLYWHEEL	526
Y	*375-4606*	1	DRIVE GP-POWER TAKE-OFF	499
Y	*375-4645*	1	HOUSING GP-FRONT	534
Y	*416-8908*	1	INJECTOR GP-FUEL	766
Y	*371-2478*	1	JET GP-PISTON COOLING	543
Y	*416-2470*	1	LIFTING GP-ENGINE	546
Y	*426-3312*	1	LINES GP-FUEL FILTER	781
Y	*416-7808*	1	MANIFOLD GP-EXHAUST	724
Y	*391-5523*	1	MANIFOLD GP-INLET	726
Y	*346-1512*	1	MOUNTING GP-ACCESSORY MODULE	855
Y	*375-4499*	1	PAN GP-OIL	557
Y	*452-9761*	1	PISTON & ROD GP	581
Y	*378-8167*	1	PLATE & FILM GP	868
Y	*346-2908*	1	PLUG GP-ENGINE	592
Y	*440-0026*	1	PLUG GP-OIL FILTER MOUNTING	644
Y	*379-6629*	1	PULLEY GP-CRANKSHAFT	603
Y	*462-6685*	1	PUMP GP-ENGINE OIL	646
Y	*563-6186*	1	PUMP GP-FUEL INJECTION	793
Y	*372-2297*	1	PUMP GP-WATER	678
Y	*456-4298*	1	RADIATOR GP	695
Y	*394-9639*	1	RAIL GP-FUEL	794
Y	*371-2480*	1	ROCKER ARM GP	606

563-6729 **ENGINE AR-PRIMARY (**contd.**)** **i07907115**

NOTE	PART NUMBER	QTY	PART NAME 1 2 3 4 5 6 (PRODUCT LEVEL)	SEE PAGE
Y	*560-7572*	1	SENSOR GP-ENGINE	822
Y	*395-0114*	1	STARTING AID GP	826
Y	*385-8000*	1	STARTING MOTOR GP-ELECTRIC	832
Y	*416-6971*	1	TURBOCHARGER GP	741
Y	*560-7999*	1	WIRING GP-ENGINE	854
	555-7277	1	ELECTRONICS GP-ENGINE	
	376-6464	1	PLATE & FILM GP	

Y - SEPARATE ILLUSTRATION

<END>

563-6730 ENGINE AR-PRIMARY

209 BRAKE KW (281 BHP) AT 1800 RPM
OPTIONAL FIELD REPLACEMENT ORDER 451-1222—PAGE: 452, 452-6584—PAGE: 462
PART OF 567-8852 ENGINE AR-COMPLETE

SMCS-1000 **i08705350**

NOTE	PART NUMBER	QTY	PART NAME 1 2 3 4 5 6 (PRODUCT LEVEL)	SEE PAGE
Y	*478-4234*	1	AIR CLEANER GP	715
Y	*377-0721*	1	ALTERNATOR GP-CHARGING	799
Y	*371-2693*	1	BELT TENSIONER GP	416
Y	*560-7573*	1	BRACKET GP-MOUNTING	424
Y	*392-0632*	1	BREATHER GP	611
Y	*376-6871*	1	CAMSHAFT GP	426
Y	*373-3607*	1	CONNECTION GP-WATER	650
Y	*564-2826*	1	CONTROL GP-ELECTRONIC	810
Y	*378-8276*	1	COOLER GP-ENGINE OIL	659
Y	*389-3346*	1	COVER GP-VALVE MECHANISM	435
Y	*374-6300*	1	CRANKSHAFT GP	447
Y	*390-0854*	1	CYLINDER BLOCK GP	450
Y	*385-2572*	1	CYLINDER HEAD GP	458
Y	*371-2742*	1	DRAIN GP-ENGINE OIL	466
Y	*393-2180*	1	DRIVE GP-FAN	484
Y	*375-8320*	1	EXTENSION GP-FAN	501
Y	*378-0627*	1	FAN GP	670
Y	*375-0098*	1	FASTENER GP-DAMPER & PULLEY	505
Y	*390-3737*	1	FILLER GP-ENGINE OIL	620
Y	*415-5625*	1	FILM GP (ALTERNATOR) (ALTERNATOR)	862
Y	*611-2653*	1	FILM GP (RADIATOR)	865
Y	*346-0220*	1	FILTER GP-ENGINE OIL	629
Y	*441-1215*	1	FILTER GP-FUEL (WATER SEPARATOR)	756
Y	*453-7163*	1	FILTER GP-FUEL	760
Y	*346-0769*	1	FLANGE GP-EXHAUST	719
Y	*345-9037*	1	FLYWHEEL GP	510
Y	*439-3432*	1	GAUGE GP-OIL LEVEL (DIPSTICK) (ENGINE)	640
Y	*393-3369*	1	HOUSING GP-FLYWHEEL	526
Y	*375-5838*	1	HOUSING GP-FRONT	536
Y	*416-8908*	1	INJECTOR GP-FUEL	766
Y	*371-2478*	1	JET GP-PISTON COOLING	543
Y	*416-2470*	1	LIFTING GP-ENGINE	546
Y	*426-3312*	1	LINES GP-FUEL FILTER	781
Y	*416-7808*	1	MANIFOLD GP-EXHAUST	724
Y	*391-5523*	1	MANIFOLD GP-INLET	726
Y	*346-1512*	1	MOUNTING GP-ACCESSORY MODULE	855
Y	*375-4499*	1	PAN GP-OIL	557
Y	*452-9761*	1	PISTON & ROD GP	581
Y	*378-8167*	1	PLATE & FILM GP	868
Y	*346-2908*	1	PLUG GP-ENGINE	592
Y	*440-0026*	1	PLUG GP-OIL FILTER MOUNTING	644
Y	*379-6629*	1	PULLEY GP-CRANKSHAFT	603
Y	*462-6685*	1	PUMP GP-ENGINE OIL	646
Y	*563-6186*	1	PUMP GP-FUEL INJECTION	793
Y	*372-2297*	1	PUMP GP-WATER	678
Y	*452-5153*	1	RADIATOR GP	686
Y	*394-9639*	1	RAIL GP-FUEL	794

563-6730 **ENGINE AR-PRIMARY (**contd.**)** **i08705350**

NOTE	PART NUMBER	QTY	PART NAME 1 2 3 4 5 6 (PRODUCT LEVEL)	SEE PAGE
Y	*371-2480*	1	ROCKER ARM GP	606
Y	*560-7572*	1	SENSOR GP-ENGINE	822
Y	*395-0114*	1	STARTING AID GP	826
Y	*385-8000*	1	STARTING MOTOR GP-ELECTRIC	832
Y	*371-2719*	1	SUPPORT GP-POWER TAKE-OFF	608
Y	*416-6971*	1	TURBOCHARGER GP	741
Y	*560-7999*	1	WIRING GP-ENGINE	854
	555-7277	1	ELECTRONICS GP-ENGINE	
	376-6464	1	PLATE & FILM GP	
	332-0905	2	RIVET-DRIVE	
	350-8958	1	PLATE-SERIAL NUMBER (ENGINE)	

Y - SEPARATE ILLUSTRATION

<END>

565-1247 ENGINE AR-PRIMARY

209 BRAKE KW (281 BHP) AT 1800 RPM

OPTIONAL FIELD REPLACEMENT ORDER 451-1222—PAGE: 452, 452-6584—PAGE: 462

SMCS-1000 **i09415678**

NOTE	PART NUMBER	QTY	PART NAME 1 2 3 4 5 6 (PRODUCT LEVEL)	SEE PAGE
Y	*478-4234*	1	AIR CLEANER GP	715
Y	*377-0721*	1	ALTERNATOR GP-CHARGING	799
Y	*371-2693*	1	BELT TENSIONER GP	416
Y	*560-7573*	1	BRACKET GP-MOUNTING	424
Y	*392-0632*	1	BREATHER GP	611
Y	*376-6871*	1	CAMSHAFT GP	426
AY	*567-8621*	1	CONFIGURATION AR-ENGINE	13
Y	*373-3607*	1	CONNECTION GP-WATER	650
Y	*564-2826*	1	CONTROL GP-ELECTRONIC	810
Y	*378-8276*	1	COOLER GP-ENGINE OIL	659
Y	*389-3346*	1	COVER GP-VALVE MECHANISM	435
Y	*374-6300*	1	CRANKSHAFT GP	447
Y	*390-0854*	1	CYLINDER BLOCK GP	450
Y	*385-2572*	1	CYLINDER HEAD GP	458
Y	*371-2742*	1	DRAIN GP-ENGINE OIL	466
Y	*393-2180*	1	DRIVE GP-FAN	484
Y	*443-4956*	1	FAN GP	672
Y	*375-0098*	1	FASTENER GP-DAMPER & PULLEY	505
Y	*390-3737*	1	FILLER GP-ENGINE OIL	620
Y	*415-5625*	1	FILM GP (ALTERNATOR)	862
Y	*346-0220*	1	FILTER GP-ENGINE OIL	629
Y	*441-1215*	1	FILTER GP-FUEL (WATER SEPARATOR)	756
Y	*453-7163*	1	FILTER GP-FUEL	760
Y	*346-0769*	1	FLANGE GP-EXHAUST	719
Y	*345-9037*	1	FLYWHEEL GP	510
Y	*439-3432*	1	GAUGE GP-OIL LEVEL (DIPSTICK) (ENGINE)	640
Y	*393-3369*	1	HOUSING GP-FLYWHEEL	526
Y	*375-5838*	1	HOUSING GP-FRONT	536
Y	*416-8908*	1	INJECTOR GP-FUEL	766
Y	*371-2478*	1	JET GP-PISTON COOLING	543
Y	*416-2470*	1	LIFTING GP-ENGINE	546
Y	*426-3312*	1	LINES GP-FUEL FILTER	781
Y	*416-7808*	1	MANIFOLD GP-EXHAUST	724
Y	*391-5523*	1	MANIFOLD GP-INLET	726
Y	*346-1512*	1	MOUNTING GP-ACCESSORY MODULE	855
Y	*375-4499*	1	PAN GP-OIL	557
Y	*452-9761*	1	PISTON & ROD GP	581
Y	*378-8167*	1	PLATE & FILM GP	868
Y	*346-2908*	1	PLUG GP-ENGINE	592
Y	*440-0026*	1	PLUG GP-OIL FILTER MOUNTING	644
Y	*379-6629*	1	PULLEY GP-CRANKSHAFT	603
Y	*462-6685*	1	PUMP GP-ENGINE OIL	646
Y	*563-6186*	1	PUMP GP-FUEL INJECTION	793
Y	*372-2297*	1	PUMP GP-WATER	678
Y	*394-9639*	1	RAIL GP-FUEL	794
Y	*371-2480*	1	ROCKER ARM GP	606
Y	*560-7572*	1	SENSOR GP-ENGINE	822
Y	*395-0114*	1	STARTING AID GP	826

565-1247 **ENGINE AR-PRIMARY (**contd.**)** **i09415678**

NOTE	PART NUMBER	QTY	PART NAME 1 2 3 4 5 6 (PRODUCT LEVEL)	SEE PAGE
Y	*385-8000*	1	STARTING MOTOR GP-ELECTRIC	832
Y	*371-2719*	1	SUPPORT GP-POWER TAKE-OFF	608
Y	*416-6971*	1	TURBOCHARGER GP	741
Y	*560-7999*	1	WIRING GP-ENGINE	854
	555-7277	1	ELECTRONICS GP-ENGINE	
	376-6464	1	PLATE & FILM GP	

A - NOT PART OF THIS GROUP
Y - SEPARATE ILLUSTRATION

<END>

569-7846 ENGINE AR-PRIMARY

205 BRAKE KW (275 BHP) AT 2200 RPM
FIELD REPLACEMENT ORDER 451-1222—PAGE: 452, 452-6584—PAGE: 462
PART OF 569-8968 ENGINE AR-COMPLETE

SMCS-1000 **i08705357**

NOTE	PART NUMBER	QTY	PART NAME 1 2 3 4 5 6 (PRODUCT LEVEL)	SEE PAGE
Y	*478-4234*	1	AIR CLEANER GP	715
Y	*377-0721*	1	ALTERNATOR GP-CHARGING	799
Y	*371-2693*	1	BELT TENSIONER GP	416
Y	*392-0632*	1	BREATHER GP	611
Y	*396-2617*	1	CAMSHAFT GP	428
Y	*373-3607*	1	CONNECTION GP-WATER	650
Y	*371-2536*	1	CONTROL GP-ELECTRONIC	808
Y	*378-8276*	1	COOLER GP-ENGINE OIL	659
Y	*389-3347*	1	COVER GP-VALVE MECHANISM	436
Y	*374-6300*	1	CRANKSHAFT GP	447
Y	*390-0854*	1	CYLINDER BLOCK GP	450
Y	*385-2572*	1	CYLINDER HEAD GP	458
Y	*393-2180*	1	DRIVE GP-FAN	484
Y	*375-8320*	1	EXTENSION GP-FAN	501
Y	*375-4574*	1	FAN GP	669
Y	*375-0098*	1	FASTENER GP-DAMPER & PULLEY	505
Y	*438-5978*	1	FILLER GP-ENGINE OIL	623
Y	*415-5625*	1	FILM GP (ALTERNATOR)	862
Y	*423-8803*	1	FILM GP (STARTING MOTOR)	863
Y	*611-2653*	1	FILM GP (RADIATOR)	865
Y	*346-0220*	1	FILTER GP-ENGINE OIL	629
Y	*441-1215*	1	FILTER GP-FUEL (WATER SEPARATOR)	756
Y	*453-7163*	1	FILTER GP-FUEL	760
Y	*346-0769*	1	FLANGE GP-EXHAUST	719
Y	*345-8902*	1	FLYWHEEL GP	507
Y	*439-3432*	1	GAUGE GP-OIL LEVEL (DIPSTICK)	640
Y	*345-8838*	1	HOUSING GP-FLYWHEEL	517
Y	*375-5838*	1	HOUSING GP-FRONT	536
Y	*416-8908*	1	INJECTOR GP-FUEL	766
Y	*371-2478*	1	JET GP-PISTON COOLING	543
Y	*416-2470*	1	LIFTING GP-ENGINE	546
Y	*426-3310*	1	LINES GP-FUEL INJECTION	787
Y	*416-7808*	1	MANIFOLD GP-EXHAUST	724
Y	*391-5523*	1	MANIFOLD GP-INLET	726
Y	*346-1528*	1	MOUNTING GP-ACCESSORY MODULE	856
Y	*395-0112*	1	MOUNTING GP-ELECTRONIC CONTROL	819
Y	*375-4499*	1	PAN GP-OIL	557
Y	*369-7304*	1	PISTON & ROD GP	566
Y	*378-8167*	1	PLATE & FILM GP	868
Y	*346-2908*	1	PLUG GP-ENGINE	592
Y	*440-0026*	1	PLUG GP-OIL FILTER MOUNTING	644
Y	*379-6629*	1	PULLEY GP-CRANKSHAFT	603
Y	*462-6685*	1	PUMP GP-ENGINE OIL	646
Y	*391-4811*	1	PUMP GP-FUEL INJECTION	790
Y	*372-2297*	1	PUMP GP-WATER	678
Y	*452-5153*	1	RADIATOR GP	686
Y	*394-9639*	1	RAIL GP-FUEL	794

569-7846 **ENGINE AR-PRIMARY (**contd.**)** **i08705357**

NOTE	PART NUMBER	QTY	PART NAME 1 2 3 4 5 6 (PRODUCT LEVEL)	SEE PAGE
Y	*371-2480*	1	ROCKER ARM GP	606
Y	*395-0110*	1	SENSOR GP-ENGINE	820
Y	*395-0114*	1	STARTING AID GP	826
Y	*392-2020*	1	STARTING MOTOR GP-ELECTRIC	835
Y	*371-2719*	1	SUPPORT GP-POWER TAKE-OFF	608
Y	*416-6971*	1	TURBOCHARGER GP	741
Y	*424-5516*	1	WIRING GP-ENGINE	846
	449-3320	1	ELECTRONICS GP-ENGINE	
	376-6464	1	PLATE & FILM GP	
	332-0905	2	RIVET-DRIVE	
	350-8958	1	PLATE-SERIAL NUMBER (ENGINE)	

Y - SEPARATE ILLUSTRATION

<END>

ENGINE ARRANGEMENT

575-2879 ENGINE AR-PRIMARY

151 BRAKE KW (203 BHP) AT 2200 RPM

OPTIONAL FIELD REPLACEMENT ORDER 451-1222—PAGE: 452, 452-6584—PAGE: 462

SMCS-1000 **i09415577**

NOTE	PART NUMBER	QTY	PART NAME 1 2 3 4 5 6 (PRODUCT LEVEL)	SEE PAGE
Y	*385-8001*	1	ALTERNATOR GP-CHARGING	800
Y	*346-0099*	1	BASE GP-OIL COOLER & FILTER	610
Y	*375-4479*	1	BELT TENSIONER GP	417
Y	*392-0632*	1	BREATHER GP	611
Y	*396-2615*	1	CAMSHAFT GP	427
Y	*374-7094*	1	COMPRESSOR & MTG GP-REFRIGERANT	429
AY	*585-7897*	1	CONFIGURATION AR-ENGINE	14
Y	*346-2911*	1	CONNECTION GP-HEATER	648
Y	*373-3607*	1	CONNECTION GP-WATER	650
Y	*371-2537*	1	CONTROL GP-ENGINE ELECTRONIC	811
Y	*389-3346*	1	COVER GP-VALVE MECHANISM	435
Y	*374-6300*	1	CRANKSHAFT GP	447
Y	*390-0854*	1	CYLINDER BLOCK GP	450
Y	*385-2572*	1	CYLINDER HEAD GP	458
Y	*394-7014*	1	DRAIN GP-ENGINE OIL	468
Y	*374-7093*	1	DRIVE GP-FAN	469
Y	*375-4606*	1	DRIVE GP-POWER TAKE-OFF	499
Y	*375-0098*	1	FASTENER GP-DAMPER & PULLEY	505
Y	*448-0944*	1	FILLER GP-ENGINE OIL	627
Y	*390-0060*	1	FILM GP	859
Y	*415-5625*	1	FILM GP (ALTERNATOR)	862
Y	*346-0220*	1	FILTER GP-ENGINE OIL	629
Y	*441-1222*	1	FILTER GP-FUEL (WATER SEPARATOR)	758
Y	*453-7163*	1	FILTER GP-FUEL	760
Y	*377-0692*	1	FLYWHEEL GP	511
Y	*460-1570*	1	GAUGE GP-OIL LEVEL (DIPSTICK)	641
Y	*393-3369*	1	HOUSING GP-FLYWHEEL	526
Y	*375-4645*	1	HOUSING GP-FRONT	534
Y	*371-2483*	1	INJECTOR GP-FUEL	763
Y	*371-2478*	1	JET GP-PISTON COOLING	543
Y	*371-2740*	1	LIFTING GP-ENGINE	545
Y	*426-3312*	1	LINES GP-FUEL FILTER	781
Y	*393-7694*	1	MANIFOLD GP-EXHAUST	723
Y	*391-5523*	1	MANIFOLD GP-INLET	726
Y	*395-0112*	1	MOUNTING GP-ELECTRONIC CONTROL	819
Y	*346-1510*	1	MOUNTING GP-ENGINE	548
Y	*393-5466*	1	PAN GP-OIL	563
Y	*374-6301*	1	PISTON & ROD GP	576
Y	*371-2554*	1	PULLEY GP-CRANKSHAFT	601
Y	*462-6685*	1	PUMP GP-ENGINE OIL	646
Y	*391-4811*	1	PUMP GP-FUEL INJECTION	790
Y	*372-2297*	1	PUMP GP-WATER	678
Y	*394-9639*	1	RAIL GP-FUEL	794
Y	*371-2480*	1	ROCKER ARM GP	606
Y	*395-0110*	1	SENSOR GP-ENGINE	820
Y	*395-0114*	1	STARTING AID GP	826
Y	*371-2541*	1	STARTING MOTOR GP-ELECTRIC	829
Y	*374-0432*	1	TURBOCHARGER GP	730

575-2879 **ENGINE AR-PRIMARY (**contd.**)** **i09415577**

NOTE	PART NUMBER	QTY	PART NAME 1 2 3 4 5 6 (PRODUCT LEVEL)	SEE PAGE
Y	*371-2745*	1	VALVE GP-FLUID SAMPLING	647
Y	*395-0113*	1	WIRING GP-ENGINE	841
	376-6464	1	PLATE & FILM GP	
	579-2220	1	ELECTRONICS GP-ENGINE	

A - NOT PART OF THIS GROUP
Y - SEPARATE ILLUSTRATION

<END>

575-2880 ENGINE AR-PRIMARY

204 BRAKE KW (274 BHP) AT 2200 RPM

OPTIONAL FIELD REPLACEMENT ORDER 451-1222—PAGE: 452, 452-6584—PAGE: 462

SMCS-1000 **i10430859**

NOTE	PART NUMBER	QTY	PART NAME 1 2 3 4 5 6 (PRODUCT LEVEL)	SEE PAGE
Y	*385-8001*	1	ALTERNATOR GP-CHARGING	800
Y	*375-4479*	1	BELT TENSIONER GP	417
Y	*392-0632*	1	BREATHER GP	611
Y	*396-2617*	1	CAMSHAFT GP	428
Y	*374-7094*	1	COMPRESSOR & MTG GP-REFRIGERANT	429
AY	*585-7898*	1	CONFIGURATION AR-ENGINE	14
Y	*346-2911*	1	CONNECTION GP-HEATER	648
Y	*373-3607*	1	CONNECTION GP-WATER	650
Y	*371-2537*	1	CONTROL GP-ENGINE ELECTRONIC	811
Y	*378-8283*	1	COOLER GP-ENGINE OIL	662
Y	*389-3346*	1	COVER GP-VALVE MECHANISM	435
Y	*374-6300*	1	CRANKSHAFT GP	447
Y	*390-0854*	1	CYLINDER BLOCK GP	450
Y	*385-2572*	1	CYLINDER HEAD GP	458
Y	*394-7014*	1	DRAIN GP-ENGINE OIL	468
Y	*374-7093*	1	DRIVE GP-FAN	469
Y	*375-4606*	1	DRIVE GP-POWER TAKE-OFF	499
Y	*375-0098*	1	FASTENER GP-DAMPER & PULLEY	505
Y	*448-0944*	1	FILLER GP-ENGINE OIL	627
Y	*390-0060*	1	FILM GP	859
Y	*415-5625*	1	FILM GP (ALTERNATOR)	862
Y	*346-0220*	1	FILTER GP-ENGINE OIL	629
Y	*441-1222*	1	FILTER GP-FUEL (WATER SEPARATOR)	758
Y	*453-7163*	1	FILTER GP-FUEL	760
Y	*377-0692*	1	FLYWHEEL GP	511
Y	*460-1570*	1	GAUGE GP-OIL LEVEL (DIPSTICK)	641
Y	*393-3369*	1	HOUSING GP-FLYWHEEL	526
Y	*375-4645*	1	HOUSING GP-FRONT	534
Y	*416-8908*	1	INJECTOR GP-FUEL	766
Y	*371-2478*	1	JET GP-PISTON COOLING	543
Y	*371-2740*	1	LIFTING GP-ENGINE	545
Y	*426-3312*	1	LINES GP-FUEL FILTER	781
Y	*393-7694*	1	MANIFOLD GP-EXHAUST	723
Y	*391-5523*	1	MANIFOLD GP-INLET	726
Y	*395-0112*	1	MOUNTING GP-ELECTRONIC CONTROL	819
Y	*346-1510*	1	MOUNTING GP-ENGINE	548
Y	*393-5466*	1	PAN GP-OIL	563
Y	*369-7304*	1	PISTON & ROD GP	566
Y	*371-2554*	1	PULLEY GP-CRANKSHAFT	601
Y	*462-6685*	1	PUMP GP-ENGINE OIL	646
Y	*391-4811*	1	PUMP GP-FUEL INJECTION	790
Y	*372-2297*	1	PUMP GP-WATER	678
Y	*394-9639*	1	RAIL GP-FUEL	794
Y	*371-2480*	1	ROCKER ARM GP	606
Y	*395-0110*	1	SENSOR GP-ENGINE	820
Y	*395-0114*	1	STARTING AID GP	826
Y	*371-2541*	1	STARTING MOTOR GP-ELECTRIC	829
Y	*416-6969*	1	TURBOCHARGER GP	739

575-2880 **ENGINE AR-PRIMARY (**contd.**)** **i10430859**

NOTE	PART NUMBER	QTY	PART NAME 1 2 3 4 5 6 (PRODUCT LEVEL)	SEE PAGE
Y	*371-2745*	1	VALVE GP-FLUID SAMPLING	647
Y	*635-3313*	1	PLATE GP-IDENTIFICATION	869
Y	*395-0113*	1	WIRING GP-ENGINE	841
Y	*376-6464*	1	PLATE & FILM GP	867
	579-3653	1	ELECTRONICS GP-ENGINE	
			SOFTWARE MUST BE PROCURED LOCALLY FROM YOUR CAT DEALER	

A - NOT PART OF THIS GROUP
Y - SEPARATE ILLUSTRATION

<END>

ENGINE ARRANGEMENT

583-8352 ENGINE AR-PRIMARY

168 BRAKE KW (225 BHP) AT 2200 RPM

OPTIONAL FIELD REPLACEMENT ORDER 451-1222—PAGE: 452, 452-6584—PAGE: 462

SMCS-1000 **i08708976**

NOTE	PART NUMBER	QTY	PART NAME 1 2 3 4 5 6 (PRODUCT LEVEL)	SEE PAGE
Y	*478-4234*	1	AIR CLEANER GP	715
Y	*377-0721*	1	ALTERNATOR GP-CHARGING	799
Y	*371-2693*	1	BELT TENSIONER GP	416
Y	*425-0196*	1	BREATHER GP (CRANKCASE)	612
Y	*396-2617*	1	CAMSHAFT GP	428
AY	*585-3037*	1	CONFIGURATION AR-ENGINE	14
Y	*373-3607*	1	CONNECTION GP-WATER	650
Y	*371-2536*	1	CONTROL GP-ELECTRONIC	808
Y	*378-8276*	1	COOLER GP-ENGINE OIL	659
Y	*389-3346*	1	COVER GP-VALVE MECHANISM	435
Y	*374-6300*	1	CRANKSHAFT GP	447
Y	*390-0854*	1	CYLINDER BLOCK GP	450
Y	*385-2572*	1	CYLINDER HEAD GP	458
Y	*393-2180*	1	DRIVE GP-FAN	484
Y	*375-8320*	1	EXTENSION GP-FAN	501
Y	*375-4574*	1	FAN GP	669
Y	*375-0098*	1	FASTENER GP-DAMPER & PULLEY	505
Y	*390-3737*	1	FILLER GP-ENGINE OIL	620
Y	*611-2653*	1	FILM GP (RADIATOR)	865
Y	*415-5625*	1	FILM GP (ALTERNATOR)	862
Y	*346-0220*	1	FILTER GP-ENGINE OIL	629
Y	*441-1215*	1	FILTER GP-FUEL (WATER SEPARATOR)	756
Y	*453-7163*	1	FILTER GP-FUEL	760
Y	*425-0197*	1	FILTER GP-FUMES DISPOSAL	630
Y	*346-0769*	1	FLANGE GP-EXHAUST	719
Y	*345-9037*	1	FLYWHEEL GP	510
Y	*439-3432*	1	GAUGE GP-OIL LEVEL (DIPSTICK)	640
Y	*393-3369*	1	HOUSING GP-FLYWHEEL	526
Y	*375-5838*	1	HOUSING GP-FRONT	536
Y	*416-8908*	1	INJECTOR GP-FUEL	766
Y	*371-2478*	1	JET GP-PISTON COOLING	543
Y	*416-2470*	1	LIFTING GP-ENGINE	546
Y	*426-3310*	1	LINES GP-FUEL INJECTION	787
Y	*416-7808*	1	MANIFOLD GP-EXHAUST	724
Y	*391-5523*	1	MANIFOLD GP-INLET	726
Y	*346-1512*	1	MOUNTING GP-ACCESSORY MODULE	855
Y	*395-0112*	1	MOUNTING GP-ELECTRONIC CONTROL	819
Y	*375-4499*	1	PAN GP-OIL	557
Y	*369-7304*	1	PISTON & ROD GP	566
Y	*378-8167*	1	PLATE & FILM GP	868
Y	*346-2908*	1	PLUG GP-ENGINE	592
Y	*440-0026*	1	PLUG GP-OIL FILTER MOUNTING	644
Y	*379-6629*	1	PULLEY GP-CRANKSHAFT	603
Y	*462-6685*	1	PUMP GP-ENGINE OIL	646
Y	*391-4811*	1	PUMP GP-FUEL INJECTION	790
Y	*372-2297*	1	PUMP GP-WATER	678
Y	*452-5153*	1	RADIATOR GP	686
Y	*394-9639*	1	RAIL GP-FUEL	794

583-8352 **ENGINE AR-PRIMARY (**contd.**)** **i08708976**

NOTE	PART NUMBER	QTY	PART NAME 1 2 3 4 5 6 (PRODUCT LEVEL)	SEE PAGE
Y	*371-2480*	1	ROCKER ARM GP	606
Y	*395-0110*	1	SENSOR GP-ENGINE	820
Y	*395-0114*	1	STARTING AID GP	826
Y	*385-8000*	1	STARTING MOTOR GP-ELECTRIC	832
Y	*371-2719*	1	SUPPORT GP-POWER TAKE-OFF	608
Y	*416-6971*	1	TURBOCHARGER GP	741
Y	*424-5516*	1	WIRING GP-ENGINE	846
	503-9589	1	ELECTRONICS GP-ENGINE	
	376-6464	1	PLATE & FILM GP	

A - NOT PART OF THIS GROUP
Y - SEPARATE ILLUSTRATION

<END>

591-1266 ENGINE AR-PRIMARY

205 BRAKE KW (275 BHP) AT 2200 RPM

OPTIONAL FIELD REPLACEMENT ORDER 451-1222—PAGE: 452, 452-6584—PAGE: 462

FIELD REPLACEMENT FOR 461-4659—PAGE: 99

SMCS-1000 **i10477488**

NOTE	PART NUMBER	QTY	PART NAME 1 2 3 4 5 6 (PRODUCT LEVEL)	SEE PAGE
Y	*478-4234*	1	AIR CLEANER GP	715
Y	*377-0720*	1	ALTERNATOR GP-CHARGING	798
Y	*371-2693*	1	BELT TENSIONER GP	416
Y	*425-0196*	1	BREATHER GP (CRANKCASE)	612
Y	*396-2617*	1	CAMSHAFT GP	428
AY	*591-4607*	1	CONFIGURATION AR-ENGINE	14
Y	*373-3607*	1	CONNECTION GP-WATER	650
Y	*371-2536*	1	CONTROL GP-ELECTRONIC	808
Y	*378-8276*	1	COOLER GP-ENGINE OIL	659
Y	*389-3346*	1	COVER GP-VALVE MECHANISM	435
Y	*374-6300*	1	CRANKSHAFT GP	447
Y	*390-0854*	1	CYLINDER BLOCK GP	450
Y	*385-2572*	1	CYLINDER HEAD GP	458
Y	*393-2180*	1	DRIVE GP-FAN	484
Y	*375-8320*	1	EXTENSION GP-FAN	501
Y	*378-0627*	1	FAN GP	670
Y	*375-0098*	1	FASTENER GP-DAMPER & PULLEY	505
Y	*390-3737*	1	FILLER GP-ENGINE OIL	620
Y	*611-2653*	1	FILM GP (RADIATOR)	865
Y	*415-5625*	1	FILM GP (ALTERNATOR)	862
Y	*423-8803*	1	FILM GP (STARTING MOTOR)	863
Y	*346-0220*	1	FILTER GP-ENGINE OIL	629
Y	*441-1215*	1	FILTER GP-FUEL (WATER SEPARATOR)	756
Y	*453-7163*	1	FILTER GP-FUEL	760
Y	*425-0197*	1	FILTER GP-FUMES DISPOSAL	630
Y	*346-0769*	1	FLANGE GP-EXHAUST	719
Y	*437-2723*	1	FLYWHEEL GP	513
Y	*439-3432*	1	GAUGE GP-OIL LEVEL (DIPSTICK)	640
Y	*437-2721*	1	HOUSING GP-FLYWHEEL	529
Y	*375-5838*	1	HOUSING GP-FRONT	536
Y	*416-8908*	1	INJECTOR GP-FUEL	766
Y	*371-2478*	1	JET GP-PISTON COOLING	543
Y	*416-2470*	1	LIFTING GP-ENGINE	546
Y	*426-3310*	1	LINES GP-FUEL INJECTION	787
Y	*416-7808*	1	MANIFOLD GP-EXHAUST	724
Y	*391-5523*	1	MANIFOLD GP-INLET	726
Y	*395-0112*	1	MOUNTING GP-ELECTRONIC CONTROL	819
Y	*458-2242*	1	MOUNTING GP-ENGINE	550
Y	*375-4499*	1	PAN GP-OIL	557
Y	*369-7304*	1	PISTON & ROD GP	566
Y	*378-8167*	1	PLATE & FILM GP	868
Y	*376-6464*	1	PLATE & FILM GP	867
Y	*346-2908*	1	PLUG GP-ENGINE	592
Y	*440-0026*	1	PLUG GP-OIL FILTER MOUNTING	644
Y	*379-6629*	1	PULLEY GP-CRANKSHAFT	603
Y	*462-6685*	1	PUMP GP-ENGINE OIL	646
Y	*391-4811*	1	PUMP GP-FUEL INJECTION	790

591-1266 **ENGINE AR-PRIMARY (**contd.**)** **i10477488**

NOTE	PART NUMBER	QTY	PART NAME 1 2 3 4 5 6 (PRODUCT LEVEL)	SEE PAGE
Y	*372-2297*	1	PUMP GP-WATER	678
Y	*452-5153*	1	RADIATOR GP	686
Y	*394-9639*	1	RAIL GP-FUEL	794
Y	*371-2480*	1	ROCKER ARM GP	606
Y	*395-0110*	1	SENSOR GP-ENGINE	820
Y	*380-9279*	1	STARTING AID GP	824
Y	*378-0589*	1	STARTING MOTOR GP-ELECTRIC	830
Y	*371-2719*	1	SUPPORT GP-POWER TAKE-OFF	608
Y	*416-6971*	1	TURBOCHARGER GP	741
Y	*424-5516*	1	WIRING GP-ENGINE	846
	449-3320	1	ELECTRONICS GP-ENGINE	
			SOFTWARE MUST BE PROCURED LOCALLY FROM YOUR CAT DEALER	

A - NOT PART OF THIS GROUP
Y - SEPARATE ILLUSTRATION

<END>

591-9440 ENGINE AR-PRIMARY

205 BRAKE KW (275 BHP) AT 2200 RPM

OPTIONAL FIELD REPLACEMENT ORDER 451-1222—PAGE: 452, 452-6584—PAGE: 462

SMCS-1000 **i10433613**

NOTE	PART NUMBER	QTY	PART NAME 1 2 3 4 5 6 (PRODUCT LEVEL)	SEE PAGE
Y	*478-4234*	1	AIR CLEANER GP	715
Y	*377-0720*	1	ALTERNATOR GP-CHARGING	798
Y	*371-2693*	1	BELT TENSIONER GP	416
Y	*392-0632*	1	BREATHER GP	611
Y	*396-2617*	1	CAMSHAFT GP	428
AY	*592-3194*	1	CONFIGURATION AR-ENGINE	15
Y	*373-3607*	1	CONNECTION GP-WATER	650
Y	*371-2536*	1	CONTROL GP-ELECTRONIC	808
Y	*378-8280*	1	COOLER GP-ENGINE OIL	661
Y	*389-3347*	1	COVER GP-VALVE MECHANISM	436
Y	*374-6300*	1	CRANKSHAFT GP	447
Y	*390-0854*	1	CYLINDER BLOCK GP	450
Y	*385-2572*	1	CYLINDER HEAD GP	458
Y	*371-2742*	1	DRAIN GP-ENGINE OIL	466
Y	*393-2180*	1	DRIVE GP-FAN	484
Y	*375-4606*	1	DRIVE GP-POWER TAKE-OFF	499
Y	*375-8320*	1	EXTENSION GP-FAN	501
Y	*375-4574*	1	FAN GP	669
Y	*375-0098*	1	FASTENER GP-DAMPER & PULLEY	505
Y	*448-0944*	1	FILLER GP-ENGINE OIL	627
Y	*611-2653*	1	FILM GP (RADIATOR)	865
Y	*423-8803*	1	FILM GP (STARTING MOTOR)	863
Y	*346-0220*	1	FILTER GP-ENGINE OIL	629
Y	*441-1215*	1	FILTER GP-FUEL (WATER SEPARATOR)	756
Y	*453-7163*	1	FILTER GP-FUEL	760
Y	*346-0769*	1	FLANGE GP-EXHAUST	719
Y	*345-8902*	1	FLYWHEEL GP	507
Y	*439-3432*	1	GAUGE GP-OIL LEVEL (DIPSTICK)	640
Y	*345-8838*	1	HOUSING GP-FLYWHEEL	517
Y	*375-4645*	1	HOUSING GP-FRONT	534
Y	*416-8908*	1	INJECTOR GP-FUEL	766
Y	*371-2478*	1	JET GP-PISTON COOLING	543
Y	*416-2470*	1	LIFTING GP-ENGINE	546
Y	*426-3310*	1	LINES GP-FUEL INJECTION	787
Y	*416-7808*	1	MANIFOLD GP-EXHAUST	724
Y	*391-5523*	1	MANIFOLD GP-INLET	726
Y	*346-1528*	1	MOUNTING GP-ACCESSORY MODULE	856
Y	*395-0112*	1	MOUNTING GP-ELECTRONIC CONTROL	819
Y	*375-4499*	1	PAN GP-OIL	557
Y	*369-7304*	1	PISTON & ROD GP	566
Y	*378-8167*	1	PLATE & FILM GP	868
Y	*376-6464*	1	PLATE & FILM GP	867
Y	*346-2908*	1	PLUG GP-ENGINE	592
Y	*440-0026*	1	PLUG GP-OIL FILTER MOUNTING	644
Y	*379-6629*	1	PULLEY GP-CRANKSHAFT	603
Y	*462-6685*	1	PUMP GP-ENGINE OIL	646
Y	*391-4811*	1	PUMP GP-FUEL INJECTION	790
Y	*372-2297*	1	PUMP GP-WATER	678

591-9440 **ENGINE AR-PRIMARY (**contd.**)** **i10433613**

NOTE	PART NUMBER	QTY	PART NAME 1 2 3 4 5 6 (PRODUCT LEVEL)	SEE PAGE
Y	*456-4298*	1	RADIATOR GP	695
Y	*394-9639*	1	RAIL GP-FUEL	794
Y	*371-2480*	1	ROCKER ARM GP	606
Y	*395-0110*	1	SENSOR GP-ENGINE	820
Y	*380-9279*	1	STARTING AID GP	824
Y	*415-4870*	1	STARTING MOTOR GP-ELECTRIC	837
Y	*416-6971*	1	TURBOCHARGER GP	741
Y	*424-5516*	1	WIRING GP-ENGINE	846
	449-3320	1	ELECTRONICS GP-ENGINE	
			SOFTWARE MUST BE PROCURED LOCALLY FROM YOUR CAT DEALER	

A - NOT PART OF THIS GROUP
Y - SEPARATE ILLUSTRATION

<END>

593-7287 ENGINE AR-PRIMARY

205 BRAKE KW (275 BHP) AT 2200 RPM

OPTIONAL FIELD REPLACEMENT ORDER 451-1222—PAGE: 452, 452-6584—PAGE: 462

SMCS-1000 **i10433615**

NOTE	PART NUMBER	QTY	PART NAME 1 2 3 4 5 6 (PRODUCT LEVEL)	SEE PAGE
Y	*377-0721*	1	ALTERNATOR GP-CHARGING	799
Y	*371-2693*	1	BELT TENSIONER GP	416
Y	*425-0196*	1	BREATHER GP (CRANKCASE)	612
Y	*396-2617*	1	CAMSHAFT GP	428
AY	*594-0211*	1	CONFIGURATION AR-ENGINE	15
Y	*373-3607*	1	CONNECTION GP-WATER	650
Y	*371-2536*	1	CONTROL GP-ELECTRONIC	808
Y	*378-8280*	1	COOLER GP-ENGINE OIL	661
Y	*389-3346*	1	COVER GP-VALVE MECHANISM	435
Y	*374-6300*	1	CRANKSHAFT GP	447
Y	*390-0854*	1	CYLINDER BLOCK GP	450
Y	*385-2572*	1	CYLINDER HEAD GP	458
Y	*393-2180*	1	DRIVE GP-FAN	484
Y	*375-8320*	1	EXTENSION GP-FAN	501
Y	*375-4574*	1	FAN GP	669
Y	*375-0098*	1	FASTENER GP-DAMPER & PULLEY	505
Y	*390-3737*	1	FILLER GP-ENGINE OIL	620
Y	*415-5625*	1	FILM GP (ALTERNATOR)	862
Y	*611-2653*	1	FILM GP (RADIATOR)	865
Y	*346-0220*	1	FILTER GP-ENGINE OIL	629
Y	*441-1215*	1	FILTER GP-FUEL (WATER SEPARATOR)	756
Y	*453-7163*	1	FILTER GP-FUEL	760
Y	*425-0197*	1	FILTER GP-FUMES DISPOSAL	630
Y	*346-0769*	1	FLANGE GP-EXHAUST	719
Y	*345-9037*	1	FLYWHEEL GP	510
Y	*439-3432*	1	GAUGE GP-OIL LEVEL (DIPSTICK)	640
Y	*393-3369*	1	HOUSING GP-FLYWHEEL	526
Y	*375-5838*	1	HOUSING GP-FRONT	536
Y	*416-8908*	1	INJECTOR GP-FUEL	766
Y	*371-2478*	1	JET GP-PISTON COOLING	543
Y	*416-2470*	1	LIFTING GP-ENGINE	546
Y	*426-3310*	1	LINES GP-FUEL INJECTION	787
Y	*416-7808*	1	MANIFOLD GP-EXHAUST	724
Y	*391-5523*	1	MANIFOLD GP-INLET	726
Y	*346-1512*	1	MOUNTING GP-ACCESSORY MODULE	855
Y	*395-0112*	1	MOUNTING GP-ELECTRONIC CONTROL	819
Y	*375-4499*	1	PAN GP-OIL	557
Y	*369-7304*	1	PISTON & ROD GP	566
Y	*378-8167*	1	PLATE & FILM GP	868
Y	*376-6464*	1	PLATE & FILM GP	867
Y	*635-3313*	1	PLATE GP-IDENTIFICATION	869
Y	*346-2908*	1	PLUG GP-ENGINE	592
Y	*440-0026*	1	PLUG GP-OIL FILTER MOUNTING	644
Y	*379-6629*	1	PULLEY GP-CRANKSHAFT	603
Y	*462-6685*	1	PUMP GP-ENGINE OIL	646
Y	*391-4811*	1	PUMP GP-FUEL INJECTION	790
Y	*372-2297*	1	PUMP GP-WATER	678
Y	*452-5153*	1	RADIATOR GP	686

593-7287 **ENGINE AR-PRIMARY (**contd.**)** **i10433615**

NOTE	PART NUMBER	QTY	PART NAME 1 2 3 4 5 6 (PRODUCT LEVEL)	SEE PAGE
Y	*394-9639*	1	RAIL GP-FUEL	794
Y	*371-2480*	1	ROCKER ARM GP	606
Y	*395-0110*	1	SENSOR GP-ENGINE	820
Y	*395-0114*	1	STARTING AID GP	826
Y	*371-2541*	1	STARTING MOTOR GP-ELECTRIC	829
Y	*371-2719*	1	SUPPORT GP-POWER TAKE-OFF	608
Y	*416-6971*	1	TURBOCHARGER GP	741
Y	*424-5516*	1	WIRING GP-ENGINE	846
	449-3320	1	ELECTRONICS GP-ENGINE	
			SOFTWARE MUST BE PROCURED LOCALLY FROM YOUR CAT DEALER	

A - NOT PART OF THIS GROUP
Y - SEPARATE ILLUSTRATION

<END>

593-7288 ENGINE AR-PRIMARY

205 BRAKE KW (275 BHP) AT 2200 RPM

OPTIONAL FIELD REPLACEMENT ORDER 451-1222—PAGE: 452, 452-6584—PAGE: 462

SMCS-1000 **i10432887**

NOTE	PART NUMBER	QTY	PART NAME 1 2 3 4 5 6 (PRODUCT LEVEL)	SEE PAGE
Y	*377-0721*	1	ALTERNATOR GP-CHARGING	799
Y	*371-2693*	1	BELT TENSIONER GP	416
Y	*425-0196*	1	BREATHER GP (CRANKCASE)	612
Y	*396-2617*	1	CAMSHAFT GP	428
AY	*594-0218*	1	CONFIGURATION AR-ENGINE	15
Y	*373-3607*	1	CONNECTION GP-WATER	650
Y	*371-2536*	1	CONTROL GP-ELECTRONIC	808
Y	*378-8280*	1	COOLER GP-ENGINE OIL	661
Y	*389-3346*	1	COVER GP-VALVE MECHANISM	435
Y	*374-6300*	1	CRANKSHAFT GP	447
Y	*390-0854*	1	CYLINDER BLOCK GP	450
Y	*385-2572*	1	CYLINDER HEAD GP	458
Y	*399-0083*	1	DRIVE GP-FAN	492
Y	*375-0098*	1	FASTENER GP-DAMPER & PULLEY	505
Y	*390-3737*	1	FILLER GP-ENGINE OIL	620
Y	*415-5625*	1	FILM GP (ALTERNATOR)	862
Y	*346-0220*	1	FILTER GP-ENGINE OIL	629
Y	*441-1215*	1	FILTER GP-FUEL (WATER SEPARATOR)	756
Y	*453-7163*	1	FILTER GP-FUEL	760
Y	*425-0197*	1	FILTER GP-FUMES DISPOSAL	630
Y	*346-0769*	1	FLANGE GP-EXHAUST	719
Y	*345-9037*	1	FLYWHEEL GP	510
Y	*439-3432*	1	GAUGE GP-OIL LEVEL (DIPSTICK)	640
Y	*393-3369*	1	HOUSING GP-FLYWHEEL	526
Y	*375-5838*	1	HOUSING GP-FRONT	536
Y	*416-8908*	1	INJECTOR GP-FUEL	766
Y	*371-2478*	1	JET GP-PISTON COOLING	543
Y	*416-2470*	1	LIFTING GP-ENGINE	546
Y	*426-3310*	1	LINES GP-FUEL INJECTION	787
Y	*416-7808*	1	MANIFOLD GP-EXHAUST	724
Y	*391-5523*	1	MANIFOLD GP-INLET	726
Y	*346-1512*	1	MOUNTING GP-ACCESSORY MODULE	855
Y	*395-0112*	1	MOUNTING GP-ELECTRONIC CONTROL	819
Y	*375-4499*	1	PAN GP-OIL	557
Y	*369-7304*	1	PISTON & ROD GP	566
Y	*378-8167*	1	PLATE & FILM GP	868
Y	*635-3313*	1	PLATE GP-IDENTIFICATION	869
Y	*346-2908*	1	PLUG GP-ENGINE	592
Y	*440-0026*	1	PLUG GP-OIL FILTER MOUNTING	644
Y	*371-2554*	1	PULLEY GP-CRANKSHAFT	601
Y	*462-6685*	1	PUMP GP-ENGINE OIL	646
Y	*391-4811*	1	PUMP GP-FUEL INJECTION	790
Y	*372-2297*	1	PUMP GP-WATER	678
Y	*394-9639*	1	RAIL GP-FUEL	794
Y	*371-2480*	1	ROCKER ARM GP	606
Y	*395-0110*	1	SENSOR GP-ENGINE	820
Y	*395-0114*	1	STARTING AID GP	826
Y	*371-2541*	1	STARTING MOTOR GP-ELECTRIC	829

593-7288 **ENGINE AR-PRIMARY (**contd.**)** **i10432887**

NOTE	PART NUMBER	QTY	PART NAME 1 2 3 4 5 6 (PRODUCT LEVEL)	SEE PAGE
Y	*371-2719*	1	SUPPORT GP-POWER TAKE-OFF	608
Y	*448-9777*	1	TURBOCHARGER GP	748
Y	*424-5516*	1	WIRING GP-ENGINE	846
	449-3320	1	ELECTRONICS GP-ENGINE	
	376-6464	1	PLATE & FILM GP	
			SOFTWARE MUST BE PROCURED LOCALLY FROM YOUR CAT DEALER	

A - NOT PART OF THIS GROUP
Y - SEPARATE ILLUSTRATION

<END>

594-2125 ENGINE AR-PRIMARY

186 BRAKE KW (249 BHP) AT 2200 RPM

OPTIONAL FIELD REPLACEMENT ORDER 451-1222—PAGE: 452, 452-6584—PAGE: 462

SMCS-1000 **i09415732**

NOTE	PART NUMBER	QTY	PART NAME 1 2 3 4 5 6 (PRODUCT LEVEL)	SEE PAGE
Y	*385-8001*	1	ALTERNATOR GP-CHARGING	800
Y	*391-9610*	1	BELT TENSIONER GP	420
Y	*392-0632*	1	BREATHER GP	611
Y	*396-2617*	1	CAMSHAFT GP	428
AY	*594-3037*	1	CONFIGURATION AR-ENGINE	15
Y	*346-2911*	1	CONNECTION GP-HEATER	648
Y	*373-3606*	1	CONNECTION GP-WATER	649
Y	*371-2536*	1	CONTROL GP-ELECTRONIC	808
Y	*378-8280*	1	COOLER GP-ENGINE OIL	661
Y	*378-0629*	1	COVER GP-ACCESSORY DRIVE	433
Y	*389-3346*	1	COVER GP-VALVE MECHANISM	435
Y	*374-6300*	1	CRANKSHAFT GP	447
Y	*390-0854*	1	CYLINDER BLOCK GP	450
Y	*385-2572*	1	CYLINDER HEAD GP	458
Y	*393-9572*	1	DRIVE GP-FAN	490
Y	*371-2694*	1	EXTENSION GP-FAN	500
Y	*375-0098*	1	FASTENER GP-DAMPER & PULLEY	505
Y	*379-6626*	1	FILLER GP-ENGINE OIL	619
Y	*390-0060*	1	FILM GP	859
Y	*415-5625*	1	FILM GP (ALTERNATOR)	862
Y	*346-0220*	1	FILTER GP-ENGINE OIL	629
Y	*441-1222*	1	FILTER GP-FUEL (WATER SEPARATOR)	758
Y	*453-7163*	1	FILTER GP-FUEL	760
Y	*346-0769*	1	FLANGE GP-EXHAUST	719
Y	*437-2723*	1	FLYWHEEL GP	513
Y	*439-3432*	1	GAUGE GP-OIL LEVEL (DIPSTICK)	640
Y	*437-2721*	1	HOUSING GP-FLYWHEEL	529
Y	*375-5838*	1	HOUSING GP-FRONT	536
Y	*416-8908*	1	INJECTOR GP-FUEL	766
Y	*371-2478*	1	JET GP-PISTON COOLING	543
Y	*371-2735*	1	LIFTING GP-ENGINE	544
Y	*398-7221*	1	LINES GP-FUEL FILTER	778
Y	*416-7808*	1	MANIFOLD GP-EXHAUST	724
Y	*391-5523*	1	MANIFOLD GP-INLET	726
Y	*395-0112*	1	MOUNTING GP-ELECTRONIC CONTROL	819
Y	*495-6156*	1	MOUNTING GP-ENGINE	551
Y	*375-4499*	1	PAN GP-OIL	557
Y	*369-7304*	1	PISTON & ROD GP	566
Y	*440-0026*	1	PLUG GP-OIL FILTER MOUNTING	644
Y	*371-2554*	1	PULLEY GP-CRANKSHAFT	601
Y	*462-6685*	1	PUMP GP-ENGINE OIL	646
Y	*391-4811*	1	PUMP GP-FUEL INJECTION	790
Y	*372-2297*	1	PUMP GP-WATER	678
Y	*394-9639*	1	RAIL GP-FUEL	794
Y	*371-2480*	1	ROCKER ARM GP	606
Y	*395-0110*	1	SENSOR GP-ENGINE	820
Y	*395-0114*	1	STARTING AID GP	826
Y	*385-8000*	1	STARTING MOTOR GP-ELECTRIC	832

594-2125 **ENGINE AR-PRIMARY (**contd.**)** **i09415732**

NOTE	PART NUMBER	QTY	PART NAME 1 2 3 4 5 6 (PRODUCT LEVEL)	SEE PAGE
Y	*448-9777*	1	TURBOCHARGER GP	748
Y	*424-5516*	1	WIRING GP-ENGINE	846
	440-1796	1	ELECTRONICS GP-ENGINE RATINGS	
	376-6464	1	PLATE & FILM GP	

A - NOT PART OF THIS GROUP
Y - SEPARATE ILLUSTRATION

<END>

596-4834 ENGINE AR-PRIMARY

186 BRAKE KW (249 BHP) AT 2200 RPM

OPTIONAL FIELD REPLACEMENT ORDER 451-1222—PAGE: 452, 452-6584—PAGE: 462

SMCS-1000 **i09415734**

NOTE	PART NUMBER	QTY	PART NAME 1 2 3 4 5 6 (PRODUCT LEVEL)	SEE PAGE
Y	*385-8001*	1	ALTERNATOR GP-CHARGING	800
Y	*391-9610*	1	BELT TENSIONER GP	420
Y	*425-0196*	1	BREATHER GP (CRANKCASE)	612
Y	*396-2617*	1	CAMSHAFT GP	428
Y	*390-5132*	1	CLAMP AS-EXHAUST	718
AY	*596-6452*	1	CONFIGURATION AR-ENGINE	16
Y	*373-3607*	1	CONNECTION GP-WATER	650
Y	*371-2536*	1	CONTROL GP-ELECTRONIC	808
Y	*378-8280*	1	COOLER GP-ENGINE OIL	661
Y	*378-0629*	1	COVER GP-ACCESSORY DRIVE	433
Y	*389-3346*	1	COVER GP-VALVE MECHANISM	435
Y	*374-6300*	1	CRANKSHAFT GP	447
Y	*390-0854*	1	CYLINDER BLOCK GP	450
Y	*385-2572*	1	CYLINDER HEAD GP	458
Y	*378-8166*	1	DRAIN GP-ENGINE OIL	467
Y	*393-9572*	1	DRIVE GP-FAN	490
Y	*371-2694*	1	EXTENSION GP-FAN	500
Y	*375-0098*	1	FASTENER GP-DAMPER & PULLEY	505
Y	*379-6626*	1	FILLER GP-ENGINE OIL	619
Y	*390-0060*	1	FILM GP	859
Y	*415-5625*	1	FILM GP (ALTERNATOR)	862
Y	*346-0220*	1	FILTER GP-ENGINE OIL	629
Y	*441-1215*	1	FILTER GP-FUEL (WATER SEPARATOR)	756
Y	*453-7163*	1	FILTER GP-FUEL	760
Y	*425-0197*	1	FILTER GP-FUMES DISPOSAL	630
Y	*437-2723*	1	FLYWHEEL GP	513
Y	*437-2721*	1	HOUSING GP-FLYWHEEL	529
Y	*375-5838*	1	HOUSING GP-FRONT	536
Y	*416-8908*	1	INJECTOR GP-FUEL	766
Y	*371-2478*	1	JET GP-PISTON COOLING	543
Y	*371-2740*	1	LIFTING GP-ENGINE	545
Y	*398-7221*	1	LINES GP-FUEL FILTER	778
Y	*393-7694*	1	MANIFOLD GP-EXHAUST	723
Y	*391-5523*	1	MANIFOLD GP-INLET	726
Y	*395-0112*	1	MOUNTING GP-ELECTRONIC CONTROL	819
Y	*495-6156*	1	MOUNTING GP-ENGINE	551
Y	*375-4499*	1	PAN GP-OIL	557
Y	*369-7304*	1	PISTON & ROD GP	566
Y	*346-2908*	1	PLUG GP-ENGINE	592
Y	*440-0026*	1	PLUG GP-OIL FILTER MOUNTING	644
Y	*458-9768*	1	PLUG GP-OIL PAN	596
Y	*371-2554*	1	PULLEY GP-CRANKSHAFT	601
Y	*462-6685*	1	PUMP GP-ENGINE OIL	646
Y	*391-4811*	1	PUMP GP-FUEL INJECTION	790
Y	*372-2297*	1	PUMP GP-WATER	678
Y	*394-9639*	1	RAIL GP-FUEL	794
Y	*371-2480*	1	ROCKER ARM GP	606
Y	*395-0110*	1	SENSOR GP-ENGINE	820

596-4834 **ENGINE AR-PRIMARY (**contd.**)** **i09415734**

NOTE	PART NUMBER	QTY	PART NAME 1 2 3 4 5 6 (PRODUCT LEVEL)	SEE PAGE
Y	*395-0114*	1	STARTING AID GP	826
Y	*385-8000*	1	STARTING MOTOR GP-ELECTRIC	832
Y	*416-6969*	1	TURBOCHARGER GP	739
Y	*424-5516*	1	WIRING GP-ENGINE	846
	440-1796	1	ELECTRONICS GP-ENGINE RATINGS	
	376-6464	1	PLATE & FILM GP	

A - NOT PART OF THIS GROUP
Y - SEPARATE ILLUSTRATION

<END>

596-7090 ENGINE AR-PRIMARY

205 BRAKE KW (275 BHP) AT 2200 RPM

OPTIONAL FIELD REPLACEMENT ORDER 451-1222—PAGE: 452, 452-6584—PAGE: 462

SMCS-1000 **i10421154**

NOTE	PART NUMBER	QTY	PART NAME 1 2 3 4 5 6 (PRODUCT LEVEL)	SEE PAGE
Y	*385-8001*	1	ALTERNATOR GP-CHARGING	800
Y	*391-9610*	1	BELT TENSIONER GP	420
Y	*425-0196*	1	BREATHER GP (CRANKCASE)	612
Y	*396-2617*	1	CAMSHAFT GP	428
Y	*390-5132*	1	CLAMP AS-EXHAUST	718
AY	*596-7092*	1	CONFIGURATION AR-ENGINE	16
Y	*373-3607*	1	CONNECTION GP-WATER	650
Y	*371-2536*	1	CONTROL GP-ELECTRONIC	808
Y	*378-8280*	1	COOLER GP-ENGINE OIL	661
Y	*378-0629*	1	COVER GP-ACCESSORY DRIVE	433
Y	*389-3346*	1	COVER GP-VALVE MECHANISM	435
Y	*374-6300*	1	CRANKSHAFT GP	447
Y	*390-0854*	1	CYLINDER BLOCK GP	450
Y	*385-2572*	1	CYLINDER HEAD GP	458
Y	*378-8166*	1	DRAIN GP-ENGINE OIL	467
Y	*393-9572*	1	DRIVE GP-FAN	490
Y	*371-2694*	1	EXTENSION GP-FAN	500
Y	*375-0098*	1	FASTENER GP-DAMPER & PULLEY	505
Y	*379-6626*	1	FILLER GP-ENGINE OIL	619
Y	*390-0060*	1	FILM GP (EMISSION)	859
Y	*415-5625*	1	FILM GP (ALTERNATOR)	862
Y	*346-0220*	1	FILTER GP-ENGINE OIL	629
Y	*453-7163*	1	FILTER GP-FUEL	760
Y	*441-1215*	1	FILTER GP-FUEL (WATER SEPARATOR)	756
			—OR—	
Y	*441-1222*	1	FILTER GP-FUEL (WATER SEPARATOR)	758
Y	*425-0197*	1	FILTER GP-FUMES DISPOSAL	630
Y	*437-2723*	1	FLYWHEEL GP	513
Y	*437-2721*	1	HOUSING GP-FLYWHEEL	529
Y	*375-5838*	1	HOUSING GP-FRONT	536
Y	*416-8908*	1	INJECTOR GP-FUEL	766
Y	*371-2478*	1	JET GP-PISTON COOLING	543
Y	*371-2740*	1	LIFTING GP-ENGINE	545
Y	*398-7221*	1	LINES GP-FUEL FILTER	778
Y	*393-7694*	1	MANIFOLD GP-EXHAUST	723
Y	*391-5523*	1	MANIFOLD GP-INLET	726
Y	*395-0112*	1	MOUNTING GP-ELECTRONIC CONTROL	819
Y	*495-6156*	1	MOUNTING GP-ENGINE	551
Y	*375-4499*	1	PAN GP-OIL	557
Y	*369-7304*	1	PISTON & ROD GP	566
Y	*376-6464*	1	PLATE & FILM GP	867
Y	*635-3313*	1	PLATE GP-IDENTIFICATION	869
Y	*346-2908*	1	PLUG GP-ENGINE	592
Y	*440-0026*	1	PLUG GP-OIL FILTER MOUNTING	644
Y	*458-9768*	1	PLUG GP-OIL PAN	596
Y	*371-2554*	1	PULLEY GP-CRANKSHAFT	601
Y	*462-6685*	1	PUMP GP-ENGINE OIL	646
Y	*391-4811*	1	PUMP GP-FUEL INJECTION	790

596-7090 **ENGINE AR-PRIMARY (**contd.**)** **i10421154**

NOTE	PART NUMBER	QTY	PART NAME 1 2 3 4 5 6 (PRODUCT LEVEL)	SEE PAGE
Y	*372-2297*	1	PUMP GP-WATER	678
Y	*394-9639*	1	RAIL GP-FUEL	794
Y	*371-2480*	1	ROCKER ARM GP	606
Y	*395-0110*	1	SENSOR GP-ENGINE	820
Y	*395-0114*	1	STARTING AID GP	826
Y	*385-8000*	1	STARTING MOTOR GP-ELECTRIC	832
Y	*416-6969*	1	TURBOCHARGER GP	739
Y	*424-5516*	1	WIRING GP-ENGINE	846
	449-3320	1	ELECTRONICS GP-ENGINE	

A - NOT PART OF THIS GROUP
Y - SEPARATE ILLUSTRATION

<END>

596-8896 ENGINE AR-PRIMARY

129 BRAKE KW (173 BHP) AT 2200 RPM

OPTIONAL FIELD REPLACEMENT ORDER 451-1222—PAGE: 452, 452-6584—PAGE: 462

SMCS-1000 **i09415610**

NOTE	PART NUMBER	QTY	PART NAME 1 2 3 4 5 6 (PRODUCT LEVEL)	SEE PAGE
Y	*377-0721*	1	ALTERNATOR GP-CHARGING	799
Y	*371-2693*	1	BELT TENSIONER GP	416
Y	*392-0632*	1	BREATHER GP	611
Y	*396-2615*	1	CAMSHAFT GP	427
Y	*373-3606*	1	CONNECTION GP-WATER	649
Y	*371-2536*	1	CONTROL GP-ELECTRONIC	808
Y	*346-0091*	1	COOLER GP-ENGINE OIL	657
Y	*389-3348*	1	COVER GP-VALVE MECHANISM	440
Y	*374-6300*	1	CRANKSHAFT GP	447
Y	*390-0854*	1	CYLINDER BLOCK GP	450
Y	*385-2572*	1	CYLINDER HEAD GP	458
Y	*415-3083*	1	DRIVE GP-FAN	497
Y	*371-2694*	1	EXTENSION GP-FAN	500
Y	*375-0098*	1	FASTENER GP-DAMPER & PULLEY	505
Y	*390-3737*	1	FILLER GP-ENGINE OIL	620
Y	*415-5625*	1	FILM GP (ALTERNATOR)	862
Y	*346-0220*	1	FILTER GP-ENGINE OIL	629
Y	*441-1215*	1	FILTER GP-FUEL (WATER SEPARATOR)	756
Y	*448-0935*	1	LINES GP-FUEL FILTER	783
Y	*453-7163*	1	FILTER GP-FUEL	760
Y	*346-0769*	1	FLANGE GP-EXHAUST	719
Y	*345-9037*	1	FLYWHEEL GP	510
Y	*439-3432*	1	GAUGE GP-OIL LEVEL (DIPSTICK)	640
Y	*345-8846*	1	HOUSING GP-FLYWHEEL	519
Y	*378-0630*	1	AIR COMPRESSOR GP	410
Y	*476-7558*	1	HOUSING GP-FRONT	541
Y	*371-2483*	1	INJECTOR GP-FUEL	763
Y	*371-2478*	1	JET GP-PISTON COOLING	543
Y	*371-2735*	1	LIFTING GP-ENGINE	544
Y	*416-7808*	1	MANIFOLD GP-EXHAUST	724
Y	*391-5523*	1	MANIFOLD GP-INLET	726
Y	*448-9710*	1	CONNECTOR GP-CAB HEATER LINES	652
Y	*395-0112*	1	MOUNTING GP-ELECTRONIC CONTROL	819
Y	*346-1510*	1	MOUNTING GP-ENGINE	548
Y	*375-4499*	1	PAN GP-OIL	557
Y	*374-6301*	1	PISTON & ROD GP	576
Y	*378-8167*	1	PLATE & FILM GP	868
Y	*379-6629*	1	PULLEY GP-CRANKSHAFT	603
Y	*462-6685*	1	PUMP GP-ENGINE OIL	646
Y	*391-4811*	1	PUMP GP-FUEL INJECTION	790
Y	*372-2297*	1	PUMP GP-WATER	678
Y	*394-9639*	1	RAIL GP-FUEL	794
Y	*371-2480*	1	ROCKER ARM GP	606
Y	*395-0110*	1	SENSOR GP-ENGINE	820
Y	*395-0114*	1	STARTING AID GP	826
Y	*448-9771*	1	TURBOCHARGER GP	744
Y	*371-2745*	1	VALVE GP-FLUID SAMPLING	647
Y	*424-5516*	1	WIRING GP-ENGINE	846

596-8896 **ENGINE AR-PRIMARY (**contd.**)** **i09415610**

NOTE	PART NUMBER	QTY	PART NAME 1 2 3 4 5 6 (PRODUCT LEVEL)	SEE PAGE
	460-6435	1	ELECTRONICS GP-ENGINE	
	376-6464	1	PLATE & FILM GP	

Y - SEPARATE ILLUSTRATION

<END>

596-8905 ENGINE AR-PRIMARY

168 BRAKE KW (225 BHP) AT 2200 RPM

OPTIONAL FIELD REPLACEMENT ORDER 451-1222—PAGE: 452, 452-6584—PAGE: 462

SMCS-1000 **i08171279**

NOTE	PART NUMBER	QTY	PART NAME 1 2 3 4 5 6 (PRODUCT LEVEL)	SEE PAGE
Y	*377-0721*	1	ALTERNATOR GP-CHARGING	799
Y	*371-2693*	1	BELT TENSIONER GP	416
Y	*392-0632*	1	BREATHER GP (CRANKCASE)	611
Y	*396-2617*	1	CAMSHAFT GP	428
AY	*596-8930*	1	CONFIGURATION AR-ENGINE	16
Y	*373-3606*	1	CONNECTION GP-WATER	649
Y	*371-2536*	1	CONTROL GP-ELECTRONIC	808
Y	*378-8276*	1	COOLER GP-ENGINE OIL	659
Y	*389-3348*	1	COVER GP-VALVE MECHANISM	440
Y	*374-6300*	1	CRANKSHAFT GP	447
Y	*390-0854*	1	CYLINDER BLOCK GP	450
Y	*385-2572*	1	CYLINDER HEAD GP	458
Y	*415-3083*	1	DRIVE GP-FAN	497
Y	*371-2694*	1	EXTENSION GP-FAN	500
Y	*375-0098*	1	FASTENER GP-DAMPER & PULLEY	505
Y	*390-3737*	1	FILLER GP-ENGINE OIL	620
Y	*415-5625*	1	FILM GP (ALTERNATOR) (ALTERNATOR)	862
Y	*346-0220*	1	FILTER GP-ENGINE OIL	629
Y	*441-1215*	1	FILTER GP-FUEL (WATER SEPARATOR)	756
Y	*448-0935*	1	LINES GP-FUEL FILTER	783
Y	*453-7163*	1	FILTER GP-FUEL	760
Y	*346-0769*	1	FLANGE GP-EXHAUST	719
Y	*345-9037*	1	FLYWHEEL GP	510
Y	*439-3432*	1	GAUGE GP-OIL LEVEL (DIPSTICK) (ENGINE)	640
Y	*345-8846*	1	HOUSING GP-FLYWHEEL	519
Y	*378-0630*	1	AIR COMPRESSOR GP	410
Y	*476-7558*	1	HOUSING GP-FRONT	541
Y	*416-8908*	1	INJECTOR GP-FUEL	766
Y	*371-2478*	1	JET GP-PISTON COOLING	543
Y	*371-2735*	1	LIFTING GP-ENGINE	544
Y	*416-7808*	1	MANIFOLD GP-EXHAUST	724
Y	*391-5523*	1	MANIFOLD GP-INLET	726
Y	*448-9710*	1	CONNECTOR GP-CAB HEATER LINES	652
Y	*395-0112*	1	MOUNTING GP-ELECTRONIC CONTROL	819
Y	*346-1510*	1	MOUNTING GP-ENGINE	548
Y	*375-4499*	1	PAN GP-OIL	557
Y	*369-7304*	1	PISTON & ROD GP	566
Y	*378-8167*	1	PLATE & FILM GP	868
Y	*379-6629*	1	PULLEY GP-CRANKSHAFT	603
Y	*462-6685*	1	PUMP GP-ENGINE OIL	646
Y	*391-4811*	1	PUMP GP-FUEL INJECTION	790
Y	*372-2297*	1	PUMP GP-WATER	678
Y	*394-9639*	1	RAIL GP-FUEL	794
Y	*371-2480*	1	ROCKER ARM GP	606
Y	*395-0110*	1	SENSOR GP-ENGINE	820
Y	*395-0114*	1	STARTING AID GP	826
Y	*448-9777*	1	TURBOCHARGER GP	748
Y	*371-2745*	1	VALVE GP-FLUID SAMPLING	647

596-8905 **ENGINE AR-PRIMARY (**contd.**)** **i08171279**

NOTE	PART NUMBER	QTY	PART NAME 1 2 3 4 5 6 (PRODUCT LEVEL)	SEE PAGE
Y	*424-5516*	1	WIRING GP-ENGINE	846
	448-4768	1	ELECTRONICS GP	
	376-6464	1	PLATE & FILM GP	

A - NOT PART OF THIS GROUP
Y - SEPARATE ILLUSTRATION

<END>

597-9248 ENGINE AR-PRIMARY

205 BRAKE KW (275 BHP) AT 2200 RPM

OPTIONAL FIELD REPLACEMENT ORDER 451-1222—PAGE: 452, 452-6584—PAGE: 462

SMCS-1000 **i10421141**

NOTE	PART NUMBER	QTY	PART NAME 1 2 3 4 5 6 (PRODUCT LEVEL)	SEE PAGE
Y	*378-0630*	1	AIR COMPRESSOR GP	410
Y	*440-6724*	1	ALTERNATOR GP-CHARGING	802
Y	*379-5585*	1	BELT TENSIONER GP	419
Y	*392-0632*	1	BREATHER GP	611
Y	*396-2617*	1	CAMSHAFT GP	428
Y	*390-5132*	1	CLAMP AS-EXHAUST	718
Y	*374-7094*	1	COMPRESSOR & MTG GP-REFRIGERANT	429
AY	*598-0764*	1	CONFIGURATION AR-ENGINE	17
Y	*373-3607*	1	CONNECTION GP-WATER	650
Y	*448-9710*	1	CONNECTOR GP-CAB HEATER LINES	652
Y	*371-2536*	1	CONTROL GP-ELECTRONIC	808
Y	*378-8276*	1	COOLER GP-ENGINE OIL	659
Y	*389-3347*	1	COVER GP-VALVE MECHANISM	436
Y	*374-6300*	1	CRANKSHAFT GP	447
Y	*390-0854*	1	CYLINDER BLOCK GP	450
Y	*385-2572*	1	CYLINDER HEAD GP	458
Y	*380-2629*	1	DRIVE GP-FAN	478
Y	*443-4956*	1	FAN GP	672
Y	*390-3737*	1	FILLER GP-ENGINE OIL	620
Y	*390-0060*	1	FILM GP	859
Y	*415-5625*	1	FILM GP (ALTERNATOR)	862
Y	*346-0220*	1	FILTER GP-ENGINE OIL	629
Y	*441-1215*	1	FILTER GP-FUEL (WATER SEPARATOR)	756
Y	*453-7163*	1	FILTER GP-FUEL	760
Y	*378-0585*	1	FLYWHEEL GP	512
Y	*371-2546*	1	GAUGE GP-OIL LEVEL (DIPSTICK)	631
Y	*393-3369*	1	HOUSING GP-FLYWHEEL	526
Y	*476-7558*	1	HOUSING GP-FRONT	541
Y	*416-8908*	1	INJECTOR GP-FUEL	766
Y	*371-2478*	1	JET GP-PISTON COOLING	543
Y	*371-2740*	1	LIFTING GP-ENGINE	545
Y	*448-0935*	1	LINES GP-FUEL FILTER	783
Y	*393-7694*	1	MANIFOLD GP-EXHAUST	723
Y	*391-5523*	1	MANIFOLD GP-INLET	726
Y	*395-0112*	1	MOUNTING GP-ELECTRONIC CONTROL	819
Y	*448-4757*	1	MOUNTING GP-ENGINE	549
Y	*371-2544*	1	PAN GP-OIL	556
Y	*369-7304*	1	PISTON & ROD GP	566
Y	*376-6464*	1	PLATE & FILM GP	867
Y	*635-3313*	1	PLATE GP-IDENTIFICATION	869
Y	*440-0026*	1	PLUG GP-OIL FILTER MOUNTING	644
Y	*379-6633*	1	PULLEY GP-AUXILIARY DRIVE	600
Y	*371-2554*	1	PULLEY GP-CRANKSHAFT	601
Y	*462-6685*	1	PUMP GP-ENGINE OIL	646
Y	*391-4811*	1	PUMP GP-FUEL INJECTION	790
Y	*372-2297*	1	PUMP GP-WATER	678
Y	*394-9639*	1	RAIL GP-FUEL	794
Y	*371-2480*	1	ROCKER ARM GP	606

597-9248 **ENGINE AR-PRIMARY (**contd.**)** **i10421141**

NOTE	PART NUMBER	QTY	PART NAME 1 2 3 4 5 6 (PRODUCT LEVEL)	SEE PAGE
Y	*395-0110*	1	SENSOR GP-ENGINE	820
Y	*395-0114*	1	STARTING AID GP	826
Y	*371-2541*	1	STARTING MOTOR GP-ELECTRIC	829
Y	*416-6969*	1	TURBOCHARGER GP	739
Y	*424-5516*	1	WIRING GP-ENGINE	846
	449-3320	1	ELECTRONICS GP-ENGINE	

A - NOT PART OF THIS GROUP
Y - SEPARATE ILLUSTRATION

<END>

598-9881 ENGINE AR-PRIMARY

205 BRAKE KW (275 BHP) AT 2200 RPM

OPTIONAL FIELD REPLACEMENT ORDER 451-1222—PAGE: 452, 452-6584—PAGE: 462

SMCS-1000 **i10433614**

NOTE	PART NUMBER	QTY	PART NAME 1 2 3 4 5 6 (PRODUCT LEVEL)	SEE PAGE
Y	*478-4234*	1	AIR CLEANER GP	715
Y	*377-0721*	1	ALTERNATOR GP-CHARGING	799
Y	*371-2693*	1	BELT TENSIONER GP	416
Y	*425-0196*	1	BREATHER GP (CRANKCASE)	612
Y	*396-2617*	1	CAMSHAFT GP	428
AY	*599-2201*	1	CONFIGURATION AR-ENGINE	17
Y	*373-3607*	1	CONNECTION GP-WATER	650
Y	*371-2536*	1	CONTROL GP-ELECTRONIC	808
Y	*378-8283*	1	COOLER GP-ENGINE OIL	662
Y	*389-3346*	1	COVER GP-VALVE MECHANISM	435
Y	*374-6300*	1	CRANKSHAFT GP	447
Y	*390-0854*	1	CYLINDER BLOCK GP	450
Y	*385-2572*	1	CYLINDER HEAD GP	458
Y	*371-2742*	1	DRAIN GP-ENGINE OIL	466
Y	*393-2180*	1	DRIVE GP-FAN	484
Y	*375-8320*	1	EXTENSION GP-FAN	501
Y	*378-0627*	1	FAN GP	670
Y	*375-0098*	1	FASTENER GP-DAMPER & PULLEY	505
Y	*390-3737*	1	FILLER GP-ENGINE OIL	620
Y	*415-5625*	1	FILM GP (ALTERNATOR)	862
Y	*611-2653*	1	FILM GP (RADIATOR)	865
Y	*346-0220*	1	FILTER GP-ENGINE OIL	629
Y	*441-1215*	1	FILTER GP-FUEL (WATER SEPARATOR)	756
Y	*453-7163*	1	FILTER GP-FUEL	760
Y	*425-0197*	1	FILTER GP-FUMES DISPOSAL	630
Y	*346-0769*	1	FLANGE GP-EXHAUST	719
Y	*377-0692*	1	FLYWHEEL GP	511
Y	*439-3432*	1	GAUGE GP-OIL LEVEL (DIPSTICK)	640
Y	*357-1915*	1	HOUSING GP-FLYWHEEL	521
Y	*375-5838*	1	HOUSING GP-FRONT	536
Y	*416-8908*	1	INJECTOR GP-FUEL	766
Y	*371-2478*	1	JET GP-PISTON COOLING	543
Y	*416-2470*	1	LIFTING GP-ENGINE	546
Y	*426-3310*	1	LINES GP-FUEL INJECTION	787
Y	*416-7808*	1	MANIFOLD GP-EXHAUST	724
Y	*391-5523*	1	MANIFOLD GP-INLET	726
Y	*346-1512*	1	MOUNTING GP-ACCESSORY MODULE	855
Y	*395-0112*	1	MOUNTING GP-ELECTRONIC CONTROL	819
Y	*375-4499*	1	PAN GP-OIL	557
Y	*369-7304*	1	PISTON & ROD GP	566
Y	*378-8167*	1	PLATE & FILM GP	868
Y	*376-6464*	1	PLATE & FILM GP	867
Y	*635-3313*	1	PLATE GP-IDENTIFICATION	869
Y	*346-2908*	1	PLUG GP-ENGINE	592
Y	*440-0026*	1	PLUG GP-OIL FILTER MOUNTING	644
Y	*379-6629*	1	PULLEY GP-CRANKSHAFT	603
Y	*462-6685*	1	PUMP GP-ENGINE OIL	646
Y	*391-4811*	1	PUMP GP-FUEL INJECTION	790

598-9881 **ENGINE AR-PRIMARY (**contd.**)** **i10433614**

NOTE	PART NUMBER	QTY	PART NAME 1 2 3 4 5 6 (PRODUCT LEVEL)	SEE PAGE
Y	*372-2297*	1	PUMP GP-WATER	678
Y	*452-5153*	1	RADIATOR GP	686
Y	*394-9639*	1	RAIL GP-FUEL	794
Y	*371-2480*	1	ROCKER ARM GP	606
Y	*395-0110*	1	SENSOR GP-ENGINE	820
Y	*395-0114*	1	STARTING AID GP	826
Y	*378-0590*	1	STARTING MOTOR GP-ELECTRIC	831
Y	*371-2719*	1	SUPPORT GP-POWER TAKE-OFF	608
Y	*416-6971*	1	TURBOCHARGER GP	741
Y	*424-5516*	1	WIRING GP-ENGINE	846
	449-3320	1	ELECTRONICS GP-ENGINE	
			SOFTWARE MUST BE PROCURED LOCALLY FROM YOUR CAT DEALER	

A - NOT PART OF THIS GROUP
Y - SEPARATE ILLUSTRATION

<END>

602-8721 ENGINE AR-PRIMARY

205 BRAKE KW (275 BHP) AT 2200 RPM

OPTIONAL FIELD REPLACEMENT ORDER 452-6584—PAGE: 462, 451-1222—PAGE: 452

SMCS-1000 **i09248622**

NOTE	PART NUMBER	QTY	PART NAME 1 2 3 4 5 6 (PRODUCT LEVEL)	SEE PAGE
Y	*478-4234*	1	AIR CLEANER GP	715
Y	*377-0721*	1	ALTERNATOR GP-CHARGING	799
Y	*371-2693*	1	BELT TENSIONER GP	416
Y	*425-0196*	1	BREATHER GP (CRANKCASE)	612
Y	*396-2617*	1	CAMSHAFT GP	428
AY	*603-1127*	1	CONFIGURATION AR-ENGINE	17
Y	*373-3607*	1	CONNECTION GP-WATER	650
Y	*371-2536*	1	CONTROL GP-ELECTRONIC	808
Y	*378-8276*	1	COOLER GP-ENGINE OIL	659
Y	*389-3346*	1	COVER GP-VALVE MECHANISM	435
Y	*374-6300*	1	CRANKSHAFT GP	447
Y	*390-0854*	1	CYLINDER BLOCK GP	450
Y	*385-2572*	1	CYLINDER HEAD GP	458
Y	*393-2180*	1	DRIVE GP-FAN	484
Y	*375-8320*	1	EXTENSION GP-FAN	501
Y	*378-0627*	1	FAN GP	670
Y	*375-0098*	1	FASTENER GP-DAMPER & PULLEY	505
Y	*390-3737*	1	FILLER GP-ENGINE OIL	620
Y	*611-2653*	1	FILM GP (RADIATOR)	865
Y	*415-5625*	1	FILM GP (ALTERNATOR)	862
Y	*423-8803*	1	FILM GP (STARTING MOTOR)	863
Y	*346-0220*	1	FILTER GP-ENGINE OIL	629
Y	*441-1215*	1	FILTER GP-FUEL (WATER SEPARATOR)	756
Y	*453-7163*	1	FILTER GP-FUEL	760
Y	*425-0197*	1	FILTER GP-FUMES DISPOSAL	630
Y	*346-0769*	1	FLANGE GP-EXHAUST	719
Y	*345-8902*	1	FLYWHEEL GP	507
Y	*439-3432*	1	GAUGE GP-OIL LEVEL (DIPSTICK)	640
Y	*345-8838*	1	HOUSING GP-FLYWHEEL	517
Y	*375-5838*	1	HOUSING GP-FRONT	536
Y	*416-8908*	1	INJECTOR GP-FUEL	766
Y	*371-2478*	1	JET GP-PISTON COOLING	543
Y	*416-2470*	1	LIFTING GP-ENGINE	546
Y	*426-3310*	1	LINES GP-FUEL INJECTION	787
Y	*416-7808*	1	MANIFOLD GP-EXHAUST	724
Y	*391-5523*	1	MANIFOLD GP-INLET	726
Y	*346-1528*	1	MOUNTING GP-ACCESSORY MODULE	856
Y	*395-0112*	1	MOUNTING GP-ELECTRONIC CONTROL	819
Y	*375-4499*	1	PAN GP-OIL	557
Y	*369-7304*	1	PISTON & ROD GP	566
Y	*378-8167*	1	PLATE & FILM GP	868
Y	*346-2908*	1	PLUG GP-ENGINE	592
Y	*440-0026*	1	PLUG GP-OIL FILTER MOUNTING	644
Y	*379-6629*	1	PULLEY GP-CRANKSHAFT	603
Y	*462-6685*	1	PUMP GP-ENGINE OIL	646
Y	*391-4811*	1	PUMP GP-FUEL INJECTION	790
Y	*372-2297*	1	PUMP GP-WATER	678
Y	*452-5153*	1	RADIATOR GP	686

602-8721 **ENGINE AR-PRIMARY (**contd.**)** **i09248622**

NOTE	PART NUMBER	QTY	PART NAME 1 2 3 4 5 6 (PRODUCT LEVEL)	SEE PAGE
Y	*394-9639*	1	RAIL GP-FUEL	794
Y	*371-2480*	1	ROCKER ARM GP	606
Y	*395-0110*	1	SENSOR GP-ENGINE	820
Y	*395-0114*	1	STARTING AID GP	826
Y	*392-2020*	1	STARTING MOTOR GP-ELECTRIC	835
Y	*371-2719*	1	SUPPORT GP-POWER TAKE-OFF	608
Y	*416-6971*	1	TURBOCHARGER GP	741
Y	*424-5516*	1	WIRING GP-ENGINE	846
	449-3320	1	ELECTRONICS GP-ENGINE	
	376-6464	1	PLATE & FILM GP	

A - NOT PART OF THIS GROUP
Y - SEPARATE ILLUSTRATION

<END>

603-5300 ENGINE AR-PRIMARY

205 BRAKE KW(275 BHP) AT 2200 RPM

OPTIONAL FIELD REPLACEMENT ORDER 451-1222—PAGE: 452, 452-6584—PAGE: 462

SMCS-1000 **i10086776**

NOTE	PART NUMBER	QTY	PART NAME 1 2 3 4 5 6 (PRODUCT LEVEL)	SEE PAGE
Y	*478-4234*	1	AIR CLEANER GP	715
Y	*377-0720*	1	ALTERNATOR GP-CHARGING	798
Y	*371-2693*	1	BELT TENSIONER GP	416
Y	*425-0196*	1	BREATHER GP (CRANKCASE)	612
Y	*396-2617*	1	CAMSHAFT GP	428
AY	*603-6833*	1	CONFIGURATION AR-ENGINE	17
Y	*373-3607*	1	CONNECTION GP-WATER	650
Y	*371-2536*	1	CONTROL GP-ELECTRONIC	808
Y	*378-8276*	1	COOLER GP-ENGINE OIL	659
Y	*389-3346*	1	COVER GP-VALVE MECHANISM	435
Y	*374-6300*	1	CRANKSHAFT GP	447
Y	*390-0854*	1	CYLINDER BLOCK GP	450
Y	*385-2572*	1	CYLINDER HEAD GP	458
Y	*393-2180*	1	DRIVE GP-FAN	484
Y	*375-8320*	1	EXTENSION GP-FAN	501
Y	*378-0627*	1	FAN GP	670
Y	*375-0098*	1	FASTENER GP-DAMPER & PULLEY	505
Y	*390-3737*	1	FILLER GP-ENGINE OIL	620
Y	*611-2653*	1	FILM GP (RADIATOR)	865
Y	*415-5625*	1	FILM GP (ALTERNATOR)	862
Y	*423-8803*	1	FILM GP (STARTING MOTOR)	863
Y	*346-0220*	1	FILTER GP-ENGINE OIL	629
Y	*441-1215*	1	FILTER GP-FUEL (WATER SEPARATOR)	756
Y	*453-7163*	1	FILTER GP-FUEL	760
Y	*425-0197*	1	FILTER GP-FUMES DISPOSAL	630
Y	*346-0769*	1	FLANGE GP-EXHAUST	719
Y	*345-8902*	1	FLYWHEEL GP	507
Y	*439-3432*	1	GAUGE GP-OIL LEVEL (DIPSTICK)	640
Y	*345-8838*	1	HOUSING GP-FLYWHEEL	517
Y	*375-5838*	1	HOUSING GP-FRONT	536
Y	*416-8908*	1	INJECTOR GP-FUEL	766
Y	*371-2478*	1	JET GP-PISTON COOLING	543
Y	*416-2470*	1	LIFTING GP-ENGINE	546
Y	*426-3310*	1	LINES GP-FUEL INJECTION	787
Y	*416-7808*	1	MANIFOLD GP-EXHAUST	724
Y	*391-5523*	1	MANIFOLD GP-INLET	726
Y	*346-1528*	1	MOUNTING GP-ACCESSORY MODULE	856
Y	*395-0112*	1	MOUNTING GP-ELECTRONIC CONTROL	819
Y	*375-4499*	1	PAN GP-OIL	557
Y	*369-7304*	1	PISTON & ROD GP	566
Y	*378-8167*	1	PLATE & FILM GP	868
Y	*635-3313*	1	PLATE GP-IDENTIFICATION	869
Y	*346-2908*	1	PLUG GP-ENGINE	592
Y	*440-0026*	1	PLUG GP-OIL FILTER MOUNTING	644
Y	*379-6629*	1	PULLEY GP-CRANKSHAFT	603
Y	*462-6685*	1	PUMP GP-ENGINE OIL	646
Y	*391-4811*	1	PUMP GP-FUEL INJECTION	790
Y	*372-2297*	1	PUMP GP-WATER	678

603-5300 **ENGINE AR-PRIMARY (**contd.**)** **i10086776**

NOTE	PART NUMBER	QTY	PART NAME 1 2 3 4 5 6 (PRODUCT LEVEL)	SEE PAGE
Y	*452-5153*	1	RADIATOR GP	686
Y	*394-9639*	1	RAIL GP-FUEL	794
Y	*371-2480*	1	ROCKER ARM GP	606
Y	*395-0110*	1	SENSOR GP-ENGINE	820
Y	*380-9279*	1	STARTING AID GP	824
Y	*415-4870*	1	STARTING MOTOR GP-ELECTRIC	837
Y	*371-2719*	1	SUPPORT GP-POWER TAKE-OFF	608
Y	*416-6971*	1	TURBOCHARGER GP	741
Y	*424-5516*	1	WIRING GP-ENGINE	846
	376-6464	1	PLATE & FILM GP	
			SOFTWARE MUST BE PROCURED LOCALLY FROM YOUR CAT DEALER	

A - NOT PART OF THIS GROUP
Y - SEPARATE ILLUSTRATION

<END>

ENGINE ARRANGEMENT

608-9261 ENGINE AR-PRIMARY

205 BRAKE KW (275 BHP) AT 2200 RPM

OPTIONAL FIELD REPLACEMENT ORDER 451-1222—PAGE: 452, 452-6584—PAGE: 462

SMCS-1000 **i09235142**

NOTE	PART NUMBER	QTY	PART NAME 1 2 3 4 5 6 (PRODUCT LEVEL)	SEE PAGE
Y	*456-1351*	1	ALTERNATOR GP-CHARGING	804
Y	*391-9611*	1	BELT TENSIONER GP	421
Y	*379-6637*	1	BRACKET GP-MOUNTING	423
Y	*392-0632*	1	BREATHER GP	611
Y	*396-2617*	1	CAMSHAFT GP	428
Y	*390-5130*	1	CLAMP AS-EXHAUST	717
AY	*609-4201*	1	CONFIGURATION AR-ENGINE	18
Y	*346-2911*	1	CONNECTION GP-HEATER	648
Y	*373-3607*	1	CONNECTION GP-WATER	650
Y	*371-2536*	1	CONTROL GP-ELECTRONIC	808
Y	*378-8280*	1	COOLER GP-ENGINE OIL	661
Y	*378-0629*	1	COVER GP-ACCESSORY DRIVE	433
Y	*389-3347*	1	COVER GP-VALVE MECHANISM	436
Y	*374-6300*	1	CRANKSHAFT GP	447
Y	*390-0854*	1	CYLINDER BLOCK GP	450
Y	*385-2572*	1	CYLINDER HEAD GP	458
Y	*378-8166*	1	DRAIN GP-ENGINE OIL	467
Y	*375-3937*	1	DRIVE GP-FAN	470
Y	*375-0098*	1	FASTENER GP-DAMPER & PULLEY	505
Y	*438-5978*	1	FILLER GP-ENGINE OIL	623
Y	*390-0060*	1	FILM GP	859
Y	*415-5625*	1	FILM GP (ALTERNATOR)	862
Y	*423-8803*	1	FILM GP (STARTING MOTOR)	863
Y	*346-0220*	1	FILTER GP-ENGINE OIL	629
Y	*441-1215*	1	FILTER GP-FUEL (WATER SEPARATOR)	756
Y	*453-7163*	1	FILTER GP-FUEL	760
Y	*345-8901*	1	FLYWHEEL GP	506
Y	*378-3484*	1	GAUGE GP-OIL LEVEL (DIPSTICK)	634
Y	*380-2587*	1	HOUSING GP-FLYWHEEL	525
Y	*375-5838*	1	HOUSING GP-FRONT	536
Y	*416-8908*	1	INJECTOR GP-FUEL	766
Y	*371-2478*	1	JET GP-PISTON COOLING	543
Y	*371-2740*	1	LIFTING GP-ENGINE	545
Y	*478-8523*	1	LINES GP-FUEL	773
Y	*393-7694*	1	MANIFOLD GP-EXHAUST	723
Y	*378-8582*	1	MANIFOLD GP-INLET	725
Y	*395-0112*	1	MOUNTING GP-ELECTRONIC CONTROL	819
Y	*378-0594*	1	PAN GP-OIL	561
Y	*369-7304*	1	PISTON & ROD GP	566
Y	*371-2554*	1	PULLEY GP-CRANKSHAFT	601
Y	*462-6685*	1	PUMP GP-ENGINE OIL	646
Y	*391-4811*	1	PUMP GP-FUEL INJECTION	790
Y	*372-2297*	1	PUMP GP-WATER	678
Y	*394-9639*	1	RAIL GP-FUEL	794
Y	*371-2480*	1	ROCKER ARM GP	606
Y	*395-0110*	1	SENSOR GP-ENGINE	820
Y	*380-9279*	1	STARTING AID GP	824
Y	*392-2019*	1	STARTING MOTOR GP-ELECTRIC	834

608-9261 **ENGINE AR-PRIMARY (**contd.**)** **i09235142**

NOTE	PART NUMBER	QTY	PART NAME 1 2 3 4 5 6 (PRODUCT LEVEL)	SEE PAGE
Y	*416-6969*	1	TURBOCHARGER GP	739
Y	*371-2745*	1	VALVE GP-FLUID SAMPLING	647
Y	*424-5516*	1	WIRING GP-ENGINE	846
	449-3320	1	ELECTRONICS GP-ENGINE	
	376-6464	1	PLATE & FILM GP	

A - NOT PART OF THIS GROUP
Y - SEPARATE ILLUSTRATION

<END>

609-9819 ENGINE AR-PRIMARY

186 BRAKE KW (249 BHP) AT 2200 RPM

OPTIONAL FIELD REPLACEMENT ORDER 451-1222—PAGE: 452, 452-6584—PAGE: 462

SMCS-1000 **i10086778**

NOTE	PART NUMBER	QTY	PART NAME 1 2 3 4 5 6 (PRODUCT LEVEL)	SEE PAGE
Y	*478-4234*	1	AIR CLEANER GP	715
Y	*378-0630*	1	AIR COMPRESSOR GP	410
Y	*377-0721*	1	ALTERNATOR GP-CHARGING	799
Y	*371-2693*	1	BELT TENSIONER GP	416
Y	*392-0632*	1	BREATHER GP	611
Y	*396-2617*	1	CAMSHAFT GP	428
AY	*610-0876*	1	CONFIGURATION AR-ENGINE	18
Y	*373-3607*	1	CONNECTION GP-WATER	650
Y	*448-9710*	1	CONNECTOR GP-CAB HEATER LINES	652
Y	*371-2536*	1	CONTROL GP-ELECTRONIC	808
Y	*378-8276*	1	COOLER GP-ENGINE OIL	659
Y	*389-3347*	1	COVER GP-VALVE MECHANISM	436
Y	*374-6300*	1	CRANKSHAFT GP	447
Y	*390-0854*	1	CYLINDER BLOCK GP	450
Y	*385-2572*	1	CYLINDER HEAD GP	458
Y	*371-2742*	1	DRAIN GP-ENGINE OIL	466
Y	*393-2180*	1	DRIVE GP-FAN	484
Y	*375-8320*	1	EXTENSION GP-FAN	501
Y	*378-0627*	1	FAN GP	670
Y	*375-0098*	1	FASTENER GP-DAMPER & PULLEY	505
Y	*390-3737*	1	FILLER GP-ENGINE OIL	620
Y	*611-2653*	1	FILM GP (RADIATOR)	865
Y	*415-5625*	1	FILM GP (ALTERNATOR)	862
Y	*346-0220*	1	FILTER GP-ENGINE OIL	629
Y	*441-1215*	1	FILTER GP-FUEL (WATER SEPARATOR)	756
Y	*453-7163*	1	FILTER GP-FUEL	760
Y	*346-0769*	1	FLANGE GP-EXHAUST	719
Y	*437-2723*	1	FLYWHEEL GP	513
Y	*439-3432*	1	GAUGE GP-OIL LEVEL (DIPSTICK)	640
Y	*437-2721*	1	HOUSING GP-FLYWHEEL	529
Y	*476-7558*	1	HOUSING GP-FRONT	541
Y	*416-8908*	1	INJECTOR GP-FUEL	766
Y	*371-2478*	1	JET GP-PISTON COOLING	543
Y	*416-2470*	1	LIFTING GP-ENGINE	546
Y	*448-0935*	1	LINES GP-FUEL FILTER	783
Y	*416-7808*	1	MANIFOLD GP-EXHAUST	724
Y	*391-5523*	1	MANIFOLD GP-INLET	726
Y	*395-0112*	1	MOUNTING GP-ELECTRONIC CONTROL	819
Y	*458-2242*	1	MOUNTING GP-ENGINE	550
Y	*375-4499*	1	PAN GP-OIL	557
Y	*369-7304*	1	PISTON & ROD GP	566
Y	*378-8167*	1	PLATE & FILM GP	868
Y	*635-3313*	1	PLATE GP-IDENTIFICATION	869
Y	*440-0026*	1	PLUG GP-OIL FILTER MOUNTING	644
Y	*379-6629*	1	PULLEY GP-CRANKSHAFT	603
Y	*462-6685*	1	PUMP GP-ENGINE OIL	646
Y	*391-4811*	1	PUMP GP-FUEL INJECTION	790
Y	*372-2297*	1	PUMP GP-WATER	678

609-9819 **ENGINE AR-PRIMARY (**contd.**)** **i10086778**

NOTE	PART NUMBER	QTY	PART NAME 1 2 3 4 5 6 (PRODUCT LEVEL)	SEE PAGE
Y	*452-5153*	1	RADIATOR GP	686
Y	*394-9639*	1	RAIL GP-FUEL	794
Y	*371-2480*	1	ROCKER ARM GP	606
Y	*395-0110*	1	SENSOR GP-ENGINE	820
Y	*395-0114*	1	STARTING AID GP	826
Y	*385-8000*	1	STARTING MOTOR GP-ELECTRIC	832
Y	*416-6971*	1	TURBOCHARGER GP	741
Y	*424-5516*	1	WIRING GP-ENGINE	846
	440-1796	1	ELECTRONICS GP-ENGINE RATINGS	
	376-6464	1	PLATE & FILM GP	

A - NOT PART OF THIS GROUP
Y - SEPARATE ILLUSTRATION

<END>

612-1735 ENGINE AR-PRIMARY

151 BRAKE KW (202 BHP) AT 2200 RPM

OPTIONAL FIELD REPLACEMENT ORDER 451-1222—PAGE: 452, 452-6584—PAGE: 462

FIELD REPLACEMENT FOR 461-4645—PAGE: 77

SMCS-1000 **i10581624**

NOTE	PART NUMBER	QTY	PART NAME 1 2 3 4 5 6 (PRODUCT LEVEL)	SEE PAGE
Y	*478-4234*	1	AIR CLEANER GP	715
Y	*377-0720*	1	ALTERNATOR GP-CHARGING	798
Y	*371-2693*	1	BELT TENSIONER GP	416
Y	*425-0196*	1	BREATHER GP (CRANKCASE)	612
Y	*396-2615*	1	CAMSHAFT GP	427
Y	*373-3607*	1	CONNECTION GP-WATER	650
Y	*371-2536*	1	CONTROL GP-ELECTRONIC	808
Y	*346-0091*	1	COOLER GP-ENGINE OIL	657
Y	*389-3346*	1	COVER GP-VALVE MECHANISM	435
Y	*374-6300*	1	CRANKSHAFT GP	447
Y	*390-0854*	1	CYLINDER BLOCK GP	450
Y	*385-2572*	1	CYLINDER HEAD GP	458
Y	*393-2180*	1	DRIVE GP-FAN	484
Y	*375-8320*	1	EXTENSION GP-FAN	501
Y	*454-5203*	1	FAN GP	674
Y	*375-0098*	1	FASTENER GP-DAMPER & PULLEY	505
Y	*390-3737*	1	FILLER GP-ENGINE OIL	620
Y	*415-5625*	1	FILM GP (ALTERNATOR)	862
Y	*423-8803*	1	FILM GP (STARTING MOTOR)	863
Y	*611-2653*	1	FILM GP (RADIATOR)	865
Y	*346-0220*	1	FILTER GP-ENGINE OIL	629
Y	*441-1215*	1	FILTER GP-FUEL (WATER SEPARATOR)	756
Y	*453-7163*	1	FILTER GP-FUEL (ULTRA HIGH EFFICIENCY)	760
Y	*425-0197*	1	FILTER GP-FUMES DISPOSAL	630
Y	*346-0769*	1	FLANGE GP-EXHAUST	719
Y	*345-8902*	1	FLYWHEEL GP	507
Y	*439-3432*	1	GAUGE GP-OIL LEVEL (DIPSTICK)	640
Y	*345-8838*	1	HOUSING GP-FLYWHEEL	517
Y	*375-5838*	1	HOUSING GP-FRONT	536
Y	*371-2483*	1	INJECTOR GP-FUEL	763
Y	*371-2478*	1	JET GP-PISTON COOLING	543
Y	*416-2470*	1	LIFTING GP-ENGINE	546
Y	*426-3310*	1	LINES GP-FUEL INJECTION	787
Y	*416-7808*	1	MANIFOLD GP-EXHAUST	724
Y	*391-5523*	1	MANIFOLD GP-INLET	726
Y	*346-1528*	1	MOUNTING GP-ACCESSORY MODULE	856
Y	*395-0112*	1	MOUNTING GP-ELECTRONIC CONTROL	819
Y	*375-4499*	1	PAN GP-OIL	557
Y	*374-6301*	1	PISTON & ROD GP	576
Y	*378-8167*	1	PLATE & FILM GP	868
Y	*346-2908*	1	PLUG GP-ENGINE	592
Y	*440-0026*	1	PLUG GP-OIL FILTER MOUNTING	644
Y	*379-6629*	1	PULLEY GP-CRANKSHAFT	603
Y	*462-6685*	1	PUMP GP-ENGINE OIL	646
Y	*391-4811*	1	PUMP GP-FUEL INJECTION	790
Y	*372-2297*	1	PUMP GP-WATER	678
Y	*454-6966*	1	RADIATOR GP	

612-1735 **ENGINE AR-PRIMARY (**contd.**)** **i10581624**

NOTE	PART NUMBER	QTY	PART NAME 1 2 3 4 5 6 (PRODUCT LEVEL)	SEE PAGE
Y	*394-9639*	1	RAIL GP-FUEL	794
Y	*371-2480*	1	ROCKER ARM GP	606
Y	*395-0110*	1	SENSOR GP-ENGINE	820
Y	*380-9279*	1	STARTING AID GP	824
Y	*415-4870*	1	STARTING MOTOR GP-ELECTRIC	837
Y	*371-2719*	1	SUPPORT GP-POWER TAKE-OFF	608
Y	*375-5002*	1	TURBOCHARGER GP	732
Y	*424-5516*	1	WIRING GP-ENGINE	846
	453-1370	1	ELECTRONICS GP-ENGINE	
	376-6464	1	PLATE & FILM GP	
			SOFTWARE MUST BE PROCURED LOCALLY FROM YOUR CAT DEALER	

Y - SEPARATE ILLUSTRATION

<END>

ENGINE ARRANGEMENT

613-9482 ENGINE AR-PRIMARY

168 BRAKE KW(225 BHP) AT 2200 RPM

OPTIONAL FIELD REPLACEMENT ORDER 451-1222—PAGE: 452, 452-6584—PAGE: 462

SMCS-1000 **i09222795**

NOTE	PART NUMBER	QTY	PART NAME 1 2 3 4 5 6 (PRODUCT LEVEL)	SEE PAGE
Y	*377-0721*	1	ALTERNATOR GP-CHARGING	799
Y	*391-9612*	1	BELT TENSIONER GP	422
Y	*392-0632*	1	BREATHER GP	611
Y	*396-2617*	1	CAMSHAFT GP	428
Y	*390-5130*	1	CLAMP AS-EXHAUST	717
Y	*374-7094*	1	COMPRESSOR & MTG GP-REFRIGERANT	429
AY	*614-1611*	1	CONFIGURATION AR-ENGINE	18
Y	*346-2911*	1	CONNECTION GP-HEATER	648
Y	*373-3607*	1	CONNECTION GP-WATER	650
Y	*371-2536*	1	CONTROL GP-ELECTRONIC	808
Y	*378-8280*	1	COOLER GP-ENGINE OIL	661
Y	*389-3348*	1	COVER GP-VALVE MECHANISM	440
Y	*374-6300*	1	CRANKSHAFT GP	447
Y	*390-0854*	1	CYLINDER BLOCK GP	450
Y	*385-2572*	1	CYLINDER HEAD GP	458
Y	*378-8166*	1	DRAIN GP-ENGINE OIL	467
Y	*392-6908*	1	DRIVE GP-FAN	482
Y	*375-4606*	1	DRIVE GP-POWER TAKE-OFF	499
Y	*371-2694*	1	EXTENSION GP-FAN	500
Y	*375-0098*	1	FASTENER GP-DAMPER & PULLEY	505
Y	*438-5983*	1	FILLER GP-ENGINE OIL	625
Y	*390-0060*	1	FILM GP	859
Y	*415-5625*	1	FILM GP (ALTERNATOR)	862
Y	*423-8803*	1	FILM GP (STARTING MOTOR)	863
Y	*346-0220*	1	FILTER GP-ENGINE OIL	629
Y	*441-1222*	1	FILTER GP-FUEL (WATER SEPARATOR)	758
Y	*453-7163*	1	FILTER GP-FUEL	760
Y	*345-8901*	1	FLYWHEEL GP	506
Y	*417-6007*	1	GAUGE GP-OIL LEVEL (DIPSTICK)	635
Y	*345-8839*	1	HOUSING GP-FLYWHEEL	518
Y	*375-4645*	1	HOUSING GP-FRONT	534
Y	*416-8908*	1	INJECTOR GP-FUEL	766
Y	*371-2478*	1	JET GP-PISTON COOLING	543
Y	*416-2470*	1	LIFTING GP-ENGINE	546
Y	*448-0935*	1	LINES GP-FUEL FILTER	783
Y	*393-7694*	1	MANIFOLD GP-EXHAUST	723
Y	*391-5523*	1	MANIFOLD GP-INLET	726
Y	*395-0112*	1	MOUNTING GP-ELECTRONIC CONTROL	819
Y	*375-4499*	1	PAN GP-OIL	557
Y	*369-7304*	1	PISTON & ROD GP	566
Y	*380-1084*	1	PLUG AS	858
Y	*440-0026*	1	PLUG GP-OIL FILTER MOUNTING	644
Y	*371-2555*	1	PULLEY GP-CRANKSHAFT	602
Y	*462-6685*	1	PUMP GP-ENGINE OIL	646
Y	*391-4811*	1	PUMP GP-FUEL INJECTION	790
Y	*372-2297*	1	PUMP GP-WATER	678
Y	*394-9639*	1	RAIL GP-FUEL	794
Y	*371-2480*	1	ROCKER ARM GP	606

613-9482 **ENGINE AR-PRIMARY (**contd.**)** **i09222795**

NOTE	PART NUMBER	QTY	PART NAME 1 2 3 4 5 6 (PRODUCT LEVEL)	SEE PAGE
Y	*395-0110*	1	SENSOR GP-ENGINE	820
Y	*395-0114*	1	STARTING AID GP	826
Y	*392-2020*	1	STARTING MOTOR GP-ELECTRIC	835
Y	*416-6969*	1	TURBOCHARGER GP	739
Y	*472-4942*	1	WIRING GP-ENGINE	852
	448-4768	1	ELECTRONICS GP	
	376-6464	1	PLATE & FILM GP	

A - NOT PART OF THIS GROUP
Y - SEPARATE ILLUSTRATION

<END>

614-5795 ENGINE AR-PRIMARY

205 BRAKE KW (275 BHP) AT 2200 RPM

OPTIONAL FIELD REPLACEMENT ORDER 451-1222—PAGE: 452, 452-6584—PAGE: 462

SMCS-1000 **i09239798**

NOTE	PART NUMBER	QTY	PART NAME 1 2 3 4 5 6 (PRODUCT LEVEL)	SEE PAGE
Y	*377-0721*	1	ALTERNATOR GP-CHARGING	799
Y	*391-9611*	1	BELT TENSIONER GP	421
Y	*392-0632*	1	BREATHER GP	611
Y	*396-2617*	1	CAMSHAFT GP	428
Y	*374-7094*	1	COMPRESSOR & MTG GP-REFRIGERANT	429
AY	*614-6389*	1	CONFIGURATION AR-ENGINE	18
Y	*346-2911*	1	CONNECTION GP-HEATER	648
Y	*373-3607*	1	CONNECTION GP-WATER	650
Y	*371-2536*	1	CONTROL GP-ELECTRONIC	808
Y	*378-8280*	1	COOLER GP-ENGINE OIL	661
Y	*389-3346*	1	COVER GP-VALVE MECHANISM	435
Y	*374-6300*	1	CRANKSHAFT GP	447
Y	*390-0854*	1	CYLINDER BLOCK GP	450
Y	*385-2572*	1	CYLINDER HEAD GP	458
Y	*378-8166*	1	DRAIN GP-ENGINE OIL	467
Y	*379-0957*	1	DRIVE GP-FAN	472
Y	*375-0098*	1	FASTENER GP-DAMPER & PULLEY	505
Y	*346-0009*	1	FILLER GP-ENGINE OIL	618
Y	*415-5625*	1	FILM GP (ALTERNATOR)	862
Y	*423-8803*	1	FILM GP (STARTING MOTOR)	863
Y	*346-0220*	1	FILTER GP-ENGINE OIL	629
Y	*441-1215*	1	FILTER GP-FUEL (WATER SEPARATOR)	756
Y	*453-7163*	1	FILTER GP-FUEL	760
Y	*345-8901*	1	FLYWHEEL GP	506
Y	*378-0626*	1	GAUGE GP-OIL LEVEL (DIPSTICK)	633
Y	*345-8838*	1	HOUSING GP-FLYWHEEL	517
Y	*371-2716*	1	HOUSING GP-FRONT	530
Y	*416-8908*	1	INJECTOR GP-FUEL	766
Y	*371-2478*	1	JET GP-PISTON COOLING	543
Y	*371-2735*	1	LIFTING GP-ENGINE	544
Y	*426-3310*	1	LINES GP-FUEL INJECTION	787
Y	*416-7808*	1	MANIFOLD GP-EXHAUST	724
Y	*391-5523*	1	MANIFOLD GP-INLET	726
Y	*395-0112*	1	MOUNTING GP-ELECTRONIC CONTROL	819
Y	*375-4499*	1	PAN GP-OIL	557
Y	*369-7304*	1	PISTON & ROD GP	566
Y	*378-8167*	1	PLATE & FILM GP	868
Y	*374-9295*	1	PLUG GP-CYLINDER BLOCK	591
Y	*346-1478*	1	PLUG GP-FLYWHEEL HOUSING	595
Y	*371-2554*	1	PULLEY GP-CRANKSHAFT	601
Y	*462-6685*	1	PUMP GP-ENGINE OIL	646
Y	*391-4811*	1	PUMP GP-FUEL INJECTION	790
Y	*372-2297*	1	PUMP GP-WATER	678
Y	*394-9639*	1	RAIL GP-FUEL	794
Y	*371-2480*	1	ROCKER ARM GP	606
Y	*395-0110*	1	SENSOR GP-ENGINE	820
Y	*395-0114*	1	STARTING AID GP	826
Y	*392-2020*	1	STARTING MOTOR GP-ELECTRIC	835

614-5795 **ENGINE AR-PRIMARY (**contd.**)** **i09239798**

NOTE	PART NUMBER	QTY	PART NAME 1 2 3 4 5 6 (PRODUCT LEVEL)	SEE PAGE
Y	*431-6516*	1	TURBOCHARGER GP	
Y	*371-2745*	1	VALVE GP-FLUID SAMPLING	647
Y	*424-5516*	1	WIRING GP-ENGINE	846
	449-3320	1	ELECTRONICS GP-ENGINE	
	376-6464	1	PLATE & FILM GP	

A - NOT PART OF THIS GROUP
Y - SEPARATE ILLUSTRATION

<END>

614-9555 ENGINE AR-PRIMARY

168 BRAKE KW (225 BHP) AT 2200 RPM

OPTIONAL FIELD REPLACEMENT ORDER 451-1222—PAGE: 452, 452-6584—PAGE: 462

FIELD REPLACEMENT FOR 456-7962—PAGE: 67

SMCS-1000 **i10581627**

NOTE	PART NUMBER	QTY	PART NAME 1 2 3 4 5 6 (PRODUCT LEVEL)	SEE PAGE
Y	*478-4234*	1	AIR CLEANER GP	715
Y	*377-0721*	1	ALTERNATOR GP-CHARGING	799
Y	*371-2693*	1	BELT TENSIONER GP	416
Y	*425-0196*	1	BREATHER GP (CRANKCASE)	612
Y	*396-2617*	1	CAMSHAFT GP	428
AY	*614-9585*	1	CONFIGURATION AR-ENGINE	19
Y	*373-3607*	1	CONNECTION GP-WATER	650
Y	*371-2536*	1	CONTROL GP-ELECTRONIC	808
Y	*378-8276*	1	COOLER GP-ENGINE OIL	659
Y	*389-3346*	1	COVER GP-VALVE MECHANISM	435
Y	*374-6300*	1	CRANKSHAFT GP	447
Y	*390-0854*	1	CYLINDER BLOCK GP	450
Y	*385-2572*	1	CYLINDER HEAD GP	458
Y	*393-2180*	1	DRIVE GP-FAN	484
Y	*375-8320*	1	EXTENSION GP-FAN	501
Y	*375-4574*	1	FAN GP	669
Y	*375-0098*	1	FASTENER GP-DAMPER & PULLEY	505
Y	*390-3737*	1	FILLER GP-ENGINE OIL	620
Y	*611-2653*	1	FILM GP (RADIATOR)	865
Y	*415-5625*	1	FILM GP (ALTERNATOR)	862
Y	*346-0220*	1	FILTER GP-ENGINE OIL	629
Y	*441-1215*	1	FILTER GP-FUEL (WATER SEPARATOR)	756
Y	*453-7163*	1	FILTER GP-FUEL	760
Y	*425-0197*	1	FILTER GP-FUMES DISPOSAL	630
Y	*346-0769*	1	FLANGE GP-EXHAUST	719
Y	*345-9037*	1	FLYWHEEL GP	510
Y	*439-3432*	1	GAUGE GP-OIL LEVEL (DIPSTICK)	640
Y	*393-3369*	1	HOUSING GP-FLYWHEEL	526
Y	*375-5838*	1	HOUSING GP-FRONT	536
Y	*416-8908*	1	INJECTOR GP-FUEL	766
Y	*371-2478*	1	JET GP-PISTON COOLING	543
Y	*416-2470*	1	LIFTING GP-ENGINE	546
Y	*426-3310*	1	LINES GP-FUEL INJECTION	787
Y	*416-7808*	1	MANIFOLD GP-EXHAUST	724
Y	*391-5523*	1	MANIFOLD GP-INLET	726
Y	*346-1512*	1	MOUNTING GP-ACCESSORY MODULE	855
Y	*395-0112*	1	MOUNTING GP-ELECTRONIC CONTROL	819
Y	*375-4499*	1	PAN GP-OIL	557
Y	*369-7304*	1	PISTON & ROD GP	566
Y	*378-8167*	1	PLATE & FILM GP	868
Y	*635-3313*	1	PLATE GP-IDENTIFICATION	869
Y	*346-2908*	1	PLUG GP-ENGINE	592
Y	*440-0026*	1	PLUG GP-OIL FILTER MOUNTING	644
Y	*379-6629*	1	PULLEY GP-CRANKSHAFT	603
Y	*462-6685*	1	PUMP GP-ENGINE OIL	646
Y	*391-4811*	1	PUMP GP-FUEL INJECTION	790
Y	*372-2297*	1	PUMP GP-WATER	678

614-9555 **ENGINE AR-PRIMARY (**contd.**)** **i10581627**

NOTE	PART NUMBER	QTY	PART NAME 1 2 3 4 5 6 (PRODUCT LEVEL)	SEE PAGE
Y	*452-5153*	1	RADIATOR GP	686
Y	*394-9639*	1	RAIL GP-FUEL	794
Y	*371-2480*	1	ROCKER ARM GP	606
Y	*395-0110*	1	SENSOR GP-ENGINE	820
Y	*395-0114*	1	STARTING AID GP	826
Y	*385-8000*	1	STARTING MOTOR GP-ELECTRIC	832
Y	*371-2719*	1	SUPPORT GP-POWER TAKE-OFF	608
Y	*416-6971*	1	TURBOCHARGER GP	741
Y	*424-5516*	1	WIRING GP-ENGINE	846
	448-4768	1	ELECTRONICS GP	
	376-6464	1	PLATE & FILM GP	
			SOFTWARE MUST BE PROCURED LOCALLY FROM YOUR CAT DEALER	

A - NOT PART OF THIS GROUP
Y - SEPARATE ILLUSTRATION

<END>

622-6239 ENGINE AR-PRIMARY

205 BRAKE KW (275 BHP) AT 2200 RPM

OPTIONAL FIELD REPLACEMENT ORDER 451-1222—PAGE: 452, 452-6584—PAGE: 462

SMCS-1000 **i09240052**

NOTE	PART NUMBER	QTY	PART NAME 1 2 3 4 5 6 (PRODUCT LEVEL)	SEE PAGE
Y	*478-4234*	1	AIR CLEANER GP	715
Y	*377-0720*	1	ALTERNATOR GP-CHARGING	798
Y	*371-2693*	1	BELT TENSIONER GP	416
Y	*425-0196*	1	BREATHER GP (CRANKCASE)	612
Y	*396-2617*	1	CAMSHAFT GP	428
AY	*623-3489*	1	CONFIGURATION AR-ENGINE	19
Y	*373-3607*	1	CONNECTION GP-WATER	650
Y	*371-2536*	1	CONTROL GP-ELECTRONIC	808
Y	*378-8276*	1	COOLER GP-ENGINE OIL	659
Y	*389-3346*	1	COVER GP-VALVE MECHANISM	435
Y	*374-6300*	1	CRANKSHAFT GP	447
Y	*390-0854*	1	CYLINDER BLOCK GP	450
Y	*385-2572*	1	CYLINDER HEAD GP	458
Y	*371-2742*	1	DRAIN GP-ENGINE OIL	466
Y	*393-2180*	1	DRIVE GP-FAN	484
Y	*375-8320*	1	EXTENSION GP-FAN	501
Y	*378-0627*	1	FAN GP	670
Y	*375-0098*	1	FASTENER GP-DAMPER & PULLEY	505
Y	*390-3737*	1	FILLER GP-ENGINE OIL	620
Y	*415-5625*	1	FILM GP (ALTERNATOR)	862
Y	*423-8803*	1	FILM GP (STARTING MOTOR)	863
Y	*611-2653*	1	FILM GP (RADIATOR)	865
Y	*346-0220*	1	FILTER GP-ENGINE OIL	629
Y	*441-1218*	1	FILTER GP-FUEL	757
Y	*453-7163*	1	FILTER GP-FUEL	760
Y	*425-0197*	1	FILTER GP-FUMES DISPOSAL	630
Y	*346-0769*	1	FLANGE GP-EXHAUST	719
Y	*345-8901*	1	FLYWHEEL GP	506
Y	*417-6007*	1	GAUGE GP-OIL LEVEL (DIPSTICK)	635
Y	*345-8838*	1	HOUSING GP-FLYWHEEL	517
Y	*375-5838*	1	HOUSING GP-FRONT	536
Y	*416-8908*	1	INJECTOR GP-FUEL	766
Y	*371-2478*	1	JET GP-PISTON COOLING	543
Y	*416-2470*	1	LIFTING GP-ENGINE	546
Y	*426-3310*	1	LINES GP-FUEL INJECTION	787
Y	*416-7808*	1	MANIFOLD GP-EXHAUST	724
Y	*391-5523*	1	MANIFOLD GP-INLET	726
Y	*346-1528*	1	MOUNTING GP-ACCESSORY MODULE	856
Y	*395-0112*	1	MOUNTING GP-ELECTRONIC CONTROL	819
Y	*375-4499*	1	PAN GP-OIL	557
Y	*369-7304*	1	PISTON & ROD GP	566
Y	*378-8167*	1	PLATE & FILM GP	868
Y	*346-2908*	1	PLUG GP-ENGINE	592
Y	*440-0026*	1	PLUG GP-OIL FILTER MOUNTING	644
Y	*379-6629*	1	PULLEY GP-CRANKSHAFT	603
Y	*462-6685*	1	PUMP GP-ENGINE OIL	646
Y	*391-4811*	1	PUMP GP-FUEL INJECTION	790
Y	*372-2297*	1	PUMP GP-WATER	678

622-6239 **ENGINE AR-PRIMARY (**contd.**)** **i09240052**

NOTE	PART NUMBER	QTY	PART NAME 1 2 3 4 5 6 (PRODUCT LEVEL)	SEE PAGE
Y	*452-5153*	1	RADIATOR GP	686
Y	*394-9639*	1	RAIL GP-FUEL	794
Y	*371-2480*	1	ROCKER ARM GP	606
Y	*395-0110*	1	SENSOR GP-ENGINE	820
Y	*380-9279*	1	STARTING AID GP	824
Y	*415-4870*	1	STARTING MOTOR GP-ELECTRIC	837
Y	*371-2719*	1	SUPPORT GP-POWER TAKE-OFF	608
Y	*416-6971*	1	TURBOCHARGER GP	741
Y	*424-5516*	1	WIRING GP-ENGINE	846
	449-3320	1	ELECTRONICS GP-ENGINE	
	376-6464	1	PLATE & FILM GP	

A - NOT PART OF THIS GROUP
Y - SEPARATE ILLUSTRATION

<END>

623-1309 ENGINE AR-PRIMARY

186 BRAKE KW (249 BHP) AT2200 RPM

OPTIONAL FIELD REPLACEMENT ORDER 451-1222—PAGE: 452, 452-6584—PAGE: 462

SMCS-1000 **i10204774**

NOTE	PART NUMBER	QTY	PART NAME 1 2 3 4 5 6 (PRODUCT LEVEL)	SEE PAGE
Y	*377-0721*	1	ALTERNATOR GP-CHARGING	799
Y	*371-2693*	1	BELT TENSIONER GP	416
Y	*392-0632*	1	BREATHER GP	611
Y	*396-2617*	1	CAMSHAFT GP	428
AY	*623-1349*	1	CONFIGURATION AR-ENGINE	19
Y	*373-3607*	1	CONNECTION GP-WATER	650
Y	*371-2536*	1	CONTROL GP-ELECTRONIC	808
Y	*378-8280*	1	COOLER GP-ENGINE OIL	661
Y	*389-3346*	1	COVER GP-VALVE MECHANISM	435
Y	*374-6300*	1	CRANKSHAFT GP	447
Y	*390-0854*	1	CYLINDER BLOCK GP	450
Y	*385-2572*	1	CYLINDER HEAD GP	458
Y	*391-5560*	1	DRIVE GP-FAN	480
Y	*371-2694*	1	EXTENSION GP-FAN	500
Y	*375-0098*	1	FASTENER GP-DAMPER & PULLEY	505
Y	*390-3737*	1	FILLER GP-ENGINE OIL	620
Y	*415-5625*	1	FILM GP (ALTERNATOR)	862
Y	*589-6006*	1	FILM GP	864
Y	*346-0220*	1	FILTER GP-ENGINE OIL	629
Y	*441-1215*	1	FILTER GP-FUEL (WATER SEPARATOR)	756
Y	*453-7163*	1	FILTER GP-FUEL	760
Y	*437-2723*	1	FLYWHEEL GP	513
Y	*439-3432*	1	GAUGE GP-OIL LEVEL (DIPSTICK)	640
Y	*437-2721*	1	HOUSING GP-FLYWHEEL	529
Y	*371-2725*	1	HOUSING GP-FRONT	532
Y	*416-8908*	1	INJECTOR GP-FUEL	766
Y	*371-2478*	1	JET GP-PISTON COOLING	543
Y	*416-2470*	1	LIFTING GP-ENGINE	546
Y	*426-3310*	1	LINES GP-FUEL INJECTION	787
Y	*416-7808*	1	MANIFOLD GP-EXHAUST	724
Y	*391-5523*	1	MANIFOLD GP-INLET	726
Y	*395-0112*	1	MOUNTING GP-ELECTRONIC CONTROL	819
Y	*495-6156*	1	MOUNTING GP-ENGINE	551
Y	*375-4499*	1	PAN GP-OIL	557
Y	*369-7304*	1	PISTON & ROD GP	566
Y	*635-3313*	1	PLATE GP-IDENTIFICATION	869
Y	*346-2908*	1	PLUG GP-ENGINE	592
Y	*440-0026*	1	PLUG GP-OIL FILTER MOUNTING	644
Y	*379-6629*	1	PULLEY GP-CRANKSHAFT	603
Y	*462-6685*	1	PUMP GP-ENGINE OIL	646
Y	*391-4811*	1	PUMP GP-FUEL INJECTION	790
Y	*372-2297*	1	PUMP GP-WATER	678
Y	*394-9639*	1	RAIL GP-FUEL	794
Y	*371-2480*	1	ROCKER ARM GP	606
Y	*395-0110*	1	SENSOR GP-ENGINE	820
Y	*395-0114*	1	STARTING AID GP	826
Y	*385-8000*	1	STARTING MOTOR GP-ELECTRIC	832
Y	*371-2719*	1	SUPPORT GP-POWER TAKE-OFF	608

623-1309 **ENGINE AR-PRIMARY (**contd.**)** **i10204774**

NOTE	PART NUMBER	QTY	PART NAME 1 2 3 4 5 6 (PRODUCT LEVEL)	SEE PAGE
Y	*431-6516*	1	TURBOCHARGER GP	
Y	*424-5516*	1	WIRING GP-ENGINE	846
	464-1142	1	ELECTRONICS GP-ENGINE	
	376-6464	1	PLATE & FILM GP	

A - NOT PART OF THIS GROUP
Y - SEPARATE ILLUSTRATION

<END>

624-0698 ENGINE AR-PRIMARY

186 BRAKE KW (249 BHP) AT 2200 RPM

OPTIONAL FIELD REPLACEMENT ORDER 451-1222—PAGE: 452, 452-6584—PAGE: 462

FIELD REPLACEMENT FOR 445-2586—PAGE: 41

SMCS-1000 **i10204731**

NOTE	PART NUMBER	QTY	PART NAME 1 2 3 4 5 6 (PRODUCT LEVEL)	SEE PAGE
Y	*377-0721*	1	ALTERNATOR GP-CHARGING	799
Y	*371-2693*	1	BELT TENSIONER GP	416
Y	*392-0632*	1	BREATHER GP	611
Y	*396-2617*	1	CAMSHAFT GP	428
AY	*624-0794*	1	CONFIGURATION AR-ENGINE	19
Y	*373-3607*	1	CONNECTION GP-WATER	650
Y	*371-2536*	1	CONTROL GP-ELECTRONIC	808
Y	*378-8280*	1	COOLER GP-ENGINE OIL	661
Y	*389-3346*	1	COVER GP-VALVE MECHANISM	435
Y	*374-6300*	1	CRANKSHAFT GP	447
Y	*390-0854*	1	CYLINDER BLOCK GP	450
Y	*385-2572*	1	CYLINDER HEAD GP	458
Y	*391-5560*	1	DRIVE GP-FAN	480
Y	*371-2694*	1	EXTENSION GP-FAN	500
Y	*375-0098*	1	FASTENER GP-DAMPER & PULLEY	505
Y	*390-3737*	1	FILLER GP-ENGINE OIL	620
Y	*415-5625*	1	FILM GP (ALTERNATOR)	862
Y	*589-6006*	1	FILM GP	864
Y	*346-0220*	1	FILTER GP-ENGINE OIL	629
Y	*441-1215*	1	FILTER GP-FUEL (WATER SEPARATOR)	756
Y	*453-7163*	1	FILTER GP-FUEL	760
Y	*377-0692*	1	FLYWHEEL GP	511
Y	*439-3432*	1	GAUGE GP-OIL LEVEL (DIPSTICK)	640
Y	*393-3369*	1	HOUSING GP-FLYWHEEL	526
Y	*371-2725*	1	HOUSING GP-FRONT	532
Y	*416-8908*	1	INJECTOR GP-FUEL	766
Y	*371-2478*	1	JET GP-PISTON COOLING	543
Y	*416-2470*	1	LIFTING GP-ENGINE	546
Y	*426-3310*	1	LINES GP-FUEL INJECTION	787
Y	*416-7808*	1	MANIFOLD GP-EXHAUST	724
Y	*391-5523*	1	MANIFOLD GP-INLET	726
Y	*395-0112*	1	MOUNTING GP-ELECTRONIC CONTROL	819
Y	*375-4499*	1	PAN GP-OIL	557
Y	*369-7304*	1	PISTON & ROD GP	566
Y	*635-3313*	1	PLATE GP-IDENTIFICATION	869
Y	*346-2908*	1	PLUG GP-ENGINE	592
Y	*440-0026*	1	PLUG GP-OIL FILTER MOUNTING	644
Y	*379-6629*	1	PULLEY GP-CRANKSHAFT	603
Y	*462-6685*	1	PUMP GP-ENGINE OIL	646
Y	*391-4811*	1	PUMP GP-FUEL INJECTION	790
Y	*372-2297*	1	PUMP GP-WATER	678
Y	*394-9639*	1	RAIL GP-FUEL	794
Y	*371-2480*	1	ROCKER ARM GP	606
Y	*395-0110*	1	SENSOR GP-ENGINE	820
Y	*395-0114*	1	STARTING AID GP	826
Y	*385-8000*	1	STARTING MOTOR GP-ELECTRIC	832
Y	*371-2719*	1	SUPPORT GP-POWER TAKE-OFF	608

624-0698 **ENGINE AR-PRIMARY (**contd.**)** **i10204731**

NOTE	PART NUMBER	QTY	PART NAME 1 2 3 4 5 6 (PRODUCT LEVEL)	SEE PAGE
Y	*431-6516*	1	TURBOCHARGER GP	
Y	*424-5516*	1	WIRING GP-ENGINE	846
	464-1142	1	ELECTRONICS GP-ENGINE	
	376-6464	1	PLATE & FILM GP	
			SOFTWARE MUST BE PROCURED LOCALLY FROM YOUR CAT DEALER	

A - NOT PART OF THIS GROUP
Y - SEPARATE ILLUSTRATION

<END>

627-8019 ENGINE AR-PRIMARY

186 BRAKE KW (249 BHP) AT 2200 RPM

OPTIONAL FIELD REPLACEMENT ORDER 451-1222—PAGE: 452, 452-6584—PAGE: 462

SMCS-1000 **i10205479**

NOTE	PART NUMBER	QTY	PART NAME 1 2 3 4 5 6 (PRODUCT LEVEL)	SEE PAGE
Y	*377-0721*	1	ALTERNATOR GP-CHARGING	799
Y	*371-2693*	1	BELT TENSIONER GP	416
Y	*392-0632*	1	BREATHER GP	611
Y	*396-2617*	1	CAMSHAFT GP	428
AY	*628-3916*	1	CONFIGURATION AR-ENGINE	20
Y	*373-3607*	1	CONNECTION GP-WATER	650
Y	*371-2536*	1	CONTROL GP-ELECTRONIC	808
Y	*378-8280*	1	COOLER GP-ENGINE OIL	661
Y	*389-3347*	1	COVER GP-VALVE MECHANISM	436
Y	*374-6300*	1	CRANKSHAFT GP	447
Y	*390-0854*	1	CYLINDER BLOCK GP	450
Y	*385-2572*	1	CYLINDER HEAD GP	458
Y	*378-8166*	1	DRAIN GP-ENGINE OIL	467
Y	*393-2180*	1	DRIVE GP-FAN	484
Y	*375-4606*	1	DRIVE GP-POWER TAKE-OFF	499
Y	*375-8320*	1	EXTENSION GP-FAN	501
Y	*375-4574*	1	FAN GP	669
Y	*375-0098*	1	FASTENER GP-DAMPER & PULLEY	505
Y	*438-5978*	1	FILLER GP-ENGINE OIL	623
Y	*415-5625*	1	FILM GP (ALTERNATOR)	862
Y	*611-2653*	1	FILM GP (RADIATOR)	865
Y	*625-6594*	1	FILM GP	866
Y	*346-0220*	1	FILTER GP-ENGINE OIL	629
Y	*441-1215*	1	FILTER GP-FUEL (WATER SEPARATOR)	756
Y	*453-7163*	1	FILTER GP-FUEL	760
Y	*346-0769*	1	FLANGE GP-EXHAUST	719
Y	*437-2723*	1	FLYWHEEL GP	513
Y	*439-3432*	1	GAUGE GP-OIL LEVEL (DIPSTICK)	640
Y	*437-2721*	1	HOUSING GP-FLYWHEEL	529
Y	*375-4645*	1	HOUSING GP-FRONT	534
Y	*416-8908*	1	INJECTOR GP-FUEL	766
Y	*371-2478*	1	JET GP-PISTON COOLING	543
Y	*416-2470*	1	LIFTING GP-ENGINE	546
Y	*426-3310*	1	LINES GP-FUEL INJECTION	787
Y	*416-7808*	1	MANIFOLD GP-EXHAUST	724
Y	*391-5523*	1	MANIFOLD GP-INLET	726
Y	*395-0112*	1	MOUNTING GP-ELECTRONIC CONTROL	819
Y	*458-2242*	1	MOUNTING GP-ENGINE	550
Y	*375-4499*	1	PAN GP-OIL	557
Y	*369-7304*	1	PISTON & ROD GP	566
Y	*635-3313*	1	PLATE GP-IDENTIFICATION (TURBOCHARGER)	869
Y	*346-2908*	1	PLUG GP-ENGINE	592
Y	*440-0026*	1	PLUG GP-OIL FILTER MOUNTING	644
Y	*379-6629*	1	PULLEY GP-CRANKSHAFT	603
Y	*462-6685*	1	PUMP GP-ENGINE OIL	646
Y	*391-4811*	1	PUMP GP-FUEL INJECTION	790
Y	*372-2297*	1	PUMP GP-WATER	678
Y	*456-4298*	1	RADIATOR GP	695

627-8019 **ENGINE AR-PRIMARY (**contd.**)** **i10205479**

NOTE	PART NUMBER	QTY	PART NAME 1 2 3 4 5 6 (PRODUCT LEVEL)	SEE PAGE
Y	*394-9639*	1	RAIL GP-FUEL	794
Y	*371-2480*	1	ROCKER ARM GP	606
Y	*395-0110*	1	SENSOR GP-ENGINE	820
Y	*395-0114*	1	STARTING AID GP	826
Y	*371-2541*	1	STARTING MOTOR GP-ELECTRIC	829
Y	*416-6971*	1	TURBOCHARGER GP	741
Y	*424-5516*	1	WIRING GP-ENGINE	846
	440-1796	1	ELECTRONICS GP-ENGINE RATINGS	
	376-6464	1	PLATE & FILM GP	
	630-0387	1	FILM-IDENTIFICATION (QR CODE)	
			SOFTWARE MUST BE PROCURED LOCALLY FROM YOUR CAT DEALER	

A - NOT PART OF THIS GROUP
Y - SEPARATE ILLUSTRATION

<END>

627-8054 ENGINE AR-PRIMARY

140 BRAKE KW (188 BHP) AT 2000 RPM

OPTIONAL FIELD REPLACEMENT ORDER 451-1222—PAGE: 452, 452-6584—PAGE: 462

SMCS-1000 **i09235044**

NOTE	PART NUMBER	QTY	PART NAME 1 2 3 4 5 6 (PRODUCT LEVEL)	SEE PAGE
Y	*377-0721*	1	ALTERNATOR GP-CHARGING	799
Y	*371-2693*	1	BELT TENSIONER GP	416
Y	*392-0632*	1	BREATHER GP	611
Y	*396-2615*	1	CAMSHAFT GP	427
AY	*629-0552*	1	CONFIGURATION AR-ENGINE	20
Y	*373-3607*	1	CONNECTION GP-WATER	650
Y	*371-2536*	1	CONTROL GP-ELECTRONIC	808
Y	*346-0097*	1	COOLER GP-ENGINE OIL	658
Y	*389-3347*	1	COVER GP-VALVE MECHANISM	436
Y	*374-6300*	1	CRANKSHAFT GP	447
Y	*390-0854*	1	CYLINDER BLOCK GP	450
Y	*385-2572*	1	CYLINDER HEAD GP	458
Y	*378-8166*	1	DRAIN GP-ENGINE OIL	467
Y	*393-2180*	1	DRIVE GP-FAN	484
Y	*375-4606*	1	DRIVE GP-POWER TAKE-OFF	499
Y	*375-8320*	1	EXTENSION GP-FAN	501
Y	*452-3651*	1	FAN GP	673
Y	*375-0098*	1	FASTENER GP-DAMPER & PULLEY	505
Y	*438-5978*	1	FILLER GP-ENGINE OIL	623
Y	*415-5625*	1	FILM GP (ALTERNATOR)	862
Y	*611-2653*	1	FILM GP (RADIATOR)	865
Y	*625-6594*	1	FILM GP	866
Y	*346-0220*	1	FILTER GP-ENGINE OIL	629
Y	*441-1215*	1	FILTER GP-FUEL (WATER SEPARATOR)	756
Y	*453-7163*	1	FILTER GP-FUEL	760
Y	*346-0769*	1	FLANGE GP-EXHAUST	719
Y	*378-0585*	1	FLYWHEEL GP	512
Y	*357-1915*	1	HOUSING GP-FLYWHEEL	521
Y	*375-4645*	1	HOUSING GP-FRONT	534
Y	*371-2483*	1	INJECTOR GP-FUEL	763
Y	*371-2478*	1	JET GP-PISTON COOLING	543
Y	*416-2470*	1	LIFTING GP-ENGINE	546
Y	*426-3310*	1	LINES GP-FUEL INJECTION	787
Y	*416-7808*	1	MANIFOLD GP-EXHAUST	724
Y	*391-5523*	1	MANIFOLD GP-INLET	726
Y	*346-1512*	1	MOUNTING GP-ACCESSORY MODULE	855
Y	*395-0112*	1	MOUNTING GP-ELECTRONIC CONTROL	819
Y	*375-4499*	1	PAN GP-OIL	557
Y	*374-6301*	1	PISTON & ROD GP	576
Y	*346-2908*	1	PLUG GP-ENGINE	592
Y	*440-0026*	1	PLUG GP-OIL FILTER MOUNTING	644
Y	*458-9768*	1	PLUG GP-OIL PAN	596
Y	*379-6629*	1	PULLEY GP-CRANKSHAFT	603
Y	*462-6685*	1	PUMP GP-ENGINE OIL	646
Y	*391-4811*	1	PUMP GP-FUEL INJECTION	790
Y	*372-2297*	1	PUMP GP-WATER	678
Y	*456-4296*	1	RADIATOR GP	689
Y	*394-9639*	1	RAIL GP-FUEL	794

627-8054 **ENGINE AR-PRIMARY (**contd.**)** **i09235044**

NOTE	PART NUMBER	QTY	PART NAME 1 2 3 4 5 6 (PRODUCT LEVEL)	SEE PAGE
Y	*371-2480*	1	ROCKER ARM GP	606
Y	*395-0110*	1	SENSOR GP-ENGINE	820
Y	*395-0114*	1	STARTING AID GP	826
Y	*378-0590*	1	STARTING MOTOR GP-ELECTRIC	831
Y	*375-5002*	1	TURBOCHARGER GP	732
Y	*424-5516*	1	WIRING GP-ENGINE	846
	468-8374	1	ELECTRONICS GP-ENGINE	
	376-6464	1	PLATE & FILM GP	

A - NOT PART OF THIS GROUP
Y - SEPARATE ILLUSTRATION

<END>

627-8129 ENGINE AR-PRIMARY

130 BRAKE KW (174 BHP) AT 2500 RPM

OPTIONAL FIELD REPLACEMENT ORDER 451-1222—PAGE: 452, 452-6584—PAGE: 462

FIELD REPLACEMENT FOR 461-4643—PAGE: 73

SMCS-1000 **i09248558**

NOTE	PART NUMBER	QTY	PART NAME 1 2 3 4 5 6 (PRODUCT LEVEL)	SEE PAGE
Y	*478-4234*	1	AIR CLEANER GP	715
Y	*377-0720*	1	ALTERNATOR GP-CHARGING	798
Y	*371-2693*	1	BELT TENSIONER GP	416
Y	*425-0196*	1	BREATHER GP (CRANKCASE)	612
Y	*396-2615*	1	CAMSHAFT GP	427
AY	*627-8148*	1	CONFIGURATION AR-ENGINE	20
Y	*373-3607*	1	CONNECTION GP-WATER	650
Y	*371-2536*	1	CONTROL GP-ELECTRONIC	808
Y	*346-0091*	1	COOLER GP-ENGINE OIL	657
Y	*389-3346*	1	COVER GP-VALVE MECHANISM	435
Y	*374-6300*	1	CRANKSHAFT GP	447
Y	*390-0854*	1	CYLINDER BLOCK GP	450
Y	*385-2572*	1	CYLINDER HEAD GP	458
Y	*393-2180*	1	DRIVE GP-FAN	484
Y	*375-8320*	1	EXTENSION GP-FAN	501
Y	*454-5203*	1	FAN GP	674
Y	*375-0098*	1	FASTENER GP-DAMPER & PULLEY	505
Y	*390-3737*	1	FILLER GP-ENGINE OIL	620
Y	*415-5625*	1	FILM GP (ALTERNATOR)	862
Y	*423-8803*	1	FILM GP (STARTING MOTOR)	863
Y	*589-6006*	1	FILM GP	864
Y	*611-2653*	1	FILM GP (RADIATOR)	865
Y	*346-0220*	1	FILTER GP-ENGINE OIL	629
Y	*441-1215*	1	FILTER GP-FUEL (WATER SEPARATOR)	756
Y	*453-7163*	1	FILTER GP-FUEL	760
Y	*425-0197*	1	FILTER GP-FUMES DISPOSAL	630
Y	*346-0769*	1	FLANGE GP-EXHAUST	719
Y	*345-8902*	1	FLYWHEEL GP	507
Y	*439-3432*	1	GAUGE GP-OIL LEVEL (DIPSTICK)	640
Y	*345-8838*	1	HOUSING GP-FLYWHEEL	517
Y	*375-5838*	1	HOUSING GP-FRONT	536
Y	*371-2483*	1	INJECTOR GP-FUEL	763
Y	*371-2478*	1	JET GP-PISTON COOLING	543
Y	*416-2470*	1	LIFTING GP-ENGINE	546
Y	*426-3310*	1	LINES GP-FUEL INJECTION	787
Y	*416-7808*	1	MANIFOLD GP-EXHAUST	724
Y	*391-5523*	1	MANIFOLD GP-INLET	726
Y	*346-1528*	1	MOUNTING GP-ACCESSORY MODULE	856
Y	*395-0112*	1	MOUNTING GP-ELECTRONIC CONTROL	819
Y	*375-4499*	1	PAN GP-OIL	557
Y	*374-6301*	1	PISTON & ROD GP	576
Y	*346-2908*	1	PLUG GP-ENGINE	592
Y	*440-0026*	1	PLUG GP-OIL FILTER MOUNTING	644
Y	*379-6629*	1	PULLEY GP-CRANKSHAFT	603
Y	*462-6685*	1	PUMP GP-ENGINE OIL	646
Y	*391-4811*	1	PUMP GP-FUEL INJECTION	790
Y	*372-2297*	1	PUMP GP-WATER	678

627-8129 **ENGINE AR-PRIMARY (**contd.**)** **i09248558**

NOTE	PART NUMBER	QTY	PART NAME 1 2 3 4 5 6 (PRODUCT LEVEL)	SEE PAGE
Y	*454-6966*	1	RADIATOR GP	
Y	*394-9639*	1	RAIL GP-FUEL	794
Y	*371-2480*	1	ROCKER ARM GP	606
Y	*395-0110*	1	SENSOR GP-ENGINE	820
Y	*380-9279*	1	STARTING AID GP	824
Y	*415-4870*	1	STARTING MOTOR GP-ELECTRIC	837
Y	*371-2719*	1	SUPPORT GP-POWER TAKE-OFF	608
Y	*375-5002*	1	TURBOCHARGER GP	732
Y	*424-5516*	1	WIRING GP-ENGINE	846
	464-0721	1	ELECTRONICS GP-ENGINE	
	376-6464	1	PLATE & FILM GP	

A - NOT PART OF THIS GROUP
Y - SEPARATE ILLUSTRATION

<END>

628-4345 ENGINE AR-PRIMARY

151 BRAKE KW(203 BHP) AT 2200 RPM

OPTIONAL FIELD REPLACEMENT ORDER 451-1222—PAGE: 452, 452-6584—PAGE: 462

SMCS-1000 **i09239993**

NOTE	PART NUMBER	QTY	PART NAME 1 2 3 4 5 6 (PRODUCT LEVEL)	SEE PAGE
Y	*377-0720*	1	ALTERNATOR GP-CHARGING	798
Y	*371-2693*	1	BELT TENSIONER GP	416
Y	*392-0632*	1	BREATHER GP	611
Y	*396-2615*	1	CAMSHAFT GP	427
AY	*629-0211*	1	CONFIGURATION AR-ENGINE	20
Y	*373-3607*	1	CONNECTION GP-WATER	650
Y	*371-2536*	1	CONTROL GP-ELECTRONIC	808
Y	*346-0097*	1	COOLER GP-ENGINE OIL	658
Y	*389-3348*	1	COVER GP-VALVE MECHANISM	440
Y	*374-6300*	1	CRANKSHAFT GP	447
Y	*390-0854*	1	CYLINDER BLOCK GP	450
Y	*385-2572*	1	CYLINDER HEAD GP	458
Y	*371-2742*	1	DRAIN GP-ENGINE OIL	466
Y	*393-2180*	1	DRIVE GP-FAN	484
Y	*375-4606*	1	DRIVE GP-POWER TAKE-OFF	499
Y	*375-8320*	1	EXTENSION GP-FAN	501
Y	*452-3651*	1	FAN GP	673
Y	*375-0098*	1	FASTENER GP-DAMPER & PULLEY	505
Y	*448-0944*	1	FILLER GP-ENGINE OIL	627
Y	*415-5625*	1	FILM GP (ALTERNATOR)	862
Y	*423-8803*	1	FILM GP (STARTING MOTOR)	863
Y	*611-2653*	1	FILM GP (RADIATOR)	865
Y	*625-6594*	1	FILM GP	866
Y	*346-0220*	1	FILTER GP-ENGINE OIL	629
Y	*441-1215*	1	FILTER GP-FUEL (WATER SEPARATOR)	756
Y	*453-7163*	1	FILTER GP-FUEL	760
Y	*346-0769*	1	FLANGE GP-EXHAUST	719
Y	*345-8961*	1	FLYWHEEL GP	508
Y	*439-3432*	1	GAUGE GP-OIL LEVEL (DIPSTICK)	640
Y	*345-8839*	1	HOUSING GP-FLYWHEEL	518
Y	*375-4645*	1	HOUSING GP-FRONT	534
Y	*371-2483*	1	INJECTOR GP-FUEL	763
Y	*371-2478*	1	JET GP-PISTON COOLING	543
Y	*416-2470*	1	LIFTING GP-ENGINE	546
Y	*426-3310*	1	LINES GP-FUEL INJECTION	787
Y	*416-7808*	1	MANIFOLD GP-EXHAUST	724
Y	*391-5523*	1	MANIFOLD GP-INLET	726
Y	*373-5023*	1	MOUNTING GP-ACCESSORY MODULE	857
Y	*395-0112*	1	MOUNTING GP-ELECTRONIC CONTROL	819
Y	*375-4499*	1	PAN GP-OIL	557
Y	*374-6301*	1	PISTON & ROD GP	576
Y	*346-2908*	1	PLUG GP-ENGINE	592
Y	*440-0026*	1	PLUG GP-OIL FILTER MOUNTING	644
Y	*379-6629*	1	PULLEY GP-CRANKSHAFT	603
Y	*462-6685*	1	PUMP GP-ENGINE OIL	646
Y	*391-4811*	1	PUMP GP-FUEL INJECTION	790
Y	*372-2297*	1	PUMP GP-WATER	678
Y	*456-4296*	1	RADIATOR GP	689

628-4345 **ENGINE AR-PRIMARY (**contd.**)** **i09239993**

NOTE	PART NUMBER	QTY	PART NAME 1 2 3 4 5 6 (PRODUCT LEVEL)	SEE PAGE
Y	*394-9639*	1	RAIL GP-FUEL	794
Y	*371-2480*	1	ROCKER ARM GP	606
Y	*395-0110*	1	SENSOR GP-ENGINE	820
Y	*380-9279*	1	STARTING AID GP	824
Y	*415-4870*	1	STARTING MOTOR GP-ELECTRIC	837
Y	*375-5002*	1	TURBOCHARGER GP	732
Y	*424-5516*	1	WIRING GP-ENGINE	846
	453-1370	1	ELECTRONICS GP-ENGINE	
	376-6464	1	PLATE & FILM GP	

A - NOT PART OF THIS GROUP
Y - SEPARATE ILLUSTRATION

<END>

633-4335 ENGINE AR-PRIMARY

209 BRAKE KW (281 BHP) AT 1800 RPM

OPTIONAL FIELD REPLACEMENT ORDER 451-1222—PAGE: 452, 452-6584—PAGE: 462

FIELD REPLACEMENT FOR 504-9579—PAGE: 252

SMCS-1000 **i09932247**

NOTE	PART NUMBER	QTY	PART NAME 1 2 3 4 5 6 (PRODUCT LEVEL)	SEE PAGE
Y	*478-4234*	1	AIR CLEANER GP	715
Y	*377-0721*	1	ALTERNATOR GP-CHARGING	799
Y	*371-2693*	1	BELT TENSIONER GP	416
Y	*392-0632*	1	BREATHER GP	611
Y	*376-6871*	1	CAMSHAFT GP	426
AY	*633-4834*	1	CONFIGURATION AR-ENGINE	21
Y	*373-3607*	1	CONNECTION GP-WATER	650
Y	*371-2536*	1	CONTROL GP-ELECTRONIC	808
Y	*378-8280*	1	COOLER GP-ENGINE OIL	661
Y	*389-3347*	1	COVER GP-VALVE MECHANISM	436
Y	*374-6300*	1	CRANKSHAFT GP	447
Y	*390-0854*	1	CYLINDER BLOCK GP	450
Y	*385-2572*	1	CYLINDER HEAD GP	458
Y	*371-2742*	1	DRAIN GP-ENGINE OIL	466
Y	*393-2180*	1	DRIVE GP-FAN	484
Y	*375-4606*	1	DRIVE GP-POWER TAKE-OFF	499
Y	*375-8320*	1	EXTENSION GP-FAN	501
Y	*375-4574*	1	FAN GP	669
Y	*375-0098*	1	FASTENER GP-DAMPER & PULLEY	505
Y	*448-0944*	1	FILLER GP-ENGINE OIL	627
Y	*415-5625*	1	FILM GP (ALTERNATOR)	862
Y	*589-6006*	1	FILM GP	864
Y	*611-2653*	1	FILM GP (RADIATOR)	865
Y	*346-0220*	1	FILTER GP-ENGINE OIL	629
Y	*441-1215*	1	FILTER GP-FUEL (WATER SEPARATOR)	756
Y	*453-7163*	1	FILTER GP-FUEL	760
Y	*346-0769*	1	FLANGE GP-EXHAUST	719
Y	*345-9037*	1	FLYWHEEL GP	510
Y	*439-3432*	1	GAUGE GP-OIL LEVEL (DIPSTICK)	640
Y	*393-3369*	1	HOUSING GP-FLYWHEEL	526
Y	*375-4645*	1	HOUSING GP-FRONT	534
Y	*416-8908*	1	INJECTOR GP-FUEL	766
Y	*371-2478*	1	JET GP-PISTON COOLING	543
Y	*416-2470*	1	LIFTING GP-ENGINE	546
Y	*426-3310*	1	LINES GP-FUEL INJECTION	787
Y	*416-7808*	1	MANIFOLD GP-EXHAUST	724
Y	*391-5523*	1	MANIFOLD GP-INLET	726
Y	*346-1512*	1	MOUNTING GP-ACCESSORY MODULE	855
Y	*395-0112*	1	MOUNTING GP-ELECTRONIC CONTROL	819
Y	*375-4499*	1	PAN GP-OIL	557
Y	*452-9761*	1	PISTON & ROD GP	581
Y	*635-3313*	1	PLATE GP-IDENTIFICATION	869
Y	*346-2908*	1	PLUG GP-ENGINE	592
Y	*440-0026*	1	PLUG GP-OIL FILTER MOUNTING	644
Y	*379-6629*	1	PULLEY GP-CRANKSHAFT	603
Y	*462-6685*	1	PUMP GP-ENGINE OIL	646
Y	*391-4811*	1	PUMP GP-FUEL INJECTION	790

633-4335 **ENGINE AR-PRIMARY (**contd.**)** **i09932247**

NOTE	PART NUMBER	QTY	PART NAME 1 2 3 4 5 6 (PRODUCT LEVEL)	SEE PAGE
Y	*372-2297*	1	PUMP GP-WATER	678
Y	*456-4298*	1	RADIATOR GP	695
Y	*394-9639*	1	RAIL GP-FUEL	794
Y	*371-2480*	1	ROCKER ARM GP	606
Y	*395-0110*	1	SENSOR GP-ENGINE	820
Y	*395-0114*	1	STARTING AID GP	826
Y	*385-8000*	1	STARTING MOTOR GP-ELECTRIC	832
Y	*416-6971*	1	TURBOCHARGER GP	741
Y	*424-5516*	1	WIRING GP-ENGINE	846
	483-1223	1	ELECTRONICS GP-ENGINE	
	376-6464	1	PLATE & FILM GP	

A - NOT PART OF THIS GROUP
Y - SEPARATE ILLUSTRATION

<END>

633-7776 ENGINE AR-PRIMARY

151 BRAKE KW (202 BHP) AT 2200 RPM

OPTIONAL FIELD REPLACEMENT ORDER 451-1222—PAGE: 452, 452-6584—PAGE: 462

FIELD INSTALLATION

SMCS-1000 **i09717861**

NOTE	PART NUMBER	QTY	PART NAME 1 2 3 4 5 6 (PRODUCT LEVEL)	SEE PAGE
Y	*377-0720*	1	ALTERNATOR GP-CHARGING	798
Y	*371-2693*	1	BELT TENSIONER GP	416
Y	*392-0632*	1	BREATHER GP	611
Y	*396-2615*	1	CAMSHAFT GP	427
Y	*373-3607*	1	CONNECTION GP-WATER	650
Y	*371-2536*	1	CONTROL GP-ELECTRONIC	808
Y	*346-0097*	1	COOLER GP-ENGINE OIL	658
Y	*389-3348*	1	COVER GP-VALVE MECHANISM	440
Y	*374-6300*	1	CRANKSHAFT GP	447
Y	*390-0854*	1	CYLINDER BLOCK GP	450
Y	*385-2572*	1	CYLINDER HEAD GP	458
Y	*371-2742*	1	DRAIN GP-ENGINE OIL	466
Y	*393-2180*	1	DRIVE GP-FAN	484
Y	*375-4606*	1	DRIVE GP-POWER TAKE-OFF	499
Y	*375-8320*	1	EXTENSION GP-FAN	501
Y	*452-3651*	1	FAN GP	673
Y	*375-0098*	1	FASTENER GP-DAMPER & PULLEY	505
Y	*448-0944*	1	FILLER GP-ENGINE OIL	627
Y	*415-5625*	1	FILM GP (ALTERNATOR)	862
Y	*423-8803*	1	FILM GP (STARTING MOTOR)	863
Y	*611-2653*	1	FILM GP (RADIATOR)	865
Y	*625-6594*	1	FILM GP	866
Y	*346-0220*	1	FILTER GP-ENGINE OIL	629
Y	*441-1215*	1	FILTER GP-FUEL (WATER SEPARATOR)	756
Y	*453-7163*	1	FILTER GP-FUEL	760
Y	*346-0769*	1	FLANGE GP-EXHAUST	719
Y	*345-8961*	1	FLYWHEEL GP	508
Y	*439-3432*	1	GAUGE GP-OIL LEVEL (DIPSTICK)	640
Y	*345-8839*	1	HOUSING GP-FLYWHEEL	518
Y	*375-4645*	1	HOUSING GP-FRONT	534
Y	*371-2483*	1	INJECTOR GP-FUEL	763
Y	*371-2478*	1	JET GP-PISTON COOLING	543
Y	*416-2470*	1	LIFTING GP-ENGINE	546
Y	*426-3310*	1	LINES GP-FUEL INJECTION	787
Y	*416-7808*	1	MANIFOLD GP-EXHAUST	724
Y	*391-5523*	1	MANIFOLD GP-INLET	726
Y	*373-5023*	1	MOUNTING GP-ACCESSORY MODULE	857
Y	*395-0112*	1	MOUNTING GP-ELECTRONIC CONTROL	819
Y	*375-4499*	1	PAN GP-OIL	557
Y	*374-6301*	1	PISTON & ROD GP	576
Y	*346-2908*	1	PLUG GP-ENGINE	592
Y	*440-0026*	1	PLUG GP-OIL FILTER MOUNTING	644
Y	*379-6629*	1	PULLEY GP-CRANKSHAFT	603
Y	*462-6685*	1	PUMP GP-ENGINE OIL	646
Y	*391-4811*	1	PUMP GP-FUEL INJECTION	790
Y	*372-2297*	1	PUMP GP-WATER	678
Y	*456-4296*	1	RADIATOR GP	689

633-7776 **ENGINE AR-PRIMARY (**contd.**)** **i09717861**

NOTE	PART NUMBER	QTY	PART NAME 1 2 3 4 5 6 (PRODUCT LEVEL)	SEE PAGE
Y	*394-9639*	1	RAIL GP-FUEL	794
Y	*371-2480*	1	ROCKER ARM GP	606
Y	*395-0110*	1	SENSOR GP-ENGINE	820
Y	*380-9279*	1	STARTING AID GP	824
Y	*415-4870*	1	STARTING MOTOR GP-ELECTRIC	837
Y	*375-5002*	1	TURBOCHARGER GP	732
Y	*424-5516*	1	WIRING GP-ENGINE	846
	453-1370	1	ELECTRONICS GP-ENGINE	
	376-6464	1	PLATE & FILM GP	

Y - SEPARATE ILLUSTRATION

<END>

645-2039 ENGINE AR-PRIMARY

204 BRAKE KW (274 BHP) AT 2200 RPM

OPTIONAL FIELD REPLACEMENT ORDER 451-1222—PAGE: 452, 452-6584—PAGE: 462

FIELD REPLACEMENT FOR 470-8814—PAGE: 139

SMCS-1000 **i10210781**

NOTE	PART NUMBER	QTY	PART NAME 1 2 3 4 5 6 (PRODUCT LEVEL)	SEE PAGE
Y	*385-8001*	1	ALTERNATOR GP-CHARGING	800
Y	*375-4479*	1	BELT TENSIONER GP	417
Y	*392-0632*	1	BREATHER GP	611
Y	*396-2617*	1	CAMSHAFT GP	428
Y	*374-7094*	1	COMPRESSOR & MTG GP-REFRIGERANT	429
Y	*346-2911*	1	CONNECTION GP-HEATER	648
Y	*373-3607*	1	CONNECTION GP-WATER	650
Y	*371-2537*	1	CONTROL GP-ENGINE ELECTRONIC	811
Y	*378-8283*	1	COOLER GP-ENGINE OIL	662
Y	*389-3346*	1	COVER GP-VALVE MECHANISM	435
Y	*374-6300*	1	CRANKSHAFT GP	447
Y	*390-0854*	1	CYLINDER BLOCK GP	450
Y	*385-2572*	1	CYLINDER HEAD GP	458
Y	*394-7014*	1	DRAIN GP-ENGINE OIL	468
Y	*374-7093*	1	DRIVE GP-FAN	469
Y	*375-4606*	1	DRIVE GP-POWER TAKE-OFF	499
Y	*375-0098*	1	FASTENER GP-DAMPER & PULLEY	505
Y	*448-0944*	1	FILLER GP-ENGINE OIL	627
Y	*415-5625*	1	FILM GP (ALTERNATOR)	862
Y	*625-6594*	1	FILM GP	866
Y	*346-0220*	1	FILTER GP-ENGINE OIL	629
Y	*441-1222*	1	FILTER GP-FUEL (WATER SEPARATOR)	758
Y	*453-7163*	1	FILTER GP-FUEL	760
Y	*377-0692*	1	FLYWHEEL GP	511
Y	*460-1570*	1	GAUGE GP-OIL LEVEL (DIPSTICK)	641
Y	*393-3369*	1	HOUSING GP-FLYWHEEL	526
Y	*375-4645*	1	HOUSING GP-FRONT	534
Y	*416-8908*	1	INJECTOR GP-FUEL	766
Y	*371-2478*	1	JET GP-PISTON COOLING	543
Y	*371-2740*	1	LIFTING GP-ENGINE	545
Y	*426-3312*	1	LINES GP-FUEL FILTER	781
Y	*393-7694*	1	MANIFOLD GP-EXHAUST	723
Y	*391-5523*	1	MANIFOLD GP-INLET	726
Y	*395-0112*	1	MOUNTING GP-ELECTRONIC CONTROL	819
Y	*346-1510*	1	MOUNTING GP-ENGINE	548
Y	*393-5466*	1	PAN GP-OIL	563
Y	*369-7304*	1	PISTON & ROD GP	566
Y	*635-3313*	1	PLATE GP-IDENTIFICATION	869
Y	*371-2554*	1	PULLEY GP-CRANKSHAFT	601
Y	*462-6685*	1	PUMP GP-ENGINE OIL	646
Y	*391-4811*	1	PUMP GP-FUEL INJECTION	790
Y	*372-2297*	1	PUMP GP-WATER	678
Y	*394-9639*	1	RAIL GP-FUEL	794
Y	*371-2480*	1	ROCKER ARM GP	606
Y	*395-0110*	1	SENSOR GP-ENGINE	820
Y	*395-0114*	1	STARTING AID GP	826
Y	*371-2541*	1	STARTING MOTOR GP-ELECTRIC	829

645-2039 **ENGINE AR-PRIMARY (**contd.**)** **i10210781**

NOTE	PART NUMBER	QTY	PART NAME 1 2 3 4 5 6 (PRODUCT LEVEL)	SEE PAGE
Y	*416-6969*	1	TURBOCHARGER GP	739
Y	*371-2745*	1	VALVE GP-FLUID SAMPLING	647
Y	*395-0113*	1	WIRING GP-ENGINE	841
	468-8412	1	ELECTRONICS GP-ENGINE	
	376-6464	1	PLATE & FILM GP	

Y - SEPARATE ILLUSTRATION

<END>

657-2370 ENGINE AR-PRIMARY

209 BRAKE KW (281 BHP) AT 1800 RPM

OPTIONAL FIELD REPLACEMENT ORDER 451-1222—PAGE: 452, 452-6584—PAGE: 462

FIELD REPLACEMENT FOR 504-9579—PAGE: 252

SMCS-1000 **i10363293**

NOTE	PART NUMBER	QTY	PART NAME 1 2 3 4 5 6 (PRODUCT LEVEL)	SEE PAGE
Y	*377-0721*	1	ALTERNATOR GP-CHARGING	799
Y	*371-2693*	1	BELT TENSIONER GP	416
Y	*392-0632*	1	BREATHER GP	611
Y	*376-6871*	1	CAMSHAFT GP	426
Y	*373-3607*	1	CONNECTION GP-WATER	650
Y	*371-2536*	1	CONTROL GP-ELECTRONIC	808
Y	*378-8280*	1	COOLER GP-ENGINE OIL	661
Y	*389-3347*	1	COVER GP-VALVE MECHANISM	436
Y	*374-6300*	1	CRANKSHAFT GP	447
Y	*390-0854*	1	CYLINDER BLOCK GP	450
Y	*385-2572*	1	CYLINDER HEAD GP	458
Y	*371-2742*	1	DRAIN GP-ENGINE OIL	466
Y	*393-2180*	1	DRIVE GP-FAN	484
Y	*375-4606*	1	DRIVE GP-POWER TAKE-OFF	499
Y	*375-8320*	1	EXTENSION GP-FAN	501
Y	*375-0098*	1	FASTENER GP-DAMPER & PULLEY	505
Y	*448-0944*	1	FILLER GP-ENGINE OIL	627
Y	*415-5625*	1	FILM GP (ALTERNATOR)	862
Y	*589-6006*	1	FILM GP	864
Y	*346-0220*	1	FILTER GP-ENGINE OIL	629
Y	*441-1215*	1	FILTER GP-FUEL (WATER SEPARATOR)	756
Y	*453-7163*	1	FILTER GP-FUEL	760
Y	*346-0769*	1	FLANGE GP-EXHAUST	719
Y	*345-9037*	1	FLYWHEEL GP	510
Y	*439-3432*	1	GAUGE GP-OIL LEVEL (DIPSTICK)	640
Y	*393-3369*	1	HOUSING GP-FLYWHEEL	526
Y	*375-4645*	1	HOUSING GP-FRONT	534
Y	*416-8908*	1	INJECTOR GP-FUEL	766
Y	*371-2478*	1	JET GP-PISTON COOLING	543
Y	*416-2470*	1	LIFTING GP-ENGINE	546
Y	*426-3310*	1	LINES GP-FUEL INJECTION	787
Y	*416-7808*	1	MANIFOLD GP-EXHAUST	724
Y	*391-5523*	1	MANIFOLD GP-INLET	726
Y	*346-1512*	1	MOUNTING GP-ACCESSORY MODULE	855
Y	*395-0112*	1	MOUNTING GP-ELECTRONIC CONTROL	819
Y	*375-4499*	1	PAN GP-OIL	557
Y	*452-9761*	1	PISTON & ROD GP	581
Y	*635-3313*	1	PLATE GP-IDENTIFICATION	869
Y	*346-2908*	1	PLUG GP-ENGINE	592
Y	*440-0026*	1	PLUG GP-OIL FILTER MOUNTING	644
Y	*379-6629*	1	PULLEY GP-CRANKSHAFT	603
Y	*462-6685*	1	PUMP GP-ENGINE OIL	646
Y	*391-4811*	1	PUMP GP-FUEL INJECTION	790
Y	*372-2297*	1	PUMP GP-WATER	678
Y	*394-9639*	1	RAIL GP-FUEL	794
Y	*371-2480*	1	ROCKER ARM GP	606
Y	*395-0110*	1	SENSOR GP-ENGINE	820

657-2370 **ENGINE AR-PRIMARY (**contd.**)** **i10363293**

NOTE	PART NUMBER	QTY	PART NAME 1 2 3 4 5 6 (PRODUCT LEVEL)	SEE PAGE
Y	*395-0114*	1	STARTING AID GP	826
Y	*385-8000*	1	STARTING MOTOR GP-ELECTRIC	832
Y	*416-6971*	1	TURBOCHARGER GP	741
Y	*424-5516*	1	WIRING GP-ENGINE	846
			SOFTWARE MUST BE PROCURED LOCALLY FROM YOUR CAT DEALER	

Y - SEPARATE ILLUSTRATION

<END>

450-4794 ACCESSORY GP-ENGINE

PART OF 526-8888 ENGINE AR-PRIMARY

SMCS-1358, 1405, 1802 **i07174572**

NOTE	REF NO	GRAPHIC REF	PART NUMBER	QTY	PART NAME 1 2 3 4 5 6 (PRODUCT LEVEL)	SEE PAGE
	1	1	**067-6823**	1	PLUG	
	2	1	**9X-3959**	1	ELBOW	
	3	1	**293-4774**	1	CLIP	
	4	1	**293-4780**	1	PLUG	
	5	1	**474-1553**	1	ADAPTER	

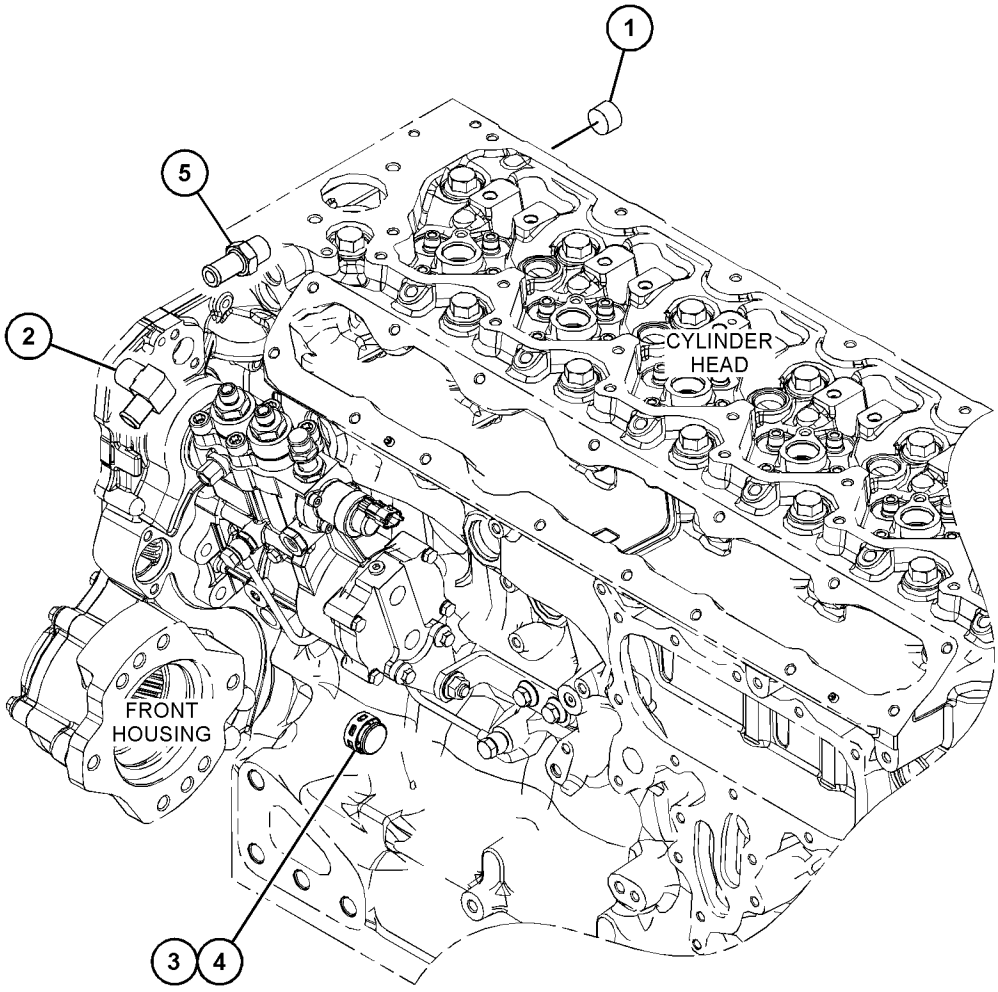

GRAPHIC #1 <END> g03665558

293-1877 ADAPTER GP-AIR COMPRESSOR

PART OF 378-0630 AIR COMPRESSOR GP

SMCS-1803 **i08839056**

NOTE	REF NO	GRAPHIC REF	PART NUMBER	QTY	PART NAME 1 2 3 4 5 6 (PRODUCT LEVEL)	SEE PAGE
M	1	1	**6I-0254**	4	BOLT (M8X1.25X30-MM)	
	2	1	**7W-2562**	1	RING-SNAP	
	3	1	**6D-0044**	2	DOWEL	
	4	1	**1B-8705**	2	KEY-WOODRUFF	
	5	1	**113-4598**	2	NUT	
	6	1	**113-4604**	1	GASKET	
	7	1	**126-3216**	2	STUD	
	8	1	**224-6635**	1	BUSHING	
	9	1	**302-4332**	1	HOUSING	
					PARTS SHOWN IN GRAPHIC(S) WITHOUT A REFERENCE NUMBER ARE NOT SERVICED SEPARATELY	

M - METRIC PART

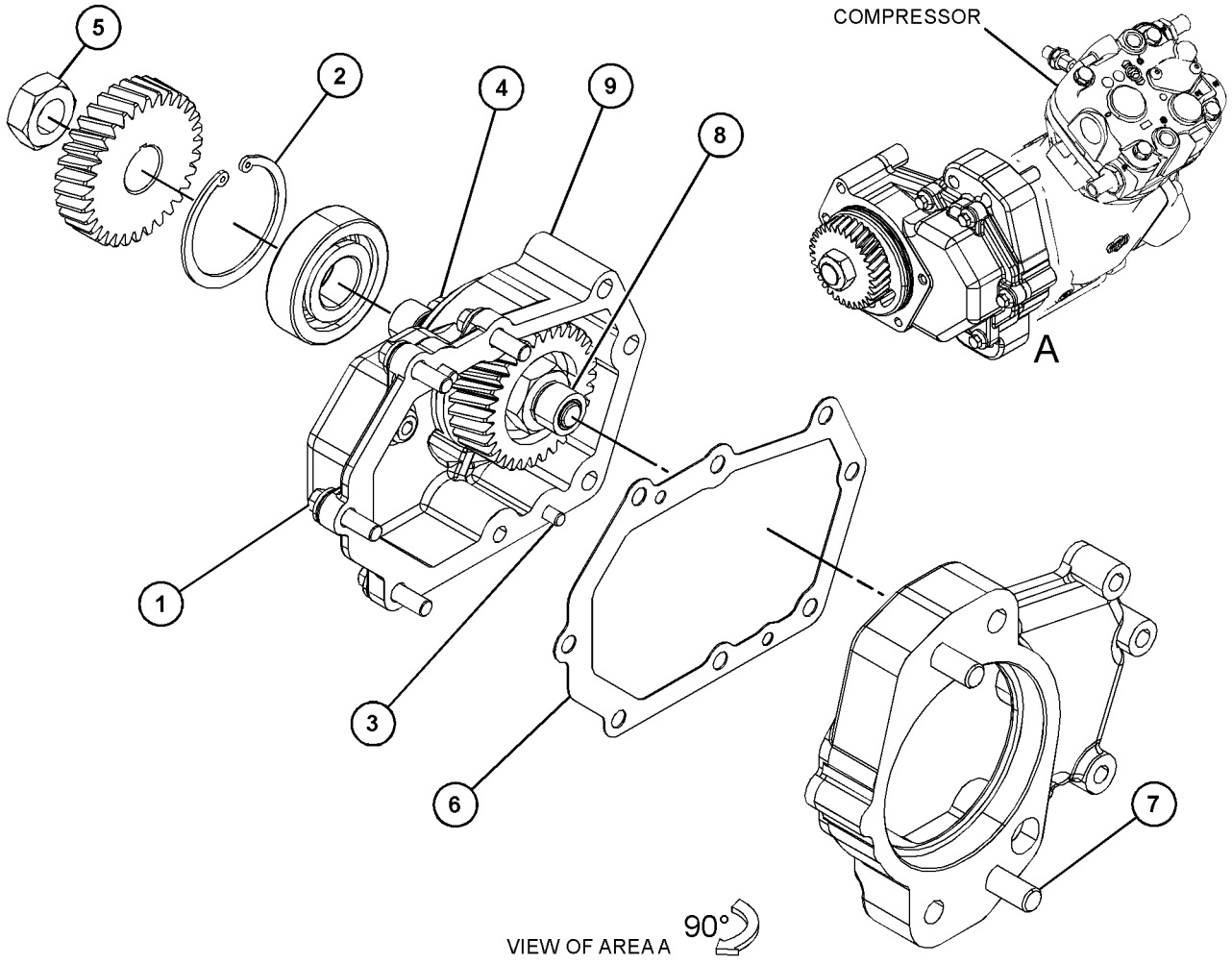

GRAPHIC #1

<END>

g06811674

378-0630 AIR COMPRESSOR GP

PTO

PART OF 468-0461, 475-8297, 475-9060, 486-2644, 489-9006, 495-8349, 506-9918, 508-0270, 525-8759, 526-0511, 528-9920, 530-1323, 539-8582, 596-8896, 596-8905, 597-9248, 609-9819 ENGINE AR-PRIMARY

SMCS-1803 **i07378197**

NOTE	REF NO	GRAPHIC REF	PART NUMBER	QTY	PART NAME 1 2 3 4 5 6 (PRODUCT LEVEL)	SEE PAGE
M	1	1	**6I-0302**	2	BOLT (M10X1.5X25-MM)	
	2	1	**102-2073**	1	SEAL-O-RING	
	3	1	**113-8076**	1	PIN	
	4	1	**126-3219**	1	SEAL-O-RING	
	5	1	**198-8262**	1	COVER AS	
	5A	1	**198-8263**	1	SEAL-O-RING	
	6	1	**214-3203**	1	WASHER (SEALING)	
	7	1	**247-4928**	2	WASHER (16.5X20.5X1.6-MM THK)	
	8	1	**259-2611**	1	HOSE	
	9	1	**259-2623**	1	GEAR (34-TEETH)	
M	10	1	**273-3691**	4	BOLT (M8X1.25X80-MM)	
M	11	1	**293-1875**	2	BOLT (M10X1.5X16-MM)	
	12	1	**293-1876**	1	BRACKET	
	13	1	**293-1878**	1	CONNECTION	
	14	1	**321-6120**	1	LINES GP-FUEL INJECTION	
	14A	1	**067-6265**	2	FITTING-BRASS	
	14B	1	**365-3308**	2	NUT-COMPRESSION (3/8-24-THD)	
	15	1	**259-2612**	1	HOSE	
	16	1	**331-6129**	4	CLAMP	
M	17	1	**6I-0217**	2	BOLT (M8X1.25X20-MM)	
M	18	1	**184-0983**	2	NUT-HEX FLANGE (M12X1.75-THD)	
	19	1	**035-8017**	1	UNION	
	20	1	**451-1179**	1	COMPRESSOR	
	21	1	**209-6825**	2	ADAPTER	
Y	22	1	**293-1877**	1	ADAPTER GP-AIR COMPRESSOR	409

M - METRIC PART
Y - SEPARATE ILLUSTRATION

378-0630 **AIR COMPRESSOR GP (**contd.**)** **i07378197**

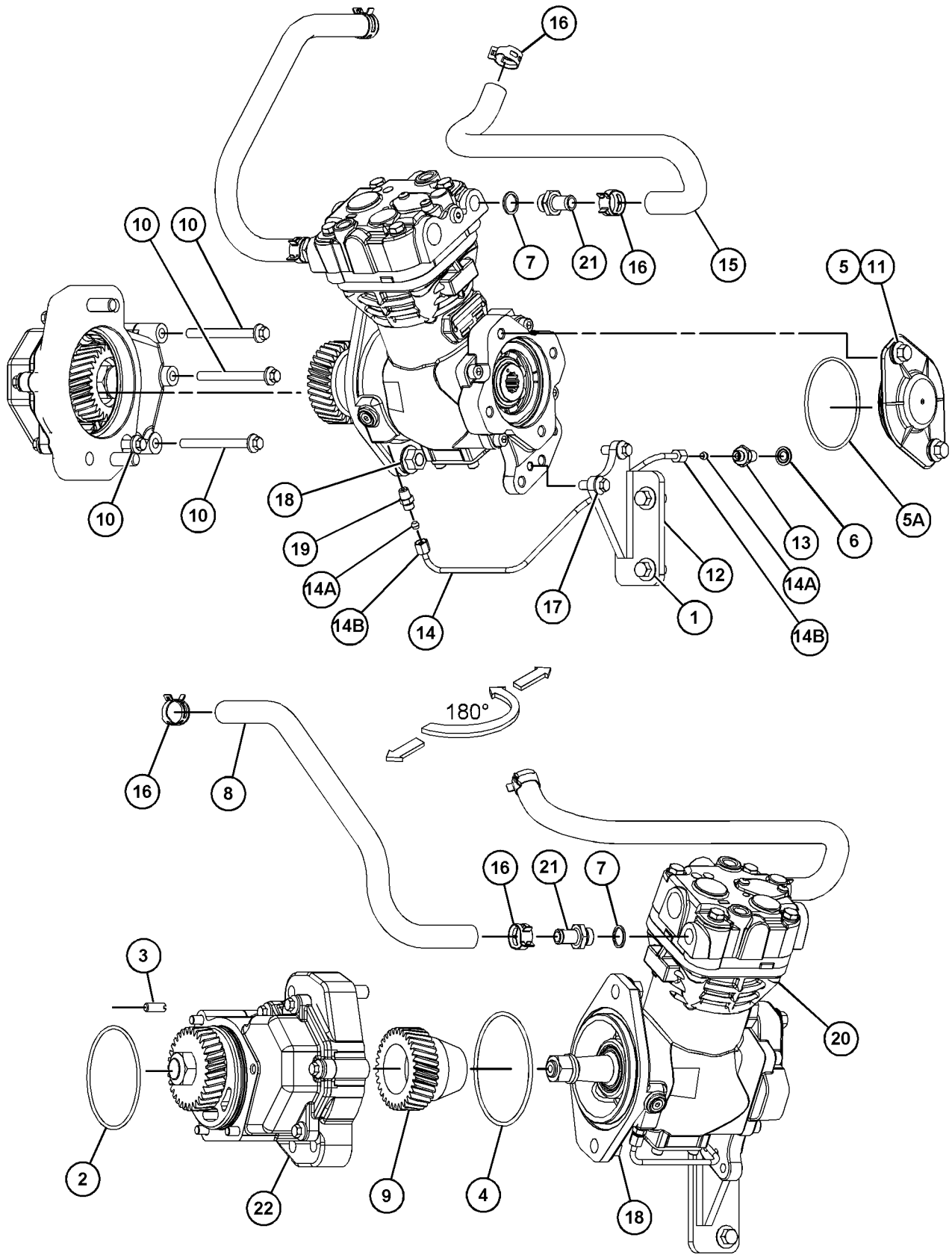

GRAPHIC #1 <END> g03732312

378-0632 AIR COMPRESSOR GP

PART OF 470-8667, 520-3152 ENGINE AR-PRIMARY

SMCS-1803 **i10420811**

NOTE	REF NO	GRAPHIC REF	PART NUMBER	QTY	PART NAME 1 2 3 4 5 6 (PRODUCT LEVEL)	SEE PAGE
M	1	1	**6I-0654**	8	BOLT (M10X1.5X25-MM)	
M	2	1	**195-2221**	2	NUT (M12X1.75-THD)	
	3	1	**198-8262**	1	COVER AS	
	3A	1	**198-8263**	1	SEAL-O-RING	
	4	1	**214-3203**	1	WASHER (SEALING)	
M	5	1	**225-8524**	1	BOLT-SPECIAL (M10X1.0X23-MM)	
	6	1	**293-1878**	1	CONNECTION	
	7	1	**293-4776**	2	WASHER	
	8	1	**294-9392**	2	ADAPTER	
	9	1	**294-9396**	1	CLIP	
	10	1	**317-6232**	2	STUD	
	11	1	**320-8384**	1	NUT	
	12	1	**099-7241**	1	WASHER-HARD (19X34X3-MM THK)	
	13	1	**375-9812**	1	HOSE	
	14	1	**375-9813**	1	HOSE	
	15	1	**381-5651**	4	CLIP	
	16	1	**246-4361**	2	WASHER (10.5X14X1.5-MM THK)	
	17	1	**296-1258**	1	PIPE AS-OIL FEED	
	18	1	**317-6163**	1	BRACKET	
	19	1	**320-8383**	1	GEAR (34-TEETH)	
	20	1	**126-3219**	1	SEAL-O-RING	
	21	1	**451-5480**	1	COMPRESSOR (AIR)	

M - METRIC PART

378-0632 **AIR COMPRESSOR GP (**contd.**)** **i10420811**

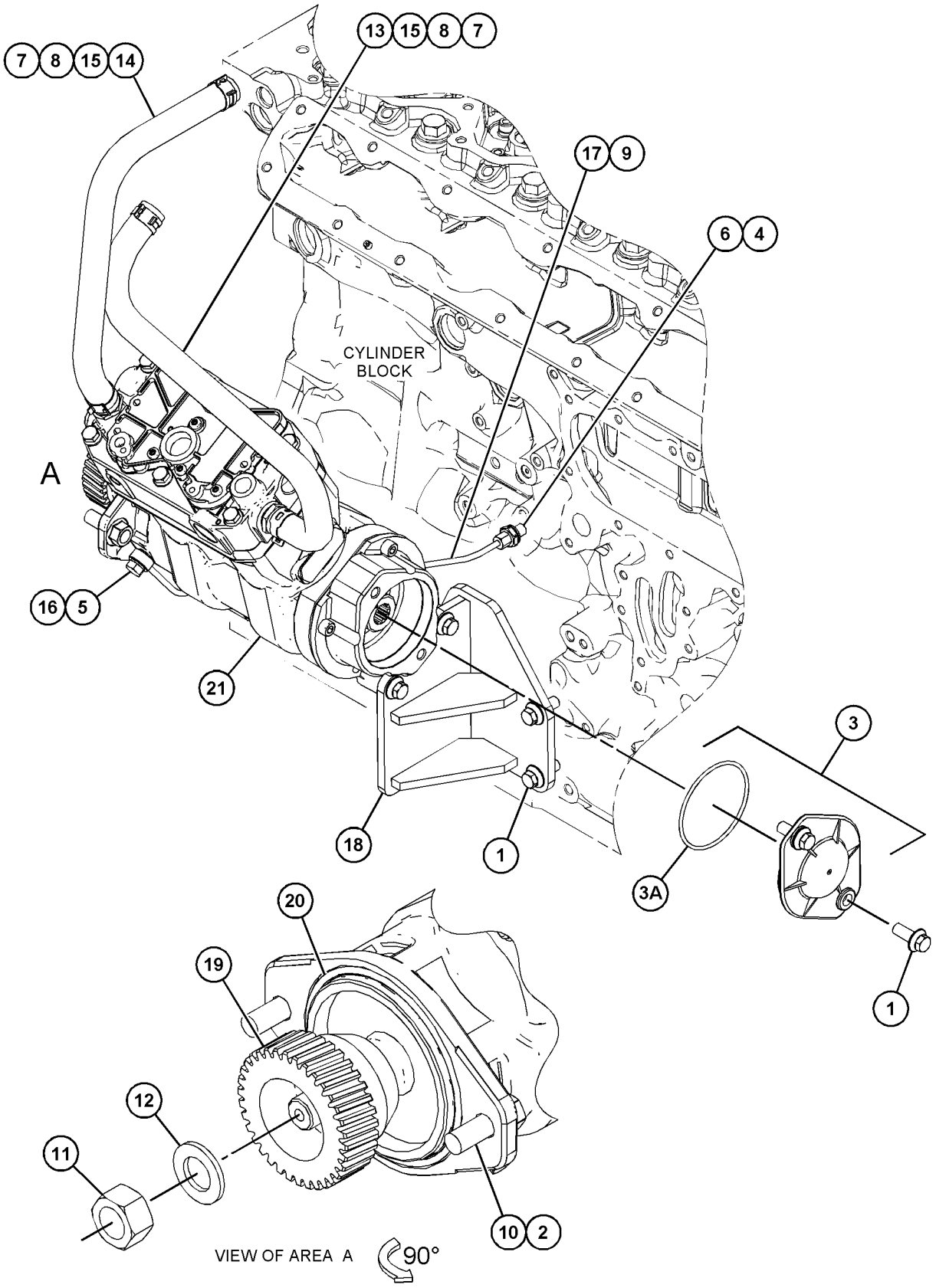

GRAPHIC #1 <END> g03739292

448-2107 AIR COMPRESSOR GP

PART OF 526-8888 ENGINE AR-PRIMARY

SMCS-1803 **i10501272**

NOTE	REF NO	GRAPHIC REF	PART NUMBER	QTY	PART NAME 1 2 3 4 5 6 (PRODUCT LEVEL)	SEE PAGE
M	1	1	**6I-0654**	8	BOLT (M10X1.5X25-MM)	
M	2	1	**195-2221**	2	NUT (M12X1.75-THD)	
	3	1	**198-8262**	1	COVER AS	
	3A	1	**198-8263**	1	SEAL-O-RING	
	4	1	**214-3203**	1	WASHER (SEALING)	
M	5	1	**225-8524**	1	BOLT-SPECIAL (M10X1.0X23-MM)	
	6	1	**293-1878**	1	CONNECTION	
	7	1	**293-4776**	2	WASHER	
	8	1	**294-9392**	2	ADAPTER	
	9	1	**294-9396**	1	CLIP	
	10	1	**317-6232**	2	STUD	
	11	1	**320-8384**	1	NUT	
	12	1	**099-7241**	1	WASHER-HARD (19X34X3-MM THK)	
	13	1	**375-9813**	1	HOSE	
	14	1	**375-9814**	1	HOSE AS	
	15	1	**381-5651**	4	CLIP	
	16	1	**246-4361**	2	WASHER (10.5X14X1.5-MM THK)	
	17	1	**296-1258**	1	PIPE AS-OIL FEED	
	17A	1	**365-3308**	1	NUT-COMPRESSION (3/8-24-THD)	
	17B	1	**067-6265**	1	FITTING-BRASS	
	18	1	**317-6163**	1	BRACKET	
	19	1	**320-8383**	1	GEAR	
	20	1	**126-3219**	1	SEAL-O-RING	
	21	1	**451-5480**	1	COMPRESSOR	

M - METRIC PART

448-2107 **AIR COMPRESSOR GP (**contd.**)** **i10501272**

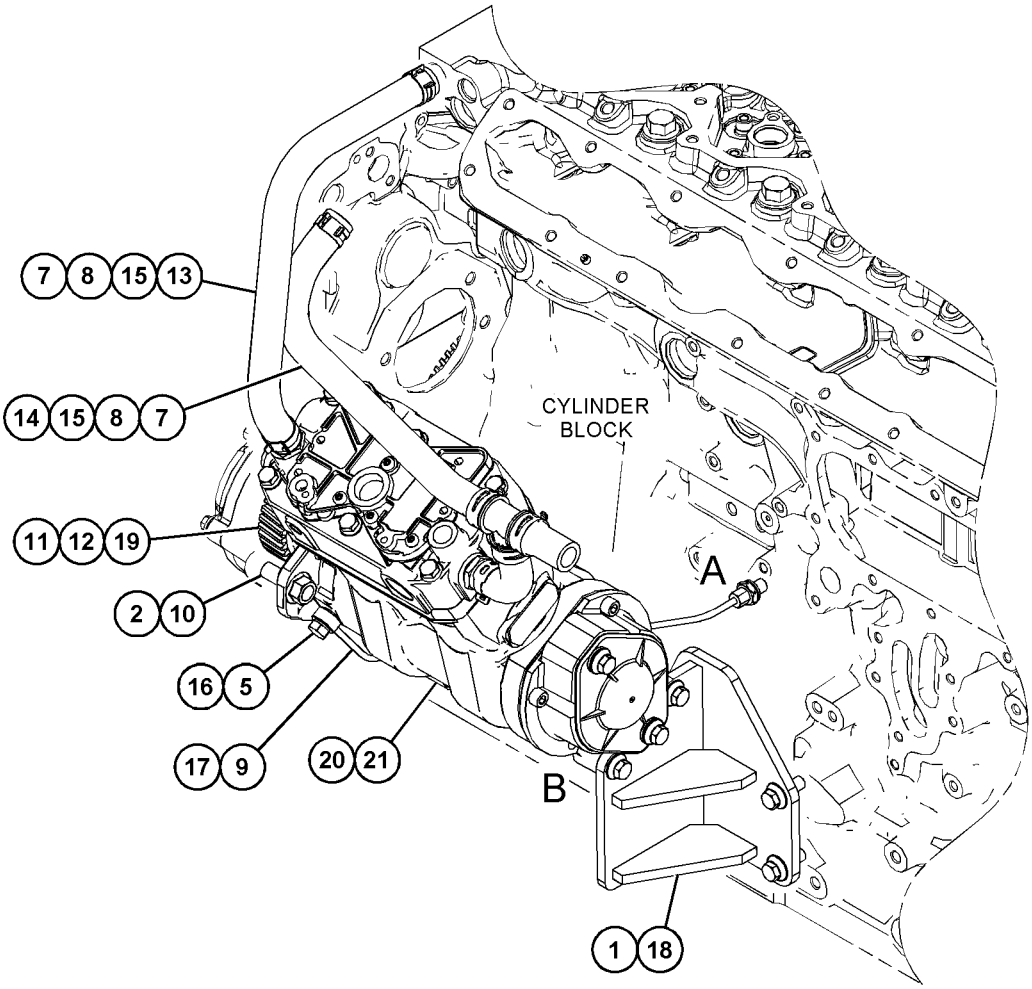

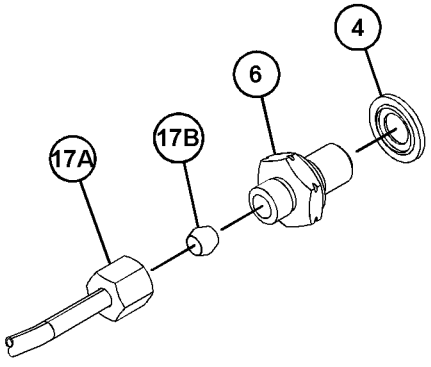

VIEW OF AREA A

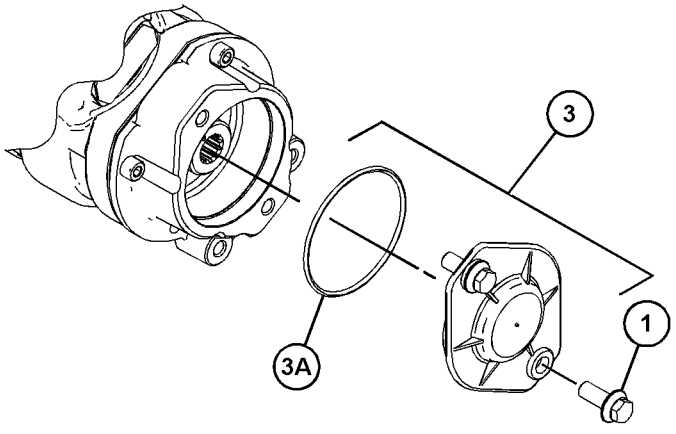

VIEW OF AREA B
(PARTS REMOVED FOR CLARITY)

GRAPHIC #1 <END> g07915715

371-2693 BELT TENSIONER GP

PART OF 596-2071 ENGINE AR-COMPLETE, 451-8343, 461-4638, 461-4649, 461-4656, 461-4658, 466-1160, 466-1161, 466-1162, 466-1163, 468-0461, 471-0541, 479-9398, 480-2181, 482-0212, 484-2939, 485-8027, 486-2644, 489-9006, 491-4973, 491-4980, 491-4993, 491-7124, 492-3021, 492-3072, 494-2073, 494-6807, 495-8349, 499-7181, 501-2466, 502-9462, 504-9579, 507-8016, 510-1088, 512-9858, 513-0851, 513-8513, 514-9367, 520-3152, 520-4644, 525-8759, 527-9686, 530-1323, 530-2601, 533-2797, 533-3588, 535-8060, 536-6675, 539-6915, 539-8582, 543-4255, 552-8869, 555-4669, 562-8873, 563-6728, 563-6729, 563-6730, 565-1247, 569-7846, 583-8352, 591-1266, 591-9440, 593-7287, 593-7288, 596-8896, 596-8905, 598-9881, 602-8721, 603-5300, 609-9819, 612-1735, 614-9555, 622-6239, 623-1309, 624-0698, 627-8019, 627-8054, 627-8129, 628-4345, 633-4335, 633-7776, 657-2370 ENGINE AR-PRIMARY

SMCS-1358 **i05723852**

NOTE	REF NO	GRAPHIC REF	PART NUMBER	QTY	PART NAME 1 2 3 4 5 6 (PRODUCT LEVEL)	SEE PAGE
	1	1	**321-6131**	1	PULLEY (8-GROOVE)	
	2	1	**377-9082**	1	BELT TENSIONER	

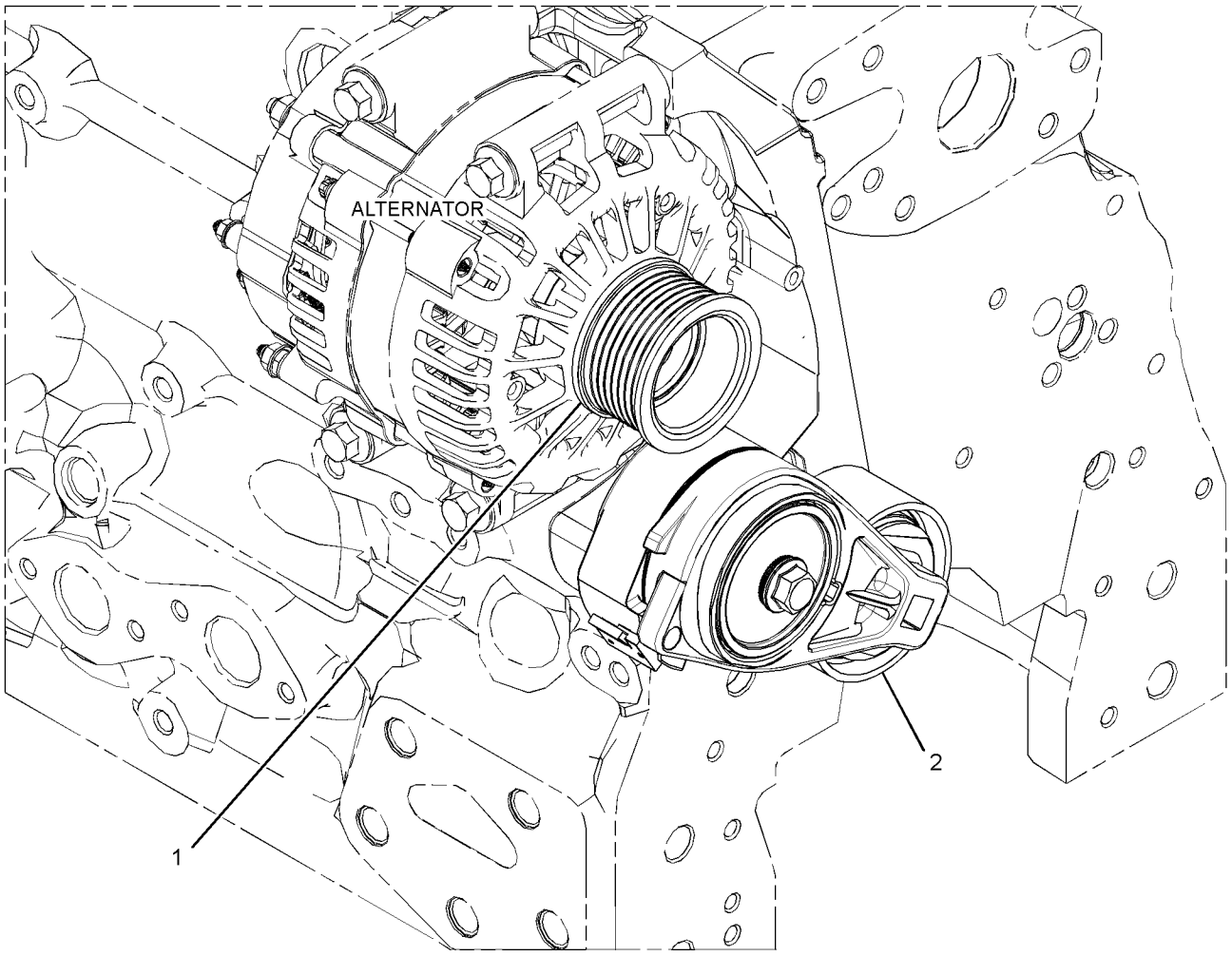

GRAPHIC #1 <END> g02736725

375-4479 BELT TENSIONER GP

PART OF 470-8814, 474-7299, 481-0811, 504-3629, 526-7210, 575-2879, 575-2880, 645-2039 ENGINE AR-PRIMARY

SMCS-1358 **i05582479**

NOTE	REF NO	GRAPHIC REF	PART NUMBER	QTY	PART NAME 1 2 3 4 5 6 (PRODUCT LEVEL)	SEE PAGE
	1	1	**369-1255**	1	TENSIONER	
	2	1	**337-6324**	1	PULLEY (8-GROOVE)	

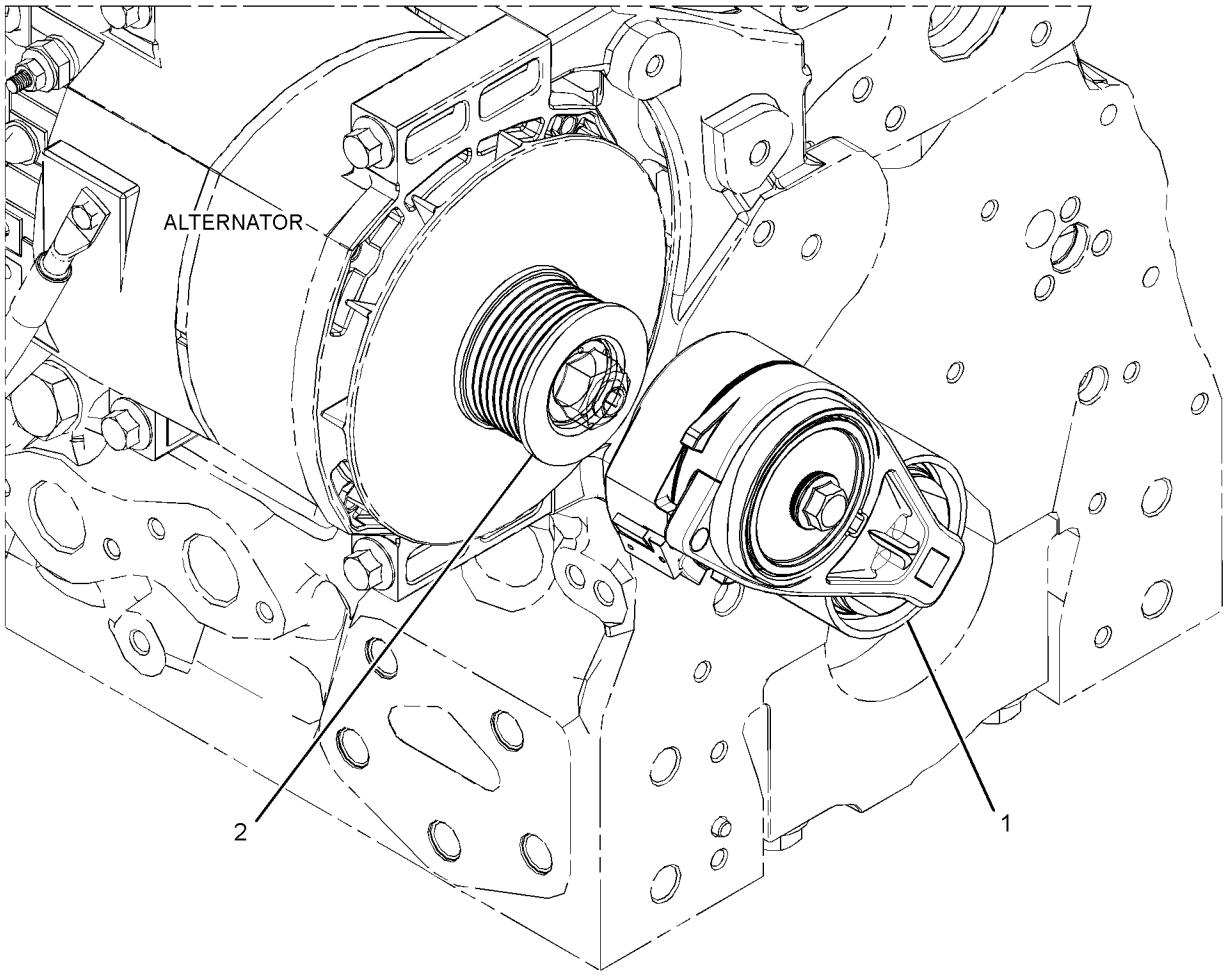

GRAPHIC #1 <END> g02406802

376-4062 BELT TENSIONER GP

PART OF 531-2492 ENGINE AR-PRIMARY

SMCS-1358 **i07563159**

NOTE	REF NO	GRAPHIC REF	PART NUMBER	QTY	PART NAME 1 2 3 4 5 6 (PRODUCT LEVEL)	SEE PAGE
	1	1	**377-9082**	1	BELT TENSIONER	

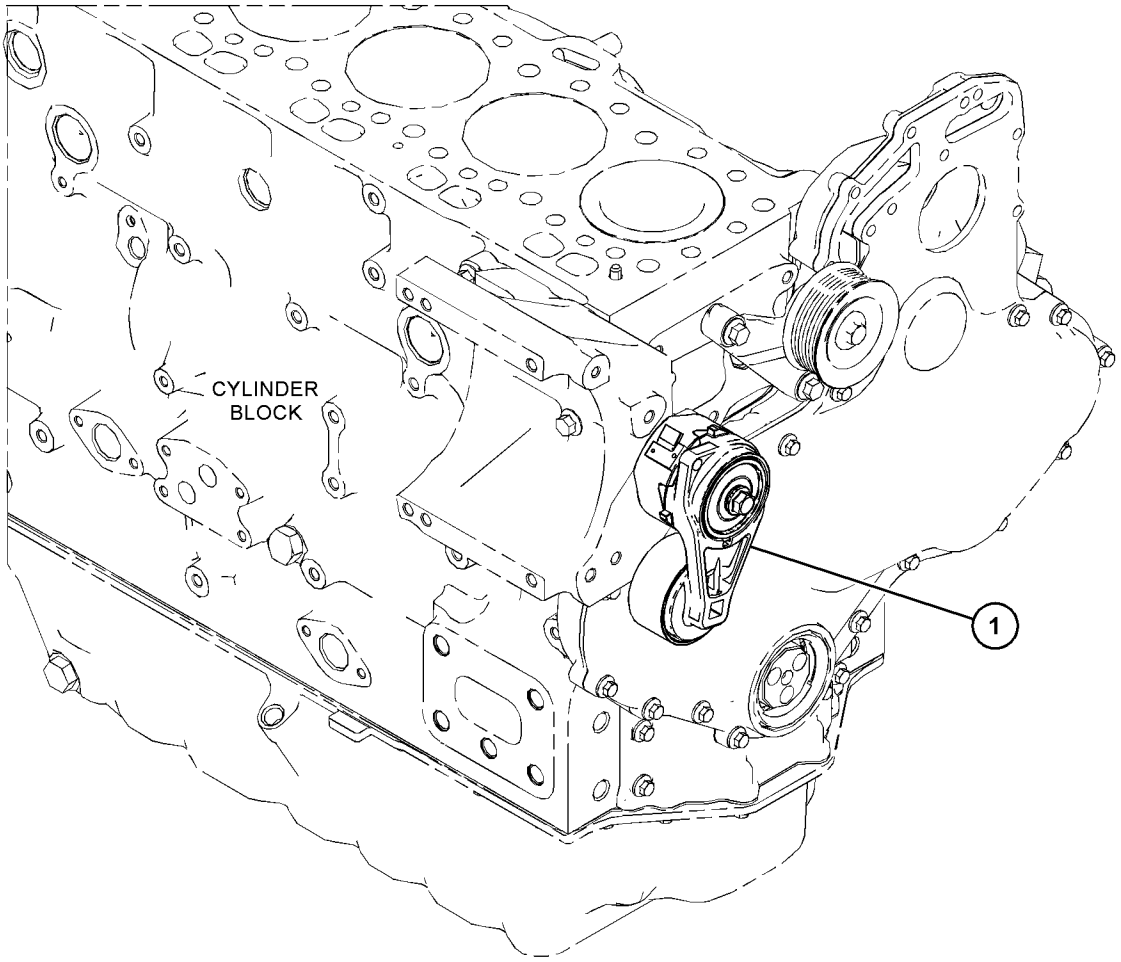

GRAPHIC #1 <END> g06386313

379-5585 BELT TENSIONER GP

PART OF 475-8297, 475-9060, 486-4250, 526-0511, 553-3730, 597-9248 ENGINE AR-PRIMARY

SMCS-1358 **i05718191**

NOTE	REF NO	GRAPHIC REF	PART NUMBER	QTY	PART NAME 1 2 3 4 5 6 (PRODUCT LEVEL)	SEE PAGE
	1	1	**261-0428**	1	PULLEY AS-IDLER	
M	1A	1	**307-2242**	1	BOLT (M10X1.5X45-MM)	
	2	1	**337-6324**	1	PULLEY (8-GROOVE)	
	3	1	**369-1255**	1	TENSIONER	

M - METRIC PART

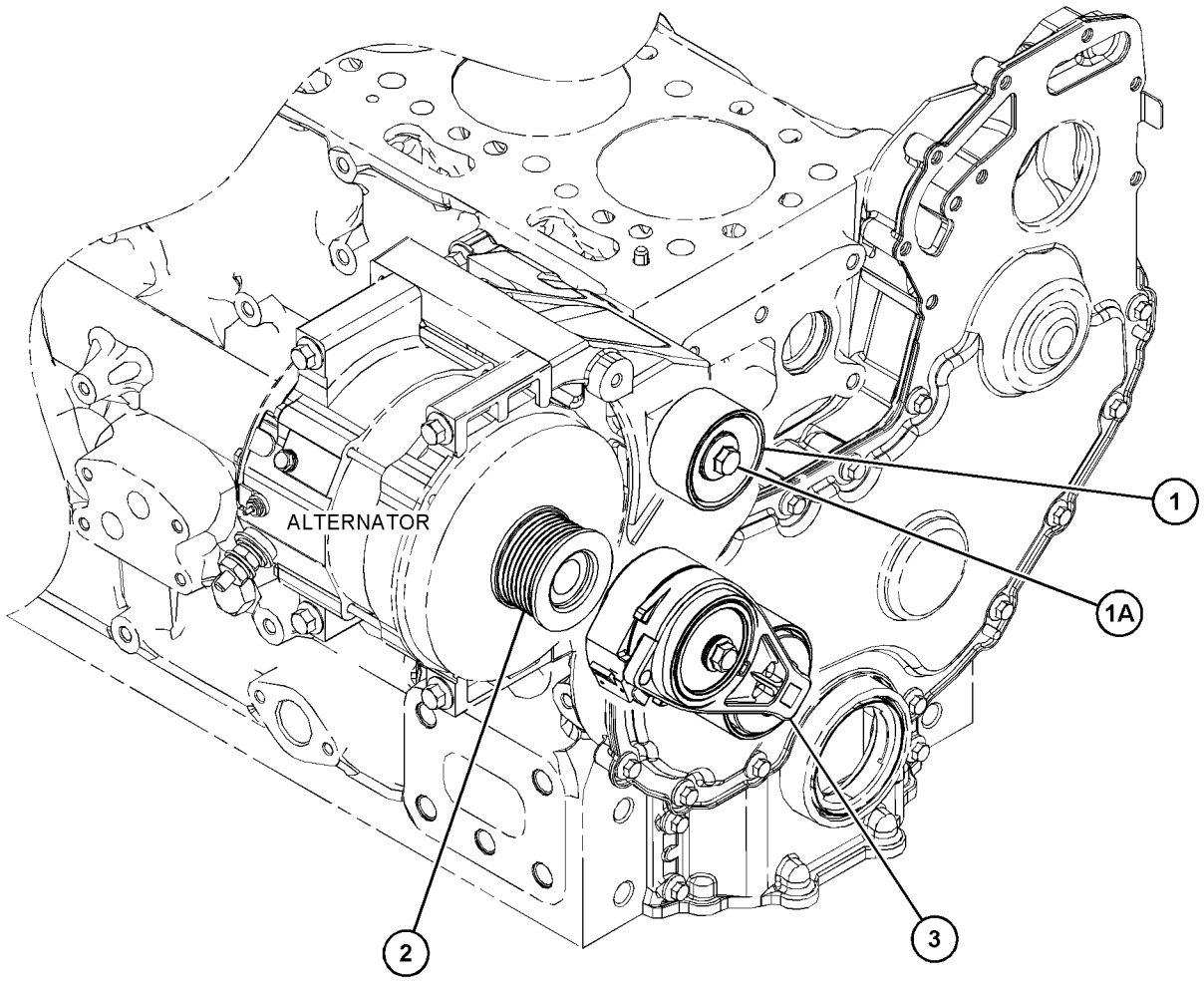

GRAPHIC #1 <END> g03650318

391-9610 BELT TENSIONER GP

PART OF 519-4128, 527-7106, 528-3358, 552-3506, 594-2125, 596-4834, 596-7090 ENGINE
AR-PRIMARY

SMCS-1358 **i05934026**

NOTE	REF NO	GRAPHIC REF	PART NUMBER	QTY	PART NAME 1 2 3 4 5 6 (PRODUCT LEVEL)	SEE PAGE
	1	1	**337-6324**	1	PULLEY (8-GROOVE) (8-GROOVE)	
	2	1	**377-9082**	1	BELT TENSIONER	

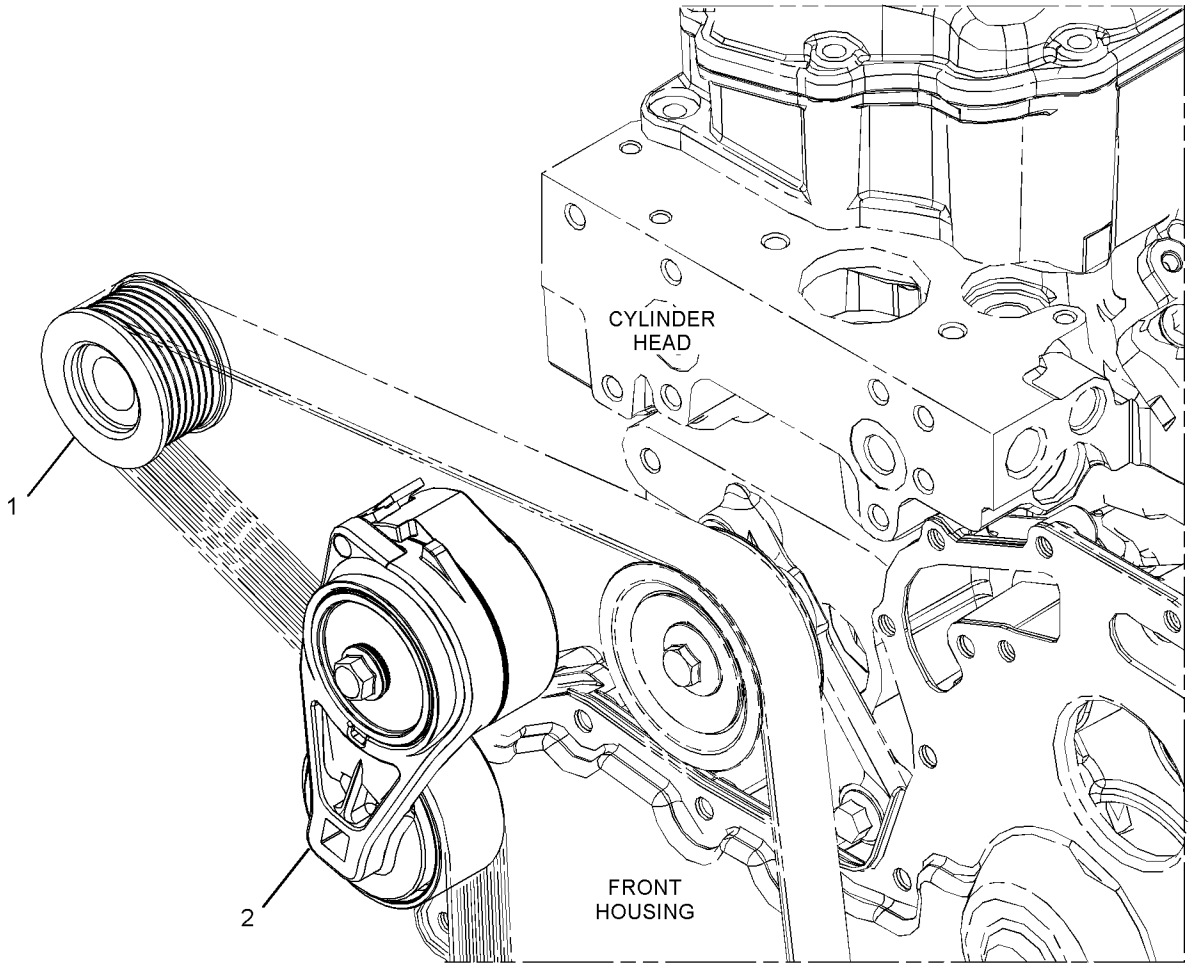

GRAPHIC #1 <END> g03380685

391-9611 BELT TENSIONER GP

PART OF 468-8218, 478-4257, 506-9918, 515-9203, 524-8271, 528-9866, 528-9920, 608-9261, 614-5795 ENGINE AR-PRIMARY

SMCS-1358 **i05711989**

NOTE	REF NO	GRAPHIC REF	PART NUMBER	QTY	PART NAME 1 2 3 4 5 6 (PRODUCT LEVEL)	SEE PAGE
	1	1	**369-1255**	1	TENSIONER	
	2	1	**321-6131**	1	PULLEY (8-GROOVE)	

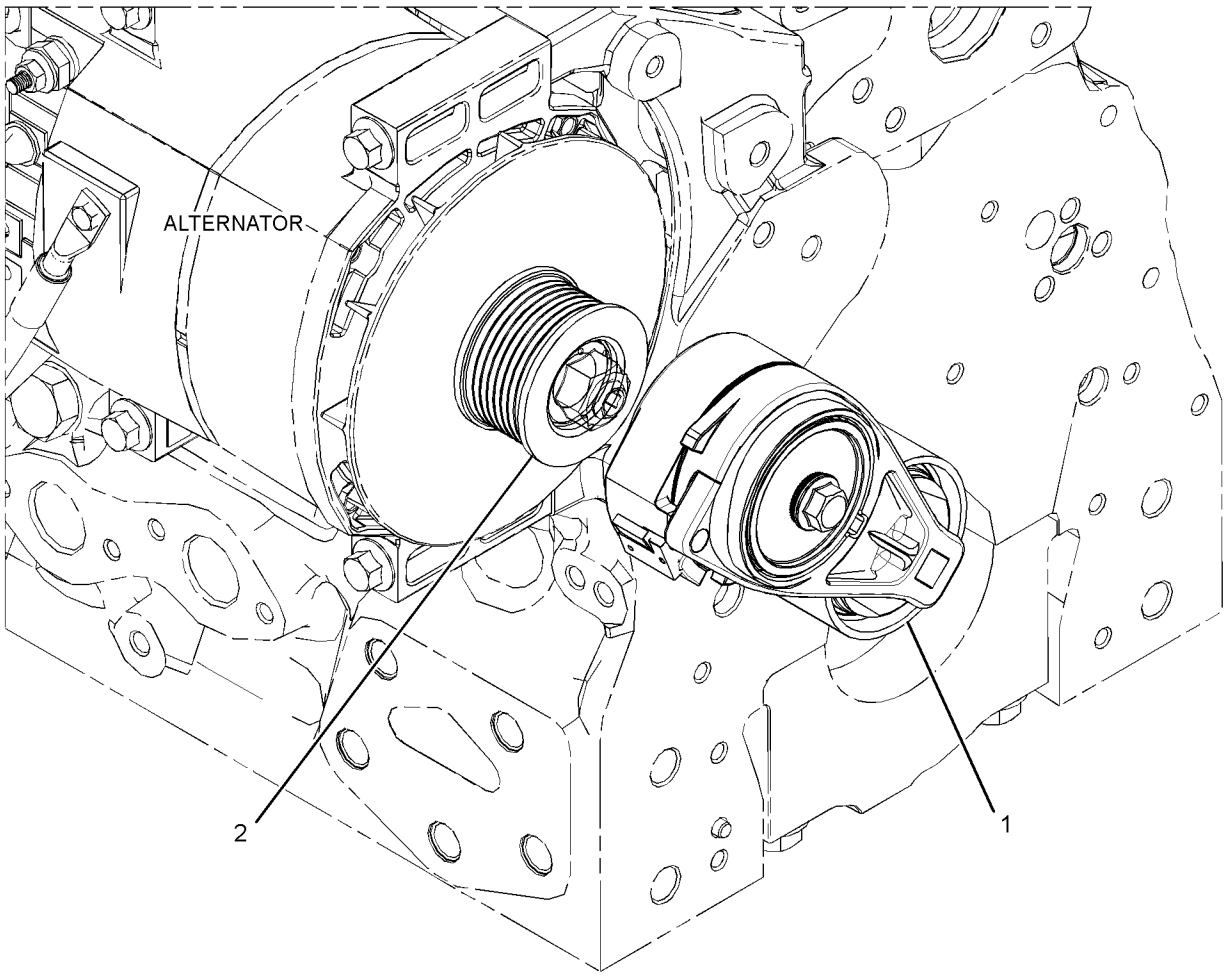

GRAPHIC #1 <END> g02406802

391-9612 BELT TENSIONER GP

PART OF 470-8667, 488-6687, 506-5035, 508-0270, 526-8888, 553-1809, 613-9482 ENGINE
AR-PRIMARY

SMCS-1358 **i06132072**

NOTE	REF NO	GRAPHIC REF	PART NUMBER	QTY	PART NAME 1 2 3 4 5 6 (PRODUCT LEVEL)	SEE PAGE
	1	1	**261-0428**	1	PULLEY AS-IDLER	
M	1A	1	**307-2242**	1	BOLT (M10X1.5X45-MM)	
	2	1	**321-6131**	1	PULLEY (8-GROOVE)	
	3	1	**369-1255**	1	TENSIONER	

M - METRIC PART

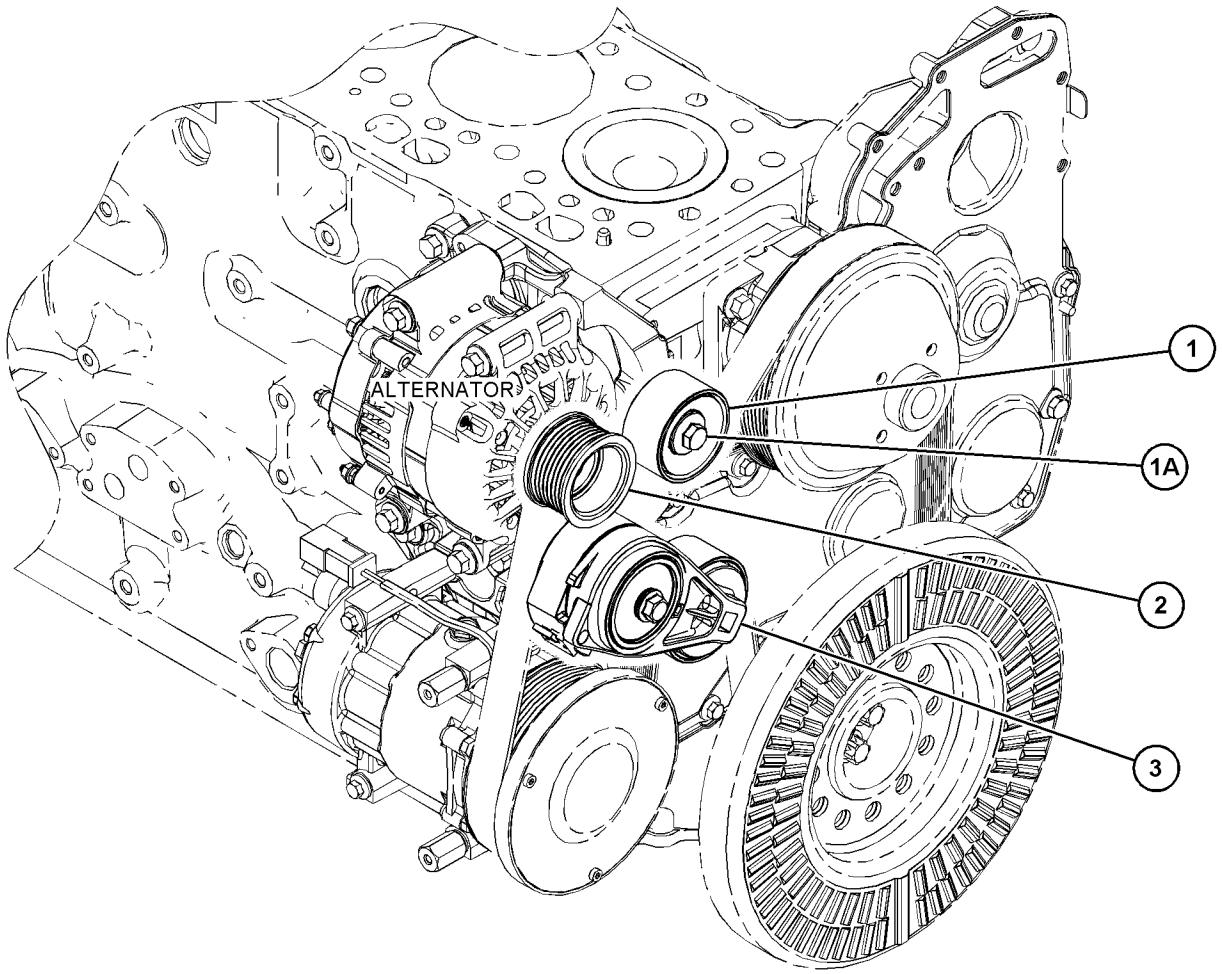

GRAPHIC #1 <END> g03821189

379-6637 BRACKET GP-MOUNTING

PART OF 470-8667, 474-7299, 478-4257, 481-0811, 486-4250, 504-3629, 506-5035, 508-0270, 515-9203, 526-0511, 526-8888, 553-1809, 608-9261 ENGINE AR-PRIMARY

SMCS-1317 **i05582481**

NOTE	REF NO	GRAPHIC REF	PART NUMBER	QTY	PART NAME 1 2 3 4 5 6 (PRODUCT LEVEL)	SEE PAGE
M	1	1	**101-7178**	3	BOLT (M10X1.5X55-MM)	
	2	1	**330-1725**	1	BRACKET AS	
	2A	1	**161-9820**	2	PIN	

M - METRIC PART

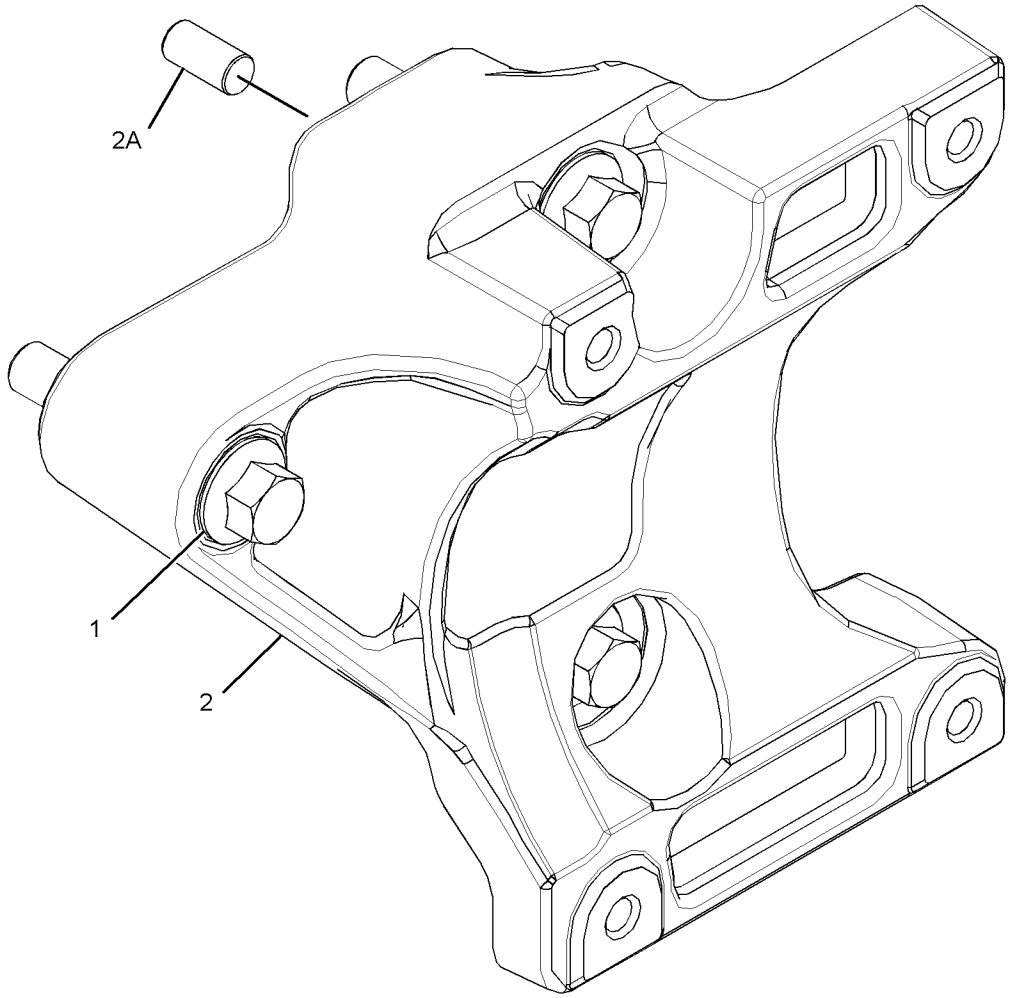

GRAPHIC #1 <END> g02392976

560-7573 BRACKET GP-MOUNTING

PART OF 563-6728, 563-6729, 563-6730, 565-1247 ENGINE AR-PRIMARY

SMCS-1317 **i07905984**

NOTE	REF NO	GRAPHIC REF	PART NUMBER	QTY	PART NAME 1 2 3 4 5 6 (PRODUCT LEVEL)	SEE PAGE
	1	1	**155-0576**	8	MOUNT-ISOLATION	
	2	1	**217-0099**	4	SPACER (8.2X25X2-MM THK)	
	3	1	**278-5203**	4	SPACER (CYLINDRICAL)	
	4	1	**446-1268**	1	BRACKET AS	
	5	1	**559-7632**	1	BRACKET	
M	6	1	**6I-0292**	2	BOLT (M8X1.25X140-MM)	
M	7	1	**6I-0293**	2	BOLT (M8X1.25X80-MM)	
M	8	1	**6I-0456**	4	BOLT (M8X1.25X45-MM)	

M - METRIC PART

560-7573 **BRACKET GP-MOUNTING (**contd.**)** **i07905984**

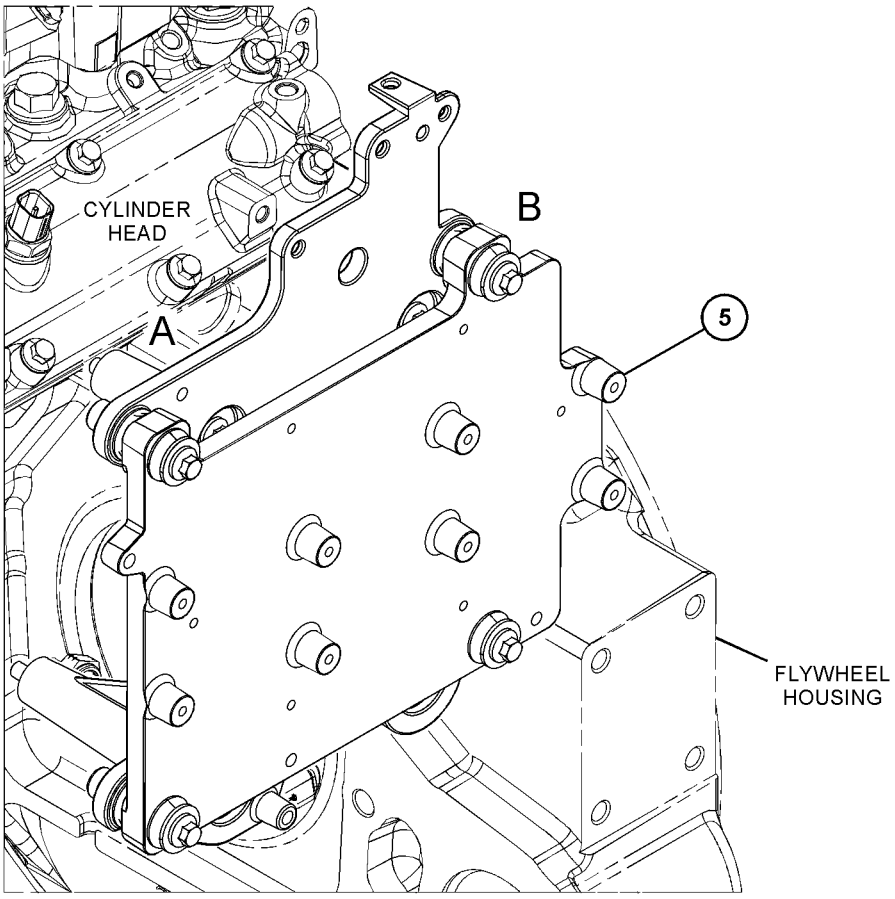

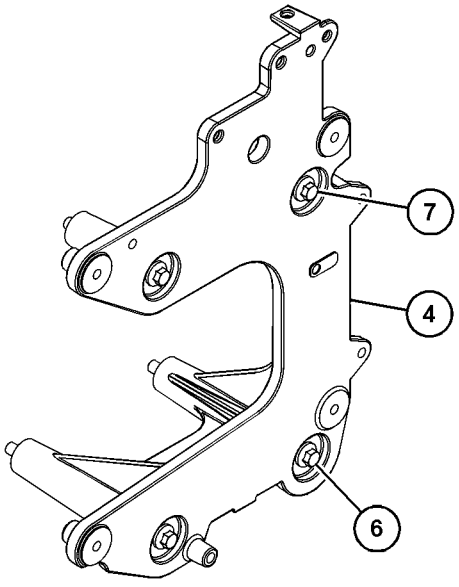

VIEW OF AREA A
(PARTS REMOVED FOR CLARITY)

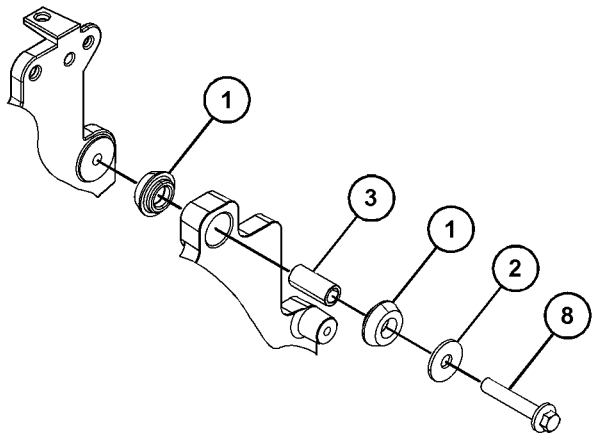

VIEW OF AREA B

GRAPHIC #1 <END> g06499601

376-6871 CAMSHAFT GP

PART OF 484-2939, 501-2466, 504-9579, 562-8873, 563-6728, 563-6729, 563-6730, 565-1247, 633-4335, 657-2370 ENGINE AR-PRIMARY

SMCS-1210 **i08432299**

NOTE	REF NO	GRAPHIC REF	PART NUMBER	QTY	PART NAME 1 2 3 4 5 6 (PRODUCT LEVEL)	SEE PAGE
	1	1	**278-5125**	12	TAPPET	
	2	1	**375-2013**	1	CAMSHAFT GP	
	2A	1	**067-6135**	1	KEY-WOODRUFF (CAMSHAFT)	
	3	1	**319-8426**	12	PUSHROD	

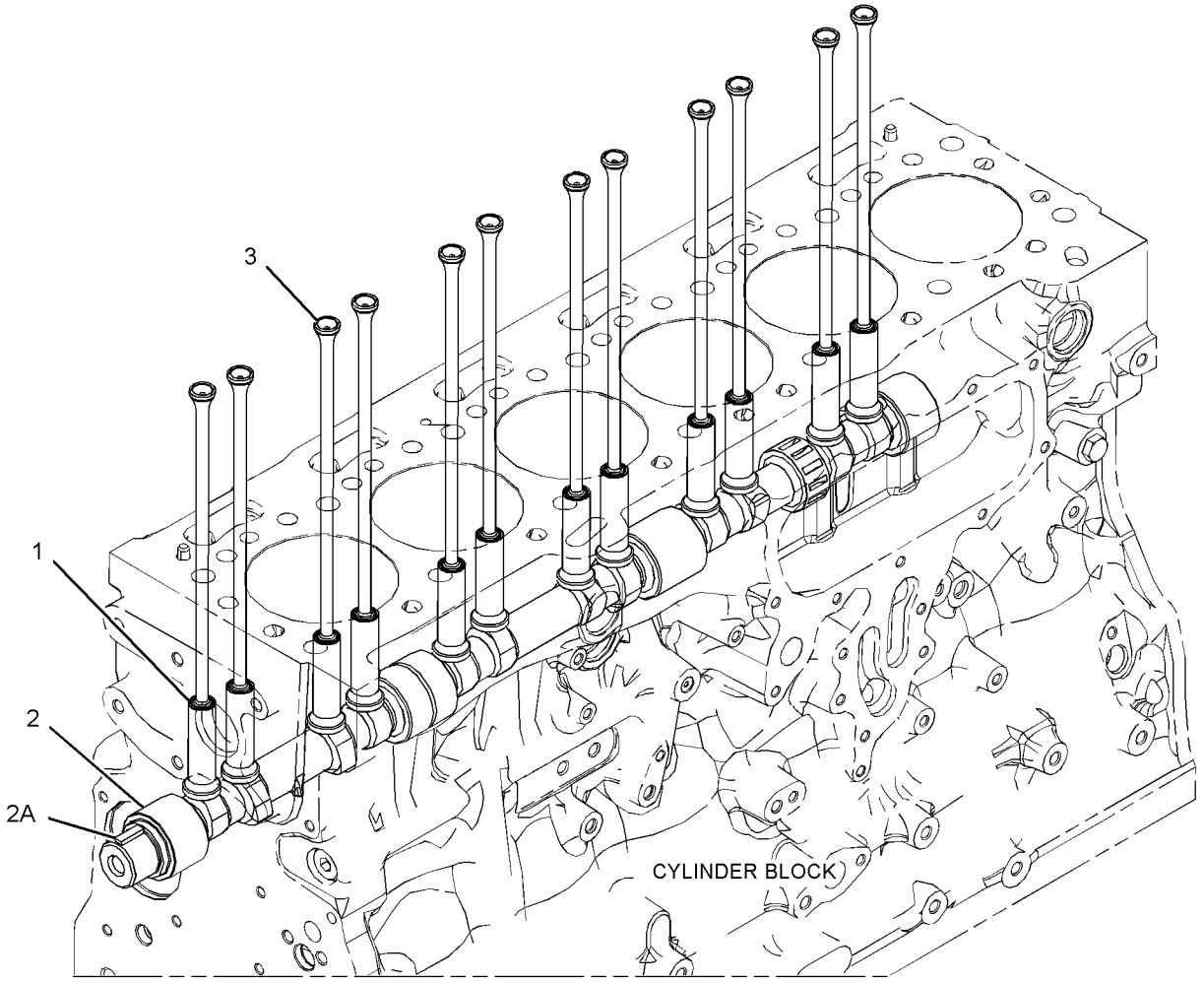

GRAPHIC #1 <END> g03109078

396-2615 CAMSHAFT GP

PART OF 596-2071 ENGINE AR-COMPLETE, 461-4638, 461-4649, 466-1160, 471-0541, 475-8297, 482-0212, 491-4973, 492-3021, 492-3072, 493-1038, 494-2073, 504-5365, 508-0270, 512-9858, 520-4644, 527-9686, 555-4669, 575-2879, 596-8896, 612-1735, 627-8054, 627-8129, 628-4345, 633-7776 ENGINE AR-PRIMARY

SMCS-1210 **i05859642**

NOTE	REF NO	GRAPHIC REF	PART NUMBER	QTY	PART NAME 1 2 3 4 5 6 (PRODUCT LEVEL)	SEE PAGE
	1	1	**278-5125**	12	TAPPET	
	2	1	**396-8795**	1	CAMSHAFT GP	
	2A	1	**067-6135**	1	KEY-WOODRUFF	
	3	1	**319-8426**	12	PUSHROD	

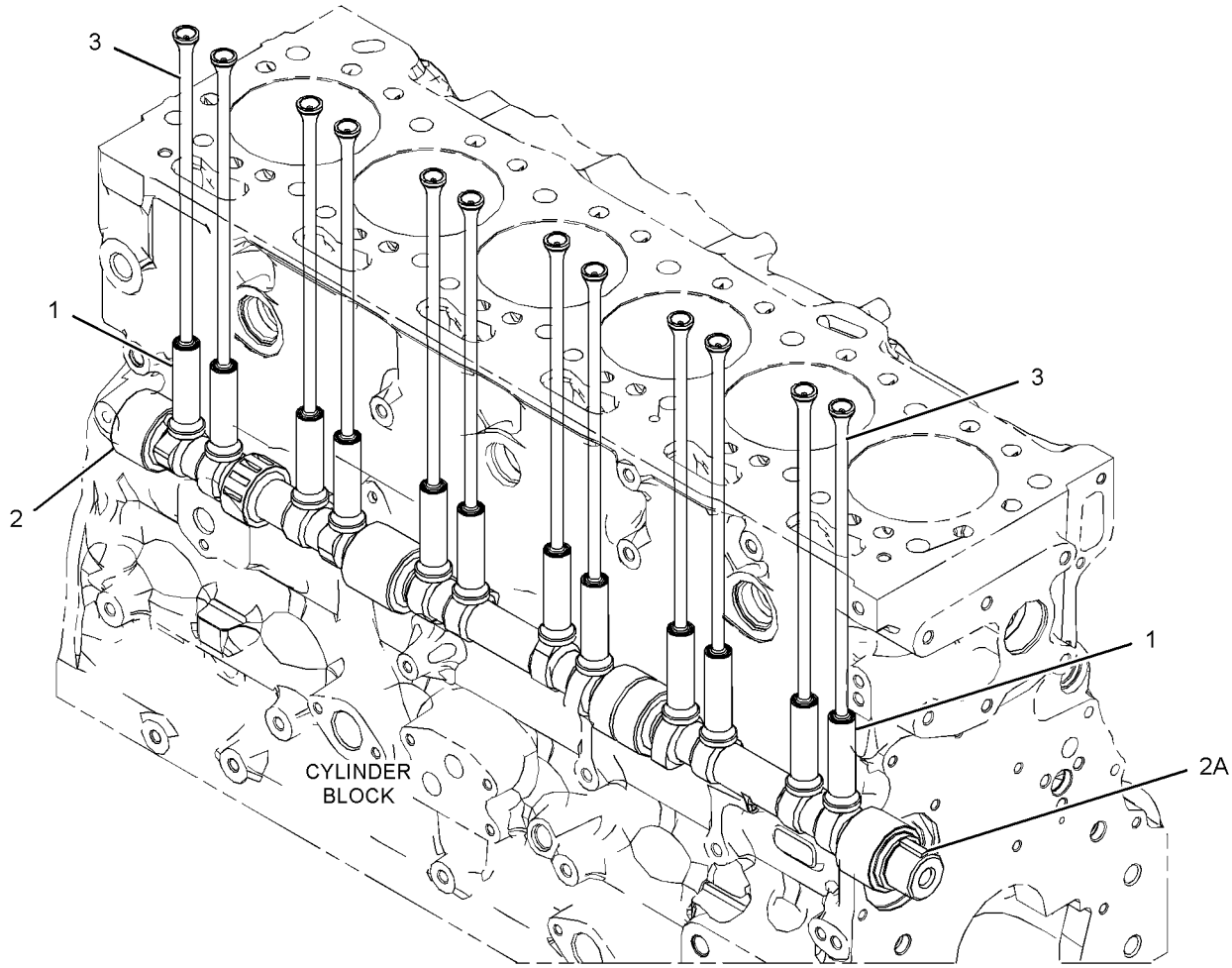

GRAPHIC #1 <END> g03380150

396-2617 CAMSHAFT GP

PART OF 451-8343, 461-4656, 461-4658, 466-1161, 466-1162, 466-1163, 468-0461, 468-8218, 470-8667, 470-8814, 474-7299, 475-9060, 478-4257, 479-9398, 480-2181, 481-0811, 485-8027, 486-2644, 486-4250, 488-6687, 489-9006, 491-2606, 491-4980, 491-4993, 491-7124, 492-3169, 493-1019, 494-6807, 495-8349, 499-7181, 502-9462, 504-3629, 504-8134, 506-5035, 506-9918, 507-8016, 510-1088, 513-0851, 513-8513, 514-9367, 515-9203, 519-4128, 520-3152, 524-8271, 525-8759, 526-0511, 526-7210, 526-8888, 527-7106, 528-3358, 528-9866, 528-9920, 530-1323, 530-2601, 531-2492, 533-2797, 533-3588, 535-8060, 536-6675, 539-6915, 539-8582, 543-4255, 552-3506, 552-8869, 553-1809, 553-3730, 569-7846, 575-2880, 583-8352, 591-1266, 591-9440, 593-7287, 593-7288, 594-2125, 596-4834, 596-7090, 596-8905, 597-9248, 598-9881, 602-8721, 603-5300, 608-9261, 609-9819, 613-9482, 614-5795, 614-9555, 622-6239, 623-1309, 624-0698, 627-8019, 645-2039 ENGINE AR-PRIMARY

SMCS-1210 **i06581168**

NOTE	REF NO	GRAPHIC REF	PART NUMBER	QTY	PART NAME 1 2 3 4 5 6 (PRODUCT LEVEL)	SEE PAGE
	1	1	**278-5125**	12	TAPPET	
	2	1	**395-1802**	1	CAMSHAFT GP	
	2A	1	**067-6135**	1	KEY-WOODRUFF	
	3	1	**278-5126**	12	PUSHROD	

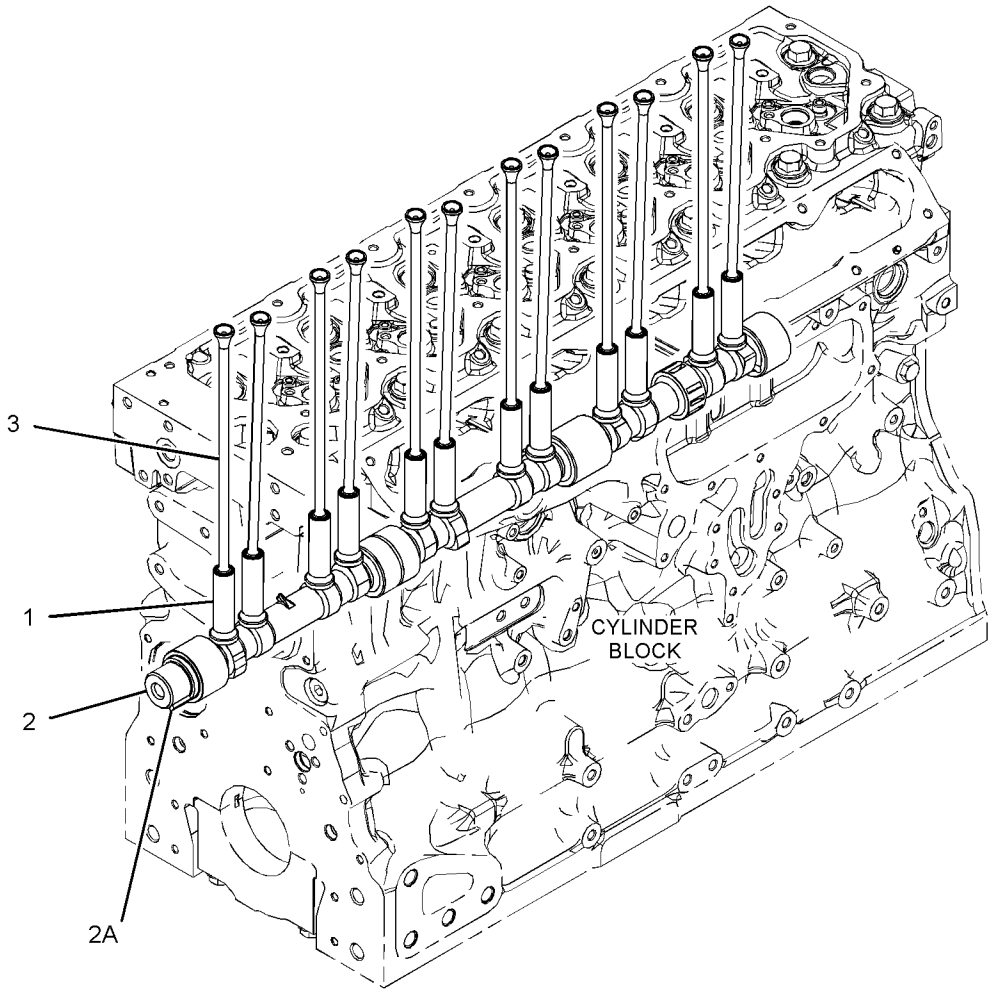

GRAPHIC #1 <END> g03533087

374-7094 COMPRESSOR & MTG GP-REFRIGERANT

PART OF 470-8814, 488-6687, 506-9918, 524-8271, 526-7210, 528-9866, 528-9920, 553-3730, 575-2879, 575-2880, 597-9248, 613-9482, 614-5795, 645-2039 ENGINE AR-PRIMARY

SMCS-1802 **i05582392**

NOTE	REF NO	GRAPHIC REF	PART NUMBER	QTY	PART NAME 1 2 3 4 5 6 (PRODUCT LEVEL)	SEE PAGE
M	1	1	**127-3361**	2	BOLT (M8X1.25X95-MM)	
M	2	1	**101-7178**	3	BOLT (M10X1.5X55-MM)	
Y	3	1	**320-1291**	1	COMPRESSOR GP-REFRIGERANT	431
	4	1	**330-1725**	1	BRACKET AS	
		1	**161-9820**	2	PIN	
M	5	1	**346-2999**	2	BOLT (M8X1.25X16.6-MM)	

M - METRIC PART
Y - SEPARATE ILLUSTRATION

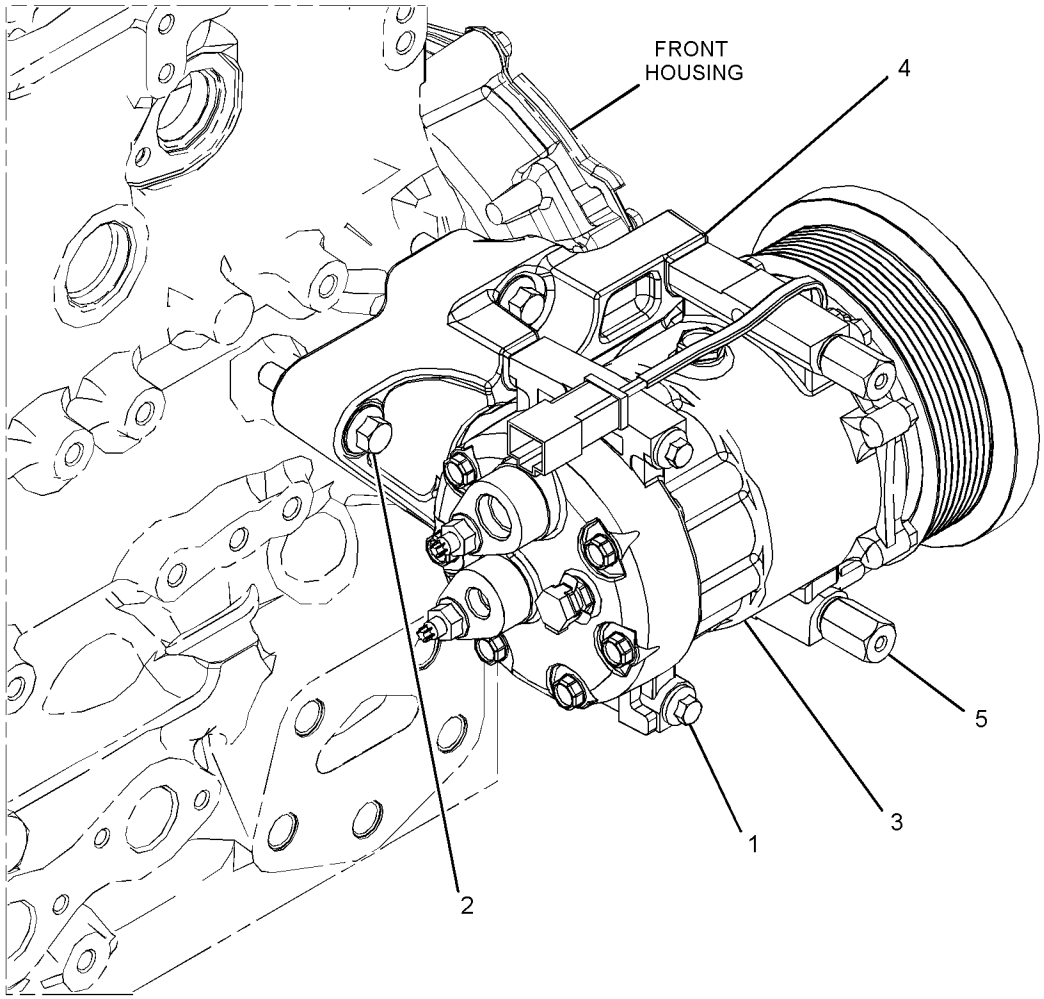

GRAPHIC #1 <END> g02510958

178-9570 COMPRESSOR GP-REFRIGERANT

PART OF 374-7090 MOUNTING GP-REFRIGERANT COMPR

SMCS-1802 **i05727156**

NOTE	REF NO	GRAPHIC REF	PART NUMBER	QTY	PART NAME 1 2 3 4 5 6 (PRODUCT LEVEL)	SEE PAGE
	1	1	**102-8802**	1	KIT-RECEPTACLE (2-PIN)	
					(INCLUDES RECEPTACLE AS & WEDGE)	
	2	1	**7T-4532**	1	PLUG AS	
	3	1	**314-4018**	1	VALVE AS-PRESSURE RELIEF (REFRIGERANT COMPRESSOR)	
	4	1	**180-9339**	2	PIN-CONNECTOR (14-GA TO 18-GA)	

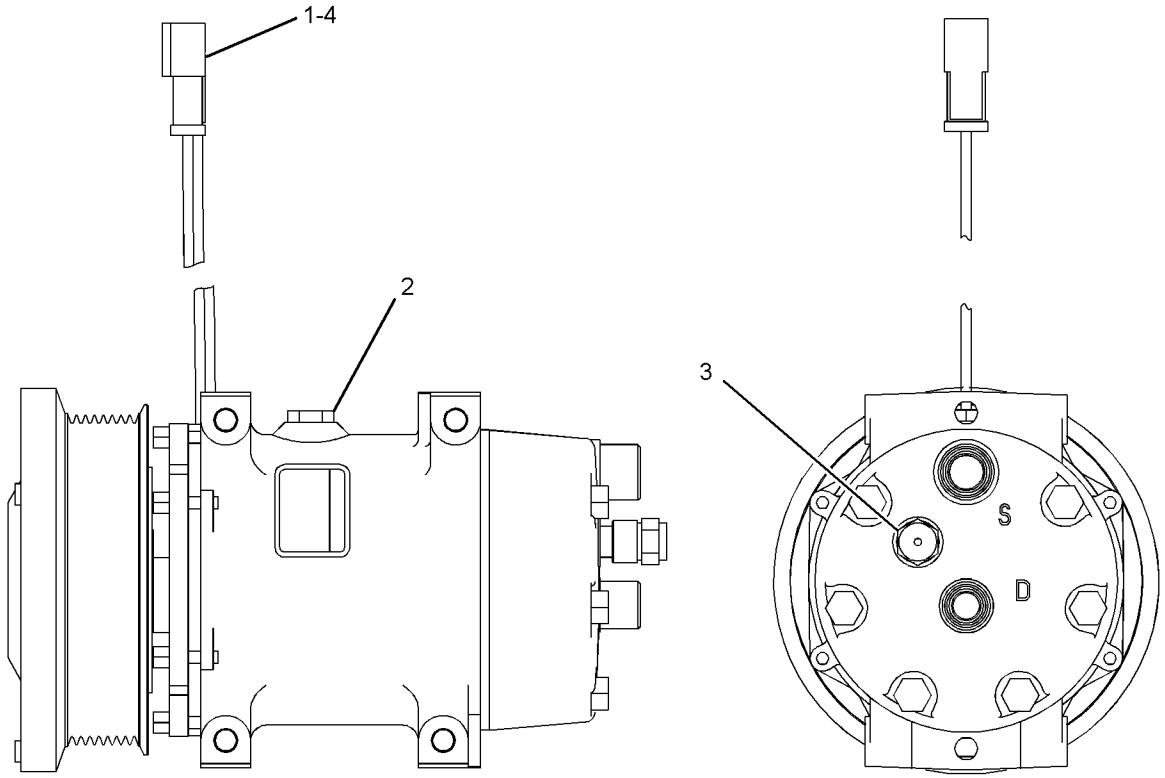

GRAPHIC #1 <END> g02749997

320-1291 COMPRESSOR GP-REFRIGERANT

PART OF 374-7094 COMPRESSOR & MTG GP-REFRIGERANT

SMCS-1802 **i05826352**

NOTE	REF NO	GRAPHIC REF	PART NUMBER	QTY	PART NAME 1 2 3 4 5 6 (PRODUCT LEVEL)	SEE PAGE
	1	1	**102-8802**	1	KIT-RECEPTACLE (2-PIN)	
					(INCLUDES RECEPTACLE AS & WEDGE)	
	2	1	**314-4018**	1	VALVE AS-PRESSURE RELIEF (REFRIGERANT COMPRESSOR)	
	3	1	**126-1767**	2	PIN-CONNECTOR (14-GA TO 16-GA)	
	4	1	**7T-4532**	1	PLUG AS	

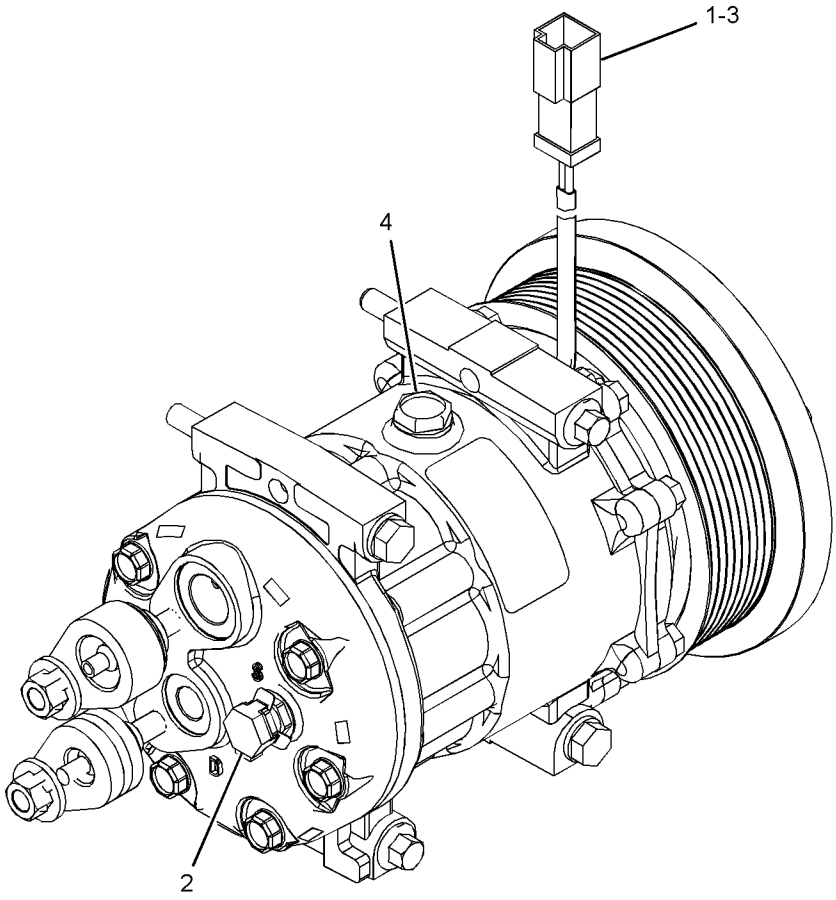

GRAPHIC #1 <END> g02214255

331-0290 CONNECTING ROD GP

PART OF 369-7304, 452-9761 PISTON & ROD GP

SMCS-1218 **i07034592**

NOTE	REF NO	GRAPHIC REF	PART NUMBER	QTY	PART NAME 1 2 3 4 5 6 (PRODUCT LEVEL)	SEE PAGE
	1	1	**276-7478**	1	BUSHING	
M	2	1	**323-9312**	2	BOLT (M10X1X50-MM)	

M - METRIC PART

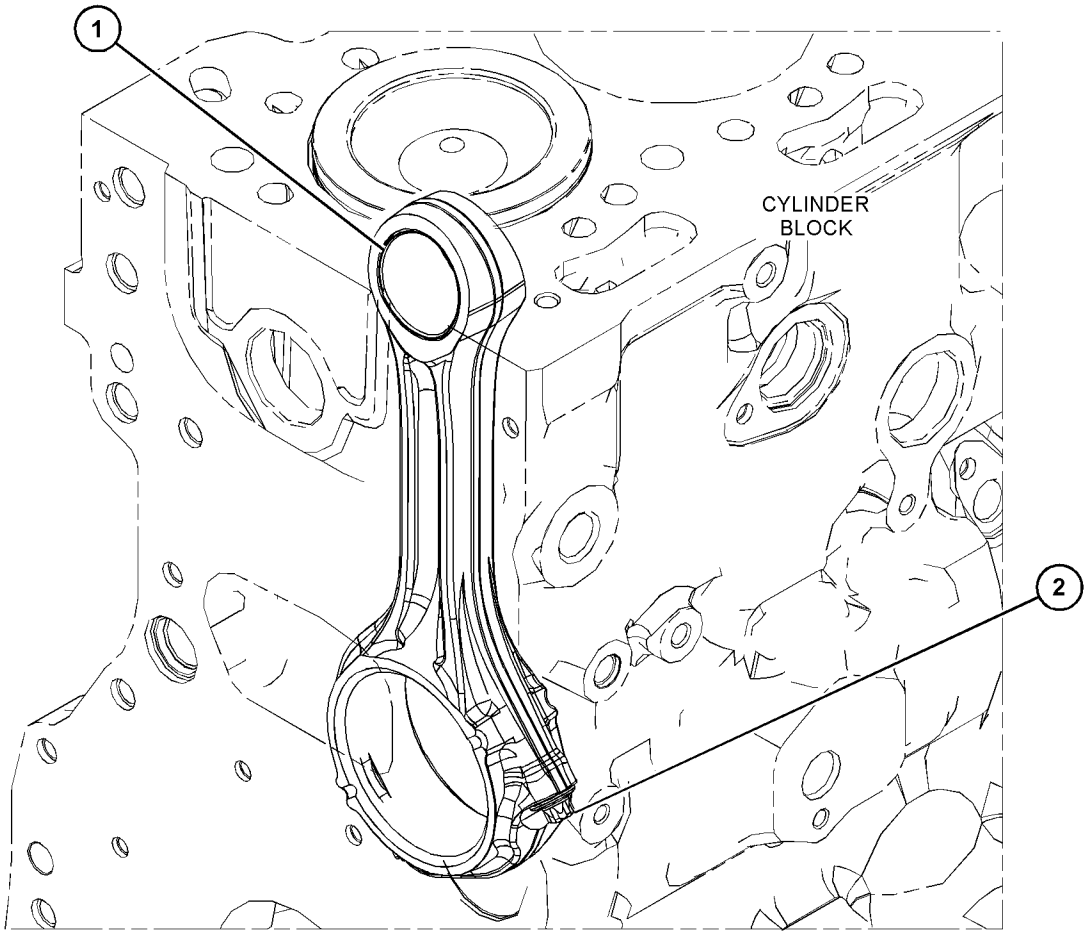

GRAPHIC #1 <END> g03551985

378-0629 COVER GP-ACCESSORY DRIVE

PART OF 478-4257, 481-0811, 488-6687, 515-9203, 520-4644, 527-7106, 528-3358, 552-3506, 594-2125, 596-4834, 596-7090, 608-9261 ENGINE AR-PRIMARY

SMCS-1207 **i10428927**

NOTE	REF NO	GRAPHIC REF	PART NUMBER	QTY	PART NAME 1 2 3 4 5 6 (PRODUCT LEVEL)	SEE PAGE
M	1	1	**100-4830**	2	BOLT (M10X1.5X20-MM)	
	2	1	**102-2073**	1	SEAL-O-RING	
M	3	1	**101-7404**	1	BOLT-SOCKET HEAD (M10X1.5X30-MM)	
M	4	1	**126-3212**	5	BOLT (M8X1.25X25-MM)	
	5	1	**198-8262**	1	COVER AS	
	5A	1	**198-8263**	1	SEAL-O-RING	
	6	1	**222-8625**	1	ADAPTER AS	
	6A	1	**6H-3957**	1	BALL BEARING	
	6B	1	**102-2075**	1	BEARING	
	6C	1	**102-2076**	1	CLIP	
	6D	1	**217-7877**	1	GEAR (33-TEETH)	
	7	1	**277-4223**	1	PLUG	

M - METRIC PART

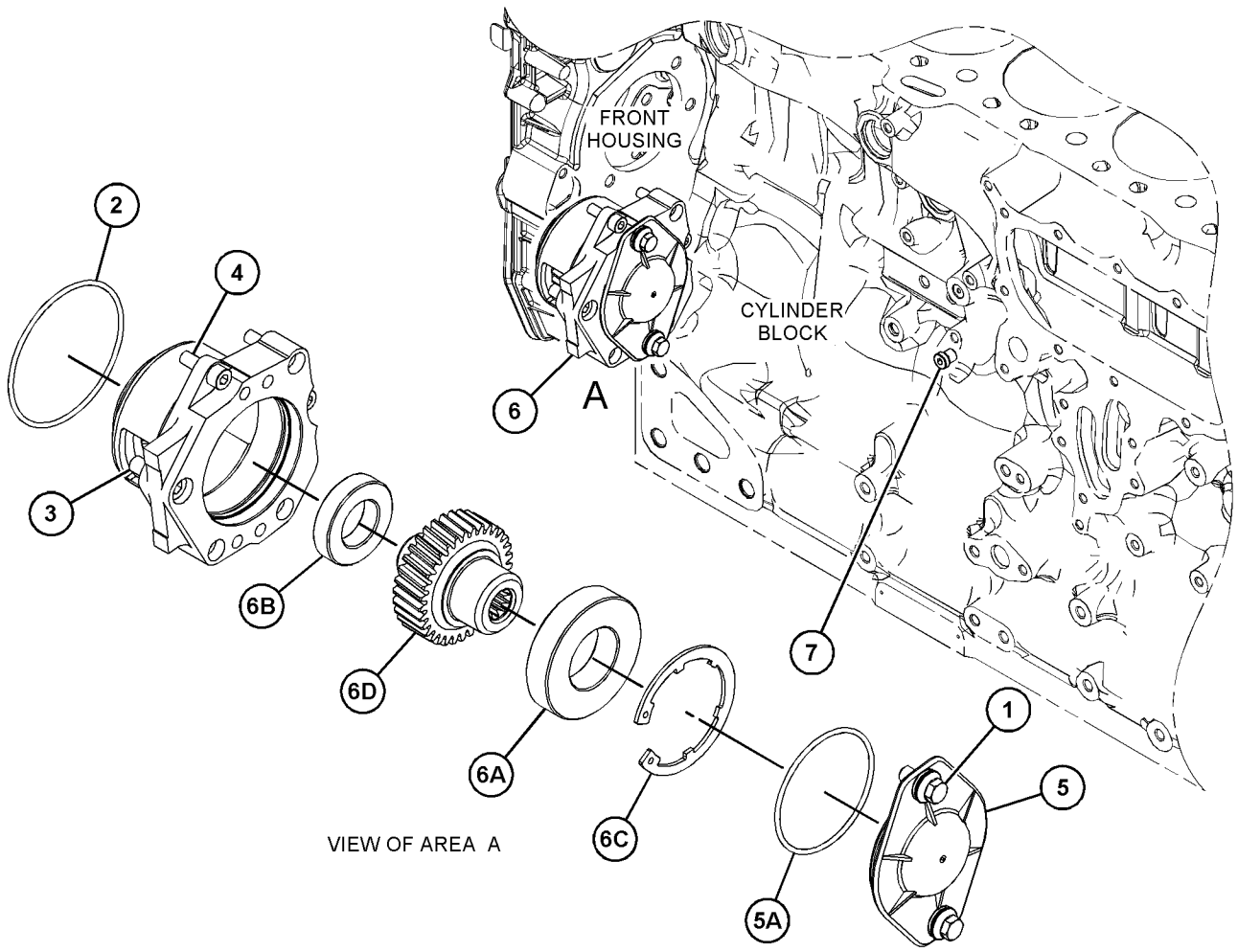

GRAPHIC #1 <END> g03658957

383-1386 COVER GP-VALVE MECHANISM

PART OF 389-3348 COVER GP-VALVE MECHANISM

SMCS-1107 **i07060383**

NOTE	REF NO	GRAPHIC REF	PART NUMBER	QTY	PART NAME 1 2 3 4 5 6 (PRODUCT LEVEL)	SEE PAGE
	1	1	**359-1310**	1	CAP AS-FILLER (ENGINE OIL)	
	1A	1	**124-0506**	1	SEAL	
	2	1	**376-4761**	1	SEAL (VALVE COVER)	
	3	1	**380-9615**	1	BREATHER (VALVE MECHANISM)	
	4	1	**383-1387**	1	COVER-VALVE MECHANISM	
M	5	1	**195-9245**	3	SCREW (M4X0.7X10-MM)	

M - METRIC PART

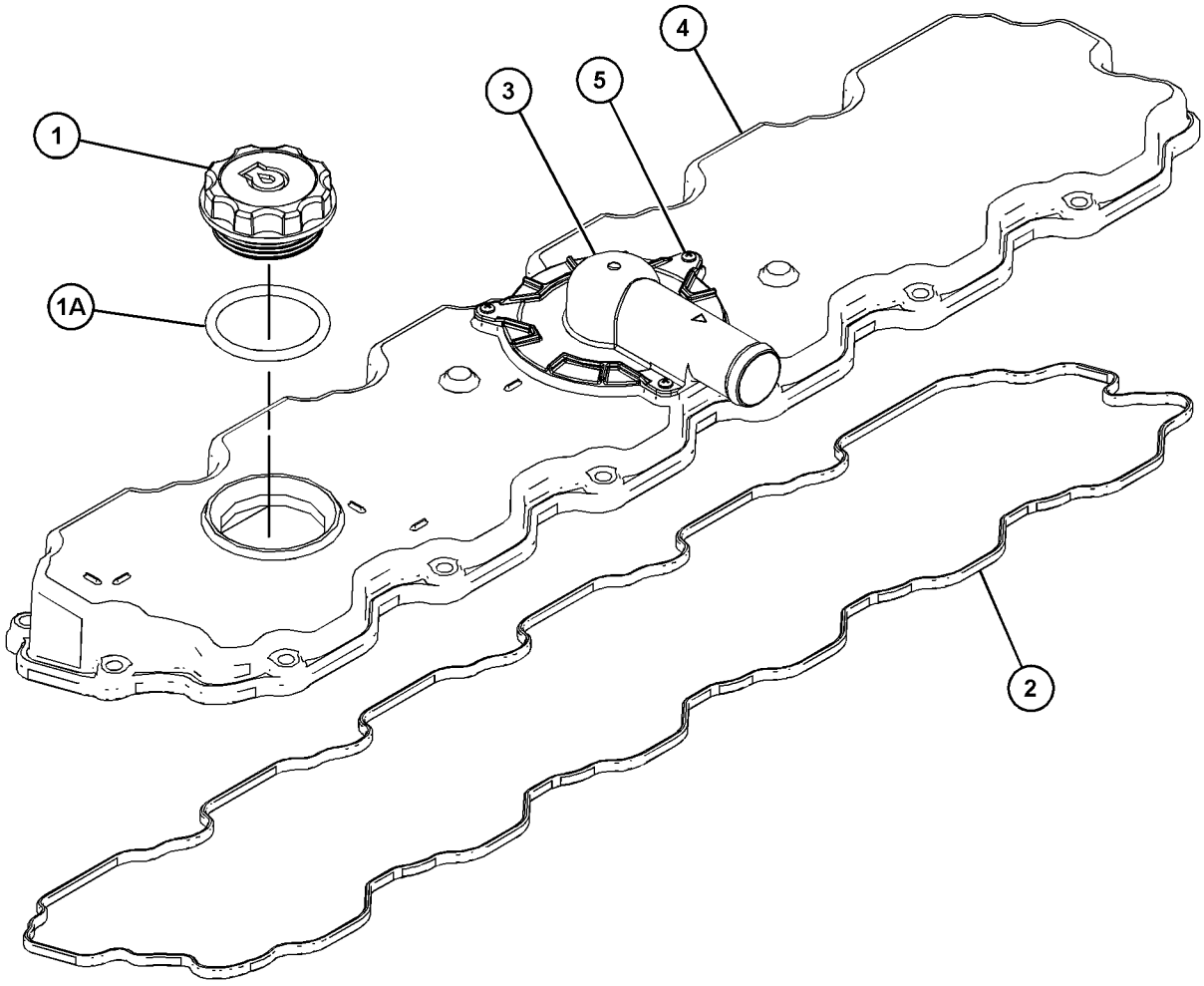

GRAPHIC #1 <END> g06043798

389-3346 COVER GP-VALVE MECHANISM

PART OF 596-2071 ENGINE AR-COMPLETE, 461-4638, 461-4649, 461-4656, 461-4658, 468-0461, 470-8814, 479-9398, 482-0212, 486-2644, 491-4973, 491-4980, 491-4993, 491-7124, 492-3021, 492-3072, 492-3169, 493-1019, 493-1038, 495-8349, 499-7181, 501-2466, 502-9462, 504-5365, 504-8134, 507-8016, 512-9858, 514-9367, 520-3152, 524-8271, 525-8759, 526-7210, 526-8888, 527-7106, 528-3358, 528-9866, 528-9920, 530-2601, 533-2797, 533-3588, 535-8060, 539-6915, 543-4255, 562-8873, 563-6730, 565-1247, 575-2879, 575-2880, 583-8352, 591-1266, 593-7287, 593-7288, 594-2125, 596-4834, 596-7090, 598-9881, 602-8721, 603-5300, 612-1735, 614-5795, 614-9555, 622-6239, 623-1309, 624-0698, 627-8129, 645-2039 ENGINE AR-PRIMARY

SMCS-1107 **i07636234**

NOTE	REF NO	GRAPHIC REF	PART NUMBER	QTY	PART NAME 1 2 3 4 5 6 (PRODUCT LEVEL)	SEE PAGE
M	1	1	**101-3895**	9	BOLT (M8X1.25X35-MM)	
M	2	1	**103-5705**	6	BOLT (M8X1.25X110-MM)	
C	3	1	**527-1637**	1	COVER GP-VALVE MECHANISM	
M	3A	1	**195-9245**	3	SCREW (M4X0.7X10-MM)	
	3B	1	**527-1641**	1	SEAL	
	3C	1	**380-9615**	1	BREATHER (VALVE MECHANISM)	
		1	**326-7289**	1	SEAL-O-RING	
	4	1	**566-7931**	1	GASKET	
	5	1	**383-1388**	1	COVER-BASE	
M	6	1	**6I-0217**	14	BOLT (M8X1.25X20-MM)	

C - CHANGE FROM PREVIOUS TYPE
M - METRIC PART

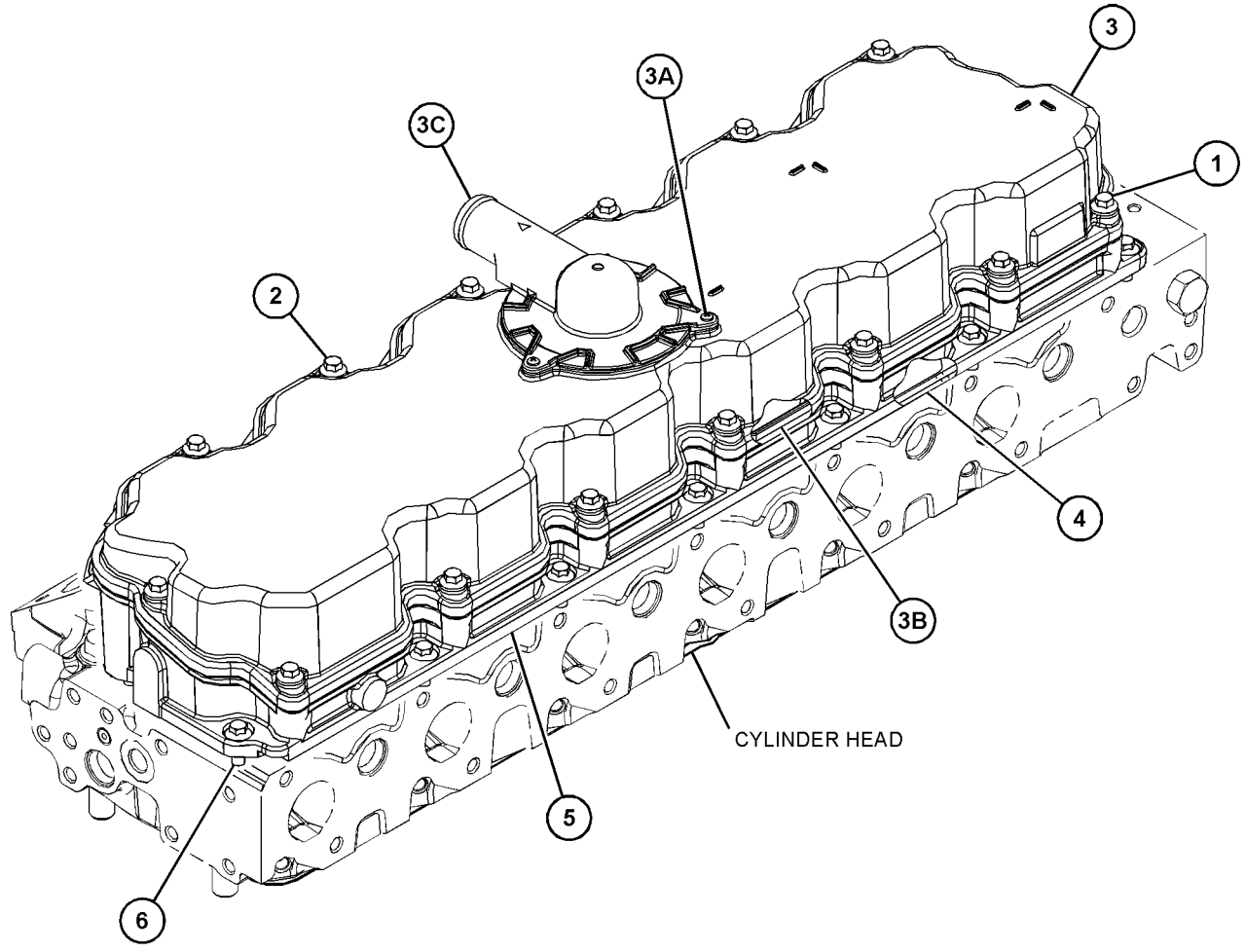

GRAPHIC #1 <END> g06145214

389-3347 COVER GP-VALVE MECHANISM

PART OF 470-8667, 478-4257, 480-2181, 481-0811, 484-2939, 485-8027, 486-4250, 489-9006, 491-2606, 494-6807, 504-9579, 506-9918, 513-0851, 519-4128, 520-4644, 526-0511, 527-9686, 530-1323, 539-8582, 552-8869, 555-4669, 563-6728, 563-6729, 569-7846, 633-4335, 657-2370 ENGINE AR-PRIMARY

SMCS-1107 **i07621618**

NOTE	REF NO	GRAPHIC REF	PART NUMBER	QTY	PART NAME 1 2 3 4 5 6 (PRODUCT LEVEL)	SEE PAGE
M	1	1	**101-3895**	9	BOLT (M8X1.25X35-MM)	
M	2	1	**103-5705**	6	BOLT (M8X1.25X110-MM)	
Y	3	1	**527-1639**	1	COVER GP-VALVE MECHANISM	444
	4	1	**383-1388**	1	COVER-BASE	
	5	1	**566-7931**	1	GASKET	
M	6	1	**6I-0217**	14	BOLT (M8X1.25X20-MM)	

M - METRIC PART
Y - SEPARATE ILLUSTRATION

389-3347 **COVER GP-VALVE MECHANISM (**contd.**)** **i07621618**

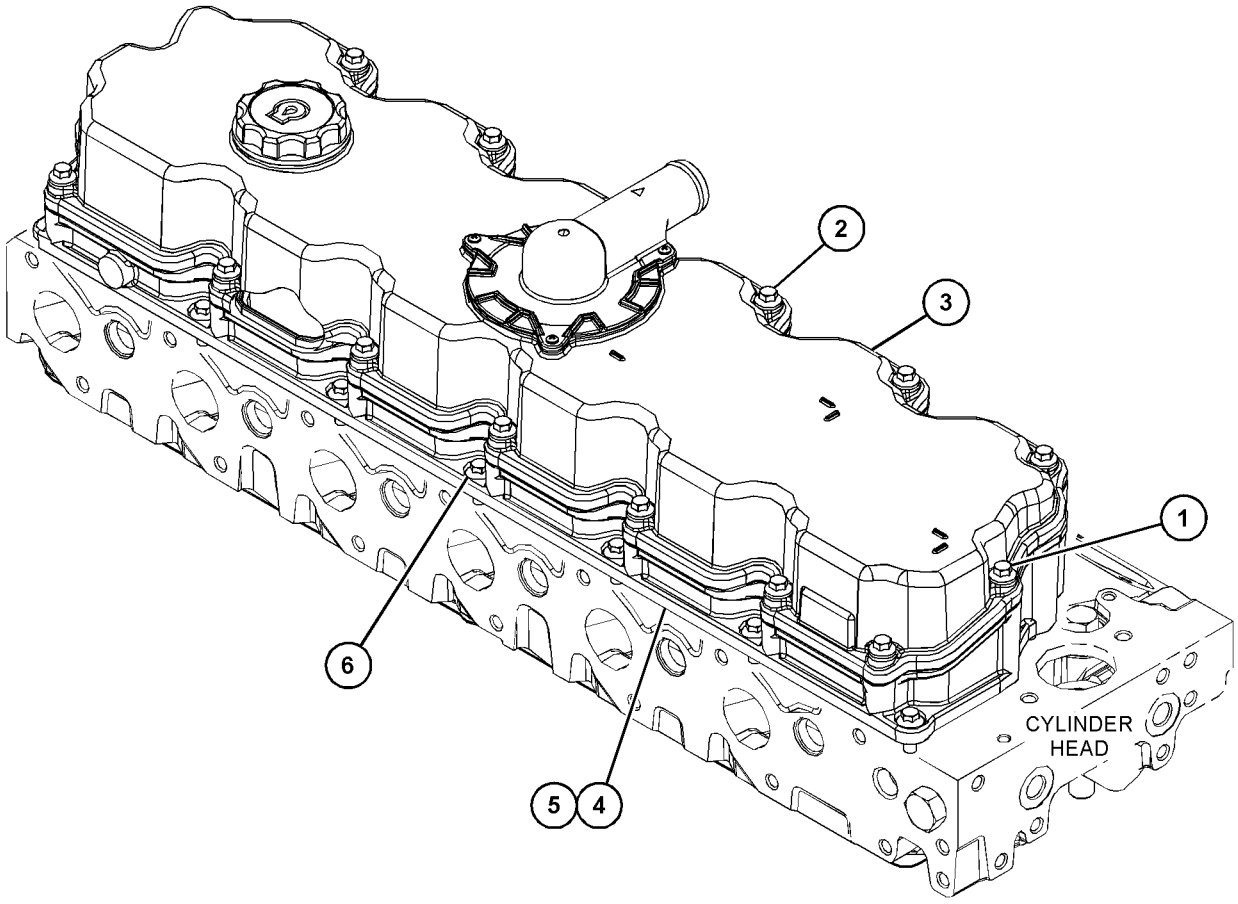

GRAPHIC #1 <END> g06238170

389-3347 COVER GP-VALVE MECHANISM

PART OF 470-8667, 478-4257, 480-2181, 481-0811, 484-2939, 485-8027, 486-4250, 489-9006, 491-2606, 494-6807, 504-9579, 506-9918, 513-0851, 515-9203, 519-4128, 520-4644, 526-0511, 527-9686, 530-1323, 539-8582, 552-8869, 555-4669, 563-6728, 563-6729, 569-7846, 591-9440, 597-9248, 608-9261, 609-9819, 627-8019, 627-8054, 633-4335, 657-2370 ENGINE AR-PRIMARY

SMCS-1107 **i07804925**

NOTE	REF NO	GRAPHIC REF	PART NUMBER	QTY	PART NAME 1 2 3 4 5 6 (PRODUCT LEVEL)	SEE PAGE
M	1	1	**101-3895**	9	BOLT (M8X1.25X35-MM)	
M	2	1	**103-5705**	6	BOLT (M8X1.25X110-MM)	
CY	3	1	**571-1827**	1	COVER GP-VALVE MECHANISM	445
	4	1	**383-1388**	1	COVER-BASE	
	5	1	**566-7931**	1	GASKET	
M	6	1	**6I-0217**	14	BOLT (M8X1.25X20-MM)	

C - CHANGE FROM PREVIOUS TYPE
M - METRIC PART
Y - SEPARATE ILLUSTRATION

389-3347 **COVER GP-VALVE MECHANISM (**contd.**)** **i07804925**

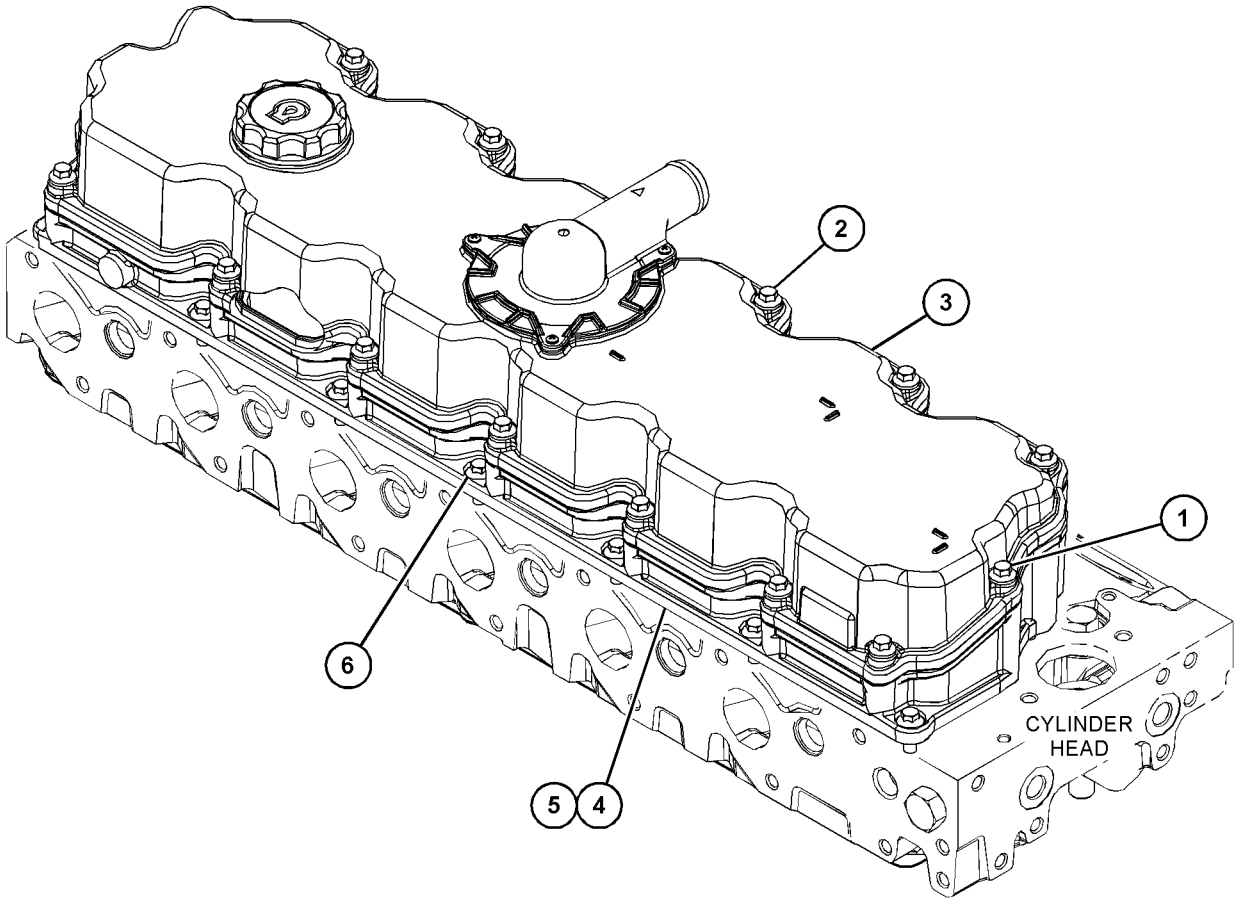

GRAPHIC #1 <END> g06238170

389-3348 COVER GP-VALVE MECHANISM

PART OF 451-8343, 466-1160, 466-1161, 466-1162, 466-1163, 471-0541, 474-7299, 475-9060, 488-6687, 494-2073, 504-3629, 506-5035, 508-0270, 513-8513 ENGINE AR-PRIMARY

SMCS-1107 **i06865795**

NOTE	REF NO	GRAPHIC REF	PART NUMBER	QTY	PART NAME 1 2 3 4 5 6 (PRODUCT LEVEL)	SEE PAGE
M	1	1	**101-3895**	9	BOLT (M8X1.25X35-MM)	
M	2	1	**103-5705**	6	BOLT (M8X1.25X110-MM)	
Y	3	1	**383-1386**	1	COVER GP-VALVE MECHANISM	434
	4	1	**383-1388**	1	COVER-BASE	
	5	1	**388-0536**	1	GASKET (VALVE COVER)	
M	6	1	**6I-0217**	14	BOLT (M8X1.25X20-MM)	

M - METRIC PART
Y - SEPARATE ILLUSTRATION

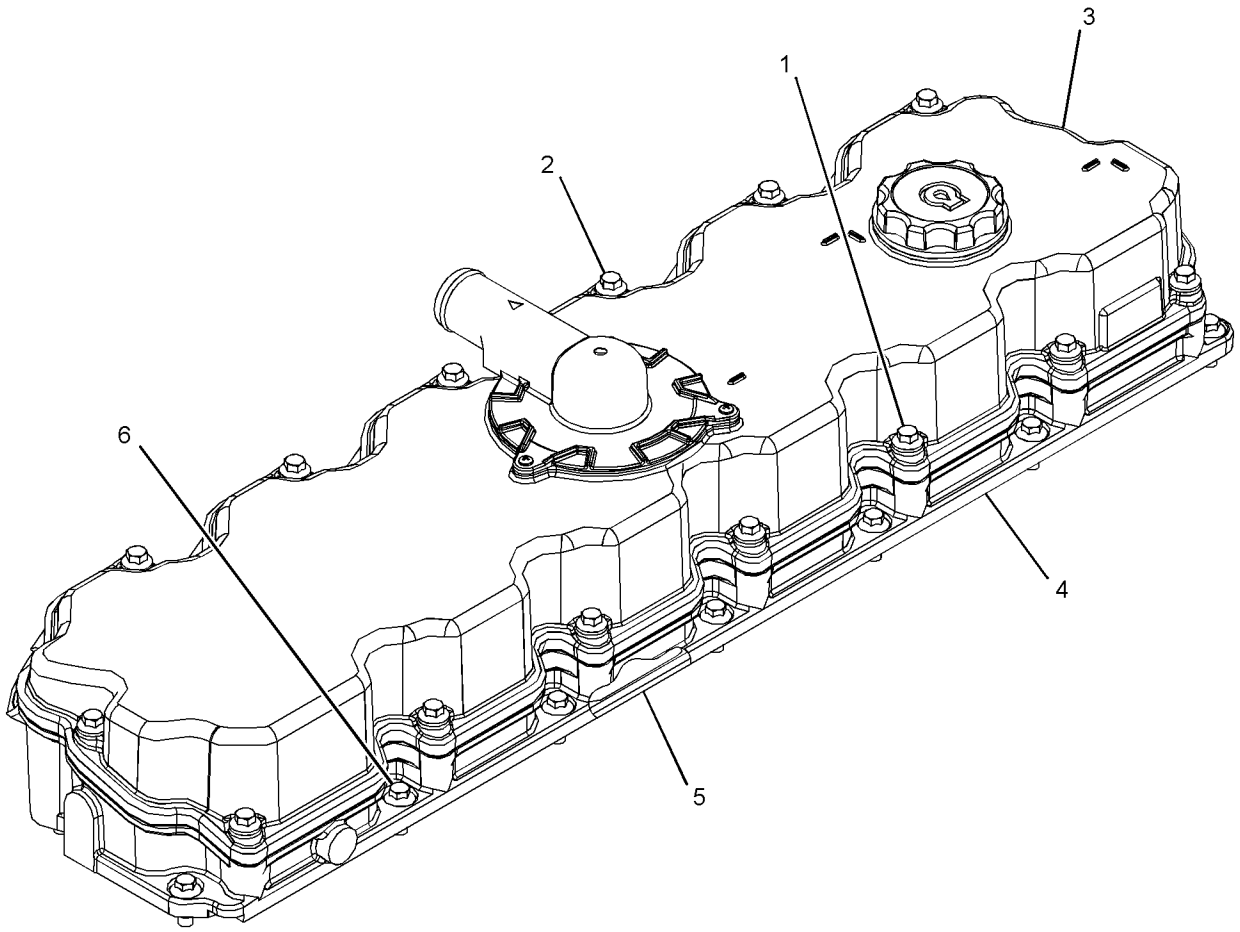

GRAPHIC #1 <END> g03481658

389-3348 COVER GP-VALVE MECHANISM

PART OF 451-8343, 466-1160, 466-1161, 466-1162, 466-1163, 471-0541, 474-7299, 475-8297, 475-9060, 488-6687, 494-2073, 504-3629, 506-5035, 508-0270, 510-1088, 513-8513, 536-6675, 552-3506, 553-1809, 553-3730, 596-8896, 596-8905, 613-9482, 628-4345, 633-7776 ENGINE AR-PRIMARY

SMCS-1107 **i07888589**

NOTE	REF NO	GRAPHIC REF	PART NUMBER	QTY	PART NAME 1 2 3 4 5 6 (PRODUCT LEVEL)	SEE PAGE
M	1	1	**101-3895**	9	BOLT (M8X1.25X35-MM)	
M	2	1	**103-5705**	6	BOLT (M8X1.25X110-MM)	
	3	1	**383-1388**	1	COVER-BASE	
	4	1	**566-7931**	1	GASKET	
CY	5	1	*571-1828*	1	COVER GP-VALVE MECHANISM	446
M	6	1	**6I-0217**	14	BOLT (M8X1.25X20-MM)	

C - CHANGE FROM PREVIOUS TYPE
M - METRIC PART
Y - SEPARATE ILLUSTRATION

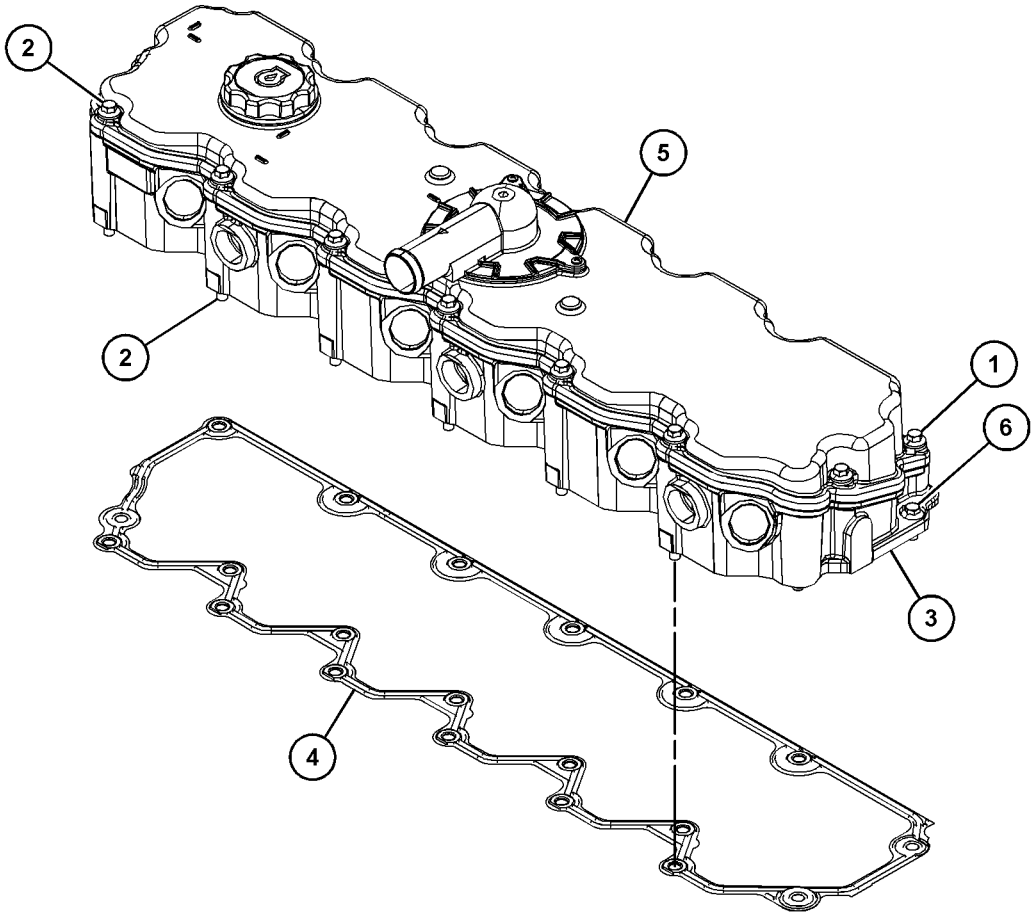

GRAPHIC #1 <END> g06497982

436-1195 COVER GP-VALVE MECHANISM

PART OF 468-8218, 531-2492 ENGINE AR-PRIMARY

SMCS-1107 **i07664532**

NOTE	REF NO	GRAPHIC REF	PART NUMBER	QTY	PART NAME 1 2 3 4 5 6 (PRODUCT LEVEL)	SEE PAGE
M	1	1	**101-3895**	9	BOLT (M8X1.25X35-MM)	
M	2	1	**103-5705**	6	BOLT (M8X1.25X110-MM)	
	3	1	**527-1637**	1	COVER GP-VALVE MECHANISM	
M	3A	1	**195-9245**	3	SCREW (M4X0.7X10-MM)	
	3B	1	**527-1641**	1	SEAL	
	3C	1	**380-9615**	1	BREATHER (VALVE MECHANISM)	
	3D	1	**326-7289**	1	SEAL-O-RING	
	4	1	**566-7931**	1	GASKET	
	5	1	**435-9557**	1	COVER-BASE	
M	6	1	**6I-0217**	14	BOLT (M8X1.25X20-MM)	

M - METRIC PART

436-1195 **COVER GP-VALVE MECHANISM (**contd.**)** **i07664532**

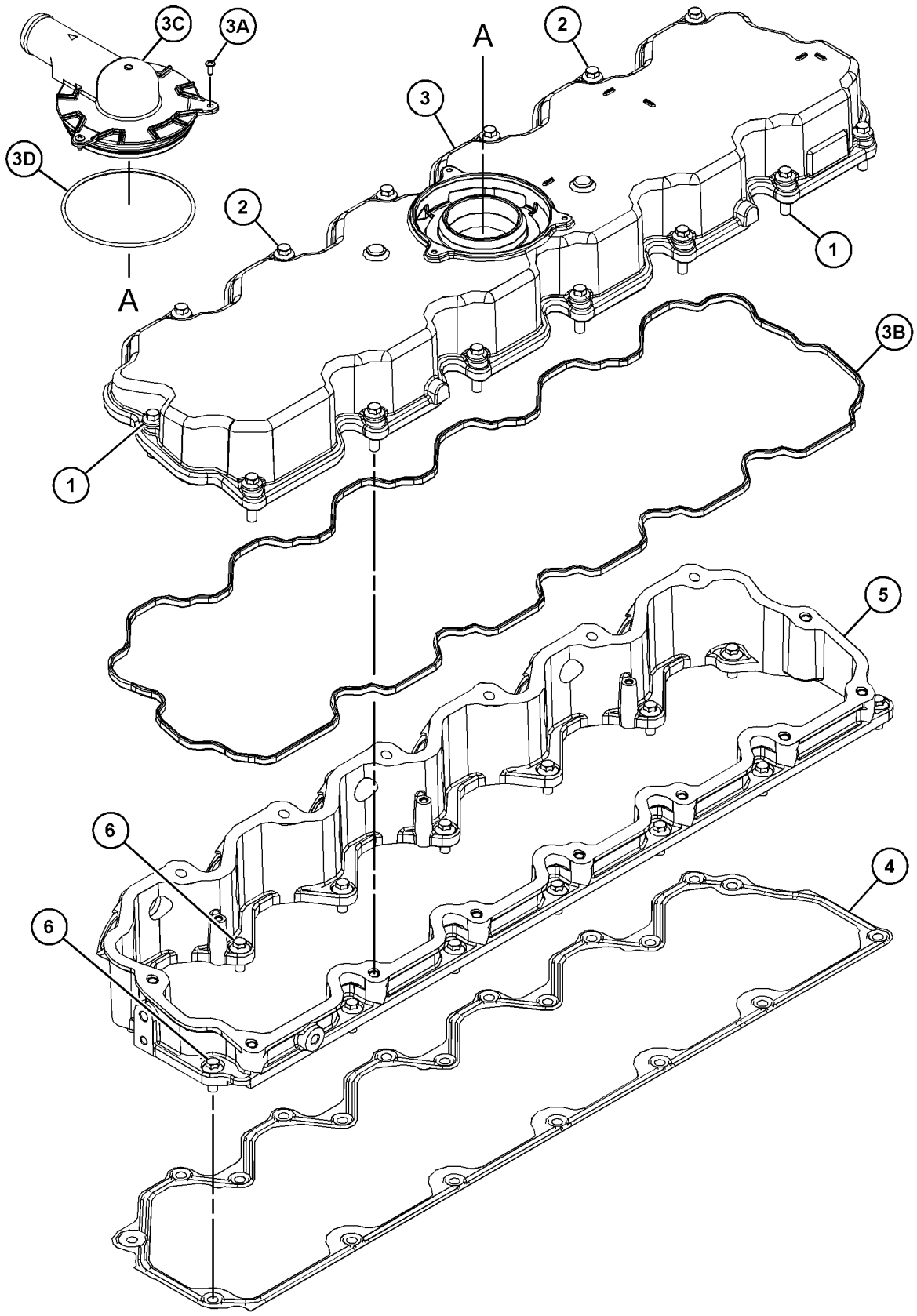

GRAPHIC #1 <END> g06396346

527-1639 COVER GP-VALVE MECHANISM

S/N: G9R1-8099

PART OF 389-3347 COVER GP-VALVE MECHANISM

SMCS-1107 **i07178050**

NOTE	REF NO	GRAPHIC REF	PART NUMBER	QTY	PART NAME 1 2 3 4 5 6 (PRODUCT LEVEL)	SEE PAGE
M	1	1	**195-9245**	3	SCREW (M4X0.7X10-MM)	
	2	1	**369-3869**	1	CAP AS-ENGINE OIL FILLER	
		1	**357-0147**	1	FILM-IDENTIFICATION (OIL FILL, READ OMM)	
		1	**124-0506**	1	SEAL	
	3	1	**380-9615**	1	BREATHER (VALVE MECHANISM) (CAP)	
	4	1	**527-1641**	1	SEAL	
	5	1	**326-7289**	1	SEAL-O-RING	

M - METRIC PART

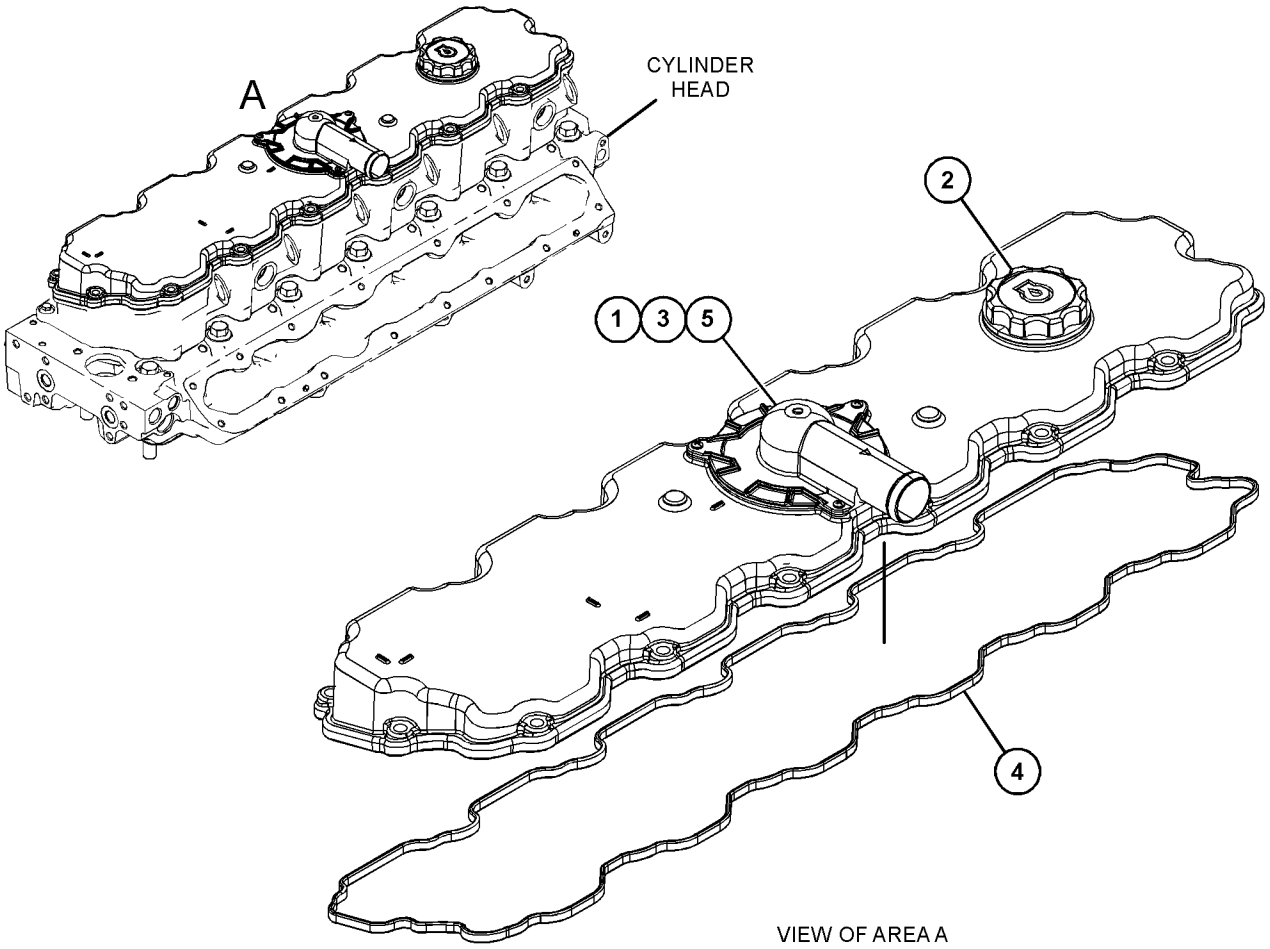

VIEW OF AREA A

GRAPHIC #1 <END> g06243569

571-1827 COVER GP-VALVE MECHANISM

PART OF 389-3347 COVER GP-VALVE MECHANISM

SMCS-1107 **i07804927**

NOTE	REF NO	GRAPHIC REF	PART NUMBER	QTY	PART NAME 1 2 3 4 5 6 (PRODUCT LEVEL)	SEE PAGE
M	1	1	**195-9245**	3	SCREW (M4X0.7X10-MM)	
	2	1	**326-7289**	1	SEAL-O-RING	
	3	1	**369-3869**	1	CAP AS-ENGINE OIL FILLER	
		1	**357-0147**	1	FILM-IDENTIFICATION (OIL FILL, READ OMM)	
		1	**124-0506**	1	SEAL	
	4	1	**380-9615**	1	BREATHER (VALVE MECHANISM) (CAP)	
	5	1	**527-1641**	1	SEAL	

M - METRIC PART

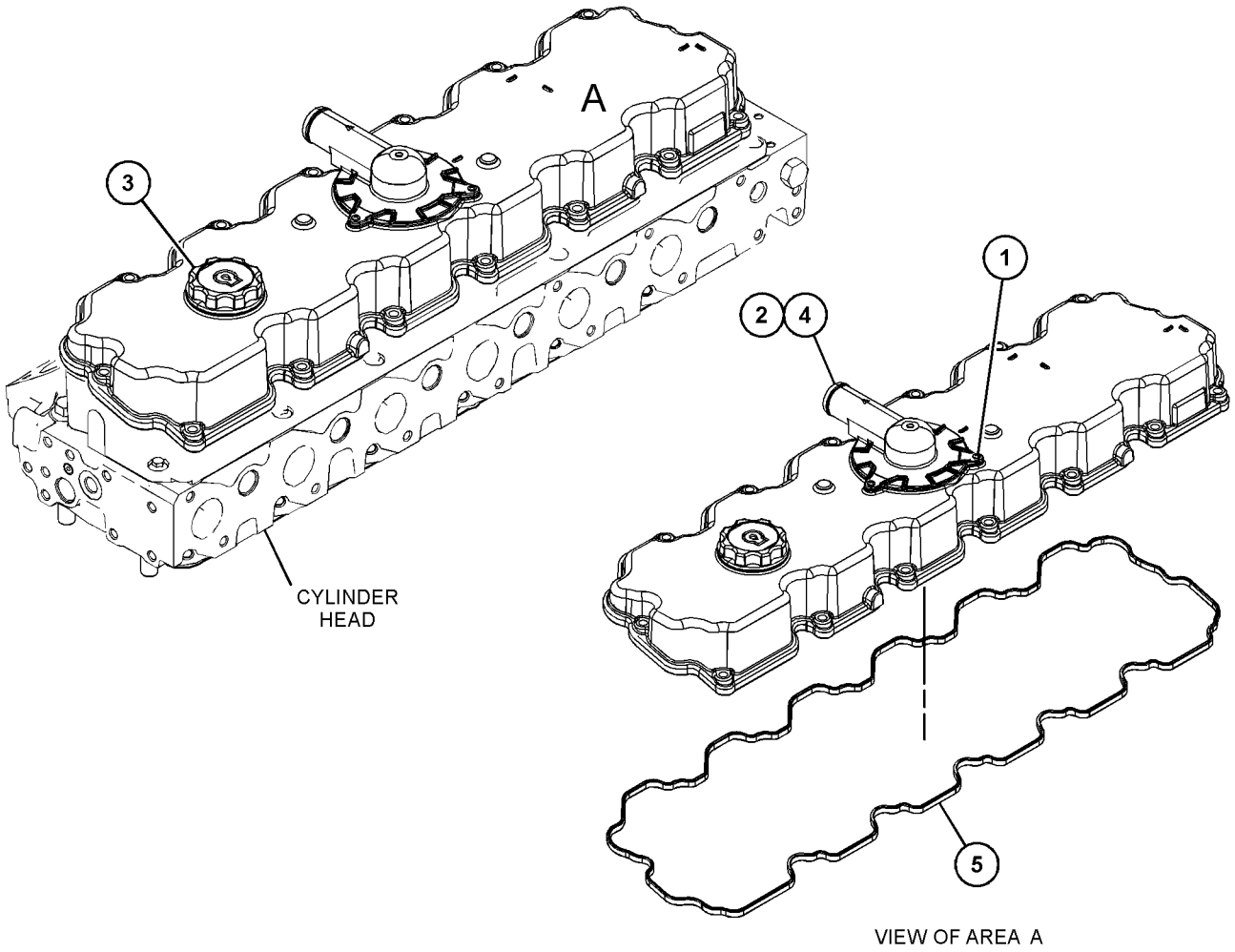

GRAPHIC #1 <END> g06458492

571-1828 COVER GP-VALVE MECHANISM

PART OF 389-3348 COVER GP-VALVE MECHANISM

SMCS-1107 **i07989575**

NOTE	REF NO	GRAPHIC REF	PART NUMBER	QTY	PART NAME 1 2 3 4 5 6 (PRODUCT LEVEL)	SEE PAGE
M	1	1	**195-9245**	3	SCREW (M4X0.7X10-MM)	
	2	1	**326-7289**	1	SEAL-O-RING	
	3	1	**369-3869**	1	CAP AS-ENGINE OIL FILLER	
		1	**357-0147**	1	FILM-IDENTIFICATION (OIL FILL, READ OMM)	
		1	**124-0506**	1	SEAL	
	4	1	**380-9615**	1	BREATHER (VALVE MECHANISM) (CAP)	
	5	1	**527-1641**	1	SEAL	

M - METRIC PART

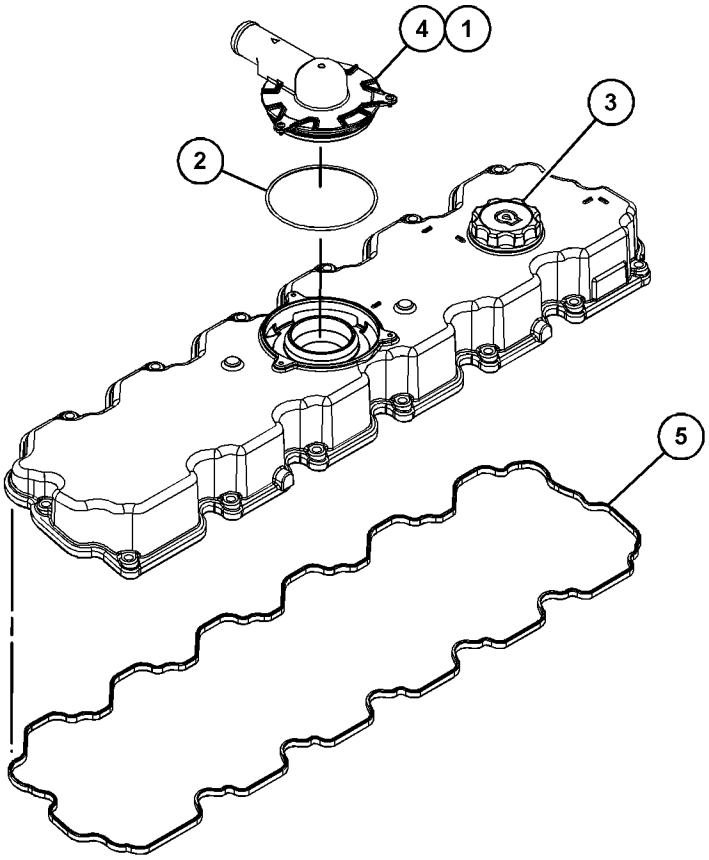

GRAPHIC #1 <END> g06498410

374-6300 CRANKSHAFT GP

PART OF 451-1222 CYLINDER BLOCK GP-SHORT, 596-2071 ENGINE AR-COMPLETE, 451-8343, 461-4638, 461-4649, 461-4656, 461-4658, 466-1160, 466-1161, 466-1162, 466-1163, 468-0461, 468-8218, 470-8814, 471-0541, 475-8297, 475-9060, 478-4257, 479-9398, 480-2181, 481-0811, 482-0212, 484-2939, 485-8027, 486-2644, 486-4250, 488-6687, 489-9006, 491-2606, 491-4973, 491-4980, 491-4993, 491-7124, 492-3021, 492-3072, 492-3169, 493-1019, 493-1038, 494-2073, 494-6807, 495-8349, 499-7181, 501-2466, 502-9462, 504-5365, 504-8134, 504-9579, 506-5035, 506-9918, 507-8016, 508-0270, 510-1088, 512-9858, 513-0851, 513-8513, 514-9367, 515-9203, 519-4128, 520-3152, 520-4644, 524-8271, 525-8759, 526-0511, 526-7210, 526-8888, 527-7106, 527-9686, 528-3358, 528-9866, 528-9920, 530-1323, 530-2601, 531-2492, 533-2797, 533-3588, 535-8060, 536-6675, 539-6915, 539-8582, 543-4255, 552-3506, 552-8869, 553-1809, 555-4669, 562-8873, 563-6728, 563-6729, 563-6730, 565-1247, 569-7846, 575-2879, 575-2880, 583-8352, 591-1266, 591-9440, 593-7287, 593-7288, 594-2125, 596-4834, 596-7090, 596-8896, 596-8905, 597-9248, 598-9881, 602-8721, 603-5300, 608-9261, 609-9819, 612-1735, 613-9482, 614-5795, 614-9555, 622-6239, 623-1309, 624-0698, 627-8019, 627-8054, 627-8129, 628-4345, 633-4335, 633-7776, 645-2039, 657-2370 ENGINE AR-PRIMARY

SMCS-1202 **i06986626**

NOTE	REF NO	GRAPHIC REF	PART NUMBER	QTY	PART NAME 1 2 3 4 5 6 (PRODUCT LEVEL)	SEE PAGE
	1	1	**067-6135**	1	KEY-WOODRUFF	
	2	1	**276-7391**	1	GEAR (34-TEETH)	
M	3	1	**276-7394**	3	SCREW (M6X1XX12-MM)	
	4	1	**339-8780**	1	DOWEL	
J	5	1	*363-0559*	2	WASHER-THRUST	
R	6	1	**376-4074**	1	CRANKSHAFT	
	7	1	**376-4078**	1	DISC-TIMING	
CP	8	1	*470-8101*	7	BEARING-CRANKSHAFT (STANDARD-UPPER)	
CP	9	1	*470-8171*	7	BEARING-CRANKSHAFT (STANDARD-LOWER)	
					AVAILABLE REPAIR KIT(S):	
P			**448-4217**	1	KIT-BEARING (STANDARD)	
					(INCLUDES BEARINGS)	
AB			**448-4218**		KIT-BEARING (0.254-MM US)	
					(INCLUDES BEARINGS)	
AB			**448-4220**		KIT-BEARING (0.508-MM US)	
					(INCLUDES BEARINGS)	
AB			**448-4222**		KIT-BEARING (0.762-MM US)	
					(INCLUDES BEARINGS)	
J			**364-5145**	1	KIT-WASHER (STANDARD)	
					(INCLUDES WASHERS)	
AB			**448-4227**		KIT-WASHER (0.20-MM US)	
					(INCLUDES WASHERS)	

A - NOT PART OF THIS GROUP
B - USE AS REQUIRED
C - CHANGE FROM PREVIOUS TYPE
J - KIT MARKED J SERVICES PART(S) MARKED J
M - METRIC PART
P - KIT MARKED P SERVICES PART(S) MARKED P
R - REMANUFACTURED PART MAY BE AVAILABLE

374-6300 **CRANKSHAFT GP (**contd.**)** **i06986626**

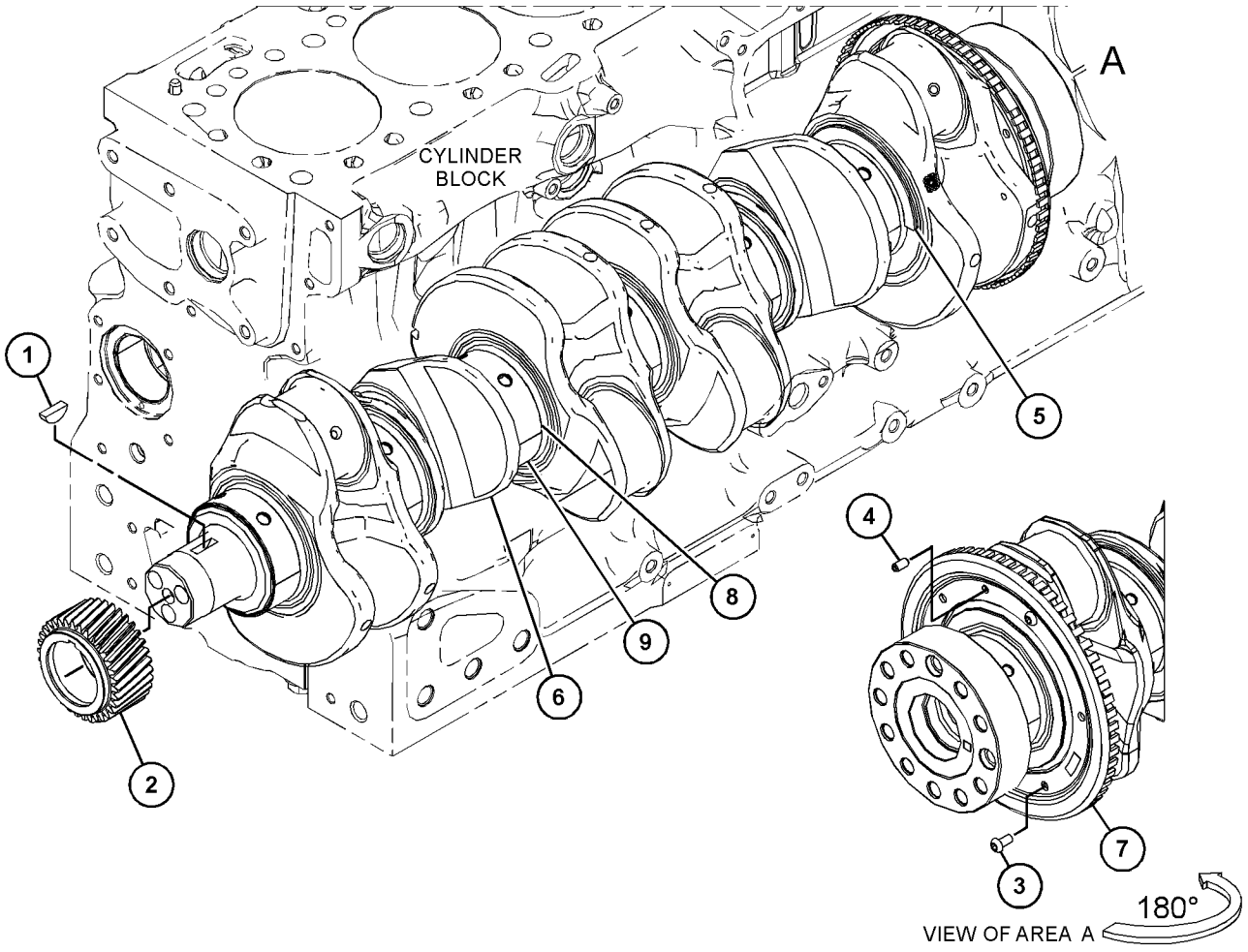

GRAPHIC #1 <END> g06188935

383-3581 CYLINDER BLOCK AS

PART OF 390-0854 CYLINDER BLOCK GP

SMCS-1201 **i07383695**

NOTE	REF NO	GRAPHIC REF	PART NUMBER	QTY	PART NAME 1 2 3 4 5 6 (PRODUCT LEVEL)	SEE PAGE
	1	1	**232-7597**	2	PLUG	
	2	1	**276-5602**	2	PLUG-CORE	
	3	1	**232-7596**	1	PLUG	
	4	1	**067-6043**	7	PLUG-SIDE	
	5	1	**067-6823**	1	PLUG	
	6	1	**185-0884**	2	DOWEL	
	7	1	**225-8858**	2	PLUG	
	8	1	**232-7599**	2	PLUG (7/8-14-THD)	
	9	1	**276-5600**	14	BOLT-SPECIAL	
	10	1	**331-6835**	2	PLUG-SEAL	
F			**370-6545**	1	BUSHING-CAMSHAFT	

F - NOT SHOWN

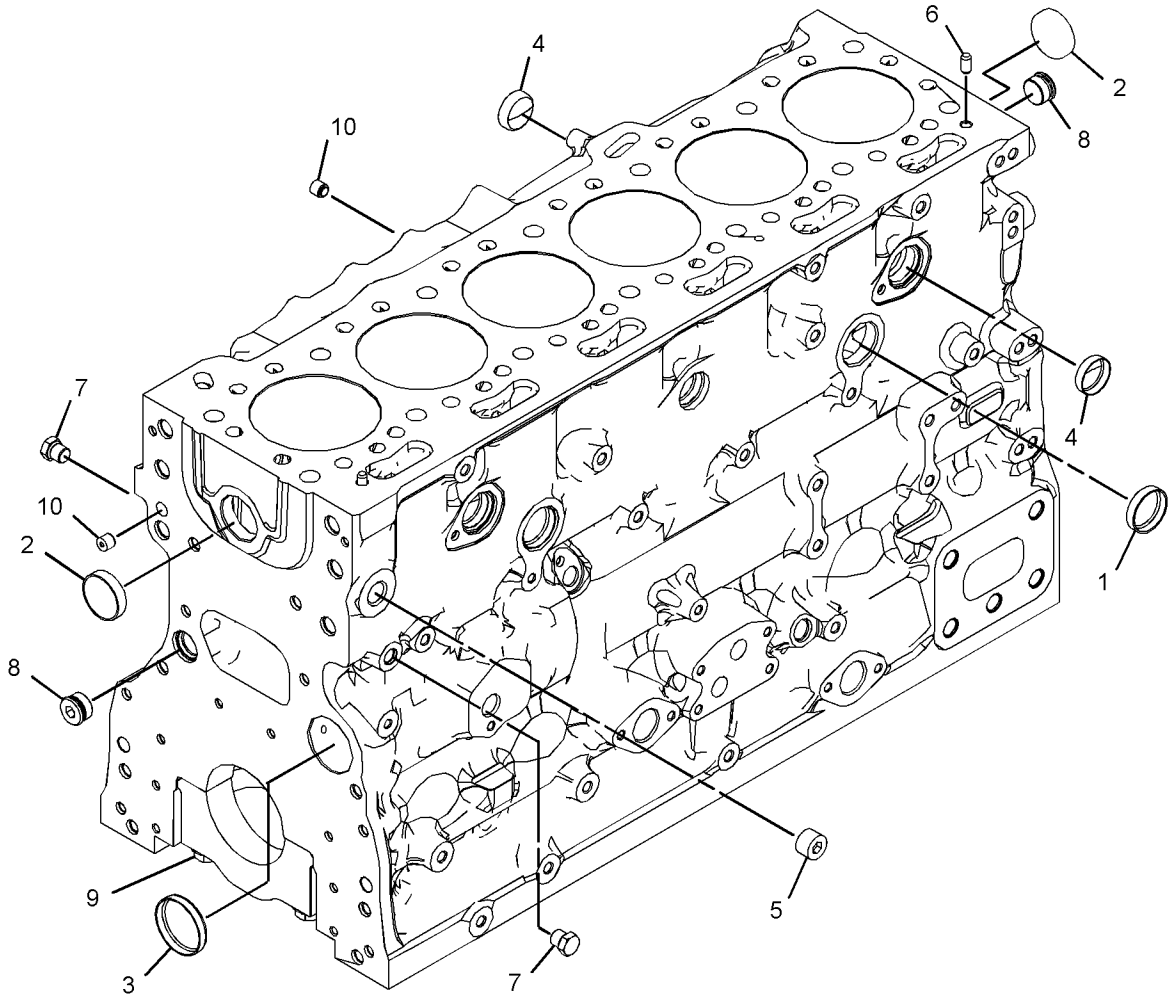

GRAPHIC #1 <END> g03351937

390-0854 CYLINDER BLOCK GP

PART OF 451-1222 CYLINDER BLOCK GP-SHORT, 596-2071 ENGINE AR-COMPLETE, 451-8343, 461-4638, 461-4649, 461-4656, 461-4658, 466-1160, 466-1161, 466-1162, 466-1163, 468-0461, 468-8218, 470-8667, 470-8814, 471-0541, 474-7299, 475-8297, 475-9060, 478-4257, 479-9398, 480-2181, 481-0811, 482-0212, 484-2939, 485-8027, 486-2644, 486-4250, 488-6687, 489-9006, 491-2606, 491-4973, 491-4980, 491-4993, 491-7124, 492-3021, 492-3072, 492-3169, 493-1019, 493-1038, 494-2073, 494-6807, 495-8349, 499-7181, 501-2466, 502-9462, 504-3629, 504-5365, 504-8134, 504-9579, 506-5035, 506-9918, 507-8016, 508-0270, 510-1088, 512-9858, 513-0851, 513-8513, 514-9367, 515-9203, 519-4128, 520-3152, 520-4644, 524-8271, 525-8759, 526-0511, 526-7210, 526-8888, 527-7106, 527-9686, 528-3358, 528-9866, 528-9920, 530-1323, 530-2601, 531-2492, 533-2797, 533-3588, 535-8060, 536-6675, 539-6915, 539-8582, 543-4255, 552-3506, 552-8869, 553-1809, 553-3730, 555-4669, 562-8873, 563-6728, 563-6729, 563-6730, 565-1247, 569-7846, 575-2879, 575-2880, 583-8352, 591-1266, 591-9440, 593-7287, 593-7288, 594-2125, 596-4834, 596-7090, 596-8896, 596-8905, 597-9248, 598-9881, 602-8721, 603-5300, 608-9261, 609-9819, 612-1735, 613-9482, 614-5795, 614-9555, 622-6239, 623-1309, 624-0698, 627-8019, 627-8054, 627-8129, 628-4345, 633-4335, 633-7776, 645-2039, 657-2370 ENGINE AR-PRIMARY

SMCS-1201 **i06582931**

NOTE	REF NO	GRAPHIC REF	PART NUMBER	QTY	PART NAME 1 2 3 4 5 6 (PRODUCT LEVEL)	SEE PAGE
	1	1	**276-5603**	1	SEAL-O-RING	
Y	2	1	*383-3581*	1	CYLINDER BLOCK AS	449
M	3	1	**209-9219**	10	BOLT (M8X1.25X16-MM)	
	4	1	**232-7449**	1	HOUSING AS	
	5	1	**232-1322**	1	PLUG	

M - METRIC PART
Y - SEPARATE ILLUSTRATION

390-0854 **CYLINDER BLOCK GP (**contd.**)** **i06582931**

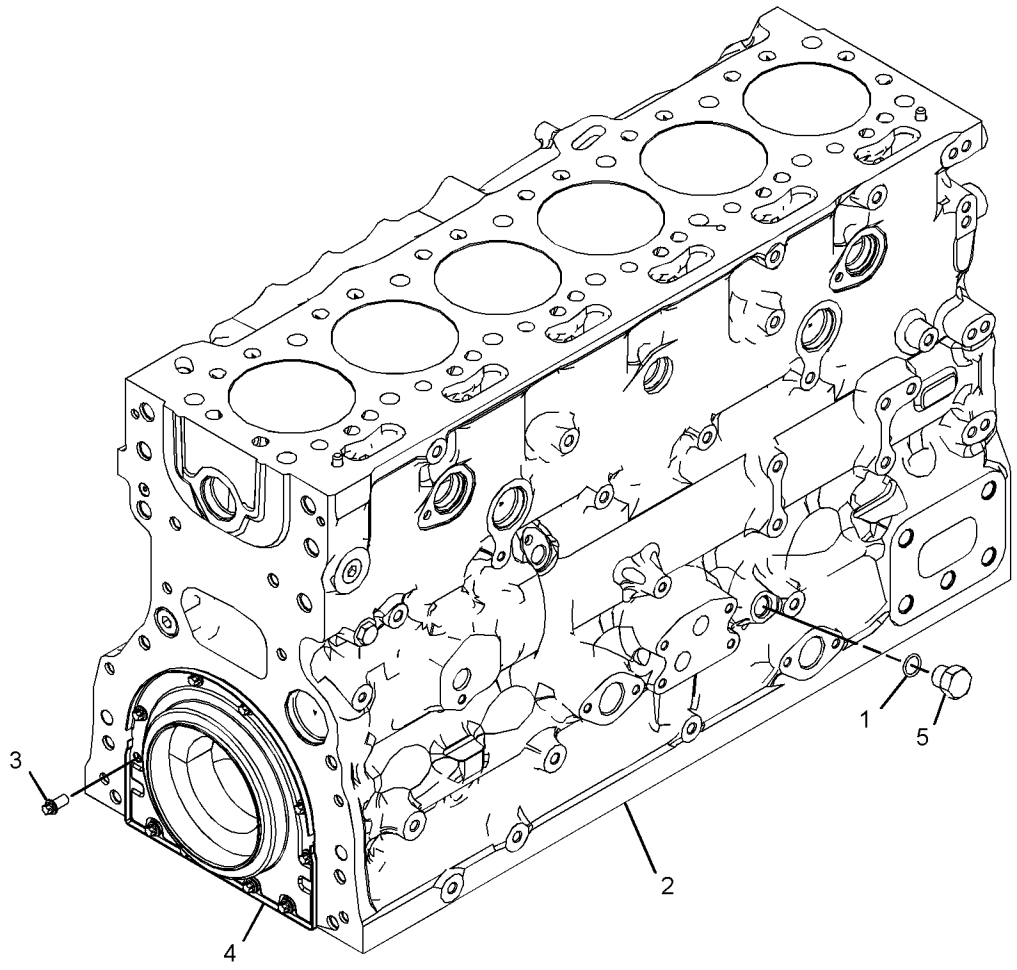

GRAPHIC #1 <END> g03384924

451-1222 CYLINDER BLOCK GP-SHORT

FIELD REPLACEMENT FOR 440-8198–PAGE: 39
: FOR 450-7535–PAGE: 55
: FOR 461-4645–PAGE: 77
: FOR 451-5272–PAGE: 57
: FOR 455-9383–PAGE: 65
: FOR 445-8905–PAGE: 45
: FOR 461-4661–PAGE: 101
: FOR 461-4657–PAGE: 95
: FOR 449-0783–PAGE: 51
: FOR 445-2586–PAGE: 41
: FOR 453-7804–PAGE: 61
: FOR 446-1005–PAGE: 47
: FOR 461-5454–PAGE: 107
: FOR 461-4653–PAGE: 89
: FOR 449-5818–PAGE: 53
: FOR 449-5818–PAGE: 53
: FOR 501-2466–PAGE: 243
: FOR 495-8349–PAGE: 239
: FOR 461-5422–PAGE: 105
: FOR 463-0313–PAGE: 117
: FOR 446-7567–PAGE: 49
: FOR 513-8513–PAGE: 268
: FOR 506-9918–PAGE: 256
: FOR 491-7124–PAGE: 226
: FOR 504-3629–PAGE: 247
: FOR 504-5365–PAGE: 250
: FOR 508-0270–PAGE: 260
: FOR 504-4575–PAGE: 249
: FOR 502-9462–PAGE: 245
: FOR 504-8134–PAGE: 251
: FOR 482-0212–PAGE: 199
: FOR 507-8016–PAGE: 258
: FOR 504-9579–PAGE: 252
: FOR 519-4128–PAGE: 274
: FOR 520-4644–PAGE: 278
: FOR 461-4638–PAGE: 69
: FOR 461-4659–PAGE: 99
: FOR 466-1160–PAGE: 123
: FOR 466-1161–PAGE: 125
: FOR 466-1162–PAGE: 127
: FOR 466-1163–PAGE: 129
: FOR 468-0461–PAGE: 131
: FOR 468-8218–PAGE: 135
: FOR 470-8667–PAGE: 137
: FOR 471-0541–PAGE: 141
: FOR 451-8343–PAGE: 59
: FOR 474-7299–PAGE: 151
: FOR 526-0511–PAGE: 284
: FOR 485-8027–PAGE: 207
: FOR 657-2370–PAGE: 406
: FOR 461-4658–PAGE: 97
: FOR 461-4652–PAGE: 87
: FOR 461-4655–PAGE: 91
: FOR 461-4662–PAGE: 103
: FOR 624-0698–PAGE: 390
: FOR 470-8814–PAGE: 139
: FOR 645-2039–PAGE: 404

: FOR 633-4335–PAGE: 400
: FOR 461-4643–PAGE: 73
: FOR 627-8054–PAGE: 394
: FOR 465-2766–PAGE: 121
: FOR 533-2797–PAGE: 306
: FOR 552-8869–PAGE: 322
: FOR 624-0698–PAGE: 390
: FOR 613-9482–PAGE: 380
: FOR 603-5300–PAGE: 372
: FOR 622-6239–PAGE: 386
: FOR 609-9819–PAGE: 376
: FOR 628-4345–PAGE: 398
: FOR 614-5795–PAGE: 382
: FOR 627-8019–PAGE: 392
: FOR 608-9261–PAGE: 374
: FOR 477-2658–PAGE: 175
: FOR 477-1870–PAGE: 167
: FOR 477-1869–PAGE: 165
: FOR 483-9334–PAGE: 203
: FOR 614-9555–PAGE: 384
: FOR 461-4649–PAGE: 81
: FOR 527-9686–PAGE: 292
: FOR 461-5460–PAGE: 109
: FOR 475-3388–PAGE: 153
: FOR 461-4648–PAGE: 79
: FOR 461-4640–PAGE: 71
: FOR 536-6675–PAGE: 312
: FOR 479-9389–PAGE: 187
: FOR 569-7846–PAGE: 340
: FOR 477-1865–PAGE: 163
: FOR 456-7962–PAGE: 67
: FOR 527-7106–PAGE: 290
: FOR 593-7288–PAGE: 354
: FOR 575-2880–PAGE: 344
: FOR 594-2125–PAGE: 356
: FOR 583-8352–PAGE: 346
: FOR 593-7287–PAGE: 352
: FOR 591-1266–PAGE: 348
: FOR 596-4834–PAGE: 358
: FOR 597-9248–PAGE: 366
: FOR 596-8896–PAGE: 362
: FOR 596-8896–PAGE: 362
: FOR 591-9440–PAGE: 350
: FOR 598-9881–PAGE: 368
: FOR 476-9752–PAGE: 161
: FOR 596-7090–PAGE: 360
: FOR 596-8905–PAGE: 364
: FOR 596-2071–PAGE: 37
: FOR 565-1247–PAGE: 338
: FOR 563-6730–PAGE: 336
: FOR 525-8759–PAGE: 282
: FOR 528-3358–PAGE: 294
: FOR 563-6729–PAGE: 334
: FOR 563-6728–PAGE: 332
: FOR 445-2599–PAGE: 43
: FOR 478-4257–PAGE: 179
: FOR 481-0811–PAGE: 195
: FOR 486-2644–PAGE: 209
: FOR 489-9006–PAGE: 217

: FOR 492-3072—PAGE: 230
: FOR 492-3169—PAGE: 232
: FOR 493-1038—PAGE: 234
: FOR 506-5035—PAGE: 254

PART OF 468-3190, 519-4236 CONFIGURATION AR-ENGINE, 451-8385 CYLINDER BLOCK GP-SHORT

SMCS-1200 **i10232823**

NOTE	REF NO	GRAPHIC REF	PART NUMBER	QTY	PART NAME 1 2 3 4 5 6 (PRODUCT LEVEL)	SEE PAGE
Y	1	1	*369-7304*	1	PISTON & ROD GP	566
Y	2	1	*371-2478*	1	JET GP-PISTON COOLING	543
Y	3	1	*374-6300*	1	CRANKSHAFT GP	447
	4	1	*451-8317*	1	PAN GP-OIL	
M	4A	1	**8T-0269**	2	BOLT-SOCKET HEAD (M6X1X20-MM)	
	4B	1	**230-8094**	1	BRIDGE	
Y	5	1	*390-0854*	1	CYLINDER BLOCK GP	450

M - METRIC PART
Y - SEPARATE ILLUSTRATION

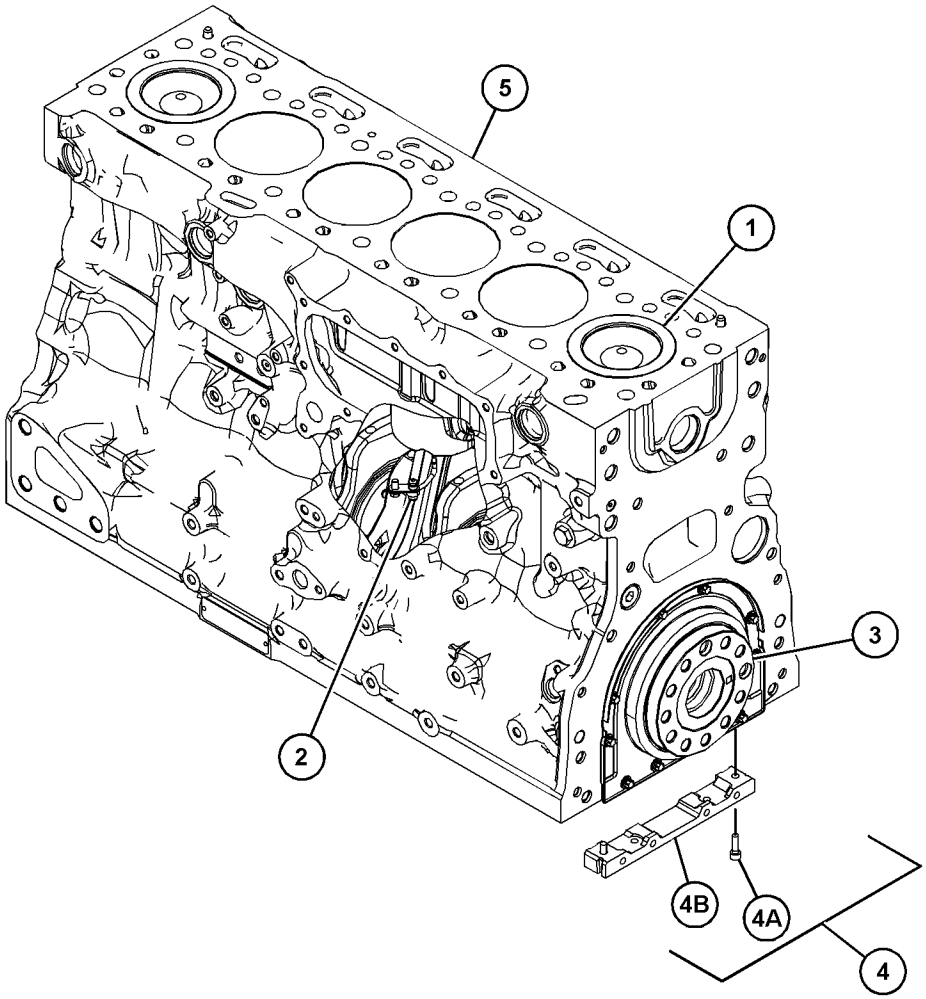

GRAPHIC #1 <END> g03733390

451-8385 CYLINDER BLOCK GP-SHORT

PART OF 454-5366, 455-4836, 461-5828, 462-9442, 464-9337, 467-2150, 467-8361, 467-9663, 467-9808, 468-0460, 468-0462, 468-2231, 468-5324, 468-5349, 474-9782, 476-7489, 477-1981, 477-1982, 477-1983, 477-3353, 477-6348, 477-6774, 478-7619, 481-1530, 481-4143, 481-4234, 482-8581, 482-9210, 483-9391, 492-7341, 493-0138, 493-2720, 504-6342, 504-8142, 506-5125, 507-6552, 507-8031, 508-0306, 513-0877, 513-0924, 513-8514, 515-1814, 524-9915, 525-9134, 527-9187, 528-3387, 529-8781, 532-0514, 532-5863, 535-8566, 552-9638, 553-6396, 555-5057, 567-8621, 585-3037, 585-7897, 585-7898, 591-4607, 592-3194, 594-0211, 594-0218, 594-3037, 596-2621, 596-6452, 596-7092, 596-8930, 598-0764, 599-2201, 603-1127, 603-6833, 609-4201, 610-0876, 614-1611, 614-6389, 614-9585, 623-1349, 623-3489, 624-0794, 627-8148, 628-3916, 629-0211, 629-0552, 633-4834 CONFIGURATION AR-ENGINE, 467-6747, 467-8280, 467-8303, 467-8314, 472-6931, 473-3757, 473-4993, 477-1986, 477-6201, 479-0926, 492-2212, 493-2708, 494-6712, 494-7261, 502-5350, 503-0943, 504-5163 ENGINE AR, 455-0703, 455-9421, 461-9682, 462-8110, 467-7437, 468-1595, 468-2471, 468-3189, 468-4398, 468-7018, 468-7019, 476-4938, 477-1984, 477-1985, 477-3355, 477-6401, 479-2167, 479-6190, 479-6192, 479-7004, 479-7773, 479-9390, 481-4235, 483-5308, 486-1539, 486-3231, 486-7179, 488-0428, 491-9765, 492-1388, 492-2161, 492-5692, 492-6555, 495-3004, 495-4475, 497-9665, 500-4376, 512-1002, 521-0449, 521-2171, 526-1772, 527-0497, 528-3699, 529-8780, 535-8565, 536-9153, 543-9476, 553-5214, 564-2349, 567-8167, 567-8852, 569-8968 ENGINE AR-COMPLETE, 526-8888, 533-3588, 553-1809 ENGINE AR-PRIMARY

SMCS-1200 **i05846147**

NOTE	REF NO	GRAPHIC REF	PART NUMBER	QTY	PART NAME 1 2 3 4 5 6 (PRODUCT LEVEL)	SEE PAGE
Y	1	1	**451-1222**	1	CYLINDER BLOCK GP-SHORT	452

Y - SEPARATE ILLUSTRATION

451-8385 **CYLINDER BLOCK GP-SHORT (**contd.**)** **i05846147**

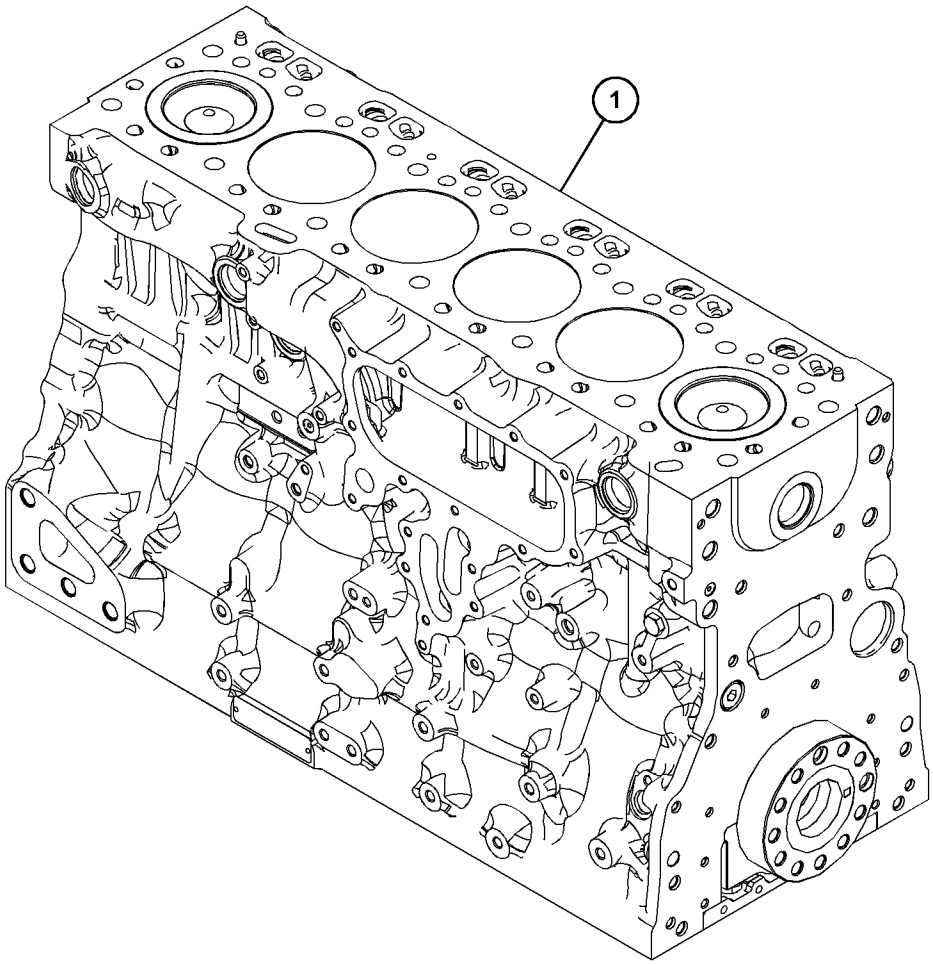

GRAPHIC #1 <END> g03697536

384-5313 CYLINDER HEAD AS

PART OF 385-2572, 452-6586 CYLINDER HEAD GP

SMCS-1100, 1101 **i05580673**

NOTE	REF NO	GRAPHIC REF	PART NUMBER	QTY	PART NAME 1 2 3 4 5 6 (PRODUCT LEVEL)	SEE PAGE
	1	1	**276-8116**	6	PLUG-CORE	
	2	1	**377-0400**	12	INSERT-VALVE SEAT (EXHAUST)	
	3	1	**377-0399**	12	INSERT-VALVE SEAT (INTAKE)	
	4	1	**276-8117**	13	PLUG-CORE	

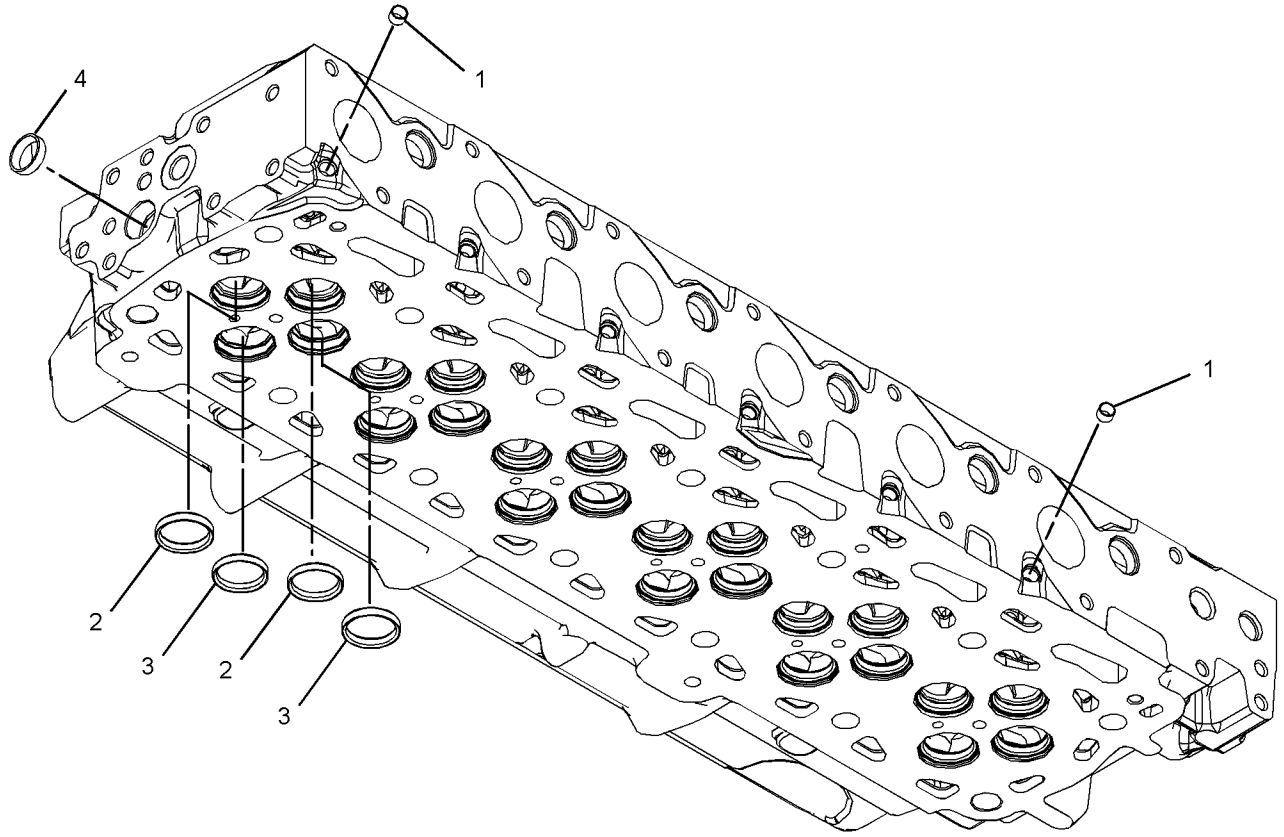

GRAPHIC #1 <END> g03379426

385-2572 CYLINDER HEAD GP

PART OF 596-2071 ENGINE AR-COMPLETE, 451-8343, 461-4638, 461-4649, 461-4656, 461-4658, 466-1160, 466-1161, 466-1162, 466-1163, 468-0461, 468-8218, 470-8667, 470-8814, 471-0541, 474-7299, 475-8297, 475-9060, 478-4257, 479-9398, 480-2181, 481-0811, 482-0212, 484-2939, 485-8027, 486-2644, 486-4250, 488-6687, 489-9006, 491-2606, 491-4973, 491-4980, 491-4993, 491-7124, 492-3021, 492-3072, 492-3169, 493-1019, 493-1038, 494-2073, 494-6807, 495-8349, 499-7181, 501-2466, 502-9462, 504-3629, 504-5365, 504-8134, 504-9579, 506-5035, 506-9918, 507-8016, 508-0270, 510-1088, 512-9858, 513-0851, 513-8513, 514-9367, 515-9203, 519-4128, 520-3152, 520-4644, 524-8271, 525-8759, 526-0511, 526-7210, 526-8888, 527-7106, 527-9686, 528-3358, 528-9866, 528-9920, 530-1323, 530-2601, 531-2492, 533-2797, 533-3588, 535-8060, 536-6675, 539-6915, 539-8582, 543-4255, 552-3506, 552-8869, 553-1809, 553-3730, 555-4669, 562-8873, 563-6728, 563-6729, 563-6730, 565-1247, 569-7846, 575-2879, 575-2880, 583-8352, 591-1266, 591-9440, 593-7287, 593-7288, 594-2125, 596-4834, 596-7090, 596-8896, 596-8905, 597-9248, 598-9881, 602-8721, 603-5300, 608-9261, 609-9819, 612-1735, 613-9482, 614-5795, 614-9555, 622-6239, 623-1309, 624-0698, 627-8019, 627-8054, 627-8129, 628-4345, 633-4335, 633-7776, 645-2039, 657-2370 ENGINE AR-PRIMARY

SMCS-1100 **i05723837**

NOTE	REF NO	GRAPHIC REF	PART NUMBER	QTY	PART NAME 1 2 3 4 5 6 (PRODUCT LEVEL)	SEE PAGE
	1	1	**199-9751**	1	SEAL-O-RING	
Y	2	1	**384-5313**	1	CYLINDER HEAD AS	457
	3	1	**388-4707**	1	GASKET-CYLINDER HEAD	
	4	1	**232-1322**	1	PLUG	
M	5	1	**276-8134**	14	BOLT-SPECIAL (M16X1.5X121-MM)	
	6	1	**277-4302**	2	DOWEL	
	7	1	**295-6661**	1	PLUG	

M - METRIC PART
Y - SEPARATE ILLUSTRATION

385-2572 **CYLINDER HEAD GP (**contd.**)** **i05723837**

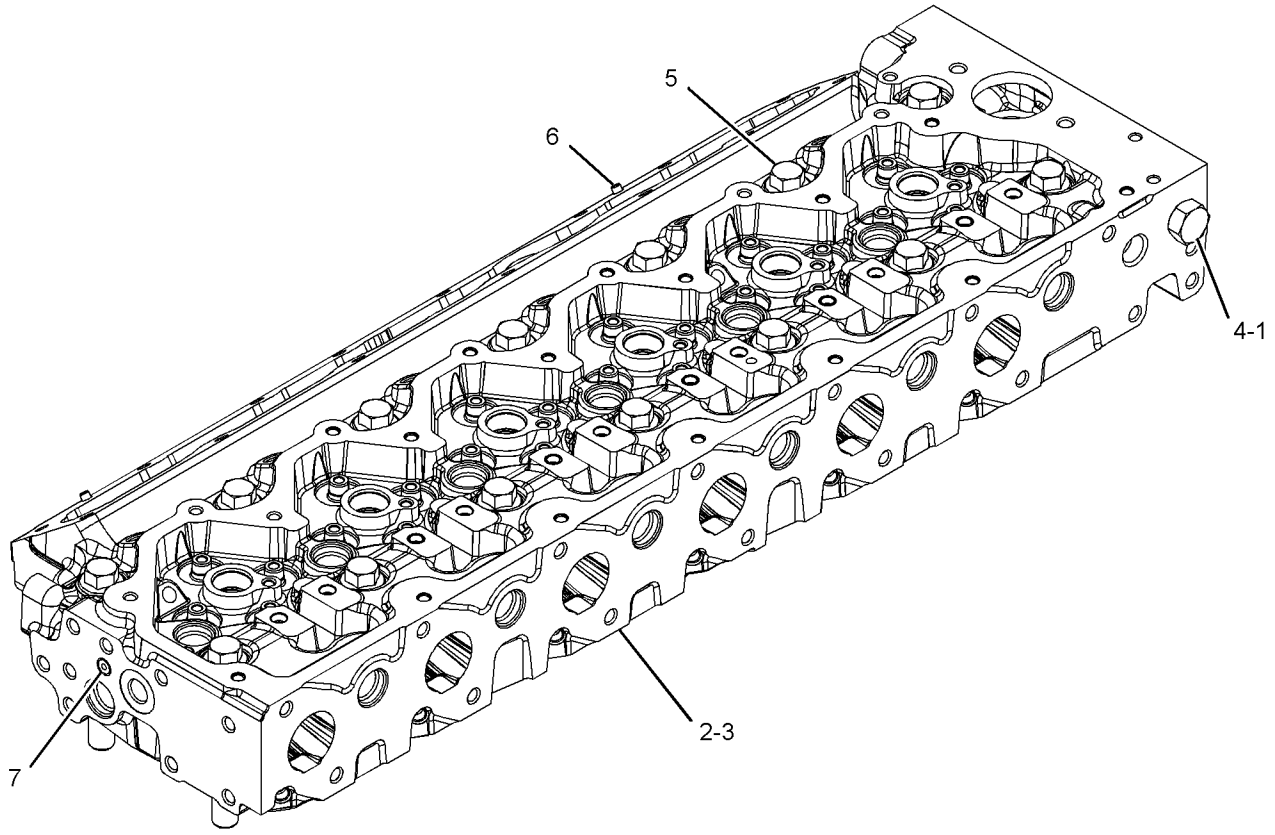

GRAPHIC #1 <END> g03379427

452-6582 CYLINDER HEAD GP

PART OF 454-5366, 455-4836, 461-5828, 462-9442, 464-9337, 467-2150, 467-8361, 467-9663, 467-9808, 468-0460, 468-0462, 468-2231, 468-3190, 468-5324, 468-5349, 474-9782, 476-7489, 477-1981, 477-1982, 477-1983, 477-3353, 477-6348, 477-6774, 478-7619, 481-1530, 481-4143, 481-4234, 482-8581, 482-9210, 483-9391, 492-7341, 493-0138, 493-2720, 504-6342, 504-8142, 506-5125, 507-6552, 507-8031, 508-0306, 513-0877, 513-0924, 513-8514, 515-1814, 524-9915, 525-9134, 527-9187, 528-3387, 529-8781, 532-0514, 532-5863, 535-8566, 552-9638, 553-6396, 555-5057, 567-8621, 585-3037, 585-7897, 585-7898, 591-4607, 592-3194, 594-0211, 594-0218, 594-3037, 596-2621, 596-6452, 596-7092, 596-8930, 598-0764, 599-2201, 603-1127, 603-6833, 609-4201, 610-0876, 614-1611, 614-6389, 614-9585, 623-1349, 623-3489, 624-0794, 627-8148, 628-3916, 629-0211, 629-0552, 633-4834 CONFIGURATION AR-ENGINE, 467-6747, 467-8280, 467-8303, 467-8314, 472-6931, 473-3757, 473-4993, 477-1986, 477-6201, 479-0926, 492-2212, 493-2708, 494-6712, 494-7261, 502-5350, 503-0943, 504-5163 ENGINE AR, 455-0703, 455-9421, 461-9682, 462-8110, 467-7437, 468-1595, 468-2471, 468-3189, 468-4398, 468-7018, 468-7019, 476-4938, 477-1984, 477-1985, 477-3355, 477-6401, 479-2167, 479-6190, 479-6192, 479-7004, 479-7773, 479-9390, 481-4235, 483-5308, 486-1539, 486-3231, 486-7179, 488-0428, 491-9765, 492-1388, 492-2161, 492-5692, 492-6555, 495-3004, 495-4475, 497-9665, 500-4376, 512-1002, 521-0449, 521-2171, 526-1772, 527-0497, 528-3699, 529-8780, 535-8565, 536-9153, 543-9476, 553-5214, 564-2349, 567-8167, 567-8852, 569-8968 ENGINE AR-COMPLETE, 526-8888, 533-3588, 553-1809 ENGINE AR-PRIMARY

SMCS-1100 **i05846149**

NOTE	REF NO	GRAPHIC REF	PART NUMBER	QTY	PART NAME 1 2 3 4 5 6 (PRODUCT LEVEL)	SEE PAGE
Y	1	1	**452-6584**	1	CYLINDER HEAD GP (SHORT)	462

Y - SEPARATE ILLUSTRATION

452-6582 **CYLINDER HEAD GP (**contd.**)** **i05846149**

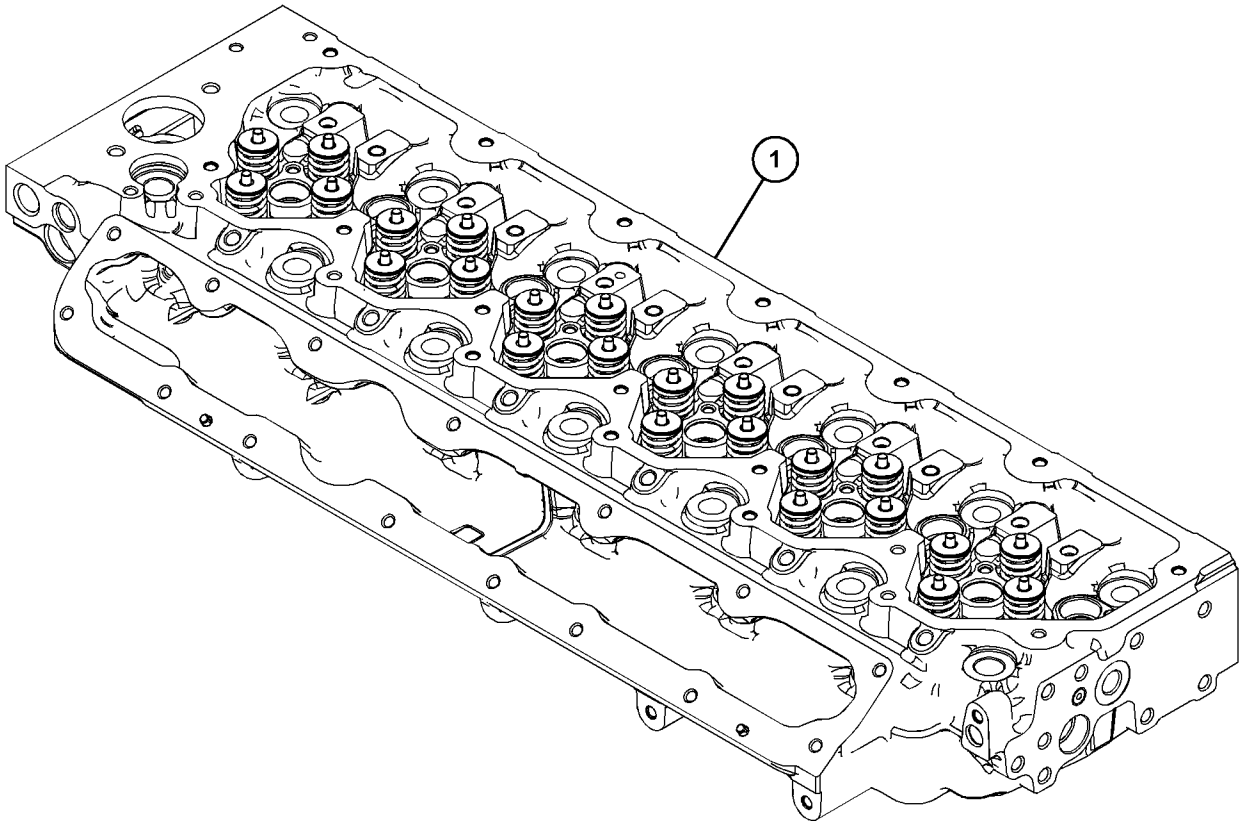

GRAPHIC #1 <END> g03697902

452-6584 CYLINDER HEAD GP

FIELD REPLACEMENT FOR 440-8198—PAGE: 39
: FOR 450-7535—PAGE: 55
: FOR 461-4645—PAGE: 77
: FOR 451-5272—PAGE: 57
: FOR 455-9383—PAGE: 65
: FOR 445-8905—PAGE: 45
: FOR 461-4661—PAGE: 101
: FOR 461-4657—PAGE: 95
: FOR 449-0783—PAGE: 51
: FOR 445-2586—PAGE: 41
: FOR 453-7804—PAGE: 61
: FOR 446-1005—PAGE: 47
: FOR 461-5454—PAGE: 107
: FOR 461-4653—PAGE: 89
: FOR 449-5818—PAGE: 53
: FOR 449-5818—PAGE: 53
: FOR 501-2466—PAGE: 243
: FOR 495-8349—PAGE: 239
: FOR 461-5422—PAGE: 105
: FOR 463-0313—PAGE: 117
: FOR 446-7567—PAGE: 49
: FOR 513-8513—PAGE: 268
: FOR 506-9918—PAGE: 256
: FOR 491-7124—PAGE: 226
: FOR 504-3629—PAGE: 247
: FOR 504-5365—PAGE: 250
: FOR 508-0270—PAGE: 260
: FOR 504-4575—PAGE: 249
: FOR 520-4644—PAGE: 278
: FOR 461-4638—PAGE: 69
: FOR 461-4659—PAGE: 99
: FOR 466-1160—PAGE: 123
: FOR 466-1161—PAGE: 125
: FOR 466-1162—PAGE: 127
: FOR 466-1163—PAGE: 129
: FOR 468-0461—PAGE: 131
: FOR 474-7299—PAGE: 151
: FOR 478-4257—PAGE: 179
: FOR 481-0811—PAGE: 195
: FOR 486-2644—PAGE: 209
: FOR 489-9006—PAGE: 217
: FOR 492-3072—PAGE: 230
: FOR 492-3169—PAGE: 232
: FOR 493-1038—PAGE: 234
: FOR 506-5035—PAGE: 254
: FOR 445-2599—PAGE: 43
: FOR 563-6728—PAGE: 332
: FOR 526-0511—PAGE: 284
: FOR 485-8027—PAGE: 207
: FOR 657-2370—PAGE: 406
: FOR 461-4658—PAGE: 97
: FOR 461-4658—PAGE: 97
: FOR 461-4652—PAGE: 87
: FOR 461-4655—PAGE: 91
: FOR 461-4662—PAGE: 103
: FOR 624-0698—PAGE: 390
: FOR 470-8814—PAGE: 139

: FOR 645-2039–PAGE: 404
: FOR 633-4335–PAGE: 400
: FOR 633-4335–PAGE: 400
: FOR 461-4643–PAGE: 73
: FOR 627-8054–PAGE: 394
: FOR 465-2766–PAGE: 121
: FOR 533-2797–PAGE: 306
: FOR 603-5300–PAGE: 372
: FOR 614-5795–PAGE: 382
: FOR 627-8019–PAGE: 392
: FOR 477-2658–PAGE: 175
: FOR 477-1870–PAGE: 167
: FOR 477-1869–PAGE: 165
: FOR 483-9334–PAGE: 203
: FOR 614-9555–PAGE: 384
: FOR 461-4649–PAGE: 81
: FOR 527-9686–PAGE: 292
: FOR 475-3388–PAGE: 153
: FOR 461-4648–PAGE: 79
: FOR 461-4640–PAGE: 71
: FOR 536-6675–PAGE: 312
: FOR 479-9389–PAGE: 187
: FOR 569-7846–PAGE: 340
: FOR 477-1865–PAGE: 163
: FOR 456-7962–PAGE: 67
: FOR 527-7106–PAGE: 290
: FOR 593-7288–PAGE: 354
: FOR 575-2880–PAGE: 344
: FOR 594-2125–PAGE: 356
: FOR 583-8352–PAGE: 346
: FOR 593-7287–PAGE: 352
: FOR 591-1266–PAGE: 348
: FOR 596-4834–PAGE: 358
: FOR 597-9248–PAGE: 366
: FOR 596-8896–PAGE: 362
: FOR 591-9440–PAGE: 350
: FOR 598-9881–PAGE: 368
: FOR 476-9752–PAGE: 161
: FOR 596-7090–PAGE: 360
: FOR 596-2071–PAGE: 37
: FOR 596-8905–PAGE: 364
: FOR 565-1247–PAGE: 338
: FOR 563-6730–PAGE: 336
: FOR 525-8759–PAGE: 282
: FOR 528-3358–PAGE: 294
: FOR 563-6729–PAGE: 334

PART OF 519-4236 CONFIGURATION AR-ENGINE, 452-6582 CYLINDER HEAD GP

SMCS-1100 **i10232826**

NOTE	REF NO	GRAPHIC REF	PART NUMBER	QTY	PART NAME 1 2 3 4 5 6 (PRODUCT LEVEL)	SEE PAGE
Y	1	1	*452-6585*	1	VALVE GP-CYLINDER HEAD	609
Y	2	1	*452-6586*	1	CYLINDER HEAD GP	465

Y - SEPARATE ILLUSTRATION

452-6584 **CYLINDER HEAD GP (**contd.**)** **i10232826**

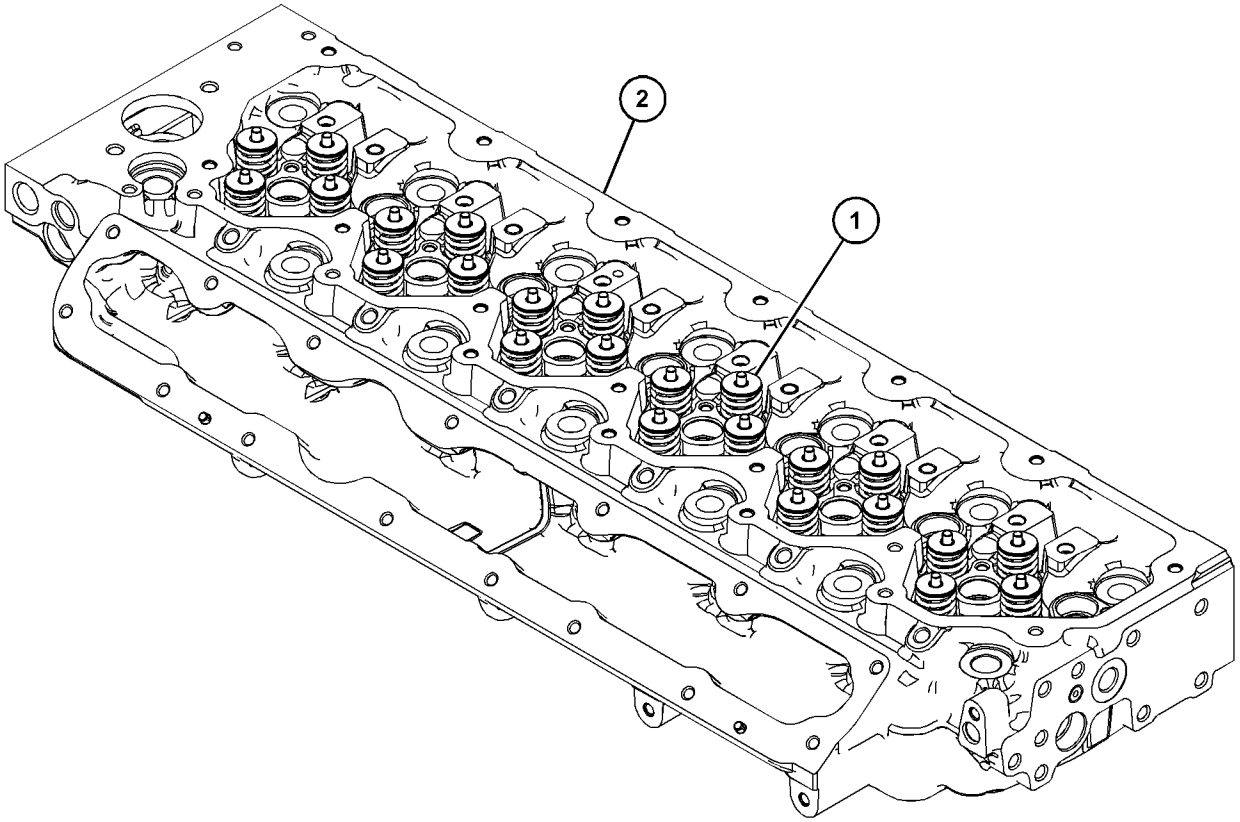

GRAPHIC #1 <END> g03674499

452-6586 CYLINDER HEAD GP

PART OF 452-6584 CYLINDER HEAD GP

SMCS-1100 **i05883715**

NOTE	REF NO	GRAPHIC REF	PART NUMBER	QTY	PART NAME 1 2 3 4 5 6 (PRODUCT LEVEL)	SEE PAGE
	1	1	**199-9751**	1	SEAL-O-RING	
	2	1	**277-4302**	2	DOWEL	
	3	1	**295-6661**	1	PLUG	
	4	1	**232-1322**	1	PLUG	
Y	5	1	*384-5313*	1	CYLINDER HEAD AS	457

Y - SEPARATE ILLUSTRATION

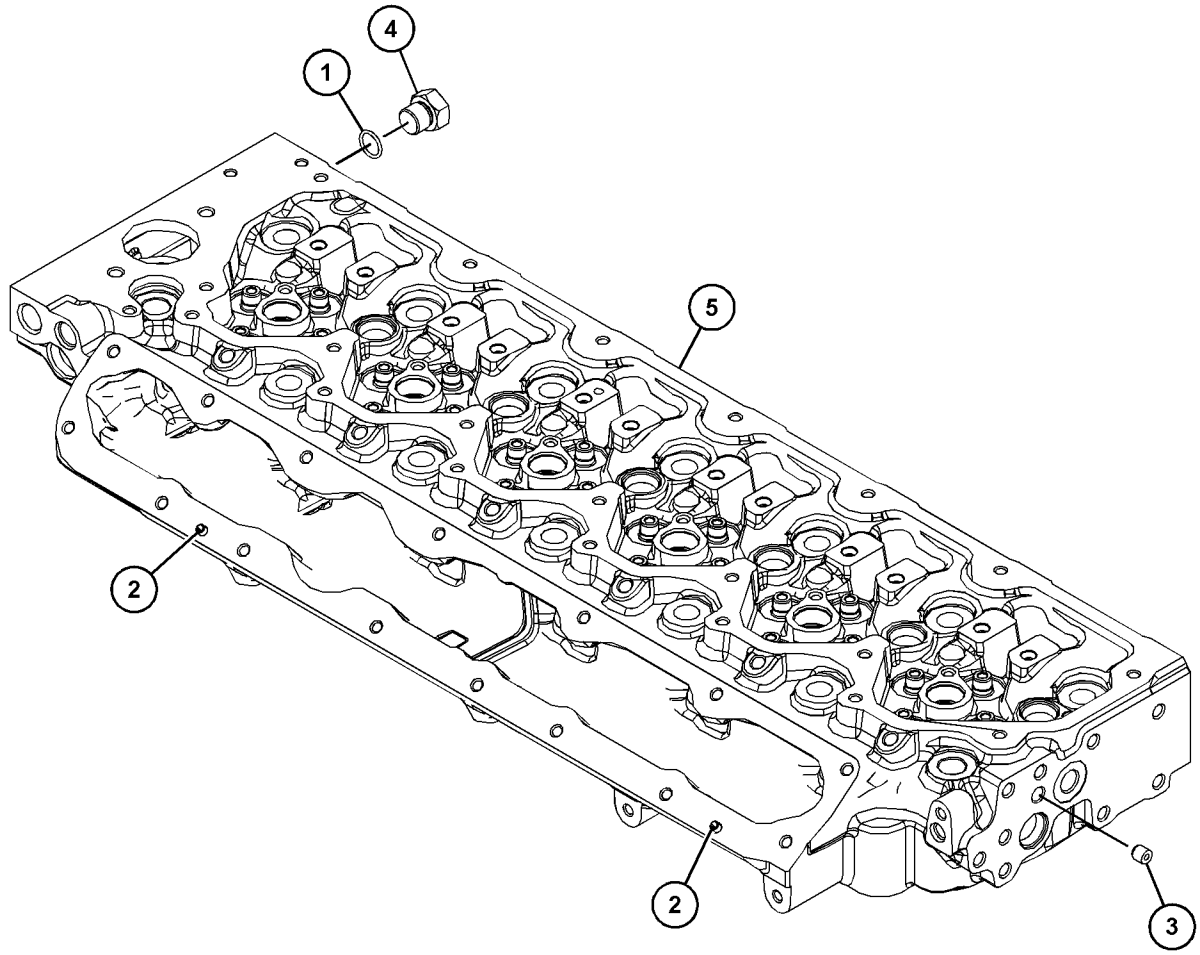

GRAPHIC #1 <END> g03714865

371-2742 DRAIN GP-ENGINE OIL

PART OF 468-8218, 479-9398, 484-2939, 485-8027, 494-6807, 501-2466, 504-9579, 513-0851, 520-3152, 525-8759, 526-8888, 531-2492, 543-4255, 552-8869, 562-8873, 563-6728, 563-6729, 563-6730, 565-1247, 591-9440, 598-9881, 609-9819, 622-6239, 628-4345, 633-4335, 633-7776, 657-2370 ENGINE AR-PRIMARY

SMCS-1302 **i05712374**

NOTE	REF NO	GRAPHIC REF	PART NUMBER	QTY	PART NAME 1 2 3 4 5 6 (PRODUCT LEVEL)	SEE PAGE
	1	1	**3K-0360**	1	SEAL-O-RING	
	2	1	**6V-7238**	1	VALVE-SHUTOFF	

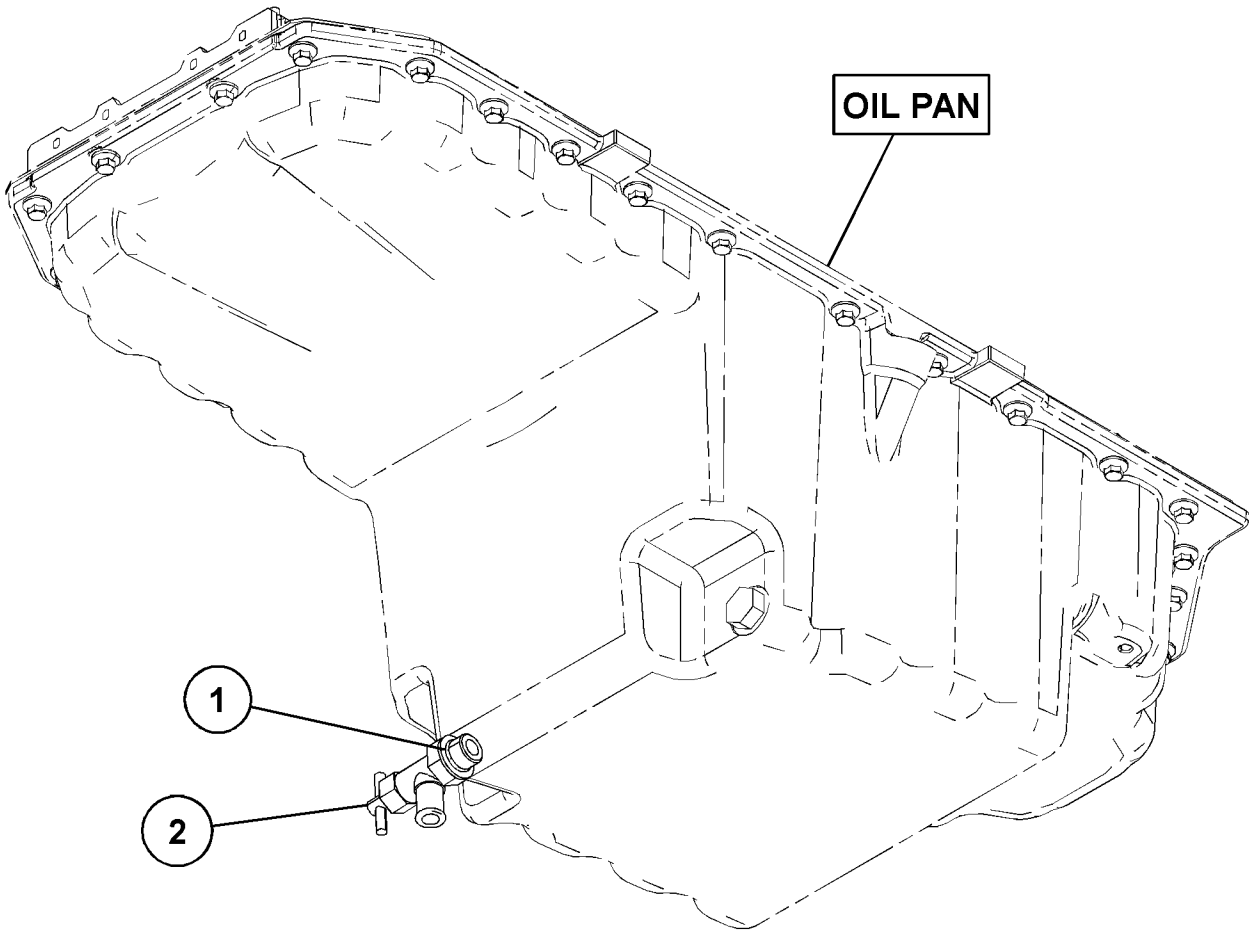

GRAPHIC #1 <END> g03171685

378-8166 DRAIN GP-ENGINE OIL

PART OF 468-0461, 470-8667, 474-7299, 478-4257, 481-0811, 488-6687, 504-3629, 515-9203, 520-4644, 524-8271, 527-7106, 528-3358, 528-9866, 553-3730, 596-4834, 596-7090, 608-9261, 613-9482, 614-5795, 627-8019, 627-8054 ENGINE AR-PRIMARY

SMCS-1302 **i05582409**

NOTE	REF NO	GRAPHIC REF	PART NUMBER	QTY	PART NAME 1 2 3 4 5 6 (PRODUCT LEVEL)	SEE PAGE
	1	1	**6V-7238**	1	VALVE-SHUTOFF	
	2	1	**3K-0360**	1	SEAL-O-RING	

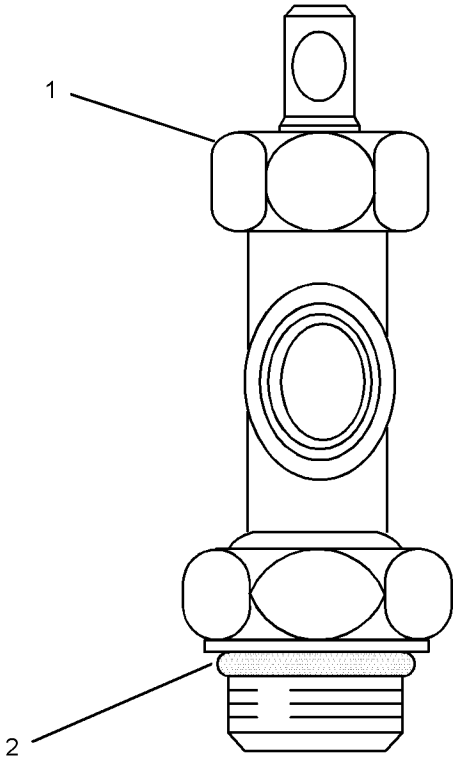

GRAPHIC #1 <END> g03457400

394-7014 DRAIN GP-ENGINE OIL

PART OF 470-8814, 575-2879, 575-2880, 645-2039 ENGINE AR-PRIMARY

SMCS-1302 **i06187522**

NOTE	REF NO	GRAPHIC REF	PART NUMBER	QTY	PART NAME 1 2 3 4 5 6 (PRODUCT LEVEL)	SEE PAGE
	1	1	**3K-0360**	1	SEAL-O-RING	
	2	1	**6V-7238**	1	VALVE-SHUTOFF	

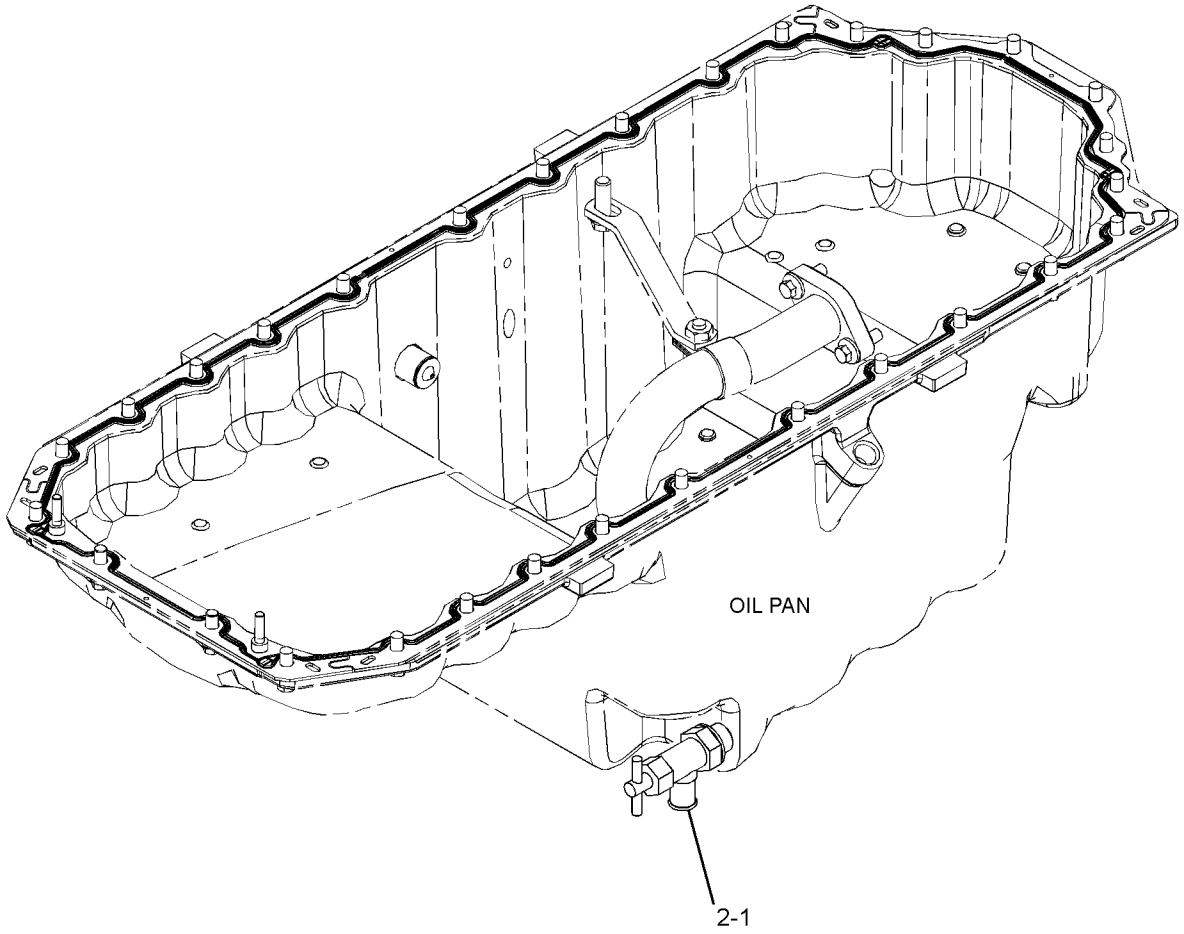

GRAPHIC #1 <END> g03317520

374-7093 DRIVE GP-FAN

PART OF 470-8814, 526-7210, 575-2879, 575-2880, 645-2039 ENGINE AR-PRIMARY

SMCS-1359 **i05990357**

NOTE	REF NO	GRAPHIC REF	PART NUMBER	QTY	PART NAME 1 2 3 4 5 6 (PRODUCT LEVEL)	SEE PAGE
	1	1	**350-8742**	1	BELT-SERPENTINE	
	2	1	**371-8298**	1	BRACKET	
	3	1	**377-9255**	1	PULLEY AS (8-GROOVE)	
M	4	1	**111-0859**	2	BOLT (M10X1.5X35-MM)	

M - METRIC PART

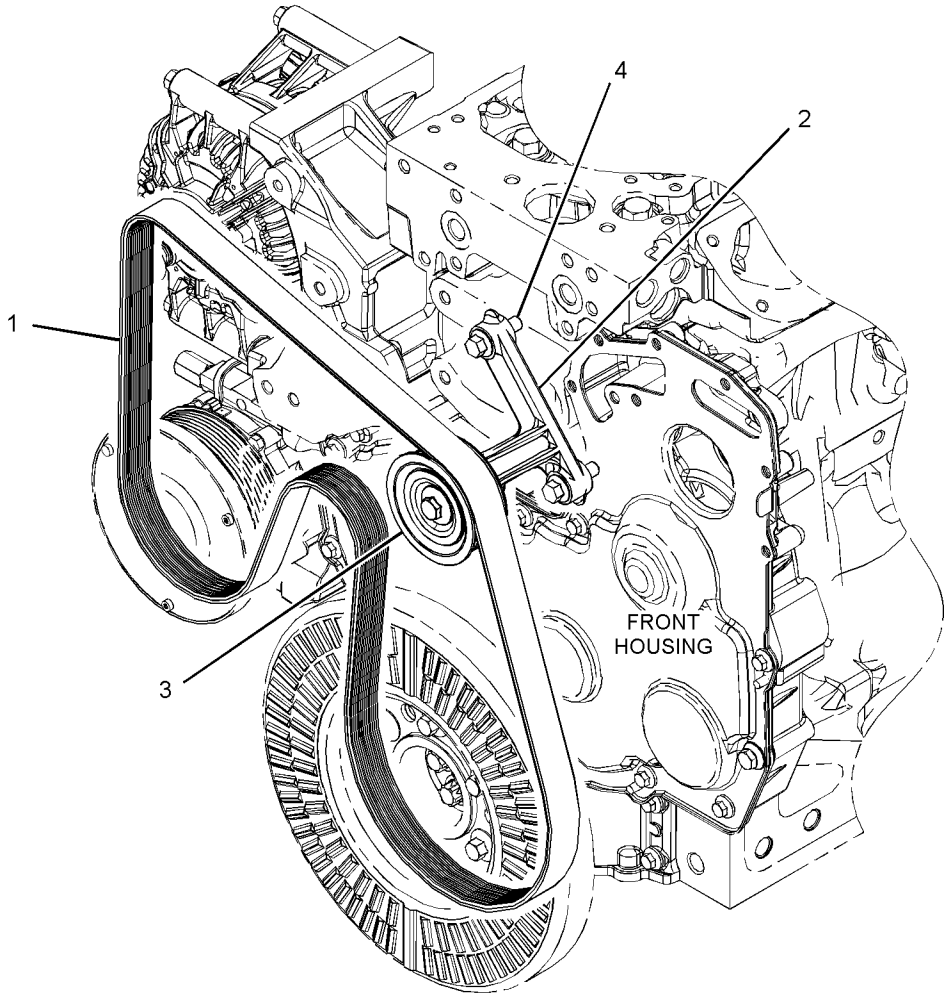

GRAPHIC #1 <END> g03457836

375-3937 DRIVE GP-FAN

PART OF 468-8218, 474-7299, 478-4257, 481-0811, 504-3629, 515-9203, 608-9261 ENGINE
AR-PRIMARY

SMCS-1359 **i07382391**

NOTE	REF NO	GRAPHIC REF	PART NUMBER	QTY	PART NAME 1 2 3 4 5 6 (PRODUCT LEVEL)	SEE PAGE
	1	1	**371-8298**	1	BRACKET	
	2	1	**377-9255**	1	PULLEY AS (8-GROOVE)	
M		1	**423-7576**	1	BOLT (M10X1.5X50-MM)	
M	3	1	**111-0859**	2	BOLT (M10X1.5X35-MM)	

M - METRIC PART

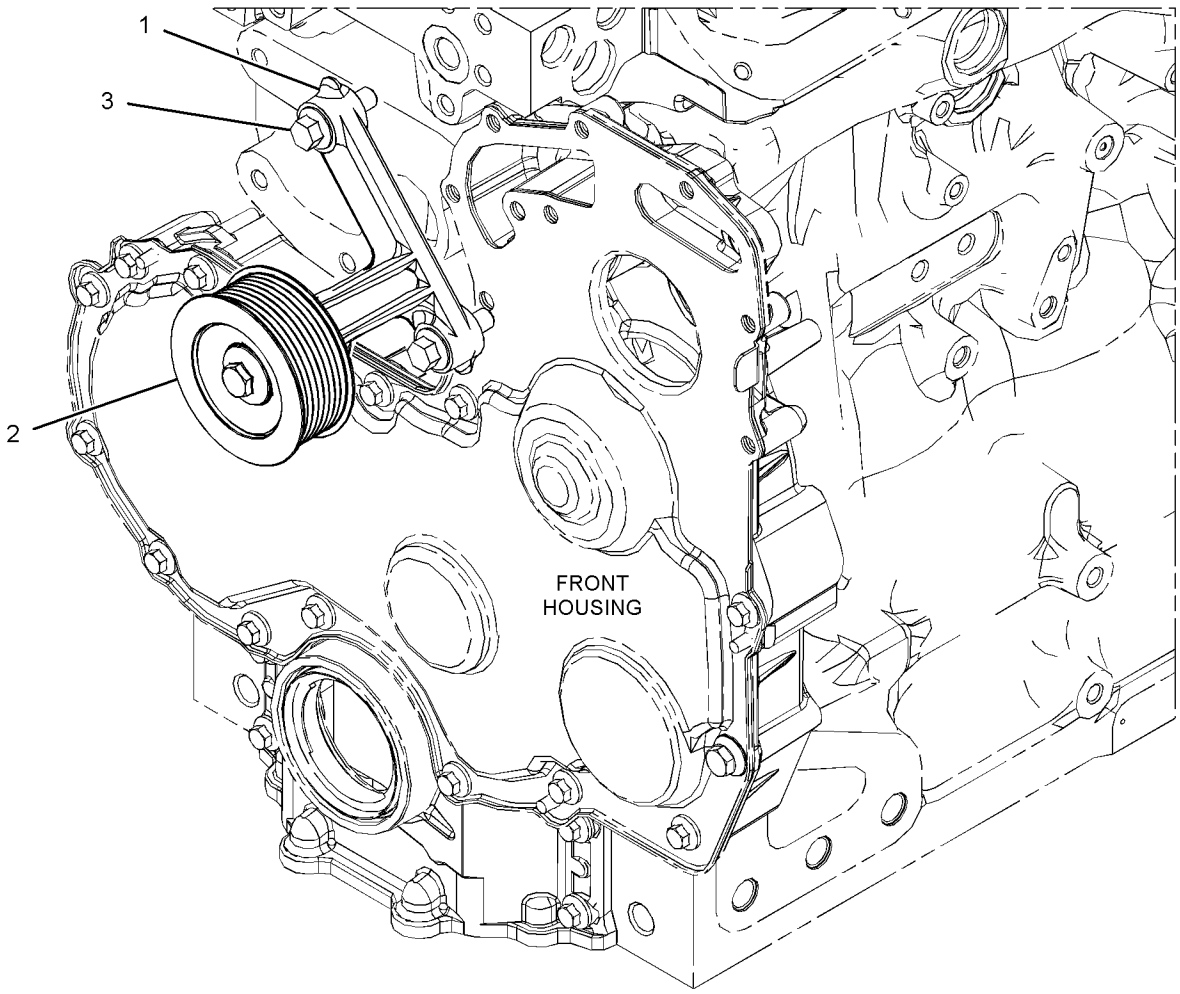

GRAPHIC #1 <END> g03108922

375-4495 DRIVE GP-FAN

PART OF 470-8667, 492-3169, 493-1019, 493-1038, 504-5365, 504-8134 ENGINE AR-PRIMARY

SMCS-1359 **i06756980**

NOTE	REF NO	GRAPHIC REF	PART NUMBER	QTY	PART NAME 1 2 3 4 5 6 (PRODUCT LEVEL)	SEE PAGE
M	1	1	**111-0859**	4	BOLT (M10X1.5X35-MM)	
	2	1	**283-4148**	1	PULLEY (8-GROOVE)	
	3	1	**289-8336**	1	HOUSING AS	

M - METRIC PART

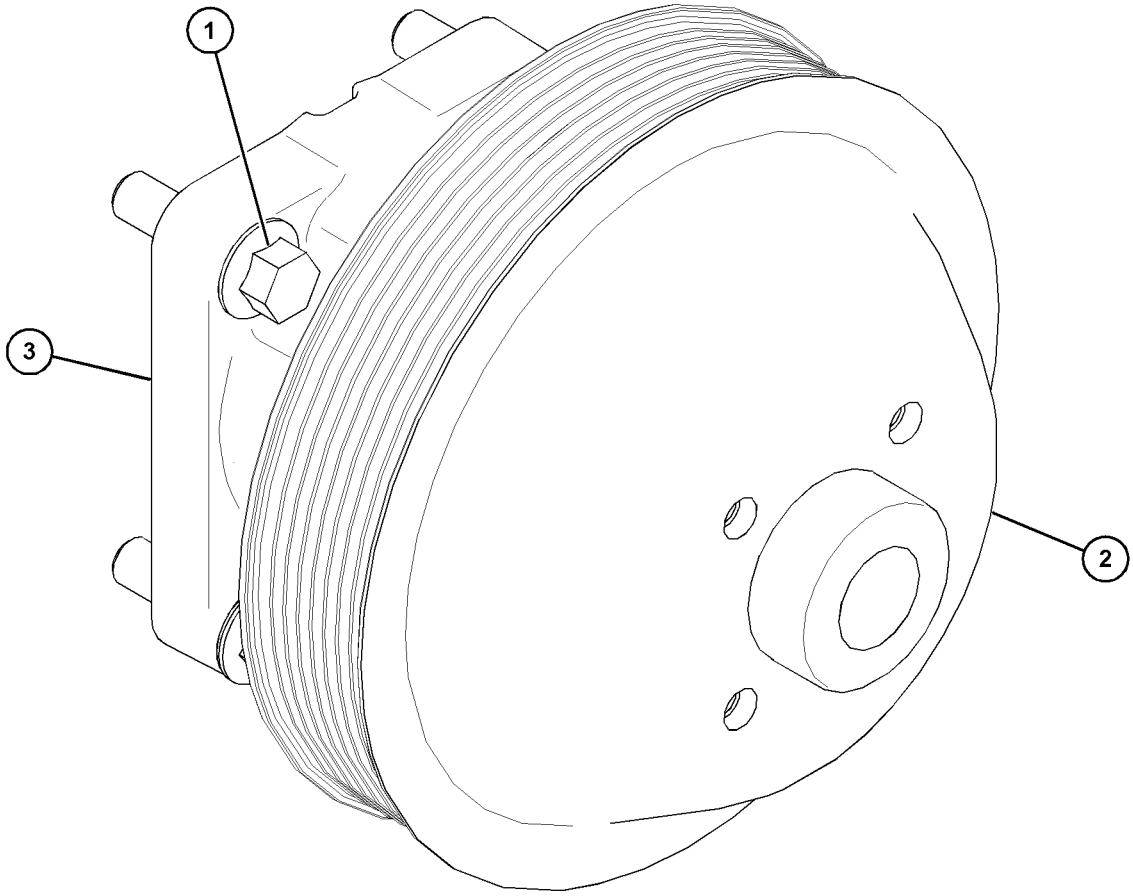

GRAPHIC #1 <END> g06111592

379-0957 DRIVE GP-FAN

PART OF 506-9918, 524-8271, 528-9866, 528-9920, 614-5795 ENGINE AR-PRIMARY

SMCS-1359 **i05712149**

NOTE	REF NO	GRAPHIC REF	PART NUMBER	QTY	PART NAME 1 2 3 4 5 6 (PRODUCT LEVEL)	SEE PAGE
	1	1	**365-2985**	1	BELT-SERPENTINE	
	2	1	**371-8298**	1	BRACKET	
	3	1	**377-9255**	1	PULLEY AS (8-GROOVE)	
M		1	**423-7576**	1	BOLT (M10X1.5X50-MM)	
M	4	1	**111-0859**	2	BOLT (M10X1.5X35-MM)	

M - METRIC PART

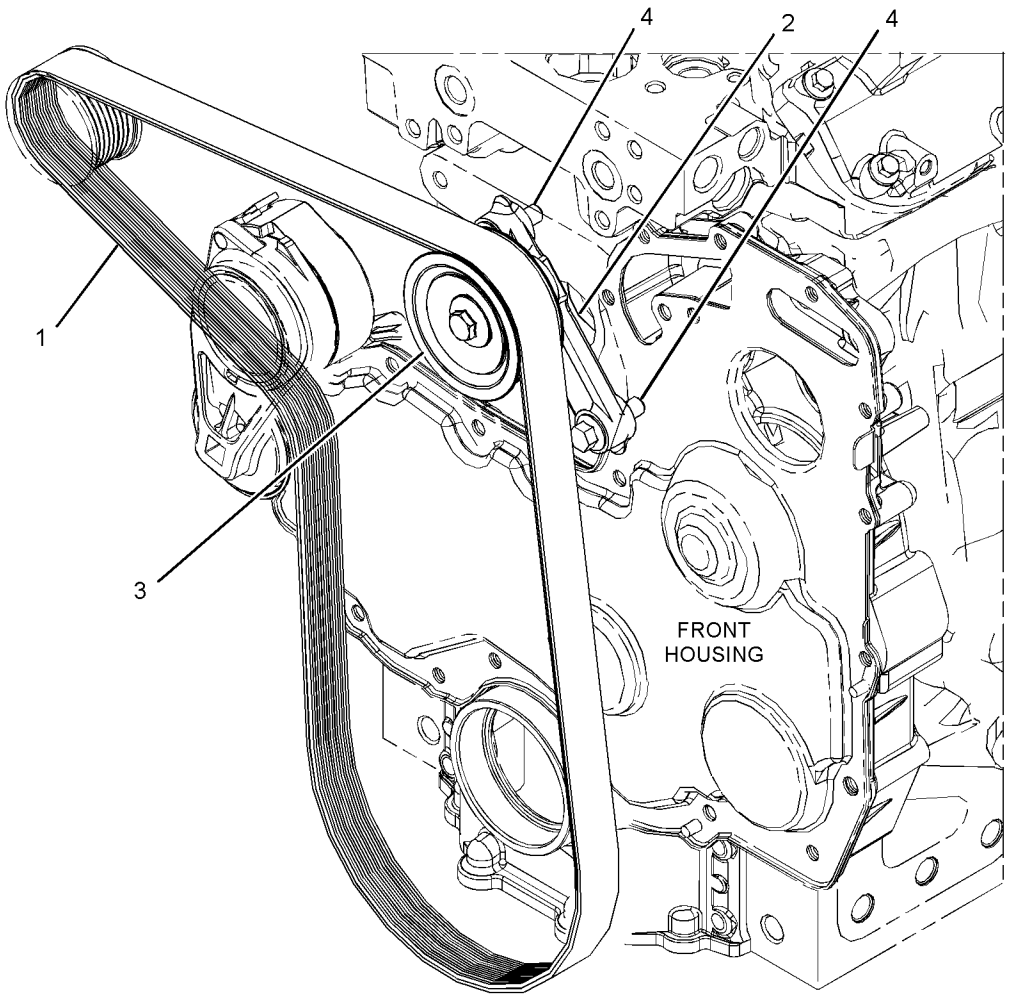

GRAPHIC #1 <END> g03380686

379-0965 DRIVE GP-FAN

PART OF 531-2492 ENGINE AR-PRIMARY

SMCS-1359 **i07563035**

NOTE	REF NO	GRAPHIC REF	PART NUMBER	QTY	PART NAME 1 2 3 4 5 6 (PRODUCT LEVEL)	SEE PAGE
M	1	1	**111-0859**	2	BOLT (M10X1.5X35-MM)	
	2	1	**371-8298**	1	BRACKET	
	3	1	**377-9255**	1	PULLEY AS (8-GROOVE)	
M	3A	1	**423-7576**	1	BOLT (M10X1.5X50-MM)	

M - METRIC PART

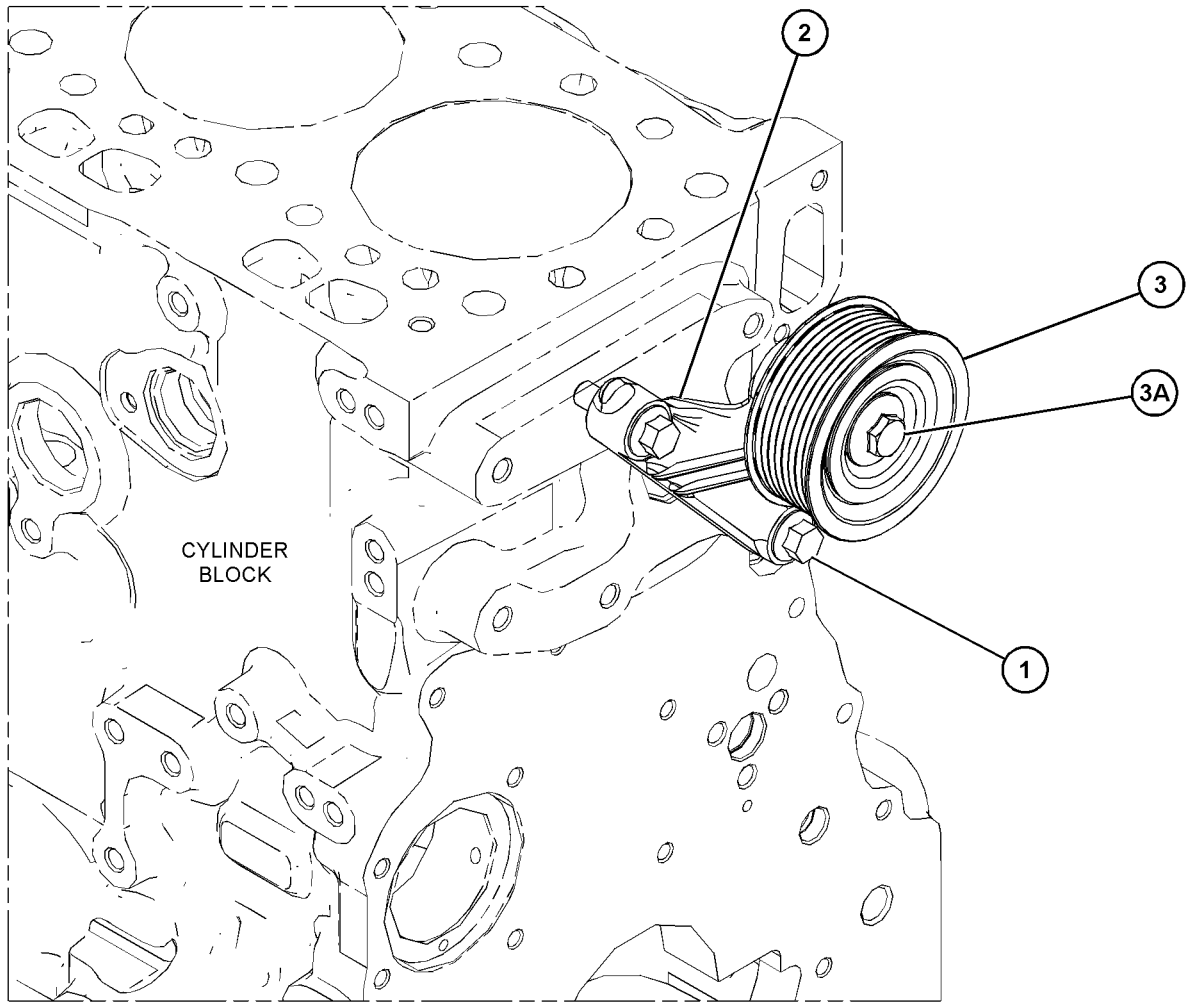

GRAPHIC #1 <END> g06032356

379-0966 DRIVE GP-FAN

PART OF 525-8759 ENGINE AR-PRIMARY

SMCS-1359 **i06052968**

NOTE	REF NO	GRAPHIC REF	PART NUMBER	QTY	PART NAME 1 2 3 4 5 6 (PRODUCT LEVEL)	SEE PAGE
M	1	1	**111-0859**	4	BOLT (M10X1.5X35-MM)	
	2	1	**283-4148**	1	PULLEY (8-GROOVE)	
	3	1	**289-8336**	1	HOUSING AS	
	4	1	**365-2968**	1	BELT-SERPENTINE	

M - METRIC PART

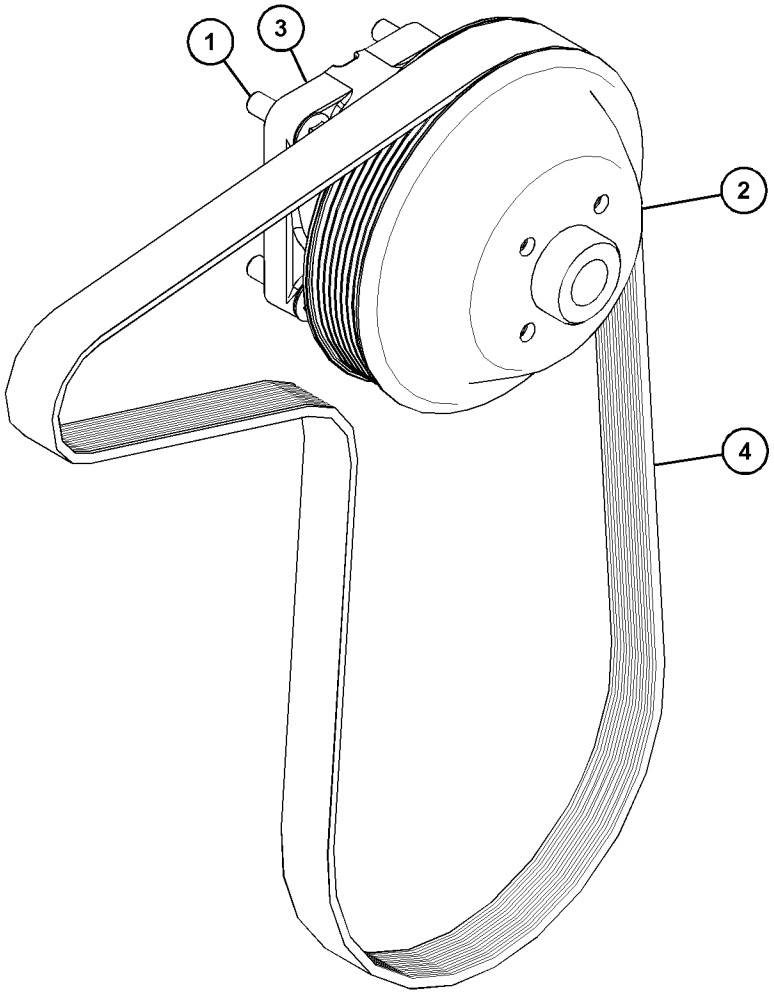

GRAPHIC #1 <END> g06111306

380-2602 DRIVE GP-FAN

SMCS-1359 **i05755561**

NOTE	REF NO	GRAPHIC REF	PART NUMBER	QTY	PART NAME 1 2 3 4 5 6 (PRODUCT LEVEL)	SEE PAGE
M	1	1	**111-0859**	5	BOLT (M10X1.5X35-MM)	
	2	1	**261-4320**	1	PULLEY (8-GROOVE)	
	3	1	**326-1876**	1	HOUSING-FAN DRIVE	
	4	1	**318-1049**	1	SPACER	
	5	1	**288-2354**	1	BRACKET	
	6	1	**261-0428**	1	PULLEY AS-IDLER	
M	6A	1	**307-2242**	1	BOLT (M10X1.5X45-MM)	
M	7	1	**6I-0650**	1	BOLT (M10X1.5X65-MM)	

M - METRIC PART

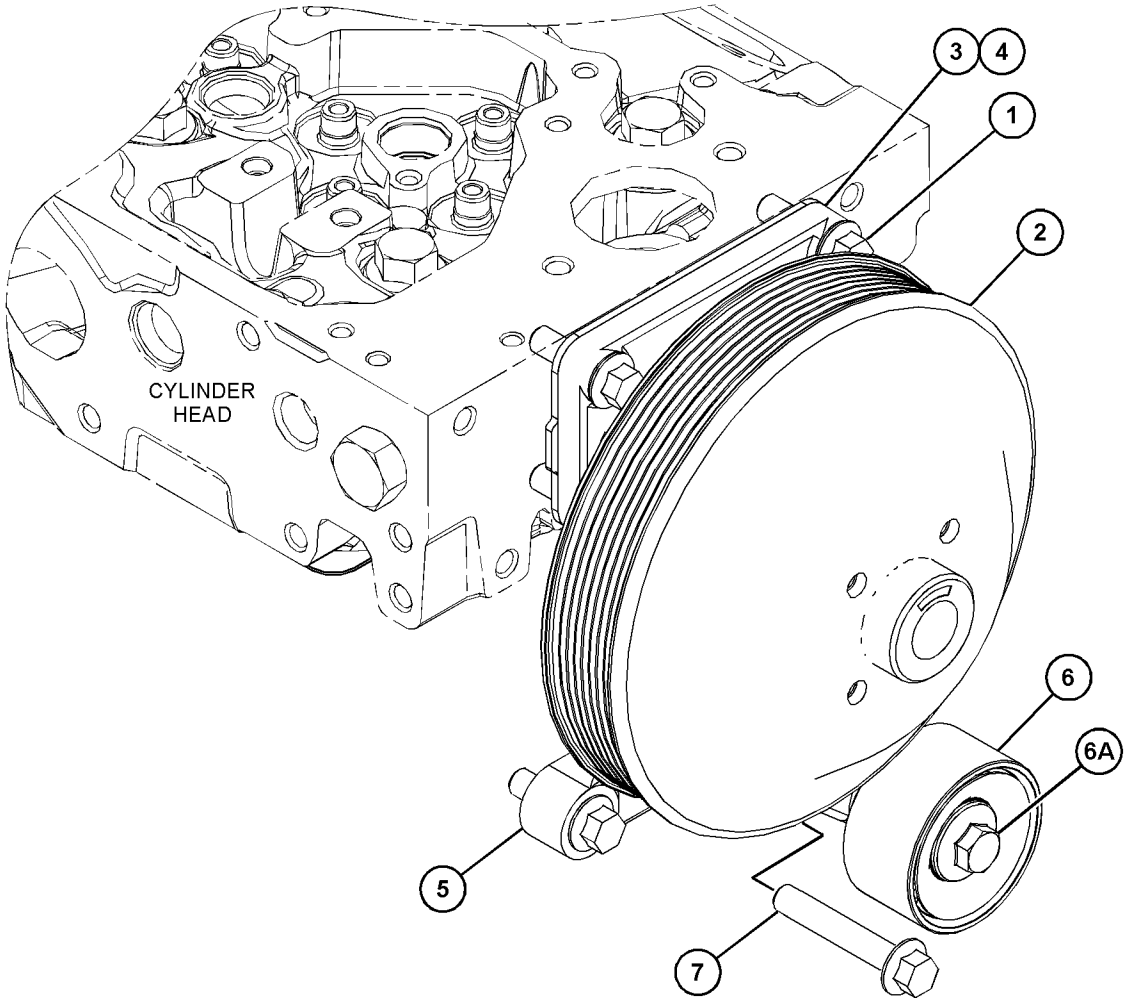

GRAPHIC #1 <END> g03664940

380-2616 DRIVE GP-FAN

PART OF 508-0270 ENGINE AR-PRIMARY

SMCS-1359 **i06132063**

NOTE	REF NO	GRAPHIC REF	PART NUMBER	QTY	PART NAME 1 2 3 4 5 6 (PRODUCT LEVEL)	SEE PAGE
M	1	1	**111-0859**	4	BOLT (M10X1.5X35-MM)	
	2	1	**284-1026**	1	PULLEY (8-GROOVE)	
	3	1	**289-8336**	1	HOUSING AS	

M - METRIC PART

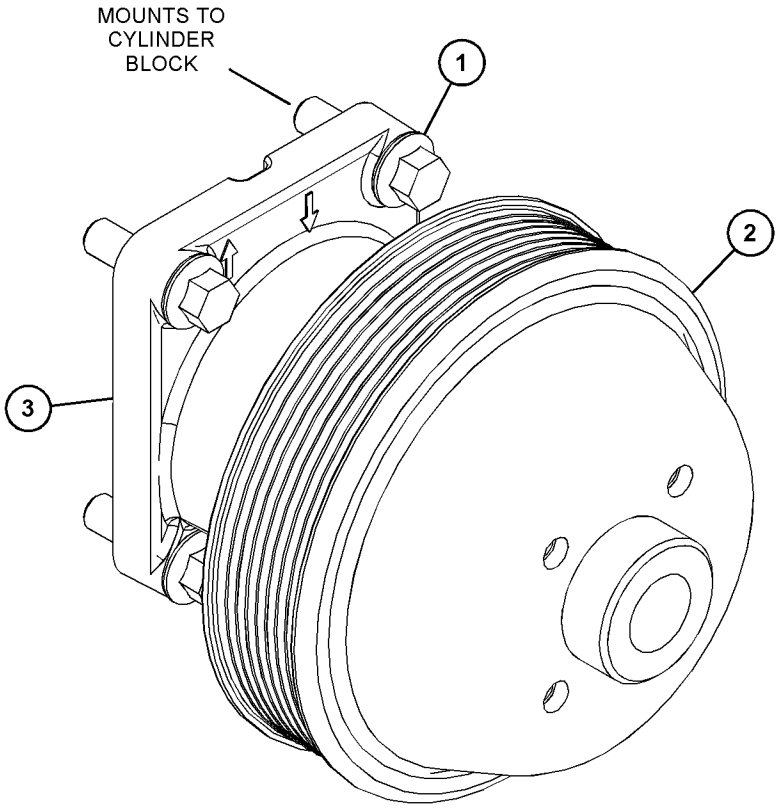

GRAPHIC #1 <END> g03821012

380-2620 DRIVE GP-FAN

PART OF 526-8888 ENGINE AR-PRIMARY

SMCS-1359 **i07158256**

NOTE	REF NO	GRAPHIC REF	PART NUMBER	QTY	PART NAME 1 2 3 4 5 6 (PRODUCT LEVEL)	SEE PAGE
M	1	1	**111-0859**	4	BOLT (M10X1.5X35-MM)	
	2	1	**283-4148**	1	PULLEY (8-GROOVE)	
	3	1	**289-8336**	1	HOUSING AS	

M - METRIC PART

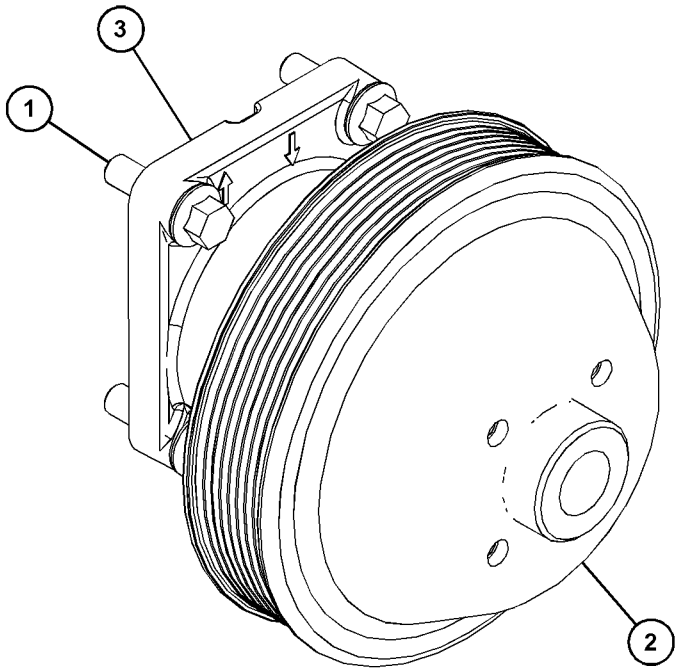

GRAPHIC #1 <END> g06238691

380-2629 DRIVE GP-FAN

PART OF 486-4250, 526-0511, 597-9248 ENGINE AR-PRIMARY

SMCS-1359 **i06258323**

NOTE	REF NO	GRAPHIC REF	PART NUMBER	QTY	PART NAME 1 2 3 4 5 6 (PRODUCT LEVEL)	SEE PAGE
M	1	1	**6I-0650**	1	BOLT (M10X1.5X65-MM)	
M	2	1	**111-0859**	5	BOLT (M10X1.5X35-MM)	
	3	1	**261-0428**	1	PULLEY AS-IDLER	
M	3A	1	**307-2242**	1	BOLT (M10X1.5X45-MM)	
	4	1	**283-4148**	1	PULLEY (8-GROOVE)	
	5	1	**288-2354**	1	BRACKET	
	6	1	**318-1049**	1	SPACER	
	7	1	**326-1876**	1	HOUSING-FAN DRIVE	

M - METRIC PART

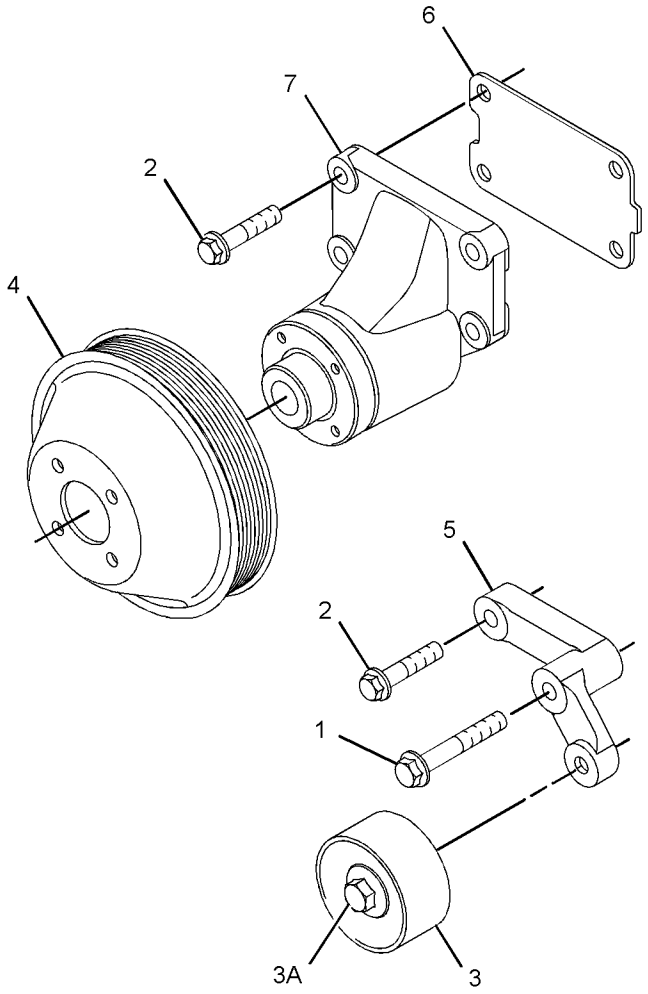

GRAPHIC #1 <END> g02154638

380-2638 DRIVE GP-FAN

PART OF 506-5035, 553-1809 ENGINE AR-PRIMARY

SMCS-1359 **i06180144**

NOTE	REF NO	GRAPHIC REF	PART NUMBER	QTY	PART NAME 1 2 3 4 5 6 (PRODUCT LEVEL)	SEE PAGE
M	1	1	**6I-0650**	1	BOLT (M10X1.5X65-MM)	
M	2	1	**111-0859**	5	BOLT (M10X1.5X35-MM)	
	3	1	**261-0428**	1	PULLEY AS-IDLER	
M	3A	1	**307-2242**	1	BOLT (M10X1.5X45-MM)	
	4	1	**283-4148**	1	PULLEY (8-GROOVE)	
	5	1	**288-2354**	1	BRACKET	
	6	1	**318-1049**	1	SPACER	
	7	1	**326-1877**	1	HOUSING-FAN DRIVE	

M - METRIC PART

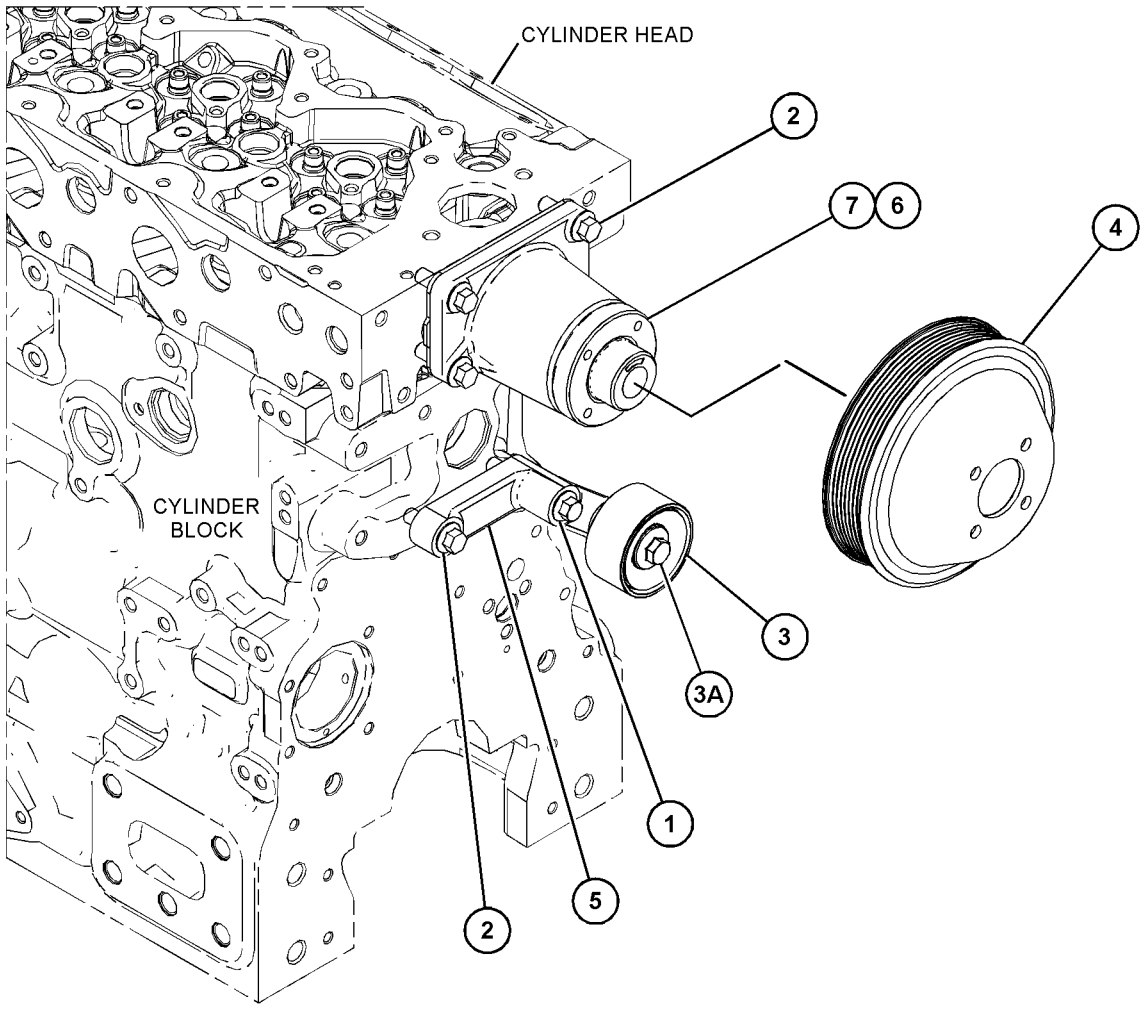

GRAPHIC #1 <END> g06003339

391-5560 DRIVE GP-FAN

PART OF 623-1309, 624-0698 ENGINE AR-PRIMARY

SMCS-1359 **i05580848**

NOTE	REF NO	GRAPHIC REF	PART NUMBER	QTY	PART NAME 1 2 3 4 5 6 (PRODUCT LEVEL)	SEE PAGE
M	1	1	**6I-0650**	1	BOLT (M10X1.5X65-MM)	
M	2	1	**111-0859**	5	BOLT (M10X1.5X35-MM)	
	3	1	**261-0428**	1	PULLEY AS-IDLER	
M	3A	1	**307-2242**	1	BOLT (M10X1.5X45-MM)	
	4	1	**261-4320**	1	PULLEY (8-GROOVE)	
	5	1	**283-1171**	1	BELT-SERPENTINE	
	6	1	**288-2354**	1	BRACKET	
	7	1	**326-1876**	1	HOUSING-FAN DRIVE	
	8	1	**318-1049**	1	SPACER	

M - METRIC PART

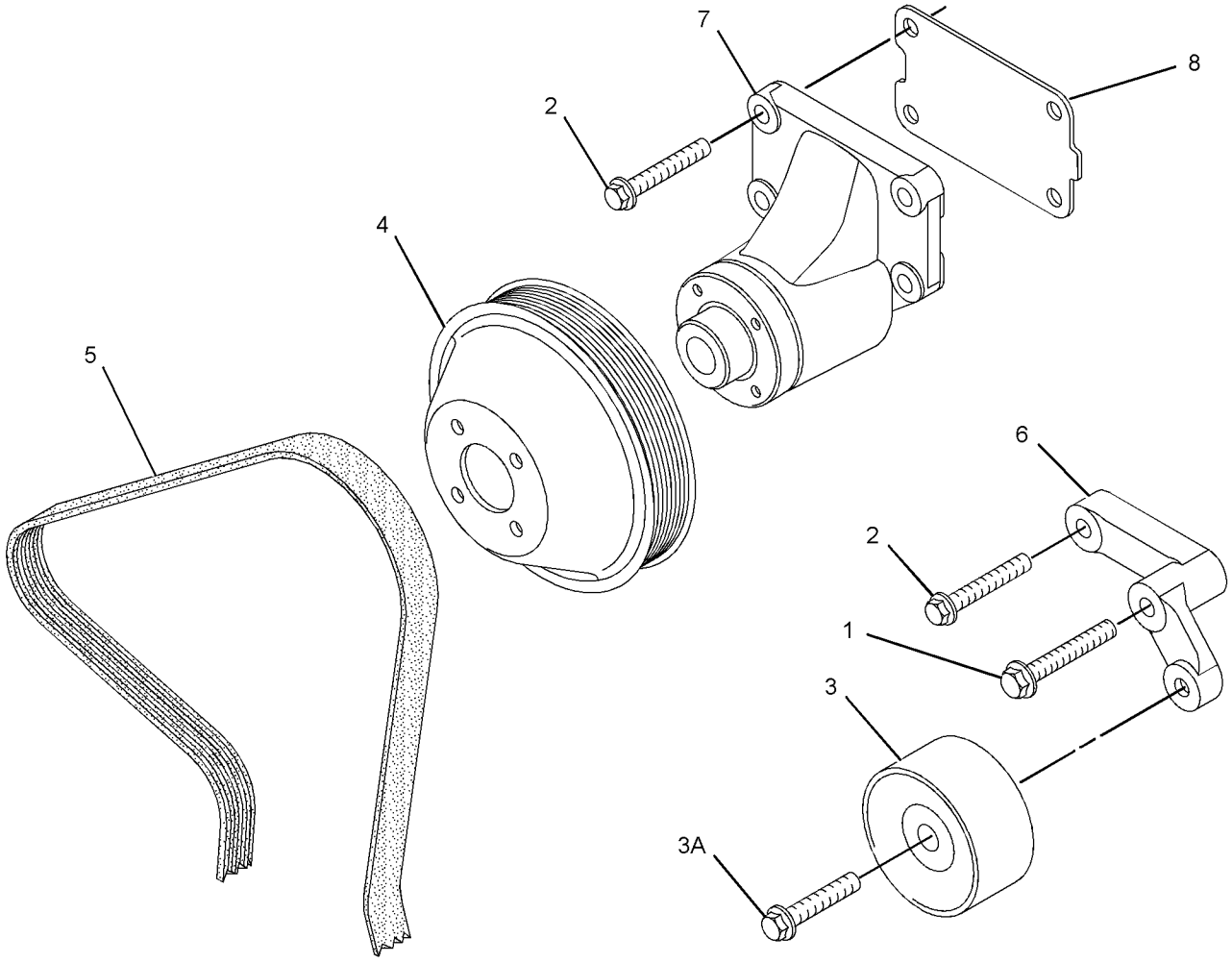

GRAPHIC #1 <END> g01400465

392-0468 DRIVE GP-FAN

SMCS-1359 **i05714809**

NOTE	REF NO	GRAPHIC REF	PART NUMBER	QTY	PART NAME 1 2 3 4 5 6 (PRODUCT LEVEL)	SEE PAGE
M	1	1	**6I-0650**	1	BOLT (M10X1.5X65-MM)	
M	2	1	**111-0859**	5	BOLT (M10X1.5X35-MM)	
	3	1	**261-0428**	1	PULLEY AS-IDLER	
M	3A	1	**307-2242**	1	BOLT (M10X1.5X45-MM)	
	4	1	**261-4320**	1	PULLEY (8-GROOVE)	
		1	**382-7383**	1	BELT-DRIVE	
	5	1	**326-1879**	1	HOUSING-FAN DRIVE	
	6	1	**288-2354**	1	BRACKET	
	7	1	**318-1049**	1	SPACER	

M - METRIC PART

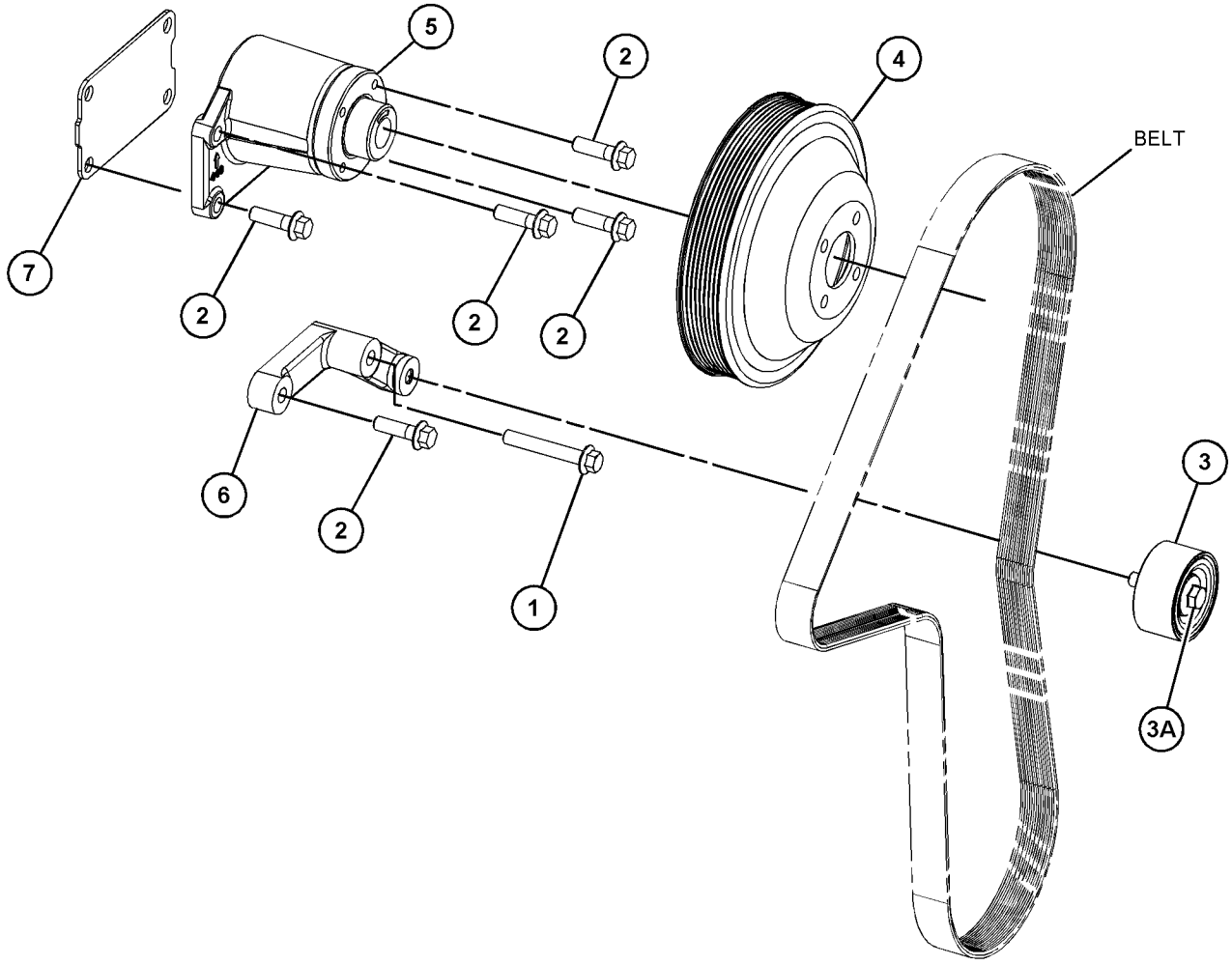

GRAPHIC #1 <END> g03651396

392-6908 DRIVE GP-FAN

PART OF 613-9482 ENGINE AR-PRIMARY

SMCS-1359 **i09240040**

NOTE	REF NO	GRAPHIC REF	PART NUMBER	QTY	PART NAME 1 2 3 4 5 6 (PRODUCT LEVEL)	SEE PAGE
M	1	1	**111-0859**	4	BOLT (M10X1.5X35-MM)	
	2	1	**283-4148**	1	PULLEY (8-GROOVE)	
	3	1	**289-8336**	1	HOUSING AS	
	4	1	**382-8827**	1	BELT-SERPENTINE	

M - METRIC PART

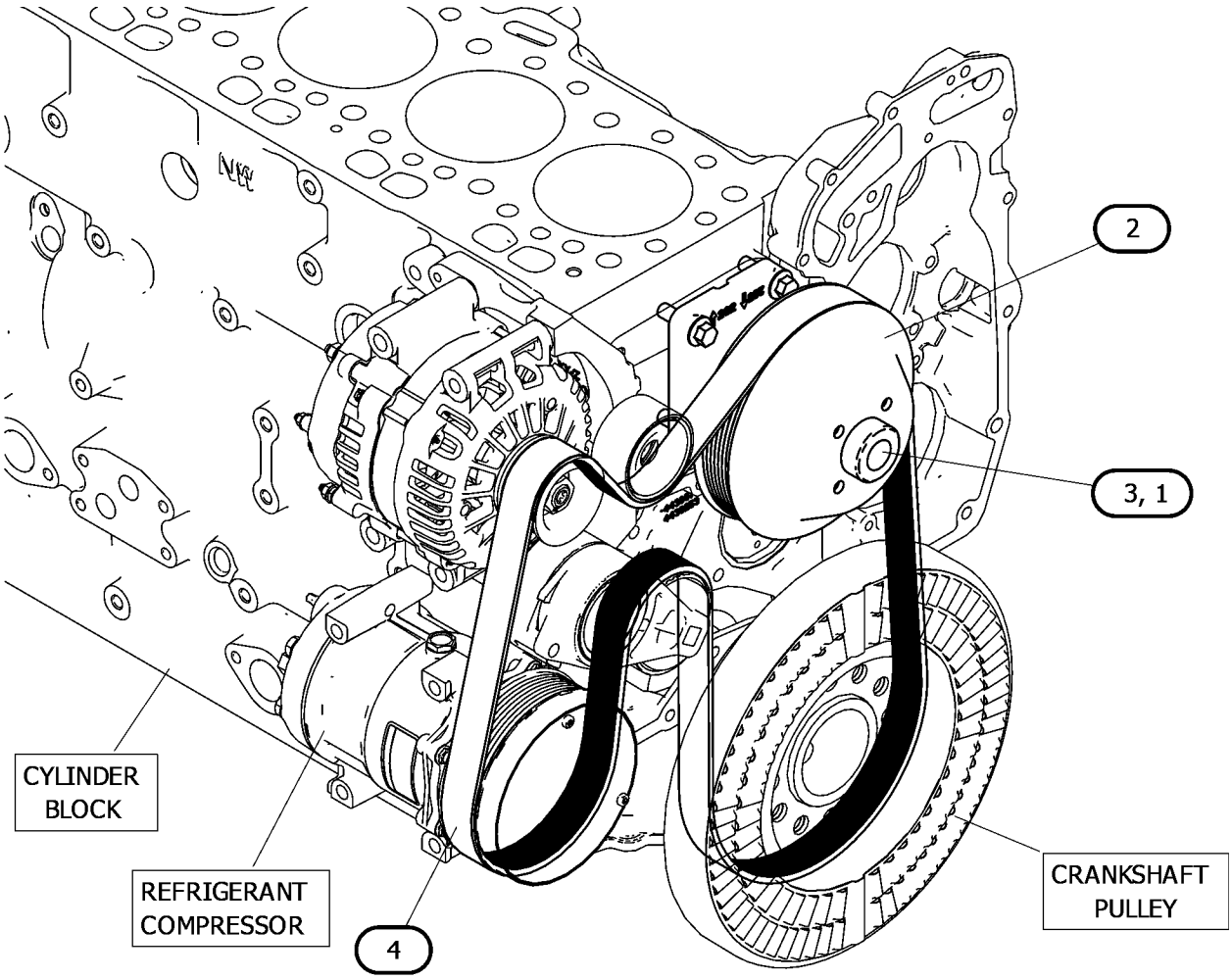

GRAPHIC #1 <END> g07197052

392-6911 DRIVE GP-FAN

SMCS-1359 **i05726742**

NOTE	REF NO	GRAPHIC REF	PART NUMBER	QTY	PART NAME 1 2 3 4 5 6 (PRODUCT LEVEL)	SEE PAGE
M	1	1	**111-0859**	4	BOLT (M10X1.5X35-MM)	
	2	1	**283-4148**	1	PULLEY (8-GROOVE)	
	3	1	**289-8336**	1	HOUSING AS	
	4	1	**298-5873**	1	BELT-SERPENTINE (DRIVE FAN)	

M - METRIC PART

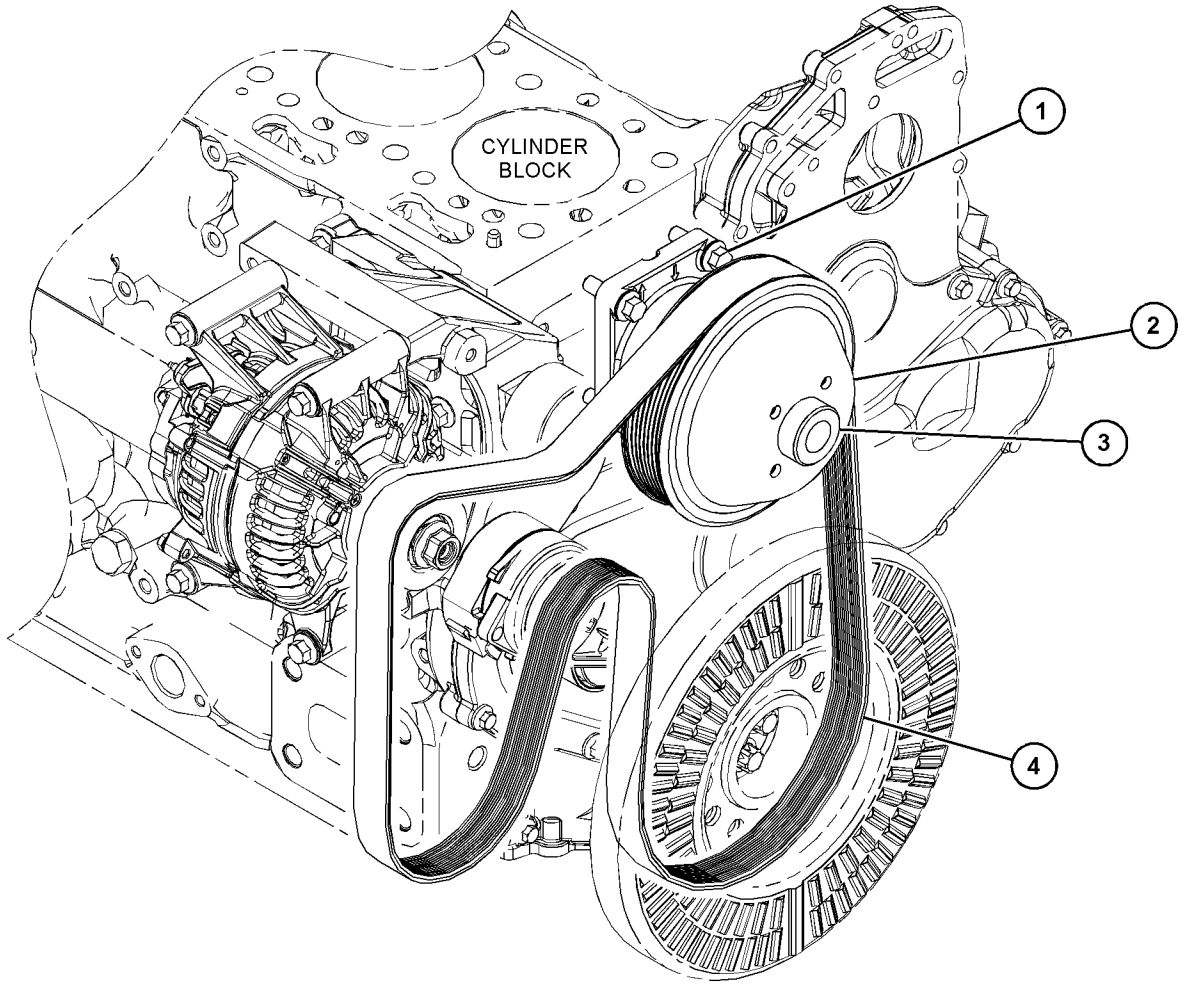

GRAPHIC #1 <END> g03665055

393-2180 DRIVE GP-FAN

PART OF 596-2071 ENGINE AR-COMPLETE, 461-4638, 461-4649, 461-4656, 461-4658, 468-0461, 471-0541, 479-9398, 480-2181, 482-0212, 484-2939, 485-8027, 486-2644, 489-9006, 491-4973, 491-4980, 491-4993, 491-7124, 492-3021, 492-3072, 494-6807, 495-8349, 499-7181, 501-2466, 502-9462, 504-9579, 507-8016, 512-9858, 513-0851, 514-9367, 520-3152, 527-9686, 530-1323, 530-2601, 533-2797, 535-8060, 536-6675, 539-6915, 539-8582, 543-4255, 552-8869, 555-4669, 562-8873, 563-6728, 563-6729, 563-6730, 565-1247, 569-7846, 583-8352, 591-1266, 591-9440, 593-7287, 598-9881, 602-8721, 603-5300, 609-9819, 612-1735, 614-9555, 622-6239, 627-8019, 627-8054, 627-8129, 628-4345, 633-4335, 633-7776, 657-2370 ENGINE AR-PRIMARY

SMCS-1359 **i05847750**

NOTE	REF NO	GRAPHIC REF	PART NUMBER	QTY	PART NAME 1 2 3 4 5 6 (PRODUCT LEVEL)	SEE PAGE
M	1	1	**111-0859**	4	BOLT (M10X1.5X35-MM)	
	2	1	**283-4148**	1	PULLEY (8-GROOVE)	
	3	1	**289-8336**	1	HOUSING AS	
	4	1	**293-5248**	1	BELT-SERPENTINE	

M - METRIC PART

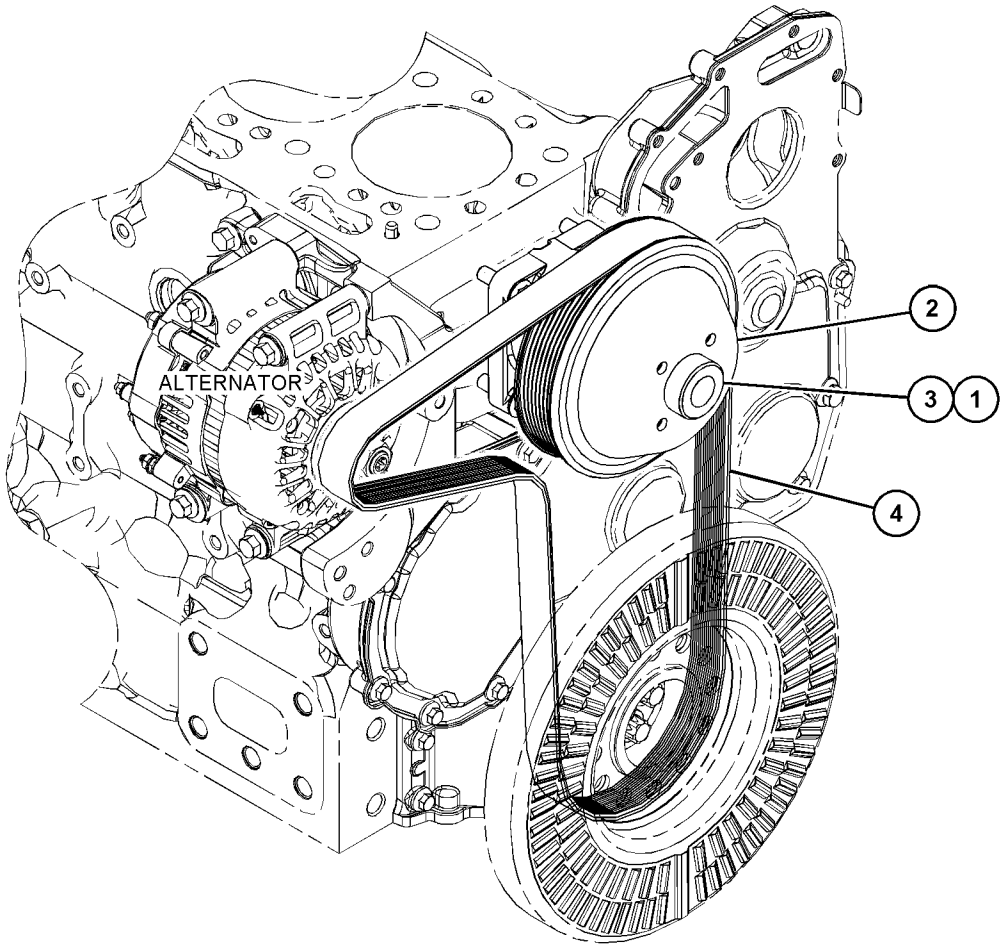

GRAPHIC #1 <END> g03696909

393-2183 DRIVE GP-FAN

SMCS-1359 **i05906485**

NOTE	REF NO	GRAPHIC REF	PART NUMBER	QTY	PART NAME 1 2 3 4 5 6 (PRODUCT LEVEL)	SEE PAGE
M	1	1	**111-0859**	4	BOLT (M10X1.5X35-MM)	
	2	1	**283-4148**	1	PULLEY (8-GROOVE)	
	3	1	**289-8336**	1	HOUSING AS	
	4	1	**298-5872**	1	BELT-SERPENTINE (FAN PULLEY)	

M - METRIC PART

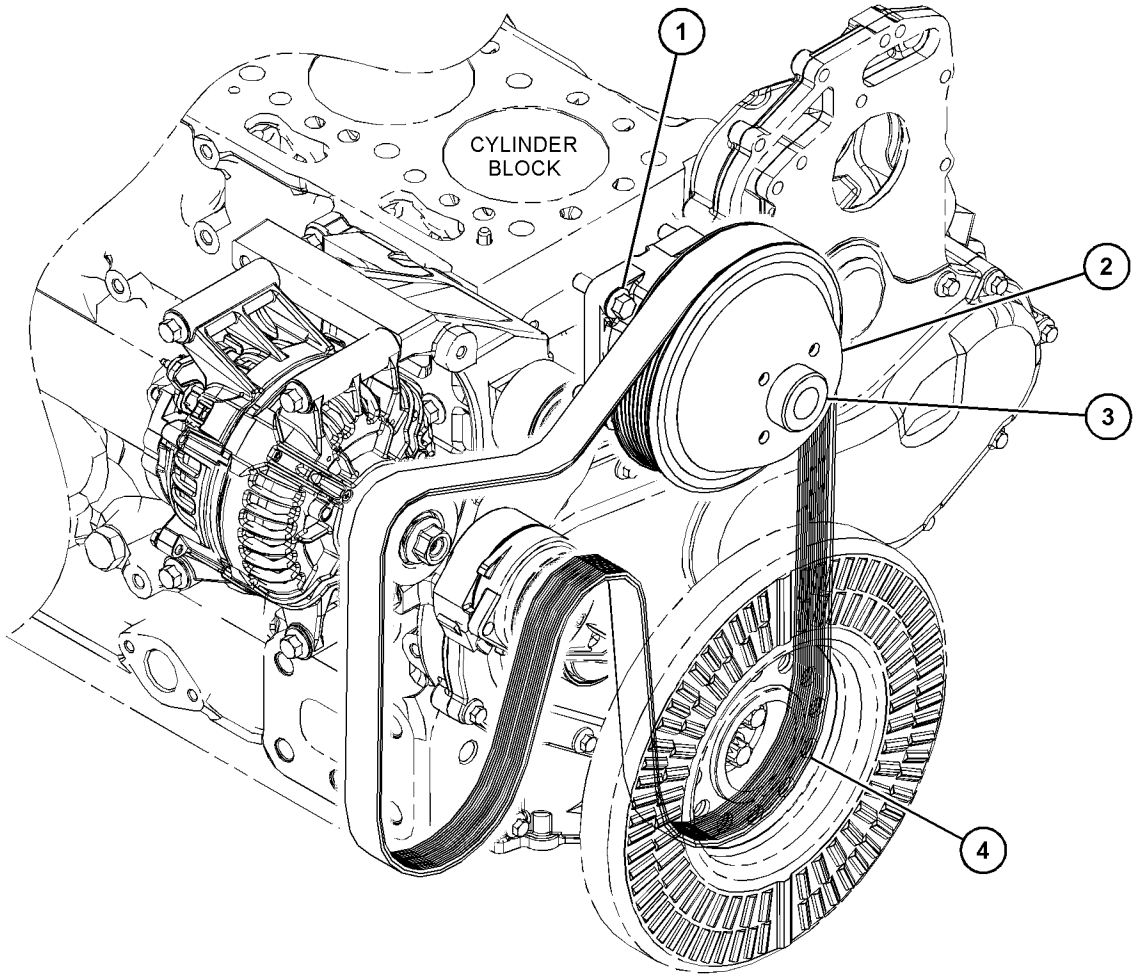

GRAPHIC #1 <END> g03737424

393-3349 DRIVE GP-FAN

PART OF 451-8343 ENGINE AR-PRIMARY

SMCS-1359 **i06052998**

NOTE	REF NO	GRAPHIC REF	PART NUMBER	QTY	PART NAME 1 2 3 4 5 6 (PRODUCT LEVEL)	SEE PAGE
M	1	1	**111-0859**	4	BOLT (M10X1.5X35-MM)	
	2	1	**283-4148**	1	PULLEY (8-GROOVE)	
	3	1	**294-2780**	1	HOUSING-FAN DRIVE	
	4	1	**372-5850**	1	BELT-SERPENTINE	
	5	1	**318-1049**	1	SPACER	

M - METRIC PART

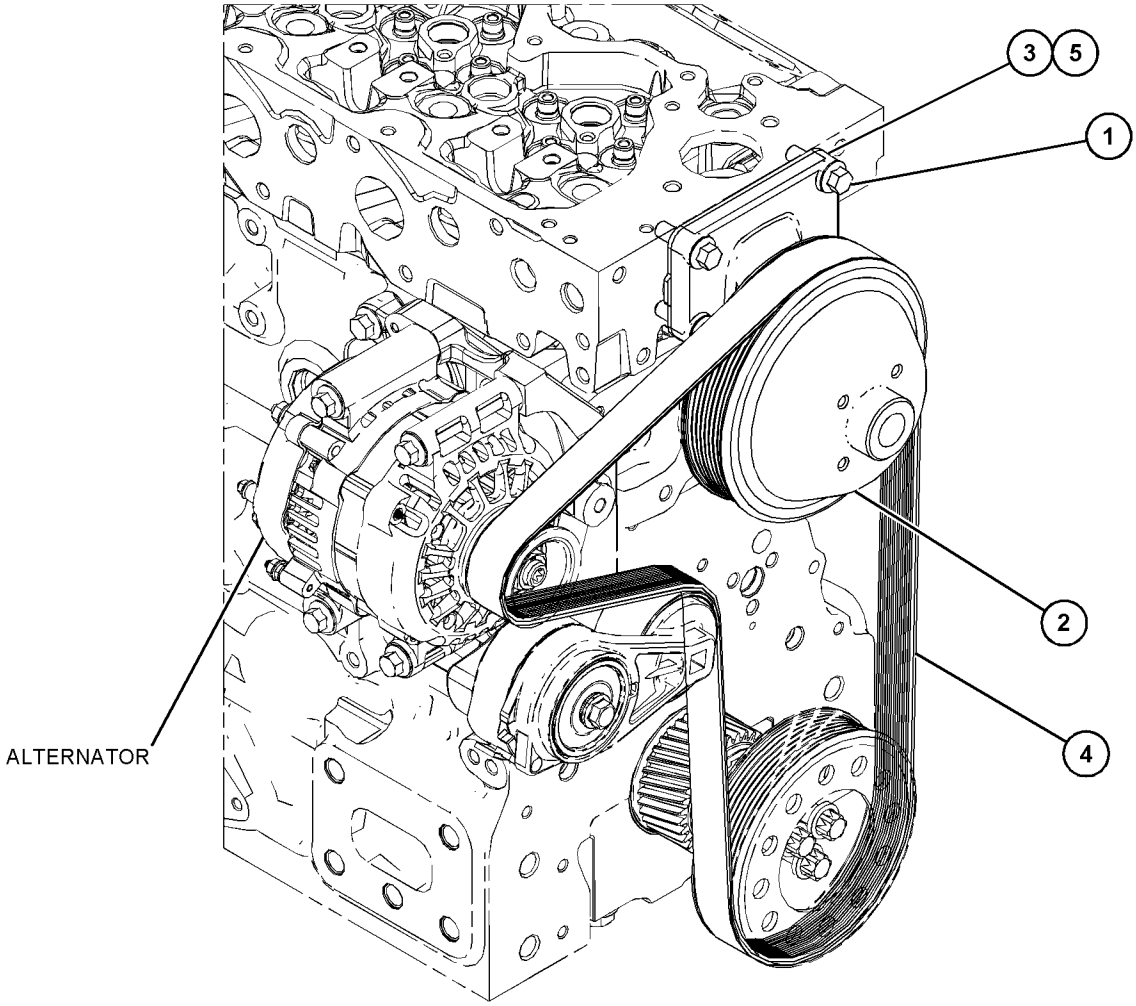

GRAPHIC #1 <END> g06008146

393-4158 DRIVE GP-FAN

PART OF 533-3588 ENGINE AR-PRIMARY

SMCS-1359 **i07158219**

NOTE	REF NO	GRAPHIC REF	PART NUMBER	QTY	PART NAME 1 2 3 4 5 6 (PRODUCT LEVEL)	SEE PAGE
M	1	1	**6I-0650**	1	BOLT (M10X1.5X65-MM)	
M	2	1	**111-0859**	5	BOLT (M10X1.5X35-MM)	
	3	1	**261-0428**	1	PULLEY AS-IDLER	
M	3A	1	**307-2242**		BOLT (M10X1.5X45-MM)	
	4	1	**261-4320**	1	PULLEY (8-GROOVE)	
	5	1	**383-0675**	1	BELT-SERPENTINE	
	6	1	**288-2354**	1	BRACKET	
	7	1	**318-1049**	1	SPACER	
	8	1	**326-1879**	1	HOUSING-FAN DRIVE	

M - METRIC PART

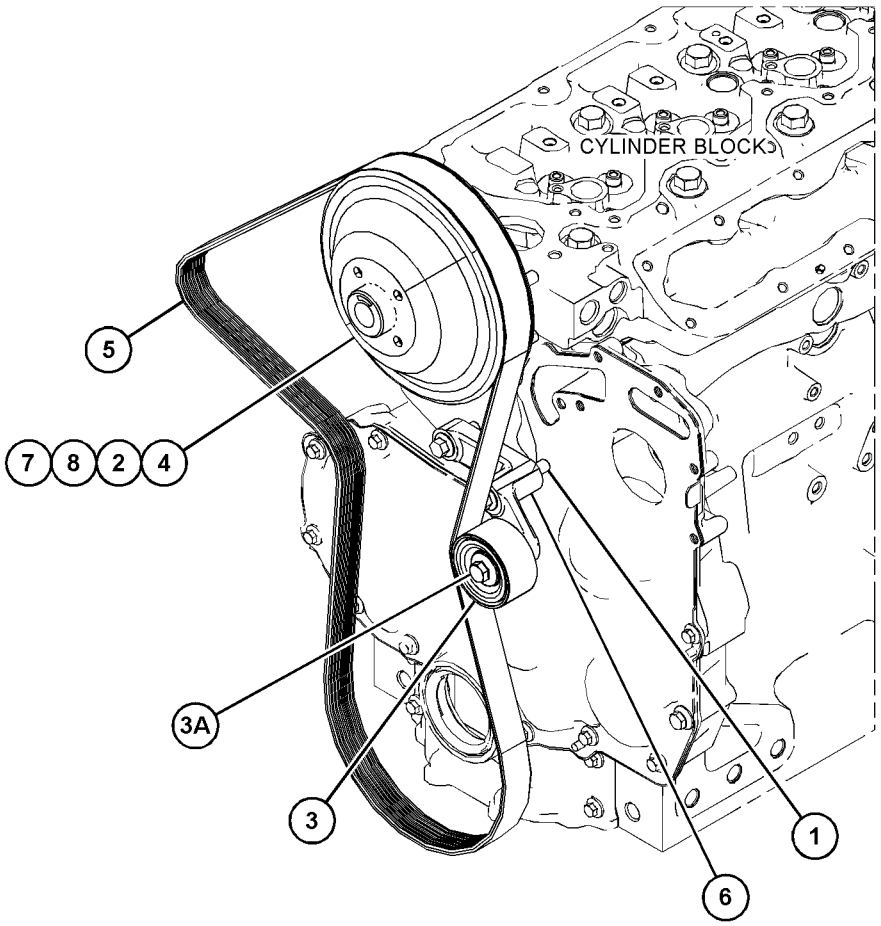

GRAPHIC #1 <END> g06246026

393-5973 DRIVE GP-FAN

PART OF 553-3730 ENGINE AR-PRIMARY

SMCS-1359 **i07307094**

NOTE	REF NO	GRAPHIC REF	PART NUMBER	QTY	PART NAME 1 2 3 4 5 6 (PRODUCT LEVEL)	SEE PAGE
M	1	1	**6I-0650**	1	BOLT (M10X1.5X65-MM)	
M	2	1	**111-0859**	5	BOLT (M10X1.5X35-MM)	
	3	1	**261-0428**	1	PULLEY AS-IDLER	
M		1	**307-2242**	1	BOLT (M10X1.5X45-MM)	
	4	1	**261-4320**	1	PULLEY (8-GROOVE)	
	5	1	**365-3002**	1	BELT-SERPENTINE	
	6	1	**288-2354**	1	BRACKET	
	7	1	**318-1049**	1	SPACER	
	8	1	**326-1876**	1	HOUSING-FAN DRIVE	

M - METRIC PART

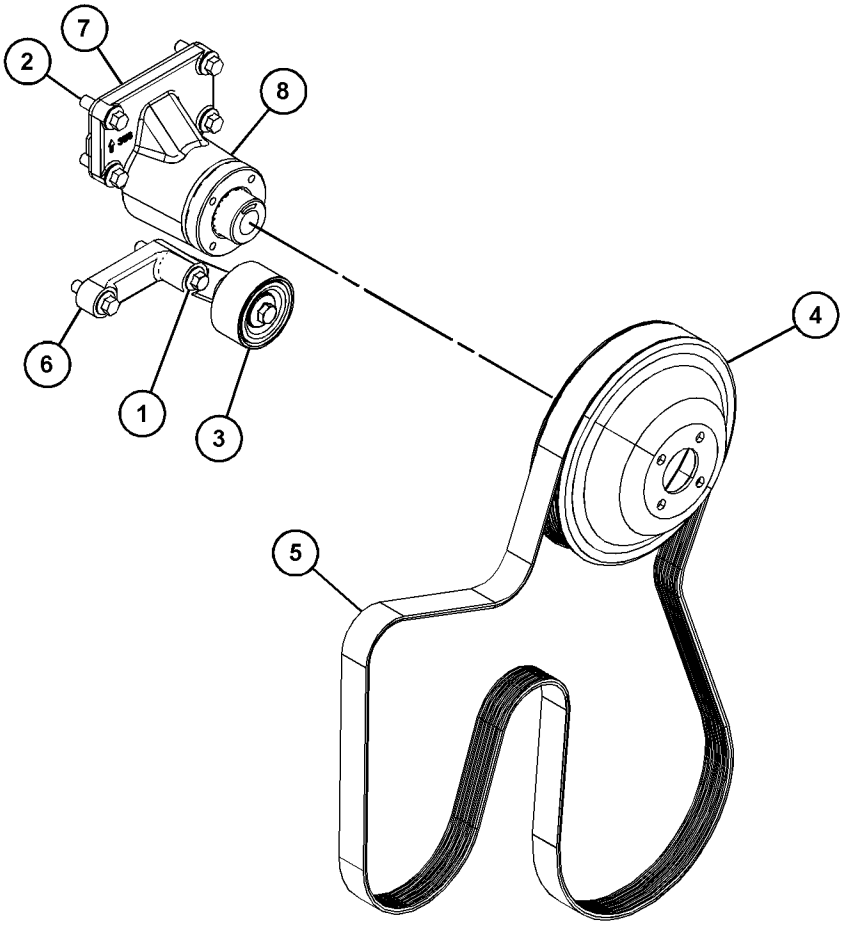

GRAPHIC #1 <END> g06280046

393-9570 DRIVE GP-FAN

PART OF 520-4644 ENGINE AR-PRIMARY

SMCS-1359 **i07349992**

NOTE	REF NO	GRAPHIC REF	PART NUMBER	QTY	PART NAME 1 2 3 4 5 6 (PRODUCT LEVEL)	SEE PAGE
M	1	1	**6I-0650**	1	BOLT (M10X1.5X65-MM)	
M	2	1	**111-0859**	5	BOLT (M10X1.5X35-MM)	
	3	1	**261-0428**	1	PULLEY AS-IDLER	
M	3A	1	**307-2242**	1	BOLT (M10X1.5X45-MM)	
	4	1	**283-4148**	1	PULLEY (8-GROOVE)	
	5	1	**372-4204**	1	BELT-SERPENTINE	
	6	1	**288-2354**	1	BRACKET	
	7	1	**318-1049**	1	SPACER	
	8	1	**326-1876**	1	HOUSING-FAN DRIVE	

M - METRIC PART

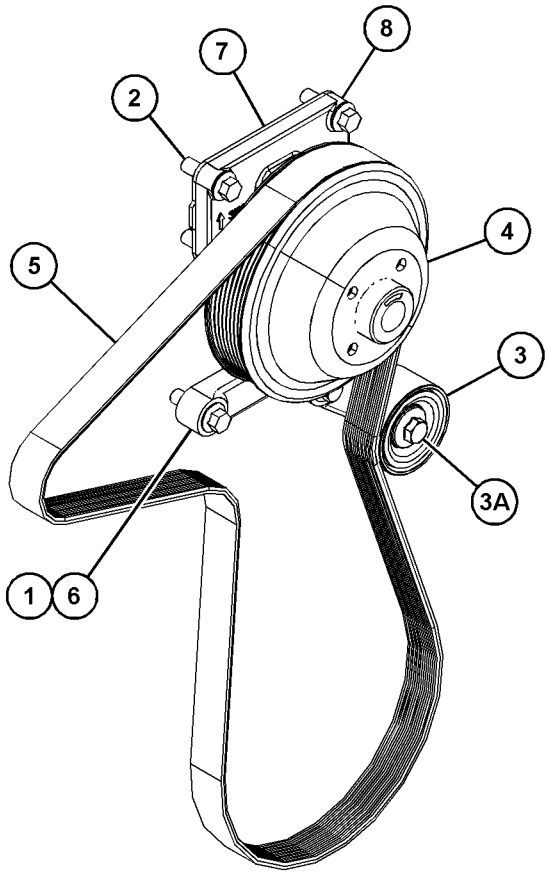

GRAPHIC #1 <END> g06294313

393-9572 DRIVE GP-FAN

PART OF 527-7106, 528-3358, 594-2125, 596-4834, 596-7090 ENGINE AR-PRIMARY

SMCS-1359 **i07039360**

NOTE	REF NO	GRAPHIC REF	PART NUMBER	QTY	PART NAME 1 2 3 4 5 6 (PRODUCT LEVEL)	SEE PAGE
M	1	1	**6I-0650**	1	BOLT (M10X1.5X65-MM)	
M	2	1	**111-0859**	5	BOLT (M10X1.5X35-MM)	
	3	1	**261-0428**	1	PULLEY AS-IDLER	
M	3A	1	**307-2242**	1	BOLT (M10X1.5X45-MM)	
	4	1	**283-4148**	1	PULLEY (8-GROOVE)	
	5	1	**291-5837**	1	BELT-SERPENTINE	
	6	1	**288-2354**	1	BRACKET	
	7	1	**318-1049**	1	SPACER	
	8	1	**326-1876**	1	HOUSING-FAN DRIVE	

M - METRIC PART

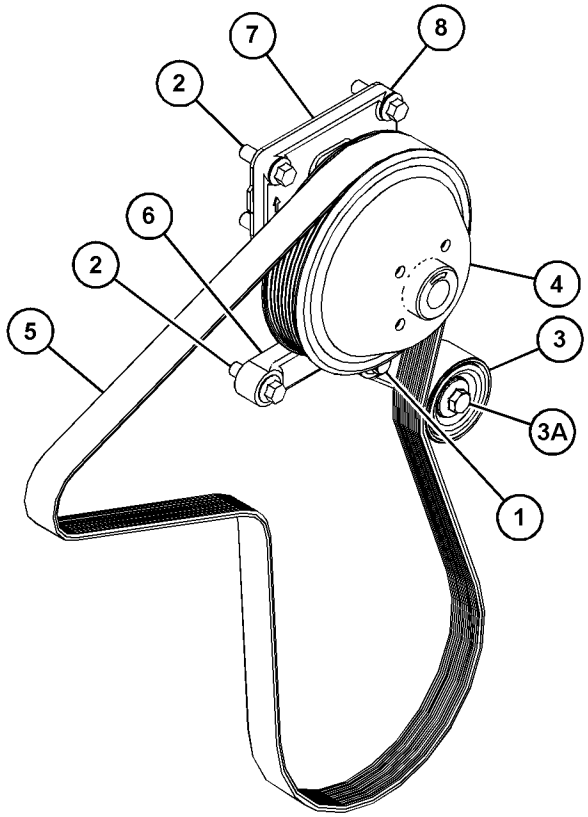

GRAPHIC #1 <END> g06227624

399-0082 DRIVE GP-FAN

PART OF 519-4128 ENGINE AR-PRIMARY

SMCS-1359 **i06995540**

NOTE	REF NO	GRAPHIC REF	PART NUMBER	QTY	PART NAME 1 2 3 4 5 6 (PRODUCT LEVEL)	SEE PAGE
	1	1	**350-8741**	1	BELT-SERPENTINE	
	2	1	**371-8298**	1	BRACKET	
	3	1	**377-9255**	1	PULLEY AS (8-GROOVE)	
M		1	**423-7576**	1	BOLT (M10X1.5X50-MM)	
M	4	1	**111-0859**	2	BOLT (M10X1.5X35-MM)	

M - METRIC PART

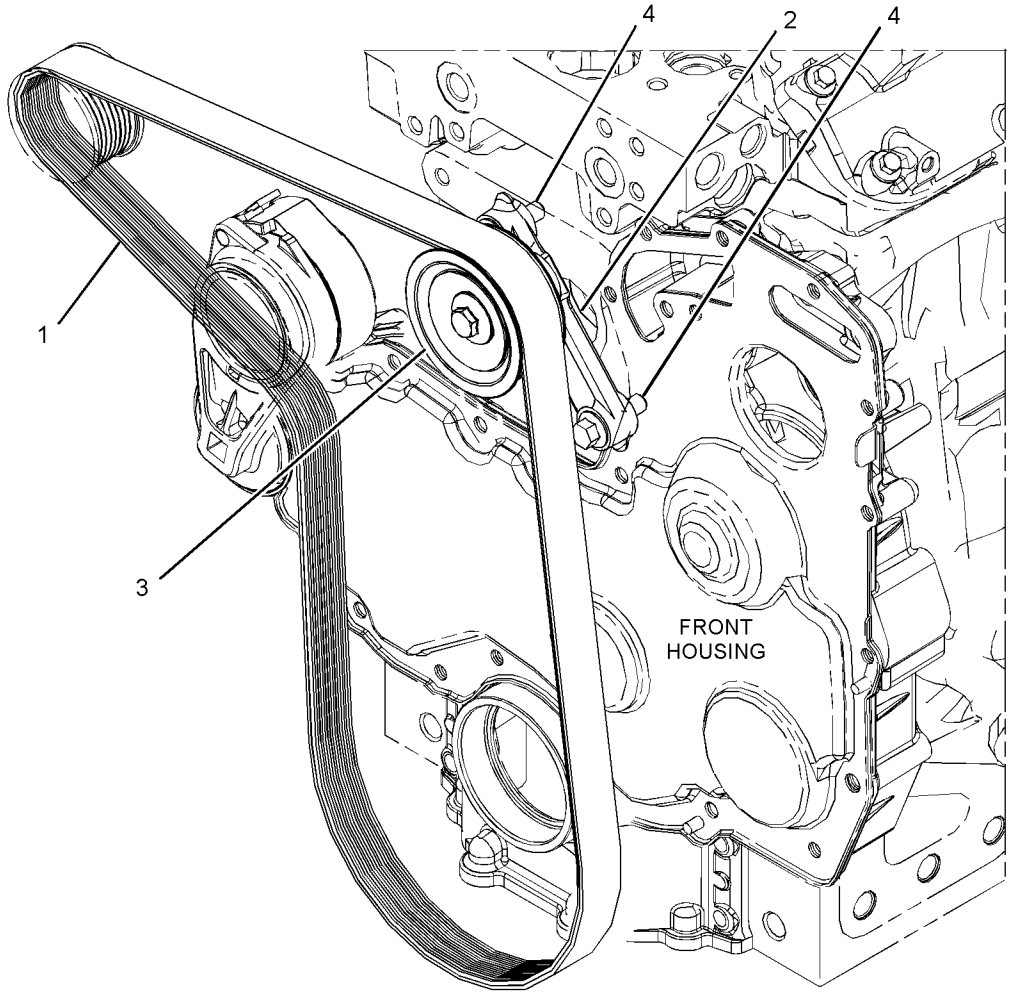

GRAPHIC #1 <END> g03380686

399-0083 DRIVE GP-FAN

PART OF 494-2073, 593-7288 ENGINE AR-PRIMARY

SMCS-1359 **i06554438**

NOTE	REF NO	GRAPHIC REF	PART NUMBER	QTY	PART NAME 1 2 3 4 5 6 (PRODUCT LEVEL)	SEE PAGE
	1	1	**371-8058**	1	BELT-SERPENTINE	
	2	1	**371-8298**	1	BRACKET	
	3	1	**377-9255**	1	PULLEY AS (8-GROOVE)	
M		1	**423-7576**	1	BOLT (M10X1.5X50-MM)	
M	4	1	**111-0859**	2	BOLT (M10X1.5X35-MM)	

M - METRIC PART

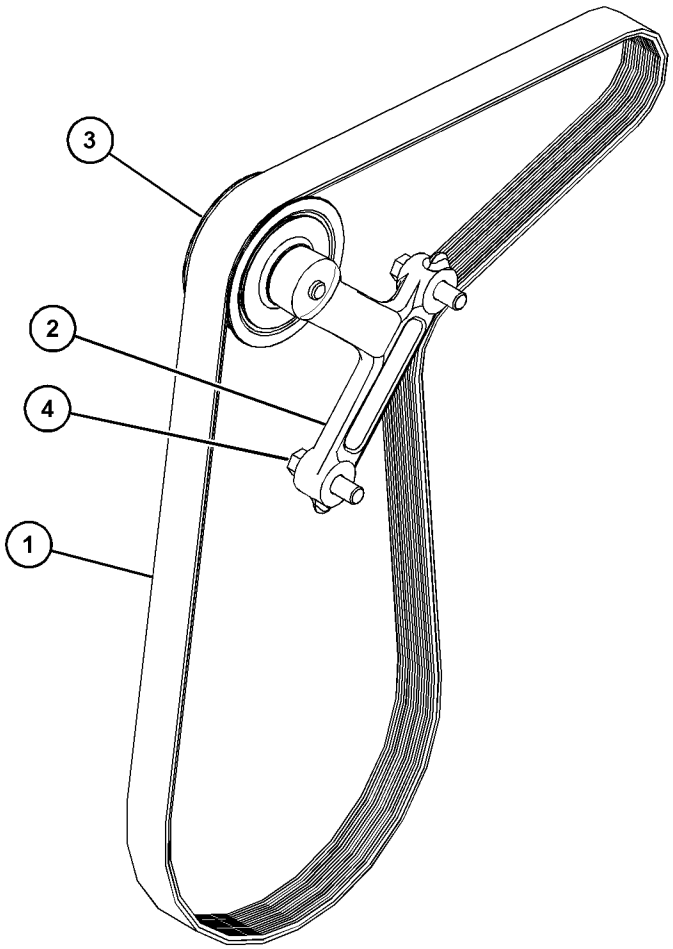

GRAPHIC #1 <END> g06108767

415-2163 DRIVE GP-FAN

PART OF 466-1161, 466-1162, 466-1163, 510-1088, 513-8513 ENGINE AR-PRIMARY

SMCS-1359 **i06705009**

NOTE	REF NO	GRAPHIC REF	PART NUMBER	QTY	PART NAME 1 2 3 4 5 6 (PRODUCT LEVEL)	SEE PAGE
M	1	1	**111-0859**	4	BOLT (M10X1.5X35-MM)	
	2	1	**284-1026**	1	PULLEY (8-GROOVE)	
	3	1	**289-8336**	1	HOUSING AS	
	4	1	**380-2619**	1	BELT-SERPENTINE	

M - METRIC PART

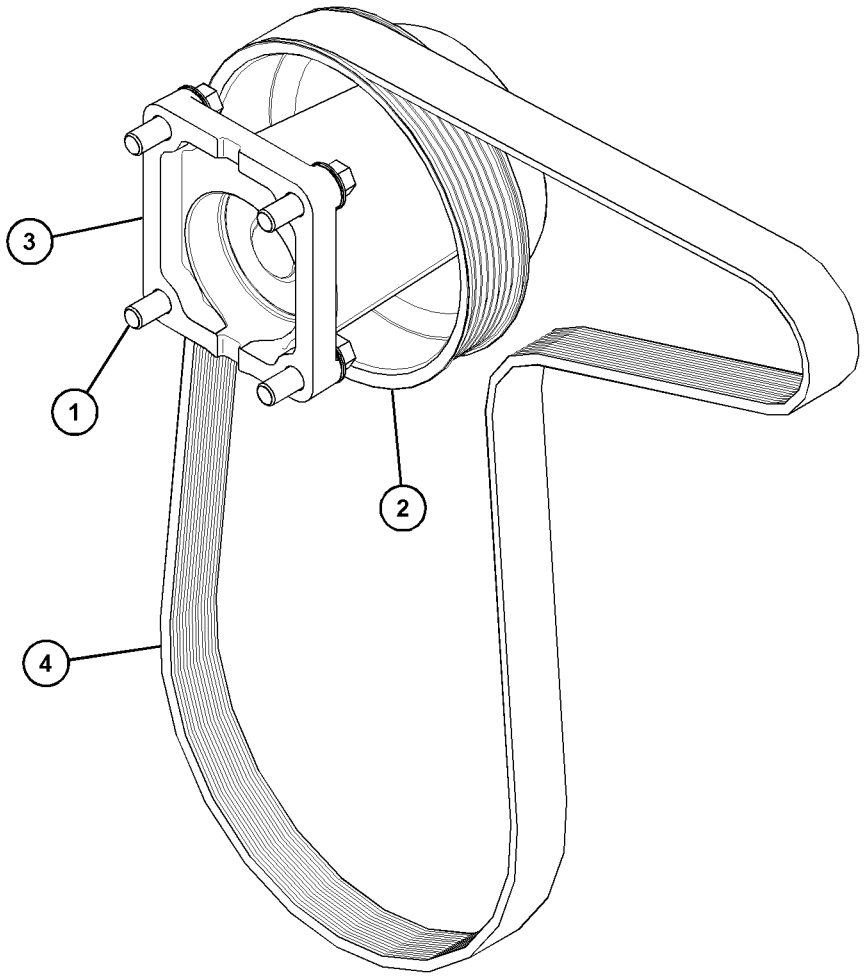

GRAPHIC #1 <END> g06115590

415-2165 DRIVE GP-FAN

PART OF 488-6687 ENGINE AR-PRIMARY

SMCS-1359 **i06920272**

NOTE	REF NO	GRAPHIC REF	PART NUMBER	QTY	PART NAME 1 2 3 4 5 6 (PRODUCT LEVEL)	SEE PAGE
M	1	1	**111-0859**	4	BOLT (M10X1.5X35-MM)	
	2	1	**284-1026**	1	PULLEY (8-GROOVE)	
	3	1	**289-8336**	1	HOUSING AS	
	4	1	**298-5880**	1	BELT-SERPENTINE	

M - METRIC PART

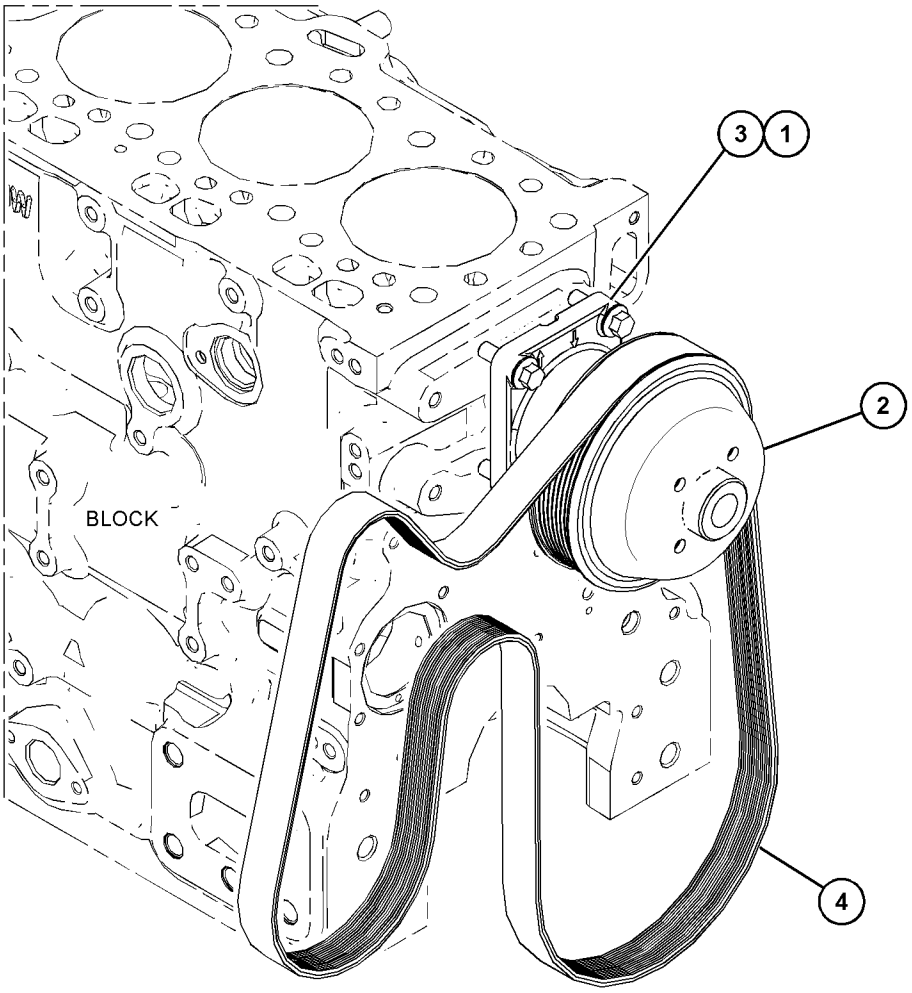

GRAPHIC #1 <END> g06171145

415-3076 DRIVE GP-FAN

PART OF 466-1160 ENGINE AR-PRIMARY

SMCS-1359 **i06053004**

NOTE	REF NO	GRAPHIC REF	PART NUMBER	QTY	PART NAME 1 2 3 4 5 6 (PRODUCT LEVEL)	SEE PAGE
M	1	1	**111-0859**	4	BOLT (M10X1.5X35-MM)	
	2	1	**284-1026**	1	PULLEY (8-GROOVE)	
	3	1	**289-8336**	1	HOUSING AS	
	4	1	**286-7845**	1	BELT-SERPENTINE	

M - METRIC PART

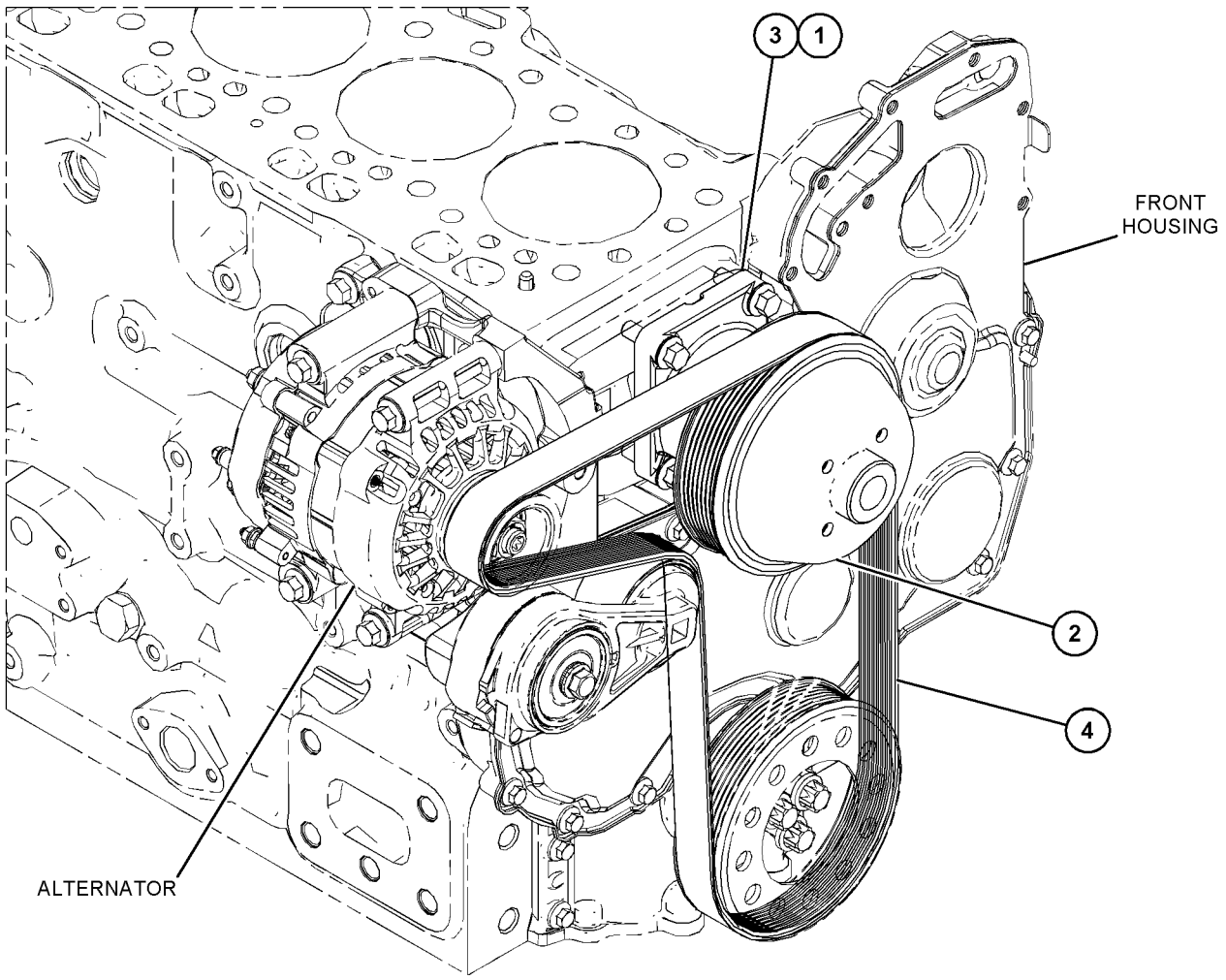

GRAPHIC #1 <END> g06008170

415-3079 DRIVE GP-FAN

PART OF 552-3506 ENGINE AR-PRIMARY

SMCS-1359 **i07307103**

NOTE	REF NO	GRAPHIC REF	PART NUMBER	QTY	PART NAME 1 2 3 4 5 6 (PRODUCT LEVEL)	SEE PAGE
M	1	1	**111-0859**	4	BOLT (M10X1.5X35-MM)	
	2	1	**284-1026**	1	PULLEY (8-GROOVE)	
	3	1	**289-8336**	1	HOUSING AS	
	4	1	**309-6666**	1	BELT-SERPENTINE	

M - METRIC PART

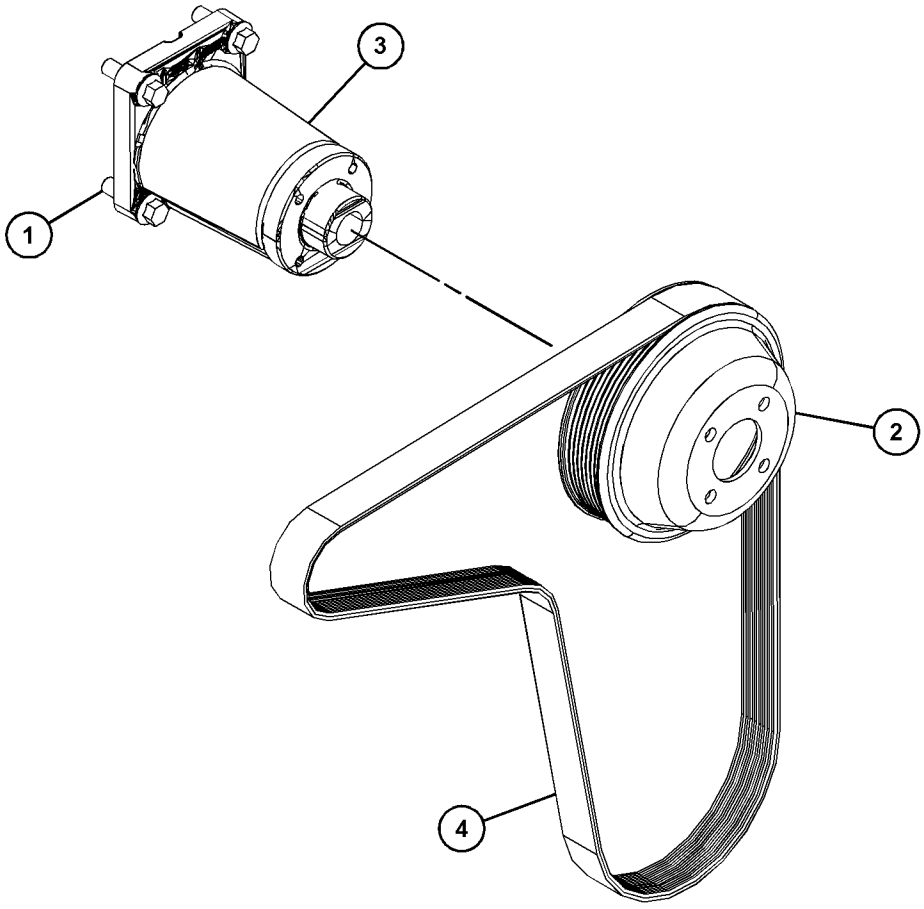

GRAPHIC #1 <END> g06280051

415-3083 DRIVE GP-FAN

PART OF 596-8896, 596-8905 ENGINE AR-PRIMARY

SMCS-1359 **i05957861**

NOTE	PART NUMBER	QTY	PART NAME 1 2 3 4 5 6 (PRODUCT LEVEL)	SEE PAGE
M	**111-0859**	4	BOLT (M10X1.5X35-MM)	
	284-1026	1	PULLEY (8-GROOVE)	
	287-6842	1	BELT-SERPENTINE	
	289-8336	1	HOUSING AS	
	347-8986	1	BELT	

M - METRIC PART

<END>

415-3086 DRIVE GP-FAN

PART OF 475-8297, 475-9060 ENGINE AR-PRIMARY

SMCS-1359 **i06269352**

NOTE	REF NO	GRAPHIC REF	PART NUMBER	QTY	PART NAME 1 2 3 4 5 6 (PRODUCT LEVEL)	SEE PAGE
M	1	1	**111-0859**	4	BOLT (M10X1.5X35-MM)	
	2	1	**289-8336**	1	HOUSING AS	
	3	1	**284-1026**	1	PULLEY (8-GROOVE)	
	4	1	**382-7387**	1	BELT-SERPENTINE	

M - METRIC PART

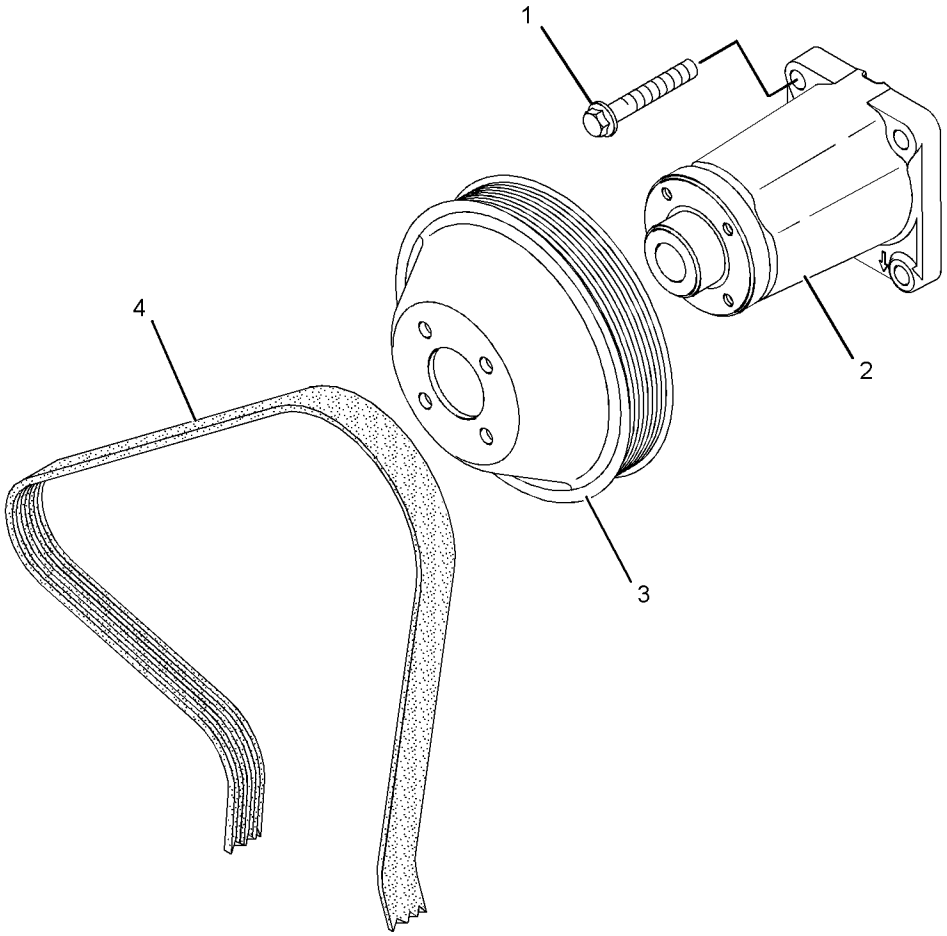

GRAPHIC #1 <END> g01235346

375-4606 DRIVE GP-POWER TAKE-OFF

PTO

PART OF 470-8814, 474-7299, 484-2939, 485-8027, 491-2606, 493-1019, 493-1038, 494-6807, 499-7181, 504-3629, 504-5365, 504-8134, 504-9579, 506-5035, 512-9858, 513-0851, 514-9367, 519-4128, 526-7210, 531-2492, 533-3588, 552-8869, 553-1809, 553-3730, 563-6728, 563-6729, 575-2879, 575-2880, 591-9440, 613-9482, 627-8019, 627-8054, 628-4345, 633-4335, 633-7776, 645-2039, 657-2370 ENGINE AR-PRIMARY

SMCS-1165 **i05752989**

NOTE	REF NO	GRAPHIC REF	PART NUMBER	QTY	PART NAME 1 2 3 4 5 6 (PRODUCT LEVEL)	SEE PAGE
M	1	1	**102-9941**	2	BOLT (M12X1.75X25-MM)	
	2	1	**277-4223**	1	PLUG	
	3	1	**291-6526**	1	BEARING-NEEDLE	
	4	1	**369-6810**	1	COVER GP	
	5	1	**293-9737**	1	GEAR (34-TEETH)	
	6	1	**302-6780**	1	BALL BEARING	
	7	1	**291-6529**	1	CLIP	
	8	1	**291-6528**	1	CLIP	

M - METRIC PART

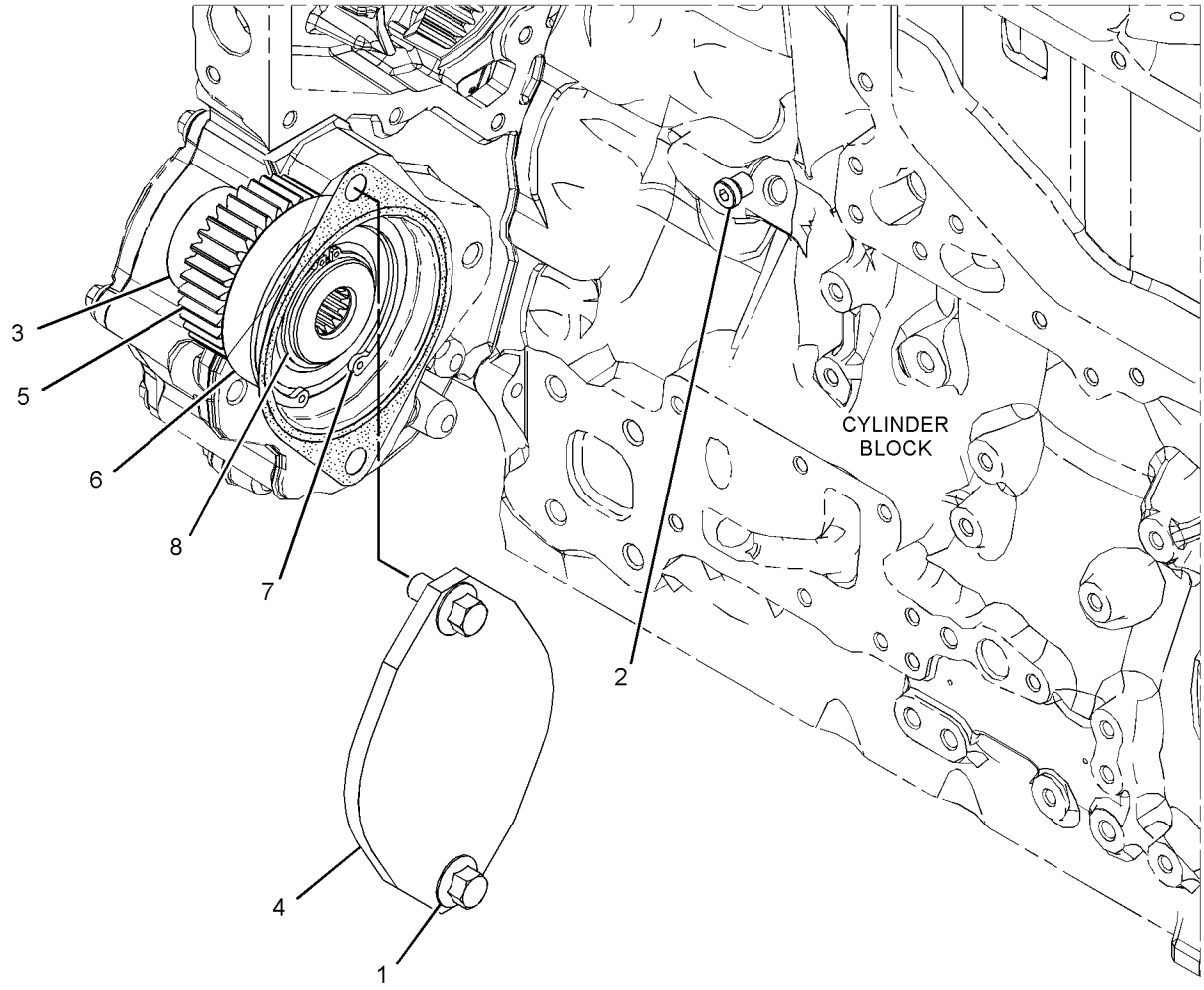

GRAPHIC #1 <END> g03670492

371-2694 EXTENSION GP-FAN

PART OF 451-8343, 475-8297, 475-9060, 492-3169, 493-1019, 493-1038, 504-5365, 504-8134, 525-8759, 527-7106, 528-3358, 553-3730, 594-2125, 596-4834, 596-7090, 596-8896, 596-8905, 613-9482, 623-1309, 624-0698 ENGINE AR-PRIMARY

SMCS-1359 **i05723851**

NOTE	REF NO	GRAPHIC REF	PART NUMBER	QTY	PART NAME 1 2 3 4 5 6 (PRODUCT LEVEL)	SEE PAGE
	1	1	**179-7071**	4	BOLT (M8X1.25X20-MM)	

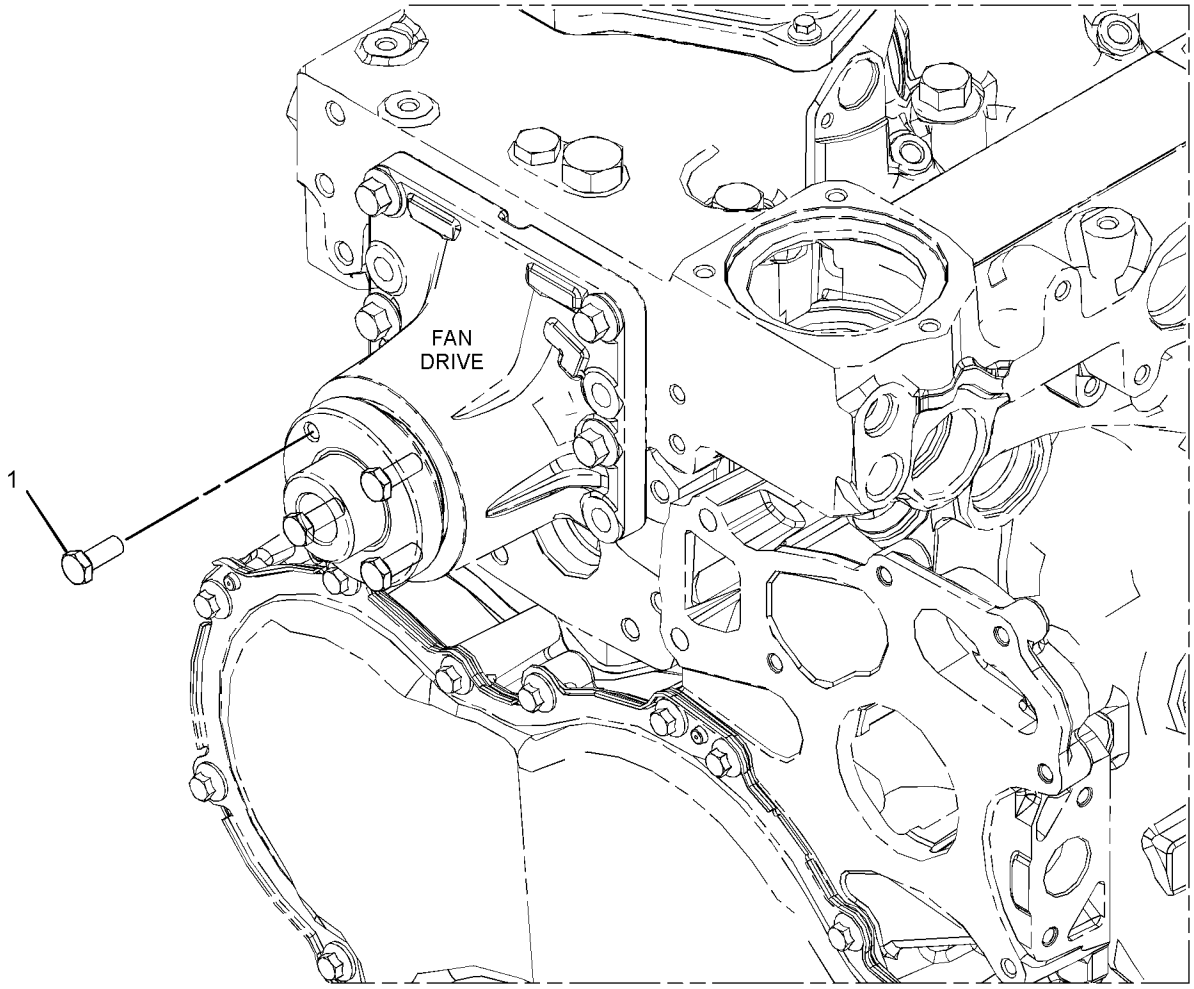

GRAPHIC #1 <END> g02564805

375-8320 EXTENSION GP-FAN

3"/ 76.2 MM EXTENSION

PART OF 596-2071 ENGINE AR-COMPLETE, 461-4638, 461-4649, 461-4656, 461-4658, 466-1160, 466-1161, 466-1162, 466-1163, 468-0461, 470-8667, 471-0541, 479-9398, 480-2181, 482-0212, 484-2939, 485-8027, 486-2644, 488-6687, 489-9006, 491-4973, 491-4980, 491-4993, 491-7124, 492-3021, 492-3072, 494-6807, 495-8349, 499-7181, 501-2466, 502-9462, 504-9579, 507-8016, 510-1088, 512-9858, 513-0851, 513-8513, 514-9367, 520-3152, 520-4644, 527-9686, 530-1323, 530-2601, 533-2797, 535-8060, 536-6675, 539-6915, 539-8582, 543-4255, 552-3506, 552-8869, 555-4669, 563-6728, 563-6729, 563-6730, 569-7846, 583-8352, 591-1266, 591-9440, 593-7287, 598-9881, 602-8721, 603-5300, 609-9819, 612-1735, 614-9555, 622-6239, 627-8019, 627-8054, 627-8129, 628-4345, 633-4335, 633-7776, 657-2370 ENGINE AR-PRIMARY

SMCS-1359 **i05727213**

NOTE	REF NO	GRAPHIC REF	PART NUMBER	QTY	PART NAME 1 2 3 4 5 6 (PRODUCT LEVEL)	SEE PAGE
M	1	1	**6V-9189**	4	LOCKNUT (M8X1.25-THD)	
M	2	1	**133-7668**	4	STUD (M8X1.25X116-MM)	
	3	1	**133-7669**	1	EXTENSION-FAN	

M - METRIC PART

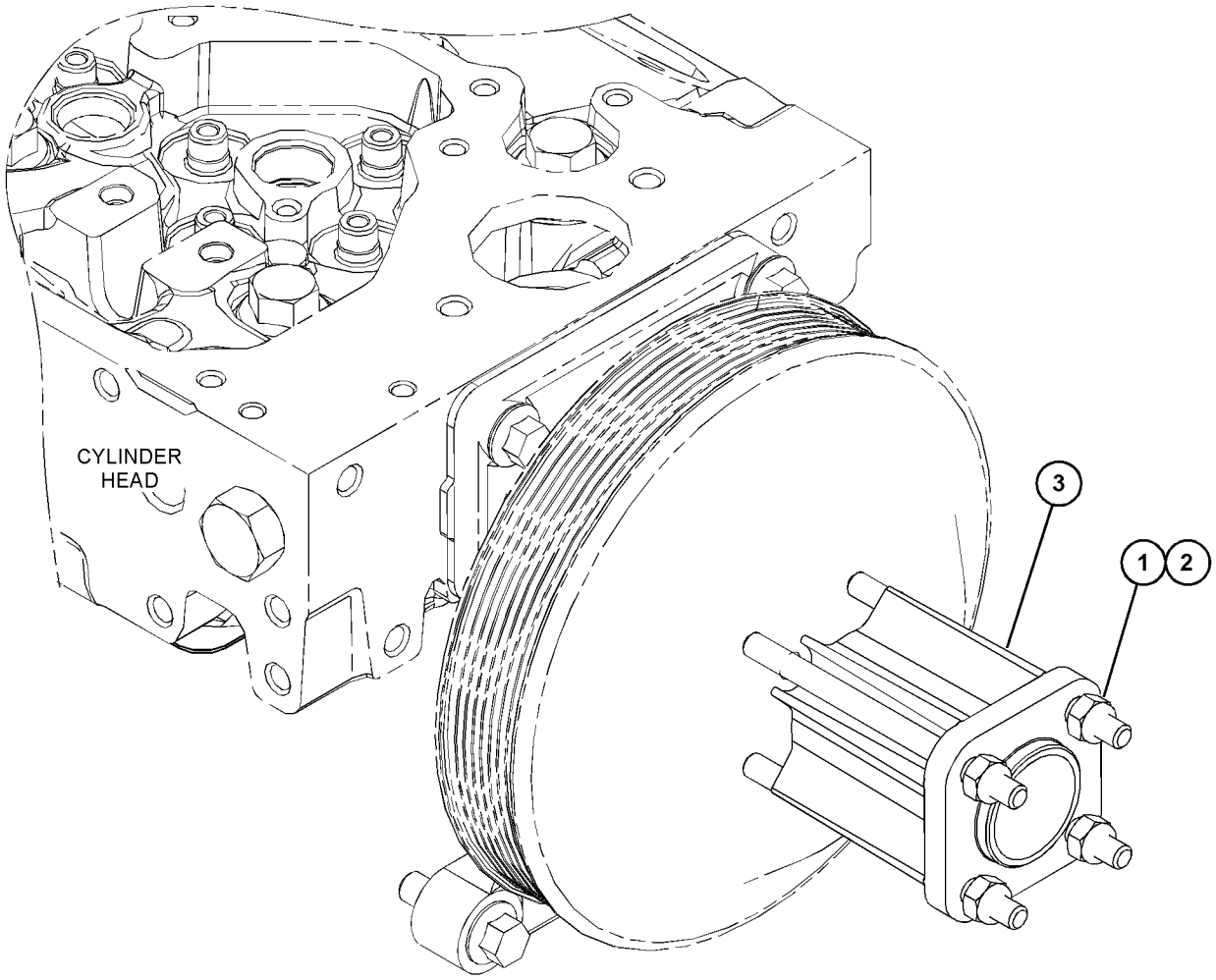

GRAPHIC #1 <END> g03666082

393-9542 EXTENSION GP-FAN

2''/50.8MM . EXTENSION

SMCS-1359 **i05723635**

NOTE	REF NO	GRAPHIC REF	PART NUMBER	QTY	PART NAME 1 2 3 4 5 6 (PRODUCT LEVEL)	SEE PAGE
M	1	1	**6V-9189**	4	LOCKNUT (M8X1.25-THD)	
	2	1	**135-5417**	4	STUD (M8X1.25X91-MM)	
	3	1	**9Y-1590**	1	EXTENSION-FAN	

M - METRIC PART

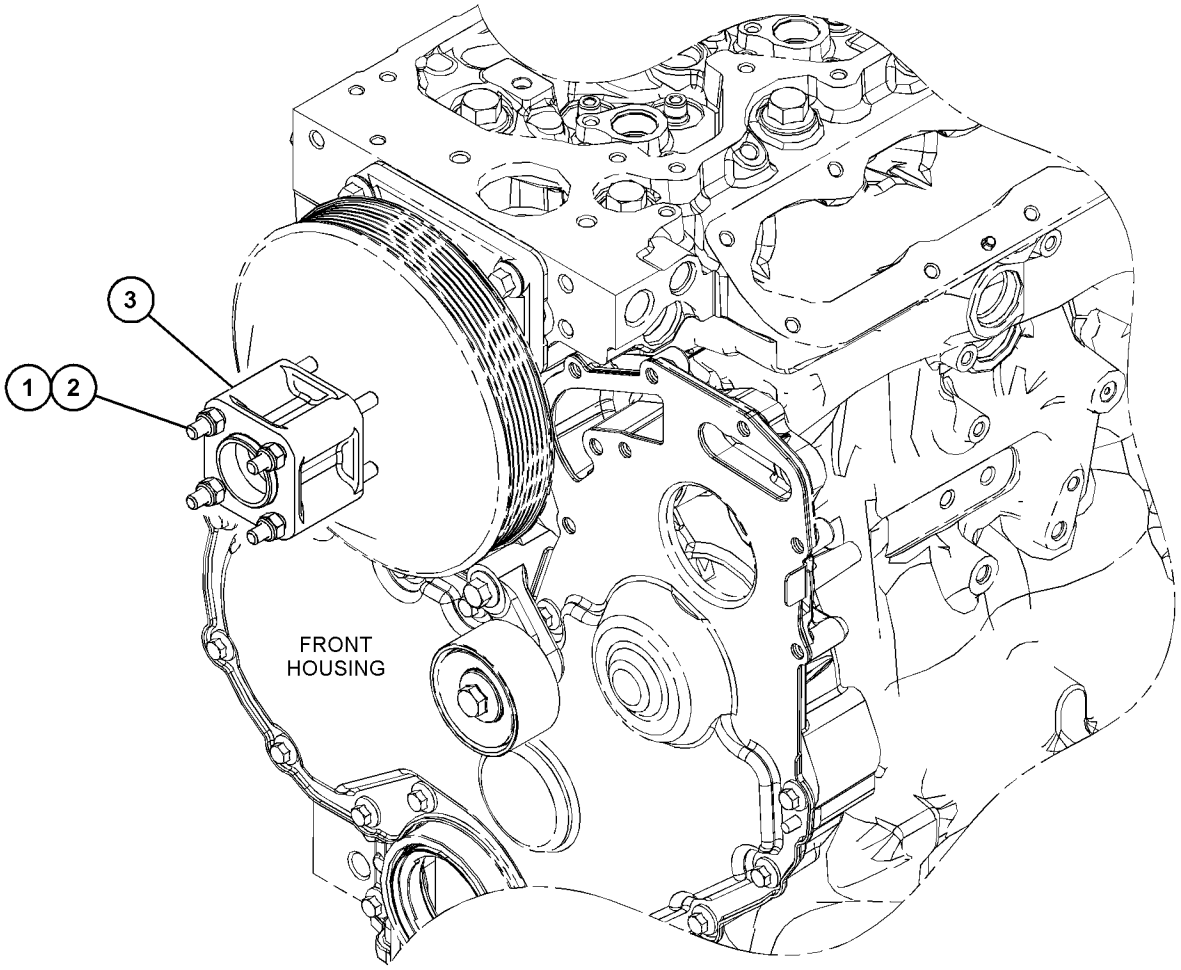

GRAPHIC #1 <END> g03646977

393-9543 EXTENSION GP-FAN

PART OF 533-3588 ENGINE AR-PRIMARY

SMCS-1359 **i07158206**

NOTE	REF NO	GRAPHIC REF	PART NUMBER	QTY	PART NAME 1 2 3 4 5 6 (PRODUCT LEVEL)	SEE PAGE
M	1	1	**6V-9189**	4	LOCKNUT (M8X1.25-THD)	
M	2	1	**135-6362**	4	STUD (M8X1.25X103-MM)	
	3	1	**135-6363**	1	EXTENSION-FAN	

M - METRIC PART

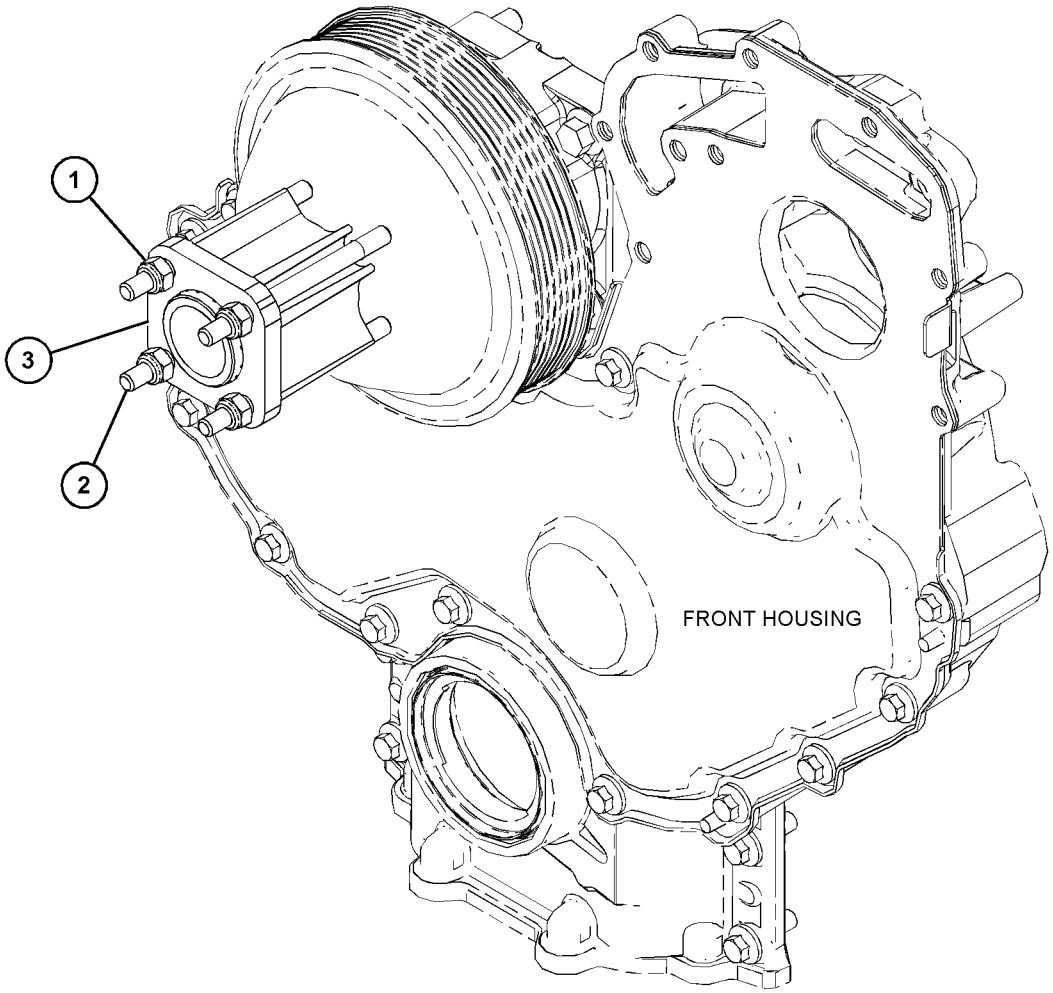

GRAPHIC #1 <END> g06001632

452-6700 EXTENSION GP-FAN

PART OF 506-5035, 553-1809 ENGINE AR-PRIMARY

SMCS-1359 **i06180430**

NOTE	REF NO	GRAPHIC REF	PART NUMBER	QTY	PART NAME 1 2 3 4 5 6 (PRODUCT LEVEL)	SEE PAGE
	1	1	**9Y-1590**	1	EXTENSION-FAN	
M	2	1	**6V-9189**	4	LOCKNUT (M8X1.25-THD)	
	3	1	**133-7669**	1	EXTENSION-FAN	
	4	1	**189-2301**	4	STUD	

M - METRIC PART

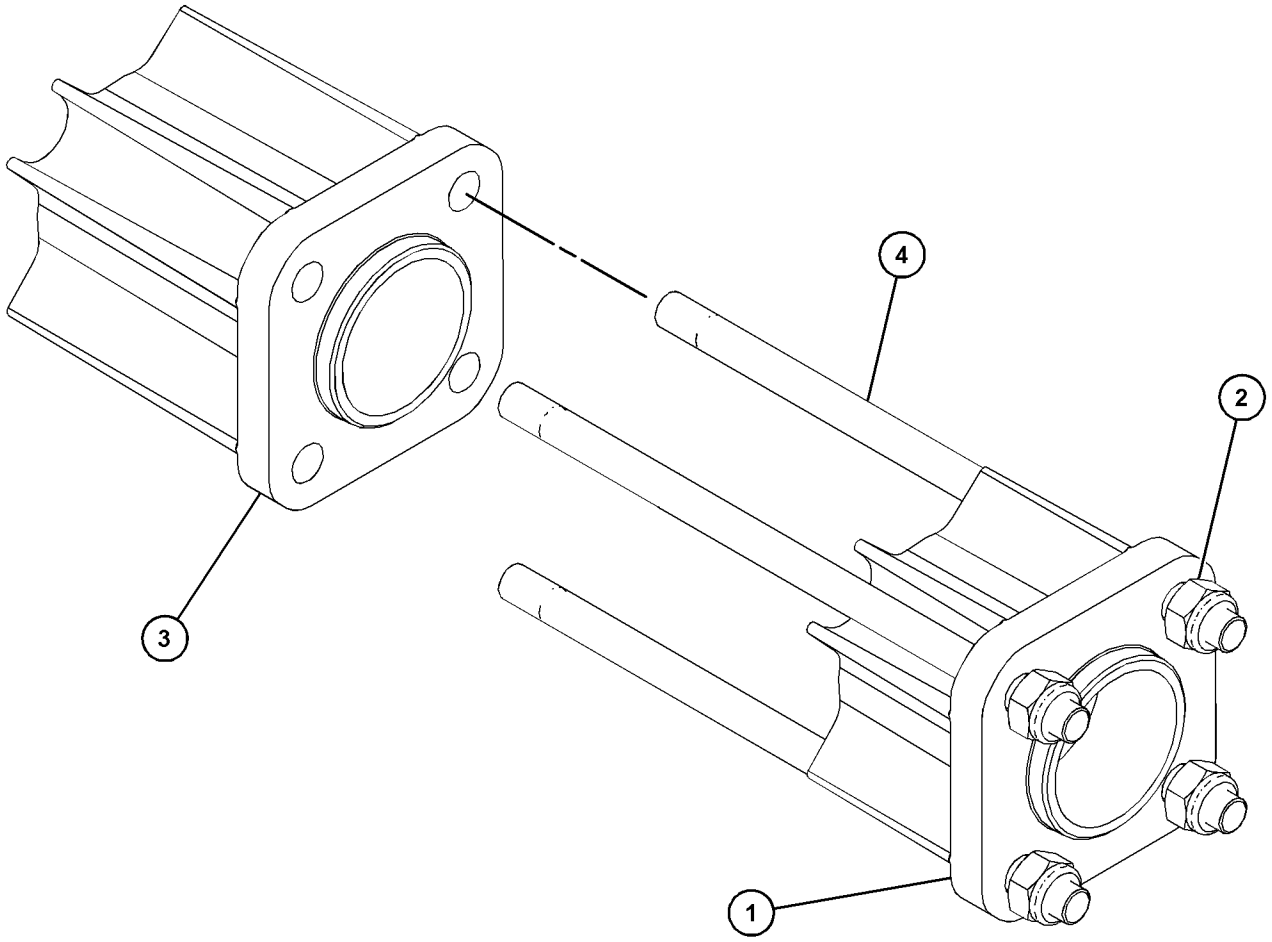

GRAPHIC #1 <END> g06007070

375-0098 FASTENER GP-DAMPER & PULLEY

PART OF 596-2071 ENGINE AR-COMPLETE, 451-8343, 461-4638, 461-4649, 461-4656, 461-4658, 468-0461, 468-8218, 470-8667, 470-8814, 471-0541, 474-7299, 475-8297, 475-9060, 478-4257, 479-9398, 480-2181, 481-0811, 482-0212, 484-2939, 485-8027, 486-2644, 488-6687, 489-9006, 491-2606, 491-4973, 491-4980, 491-4993, 491-7124, 492-3021, 492-3072, 494-2073, 494-6807, 495-8349, 499-7181, 501-2466, 502-9462, 504-3629, 504-9579, 506-5035, 506-9918, 507-8016, 508-0270, 510-1088, 512-9858, 513-0851, 513-8513, 514-9367, 515-9203, 519-4128, 520-3152, 520-4644, 524-8271, 525-8759, 526-7210, 527-7106, 527-9686, 528-3358, 528-9866, 528-9920, 530-1323, 530-2601, 531-2492, 533-2797, 533-3588, 535-8060, 536-6675, 539-6915, 539-8582, 543-4255, 552-3506, 552-8869, 553-1809, 553-3730, 555-4669, 562-8873, 563-6728, 563-6729, 563-6730, 565-1247, 569-7846, 575-2879, 575-2880, 583-8352, 591-1266, 591-9440, 593-7287, 593-7288, 594-2125, 596-4834, 596-7090, 596-8896, 596-8905, 598-9881, 602-8721, 603-5300, 608-9261, 609-9819, 612-1735, 613-9482, 614-5795, 614-9555, 622-6239, 623-1309, 624-0698, 627-8019, 627-8054, 627-8129, 628-4345, 633-4335, 633-7776, 645-2039, 657-2370 ENGINE AR-PRIMARY

SMCS-1205 **i05723735**

NOTE	REF NO	GRAPHIC REF	PART NUMBER	QTY	PART NAME 1 2 3 4 5 6 (PRODUCT LEVEL)	SEE PAGE
M	1	1	**274-1935**	6	BOLT (M12X1.75X30-MM)	

M - METRIC PART

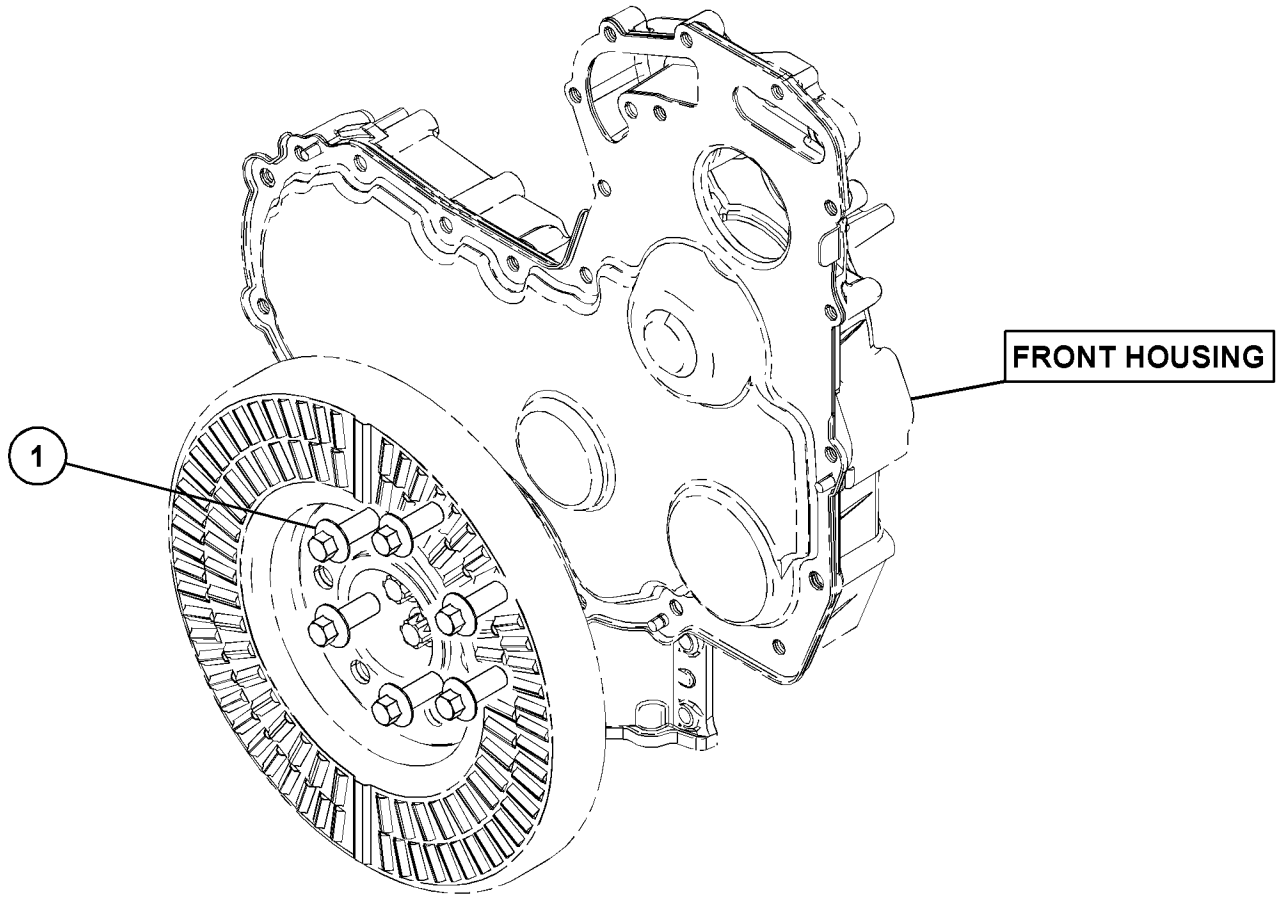

GRAPHIC #1 <END> g03172177

345-8901 FLYWHEEL GP

PART OF 466-1160, 466-1161, 466-1162, 466-1163, 475-8297, 475-9060, 478-4257, 481-0811, 494-2073, 499-7181, 506-5035, 510-1088, 512-9858, 513-8513, 514-9367, 515-9203, 524-8271, 527-9686, 528-9866, 533-3588, 553-1809, 555-4669, 608-9261, 613-9482, 614-5795, 622-6239 ENGINE AR-PRIMARY

SMCS-1156 **i06240174**

NOTE	REF NO	GRAPHIC REF	PART NUMBER	QTY	PART NAME 1 2 3 4 5 6 (PRODUCT LEVEL)	SEE PAGE
	1	1	**458-3400**	1	FLYWHEEL AS	
	1A	1	**033-7687**	1	RING-STARTING MOTOR (126-TEETH)	
	2	1	**0S-1603**	12	BOLT (1/2-20X1.5-IN)	
	3	1	**145-4911**	12	WASHER	

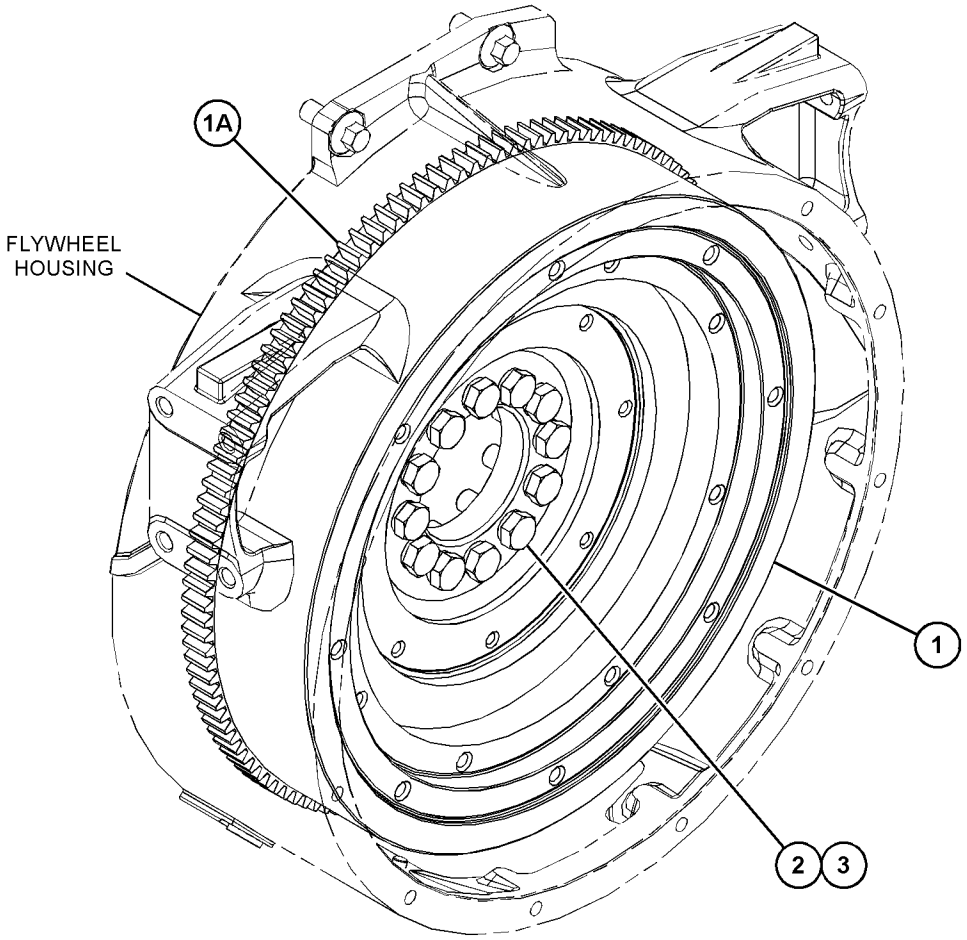

GRAPHIC #1 <END> g03647217

345-8902 FLYWHEEL GP

PART OF 596-2071 ENGINE AR-COMPLETE, 461-4638, 482-0212, 489-9006, 491-4973, 491-4980, 492-3021, 492-3072, 530-1323, 530-2601, 535-8060, 536-6675, 539-8582, 569-7846, 591-9440, 602-8721, 603-5300, 612-1735, 627-8129 ENGINE AR-PRIMARY

SMCS-1156 **i06240181**

NOTE	REF NO	GRAPHIC REF	PART NUMBER	QTY	PART NAME 1 2 3 4 5 6 (PRODUCT LEVEL)	SEE PAGE
	1	1	**9V-3811**	4	BOLT-12 POINT HEAD (1/2-20X2.25-IN)	
	2	1	**0S-1603**	8	BOLT (1/2-20X1.5-IN)	
	3	1	**145-4911**	8	WASHER	
	4	1	**149-5599**	1	HOUSING	
	5	1	**458-3400**	1	FLYWHEEL AS	
	5A	1	**033-7687**	1	RING-STARTING MOTOR (126-TEETH)	

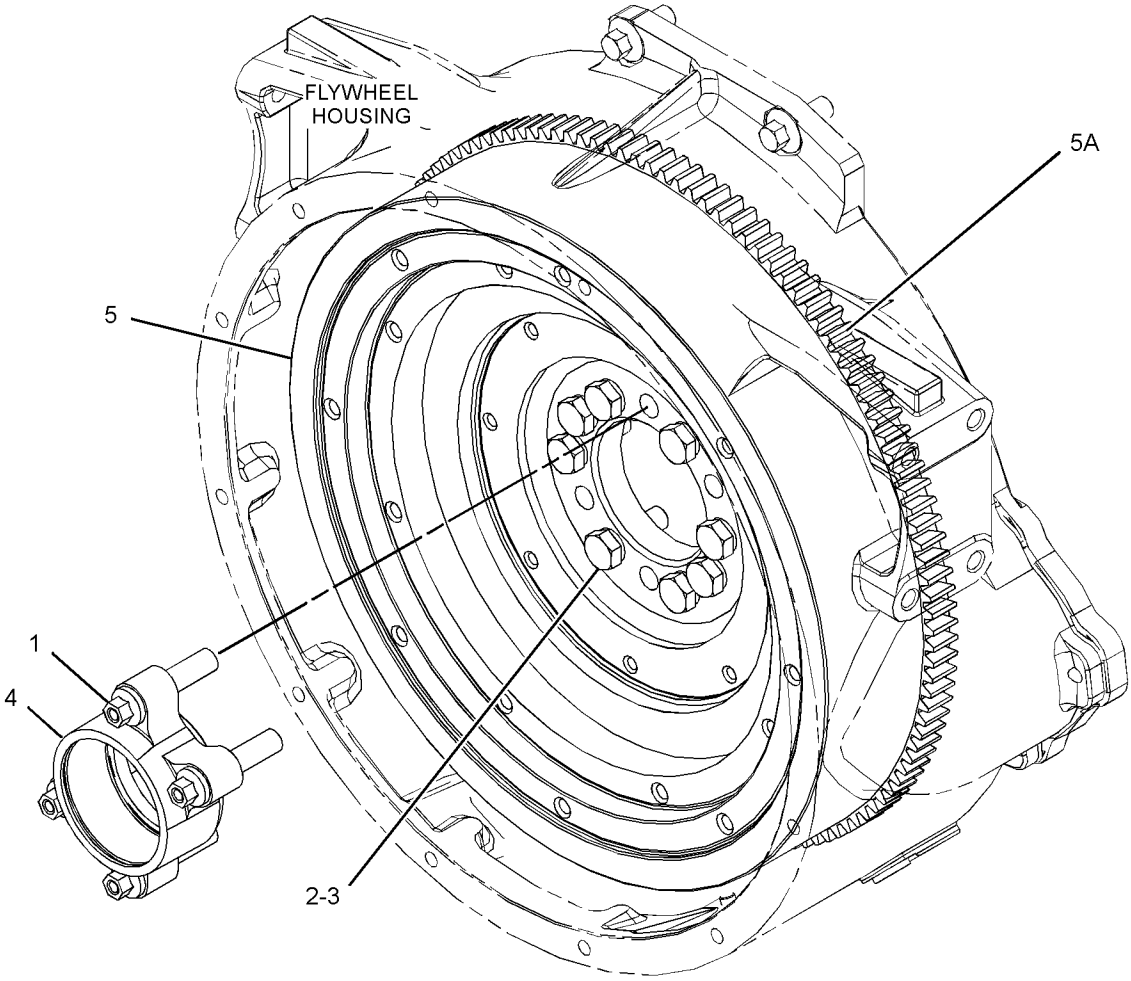

GRAPHIC #1 <END> g03310057

345-8961 FLYWHEEL GP

PART OF 474-7299, 504-3629, 553-3730, 628-4345, 633-7776 ENGINE AR-PRIMARY

SMCS-1156 **i06992697**

NOTE	REF NO	GRAPHIC REF	PART NUMBER	QTY	PART NAME 1 2 3 4 5 6 (PRODUCT LEVEL)	SEE PAGE
	1	1	**0S-1603**	12	BOLT (1/2-20X1.5-IN)	
	2	1	**145-4911**	12	WASHER	
	3	1	**458-3404**	1	FLYWHEEL AS	
	3A	1	**033-7687**	1	RING-STARTING MOTOR (126-TEETH)	

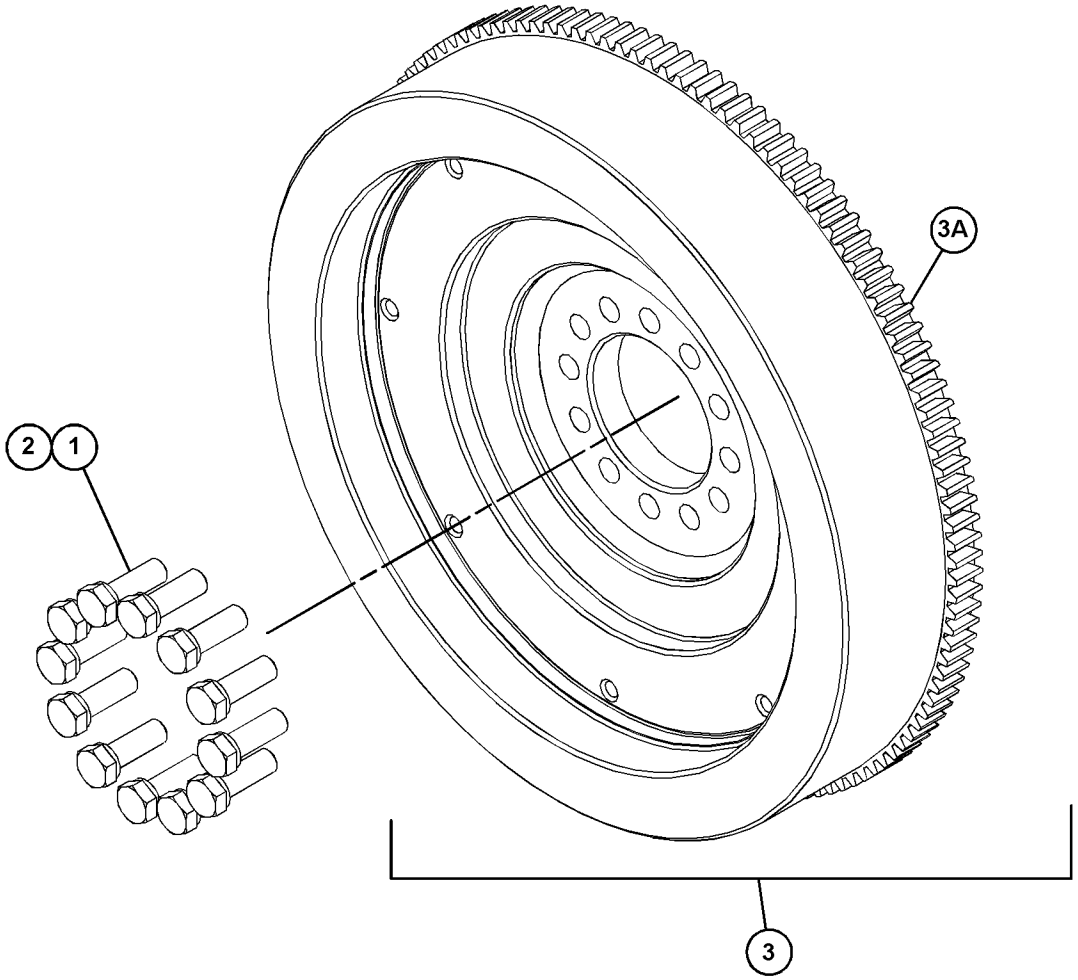

GRAPHIC #1 <END> g03686845

345-9028 FLYWHEEL GP

PART OF 468-8218, 488-6687, 491-2606, 531-2492 ENGINE AR-PRIMARY

SMCS-1156 **i06627585**

NOTE	REF NO	GRAPHIC REF	PART NUMBER	QTY	PART NAME 1 2 3 4 5 6 (PRODUCT LEVEL)	SEE PAGE
	1	1	**0S-1603**	12	BOLT (1/2-20X1.5-IN)	
	2	1	**145-4911**	12	WASHER	
	3	1	**277-0587**	1	FLYWHEEL AS	
	3A	1	**277-0588**	1	GEAR-STARTING MOTOR RING (134-TEETH)	

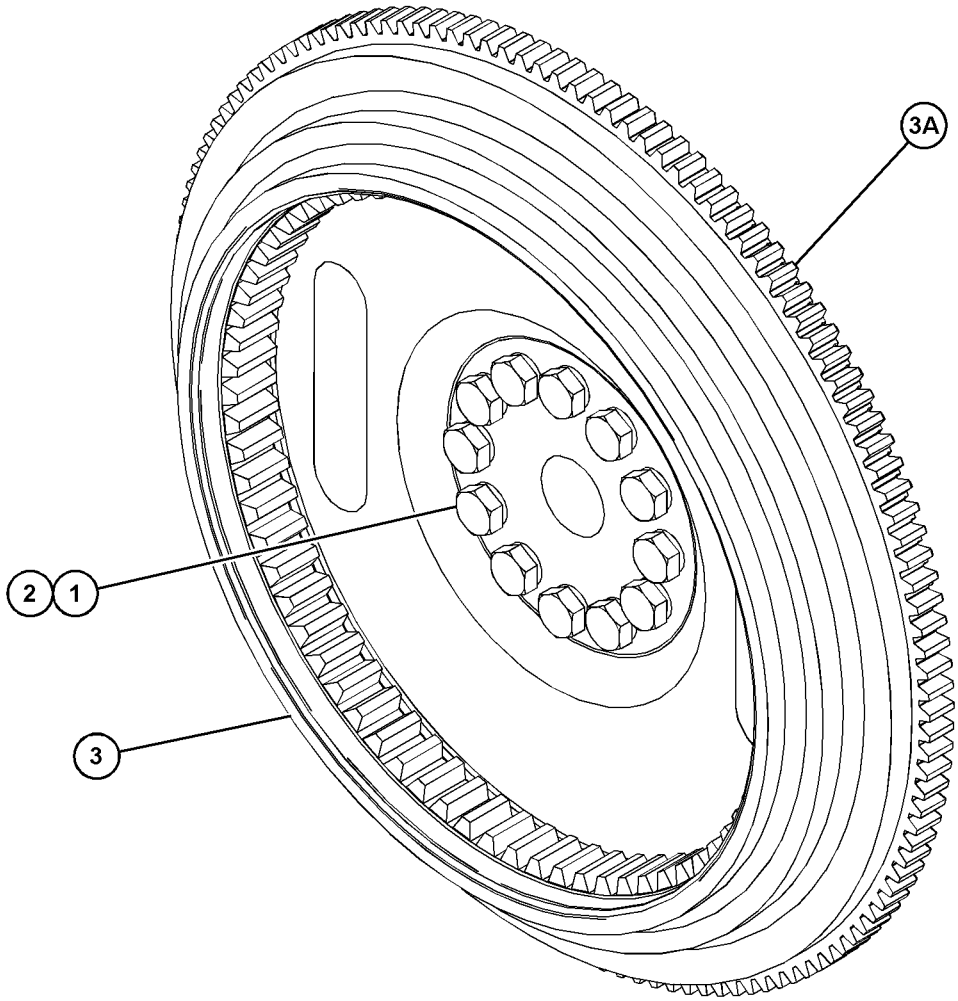

GRAPHIC #1 <END> g06031647

345-9037 FLYWHEEL GP

PART OF 461-4649, 461-4656, 479-9398, 485-8027, 486-2644, 491-4993, 494-6807, 501-2466, 504-9579, 507-8016, 508-0270, 513-0851, 520-3152, 533-2797, 539-6915, 543-4255, 552-8869, 562-8873, 563-6729, 563-6730, 565-1247, 583-8352, 593-7287, 593-7288, 596-8896, 596-8905, 614-9555, 633-4335, 657-2370 ENGINE AR-PRIMARY

SMCS-1156 **i05723633**

NOTE	REF NO	GRAPHIC REF	PART NUMBER	QTY	PART NAME 1 2 3 4 5 6 (PRODUCT LEVEL)	SEE PAGE
	1	1	**145-4911**	12	WASHER	
	2	1	**279-9254**	12	BOLT (1/2-20X2-IN)	
	3	1	**308-3702**	1	FLYWHEEL AS	
	3A	1	**277-0588**	1	GEAR-STARTING MOTOR RING (134-TEETH)	

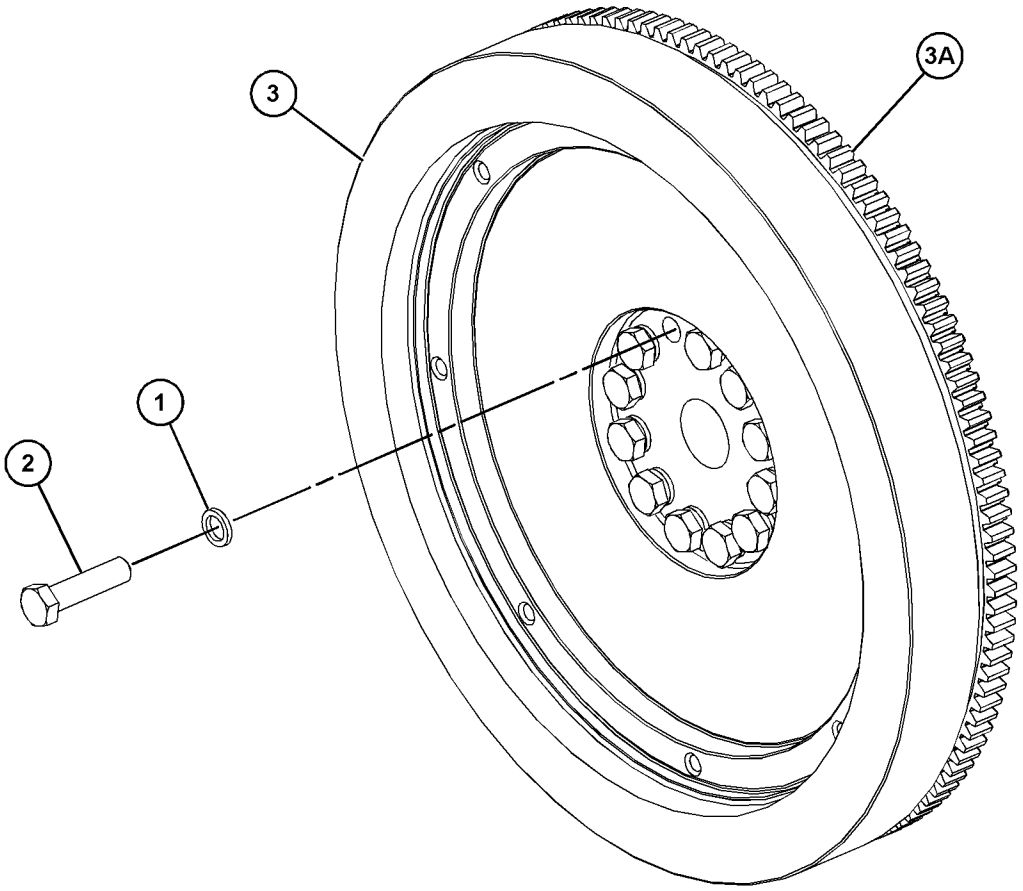

GRAPHIC #1 <END> g03651400

377-0692 FLYWHEEL GP

PART OF 470-8814, 506-9918, 520-4644, 528-9920, 575-2879, 575-2880, 598-9881, 624-0698, 645-2039 ENGINE AR-PRIMARY

SMCS-1156 **i05723736**

NOTE	REF NO	GRAPHIC REF	PART NUMBER	QTY	PART NAME 1 2 3 4 5 6 (PRODUCT LEVEL)	SEE PAGE
	1	1	**145-4911**	12	WASHER	
	2	1	**361-7350**	1	FLYWHEEL AS	
		1	**277-0588**	1	GEAR-STARTING MOTOR RING (134-TEETH)	
	3	1	**321-7706**	12	BOLT	

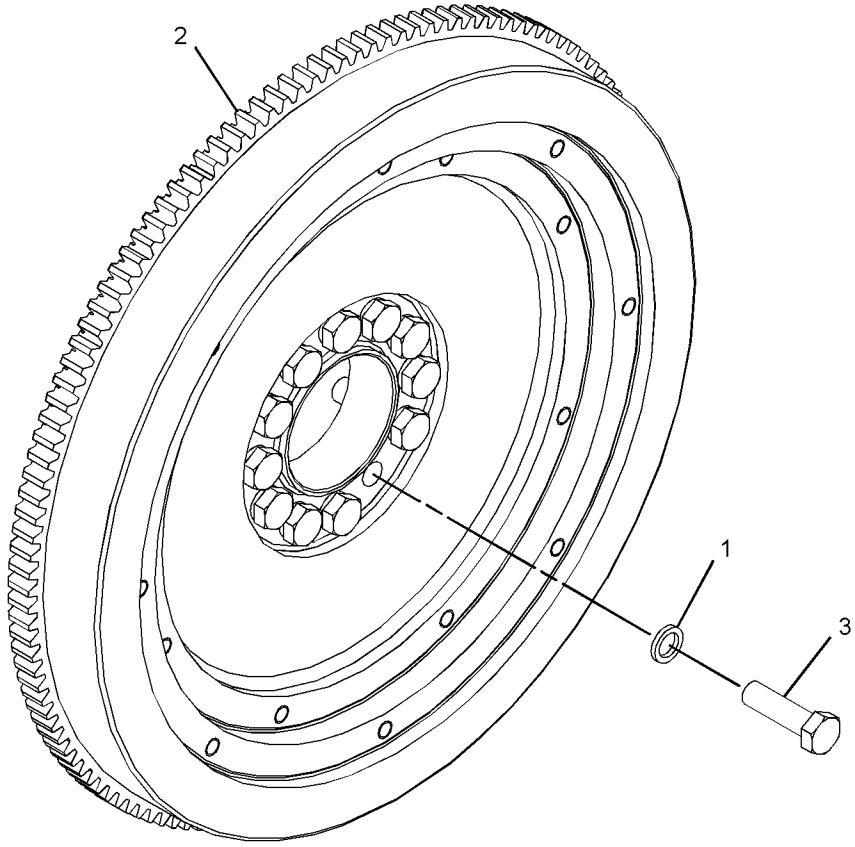

GRAPHIC #1 <END> g03457476

378-0585 FLYWHEEL GP

PART OF 484-2939, 486-4250, 526-0511, 563-6728, 597-9248, 627-8054 ENGINE AR-PRIMARY

SMCS-1156 **i06151741**

NOTE	REF NO	GRAPHIC REF	PART NUMBER	QTY	PART NAME 1 2 3 4 5 6 (PRODUCT LEVEL)	SEE PAGE
	1	1	**145-4911**	12	WASHER	
	2	1	**295-7712**	12	BOLT	
	3	1	**299-6878**	1	FLYWHEEL AS	
	3A	1	**277-0588**	1	GEAR-STARTING MOTOR RING (134-TEETH)	

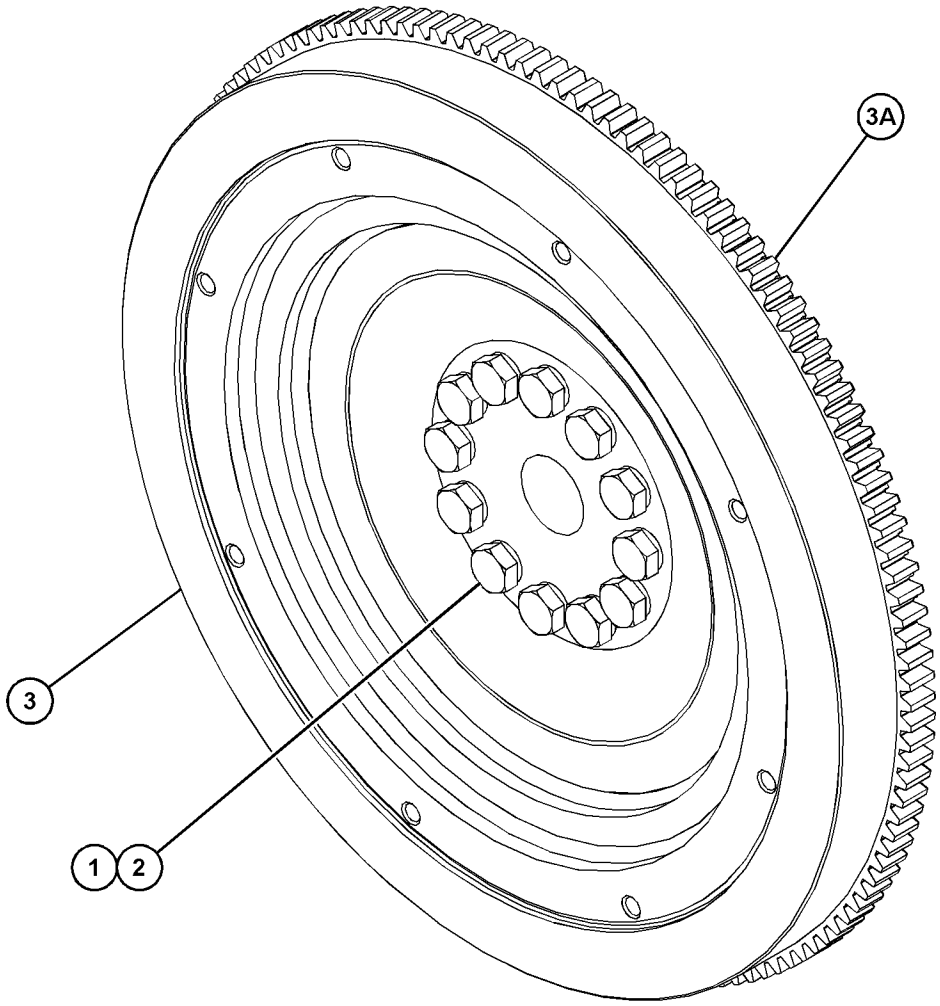

GRAPHIC #1 <END> g06001779

437-2723 FLYWHEEL GP

PART OF 451-8343, 461-4658, 468-0461, 470-8667, 480-2181, 491-7124, 502-9462, 519-4128, 525-8759, 526-7210, 527-7106, 528-3358, 552-3506, 591-1266, 594-2125, 596-4834, 596-7090, 609-9819, 623-1309, 627-8019 ENGINE AR-PRIMARY

SMCS-1156 **i05719017**

NOTE	REF NO	GRAPHIC REF	PART NUMBER	QTY	PART NAME 1 2 3 4 5 6 (PRODUCT LEVEL)	SEE PAGE
	1	1	**145-4911**	12	WASHER	
	2	1	**279-9254**	12	BOLT (1/2-20X2-IN)	
	3	1	**356-3499**	1	FLYWHEEL AS	
	3A	1	**6I-2997**	1	GEAR (156-TEETH)	

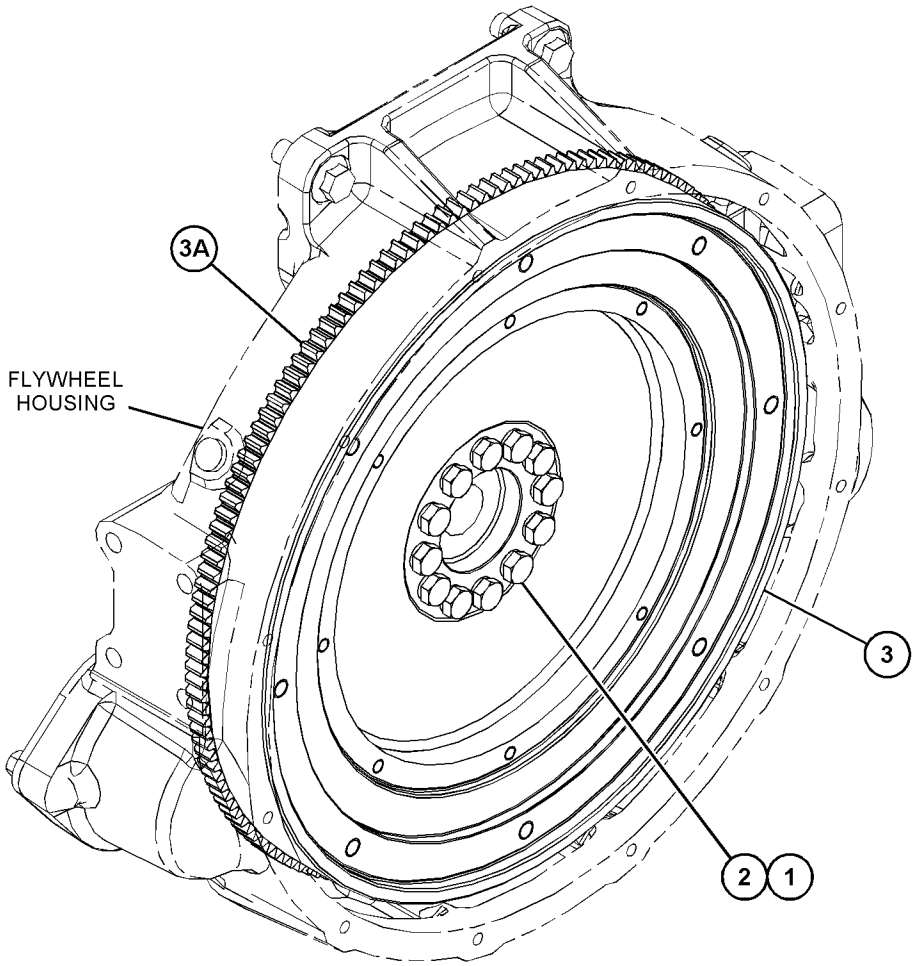

GRAPHIC #1 <END> g03646445

466-1010 FLYWHEEL GP

SMCS-1156 **i06151649**

NOTE	REF NO	GRAPHIC REF	PART NUMBER	QTY	PART NAME 1 2 3 4 5 6 (PRODUCT LEVEL)	SEE PAGE
	1	1	**317-6221**	12	BOLT (1/2-20X2.75-IN)	
	2	1	**145-4911**	12	WASHER	
	3	1	**464-8660**	1	FLYWHEEL AS	
		1	**033-7687**	1	RING-STARTING MOTOR (126-TEETH)	

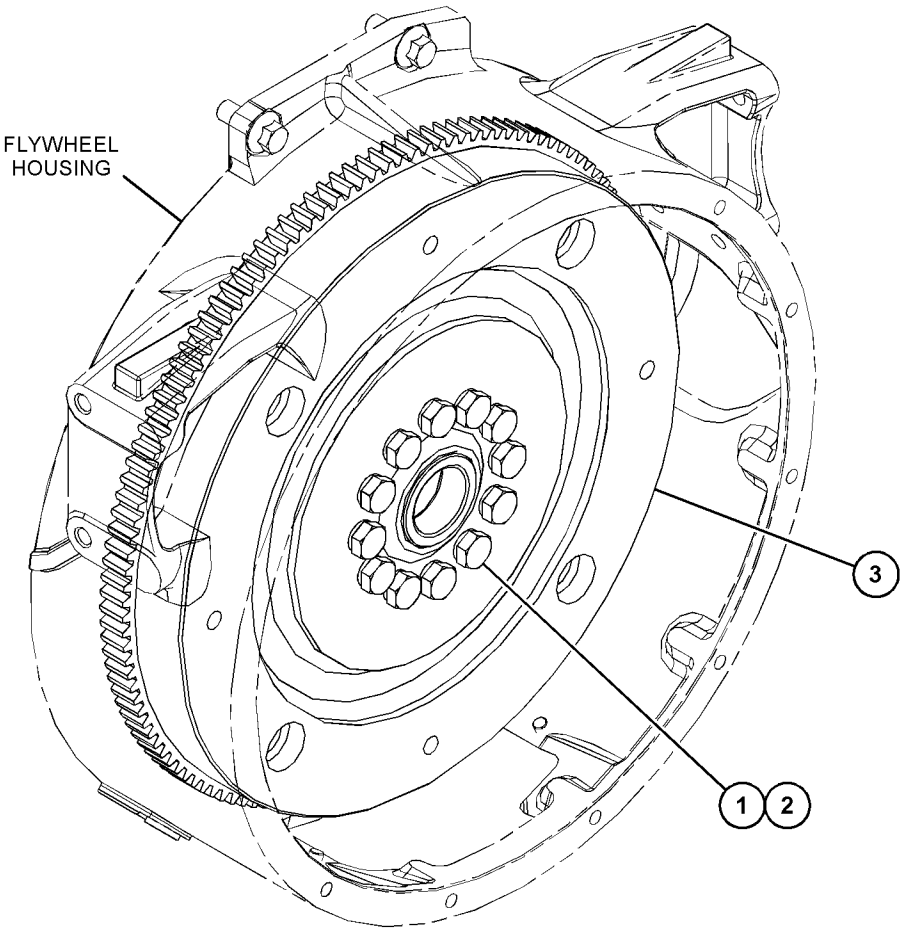

GRAPHIC #1 <END> g03858911

482-7703 FLYWHEEL GP

PART OF 471-0541 ENGINE AR-PRIMARY

SMCS-1156 **i06258418**

NOTE	REF NO	GRAPHIC REF	PART NUMBER	QTY	PART NAME 1 2 3 4 5 6 (PRODUCT LEVEL)	SEE PAGE
	1	1	**006-9566**	12	BOLT (1/2-20X1.437-IN)	
	2	1	**145-4911**	12	WASHER	
	3	1	**119-4034**	1	FLYWHEEL AS	
	3A	1	**033-7687**	1	RING-STARTING MOTOR (126-TEETH)	

482-7703 **FLYWHEEL GP (**contd.**)** **i06258418**

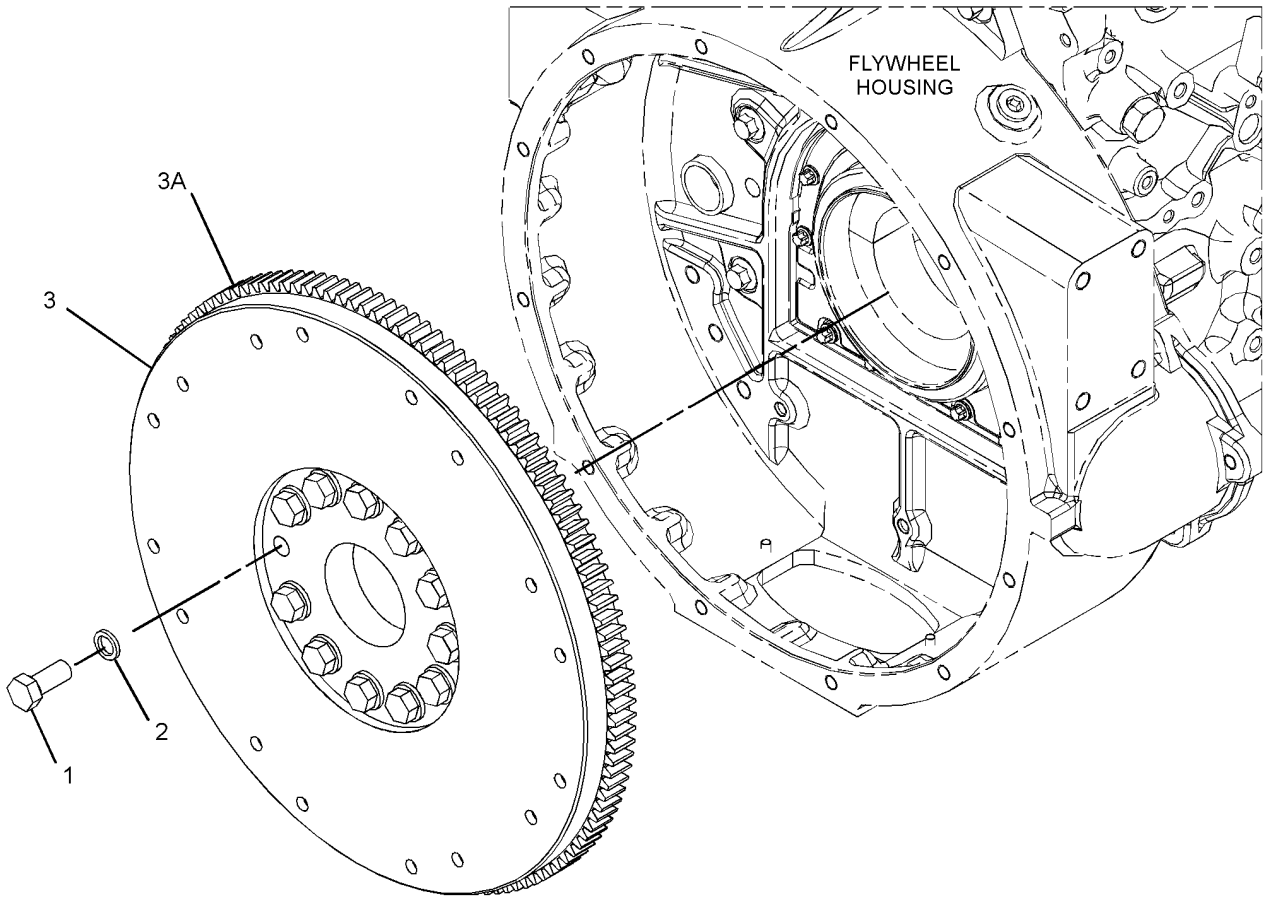

GRAPHIC #1 <END> g03874690

345-8838 HOUSING GP-FLYWHEEL

PART OF 596-2071 ENGINE AR-COMPLETE, 461-4638, 466-1160, 466-1161, 466-1162, 466-1163, 475-8297, 475-9060, 481-0811, 482-0212, 489-9006, 491-4973, 491-4980, 492-3021, 492-3072, 499-7181, 510-1088, 513-8513, 524-8271, 527-9686, 528-9866, 530-1323, 530-2601, 535-8060, 536-6675, 539-8582, 555-4669, 569-7846, 591-9440, 602-8721, 603-5300, 612-1735, 614-5795, 622-6239, 627-8129 ENGINE AR-PRIMARY

SMCS-1157 **i05727425**

NOTE	REF NO	GRAPHIC REF	PART NUMBER	QTY	PART NAME 1 2 3 4 5 6 (PRODUCT LEVEL)	SEE PAGE
M	1	1	**6I-0423**	2	BOLT (M12X1.75X30-MM)	
	2	1	**7W-1176**	1	PLATE-COVER	
M	3	1	**114-4363**	2	BOLT (M8X1.25X12-MM)	
M	4	1	**121-0883**	6	BOLT (M10X1.5X30-MM)	
	5	1	**199-3109**	1	PLUG	
	6	1	**287-8597**	2	DOWEL	
	7	1	**306-2332**	1	HOUSING-FLYWHEEL	
	8	1	**375-9272**	2	PLUG (M16X1.5-THD)	
	9	1	**393-4006**	1	GASKET	

M - METRIC PART

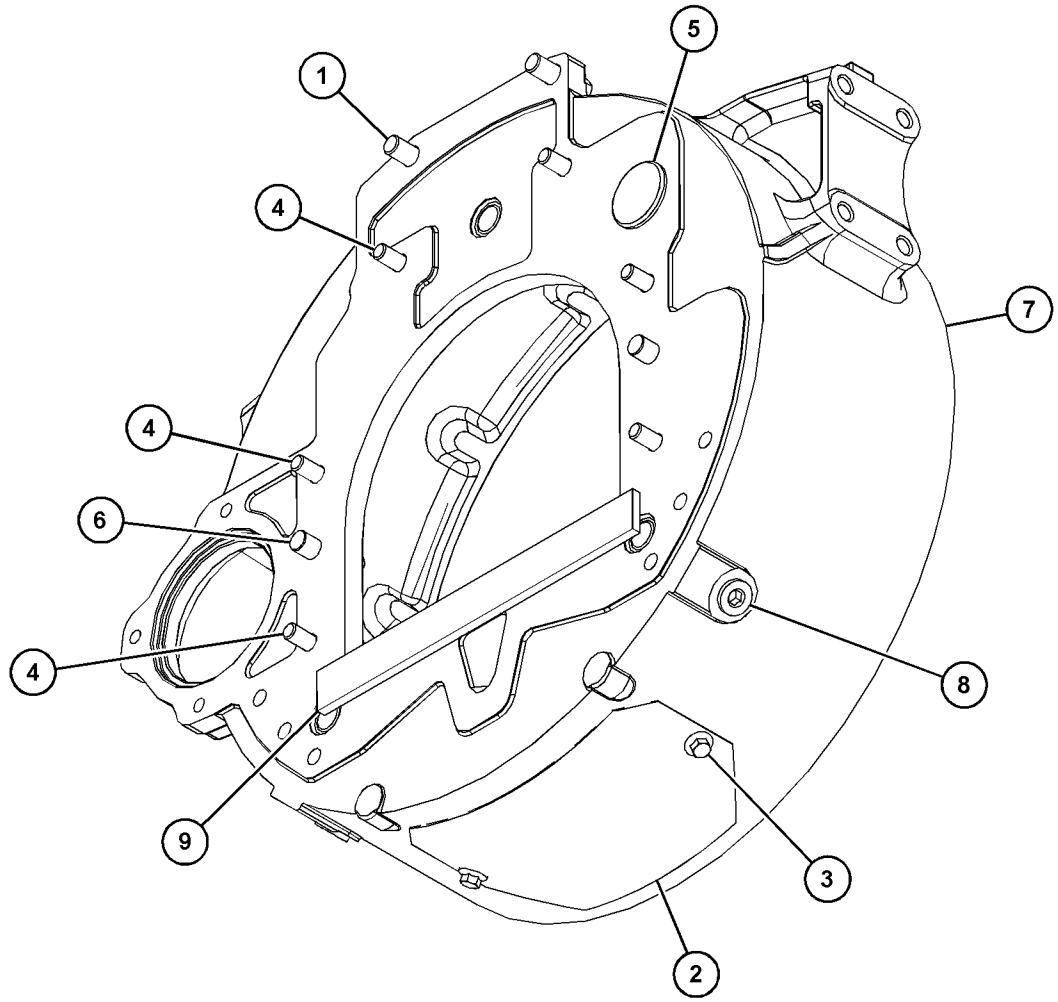

GRAPHIC #1 <END> g03647626

345-8839 HOUSING GP-FLYWHEEL

PART OF 471-0541, 613-9482, 628-4345, 633-7776 ENGINE AR-PRIMARY

SMCS-1157 **i05726732**

NOTE	REF NO	GRAPHIC REF	PART NUMBER	QTY	PART NAME 1 2 3 4 5 6 (PRODUCT LEVEL)	SEE PAGE
	1	1	**281-6331**	1	HOUSING-FLYWHEEL	
M	2	1	**6I-0423**	2	BOLT (M12X1.75X30-MM)	
M	3	1	**6I-0631**	2	BOLT (M6X1X12-MM)	
	4	1	**102-1957**	1	PLATE	
M	5	1	**121-0883**	6	BOLT (M10X1.5X30-MM)	
	6	1	**199-3108**	1	PLUG	
	7	1	**199-3109**	1	PLUG	
	8	1	**287-8597**	2	DOWEL	
	9	1	**375-9272**	1	PLUG (M16X1.5-THD)	
	10	1	**393-4006**	1	GASKET	

M - METRIC PART

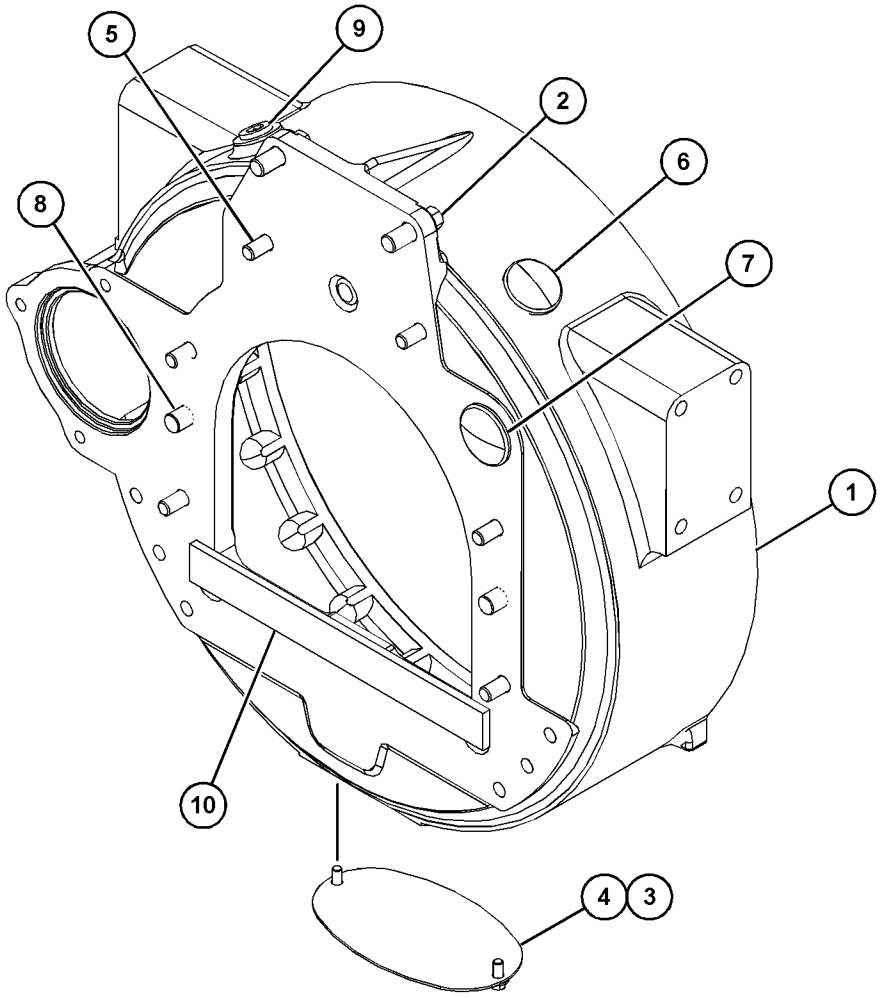

GRAPHIC #1 <END> g03666105

345-8846 HOUSING GP-FLYWHEEL

TYPE 1

SMCS-1157 **i06913954**

NOTE	REF NO	GRAPHIC REF	PART NUMBER	QTY	PART NAME 1 2 3 4 5 6 (PRODUCT LEVEL)	SEE PAGE
	1	1	**277-0116**	1	SEAL-CRANKSHAFT (REAR)	
M	2	1	**283-4662**	2	BOLT-FLANGE HEAD (M12X1.75X55-MM)	
	3	1	**287-8597**	2	DOWEL	
M	4	1	**288-6974**	4	BOLT (M10X1.5X50-MM)	
M	5	1	**288-6975**	2	BOLT (M16X2X40-MM)	
	6	1	**302-6112**	1	GASKET	
	7	1	**354-8322**	2	PLUG (M16X1.5-THD)	
	8	1	**366-6614**	1	HOUSING-FLYWHEEL	
	9	1	**393-4006**	1	GASKET	
	10	1	**1W-6735**	1	COVER-FLYWHEEL HOUSING	
M	11	1	**7E-7606**	4	BOLT (M10X1.5X16-MM)	

M - METRIC PART

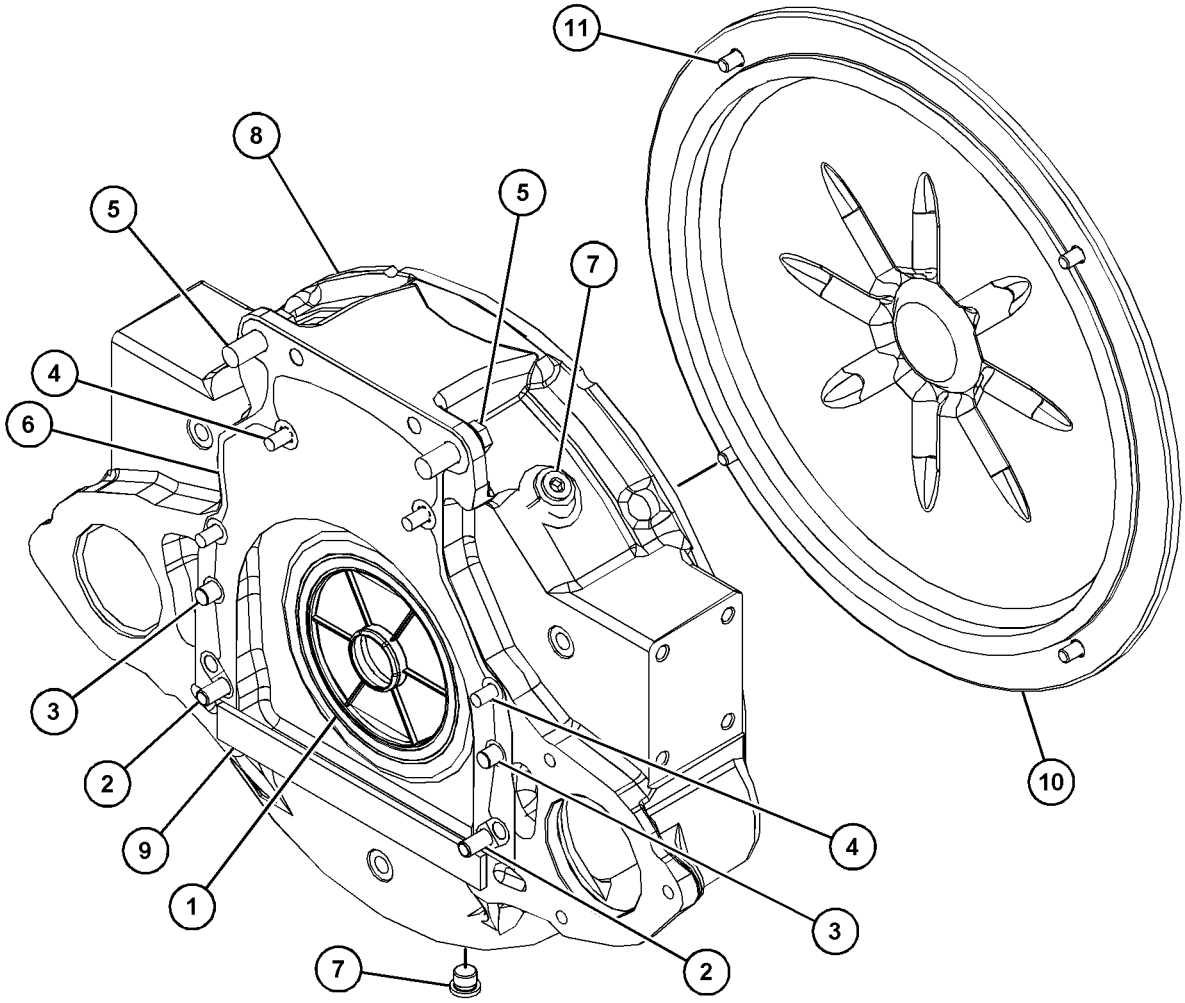

GRAPHIC #1 <END> g06009727

345-8846 HOUSING GP-FLYWHEEL

PART OF 488-6687, 596-8896, 596-8905 ENGINE AR-PRIMARY

TYPE 2

SMCS-1157 **i07893491**

NOTE	REF NO	GRAPHIC REF	PART NUMBER	QTY	PART NAME 1 2 3 4 5 6 (PRODUCT LEVEL)	SEE PAGE
	1	1	**277-0116**	1	SEAL-CRANKSHAFT (REAR)	
M	2	1	**283-4662**	2	BOLT-FLANGE HEAD (M12X1.75X55-MM)	
	3	1	**287-8597**	2	DOWEL	
M	4	1	**288-6974**	4	BOLT (M10X1.5X50-MM)	
M	5	1	**288-6975**	2	BOLT (M16X2X40-MM)	
	6	1	**302-6112**	1	GASKET	
	7	1	**354-8322**	2	PLUG (M16X1.5-THD)	
C	8	1	**366-6614**	1	HOUSING-FLYWHEEL	
	9	1	**393-4006**	1	GASKET	
	10	1	**1W-6735**	1	COVER-FLYWHEEL HOUSING	
M	11	1	**7E-7606**	4	BOLT (M10X1.5X16-MM)	

C - CHANGE FROM PREVIOUS TYPE
M - METRIC PART

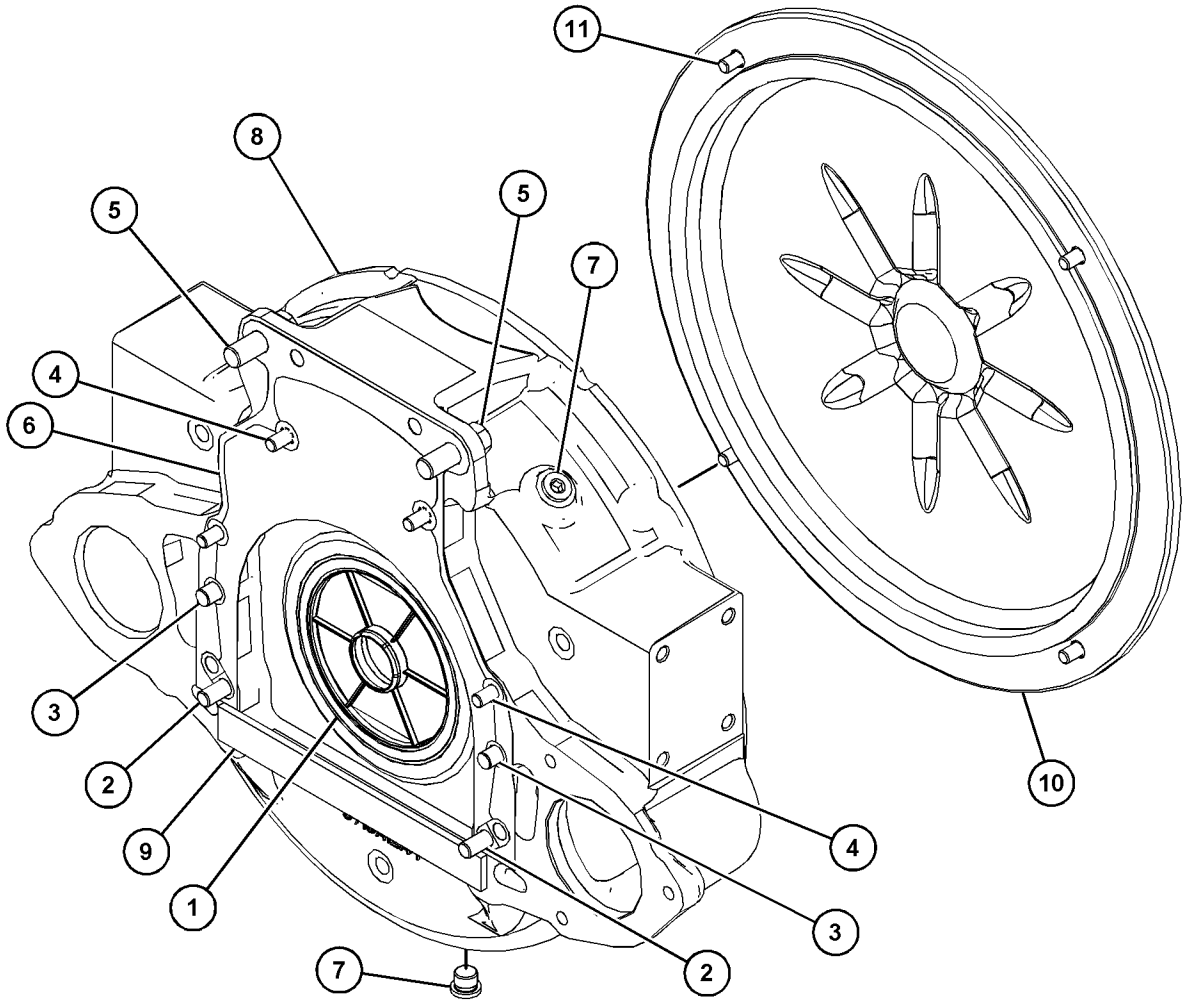

GRAPHIC #1 <END> g06482998

357-1915 HOUSING GP-FLYWHEEL

PART OF 484-2939, 486-2644, 506-9918 ENGINE AR-PRIMARY

TYPE 1

SMCS-1157 **i06230222**

NOTE	REF NO	GRAPHIC REF	PART NUMBER	QTY	PART NAME 1 2 3 4 5 6 (PRODUCT LEVEL)	SEE PAGE
	1	1	**354-8322**	3	PLUG (M16X1.5-THD)	
M	2	1	**283-4662**	1	BOLT-FLANGE HEAD (M12X1.75X55-MM)	
	3	1	**287-8597**	1	DOWEL	
	4	1	**393-4006**	1	GASKET	
M	5	1	**288-6975**	2	BOLT (M16X2X40-MM)	
	6	1	**357-1916**	1	HOUSING-FLYWHEEL	
	7	1	**393-4006**	1	GASKET	

M - METRIC PART

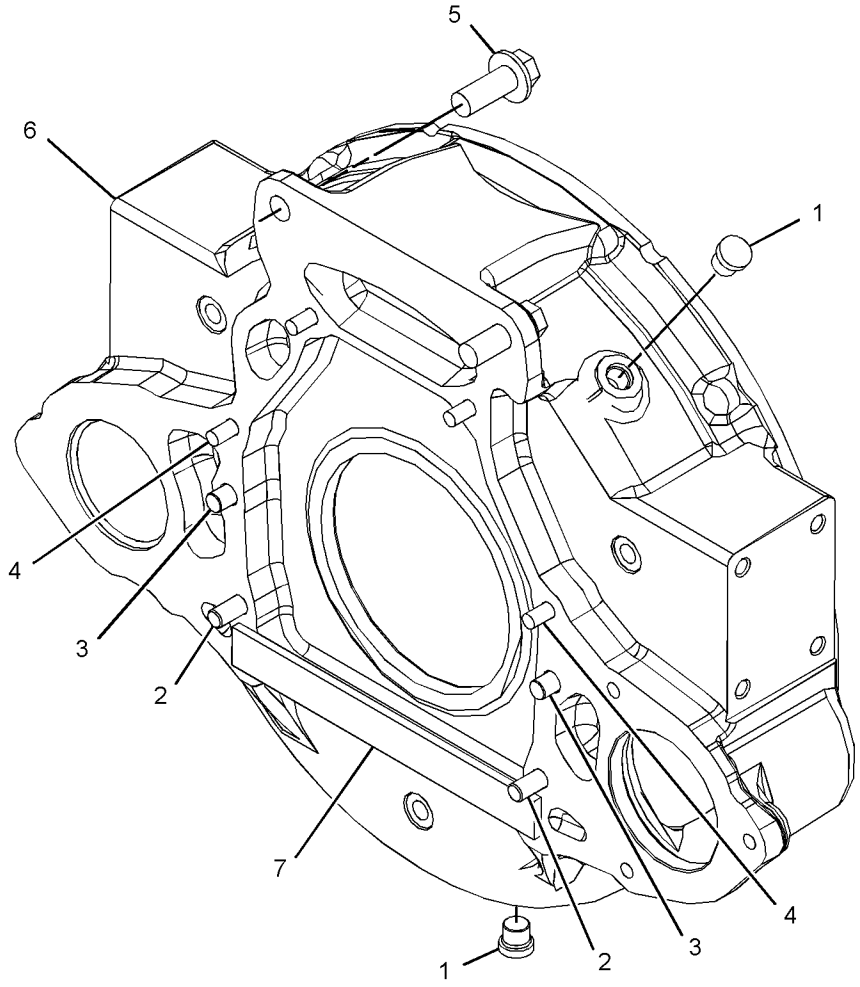

GRAPHIC #1 <END> g03809373

357-1915 HOUSING GP-FLYWHEEL

PART OF 484-2939, 486-2644, 506-9918, 528-9920, 563-6728, 598-9881, 627-8054 ENGINE
AR-PRIMARY
TYPE 2

SMCS-1157 **i08193007**

NOTE	REF NO	GRAPHIC REF	PART NUMBER	QTY	PART NAME 1 2 3 4 5 6 (PRODUCT LEVEL)	SEE PAGE
M	1	1	**283-4662**	2	BOLT-FLANGE HEAD (M12X1.75X55-MM)	
	2	1	**287-8597**	2	DOWEL	
M	3	1	**288-6974**	4	BOLT (M10X1.5X50-MM)	
M	4	1	**288-6975**	2	BOLT (M16X2X40-MM)	
	5	1	**354-8322**	3	PLUG (M16X1.5-THD)	
	6	1	**393-4006**	1	GASKET	
C	7	1	**357-1916**	1	HOUSING-FLYWHEEL	

C - CHANGE FROM PREVIOUS TYPE
M - METRIC PART

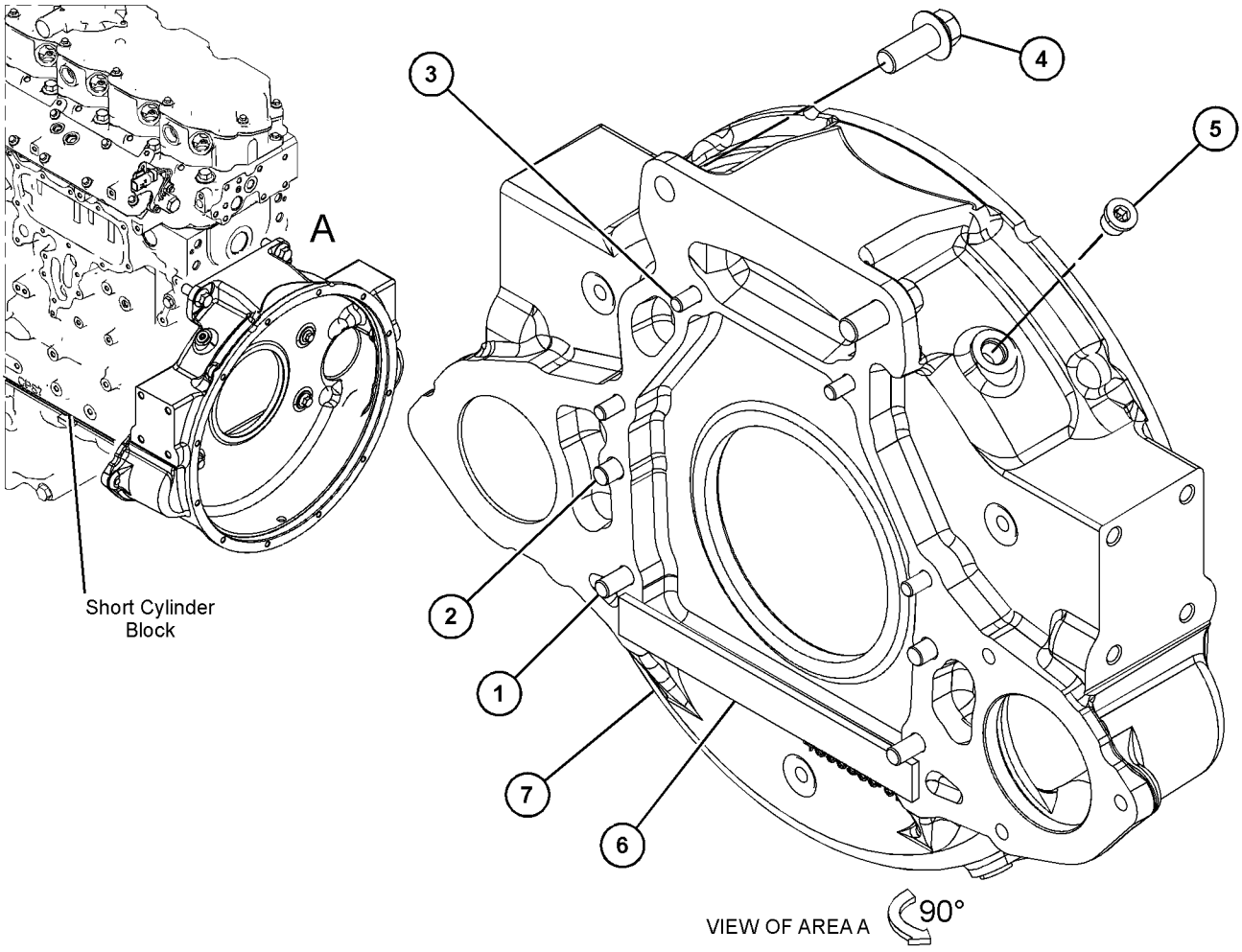

GRAPHIC #1 <END> g06196830

378-0582 HOUSING GP-FLYWHEEL

PART OF 468-8218, 531-2492 ENGINE AR-PRIMARY

SMCS-1157 **i10496785**

NOTE	REF NO	GRAPHIC REF	PART NUMBER	QTY	PART NAME 1 2 3 4 5 6 (PRODUCT LEVEL)	SEE PAGE
	1	1	**277-0116**	1	SEAL-CRANKSHAFT (REAR)	
M	2	1	**283-4662**	4	BOLT-FLANGE HEAD (M12X1.75X55-MM)	
M	3	1	**283-8301**	4	BOLT (M16X2X60-MM)	
	4	1	**287-8597**	2	DOWEL	
M	5	1	**288-6974**	4	BOLT (M10X1.5X50-MM)	
	6	1	**354-8322**	2	PLUG (M16X1.5-THD)	
	7	1	**617-8875**	1	HOUSING-FLYWHEEL	
	8	1	**375-7531**	1	GASKET	
	9	1	**393-4006**	1	GASKET	
	10	1	**1W-6735**	1	COVER-FLYWHEEL HOUSING	
M	11	1	**7E-7606**	4	BOLT (M10X1.5X16-MM)	

M - METRIC PART

378-0582 **HOUSING GP-FLYWHEEL (**contd.**)** **i10496785**

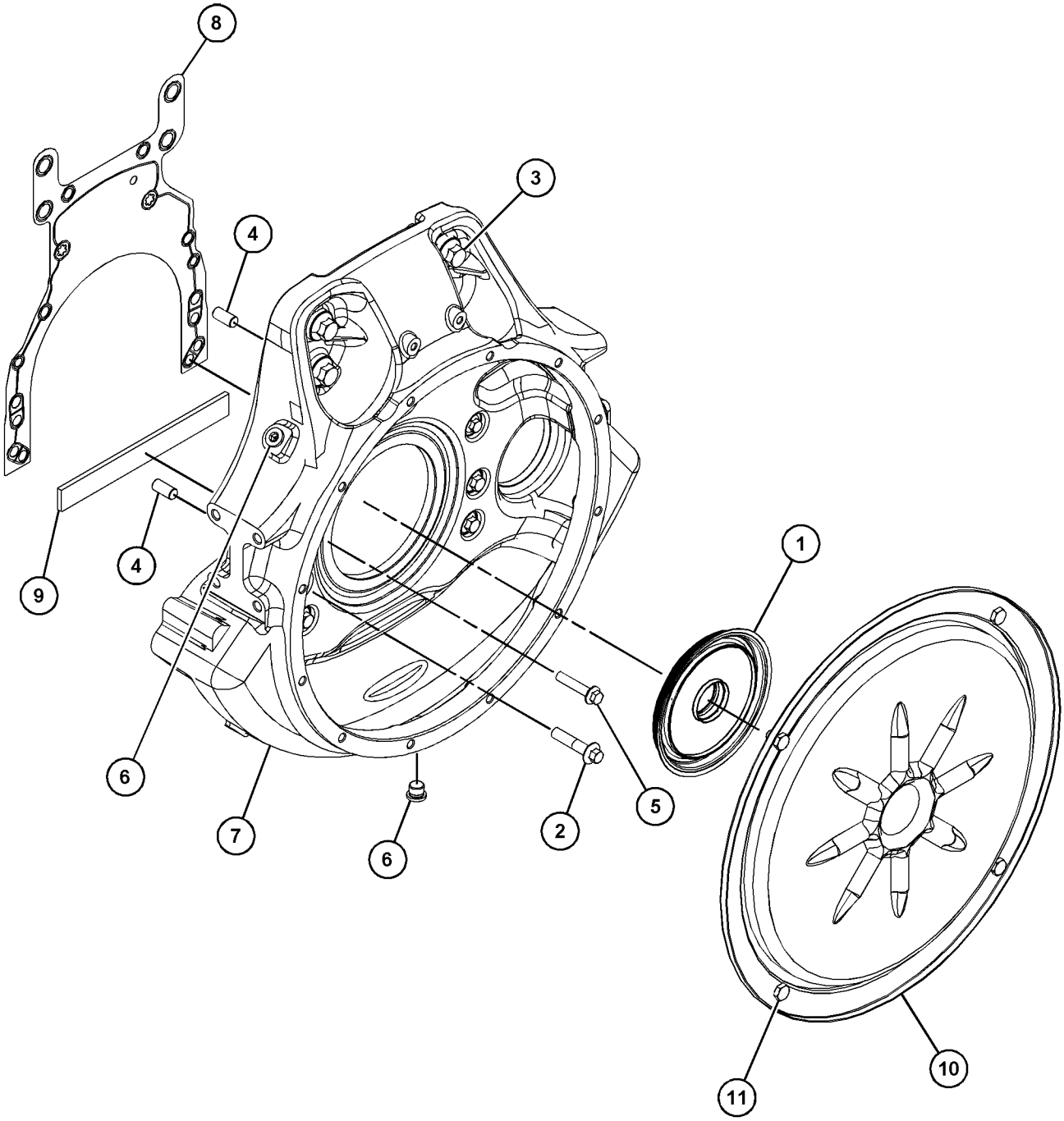

GRAPHIC #1 <END> g07915434

380-2587 HOUSING GP-FLYWHEEL

SAE3 LHS STARTER

PART OF 474-7299, 478-4257, 494-2073, 504-3629, 506-5035, 512-9858, 514-9367, 515-9203, 533-3588, 553-1809, 553-3730, 608-9261 ENGINE AR-PRIMARY

SMCS-1157 **i05752990**

NOTE	REF NO	GRAPHIC REF	PART NUMBER	QTY	PART NAME 1 2 3 4 5 6 (PRODUCT LEVEL)	SEE PAGE
M	1	1	**114-4363**	2	BOLT (M8X1.25X12-MM)	
M	2	1	**121-0883**	6	BOLT (M10X1.5X30-MM)	
	3	1	**199-3109**	1	PLUG	
	4	1	**393-4006**	1	GASKET	
	5	1	**287-8597**	2	DOWEL	
	6	1	**347-2151**	1	HOUSING-FLYWHEEL	
M	7	1	**6I-0423**	2	BOLT (M12X1.75X30-MM)	
	8	1	**7W-1176**	1	PLATE-COVER	

M - METRIC PART

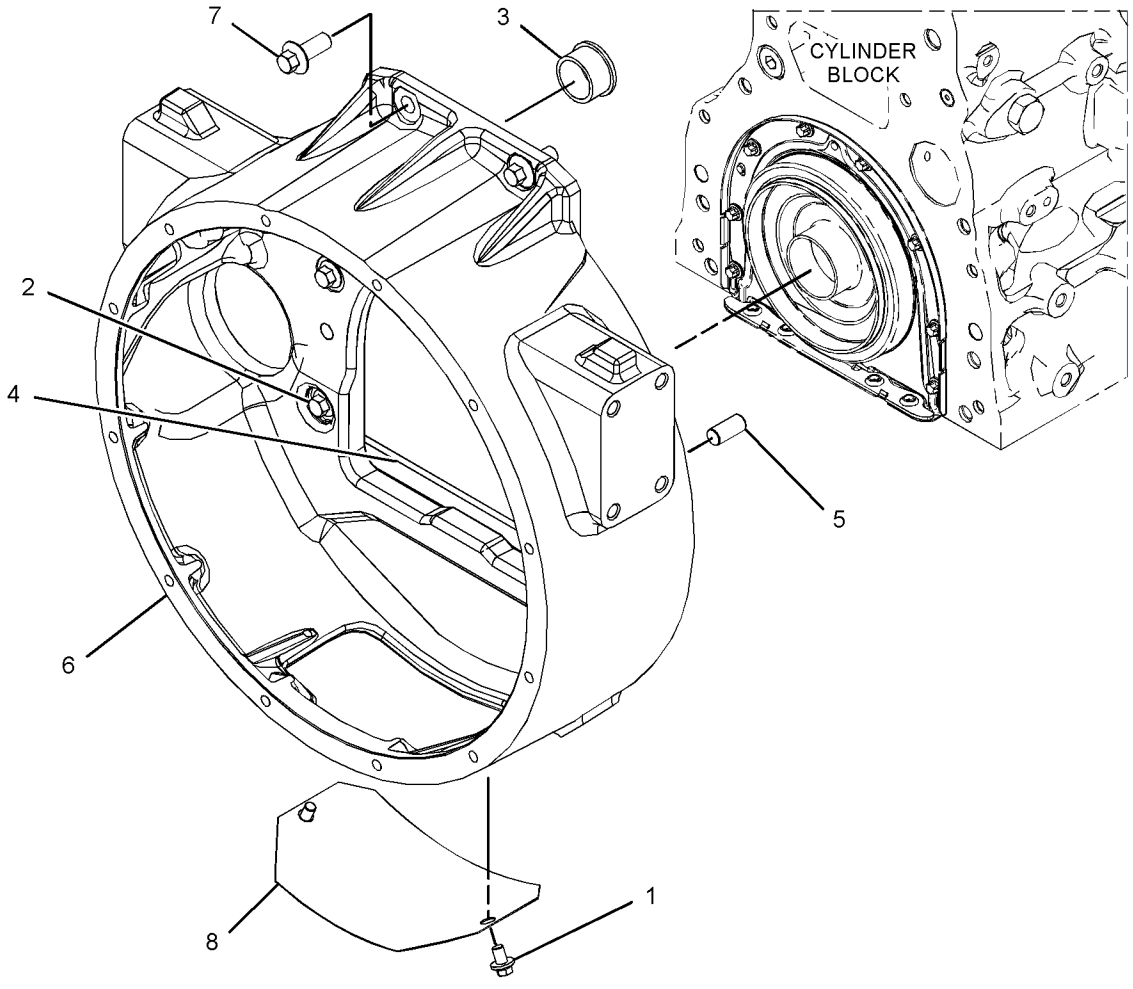

GRAPHIC #1 <END> g03809404

393-3369 HOUSING GP-FLYWHEEL

PART OF 461-4649, 461-4656, 470-8814, 479-9398, 485-8027, 486-4250, 491-4993, 494-6807, 495-8349, 501-2466, 504-9579, 507-8016, 508-0270, 513-0851, 520-3152, 520-4644, 526-0511, 526-8888, 533-2797, 539-6915, 543-4255, 552-8869, 562-8873, 563-6729, 563-6730, 565-1247, 575-2879, 575-2880, 583-8352, 593-7287, 593-7288, 597-9248, 614-9555, 624-0698, 633-4335, 645-2039, 657-2370 ENGINE AR-PRIMARY

SMCS-1157 **i08155756**

NOTE	REF NO	GRAPHIC REF	PART NUMBER	QTY	PART NAME 1 2 3 4 5 6 (PRODUCT LEVEL)	SEE PAGE
	1	1	**354-8322**	3	PLUG (M16X1.5-THD)	
M	2	1	**283-4662**	2	BOLT-FLANGE HEAD (M12X1.75X55-MM)	
	3	1	**287-8597**	2	DOWEL	
M	4	1	**288-6974**	4	BOLT (M10X1.5X50-MM)	
M	5	1	**288-6975**	2	BOLT (M16X2X40-MM)	
	6	1	**393-4006**	1	GASKET	
C	7	1	**489-5888**	1	HOUSING-FLYWHEEL	

C - CHANGE FROM PREVIOUS TYPE
M - METRIC PART

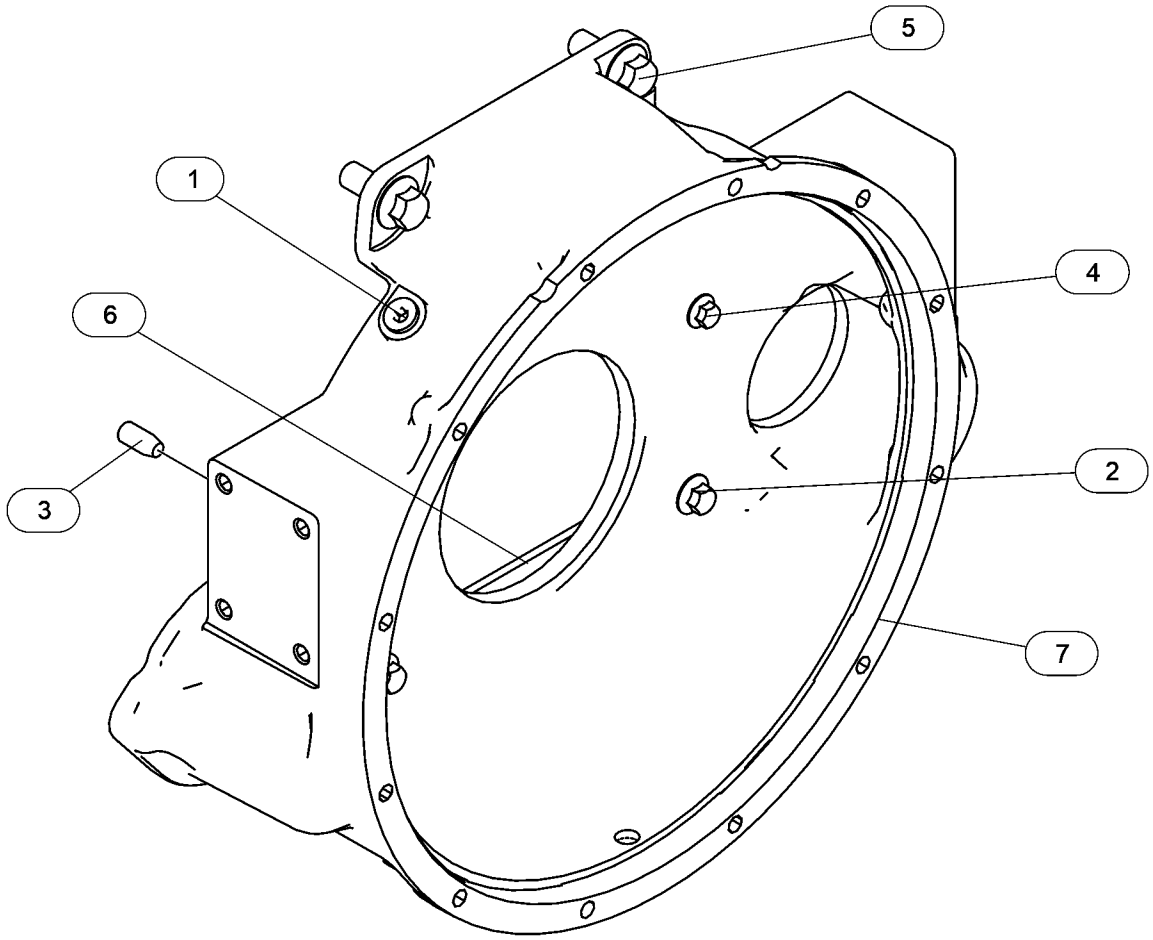

GRAPHIC #1 <END> g06586823

437-2720 HOUSING GP-FLYWHEEL

PART OF 491-2606 ENGINE AR-PRIMARY

TYPE 1

SMCS-1157 **i07219847**

NOTE	REF NO	GRAPHIC REF	PART NUMBER	QTY	PART NAME 1 2 3 4 5 6 (PRODUCT LEVEL)	SEE PAGE
	1	1	**199-3109**	1	PLUG	
	2	1	**354-8322**	2	PLUG (M16X1.5-THD)	
M	3	1	**283-4662**	2	BOLT-FLANGE HEAD (M12X1.75X55-MM)	
	4	1	**287-8597**	2	DOWEL	
M	5	1	**288-6974**	4	BOLT (M10X1.5X50-MM)	
M	6	1	**288-6975**	2	BOLT (M16X2X40-MM)	
	7	1	**489-5885**	1	HOUSING-FLYWHEEL	
	8	1	**393-4006**	1	GASKET	

M - METRIC PART

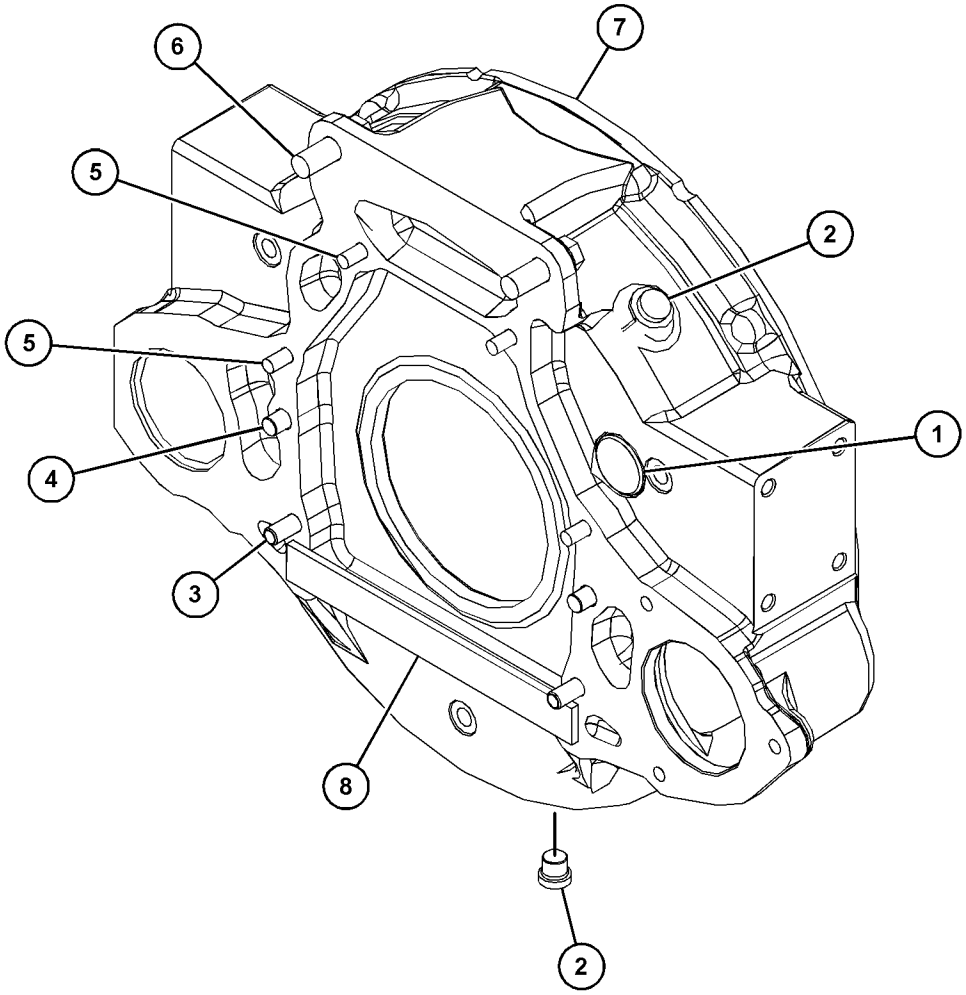

GRAPHIC #1 <END> g03737410

437-2720 HOUSING GP-FLYWHEEL

PART OF 491-2606 ENGINE AR-PRIMARY

TYPE 2

SMCS-1157 **i08002496**

NOTE	REF NO	GRAPHIC REF	PART NUMBER	QTY	PART NAME 1 2 3 4 5 6 (PRODUCT LEVEL)	SEE PAGE
	1	1	**199-3109**	1	PLUG	
	2	1	**354-8322**	2	PLUG (M16X1.5-THD)	
M	3	1	**283-4662**	2	BOLT-FLANGE HEAD (M12X1.75X55-MM)	
	4	1	**287-8597**	2	DOWEL	
M	5	1	**288-6974**	4	BOLT (M10X1.5X50-MM)	
M	6	1	**288-6975**	2	BOLT (M16X2X40-MM)	
C	7	1	**366-6596**	1	HOUSING-FLYWHEEL	
	8	1	**393-4006**	1	GASKET	

C - CHANGE FROM PREVIOUS TYPE
M - METRIC PART

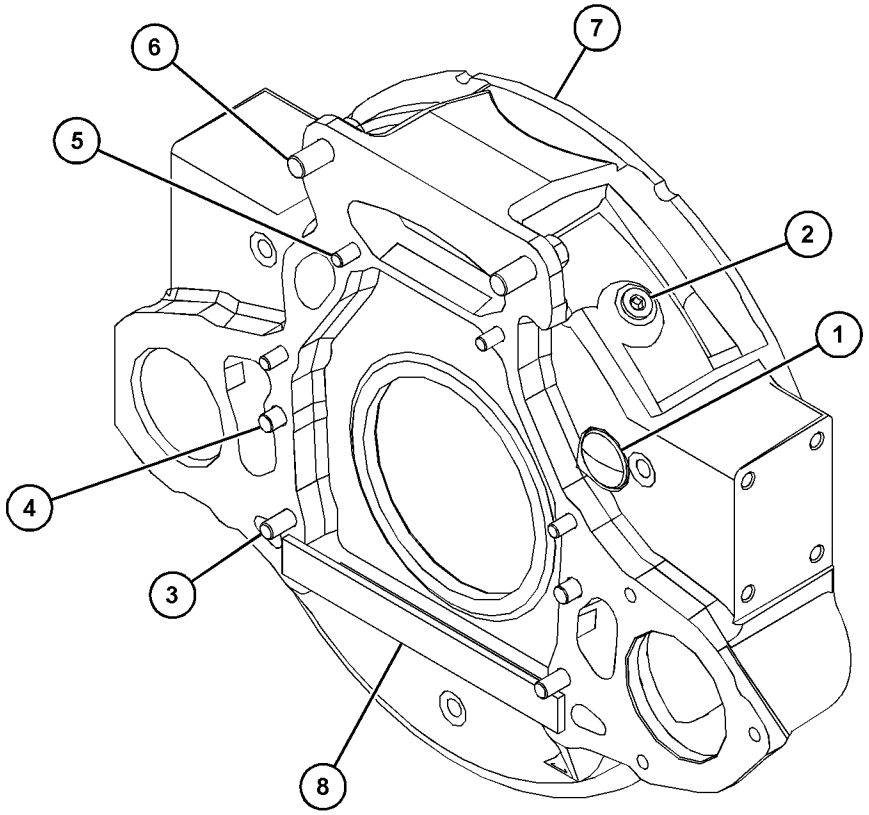

GRAPHIC #1 <END> g06516298

437-2721 HOUSING GP-FLYWHEEL

RHS STARTER

PART OF 451-8343, 461-4658, 468-0461, 470-8667, 480-2181, 491-7124, 502-9462, 519-4128, 525-8759, 526-7210, 527-7106, 528-3358, 552-3506, 591-1266, 594-2125, 596-4834, 596-7090, 609-9819, 623-1309, 627-8019 ENGINE AR-PRIMARY

SMCS-1157 **i10496417**

NOTE	REF NO	GRAPHIC REF	PART NUMBER	QTY	PART NAME 1 2 3 4 5 6 (PRODUCT LEVEL)	SEE PAGE
M	1	1	**102-9941**	3	BOLT (M12X1.75X25-MM)	
	2	1	**354-8322**	1	PLUG (M16X1.5-THD)	
M	3	1	**283-4662**	6	BOLT-FLANGE HEAD (M12X1.75X55-MM)	
	4	1	**287-8597**	2	DOWEL	
M	5	1	**288-6974**	4	BOLT (M10X1.5X50-MM)	
M	6	1	**288-6975**	2	BOLT (M16X2X40-MM)	
	7	1	**617-8876**	1	HOUSING-FLYWHEEL	
	8	1	**393-4006**	1	GASKET	
	9	1	**277-0122**	1	COVER	

M - METRIC PART

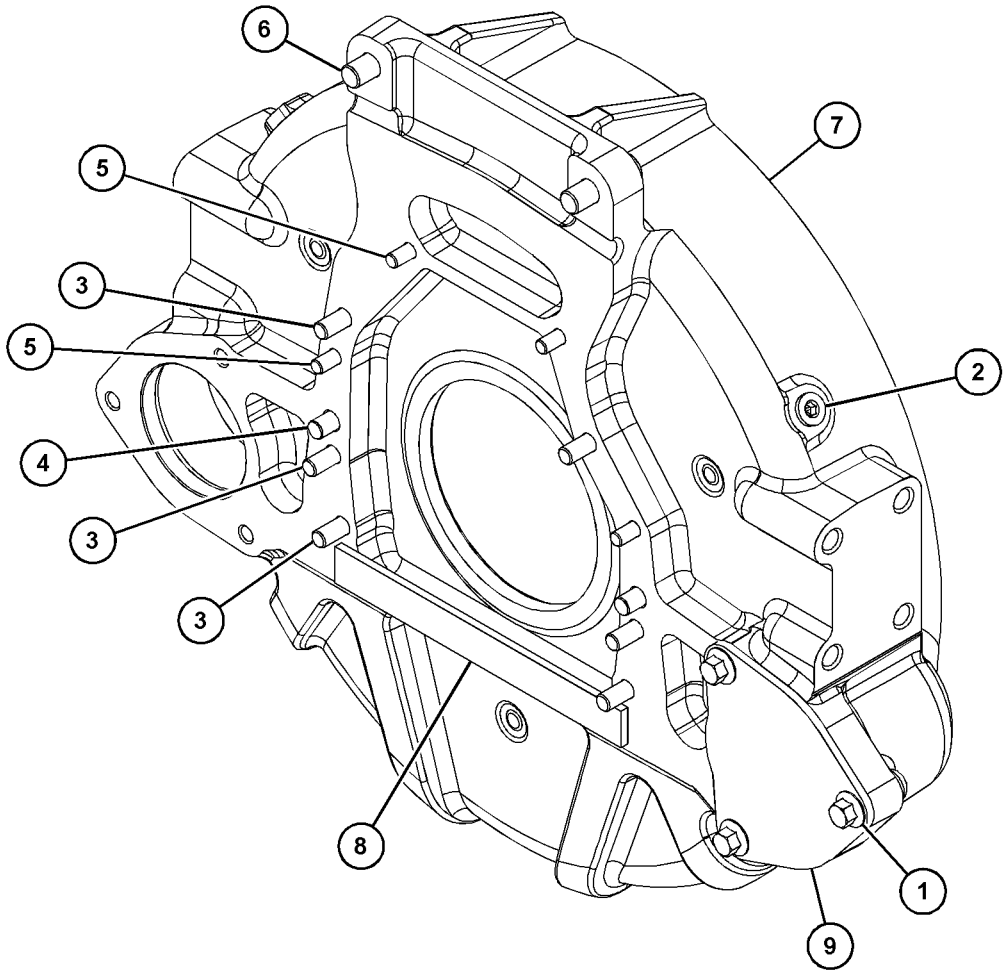

GRAPHIC #1 <END> g07918326

371-2716 HOUSING GP-FRONT

PART OF 451-8343, 524-8271, 528-9866, 614-5795 ENGINE AR-PRIMARY

SMCS-1151, 1162, 1206 **i06909401**

NOTE	REF NO	GRAPHIC REF	PART NUMBER	QTY	PART NAME 1 2 3 4 5 6 (PRODUCT LEVEL)	SEE PAGE
M	1	1	**6I-0217**	6	BOLT (M8X1.25X20-MM)	
M	2	1	**6I-0645**	4	BOLT (M8X1.25X25-MM)	
M	3	1	**6I-0650**	3	BOLT (M10X1.5X65-MM)	
M	4	1	**7C-4616**	1	BOLT (M12X1.75X45-MM)	
	5	1	**067-6179**	1	DOWEL	
M	6	1	**100-3751**	5	BOLT (M8X1.25X65-MM)	
M	7	1	**101-3895**	2	BOLT (M8X1.25X35-MM)	
M	8	1	**124-3815**	10	BOLT (M8X1.25X16-MM)	
	9	1	**133-1011**	1	WASHER (13X54X6-MM THK)	
	10	1	**425-7103**	1	GEAR (68-TEETH)	
	11	1	**232-3657**	1	COVER AS-FRONT	
	11A	1	**225-8287**	1	GASKET	
	12	1	**232-3666**	1	WASHER-THRUST	
	13	1	**277-3012**	1	GASKET-COVER	
	14	1	**277-3013**	1	SEAL	
	15	1	**324-0444**	1	HUB-IDLER GEAR	
	16	1	**346-0407**	1	GEAR-IDLER	
	17	1	**346-0408**	1	PLATE	
	18	1	**386-2112**	1	CASE-GEAR	

M - METRIC PART

371-2716 **HOUSING GP-FRONT (**contd.**)** **i06909401**

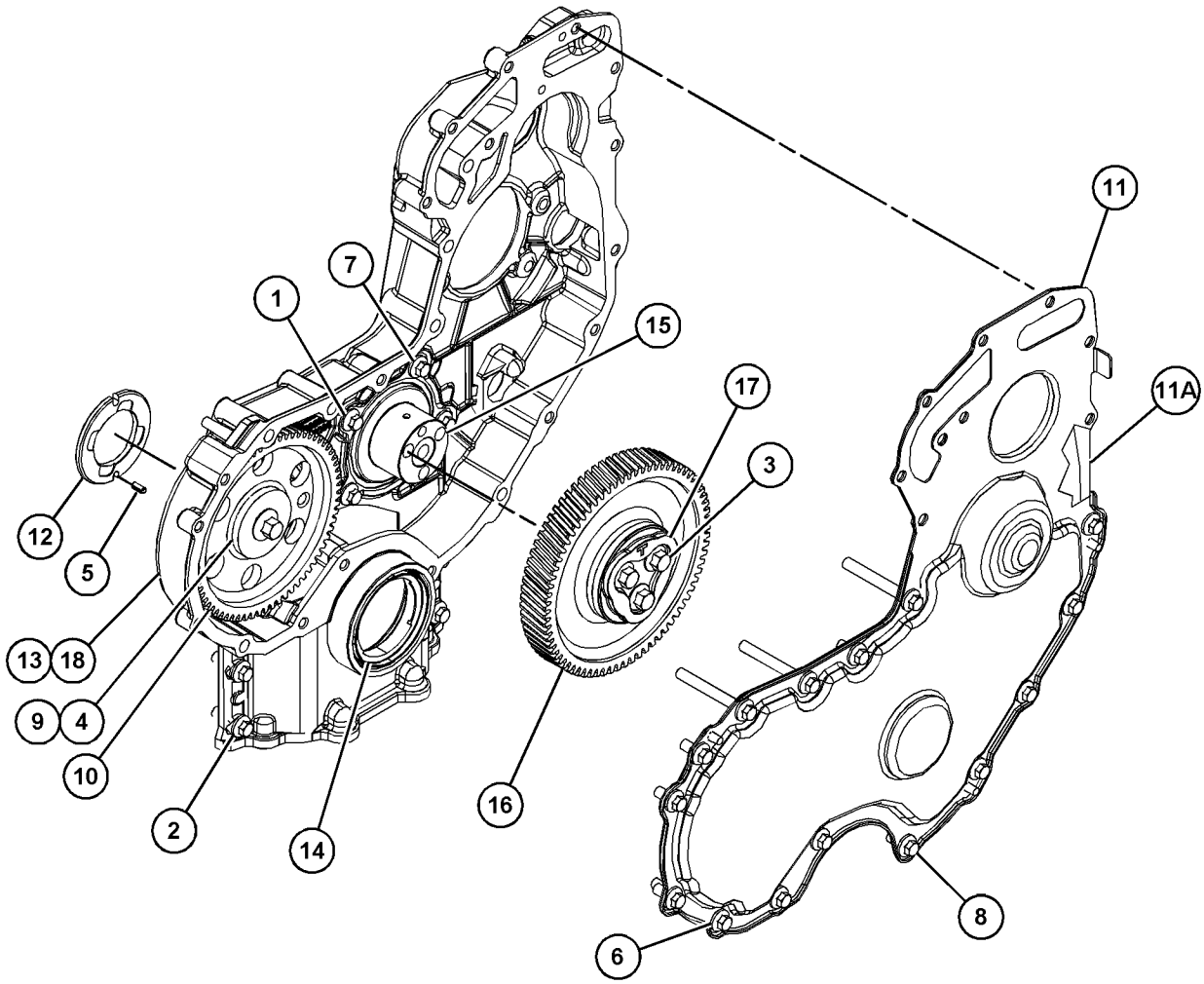

GRAPHIC #1 <END> g03483004

371-2725 HOUSING GP-FRONT

PART OF 468-8218, 471-0541, 486-4250, 488-6687, 492-3169, 520-4644, 623-1309, 624-0698 ENGINE AR-PRIMARY

SMCS-1151, 1162, 1206

i10149607

NOTE	REF NO	GRAPHIC REF	PART NUMBER	QTY	PART NAME 1 2 3 4 5 6 (PRODUCT LEVEL)	SEE PAGE
M	1	1	**6I-0650**	3	BOLT (M10X1.5X65-MM)	
M	2	1	**7C-4616**	1	BOLT (M12X1.75X45-MM)	
	3	1	**067-6179**	1	DOWEL	
M	4	1	**100-3751**	5	BOLT (M8X1.25X65-MM)	
M	5	1	**100-4830**	1	BOLT (M10X1.5X20-MM)	
M	6	1	**101-3895**	2	BOLT (M8X1.25X35-MM)	
M	7	1	**124-3815**	9	BOLT (M8X1.25X16-MM)	
	8	1	**133-1011**	1	WASHER (13X54X6-MM THK)	
	9	1	**232-3666**	1	WASHER-THRUST	
	10	1	**277-3013**	1	SEAL	
	11	1	**346-0408**	1	PLATE	
	12	1	**443-9076**	1	CASE-GEAR	
M	13	1	**6I-0217**	6	BOLT (M8X1.25X20-MM)	
M	14	1	**6I-0645**	4	BOLT (M8X1.25X25-MM)	
	15	1	**324-0444**	1	HUB-IDLER GEAR	
	16	1	**425-7103**	1	GEAR (68-TEETH)	
	17	1	**648-9166**	1	COVER	
	18	1	**251-4336**	1	GEAR AS-IDLER (73-TEETH)	
	19	1	**277-3012**	1	GASKET-COVER	
	20	1	**226-8766**	1	GASKET-COVER	
F			**226-8767**	1	COVER AS-FRONT	
F			**226-8766**	1	GASKET-COVER	

F - NOT SHOWN
M - METRIC PART

371-2725 **HOUSING GP-FRONT (**contd.**)** **i10149607**

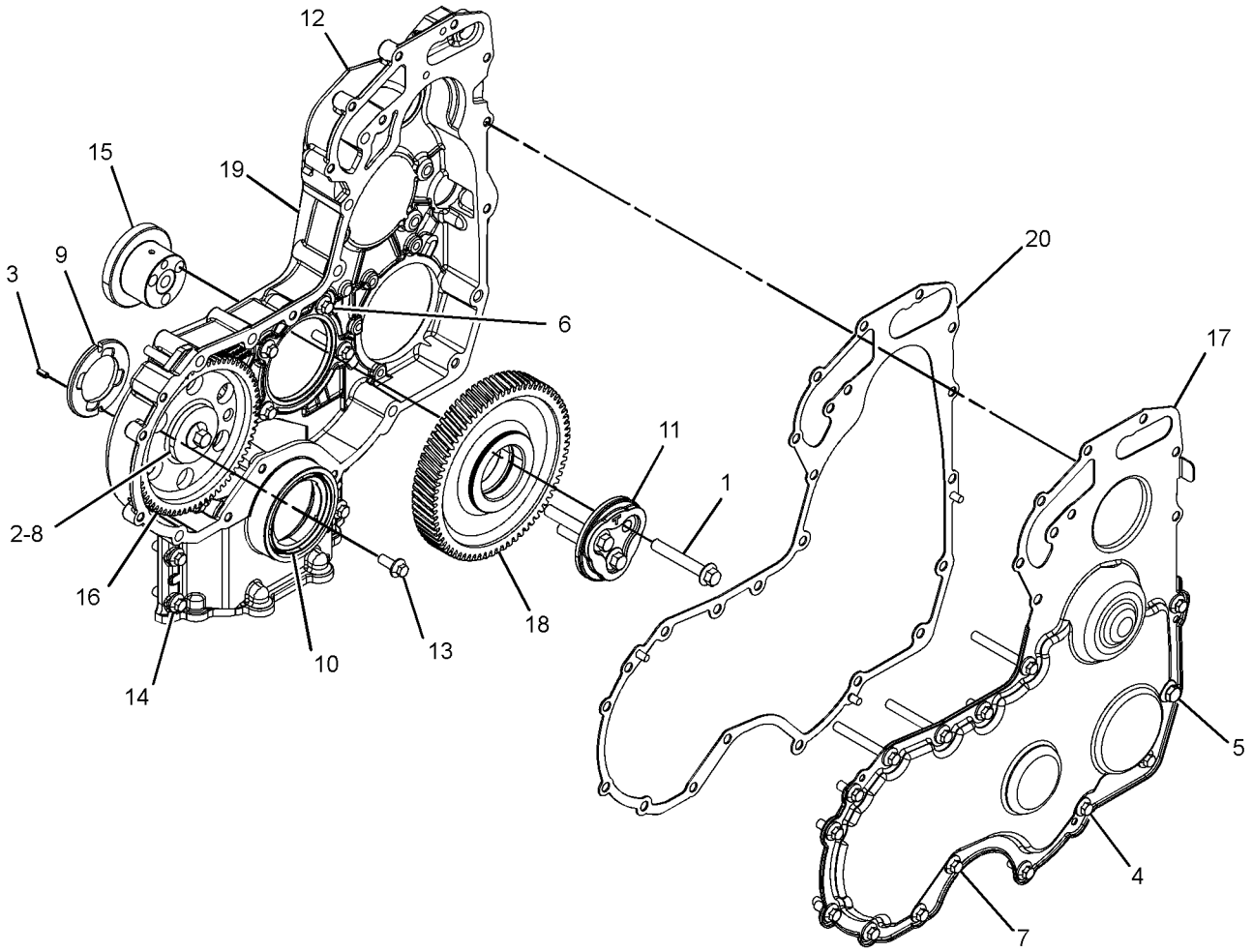

GRAPHIC #1 <END> g07790021

375-4645 HOUSING GP-FRONT

HD LHS PTO 280NM

PART OF 470-8667, 470-8814, 474-7299, 480-2181, 484-2939, 485-8027, 491-2606, 493-1019, 493-1038, 494-6807, 499-7181, 504-3629, 504-5365, 504-8134, 504-9579, 506-5035, 512-9858, 513-0851, 514-9367, 519-4128, 520-3152, 526-7210, 526-8888, 531-2492, 533-3588, 552-8869, 553-1809, 553-3730, 563-6728, 563-6729, 575-2879, 575-2880, 591-9440, 613-9482, 627-8019, 627-8054, 628-4345, 633-4335, 633-7776, 645-2039, 657-2370 ENGINE AR-PRIMARY

SMCS-1151, 1162, 1206 **i06810451**

NOTE	REF NO	GRAPHIC REF	PART NUMBER	QTY	PART NAME 1 2 3 4 5 6 (PRODUCT LEVEL)	SEE PAGE
M	1	1	**6I-0454**	6	BOLT (M10X1.5X70-MM)	
M	2	1	**7C-4616**	1	BOLT (M12X1.75X45-MM)	
	3	1	**067-6179**	1	DOWEL	
M	4	1	**100-3751**	5	BOLT (M8X1.25X65-MM)	
M	5	1	**101-3895**	2	BOLT (M8X1.25X35-MM)	
	6	1	**133-1011**	1	WASHER (13X54X6-MM THK)	
	7	1	**232-3666**	1	WASHER-THRUST	
	8	1	**277-3012**	1	GASKET-COVER	
	9	1	**277-3013**	1	SEAL	
	10	1	**291-6517**	1	PLATE	
	11	1	**381-9252**	1	GEAR-IDLER (73-TEETH)	
	12	1	**416-1234**	1	CASE-GEAR	
	13	1	**418-7684**	1	GEAR-IDLER (44-TEETH)	
M	14	1	**6I-0217**	6	BOLT (M8X1.25X20-MM)	
M	15	1	**6I-0254**	3	BOLT (M8X1.25X30-MM)	
M	16	1	**6I-0260**	9	BOLT (M8X1.25X25-MM)	
M	17	1	**6I-0645**	4	BOLT (M8X1.25X25-MM)	
	18	1	**425-7103**	1	GEAR (68-TEETH)	
	19	1	**291-6521**	1	TUBE	
	20	1	**291-6522**	2	CLIP	
	21	1	**291-6523**	1	COVER-FRONT	
	22	1	**291-6524**	1	GASKET	

M - METRIC PART

375-4645 **HOUSING GP-FRONT (**contd.**)** **i06810451**

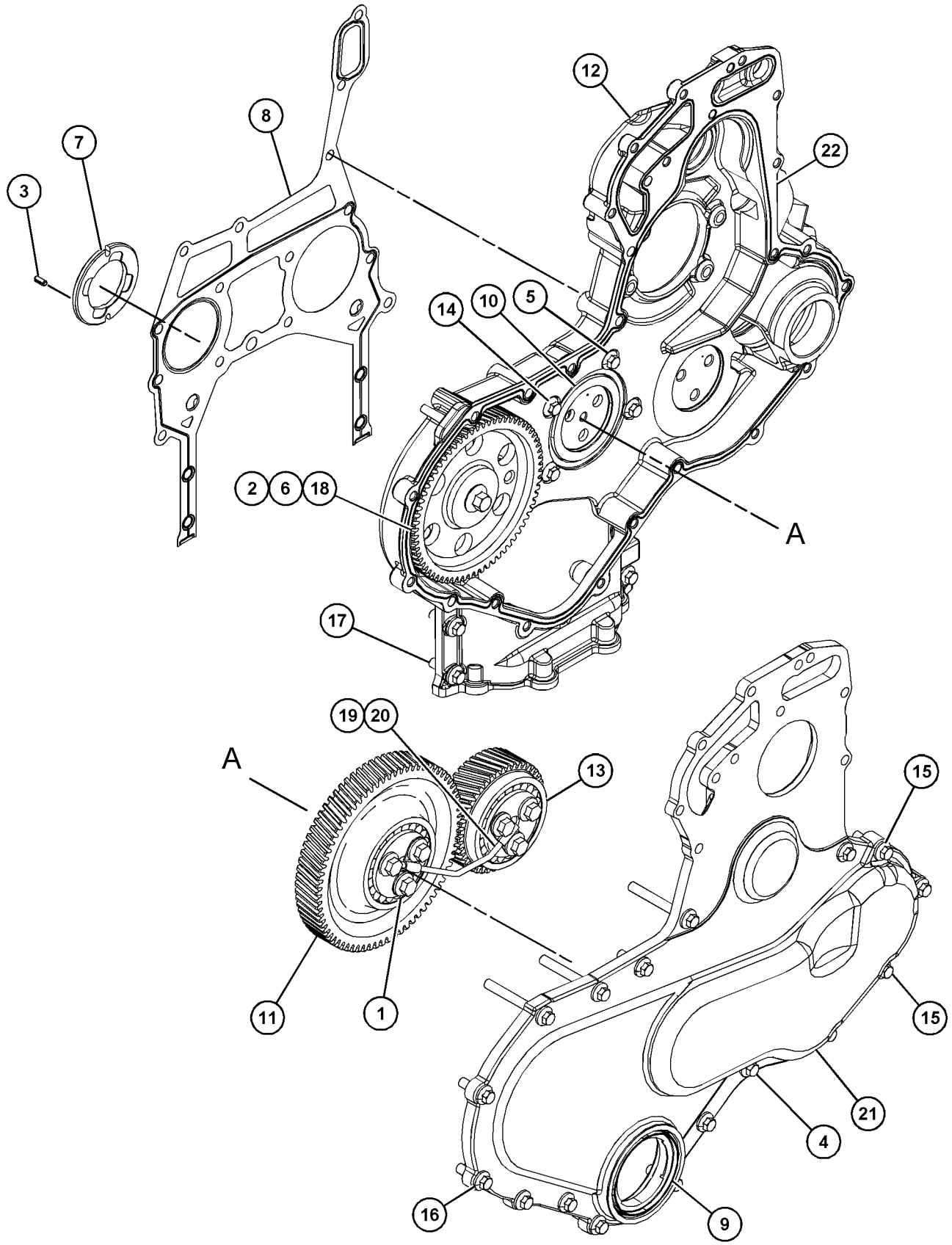

GRAPHIC #1 <END> g03664565

375-5838 HOUSING GP-FRONT

GEAR CASE

PART OF 596-2071 ENGINE AR-COMPLETE, 461-4638, 461-4649, 461-4656, 461-4658, 466-1160, 466-1161, 466-1162, 466-1163, 478-4257, 479-9398, 481-0811, 482-0212, 491-4973, 491-4980, 491-4993, 491-7124, 492-3021, 492-3072, 494-2073, 501-2466, 502-9462, 507-8016, 510-1088, 513-8513, 515-9203, 527-7106, 527-9686, 528-3358, 530-2601, 533-2797, 535-8060, 536-6675, 539-6915, 543-4255, 552-3506, 555-4669, 562-8873, 563-6730, 565-1247, 569-7846, 583-8352, 591-1266, 593-7287, 593-7288, 594-2125, 596-4834, 596-7090, 598-9881, 602-8721, 603-5300, 608-9261, 612-1735, 614-9555, 622-6239, 627-8129 ENGINE AR-PRIMARY

SMCS-1151, 1162, 1206

i10694562

NOTE	REF NO	GRAPHIC REF	PART NUMBER	QTY	PART NAME 1 2 3 4 5 6 (PRODUCT LEVEL)	SEE PAGE
M	1	1	**6I-0217**	6	BOLT (M8X1.25X20-MM)	
M	2	1	**6I-0454**	3	BOLT (M10X1.5X70-MM)	
M	3	1	**6I-0645**	4	BOLT (M8X1.25X25-MM)	
M	4	1	**344-3434**	1	BOLT-FLANGE HEAD (M12X1.75X45-MM)	
	5	1	**067-6179**	1	DOWEL	
M	6	1	**100-3751**	5	BOLT (M8X1.25X65-MM)	
M	7	1	**100-4830**	1	BOLT (M10X1.5X20-MM)	
M	8	1	**101-3895**	2	BOLT (M8X1.25X35-MM)	
M	9	1	**124-3815**	9	BOLT (M8X1.25X16-MM)	
	10	1	**133-1011**	1	WASHER (13X54X6-MM THK)	
	11	1	**425-7103**	1	GEAR (68-TEETH)	
	12	1	**226-8766**	1	GASKET-COVER	
	13	1	**232-3666**	1	WASHER-THRUST	
	14	1	**277-3012**	1	GASKET-COVER	
	15	1	**277-3013**	1	SEAL	
	16	1	**291-6517**	1	PLATE	
	17	1	**359-9431**	1	GEAR-IDLER	
	18	1	**443-9076**	1	CASE-GEAR	
	19	1	**648-9166**	1	COVER	
F			**226-8767**	1	COVER AS-FRONT	
F			**226-8766**	1	GASKET-COVER	

F - NOT SHOWN
M - METRIC PART

375-5838 **HOUSING GP-FRONT (**contd.**)** **i10694562**

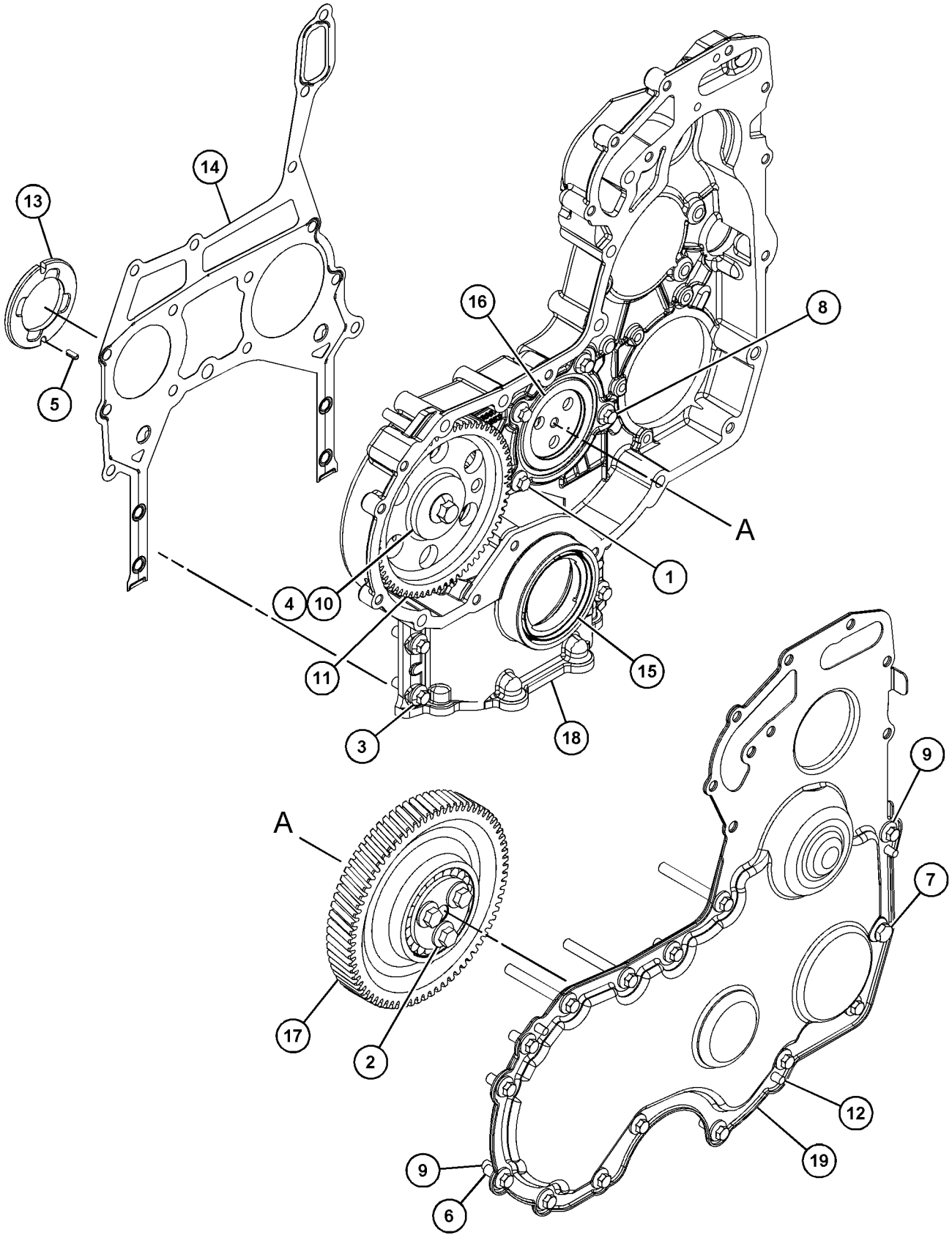

GRAPHIC #1 <END> g07940454

448-9719 HOUSING GP-FRONT

PART OF 475-8297, 475-9060, 486-2644, 525-8759 ENGINE AR-PRIMARY

SMCS-1151, 1162, 1206 **i10262177**

NOTE	REF NO	GRAPHIC REF	PART NUMBER	QTY	PART NAME 1 2 3 4 5 6 (PRODUCT LEVEL)	SEE PAGE
M	1	1	**6I-0650**	3	BOLT (M10X1.5X65-MM)	
M	2	1	**7C-4616**	1	BOLT (M12X1.75X45-MM)	
	3	1	**067-6179**	1	DOWEL	
M	4	1	**100-3751**	6	BOLT (M8X1.25X65-MM)	
	5	1	**277-3012**	1	GASKET-COVER	
M	6	1	**101-3895**	2	BOLT (M8X1.25X35-MM)	
M	7	1	**124-3815**	9	BOLT (M8X1.25X16-MM)	
	8	1	**133-1011**	1	WASHER (13X54X6-MM THK)	
	9	1	**232-3666**	1	WASHER-THRUST	
	10	1	**277-3013**	1	SEAL	
	11	1	**346-0408**	1	PLATE	
	12	1	**443-9076**	1	CASE-GEAR	
M	13	1	**6I-0217**	6	BOLT (M8X1.25X20-MM)	
M	14	1	**6I-0645**	4	BOLT (M8X1.25X25-MM)	
	15	1	**324-0444**	1	HUB-IDLER GEAR	
	16	1	**425-7103**	1	GEAR (68-TEETH)	
	17	1	**226-8767**	1	COVER AS-FRONT	
	17A	1	**226-8766**	1	GASKET-COVER	
	18	1	**251-4336**	1	GEAR AS-IDLER (73-TEETH)	

M - METRIC PART

448-9719 **HOUSING GP-FRONT (**contd.**)** **i10262177**

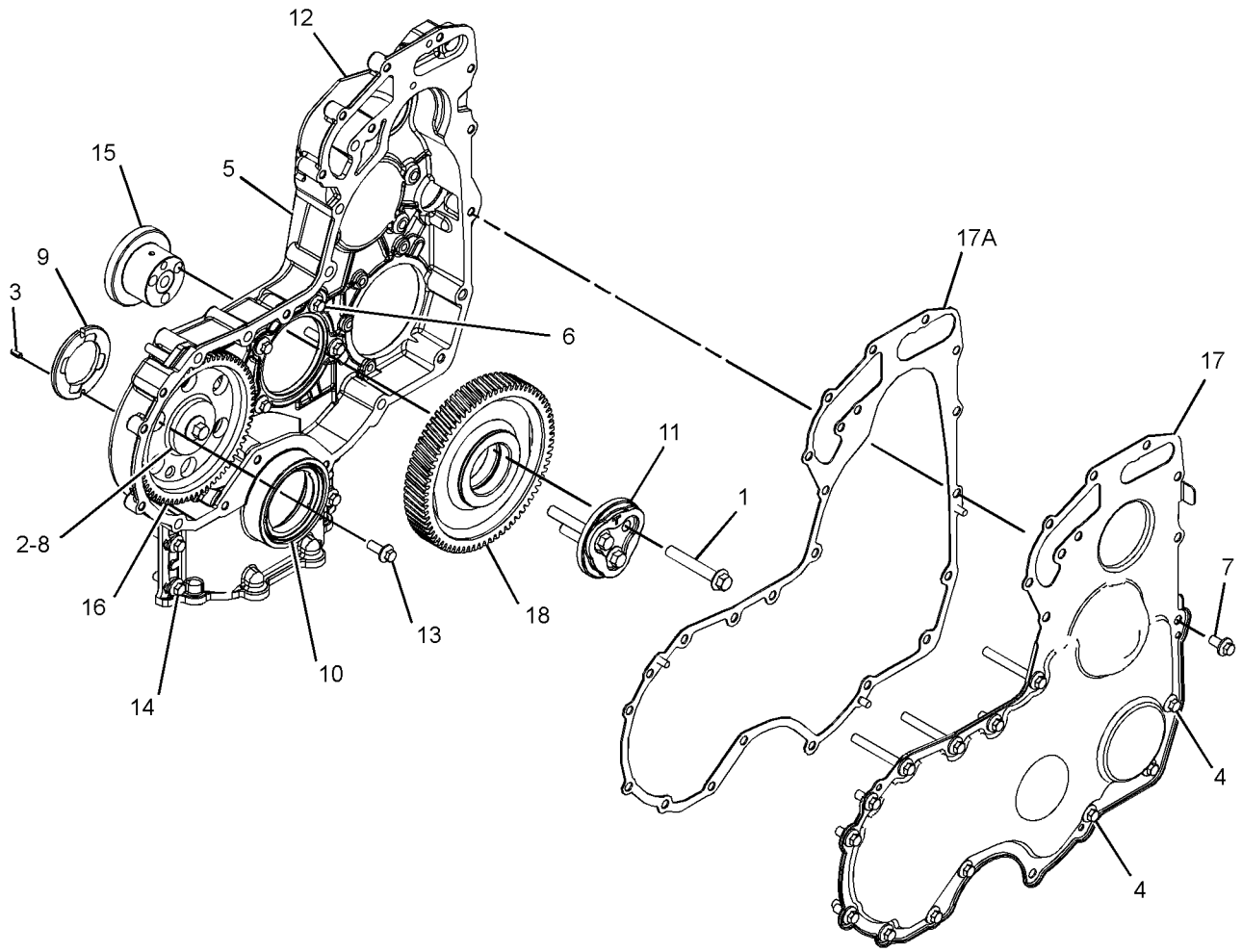

GRAPHIC #1 <END> g07817345

448-9788 HOUSING GP-FRONT

PART OF 480-2181 ENGINE AR-PRIMARY

SMCS-1151, 1162, 1206 **i06653862**

NOTE	REF NO	GRAPHIC REF	PART NUMBER	QTY	PART NAME 1 2 3 4 5 6 (PRODUCT LEVEL)	SEE PAGE
M	1	1	**102-9941**	2	BOLT (M12X1.75X25-MM)	
	2	1	**277-4223**	1	PLUG	
	3	1	**369-6810**	1	COVER GP	
	3A	1	**357-2646**	1	PLATE-SEAL	

M - METRIC PART

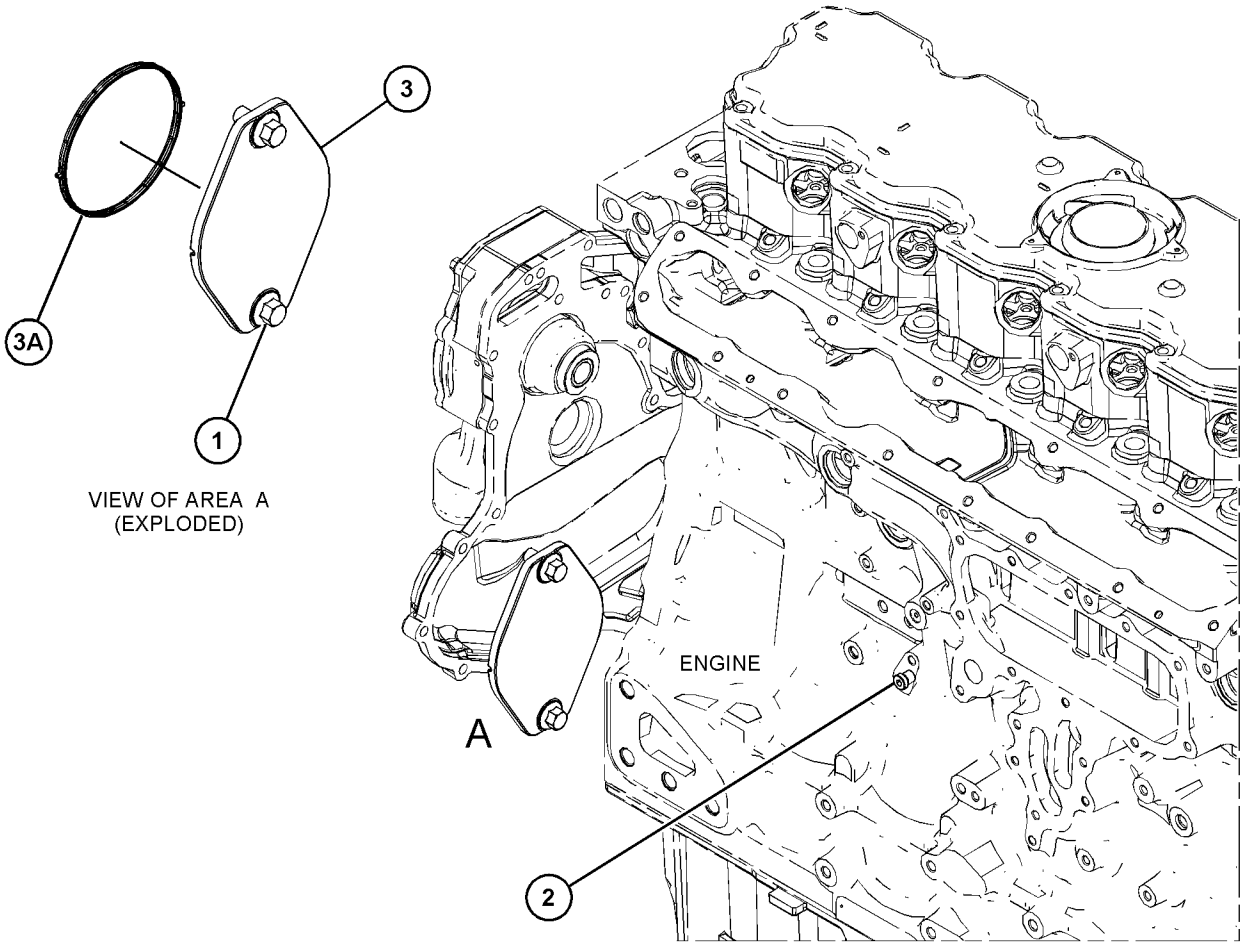

GRAPHIC #1 <END> g06116373

476-7558 HOUSING GP-FRONT

GEAR CASE

PART OF 468-0461, 489-9006, 495-8349, 506-9918, 508-0270, 526-0511, 528-9920, 530-1323, 539-8582, 596-8896, 596-8905, 597-9248, 609-9819 ENGINE AR-PRIMARY

SMCS-1151, 1162, 1206 **i10694574**

NOTE	REF NO	GRAPHIC REF	PART NUMBER	QTY	PART NAME 1 2 3 4 5 6 (PRODUCT LEVEL)	SEE PAGE
M	1	1	**6I-0454**	3	BOLT (M10X1.5X70-MM)	
M	2	1	**7C-4616**	1	BOLT (M12X1.75X45-MM)	
	3	1	**067-6179**	1	DOWEL	
M	4	1	**100-3751**	5	BOLT (M8X1.25X65-MM)	
M	5	1	**101-3895**	2	BOLT (M8X1.25X35-MM)	
M	6	1	**124-3815**	9	BOLT (M8X1.25X16-MM)	
	7	1	**133-1011**	1	WASHER (13X54X6-MM THK)	
	8	1	**425-7103**	1	GEAR (68-TEETH)	
	9	1	**648-9166**	1	COVER	
	10	1	**232-3666**	1	WASHER-THRUST	
	11	1	**273-3690**	1	BOLT	
	12	1	**277-3012**	1	GASKET-COVER	
	13	1	**277-3013**	1	SEAL	
	14	1	**291-6517**	1	PLATE	
	15	1	**359-9431**	1	GEAR-IDLER	
	16	1	**443-9076**	1	CASE-GEAR	
M	17	1	**6I-0217**	6	BOLT (M8X1.25X20-MM)	
M	18	1	**6I-0645**	4	BOLT (M8X1.25X25-MM)	
	19	1	**226-8766**	1	GASKET-COVER	
F			**226-8767**	1	COVER AS-FRONT	
F			**226-8766**	1	GASKET-COVER	

F - NOT SHOWN
M - METRIC PART

476-7558 **HOUSING GP-FRONT (**contd.**)** **i10694574**

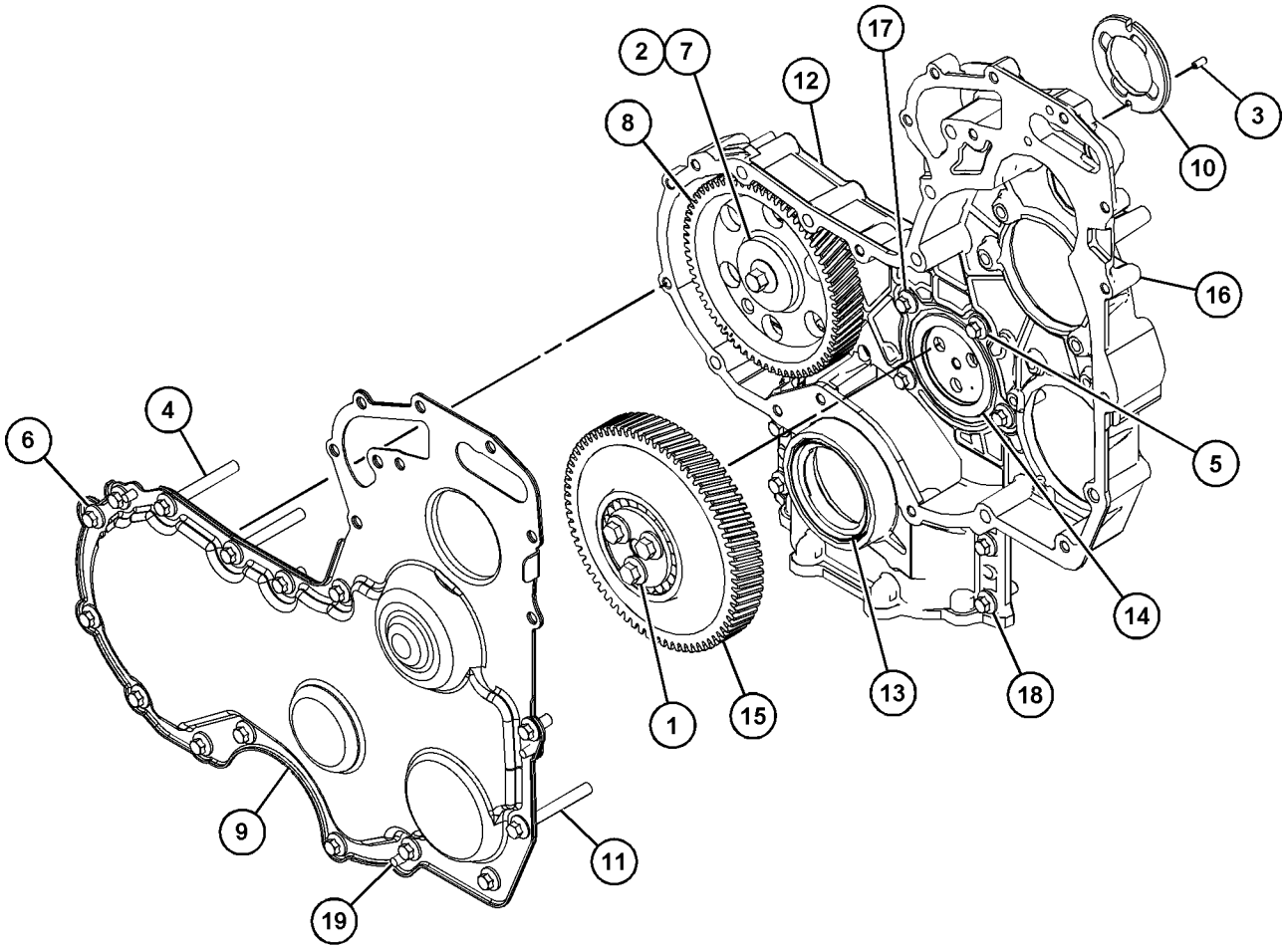

GRAPHIC #1 <END> g07939662

371-2478 JET GP-PISTON COOLING

PART OF 451-1222 CYLINDER BLOCK GP-SHORT, 596-2071 ENGINE AR-COMPLETE, 451-8343, 461-4638, 461-4649, 461-4656, 461-4658, 466-1160, 466-1161, 466-1162, 466-1163, 468-0461, 468-8218, 470-8667, 470-8814, 471-0541, 474-7299, 475-8297, 475-9060, 478-4257, 479-9398, 480-2181, 481-0811, 482-0212, 484-2939, 485-8027, 486-2644, 486-4250, 488-6687, 489-9006, 491-2606, 491-4973, 491-4980, 491-4993, 491-7124, 492-3021, 492-3072, 492-3169, 493-1019, 493-1038, 494-2073, 494-6807, 495-8349, 499-7181, 501-2466, 502-9462, 504-3629, 504-5365, 504-8134, 504-9579, 506-5035, 506-9918, 507-8016, 508-0270, 510-1088, 512-9858, 513-0851, 513-8513, 514-9367, 515-9203, 519-4128, 520-3152, 520-4644, 524-8271, 525-8759, 526-0511, 526-7210, 526-8888, 527-7106, 527-9686, 528-3358, 528-9866, 528-9920, 530-1323, 530-2601, 531-2492, 533-2797, 533-3588, 535-8060, 536-6675, 539-6915, 539-8582, 543-4255, 552-3506, 552-8869, 553-1809, 553-3730, 555-4669, 562-8873, 563-6728, 563-6729, 563-6730, 565-1247, 569-7846, 575-2879, 575-2880, 583-8352, 591-1266, 591-9440, 593-7287, 593-7288, 594-2125, 596-4834, 596-7090, 596-8896, 596-8905, 597-9248, 598-9881, 602-8721, 603-5300, 608-9261, 609-9819, 612-1735, 613-9482, 614-5795, 614-9555, 622-6239, 623-1309, 624-0698, 627-8019, 627-8054, 627-8129, 628-4345, 633-4335, 633-7776, 645-2039, 657-2370 ENGINE AR-PRIMARY

SMCS-1331 **i05723748**

NOTE	REF NO	GRAPHIC REF	PART NUMBER	QTY	PART NAME 1 2 3 4 5 6 (PRODUCT LEVEL)	SEE PAGE
M	1	1	**100-4841**	6	BOLT (M6X1X10-MM)	
	2	1	**329-3796**	6	TUBE AS-OIL JET	

M - METRIC PART

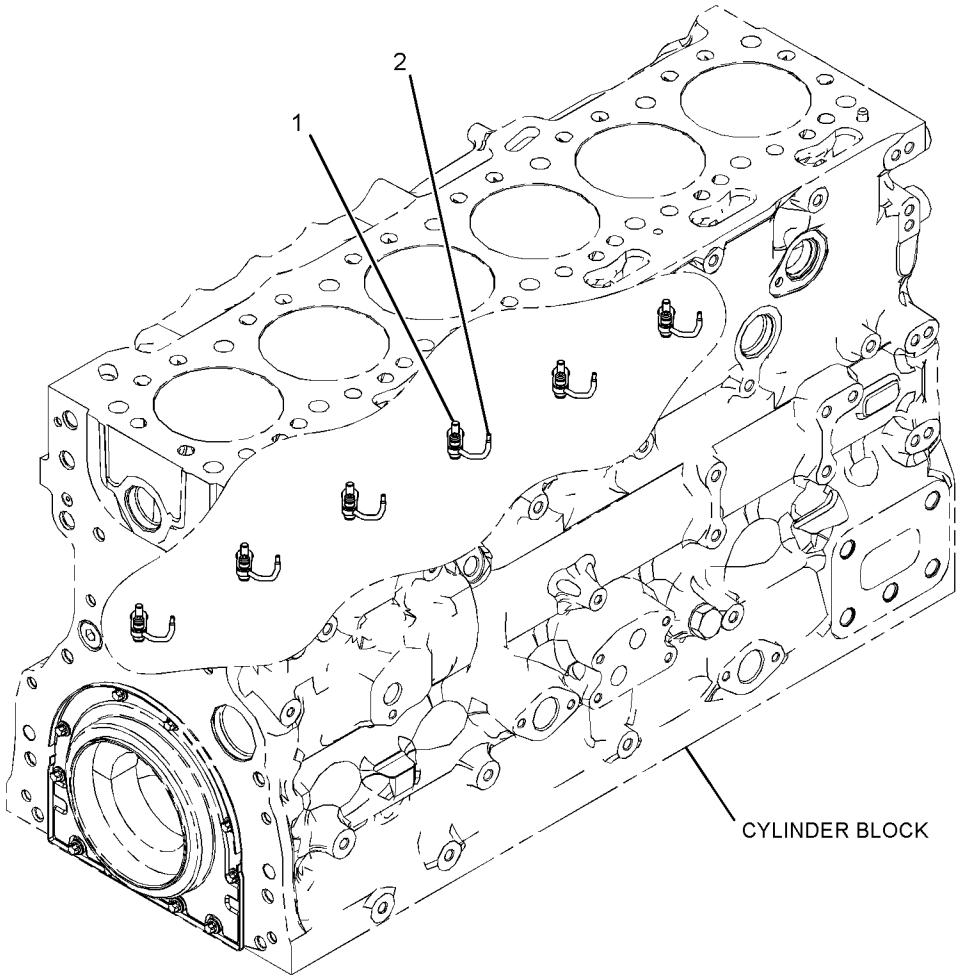

GRAPHIC #1 <END> g03378569

371-2735 LIFTING GP-ENGINE

PART OF 466-1160, 466-1161, 466-1162, 466-1163, 474-7299, 491-2606, 504-3629, 506-9918, 524-8271, 528-9866, 528-9920, 531-2492, 533-3588, 553-3730, 594-2125, 596-8896, 596-8905, 614-5795 ENGINE AR-PRIMARY

SMCS-1122 **i05723739**

NOTE	REF NO	GRAPHIC REF	PART NUMBER	QTY	PART NAME 1 2 3 4 5 6 (PRODUCT LEVEL)	SEE PAGE
	1	1	**279-9651**	1	PLATE-LIFTING	
	2	1	**279-9652**	1	PLATE-LIFTING	
M	3	1	**6I-0654**	4	BOLT (M10X1.5X25-MM)	

M - METRIC PART

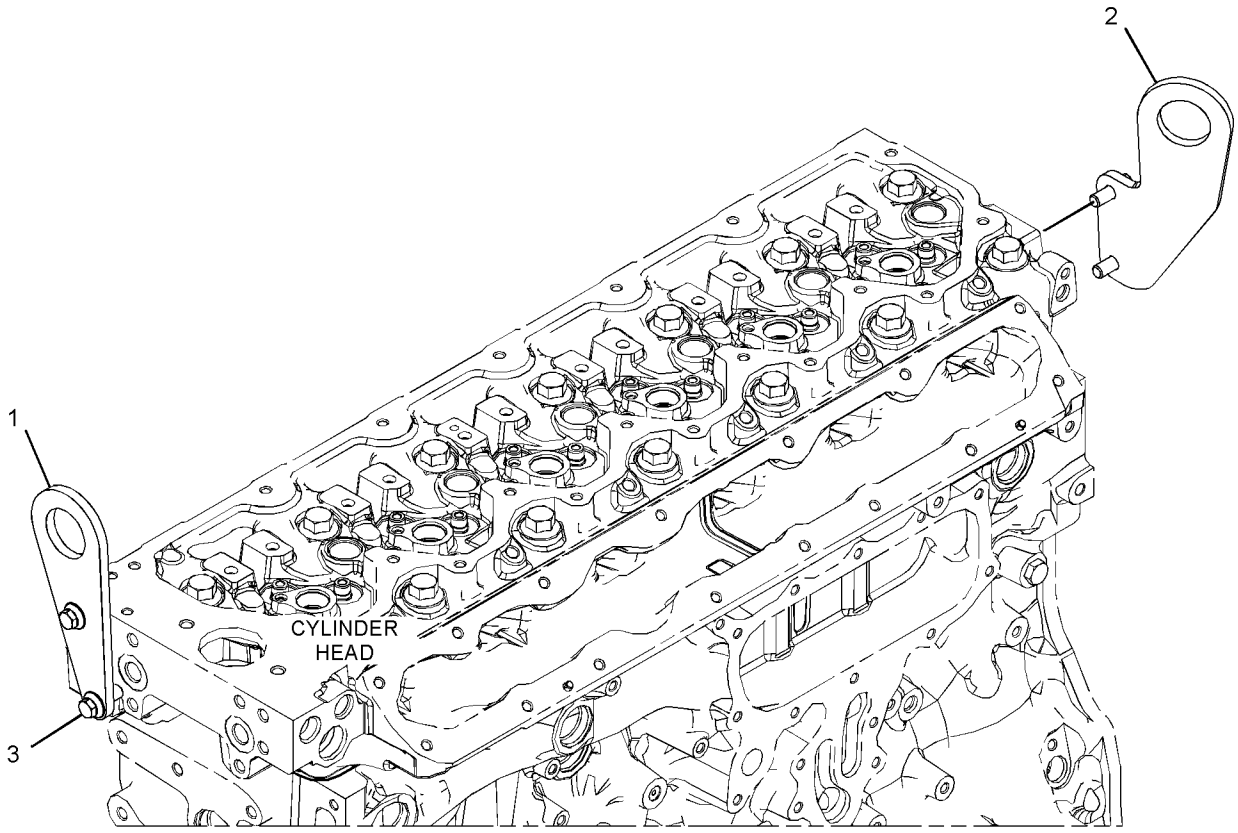

GRAPHIC #1 <END> g03098956

371-2740 LIFTING GP-ENGINE

PART OF 468-8218, 470-8814, 478-4257, 486-4250, 494-2073, 515-9203, 526-0511, 526-7210, 527-7106, 528-3358, 575-2879, 575-2880, 596-4834, 596-7090, 597-9248, 608-9261, 645-2039 ENGINE AR-PRIMARY

SMCS-1122 **i05582432**

NOTE	REF NO	GRAPHIC REF	PART NUMBER	QTY	PART NAME 1 2 3 4 5 6 (PRODUCT LEVEL)	SEE PAGE
	1	1	**279-9651**	1	PLATE-LIFTING	
	2	1	**304-5062**	1	BRACKET	
M	3	1	**6I-0654**	2	BOLT (M10X1.5X25-MM)	
M	4	1	**123-2899**	4	BOLT (M10X1.5X40-MM)	
	5	1	**415-1604**	1	BRACKET-LIFTING	

M - METRIC PART

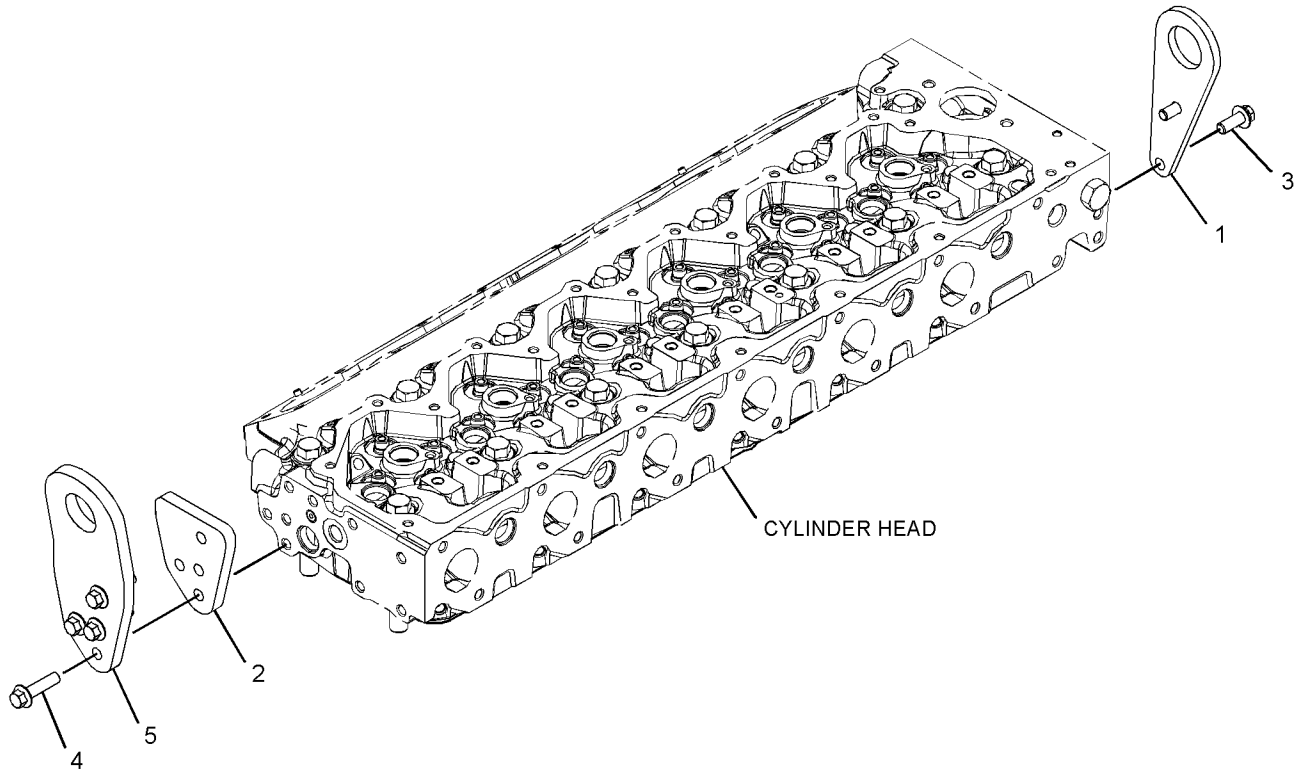

GRAPHIC #1 <END> g03456846

416-2470 LIFTING GP-ENGINE

PART OF 596-2071 ENGINE AR-COMPLETE, 451-8343, 461-4638, 461-4649, 461-4656, 461-4658, 468-0461, 470-8667, 471-0541, 475-8297, 475-9060, 479-9398, 480-2181, 481-0811, 482-0212, 484-2939, 485-8027, 486-2644, 488-6687, 489-9006, 491-4973, 491-4980, 491-4993, 491-7124, 492-3021, 492-3072, 492-3169, 493-1019, 493-1038, 494-6807, 495-8349, 499-7181, 501-2466, 502-9462, 504-5365, 504-8134, 504-9579, 506-5035, 507-8016, 508-0270, 510-1088, 512-9858, 513-0851, 513-8513, 514-9367, 519-4128, 520-3152, 520-4644, 525-8759, 526-8888, 527-9686, 530-1323, 530-2601, 533-2797, 535-8060, 536-6675, 539-6915, 539-8582, 543-4255, 552-3506, 552-8869, 553-1809, 555-4669, 562-8873, 563-6728, 563-6729, 563-6730, 565-1247, 569-7846, 583-8352, 591-1266, 591-9440, 593-7287, 593-7288, 598-9881, 602-8721, 603-5300, 609-9819, 612-1735, 613-9482, 614-9555, 622-6239, 623-1309, 624-0698, 627-8019, 627-8054, 627-8129, 628-4345, 633-4335, 633-7776, 657-2370 ENGINE AR-PRIMARY

SMCS-1122 **i05581213**

NOTE	REF NO	GRAPHIC REF	PART NUMBER	QTY	PART NAME 1 2 3 4 5 6 (PRODUCT LEVEL)	SEE PAGE
	1	1	**277-4444**	1	PLATE-LIFTING	
M	2	1	**6I-0654**	4	BOLT (M10X1.5X25-MM)	
	3	1	**277-4445**	1	PLATE-LIFTING	

M - METRIC PART

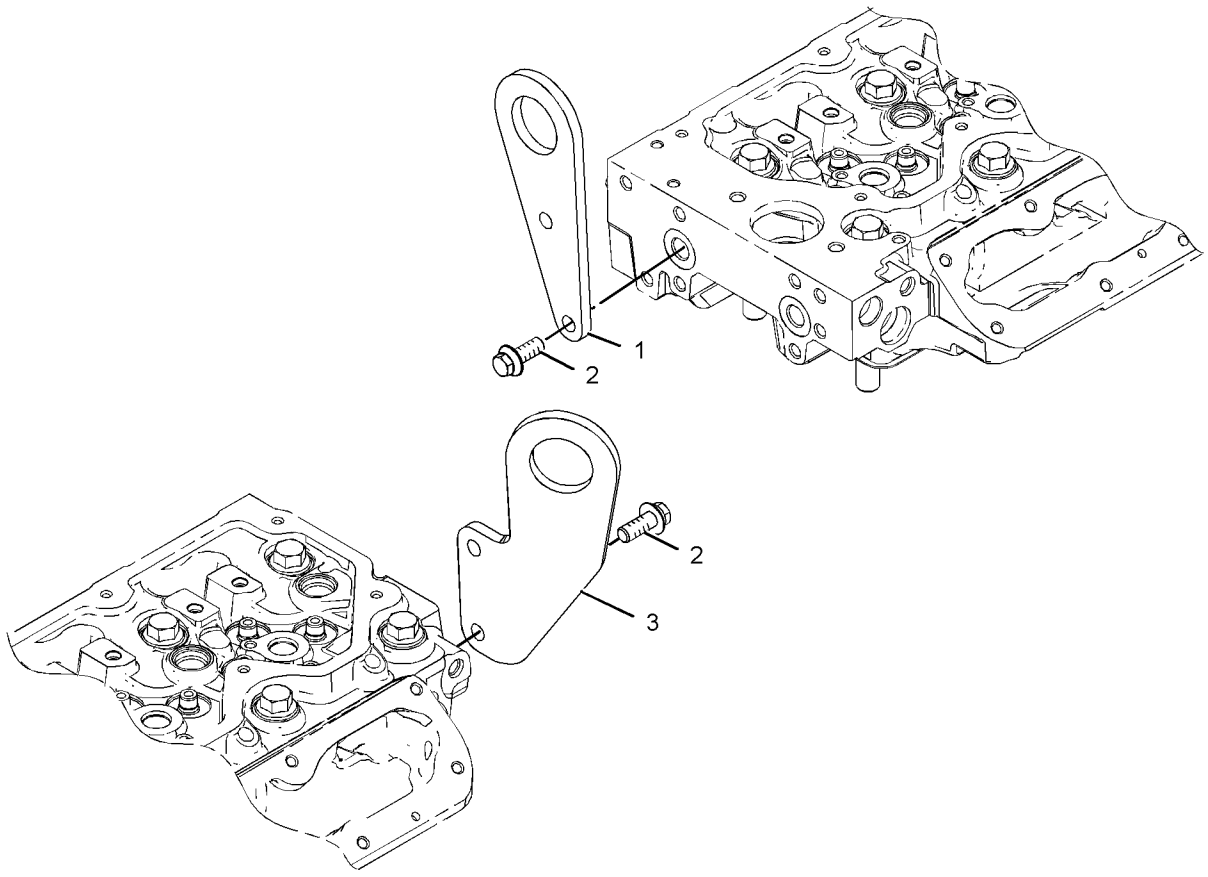

GRAPHIC #1 <END> g01195531

371-2558 MOUNTING GP-ALTERNATOR

PART OF 531-2492 ENGINE AR-PRIMARY

SMCS-1154, 1405 **i05916300**

NOTE	REF NO	GRAPHIC REF	PART NUMBER	QTY	PART NAME 1 2 3 4 5 6 (PRODUCT LEVEL)	SEE PAGE
M	1	1	**111-0859**	4	BOLT (M10X1.5X35-MM)	
	2	1	**394-4451**	1	BRACKET AS	
		1	**161-9820**	2	PIN	

M - METRIC PART

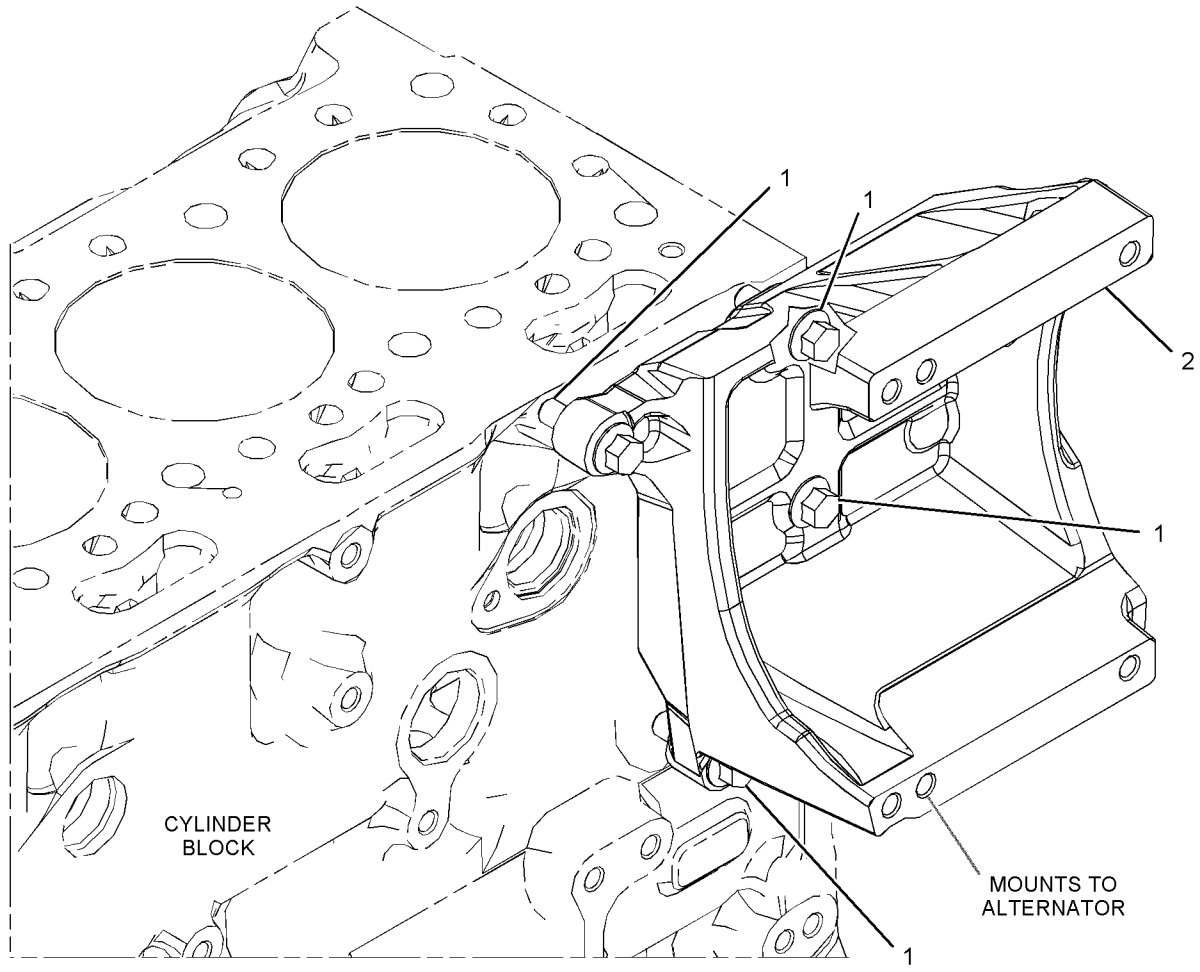

GRAPHIC #1 <END> g03378855

346-1510 MOUNTING GP-ENGINE

PART OF 470-8814, 491-2606, 520-4644, 531-2492, 575-2879, 575-2880, 596-8896, 596-8905, 645-2039 ENGINE AR-PRIMARY

SMCS-1152, 1153, 1154 **i05582991**

NOTE	REF NO	GRAPHIC REF	PART NUMBER	QTY	PART NAME 1 2 3 4 5 6 (PRODUCT LEVEL)	SEE PAGE
M	1	1	**283-8301**	2	BOLT (M16X2X60-MM)	
M	2	1	**283-8302**	6	BOLT (M16X2X80-MM)	
	3	1	**277-4490**	2	BRACKET-MOUNTING	

M - METRIC PART

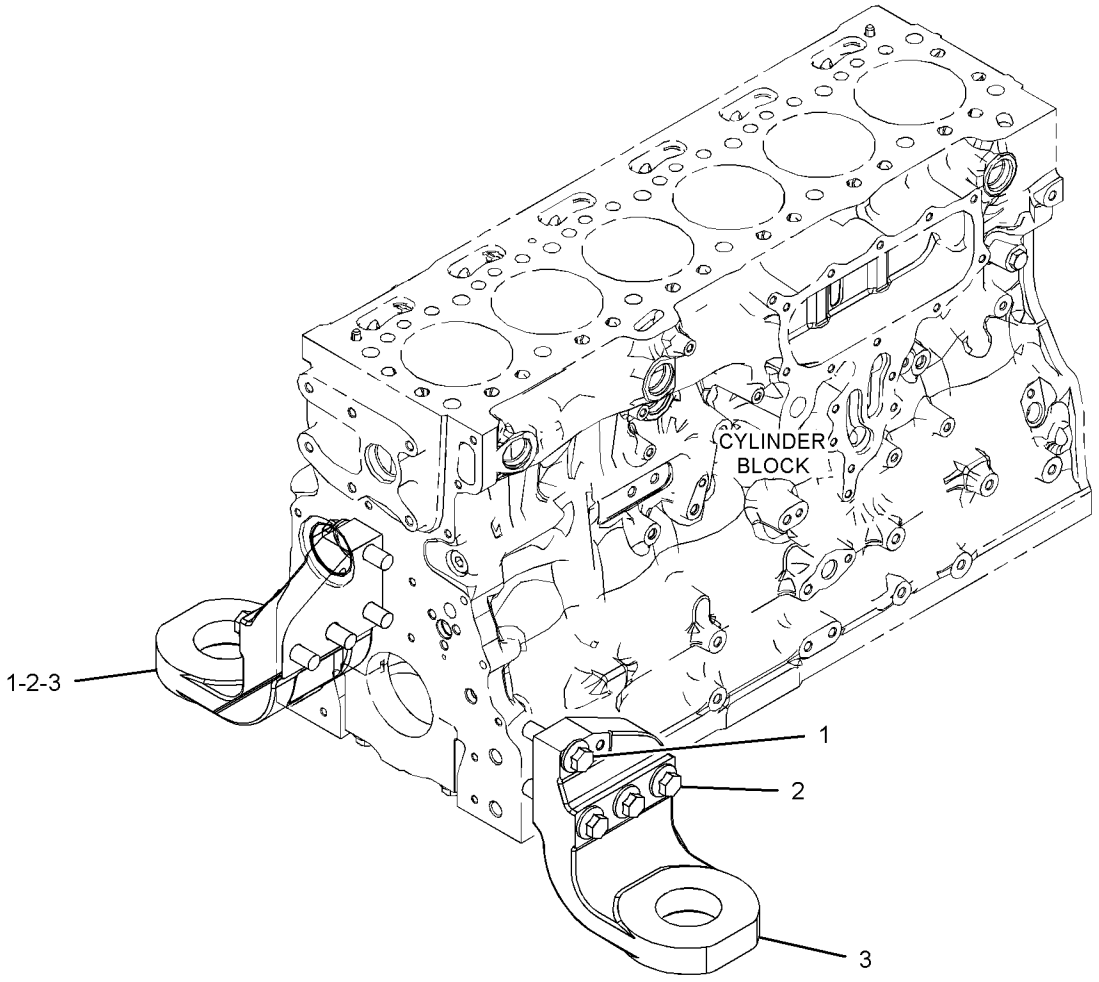

GRAPHIC #1 <END> g03507641

448-4757 MOUNTING GP-ENGINE

PART OF 486-4250, 526-0511, 597-9248 ENGINE AR-PRIMARY

SMCS-1152, 1153, 1154 **i06180478**

NOTE	REF NO	GRAPHIC REF	PART NUMBER	QTY	PART NAME 1 2 3 4 5 6 (PRODUCT LEVEL)	SEE PAGE
M	1	1	**283-8301**	4	BOLT (M16X2X60-MM)	
	2	1	**303-8523**	1	BRACKET	

M - METRIC PART

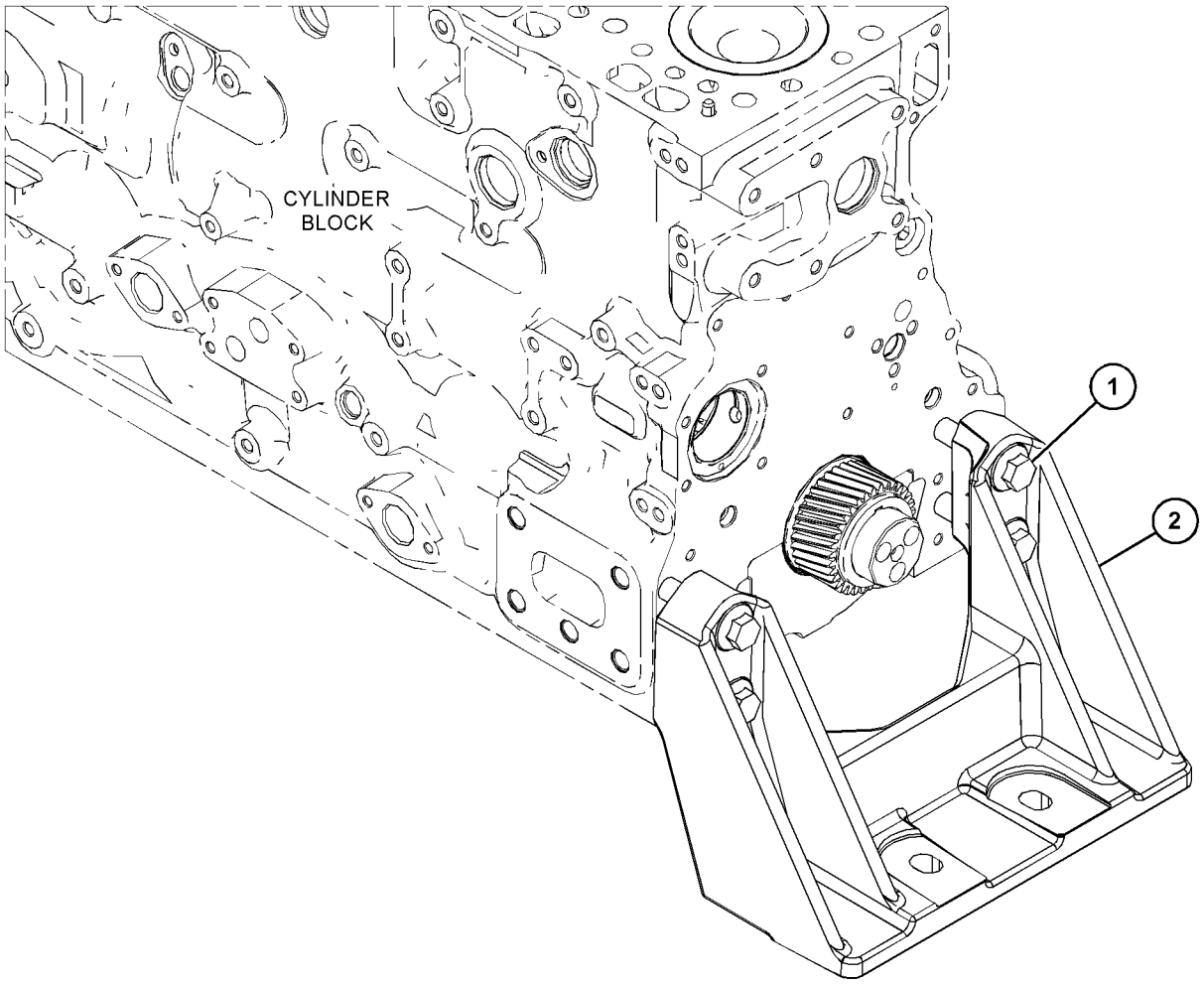

GRAPHIC #1 <END> g03873268

458-2242 MOUNTING GP-ENGINE

PART OF 461-4658, 468-0461, 480-2181, 491-7124, 502-9462, 591-1266, 609-9819, 627-8019 ENGINE AR-PRIMARY

SMCS-1152, 1153, 1154

i05859574

NOTE	REF NO	GRAPHIC REF	PART NUMBER	QTY	PART NAME 1 2 3 4 5 6 (PRODUCT LEVEL)	SEE PAGE
M	1	1	**283-8302**	4	BOLT (M16X2X80-MM)	
M	2	1	**360-2903**	4	BOLT-FLANGE HEAD (M16X2X55-MM)	
	3	1	**365-5504**	1	SUPPORT	
	4	1	**365-5505**	1	SUPPORT	

M - METRIC PART

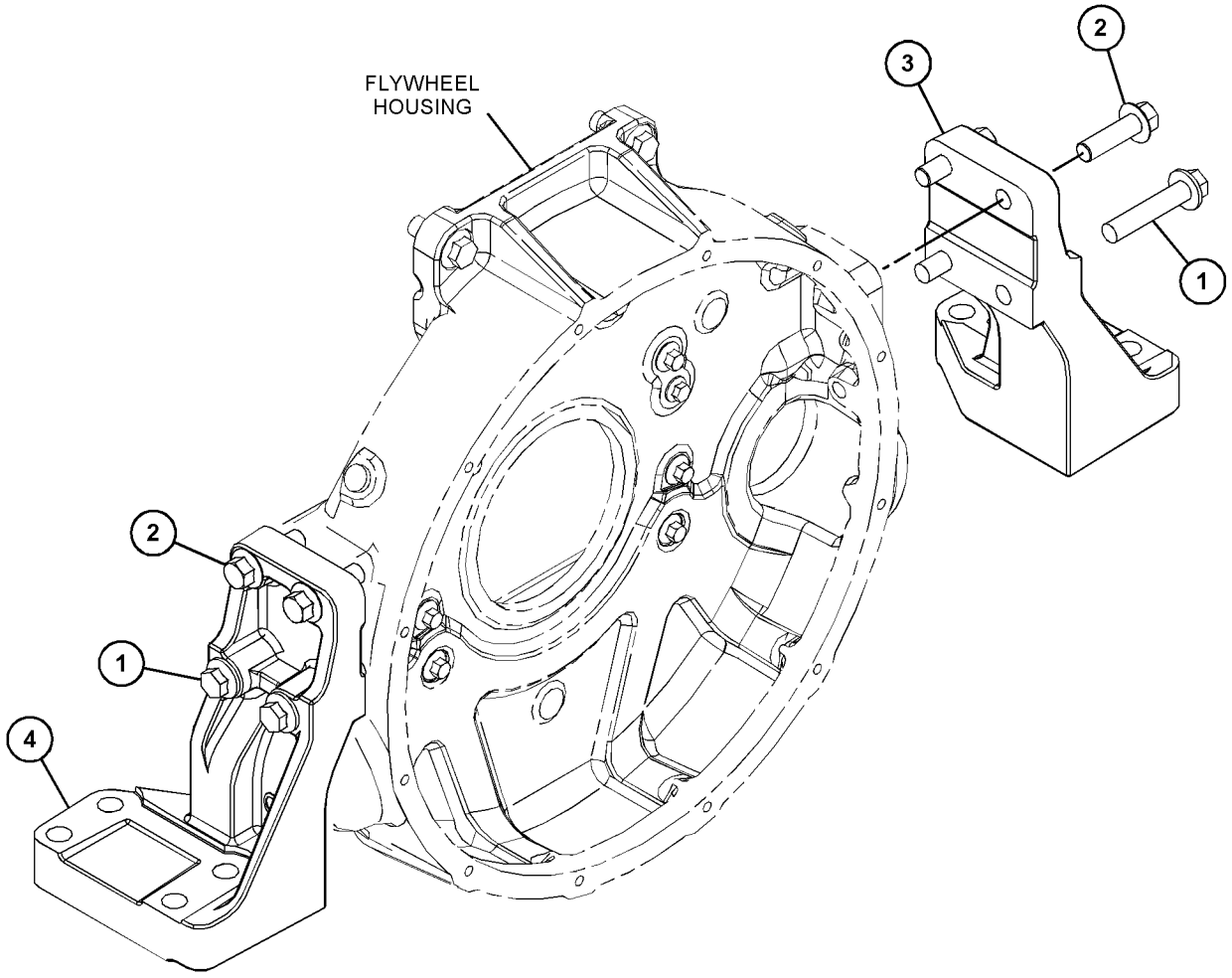

GRAPHIC #1 <END> g03716137

495-6156 MOUNTING GP-ENGINE

PART OF 519-4128, 525-8759, 526-7210, 527-7106, 528-3358, 552-3506, 594-2125, 596-4834, 596-7090, 623-1309 ENGINE AR-PRIMARY

SMCS-1152, 1153, 1154

i06674323

NOTE	REF NO	GRAPHIC REF	PART NUMBER	QTY	PART NAME 1 2 3 4 5 6 (PRODUCT LEVEL)	SEE PAGE
	1	1	**309-0820**	2	BOLT (M16X2X30-MM)	

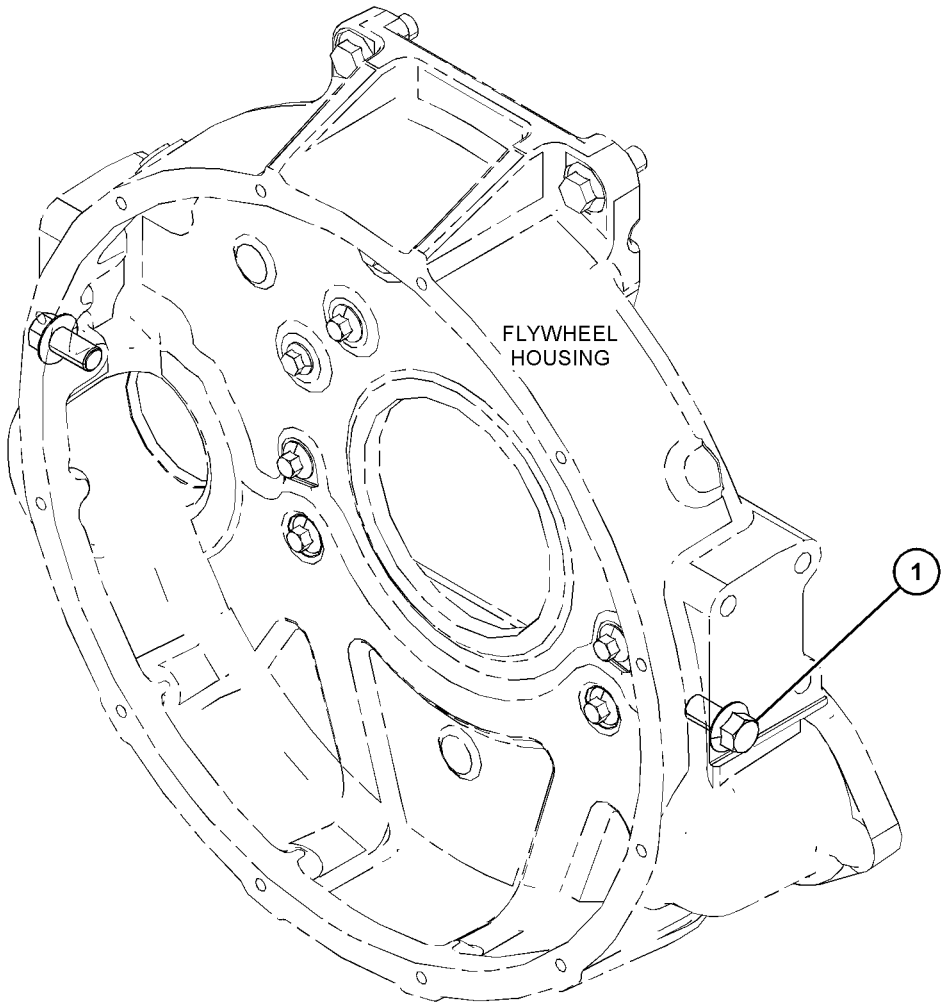

GRAPHIC #1 <END> g06115682

495-6162 MOUNTING GP-ENGINE

PART OF 451-8343 ENGINE AR-PRIMARY

SMCS-1152, 1153, 1154 **i06980022**

NOTE	REF NO	GRAPHIC REF	PART NUMBER	QTY	PART NAME 1 2 3 4 5 6 (PRODUCT LEVEL)	SEE PAGE
M	1	1	**8T-4132**	6	NUT (M16X2-THD)	
M	2	1	**113-7913**	6	STUD (M16X2X45-MM)	
	3	1	**7X-0591**	6	WASHER-HARD (17X29X3-MM THK)	
	4	1	**286-0188**	2	BRACKET-MOUNTING	
	5	1	**309-0820**	2	BOLT (M16X2X30-MM)	

M - METRIC PART

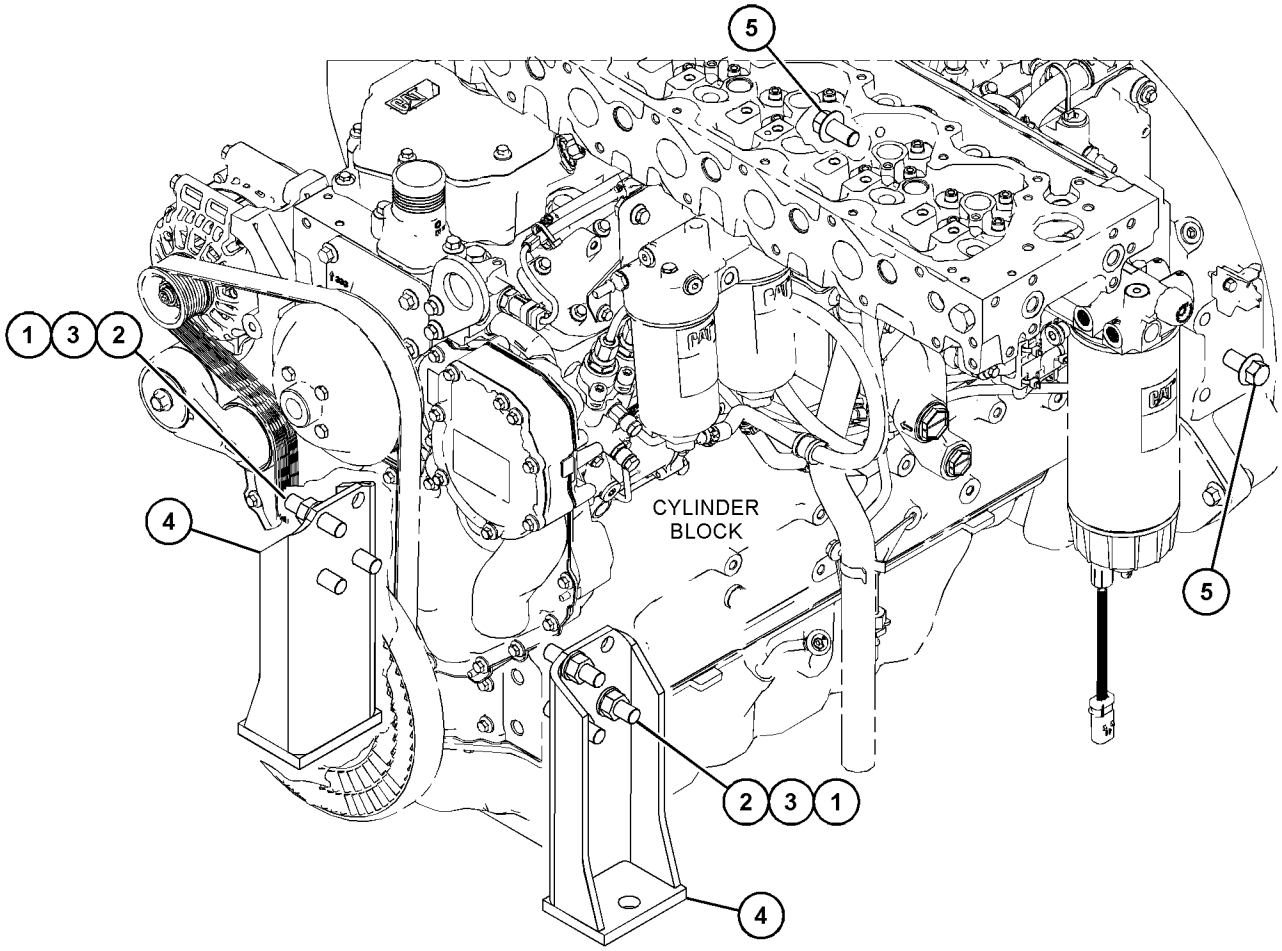

GRAPHIC #1 <END> g06187345

495-6168 MOUNTING GP-ENGINE

SMCS-1152, 1153, 1154 **i06664651**

NOTE	REF NO	GRAPHIC REF	PART NUMBER	QTY	PART NAME 1 2 3 4 5 6 (PRODUCT LEVEL)	SEE PAGE
M	1	1	**283-8301**	4	BOLT (M16X2X60-MM)	
	2	1	**309-0820**	2	BOLT (M16X2X30-MM)	
	3	1	**303-8523**	1	BRACKET	

M - METRIC PART

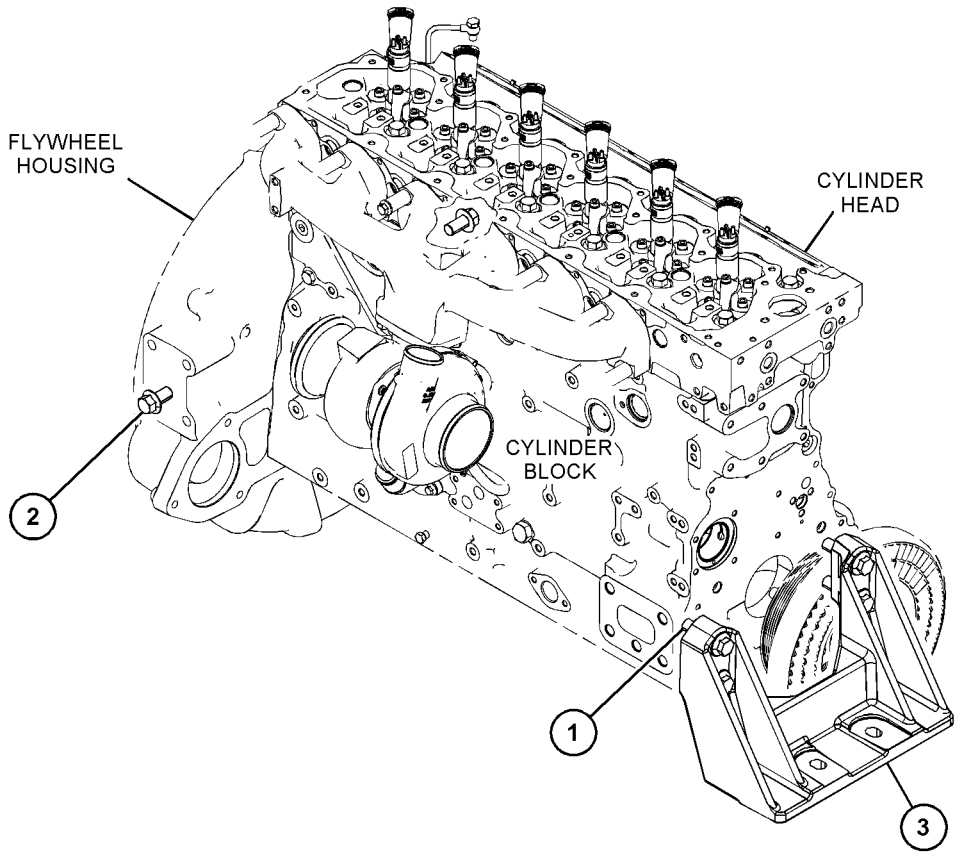

GRAPHIC #1 <END> g06117878

504-6359 MOUNTING GP-ENGINE

LH, RH

PART OF 470-8667 ENGINE AR-PRIMARY

SMCS-1152, 1153, 1154 **i06942863**

NOTE	REF NO	GRAPHIC REF	PART NUMBER	QTY	PART NAME 1 2 3 4 5 6 (PRODUCT LEVEL)	SEE PAGE
	1	1	**6H-3616**	6	PLUG-PROTECTION	
	2	1	**277-4490**	2	BRACKET-MOUNTING	
M	3	1	**283-8301**	2	BOLT (M16X2X60-MM)	
M	4	1	**283-8302**	6	BOLT (M16X2X80-MM)	

M - METRIC PART

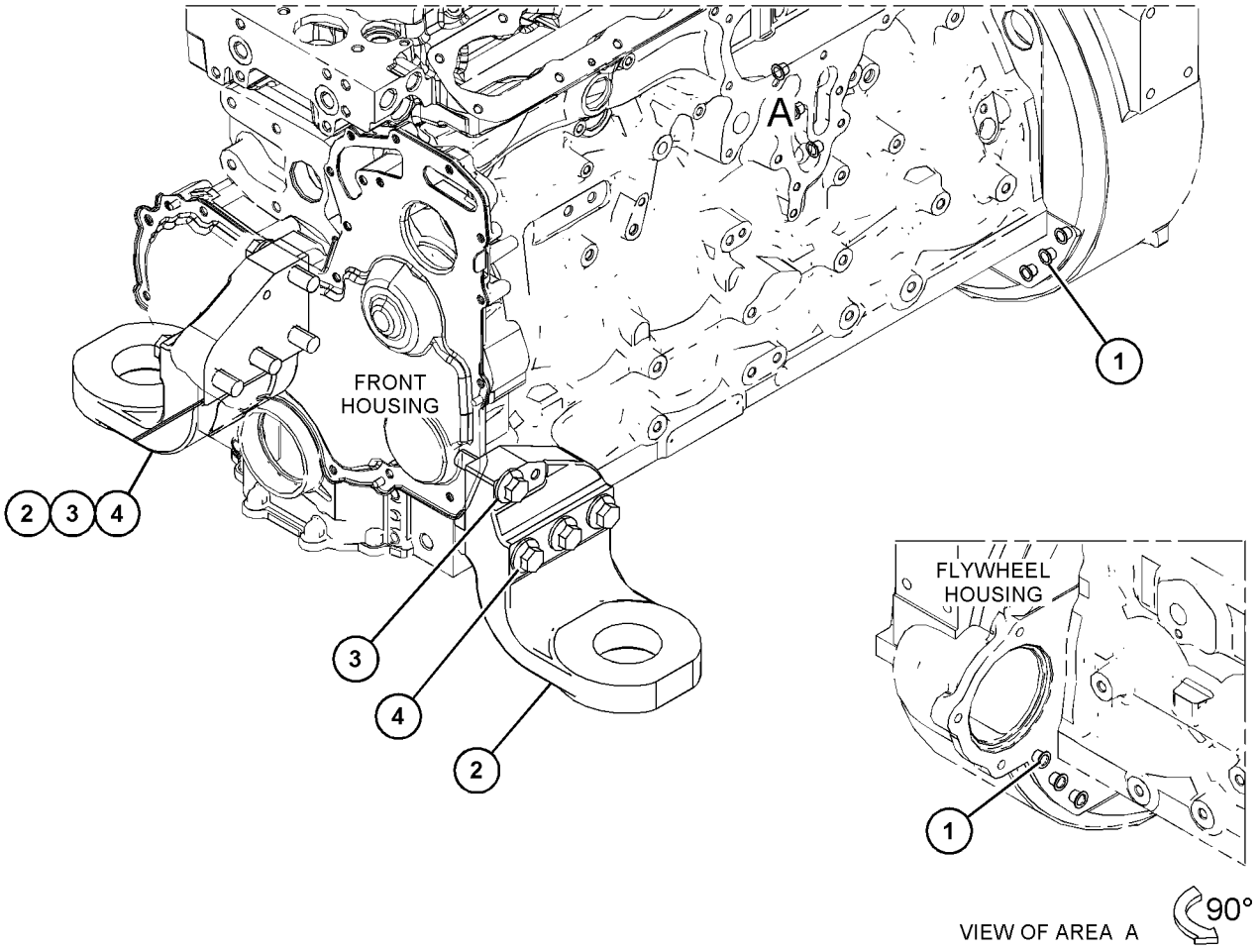

GRAPHIC #1 <END> g06106705

374-7090 MOUNTING GP-REFRIGERANT COMPR

12 VOLT

PART OF 475-8297, 475-9060 ENGINE AR-PRIMARY

SMCS-1802 **i05727150**

NOTE	REF NO	GRAPHIC REF	PART NUMBER	QTY	PART NAME 1 2 3 4 5 6 (PRODUCT LEVEL)	SEE PAGE
M	1	1	**101-7178**	3	BOLT (M10X1.5X55-MM)	
M	2	1	**127-3361**	4	BOLT (M8X1.25X95-MM)	
Y	3	1	**178-9570**	1	COMPRESSOR GP-REFRIGERANT	430
	4	1	**330-1725**	1	BRACKET AS	
	4A	1	**161-9820**	2	PIN	

M - METRIC PART
Y - SEPARATE ILLUSTRATION

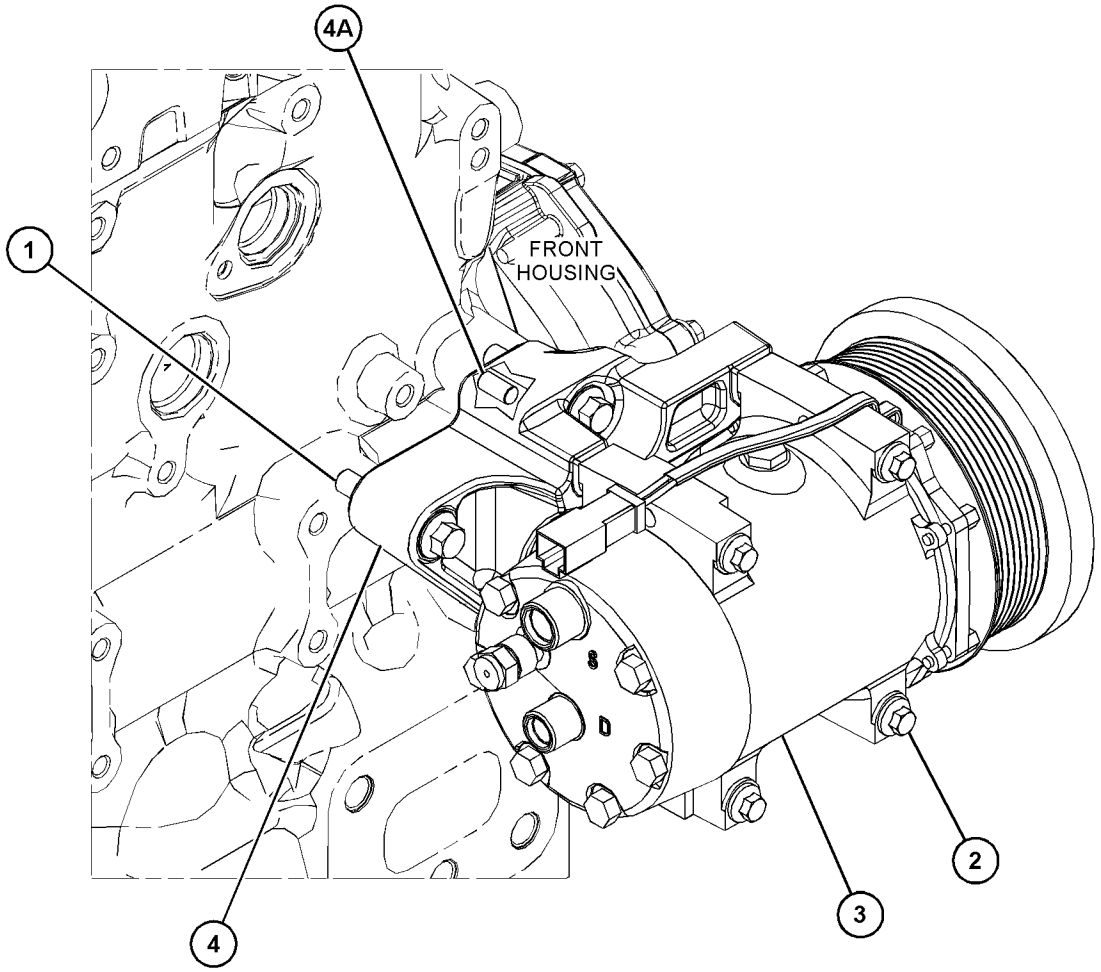

GRAPHIC #1 <END> g03666102

371-2544 PAN GP-OIL

PART OF 474-7299, 504-3629, 526-0511, 553-3730, 597-9248 ENGINE AR-PRIMARY

SMCS-1302 **i05719290**

NOTE	REF NO	GRAPHIC REF	PART NUMBER	QTY	PART NAME 1 2 3 4 5 6 (PRODUCT LEVEL)	SEE PAGE
	1	1	**230-8094**	1	BRIDGE	
M	2	1	**6I-0217**	29	BOLT (M8X1.25X20-MM)	
M	3	1	**6I-0260**	2	BOLT (M8X1.25X25-MM)	
M	4	1	**6I-0363**	2	BOLT (M6X1X20-MM)	
M	5	1	**6I-0572**	2	BOLT (M8X1.25X20-MM)	
	6	1	**351-4749**	1	GASKET-OIL PAN	
Y	7	1	**377-4718**	1	PAN GP-OIL	559
M	8	1	**6I-0654**	1	BOLT (M10X1.5X25-MM)	
	9	1	**275-9897**	1	BRACKET	
	10	1	**280-1384**	1	TUBE AS-OIL SUCTION	
	10A	1	**236-5511**	1	CLIP-PIPE	
	11	1	**6I-4681**	1	GASKET	

M - METRIC PART
Y - SEPARATE ILLUSTRATION

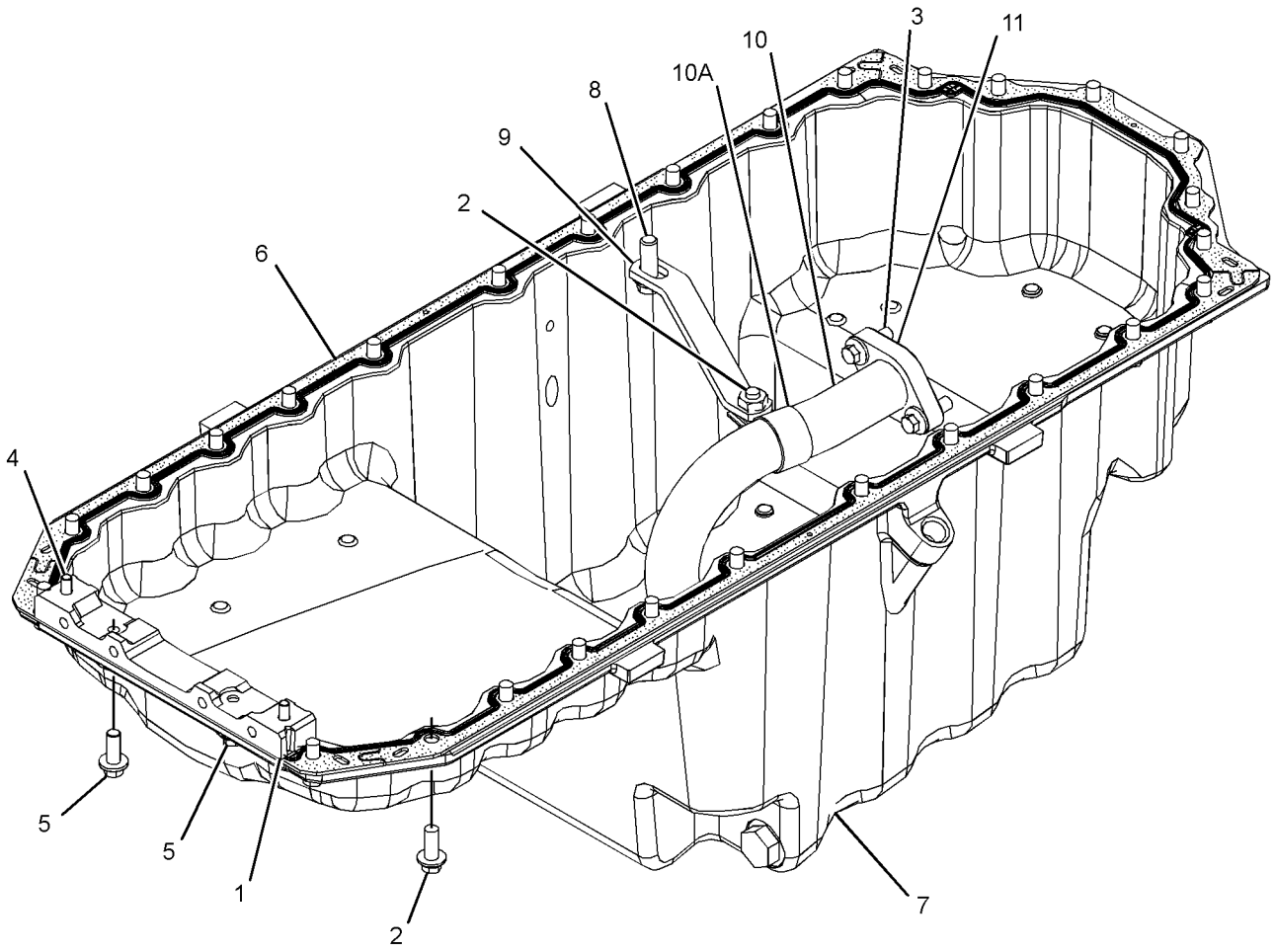

GRAPHIC #1 <END> g03110796

375-4499 PAN GP-OIL

PART OF 596-2071 ENGINE AR-COMPLETE, 451-8343, 461-4638, 461-4649, 461-4656, 461-4658, 466-1160, 466-1161, 466-1162, 466-1163, 468-0461, 468-8218, 471-0541, 479-9398, 480-2181, 482-0212, 484-2939, 485-8027, 486-2644, 489-9006, 491-2606, 491-4973, 491-4980, 491-4993, 491-7124, 492-3021, 492-3072, 492-3169, 493-1019, 493-1038, 494-2073, 494-6807, 495-8349, 499-7181, 501-2466, 502-9462, 504-5365, 504-8134, 504-9579, 506-5035, 507-8016, 508-0270, 510-1088, 512-9858, 513-0851, 513-8513, 514-9367, 519-4128, 520-3152, 520-4644, 524-8271, 525-8759, 526-7210, 526-8888, 527-7106, 527-9686, 528-3358, 528-9866, 530-1323, 530-2601, 531-2492, 533-2797, 535-8060, 539-6915, 539-8582, 543-4255, 552-3506, 552-8869, 553-1809, 555-4669, 562-8873, 563-6728, 563-6729, 563-6730, 565-1247, 569-7846, 583-8352, 591-1266, 591-9440, 593-7287, 593-7288, 594-2125, 596-4834, 596-7090, 596-8896, 596-8905, 598-9881, 602-8721, 603-5300, 609-9819, 612-1735, 613-9482, 614-5795, 614-9555, 622-6239, 623-1309, 624-0698, 627-8019, 627-8054, 627-8129, 628-4345, 633-4335, 633-7776, 657-2370 ENGINE AR-PRIMARY

SMCS-1302 **i06927929**

NOTE	REF NO	GRAPHIC REF	PART NUMBER	QTY	PART NAME 1 2 3 4 5 6 (PRODUCT LEVEL)	SEE PAGE
M	1	1	**8T-0269**	2	BOLT-SOCKET HEAD (M6X1X20-MM)	
	2	1	**230-8094**	1	BRIDGE	
	3	1	**351-4749**	1	GASKET-OIL PAN	
	4	1	**354-8538**	1	PAN AS-OIL	
	4A	1	**8L-2786**	2	SEAL-O-RING	
	4B	1	**9S-4185**	2	PLUG (3/4-16-THD)	
	5	1	**6I-4681**	1	GASKET	
M	6	1	**6I-0260**	30	BOLT (M8X1.25X25-MM)	
M	7	1	**6I-0572**	2	BOLT (M8X1.25X20-MM)	
	8	1	**283-4302**	1	TUBE-OIL SUCTION	

M - METRIC PART

375-4499 **PAN GP-OIL (**contd.**)** **i06927929**

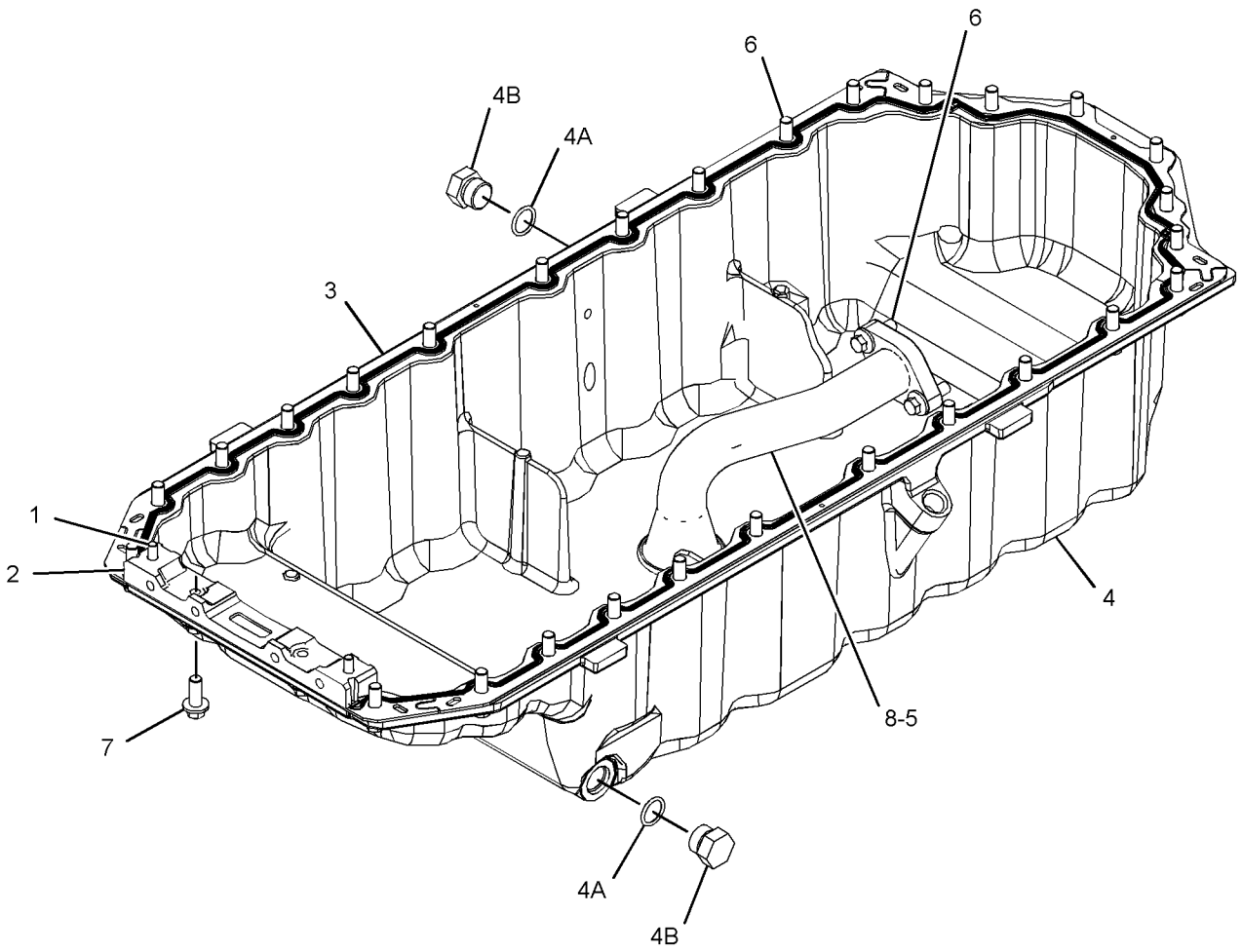

GRAPHIC #1 <END> g06177293

377-4718 PAN GP-OIL

PART OF 371-2544 PAN GP-OIL

SMCS-1302 **i05719591**

NOTE	REF NO	GRAPHIC REF	PART NUMBER	QTY	PART NAME 1 2 3 4 5 6 (PRODUCT LEVEL)	SEE PAGE
	1	1	**8L-2786**	2	SEAL-O-RING	
	2	1	**9S-4185**	2	PLUG (3/4-16-THD)	

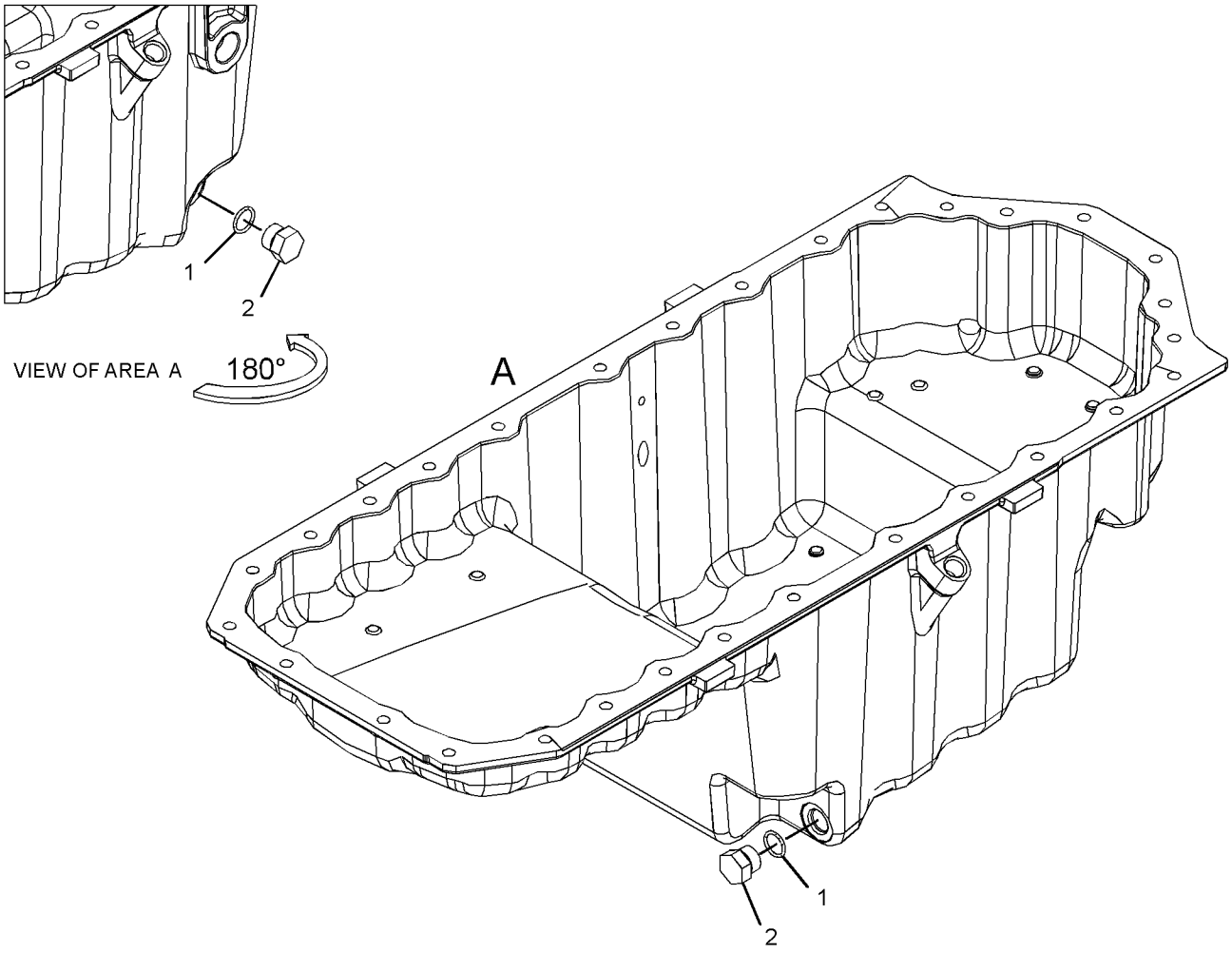

GRAPHIC #1 <END> g03371776

378-0593 PAN GP-OIL

PART OF 470-8667, 536-6675 ENGINE AR-PRIMARY

SMCS-1302 **i10694236**

NOTE	REF NO	GRAPHIC REF	PART NUMBER	QTY	PART NAME 1 2 3 4 5 6 (PRODUCT LEVEL)	SEE PAGE
M	1	1	**8T-0269**	2	BOLT-SOCKET HEAD (M6X1X20-MM)	
	2	1	**230-8094**	1	BRIDGE	
	3	1	**351-4749**	1	GASKET-OIL PAN	
	4	1	**366-7721**	1	PAN AS-OIL	
	4A	1	**8L-2786**	2	SEAL-O-RING	
	4B	1	**9S-4185**	2	PLUG (3/4-16-THD)	
	5	1	**6I-4681**	1	GASKET	
M	6	1	**6I-0260**	30	BOLT (M8X1.25X25-MM)	
M	7	1	**6I-0572**	2	BOLT (M8X1.25X20-MM)	
	8	1	**286-8817**	1	TUBE-OIL SUCTION	

M - METRIC PART

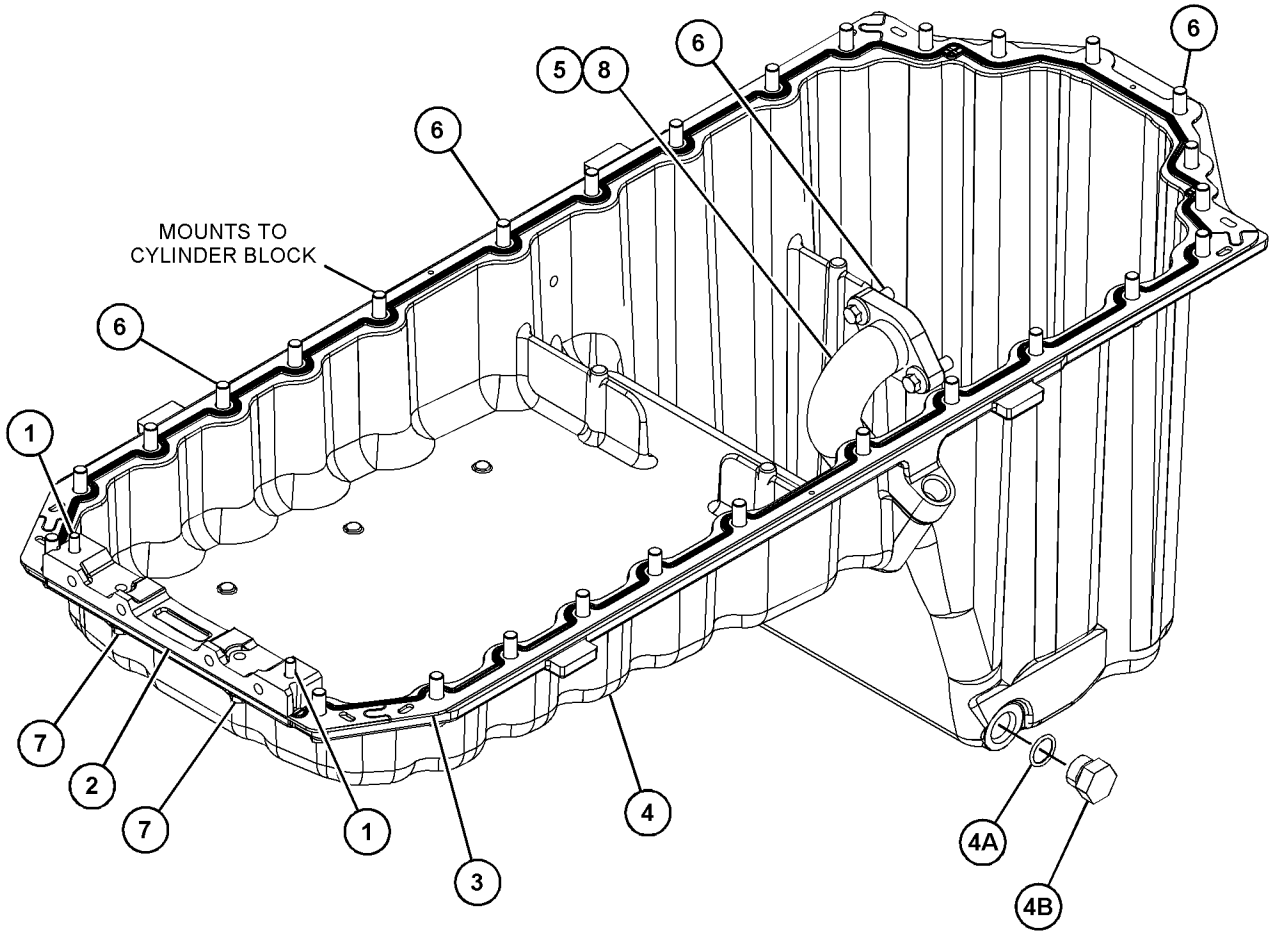

GRAPHIC #1 <END> g07936459

378-0594 PAN GP-OIL

PART OF 475-8297, 475-9060, 478-4257, 481-0811, 486-4250, 488-6687, 515-9203, 533-3588, 608-9261 ENGINE AR-PRIMARY

SMCS-1302 **i10694208**

NOTE	REF NO	GRAPHIC REF	PART NUMBER	QTY	PART NAME 1 2 3 4 5 6 (PRODUCT LEVEL)	SEE PAGE
M	1	1	**8T-0269**	2	BOLT-SOCKET HEAD (M6X1X20-MM)	
M	2	1	**6I-0654**	1	BOLT (M10X1.5X25-MM)	
	3	1	**230-8094**	1	BRIDGE	
	4	1	**351-4749**	1	GASKET-OIL PAN	
	5	1	**539-7274**	1	PAN GP-OIL	
	5A	1	**8L-2786**	2	SEAL-O-RING	
	5B	1	**9S-4185**	2	PLUG (3/4-16-THD)	
	6	1	**6I-4681**	1	GASKET	
M	7	1	**6I-0260**	30	BOLT (M8X1.25X25-MM)	
M	8	1	**6I-0572**	3	BOLT (M8X1.25X20-MM)	
	9	1	**275-9897**	1	BRACKET	
	10	1	**285-2991**	1	TUBE AS-OIL SUCTION	
		1	**236-5511**	1	CLIP-PIPE	

M - METRIC PART

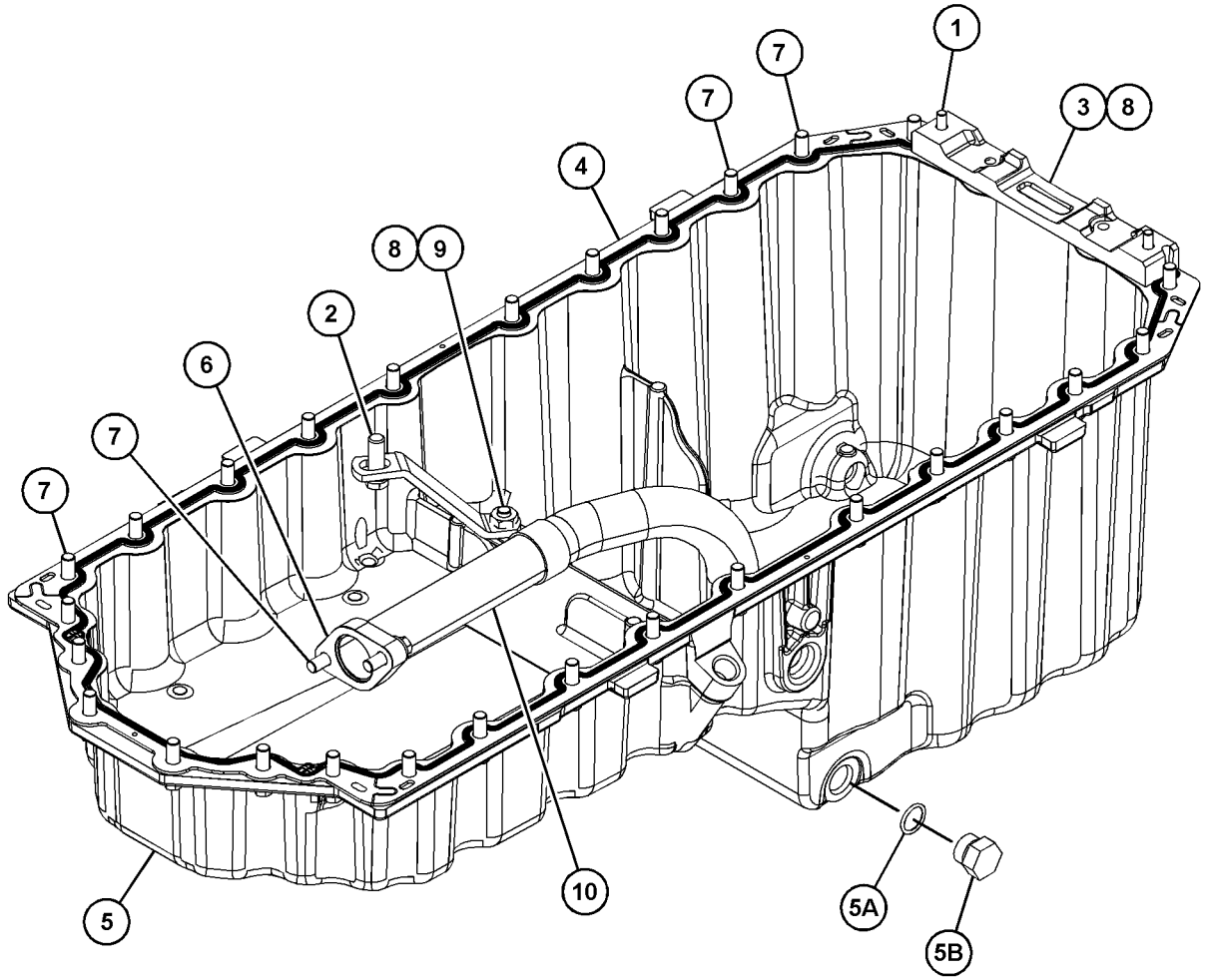

GRAPHIC #1 <END> g07936450

378-8260 PAN GP-OIL

PART OF 506-9918, 528-9920 ENGINE AR-PRIMARY

SMCS-1302 **i10692433**

NOTE	REF NO	GRAPHIC REF	PART NUMBER	QTY	PART NAME 1 2 3 4 5 6 (PRODUCT LEVEL)	SEE PAGE
	1	1	**230-8094**	1	BRIDGE	
M	2	1	**6I-0217**	1	BOLT (M8X1.25X20-MM)	
M	3	1	**6I-0260**	30	BOLT (M8X1.25X25-MM)	
M	4	1	**8T-0269**	2	BOLT-SOCKET HEAD (M6X1X20-MM)	
M	5	1	**6I-0572**	2	BOLT (M8X1.25X20-MM)	
	6	1	**351-4749**	1	GASKET-OIL PAN	
Y	7	1	**453-6156**	1	PAN GP-OIL	564
M	8	1	**6I-0654**	1	BOLT (M10X1.5X25-MM)	
	9	1	**275-9897**	1	BRACKET	
	10	1	**280-1384**	1	TUBE AS-OIL SUCTION	
	11	1	**6I-4681**	1	GASKET	

M - METRIC PART
Y - SEPARATE ILLUSTRATION

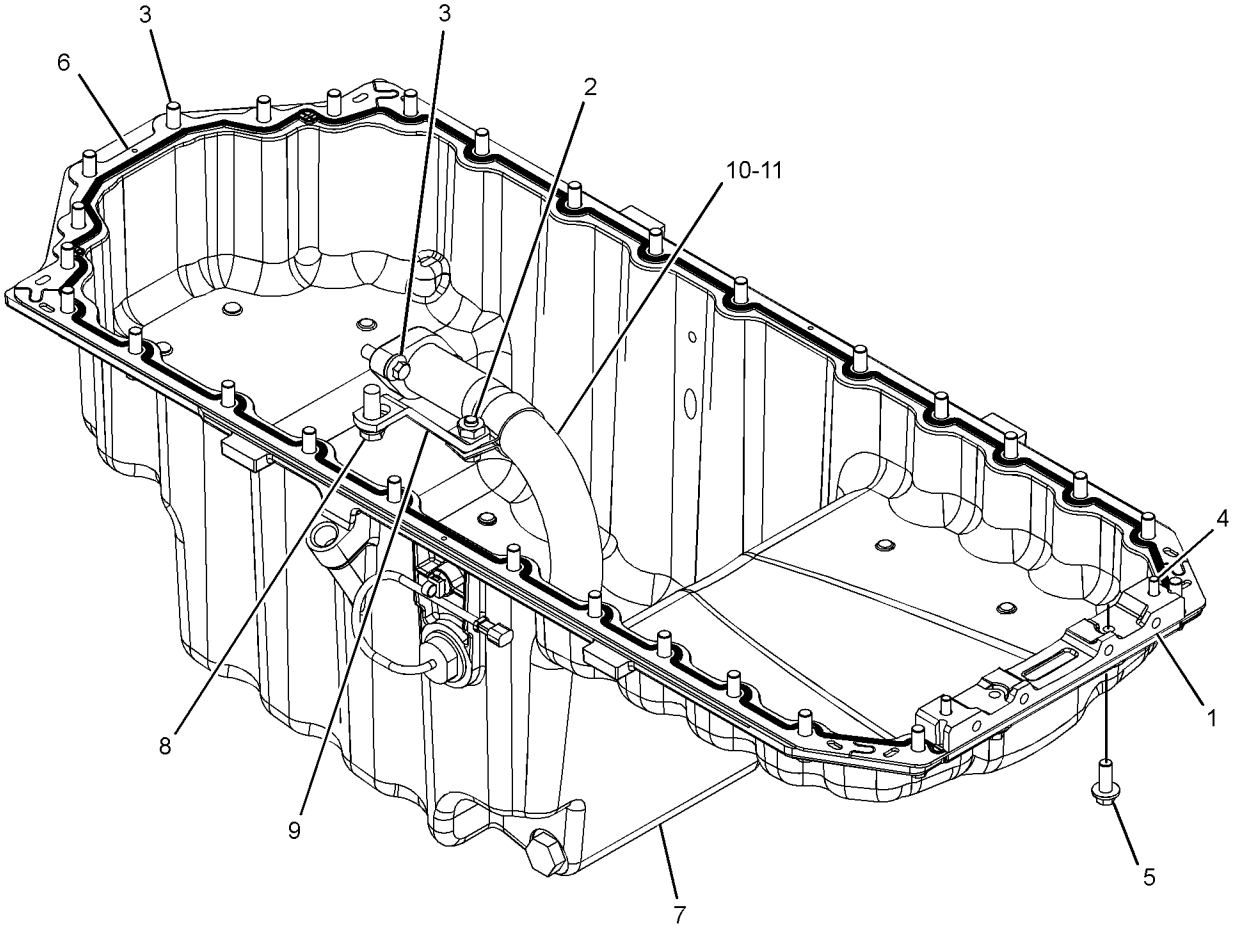

GRAPHIC #1 <END> g07935983

393-5466 PAN GP-OIL

OIL LEVEL SENSOR

PART OF 470-8814, 575-2879, 575-2880, 645-2039 ENGINE AR-PRIMARY

SMCS-1302 **i10694223**

NOTE	REF NO	GRAPHIC REF	PART NUMBER	QTY	PART NAME 1 2 3 4 5 6 (PRODUCT LEVEL)	SEE PAGE
M	1	1	**8T-0269**	2	BOLT-SOCKET HEAD (M6X1X20-MM)	
M	2	1	**6I-0654**	1	BOLT (M10X1.5X25-MM)	
	3	1	**230-8094**	1	BRIDGE	
	4	1	**351-4749**	1	GASKET-OIL PAN	
Y	5	1	**539-7275**	1	PAN GP-OIL	565
	6	1	**6I-4681**	1	GASKET	
M	7	1	**6I-0260**	30	BOLT (M8X1.25X25-MM)	
M	8	1	**6I-0572**	3	BOLT (M8X1.25X20-MM)	
	9	1	**275-9897**	1	BRACKET	
	10	1	**285-2991**	1	TUBE AS-OIL SUCTION	
		1	**236-5511**	1	CLIP-PIPE	

M - METRIC PART
Y - SEPARATE ILLUSTRATION

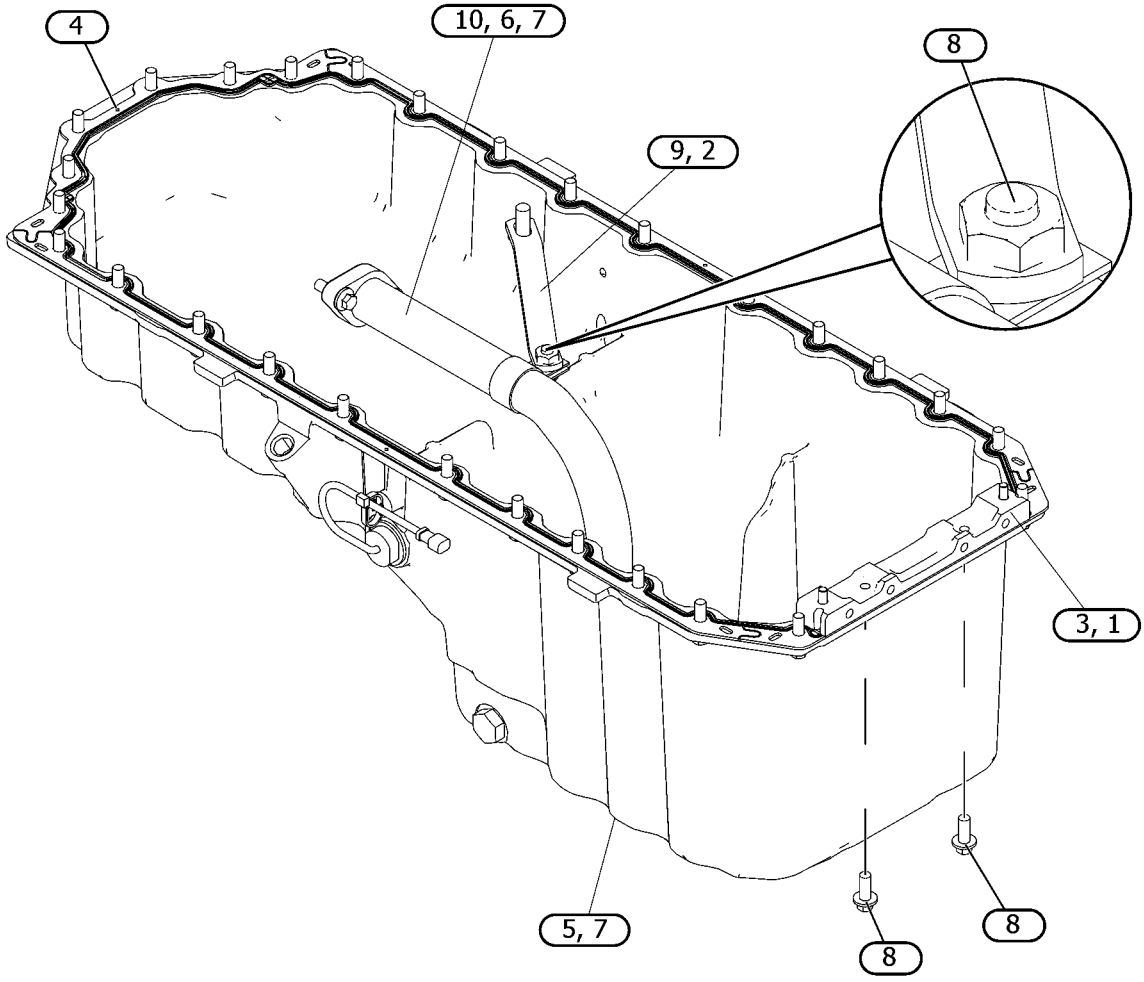

GRAPHIC #1 <END> g07937886

453-6156 PAN GP-OIL

PART OF 378-8260 PAN GP-OIL

SMCS-1302 **i07578895**

NOTE	REF NO	GRAPHIC REF	PART NUMBER	QTY	PART NAME 1 2 3 4 5 6 (PRODUCT LEVEL)	SEE PAGE
	1	1	**213-0677**	1	SWITCH AS-LIQUID LEVEL	
		1	**102-8802**	1	KIT-RECEPTACLE (2-PIN)	
					(INCLUDES RECEPTACLE AS & WEDGE)	
		1	**9X-3401**	2	PIN-CONNECTOR (16-GA TO 18-GA)	
		1	**126-1767**	2	PIN-CONNECTOR (14-GA TO 16-GA)	
	2	1	**9S-4185**	2	PLUG (3/4-16-THD)	
	3	1	**189-9377**	1	SEAL-O-RING	
	4	1	**316-9351**	1	MOUNTING-CABLE TIE	
	5	1	**8L-2786**	2	SEAL-O-RING	

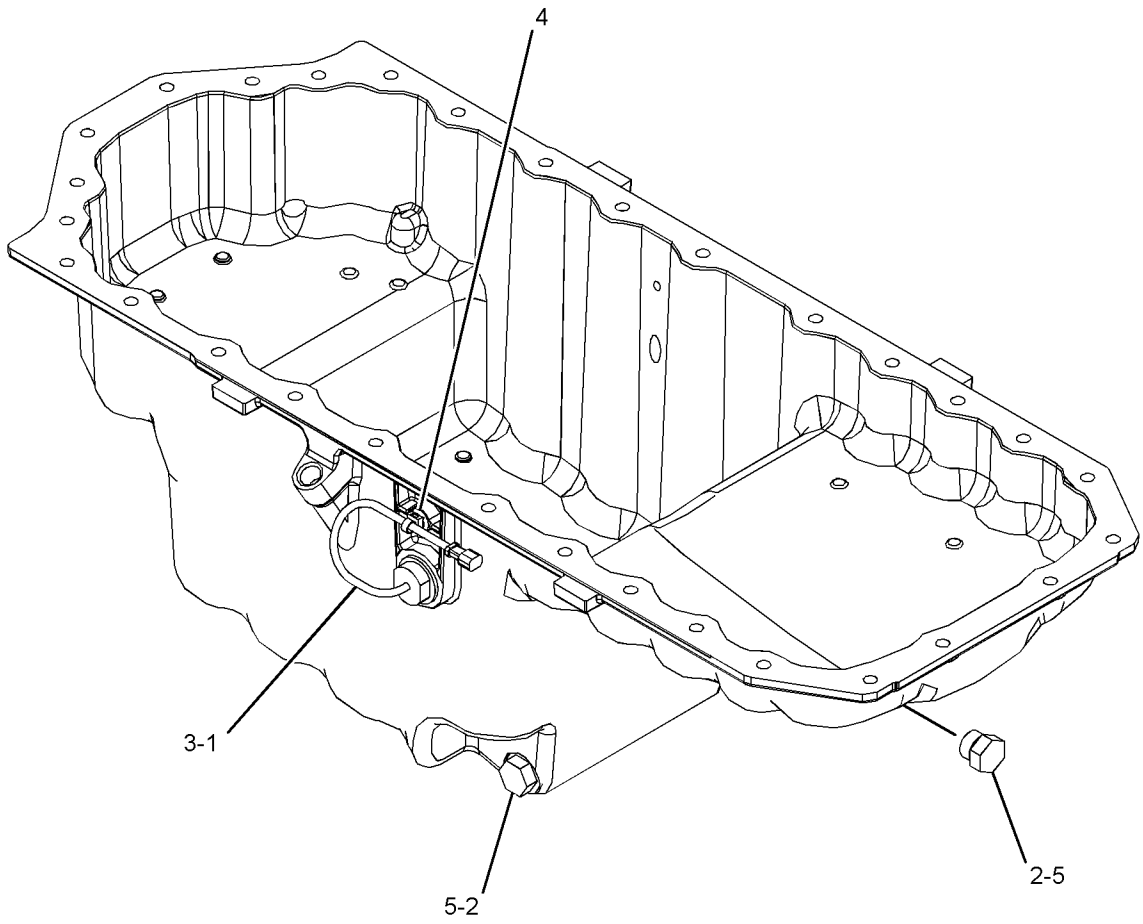

GRAPHIC #1 <END> g03583219

539-7275 PAN GP-OIL

PART OF 393-5466 PAN GP-OIL

SMCS-1302 **i07244112**

NOTE	REF NO	GRAPHIC REF	PART NUMBER	QTY	PART NAME 1 2 3 4 5 6 (PRODUCT LEVEL)	SEE PAGE
	1	1	**213-0677**	1	SWITCH AS-LIQUID LEVEL	
		1	**102-8802**	1	KIT-RECEPTACLE (2-PIN)	
					(INCLUDES RECEPTACLE AS & WEDGE)	
		1	**9X-3401**	2	PIN-CONNECTOR (16-GA TO 18-GA)	
					—OR—	
		1	**126-1767**	2	PIN-CONNECTOR (14-GA TO 16-GA)	
	2	1	**9S-4185**	2	PLUG (3/4-16-THD)	
	3	1	**189-9377**	1	SEAL-O-RING	
	4	1	**316-9351**	1	MOUNTING-CABLE TIE	
	5	1	**8L-2786**	2	SEAL-O-RING	

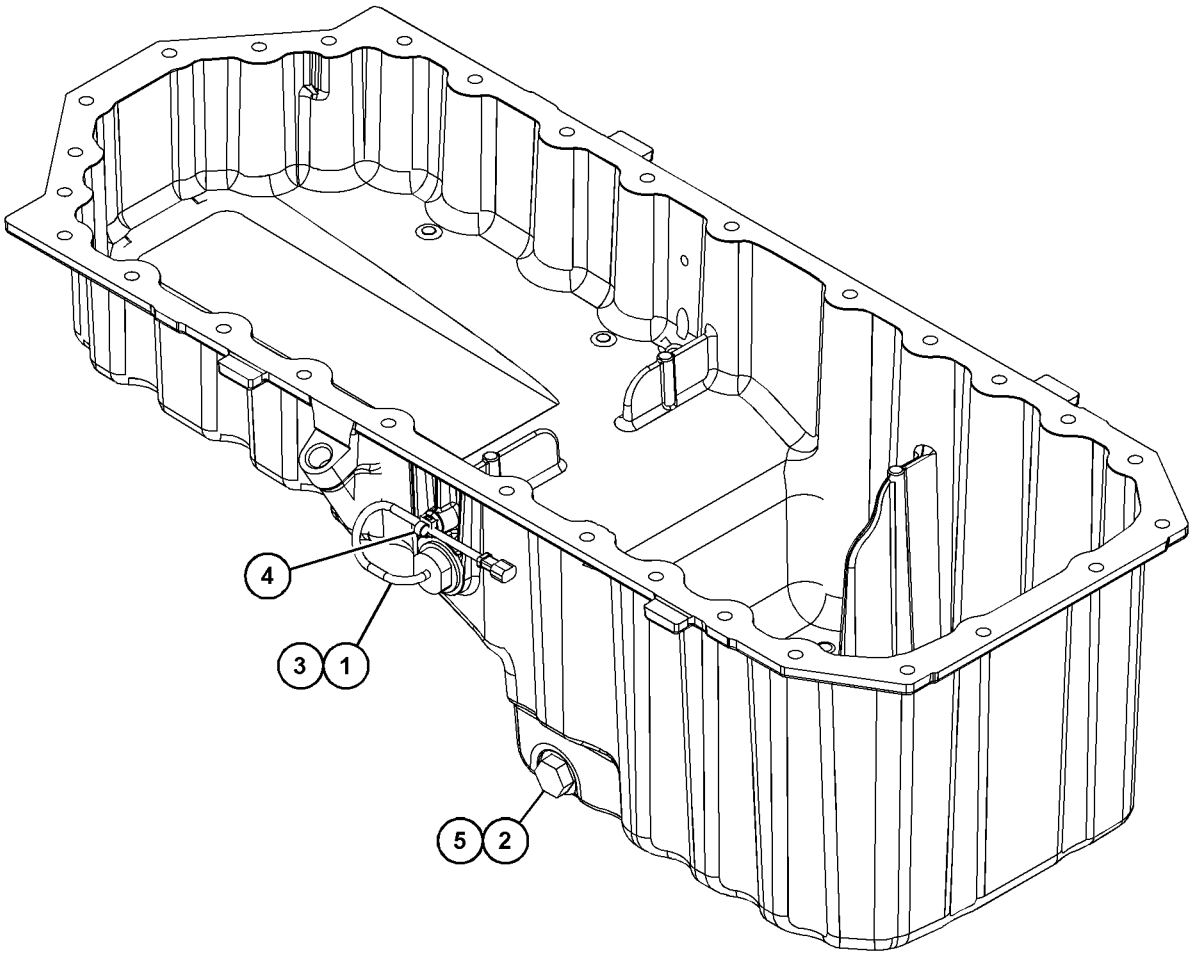

GRAPHIC #1 <END> g06262255

369-7304 PISTON & ROD GP

S/N: G9R1-3803

PART OF 451-1222 CYLINDER BLOCK GP-SHORT, 451-8343, 461-4656, 461-4658, 466-1161, 466-1162, 466-1163, 468-0461, 468-8218, 470-8667, 470-8814, 474-7299, 475-9060, 478-4257, 480-2181, 481-0811, 485-8027, 486-2644, 486-4250, 488-6687, 489-9006, 491-2606, 491-4980, 491-4993, 491-7124, 492-3169, 494-6807, 495-8349, 502-9462, 504-3629, 504-8134, 506-5035, 506-9918, 507-8016, 513-0851, 513-8513, 514-9367, 519-4128, 520-3152, 524-8271, 525-8759, 526-0511, 526-8888, 527-7106, 528-3358, 528-9866, 528-9920, 535-8060, 536-6675, 591-1266, 645-2039 ENGINE AR-PRIMARY

SMCS-1225 **i06995794**

NOTE	REF NO	GRAPHIC REF	PART NUMBER	QTY	PART NAME 1 2 3 4 5 6 (PRODUCT LEVEL)	SEE PAGE
Y	1	1	**331-0290**	6	CONNECTING ROD GP (GRADE G)	432
LP	2	1	**369-3186**	6	PISTON GP	
J	3	1	*317-5482*	6	BEARING	
J	4	1	*470-8038*	6	BEARING	
P	5	1	**124-3536**	12	RING-RETAINING	
					AVAILABLE REPAIR KIT(S):	
BJ			**436-7781**		KIT-BEARING (STANDARD)	
BJ			**458-7918**		KIT-BEARING (0.25-MM US)	
BJ			**458-7939**		KIT-BEARING (0.50-MM US)	
BJ			**458-7940**		KIT-BEARING (0.75-MM US)	
BL			**276-7476**	1	KIT-PISTON RING (STANDARD) (STANDARD)	
					(INCLUDES ONE SET RINGS)	
BL			**466-4849**	1	KIT-PISTON RING (1-MM OS)	
					(INCLUDES ONE SET RINGS)	
BP			**443-9475**	1	KIT-PISTON (STANDARD)	
					(INCLUDES PISTON AND SET OF RINGS)	
BP			**443-9898**	1	KIT-PISTON (0.5-MM OS) (0.5-MM OS)	
					(INCLUDES PISTON AND SET OF RINGS)	
BP			**443-9919**		KIT-PISTON (1-MM OS) (1-MM OS)	
					(INCLUDES PISTON AND SET OF RINGS)	

B - USE AS REQUIRED
J - KIT MARKED J SERVICES PART(S) MARKED J
L - KIT MARKED L SERVICES PART(S) MARKED L
P - KIT MARKED P SERVICES PART(S) MARKED P
Y - SEPARATE ILLUSTRATION

369-7304 **PISTON & ROD GP (**contd.**)** **i06995794**

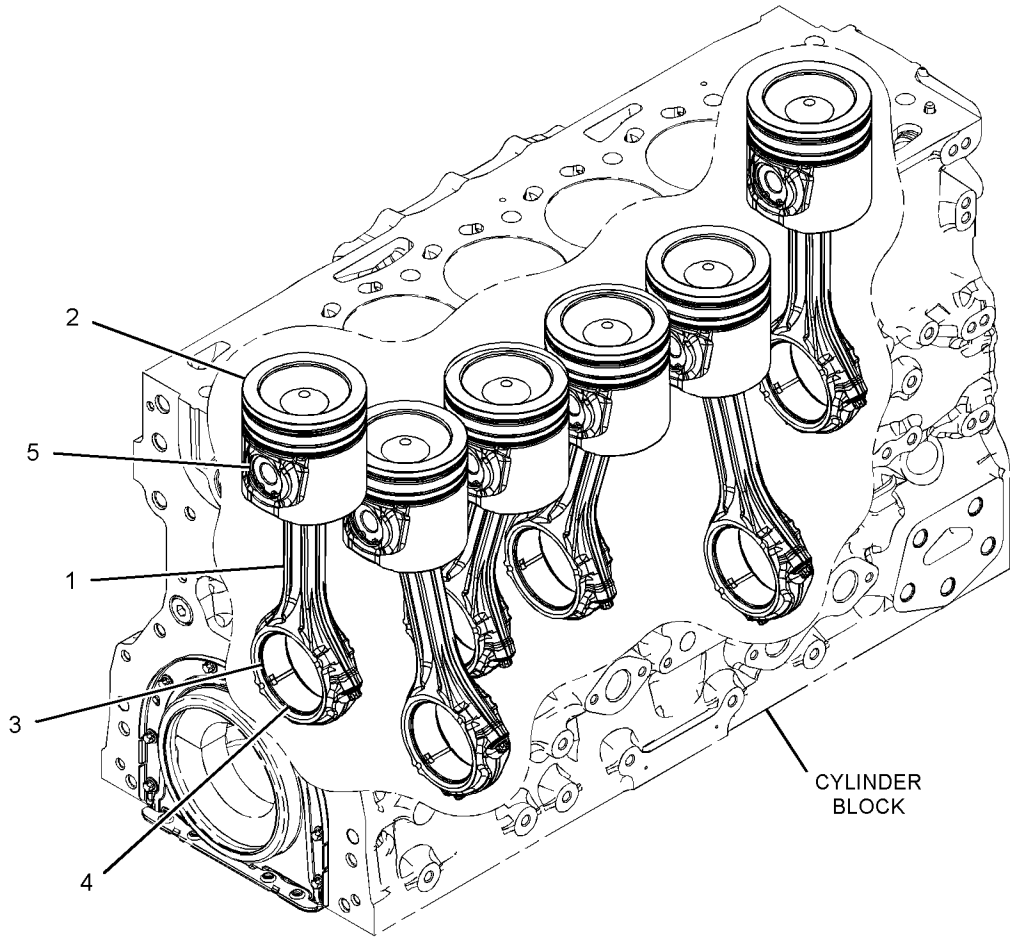

GRAPHIC #1 <END> g03532656

369-7304 PISTON & ROD GP

S/N: G9R1-8323

PART OF 451-1222 CYLINDER BLOCK GP-SHORT, 451-8343, 461-4656, 461-4658, 466-1161, 466-1162, 466-1163, 468-0461, 468-8218, 470-8667, 470-8814, 474-7299, 475-9060, 478-4257, 479-9398, 480-2181, 481-0811, 485-8027, 486-2644, 486-4250, 488-6687, 489-9006, 491-2606, 491-4980, 491-4993, 491-7124, 492-3169, 493-1019, 494-6807, 495-8349, 499-7181, 502-9462, 504-3629, 504-8134, 506-5035, 506-9918, 507-8016, 510-1088, 513-0851, 513-8513, 514-9367, 519-4128, 520-3152, 524-8271, 525-8759, 526-0511, 526-7210, 526-8888, 527-7106, 528-3358, 528-9866, 528-9920, 530-1323, 530-2601, 531-2492, 533-3588, 535-8060, 536-6675, 539-6915, 539-8582, 543-4255, 552-3506, 552-8869, 553-1809, 553-3730, 569-7846, 591-1266, 645-2039 ENGINE AR-PRIMARY

SMCS-1225 **i07158132**

NOTE	REF NO	GRAPHIC REF	PART NUMBER	QTY	PART NAME 1 2 3 4 5 6 (PRODUCT LEVEL)	SEE PAGE
Y	1	1	**331-0290**	6	CONNECTING ROD GP (GRADE G)	432
CPTY	2	1	*504-2903*	6	PISTON GP	587
J	3	1	*317-5482*	6	BEARING	
J	4	1	*470-8038*	6	BEARING	
PQS	5	1	**124-3536**	12	RING-RETAINING	
					AVAILABLE REPAIR KIT(S):	
BJ			**436-7781**		KIT-BEARING (STANDARD)	
					(INCLUDES BEARINGS)	
AB			**480-4489**		KIT-BEARING (0.254-MM US)	
					(INCLUDES BEARINGS)	
AB			**480-4490**		KIT-BEARING (0.51-MM US)	
					(INCLUDES BEARINGS)	
AB			**480-4491**		KIT-BEARING (0.762-MM US)	
					(INCLUDES BEARINGS)	
BP			**443-9475**	1	KIT-PISTON (STANDARD)	
					(KIT INCLUDES RETAINING RING, PIN, PISTON RINGS & PISTON)	
ABQ			**443-9898**		KIT-PISTON (0.5-MM OS)	
					(KIT INCLUDES RETAINING RING, PIN, PISTON RINGS & PISTON)	
ABS			**443-9919**		KIT-PISTON (1-MM OS)	
					(KIT INCLUDES RETAINING RING, PIN, PISTON RINGS & PISTON)	
T			**276-7476**	1	KIT-PISTON RING (STANDARD)	
					(INCLUDES PISTON RINGS)	
AB			**380-2065**		KIT-PISTON RING (0.5-MM OS)	
					(INCLUDES PISTON RINGS)	
AB			**466-4849**		KIT-PISTON RING (1-MM OS)	
					(INCLUDES PISTON RINGS)	

A - NOT PART OF THIS GROUP
B - USE AS REQUIRED
C - CHANGE FROM PREVIOUS TYPE
J - KIT MARKED J SERVICES PART(S) MARKED J
P - KIT MARKED P SERVICES PART(S) MARKED P
Q - KIT MARKED Q SERVICES PART(S) MARKED Q
S - KIT MARKED S SERVICES PART(S) MARKED S
T - KIT MARKED T SERVICES PART(S) MARKED T
Y - SEPARATE ILLUSTRATION

369-7304 **PISTON & ROD GP (**contd.**)** **i07158132**

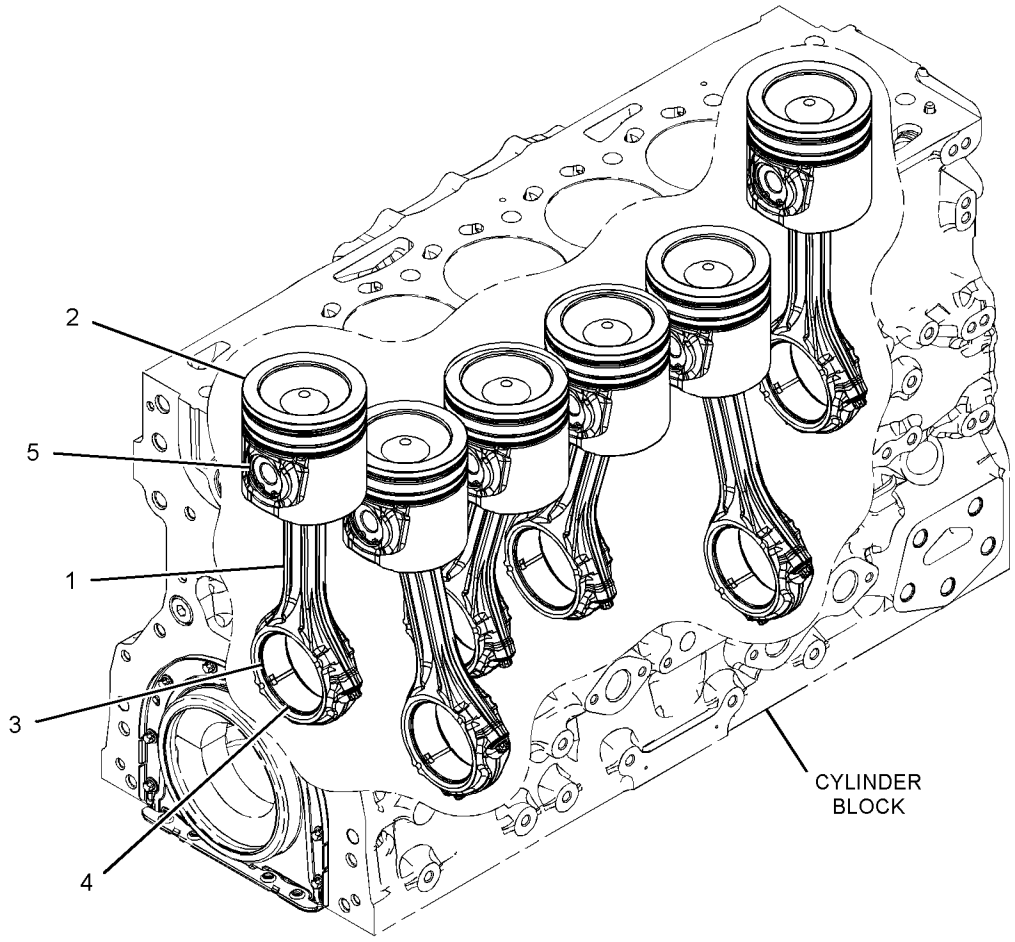

GRAPHIC #1 <END> g03532656

369-7304 PISTON & ROD GP

S/N: G9R8324-9892

PART OF 451-1222 CYLINDER BLOCK GP-SHORT, 451-8343, 461-4656, 461-4658, 466-1161, 466-1162, 466-1163, 468-0461, 468-8218, 470-8667, 470-8814, 474-7299, 475-9060, 478-4257, 479-9398, 480-2181, 481-0811, 485-8027, 486-2644, 486-4250, 488-6687, 489-9006, 491-2606, 491-4980, 491-4993, 491-7124, 492-3169, 493-1019, 494-6807, 495-8349, 499-7181, 502-9462, 504-3629, 504-8134, 506-5035, 506-9918, 507-8016, 510-1088, 513-0851, 513-8513, 514-9367, 519-4128, 520-3152, 524-8271, 525-8759, 526-0511, 526-7210, 526-8888, 527-7106, 528-3358, 528-9866, 528-9920, 530-1323, 530-2601, 531-2492, 533-3588, 535-8060, 536-6675, 539-6915, 539-8582, 543-4255, 552-3506, 552-8869, 553-1809, 553-3730, 569-7846, 591-1266, 645-2039 ENGINE AR-PRIMARY

SMCS-1225 **i07898882**

NOTE	REF NO	GRAPHIC REF	PART NUMBER	QTY	PART NAME 1 2 3 4 5 6 (PRODUCT LEVEL)	SEE PAGE
Y	1	1	**331-0290**	6	CONNECTING ROD GP (GRADE G)	432
CPTY	2	1	*567-6036*	6	PISTON GP	589
J	3	1	*317-5482*	6	BEARING	
J	4	1	*470-8038*	6	BEARING	
PQS	5	1	**124-3536**	12	RING-RETAINING	
					AVAILABLE REPAIR KIT(S):	
BJ			**436-7781**	1	KIT-BEARING (STANDARD)	
					(INCLUDES BEARINGS)	
AB			**480-4489**		KIT-BEARING (0.254-MM US)	
					(INCLUDES BEARINGS)	
AB			**480-4490**		KIT-BEARING (0.51-MM US)	
					(INCLUDES BEARINGS)	
AB			**480-4491**		KIT-BEARING (0.762-MM US)	
					(INCLUDES BEARINGS)	
BP			**443-9475**	1	KIT-PISTON (STANDARD)	
					(KIT INCLUDES RETAINING RING, PIN, PISTON RINGS & PISTON)	
ABQ			**443-9898**	1	KIT-PISTON (0.5-MM OS)	
					(KIT INCLUDES RETAINING RING, PIN, PISTON RINGS & PISTON)	
ABS			**443-9919**	1	KIT-PISTON (1-MM OS)	
					(KIT INCLUDES RETAINING RING, PIN, PISTON RINGS & PISTON)	
T			**574-9895**	1	KIT-PISTON RING (STANDARD)	
					(INCLUDES PISTON RINGS)	
AB			**574-9896**		KIT-PISTON RING (0.5-MM OS)	
					(INCLUDES PISTON RINGS)	
AB			**575-3353**		KIT-PISTON RING (1.0-MM OS)	
					(INCLUDES PISTON RINGS)	

A - NOT PART OF THIS GROUP
B - USE AS REQUIRED
C - CHANGE FROM PREVIOUS TYPE
J - KIT MARKED J SERVICES PART(S) MARKED J
P - KIT MARKED P SERVICES PART(S) MARKED P
Q - KIT MARKED Q SERVICES PART(S) MARKED Q
S - KIT MARKED S SERVICES PART(S) MARKED S
T - KIT MARKED T SERVICES PART(S) MARKED T
Y - SEPARATE ILLUSTRATION

369-7304 **PISTON & ROD GP (**contd.**)** **i07898882**

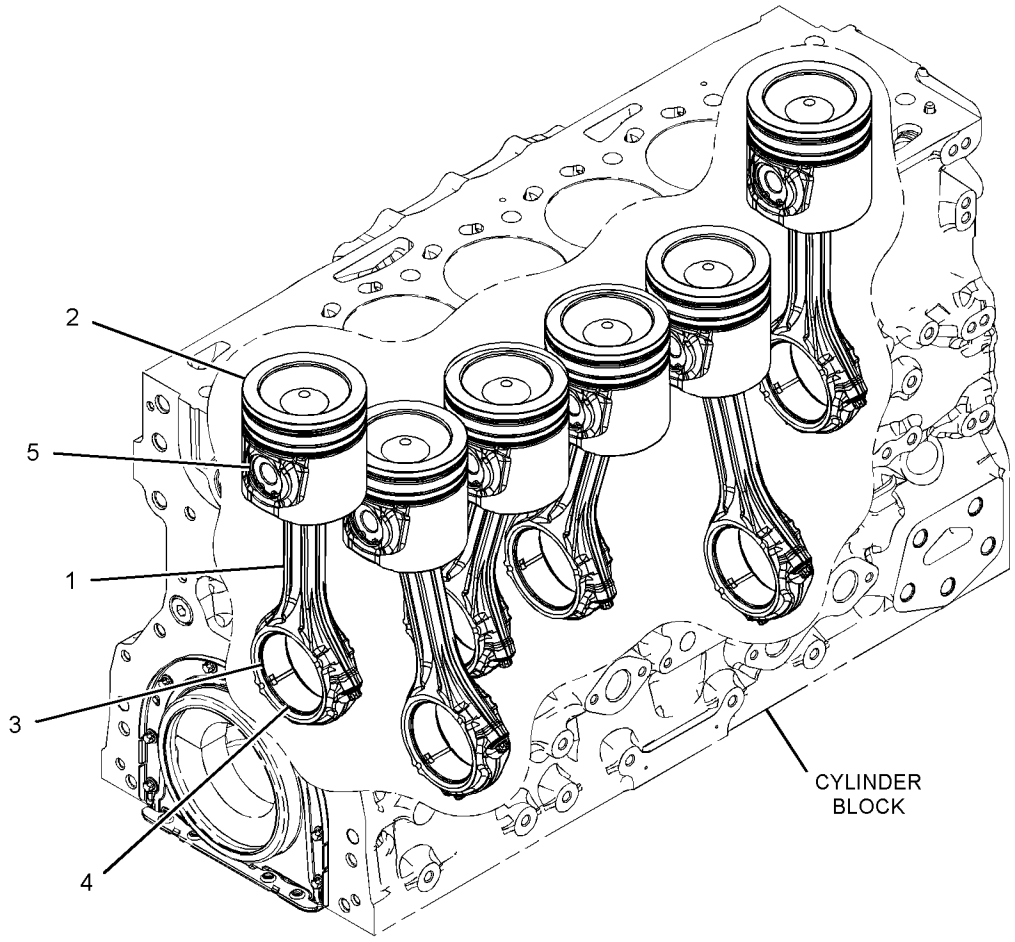

GRAPHIC #1 <END> g03532656

369-7304 PISTON & ROD GP

PART OF 451-1222 CYLINDER BLOCK GP-SHORT, 451-8343, 461-4656, 461-4658, 466-1161, 466-1162, 466-1163, 468-0461, 470-8667, 470-8814, 474-7299, 475-9060, 478-4257, 479-9398, 485-8027, 486-4250, 488-6687, 489-9006, 491-2606, 491-4980, 491-4993, 491-7124, 492-3169, 493-1019, 494-6807, 495-8349, 499-7181, 502-9462, 504-3629, 504-8134, 506-5035, 506-9918, 507-8016, 510-1088, 513-0851, 514-9367, 515-9203, 519-4128, 520-3152, 524-8271, 525-8759, 526-0511, 526-7210, 526-8888, 527-7106, 528-3358, 528-9866, 528-9920, 530-1323, 530-2601, 531-2492, 533-2797, 533-3588, 535-8060, 536-6675, 539-6915, 539-8582, 543-4255, 552-3506, 552-8869, 553-1809, 553-3730, 569-7846, 575-2880, 583-8352, 591-1266, 591-9440, 593-7287, 593-7288, 594-2125, 596-4834, 596-7090, 596-8905, 597-9248, 598-9881, 645-2039 ENGINE AR-PRIMARY
TYPE 1

SMCS-1225 **i08093722**

NOTE	REF NO	GRAPHIC REF	PART NUMBER	QTY	PART NAME 1 2 3 4 5 6 (PRODUCT LEVEL)	SEE PAGE
Y	1	1	**331-0290**	6	CONNECTING ROD GP (GRADE G)	432
CHNY	2	1	*504-2903*	6	PISTON GP	587
J	3	1	*317-5482*	6	BEARING	
J	4	1	*470-8038*	6	BEARING	
N	5	1	**124-3536**	12	RING-RETAINING	
					AVAILABLE REPAIR KIT(S):	
BJ			**436-7781**	1	KIT-BEARING (STANDARD)	
					(INCLUDES BEARINGS)	
AB			**480-4489**		KIT-BEARING (0.254-MM US)	
					(INCLUDES BEARINGS)	
AB			**480-4490**		KIT-BEARING (0.51-MM US)	
					(INCLUDES BEARINGS)	
AB			**480-4491**		KIT-BEARING (0.762-MM US)	
					(INCLUDES BEARINGS)	
BH			**276-7476**	1	KIT-PISTON RING (STANDARD) (STANDARD)	
					(INCLUDES RINGS)	
AB			**380-2065**		KIT-PISTON RING (0.5-MM OS)	
					(INCLUDES RINGS)	
AB			**466-4849**		KIT-PISTON RING (1-MM OS)	
					(INCLUDES RINGS)	
BHN			**443-9475**	1	KIT-PISTON (STANDARD)	
					(INCLUDES PISTON, PIN & RINGS)	
AB			**443-9898**		KIT-PISTON (0.5-MM OS)	
					(INCLUDES PISTON, PIN & RINGS)	
AB			**443-9919**		KIT-PISTON (1-MM OS)	
					(INCLUDES PISTON, PIN & RINGS)	

A - NOT PART OF THIS GROUP
B - USE AS REQUIRED
C - CHANGE FROM PREVIOUS TYPE
H - KIT MARKED H SERVICES PART(S) MARKED H
J - KIT MARKED J SERVICES PART(S) MARKED J
N - KIT MARKED N SERVICES PART(S) MARKED N
Y - SEPARATE ILLUSTRATION

369-7304 **PISTON & ROD GP (**contd.**)** **i08093722**

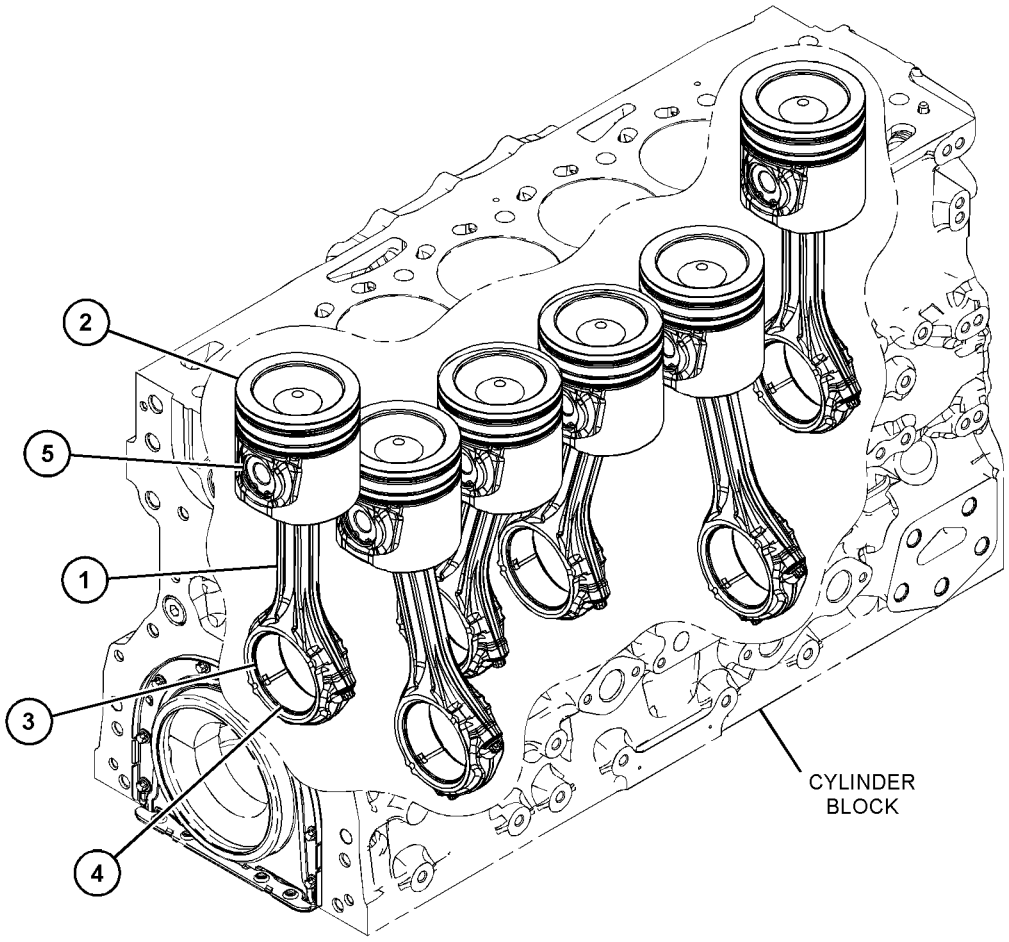

GRAPHIC #1 <END> g06540334

369-7304 PISTON & ROD GP

PART OF 451-1222 CYLINDER BLOCK GP-SHORT, 451-8343, 461-4656, 461-4658, 466-1161, 466-1162, 466-1163, 468-0461, 470-8667, 470-8814, 474-7299, 475-9060, 478-4257, 479-9398, 485-8027, 486-4250, 488-6687, 489-9006, 491-2606, 491-4980, 491-4993, 491-7124, 492-3169, 493-1019, 494-6807, 495-8349, 499-7181, 502-9462, 504-3629, 504-8134, 506-5035, 506-9918, 507-8016, 510-1088, 513-0851, 513-8513, 514-9367, 515-9203, 519-4128, 520-3152, 524-8271, 525-8759, 526-0511, 526-7210, 526-8888, 527-7106, 528-3358, 528-9866, 528-9920, 530-1323, 530-2601, 531-2492, 533-2797, 533-3588, 535-8060, 536-6675, 539-6915, 539-8582, 543-4255, 552-3506, 552-8869, 553-1809, 553-3730, 569-7846, 575-2880, 583-8352, 591-1266, 591-9440, 593-7287, 593-7288, 594-2125, 596-4834, 596-7090, 596-8905, 597-9248, 598-9881, 602-8721, 603-5300, 608-9261, 609-9819, 613-9482, 614-5795, 614-9555, 622-6239, 623-1309, 624-0698, 627-8019, 645-2039 ENGINE AR-PRIMARY
TYPE 2

SMCS-1225 **i10498539**

NOTE	REF NO	GRAPHIC REF	PART NUMBER	QTY	PART NAME 1 2 3 4 5 6 (PRODUCT LEVEL)	SEE PAGE
BU	1	1	**605-5520**	6	CONNECTING ROD GP (STANDARD)	
					—OR—	
BU		1	**331-0290**	6	CONNECTING ROD GP (GRADE G)	
					—OR—	
BU		1	**331-0291**	6	CONNECTING ROD GP (GRADE R)	
					—OR—	
BU		1	**331-0292**	6	CONNECTING ROD GP (GRADE B)	
					(EACH CONNECTING ROD GP INCLUDES)	
	1A	1	**276-7478**	1	BUSHING	
M	1B	1	**323-9312**	2	BOLT (M10X1X50-MM)	
CY	2	1	*567-6036*	6	PISTON GP	589
J	3	1	*656-6844*	6	BEARING-CONNECTING ROD	
J	4	1	*470-8038*	6	BEARING	
	5	1	**619-3393**	12	RING-RETAINING	
BF			**621-7933**	1	LINER-CYLINDER	
					AVAILABLE REPAIR KIT(S):	
BJ			**436-7781**	1	KIT-BEARING (STANDARD)	
					(INCLUDES BEARINGS)	
AB			**480-4489**		KIT-BEARING (0.254-MM US)	
					(INCLUDES BEARINGS)	
AB			**480-4490**		KIT-BEARING (0.51-MM US)	
					(INCLUDES BEARINGS)	
AB			**480-4491**		KIT-BEARING (0.762-MM US)	
					(INCLUDES BEARINGS)	

A - NOT PART OF THIS GROUP
B - USE AS REQUIRED
C - CHANGE FROM PREVIOUS TYPE
F - NOT SHOWN
J - KIT MARKED J SERVICES PART(S) MARKED J
M - METRIC PART
U - ENSURE THAT CORRECT ROD LENGTH IS FITTED
Y - SEPARATE ILLUSTRATION

369-7304 **PISTON & ROD GP (**contd.**)** **i10498539**

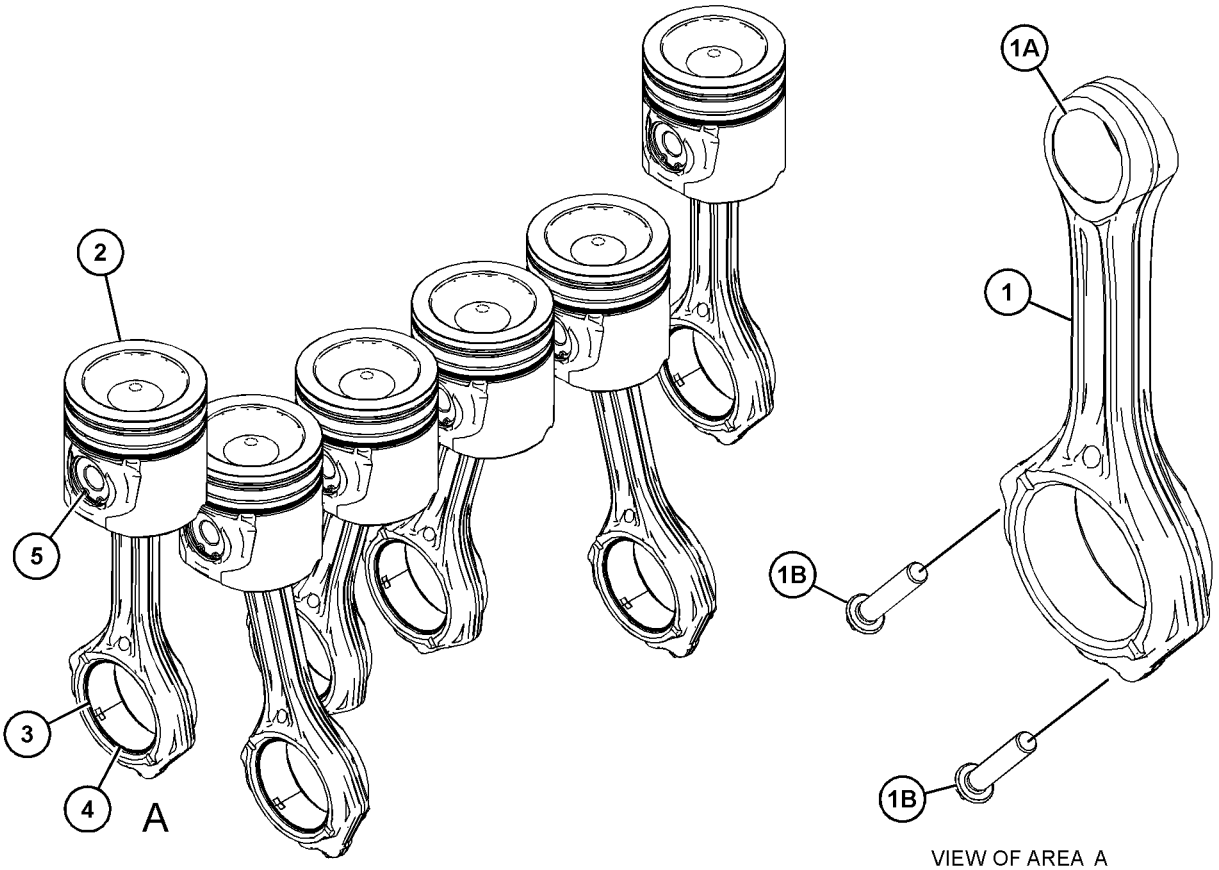

VIEW OF AREA A
(PARTS REMOVED FOR CLARITY)

GRAPHIC #1 <END> g07656995

374-6301 PISTON & ROD GP

PART OF 461-4638, 461-4649, 466-1160, 471-0541, 475-8297, 482-0212, 491-4973, 492-3021, 492-3072, 493-1038, 494-2073, 504-5365, 508-0270, 512-9858, 520-4644, 527-9686, 555-4669 ENGINE AR-PRIMARY

SMCS-1225 **i07383524**

NOTE	REF NO	GRAPHIC REF	PART NUMBER	QTY	PART NAME 1 2 3 4 5 6 (PRODUCT LEVEL)	SEE PAGE
	1	1	**331-0290**	6	CONNECTING ROD GP (GRADE G)	
					(EACH INCLUDES)	
	1A	1	**276-7478**	1	BUSHING	
M	1B	1	**323-9312**	2	BOLT (M10X1X50-MM)	
J	2	1	*450-5996*	6	PISTON GP	
AB		1	**391-3732**		KIT-PISTON (0.5-MM OS)	
AB		1	**391-3735**		KIT-PISTON (1-MM OS)	
P	3	1	*317-5482*	6	BEARING	
P	4	1	*470-8038*	6	BEARING (LOWER)	
J	5	1	**124-3536**	12	RING-RETAINING	
					AVAILABLE REPAIR KIT(S):	
BC			**276-7476**	1	KIT-PISTON RING (STANDARD) (STANDARD)	
					(INCLUDES RINGS)	
AB			**380-2065**		KIT-PISTON RING (0.5-MM OS)	
					(INCLUDES RINGS)	
AB			**466-4849**		KIT-PISTON RING (1-MM OS)	
					(INCLUDES RINGS)	
P			**436-7781**	1	KIT-BEARING (STANDARD) (STANDARD)	
					(INCLUDES BEARINGS)	
AB			**480-4489**		KIT-BEARING (0.254-MM US)	
					(INCLUDES BEARINGS)	
AB			**480-4490**		KIT-BEARING (0.51-MM US)	
					(INCLUDES BEARINGS)	
AB			**480-4491**		KIT-BEARING (0.762-MM US)	
					(INCLUDES BEARINGS)	
J			**444-2190**	1	KIT-PISTON	
					(INCLUDES PIN, PISTON RINGS, RETAINING RINGS & PISTON)	

A - NOT PART OF THIS GROUP
B - USE AS REQUIRED
C - CHANGE FROM PREVIOUS TYPE
J - KIT MARKED J SERVICES PART(S) MARKED J
M - METRIC PART
P - KIT MARKED P SERVICES PART(S) MARKED P

374-6301 **PISTON & ROD GP (**contd.**)** **i07383524**

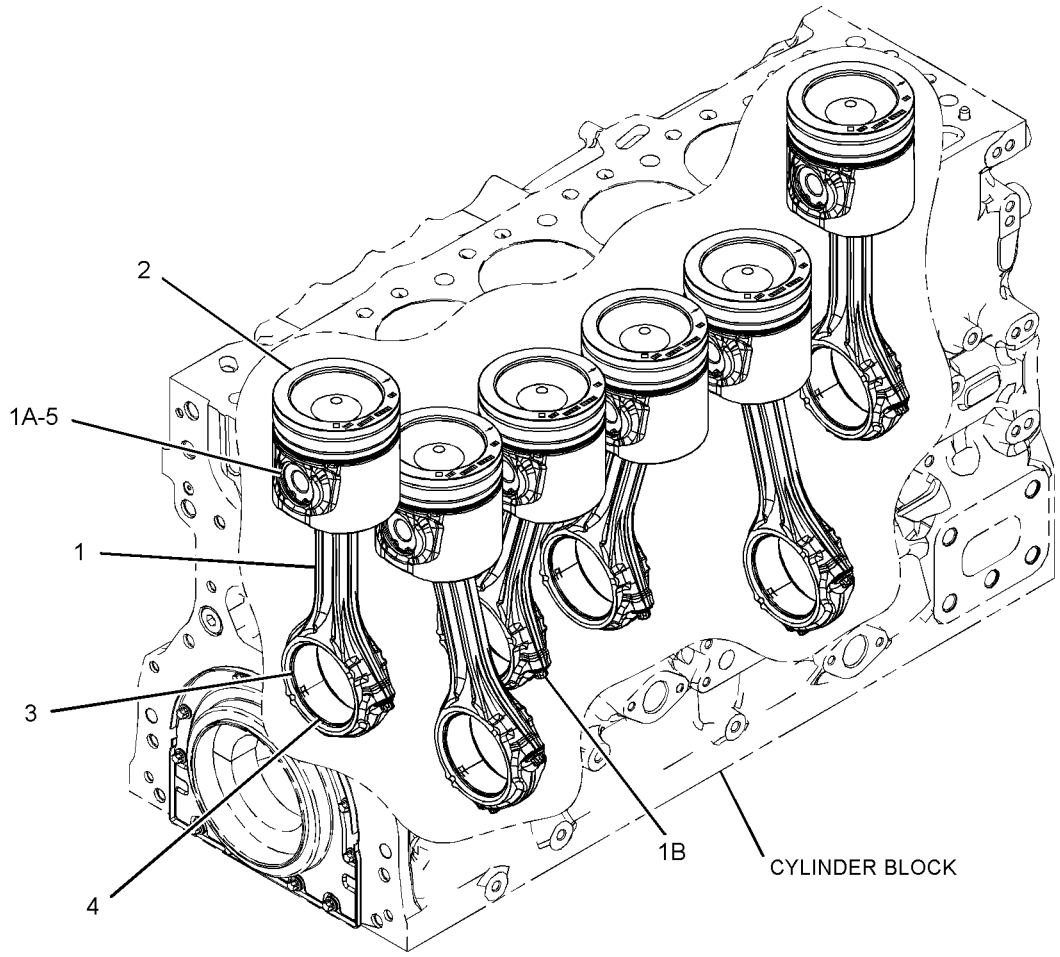

GRAPHIC #1 <END> g06158534

374-6301 PISTON & ROD GP

PART OF 596-2071 ENGINE AR-COMPLETE, 461-4638, 461-4649, 466-1160, 471-0541, 475-8297, 482-0212, 491-4973, 492-3021, 492-3072, 493-1038, 494-2073, 504-5365, 508-0270, 512-9858, 520-4644, 527-9686, 555-4669, 575-2879, 596-8896, 612-1735, 627-8054, 627-8129, 628-4345, 633-7776 ENGINE AR-PRIMARY

SMCS-1225 **i09938542**

NOTE	REF NO	GRAPHIC REF	PART NUMBER	QTY	PART NAME 1 2 3 4 5 6 (PRODUCT LEVEL)	SEE PAGE
BQ	1	2	*605-5520*	6	CONNECTING ROD GP (STANDARD)	
					—OR—	
BQ		2	**331-0290**	6	CONNECTING ROD GP (GRADE G)	
					—OR—	
BQ		2	**331-0291**	6	CONNECTING ROD GP (GRADE R)	
					—OR—	
BQ		2	**331-0292**	6	CONNECTING ROD GP (GRADE B)	
					(EACH CONNECTING ROD GP INCLUDES)	
	1A	2	**276-7478**	1	BUSHING	
M	1B	2	**323-9312**	2	BOLT (M10X1X50-MM)	
CJN	2	1,2	*567-6035*	6	PISTON GP	
P	3	2	*317-5482*	6	BEARING	
P	4	2	*470-8038*	6	BEARING	
J	5	2	**619-3393**	12	RING-RETAINING	
BF			**621-7933**	1	LINER-CYLINDER	
					AVAILABLE REPAIR KIT(S):	
BN			**574-9895**	1	KIT-PISTON RING (STANDARD)	
					(INCLUDES PISTON RINGS)	
AB			**574-9896**		KIT-PISTON RING (0.5-MM OS)	
					(INCLUDES PISTON RINGS)	
AB			**575-3353**		KIT-PISTON RING (1.0-MM OS)	
					(INCLUDES PISTON RINGS)	
P			**436-7781**	1	KIT-BEARING (STANDARD)	
					(INCLUDES BEARINGS)	
AB			**480-4489**		KIT-BEARING (0.254-MM US)	
					(INCLUDES BEARINGS)	
AB			**480-4490**		KIT-BEARING (0.51-MM US)	
					(INCLUDES BEARINGS)	
AB			**480-4491**		KIT-BEARING (0.762-MM US)	
					(INCLUDES BEARINGS)	
JN			**575-3358**	1	KIT-PISTON (STANDARD)	
					(INCLUDES PIN, PISTON RINGS, RETAINING RINGS & PISTON)	
AB			**574-9880**		KIT-PISTON (0.5-MM OS)	
					(INCLUDES PIN, PISTON RINGS, RETAINING RINGS & PISTON)	
AB			**574-9886**		KIT-PISTON (1.0-MM OS)	
					(INCLUDES PIN, PISTON RINGS, RETAINING RINGS & PISTON)	

374-6301 **PISTON & ROD GP (**contd.**)** **i09938542**

NOTE	REF NO	GRAPHIC REF	PART NUMBER	QTY	PART NAME 1 2 3 4 5 6 (PRODUCT LEVEL)	SEE PAGE

A - NOT PART OF THIS GROUP
B - USE AS REQUIRED
C - CHANGE FROM PREVIOUS TYPE
F - NOT SHOWN
J - KIT MARKED J SERVICES PART(S) MARKED J
M - METRIC PART
N - KIT MARKED N SERVICES PART(S) MARKED N
P - KIT MARKED P SERVICES PART(S) MARKED P
Q - ENSURE THAT CORRECT ROD LENGTH IS FITTED

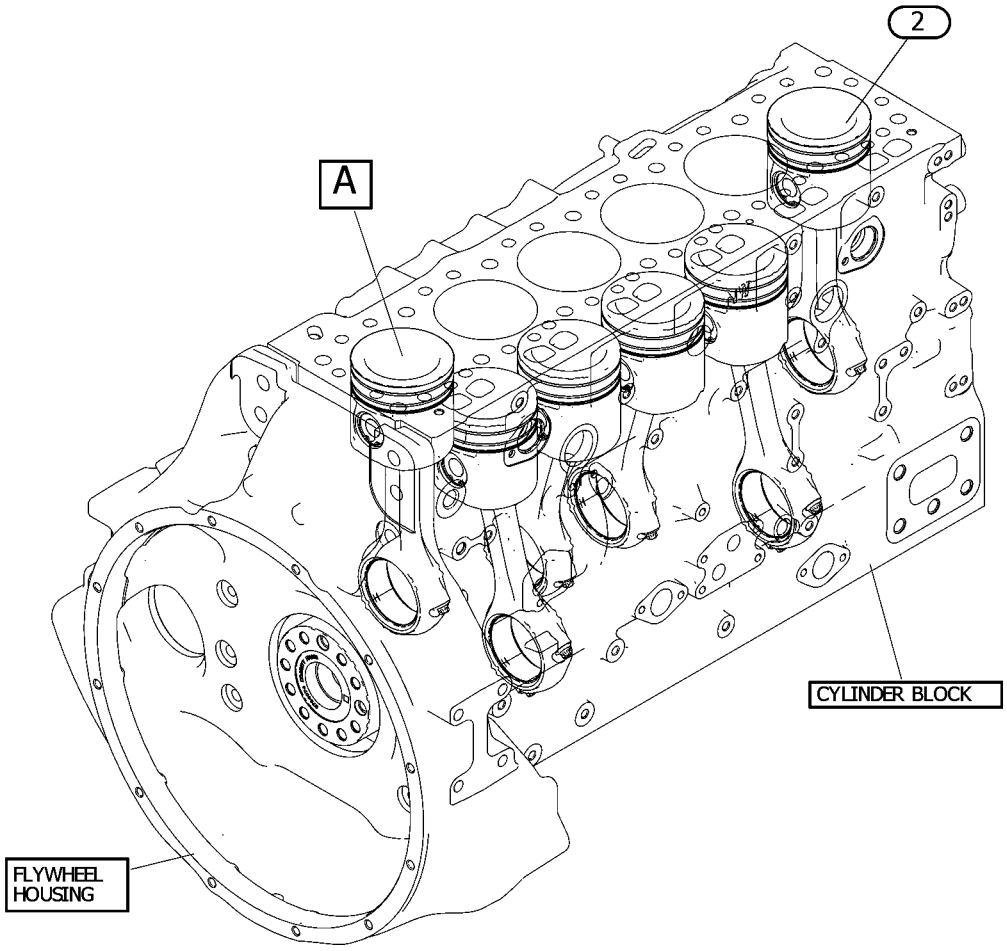

GRAPHIC #1 g07656715

374-6301 **PISTON & ROD GP (**contd.**)** **i09938542**

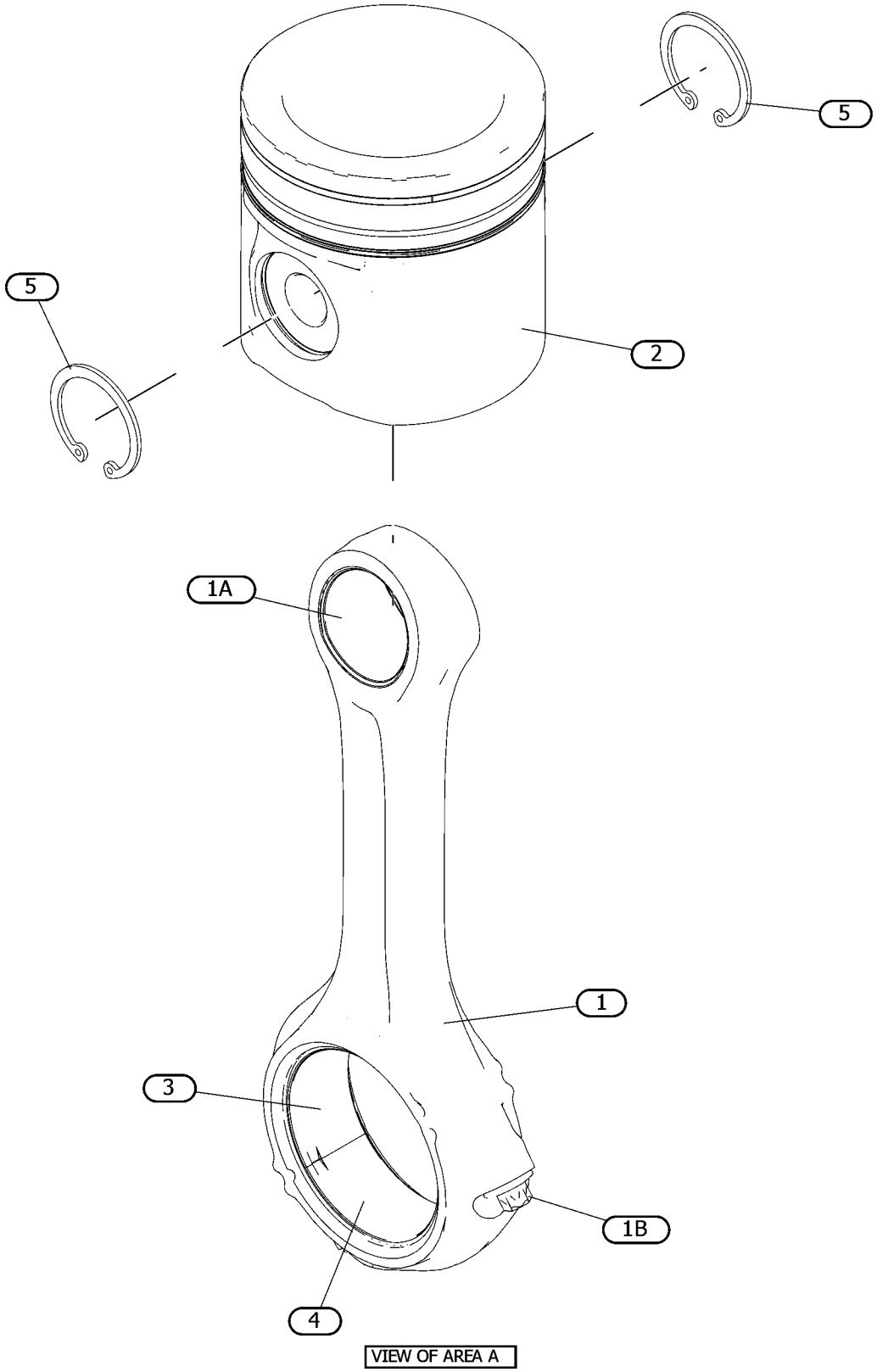

GRAPHIC #2 <END> g07656715_01

452-9761 PISTON & ROD GP

S/N: G9R1-3948

PART OF 484-2939, 501-2466, 504-9579, 633-4335, 657-2370 ENGINE AR-PRIMARY

SMCS-1225 **i06859059**

NOTE	REF NO	GRAPHIC REF	PART NUMBER	QTY	PART NAME 1 2 3 4 5 6 (PRODUCT LEVEL)	SEE PAGE
	1	1	**331-0290**	6	CONNECTING ROD GP (GRADE G)	
					(EACH INCLUDES)	
	1A	1	**276-7478**	1	BUSHING	
M	1B	1	**323-9312**	2	BOLT (M10X1X50-MM)	
	2	1	*369-3186*	6	PISTON GP	
J	3	1	*387-2156*	6	BEARING	
JN	4	1	*470-8038*	6	BEARING	
L	5	1	**124-3536**	12	RING-RETAINING	
					PARTS SHOWN IN GRAPHIC(S) WITHOUT A REFERENCE NUMBER ARE NOT SERVICED SEPARATELY	
					AVAILABLE REPAIR KIT(S):	
J			**436-7781**	1	KIT-BEARING (STANDARD)	
					(INCLUDES BEARINGS)	
AB			**480-4489**		KIT-BEARING (0.254-MM US)	
					(INCLUDES BEARINGS)	
AB			**480-4490**		KIT-BEARING (0.51-MM US)	
					(INCLUDES BEARINGS)	
AB			**480-4491**		KIT-BEARING (0.762-MM US)	
					(INCLUDES BEARINGS)	
L			**443-9475**	1	KIT-PISTON (STANDARD)	
					(INCLUDES RETAINING RING, PIN, PISTON RINGS & PISTON)	
ABL			**443-9898**		KIT-PISTON (0.5-MM OS) (0.5-MM OS)	
					(INCLUDES RETAINING RING, PIN, PISTON RINGS & PISTON)	
ABL			**443-9919**		KIT-PISTON (1-MM OS) (1-MM OS)	
					(INCLUDES RETAINING RING, PIN, PISTON RINGS & PISTON)	
B			**276-7476**	1	KIT-PISTON RING (STANDARD) (STANDARD)	
					(INCLUDES PISTON RINGS)	
AB			**466-4849**		KIT-PISTON RING (1-MM OS)	
					(INCLUDES PISTON RINGS)	
AB			**380-2065**		KIT-PISTON RING (0.5-MM OS)	
					(INCLUDES PISTON RINGS)	
N			**360-1564**	1	KIT-BEARING (STANDARD)	
					(INCLUDES BEARINGS)	
AB			**458-7918**		KIT-BEARING (0.25-MM US)	
					(INCLUDES BEARINGS)	
AB			**458-7939**		KIT-BEARING (0.50-MM US)	
					(INCLUDES BEARINGS)	
AB			**458-7940**		KIT-BEARING (0.75-MM US)	
					(INCLUDES BEARINGS)	

A - NOT PART OF THIS GROUP
B - USE AS REQUIRED
J - KIT MARKED J SERVICES PART(S) MARKED J
L - KIT MARKED L SERVICES PART(S) MARKED L
M - METRIC PART
N - KIT MARKED N SERVICES PART(S) MARKED N

452-9761 **PISTON & ROD GP (**contd.**)** **i06859059**

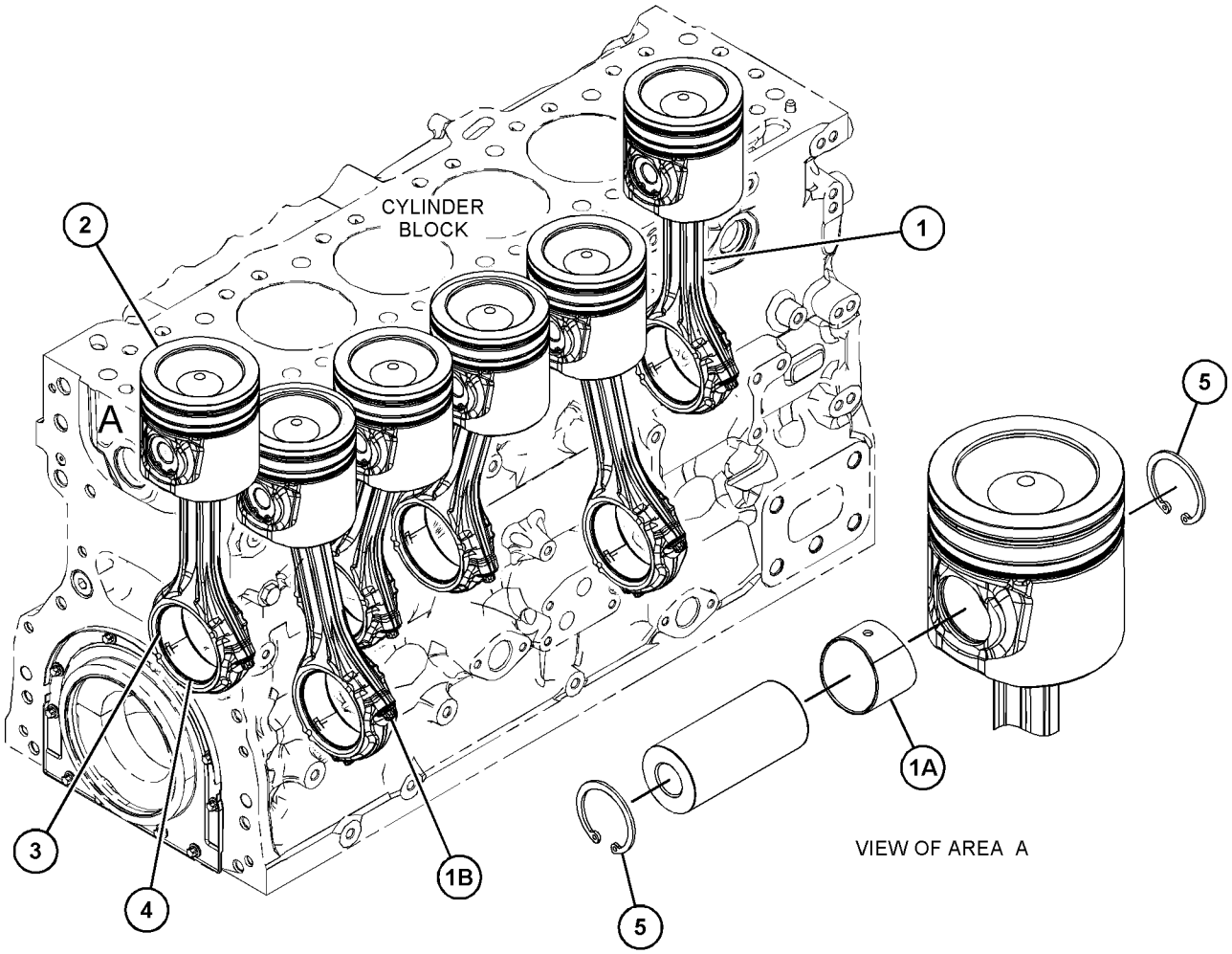

GRAPHIC #1 <END> g03707228

452-9761 PISTON & ROD GP

PART OF 484-2939, 501-2466, 504-9579, 562-8873, 563-6728, 563-6729, 563-6730, 565-1247, 633-4335, 657-2370 ENGINE AR-PRIMARY

TYPE 1

SMCS-1225 **i09945267**

NOTE	REF NO	GRAPHIC REF	PART NUMBER	QTY	PART NAME 1 2 3 4 5 6 (PRODUCT LEVEL)	SEE PAGE
BN	1	1	**605-5520**	6	CONNECTING ROD GP (STANDARD)	
					—OR—	
BNY		1	**331-0290**	6	CONNECTING ROD GP (GRADE G)	432
					—OR—	
BN		1	**331-0291**	6	CONNECTING ROD GP (GRADE R)	
					—OR—	
BN		1	**331-0292**	6	CONNECTING ROD GP (GRADE B)	
					(EACH CONNECTING ROD GP INCLUDES)	
	1A	1	**276-7478**	1	BUSHING	
M	1B	1	**323-9312**	2	BOLT (M10X1X50-MM)	
CY	2	1	*504-2903*	6	PISTON GP	587
J	3	1	*387-2156*	6	BEARING	
J	4	1	*470-8038*	6	BEARING	
	5	1	**619-3393**	12	RING-RETAINING	
					PARTS SHOWN IN GRAPHIC(S) WITHOUT A REFERENCE NUMBER ARE NOT SERVICED SEPARATELY	
					AVAILABLE REPAIR KIT(S):	
J			**436-7781**	1	KIT-BEARING (STANDARD)	
					(INCLUDES BEARINGS)	
AB			**480-4489**		KIT-BEARING (0.254-MM US)	
					(INCLUDES BEARINGS)	
AB			**480-4490**		KIT-BEARING (0.51-MM US)	
					(INCLUDES BEARINGS)	
AB			**480-4491**		KIT-BEARING (0.762-MM US)	
					(INCLUDES BEARINGS)	

A - NOT PART OF THIS GROUP
B - USE AS REQUIRED
C - CHANGE FROM PREVIOUS TYPE
J - KIT MARKED J SERVICES PART(S) MARKED J
M - METRIC PART
N - ENSURE THAT CORRECT ROD LENGTH IS FITTED
Y - SEPARATE ILLUSTRATION

452-9761 **PISTON & ROD GP (**contd.**)** **i09945267**

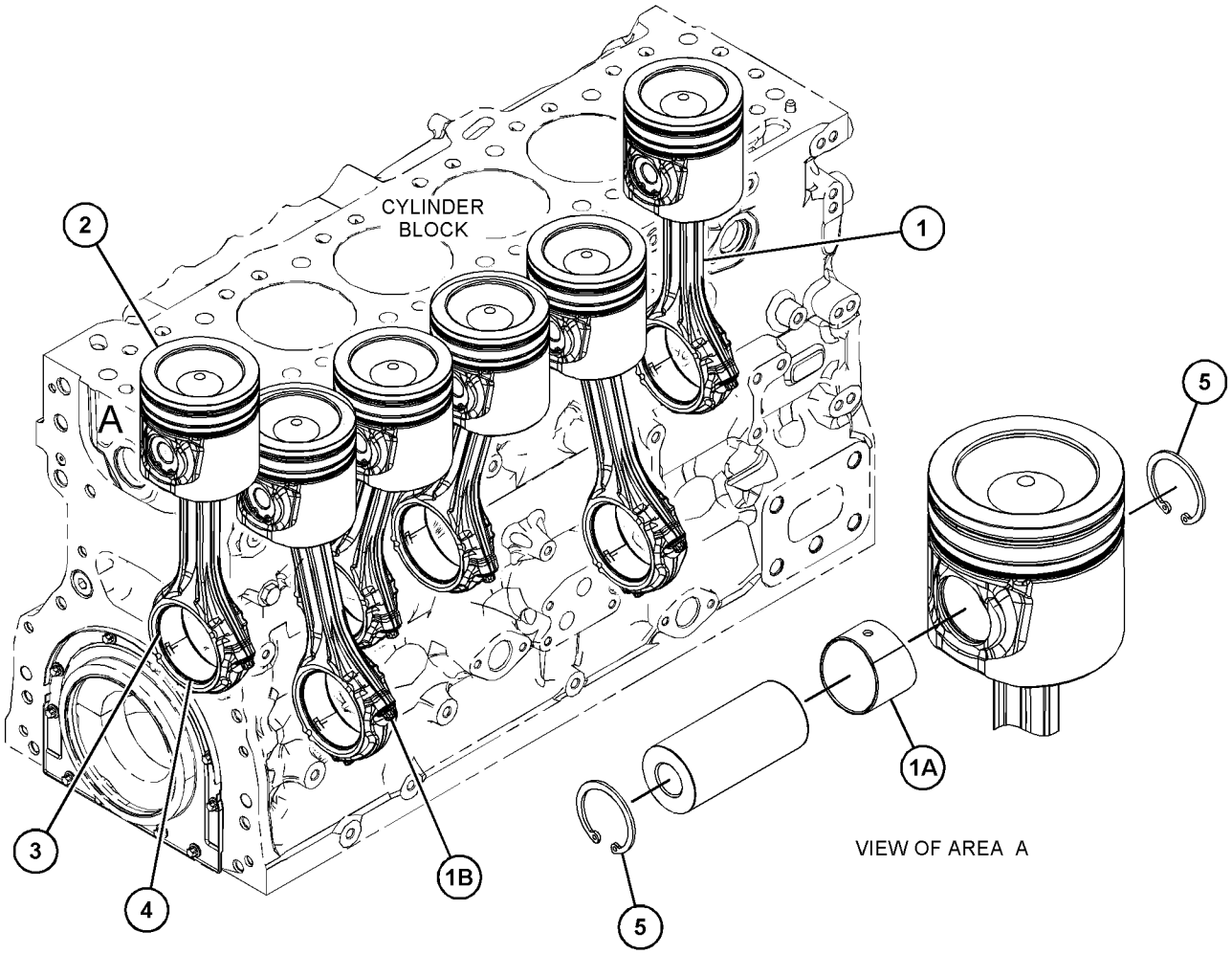

GRAPHIC #1 <END> g03707228

452-9761 PISTON & ROD GP

PART OF 484-2939, 501-2466, 504-9579, 562-8873, 563-6728, 563-6729, 563-6730, 565-1247, 633-4335, 657-2370 ENGINE AR-PRIMARY
TYPE 2

SMCS-1225 **i09938365**

NOTE	REF NO	GRAPHIC REF	PART NUMBER	QTY	PART NAME 1 2 3 4 5 6 (PRODUCT LEVEL)	SEE PAGE
BN	1	1	*605-5520*	6	CONNECTING ROD GP (STANDARD)	
					—OR—	
BN		1	**331-0290**	6	CONNECTING ROD GP (GRADE G)	
					—OR—	
BN		1	**331-0291**	6	CONNECTING ROD GP (GRADE R)	
					—OR—	
BN		1	**331-0292**	6	CONNECTING ROD GP (GRADE B)	
					(EACH CONNECTING ROD GP INCLUDES)	
	1A	1	**276-7478**	1	BUSHING	
M	1B	1	**323-9312**	2	BOLT (M10X1X50-MM)	
CY	2	1	*567-6036*	6	PISTON GP	589
J	3	1	*387-2156*	6	BEARING	
J	4	1	*470-8038*	6	BEARING	
	5	1	**619-3393**	12	RING-RETAINING	
BF			**621-7933**	1	LINER-CYLINDER	
					PARTS SHOWN IN GRAPHIC(S) WITHOUT A REFERENCE NUMBER ARE NOT SERVICED SEPARATELY	
					AVAILABLE REPAIR KIT(S):	
J			**436-7781**	1	KIT-BEARING (STANDARD)	
					(INCLUDES BEARINGS)	
AB			**480-4489**		KIT-BEARING (0.254-MM US)	
					(INCLUDES BEARINGS)	
AB			**480-4490**		KIT-BEARING (0.51-MM US)	
					(INCLUDES BEARINGS)	
AB			**480-4491**		KIT-BEARING (0.762-MM US)	
					(INCLUDES BEARINGS)	

A - NOT PART OF THIS GROUP
B - USE AS REQUIRED
C - CHANGE FROM PREVIOUS TYPE
F - NOT SHOWN
J - KIT MARKED J SERVICES PART(S) MARKED J
M - METRIC PART
N - ENSURE THAT CORRECT ROD LENGTH IS FITTED
Y - SEPARATE ILLUSTRATION

452-9761 **PISTON & ROD GP (**contd.**)** **i09938365**

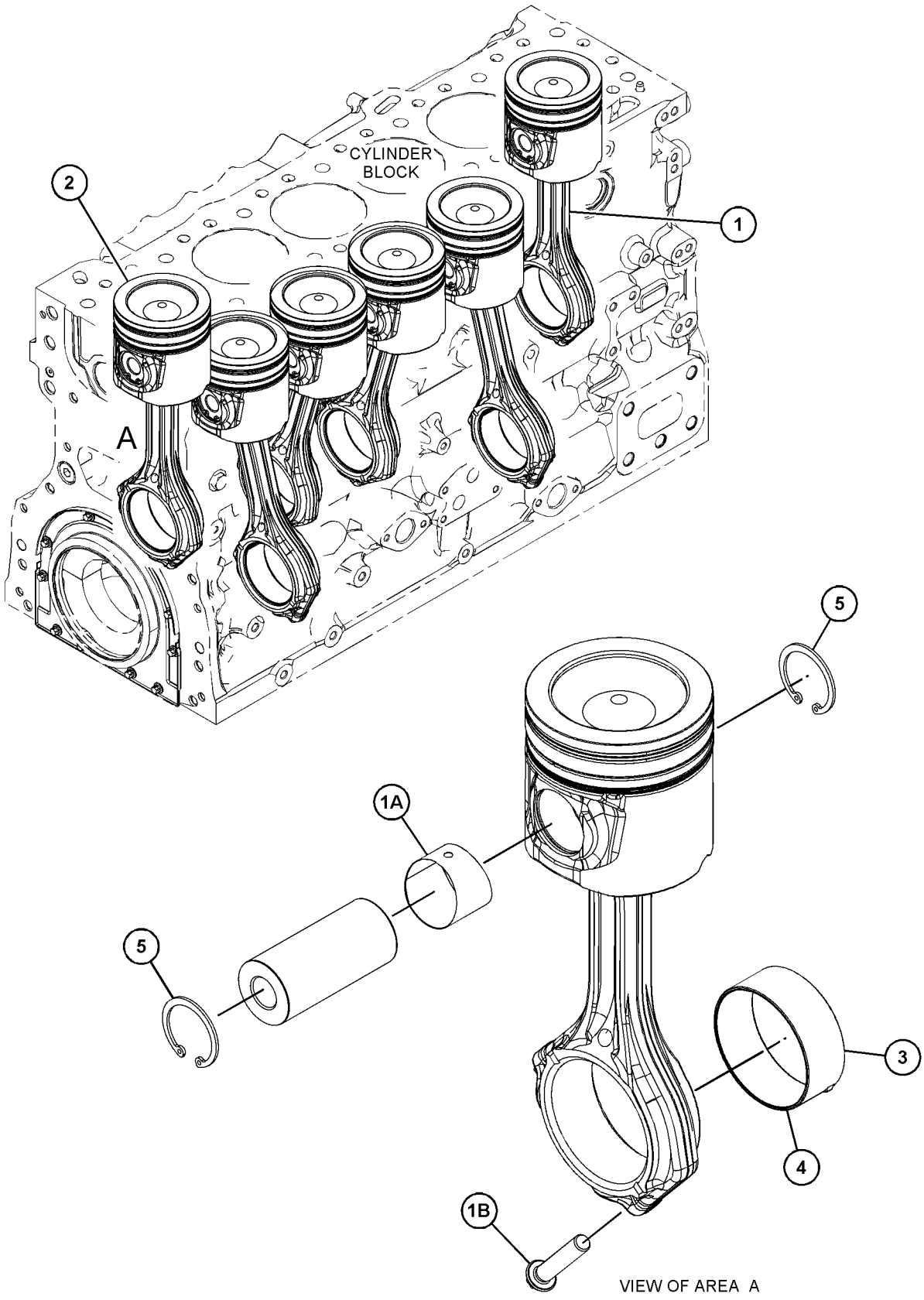

GRAPHIC #1 <END> g07562684

504-2903 PISTON GP

PART OF 369-7304, 452-9761 PISTON & ROD GP

SMCS-1214 **i09761634**

NOTE	REF NO	GRAPHIC REF	PART NUMBER	QTY	PART NAME 1 2 3 4 5 6 (PRODUCT LEVEL)	SEE PAGE
PQT	1	1	*317-6214*	1	PIN	
P	2	1	*369-3188*	1	PISTON	
JP	3	1	*454-9560*	1	RING-PISTON	
JP	4	1	*454-9569*	1	RING-PISTON	
JP	5	1	*454-9573*	1	RING-OIL	
					AVAILABLE REPAIR KIT(S):	
J			**276-7476**	1	KIT-PISTON RING (STANDARD)	
					(INCLUDES RINGS)	
AB			**380-2065**		KIT-PISTON RING (0.5-MM OS)	
					(INCLUDES RINGS)	
AB			**466-4849**		KIT-PISTON RING (1-MM OS)	
					(INCLUDES RINGS)	
P			**443-9475**	1	KIT-PISTON (STANDARD)	
					(INCLUDES PIN, PISTON RINGS, RETAINING RINGS & PISTON)	
ABQ			**443-9898**		KIT-PISTON (0.5-MM OS)	
					(INCLUDES PIN, PISTON RINGS, RETAINING RINGS & PISTON)	
ABT			**443-9919**		KIT-PISTON (1-MM OS)	
					(INCLUDES PIN, PISTON RINGS, RETAINING RINGS & PISTON)	

A - NOT PART OF THIS GROUP
B - USE AS REQUIRED
J - KIT MARKED J SERVICES PART(S) MARKED J
P - KIT MARKED P SERVICES PART(S) MARKED P
Q - KIT MARKED Q SERVICES PART(S) MARKED Q
T - KIT MARKED T SERVICES PART(S) MARKED T

504-2903 **PISTON GP (**contd.**)** **i09761634**

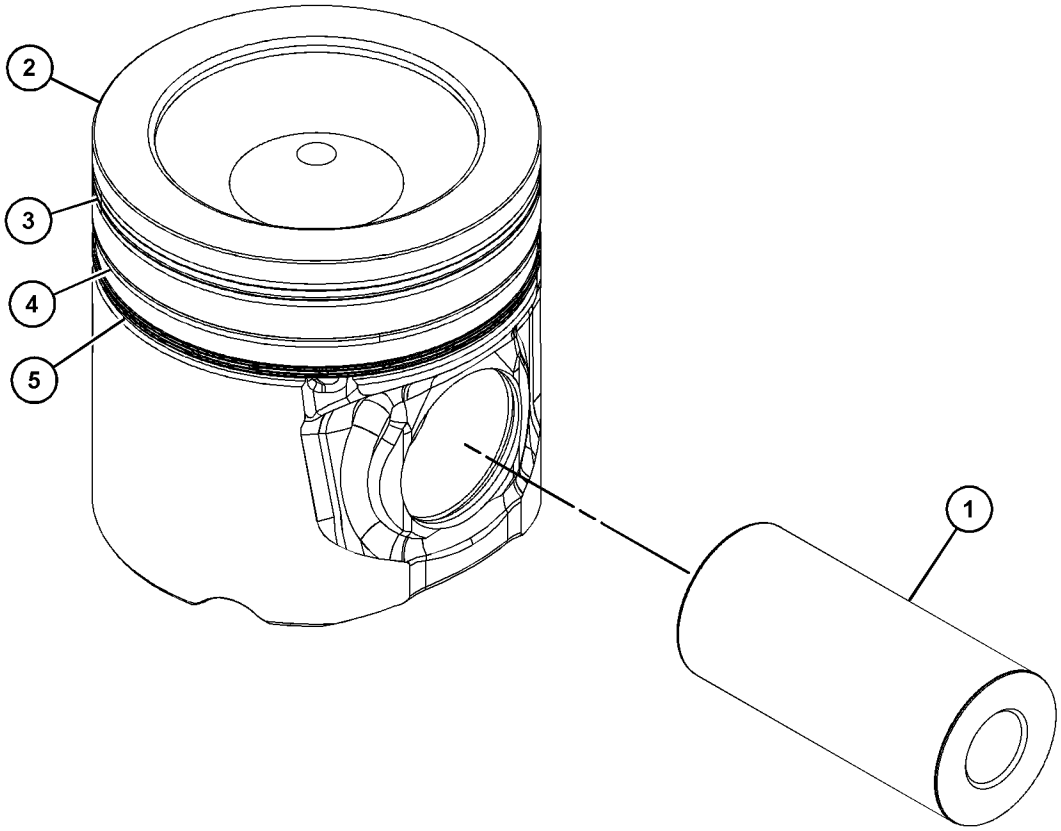

GRAPHIC #1 <END> g06238431

567-6036 PISTON GP

PART OF 369-7304, 452-9761 PISTON & ROD GP

SMCS-1214 **i07898934**

NOTE	REF NO	GRAPHIC REF	PART NUMBER	QTY	PART NAME 1 2 3 4 5 6 (PRODUCT LEVEL)	SEE PAGE
PQT	1	1	**317-6214**	1	PIN	
T	2	1	*369-3188*	1	PISTON	
JT	3	1	*539-6668*	1	RING-PISTON	
JT	4	1	*539-6672*	1	RING-PISTON	
JT	5	1	*539-6673*	1	RING-PISTON	
					AVAILABLE REPAIR KIT(S):	
J			**574-9895**	1	KIT-PISTON RING (STANDARD) (STANDARD)	
					(INCLUDES PISTON RINGS)	
AB			**574-9896**		KIT-PISTON RING (0.5-MM OS)	
					(INCLUDES PISTON RINGS)	
AB			**575-3353**		KIT-PISTON RING (1.0-MM OS)	
					(INCLUDES PISTON RINGS)	
T			**575-3355**	1	KIT-PISTON (STANDARD)	
					(INCLUDES RETAINING RINGS, PIN, PISTON & PISTON RINGS)	
ABP			**574-9871**		KIT-PISTON (0.5-MM OS)	
					(INCLUDES RETAINING RINGS, PIN, PISTON & PISTON RINGS)	
ABQ			**574-9881**		KIT-PISTON (1.0-MM OS)	
					(INCLUDES RETAINING RINGS, PIN, PISTON & PISTON RINGS)	

A - NOT PART OF THIS GROUP
B - USE AS REQUIRED
J - KIT MARKED J SERVICES PART(S) MARKED J
P - KIT MARKED P SERVICES PART(S) MARKED P
Q - KIT MARKED Q SERVICES PART(S) MARKED Q
T - KIT MARKED T SERVICES PART(S) MARKED T

567-6036 **PISTON GP (**contd.**)** **i07898934**

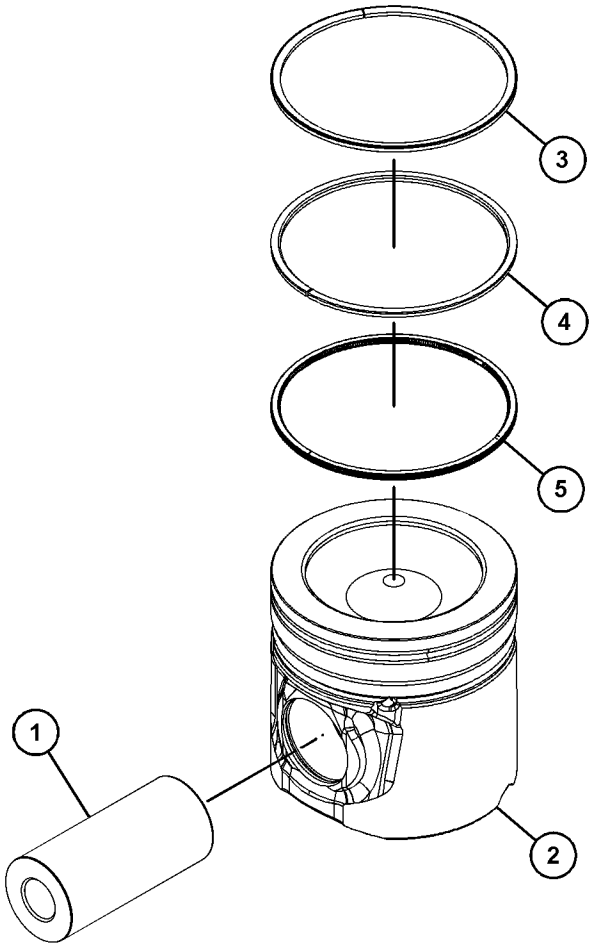

GRAPHIC #1 <END> g06478631

374-9295 PLUG GP-CYLINDER BLOCK

PART OF 451-8343, 524-8271, 528-9866, 614-5795 ENGINE AR-PRIMARY

SMCS-1201 **i05723807**

NOTE	REF NO	GRAPHIC REF	PART NUMBER	QTY	PART NAME 1 2 3 4 5 6 (PRODUCT LEVEL)	SEE PAGE
	1	1	**277-4223**	1	PLUG	

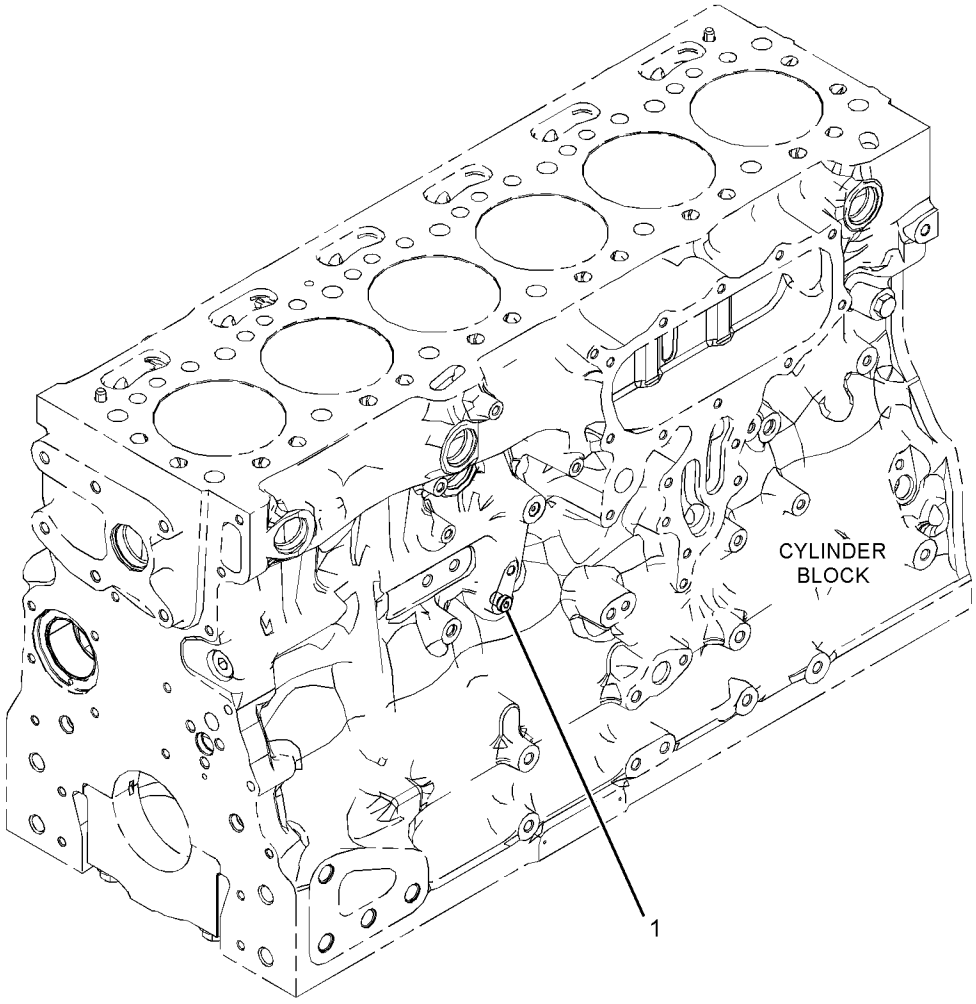

GRAPHIC #1 <END> g03483538

346-2908 PLUG GP-ENGINE

PART OF 596-2071 ENGINE AR-COMPLETE, 451-8343, 461-4638, 461-4649, 461-4656, 461-4658, 466-1160, 466-1161, 466-1162, 466-1163, 471-0541, 474-7299, 479-9398, 480-2181, 482-0212, 484-2939, 485-8027, 486-4250, 491-2606, 491-4973, 491-4980, 491-4993, 491-7124, 492-3021, 492-3072, 492-3169, 493-1019, 493-1038, 494-2073, 494-6807, 499-7181, 501-2466, 502-9462, 504-3629, 504-5365, 504-8134, 504-9579, 506-5035, 507-8016, 510-1088, 512-9858, 513-0851, 513-8513, 514-9367, 519-4128, 527-7106, 527-9686, 528-3358, 530-2601, 531-2492, 533-2797, 533-3588, 535-8060, 536-6675, 539-6915, 543-4255, 552-3506, 552-8869, 553-1809, 553-3730, 555-4669, 562-8873, 563-6728, 563-6729, 563-6730, 565-1247, 569-7846, 583-8352, 591-1266, 591-9440, 593-7287, 593-7288, 596-4834, 596-7090, 598-9881, 602-8721, 603-5300, 612-1735, 614-9555, 622-6239, 623-1309, 624-0698, 627-8019, 627-8054, 627-8129, 628-4345, 633-4335, 633-7776, 657-2370 ENGINE AR-PRIMARY

SMCS-1100, 1201 **i05723850**

NOTE	REF NO	GRAPHIC REF	PART NUMBER	QTY	PART NAME 1 2 3 4 5 6 (PRODUCT LEVEL)	SEE PAGE
	1	1	**067-6823**	3	PLUG	

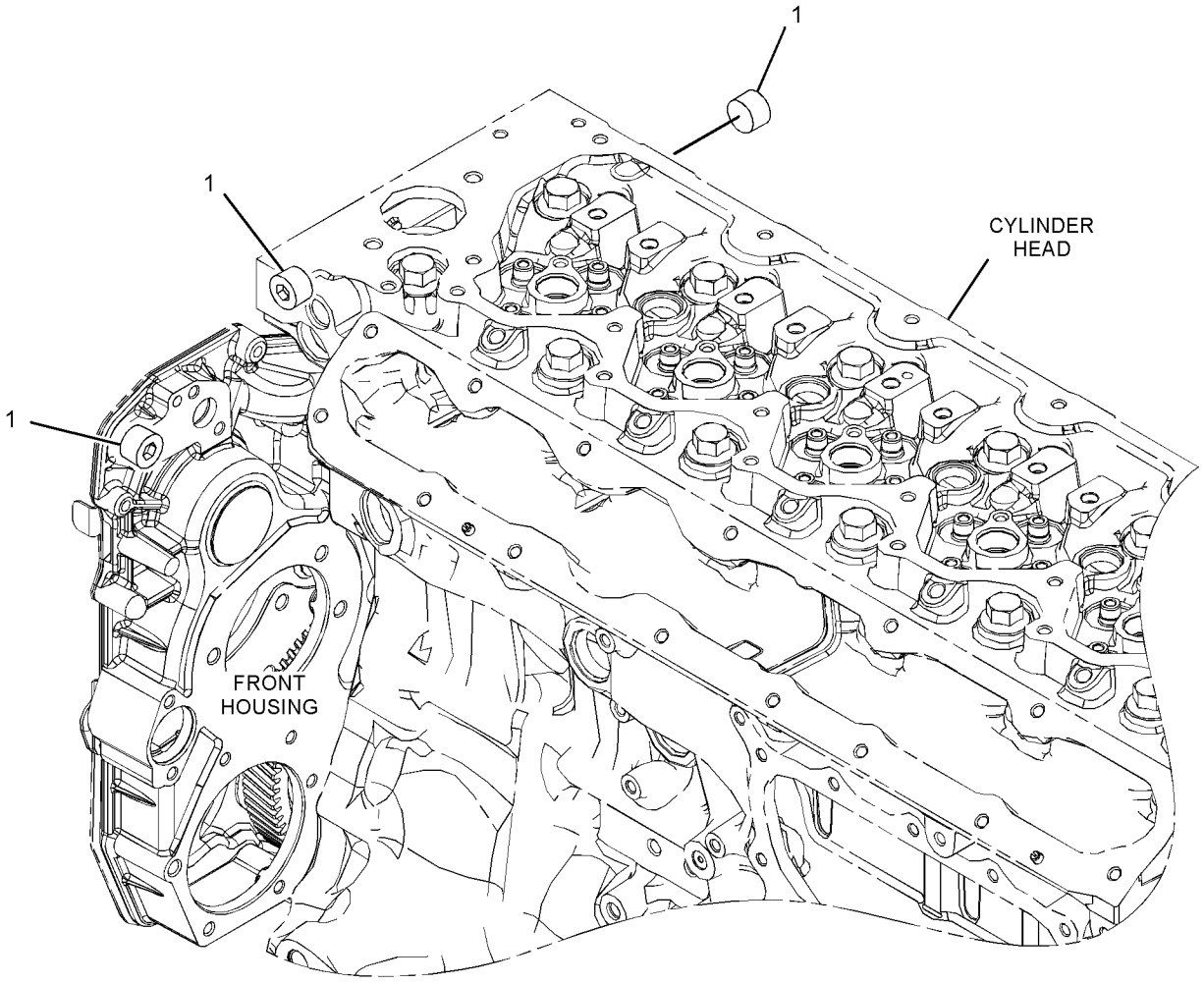

GRAPHIC #1 <END> g03380722

327-0675 PLUG GP-FLYWHEEL HOUSING

SMCS-1157 **i05732833**

NOTE	REF NO	GRAPHIC REF	PART NUMBER	QTY	PART NAME 1 2 3 4 5 6 (PRODUCT LEVEL)	SEE PAGE
	1	1	**6H-3616**	10	PLUG-PROTECTION	

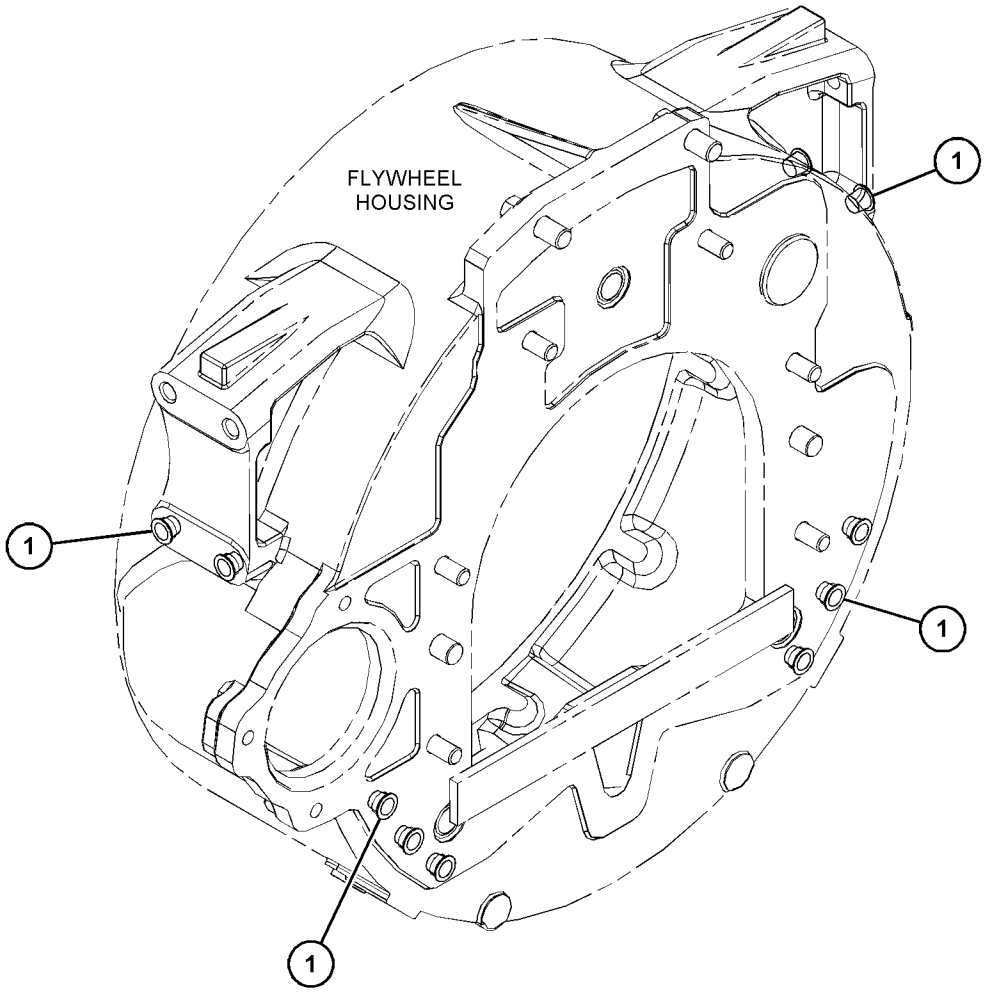

GRAPHIC #1 <END> g03651142

332-9106 PLUG GP-FLYWHEEL HOUSING

SMCS-1157 **i05727029**

NOTE	REF NO	GRAPHIC REF	PART NUMBER	QTY	PART NAME 1 2 3 4 5 6 (PRODUCT LEVEL)	SEE PAGE
	1	1	**6H-3616**	6	PLUG-PROTECTION	

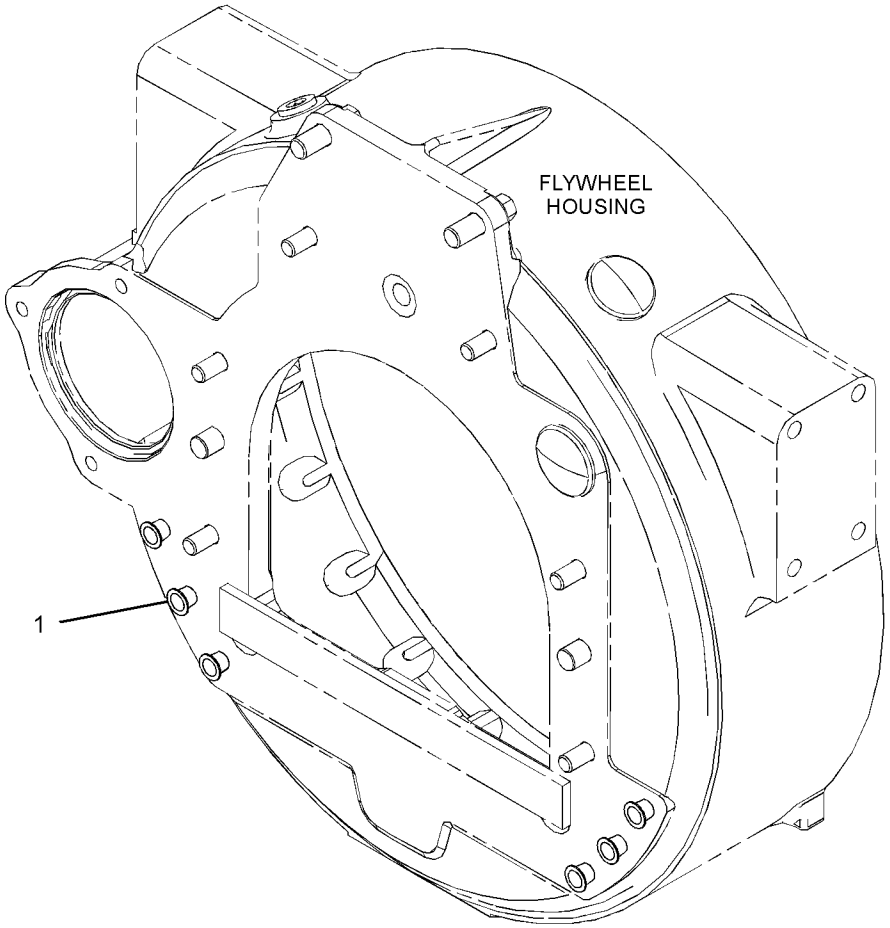

GRAPHIC #1 <END> g03530065

346-1478 PLUG GP-FLYWHEEL HOUSING

PART OF 466-1160, 466-1161, 466-1162, 466-1163, 475-8297, 475-9060, 481-0811, 510-1088, 513-8513, 524-8271, 528-9866, 614-5795 ENGINE AR-PRIMARY

SMCS-1157 **i05733302**

NOTE	REF NO	GRAPHIC REF	PART NUMBER	QTY	PART NAME 1 2 3 4 5 6 (PRODUCT LEVEL)	SEE PAGE
	1	1	**6H-3616**	10	PLUG-PROTECTION	

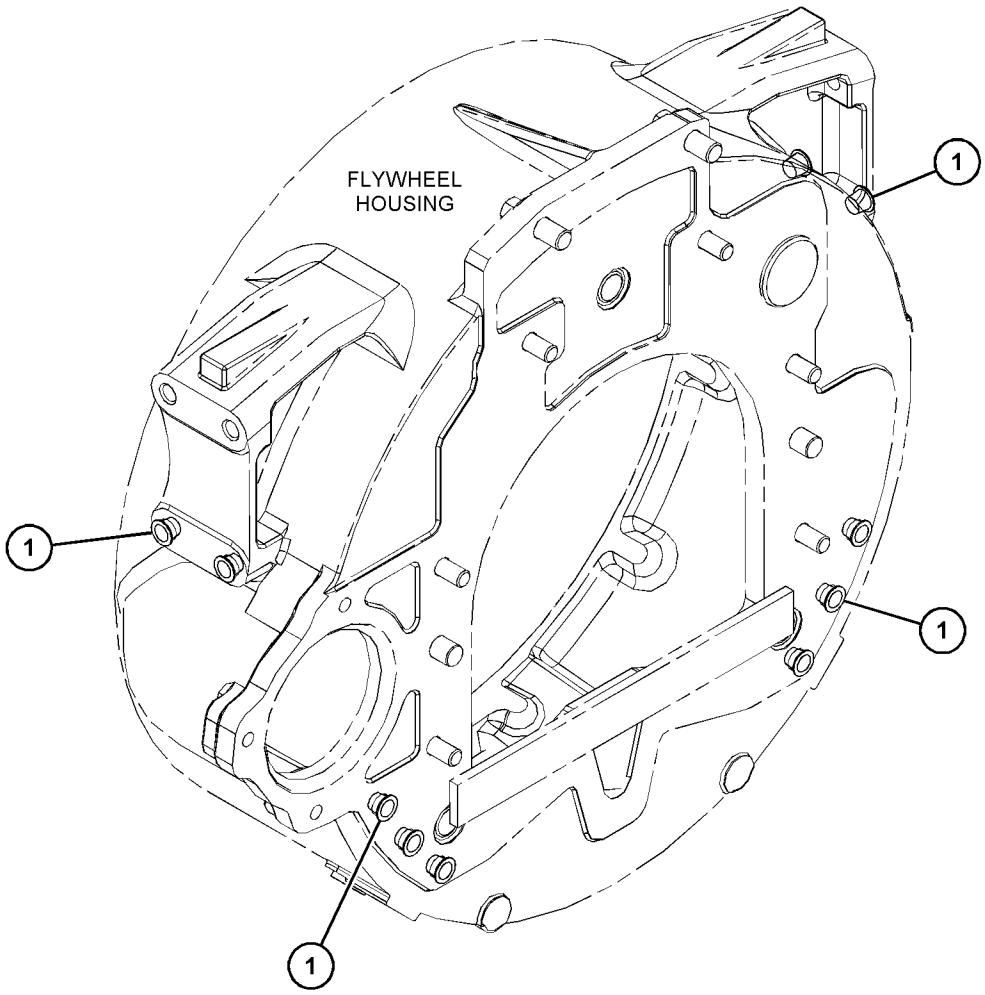

GRAPHIC #1 <END> g03651126

458-9768 PLUG GP-OIL PAN

PART OF 527-7106, 528-3358, 531-2492, 596-4834, 596-7090, 627-8054 ENGINE AR-PRIMARY

SMCS-1302 **i06173417**

NOTE	REF NO	GRAPHIC REF	PART NUMBER	QTY	PART NAME 1 2 3 4 5 6 (PRODUCT LEVEL)	SEE PAGE
	1	1	**354-8322**	2	PLUG (M16X1.5-THD)	

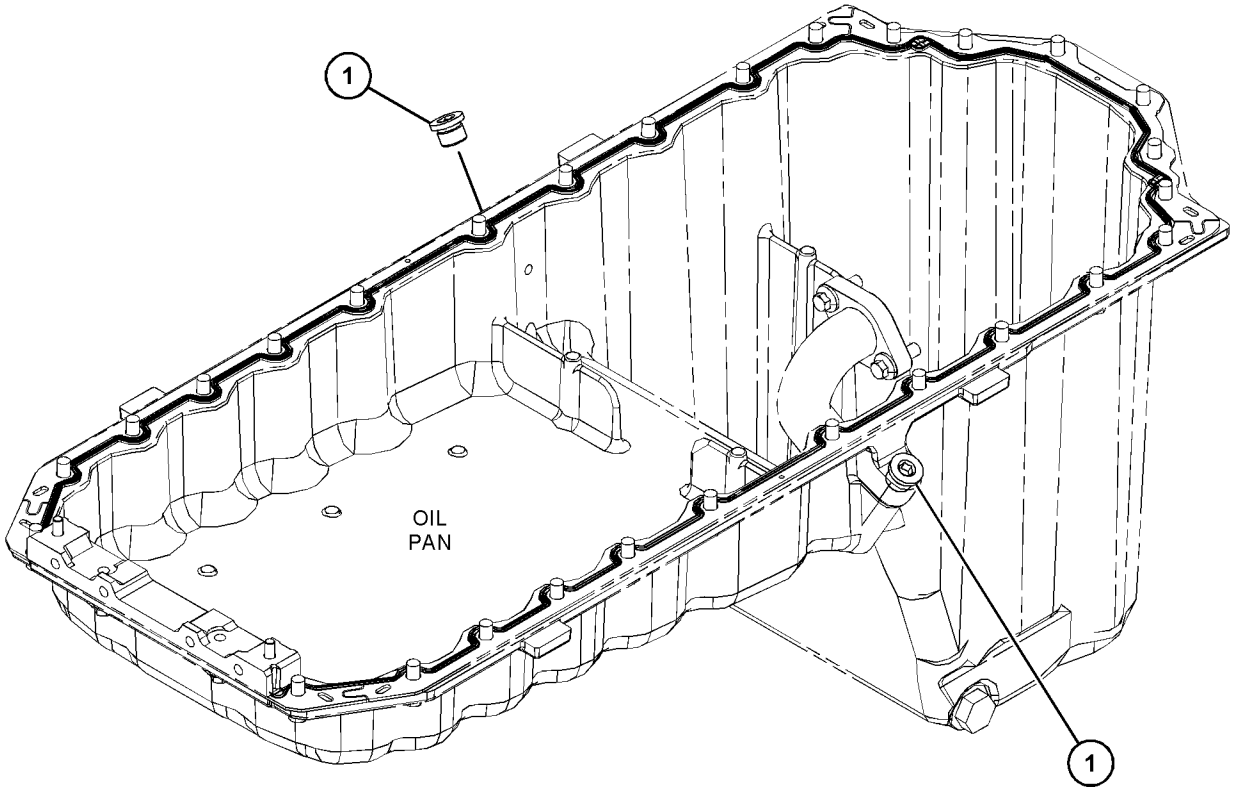

GRAPHIC #1 <END> g03696638

378-0628 POWER TAKE-OFF GP

PART OF 494-2073 ENGINE AR-PRIMARY

SMCS-1165 **i10428934**

NOTE	REF NO	GRAPHIC REF	PART NUMBER	QTY	PART NAME 1 2 3 4 5 6 (PRODUCT LEVEL)	SEE PAGE
M	1	1	**100-4830**	2	BOLT (M10X1.5X20-MM)	
	2	1	**102-2073**	1	SEAL-O-RING	
M	3	1	**101-7404**	1	BOLT-SOCKET HEAD (M10X1.5X30-MM)	
	4	1	**277-4223**	1	PLUG	
M	5	1	**126-3212**	5	BOLT (M8X1.25X25-MM)	
	6	1	**198-8262**	1	COVER AS	
	6A	1	**198-8263**	1	SEAL-O-RING	
	7	1	**235-1063**	1	ADAPTER AS	
	7A	1	**6H-3957**	1	BALL BEARING	
	7B	1	**102-2075**	1	BEARING	
	7C	1	**102-2076**	1	CLIP	
	7D	1	**235-1061**	1	GEAR (33-TEETH)	

M - METRIC PART

378-0628 **POWER TAKE-OFF GP (**contd.**)** **i10428934**

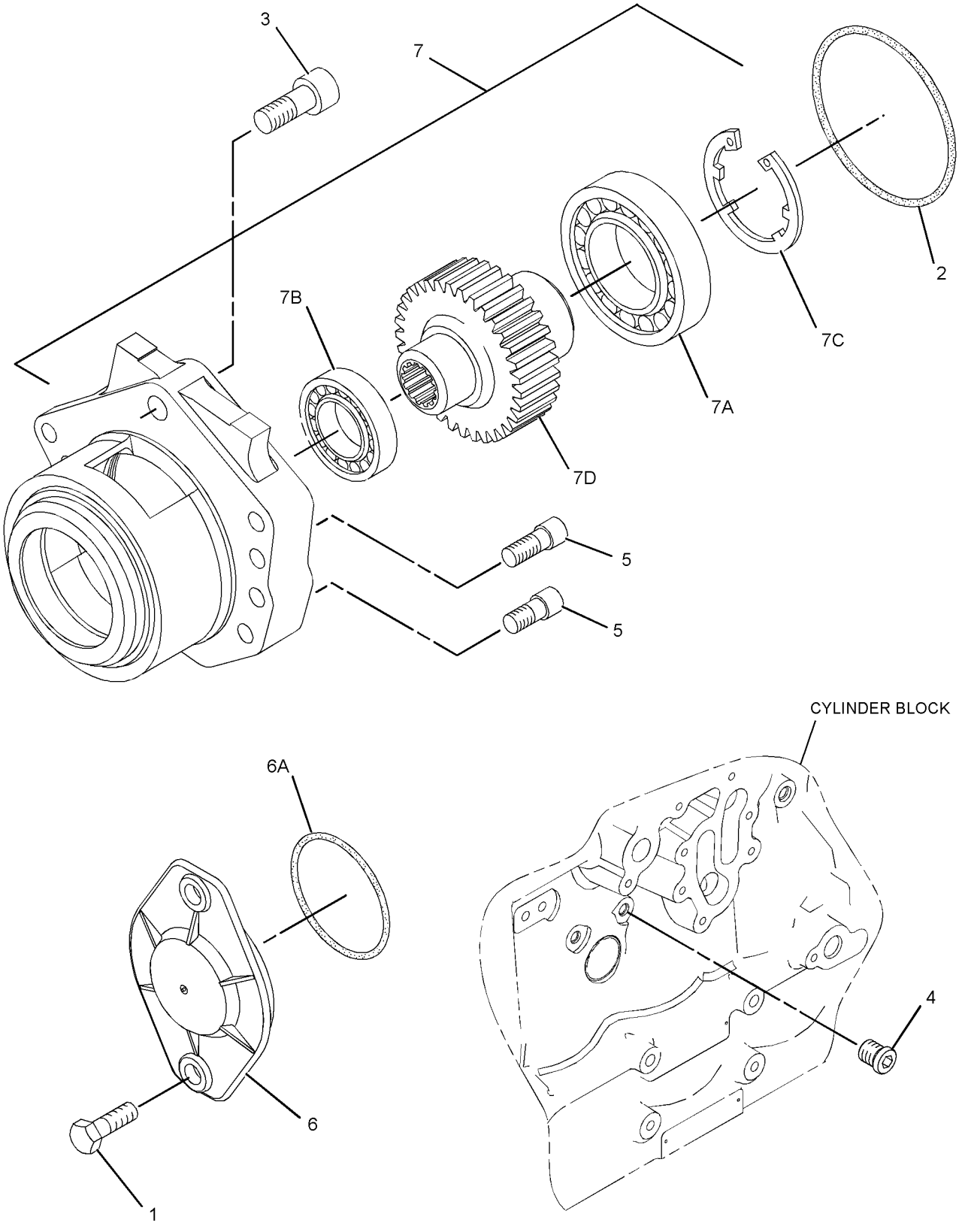

GRAPHIC #1 <END> g07872418

371-2692 PULLEY GP-ALTERNATOR

SMCS-1425 **i05722435**

NOTE	REF NO	GRAPHIC REF	PART NUMBER	QTY	PART NAME 1 2 3 4 5 6 (PRODUCT LEVEL)	SEE PAGE
	1	1	**321-6131**	1	PULLEY (8-GROOVE) (ALTERNATOR)	

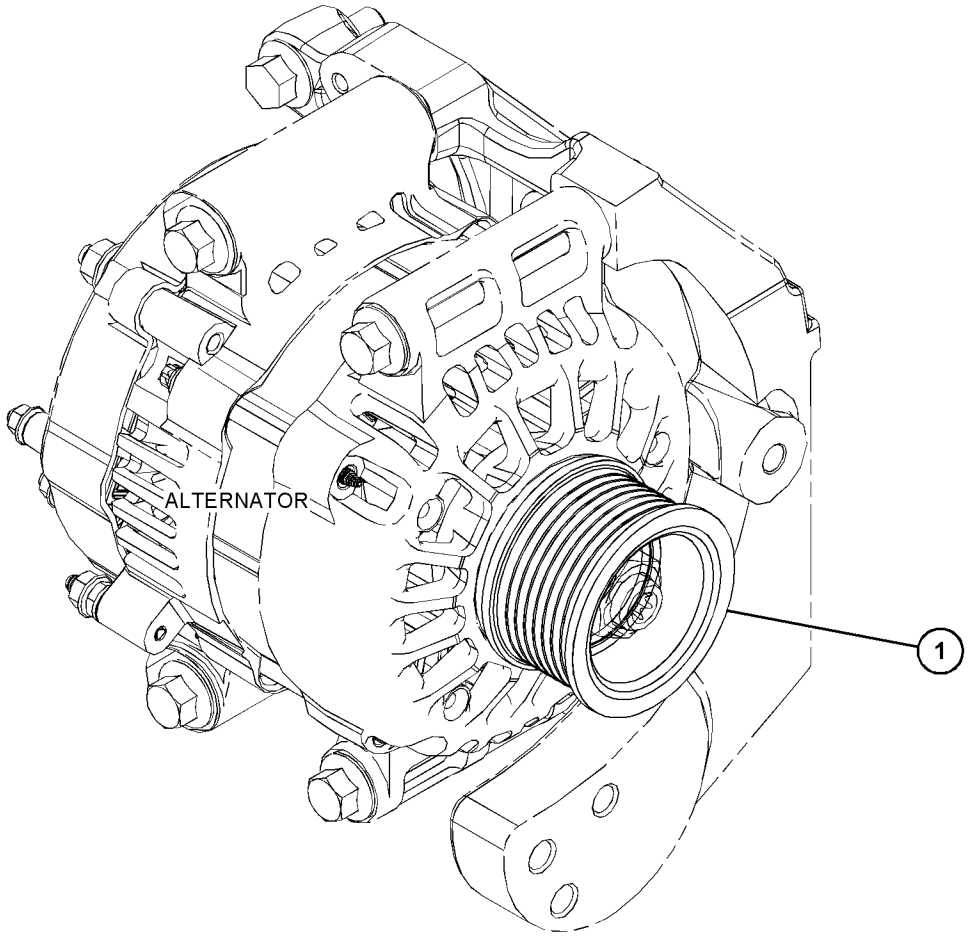

GRAPHIC #1 <END> g03650264

379-6633 PULLEY GP-AUXILIARY DRIVE

PART OF 466-1160, 466-1161, 466-1162, 466-1163, 486-4250, 492-3169, 493-1019, 493-1038, 504-5365, 504-8134, 526-0511, 526-8888, 597-9248 ENGINE AR-PRIMARY

SMCS-1205, 1207

i06052970

NOTE	REF NO	GRAPHIC REF	PART NUMBER	QTY	PART NAME 1 2 3 4 5 6 (PRODUCT LEVEL)	SEE PAGE
	1	1	**283-4674**	1	PULLEY-AUXILIARY DRIVE	
M	2	1	**283-4662**	6	BOLT-FLANGE HEAD (M12X1.75X55-MM)	

M - METRIC PART

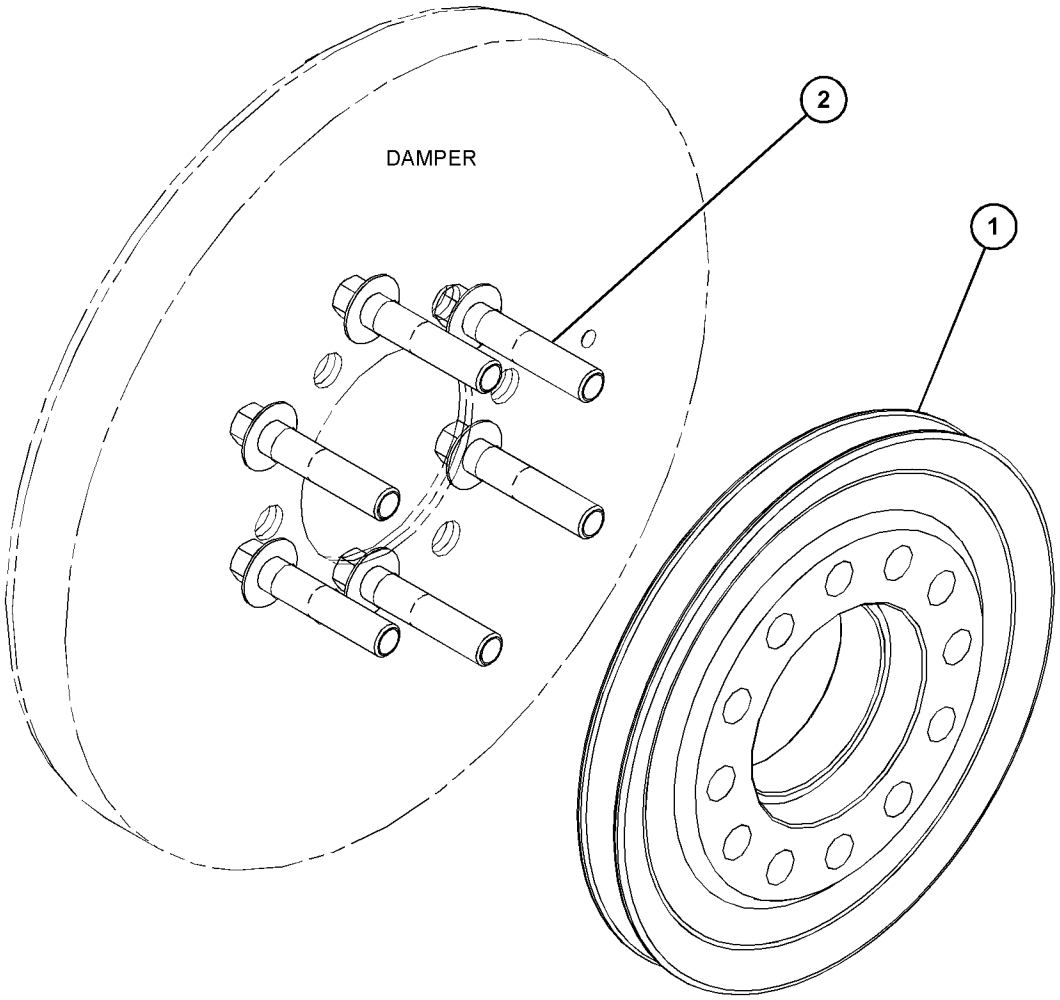

GRAPHIC #1 <END> g06003220

371-2554 PULLEY GP-CRANKSHAFT

PART OF 466-1161, 466-1162, 466-1163, 470-8814, 478-4257, 481-0811, 486-4250, 488-6687, 491-2606, 492-3169, 493-1019, 493-1038, 494-2073, 504-5365, 504-8134, 506-5035, 506-9918, 510-1088, 513-8513, 515-9203, 520-4644, 524-8271, 525-8759, 526-0511, 526-7210, 526-8888, 527-7106, 528-3358, 528-9866, 528-9920, 531-2492, 533-3588, 553-1809, 575-2879, 575-2880, 593-7288, 594-2125, 596-4834, 596-7090, 597-9248, 608-9261, 614-5795, 645-2039 ENGINE AR-PRIMARY

SMCS-1205 **i05582472**

NOTE	REF NO	GRAPHIC REF	PART NUMBER	QTY	PART NAME 1 2 3 4 5 6 (PRODUCT LEVEL)	SEE PAGE
	1	1	**274-1931**	1	PULLEY (8-GROOVE)	
	2	1	**342-6502**	1	ADAPTER	
M	3	1	**342-6510**	3	BOLT-TORX (M14X1.5X70-MM)	
	4	1	**351-1724**	1	DAMPER	

M - METRIC PART

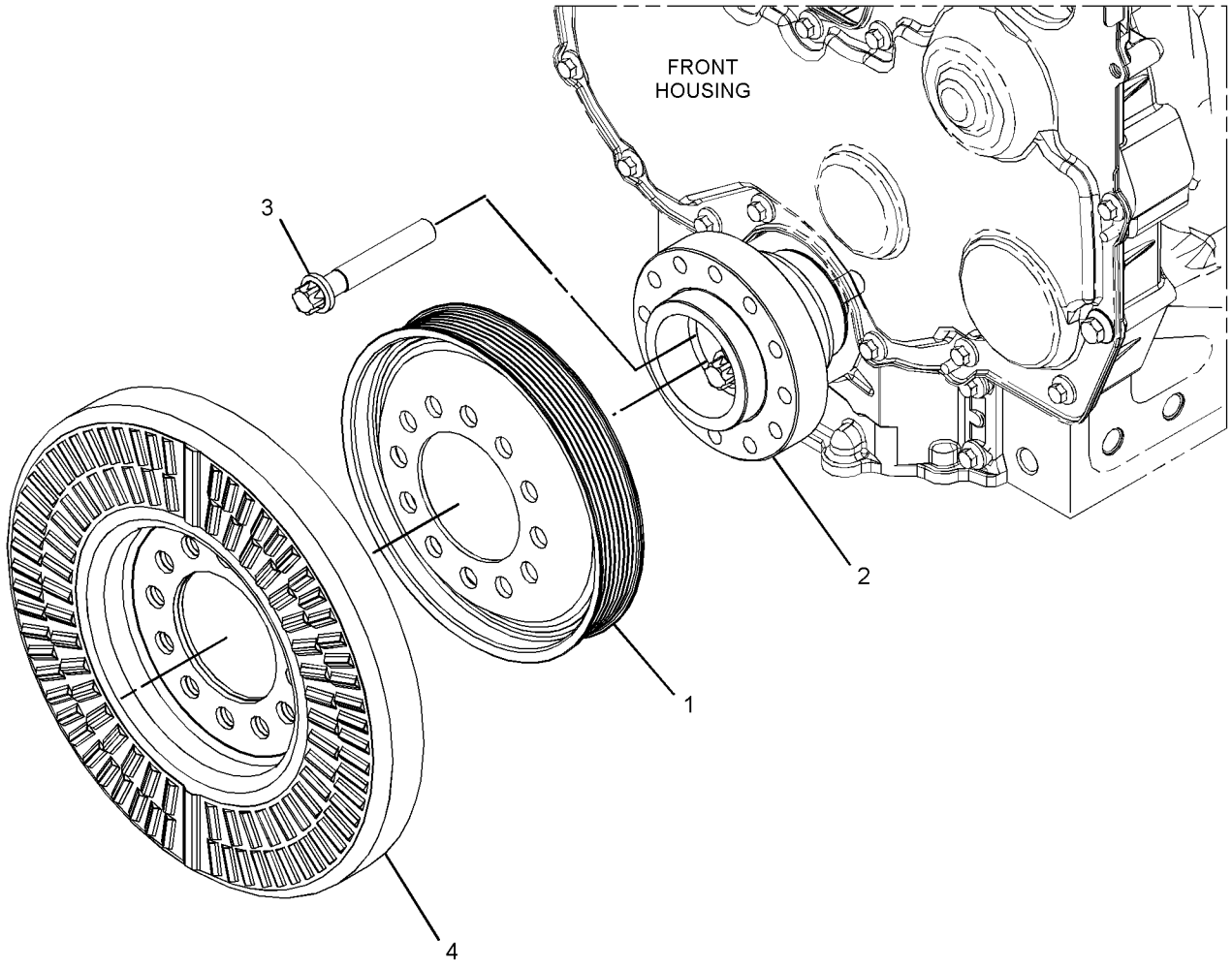

GRAPHIC #1 <END> g03110077

371-2555 PULLEY GP-CRANKSHAFT

200MM. 8 RIB AXPTO

PART OF 470-8667, 474-7299, 504-3629, 519-4128, 553-3730, 613-9482 ENGINE AR-PRIMARY

SMCS-1205 **i05719497**

NOTE	REF NO	GRAPHIC REF	PART NUMBER	QTY	PART NAME 1 2 3 4 5 6 (PRODUCT LEVEL)	SEE PAGE
	1	1	**274-1931**	1	PULLEY (8-GROOVE)	
	2	1	**342-6502**	1	ADAPTER	
	3	1	**342-6507**	1	SHIM (0.1-MM THK)	
M	4	1	**342-6510**	3	BOLT-TORX (M14X1.5X70-MM)	
	5	1	**351-1724**	1	DAMPER	

M - METRIC PART

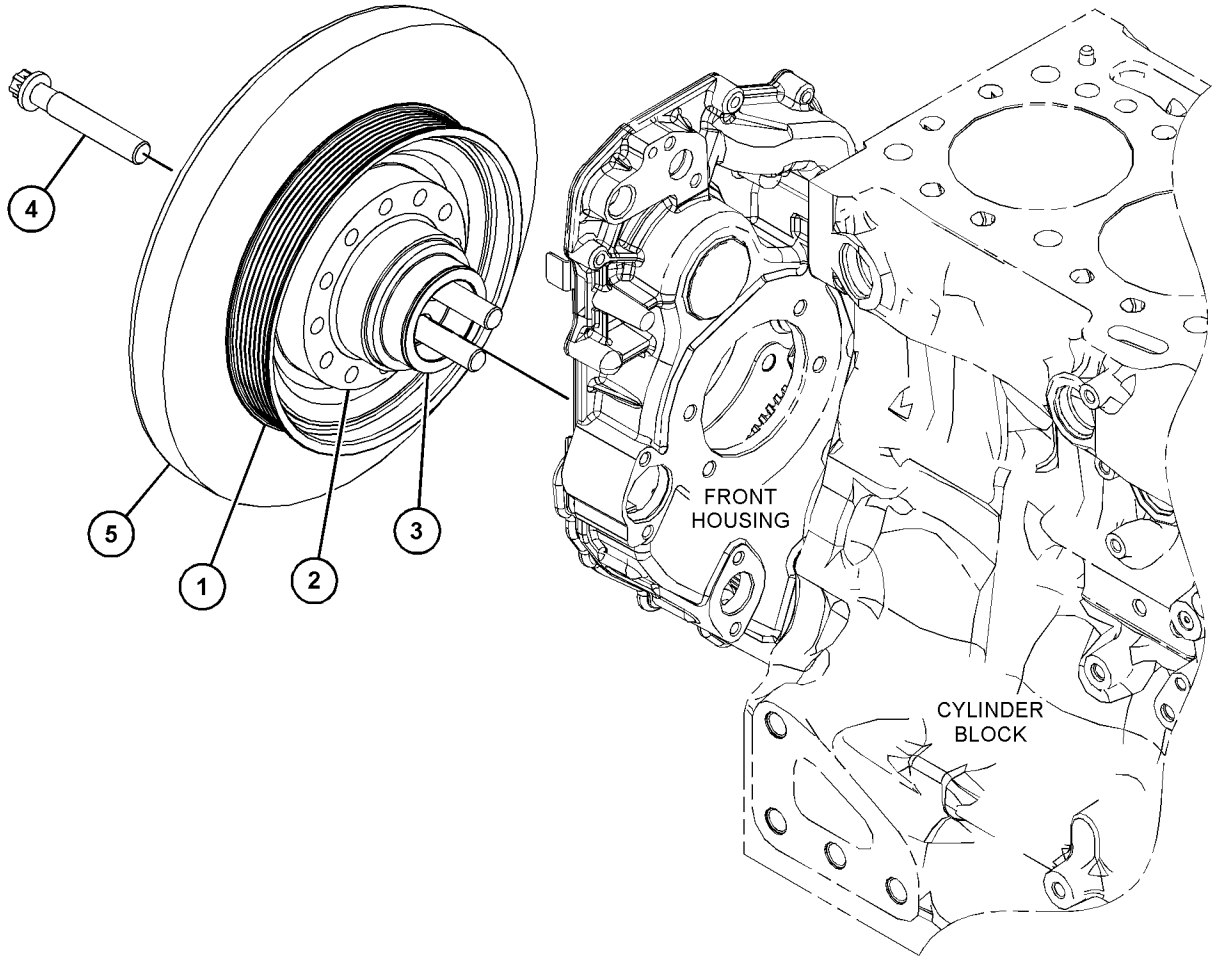

GRAPHIC #1 <END> g03651022

379-6629 PULLEY GP-CRANKSHAFT

PART OF 596-2071 ENGINE AR-COMPLETE, 451-8343, 461-4638, 461-4649, 461-4656, 461-4658, 466-1160, 468-0461, 468-8218, 471-0541, 475-8297, 475-9060, 479-9398, 480-2181, 482-0212, 484-2939, 485-8027, 486-2644, 489-9006, 491-4973, 491-4980, 491-4993, 491-7124, 492-3021, 492-3072, 494-6807, 495-8349, 499-7181, 501-2466, 502-9462, 504-9579, 507-8016, 508-0270, 512-9858, 513-0851, 514-9367, 520-3152, 527-9686, 530-1323, 530-2601, 533-2797, 535-8060, 536-6675, 539-6915, 539-8582, 543-4255, 552-3506, 552-8869, 555-4669, 562-8873, 563-6728, 563-6729, 563-6730, 565-1247, 569-7846, 583-8352, 591-1266, 591-9440, 593-7287, 596-8896, 596-8905, 598-9881, 602-8721, 603-5300, 609-9819, 612-1735, 614-9555, 622-6239, 623-1309, 624-0698, 627-8019, 627-8054, 627-8129, 628-4345, 633-4335, 633-7776, 657-2370 ENGINE AR-PRIMARY

SMCS-1205 **i05723715**

NOTE	REF NO	GRAPHIC REF	PART NUMBER	QTY	PART NAME 1 2 3 4 5 6 (PRODUCT LEVEL)	SEE PAGE
	1	1	**351-1724**	1	DAMPER	
M	2	1	**342-6510**	3	BOLT-TORX (M14X1.5X70-MM)	
	3	1	**342-6502**	1	ADAPTER	
	4	1	**286-7848**	1	PULLEY (8-GROOVE)	

M - METRIC PART

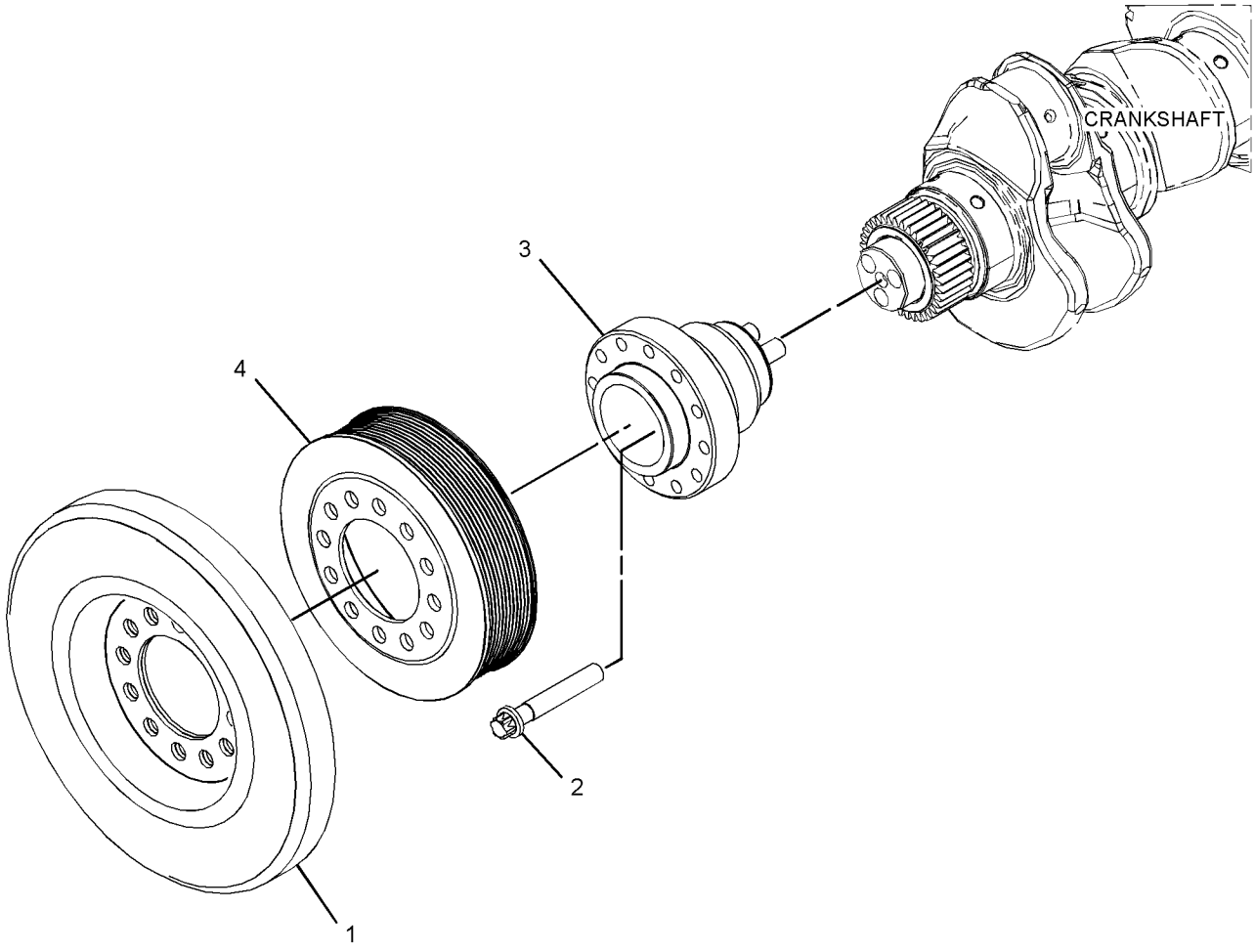

GRAPHIC #1 <END> g02723352

280-1911 ROCKER ARM GP

PART OF 371-2480 ROCKER ARM GP

SMCS-1123 **i05581254**

NOTE	REF NO	GRAPHIC REF	PART NUMBER	QTY	PART NAME 1 2 3 4 5 6 (PRODUCT LEVEL)	SEE PAGE
	1	1	**276-9201**	1	CLIP	
	2	1	**276-9206**	5	SPRING-SHAFT	
	3	1	**276-9207**	1	SPRING-SHAFT	
	4	1	**277-5307**	1	SHAFT AS-ROCKER ARM	
	4A	1	**276-9200**	1	PLUG-SHAFT END	
	5	1	**278-5111**	6	ROCKER ARM AS	
					(EACH INCLUDES)	
	5A	1	**276-9230**	1	NUT	
	5B	1	**278-5113**	1	SCREW-ADJUSTING (TORX)	
	6	1	**278-5112**	6	ROCKER ARM AS	
					(EACH INCLUDES)	
	6A	1	**276-9230**	1	NUT	
	6B	1	**278-5113**	1	SCREW-ADJUSTING (TORX)	
	7	1	**280-1912**	6	BRACKET	
	8	1	**280-1913**	6	RETAINER	
	9	1	**280-1914**	12	BOLT (M8X1.25X55-MM)	

280-1911 **ROCKER ARM GP (**contd.**)** **i05581254**

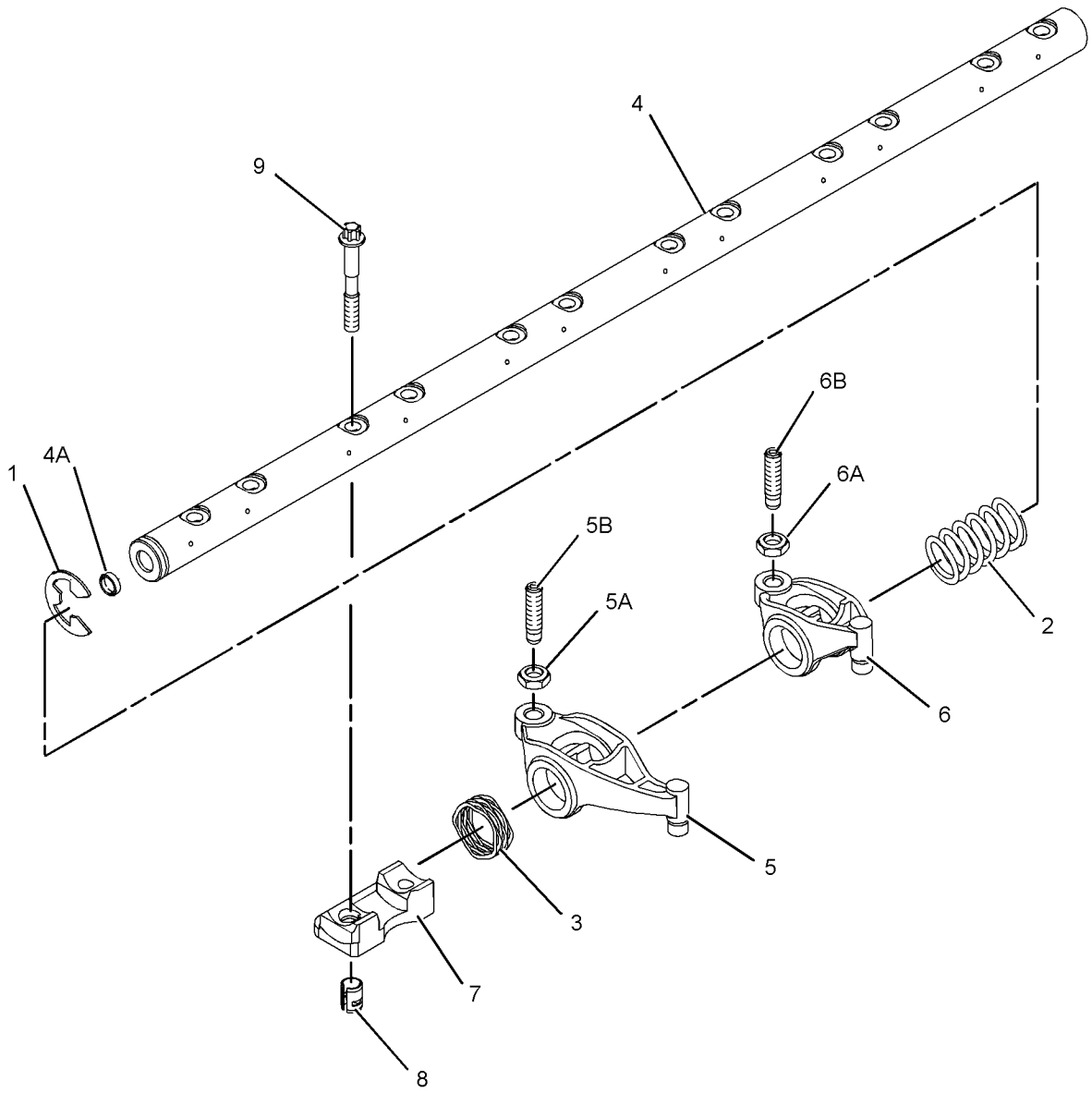

GRAPHIC #1 <END> g01235750

371-2480 ROCKER ARM GP

PART OF 596-2071 ENGINE AR-COMPLETE, 451-8343, 461-4638, 461-4649, 461-4656, 461-4658, 466-1160, 466-1161, 466-1162, 466-1163, 468-0461, 468-8218, 470-8667, 470-8814, 471-0541, 474-7299, 475-8297, 475-9060, 478-4257, 479-9398, 480-2181, 481-0811, 482-0212, 484-2939, 485-8027, 486-2644, 486-4250, 488-6687, 491-2606, 491-4973, 491-4980, 491-4993, 491-7124, 492-3021, 492-3072, 492-3169, 493-1019, 493-1038, 494-2073, 494-6807, 495-8349, 499-7181, 501-2466, 502-9462, 504-3629, 504-5365, 504-8134, 504-9579, 506-5035, 506-9918, 507-8016, 508-0270, 510-1088, 512-9858, 513-0851, 513-8513, 514-9367, 515-9203, 519-4128, 520-3152, 520-4644, 524-8271, 525-8759, 526-0511, 526-7210, 526-8888, 527-7106, 527-9686, 528-3358, 528-9866, 528-9920, 530-1323, 530-2601, 531-2492, 533-2797, 533-3588, 535-8060, 536-6675, 539-6915, 539-8582, 543-4255, 552-3506, 552-8869, 553-1809, 553-3730, 555-4669, 562-8873, 563-6728, 563-6729, 563-6730, 565-1247, 569-7846, 575-2879, 575-2880, 583-8352, 591-1266, 591-9440, 593-7287, 593-7288, 594-2125, 596-4834, 596-7090, 596-8896, 596-8905, 597-9248, 598-9881, 602-8721, 603-5300, 608-9261, 609-9819, 612-1735, 613-9482, 614-5795, 614-9555, 622-6239, 623-1309, 624-0698, 627-8019, 627-8054, 627-8129, 628-4345, 633-4335, 633-7776, 645-2039, 657-2370 ENGINE AR-PRIMARY

SMCS-1123 **i05773124**

NOTE	REF NO	GRAPHIC REF	PART NUMBER	QTY	PART NAME 1 2 3 4 5 6 (PRODUCT LEVEL)	SEE PAGE
	1	1	**436-0521**	24	SPRING-VALVE	
	2	1	**346-4709**	12	BRIDGE GP-VALVE	
	3	1	**276-8123**	48	COTTER-CAP	
	4	1	**276-8133**	24	CAP-VALVE	
Y	5	1	**280-1911**	1	ROCKER ARM GP	604
	6	1	**299-5511**	24	SEAL-VALVE STEM	
	7	1	**309-6678**	12	VALVE-INLET	
	8	1	**339-9637**	12	VALVE-EXHAUST	

Y - SEPARATE ILLUSTRATION

371-2480 **ROCKER ARM GP (**contd.**)** **i05773124**

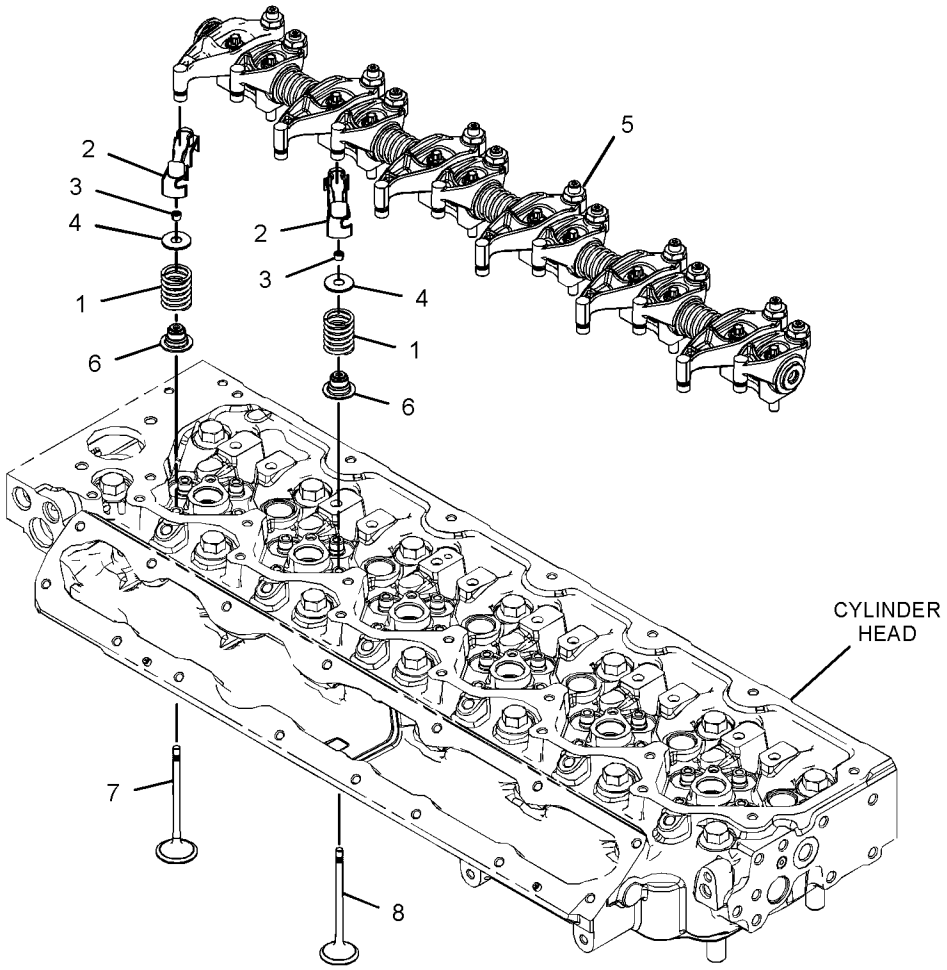

GRAPHIC #1 <END> g03103178

371-2719 SUPPORT GP-POWER TAKE-OFF

PART OF 596-2071 ENGINE AR-COMPLETE, 461-4638, 461-4649, 461-4656, 461-4658, 466-1160, 466-1161, 466-1162, 466-1163, 468-8218, 471-0541, 479-9398, 482-0212, 486-4250, 491-4973, 491-4980, 491-4993, 491-7124, 492-3021, 492-3072, 492-3169, 501-2466, 502-9462, 507-8016, 510-1088, 513-8513, 527-9686, 530-2601, 533-2797, 535-8060, 536-6675, 539-6915, 543-4255, 555-4669, 562-8873, 563-6730, 565-1247, 569-7846, 583-8352, 591-1266, 593-7287, 593-7288, 598-9881, 602-8721, 603-5300, 612-1735, 614-9555, 622-6239, 623-1309, 624-0698, 627-8129 ENGINE AR-PRIMARY

SMCS-1165 **i05583092**

NOTE	REF NO	GRAPHIC REF	PART NUMBER	QTY	PART NAME 1 2 3 4 5 6 (PRODUCT LEVEL)	SEE PAGE
	1	1	**329-7854**	1	PLATE AS	
	1A	1	**329-7856**	1	SEAL-O-RING	
M	2	1	**111-8222**	5	BOLT (M8X1.25X16-MM)	
M	3	1	**100-4830**	1	BOLT (M10X1.5X20-MM)	
	4	1	**277-4223**	1	PLUG	

M - METRIC PART

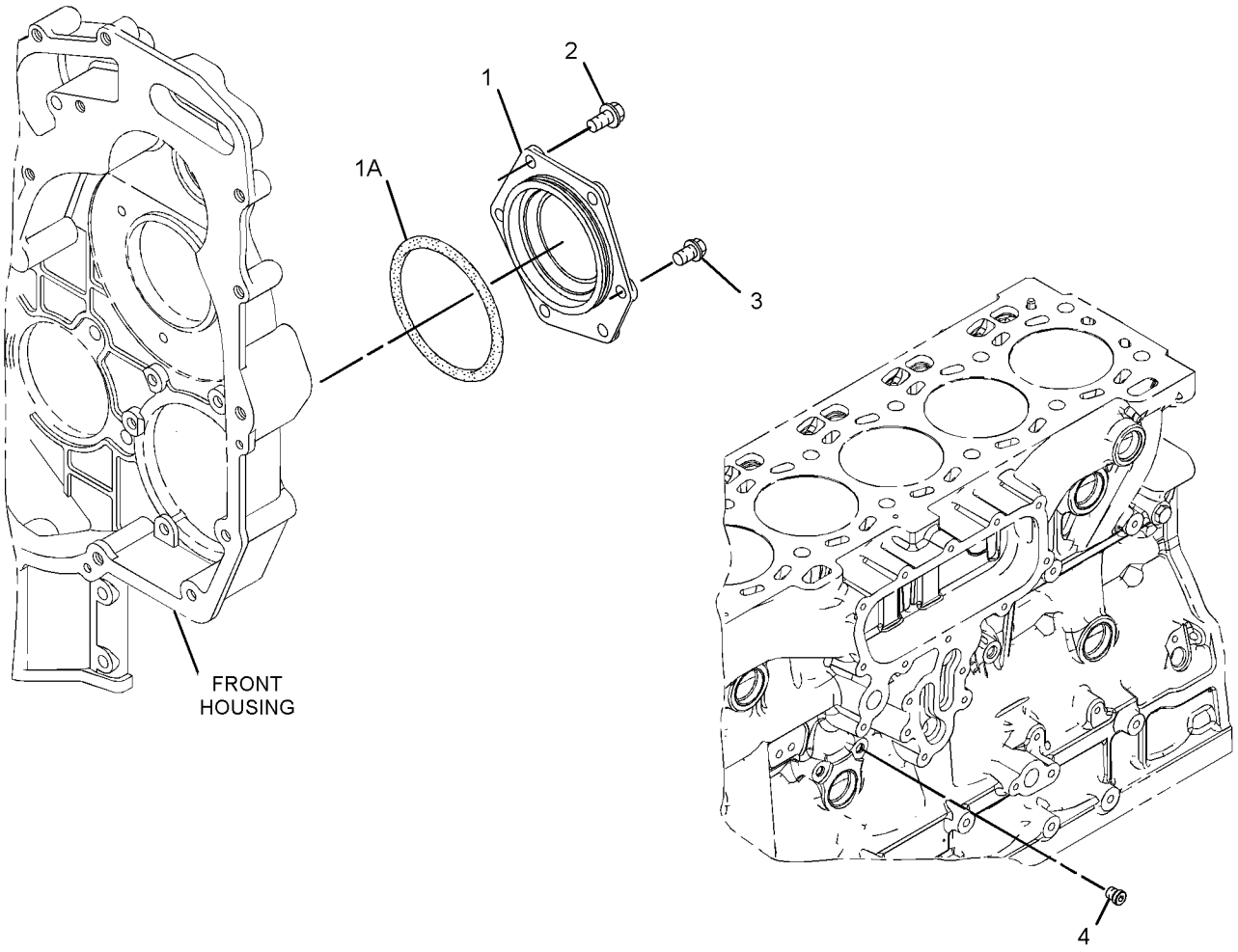

GRAPHIC #1 <END> g01682857

452-6585 VALVE GP-CYLINDER HEAD

PART OF 452-6584 CYLINDER HEAD GP

SMCS-1105 **i06041075**

NOTE	REF NO	GRAPHIC REF	PART NUMBER	QTY	PART NAME 1 2 3 4 5 6 (PRODUCT LEVEL)	SEE PAGE
	1	1	**436-0521**	24	SPRING-VALVE	
	2	1	**276-8133**	24	CAP-VALVE	
	3	1	**276-8123**	48	COTTER-CAP	
	4	1	**299-5511**	24	SEAL-VALVE STEM	
	5	1	**309-6678**	12	VALVE-INLET	
	6	1	**339-9637**	12	VALVE-EXHAUST	

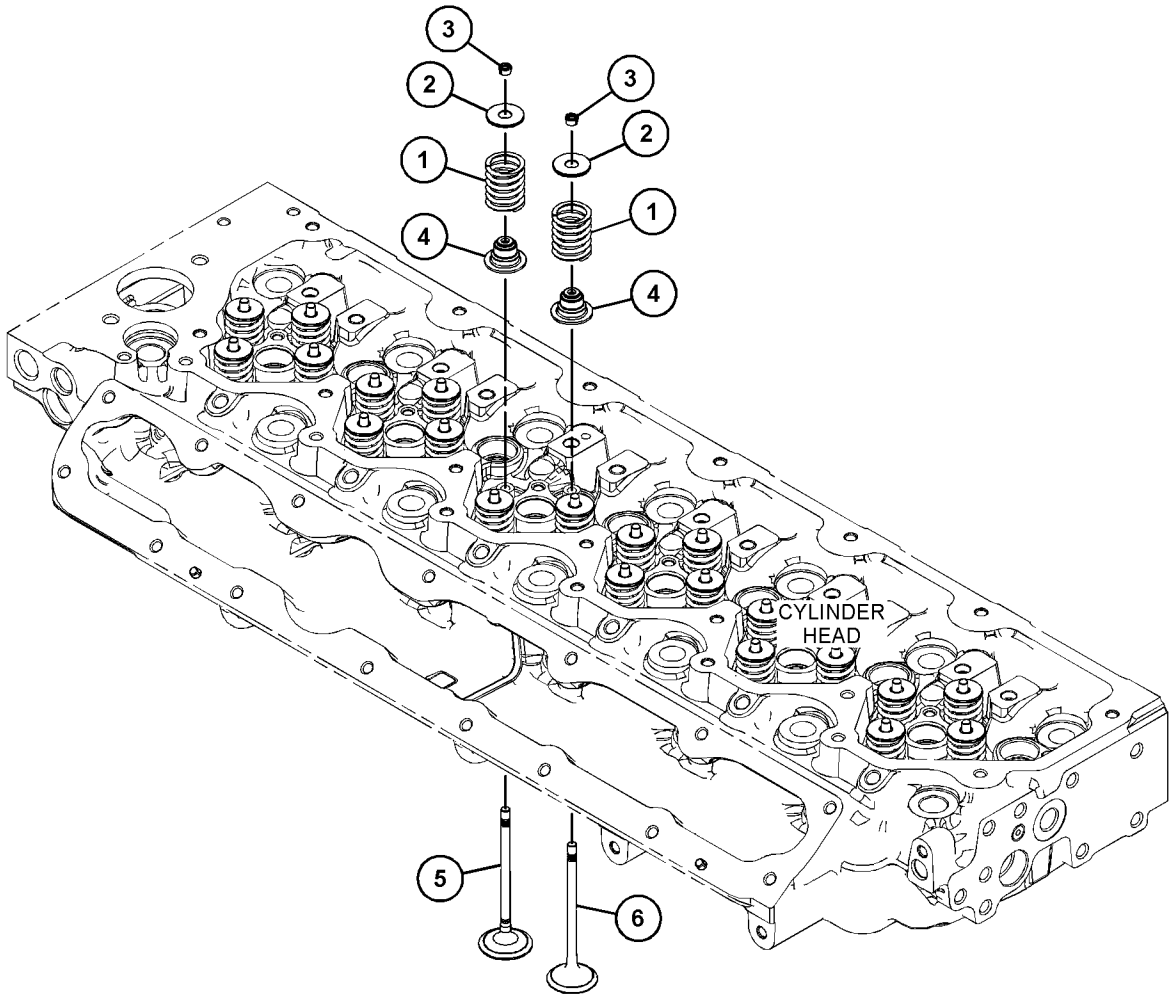

GRAPHIC #1 <END> g03674542

346-0099 BASE GP-OIL COOLER & FILTER

PART OF 575-2879 ENGINE AR-PRIMARY

SMCS-1306, 1378 **i06910467**

NOTE	REF NO	GRAPHIC REF	PART NUMBER	QTY	PART NAME 1 2 3 4 5 6 (PRODUCT LEVEL)	SEE PAGE
M	1	1	**100-3751**	5	BOLT (M8X1.25X65-MM)	
	2	1	**225-7944**	1	GASKET	
	3	1	**232-3751**	1	PLATE	
	4	1	**277-2525**	1	HEAD AS-OIL FILTER	
	5	1	**277-2526**	1	GASKET-FILTER (ENGINE OIL)	
	6	1	**277-2537**	1	PLATE	
Y	8	1	**295-8610**	1	COOLER GP-ENGINE OIL	653
M	9	1	**6I-0217**	6	BOLT (M8X1.25X20-MM)	
M	10	1	**6I-0260**	8	BOLT (M8X1.25X25-MM)	
M	11	1	**6I-4709**	3	BOLT (M8X1.25X100-MM)	

M - METRIC PART
Y - SEPARATE ILLUSTRATION

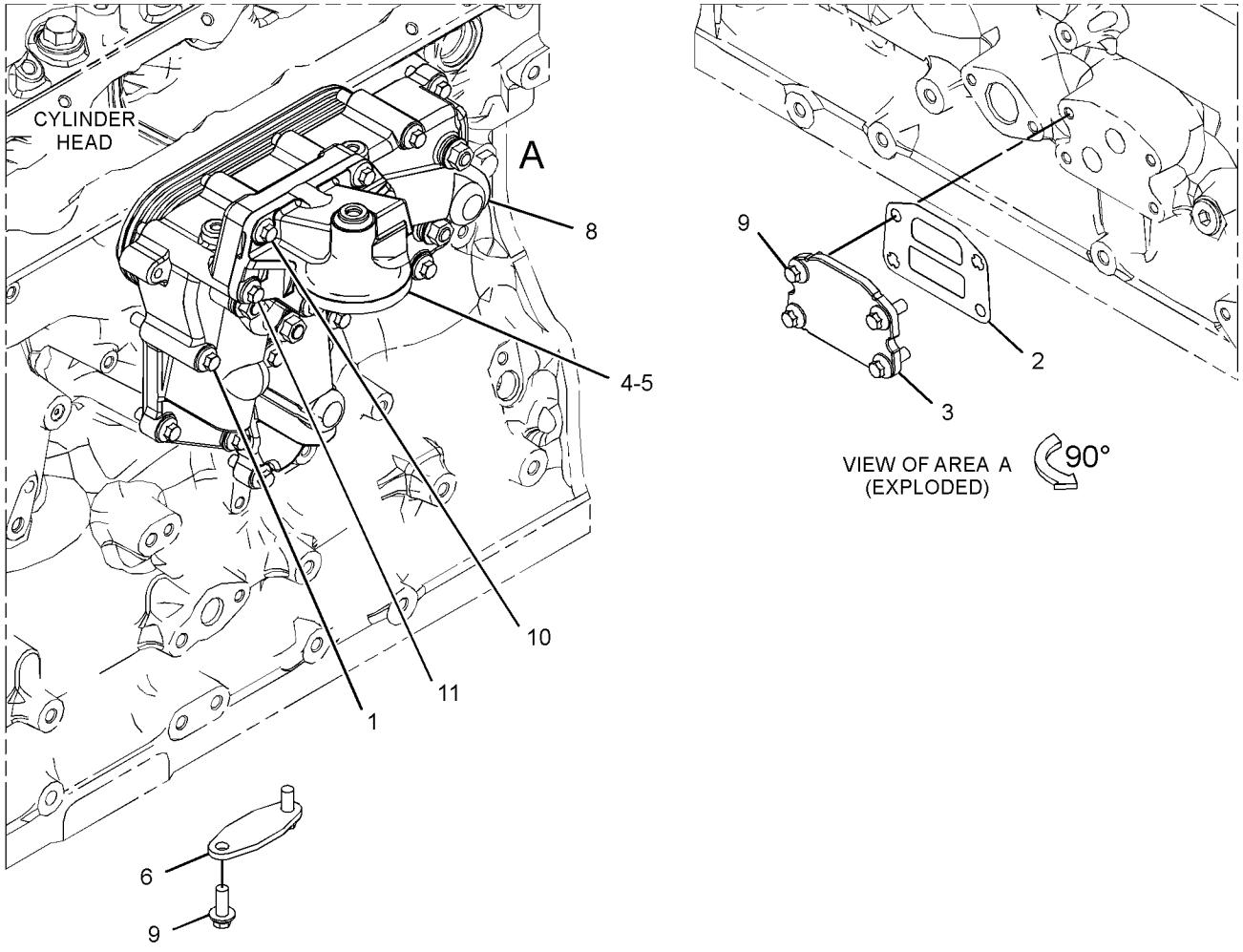

GRAPHIC #1 <END> g06161854

392-0632 BREATHER GP

PART OF 451-8343, 468-0461, 470-8667, 470-8814, 471-0541, 474-7299, 475-8297, 475-9060, 478-4257, 481-0811, 484-2939, 485-8027, 486-2644, 489-9006, 491-2606, 492-3169, 493-1019, 493-1038, 494-6807, 495-8349, 501-2466, 504-3629, 504-5365, 504-8134, 504-9579, 506-5035, 506-9918, 508-0270, 512-9858, 513-0851, 514-9367, 515-9203, 520-4644, 524-8271, 525-8759, 526-0511, 526-7210, 528-9866, 528-9920, 530-1323, 531-2492, 533-3588, 539-8582, 552-8869, 553-1809, 553-3730, 562-8873, 563-6728, 563-6729, 563-6730, 565-1247, 569-7846, 575-2879, 575-2880, 591-9440, 594-2125, 596-8896, 596-8905, 597-9248, 608-9261, 609-9819, 613-9482, 614-5795, 623-1309, 624-0698, 627-8019, 627-8054, 628-4345, 633-4335, 633-7776, 645-2039, 657-2370 ENGINE AR-PRIMARY

SMCS-1317 **i05723815**

NOTE	REF NO	GRAPHIC REF	PART NUMBER	QTY	PART NAME 1 2 3 4 5 6 (PRODUCT LEVEL)	SEE PAGE
M	1	1	**105-2740**	3	BOLT (M8X1.25X40-MM)	
M	2	1	**124-3815**	3	BOLT (M8X1.25X16-MM)	
	3	1	**363-5813**	1	CLAMP-HOSE	
	4	1	**378-5311**	2	CLIP-PIPE	
	5	1	**389-1995**	1	BRACKET AS	
	6	1	**392-4097**	1	HOSE	

M - METRIC PART

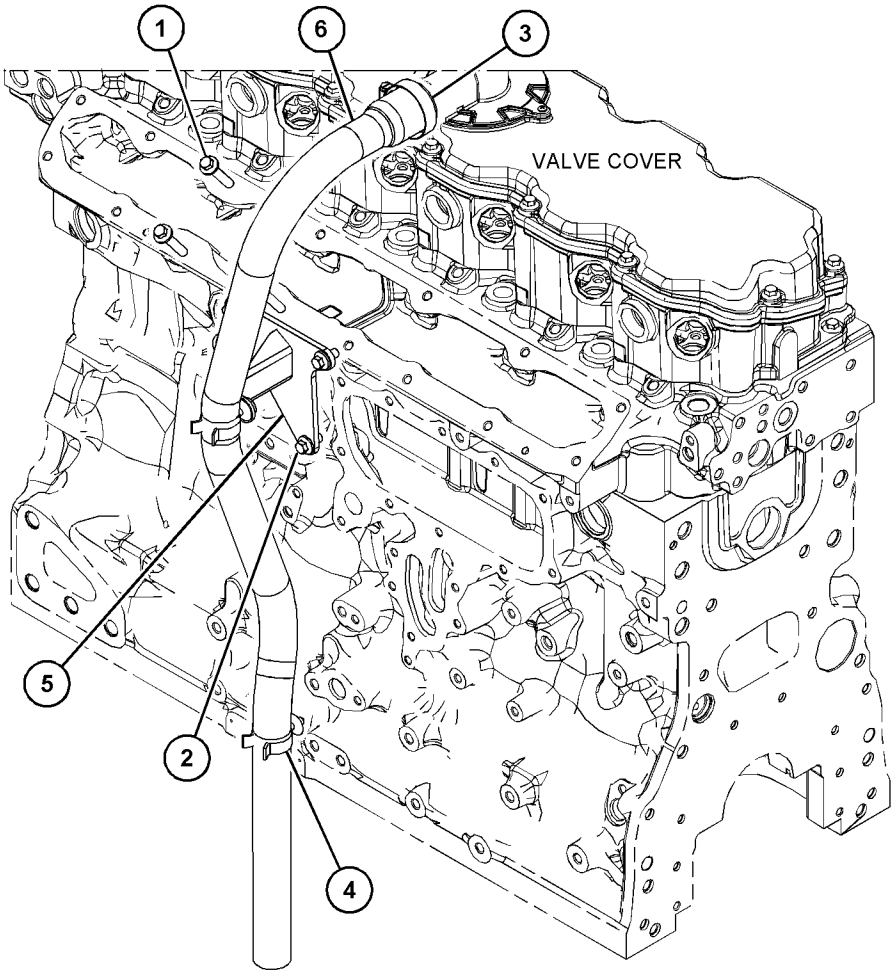

GRAPHIC #1 <END> g03482913

425-0196 BREATHER GP

SMCS-1317 **i05564958**

NOTE	REF NO	GRAPHIC REF	PART NUMBER	QTY	PART NAME 1 2 3 4 5 6 (PRODUCT LEVEL)	SEE PAGE
M	1	1	**124-3815**	3	BOLT (M8X1.25X16-MM)	
	2	1	**5V-9155**	1	CLAMP-HOSE	
	3	1	**9M-7958**	1	CLAMP-HOSE	
	4	1	**363-5813**	1	CLAMP-HOSE	
	5	1	**388-9243**	1	PLUG GP-ENGINE OIL LINES	
	5A	1	**331-8053**	1	SEAL-O-RING	
	6	1	**424-0566**	1	HOSE	
	7	1	**424-3214**	1	BASE AS-OIL FILTER	
	7A	1	**286-0015**	1	STEM	
	8	1	**428-7042**	1	BRACKET	
	9	1	**430-6686**	1	BRACKET-FILTER	
	10	1	**433-2039**	1	HOSE	
M	11	1	**6I-0217**	1	BOLT (M8X1.25X20-MM)	
M	12	1	**6I-0260**	2	BOLT (M8X1.25X25-MM)	
M	13	1	**195-2186**	3	BOLT-SOCKET HEAD	
	14	1	**316-9351**	1	MOUNTING-CABLE TIE	

M - METRIC PART

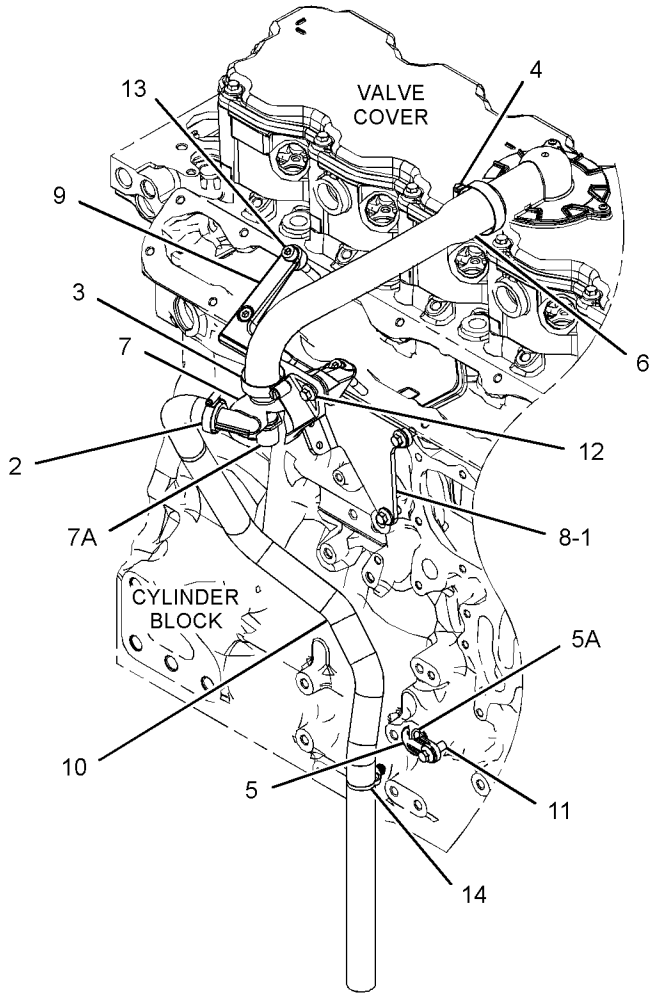

GRAPHIC #1 <END> g03380302

425-0196 BREATHER GP

PART OF 596-2071 ENGINE AR-COMPLETE, 461-4638, 461-4649, 461-4656, 461-4658, 466-1160, 466-1161, 466-1162, 466-1163, 468-8218, 479-9398, 480-2181, 482-0212, 486-4250, 488-6687, 491-4973, 491-4980, 491-4993, 491-7124, 492-3021, 492-3072, 494-2073, 499-7181, 502-9462, 507-8016, 510-1088, 513-8513, 519-4128, 520-3152, 526-8888, 527-7106, 527-9686, 528-3358, 530-2601, 533-2797, 535-8060, 536-6675, 539-6915, 543-4255, 552-3506, 555-4669, 583-8352, 591-1266, 593-7287, 593-7288, 596-4834, 596-7090, 598-9881, 602-8721, 603-5300, 612-1735, 614-9555, 622-6239, 627-8129 ENGINE AR-PRIMARY

SMCS-1317 **i05727298**

NOTE	REF NO	GRAPHIC REF	PART NUMBER	QTY	PART NAME 1 2 3 4 5 6 (PRODUCT LEVEL)	SEE PAGE
M	1	1	**124-3815**	3	BOLT (M8X1.25X16-MM)	
	2	1	**5V-9155**	1	CLAMP-HOSE	
	3	1	**9M-7958**	1	CLAMP-HOSE	
	4	1	**363-5813**	1	CLAMP-HOSE	
	5	1	**316-9351**	1	MOUNTING-CABLE TIE	
	6	1	**424-0566**	1	HOSE	
	7	1	**424-3214**	1	BASE AS-OIL FILTER	
	7A	1	**286-0015**	1	STEM	
	8	1	**428-7042**	1	BRACKET	
	9	1	**430-6686**	1	BRACKET-FILTER	
	10	1	**433-2039**	1	HOSE	
M	11	1	**195-2186**	3	BOLT-SOCKET HEAD	
M	12	1	**6I-0260**	2	BOLT (M8X1.25X25-MM)	

M - METRIC PART

425-0196 **BREATHER GP** (contd.) **i05727298**

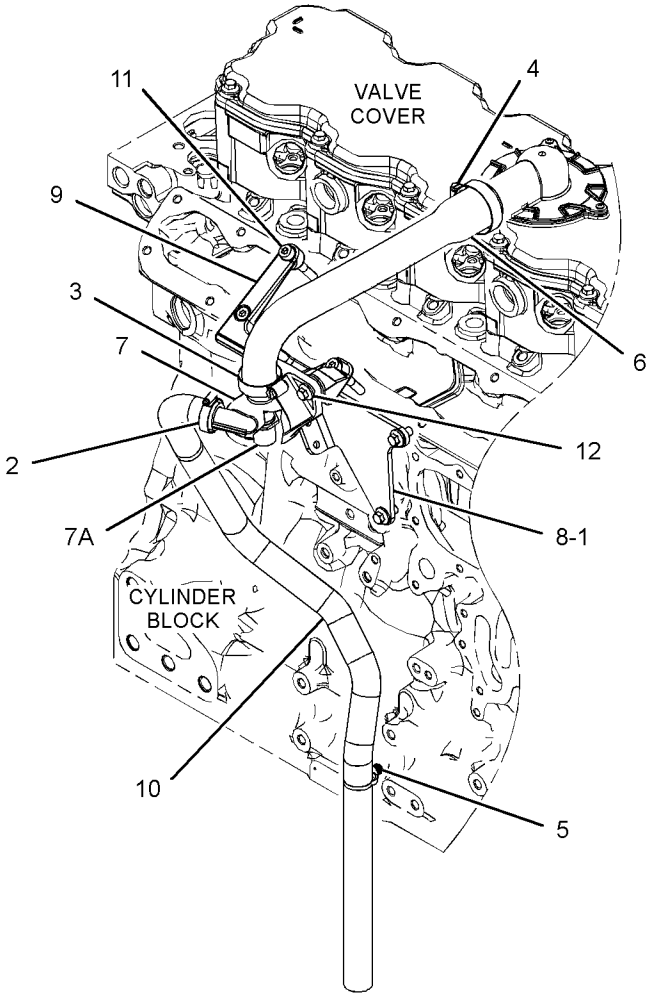

GRAPHIC #1 <END> g03653579

374-0427 COVER GP-OIL FILLER

PART OF 451-8343 ENGINE AR-PRIMARY

SMCS-1316 **i06285689**

NOTE	REF NO	GRAPHIC REF	PART NUMBER	QTY	PART NAME 1 2 3 4 5 6 (PRODUCT LEVEL)	SEE PAGE
	1	1	**225-6522**	1	PLUG-CUP	
	2	1	**225-6524**	1	PLUG-CUP	
	3	1	**277-1974**	1	PLATE AS	
		1	**277-1975**	1	SEAL-O-RING	
M	4	1	**6I-0217**	2	BOLT (M8X1.25X20-MM)	

M - METRIC PART

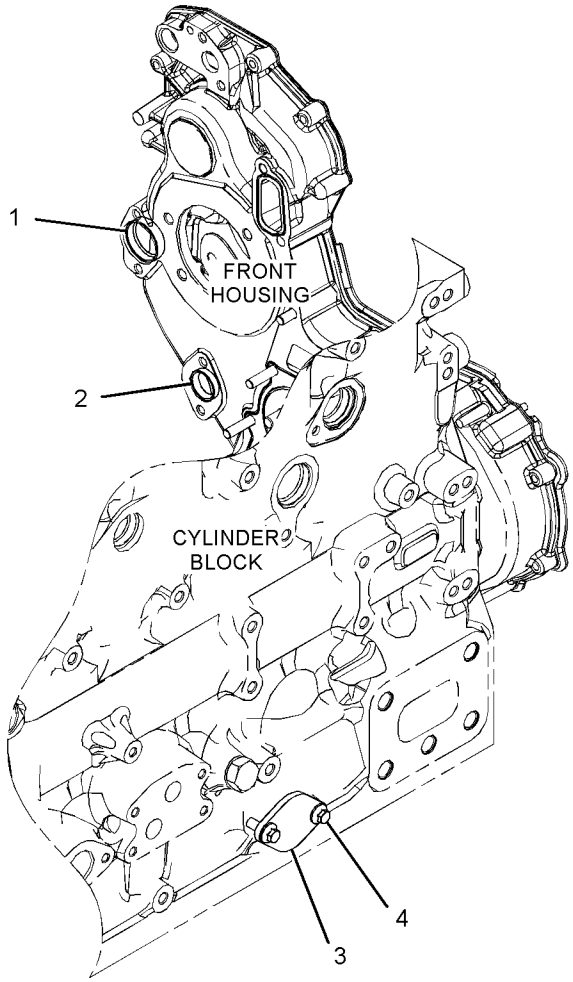

GRAPHIC #1 <END> g03869723

371-2743 DRAIN GP-OIL

PART OF 506-5035, 506-9918, 528-9920, 553-1809 ENGINE AR-PRIMARY

SMCS-1372 **i06271651**

NOTE	REF NO	GRAPHIC REF	PART NUMBER	QTY	PART NAME 1 2 3 4 5 6 (PRODUCT LEVEL)	SEE PAGE
	1	1	**3K-0360**	1	SEAL-O-RING	
	2	1	**6V-7238**	1	VALVE-SHUTOFF	

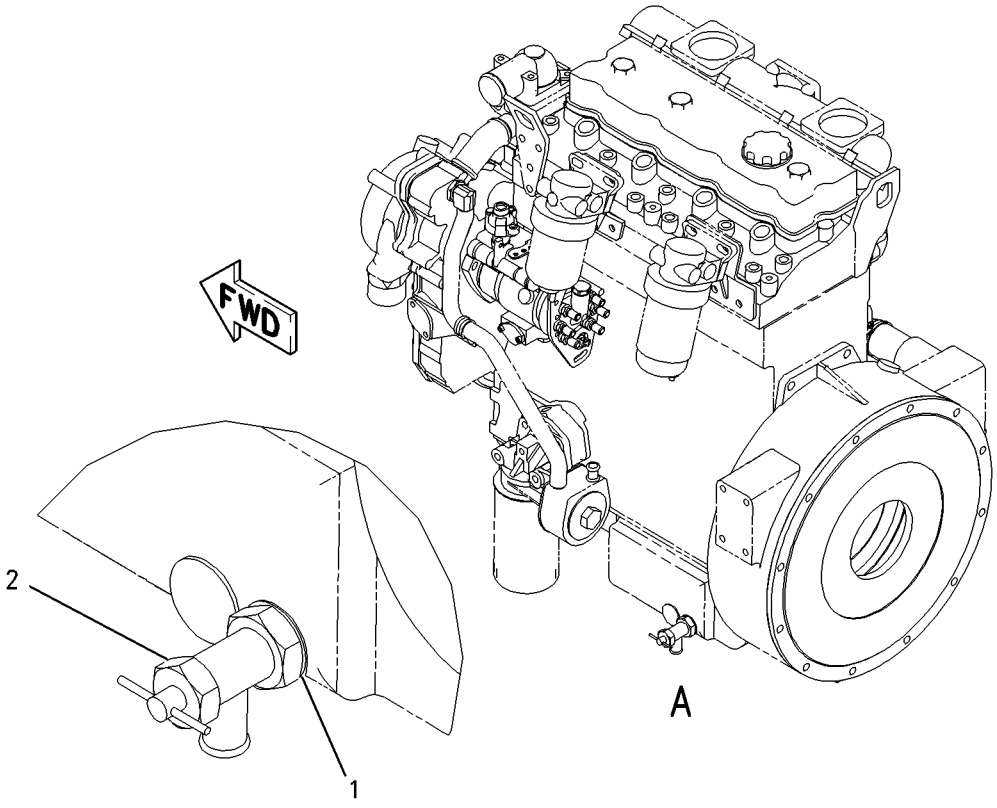

VIEW OF AREA A

GRAPHIC #1 <END> g00985377

390-0067 DRAIN GP-OIL

PART OF 491-2606 ENGINE AR-PRIMARY

SMCS-1372 **i06627596**

NOTE	REF NO	GRAPHIC REF	PART NUMBER	QTY	PART NAME 1 2 3 4 5 6 (PRODUCT LEVEL)	SEE PAGE
	1	1	**291-4184**	1	ADAPTER AS	
	1A	1	**275-9883**	1	SEAL	
	2	1	*170-0967*	1	ELBOW AS	
	2A	1	**3K-0360**	1	SEAL-O-RING	
	2B	1	**5P-4906**	1	ELBOW	

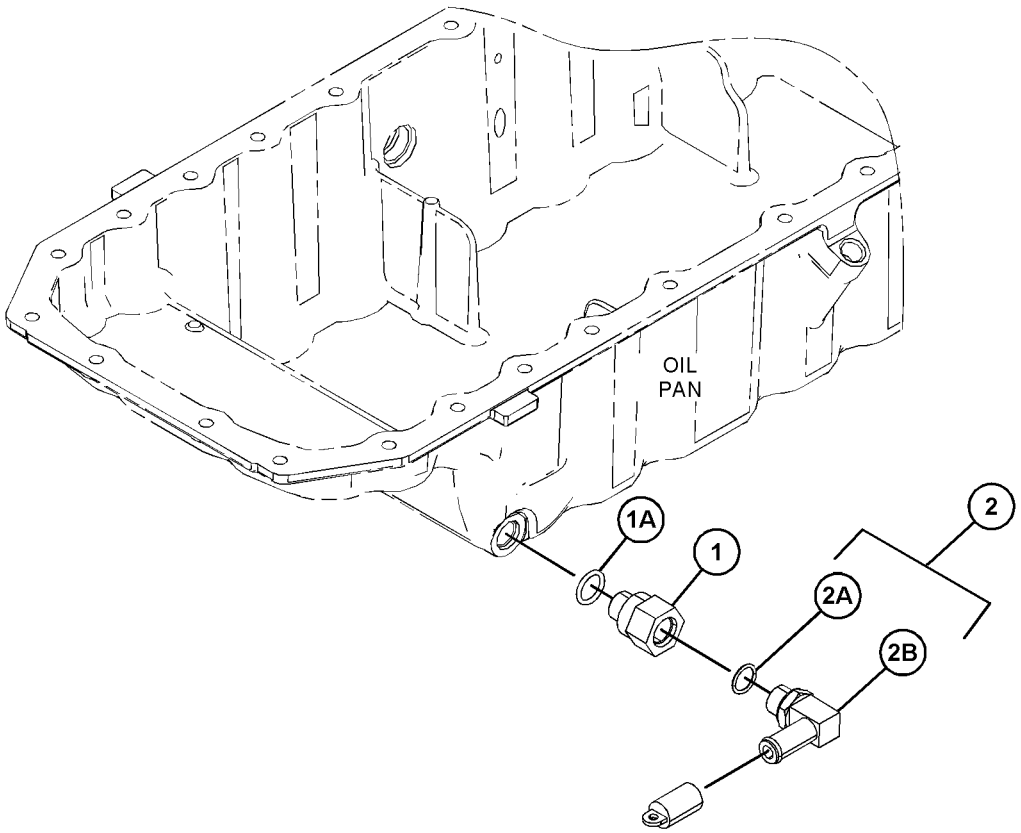

GRAPHIC #1 <END> g06119404

346-0009 FILLER GP-ENGINE OIL

PART OF 524-8271, 528-9866, 614-5795 ENGINE AR-PRIMARY

SMCS-1316 **i07581274**

NOTE	REF NO	GRAPHIC REF	PART NUMBER	QTY	PART NAME 1 2 3 4 5 6 (PRODUCT LEVEL)	SEE PAGE
	1	1	**225-6524**	1	PLUG-CUP	
	2	1	**321-2383**	1	FILLER AS	
		1	**130-9888**	1	CAP AS-OIL FILLER (ENGINE)	
		1	**113-1504**	1	SEAL-O-RING	
		1	**306-2337**	1	SEAL-O-RING	
	3	1	**277-1974**	1	PLATE AS	
	3A	1	**277-1975**	1	SEAL-O-RING	
M	4	1	**6I-0217**	2	BOLT (M8X1.25X20-MM)	
M	5	1	**6I-0254**	1	BOLT (M8X1.25X30-MM)	
M	6	1	**6I-4374**	1	BOLT (M8X1.25X60-MM)	

M - METRIC PART

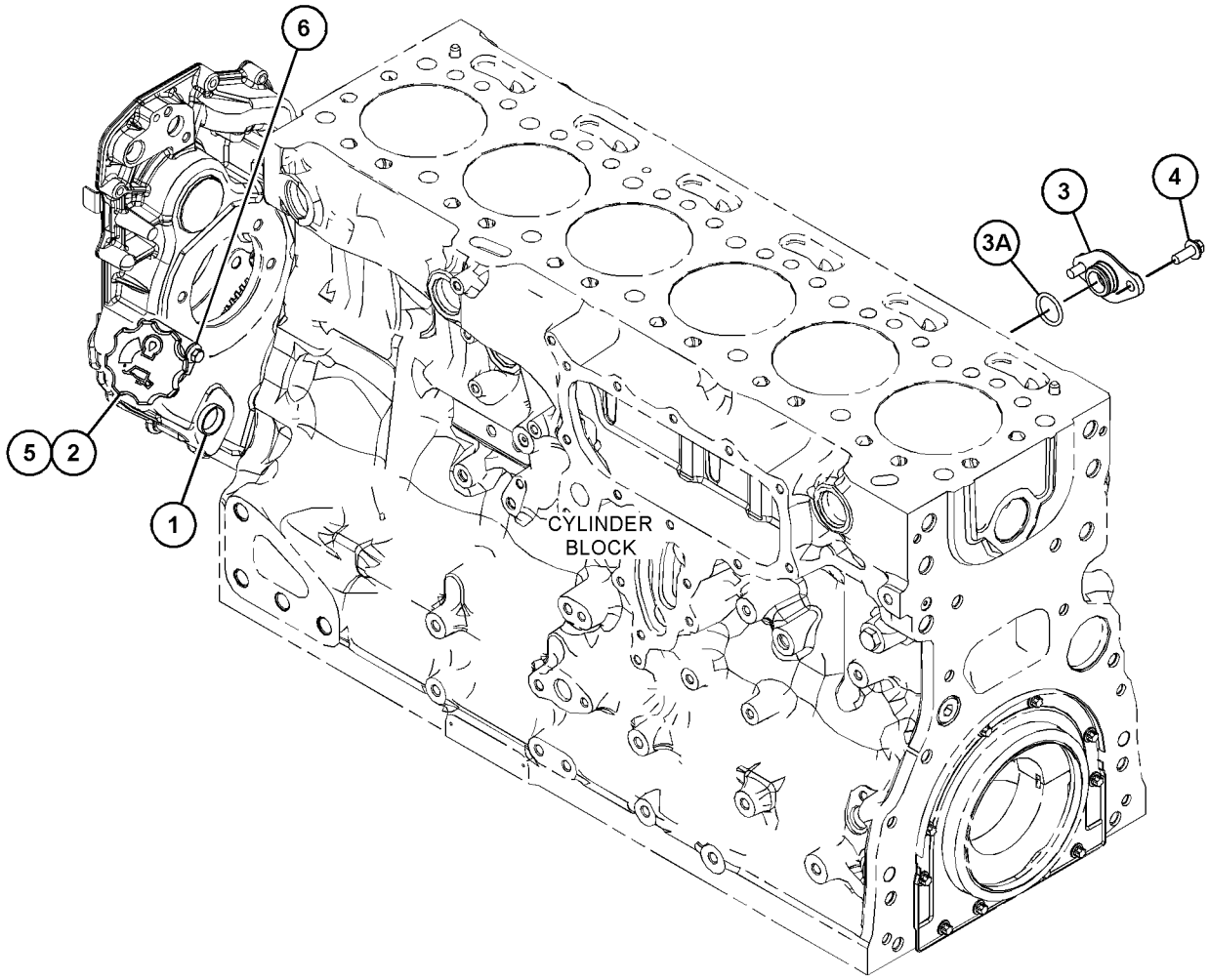

GRAPHIC #1 <END> g03706917

379-6626 FILLER GP-ENGINE OIL

PART OF 474-7299, 504-3629, 506-5035, 520-3152, 520-4644, 526-7210, 527-7106, 528-3358, 553-1809, 553-3730, 594-2125, 596-4834, 596-7090 ENGINE AR-PRIMARY

SMCS-1316 **i05794718**

NOTE	REF NO	GRAPHIC REF	PART NUMBER	QTY	PART NAME 1 2 3 4 5 6 (PRODUCT LEVEL)	SEE PAGE
	1	1	**225-6522**	1	PLUG-CUP	
	2	1	**278-0017**	1	GASKET	
M	3	1	**6I-0260**	2	BOLT (M8X1.25X25-MM)	
	4	1	**385-5363**	1	FILLER GP-ENGINE OIL	
	4A	1	**359-1309**	1	CAP AS-OIL FILLER (ENGINE OIL)	

M - METRIC PART

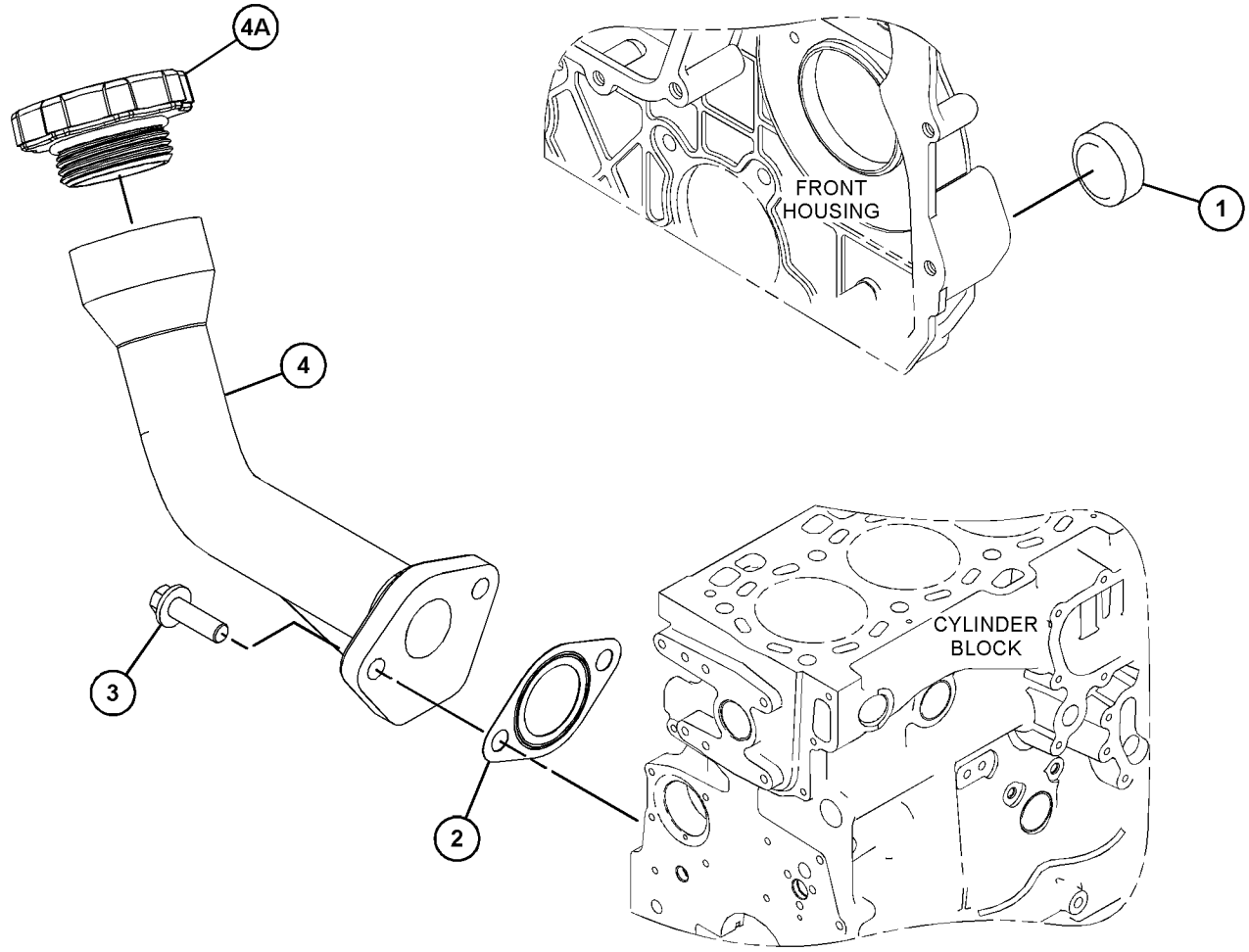

GRAPHIC #1 <END> g03730816

390-3737 FILLER GP-ENGINE OIL

PART OF 596-2071 ENGINE AR-COMPLETE, 461-4638, 461-4649, 461-4656, 461-4658, 468-0461, 468-8218, 471-0541, 479-9398, 482-0212, 486-2644, 486-4250, 491-4973, 491-4980, 491-4993, 491-7124, 492-3021, 492-3072, 492-3169, 495-8349, 499-7181, 501-2466, 502-9462, 506-9918, 507-8016, 512-9858, 514-9367, 526-0511, 528-9920, 530-2601, 533-2797, 533-3588, 535-8060, 536-6675, 539-6915, 543-4255, 562-8873, 563-6730, 565-1247, 583-8352, 591-1266, 593-7287, 593-7288, 596-8896, 596-8905, 597-9248, 598-9881, 602-8721, 603-5300, 609-9819, 612-1735, 614-9555, 622-6239, 623-1309, 624-0698, 627-8129 ENGINE AR-PRIMARY

SMCS-1316 **i08330641**

NOTE	REF NO	GRAPHIC REF	PART NUMBER	QTY	PART NAME 1 2 3 4 5 6 (PRODUCT LEVEL)	SEE PAGE
M	1	1	**6I-0217**	2	BOLT (M8X1.25X20-MM)	
	2	1	**277-1974**	1	PLATE AS	
		1	**277-1975**	1	SEAL-O-RING	
	3	1	**321-2383**	1	FILLER AS	
		1	**306-2337**	1	SEAL-O-RING	
		1	**130-9888**	1	CAP AS-OIL FILLER (ENGINE)	
		1	**113-1504**	1	SEAL-O-RING	
M	4	1	**6I-0254**	1	BOLT (M8X1.25X30-MM)	
M	5	1	**6I-4374**	1	BOLT (M8X1.25X60-MM)	

M - METRIC PART

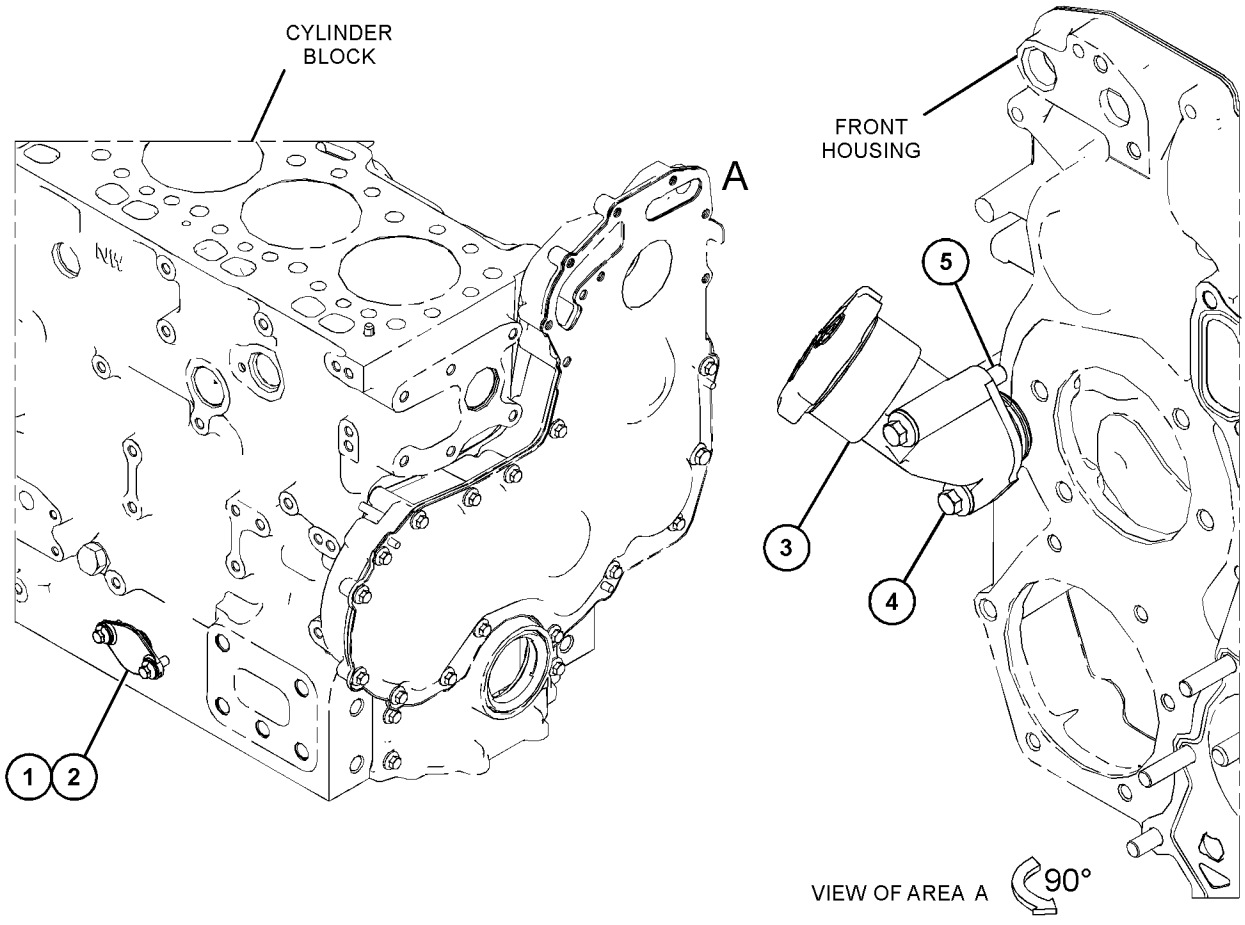

GRAPHIC #1 <END> g06614861

415-1646 FILLER GP-ENGINE OIL

SMCS-1316 **i05794719**

NOTE	REF NO	GRAPHIC REF	PART NUMBER	QTY	PART NAME 1 2 3 4 5 6 (PRODUCT LEVEL)	SEE PAGE
	1	1	**225-6522**	1	PLUG-CUP	
	2	1	**225-6524**	1	PLUG-CUP	
	3	1	**278-0017**	1	GASKET	
M	4	1	**6I-0260**	2	BOLT (M8X1.25X25-MM)	
	5	1	**385-5363**	1	FILLER GP-ENGINE OIL	
	5A	1	**369-3867**	1	CAP AS-OIL FILLER (ENGINE OIL) (ENGINE)	
	5B	1	**357-0147**	1	FILM-IDENTIFICATION (OIL FILL, READ OMM)	

M - METRIC PART

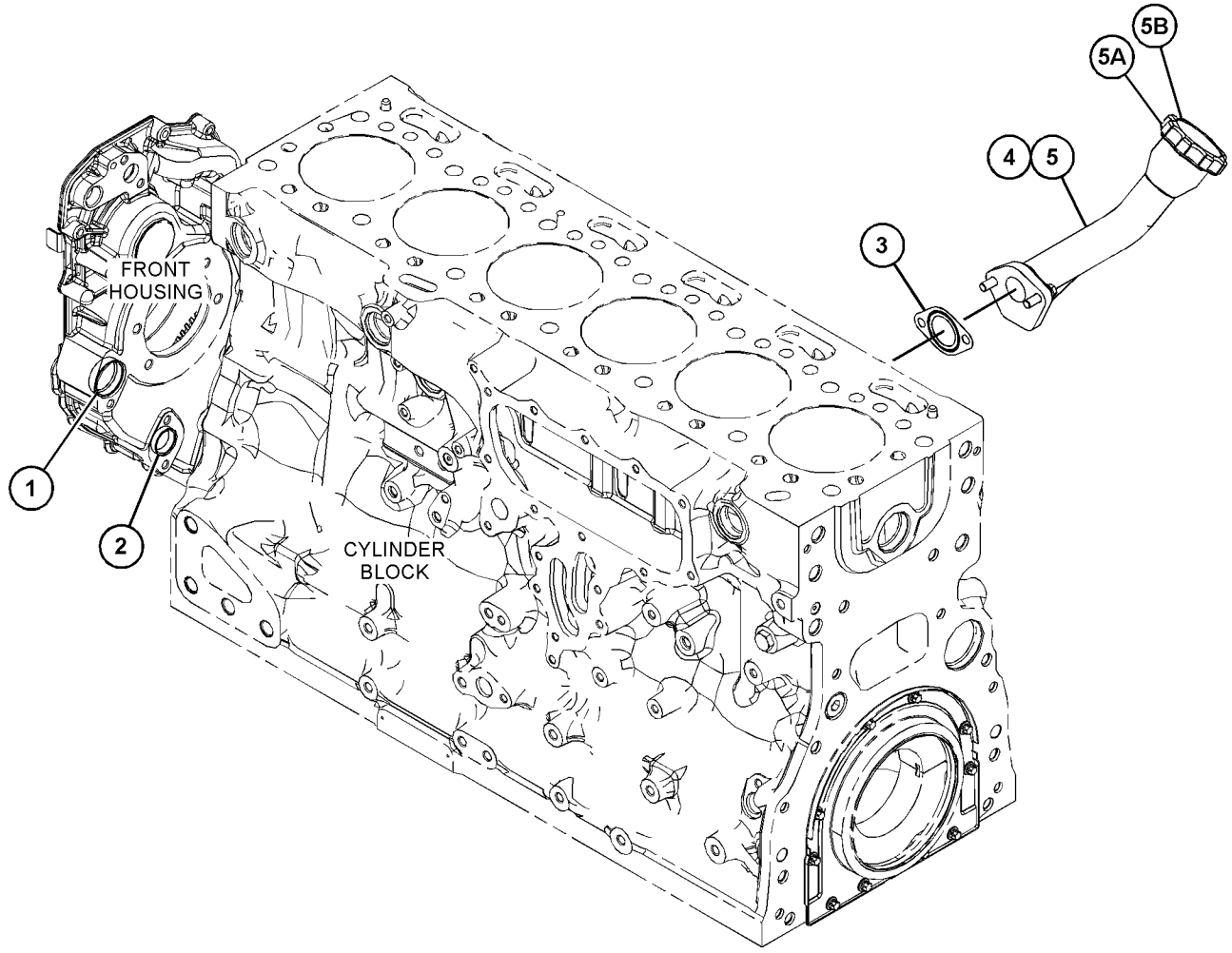

GRAPHIC #1 <END> g03688546

419-6603 FILLER GP-ENGINE OIL

SMCS-1316 **i08488093**

NOTE	REF NO	GRAPHIC REF	PART NUMBER	QTY	PART NAME 1 2 3 4 5 6 (PRODUCT LEVEL)	SEE PAGE
M	1	1	**6I-4374**	1	BOLT (M8X1.25X60-MM)	
M	2	1	**124-3815**	1	BOLT (M8X1.25X16-MM)	
	3	1	**225-6524**	1	PLUG-CUP	
	4	1	**416-9520**	1	BRACKET AS	
	5	1	**419-0384**	1	FILLER GP-ENGINE OIL	
	5A	1	**306-2337**	1	SEAL-O-RING	
	5B	1	**359-1309**	1	CAP AS-OIL FILLER (ENGINE OIL)	
					—OR—	
	5C	1	**113-1504**	1	SEAL-O-RING	
AF			**369-3867**	1	CAP AS-OIL FILLER (ENGINE OIL) (CAT)	
AF			**113-1504**	1	SEAL-O-RING	
AF			**357-0147**	1	FILM-IDENTIFICATION (OIL FILL, READ OMM)	
M	6	1	**6I-0217**	2	BOLT (M8X1.25X20-MM)	
M	7	1	**6I-1090**	1	BOLT (M8X1.25X40-MM)	
	8	1	**277-1974**	1	PLATE AS	
	8A	1	**277-1975**	1	SEAL-O-RING	

A - NOT PART OF THIS GROUP
F - NOT SHOWN
M - METRIC PART

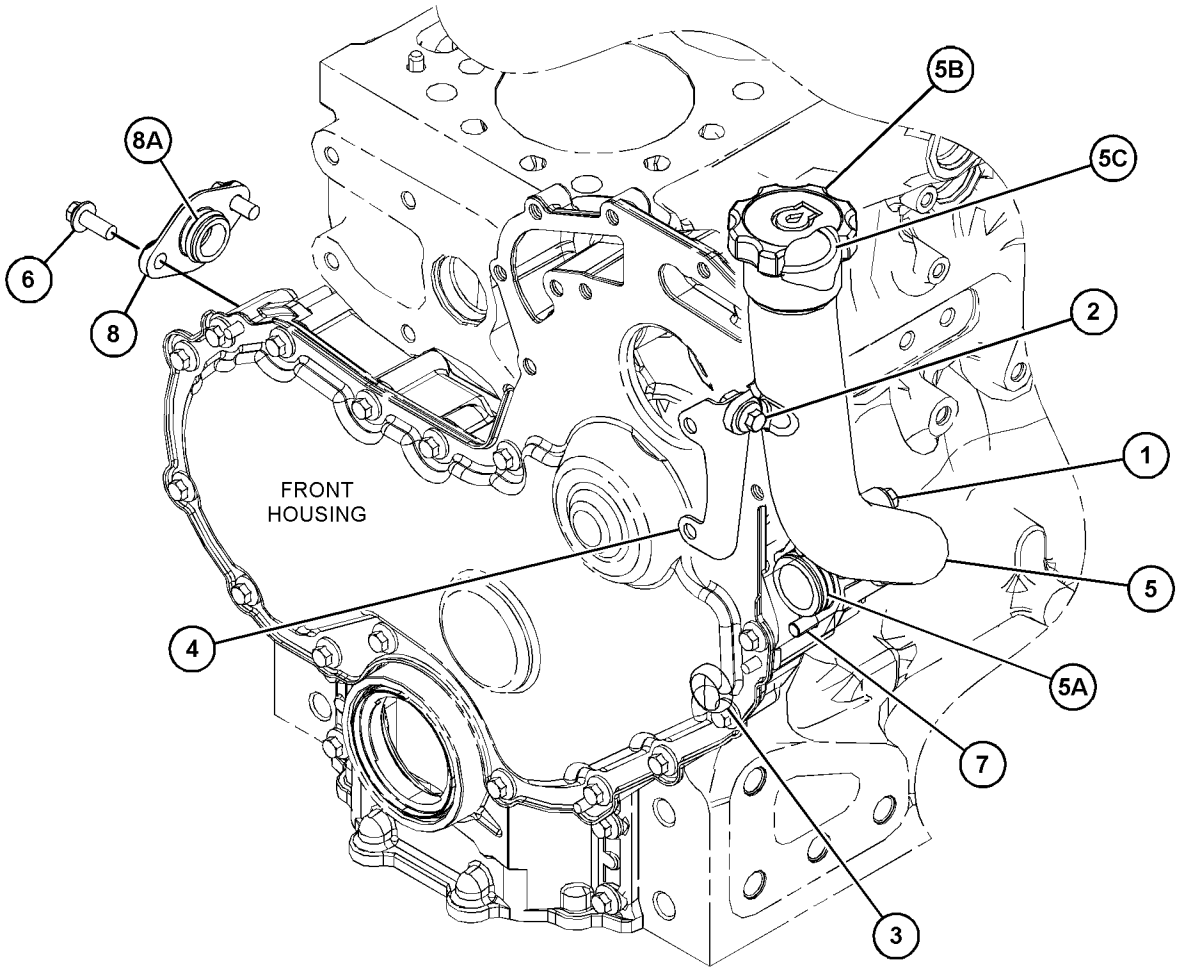

GRAPHIC #1 <END> g06686104

438-5978 FILLER GP-ENGINE OIL

PART OF 466-1160, 466-1161, 466-1162, 466-1163, 470-8667, 475-8297, 478-4257 ENGINE
AR-PRIMARY
TYPE 1

SMCS-1316 **i05726929**

NOTE	REF NO	GRAPHIC REF	PART NUMBER	QTY	PART NAME 1 2 3 4 5 6 (PRODUCT LEVEL)	SEE PAGE
	1	1	**225-6522**	1	PLUG-CUP	
	2	1	**278-0017**	1	GASKET	
	3	1	**351-5583**	1	PLATE	
M	4	1	**6I-0217**	2	BOLT (M8X1.25X20-MM)	

M - METRIC PART

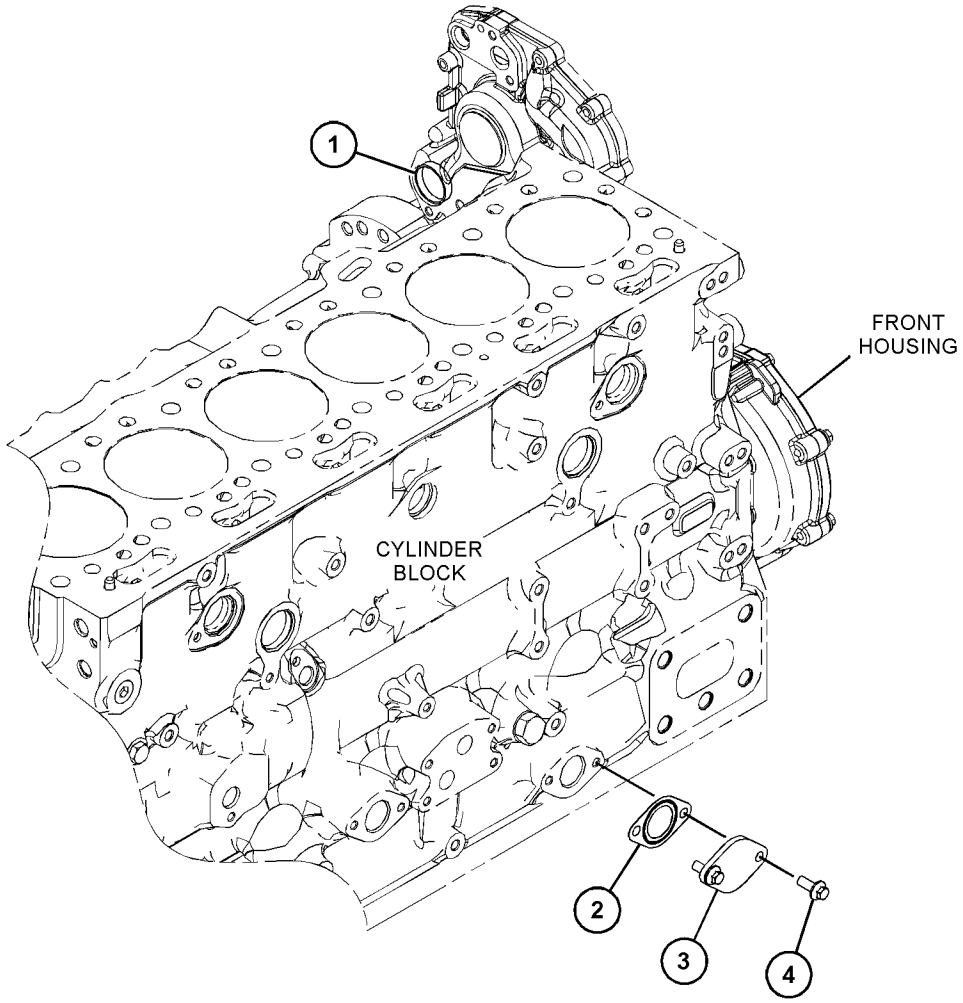

GRAPHIC #1 <END> g03665506

438-5978 FILLER GP-ENGINE OIL

PART OF 466-1160, 466-1161, 466-1162, 466-1163, 470-8667, 475-8297, 475-9060, 478-4257, 480-2181, 481-0811, 488-6687, 489-9006, 494-2073, 508-0270, 510-1088, 513-8513, 515-9203, 519-4128, 527-9686, 530-1323, 539-8582, 555-4669, 569-7846, 608-9261, 627-8019, 627-8054 ENGINE AR-PRIMARY
TYPE 2

SMCS-1316 **i06779858**

NOTE	REF NO	GRAPHIC REF	PART NUMBER	QTY	PART NAME 1 2 3 4 5 6 (PRODUCT LEVEL)	SEE PAGE
	1	1	**225-6522**	1	PLUG-CUP	
C	3	1	**277-1974**	1	PLATE AS	
	3A	1	**277-1975**	1	SEAL-O-RING	
M	4	1	**6I-0217**	2	BOLT (M8X1.25X20-MM)	

C - CHANGE FROM PREVIOUS TYPE
M - METRIC PART

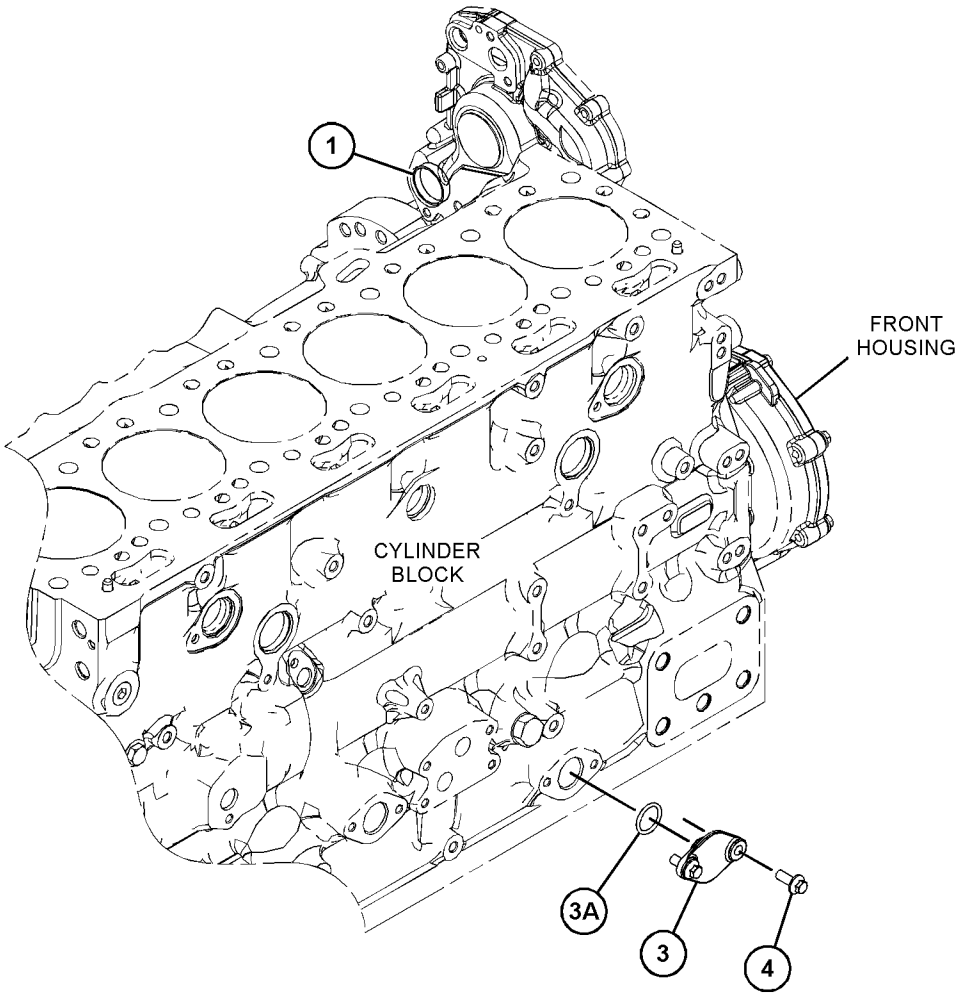

GRAPHIC #1 <END> g06109509

438-5983 FILLER GP-ENGINE OIL

PART OF 552-3506, 613-9482 ENGINE AR-PRIMARY

SMCS-1316 **i05934031**

NOTE	REF NO	GRAPHIC REF	PART NUMBER	QTY	PART NAME 1 2 3 4 5 6 (PRODUCT LEVEL)	SEE PAGE
	1	1	**225-6522**	1	PLUG-CUP	
	2	1	**285-3058**	1	FILLER AS-OIL	
		1	**130-9888**	1	CAP AS-OIL FILLER (ENGINE)	
		1	**113-1504**	1	SEAL-O-RING	
		1	**234-6171**	1	SEAL-O-RING	
M	3	1	**6I-0217**	2	BOLT (M8X1.25X20-MM)	

M - METRIC PART

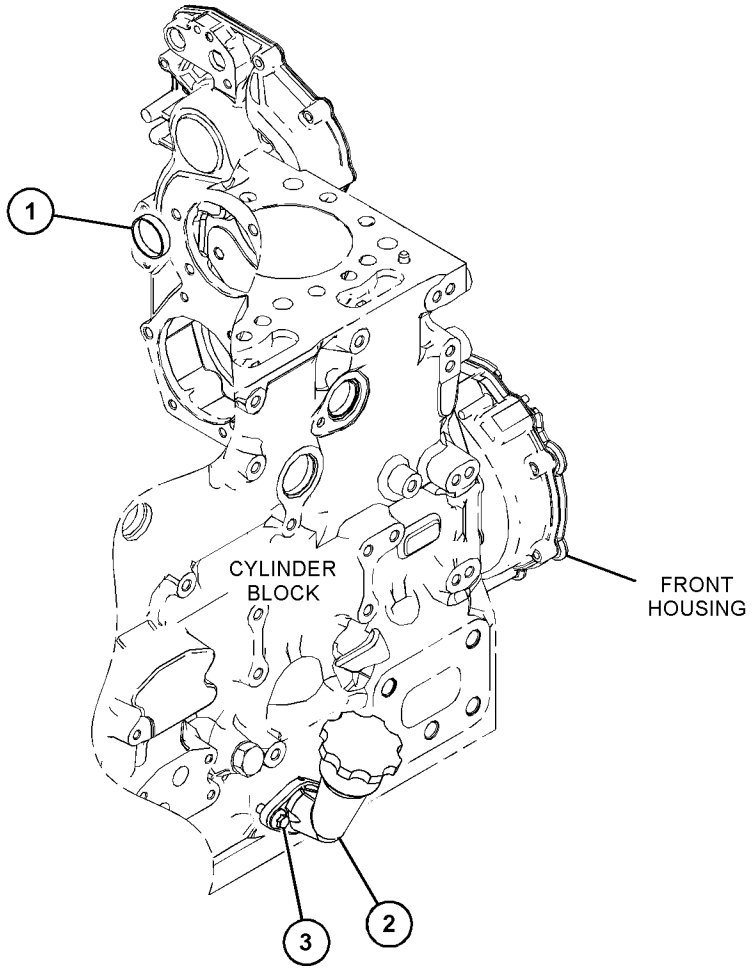

GRAPHIC #1 <END> g03790397

439-3441 FILLER GP-ENGINE OIL

PART OF 525-8759, 526-8888 ENGINE AR-PRIMARY

SMCS-1316 **i06284386**

NOTE	REF NO	GRAPHIC REF	PART NUMBER	QTY	PART NAME 1 2 3 4 5 6 (PRODUCT LEVEL)	SEE PAGE
M	1	1	**6I-4374**	1	BOLT (M8X1.25X60-MM)	
M	2	1	**6I-0217**	2	BOLT (M8X1.25X20-MM)	
M	3	1	**6I-0254**	1	BOLT (M8X1.25X30-MM)	
	4	1	**277-1974**	1	PLATE AS	
	4A	1	**277-1975**	1	SEAL-O-RING	
	5	1	**318-0774**	1	FILLER GP-ENGINE OIL	
	5A	1	**130-9888**	1	CAP AS-OIL FILLER (ENGINE)	
	5B	1	**113-1504**	1	SEAL-O-RING	
	5C	1	**306-2337**	1	SEAL-O-RING	

M - METRIC PART

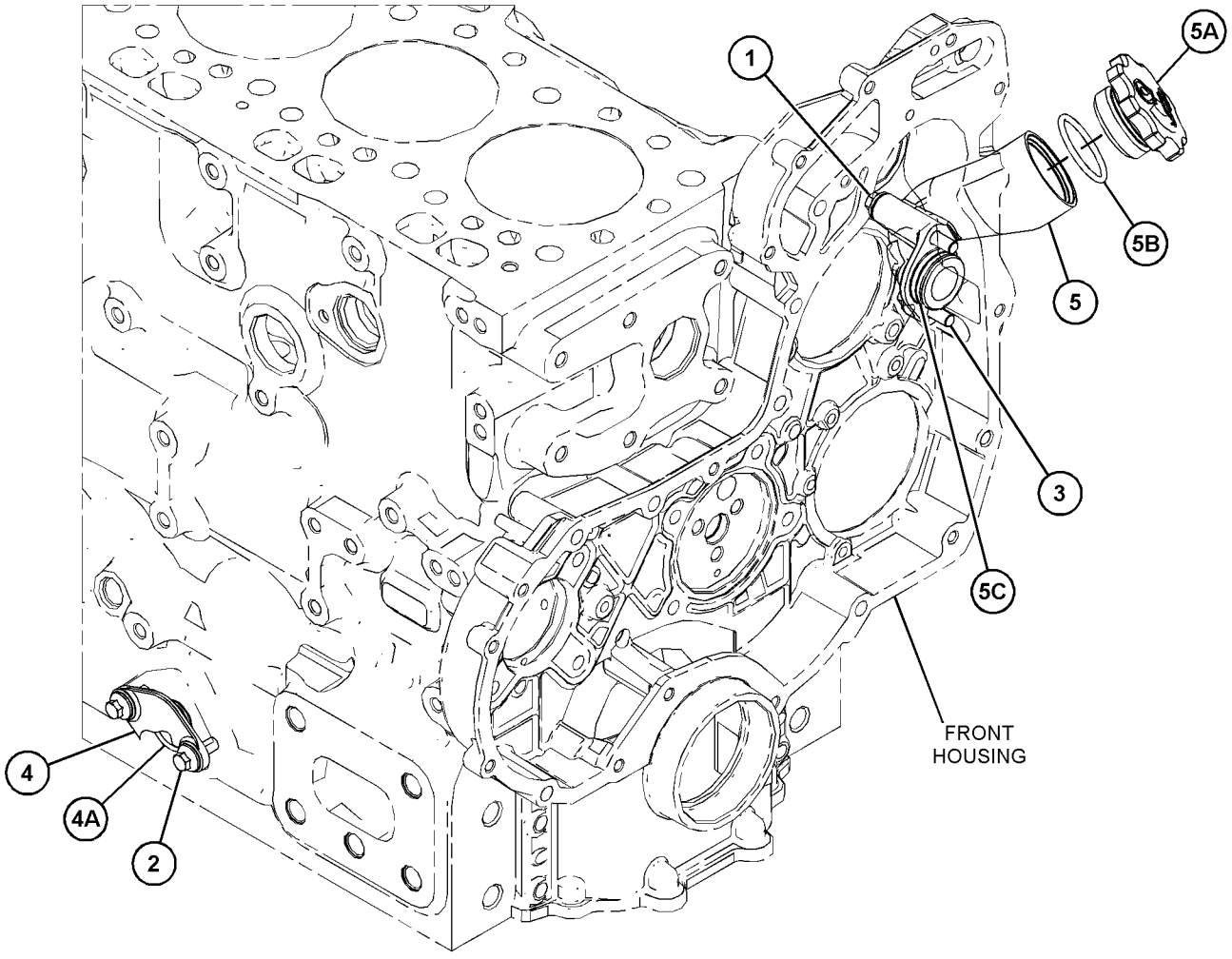

GRAPHIC #1 <END> g03885543

448-0944 FILLER GP-ENGINE OIL

PART OF 470-8814, 484-2939, 485-8027, 491-2606, 493-1019, 493-1038, 494-6807, 504-5365, 504-8134, 504-9579, 513-0851, 531-2492, 552-8869, 563-6728, 563-6729, 575-2879, 575-2880, 591-9440, 628-4345, 633-4335, 633-7776, 645-2039, 657-2370 ENGINE AR-PRIMARY

SMCS-1316 **i06024436**

NOTE	REF NO	GRAPHIC REF	PART NUMBER	QTY	PART NAME 1 2 3 4 5 6 (PRODUCT LEVEL)	SEE PAGE
	1	1	**443-3851**	1	FILLER GP-ENGINE OIL	
		1	**130-9888**	1	CAP AS-OIL FILLER (ENGINE)	
		1	**306-2337**	1	SEAL-O-RING	
M	2	1	**6I-0217**	2	BOLT (M8X1.25X20-MM)	
M	3	1	**6I-0254**	2	BOLT (M8X1.25X30-MM)	
	4	1	**277-1974**	1	PLATE AS	
		1	**277-1975**	1	SEAL-O-RING	

M - METRIC PART

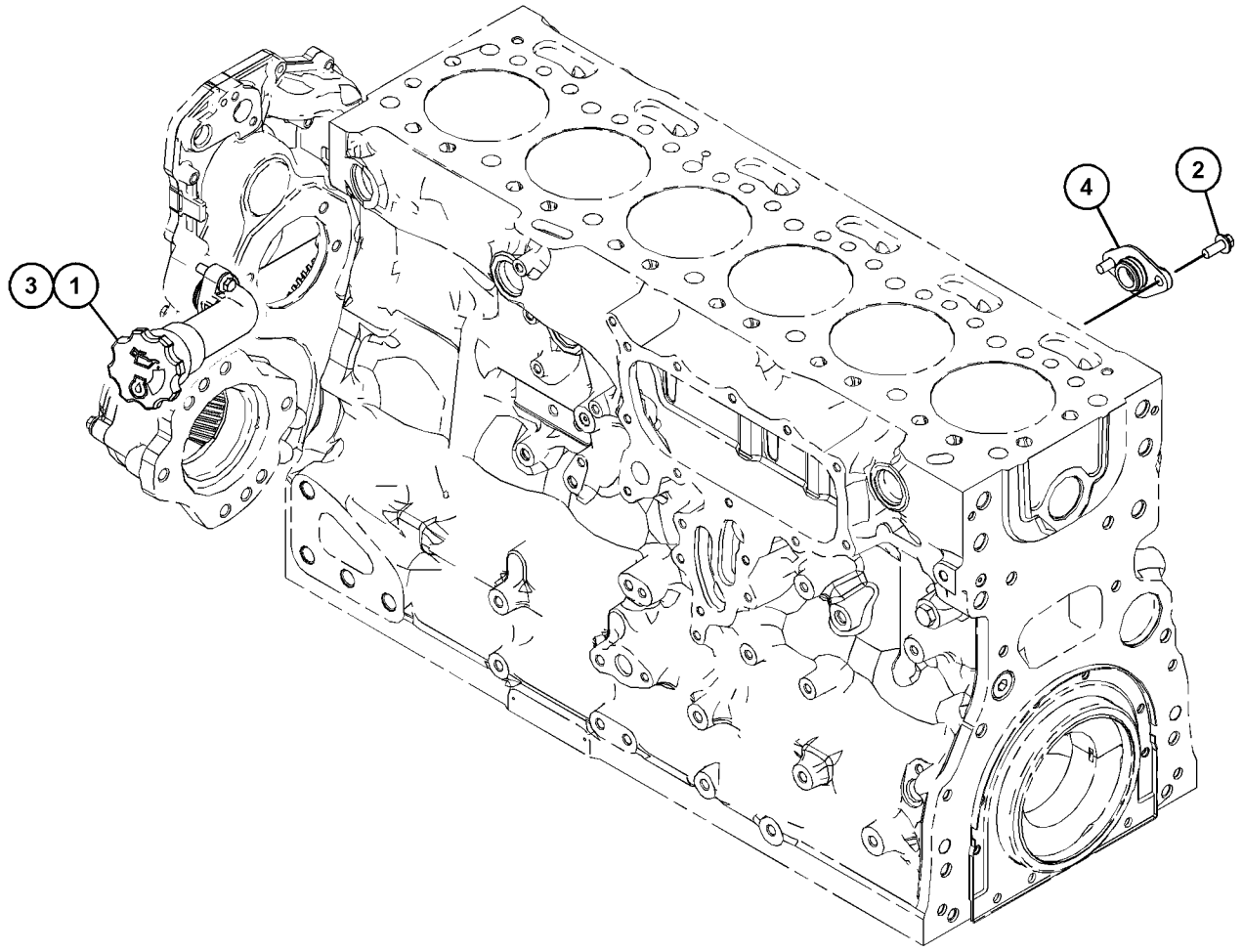

GRAPHIC #1 <END> g03749546

452-0776 FILLER GP-ENGINE OIL

SMCS-1316 **i05957862**

NOTE	PART NUMBER	QTY	PART NAME 1 2 3 4 5 6 (PRODUCT LEVEL)	SEE PAGE
M	**6I-0217**	2	BOLT (M8X1.25X20-MM)	
M	**6I-1090**	1	BOLT (M8X1.25X40-MM)	
M	**6I-4374**	1	BOLT (M8X1.25X60-MM)	
M	**124-3815**	1	BOLT (M8X1.25X16-MM)	
	277-1974	1	PLATE AS	
	277-1975	1	SEAL-O-RING	
	416-9520	1	BRACKET AS	
M	*317-6213*	1	NUT-WELD (M8X1.25-THD)	
	419-0384	1	FILLER GP-ENGINE OIL	

M - METRIC PART

<END>

346-0220 FILTER GP-ENGINE OIL

PART OF 596-2071 ENGINE AR-COMPLETE, 461-4638, 461-4649, 461-4656, 461-4658, 466-1160, 466-1161, 466-1162, 466-1163, 468-0461, 468-8218, 470-8667, 470-8814, 471-0541, 474-7299, 475-8297, 475-9060, 478-4257, 479-9398, 480-2181, 481-0811, 482-0212, 484-2939, 485-8027, 486-2644, 486-4250, 488-6687, 489-9006, 491-2606, 491-4973, 491-4980, 491-4993, 491-7124, 492-3021, 492-3072, 492-3169, 493-1019, 493-1038, 494-2073, 494-6807, 495-8349, 499-7181, 501-2466, 502-9462, 504-3629, 504-5365, 504-8134, 504-9579, 506-5035, 506-9918, 507-8016, 508-0270, 510-1088, 512-9858, 513-0851, 513-8513, 514-9367, 515-9203, 519-4128, 520-3152, 520-4644, 524-8271, 525-8759, 526-0511, 526-7210, 526-8888, 527-7106, 527-9686, 528-3358, 528-9866, 528-9920, 530-1323, 530-2601, 531-2492, 533-2797, 533-3588, 535-8060, 536-6675, 539-6915, 539-8582, 543-4255, 552-3506, 552-8869, 553-1809, 553-3730, 555-4669, 562-8873, 563-6728, 563-6729, 563-6730, 565-1247, 569-7846, 575-2879, 575-2880, 583-8352, 591-1266, 591-9440, 593-7287, 593-7288, 594-2125, 596-4834, 596-7090, 596-8896, 596-8905, 597-9248, 598-9881, 602-8721, 603-5300, 608-9261, 609-9819, 612-1735, 613-9482, 614-5795, 614-9555, 622-6239, 623-1309, 624-0698, 627-8019, 627-8054, 627-8129, 628-4345, 633-4335, 633-7776, 645-2039, 657-2370 ENGINE AR-PRIMARY

SMCS-1306, 1308 **i05882504**

NOTE	REF NO	GRAPHIC REF	PART NUMBER	QTY	PART NAME 1 2 3 4 5 6 (PRODUCT LEVEL)	SEE PAGE
	1	1	**462-1171**	1	FILTER-ENGINE OIL	

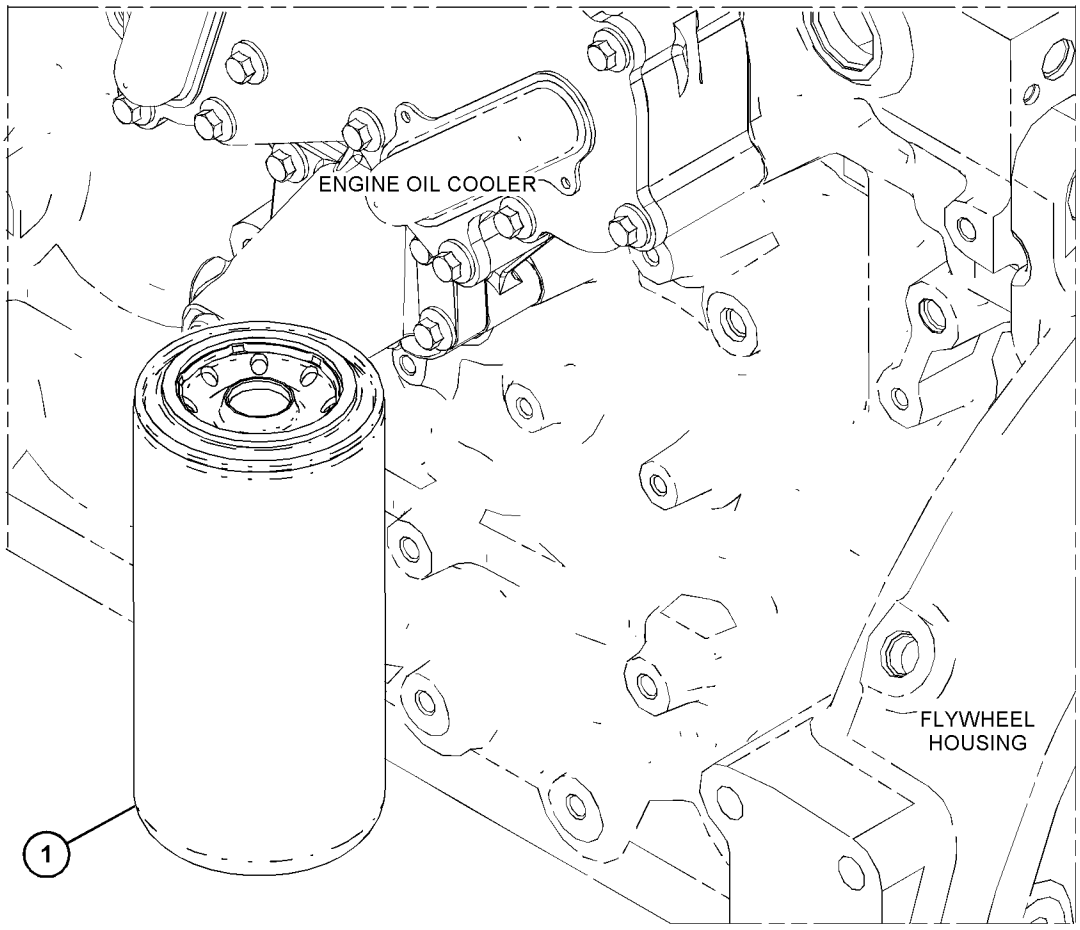

GRAPHIC #1 <END> g03710180

425-0197 FILTER GP-FUMES DISPOSAL

PART OF 596-2071 ENGINE AR-COMPLETE, 461-4638, 461-4649, 461-4656, 461-4658, 466-1160, 466-1161, 466-1162, 466-1163, 468-8218, 479-9398, 480-2181, 482-0212, 486-4250, 488-6687, 491-4973, 491-4980, 491-4993, 491-7124, 492-3021, 492-3072, 494-2073, 499-7181, 502-9462, 507-8016, 510-1088, 513-8513, 519-4128, 520-3152, 526-8888, 527-7106, 527-9686, 528-3358, 530-2601, 533-2797, 535-8060, 536-6675, 539-6915, 543-4255, 552-3506, 555-4669, 583-8352, 591-1266, 593-7287, 593-7288, 596-4834, 596-7090, 598-9881, 602-8721, 603-5300, 612-1735, 614-9555, 622-6239, 627-8129 ENGINE AR-PRIMARY

SMCS-1074 **i05580592**

NOTE	REF NO	GRAPHIC REF	PART NUMBER	QTY	PART NAME 1 2 3 4 5 6 (PRODUCT LEVEL)	SEE PAGE
	1	1	**273-5711**	1	FILTER-FUMES DISPOSAL	

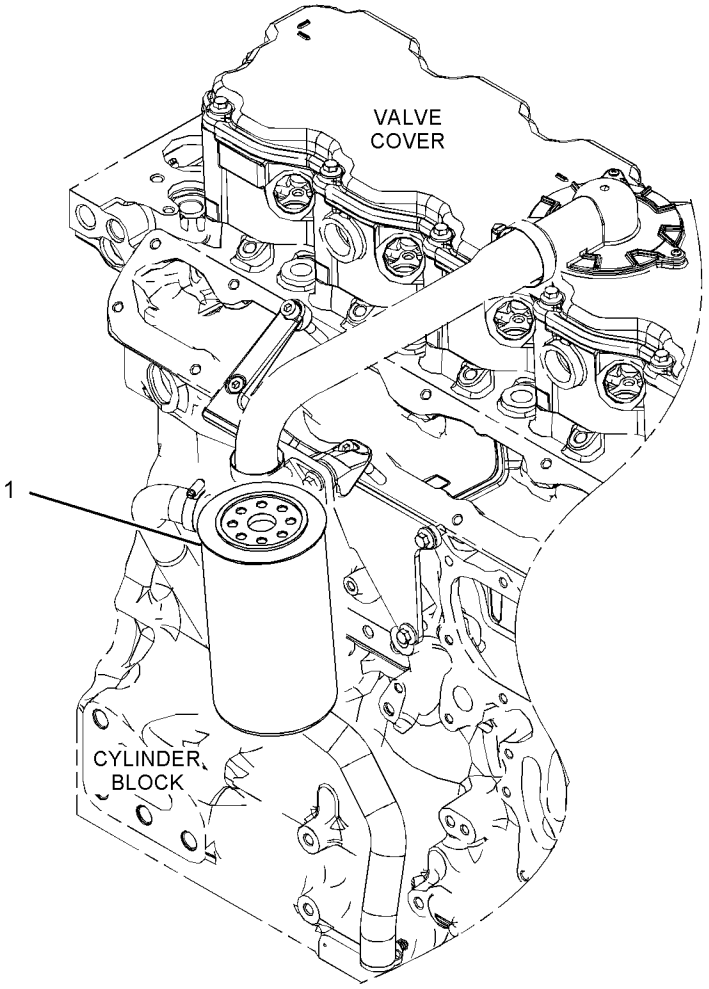

GRAPHIC #1 <END> g03380365

371-2546 GAUGE GP-OIL LEVEL (DIPSTICK)

PART OF 506-9918, 526-0511, 528-9920, 597-9248 ENGINE AR-PRIMARY

SMCS-1326 **i07576162**

NOTE	REF NO	GRAPHIC REF	PART NUMBER	QTY	PART NAME 1 2 3 4 5 6 (PRODUCT LEVEL)	SEE PAGE
	1	1	**353-2637**	1	GAUGE GP-OIL LEVEL (DIPSTICK) (ENGINE)	
	1A	1	**228-7089**	1	SEAL-O-RING	
	1B	1	**275-9891**	2	SEAL-O-RING	
	2	1	**6I-0289**	1	PLUG	
	3	1	**6I-1497**	1	SEAL	

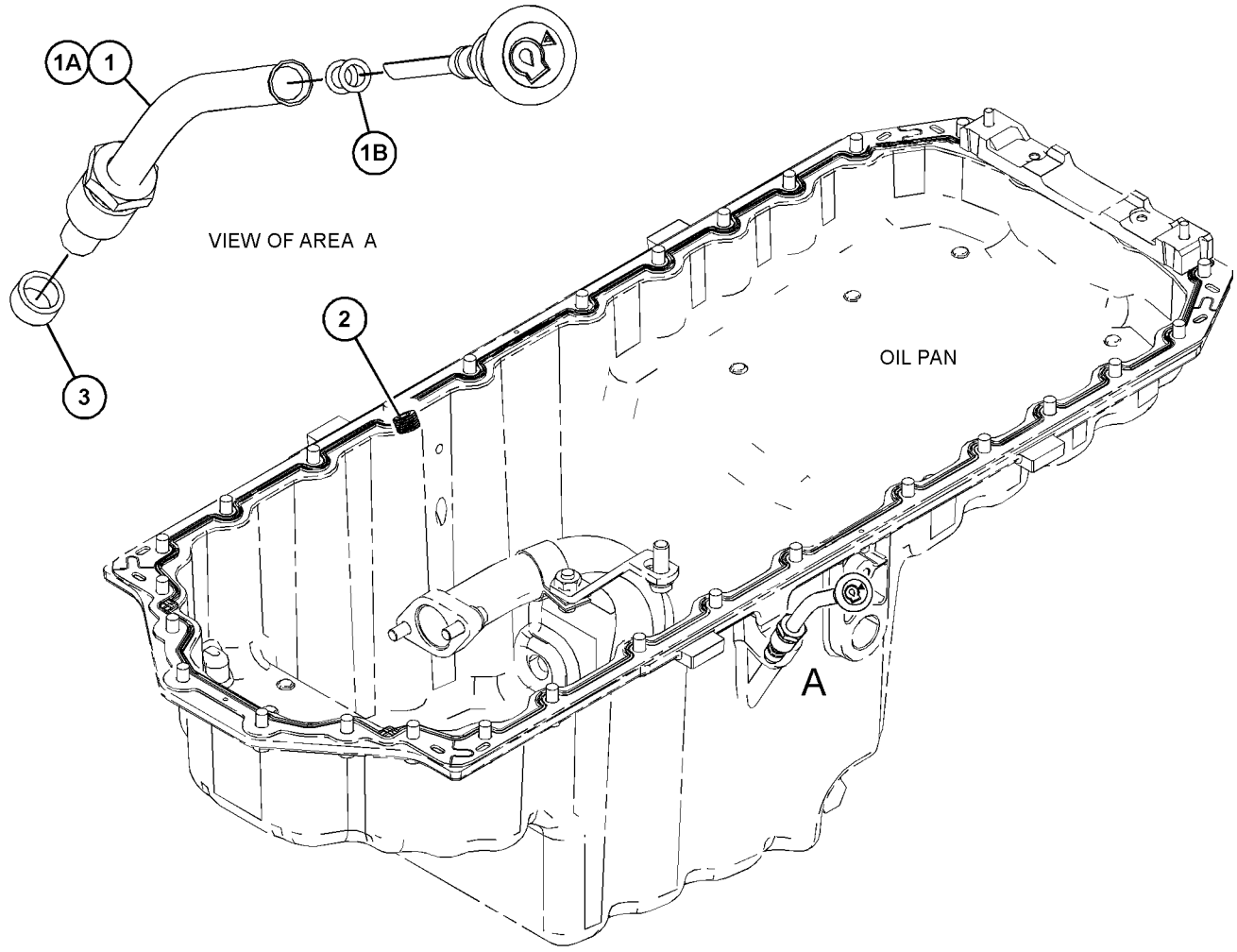

GRAPHIC #1 <END> g06389767

375-8851 GAUGE GP-OIL LEVEL (DIPSTICK)

SMCS-1326 **i07577389**

NOTE	REF NO	GRAPHIC REF	PART NUMBER	QTY	PART NAME 1 2 3 4 5 6 (PRODUCT LEVEL)	SEE PAGE
	1	1	**6I-0289**	1	PLUG	
	2	1	**378-8587**	1	GAUGE GP-OIL LEVEL (DIPSTICK)	
	3	1	**317-6664**	1	BRACKET	
M	4	1	**124-3815**	1	BOLT (M8X1.25X16-MM)	
M	5	1	**6I-4200**	2	BOLT-FLANGE HEAD (M10X1.5X16-MM)	

M - METRIC PART

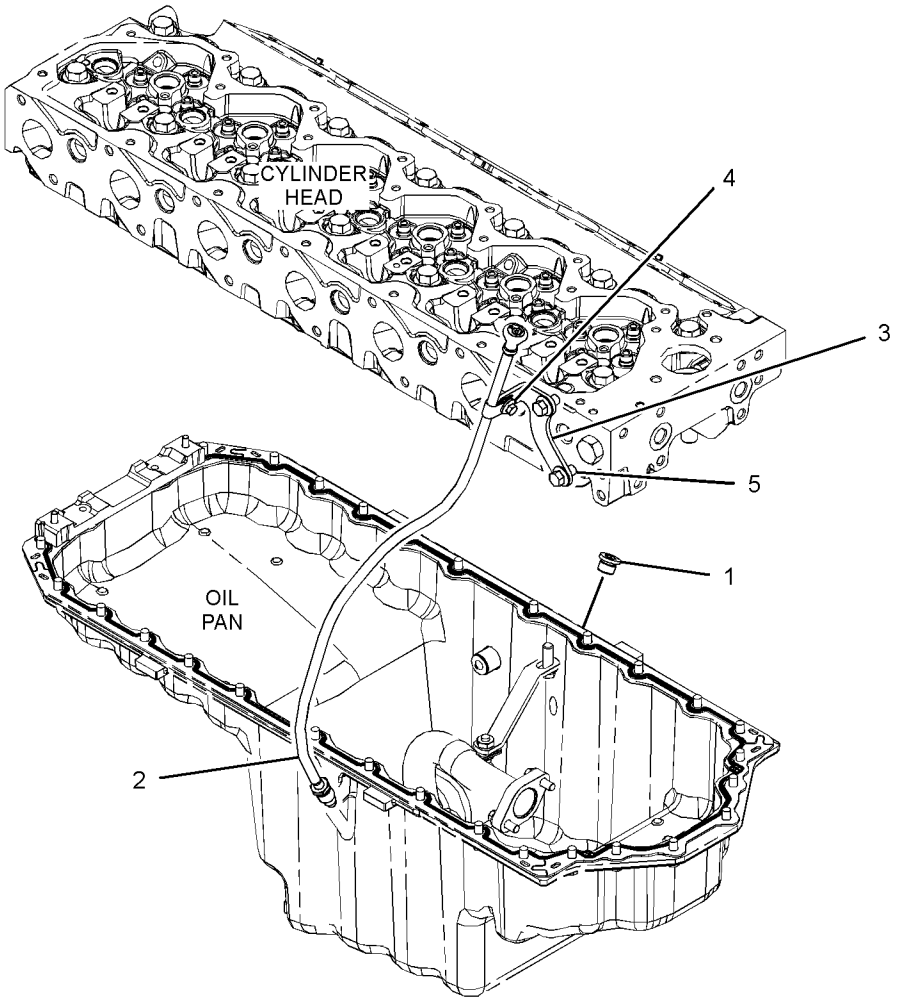

GRAPHIC #1 <END> g03483057

378-0626 GAUGE GP-OIL LEVEL (DIPSTICK)

ENGINE

PART OF 524-8271, 528-9866, 614-5795 ENGINE AR-PRIMARY

SMCS-1326 **i07592180**

NOTE	REF NO	GRAPHIC REF	PART NUMBER	QTY	PART NAME 1 2 3 4 5 6 (PRODUCT LEVEL)	SEE PAGE
M	1	1	**6I-4200**	1	BOLT-FLANGE HEAD (M10X1.5X16-MM)	
M	2	1	**100-3751**	1	BOLT (M8X1.25X65-MM)	
M	3	1	**124-3815**	1	BOLT (M8X1.25X16-MM)	
	4	1	**6I-0289**	1	PLUG	
	5	1	**423-0792**	1	BRACKET AS	
	6	1	**423-0793**	1	BRACKET-TUBE	
	7	1	**462-8594**	1	GAUGE GP-OIL LEVEL (DIPSTICK) (ENGINE)	
	7A	1	**275-9891**	2	SEAL-O-RING	
	7B	1	**6I-1497**	1	SEAL	
	7C	1	**187-0555**	2	CLIP	
	7D	1	**228-7089**	1	SEAL-O-RING	

M - METRIC PART

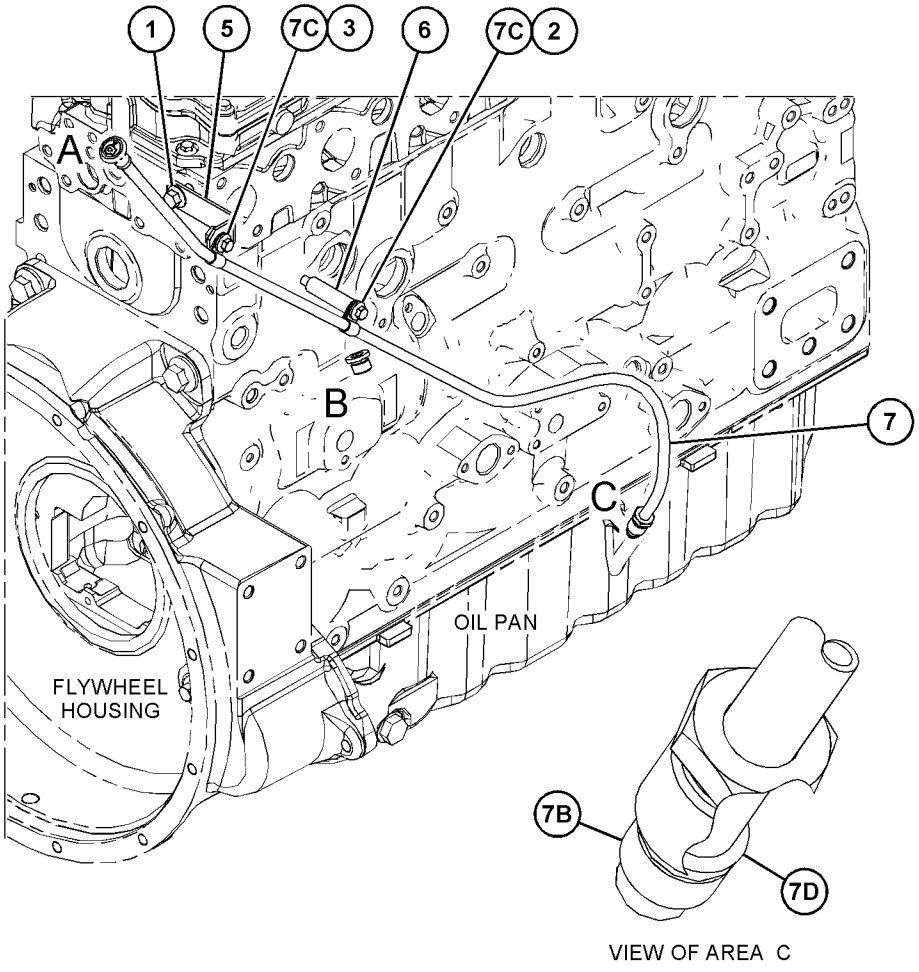

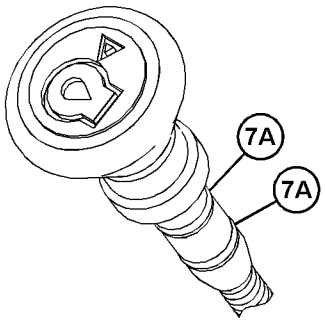

VIEW OF AREA A
(PARTS REMOVED FOR CLARITY)

VIEW OF AREA C

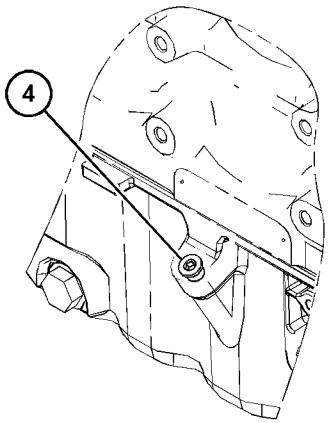

VIEW OF AREA B 90°

GRAPHIC #1

<END>

g03796183

378-3484 GAUGE GP-OIL LEVEL (DIPSTICK)

ENGINE

PART OF 478-4257, 488-6687, 515-9203, 608-9261 ENGINE AR-PRIMARY

SMCS-1326 **i07580187**

NOTE	REF NO	GRAPHIC REF	PART NUMBER	QTY	PART NAME 1 2 3 4 5 6 (PRODUCT LEVEL)	SEE PAGE
	1	1	**353-2636**	1	GAUGE GP-OIL LEVEL (DIPSTICK) (ENGINE)	
	1A	1	**228-7089**	1	SEAL-O-RING	
	1B	1	**275-9891**	2	SEAL-O-RING	
	2	1	**6I-0289**	1	PLUG	
	3	1	**6I-1497**	1	SEAL	

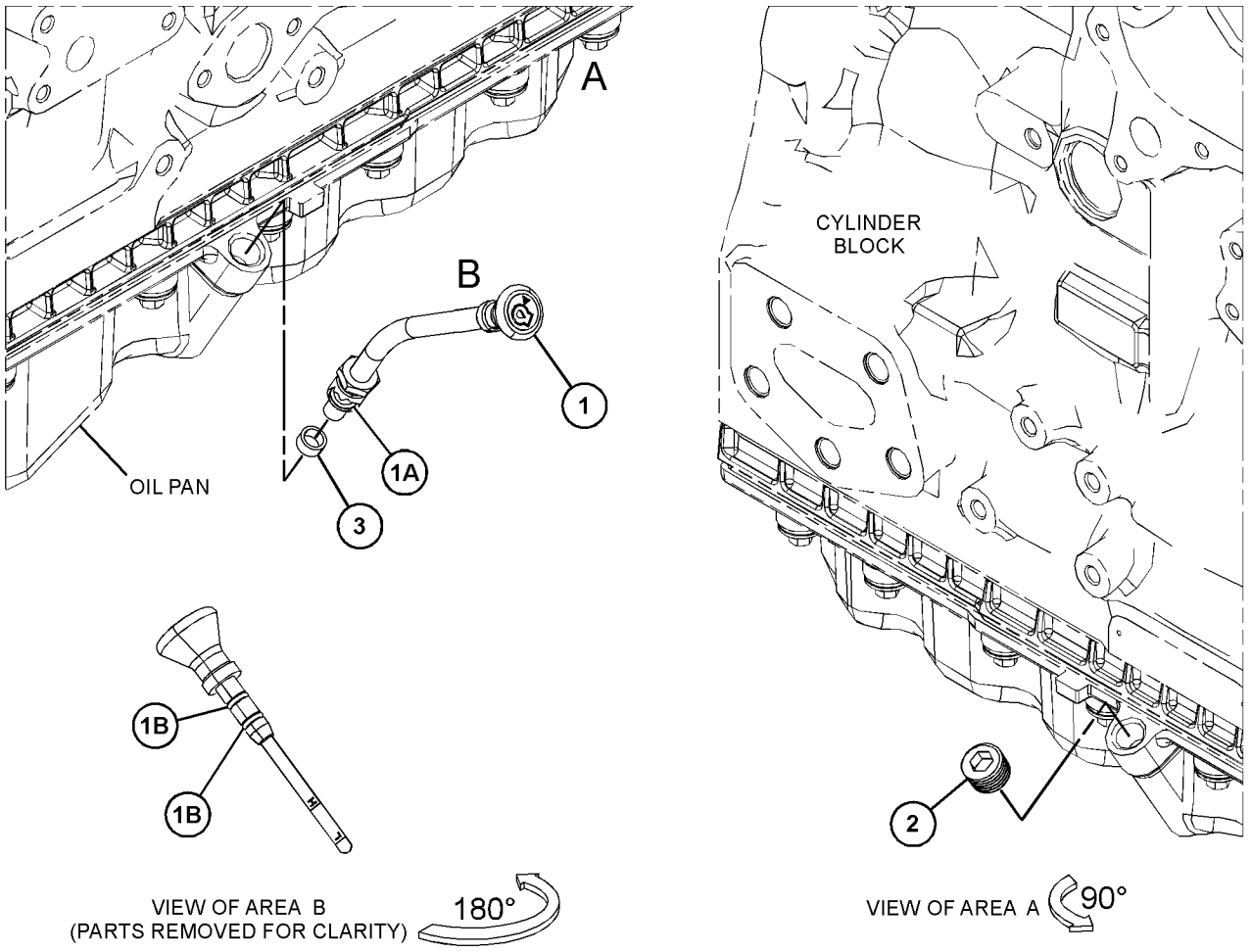

GRAPHIC #1 <END> g06390020

417-6007 GAUGE GP-OIL LEVEL (DIPSTICK)

PART OF 484-2939, 494-2073, 506-5035, 508-0270, 512-9858, 514-9367, 527-9686, 553-1809, 555-4669, 563-6728, 613-9482, 622-6239 ENGINE AR-PRIMARY

SMCS-1326 **i07664563**

NOTE	REF NO	GRAPHIC REF	PART NUMBER	QTY	PART NAME 1 2 3 4 5 6 (PRODUCT LEVEL)	SEE PAGE
	1	1	**353-2634**	1	GAUGE GP-OIL LEVEL (DIPSTICK) (ENGINE)	
	1A	1	**228-7089**	1	SEAL-O-RING	
	1B	1	**275-9891**	2	SEAL-O-RING	
	2	1	**6I-0289**	1	PLUG (M16X1.5-THD)	
	3	1	**6I-1497**	1	SEAL	

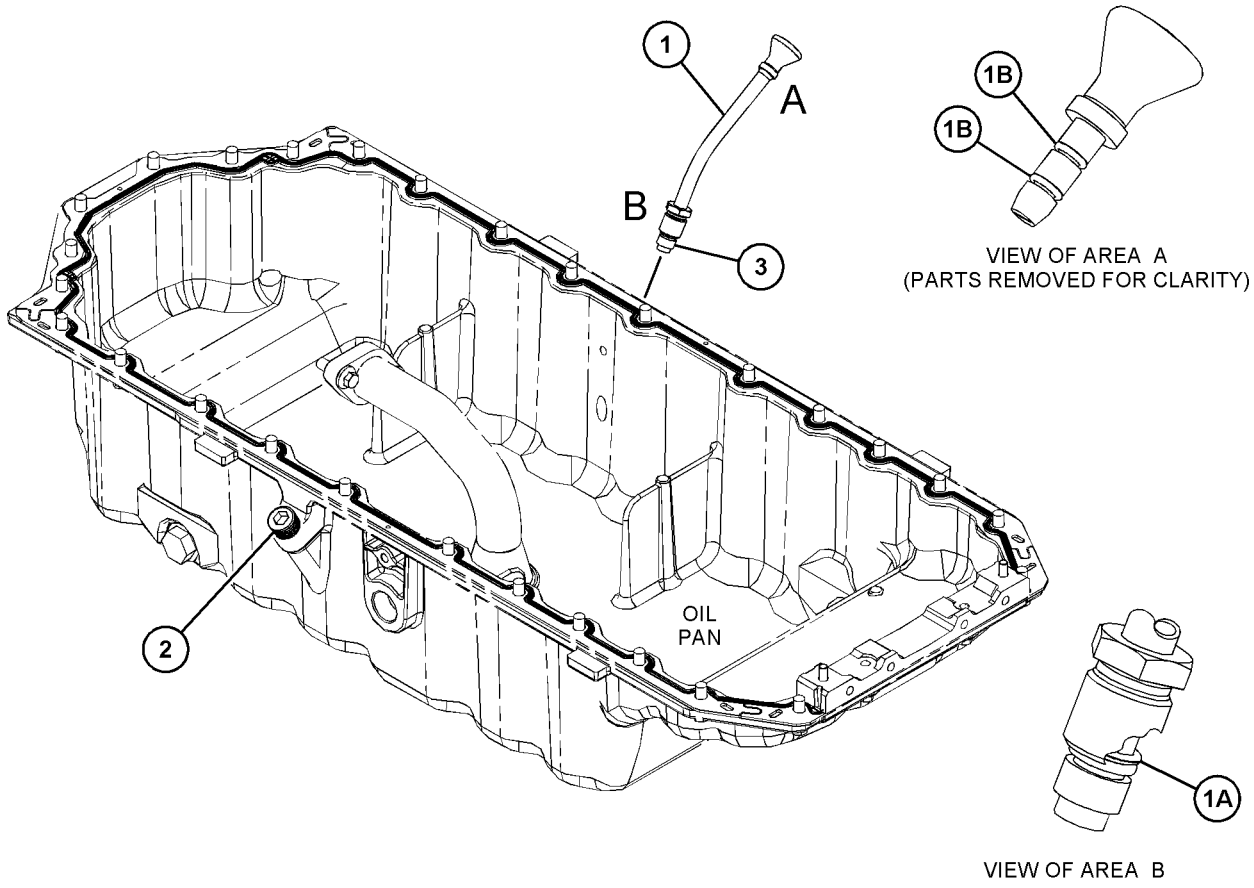

GRAPHIC #1 <END> g06391142

439-3377 GAUGE GP-OIL LEVEL (DIPSTICK)

GAUGE

PART OF 536-6675 ENGINE AR-PRIMARY

SMCS-1326 **i07577449**

NOTE	REF NO	GRAPHIC REF	PART NUMBER	QTY	PART NAME 1 2 3 4 5 6 (PRODUCT LEVEL)	SEE PAGE
	1	1	**353-2635**	1	GAUGE GP-OIL LEVEL (DIPSTICK) (ENGINE)	
		1	**275-9891**	2	SEAL-O-RING	
		1	**228-7089**	1	SEAL-O-RING	
	2	1	**6I-0289**	1	PLUG	
	3	1	**6I-1497**	1	SEAL	

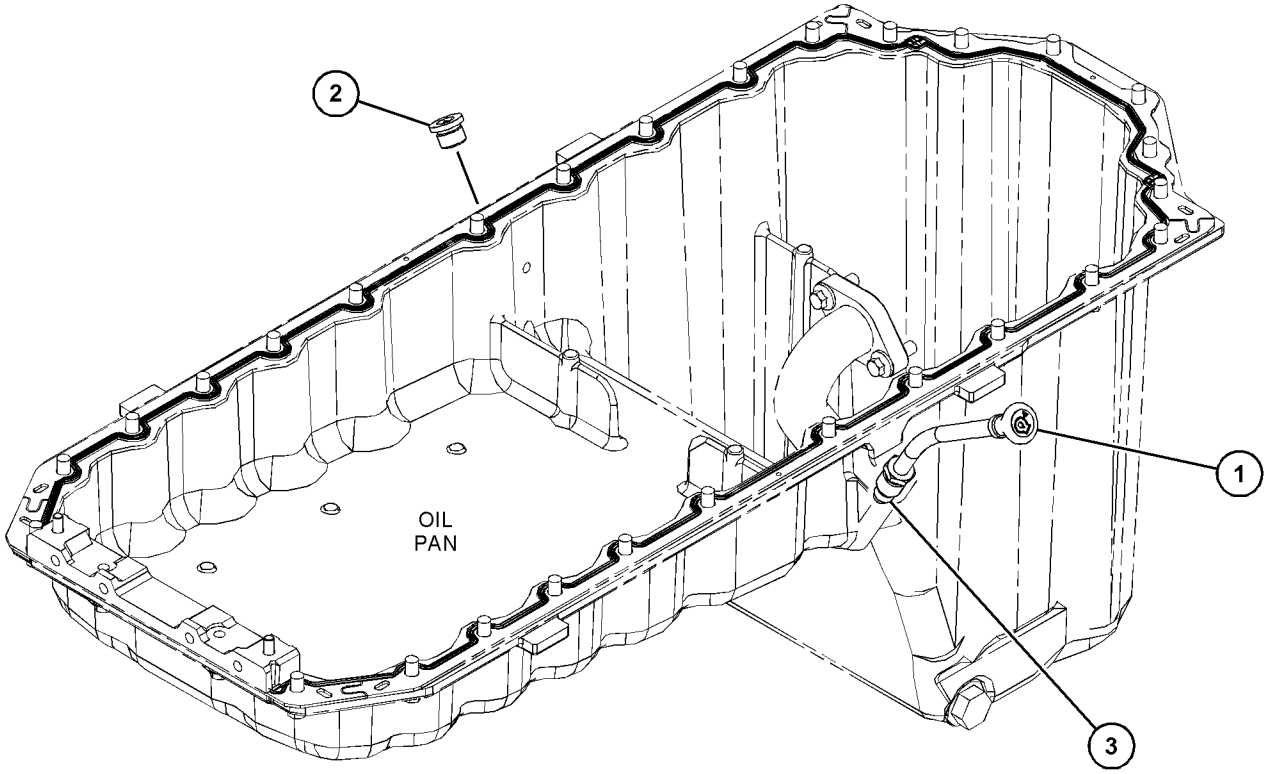

GRAPHIC #1 <END> g03650676

439-3378 GAUGE GP-OIL LEVEL (DIPSTICK)

PART OF 474-7299, 504-3629, 553-3730 ENGINE AR-PRIMARY

SMCS-1326 **i07573718**

NOTE	REF NO	GRAPHIC REF	PART NUMBER	QTY	PART NAME 1 2 3 4 5 6 (PRODUCT LEVEL)	SEE PAGE
	1	1	**353-2637**	1	GAUGE GP-OIL LEVEL (DIPSTICK) (ENGINE)	
	1A	1	**228-7089**	1	SEAL-O-RING	
	1B	1	**275-9891**	2	SEAL-O-RING	
	2	1	**6I-0289**	1	PLUG	
	3	1	**6I-1497**	1	SEAL	

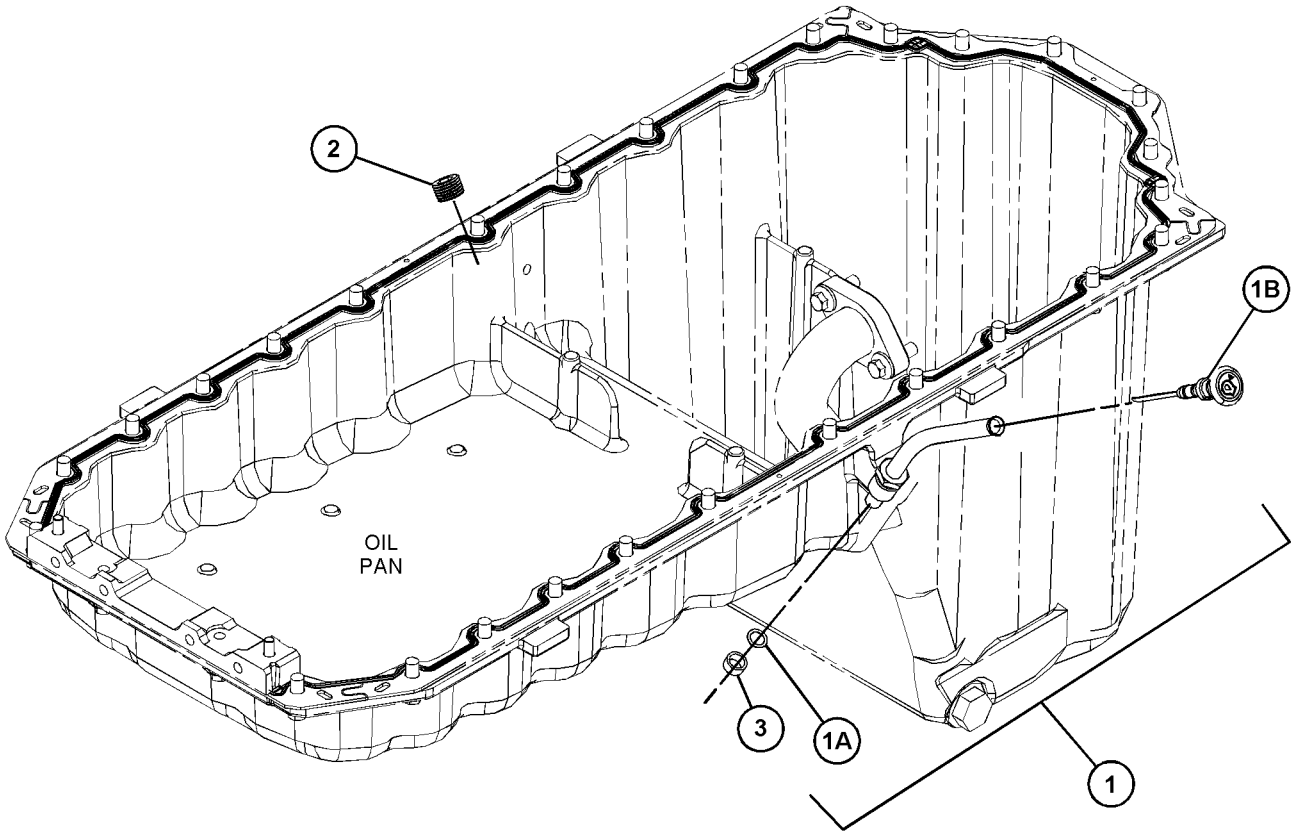

GRAPHIC #1 <END> g06390720

439-3430 GAUGE GP-OIL LEVEL (DIPSTICK)

PART OF 475-8297, 475-9060, 481-0811, 486-4250, 533-3588 ENGINE AR-PRIMARY

SMCS-1326 **i07580216**

NOTE	REF NO	GRAPHIC REF	PART NUMBER	QTY	PART NAME 1 2 3 4 5 6 (PRODUCT LEVEL)	SEE PAGE
	1	1	**353-2636**	1	GAUGE GP-OIL LEVEL (DIPSTICK) (ENGINE)	
	1A	1	**228-7089**	1	SEAL-O-RING	
	1B	1	**275-9891**	2	SEAL-O-RING	
	2	1	**6I-0289**	1	PLUG	
	3	1	**6I-1497**	1	SEAL	

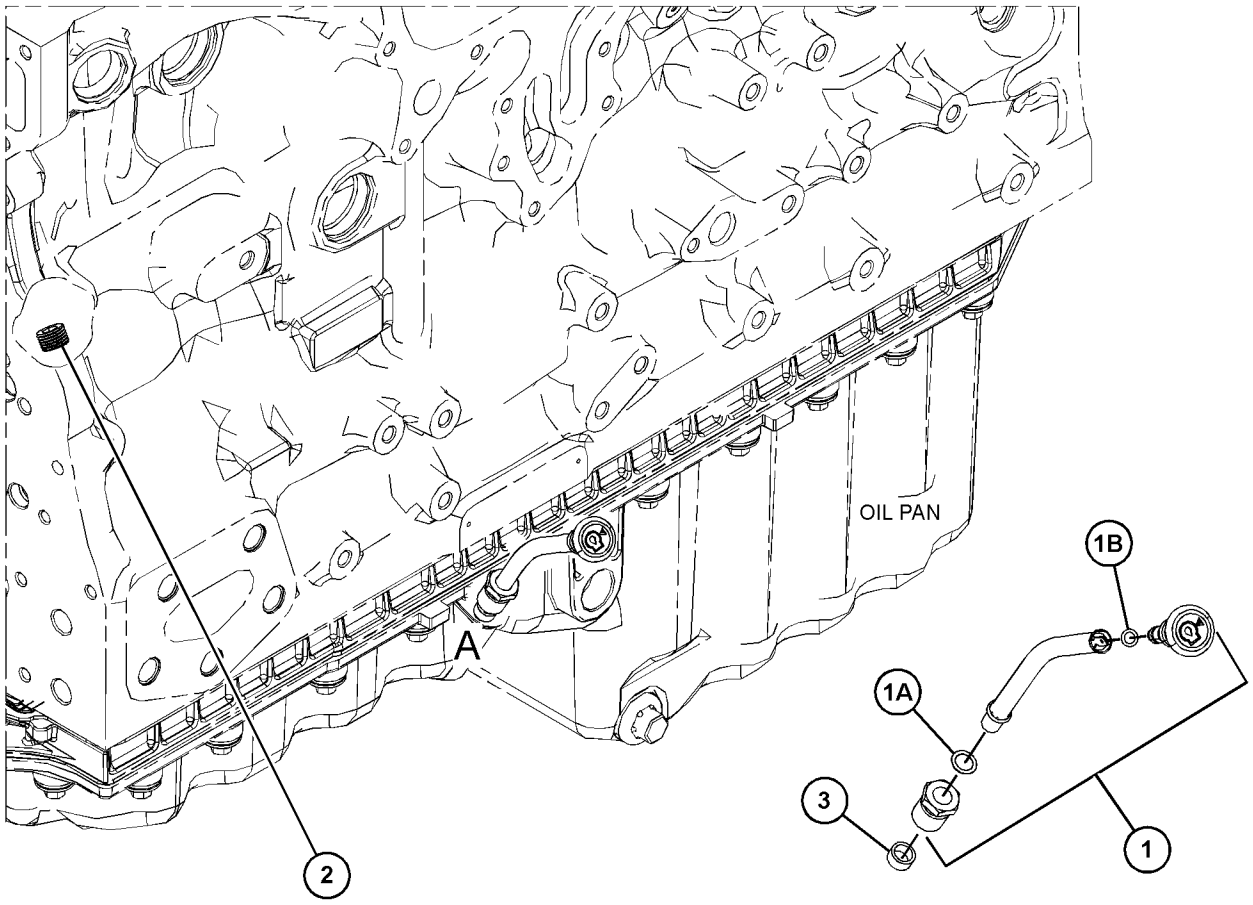

VIEW OF AREA A

GRAPHIC #1 <END> g06386779

439-3431 GAUGE GP-OIL LEVEL (DIPSTICK)

PART OF 470-8667 ENGINE AR-PRIMARY

SMCS-1326 **i07577258**

NOTE	REF NO	GRAPHIC REF	PART NUMBER	QTY	PART NAME 1 2 3 4 5 6 (PRODUCT LEVEL)	SEE PAGE
	1	1	**353-2635**	1	GAUGE GP-OIL LEVEL (DIPSTICK) (ENGINE)	
	1A	1	**228-7089**	1	SEAL-O-RING	
	1B	1	**275-9891**	2	SEAL-O-RING	
	2	1	**6I-0289**	1	PLUG	
	3	1	**6I-1497**	1	SEAL	

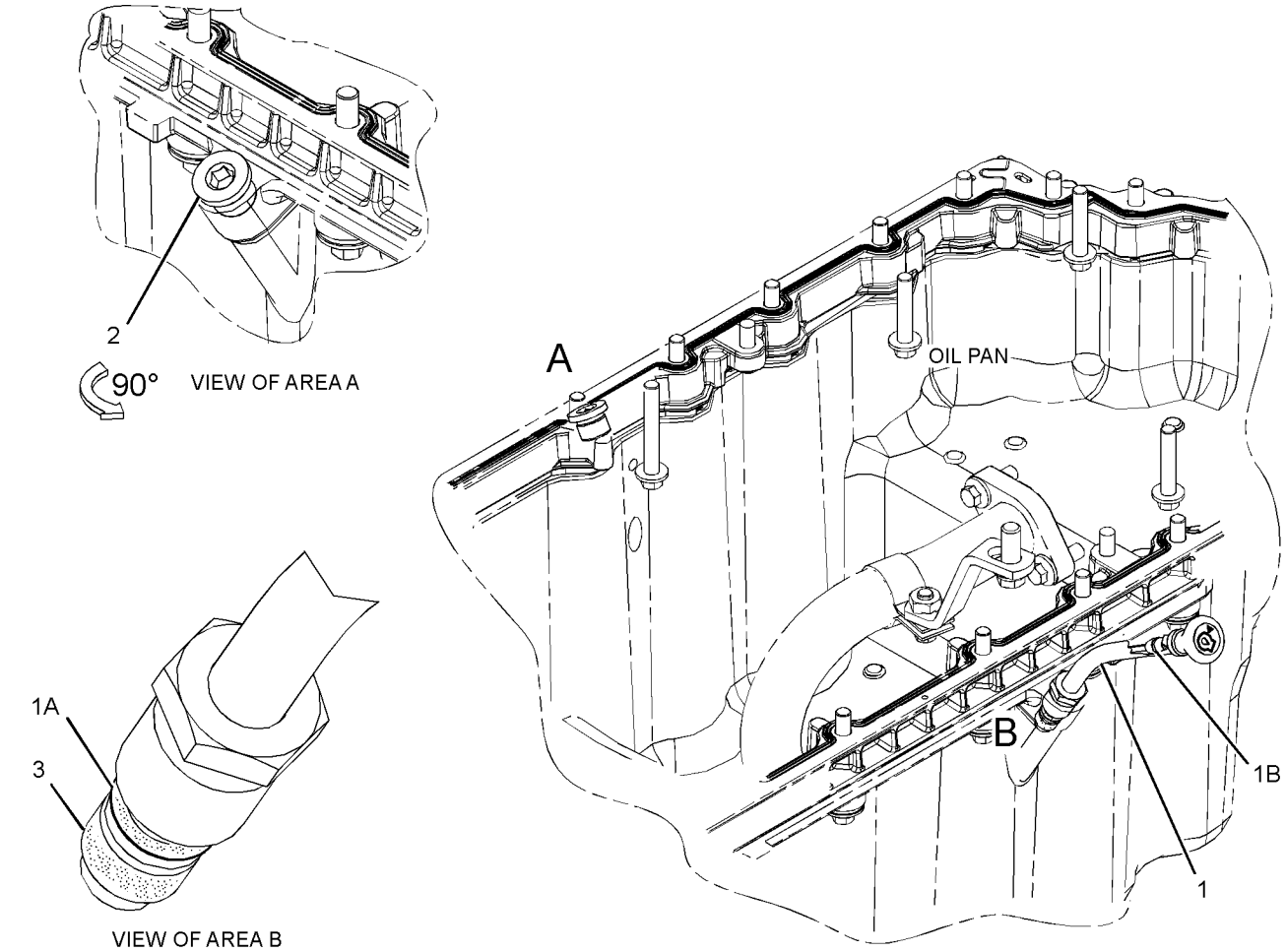

GRAPHIC #1 <END> g02410896

439-3432 GAUGE GP-OIL LEVEL (DIPSTICK)

PART OF 596-2071 ENGINE AR-COMPLETE, 451-8343, 461-4638, 461-4649, 461-4656, 461-4658, 466-1160, 466-1161, 466-1162, 466-1163, 468-0461, 468-8218, 471-0541, 479-9398, 480-2181, 482-0212, 485-8027, 486-2644, 489-9006, 491-2606, 491-4973, 491-4980, 491-4993, 491-7124, 492-3021, 492-3072, 492-3169, 493-1019, 493-1038, 494-6807, 495-8349, 499-7181, 501-2466, 502-9462, 504-5365, 504-8134, 504-9579, 507-8016, 510-1088, 513-0851, 513-8513, 519-4128, 520-3152, 520-4644, 525-8759, 526-7210, 526-8888, 530-1323, 530-2601, 533-2797, 535-8060, 539-6915, 539-8582, 543-4255, 552-3506, 552-8869, 562-8873, 563-6729, 563-6730, 565-1247, 569-7846, 583-8352, 591-1266, 591-9440, 593-7287, 593-7288, 594-2125, 596-8896, 596-8905, 598-9881, 602-8721, 603-5300, 609-9819, 612-1735, 614-9555, 623-1309, 624-0698, 627-8019, 627-8129, 628-4345, 633-4335, 633-7776, 657-2370 ENGINE AR-PRIMARY

SMCS-1326 **i07575068**

NOTE	REF NO	GRAPHIC REF	PART NUMBER	QTY	PART NAME 1 2 3 4 5 6 (PRODUCT LEVEL)	SEE PAGE
	1	1	**353-2634**	1	GAUGE GP-OIL LEVEL (DIPSTICK) (ENGINE)	
	1A	1	**228-7089**	1	SEAL-O-RING	
	1B	1	**275-9891**	2	SEAL-O-RING	
	2	1	**6I-0289**	1	PLUG	
	3	1	**6I-1497**	1	SEAL	

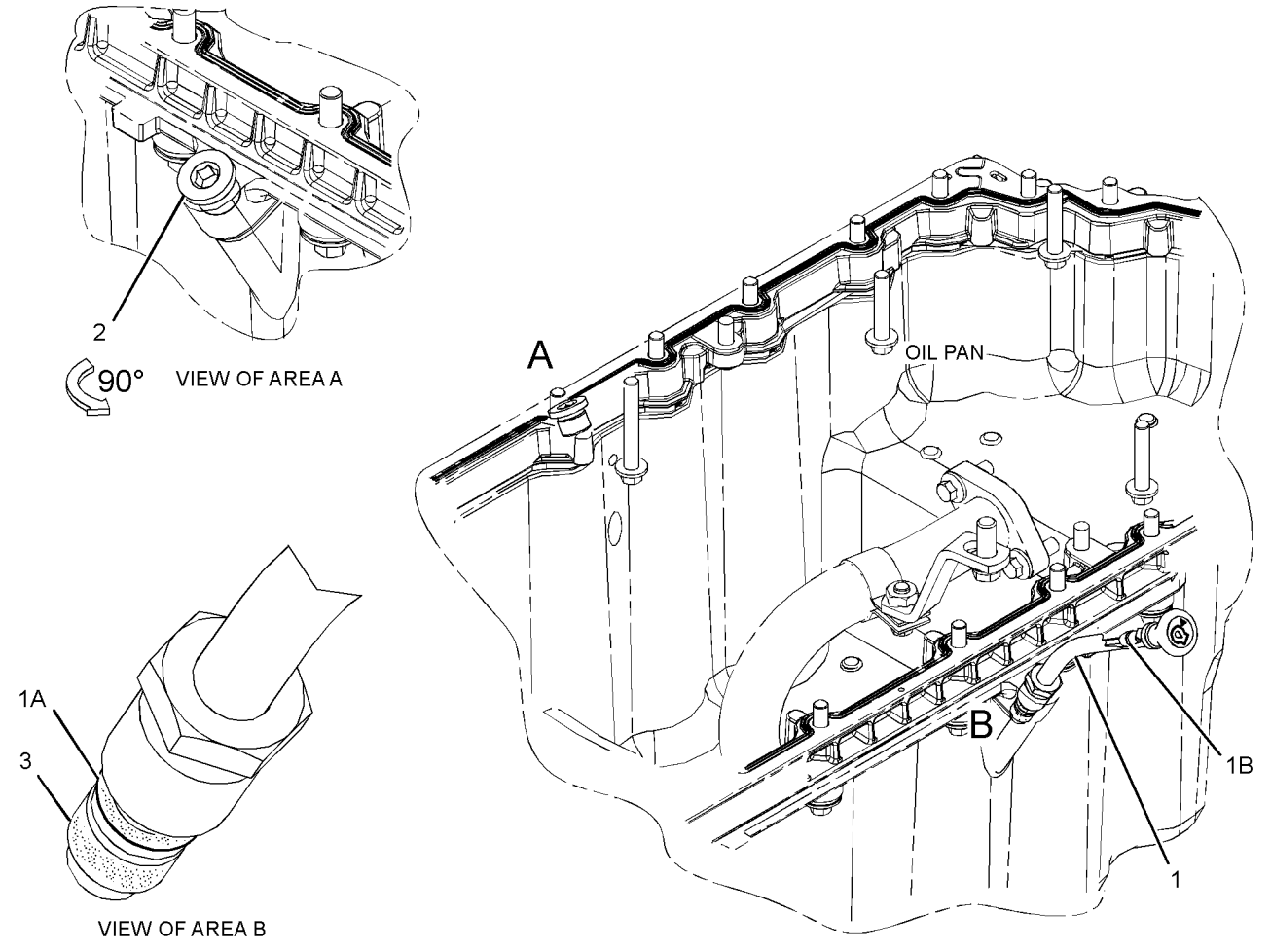

GRAPHIC #1 <END> g02410896

460-1570 GAUGE GP-OIL LEVEL (DIPSTICK)—ENGINE

PART OF 470-8814, 575-2879, 575-2880, 645-2039 ENGINE AR-PRIMARY

SMCS-1326 **i07577271**

NOTE	REF NO	GRAPHIC REF	PART NUMBER	QTY	PART NAME 1 2 3 4 5 6 (PRODUCT LEVEL)	SEE PAGE
	1	1	**6I-1497**	1	SEAL	
M	2	1	**100-4830**	1	BOLT (M10X1.5X20-MM)	
	3	1	**6I-0289**	1	PLUG	
	4	1	**460-1103**	1	BRACKET AS	
	5	1	**460-1112**	1	GAUGE GP-OIL LEVEL (DIPSTICK) (ENGINE)	
		1	**275-9891**	2	SEAL-O-RING	
M	6	1	**6I-0217**	1	BOLT (M8X1.25X20-MM)	

M - METRIC PART

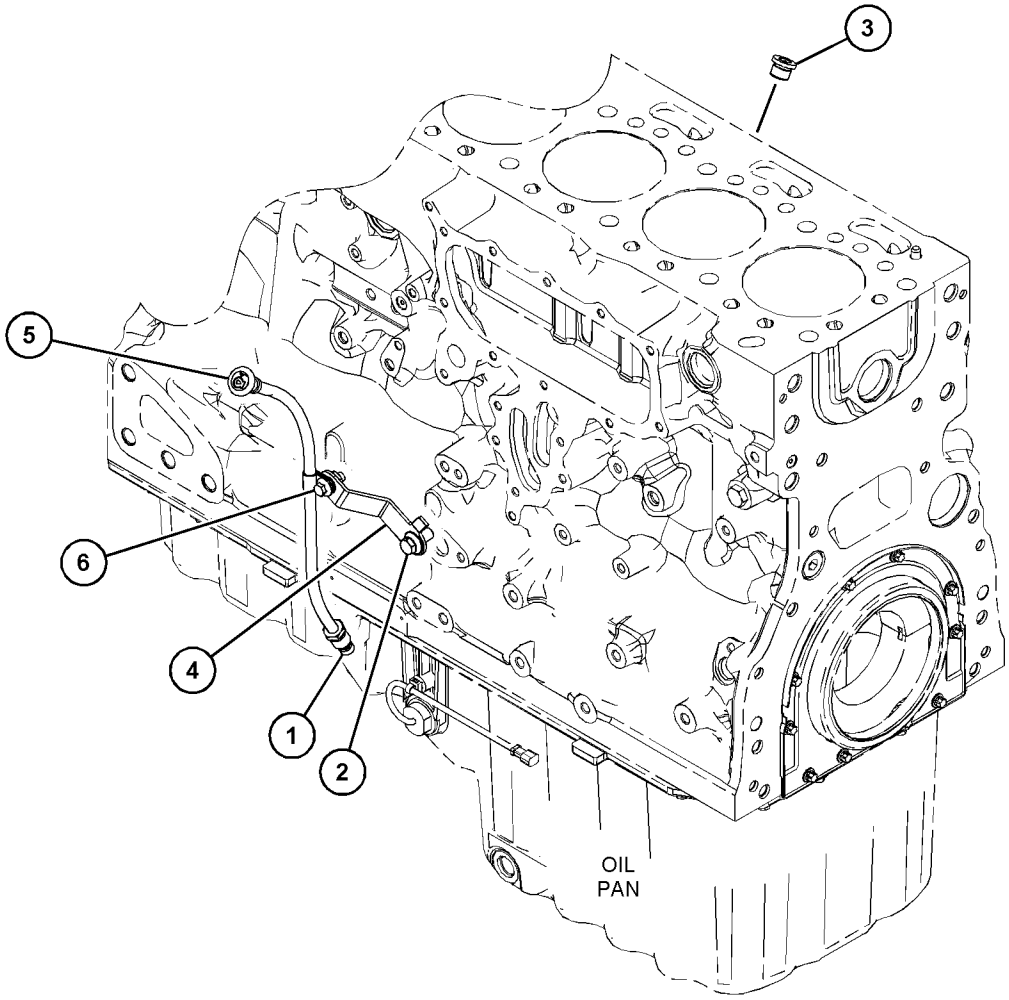

GRAPHIC #1 <END> g03751157

476-1230 GAUGE GP-OIL LEVEL (DIPSTICK)

SMCS-1326 **i07577441**

NOTE	REF NO	GRAPHIC REF	PART NUMBER	QTY	PART NAME 1 2 3 4 5 6 (PRODUCT LEVEL)	SEE PAGE
M	1	1	**100-3751**	1	BOLT (M8X1.25X65-MM)	
M	2	1	**124-3815**	1	BOLT (M8X1.25X16-MM)	
	3	1	**6I-0289**	1	PLUG	
	4	1	**423-0792**	1	BRACKET AS	
	5	1	**423-0793**	1	BRACKET-TUBE	
	6	1	**462-8594**	1	GAUGE GP-OIL LEVEL (DIPSTICK)	
	6A	1	**275-9891**	2	SEAL-O-RING	
	6B	1	**6I-1497**	1	SEAL	
	6C	1	**187-0555**	2	CLIP	
	6D	1	**228-7089**	1	SEAL-O-RING	

M - METRIC PART

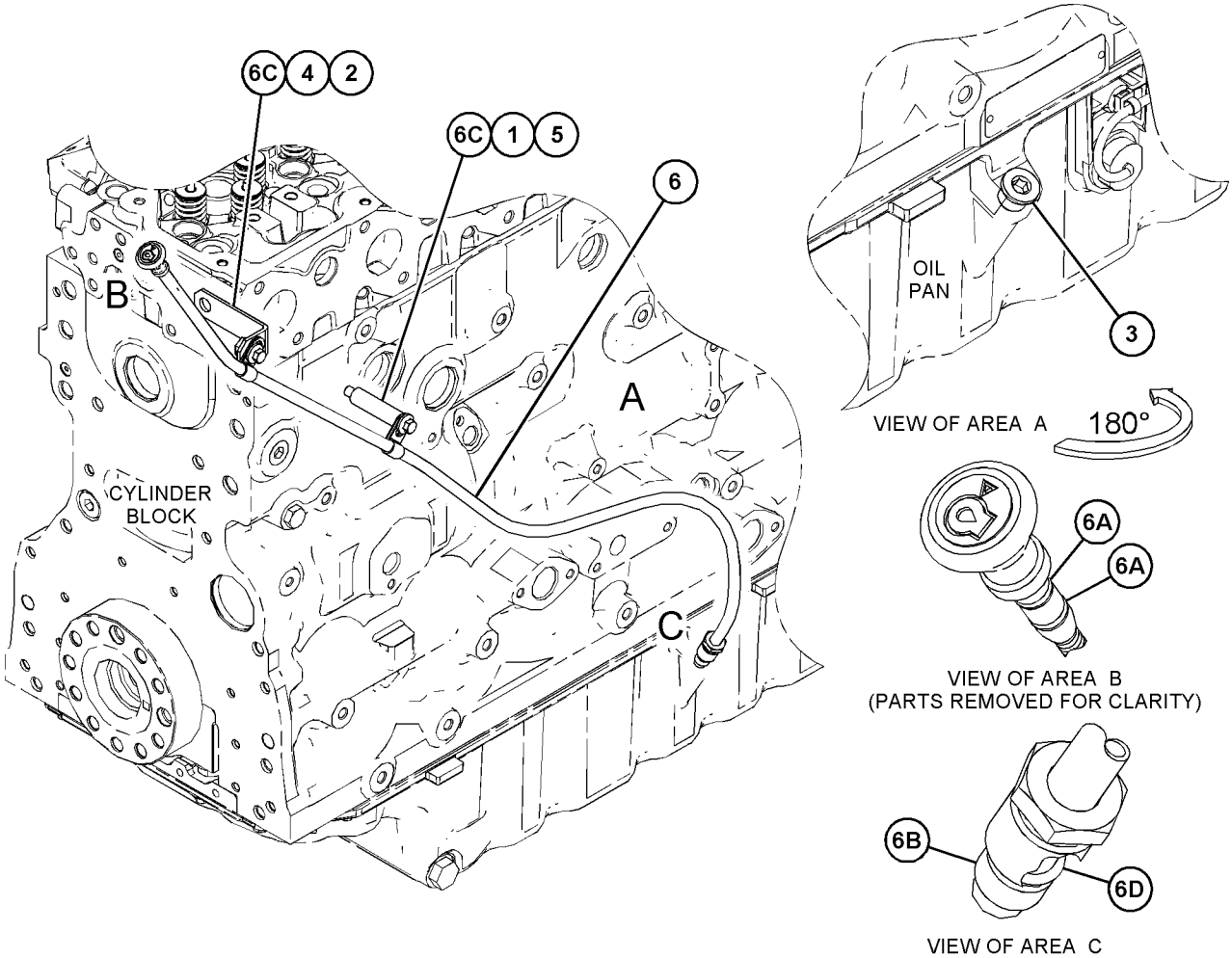

GRAPHIC #1 <END> g03857044

368-8559 LINES GP-TURBOCHARGER OIL

PART OF 371-2720, 374-0432, 416-6968, 416-6969, 416-6970, 431-6518 TURBOCHARGER GP

SMCS-1052, 1307

i08702656

NOTE	REF NO	GRAPHIC REF	PART NUMBER	QTY	PART NAME 1 2 3 4 5 6 (PRODUCT LEVEL)	SEE PAGE
	1	1	**277-9938**	1	BOLT-SPECIAL (BANJO)	
	2	1	**277-9940**	1	SEAL-O-RING	
	3	1	**358-6475**	2	WASHER	

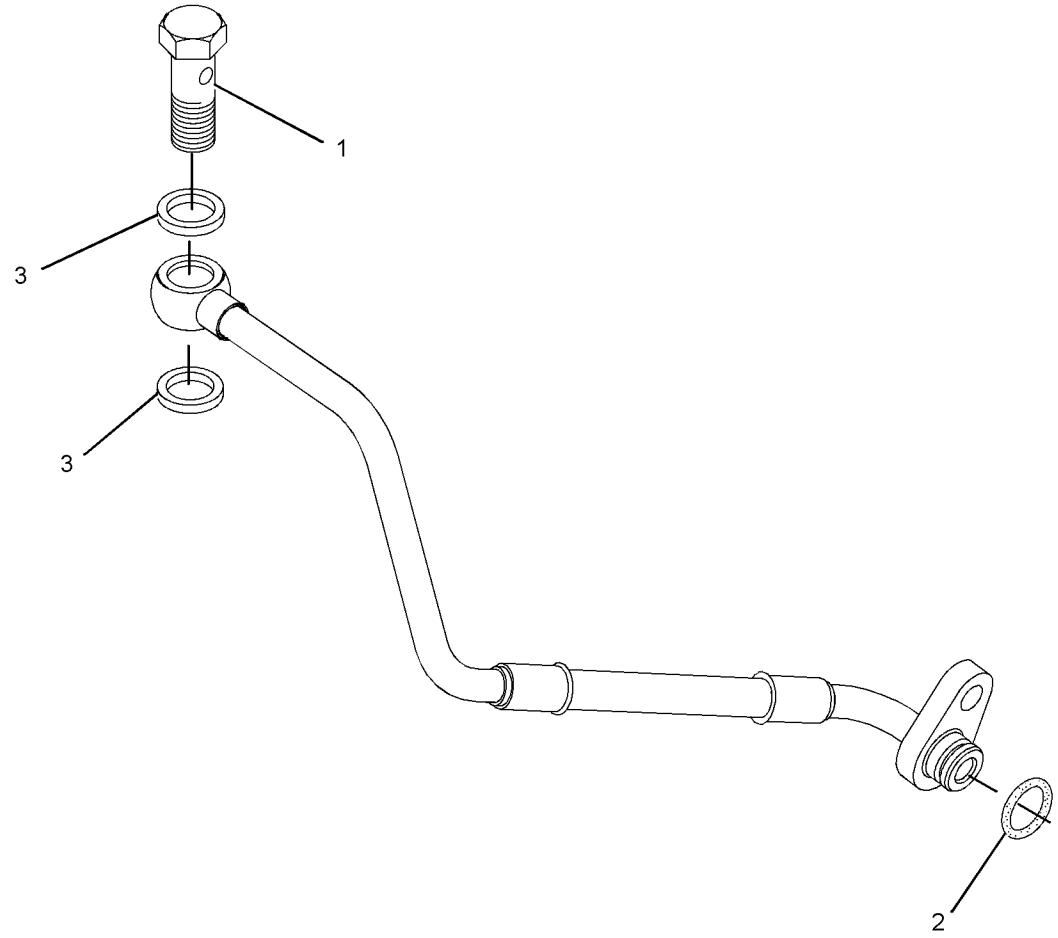

GRAPHIC #1 <END> g02400339

440-0026 PLUG GP-OIL FILTER MOUNTING

PART OF 596-2071 ENGINE AR-COMPLETE, 461-4638, 461-4649, 461-4656, 461-4658, 466-1160, 466-1161, 466-1162, 466-1163, 468-0461, 471-0541, 479-9398, 480-2181, 481-0811, 482-0212, 484-2939, 485-8027, 486-2644, 486-4250, 489-9006, 491-4973, 491-4980, 491-4993, 491-7124, 492-3021, 492-3072, 492-3169, 493-1019, 493-1038, 494-6807, 495-8349, 501-2466, 502-9462, 504-5365, 504-8134, 504-9579, 506-9918, 507-8016, 510-1088, 512-9858, 513-0851, 513-8513, 514-9367, 519-4128, 520-3152, 525-8759, 526-0511, 526-7210, 526-8888, 527-7106, 527-9686, 528-3358, 528-9920, 530-1323, 530-2601, 533-2797, 533-3588, 535-8060, 536-6675, 539-6915, 539-8582, 543-4255, 552-3506, 552-8869, 555-4669, 562-8873, 563-6728, 563-6729, 563-6730, 565-1247, 569-7846, 583-8352, 591-1266, 591-9440, 593-7287, 593-7288, 594-2125, 596-4834, 596-7090, 597-9248, 598-9881, 602-8721, 603-5300, 609-9819, 612-1735, 613-9482, 614-9555, 622-6239, 623-1309, 624-0698, 627-8019, 627-8054, 627-8129, 628-4345, 633-4335, 633-7776, 657-2370 ENGINE AR-PRIMARY

SMCS-1306 **i05583129**

NOTE	PART NUMBER	QTY	PART NAME 1 2 3 4 5 6 (PRODUCT LEVEL)	SEE PAGE
	225-7941	1	PLUG	
	330-5898	1	SEAL-O-RING	

<END>

346-0737 PUMP GP-ENGINE OIL

PART OF 461-4656 ENGINE AR-PRIMARY

SMCS-1304, 1315 **i06980129**

NOTE	REF NO	GRAPHIC REF	PART NUMBER	QTY	PART NAME 1 2 3 4 5 6 (PRODUCT LEVEL)	SEE PAGE
	1	1	**373-8014**	1	PUMP-OIL	
M	2	1	**6I-1090**	4	BOLT (M8X1.25X40-MM)	

M - METRIC PART

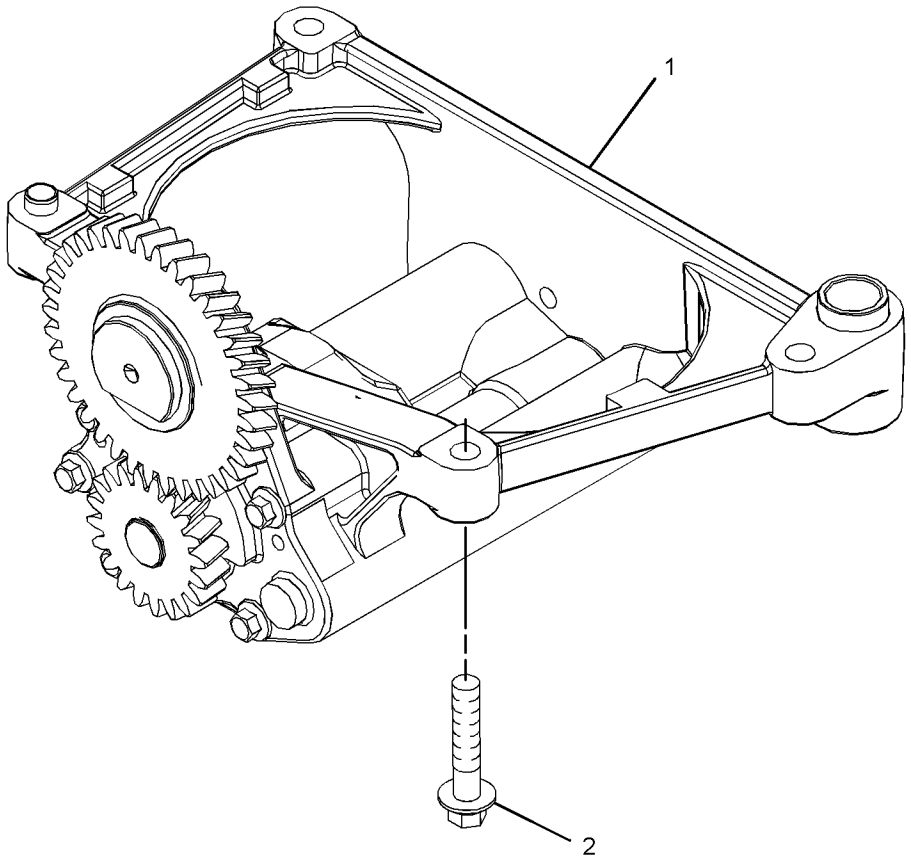

GRAPHIC #1 <END> g02815299

462-6685 PUMP GP-ENGINE OIL

PART OF 596-2071 ENGINE AR-COMPLETE, 451-8343, 461-4638, 461-4649, 461-4656, 461-4658, 466-1160, 466-1161, 466-1162, 466-1163, 468-0461, 468-8218, 470-8667, 470-8814, 471-0541, 474-7299, 475-8297, 475-9060, 478-4257, 479-9398, 480-2181, 481-0811, 482-0212, 484-2939, 485-8027, 486-2644, 486-4250, 488-6687, 489-9006, 491-2606, 491-4973, 491-4980, 491-4993, 491-7124, 492-3021, 492-3072, 492-3169, 493-1019, 493-1038, 494-2073, 494-6807, 495-8349, 499-7181, 501-2466, 502-9462, 504-3629, 504-5365, 504-8134, 504-9579, 506-5035, 506-9918, 507-8016, 508-0270, 510-1088, 512-9858, 513-0851, 513-8513, 514-9367, 515-9203, 519-4128, 520-3152, 520-4644, 524-8271, 525-8759, 526-0511, 526-7210, 526-8888, 527-7106, 527-9686, 528-3358, 528-9866, 528-9920, 530-1323, 530-2601, 531-2492, 533-2797, 533-3588, 535-8060, 536-6675, 539-6915, 539-8582, 543-4255, 552-3506, 552-8869, 553-1809, 553-3730, 555-4669, 562-8873, 563-6728, 563-6729, 563-6730, 565-1247, 569-7846, 575-2879, 575-2880, 583-8352, 591-1266, 591-9440, 593-7287, 593-7288, 594-2125, 596-4834, 596-7090, 596-8896, 596-8905, 597-9248, 598-9881, 602-8721, 603-5300, 608-9261, 609-9819, 612-1735, 613-9482, 614-5795, 614-9555, 622-6239, 623-1309, 624-0698, 627-8019, 627-8054, 627-8129, 628-4345, 633-4335, 633-7776, 645-2039, 657-2370 ENGINE AR-PRIMARY

SMCS-1304, 1315 **i07025260**

NOTE	REF NO	GRAPHIC REF	PART NUMBER	QTY	PART NAME 1 2 3 4 5 6 (PRODUCT LEVEL)	SEE PAGE
	1	1	**420-0454**	1	PUMP AS-OIL	
M	2	1	**6I-1090**	4	BOLT (M8X1.25X40-MM)	

M - METRIC PART

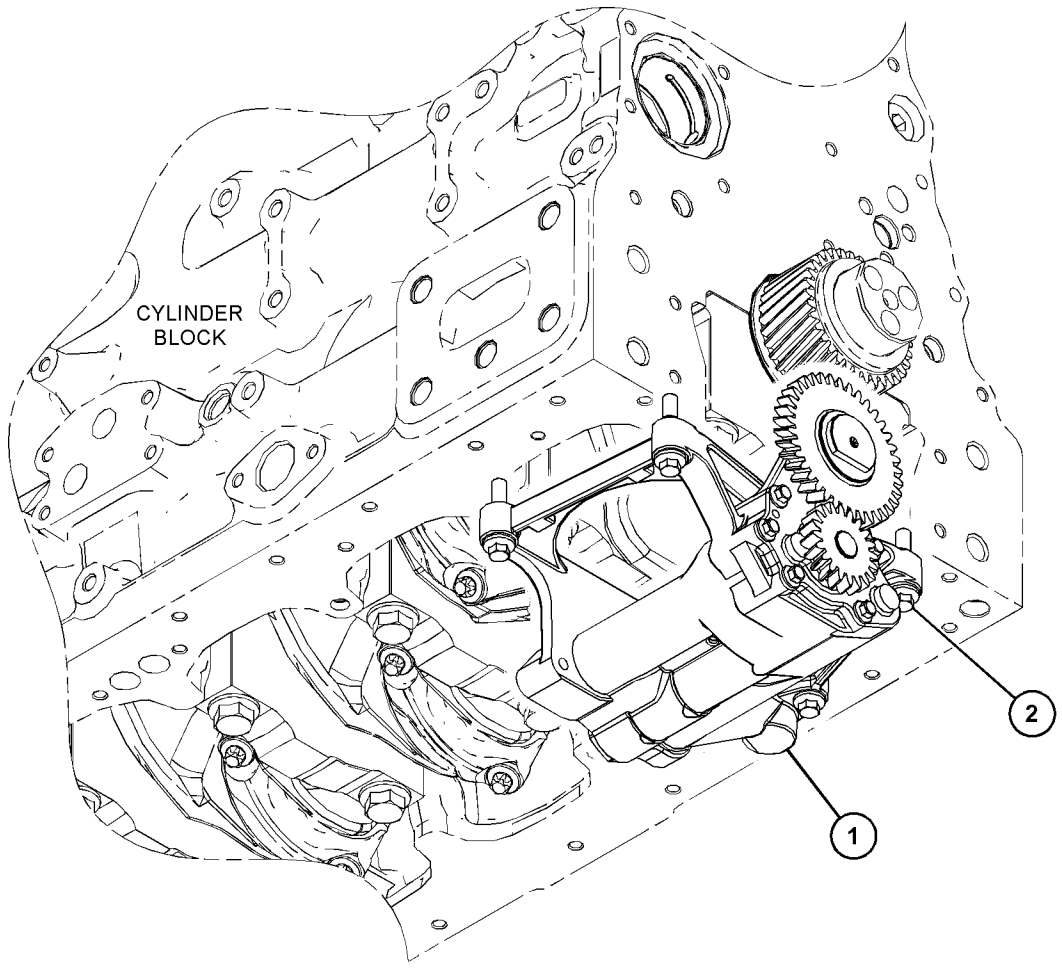

GRAPHIC #1 <END> g03797853

371-2745 VALVE GP-FLUID SAMPLING

PART OF 468-8218, 470-8667, 470-8814, 474-7299, 475-8297, 475-9060, 478-4257, 488-6687, 491-2606, 494-2073, 499-7181, 504-3629, 506-5035, 508-0270, 515-9203, 524-8271, 528-9866, 531-2492, 553-1809, 553-3730, 575-2879, 575-2880, 596-8896, 596-8905, 608-9261, 614-5795, 645-2039 ENGINE AR-PRIMARY

SMCS-7542 **i05723738**

NOTE	REF NO	GRAPHIC REF	PART NUMBER	QTY	PART NAME 1 2 3 4 5 6 (PRODUCT LEVEL)	SEE PAGE
	1	1	**216-9633**	1	VALVE AS-FLUID SAMPLING	
	2	1	**8C-3445**	1	CAP-DUST	

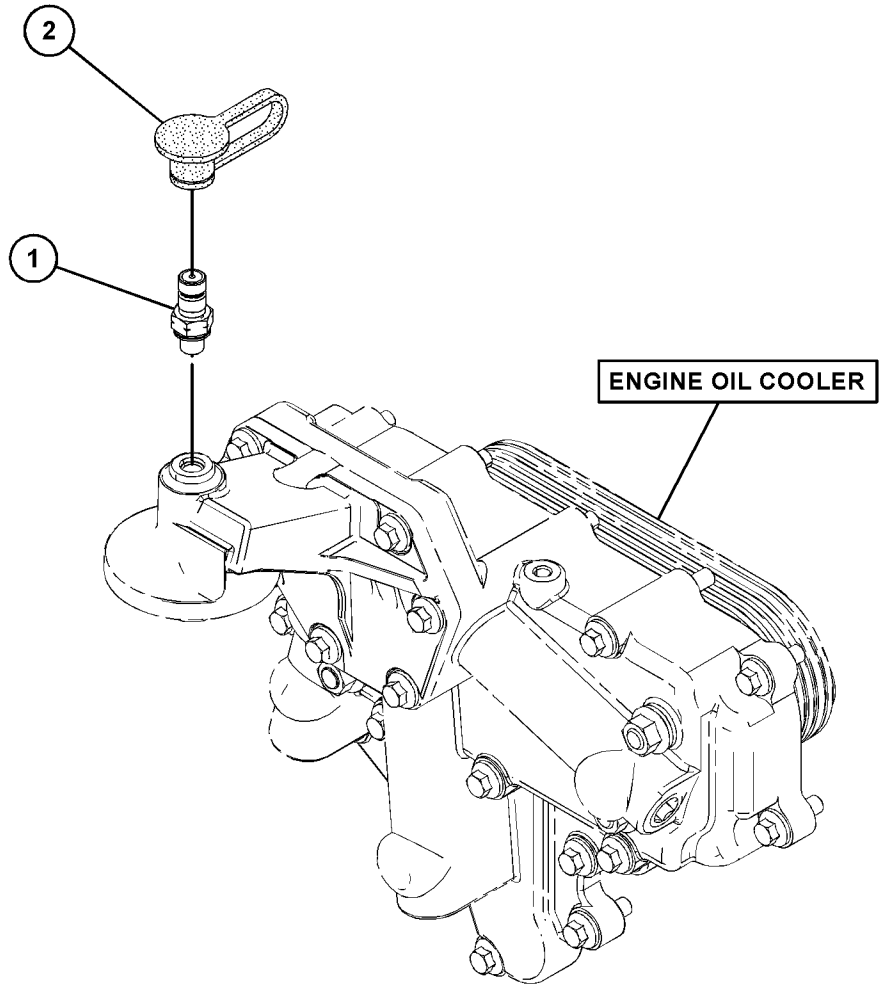

GRAPHIC #1 <END> g03178016

346-2911 CONNECTION GP-HEATER

FOR USE WITH OPTIONAL CUSTOMER CONNECTION FOR CAB HEATER

PART OF 468-8218, 470-8814, 478-4257, 481-0811, 488-6687, 515-9203, 520-4644, 524-8271, 526-7210, 528-9866, 575-2879, 575-2880, 594-2125, 608-9261, 613-9482, 614-5795, 645-2039 ENGINE AR-PRIMARY

SMCS-1333, 1380, 1383 **i05582482**

NOTE	REF NO	GRAPHIC REF	PART NUMBER	QTY	PART NAME 1 2 3 4 5 6 (PRODUCT LEVEL)	SEE PAGE
	1	1	**067-6823**	1	PLUG	
	2	1	**9X-3959**	1	ELBOW	
	3	1	**7W-4669**	1	ADAPTER	

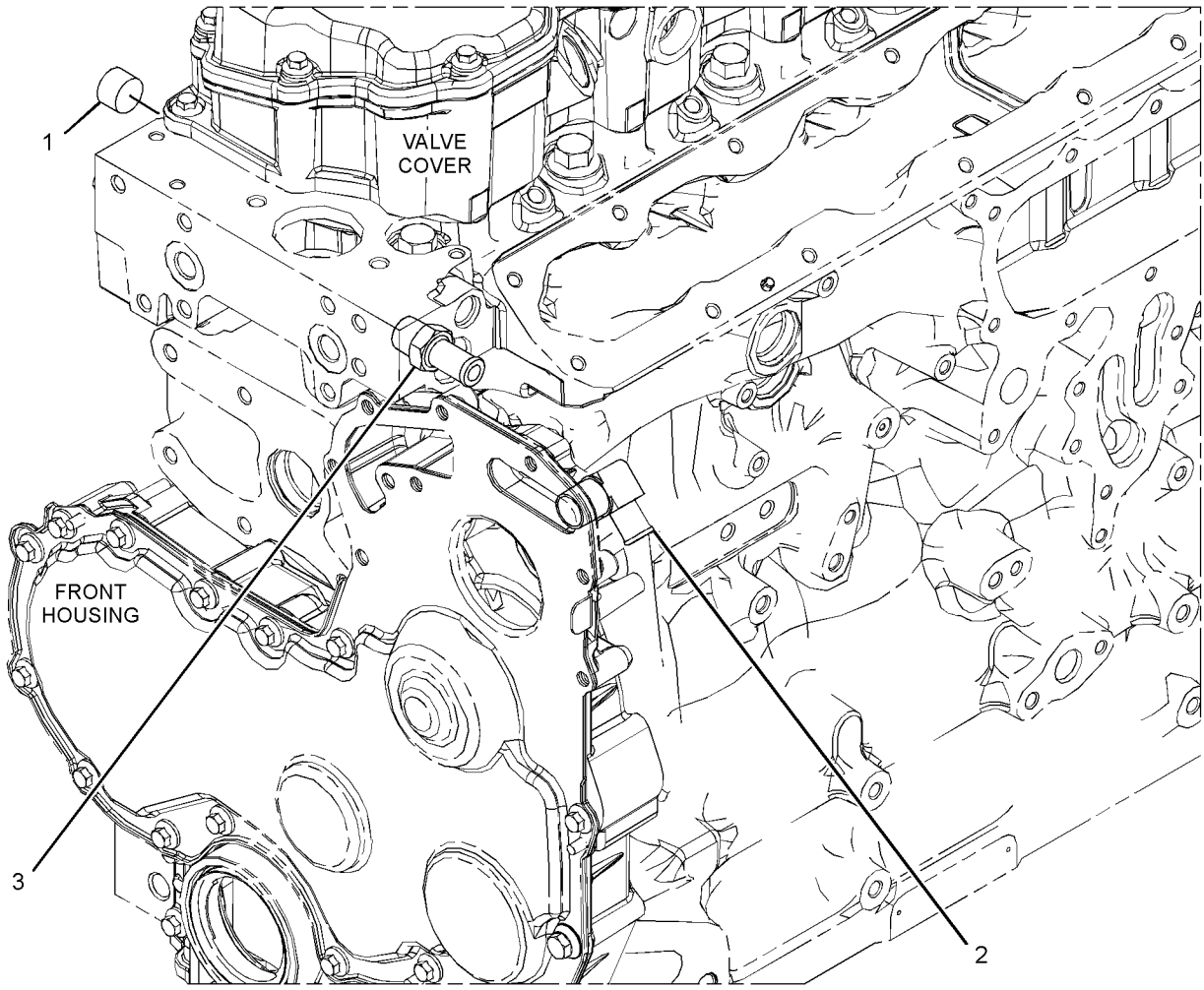

GRAPHIC #1 <END> g03105759

373-3606 CONNECTION GP-WATER

PART OF 468-8218, 474-7299, 491-2606, 494-2073, 504-3629, 506-9918, 528-9920, 531-2492, 553-3730, 594-2125, 596-8896, 596-8905 ENGINE AR-PRIMARY

SMCS-1380 **i05752984**

NOTE	REF NO	GRAPHIC REF	PART NUMBER	QTY	PART NAME 1 2 3 4 5 6 (PRODUCT LEVEL)	SEE PAGE
M	1	1	**123-2899**	1	BOLT (M10X1.5X40-MM)	
	2	1	**367-1817**	1	CONNECTION AS (INCLUDES TEMPERATURE REGULATOR)	
	2A	1	**367-8509**	1	SEAL-BONDED	
	2B	1	**367-8512**	1	PLUG	
M	3	1	**103-5687**	1	BOLT (M10X1.5X85-MM)	
	4	1	**281-8744**	1	GASKET-WATER REGULATOR	

M - METRIC PART

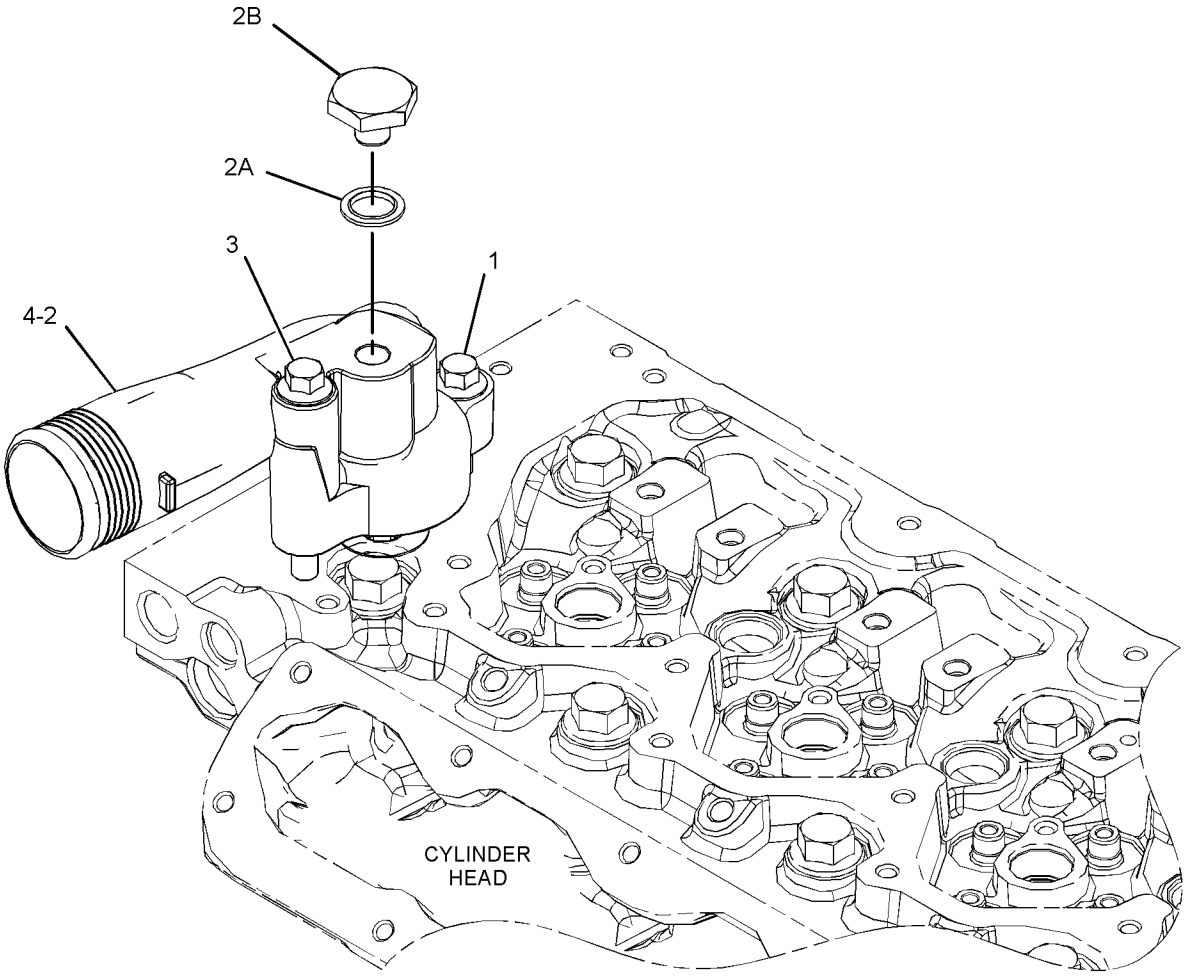

GRAPHIC #1 <END> g03483203

373-3607 CONNECTION GP-WATER

PART OF 596-2071 ENGINE AR-COMPLETE, 451-8343, 461-4638, 461-4649, 461-4656, 461-4658, 466-1160, 466-1161, 466-1162, 466-1163, 468-0461, 470-8667, 470-8814, 471-0541, 475-8297, 475-9060, 478-4257, 479-9398, 480-2181, 482-0212, 484-2939, 485-8027, 486-2644, 486-4250, 489-9006, 491-4973, 491-4980, 491-4993, 491-7124, 492-3021, 492-3072, 492-3169, 493-1019, 493-1038, 494-6807, 495-8349, 499-7181, 501-2466, 502-9462, 504-5365, 504-8134, 504-9579, 506-5035, 507-8016, 508-0270, 510-1088, 512-9858, 513-0851, 513-8513, 514-9367, 515-9203, 520-3152, 520-4644, 524-8271, 525-8759, 526-0511, 526-7210, 526-8888, 527-7106, 527-9686, 528-3358, 528-9866, 530-1323, 530-2601, 533-2797, 533-3588, 535-8060, 536-6675, 539-6915, 539-8582, 543-4255, 552-8869, 553-1809, 555-4669, 562-8873, 563-6728, 563-6729, 563-6730, 565-1247, 569-7846, 575-2879, 575-2880, 583-8352, 591-1266, 591-9440, 593-7287, 593-7288, 596-4834, 596-7090, 597-9248, 598-9881, 602-8721, 603-5300, 608-9261, 609-9819, 612-1735, 613-9482, 614-5795, 614-9555, 622-6239, 623-1309, 624-0698, 627-8019, 627-8054, 627-8129, 628-4345, 633-4335, 633-7776, 645-2039, 657-2370 ENGINE AR-PRIMARY

SMCS-1380 **i05723841**

NOTE	REF NO	GRAPHIC REF	PART NUMBER	QTY	PART NAME 1 2 3 4 5 6 (PRODUCT LEVEL)	SEE PAGE
M	1	1	**123-2899**	2	BOLT (M10X1.5X40-MM)	
	2	1	**417-7782**	1	REGULATOR AS-WATER TEMPERATURE (INCLUDES CONNECTOR)	
	3	1	**281-8744**	1	GASKET-WATER REGULATOR (TEMPERATURE)	

M - METRIC PART

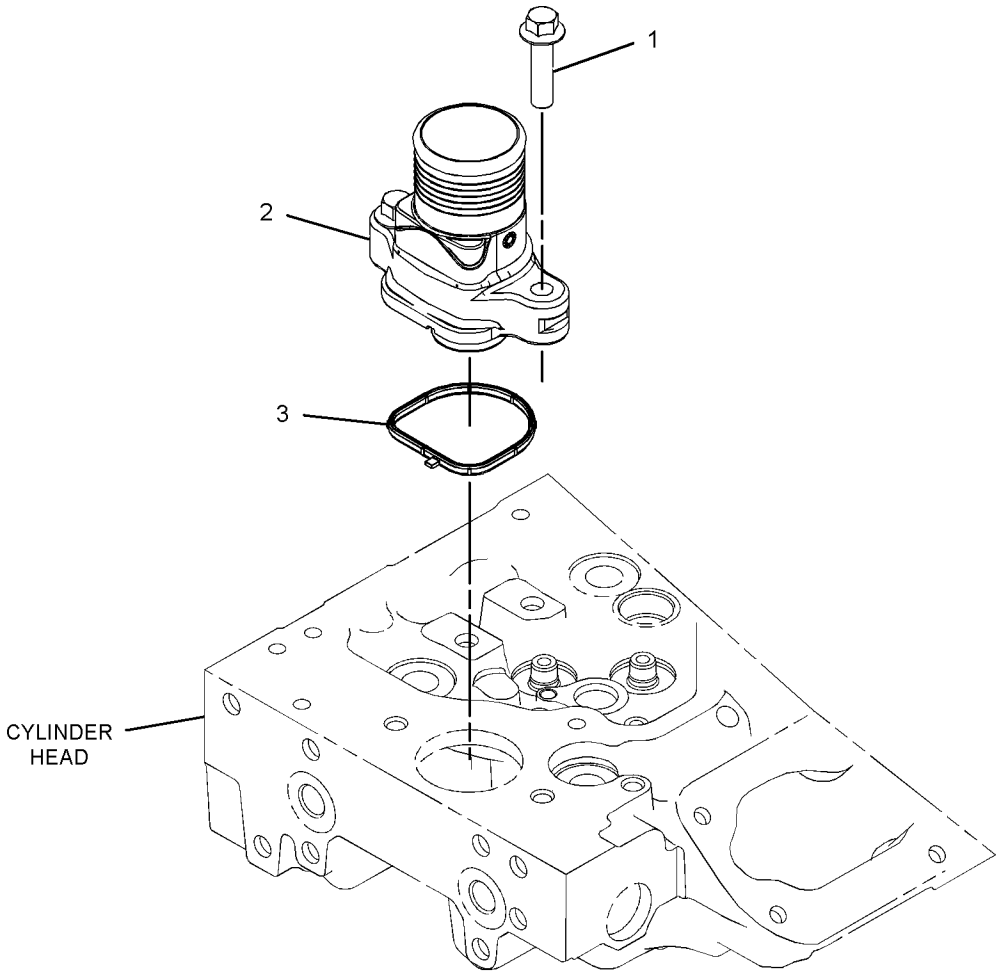

GRAPHIC #1 <END> g03341487

378-8581 CONNECTION GP-WATER

PART OF 481-0811, 488-6687, 519-4128, 552-3506 ENGINE AR-PRIMARY

SMCS-1380 **i05733051**

NOTE	REF NO	GRAPHIC REF	PART NUMBER	QTY	PART NAME 1 2 3 4 5 6 (PRODUCT LEVEL)	SEE PAGE
M	1	1	**103-5687**	1	BOLT (M10X1.5X85-MM)	
M	2	1	**123-2899**	1	BOLT (M10X1.5X40-MM)	
	3	1	**281-8744**	1	GASKET-WATER REGULATOR	
	4	1	**357-8714**	1	CONNECTION AS	
	4A	1	**367-8509**	1	SEAL-BONDED	
	4B	1	**367-8512**	1	PLUG	

M - METRIC PART

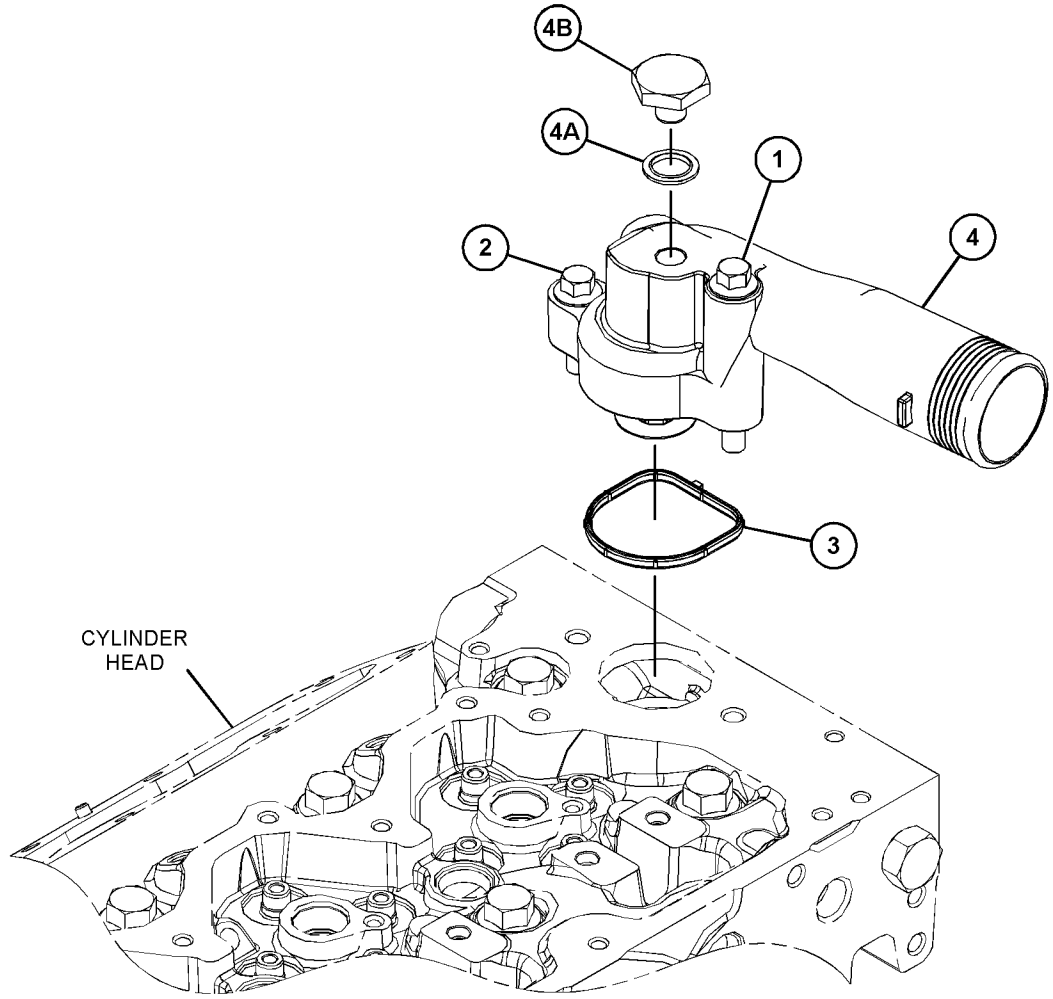

GRAPHIC #1 <END> g03650362

448-9710 CONNECTOR GP-CAB HEATER LINES

PART OF 468-0461, 475-8297, 475-9060, 486-2644, 489-9006, 495-8349, 506-9918, 508-0270, 525-8759, 526-0511, 528-9920, 530-1323, 539-8582, 596-8896, 596-8905, 597-9248, 609-9819 ENGINE AR-PRIMARY

SMCS-1380 **i06211409**

NOTE	REF NO	GRAPHIC REF	PART NUMBER	QTY	PART NAME 1 2 3 4 5 6 (PRODUCT LEVEL)	SEE PAGE
	1	1	**067-6823**	1	PLUG	
	2	1	**113-4616**	1	CONNECTOR	
	3	1	**293-1881**	1	ELBOW	

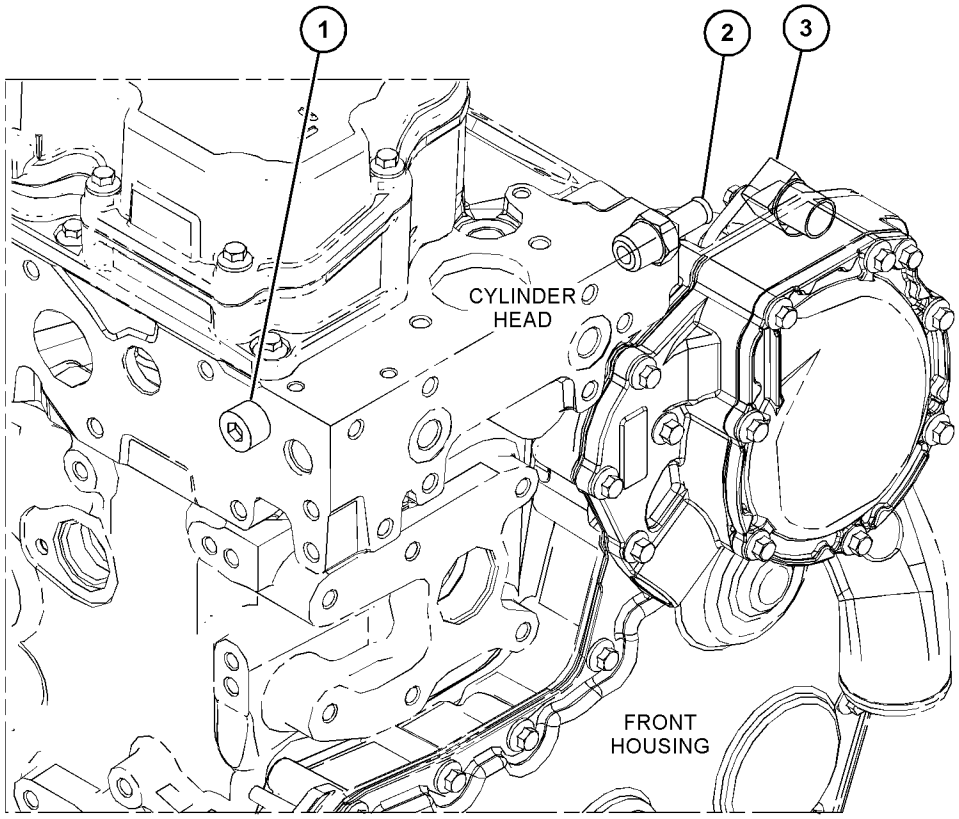

GRAPHIC #1 <END> g03820198

295-8610 COOLER GP-ENGINE OIL

PART OF 346-0099 BASE GP-OIL COOLER & FILTER

SMCS-1378 **i06300695**

NOTE	REF NO	GRAPHIC REF	PART NUMBER	QTY	PART NAME 1 2 3 4 5 6 (PRODUCT LEVEL)	SEE PAGE
M	1	1	**6I-0260**	3	BOLT (M8X1.25X25-MM)	
M	2	1	**6I-0594**	4	NUT (M10X1.5-THD)	
	3	1	**101-3917**	4	WASHER (10.5X21X2-MM THK)	
	4	1	**101-7547**	4	LOCKWASHER	
	5	1	**231-1455**	2	STUD	
	6	1	**277-2500**	1	GASKET	
	7	1	**277-2502**	2	STUD	
	8	1	**277-2503**	3	PLUG	
	9	1	**295-8613**	1	COOLER-OIL (ENGINE)	
	10	1	**295-8615**	2	GASKET	
					PARTS SHOWN IN GRAPHIC(S) WITHOUT A REFERENCE NUMBER ARE NOT SERVICED SEPARATELY	

M - METRIC PART

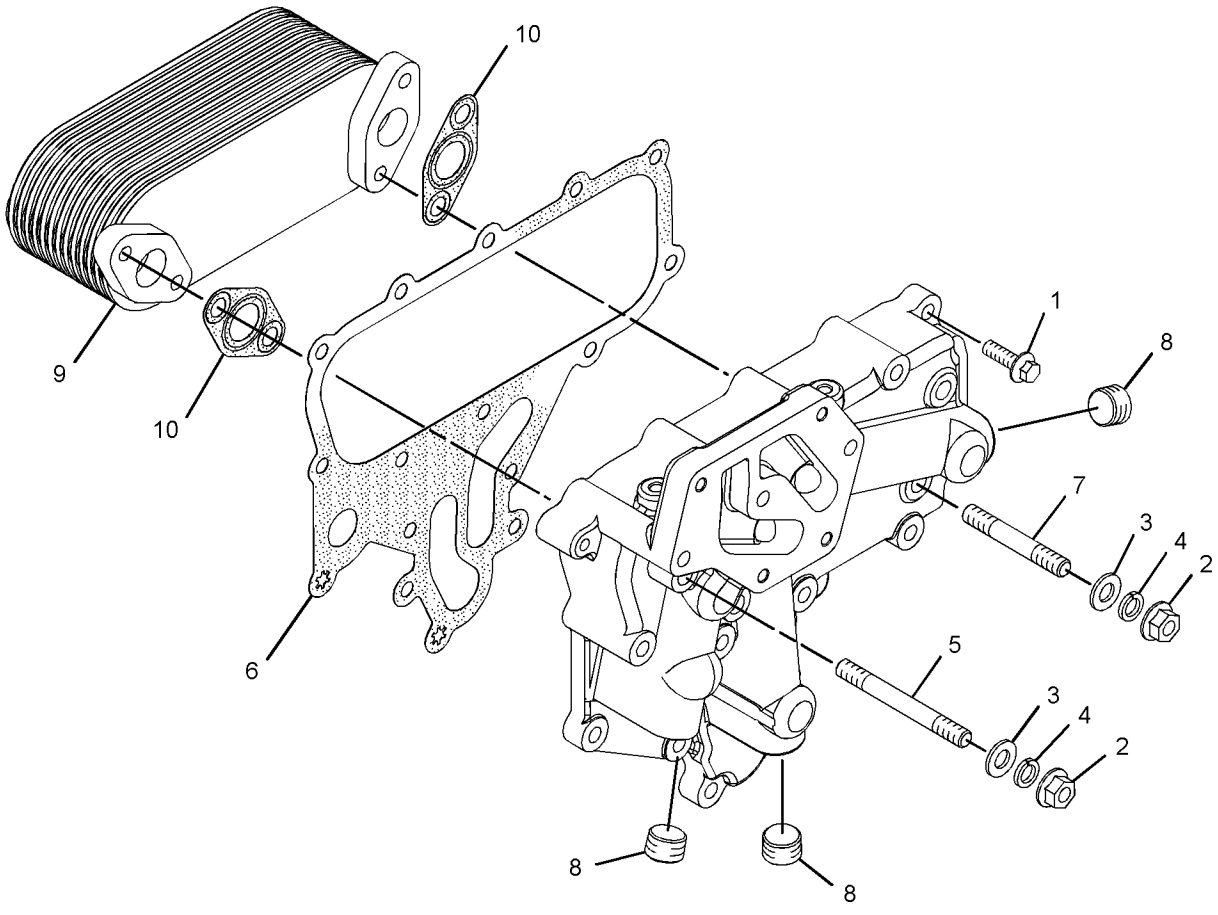

GRAPHIC #1 <END> g03105899

326-7401 COOLER GP-ENGINE OIL

PART OF 346-0091, 346-0097, 445-0303 COOLER GP-ENGINE OIL

SMCS-1378 **i05644584**

NOTE	REF NO	GRAPHIC REF	PART NUMBER	QTY	PART NAME 1 2 3 4 5 6 (PRODUCT LEVEL)	SEE PAGE
M	1	1	**6I-0260**	1	BOLT (M8X1.25X25-MM)	
M	2	1	**6I-4793**	6	BOLT (M8X1.25X50-MM)	
	3	1	**277-2500**	1	GASKET	
	4	1	**281-7039**	1	COOLER-OIL (ENGINE)	
	5	1	**281-7040**	1	GASKET	

M - METRIC PART

326-7401 **COOLER GP-ENGINE OIL (**contd.**)** **i05644584**

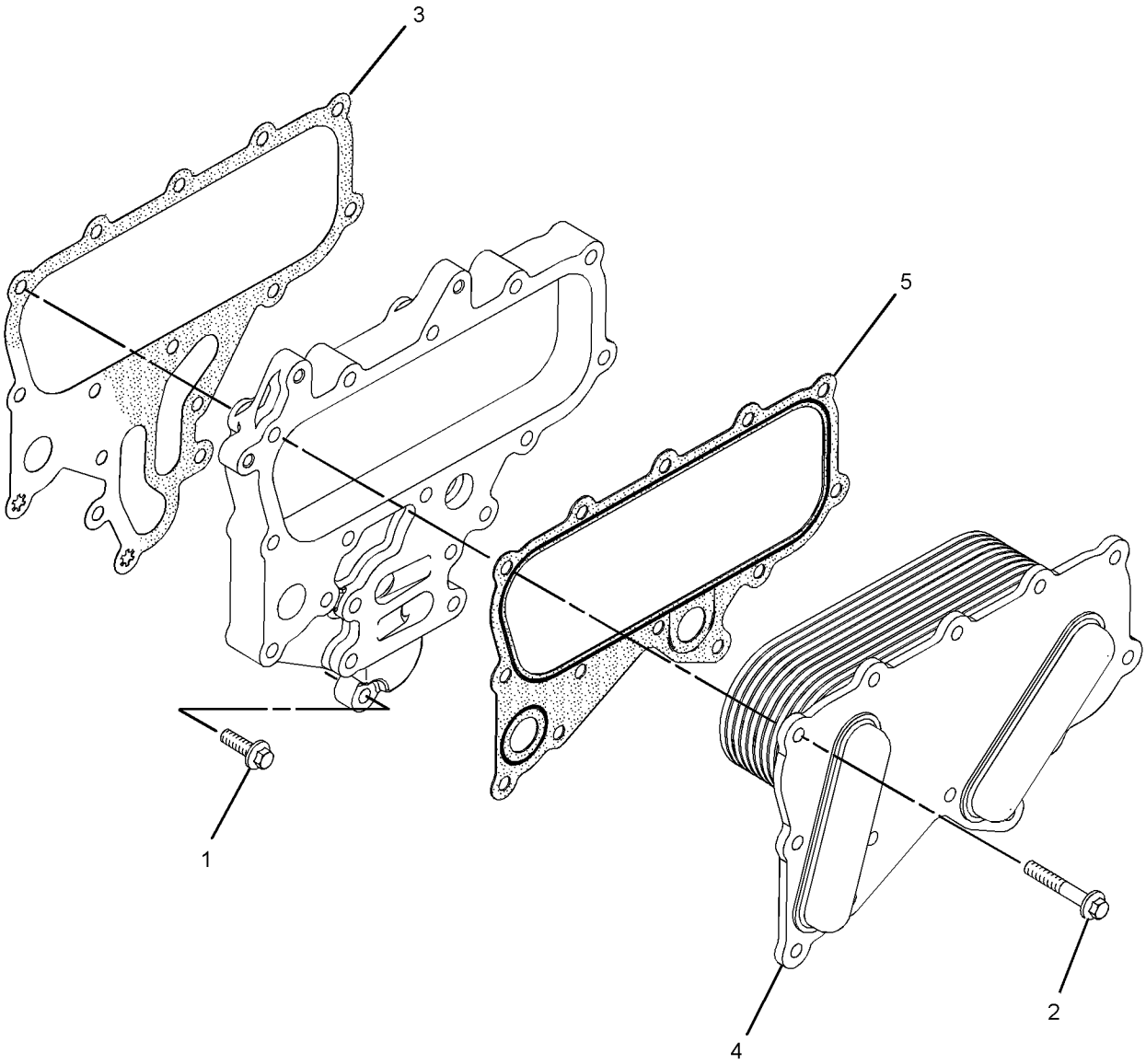

GRAPHIC #1 <END> g01508024

326-7402 COOLER GP-ENGINE OIL

PART OF 378-8276, 378-8280, 443-3790 COOLER GP-ENGINE OIL

SMCS-1378 **i05705749**

NOTE	REF NO	GRAPHIC REF	PART NUMBER	QTY	PART NAME 1 2 3 4 5 6 (PRODUCT LEVEL)	SEE PAGE
M	1	1	**6I-0260**	3	BOLT (M8X1.25X25-MM)	
	2	1	**277-2500**	1	GASKET	
	3	1	**281-7040**	1	GASKET	
	4	1	**287-7424**	1	COOLER AS-OIL	
M	5	1	**6I-0839**	4	BOLT (M8X1.25X70-MM)	

PARTS SHOWN IN GRAPHIC(S) WITHOUT A REFERENCE NUMBER ARE NOT SERVICED SEPARATELY

M - METRIC PART

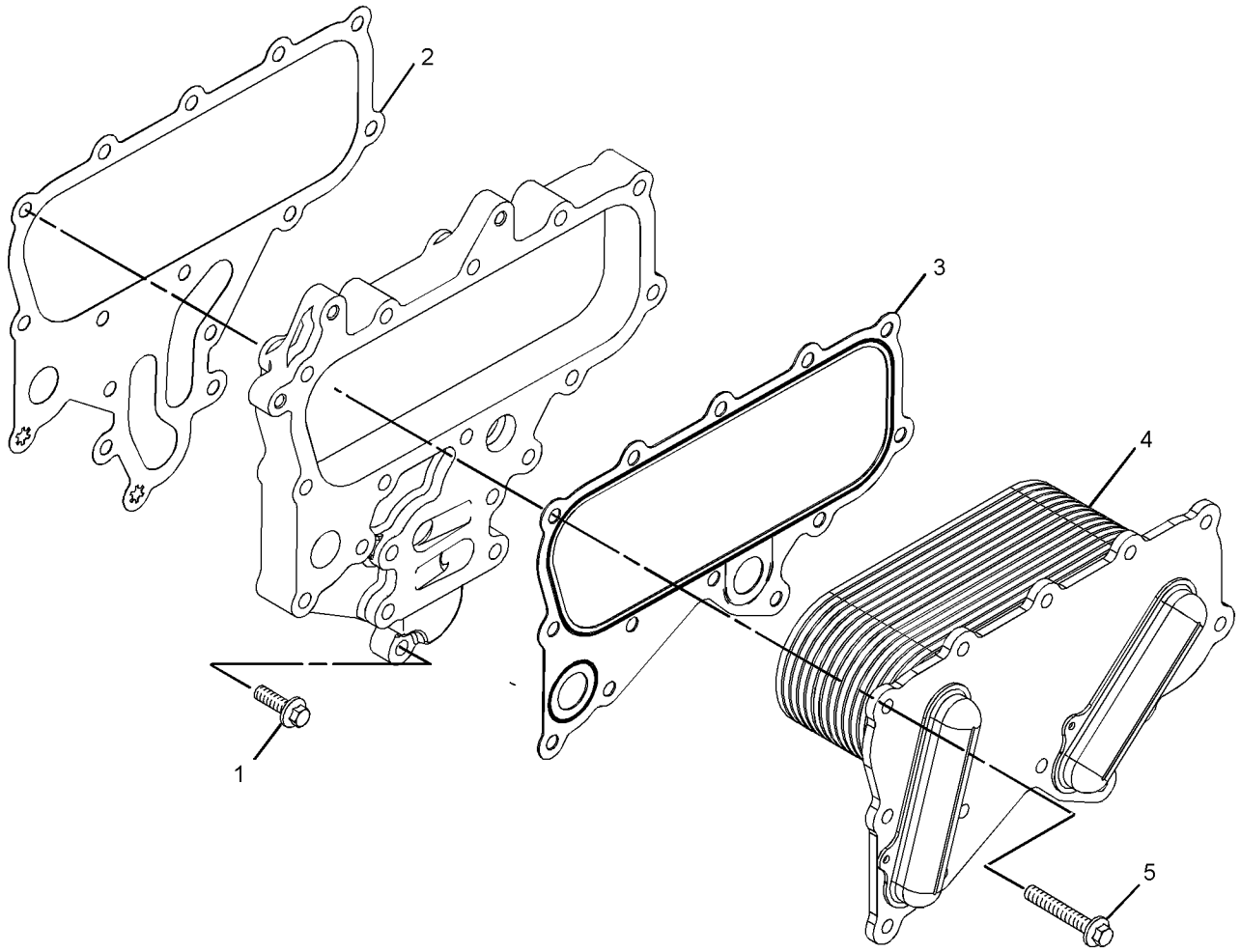

GRAPHIC #1 <END> g03654496

346-0091 COOLER GP-ENGINE OIL

PART OF 596-2071 ENGINE AR-COMPLETE, 461-4638, 461-4649, 466-1160, 471-0541, 482-0212, 491-4973, 492-3021, 492-3072, 492-3169, 493-1038, 504-5365, 596-8896, 612-1735, 627-8129 ENGINE AR-PRIMARY

SMCS-1378 **i06713303**

NOTE	REF NO	GRAPHIC REF	PART NUMBER	QTY	PART NAME 1 2 3 4 5 6 (PRODUCT LEVEL)	SEE PAGE
	1	1	**225-7944**	2	GASKET	
	2	1	**232-3751**	1	PLATE	
	3	1	**277-2537**	1	PLATE	
M	4	1	**6I-0217**	6	BOLT (M8X1.25X20-MM)	
C	5	1	*502-2115*	1	HEAD AS-OIL FILTER	
Y	6	1	**326-7401**	1	COOLER GP-ENGINE OIL	654
M	7	1	**6I-0455**	4	BOLT (M8X1.25X55-MM)	
M	8	1	**6I-4793**	7	BOLT (M8X1.25X50-MM)	

C - CHANGE FROM PREVIOUS TYPE
M - METRIC PART
Y - SEPARATE ILLUSTRATION

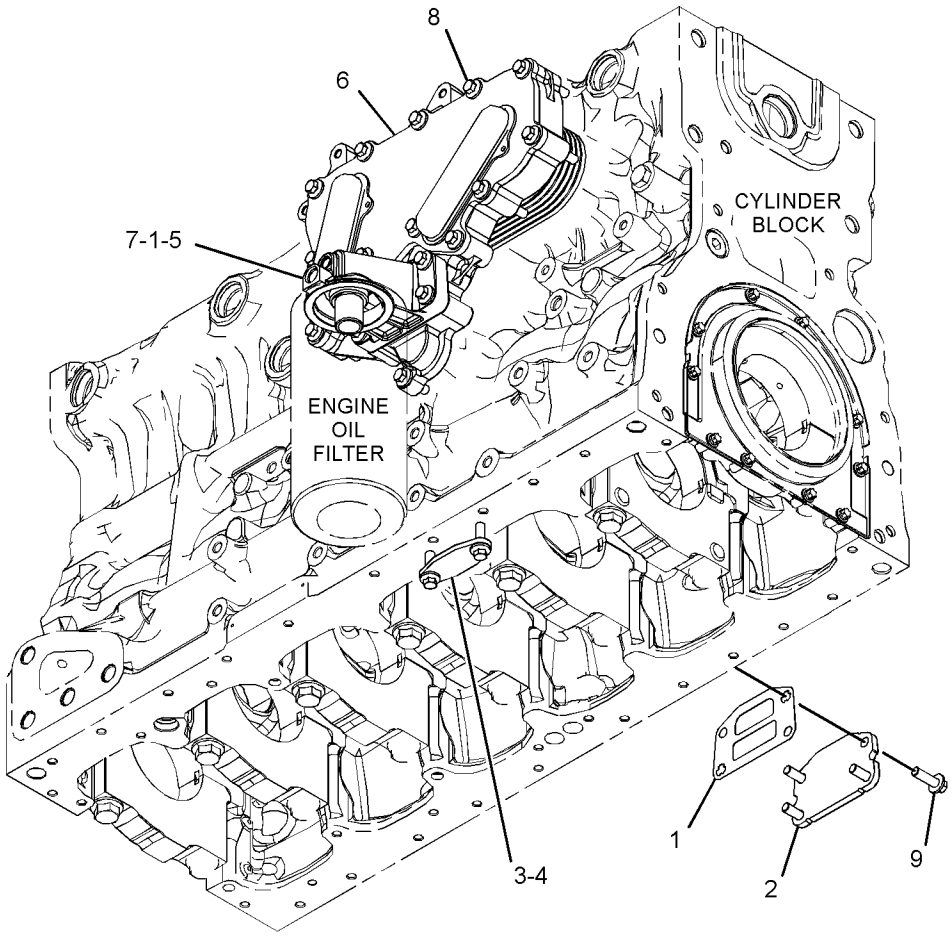

GRAPHIC #1 <END> g03743771

346-0097 COOLER GP-ENGINE OIL

PART OF 475-8297, 488-6687, 494-2073, 508-0270, 512-9858, 527-9686, 555-4669, 627-8054, 628-4345, 633-7776 ENGINE AR-PRIMARY

SMCS-1378 **i05982191**

NOTE	REF NO	GRAPHIC REF	PART NUMBER	QTY	PART NAME 1 2 3 4 5 6 (PRODUCT LEVEL)	SEE PAGE
	1	1	**225-7944**	2	GASKET	
	2	1	**232-3751**	1	PLATE	
M	3	1	**6I-4793**	11	BOLT (M8X1.25X50-MM)	
	4	1	**283-4559**	1	HEAD AS-OIL FILTER	
Y	5	1	**326-7401**	1	COOLER GP-ENGINE OIL	654
	6	1	**367-7142**	1	TUBE AS-OIL	
M	7	1	**6I-0260**	4	BOLT (M8X1.25X25-MM)	
M	8	1	**6I-0456**	4	BOLT (M8X1.25X45-MM)	

M - METRIC PART
Y - SEPARATE ILLUSTRATION

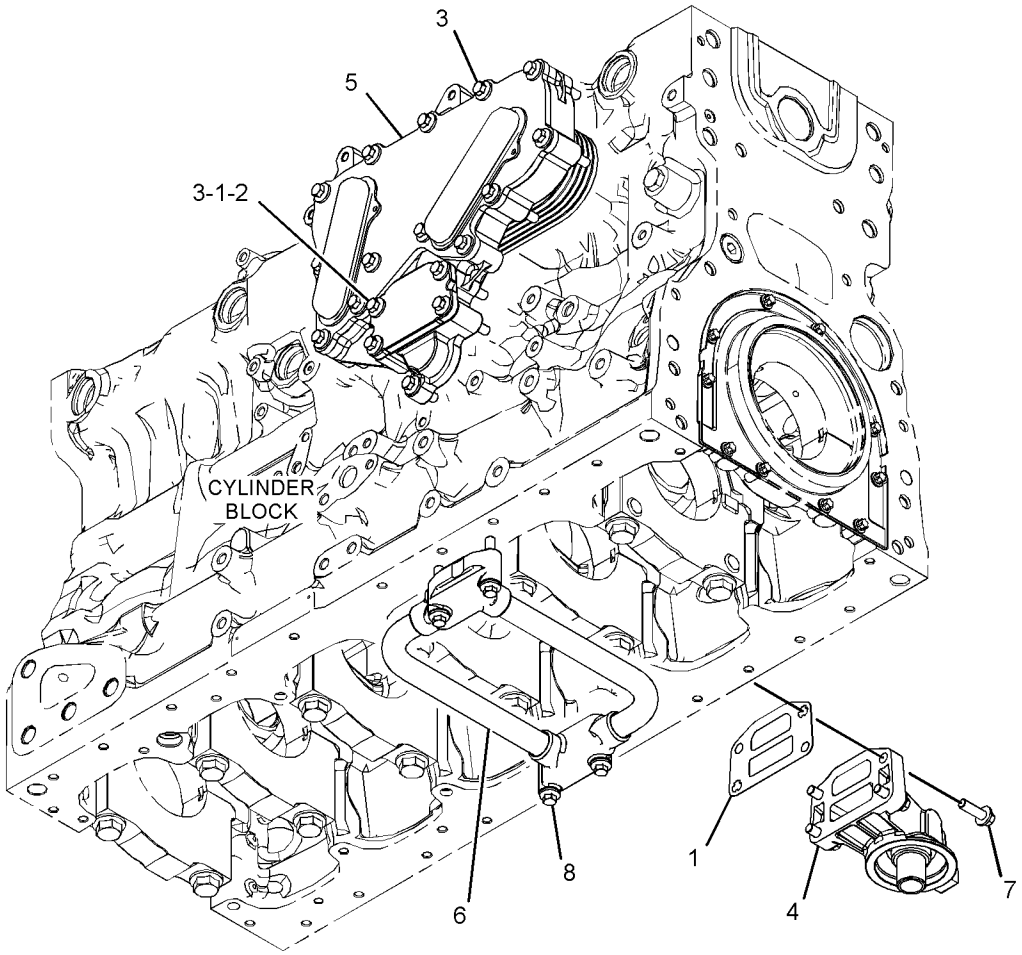

GRAPHIC #1 <END> g03776103

378-8276 COOLER GP-ENGINE OIL

PART OF 461-4656, 461-4658, 466-1161, 466-1162, 466-1163, 468-0461, 479-9398, 480-2181, 486-4250, 489-9006, 491-4980, 491-4993, 491-7124, 493-1019, 495-8349, 501-2466, 502-9462, 504-8134, 507-8016, 510-1088, 513-8513, 520-3152, 526-0511, 526-8888, 530-1323, 530-2601, 533-2797, 535-8060, 539-6915, 539-8582, 543-4255, 562-8873, 563-6730, 565-1247, 569-7846, 583-8352, 591-1266, 596-8905, 597-9248, 602-8721, 603-5300, 609-9819, 614-9555, 622-6239 ENGINE AR-PRIMARY

SMCS-1378 **i09704461**

NOTE	REF NO	GRAPHIC REF	PART NUMBER	QTY	PART NAME 1 2 3 4 5 6 (PRODUCT LEVEL)	SEE PAGE
M	1	1,2	**6I-0217**	6	BOLT (M8X1.25X20-MM)	
M	2	2	**6I-0455**	4	BOLT (M8X1.25X55-MM)	
M	3	2	**6I-0839**	7	BOLT (M8X1.25X70-MM)	
	4	1,2	**225-7944**	2	GASKET	
	5	1	**232-3751**	1	PLATE	
	6	2	**277-2537**	1	PLATE	
Y	7	2	**326-7402**	1	COOLER GP-ENGINE OIL	656
	8	2	**502-2115**	1	HEAD AS-OIL FILTER	

M - METRIC PART
Y - SEPARATE ILLUSTRATION

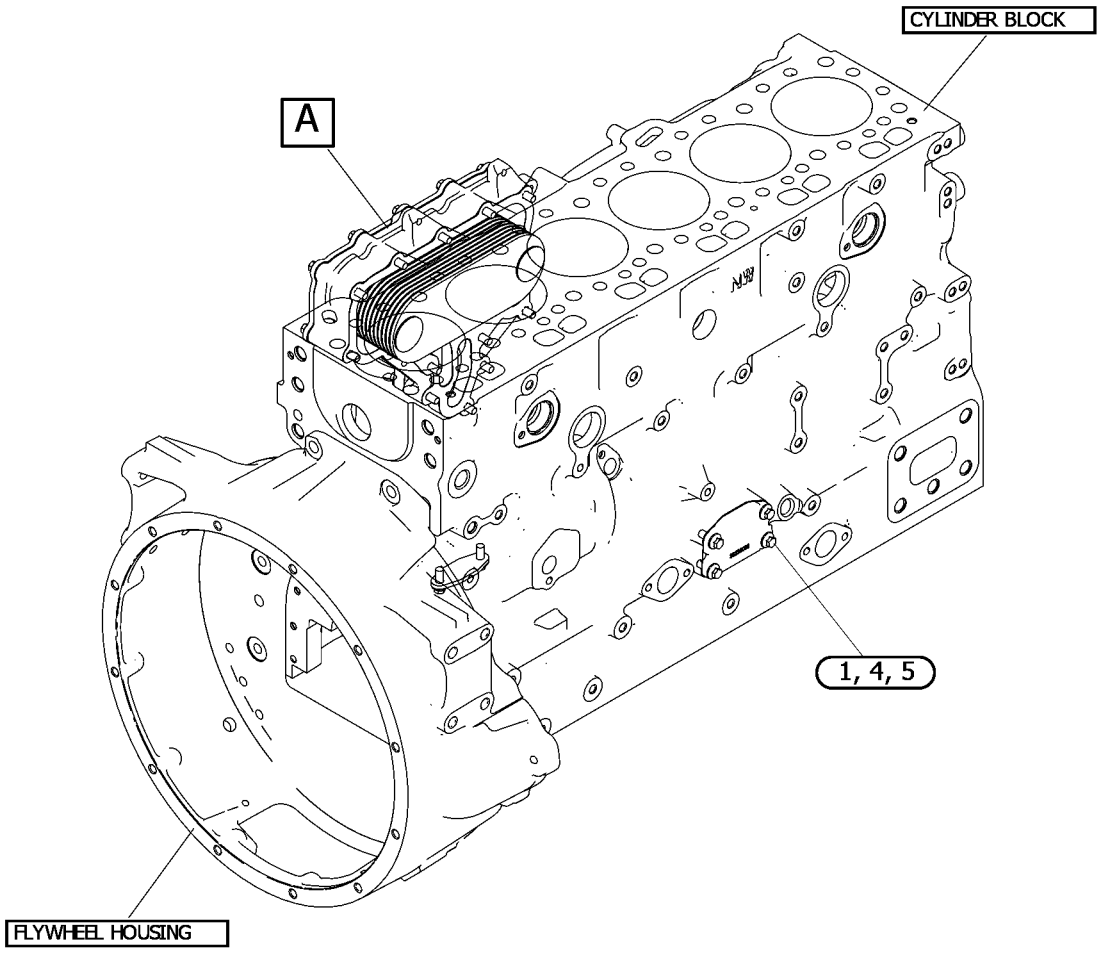

GRAPHIC #1 g07561014

378-8276 **COOLER GP-ENGINE OIL (**contd.**)** **i09704461**

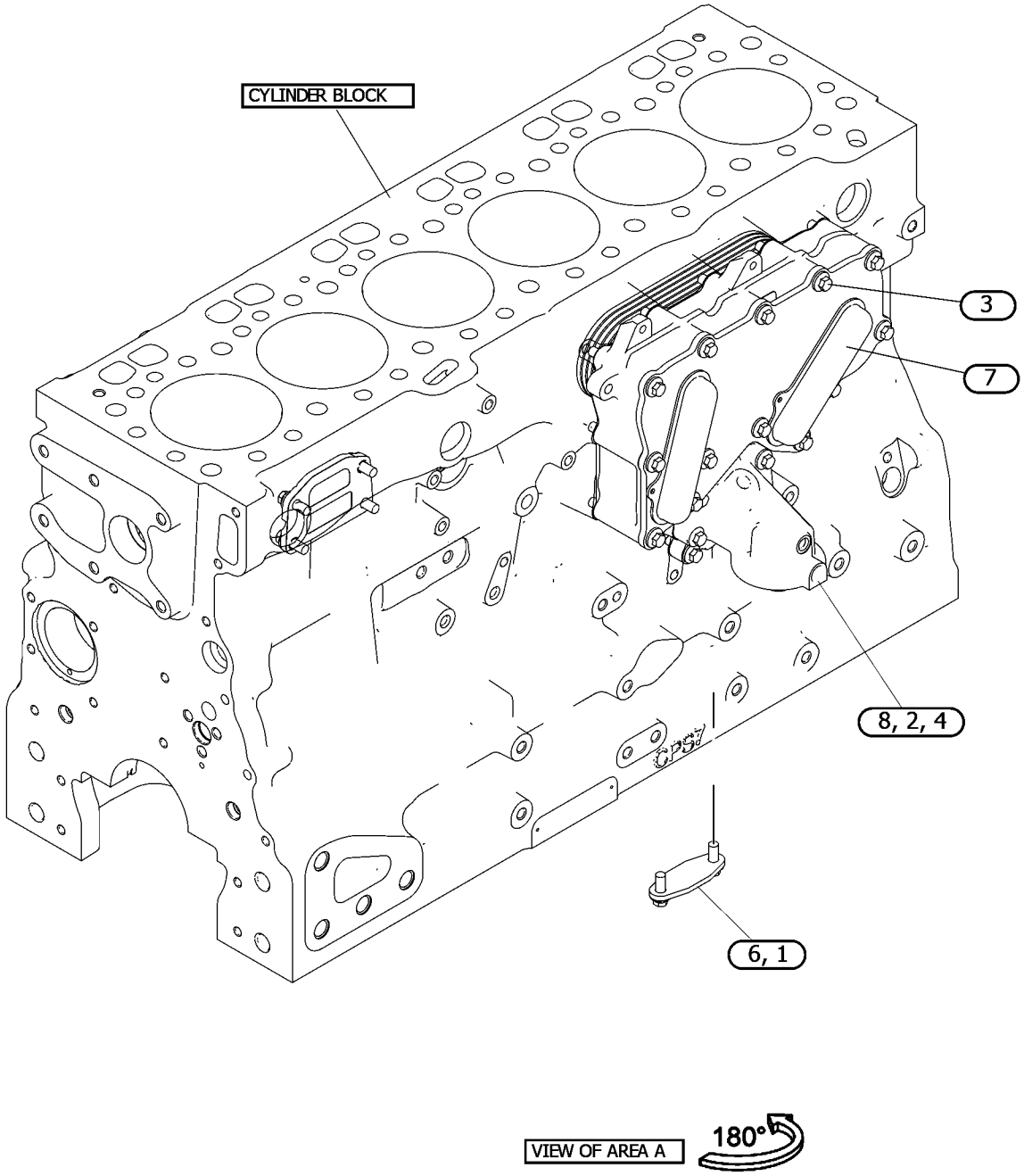

GRAPHIC #2 <END> g07561014_01

378-8280 COOLER GP-ENGINE OIL

PART OF 470-8667, 474-7299, 475-9060, 478-4257, 481-0811, 484-2939, 485-8027, 486-2644, 494-6807, 499-7181, 504-3629, 504-9579, 506-5035, 513-0851, 514-9367, 515-9203, 519-4128, 524-8271, 526-7210, 527-7106, 528-3358, 528-9866, 536-6675, 552-3506, 552-8869, 553-1809, 553-3730, 563-6728, 563-6729, 591-9440, 593-7287, 593-7288, 594-2125, 596-4834, 596-7090, 608-9261, 613-9482, 614-5795, 623-1309, 624-0698, 627-8019, 633-4335, 657-2370 ENGINE AR-PRIMARY

SMCS-1378 **i05985212**

NOTE	REF NO	GRAPHIC REF	PART NUMBER	QTY	PART NAME 1 2 3 4 5 6 (PRODUCT LEVEL)	SEE PAGE
M	1	1	**6I-4793**	4	BOLT (M8X1.25X50-MM)	
	2	1	**367-7142**	1	TUBE AS-OIL	
M	3	1	**6I-0260**	4	BOLT (M8X1.25X25-MM)	
M	4	1	**6I-0456**	4	BOLT (M8X1.25X45-MM)	
	5	1	**283-4559**	1	HEAD AS-OIL FILTER	
	6	1	**225-7944**	2	GASKET (ENGINE OIL FILTER BASE)	
	7	1	**232-3751**	1	PLATE	
M	8	1	**6I-0839**	7	BOLT (M8X1.25X70-MM)	
Y	9	1	**326-7402**	1	COOLER GP-ENGINE OIL	656

M - METRIC PART
Y - SEPARATE ILLUSTRATION

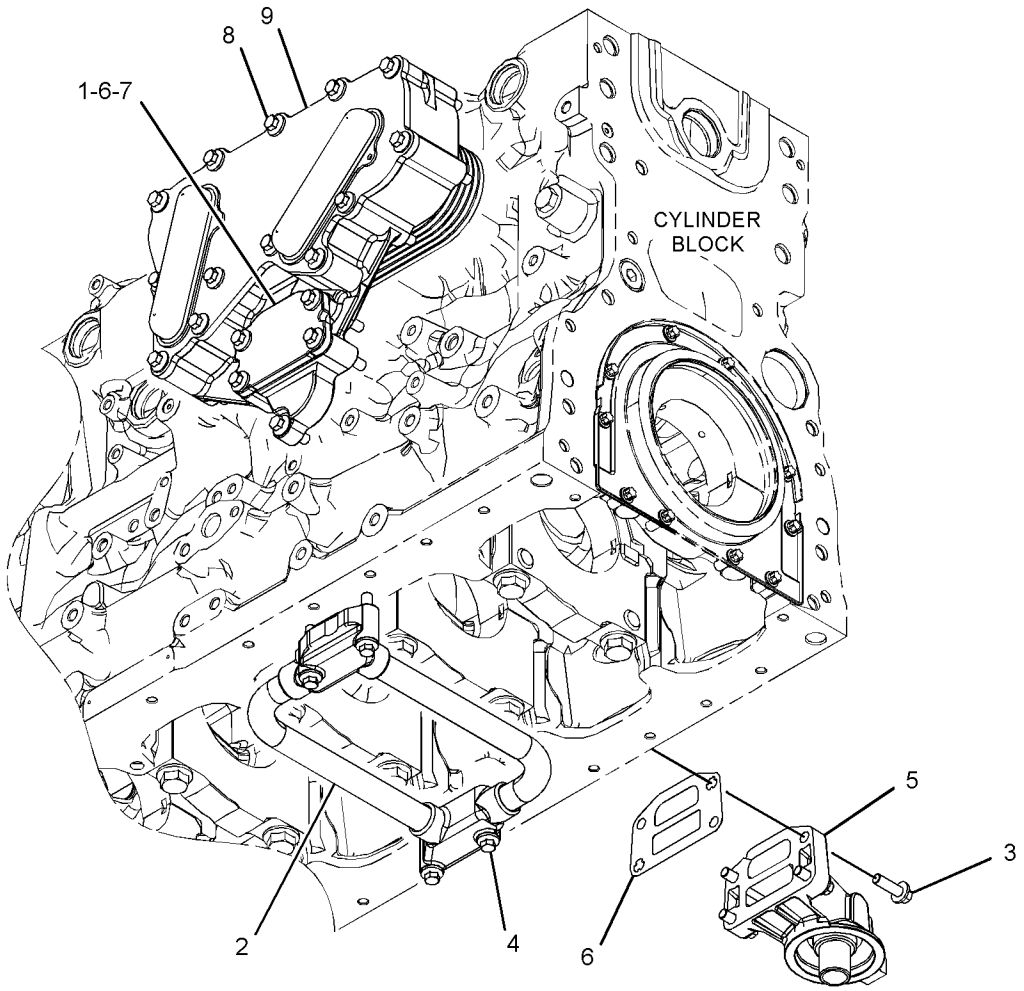

GRAPHIC #1 <END> g03819496

378-8283 COOLER GP-ENGINE OIL

PART OF 468-8218, 470-8814, 491-2606, 506-9918, 525-8759, 528-9920, 531-2492, 533-3588, 575-2880, 598-9881, 645-2039 ENGINE AR-PRIMARY

SMCS-1378 **i06811310**

NOTE	REF NO	GRAPHIC REF	PART NUMBER	QTY	PART NAME 1 2 3 4 5 6 (PRODUCT LEVEL)	SEE PAGE
M	1	1	**103-5705**	3	BOLT (M8X1.25X110-MM)	
M	2	1	**113-8129**	5	BOLT (M8X1.25X75-MM)	
	3	1	**277-2525**	1	HEAD AS-OIL FILTER	
Y	4	1	*419-3606*	1	COOLER GP-ENGINE OIL	663
M	5	1	**6I-0217**	6	BOLT (M8X1.25X20-MM)	
M	6	1	**6I-0260**	8	BOLT (M8X1.25X25-MM)	
	7	1	**225-7944**	1	GASKET	
	8	1	**232-3751**	1	PLATE	
	9	1	**277-2526**	1	GASKET-FILTER	
	10	1	**277-2537**	1	PLATE	

M - METRIC PART
Y - SEPARATE ILLUSTRATION

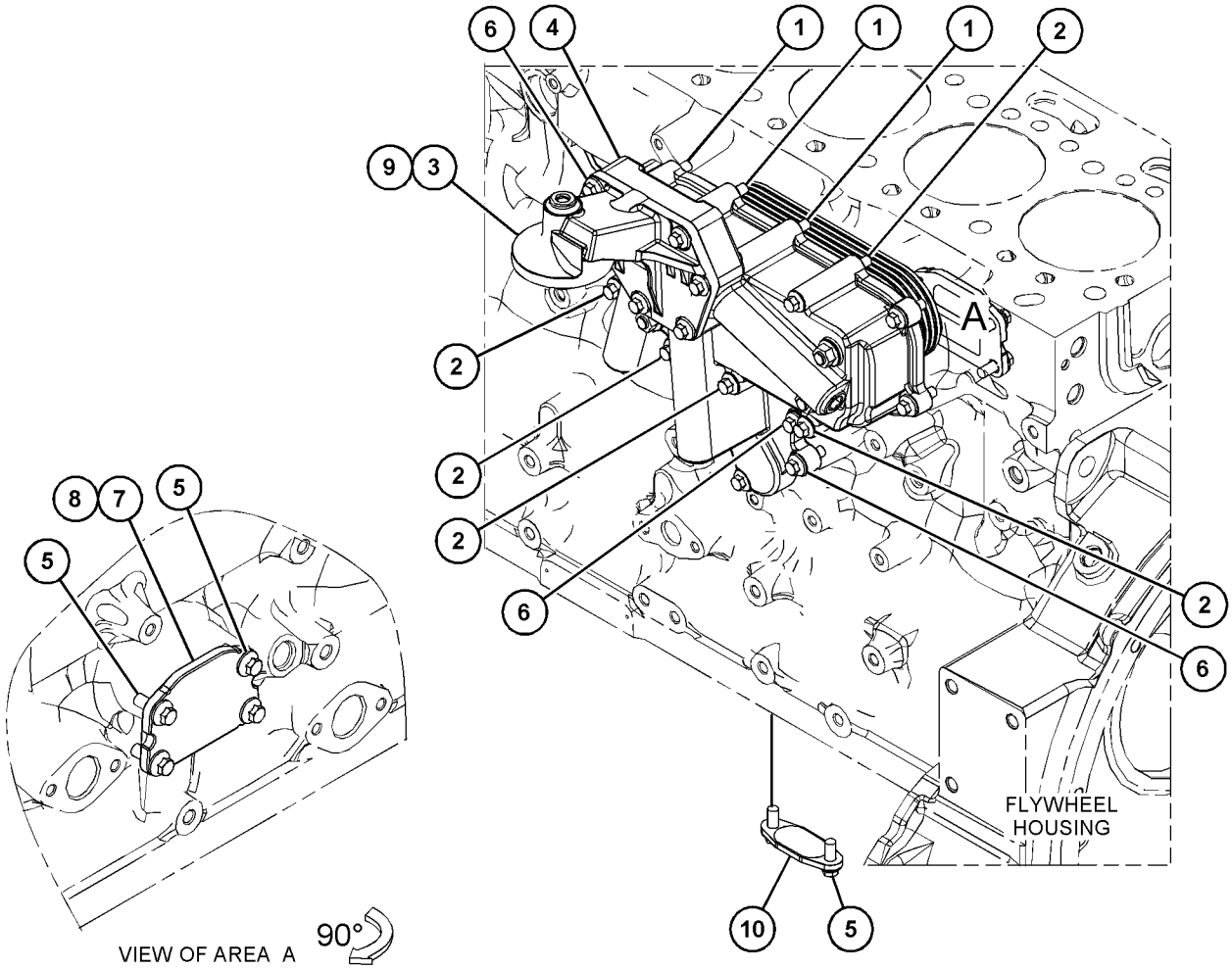

GRAPHIC #1 <END> g06124017

419-3606 COOLER GP-ENGINE OIL

PART OF 378-8283 COOLER GP-ENGINE OIL

SMCS-1378 **i09602381**

NOTE	REF NO	GRAPHIC REF	PART NUMBER	QTY	PART NAME 1 2 3 4 5 6 (PRODUCT LEVEL)	SEE PAGE
M	1	1	**100-4003**	2	STUD (M10X1.5X35-MM)	
M	2	1	**102-9909**	2	STUD (M10X1.5X25-MM)	
J	3	1	**351-8206**	2	SEAL	
	4	1	**419-3607**	1	COOLER	
	5	1	**419-3608**	1	HOUSING	
M	6	1	**6I-0260**	4	BOLT (M8X1.25X25-MM)	
M	7	1	**6I-0594**	4	NUT (M10X1.5-THD)	
J	8	1	**277-2500**	1	GASKET	
	9	1	**277-2503**	3	PLUG	
					AVAILABLE REPAIR KIT(S):	
J			**614-2901**	1	KIT-SEAL	
Y			**614-2917**	1	COOLER GP-ENGINE OIL (KIT)	667

J - KIT MARKED J SERVICES PART(S) MARKED J
M - METRIC PART
Y - SEPARATE ILLUSTRATION

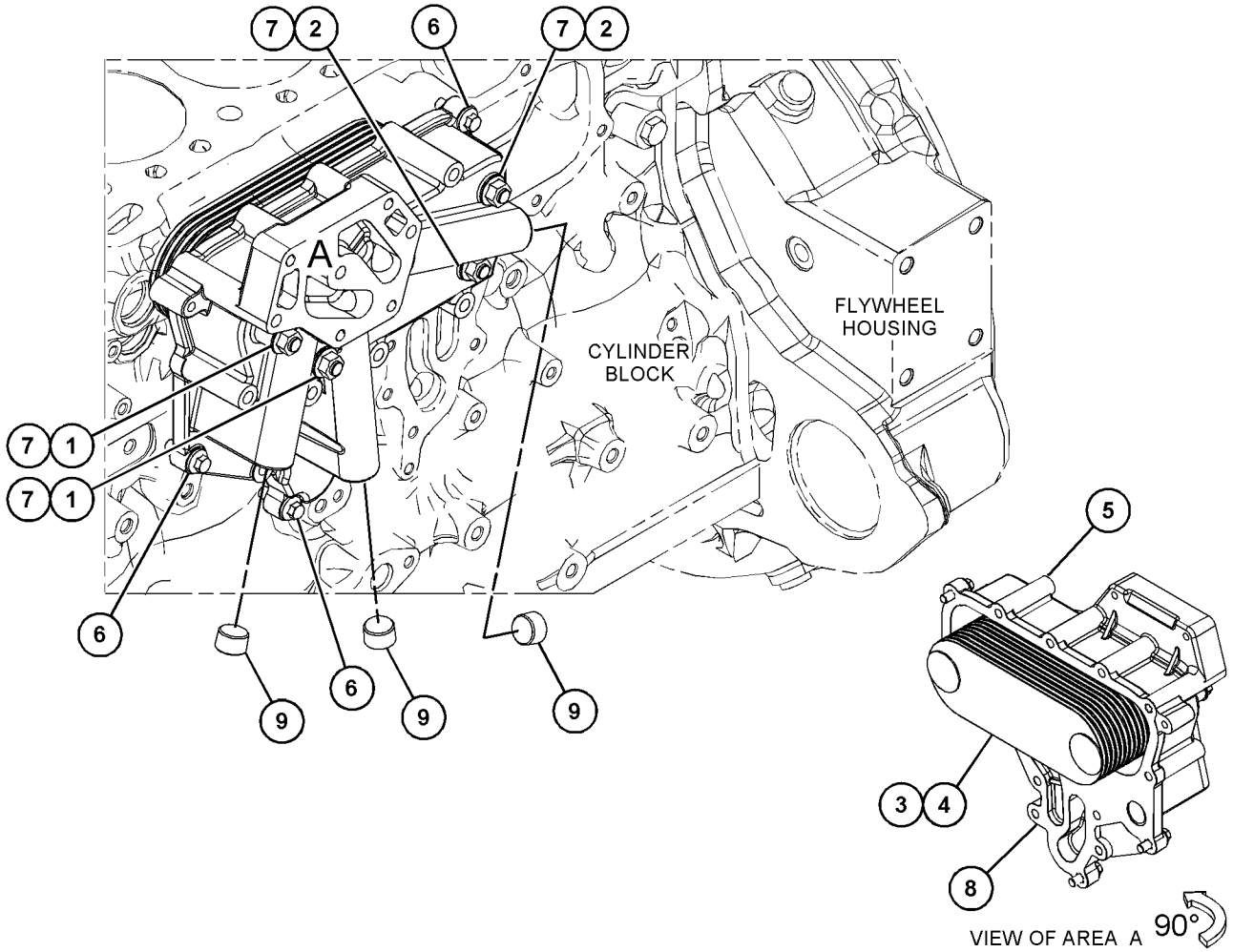

GRAPHIC #1 <END> g03562236

443-3790 COOLER GP-ENGINE OIL

PART OF 451-8343 ENGINE AR-PRIMARY

SMCS-1378 **i06062220**

NOTE	REF NO	GRAPHIC REF	PART NUMBER	QTY	PART NAME 1 2 3 4 5 6 (PRODUCT LEVEL)	SEE PAGE
	1	1	**277-2537**	1	PLATE	
	2	1	**340-4212**	1	ADAPTER	
	3	1	**232-3751**	1	PLATE	
Y	4	1	**326-7402**	1	COOLER GP-ENGINE OIL	656
M	5	1	**6I-0217**	6	BOLT (M8X1.25X20-MM)	
M	6	1	**6I-0455**	4	BOLT (M8X1.25X55-MM)	
M	7	1	**6I-0839**	7	BOLT (M8X1.25X70-MM)	
	8	1	**225-7944**	2	GASKET (ENGINE OIL FILTER BASE)	

M - METRIC PART
Y - SEPARATE ILLUSTRATION

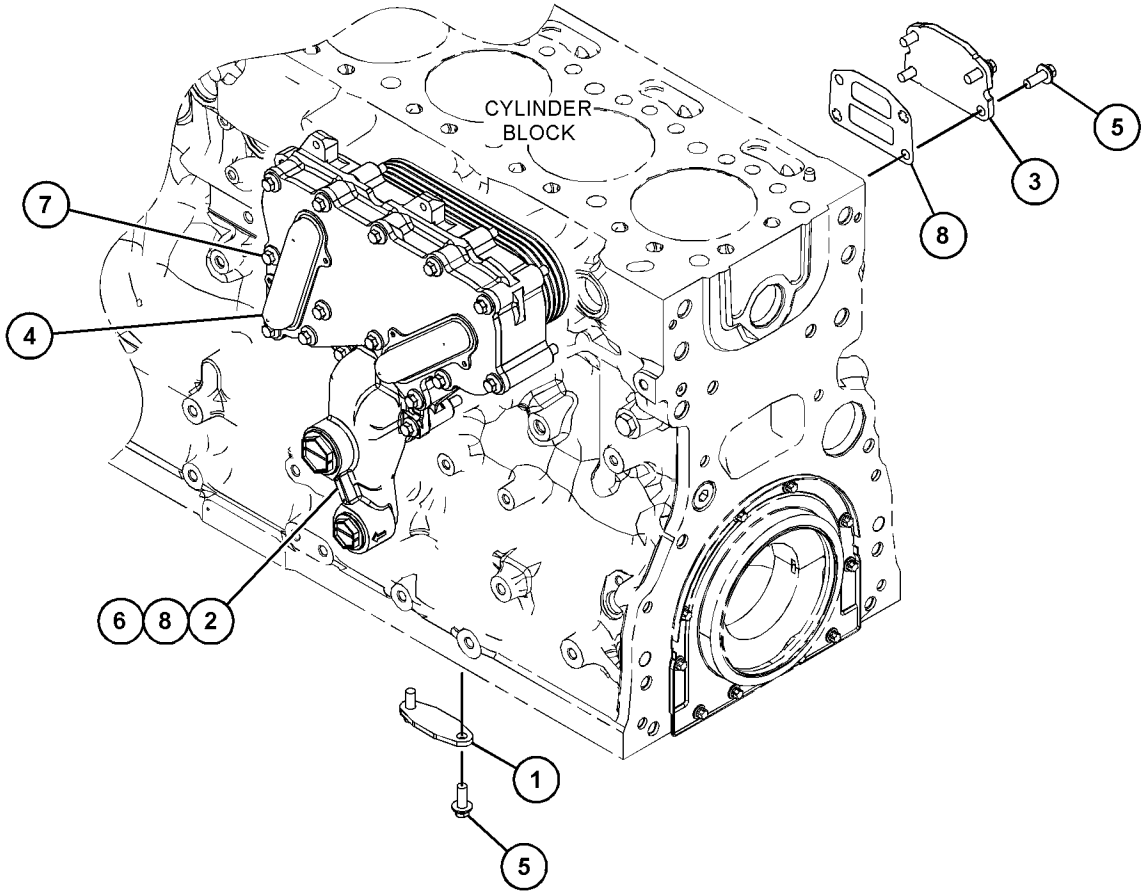

GRAPHIC #1 <END> g03832784

445-0303 COOLER GP-ENGINE OIL

PART OF 520-4644 ENGINE AR-PRIMARY

SMCS-1378 **i07349977**

NOTE	REF NO	GRAPHIC REF	PART NUMBER	QTY	PART NAME 1 2 3 4 5 6 (PRODUCT LEVEL)	SEE PAGE
M	1	1	**6I-4793**	7	BOLT (M8X1.25X50-MM)	
	2	1	**277-2537**	1	PLATE	
I	3	1	**295-1654**	2	HOSE AS	
Y	4	1	**326-7401**	1	COOLER GP-ENGINE OIL	654
	5	1	**340-4212**	1	ADAPTER	
	6	1	**386-7037**	1	ADAPTER AS	
	7	1	**8J-4645**	1	PLUG (STRAIGHT THREAD O-RING)	
	8	1	**8T-6684**	1	ELBOW (90-DEG)	
M	9	1	**6I-0217**	6	BOLT (M8X1.25X20-MM)	
M	10	1	**6I-0455**	4	BOLT (M8X1.25X55-MM)	
	11	1	**153-5294**	1	PLUG	
	12	1	**225-7944**	2	GASKET	
	13	1	**228-7093**	4	SEAL-O-RING	
	14	1	**232-3751**	1	PLATE	
	15	1	**3D-2824**	3	SEAL-O-RING	
	16	1	**6V-8635**	1	ADAPTER	
	17	1	**6V-8714**	1	CONNECTOR	
	18	1	**6V-9008**	1	ELBOW (90-DEG)	
	19	1	**7M-8485**	3	SEAL-O-RING	

I - REFER TO HYDRAULIC INFORMATION SYSTEM
M - METRIC PART
Y - SEPARATE ILLUSTRATION

445-0303 **COOLER GP-ENGINE OIL (**contd.**)** **i07349977**

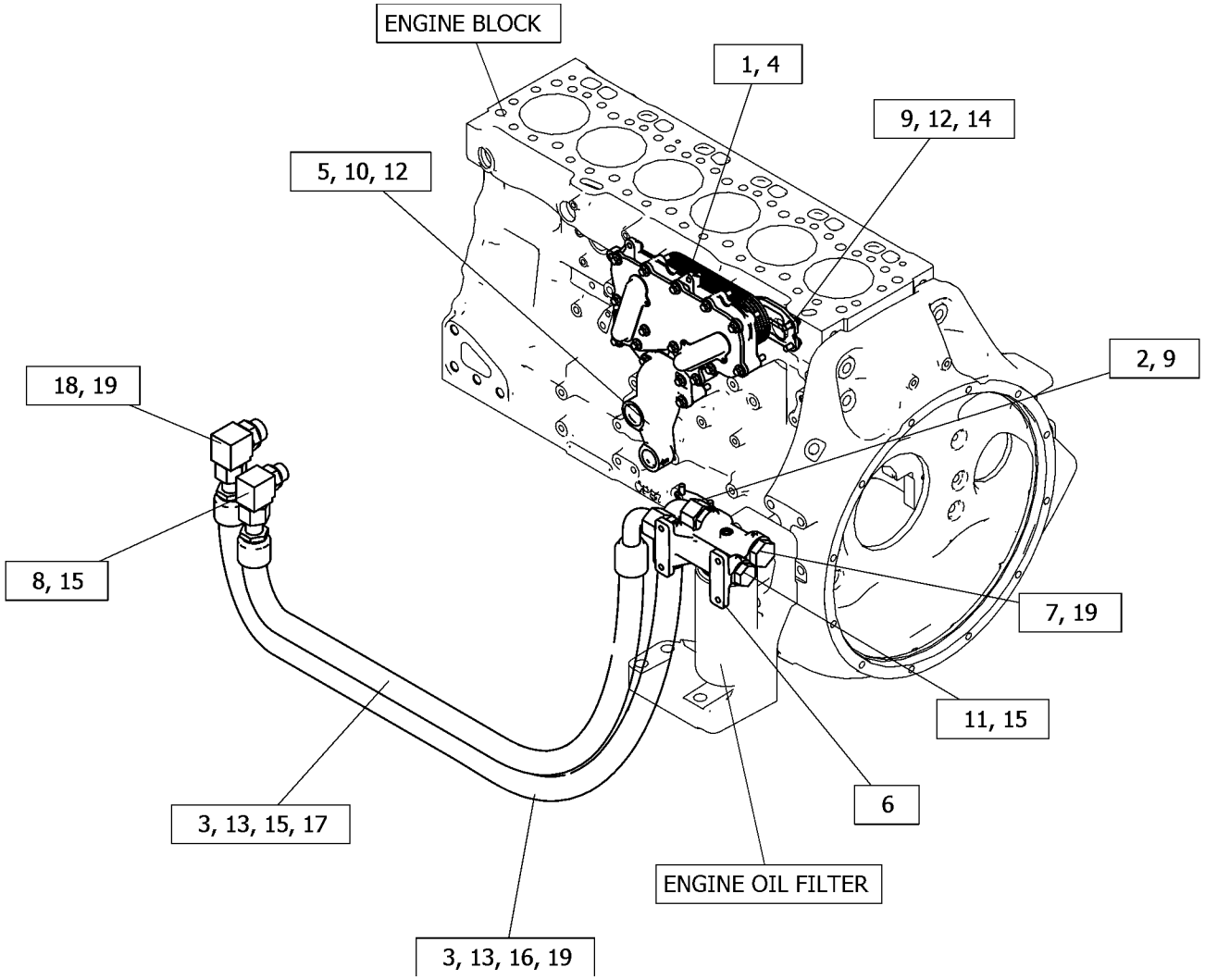

GRAPHIC #1 <END> g06293732

614-2917 COOLER GP-ENGINE OIL

PART OF 419-3606 COOLER GP-ENGINE OIL

SMCS-1378 **i09602393**

NOTE	REF NO	GRAPHIC REF	PART NUMBER	QTY	PART NAME 1 2 3 4 5 6 (PRODUCT LEVEL)	SEE PAGE
M	1	2	**100-4003**	2	STUD (M10X1.5X35-MM)	
M	2	2	**102-9909**	2	STUD (M10X1.5X25-MM)	
	3	2	**419-3607**	1	COOLER	
	4	2	*614-2901*	1	KIT-SEAL (OIL COOLER)	
	4A	2	**277-2500**	1	GASKET	
	4B	2	**351-8206**	2	SEAL	
M	5	1	**6I-0260**	4	BOLT (M8X1.25X25-MM)	
M	6	2	**175-7141**	4	NUT-HEX FLANGE (M10X1.5-THD)	

M - METRIC PART

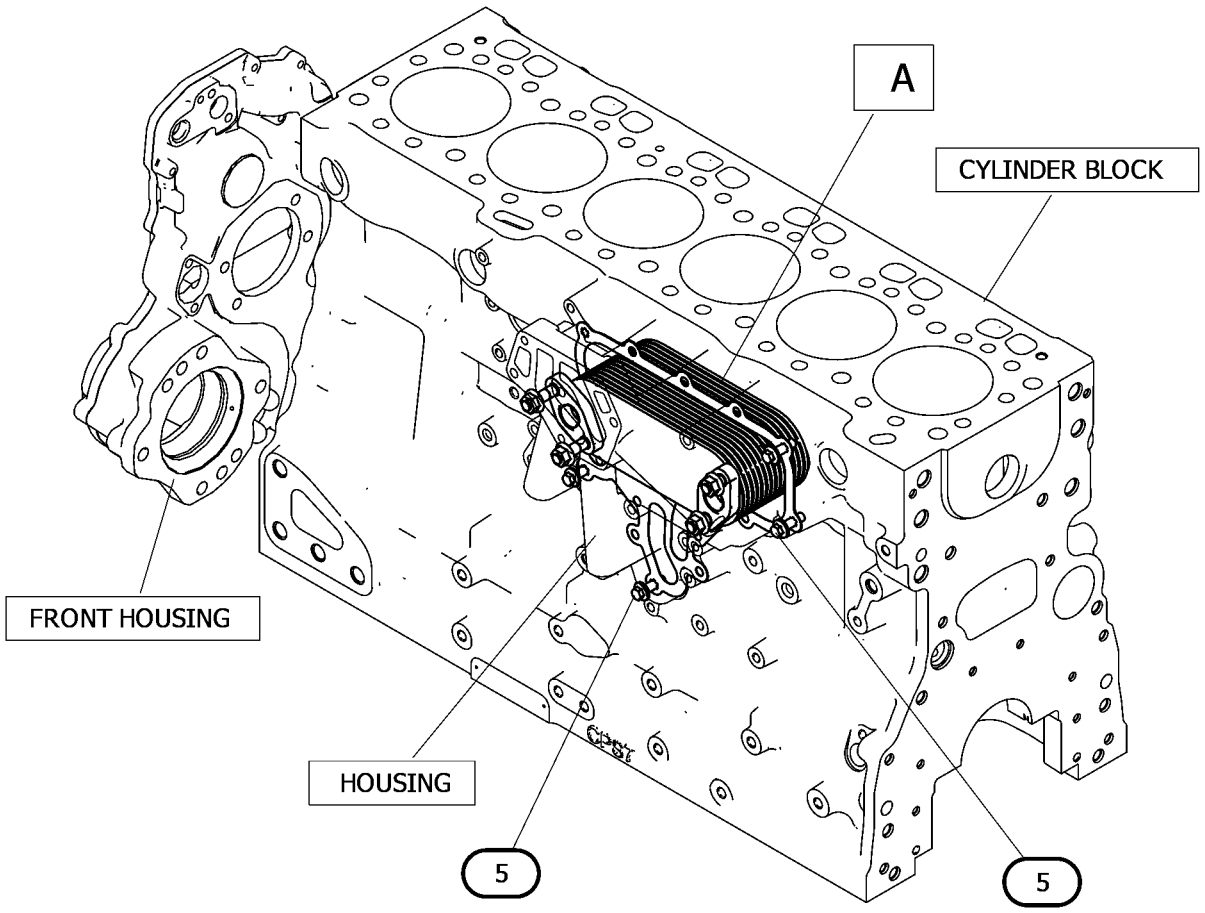

GRAPHIC #1 g07525294

614-2917 **COOLER GP-ENGINE OIL (**contd.**)** **i09602393**

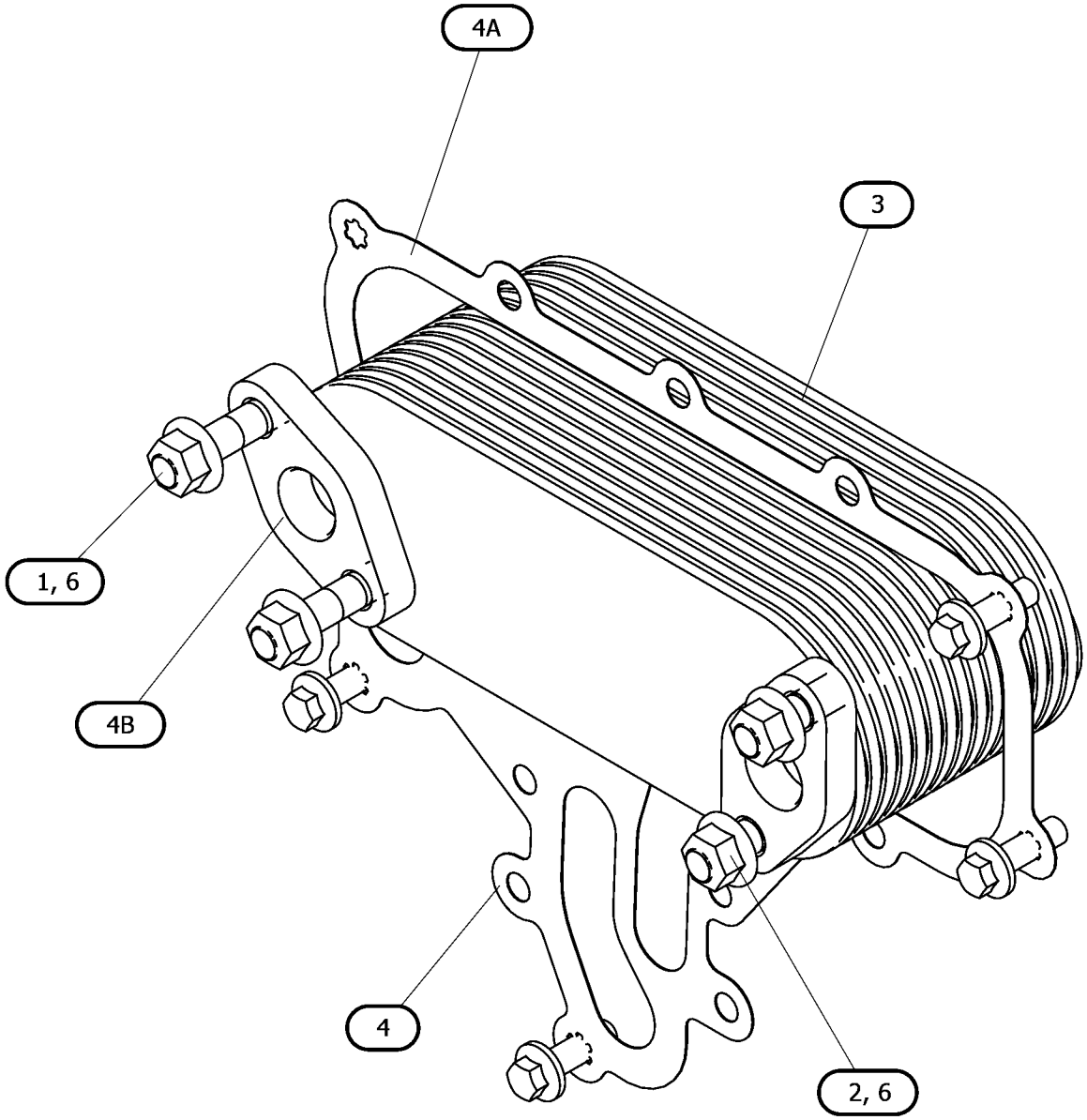

VIEW OF AREA A

GRAPHIC #2 <END> g07525294_01

375-4574 FAN GP

PART OF 479-9398, 484-2939, 485-8027, 486-2644, 489-9006, 494-6807, 495-8349, 504-9579, 507-8016, 513-0851, 514-9367, 530-1323, 539-8582, 552-8869, 563-6728, 563-6729, 569-7846, 583-8352, 591-9440, 593-7287, 614-9555, 627-8019, 633-4335 ENGINE AR-PRIMARY

SMCS-1356 **i05845076**

NOTE	REF NO	GRAPHIC REF	PART NUMBER	QTY	PART NAME 1 2 3 4 5 6 (PRODUCT LEVEL)	SEE PAGE
	1	1	**294-0366**	1	FAN	

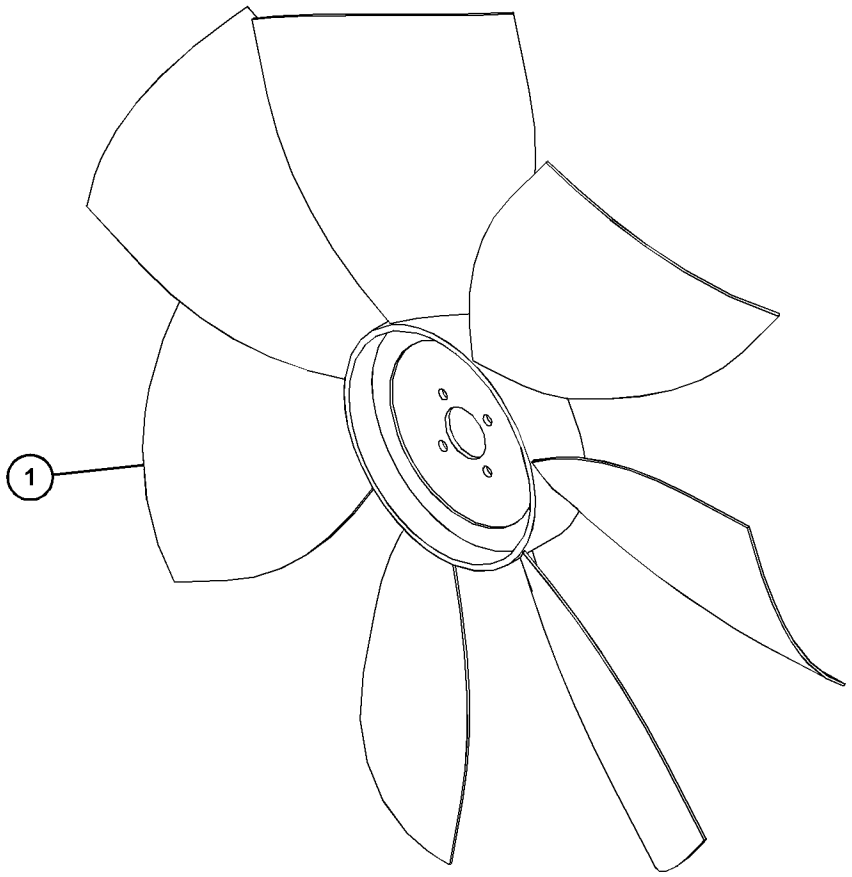

GRAPHIC #1 <END> g03696607

378-0627 FAN GP

PART OF 461-4656, 461-4658, 468-0461, 470-8667, 480-2181, 488-6687, 491-4980, 491-4993, 491-7124, 499-7181, 501-2466, 502-9462, 510-1088, 513-8513, 530-2601, 533-2797, 535-8060, 536-6675, 539-6915, 543-4255, 563-6730, 591-1266, 598-9881, 602-8721, 603-5300, 609-9819, 622-6239 ENGINE AR-PRIMARY

SMCS-1356 **i05726738**

NOTE	REF NO	GRAPHIC REF	PART NUMBER	QTY	PART NAME 1 2 3 4 5 6 (PRODUCT LEVEL)	SEE PAGE
	1	1	**293-8067**	1	FAN	

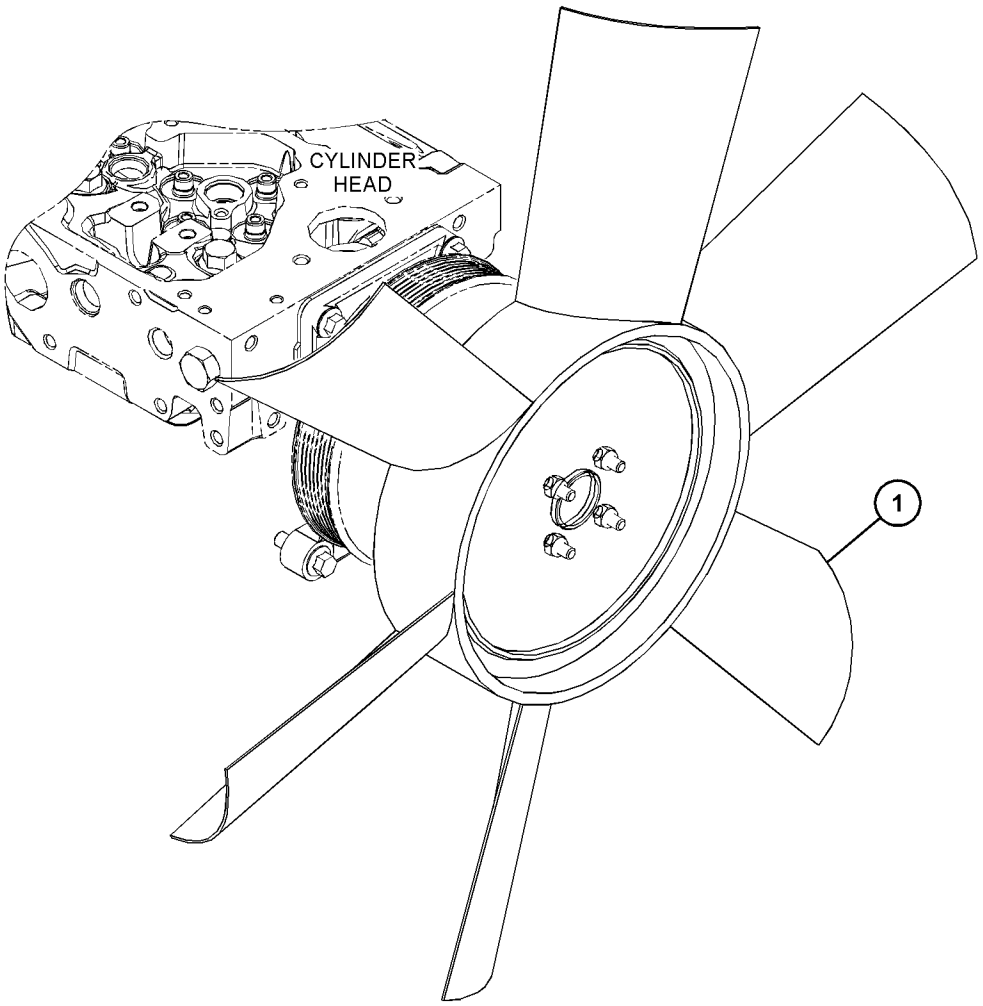

GRAPHIC #1 <END> g03666093

393-9541 FAN GP

EXTENSION

PART OF 508-0270 ENGINE AR-PRIMARY

SMCS-1356 **i06132068**

NOTE	REF NO	GRAPHIC REF	PART NUMBER	QTY	PART NAME 1 2 3 4 5 6 (PRODUCT LEVEL)	SEE PAGE
M	1	1	**6V-9189**	4	LOCKNUT (M8X1.25-THD)	
	2	1	**134-4139**	4	STUD	
	3	1	**122-4614**	1	EXTENSION-FAN	

M - METRIC PART

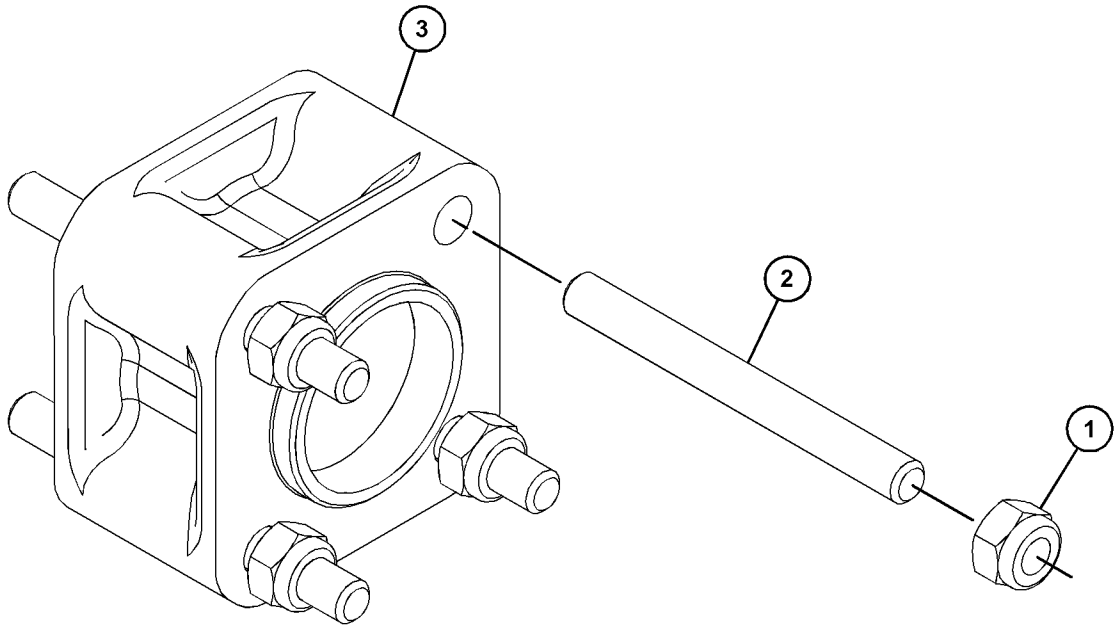

GRAPHIC #1 <END> g03820836

443-4956 FAN GP

PART OF 486-4250, 526-0511, 526-8888, 562-8873, 565-1247, 597-9248 ENGINE AR-PRIMARY

SMCS-1356 **i06053078**

NOTE	REF NO	GRAPHIC REF	PART NUMBER	QTY	PART NAME 1 2 3 4 5 6 (PRODUCT LEVEL)	SEE PAGE
M	1	1	**6V-9189**	4	LOCKNUT (M8X1.25-THD)	
M	2	1	**135-7992**	4	STUD (M8X1.25X144-MM)	
	3	1	**375-1277**	1	EXTENSION-FAN	

M - METRIC PART

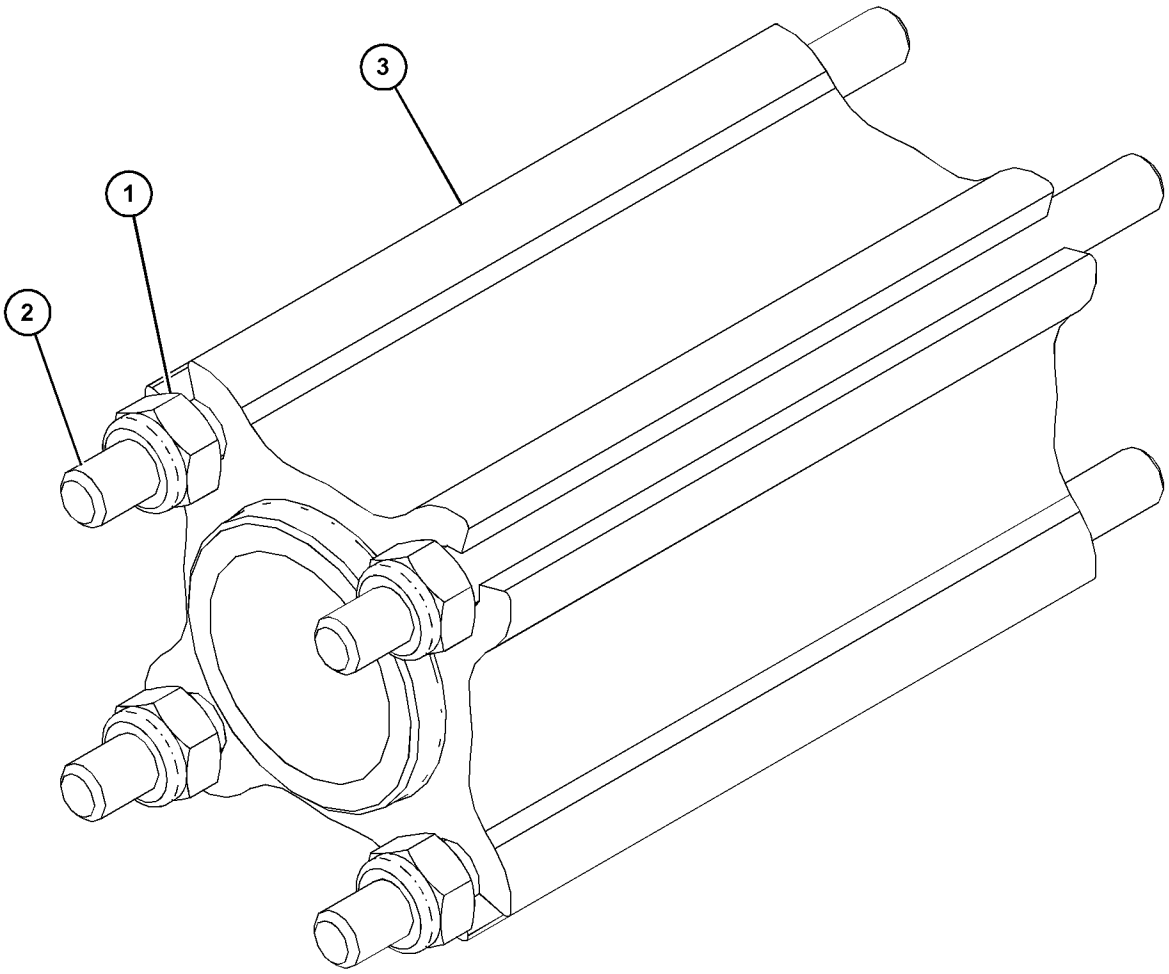

GRAPHIC #1 <END> g06004262

452-3651 FAN GP

PART OF 512-9858, 527-9686, 555-4669, 627-8054, 628-4345, 633-7776 ENGINE AR-PRIMARY

SMCS-1356 **i05949434**

NOTE	PART NUMBER	QTY	PART NAME 1 2 3 4 5 6 (PRODUCT LEVEL)	SEE PAGE
	293-9736	1	FAN	

<END>

454-5203 FAN GP

PART OF 596-2071 ENGINE AR-COMPLETE, 461-4638, 461-4649, 471-0541, 482-0212, 491-4973, 492-3021, 492-3072, 612-1735, 627-8129 ENGINE AR-PRIMARY

SMCS-1356 **i05859135**

NOTE	REF NO	GRAPHIC REF	PART NUMBER	QTY	PART NAME 1 2 3 4 5 6 (PRODUCT LEVEL)	SEE PAGE
	1	1	**293-9235**	1	FAN	

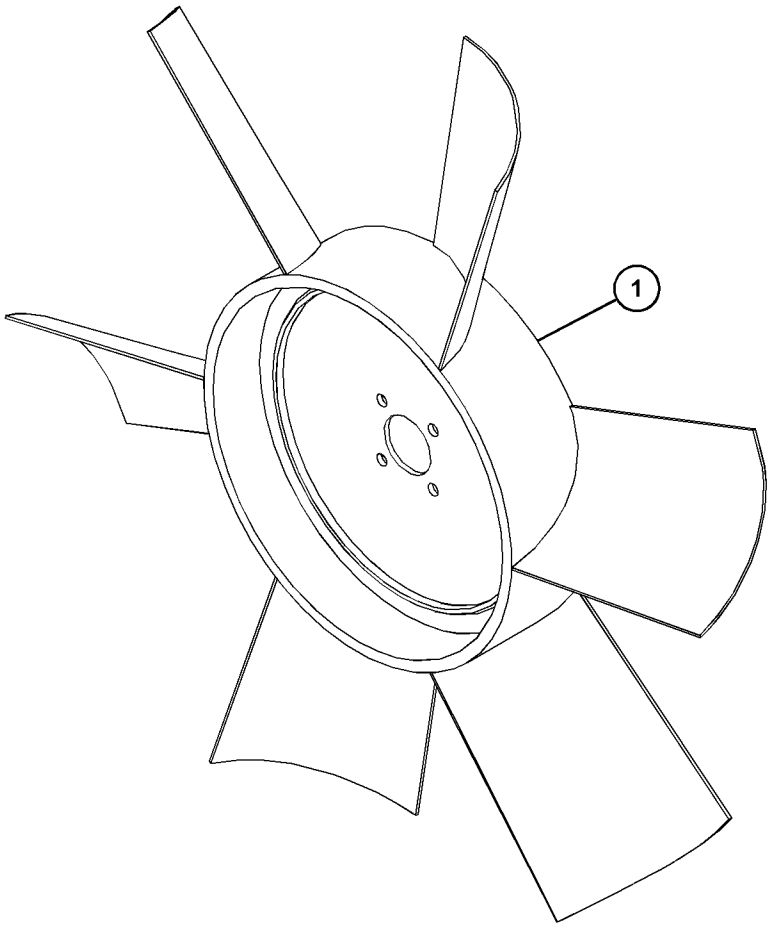

GRAPHIC #1 <END> g03716471

501-7442 FAN GP

SMCS-1356 **i06999559**

NOTE	REF NO	GRAPHIC REF	PART NUMBER	QTY	PART NAME 1 2 3 4 5 6 (PRODUCT LEVEL)	SEE PAGE
	1	1	**293-8067**	1	FAN (6-BLADE)	

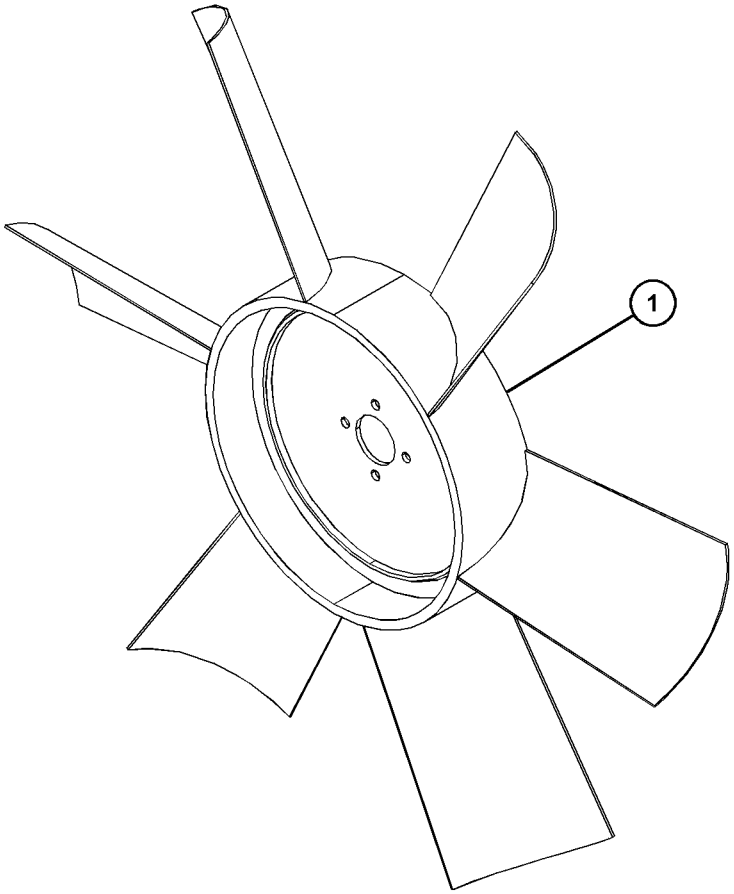

GRAPHIC #1 <END> g06206781

501-7441 FAN GP-ENGINE

PART OF 552-3506 ENGINE AR-PRIMARY

SMCS-1356 **i08206192**

NOTE	REF NO	GRAPHIC REF	PART NUMBER	QTY	PART NAME 1 2 3 4 5 6 (PRODUCT LEVEL)	SEE PAGE
	1	1	**294-0366**	1	FAN	

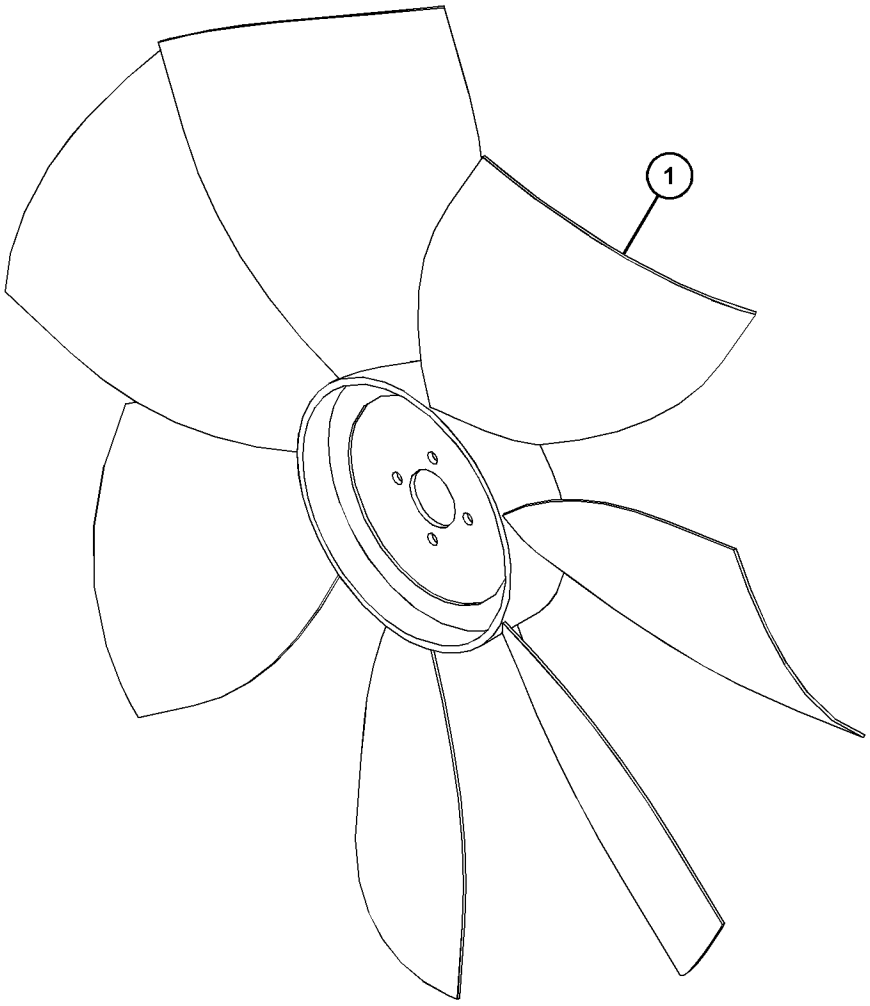

GRAPHIC #1 <END> g06589826

448-2106 FITTING GP-WATER LINES

PART OF 470-8667, 520-3152 ENGINE AR-PRIMARY

SMCS-1380 **i06920964**

NOTE	REF NO	GRAPHIC REF	PART NUMBER	QTY	PART NAME 1 2 3 4 5 6 (PRODUCT LEVEL)	SEE PAGE
	1	1	**067-6823**	1	PLUG	
	2	1	**9X-3959**	1	ELBOW	
	3	1	**474-1553**	1	ADAPTER	

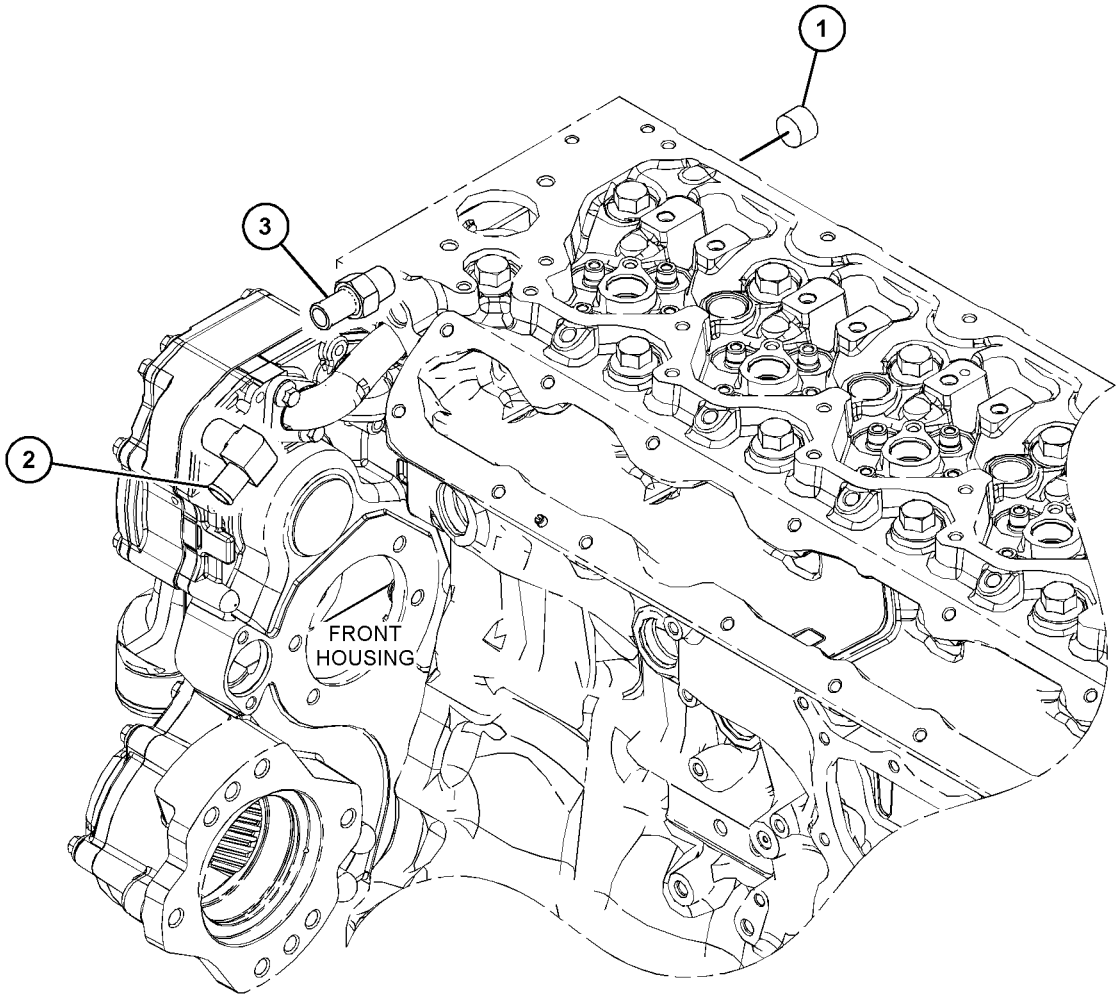

GRAPHIC #1 <END> g06200292

372-2297 PUMP GP-WATER

PART OF 596-2071 ENGINE AR-COMPLETE, 451-8343, 461-4638, 461-4649, 461-4656, 461-4658, 466-1160, 466-1161, 466-1162, 466-1163, 468-0461, 468-8218, 470-8667, 470-8814, 471-0541, 474-7299, 475-8297, 475-9060, 478-4257, 479-9398, 480-2181, 481-0811, 482-0212, 484-2939, 485-8027, 486-2644, 486-4250, 488-6687, 489-9006, 491-2606, 491-4973, 491-4980, 491-4993, 491-7124, 492-3021, 492-3072, 492-3169, 493-1019, 493-1038, 494-2073, 494-6807, 495-8349, 499-7181, 501-2466, 502-9462, 504-3629, 504-5365, 504-8134, 504-9579, 506-5035, 506-9918, 507-8016, 508-0270, 510-1088, 512-9858, 513-0851, 513-8513, 514-9367, 515-9203, 519-4128, 520-3152, 520-4644, 524-8271, 525-8759, 526-0511, 526-7210, 526-8888, 527-7106, 527-9686, 528-3358, 528-9866, 528-9920, 530-1323, 530-2601, 531-2492, 533-2797, 533-3588, 535-8060, 536-6675, 539-6915, 539-8582, 543-4255, 552-3506, 552-8869, 553-1809, 553-3730, 555-4669, 562-8873, 563-6728, 563-6729, 563-6730, 565-1247, 569-7846, 575-2879, 575-2880, 583-8352, 591-1266, 591-9440, 593-7287, 593-7288, 594-2125, 596-4834, 596-7090, 596-8896, 596-8905, 597-9248, 598-9881, 602-8721, 603-5300, 608-9261, 609-9819, 612-1735, 613-9482, 614-5795, 614-9555, 622-6239, 623-1309, 624-0698, 627-8019, 627-8054, 627-8129, 628-4345, 633-4335, 633-7776, 645-2039, 657-2370 ENGINE AR-PRIMARY

SMCS-1361 **i09570031**

NOTE	REF NO	GRAPHIC REF	PART NUMBER	QTY	PART NAME 1 2 3 4 5 6 (PRODUCT LEVEL)	SEE PAGE
M	1	1	**6I-0217**	2	BOLT (M8X1.25X20-MM)	
J	2	1	*485-4894*	1	PUMP GP-WATER	
M	2A	1	**278-3242**	3	BOLT-FLANGE HEAD (M8X1.25X18-MM)	
	2B	1	**374-4419**	1	GASKET	
M	3	1	**113-8129**	2	BOLT (M8X1.25X75-MM)	
J	4	1	**225-8019**	1	GASKET	
	5	1	**604-2388**	1	PIPE AS	
	5A	1	**225-7738**	1	SEAL-O-RING	
	5B	1	**619-4764**	1	SEAL	
M	6	1	**6I-0254**	2	BOLT (M8X1.25X30-MM)	
M	7	1	**6I-0839**	5	BOLT (M8X1.25X70-MM)	
					AVAILABLE REPAIR KIT(S):	
J			**485-4895**	1	KIT-WATER PUMP	

J - KIT MARKED J SERVICES PART(S) MARKED J
M - METRIC PART

372-2297 **PUMP GP-WATER (**contd.**)** **i09570031**

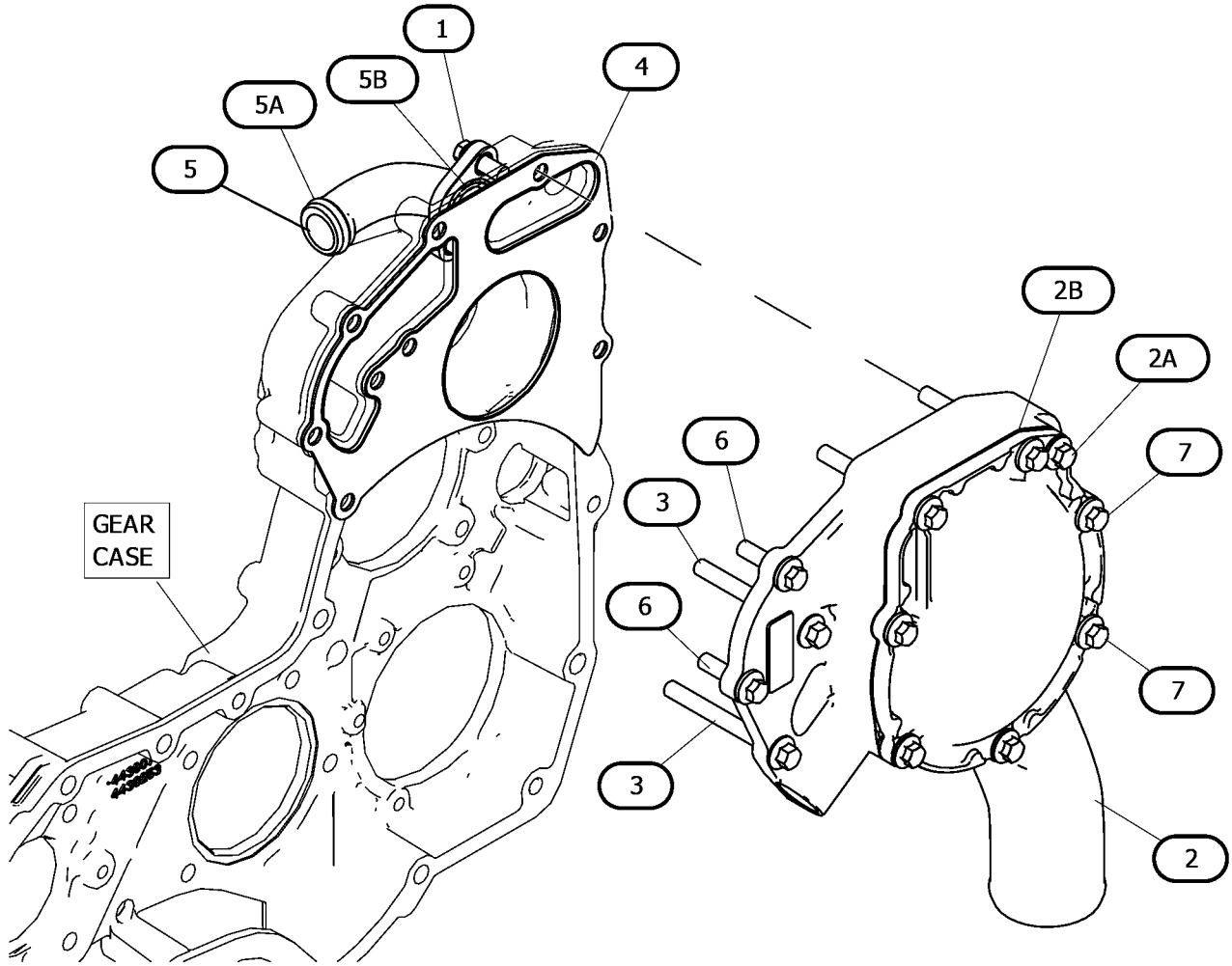

GRAPHIC #1 <END> g07487430

454-3464 RADIATOR AS

PART OF 456-4299 RADIATOR GP

SMCS-1353 **i07506621**

NOTE	REF NO	GRAPHIC REF	PART NUMBER	QTY	PART NAME 1 2 3 4 5 6 (PRODUCT LEVEL)	SEE PAGE
	1	1	**457-0482**	1	GUARD-RADIATOR	
	2	1	**422-6389**	2	WASHER (1/4-IN)	
	3	1	**422-6388**	1	WASHER (1/2-IN)	
	4	1	**422-6387**	1	PLUG (1/4-IN)	
M	5	1	**124-3815**	15	BOLT (M8X1.25X16-MM)	
	6	1	**365-2908**	1	AFTERCOOLER	
	7	1	**398-1750**	1	RADIATOR AS	
	8	1	**398-1775**	1	BRACKET AS	
	9	1	**422-6385**	1	PLUG (1/2-IN)	

M - METRIC PART

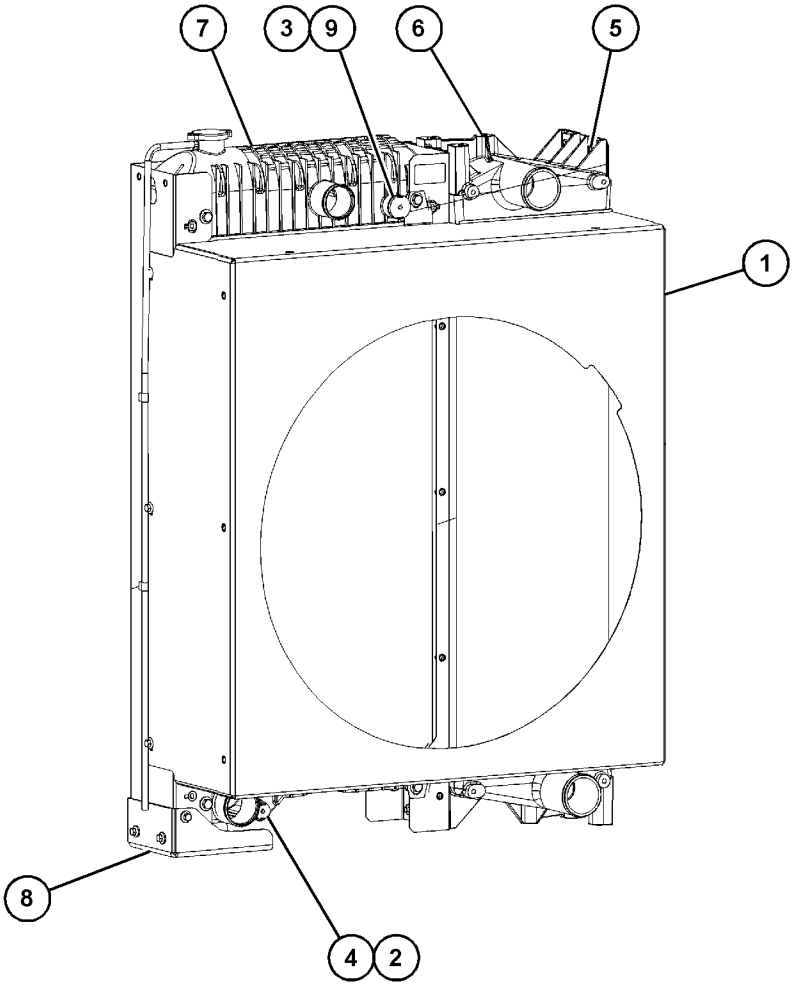

GRAPHIC #1 <END> g06342824

454-3470 RADIATOR AS

S/N: G9R1-10235

PART OF 456-4302 RADIATOR GP

SMCS-1353 **i06008110**

NOTE	PART NUMBER	QTY	PART NAME 1 2 3 4 5 6 (PRODUCT LEVEL)	SEE PAGE
M	**124-3815**	15	BOLT (M8X1.25X16-MM)	
	365-2908	1	AFTERCOOLER	
	398-1750	1	RADIATOR AS	
	398-1775	1	BRACKET AS	
	422-6385	1	PLUG	
	422-6387	2	PLUG	
	422-6388	1	WASHER	
	422-6389	2	WASHER	
	457-0481	1	COWLING	

M - METRIC PART

<END>

478-5198 RADIATOR AS

S/N: G9R1-9883

PART OF 456-4298 RADIATOR GP

SMCS-1353 **i06258161**

NOTE	REF NO	GRAPHIC REF	PART NUMBER	QTY	PART NAME 1 2 3 4 5 6 (PRODUCT LEVEL)	SEE PAGE
M	1	1	**124-3815**	19	BOLT (M8X1.25X16-MM)	
	2	1	**365-2908**	1	AFTERCOOLER	
	3	1	**398-1750**	1	RADIATOR AS	
	4	1	**398-1775**	1	BRACKET AS	
	5	1	**422-6388**	1	WASHER	
	6	1	**422-6389**	2	WASHER	
	7	1	**457-0481**	1	COWLING	
	8	1	**442-5177**	1	SCREEN AS (RADIATOR)	
					PARTS SHOWN IN GRAPHIC(S) WITHOUT A REFERENCE NUMBER ARE NOT SERVICED SEPARATELY	

M - METRIC PART

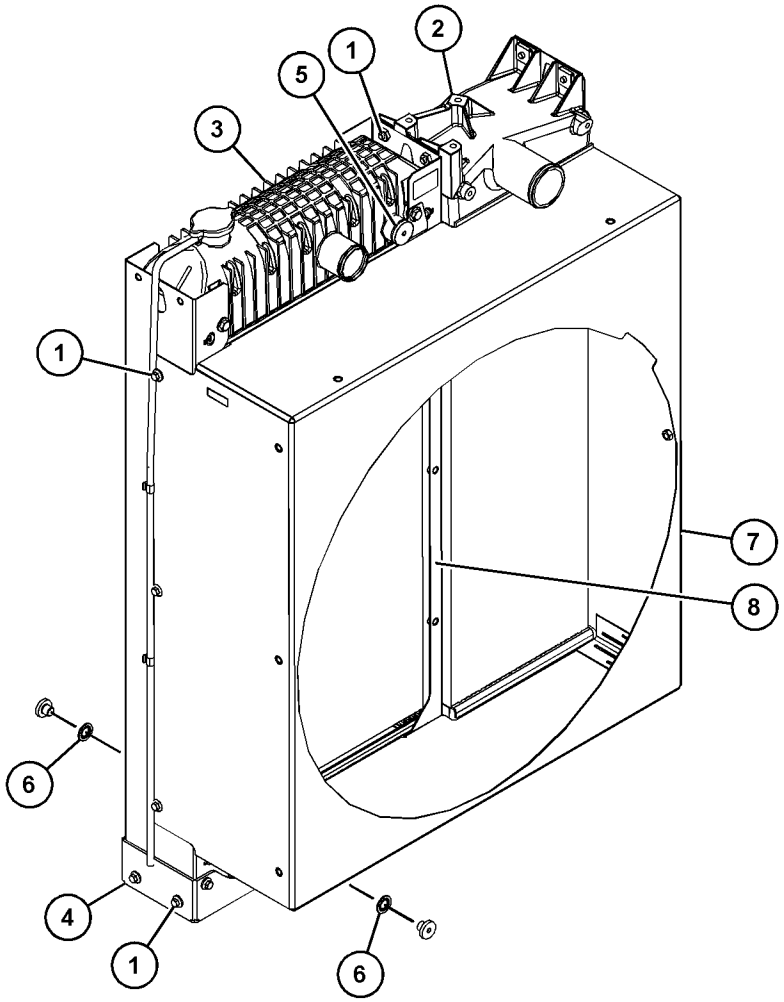

GRAPHIC #1 <END> g03874442

478-5200 RADIATOR AS

PART OF 456-4296 RADIATOR GP

SMCS-1353 **i06556513**

NOTE	REF NO	GRAPHIC REF	PART NUMBER	QTY	PART NAME 1 2 3 4 5 6 (PRODUCT LEVEL)	SEE PAGE
	1	1	**422-6388**	1	WASHER	
	2	1	**422-6389**	2	WASHER	
	3	1	**442-5177**	1	SCREEN AS (RADIATOR)	
	4	1	**457-0482**	1	GUARD-RADIATOR	
M	5	1	**124-3815**	19	BOLT (M8X1.25X16-MM)	
	6	1	**365-2908**	1	AFTERCOOLER	
	7	1	**398-1750**	1	RADIATOR AS	
	8	1	**398-1775**	1	BRACKET AS	

M - METRIC PART

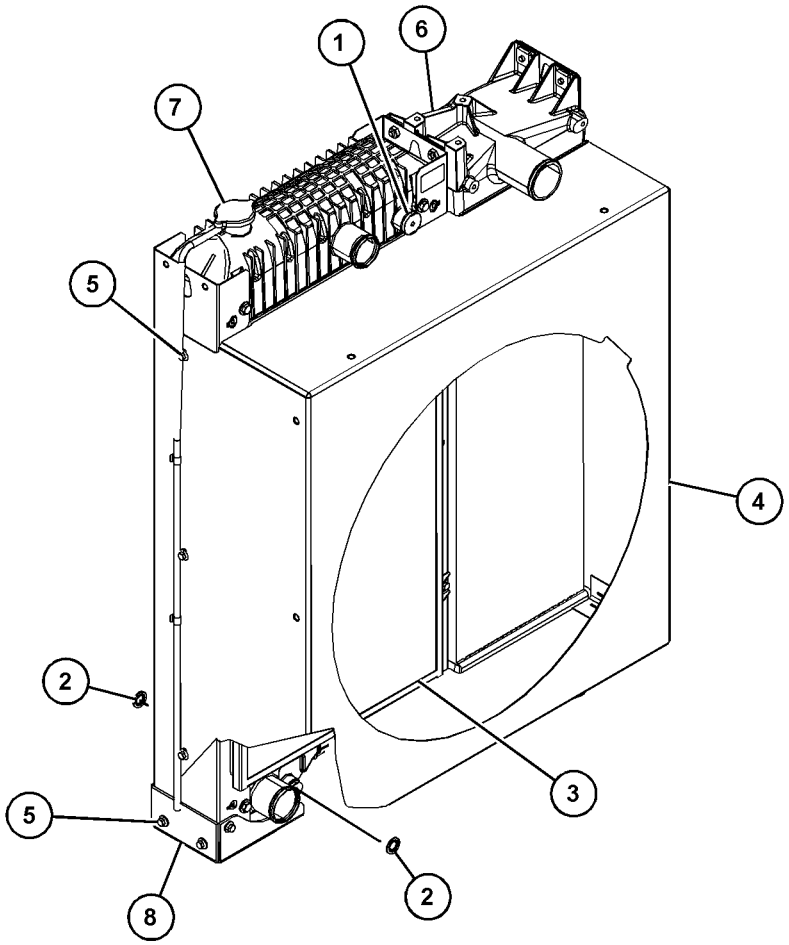

GRAPHIC #1 <END> g06110844

604-2395 RADIATOR AS

FIELD REPLACEMENT ORDER 604-2413—PAGE: 710

PART OF 456-4296 RADIATOR GP

SMCS-1353 **i10207651**

NOTE	REF NO	GRAPHIC REF	PART NUMBER	QTY	PART NAME 1 2 3 4 5 6 (PRODUCT LEVEL)	SEE PAGE
	1	1	**422-6388**	1	WASHER	
	2	1	**422-6389**	2	WASHER	
	3	1	**442-5177**	1	SCREEN AS	
	4	1	**457-0482**	1	GUARD-RADIATOR	
M	5	1	**124-3815**	19	BOLT (M8X1.25X16-MM)	
	6	1	**365-2908**	1	AFTERCOOLER	
	7	1	**398-1750**	1	RADIATOR AS	
		1	**211-6574**	1	CAP-RADIATOR (16-PSI)	
	8	1	**398-1775**	1	BRACKET AS	

M - METRIC PART

604-2395 **RADIATOR AS (**contd.**)** **i10207651**

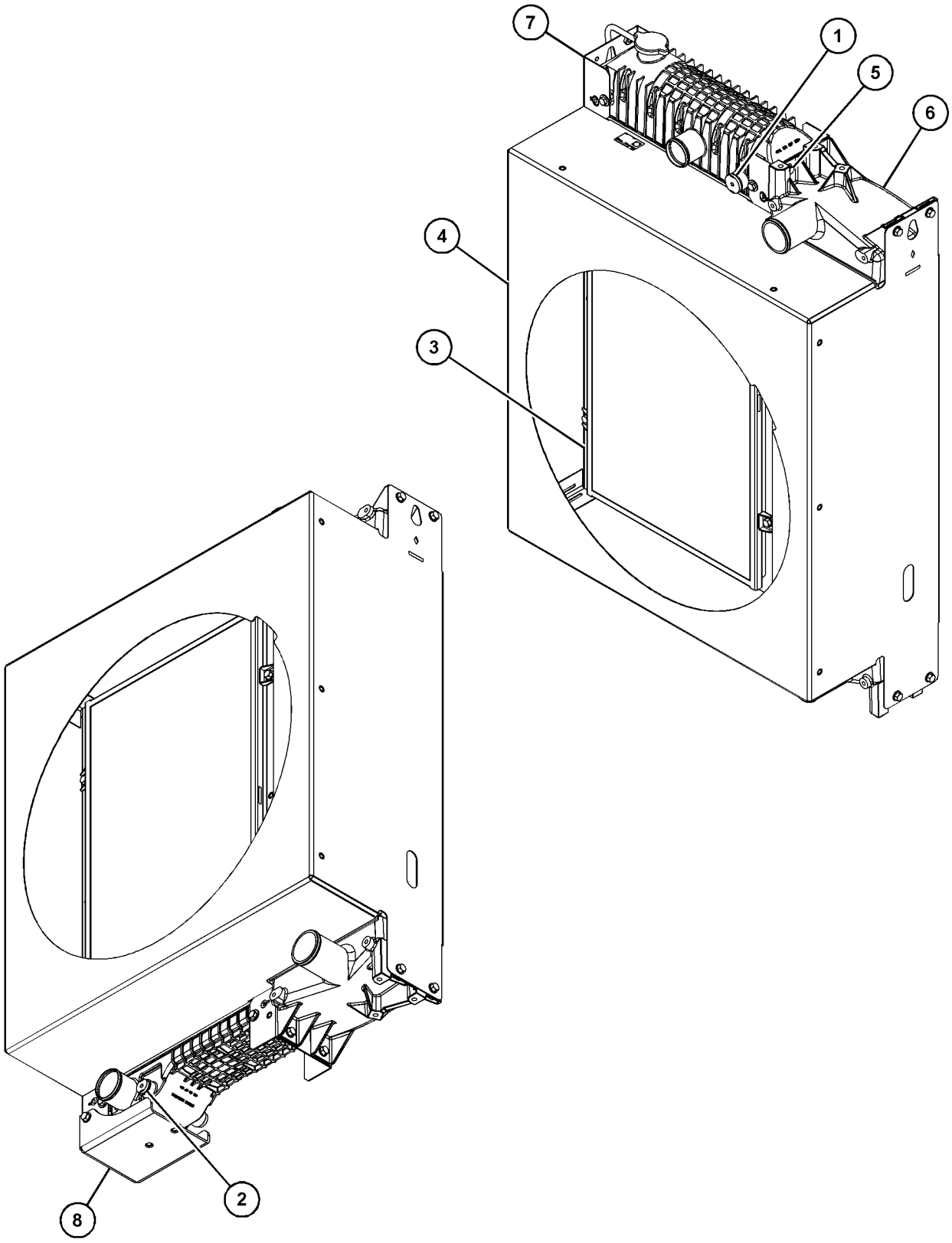

(VIEWED FROM BOTTOM)

GRAPHIC #1 <END> g07360143

452-5153 RADIATOR GP

PART OF 461-4656, 461-4658, 468-0461, 479-9398, 486-2644, 489-9006, 491-4980, 491-4993, 491-7124, 495-8349, 501-2466, 502-9462, 507-8016, 530-1323, 530-2601, 533-2797, 535-8060, 536-6675, 539-6915, 539-8582, 543-4255, 563-6730, 569-7846, 583-8352, 591-1266, 593-7287, 598-9881, 602-8721, 603-5300, 609-9819, 614-9555, 622-6239 ENGINE AR-PRIMARY

SMCS-1353 **i10454897**

NOTE	REF NO	GRAPHIC REF	PART NUMBER	QTY	PART NAME 1 2 3 4 5 6 (PRODUCT LEVEL)	SEE PAGE
M	1	1	**6I-0593**	3	BOLT (M10X1.5X30-MM)	
M	2	2	**6I-0654**	3	BOLT (M10X1.5X25-MM)	
M	3	2	**100-4461**	2	BOLT (M10X1.5X50-MM)	
M	4	2	**188-9644**	4	SCREW-FLAT HEAD (M8X1.25X25-MM)	
	5	2	**630-1761**	2	MOUNTING	
M	6	1	**114-4363**	3	BOLT (M8X1.25X12-MM)	
M	7	1	**124-3815**	3	BOLT (M8X1.25X16-MM)	
	8	1	**185-0112**	1	HOSE-AIR	
	9	1	**265-6527**	1	CLAMP-HOSE	
M	10	1	**342-9917**	6	BOLT-FLANGE HEAD (M16X2X40-MM)	
	11	2	**498-2984**	2	ISOLATOR	
	12	1	**293-8077**	1	BRACKET	
	13	2	**293-8078**	1	BRACKET	
	14	1	**293-8079**	1	BRACKET	
	15	1	**293-8080**	1	HOSE-WATER	
	16	1,2	**293-8084**	2	HOSE-AIR	
	17	1	**293-8085**	1	PIPE-AIR	
	18	1	**293-8086**	1	HOSE-AIR	
	19	2	**303-6191**	1	HOSE-WATER	
	20	1	**322-9011**	1	BRACKET AS-RADIATOR	
	21	1,2	**324-3528**	6	CLAMP-HOSE	
M	22	2	**195-3699**	4	NUT (M8X1.25-THD)	
M	23	2	**357-3513**	1	BOLT-FLANGE HEAD (M8X1.25X40-MM)	
	24	2	**368-4111**	1	GUARD AS-FAN	
M	24A	2	**195-3699**	3	NUT (M8X1.25-THD)	
M	24B	2	**357-3513**	3	BOLT-FLANGE HEAD (M8X1.25X40-MM)	
	25	1	**454-3449**	1	GUARD AS	
Y	26	2	*604-2398*	1	RADIATOR GP	709
M	28	2	**6I-0260**	3	BOLT (M8X1.25X25-MM)	
M	29	2	**175-7141**	4	NUT-HEX FLANGE (M10X1.5-THD)	
	30	2	**7W-2601**	2	SPACER (10.3X19X3.2-MM THK)	
	31	1,2	**317-9229**	5	CLAMP-HOSE	
	32	2	**101-7539**	2	WASHER (11.91X47.63X1.625-MM THK)	
					—OR—	
AF			**7Y-2292**	2	WASHER (13X50X2-MM THK)	
	33	2	**101-7540**	2	WASHER (11.9X38.2X1.6-MM THK)	
	34	1	**469-3797**	1	CONNECTION	

A - NOT PART OF THIS GROUP
F - NOT SHOWN
M - METRIC PART
Y - SEPARATE ILLUSTRATION

452-5153 **RADIATOR GP (**contd.**)** **i10454897**

REFER TO ALL ILLUSTRATIONS OF
THIS GROUP FOR AUXILIARY VIEWS

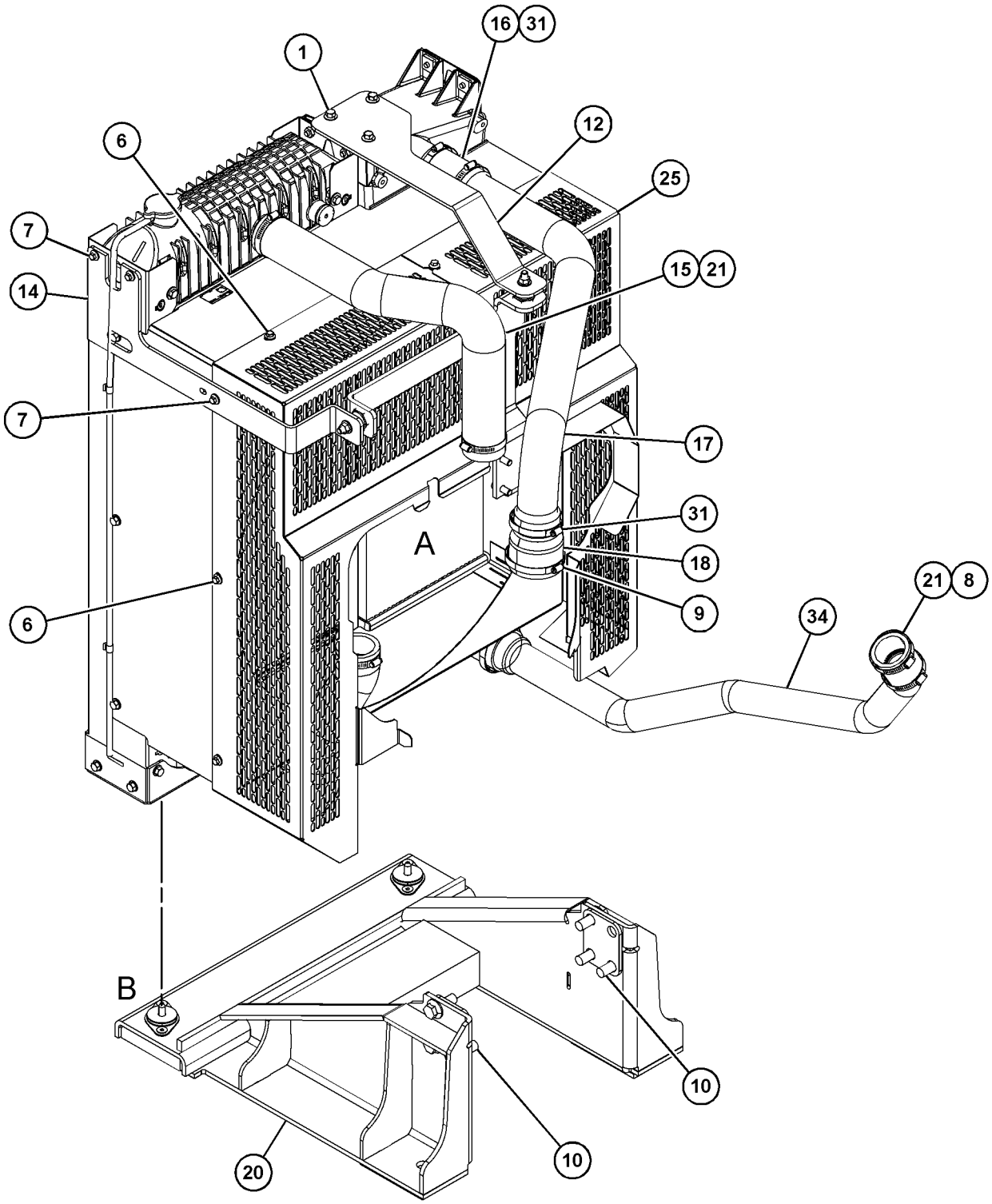

GRAPHIC #1 g07910352

452-5153 **RADIATOR GP (**contd.**)** **i10454897**

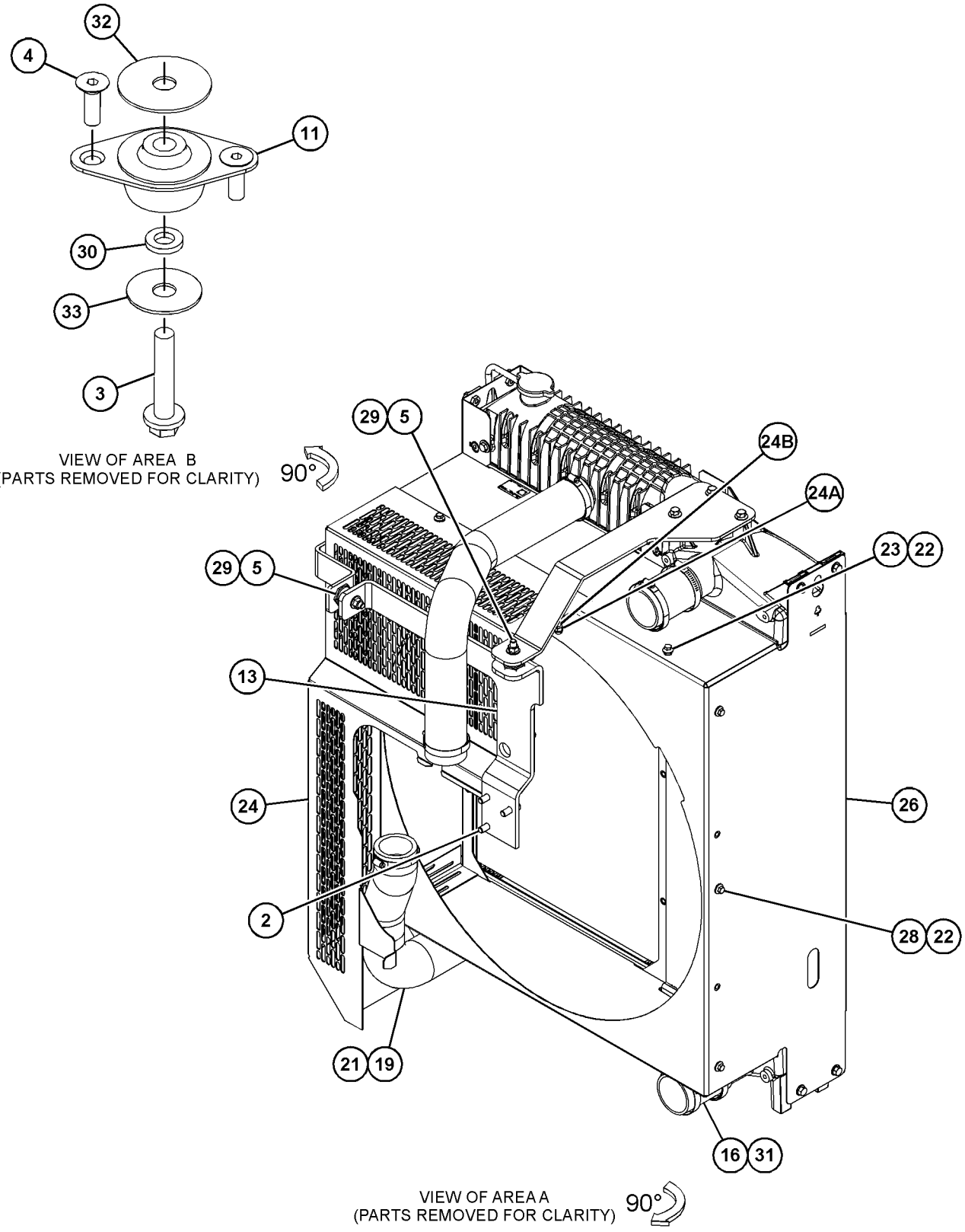

GRAPHIC #2 <END> g07910353

456-4296 RADIATOR GP

SMCS-1353 **i06711375**

NOTE	PART NUMBER	QTY	PART NAME 1 2 3 4 5 6 (PRODUCT LEVEL)	SEE PAGE
Y	**478-5200**	1	RADIATOR AS	683
M	**6I-0260**	3	BOLT (M8X1.25X25-MM)	
M	**6I-0593**	3	BOLT (M10X1.5X30-MM)	
M	**6I-0654**	3	BOLT (M10X1.5X25-MM)	
M	**100-4461**	2	BOLT (M10X1.5X50-MM)	
M	**101-7541**	4	SCREW-FLAT HEAD (M8X1.25X25-MM)	
M	**114-4363**	3	BOLT (M8X1.25X12-MM)	
M	**124-3815**	3	BOLT (M8X1.25X16-MM)	
M	**277-0120**	6	BOLT (M16X2X40-MM)	
M	**363-4208**	1	BOLT (M8X1.25X40-MM)	
	293-8077	1	BRACKET	
	293-8078	1	BRACKET	
	293-8079	1	BRACKET	
	322-9011	1	BRACKET AS-RADIATOR	
	317-9229	5	CLAMP-HOSE	
	324-3528	6	CLAMP-HOSE	
	265-6527	1	CLAMP-HOSE	
	469-3797	1	CONNECTION	
	454-3449	1	GUARD AS	
	368-3338	1	GUARD AS-FAN	
M	**362-8050**	3	NUT (M8X1.25-THD)	
M	**363-4208**	3	BOLT (M8X1.25X40-MM)	
	185-0112	1	HOSE-AIR	
	293-8084	2	HOSE-AIR	
	293-8086	1	HOSE-AIR	
	293-8080	1	HOSE-WATER	
	303-6191	1	HOSE-WATER	
	498-2984	2	ISOLATOR	
	101-7546	2	MOUNT	
M	*6I-0594*	4	NUT (M10X1.5-THD)	
M	**175-7141**	1	NUT-HEX FLANGE (M10X1.5-THD)	
M	**362-8050**	4	NUT (M8X1.25-THD)	
	293-8085	1	PIPE-AIR	
	7W-2601	2	SPACER (10.3X19X3.2-MM THK)	
	101-7539	2	WASHER (11.91X47.63X1.625-MM THK)	
	7Y-2292	1	WASHER (13X50X2-MM THK)	
	101-7540	2	WASHER (11.9X38.2X1.6-MM THK)	

M - METRIC PART
Y - SEPARATE ILLUSTRATION

<END>

456-4296 RADIATOR GP

PART OF 627-8054, 628-4345, 633-7776 ENGINE AR-PRIMARY

SMCS-1353 **i09140641**

NOTE	REF NO	GRAPHIC REF	PART NUMBER	QTY	PART NAME 1 2 3 4 5 6 (PRODUCT LEVEL)	SEE PAGE
	1	4	**322-9011**	1	BRACKET AS-RADIATOR	
M	2	4	**100-4461**	2	BOLT (M10X1.5X50-MM)	
	3	4	**101-7539**	2	WASHER (11.91X47.63X1.625-MM THK) (11.9X47.6X1.6-MM THK)	
					—OR—	
AF			**7Y-2292**	2	WASHER (13X50X2-MM THK)	
	4	4	**101-7540**	2	WASHER (11.9X38.2X1.6-MM THK)	
M	5	4	**188-9644**	4	SCREW-FLAT HEAD (M8X1.25X25-MM)	
	6	2	**101-7546**	2	MOUNT	
M	7	3	**114-4363**	3	BOLT (M8X1.25X12-MM)	
M	8	2	**124-3815**	3	BOLT (M8X1.25X16-MM)	
	9	1	**185-0112**	1	HOSE-AIR	
	10	1	**265-6527**	1	CLAMP-HOSE	
M	11	4	**342-9917**	6	BOLT-FLANGE HEAD (M16X2X40-MM)	
	12	2	**293-8077**	1	BRACKET	
	13	2	**293-8078**	1	BRACKET	
	14	2	**293-8079**	1	BRACKET	
	15	1	**293-8080**	1	HOSE-WATER	
	16	1	**293-8084**	2	HOSE-AIR	
	17	1	**293-8085**	1	PIPE-AIR	
	18	1	**293-8086**	1	HOSE-AIR	
	19	1	**303-6191**	1	HOSE-WATER	
	20	1	**317-9229**	5	CLAMP-HOSE	
	21	1	**324-3528**	6	CLAMP-HOSE	
M	22	3	**195-3699**	4	NUT (M8X1.25-THD)	
M	23	3	**357-3513**	1	BOLT-FLANGE HEAD (M8X1.25X40-MM)	
	24	3	**368-3338**	1	GUARD AS-FAN	
M	24A	3	**195-3699**	3	NUT (M8X1.25-THD)	
M	24B	3	**357-3513**	3	BOLT-FLANGE HEAD (M8X1.25X40-MM)	
	25	3	**454-3449**	1	GUARD AS	
	26	1	**469-3797**	1	CONNECTION	
	27	4	**498-2984**	2	ISOLATOR	
CY	28	1	*604-2395*	1	RADIATOR AS	684
M	29	3	**6I-0260**	3	BOLT (M8X1.25X25-MM)	
M	30	2	**6I-0593**	3	BOLT (M10X1.5X30-MM)	
M	31	2	**175-7141**	4	NUT-HEX FLANGE (M10X1.5-THD)	
M	32	2	**6I-0654**	3	BOLT (M10X1.5X25-MM)	
	33	4	**7W-2601**	2	SPACER (10.3X19X3.2-MM THK)	

A - NOT PART OF THIS GROUP
C - CHANGE FROM PREVIOUS TYPE
F - NOT SHOWN
M - METRIC PART
Y - SEPARATE ILLUSTRATION

456-4296 **RADIATOR GP** (contd.) **i09140641**

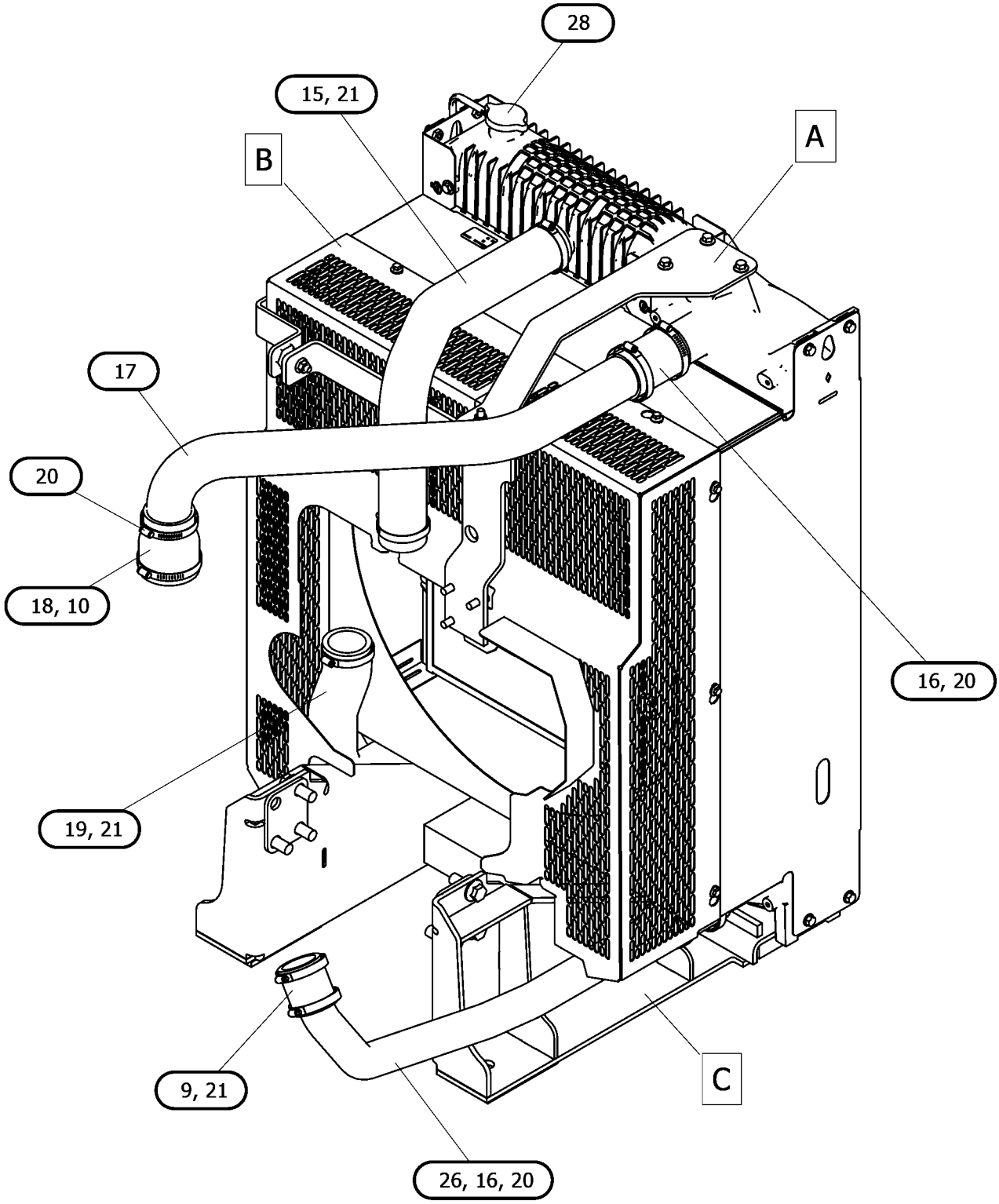

GRAPHIC #1 g07191531

456-4296 **RADIATOR GP** (contd.) **i09140641**

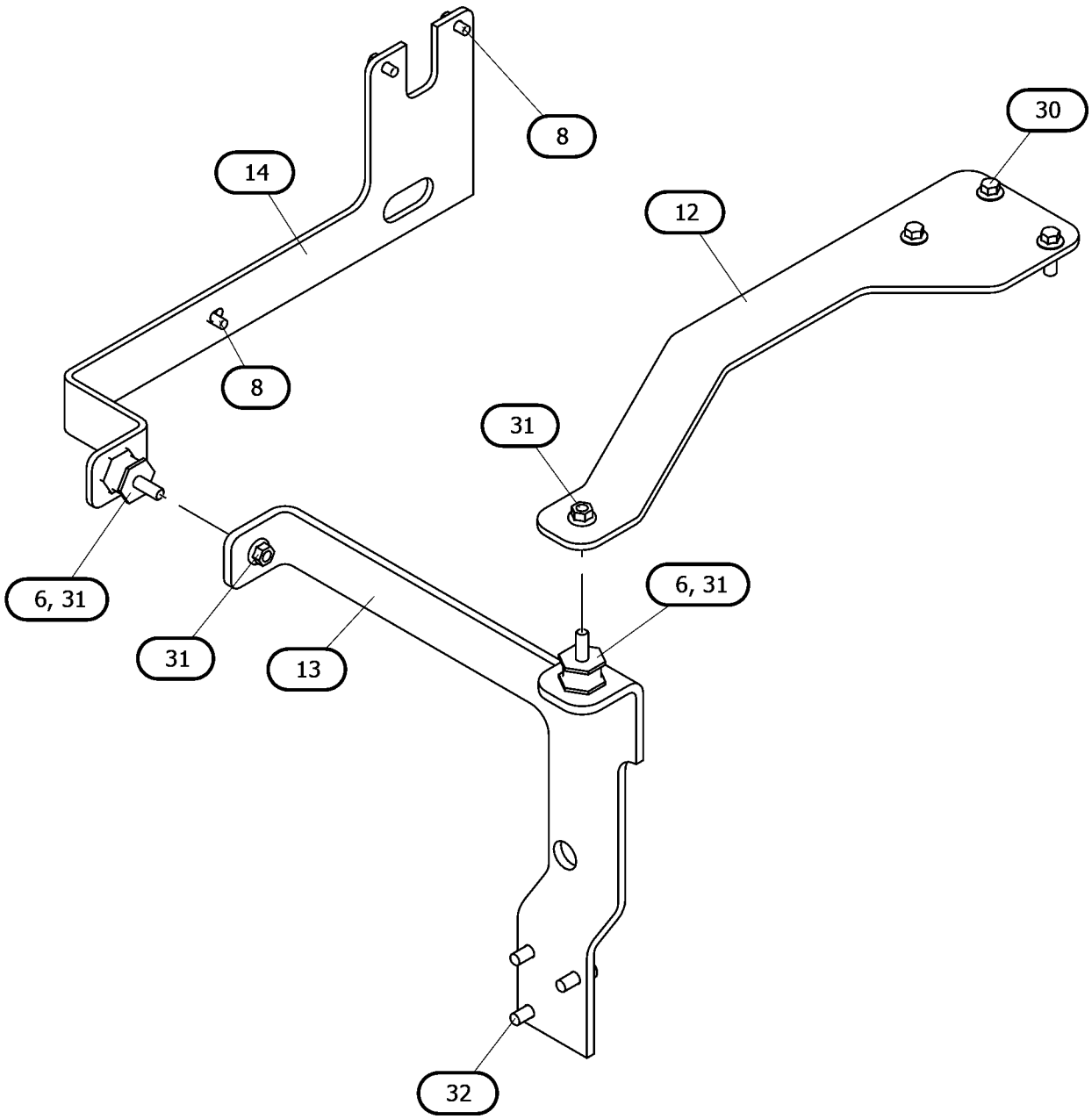

VIEW OF AREA A
(PARTS REMOVED FOR CLARITY)

GRAPHIC #2 g07191531_01

456-4296 **RADIATOR GP (**contd.**)** **i09140641**

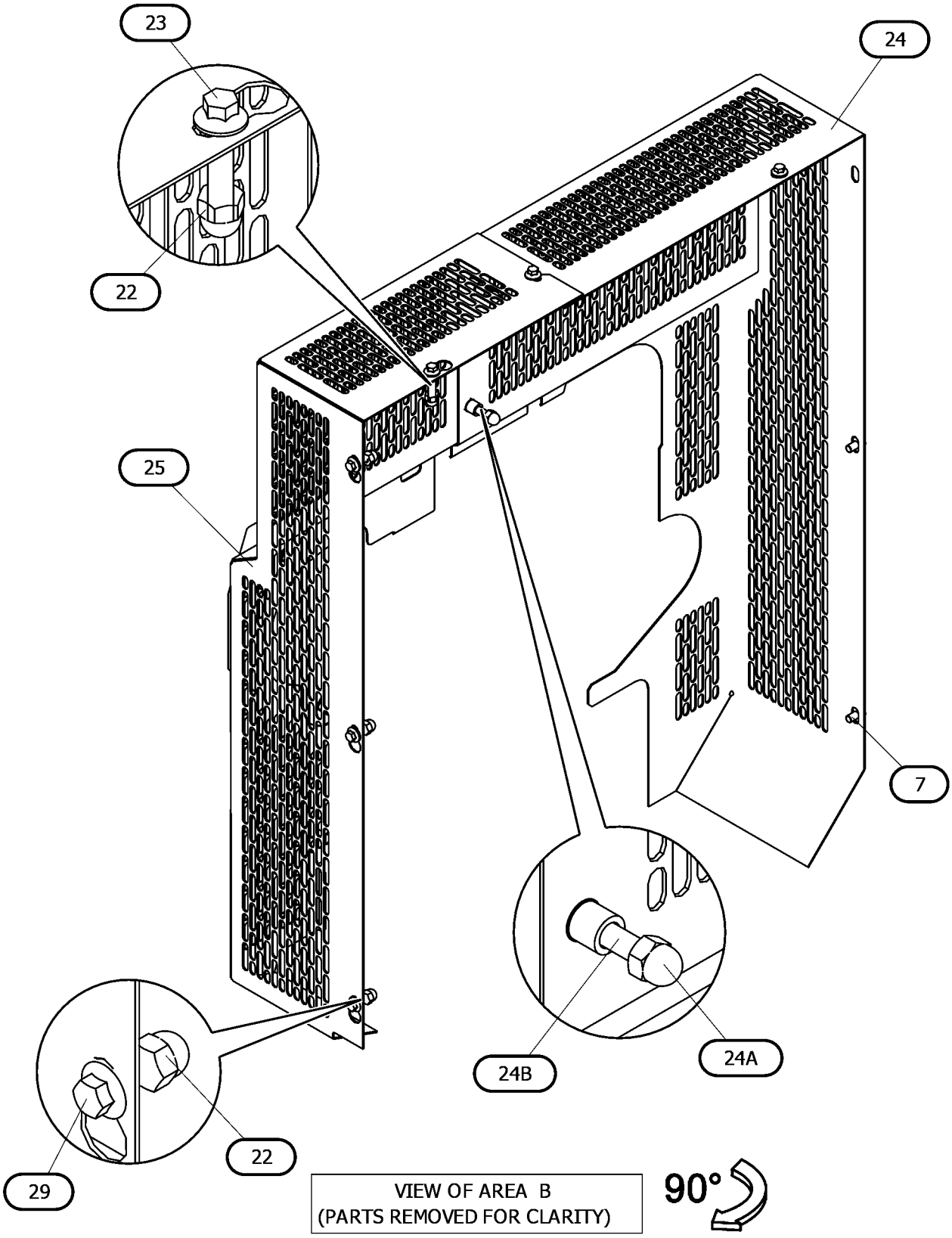

GRAPHIC #3 g07191531_02

456-4296 **RADIATOR GP** (contd.) **i09140641**

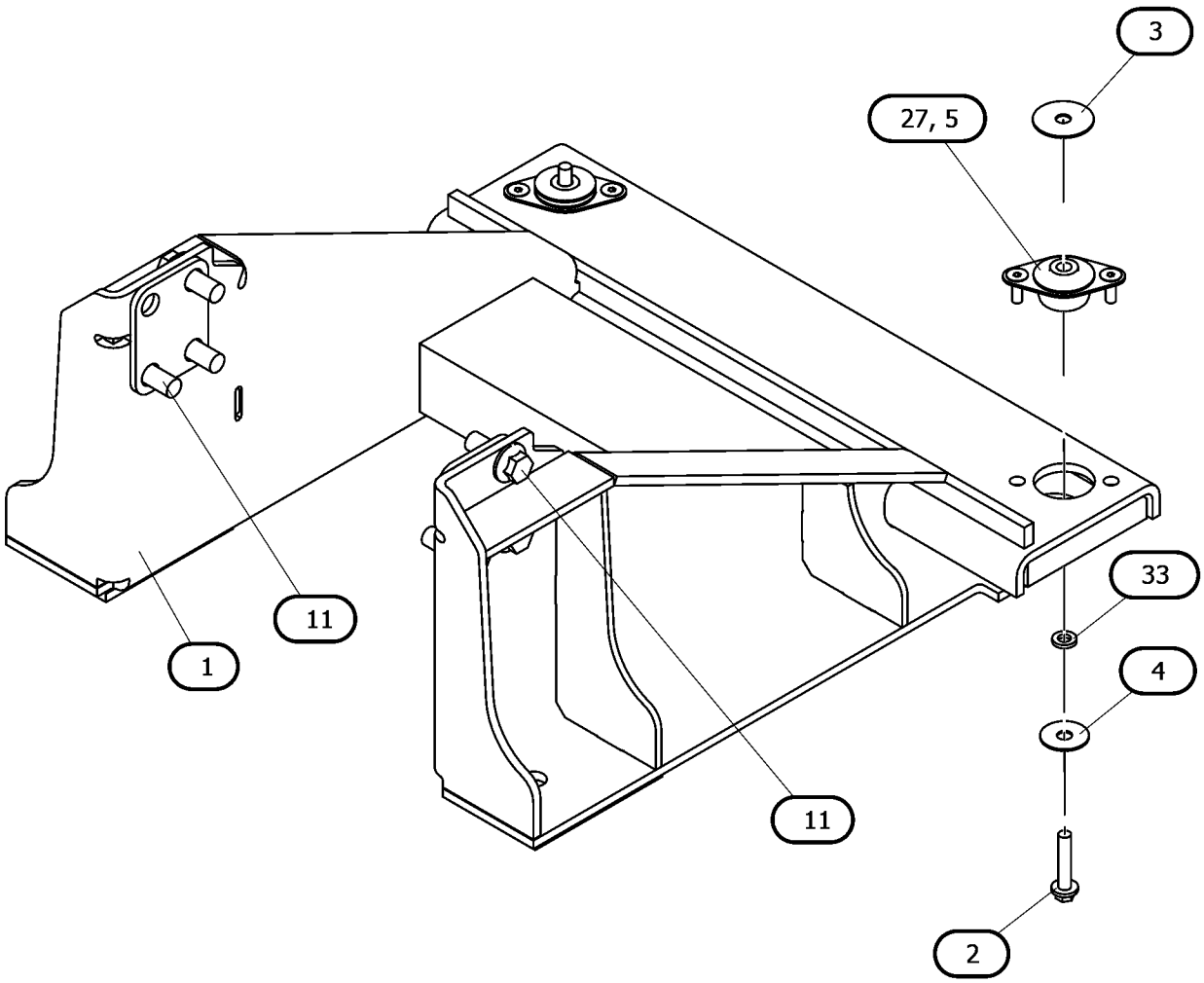

VIEW OF AREA C
(PARTS REMOVED FOR CLARITY)

GRAPHIC #4 <END> g07191531_03

456-4298 RADIATOR GP

S/N: G9R1-9883

PART OF 484-2939, 485-8027, 494-6807, 504-9579, 513-0851, 552-8869, 563-6728, 563-6729, 591-9440, 633-4335 ENGINE AR-PRIMARY

SMCS-1353 **i06901607**

NOTE	REF NO	GRAPHIC REF	PART NUMBER	QTY	PART NAME 1 2 3 4 5 6 (PRODUCT LEVEL)	SEE PAGE
M	1	1	**6I-0593**	3	BOLT (M10X1.5X30-MM)	
M	2	1	**6I-0654**	3	BOLT (M10X1.5X25-MM)	
M	3	1	**100-4461**	2	BOLT (M10X1.5X50-MM)	
M	4	1	**101-7541**	4	SCREW-FLAT HEAD (M8X1.25X25-MM)	
	5	1	**101-7546**	2	MOUNT	
M	6	1	**114-4363**	3	BOLT (M8X1.25X12-MM)	
M	7	1	**124-3815**	3	BOLT (M8X1.25X16-MM)	
	8	1	**185-0112**	1	HOSE-AIR	
	9	1	**265-6527**	1	CLAMP-HOSE	
M	10	1	**277-0120**	6	BOLT (M16X2X40-MM)	
	11	1	**498-2984**	2	ISOLATOR	
	12	1	**293-8077**	1	BRACKET	
	13	1	**293-8078**	1	BRACKET	
	14	1	**293-8079**	1	BRACKET	
	15	1	**293-8080**	1	HOSE-WATER	
	16	1	**293-8084**	2	HOSE-AIR	
	17	1	**293-8085**	1	PIPE-AIR	
	18	1	**293-8086**	1	HOSE-AIR	
	19	1	**303-6191**	1	HOSE-WATER	
	20	1	**322-9011**	1	BRACKET AS-RADIATOR	
	21	1	**324-3528**	6	CLAMP-HOSE	
M	22	1	**362-8050**	4	NUT (M8X1.25-THD)	
M	23	1	**363-4208**	1	BOLT (M8X1.25X40-MM)	
	24	1	**368-3338**	1	GUARD AS-FAN	
M		1	**362-8050**	3	NUT (M8X1.25-THD)	
M		1	**363-4208**	3	BOLT (M8X1.25X40-MM)	
	26	1	**454-3449**	1	GUARD AS	
	28	1	**469-3797**	1	CONNECTION	
M	29	1	**6I-0260**	3	BOLT (M8X1.25X25-MM)	
M	30	1	**175-7141**	4	NUT-HEX FLANGE (M10X1.5-THD)	
	31	1	**7W-2601**	2	SPACER (10.3X19X3.2-MM THK)	
	32	1	**317-9229**	5	CLAMP-HOSE	
	33	1	**101-7539**	2	WASHER (11.91X47.63X1.625-MM THK)	
	34	1	**101-7540**	2	WASHER (11.9X38.2X1.6-MM THK)	
Y	35	1	**478-5198**	1	RADIATOR AS	682

M - METRIC PART
Y - SEPARATE ILLUSTRATION

456-4298 **RADIATOR GP** (contd.) **i06901607**

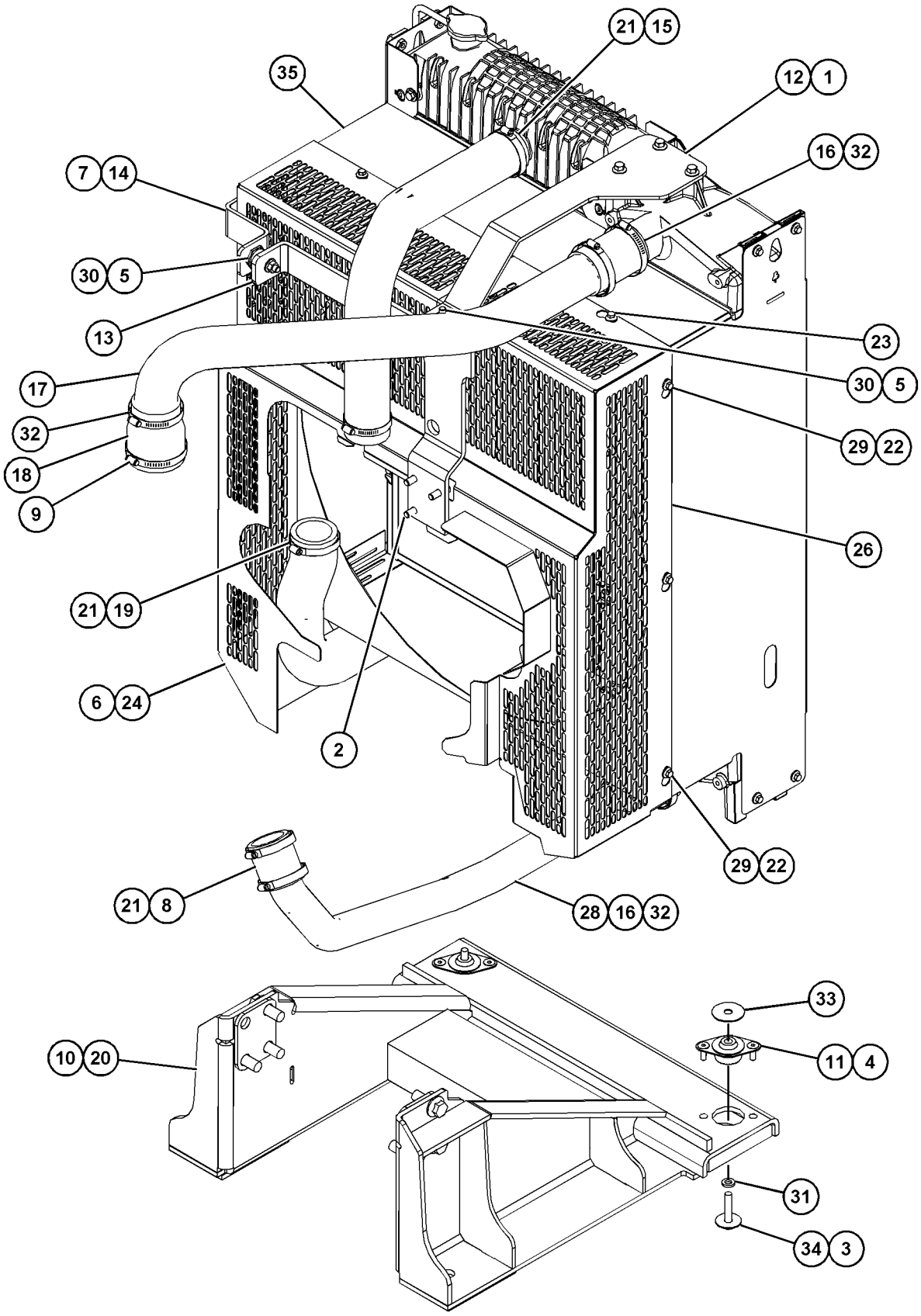

GRAPHIC #1 <END> g06159718

456-4298 RADIATOR GP

PART OF 484-2939, 485-8027, 494-6807, 504-9579, 513-0851, 552-8869, 563-6728, 563-6729, 591-9440, 627-8019, 633-4335 ENGINE AR-PRIMARY

SMCS-1353 **i09023561**

NOTE	REF NO	GRAPHIC REF	PART NUMBER	QTY	PART NAME 1 2 3 4 5 6 (PRODUCT LEVEL)	SEE PAGE
M	1	1	**6I-0593**	3	BOLT (M10X1.5X30-MM)	
M	2	1	**6I-0654**	3	BOLT (M10X1.5X25-MM)	
M	3	2	**100-4461**	2	BOLT (M10X1.5X50-MM)	
M	4	2	**188-9644**	4	SCREW-FLAT HEAD (M8X1.25X25-MM)	
	5	1	**101-7546**	2	MOUNT	
M	6	1	**114-4363**	3	BOLT (M8X1.25X12-MM)	
M	7	1	**124-3815**	3	BOLT (M8X1.25X16-MM)	
	8	1	**185-0112**	1	HOSE-AIR	
	9	1	**265-6527**	1	CLAMP-HOSE	
M	10	1	**342-9917**	6	BOLT-FLANGE HEAD (M16X2X40-MM)	
	11	2	**498-2984**	2	ISOLATOR	
	12	1	**293-8077**	1	BRACKET	
	13	1	**293-8078**	1	BRACKET	
	14	1	**293-8079**	1	BRACKET	
	15	1	**293-8080**	1	HOSE-WATER	
	16	1	**293-8084**	2	HOSE-AIR	
	17	1	**293-8085**	1	PIPE-AIR	
	18	1	**293-8086**	1	HOSE-AIR	
	19	1	**303-6191**	1	HOSE-WATER	
	20	1	**322-9011**	1	BRACKET AS-RADIATOR	
	21	1	**324-3528**	6	CLAMP-HOSE	
M	22	2	**195-3699**	4	NUT (M8X1.25-THD)	
M	23	2	**357-3513**	1	BOLT-FLANGE HEAD (M8X1.25X40-MM)	
	24	1	**368-3338**	1	GUARD AS-FAN	
M		1	**195-3699**	3	NUT (M8X1.25-THD)	
M		1	**357-3513**	3	BOLT-FLANGE HEAD (M8X1.25X40-MM)	
	26	1	**454-3449**	1	GUARD AS	
	28	1	**469-3797**	1	CONNECTION	
M	29	2	**6I-0260**	3	BOLT (M8X1.25X25-MM)	
M	30	1	**175-7141**	4	NUT-HEX FLANGE (M10X1.5-THD)	
	31	2	**7W-2601**	2	SPACER (10.3X19X3.2-MM THK)	
	32	1	**317-9229**	5	CLAMP-HOSE	
	33	2	**101-7539**	2	WASHER (11.91X47.63X1.625-MM THK)	
					—OR—	
AF			**7Y-2292**	2	WASHER (13X50X2-MM THK)	
	34	2	**101-7540**	2	WASHER (11.9X38.2X1.6-MM THK)	
CY	35	2	*604-2396*	1	RADIATOR GP	708

A - NOT PART OF THIS GROUP
C - CHANGE FROM PREVIOUS TYPE
F - NOT SHOWN
M - METRIC PART
Y - SEPARATE ILLUSTRATION

456-4298 **RADIATOR GP** (contd.) **i09023561**

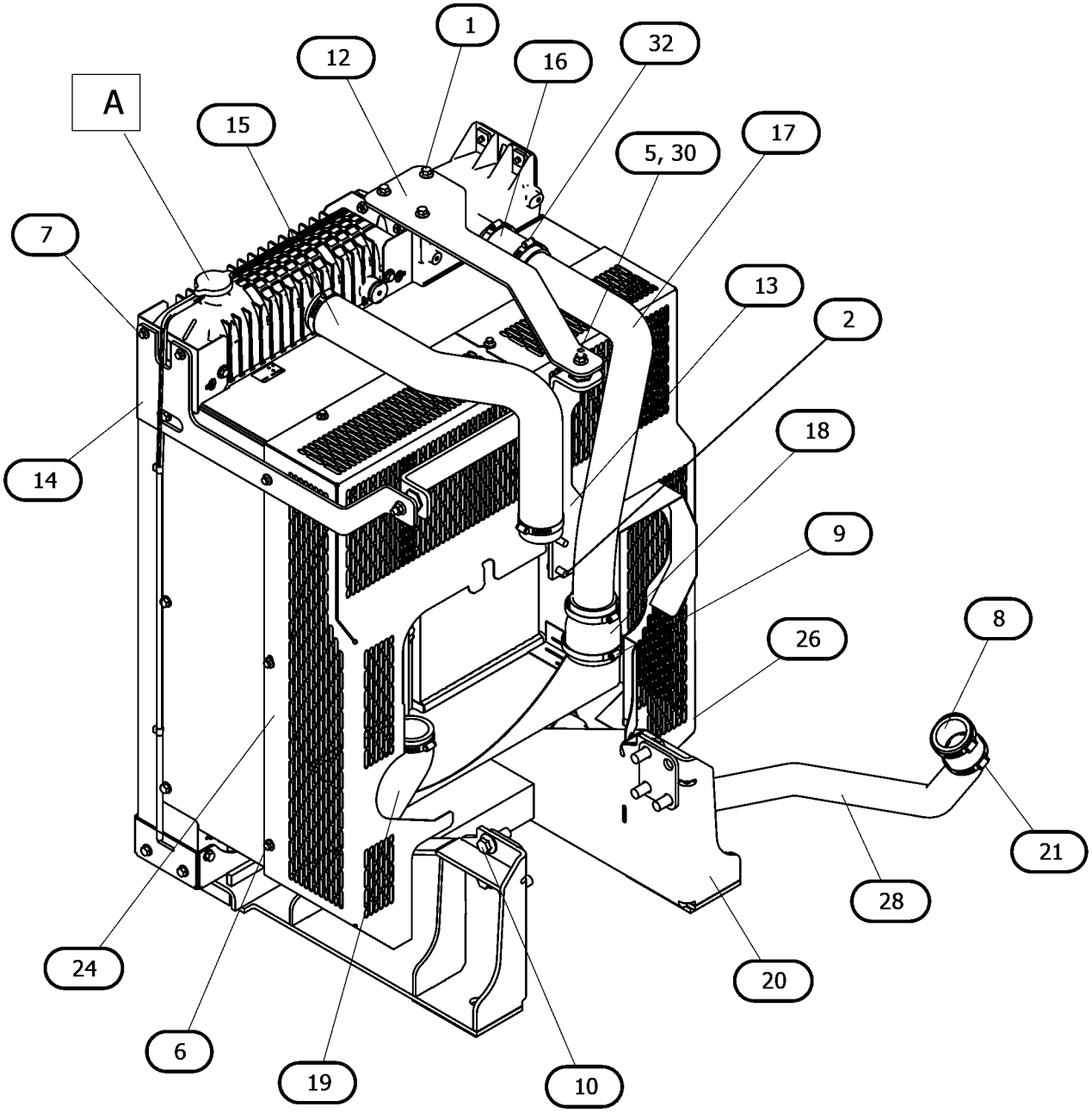

GRAPHIC #1 g07187218

456-4298 **RADIATOR GP (**contd.**)** **i09023561**

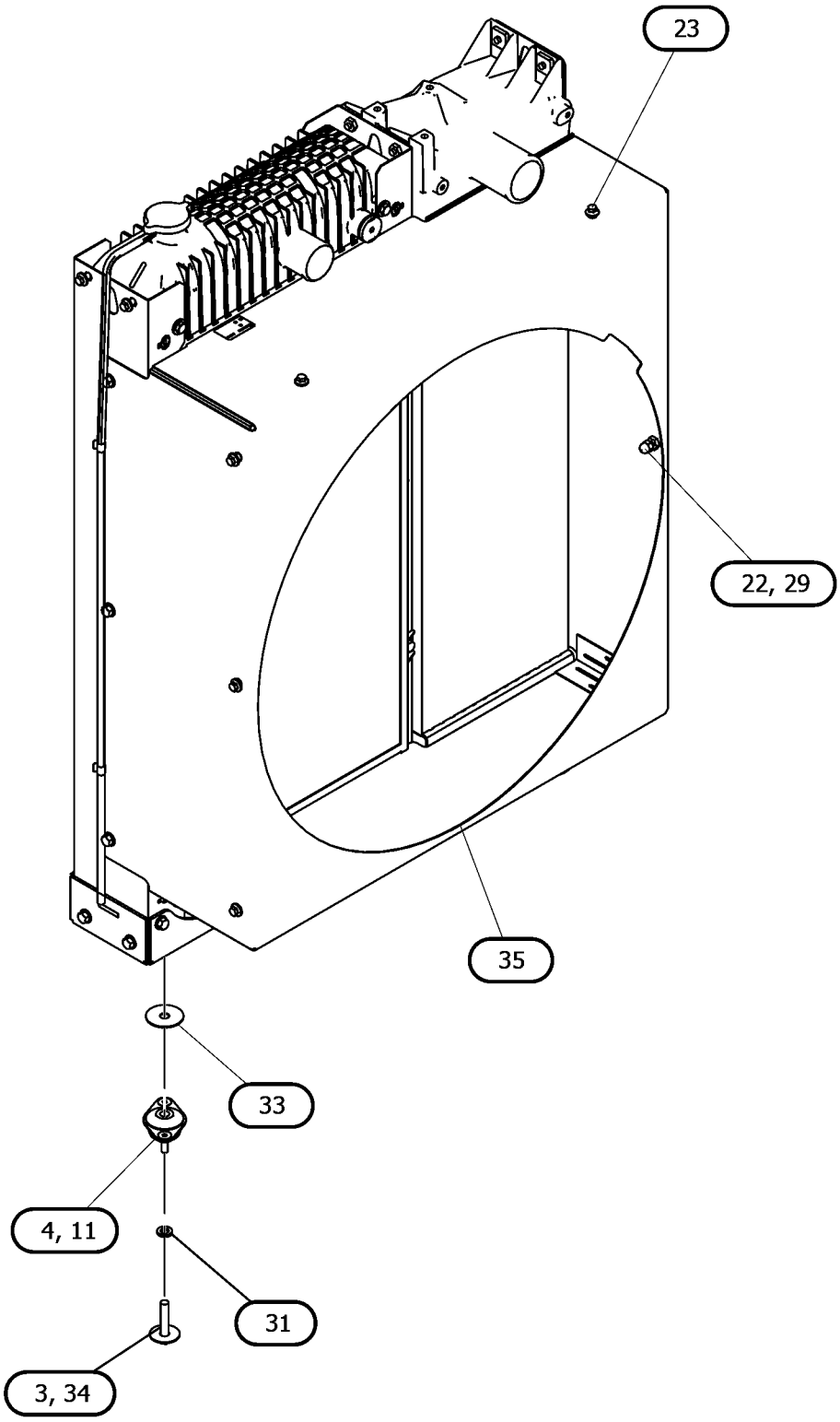

VIEW OF AREA A
(PARTS REMOVED FOR CLARITY)

GRAPHIC #2 <END> g07187218_01

456-4299 RADIATOR GP

PART OF 512-9858 ENGINE AR-PRIMARY

SMCS-1353 **i05952752**

NOTE	PART NUMBER	QTY	PART NAME 1 2 3 4 5 6 (PRODUCT LEVEL)	SEE PAGE
M	**6I-0260**	3	BOLT (M8X1.25X25-MM)	
M	**6I-0593**	3	BOLT (M10X1.5X30-MM)	
M	*6I-0594*	4	NUT (M10X1.5-THD)	
M	**175-7141**	1	NUT-HEX FLANGE (M10X1.5-THD)	
M	**6I-0654**	3	BOLT (M10X1.5X25-MM)	
	7W-2601	2	SPACER (10.3X19X3.2-MM THK)	
M	**100-4461**	2	BOLT (M10X1.5X50-MM)	
	101-7539	2	WASHER (11.91X47.63X1.625-MM THK)	
	7Y-2292	1	WASHER (13X50X2-MM THK)	
	101-7540	2	WASHER (11.9X38.2X1.6-MM THK)	
M	**101-7541**	4	SCREW-FLAT HEAD (M8X1.25X25-MM)	
	101-7546	2	MOUNT	
M	**114-4363**	3	BOLT (M8X1.25X12-MM)	
M	**124-3815**	3	BOLT (M8X1.25X16-MM)	
	185-0112	1	HOSE-AIR	
	265-6527	1	CLAMP-HOSE	
M	**277-0120**	6	BOLT (M16X2X40-MM)	
	293-8076	2	BRACKET	
	293-8077	1	BRACKET	
	293-8078	1	BRACKET	
	293-8079	1	BRACKET	
	293-8080	1	HOSE-WATER	
	293-8083	1	PIPE-AIR	
	293-8084	2	HOSE-AIR	
	293-8085	1	PIPE-AIR	
	293-8086	1	HOSE-AIR	
	303-6191	1	HOSE-WATER	
	317-9229	5	CLAMP-HOSE	
	322-9011	1	BRACKET AS-RADIATOR	
	324-3528	6	CLAMP-HOSE	
M	**362-8050**	4	NUT (M8X1.25-THD)	
M	**363-4208**	1	BOLT (M8X1.25X40-MM)	
	368-3338	1	GUARD AS-FAN	
M	**362-8050**	3	NUT (M8X1.25-THD)	
M	**363-4208**	3	BOLT (M8X1.25X40-MM)	
	454-3449	1	GUARD AS	
Y	**454-3464**	1	RADIATOR AS	680

M - METRIC PART
Y - SEPARATE ILLUSTRATION

<END>

456-4302 RADIATOR GP

S/N: G9R1-10235

PART OF 480-2181, 499-7181, 514-9367 ENGINE AR-PRIMARY

SMCS-1353 **i06673237**

NOTE	REF NO	GRAPHIC REF	PART NUMBER	QTY	PART NAME 1 2 3 4 5 6 (PRODUCT LEVEL)	SEE PAGE
M	1	1	**6I-0260**	3	BOLT (M8X1.25X25-MM)	
M	2	1	**6I-0593**	3	BOLT (M10X1.5X30-MM)	
M	3	1	**175-7141**	4	NUT-HEX FLANGE (M10X1.5-THD)	
M	4	1	**6I-0654**	3	BOLT (M10X1.5X25-MM)	
	5	1	**7W-2601**	2	SPACER (10.3X19X3.2-MM THK)	
M	6	1	**100-4461**	2	BOLT (M10X1.5X50-MM)	
	7	1	**101-7539**	2	WASHER (11.91X47.63X1.625-MM THK)	
	8	1	**101-7540**	2	WASHER (11.9X38.2X1.6-MM THK)	
M	9	1	**101-7541**	4	SCREW-FLAT HEAD (M8X1.25X25-MM)	
	10	1	**101-7546**	2	MOUNT	
M	11	1	**114-4363**	3	BOLT (M8X1.25X12-MM)	
M	12	1	**124-3815**	3	BOLT (M8X1.25X16-MM)	
	13	1	**185-0112**	1	HOSE-AIR	
	14	1	**265-6527**	1	CLAMP-HOSE	
M	15	1	**277-0120**	6	BOLT (M16X2X40-MM)	
	16	1	**498-2984**	2	ISOLATOR	
	17	1	**293-8077**	1	BRACKET	
	18	1	**293-8078**	1	BRACKET	
	19	1	**293-8079**	1	BRACKET	
	20	1	**293-8080**	1	HOSE-WATER	
	21	1	**469-3797**	1	CONNECTION	
	22	1	**293-8084**	2	HOSE-AIR	
	23	1	**293-8085**	1	PIPE-AIR	
	24	1	**293-8086**	1	HOSE-AIR	
	25	1	**303-6191**	1	HOSE-WATER	
	26	1	**317-9229**	5	CLAMP-HOSE	
	27	1	**322-9011**	1	BRACKET AS-RADIATOR	
	28	1	**324-3528**	6	CLAMP-HOSE	
M	29	1	**362-8050**	4	NUT (M8X1.25-THD)	
M	30	1	**363-4208**	1	BOLT (M8X1.25X40-MM)	
	31	1	**368-3338**	1	GUARD AS-FAN	
M		1	**362-8050**	3	NUT (M8X1.25-THD)	
M		1	**363-4208**	3	BOLT (M8X1.25X40-MM)	
	32	1	**454-3449**	1	GUARD AS	
Y	33	1	**454-3470**	1	RADIATOR AS	681

M - METRIC PART
Y - SEPARATE ILLUSTRATION

456-4302 **RADIATOR GP (**contd.**)** **i06673237**

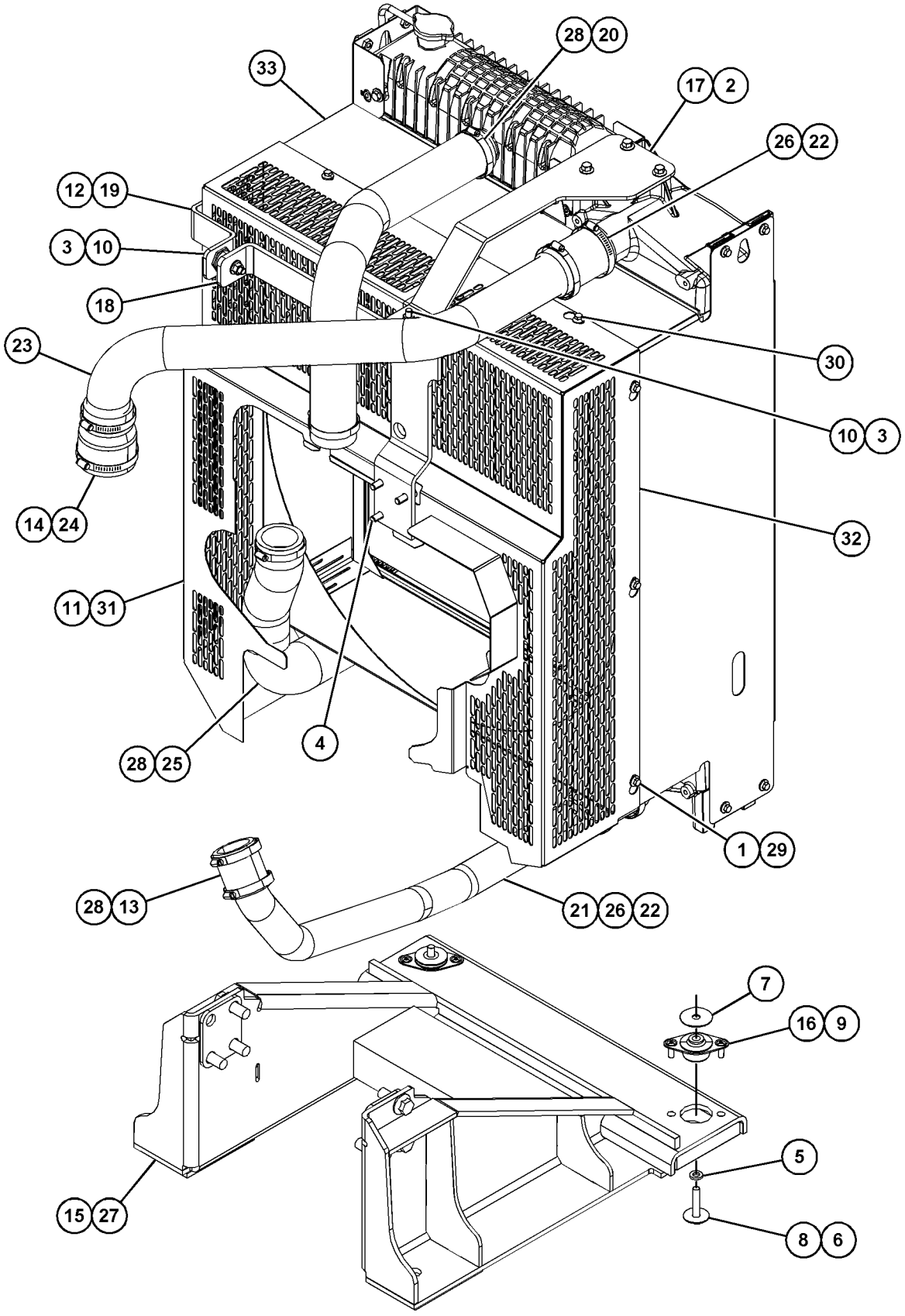

GRAPHIC #1 <END> g06190414

456-4302 RADIATOR GP

S/N: G9R10236-UP

PART OF 499-7181, 514-9367 ENGINE AR-PRIMARY

SMCS-1353 **i09160454**

NOTE	REF NO	GRAPHIC REF	PART NUMBER	QTY	PART NAME 1 2 3 4 5 6 (PRODUCT LEVEL)	SEE PAGE
M	1	3	**6I-0260**	3	BOLT (M8X1.25X25-MM)	
M	2	2	**6I-0593**	3	BOLT (M10X1.5X30-MM)	
M	3	2	**175-7141**	4	NUT-HEX FLANGE (M10X1.5-THD)	
M	4	2	**6I-0654**	3	BOLT (M10X1.5X25-MM)	
	5	4	**7W-2601**	2	SPACER (10.3X19X3.2-MM THK)	
M	6	4	**100-4461**	2	BOLT (M10X1.5X50-MM)	
	7	4	**101-7539**	2	WASHER (11.91X47.63X1.625-MM THK)	
					—OR—	
AF			**7Y-2292**	2	WASHER (13X50X2-MM THK)	
	8	4	**101-7540**	2	WASHER (11.9X38.2X1.6-MM THK)	
M	9	4	**188-9644**	4	SCREW-FLAT HEAD (M8X1.25X25-MM)	
	10	2	**101-7546**	2	MOUNT	
M	11	3	**114-4363**	3	BOLT (M8X1.25X12-MM)	
M	12	2	**124-3815**	3	BOLT (M8X1.25X16-MM)	
	13	1	**185-0112**	1	HOSE-AIR	
	14	1	**265-6527**	1	CLAMP-HOSE	
M	15	4	**342-9917**	6	BOLT-FLANGE HEAD (M16X2X40-MM)	
	16	4	**498-2984**	2	ISOLATOR	
	17	2	**293-8077**	1	BRACKET	
	18	2	**293-8078**	1	BRACKET	
	19	2	**293-8079**	1	BRACKET	
	20	1	**293-8080**	1	HOSE-WATER	
	21	1	**469-3797**	1	CONNECTION	
	22	1	**293-8084**	2	HOSE-AIR	
	23	1	**293-8085**	1	PIPE-AIR	
	24	1	**293-8086**	1	HOSE-AIR	
	25	1	**303-6191**	1	HOSE-WATER	
	26	1	**317-9229**	5	CLAMP-HOSE	
	27	4	**322-9011**	1	BRACKET AS-RADIATOR	
	28	1	**324-3528**	6	CLAMP-HOSE	
M	29	3	**195-3699**	4	NUT (M8X1.25-THD)	
M	30	3	**357-3513**	1	BOLT-FLANGE HEAD (M8X1.25X40-MM)	
	31	3	**368-3338**	1	GUARD AS-FAN	
M	31A	3	**195-3699**	3	NUT (M8X1.25-THD)	
M	31B	3	**357-3513**	3	BOLT-FLANGE HEAD (M8X1.25X40-MM)	
	32	3	**454-3449**	1	GUARD AS	
CY	33	1	*604-2398*	1	RADIATOR GP	709

A - NOT PART OF THIS GROUP
C - CHANGE FROM PREVIOUS TYPE
F - NOT SHOWN
M - METRIC PART
Y - SEPARATE ILLUSTRATION

456-4302 **RADIATOR GP** (contd.) **i09160454**

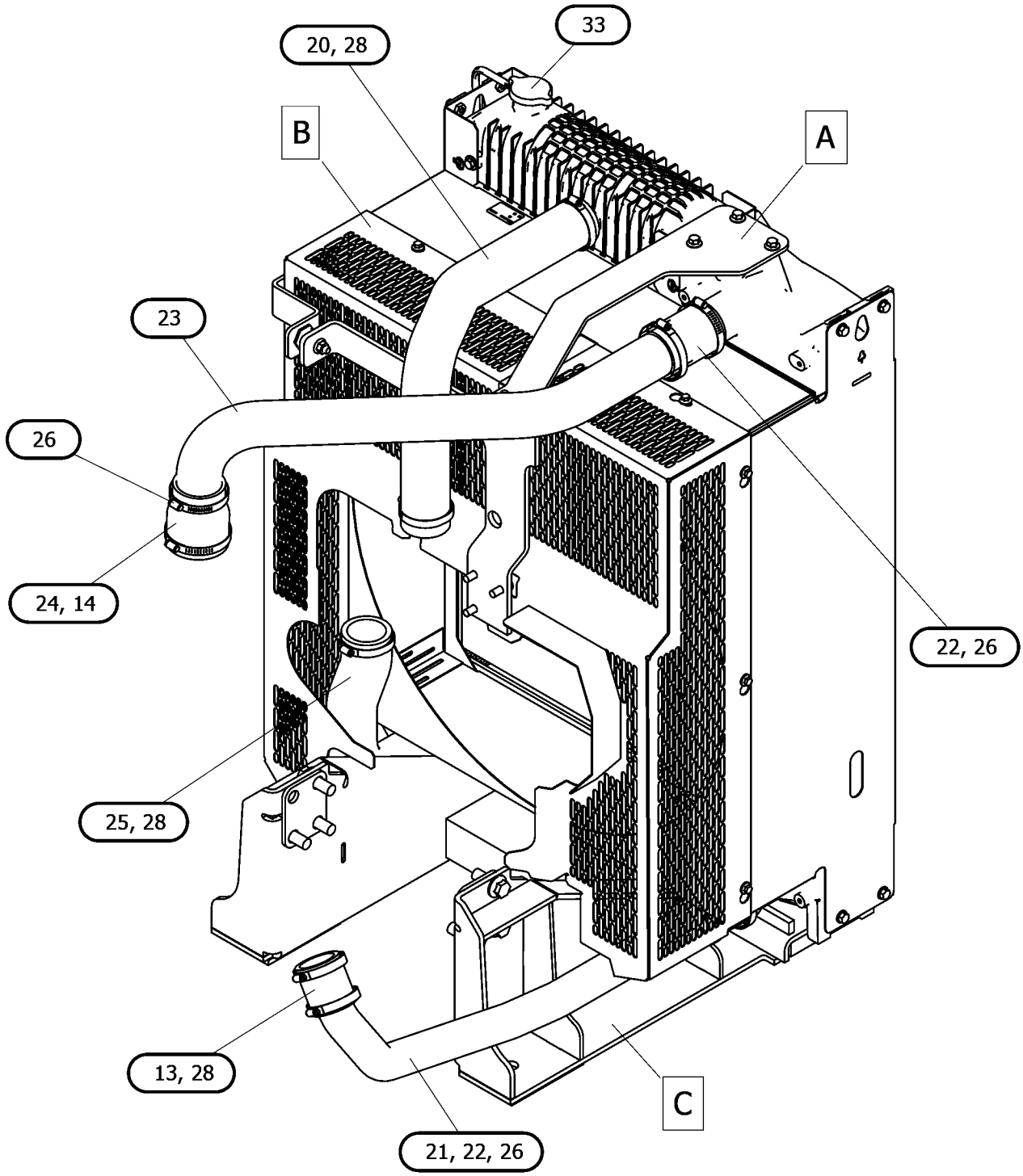

GRAPHIC #1 g07191522

456-4302 **RADIATOR GP (**contd.**)** **i09160454**

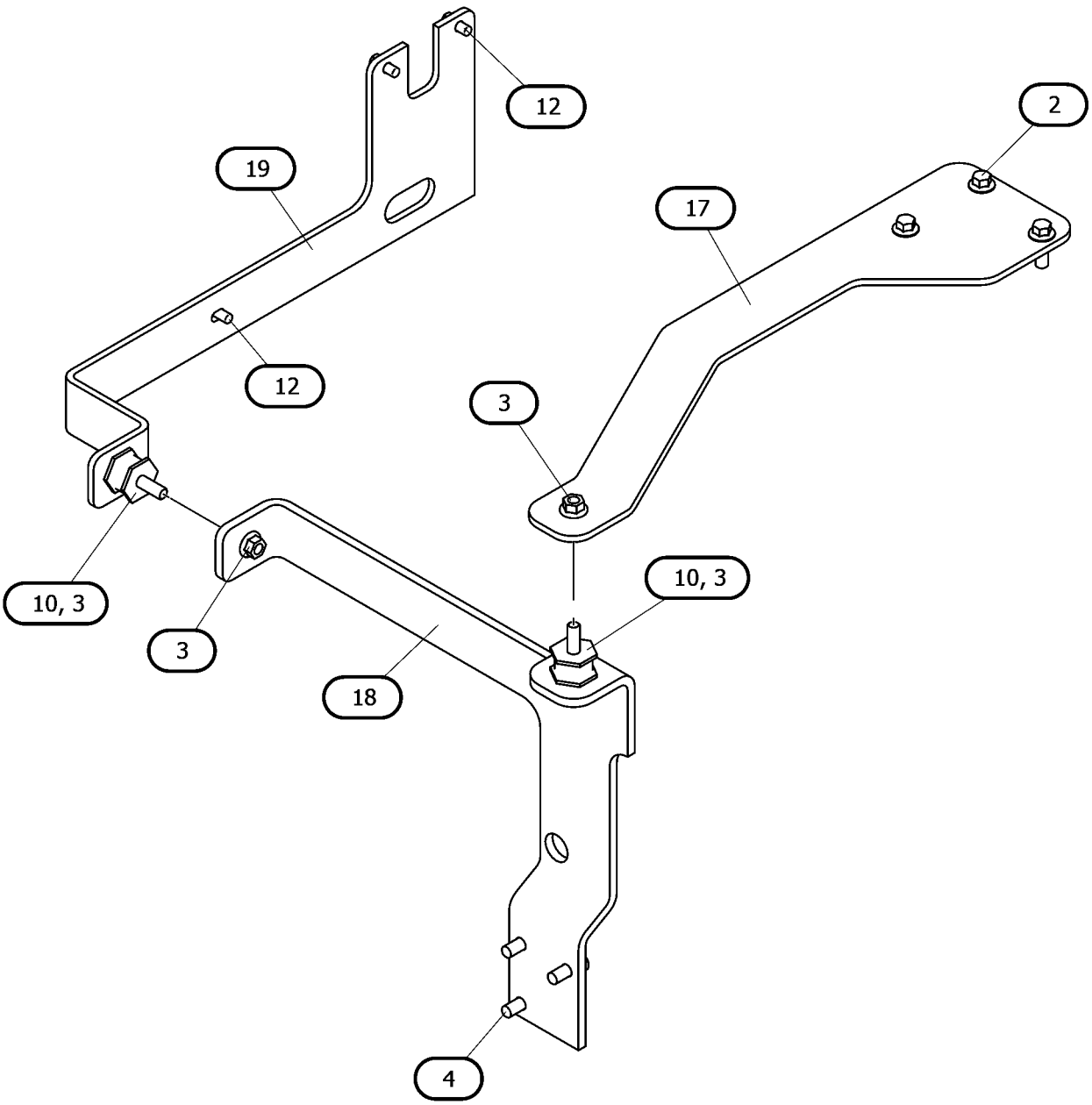

VIEW OF AREA A
(PARTS REMOVED FOR CLARITY)

GRAPHIC #2 g07191522_01

456-4302 **RADIATOR GP** (contd.) **i09160454**

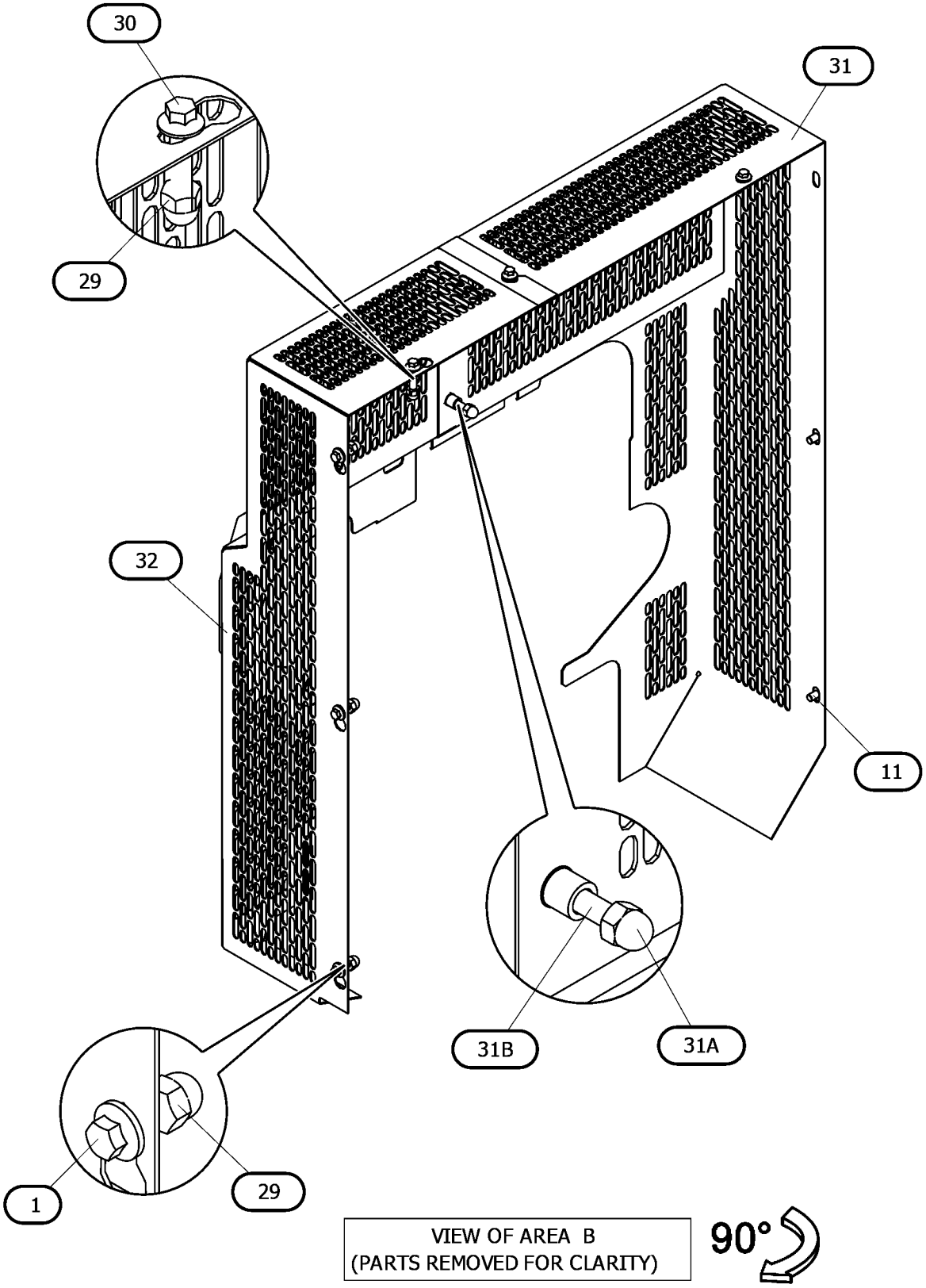

GRAPHIC #3 g07191522_02

456-4302 **RADIATOR GP (**contd.**)** **i09160454**

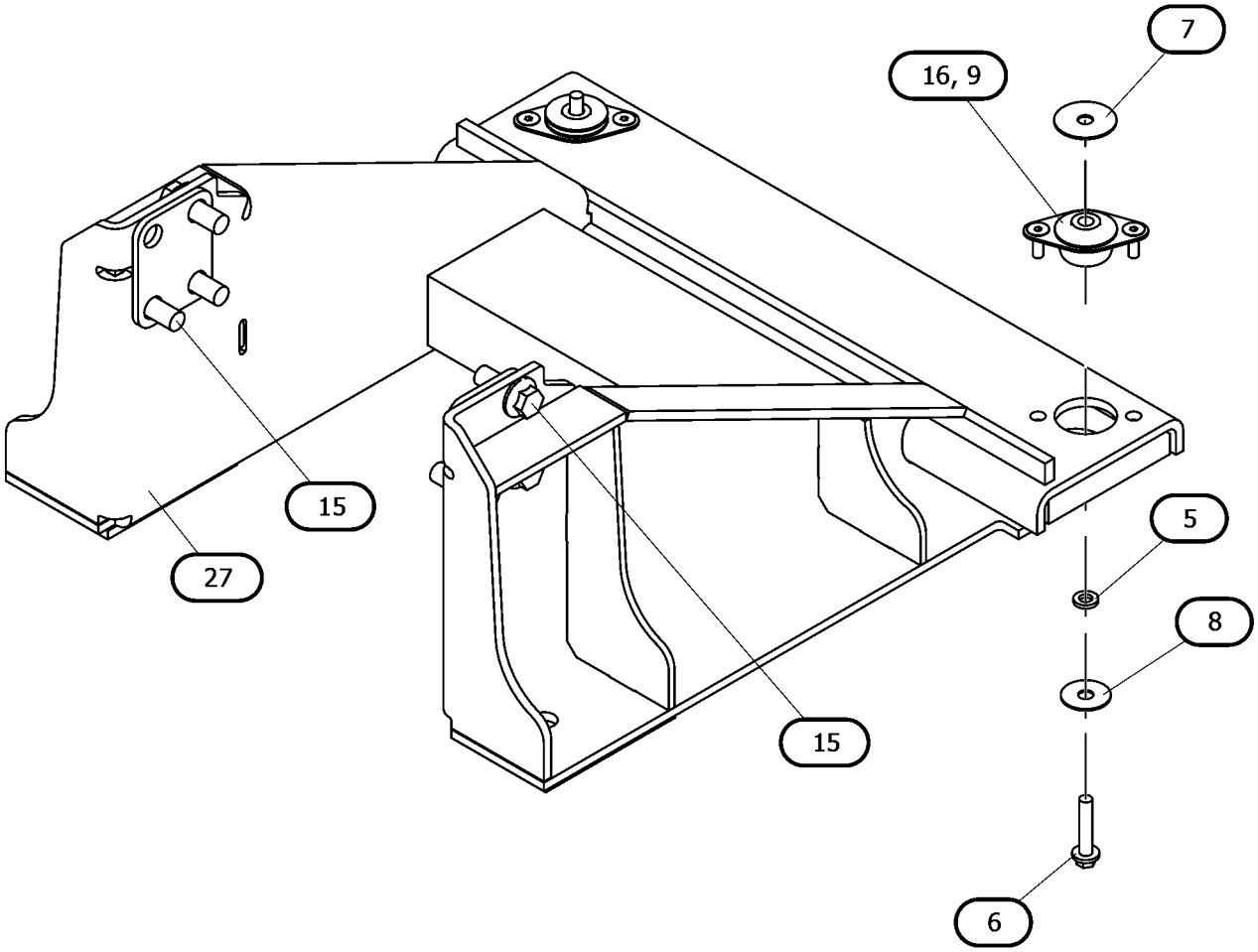

VIEW OF AREA C
(PARTS REMOVED FOR CLARITY)

GRAPHIC #4 <END> g07191522_03

604-2396 RADIATOR GP

FIELD REPLACEMENT ORDER 604-2415—PAGE: 711
PART OF 456-4298, 604-2415 RADIATOR GP

SMCS-1353 **i09023563**

NOTE	REF NO	GRAPHIC REF	PART NUMBER	QTY	PART NAME 1 2 3 4 5 6 (PRODUCT LEVEL)	SEE PAGE
M	1	1	**124-3815**	19	BOLT (M8X1.25X16-MM)	
	2	1	**365-2908**	1	AFTERCOOLER	
	3	1	**398-1750**	1	RADIATOR AS	
	4	1	**398-1775**	1	BRACKET AS	
	5	1	**422-6388**	1	WASHER	
	6	1	**422-6389**	2	WASHER	
	7	1	**457-0481**	1	COWLING	
	8	1	**442-5177**	1	SCREEN AS (RADIATOR)	

M - METRIC PART

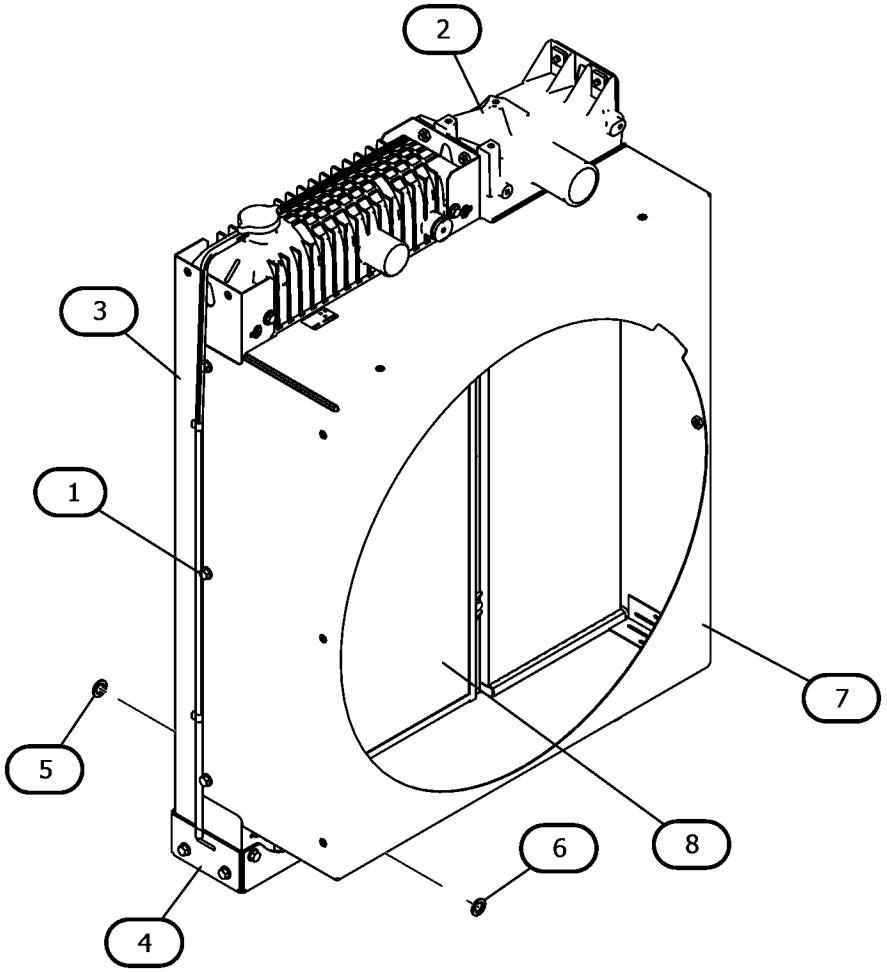

GRAPHIC #1 <END> g07187217

604-2398 RADIATOR GP

FIELD REPLACEMENT ORDER 604-2418–PAGE: 712
PART OF 452-5153, 456-4302, 604-2418 RADIATOR GP

SMCS-1353 **i09160497**

NOTE	REF NO	GRAPHIC REF	PART NUMBER	QTY	PART NAME 1 2 3 4 5 6 (PRODUCT LEVEL)	SEE PAGE
M	1	1	**124-3815**	15	BOLT (M8X1.25X16-MM)	
	2	1	**365-2908**	1	AFTERCOOLER	
	3	1	**398-1750**	1	RADIATOR AS	
	4	1	**398-1775**	1	BRACKET AS	
	5	1	**422-6385**	1	PLUG	
	6	1	**457-0481**	1	COWLING	
	7	1	**422-6388**	1	WASHER	
	8	1	**422-6389**	2	WASHER	
					PARTS SHOWN IN GRAPHIC(S) WITHOUT A REFERENCE NUMBER ARE NOT SERVICED SEPARATELY	

M - METRIC PART

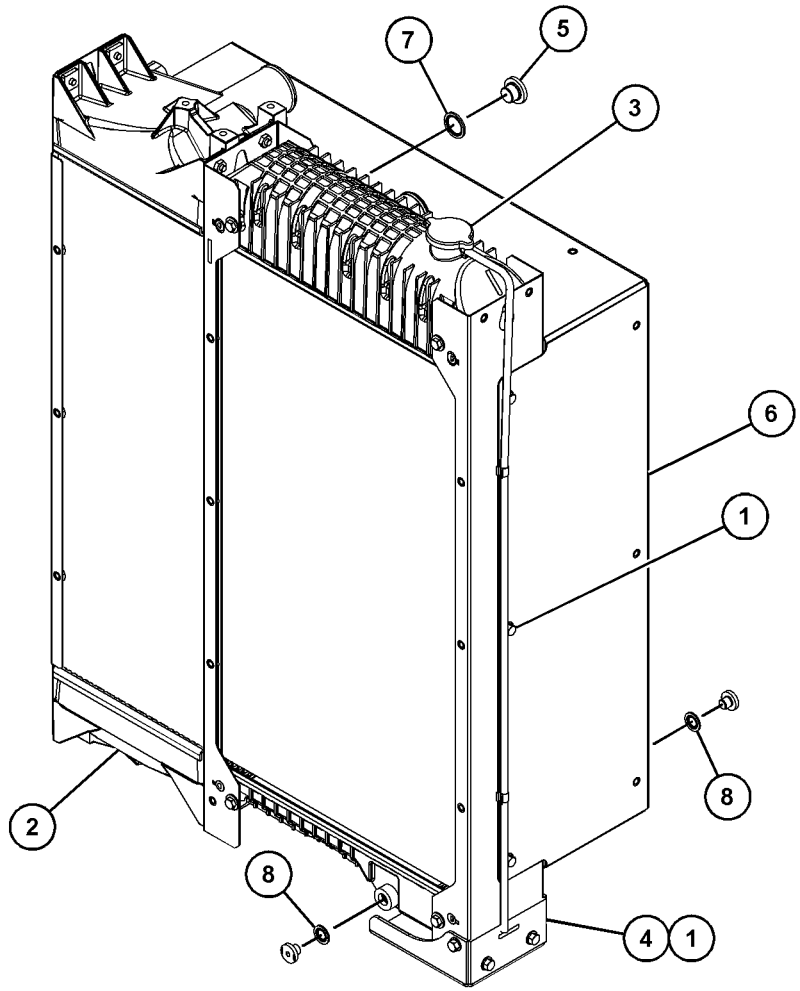

GRAPHIC #1 <END> g07255542

604-2413 RADIATOR GP

FIELD REPLACEMENT FOR 604-2395—PAGE: 684

SMCS-1353 **i09140655**

NOTE	REF NO	GRAPHIC REF	PART NUMBER	QTY	PART NAME 1 2 3 4 5 6 (PRODUCT LEVEL)	SEE PAGE
	1	1	**451-7225**	1	FILM-IDENTIFICATION (CAT)	
Y	2	1	*604-2395*	1	RADIATOR AS	684

Y - SEPARATE ILLUSTRATION

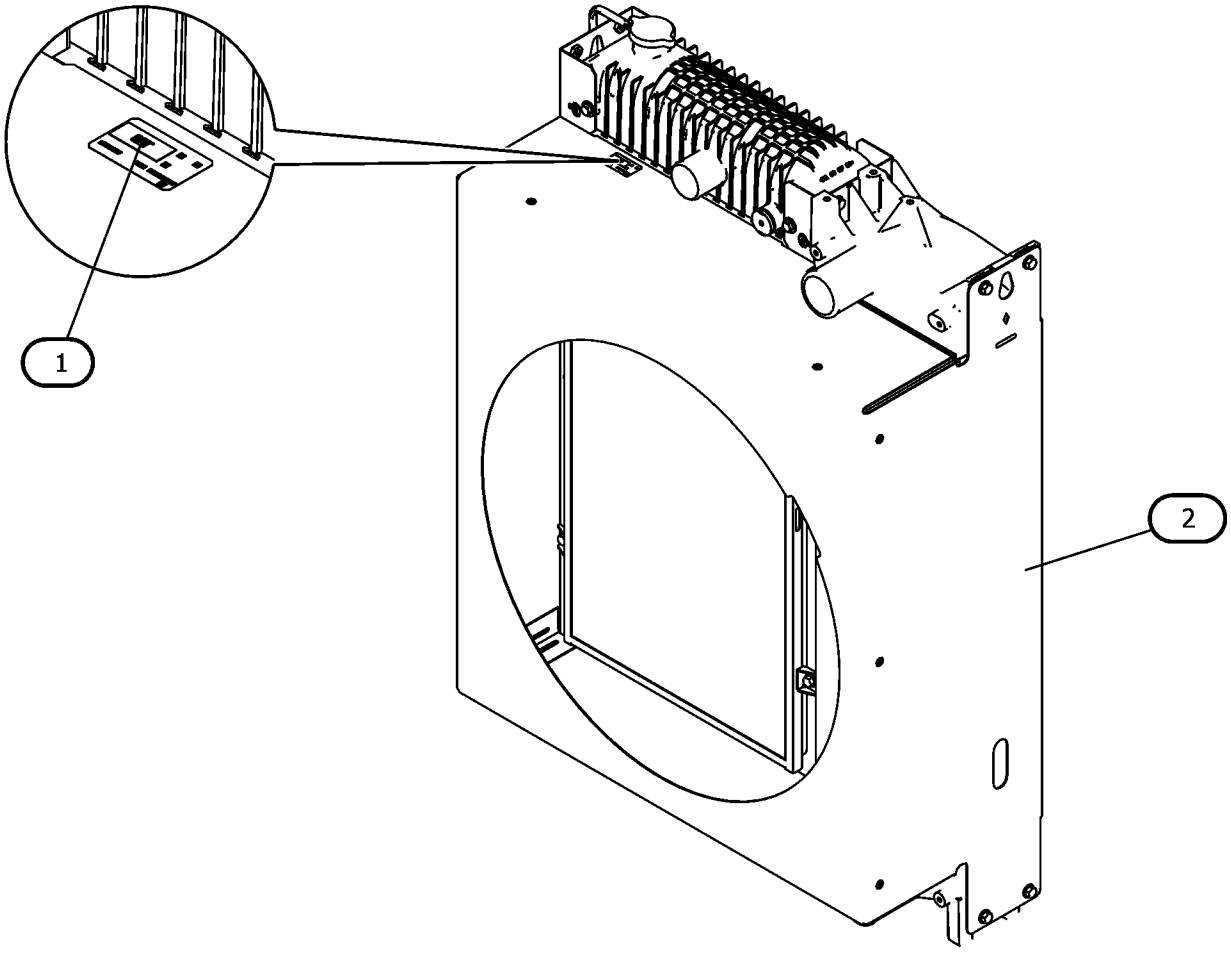

GRAPHIC #1 <END> g07191549

604-2415 RADIATOR GP

FIELD REPLACEMENT FOR 604-2396—PAGE: 708

SMCS-1353 **i09023565**

NOTE	REF NO	GRAPHIC REF	PART NUMBER	QTY	PART NAME 1 2 3 4 5 6 (PRODUCT LEVEL)	SEE PAGE
	1	1	**451-7225**	1	FILM-IDENTIFICATION (CAT)	
Y	2	1	*604-2396*	1	RADIATOR GP	708

Y - SEPARATE ILLUSTRATION

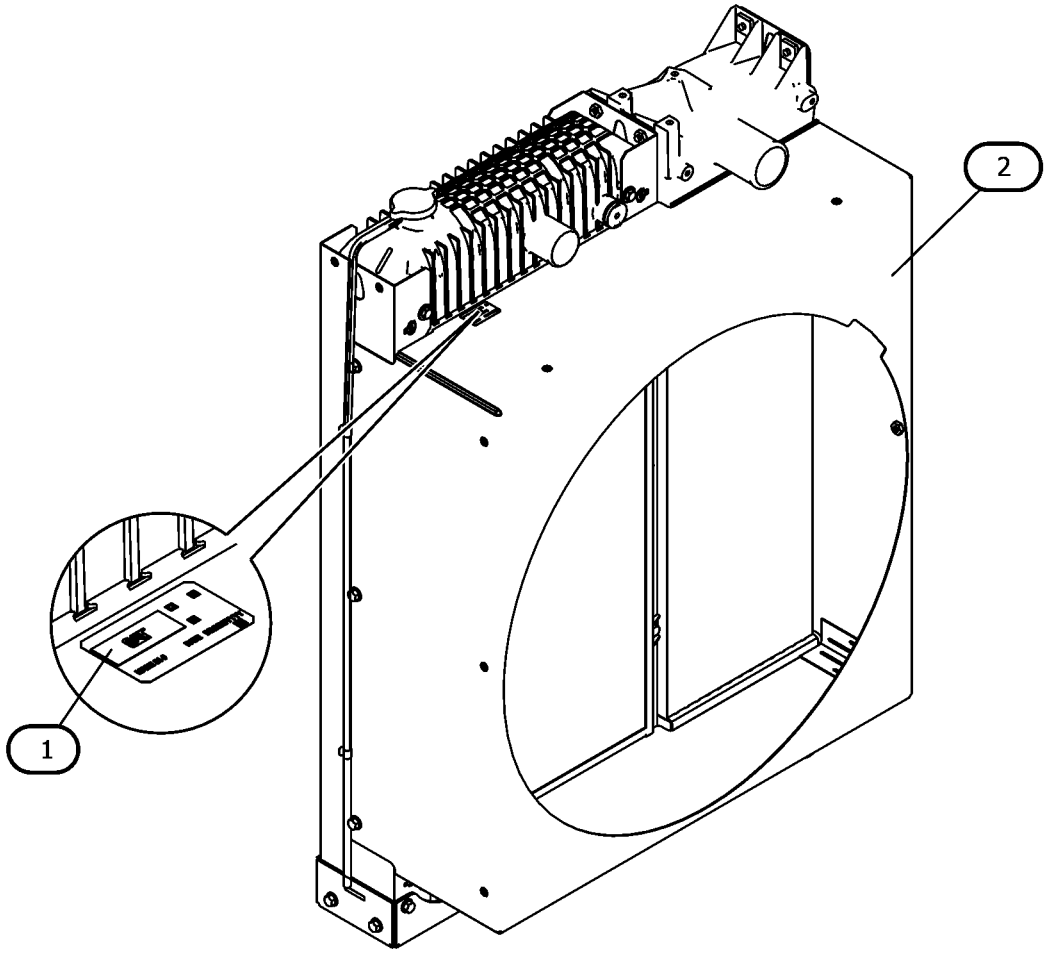

GRAPHIC #1 <END> g07187433

604-2418 RADIATOR GP

FIELD REPLACEMENT FOR 604-2398—PAGE: 709

SMCS-1353 **i09160499**

NOTE	REF NO	GRAPHIC REF	PART NUMBER	QTY	PART NAME 1 2 3 4 5 6 (PRODUCT LEVEL)	SEE PAGE
	1	1	**451-7225**	1	FILM-IDENTIFICATION (CAT)	
Y	2	1	*604-2398*	1	RADIATOR GP	709

Y - SEPARATE ILLUSTRATION

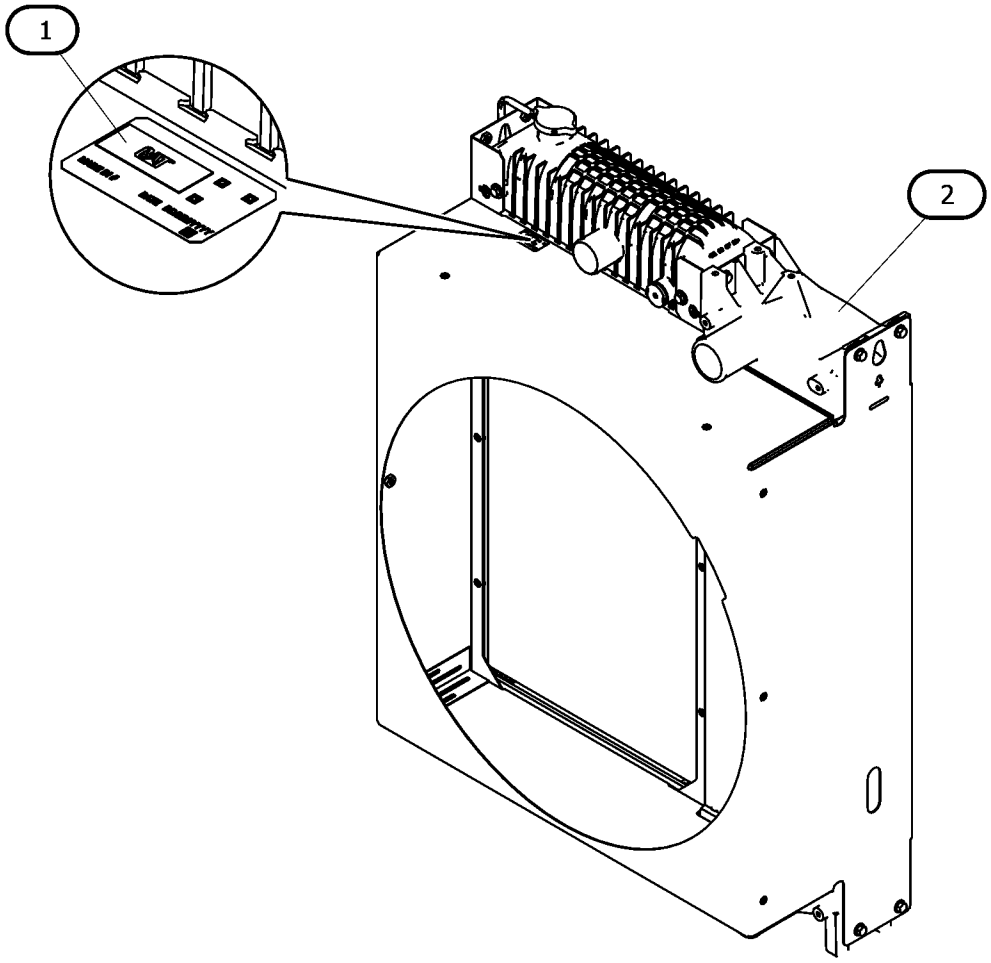

GRAPHIC #1 <END> g07191529

375-5006 AIR CLEANER GP

SMCS-1051, 1054 **i05847749**

NOTE	REF NO	GRAPHIC REF	PART NUMBER	QTY	PART NAME 1 2 3 4 5 6 (PRODUCT LEVEL)	SEE PAGE
M	1	1	**6I-0654**	4	BOLT (M10X1.5X25-MM)	
M	2	1	**100-4830**	2	BOLT (M10X1.5X20-MM)	
	3	1	**268-5341**	1	CLAMP-HOSE	
	4	1	**289-2360**	1	CAP	
	5	1	**294-9389**	1	BRACKET	
	6	1	**315-4691**	1	INDICATOR-AIR FILTER CHANGE	
	7	1	**356-9627**	1	FILTER	
	8	1	**385-0020**	1	CLIP-HOSE	
	9	1	**421-8534**	1	HOSE	

M - METRIC PART

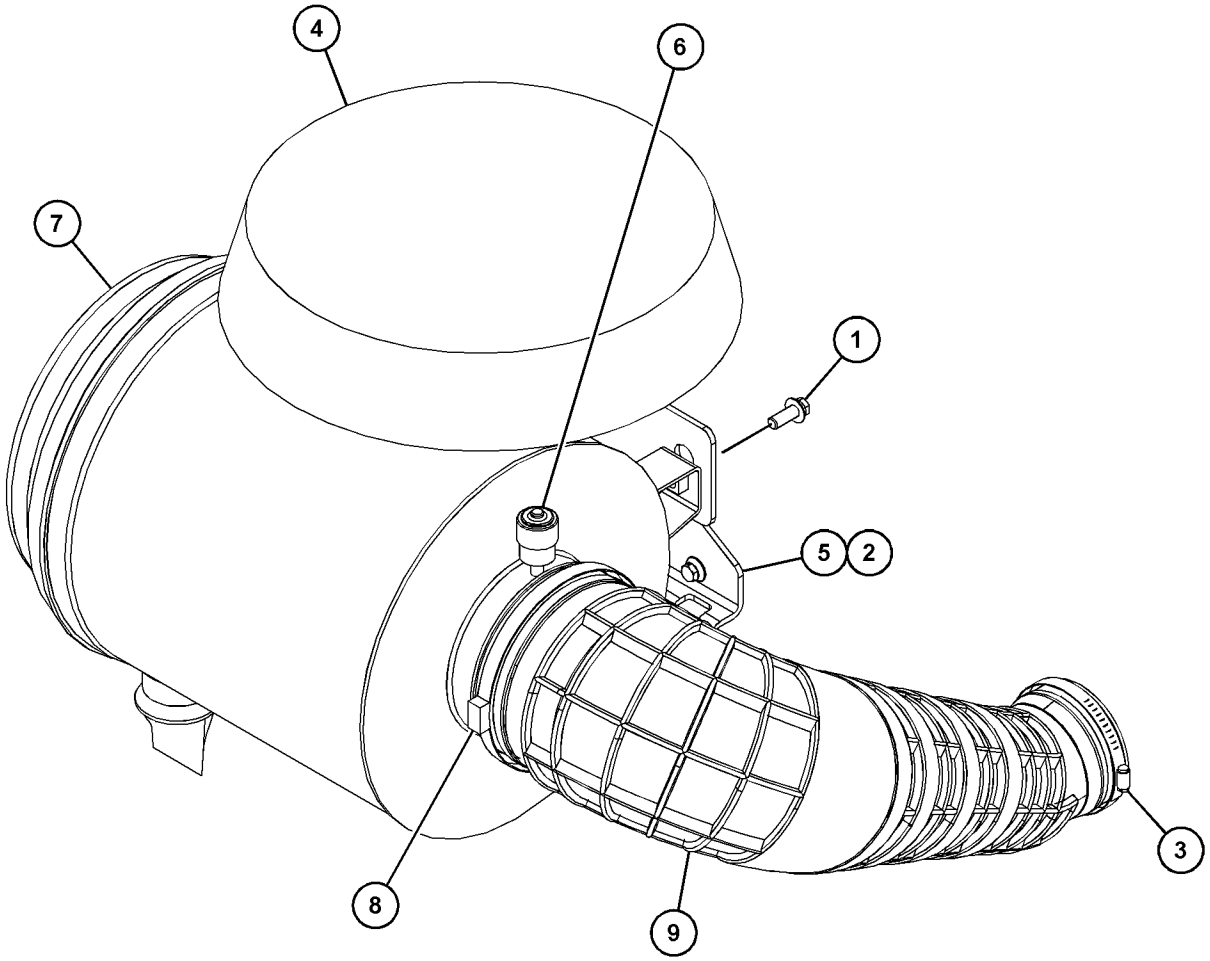

GRAPHIC #1 <END> g03696756

467-1940 AIR CLEANER GP

PART OF 461-4656 ENGINE AR-PRIMARY

SMCS-1051, 1054 **i10499116**

NOTE	REF NO	GRAPHIC REF	PART NUMBER	QTY	PART NAME 1 2 3 4 5 6 (PRODUCT LEVEL)	SEE PAGE
M	1	1	**6I-0654**	4	BOLT (M10X1.5X25-MM)	
M	2	1	**100-4830**	2	BOLT (M10X1.5X20-MM)	
	3	1	**371-2636**	1	CLIP-HOSE	
	4	1	**289-2360**	1	CAP	
	5	1	**294-9389**	1	BRACKET	
	6	1	**315-4691**	1	INDICATOR-AIR FILTER CHANGE	
	7	1	**344-0927**	1	FILTER GP-AIR	
	7A	1	**133-7403**	1	VALVE-DUST	
	7B	1	**289-2348**	1	FILTER ELEMENT-AIR (PRIMARY)	
	8	1	**385-0020**	1	CLIP-HOSE	
	9	1	**421-8534**	1	HOSE	
	10	1	**326-9053**	1	FILM-WARNING (DO NOT SPRAY, READ OMM)	
					(EXPLOSION HAZARD. COULD CAUSE SERIOUS INJURY OR DEATH. DO NOT USE ETHER. READ THE OPERATOR'S MANUAL)	

M - METRIC PART

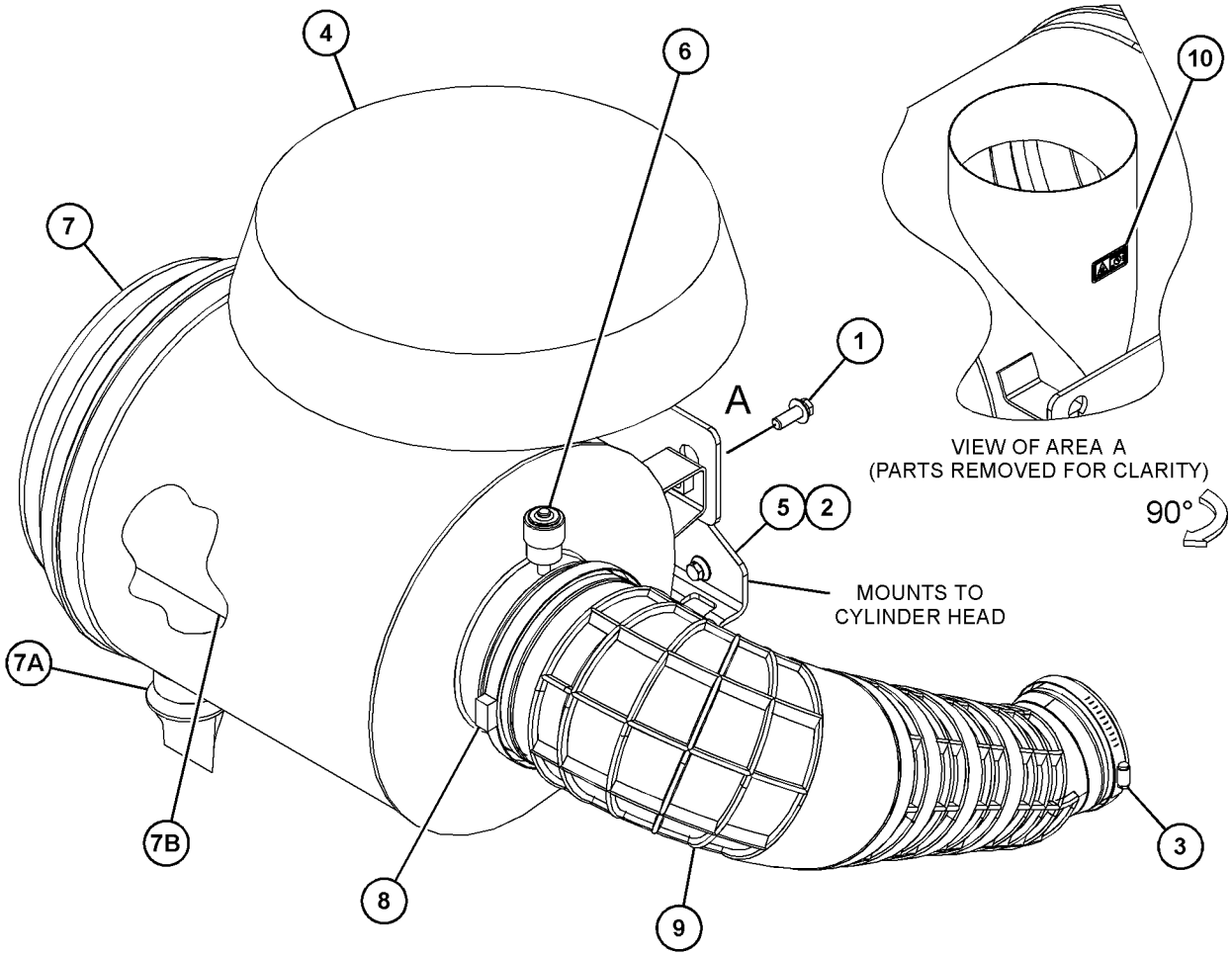

GRAPHIC #1 <END> g07916138

478-4234 AIR CLEANER GP

PART OF 596-2071 ENGINE AR-COMPLETE, 451-8343, 461-4638, 461-4649, 461-4656, 461-4658, 468-0461, 480-2181, 482-0212, 485-8027, 486-2644, 489-9006, 491-4973, 491-4980, 491-4993, 491-7124, 492-3021, 492-3072, 494-6807, 495-8349, 499-7181, 501-2466, 502-9462, 504-9579, 507-8016, 510-1088, 512-9858, 513-0851, 513-8513, 514-9367, 520-3152, 527-9686, 530-1323, 530-2601, 533-2797, 535-8060, 536-6675, 539-6915, 539-8582, 543-4255, 552-8869, 555-4669, 562-8873, 563-6729, 563-6730, 565-1247, 569-7846, 583-8352, 591-1266, 591-9440, 598-9881, 602-8721, 603-5300, 609-9819, 612-1735, 614-9555, 622-6239, 627-8129, 633-4335 ENGINE AR-PRIMARY

SMCS-1051, 1054 **i06241618**

NOTE	REF NO	GRAPHIC REF	PART NUMBER	QTY	PART NAME 1 2 3 4 5 6 (PRODUCT LEVEL)	SEE PAGE
M	1	1	**6I-0654**	4	BOLT (M10X1.5X25-MM)	
M	2	1	**100-4830**	2	BOLT (M10X1.5X20-MM)	
	3	1	**268-5341**	1	CLAMP-HOSE	
	4	1	**294-9389**	1	BRACKET	
	5	1	**289-2360**	1	CAP	
	6	1	**286-0127**	1	INDICATOR-AIR FILTER SERVICE	
	7	1	**289-2347**	1	FILTER AS-AIR	
	7A	1	**289-2348**	1	FILTER ELEMENT-AIR (PRIMARY)	
	7B	1	**289-2349**	1	FILTER ELEMENT-AIR (SECONDARY)	
	8	1	**385-0020**	1	CLIP-HOSE	
	9	1	**421-8534**	1	HOSE	

M - METRIC PART

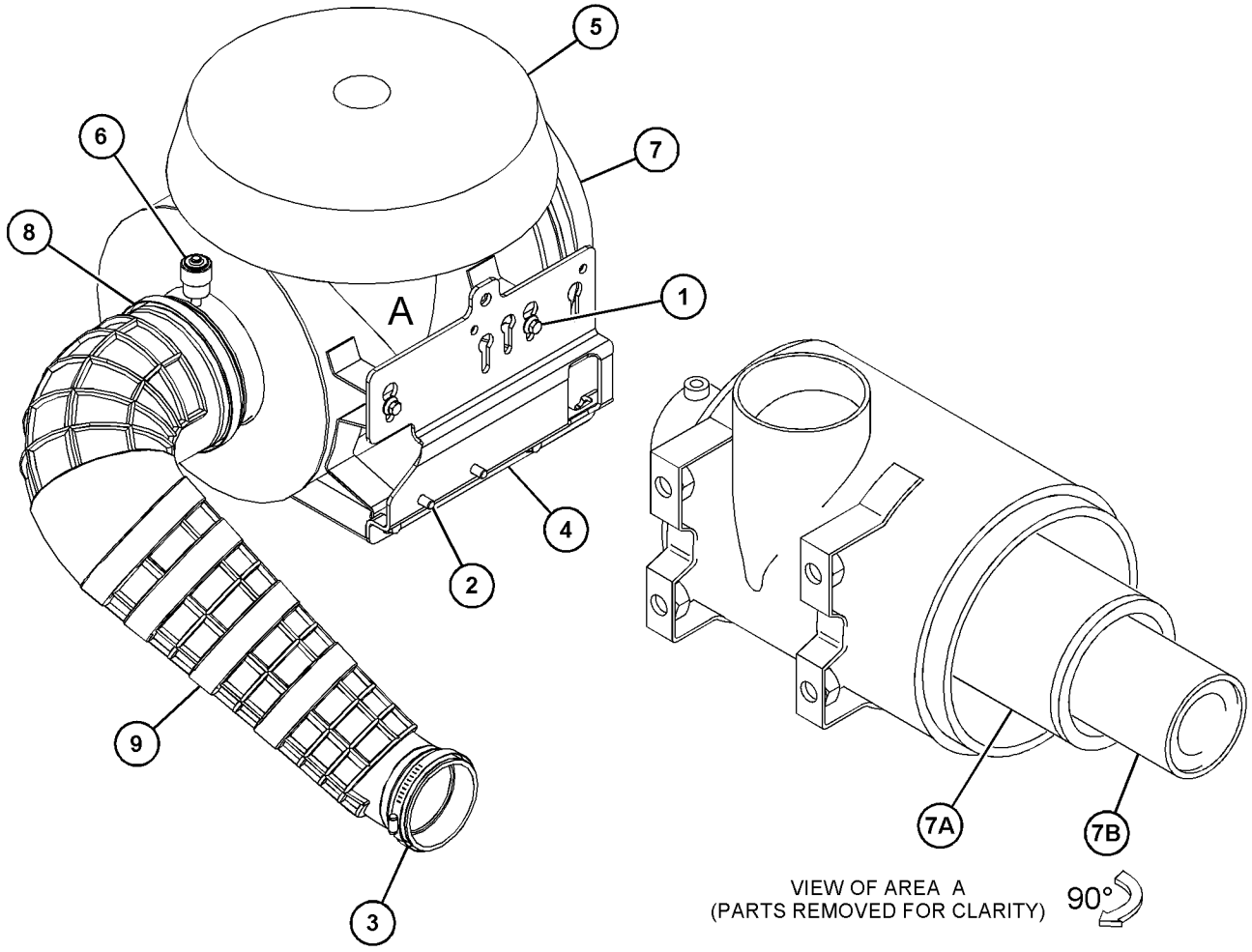

GRAPHIC #1 <END> g03869540

557-7811 AIR CLEANER GP

SMCS-1051, 1054

i08132351

NOTE	REF NO	GRAPHIC REF	PART NUMBER	QTY	PART NAME 1 2 3 4 5 6 (PRODUCT LEVEL)	SEE PAGE
	1	1	**160-7163**	1	FILTER GP-AIR (TURBOCHARGER, AIR CLEANER)	

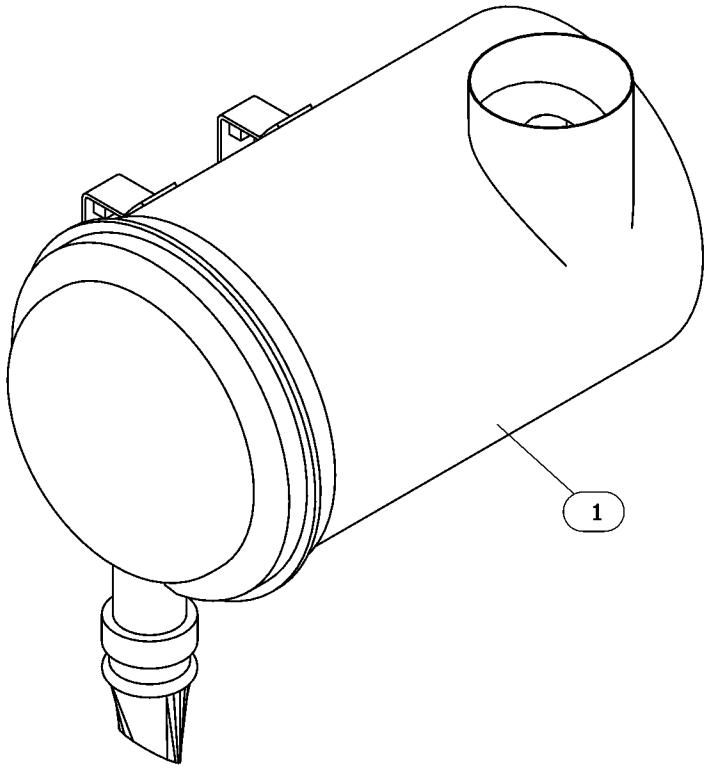

GRAPHIC #1 <END> g06637939

390-5130 CLAMP AS-EXHAUST

HARDWARE

PART OF 468-8218, 470-8667, 478-4257, 481-0811, 515-9203, 526-7210, 531-2492, 552-3506, 608-9261, 613-9482 ENGINE AR-PRIMARY

SMCS-1061, 1062, 1071 **i05718189**

NOTE	REF NO	GRAPHIC REF	PART NUMBER	QTY	PART NAME 1 2 3 4 5 6 (PRODUCT LEVEL)	SEE PAGE
	1	1	**1W-2431**	1	CLAMP-BAND	

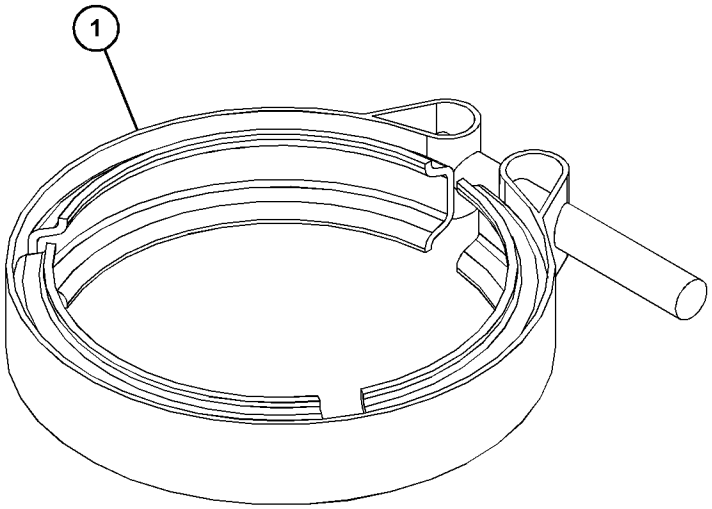

GRAPHIC #1 <END> g03649515

390-5132 CLAMP AS-EXHAUST

PART OF 474-7299, 486-4250, 494-2073, 504-3629, 506-5035, 506-9918, 526-0511, 527-7106, 528-3358, 528-9920, 553-1809, 553-3730, 596-4834, 596-7090, 597-9248 ENGINE AR-PRIMARY

SMCS-1061, 1062, 1071

i05712036

NOTE	REF NO	GRAPHIC REF	PART NUMBER	QTY	PART NAME 1 2 3 4 5 6 (PRODUCT LEVEL)	SEE PAGE
	1	1	**1W-2431**	1	CLAMP-BAND	
		1	**8T-0193**	1	NUT-FULL (5/16-24-THD)	

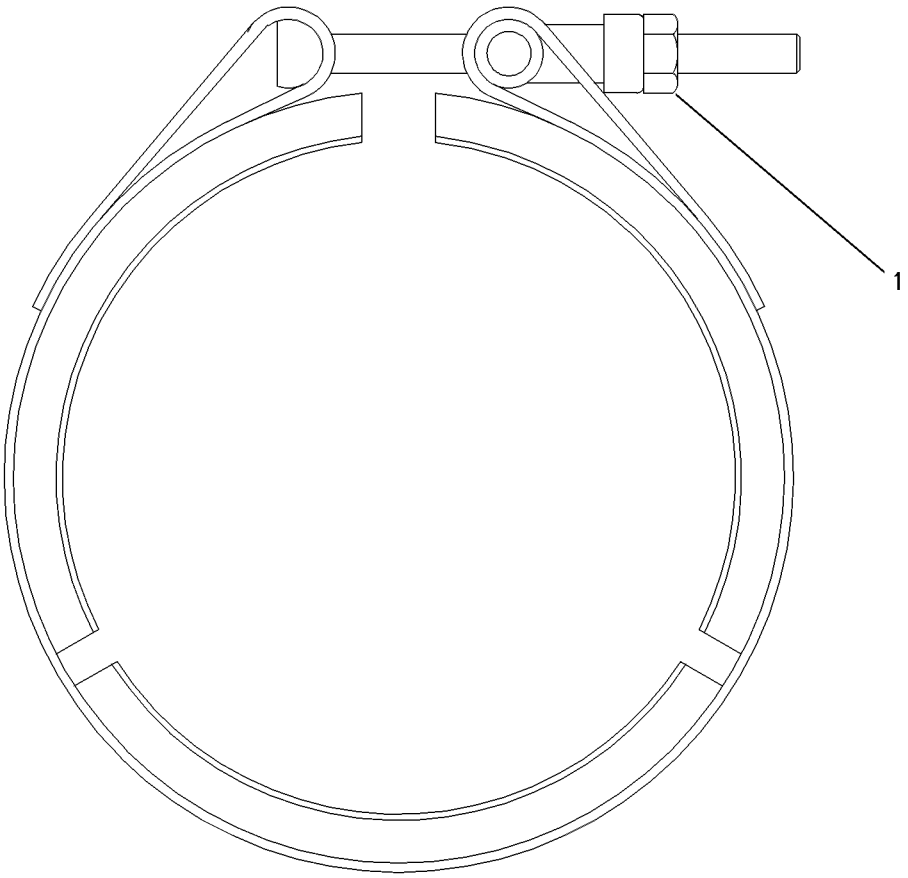

GRAPHIC #1 <END> g00605009

346-0769 FLANGE GP-EXHAUST

PART OF 596-2071 ENGINE AR-COMPLETE, 461-4638, 461-4649, 461-4656, 461-4658, 466-1160, 466-1161, 466-1162, 466-1163, 468-0461, 471-0541, 479-9398, 480-2181, 482-0212, 484-2939, 485-8027, 486-2644, 489-9006, 491-4973, 491-4980, 491-4993, 491-7124, 492-3021, 492-3072, 494-6807, 495-8349, 499-7181, 501-2466, 502-9462, 504-9579, 507-8016, 508-0270, 510-1088, 512-9858, 513-0851, 513-8513, 514-9367, 519-4128, 520-3152, 520-4644, 526-8888, 527-9686, 530-1323, 530-2601, 533-2797, 535-8060, 536-6675, 539-6915, 539-8582, 543-4255, 552-8869, 555-4669, 562-8873, 563-6728, 563-6729, 563-6730, 565-1247, 569-7846, 583-8352, 591-1266, 591-9440, 593-7287, 593-7288, 594-2125, 596-8896, 596-8905, 598-9881, 602-8721, 603-5300, 609-9819, 612-1735, 614-9555, 622-6239, 627-8019, 627-8054, 627-8129, 628-4345, 633-4335, 633-7776, 657-2370 ENGINE AR-PRIMARY

SMCS-1061 **i05847746**

NOTE	REF NO	GRAPHIC REF	PART NUMBER	QTY	PART NAME 1 2 3 4 5 6 (PRODUCT LEVEL)	SEE PAGE
	1	1	**7R-6290**	1	FLANGE	
	2	1	**100-4002**	1	ADAPTER	
M	3	1	**100-4003**	3	STUD (M10X1.5X35-MM)	
M	4	1	**6I-0563**	3	NUT (M10X1.5-THD)	
	5	1	**7C-1243**	1	RING	

M - METRIC PART

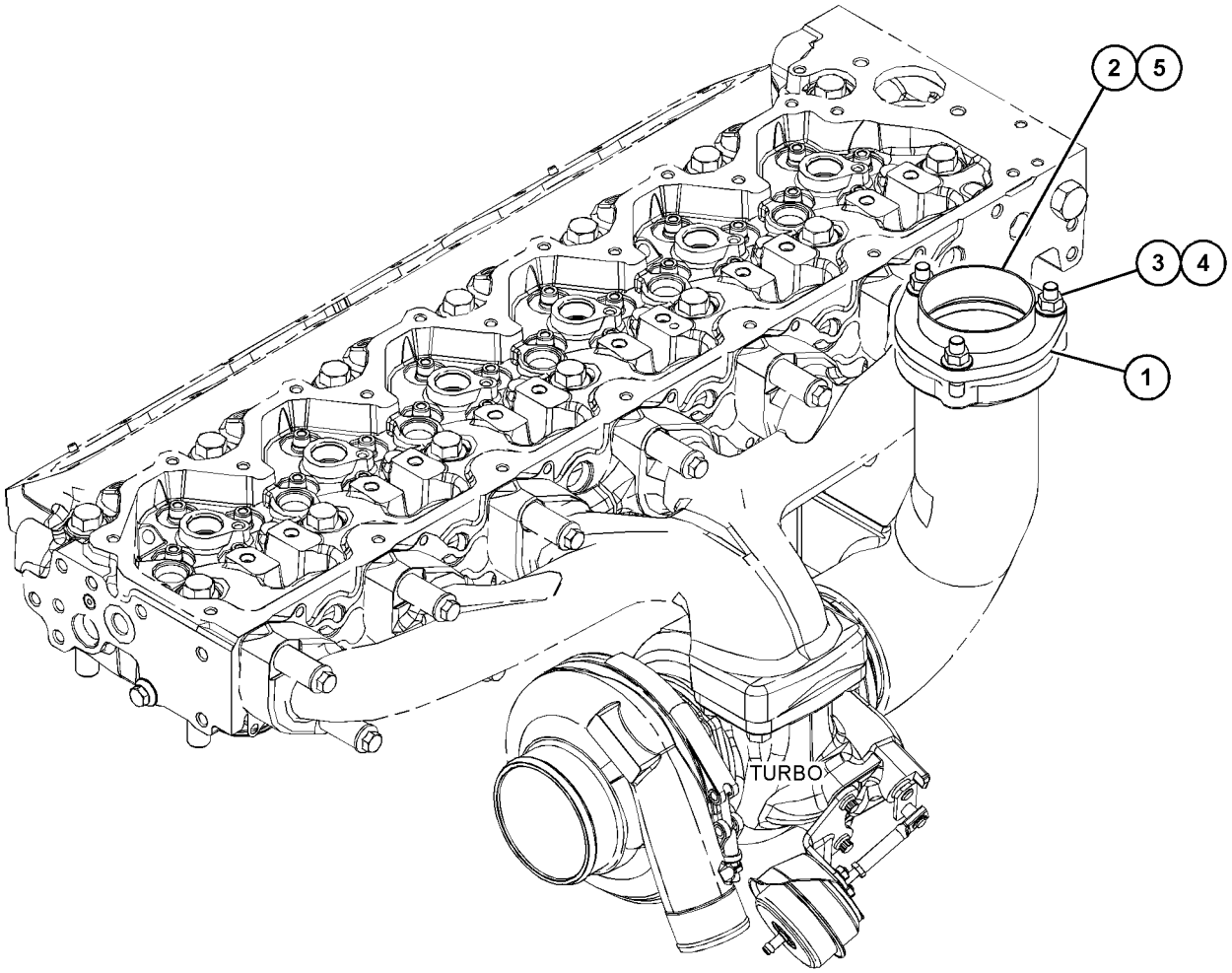

GRAPHIC #1 <END> g03696664

377-2877 LINES GP-TURBOCHARGER AIR

PART OF 371-2720, 374-0432, 416-6968, 416-6969, 431-6518 TURBOCHARGER GP

SMCS-1052, 1071

i05717925

NOTE	REF NO	GRAPHIC REF	PART NUMBER	QTY	PART NAME 1 2 3 4 5 6 (PRODUCT LEVEL)	SEE PAGE
	1	1	**225-8526**	2	WASHER (10.4X13.75X1.37-MM THK)	
	2	1	**133-9469**	1	CLIP	
M	3	1	**225-8524**	1	BOLT-SPECIAL (M10X1.0X23-MM)	
	4	1	**335-8611**	2	CLIP	
	5	1	**377-2876**	1	TUBE AS	
	6	1	**422-7715**	1	HOSE-TURBOCHARGER	
	7	1	**107-2348**	2	CLIP	

M - METRIC PART

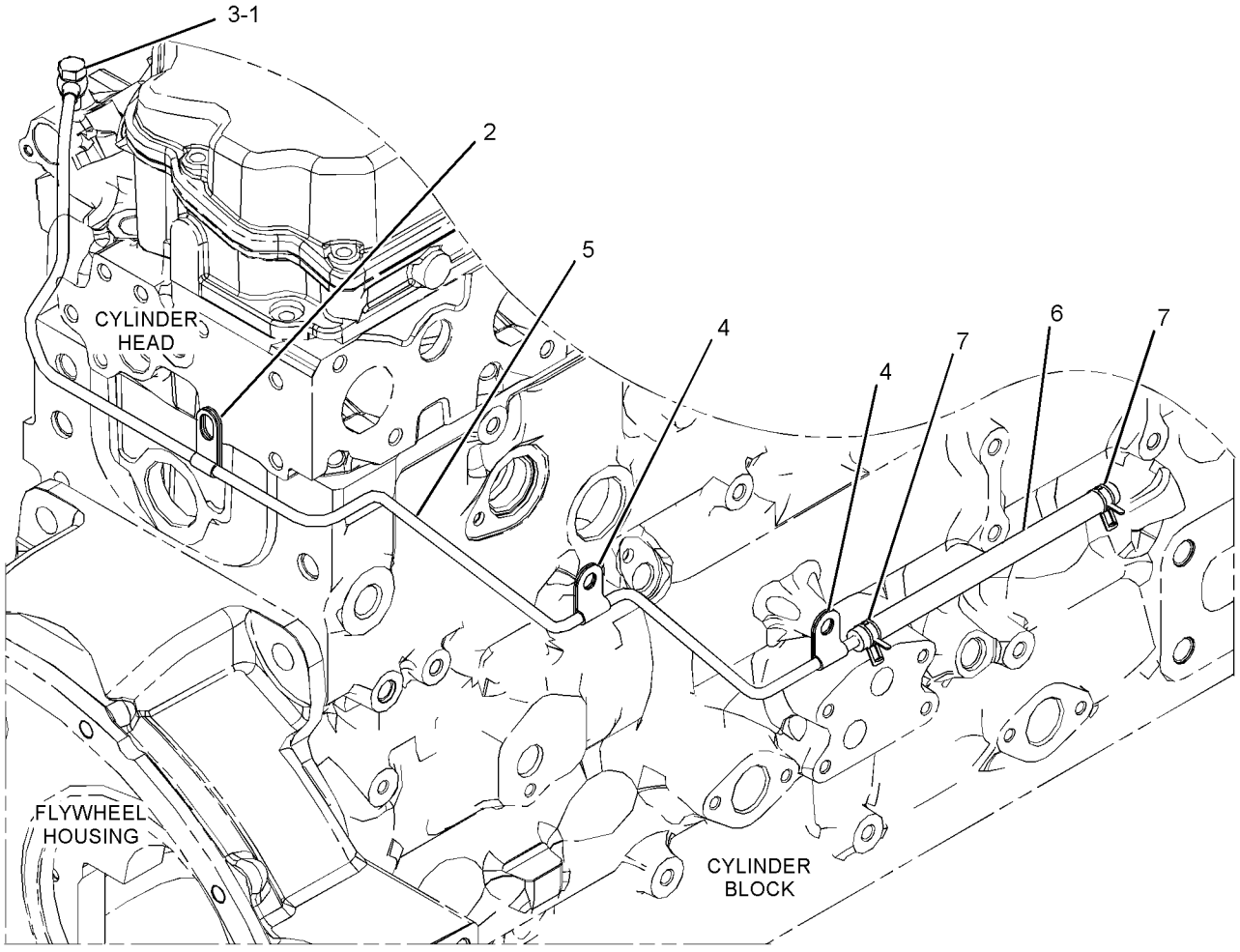

GRAPHIC #1 <END> g03380817

396-9532 LINES GP-TURBOCHARGER AIR

PART OF 375-5002, 380-2016, 416-6971, 448-9771, 448-9777 TURBOCHARGER GP

SMCS-1052, 1071

i05777566

NOTE	REF NO	GRAPHIC REF	PART NUMBER	QTY	PART NAME 1 2 3 4 5 6 (PRODUCT LEVEL)	SEE PAGE
	1	1	**225-8526**	2	WASHER (10.4X13.75X1.37-MM THK)	
	2	1	**133-9469**	1	CLIP	
M	3	1	**225-8524**	1	BOLT-SPECIAL (M10X1.0X23-MM)	
	4	1	**335-8611**	1	CLIP	
	5	1	**396-9529**	1	TUBE AS-TURBOCHARGER	
	6	1	**107-2348**	2	CLIP	

M - METRIC PART

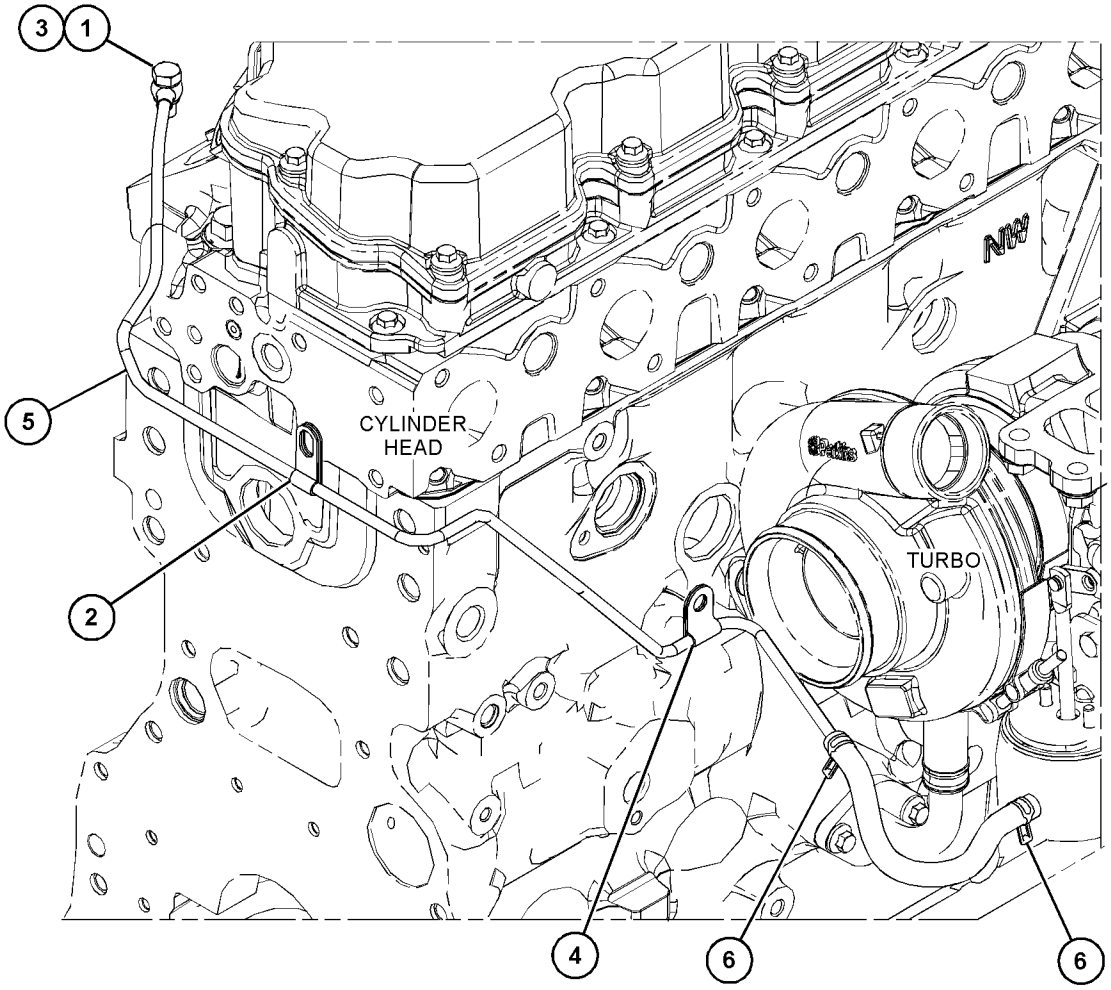

GRAPHIC #1 <END> g03557599

420-9572 LINES GP-TURBOCHARGER AIR

PART OF 416-6970 TURBOCHARGER GP

SMCS-1052, 1071 **i07563214**

NOTE	REF NO	GRAPHIC REF	PART NUMBER	QTY	PART NAME 1 2 3 4 5 6 (PRODUCT LEVEL)	SEE PAGE
	1	1	**225-8526**	2	WASHER (10.4X13.75X1.37-MM THK)	
	2	1	**133-9469**	2	CLIP	
M	3	1	**225-8524**	1	BOLT-SPECIAL (M10X1.0X23-MM)	
	4	1	**335-8611**	2	CLIP	
	6	1	**422-7715**	1	HOSE-TURBOCHARGER	
	7	1	**107-2348**	2	CLIP	

M - METRIC PART

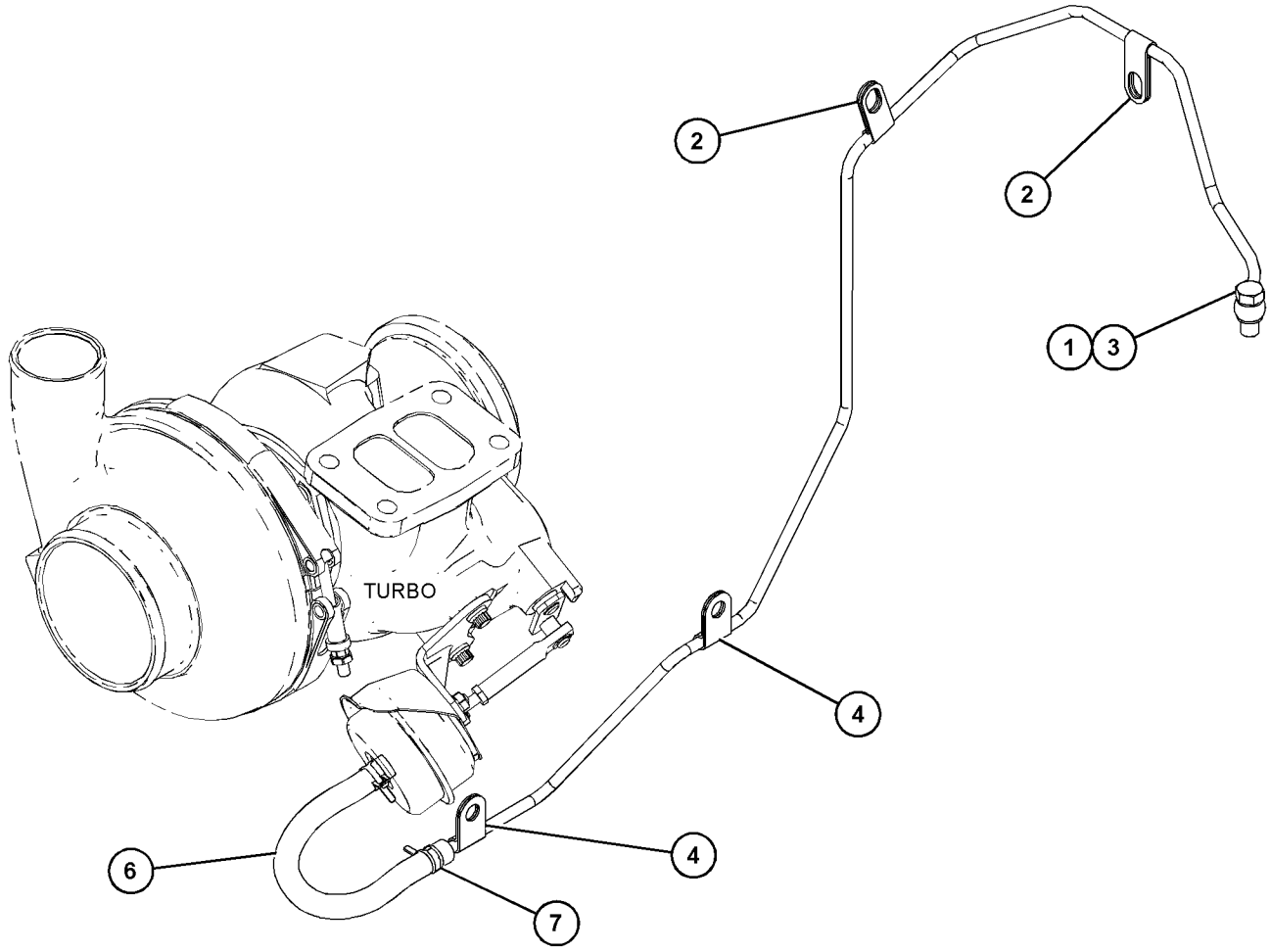

GRAPHIC #1 <END> g06041344

393-7694 MANIFOLD GP-EXHAUST

PART OF 468-8218, 470-8667, 470-8814, 474-7299, 478-4257, 481-0811, 486-4250, 488-6687, 491-2606, 494-2073, 504-3629, 506-5035, 506-9918, 515-9203, 526-0511, 526-7210, 527-7106, 528-3358, 528-9920, 531-2492, 552-3506, 553-1809, 553-3730, 575-2879, 575-2880, 596-4834, 596-7090, 597-9248, 608-9261, 613-9482, 645-2039 ENGINE AR-PRIMARY

SMCS-1059 **i05582451**

NOTE	REF NO	GRAPHIC REF	PART NUMBER	QTY	PART NAME 1 2 3 4 5 6 (PRODUCT LEVEL)	SEE PAGE
	1	1	**238-8292**	12	BOLT-FLANGE HEAD	
	2	1	**286-7851**	12	SPACER	
	3	1	**367-3340**	4	STUD	
	4	1	**384-2286**	1	MANIFOLD	
	5	1	**416-7727**	2	GASKET	

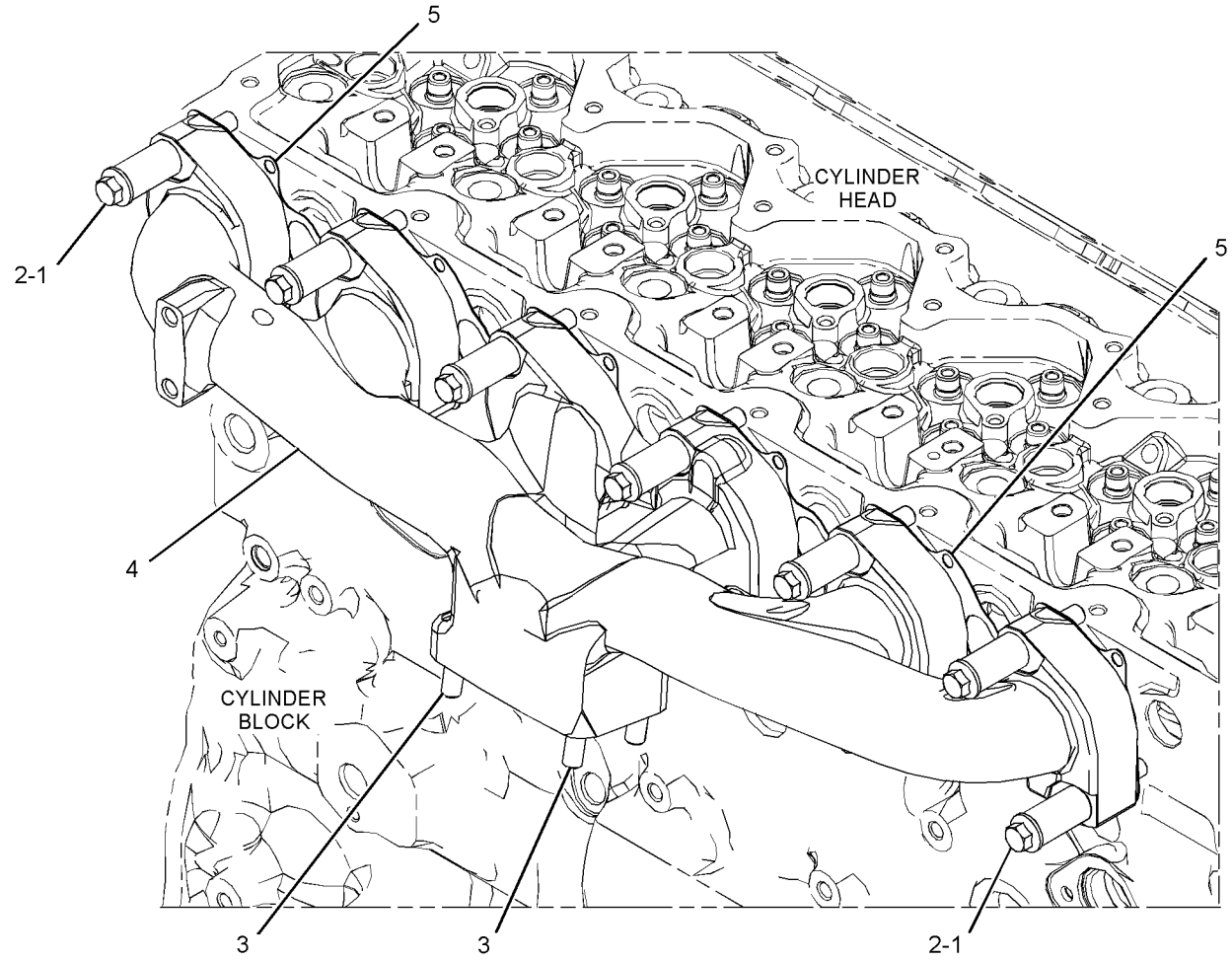

GRAPHIC #1 <END> g03379009

416-7808 MANIFOLD GP-EXHAUST

PART OF 596-2071 ENGINE AR-COMPLETE, 451-8343, 461-4638, 461-4649, 461-4656, 461-4658, 466-1160, 466-1161, 466-1162, 466-1163, 468-0461, 471-0541, 475-8297, 475-9060, 479-9398, 480-2181, 482-0212, 484-2939, 485-8027, 486-2644, 489-9006, 491-4973, 491-4980, 491-4993, 491-7124, 492-3021, 492-3072, 492-3169, 493-1019, 493-1038, 494-6807, 495-8349, 499-7181, 501-2466, 502-9462, 504-5365, 504-8134, 504-9579, 507-8016, 508-0270, 510-1088, 512-9858, 513-0851, 513-8513, 514-9367, 519-4128, 520-3152, 520-4644, 524-8271, 525-8759, 526-8888, 527-9686, 528-9866, 530-1323, 530-2601, 533-2797, 533-3588, 535-8060, 536-6675, 539-6915, 539-8582, 543-4255, 552-8869, 555-4669, 562-8873, 563-6728, 563-6729, 563-6730, 565-1247, 569-7846, 583-8352, 591-1266, 591-9440, 593-7287, 593-7288, 594-2125, 596-8896, 596-8905, 598-9881, 602-8721, 603-5300, 609-9819, 612-1735, 614-5795, 614-9555, 622-6239, 623-1309, 624-0698, 627-8019, 627-8054, 627-8129, 628-4345, 633-4335, 633-7776, 657-2370 ENGINE AR-PRIMARY

SMCS-1059 **i06060822**

NOTE	REF NO	GRAPHIC REF	PART NUMBER	QTY	PART NAME 1 2 3 4 5 6 (PRODUCT LEVEL)	SEE PAGE
	1	1	**238-8292**	12	BOLT-FLANGE HEAD	
	2	1	**286-7851**	12	SPACER	
	3	1	**396-8052**	1	MANIFOLD-EXHAUST	
	4	1	**367-3340**	4	STUD	
	5	1	**416-7727**	2	GASKET	

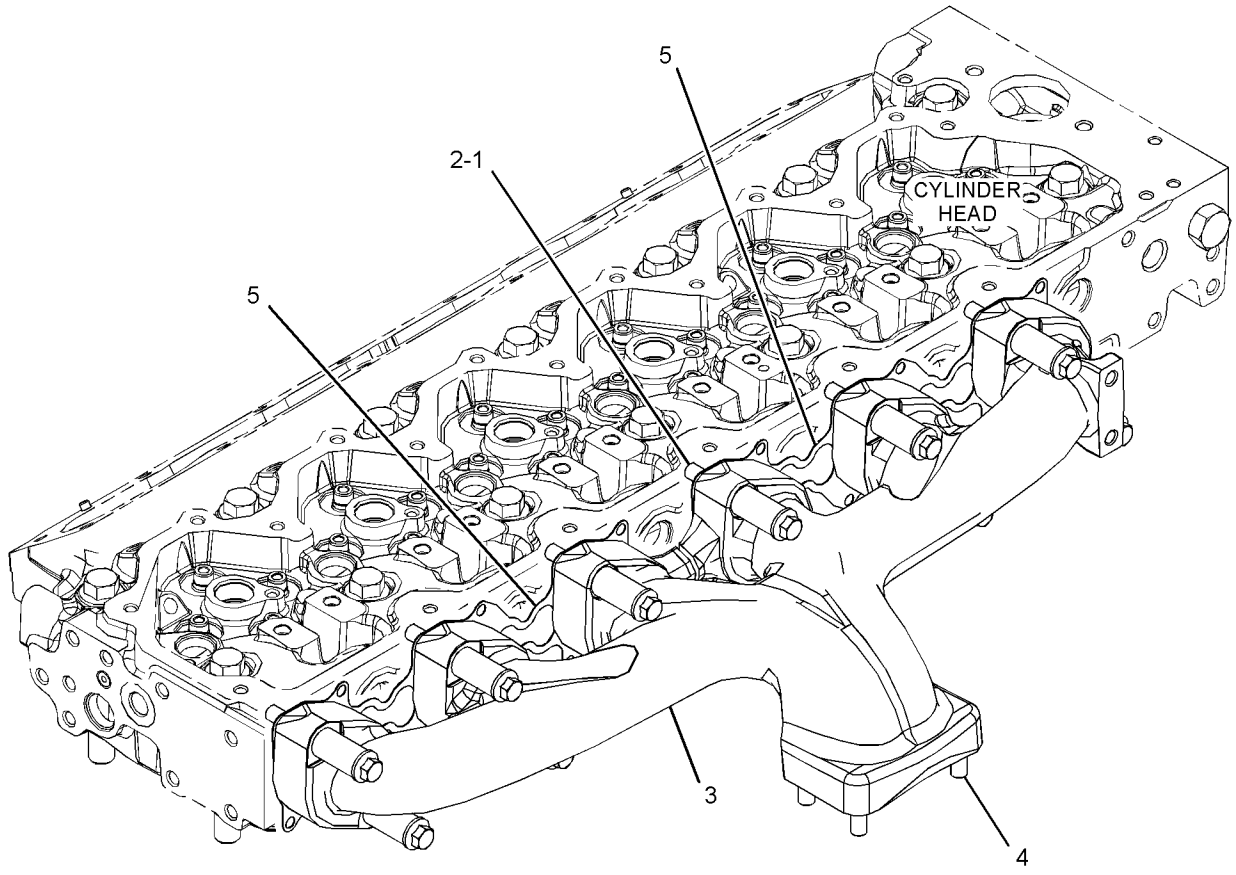

GRAPHIC #1 <END> g03535858

378-8582 MANIFOLD GP-INLET

PART OF 478-4257, 481-0811, 506-9918, 515-9203, 528-9920, 608-9261 ENGINE AR-PRIMARY

SMCS-1058 **i05773130**

NOTE	REF NO	GRAPHIC REF	PART NUMBER	QTY	PART NAME 1 2 3 4 5 6 (PRODUCT LEVEL)	SEE PAGE
M	1	1	**6I-0917**	2	BOLT (M6X1X25-MM)	
M	2	1	**105-2740**	12	BOLT (M8X1.25X40-MM)	
	3	1	**369-1658**	1	SOLENOID (12/24-VOLT)	
	4	1	**452-9704**	1	COVER (CYLINDER HEAD)	
M	5	1	**6I-0260**	4	BOLT (M8X1.25X25-MM)	
	6	1	**390-7626**	1	CONNECTION GP-AIR	
	6A	1	**238-8288**	1	GASKET-INLET	
	6B	1	**292-3462**	1	PLUG-PIPE	

M - METRIC PART

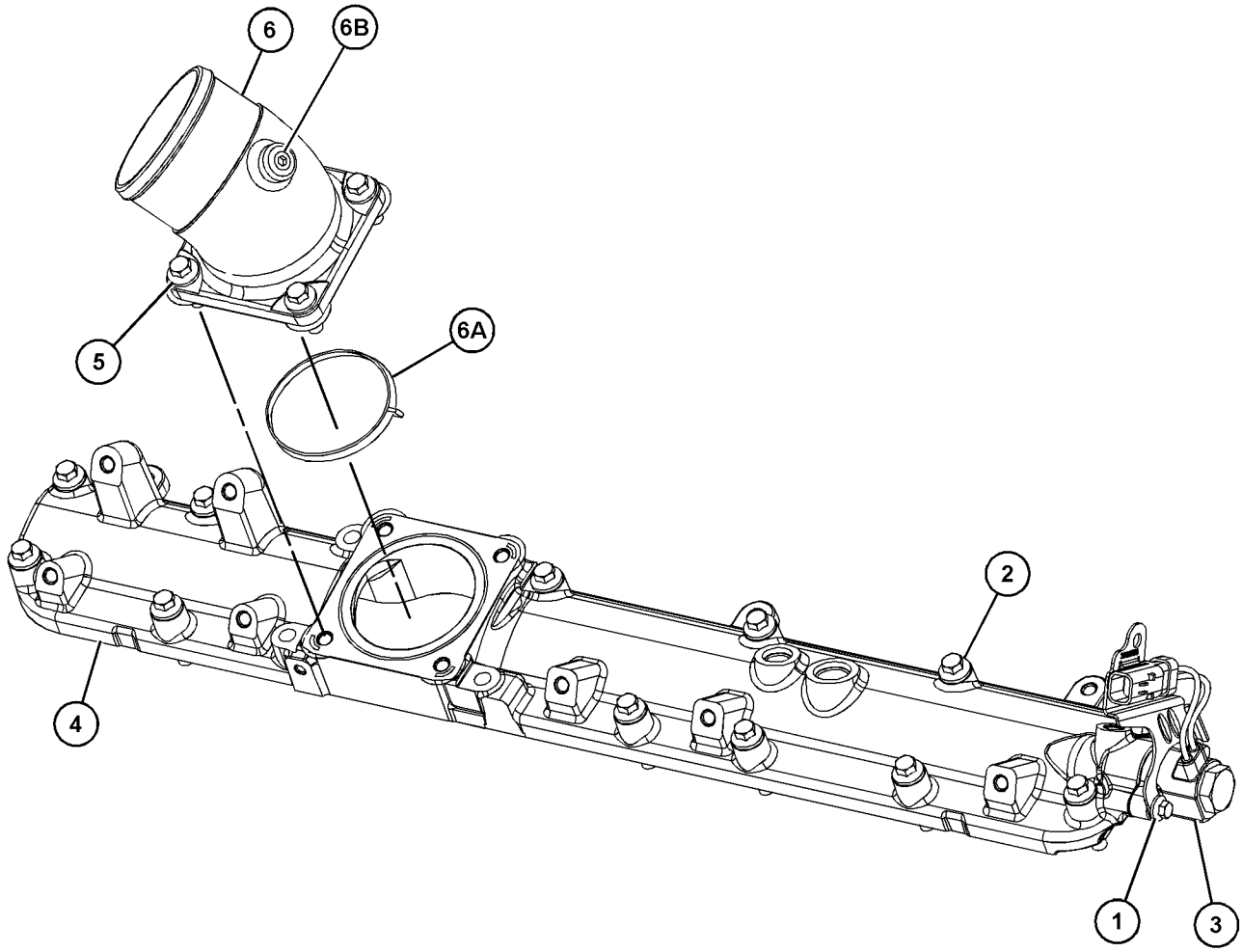

GRAPHIC #1 <END> g03651405

391-5523 MANIFOLD GP-INLET

PART OF 596-2071 ENGINE AR-COMPLETE, 451-8343, 461-4638, 461-4649, 461-4656, 461-4658, 466-1160, 466-1161, 466-1162, 466-1163, 468-0461, 468-8218, 470-8667, 470-8814, 471-0541, 474-7299, 475-8297, 475-9060, 479-9398, 480-2181, 482-0212, 484-2939, 485-8027, 486-2644, 486-4250, 488-6687, 489-9006, 491-2606, 491-4973, 491-4980, 491-4993, 491-7124, 492-3021, 492-3072, 492-3169, 493-1019, 493-1038, 494-2073, 494-6807, 495-8349, 499-7181, 501-2466, 502-9462, 504-3629, 504-5365, 504-8134, 504-9579, 506-5035, 507-8016, 508-0270, 510-1088, 512-9858, 513-0851, 513-8513, 514-9367, 519-4128, 520-3152, 520-4644, 524-8271, 525-8759, 526-0511, 526-7210, 526-8888, 527-7106, 527-9686, 528-3358, 528-9866, 530-1323, 530-2601, 531-2492, 533-2797, 533-3588, 535-8060, 536-6675, 539-6915, 539-8582, 543-4255, 552-3506, 552-8869, 553-1809, 553-3730, 555-4669, 562-8873, 563-6728, 563-6729, 563-6730, 565-1247, 569-7846, 575-2879, 575-2880, 583-8352, 591-1266, 591-9440, 593-7287, 593-7288, 594-2125, 596-4834, 596-7090, 596-8896, 596-8905, 597-9248, 598-9881, 602-8721, 603-5300, 609-9819, 612-1735, 613-9482, 614-5795, 614-9555, 622-6239, 623-1309, 624-0698, 627-8019, 627-8054, 627-8129, 628-4345, 633-4335, 633-7776, 645-2039, 657-2370 ENGINE AR-PRIMARY

SMCS-1058 **i05832944**

NOTE	REF NO	GRAPHIC REF	PART NUMBER	QTY	PART NAME 1 2 3 4 5 6 (PRODUCT LEVEL)	SEE PAGE
M	1	1	**6I-0917**	2	BOLT (M6X1X25-MM)	
M	2	1	**105-2740**	12	BOLT (M8X1.25X40-MM)	
	3	1	**369-1658**	1	SOLENOID (12/24-VOLT)	
	4	1	**452-9704**	1	COVER (CYLINDER HEAD)	
M	5	1	**6I-0260**	4	BOLT (M8X1.25X25-MM)	
	6	1	**390-7626**	1	CONNECTION GP-AIR	
		1	**238-8288**	1	GASKET-INLET	
		1	**292-3462**	1	PLUG-PIPE	

M - METRIC PART

391-5523 **MANIFOLD GP-INLET (**contd.**)** **i05832944**

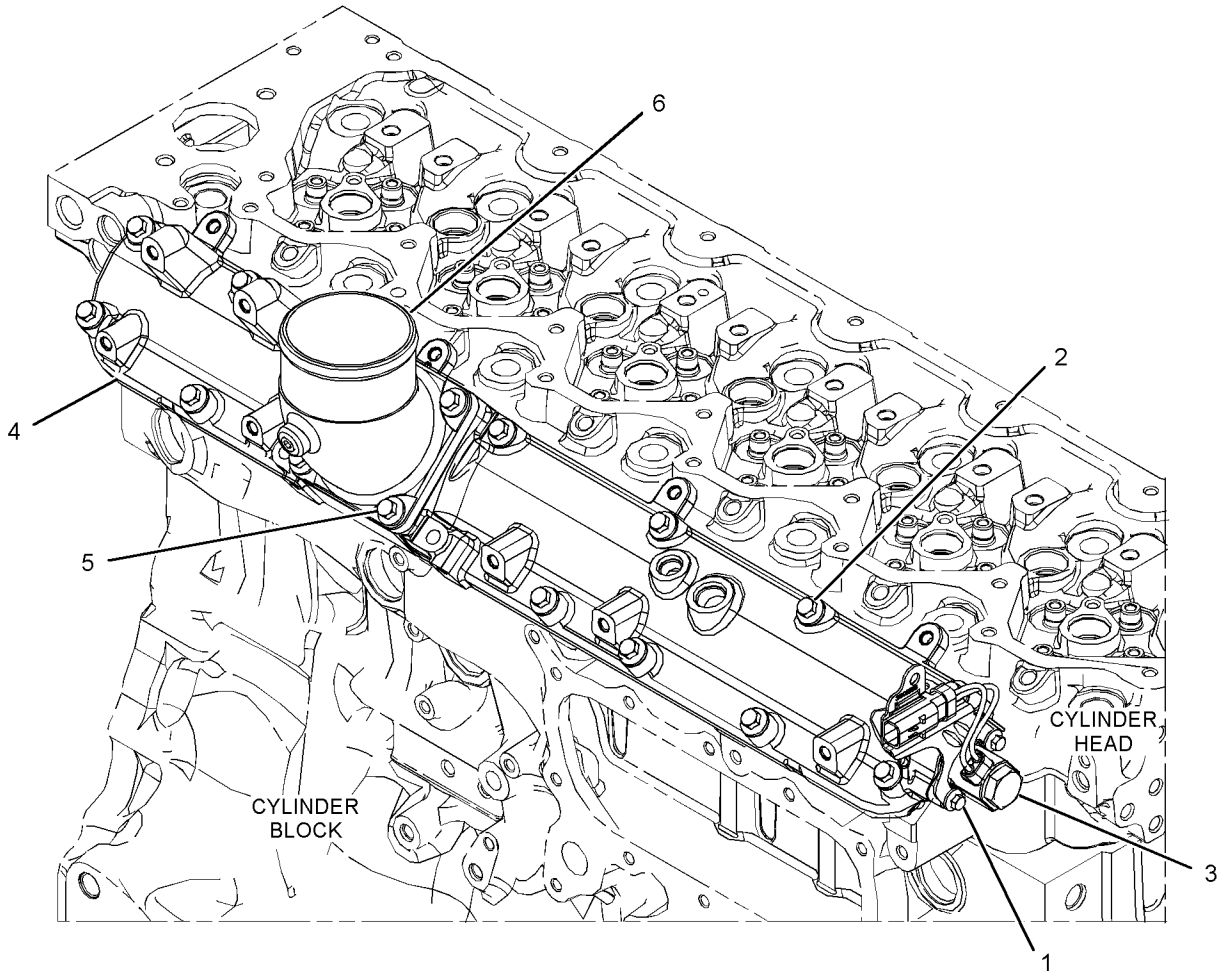

GRAPHIC #1 <END> g03476304

371-2720 TURBOCHARGER GP

S/N: G9R1-8295

SMCS-1052, 1053 **i06127457**

NOTE	REF NO	GRAPHIC REF	PART NUMBER	QTY	PART NAME 1 2 3 4 5 6 (PRODUCT LEVEL)	SEE PAGE
M	1	1	**100-4830**	1	BOLT (M10X1.5X20-MM)	
M	2	1	**124-3815**	2	BOLT (M8X1.25X16-MM)	
	3	1	**437-4170**	1	GASKET	
	4	1	**278-0017**	1	GASKET	
R	5	1	**315-9810**	1	TURBOCHARGER GP	
		1	**277-9602**	1	CLAMP	
		1	**277-9603**	1	CLAMP	
Y	6	1	**368-8559**	1	LINES GP-TURBOCHARGER OIL	643
Y	7	1	**377-2877**	1	LINES GP-TURBOCHARGER AIR	720
	8	1	**420-2371**	1	LINE AS	
M	9	1	**6I-0217**	5	BOLT (M8X1.25X20-MM)	
M	10	1	**6I-0563**	4	NUT (M10X1.5-THD)	

M - METRIC PART
R - REMANUFACTURED PART MAY BE AVAILABLE
Y - SEPARATE ILLUSTRATION

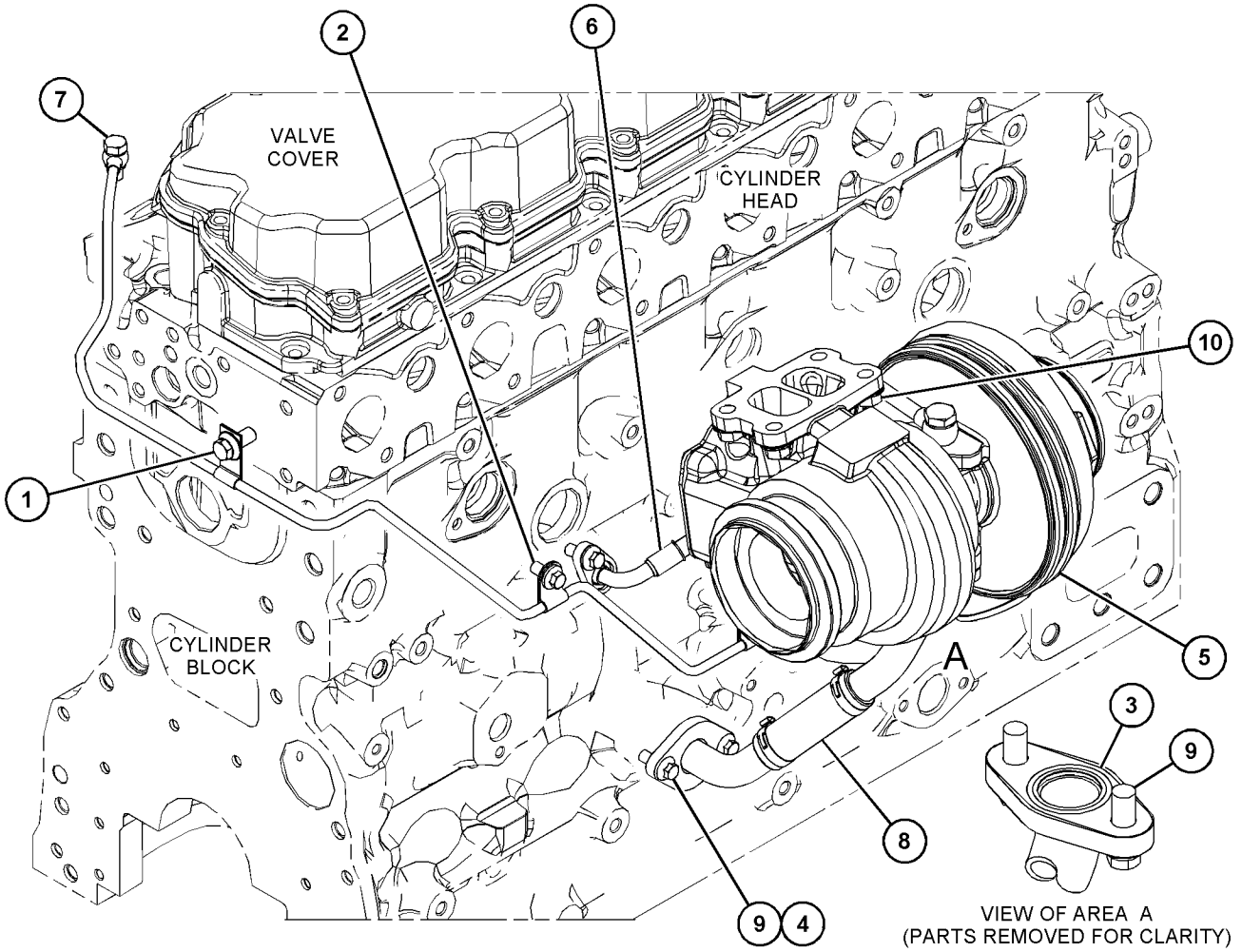

GRAPHIC #1 <END> g03818554

371-2720 TURBOCHARGER GP

S/N: G9R8296-UP

SMCS-1052, 1053 **i08068854**

NOTE	REF NO	GRAPHIC REF	PART NUMBER	QTY	PART NAME 1 2 3 4 5 6 (PRODUCT LEVEL)	SEE PAGE
M	1	1	**100-4830**	1	BOLT (M10X1.5X20-MM)	
M	2	1	**124-3815**	2	BOLT (M8X1.25X16-MM)	
	3	1	**437-4170**	1	GASKET	
	4	1	**278-0017**	1	GASKET	
CR	5	1	**569-6097**	1	TURBOCHARGER AS	
Y	6	1	**368-8559**	1	LINES GP-TURBOCHARGER OIL	643
Y	7	1	**377-2877**	1	LINES GP-TURBOCHARGER AIR	720
	8	1	**420-2371**	1	LINE AS	
M	9	1	**6I-0217**	5	BOLT (M8X1.25X20-MM)	
M	10	1	**6I-0563**	4	NUT (M10X1.5-THD)	

C - CHANGE FROM PREVIOUS TYPE
M - METRIC PART
R - REMANUFACTURED PART MAY BE AVAILABLE
Y - SEPARATE ILLUSTRATION

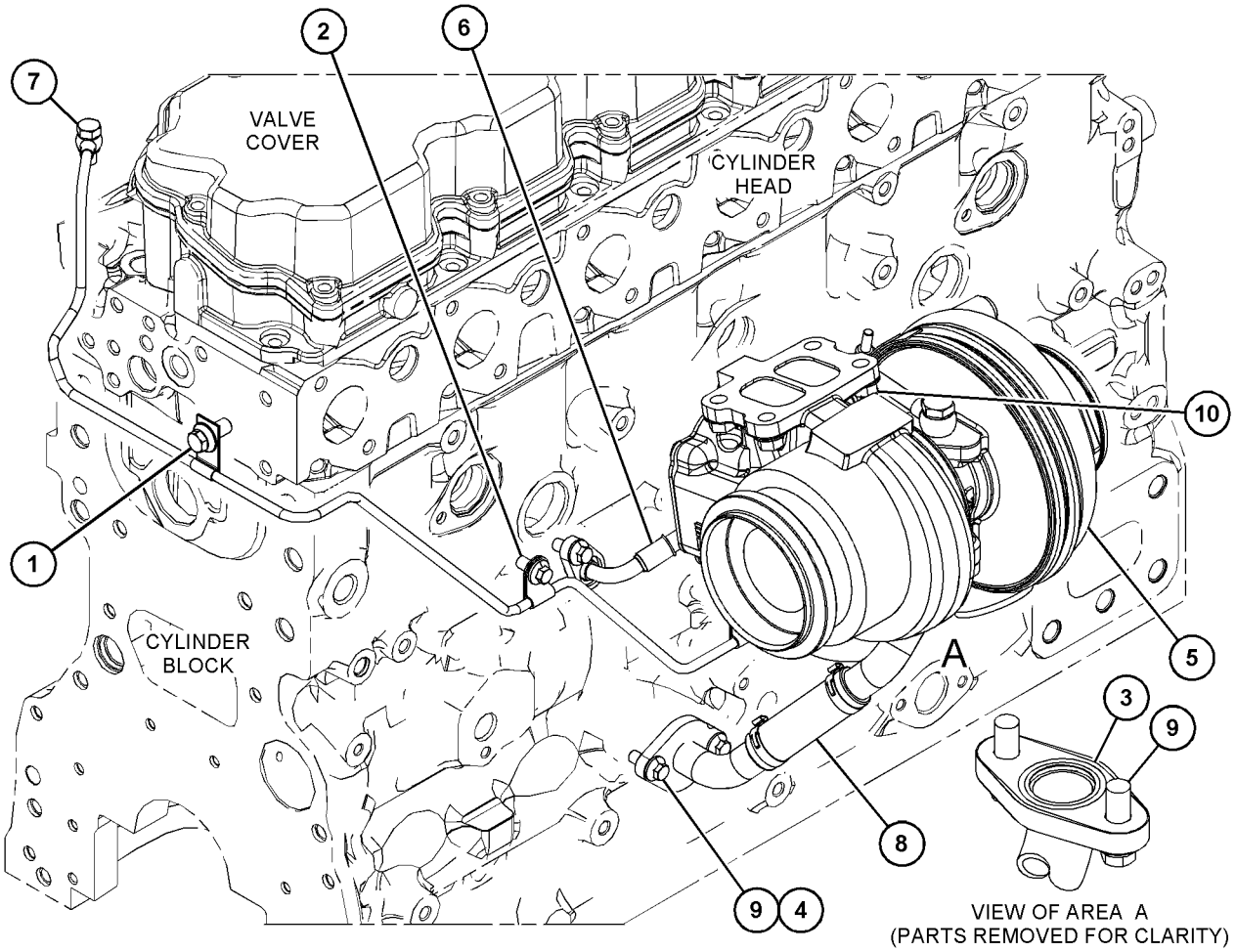

GRAPHIC #1 <END> g06328741

374-0432 TURBOCHARGER GP

S/N: G9R1-7239

PART OF 494-2073 ENGINE AR-PRIMARY

SMCS-1052, 1053 **i06554448**

NOTE	REF NO	GRAPHIC REF	PART NUMBER	QTY	PART NAME 1 2 3 4 5 6 (PRODUCT LEVEL)	SEE PAGE
M	1	1	**6I-0563**	4	NUT (M10X1.5-THD)	
M	2	1	**6I-0217**	5	BOLT (M8X1.25X20-MM)	
M	3	1	**100-4830**	1	BOLT (M10X1.5X20-MM)	
M	4	1	**124-3815**	2	BOLT (M8X1.25X16-MM)	
	5	1	**420-2371**	1	LINE AS	
	6	1	**437-4170**	1	GASKET	
	7	1	**278-0017**	1	GASKET	
R	8	1	**315-9810**	1	TURBOCHARGER GP	
	8A	1	**277-9602**	1	CLAMP	
	8B	1	**277-9603**	1	CLAMP	
Y	9	1	**368-8559**	1	LINES GP-TURBOCHARGER OIL	643
Y	10	1	**377-2877**	1	LINES GP-TURBOCHARGER AIR	720

M - METRIC PART
R - REMANUFACTURED PART MAY BE AVAILABLE
Y - SEPARATE ILLUSTRATION

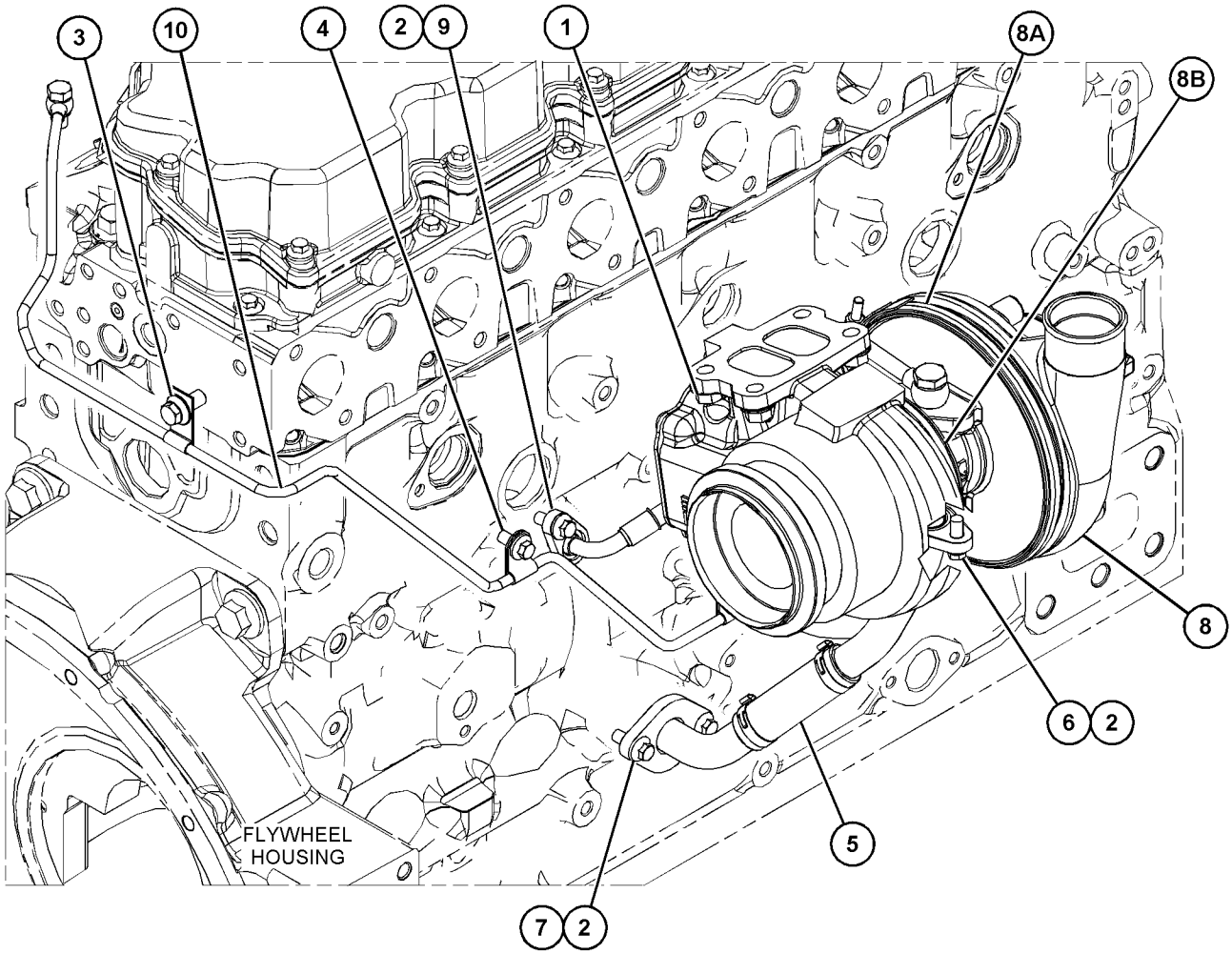

GRAPHIC #1 <END> g03659589

374-0432 TURBOCHARGER GP

S/N: G9R7240-UP

PART OF 494-2073, 575-2879 ENGINE AR-PRIMARY

SMCS-1052, 1053

i08693665

NOTE	REF NO	GRAPHIC REF	PART NUMBER	QTY	PART NAME 1 2 3 4 5 6 (PRODUCT LEVEL)	SEE PAGE
M	1	1	**6I-0563**	4	NUT (M10X1.5-THD)	
M	2	1	**6I-0217**	5	BOLT (M8X1.25X20-MM)	
M	3	1	**100-4830**	1	BOLT (M10X1.5X20-MM)	
M	4	1	**124-3815**	2	BOLT (M8X1.25X16-MM)	
	5	1	**420-2371**	1	LINE AS	
	6	1	**437-4170**	1	GASKET	
	7	1	**278-0017**	1	GASKET	
CR	8	1	**569-6097**	1	TURBOCHARGER AS	
Y	9	1	**368-8559**	1	LINES GP-TURBOCHARGER OIL	643
Y	10	1	**377-2877**	1	LINES GP-TURBOCHARGER AIR	720
					(NO GASKET REQUIRED BETWEEN TURBO AND EXHAUST MANIFOLD)	

C - CHANGE FROM PREVIOUS TYPE
M - METRIC PART
R - REMANUFACTURED PART MAY BE AVAILABLE
Y - SEPARATE ILLUSTRATION

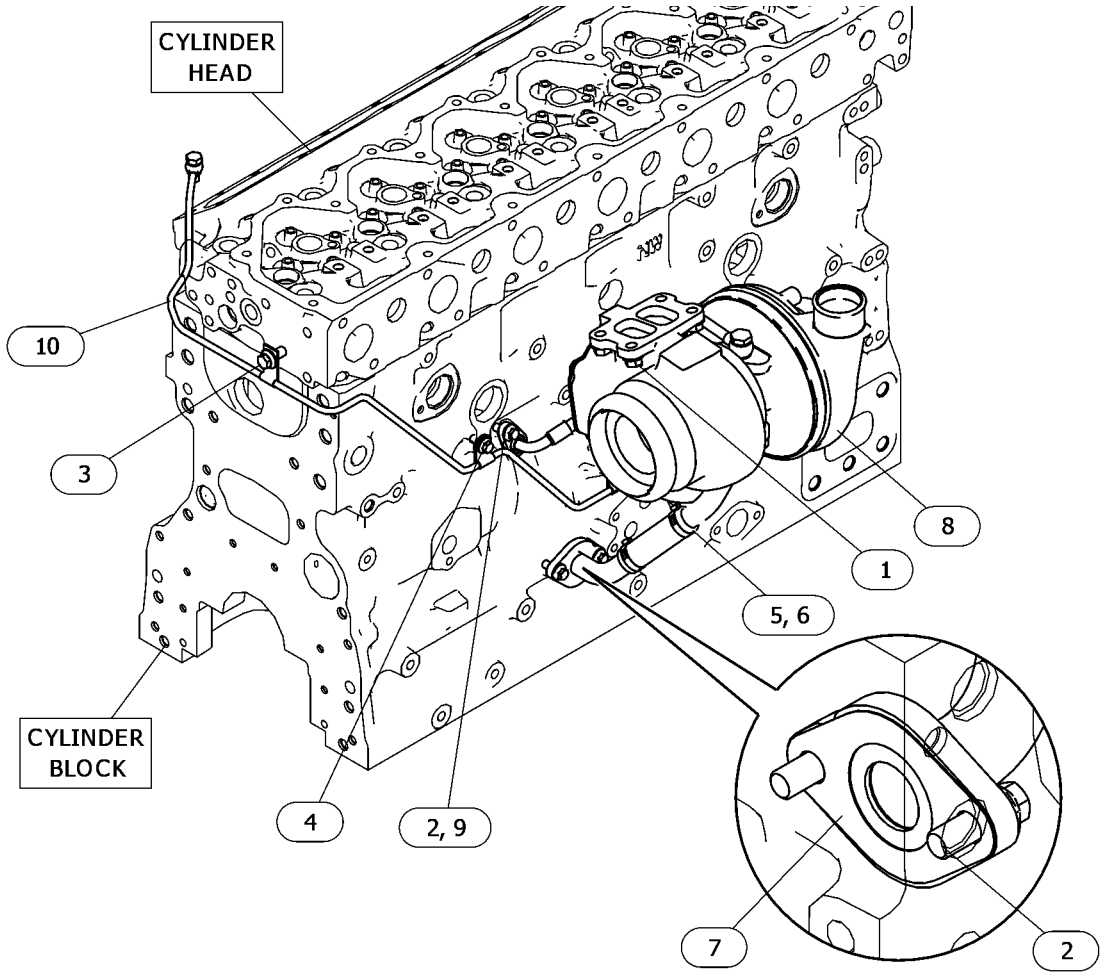

GRAPHIC #1 <END> g06572174

375-5002 TURBOCHARGER GP

PART OF 461-4638, 461-4649, 466-1160, 471-0541, 475-8297, 482-0212, 491-4973, 492-3072, 493-1038, 504-5365, 508-0270 ENGINE AR-PRIMARY

SMCS-1052, 1053 **i05859680**

NOTE	REF NO	GRAPHIC REF	PART NUMBER	QTY	PART NAME 1 2 3 4 5 6 (PRODUCT LEVEL)	SEE PAGE
M	1	1	**6I-0217**	5	BOLT (M8X1.25X20-MM)	
M	2	1	**6I-0563**	4	NUT (M10X1.5-THD)	
M	3	1	**6I-0593**	3	BOLT (M10X1.5X30-MM)	
M	4	1	**100-4830**	1	BOLT (M10X1.5X20-MM)	
M	5	1	**124-3815**	1	BOLT (M8X1.25X16-MM)	
	6	1	**278-0017**	1	GASKET	
	7	1	**280-2424**	1	ADAPTER	
	8	1	**282-2830**	1	ELBOW	
R	9	1	**315-9810**	1	TURBOCHARGER GP	
	9A	1	**277-9602**	1	CLAMP	
	9B	1	**277-9603**	1	CLAMP	
	10	1	**368-8557**	1	TUBE AS-TURBOCHARGER	
	10A	1	**277-9938**	1	BOLT-SPECIAL (BANJO)	
	10B	1	**277-9940**	1	SEAL-O-RING	
	10C	1	**365-5823**	2	WASHER	
Y	11	1	*396-9532*	1	LINES GP-TURBOCHARGER AIR	721
	12	1	**420-2372**	1	LINE AS	
	13	1	**437-4170**	1	GASKET	

M - METRIC PART
R - REMANUFACTURED PART MAY BE AVAILABLE
Y - SEPARATE ILLUSTRATION

375-5002 **TURBOCHARGER GP (**contd.**)** **i05859680**

NO GRAPHIC AVAILABLE AT TIME OF PUBLICATION

GRAPHIC #1 <END> g01269539

375-5002 TURBOCHARGER GP

PART OF 596-2071 ENGINE AR-COMPLETE, 461-4638, 461-4649, 466-1160, 471-0541, 475-8297, 482-0212, 491-4973, 492-3021, 492-3072, 493-1038, 504-5365, 508-0270, 512-9858, 527-9686, 555-4669, 612-1735, 627-8054, 627-8129, 628-4345, 633-7776 ENGINE AR-PRIMARY

SMCS-1052, 1053 **i08068839**

NOTE	REF NO	GRAPHIC REF	PART NUMBER	QTY	PART NAME 1 2 3 4 5 6 (PRODUCT LEVEL)	SEE PAGE
M	1	1	**6I-0217**	5	BOLT (M8X1.25X20-MM)	
M	2	1	**6I-0563**	4	NUT (M10X1.5-THD)	
M	3	1	**6I-0593**	3	BOLT (M10X1.5X30-MM)	
M	4	1	**100-4830**	1	BOLT (M10X1.5X20-MM)	
M	5	1	**124-3815**	1	BOLT (M8X1.25X16-MM)	
	6	1	**278-0017**	1	GASKET	
	7	1	**280-2424**	1	ADAPTER	
	8	1	**282-2830**	1	ELBOW	
CR	9	1	**569-6097**	1	TURBOCHARGER AS	
	10	1	**368-8557**	1	TUBE AS-TURBOCHARGER	
	10A	1	**277-9938**	1	BOLT-SPECIAL (BANJO)	
	10B	1	**277-9940**	1	SEAL-O-RING	
	10C	1	**365-5823**	2	WASHER	
Y	11	1	**396-9532**	1	LINES GP-TURBOCHARGER AIR	721
	12	1	**420-2372**	1	LINE AS	
	13	1	**437-4170**	1	GASKET	

C - CHANGE FROM PREVIOUS TYPE
M - METRIC PART
R - REMANUFACTURED PART MAY BE AVAILABLE
Y - SEPARATE ILLUSTRATION

375-5002 **TURBOCHARGER GP (**contd.**)** **i08068839**

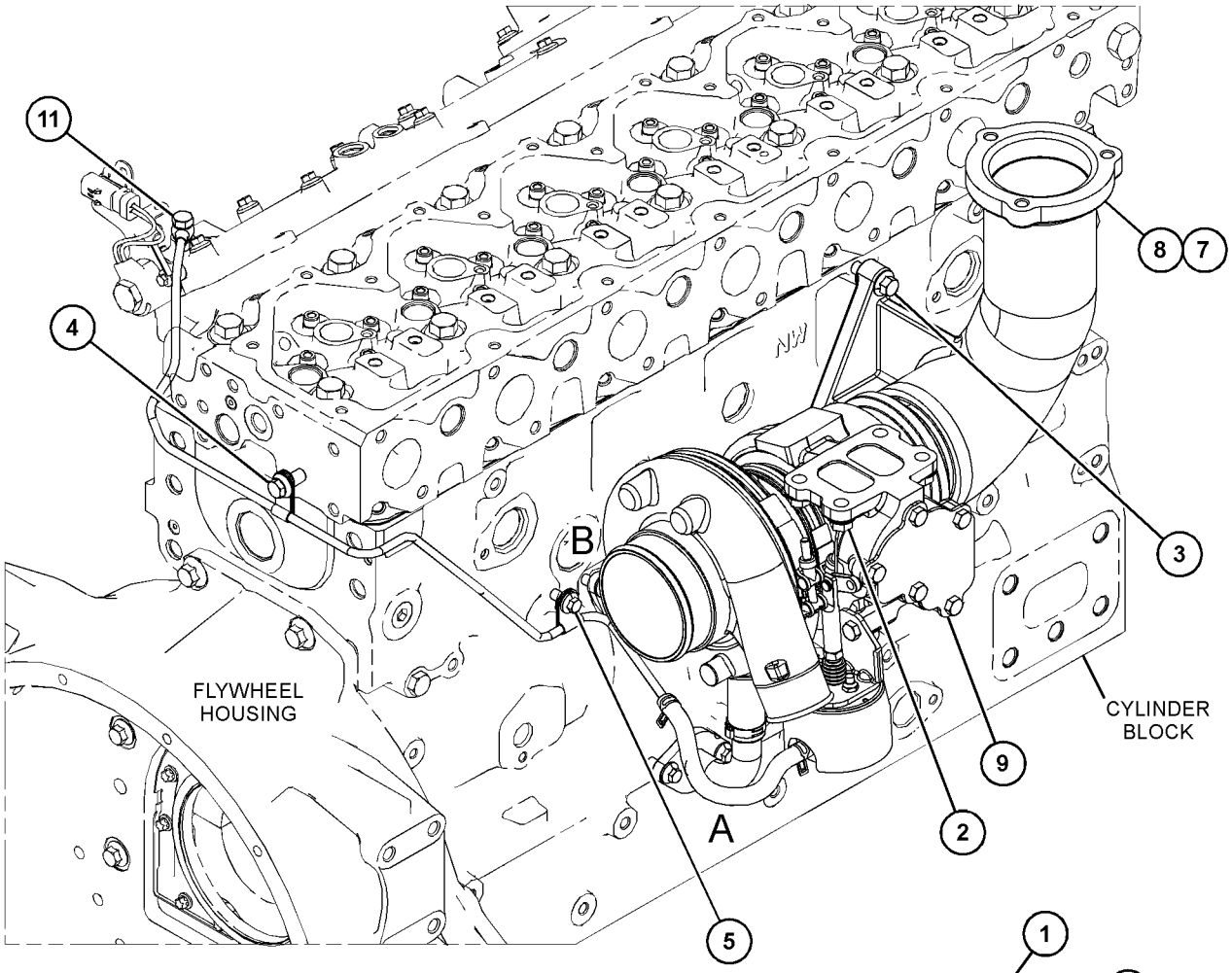

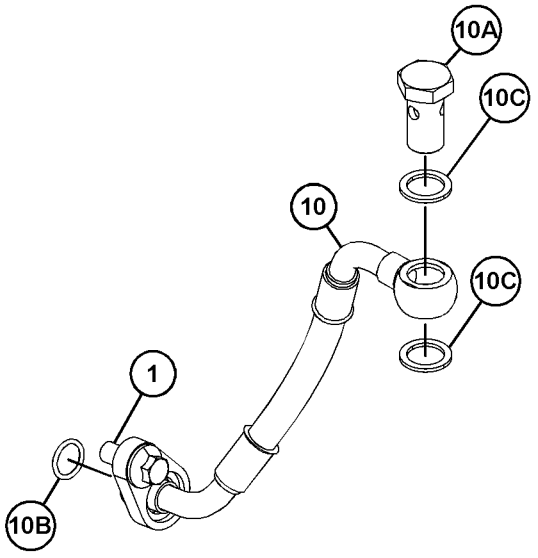

VIEW OF AREA B
(PARTS REMOVED FOR CLARITY)

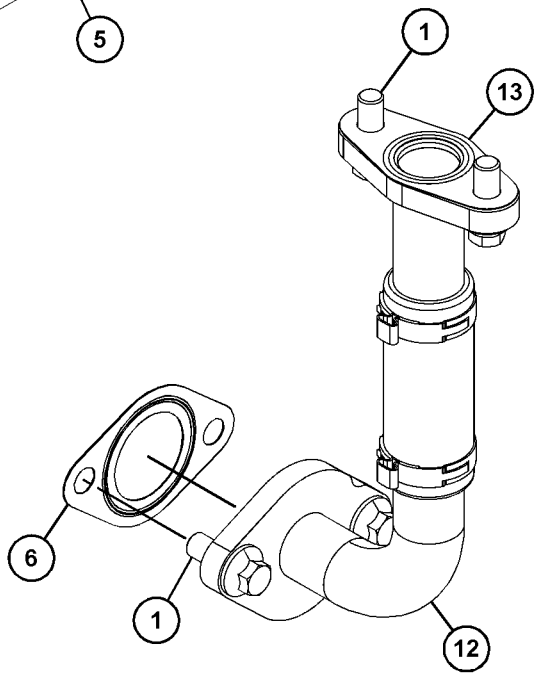

VIEW OF AREA A
(PARTS REMOVED FOR CLARITY)

GRAPHIC #1 <END> g06327799

380-2016 TURBOCHARGER GP

TYPE 1

SMCS-1052, 1053 **i06285711**

NOTE	REF NO	GRAPHIC REF	PART NUMBER	QTY	PART NAME 1 2 3 4 5 6 (PRODUCT LEVEL)	SEE PAGE
M	1	1	**6I-0217**	5	BOLT (M8X1.25X20-MM)	
M	2	1	**6I-0563**	4	NUT (M10X1.5-THD)	
M	3	1	**100-4830**	1	BOLT (M10X1.5X20-MM)	
M	4	1	**124-3815**	1	BOLT (M8X1.25X16-MM)	
	5	1	**277-9463**	2	CLAMP	
	6	1	**278-0017**	1	GASKET	
R	7	1	**315-9810**	1	TURBOCHARGER GP	
	7A	1	**277-9602**	1	CLAMP	
	7B	1	**277-9603**	1	CLAMP	
	8	1	**368-8557**	1	TUBE AS-TURBOCHARGER	
	8A	1	**277-9938**	1	BOLT-SPECIAL (BANJO)	
	8B	1	**277-9940**	1	SEAL-O-RING	
	8C	1	**358-6475**	2	WASHER	
Y	9	1	*396-9532*	1	LINES GP-TURBOCHARGER AIR	721
	10	1	**420-2372**	1	LINE AS	
	11	1	**437-4170**	1	GASKET	

M - METRIC PART
R - REMANUFACTURED PART MAY BE AVAILABLE
Y - SEPARATE ILLUSTRATION

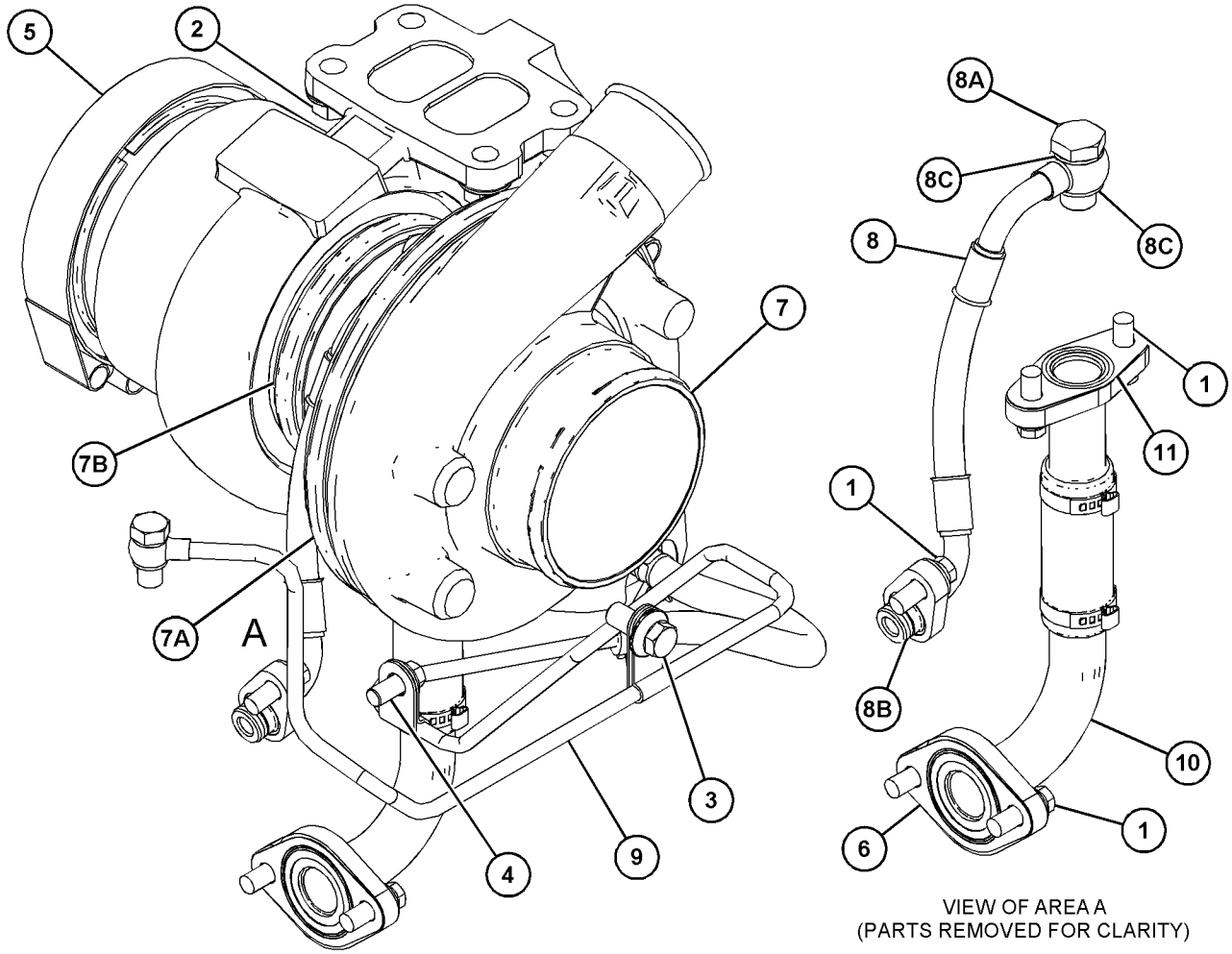

VIEW OF AREA A
(PARTS REMOVED FOR CLARITY)

GRAPHIC #1 <END> g03888583

380-2016 TURBOCHARGER GP

TYPE 2

SMCS-1052, 1053 **i08069551**

NOTE	REF NO	GRAPHIC REF	PART NUMBER	QTY	PART NAME 1 2 3 4 5 6 (PRODUCT LEVEL)	SEE PAGE
M	1	1	**6I-0217**	5	BOLT (M8X1.25X20-MM)	
M	2	1	**6I-0563**	4	NUT (M10X1.5-THD)	
M	3	1	**100-4830**	1	BOLT (M10X1.5X20-MM)	
M	4	1	**124-3815**	1	BOLT (M8X1.25X16-MM)	
	5	1	**277-9463**	1	CLAMP	
	6	1	**278-0017**	1	GASKET	
CR	7	1	**569-6097**	1	TURBOCHARGER AS	
	8	1	**368-8557**	1	TUBE AS-TURBOCHARGER	
	8A	1	**277-9938**	1	BOLT-SPECIAL (BANJO)	
	8B	1	**277-9940**	1	SEAL-O-RING	
	8C	1	**358-6475**	2	WASHER	
Y	9	1	**396-9532**	1	LINES GP-TURBOCHARGER AIR	721
	10	1	**420-2372**	1	LINE AS	
	11	1	**437-4170**	1	GASKET	

C - CHANGE FROM PREVIOUS TYPE
M - METRIC PART
R - REMANUFACTURED PART MAY BE AVAILABLE
Y - SEPARATE ILLUSTRATION

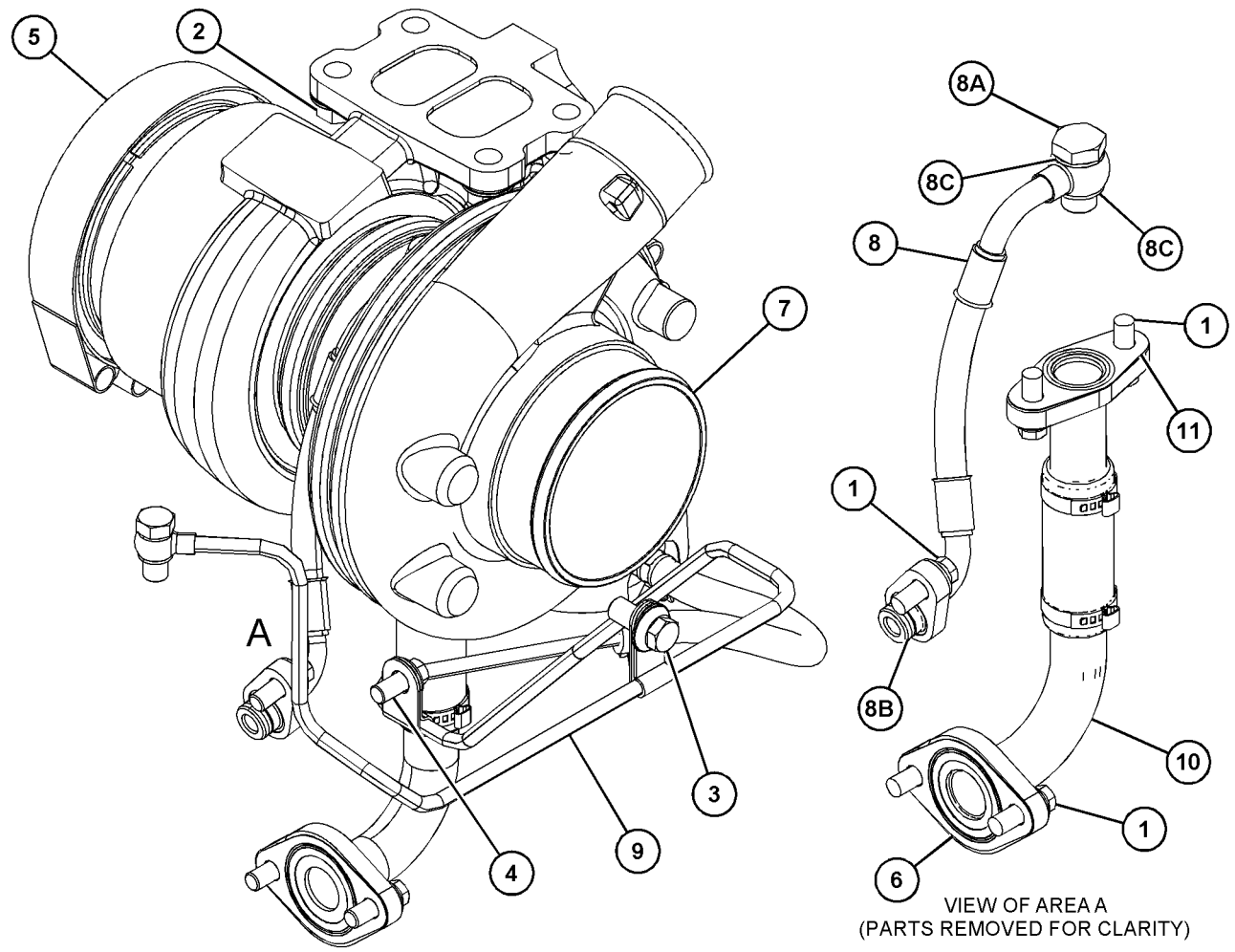

VIEW OF AREA A
(PARTS REMOVED FOR CLARITY)

GRAPHIC #1 <END> g06327846

416-6968 TURBOCHARGER GP

PART OF 474-7299, 488-6687, 491-2606, 504-3629, 506-5035, 553-1809, 553-3730 ENGINE
AR-PRIMARY

SMCS-1052, 1053

i05774420

NOTE	REF NO	GRAPHIC REF	PART NUMBER	QTY	PART NAME 1 2 3 4 5 6 (PRODUCT LEVEL)	SEE PAGE
M	1	1	**6I-0217**	5	BOLT (M8X1.25X20-MM)	
M	2	1	**6I-0563**	4	NUT (M10X1.5-THD)	
M	3	1	**100-4830**	1	BOLT (M10X1.5X20-MM)	
M	4	1	**124-3815**	2	BOLT (M8X1.25X16-MM)	
	5	1	**420-2371**	1	LINE AS	
	6	1	**437-4170**	1	GASKET	
	7	1	**278-0017**	1	GASKET	
Y	8	1	**368-8559**	1	LINES GP-TURBOCHARGER OIL	643
Y	9	1	**377-2877**	1	LINES GP-TURBOCHARGER AIR	720

M - METRIC PART
Y - SEPARATE ILLUSTRATION

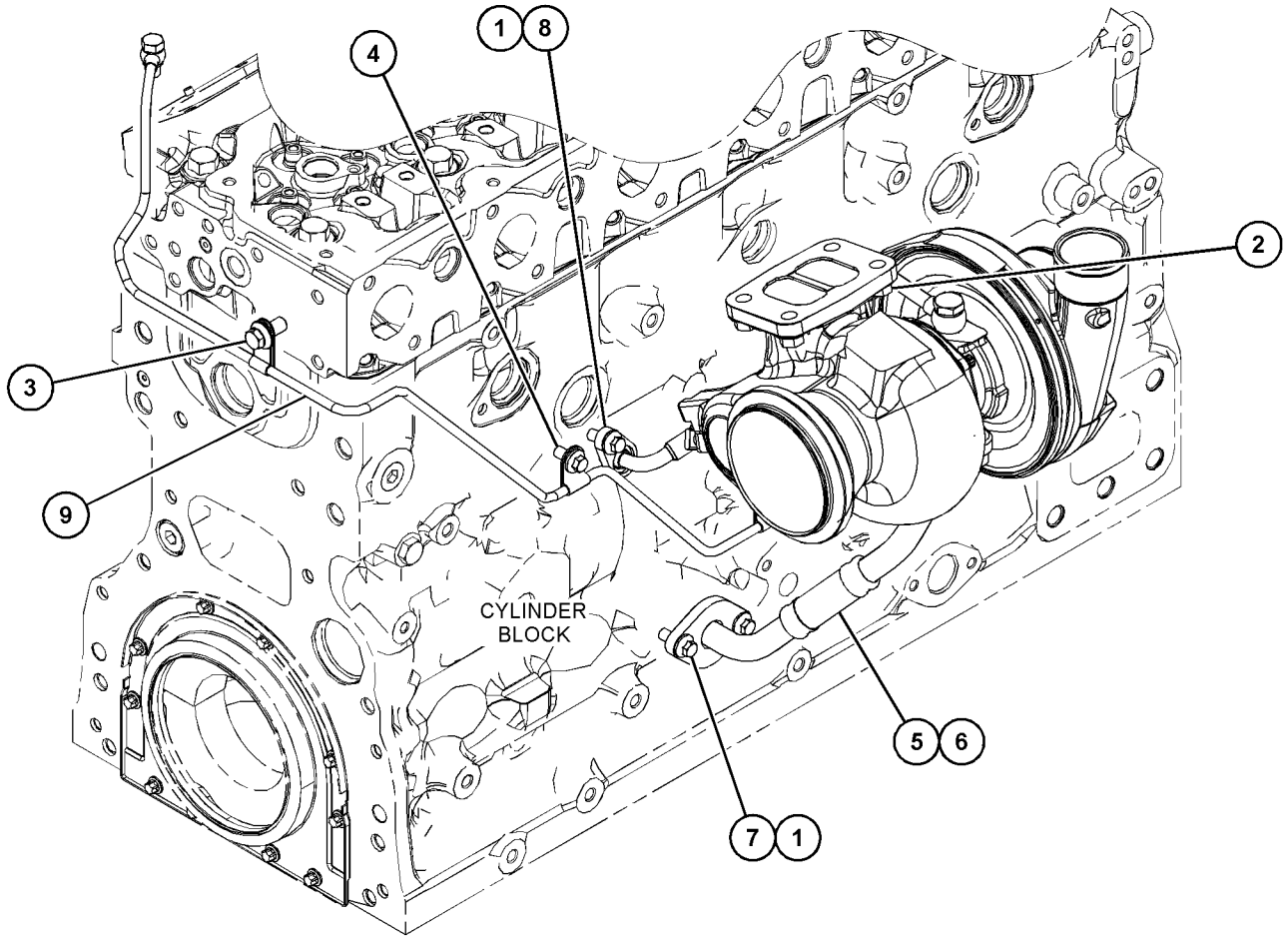

GRAPHIC #1 <END> g03646817

416-6969 TURBOCHARGER GP

PART OF 470-8814, 478-4257, 481-0811, 486-4250, 506-9918, 515-9203, 526-0511, 526-7210, 527-7106, 528-3358, 528-9920, 552-3506, 575-2880, 596-4834, 596-7090, 597-9248, 608-9261, 613-9482, 645-2039 ENGINE AR-PRIMARY

SMCS-1052, 1053 **i10694389**

NOTE	REF NO	GRAPHIC REF	PART NUMBER	QTY	PART NAME 1 2 3 4 5 6 (PRODUCT LEVEL)	SEE PAGE
M	1	1	**6I-0217**	5	BOLT (M8X1.25X20-MM)	
M	2	1	**6I-0563**	4	NUT (M10X1.5-THD)	
M	3	1	**100-4830**	1	BOLT (M10X1.5X20-MM)	
M	4	1	**124-3815**	2	BOLT (M8X1.25X16-MM)	
	5	1	**420-2371**	1	LINE AS	
	6	1	**437-4170**	1	GASKET	
	7	1	**278-0017**	1	GASKET	
Y	8	1	**368-8559**	1	LINES GP-TURBOCHARGER OIL	643
Y	9	1	**377-2877**	1	LINES GP-TURBOCHARGER AIR	720
	10	1	*633-9481*	1	TURBOCHARGER AS	

M - METRIC PART
Y - SEPARATE ILLUSTRATION

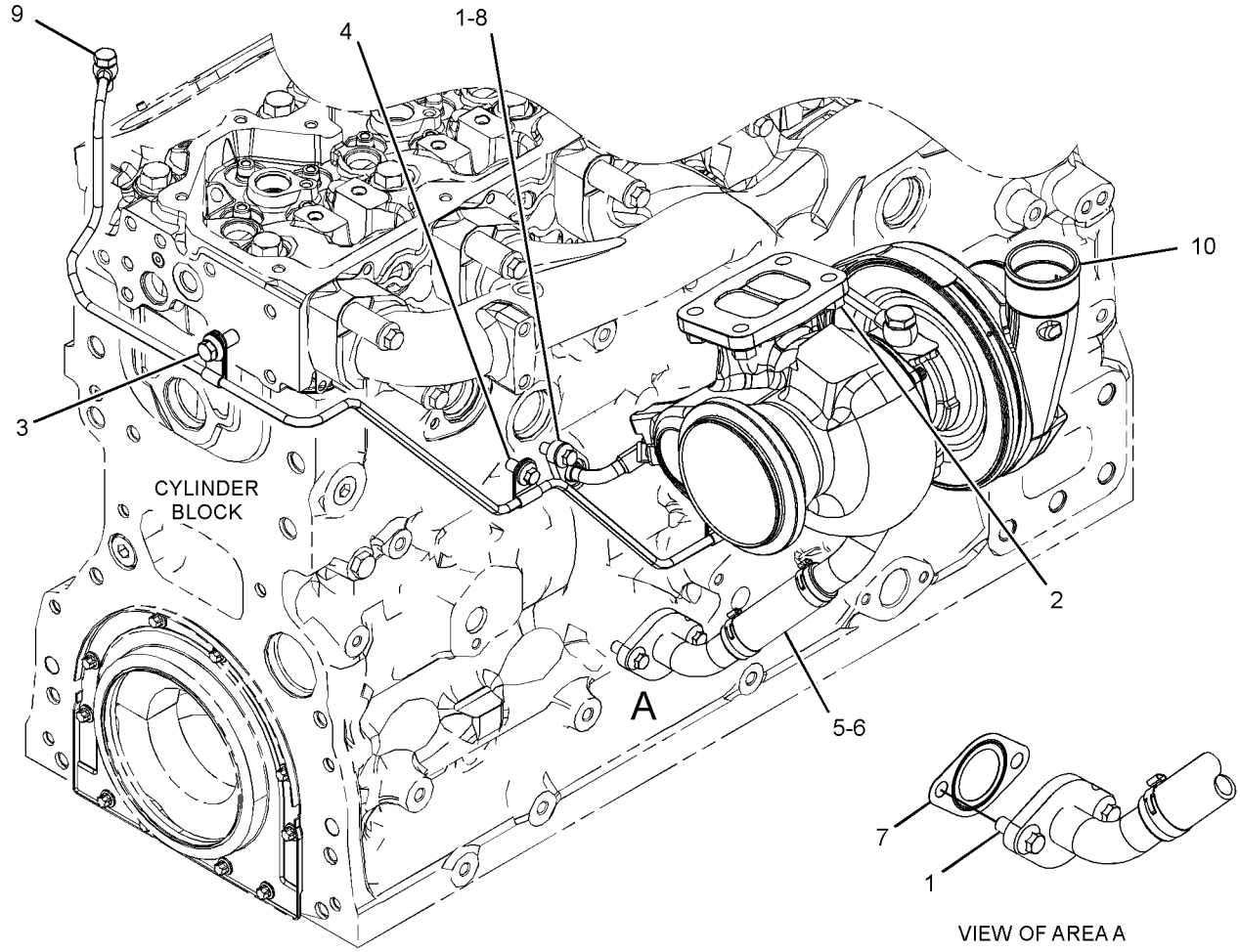

GRAPHIC #1 <END> g07937732

416-6970 TURBOCHARGER GP

PART OF 468-8218, 531-2492 ENGINE AR-PRIMARY

SMCS-1052, 1053 **i07563066**

NOTE	REF NO	GRAPHIC REF	PART NUMBER	QTY	PART NAME 1 2 3 4 5 6 (PRODUCT LEVEL)	SEE PAGE
M	1	1	**6I-0217**	5	BOLT (M8X1.25X20-MM)	
M	2	1	**6I-0563**	4	NUT (M10X1.5-THD)	
M	3	1	**100-4830**	2	BOLT (M10X1.5X20-MM)	
M	4	1	**124-3815**	2	BOLT (M8X1.25X16-MM)	
	5	1	**278-0017**	1	GASKET	
Y	6	1	**368-8559**	1	LINES GP-TURBOCHARGER OIL	643
	7	1	**420-2371**	1	LINE AS	
Y	8	1	**420-9572**	1	LINES GP-TURBOCHARGER AIR	722
R	9	1	**435-4500**	1	TURBOCHARGER	
	10	1	**437-4170**	1	GASKET	

M - METRIC PART
R - REMANUFACTURED PART MAY BE AVAILABLE
Y - SEPARATE ILLUSTRATION

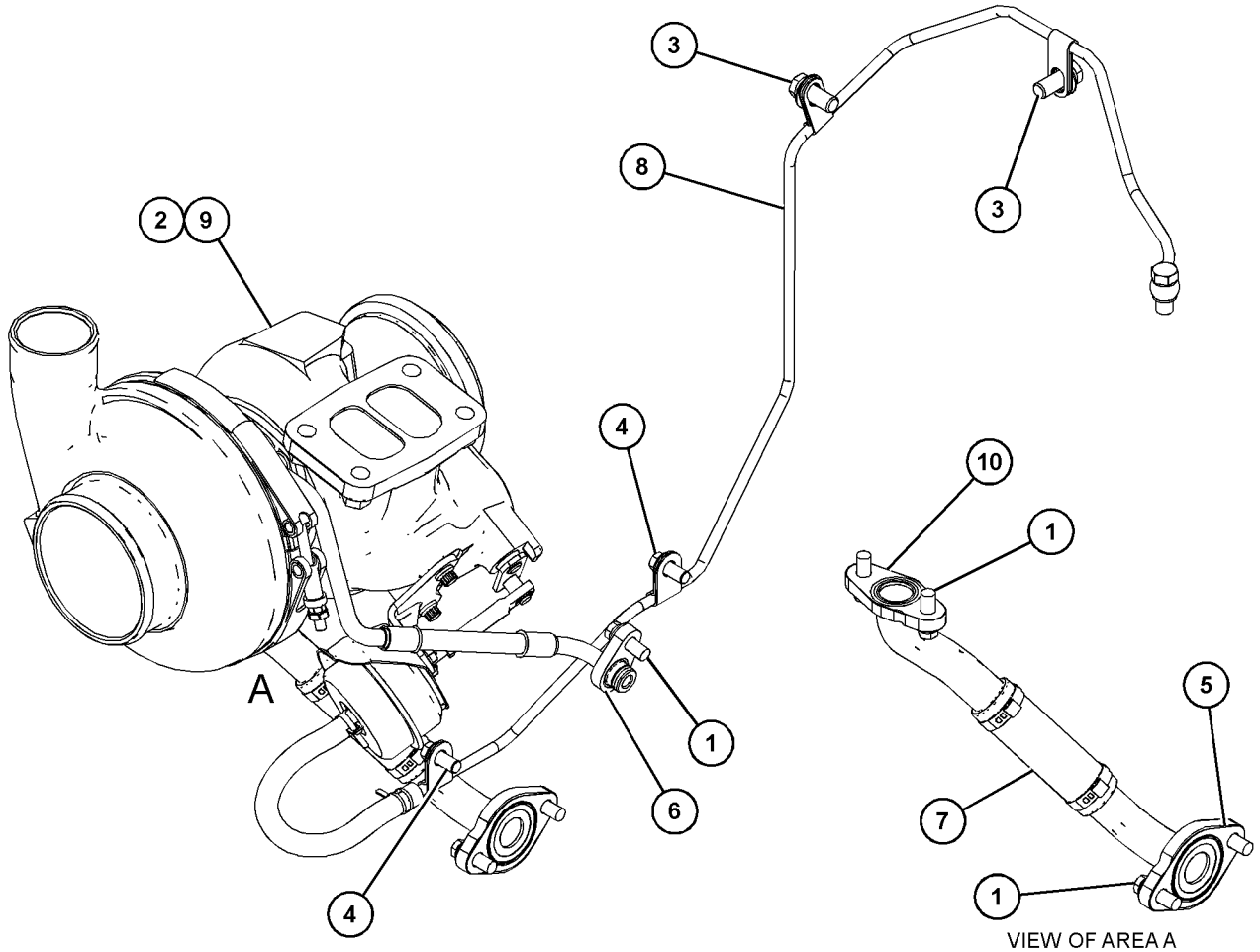

VIEW OF AREA A
(PARTS REMOVED FOR CLARITY)

GRAPHIC #1 <END> g06041329

416-6971 TURBOCHARGER GP

PART OF 461-4656, 461-4658, 466-1161, 466-1162, 466-1163, 468-0461, 475-9060, 479-9398, 480-2181, 484-2939, 485-8027, 486-2644, 489-9006, 491-4980, 491-4993, 491-7124, 492-3169, 493-1019, 494-6807, 495-8349, 499-7181, 501-2466, 502-9462, 504-8134, 504-9579, 507-8016, 510-1088, 513-0851, 513-8513, 514-9367, 520-3152, 530-1323, 530-2601, 533-2797, 533-3588, 535-8060, 536-6675, 539-6915, 539-8582, 543-4255, 552-8869, 562-8873, 563-6728, 563-6729, 563-6730, 565-1247, 569-7846, 583-8352, 591-1266, 591-9440, 593-7287, 598-9881, 602-8721, 603-5300, 609-9819, 614-9555, 622-6239, 627-8019, 633-4335, 657-2370 ENGINE AR-PRIMARY

SMCS-1052, 1053 **i10694374**

NOTE	REF NO	GRAPHIC REF	PART NUMBER	QTY	PART NAME 1 2 3 4 5 6 (PRODUCT LEVEL)	SEE PAGE
M	1	1	**6I-0217**	5	BOLT (M8X1.25X20-MM)	
M	2	1	**6I-0563**	4	NUT (M10X1.5-THD)	
M	3	1	**6I-0593**	3	BOLT (M10X1.5X30-MM)	
M	4	1	**100-4830**	1	BOLT (M10X1.5X20-MM)	
M	5	1	**124-3815**	1	BOLT (M8X1.25X16-MM)	
	6	1	**437-4170**	1	GASKET	
	7	1	**278-0017**	1	GASKET	
	8	1	**420-2372**	1	LINE AS	
	9	1	**280-2424**	1	ADAPTER	
	10	1	**282-2830**	1	ELBOW	
	11	1	**368-8557**	1	TUBE AS-TURBOCHARGER	
	11A	1	**358-6475**	2	WASHER	
	11B	1	**277-9938**	1	BOLT-SPECIAL (BANJO)	
	11C	1	**277-9940**	1	SEAL-O-RING	
Y	12	1	**396-9532**	1	LINES GP-TURBOCHARGER AIR	721
	13	1	*633-9482*	1	TURBOCHARGER AS	

M - METRIC PART
Y - SEPARATE ILLUSTRATION

416-6971 **TURBOCHARGER GP (**contd.**)** **i10694374**

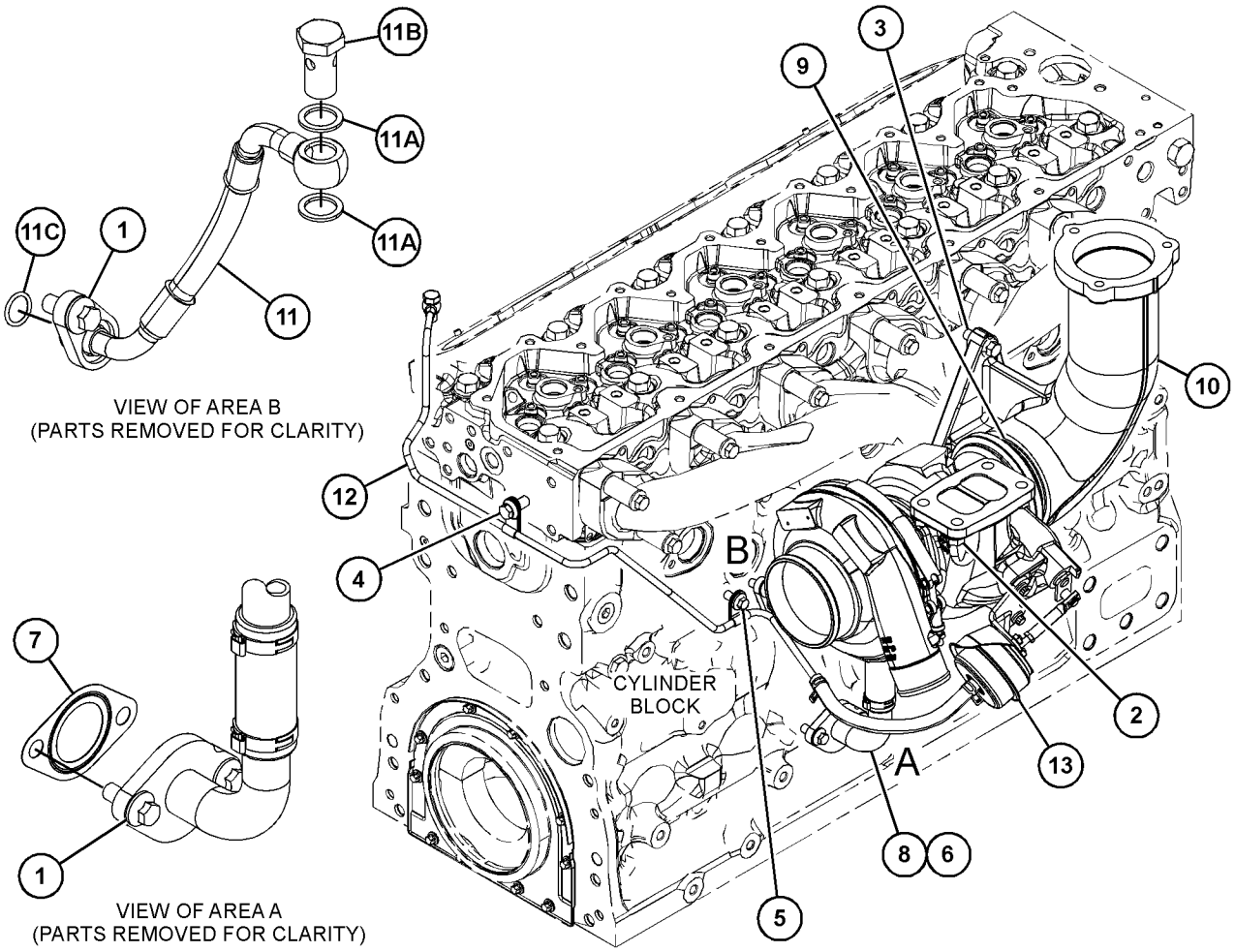

GRAPHIC #1 <END> g07937715

431-6518 TURBOCHARGER GP

REAR EXHAUST

PART OF 470-8667 ENGINE AR-PRIMARY

SMCS-1052, 1053 **i10694384**

NOTE	REF NO	GRAPHIC REF	PART NUMBER	QTY	PART NAME 1 2 3 4 5 6 (PRODUCT LEVEL)	SEE PAGE
M	1	1	**100-4830**	1	BOLT (M10X1.5X20-MM)	
M	2	1	**124-3815**	2	BOLT (M8X1.25X16-MM)	
	3	1	**278-0017**	1	GASKET	
Y	4	1	**368-8559**	1	LINES GP-TURBOCHARGER OIL	643
Y	5	1	**377-2877**	1	LINES GP-TURBOCHARGER AIR	720
	6	1	**420-2371**	1	LINE AS	
	7	1	*633-9481*	1	TURBOCHARGER AS	
	8	1	**437-4170**	1	GASKET	
M	9	1	**6I-0217**	5	BOLT (M8X1.25X20-MM)	
M	10	1	**6I-0563**	4	NUT (M10X1.5-THD)	

M - METRIC PART
Y - SEPARATE ILLUSTRATION

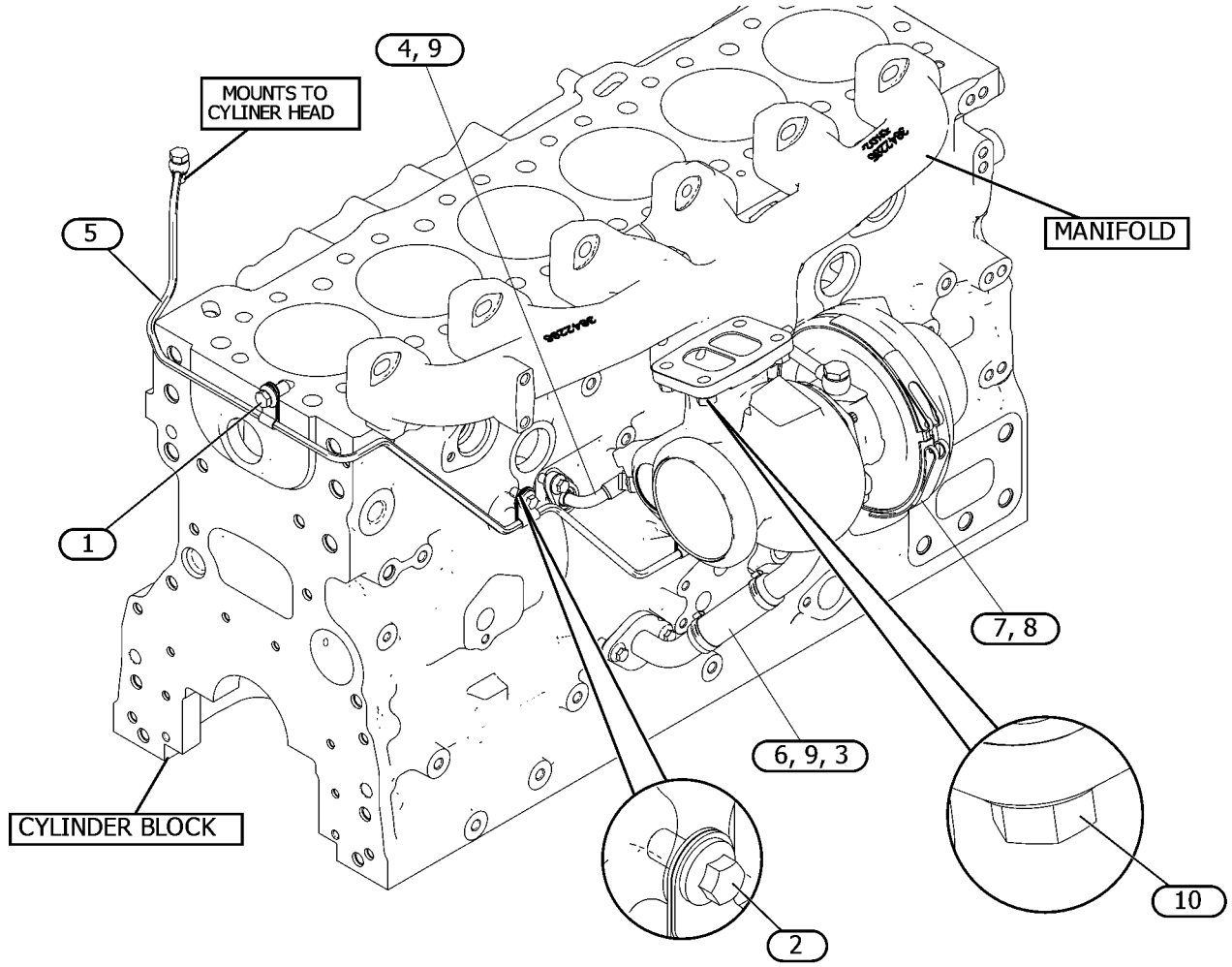

GRAPHIC #1 <END> g07947660

448-9771 TURBOCHARGER GP

PART OF 520-4644 ENGINE AR-PRIMARY

TYPE 1

SMCS-1052, 1053 **i06211801**

NOTE	REF NO	GRAPHIC REF	PART NUMBER	QTY	PART NAME 1 2 3 4 5 6 (PRODUCT LEVEL)	SEE PAGE
M	1	1	**6I-0217**	1	BOLT (M8X1.25X20-MM)	
M	2	1	**6I-0563**	4	NUT (M10X1.5-THD)	
M	3	1	**6I-0593**	3	BOLT (M10X1.5X30-MM)	
M	4	1	**100-4830**	1	BOLT (M10X1.5X20-MM)	
M	5	1	**124-3815**	5	BOLT (M8X1.25X16-MM)	
	6	1	**278-0017**	1	GASKET	
	7	1	**280-2424**	1	ADAPTER	
	8	1	**282-2830**	1	ELBOW	
R	9	1	**315-9810**	1	TURBOCHARGER GP	
	9A	1	**277-9602**	1	CLAMP	
	9B	1	**277-9603**	1	CLAMP	
	10	1	**368-8557**	1	TUBE AS-TURBOCHARGER	
		1	**277-9938**	1	BOLT-SPECIAL (BANJO)	
		1	**277-9940**	1	SEAL-O-RING	
		1	**365-5823**	1	WASHER	
Y	11	1	*396-9532*	1	LINES GP-TURBOCHARGER AIR	721
	12	1	**420-2372**	1	LINE AS	
	13	1	**437-4170**	1	GASKET	

M - METRIC PART
R - REMANUFACTURED PART MAY BE AVAILABLE
Y - SEPARATE ILLUSTRATION

448-9771 **TURBOCHARGER GP** (contd.) **i06211801**

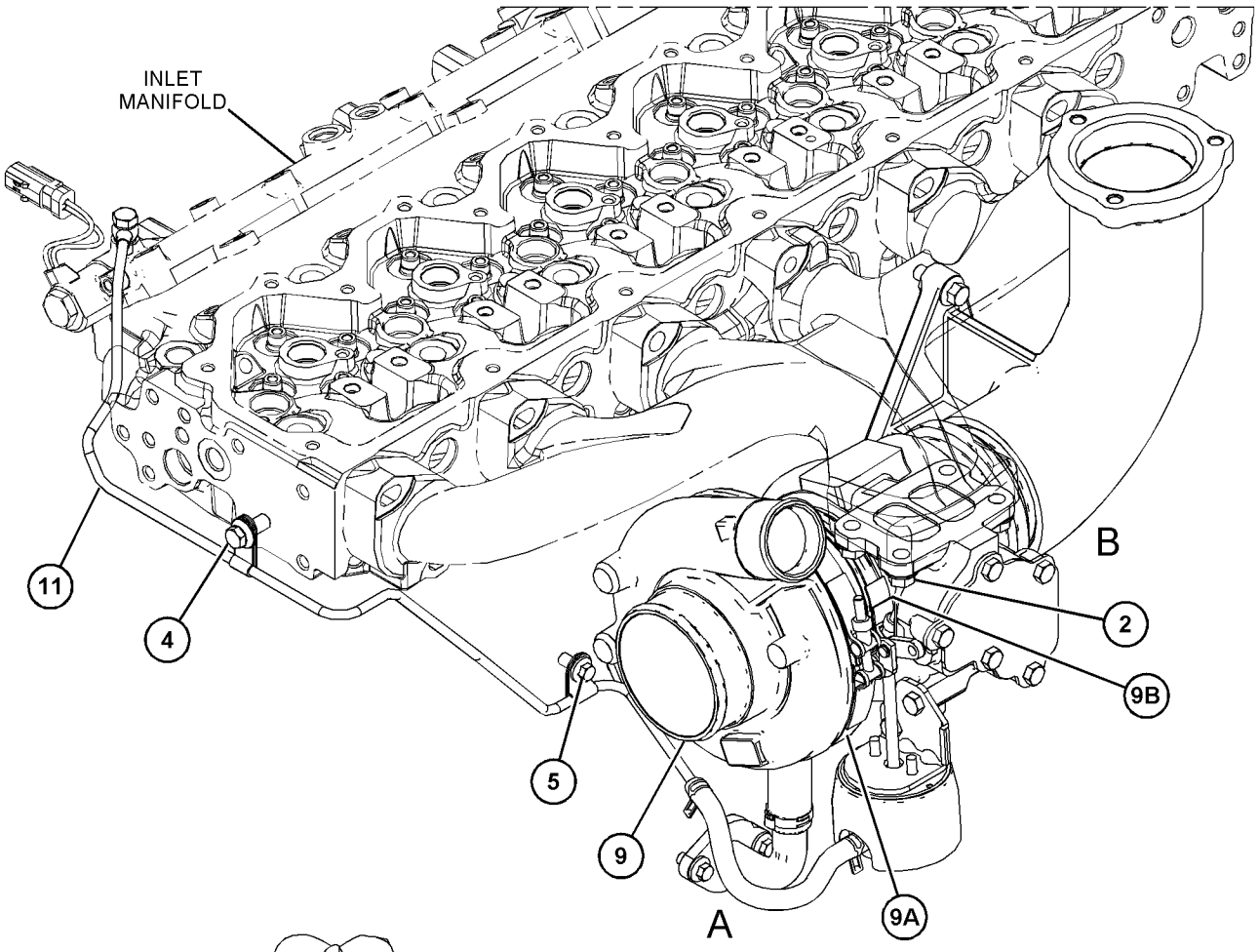

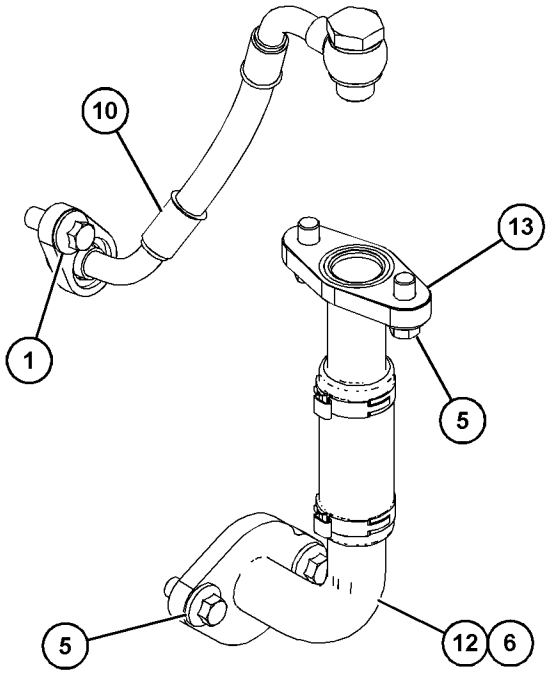

VIEW OF AREA A
(PARTS REMOVED FOR CLARITY)

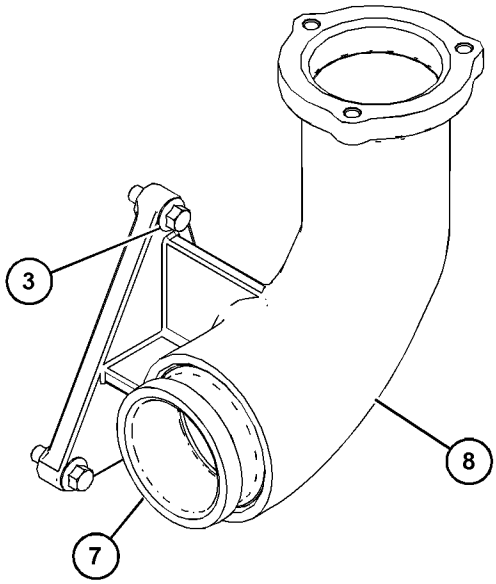

VIEW OF AREA B
(PARTS REMOVED FOR CLARITY)

GRAPHIC #1 <END> g03890342

448-9771 TURBOCHARGER GP

PART OF 520-4644, 596-8896 ENGINE AR-PRIMARY

TYPE 2

SMCS-1052, 1053 **i08069557**

NOTE	REF NO	GRAPHIC REF	PART NUMBER	QTY	PART NAME 1 2 3 4 5 6 (PRODUCT LEVEL)	SEE PAGE
M	1	1	**6I-0217**	5	BOLT (M8X1.25X20-MM)	
M	2	1	**6I-0563**	4	NUT (M10X1.5-THD)	
M	3	1	**6I-0593**	3	BOLT (M10X1.5X30-MM)	
M	4	1	**100-4830**	1	BOLT (M10X1.5X20-MM)	
M	5	1	**124-3815**	1	BOLT (M8X1.25X16-MM)	
	6	1	**278-0017**	1	GASKET	
	7	1	**280-2424**	1	ADAPTER	
	8	1	**282-2830**	1	ELBOW	
CR	9	1	**569-6097**	1	TURBOCHARGER AS	
	10	1	**368-8557**	1	TUBE AS-TURBOCHARGER	
	10A	1	**277-9938**	1	BOLT-SPECIAL (BANJO)	
	10B	1	**277-9940**	1	SEAL-O-RING	
	10C	1	**365-5823**	1	WASHER	
Y	11	1	**396-9532**	1	LINES GP-TURBOCHARGER AIR	721
	12	1	**420-2372**	1	LINE AS	
	13	1	**437-4170**	1	GASKET	

C - CHANGE FROM PREVIOUS TYPE
M - METRIC PART
R - REMANUFACTURED PART MAY BE AVAILABLE
Y - SEPARATE ILLUSTRATION

448-9771 **TURBOCHARGER GP (**contd.**)** **i08069557**

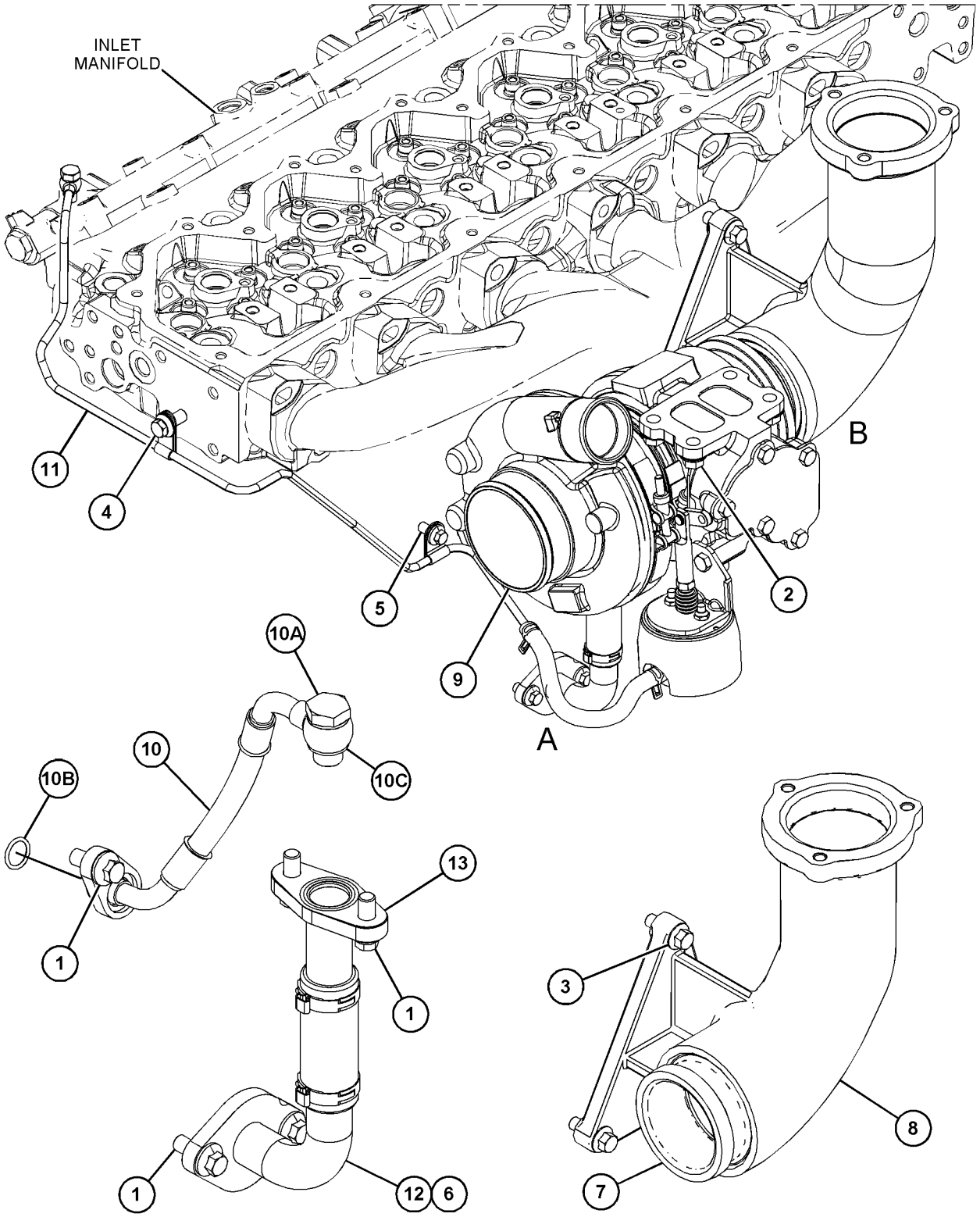

VIEW OF AREA A
(PARTS REMOVED FOR CLARITY)

VIEW OF AREA B
(PARTS REMOVED FOR CLARITY)

GRAPHIC #1 <END> g06476768

448-9777 TURBOCHARGER GP

PART OF 451-8343, 519-4128, 526-8888, 593-7288, 594-2125, 596-8905 ENGINE AR-PRIMARY

SMCS-1052, 1053 **i10694369**

NOTE	REF NO	GRAPHIC REF	PART NUMBER	QTY	PART NAME 1 2 3 4 5 6 (PRODUCT LEVEL)	SEE PAGE
M	1	1	**6I-0217**	5	BOLT (M8X1.25X20-MM)	
M	2	1	**6I-0563**	4	NUT (M10X1.5-THD)	
M	3	1	**6I-0593**	3	BOLT (M10X1.5X30-MM)	
M	4	1	**100-4830**	1	BOLT (M10X1.5X20-MM)	
M	5	1	**124-3815**	1	BOLT (M8X1.25X16-MM)	
	6	1	**437-4170**	1	GASKET	
	7	1	**278-0017**	1	GASKET	
	8	1	**420-2372**	1	LINE AS	
	9	1	**280-2424**	1	ADAPTER	
	10	1	**282-2830**	1	ELBOW	
	11	1	**368-8557**	1	TUBE AS-TURBOCHARGER	
	11A	1	**277-9940**	1	SEAL-O-RING	
	11B	1	**277-9938**	1	BOLT-SPECIAL (BANJO)	
	11C	1	**358-6475**	2	WASHER	
Y	12	1	**396-9532**	1	LINES GP-TURBOCHARGER AIR	721
	13	1	*633-9482*	1	TURBOCHARGER AS	

M - METRIC PART
Y - SEPARATE ILLUSTRATION

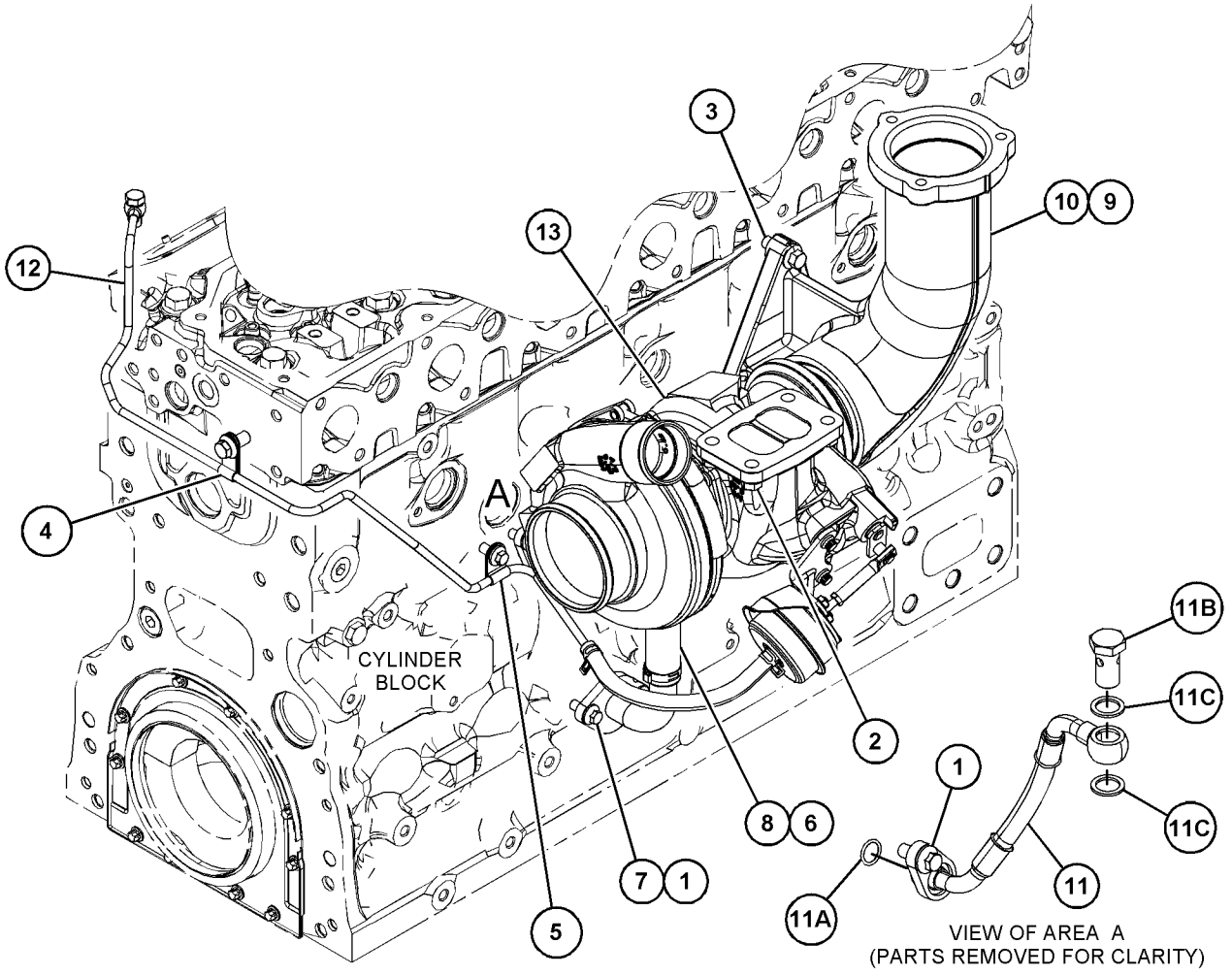

GRAPHIC #1 <END> g07939086

360-8958 FILTER GP-FUEL

PART OF 421-5684, 421-5685, 452-8547 FILTER GP-FUEL

SMCS-1261 **i10154526**

NOTE	REF NO	GRAPHIC REF	PART NUMBER	QTY	PART NAME 1 2 3 4 5 6 (PRODUCT LEVEL)	SEE PAGE
	1	1	**360-8960**	1	FILTER ELEMENT-FUEL	

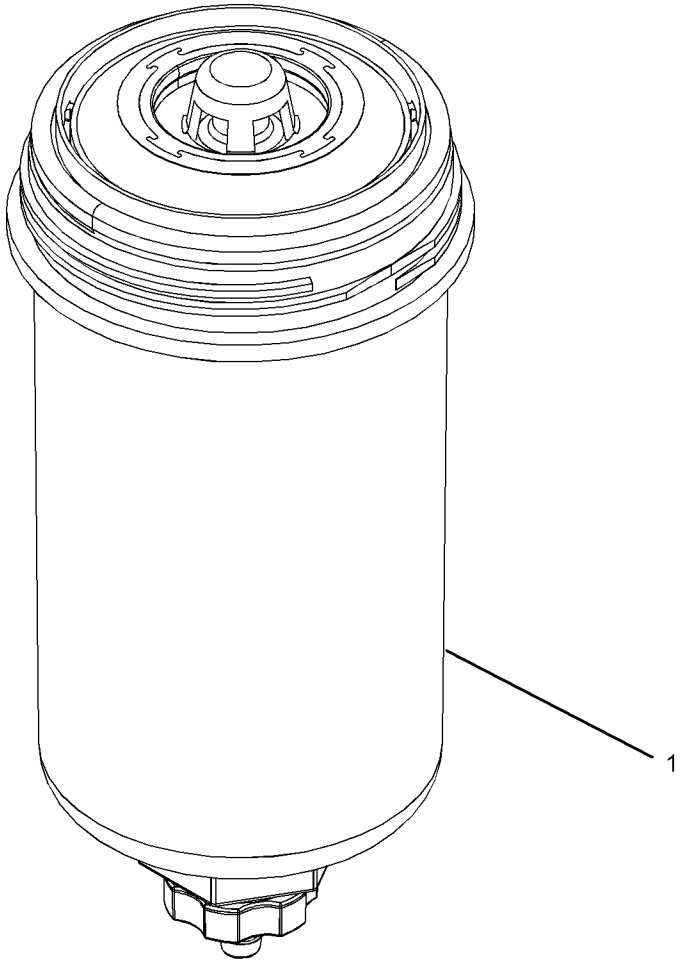

GRAPHIC #1 <END> g03173178

421-5684 FILTER GP-FUEL

FIELD REPLACEMENT ORDER 452-8547—PAGE: 759
PART OF 426-3290, 426-3292 FILTER GP-FUEL

SMCS-1261 **i07073041**

NOTE	REF NO	GRAPHIC REF	PART NUMBER	QTY	PART NAME 1 2 3 4 5 6 (PRODUCT LEVEL)	SEE PAGE
Y	1	1	**360-8958**	2	FILTER GP-FUEL	749
	2	1	**362-9689**	2	SCREW-SPECIAL	
					AVAILABLE REPAIR KIT(S):	
			362-5412	2	KIT-DRAIN	
					(EACH KIT INCLUDES DRAIN, KNOB, & SEAL REPLACEMENTS)	

Y - SEPARATE ILLUSTRATION

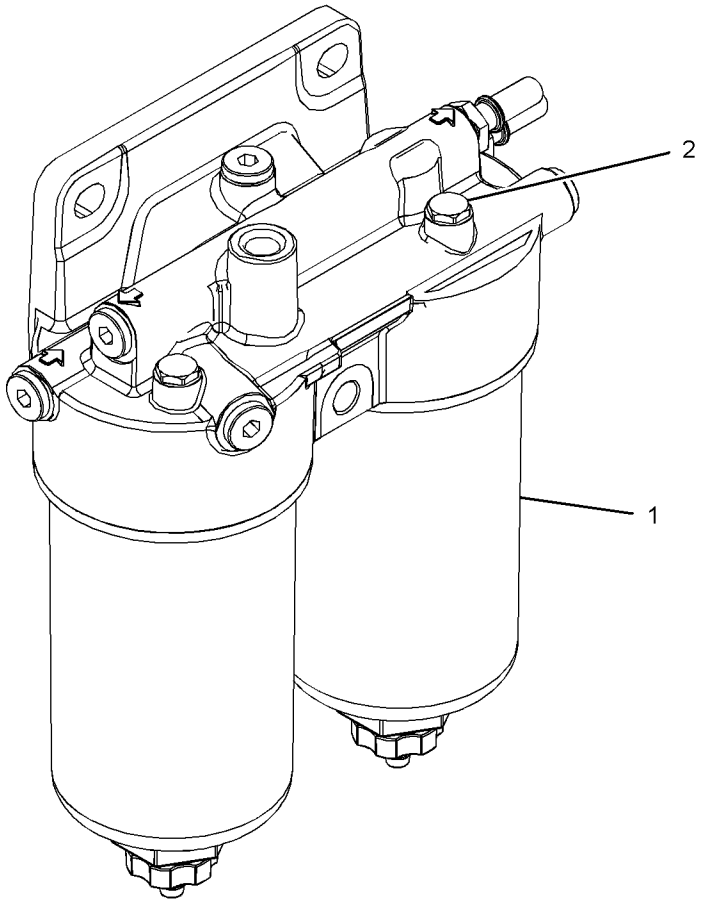

GRAPHIC #1 <END> g03379539

421-5685 FILTER GP-FUEL

PART OF 426-3296 FILTER GP-FUEL

SMCS-1261 **i05718369**

NOTE	REF NO	GRAPHIC REF	PART NUMBER	QTY	PART NAME 1 2 3 4 5 6 (PRODUCT LEVEL)	SEE PAGE
Y	1	1	**360-8958**	2	FILTER GP-FUEL	749
	2	1	**362-9689**	2	SCREW-SPECIAL	
					AVAILABLE REPAIR KIT(S):	
			362-5412	1	KIT-DRAIN	

Y - SEPARATE ILLUSTRATION

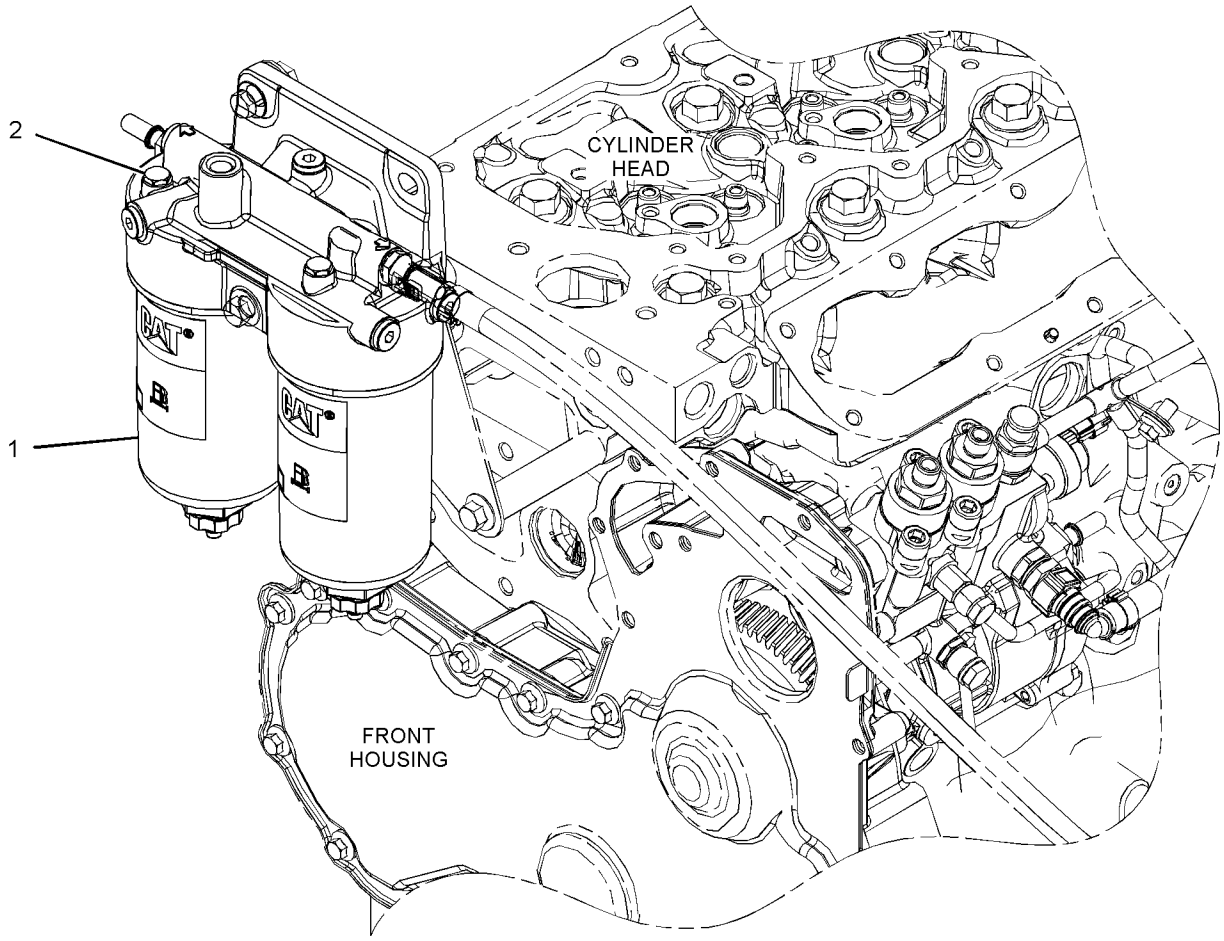

GRAPHIC #1 <END> g03489376

426-3290 FILTER GP-FUEL

SMCS-1261 **i05831729**

NOTE	REF NO	GRAPHIC REF	PART NUMBER	QTY	PART NAME 1 2 3 4 5 6 (PRODUCT LEVEL)	SEE PAGE
	1	1	*394-3484*	1	FILTER GP-WATER SEP & FUEL	
	1A	1	**394-3438**	1	SENSOR GP-LEVEL (WATER SEPARATOR)	
	1B	1	**416-7743**	1	BOWL AS	
	1C	1	**416-7740**	1	FILTER AS-WATER SEP & FUEL	
Y	2	1	*421-5684*	1	FILTER GP-FUEL	750

Y - SEPARATE ILLUSTRATION

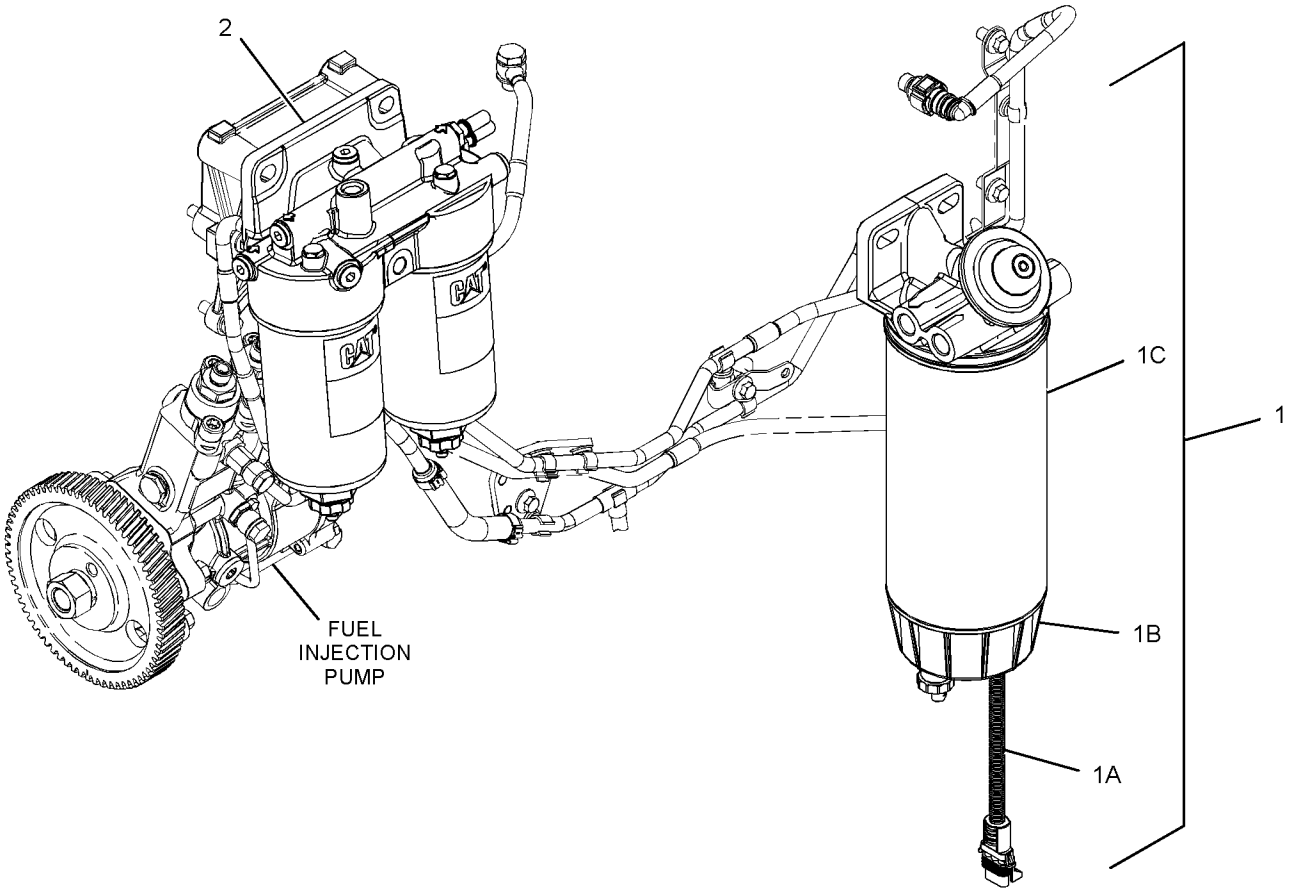

GRAPHIC #1 <END> g03556068

426-3292 FILTER GP-FUEL

SMCS-1261 **i05723848**

NOTE	REF NO	GRAPHIC REF	PART NUMBER	QTY	PART NAME 1 2 3 4 5 6 (PRODUCT LEVEL)	SEE PAGE
Y	1	1	*421-5684*	1	FILTER GP-FUEL	750

Y - SEPARATE ILLUSTRATION

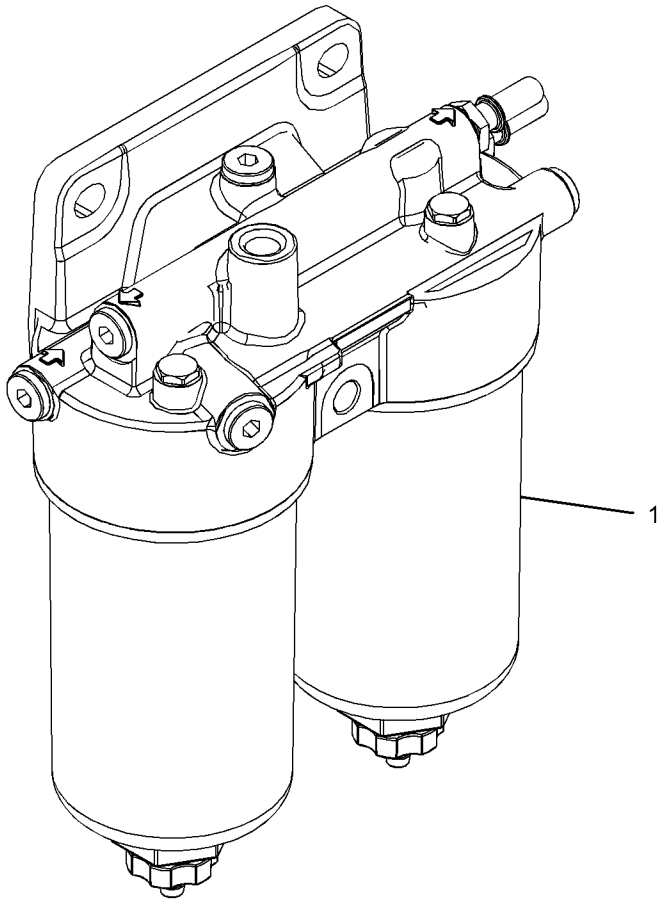

GRAPHIC #1 <END> g03379517

426-3296 FILTER GP-FUEL

SMCS-1261 **i05584296**

NOTE	REF NO	GRAPHIC REF	PART NUMBER	QTY	PART NAME 1 2 3 4 5 6 (PRODUCT LEVEL)	SEE PAGE
Y	1	1	*421-5685*	1	FILTER GP-FUEL	751

Y - SEPARATE ILLUSTRATION

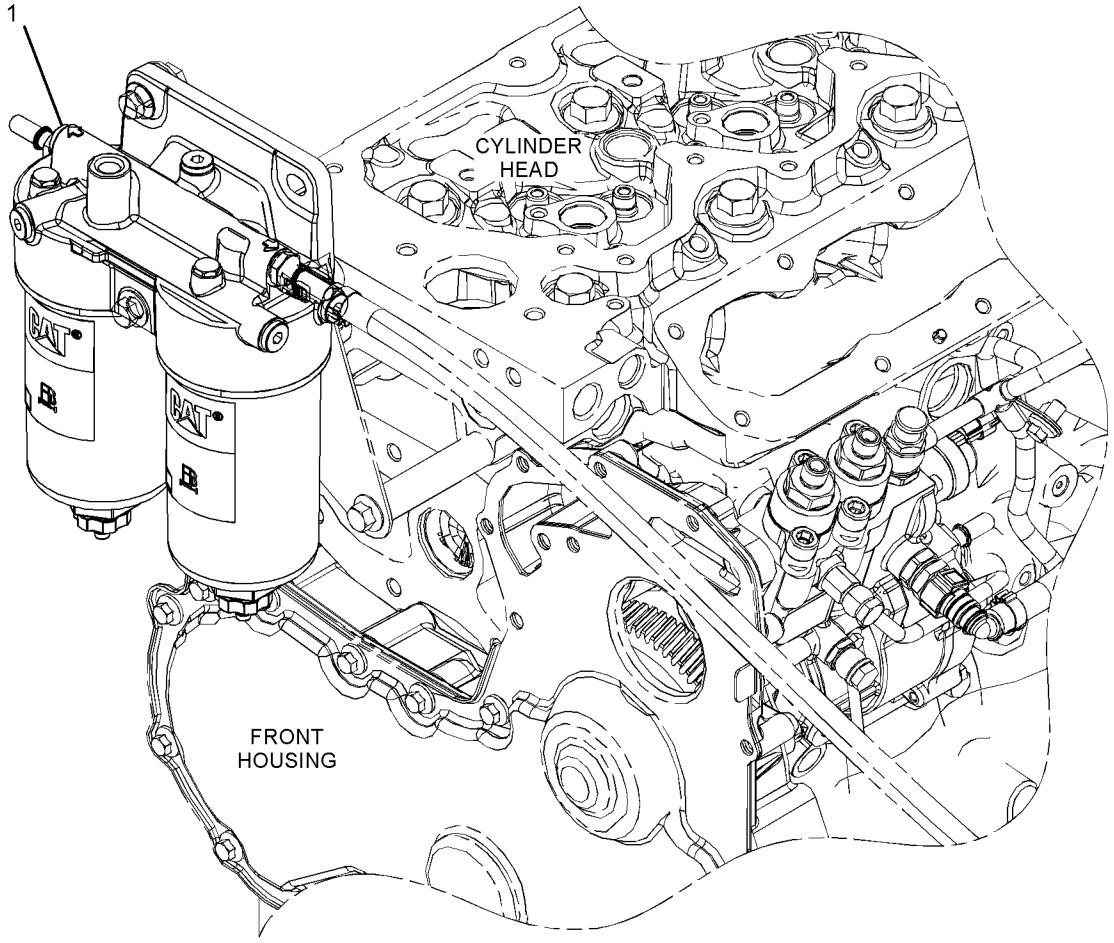

GRAPHIC #1 <END> g03487549

438-7763 FILTER GP-FUEL

WATER SEPARATOR

PART OF 441-1215 FILTER GP-FUEL

SMCS-1261 **i10340078**

NOTE	REF NO	GRAPHIC REF	PART NUMBER	QTY	PART NAME 1 2 3 4 5 6 (PRODUCT LEVEL)	SEE PAGE
	1	1	**439-5040**	1	BOWL AS	
	2	1	*192-9207*	1	PLUG AS	
	2A	1	**126-9093**	1	SEAL	
	2B	1	**439-1841**	1	PLUG	
	3	1	**439-5037**	1	FILTER AS-WATER SEP & FUEL	
	4	1	**641-5407**	1	SENSOR AS-LIQUID LEVEL (WATER IN FUEL)	

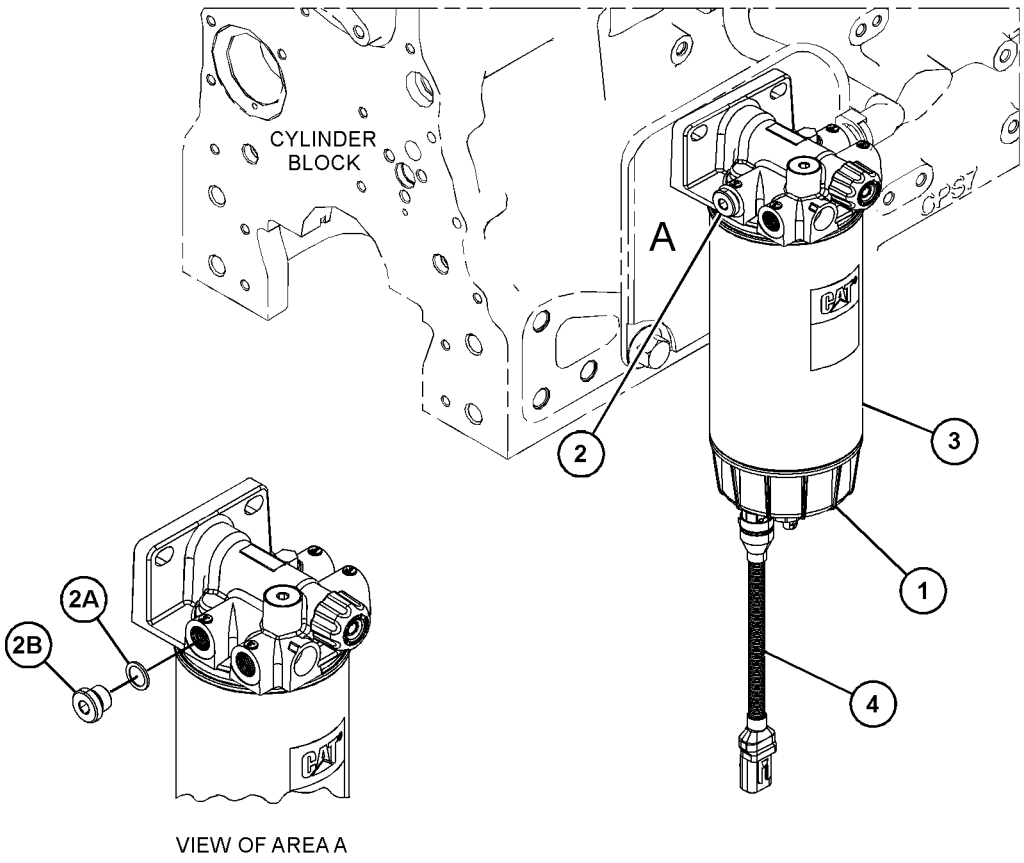

VIEW OF AREA A

GRAPHIC #1 <END> g07883141

441-1215 FILTER GP-FUEL

PART OF 596-2071 ENGINE AR-COMPLETE, 451-8343, 461-4638, 461-4649, 461-4656, 461-4658, 466-1160, 466-1161, 466-1162, 466-1163, 468-0461, 471-0541, 474-7299, 475-8297, 475-9060, 478-4257, 479-9398, 480-2181, 481-0811, 482-0212, 484-2939, 485-8027, 486-2644, 486-4250, 489-9006, 491-2606, 491-4973, 491-4980, 491-4993, 491-7124, 492-3021, 492-3072, 492-3169, 493-1019, 493-1038, 494-2073, 494-6807, 495-8349, 499-7181, 501-2466, 502-9462, 504-3629, 504-5365, 504-8134, 504-9579, 506-5035, 507-8016, 508-0270, 510-1088, 512-9858, 513-0851, 513-8513, 514-9367, 515-9203, 519-4128, 520-3152, 520-4644, 524-8271, 526-0511, 526-7210, 526-8888, 527-7106, 527-9686, 528-3358, 528-9866, 530-1323, 530-2601, 533-2797, 535-8060, 536-6675, 539-6915, 539-8582, 543-4255, 552-3506, 552-8869, 553-1809, 553-3730, 555-4669, 562-8873, 563-6728, 563-6729, 563-6730, 565-1247, 569-7846, 583-8352, 591-1266, 591-9440, 593-7287, 593-7288, 596-4834, 596-7090, 596-8896, 596-8905, 597-9248, 598-9881, 602-8721, 603-5300, 608-9261, 609-9819, 612-1735, 614-5795, 614-9555, 623-1309, 624-0698, 627-8019, 627-8054, 627-8129, 628-4345, 633-4335, 633-7776, 657-2370 ENGINE AR-PRIMARY

SMCS-1261 **i05723716**

NOTE	REF NO	GRAPHIC REF	PART NUMBER	QTY	PART NAME 1 2 3 4 5 6 (PRODUCT LEVEL)	SEE PAGE
Y	1	1	**438-7763**	1	FILTER GP-FUEL	755

Y - SEPARATE ILLUSTRATION

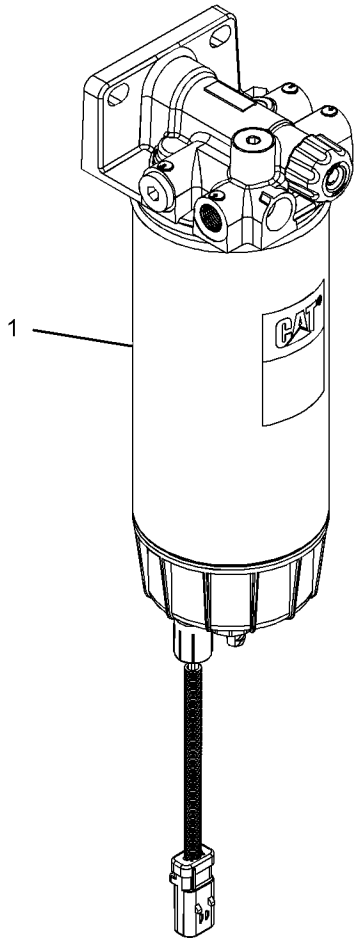

GRAPHIC #1 <END> g03535423

441-1218 FILTER GP-FUEL

PART OF 622-6239 ENGINE AR-PRIMARY

SMCS-1261 **i06100968**

NOTE	REF NO	GRAPHIC REF	PART NUMBER	QTY	PART NAME 1 2 3 4 5 6 (PRODUCT LEVEL)	SEE PAGE
Y	1	1	**444-5021**	1	FILTER GP-WATER SEP & FUEL	761

Y - SEPARATE ILLUSTRATION

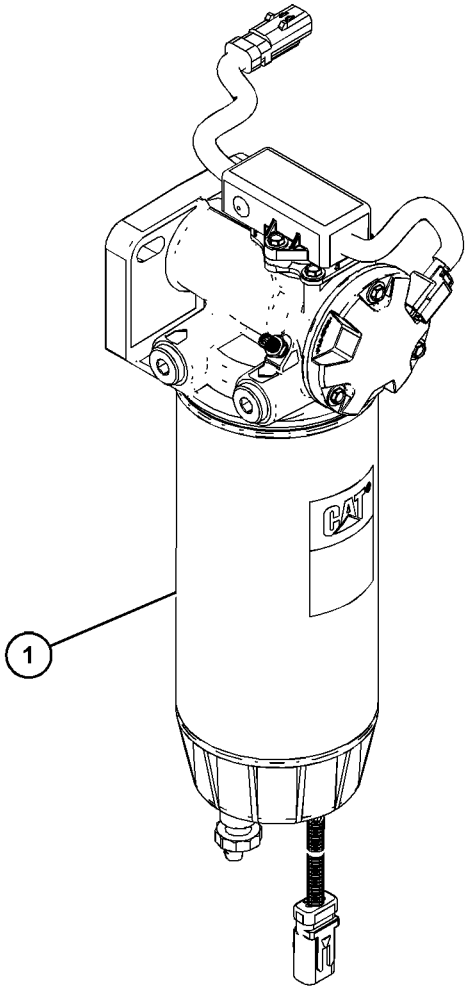

GRAPHIC #1 <END> g06004256

441-1222 FILTER GP-FUEL

PART OF 468-8218, 470-8667, 470-8814, 488-6687, 506-9918, 525-8759, 527-7106, 528-9920, 531-2492, 533-3588, 575-2879, 575-2880, 594-2125, 596-7090, 613-9482, 645-2039 ENGINE AR-PRIMARY

SMCS-1261 **i05716470**

NOTE	REF NO	GRAPHIC REF	PART NUMBER	QTY	PART NAME 1 2 3 4 5 6 (PRODUCT LEVEL)	SEE PAGE
Y	1	1	**444-5022**	1	FILTER GP-WATER SEP & FUEL	762

Y - SEPARATE ILLUSTRATION

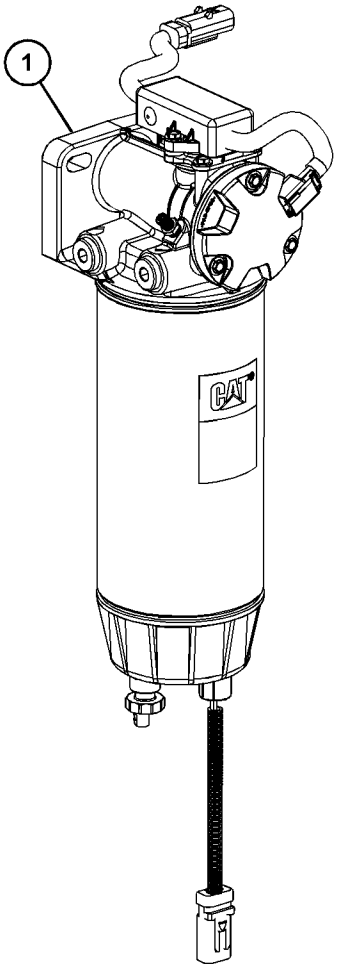

GRAPHIC #1 <END> g03651398

452-8547 FILTER GP-FUEL

FIELD REPLACEMENT FOR 421-5684—PAGE: 750
PART OF 453-7163 FILTER GP-FUEL
ALSO FIELD INSTALLATION

SMCS-1261 **i05836352**

NOTE	REF NO	GRAPHIC REF	PART NUMBER	QTY	PART NAME 1 2 3 4 5 6 (PRODUCT LEVEL)	SEE PAGE
Y	1	1	**360-8958**	2	FILTER GP-FUEL	749
	2	1	**362-9689**	2	SCREW-SPECIAL	
					AVAILABLE REPAIR KIT(S):	
			362-5412	2	KIT-DRAIN	
					(EACH KIT INCLUDES DRAIN, KNOB & SEAL)	

Y - SEPARATE ILLUSTRATION

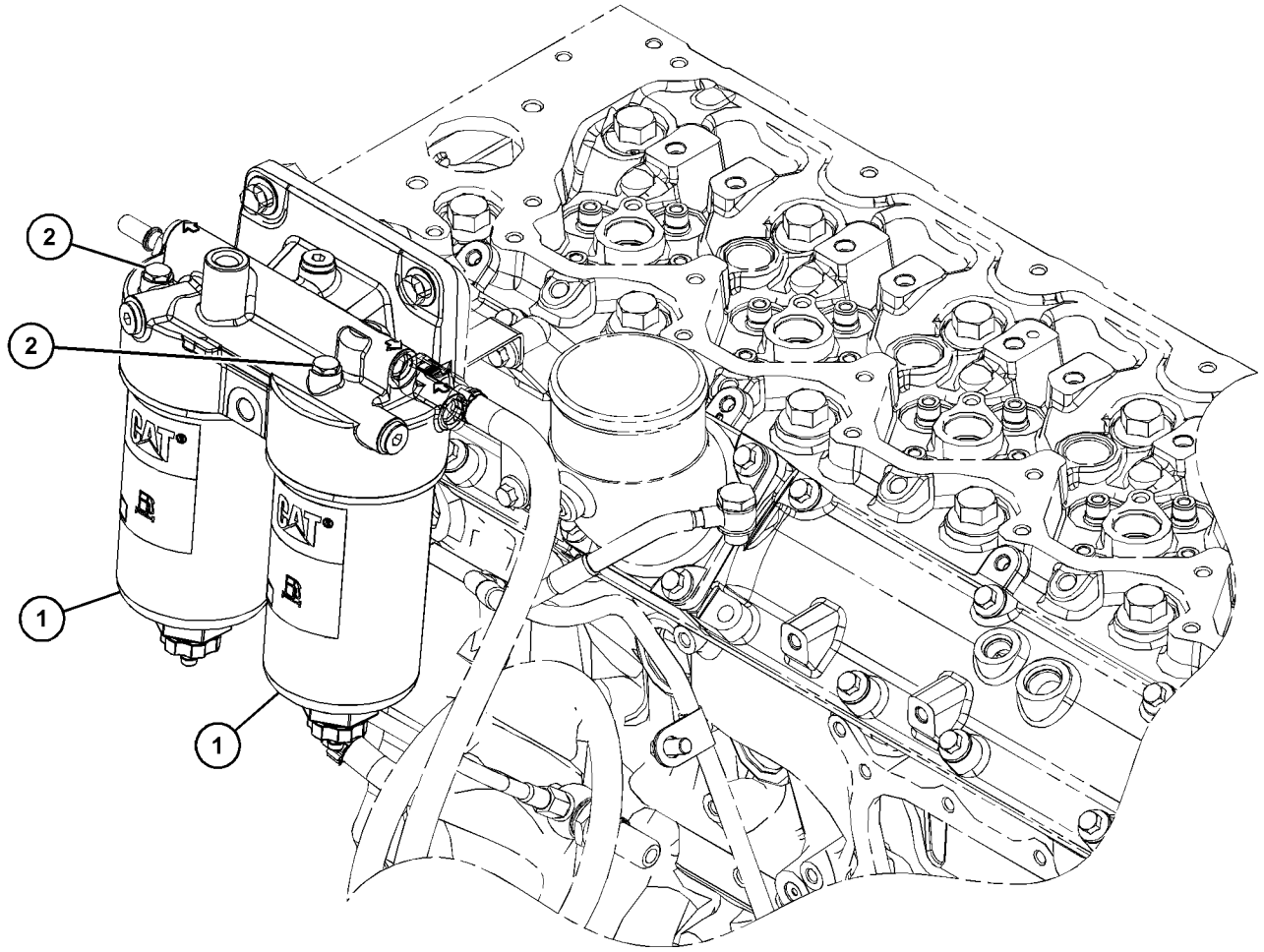

GRAPHIC #1 <END> g03701881

453-7163 FILTER GP-FUEL

PART OF 596-2071 ENGINE AR-COMPLETE, 451-8343, 461-4638, 461-4649, 461-4656, 461-4658, 466-1160, 466-1161, 466-1162, 466-1163, 468-0461, 468-8218, 470-8667, 470-8814, 471-0541, 474-7299, 475-8297, 475-9060, 478-4257, 479-9398, 480-2181, 481-0811, 482-0212, 484-2939, 485-8027, 486-2644, 486-4250, 488-6687, 489-9006, 491-2606, 491-4973, 491-4980, 491-4993, 491-7124, 492-3021, 492-3072, 492-3169, 493-1019, 493-1038, 494-2073, 494-6807, 495-8349, 499-7181, 501-2466, 502-9462, 504-3629, 504-5365, 504-8134, 504-9579, 506-5035, 506-9918, 507-8016, 508-0270, 510-1088, 512-9858, 513-0851, 513-8513, 514-9367, 515-9203, 519-4128, 520-3152, 520-4644, 524-8271, 525-8759, 526-0511, 526-7210, 526-8888, 527-7106, 527-9686, 528-3358, 528-9866, 528-9920, 530-1323, 530-2601, 531-2492, 533-2797, 533-3588, 535-8060, 536-6675, 539-6915, 539-8582, 543-4255, 552-3506, 552-8869, 553-1809, 553-3730, 555-4669, 562-8873, 563-6728, 563-6729, 563-6730, 565-1247, 569-7846, 575-2879, 575-2880, 583-8352, 591-1266, 591-9440, 593-7287, 593-7288, 594-2125, 596-4834, 596-7090, 596-8896, 596-8905, 597-9248, 598-9881, 602-8721, 603-5300, 608-9261, 609-9819, 612-1735, 613-9482, 614-5795, 614-9555, 622-6239, 623-1309, 624-0698, 627-8019, 627-8054, 627-8129, 628-4345, 633-4335, 633-7776, 645-2039, 657-2370 ENGINE AR-PRIMARY

SMCS-1261 **i05836344**

NOTE	REF NO	GRAPHIC REF	PART NUMBER	QTY	PART NAME 1 2 3 4 5 6 (PRODUCT LEVEL)	SEE PAGE
Y	1	1	**452-8547**	1	FILTER GP-FUEL	759

Y - SEPARATE ILLUSTRATION

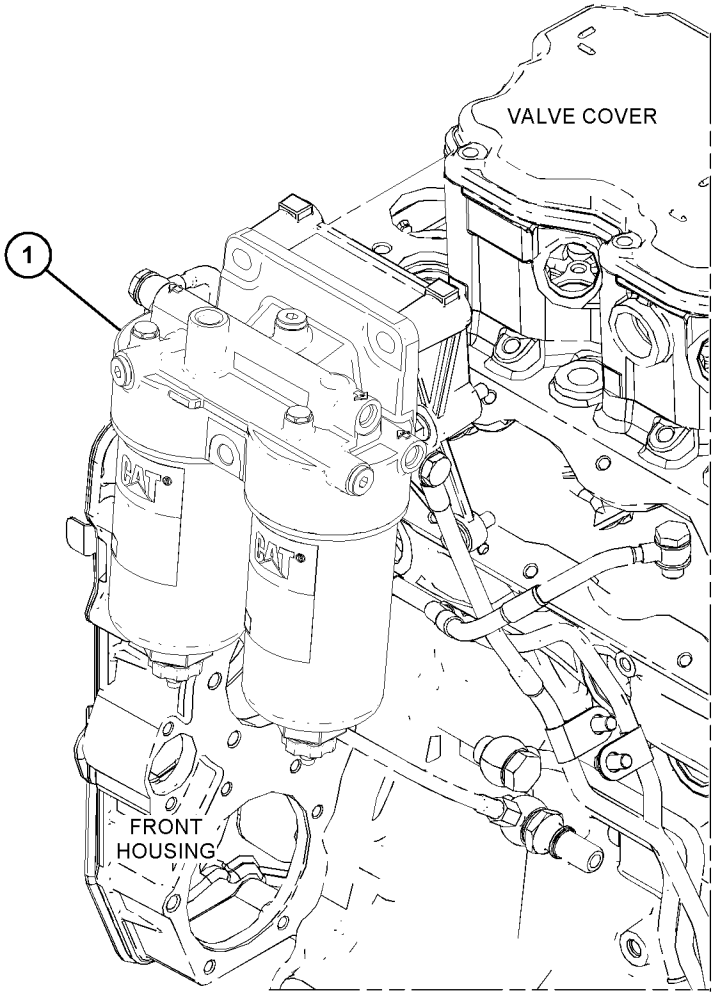

GRAPHIC #1 <END> g03695817

444-5021 FILTER GP-WATER SEP & FUEL

PART OF 441-1218 FILTER GP-FUEL

SMCS-1261, 1263 **i08224106**

NOTE	REF NO	GRAPHIC REF	PART NUMBER	QTY	PART NAME 1 2 3 4 5 6 (PRODUCT LEVEL)	SEE PAGE
	1	1	*192-9207*	2	PLUG AS	
					(EACH INCLUDES)	
	1A	1	**126-9093**	1	SEAL	
	1B	1	**439-1841**	1	PLUG	
	2	1	**439-5037**	1	FILTER AS-WATER SEP & FUEL	
	3	1	**549-6892**	1	SENSOR AS-LIQUID LEVEL (WATER IN FUEL)	
	4	1	**439-5040**	1	BOWL AS	
	5	1	**445-5511**	1	VALVE AS	

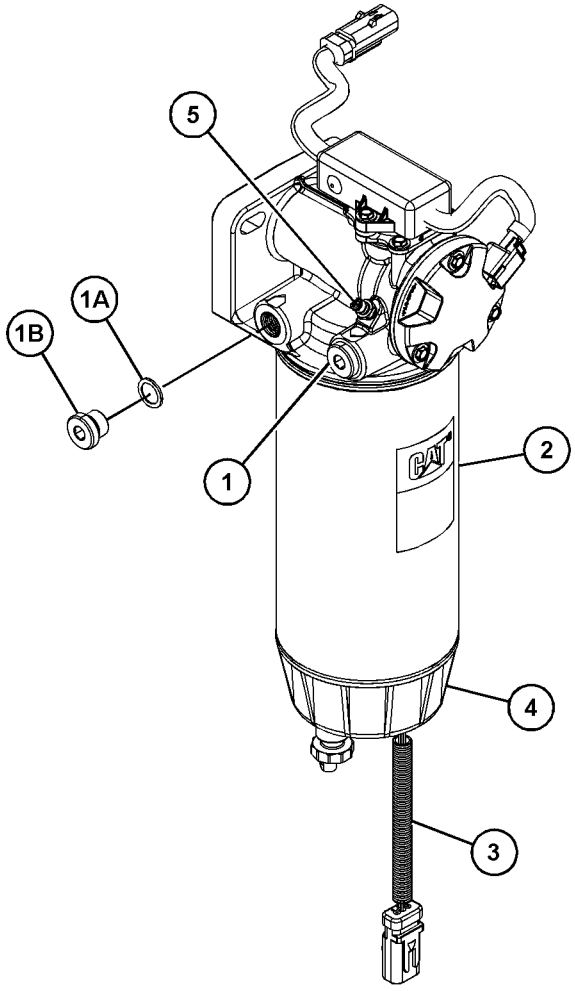

GRAPHIC #1 <END> g06713103

444-5022 FILTER GP-WATER SEP & FUEL

PART OF 441-1222 FILTER GP-FUEL

SMCS-1261, 1263 **i08161596**

NOTE	REF NO	GRAPHIC REF	PART NUMBER	QTY	PART NAME 1 2 3 4 5 6 (PRODUCT LEVEL)	SEE PAGE
	1	1	**439-1841**	2	PLUG	
	1A	1	**126-9093**	2	SEAL	
	2	1	**439-5037**	1	FILTER AS-WATER SEP & FUEL	
	3	1	**549-6892**	1	SENSOR AS-LIQUID LEVEL (FUEL)	
	4	1	**439-5040**	1	BOWL AS	
	5	1	**446-0105**	1	MODULE AS	
	6	1	**445-5511**	1	VALVE AS	

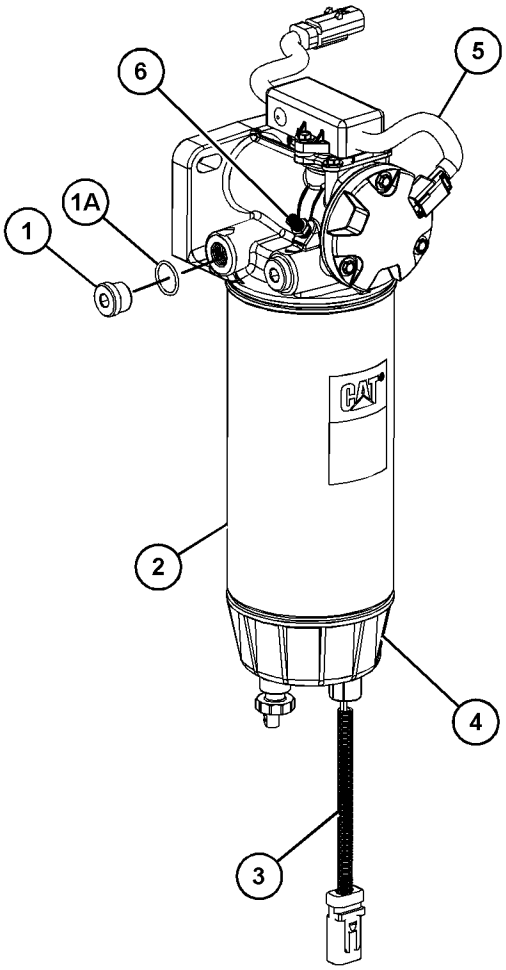

GRAPHIC #1 <END> g03651397

371-2483 INJECTOR GP-FUEL

PART OF 596-2071 ENGINE AR-COMPLETE, 461-4638, 461-4649, 466-1160, 471-0541, 475-8297, 482-0212, 491-4973, 492-3021, 492-3072, 493-1038, 494-2073, 504-5365, 508-0270, 512-9858, 520-4644, 527-9686, 555-4669, 575-2879, 596-8896, 612-1735, 627-8054, 627-8129, 628-4345, 633-7776 ENGINE AR-PRIMARY

SMCS-1251, 1254, 1290, 1713 **i06928404**

NOTE	REF NO	GRAPHIC REF	PART NUMBER	QTY	PART NAME 1 2 3 4 5 6 (PRODUCT LEVEL)	SEE PAGE
M	1	1	**278-5170**	6	BOLT (M7X1X45-MM)	
	2	1	**369-7799**	6	CLAMP-INJECTOR	
YR	3	1	**371-3974**	6	INJECTOR GP-FUEL	764
	4	1	**517-8243**	6	SLEEVE-INJECTOR	

M - METRIC PART
R - REMANUFACTURED PART MAY BE AVAILABLE
Y - SEPARATE ILLUSTRATION

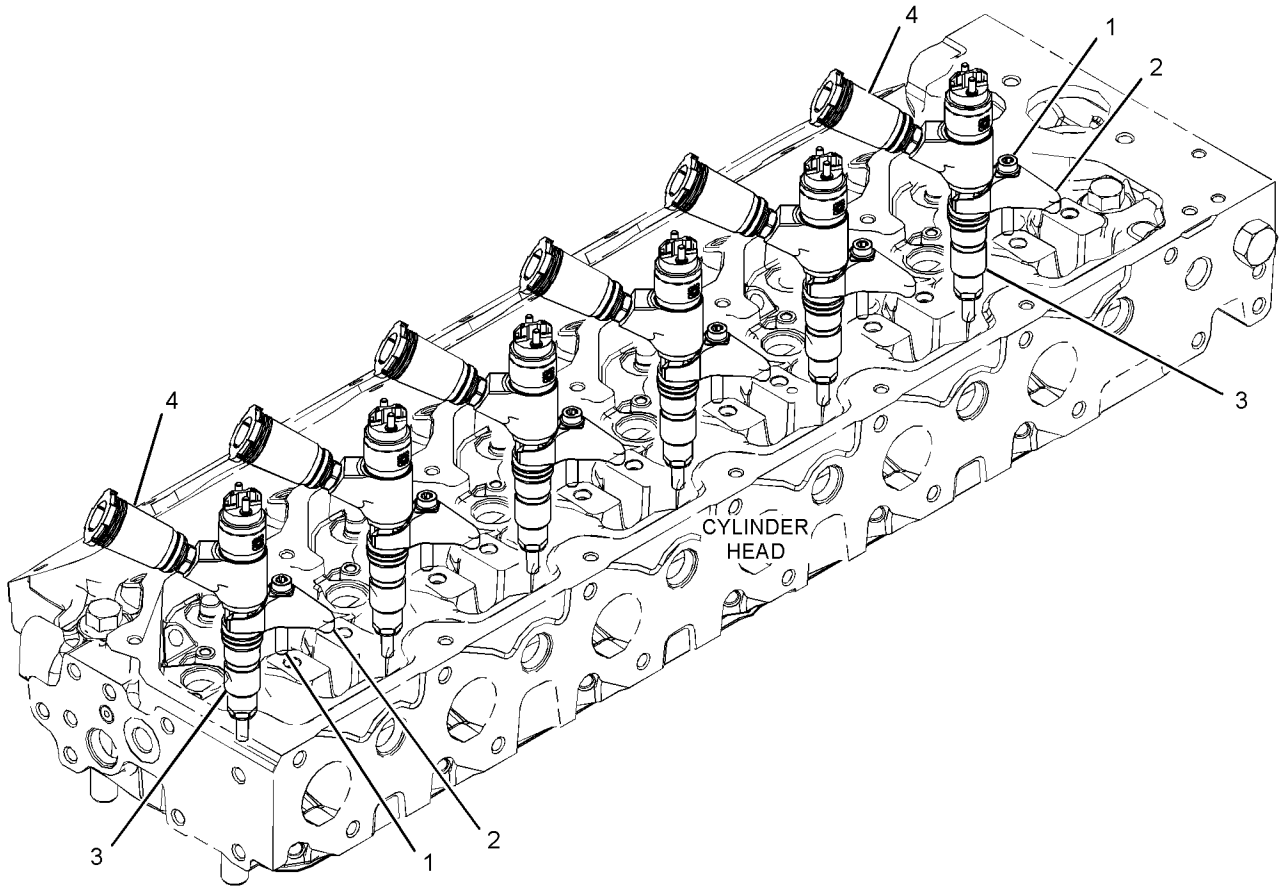

GRAPHIC #1 <END> g03378802

371-3974 INJECTOR GP-FUEL*R

PART OF 371-2483 INJECTOR GP-FUEL

SMCS-1251, 1254, 1290, 1713 **i07426452**

NOTE	REF NO	GRAPHIC REF	PART NUMBER	QTY	PART NAME 1 2 3 4 5 6 (PRODUCT LEVEL)	SEE PAGE
	1	1	**376-6403**	1	WASHER-SEALING	
	2	1	**376-6405**	1	SEAL-O-RING	

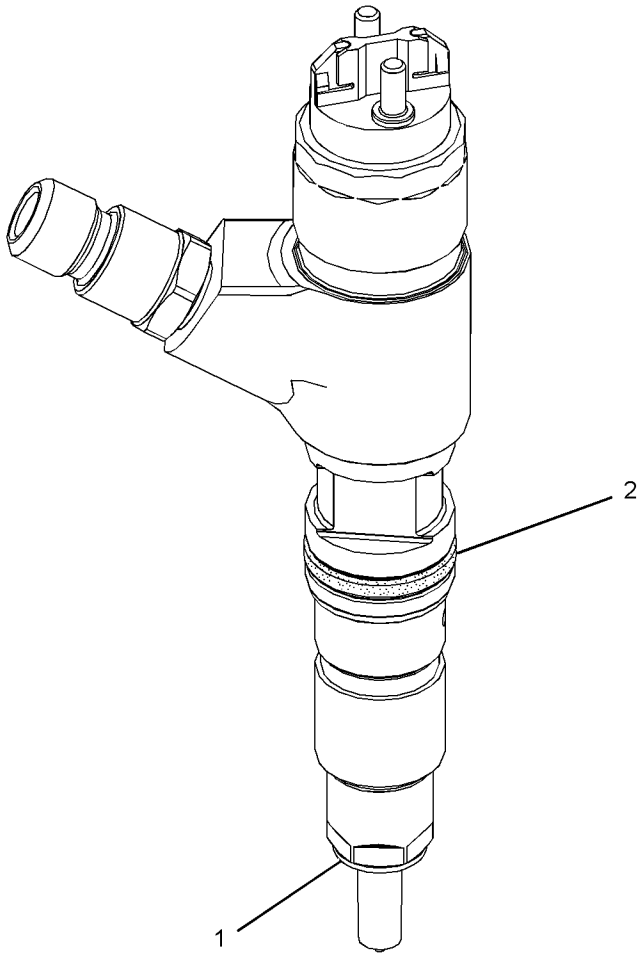

GRAPHIC #1 <END> g03110876

396-9626 INJECTOR GP-FUEL*R

PART OF 416-8908 INJECTOR GP-FUEL

SMCS-1251, 1254, 1290, 1713

i07487385

NOTE	PART NUMBER	QTY	PART NAME 1 2 3 4 5 6 (PRODUCT LEVEL)	SEE PAGE
	376-6403	1	WASHER-SEALING	
	376-6405	1	SEAL-O-RING	

<END>

416-8908 INJECTOR GP-FUEL

PART OF 451-8343, 461-4656, 461-4658, 466-1161, 466-1162, 466-1163, 468-0461, 468-8218, 470-8667, 470-8814, 474-7299, 475-9060, 478-4257, 479-9398, 480-2181, 481-0811, 484-2939, 485-8027, 486-2644, 486-4250, 488-6687, 489-9006, 491-2606, 491-4980, 491-4993, 491-7124, 492-3169, 493-1019, 494-6807, 495-8349, 499-7181, 501-2466, 502-9462, 504-3629, 504-8134, 504-9579, 506-5035, 506-9918, 507-8016, 510-1088, 513-0851, 513-8513, 514-9367, 515-9203, 519-4128, 520-3152, 524-8271, 525-8759, 526-0511, 526-7210, 526-8888, 527-7106, 528-3358, 528-9866, 528-9920, 530-1323, 530-2601, 531-2492, 533-2797, 533-3588, 535-8060, 536-6675, 539-6915, 539-8582, 543-4255, 552-3506, 552-8869, 553-1809, 553-3730, 562-8873, 563-6728, 563-6729, 563-6730, 565-1247, 569-7846, 575-2880, 583-8352, 591-1266, 591-9440, 593-7287, 593-7288, 594-2125, 596-4834, 596-7090, 596-8905, 597-9248, 598-9881, 602-8721, 603-5300, 608-9261, 609-9819, 613-9482, 614-5795, 614-9555, 622-6239, 623-1309, 624-0698, 627-8019, 633-4335, 645-2039, 657-2370 ENGINE AR-PRIMARY

SMCS-1251, 1254, 1290, 1713 **i06928330**

NOTE	REF NO	GRAPHIC REF	PART NUMBER	QTY	PART NAME 1 2 3 4 5 6 (PRODUCT LEVEL)	SEE PAGE
M	1	1	**278-5170**	6	BOLT (M7X1X45-MM)	
	2	1	**369-7799**	6	CLAMP-INJECTOR	
YR	3	1	**396-9626**	6	INJECTOR GP-FUEL	765
	4	1	**517-8243**	6	SLEEVE-INJECTOR	

M - METRIC PART
R - REMANUFACTURED PART MAY BE AVAILABLE
Y - SEPARATE ILLUSTRATION

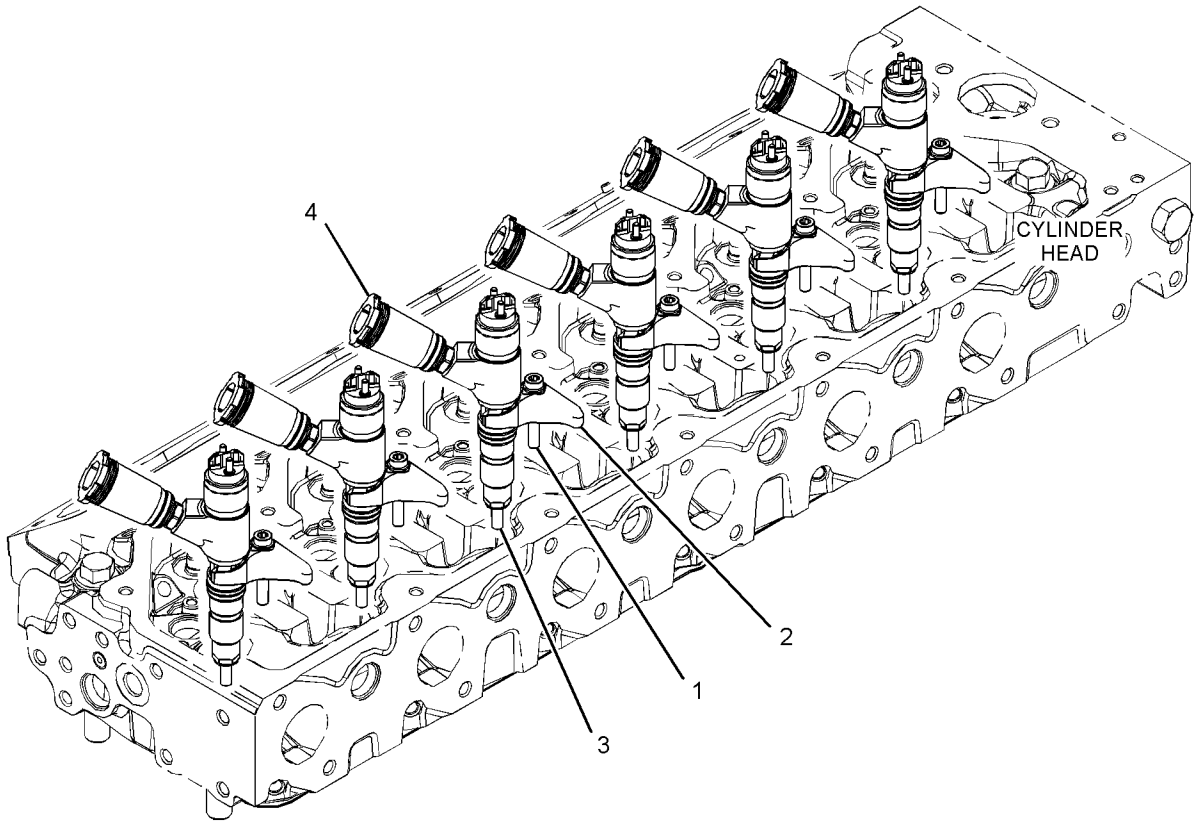

GRAPHIC #1 <END> g03535641

416-1069 LINES GP-FUEL

PART OF 398-7221 LINES GP-FUEL FILTER

SMCS-1274 **i08756780**

NOTE	REF NO	GRAPHIC REF	PART NUMBER	QTY	PART NAME 1 2 3 4 5 6 (PRODUCT LEVEL)	SEE PAGE
	1	1	**286-2890**	2	WASHER	
	2	1	**377-5988**	1	BOLT	
	3	1	**416-1065**	1	LINE AS-FUEL	
	4	1	**277-4993**	1	SEAL-O-RING	
	5	1	**349-6847**	2	CLIP	

416-1069 **LINES GP-FUEL (**contd.**)** **i08756780**

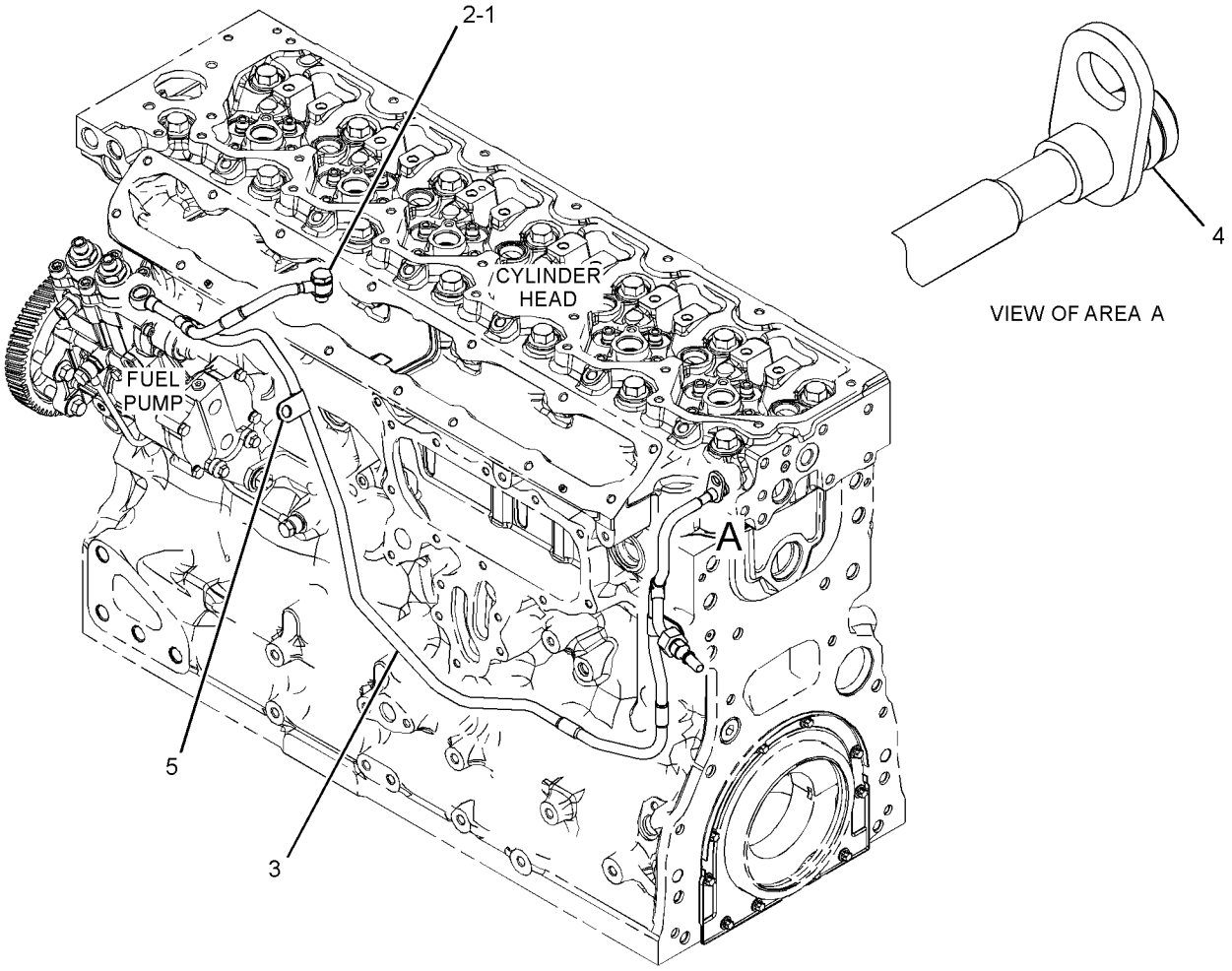

GRAPHIC #1 <END> g06764782

433-1316 LINES GP-FUEL

PART OF 478-8523, 478-8524 LINES GP-FUEL, 398-7221, 426-3312, 448-0935 LINES GP-FUEL FILTER, 426-3310 LINES GP-FUEL INJECTION

SMCS-1274 **i07961646**

NOTE	REF NO	GRAPHIC REF	PART NUMBER	QTY	PART NAME 1 2 3 4 5 6 (PRODUCT LEVEL)	SEE PAGE
	1	1	**246-4361**	2	WASHER (10.5X14X1.5-MM THK)	
	2	1	**385-1398**	1	CONNECTION-FUEL	
	3	1	**386-1864**	1	BOLT-BANJO	
	4	1	**247-4928**	2	WASHER (16.5X20.5X1.6-MM THK)	
					PARTS SHOWN IN GRAPHIC(S) WITHOUT A REFERENCE NUMBER ARE NOT SERVICED SEPARATELY	

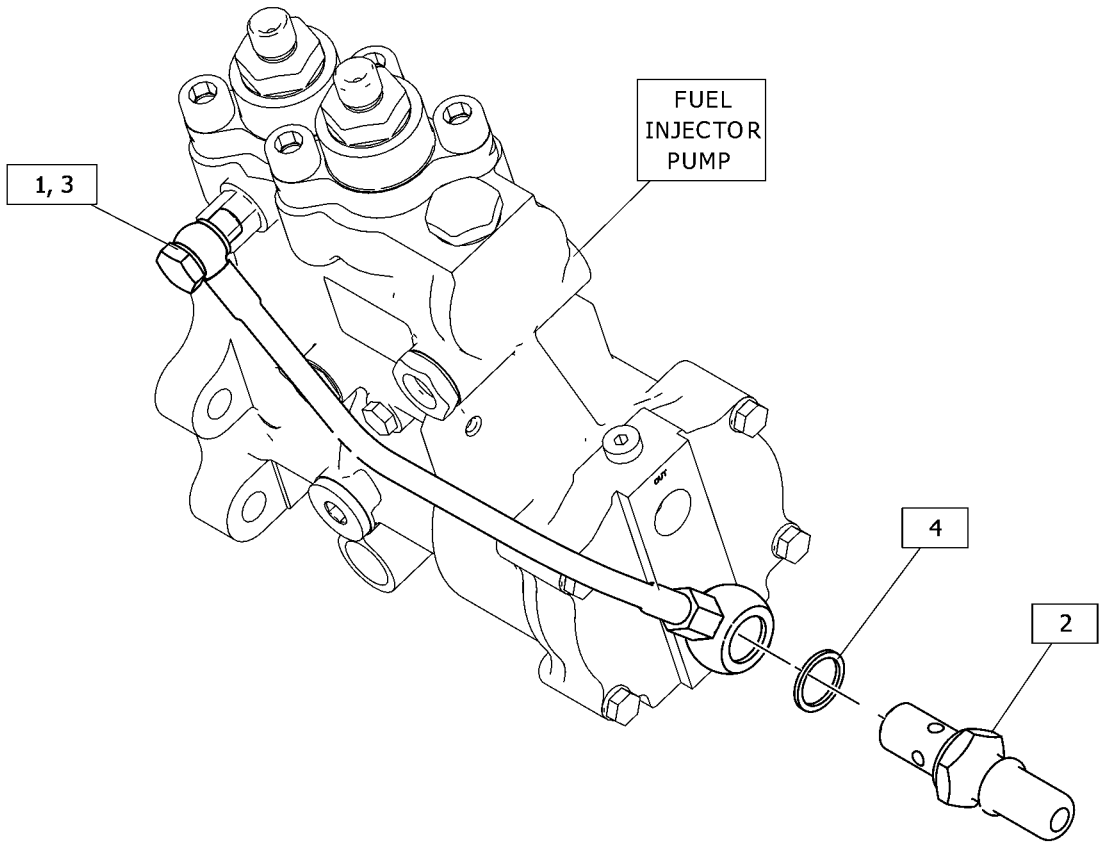

GRAPHIC #1 <END> g06494442

442-8465 LINES GP-FUEL

PART OF 426-3312 LINES GP-FUEL FILTER, 426-3310 LINES GP-FUEL INJECTION

SMCS-1274 **i07244818**

NOTE	REF NO	GRAPHIC REF	PART NUMBER	QTY	PART NAME 1 2 3 4 5 6 (PRODUCT LEVEL)	SEE PAGE
	1	1	**277-9938**	1	BOLT-SPECIAL (BANJO)	
	2	1	**286-2890**	2	WASHER	
	3	1	**295-4670**	1	BOLT-SPECIAL (BANJO)	
	4	1	**348-0495**	2	WASHER	

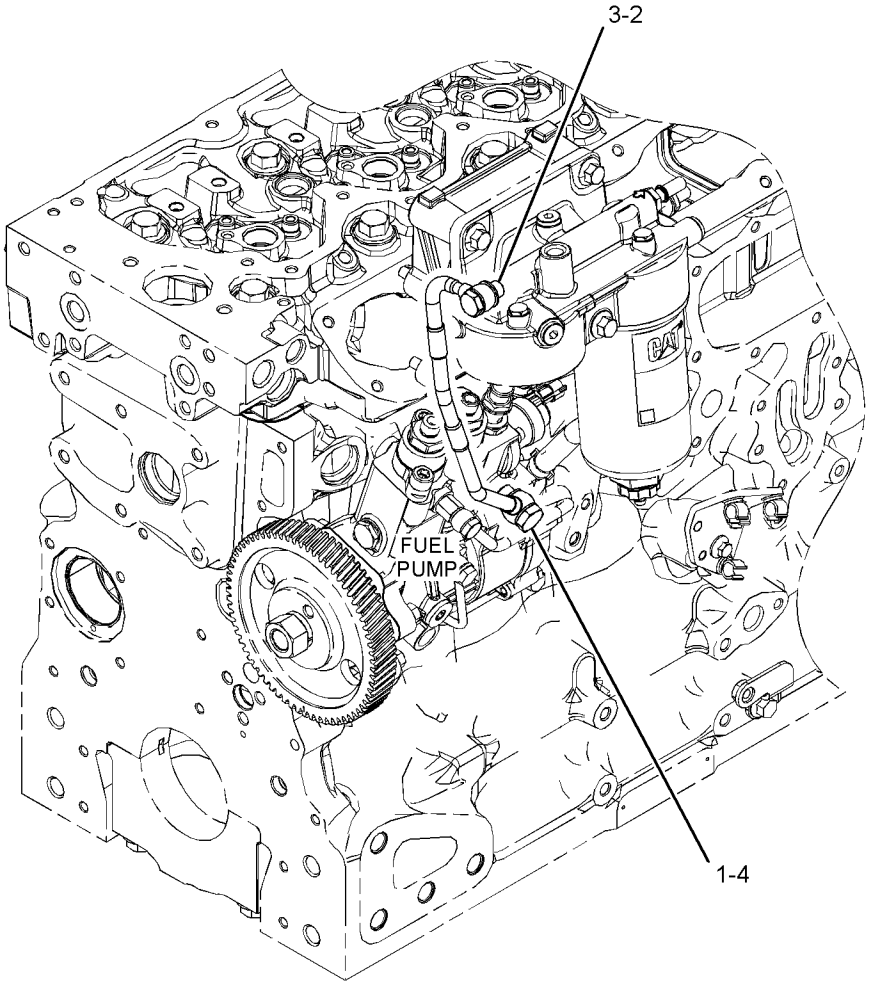

GRAPHIC #1 <END> g06263421

464-7891 LINES GP-FUEL

PART OF 426-3310 LINES GP-FUEL INJECTION

SMCS-1274 **i05981455**

NOTE	REF NO	GRAPHIC REF	PART NUMBER	QTY	PART NAME 1 2 3 4 5 6 (PRODUCT LEVEL)	SEE PAGE
	1	1	**286-2890**	2	WASHER	
	2	1	**295-4670**	1	BOLT-SPECIAL (BANJO)	

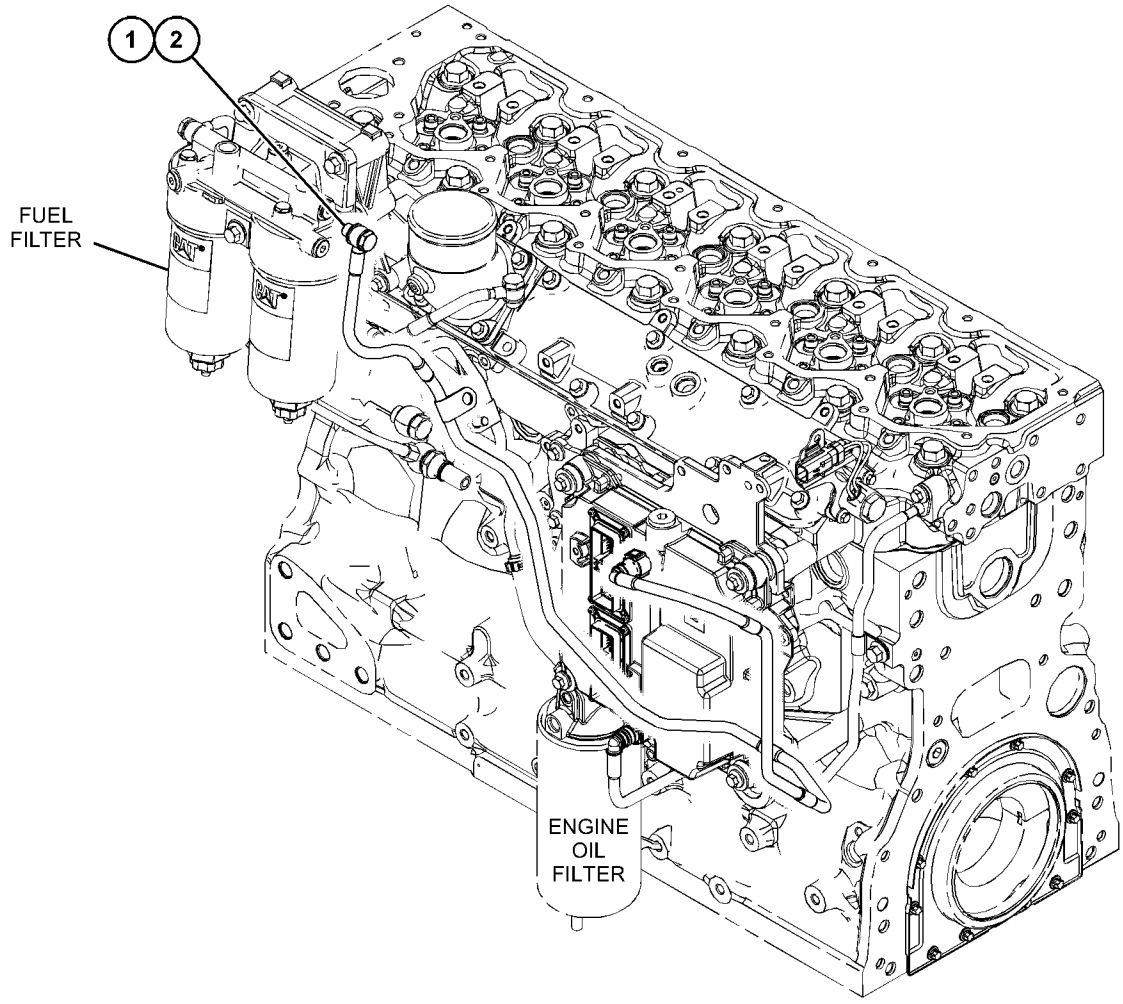

GRAPHIC #1 <END> g03805077

464-7899 LINES GP-FUEL

PART OF 478-8523 LINES GP-FUEL, 426-3312, 448-0935 LINES GP-FUEL FILTER, 426-3310 LINES GP-FUEL INJECTION

SMCS-1274 **i06022309**

NOTE	REF NO	GRAPHIC REF	PART NUMBER	QTY	PART NAME 1 2 3 4 5 6 (PRODUCT LEVEL)	SEE PAGE
	1	1	**349-6847**	2	CLIP	
	2	1	**377-5988**	1	BOLT	
	3	1	**286-2890**	2	WASHER	
M	4	1	**161-7614**	1	NUT (M16X1.5-THD)	
	5	1	**277-4993**	1	SEAL-O-RING	

M - METRIC PART

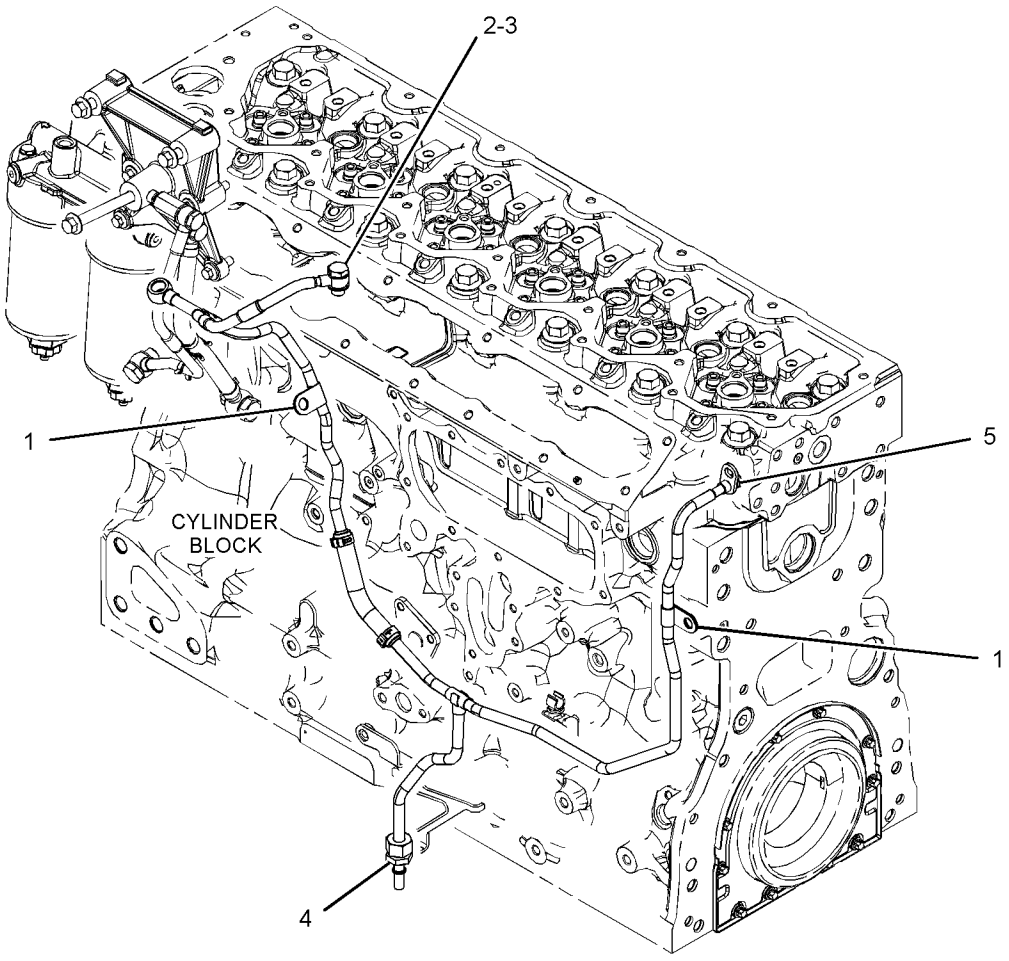

GRAPHIC #1 <END> g03384683

478-8523 LINES GP-FUEL

PART OF 478-4257, 481-0811, 515-9203, 608-9261 ENGINE AR-PRIMARY

SMCS-1274 **i07229092**

NOTE	REF NO	GRAPHIC REF	PART NUMBER	QTY	PART NAME 1 2 3 4 5 6 (PRODUCT LEVEL)	SEE PAGE
M	1	1	**6I-0654**	1	BOLT (M10X1.5X25-MM)	
M	2	1	**6I-4200**	2	BOLT-FLANGE HEAD (M10X1.5X16-MM)	
M	3	1	**100-4458**	1	BOLT (M8X1.25X14-MM)	
M	4	1	**103-5687**	1	BOLT (M10X1.5X85-MM)	
M	5	1	**124-3815**	1	BOLT (M8X1.25X16-MM)	
M	6	1	**113-7584**	2	BOLT (M10X1.5X110-MM)	
	7	1	*330-9723*	2	PLUG AS	
					(EACH INCLUDES)	
	7A	1	**228-7100**	1	SEAL-O-RING	
M	7B	1	**241-6157**	1	PLUG (M12X1.5-THD)	
	8	1	**348-0495**	1	WASHER	
	9	1	**356-3986**	4	CONNECTOR AS	
					(EACH INCLUDES)	
	9A	1	**277-4993**	1	SEAL-O-RING	
	10	1	*535-8994*	1	BRACKET AS	
M	10A	1	**159-9541**	3	NUT-WELD (M10X1.5-THD)	
	11	1	**379-8434**	1	LINE AS-FUEL	
	11A	1	**355-0632**	1	CONNECTOR-SPECIAL (204-CM)	
	12	1	**387-3577**	1	SUPPORT GP-LINES	
	12A	1	**366-9373**	4	CLIP	
	13	1	**389-3789**	1	LINES GP-FUEL	
	13A	1	**247-4928**	2	WASHER (16.5X20.5X1.6-MM THK)	
M	13B	1	**386-2737**	1	BOLT-BANJO (M16X1.5X27-MM)	
	13C	1	**389-3786**	1	LINE AS-FUEL	
	14	1	**389-5775**	1	BRACKET	
	15	1	**390-0755**	1	BRACKET AS	
	16	1	**391-1817**	1	SUPPORT GP-LINES	
	16A	1	**366-9373**	2	CLIP	
	17	1	**391-2493**	1	CONNECTION-FUEL	
Y	18	1	**433-1316**	1	LINES GP-FUEL	769
Y	19	1	**464-7899**	1	LINES GP-FUEL	772
M	20	1	**6I-0217**	1	BOLT (M8X1.25X20-MM)	
M	21	1	**6I-0260**	1	BOLT (M8X1.25X25-MM)	
	22	1	**311-2732**	3	TIE-CABLE	

M - METRIC PART
Y - SEPARATE ILLUSTRATION

478-8523 **LINES GP-FUEL (**contd.**)** **i07229092**

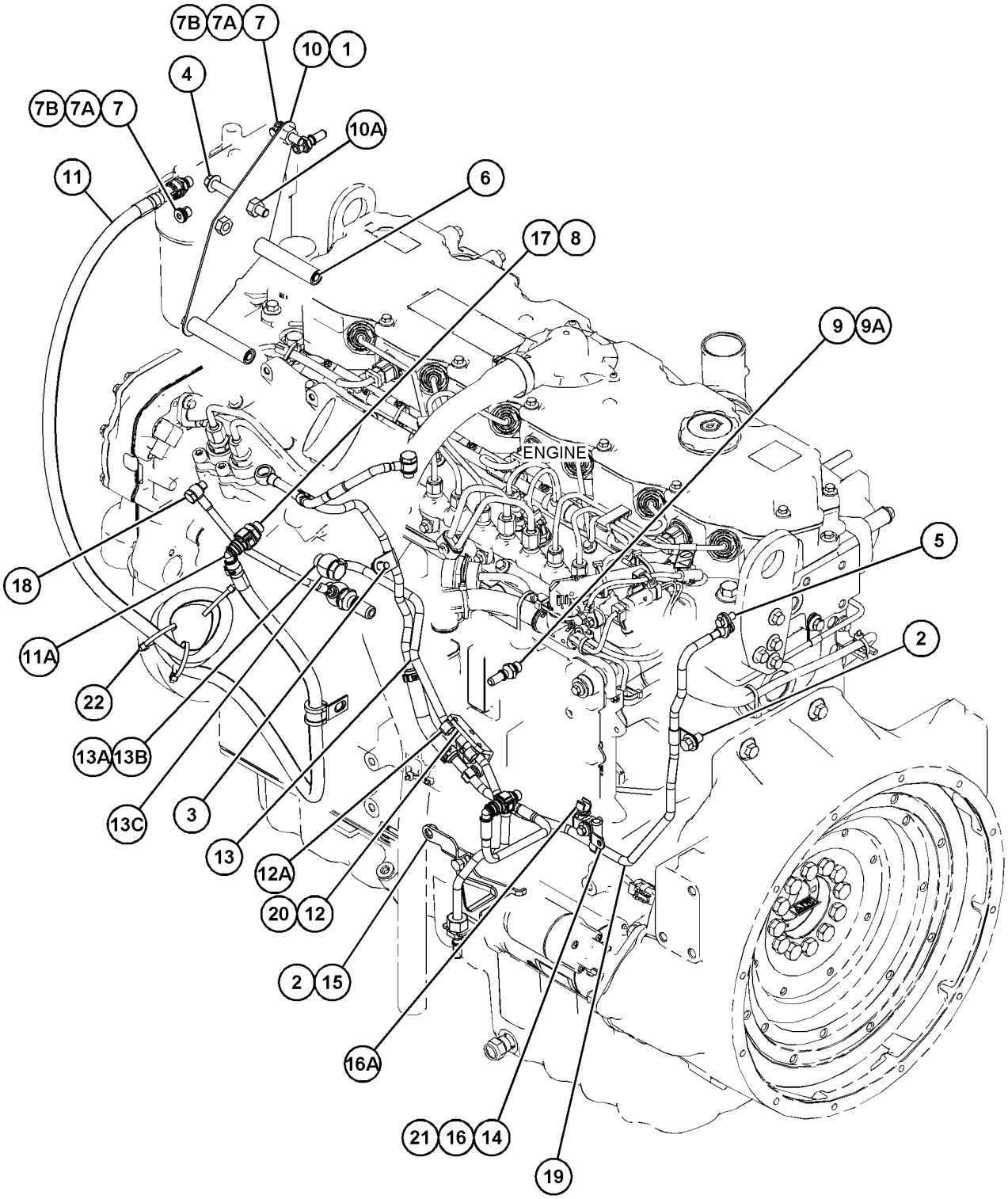

GRAPHIC #1 <END> g06211543

478-8524 LINES GP-FUEL

PART OF 506-9918, 528-9920 ENGINE AR-PRIMARY

SMCS-1274 **i07176444**

NOTE	REF NO	GRAPHIC REF	PART NUMBER	QTY	PART NAME 1 2 3 4 5 6 (PRODUCT LEVEL)	SEE PAGE
M	1	1	**6I-0654**	1	BOLT (M10X1.5X25-MM)	
M	2	1	**6I-4200**	2	BOLT-FLANGE HEAD (M10X1.5X16-MM)	
M	3	1	**100-4458**	1	BOLT (M8X1.25X14-MM)	
M	4	1	**103-5687**	1	BOLT (M10X1.5X85-MM)	
M	5	1	**124-3815**	1	BOLT (M8X1.25X16-MM)	
M	6	1	**113-7584**	2	BOLT (M10X1.5X110-MM)	
	7	1	*330-9723*	2	PLUG AS	
					(EACH INCLUDES)	
		1	**228-7100**	1	SEAL-O-RING	
M		1	**241-6157**	1	PLUG (M12X1.5-THD)	
	8	1	**348-0495**	1	WASHER	
	9	1	**356-3986**	4	CONNECTOR AS	
					(EACH INCLUDES)	
		1	**277-4993**	1	SEAL-O-RING	
	10	1	*535-8994*	1	BRACKET AS	
M		1	**159-9541**	3	NUT-WELD (M10X1.5-THD)	
	11	1	**387-3577**	1	SUPPORT GP-LINES	
		1	**366-9373**	4	CLIP	
	12	1	**389-3789**	1	LINES GP-FUEL	
		1	**247-4928**	2	WASHER (16.5X20.5X1.6-MM THK)	
M		1	**386-2737**	1	BOLT-BANJO (M16X1.5X27-MM)	
	13	1	**389-5775**	1	BRACKET	
	14	1	**391-1817**	1	SUPPORT GP-LINES	
		1	**366-9373**	2	CLIP	
	15	1	**391-2493**	1	CONNECTION-FUEL	
	16	1	**416-1069**	1	LINES GP-FUEL	
		1	**277-4993**	1	SEAL-O-RING	
		1	**286-2890**	2	WASHER	
		1	**377-5988**	1	BOLT	
	17	1	**432-8723**	1	BRACKET AS	
Y	18	1	**433-1316**	1	LINES GP-FUEL	769
	19	1	**443-2487**	1	LINE AS-FUEL	
E		1	**347-8645**		HOSE (100-CM)	
		1	**359-7115**	1	CONNECTOR-FUEL	
M	20	1	**6I-0217**	1	BOLT (M8X1.25X20-MM)	
M	21	1	**6I-0260**	1	BOLT (M8X1.25X25-MM)	

E - ORDER BY THE CENTIMETER
M - METRIC PART
Y - SEPARATE ILLUSTRATION

478-8524 **LINES GP-FUEL (**contd.**)** **i07176444**

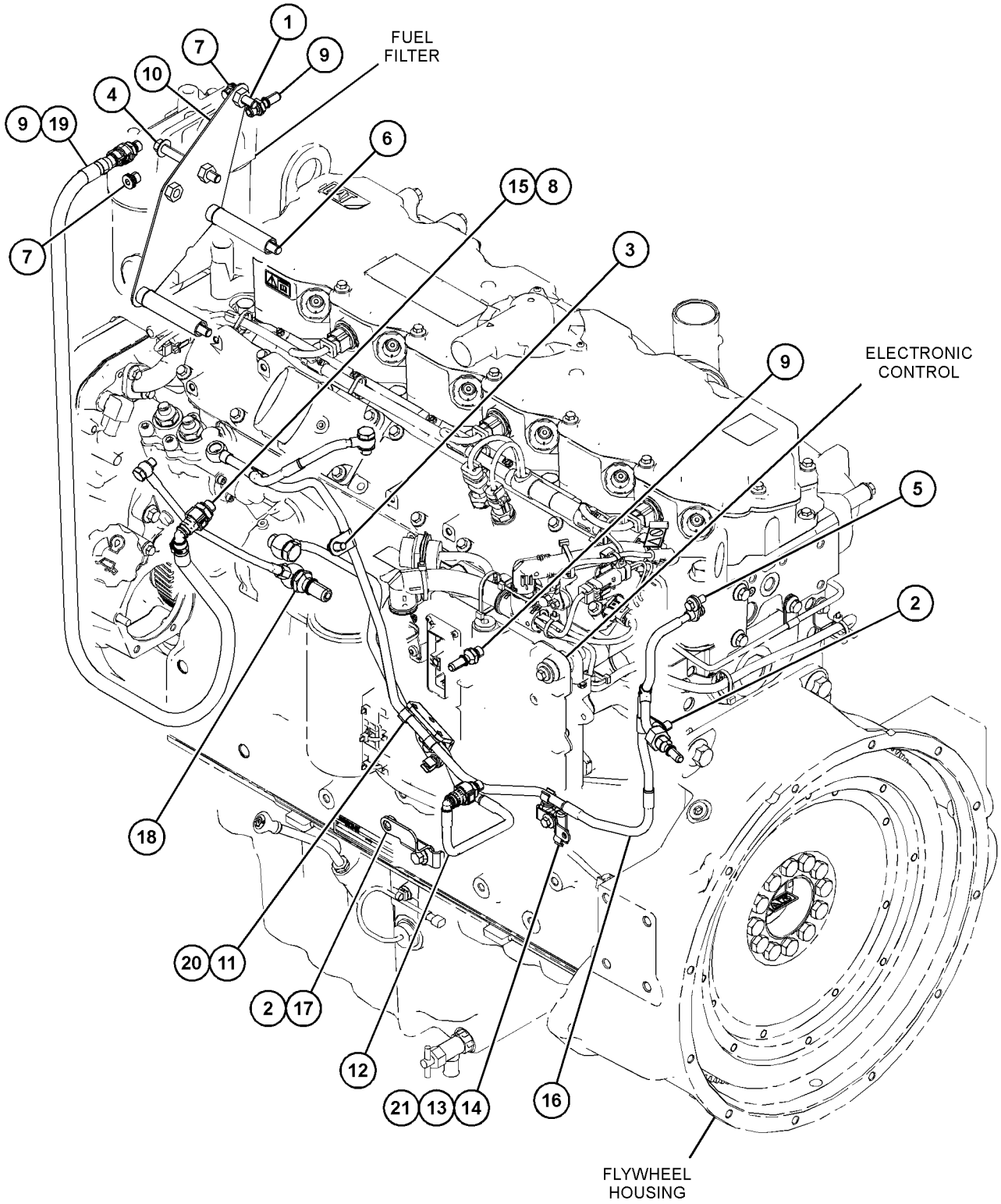

GRAPHIC #1 <END> g06190591

484-7200 LINES GP-FUEL

PART OF 426-3312 LINES GP-FUEL FILTER

SMCS-1274 **i08785943**

NOTE	REF NO	GRAPHIC REF	PART NUMBER	QTY	PART NAME 1 2 3 4 5 6 (PRODUCT LEVEL)	SEE PAGE
	1	1	**247-4928**	2	WASHER (16.5X20.5X1.6-MM THK)	
	2	1	**286-2890**	2	WASHER	
	3	1	**295-4670**	1	BOLT-SPECIAL (BANJO)	
M	4	1	**386-2737**	1	BOLT-BANJO (M16X1.5X27-MM)	
	5	1	*624-8991*	1	LINE AS-FUEL	
E	5A	1	**541-7104**		HOSE (29-CM)	
					PARTS SHOWN IN GRAPHIC(S) WITHOUT A REFERENCE NUMBER ARE NOT SERVICED SEPARATELY	

E - ORDER BY THE CENTIMETER
M - METRIC PART

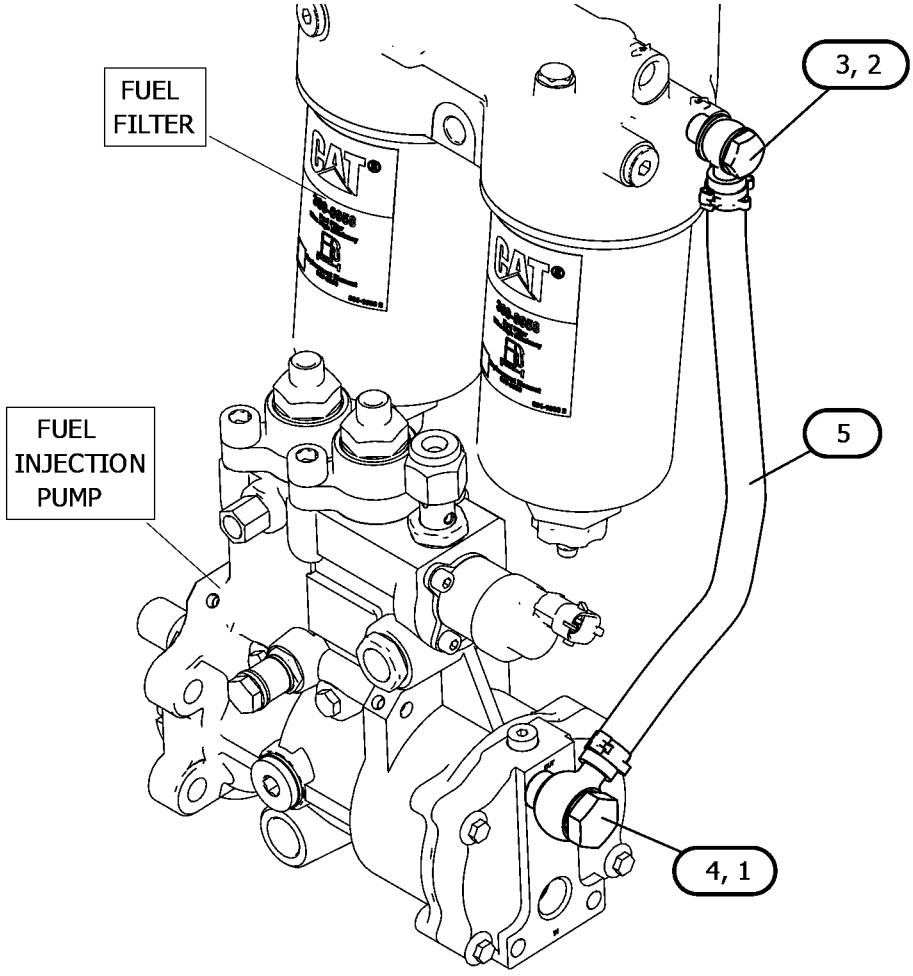

GRAPHIC #1 <END> g06791385

398-7221 LINES GP-FUEL FILTER

PART OF 470-8667, 499-7181, 520-4644, 525-8759, 526-7210, 527-7106, 528-3358, 533-3588, 594-2125, 596-4834, 596-7090 ENGINE AR-PRIMARY

SMCS-1261, 1274 **i08756778**

NOTE	REF NO	GRAPHIC REF	PART NUMBER	QTY	PART NAME 1 2 3 4 5 6 (PRODUCT LEVEL)	SEE PAGE
	1	2	**348-0495**	1	WASHER	
	2	2	**387-3577**	1	SUPPORT GP-LINES	
	2A	2	**366-9373**	4	CLIP	
	3	2	**391-1817**	1	SUPPORT GP-LINES	
	3A	2	**366-9373**	2	CLIP	
	4	1	*330-9723*	2	PLUG AS	
					(EACH INCLUDES)	
		1	**228-7100**	1	SEAL-O-RING	
M		1	**241-6157**	1	PLUG (M12X1.5-THD)	
	5	2	**389-3789**	1	LINES GP-FUEL	
M	5A	2	**386-2737**	1	BOLT-BANJO (M16X1.5X27-MM)	
	5B	2	**247-4928**	2	WASHER (16.5X20.5X1.6-MM THK)	
	5C	2	**457-9534**	1	COUPLER-QUICK DISCONNECT	
Y	6	2	**416-1069**	1	LINES GP-FUEL	767
Y	7	1	**433-1316**	1	LINES GP-FUEL	769
	8	2	**443-2487**	1	LINE AS-FUEL	
E	8A	2	**541-7104**		HOSE (100-CM)	
	8B	2	**359-7115**	1	CONNECTOR-FUEL	
	8C	2	**355-0632**	1	CONNECTOR-SPECIAL	
	9	1,2	**356-3986**	4	CONNECTOR AS	
					(EACH INCLUDES)	
		1,2	**277-4993**	1	SEAL-O-RING	
	10	2	**391-2493**	1	CONNECTION-FUEL	
	11	1	**311-2732**	3	TIE-CABLE	
	12	1	**448-2191**	1	BRACKET AS (FILTER)	
	13	1	**432-8723**	1	BRACKET AS	
	14	2	**389-5775**	1	BRACKET	
M	15	1	**6I-0654**	2	BOLT (M10X1.5X25-MM)	
M	16	1,2	**6I-4200**	2	BOLT-FLANGE HEAD (M10X1.5X16-MM)	
M	17	1,2	**100-4458**	4	BOLT (M8X1.25X14-MM)	
M	18	2	**124-3815**	1	BOLT (M8X1.25X16-MM)	
M	19	2	**6I-0217**	1	BOLT (M8X1.25X20-MM)	
M	20	2	**6I-0260**	1	BOLT (M8X1.25X25-MM)	

E - ORDER BY THE CENTIMETER
M - METRIC PART
Y - SEPARATE ILLUSTRATION

398-7221 **LINES GP-FUEL FILTER (**contd.**)** **i08756778**

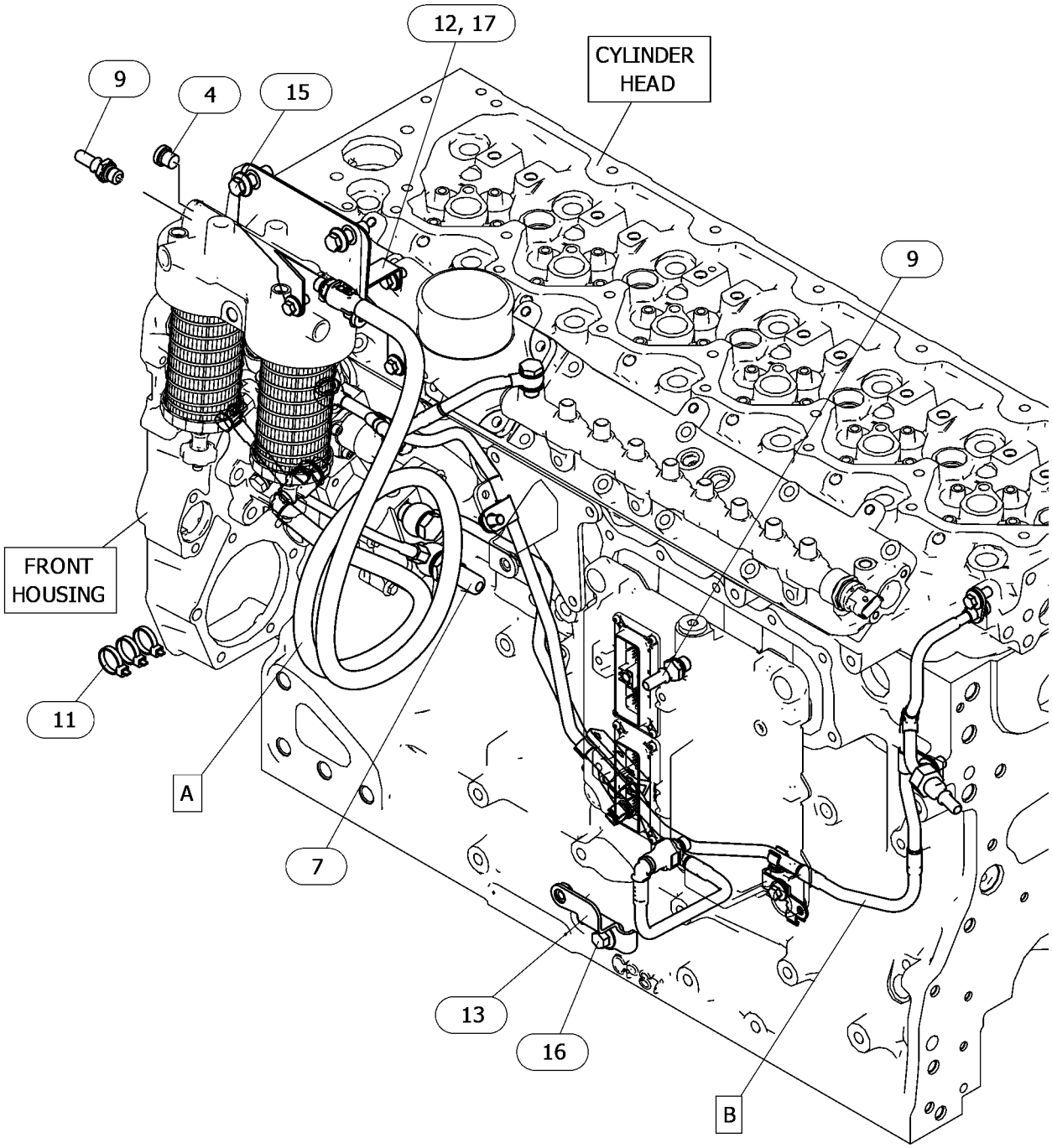

GRAPHIC #1 g06768448

398-7221 **LINES GP-FUEL FILTER (**contd.**)** **i08756778**

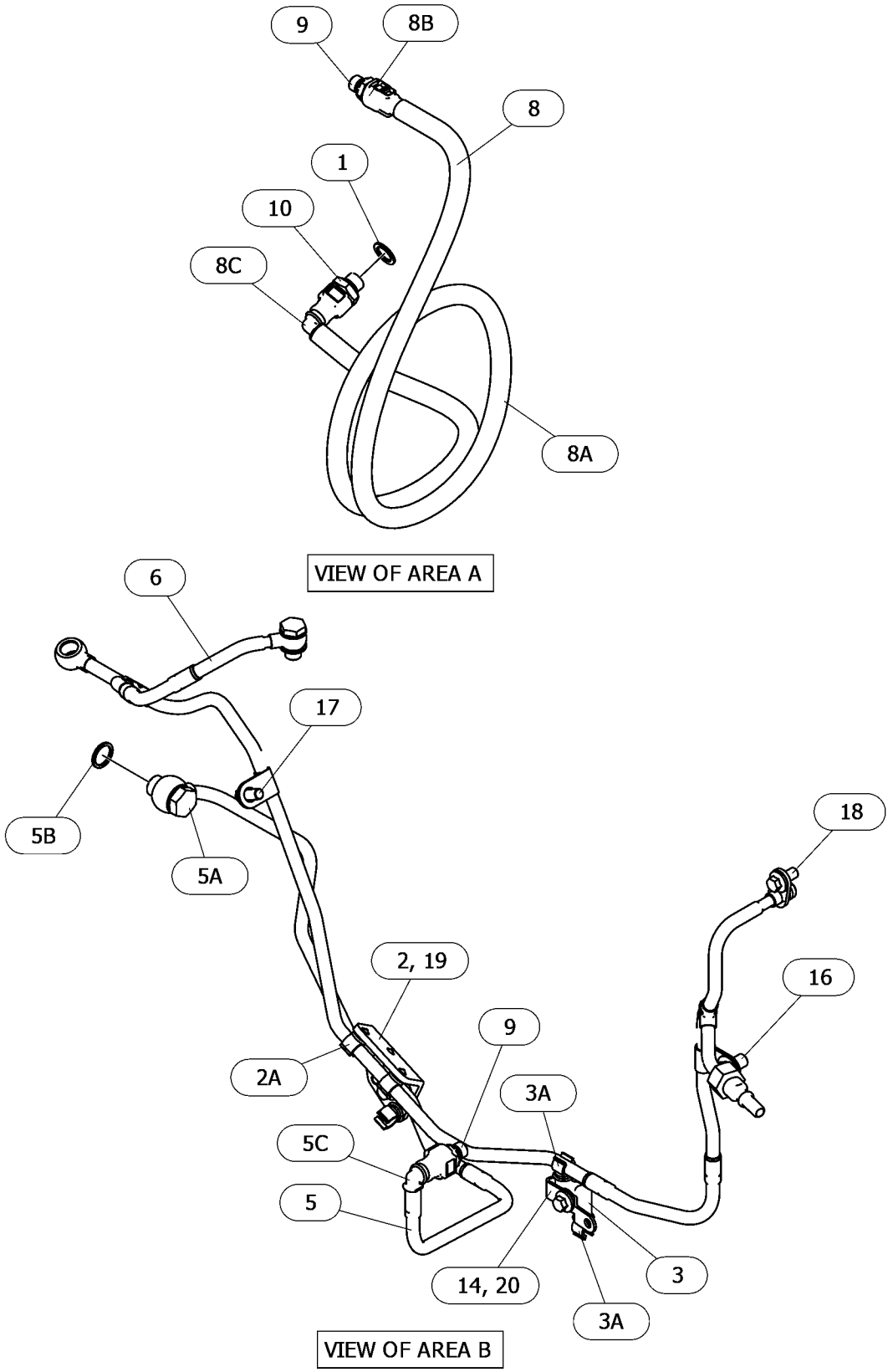

GRAPHIC #2 <END> g06768448_01

426-3312 LINES GP-FUEL FILTER

PART OF 470-8814, 494-2073, 563-6728, 563-6729, 563-6730, 565-1247, 575-2879, 575-2880, 645-2039 ENGINE AR-PRIMARY

SMCS-1261, 1274 **i07176730**

NOTE	REF NO	GRAPHIC REF	PART NUMBER	QTY	PART NAME 1 2 3 4 5 6 (PRODUCT LEVEL)	SEE PAGE
M	1	1	**6I-0593**	2	BOLT (M10X1.5X30-MM)	
M	2	1	**6I-4200**	2	BOLT-FLANGE HEAD (M10X1.5X16-MM)	
M	3	1	**100-4458**	1	BOLT (M8X1.25X14-MM)	
M	4	1	**164-7468**	1	BOLT (M10X1.5X95-MM)	
	5	1	**442-8569**	1	CLIP-PIPE	
M	6	1	**208-9287**	2	BOLT-FLANGE HEAD (M8X1.25X50-MM)	
Y	7	1	**442-8465**	1	LINES GP-FUEL	770
	8	1	**389-5775**	1	BRACKET	
	9	1	**389-5784**	1	BRACKET-FILTER	
	10	1	**390-0755**	1	BRACKET AS	
	11	1	**390-8738**	1	SUPPORT GP-LINES	
	12	1	**391-1817**	1	SUPPORT GP-LINES	
Y	13	1	**484-7200**	1	LINES GP-FUEL	777
CY	14	1	**464-7899**	1	LINES GP-FUEL	772
Y	15	1	**433-1316**	1	LINES GP-FUEL	769
M	16	1	**6I-0217**	1	BOLT (M8X1.25X20-MM)	
M	17	1	**6I-0260**	3	BOLT (M8X1.25X25-MM)	
	18	1	*330-9723*	2	PLUG AS	
					(EACH INCLUDES)	
		1	**228-7100**	1	SEAL-O-RING	
M		1	**241-6157**	1	PLUG (M12X1.5-THD)	
M	19	1	**124-3815**	1	BOLT (M8X1.25X16-MM)	

C - CHANGE FROM PREVIOUS TYPE
M - METRIC PART
Y - SEPARATE ILLUSTRATION

426-3312 **LINES GP-FUEL FILTER (**contd.**)** **i07176730**

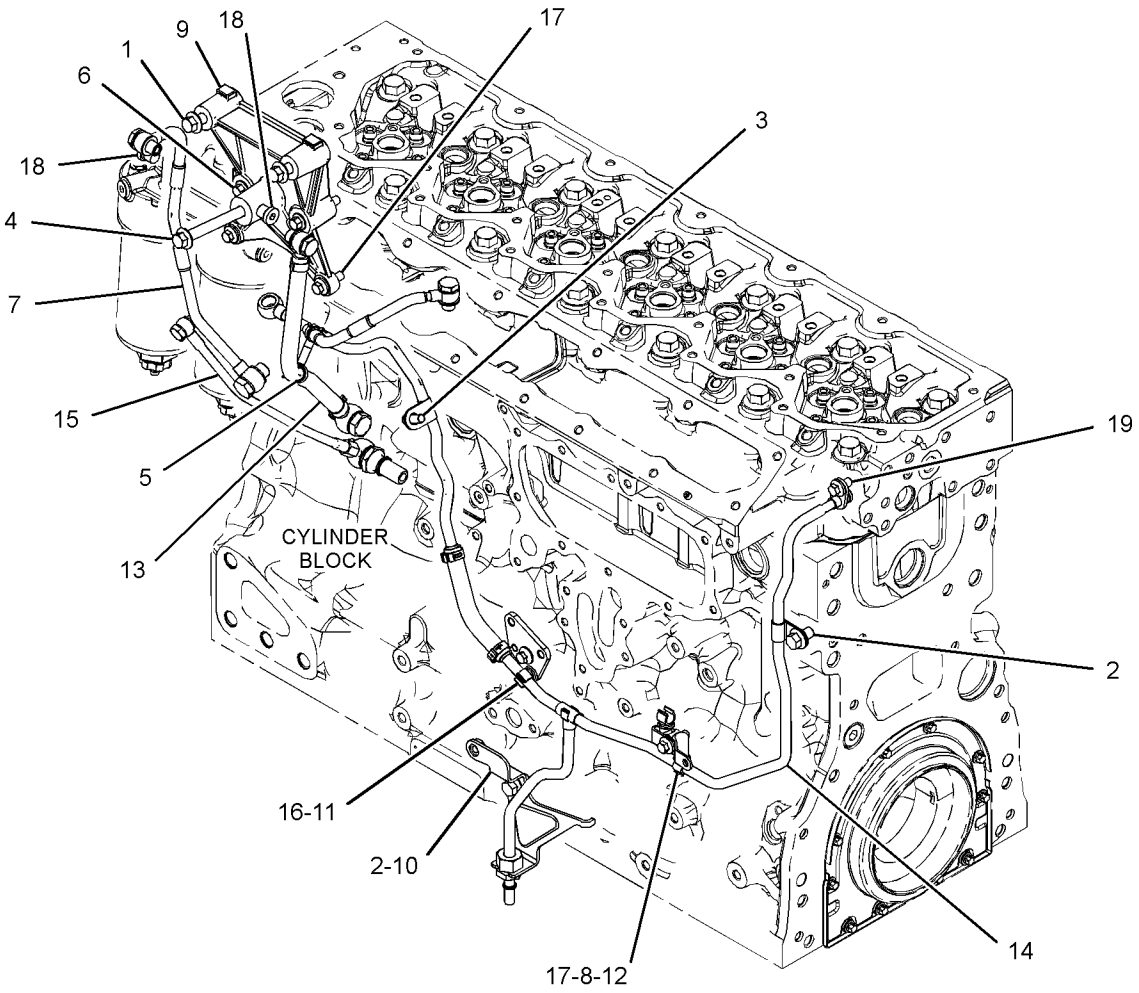

GRAPHIC #1 <END> g06242857

448-0935 LINES GP-FUEL FILTER

LINES

PART OF 451-8343, 468-0461, 474-7299, 475-8297, 475-9060, 486-2644, 488-6687, 489-9006, 495-8349, 504-3629, 506-5035, 508-0270, 512-9858, 514-9367, 519-4128, 520-3152, 526-0511, 526-8888, 527-9686, 530-1323, 539-8582, 553-1809, 553-3730, 555-4669, 596-8896, 596-8905, 597-9248, 609-9819, 613-9482 ENGINE AR-PRIMARY

SMCS-1261, 1274 **i06998697**

NOTE	REF NO	GRAPHIC REF	PART NUMBER	QTY	PART NAME 1 2 3 4 5 6 (PRODUCT LEVEL)	SEE PAGE
M	1	1	**6I-0654**	2	BOLT (M10X1.5X25-MM)	
M	2	1	**6I-4200**	2	BOLT-FLANGE HEAD (M10X1.5X16-MM)	
M	3	1	**100-4458**	4	BOLT (M8X1.25X14-MM)	
M	4	1	**124-3815**	1	BOLT (M8X1.25X16-MM)	
	5	1	**311-2732**	3	TIE-CABLE	
	6	1	**348-0495**	1	WASHER	
	7	1	**356-3986**	4	CONNECTOR AS	
					(EACH INCLUDES)	
	7A	1	**277-4993**	1	SEAL-O-RING	
	8	1	**379-8434**	1	LINE AS-FUEL	
E	8A	1	**347-8645**		HOSE (204-CM)	
	8B	1	**351-4318**	1	CLIP	
	9	1	**387-3577**	1	SUPPORT GP-LINES	
	10	1	*389-3789*	1	LINES GP-FUEL	
	10A	1	**247-4928**	2	WASHER (16.5X20.5X1.6-MM THK)	
M	10B	1	**386-2737**	1	BOLT-BANJO (M16X1.5X27-MM)	
	10C	1	**457-9534**	1	COUPLER-QUICK DISCONNECT	
	11	1	**389-5775**	1	BRACKET	
	12	1	**390-0755**	1	BRACKET AS	
	13	1	**391-1817**	1	SUPPORT GP-LINES	
	13A	1	**366-9373**	2	CLIP	
	14	1	**391-2493**	1	CONNECTION-FUEL	
Y	15	1	**464-7899**	1	LINES GP-FUEL	772
Y	16	1	**433-1316**	1	LINES GP-FUEL	769
	17	1	*448-2191*	1	BRACKET AS	
M	17A	1	**322-0819**	2	INSERT-THREADED (M10X1.5-THD)	
M	18	1	**6I-0217**	1	BOLT (M8X1.25X20-MM)	
M	19	1	**6I-0260**	1	BOLT (M8X1.25X25-MM)	
	20	1	*330-9723*	2	PLUG AS	
					(EACH INCLUDES)	
	20A	1	**228-7100**	1	SEAL-O-RING	
M	20B	1	**241-6157**	1	PLUG (M12X1.5-THD)	

E - ORDER BY THE CENTIMETER
M - METRIC PART
Y - SEPARATE ILLUSTRATION

448-0935 **LINES GP-FUEL FILTER (**contd.**)** **i06998697**

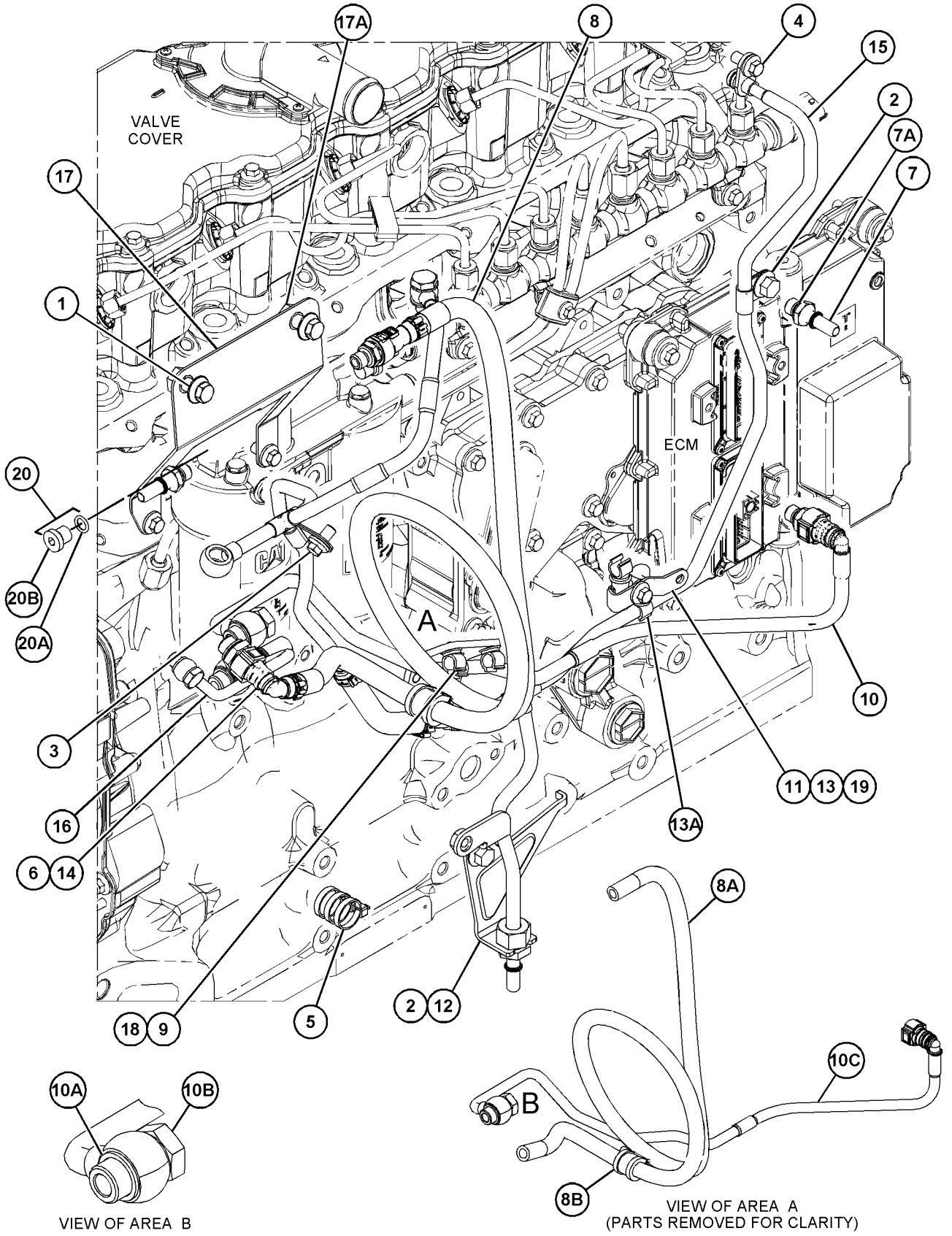

GRAPHIC #1 <END> g06213615

370-5520 LINES GP-FUEL INJECTION

PART OF 394-9639 RAIL GP-FUEL

SMCS-1252, 1254 **i07175079**

NOTE	REF NO	GRAPHIC REF	PART NUMBER	QTY	PART NAME 1 2 3 4 5 6 (PRODUCT LEVEL)	SEE PAGE
	1	1	**395-1633**	1	BRACKET AS	
M		1	**6I-0631**	1	BOLT (M6X1X12-MM)	
	2	1	**370-5516**	1	LINE AS-FUEL INJECTION	
	3	1	**370-5517**	1	LINE AS-FUEL INJECTION	
	4	1	**370-5518**	1	LINE AS-FUEL INJECTION	

M - METRIC PART

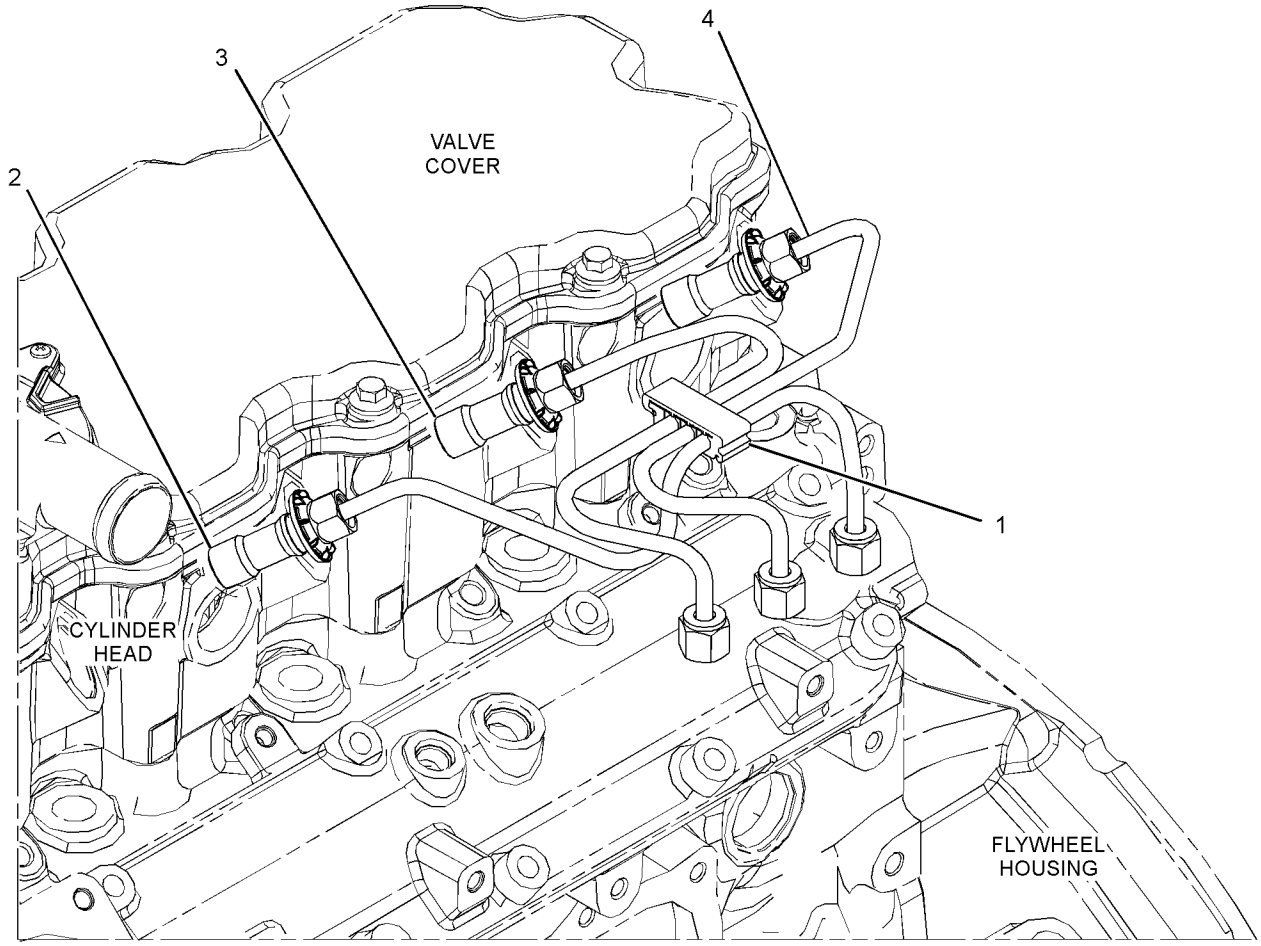

GRAPHIC #1 <END> g03380791

394-0525 LINES GP-FUEL INJECTION

PART OF 394-9639 RAIL GP-FUEL

SMCS-1252, 1254 **i07076162**

NOTE	REF NO	GRAPHIC REF	PART NUMBER	QTY	PART NAME 1 2 3 4 5 6 (PRODUCT LEVEL)	SEE PAGE
	1	1	**395-1633**	1	BRACKET AS	
M	1A	1	**6I-0631**	1	BOLT (M6X1X12-MM)	
	2	1	**370-5513**	1	LINE AS-FUEL	
	3	1	**393-5467**	1	LINE AS-FUEL	
	4	1	**393-5468**	1	LINE AS-FUEL	

M - METRIC PART

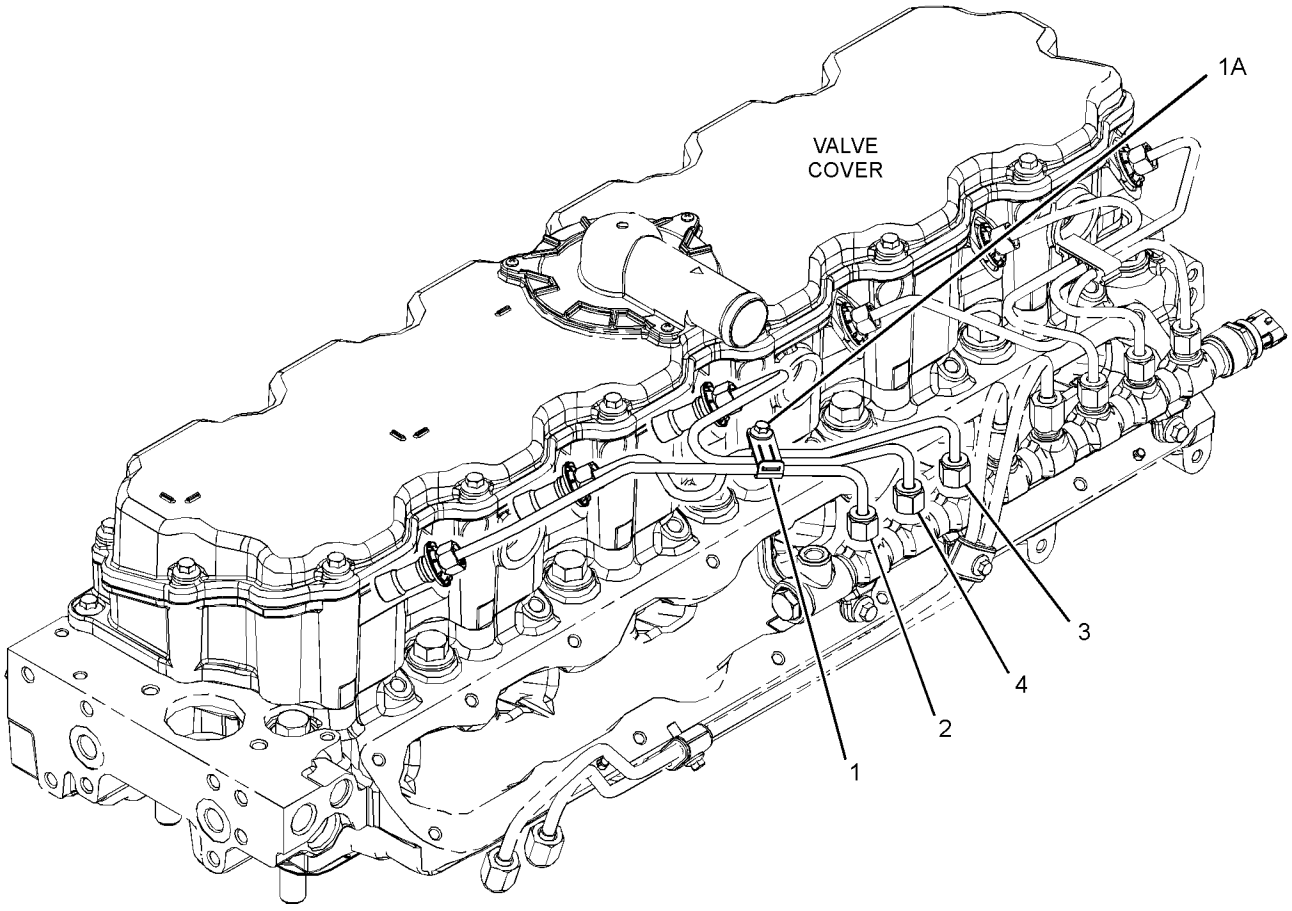

GRAPHIC #1 <END> g03479680

426-3310 LINES GP-FUEL INJECTION

PART OF 596-2071 ENGINE AR-COMPLETE, 461-4638, 461-4649, 461-4656, 461-4658, 466-1160, 466-1161, 466-1162, 466-1163, 468-8218, 471-0541, 479-9398, 480-2181, 482-0212, 484-2939, 485-8027, 486-4250, 491-2606, 491-4973, 491-4980, 491-4993, 491-7124, 492-3021, 492-3072, 492-3169, 493-1019, 493-1038, 494-6807, 501-2466, 502-9462, 504-5365, 504-8134, 504-9579, 507-8016, 510-1088, 513-0851, 513-8513, 524-8271, 528-9866, 530-2601, 531-2492, 533-2797, 535-8060, 536-6675, 539-6915, 543-4255, 552-3506, 552-8869, 562-8873, 569-7846, 583-8352, 591-1266, 591-9440, 593-7287, 593-7288, 598-9881, 602-8721, 603-5300, 612-1735, 614-5795, 614-9555, 622-6239, 623-1309, 624-0698, 627-8019, 627-8054, 627-8129, 628-4345, 633-4335, 633-7776, 657-2370 ENGINE AR-PRIMARY

SMCS-1252, 1254 **i07165781**

NOTE	REF NO	GRAPHIC REF	PART NUMBER	QTY	PART NAME 1 2 3 4 5 6 (PRODUCT LEVEL)	SEE PAGE
M	1	1	**6I-0593**	2	BOLT (M10X1.5X30-MM)	
M	2	1	**6I-4200**	2	BOLT-FLANGE HEAD (M10X1.5X16-MM)	
M	3	1	**100-4458**	4	BOLT (M8X1.25X14-MM)	
M	4	1	**164-7468**	1	BOLT (M10X1.5X95-MM)	
	5	1	**356-3986**	2	CONNECTOR AS	
					(EACH INCLUDES)	
		1	**277-4993**	1	SEAL-O-RING	
	6	1	**387-3577**	1	SUPPORT GP-LINES	
	7	1	**389-3789**	1	LINES GP-FUEL	
	7A	1	**247-4928**	2	WASHER (16.5X20.5X1.6-MM THK)	
M	7B	1	**386-2737**	1	BOLT-BANJO (M16X1.5X27-MM)	
	7C	1	**457-9534**	1	COUPLER-QUICK DISCONNECT	
	8	1	**389-5775**	1	BRACKET	
	9	1	**389-5777**	1	SUPPORT GP-LINES	
	9A	1	**389-5776**	1	BRACKET	
	10	1	**389-5784**	1	BRACKET-FILTER	
	11	1	**390-0755**	1	BRACKET AS	
	12	1	**391-1817**	1	SUPPORT GP-LINES	
Y	13	1	**464-7891**	1	LINES GP-FUEL	771
Y	14	1	**464-7899**	1	LINES GP-FUEL	772
Y	15	1	**433-1316**	1	LINES GP-FUEL	769
Y	16	1	**442-8465**	1	LINES GP-FUEL	770
M	17	1	**6I-0217**	1	BOLT (M8X1.25X20-MM)	
M	18	1	**6I-0260**	3	BOLT (M8X1.25X25-MM)	
M	19	1	**208-9287**	2	BOLT-FLANGE HEAD (M8X1.25X50-MM)	
	20	1	*330-9723*	2	PLUG AS	
					(EACH INCLUDES)	
		1	**228-7100**	1	SEAL-O-RING	
M		1	**241-6157**	1	PLUG (M12X1.5-THD)	
M	21	1	**124-3815**	1	BOLT (M8X1.25X16-MM)	

M - METRIC PART
Y - SEPARATE ILLUSTRATION

426-3310 **LINES GP-FUEL INJECTION (**contd.**)** **i07165781**

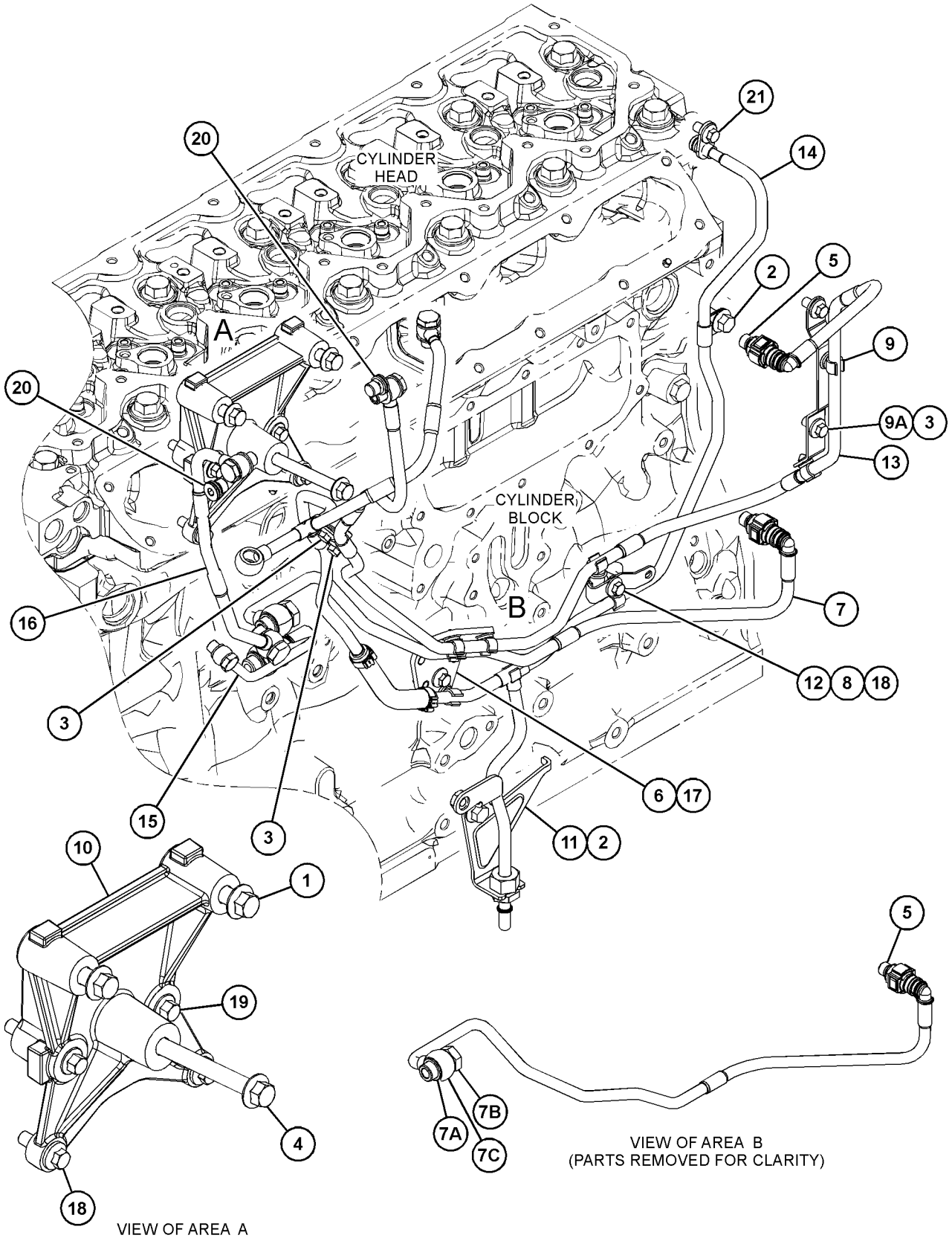

GRAPHIC #1 <END> g06248467

375-2647 PUMP GP-FUEL INJECTION*R

PART OF 391-4811 PUMP GP-FUEL INJECTION

SMCS-1251, 1290 **i08287659**

NOTE	REF NO	GRAPHIC REF	PART NUMBER	QTY	PART NAME 1 2 3 4 5 6 (PRODUCT LEVEL)	SEE PAGE
	1	1	**386-3819**	1	KEY-SHAFT	
	2	1	**375-8254**	1	VALVE	
	3	1	**376-6409**	1	SEAL	
	4	1	**376-6410**	1	RETAINER-WASHER	
	5	1	**376-6411**	1	NUT-SHAFT	
	6	1	**386-2971**	2	WASHER	
M	7	1	**454-5109**	1	BOLT-BANJO (M10X1X26-MM)	
M	8	1	**453-0790**	3	BOLT (M5X0.8X12-MM)	

M - METRIC PART

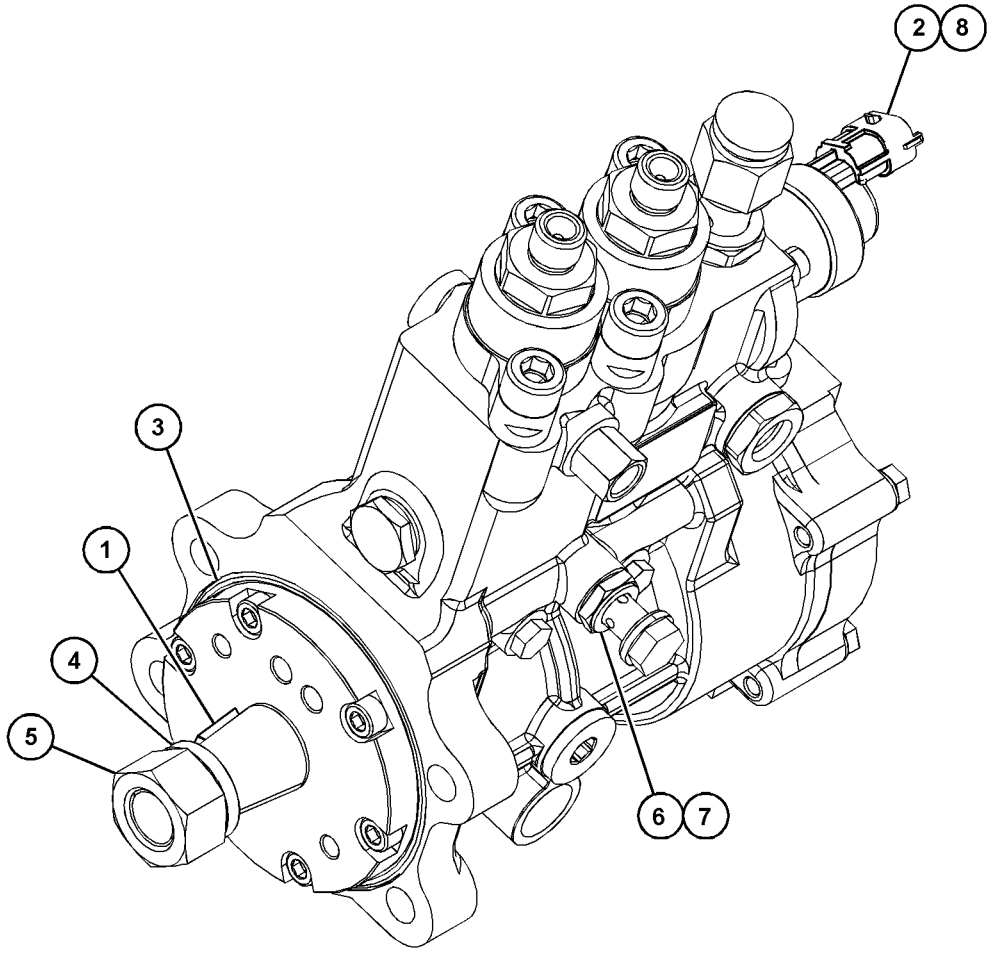

GRAPHIC #1 <END> g06572533

391-4811 PUMP GP-FUEL INJECTION

PART OF 596-2071 ENGINE AR-COMPLETE, 451-8343, 461-4638, 461-4649, 461-4656, 461-4658, 466-1160, 466-1161, 466-1162, 466-1163, 468-0461, 468-8218, 470-8667, 470-8814, 471-0541, 474-7299, 475-8297, 475-9060, 478-4257, 479-9398, 480-2181, 481-0811, 482-0212, 484-2939, 485-8027, 486-2644, 486-4250, 488-6687, 489-9006, 491-2606, 491-4973, 491-4980, 491-4993, 491-7124, 492-3021, 492-3072, 492-3169, 493-1019, 493-1038, 494-2073, 494-6807, 495-8349, 499-7181, 501-2466, 502-9462, 504-3629, 504-5365, 504-8134, 504-9579, 506-5035, 506-9918, 507-8016, 508-0270, 510-1088, 512-9858, 513-0851, 513-8513, 514-9367, 515-9203, 519-4128, 520-3152, 520-4644, 524-8271, 525-8759, 526-0511, 526-7210, 526-8888, 527-7106, 527-9686, 528-3358, 528-9866, 528-9920, 530-1323, 530-2601, 531-2492, 533-2797, 533-3588, 535-8060, 536-6675, 539-6915, 539-8582, 543-4255, 552-3506, 552-8869, 553-1809, 553-3730, 555-4669, 562-8873, 569-7846, 575-2879, 575-2880, 583-8352, 591-1266, 591-9440, 593-7287, 593-7288, 594-2125, 596-4834, 596-7090, 596-8896, 596-8905, 597-9248, 598-9881, 602-8721, 603-5300, 608-9261, 609-9819, 612-1735, 613-9482, 614-5795, 614-9555, 622-6239, 623-1309, 624-0698, 627-8019, 627-8054, 627-8129, 628-4345, 633-4335, 633-7776, 645-2039, 657-2370 ENGINE AR-PRIMARY

SMCS-1251, 1290 **i08082995**

NOTE	REF NO	GRAPHIC REF	PART NUMBER	QTY	PART NAME 1 2 3 4 5 6 (PRODUCT LEVEL)	SEE PAGE
M	1	1	**111-0859**	4	BOLT (M10X1.5X35-MM)	
M	2	1	**6I-0654**	3	BOLT (M10X1.5X25-MM)	
	3	1	**371-2684**	1	BRACKET	
	4	1	**371-2691**	1	BRACKET	
	5	1	**371-7263**	1	LINE AS-FUEL	
YR	6	1	**375-2647**	1	PUMP GP-FUEL INJECTION	789
	7	1	**476-2947**	1	GEAR-FUEL PUMP (68-TEETH)	
M	8	1	**6I-0217**	2	BOLT (M8X1.25X20-MM)	
	9	1	**346-0006**	1	BOLT-SPECIAL	
	10	1	**346-0007**	2	WASHER	
M	11	1	**175-7141**	1	NUT-HEX FLANGE (M10X1.5-THD)	
	12	1	**348-0495**	2	WASHER	

M - METRIC PART
R - REMANUFACTURED PART MAY BE AVAILABLE
Y - SEPARATE ILLUSTRATION

391-4811 **PUMP GP-FUEL INJECTION** (contd.) **i08082995**

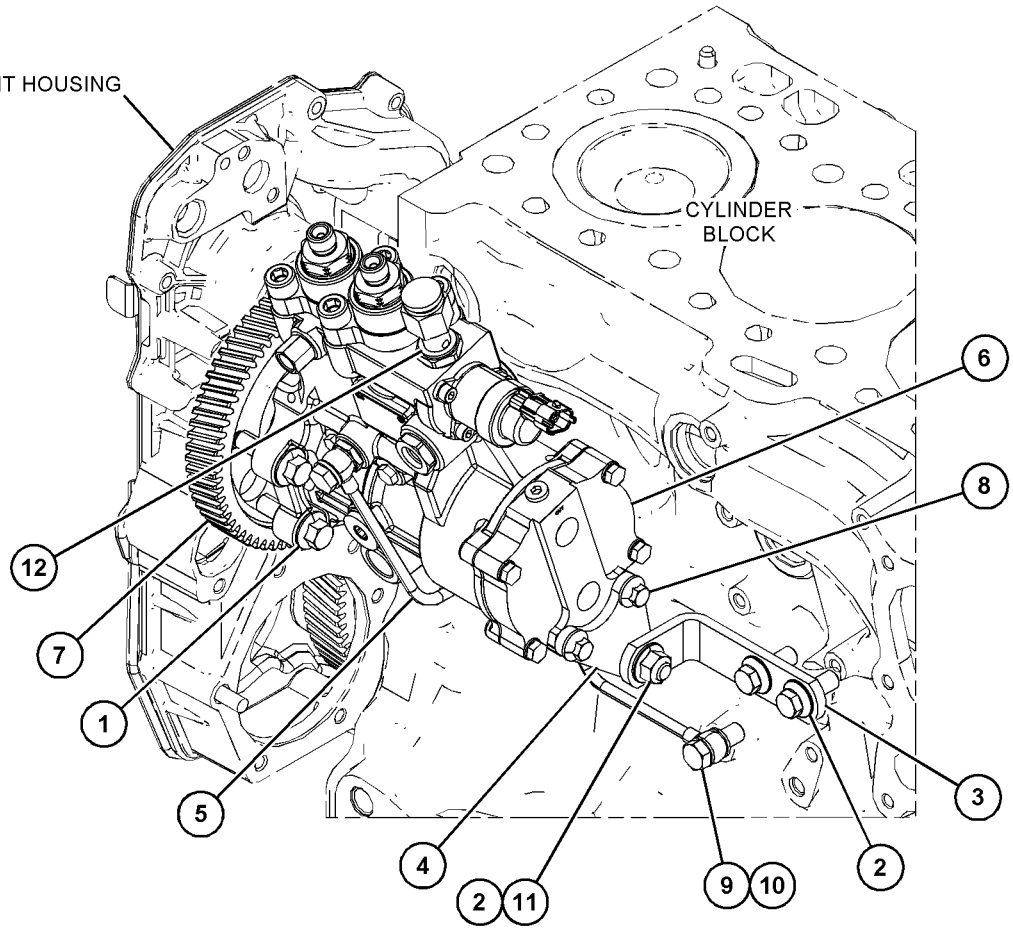

GRAPHIC #1 <END> g06537698

563-6171 PUMP GP-FUEL INJECTION

PART OF 563-6186 PUMP GP-FUEL INJECTION

SMCS-1251, 1290 **i09741704**

NOTE	REF NO	GRAPHIC REF	PART NUMBER	QTY	PART NAME 1 2 3 4 5 6 (PRODUCT LEVEL)	SEE PAGE
M	1	1	**454-5109**	1	BOLT-BANJO (M10X1X26-MM)	
M	2	1	**453-0790**	3	BOLT (M5X0.8X12-MM)	
	3	1	**375-8254**	1	VALVE	
	4	1	**376-6409**	1	SEAL	
	5	1	**376-6410**	1	RETAINER-WASHER	
	6	1	**376-6411**	1	NUT-SHAFT	
	7	1	**386-2971**	2	WASHER	
	8	1	**386-3819**	1	KEY-SHAFT	

M - METRIC PART

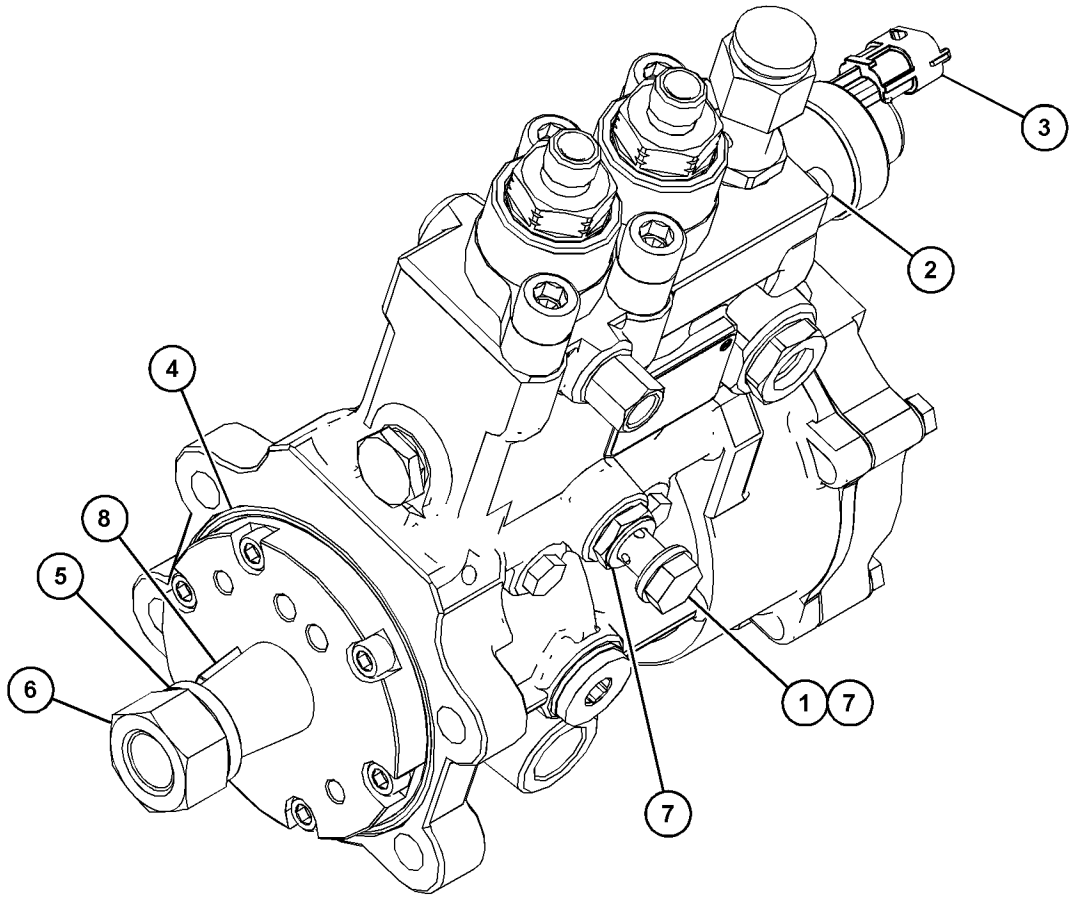

GRAPHIC #1 <END> g06611591

563-6186 PUMP GP-FUEL INJECTION

PART OF 563-6728, 563-6729, 563-6730, 565-1247 ENGINE AR-PRIMARY

SMCS-1251, 1290 **i10344785**

NOTE	REF NO	GRAPHIC REF	PART NUMBER	QTY	PART NAME 1 2 3 4 5 6 (PRODUCT LEVEL)	SEE PAGE
M	1	1	**6I-0217**	2	BOLT (M8X1.25X20-MM)	
M	2	1	**286-0123**	4	BOLT (M10X1.5X35-MM THK)	
	3	1	**371-2684**	1	BRACKET	
	4	1	**371-2691**	1	BRACKET	
	5	1	**371-7263**	1	LINE AS-FUEL	
	6	1	**476-2947**	1	GEAR-FUEL PUMP (68-TEETH)	
	7	1	**346-0006**	1	BOLT-SPECIAL	
	8	1	**346-0007**	2	WASHER	
Y	9	1	**563-6171**	1	PUMP GP-FUEL INJECTION	792
M	10	1	**175-7141**	1	NUT-HEX FLANGE (M10X1.5-THD)	
M	11	1	**6I-0654**	3	BOLT (M10X1.5X25-MM)	
	12	1	**348-0495**	2	WASHER	

M - METRIC PART
Y - SEPARATE ILLUSTRATION

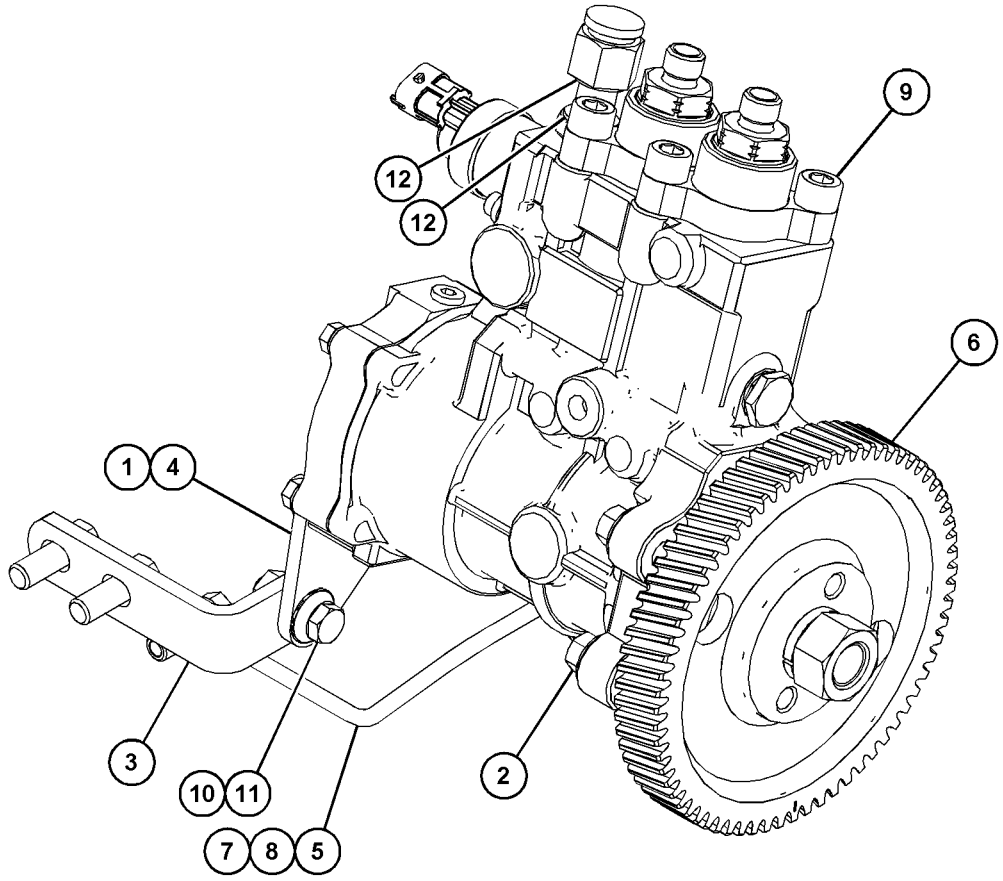

GRAPHIC #1 <END> g06611606

394-9639 RAIL GP-FUEL

PART OF 596-2071 ENGINE AR-COMPLETE, 451-8343, 461-4638, 461-4649, 461-4656, 461-4658, 466-1160, 466-1161, 466-1162, 466-1163, 468-0461, 468-8218, 470-8667, 470-8814, 471-0541, 474-7299, 475-8297, 475-9060, 478-4257, 479-9398, 480-2181, 481-0811, 482-0212, 484-2939, 485-8027, 486-2644, 486-4250, 488-6687, 489-9006, 491-2606, 491-4973, 491-4980, 491-4993, 491-7124, 492-3021, 492-3072, 492-3169, 493-1019, 493-1038, 494-2073, 494-6807, 495-8349, 499-7181, 501-2466, 502-9462, 504-3629, 504-5365, 504-8134, 504-9579, 506-5035, 506-9918, 507-8016, 508-0270, 510-1088, 512-9858, 513-0851, 513-8513, 514-9367, 515-9203, 519-4128, 520-3152, 520-4644, 524-8271, 525-8759, 526-0511, 526-7210, 526-8888, 527-7106, 527-9686, 528-3358, 528-9866, 528-9920, 530-1323, 530-2601, 531-2492, 533-2797, 533-3588, 535-8060, 536-6675, 539-6915, 539-8582, 543-4255, 552-3506, 552-8869, 553-1809, 553-3730, 555-4669, 562-8873, 563-6728, 563-6729, 563-6730, 565-1247, 569-7846, 575-2879, 575-2880, 583-8352, 591-1266, 591-9440, 593-7287, 593-7288, 594-2125, 596-4834, 596-7090, 596-8896, 596-8905, 597-9248, 598-9881, 602-8721, 603-5300, 608-9261, 609-9819, 612-1735, 613-9482, 614-5795, 614-9555, 622-6239, 623-1309, 624-0698, 627-8019, 627-8054, 627-8129, 628-4345, 633-4335, 633-7776, 645-2039, 657-2370 ENGINE AR-PRIMARY

SMCS-1288 **i08755405**

NOTE	REF NO	GRAPHIC REF	PART NUMBER	QTY	PART NAME 1 2 3 4 5 6 (PRODUCT LEVEL)	SEE PAGE
M	1	1	**6I-0260**	3	BOLT (M8X1.25X25-MM)	
M	2	1	**099-6418**	1	NUT (M6X1-THD)	
M	3	1	**206-1826**	2	BOLT (M6X1X25-MM)	
Y	4	1	*370-5520*	1	LINES GP-FUEL INJECTION	785
	5	1	**375-0482**	4	CLAMP-PIPE	
	6	1	**375-0483**	2	INSERT-CLAMP	
	7	1	**375-2649**	1	RAIL GP-FUEL	
		1	**375-6988**	1	SENSOR (FUEL RAIL PRESSURE)	
		1	**398-6226**	1	VALVE (FUEL RAIL PRESSURE)	
	8	1	**393-2034**	1	LINE AS-FUEL	
	9	1	**393-2035**	1	LINE AS-FUEL	
Y	10	1	*394-0525*	1	LINES GP-FUEL INJECTION	786

M - METRIC PART
Y - SEPARATE ILLUSTRATION

394-9639 **RAIL GP-FUEL (**contd.**)** **i08755405**

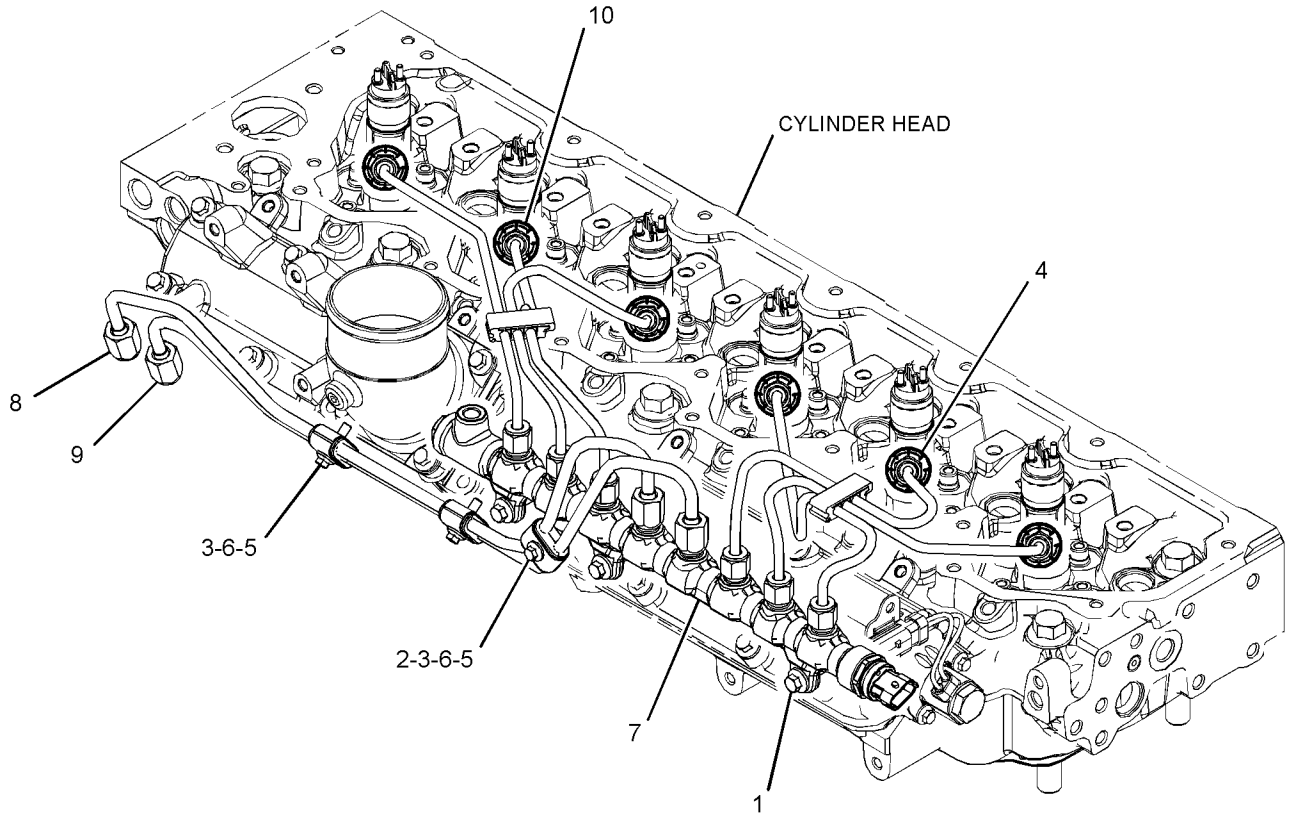

GRAPHIC #1 <END> g03380177

235-7133 ALTERNATOR GP-CHARGING*R

24-VOLT, 80-AMPERE
FIELD REPLACEMENT ORDER 561-3000—PAGE: 806
PART OF 440-6724 ALTERNATOR GP-CHARGING

SMCS-1405 **i08041952**

NOTE	REF NO	GRAPHIC REF	PART NUMBER	QTY	PART NAME 1 2 3 4 5 6 (PRODUCT LEVEL)	SEE PAGE
	1	1	**228-9656**	1	FRAME AS-DRIVE END	
	2	1	**5S-7349**	1	BOLT (1/4-20X0.5-IN)	
	3	1	**185-2639**	1	FAN AS	
	4	1	**1H-3244**	1	LOCKWASHER	
	5	1	**228-9655**	1	FRAME AS-ALTERNATOR	
	6	1	**2K-4821**	1	LOCKNUT (5/8-18-THD)	
	7	1	**5P-8247**	1	WASHER-HARD (17X32X3.5-MM THK)	
	8	1	**228-9657**	1	COVER AS	
	9	1	**8T-4205**	1	WASHER-HARD (7.2X14.5X2-MM THK)	
	10	1	**185-2647**	1	GROMMET	
	11	1	**9L-6770**	1	CAP-DUST	
	12	1	**423-2775**	1	STATOR AS (24-VOLT, 95-AMPERE)	
	13	1	**185-2638**	2	COLLAR	
	14	1	**185-2654**	1	PLATE	
	15	1	**185-2650**	1	ROTOR AS	
	16	1	**185-2644**	1	COIL AS	
	17	1	**185-2648**	1	REGULATOR AS-VOLTAGE (24-VOLT) (ALTERNATOR)	
	18	1	**6V-8189**	1	NUT (5/16-18-THD)	
	19	1	**8T-4224**	1	WASHER-HARD (8.8X16X2-MM THK)	
	20	1	**3F-9556**	1	LOCKWASHER	
					AVAILABLE REPAIR KIT(S):	
			185-2655	1	KIT-BEARING (ALTERNATOR)	
					(INCLUDES 3 BEARINGS)	
			185-2658	1	KIT-HARDWARE (ALTERNATOR AIR)	
					(INCLUDES BOLTS)	
			199-7891	1	KIT-TERMINAL (ALTERNATOR AIR)	
					(INCLUDES INSULATORS, WASHERS, NUT & STEP NUT)	
			199-8436	1	KIT-TERMINAL (ALTERNATOR AIR)	
					(INCLUDES HOLDER AS, PLATE, INSULATOR, PIN, BOLT, GROMMET,& NUT)	

235-7133 **ALTERNATOR GP-CHARGING (**contd.**)** **i08041952**

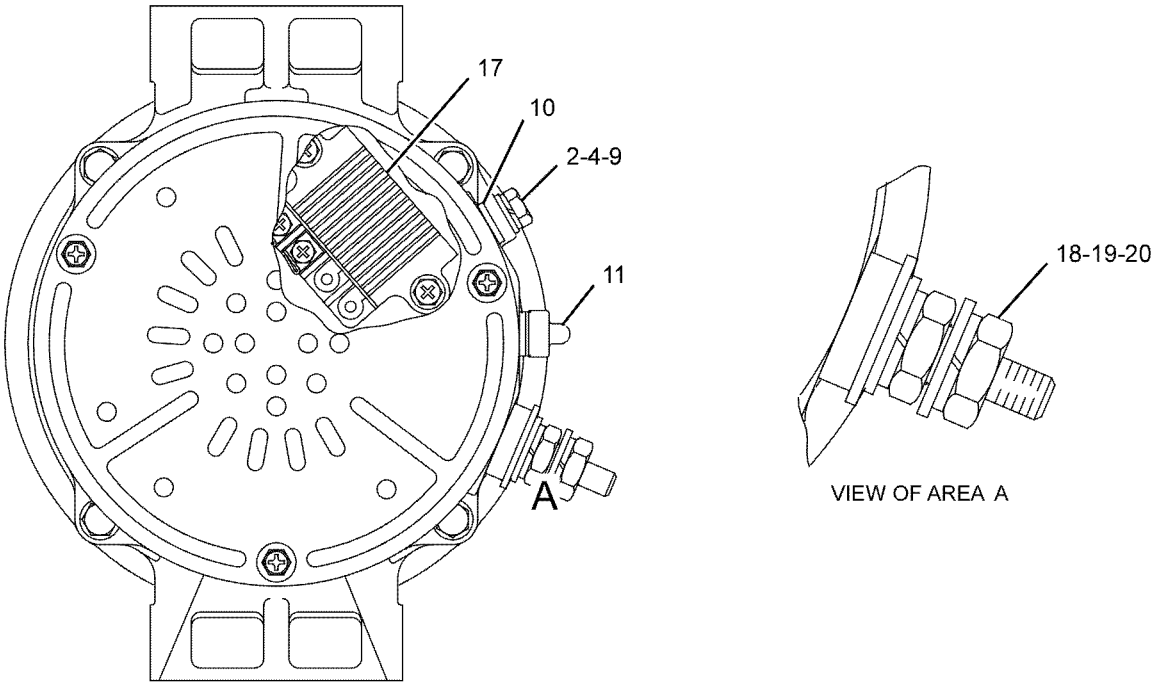

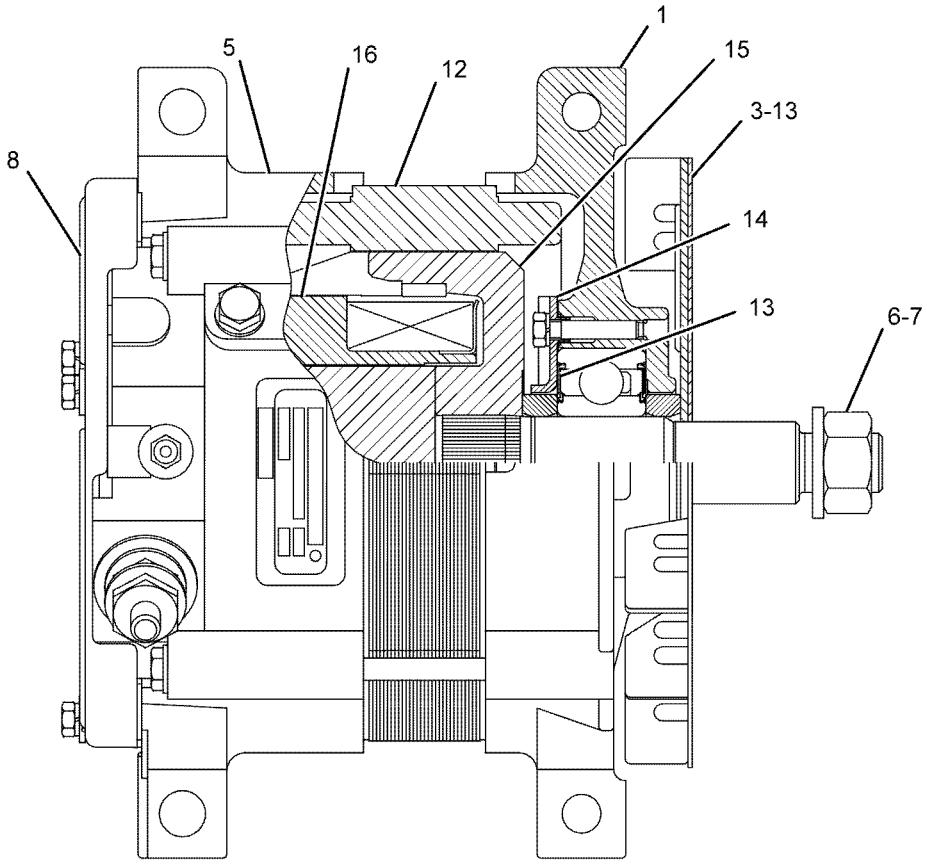

GRAPHIC #1 <END> g01102532

377-0720 ALTERNATOR GP-CHARGING–12-VOLT, 100-AMPERE

PART OF 596-2071 ENGINE AR-COMPLETE, 461-4638, 461-4649, 461-4656, 471-0541, 491-4993, 492-3021, 530-2601, 535-8060, 591-1266, 591-9440, 603-5300, 612-1735, 622-6239, 627-8129, 628-4345, 633-7776 ENGINE AR-PRIMARY

SMCS-1405 **i07582834**

NOTE	REF NO	GRAPHIC REF	PART NUMBER	QTY	PART NAME 1 2 3 4 5 6 (PRODUCT LEVEL)	SEE PAGE
M	1	1	**164-7468**	4	BOLT (M10X1.5X95-MM)	
R	2	1	**560-6100**	1	ALTERNATOR (12-VOLT, 100-AMPERE) (12-VOLT, 100-AMPERE)	
	3	1	**321-8952**	1	BRACKET AS	
	3A	1	**161-9820**	2	PIN	
M	4	1	**111-0859**	4	BOLT (M10X1.5X35-MM)	

M - METRIC PART
R - REMANUFACTURED PART MAY BE AVAILABLE

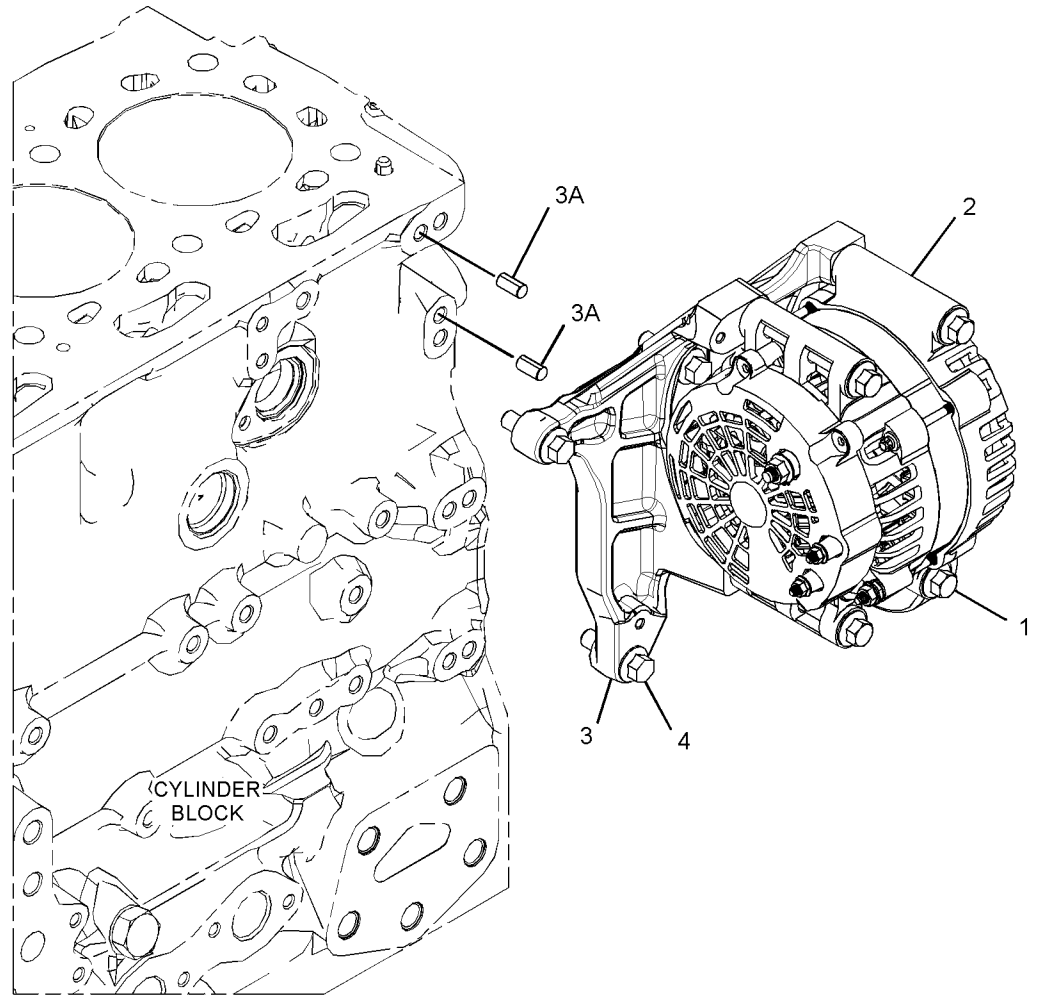

GRAPHIC #1 <END> g02416156

377-0721 ALTERNATOR GP-CHARGING

24-VOLT, 85-AMPERE

PART OF 451-8343, 461-4658, 466-1160, 466-1161, 466-1162, 466-1163, 468-0461, 468-8218, 470-8667, 479-9398, 480-2181, 482-0212, 484-2939, 485-8027, 486-2644, 489-9006, 491-4973, 491-4980, 491-7124, 492-3072, 494-2073, 494-6807, 495-8349, 499-7181, 501-2466, 502-9462, 504-9579, 506-5035, 506-9918, 507-8016, 508-0270, 510-1088, 512-9858, 513-0851, 513-8513, 514-9367, 520-3152, 524-8271, 525-8759, 527-9686, 528-9866, 528-9920, 530-1323, 533-2797, 536-6675, 539-6915, 539-8582, 543-4255, 552-8869, 553-1809, 555-4669, 562-8873, 563-6728, 563-6729, 563-6730, 565-1247, 569-7846, 583-8352, 593-7287, 593-7288, 596-8896, 596-8905, 598-9881, 602-8721, 609-9819, 613-9482, 614-5795, 614-9555, 623-1309, 624-0698, 627-8019, 627-8054, 633-4335, 657-2370 ENGINE AR-PRIMARY

SMCS-1405 **i09565355**

NOTE	REF NO	GRAPHIC REF	PART NUMBER	QTY	PART NAME 1 2 3 4 5 6 (PRODUCT LEVEL)	SEE PAGE
M	1	1	**164-7468**	4	BOLT (M10X1.5X95-MM)	
	2	1	**593-5777**	1	ALTERNATOR AS (24-VOLT, 85-AMPERE)	
		1	**451-7225**	1	FILM-IDENTIFICATION (CAT)	
	3	1	**321-8952**	1	BRACKET AS	
	3A	1	**161-9820**	2	PIN	
M	4	1	**111-0859**	4	BOLT (M10X1.5X35-MM)	

M - METRIC PART

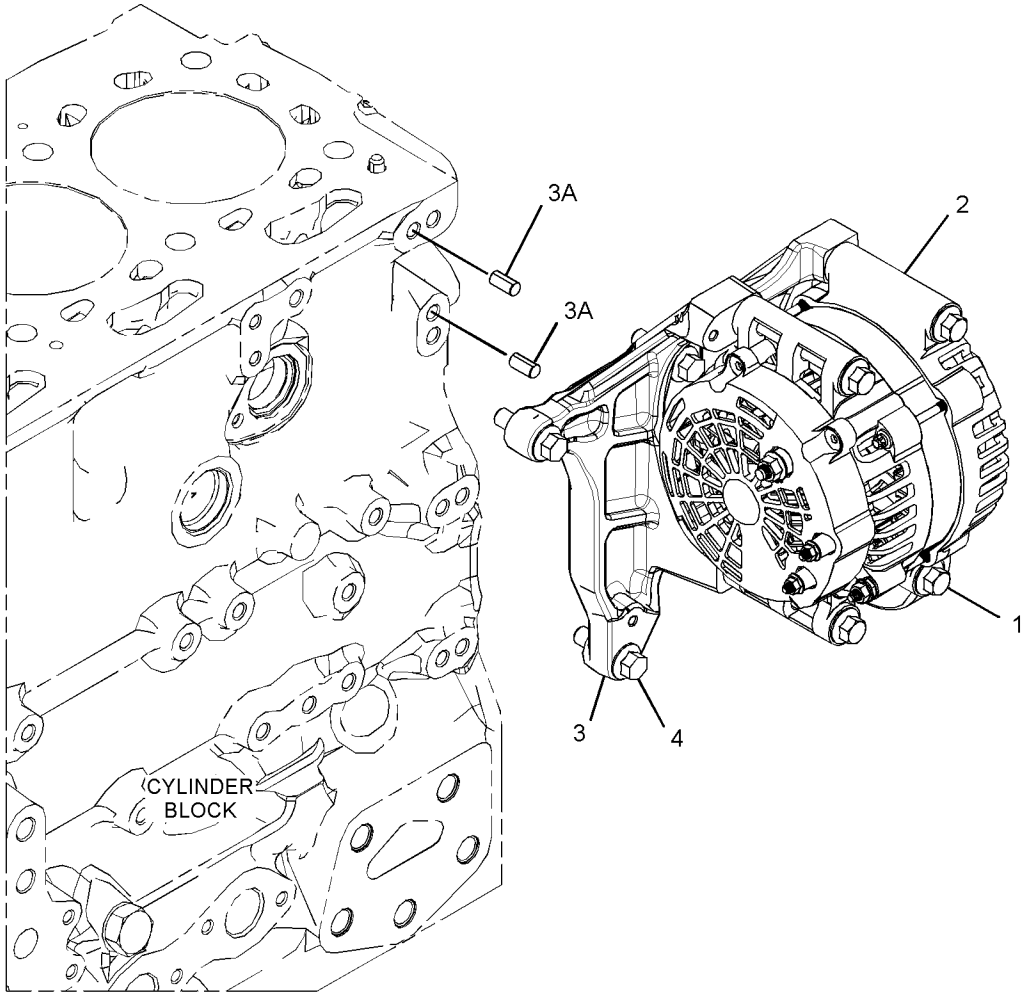

GRAPHIC #1 <END> g02416156

385-8001 ALTERNATOR GP-CHARGING

24-VOLTS, 115-AMPERES

PART OF 470-8814, 519-4128, 526-7210, 527-7106, 528-3358, 552-3506, 575-2879, 575-2880, 594-2125, 596-4834, 596-7090, 645-2039 ENGINE AR-PRIMARY

SMCS-1405 **i05584320**

NOTE	REF NO	GRAPHIC REF	PART NUMBER	QTY	PART NAME 1 2 3 4 5 6 (PRODUCT LEVEL)	SEE PAGE
M	1	1	**111-0859**	4	BOLT (M10X1.5X35-MM)	
M	2	1	**164-7468**	4	BOLT (M10X1.5X95-MM)	
R	3	1	**344-5081**	1	ALTERNATOR GP-CHARGING (24-VOLT, 115-AMPERE)	
	4	1	**394-4451**	1	BRACKET AS	
		1	**161-9820**	2	PIN	

M - METRIC PART
R - REMANUFACTURED PART MAY BE AVAILABLE

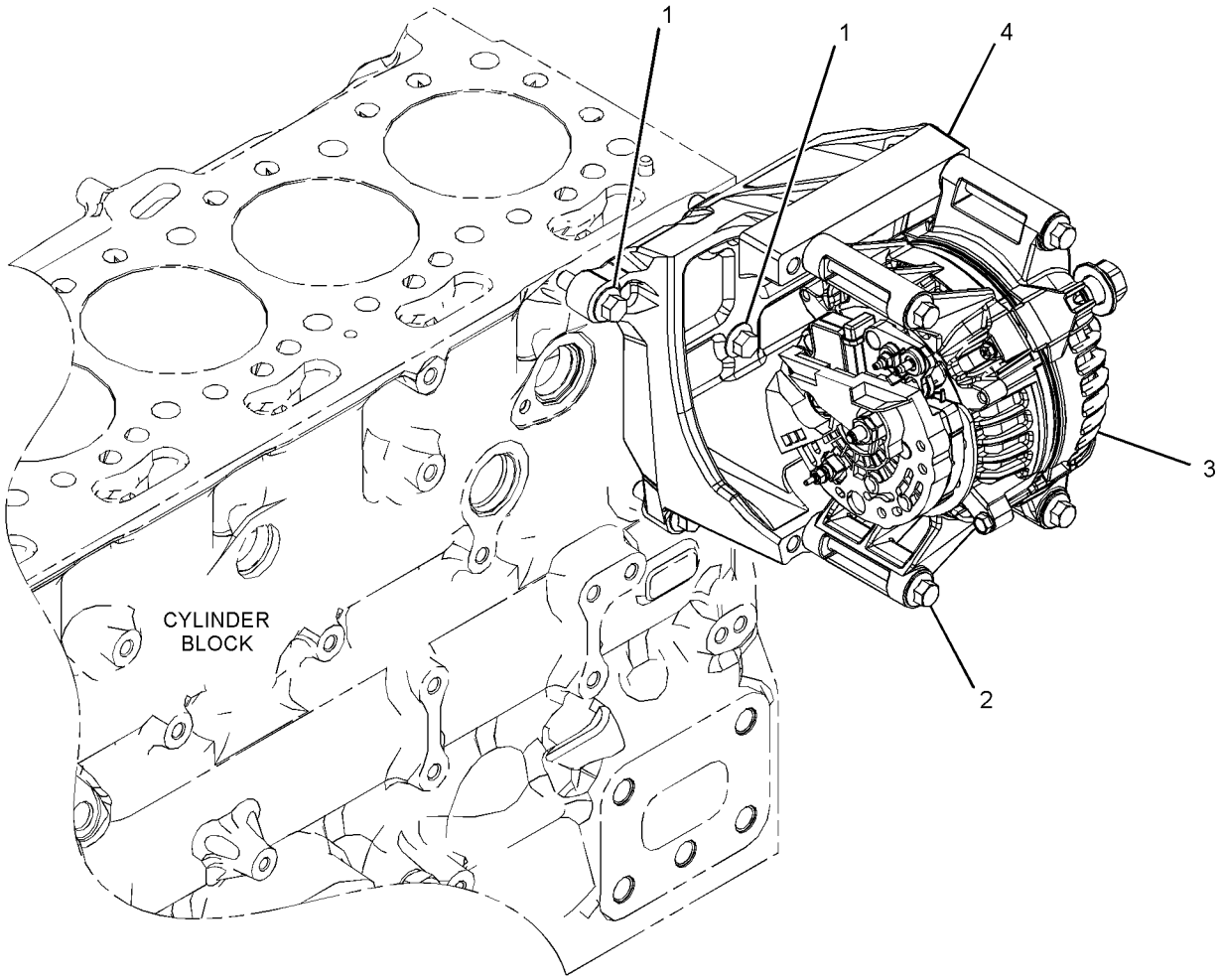

GRAPHIC #1 <END> g03380061

392-2023 ALTERNATOR GP-CHARGING

12 VOLT. UNITY LRC

PART OF 475-8297, 475-9060, 481-0811 ENGINE AR-PRIMARY

SMCS-1405 **i05726589**

NOTE	REF NO	GRAPHIC REF	PART NUMBER	QTY	PART NAME 1 2 3 4 5 6 (PRODUCT LEVEL)	SEE PAGE
M	1	1	**111-0859**	4	BOLT (M10X1.5X35-MM)	
M	2	1	**164-7468**	4	BOLT (M10X1.5X95-MM)	
R	3	1	**346-6147**	1	ALTERNATOR GP-CHARGING	
	4	1	**394-4451**	1	BRACKET AS	
		1	**161-9820**	2	PIN	

M - METRIC PART
R - REMANUFACTURED PART MAY BE AVAILABLE

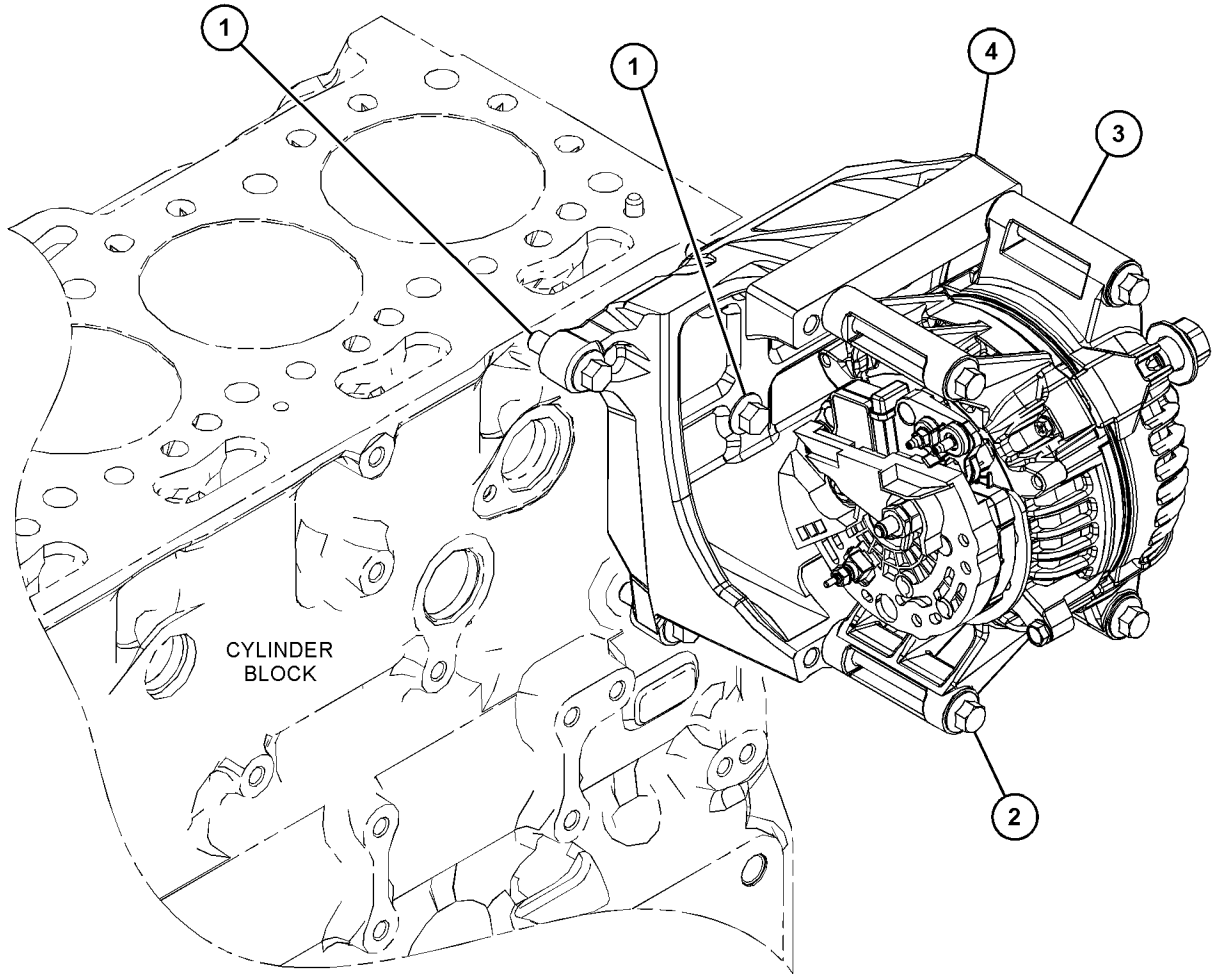

GRAPHIC #1 <END> g03664932

440-6724 ALTERNATOR GP-CHARGING

24 VOLT, 80 AMPERE. BRUSHLESS

PART OF 474-7299, 486-4250, 504-3629, 526-0511, 553-3730 ENGINE AR-PRIMARY

TYPE 1

SMCS-1405 **i05785747**

NOTE	REF NO	GRAPHIC REF	PART NUMBER	QTY	PART NAME 1 2 3 4 5 6 (PRODUCT LEVEL)	SEE PAGE
YR	1	1	**235-7133**	1	ALTERNATOR GP-CHARGING (24-VOLT, 80-AMPERE)	796
M	2	1	**111-0859**	4	BOLT (M10X1.5X35-MM)	
M	3	1	**164-7468**	4	BOLT (M10X1.5X95-MM)	
	4	1	**394-4451**	1	BRACKET AS	
		1	**161-9820**	2	PIN	

M - METRIC PART
R - REMANUFACTURED PART MAY BE AVAILABLE
Y - SEPARATE ILLUSTRATION

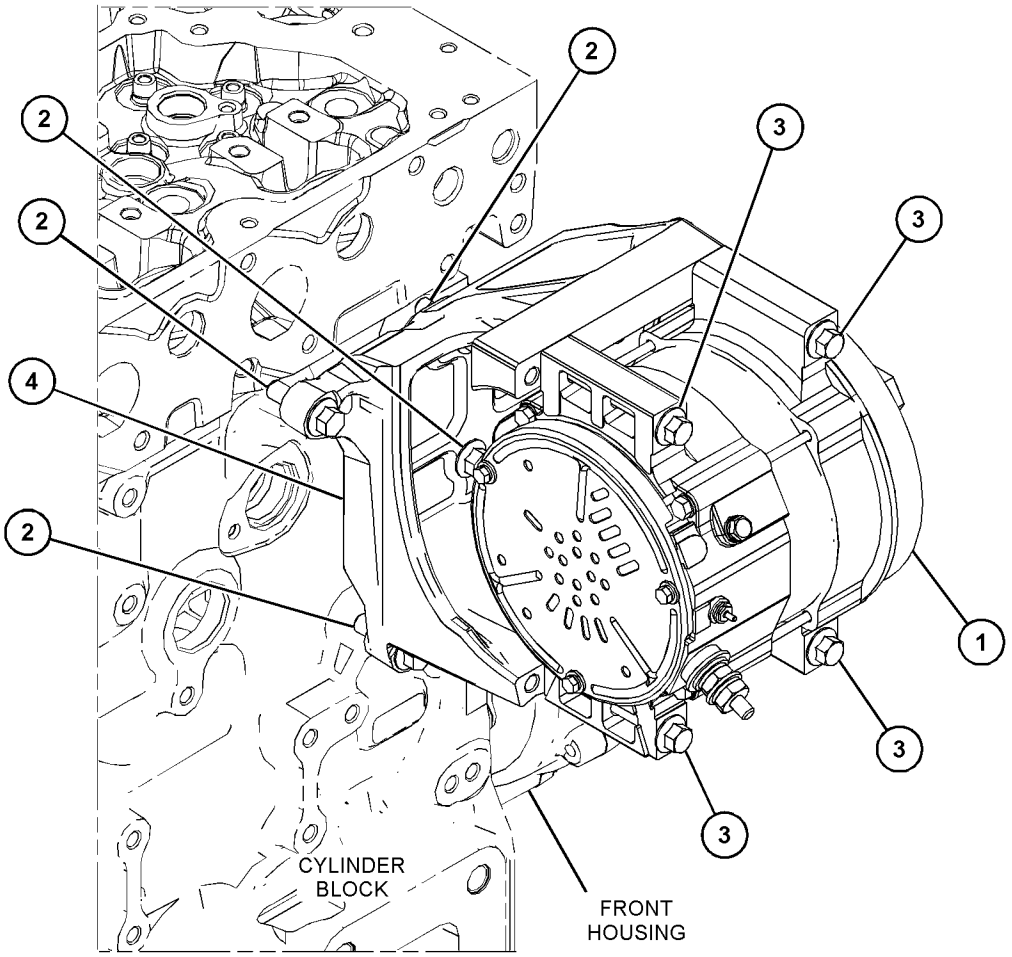

GRAPHIC #1 <END> g03688540

440-6724 ALTERNATOR GP-CHARGING

24 VOLT, 80 AMPERE. BRUSHLESS

PART OF 474-7299, 486-4250, 504-3629, 526-0511, 553-3730, 597-9248 ENGINE AR-PRIMARY

TYPE 2

SMCS-1405 **i07584574**

NOTE	REF NO	GRAPHIC REF	PART NUMBER	QTY	PART NAME 1 2 3 4 5 6 (PRODUCT LEVEL)	SEE PAGE
M	1	1	**111-0859**	4	BOLT (M10X1.5X35-MM)	
M	2	1	**164-7468**	4	BOLT (M10X1.5X95-MM)	
	3	1	**394-4451**	1	BRACKET AS	
		1	**161-9820**	2	PIN	
CYR	4	1	**561-3000**	1	ALTERNATOR GP-CHARGING (24-VOLT, 80-AMPERE)	806

C - CHANGE FROM PREVIOUS TYPE
M - METRIC PART
R - REMANUFACTURED PART MAY BE AVAILABLE
Y - SEPARATE ILLUSTRATION

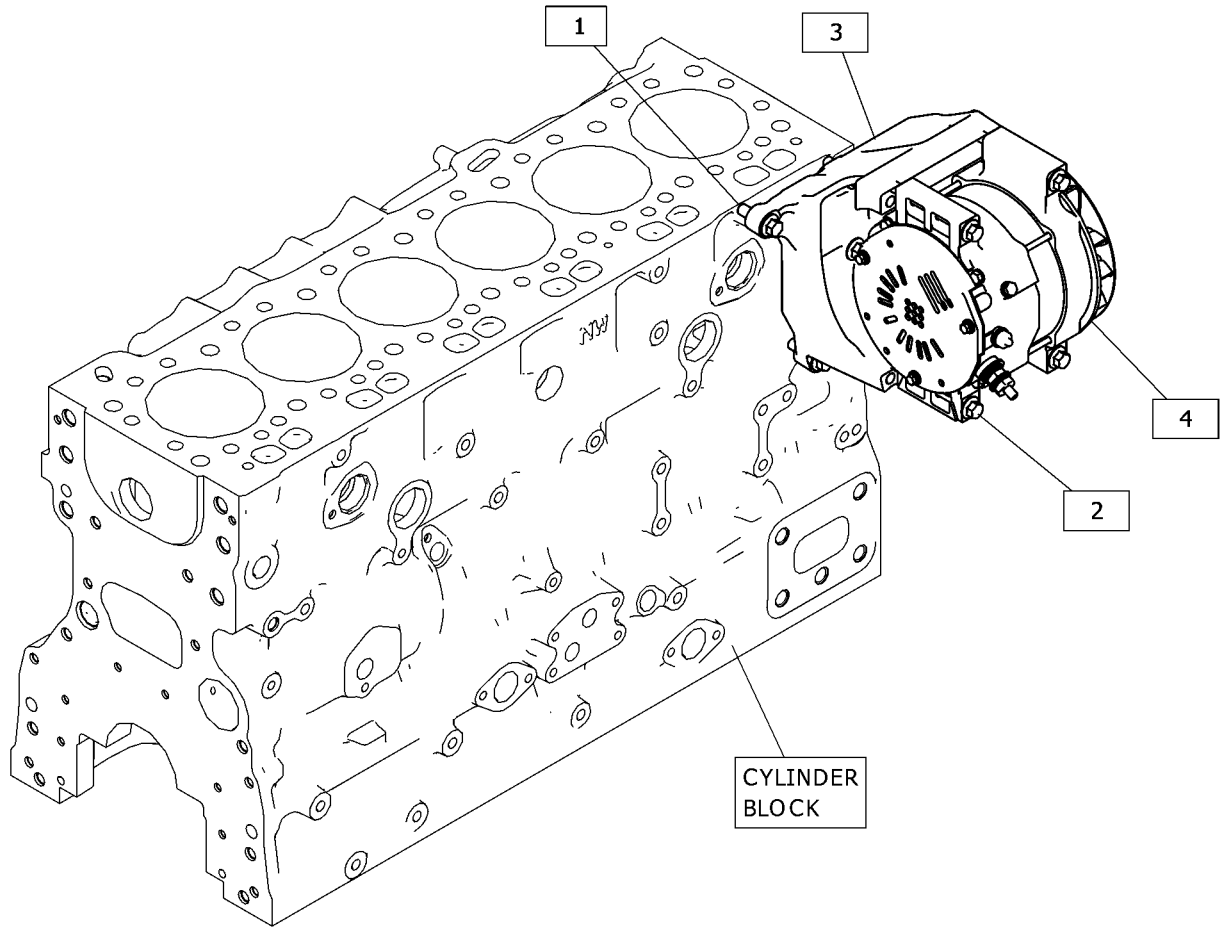

GRAPHIC #1 <END> g06386328

456-1351 ALTERNATOR GP-CHARGING

12-VOLT, 150-AMPERE

PART OF 478-4257, 515-9203, 520-4644, 526-8888, 608-9261 ENGINE AR-PRIMARY

SMCS-1405 **i07789692**

NOTE	REF NO	GRAPHIC REF	PART NUMBER	QTY	PART NAME 1 2 3 4 5 6 (PRODUCT LEVEL)	SEE PAGE
M	1	1	**111-0859**	4	BOLT (M10X1.5X35-MM)	
M	2	1	**164-7468**	4	BOLT (M10X1.5X95-MM)	
R	3	1	**560-6101**	1	ALTERNATOR (12-VOLT, 150-AMPERE)	
	4	1	**321-8952**	1	BRACKET AS	
		1	**161-9820**	2	PIN	

M - METRIC PART
R - REMANUFACTURED PART MAY BE AVAILABLE

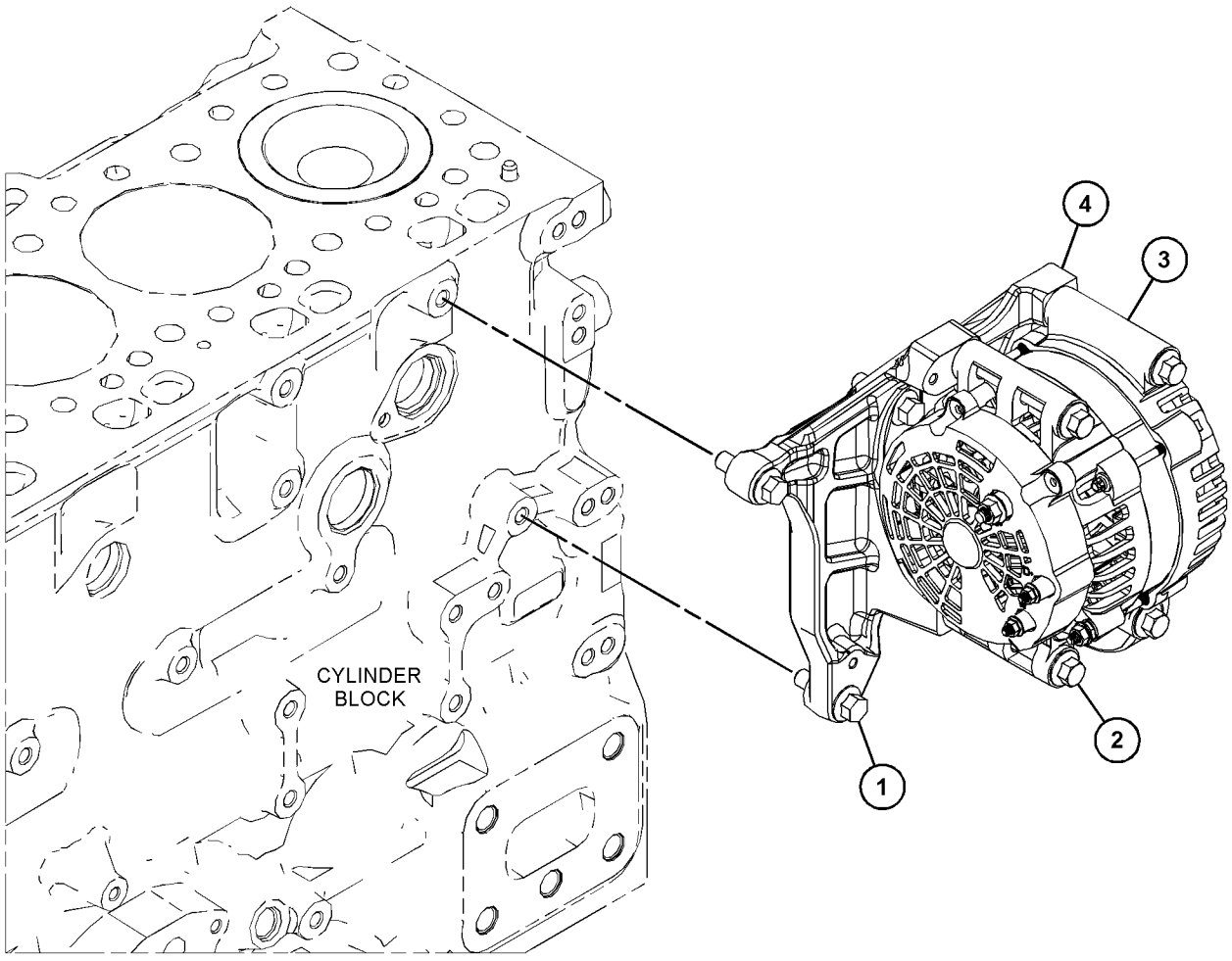

GRAPHIC #1 <END> g03873256

456-1352 ALTERNATOR GP-CHARGING

PART OF 488-6687, 533-3588 ENGINE AR-PRIMARY

SMCS-1405 **i07860447**

NOTE	REF NO	GRAPHIC REF	PART NUMBER	QTY	PART NAME 1 2 3 4 5 6 (PRODUCT LEVEL)	SEE PAGE
M	1	1	**111-0859**	4	BOLT (M10X1.5X35-MM)	
M	2	1	**164-7468**	4	BOLT (M10X1.5X95-MM)	
	3	1	**321-8952**	1	BRACKET AS	
	3A	1	**161-9820**	2	PIN	
R	4	1	**560-6104**	1	ALTERNATOR (24-VOLT, 100-AMPERE)	

M - METRIC PART
R - REMANUFACTURED PART MAY BE AVAILABLE

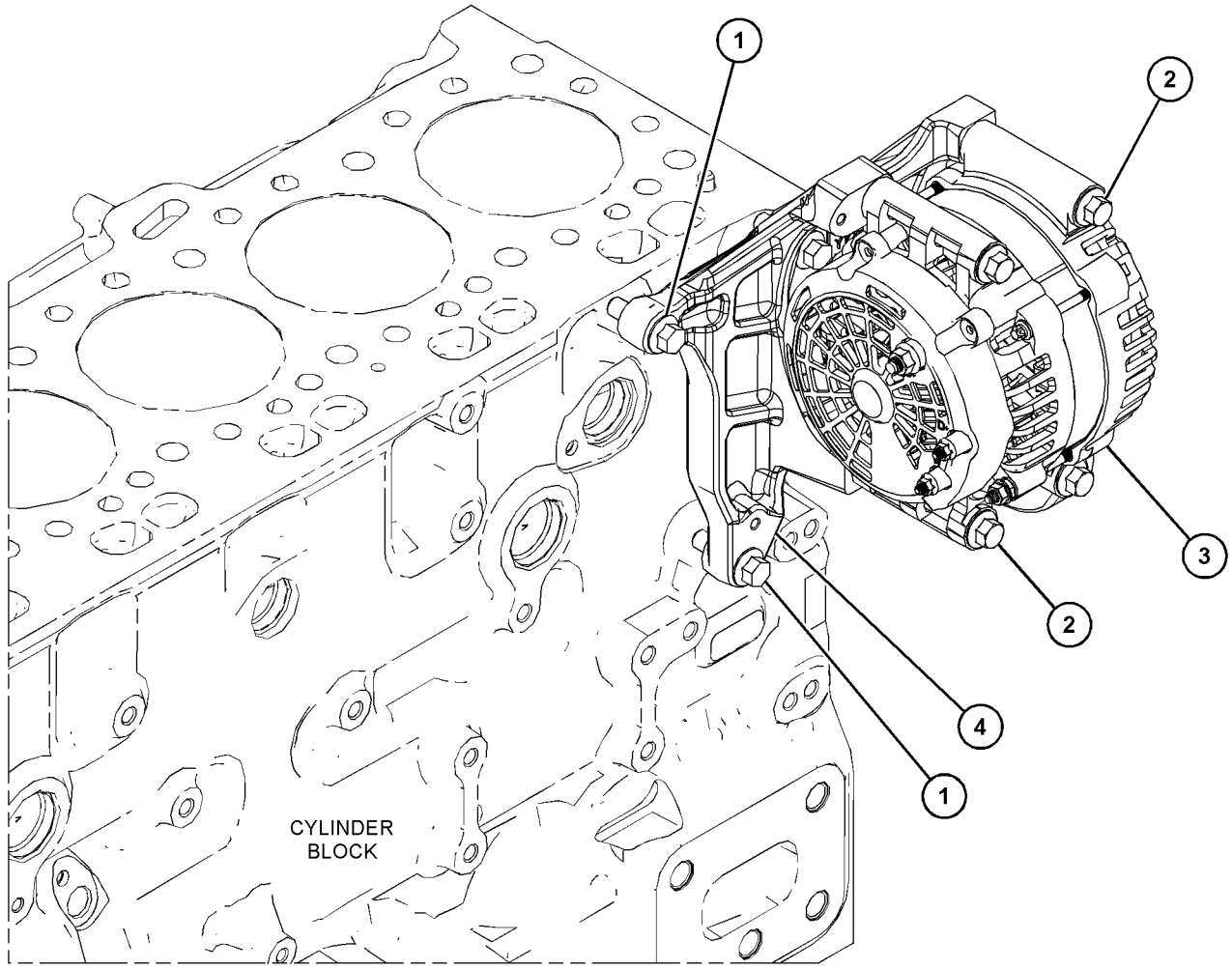

GRAPHIC #1 <END> g06033357

561-3000 ALTERNATOR GP-CHARGING*R

FIELD REPLACEMENT FOR 235-7133—PAGE: 796

PART OF 440-6724 ALTERNATOR GP-CHARGING

SMCS-1405 **i07584575**

NOTE	REF NO	GRAPHIC REF	PART NUMBER	QTY	PART NAME 1 2 3 4 5 6 (PRODUCT LEVEL)	SEE PAGE
	1	1	**228-9656**	1	FRAME AS-DRIVE END	
	2	1	**5S-7349**	1	BOLT (1/4-20X0.5-IN)	
	3	1	**185-2639**	1	FAN AS	
	4	1	**1H-3244**	1	LOCKWASHER	
	5	1	**228-9655**	1	FRAME AS-ALTERNATOR	
	6	1	**2K-4821**	1	LOCKNUT (5/8-18-THD)	
	7	1	**5P-8247**	1	WASHER-HARD (17X32X3.5-MM THK)	
	8	1	**228-9657**	1	COVER AS	
	9	1	**8T-4205**	1	WASHER-HARD (7.2X14.5X2-MM THK)	
	10	1	**185-2647**	1	GROMMET	
	11	1	**9L-6770**	1	CAP-DUST	
	12	1	**423-2775**	1	STATOR AS (24-VOLT, 95-AMPERE)	
	13	1	**185-2638**	2	COLLAR	
	14	1	**185-2654**	1	PLATE	
	15	1	**185-2650**	1	ROTOR AS	
	16	1	**185-2644**	1	COIL AS	
	17	1	**561-3457**	1	REGULATOR AS-VOLTAGE (24-VOLT)	
	18	1	**6V-8189**	1	NUT (5/16-18-THD)	
	19	1	**8T-4224**	1	WASHER-HARD (8.8X16X2-MM THK)	
	20	1	**3F-9556**	1	LOCKWASHER	
	21	1	**185-2655**	1	KIT-BEARING (ALTERNATOR)	
					(INCLUDES BEARINGS)	
	22	1	**199-8436**	1	KIT-TERMINAL (ALTERNATOR AIR)	
					(INCLUDES HOLDERS AS, PLATE, INSULATOR, PIN, BOLTS, WASHERS, GROMMET & NUT)	
	23	1	**199-7891**	1	KIT-TERMINAL (ALTERNATOR AIR)	
					(INCLUDES INSULATORS, WASHERS & NUTS)	
	24	1	**185-2658**	1	KIT-HARDWARE (ALTERNATOR AIR)	
					(INCLUDES BOLTS AND WASHERS)	

561-3000 **ALTERNATOR GP-CHARGING (**contd.**)** **i07584575**

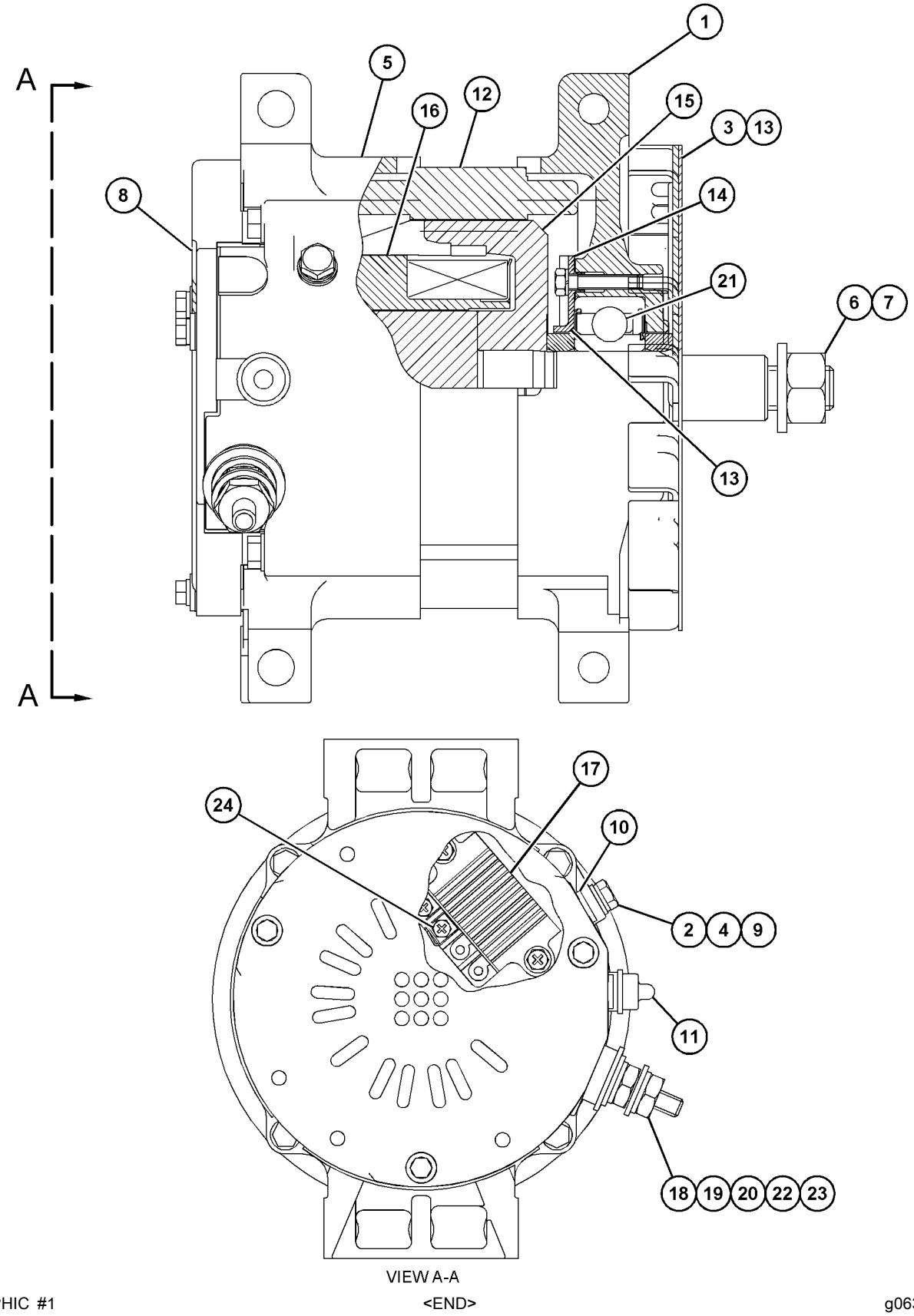

VIEW A-A

GRAPHIC #1 <END> g06386351

371-2536 CONTROL GP-ELECTRONIC

PART OF 596-2071 ENGINE AR-COMPLETE, 451-8343, 461-4638, 461-4649, 461-4656, 461-4658, 466-1160, 466-1161, 466-1162, 466-1163, 468-0461, 468-8218, 470-8667, 471-0541, 474-7299, 475-8297, 475-9060, 478-4257, 479-9398, 480-2181, 481-0811, 482-0212, 484-2939, 485-8027, 486-2644, 486-4250, 488-6687, 489-9006, 491-2606, 491-4973, 491-4980, 491-4993, 491-7124, 492-3021, 492-3072, 492-3169, 493-1019, 493-1038, 494-6807, 495-8349, 499-7181, 501-2466, 502-9462, 504-3629, 504-5365, 504-8134, 504-9579, 506-5035, 506-9918, 507-8016, 508-0270, 510-1088, 512-9858, 513-0851, 513-8513, 514-9367, 515-9203, 519-4128, 520-3152, 520-4644, 524-8271, 525-8759, 526-0511, 526-7210, 526-8888, 527-7106, 527-9686, 528-3358, 528-9866, 528-9920, 530-1323, 530-2601, 531-2492, 533-2797, 533-3588, 535-8060, 536-6675, 539-6915, 539-8582, 543-4255, 552-3506, 552-8869, 553-1809, 553-3730, 555-4669, 562-8873, 569-7846, 583-8352, 591-1266, 591-9440, 593-7287, 593-7288, 594-2125, 596-4834, 596-7090, 596-8896, 596-8905, 597-9248, 598-9881, 602-8721, 603-5300, 608-9261, 609-9819, 612-1735, 613-9482, 614-5795, 614-9555, 622-6239, 623-1309, 624-0698, 627-8019, 627-8054, 627-8129, 628-4345, 633-4335, 633-7776, 657-2370 ENGINE AR-PRIMARY

SMCS-1410, 1917, 1924, 4490 **i10025217**

NOTE	REF NO	GRAPHIC REF	PART NUMBER	QTY	PART NAME 1 2 3 4 5 6 (PRODUCT LEVEL)	SEE PAGE
	1	1	**155-0576**	8	MOUNT-ISOLATION	
	2	1	**7W-2632**	1	WASHER (8.5X16.8X1.6-MM THK)	
	3	1	**217-0099**	4	SPACER (8.2X25X2-MM THK)	
	4	1	**278-5203**	4	SPACER (CYLINDRICAL)	
R	5	1	**582-6899**	1	CONTROL GP-UNPROGRAMMED	
M	6	1	**6I-0456**	4	BOLT (M8X1.25X45-MM)	
					SOFTWARE MUST BE PROCURED LOCALLY FROM YOUR CAT DEALER	

M - METRIC PART
R - REMANUFACTURED PART MAY BE AVAILABLE

371-2536 **CONTROL GP-ELECTRONIC (**contd.**)** **i10025217**

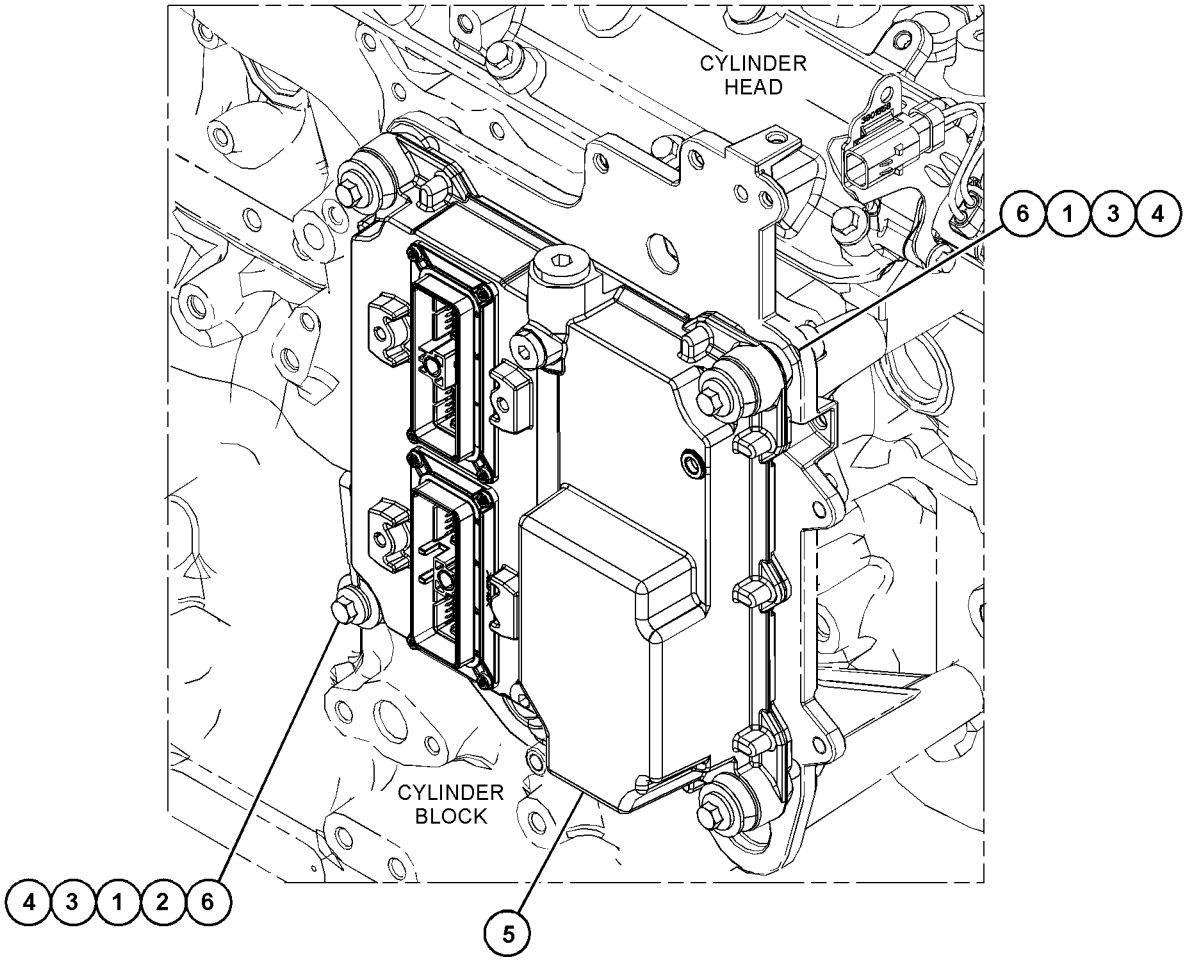

GRAPHIC #1 <END> g06171338

564-2826 CONTROL GP-ELECTRONIC

24 VOLT

PART OF 563-6728, 563-6729, 563-6730, 565-1247 ENGINE AR-PRIMARY

SMCS-1410, 1917, 1924, 4490 **i07581321**

NOTE	REF NO	GRAPHIC REF	PART NUMBER	QTY	PART NAME 1 2 3 4 5 6 (PRODUCT LEVEL)	SEE PAGE
M	1	1	**112-7704**	7	BOLT (M6X1X30-MM)	
	2	1	**232-1473**	1	WASHER (6X18X1-MM THK)	
R	3	1	**491-5836**	1	CONTROL GP-ELECTRONIC	
	4	1	**557-4275**	1	ADAPTER AS	
	5	1	**568-2023**	1	RELAY AS (24-VOLT)	

M - METRIC PART
R - REMANUFACTURED PART MAY BE AVAILABLE

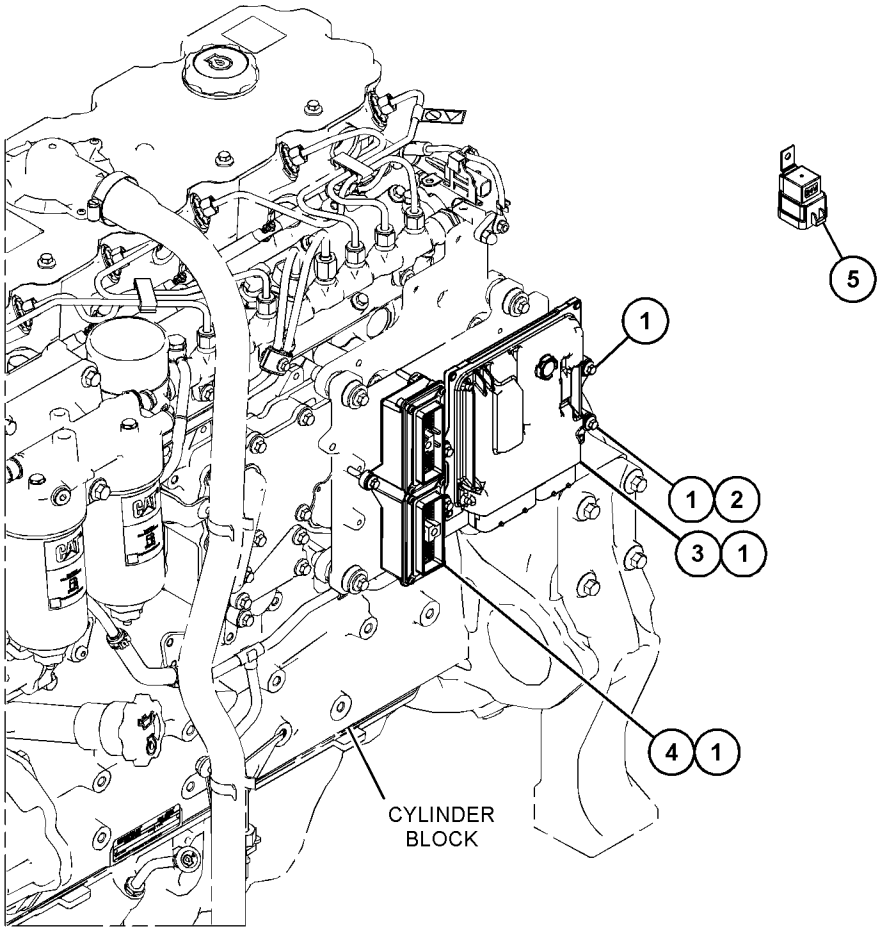

GRAPHIC #1 <END> g06370127

371-2537 CONTROL GP-ENGINE ELECTRONIC

PART OF 470-8814, 494-2073, 575-2879, 575-2880, 645-2039 ENGINE AR-PRIMARY

SMCS-1901 **i09705018**

NOTE	REF NO	GRAPHIC REF	PART NUMBER	QTY	PART NAME 1 2 3 4 5 6 (PRODUCT LEVEL)	SEE PAGE
	1	1	**7W-2632**	1	WASHER (8.5X16.8X1.6-MM THK)	
	2	1	**217-0099**	4	SPACER (8.2X25X2-MM THK)	
	3	1	**278-5203**	4	SPACER (CYLINDRICAL)	
	4	1	**155-0576**	8	MOUNT-ISOLATION	
M	5	1	**6I-0456**	4	BOLT (M8X1.25X45-MM)	
R	6	1	**582-6898**	1	CONTROL GP-UNPROGRAMMED	

M - METRIC PART
R - REMANUFACTURED PART MAY BE AVAILABLE

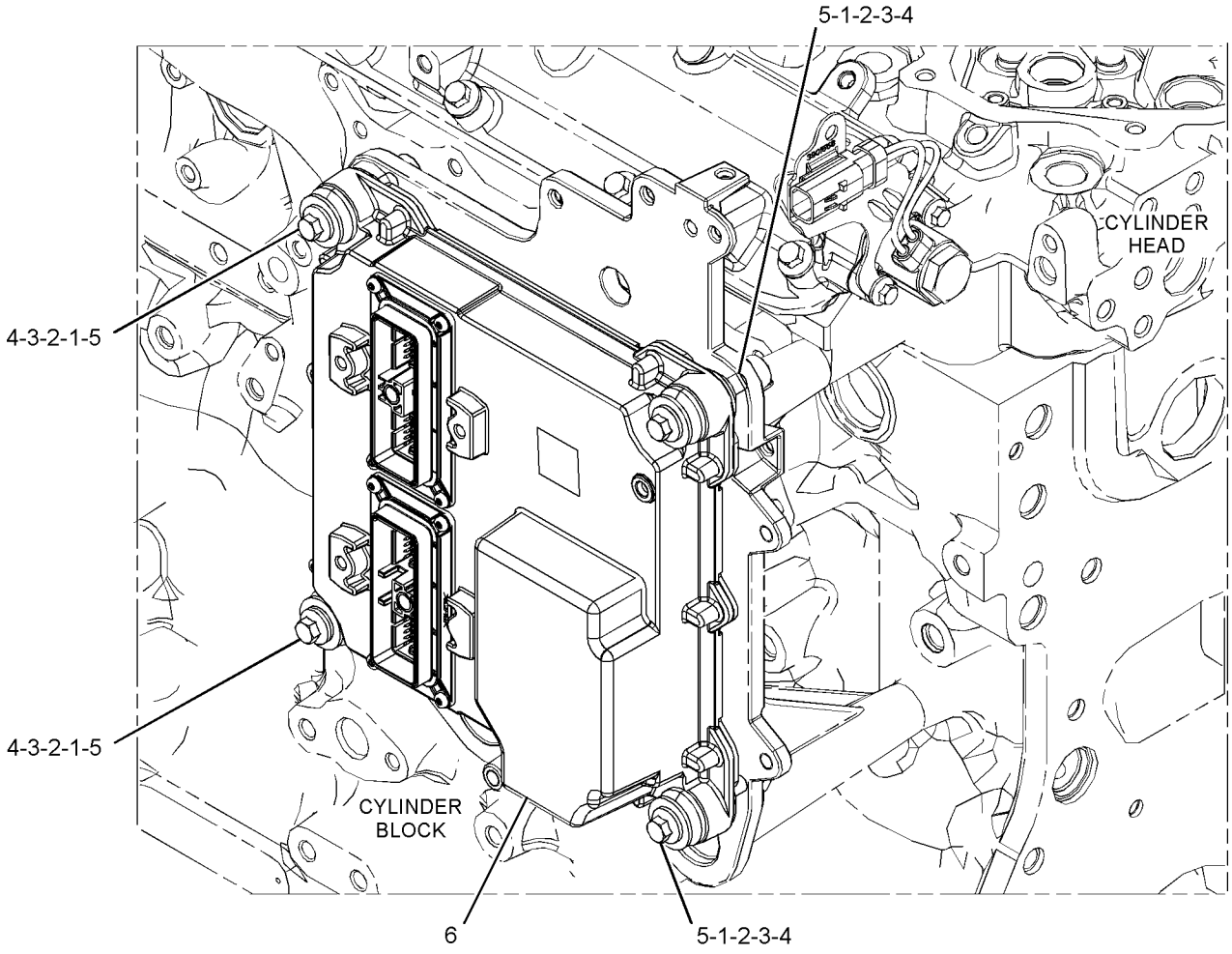

GRAPHIC #1 <END> g03644945

385-5997 HARNESS AS-ENGINE

PART OF 395-0113, 472-4942 WIRING GP-ENGINE

SMCS-1408 **i07383506**

NOTE	PART NUMBER	QTY	PART NAME 1 2 3 4 5 6 (PRODUCT LEVEL)	SEE PAGE
	377-6932	1	COVER	
E	**292-2896**		CONDUIT (16.9-MM ID) (45-CM)	
	155-2271	3	KIT-CONNECTING PLUG (4-PIN)	
			(EACH INCLUDES PLUG AS, WEDGE, & INTERFACE SEAL)	
	245-1044	2	LOCK-CONNECTOR	
	316-9351	7	MOUNTING-CABLE TIE	
	230-4011	2	PLUG AS-CONNECTOR (2-PIN)	
			(EACH INCLUDES)	
	264-7029	1	SEAL-CONNECTOR	
	238-8245	1	PLUG AS-CONNECTOR (2-PIN)	
	455-0704	1	SEAL-CONNECTOR	
	238-8247	2	PLUG AS-CONNECTOR (2-PIN)	
			(EACH INCLUDES)	
	455-0704	1	SEAL-CONNECTOR	
	245-1043	1	PLUG GP-CONNECTOR (64-PIN)	
	267-7208	1	RING-RETAINING	
	274-4990	1	SEAL	
M	**267-7207**	1	BOLT-SPECIAL (M6X1-THD)	
	281-8804	2	PLUG AS-CONNECTOR (3-PIN)	
			(EACH INCLUDES)	
	455-0705	1	SEAL-CONNECTOR	
	536-7946	1	PLUG AS-CONNECTOR (2-PIN)	
	444-7604	2	SOCKET-CONNECTOR (16-GA)	
	536-7945	1	PLUG AS-CONNECTOR	
	444-7604	3	SOCKET-CONNECTOR (16-GA)	
	245-1048	33	PLUG-CONNECTOR (1-PIN)	
	185-1860	5	SEAL-WIRE	
	267-9572	31	SOCKET-CONNECTION (18-GA)	
	9X-3402	16	SOCKET-CONNECTOR (16-GA TO 18-GA)	
			—OR—	
	126-1768	16	SOCKET-CONNECTOR (14-GA TO 16-GA)	
	217-9039	6	STRAP-CABLE	
	356-1219	1	CLIP	
	206-1345	14	STRAP-CABLE	
E	**125-7874**		TUBE-HEAT SHRINK (5.72-MM DIA) (10-CM)	
	194-5226	12	TERMINAL AS (16-GA)	
			—OR—	
	194-5227	12	TERMINAL AS (14-GA)	

E - ORDER BY THE CENTIMETER
M - METRIC PART

<END>

416-5388 HARNESS AS-ENGINE

PART OF 418-0928 WIRING GP-ENGINE

SMCS-1408 **i07563196**

NOTE	PART NUMBER	QTY	PART NAME 1 2 3 4 5 6 (PRODUCT LEVEL)	SEE PAGE
E	**125-7874**		TUBE-HEAT SHRINK (5.72-MM DIA) (10-CM)	
	9X-3402	16	SOCKET-CONNECTOR (16-GA TO 18-GA)	
			—OR—	
	126-1768	16	SOCKET-CONNECTOR (14-GA TO 16-GA)	
	155-2271	3	KIT-CONNECTING PLUG (4-PIN)	
			(EACH INCLUDES PLUG AS, WEDGE, & INTERFACE SEAL)	
	194-5226	12	TERMINAL AS (16-GA)	
			—OR—	
	194-5227	12	TERMINAL AS (14-GA)	
	185-1860	5	SEAL-WIRE	
	206-1345	14	STRAP-CABLE	
	217-9039	6	STRAP-CABLE	
	238-8247	2	PLUG AS-CONNECTOR (2-PIN)	
	238-8245	1	PLUG AS-CONNECTOR (2-PIN)	
	230-4011	2	PLUG AS-CONNECTOR (2-PIN)	
			(EACH PLUG AS INCLUDES)	
	455-0704	1	SEAL-CONNECTOR	
	245-1043	1	PLUG GP-CONNECTOR (64-PIN)	
M	**267-7207**	1	BOLT-SPECIAL (M6X1-THD)	
	245-1044	2	LOCK-CONNECTOR	
	267-9572	31	SOCKET-CONNECTION (18-GA)	
	245-1048	33	PLUG-CONNECTOR (1-PIN)	
	281-8804	2	PLUG AS-CONNECTOR (3-PIN)	
			(EACH INCLUDES)	
	455-0705	1	SEAL-CONNECTOR	
E	**292-2893**		CONDUIT (10.1-MM ID) (70-CM)	
E	**292-2896**		CONDUIT (16.9-MM ID) (45-CM)	
	316-9351	5	MOUNTING-CABLE TIE	
	372-6382	5	SOCKET-CONNECTOR (17-GA TO 20-GA)	
	356-1219	1	CLIP	
	377-6932	1	COVER	

E - ORDER BY THE CENTIMETER
M - METRIC PART

<END>

559-0271 HARNESS AS-ENGINE

PART OF 560-7999 WIRING GP-ENGINE

SMCS-1408 **i08026384**

NOTE	PART NUMBER	QTY	PART NAME 1 2 3 4 5 6 (PRODUCT LEVEL)	SEE PAGE
	8C-6354	1	CAP-RECEPTACLE (ET CONNECTOR)	
E	**292-2893**		CONDUIT (10.1-MM ID) (47-CM)	
E	**292-2896**		CONDUIT (16.9-MM ID) (45-CM)	
E	**292-6812**		CONDUIT (6.5-MM ID) (145-CM)	
	245-1045	1	COVER	
	536-7945	1	PLUG AS-CONNECTOR	
	444-7604	3	SOCKET-CONNECTOR (16-GA)	
	155-2271	3	KIT-CONNECTING PLUG (4-PIN)	
	176-2947	3	KIT-CONNECTING PLUG (4-PIN)	
			(EACH PLUG KIT INCLUDES PLUG AS, WEDGE(S), & INTERFACE SEAL)	
	245-1044	2	LOCK-CONNECTOR	
	316-9351	6	MOUNTING-CABLE TIE	
	9X-3401	4	PIN-CONNECTOR (16-GA TO 18-GA)	
			—OR—	
	126-1767	4	PIN-CONNECTOR (14-GA TO 16-GA)	
	230-5008	1	PLUG AS-CONNECTOR (4-PIN)	
	455-0706	1	SEAL-CONNECTOR	
	240-7874	2	PLUG AS-CONNECTOR (2-PIN)	
	240-7876	1	PLUG AS-CONNECTOR (2-PIN)	
			(EACH PLUG AS INCLUDES)	
	455-0704	1	SEAL-CONNECTOR	
	281-3120	2	PLUG AS-CONNECTOR (3-PIN)	
			(EACH INCLUDES)	
	455-0705	1	SEAL-CONNECTOR	
	536-7946	1	PLUG AS-CONNECTOR (2-PIN)	
	444-7604	2	SOCKET-CONNECTOR (16-GA)	
	536-7943	2	PLUG AS-CONNECTOR	
			(EACH INCLUDES)	
	369-3774	3	SEAL-CONNECTOR	
	497-2278	1	PLUG AS-CONNECTOR	
	495-4052	1	PLUG AS-CONNECTOR (114-PIN)	
	495-4054	1	COVER-CONNECTOR	
	495-4056	1	LEVER	
	497-2279	1	PLUG AS-CONNECTOR	
	495-4053	1	PLUG AS-CONNECTOR (72-PIN)	
	495-4057	1	COVER AS	
	245-1043	1	PLUG GP-CONNECTOR (64-PIN)	
M	**267-7207**	1	BOLT-SPECIAL (M6X1-THD)	
	245-1048	12	PLUG-CONNECTOR (1-PIN)	
	8T-8737	5	PLUG-SEAL	
	491-9667	16	PLUG-SEAL	
	317-3176	1	RECEPTACLE-CONNECTOR (9-PIN)	
	369-3774	2	SEAL-CONNECTOR	
	185-1860	5	SEAL-WIRE	
	185-1861	6	SEAL-WIRE	
	267-9572	16	SOCKET-CONNECTION (18-GA)	
	9X-3402	6	SOCKET-CONNECTOR (16-GA TO 18-GA)	

559-0271 **HARNESS AS-ENGINE (**contd.**)** **i08026384**

NOTE	PART NUMBER	QTY	PART NAME 1 2 3 4 5 6 (PRODUCT LEVEL)	SEE PAGE
			—OR—	
	126-1768	6	SOCKET-CONNECTOR (14-GA TO 16-GA)	
	194-5226	12	TERMINAL AS (16-GA)	
			—OR—	
	194-5227	12	TERMINAL AS (14-GA)	
	9X-3402	10	SOCKET-CONNECTOR (16-GA TO 18-GA)	
	372-6382	5	SOCKET-CONNECTOR (17-GA TO 20-GA)	
	206-1345	14	STRAP-CABLE	
	217-9039	4	STRAP-CABLE	
	356-1219	1	CLIP	
	542-2303	6	TERMINAL AS	
			(EACH INCLUDES)	
	369-3774	1	SEAL-CONNECTOR	
BN	**331-4040**		WIRE (16-GA, BLACK) (2-DM)	
	559-6883	57	TERMINAL AS (20-GA)	
	559-6884	20	TERMINAL AS (16-GA)	
	559-6885	6	TERMINAL AS (14-GA)	
			(EACH INCLUDES)	
	185-1861	1	SEAL-WIRE	
	550-5740	36	TERMINAL AS (20-GA)	
	5P-5592	1	TERMINAL-RING (18-GA TO 22-GA, 1/4-IN SCREW)	
	332-7865	1	TIE-CABLE	
E	**125-7874**		TUBE-HEAT SHRINK (5.72-MM DIA) (50-CM)	
E	**125-7875**		TUBE-HEAT SHRINK (7.44-MM DIA) (10-CM)	

B - USE AS REQUIRED
E - ORDER BY THE CENTIMETER
M - METRIC PART
N - ORDER BY THE DECIMETER

<END>

561-6318 HARNESS AS-POWER

ROHS LINK, 2.5-METERS

PART OF 560-7999 WIRING GP-ENGINE

SMCS-1408 **i08026353**

NOTE	PART NUMBER	QTY	PART NAME 1 2 3 4 5 6 (PRODUCT LEVEL)	SEE PAGE
E	**292-6812**		CONDUIT (6.5-MM ID) (239-CM)	
	9X-3401	4	PIN-CONNECTOR (16-GA TO 18-GA)	
			—OR—	
	126-1767	4	PIN-CONNECTOR (14-GA TO 16-GA)	
	212-8375	1	PLUG	
	230-5009	1	RECEPTACLE AS-CONNECTOR (4-PIN)	
	9X-1056	3	TERMINAL AS (14-GA TO 16-GA)	
	100-5041	1	TERMINAL AS-BLADE (18-GA TO 20-GA)	

E - ORDER BY THE CENTIMETER

<END>

416-5399 HARNESS AS-SENSOR

UNITY LCR C7.1 T3

PART OF 424-5516 WIRING GP-ENGINE

SMCS-1408 **i05873533**

NOTE	PART NUMBER	QTY	PART NAME 1 2 3 4 5 6 (PRODUCT LEVEL)	SEE PAGE
	8C-6354	1	CAP-RECEPTACLE (ET CONNECTOR)	
	155-2271	6	KIT-CONNECTING PLUG (4-PIN)	
			(EACH CONNECTOR KIT INCLUDES CONNECTOR AS & WEDGE)	
	245-1044	2	LOCK-CONNECTOR	
	316-9351	7	MOUNTING-CABLE TIE	
	230-4011	2	PLUG AS-CONNECTOR (2-PIN)	
			(EACH INCLUDES)	
	455-0704	1	SEAL-CONNECTOR	
	238-8245	1	PLUG AS-CONNECTOR (2-PIN)	
	455-0704	1	SEAL-CONNECTOR	
	238-8247	2	PLUG AS-CONNECTOR (2-PIN)	
			(EACH INCLUDES)	
	455-0704	1	SEAL-CONNECTOR	
	245-1043	1	PLUG GP-CONNECTOR (64-PIN)	
M	**267-7207**	1	BOLT-SPECIAL (M6X1-THD)	
	281-8804	2	PLUG AS-CONNECTOR (3-PIN)	
			(EACH INCLUDES)	
	455-0705	1	SEAL-CONNECTOR	
	245-1048	26	PLUG-CONNECTOR (1-PIN)	
	8T-8737	2	PLUG-SEAL	
	185-1860	5	SEAL-WIRE	
	267-9572	38	SOCKET-CONNECTION (18-GA)	
	9X-3401	7	PIN-CONNECTOR (16-GA TO 18-GA)	
			—OR—	
	126-1767	7	PIN-CONNECTOR (14-GA TO 16-GA)	
	9X-3402	16	SOCKET-CONNECTOR (16-GA TO 18-GA)	
			—OR—	
	126-1768	16	SOCKET-CONNECTOR (14-GA TO 16-GA)	
	217-9039	7	STRAP-CABLE	
	206-1345	14	STRAP-CABLE	
E	**125-7874**		TUBE-HEAT SHRINK (5.72-MM DIA) (10-CM)	
	194-5226	12	TERMINAL AS (16-GA)	
			—OR—	
	194-5227	12	TERMINAL AS (14-GA)	

E - ORDER BY THE CENTIMETER
M - METRIC PART

<END>

375-8407 HARNESS AS-WIRING

PART OF 395-0113, 418-0928, 424-5516, 472-4942, 560-7999 WIRING GP-ENGINE

SMCS-1408 **i05716574**

NOTE	PART NUMBER	QTY	PART NAME 1 2 3 4 5 6 (PRODUCT LEVEL)	SEE PAGE
	102-8804	1	KIT-RECEPTACLE (4-PIN)	
			(INCLUDES RECEPTACLE AS & WEDGE)	
	113-4630	1	RECEPTACLE AS-CONNECTOR (4-PIN)	
	9X-3401	4	PIN-CONNECTOR (16-GA TO 18-GA)	
			–OR–	
	126-1767	4	PIN-CONNECTOR (14-GA TO 16-GA)	
	332-7865	1	TIE-CABLE	
			<END>	

395-0112 MOUNTING GP-ELECTRONIC CONTROL

PART OF 596-2071 ENGINE AR-COMPLETE, 451-8343, 461-4638, 461-4649, 461-4656, 461-4658, 466-1160, 466-1161, 466-1162, 466-1163, 468-0461, 468-8218, 470-8667, 470-8814, 471-0541, 474-7299, 475-8297, 475-9060, 478-4257, 479-9398, 480-2181, 481-0811, 482-0212, 484-2939, 485-8027, 486-2644, 486-4250, 488-6687, 489-9006, 491-2606, 491-4973, 491-4980, 491-4993, 491-7124, 492-3021, 492-3072, 492-3169, 493-1019, 493-1038, 494-2073, 494-6807, 495-8349, 499-7181, 501-2466, 502-9462, 504-3629, 504-5365, 504-8134, 504-9579, 506-5035, 506-9918, 507-8016, 508-0270, 510-1088, 512-9858, 513-0851, 513-8513, 514-9367, 515-9203, 519-4128, 520-3152, 520-4644, 524-8271, 525-8759, 526-0511, 526-7210, 526-8888, 527-7106, 527-9686, 528-3358, 528-9866, 528-9920, 530-1323, 530-2601, 531-2492, 533-2797, 533-3588, 535-8060, 536-6675, 539-6915, 539-8582, 543-4255, 552-3506, 552-8869, 553-1809, 553-3730, 555-4669, 562-8873, 569-7846, 575-2879, 575-2880, 583-8352, 591-1266, 591-9440, 593-7287, 593-7288, 594-2125, 596-4834, 596-7090, 596-8896, 596-8905, 597-9248, 598-9881, 602-8721, 603-5300, 608-9261, 609-9819, 612-1735, 613-9482, 614-5795, 614-9555, 622-6239, 623-1309, 624-0698, 627-8019, 627-8054, 627-8129, 628-4345, 633-4335, 633-7776, 645-2039, 657-2370 ENGINE AR-PRIMARY

SMCS-1901 **i06554270**

NOTE	REF NO	GRAPHIC REF	PART NUMBER	QTY	PART NAME 1 2 3 4 5 6 (PRODUCT LEVEL)	SEE PAGE
	1	1	**446-1268**	1	BRACKET AS	
M	2	1	**6I-0292**	2	BOLT (M8X1.25X140-MM)	
M	3	1	**6I-0293**	2	BOLT (M8X1.25X80-MM)	

M - METRIC PART

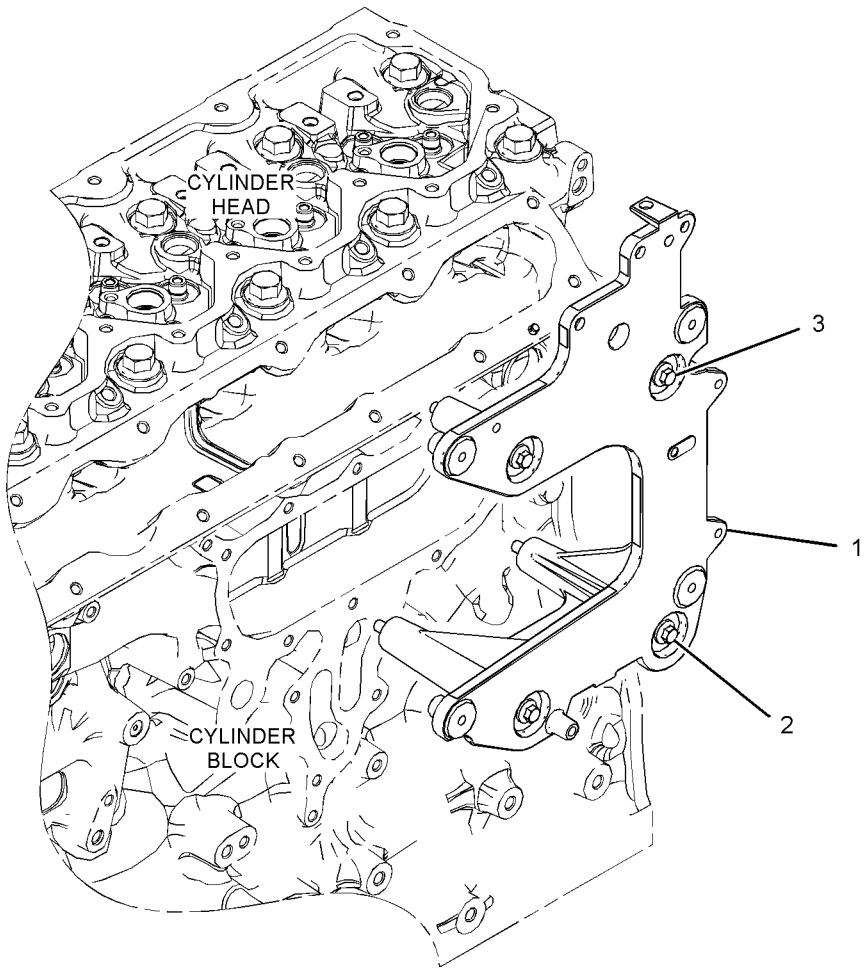

GRAPHIC #1 <END> g06032947

395-0110 SENSOR GP-ENGINE

PART OF 596-2071 ENGINE AR-COMPLETE, 451-8343, 461-4638, 461-4649, 461-4656, 461-4658, 466-1160, 466-1161, 466-1162, 466-1163, 468-0461, 468-8218, 470-8667, 470-8814, 471-0541, 474-7299, 475-8297, 475-9060, 478-4257, 479-9398, 480-2181, 481-0811, 482-0212, 484-2939, 485-8027, 486-2644, 486-4250, 488-6687, 489-9006, 491-2606, 491-4973, 491-4980, 491-4993, 491-7124, 492-3021, 492-3072, 492-3169, 493-1019, 493-1038, 494-2073, 494-6807, 495-8349, 499-7181, 501-2466, 502-9462, 504-3629, 504-5365, 504-8134, 504-9579, 506-5035, 506-9918, 507-8016, 508-0270, 510-1088, 512-9858, 513-0851, 513-8513, 514-9367, 515-9203, 519-4128, 520-3152, 520-4644, 524-8271, 525-8759, 526-0511, 526-7210, 526-8888, 527-7106, 527-9686, 528-3358, 528-9866, 528-9920, 530-1323, 530-2601, 531-2492, 533-2797, 533-3588, 535-8060, 536-6675, 539-6915, 539-8582, 543-4255, 552-3506, 552-8869, 553-1809, 553-3730, 555-4669, 562-8873, 569-7846, 575-2879, 575-2880, 583-8352, 591-1266, 591-9440, 593-7287, 593-7288, 594-2125, 596-4834, 596-7090, 596-8896, 596-8905, 597-9248, 598-9881, 602-8721, 603-5300, 608-9261, 609-9819, 612-1735, 613-9482, 614-5795, 614-9555, 622-6239, 623-1309, 624-0698, 627-8019, 627-8054, 627-8129, 628-4345, 633-4335, 633-7776, 645-2039, 657-2370 ENGINE AR-PRIMARY

SMCS-1403, 1718, 1906, 1907, 1912, 1917, 1923, 1924, 1925, 1928, 1929, 7400, 7422

i09710761

NOTE	REF NO	GRAPHIC REF	PART NUMBER	QTY	PART NAME 1 2 3 4 5 6 (PRODUCT LEVEL)	SEE PAGE
M	1	1	**124-3815**	2	BOLT (M8X1.25X16-MM)	
	2	1	**199-9252**	1	SEAL-O-RING	
	3	1	**199-9267**	1	SEAL-O-RING	
	4	1	**199-9751**	1	SEAL-O-RING	
	5	1	**238-0120**	2	SENSOR GP-SPEED (ENGINE)	
	6	1	**256-6454**	1	SENSOR-TEMPERATURE (2-PIN) (AIR INLET MANIFOLD)	
	6A	1	**256-6454**	1	SENSOR-TEMPERATURE (2-PIN) (COOLANT)	
	7	1	**276-5603**	1	SEAL-O-RING	
	8	1	**320-3060**	1	SENSOR GP-PRESSURE (3-PIN) (ENGINE OIL)	
	9	1	**320-3062**	1	SENSOR GP-PRESSURE (INLET MANIFOLD AIR)	
	10	1	**228-4947**	2	SEAL-O-RING	

M - METRIC PART

395-0110 **SENSOR GP-ENGINE (**contd.**)** **i09710761**

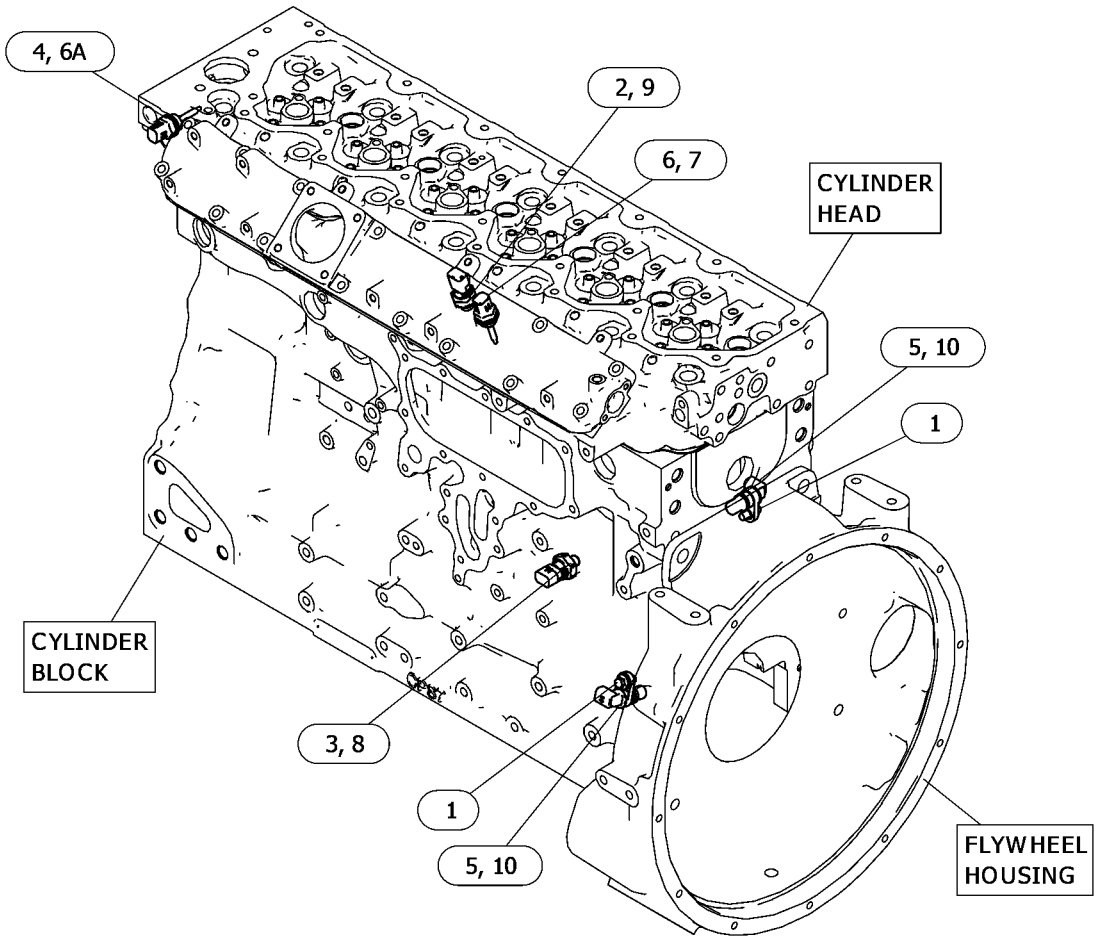

GRAPHIC #1 <END> g06622649

560-7572 SENSOR GP-ENGINE

PART OF 563-6728, 563-6729, 563-6730, 565-1247 ENGINE AR-PRIMARY

SMCS-1403, 1718, 1906, 1907, 1912, 1917, 1923, 1924, 1925, 1928, 1929, 7400, 7422

i09759740

NOTE	REF NO	GRAPHIC REF	PART NUMBER	QTY	PART NAME 1 2 3 4 5 6 (PRODUCT LEVEL)	SEE PAGE
	1	1	**199-9267**	1	SEAL-O-RING	
	2	1	**228-4947**	2	SEAL-O-RING	
	3	1	**276-5603**	1	SEAL-O-RING	
M	4	1	**124-3815**	2	BOLT (M8X1.25X16-MM)	
	5	1	**199-9252**	1	SEAL-O-RING	
	6	1	**256-6454**	1	SENSOR-TEMPERATURE (2-PIN) (COOLANT)	
	6A	1	**256-6454**	1	SENSOR-TEMPERATURE (2-PIN) (INTAKE MANIFOLD AIR)	
	7	1	**320-3060**	1	SENSOR GP-PRESSURE (3-PIN) (ENGINE OIL)	
	8	1	**320-3062**	1	SENSOR GP-PRESSURE (INTAKE MANIFOLD AIR)	
	9	1	**481-5929**	1	SENSOR GP-SPEED (PRIMARY, TIMING)	
	9A	1	**481-5929**	1	SENSOR GP-SPEED (SECONDARY, TIMING)	
	10	1	**199-9751**	1	SEAL-O-RING	

M - METRIC PART

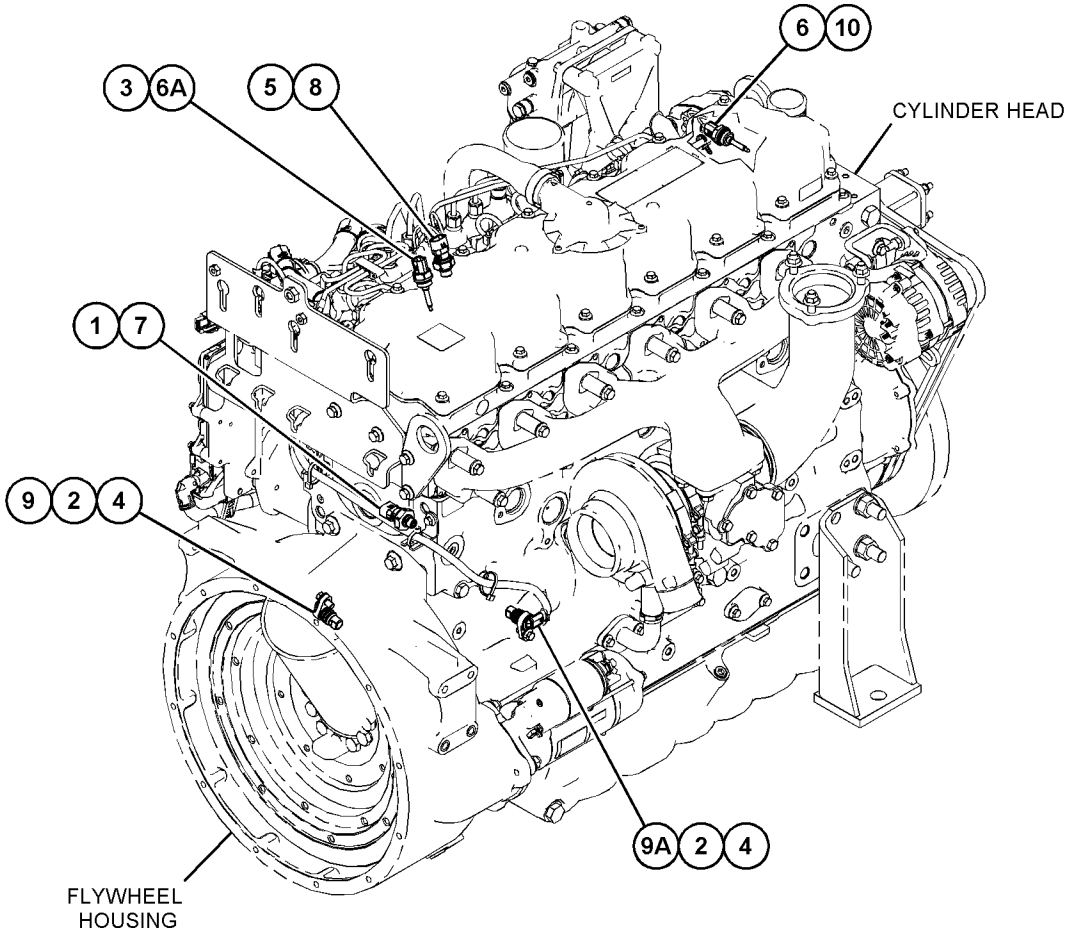

GRAPHIC #1 <END> g06369984

371-2733 STARTING AID GP

PART OF 468-8218, 488-6687, 531-2492 ENGINE AR-PRIMARY

SMCS-1090 **i05906470**

NOTE	REF NO	GRAPHIC REF	PART NUMBER	QTY	PART NAME 1 2 3 4 5 6 (PRODUCT LEVEL)	SEE PAGE
	1	1	**299-6953**	6	GLOW PLUG	

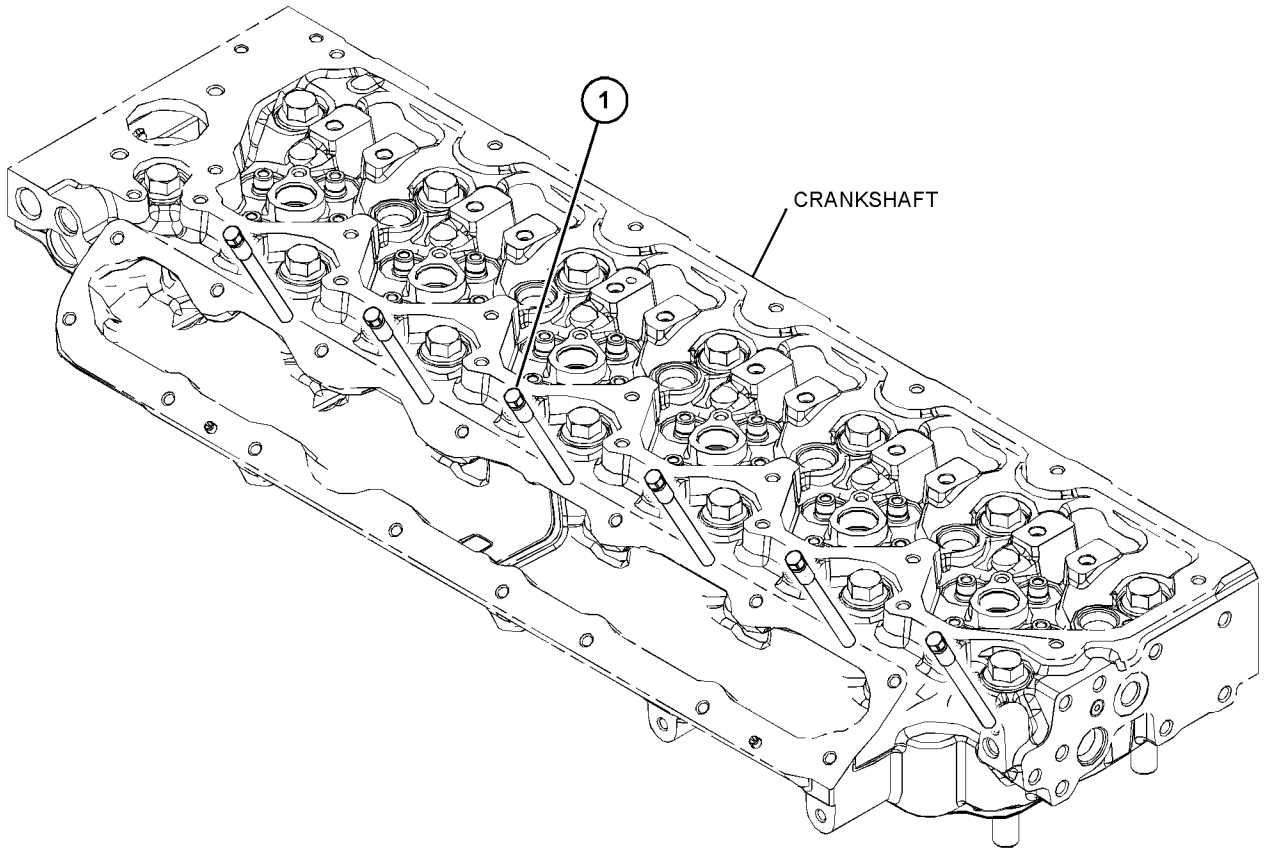

GRAPHIC #1 <END> g03707568

380-9279 STARTING AID GP

PART OF 596-2071 ENGINE AR-COMPLETE, 461-4638, 461-4649, 461-4656, 471-0541, 475-8297, 475-9060, 478-4257, 481-0811, 491-4993, 492-3021, 492-3169, 493-1019, 493-1038, 504-5365, 504-8134, 515-9203, 520-4644, 526-8888, 530-2601, 535-8060, 591-1266, 591-9440, 603-5300, 608-9261, 612-1735, 622-6239, 627-8129, 628-4345, 633-7776 ENGINE AR-PRIMARY

SMCS-1090 **i06583086**

NOTE	REF NO	GRAPHIC REF	PART NUMBER	QTY	PART NAME 1 2 3 4 5 6 (PRODUCT LEVEL)	SEE PAGE
M	1	1	**112-7704**	1	BOLT (M6X1X30-MM)	
M	2	1	**5C-2890**	2	NUT (M6X1-THD)	
	3	1	**217-9039**	1	STRAP-CABLE	
	4	1	**452-3112**	6	GLOW PLUG (12-VOLT)	
	5	1	**277-4409**	1	CAP	
	6	1	**384-7567**	1	HARNESS AS-STARTING AID	
		1	**2L-8050**	1	TERMINAL-RING (6-GA, 1/4-IN SCREW)	
					—OR—	
		1	**2L-8058**	1	TERMINAL-RING (8-GA, 1/4-IN SCREW)	
		1	**427-9771**	1	TIE	
M	7	1	**208-8469**	1	LOCKNUT (M6X1-THD)	
	8	1	**275-2428**	1	INSULATOR	
	9	1	**275-2431**	1	WASHER	
	10	1	**067-6070**	1	WASHER	
	11	1	**368-3145**	1	BUS BAR AS	

M - METRIC PART

380-9279 **STARTING AID GP (**contd.**)** **i06583086**

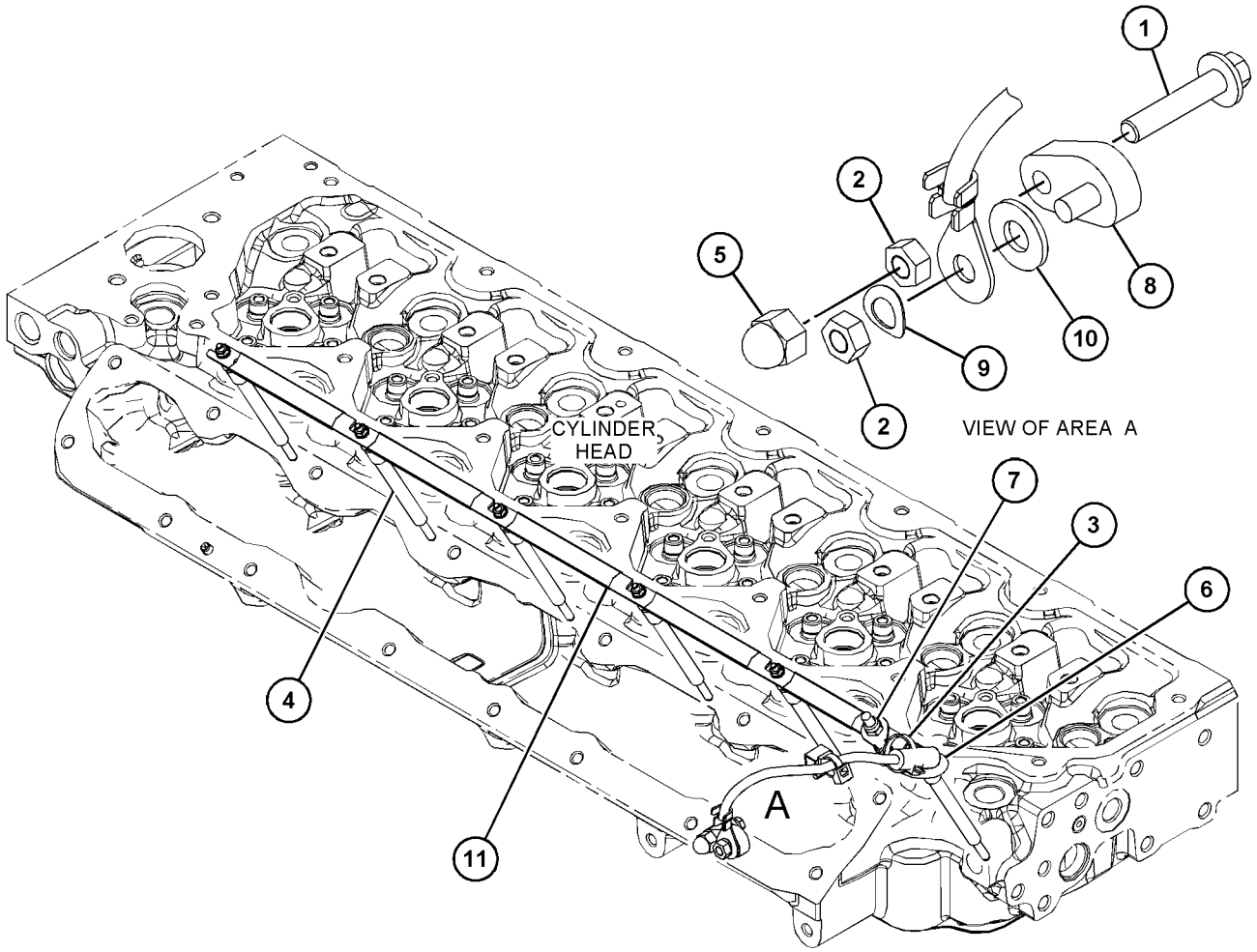

GRAPHIC #1 <END> g06036396

395-0114 STARTING AID GP

PART OF 451-8343, 461-4658, 466-1160, 466-1161, 466-1162, 466-1163, 468-0461, 470-8667, 470-8814, 474-7299, 479-9398, 480-2181, 482-0212, 484-2939, 485-8027, 486-2644, 486-4250, 489-9006, 491-2606, 491-4973, 491-4980, 491-7124, 492-3072, 494-2073, 494-6807, 495-8349, 499-7181, 501-2466, 502-9462, 504-3629, 504-9579, 506-5035, 506-9918, 507-8016, 508-0270, 510-1088, 512-9858, 513-0851, 513-8513, 514-9367, 519-4128, 520-3152, 524-8271, 525-8759, 526-0511, 526-7210, 527-7106, 527-9686, 528-3358, 528-9866, 528-9920, 530-1323, 533-2797, 533-3588, 536-6675, 539-6915, 539-8582, 543-4255, 552-3506, 552-8869, 553-1809, 553-3730, 555-4669, 562-8873, 563-6728, 563-6729, 563-6730, 565-1247, 569-7846, 575-2879, 575-2880, 583-8352, 593-7287, 593-7288, 594-2125, 596-4834, 596-7090, 596-8896, 596-8905, 597-9248, 598-9881, 602-8721, 609-9819, 613-9482, 614-5795, 614-9555, 623-1309, 624-0698, 627-8019, 627-8054, 633-4335, 645-2039, 657-2370 ENGINE AR-PRIMARY

SMCS-1090 **i07383443**

NOTE	REF NO	GRAPHIC REF	PART NUMBER	QTY	PART NAME 1 2 3 4 5 6 (PRODUCT LEVEL)	SEE PAGE
M	1	1	**112-7704**	1	BOLT (M6X1X30-MM)	
M	2	1	**5C-2890**	2	NUT (M6X1-THD)	
	3	1	**217-9039**	1	STRAP-CABLE	
	4	1	**462-2235**	6	GLOW PLUG (24-VOLT)	
	5	1	**368-3145**	1	BUS BAR AS	
	6	1	**384-7567**	1	HARNESS AS-STARTING AID	
E		1	**292-2893**		CONDUIT (10.1-MM ID) (4-CM)	
		1	**2L-8050**	2	TERMINAL-RING (6-GA, 1/4-IN SCREW)	
					—OR—	
		1	**2L-8058**	2	TERMINAL-RING (8-GA, 1/4-IN SCREW)	
		1	**427-9771**	1	TIE	
M	7	1	**208-8469**	1	LOCKNUT (M6X1-THD)	
	8	1	**275-2428**	1	INSULATOR	
	9	1	**277-4409**	1	CAP	
	10	1	**067-6070**	1	WASHER	
	11	1	**275-2431**	1	WASHER	

E - ORDER BY THE CENTIMETER
M - METRIC PART

395-0114 **STARTING AID GP (**contd.**)** **i07383443**

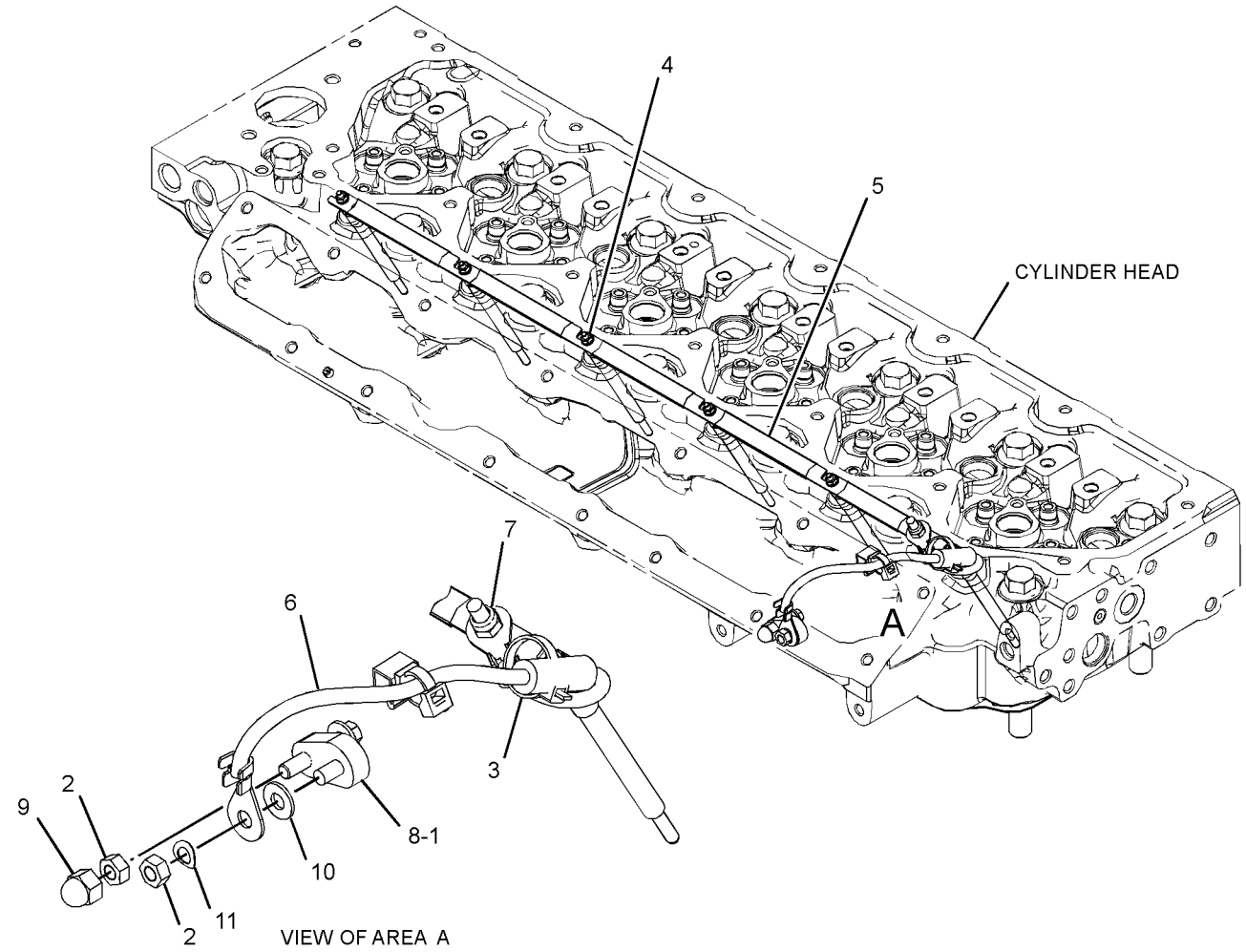

GRAPHIC #1 <END> g06032380

354-5671 STARTING MOTOR GP-ELECTRIC*R

PART OF 385-8000 STARTING MOTOR GP-ELECTRIC

SMCS-1453 **i07761998**

NOTE	REF NO	GRAPHIC REF	PART NUMBER	QTY	PART NAME 1 2 3 4 5 6 (PRODUCT LEVEL)	SEE PAGE
	1	1	**230-4012**	1	RECEPTACLE AS-CONNECTOR (2-PIN)	
	2	1	**488-3767**	1	YOKE AS	
	3	1	**488-3768**	1	HOLDER AS-BRUSH	
	4	1	**488-3770**	1	ARMATURE AS	
	5	1	**488-3771**	1	DRIVE AS-CLUTCH	
	6	1	**488-3779**	1	HOUSING AS-DRIVE	
	7	1	**488-3787**	1	SWITCH AS-RELAY	
					AVAILABLE REPAIR KIT(S):	
			488-3794	1	KIT-GEAR	
					``(KIT INCLUDES: SHOCK ABSORBER AND GEAR)	
			488-3797	1	KIT-SHIFT LEVER	
					``(KIT INCLUDES: SHAFT, LEVER, AND WASHERS)	
			488-3798	1	KIT-PINION	
					``(KIT INCLUDES: NUTS, PINION,RETAINER, AND SPR)	
			488-3799	1	KIT-HARDWARE	
					``(KIT INCLUDES: BOLTS, NUTS, SCREWS, AND WASHERS)	

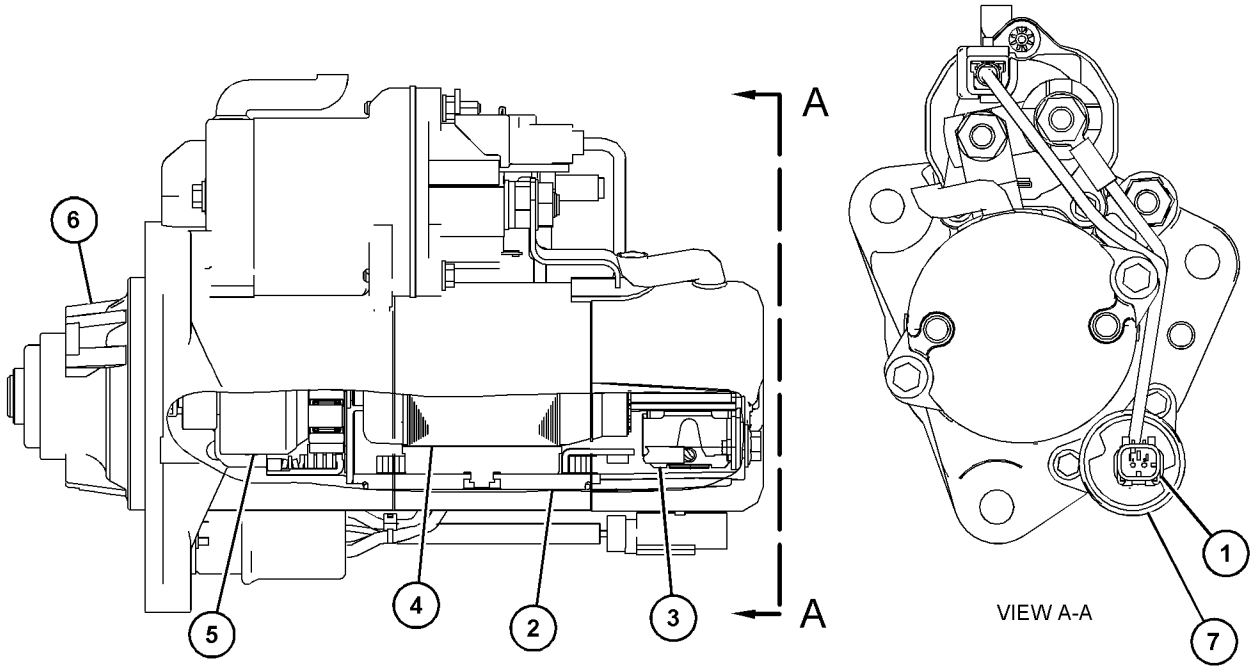

GRAPHIC #1 <END> g06016324

371-2541 STARTING MOTOR GP-ELECTRIC

PART OF 451-8343, 470-8814, 486-4250, 508-0270, 519-4128, 526-0511, 526-7210, 552-3506, 575-2879, 575-2880, 593-7287, 593-7288, 597-9248, 627-8019, 645-2039 ENGINE
AR-PRIMARY

SMCS-1453 **i06807103**

NOTE	REF NO	GRAPHIC REF	PART NUMBER	QTY	PART NAME 1 2 3 4 5 6 (PRODUCT LEVEL)	SEE PAGE
M	1	1	**183-1343**	3	STUD (M12X1.75X53-MM)	
R	2	1	**436-9104**	1	STARTING MOTOR GP-ELECTRIC (24-VOLT)	
		1	**230-4012**	1	RECEPTACLE AS-CONNECTOR (2-PIN)	
		1	**423-9049**	1	SEAL-O-RING	
M	3	1	**184-0983**	3	NUT-HEX FLANGE (M12X1.75-THD)	

M - METRIC PART
R - REMANUFACTURED PART MAY BE AVAILABLE

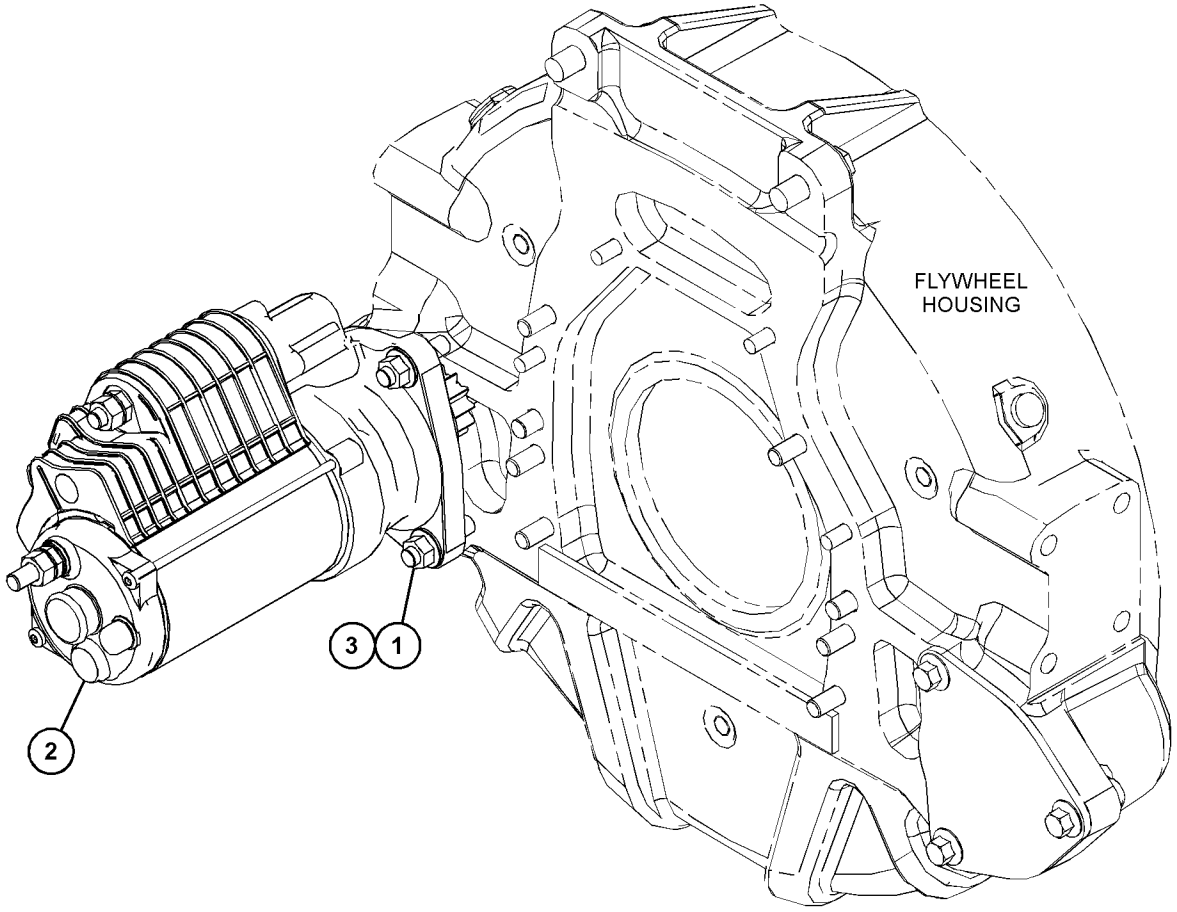

GRAPHIC #1 <END> g03863804

378-0589 STARTING MOTOR GP-ELECTRIC

PART OF 461-4649, 461-4656, 491-4993, 520-4644, 526-8888, 591-1266 ENGINE AR-PRIMARY

SMCS-1453 **i05859740**

NOTE	REF NO	GRAPHIC REF	PART NUMBER	QTY	PART NAME 1 2 3 4 5 6 (PRODUCT LEVEL)	SEE PAGE
	1	1	**373-1665**	1	MOTOR-STARTING	
M	2	1	**183-1343**	3	STUD (M12X1.75X53-MM)	
M	3	1	**184-0983**	3	NUT-HEX FLANGE (M12X1.75-THD)	

M - METRIC PART

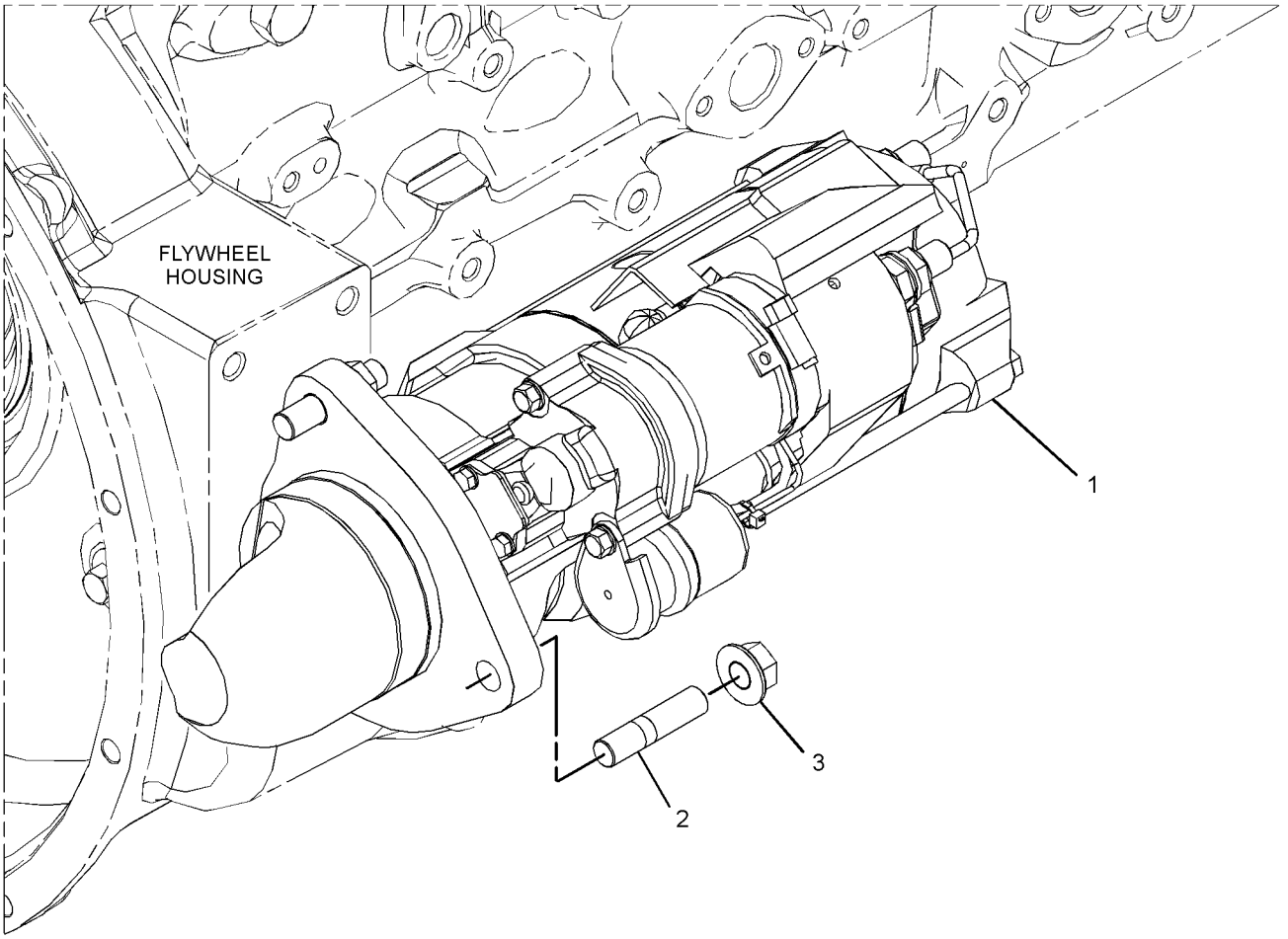

GRAPHIC #1 <END> g03161616

378-0590 STARTING MOTOR GP-ELECTRIC

24-VOLT

PART OF 484-2939, 486-2644, 488-6687, 491-2606, 506-9918, 528-9920, 563-6728, 598-9881, 627-8054 ENGINE AR-PRIMARY

SMCS-1453 **i06179802**

NOTE	REF NO	GRAPHIC REF	PART NUMBER	QTY	PART NAME 1 2 3 4 5 6 (PRODUCT LEVEL)	SEE PAGE
M	1	1	**183-1343**	3	STUD (M12X1.75X53-MM)	
	2	1	**389-5833**	1	STARTING MOTOR GP-ELECTRIC (24-VOLT)	
M	3	1	**184-0983**	3	NUT-HEX FLANGE (M12X1.75-THD)	

M - METRIC PART

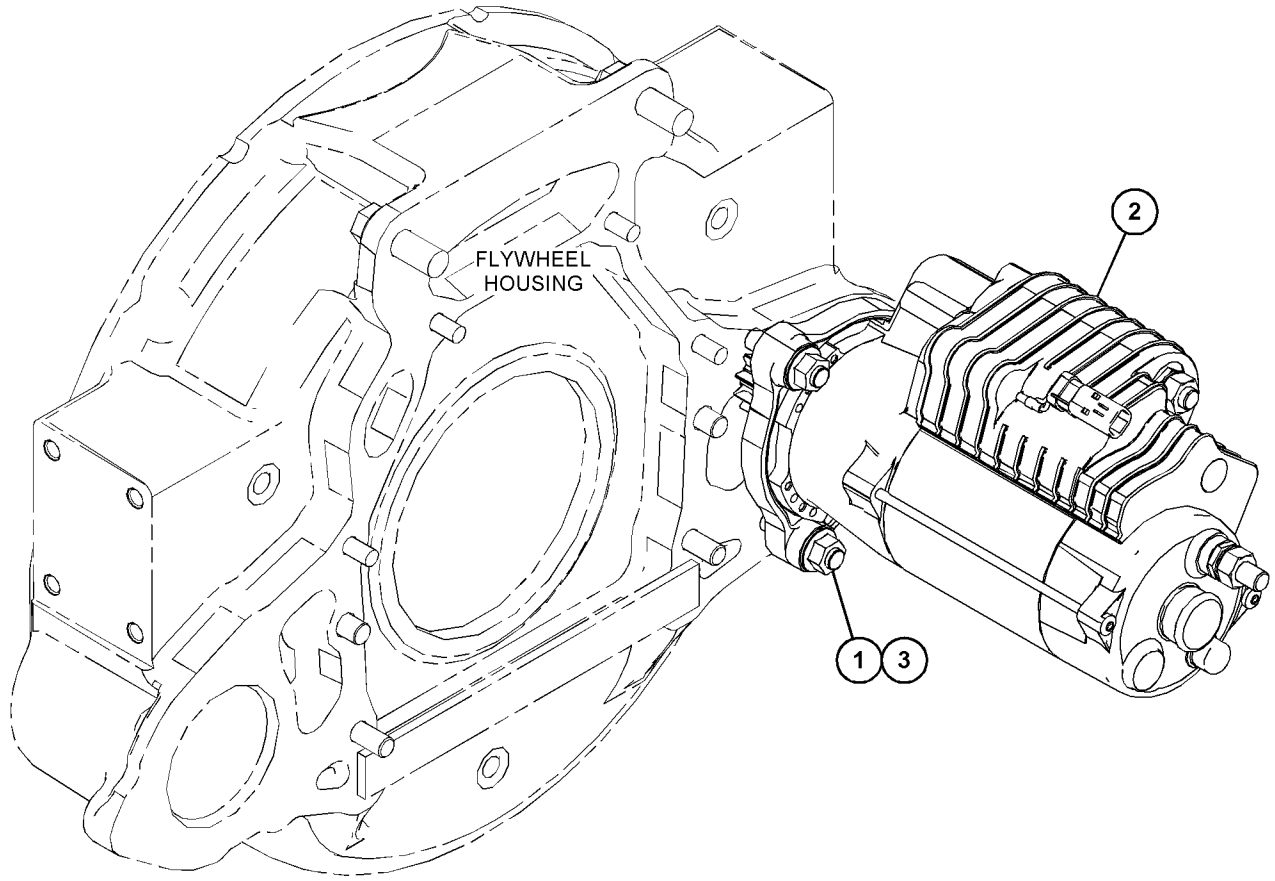

GRAPHIC #1 <END> g03842935

385-8000 STARTING MOTOR GP-ELECTRIC

PART OF 461-4658, 468-0461, 470-8667, 479-9398, 480-2181, 485-8027, 491-7124, 494-6807, 495-8349, 501-2466, 502-9462, 504-9579, 507-8016, 513-0851, 520-3152, 525-8759, 527-7106, 528-3358, 533-2797, 539-6915, 543-4255, 552-8869, 562-8873, 563-6729, 563-6730, 565-1247, 583-8352, 594-2125, 596-4834, 596-7090, 609-9819, 614-9555, 623-1309, 624-0698, 633-4335, 657-2370 ENGINE AR-PRIMARY

SMCS-1453 **i08752827**

NOTE	REF NO	GRAPHIC REF	PART NUMBER	QTY	PART NAME 1 2 3 4 5 6 (PRODUCT LEVEL)	SEE PAGE
YR	1	1	**354-5671**	1	STARTING MOTOR GP-ELECTRIC	828
M	2	1	**519-9198**	3	STUD (M12X1.75X53-MM)	
M	3	1	**184-0983**	3	NUT-HEX FLANGE (M12X1.75-THD)	

M - METRIC PART
R - REMANUFACTURED PART MAY BE AVAILABLE
Y - SEPARATE ILLUSTRATION

385-8000 **STARTING MOTOR GP-ELECTRIC (**contd.**)** **i08752827**

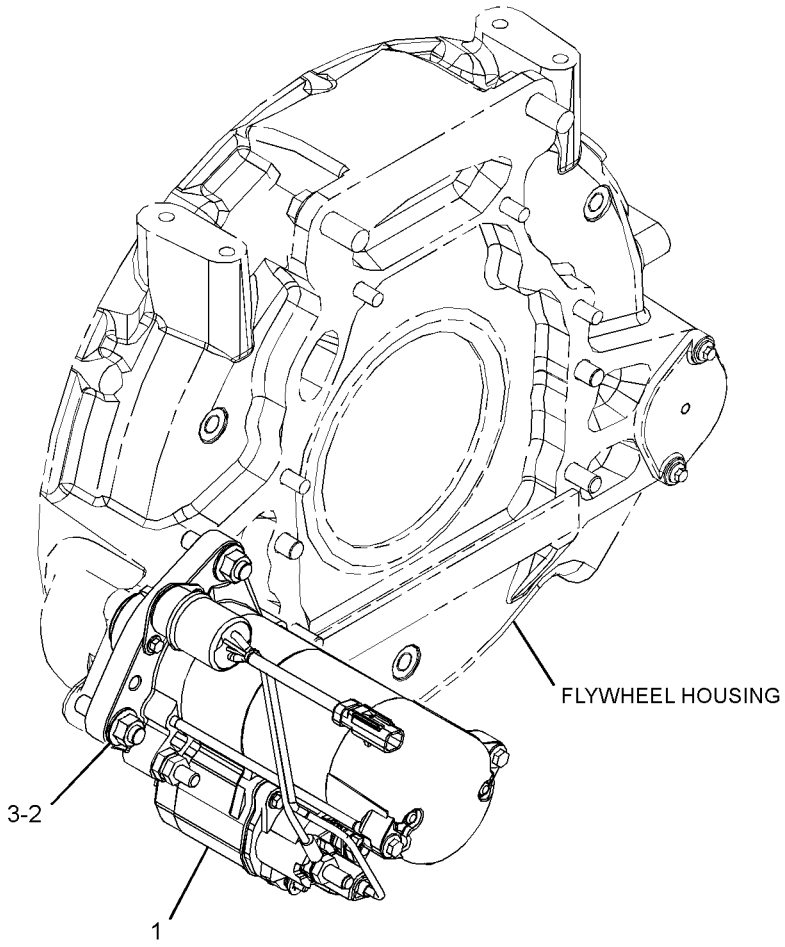

GRAPHIC #1 <END> g06165392

392-2019 STARTING MOTOR GP-ELECTRIC

12-VOLT,4-KILOWATT. LH

PART OF 478-4257, 515-9203, 608-9261 ENGINE AR-PRIMARY

SMCS-1453 **i10547124**

NOTE	REF NO	GRAPHIC REF	PART NUMBER	QTY	PART NAME 1 2 3 4 5 6 (PRODUCT LEVEL)	SEE PAGE
R	1	1	**575-8234**	1	STARTING MOTOR AS-ELECTRIC	
	1A	1	**451-7225**	1	FILM-IDENTIFICATION (CAT)	
M	2	1	**6I-0364**	3	STUD (M10X1.5X45-MM)	
M	3	1	**175-7141**	3	NUT-HEX FLANGE (M10X1.5-THD)	

M - METRIC PART
R - REMANUFACTURED PART MAY BE AVAILABLE

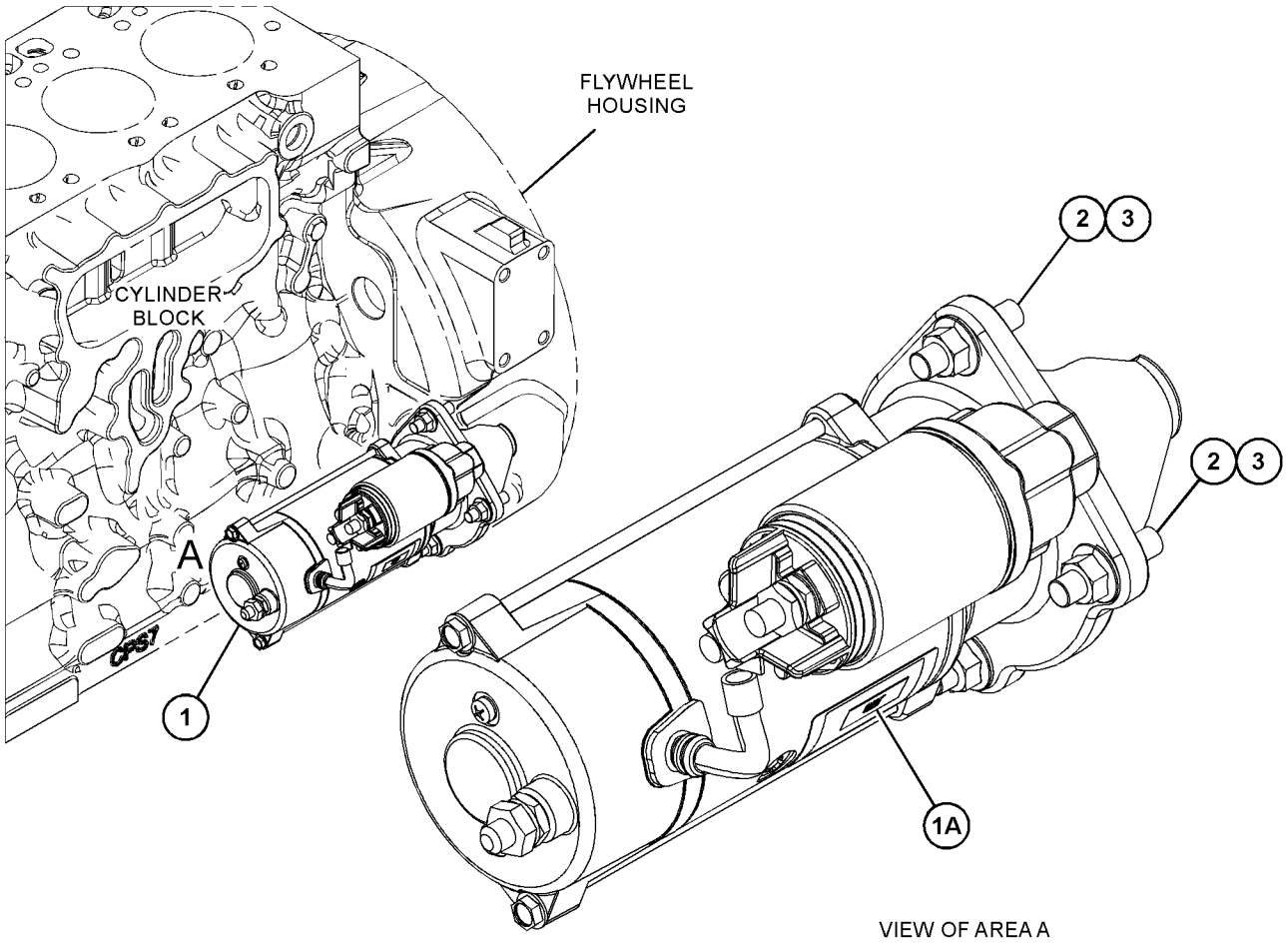

VIEW OF AREA A

GRAPHIC #1 <END> g07939553

392-2020 STARTING MOTOR GP-ELECTRIC

24-VOLT, 4-KILOWATT

PART OF 466-1160, 466-1161, 466-1162, 466-1163, 482-0212, 489-9006, 491-4973, 491-4980, 492-3072, 499-7181, 510-1088, 513-8513, 524-8271, 527-9686, 528-9866, 530-1323, 536-6675, 539-8582, 555-4669, 569-7846, 602-8721, 613-9482, 614-5795 ENGINE AR-PRIMARY

SMCS-1453 **i10694873**

NOTE	REF NO	GRAPHIC REF	PART NUMBER	QTY	PART NAME 1 2 3 4 5 6 (PRODUCT LEVEL)	SEE PAGE
M	1	1	**6I-0364**	3	STUD (M10X1.5X45-MM)	
M	2	1	**175-7141**	3	NUT-HEX FLANGE (M10X1.5-THD)	
	3	1	**611-9112**	1	MOTOR AS-ELECTRIC	

M - METRIC PART

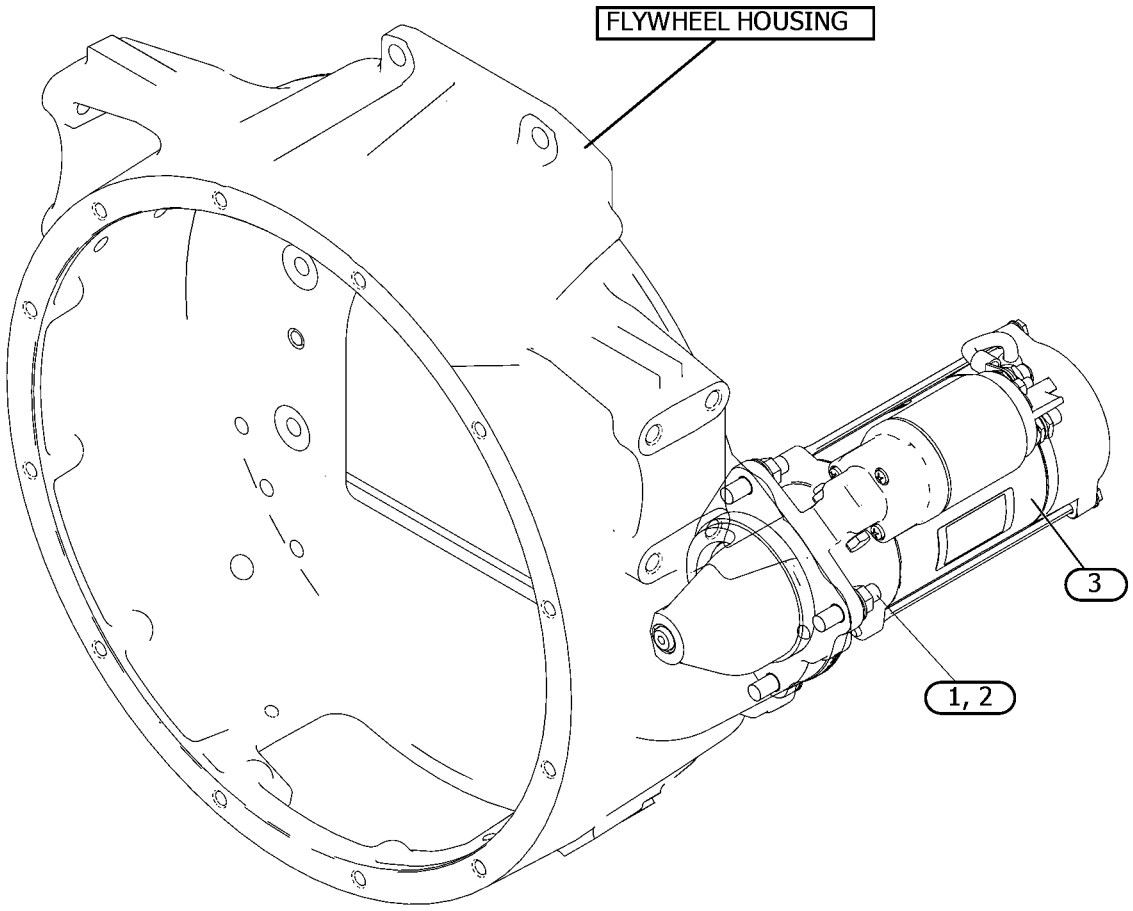

GRAPHIC #1 <END> g07943393

392-2021 STARTING MOTOR GP-ELECTRIC

PART OF 494-2073, 506-5035, 533-3588, 553-1809 ENGINE AR-PRIMARY

SMCS-1453 **i06052997**

NOTE	REF NO	GRAPHIC REF	PART NUMBER	QTY	PART NAME 1 2 3 4 5 6 (PRODUCT LEVEL)	SEE PAGE
	1	1	**341-7601**	1	MOTOR	
M	2	1	**6I-4012**	3	STUD (M10X1.5X40-MM)	
M	3	1	**175-7141**	3	NUT-HEX FLANGE (M10X1.5-THD)	

M - METRIC PART

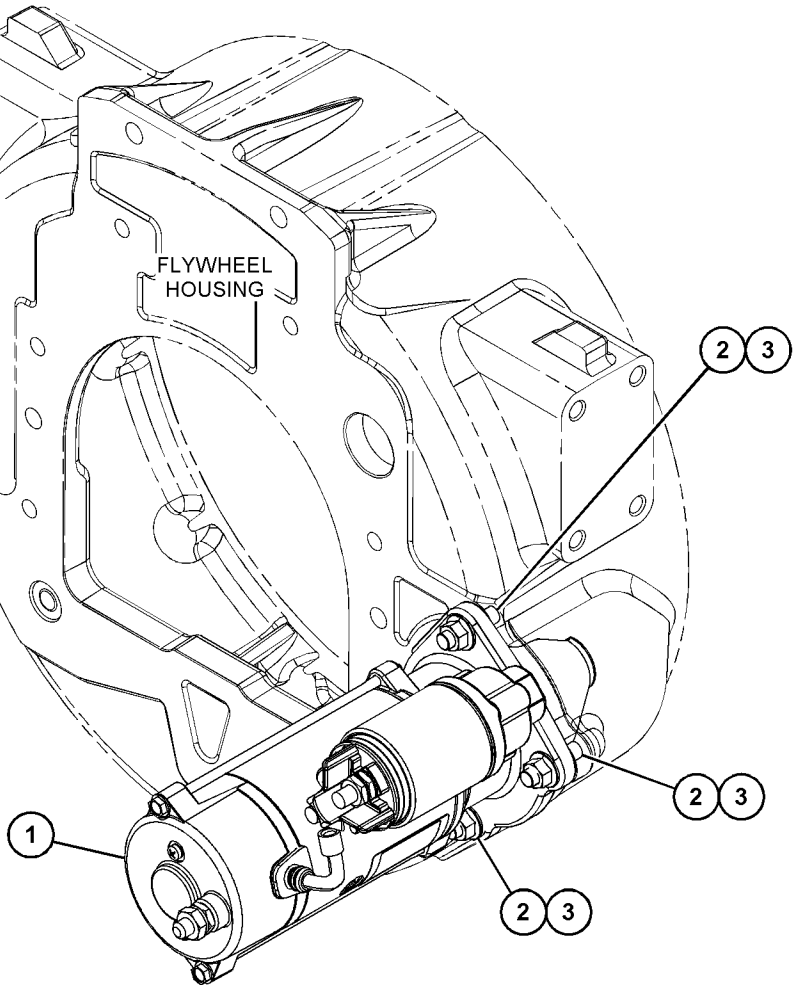

GRAPHIC #1 <END> g06111864

415-4870 STARTING MOTOR GP-ELECTRIC

PART OF 596-2071 ENGINE AR-COMPLETE, 461-4638, 471-0541, 475-8297, 475-9060, 481-0811, 492-3021, 530-2601, 535-8060, 591-9440, 603-5300, 612-1735, 622-6239, 627-8129, 628-4345, 633-7776 ENGINE AR-PRIMARY

SMCS-1453 **i05726910**

NOTE	REF NO	GRAPHIC REF	PART NUMBER	QTY	PART NAME 1 2 3 4 5 6 (PRODUCT LEVEL)	SEE PAGE
R	1	1	**321-8965**	1	STARTING MOTOR-ELECTRIC (12-VOLT, 4-KW)	
M	2	1	**6I-4012**	3	STUD (M10X1.5X40-MM)	
M	3	1	**175-7141**	3	NUT-HEX FLANGE (M10X1.5-THD)	

M - METRIC PART
R - REMANUFACTURED PART MAY BE AVAILABLE

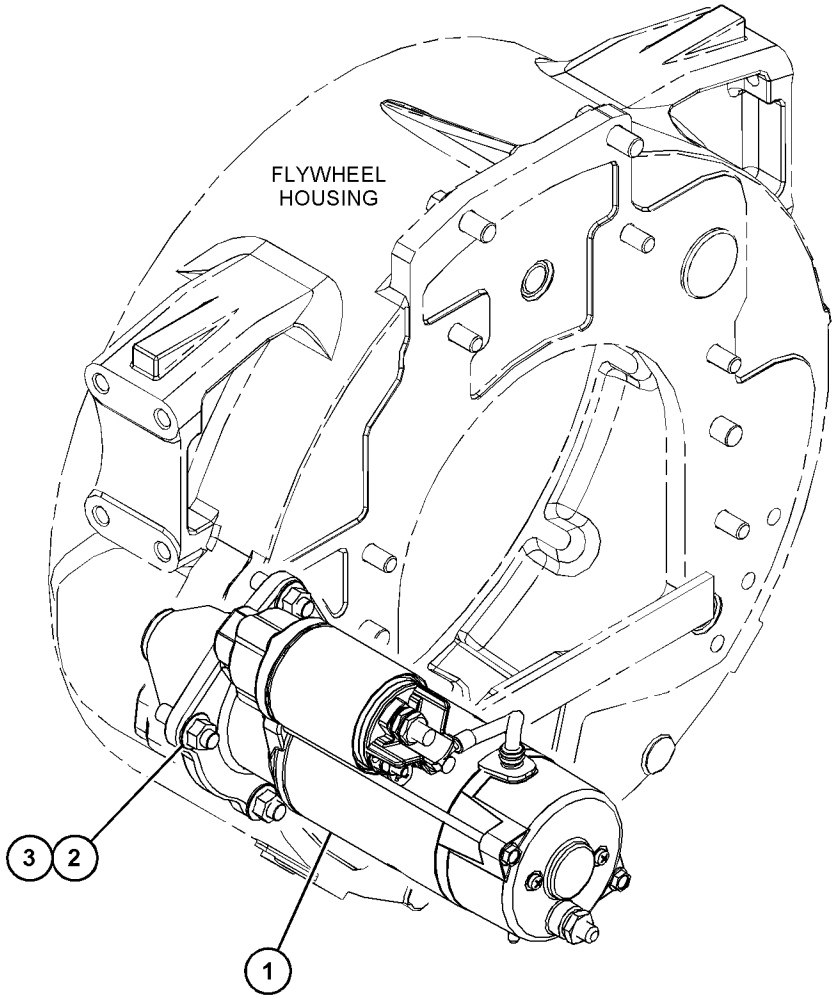

GRAPHIC #1 <END> g03665402

445-4703 STARTING MOTOR GP-ELECTRIC

PART OF 468-8218, 531-2492 ENGINE AR-PRIMARY

SMCS-1453 **i08847004**

NOTE	REF NO	GRAPHIC REF	PART NUMBER	QTY	PART NAME 1 2 3 4 5 6 (PRODUCT LEVEL)	SEE PAGE
M	1	1	**519-9198**	3	STUD (M12X1.75X53-MM)	
	2	1	**424-6652**	1	STARTING MOTOR GP-ELECTRIC (24-VOLT)	
	2A	1	**230-4012**	1	RECEPTACLE AS-CONNECTOR (2-PIN)	
	2B	1	**423-9049**	1	SEAL-O-RING	
M	3	1	**184-0983**	3	NUT-HEX FLANGE (M12X1.75-THD)	

M - METRIC PART

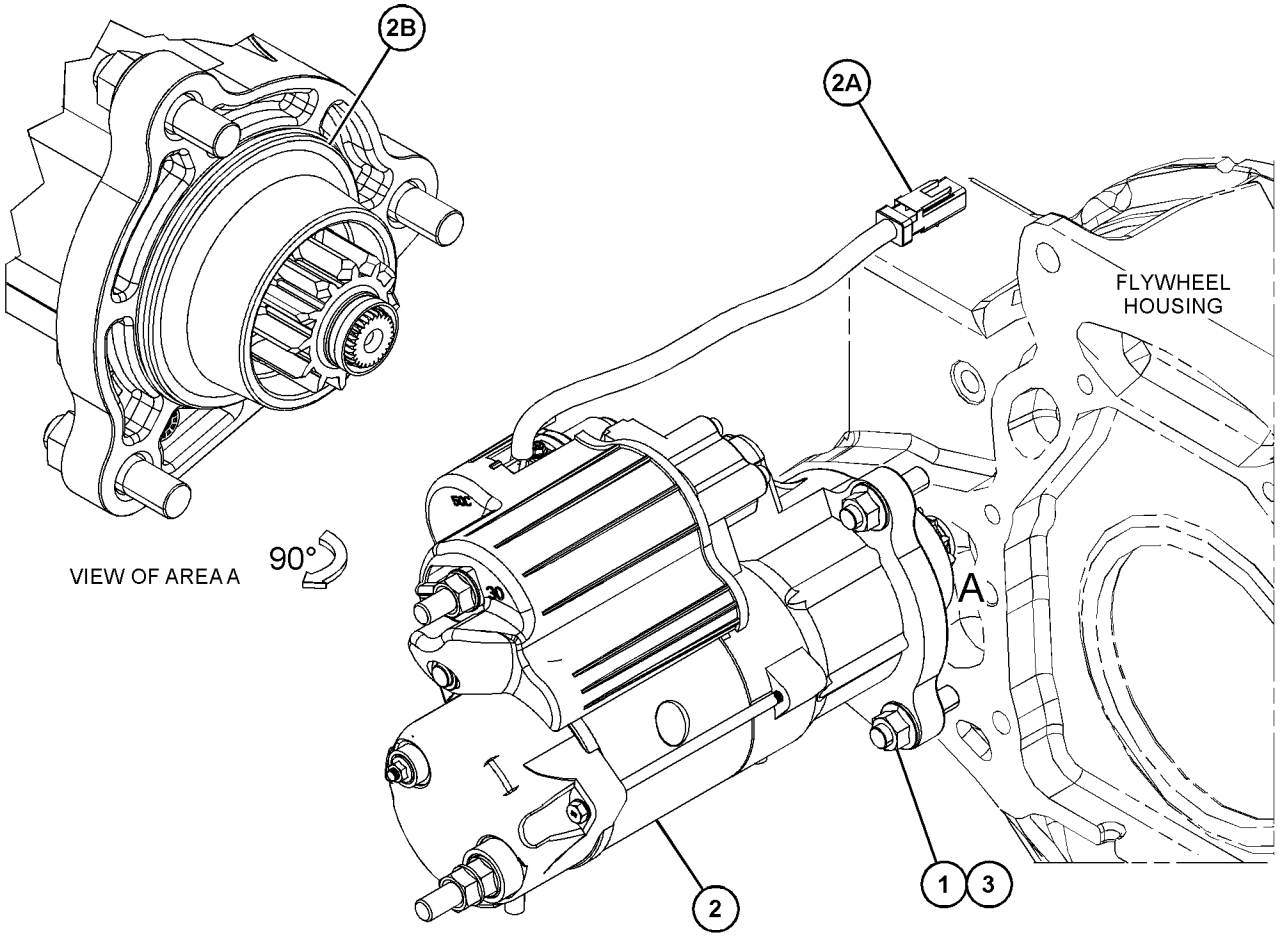

GRAPHIC #1 <END> g06814026

458-3684 STARTING MOTOR GP-ELECTRIC

S/N: G9R1-2271

PART OF 474-7299, 504-3629 ENGINE AR-PRIMARY

SMCS-1453 **i05836346**

NOTE	REF NO	GRAPHIC REF	PART NUMBER	QTY	PART NAME 1 2 3 4 5 6 (PRODUCT LEVEL)	SEE PAGE
	1	1	**382-5901**	1	STARTING MOTOR GP-ELECTRIC (24-VOLT)	
M	2	1	**6I-0594**	3	NUT (M10X1.5-THD)	
M	3	1	**6I-4012**	3	STUD (M10X1.5X40-MM)	

M - METRIC PART

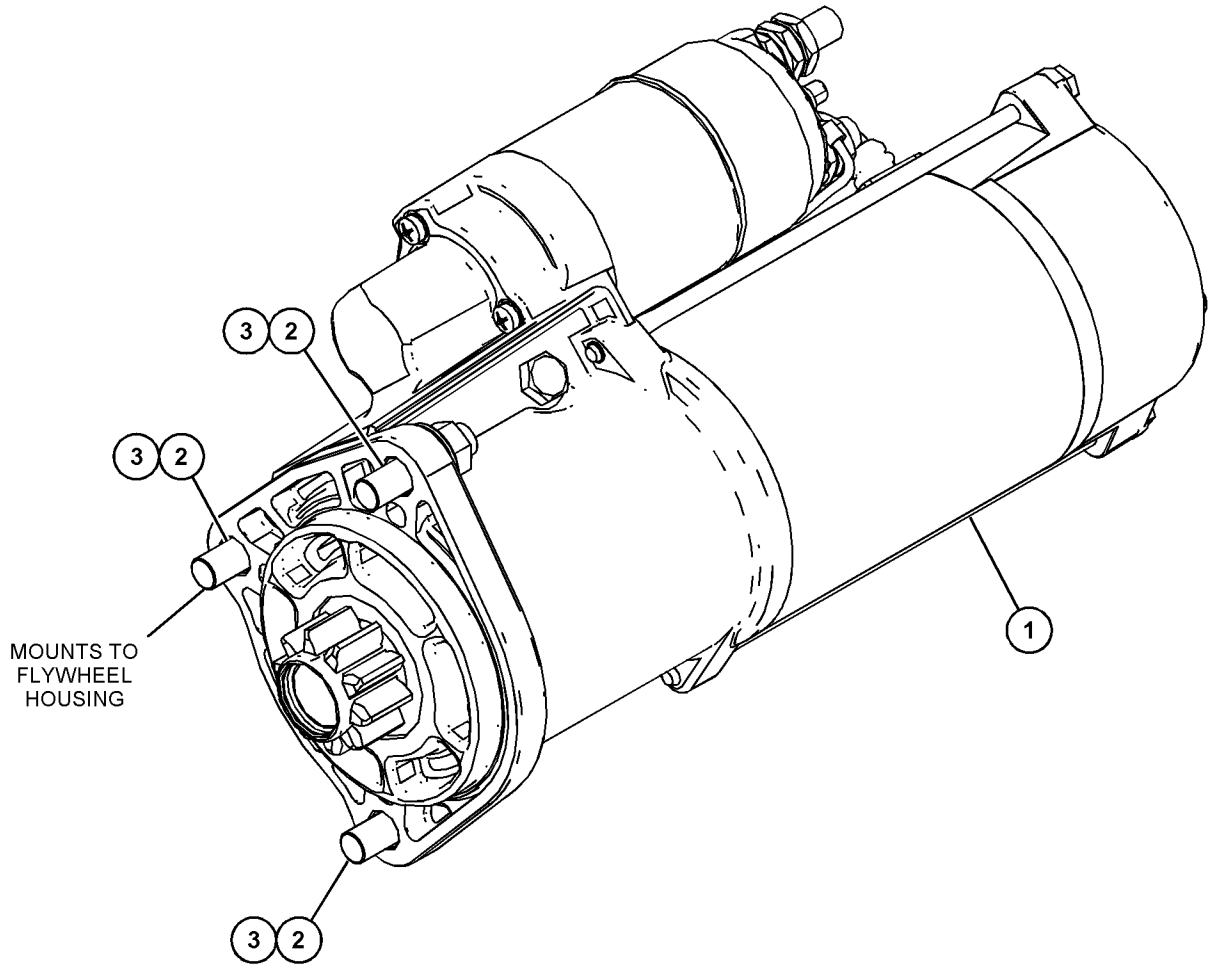

GRAPHIC #1 <END> g03693254

458-3684 STARTING MOTOR GP-ELECTRIC

PART OF 474-7299, 504-3629, 512-9858, 514-9367, 553-3730 ENGINE AR-PRIMARY

SMCS-1453 **i07034836**

NOTE	REF NO	GRAPHIC REF	PART NUMBER	QTY	PART NAME 1 2 3 4 5 6 (PRODUCT LEVEL)	SEE PAGE
C	1	1	**482-3187**	1	STARTING MOTOR GP-ELECTRIC (24-VOLT)	
CM	2	1	**6I-0364**	3	STUD (M10X1.5X45-MM)	
M	3	1	**175-7141**	3	NUT-HEX FLANGE (M10X1.5-THD)	

C - CHANGE FROM PREVIOUS TYPE
M - METRIC PART

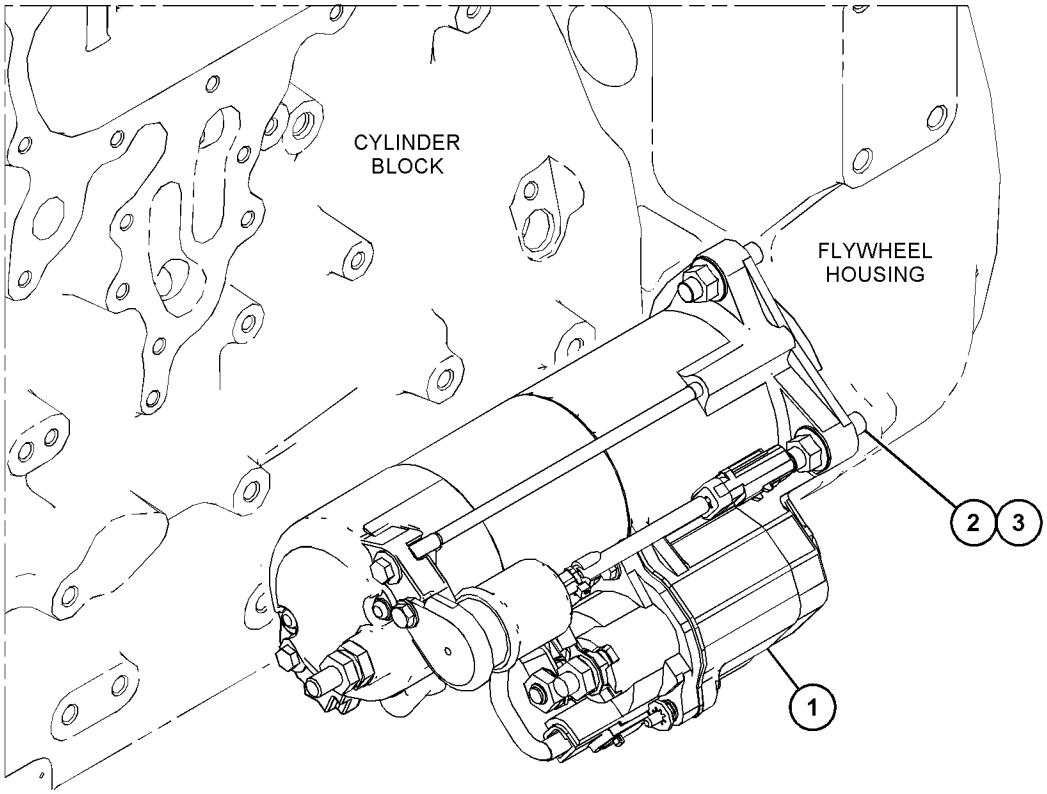

GRAPHIC #1 <END> g06200163

395-0113 WIRING GP-ENGINE

S/N: G9R1-234

SMCS-1403 **i05933200**

NOTE	REF NO	GRAPHIC REF	PART NUMBER	QTY	PART NAME 1 2 3 4 5 6 (PRODUCT LEVEL)	SEE PAGE
	1	1	**277-5064**	3	SEAL-O-RING	
	2	1	**277-5065**	3	CLIP	
M	3	1	**124-3815**	4	BOLT (M8X1.25X16-MM)	
	4	1	**217-9039**	1	STRAP-CABLE	
	5	1	**348-4637**	1	BOLT	
Y	6	1	**375-8407**	3	HARNESS AS-WIRING	818
	7	1	**377-1293**	1	BRACKET	
Y	8	1	**385-5997**	1	HARNESS AS-ENGINE	812
	9	1	**389-3863**	1	BRACKET	
	10	1	**392-2780**	1	BRACKET	
	11	1	**132-5789**	1	CLIP	
M	12	1	**232-1693**	1	BOLT-FLANGE HEAD (M6X1X35-MM)	

M - METRIC PART
Y - SEPARATE ILLUSTRATION

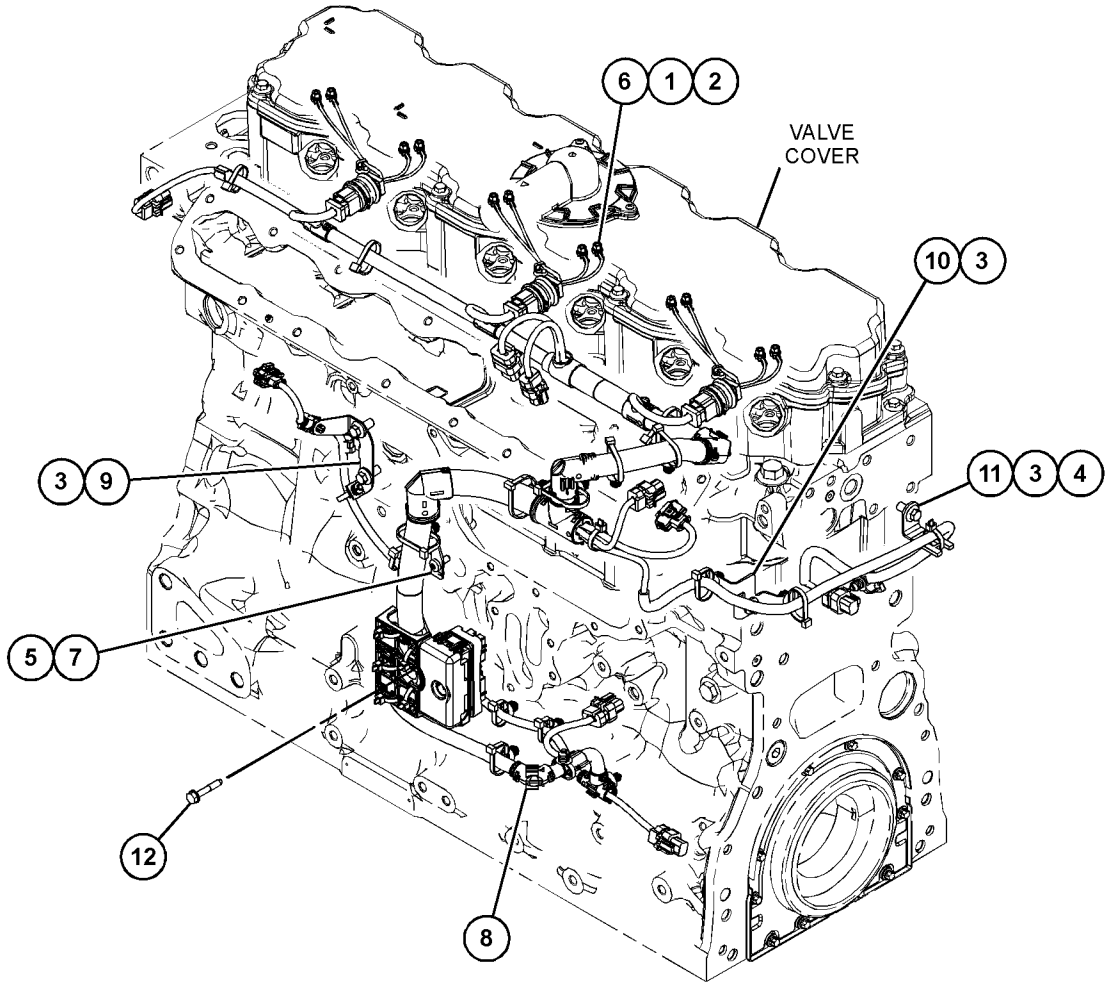

GRAPHIC #1 <END> g03731718

395-0113 WIRING GP-ENGINE

PART OF 470-8814, 645-2039 ENGINE AR-PRIMARY

TYPE 1

SMCS-1403 **i05954941**

NOTE	REF NO	GRAPHIC REF	PART NUMBER	QTY	PART NAME 1 2 3 4 5 6 (PRODUCT LEVEL)	SEE PAGE
C	1	1	**323-7347**	3	SEAL-O-RING	
CM	2	1	**254-3633**	3	BOLT-FLANGE HEAD (M6X1X16-MM)	
M	3	1	**124-3815**	4	BOLT (M8X1.25X16-MM)	
	4	1	**217-9039**	1	STRAP-CABLE	
	5	1	**348-4637**	1	BOLT	
C	6	1	**458-3745**	3	HARNESS AS-ENGINE (INJECTOR)	
					(EACH INCLUDES)	
		1	**332-7865**	1	TIE-CABLE	
	7	1	**377-1293**	1	BRACKET	
Y	8	1	**385-5997**	1	HARNESS AS-ENGINE	812
	9	1	**389-3863**	1	BRACKET	
	10	1	**392-2780**	1	BRACKET	
	11	1	**132-5789**	1	CLIP	
M	12	1	**232-1693**	1	BOLT-FLANGE HEAD (M6X1X35-MM)	

C - CHANGE FROM PREVIOUS TYPE
M - METRIC PART
Y - SEPARATE ILLUSTRATION

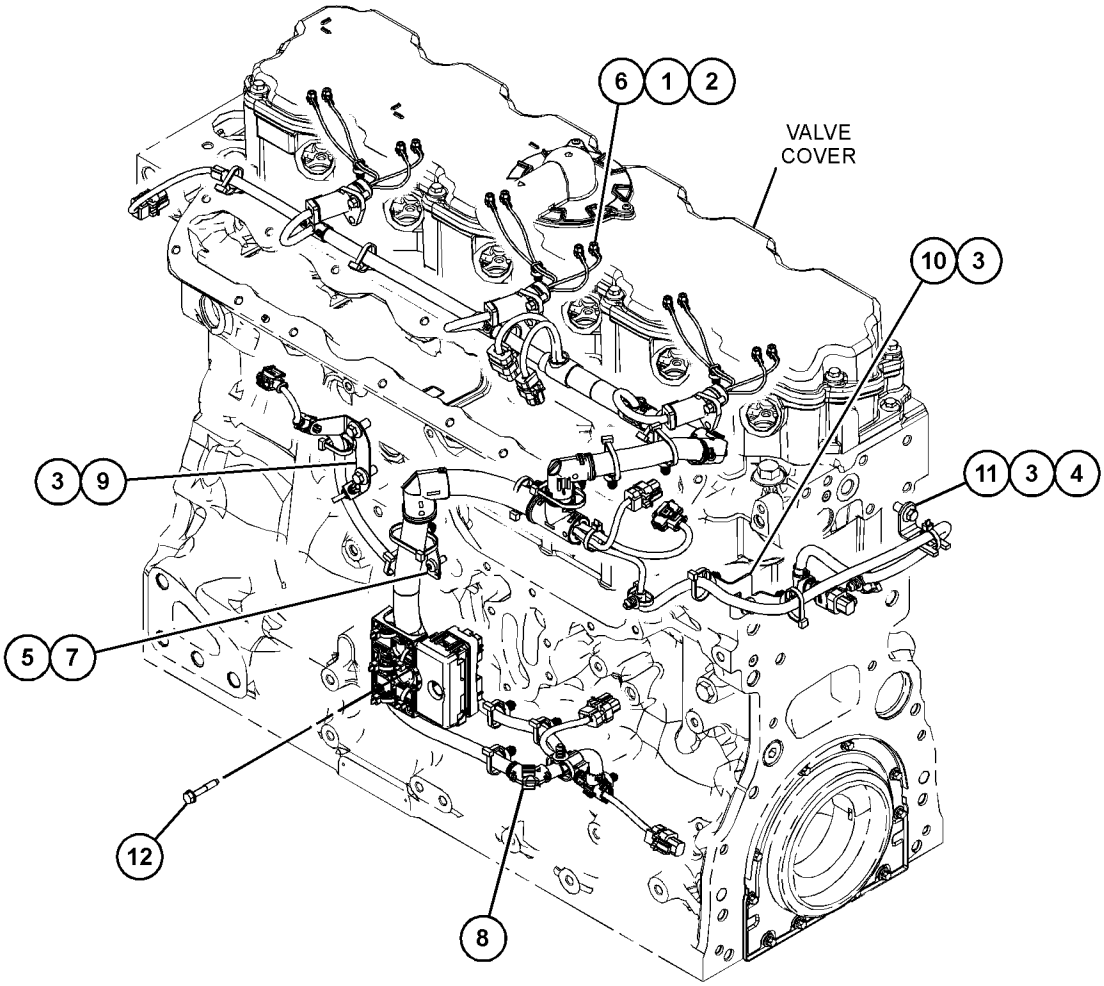

GRAPHIC #1 <END> g03739892

395-0113 WIRING GP-ENGINE

PART OF 470-8814, 575-2879, 575-2880, 645-2039 ENGINE AR-PRIMARY
TYPE 2

SMCS-1403 **i06997751**

NOTE	REF NO	GRAPHIC REF	PART NUMBER	QTY	PART NAME 1 2 3 4 5 6 (PRODUCT LEVEL)	SEE PAGE
C	1	1	**033-6034**	3	SEAL-O-RING	
C	2	1	**277-5065**	3	CLIP	
M	3	1	**124-3815**	4	BOLT (M8X1.25X16-MM)	
	4	1	**217-9039**	1	STRAP-CABLE	
	5	1	**348-4637**	1	BOLT	
CY	6	1	**375-8407**	3	HARNESS AS-WIRING (INJECTOR)	818
	7	1	**377-1293**	1	BRACKET	
Y	8	1	**385-5997**	1	HARNESS AS-ENGINE	812
	9	1	**389-3863**	1	BRACKET	
	10	1	**392-2780**	1	BRACKET	
	11	1	**132-5789**	1	CLIP	
M	12	1	**232-1693**	1	BOLT-FLANGE HEAD (M6X1X35-MM)	

C - CHANGE FROM PREVIOUS TYPE
M - METRIC PART
Y - SEPARATE ILLUSTRATION

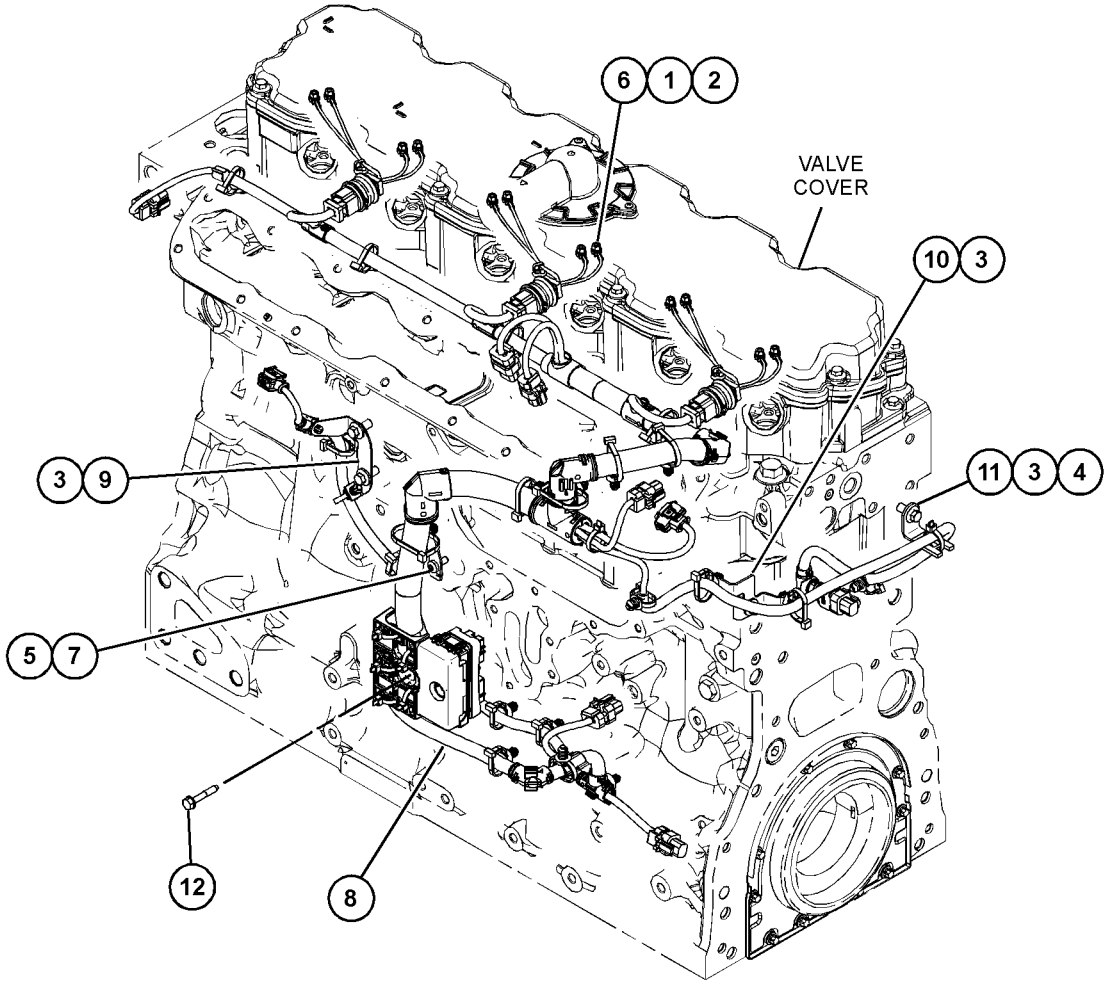

GRAPHIC #1 <END> g06177895

418-0928 WIRING GP-ENGINE

PART OF 468-8218, 531-2492 ENGINE AR-PRIMARY

SMCS-1403 **i07563076**

NOTE	REF NO	GRAPHIC REF	PART NUMBER	QTY	PART NAME 1 2 3 4 5 6 (PRODUCT LEVEL)	SEE PAGE
M	1	1	**100-4830**	1	BOLT (M10X1.5X20-MM)	
M	2	1	**124-3815**	2	BOLT (M8X1.25X16-MM)	
	3	1	**217-9039**	1	STRAP-CABLE	
	4	1	**348-4637**	1	BOLT	
	5	1	**377-1293**	1	BRACKET	
	6	1	**389-3863**	1	BRACKET	
Y	7	1	**416-5388**	1	HARNESS AS-ENGINE	813
Y	8	1	**375-8407**	3	HARNESS AS-WIRING	818
M	9	1	**232-1693**	1	BOLT-FLANGE HEAD (M6X1X35-MM)	
	10	1	**277-5065**	3	CLIP	
	11	1	**033-6034**	3	SEAL-O-RING	
	12	1	**352-3964**	1	CLIP	

M - METRIC PART
Y - SEPARATE ILLUSTRATION

418-0928 **WIRING GP-ENGINE (**contd.**)** **i07563076**

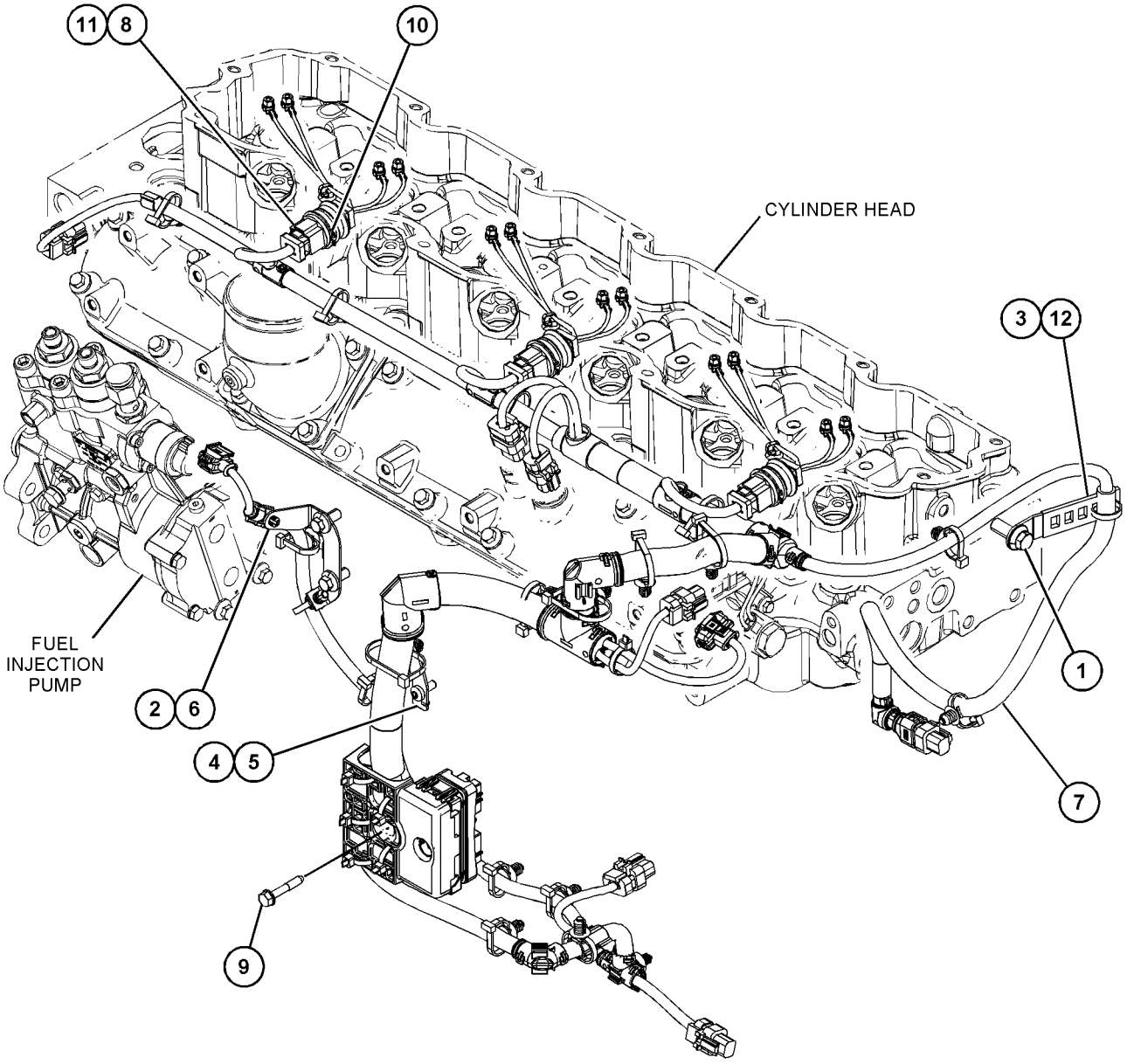

GRAPHIC #1 <END> g06132629

424-5516 WIRING GP-ENGINE

S/N: G9R1-97

PART OF 471-0541 ENGINE AR-PRIMARY

SMCS-1403 **i05706055**

NOTE	REF NO	GRAPHIC REF	PART NUMBER	QTY	PART NAME 1 2 3 4 5 6 (PRODUCT LEVEL)	SEE PAGE
	1	1	**277-5064**	3	SEAL-O-RING	
	2	1	**277-5065**	3	CLIP	
M	3	1	**114-4363**	1	BOLT (M8X1.25X12-MM)	
M	4	1	**124-3815**	4	BOLT (M8X1.25X16-MM)	
	5	1	**270-2679**	1	LOCKWASHER (38.4X48X0.5-MM THK)	
	6	1	**348-4637**	1	BOLT	
Y	7	1	**375-8407**	3	HARNESS AS-WIRING	818
	8	1	**377-1293**	1	BRACKET	
	9	1	**389-3863**	1	BRACKET	
	10	1	**392-2780**	1	BRACKET	
Y	11	1	**416-5399**	1	HARNESS AS-SENSOR	817
	12	1	**423-3842**	1	BRACKET	
	13	1	**132-5789**	1	CLIP	
	14	1	**203-9007**	1	NUT (1-1/2-18-THD)	
	15	1	**217-9039**	1	STRAP-CABLE	
M	16	1	**232-1693**	1	BOLT-FLANGE HEAD (M6X1X35-MM)	

M - METRIC PART
Y - SEPARATE ILLUSTRATION

424-5516 **WIRING GP-ENGINE (**contd.**)** **i05706055**

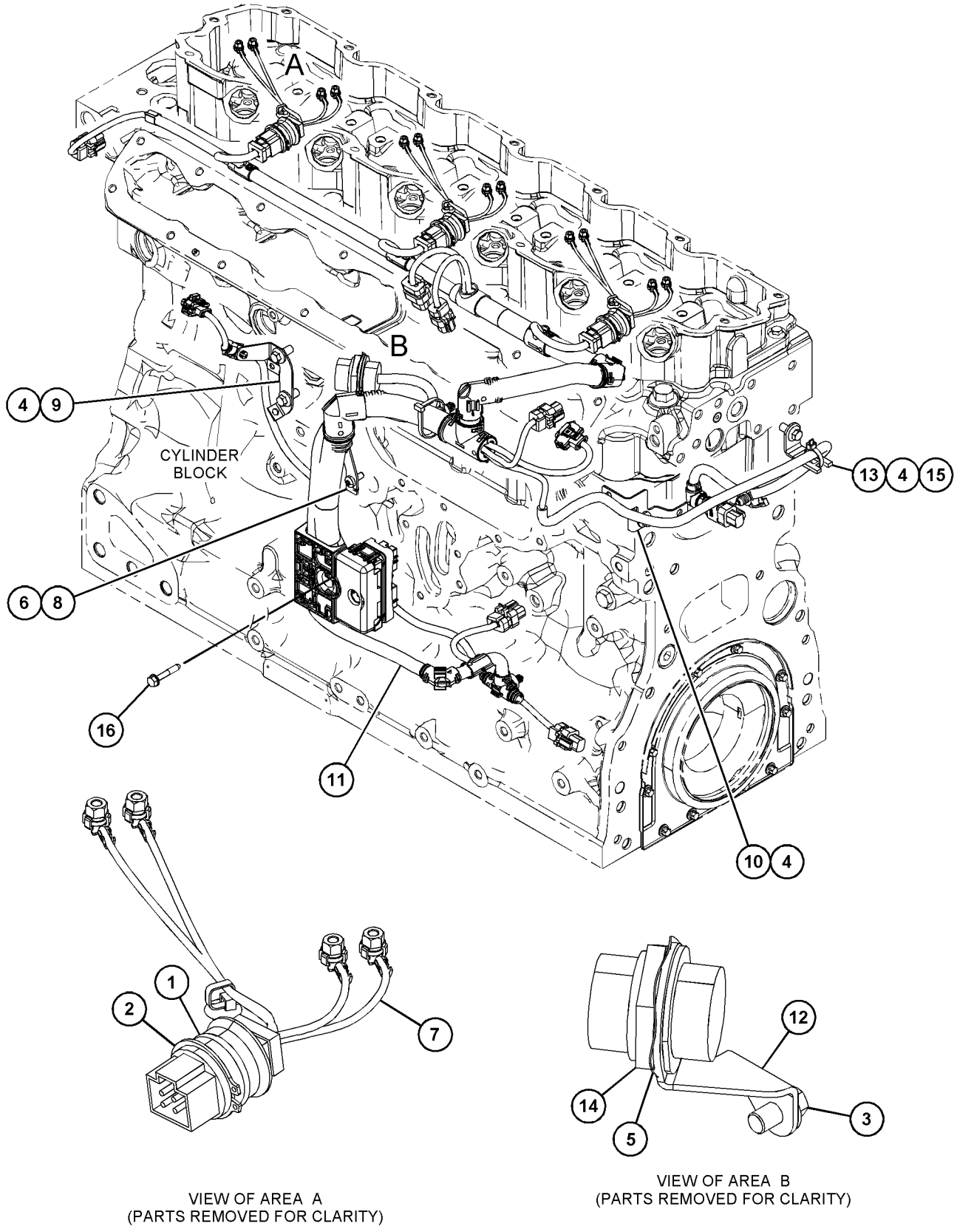

VIEW OF AREA A
(PARTS REMOVED FOR CLARITY)

VIEW OF AREA B
(PARTS REMOVED FOR CLARITY)

GRAPHIC #1 <END> g03648885

424-5516 WIRING GP-ENGINE

PART OF 466-1160, 466-1161, 466-1162, 466-1163, 468-0461, 470-8667, 471-0541, 475-8297, 478-4257, 480-2181, 481-0811, 484-2939, 485-8027, 489-9006, 491-4973, 491-4980, 491-4993, 492-3072, 492-3169, 494-2073, 494-6807, 591-1266 ENGINE AR-PRIMARY
TYPE 1

SMCS-1403 **i06133749**

NOTE	REF NO	GRAPHIC REF	PART NUMBER	QTY	PART NAME 1 2 3 4 5 6 (PRODUCT LEVEL)	SEE PAGE
	1	1	**323-7347**	3	SEAL-O-RING	
M	2	1	**254-3633**	3	BOLT-FLANGE HEAD (M6X1X16-MM)	
M	3	1	**114-4363**	1	BOLT (M8X1.25X12-MM)	
M	4	1	**124-3815**	4	BOLT (M8X1.25X16-MM)	
	5	1	**270-2679**	1	LOCKWASHER (38.4X48X0.5-MM THK)	
	6	1	**348-4637**	1	BOLT	
	7	1	**458-3745**	3	HARNESS AS-ENGINE (INJECTOR)	
					(EACH INCLUDES)	
		1	**332-7865**	1	TIE-CABLE	
	8	1	**377-1293**	1	BRACKET	
	9	1	**389-3863**	1	BRACKET	
M	10	1	**232-1693**	1	BOLT-FLANGE HEAD (M6X1X35-MM)	
Y	11	1	**416-5399**	1	HARNESS AS-SENSOR	817
	12	1	**423-3842**	1	BRACKET	
	13	1	**132-5789**	1	CLIP	
	14	1	**203-9007**	1	NUT (1-1/2-18-THD)	
	15	1	**217-9039**	1	STRAP-CABLE	

M - METRIC PART
Y - SEPARATE ILLUSTRATION

424-5516 **WIRING GP-ENGINE (**contd.**)** **i06133749**

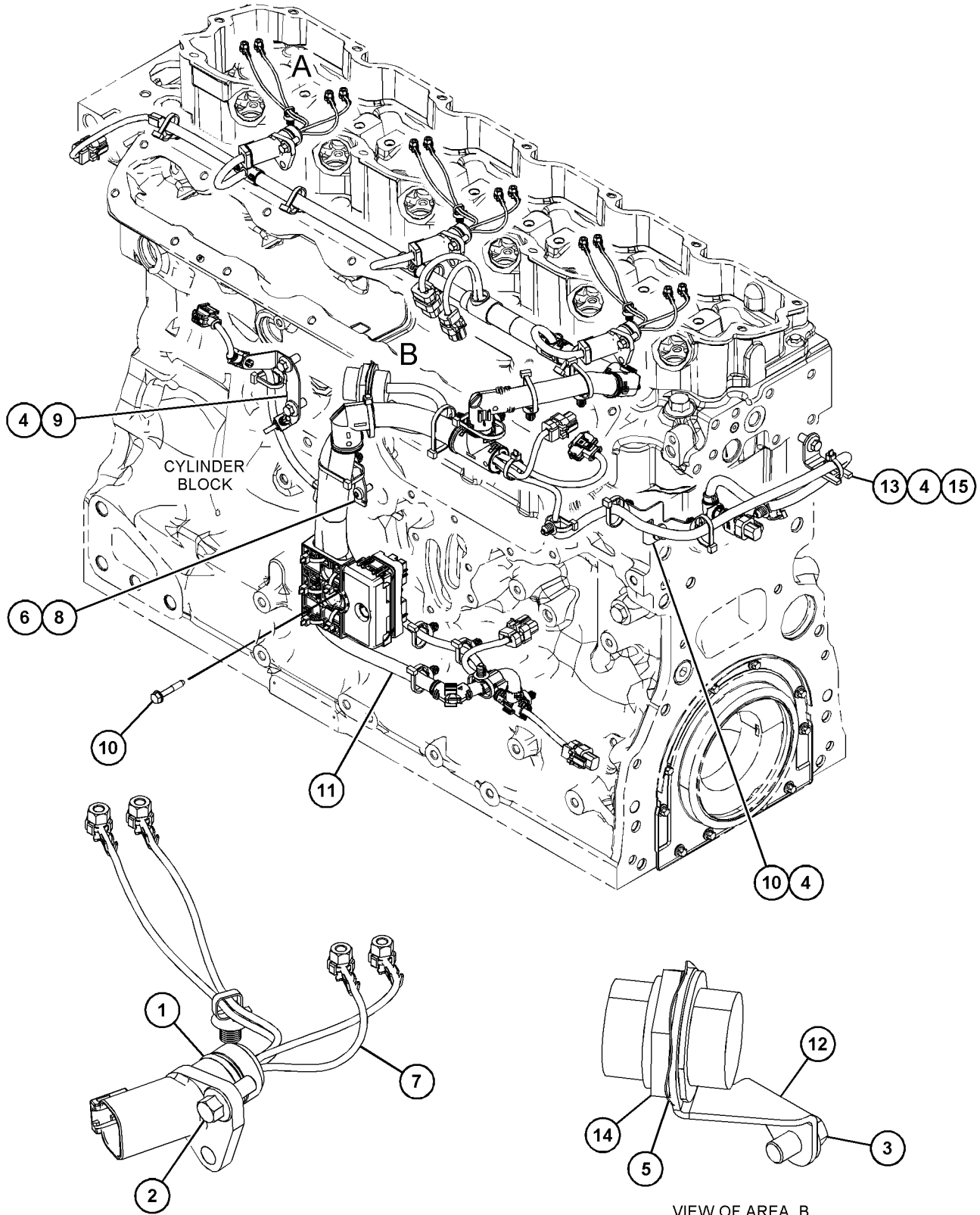

GRAPHIC #1 <END> g03808738

424-5516 WIRING GP-ENGINE

PART OF 596-2071 ENGINE AR-COMPLETE, 451-8343, 461-4638, 461-4649, 461-4656, 461-4658, 466-1160, 466-1161, 466-1162, 466-1163, 468-0461, 470-8667, 471-0541, 474-7299, 475-8297, 475-9060, 479-9398, 481-0811, 482-0212, 484-2939, 485-8027, 486-2644, 486-4250, 488-6687, 491-2606, 491-4973, 491-4980, 491-4993, 491-7124, 492-3021, 493-1019, 493-1038, 494-2073, 494-6807, 495-8349, 499-7181, 501-2466, 502-9462, 504-3629, 504-5365, 504-8134, 504-9579, 506-5035, 506-9918, 507-8016, 508-0270, 510-1088, 512-9858, 513-0851, 513-8513, 514-9367, 515-9203, 519-4128, 520-3152, 520-4644, 524-8271, 525-8759, 526-0511, 526-7210, 526-8888, 527-7106, 527-9686, 528-3358, 528-9866, 528-9920, 530-1323, 530-2601, 533-2797, 533-3588, 535-8060, 536-6675, 539-6915, 539-8582, 543-4255, 552-3506, 552-8869, 553-1809, 553-3730, 555-4669, 562-8873, 569-7846, 583-8352, 591-1266, 591-9440, 593-7287, 593-7288, 594-2125, 596-4834, 596-7090, 596-8896, 596-8905, 597-9248, 598-9881, 602-8721, 603-5300, 608-9261, 609-9819, 612-1735, 614-5795, 614-9555, 622-6239, 623-1309, 624-0698, 627-8019, 627-8054, 627-8129, 628-4345, 633-4335, 633-7776, 657-2370 ENGINE AR-PRIMARY
TYPE 2

SMCS-1403 **i09931703**

NOTE	REF NO	GRAPHIC REF	PART NUMBER	QTY	PART NAME 1 2 3 4 5 6 (PRODUCT LEVEL)	SEE PAGE
C	1	1	**033-6034**	3	SEAL-O-RING	
C	2	1	**277-5065**	3	CLIP (CIRCLE)	
M	3	1	**114-4363**	1	BOLT (M8X1.25X12-MM)	
M	4	1	**124-3815**	4	BOLT (M8X1.25X16-MM)	
	5	1	**270-2679**	1	LOCKWASHER (38.4X48X0.5-MM THK)	
	6	1	**348-4637**	1	BOLT	
CY	7	1	**375-8407**	3	HARNESS AS-WIRING	818
	8	1	**377-1293**	1	BRACKET	
	9	1	**389-3863**	1	BRACKET	
M	10	1	**232-1693**	1	BOLT-FLANGE HEAD (M6X1X35-MM)	
Y	11	1	**416-5399**	1	HARNESS AS-SENSOR	817
	12	1	**423-3842**	1	BRACKET	
	13	1	**132-5789**	1	CLIP	
	14	1	**203-9007**	1	NUT (1-1/2-18-THD)	
	15	1	**217-9039**	1	STRAP-CABLE	
C	16	1	**268-6677**	1	BRACKET AS	
M	16A	1	**260-3939**	1	SCREW-HEX HEAD (M6X1X25-MM)	
	17	1	**392-2780**	1	BRACKET	

C - CHANGE FROM PREVIOUS TYPE
M - METRIC PART
Y - SEPARATE ILLUSTRATION

424-5516 **WIRING GP-ENGINE (**contd.**)** **i09931703**

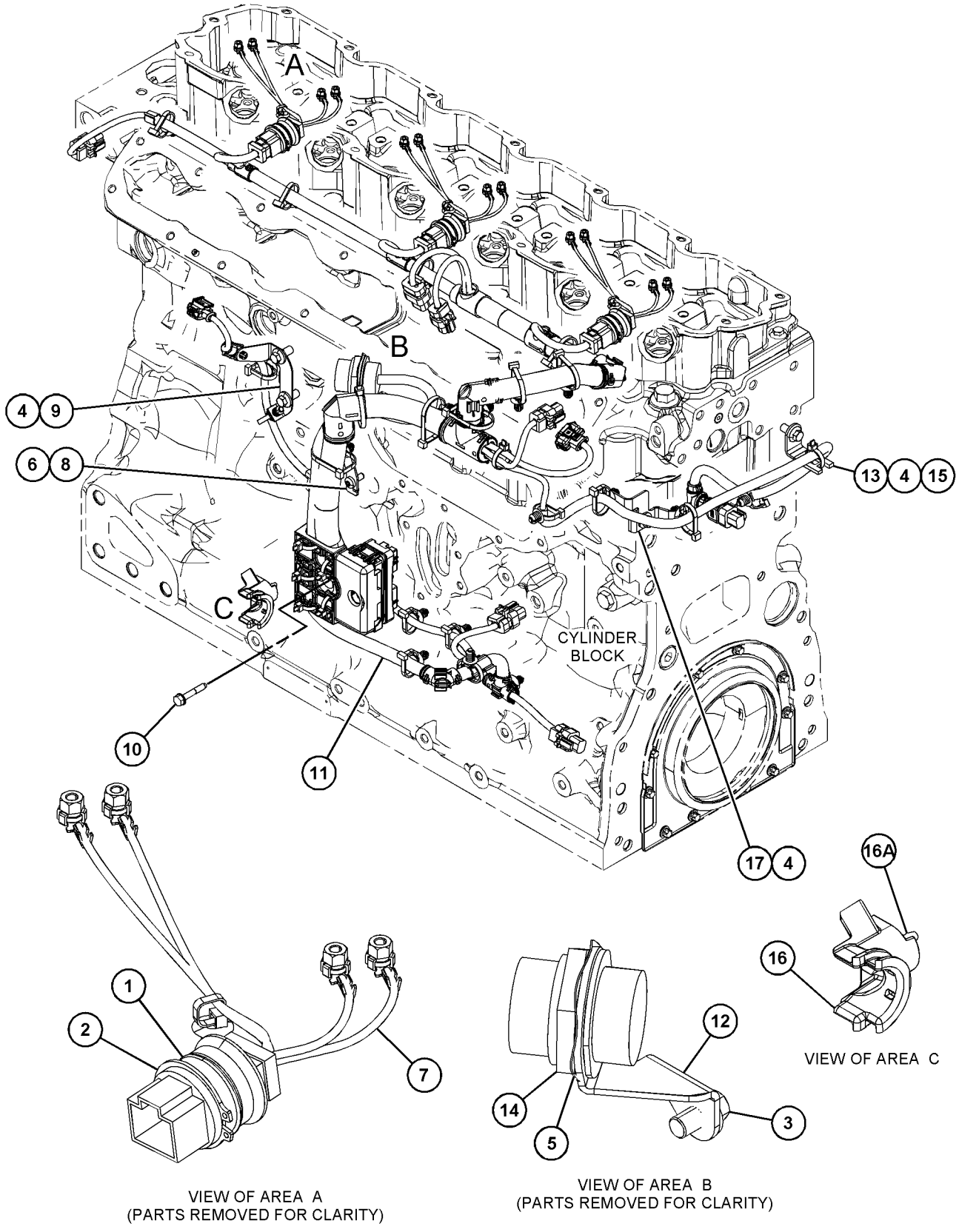

GRAPHIC #1 <END> g06149383

472-4942 WIRING GP-ENGINE

PART OF 613-9482 ENGINE AR-PRIMARY

SMCS-1403 **i09240044**

NOTE	REF NO	GRAPHIC REF	PART NUMBER	QTY	PART NAME 1 2 3 4 5 6 (PRODUCT LEVEL)	SEE PAGE
	1	1	**033-6034**	3	SEAL-O-RING	
M	2	1	**100-4830**	1	BOLT (M10X1.5X20-MM)	
M	3	1	**124-3815**	4	BOLT (M8X1.25X16-MM)	
	4	1	**217-9039**	1	STRAP-CABLE	
	5	1	**348-4637**	1	BOLT	
Y	6	1	**375-8407**	3	HARNESS AS-WIRING (INJECTOR)	818
	7	1	**377-1293**	1	BRACKET	
Y	8	1	**385-5997**	1	HARNESS AS-ENGINE	812
	9	1	**389-3863**	1	BRACKET	
	10	1	**392-2780**	1	BRACKET	
	11	1	**431-9793**	1	BRACKET	
	12	1	**132-5789**	1	CLIP	
M	13	1	**232-1693**	1	BOLT-FLANGE HEAD (M6X1X35-MM)	
	14	1	**277-5065**	3	CLIP (CIRCLE)	
	15	1	**290-1993**	1	STRAP-CABLE	

M - METRIC PART
Y - SEPARATE ILLUSTRATION

472-4942 **WIRING GP-ENGINE (**contd.**)** **i09240044**

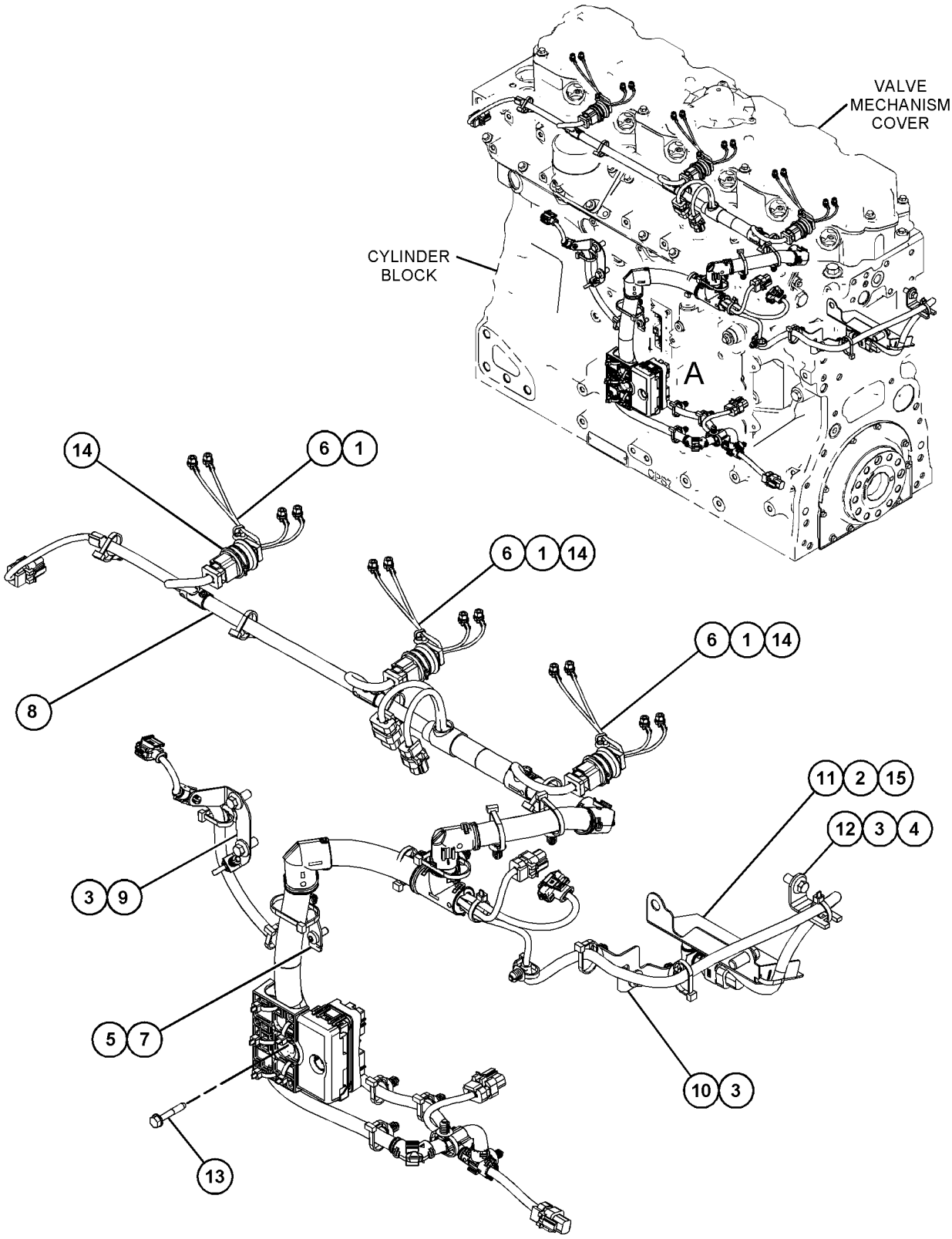

VIEW OF AREA A

GRAPHIC #1 <END> g06205111

560-7999 WIRING GP-ENGINE

PART OF 563-6728, 563-6729, 563-6730, 565-1247 ENGINE AR-PRIMARY

SMCS-1403 **i07916064**

NOTE	REF NO	GRAPHIC REF	PART NUMBER	QTY	PART NAME 1 2 3 4 5 6 (PRODUCT LEVEL)	SEE PAGE
	1	1	**330-8197**	3	SEAL-O-RING	
M	2	1	**114-4363**	1	BOLT (M8X1.25X12-MM)	
M	3	1	**124-3815**	5	BOLT (M8X1.25X16-MM)	
	4	1	**132-5789**	1	CLIP	
	5	1	**203-9007**	1	NUT (1-1/2-18-THD)	
	6	1	**217-9039**	2	STRAP-CABLE	
	7	1	**4P-7581**	1	CLIP	
	8	1	**270-2679**	1	LOCKWASHER (38.4X48XO.5-MM THK)	
	9	1	**277-5065**	3	CLIP	
Y	10	1	**375-8407**	3	HARNESS AS-WIRING (INJECTOR)	818
	11	1	**389-3863**	1	BRACKET	
	12	1	**392-2780**	1	BRACKET	
Y	13	1	**559-0271**	1	HARNESS AS-ENGINE	814
	14	1	**423-3842**	1	BRACKET	
Y	15	1	**561-6318**	1	HARNESS AS-POWER	816

M - METRIC PART
Y - SEPARATE ILLUSTRATION

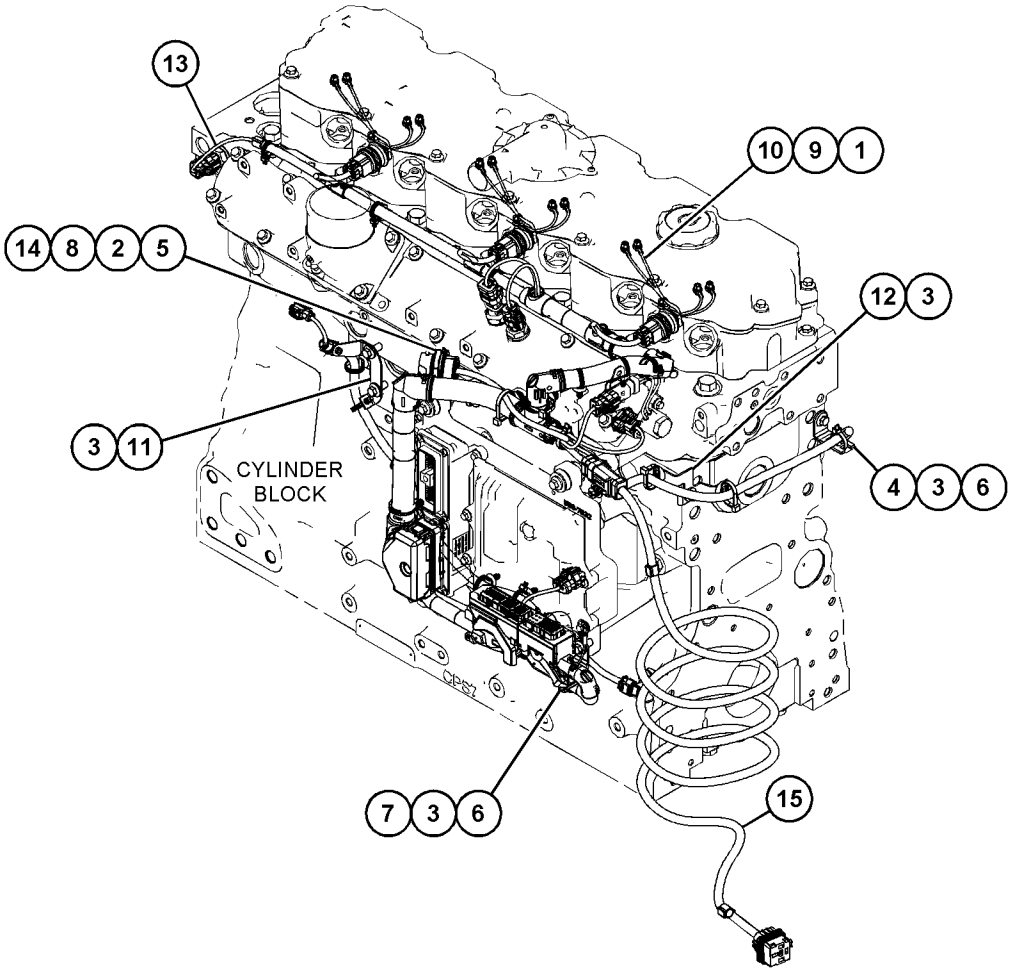

GRAPHIC #1 <END> g06504925

346-1512 MOUNTING GP-ACCESSORY MODULE

SAE 2 FLYWHEEL HOUSING

PART OF 461-4649, 461-4656, 479-9398, 484-2939, 485-8027, 486-2644, 491-4993, 494-6807, 501-2466, 504-9579, 507-8016, 513-0851, 520-3152, 533-2797, 539-6915, 543-4255, 552-8869, 562-8873, 563-6728, 563-6729, 563-6730, 565-1247, 583-8352, 593-7287, 593-7288, 598-9881, 614-9555, 627-8054, 633-4335, 657-2370 ENGINE AR-PRIMARY

SMCS-7263, 7274

i05847747

NOTE	REF NO	GRAPHIC REF	PART NUMBER	QTY	PART NAME 1 2 3 4 5 6 (PRODUCT LEVEL)	SEE PAGE
M	1	1	**7C-4616**	8	BOLT (M12X1.75X45-MM)	
	2	1	**293-8070**	2	BRACKET	

M - METRIC PART

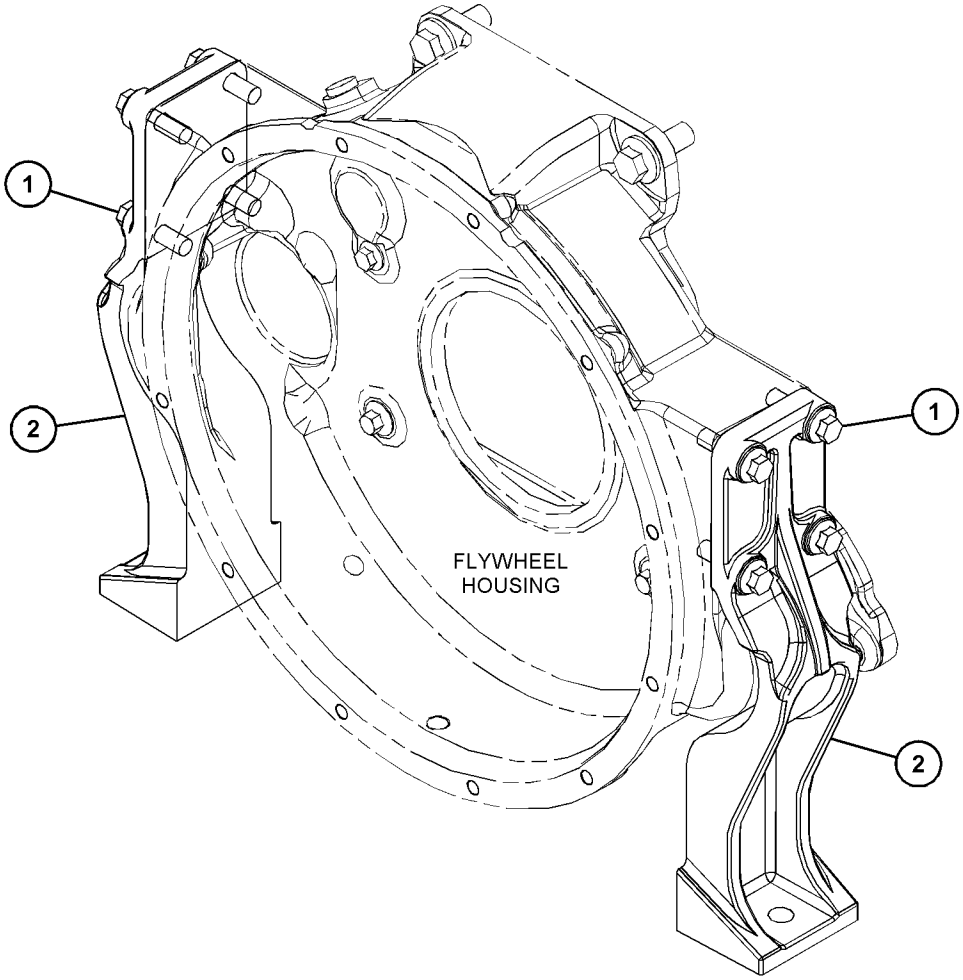

GRAPHIC #1 <END> g03696709

346-1528 MOUNTING GP-ACCESSORY MODULE

WHITE BLANKING PLUGS

PART OF 596-2071 ENGINE AR-COMPLETE, 461-4638, 482-0212, 489-9006, 491-4973, 491-4980, 492-3021, 492-3072, 499-7181, 527-9686, 530-1323, 530-2601, 535-8060, 536-6675, 539-8582, 555-4669, 569-7846, 591-9440, 602-8721, 603-5300, 612-1735, 622-6239, 627-8129 ENGINE AR-PRIMARY

SMCS-7263, 7274

i05859679

NOTE	REF NO	GRAPHIC REF	PART NUMBER	QTY	PART NAME 1 2 3 4 5 6 (PRODUCT LEVEL)	SEE PAGE
	1	1	**101-7186**	1	BRACKET	
	2	1	**101-7185**	1	BRACKET	
M	3	1	**6I-0423**	6	BOLT (M12X1.75X30-MM)	
	4	1	**6H-3616**	4	PLUG-PROTECTION	

M - METRIC PART

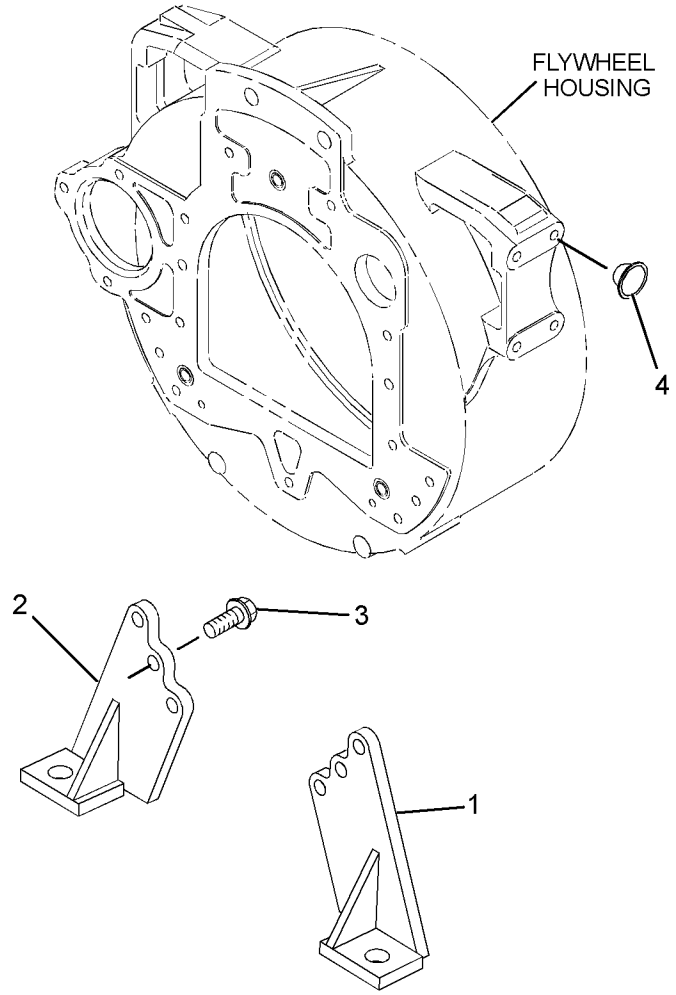

GRAPHIC #1 <END> g01316761

373-5023 MOUNTING GP-ACCESSORY MODULE

PART OF 471-0541, 628-4345, 633-7776 ENGINE AR-PRIMARY

SMCS-7263, 7274

i05949463

NOTE	PART NUMBER	QTY	PART NAME 1 2 3 4 5 6 (PRODUCT LEVEL)	SEE PAGE
M	**6I-0423**	6	BOLT (M12X1.75X30-MM)	
	101-7185	1	BRACKET	
	101-7186	1	BRACKET	

M - METRIC PART

<END>

380-1084 PLUG AS

PART OF 613-9482 ENGINE AR-PRIMARY

SMCS-7553 **i05934036**

NOTE	REF NO	GRAPHIC REF	PART NUMBER	QTY	PART NAME 1 2 3 4 5 6 (PRODUCT LEVEL)	SEE PAGE
	1	1	**6H-3616**	6	PLUG-PROTECTION	

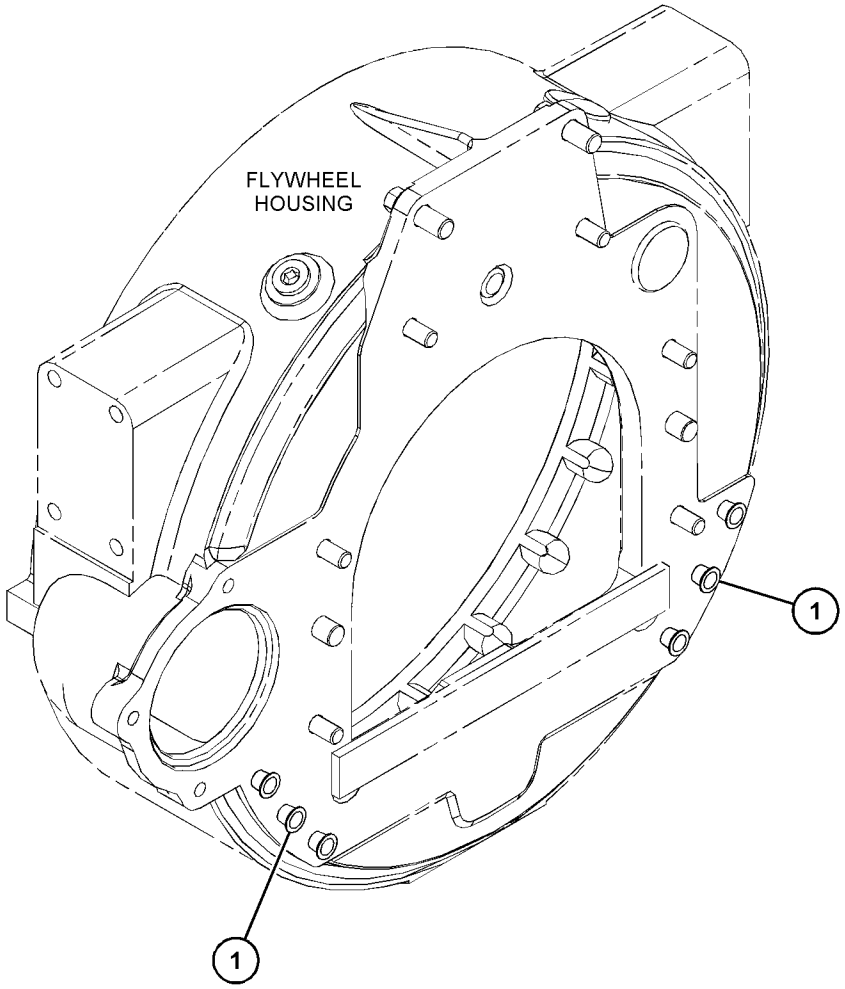

GRAPHIC #1 <END> g03732224

390-0060 FILM GP

EMISSIONS

PART OF 466-1160, 470-8814, 471-0541, 474-7299, 475-8297, 475-9060, 481-0811, 484-2939, 486-4250, 492-3169, 493-1019, 493-1038, 494-2073, 499-7181, 504-3629, 504-5365, 504-8134, 506-5035, 506-9918, 510-1088, 513-8513, 515-9203, 525-8759, 526-0511, 527-7106, 528-3358, 528-9920, 553-1809, 553-3730, 563-6728, 575-2879, 575-2880, 594-2125, 596-4834, 596-7090, 597-9248, 608-9261, 613-9482 ENGINE AR-PRIMARY

SMCS-7405, 7557

i08068789

NOTE	REF NO	GRAPHIC REF	PART NUMBER	QTY	PART NAME 1 2 3 4 5 6 (PRODUCT LEVEL)	SEE PAGE
	1	1	**576-1157**	1	FILM-IDENTIFICATION (CAT)	
	2	1	**326-9053**	1	FILM-WARNING (DO NOT SPRAY, READ OMM)	
					(EXPLOSION HAZARD. COULD CAUSE SERIOUS INJURY OR DEATH. DO NOT USE ETHER. READ THE OPERATOR'S MANUAL.)	
	3	1	**346-8219**	2	FILM-WARNING (UNIVERSAL WARNING)	
					(COULD CAUSE SERIOUS INJURY OR DEATH. DO NOT OPERATE OR WORK ON THIS EQUIPMENT UNLESS YOU HAVE READ AND UNDERSTAND THE OPERATION AND MAINTENANCE MANUALS.)	
	4	1	**355-3486**	1	FILM-WARNING (HAND, ANSI)	

390-0060 **FILM GP (**contd.**)** **i08068789**

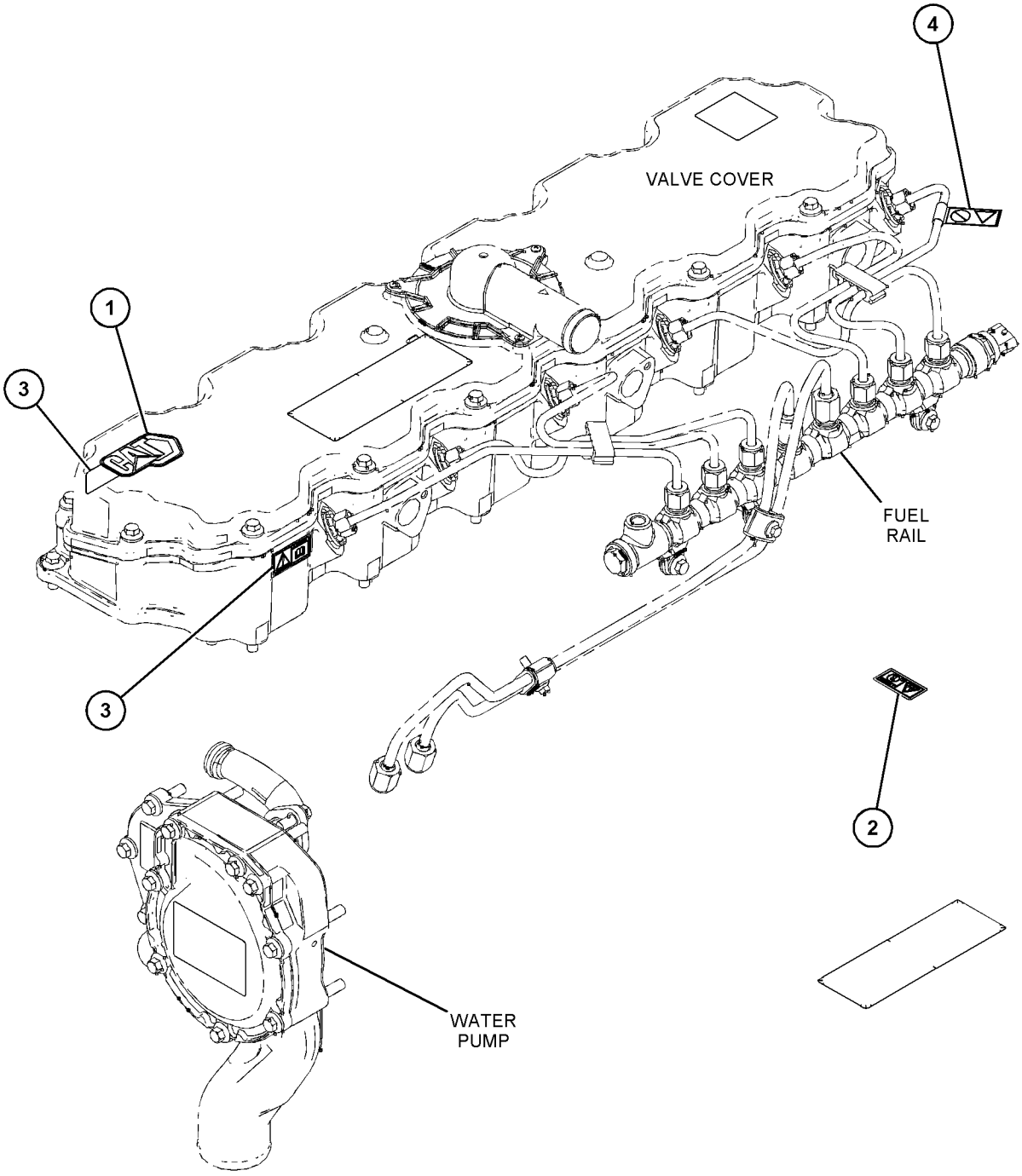

GRAPHIC #1 <END> g06583446

393-0367 FILM GP–ENGINE

PART OF 478-4257 ENGINE AR-PRIMARY

SMCS-7405, 7557 **i08288540**

NOTE	REF NO	GRAPHIC REF	PART NUMBER	QTY	PART NAME 1 2 3 4 5 6 (PRODUCT LEVEL)	SEE PAGE
	1	1	**576-1157**	1	FILM-IDENTIFICATION (CAT)	
	2	1	**326-9053**	1	FILM-WARNING (DO NOT SPRAY, READ OMM)	
					(EXPLOSION HAZARD. COULD CAUSE SERIOUS INJURY OR DEATH. DO NOT USE ETHER. READ THE OPERATOR'S MANUAL.)	
	3	1	**346-8219**	2	FILM-WARNING (UNIVERSAL WARNING)	
					(COULD CAUSE SERIOUS INJURY OR DEATH. DO NOT OPERATE OR WORK ON THIS EQUIPMENT UNLESS YOU HAVE READ AND UNDERSTAND THE OPERATION AND MAINTENANCE MANUALS.)	
	4	1	**355-3486**	1	FILM-WARNING (HAND, ANSI)	

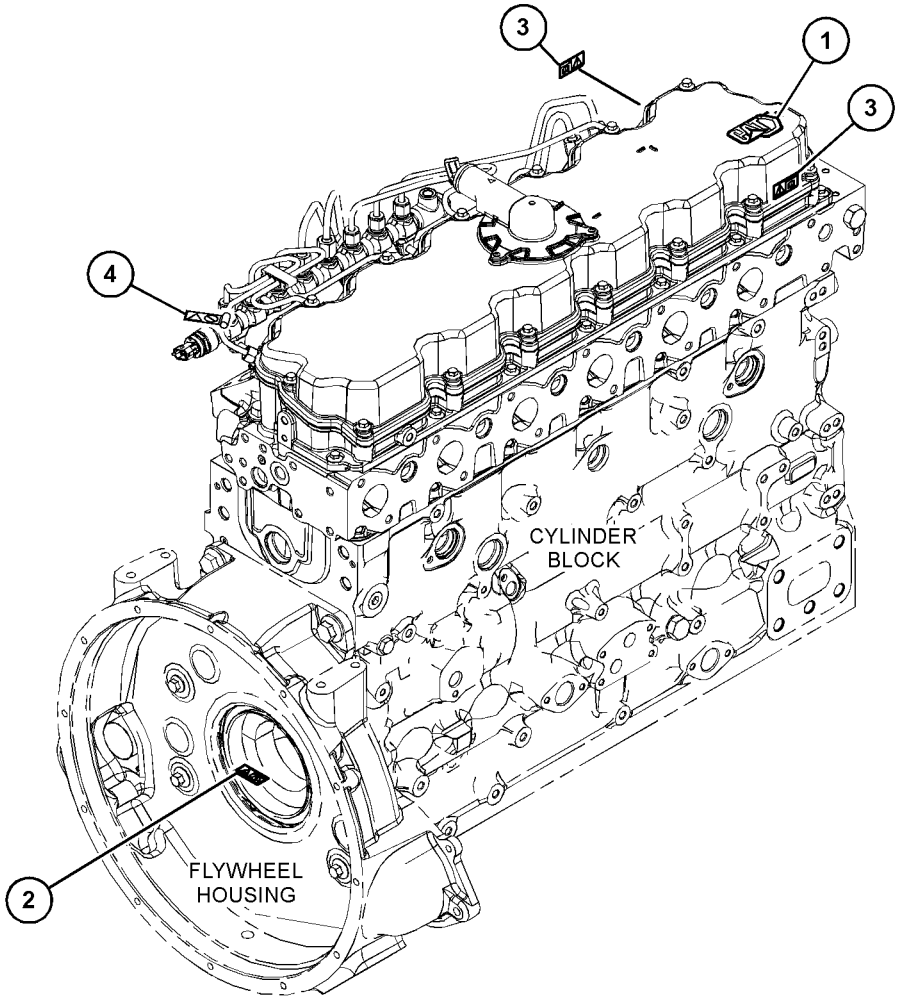

GRAPHIC #1 <END> g06541048

415-5625 FILM GP

PART OF 596-2071 ENGINE AR-COMPLETE, 451-8343, 461-4638, 461-4649, 461-4656, 461-4658, 466-1160, 466-1161, 466-1162, 466-1163, 468-0461, 468-8218, 470-8667, 470-8814, 471-0541, 474-7299, 475-8297, 475-9060, 478-4257, 479-9398, 480-2181, 481-0811, 482-0212, 484-2939, 485-8027, 486-2644, 486-4250, 488-6687, 489-9006, 491-4973, 491-4980, 491-4993, 491-7124, 492-3021, 492-3072, 494-2073, 494-6807, 495-8349, 499-7181, 501-2466, 502-9462, 504-3629, 504-9579, 506-5035, 506-9918, 507-8016, 508-0270, 510-1088, 512-9858, 513-0851, 513-8513, 514-9367, 515-9203, 519-4128, 520-3152, 520-4644, 524-8271, 525-8759, 526-0511, 526-7210, 526-8888, 527-7106, 527-9686, 528-3358, 528-9866, 528-9920, 530-1323, 530-2601, 533-2797, 533-3588, 535-8060, 536-6675, 539-6915, 539-8582, 543-4255, 552-3506, 552-8869, 553-1809, 553-3730, 555-4669, 562-8873, 563-6728, 563-6729, 563-6730, 565-1247, 569-7846, 575-2879, 575-2880, 583-8352, 591-1266, 593-7287, 593-7288, 594-2125, 596-4834, 596-7090, 596-8896, 596-8905, 597-9248, 598-9881, 602-8721, 603-5300, 608-9261, 609-9819, 612-1735, 613-9482, 614-5795, 614-9555, 622-6239, 623-1309, 624-0698, 627-8019, 627-8054, 627-8129, 628-4345, 633-4335, 633-7776, 645-2039, 657-2370 ENGINE AR-PRIMARY

SMCS-7405, 7557 **i06041156**

NOTE	REF NO	GRAPHIC REF	PART NUMBER	QTY	PART NAME 1 2 3 4 5 6 (PRODUCT LEVEL)	SEE PAGE
	1	1	**451-7225**	1	FILM-IDENTIFICATION (CAT)	

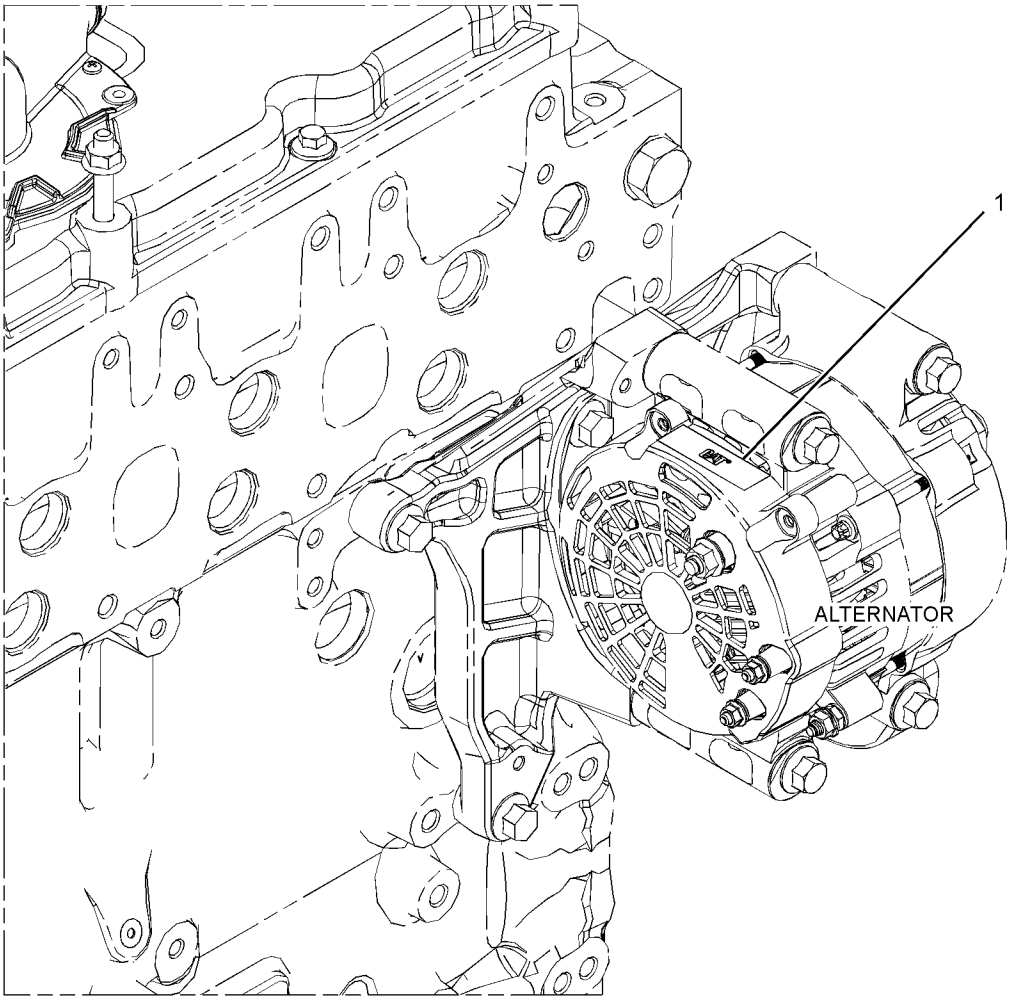

GRAPHIC #1 <END> g02675436

423-8803 FILM GP

BRANDING

PART OF 596-2071 ENGINE AR-COMPLETE, 461-4638, 461-4649, 461-4656, 466-1160, 466-1161, 466-1162, 466-1163, 471-0541, 475-8297, 475-9060, 478-4257, 481-0811, 482-0212, 489-9006, 491-4973, 491-4980, 491-4993, 492-3021, 492-3072, 494-2073, 499-7181, 504-3629, 506-5035, 510-1088, 512-9858, 513-8513, 514-9367, 515-9203, 520-4644, 524-8271, 526-8888, 527-9686, 528-9866, 530-1323, 530-2601, 533-3588, 535-8060, 536-6675, 539-8582, 553-1809, 553-3730, 555-4669, 569-7846, 591-1266, 591-9440, 602-8721, 603-5300, 608-9261, 612-1735, 613-9482, 614-5795, 622-6239, 627-8129, 628-4345, 633-7776 ENGINE AR-PRIMARY

SMCS-7405, 7557

i06016684

NOTE	REF NO	GRAPHIC REF	PART NUMBER	QTY	PART NAME 1 2 3 4 5 6 (PRODUCT LEVEL)	SEE PAGE
	1	1	**451-7225**	1	FILM-IDENTIFICATION (CAT)	

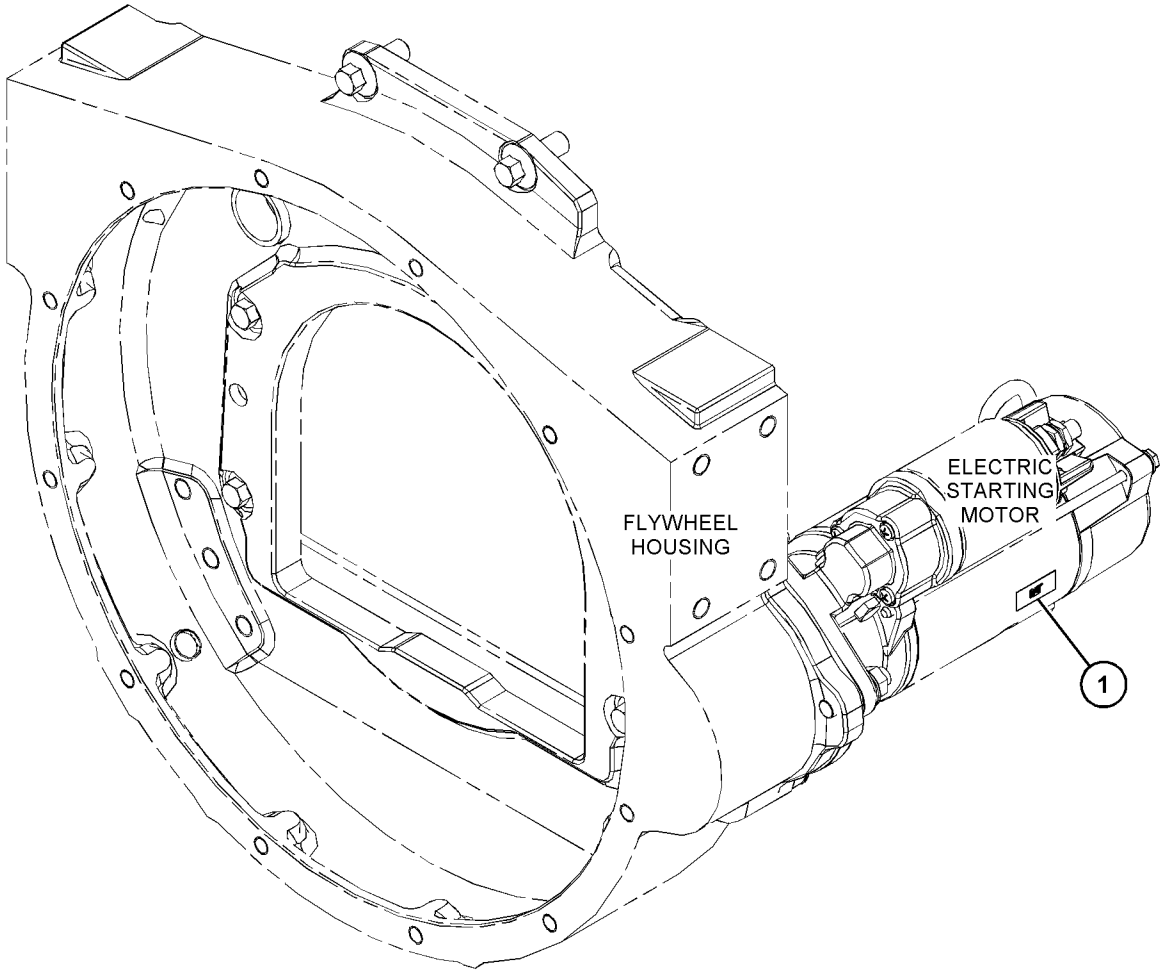

GRAPHIC #1 <END> g03820844

589-6006 FILM GP

PART OF 623-1309, 624-0698, 627-8129, 633-4335, 657-2370 ENGINE AR-PRIMARY

SMCS-7405, 7557 **i08838681**

NOTE	REF NO	GRAPHIC REF	PART NUMBER	QTY	PART NAME 1 2 3 4 5 6 (PRODUCT LEVEL)	SEE PAGE
	1	1	**576-1157**	1	FILM-IDENTIFICATION (CAT)	
	2	1	**326-9053**	1	FILM-WARNING (DO NOT SPRAY, READ OMM)	
					(EXPLOSION HAZARD. COULD CAUSE SERIOUS INJURY OR DEATH. DO NOT USE ETHER. READ THE OPERATOR'S MANUAL)	
	3	1	**346-8219**	2	FILM-WARNING (UNIVERSAL WARNING)	
					(COULD CAUSE SERIOUS INJJRWOR DEATH. DO NOT OPERATE OR WORK ON THLS EQUIPMENT UNLESS YOU HAVE READ AND UNDERSTAND THE OPERATION AND MAINTENANCE MANUALS)	
	4	1	**355-3486**	1	FILM-WARNING (HAND, ANSI)	
					(HIGH PRESSURE FUEL LINES. COULD CAUSE SERIOUS INJURY OR DEATH. DO NOT BLEED NUTS. READ OPERATORS MANUAL)	
					PARTS SHOWN IN GRAPHIC(S) WITHOUT A REFERENCE NUMBER ARE NOT SERVICED SEPARATELY	

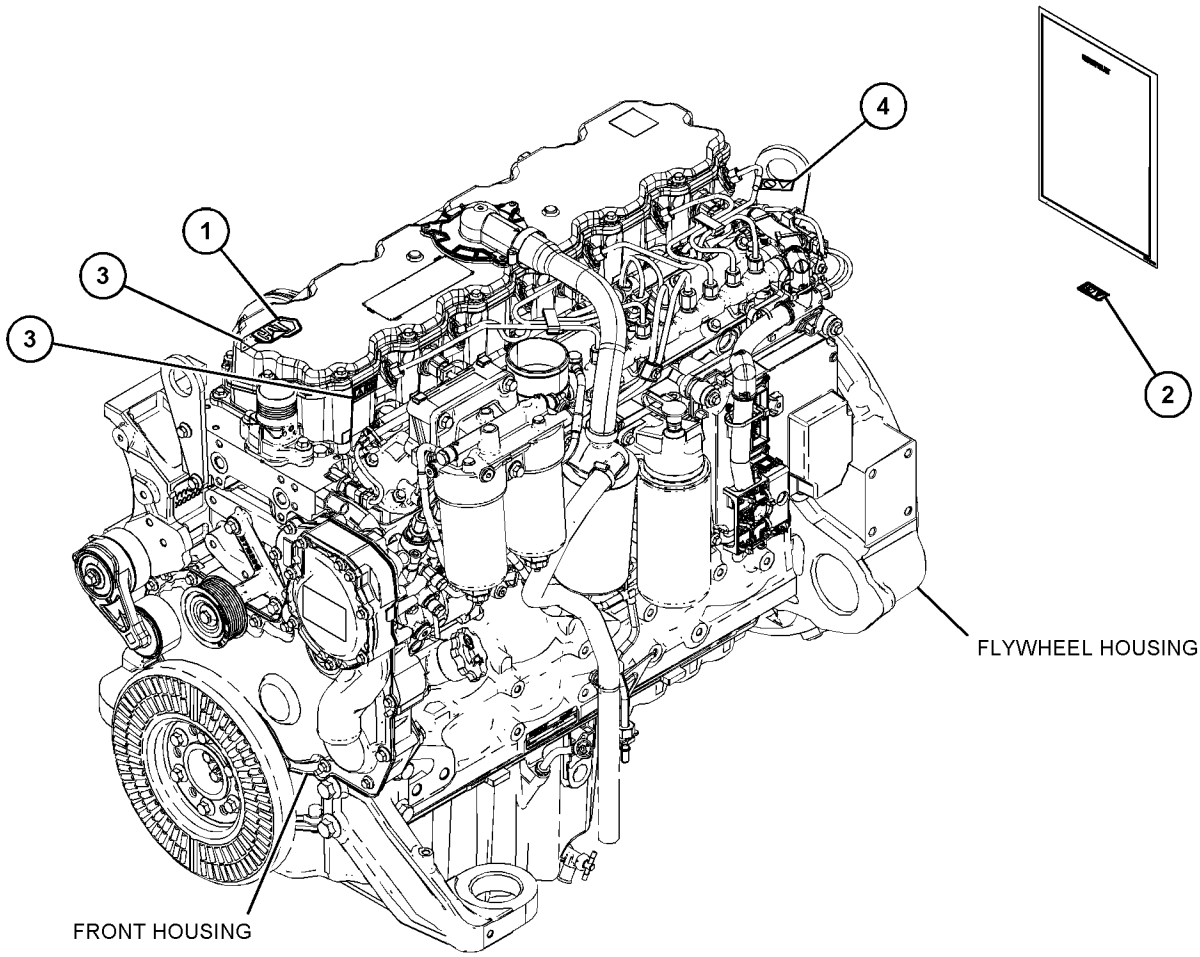

GRAPHIC #1 <END> g06582086

611-2653 FILM GP

PART OF 596-2071 ENGINE AR-COMPLETE, 461-4638, 461-4649, 461-4656, 461-4658, 468-0461, 484-2939, 485-8027, 489-9006, 492-3021, 499-7181, 501-2466, 504-9579, 527-9686, 536-6675, 539-6915, 539-8582, 543-4255, 563-6728, 563-6730, 569-7846, 583-8352, 591-1266, 591-9440, 593-7287, 598-9881, 602-8721, 603-5300, 609-9819, 612-1735, 614-9555, 622-6239, 627-8019, 627-8054, 627-8129, 628-4345, 633-4335, 633-7776 ENGINE AR-PRIMARY

SMCS-7405, 7557 **i08692658**

NOTE	REF NO	GRAPHIC REF	PART NUMBER	QTY	PART NAME 1 2 3 4 5 6 (PRODUCT LEVEL)	SEE PAGE
	1	1	**451-7225**	1	FILM-IDENTIFICATION (CAT)	

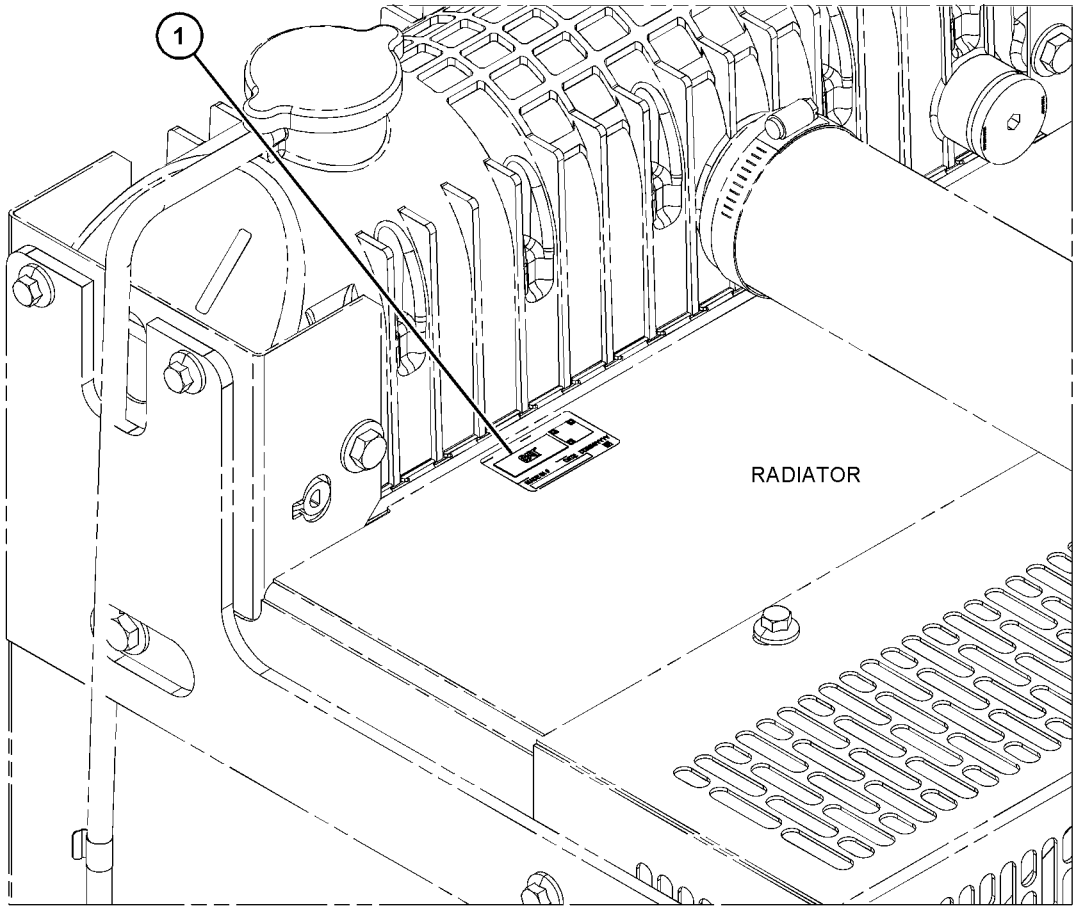

GRAPHIC #1 <END> g06786604

625-6594 FILM GP

PART OF 627-8019, 627-8054, 628-4345, 633-7776, 645-2039 ENGINE AR-PRIMARY

SMCS-7405, 7557

i09235267

NOTE	REF NO	GRAPHIC REF	PART NUMBER	QTY	PART NAME 1 2 3 4 5 6 (PRODUCT LEVEL)	SEE PAGE
	1	1	**355-3486**	1	FILM-WARNING (HAND, ANSI)	
					(HIGH PRESSURE FUEL LINES. COULD CAUSE SERIOUS INJURY OR DEATH. DO NOT BLEED NUTS. READ OPERATORS MANUAL.)	
	2	1	**317-6198**	1	FILM-IDENTIFICATION (ENGINE SERIAL NUMBER)	
	3	1	**326-9053**	1	FILM-WARNING (DO NOT SPRAY, READ OMM)	
					(COULD CAUSE SERIOUS INJURY OR DEATH. DO NOT OPERATE OR WORK ON THIS EQUIPMENT UNLESS YOU HAVE READ AND UNDERSTAND THE OPERATION AND MAINTENANCE MANUALS.)	
	4	1	**346-8219**	2	FILM-WARNING (UNIVERSAL WARNING)	
					(COULD CAUSE SERIOUS INJURY OR DEATH. DO NOT OPERATE OR WORK ON THIS EQUIPMENT UNLESS YOU HAVE READ AND UNDERSTAND THE OPERATION AND MAINTENANCE MANUALS.)	
	5	1	**576-1157**	1	FILM-IDENTIFICATION (CAT)	
					PARTS SHOWN IN GRAPHIC(S) WITHOUT A REFERENCE NUMBER ARE NOT SERVICED SEPARATELY	

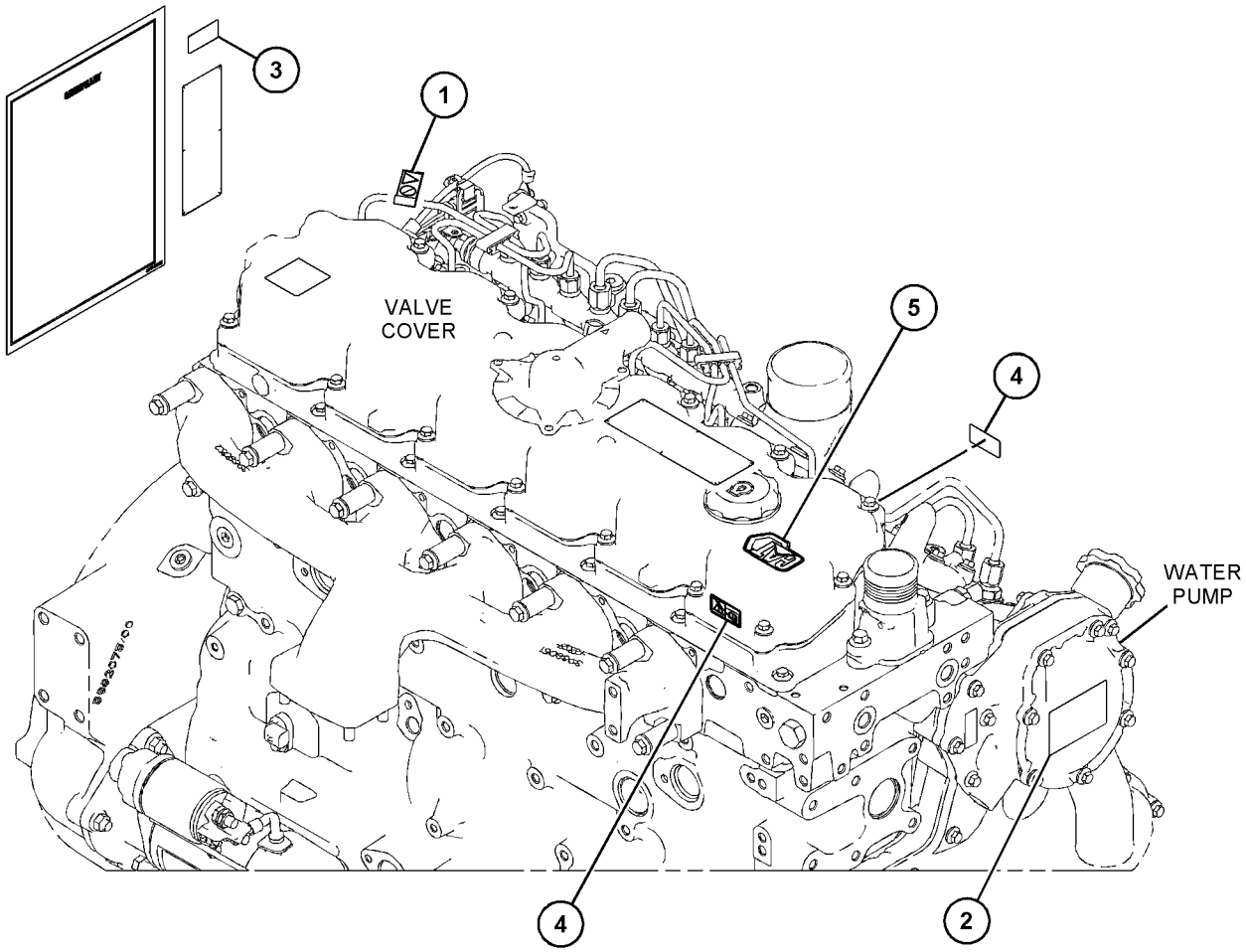

GRAPHIC #1 <END> g07199752

376-6464 PLATE & FILM GP

PART OF 485-8027, 499-7181, 506-9918, 526-0511, 531-2492, 575-2880, 591-1266, 591-9440, 593-7287, 596-7090, 597-9248, 598-9881 ENGINE AR-PRIMARY

SMCS-7405, 7557

i10699521

NOTE	REF NO	GRAPHIC REF	PART NUMBER	QTY	PART NAME 1 2 3 4 5 6 (PRODUCT LEVEL)	SEE PAGE
	1	1	**630-0387**	1	FILM-IDENTIFICATION (QR CODE)	

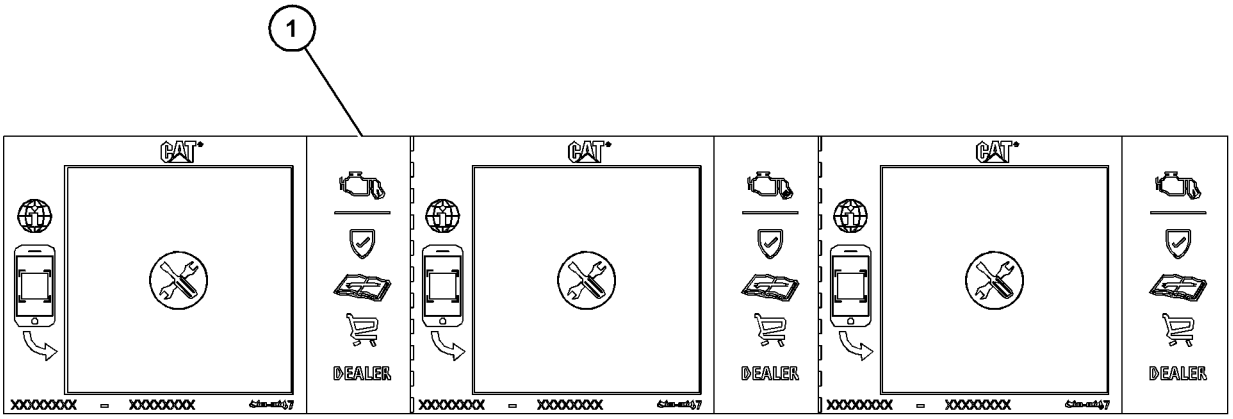

GRAPHIC #1 <END> g07962101

378-8167 PLATE & FILM GP

PART OF 596-2071 ENGINE AR-COMPLETE, 451-8343, 461-4638, 461-4649, 461-4656, 461-4658, 466-1161, 466-1162, 466-1163, 468-0461, 468-8218, 470-8667, 479-9398, 480-2181, 482-0212, 485-8027, 486-2644, 488-6687, 489-9006, 491-2606, 491-4973, 491-4980, 491-4993, 491-7124, 492-3021, 492-3072, 494-6807, 495-8349, 501-2466, 502-9462, 504-9579, 507-8016, 508-0270, 512-9858, 513-0851, 514-9367, 519-4128, 520-3152, 520-4644, 524-8271, 526-7210, 526-8888, 527-9686, 528-9866, 530-1323, 530-2601, 531-2492, 533-2797, 533-3588, 535-8060, 536-6675, 539-6915, 539-8582, 543-4255, 552-3506, 552-8869, 555-4669, 562-8873, 563-6729, 563-6730, 565-1247, 569-7846, 583-8352, 591-1266, 591-9440, 593-7287, 593-7288, 596-8896, 596-8905, 598-9881, 602-8721, 603-5300, 609-9819, 612-1735, 614-5795, 614-9555, 622-6239 ENGINE AR-PRIMARY

SMCS-7405, 7557

i08075173

NOTE	REF NO	GRAPHIC REF	PART NUMBER	QTY	PART NAME 1 2 3 4 5 6 (PRODUCT LEVEL)	SEE PAGE
	1	1	**576-1157**	1	FILM-IDENTIFICATION (CAT)	
	2	1	**326-9053**	1	FILM-WARNING (DO NOT SPRAY, READ OMM)	
	3	1	**346-8219**	2	FILM-WARNING (UNIVERSAL WARNING)	
	4	1	**355-3486**	1	FILM-WARNING (HAND, ANSI)	

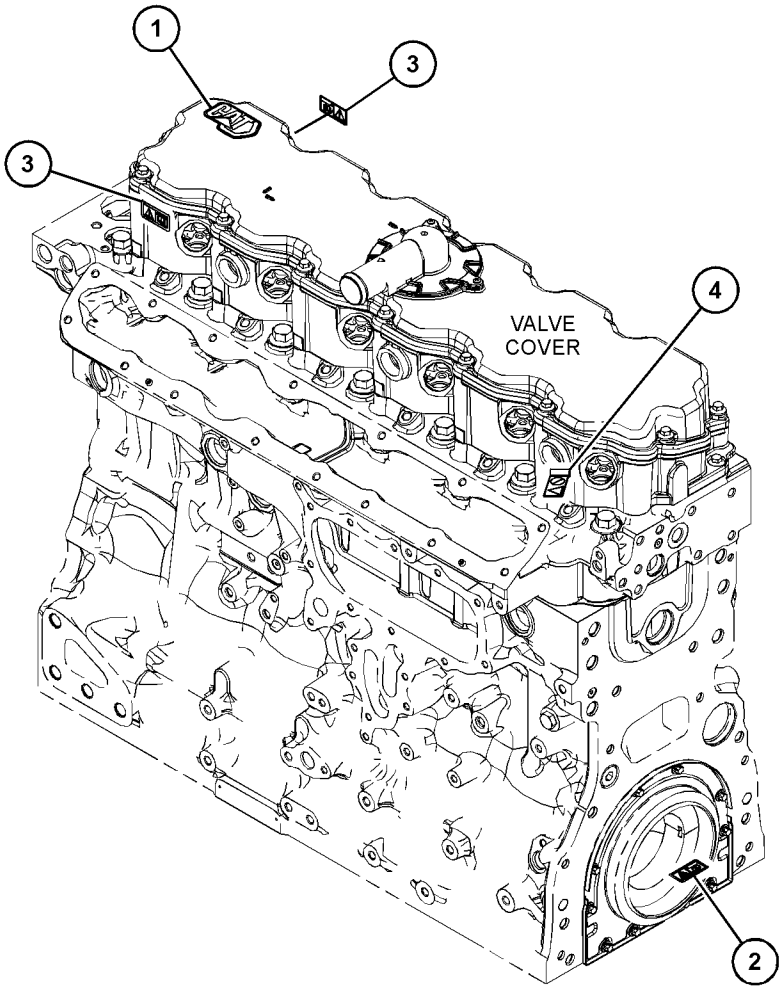

GRAPHIC #1

<END>

g06540380

635-3313 PLATE GP-IDENTIFICATION

TURBOCHARGER

PART OF 468-0461, 470-8814, 475-9060, 485-8027, 501-2466, 504-9579, 519-4128, 527-7106, 531-2492, 552-3506, 575-2880, 593-7287, 593-7288, 596-7090, 597-9248, 598-9881, 603-5300, 609-9819, 614-9555, 623-1309, 624-0698, 627-8019, 633-4335, 645-2039, 657-2370 ENGINE AR-PRIMARY

SMCS-7557 **i09932245**

NOTE	REF NO	GRAPHIC REF	PART NUMBER	QTY	PART NAME 1 2 3 4 5 6 (PRODUCT LEVEL)	SEE PAGE
	1	1	**332-0905**	2	RIVET-DRIVE	
	2	1	**549-5430**	1	PLATE-IDENTIFICATION (CAT)	

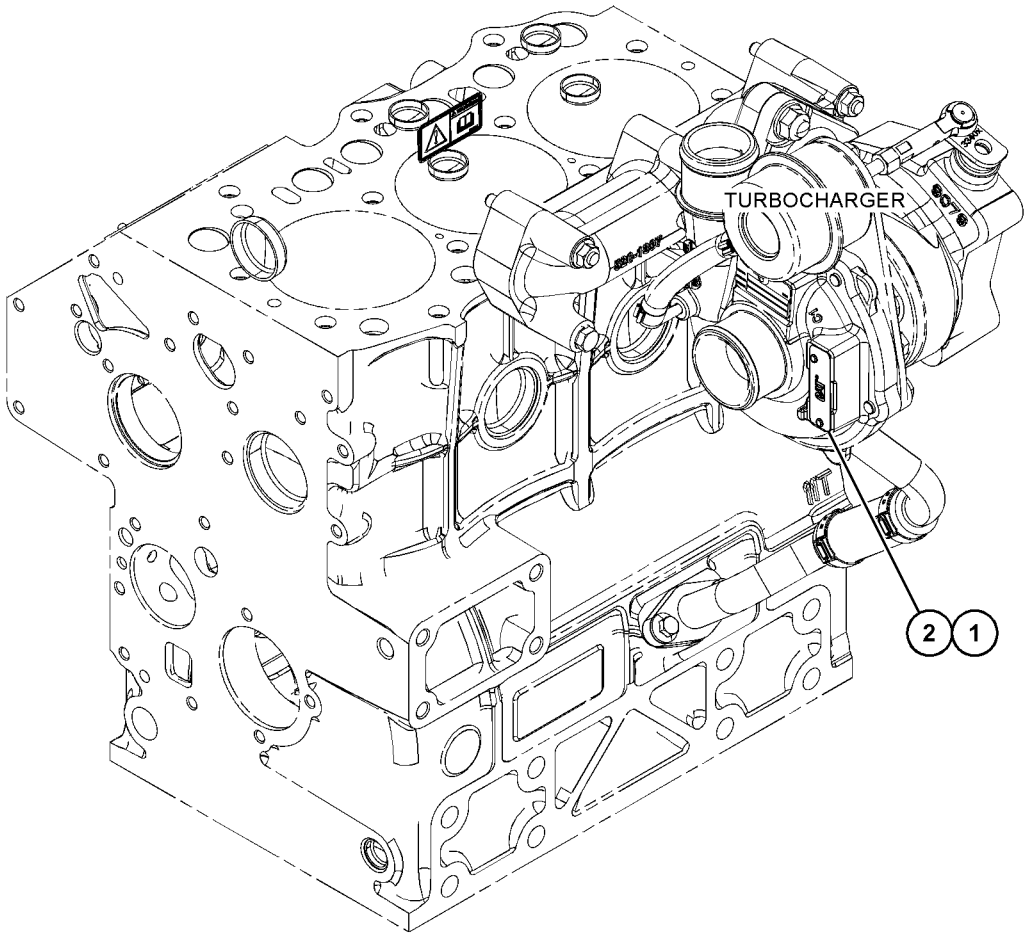

GRAPHIC #1 <END> g07670903

MEMORANDA

PART NUMBER INDEX

Part	Page
0	
0S-1603	506
	507
	508
	509
1	
1B-8705	409
1H-3244	796
	806
1W-2431	717
	718
1W-6735	519
	520
	523
2	
2K-4821	796
	806
2L-8050	824
	826
2L-8058	824
	826
3	
3D-2824	665
3F-9556	796
	806
3K-0360	466
	467
	468
	616
	617
4	
4P-7581	854
5	
5C-2890	824
	826
5P-4906	617
5P-5592	815
5P-8247	796
	806
5S-7349	796
	806
5V-9155	612
	613
6	
6D-0044	409
6H-3616	554
	593
	594
	595
	856
	858
6H-3957	433
	597
6I-0217	410
	435
	436
	438
	440
	441
	442
	530
	532
	534
	536
	538
	541
	556
	562
	610
	612
	615
	618
	620
	622
	623
	624
	625
	626
	627
	628
	641
	657
	659
	662
	664
	665
	678
	728
	729
	730
	731
	732
	734
	736
	737
	738
	739
	740
	741
	743
	744
	746
	748
	773
	775
	778
	781
	783
	787
	790
	793
6I-0254	409
	534
	618
	620
	626
	627
	678
6I-0260	534
	556
	557
	560
	561
	562
	563
	610
	612
	613
	619
	621
	653
	654
	656
	658
	661
	662
	663
	667
	686
	689
	690
	695
	697
	701
	703
	725
	726
	773
	775
	778
	781
	783
	787
	794
6I-0289	631
	632
	633
	634
	635
	636
	637
	638
	639
	640
	641
	642
6I-0292	424
	819
6I-0293	424
	819
6I-0302	410
6I-0363	556
6I-0364	834
	835
	840
6I-0423	517
	518
	525
	856
	857
6I-0454	534
	536
	541
6I-0455	657
	659
	664
	665
6I-0456	424
	658
	661
	808
	811
6I-0563	719
	728
	729
	730
	731
	732
	734
	736
	737
	738
	739
	740
	741
	743
	744
	746
	748
6I-0572	556
	557
	560
	561
	562
	563
6I-0593	686
	689
	690
	695
	697
	700
	701
	703
	732
	734
	741
	744
	746
	748
	781
	787
6I-0594	653
	663
	689
	700
	839
6I-0631	518
	785
	786
6I-0645	530
	532
	534
	536
	538
	541
6I-0650	475
	478
	479
	480
	481
	487
	488
	489
	490
	530
	532
	538
6I-0654	412
	414
	544
	545
	546
	556
	561
	562
	563
	686
	689
	690
	695
	697
	700

► PRIMARY REFERENCE

PART NUMBER INDEX

Part	Page
	701
	703
	713
	714
	715
	773
	775
	778
	783
	790
	793
6I-0839	656
	659
	661
	664
	678
6I-0917	725
	726
6I-1090	622
	628
	645
	646
6I-1497	631
	633
	634
	635
	636
	637
	638
	639
	640
	641
	642
6I-2997	513
6I-4012	836
	837
	839
6I-4200	632
	633
	773
	775
	778
	781
	783
	787
6I-4374	618
	620
	622
	626
	628
6I-4681	556
	557
	560
	561
	562
	563
6I-4709	610
6I-4793	654
	657
	658
	661
	665
6V-7238	466
	467
	468
	616
6V-8189	796
	806
6V-8635	665
6V-8714	665
6V-9008	665
6V-9189	501
	502
	503
	504
	671
	672

7

Part	Page
7C-1243	719
7C-4616	530
	532
	534
	538
	541
	855
7E-7606	519
	520
	523
7M-8485	665
7R-6290	719
7T-4532	430
	431
7W-1176	517
	525
7W-2562	409
7W-2601	686
	689
	690
	695
	697
	700
	701
	703
7W-2632	808
	811
7W-4669	648
7X-0591	552
7Y-2292	686
	689
	690
	697
	700
	703

8

Part	Page
8C-3445	647
8C-6354	814
	817
8J-4645	665
8L-2786	557
	559
	560
	561
	564
	565
8T-0193	718
8T-0269	454
	557
	560
	561
	562
	563
8T-4132	552
8T-4205	796
	806
8T-4224	796
	806
8T-6684	665
8T-8737	814
	817

9

Part	Page
9L-6770	796
	806
9M-7958	612
	613
9S-4185	557
	559
	560
	561
	564
	565
9V-3811	507
9X-1056	816
9X-3401	564
	565
	814
	816
	817
	818
9X-3402	812
	813
	814
	815
	817
9X-3959	408
	648
	677
9Y-1590	502
	504

0

Part	Page
006-9566	515
033-6034	843
	844
	850
	852
033-7687	506
	507
	508
	514
	515
035-8017	410
067-6043	449
067-6070	824
	826
067-6135	426
	427
	428
	447
067-6179	530
	532
	534
	536
	538
	541
067-6265	410
	414
067-6823	408
	449
	592
	648
	652
	677
099-6418	794
099-7241	412
	414

1

Part	Page
100-3751	530
	532
	534
	536
	538
	541
	610
	633
	642
100-4002	719
100-4003	663
	667
	719
100-4458	773
	775
	778
	781
	783
	787
100-4461	686
	689
	690
	695
	697
	700
	701
	703
100-4830	433
	532
	536
	597
	608
	641
	713
	714
	715
	728
	729
	730
	731
	732
	734
	736
	737
	738
	739
	740
	741
	743
	744
	746
	748
	844
	852
100-4841	543
100-5041	816
101-3895	435
	436
	438
	440
	441
	442
	530
	532
	534
	536
	538
	541
101-3917	653
101-7178	423
	429
	555

PART NUMBER INDEX

Part	Page
101-7185	856
	857
101-7186	856
	857
101-7404	433
	597
101-7539	686
	689
	690
	695
	697
	700
	701
	703
101-7540	686
	689
	690
	695
	697
	700
	701
	703
101-7541	689
	695
	700
	701
101-7546	689
	690
	695
	697
	700
	701
	703
101-7547	653
102-1957	518
102-2073	410
	433
	597
102-2075	433
	597
102-2076	433
	597
102-8802	430
	431
	564
	565
102-8804	818
102-9909	663
	667
102-9941	499
	529
	540
103-5687	649
	651
	773
	775
103-5705	435
	436
	438
	440
	441
	442
	662
105-2740	611
	725
	726
107-2348	720
	721
	722
111-0859	469-498
	547
	790
	798
	799
	800
	801
	802
	803
	804
	805
111-8222	608
112-7704	810
	824
	826
113-1504	618
	620
	622
	625
	626
113-4598	409
113-4604	409
113-4616	652
113-4630	818
113-7584	773
	775
113-7913	552
113-8076	410
113-8129	662
	678
114-4363	517
	525
	686
	689
	690
	695
	697
	700
	701
	703
119-4034	515
121-0883	517
	518
	525
122-4614	671
123-2899	545
	649
	650
	651
124-0506	434
	444
	445
	446
124-3536	566
	568
	570
	572
	576
	581
124-3815	530
	532
	536
	538
	541
	611
	612
	613
	622
	628
	632
	633
	642
	680
	681
	682
	683
	684
	686
	689
	690
	695
	697
	700
	701
	703
	708
	709
	728
	729
	730
	731
	732
	734
	736
	737
	738
	739
	740
	741
	743
	744
	746
	748
	773
	775
	778
	781
	783
	787
	820
	822
	841
	842
	843
	844
	846
	848
	850
	852
	854
125-7874	812
	813
	815
	817
125-7875	815
126-1767	431
	564
	565
	814
	816
	817
	818
126-1768	812
	813
	815
	817
126-3212	433
	597
126-3216	409
126-3219	410
	412
	414
126-9093	755
	761
	762
127-3361	429
	555
130-9888	618
	620
	625
	626
	627
132-5789	841
	842
	843
	846
	848
	850
	852
	854
133-1011	530
	532
	534
	536
	538
	541
133-7403	714
133-7668	501
133-7669	501
	504
133-9469	720
	721
	722
134-4139	671
135-5417	502
135-6362	503
135-6363	503
135-7992	672
145-4911	506
	507
	508
	509
	510
	511
	512
	513
	514
	515
149-5599	507
153-5294	665
155-0576	424
	808
	811
155-2271	812
	813
	814
	817
159-9541	773
	775
160-7163	716
161-7614	772
161-9820	423
	429
	547
	555
	798
	799
	800
	801
	802
	803
	804
	805
164-7468	781
	787
	798
	799
	800
	801
	802
	803
	804
	805

► PRIMARY REFERENCE

PART NUMBER INDEX

Part	Page
170-0967	617
175-7141	667
	686
	689
	690
	695
	697
	700
	701
	703
	790
	793
	834
	835
	836
	837
	840
176-2947	814
178-9570	▶430
	▶555
179-7071	500
180-9339	430
183-1343	829
	830
	831
184-0983	410
	829
	830
	831
	832
	838
185-0112	686
	689
	690
	695
	697
	700
	701
	703
185-0884	449
185-1860	812
	813
	814
	817
185-1861	814
	815
185-2638	796
	806
185-2639	796
	806
185-2644	796
	806
185-2647	796
	806
185-2648	796
185-2650	796
	806
185-2654	796
	806
185-2655	796
	806
185-2658	796
	806
187-0555	633
	642
188-9644	686
	690
	697
	703
189-2301	504
189-9377	564
	565
192-9207	755
	761
194-5226	812
	813
	815
	817
194-5227	812
	813
	815
	817
195-2186	612
	613
195-2221	412
	414
195-3699	686
	690
	697
	703
195-9245	434
	435
	442
	444
	445
	446
198-8262	410
	412
	414
	433
	597
198-8263	410
	412
	414
	433
	597
199-3108	518
199-3109	517
	518
	525
	527
	528
199-7891	796
	806
199-8436	796
	806
199-9252	820
	822
199-9267	820
	822
199-9751	458
	465
	820
	822
203-9007	846
	848
	850
	854
206-1345	812
	813
	815
	817
206-1826	794
208-8469	824
	826
208-9287	781
	787
209-6825	410
209-9219	450
211-6574	684
212-8375	816
213-0677	564
	565
214-3203	410
	412
	414
216-9633	647
217-0099	424
	808
	811
217-7877	433
217-9039	812
	813
	815
	817
	824
	826
	841
	842
	843
	844
	846
	848
	850
	852
	854
222-8625	433
224-6635	409
225-6522	615
	619
	621
	623
	624
	625
225-6524	615
	618
	621
	622
225-7738	678
225-7941	644
225-7944	610
	657
	658
	659
	661
	662
	664
	665
225-8019	678
225-8287	530
225-8524	412
	414
	720
	721
	722
225-8526	720
	721
	722
225-8858	449
226-8766	532
	536
	538
	541
226-8767	532
	536
	538
	541
228-4947	820
	822
228-7089	631
	633
	634
	635
	636
	637
	638
	639
	640
	642
228-7093	665
228-7100	773
	775
	778
	781
	783
	787
228-9655	796
	806
228-9656	796
	806
228-9657	796
	806
230-4011	812
	813
	817
230-4012	828
	829
	838
230-5008	814
230-5009	816
230-8094	454
	556
	557
	560
	561
	562
	563
231-1455	653
232-1322	450
	458
	465
232-1473	810
232-1693	841
	842
	843
	844
	846
	848
	850
	852
232-3657	530
232-3666	530
	532
	534
	536
	538
	541
232-3751	610
	657
	658
	659
	661
	662
	664
	665
232-7449	450
232-7596	449
232-7597	449
232-7599	449
234-6171	625
235-1061	597
235-1063	597
235-7133	▶796
	▶802
236-5511	556
	561
	563
238-0120	820
238-8245	812
	813
	817

2

PART NUMBER INDEX

Part	Page
238-8247	812
	813
	817
238-8288	725
	726
238-8292	723
	724
240-7874	814
240-7876	814
241-6157	773
	775
	778
	781
	783
	787
245-1043	812
	813
	814
	817
245-1044	812
	813
	814
	817
245-1045	814
245-1048	812
	813
	814
	817
246-4361	412
	414
	769
247-4928	410
	769
	773
	775
	777
	778
	783
	787
251-4336	532
	538
254-3633	842
	848
256-6454	820
	822
259-2611	410
259-2612	410
259-2623	410
260-3939	850
261-0428	419
	422
	475
	478
	479
	480
	481
	487
	488
	489
	490
261-4320	475
	480
	481
	487
	488
264-7029	812
265-6527	686
	689
	690
	695
	697
	700
	701
	703
267-7207	812
	813
	814
	817
267-7208	812
267-9572	812
	813
	814
	817
268-5341	713
	715
268-6677	850
270-2679	846
	848
	850
	854
273-3690	541
273-3691	410
273-5711	630
274-1931	601
	602
274-1935	505
274-4990	812
275-2428	824
	826
275-2431	824
	826
275-9883	617
275-9891	631
	633
	634
	635
	636
	637
	638
	639
	640
	641
	642
275-9897	556
	561
	562
	563
276-5600	449
276-5602	449
276-5603	450
	820
	822
276-7391	447
276-7394	447
276-7476	566
	568
	572
	576
	581
	587
276-7478	432
	574
	576
	578
	581
	583
	585
276-8116	457
276-8117	457
276-8123	606
	609
276-8133	606
	609
276-8134	458
276-9200	604
276-9201	604
276-9206	604
276-9207	604
276-9230	604
277-0116	519
	520
	523
277-0120	689
	695
	700
	701
277-0122	529
277-0587	509
277-0588	509
	510
	511
	512
277-1974	615
	618
	620
	622
	624
	626
	627
	628
277-1975	615
	618
	620
	622
	624
	626
	627
	628
277-2500	653
	654
	656
	663
	667
277-2502	653
277-2503	653
	663
277-2525	610
	662
277-2526	610
	662
277-2537	610
	657
	659
	662
	664
	665
277-3012	530
	532
	534
	536
	538
	541
277-3013	530
	532
	534
	536
	538
	541
277-4223	433
	499
	540
	591
	597
	608
277-4302	458
	465
277-4409	824
	826
277-4444	546
277-4445	546
277-4490	548
	554
277-4993	767
	772
	773
	775
	778
	783
	787
277-5064	841
	846
277-5065	841
	843
	844
	846
	850
	852
	854
277-5307	604
277-9463	736
	737
277-9602	728
	730
	732
	736
	744
277-9603	728
	730
	732
	736
	744
277-9938	643
	732
	734
	736
	737
	741
	744
	746
	748
	770
277-9940	643
	732
	734
	736
	737
	741
	744
	746
	748
278-0017	619
	621
	623
	728
	729
	730
	731
	732
	734
	736
	737
	738
	739
	740
	741
	743
	744
	746
	748
278-3242	678
278-5111	604
278-5112	604
278-5113	604
278-5125	426
	427
	428

► PRIMARY REFERENCE

PART NUMBER INDEX

Part	Page
278-5126	428
278-5170	763
	766
278-5203	424
	808
	811
279-9254	510
	513
279-9651	544
	545
279-9652	544
280-1384	556
	562
280-1911	▶604
	▶606
280-1912	604
280-1913	604
280-1914	604
280-2424	732
	734
	741
	744
	746
	748
281-3120	814
281-6331	518
281-7039	654
281-7040	654
	656
281-8744	649
	650
	651
281-8804	812
	813
	817
282-2830	732
	734
	741
	744
	746
	748
283-1171	480
283-4148	471
	474
	477
	478
	479
	482
	483
	484
	485
	486
	489
	490
283-4302	557
283-4559	658
	661
283-4662	519
	520
	521
	522
	523
	526
	527
	528
	529
	600
283-4674	600
283-8301	523
	548
	549
	553
	554
283-8302	548
	550
284-1026	476
	493
	494
	495
	496
	497
	498
285-2991	561
	563
285-3058	625
286-0015	612
	613
286-0123	793
286-0127	715
286-0188	552
286-2890	767
	770
	771
	772
	775
	777
286-7845	495
286-7848	603
286-7851	723
	724
286-8817	560
287-6842	497
287-7424	656
287-8597	517
	518
	519
	520
	521
	522
	523
	525
	526
	527
	528
	529
288-2354	475
	478
	479
	480
	481
	487
	488
	489
	490
288-6974	519
	520
	522
	523
	526
	527
	528
288-6975	519
	520
	521
	522
	526
	527
	528
	529
289-2347	715
289-2348	714
	715
289-2349	715
289-2360	713
	714
	715
289-8336	471
	474
	476
	477
	482
	483
	484
	485
	493
	494
	495
	496
	497
	498
290-1993	852
291-4184	617
291-5837	490
291-6517	534
	536
	541
291-6521	534
291-6522	534
291-6523	534
291-6524	534
291-6526	499
291-6528	499
291-6529	499
292-2893	813
	814
	826
292-2896	812
	813
	814
292-3462	725
	726
292-6812	814
	816
293-1875	410
293-1876	410
293-1877	▶409
	▶410
293-1878	410
	412
	414
293-1881	652
293-4774	408
293-4776	412
	414
293-4780	408
293-5248	484
293-8067	670
	675
293-8070	855
293-8076	700
293-8077	686
	689
	690
	695
	697
	700
	701
	703
293-8078	686
	689
	690
	695
	697
	700
	701
	703
293-8079	686
	689
	690
	695
	697
293-8080	686
	689
	690
	695
	697
	700
	701
	703
293-8083	700
293-8084	686
	689
	690
	695
	697
	700
	701
	703
293-8085	686
	689
	690
	695
	697
	700
	701
	703
293-8086	686
	689
	690
	695
	697
	700
	701
	703
293-9235	674
293-9736	673
293-9737	499
294-0366	669
	676
294-2780	486
294-9389	713
	714
	715
294-9392	412
	414
294-9396	412
	414
295-1654	665
295-4670	770
	771
	777
295-6661	458
	465
295-7712	512
295-8610	610
	653
295-8613	653
295-8615	653
296-1258	412
	414
298-5872	485
298-5873	483
298-5880	494
299-5511	606
	609
299-6878	512
299-6953	823

▶ PRIMARY REFERENCE

PART NUMBER INDEX

Part	Page
3	
302-4332	409
302-6112	519
	520
302-6780	499
303-6191	686
	689
	690
	695
	697
	700
	701
	703
303-8523	549
	553
304-5062	545
306-2332	517
306-2337	618
	620
	622
	626
	627
307-2242	419
	422
	475
	478
	479
	480
	481
	487
	488
	489
	490
308-3702	510
309-0820	551
	552
	553
309-6666	496
309-6678	606
	609
311-2732	773
	778
	783
314-4018	430
	431
315-4691	713
	714
315-9810	728
	730
	732
	736
	744
316-9351	564
	565
	612
	613
	812
	813
	814
	817
317-3176	814
317-5482	566
	568
	570
	572
	576
	578
317-6163	412
	414
317-6198	866
317-6213	628
317-6214	587
	589
317-6221	514
317-6232	412
	414
317-6664	632
317-9229	686
	689
	690
	695
	697
	700
	701
	703
318-0774	626
318-1049	475
	478
	479
	480
	481
	486
	487
	488
	489
	490
319-8426	426
	427
320-1291	429
	431
320-3060	820
	822
320-3062	820
	822
320-8383	412
	414
320-8384	412
	414
321-2383	618
	620
321-6120	410
321-6131	416
	421
	422
	599
321-7706	511
321-8952	798
	799
	804
	805
321-8965	837
322-0819	783
322-9011	686
	689
	690
	695
	697
	700
	701
	703
323-7347	842
	848
323-9312	432
	574
	576
	578
	581
	583
	585
324-0444	530
	532
	538
324-3528	686
	689
	690
	695
	697
	700
	701
	703
326-1876	475
	478
	480
	488
	489
	490
326-1877	479
326-1879	481
	487
326-7289	435
	442
	444
	445
	446
326-7401	▶654
	▶657
	▶658
	▶665
326-7402	▶656
	▶659
	▶661
	▶664
326-9053	714
	859
	861
	864
	866
	868
327-0675	43
	49
	593
329-3796	543
329-7854	608
329-7856	608
330-1725	423
	429
	555
330-5898	644
330-8197	854
330-9723	773
	775
	778
	781
	783
	787
331-0290	▶432
	▶566
	▶568
	▶570
	▶572
	▶574
	▶576
	▶578
	▶581
	▶583
	▶585
331-0291	574
	578
	583
	585
331-0292	574
	578
	583
	585
331-0905	319
331-4040	815
331-6129	410
331-6835	449
331-8053	612
332-0905	58
	190
	206
	279
	289
	337
	341
	869
332-7865	815
	818
	842
	848
332-9106	47
	594
335-8611	720
	721
	722
337-6324	417
	419
	420
339-8780	447
339-9637	606
	609
340-4212	664
	665
341-7601	836
342-6502	601
	602
	603
342-6507	602
342-6510	601
	602
	603
342-9917	686
	690
	697
	703
344-0927	714
344-3434	536
344-5081	800
345-8838	37
	43
	49
	69
	71
	73
	75
	77
	79
	85
	87
	115
	123
	125
	127
	129
	149
	157
	159
	163
	165
	169
	183
	195
	197
	199
	217
	220
	222
	228
	230
	241
	262
	268
	280
	292

► PRIMARY REFERENCE

PART NUMBER INDEX

Part	Page
	296
	300
	302
	310
	312
	316
	328
	340
	350
	370
	372
	378
	382
	386
	396
	517
345-8839	47
	51
	107
	141
	161
	380
	398
	402
	518
345-8846	145
	147
	215
	362
	364
	519
	520
345-8901	43
	47
	49
	57
	107
	123
	125
	127
	129
	149
	157
	159
	179
	181
	193
	195
	201
	203
	235
	241
	254
	262
	264
	268
	270
	272
	280
	292
	296
	308
	324
	328
	374
	380
	382
	386
	506
345-8902	37
	69
	71
	73
	75
	77
	79
	85
	87
	113
	143
	163
	165
	169
	183
	197
	199
	217
	220
	222
	228
	230
	300
	302
	310
	312
	316
	340
	350
	370
	372
	378
	396
	507
345-8961	39
	51
	151
	213
	247
	326
	398
	402
	508
345-9028	135
	215
	219
	304
	509
345-9037	55
	65
	67
	81
	83
	89
	91
	93
	95
	109
	117
	133
	145
	147
	153
	155
	167
	171
	173
	177
	189
	207
	209
	224
	237
	243
	252
	258
	260
	266
	276
	306
	314
	318
	322
	330
	334
	336
	338
	346
	352
	354
	362
	364
	384
	400
	406
	510
346-0006	790
	793
346-0007	790
	793
346-0009	280
	296
	382
	618
346-0091	37
	69
	71
	73
	75
	77
	79
	81
	83
	115
	123
	141
	145
	161
	163
	165
	167
	183
	187
	197
	199
	220
	228
	230
	232
	234
	249
	250
	362
	378
	396
	657
346-0097	51
	109
	121
	133
	157
	215
	235
	260
	264
	292
	328
	394
	398
	402
	658
346-0099	113
	143
	342
	610
346-0220	37
	39
	41
	43
	47
	49
	51
	53
	57
	61
	63
	65
	67
	69
	71
	73
	75
	77
	79
	81
	83
	85
	87
	89
	91
	93
	95
	97
	99
	101
	103
	105
	107
	109
	111
	113
	115
	117
	119
	121
	123
	125
	127
	129
	131
	133
	135
	137
	139
	141
	143
	145
	147
	149
	151
	153
	155
	157
	159
	161
	163
	165
	167
	169
	171
	173
	175
	177
	179
	181
	183
	185

PART NUMBER INDEX

Part	Page	Part	Page	Part	Page	Part	Page
	187		328		91		322
	189		330		93		328
	191		332		95		330
	193		334		97		332
	195		336		99		334
	197		338		101		336
	199		340		103		338
	201		342		109		340
	203		344		117		346
	205		346		119		348
	207		348		121		350
	209		350		123		352
	211		352		125		354
	213		354		127		356
	215		356		129		362
	217		358		131		364
	219		360		133		368
	220		362		141		370
	222		364		145		372
	224		366		147		376
	226		368		149		378
	228		370		153		384
	230		372		155		386
	232		374		161		392
	233		376		163		394
	234		378		165		396
	235		380		167		398
	237		382		169		400
	239		384		171		402
	241		386		173		406
	243		388		175		719
	245		390		177	346-1478	115
	247		392		183		123
	249		394		185		125
	250		396		189		127
	251		398		191		129
	252		400		197		157
	254		402		199		159
	256		404		205		195
	258		406		207		262
	260		629		209		268
	262	346-0407	530		217		280
	264	346-0408	530		220		296
	266		532		222		382
	268		538		224		595
	270	346-0737	40		226	346-1510	46
	272		41		228		139
	274		43		230		145
	276		46		237		147
	278		47		239		219
	280		49		241		278
	282		52		243		304
	284		53		245		342
	286		55		252		344
	288		57		258		362
	290		61		260		364
	292		63		262		404
	294		68		264		548
	296		645		266	346-1512	65
	298	346-0769	37		268		67
	300		51		270		81
	302		65		274		83
	304		67		276		89
	306		69		278		91
	308		71		288		93
	310		73		292		95
	312		75		300		109
	314		77		302		117
	316		79		306		121
	318		81		310		153
	320		83		312		155
	322		85		314		167
	324		87		316		171
	326		89		318		173

► PRIMARY REFERENCE

PART NUMBER INDEX

Part	Page
	177
	189
	205
	207
	209
	224
	237
	243
	252
	258
	266
	276
	306
	314
	318
	322
	330
	332
	334
	336
	338
	346
	352
	354
	368
	384
	394
	400
	406
	855
346-1528	37
	69
	71
	73
	75
	77
	79
	85
	87
	149
	163
	165
	169
	183
	197
	199
	217
	220
	222
	228
	230
	241
	292
	300
	302
	310
	312
	316
	328
	340
	350
	370
	372
	378
	386
	396
	856
346-2908	37
	40
	41
	43
	49
	52
	53
	55
	59
	63
	68
	69
	71
	73
	75
	77
	79
	81
	83
	85
	87
	89
	91
	93
	95
	97
	99
	101
	104
	105
	107
	117
	119
	121
	123
	125
	127
	129
	141
	149
	151
	153
	155
	161
	163
	165
	167
	169
	171
	173
	175
	177
	183
	185
	189
	191
	197
	199
	205
	207
	211
	213
	219
	220
	222
	224
	226
	228
	230
	232
	233
	234
	235
	237
	241
	243
	245
	247
	249
	250
	251
	252
	254
	258
	262
	264
	266
	268
	270
	274
	290
	292
	294
	302
	304
	306
	308
	310
	312
	314
	318
	320
	322
	324
	326
	328
	330
	332
	334
	336
	338
	340
	346
	348
	350
	352
	354
	358
	360
	368
	370
	372
	378
	384
	386
	388
	390
	392
	394
	396
	398
	400
	402
	406
	592
346-2911	45
	57
	111
	115
	135
	139
	179
	181
	193
	195
	201
	203
	215
	272
	278
	280
	286
	296
	342
	344
	356
	374
	380
	382
	404
	648
346-2999	429
346-4709	606
346-6147	801
346-8219	859
	861
	864
	866
	868
347-2151	525
347-8645	775
	783
347-8986	497
348-0495	770
	773
	775
	778
	783
	790
	793
348-4637	841
	842
	843
	844
	846
	848
	850
	852
349-6847	767
	772
350-8741	491
350-8742	469
350-8958	46
	58
	190
	206
	279
	289
	319
	337
	341
351-1724	601
	602
	603
351-4318	783
351-4749	556
	557
	560
	561
	562
	563
351-5583	623
351-8206	663
	667
352-3964	844
353-2634	635
	640
353-2635	636
	639
353-2636	634
	638
353-2637	631
	637
354-5671	►828
	►832
354-8322	519
	520
	521
	522

► PRIMARY REFERENCE

PART NUMBER INDEX

Part	Page
	523
	526
	527
	528
	529
	596
354-8538	557
355-0632	773
	778
355-3486	859
	861
	864
	866
	868
356-1219	812
	813
	815
356-3499	513
356-3986	773
	775
	778
	783
	787
356-7065	194
356-9627	713
357-0147	444
	445
	446
	621
	622
357-1915	65
	109
	117
	121
	205
	209
	256
	298
	332
	368
	394
	521
	522
357-1916	521
	522
357-2646	540
357-3513	686
	690
	697
	703
357-8714	651
358-6475	643
	736
	737
	741
	748
359-1309	619
	622
359-1310	434
359-7115	775
	778
359-9431	536
	541
360-1564	581
360-2903	550
360-8958	▶749
	750
	751
	▶759
360-8960	749
361-7350	511
362-5412	750
	751
	759
362-8050	689
	695
	700
	701
362-9689	750
	751
	759
363-0559	447
363-4208	689
	695
	700
	701
363-5813	611
	612
	613
364-5145	447
365-2908	680
	681
	682
	683
	684
	708
	709
365-2968	474
365-2985	472
365-3002	488
365-3308	410
	414
365-5504	550
365-5505	550
365-5823	732
	734
	744
	746
366-6596	528
366-6614	519
	520
366-7721	560
366-9373	773
	775
	778
	783
367-1817	649
367-3340	723
	724
367-7142	658
	661
367-8509	649
	651
367-8512	649
	651
368-3145	824
	826
368-3338	689
	690
	695
	697
	700
	701
	703
368-4111	686
368-8557	732
	734
	736
	737
	741
	744
	746
	748
368-8559	▶643
	▶728
	729
	730
	731
	▶738
	739
	740
	▶743
369-1255	417
	419
	421
	422
369-1658	725
	726
369-3186	566
	581
369-3188	587
	589
369-3774	814
	815
369-3867	621
	622
369-3869	444
	445
	446
369-6810	499
	540
369-7304	39
	41
	43
	46
	47
	49
	53
	55
	57
	59
	61
	63
	65
	68
	85
	87
	89
	91
	93
	95
	97
	99
	101
	103
	105
	107
	111
	117
	119
	125
	127
	129
	131
	135
	137
	139
	147
	149
	151
	153
	155
	159
	169
	171
	173
	175
	177
	179
	181
	185
	189
	191
	193
	195
	201
	203
	207
	209
	211
	213
	215
	217
	219
	222
	224
	226
	232
	233
	237
	239
	241
	245
	247
	249
	251
	254
	256
	258
	262
	266
	268
	270
	272
	274
	276
	280
	282
	284
	286
	288
	290
	294
	296
	298
	300
	302
	304
	306
	308
	310
	312
	314
	316
	318
	320
	322
	324
	326
	340
	344
	346
	348
	350
	352
	354
	356
	358
	360
	364
	366
	368
	370
	372
	374
	376

▶ PRIMARY REFERENCE

PART NUMBER INDEX

Part	Page	Part	Page	Part	Page	Part	Page
	380		129		270		43
	382		131		272		46
	384		133		274		48
	386		135		276		49
	388		137		278		52
	390		139		280		54
	392		141		282		55
	404		143		284		57
	454		145		286		59
	566		147		288		61
	568		149		290		63
	570		151		292		66
	572		153		294		68
	574		155		296		70
369-7799	763		157		298		72
	766		159		300		74
370-5513	786		161		302		76
370-5516	785		163		304		78
370-5517	785		165		306		80
370-5518	785		167		308		82
370-5520	▶785		169		310		84
	▶794		171		312		86
370-6545	449		173		314		88
371-2477	137		175		316		90
	151		177		318		92
	213		179		320		94
	247		181		322		96
	326		183		324		98
371-2478	37		185		326		100
	39		187		328		102
	41		189		330		104
	43		191		332		105
	45		193		334		107
	47		195		336		110
	49		197		338		111
	51		199		340		113
	53		201		342		115
	55		203		344		118
	57		205		346		120
	59		207		348		122
	61		209		350		123
	63		211		352		125
	65		213		354		127
	67		215		356		129
	69		217		358		132
	71		219		360		133
	73		220		362		135
	75		222		364		137
	77		224		366		139
	79		226		368		141
	81		228		370		143
	83		230		372		145
	85		232		374		147
	87		233		376		149
	89		234		378		151
	91		235		380		154
	93		237		382		155
	95		239		384		157
	97		241		386		159
	99		243		388		161
	101		245		390		164
	103		247		392		166
	105		249		394		168
	107		250		396		169
	109		251		398		171
	111		252		400		173
	113		254		402		176
	115		256		404		177
	117		258		406		179
	119		260		454		181
	121		262		543		184
	123		264	371-2480	38		185
	125		266		40		187
	127		268		41		189

▶ PRIMARY REFERENCE

PART NUMBER INDEX

Part	Page	Part	Page	Part	Page	Part	Page
	192		334		278		165
	193		337		292		167
	195		338		328		169
	198		341		342		171
	200		342		362		173
	201		344		378		175
	203		347		394		177
	205		349		396		179
	208		351		398		181
	209		353		402		183
	211		354		763		185
	213		356	371-2536	37		187
	215		358		39		189
	219		361		41		191
	220		362		43		193
	222		364		45		195
	224		366		47		197
	226		369		49		199
	229		371		51		201
	231		373		53		203
	232		374		55		205
	233		377		57		207
	234		379		59		209
	235		380		61		211
	237		382		63		213
	239		385		65		215
	242		387		67		217
	244		388		69		219
	245		390		71		220
	247		393		73		222
	249		395		75		224
	250		397		77		226
	251		399		79		228
	253		401		81		230
	254		403		83		232
	256		404		85		233
	258		406		87		234
	260		606		89		237
	262	371-2483	37		91		239
	264		51		93		241
	266		69		95		243
	268		71		97		245
	270		73		99		247
	272		75		101		249
	274		77		103		250
	276		79		105		251
	278		81		107		252
	280		83		109		254
	282		109		111		256
	284		113		113		258
	286		115		115		260
	288		121		117		262
	291		123		119		264
	293		133		121		266
	294		141		123		268
	296		143		125		270
	298		145		127		272
	300		157		129		274
	302		161		131		276
	304		163		133		278
	306		165		135		280
	308		167		137		282
	310		183		141		284
	313		187		143		286
	314		197		145		288
	316		199		147		290
	319		220		149		292
	320		228		151		294
	323		230		153		296
	324		234		155		298
	326		235		157		300
	329		250		159		302
	330		260		161		304
	333		264		163		306

► PRIMARY REFERENCE

PART NUMBER INDEX

Part	Page
	308
	310
	312
	314
	316
	318
	320
	322
	324
	326
	328
	330
	340
	346
	348
	350
	352
	354
	356
	358
	360
	362
	364
	366
	368
	370
	372
	374
	376
	378
	380
	382
	384
	386
	388
	390
	392
	394
	396
	398
	400
	402
	406
	808
371-2537	139
	235
	342
	344
	404
	811
371-2541	46
	54
	59
	64
	111
	120
	133
	140
	211
	260
	275
	285
	286
	321
	342
	344
	353
	354
	367
	393
	404
	829
371-2544	39
	46
	151
	213
	247
	284
	326
	366
	556
371-2546	256
	284
	298
	366
	631
371-2554	43
	47
	49
	55
	57
	111
	113
	115
	125
	127
	129
	139
	143
	179
	181
	193
	195
	201
	203
	211
	215
	219
	232
	233
	234
	235
	249
	250
	251
	254
	256
	262
	268
	272
	278
	280
	282
	284
	286
	288
	290
	294
	296
	298
	304
	308
	324
	342
	344
	354
	356
	358
	360
	366
	374
	382
	404
	601
371-2555	40
	46
	137
	151
	213
	247
	274
	326
	380
	602
371-2558	304
	547
371-2636	714
371-2684	790
	793
371-2691	790
	793
371-2692	55
	599
371-2693	37
	41
	51
	53
	59
	63
	65
	67
	69
	71
	73
	75
	77
	79
	81
	83
	85
	87
	89
	91
	93
	95
	97
	99
	101
	103
	105
	109
	113
	117
	119
	121
	123
	125
	127
	129
	131
	141
	143
	145
	147
	149
	153
	155
	161
	163
	165
	167
	169
	171
	173
	175
	177
	183
	185
	187
	189
	191
	197
	199
	205
	207
	209
	217
	220
	222
	224
	226
	228
	230
	235
	237
	239
	241
	243
	245
	252
	258
	262
	264
	266
	268
	270
	276
	278
	282
	292
	300
	302
	306
	308
	310
	312
	314
	316
	318
	322
	328
	330
	332
	334
	336
	338
	340
	346
	348
	350
	352
	354
	362
	364
	368
	370
	372
	376
	378
	384
	386
	388
	390
	392
	394
	396
	398
	400
	402
	406
	416
371-2694	41
	59
	61
	63
	105

► PRIMARY REFERENCE

PART NUMBER INDEX

Part	Page
	115
	145
	147
	157
	159
	232
	233
	234
	249
	250
	251
	282
	290
	294
	326
	356
	358
	360
	362
	364
	380
	388
	390
	500
371-2716	43
	49
	55
	59
	63
	115
	280
	296
	382
	530
371-2719	38
	42
	68
	70
	72
	74
	76
	78
	80
	82
	84
	86
	88
	90
	92
	94
	96
	98
	100
	102
	104
	105
	118
	124
	126
	128
	130
	135
	142
	150
	154
	156
	162
	164
	166
	168
	170
	172
	174
	176
	178
	184
	186
	190
	198
	200
	212
	221
	223
	225
	227
	229
	231
	232
	244
	246
	249
	259
	263
	269
	293
	303
	307
	311
	313
	315
	319
	329
	331
	337
	339
	341
	347
	349
	353
	355
	369
	371
	373
	379
	385
	387
	388
	390
	397
	608
371-2720	113
	143
	728
	729
371-2725	41
	105
	111
	135
	141
	161
	211
	215
	232
	249
	278
	388
	390
	532
371-2733	61
	135
	215
	304
	823
371-2735	39
	45
	47
	53
	55
	63
	111
	123
	125
	127
	129
	145
	147
	151
	213
	219
	247
	256
	280
	296
	298
	304
	308
	326
	356
	362
	364
	382
	544
371-2740	43
	49
	135
	139
	179
	181
	201
	203
	211
	235
	272
	284
	286
	290
	294
	342
	344
	358
	360
	366
	374
	404
	545
371-2742	51
	53
	63
	113
	135
	143
	153
	189
	205
	207
	237
	243
	252
	266
	276
	282
	288
	304
	318
	322
	330
	332
	334
	336
	338
	350
	368
	376
	386
	398
	400
	402
	406
	466
371-2743	193
	254
	256
	298
	324
	616
371-2745	40
	44
	48
	50
	55
	62
	64
	113
	133
	136
	138
	140
	143
	145
	147
	150
	152
	157
	160
	180
	181
	194
	201
	204
	213
	216
	219
	235
	242
	248
	255
	261
	272
	281
	297
	305
	325
	327
	343
	345
	362
	364
	375
	383
	405
	647
371-3974	763
	764
371-7263	790
	793
371-8058	492
371-8298	469
	470
	472
	473
	491
	492
372-2297	37
	40
	41
	43

► PRIMARY REFERENCE

PART NUMBER INDEX

Part	Page	Part	Page	Part	Page	Part	Page
	46		193		334		69
	48		195		336		71
	49		197		338		73
	52		199		340		75
	53		201		342		77
	55		203		344		79
	57		205		346		81
	59		208		349		83
	61		209		350		85
	63		211		352		87
	66		213		354		89
	68		215		356		91
	69		217		358		93
	71		219		361		95
	73		220		362		97
	75		222		364		99
	78		224		366		101
	79		226		369		103
	81		228		370		105
	83		230		372		109
	86		232		374		111
	88		233		376		113
	90		234		378		117
	91		235		380		119
	93		237		382		121
	96		239		384		123
	97		241		386		125
	100		243		388		127
	102		245		390		129
	104		247		392		131
	105		249		394		133
	107		250		396		137
	110		251		398		139
	111		252		401		141
	113		254		402		143
	115		256		404		149
	118		258		406		153
	119		260		678		155
	121		262	372-4204	489		157
	123		264	372-5850	486		159
	125		266	372-6382	813		161
	127		268		815		163
	129		270	373-1665	830		165
	131		272	373-3606	39		167
	133		274		45		169
	135		276		135		171
	137		278		145		173
	139		280		147		175
	141		282		151		177
	143		284		213		179
	145		286		219		181
	147		288		235		183
	149		290		247		185
	151		292		256		187
	154		294		298		189
	155		296		304		191
	157		298		326		193
	159		300		356		197
	161		302		362		199
	163		304		364		201
	165		306		649		203
	167		308	373-3607	37		205
	169		310		41		207
	171		312		43		209
	173		314		45		211
	175		316		47		217
	177		318		49		220
	179		320		51		222
	181		322		53		224
	183		324		55		226
	185		326		59		228
	187		328		63		230
	189		330		65		232
	191		332		67		233

PART NUMBER INDEX

Part	Page	Part	Page	Part	Page	Part	Page
	234		400		147		294
	237		402		149		296
	239		404		153		298
	241		406		155		300
	243		650		157		302
	245	373-5023	52		159		304
	249		141		161		306
	250		161		163		308
	251		398		165		310
	252		402		167		312
	254		857		169		314
	258	373-8014	645		171		316
	260	374-0427	59		173		318
	262		115		175		320
	264		615		177		322
	266	374-0432	235		179		324
	268		342		181		328
	270		730		183		330
	272		731		185		332
	276	374-4419	678		187		334
	278	374-6300	37		189		336
	280		39		191		338
	282		41		193		340
	284		43		195		342
	286		45		197		344
	288		47		199		346
	290		49		201		348
	292		51		203		350
	294		53		205		352
	296		55		207		354
	300		57		209		356
	302		59		211		358
	306		61		215		360
	308		63		217		362
	310		65		219		364
	312		67		220		366
	314		69		222		368
	316		71		224		370
	318		73		226		372
	322		75		228		374
	324		77		230		376
	328		79		232		378
	330		81		233		380
	332		83		234		382
	334		85		235		384
	336		87		237		386
	338		89		239		388
	340		91		241		390
	342		93		243		392
	344		95		245		394
	346		97		249		396
	348		99		250		398
	350		101		251		400
	352		103		252		402
	354		105		254		404
	358		107		256		406
	360		109		258		447
	366		111		260		454
	368		113		262	374-6301	37
	370		115		264		52
	372		117		266		69
	374		119		268		71
	376		121		270		73
	378		123		272		75
	380		125		274		77
	382		127		276		79
	384		129		278		81
	386		131		280		83
	388		133		282		109
	390		135		284		113
	392		139		286		115
	394		141		288		121
	396		143		290		123
	398		145		292		133

► PRIMARY REFERENCE

PART NUMBER INDEX

Part	Page
	141
	143
	145
	157
	161
	163
	165
	167
	183
	187
	197
	199
	220
	228
	230
	234
	235
	250
	260
	264
	278
	292
	328
	342
	362
	378
	394
	396
	398
	402
	576
	578
374-7090	47
	157
	159
	555
374-7093	45
	111
	139
	286
	342
	344
	404
	469
374-7094	43
	45
	49
	61
	111
	115
	139
	215
	256
	280
	286
	296
	298
	326
	342
	344
	366
	380
	382
	404
	429
374-9295	43
	49
	55
	59
	63
	115
	280
	296
	382
	591
375-0098	37
	40
	41
	43
	46
	47
	49
	51
	53
	55
	57
	59
	61
	63
	65
	67
	69
	71
	73
	75
	77
	79
	81
	83
	86
	87
	89
	91
	93
	95
	97
	99
	102
	103
	105
	107
	109
	113
	115
	117
	119
	121
	131
	133
	135
	137
	139
	141
	143
	145
	147
	149
	151
	153
	155
	157
	159
	161
	163
	165
	167
	169
	171
	173
	175
	177
	179
	181
	183
	185
	187
	189
	191
	193
	195
	197
	199
	201
	203
	205
	207
	209
	213
	215
	217
	219
	220
	222
	224
	226
	228
	230
	235
	237
	239
	241
	243
	245
	247
	252
	254
	256
	258
	260
	262
	264
	266
	268
	270
	272
	274
	276
	278
	280
	282
	286
	290
	292
	294
	296
	298
	300
	302
	304
	306
	308
	310
	312
	314
	316
	318
	320
	322
	324
	326
	328
	330
	332
	334
	336
	338
	340
	342
	344
	346
	348
	350
	352
	354
	356
	358
	360
	362
	364
	368
	370
	372
	374
	376
	378
	380
	382
	384
	386
	388
	390
	392
	394
	396
	398
	400
	402
	404
	406
	505
375-0482	794
375-0483	794
375-1277	672
375-2013	426
375-2647	►789
	►790
375-2649	794
375-3937	39
	57
	135
	151
	179
	181
	195
	201
	203
	213
	247
	272
	374
	470
375-4479	39
	45
	111
	139
	151
	195
	213
	247
	286
	342
	344
	404
	417
375-4495	137
	232
	233
	234
	249
	250
	251
	471
375-4499	37
	41
	52
	53

► PRIMARY REFERENCE

PART NUMBER INDEX

Part	Page	Part	Page	Part	Page	Part	Page
	59		235		406	375-4645	39
	65		237		557		47
	67		239	375-4574	65		51
	69		241		67		61
	71		243		119		119
	73		245		177		121
	75		249		189		137
	77		250		205		139
	79		251		207		151
	81		252		209		191
	83		254		217		193
	85		258		237		205
	87		260		239		207
	89		262		252		213
	91		264		258		219
	93		266		266		233
	95		268		270		234
	97		270		300		237
	99		274		316		241
	101		276		322		247
	103		278		332		250
	105		280		334		251
	107		282		340		252
	109		286		346		254
	111		288		350		264
	113		290		352		266
	117		292		384		270
	119		294		392		274
	121		296		400		276
	123		300		669		286
	125		302	375-4606	39		288
	127		304		51		304
	129		306		119		308
	131		310		121		322
	133		314		139		324
	135		316		151		326
	141		318		193		332
	143		320		205		334
	145		322		207		342
	147		324		213		344
	149		328		219		350
	153		330		233		380
	155		332		234		392
	161		334		237		394
	163		336		241		398
	165		338		247		400
	167		340		250		402
	169		346		251		404
	171		348		252		406
	173		350		254		534
	175		352		264	375-5002	38
	177		354		266		52
	183		356		270		70
	185		358		274		72
	187		360		286		74
	189		362		304		76
	191		364		308		78
	193		368		322		80
	197		370		324		82
	199		372		326		84
	205		376		332		110
	207		378		334		122
	209		380		342		124
	217		382		344		133
	219		384		350		142
	220		386		380		157
	222		388		392		162
	224		390		394		164
	226		392		398		166
	228		394		400		168
	230		396		402		184
	232		398		404		188
	233		400		406		198
	234		402		499		200

► PRIMARY REFERENCE

PART NUMBER INDEX

Part	Page
	221
	229
	231
	234
	250
	260
	265
	293
	329
	379
	395
	397
	399
	403
	732
	734
375-5006	51
	65
	67
	77
	85
	89
	95
	101
	103
	713
375-5838	37
	53
	57
	67
	69
	71
	73
	75
	77
	79
	81
	83
	85
	87
	89
	91
	93
	95
	97
	99
	101
	103
	107
	117
	123
	125
	127
	129
	149
	153
	155
	163
	165
	167
	169
	171
	173
	175
	177
	179
	181
	183
	185
	189
	195
	197
	199
	201
	203
	220
	222
	224
	226
	228
	230
	235
	243
	245
	258
	262
	268
	272
	290
	292
	294
	302
	306
	310
	312
	314
	318
	320
	328
	330
	336
	338
	340
	346
	348
	352
	354
	356
	358
	360
	368
	370
	372
	374
	378
	384
	386
	396
	536
375-6988	794
375-7531	523
375-8254	789
	792
375-8320	37
	47
	51
	53
	65
	67
	69
	71
	73
	75
	77
	79
	81
	83
	85
	87
	89
	91
	93
	95
	97
	99
	101
	103
	109
	117
	119
	121
	123
	125
	127
	129
	131
	137
	141
	153
	155
	161
	163
	165
	167
	169
	171
	173
	175
	177
	183
	185
	187
	189
	191
	197
	199
	205
	207
	209
	215
	217
	220
	222
	224
	226
	228
	230
	237
	239
	241
	243
	245
	252
	258
	262
	264
	266
	268
	270
	276
	278
	292
	300
	302
	306
	310
	312
	314
	316
	318
	320
	322
	328
	332
	334
	336
	340
	346
	348
	350
	352
	368
	370
	372
	376
	378
	384
	386
	392
	394
	396
	398
	400
	402
	406
	501
375-8407	▶818
	▶841
	▶843
	▶844
	▶846
	▶850
	▶852
	▶854
375-8851	45
	632
375-9272	517
	518
375-9812	412
375-9813	412
	414
375-9814	414
376-4062	304
	418
376-4074	447
376-4078	447
376-4761	434
376-6403	764
	765
376-6405	764
	765
376-6409	789
	792
376-6410	789
	792
376-6411	789
	792
376-6464	38
	46
	52
	58
	60
	66
	68
	70
	76
	80
	82
	90
	92
	94
	96
	99
	104
	105
	118
	119
	122
	124
	126
	128
	130
	132
	136
	138
	142

PART NUMBER INDEX

Part	Page	Part	Page	Part	Page	Part	Page
	152		341		165		230
	154		343		167		235
	158		345		169		237
	160		347		171		239
	164		348		173		241
	166		350		175		243
	168		352		185		245
	176		355		224		252
	180		357		228		254
	188		359		302		256
	190		360		310		258
	192		363		348		260
	194		365		350		262
	196		366		372		264
	198		368		378		266
	200		371		386		268
	204		373		396		270
	206		375		398		276
	207		377		402		280
	210		379		798		282
	218		381	377-0721	39		292
	227		383		41		296
	229		385		43		298
	231		387		49		300
	232		389		53		306
	233		391		55		312
	234		393		59		314
	241		395		63		316
	244		397		65		318
	250		399		67		322
	251		401		71		324
	255		403		75		328
	256		405		79		330
	259		867		83		332
	261	376-6871	205		87		334
	263		243		91		336
	265		252		95		338
	267		330		97		340
	269		332		101		346
	271		334		105		352
	273		336		109		354
	275		338		113		362
	277		400		117		364
	279		406		119		368
	281		426		121		370
	283	377-0399	457		123		376
	284	377-0400	457		125		380
	287	377-0692	41		127		382
	289		45		129		384
	291		63		131		388
	293		139		133		390
	295		256		135		392
	297		278		137		394
	299		298		143		400
	301		342		145		406
	303		344		147		799
	304		368		149	377-1293	841
	307		390		153		842
	309		404		155		843
	311		511		177		844
	313	377-0720	37		183		846
	315		51		187		848
	317		69		189		850
	319		73		191		852
	321		77		193	377-2876	720
	323		81		197	377-2877	►720
	325		85		199		►728
	327		89		205		729
	329		93		207		730
	331		99		209		731
	333		103		217		►738
	335		141		220		►739
	337		161		222		►743
	339		163		226	377-4718	556

► PRIMARY REFERENCE

PART NUMBER INDEX

Part	Page
	559
377-5988	767
	772
	775
377-6932	812
	813
377-9082	416
	418
	420
377-9255	469
	470
	472
	473
	491
	492
378-0582	135
	304
	523
378-0585	121
	205
	211
	284
	332
	366
	394
	512
378-0589	82
	90
	94
	100
	104
	168
	172
	174
	176
	186
	225
	279
	289
	349
	830
378-0590	62
	66
	110
	118
	122
	206
	210
	215
	219
	257
	298
	333
	369
	395
	831
378-0593	43
	47
	49
	55
	61
	63
	137
	312
	560
378-0594	57
	157
	159
	179
	181
	195
	201
	203
	211
	215
	272
	308
	374
	561
378-0626	280
	296
	382
	633
378-0627	53
	85
	87
	89
	91
	93
	95
	97
	99
	101
	103
	117
	131
	137
	153
	155
	169
	171
	173
	175
	185
	191
	215
	222
	224
	226
	241
	243
	245
	262
	268
	302
	306
	310
	312
	314
	318
	336
	348
	368
	370
	372
	376
	386
	670
378-0628	235
	597
378-0629	53
	57
	107
	111
	179
	181
	195
	201
	203
	215
	272
	278
	290
	294
	320
	356
	358
	360
	374
	433
378-0630	45
	65
	109
	113
	131
	133
	143
	145
	147
	157
	159
	187
	209
	217
	239
	256
	260
	282
	284
	298
	300
	316
	362
	364
	366
	376
	410
378-0632	61
	137
	276
	412
378-3484	179
	181
	201
	203
	215
	272
	374
	634
378-5311	611
378-8166	39
	43
	45
	49
	57
	119
	121
	131
	137
	151
	179
	181
	195
	201
	203
	213
	215
	247
	272
	278
	280
	290
	294
	296
	326
	358
	360
	374
	380
	382
	392
	394
	467
378-8167	37
	39
	41
	43
	46
	47
	49
	53
	55
	57
	59
	61
	63
	65
	68
	69
	71
	73
	75
	77
	79
	81
	83
	85
	87
	89
	91
	93
	95
	97
	99
	101
	103
	105
	107
	109
	111
	115
	117
	125
	127
	129
	131
	133
	135
	137
	145
	147
	153
	155
	163
	165
	167
	169
	171
	173
	175
	177
	183
	185
	187
	189
	191
	197
	199
	207
	209
	215
	217
	219
	220
	222
	224

PART NUMBER INDEX

Part	Page
	226
	228
	230
	237
	239
	243
	245
	252
	258
	260
	264
	266
	270
	274
	276
	278
	280
	286
	288
	292
	296
	300
	302
	304
	306
	308
	310
	312
	314
	316
	318
	320
	322
	328
	330
	334
	336
	338
	340
	346
	348
	350
	352
	354
	362
	364
	368
	370
	372
	376
	378
	382
	384
	386
	868
378-8260	256
	298
	562
378-8276	55
	67
	85
	87
	89
	91
	93
	95
	97
	99
	101
	103
	125
	127
	129
	131
	147
	153
	155
	169
	171
	173
	175
	177
	185
	189
	191
	211
	217
	222
	224
	226
	233
	239
	243
	245
	251
	258
	262
	268
	276
	284
	288
	300
	302
	306
	310
	314
	316
	318
	330
	336
	338
	340
	346
	348
	364
	366
	370
	372
	376
	384
	386
	659
378-8280	39
	41
	43
	47
	49
	57
	61
	65
	105
	107
	111
	117
	119
	137
	149
	151
	159
	179
	181
	193
	195
	201
	203
	205
	207
	209
	213
	237
	241
	247
	252
	254
	266
	270
	272
	274
	280
	286
	290
	294
	296
	312
	320
	322
	324
	326
	332
	334
	350
	352
	354
	356
	358
	360
	374
	380
	382
	388
	390
	392
	400
	406
	661
378-8283	53
	63
	135
	139
	219
	256
	282
	298
	304
	308
	344
	368
	404
	662
378-8581	61
	107
	115
	195
	215
	274
	320
	651
378-8582	43
	49
	57
	61
	111
	179
	181
	195
	201
	203
	256
	272
	298
	374
	725
378-8587	632
379-0957	43
	49
	256
	280
	296
	298
	382
	472
379-0965	304
	473
379-0966	113
	143
	282
	474
379-5585	45
	47
	61
	115
	157
	159
	211
	284
	326
	366
	419
379-6626	39
	45
	111
	151
	193
	213
	247
	254
	276
	278
	286
	290
	294
	324
	326
	356
	358
	360
	619
379-6629	37
	41
	52
	53
	59
	61
	63
	66
	68
	69
	71
	73
	75
	77
	79
	81
	83
	86
	87
	90
	91
	93
	96
	97
	99
	102
	104
	105
	107

► PRIMARY REFERENCE

PART NUMBER INDEX

Part	Page	Part	Page	Part	Page	Part	Page
	109		350		143		278
	117		352		151		288
	119		362		179		303
	121		364		181		311
	123		368		193		349
	131		370		201		351
	133		372		203		373
	135		376		213		374
	141		378		235		379
	145		384		247		387
	147		386		254		397
	149		388		264		399
	153		390		270		403
	155		392		272		824
	157		394		308	380-9615	434
	159		396		324		435
	161		398		326		442
	163		400		374		444
	165		402		525		445
	167		406	380-2602	55		446
	169		603		475	381-5651	412
	171	379-6633	111	380-2616	133		414
	173		123		260	381-9252	534
	175		125		476	382-5901	839
	177		127	380-2619	493	382-7383	481
	183		129	380-2620	288	382-7387	498
	185		211		477	382-8827	482
	187		232	380-2629	211	383-0675	487
	189		233		284	383-1386	▶434
	191		234		366		▶440
	197		249		478	383-1387	434
	199		250	380-2638	193	383-1388	435
	205		251		254		436
	207		284		324		438
	209		288		479		440
	217		366	380-9279	38		441
	220		600		48	383-3581	▶449
	222	379-6637	39		52		▶450
	224		57		57	384-2286	723
	226		133		70	384-5313	▶457
	228		137		74		▶458
	230		151		78		▶465
	237		179		82	384-7567	824
	239		181		86		826
	241		193		90	385-0020	713
	243		195		94		714
	245		201		100		715
	252		203		104	385-1398	769
	258		211		141	385-2572	37
	260		213		157		39
	264		247		159		41
	266		254		162		43
	270		260		164		45
	276		272		166		47
	292		284		168		49
	300		288		170		51
	302		324		172		53
	306		374		174		55
	310		423		176		57
	312	379-8434	773		179		59
	314		783		181		61
	316	380-1084	107		186		63
	318		380		195		65
	320		858		201		67
	322	380-2016	115		203		69
	328		736		225		71
	330		737		229		73
	332	380-2065	568		232		75
	334		572		233		77
	336		576		234		79
	338		581		249		81
	340		587		250		83
	346	380-2587	39		251		85
	348		113		272		87

▶ PRIMARY REFERENCE

PART NUMBER INDEX

Part	Page	Part	Page	Part	Page	Part	Page
	89		234		378		111
	91		235		380		115
	93		237		382		139
	95		239		384		274
	97		241		386		286
	99		243		388		290
	101		245		390		294
	103		247		392		320
	105		249		394		342
	107		250		396		344
	109		251		398		356
	111		252		400		358
	113		254		402		360
	115		256		404		404
	117		258		406		800
	119		260		458	386-1864	769
	121		262	385-5363	619	386-2112	530
	123		264		621	386-2737	773
	125		266	385-5997	▶812		775
	127		268		▶841		777
	129		270		842		778
	131		272		843		783
	133		274		▶852		787
	135		276	385-8000	41	386-2971	789
	137		278		55		792
	139		280		68	386-3819	789
	141		282		84		792
	143		284		92	386-7037	665
	145		286		96	387-2156	581
	147		288		98		583
	149		290		102		585
	151		292		105	387-3577	773
	153		294		132		775
	155		296		138		778
	157		298		154		783
	159		300		155		787
	161		302		178	388-0536	440
	163		304		188	388-4707	458
	165		306		190	388-9243	612
	167		308		192	389-1995	611
	169		310		208	389-3346	37
	171		312		227		41
	173		314		238		43
	175		316		240		49
	177		318		244		55
	179		320		246		67
	181		322		253		69
	183		324		259		71
	185		326		267		73
	187		328		277		75
	189		330		282		77
	191		332		291		79
	193		334		295		81
	195		336		307		83
	197		338		315		85
	199		340		319		87
	201		342		323		89
	203		344		331		91
	205		346		335		93
	207		348		337		95
	209		350		339		97
	211		352		347		99
	213		354		356		101
	215		356		359		103
	217		358		361		105
	219		360		377		109
	220		362		385		111
	222		364		388		113
	224		366		390		117
	226		368		401		131
	228		370		407		139
	230		372		832		143
	232		374	385-8001	45		149
	233		376		107		153

► PRIMARY REFERENCE

PART NUMBER INDEX

Part	Page	Part	Page	Part	Page	Part	Page
	155	389-3347	47		312		294
	163		53		320		298
	165		57		324		324
	167		63		326		326
	169		65		362		332
	171		109		364		342
	173		115		380		344
	175		119		398		356
	177		121		402		358
	183		137		440		360
	185		179		441		366
	187		181	389-3786	773		374
	189		191	389-3789	773		380
	197		195		775		859
	199		201		778	390-0067	219
	209		203		783		617
	220		205		787	390-0755	773
	222		207	389-3863	841		781
	224		211		842		783
	226		217		843		787
	228		219		844	390-0854	37
	230		237		846		39
	232		252		848		41
	233		256		850		43
	234		266		852		45
	239		272		854		47
	241		274	389-5775	773		49
	243		278		775		51
	245		284		778		53
	249		292		781		55
	250		300		783		57
	251		316		787		59
	258		322	389-5776	787		61
	264		328	389-5777	787		63
	270		332	389-5784	781		65
	276		334		787		67
	280		340	389-5833	831		69
	282		350	390-0060	40		71
	286		366		51		73
	288		374		113		75
	290		376		119		77
	294		392		121		79
	296		394		123		81
	298		400		139		83
	302		406		141		85
	306		436		143		87
	308		438		149		89
	310	389-3348	39		151		91
	314		45		157		93
	318		51		159		95
	330		59		161		97
	336		61		193		99
	338		107		195		101
	342		123		201		103
	344		125		205		105
	346		127		211		107
	348		129		213		109
	352		133		232		111
	354		141		233		113
	356		145		234		115
	358		147		235		117
	360		151		241		119
	368		157		247		121
	370		159		249		123
	372		161		250		125
	378		193		251		127
	382		213		254		129
	384		215		256		131
	386		235		262		133
	388		247		268		135
	390		254		272		137
	396		260		282		139
	404		262		284		141
	435		268		290		143

PART NUMBER INDEX

Part	Page	Part	Page	Part	Page	Part	Page
	145		286		81		366
	147		288		83		368
	149		290		85		370
	151		292		87		372
	153		294		89		376
	155		296		91		378
	157		298		93		384
	159		300		95		386
	161		302		97		388
	163		304		99		390
	165		306		101		396
	167		308		103		620
	169		310		105	390-5130	45
	171		312		109		47
	173		314		113		57
	175		316		117		61
	177		318		131		107
	179		320		135		111
	181		322		141		135
	183		324		145		137
	185		326		147		179
	187		328		153		181
	189		330		155		195
	191		332		161		201
	193		334		163		203
	195		336		165		272
	197		338		167		286
	199		340		169		304
	201		342		171		320
	203		344		173		374
	205		346		175		380
	207		348		177		717
	209		350		183	390-5132	39
	211		352		185		43
	213		354		187		49
	215		356		189		67
	217		358		197		151
	219		360		199		193
	220		362		209		211
	222		364		211		213
	224		366		220		235
	226		368		222		247
	228		370		224		254
	230		372		226		256
	232		374		228		284
	233		376		230		290
	234		378		232		294
	235		380		239		298
	237		382		241		324
	239		384		243		326
	241		386		245		358
	243		388		249		360
	245		390		256		366
	247		392		258		718
	249		394		264	390-7626	725
	250		396		270		726
	251		398		284	390-8738	781
	252		400		298	391-1817	773
	254		402		302		775
	256		404		306		778
	258		406		308		781
	260		450		310		783
	262		454		312		787
	264	390-3737	37		314	391-2493	773
	266		41		318		775
	268		51		330		778
	270		65		336		783
	272		67		338	391-3732	576
	274		69		346	391-3735	576
	276		71		348	391-4811	37
	278		73		352		40
	280		75		354		41
	282		77		362		43
	284		79		364		46

► PRIMARY REFERENCE

PART NUMBER INDEX

Part	Page	Part	Page	Part	Page	Part	Page
	48		195		344		129
	49		197		346		131
	52		199		348		133
	53		201		350		135
	55		203		352		137
	57		205		354		139
	59		207		356		141
	61		209		358		143
	63		211		360		145
	66		213		362		147
	68		215		364		149
	69		217		366		151
	71		219		368		153
	73		220		370		155
	75		222		372		157
	78		224		374		159
	79		226		376		161
	81		228		378		163
	83		230		380		165
	86		232		382		167
	87		233		384		169
	90		234		386		171
	91		235		388		173
	93		237		390		175
	96		239		392		177
	97		241		394		183
	100		243		396		185
	102		245		398		187
	104		247		400		189
	105		249		402		191
	107		250		404		193
	110		251		406		197
	111		252		790		199
	113		254	391-5523	37		205
	115		256		39		207
	117		258		41		209
	119		260		46		211
	121		262		47		213
	123		264		51		215
	125		266		53		217
	127		268		55		219
	129		270		59		220
	131		272		63		222
	133		274		65		224
	135		276		67		226
	137		278		69		228
	139		280		71		230
	141		282		73		232
	143		284		75		233
	145		286		77		234
	147		288		79		235
	149		290		81		237
	151		292		83		239
	153		294		85		241
	155		296		87		243
	157		298		89		245
	159		300		91		247
	161		302		93		249
	163		304		95		250
	165		306		97		251
	167		308		99		252
	169		310		101		254
	171		312		103		258
	173		314		105		260
	175		316		107		262
	177		318		109		264
	179		320		113		266
	181		322		115		268
	183		324		117		270
	185		326		119		274
	187		328		121		276
	189		330		123		278
	191		340		125		280
	193		342		127		282

PART NUMBER INDEX

Part	Page
	284
	286
	288
	290
	292
	294
	296
	300
	302
	304
	306
	308
	310
	312
	314
	316
	318
	320
	322
	324
	326
	328
	330
	332
	334
	336
	338
	340
	342
	344
	346
	348
	350
	352
	354
	356
	358
	360
	362
	364
	366
	368
	370
	372
	376
	378
	380
	382
	384
	386
	388
	390
	392
	394
	396
	398
	400
	402
	404
	406
	726
391-5560	41
	105
	388
	390
	480
391-9610	107
	274
	290
	294
	320
	356
	358
	360
	420
391-9611	39
	43
	49
	135
	179
	181
	201
	203
	256
	272
	280
	296
	298
	374
	382
	421
391-9612	133
	137
	193
	215
	254
	260
	288
	324
	380
	422
392-0468	63
	481
392-0632	39
	41
	43
	45
	49
	51
	53
	55
	57
	59
	61
	63
	65
	105
	109
	111
	113
	115
	119
	121
	131
	133
	137
	139
	141
	143
	145
	147
	149
	151
	153
	157
	159
	161
	179
	181
	187
	193
	195
	201
	203
	205
	207
	209
	213
	217
	219
	232
	233
	234
	237
	239
	243
	247
	249
	250
	251
	252
	254
	256
	260
	264
	266
	270
	272
	278
	280
	282
	284
	286
	296
	298
	300
	304
	308
	316
	322
	324
	326
	330
	332
	334
	336
	338
	340
	342
	344
	350
	356
	362
	364
	366
	374
	376
	380
	382
	388
	390
	392
	394
	398
	400
	402
	404
	406
	611
392-2019	179
	181
	201
	203
	272
	374
	834
392-2020	43
	49
	72
	76
	80
	88
	107
	115
	124
	126
	128
	129
	149
	184
	198
	200
	218
	221
	223
	231
	242
	263
	269
	280
	293
	296
	301
	313
	317
	329
	341
	371
	381
	382
	835
392-2021	113
	143
	194
	235
	255
	308
	324
	836
392-2023	47
	157
	159
	195
	801
392-2780	841
	842
	843
	846
	850
	852
	854
392-4097	611
392-6908	380
	482
392-6911	47
	115
	483
393-0367	179
	861
393-2034	794
393-2035	794
393-2180	37
	51
	65
	67
	69
	71
	73
	75
	77
	79
	81
	83
	85
	87
	89

► PRIMARY REFERENCE

PART NUMBER INDEX

Part	Page
	91
	93
	95
	97
	99
	101
	103
	109
	117
	119
	121
	131
	141
	153
	155
	161
	163
	165
	167
	169
	171
	173
	175
	177
	183
	185
	187
	189
	191
	197
	199
	205
	207
	209
	217
	220
	222
	224
	226
	228
	230
	237
	239
	241
	243
	245
	252
	258
	264
	266
	270
	276
	292
	300
	302
	306
	310
	312
	314
	316
	318
	322
	328
	330
	332
	334
	336
	338
	340
	346
	348
	350
	352
	368
	370
	372
	376
	378
	384
	386
	392
	394
	396
	398
	400
	402
	406
	484
393-2183	61
	485
393-3349	59
	486
393-3369	41
	45
	55
	63
	67
	81
	83
	89
	91
	93
	95
	133
	139
	153
	155
	167
	171
	173
	177
	189
	207
	211
	224
	237
	239
	243
	252
	258
	260
	266
	276
	278
	284
	288
	306
	314
	318
	322
	330
	334
	336
	338
	342
	344
	346
	352
	354
	366
	384
	390
	400
	404
	406
	526
393-4006	517
	518
	519
	520
	521
	522
	523
	525
	526
	527
	528
	529
393-4158	308
	487
393-5466	139
	342
	344
	404
	563
393-5467	786
393-5468	786
393-5973	326
	488
393-7694	39
	43
	46
	47
	49
	53
	57
	61
	107
	111
	113
	135
	137
	139
	143
	151
	179
	181
	193
	195
	201
	203
	211
	213
	215
	219
	235
	247
	254
	256
	272
	284
	286
	290
	294
	298
	304
	320
	324
	326
	342
	344
	358
	360
	366
	374
	380
	404
	723
393-9541	133
	260
	671
393-9542	55
	502
393-9543	308
	503
393-9570	278
	489
393-9572	290
	294
	356
	358
	360
	490
394-0525	▶786
	▶794
394-3438	752
394-3484	752
394-4451	547
	800
	801
	802
	803
394-7014	139
	342
	344
	404
	468
394-9639	38
	40
	41
	43
	46
	48
	49
	52
	54
	55
	57
	59
	61
	63
	66
	68
	70
	72
	74
	76
	78
	80
	82
	84
	86
	88
	90
	92
	94
	96
	97
	100
	102
	104
	105
	107
	110
	111
	113
	115
	118
	120
	121
	123
	125
	127
	129
	132
	133

▶ PRIMARY REFERENCE

PART NUMBER INDEX

Part	Page	Part	Page	Part	Page	Part	Page
	135		276		52		200
	137		278		54		201
	139		280		55		203
	141		282		57		206
	143		284		59		208
	145		286		61		209
	147		288		63		211
	149		291		66		213
	151		293		68		215
	154		294		70		218
	155		296		72		219
	157		298		74		221
	159		300		76		223
	161		302		78		225
	163		304		80		227
	165		306		82		229
	167		308		84		231
	169		310		86		232
	171		313		88		233
	173		314		90		234
	175		316		92		235
	177		318		94		238
	179		320		96		239
	181		322		98		242
	183		324		100		244
	185		326		102		246
	187		328		104		247
	189		330		105		249
	191		332		107		250
	193		334		110		251
	195		336		111		253
	197		338		113		254
	199		340		115		256
	201		342		118		259
	203		344		120		260
	205		346		122		263
	208		349		123		264
	209		351		125		267
	211		353		127		269
	213		354		129		270
	215		356		132		272
	218		358		133		274
	219		361		135		276
	220		362		137		278
	222		364		139		280
	224		366		141		282
	226		369		143		284
	229		371		145		286
	230		373		147		288
	232		374		149		291
	233		377		151		293
	234		379		154		294
	235		380		155		296
	237		382		157		298
	239		385		159		300
	242		387		161		303
	244		388		164		304
	245		390		166		306
	247		393		168		308
	249		394		169		311
	250		397		171		313
	251		399		173		314
	253		401		176		317
	254		403		177		319
	256		404		179		320
	258		406		181		323
	260		794		184		324
	262	395-0110	38		186		326
	264		40		188		329
	266		41		189		330
	268		43		192		341
	270		46		193		342
	272		48		195		344
	274		49		198		347

► PRIMARY REFERENCE

PART NUMBER INDEX

Part	Page	Part	Page	Part	Page	Part	Page
	349		123		264		405
	351		125		266		841
	353		127		268		842
	354		129		270		843
	356		131		272	395-0114	40
	358		133		274		41
	361		135		276		43
	362		137		278		46
	364		139		280		49
	367		141		282		54
	369		143		284		55
	371		145		286		59
	373		147		288		63
	374		149		290		66
	377		151		292		68
	379		153		294		72
	381		155		296		76
	382		157		298		80
	385		159		300		84
	387		161		302		88
	388		163		304		92
	390		165		306		96
	393		167		308		98
	395		169		310		102
	397		171		312		105
	399		173		314		107
	401		175		316		110
	403		177		318		111
	404		179		320		113
	406		181		322		115
	820		183		324		118
395-0112	37		185		326		120
	39		187		328		122
	41		189		330		123
	43		191		340		125
	46		193		342		127
	47		195		344		129
	49		197		346		132
	52		199		348		133
	53		201		350		138
	55		203		352		139
	57		205		354		143
	59		207		356		145
	61		209		358		147
	63		211		360		149
	65		213		362		151
	67		215		364		154
	69		217		366		155
	71		219		368		178
	73		220		370		184
	75		222		372		188
	77		224		374		189
	79		226		376		192
	81		228		378		194
	83		230		380		198
	85		232		382		200
	87		233		384		206
	89		234		386		208
	91		235		388		210
	93		237		390		211
	95		239		392		213
	97		241		394		218
	99		243		396		219
	101		245		398		221
	103		247		400		223
	105		249		402		227
	107		250		404		231
	109		251		406		235
	111		252		819		238
	113		254	395-0113	44		239
	115		256		50		242
	117		258		140		244
	119		260		343		246
	121		262		345		247

PART NUMBER INDEX

Part	Page	Part	Page	Part	Page	Part	Page
	253		79		137		340
	254		81		139		344
	256		83		147		346
	259		109		149		348
	260		113		151		350
	263		115		153		352
	265		121		155		354
	267		123		159		356
	269		133		169		358
	271		141		171		360
	275		143		173		364
	276		145		175		366
	280		157		177		368
	282		161		179		370
	285		163		181		372
	286		165		185		374
	291		167		189		376
	293		183		191		380
	295		187		193		382
	296		197		195		384
	298		199		201		386
	301		220		203		388
	307		228		207		390
	308		230		209		392
	313		234		211		404
	315		235		213		428
	317		250		215	396-8052	724
	319		260		217	396-8795	427
	321		264		219	396-9529	721
	323		278		222	396-9532	▶721
	324		292		224		▶732
	326		328		226		▶734
	329		342		232		▶736
	330		362		233		▶737
	333		378		237		▶741
	335		394		239		▶744
	337		396		241		▶746
	338		398		245		▶748
	341		402		247	396-9626	▶765
	342		427		249		▶766
	344	396-2617	39		251	398-1750	680
	347		41		254		681
	353		43		256		682
	354		45		258		683
	356		47		262		684
	359		49		266		708
	361		53		268		709
	362		55		270	398-1775	680
	364		57		272		681
	367		59		274		682
	369		61		276		683
	371		63		280		684
	377		65		282		708
	381		67		284		709
	382		85		286	398-6226	794
	385		87		288	398-7221	45
	388		89		290		47
	390		91		294		49
	393		93		296		51
	395		95		298		113
	401		97		300		137
	404		99		302		143
	407		101		304		149
	826		103		306		241
395-1633	785		105		308		278
	786		107		310		282
395-1802	428		111		312		286
396-2615	37		117		314		290
	51		119		316		294
	69		125		318		308
	71		127		320		356
	73		129		322		358
	75		131		324		360
	77		135		326		778

▶ PRIMARY REFERENCE

PART NUMBER INDEX

Part	Page
399-0082	274
	491
399-0083	235
	354
	492
4	
415-1604	545
415-1646	43
	49
	55
	621
415-2163	125
	127
	129
	262
	268
	493
415-2165	215
	494
415-3076	123
	149
	495
415-3079	320
	496
415-3083	53
	145
	147
	362
	364
	497
415-3086	157
	159
	498
415-4870	38
	48
	52
	70
	74
	78
	86
	142
	157
	159
	162
	164
	166
	170
	196
	229
	303
	311
	351
	373
	379
	387
	397
	399
	403
	837
415-5625	37
	43
	45
	47
	49
	51
	53
	57
	59
	61
	63
	65
	67
	69
	71
	73
	75
	77
	79
	81
	83
	85
	87
	89
	91
	93
	95
	97
	99
	101
	103
	105
	109
	111
	113
	115
	117
	119
	121
	123
	125
	127
	129
	131
	133
	135
	137
	139
	141
	143
	145
	147
	149
	151
	153
	155
	157
	159
	161
	163
	165
	167
	169
	171
	173
	215
	217
	220
	222
	224
	226
	228
	230
	235
	237
	239
	241
	243
	245
	247
	252
	254
	256
	258
	260
	262
	264
	266
	268
	270
	272
	274
	276
	278
	280
	282
	284
	286
	288
	290
	292
	294
	296
	298
	300
	302
	306
	308
	310
	312
	314
	316
	318
	320
	322
	324
	326
	328
	330
	332
	334
	336
	338
	340
	342
	344
	346
	348
	352
	354
	356
	358
	360
	362
	364
	366
	368
	370
	372
	374
	376
	378
	380
	382
	384
	386
	388
	390
	392
	394
	396
	398
	400
	402
	404
	406
	862
416-1065	767
416-1069	►767
	►775
	►778
416-1234	534
416-2470	37
	41
	45
	51
	59
	61
	65
	67
	69
	71
	73
	75
	77
	79
	81
	83
	85
	87
	89
	91
	93
	95
	97
	99
	101
	103
	105
	107
	109
	113
	115
	117
	119
	121
	131
	133
	137
	141
	143
	149
	153
	155
	157
	159
	161
	163
	165
	167
	169
	171
	173

► PRIMARY REFERENCE

PART NUMBER INDEX

Part	Page	Part	Page	Part	Page	Part	Page
	175		376		94		401
	177		378		96		407
	183		380		98		741
	185		384		100	416-7727	723
	187		386		102		724
	189		388		104	416-7740	752
	191		390		118	416-7743	752
	193		392		120	416-7808	37
	195		394		126		41
	197		396		128		51
	199		398		130		55
	205		400		132		59
	207		402		150		63
	209		406		154		65
	215		546		156		67
	217	416-5388	▶813		159		69
	220		▶844		170		71
	222	416-5399	▶817		172		73
	224		▶846		174		75
	226		▶848		176		77
	228		▶850		178		79
	230	416-6968	40		186		81
	232		46		190		83
	233		62		192		85
	234		111		206		87
	237		151		208		89
	239		194		210		91
	241		213		218		93
	243		216		223		95
	245		219		225		97
	249		248		227		99
	250		255		232		101
	251		325		233		103
	252		327		238		105
	254		738		240		109
	258	416-6969	44		242		115
	260		46		244		117
	262		48		246		119
	264		50		249		121
	266		54		251		123
	268		57		253		125
	270		107		259		127
	274		140		263		129
	276		180		267		131
	278		181		269		133
	282		196		271		141
	288		201		277		145
	292		203		301		147
	300		212		303		149
	302		257		307		153
	306		272		309		155
	310		285		311		157
	312		287		313		159
	314		291		315		161
	316		295		317		163
	318		298		319		165
	320		321		323		167
	322		344		331		169
	324		359		333		171
	328		361		335		173
	330		367		337		175
	332		375		339		177
	334		381		341		183
	336		405		347		185
	338		739		349		187
	340	416-6970	135		351		189
	346		305		353		191
	348		740		369		197
	350	416-6971	66		371		199
	352		68		373		205
	354		86		377		207
	368		88		385		209
	370		90		387		217
	372		92		393		220

► PRIMARY REFERENCE

PART NUMBER INDEX

Part	Page	Part	Page	Part	Page	Part	Page
	222		724		245		133
	224	416-8908	39		247		193
	226		41		249		205
	228		43		251		235
	230		45		252		254
	232		47		254		260
	233		49		256		264
	234		53		258		270
	237		55		262		292
	239		57		266		324
	241		59		268		328
	243		61		270		332
	245		63		272		380
	249		65		274		386
	250		67		276		635
	251		85		280	417-7782	650
	252		87		282	418-0928	136
	258		89		284		305
	260		91		286		844
	262		93		288	418-7684	534
	264		95		290	419-0384	622
	266		97		294		628
	268		99		296	419-3606	662
	270		101		298		663
	274		103		300	419-3607	663
	276		105		302		667
	278		107		304	419-3608	663
	280		111		306	419-6603	63
	282		117		308		622
	288		119		310	420-0454	646
	292		125		312	420-2371	728
	296		127		314		729
	300		129		316		730
	302		131		318		731
	306		135		320		738
	308		137		322		739
	310		139		324		740
	312		147		326		743
	314		149		330	420-2372	732
	316		151		332		734
	318		153		334		736
	322		155		336		737
	328		159		338		741
	330		169		340		744
	332		171		344		746
	334		173		346		748
	336		175		348	420-9572	▶722
	338		177		350		▶740
	340		179		352	421-5684	▶750
	346		181		354		▶752
	348		185		356		▶753
	350		189		358	421-5685	▶751
	352		191		360		▶754
	354		193		364	421-8534	713
	356		195		366		714
	362		201		368		715
	364		203		370	422-6385	680
	368		205		372		681
	370		207		374		709
	372		209		376	422-6387	680
	376		211		380		681
	378		213		382	422-6388	680
	382		215		384		681
	384		217		386		682
	386		219		388		683
	388		222		390		684
	390		224		392		708
	392		226		400		709
	394		232		404	422-6389	680
	396		233		406		681
	398		237		766		682
	400		239	416-9520	622		683
	402		241		628		684
	406		243	417-6007	111		708

▶ PRIMARY REFERENCE

PART NUMBER INDEX

Part	Page	Part	Page	Part	Page	Part	Page
	709		235		104		250
422-7715	720		241		106		251
	722		247		108		253
423-0792	633		254		110		255
	642		262		112		257
423-0793	633		264		114		259
	642		268		116		261
423-2775	796		270		118		263
	806		272		120		265
423-3842	846		278		122		267
	848		280		124		269
	850		288		126		271
	854		292		128		273
423-7576	470		296		130		275
	472		300		132		277
	473		302		134		279
	491		308		138		281
	492		310		142		283
423-8803	37		312		144		285
	39		316		146		287
	43		324		148		289
	47		326		150		291
	49		328		152		293
	51		340		154		295
	57		348		156		297
	69		350		158		299
	71		370		160		301
	73		372		162		303
	75		374		164		307
	77		378		166		309
	79		380		168		311
	81		382		170		313
	85		386		172		315
	87		396		174		317
	89		398		176		319
	93		402		178		321
	99		863		180		323
	103	423-9049	829		182		325
	113		838		184		327
	115	424-0566	612		186		329
	123		613		188		331
	125	424-3214	612		190		341
	127		613		192		347
	129	424-5516	38		194		349
	141		40		196		351
	143		42		198		353
	149		46		200		355
	157		48		202		357
	159		52		204		359
	161		54		206		361
	163		56		208		362
	165		57		210		365
	167		59		212		367
	169		62		214		369
	171		64		216		371
	173		66		218		373
	175		68		219		375
	179		70		221		377
	181		72		223		379
	183		74		225		383
	185		76		227		385
	193		78		229		387
	195		80		231		389
	197		82		232		391
	199		84		233		393
	201		86		234		395
	203		88		236		397
	213		90		238		399
	217		92		240		401
	220		94		242		403
	222		96		244		407
	224		98		246		846
	228		100		248		848
	230		102		249		850

► PRIMARY REFERENCE

PART NUMBER INDEX

Part	Page
424-6652	►838
425-0196	37
	47
	51
	67
	69
	71
	73
	75
	77
	79
	81
	83
	85
	87
	89
	91
	93
	95
	97
	99
	101
	103
	107
	117
	123
	125
	127
	129
	135
	155
	163
	165
	167
	169
	171
	173
	175
	177
	183
	185
	189
	191
	197
	199
	211
	215
	220
	222
	224
	226
	228
	230
	235
	241
	245
	258
	262
	268
	274
	276
	288
	290
	292
	294
	302
	306
	310
	312
	314
	318
	320
	328
	346
	348
	352
	354
	358
	360
	368
	370
	372
	378
	384
	386
	396
	612
	613
425-0197	37
	47
	51
	67
	69
	71
	73
	75
	77
	79
	81
	83
	85
	87
	89
	91
	93
	95
	97
	99
	101
	103
	107
	117
	123
	125
	127
	129
	135
	155
	163
	165
	167
	169
	171
	173
	175
	177
	183
	185
	189
	191
	197
	199
	211
	215
	220
	222
	224
	226
	228
	230
	235
	241
	245
	258
	262
	268
	274
	276
	288
	290
	292
	294
	302
	306
	310
	312
	314
	318
	320
	328
	346
	348
	352
	354
	358
	360
	368
	370
	372
	378
	384
	386
	396
	630
425-7103	530
	532
	534
	536
	538
	541
426-3290	39
	752
426-3292	39
	41
	43
	47
	49
	53
	55
	63
	67
	753
426-3296	45
	57
	65
	754
426-3310	37
	39
	41
	51
	53
	55
	63
	67
	69
	71
	73
	75
	77
	79
	81
	83
	85
	87
	89
	91
	93
	95
	97
	99
	101
	103
	105
	107
	115
	117
	119
	121
	123
	125
	127
	129
	135
	141
	153
	155
	161
	163
	165
	167
	169
	171
	173
	175
	177
	183
	185
	189
	191
	197
	199
	205
	207
	211
	219
	220
	222
	224
	226
	228
	230
	232
	233
	234
	237
	243
	245
	249
	250
	251
	252
	258
	262
	266
	268
	280
	296
	302
	304
	306
	310
	312
	314
	318
	320
	322
	330
	340
	346
	348
	350
	352
	354
	368
	370
	372

► PRIMARY REFERENCE

PART NUMBER INDEX

Part	Page
	378
	382
	384
	386
	388
	390
	392
	394
	396
	398
	400
	402
	406
	787
426-3312	139
	235
	332
	334
	336
	338
	342
	344
	404
	781
427-9771	824
	826
428-7042	612
	613
430-6686	612
	613
431-6516	42
	106
	280
	282
	296
	383
	389
	391
431-6518	138
	743
431-9793	852
432-8723	775
	778
433-1316	▶769
	▶773
	▶775
	▶778
	▶781
	▶783
	▶787
433-2039	612
	613
435-4500	740
435-9557	442
436-0521	606
	609
436-1195	135
	304
	442
436-7781	566
	568
	570
	572
	574
	576
	578
	581
	583
	585
436-9104	829
437-2720	61
	219
	527
	528
437-2721	45
	53
	59
	97
	99
	101
	103
	105
	111
	119
	131
	137
	175
	185
	187
	191
	226
	245
	274
	282
	286
	290
	294
	320
	348
	356
	358
	360
	376
	388
	392
	529
437-2723	45
	53
	59
	97
	99
	101
	103
	105
	111
	119
	131
	137
	175
	185
	187
	191
	226
	245
	274
	282
	286
	290
	294
	320
	348
	356
	358
	360
	376
	388
	392
	513
437-4170	728
	729
	730
	731
	732
	734
	736
	737
	738
	739
	740
	741
	743
	744
	746
	748
438-5978	45
	47
	57
	61
	119
	121
	123
	125
	127
	129
	133
	137
	157
	159
	179
	181
	191
	195
	201
	203
	215
	217
	235
	260
	262
	268
	272
	274
	292
	300
	316
	328
	340
	374
	392
	394
	623
	624
438-5983	107
	320
	380
	625
438-7763	▶755
	▶756
439-1841	755
	761
	762
439-3377	43
	49
	55
	61
	312
	636
439-3378	39
	45
	151
	213
	247
	326
	637
439-3430	157
	159
	195
	211
	308
	638
439-3431	47
	63
	137
	639
439-3432	37
	41
	51
	53
	59
	65
	67
	69
	71
	73
	75
	77
	79
	81
	83
	85
	87
	89
	91
	93
	95
	97
	99
	101
	103
	105
	107
	109
	113
	117
	119
	123
	125
	127
	129
	131
	135
	141
	143
	145
	147
	149
	153
	155
	161
	163
	165
	167
	169
	171
	173
	175
	177
	183
	185
	187
	189
	191
	197
	199
	207
	209
	217
	219
	220
	222
	224
	226
	228
	230
	232
	233

▶ PRIMARY REFERENCE

PART NUMBER INDEX

Part	Page
	234
	237
	239
	241
	243
	245
	249
	250
	251
	252
	258
	262
	266
	268
	274
	276
	278
	282
	286
	288
	300
	302
	306
	310
	314
	316
	318
	320
	322
	330
	334
	336
	338
	340
	346
	348
	350
	352
	354
	356
	362
	364
	368
	370
	372
	376
	378
	384
	388
	390
	392
	396
	398
	400
	402
	406
	640
439-3441	143
	282
	288
	626
439-5037	755
	761
	762
439-5040	755
	761
	762
440-0026	37
	41
	52
	53
	66
	68
	69
	71
	73
	75
	77
	79
	81
	83
	86
	87
	90
	91
	93
	95
	97
	99
	101
	104
	105
	107
	109
	111
	115
	117
	119
	121
	123
	125
	127
	129
	131
	141
	153
	155
	161
	163
	165
	167
	169
	171
	173
	175
	177
	183
	185
	187
	189
	191
	195
	197
	199
	205
	207
	209
	211
	217
	220
	222
	224
	226
	228
	230
	232
	233
	234
	237
	239
	243
	245
	249
	250
	251
	252
	256
	258
	262
	264
	266
	268
	270
	274
	276
	282
	284
	286
	288
	290
	292
	294
	298
	300
	302
	306
	308
	310
	312
	314
	316
	318
	320
	322
	328
	330
	332
	334
	336
	338
	340
	346
	348
	350
	352
	354
	356
	358
	360
	366
	368
	370
	372
	376
	378
	380
	384
	386
	388
	390
	392
	394
	396
	398
	400
	402
	406
	644
440-1796	44
	54
	60
	66
	94
	96
	98
	104
	112
	120
	126
	156
	174
	176
	182
	194
	196
	214
	233
	246
	248
	251
	255
	277
	285
	287
	291
	295
	303
	311
	313
	327
	357
	359
	377
	393
440-6724	39
	61
	151
	211
	213
	247
	284
	326
	366
	802
	803
440-8198	►39
441-1215	37
	39
	41
	45
	47
	51
	53
	57
	59
	61
	63
	65
	67
	69
	71
	73
	75
	77
	79
	81
	83
	85
	87
	89
	91
	93
	95
	97
	99
	101
	103
	105
	107
	109
	111
	115
	117
	119
	121
	123

► PRIMARY REFERENCE

PART NUMBER INDEX

Part	Page	Part	Page	Part	Page	Part	Page
	125		278		356		56
	127		280		360	448-0935	39
	129		284		380		59
	131		286		404		65
	133		288		758		109
	141		290	442-5177	682		131
	145		292		683		133
	147		294		684		145
	149		296		708		147
	151		300	442-8465	▶770		151
	153		302		▶781		157
	155		306		▶787		159
	157		310	442-8569	781		187
	159		312	443-2487	775		193
	161		314		778		209
	163		316	443-3790	45		213
	165		318		59		215
	167		320		664		217
	169		322	443-3851	627		239
	171		324	443-4956	113		247
	173		326		143		254
	175		328		149		260
	177		330		211		264
	179		332		284		270
	181		334		288		274
	183		336		330		276
	185		338		338		284
	187		340		366		288
	189		346		672		292
	191		348	443-9076	532		300
	193		350		536		316
	195		352		538		324
	197		354		541		326
	199		358	443-9475	566		328
	201		360		568		362
	203		362		570		364
	205		364		572		366
	207		366		581		376
	209		368		587		380
	211		370	443-9898	566		783
	213		372		568	448-0944	51
	217		374		570		139
	219		376		572		205
	220		378		581		207
	222		382		587		219
	224		384	443-9919	566		233
	226		388		568		234
	228		390		570		237
	230		392		572		250
	232		394		581		251
	233		396		587		252
	234		398	444-2190	576		266
	235		400	444-5021	757		304
	237		402		761		322
	239		406	444-5022	758		332
	241		756		762		334
	243	441-1218	386	444-7604	812		342
	245		757		814		344
	247	441-1222	43	445-0303	278		350
	249		49		665		398
	250		113	445-2586	▶41		400
	251		135	445-2599	▶43		402
	252		137	445-4703	135		404
	254		139		304		406
	258		143		838		627
	260		215	445-5511	761	448-2106	61
	262		256		762		137
	264		282	445-8905	▶45		276
	266		290	446-0105	762		677
	268		298	446-1005	▶47	448-2107	47
	270		304	446-1268	424		288
	272		308		819		414
	274		342	446-7567	▶49	448-2191	778
	276		344	447-7816	48		783

▶ PRIMARY REFERENCE

PART NUMBER INDEX

Part	Page
448-4217	447
448-4218	447
448-4220	447
448-4222	447
448-4227	447
448-4757	211
	284
	366
	549
448-4768	40
	50
	57
	62
	68
	86
	88
	90
	92
	108
	128
	136
	148
	150
	152
	154
	170
	172
	178
	190
	202
	208
	210
	212
	218
	223
	225
	238
	263
	267
	269
	271
	305
	309
	321
	365
	381
	385
448-9710	45
	65
	109
	113
	131
	133
	143
	145
	147
	157
	159
	187
	209
	217
	239
	256
	260
	282
	284
	298
	300
	316
	362
	364
	366
	376
	652
448-9719	65
	113
	143
	157
	159
	209
	282
	538
448-9771	145
	279
	362
	744
	746
448-9777	55
	59
	64
	147
	275
	289
	355
	357
	364
	748
448-9788	191
	540
449-0783	2
	51
449-3320	46
	64
	100
	102
	118
	130
	138
	180
	186
	192
	204
	219
	227
	240
	242
	257
	273
	275
	281
	283
	289
	297
	299
	301
	307
	315
	317
	319
	323
	325
	341
	349
	351
	353
	355
	361
	367
	369
	371
	375
	383
	387
449-5818	▶53
450-4794	47
	288
	408
450-5996	576
450-7535	▶55
451-1179	410
451-1222	3
	10
	452
	455
451-5272	1
	57
451-5480	412
	414
451-7225	710
	711
	712
	799
	834
	862
	863
	865
451-8317	454
451-8343	▶59
451-8385	1-36
	288
	308
	324
	455
452-0776	53
	149
	628
452-3112	824
452-3651	51
	109
	121
	187
	264
	292
	328
	394
	398
	402
	673
452-5153	66
	68
	86
	88
	90
	92
	94
	96
	97
	100
	102
	104
	118
	132
	154
	155
	169
	171
	173
	175
	177
	185
	189
	209
	217
	222
	224
	226
	239
	243
	245
	258
	300
	302
	306
	310
	312
	314
	316
	318
	336
	340
	346
	349
	352
	369
	370
	373
	377
	385
	387
	686
452-6582	1-36
	288
	308
	324
	460
452-6584	10
	460
	462
452-6585	463
	609
452-6586	463
	465
452-6700	193
	254
	324
	504
452-8547	▶759
	▶760
452-9704	725
	726
452-9761	205
	243
	252
	330
	332
	334
	336
	338
	400
	406
	581
	583
	585
453-0790	789
	792
453-1370	52
	78
	80
	82
	84
	110
	166
	168
	184
	200
	236
	265
	279
	379
	399
	403
453-6156	562
	564
453-7163	37
	39
	41

PART NUMBER INDEX

Part	Page
	45
	47
	51
	53
	55
	57
	59
	61
	63
	65
	67
	69
	71
	73
	75
	77
	79
	81
	83
	85
	87
	89
	91
	93
	95
	97
	99
	101
	103
	105
	107
	109
	111
	113
	115
	117
	119
	121
	123
	125
	127
	129
	131
	133
	135
	137
	139
	141
	143
	145
	147
	149
	151
	153
	155
	157
	159
	161
	163
	165
	167
	169
	171
	173
	175
	177
	179
	181
	183
	185
	187
	189
	191
	193
	195
	197
	199
	201
	203
	205
	207
	209
	211
	213
	215
	217
	219
	220
	222
	224
	226
	228
	230
	232
	233
	234
	235
	237
	239
	241
	243
	245
	247
	249
	250
	251
	252
	254
	256
	258
	260
	262
	264
	266
	268
	270
	272
	274
	276
	278
	280
	282
	284
	286
	288
	290
	292
	294
	296
	298
	300
	302
	304
	306
	308
	310
	312
	314
	316
	318
	320
	322
	324
	326
	328
	330
	332
	334
	336
	338
	340
	342
	344
	346
	348
	350
	352
	354
	356
	358
	360
	362
	364
	366
	368
	370
	372
	374
	376
	378
	380
	382
	384
	386
	388
	390
	392
	394
	396
	398
	400
	402
	404
	406
	760
453-7804	1
	61
454-3449	686
	689
	690
	695
	697
	700
	701
	703
454-3464	▶680
	▶700
454-3470	▶681
	▶701
454-3965	▶63
454-5109	789
	792
454-5203	37
	69
	71
	73
	75
	77
	79
	81
	83
	85
	89
	95
	101
	103
	141
	161
	163
	165
	167
	183
454-5366	▶1
	▶57
454-6966	38
	69
	71
	74
	76
	78
	79
	81
	83
	110
	163
	165
	167
	183
	187
	197
	199
	220
	228
	230
	292
	328
	378
	397
454-9560	587
454-9569	587
454-9573	587
455-0703	▶24
455-0704	812
	813
	814
	817
455-0705	812
	813
	814
	817
455-0706	814
455-4836	▶1
	▶61
455-9383	1
	65
455-9421	▶25
456-1351	179
	181
	201
	203
	272
	278
	288
	374
	804
456-1352	215
	308
	805
456-4296	52
	121
	394
	398
	402
	689
	690
456-4298	120
	205
	208

▶ PRIMARY REFERENCE

PART NUMBER INDEX

Part	Page	Part	Page	Part	Page	Part	Page
	237		596		40		191
	253	460-1103	641		41		193
	266	460-1112	641		46		195
	322	460-1570	139		47		197
	332		342		52		199
	334		344		53		201
	351		404		55		203
	392		641		57		205
	401	460-6435	114		59		207
	695		116		61		209
	697		124		63		211
456-4299	52		134		66		213
	264		144		68		215
	700		146		69		217
456-4302	191		158		71		219
	242		261		73		220
	270		293		75		222
	701		329		78		224
	703		363		79		226
456-7962	1	461-3814	►1		81		228
	67		►65		83		230
457-0481	681	461-4638	3		86		232
	682		69		87		233
	708	461-4640	26		90		234
	709		71		91		235
457-0482	680	461-4643	3		93		237
	683		73		96		239
	684	461-4644	27		97		241
457-9534	778		75		99		243
	783	461-4645	25		102		245
	787		77		104		247
458-2242	97	461-4648	4		105		249
	99		79		107		250
	101	461-4649	3		109		251
	103		81		111		252
	119	461-4650	25		113		254
	131		83		115		256
	175	461-4651	26		117		258
	185		85		119		260
	187	461-4652	27		121		262
	191		87		123		264
	226	461-4653	26		125		266
	245		89		127		268
	348	461-4655	2		129		270
	376		91		131		272
	392	461-4656	27		133		274
	550		93		135		276
458-3400	506	461-4657	25		137		278
	507		95		139		280
458-3404	508	461-4658	26		141		282
458-3684	40		97		143		284
	151	461-4659	28		145		286
	213		99		147		288
	247	461-4661	25		149		290
	265		101		151		292
	271	461-4662	1		153		294
	327		103		155		296
	839	461-5422	21		157		298
	840		105		159		300
458-3745	842	461-5454	►107		161		302
	848	461-5460	22		163		304
458-7918	566		109		165		306
	581	461-5828	►1		167		308
458-7939	566		►67		169		310
	581	461-8772	22		171		312
458-7940	566		111		173		314
	581	461-9682	►25		175		316
458-9768	121	462-0854	►25		177		318
	290	462-1171	629		179		320
	294	462-2235	826		181		322
	304	462-3105	►25		183		324
	358	462-6028	26		185		326
	360		113		187		328
	394	462-6685	37		189		330

► PRIMARY REFERENCE

PART NUMBER INDEX

Part	Page
	332
	334
	336
	338
	340
	342
	344
	346
	348
	350
	352
	354
	356
	358
	360
	362
	364
	366
	368
	370
	372
	374
	376
	378
	380
	382
	384
	386
	388
	390
	392
	394
	396
	398
	400
	402
	404
	406
	646
462-6732	▶25
462-7245	▶115
462-8110	▶26
462-8594	633
	642
462-8972	▶26
462-9442	▶1
	▶103
463-0313	27
	117
464-0721	38
	74
	164
	188
	221
	234
	250
	397
464-0722	72
	198
464-1142	42
	106
	389
	391
464-7891	▶771
	▶787
464-7899	▶772
	▶773
	▶781
	▶783
	▶787
464-8580	2
	119
464-8660	514
464-9337	▶2
	▶51
465-2766	5
	121
466-1010	115
	514
466-1160	▶123
466-1161	▶125
466-1162	▶127
466-1163	▶129
466-4849	566
	568
	572
	576
	581
	587
467-1940	51
	65
	67
	71
	75
	77
	83
	85
	87
	89
	91
	93
	95
	99
	101
	103
	109
	117
	153
	714
467-2150	▶2
	▶119
467-6747	▶21
467-7437	▶26
467-8280	▶21
467-8303	▶21
467-8314	▶21
467-8361	▶2
	▶127
467-9663	▶2
	▶125
467-9808	▶2
	▶91
468-0460	▶3
	▶73
468-0461	3
	131
468-0462	▶3
	▶69
468-1595	▶26
468-2231	▶3
	▶131
468-2471	▶26
468-3189	▶27
468-3190	▶3
	▶81
468-4398	▶27
468-5324	▶3
	▶123
468-5349	▶4
	▶79
468-7018	▶27
468-7019	▶27
468-8148	▶133
468-8218	5
	135
468-8357	216
	232
	249
468-8374	122
	395
468-8412	140
	405
468-8413	142
469-3797	686
	689
	690
	695
	697
	701
	703
470-8038	566
	568
	570
	572
	574
	576
	578
	581
	583
	585
470-8101	447
470-8171	447
470-8667	▶137
470-8814	28
	139
471-0541	▶141
472-4942	381
	852
472-5560	22
	143
472-6931	▶22
473-3372	30
	145
473-3373	23
	147
473-3375	29
	149
473-3757	▶22
473-4993	▶22
474-1553	408
	677
474-7299	4
	151
474-9782	▶4
	▶151
475-3388	5
	153
475-6719	27
	155
475-7307	▶27
475-8297	▶157
475-9060	▶159
476-1230	115
	642
476-2947	790
	793
476-4938	▶28
476-7489	▶4
	▶141
476-7558	46
	109
	131
	133
	145
	147
	187
	217
	239
	256
	260
	284
	298
	300
	316
	362
	364
	366
	376
	541
476-9752	▶161
477-1865	4
	163
477-1869	4
	165
477-1870	5
	167
477-1871	28
	169
477-1873	28
	171
477-1874	22
	173
477-1981	▶4
	▶163
477-1982	▶4
	▶165
477-1983	▶5
	▶167
477-1984	▶28
477-1985	▶28
477-1986	▶22
477-2658	5
	175
477-2660	28
	177
477-3353	▶5
	▶175
477-3355	▶28
477-6201	▶22
477-6348	▶5
	▶153
477-6401	▶28
477-6774	▶5
	▶135
477-8829	▶5
	▶121
478-4234	37
	59
	65
	67
	69
	73
	75
	77
	79
	81
	83
	85
	87
	89
	91
	93
	95
	97
	99
	101
	103
	109
	117
	131
	149
	155
	163
	165
	167

PART NUMBER INDEX

Part	Page
	169
	171
	173
	175
	177
	183
	185
	187
	191
	197
	199
	207
	209
	217
	220
	222
	224
	226
	228
	230
	237
	239
	241
	243
	245
	252
	258
	262
	264
	266
	268
	270
	276
	292
	300
	302
	306
	310
	312
	314
	316
	318
	322
	328
	330
	334
	336
	338
	340
	346
	348
	350
	368
	370
	372
	376
	378
	384
	386
	396
	400
	715
478-4257	29
	179
478-4261	▶181
478-5198	▶682
	▶695
478-5200	▶683
	▶689
478-7619	▶6
	▶137
478-8523	43
	111
	179
	181
	195
	201
	203
	272
	374
	773
478-8524	61
	256
	298
	775
479-0926	▶23
479-2167	▶29
479-6190	▶29
479-6192	▶29
479-6973	29
	183
479-7004	▶29
479-7682	29
	185
479-7773	▶29
479-9389	6
	187
479-9390	▶30
479-9398	▶189
480-2181	6
	191
480-4489	568
	570
	572
	574
	576
	578
	581
	583
	585
480-4490	568
	570
	572
	574
	576
	578
	581
	583
	585
480-4491	568
	570
	572
	574
	576
	578
	581
	583
	585
481-0144	6
	193
481-0811	▶195
481-1530	▶6
	▶193
481-4143	▶6
	▶187
481-4234	▶6
	▶191
481-4235	▶30
481-5929	822
482-0209	6
	197
482-0212	7
	199
482-3187	840
482-7703	141
	161
	515
482-8581	▶6
	▶197
482-9210	▶7
	▶199
483-1223	206
	244
	331
	401
483-5155	30
	201
483-5308	▶30
483-9334	7
	203
483-9391	▶7
	▶203
484-2939	31
	205
484-7200	▶777
	▶781
485-4894	678
485-4895	678
485-8027	30
	207
486-1539	▶30
486-2644	▶209
486-3231	▶30
486-4250	31
	211
486-7179	▶31
488-0428	▶31
488-2691	▶213
488-3767	828
488-3768	828
488-3770	828
488-3771	828
488-3779	828
488-3787	828
488-3794	828
488-3797	828
488-3798	828
488-3799	828
488-6687	32
	215
489-5885	527
489-5888	526
489-9006	31
	217
490-4917	229
	231
491-2606	32
	219
491-4973	23
	220
491-4980	31
	222
491-4993	31
	224
491-5836	810
491-7124	7
	226
491-9667	814
491-9765	▶31
492-1388	▶31
492-2161	▶31
492-2212	▶23
492-3021	32
	228
492-3072	32
	230
492-3169	7
	232
492-5692	▶32
492-6555	▶32
492-7341	▶7
	▶232
493-0138	▶7
	▶226
493-1019	23
	233
493-1038	8
	234
493-2708	▶23
493-2720	▶8
	▶234
494-2073	23
	235
494-6712	▶23
494-6807	23
	237
494-7261	▶23
495-3004	▶32
495-4052	814
495-4053	814
495-4054	814
495-4056	814
495-4057	814
495-4475	▶32
495-6156	53
	105
	274
	282
	286
	290
	294
	320
	356
	358
	360
	388
	551
495-6162	59
	552
495-6168	111
	553
495-8349	32
	239
497-2278	814
497-2279	814
497-9665	▶32
498-2984	686
	689
	690
	695
	697
	701
	703
499-7181	33
	241

5

500-4376	▶33
501-2466	24
	243
501-7441	320
	676
501-7442	47
	675
502-2115	657
	659
502-5350	▶24
502-9462	24
	245
503-0943	▶24
503-9589	259
	347
504-2903	568

PART NUMBER INDEX

Part	Page
	572
	583
	587
504-3629	24
	247
504-4551	▶24
504-4575	24
	249
504-5163	▶24
504-5365	8
	250
504-6342	▶8
	▶250
504-6359	137
	554
504-8134	8
	251
504-8142	▶8
	▶251
504-9579	▶252
506-5035	8
	254
506-5125	▶8
	▶254
506-9918	9
	256
507-6552	▶9
	▶256
507-8016	9
	258
507-8031	▶9
	▶258
508-0270	9
	260
508-0306	▶9
	▶260
510-1088	33
	262
512-1002	▶33
512-4903	▶263
512-9858	10
	264
513-0851	9
	266
513-0877	▶9
	▶266
513-0924	▶10
	▶264
513-8513	10
	268
513-8514	▶10
	▶268
514-9367	10
	270
515-1814	▶10
	▶270
515-9203	▶272
517-8243	763
	766
519-4128	10
	274
519-4236	▶10
	▶274
519-9198	832
	838
520-3152	33
	276
520-4644	33
	278
521-0449	▶33
521-2171	▶33
524-8271	11
	280
524-9915	▶11
	▶280
525-8759	11
	282
525-9134	▶11
	▶282
526-0511	33
	284
526-1772	▶33
526-7210	34
	286
526-8888	▶288
527-0497	▶34
527-1637	435
	442
527-1639	436
	444
527-1641	435
	442
	444
	445
	446
527-7106	11
	290
527-9187	▶11
	▶290
527-9686	11
	292
528-3358	34
	294
528-3387	▶11
	▶292
528-3699	▶34
528-9866	34
	296
528-9920	12
	298
529-8780	▶34
529-8781	▶12
	▶298
530-1323	▶300
530-2601	12
	302
531-2492	12
	304
532-0514	▶12
	▶302
532-5863	▶12
	▶304
533-2797	▶306
533-3524	162
533-3588	34
	308
535-8060	12
	310
535-8565	▶34
535-8566	▶12
	▶310
535-8994	773
	775
536-6675	34
	312
536-7943	814
536-7945	812
	814
536-7946	812
	814
536-9153	▶34
539-6668	589
539-6672	589
539-6673	589
539-6915	▶314
539-7274	561
539-7275	563
	565
539-8582	▶316
541-7104	777
	778
542-2303	815
543-4255	35
	318
543-9476	▶35
549-5430	46
	94
	869
549-6892	761
	762
550-5740	815
552-3506	35
	320
552-8869	13
	322
552-9638	▶13
	▶322
553-1809	▶324
553-3730	13
	326
553-5214	▶35
553-6396	▶13
	▶326
555-4669	13
	328
555-5057	▶13
	▶328
555-7277	333
	335
	337
	339
557-4275	810
557-7811	161
	716
559-0271	▶814
	▶854
559-6883	815
559-6884	815
559-6885	815
559-7632	424
560-6100	798
560-6101	804
560-6104	805
560-7572	333
	335
	337
	338
	822
560-7573	332
	334
	336
	338
	424
560-7999	333
	335
	337
	339
	854
561-3000	803
	806
561-3457	806
561-6318	▶816
	▶854
562-8873	35
	330
563-6171	▶792
	▶793
563-6186	332
	334
	336
	338
	793
563-6728	35
	332
563-6729	▶334
563-6730	35
	336
564-2349	▶35
564-2826	332
	334
	336
	338
	810
565-1247	13
	338
566-7931	435
	436
	438
	441
	442
567-6035	578
567-6036	570
	574
	585
	589
567-8167	▶35
567-8621	▶13
	▶338
567-8852	▶35
568-2023	810
569-6097	729
	731
	734
	737
	746
569-7846	36
	340
569-8968	▶36
571-1827	438
	445
571-1828	441
	446
574-9871	589
574-9880	578
574-9881	589
574-9886	578
574-9895	570
	578
	589
574-9896	570
	578
	589
575-2879	14
	342
575-2880	14
	344
575-3353	570
	578
	589
575-3355	589
575-3358	578
575-8234	834
576-1157	859
	861
	864
	866
	868
579-2220	343
579-3653	345
582-6898	811
582-6899	808
583-8352	14
	346
585-3037	▶14
	▶346
585-7897	▶14

▶ PRIMARY REFERENCE

PART NUMBER INDEX

Part	Page
	▶342
585-7898	▶14
	▶344
589-6006	388
	390
	396
	400
	406
	864
591-1266	14
	348
591-4607	▶14
	▶348
591-9440	15
	350
592-3194	▶15
	▶350
593-5777	799
593-7287	15
	352
593-7288	15
	354
594-0211	▶15
	▶352
594-0218	▶15
	▶354
594-2125	15
	356
594-3037	▶15
	▶356
596-2071	16
	37
596-2621	▶16
	▶37
596-4834	16
	358
596-6452	▶16
	▶358
596-7090	16
	360
596-7092	▶16
	▶360
596-8896	▶362
596-8905	16
	364
596-8930	▶16
	▶364
597-9248	17
	366
598-0764	▶17
	▶366
598-9881	17
	368
599-2201	▶17
	▶368

6

Part	Page
602-8721	17
	370
603-1127	▶17
	▶370
603-5300	17
	372
603-6833	▶17
	▶372
604-2388	678
604-2395	▶684
	▶690
	▶710
604-2396	697
	708
	711
604-2398	686
	703
	709
	712
604-2413	▶710
604-2415	▶711
604-2418	▶712
605-5520	574
	578
	583
	585
608-9261	18
	374
609-4201	▶18
	▶374
609-9819	18
	376
610-0876	▶18
	▶376
611-2653	37
	51
	65
	67
	69
	71
	73
	75
	77
	79
	81
	83
	85
	87
	89
	91
	93
	95
	97
	99
	101
	103
	109
	117
	119
	121
	131
	153
	183
	187
	205
	207
	217
	228
	241
	243
	252
	292
	312
	314
	316
	318
	332
	336
	340
	346
	348
	350
	352
	368
	370
	372
	376
	378
	384
	386
	392
	394
	396
	398
	400
	402
	865
611-9112	835
612-1735	▶378
613-9482	18
	380
614-1611	▶18
	▶380
614-2901	663
	667
614-2917	663
	667
614-5795	18
	382
614-6389	▶18
	▶382
614-9555	19
	384
614-9585	▶19
	▶384
617-8875	523
617-8876	529
619-3393	574
	578
	583
	585
619-4764	678
621-7933	574
	578
	585
622-6239	19
	386
623-1309	19
	388
623-1349	▶19
	▶388
623-3489	▶19
	▶386
624-0698	19
	390
624-0794	▶19
	▶390
624-8991	777
625-6594	392
	394
	398
	402
	404
	866
627-8019	20
	392
627-8054	20
	394
627-8129	20
	396
627-8148	▶20
	▶396
628-3916	▶20
	▶392
628-4345	20
	398
629-0211	▶20
	▶398
629-0552	▶20
	▶394
630-0387	76
	94
	393
	867
630-1761	686
633-4335	21
	400
633-4834	▶21
	▶400
633-7776	▶402
633-9481	739
	743
633-9482	741
	748
635-3313	39
	46
	61
	66
	68
	85
	88
	92
	94
	98
	99
	101
	104
	117
	119
	131
	139
	153
	159
	193
	207
	243
	252
	274
	290
	304
	309
	320
	345
	352
	354
	360
	366
	368
	372
	376
	384
	388
	390
	392
	394
	400
	404
	406
	869
641-5407	755
645-2039	▶404
648-9166	532
	536
	541
656-6844	574
657-2370	▶406

©2025 Caterpillar
All Rights Reserved

CAT, CATERPILLAR, LET'S DO THE WORK, their respective logos, “Caterpillar Corporate Yellow”, the "Power Edge" and Cat "Modern Hex" trade dress as well as corporate and product identity used herein, are trademarks of Caterpillar and may not be used without permission.