SEBP7530-26 (en-us)
July 2018

Parts Manual

C4.4 Industrial Engine

W231-UP (Engine)

Product and Dealer Information

Note: For product identification plate locations, see the section “Product Identification Information” in the Operation and Maintenance Manual.

Delivery Date: _____

Product Information

Model: _____

Product Identification Number: _____

Engine Serial Number: _____

Transmission Serial Number: _____

Generator Serial Number: _____

Attachment Serial Numbers: _____

Attachment Information: _____

Customer Equipment Number: _____

Dealer Equipment Number: _____

Dealer Information

Name: _____ Branch: _____

Address: _____

_____

_____

	Dealer Contact	Phone Number	Hours
Sales:	_____	_____	_____
Parts:	_____	_____	_____
Service:	_____	_____	_____

MEMORANDA

TABLE OF CONTENTS

NAME	PAGE
GENERAL INFORMATION	A3
REPAIR ALTERNATIVES	A5
SUPPLEMENTAL COOLANT ADDITIVES	A6
MAINTENANCE PARTS	A7
INDEX	A9
ENGINE ARRANGEMENT	1
ENGINE AR	1
ENGINE AR-COMPLETE	10
ENGINE AR-PRIMARY	14
BASIC ENGINE	162
ACCESSORY GP-ENGINE	162
ADAPTER GP-AIR COMPRESSOR	163
AIR COMPRESSOR GP	164
BALANCER AS	166
BALANCER GP	167
BELT TENSIONER GP	168
CAMSHAFT GP	170
COVER GP-FRONT HOUSING	172
COVER GP-VALVE MECHANISM	173
CRANKSHAFT GP	180
CYLINDER BLOCK GP	190
CYLINDER BLOCK GP-SHORT	192
CYLINDER HEAD AS	195
CYLINDER HEAD GP	197
DRAIN GP-ENGINE OIL	200
DRIVE GP-AUXILIARY	203
DRIVE GP-FAN	204
EXTENSION GP-FAN	219
FLYWHEEL GP	222
HOUSING GP-FLYWHEEL	231
HOUSING GP-FRONT	240
JET GP-PISTON COOLING	257
LIFTING GP-ENGINE	258
MOUNTING GP-ENGINE	261
PAN GP-OIL	271
PISTON & ROD GP	280
PLUG GP-ENGINE	284
PLUG GP-FLYWHEEL HOUSING	288
PLUG GP-FRONT HOUSING	289
PLUG GP-OIL PAN	290
PULLEY GP-ALTERNATOR	291
PULLEY GP-AUXILIARY DRIVE	293
PULLEY GP-CRANKSHAFT	294
PULLEY GP-FAN DRIVE	297
ROCKER ARM GP	298
LUBRICATION SYSTEM	301
BREATHER GP	301
DRAIN GP-OIL	304
FILLER GP-ENGINE OIL	305
FILTER GP-ENGINE OIL	310
FUMES DISPOSAL GP	311
GAUGE GP-OIL LEVEL (DIPSTICK)	312
PLUG GP-OIL FILTER MOUNTING	318
PUMP GP-ENGINE OIL	319
VALVE GP-CHECK	322
VALVE GP-FLUID SAMPLING	323
COOLING SYSTEM	324
CONNECTION GP-HEATER	324
CONNECTION GP-WATER	325
COOLER GP-ENGINE OIL	328
FAN GP	334
MOUNTING GP-FAN	338
PUMP GP-WATER	339
RADIATOR AS	342
RADIATOR GP	345
AIR INLET AND EXHAUST SYSTEM	352
AIR CLEANER GP	352
ELBOW GP-AIR INLET	354
FASTENER GP-EXHAUST MANIFOLD	359
FITTING GP-EXHAUST	360
MANIFOLD GP-EXHAUST	361
MANIFOLD GP-INLET	364
MOUNTING GP-EXHAUST	365
TURBOCHARGER GP	366
FUEL SYSTEM	393
FILTER & LINES GP-FUEL	393
FILTER GP-FUEL	397
FILTER GP-WATER SEP & FUEL	408
INJECTOR GP-FUEL	410
LINES GP-FUEL	412
PUMP GP-FUEL INJECTION	420
RAIL GP-FUEL	422
ELECTRICAL AND STARTING SYSTEM	424
ALTERNATOR GP-CHARGING	424
CONTROL GP-ELECTRONIC	428
HARNESS AS-ENGINE	430
HARNESS AS-WIRING	430
SENSOR GP-ENGINE	432
SENSOR GP-TEMPERATURE	436
STARTING AID GP	437
STARTING MOTOR GP-ELECTRIC	439
SWITCH GP-HEAT START	443
WIRING GP-ENGINE	444
HYDRAULIC SYSTEM	453
FILTER GP-OIL	453
TRANSMISSION	454

TABLE OF CONTENTS

NAME	PAGE	NAME	PAGE
GAUGE GP-OIL LEVEL (DIPSTICK)	454		
OPERATOR STATION	455		
MOUNTING GP-CONTROL	455		
SERVICE EQUIPMENT AND SUPPLIES	456		
FILM GP	456		
PART NUMBER INDEX	B1		

1. ENGINE IDENTIFICATION

Cat engines are identified with Serial Numbers and Arrangement Numbers. In some cases, Modification Numbers are also used. The serial number plate which shows these numbers is mounted on the engine.

Cat dealers need this information to determine which components were included on the engine when it was assembled at the factory. This permits accurate identification of replacement part numbers.

2. ORDERING PARTS

⚠ WARNING

When replacement parts are required for this product Caterpillar recommends using Caterpillar replacement parts or parts with equivalent specifications including, but not limited to, physical dimensions, type, strength and material.

Failure to heed this warning can lead to premature failures, product damage, personal injury or death.

Quality Cat replacement parts are available from Cat dealers throughout the world. Their parts inventories are up to date and include all parts normally required to protect your investment in Cat Engines. Dealers may offer repair kits or remanufactured parts to allow selection of the most effective repair alternative for a particular situation. When ordering parts, your order should specify the quantity, part number, part name, and the serial number/product identification number of the engine for which the parts are needed.

3. PARTS MANUAL ORGANIZATION

Product information in this manual is presented as "information elements" that represent all of the components for the specific model. An Engine Arrangement is an example of an information element. The information elements are organized alphabetically by part name and secondarily by part number within each major section of the manual.

4. TABLE OF CONTENTS

A table of contents (TOC) is found at the beginning of the manual. The TOC lists each section of the manual with a complete list of all information elements organized as they appear in the manual. Page numbers are provided for quick reference to detailed parts identification illustrations and serviceable consist lists.

5. MAINTENANCE PARTS INDEX

The Maintenance Parts Index, located near the beginning of the manual, references most frequently used maintenance part numbers, providing description, quantity, usage and page number. This information is organized alphabetically by part description.

6. INDEX

The index located near the front of the manual is an alphabetical listing of all information elements included in the manual. Page numbers are provided for quick reference to detailed parts identification illustrations and serviceable consist lists.

7. PART NUMBER INDEX

A numerical index listing all part numbers and the corresponding page number(s) appears at the back of the manual.

8. CAPTIONS

Captions located at the beginning each information element identify the part number and part name along with additional descriptive information. S/N information found in each caption should be used to select correct information for a specific engine. Field replacement options, identification of optional attachment components, and where used ("part of") information is also provided.

The first line of a caption is shown in larger type font to indicate the beginning of an information element. Captions for additional pages that may be required to illustrate an information element will be shown in standard type font and will include the term (contd.) .

9. NON-SERVICED PARTS

In some instances it is necessary to display non-serviced parts that are a link to lower level serviceable consist lists. These non-serviced part numbers are shown in italic type indicating that they are not available. All consist lists have not been converted to reflect this enhancement.

10. PARTS LIST REFERENCE NUMBERS

Numbers shown in the Ref No column correspond to numbers used in the associated graphic(s). An alphabetic suffix may be added to a reference number to identify lower level consist items. Numbers shown in the Graphic Ref column refer to the graphic number identifier displayed in the lower left corner of each illustration. The Graphic Ref number may be used in combination with the item Ref No to determine the correct part number. There may be intentional omission of a Ref No in a consist list as information is updated to reflect the latest serviceable part numbers.

11. INDENTED PART NAMES

When a part name is indented in a parts list, it is part of (included in) the group or assembly under which it is indented.

12. ILLUSTRATION REFERENCE LETTERS

When necessary, illustrations contain reference letters (A, B, C etc.) that are intended to track lines and harnesses from one point to another. They are also used to show where to reconnect illustrations that have been separated.

13. ABBREVIATIONS AND SYMBOLS

O.D. – Outside Diameter
I.D. – Inside Diameter
A – Not Part Of This Group
B – Use As Required
C – Change From Previous Type
D – Order By The Meter
E – Order By The Centimeter
F – Not Shown
G – Order By The Inch
I – Refer To Hydraulic Information System
M – Metric Part
R – Remfg Part May Be Available
Y – Separate Illustration
Z – Not Serviced Separately

14. DESCRIPTION OF TYPE CHANGES

Type - A type is defined as any configuration change that requires an additional Information Element for an Arrangement, Group, or Assembly. If serial number breaks for types are not available, a type # (Type 1, Type 2, etc.) will be displayed in the caption. These "type" changes are identified with a "C" note (change from previous type) in the Parts List. Only the "types" that apply to this Parts Manual will be included. Additional types may exist causing "C" notes to appear on an Information Element when no other types are shown.

15. <END>

This symbol indicates the end of an information element.

NOTE:

Continuing improvement and advancement of product design may cause changes to your engine which may not be included in this publication. Whenever a question arises regarding your Cat product or this publication, please consult your Cat dealer for the latest available information.

REMANUFACTURED COMPONENTS

As an option when making repairs consider Cat Remanufactured Components. Components that are available through the Cat Remanufactured Program are identified three ways in the parts book:

- with the letter R in the note field of the parts list
- with an R* at the beginning of the first line of the caption
- with an *R at the end of the first line of the caption

Typical components included in the Remanufacturing Program include:

ALTERNATORS
CONNECTING RODS
CRANKSHAFTS - UNDERSIZE
CRANKSHAFTS - UPGRADE TO NEW
CYLINDER HEADS
ELECTRONIC CONTROL MODULES (ECM)
ELECTRONIC SENSORS
FUEL INJECTORS
FUEL NOZZLES
FUEL PUMPS
GOVERNORS
OIL PUMPS
PISTONS
SHORT BLOCKS
STARTERS
TURBOCHARGERS - COMPLETE
TURBOCHARGER CARTRIDGES
WATER PUMPS

Cat Remanufactured engines for many engine arrangements are also available.

SUPPLEMENTAL COOLANT ADDITIVES

CUSTOMER BENEFITS:

Protects against cavitation, foam, erosion, corrosion, and scale buildup in cooling systems.

- Provides measured coolant conditioner.

DESCRIPTION:

Additives deplete from the coolant with normal operation. For this reason, Supplemental Coolant Additives (SCA) must be added to all heavy duty coolants at regular intervals. In addition, when not using a fully formulated, pre-charged antifreeze, like Cat DEAC, an initial charge of SCA must be added to the cooling system. The amount of SCA added to the system is dependent on the capacity of the system.

The SCA for initial fill is provided as a liquid. SCA's for maintenance intervals are available in liquid form and as a spin-on element. (No Spin-on available for 3600 Family of Engines)

NOTE:

The amount of SCA added at initial fill is not the same as the amount added at maintenance intervals.

The coolant additive elements can be used with any ethylene or propylene glycol type antifreeze which meets ASTM D4985 or ASTM D5345 Specifications.

NOTE:

For use with standard heavy duty coolant only, not for use with Extended Life Coolant.

PARTS NEEDED:

Cooling System Capacity		Liquid SCA at Initial Fill	Liquid SCA at Maintenance*	Spin-on SCA Maintenance Element*
Liters	Gallons			
22-30	(6-8)	3P-2044 (1)	6V-3542 (1)	111-2370 (1)
30-38	(8-10)	3P-2044 (1) 6V-3542 (1)	111-2372 (1)	111-2369 (1)
38-49	(10-13)	3P-2044 (1) 8T-1589 (1)	111-2372 (1)	111-2369 (1)
49-64	(13-17)	3P-2044 (2)	8T-1589 (1)	9N-3368 (1)
64-83	(17-22)	3P-2044 (2) 8T-1589 (1)	111-2372 (1) 6V-3542 (1)	111-2371 (1)
83-114	(22-30)	3P-2044 (3) 8T-1589 (1)	3P-2044 (1)	9N-3718 (1)
114-163	(30-43)	3P-2044 (5)	3P-2044 (1) 6V-3542 (1)	111-2371 (2)
163-242	(43-64)	3P-2044 (8)	3P-2044 (2)	9N-3718 (2)

* Normal maintenance period is 250 hrs. See your Operation and Maintenance Manual for complete coolant maintenance instructions.

( ) Indicates quantity required.

MAINTENANCE PARTS

DESCRIPTION	PART NUMBER	QTY	WHERE USED	PAGE
AIR INLET AND EXHAUST SYSTEM				
FILTER AS-AIR	449-9365	1	AIR CLEANER GP	352
FILTER ELEMENT AS-AIR (PRIMARY)	206-5234	1	AIR CLEANER GP	352
FILTER ELEMENT AS-AIR (SECONDARY)	206-5235	1	AIR CLEANER GP	352
GASKET-EXHAUST MANIFOLD	298-4570	1	MANIFOLD GP-EXHAUST	361
		1	MANIFOLD GP-EXHAUST	362
		1	MANIFOLD GP-EXHAUST	363
BASIC ENGINE				
BELT-SERPENTINE	285-2040	1	DRIVE GP-FAN	205
	359-0191	1	DRIVE GP-FAN	211
	365-2968	1	DRIVE GP-FAN	209
	371-8058	1	DRIVE GP-FAN	208
	380-2619	1	DRIVE GP-FAN	206
	380-2622	1	DRIVE GP-FAN	212
BELT-SERPENTINE (FAN DRIVE)	286-7845	1	DRIVE GP-FAN	204
CAP AS-ENGINE OIL FILLER	369-3869	1	COVER GP-VALVE MECHANISM	173
		1	COVER GP-VALVE MECHANISM	174
GASKET (VALVE COVER)	392-9472	1	COVER GP-VALVE MECHANISM	175
		1	COVER GP-VALVE MECHANISM	176
		1	COVER GP-VALVE MECHANISM	177
		1	COVER GP-VALVE MECHANISM	178
KEY	067-6344	2	ADAPTER GP-AIR COMPRESSOR	163
PLUG-DRAIN (ENGINE OIL)	7C-0351	2	DRAIN GP-ENGINE OIL	200
		1	DRAIN GP-ENGINE OIL	201
		1	DRAIN GP-ENGINE OIL	202
STRAINER	233-8148	1	PAN GP-OIL	279
V-BELT SET (INCLUDES 2-BELTS)	276-1408	1	DRIVE GP-FAN	218
COOLING SYSTEM				
CAP-RADIATOR	236-7764	1	RADIATOR AS	342
		1	RADIATOR AS	343
		1	RADIATOR GP	345
CONNECTION AS (INCLUDES TEMPERATURE REGULATOR)	367-1817	1	CONNECTION GP-WATER	325
GASKET-WATER REGULATOR	281-8744	1	CONNECTION GP-WATER	325
		1	CONNECTION GP-WATER	326
		1	CONNECTION GP-WATER	327
HOSE-RADIATOR	236-7722	1	RADIATOR GP	345
		1	RADIATOR GP	348
		1	RADIATOR GP	350
	236-7734	1	RADIATOR GP	345
		1	RADIATOR GP	348
		1	RADIATOR GP	350
	236-7735	2	RADIATOR GP	345
		2	RADIATOR GP	348
		2	RADIATOR GP	350
	236-8781	1	RADIATOR GP	345

MAINTENANCE PARTS

DESCRIPTION	PART NUMBER	QTY	WHERE USED	PAGE
		1	RADIATOR GP	348
		1	RADIATOR GP	350
PLUG-DRAIN	236-7765	1	RADIATOR AS	342
		1	RADIATOR AS	343
		1	RADIATOR GP	345
REGULATOR AS-WATER TEMPERATURE (INCLUDES CONNECTOR)	417-7782	1	CONNECTION GP-WATER	327
ELECTRICAL AND STARTING SYSTEM				
GLOW PLUG (12-VOLT)	452-3112	4	STARTING AID GP	437
GLOW PLUG (24-VOLT)	462-2235	4	STARTING AID GP	438
KEY	128-7723	1	SWITCH GP-HEAT START	443
FUEL SYSTEM				
FILTER AS-WATER SEP & FUEL	439-5037	1	FILTER GP-FUEL	401
		1	FILTER GP-WATER SEP & FUEL	408
		1	FILTER GP-WATER SEP & FUEL	409
FILTER ELEMENT-FUEL	360-8960	1	FILTER GP-FUEL	397
HYDRAULIC SYSTEM				
FILTER-FUMES DISPOSAL	273-5711	1	FILTER GP-OIL	453
LUBRICATION SYSTEM				
CAP AS-OIL FILLER (ENGINE)	130-9888	1	FILLER GP-ENGINE OIL	308
FILTER AS-ENGINE OIL	7W-2326	1	FILTER GP-ENGINE OIL	310
PLUG-DRAIN (ENGINE OIL)	7C-0351	1	DRAIN GP-OIL	304

INDEX

NAME PAGE

A

ACCESSORY GP-ENGINE 162
ADAPTER GP-AIR COMPRESSOR 163
AIR CLEANER GP 352
353
AIR COMPRESSOR GP 164
ALTERNATOR GP-CHARGING 424
425
426
427

B

BALANCER AS. 166
BALANCER GP 167
BELT TENSIONER GP. 168
169
BELT-SERPENTINE. 205
206
208
209
211
212
BELT-SERPENTINE (FAN DRIVE) 204
BREATHER GP 301
302
303
BRIDGE GP-VALVE 299

C

CAMSHAFT GP 170
171
CAP AS-ENGINE OIL FILLER 173
174
CAP AS-OIL FILLER (ENGINE). 308
CAP-RADIATOR 342
343
345
CONNECTION AS (INCLUDES TEMPERATURE REGULATOR) 325
CONNECTION GP-HEATER 324
CONNECTION GP-INLET 354
364
CONNECTION GP-WATER 325
326
327
CONTROL GP-ELECTRONIC 428
429
CONTROL GP-UNPROGRAMMED 428
429
COOLER GP-ENGINE OIL 328
329
330
331
332
333
COVER GP 248

NAME PAGE

COVER GP-FRONT HOUSING 172
COVER GP-VALVE MECHANISM. 173
174
175
176
177
178
179
CRANKSHAFT GP. 180
181
182
184
186
188
CYLINDER BLOCK GP 190
191
CYLINDER BLOCK GP-SHORT. 192
193
CYLINDER HEAD AS. 195
196
CYLINDER HEAD GP. 197
198
199

D

DRAIN GP-ENGINE OIL 200
201
202
DRAIN GP-OIL 304
DRIVE GP-AUXILIARY 203
DRIVE GP-FAN 204
205
206
207
208
209
210
211
212
213
214
215
216
217
218

E

ELBOW GP-AIR INLET 354
355
356
357
358

INDEX

NAME	PAGE
ENGINE AR	1
	2
	3
	4
	5
	6
	7
	8
	9
	10
ENGINE AR-COMPLETE	10
	11
	12
	13
ENGINE AR-PRIMARY	14
	16
	18
	20
	22
	24
	26
	28
	30
	32
	34
	36
	38
	40
	42
	44
	46
	48
	50
	52
	54
	56
	58
	60
	62
	64
	66
	68
	70
	72
	74
	76
	78
	80
	82
	84
	86
	88
	90
	92
	94
	96
	98
	100
	102
	104
	106
	108
	110
	112
	114
	116
	118
	120
	122
	124
	126
	128
	130
	132
	134

INDEX

NAME PAGE

136
138
140
142
144
146
148
150
152
154
156
158
160
EXTENSION GP-FAN 219
220
221

F

FAN GP 334
335
336
337
FASTENER GP-EXHAUST MANIFOLD 359
FILLER GP-ENGINE OIL 305
306
307
308
309
FILM GP 456
457
458
FILM GP–ENGINE 459
FILM-IDENTIFICATION (CAT) 456
457
FILM-IDENTIFICATION (OIL FILL, READ OMM) 173
174
FILM-WARNING (DO NOT SPRAY, READ OMM) 458
459
FILM-WARNING (UNIVERSAL WARNING) 458
459
FILTER & LINES GP-FUEL 393
395
FILTER AS-AIR 352
FILTER AS-ENGINE OIL 310
FILTER AS-WATER SEP & FUEL 401
408
409
FILTER ELEMENT AS-AIR (PRIMARY) 352
FILTER ELEMENT AS-AIR (SECONDARY) 352
FILTER ELEMENT-FUEL 397
FILTER GP-ENGINE OIL 310

NAME PAGE

FILTER GP-FUEL 397
398
400
401
402
403
404
405
406
407
FILTER GP-OIL 453
FILTER GP-WATER SEP & FUEL 408
409
FILTER-FUMES DISPOSAL 453
FITTING GP-EXHAUST 360
FLYWHEEL GP 222
223
224
225
226
227
228
229
230
FUMES DISPOSAL GP 311

G

GASKET (VALVE COVER) 175
176
177
178
GASKET-EXHAUST MANIFOLD 361
362
363
GASKET-WATER REGULATOR 325
326
327
GAUGE AS-OIL LEVEL (DIPSTICK) 312
313
317
GAUGE AS-OIL LEVEL (DIPSTICK) (ENGINE) 454
GAUGE GP-OIL LEVEL (DIPSTICK) 312
313
314
315
316
317
454
GAUGE GP-OIL LEVEL (DIPSTICK) (ENGINE) 278
314
315
GAUGE-OIL LEVEL (DIPSTICK) 316
GLOW PLUG (12-VOLT) 437
GLOW PLUG (24-VOLT) 438

INDEX

NAME PAGE

H

HARNESS AS-ENGINE 430
HARNESS AS-WIRING. 430
431
HOSE-RADIATOR 345
348
350
HOUSING GP-FLYWHEEL 231
232
233
234
235
236
237
238
239
HOUSING GP-FRONT 240
242
244
246
247
248
249
251
253
255

I

INDICATOR-AIR FILTER CHANGE. 352
INJECTOR GP-FUEL 410
411

J

JET GP-PISTON COOLING 257

K

KEY 163
443

L

LIFTING GP-ENGINE 258
259
260
LINE AS-FUEL 398
413
LINES GP-FUEL. 412
413
415
416
418

NAME PAGE

M

MANIFOLD GP-EXHAUST. 361
362
363
MANIFOLD GP-INLET. 364
MOUNTING GP-CONTROL 455
MOUNTING GP-ENGINE 261
262
263
264
265
266
267
268
269
270
MOUNTING GP-EXHAUST 365
MOUNTING GP-FAN. 338

P

PAN GP-OIL 193
271
272
273
274
275
276
277
278
279
PISTON & ROD GP 280
282
PLATE GP-IDENTIFICATION 193

INDEX

NAME PAGE

PLATE GP-SERIAL NUMBER 19
41
43
47
49
51
65
73
89
91
93
95
101
111
113
115
117
121
123
125
127
129
131
133
139
141
143
145
147
149
153
155
157
159
PLUG GP-CONNECTOR (64-PIN) 430
431
PLUG GP-ENGINE 284
285
286
287
PLUG GP-FLYWHEEL HOUSING 288
PLUG GP-FRONT HOUSING 289
PLUG GP-OIL FILTER MOUNTING 318
PLUG GP-OIL PAN 290
PLUG-DRAIN 342
343
345
PLUG-DRAIN (ENGINE OIL) 200
201
202
304
PULLEY GP-ALTERNATOR 291
292
PULLEY GP-AUXILIARY DRIVE 293
PULLEY GP-CRANKSHAFT 294
295
296
PULLEY GP-FAN DRIVE 297
PUMP GP-ENGINE OIL 319
320
321

NAME PAGE

PUMP GP-FUEL INJECTION 420
421
PUMP GP-WATER 339
340

R

RADIATOR AS 342
343
RADIATOR GP 345
348
350
RAIL GP-FUEL 422
REGULATOR AS-WATER TEMPERATURE (INCLUDES CONNECTOR) 327
ROCKER ARM GP 298
299
300

S

SENSOR (FUEL RAIL PRESSURE) 422
SENSOR GP-ENGINE 432
434
SENSOR GP-LIQUID LEVEL 408
409
SENSOR GP-LIQUID LEVEL (WATER IN FUEL) 401
SENSOR GP-PRESSURE 434
SENSOR GP-PRESSURE (ENGINE OIL) 432
SENSOR GP-PRESSURE (FUEL FILTER INLET) 400
SENSOR GP-PRESSURE (INLET MANIFOLD AIR) 432
SENSOR GP-SPEED 432
434
SENSOR GP-TEMPERATURE 434
436
SENSOR GP-TEMPERATURE (ENGINE COOLANT) 400
432
SENSOR-TEMPERATURE 434
STARTING AID GP 437
438
STARTING MOTOR GP-ELECTRIC 439
440
441
442
STRAINER 279
SWITCH GP-HEAT START 443

NAME PAGE NAME PAGE

T

TURBOCHARGER GP 366
367
368
370
372
374
376
377
378
379
381
382
384
386
389
391

V

V-BELT SET (INCLUDES 2-BELTS). 218
VALVE AS-RELIEF (ENGINE OIL PRESSURE) 166
VALVE GP-CHECK 322
VALVE GP-FLUID SAMPLING 323

W

WIRING GP-ENGINE 444
445
446
447
448
449
450
451
452

ENGINE ARRANGEMENT

467-4389 ENGINE AR

SMCS-1000 **i06791195**

NOTE	PART NUMBER	QTY	PART NAME 1 2 3 4 5 6 (PRODUCT LEVEL)	SEE PAGE
Y	*452-7366*	1	CYLINDER BLOCK GP-SHORT	192
Y	*452-7394*	1	CYLINDER HEAD GP (SHORT)	198
Y	**463-8815**	1	ENGINE AR-PRIMARY	30

Y - SEPARATE ILLUSTRATION

<END>

467-4406 ENGINE AR

SMCS-1000 **i06796485**

NOTE	PART NUMBER	QTY	PART NAME 1 2 3 4 5 6 (PRODUCT LEVEL)	SEE PAGE
Y	*452-7366*	1	CYLINDER BLOCK GP-SHORT	192
Y	*452-7394*	1	CYLINDER HEAD GP (SHORT)	198
Y	**463-9823**	1	ENGINE AR-PRIMARY	40

Y - SEPARATE ILLUSTRATION

<END>

467-4409 ENGINE AR

SMCS-1000 **i06791173**

NOTE	PART NUMBER	QTY	PART NAME 1 2 3 4 5 6 (PRODUCT LEVEL)	SEE PAGE
Y	*452-7366*	1	CYLINDER BLOCK GP-SHORT	192
Y	*452-7394*	1	CYLINDER HEAD GP (SHORT)	198
Y	**463-8848**	1	ENGINE AR-PRIMARY	34

Y - SEPARATE ILLUSTRATION

<END>

467-4415 ENGINE AR

SMCS-1000 **i06796428**

NOTE	PART NUMBER	QTY	PART NAME 1 2 3 4 5 6 (PRODUCT LEVEL)	SEE PAGE
Y	*452-7366*	1	CYLINDER BLOCK GP-SHORT	192
Y	*452-7394*	1	CYLINDER HEAD GP (SHORT)	198
Y	**463-9821**	1	ENGINE AR-PRIMARY	38

Y - SEPARATE ILLUSTRATION

<END>

467-4859 ENGINE AR

SMCS-1000 **i06796472**

NOTE	PART NUMBER	QTY	PART NAME 1 2 3 4 5 6 (PRODUCT LEVEL)	SEE PAGE
Y	*452-7366*	1	CYLINDER BLOCK GP-SHORT	192
Y	*452-7394*	1	CYLINDER HEAD GP (SHORT)	198

Y - SEPARATE ILLUSTRATION

<END>

ENGINE ARRANGEMENT

467-5484 ENGINE AR

SMCS-1000 **i06796400**

NOTE	PART NUMBER	QTY	PART NAME 1 2 3 4 5 6 (PRODUCT LEVEL)	SEE PAGE
Y	*452-7366*	1	CYLINDER BLOCK GP-SHORT	192
Y	*452-7394*	1	CYLINDER HEAD GP (SHORT)	198

Y - SEPARATE ILLUSTRATION

<END>

467-8282 ENGINE AR

SMCS-1000 **i07331535**

NOTE	PART NUMBER	QTY	PART NAME 1 2 3 4 5 6 (PRODUCT LEVEL)	SEE PAGE
Y	*452-7366*	1	CYLINDER BLOCK GP-SHORT	192
Y	*452-7394*	1	CYLINDER HEAD GP (SHORT)	198
Y	**463-8820**	1	ENGINE AR-PRIMARY	32

Y - SEPARATE ILLUSTRATION

<END>

467-8302 ENGINE AR

SMCS-1000 **i06791175**

NOTE	PART NUMBER	QTY	PART NAME 1 2 3 4 5 6 (PRODUCT LEVEL)	SEE PAGE
Y	*452-7366*	1	CYLINDER BLOCK GP-SHORT	192
Y	*452-7394*	1	CYLINDER HEAD GP (SHORT)	198
Y	**463-8910**	1	ENGINE AR-PRIMARY	36

Y - SEPARATE ILLUSTRATION

<END>

467-8319 ENGINE AR

SMCS-1000 **i06791189**

NOTE	PART NUMBER	QTY	PART NAME 1 2 3 4 5 6 (PRODUCT LEVEL)	SEE PAGE
Y	*452-7366*	1	CYLINDER BLOCK GP-SHORT	192
Y	*452-7394*	1	CYLINDER HEAD GP (SHORT)	198
Y	**467-7465**	1	ENGINE AR-PRIMARY	48

Y - SEPARATE ILLUSTRATION

<END>

468-2230 ENGINE AR

SMCS-1000 **i06791179**

NOTE	PART NUMBER	QTY	PART NAME 1 2 3 4 5 6 (PRODUCT LEVEL)	SEE PAGE
Y	*452-7366*	1	CYLINDER BLOCK GP-SHORT	192
Y	*452-7394*	1	CYLINDER HEAD GP (SHORT)	198
Y	**455-9378**	1	ENGINE AR-PRIMARY	14

Y - SEPARATE ILLUSTRATION

<END>

ENGINE ARRANGEMENT

469-5132 ENGINE AR

SMCS-1000 **i06791185**

NOTE	PART NUMBER	QTY	PART NAME 1 2 3 4 5 6 (PRODUCT LEVEL)	SEE PAGE
Y	*452-7366*	1	CYLINDER BLOCK GP-SHORT	192
Y	*452-7394*	1	CYLINDER HEAD GP (SHORT)	198
Y	**461-3165**	1	ENGINE AR-PRIMARY	16

Y - SEPARATE ILLUSTRATION

<END>

469-5134 ENGINE AR

SMCS-1000 **i06796480**

NOTE	PART NUMBER	QTY	PART NAME 1 2 3 4 5 6 (PRODUCT LEVEL)	SEE PAGE
Y	*452-7366*	1	CYLINDER BLOCK GP-SHORT	192
Y	*452-7394*	1	CYLINDER HEAD GP (SHORT)	198
Y	**461-3168**	1	ENGINE AR-PRIMARY	18

Y - SEPARATE ILLUSTRATION

<END>

469-5136 ENGINE AR

SMCS-1000 **i06791174**

NOTE	PART NUMBER	QTY	PART NAME 1 2 3 4 5 6 (PRODUCT LEVEL)	SEE PAGE
Y	*452-7366*	1	CYLINDER BLOCK GP-SHORT	192
Y	*452-7394*	1	CYLINDER HEAD GP (SHORT)	198
Y	**461-3170**	1	ENGINE AR-PRIMARY	20

Y - SEPARATE ILLUSTRATION

<END>

469-5137 ENGINE AR

SMCS-1000 **i06791180**

NOTE	PART NUMBER	QTY	PART NAME 1 2 3 4 5 6 (PRODUCT LEVEL)	SEE PAGE
Y	*452-7366*	1	CYLINDER BLOCK GP-SHORT	192
Y	*452-7394*	1	CYLINDER HEAD GP (SHORT)	198
Y	**461-3171**	1	ENGINE AR-PRIMARY	22

Y - SEPARATE ILLUSTRATION

<END>

469-5139 ENGINE AR

SMCS-1000 **i06791184**

NOTE	PART NUMBER	QTY	PART NAME 1 2 3 4 5 6 (PRODUCT LEVEL)	SEE PAGE
Y	*452-7366*	1	CYLINDER BLOCK GP-SHORT	192
Y	*452-7394*	1	CYLINDER HEAD GP (SHORT)	198
Y	**461-3175**	1	ENGINE AR-PRIMARY	24

Y - SEPARATE ILLUSTRATION

<END>

ENGINE ARRANGEMENT

469-5140 ENGINE AR

SMCS-1000 **i06791181**

NOTE	PART NUMBER	QTY	PART NAME 1 2 3 4 5 6 (PRODUCT LEVEL)	SEE PAGE
Y	*452-7366*	1	CYLINDER BLOCK GP-SHORT	192
Y	*452-7394*	1	CYLINDER HEAD GP (SHORT)	198
Y	**461-3177**	1	ENGINE AR-PRIMARY	26

Y - SEPARATE ILLUSTRATION

<END>

469-5141 ENGINE AR

SMCS-1000 **i06791186**

NOTE	PART NUMBER	QTY	PART NAME 1 2 3 4 5 6 (PRODUCT LEVEL)	SEE PAGE
Y	*452-7366*	1	CYLINDER BLOCK GP-SHORT	192
Y	*452-7394*	1	CYLINDER HEAD GP (SHORT)	198
Y	**461-3181**	1	ENGINE AR-PRIMARY	28

Y - SEPARATE ILLUSTRATION

<END>

470-0611 ENGINE AR

SMCS-1000 **i06791191**

NOTE	PART NUMBER	QTY	PART NAME 1 2 3 4 5 6 (PRODUCT LEVEL)	SEE PAGE
Y	*452-7366*	1	CYLINDER BLOCK GP-SHORT	192
Y	*452-7394*	1	CYLINDER HEAD GP (SHORT)	198
Y	**466-3332**	1	ENGINE AR-PRIMARY	44

Y - SEPARATE ILLUSTRATION

<END>

472-3325 ENGINE AR

SMCS-1000 **i06791176**

NOTE	PART NUMBER	QTY	PART NAME 1 2 3 4 5 6 (PRODUCT LEVEL)	SEE PAGE
Y	*452-7366*	1	CYLINDER BLOCK GP-SHORT	192
Y	*452-7394*	1	CYLINDER HEAD GP (SHORT)	198
Y	**469-1048**	1	ENGINE AR-PRIMARY	50

Y - SEPARATE ILLUSTRATION

<END>

472-4944 ENGINE AR

SMCS-1000 **i07331570**

NOTE	PART NUMBER	QTY	PART NAME 1 2 3 4 5 6 (PRODUCT LEVEL)	SEE PAGE
Y	*452-7366*	1	CYLINDER BLOCK GP-SHORT	192
Y	*452-7394*	1	CYLINDER HEAD GP (SHORT)	198
Y	**466-4382**	1	ENGINE AR-PRIMARY	46

Y - SEPARATE ILLUSTRATION

<END>

475-5557 ENGINE AR

SMCS-1000 **i06796409**

NOTE	PART NUMBER	QTY	PART NAME 1 2 3 4 5 6 (PRODUCT LEVEL)	SEE PAGE
Y	*452-7366*	1	CYLINDER BLOCK GP-SHORT	192
Y	*452-7394*	1	CYLINDER HEAD GP (SHORT)	198
Y	*475-0574*	1	ENGINE AR-PRIMARY	58

Y - SEPARATE ILLUSTRATION

<END>

476-2948 ENGINE AR

SMCS-1000 **i06796422**

NOTE	PART NUMBER	QTY	PART NAME 1 2 3 4 5 6 (PRODUCT LEVEL)	SEE PAGE
Y	*452-7366*	1	CYLINDER BLOCK GP-SHORT	192
Y	*452-7394*	1	CYLINDER HEAD GP (SHORT)	198
Y	*476-2914*	1	ENGINE AR-PRIMARY	66

Y - SEPARATE ILLUSTRATION

<END>

477-3350 ENGINE AR

SMCS-1000 **i06796440**

NOTE	PART NUMBER	QTY	PART NAME 1 2 3 4 5 6 (PRODUCT LEVEL)	SEE PAGE
Y	*452-7366*	1	CYLINDER BLOCK GP-SHORT	192
Y	*452-7394*	1	CYLINDER HEAD GP (SHORT)	198
Y	*477-2657*	1	ENGINE AR-PRIMARY	72

Y - SEPARATE ILLUSTRATION

<END>

477-3351 ENGINE AR

SMCS-1000 **i06796490**

NOTE	PART NUMBER	QTY	PART NAME 1 2 3 4 5 6 (PRODUCT LEVEL)	SEE PAGE
Y	*452-7366*	1	CYLINDER BLOCK GP-SHORT	192
Y	*452-7394*	1	CYLINDER HEAD GP (SHORT)	198
Y	*477-2654*	1	ENGINE AR-PRIMARY	68

Y - SEPARATE ILLUSTRATION

<END>

477-3352 ENGINE AR

SMCS-1000 **i06796420**

NOTE	PART NUMBER	QTY	PART NAME 1 2 3 4 5 6 (PRODUCT LEVEL)	SEE PAGE
Y	*452-7366*	1	CYLINDER BLOCK GP-SHORT	192
Y	*452-7394*	1	CYLINDER HEAD GP (SHORT)	198
Y	*477-2655*	1	ENGINE AR-PRIMARY	70

Y - SEPARATE ILLUSTRATION

<END>

ENGINE ARRANGEMENT

477-6787 ENGINE AR

SMCS-1000 **i06791182**

NOTE	PART NUMBER	QTY	PART NAME 1 2 3 4 5 6 (PRODUCT LEVEL)	SEE PAGE
Y	*452-7366*	1	CYLINDER BLOCK GP-SHORT	192
Y	*452-7394*	1	CYLINDER HEAD GP (SHORT)	198
Y	**475-8138**	1	ENGINE AR-PRIMARY	62
Y - SEPARATE ILLUSTRATION				

<END>

478-0240 ENGINE AR

SMCS-1000 **i06796459**

NOTE	PART NUMBER	QTY	PART NAME 1 2 3 4 5 6 (PRODUCT LEVEL)	SEE PAGE
Y	*452-7366*	1	CYLINDER BLOCK GP-SHORT	192
Y	*452-7394*	1	CYLINDER HEAD GP (SHORT)	198
Y	**477-5057**	1	ENGINE AR-PRIMARY	76
Y - SEPARATE ILLUSTRATION				

<END>

478-0241 ENGINE AR

SMCS-1000 **i06796394**

NOTE	PART NUMBER	QTY	PART NAME 1 2 3 4 5 6 (PRODUCT LEVEL)	SEE PAGE
Y	*452-7366*	1	CYLINDER BLOCK GP-SHORT	192
Y	*452-7394*	1	CYLINDER HEAD GP (SHORT)	198
Y	**477-4127**	1	ENGINE AR-PRIMARY	74
Y - SEPARATE ILLUSTRATION				

<END>

478-3105 ENGINE AR

SMCS-1000 **i06796416**

NOTE	PART NUMBER	QTY	PART NAME 1 2 3 4 5 6 (PRODUCT LEVEL)	SEE PAGE
Y	*452-7366*	1	CYLINDER BLOCK GP-SHORT	192
Y	*452-7394*	1	CYLINDER HEAD GP (SHORT)	198
Y	**475-7126**	1	ENGINE AR-PRIMARY	60
Y - SEPARATE ILLUSTRATION				

<END>

478-6236 ENGINE AR

SMCS-1000 **i06796468**

NOTE	PART NUMBER	QTY	PART NAME 1 2 3 4 5 6 (PRODUCT LEVEL)	SEE PAGE
Y	*452-7366*	1	CYLINDER BLOCK GP-SHORT	192
Y	*452-7394*	1	CYLINDER HEAD GP (SHORT)	198
Y	*478-6220*	1	ENGINE AR-PRIMARY	78
Y - SEPARATE ILLUSTRATION				

<END>

478-7609 ENGINE AR

SMCS-1000 **i06796476**

NOTE	PART NUMBER	QTY	PART NAME 1 2 3 4 5 6 (PRODUCT LEVEL)	SEE PAGE
Y	*452-7366*	1	CYLINDER BLOCK GP-SHORT	192
Y	*452-7394*	1	CYLINDER HEAD GP (SHORT)	198
Y	**470-4348**	1	ENGINE AR-PRIMARY	52

Y - SEPARATE ILLUSTRATION

<END>

480-6118 ENGINE AR

SMCS-1000 **i06796431**

NOTE	PART NUMBER	QTY	PART NAME 1 2 3 4 5 6 (PRODUCT LEVEL)	SEE PAGE
Y	*452-7366*	1	CYLINDER BLOCK GP-SHORT	192
Y	*452-7394*	1	CYLINDER HEAD GP (SHORT)	198
Y	*480-6065*	1	ENGINE AR-PRIMARY	82

Y - SEPARATE ILLUSTRATION

<END>

486-4247 ENGINE AR

SMCS-1000 **i06676123**

NOTE	PART NUMBER	QTY	PART NAME 1 2 3 4 5 6 (PRODUCT LEVEL)	SEE PAGE
Y	*452-7366*	1	CYLINDER BLOCK GP-SHORT	192
Y	*452-7394*	1	CYLINDER HEAD GP (SHORT) (SHORT)	198
Y	*478-6560*	1	ENGINE AR-PRIMARY	80

Y - SEPARATE ILLUSTRATION

<END>

488-4771 ENGINE AR

SMCS-1000 **i06808510**

NOTE	PART NUMBER	QTY	PART NAME 1 2 3 4 5 6 (PRODUCT LEVEL)	SEE PAGE
Y	*452-7366*	1	CYLINDER BLOCK GP-SHORT	192
Y	*452-7394*	1	CYLINDER HEAD GP (SHORT)	198
Y	*488-4641*	1	ENGINE AR-PRIMARY	104

Y - SEPARATE ILLUSTRATION

<END>

488-4772 ENGINE AR

SMCS-1000 **i06796407**

NOTE	PART NUMBER	QTY	PART NAME 1 2 3 4 5 6 (PRODUCT LEVEL)	SEE PAGE
Y	*452-7366*	1	CYLINDER BLOCK GP-SHORT	192
Y	*452-7394*	1	CYLINDER HEAD GP (SHORT)	198
Y	*488-4590*	1	ENGINE AR-PRIMARY	102

Y - SEPARATE ILLUSTRATION

<END>

ENGINE ARRANGEMENT

491-5059 ENGINE AR

SMCS-1000 **i06808743**

NOTE	PART NUMBER	QTY	PART NAME 1 2 3 4 5 6 (PRODUCT LEVEL)	SEE PAGE
Y	*452-7366*	1	CYLINDER BLOCK GP-SHORT	192
Y	*452-7394*	1	CYLINDER HEAD GP (SHORT)	198
Y	*491-2522*	1	ENGINE AR-PRIMARY	106
Y - SEPARATE ILLUSTRATION				

<END>

492-8540 ENGINE AR

SMCS-1000 **i06705202**

NOTE	PART NUMBER	QTY	PART NAME 1 2 3 4 5 6 (PRODUCT LEVEL)	SEE PAGE
Y	*452-7366*	1	CYLINDER BLOCK GP-SHORT	192
Y	*452-7394*	1	CYLINDER HEAD GP (SHORT)	198
Y	**492-3118**	1	ENGINE AR-PRIMARY	112
Y - SEPARATE ILLUSTRATION				

<END>

503-3757 ENGINE AR

SMCS-1000 **i06715504**

NOTE	PART NUMBER	QTY	PART NAME 1 2 3 4 5 6 (PRODUCT LEVEL)	SEE PAGE
Y	*503-1940*	1	ENGINE AR-PRIMARY	122
	452-7366	1	CYLINDER BLOCK GP-SHORT	
	452-7394	1	CYLINDER HEAD GP (SHORT)	
Y - SEPARATE ILLUSTRATION				

<END>

504-5152 ENGINE AR

SMCS-1000 **i06719871**

NOTE	PART NUMBER	QTY	PART NAME 1 2 3 4 5 6 (PRODUCT LEVEL)	SEE PAGE
Y	*452-7366*	1	CYLINDER BLOCK GP-SHORT	192
Y	*452-7394*	1	CYLINDER HEAD GP (SHORT)	198
Y	*504-3628*	1	ENGINE AR-PRIMARY	126
Y - SEPARATE ILLUSTRATION				

<END>

504-5164 ENGINE AR

SMCS-1000 **i06719883**

NOTE	PART NUMBER	QTY	PART NAME 1 2 3 4 5 6 (PRODUCT LEVEL)	SEE PAGE
Y	*452-7366*	1	CYLINDER BLOCK GP-SHORT	192
Y	*452-7394*	1	CYLINDER HEAD GP (SHORT)	198
Y	*504-3645*	1	ENGINE AR-PRIMARY	128
Y - SEPARATE ILLUSTRATION				

<END>

ENGINE ARRANGEMENT

510-3274 ENGINE AR

SMCS-1000 **i07025565**

NOTE	PART NUMBER	QTY	PART NAME 1 2 3 4 5 6 (PRODUCT LEVEL)	SEE PAGE
Y	*452-7366*	1	CYLINDER BLOCK GP-SHORT	192
Y	*452-7394*	1	CYLINDER HEAD GP (SHORT)	198
Y	**509-5882**	1	ENGINE AR-PRIMARY	134
Y - SEPARATE ILLUSTRATION				

<END>

512-0355 ENGINE AR

SMCS-1000 **i06796417**

NOTE	PART NUMBER	QTY	PART NAME 1 2 3 4 5 6 (PRODUCT LEVEL)	SEE PAGE
Y	*452-7366*	1	CYLINDER BLOCK GP-SHORT	192
Y	*452-7394*	1	CYLINDER HEAD GP (SHORT)	198
Y	**509-3109**	1	ENGINE AR-PRIMARY	132
Y - SEPARATE ILLUSTRATION				

<END>

513-0849 ENGINE AR

SMCS-1000 **i06713714**

NOTE	PART NUMBER	QTY	PART NAME 1 2 3 4 5 6 (PRODUCT LEVEL)	SEE PAGE
Y	*512-9884*	1	ENGINE AR-PRIMARY	142
	452-7366	1	CYLINDER BLOCK GP-SHORT	
	452-7394	1	CYLINDER HEAD GP (SHORT)	
Y - SEPARATE ILLUSTRATION				

<END>

513-0850 ENGINE AR

SMCS-1000 **i06714793**

NOTE	PART NUMBER	QTY	PART NAME 1 2 3 4 5 6 (PRODUCT LEVEL)	SEE PAGE
Y	*512-9838*	1	ENGINE AR-PRIMARY	140
	452-7366	1	CYLINDER BLOCK GP-SHORT	
	452-7394	1	CYLINDER HEAD GP (SHORT)	
Y - SEPARATE ILLUSTRATION				

<END>

526-8932 ENGINE AR

SMCS-1000 **i07084617**

NOTE	PART NUMBER	QTY	PART NAME 1 2 3 4 5 6 (PRODUCT LEVEL)	SEE PAGE
Y	*452-7366*	1	CYLINDER BLOCK GP-SHORT	192
Y	*452-7394*	1	CYLINDER HEAD GP (SHORT)	198
Y	*526-8847*	1	ENGINE AR-PRIMARY	152
Y - SEPARATE ILLUSTRATION				

<END>

ENGINE ARRANGEMENT

528-3357 ENGINE AR

SMCS-1000 **i07025576**

NOTE	PART NUMBER	QTY	PART NAME 1 2 3 4 5 6 (PRODUCT LEVEL)	SEE PAGE
Y	*452-7366*	1	CYLINDER BLOCK GP-SHORT	192
Y	*452-7394*	1	CYLINDER HEAD GP (SHORT)	198
Y	**527-9081**	1	ENGINE AR-PRIMARY	154
Y - SEPARATE ILLUSTRATION				

<END>

472-6933 ENGINE AR-COMPLETE

SMCS-1000 **i07236352**

NOTE	PART NUMBER	QTY	PART NAME 1 2 3 4 5 6 (PRODUCT LEVEL)	SEE PAGE
Y	*452-7366*	1	CYLINDER BLOCK GP-SHORT	192
Y	*452-7394*	1	CYLINDER HEAD GP (SHORT)	198
Y	*472-5564*	1	ENGINE AR-PRIMARY	54
Y - SEPARATE ILLUSTRATION				

<END>

482-0226 ENGINE AR-COMPLETE

SMCS-1000 **i07282632**

NOTE	PART NUMBER	QTY	PART NAME 1 2 3 4 5 6 (PRODUCT LEVEL)	SEE PAGE
Y	*452-7366*	1	CYLINDER BLOCK GP-SHORT	192
Y	*452-7394*	1	CYLINDER HEAD GP (SHORT)	198
Y	**481-8439**	1	ENGINE AR-PRIMARY	86
Y - SEPARATE ILLUSTRATION				

<END>

483-1263 ENGINE AR-COMPLETE

SMCS-1000 **i07282634**

NOTE	PART NUMBER	QTY	PART NAME 1 2 3 4 5 6 (PRODUCT LEVEL)	SEE PAGE
Y	*452-7366*	1	CYLINDER BLOCK GP-SHORT	192
Y	*452-7394*	1	CYLINDER HEAD GP (SHORT)	198
Y	**481-5182**	1	ENGINE AR-PRIMARY	84
Y - SEPARATE ILLUSTRATION				

<END>

484-2938 ENGINE AR-COMPLETE

SMCS-1000 **i07247015**

NOTE	PART NUMBER	QTY	PART NAME 1 2 3 4 5 6 (PRODUCT LEVEL)	SEE PAGE
Y	*452-7366*	1	CYLINDER BLOCK GP-SHORT	192
Y	*452-7394*	1	CYLINDER HEAD GP (SHORT)	198
Y	*484-2343*	1	ENGINE AR-PRIMARY	94
Y - SEPARATE ILLUSTRATION				

<END>

485-1660 ENGINE AR-COMPLETE

SMCS-1000 **i07306362**

NOTE	PART NUMBER	QTY	PART NAME 1 2 3 4 5 6 (PRODUCT LEVEL)	SEE PAGE
Y	*452-7366*	1	CYLINDER BLOCK GP-SHORT	192
Y	*452-7394*	1	CYLINDER HEAD GP (SHORT)	198
Y	*484-2326*	1	ENGINE AR-PRIMARY	92

Y - SEPARATE ILLUSTRATION

<END>

486-2571 ENGINE AR-COMPLETE

SMCS-1000 **i07282446**

NOTE	PART NUMBER	QTY	PART NAME 1 2 3 4 5 6 (PRODUCT LEVEL)	SEE PAGE
Y	*452-7366*	1	CYLINDER BLOCK GP-SHORT	192
Y	*452-7394*	1	CYLINDER HEAD GP (SHORT)	198
Y	*486-2471*	1	ENGINE AR-PRIMARY	100

Y - SEPARATE ILLUSTRATION

<END>

495-3032 ENGINE AR-COMPLETE

SMCS-1000 **i07236307**

NOTE	PART NUMBER	QTY	PART NAME 1 2 3 4 5 6 (PRODUCT LEVEL)	SEE PAGE
Y	*452-7366*	1	CYLINDER BLOCK GP-SHORT	192
Y	*452-7394*	1	CYLINDER HEAD GP (SHORT)	198
Y	*495-3005*	1	ENGINE AR-PRIMARY	114

Y - SEPARATE ILLUSTRATION

<END>

495-9691 ENGINE AR-COMPLETE

SMCS-1000 **i07282635**

NOTE	PART NUMBER	QTY	PART NAME 1 2 3 4 5 6 (PRODUCT LEVEL)	SEE PAGE
Y	*452-7366*	1	CYLINDER BLOCK GP-SHORT	192
Y	*452-7394*	1	CYLINDER HEAD GP (SHORT)	198
Y	*495-9687*	1	ENGINE AR-PRIMARY	116

Y - SEPARATE ILLUSTRATION

<END>

502-7262 ENGINE AR-COMPLETE

SMCS-1000 **i07133972**

NOTE	PART NUMBER	QTY	PART NAME 1 2 3 4 5 6 (PRODUCT LEVEL)	SEE PAGE
Y	*452-7366*	1	CYLINDER BLOCK GP-SHORT	192
Y	*452-7394*	1	CYLINDER HEAD GP (SHORT)	198
Y	*502-7230*	1	ENGINE AR-PRIMARY	120

Y - SEPARATE ILLUSTRATION

<END>

ENGINE ARRANGEMENT

510-2181 ENGINE AR-COMPLETE

SMCS-1000 **i06999954**

NOTE	PART NUMBER	QTY	PART NAME 1 2 3 4 5 6 (PRODUCT LEVEL)	SEE PAGE
Y	*452-7366*	1	CYLINDER BLOCK GP-SHORT	192
Y	*452-7394*	1	CYLINDER HEAD GP (SHORT)	198
Y	*510-0902*	1	ENGINE AR-PRIMARY	138

Y - SEPARATE ILLUSTRATION

<END>

512-0317 ENGINE AR-COMPLETE

SMCS-1000 **i06835865**

NOTE	PART NUMBER	QTY	PART NAME 1 2 3 4 5 6 (PRODUCT LEVEL)	SEE PAGE
Y	**452-7366**	1	CYLINDER BLOCK GP-SHORT	192
Y	**452-7397**	1	CYLINDER HEAD GP	199
Y	**509-5884**	1	ENGINE AR-PRIMARY	136

Y - SEPARATE ILLUSTRATION

<END>

514-4609 ENGINE AR-COMPLETE

SMCS-1000 **i07167584**

NOTE	PART NUMBER	QTY	PART NAME 1 2 3 4 5 6 (PRODUCT LEVEL)	SEE PAGE
Y	*452-7366*	1	CYLINDER BLOCK GP-SHORT	192
Y	*452-7394*	1	CYLINDER HEAD GP (SHORT)	198
Y	**514-3535**	1	ENGINE AR-PRIMARY	144

Y - SEPARATE ILLUSTRATION

<END>

514-4611 ENGINE AR-COMPLETE

SMCS-1000 **i07282640**

NOTE	PART NUMBER	QTY	PART NAME 1 2 3 4 5 6 (PRODUCT LEVEL)	SEE PAGE
Y	*452-7366*	1	CYLINDER BLOCK GP-SHORT	192
Y	*452-7394*	1	CYLINDER HEAD GP (SHORT)	198
Y	**514-3537**	1	ENGINE AR-PRIMARY	146

Y - SEPARATE ILLUSTRATION

<END>

517-0060 ENGINE AR-COMPLETE

SMCS-1000 **i06812153**

NOTE	PART NUMBER	QTY	PART NAME 1 2 3 4 5 6 (PRODUCT LEVEL)	SEE PAGE
Y	*452-7366*	1	CYLINDER BLOCK GP-SHORT	192
Y	*452-7394*	1	CYLINDER HEAD GP (SHORT)	198
Y	**516-9846**	1	ENGINE AR-PRIMARY	148

Y - SEPARATE ILLUSTRATION

<END>

539-4170 ENGINE AR-COMPLETE

SMCS-1000 **i07282633**

NOTE	PART NUMBER	QTY	PART NAME 1 2 3 4 5 6 (PRODUCT LEVEL)	SEE PAGE
Y	*452-7366*	1	CYLINDER BLOCK GP-SHORT	192
Y	*452-7394*	1	CYLINDER HEAD GP (SHORT)	198
Y	*539-3889*	1	ENGINE AR-PRIMARY	158

Y - SEPARATE ILLUSTRATION

<END>

542-9131 ENGINE AR-COMPLETE

SMCS-1000 **i07236269**

NOTE	PART NUMBER	QTY	PART NAME 1 2 3 4 5 6 (PRODUCT LEVEL)	SEE PAGE
Y	*452-7366*	1	CYLINDER BLOCK GP-SHORT	192
Y	*452-7394*	1	CYLINDER HEAD GP (SHORT)	198
Y	**541-2728**	1	ENGINE AR-PRIMARY	160

Y - SEPARATE ILLUSTRATION

<END>

455-9378 ENGINE AR-PRIMARY

96.5 BRAKE KW (129.4 BHP) AT 2200-RPM

PART OF 468-2230 ENGINE AR

SMCS-1000 **i06821217**

NOTE	PART NUMBER	QTY	PART NAME 1 2 3 4 5 6 (PRODUCT LEVEL)	SEE PAGE
Y	*416-8716*	1	FILM GP (ALTERNATOR)	457
Y	*418-7664*	1	ALTERNATOR GP-CHARGING	425
Y	*433-5258*	1	FUMES DISPOSAL GP	311
Y	*435-7778*	1	CAMSHAFT GP	170
Y	*416-1867*	1	CONNECTION GP-WATER	327
Y	*415-5535*	1	CONTROL GP-ELECTRONIC	429
Y	*418-7659*	1	COOLER GP-ENGINE OIL	330
Y	*418-6381*	1	COVER GP-VALVE MECHANISM	177
Y	*433-6323*	1	CRANKSHAFT GP	181
			—OR—	
Y	*510-5297*	1	CRANKSHAFT GP	186
Y	*415-3299*	1	CYLINDER BLOCK GP	190
Y	*415-5520*	1	CYLINDER HEAD GP	197
Y	*417-4187*	1	DRAIN GP-ENGINE OIL	200
Y	*444-2678*	1	DRIVE GP-FAN	214
			—OR—	
Y	*432-1853*	1	DRIVE GP-FAN	211
Y	*462-9629*	1	ELBOW GP-AIR INLET	358
Y	*420-0291*	1	EXTENSION GP-FAN	219
Y	*445-0296*	1	FAN GP	335
Y	*418-6475*	1	FASTENER GP-EXHAUST MANIFOLD	359
Y	*432-0065*	1	FILLER GP-ENGINE OIL	308
Y	*417-4284*	1	FILM GP	458
Y	*417-3394*	1	FILTER GP-ENGINE OIL	310
Y	*441-1215*	1	FILTER GP-FUEL (WATER SEPARATOR)	402
Y	*453-7163*	1	FILTER GP-FUEL	407
Y	*417-3391*	1	FLYWHEEL GP	225
Y	*441-9154*	1	GAUGE GP-OIL LEVEL (DIPSTICK)	314
			—OR—	
Y	*447-7651*	1	PLUG GP-OIL PAN	290
Y	*416-1029*	1	HOUSING GP-FLYWHEEL	231
Y	*432-4972*	1	HOUSING GP-FRONT	248
Y	*432-8266*	1	HOUSING GP-FRONT	251
Y	*415-5522*	1	INJECTOR GP-FUEL	410
Y	*415-7948*	1	JET GP-PISTON COOLING	257
Y	*417-3458*	1	LIFTING GP-ENGINE	258
Y	*415-7119*	1	LINES GP-FUEL	413
Y	*416-9552*	1	MANIFOLD GP-EXHAUST	361
Y	*415-7949*	1	MOUNTING GP-CONTROL	455
Y	*465-3614*	1	MOUNTING GP-ENGINE	266
Y	*416-1051*	1	PAN GP-OIL	272
			—OR—	
Y	*419-8519*	1	PAN GP-OIL	274
Y	*415-5519*	1	PISTON & ROD GP	282
Y	*417-4190*	1	PLUG GP-OIL FILTER MOUNTING	318
Y	*417-4286*	1	PLUG GP-ENGINE	285
Y	*416-1047*	1	PULLEY GP-ALTERNATOR	291
			—OR—	
Y	*418-7425*	1	BELT TENSIONER GP	169

455-9378 **ENGINE AR-PRIMARY (**contd.**)** **i06821217**

NOTE	PART NUMBER	QTY	PART NAME 1 2 3 4 5 6 (PRODUCT LEVEL)	SEE PAGE
Y	*426-3230*	1	PULLEY GP-CRANKSHAFT	296
Y	*416-8723*	1	PUMP GP-ENGINE OIL	320
			—OR—	
Y	*508-3673*	1	PUMP GP-ENGINE OIL	321
Y	*415-5523*	1	PUMP GP-FUEL INJECTION	421
Y	*416-1864*	1	PUMP GP-WATER	339
Y	*459-6904*	1	RADIATOR GP	350
Y	*415-5527*	1	RAIL GP-FUEL	422
Y	*415-7947*	1	ROCKER ARM GP	299
Y	*425-9760*	1	SENSOR GP-ENGINE	432
Y	*430-5204*	1	SENSOR GP-TEMPERATURE	436
Y	*417-3453*	1	STARTING AID GP	437
Y	*416-1042*	1	FILM GP	456
Y	*418-7475*	1	STARTING MOTOR GP-ELECTRIC	440
			—OR—	
Y	*419-8514*	1	STARTING MOTOR GP-ELECTRIC	441
Y	*445-1450*	1	TURBOCHARGER GP	384
Y	*417-4227*	1	WIRING GP-ENGINE	444
	462-5117	1	ELECTRONICS GP-ENGINE	

Y - SEPARATE ILLUSTRATION

<END>

461-3165 ENGINE AR-PRIMARY

PART OF 469-5132 ENGINE AR

SMCS-1000 **i06835911**

NOTE	PART NUMBER	QTY	PART NAME 1 2 3 4 5 6 (PRODUCT LEVEL)	SEE PAGE
Y	*467-0357*	1	AIR CLEANER GP	353
Y	*416-8716*	1	FILM GP (ALTERNATOR)	457
Y	*418-7664*	1	ALTERNATOR GP-CHARGING	425
Y	*432-4983*	1	BALANCER GP	167
Y	*433-5258*	1	FUMES DISPOSAL GP	311
Y	*435-7778*	1	CAMSHAFT GP	170
Y	*416-1867*	1	CONNECTION GP-WATER	327
Y	*415-5535*	1	CONTROL GP-ELECTRONIC	429
Y	*452-0797*	1	COOLER GP-ENGINE OIL	333
Y	*415-7105*	1	COVER GP-VALVE MECHANISM	175
Y	*433-6323*	1	CRANKSHAFT GP	181
			—OR—	
Y	*510-5297*	1	CRANKSHAFT GP	186
Y	*415-3299*	1	CYLINDER BLOCK GP	190
Y	*415-5520*	1	CYLINDER HEAD GP	197
Y	*417-4187*	1	DRAIN GP-ENGINE OIL	200
Y	*416-1044*	1	DRIVE GP-FAN	205
Y	*418-7425*	1	BELT TENSIONER GP	169
Y	*462-9629*	1	ELBOW GP-AIR INLET	358
Y	*420-0291*	1	EXTENSION GP-FAN	219
Y	*445-0296*	1	FAN GP	335
Y	*418-6475*	1	FASTENER GP-EXHAUST MANIFOLD	359
Y	*432-0065*	1	FILLER GP-ENGINE OIL	308
Y	*417-4284*	1	FILM GP	458
Y	*417-3394*	1	FILTER GP-ENGINE OIL	310
Y	*441-1215*	1	FILTER GP-FUEL (WATER SEPARATOR)	402
Y	*453-7163*	1	FILTER GP-FUEL	407
Y	*417-3390*	1	FLYWHEEL GP	224
Y	*418-7473*	1	HOUSING GP-FLYWHEEL	233
Y	*415-7117*	1	HOUSING GP-FRONT	244
Y	*416-8719*	1	COVER GP-FRONT HOUSING	172
Y	*415-5522*	1	INJECTOR GP-FUEL	410
Y	*415-7948*	1	JET GP-PISTON COOLING	257
Y	*417-3458*	1	LIFTING GP-ENGINE	258
Y	*415-7119*	1	LINES GP-FUEL	413
Y	*416-9552*	1	MANIFOLD GP-EXHAUST	361
Y	*415-7949*	1	MOUNTING GP-CONTROL	455
Y	*465-3613*	1	MOUNTING GP-ENGINE	265
Y	*416-1052*	1	GAUGE GP-OIL LEVEL (DIPSTICK)	454
Y	*452-0796*	1	PAN GP-OIL	279
Y	*415-5519*	1	PISTON & ROD GP	282
Y	*417-4190*	1	PLUG GP-OIL FILTER MOUNTING	318
Y	*417-4286*	1	PLUG GP-ENGINE	285
Y	*416-1089*	1	PULLEY GP-CRANKSHAFT	294
Y	*415-5523*	1	PUMP GP-FUEL INJECTION	421
Y	*416-1864*	1	PUMP GP-WATER	339
Y	*432-8215*	1	RADIATOR GP	345
Y	*415-5527*	1	RAIL GP-FUEL	422
Y	*415-7947*	1	ROCKER ARM GP	299

461-3165 **ENGINE AR-PRIMARY (**contd.**)** **i06835911**

NOTE	PART NUMBER	QTY	PART NAME 1 2 3 4 5 6 (PRODUCT LEVEL)	SEE PAGE
Y	*425-9760*	1	SENSOR GP-ENGINE	432
Y	*430-5204*	1	SENSOR GP-TEMPERATURE	436
Y	*417-3453*	1	STARTING AID GP	437
Y	*416-1042*	1	FILM GP	456
Y	*418-7475*	1	STARTING MOTOR GP-ELECTRIC	440
Y	*445-1450*	1	TURBOCHARGER GP	384
Y	*417-4227*	1	WIRING GP-ENGINE	444
	462-5117	1	ELECTRONICS GP-ENGINE	

Y - SEPARATE ILLUSTRATION

<END>

461-3168 ENGINE AR-PRIMARY

97 BRAKE KW (129 BHP) AT 2200 RPM

OPTIONAL FIELD REPLACEMENT ORDER 452-7386—PAGE: 193, 452-7397—PAGE: 199

PART OF 469-5134 ENGINE AR

SMCS-1000 **i06835912**

NOTE	PART NUMBER	QTY	PART NAME 1 2 3 4 5 6 (PRODUCT LEVEL)	SEE PAGE
Y	*467-0357*	1	AIR CLEANER GP	353
Y	*418-7664*	1	ALTERNATOR GP-CHARGING	425
Y	*432-4983*	1	BALANCER GP	167
Y	*418-7425*	1	BELT TENSIONER GP	169
Y	*433-5258*	1	FUMES DISPOSAL GP	311
Y	*435-7778*	1	CAMSHAFT GP	170
Y	*416-1867*	1	CONNECTION GP-WATER	327
Y	*415-5535*	1	CONTROL GP-ELECTRONIC	429
Y	*452-0797*	1	COOLER GP-ENGINE OIL	333
Y	*415-7105*	1	COVER GP-VALVE MECHANISM	175
Y	*433-6323*	1	CRANKSHAFT GP	181
			—OR—	
Y	*510-5297*	1	CRANKSHAFT GP	186
Y	*415-3299*	1	CYLINDER BLOCK GP	190
Y	*415-5520*	1	CYLINDER HEAD GP	197
Y	*417-4187*	1	DRAIN GP-ENGINE OIL	200
Y	*432-1853*	1	DRIVE GP-FAN	211
Y	*462-9629*	1	ELBOW GP-AIR INLET	358
Y	*420-0291*	1	EXTENSION GP-FAN	219
Y	*445-0297*	1	FAN GP	336
Y	*418-6475*	1	FASTENER GP-EXHAUST MANIFOLD	359
Y	*432-0065*	1	FILLER GP-ENGINE OIL	308
Y	*416-1042*	1	FILM GP	456
Y	*416-8716*	1	FILM GP (ALTERNATOR)	457
Y	*417-4284*	1	FILM GP	458
Y	*417-3394*	1	FILTER GP-ENGINE OIL	310
Y	*441-1215*	1	FILTER GP-FUEL (WATER SEPARATOR)	402
Y	*453-7163*	1	FILTER GP-FUEL	407
Y	*417-3390*	1	FLYWHEEL GP	224
Y	*418-7473*	1	HOUSING GP-FLYWHEEL	233
Y	*415-7117*	1	HOUSING GP-FRONT	244
Y	*416-8719*	1	COVER GP-FRONT HOUSING	172
Y	*415-5522*	1	INJECTOR GP-FUEL	410
Y	*415-7948*	1	JET GP-PISTON COOLING	257
Y	*417-3458*	1	LIFTING GP-ENGINE	258
Y	*415-7119*	1	LINES GP-FUEL	413
Y	*416-9552*	1	MANIFOLD GP-EXHAUST	361
Y	*415-7949*	1	MOUNTING GP-CONTROL	455
Y	*465-3613*	1	MOUNTING GP-ENGINE	265
Y	*416-1052*	1	GAUGE GP-OIL LEVEL (DIPSTICK)	454
Y	*452-0796*	1	PAN GP-OIL	279
Y	*415-5519*	1	PISTON & ROD GP	282
Y	*417-4190*	1	PLUG GP-OIL FILTER MOUNTING	318
Y	*417-4286*	1	PLUG GP-ENGINE	285
Y	*426-3230*	1	PULLEY GP-CRANKSHAFT	296
Y	*415-5523*	1	PUMP GP-FUEL INJECTION	421
Y	*416-1864*	1	PUMP GP-WATER	339

461-3168 **ENGINE AR-PRIMARY (**contd.**)** **i06835912**

NOTE	PART NUMBER	QTY	PART NAME 1 2 3 4 5 6 (PRODUCT LEVEL)	SEE PAGE
Y	*432-8215*	1	RADIATOR GP	345
Y	*415-5527*	1	RAIL GP-FUEL	422
Y	*415-7947*	1	ROCKER ARM GP	299
Y	*425-9760*	1	SENSOR GP-ENGINE	432
Y	*430-5204*	1	SENSOR GP-TEMPERATURE	436
Y	*417-3453*	1	STARTING AID GP	437
Y	*418-7475*	1	STARTING MOTOR GP-ELECTRIC	440
Y	*445-1450*	1	TURBOCHARGER GP	384
Y	*417-4227*	1	WIRING GP-ENGINE	444
	462-5117	1	ELECTRONICS GP-ENGINE	
	415-9834	1	PLATE GP-SERIAL NUMBER	

Y - SEPARATE ILLUSTRATION

<END>

461-3170 ENGINE AR-PRIMARY

PART OF 469-5136 ENGINE AR

SMCS-1000 **i06835913**

NOTE	PART NUMBER	QTY	PART NAME 1 2 3 4 5 6 (PRODUCT LEVEL)	SEE PAGE
Y	*467-0357*	1	AIR CLEANER GP	353
Y	*415-7107*	1	ALTERNATOR GP-CHARGING	424
Y	*416-8716*	1	FILM GP (ALTERNATOR)	457
Y	*432-4983*	1	BALANCER GP	167
Y	*433-5258*	1	FUMES DISPOSAL GP	311
Y	*435-7778*	1	CAMSHAFT GP	170
Y	*416-1867*	1	CONNECTION GP-WATER	327
Y	*415-5535*	1	CONTROL GP-ELECTRONIC	429
Y	*452-0797*	1	COOLER GP-ENGINE OIL	333
Y	*415-7105*	1	COVER GP-VALVE MECHANISM	175
Y	*433-6323*	1	CRANKSHAFT GP	181
			—OR—	
Y	*510-5297*	1	CRANKSHAFT GP	186
Y	*415-3299*	1	CYLINDER BLOCK GP	190
Y	*415-5520*	1	CYLINDER HEAD GP	197
Y	*417-4187*	1	DRAIN GP-ENGINE OIL	200
Y	*416-1044*	1	DRIVE GP-FAN	205
Y	*418-7425*	1	BELT TENSIONER GP	169
Y	*462-9629*	1	ELBOW GP-AIR INLET	358
Y	*420-0291*	1	EXTENSION GP-FAN	219
Y	*445-0296*	1	FAN GP	335
Y	*418-6475*	1	FASTENER GP-EXHAUST MANIFOLD	359
Y	*432-0065*	1	FILLER GP-ENGINE OIL	308
Y	*417-4284*	1	FILM GP	458
Y	*417-3394*	1	FILTER GP-ENGINE OIL	310
Y	*441-1215*	1	FILTER GP-FUEL (WATER SEPARATOR)	402
Y	*453-7163*	1	FILTER GP-FUEL	407
Y	*417-3390*	1	FLYWHEEL GP	224
Y	*418-7473*	1	HOUSING GP-FLYWHEEL	233
Y	*415-7117*	1	HOUSING GP-FRONT	244
Y	*416-8719*	1	COVER GP-FRONT HOUSING	172
Y	*415-5522*	1	INJECTOR GP-FUEL	410
Y	*415-7948*	1	JET GP-PISTON COOLING	257
Y	*417-3458*	1	LIFTING GP-ENGINE	258
Y	*415-7119*	1	LINES GP-FUEL	413
Y	*416-9552*	1	MANIFOLD GP-EXHAUST	361
Y	*415-7949*	1	MOUNTING GP-CONTROL	455
Y	*465-3613*	1	MOUNTING GP-ENGINE	265
Y	*416-1052*	1	GAUGE GP-OIL LEVEL (DIPSTICK)	454
Y	*452-0796*	1	PAN GP-OIL	279
Y	*415-5519*	1	PISTON & ROD GP	282
Y	*417-4190*	1	PLUG GP-OIL FILTER MOUNTING	318
Y	*417-4286*	1	PLUG GP-ENGINE	285
Y	*416-1089*	1	PULLEY GP-CRANKSHAFT	294
Y	*415-5523*	1	PUMP GP-FUEL INJECTION	421
Y	*416-1864*	1	PUMP GP-WATER	339
Y	*432-8215*	1	RADIATOR GP	345
Y	*415-5527*	1	RAIL GP-FUEL	422
Y	*415-7947*	1	ROCKER ARM GP	299

461-3170 **ENGINE AR-PRIMARY (**contd.**)** **i06835913**

NOTE	PART NUMBER	QTY	PART NAME 1 2 3 4 5 6 (PRODUCT LEVEL)	SEE PAGE
Y	*425-9760*	1	SENSOR GP-ENGINE	432
Y	*430-5204*	1	SENSOR GP-TEMPERATURE	436
Y	*417-4371*	1	STARTING AID GP	438
Y	*415-5536*	1	STARTING MOTOR GP-ELECTRIC	439
Y	*416-1042*	1	FILM GP	456
Y	*445-1450*	1	TURBOCHARGER GP	384
Y	*417-4227*	1	WIRING GP-ENGINE	444
	462-5117	1	ELECTRONICS GP-ENGINE	

Y - SEPARATE ILLUSTRATION

<END>

461-3171 ENGINE AR-PRIMARY

PART OF 469-5137 ENGINE AR

SMCS-1000 **i06835914**

NOTE	PART NUMBER	QTY	PART NAME 1 2 3 4 5 6 (PRODUCT LEVEL)	SEE PAGE
Y	*467-0357*	1	AIR CLEANER GP	353
Y	*415-7107*	1	ALTERNATOR GP-CHARGING	424
Y	*416-8716*	1	FILM GP (ALTERNATOR)	457
Y	*432-4983*	1	BALANCER GP	167
Y	*433-5258*	1	FUMES DISPOSAL GP	311
Y	*435-7778*	1	CAMSHAFT GP	170
Y	*416-1867*	1	CONNECTION GP-WATER	327
Y	*415-5535*	1	CONTROL GP-ELECTRONIC	429
Y	*452-0797*	1	COOLER GP-ENGINE OIL	333
Y	*415-7105*	1	COVER GP-VALVE MECHANISM	175
Y	*433-6323*	1	CRANKSHAFT GP	181
			—OR—	
Y	*510-5297*	1	CRANKSHAFT GP	186
Y	*415-3299*	1	CYLINDER BLOCK GP	190
Y	*415-5520*	1	CYLINDER HEAD GP	197
Y	*417-4187*	1	DRAIN GP-ENGINE OIL	200
Y	*418-7425*	1	BELT TENSIONER GP	169
Y	*432-1853*	1	DRIVE GP-FAN	211
Y	*462-9629*	1	ELBOW GP-AIR INLET	358
Y	*420-0291*	1	EXTENSION GP-FAN	219
Y	*445-0297*	1	FAN GP	336
Y	*418-6475*	1	FASTENER GP-EXHAUST MANIFOLD	359
Y	*432-0065*	1	FILLER GP-ENGINE OIL	308
Y	*417-4284*	1	FILM GP	458
Y	*417-3394*	1	FILTER GP-ENGINE OIL	310
Y	*441-1215*	1	FILTER GP-FUEL (WATER SEPARATOR)	402
Y	*453-7163*	1	FILTER GP-FUEL	407
Y	*417-3390*	1	FLYWHEEL GP	224
Y	*418-7473*	1	HOUSING GP-FLYWHEEL	233
Y	*415-7117*	1	HOUSING GP-FRONT	244
Y	*416-8719*	1	COVER GP-FRONT HOUSING	172
Y	*415-5522*	1	INJECTOR GP-FUEL	410
Y	*415-7948*	1	JET GP-PISTON COOLING	257
Y	*417-3458*	1	LIFTING GP-ENGINE	258
Y	*415-7119*	1	LINES GP-FUEL	413
Y	*416-9552*	1	MANIFOLD GP-EXHAUST	361
Y	*415-7949*	1	MOUNTING GP-CONTROL	455
Y	*465-3613*	1	MOUNTING GP-ENGINE	265
Y	*416-1052*	1	GAUGE GP-OIL LEVEL (DIPSTICK)	454
Y	*452-0796*	1	PAN GP-OIL	279
Y	*415-5519*	1	PISTON & ROD GP	282
Y	*417-4190*	1	PLUG GP-OIL FILTER MOUNTING	318
Y	*417-4286*	1	PLUG GP-ENGINE	285
Y	*426-3230*	1	PULLEY GP-CRANKSHAFT	296
Y	*415-5523*	1	PUMP GP-FUEL INJECTION	421
Y	*416-1864*	1	PUMP GP-WATER	339
Y	*432-8215*	1	RADIATOR GP	345
Y	*415-5527*	1	RAIL GP-FUEL	422
Y	*415-7947*	1	ROCKER ARM GP	299

461-3171 **ENGINE AR-PRIMARY (**contd.**)** **i06835914**

NOTE	PART NUMBER	QTY	PART NAME 1 2 3 4 5 6 (PRODUCT LEVEL)	SEE PAGE
Y	*425-9760*	1	SENSOR GP-ENGINE	432
Y	*430-5204*	1	SENSOR GP-TEMPERATURE	436
Y	*417-4371*	1	STARTING AID GP	438
Y	*415-5536*	1	STARTING MOTOR GP-ELECTRIC	439
Y	*416-1042*	1	FILM GP	456
Y	*445-1450*	1	TURBOCHARGER GP	384
Y	*417-4227*	1	WIRING GP-ENGINE	444
	462-5117	1	ELECTRONICS GP-ENGINE	

Y - SEPARATE ILLUSTRATION

<END>

461-3175 ENGINE AR-PRIMARY

PART OF 469-5139 ENGINE AR

SMCS-1000 **i06835915**

NOTE	PART NUMBER	QTY	PART NAME 1 2 3 4 5 6 (PRODUCT LEVEL)	SEE PAGE
Y	*467-0357*	1	AIR CLEANER GP	353
Y	*416-8716*	1	FILM GP (ALTERNATOR)	457
Y	*418-7664*	1	ALTERNATOR GP-CHARGING	425
Y	*432-4983*	1	BALANCER GP	167
Y	*433-5258*	1	FUMES DISPOSAL GP	311
Y	*435-7778*	1	CAMSHAFT GP	170
Y	*416-1867*	1	CONNECTION GP-WATER	327
Y	*415-5535*	1	CONTROL GP-ELECTRONIC	429
Y	*452-0797*	1	COOLER GP-ENGINE OIL	333
Y	*415-7105*	1	COVER GP-VALVE MECHANISM	175
Y	*433-6323*	1	CRANKSHAFT GP	181
			—OR—	
Y	*510-5297*	1	CRANKSHAFT GP	186
Y	*415-3299*	1	CYLINDER BLOCK GP	190
Y	*415-5520*	1	CYLINDER HEAD GP	197
Y	*417-4187*	1	DRAIN GP-ENGINE OIL	200
Y	*418-7425*	1	BELT TENSIONER GP	169
Y	*432-1853*	1	DRIVE GP-FAN	211
Y	*462-9629*	1	ELBOW GP-AIR INLET	358
Y	*420-0291*	1	EXTENSION GP-FAN	219
Y	*445-0297*	1	FAN GP	336
Y	*418-6475*	1	FASTENER GP-EXHAUST MANIFOLD	359
Y	*432-0065*	1	FILLER GP-ENGINE OIL	308
Y	*417-4284*	1	FILM GP	458
Y	*417-3394*	1	FILTER GP-ENGINE OIL	310
Y	*441-1215*	1	FILTER GP-FUEL (WATER SEPARATOR)	402
Y	*453-7163*	1	FILTER GP-FUEL	407
Y	*417-3390*	1	FLYWHEEL GP	224
Y	*418-7473*	1	HOUSING GP-FLYWHEEL	233
Y	*415-7117*	1	HOUSING GP-FRONT	244
Y	*416-8719*	1	COVER GP-FRONT HOUSING	172
Y	*415-5522*	1	INJECTOR GP-FUEL	410
Y	*415-7948*	1	JET GP-PISTON COOLING	257
Y	*417-3458*	1	LIFTING GP-ENGINE	258
Y	*415-7119*	1	LINES GP-FUEL	413
Y	*416-9552*	1	MANIFOLD GP-EXHAUST	361
Y	*415-7949*	1	MOUNTING GP-CONTROL	455
Y	*465-3613*	1	MOUNTING GP-ENGINE	265
Y	*416-1052*	1	GAUGE GP-OIL LEVEL (DIPSTICK)	454
Y	*452-0796*	1	PAN GP-OIL	279
Y	*415-5518*	1	PISTON & ROD GP	280
Y	*417-4190*	1	PLUG GP-OIL FILTER MOUNTING	318
Y	*417-4286*	1	PLUG GP-ENGINE	285
Y	*426-3230*	1	PULLEY GP-CRANKSHAFT	296
Y	*415-5523*	1	PUMP GP-FUEL INJECTION	421
Y	*416-1864*	1	PUMP GP-WATER	339
Y	*432-8215*	1	RADIATOR GP	345
Y	*415-5527*	1	RAIL GP-FUEL	422
Y	*415-7947*	1	ROCKER ARM GP	299

461-3175 **ENGINE AR-PRIMARY (**contd.**)** **i06835915**

NOTE	PART NUMBER	QTY	PART NAME 1 2 3 4 5 6 (PRODUCT LEVEL)	SEE PAGE
Y	*425-9760*	1	SENSOR GP-ENGINE	432
Y	*430-5204*	1	SENSOR GP-TEMPERATURE	436
Y	*417-3453*	1	STARTING AID GP	437
Y	*416-1042*	1	FILM GP	456
Y	*418-7475*	1	STARTING MOTOR GP-ELECTRIC	440
Y	*445-1450*	1	TURBOCHARGER GP	384
Y	*417-4227*	1	WIRING GP-ENGINE	444
	462-8609	1	ELECTRONICS GP-ENGINE	

Y - SEPARATE ILLUSTRATION

<END>

461-3177 ENGINE AR-PRIMARY

PART OF 469-5140 ENGINE AR

SMCS-1000 **i06835916**

NOTE	PART NUMBER	QTY	PART NAME 1 2 3 4 5 6 (PRODUCT LEVEL)	SEE PAGE
Y	*467-0357*	1	AIR CLEANER GP	353
Y	*416-8716*	1	FILM GP (ALTERNATOR)	457
Y	*418-7664*	1	ALTERNATOR GP-CHARGING	425
Y	*432-4983*	1	BALANCER GP	167
Y	*433-5258*	1	FUMES DISPOSAL GP	311
Y	*435-7778*	1	CAMSHAFT GP	170
Y	*416-1867*	1	CONNECTION GP-WATER	327
Y	*415-5535*	1	CONTROL GP-ELECTRONIC	429
Y	*452-0797*	1	COOLER GP-ENGINE OIL	333
Y	*415-7105*	1	COVER GP-VALVE MECHANISM	175
Y	*433-6323*	1	CRANKSHAFT GP	181
			—OR—	
Y	*510-5297*	1	CRANKSHAFT GP	186
Y	*415-3299*	1	CYLINDER BLOCK GP	190
Y	*415-5520*	1	CYLINDER HEAD GP	197
Y	*417-4187*	1	DRAIN GP-ENGINE OIL	200
Y	*418-7425*	1	BELT TENSIONER GP	169
Y	*432-1853*	1	DRIVE GP-FAN	211
Y	*462-9629*	1	ELBOW GP-AIR INLET	358
Y	*420-0291*	1	EXTENSION GP-FAN	219
Y	*445-0297*	1	FAN GP	336
Y	*418-6475*	1	FASTENER GP-EXHAUST MANIFOLD	359
Y	*432-0065*	1	FILLER GP-ENGINE OIL	308
Y	*417-4284*	1	FILM GP	458
Y	*417-3394*	1	FILTER GP-ENGINE OIL	310
Y	*441-1215*	1	FILTER GP-FUEL (WATER SEPARATOR)	402
Y	*453-7163*	1	FILTER GP-FUEL	407
Y	*417-3390*	1	FLYWHEEL GP	224
Y	*418-7473*	1	HOUSING GP-FLYWHEEL	233
Y	*432-4972*	1	HOUSING GP-FRONT	248
Y	*432-8266*	1	HOUSING GP-FRONT	251
Y	*415-5522*	1	INJECTOR GP-FUEL	410
Y	*415-7948*	1	JET GP-PISTON COOLING	257
Y	*417-3458*	1	LIFTING GP-ENGINE	258
Y	*415-7119*	1	LINES GP-FUEL	413
Y	*416-9552*	1	MANIFOLD GP-EXHAUST	361
Y	*415-7949*	1	MOUNTING GP-CONTROL	455
Y	*465-3613*	1	MOUNTING GP-ENGINE	265
Y	*416-1052*	1	GAUGE GP-OIL LEVEL (DIPSTICK)	454
Y	*452-0796*	1	PAN GP-OIL	279
Y	*415-5519*	1	PISTON & ROD GP	282
Y	*417-4190*	1	PLUG GP-OIL FILTER MOUNTING	318
Y	*417-4286*	1	PLUG GP-ENGINE	285
Y	*426-3230*	1	PULLEY GP-CRANKSHAFT	296
Y	*415-5523*	1	PUMP GP-FUEL INJECTION	421
Y	*416-1864*	1	PUMP GP-WATER	339
Y	*432-8218*	1	RADIATOR GP	348
Y	*415-5527*	1	RAIL GP-FUEL	422
Y	*415-7947*	1	ROCKER ARM GP	299

461-3177 **ENGINE AR-PRIMARY (**contd.**)** **i06835916**

NOTE	PART NUMBER	QTY	PART NAME 1 2 3 4 5 6 (PRODUCT LEVEL)	SEE PAGE
Y	*425-9760*	1	SENSOR GP-ENGINE	432
Y	*430-5204*	1	SENSOR GP-TEMPERATURE	436
Y	*417-3453*	1	STARTING AID GP	437
Y	*416-1042*	1	FILM GP	456
Y	*418-7475*	1	STARTING MOTOR GP-ELECTRIC	440
Y	*445-1450*	1	TURBOCHARGER GP	384
Y	*417-4227*	1	WIRING GP-ENGINE	444
	462-5117	1	ELECTRONICS GP-ENGINE	

Y - SEPARATE ILLUSTRATION

<END>

461-3181 ENGINE AR-PRIMARY

PART OF 469-5141 ENGINE AR

SMCS-1000 **i06835918**

NOTE	PART NUMBER	QTY	PART NAME 1 2 3 4 5 6 (PRODUCT LEVEL)	SEE PAGE
Y	*467-0357*	1	AIR CLEANER GP	353
Y	*416-8716*	1	FILM GP (ALTERNATOR)	457
Y	*418-7664*	1	ALTERNATOR GP-CHARGING	425
Y	*432-4983*	1	BALANCER GP	167
Y	*433-5258*	1	FUMES DISPOSAL GP	311
Y	*435-7778*	1	CAMSHAFT GP	170
Y	*416-1867*	1	CONNECTION GP-WATER	327
Y	*415-5535*	1	CONTROL GP-ELECTRONIC	429
Y	*452-0797*	1	COOLER GP-ENGINE OIL	333
Y	*415-7105*	1	COVER GP-VALVE MECHANISM	175
Y	*433-6323*	1	CRANKSHAFT GP	181
			—OR—	
Y	*510-5297*	1	CRANKSHAFT GP	186
Y	*415-3299*	1	CYLINDER BLOCK GP	190
Y	*415-5520*	1	CYLINDER HEAD GP	197
Y	*417-4187*	1	DRAIN GP-ENGINE OIL	200
Y	*416-1044*	1	DRIVE GP-FAN	205
Y	*418-7425*	1	BELT TENSIONER GP	169
Y	*462-9629*	1	ELBOW GP-AIR INLET	358
Y	*420-0291*	1	EXTENSION GP-FAN	219
Y	*445-0296*	1	FAN GP	335
Y	*418-6475*	1	FASTENER GP-EXHAUST MANIFOLD	359
Y	*432-0065*	1	FILLER GP-ENGINE OIL	308
Y	*417-4284*	1	FILM GP	458
Y	*417-3394*	1	FILTER GP-ENGINE OIL	310
Y	*441-1215*	1	FILTER GP-FUEL (WATER SEPARATOR)	402
Y	*453-7163*	1	FILTER GP-FUEL	407
Y	*417-3390*	1	FLYWHEEL GP	224
Y	*418-7473*	1	HOUSING GP-FLYWHEEL	233
Y	*432-4972*	1	HOUSING GP-FRONT	248
Y	*432-8266*	1	HOUSING GP-FRONT	251
Y	*415-5522*	1	INJECTOR GP-FUEL	410
Y	*415-7948*	1	JET GP-PISTON COOLING	257
Y	*417-3458*	1	LIFTING GP-ENGINE	258
Y	*415-7119*	1	LINES GP-FUEL	413
Y	*416-9552*	1	MANIFOLD GP-EXHAUST	361
Y	*415-7949*	1	MOUNTING GP-CONTROL	455
Y	*465-3613*	1	MOUNTING GP-ENGINE	265
Y	*416-1052*	1	GAUGE GP-OIL LEVEL (DIPSTICK)	454
Y	*452-0796*	1	PAN GP-OIL	279
Y	*415-5519*	1	PISTON & ROD GP	282
Y	*417-4190*	1	PLUG GP-OIL FILTER MOUNTING	318
Y	*417-4286*	1	PLUG GP-ENGINE	285
Y	*416-1089*	1	PULLEY GP-CRANKSHAFT	294
Y	*415-5523*	1	PUMP GP-FUEL INJECTION	421
Y	*416-1864*	1	PUMP GP-WATER	339
Y	*432-8218*	1	RADIATOR GP	348
Y	*415-5527*	1	RAIL GP-FUEL	422
Y	*415-7947*	1	ROCKER ARM GP	299

461-3181 **ENGINE AR-PRIMARY (**contd.**)** **i06835918**

NOTE	PART NUMBER	QTY	PART NAME 1 2 3 4 5 6 (PRODUCT LEVEL)	SEE PAGE
Y	*425-9760*	1	SENSOR GP-ENGINE	432
Y	*430-5204*	1	SENSOR GP-TEMPERATURE	436
Y	*417-3453*	1	STARTING AID GP	437
Y	*416-1042*	1	FILM GP	456
Y	*418-7475*	1	STARTING MOTOR GP-ELECTRIC	440
Y	*445-1450*	1	TURBOCHARGER GP	384
Y	*417-4227*	1	WIRING GP-ENGINE	444
	462-5117	1	ELECTRONICS GP-ENGINE	

Y - SEPARATE ILLUSTRATION

<END>

463-8815 ENGINE AR-PRIMARY

PART OF 467-4389 ENGINE AR

SMCS-1000 **i06995366**

NOTE	PART NUMBER	QTY	PART NAME 1 2 3 4 5 6 (PRODUCT LEVEL)	SEE PAGE
Y	*416-8716*	1	FILM GP (ALTERNATOR)	457
Y	*425-8162*	1	ALTERNATOR GP-CHARGING	426
Y	*433-5258*	1	FUMES DISPOSAL GP	311
Y	*435-7778*	1	CAMSHAFT GP	170
Y	*416-1867*	1	CONNECTION GP-WATER	327
Y	*415-5534*	1	CONTROL GP-ELECTRONIC	428
Y	*418-7659*	1	COOLER GP-ENGINE OIL	330
Y	*418-6381*	1	COVER GP-VALVE MECHANISM	177
Y	*510-5297*	1	CRANKSHAFT GP	186
Y	*415-3299*	1	CYLINDER BLOCK GP	190
Y	*415-5520*	1	CYLINDER HEAD GP	197
Y	*419-8538*	1	DRAIN GP-ENGINE OIL	202
Y	*416-1044*	1	DRIVE GP-FAN	205
Y	*418-7425*	1	BELT TENSIONER GP	169
Y	*416-9543*	1	ELBOW GP-AIR INLET	354
Y	*420-0291*	1	EXTENSION GP-FAN	219
Y	*416-1070*	1	FILLER GP-ENGINE OIL	305
Y	*417-4284*	1	FILM GP	458
Y	*417-3394*	1	FILTER GP-ENGINE OIL	310
Y	*441-1215*	1	FILTER GP-FUEL (WATER SEPARATOR)	402
Y	*453-7163*	1	FILTER GP-FUEL	407
Y	*421-3853*	1	FILTER GP-FUEL	398
Y	*423-1270*	1	FLYWHEEL GP	226
Y	*441-9155*	1	GAUGE GP-OIL LEVEL (DIPSTICK)	315
Y	*431-7048*	1	HOUSING GP-FLYWHEEL	234
Y	*415-7115*	1	HOUSING GP-FRONT	240
Y	*415-5522*	1	INJECTOR GP-FUEL	410
Y	*415-7948*	1	JET GP-PISTON COOLING	257
Y	*417-3463*	1	LIFTING GP-ENGINE	260
Y	*416-9552*	1	MANIFOLD GP-EXHAUST	361
Y	*415-7949*	1	MOUNTING GP-CONTROL	455
Y	*416-8775*	1	MOUNTING GP-EXHAUST	365
Y	*423-1280*	1	PAN GP-OIL	275
Y	*415-5518*	1	PISTON & ROD GP	280
Y	*417-4286*	1	PLUG GP-ENGINE	285
Y	*417-4190*	1	PLUG GP-OIL FILTER MOUNTING	318
Y	*446-2236*	1	PLUG GP-ENGINE	287
Y	*417-3401*	1	PLUG GP-FRONT HOUSING	289
Y	*416-1089*	1	PULLEY GP-CRANKSHAFT	294
Y	*508-3673*	1	PUMP GP-ENGINE OIL	321
Y	*415-5523*	1	PUMP GP-FUEL INJECTION	421
Y	*416-1864*	1	PUMP GP-WATER	339
Y	*415-5527*	1	RAIL GP-FUEL	422
Y	*415-7947*	1	ROCKER ARM GP	299
Y	*425-9760*	1	SENSOR GP-ENGINE	432
Y	*430-5204*	1	SENSOR GP-TEMPERATURE	436
Y	*417-3453*	1	STARTING AID GP	437
Y	*416-1042*	1	FILM GP	456
Y	*425-9174*	1	STARTING MOTOR GP-ELECTRIC	442

463-8815 **ENGINE AR-PRIMARY (**contd.**)** **i06995366**

NOTE	PART NUMBER	QTY	PART NAME 1 2 3 4 5 6 (PRODUCT LEVEL)	SEE PAGE
Y	*432-6655*	1	TURBOCHARGER GP	374
Y	*417-4227*	1	WIRING GP-ENGINE	444
	464-3024	1	ELECTRONICS GP	
	462-8609	1	ELECTRONICS GP-ENGINE	

Y - SEPARATE ILLUSTRATION

<END>

463-8820 ENGINE AR-PRIMARY

75 BRAKE KW (101 BHP) AT 2200 RPM

OPTIONAL FIELD REPLACEMENT ORDER 452-7386—PAGE: 193, 452-7397—PAGE: 199

PART OF 467-8282 ENGINE AR

SMCS-1000 **i07026807**

NOTE	PART NUMBER	QTY	PART NAME 1 2 3 4 5 6 (PRODUCT LEVEL)	SEE PAGE
Y	*425-8162*	1	ALTERNATOR GP-CHARGING	426
Y	*418-7425*	1	BELT TENSIONER GP	169
Y	*433-5258*	1	FUMES DISPOSAL GP	311
Y	*435-7778*	1	CAMSHAFT GP	170
Y	*416-1867*	1	CONNECTION GP-WATER	327
Y	*415-5534*	1	CONTROL GP-ELECTRONIC	428
Y	*418-7659*	1	COOLER GP-ENGINE OIL	330
Y	*418-6381*	1	COVER GP-VALVE MECHANISM	177
Y	*433-6323*	1	CRANKSHAFT GP	181
			—OR—	
Y	*510-5297*	1	CRANKSHAFT GP	186
Y	*415-3299*	1	CYLINDER BLOCK GP	190
Y	*415-5520*	1	CYLINDER HEAD GP	197
Y	*419-8538*	1	DRAIN GP-ENGINE OIL	202
Y	*432-1856*	1	DRIVE GP-FAN	212
Y	*416-9543*	1	ELBOW GP-AIR INLET	354
Y	*420-0291*	1	EXTENSION GP-FAN	219
Y	*416-1070*	1	FILLER GP-ENGINE OIL	305
Y	*416-1042*	1	FILM GP	456
Y	*416-8716*	1	FILM GP (ALTERNATOR)	457
Y	*417-4284*	1	FILM GP	458
Y	*417-3394*	1	FILTER GP-ENGINE OIL	310
Y	*421-3853*	1	FILTER GP-FUEL	398
Y	*441-1215*	1	FILTER GP-FUEL (WATER SEPARATOR)	402
Y	*453-7163*	1	FILTER GP-FUEL	407
Y	*423-1270*	1	FLYWHEEL GP	226
Y	*441-9155*	1	GAUGE GP-OIL LEVEL (DIPSTICK)	315
Y	*431-7048*	1	HOUSING GP-FLYWHEEL	234
Y	*415-7115*	1	HOUSING GP-FRONT	240
Y	*415-5522*	1	INJECTOR GP-FUEL	410
Y	*415-7948*	1	JET GP-PISTON COOLING	257
Y	*417-3463*	1	LIFTING GP-ENGINE	260
Y	*416-9552*	1	MANIFOLD GP-EXHAUST	361
Y	*415-7949*	1	MOUNTING GP-CONTROL	455
Y	*416-8775*	1	MOUNTING GP-EXHAUST	365
Y	*423-1280*	1	PAN GP-OIL	275
Y	*415-5519*	1	PISTON & ROD GP	282
Y	*417-4190*	1	PLUG GP-OIL FILTER MOUNTING	318
Y	*417-4286*	1	PLUG GP-ENGINE	285
Y	*446-2236*	1	PLUG GP-ENGINE	287
Y	*417-3401*	1	PLUG GP-FRONT HOUSING	289
Y	*426-3230*	1	PULLEY GP-CRANKSHAFT	296
Y	*416-8723*	1	PUMP GP-ENGINE OIL	320
			—OR—	
Y	*508-3673*	1	PUMP GP-ENGINE OIL	321
Y	*415-5523*	1	PUMP GP-FUEL INJECTION	421
Y	*416-1864*	1	PUMP GP-WATER	339
Y	*415-5527*	1	RAIL GP-FUEL	422

463-8820 **ENGINE AR-PRIMARY (**contd.**)** **i07026807**

NOTE	PART NUMBER	QTY	PART NAME 1 2 3 4 5 6 (PRODUCT LEVEL)	SEE PAGE
Y	*415-7947*	1	ROCKER ARM GP	299
Y	*425-9760*	1	SENSOR GP-ENGINE	432
Y	*430-5204*	1	SENSOR GP-TEMPERATURE	436
Y	*417-3453*	1	STARTING AID GP	437
Y	*425-9174*	1	STARTING MOTOR GP-ELECTRIC	442
Y	*432-6628*	1	TURBOCHARGER GP	367
Y	*417-4227*	1	WIRING GP-ENGINE	444
	524-2576	1	ELECTRONICS GP-ENGINE	
			PLEASE USE THE GASKET KIT LINK IN SIS OR CONTACT YOUR LOCAL DEALER FOR THE LATEST GASKET KIT INFORMATION	

Y - SEPARATE ILLUSTRATION

<END>

463-8848 ENGINE AR-PRIMARY

97 BRAKE KW 9 129 BHP) AT 2200 RPM

OPTIONAL FIELD REPLACEMENT ORDER 452-7386—PAGE: 193, 452-7397—PAGE: 199

PART OF 467-4409 ENGINE AR

SMCS-1000 **i06999780**

NOTE	PART NUMBER	QTY	PART NAME 1 2 3 4 5 6 (PRODUCT LEVEL)	SEE PAGE
Y	*418-7425*	1	BELT TENSIONER GP	169
Y	*435-7778*	1	CAMSHAFT GP	170
Y	*416-1867*	1	CONNECTION GP-WATER	327
Y	*415-5534*	1	CONTROL GP-ELECTRONIC	428
Y	*418-7659*	1	COOLER GP-ENGINE OIL	330
Y	*415-7105*	1	COVER GP-VALVE MECHANISM	175
Y	*510-5297*	1	CRANKSHAFT GP	186
Y	*415-3299*	1	CYLINDER BLOCK GP	190
Y	*415-5520*	1	CYLINDER HEAD GP	197
Y	*419-8538*	1	DRAIN GP-ENGINE OIL	202
Y	*416-1043*	1	DRIVE GP-FAN	204
Y	*416-9543*	1	ELBOW GP-AIR INLET	354
Y	*432-0065*	1	FILLER GP-ENGINE OIL	308
Y	*416-1042*	1	FILM GP	456
Y	*416-8716*	1	FILM GP (ALTERNATOR)	457
Y	*417-4284*	1	FILM GP	458
Y	*417-3394*	1	FILTER GP-ENGINE OIL	310
Y	*421-3853*	1	FILTER GP-FUEL	398
Y	*441-1215*	1	FILTER GP-FUEL (WATER SEPARATOR)	402
Y	*453-7163*	1	FILTER GP-FUEL	407
Y	*423-1270*	1	FLYWHEEL GP	226
Y	*433-5258*	1	FUMES DISPOSAL GP	311
Y	*441-9154*	1	GAUGE GP-OIL LEVEL (DIPSTICK) (ENGINE)	314
Y	*431-7048*	1	HOUSING GP-FLYWHEEL	234
Y	*415-7116*	1	HOUSING GP-FRONT	242
Y	*416-8722*	1	HOUSING GP-FRONT	246
Y	*415-5522*	1	INJECTOR GP-FUEL	410
Y	*415-7948*	1	JET GP-PISTON COOLING	257
Y	*417-3463*	1	LIFTING GP-ENGINE	260
Y	*416-9552*	1	MANIFOLD GP-EXHAUST	361
Y	*415-7949*	1	MOUNTING GP-CONTROL	455
Y	*416-8775*	1	MOUNTING GP-EXHAUST	365
Y	*416-1051*	1	PAN GP-OIL	272
Y	*415-5519*	1	PISTON & ROD GP	282
Y	*417-4286*	1	PLUG GP-ENGINE	285
Y	*446-2236*	1	PLUG GP-ENGINE	287
Y	*417-4190*	1	PLUG GP-OIL FILTER MOUNTING	318
Y	*416-1089*	1	PULLEY GP-CRANKSHAFT	294
Y	*508-3673*	1	PUMP GP-ENGINE OIL	321
Y	*415-5523*	1	PUMP GP-FUEL INJECTION	421
Y	*416-1864*	1	PUMP GP-WATER	339
Y	*415-5527*	1	RAIL GP-FUEL	422
Y	*415-7947*	1	ROCKER ARM GP	299
Y	*425-9760*	1	SENSOR GP-ENGINE	432
Y	*430-5204*	1	SENSOR GP-TEMPERATURE	436
Y	*417-3453*	1	STARTING AID GP	437
Y	*425-9174*	1	STARTING MOTOR GP-ELECTRIC	442

463-8848 **ENGINE AR-PRIMARY (**contd.**)** **i06999780**

NOTE	PART NUMBER	QTY	PART NAME 1 2 3 4 5 6 (PRODUCT LEVEL)	SEE PAGE
Y	*432-6655*	1	TURBOCHARGER GP	374
Y	*492-2945*	1	WIRING GP-ENGINE	452
	462-5117	1	ELECTRONICS GP-ENGINE	

Y - SEPARATE ILLUSTRATION

<END>

463-8910 ENGINE AR-PRIMARY

75 BRAKE KW (100 BHP) AT 2200 RPM

OPTIONAL FIELD REPLACEMENT ORDER 452-7386—PAGE: 193, 452-7397—PAGE: 199

PART OF 467-8302 ENGINE AR

SMCS-1000 **i07026830**

NOTE	PART NUMBER	QTY	PART NAME 1 2 3 4 5 6 (PRODUCT LEVEL)	SEE PAGE
Y	*425-8162*	1	ALTERNATOR GP-CHARGING	426
Y	*418-7425*	1	BELT TENSIONER GP	169
Y	*435-7778*	1	CAMSHAFT GP	170
Y	*416-1867*	1	CONNECTION GP-WATER	327
Y	*415-5534*	1	CONTROL GP-ELECTRONIC	428
Y	*418-7659*	1	COOLER GP-ENGINE OIL	330
Y	*415-7105*	1	COVER GP-VALVE MECHANISM	175
Y	*433-6323*	1	CRANKSHAFT GP	181
			—OR—	
Y	*510-5297*	1	CRANKSHAFT GP	186
Y	*415-3299*	1	CYLINDER BLOCK GP	190
Y	*415-5520*	1	CYLINDER HEAD GP	197
Y	*419-8538*	1	DRAIN GP-ENGINE OIL	202
Y	*416-1043*	1	DRIVE GP-FAN	204
Y	*416-9543*	1	ELBOW GP-AIR INLET	354
Y	*432-0065*	1	FILLER GP-ENGINE OIL	308
Y	*416-1042*	1	FILM GP	456
Y	*416-8716*	1	FILM GP (ALTERNATOR)	457
Y	*417-4284*	1	FILM GP	458
Y	*417-3394*	1	FILTER GP-ENGINE OIL	310
Y	*421-3853*	1	FILTER GP-FUEL	398
Y	*441-1215*	1	FILTER GP-FUEL (WATER SEPARATOR)	402
Y	*453-7163*	1	FILTER GP-FUEL	407
Y	*423-1270*	1	FLYWHEEL GP	226
Y	*433-5258*	1	FUMES DISPOSAL GP	311
Y	*441-9154*	1	GAUGE GP-OIL LEVEL (DIPSTICK) (ENGINE)	314
Y	*431-7048*	1	HOUSING GP-FLYWHEEL	234
Y	*415-7116*	1	HOUSING GP-FRONT	242
Y	*416-8722*	1	HOUSING GP-FRONT	246
Y	*415-5522*	1	INJECTOR GP-FUEL	410
Y	*415-7948*	1	JET GP-PISTON COOLING	257
Y	*417-3463*	1	LIFTING GP-ENGINE	260
Y	*416-9552*	1	MANIFOLD GP-EXHAUST	361
Y	*415-7949*	1	MOUNTING GP-CONTROL	455
Y	*416-8775*	1	MOUNTING GP-EXHAUST	365
Y	*416-1051*	1	PAN GP-OIL	272
Y	*415-5519*	1	PISTON & ROD GP	282
Y	*417-4286*	1	PLUG GP-ENGINE	285
Y	*446-2236*	1	PLUG GP-ENGINE	287
Y	*417-4190*	1	PLUG GP-OIL FILTER MOUNTING	318
Y	*416-1089*	1	PULLEY GP-CRANKSHAFT	294
Y	*416-8723*	1	PUMP GP-ENGINE OIL	320
			—OR—	
Y	*508-3673*	1	PUMP GP-ENGINE OIL	321
Y	*415-5523*	1	PUMP GP-FUEL INJECTION	421
Y	*416-1864*	1	PUMP GP-WATER	339
Y	*415-5527*	1	RAIL GP-FUEL	422
Y	*415-7947*	1	ROCKER ARM GP	299

463-8910 **ENGINE AR-PRIMARY (**contd.**)** **i07026830**

NOTE	PART NUMBER	QTY	PART NAME 1 2 3 4 5 6 (PRODUCT LEVEL)	SEE PAGE
Y	*425-9760*	1	SENSOR GP-ENGINE	432
Y	*430-5204*	1	SENSOR GP-TEMPERATURE	436
Y	*417-3453*	1	STARTING AID GP	437
Y	*425-9174*	1	STARTING MOTOR GP-ELECTRIC	442
Y	*432-6628*	1	TURBOCHARGER GP	367
Y	*492-2945*	1	WIRING GP-ENGINE	452
	524-2574	1	ELECTRONICS GP-ENGINE	
			PLEASE USE THE GASKET KIT LINK IN SIS OR CONTACT YOUR LOCAL DEALER FOR THE LATEST GASKET KIT INFORMATION	

Y - SEPARATE ILLUSTRATION

<END>

463-9821 ENGINE AR-PRIMARY

75 BRAKE KW (100 BHP) AT 2200 RPM

OPTIONAL FIELD REPLACEMENT ORDER 452-7386—PAGE: 193, 452-7394—PAGE: 198

PART OF 467-4415 ENGINE AR

SMCS-1000 **i06999661**

NOTE	PART NUMBER	QTY	PART NAME 1 2 3 4 5 6 (PRODUCT LEVEL)	SEE PAGE
Y	*425-8162*	1	ALTERNATOR GP-CHARGING	426
Y	*418-7425*	1	BELT TENSIONER GP	169
Y	*435-7778*	1	CAMSHAFT GP	170
Y	*416-1867*	1	CONNECTION GP-WATER	327
Y	*415-5534*	1	CONTROL GP-ELECTRONIC	428
Y	*418-7659*	1	COOLER GP-ENGINE OIL	330
Y	*418-6381*	1	COVER GP-VALVE MECHANISM	177
Y	*510-5297*	1	CRANKSHAFT GP	186
Y	*415-3299*	1	CYLINDER BLOCK GP	190
Y	*415-5520*	1	CYLINDER HEAD GP	197
Y	*419-8538*	1	DRAIN GP-ENGINE OIL	202
Y	*416-1044*	1	DRIVE GP-FAN	205
Y	*421-6894*	1	ELBOW GP-AIR INLET	356
Y	*420-0291*	1	EXTENSION GP-FAN	219
Y	*416-1070*	1	FILLER GP-ENGINE OIL	305
Y	*416-1042*	1	FILM GP	456
Y	*416-8716*	1	FILM GP (ALTERNATOR)	457
Y	*417-4284*	1	FILM GP	458
Y	*417-3394*	1	FILTER GP-ENGINE OIL	310
Y	*421-3853*	1	FILTER GP-FUEL	398
Y	*441-1215*	1	FILTER GP-FUEL (WATER SEPARATOR) (WATER SEPARATOR)	402
Y	*453-7163*	1	FILTER GP-FUEL	407
Y	*433-3370*	1	FLYWHEEL GP	229
Y	*433-5258*	1	FUMES DISPOSAL GP	311
Y	*441-9155*	1	GAUGE GP-OIL LEVEL (DIPSTICK) (ENGINE)	315
Y	*431-7048*	1	HOUSING GP-FLYWHEEL	234
Y	*415-7115*	1	HOUSING GP-FRONT	240
Y	*415-5522*	1	INJECTOR GP-FUEL	410
Y	*415-7948*	1	JET GP-PISTON COOLING	257
Y	*417-3463*	1	LIFTING GP-ENGINE	260
Y	*416-9552*	1	MANIFOLD GP-EXHAUST	361
Y	*415-7949*	1	MOUNTING GP-CONTROL	455
Y	*416-8775*	1	MOUNTING GP-EXHAUST	365
Y	*423-1280*	1	PAN GP-OIL	275
Y	*415-5519*	1	PISTON & ROD GP	282
Y	*417-4286*	1	PLUG GP-ENGINE	285
Y	*446-2236*	1	PLUG GP-ENGINE	287
Y	*417-3401*	1	PLUG GP-FRONT HOUSING	289
Y	*417-4190*	1	PLUG GP-OIL FILTER MOUNTING	318
Y	*416-1089*	1	PULLEY GP-CRANKSHAFT	294
Y	*508-3673*	1	PUMP GP-ENGINE OIL	321
Y	*415-5523*	1	PUMP GP-FUEL INJECTION	421
Y	*416-1864*	1	PUMP GP-WATER	339
Y	*415-5527*	1	RAIL GP-FUEL	422
Y	*415-7947*	1	ROCKER ARM GP	299
Y	*438-0911*	1	SENSOR GP-ENGINE	434
Y	*430-5204*	1	SENSOR GP-TEMPERATURE	436

463-9821 **ENGINE AR-PRIMARY (**contd.**)** **i06999661**

NOTE	PART NUMBER	QTY	PART NAME 1 2 3 4 5 6 (PRODUCT LEVEL)	SEE PAGE
Y	*417-3453*	1	STARTING AID GP	437
Y	*425-9174*	1	STARTING MOTOR GP-ELECTRIC	442
Y	*448-4912*	1	TURBOCHARGER GP	389
Y	*417-4227*	1	WIRING GP-ENGINE	444
	465-8331	1	ELECTRONICS GP-ENGINE	

Y - SEPARATE ILLUSTRATION

<END>

463-9823 ENGINE AR-PRIMARY

PART OF 467-4406 ENGINE AR

SMCS-1000 **i07030843**

NOTE	PART NUMBER	QTY	PART NAME 1 2 3 4 5 6 (PRODUCT LEVEL)	SEE PAGE
Y	*425-8162*	1	ALTERNATOR GP-CHARGING	426
Y	*418-7425*	1	BELT TENSIONER GP	169
Y	*435-7778*	1	CAMSHAFT GP	170
Y	*416-1867*	1	CONNECTION GP-WATER	327
Y	*415-5534*	1	CONTROL GP-ELECTRONIC	428
Y	*418-7659*	1	COOLER GP-ENGINE OIL	330
Y	*418-6381*	1	COVER GP-VALVE MECHANISM	177
Y	*510-5297*	1	CRANKSHAFT GP	186
Y	*415-3299*	1	CYLINDER BLOCK GP	190
Y	*415-5520*	1	CYLINDER HEAD GP	197
Y	*419-8538*	1	DRAIN GP-ENGINE OIL	202
Y	*416-1044*	1	DRIVE GP-FAN	205
Y	*416-9543*	1	ELBOW GP-AIR INLET	354
Y	*420-0291*	1	EXTENSION GP-FAN	219
Y	*416-1070*	1	FILLER GP-ENGINE OIL	305
Y	*416-8716*	1	FILM GP (ALTERNATOR)	457
Y	*417-4284*	1	FILM GP	458
Y	*416-1042*	1	FILM GP	456
Y	*417-3394*	1	FILTER GP-ENGINE OIL	310
Y	*441-1215*	1	FILTER GP-FUEL (WATER SEPARATOR)	402
Y	*453-7163*	1	FILTER GP-FUEL	407
Y	*421-3853*	1	FILTER GP-FUEL	398
Y	*423-1270*	1	FLYWHEEL GP	226
Y	*433-5258*	1	FUMES DISPOSAL GP	311
Y	*441-9155*	1	GAUGE GP-OIL LEVEL (DIPSTICK) (ENGINE)	315
Y	*431-7048*	1	HOUSING GP-FLYWHEEL	234
Y	*415-7115*	1	HOUSING GP-FRONT	240
Y	*415-5522*	1	INJECTOR GP-FUEL	410
Y	*415-7948*	1	JET GP-PISTON COOLING	257
Y	*417-3463*	1	LIFTING GP-ENGINE	260
Y	*416-9552*	1	MANIFOLD GP-EXHAUST	361
Y	*415-7949*	1	MOUNTING GP-CONTROL	455
Y	*416-8775*	1	MOUNTING GP-EXHAUST	365
Y	*423-1280*	1	PAN GP-OIL	275
Y	*415-5519*	1	PISTON & ROD GP	282
Y	*417-4286*	1	PLUG GP-ENGINE	285
Y	*446-2236*	1	PLUG GP-ENGINE	287
Y	*417-3401*	1	PLUG GP-FRONT HOUSING	289
Y	*417-4190*	1	PLUG GP-OIL FILTER MOUNTING	318
Y	*416-1089*	1	PULLEY GP-CRANKSHAFT	294
Y	*508-3673*	1	PUMP GP-ENGINE OIL	321
Y	*415-5523*	1	PUMP GP-FUEL INJECTION	421
Y	*416-1864*	1	PUMP GP-WATER	339
Y	*415-5527*	1	RAIL GP-FUEL	422
Y	*415-7947*	1	ROCKER ARM GP	299
Y	*425-9760*	1	SENSOR GP-ENGINE	432
Y	*430-5204*	1	SENSOR GP-TEMPERATURE	436
Y	*417-3453*	1	STARTING AID GP	437
Y	*425-9174*	1	STARTING MOTOR GP-ELECTRIC	442

463-9823 **ENGINE AR-PRIMARY (**contd.**)** **i07030843**

NOTE	PART NUMBER	QTY	PART NAME 1 2 3 4 5 6 (PRODUCT LEVEL)	SEE PAGE
Y	*432-6628*	1	TURBOCHARGER GP	367
Y	*492-2945*	1	WIRING GP-ENGINE	452
	465-8332	1	ELECTRONICS GP-ENGINE	
	415-9834	1	PLATE GP-SERIAL NUMBER	
	332-0905	2	RIVET-DRIVE	
	350-8958	1	PLATE-SERIAL NUMBER (ENGINE)	

Y - SEPARATE ILLUSTRATION

<END>

465-5141 ENGINE AR-PRIMARY

93 BRAKE KW (125 BHP) 2200 RPM

OPTIONAL FIELD REPLACEMENT ORDER 452-7386—PAGE: 193, 452-7397—PAGE: 199

SMCS-1000 **i06627847**

NOTE	PART NUMBER	QTY	PART NAME 1 2 3 4 5 6 (PRODUCT LEVEL)	SEE PAGE
Y	*417-4287*	1	CONNECTION GP-HEATER	324
Y	*415-7107*	1	ALTERNATOR GP-CHARGING	424
Y	*416-8716*	1	FILM GP (ALTERNATOR)	457
Y	*435-7778*	1	CAMSHAFT GP	170
Y	*416-1865*	1	CONNECTION GP-WATER	325
Y	*415-5534*	1	CONTROL GP-ELECTRONIC	428
Y	*416-1084*	1	COOLER GP-ENGINE OIL	329
Y	*418-6381*	1	COVER GP-VALVE MECHANISM	177
Y	*433-6323*	1	CRANKSHAFT GP	181
Y	*415-3299*	1	CYLINDER BLOCK GP	190
Y	*415-5520*	1	CYLINDER HEAD GP	197
Y	*417-4188*	1	DRAIN GP-OIL	304
Y	*416-1046*	1	BELT TENSIONER GP	168
Y	*422-7257*	1	DRIVE GP-FAN	207
Y	*416-9543*	1	ELBOW GP-AIR INLET	354
Y	*416-1070*	1	FILLER GP-ENGINE OIL	305
Y	*447-9463*	1	FILM GP	459
Y	*444-3242*	1	FILTER GP-FUEL	405
Y	*416-1031*	1	FLYWHEEL GP	222
Y	*416-1054*	1	GAUGE GP-OIL LEVEL (DIPSTICK)	313
Y	*476-9753*	1	HOUSING GP-FLYWHEEL	238
Y	*415-7115*	1	HOUSING GP-FRONT	240
Y	*415-5522*	1	INJECTOR GP-FUEL	410
Y	*415-7948*	1	JET GP-PISTON COOLING	257
Y	*417-3462*	1	LIFTING GP-ENGINE	259
Y	*447-7926*	1	LINES GP-FUEL	416
Y	*421-7092*	1	MANIFOLD GP-EXHAUST	363
Y	*415-7949*	1	MOUNTING GP-CONTROL	455
Y	*490-7862*	1	MOUNTING GP-ENGINE	269
Y	*416-8715*	1	MOUNTING GP-FAN	338
Y	*416-1050*	1	PAN GP-OIL	271
Y	*415-5519*	1	PISTON & ROD GP	282
Y	*417-3401*	1	PLUG GP-FRONT HOUSING	289
Y	*426-3230*	1	PULLEY GP-CRANKSHAFT	296
Y	*416-8723*	1	PUMP GP-ENGINE OIL	320
Y	*415-5523*	1	PUMP GP-FUEL INJECTION	421
Y	*416-1864*	1	PUMP GP-WATER	339
Y	*415-5527*	1	RAIL GP-FUEL	422
Y	*415-7947*	1	ROCKER ARM GP	299
Y	*425-9760*	1	SENSOR GP-ENGINE	432
Y	*430-5204*	1	SENSOR GP-TEMPERATURE	436
Y	*417-4371*	1	STARTING AID GP	438
Y	*415-5536*	1	STARTING MOTOR GP-ELECTRIC	439
Y	*416-1042*	1	FILM GP	456
Y	*444-8091*	1	TURBOCHARGER GP	381
Y	*450-2852*	1	WIRING GP-ENGINE	446

465-5141 **ENGINE AR-PRIMARY (**contd.**)** **i06627847**

NOTE	PART NUMBER	QTY	PART NAME 1 2 3 4 5 6 (PRODUCT LEVEL)	SEE PAGE
	465-8603	1	ELECTRONICS GP-ENGINE	
	415-9834	1	PLATE GP-SERIAL NUMBER	

Y - SEPARATE ILLUSTRATION

<END>

466-3332 ENGINE AR-PRIMARY

74.5 BRAKE KW (99.9 BHP) AT2200-RPM

PART OF 470-0611 ENGINE AR

SMCS-1000 **i06501569**

NOTE	PART NUMBER	QTY	PART NAME 1 2 3 4 5 6 (PRODUCT LEVEL)	SEE PAGE
Y	*416-8716*	1	FILM GP (ALTERNATOR)	457
Y	*425-8162*	1	ALTERNATOR GP-CHARGING	426
Y	*415-5617*	1	BREATHER GP	301
Y	*435-7778*	1	CAMSHAFT GP	170
Y	*416-1865*	1	CONNECTION GP-WATER	325
Y	*415-5535*	1	CONTROL GP-ELECTRONIC	429
Y	*418-7659*	1	COOLER GP-ENGINE OIL	330
Y	*415-7106*	1	COVER GP-VALVE MECHANISM	176
Y	*433-6323*	1	CRANKSHAFT GP	181
Y	*415-3299*	1	CYLINDER BLOCK GP	190
Y	*415-5520*	1	CYLINDER HEAD GP	197
Y	*417-4187*	1	DRAIN GP-ENGINE OIL	200
Y	*418-7425*	1	BELT TENSIONER GP	169
Y	*432-1853*	1	DRIVE GP-FAN	211
Y	*434-2311*	1	ELBOW GP-AIR INLET	357
Y	*420-0291*	1	EXTENSION GP-FAN	219
Y	*418-6475*	1	FASTENER GP-EXHAUST MANIFOLD	359
Y	*417-4185*	1	FILLER GP-ENGINE OIL	306
Y	*417-4284*	1	FILM GP	458
Y	*417-3394*	1	FILTER GP-ENGINE OIL	310
Y	*441-1215*	1	FILTER GP-FUEL (WATER SEPARATOR)	402
Y	*453-7163*	1	FILTER GP-FUEL	407
Y	*416-1073*	1	FILTER GP-OIL	453
Y	*416-1032*	1	FLYWHEEL GP	223
Y	*444-9659*	1	HOUSING GP-FLYWHEEL	235
Y	*415-7117*	1	HOUSING GP-FRONT	244
Y	*416-8719*	1	COVER GP-FRONT HOUSING	172
Y	*415-5522*	1	INJECTOR GP-FUEL	410
Y	*415-7948*	1	JET GP-PISTON COOLING	257
Y	*417-3462*	1	LIFTING GP-ENGINE	259
Y	*415-7119*	1	LINES GP-FUEL	413
Y	*416-9552*	1	MANIFOLD GP-EXHAUST	361
Y	*415-7949*	1	MOUNTING GP-CONTROL	455
Y	*445-0224*	1	MOUNTING GP-ENGINE	263
Y	*416-1051*	1	PAN GP-OIL	272
Y	*441-9154*	1	GAUGE GP-OIL LEVEL (DIPSTICK)	314
Y	*415-5519*	1	PISTON & ROD GP	282
Y	*417-4190*	1	PLUG GP-OIL FILTER MOUNTING	318
Y	*417-4286*	1	PLUG GP-ENGINE	285
Y	*426-3230*	1	PULLEY GP-CRANKSHAFT	296
Y	*416-8723*	1	PUMP GP-ENGINE OIL	320
Y	*415-5523*	1	PUMP GP-FUEL INJECTION	421
Y	*416-1864*	1	PUMP GP-WATER	339
Y	*415-5527*	1	RAIL GP-FUEL	422
Y	*415-7947*	1	ROCKER ARM GP	299
Y	*438-0911*	1	SENSOR GP-ENGINE	434
Y	*430-5204*	1	SENSOR GP-TEMPERATURE	436
Y	*417-3453*	1	STARTING AID GP	437

466-3332 **ENGINE AR-PRIMARY (**contd.**)** **i06501569**

NOTE	PART NUMBER	QTY	PART NAME 1 2 3 4 5 6 (PRODUCT LEVEL)	SEE PAGE
Y	*416-1042*	1	FILM GP	456
Y	*419-8514*	1	STARTING MOTOR GP-ELECTRIC	441
Y	*432-6631*	1	TURBOCHARGER GP	368
Y	*417-4227*	1	WIRING GP-ENGINE	444
	465-8331	1	ELECTRONICS GP-ENGINE	

Y - SEPARATE ILLUSTRATION

<END>

466-4382 ENGINE AR-PRIMARY

106 BRAKE KW (142 BHP) AT 2200 RPM
PART OF 472-4944 ENGINE AR

SMCS-1000 **i07350769**

NOTE	PART NUMBER	QTY	PART NAME 1 2 3 4 5 6 (PRODUCT LEVEL)	SEE PAGE
Y	*425-8162*	1	ALTERNATOR GP-CHARGING	426
Y	*416-1046*	1	BELT TENSIONER GP	168
Y	*486-4227*	1	BREATHER GP	302
Y	*435-7778*	1	CAMSHAFT GP	170
Y	*417-4287*	1	CONNECTION GP-HEATER	324
Y	*416-1866*	1	CONNECTION GP-WATER	326
Y	*415-5535*	1	CONTROL GP-ELECTRONIC	429
Y	*418-7659*	1	COOLER GP-ENGINE OIL	330
Y	*415-7105*	1	COVER GP-VALVE MECHANISM	175
Y	*510-5297*	1	CRANKSHAFT GP	186
Y	*415-3299*	1	CYLINDER BLOCK GP	190
Y	*415-5520*	1	CYLINDER HEAD GP	197
Y	*417-4187*	1	DRAIN GP-ENGINE OIL	200
Y	*432-4956*	1	DRIVE GP-AUXILIARY	203
Y	*444-9589*	1	DRIVE GP-FAN	215
Y	*416-9543*	1	ELBOW GP-AIR INLET	354
Y	*423-1281*	1	EXTENSION GP-FAN	220
Y	*417-4186*	1	FILLER GP-ENGINE OIL	307
Y	*416-1042*	1	FILM GP (MOTOR)	456
Y	*416-8716*	1	FILM GP (ALTERNATOR)	457
Y	*417-4284*	1	FILM GP (EMISSIONS)	458
Y	*417-3394*	1	FILTER GP-ENGINE OIL	310
Y	*441-1215*	1	FILTER GP-FUEL (WATER SEPARATOR)	402
Y	*453-7163*	1	FILTER GP-FUEL	407
Y	*417-3390*	1	FLYWHEEL GP	224
Y	*441-9154*	1	GAUGE GP-OIL LEVEL (DIPSTICK)	314
Y	*444-9659*	1	HOUSING GP-FLYWHEEL	235
Y	*415-7117*	1	HOUSING GP-FRONT	244
Y	*415-5522*	1	INJECTOR GP-FUEL	410
Y	*415-7948*	1	JET GP-PISTON COOLING	257
Y	*417-3458*	1	LIFTING GP-ENGINE	258
Y	*415-7119*	1	LINES GP-FUEL	413
Y	*421-7092*	1	MANIFOLD GP-EXHAUST	363
Y	*415-7949*	1	MOUNTING GP-CONTROL	455
Y	*416-8775*	1	MOUNTING GP-EXHAUST	365
Y	*416-1051*	1	PAN GP-OIL	272
Y	*415-5518*	1	PISTON & ROD GP	280
Y	*418-8564*	1	PLUG GP-ENGINE	286
Y	*417-4190*	1	PLUG GP-OIL FILTER MOUNTING	318
Y	*416-1089*	1	PULLEY GP-CRANKSHAFT	294
Y	*508-3673*	1	PUMP GP-ENGINE OIL	321
Y	*415-5523*	1	PUMP GP-FUEL INJECTION	421
Y	*416-1864*	1	PUMP GP-WATER	339
Y	*415-5527*	1	RAIL GP-FUEL	422
Y	*415-7947*	1	ROCKER ARM GP	299
Y	*425-9760*	1	SENSOR GP-ENGINE	432
Y	*430-5204*	1	SENSOR GP-TEMPERATURE	436
Y	*417-3453*	1	STARTING AID GP	437

466-4382 **ENGINE AR-PRIMARY (**contd.**)** **i07350769**

NOTE	PART NUMBER	QTY	PART NAME 1 2 3 4 5 6 (PRODUCT LEVEL)	SEE PAGE
Y	*419-8514*	1	STARTING MOTOR GP-ELECTRIC	441
Y	*444-8091*	1	TURBOCHARGER GP	381
Y	*492-2945*	1	WIRING GP-ENGINE	452
	462-8609	1	ELECTRONICS GP-ENGINE	
	415-9834	1	PLATE GP-SERIAL NUMBER	
	332-0905	2	RIVET-DRIVE	
	350-8958	1	PLATE-SERIAL NUMBER (ENGINE)	
			AVAILABLE REPAIR KIT(S):	
Y	**452-7386**	1	CYLINDER BLOCK GP-SHORT	193
Y	**452-7397**	1	CYLINDER HEAD GP	199

Y - SEPARATE ILLUSTRATION

<END>

467-7465 ENGINE AR-PRIMARY

106 BRAKE KW (142 BHP) AT 2200 RPM
OPTIONAL FIELD REPLACEMENT ORDER 452-7386—PAGE: 193, 452-7397—PAGE: 199
PART OF 467-8319 ENGINE AR

SMCS-1000 **i06791509**

NOTE	PART NUMBER	QTY	PART NAME 1 2 3 4 5 6 (PRODUCT LEVEL)	SEE PAGE
Y	*425-8162*	1	ALTERNATOR GP-CHARGING	426
Y	*418-7425*	1	BELT TENSIONER GP	169
Y	*415-5617*	1	BREATHER GP	301
Y	*435-7778*	1	CAMSHAFT GP	170
Y	*416-1865*	1	CONNECTION GP-WATER	325
Y	*415-5535*	1	CONTROL GP-ELECTRONIC	429
Y	*418-7659*	1	COOLER GP-ENGINE OIL	330
Y	*415-7106*	1	COVER GP-VALVE MECHANISM	176
Y	*510-5297*	1	CRANKSHAFT GP	186
Y	*415-3299*	1	CYLINDER BLOCK GP	190
Y	*415-5520*	1	CYLINDER HEAD GP	197
Y	*417-4187*	1	DRAIN GP-ENGINE OIL	200
Y	*416-1044*	1	DRIVE GP-FAN	205
Y	*420-0291*	1	EXTENSION GP-FAN	219
Y	*418-6475*	1	FASTENER GP-EXHAUST MANIFOLD	359
Y	*417-4185*	1	FILLER GP-ENGINE OIL	306
Y	*416-1042*	1	FILM GP	456
Y	*416-8716*	1	FILM GP (ALTERNATOR)	457
Y	*417-4284*	1	FILM GP	458
Y	*417-3394*	1	FILTER GP-ENGINE OIL	310
Y	*441-1215*	1	FILTER GP-FUEL (WATER SEPARATOR)	402
Y	*453-7163*	1	FILTER GP-FUEL	407
Y	*416-1073*	1	FILTER GP-OIL	453
Y	*417-3390*	1	FLYWHEEL GP	224
Y	*441-9154*	1	GAUGE GP-OIL LEVEL (DIPSTICK)	314
Y	*444-9659*	1	HOUSING GP-FLYWHEEL	235
Y	*415-7117*	1	HOUSING GP-FRONT	244
Y	*416-8719*	1	COVER GP-FRONT HOUSING	172
Y	*415-5522*	1	INJECTOR GP-FUEL	410
Y	*415-7948*	1	JET GP-PISTON COOLING	257
Y	*417-3462*	1	LIFTING GP-ENGINE	259
Y	*415-7119*	1	LINES GP-FUEL	413
Y	*416-9552*	1	MANIFOLD GP-EXHAUST	361
Y	*418-7675*	1	MANIFOLD GP-INLET	364
Y	*415-7949*	1	MOUNTING GP-CONTROL	455
Y	*445-0224*	1	MOUNTING GP-ENGINE	263
Y	*416-1051*	1	PAN GP-OIL	272
Y	*415-5518*	1	PISTON & ROD GP	280
Y	*417-4190*	1	PLUG GP-OIL FILTER MOUNTING	318
Y	*417-4286*	1	PLUG GP-ENGINE	285
Y	*416-1089*	1	PULLEY GP-CRANKSHAFT	294
Y	*508-3673*	1	PUMP GP-ENGINE OIL	321
Y	*415-5523*	1	PUMP GP-FUEL INJECTION	421
Y	*416-1864*	1	PUMP GP-WATER	339
Y	*415-5527*	1	RAIL GP-FUEL	422
Y	*415-7947*	1	ROCKER ARM GP	299
Y	*425-9760*	1	SENSOR GP-ENGINE	432

467-7465 **ENGINE AR-PRIMARY (**contd.**)** **i06791509**

NOTE	PART NUMBER	QTY	PART NAME 1 2 3 4 5 6 (PRODUCT LEVEL)	SEE PAGE
Y	*430-5204*	1	SENSOR GP-TEMPERATURE	436
Y	*417-3453*	1	STARTING AID GP	437
Y	*419-8514*	1	STARTING MOTOR GP-ELECTRIC	441
Y	*445-1450*	1	TURBOCHARGER GP	384
Y	*417-4227*	1	WIRING GP-ENGINE	444
	462-8609	1	ELECTRONICS GP-ENGINE	
	415-9834	1	PLATE GP-SERIAL NUMBER	

Y - SEPARATE ILLUSTRATION

<END>

469-1048 ENGINE AR-PRIMARY

106 BRAKE KW (142 BHP) AT 2200 RPM

OPTIONAL FIELD REPLACEMENT ORDER 452-7386—PAGE: 193, 452-7397—PAGE: 199

PART OF 472-3325 ENGINE AR

SMCS-1000 **i06791597**

NOTE	PART NUMBER	QTY	PART NAME 1 2 3 4 5 6 (PRODUCT LEVEL)	SEE PAGE
Y	*418-7664*	1	ALTERNATOR GP-CHARGING	425
Y	*433-5258*	1	FUMES DISPOSAL GP	311
Y	*435-7778*	1	CAMSHAFT GP	170
Y	*417-4287*	1	CONNECTION GP-HEATER	324
Y	*416-1865*	1	CONNECTION GP-WATER	325
Y	*415-5535*	1	CONTROL GP-ELECTRONIC	429
Y	*418-7659*	1	COOLER GP-ENGINE OIL	330
Y	*415-7106*	1	COVER GP-VALVE MECHANISM	176
Y	*433-6323*	1	CRANKSHAFT GP	181
Y	*415-3299*	1	CYLINDER BLOCK GP	190
Y	*415-5520*	1	CYLINDER HEAD GP	197
Y	*417-4187*	1	DRAIN GP-ENGINE OIL	200
Y	*444-9591*	1	DRIVE GP-FAN	216
Y	*432-0069*	1	FILLER GP-ENGINE OIL	309
Y	*416-1042*	1	FILM GP	456
Y	*416-8716*	1	FILM GP (ALTERNATOR)	457
Y	*417-4284*	1	FILM GP	458
Y	*417-3394*	1	FILTER GP-ENGINE OIL	310
Y	*441-1215*	1	FILTER GP-FUEL (WATER SEPARATOR)	402
Y	*453-7163*	1	FILTER GP-FUEL	407
Y	*431-7141*	1	FLYWHEEL GP	228
Y	*444-9659*	1	HOUSING GP-FLYWHEEL	235
Y	*415-7115*	1	HOUSING GP-FRONT	240
Y	*415-5522*	1	INJECTOR GP-FUEL	410
Y	*415-7948*	1	JET GP-PISTON COOLING	257
Y	*417-3462*	1	LIFTING GP-ENGINE	259
Y	*415-7119*	1	LINES GP-FUEL	413
Y	*421-7092*	1	MANIFOLD GP-EXHAUST	363
Y	*418-7675*	1	MANIFOLD GP-INLET	364
Y	*415-7949*	1	MOUNTING GP-CONTROL	455
Y	*445-0224*	1	MOUNTING GP-ENGINE	263
Y	*416-8715*	1	MOUNTING GP-FAN	338
Y	*430-5220*	1	PAN GP-OIL	277
Y	*431-8625*	1	PAN GP-OIL	278
Y	*415-5518*	1	PISTON & ROD GP	280
Y	*417-4190*	1	PLUG GP-OIL FILTER MOUNTING	318
Y	*417-3401*	1	PLUG GP-FRONT HOUSING	289
Y	*416-1047*	1	PULLEY GP-ALTERNATOR	291
Y	*432-2302*	1	PULLEY GP-AUXILIARY DRIVE	293
Y	*416-1089*	1	PULLEY GP-CRANKSHAFT	294
Y	*419-7641*	1	PULLEY GP-FAN DRIVE	297
Y	*416-8723*	1	PUMP GP-ENGINE OIL	320
Y	*415-5523*	1	PUMP GP-FUEL INJECTION	421
Y	*416-1864*	1	PUMP GP-WATER	339
Y	*415-5527*	1	RAIL GP-FUEL	422
Y	*415-7947*	1	ROCKER ARM GP	299
Y	*425-9760*	1	SENSOR GP-ENGINE	432

469-1048 **ENGINE AR-PRIMARY (**contd.**)** **i06791597**

NOTE	PART NUMBER	QTY	PART NAME 1 2 3 4 5 6 (PRODUCT LEVEL)	SEE PAGE
Y	*430-5204*	1	SENSOR GP-TEMPERATURE	436
Y	*417-3453*	1	STARTING AID GP	437
Y	*418-7475*	1	STARTING MOTOR GP-ELECTRIC	440
Y	*444-8091*	1	TURBOCHARGER GP	381
Y	*426-5232*	1	WIRING GP-ENGINE	445
	462-8609	1	ELECTRONICS GP-ENGINE	
	415-9834	1	PLATE GP-SERIAL NUMBER	

Y - SEPARATE ILLUSTRATION

<END>

470-4348 ENGINE AR-PRIMARY

PART OF 478-7609 ENGINE AR

SMCS-1000 **i06821121**

NOTE	PART NUMBER	QTY	PART NAME 1 2 3 4 5 6 (PRODUCT LEVEL)	SEE PAGE
Y	*433-5258*	1	FUMES DISPOSAL GP	311
Y	*435-7778*	1	CAMSHAFT GP	170
Y	*416-1865*	1	CONNECTION GP-WATER	325
Y	*415-5535*	1	CONTROL GP-ELECTRONIC	429
Y	*418-7659*	1	COOLER GP-ENGINE OIL	330
Y	*415-7106*	1	COVER GP-VALVE MECHANISM	176
Y	*433-6323*	1	CRANKSHAFT GP	181
			—OR—	
Y	*510-5297*	1	CRANKSHAFT GP	186
Y	*415-3299*	1	CYLINDER BLOCK GP	190
Y	*415-5520*	1	CYLINDER HEAD GP	197
Y	*417-4187*	1	DRAIN GP-ENGINE OIL	200
Y	*444-9597*	1	DRIVE GP-FAN	217
Y	*421-6894*	1	ELBOW GP-AIR INLET	356
Y	*418-6475*	1	FASTENER GP-EXHAUST MANIFOLD	359
Y	*416-1070*	1	FILLER GP-ENGINE OIL	305
Y	*417-4284*	1	FILM GP	458
Y	*417-3394*	1	FILTER GP-ENGINE OIL	310
Y	*441-1215*	1	FILTER GP-FUEL (WATER SEPARATOR)	402
Y	*453-7163*	1	FILTER GP-FUEL	407
Y	*472-2188*	1	FLYWHEEL GP	230
Y	*447-7670*	1	GAUGE GP-OIL LEVEL (DIPSTICK)	316
Y	*472-2181*	1	HOUSING GP-FLYWHEEL	237
Y	*415-7115*	1	HOUSING GP-FRONT	240
Y	*415-5522*	1	INJECTOR GP-FUEL	410
Y	*415-7948*	1	JET GP-PISTON COOLING	257
Y	*417-3462*	1	LIFTING GP-ENGINE	259
Y	*415-7119*	1	LINES GP-FUEL	413
Y	*416-9552*	1	MANIFOLD GP-EXHAUST	361
Y	*415-7949*	1	MOUNTING GP-CONTROL	455
Y	*477-6887*	1	MOUNTING GP-ENGINE	268
Y	*416-8715*	1	MOUNTING GP-FAN	338
Y	*416-1051*	1	PAN GP-OIL	272
Y	*415-5519*	1	PISTON & ROD GP	282
Y	*417-4190*	1	PLUG GP-OIL FILTER MOUNTING	318
Y	*417-4286*	1	PLUG GP-ENGINE	285
Y	*417-3401*	1	PLUG GP-FRONT HOUSING	289
Y	*416-1089*	1	PULLEY GP-CRANKSHAFT	294
Y	*416-8723*	1	PUMP GP-ENGINE OIL	320
			—OR—	
Y	*508-3673*	1	PUMP GP-ENGINE OIL	321
Y	*415-5523*	1	PUMP GP-FUEL INJECTION	421
Y	*416-1864*	1	PUMP GP-WATER	339
Y	*415-5527*	1	RAIL GP-FUEL	422
Y	*415-7947*	1	ROCKER ARM GP	299
Y	*438-0911*	1	SENSOR GP-ENGINE	434
Y	*430-5204*	1	SENSOR GP-TEMPERATURE	436
Y	*417-3453*	1	STARTING AID GP	437
Y	*432-6636*	1	TURBOCHARGER GP	370

470-4348 **ENGINE AR-PRIMARY (**contd.**)** **i06821121**

NOTE	PART NUMBER	QTY	PART NAME 1 2 3 4 5 6 (PRODUCT LEVEL)	SEE PAGE
Y	*417-4227*	1	WIRING GP-ENGINE	444
	465-8331	1	ELECTRONICS GP-ENGINE	

Y - SEPARATE ILLUSTRATION

<END>

472-5564 ENGINE AR-PRIMARY

PART OF 472-6933 ENGINE AR-COMPLETE

SMCS-1000 **i06990423**

NOTE	PART NUMBER	QTY	PART NAME 1 2 3 4 5 6 (PRODUCT LEVEL)	SEE PAGE
Y	*467-0357*	1	AIR CLEANER GP	353
Y	*416-8716*	1	FILM GP (ALTERNATOR)	457
Y	*418-7664*	1	ALTERNATOR GP-CHARGING	425
Y	*432-4983*	1	BALANCER GP	167
Y	*433-5258*	1	FUMES DISPOSAL GP	311
Y	*435-7778*	1	CAMSHAFT GP	170
Y	*415-5519*	1	PISTON & ROD GP	282
Y	*416-1867*	1	CONNECTION GP-WATER	327
Y	*415-5535*	1	CONTROL GP-ELECTRONIC	429
Y	*452-0797*	1	COOLER GP-ENGINE OIL	333
Y	*415-7105*	1	COVER GP-VALVE MECHANISM	175
Y	*433-6323*	1	CRANKSHAFT GP	181
			—OR—	
Y	*510-5297*	1	CRANKSHAFT GP	186
Y	*415-3299*	1	CYLINDER BLOCK GP	190
Y	*415-5520*	1	CYLINDER HEAD GP	197
Y	*417-4187*	1	DRAIN GP-ENGINE OIL	200
Y	*418-7425*	1	BELT TENSIONER GP	169
Y	*432-1853*	1	DRIVE GP-FAN	211
Y	*462-9629*	1	ELBOW GP-AIR INLET	358
Y	*420-0291*	1	EXTENSION GP-FAN	219
Y	*445-0297*	1	FAN GP	336
Y	*418-6475*	1	FASTENER GP-EXHAUST MANIFOLD	359
Y	*432-0065*	1	FILLER GP-ENGINE OIL	308
Y	*417-4284*	1	FILM GP	458
Y	*417-3394*	1	FILTER GP-ENGINE OIL	310
Y	*441-1215*	1	FILTER GP-FUEL (WATER SEPARATOR)	402
Y	*453-7163*	1	FILTER GP-FUEL	407
Y	*417-3390*	1	FLYWHEEL GP	224
Y	*418-7473*	1	HOUSING GP-FLYWHEEL	233
Y	*415-7117*	1	HOUSING GP-FRONT	244
Y	*416-8719*	1	COVER GP-FRONT HOUSING	172
Y	*415-5522*	1	INJECTOR GP-FUEL	410
Y	*415-7948*	1	JET GP-PISTON COOLING	257
Y	*417-3458*	1	LIFTING GP-ENGINE	258
Y	*415-7119*	1	LINES GP-FUEL	413
Y	*416-9552*	1	MANIFOLD GP-EXHAUST	361
Y	*415-7949*	1	MOUNTING GP-CONTROL	455
Y	*465-3613*	1	MOUNTING GP-ENGINE	265
Y	*416-1052*	1	GAUGE GP-OIL LEVEL (DIPSTICK)	454
Y	*452-0796*	1	PAN GP-OIL	279
Y	*417-4190*	1	PLUG GP-OIL FILTER MOUNTING	318
Y	*417-4286*	1	PLUG GP-ENGINE	285
Y	*426-3230*	1	PULLEY GP-CRANKSHAFT	296
Y	*415-5523*	1	PUMP GP-FUEL INJECTION	421
Y	*416-1864*	1	PUMP GP-WATER	339
Y	*432-8215*	1	RADIATOR GP	345
Y	*415-5527*	1	RAIL GP-FUEL	422
Y	*415-7947*	1	ROCKER ARM GP	299

472-5564 **ENGINE AR-PRIMARY (**contd.**)** **i06990423**

NOTE	PART NUMBER	QTY	PART NAME 1 2 3 4 5 6 (PRODUCT LEVEL)	SEE PAGE
Y	*425-9760*	1	SENSOR GP-ENGINE	432
Y	*430-5204*	1	SENSOR GP-TEMPERATURE	436
Y	*417-3453*	1	STARTING AID GP	437
Y	*416-1042*	1	FILM GP	456
Y	*418-7475*	1	STARTING MOTOR GP-ELECTRIC	440
Y	*445-1450*	1	TURBOCHARGER GP	384
Y	*417-4227*	1	WIRING GP-ENGINE	444
	462-5117	1	ELECTRONICS GP-ENGINE	

Y - SEPARATE ILLUSTRATION

<END>

475-0560 ENGINE AR-PRIMARY

106 BRAKE KW (142 BHP) AT 2200 RPM

SMCS-1000 **i06089339**

NOTE	PART NUMBER	QTY	PART NAME 1 2 3 4 5 6 (PRODUCT LEVEL)	SEE PAGE
Y	*417-4286*	1	PLUG GP-ENGINE	285
Y	*467-0357*	1	AIR CLEANER GP	353
Y	*416-8716*	1	FILM GP (ALTERNATOR)	457
Y	*418-7664*	1	ALTERNATOR GP-CHARGING	425
Y	*432-4983*	1	BALANCER GP	167
Y	*433-5258*	1	FUMES DISPOSAL GP	311
Y	*435-7778*	1	CAMSHAFT GP	170
Y	*416-1867*	1	CONNECTION GP-WATER	327
Y	*415-5535*	1	CONTROL GP-ELECTRONIC	429
Y	*452-0797*	1	COOLER GP-ENGINE OIL	333
Y	*415-7105*	1	COVER GP-VALVE MECHANISM	175
Y	*433-6323*	1	CRANKSHAFT GP	181
Y	*415-3299*	1	CYLINDER BLOCK GP	190
Y	*415-5520*	1	CYLINDER HEAD GP	197
Y	*417-4187*	1	DRAIN GP-ENGINE OIL	200
Y	*418-7425*	1	BELT TENSIONER GP	169
Y	*432-1853*	1	DRIVE GP-FAN	211
Y	*462-9629*	1	ELBOW GP-AIR INLET	358
Y	*416-9552*	1	MANIFOLD GP-EXHAUST	361
Y	*418-6475*	1	FASTENER GP-EXHAUST MANIFOLD	359
Y	*420-0291*	1	EXTENSION GP-FAN	219
Y	*445-0297*	1	FAN GP	336
Y	*432-0065*	1	FILLER GP-ENGINE OIL	308
Y	*417-4284*	1	FILM GP	458
Y	*417-3394*	1	FILTER GP-ENGINE OIL	310
Y	*441-1215*	1	FILTER GP-FUEL (WATER SEPARATOR)	402
Y	*453-7163*	1	FILTER GP-FUEL	407
Y	*415-7119*	1	LINES GP-FUEL	413
Y	*417-3390*	1	FLYWHEEL GP	224
Y	*418-7473*	1	HOUSING GP-FLYWHEEL	233
Y	*415-7117*	1	HOUSING GP-FRONT	244
Y	*416-8719*	1	COVER GP-FRONT HOUSING	172
Y	*415-5522*	1	INJECTOR GP-FUEL	410
Y	*415-7948*	1	JET GP-PISTON COOLING	257
Y	*417-3458*	1	LIFTING GP-ENGINE	258
Y	*415-7949*	1	MOUNTING GP-CONTROL	455
Y	*465-3613*	1	MOUNTING GP-ENGINE	265
Y	*416-1052*	1	GAUGE GP-OIL LEVEL (DIPSTICK)	454
Y	*452-0796*	1	PAN GP-OIL	279
Y	*415-5518*	1	PISTON & ROD GP	280
Y	*426-3230*	1	PULLEY GP-CRANKSHAFT	296
Y	*415-5523*	1	PUMP GP-FUEL INJECTION	421
Y	*416-1864*	1	PUMP GP-WATER	339
Y	*432-8215*	1	RADIATOR GP	345
Y	*415-5527*	1	RAIL GP-FUEL	422
Y	*415-7947*	1	ROCKER ARM GP	299
Y	*425-9760*	1	SENSOR GP-ENGINE	432
Y	*430-5204*	1	SENSOR GP-TEMPERATURE	436
Y	*417-3453*	1	STARTING AID GP	437

475-0560 **ENGINE AR-PRIMARY (**contd.**)** **i06089339**

NOTE	PART NUMBER	QTY	PART NAME 1 2 3 4 5 6 (PRODUCT LEVEL)	SEE PAGE
Y	*416-1042*	1	FILM GP	456
Y	*418-7475*	1	STARTING MOTOR GP-ELECTRIC	440
Y	*417-4190*	1	PLUG GP-OIL FILTER MOUNTING	318
Y	*445-1450*	1	TURBOCHARGER GP	384
Y	*417-4227*	1	WIRING GP-ENGINE	444
	452-7366	1	CYLINDER BLOCK GP-SHORT	
	452-7394	1	CYLINDER HEAD GP (SHORT)	
	462-8609	1	ELECTRONICS GP-ENGINE	

Y - SEPARATE ILLUSTRATION

<END>

475-0574 ENGINE AR-PRIMARY

PART OF 475-5557 ENGINE AR

SMCS-1000 **i06931199**

NOTE	PART NUMBER	QTY	PART NAME 1 2 3 4 5 6 (PRODUCT LEVEL)	SEE PAGE
Y	*467-0357*	1	AIR CLEANER GP	353
Y	*418-7664*	1	ALTERNATOR GP-CHARGING	425
Y	*432-4983*	1	BALANCER GP	167
Y	*418-7425*	1	BELT TENSIONER GP	169
Y	*435-7778*	1	CAMSHAFT GP	170
Y	*416-1867*	1	CONNECTION GP-WATER	327
Y	*415-5535*	1	CONTROL GP-ELECTRONIC	429
Y	*452-0797*	1	COOLER GP-ENGINE OIL	333
Y	*415-7105*	1	COVER GP-VALVE MECHANISM	175
Y	*510-5297*	1	CRANKSHAFT GP	186
Y	*415-3299*	1	CYLINDER BLOCK GP	190
Y	*415-5520*	1	CYLINDER HEAD GP	197
Y	*417-4187*	1	DRAIN GP-ENGINE OIL	200
Y	*432-1853*	1	DRIVE GP-FAN	211
Y	*462-9629*	1	ELBOW GP-AIR INLET	358
Y	*420-0291*	1	EXTENSION GP-FAN	219
Y	*445-0297*	1	FAN GP	336
Y	*418-6475*	1	FASTENER GP-EXHAUST MANIFOLD	359
Y	*432-0065*	1	FILLER GP-ENGINE OIL	308
Y	*416-8716*	1	FILM GP (ALTERNATOR)	457
Y	*417-4284*	1	FILM GP	458
Y	*416-1042*	1	FILM GP	456
Y	*417-3394*	1	FILTER GP-ENGINE OIL	310
Y	*441-1215*	1	FILTER GP-FUEL (WATER SEPARATOR)	402
Y	*453-7163*	1	FILTER GP-FUEL	407
Y	*417-3390*	1	FLYWHEEL GP	224
Y	*433-5258*	1	FUMES DISPOSAL GP	311
Y	*418-7473*	1	HOUSING GP-FLYWHEEL	233
Y	*432-4972*	1	HOUSING GP-FRONT	248
Y	*432-8266*	1	HOUSING GP-FRONT	251
Y	*415-5522*	1	INJECTOR GP-FUEL	410
Y	*415-7948*	1	JET GP-PISTON COOLING	257
Y	*417-3458*	1	LIFTING GP-ENGINE	258
Y	*415-7119*	1	LINES GP-FUEL	413
Y	*416-9552*	1	MANIFOLD GP-EXHAUST	361
Y	*415-7949*	1	MOUNTING GP-CONTROL	455
Y	*465-3613*	1	MOUNTING GP-ENGINE	265
Y	*416-1052*	1	GAUGE GP-OIL LEVEL (DIPSTICK)	454
Y	*452-0796*	1	PAN GP-OIL	279
Y	*415-5519*	1	PISTON & ROD GP	282
Y	*417-4286*	1	PLUG GP-ENGINE	285
Y	*417-4190*	1	PLUG GP-OIL FILTER MOUNTING	318
Y	*426-3230*	1	PULLEY GP-CRANKSHAFT	296
Y	*415-5523*	1	PUMP GP-FUEL INJECTION	421
Y	*416-1864*	1	PUMP GP-WATER	339
Y	*432-8218*	1	RADIATOR GP	348
Y	*415-5527*	1	RAIL GP-FUEL	422
Y	*415-7947*	1	ROCKER ARM GP	299
Y	*425-9760*	1	SENSOR GP-ENGINE	432

475-0574 **ENGINE AR-PRIMARY (**contd.**)** **i06931199**

NOTE	PART NUMBER	QTY	PART NAME 1 2 3 4 5 6 (PRODUCT LEVEL)	SEE PAGE
Y	*430-5204*	1	SENSOR GP-TEMPERATURE	436
Y	*417-3453*	1	STARTING AID GP	437
Y	*418-7475*	1	STARTING MOTOR GP-ELECTRIC	440
Y	*445-1450*	1	TURBOCHARGER GP	384
Y	*417-4227*	1	WIRING GP-ENGINE	444
	462-5117	1	ELECTRONICS GP-ENGINE	

Y - SEPARATE ILLUSTRATION

<END>

475-7126 ENGINE AR-PRIMARY

PART OF 478-3105 ENGINE AR

SMCS-1000 **i06821198**

NOTE	PART NUMBER	QTY	PART NAME 1 2 3 4 5 6 (PRODUCT LEVEL)	SEE PAGE
Y	*467-0357*	1	AIR CLEANER GP	353
Y	*416-8716*	1	FILM GP (ALTERNATOR)	457
Y	*425-8162*	1	ALTERNATOR GP-CHARGING	426
Y	*433-5258*	1	FUMES DISPOSAL GP	311
Y	*435-7778*	1	CAMSHAFT GP	170
Y	*415-5519*	1	PISTON & ROD GP	282
Y	*416-1867*	1	CONNECTION GP-WATER	327
Y	*415-5534*	1	CONTROL GP-ELECTRONIC	428
Y	*419-7639*	1	COOLER GP-ENGINE OIL	331
Y	*418-6381*	1	COVER GP-VALVE MECHANISM	177
Y	*433-6323*	1	CRANKSHAFT GP	181
			—OR—	
Y	*510-5297*	1	CRANKSHAFT GP	186
Y	*415-3299*	1	CYLINDER BLOCK GP	190
Y	*415-5520*	1	CYLINDER HEAD GP	197
Y	*417-4187*	1	DRAIN GP-ENGINE OIL	200
Y	*418-7425*	1	BELT TENSIONER GP	169
Y	*432-1852*	1	DRIVE GP-FAN	210
Y	*418-6475*	1	FASTENER GP-EXHAUST MANIFOLD	359
Y	*417-4185*	1	FILLER GP-ENGINE OIL	306
Y	*417-4284*	1	FILM GP	458
Y	*417-3394*	1	FILTER GP-ENGINE OIL	310
Y	*441-1218*	1	FILTER GP-FUEL	403
Y	*453-7163*	1	FILTER GP-FUEL	407
Y	*460-1998*	1	LINES GP-FUEL	418
Y	*417-3390*	1	FLYWHEEL GP	224
Y	*418-7473*	1	HOUSING GP-FLYWHEEL	233
Y	*432-4956*	1	DRIVE GP-AUXILIARY	203
Y	*415-7116*	1	HOUSING GP-FRONT	242
Y	*415-5522*	1	INJECTOR GP-FUEL	410
Y	*415-7948*	1	JET GP-PISTON COOLING	257
Y	*417-3458*	1	LIFTING GP-ENGINE	258
Y	*416-9552*	1	MANIFOLD GP-EXHAUST	361
Y	*418-7675*	1	MANIFOLD GP-INLET	364
Y	*415-7949*	1	MOUNTING GP-CONTROL	455
Y	*432-8206*	1	MOUNTING GP-ENGINE	262
Y	*416-8715*	1	MOUNTING GP-FAN	338
Y	*416-1052*	1	GAUGE GP-OIL LEVEL (DIPSTICK)	454
Y	*418-7530*	1	PAN GP-OIL	273
Y	*417-4191*	1	PLUG GP-ENGINE	284
Y	*417-4286*	1	PLUG GP-ENGINE	285
Y	*416-1089*	1	PULLEY GP-CRANKSHAFT	294
Y	*416-8723*	1	PUMP GP-ENGINE OIL	320
			—OR—	
Y	*508-3673*	1	PUMP GP-ENGINE OIL	321
Y	*415-5523*	1	PUMP GP-FUEL INJECTION	421
Y	*416-1864*	1	PUMP GP-WATER	339
Y	*415-5527*	1	RAIL GP-FUEL	422
Y	*415-7947*	1	ROCKER ARM GP	299

475-7126 **ENGINE AR-PRIMARY (**contd.**)** **i06821198**

NOTE	PART NUMBER	QTY	PART NAME 1 2 3 4 5 6 (PRODUCT LEVEL)	SEE PAGE
Y	*425-9760*	1	SENSOR GP-ENGINE	432
Y	*430-5204*	1	SENSOR GP-TEMPERATURE	436
Y	*417-3453*	1	STARTING AID GP	437
Y	*416-1042*	1	FILM GP	456
Y	*418-7475*	1	STARTING MOTOR GP-ELECTRIC	440
Y	*417-3408*	1	TURBOCHARGER GP	366
Y	*450-2856*	1	WIRING GP-ENGINE	450
	462-5117	1	ELECTRONICS GP-ENGINE	

Y - SEPARATE ILLUSTRATION

<END>

475-8138 ENGINE AR-PRIMARY

68 BRAKE KW (91 BHP) AT 2200 RPM
OPTIONAL FIELD REPLACEMENT ORDER 452-7397—PAGE: 199, 452-7386—PAGE: 193
PART OF 477-6787 ENGINE AR

SMCS-1000 **i07410193**

NOTE	PART NUMBER	QTY	PART NAME 1 2 3 4 5 6 (PRODUCT LEVEL)	SEE PAGE
Y	*416-8716*	1	FILM GP (ALTERNATOR)	457
Y	*418-7664*	1	ALTERNATOR GP-CHARGING	425
Y	*433-5258*	1	FUMES DISPOSAL GP	311
Y	*435-7778*	1	CAMSHAFT GP	170
Y	*415-5519*	1	PISTON & ROD GP	282
Y	*416-1867*	1	CONNECTION GP-WATER	327
Y	*415-5535*	1	CONTROL GP-ELECTRONIC	429
Y	*419-7639*	1	COOLER GP-ENGINE OIL	331
Y	*418-6381*	1	COVER GP-VALVE MECHANISM	177
Y	*433-6323*	1	CRANKSHAFT GP	181
			—OR—	
Y	*510-5297*	1	CRANKSHAFT GP	186
Y	*415-3299*	1	CYLINDER BLOCK GP	190
Y	*415-5520*	1	CYLINDER HEAD GP	197
Y	*417-4187*	1	DRAIN GP-ENGINE OIL	200
Y	*418-7425*	1	BELT TENSIONER GP	169
Y	*423-1279*	1	DRIVE GP-FAN	208
Y	*421-6894*	1	ELBOW GP-AIR INLET	356
Y	*420-0291*	1	EXTENSION GP-FAN	219
Y	*501-7366*	1	FAN GP	337
Y	*418-6475*	1	FASTENER GP-EXHAUST MANIFOLD	359
Y	*417-4185*	1	FILLER GP-ENGINE OIL	306
Y	*417-4284*	1	FILM GP	458
Y	*417-3394*	1	FILTER GP-ENGINE OIL	310
Y	*441-1218*	1	FILTER GP-FUEL	403
Y	*453-7163*	1	FILTER GP-FUEL	407
Y	*431-7138*	1	FLYWHEEL GP	227
Y	*418-7473*	1	HOUSING GP-FLYWHEEL	233
Y	*432-4972*	1	HOUSING GP-FRONT	248
Y	*432-8266*	1	HOUSING GP-FRONT	251
Y	*415-5522*	1	INJECTOR GP-FUEL	410
Y	*415-7948*	1	JET GP-PISTON COOLING	257
Y	*417-3462*	1	LIFTING GP-ENGINE	259
Y	*415-7119*	1	LINES GP-FUEL	413
Y	*416-9552*	1	MANIFOLD GP-EXHAUST	361
Y	*415-7949*	1	MOUNTING GP-CONTROL	455
Y	*416-1052*	1	GAUGE GP-OIL LEVEL (DIPSTICK)	454
Y	*418-7530*	1	PAN GP-OIL	273
Y	*417-4286*	1	PLUG GP-ENGINE	285
Y	*418-8564*	1	PLUG GP-ENGINE	286
Y	*432-2302*	1	PULLEY GP-AUXILIARY DRIVE	293
Y	*416-1089*	1	PULLEY GP-CRANKSHAFT	294
Y	*416-8723*	1	PUMP GP-ENGINE OIL	320
			—OR—	
Y	*508-3673*	1	PUMP GP-ENGINE OIL	321
Y	*415-5523*	1	PUMP GP-FUEL INJECTION	421
Y	*416-1864*	1	PUMP GP-WATER	339
Y	*415-5527*	1	RAIL GP-FUEL	422

475-8138 **ENGINE AR-PRIMARY (**contd.**)** **i07410193**

NOTE	PART NUMBER	QTY	PART NAME 1 2 3 4 5 6 (PRODUCT LEVEL)	SEE PAGE
Y	*415-7947*	1	ROCKER ARM GP	299
Y	*438-0911*	1	SENSOR GP-ENGINE	434
Y	*430-5204*	1	SENSOR GP-TEMPERATURE	436
Y	*417-3453*	1	STARTING AID GP	437
Y	*416-1042*	1	FILM GP (MOTOR)	456
Y	*419-8514*	1	STARTING MOTOR GP-ELECTRIC	441
Y	*417-4214*	1	VALVE GP-CHECK (ALARM)	322
Y	*432-8211*	1	SWITCH GP-HEAT START	443
Y	*432-6636*	1	TURBOCHARGER GP	370
Y	*450-2854*	1	WIRING GP-ENGINE	447
	465-8596	1	ELECTRONICS GP-ENGINE	

Y - SEPARATE ILLUSTRATION

<END>

ENGINE ARRANGEMENT

475-8294 ENGINE AR-PRIMARY

97 BRAKE KW (129 BHP) AT 2200 RPM

OPTIONAL FIELD REPLACEMENT ORDER 452-7386—PAGE: 193, 452-7397—PAGE: 199

SMCS-1000 **i06570631**

NOTE	PART NUMBER	QTY	PART NAME 1 2 3 4 5 6 (PRODUCT LEVEL)	SEE PAGE
Y	*465-4990*	1	ACCESSORY GP-ENGINE	162
Y	*467-0357*	1	AIR CLEANER GP	353
Y	*418-7664*	1	ALTERNATOR GP-CHARGING	425
Y	*432-4983*	1	BALANCER GP	167
Y	*435-7778*	1	CAMSHAFT GP	170
Y	*416-1867*	1	CONNECTION GP-WATER	327
Y	*415-5534*	1	CONTROL GP-ELECTRONIC	428
Y	*452-0797*	1	COOLER GP-ENGINE OIL	333
Y	*418-6381*	1	COVER GP-VALVE MECHANISM	177
Y	*433-6323*	1	CRANKSHAFT GP	181
Y	*415-3299*	1	CYLINDER BLOCK GP	190
Y	*415-5520*	1	CYLINDER HEAD GP	197
Y	*417-4189*	1	DRAIN GP-ENGINE OIL	201
Y	*416-1044*	1	DRIVE GP-FAN	205
Y	*462-9629*	1	ELBOW GP-AIR INLET	358
Y	*420-0291*	1	EXTENSION GP-FAN	219
Y	*445-0297*	1	FAN GP	336
Y	*418-6475*	1	FASTENER GP-EXHAUST MANIFOLD	359
Y	*417-4185*	1	FILLER GP-ENGINE OIL	306
Y	*416-8716*	1	FILM GP (ALTERNATOR)	457
Y	*417-4284*	1	FILM GP	458
Y	*416-1042*	1	FILM GP	456
Y	*417-3394*	1	FILTER GP-ENGINE OIL	310
Y	*441-1218*	1	FILTER GP-FUEL	403
Y	*453-7163*	1	FILTER GP-FUEL	407
Y	*431-7141*	1	FLYWHEEL GP	228
Y	*451-2273*	1	GAUGE GP-OIL LEVEL (DIPSTICK)	317
Y	*418-7473*	1	HOUSING GP-FLYWHEEL	233
Y	*448-9791*	1	HOUSING GP-FRONT	253
Y	*432-4976*	1	AIR COMPRESSOR GP	164
Y	*415-5522*	1	INJECTOR GP-FUEL	410
Y	*415-7948*	1	JET GP-PISTON COOLING	257
Y	*417-3458*	1	LIFTING GP-ENGINE	258
Y	*460-1998*	1	LINES GP-FUEL	418
Y	*416-9552*	1	MANIFOLD GP-EXHAUST	361
Y	*415-7949*	1	MOUNTING GP-CONTROL	455
Y	*465-3613*	1	MOUNTING GP-ENGINE	265
Y	*452-0796*	1	PAN GP-OIL	279
Y	*415-5519*	1	PISTON & ROD GP	282
Y	*418-7425*	1	BELT TENSIONER GP	169
Y	*416-1089*	1	PULLEY GP-CRANKSHAFT	294
Y	*415-5523*	1	PUMP GP-FUEL INJECTION	421
Y	*416-1864*	1	PUMP GP-WATER	339
Y	*432-8215*	1	RADIATOR GP	345
Y	*415-5527*	1	RAIL GP-FUEL	422
Y	*415-7947*	1	ROCKER ARM GP	299
Y	*425-9760*	1	SENSOR GP-ENGINE	432
Y	*430-5204*	1	SENSOR GP-TEMPERATURE	436

475-8294 **ENGINE AR-PRIMARY (**contd.**)** **i06570631**

NOTE	PART NUMBER	QTY	PART NAME 1 2 3 4 5 6 (PRODUCT LEVEL)	SEE PAGE
Y	*417-3453*	1	STARTING AID GP	437
Y	*419-8514*	1	STARTING MOTOR GP-ELECTRIC	441
Y	*445-1450*	1	TURBOCHARGER GP	384
Y	*417-4213*	1	VALVE GP-FLUID SAMPLING	323
Y	*450-2855*	1	WIRING GP-ENGINE	448
	462-5117	1	ELECTRONICS GP-ENGINE	
	415-9834	1	PLATE GP-SERIAL NUMBER	

Y - SEPARATE ILLUSTRATION

<END>

476-2914 ENGINE AR-PRIMARY

PART OF 476-2948 ENGINE AR

SMCS-1000 **i06124333**

NOTE	PART NUMBER	QTY	PART NAME 1 2 3 4 5 6 (PRODUCT LEVEL)	SEE PAGE
Y	*467-0357*	1	AIR CLEANER GP	353
Y	*416-8716*	1	FILM GP (ALTERNATOR)	457
Y	*415-7107*	1	ALTERNATOR GP-CHARGING	424
Y	*432-4983*	1	BALANCER GP	167
Y	*433-5258*	1	FUMES DISPOSAL GP	311
Y	*435-7778*	1	CAMSHAFT GP	170
Y	*415-5519*	1	PISTON & ROD GP	282
Y	*416-1867*	1	CONNECTION GP-WATER	327
Y	*415-5535*	1	CONTROL GP-ELECTRONIC	429
Y	*452-0797*	1	COOLER GP-ENGINE OIL	333
Y	*415-7105*	1	COVER GP-VALVE MECHANISM	175
Y	*433-6323*	1	CRANKSHAFT GP	181
Y	*415-3299*	1	CYLINDER BLOCK GP	190
Y	*415-5520*	1	CYLINDER HEAD GP	197
Y	*417-4187*	1	DRAIN GP-ENGINE OIL	200
Y	*418-7425*	1	BELT TENSIONER GP	169
Y	*432-1853*	1	DRIVE GP-FAN	211
Y	*462-9629*	1	ELBOW GP-AIR INLET	358
Y	*420-0291*	1	EXTENSION GP-FAN	219
Y	*445-0297*	1	FAN GP	336
Y	*418-6475*	1	FASTENER GP-EXHAUST MANIFOLD	359
Y	*432-0065*	1	FILLER GP-ENGINE OIL	308
Y	*417-4284*	1	FILM GP	458
Y	*417-3394*	1	FILTER GP-ENGINE OIL	310
Y	*441-1215*	1	FILTER GP-FUEL (WATER SEPARATOR)	402
Y	*453-7163*	1	FILTER GP-FUEL	407
Y	*417-3390*	1	FLYWHEEL GP	224
Y	*418-7473*	1	HOUSING GP-FLYWHEEL	233
Y	*415-7117*	1	HOUSING GP-FRONT	244
Y	*416-8719*	1	COVER GP-FRONT HOUSING	172
Y	*415-5522*	1	INJECTOR GP-FUEL	410
Y	*415-7948*	1	JET GP-PISTON COOLING	257
Y	*417-3458*	1	LIFTING GP-ENGINE	258
Y	*415-7119*	1	LINES GP-FUEL	413
Y	*416-9552*	1	MANIFOLD GP-EXHAUST	361
Y	*415-7949*	1	MOUNTING GP-CONTROL	455
Y	*465-3613*	1	MOUNTING GP-ENGINE	265
Y	*416-1052*	1	GAUGE GP-OIL LEVEL (DIPSTICK)	454
Y	*452-0796*	1	PAN GP-OIL	279
Y	*417-4190*	1	PLUG GP-OIL FILTER MOUNTING	318
Y	*417-4286*	1	PLUG GP-ENGINE	285
Y	*426-3230*	1	PULLEY GP-CRANKSHAFT	296
Y	*415-5523*	1	PUMP GP-FUEL INJECTION	421
Y	*416-1864*	1	PUMP GP-WATER	339
Y	*432-8215*	1	RADIATOR GP	345
Y	*415-5527*	1	RAIL GP-FUEL	422
Y	*415-7947*	1	ROCKER ARM GP	299
Y	*425-9760*	1	SENSOR GP-ENGINE	432
Y	*430-5204*	1	SENSOR GP-TEMPERATURE	436

476-2914 **ENGINE AR-PRIMARY (**contd.**)** **i06124333**

NOTE	PART NUMBER	QTY	PART NAME 1 2 3 4 5 6 (PRODUCT LEVEL)	SEE PAGE
Y	*417-4371*	1	STARTING AID GP	438
Y	*416-1042*	1	FILM GP	456
Y	*415-5536*	1	STARTING MOTOR GP-ELECTRIC	439
Y	*445-1450*	1	TURBOCHARGER GP	384
Y	*417-4227*	1	WIRING GP-ENGINE	444
	462-5117	1	ELECTRONICS GP-ENGINE	

Y - SEPARATE ILLUSTRATION

<END>

477-2654 ENGINE AR-PRIMARY

97 BRAKE KW (129 BHP) AT 2200 RPM

PART OF 477-3351 ENGINE AR

SMCS-1000 **i06701281**

NOTE	PART NUMBER	QTY	PART NAME 1 2 3 4 5 6 (PRODUCT LEVEL)	SEE PAGE
Y	*418-7664*	1	ALTERNATOR GP-CHARGING	425
Y	*418-7425*	1	BELT TENSIONER GP	169
Y	*433-5258*	1	FUMES DISPOSAL GP	311
Y	*435-7778*	1	CAMSHAFT GP	170
Y	*416-1867*	1	CONNECTION GP-WATER	327
Y	*415-5535*	1	CONTROL GP-ELECTRONIC	429
Y	*418-7659*	1	COOLER GP-ENGINE OIL	330
Y	*415-7106*	1	COVER GP-VALVE MECHANISM	176
Y	*433-6323*	1	CRANKSHAFT GP	181
Y	*415-3299*	1	CYLINDER BLOCK GP	190
Y	*415-5520*	1	CYLINDER HEAD GP	197
Y	*417-4187*	1	DRAIN GP-ENGINE OIL	200
Y	*432-1852*	1	DRIVE GP-FAN	210
Y	*416-9543*	1	ELBOW GP-AIR INLET	354
Y	*418-6475*	1	FASTENER GP-EXHAUST MANIFOLD	359
Y	*417-4186*	1	FILLER GP-ENGINE OIL	307
Y	*416-8716*	1	FILM GP (ALTERNATOR)	457
Y	*417-4284*	1	FILM GP	458
Y	*416-1042*	1	FILM GP	456
Y	*417-3394*	1	FILTER GP-ENGINE OIL	310
Y	*441-1215*	1	FILTER GP-FUEL (WATER SEPARATOR)	402
Y	*453-7163*	1	FILTER GP-FUEL	407
Y	*431-7141*	1	FLYWHEEL GP	228
Y	*492-2945*	1	WIRING GP-ENGINE	452
Y	*418-7473*	1	HOUSING GP-FLYWHEEL	233
Y	*432-4956*	1	DRIVE GP-AUXILIARY	203
Y	*415-7116*	1	HOUSING GP-FRONT	242
Y	*415-5522*	1	INJECTOR GP-FUEL	410
Y	*415-7948*	1	JET GP-PISTON COOLING	257
Y	*417-3458*	1	LIFTING GP-ENGINE	258
Y	*415-7119*	1	LINES GP-FUEL	413
Y	*416-9552*	1	MANIFOLD GP-EXHAUST	361
Y	*415-7949*	1	MOUNTING GP-CONTROL	455
Y	*416-8715*	1	MOUNTING GP-FAN	338
Y	*416-1052*	1	GAUGE GP-OIL LEVEL (DIPSTICK)	454
Y	*418-7530*	1	PAN GP-OIL	273
Y	*415-5519*	1	PISTON & ROD GP	282
Y	*417-4190*	1	PLUG GP-OIL FILTER MOUNTING	318
Y	*417-4286*	1	PLUG GP-ENGINE	285
Y	*418-8564*	1	PLUG GP-ENGINE	286
Y	*416-1089*	1	PULLEY GP-CRANKSHAFT	294
Y	*416-8723*	1	PUMP GP-ENGINE OIL	320
Y	*415-5523*	1	PUMP GP-FUEL INJECTION	421
Y	*416-1864*	1	PUMP GP-WATER	339
Y	*415-5527*	1	RAIL GP-FUEL	422
Y	*415-7947*	1	ROCKER ARM GP	299
Y	*425-9760*	1	SENSOR GP-ENGINE	432
Y	*430-5204*	1	SENSOR GP-TEMPERATURE	436

477-2654 **ENGINE AR-PRIMARY (**contd.**)** **i06701281**

NOTE	PART NUMBER	QTY	PART NAME 1 2 3 4 5 6 (PRODUCT LEVEL)	SEE PAGE
Y	*417-3453*	1	STARTING AID GP	437
Y	*418-7475*	1	STARTING MOTOR GP-ELECTRIC	440
Y	*417-3408*	1	TURBOCHARGER GP	366
	462-5117	1	ELECTRONICS GP-ENGINE	

Y - SEPARATE ILLUSTRATION

<END>

477-2655 ENGINE AR-PRIMARY

97 BRAKE KW (129 BHP) AT 2200 RPM

PART OF 477-3352 ENGINE AR

SMCS-1000 **i06701259**

NOTE	PART NUMBER	QTY	PART NAME 1 2 3 4 5 6 (PRODUCT LEVEL)	SEE PAGE
Y	*418-7664*	1	ALTERNATOR GP-CHARGING	425
Y	*418-7425*	1	BELT TENSIONER GP	169
Y	*433-5258*	1	FUMES DISPOSAL GP	311
Y	*435-7778*	1	CAMSHAFT GP	170
Y	*416-1867*	1	CONNECTION GP-WATER	327
Y	*415-5535*	1	CONTROL GP-ELECTRONIC	429
Y	*418-7659*	1	COOLER GP-ENGINE OIL	330
Y	*415-7106*	1	COVER GP-VALVE MECHANISM	176
Y	*433-6323*	1	CRANKSHAFT GP	181
Y	*415-3299*	1	CYLINDER BLOCK GP	190
Y	*415-5520*	1	CYLINDER HEAD GP	197
Y	*417-4187*	1	DRAIN GP-ENGINE OIL	200
Y	*432-1846*	1	DRIVE GP-FAN	209
Y	*416-9543*	1	ELBOW GP-AIR INLET	354
Y	*418-6475*	1	FASTENER GP-EXHAUST MANIFOLD	359
Y	*417-4186*	1	FILLER GP-ENGINE OIL	307
Y	*416-8716*	1	FILM GP (ALTERNATOR)	457
Y	*417-4284*	1	FILM GP	458
Y	*416-1042*	1	FILM GP	456
Y	*417-3394*	1	FILTER GP-ENGINE OIL	310
Y	*441-1215*	1	FILTER GP-FUEL (WATER SEPARATOR)	402
Y	*453-7163*	1	FILTER GP-FUEL	407
Y	*431-7141*	1	FLYWHEEL GP	228
Y	*492-2945*	1	WIRING GP-ENGINE	452
Y	*418-7473*	1	HOUSING GP-FLYWHEEL	233
Y	*432-4956*	1	DRIVE GP-AUXILIARY	203
Y	*415-7116*	1	HOUSING GP-FRONT	242
Y	*415-5522*	1	INJECTOR GP-FUEL	410
Y	*415-7948*	1	JET GP-PISTON COOLING	257
Y	*417-3458*	1	LIFTING GP-ENGINE	258
Y	*415-7119*	1	LINES GP-FUEL	413
Y	*416-9552*	1	MANIFOLD GP-EXHAUST	361
Y	*415-7949*	1	MOUNTING GP-CONTROL	455
Y	*416-8715*	1	MOUNTING GP-FAN	338
Y	*416-1052*	1	GAUGE GP-OIL LEVEL (DIPSTICK)	454
Y	*418-7530*	1	PAN GP-OIL	273
Y	*415-5519*	1	PISTON & ROD GP	282
Y	*417-4286*	1	PLUG GP-ENGINE	285
Y	*417-4190*	1	PLUG GP-OIL FILTER MOUNTING	318
Y	*418-8564*	1	PLUG GP-ENGINE	286
Y	*416-1089*	1	PULLEY GP-CRANKSHAFT	294
Y	*416-8723*	1	PUMP GP-ENGINE OIL	320
Y	*415-5523*	1	PUMP GP-FUEL INJECTION	421
Y	*416-1864*	1	PUMP GP-WATER	339
Y	*415-5527*	1	RAIL GP-FUEL	422
Y	*415-7947*	1	ROCKER ARM GP	299
Y	*425-9760*	1	SENSOR GP-ENGINE	432
Y	*430-5204*	1	SENSOR GP-TEMPERATURE	436

477-2655 **ENGINE AR-PRIMARY (**contd.**)** **i06701259**

NOTE	PART NUMBER	QTY	PART NAME 1 2 3 4 5 6 (PRODUCT LEVEL)	SEE PAGE
Y	*417-3453*	1	STARTING AID GP	437
Y	*418-7475*	1	STARTING MOTOR GP-ELECTRIC	440
Y	*445-1450*	1	TURBOCHARGER GP	384
	462-5117	1	ELECTRONICS GP-ENGINE	

Y - SEPARATE ILLUSTRATION

<END>

477-2657 ENGINE AR-PRIMARY

106 BRAKE KW (142 BHP) AT 2200 RPM

OPTIONAL FIELD REPLACEMENT ORDER 452-7386—PAGE: 193, 452-7397—PAGE: 199

PART OF 477-3350 ENGINE AR

SMCS-1000 **i06808164**

NOTE	PART NUMBER	QTY	PART NAME 1 2 3 4 5 6 (PRODUCT LEVEL)	SEE PAGE
Y	*418-7664*	1	ALTERNATOR GP-CHARGING	425
Y	*433-5258*	1	FUMES DISPOSAL GP	311
Y	*435-7778*	1	CAMSHAFT GP	170
Y	*417-4287*	1	CONNECTION GP-HEATER	324
Y	*416-1865*	1	CONNECTION GP-WATER	325
Y	*415-5535*	1	CONTROL GP-ELECTRONIC	429
Y	*418-7659*	1	COOLER GP-ENGINE OIL	330
Y	*415-7106*	1	COVER GP-VALVE MECHANISM	176
Y	*433-6323*	1	CRANKSHAFT GP	181
Y	*415-3299*	1	CYLINDER BLOCK GP	190
Y	*415-5520*	1	CYLINDER HEAD GP	197
Y	*417-4187*	1	DRAIN GP-ENGINE OIL	200
Y	*444-9591*	1	DRIVE GP-FAN	216
Y	*432-0069*	1	FILLER GP-ENGINE OIL	309
Y	*416-1042*	1	FILM GP	456
Y	*416-8716*	1	FILM GP (ALTERNATOR)	457
Y	*417-4284*	1	FILM GP	458
Y	*417-3394*	1	FILTER GP-ENGINE OIL	310
Y	*441-1215*	1	FILTER GP-FUEL (WATER SEPARATOR)	402
Y	*453-7163*	1	FILTER GP-FUEL	407
Y	*431-7141*	1	FLYWHEEL GP	228
Y	*444-9659*	1	HOUSING GP-FLYWHEEL	235
Y	*415-7115*	1	HOUSING GP-FRONT	240
Y	*415-5522*	1	INJECTOR GP-FUEL	410
Y	*415-7948*	1	JET GP-PISTON COOLING	257
Y	*417-3462*	1	LIFTING GP-ENGINE	259
Y	*415-7119*	1	LINES GP-FUEL	413
Y	*421-7092*	1	MANIFOLD GP-EXHAUST	363
Y	*418-7675*	1	MANIFOLD GP-INLET	364
Y	*415-7949*	1	MOUNTING GP-CONTROL	455
Y	*445-0224*	1	MOUNTING GP-ENGINE	263
Y	*416-8715*	1	MOUNTING GP-FAN	338
Y	*430-5220*	1	PAN GP-OIL	277
Y	*431-8625*	1	PAN GP-OIL	278
Y	*415-5518*	1	PISTON & ROD GP	280
Y	*417-4190*	1	PLUG GP-OIL FILTER MOUNTING	318
Y	*417-3401*	1	PLUG GP-FRONT HOUSING	289
Y	*416-1047*	1	PULLEY GP-ALTERNATOR	291
Y	*432-2302*	1	PULLEY GP-AUXILIARY DRIVE	293
Y	*416-1089*	1	PULLEY GP-CRANKSHAFT	294
Y	*419-7641*	1	PULLEY GP-FAN DRIVE	297
Y	*416-8723*	1	PUMP GP-ENGINE OIL	320
Y	*415-5523*	1	PUMP GP-FUEL INJECTION	421
Y	*416-1864*	1	PUMP GP-WATER	339
Y	*415-5527*	1	RAIL GP-FUEL	422
Y	*415-7947*	1	ROCKER ARM GP	299
Y	*425-9760*	1	SENSOR GP-ENGINE	432

477-2657 **ENGINE AR-PRIMARY (**contd.**)** **i06808164**

NOTE	PART NUMBER	QTY	PART NAME 1 2 3 4 5 6 (PRODUCT LEVEL)	SEE PAGE
Y	*430-5204*	1	SENSOR GP-TEMPERATURE	436
Y	*417-3453*	1	STARTING AID GP	437
Y	*418-7475*	1	STARTING MOTOR GP-ELECTRIC	440
Y	*444-8091*	1	TURBOCHARGER GP	381
Y	*426-5232*	1	WIRING GP-ENGINE	445
	462-8609	1	ELECTRONICS GP-ENGINE	
	415-9834	1	PLATE GP-SERIAL NUMBER	

Y - SEPARATE ILLUSTRATION

<END>

477-4127 ENGINE AR-PRIMARY

PART OF 478-0241 ENGINE AR

SMCS-1000 **i06821220**

NOTE	PART NUMBER	QTY	PART NAME 1 2 3 4 5 6 (PRODUCT LEVEL)	SEE PAGE
Y	*467-0357*	1	AIR CLEANER GP	353
Y	*416-8716*	1	FILM GP (ALTERNATOR)	457
Y	*418-7664*	1	ALTERNATOR GP-CHARGING	425
Y	*433-5258*	1	FUMES DISPOSAL GP	311
Y	*435-7778*	1	CAMSHAFT GP	170
Y	*416-1867*	1	CONNECTION GP-WATER	327
Y	*415-5535*	1	CONTROL GP-ELECTRONIC	429
Y	*418-7659*	1	COOLER GP-ENGINE OIL	330
Y	*418-6381*	1	COVER GP-VALVE MECHANISM	177
Y	*433-6323*	1	CRANKSHAFT GP	181
			—OR—	
Y	*510-5297*	1	CRANKSHAFT GP	186
Y	*415-3299*	1	CYLINDER BLOCK GP	190
Y	*415-5520*	1	CYLINDER HEAD GP	197
Y	*417-4187*	1	DRAIN GP-ENGINE OIL	200
Y	*416-1044*	1	DRIVE GP-FAN	205
Y	*418-7425*	1	BELT TENSIONER GP	169
Y	*462-9629*	1	ELBOW GP-AIR INLET	358
Y	*420-0291*	1	EXTENSION GP-FAN	219
Y	*445-0296*	1	FAN GP	335
Y	*418-6475*	1	FASTENER GP-EXHAUST MANIFOLD	359
Y	*417-4185*	1	FILLER GP-ENGINE OIL	306
Y	*417-4284*	1	FILM GP	458
Y	*417-3394*	1	FILTER GP-ENGINE OIL	310
Y	*441-1218*	1	FILTER GP-FUEL	403
Y	*453-7163*	1	FILTER GP-FUEL	407
Y	*431-7141*	1	FLYWHEEL GP	228
Y	*416-1053*	1	GAUGE GP-OIL LEVEL (DIPSTICK)	312
Y	*444-9659*	1	HOUSING GP-FLYWHEEL	235
Y	*432-4972*	1	HOUSING GP-FRONT	248
Y	*432-8266*	1	HOUSING GP-FRONT	251
Y	*415-5522*	1	INJECTOR GP-FUEL	410
Y	*415-7948*	1	JET GP-PISTON COOLING	257
Y	*417-3458*	1	LIFTING GP-ENGINE	258
Y	*415-7119*	1	LINES GP-FUEL	413
Y	*416-9552*	1	MANIFOLD GP-EXHAUST	361
Y	*415-7949*	1	MOUNTING GP-CONTROL	455
Y	*465-3613*	1	MOUNTING GP-ENGINE	265
Y	*419-8519*	1	PAN GP-OIL	274
Y	*415-5519*	1	PISTON & ROD GP	282
Y	*417-4190*	1	PLUG GP-OIL FILTER MOUNTING	318
Y	*417-4286*	1	PLUG GP-ENGINE	285
Y	*416-1089*	1	PULLEY GP-CRANKSHAFT	294
Y	*416-8723*	1	PUMP GP-ENGINE OIL	320
			—OR—	
Y	*508-3673*	1	PUMP GP-ENGINE OIL	321
Y	*415-5523*	1	PUMP GP-FUEL INJECTION	421
Y	*416-1864*	1	PUMP GP-WATER	339
Y	*432-8218*	1	RADIATOR GP	348

477-4127 **ENGINE AR-PRIMARY (**contd.**)** **i06821220**

NOTE	PART NUMBER	QTY	PART NAME 1 2 3 4 5 6 (PRODUCT LEVEL)	SEE PAGE
Y	*415-5527*	1	RAIL GP-FUEL	422
Y	*415-7947*	1	ROCKER ARM GP	299
Y	*425-9760*	1	SENSOR GP-ENGINE	432
Y	*430-5204*	1	SENSOR GP-TEMPERATURE	436
Y	*417-3453*	1	STARTING AID GP	437
Y	*416-1042*	1	FILM GP	456
Y	*418-7475*	1	STARTING MOTOR GP-ELECTRIC	440
Y	*445-1450*	1	TURBOCHARGER GP	384
Y	*417-4227*	1	WIRING GP-ENGINE	444
	462-5117	1	ELECTRONICS GP-ENGINE	

Y - SEPARATE ILLUSTRATION

<END>

477-5057 ENGINE AR-PRIMARY

PART OF 478-0240 ENGINE AR

SMCS-1000 **i06821222**

NOTE	PART NUMBER	QTY	PART NAME 1 2 3 4 5 6 (PRODUCT LEVEL)	SEE PAGE
Y	*416-8716*	1	FILM GP (ALTERNATOR)	457
Y	*418-7664*	1	ALTERNATOR GP-CHARGING	425
Y	*433-5258*	1	FUMES DISPOSAL GP	311
Y	*435-7778*	1	CAMSHAFT GP	170
Y	*416-1867*	1	CONNECTION GP-WATER	327
Y	*415-5535*	1	CONTROL GP-ELECTRONIC	429
Y	*418-7659*	1	COOLER GP-ENGINE OIL	330
Y	*418-6381*	1	COVER GP-VALVE MECHANISM	177
Y	*433-6323*	1	CRANKSHAFT GP	181
			—OR—	
Y	*510-5297*	1	CRANKSHAFT GP	186
Y	*415-3299*	1	CYLINDER BLOCK GP	190
Y	*415-5520*	1	CYLINDER HEAD GP	197
Y	*419-8538*	1	DRAIN GP-ENGINE OIL	202
Y	*418-7425*	1	BELT TENSIONER GP	169
Y	*432-1853*	1	DRIVE GP-FAN	211
Y	*462-9629*	1	ELBOW GP-AIR INLET	358
Y	*420-0291*	1	EXTENSION GP-FAN	219
Y	*445-0296*	1	FAN GP	335
Y	*418-6475*	1	FASTENER GP-EXHAUST MANIFOLD	359
Y	*417-4185*	1	FILLER GP-ENGINE OIL	306
Y	*417-4284*	1	FILM GP	458
Y	*417-3394*	1	FILTER GP-ENGINE OIL	310
Y	*441-1215*	1	FILTER GP-FUEL (WATER SEPARATOR)	402
Y	*453-7163*	1	FILTER GP-FUEL	407
Y	*417-3391*	1	FLYWHEEL GP	225
Y	*416-1053*	1	GAUGE GP-OIL LEVEL (DIPSTICK)	312
Y	*416-1029*	1	HOUSING GP-FLYWHEEL	231
Y	*432-4972*	1	HOUSING GP-FRONT	248
Y	*432-8266*	1	HOUSING GP-FRONT	251
Y	*415-5522*	1	INJECTOR GP-FUEL	410
Y	*415-7948*	1	JET GP-PISTON COOLING	257
Y	*417-3458*	1	LIFTING GP-ENGINE	258
Y	*415-7119*	1	LINES GP-FUEL	413
Y	*416-9552*	1	MANIFOLD GP-EXHAUST	361
Y	*415-7949*	1	MOUNTING GP-CONTROL	455
Y	*465-3614*	1	MOUNTING GP-ENGINE	266
Y	*419-8519*	1	PAN GP-OIL	274
Y	*415-5519*	1	PISTON & ROD GP	282
Y	*417-4190*	1	PLUG GP-OIL FILTER MOUNTING	318
Y	*417-4286*	1	PLUG GP-ENGINE	285
Y	*426-3230*	1	PULLEY GP-CRANKSHAFT	296
Y	*416-8723*	1	PUMP GP-ENGINE OIL	320
			—OR—	
Y	*508-3673*	1	PUMP GP-ENGINE OIL	321
Y	*415-5523*	1	PUMP GP-FUEL INJECTION	421
Y	*416-1864*	1	PUMP GP-WATER	339
Y	*459-6904*	1	RADIATOR GP	350
Y	*415-5527*	1	RAIL GP-FUEL	422

477-5057 **ENGINE AR-PRIMARY (**contd.**)** **i06821222**

NOTE	PART NUMBER	QTY	PART NAME 1 2 3 4 5 6 (PRODUCT LEVEL)	SEE PAGE
Y	*415-7947*	1	ROCKER ARM GP	299
Y	*425-9760*	1	SENSOR GP-ENGINE	432
Y	*430-5204*	1	SENSOR GP-TEMPERATURE	436
Y	*417-3453*	1	STARTING AID GP	437
Y	*416-1042*	1	FILM GP	456
Y	*418-7475*	1	STARTING MOTOR GP-ELECTRIC	440
Y	*445-1450*	1	TURBOCHARGER GP	384
Y	*417-4227*	1	WIRING GP-ENGINE	444
	462-5117	1	ELECTRONICS GP-ENGINE	

Y - SEPARATE ILLUSTRATION

<END>

478-6220 ENGINE AR-PRIMARY

PART OF 478-6236 ENGINE AR

SMCS-1000 **i06149719**

NOTE	PART NUMBER	QTY	PART NAME 1 2 3 4 5 6 (PRODUCT LEVEL)	SEE PAGE
Y	*467-0357*	1	AIR CLEANER GP	353
Y	*416-8716*	1	FILM GP (ALTERNATOR)	457
Y	*425-8162*	1	ALTERNATOR GP-CHARGING	426
Y	*433-5258*	1	FUMES DISPOSAL GP	311
Y	*435-7778*	1	CAMSHAFT GP	170
Y	*415-5519*	1	PISTON & ROD GP	282
Y	*416-1867*	1	CONNECTION GP-WATER	327
Y	*415-5534*	1	CONTROL GP-ELECTRONIC	428
Y	*419-7639*	1	COOLER GP-ENGINE OIL	331
Y	*418-6381*	1	COVER GP-VALVE MECHANISM	177
Y	*433-6323*	1	CRANKSHAFT GP	181
Y	*415-3299*	1	CYLINDER BLOCK GP	190
Y	*415-5520*	1	CYLINDER HEAD GP	197
Y	*417-4187*	1	DRAIN GP-ENGINE OIL	200
Y	*418-7425*	1	BELT TENSIONER GP	169
Y	*432-1852*	1	DRIVE GP-FAN	210
Y	*416-8715*	1	MOUNTING GP-FAN	338
Y	*418-6475*	1	FASTENER GP-EXHAUST MANIFOLD	359
Y	*417-4185*	1	FILLER GP-ENGINE OIL	306
Y	*417-4284*	1	FILM GP	458
Y	*417-3394*	1	FILTER GP-ENGINE OIL	310
Y	*441-1218*	1	FILTER GP-FUEL	403
Y	*453-7163*	1	FILTER GP-FUEL	407
Y	*460-1998*	1	LINES GP-FUEL	418
Y	*417-3390*	1	FLYWHEEL GP	224
Y	*418-7473*	1	HOUSING GP-FLYWHEEL	233
Y	*432-4956*	1	DRIVE GP-AUXILIARY	203
Y	*415-7116*	1	HOUSING GP-FRONT	242
Y	*415-5522*	1	INJECTOR GP-FUEL	410
Y	*415-7948*	1	JET GP-PISTON COOLING	257
Y	*417-3458*	1	LIFTING GP-ENGINE	258
Y	*416-9552*	1	MANIFOLD GP-EXHAUST	361
Y	*418-7675*	1	MANIFOLD GP-INLET	364
Y	*415-7949*	1	MOUNTING GP-CONTROL	455
Y	*432-8206*	1	MOUNTING GP-ENGINE	262
Y	*416-1052*	1	GAUGE GP-OIL LEVEL (DIPSTICK)	454
Y	*418-7530*	1	PAN GP-OIL	273
Y	*417-4191*	1	PLUG GP-ENGINE	284
Y	*417-4286*	1	PLUG GP-ENGINE	285
Y	*416-1089*	1	PULLEY GP-CRANKSHAFT	294
Y	*416-8723*	1	PUMP GP-ENGINE OIL	320
Y	*415-5523*	1	PUMP GP-FUEL INJECTION	421
Y	*416-1864*	1	PUMP GP-WATER	339
Y	*415-5527*	1	RAIL GP-FUEL	422
Y	*415-7947*	1	ROCKER ARM GP	299
Y	*425-9760*	1	SENSOR GP-ENGINE	432
Y	*430-5204*	1	SENSOR GP-TEMPERATURE	436
Y	*417-3453*	1	STARTING AID GP	437
Y	*416-1042*	1	FILM GP	456

478-6220 **ENGINE AR-PRIMARY (**contd.**)** **i06149719**

NOTE	PART NUMBER	QTY	PART NAME 1 2 3 4 5 6 (PRODUCT LEVEL)	SEE PAGE
Y	*418-7475*	1	STARTING MOTOR GP-ELECTRIC	440
Y	*417-3408*	1	TURBOCHARGER GP	366
Y	*450-2856*	1	WIRING GP-ENGINE	450
	462-5117	1	ELECTRONICS GP-ENGINE	

Y - SEPARATE ILLUSTRATION

<END>

478-6560 ENGINE AR-PRIMARY

98 BRAKE KW(132 BHP) AT1800 RPM

OPTIONAL FIELD REPLACEMENT ORDER 452-7386—PAGE: 193, 452-7397—PAGE: 199

PART OF 486-4247 ENGINE AR

SMCS-1000 **i06926984**

NOTE	PART NUMBER	QTY	PART NAME 1 2 3 4 5 6 (PRODUCT LEVEL)	SEE PAGE
Y	*416-8716*	1	FILM GP (ALTERNATOR)	457
Y	*418-7664*	1	ALTERNATOR GP-CHARGING	425
Y	*433-5258*	1	FUMES DISPOSAL GP	311
Y	*470-6153*	1	CAMSHAFT GP	171
Y	*416-1867*	1	CONNECTION GP-WATER	327
Y	*415-5535*	1	CONTROL GP-ELECTRONIC	429
Y	*418-7659*	1	COOLER GP-ENGINE OIL	330
Y	*418-6381*	1	COVER GP-VALVE MECHANISM	177
Y	*433-6323*	1	CRANKSHAFT GP	181
			—OR—	
Y	*510-5297*	1	CRANKSHAFT GP	186
Y	*415-3299*	1	CYLINDER BLOCK GP	190
Y	*415-5520*	1	CYLINDER HEAD GP	197
Y	*417-4187*	1	DRAIN GP-ENGINE OIL	200
Y	*416-1044*	1	DRIVE GP-FAN	205
Y	*418-7425*	1	BELT TENSIONER GP	169
Y	*462-9629*	1	ELBOW GP-AIR INLET	358
Y	*420-0291*	1	EXTENSION GP-FAN	219
Y	*445-0296*	1	FAN GP	335
Y	*418-6475*	1	FASTENER GP-EXHAUST MANIFOLD	359
Y	*432-0065*	1	FILLER GP-ENGINE OIL	308
Y	*417-4284*	1	FILM GP	458
Y	*417-3394*	1	FILTER GP-ENGINE OIL	310
Y	*441-1215*	1	FILTER GP-FUEL (WATER SEPARATOR)	402
Y	*453-7163*	1	FILTER GP-FUEL	407
Y	*417-3391*	1	FLYWHEEL GP	225
Y	*416-1029*	1	HOUSING GP-FLYWHEEL	231
Y	*432-4972*	1	HOUSING GP-FRONT	248
Y	*432-8266*	1	HOUSING GP-FRONT	251
Y	*415-5522*	1	INJECTOR GP-FUEL	410
Y	*415-7948*	1	JET GP-PISTON COOLING	257
Y	*417-3458*	1	LIFTING GP-ENGINE	258
Y	*415-7119*	1	LINES GP-FUEL	413
Y	*416-9552*	1	MANIFOLD GP-EXHAUST	361
Y	*415-7949*	1	MOUNTING GP-CONTROL	455
Y	*465-3614*	1	MOUNTING GP-ENGINE	266
Y	*419-8519*	1	PAN GP-OIL	274
Y	*415-5519*	1	PISTON & ROD GP	282
Y	*417-4190*	1	PLUG GP-OIL FILTER MOUNTING	318
Y	*417-4286*	1	PLUG GP-ENGINE	285
Y	*447-7651*	1	PLUG GP-OIL PAN	290
Y	*416-1089*	1	PULLEY GP-CRANKSHAFT	294
Y	*416-8723*	1	PUMP GP-ENGINE OIL	320
			—OR—	
Y	*508-3673*	1	PUMP GP-ENGINE OIL	321
Y	*415-5523*	1	PUMP GP-FUEL INJECTION	421
Y	*416-1864*	1	PUMP GP-WATER	339
Y	*459-6904*	1	RADIATOR GP	350

478-6560 **ENGINE AR-PRIMARY (**contd.**)** **i06926984**

NOTE	PART NUMBER	QTY	PART NAME 1 2 3 4 5 6 (PRODUCT LEVEL)	SEE PAGE
Y	*415-5527*	1	RAIL GP-FUEL	422
Y	*415-7947*	1	ROCKER ARM GP	299
Y	*425-9760*	1	SENSOR GP-ENGINE	432
Y	*430-5204*	1	SENSOR GP-TEMPERATURE	436
Y	*417-3453*	1	STARTING AID GP	437
Y	*416-1042*	1	FILM GP	456
Y	*419-8514*	1	STARTING MOTOR GP-ELECTRIC	441
Y	*467-7639*	1	TURBOCHARGER GP	391
Y	*417-4227*	1	WIRING GP-ENGINE	444
	478-6553	1	ELECTRONICS GP-ENGINE	

Y - SEPARATE ILLUSTRATION

<END>

480-6065 ENGINE AR-PRIMARY

96.5 BRAKE KW (129.4 BHP) AT 2200-RPM

PART OF 480-6118 ENGINE AR

SMCS-1000 **i06547665**

NOTE	PART NUMBER	QTY	PART NAME 1 2 3 4 5 6 (PRODUCT LEVEL)	SEE PAGE
Y	*467-0357*	1	AIR CLEANER GP	353
Y	*415-7107*	1	ALTERNATOR GP-CHARGING	424
Y	*416-8716*	1	FILM GP (ALTERNATOR)	457
Y	*432-4983*	1	BALANCER GP	167
Y	*433-5258*	1	FUMES DISPOSAL GP	311
Y	*435-7778*	1	CAMSHAFT GP	170
Y	*416-1867*	1	CONNECTION GP-WATER	327
Y	*415-5535*	1	CONTROL GP-ELECTRONIC	429
Y	*452-0797*	1	COOLER GP-ENGINE OIL	333
Y	*415-7105*	1	COVER GP-VALVE MECHANISM	175
Y	*433-6323*	1	CRANKSHAFT GP	181
Y	*415-3299*	1	CYLINDER BLOCK GP	190
Y	*415-5520*	1	CYLINDER HEAD GP	197
Y	*417-4187*	1	DRAIN GP-ENGINE OIL	200
Y	*416-1044*	1	DRIVE GP-FAN	205
Y	*418-7425*	1	BELT TENSIONER GP	169
Y	*462-9629*	1	ELBOW GP-AIR INLET	358
Y	*420-0291*	1	EXTENSION GP-FAN	219
Y	*445-0296*	1	FAN GP	335
Y	*418-6475*	1	FASTENER GP-EXHAUST MANIFOLD	359
Y	*432-0065*	1	FILLER GP-ENGINE OIL	308
Y	*417-4284*	1	FILM GP	458
Y	*417-3394*	1	FILTER GP-ENGINE OIL	310
Y	*441-1215*	1	FILTER GP-FUEL (WATER SEPARATOR)	402
Y	*453-7163*	1	FILTER GP-FUEL	407
Y	*417-3390*	1	FLYWHEEL GP	224
Y	*418-7473*	1	HOUSING GP-FLYWHEEL	233
Y	*415-7117*	1	HOUSING GP-FRONT	244
Y	*416-8719*	1	COVER GP-FRONT HOUSING	172
Y	*415-5522*	1	INJECTOR GP-FUEL	410
Y	*415-7948*	1	JET GP-PISTON COOLING	257
Y	*417-3458*	1	LIFTING GP-ENGINE	258
Y	*415-7119*	1	LINES GP-FUEL	413
Y	*416-9552*	1	MANIFOLD GP-EXHAUST	361
Y	*415-7949*	1	MOUNTING GP-CONTROL	455
Y	*465-3613*	1	MOUNTING GP-ENGINE	265
Y	*416-1052*	1	GAUGE GP-OIL LEVEL (DIPSTICK)	454
Y	*452-0796*	1	PAN GP-OIL	279
Y	*415-5519*	1	PISTON & ROD GP	282
Y	*417-4190*	1	PLUG GP-OIL FILTER MOUNTING	318
Y	*417-4286*	1	PLUG GP-ENGINE	285
Y	*416-1089*	1	PULLEY GP-CRANKSHAFT	294
Y	*415-5523*	1	PUMP GP-FUEL INJECTION	421
Y	*416-1864*	1	PUMP GP-WATER	339
Y	*432-8215*	1	RADIATOR GP	345
Y	*415-5527*	1	RAIL GP-FUEL	422
Y	*415-7947*	1	ROCKER ARM GP	299
Y	*425-9760*	1	SENSOR GP-ENGINE	432

480-6065 **ENGINE AR-PRIMARY (**contd.**)** **i06547665**

NOTE	PART NUMBER	QTY	PART NAME 1 2 3 4 5 6 (PRODUCT LEVEL)	SEE PAGE
Y	*430-5204*	1	SENSOR GP-TEMPERATURE	436
Y	*417-4371*	1	STARTING AID GP	438
Y	*415-5536*	1	STARTING MOTOR GP-ELECTRIC	439
Y	*416-1042*	1	FILM GP	456
Y	*445-1450*	1	TURBOCHARGER GP	384
Y	*417-4227*	1	WIRING GP-ENGINE	444
	462-5117	1	ELECTRONICS GP-ENGINE	

Y - SEPARATE ILLUSTRATION

<END>

481-5182 ENGINE AR-PRIMARY

PART OF 483-1263 ENGINE AR-COMPLETE

SMCS-1000 **i06821118**

NOTE	PART NUMBER	QTY	PART NAME 1 2 3 4 5 6 (PRODUCT LEVEL)	SEE PAGE
Y	*467-0357*	1	AIR CLEANER GP	353
Y	*415-7107*	1	ALTERNATOR GP-CHARGING	424
Y	*416-8716*	1	FILM GP (ALTERNATOR)	457
Y	*433-5258*	1	FUMES DISPOSAL GP	311
Y	*435-7778*	1	CAMSHAFT GP	170
Y	*416-1867*	1	CONNECTION GP-WATER	327
Y	*415-5535*	1	CONTROL GP-ELECTRONIC	429
Y	*418-7659*	1	COOLER GP-ENGINE OIL	330
Y	*418-6381*	1	COVER GP-VALVE MECHANISM	177
Y	*433-6323*	1	CRANKSHAFT GP	181
			—OR—	
Y	*510-5297*	1	CRANKSHAFT GP	186
Y	*415-3299*	1	CYLINDER BLOCK GP	190
Y	*415-5520*	1	CYLINDER HEAD GP	197
Y	*417-4187*	1	DRAIN GP-ENGINE OIL	200
Y	*418-7425*	1	BELT TENSIONER GP	169
Y	*432-1853*	1	DRIVE GP-FAN	211
Y	*462-9629*	1	ELBOW GP-AIR INLET	358
Y	*420-0291*	1	EXTENSION GP-FAN	219
Y	*445-0297*	1	FAN GP	336
Y	*418-6475*	1	FASTENER GP-EXHAUST MANIFOLD	359
Y	*417-4185*	1	FILLER GP-ENGINE OIL	306
Y	*417-4284*	1	FILM GP	458
Y	*417-3394*	1	FILTER GP-ENGINE OIL	310
Y	*441-1215*	1	FILTER GP-FUEL (WATER SEPARATOR)	402
Y	*453-7163*	1	FILTER GP-FUEL	407
Y	*431-7141*	1	FLYWHEEL GP	228
Y	*441-9155*	1	GAUGE GP-OIL LEVEL (DIPSTICK)	315
Y	*444-9659*	1	HOUSING GP-FLYWHEEL	235
Y	*415-7117*	1	HOUSING GP-FRONT	244
Y	*416-8719*	1	COVER GP-FRONT HOUSING	172
Y	*415-5522*	1	INJECTOR GP-FUEL	410
Y	*415-7948*	1	JET GP-PISTON COOLING	257
Y	*417-3458*	1	LIFTING GP-ENGINE	258
Y	*415-7119*	1	LINES GP-FUEL	413
Y	*416-9552*	1	MANIFOLD GP-EXHAUST	361
Y	*415-7949*	1	MOUNTING GP-CONTROL	455
Y	*465-3613*	1	MOUNTING GP-ENGINE	265
Y	*423-1280*	1	PAN GP-OIL	275
Y	*415-5518*	1	PISTON & ROD GP	280
Y	*417-4190*	1	PLUG GP-OIL FILTER MOUNTING	318
Y	*417-4286*	1	PLUG GP-ENGINE	285
Y	*426-3230*	1	PULLEY GP-CRANKSHAFT	296
Y	*416-8723*	1	PUMP GP-ENGINE OIL	320
			—OR—	
Y	*508-3673*	1	PUMP GP-ENGINE OIL	321
Y	*415-5523*	1	PUMP GP-FUEL INJECTION	421
Y	*416-1864*	1	PUMP GP-WATER	339
Y	*432-8215*	1	RADIATOR GP	345

481-5182 **ENGINE AR-PRIMARY (**contd.**)** **i06821118**

NOTE	PART NUMBER	QTY	PART NAME 1 2 3 4 5 6 (PRODUCT LEVEL)	SEE PAGE
Y	*415-5527*	1	RAIL GP-FUEL	422
Y	*415-7947*	1	ROCKER ARM GP	299
Y	*425-9760*	1	SENSOR GP-ENGINE	432
Y	*430-5204*	1	SENSOR GP-TEMPERATURE	436
Y	*417-4371*	1	STARTING AID GP	438
Y	*415-5536*	1	STARTING MOTOR GP-ELECTRIC	439
Y	*416-1042*	1	FILM GP	456
Y	*445-1450*	1	TURBOCHARGER GP	384
Y	*417-4227*	1	WIRING GP-ENGINE	444
	462-8609	1	ELECTRONICS GP-ENGINE	

Y - SEPARATE ILLUSTRATION

<END>

481-8439 ENGINE AR-PRIMARY

PART OF 482-0226 ENGINE AR-COMPLETE

SMCS-1000 **i06821088**

NOTE	PART NUMBER	QTY	PART NAME 1 2 3 4 5 6 (PRODUCT LEVEL)	SEE PAGE
Y	*415-7107*	1	ALTERNATOR GP-CHARGING	424
Y	*416-8716*	1	FILM GP (ALTERNATOR)	457
Y	*433-5258*	1	FUMES DISPOSAL GP	311
Y	*435-7778*	1	CAMSHAFT GP	170
Y	*416-1867*	1	CONNECTION GP-WATER	327
Y	*415-5535*	1	CONTROL GP-ELECTRONIC	429
Y	*418-7659*	1	COOLER GP-ENGINE OIL	330
Y	*415-7105*	1	COVER GP-VALVE MECHANISM	175
Y	*433-6323*	1	CRANKSHAFT GP	181
			—OR—	
Y	*510-5297*	1	CRANKSHAFT GP	186
Y	*415-3299*	1	CYLINDER BLOCK GP	190
Y	*415-5520*	1	CYLINDER HEAD GP	197
Y	*417-4187*	1	DRAIN GP-ENGINE OIL	200
Y	*418-7425*	1	BELT TENSIONER GP	169
Y	*432-1846*	1	DRIVE GP-FAN	209
Y	*421-6894*	1	ELBOW GP-AIR INLET	356
Y	*432-4333*	1	EXTENSION GP-FAN	221
Y	*418-6475*	1	FASTENER GP-EXHAUST MANIFOLD	359
Y	*417-4186*	1	FILLER GP-ENGINE OIL	307
Y	*417-4284*	1	FILM GP	458
Y	*417-3394*	1	FILTER GP-ENGINE OIL	310
Y	*441-1215*	1	FILTER GP-FUEL (WATER SEPARATOR)	402
Y	*453-7163*	1	FILTER GP-FUEL	407
Y	*416-1032*	1	FLYWHEEL GP	223
Y	*444-9660*	1	HOUSING GP-FLYWHEEL	236
Y	*415-7117*	1	HOUSING GP-FRONT	244
Y	*416-8722*	1	HOUSING GP-FRONT	246
Y	*415-5522*	1	INJECTOR GP-FUEL	410
Y	*415-7948*	1	JET GP-PISTON COOLING	257
Y	*417-3458*	1	LIFTING GP-ENGINE	258
Y	*415-7119*	1	LINES GP-FUEL	413
Y	*416-9552*	1	MANIFOLD GP-EXHAUST	361
Y	*415-7949*	1	MOUNTING GP-CONTROL	455
Y	*416-1052*	1	GAUGE GP-OIL LEVEL (DIPSTICK)	454
Y	*418-7530*	1	PAN GP-OIL	273
Y	*415-5519*	1	PISTON & ROD GP	282
Y	*417-4190*	1	PLUG GP-OIL FILTER MOUNTING	318
Y	*417-4286*	1	PLUG GP-ENGINE	285
Y	*446-2228*	1	PLUG GP-FLYWHEEL HOUSING	288
Y	*416-1089*	1	PULLEY GP-CRANKSHAFT	294
Y	*416-8723*	1	PUMP GP-ENGINE OIL	320
			—OR—	
Y	*508-3673*	1	PUMP GP-ENGINE OIL	321
Y	*415-5523*	1	PUMP GP-FUEL INJECTION	421
Y	*416-1864*	1	PUMP GP-WATER	339
Y	*415-5527*	1	RAIL GP-FUEL	422
Y	*415-7947*	1	ROCKER ARM GP	299
Y	*438-0911*	1	SENSOR GP-ENGINE	434

481-8439 **ENGINE AR-PRIMARY (**contd.**)** **i06821088**

NOTE	PART NUMBER	QTY	PART NAME 1 2 3 4 5 6 (PRODUCT LEVEL)	SEE PAGE
Y	*430-5204*	1	SENSOR GP-TEMPERATURE	436
Y	*417-4371*	1	STARTING AID GP	438
Y	*415-5536*	1	STARTING MOTOR GP-ELECTRIC	439
Y	*416-1042*	1	FILM GP	456
Y	*432-6636*	1	TURBOCHARGER GP	370
Y	*417-4227*	1	WIRING GP-ENGINE	444
	465-8331	1	ELECTRONICS GP-ENGINE	

Y - SEPARATE ILLUSTRATION

<END>

483-5184 ENGINE AR-PRIMARY

97 BRAKE KW (129 BHP) AT 2200 RPM

OPTIONAL FIELD REPLACEMENT ORDER 452-7386—PAGE: 193, 452-7397—PAGE: 199

SMCS-1000 **i06991602**

NOTE	PART NUMBER	QTY	PART NAME 1 2 3 4 5 6 (PRODUCT LEVEL)	SEE PAGE
Y	*467-0357*	1	AIR CLEANER GP	353
Y	*418-7664*	1	ALTERNATOR GP-CHARGING	425
Y	*418-7425*	1	BELT TENSIONER GP	169
Y	*433-5258*	1	FUMES DISPOSAL GP	311
Y	*435-7778*	1	CAMSHAFT GP	170
Y	*416-1867*	1	CONNECTION GP-WATER	327
Y	*415-5535*	1	CONTROL GP-ELECTRONIC	429
Y	*418-7659*	1	COOLER GP-ENGINE OIL	330
Y	*418-6381*	1	COVER GP-VALVE MECHANISM	177
Y	*433-6323*	1	CRANKSHAFT GP	181
			—OR—	
Y	*510-5297*	1	CRANKSHAFT GP	186
Y	*415-3299*	1	CYLINDER BLOCK GP	190
Y	*415-5520*	1	CYLINDER HEAD GP	197
Y	*417-4187*	1	DRAIN GP-ENGINE OIL	200
Y	*416-1044*	1	DRIVE GP-FAN	205
Y	*462-9629*	1	ELBOW GP-AIR INLET	358
Y	*420-0291*	1	EXTENSION GP-FAN	219
Y	*445-0296*	1	FAN GP	335
Y	*418-6475*	1	FASTENER GP-EXHAUST MANIFOLD	359
Y	*432-0065*	1	FILLER GP-ENGINE OIL	308
Y	*416-8716*	1	FILM GP (ALTERNATOR)	457
Y	*417-4284*	1	FILM GP	458
Y	*416-1042*	1	FILM GP	456
Y	*417-3394*	1	FILTER GP-ENGINE OIL	310
Y	*441-1218*	1	FILTER GP-FUEL	403
Y	*453-7163*	1	FILTER GP-FUEL	407
Y	*431-7141*	1	FLYWHEEL GP	228
Y	*416-1053*	1	GAUGE GP-OIL LEVEL (DIPSTICK)	312
Y	*444-9659*	1	HOUSING GP-FLYWHEEL	235
Y	*432-4972*	1	HOUSING GP-FRONT	248
Y	*432-8266*	1	HOUSING GP-FRONT	251
Y	*415-5522*	1	INJECTOR GP-FUEL	410
Y	*415-7948*	1	JET GP-PISTON COOLING	257
Y	*417-3458*	1	LIFTING GP-ENGINE	258
Y	*415-7119*	1	LINES GP-FUEL	413
Y	*416-9552*	1	MANIFOLD GP-EXHAUST	361
Y	*415-7949*	1	MOUNTING GP-CONTROL	455
Y	*465-3613*	1	MOUNTING GP-ENGINE	265
Y	*419-8519*	1	PAN GP-OIL	274
Y	*415-5519*	1	PISTON & ROD GP	282
Y	*417-4190*	1	PLUG GP-OIL FILTER MOUNTING	318
Y	*417-4286*	1	PLUG GP-ENGINE	285
Y	*416-1089*	1	PULLEY GP-CRANKSHAFT	294
Y	*416-8723*	1	PUMP GP-ENGINE OIL	320
			—OR—	
Y	*508-3673*	1	PUMP GP-ENGINE OIL	321
Y	*415-5523*	1	PUMP GP-FUEL INJECTION	421

483-5184 **ENGINE AR-PRIMARY (**contd.**)** **i06991602**

NOTE	PART NUMBER	QTY	PART NAME 1 2 3 4 5 6 (PRODUCT LEVEL)	SEE PAGE
Y	*416-1864*	1	PUMP GP-WATER	339
Y	*432-8218*	1	RADIATOR GP	348
Y	*415-5527*	1	RAIL GP-FUEL	422
Y	*415-7947*	1	ROCKER ARM GP	299
Y	*425-9760*	1	SENSOR GP-ENGINE	432
Y	*430-5204*	1	SENSOR GP-TEMPERATURE	436
Y	*417-3453*	1	STARTING AID GP	437
Y	*418-7475*	1	STARTING MOTOR GP-ELECTRIC	440
Y	*445-1450*	1	TURBOCHARGER GP	384
Y	*417-4227*	1	WIRING GP-ENGINE	444
	462-5117	1	ELECTRONICS GP-ENGINE	
	415-9834	1	PLATE GP-SERIAL NUMBER	
	350-8958	1	PLATE-SERIAL NUMBER (ENGINE)	
	332-0905	2	RIVET-DRIVE	

Y - SEPARATE ILLUSTRATION

<END>

484-1469 ENGINE AR-PRIMARY

106 BRAKE KW (143 BHP) AT 2200 RPM

OPTIONAL FIELD REPLACEMENT ORDER 452-7386—PAGE: 193, 452-7397—PAGE: 199

SMCS-1000 **i07368944**

NOTE	PART NUMBER	QTY	PART NAME 1 2 3 4 5 6 (PRODUCT LEVEL)	SEE PAGE
Y	*425-8162*	1	ALTERNATOR GP-CHARGING	426
Y	*416-1046*	1	BELT TENSIONER GP	168
Y	*486-4227*	1	BREATHER GP	302
Y	*435-7778*	1	CAMSHAFT GP	170
Y	*417-4287*	1	CONNECTION GP-HEATER	324
Y	*416-1866*	1	CONNECTION GP-WATER	326
Y	*415-5535*	1	CONTROL GP-ELECTRONIC	429
Y	*432-2295*	1	COOLER GP-ENGINE OIL	332
Y	*415-7105*	1	COVER GP-VALVE MECHANISM	175
Y	*433-6323*	1	CRANKSHAFT GP	181
			—OR—	
Y	*510-5297*	1	CRANKSHAFT GP	186
Y	*415-3299*	1	CYLINDER BLOCK GP	190
Y	*415-5520*	1	CYLINDER HEAD GP	197
Y	*417-4187*	1	DRAIN GP-ENGINE OIL	200
Y	*432-4956*	1	DRIVE GP-AUXILIARY	203
Y	*444-9589*	1	DRIVE GP-FAN	215
Y	*416-9543*	1	ELBOW GP-AIR INLET	354
Y	*423-1281*	1	EXTENSION GP-FAN	220
Y	*417-4186*	1	FILLER GP-ENGINE OIL	307
Y	*416-1042*	1	FILM GP	456
Y	*416-8716*	1	FILM GP (ALTERNATOR)	457
Y	*417-4284*	1	FILM GP	458
Y	*417-3394*	1	FILTER GP-ENGINE OIL	310
Y	*441-1215*	1	FILTER GP-FUEL (WATER SEPARATOR)	402
Y	*453-7163*	1	FILTER GP-FUEL	407
Y	*417-3390*	1	FLYWHEEL GP	224
Y	*441-9154*	1	GAUGE GP-OIL LEVEL (DIPSTICK) (ENGINE)	314
Y	*444-9659*	1	HOUSING GP-FLYWHEEL	235
Y	*415-7117*	1	HOUSING GP-FRONT	244
Y	*415-5522*	1	INJECTOR GP-FUEL	410
Y	*415-7948*	1	JET GP-PISTON COOLING	257
Y	*417-3458*	1	LIFTING GP-ENGINE	258
Y	*415-7119*	1	LINES GP-FUEL	413
Y	*421-7092*	1	MANIFOLD GP-EXHAUST	363
Y	*415-7949*	1	MOUNTING GP-CONTROL	455
Y	*416-8775*	1	MOUNTING GP-EXHAUST	365
Y	*416-1051*	1	PAN GP-OIL	272
Y	*415-5518*	1	PISTON & ROD GP	280
Y	*417-4190*	1	PLUG GP-OIL FILTER MOUNTING	318
Y	*418-8564*	1	PLUG GP-ENGINE	286
Y	*416-1089*	1	PULLEY GP-CRANKSHAFT	294
Y	*416-8723*	1	PUMP GP-ENGINE OIL	320
			—OR—	
Y	*508-3673*	1	PUMP GP-ENGINE OIL	321
Y	*415-5523*	1	PUMP GP-FUEL INJECTION	421
Y	*416-1864*	1	PUMP GP-WATER	339
Y	*415-5527*	1	RAIL GP-FUEL	422

484-1469 **ENGINE AR-PRIMARY (**contd.**)** **i07368944**

NOTE	PART NUMBER	QTY	PART NAME 1 2 3 4 5 6 (PRODUCT LEVEL)	SEE PAGE
Y	*415-7947*	1	ROCKER ARM GP	299
Y	*425-9760*	1	SENSOR GP-ENGINE	432
Y	*430-5204*	1	SENSOR GP-TEMPERATURE	436
Y	*417-3453*	1	STARTING AID GP	437
Y	*419-8514*	1	STARTING MOTOR GP-ELECTRIC	441
Y	*444-8091*	1	TURBOCHARGER GP	381
Y	*492-2945*	1	WIRING GP-ENGINE	452
	462-8609	1	ELECTRONICS GP-ENGINE	
	415-9834	1	PLATE GP-SERIAL NUMBER	
	350-8958	1	PLATE-SERIAL NUMBER (ENGINE)	
	332-0905	2	RIVET-DRIVE	

Y - SEPARATE ILLUSTRATION

<END>

484-2326 ENGINE AR-PRIMARY

75 BRAKE KW (100 BHP) AT 2200 RPM

OPTIONAL FIELD REPLACEMENT ORDER 452-7386—PAGE: 193, 452-7397—PAGE: 199

PART OF 485-1660 ENGINE AR-COMPLETE

SMCS-1000 **i07311277**

NOTE	PART NUMBER	QTY	PART NAME 1 2 3 4 5 6 (PRODUCT LEVEL)	SEE PAGE
Y	*528-5052*	1	ALTERNATOR GP-CHARGING	427
Y	*435-7778*	1	CAMSHAFT GP	170
Y	*416-1865*	1	CONNECTION GP-WATER	325
Y	*415-5535*	1	CONTROL GP-ELECTRONIC	429
Y	*418-7659*	1	COOLER GP-ENGINE OIL	330
Y	*415-7106*	1	COVER GP-VALVE MECHANISM	176
Y	*433-6323*	1	CRANKSHAFT GP	181
			—OR—	
Y	*510-5297*	1	CRANKSHAFT GP	186
Y	*415-3299*	1	CYLINDER BLOCK GP	190
Y	*415-5520*	1	CYLINDER HEAD GP	197
Y	*417-4187*	1	DRAIN GP-ENGINE OIL	200
Y	*515-7183*	1	DRIVE GP-FAN	218
Y	*421-6894*	1	ELBOW GP-AIR INLET	356
Y	*418-6475*	1	FASTENER GP-EXHAUST MANIFOLD	359
Y	*416-1070*	1	FILLER GP-ENGINE OIL	305
Y	*416-8716*	1	FILM GP (ALTERNATOR)	457
Y	*417-4284*	1	FILM GP (EMISSIONS)	458
Y	*417-3394*	1	FILTER GP-ENGINE OIL	310
Y	*441-1215*	1	FILTER GP-FUEL (WATER SEPARATOR)	402
Y	*453-7163*	1	FILTER GP-FUEL	407
Y	*472-2188*	1	FLYWHEEL GP	230
Y	*433-5258*	1	FUMES DISPOSAL GP	311
Y	*447-7670*	1	GAUGE GP-OIL LEVEL (DIPSTICK)	316
Y	*472-2181*	1	HOUSING GP-FLYWHEEL	237
Y	*467-7637*	1	HOUSING GP-FRONT	255
Y	*415-5522*	1	INJECTOR GP-FUEL	410
Y	*415-7948*	1	JET GP-PISTON COOLING	257
Y	*417-3462*	1	LIFTING GP-ENGINE	259
Y	*415-7119*	1	LINES GP-FUEL	413
Y	*416-9552*	1	MANIFOLD GP-EXHAUST	361
Y	*415-7949*	1	MOUNTING GP-CONTROL	455
Y	*477-6887*	1	MOUNTING GP-ENGINE	268
Y	*416-8715*	1	MOUNTING GP-FAN	338
Y	*416-1051*	1	PAN GP-OIL	272
Y	*415-5519*	1	PISTON & ROD GP	282
Y	*417-4286*	1	PLUG GP-ENGINE	285
Y	*417-3401*	1	PLUG GP-FRONT HOUSING	289
Y	*417-4190*	1	PLUG GP-OIL FILTER MOUNTING	318
Y	*467-7586*	1	PULLEY GP-ALTERNATOR	292
Y	*418-7661*	1	PULLEY GP-CRANKSHAFT	295
Y	*416-8723*	1	PUMP GP-ENGINE OIL	320
			—OR—	
Y	*508-3673*	1	PUMP GP-ENGINE OIL	321
Y	*415-5523*	1	PUMP GP-FUEL INJECTION	421
Y	*416-1864*	1	PUMP GP-WATER	339
Y	*415-5527*	1	RAIL GP-FUEL	422
Y	*415-7947*	1	ROCKER ARM GP	299

484-2326 **ENGINE AR-PRIMARY (**contd.**)** **i07311277**

NOTE	PART NUMBER	QTY	PART NAME 1 2 3 4 5 6 (PRODUCT LEVEL)	SEE PAGE
Y	*438-0911*	1	SENSOR GP-ENGINE	434
Y	*430-5204*	1	SENSOR GP-TEMPERATURE	436
Y	*417-3453*	1	STARTING AID GP	437
Y	*432-6636*	1	TURBOCHARGER GP	370
Y	*417-4227*	1	WIRING GP-ENGINE	444
	465-8331	1	ELECTRONICS GP-ENGINE	
	415-9834	1	PLATE GP-SERIAL NUMBER	
	332-0905	2	RIVET-DRIVE	
	350-8958	1	PLATE-SERIAL NUMBER (ENGINE)	

Y - SEPARATE ILLUSTRATION

<END>

484-2343 ENGINE AR-PRIMARY

106 BRAKE KW (143 BHP) AT 2200 RPM
OPTIONAL FIELD REPLACEMENT ORDER 452-7386—PAGE: 193, 452-7397—PAGE: 199
PART OF 484-2938 ENGINE AR-COMPLETE

SMCS-1000 **i06989840**

NOTE	PART NUMBER	QTY	PART NAME 1 2 3 4 5 6 (PRODUCT LEVEL)	SEE PAGE
Y	*418-7664*	1	ALTERNATOR GP-CHARGING	425
Y	*432-4983*	1	BALANCER GP	167
Y	*418-7425*	1	BELT TENSIONER GP	169
Y	*433-5258*	1	FUMES DISPOSAL GP	311
Y	*435-7778*	1	CAMSHAFT GP	170
Y	*416-1867*	1	CONNECTION GP-WATER	327
Y	*415-5535*	1	CONTROL GP-ELECTRONIC	429
Y	*452-0797*	1	COOLER GP-ENGINE OIL	333
Y	*415-7106*	1	COVER GP-VALVE MECHANISM	176
Y	*433-6323*	1	CRANKSHAFT GP	181
			—OR—	
Y	*510-5297*	1	CRANKSHAFT GP	186
Y	*415-3299*	1	CYLINDER BLOCK GP	190
Y	*415-5520*	1	CYLINDER HEAD GP	197
Y	*417-4187*	1	DRAIN GP-ENGINE OIL	200
Y	*432-1856*	1	DRIVE GP-FAN	212
Y	*432-4332*	1	FAN GP	334
Y	*418-6475*	1	FASTENER GP-EXHAUST MANIFOLD	359
Y	*417-4186*	1	FILLER GP-ENGINE OIL	307
Y	*416-1042*	1	FILM GP	456
Y	*416-8716*	1	FILM GP (ALTERNATOR)	457
Y	*417-4284*	1	FILM GP	458
Y	*483-1195*	1	FILTER & LINES GP-FUEL	395
Y	*417-3394*	1	FILTER GP-ENGINE OIL	310
Y	*441-1215*	1	FILTER GP-FUEL (WATER SEPARATOR)	402
Y	*453-7163*	1	FILTER GP-FUEL	407
Y	*431-7141*	1	FLYWHEEL GP	228
Y	*444-9660*	1	HOUSING GP-FLYWHEEL	236
Y	*415-7117*	1	HOUSING GP-FRONT	244
Y	*416-8719*	1	COVER GP-FRONT HOUSING	172
Y	*415-5522*	1	INJECTOR GP-FUEL	410
Y	*415-7948*	1	JET GP-PISTON COOLING	257
Y	*417-3458*	1	LIFTING GP-ENGINE	258
Y	*421-7092*	1	MANIFOLD GP-EXHAUST	363
Y	*418-7675*	1	MANIFOLD GP-INLET	364
Y	*415-7949*	1	MOUNTING GP-CONTROL	455
Y	*416-1052*	1	GAUGE GP-OIL LEVEL (DIPSTICK)	454
Y	*452-0796*	1	PAN GP-OIL	279
Y	*415-5518*	1	PISTON & ROD GP	280
Y	*417-4190*	1	PLUG GP-OIL FILTER MOUNTING	318
Y	*417-4286*	1	PLUG GP-ENGINE	285
Y	*446-2228*	1	PLUG GP-FLYWHEEL HOUSING	288
Y	*426-3230*	1	PULLEY GP-CRANKSHAFT	296
Y	*415-5523*	1	PUMP GP-FUEL INJECTION	421
Y	*416-1864*	1	PUMP GP-WATER	339
Y	*415-5527*	1	RAIL GP-FUEL	422
Y	*415-7947*	1	ROCKER ARM GP	299

484-2343 **ENGINE AR-PRIMARY (**contd.**)** **i06989840**

NOTE	PART NUMBER	QTY	PART NAME 1 2 3 4 5 6 (PRODUCT LEVEL)	SEE PAGE
Y	*425-9760*	1	SENSOR GP-ENGINE	432
Y	*430-5204*	1	SENSOR GP-TEMPERATURE	436
Y	*417-3453*	1	STARTING AID GP	437
Y	*418-7475*	1	STARTING MOTOR GP-ELECTRIC	440
Y	*432-6668*	1	TURBOCHARGER GP	379
Y	*450-2855*	1	WIRING GP-ENGINE	448
	462-8609	1	ELECTRONICS GP-ENGINE	
	415-9834	1	PLATE GP-SERIAL NUMBER	

Y - SEPARATE ILLUSTRATION

<END>

484-6074 ENGINE AR-PRIMARY

SMCS-1000 **i06821215**

NOTE	PART NUMBER	QTY	PART NAME 1 2 3 4 5 6 (PRODUCT LEVEL)	SEE PAGE
Y	*415-7107*	1	ALTERNATOR GP-CHARGING	424
Y	*416-8716*	1	FILM GP (ALTERNATOR)	457
Y	*433-5258*	1	FUMES DISPOSAL GP	311
Y	*435-7778*	1	CAMSHAFT GP	170
Y	*416-1867*	1	CONNECTION GP-WATER	327
Y	*415-5535*	1	CONTROL GP-ELECTRONIC	429
Y	*418-7659*	1	COOLER GP-ENGINE OIL	330
Y	*415-7105*	1	COVER GP-VALVE MECHANISM	175
Y	*433-6323*	1	CRANKSHAFT GP	181
			—OR—	
Y	*510-5297*	1	CRANKSHAFT GP	186
Y	*415-3299*	1	CYLINDER BLOCK GP	190
Y	*415-5520*	1	CYLINDER HEAD GP	197
Y	*417-4187*	1	DRAIN GP-ENGINE OIL	200
Y	*418-7425*	1	BELT TENSIONER GP	169
Y	*432-1846*	1	DRIVE GP-FAN	209
Y	*421-6894*	1	ELBOW GP-AIR INLET	356
Y	*432-4333*	1	EXTENSION GP-FAN	221
Y	*418-6475*	1	FASTENER GP-EXHAUST MANIFOLD	359
Y	*417-4186*	1	FILLER GP-ENGINE OIL	307
Y	*417-4284*	1	FILM GP	458
Y	*417-3394*	1	FILTER GP-ENGINE OIL	310
Y	*441-1215*	1	FILTER GP-FUEL (WATER SEPARATOR)	402
Y	*453-7163*	1	FILTER GP-FUEL	407
Y	*416-1032*	1	FLYWHEEL GP	223
Y	*444-9660*	1	HOUSING GP-FLYWHEEL	236
Y	*415-7117*	1	HOUSING GP-FRONT	244
Y	*416-8722*	1	HOUSING GP-FRONT	246
Y	*415-5522*	1	INJECTOR GP-FUEL	410
Y	*415-7948*	1	JET GP-PISTON COOLING	257
Y	*417-3458*	1	LIFTING GP-ENGINE	258
Y	*415-7119*	1	LINES GP-FUEL	413
Y	*416-9552*	1	MANIFOLD GP-EXHAUST	361
Y	*415-7949*	1	MOUNTING GP-CONTROL	455
Y	*416-1052*	1	GAUGE GP-OIL LEVEL (DIPSTICK)	454
Y	*418-7530*	1	PAN GP-OIL	273
Y	*415-5519*	1	PISTON & ROD GP	282
Y	*417-4190*	1	PLUG GP-OIL FILTER MOUNTING	318
Y	*417-4286*	1	PLUG GP-ENGINE	285
Y	*446-2228*	1	PLUG GP-FLYWHEEL HOUSING	288
Y	*416-1089*	1	PULLEY GP-CRANKSHAFT	294
Y	*416-8723*	1	PUMP GP-ENGINE OIL	320
			—OR—	
Y	*508-3673*	1	PUMP GP-ENGINE OIL	321
Y	*415-5523*	1	PUMP GP-FUEL INJECTION	421
Y	*416-1864*	1	PUMP GP-WATER	339
Y	*415-5527*	1	RAIL GP-FUEL	422
Y	*415-7947*	1	ROCKER ARM GP	299
Y	*438-0911*	1	SENSOR GP-ENGINE	434
Y	*430-5204*	1	SENSOR GP-TEMPERATURE	436

484-6074 **ENGINE AR-PRIMARY (**contd.**)** **i06821215**

NOTE	PART NUMBER	QTY	PART NAME 1 2 3 4 5 6 (PRODUCT LEVEL)	SEE PAGE
Y	*417-4371*	1	STARTING AID GP	438
Y	*415-5536*	1	STARTING MOTOR GP-ELECTRIC	439
Y	*416-1042*	1	FILM GP	456
Y	*432-6636*	1	TURBOCHARGER GP	370
Y	*417-4227*	1	WIRING GP-ENGINE	444
	465-8331	1	ELECTRONICS GP-ENGINE	

Y - SEPARATE ILLUSTRATION

<END>

485-2322 ENGINE AR-PRIMARY

97 BRAKE KW (129 BHP) AT 2200 RPM

OPTIONAL FIELD REPLACEMENT ORDER 452-7386—PAGE: 193, 452-7397—PAGE: 199

SMCS-1000 **i06829304**

NOTE	PART NUMBER	QTY	PART NAME 1 2 3 4 5 6 (PRODUCT LEVEL)	SEE PAGE
Y	*467-0357*	1	AIR CLEANER GP	353
Y	*416-8716*	1	FILM GP (ALTERNATOR)	457
Y	*418-7664*	1	ALTERNATOR GP-CHARGING	425
Y	*433-5258*	1	FUMES DISPOSAL GP	311
Y	*435-7778*	1	CAMSHAFT GP	170
Y	*416-1867*	1	CONNECTION GP-WATER	327
Y	*415-5535*	1	CONTROL GP-ELECTRONIC	429
Y	*418-7659*	1	COOLER GP-ENGINE OIL	330
Y	*418-6381*	1	COVER GP-VALVE MECHANISM	177
Y	*433-6323*	1	CRANKSHAFT GP	181
			—OR—	
Y	*510-5297*	1	CRANKSHAFT GP	186
Y	*415-3299*	1	CYLINDER BLOCK GP	190
Y	*415-5520*	1	CYLINDER HEAD GP	197
Y	*419-8538*	1	DRAIN GP-ENGINE OIL	202
Y	*418-7425*	1	BELT TENSIONER GP	169
Y	*432-1853*	1	DRIVE GP-FAN	211
Y	*462-9629*	1	ELBOW GP-AIR INLET	358
Y	*420-0291*	1	EXTENSION GP-FAN	219
Y	*445-0296*	1	FAN GP	335
Y	*418-6475*	1	FASTENER GP-EXHAUST MANIFOLD	359
Y	*417-4185*	1	FILLER GP-ENGINE OIL	306
Y	*417-4284*	1	FILM GP	458
Y	*417-3394*	1	FILTER GP-ENGINE OIL	310
Y	*441-1215*	1	FILTER GP-FUEL (WATER SEPARATOR)	402
Y	*453-7163*	1	FILTER GP-FUEL	407
Y	*417-3391*	1	FLYWHEEL GP	225
Y	*416-1053*	1	GAUGE GP-OIL LEVEL (DIPSTICK)	312
Y	*416-1029*	1	HOUSING GP-FLYWHEEL	231
Y	*432-4972*	1	HOUSING GP-FRONT	248
Y	*432-8266*	1	HOUSING GP-FRONT	251
Y	*415-5522*	1	INJECTOR GP-FUEL	410
Y	*415-7948*	1	JET GP-PISTON COOLING	257
Y	*417-3458*	1	LIFTING GP-ENGINE	258
Y	*415-7119*	1	LINES GP-FUEL	413
Y	*416-9552*	1	MANIFOLD GP-EXHAUST	361
Y	*415-7949*	1	MOUNTING GP-CONTROL	455
Y	*465-3614*	1	MOUNTING GP-ENGINE	266
Y	*419-8519*	1	PAN GP-OIL	274
Y	*415-5519*	1	PISTON & ROD GP	282
Y	*417-4190*	1	PLUG GP-OIL FILTER MOUNTING	318
Y	*417-4286*	1	PLUG GP-ENGINE	285
Y	*426-3230*	1	PULLEY GP-CRANKSHAFT	296
Y	*416-8723*	1	PUMP GP-ENGINE OIL	320
			—OR—	
Y	*508-3673*	1	PUMP GP-ENGINE OIL	321
Y	*415-5523*	1	PUMP GP-FUEL INJECTION	421
Y	*416-1864*	1	PUMP GP-WATER	339

485-2322 **ENGINE AR-PRIMARY (**contd.**)** **i06829304**

NOTE	PART NUMBER	QTY	PART NAME 1 2 3 4 5 6 (PRODUCT LEVEL)	SEE PAGE
Y	*459-6904*	1	RADIATOR GP	350
Y	*415-5527*	1	RAIL GP-FUEL	422
Y	*415-7947*	1	ROCKER ARM GP	299
Y	*425-9760*	1	SENSOR GP-ENGINE	432
Y	*430-5204*	1	SENSOR GP-TEMPERATURE	436
Y	*417-3453*	1	STARTING AID GP	437
Y	*416-1042*	1	FILM GP	456
Y	*418-7475*	1	STARTING MOTOR GP-ELECTRIC	440
Y	*445-1450*	1	TURBOCHARGER GP	384
Y	*417-4227*	1	WIRING GP-ENGINE	444
	462-5117	1	ELECTRONICS GP-ENGINE	

Y - SEPARATE ILLUSTRATION

<END>

486-2471 ENGINE AR-PRIMARY

96.5 BRAKE KW (129.4BHP) AT 2200-RPM

OPTIONAL FIELD REPLACEMENT ORDER 452-7386—PAGE: 193, 452-7397—PAGE: 199

PART OF 486-2571 ENGINE AR-COMPLETE

SMCS-1000 **i07284674**

NOTE	PART NUMBER	QTY	PART NAME 1 2 3 4 5 6 (PRODUCT LEVEL)	SEE PAGE
Y	*467-0357*	1	AIR CLEANER GP	353
Y	*415-7107*	1	ALTERNATOR GP-CHARGING	424
Y	*432-4983*	1	BALANCER GP	167
Y	*418-7425*	1	BELT TENSIONER GP	169
Y	*522-1257*	1	BREATHER GP	303
Y	*435-7778*	1	CAMSHAFT GP	170
Y	*417-4287*	1	CONNECTION GP-HEATER	324
Y	*416-1867*	1	CONNECTION GP-WATER	327
Y	*415-5535*	1	CONTROL GP-ELECTRONIC	429
Y	*452-0797*	1	COOLER GP-ENGINE OIL	333
Y	*418-6381*	1	COVER GP-VALVE MECHANISM	177
Y	*510-5297*	1	CRANKSHAFT GP	186
Y	*415-3299*	1	CYLINDER BLOCK GP	190
Y	*415-5520*	1	CYLINDER HEAD GP	197
Y	*417-4187*	1	DRAIN GP-ENGINE OIL	200
Y	*416-1044*	1	DRIVE GP-FAN	205
Y	*462-9629*	1	ELBOW GP-AIR INLET	358
Y	*420-0291*	1	EXTENSION GP-FAN	219
Y	*445-0297*	1	FAN GP	336
Y	*418-6475*	1	FASTENER GP-EXHAUST MANIFOLD	359
Y	*417-4185*	1	FILLER GP-ENGINE OIL	306
Y	*416-1042*	1	FILM GP (MOTOR)	456
Y	*416-8716*	1	FILM GP (ALTERNATOR)	457
Y	*417-4284*	1	FILM GP (EMISSIONS)	458
Y	*483-1194*	1	FILTER & LINES GP-FUEL	393
Y	*417-3394*	1	FILTER GP-ENGINE OIL	310
Y	*441-1222*	1	FILTER GP-FUEL	404
Y	*453-7163*	1	FILTER GP-FUEL	407
Y	*431-7141*	1	FLYWHEEL GP	228
Y	*451-2273*	1	GAUGE GP-OIL LEVEL (DIPSTICK)	317
Y	*418-7473*	1	HOUSING GP-FLYWHEEL	233
Y	*432-8266*	1	HOUSING GP-FRONT	251
Y	*432-4978*	1	HOUSING GP-FRONT	249
Y	*415-5522*	1	INJECTOR GP-FUEL	410
Y	*415-7948*	1	JET GP-PISTON COOLING	257
Y	*417-3458*	1	LIFTING GP-ENGINE	258
Y	*416-9552*	1	MANIFOLD GP-EXHAUST	361
Y	*415-7949*	1	MOUNTING GP-CONTROL	455
Y	*465-3613*	1	MOUNTING GP-ENGINE	265
Y	*452-0796*	1	PAN GP-OIL	279
Y	*415-5519*	1	PISTON & ROD GP	282
Y	*417-4190*	1	PLUG GP-OIL FILTER MOUNTING	318
Y	*416-1089*	1	PULLEY GP-CRANKSHAFT	294
Y	*415-5523*	1	PUMP GP-FUEL INJECTION	421
Y	*416-1864*	1	PUMP GP-WATER	339
Y	*432-8218*	1	RADIATOR GP	348
Y	*415-5527*	1	RAIL GP-FUEL	422

486-2471 **ENGINE AR-PRIMARY (**contd.**)** **i07284674**

NOTE	PART NUMBER	QTY	PART NAME 1 2 3 4 5 6 (PRODUCT LEVEL)	SEE PAGE
Y	*415-7947*	1	ROCKER ARM GP	299
Y	*425-9760*	1	SENSOR GP-ENGINE	432
Y	*430-5204*	1	SENSOR GP-TEMPERATURE	436
Y	*417-4371*	1	STARTING AID GP	438
Y	*415-5536*	1	STARTING MOTOR GP-ELECTRIC	439
Y	*445-1450*	1	TURBOCHARGER GP	384
Y	*450-2855*	1	WIRING GP-ENGINE	448
	462-5117	1	ELECTRONICS GP-ENGINE	
	415-9834	1	PLATE GP-SERIAL NUMBER	
	350-8958	1	PLATE-SERIAL NUMBER (ENGINE)	
	332-0905	2	RIVET-DRIVE	

Y - SEPARATE ILLUSTRATION

<END>

488-4590 ENGINE AR-PRIMARY

97 BRAKE KW (129 BHP) AT 2200 RPM

OPTIONAL FIELD REPLACEMENT ORDER 452-7386—PAGE: 193, 452-7397—PAGE: 199

PART OF 488-4772 ENGINE AR

SMCS-1000 **i06713697**

NOTE	PART NUMBER	QTY	PART NAME 1 2 3 4 5 6 (PRODUCT LEVEL)	SEE PAGE
Y	*467-0357*	1	AIR CLEANER GP	353
Y	*415-7107*	1	ALTERNATOR GP-CHARGING	424
Y	*432-4983*	1	BALANCER GP	167
Y	*418-7425*	1	BELT TENSIONER GP	169
Y	*433-5258*	1	FUMES DISPOSAL GP	311
Y	*435-7778*	1	CAMSHAFT GP	170
Y	*416-1867*	1	CONNECTION GP-WATER	327
Y	*415-5535*	1	CONTROL GP-ELECTRONIC	429
Y	*452-0797*	1	COOLER GP-ENGINE OIL	333
Y	*415-7105*	1	COVER GP-VALVE MECHANISM	175
Y	*433-6323*	1	CRANKSHAFT GP	181
Y	*415-3299*	1	CYLINDER BLOCK GP	190
Y	*415-5520*	1	CYLINDER HEAD GP	197
Y	*417-4187*	1	DRAIN GP-ENGINE OIL	200
Y	*432-1853*	1	DRIVE GP-FAN	211
Y	*462-9629*	1	ELBOW GP-AIR INLET	358
Y	*420-0291*	1	EXTENSION GP-FAN	219
Y	*445-0297*	1	FAN GP	336
Y	*418-6475*	1	FASTENER GP-EXHAUST MANIFOLD	359
Y	*432-0065*	1	FILLER GP-ENGINE OIL	308
Y	*416-8716*	1	FILM GP (ALTERNATOR)	457
Y	*417-4284*	1	FILM GP	458
Y	*416-1042*	1	FILM GP	456
Y	*417-3394*	1	FILTER GP-ENGINE OIL	310
Y	*441-1215*	1	FILTER GP-FUEL (WATER SEPARATOR)	402
Y	*453-7163*	1	FILTER GP-FUEL	407
Y	*417-3390*	1	FLYWHEEL GP	224
Y	*418-7473*	1	HOUSING GP-FLYWHEEL	233
Y	*415-7117*	1	HOUSING GP-FRONT	244
Y	*416-8719*	1	COVER GP-FRONT HOUSING	172
Y	*415-5522*	1	INJECTOR GP-FUEL	410
Y	*415-7948*	1	JET GP-PISTON COOLING	257
Y	*417-3458*	1	LIFTING GP-ENGINE	258
Y	*415-7119*	1	LINES GP-FUEL	413
Y	*416-9552*	1	MANIFOLD GP-EXHAUST	361
Y	*415-7949*	1	MOUNTING GP-CONTROL	455
Y	*465-3613*	1	MOUNTING GP-ENGINE	265
Y	*416-1052*	1	GAUGE GP-OIL LEVEL (DIPSTICK)	454
Y	*452-0796*	1	PAN GP-OIL	279
Y	*415-5519*	1	PISTON & ROD GP	282
Y	*417-4190*	1	PLUG GP-OIL FILTER MOUNTING	318
Y	*417-4286*	1	PLUG GP-ENGINE	285
Y	*426-3230*	1	PULLEY GP-CRANKSHAFT	296
Y	*415-5523*	1	PUMP GP-FUEL INJECTION	421
Y	*416-1864*	1	PUMP GP-WATER	339
Y	*432-8215*	1	RADIATOR GP	345
Y	*415-5527*	1	RAIL GP-FUEL	422

488-4590 **ENGINE AR-PRIMARY (**contd.**)** **i06713697**

NOTE	PART NUMBER	QTY	PART NAME 1 2 3 4 5 6 (PRODUCT LEVEL)	SEE PAGE
Y	*415-7947*	1	ROCKER ARM GP	299
Y	*425-9760*	1	SENSOR GP-ENGINE	432
Y	*430-5204*	1	SENSOR GP-TEMPERATURE	436
Y	*417-4371*	1	STARTING AID GP	438
Y	*415-5536*	1	STARTING MOTOR GP-ELECTRIC	439
Y	*445-1450*	1	TURBOCHARGER GP	384
Y	*417-4227*	1	WIRING GP-ENGINE	444
	462-5117	1	ELECTRONICS GP-ENGINE	

Y - SEPARATE ILLUSTRATION

<END>

488-4641 ENGINE AR-PRIMARY

106 BRAKE KW (143 BHP) AT 2200 RPM

OPTIONAL FIELD REPLACEMENT ORDER 452-7386—PAGE: 193, 452-7397—PAGE: 199

PART OF 488-4771 ENGINE AR

SMCS-1000 **i06712195**

NOTE	PART NUMBER	QTY	PART NAME 1 2 3 4 5 6 (PRODUCT LEVEL)	SEE PAGE
Y	*467-0357*	1	AIR CLEANER GP	353
Y	*418-7664*	1	ALTERNATOR GP-CHARGING	425
Y	*432-4983*	1	BALANCER GP	167
Y	*418-7425*	1	BELT TENSIONER GP	169
Y	*433-5258*	1	FUMES DISPOSAL GP	311
Y	*435-7778*	1	CAMSHAFT GP	170
Y	*416-1867*	1	CONNECTION GP-WATER	327
Y	*415-5535*	1	CONTROL GP-ELECTRONIC	429
Y	*452-0797*	1	COOLER GP-ENGINE OIL	333
Y	*415-7105*	1	COVER GP-VALVE MECHANISM	175
Y	*433-6323*	1	CRANKSHAFT GP	181
Y	*415-3299*	1	CYLINDER BLOCK GP	190
Y	*415-5520*	1	CYLINDER HEAD GP	197
Y	*417-4187*	1	DRAIN GP-ENGINE OIL	200
Y	*432-1853*	1	DRIVE GP-FAN	211
Y	*462-9629*	1	ELBOW GP-AIR INLET	358
Y	*420-0291*	1	EXTENSION GP-FAN	219
Y	*445-0297*	1	FAN GP	336
Y	*418-6475*	1	FASTENER GP-EXHAUST MANIFOLD	359
Y	*432-0065*	1	FILLER GP-ENGINE OIL	308
Y	*416-8716*	1	FILM GP (ALTERNATOR)	457
Y	*417-4284*	1	FILM GP	458
Y	*416-1042*	1	FILM GP	456
Y	*417-3394*	1	FILTER GP-ENGINE OIL	310
Y	*441-1215*	1	FILTER GP-FUEL (WATER SEPARATOR)	402
Y	*453-7163*	1	FILTER GP-FUEL	407
Y	*417-3390*	1	FLYWHEEL GP	224
Y	*418-7473*	1	HOUSING GP-FLYWHEEL	233
Y	*415-7117*	1	HOUSING GP-FRONT	244
Y	*416-8719*	1	COVER GP-FRONT HOUSING	172
Y	*415-5522*	1	INJECTOR GP-FUEL	410
Y	*415-7948*	1	JET GP-PISTON COOLING	257
Y	*417-3458*	1	LIFTING GP-ENGINE	258
Y	*415-7119*	1	LINES GP-FUEL	413
Y	*416-9552*	1	MANIFOLD GP-EXHAUST	361
Y	*415-7949*	1	MOUNTING GP-CONTROL	455
Y	*465-3613*	1	MOUNTING GP-ENGINE	265
Y	*416-1052*	1	GAUGE GP-OIL LEVEL (DIPSTICK)	454
Y	*452-0796*	1	PAN GP-OIL	279
Y	*415-5518*	1	PISTON & ROD GP	280
Y	*417-4190*	1	PLUG GP-OIL FILTER MOUNTING	318
Y	*417-4286*	1	PLUG GP-ENGINE	285
Y	*426-3230*	1	PULLEY GP-CRANKSHAFT	296
Y	*415-5523*	1	PUMP GP-FUEL INJECTION	421
Y	*416-1864*	1	PUMP GP-WATER	339
Y	*432-8215*	1	RADIATOR GP	345
Y	*415-5527*	1	RAIL GP-FUEL	422

488-4641 **ENGINE AR-PRIMARY (**contd.**)** **i06712195**

NOTE	PART NUMBER	QTY	PART NAME 1 2 3 4 5 6 (PRODUCT LEVEL)	SEE PAGE
Y	*415-7947*	1	ROCKER ARM GP	299
Y	*425-9760*	1	SENSOR GP-ENGINE	432
Y	*430-5204*	1	SENSOR GP-TEMPERATURE	436
Y	*417-3453*	1	STARTING AID GP	437
Y	*418-7475*	1	STARTING MOTOR GP-ELECTRIC	440
Y	*445-1450*	1	TURBOCHARGER GP	384
Y	*417-4227*	1	WIRING GP-ENGINE	444
	462-8609	1	ELECTRONICS GP-ENGINE	

Y - SEPARATE ILLUSTRATION

<END>

491-2522 ENGINE AR-PRIMARY

97 BRAKE KW (129 BHP) AT 2200 RPM

OPTIONAL FIELD REPLACEMENT ORDER 452-7386—PAGE: 193, 452-7397—PAGE: 199

PART OF 491-5059 ENGINE AR

SMCS-1000 **i06712332**

NOTE	PART NUMBER	QTY	PART NAME 1 2 3 4 5 6 (PRODUCT LEVEL)	SEE PAGE
Y	*418-7664*	1	ALTERNATOR GP-CHARGING	425
Y	*418-7425*	1	BELT TENSIONER GP	169
Y	*433-5258*	1	FUMES DISPOSAL GP	311
Y	*435-7778*	1	CAMSHAFT GP	170
Y	*416-1867*	1	CONNECTION GP-WATER	327
Y	*415-5535*	1	CONTROL GP-ELECTRONIC	429
Y	*419-7639*	1	COOLER GP-ENGINE OIL	331
Y	*415-7106*	1	COVER GP-VALVE MECHANISM	176
Y	*433-6323*	1	CRANKSHAFT GP	181
Y	*415-3299*	1	CYLINDER BLOCK GP	190
Y	*415-5520*	1	CYLINDER HEAD GP	197
Y	*417-4187*	1	DRAIN GP-ENGINE OIL	200
Y	*416-1045*	1	DRIVE GP-FAN	206
Y	*445-0297*	1	FAN GP	336
Y	*423-1281*	1	EXTENSION GP-FAN	220
Y	*417-4185*	1	FILLER GP-ENGINE OIL	306
Y	*416-8716*	1	FILM GP (ALTERNATOR)	457
Y	*417-4284*	1	FILM GP	458
Y	*416-1042*	1	FILM GP	456
Y	*417-3394*	1	FILTER GP-ENGINE OIL	310
Y	*441-1215*	1	FILTER GP-FUEL (WATER SEPARATOR)	402
Y	*453-7163*	1	FILTER GP-FUEL	407
Y	*416-8774*	1	FITTING GP-EXHAUST	360
Y	*417-3390*	1	FLYWHEEL GP	224
Y	*447-7670*	1	GAUGE GP-OIL LEVEL (DIPSTICK) (ENGINE)	316
Y	*444-9659*	1	HOUSING GP-FLYWHEEL	235
Y	*415-7116*	1	HOUSING GP-FRONT	242
Y	*419-8508*	1	HOUSING GP-FRONT	247
Y	*415-5522*	1	INJECTOR GP-FUEL	410
Y	*415-7948*	1	JET GP-PISTON COOLING	257
Y	*417-3458*	1	LIFTING GP-ENGINE	258
Y	*415-7119*	1	LINES GP-FUEL	413
Y	*416-9552*	1	MANIFOLD GP-EXHAUST	361
Y	*418-7675*	1	MANIFOLD GP-INLET	364
Y	*415-7949*	1	MOUNTING GP-CONTROL	455
Y	*445-0224*	1	MOUNTING GP-ENGINE	263
Y	*416-1051*	1	PAN GP-OIL	272
Y	*415-5519*	1	PISTON & ROD GP	282
Y	*417-4286*	1	PLUG GP-ENGINE	285
Y	*416-1089*	1	PULLEY GP-CRANKSHAFT	294
Y	*416-8723*	1	PUMP GP-ENGINE OIL	320
Y	*415-5523*	1	PUMP GP-FUEL INJECTION	421
Y	*416-1864*	1	PUMP GP-WATER	339
Y	*415-5527*	1	RAIL GP-FUEL	422
Y	*415-7947*	1	ROCKER ARM GP	299
Y	*425-9760*	1	SENSOR GP-ENGINE	432
Y	*430-5204*	1	SENSOR GP-TEMPERATURE	436

491-2522 **ENGINE AR-PRIMARY (**contd.**)** **i06712332**

NOTE	PART NUMBER	QTY	PART NAME 1 2 3 4 5 6 (PRODUCT LEVEL)	SEE PAGE
Y	*417-3453*	1	STARTING AID GP	437
Y	*419-8514*	1	STARTING MOTOR GP-ELECTRIC	441
Y	*432-8211*	1	SWITCH GP-HEAT START	443
Y	*432-6655*	1	TURBOCHARGER GP	374
Y	*417-4214*	1	VALVE GP-CHECK (ALARM)	322
Y	*450-2854*	1	WIRING GP-ENGINE	447
	462-5117	1	ELECTRONICS GP-ENGINE	

Y - SEPARATE ILLUSTRATION

<END>

492-1322 ENGINE AR-PRIMARY

98.1 BRAKE KW (131.6 BHP) AT 1800-RPM

SMCS-1000 **i06821183**

NOTE	PART NUMBER	QTY	PART NAME 1 2 3 4 5 6 (PRODUCT LEVEL)	SEE PAGE
Y	*416-8716*	1	FILM GP (ALTERNATOR)	457
Y	*418-7664*	1	ALTERNATOR GP-CHARGING	425
Y	*433-5258*	1	FUMES DISPOSAL GP	311
Y	*470-6153*	1	CAMSHAFT GP	171
Y	*416-1867*	1	CONNECTION GP-WATER	327
Y	*415-5535*	1	CONTROL GP-ELECTRONIC	429
Y	*418-7659*	1	COOLER GP-ENGINE OIL	330
Y	*418-6381*	1	COVER GP-VALVE MECHANISM	177
Y	*433-6323*	1	CRANKSHAFT GP	181
			—OR—	
Y	*510-5297*	1	CRANKSHAFT GP	186
Y	*415-3299*	1	CYLINDER BLOCK GP	190
Y	*415-5520*	1	CYLINDER HEAD GP	197
Y	*417-4189*	1	DRAIN GP-ENGINE OIL	201
Y	*416-1044*	1	DRIVE GP-FAN	205
Y	*418-7425*	1	BELT TENSIONER GP	169
Y	*462-9629*	1	ELBOW GP-AIR INLET	358
Y	*420-0291*	1	EXTENSION GP-FAN	219
Y	*445-0297*	1	FAN GP	336
Y	*418-6475*	1	FASTENER GP-EXHAUST MANIFOLD	359
Y	*432-0065*	1	FILLER GP-ENGINE OIL	308
Y	*417-4284*	1	FILM GP	458
Y	*417-3394*	1	FILTER GP-ENGINE OIL	310
Y	*441-1215*	1	FILTER GP-FUEL (WATER SEPARATOR)	402
Y	*453-7163*	1	FILTER GP-FUEL	407
Y	*417-3391*	1	FLYWHEEL GP	225
Y	*416-1029*	1	HOUSING GP-FLYWHEEL	231
Y	*432-4972*	1	HOUSING GP-FRONT	248
Y	*432-8266*	1	HOUSING GP-FRONT	251
Y	*415-5522*	1	INJECTOR GP-FUEL	410
Y	*415-7948*	1	JET GP-PISTON COOLING	257
Y	*417-3458*	1	LIFTING GP-ENGINE	258
Y	*415-7119*	1	LINES GP-FUEL	413
Y	*416-9552*	1	MANIFOLD GP-EXHAUST	361
Y	*415-7949*	1	MOUNTING GP-CONTROL	455
Y	*465-3614*	1	MOUNTING GP-ENGINE	266
Y	*430-5220*	1	PAN GP-OIL	277
Y	*431-8625*	1	PAN GP-OIL	278
Y	*415-5519*	1	PISTON & ROD GP	282
Y	*417-4190*	1	PLUG GP-OIL FILTER MOUNTING	318
Y	*417-4286*	1	PLUG GP-ENGINE	285
Y	*416-1089*	1	PULLEY GP-CRANKSHAFT	294
Y	*416-8723*	1	PUMP GP-ENGINE OIL	320
			—OR—	
Y	*508-3673*	1	PUMP GP-ENGINE OIL	321
Y	*415-5523*	1	PUMP GP-FUEL INJECTION	421
Y	*416-1864*	1	PUMP GP-WATER	339
Y	*432-8218*	1	RADIATOR GP	348
Y	*415-5527*	1	RAIL GP-FUEL	422

492-1322 **ENGINE AR-PRIMARY (**contd.**)** **i06821183**

NOTE	PART NUMBER	QTY	PART NAME 1 2 3 4 5 6 (PRODUCT LEVEL)	SEE PAGE
Y	*415-7947*	1	ROCKER ARM GP	299
Y	*425-9760*	1	SENSOR GP-ENGINE	432
Y	*430-5204*	1	SENSOR GP-TEMPERATURE	436
Y	*417-3453*	1	STARTING AID GP	437
Y	*416-1042*	1	FILM GP	456
Y	*419-8514*	1	STARTING MOTOR GP-ELECTRIC	441
Y	*467-7639*	1	TURBOCHARGER GP	391
Y	*417-4227*	1	WIRING GP-ENGINE	444
	478-6553	1	ELECTRONICS GP-ENGINE	

Y - SEPARATE ILLUSTRATION

<END>

492-3115 ENGINE AR-PRIMARY

87 BRAKE KW (117 BHP) AT 2200 RPM

OPTIONAL FIELD REPLACEMENT ORDER 452-7386—PAGE: 193, 452-7397—PAGE: 199

SMCS-1000 **i06835906**

NOTE	PART NUMBER	QTY	PART NAME 1 2 3 4 5 6 (PRODUCT LEVEL)	SEE PAGE
Y	*418-7664*	1	ALTERNATOR GP-CHARGING	425
Y	*432-4983*	1	BALANCER GP	167
Y	*433-5258*	1	FUMES DISPOSAL GP	311
Y	*435-7778*	1	CAMSHAFT GP	170
Y	*416-1867*	1	CONNECTION GP-WATER	327
Y	*415-5535*	1	CONTROL GP-ELECTRONIC	429
Y	*452-0797*	1	COOLER GP-ENGINE OIL	333
Y	*415-7105*	1	COVER GP-VALVE MECHANISM	175
Y	*433-6323*	1	CRANKSHAFT GP	181
			—OR—	
Y	*510-5297*	1	CRANKSHAFT GP	186
Y	*415-3299*	1	CYLINDER BLOCK GP	190
Y	*415-5520*	1	CYLINDER HEAD GP	197
Y	*417-4187*	1	DRAIN GP-ENGINE OIL	200
Y	*417-4186*	1	FILLER GP-ENGINE OIL	307
Y	*416-8716*	1	FILM GP (ALTERNATOR)	457
Y	*417-4284*	1	FILM GP	458
Y	*417-3394*	1	FILTER GP-ENGINE OIL	310
Y	*441-1215*	1	FILTER GP-FUEL (WATER SEPARATOR)	402
Y	*453-7163*	1	FILTER GP-FUEL	407
Y	*415-7116*	1	HOUSING GP-FRONT	242
Y	*416-8719*	1	COVER GP-FRONT HOUSING	172
Y	*415-5522*	1	INJECTOR GP-FUEL	410
Y	*415-7948*	1	JET GP-PISTON COOLING	257
Y	*417-3458*	1	LIFTING GP-ENGINE	258
Y	*415-7119*	1	LINES GP-FUEL	413
Y	*421-7092*	1	MANIFOLD GP-EXHAUST	363
Y	*418-7675*	1	MANIFOLD GP-INLET	364
Y	*415-7949*	1	MOUNTING GP-CONTROL	455
Y	*446-2244*	1	MOUNTING GP-ENGINE	264
Y	*416-1052*	1	GAUGE GP-OIL LEVEL (DIPSTICK)	454
Y	*452-0796*	1	PAN GP-OIL	279
Y	*415-5519*	1	PISTON & ROD GP	282
Y	*417-4190*	1	PLUG GP-OIL FILTER MOUNTING	318
Y	*417-4286*	1	PLUG GP-ENGINE	285
Y	*416-1047*	1	PULLEY GP-ALTERNATOR	291
Y	*416-1089*	1	PULLEY GP-CRANKSHAFT	294
Y	*415-5523*	1	PUMP GP-FUEL INJECTION	421
Y	*416-1864*	1	PUMP GP-WATER	339
Y	*415-5527*	1	RAIL GP-FUEL	422
Y	*415-7947*	1	ROCKER ARM GP	299
Y	*425-9760*	1	SENSOR GP-ENGINE	432
Y	*430-5204*	1	SENSOR GP-TEMPERATURE	436
Y	*417-3453*	1	STARTING AID GP	437
Y	*445-1452*	1	TURBOCHARGER GP	386
Y	*417-4227*	1	WIRING GP-ENGINE	444

492-3115 **ENGINE AR-PRIMARY (**contd.**)** **i06835906**

NOTE	PART NUMBER	QTY	PART NAME 1 2 3 4 5 6 (PRODUCT LEVEL)	SEE PAGE
	465-8599	1	ELECTRONICS GP-ENGINE	
	415-9834	1	PLATE GP-SERIAL NUMBER	

Y - SEPARATE ILLUSTRATION

<END>

492-3118 ENGINE AR-PRIMARY

106 BRAKE KW (143 BHP) AT 2200 RPM
OPTIONAL FIELD REPLACEMENT ORDER 452-7386—PAGE: 193, 452-7397—PAGE: 199
PART OF 492-8540 ENGINE AR

SMCS-1000 **i06821214**

NOTE	PART NUMBER	QTY	PART NAME 1 2 3 4 5 6 (PRODUCT LEVEL)	SEE PAGE
Y	*418-7664*	1	ALTERNATOR GP-CHARGING	425
Y	*433-5258*	1	FUMES DISPOSAL GP	311
Y	*435-7778*	1	CAMSHAFT GP	170
Y	*416-1867*	1	CONNECTION GP-WATER	327
Y	*415-5535*	1	CONTROL GP-ELECTRONIC	429
Y	*418-7659*	1	COOLER GP-ENGINE OIL	330
Y	*415-7105*	1	COVER GP-VALVE MECHANISM	175
Y	*433-6323*	1	CRANKSHAFT GP	181
			—OR—	
Y	*510-5297*	1	CRANKSHAFT GP	186
Y	*415-3299*	1	CYLINDER BLOCK GP	190
Y	*415-5520*	1	CYLINDER HEAD GP	197
Y	*417-4187*	1	DRAIN GP-ENGINE OIL	200
Y	*444-2676*	1	DRIVE GP-FAN	213
Y	*432-0065*	1	FILLER GP-ENGINE OIL	308
Y	*416-8716*	1	FILM GP (ALTERNATOR)	457
Y	*417-4284*	1	FILM GP	458
Y	*417-3394*	1	FILTER GP-ENGINE OIL	310
Y	*441-1215*	1	FILTER GP-FUEL (WATER SEPARATOR)	402
Y	*453-7163*	1	FILTER GP-FUEL	407
Y	*441-9155*	1	GAUGE GP-OIL LEVEL (DIPSTICK)	315
Y	*415-7116*	1	HOUSING GP-FRONT	242
Y	*416-8719*	1	COVER GP-FRONT HOUSING	172
Y	*415-5522*	1	INJECTOR GP-FUEL	410
Y	*415-7948*	1	JET GP-PISTON COOLING	257
Y	*417-3458*	1	LIFTING GP-ENGINE	258
Y	*415-7119*	1	LINES GP-FUEL	413
Y	*421-7092*	1	MANIFOLD GP-EXHAUST	363
Y	*418-7675*	1	MANIFOLD GP-INLET	364
Y	*415-7949*	1	MOUNTING GP-CONTROL	455
Y	*446-2244*	1	MOUNTING GP-ENGINE	264
Y	*416-8715*	1	MOUNTING GP-FAN	338
Y	*423-1280*	1	PAN GP-OIL	275
Y	*415-5518*	1	PISTON & ROD GP	280
Y	*417-4190*	1	PLUG GP-OIL FILTER MOUNTING	318
Y	*417-4286*	1	PLUG GP-ENGINE	285
Y	*416-1047*	1	PULLEY GP-ALTERNATOR	291
Y	*416-1089*	1	PULLEY GP-CRANKSHAFT	294
Y	*416-8723*	1	PUMP GP-ENGINE OIL	320
			—OR—	
Y	*508-3673*	1	PUMP GP-ENGINE OIL	321
Y	*415-5523*	1	PUMP GP-FUEL INJECTION	421
Y	*416-1864*	1	PUMP GP-WATER	339
Y	*415-5527*	1	RAIL GP-FUEL	422
Y	*415-7947*	1	ROCKER ARM GP	299
Y	*425-9760*	1	SENSOR GP-ENGINE	432
Y	*430-5204*	1	SENSOR GP-TEMPERATURE	436
Y	*417-3453*	1	STARTING AID GP	437

492-3118 **ENGINE AR-PRIMARY (**contd.**)** **i06821214**

NOTE	PART NUMBER	QTY	PART NAME 1 2 3 4 5 6 (PRODUCT LEVEL)	SEE PAGE
Y	*432-6668*	1	TURBOCHARGER GP	379
Y	*417-4227*	1	WIRING GP-ENGINE	444
	462-8609	1	ELECTRONICS GP-ENGINE	
	415-9834	1	PLATE GP-SERIAL NUMBER	

Y - SEPARATE ILLUSTRATION

<END>

495-3005 ENGINE AR-PRIMARY

97 BRAKE KW (129 BHP) AT 2200 RPM

OPTIONAL FIELD REPLACEMENT ORDER 452-7386—PAGE: 193, 452-7397—PAGE: 199

PART OF 495-3032 ENGINE AR-COMPLETE

SMCS-1000 **i06821219**

NOTE	PART NUMBER	QTY	PART NAME 1 2 3 4 5 6 (PRODUCT LEVEL)	SEE PAGE
Y	*418-7664*	1	ALTERNATOR GP-CHARGING	425
Y	*418-7425*	1	BELT TENSIONER GP	169
Y	*433-5258*	1	FUMES DISPOSAL GP	311
Y	*435-7778*	1	CAMSHAFT GP	170
Y	*416-1867*	1	CONNECTION GP-WATER	327
Y	*415-5535*	1	CONTROL GP-ELECTRONIC	429
Y	*418-7659*	1	COOLER GP-ENGINE OIL	330
Y	*418-6381*	1	COVER GP-VALVE MECHANISM	177
Y	*433-6323*	1	CRANKSHAFT GP	181
			—OR—	
Y	*510-5297*	1	CRANKSHAFT GP	186
Y	*415-3299*	1	CYLINDER BLOCK GP	190
Y	*415-5520*	1	CYLINDER HEAD GP	197
Y	*419-8538*	1	DRAIN GP-ENGINE OIL	202
Y	*432-1853*	1	DRIVE GP-FAN	211
Y	*462-9629*	1	ELBOW GP-AIR INLET	358
Y	*420-0291*	1	EXTENSION GP-FAN	219
Y	*445-0296*	1	FAN GP	335
Y	*418-6475*	1	FASTENER GP-EXHAUST MANIFOLD	359
Y	*417-4185*	1	FILLER GP-ENGINE OIL	306
Y	*416-1042*	1	FILM GP	456
Y	*416-8716*	1	FILM GP (ALTERNATOR)	457
Y	*417-4284*	1	FILM GP	458
Y	*417-3394*	1	FILTER GP-ENGINE OIL	310
Y	*441-1215*	1	FILTER GP-FUEL (WATER SEPARATOR)	402
Y	*453-7163*	1	FILTER GP-FUEL	407
Y	*417-3391*	1	FLYWHEEL GP	225
Y	*416-1053*	1	GAUGE GP-OIL LEVEL (DIPSTICK)	312
Y	*416-1029*	1	HOUSING GP-FLYWHEEL	231
Y	*432-4972*	1	HOUSING GP-FRONT	248
Y	*432-8266*	1	HOUSING GP-FRONT	251
Y	*415-5522*	1	INJECTOR GP-FUEL	410
Y	*415-7948*	1	JET GP-PISTON COOLING	257
Y	*417-3458*	1	LIFTING GP-ENGINE	258
Y	*415-7119*	1	LINES GP-FUEL	413
Y	*416-9552*	1	MANIFOLD GP-EXHAUST	361
Y	*415-7949*	1	MOUNTING GP-CONTROL	455
Y	*465-3614*	1	MOUNTING GP-ENGINE	266
Y	*419-8519*	1	PAN GP-OIL	274
Y	*415-5519*	1	PISTON & ROD GP	282
Y	*417-4190*	1	PLUG GP-OIL FILTER MOUNTING	318
Y	*417-4286*	1	PLUG GP-ENGINE	285
Y	*426-3230*	1	PULLEY GP-CRANKSHAFT	296
Y	*416-8723*	1	PUMP GP-ENGINE OIL	320
			—OR—	
Y	*508-3673*	1	PUMP GP-ENGINE OIL	321
Y	*415-5523*	1	PUMP GP-FUEL INJECTION	421
Y	*416-1864*	1	PUMP GP-WATER	339

495-3005 **ENGINE AR-PRIMARY (**contd.**)** **i06821219**

NOTE	PART NUMBER	QTY	PART NAME 1 2 3 4 5 6 (PRODUCT LEVEL)	SEE PAGE
Y	*459-6904*	1	RADIATOR GP	350
Y	*415-5527*	1	RAIL GP-FUEL	422
Y	*415-7947*	1	ROCKER ARM GP	299
Y	*425-9760*	1	SENSOR GP-ENGINE	432
Y	*430-5204*	1	SENSOR GP-TEMPERATURE	436
Y	*417-3453*	1	STARTING AID GP	437
Y	*418-7475*	1	STARTING MOTOR GP-ELECTRIC	440
Y	*445-1450*	1	TURBOCHARGER GP	384
Y	*417-4227*	1	WIRING GP-ENGINE	444
	462-5117	1	ELECTRONICS GP-ENGINE	
	415-9834	1	PLATE GP-SERIAL NUMBER	

Y - SEPARATE ILLUSTRATION

<END>

495-9687 ENGINE AR-PRIMARY

106 BRAKE KW (143 BHP) AT 2200 RPM
OPTIONAL FIELD REPLACEMENT ORDER 452-7386—PAGE: 193, 452-7397—PAGE: 199
PART OF 495-9691 ENGINE AR-COMPLETE

SMCS-1000 **i06834504**

NOTE	PART NUMBER	QTY	PART NAME 1 2 3 4 5 6 (PRODUCT LEVEL)	SEE PAGE
Y	*425-8162*	1	ALTERNATOR GP-CHARGING	426
Y	*486-4227*	1	BREATHER GP	302
Y	*435-7778*	1	CAMSHAFT GP	170
Y	*417-4287*	1	CONNECTION GP-HEATER	324
Y	*416-1865*	1	CONNECTION GP-WATER	325
Y	*415-5535*	1	CONTROL GP-ELECTRONIC	429
Y	*432-2295*	1	COOLER GP-ENGINE OIL	332
Y	*420-9614*	1	COVER GP-VALVE MECHANISM	178
Y	*433-6323*	1	CRANKSHAFT GP	181
			—OR—	
Y	*510-5297*	1	CRANKSHAFT GP	186
Y	*415-3299*	1	CYLINDER BLOCK GP	190
Y	*415-5520*	1	CYLINDER HEAD GP	197
Y	*417-4187*	1	DRAIN GP-ENGINE OIL	200
Y	*416-1046*	1	BELT TENSIONER GP	168
Y	*416-9543*	1	ELBOW GP-AIR INLET	354
Y	*417-4186*	1	FILLER GP-ENGINE OIL	307
Y	*416-1042*	1	FILM GP	456
Y	*416-8716*	1	FILM GP (ALTERNATOR)	457
Y	*417-4284*	1	FILM GP	458
Y	*417-3394*	1	FILTER GP-ENGINE OIL	310
Y	*441-1215*	1	FILTER GP-FUEL (WATER SEPARATOR)	402
Y	*453-7163*	1	FILTER GP-FUEL	407
Y	*423-1270*	1	FLYWHEEL GP	226
Y	*441-9154*	1	GAUGE GP-OIL LEVEL (DIPSTICK)	314
Y	*415-7116*	1	HOUSING GP-FRONT	242
Y	*416-1029*	1	HOUSING GP-FLYWHEEL	231
Y	*416-8719*	1	COVER GP-FRONT HOUSING	172
Y	*415-5522*	1	INJECTOR GP-FUEL	410
Y	*415-7948*	1	JET GP-PISTON COOLING	257
Y	*417-3462*	1	LIFTING GP-ENGINE	259
Y	*415-7119*	1	LINES GP-FUEL	413
Y	*421-4493*	1	MANIFOLD GP-EXHAUST	362
Y	*415-7949*	1	MOUNTING GP-CONTROL	455
Y	*416-1051*	1	PAN GP-OIL	272
Y	*415-5518*	1	PISTON & ROD GP	280
Y	*417-4190*	1	PLUG GP-OIL FILTER MOUNTING	318
Y	*446-2228*	1	PLUG GP-FLYWHEEL HOUSING	288
Y	*416-1089*	1	PULLEY GP-CRANKSHAFT	294
Y	*416-8723*	1	PUMP GP-ENGINE OIL	320
			—OR—	
Y	*508-3673*	1	PUMP GP-ENGINE OIL	321
Y	*415-5523*	1	PUMP GP-FUEL INJECTION	421
Y	*416-1864*	1	PUMP GP-WATER	339
Y	*415-5527*	1	RAIL GP-FUEL	422
Y	*415-7947*	1	ROCKER ARM GP	299
Y	*425-9760*	1	SENSOR GP-ENGINE	432
Y	*430-5204*	1	SENSOR GP-TEMPERATURE	436

495-9687 **ENGINE AR-PRIMARY (**contd.**)** **i06834504**

NOTE	PART NUMBER	QTY	PART NAME 1 2 3 4 5 6 (PRODUCT LEVEL)	SEE PAGE
Y	*417-3453*	1	STARTING AID GP	437
Y	*419-8514*	1	STARTING MOTOR GP-ELECTRIC	441
Y	*444-8106*	1	TURBOCHARGER GP	382
Y	*492-2945*	1	WIRING GP-ENGINE	452
	462-8609	1	ELECTRONICS GP-ENGINE	
	415-9834	1	PLATE GP-SERIAL NUMBER	
	350-8958	1	PLATE-SERIAL NUMBER (ENGINE)	
	332-0905	2	RIVET-DRIVE	

Y - SEPARATE ILLUSTRATION

<END>

500-8128 ENGINE AR-PRIMARY

106.3 KW (142.6 BHP) AT 2200-RPM

OPTIONAL FIELD REPLACEMENT ORDER 452-7386—PAGE: 193, 452-7397—PAGE: 199

SMCS-1000 **i06829297**

NOTE	PART NUMBER	QTY	PART NAME 1 2 3 4 5 6 (PRODUCT LEVEL)	SEE PAGE
Y	*467-0357*	1	AIR CLEANER GP	353
Y	*415-7107*	1	ALTERNATOR GP-CHARGING	424
Y	*416-8716*	1	FILM GP (ALTERNATOR)	457
Y	*433-5258*	1	FUMES DISPOSAL GP	311
Y	*435-7778*	1	CAMSHAFT GP	170
Y	*416-1867*	1	CONNECTION GP-WATER	327
Y	*415-5535*	1	CONTROL GP-ELECTRONIC	429
Y	*418-7659*	1	COOLER GP-ENGINE OIL	330
Y	*418-6381*	1	COVER GP-VALVE MECHANISM	177
Y	*433-6323*	1	CRANKSHAFT GP	181
			—OR—	
Y	*510-5297*	1	CRANKSHAFT GP	186
Y	*415-3299*	1	CYLINDER BLOCK GP	190
Y	*415-5520*	1	CYLINDER HEAD GP	197
Y	*417-4187*	1	DRAIN GP-ENGINE OIL	200
Y	*418-7425*	1	BELT TENSIONER GP	169
Y	*432-1853*	1	DRIVE GP-FAN	211
Y	*462-9629*	1	ELBOW GP-AIR INLET	358
Y	*420-0291*	1	EXTENSION GP-FAN	219
Y	*445-0297*	1	FAN GP	336
Y	*418-6475*	1	FASTENER GP-EXHAUST MANIFOLD	359
Y	*432-0065*	1	FILLER GP-ENGINE OIL	308
Y	*417-4284*	1	FILM GP	458
Y	*417-3394*	1	FILTER GP-ENGINE OIL	310
Y	*441-1215*	1	FILTER GP-FUEL (WATER SEPARATOR)	402
Y	*453-7163*	1	FILTER GP-FUEL	407
Y	*417-3390*	1	FLYWHEEL GP	224
Y	*441-9155*	1	GAUGE GP-OIL LEVEL (DIPSTICK) (ENGINE)	315
Y	*444-9659*	1	HOUSING GP-FLYWHEEL	235
Y	*415-7117*	1	HOUSING GP-FRONT	244
Y	*416-8719*	1	COVER GP-FRONT HOUSING	172
Y	*415-5522*	1	INJECTOR GP-FUEL	410
Y	*415-7948*	1	JET GP-PISTON COOLING	257
Y	*417-3458*	1	LIFTING GP-ENGINE	258
Y	*415-7119*	1	LINES GP-FUEL	413
Y	*416-9552*	1	MANIFOLD GP-EXHAUST	361
Y	*415-7949*	1	MOUNTING GP-CONTROL	455
Y	*465-3613*	1	MOUNTING GP-ENGINE	265
Y	*423-1280*	1	PAN GP-OIL	275
Y	*415-5518*	1	PISTON & ROD GP	280
Y	*417-4190*	1	PLUG GP-OIL FILTER MOUNTING	318
Y	*417-4286*	1	PLUG GP-ENGINE	285
Y	*426-3230*	1	PULLEY GP-CRANKSHAFT	296
Y	*416-8723*	1	PUMP GP-ENGINE OIL	320
			—OR—	
Y	*508-3673*	1	PUMP GP-ENGINE OIL	321
Y	*415-5523*	1	PUMP GP-FUEL INJECTION	421
Y	*416-1864*	1	PUMP GP-WATER	339

500-8128 **ENGINE AR-PRIMARY (**contd.**)** **i06829297**

NOTE	PART NUMBER	QTY	PART NAME 1 2 3 4 5 6 (PRODUCT LEVEL)	SEE PAGE
Y	*432-8215*	1	RADIATOR GP	345
Y	*415-5527*	1	RAIL GP-FUEL	422
Y	*415-7947*	1	ROCKER ARM GP	299
Y	*425-9760*	1	SENSOR GP-ENGINE	432
Y	*430-5204*	1	SENSOR GP-TEMPERATURE	436
Y	*417-4371*	1	STARTING AID GP	438
Y	*415-5536*	1	STARTING MOTOR GP-ELECTRIC	439
Y	*416-1042*	1	FILM GP	456
Y	*445-1450*	1	TURBOCHARGER GP	384
Y	*417-4227*	1	WIRING GP-ENGINE	444
	462-8609	1	ELECTRONICS GP-ENGINE	

Y - SEPARATE ILLUSTRATION

<END>

502-7230 ENGINE AR-PRIMARY

106 BRAKE KW (143 BHP) AT 2200 RPM
OPTIONAL FIELD REPLACEMENT ORDER 452-7386—PAGE: 193, 452-7397—PAGE: 199
PART OF 502-7262 ENGINE AR-COMPLETE

SMCS-1000 **i06996256**

NOTE	PART NUMBER	QTY	PART NAME 1 2 3 4 5 6 (PRODUCT LEVEL)	SEE PAGE
Y	*467-0357*	1	AIR CLEANER GP	353
Y	*415-7107*	1	ALTERNATOR GP-CHARGING	424
Y	*418-7425*	1	BELT TENSIONER GP	169
Y	*435-7778*	1	CAMSHAFT GP	170
Y	*416-1867*	1	CONNECTION GP-WATER	327
Y	*415-5535*	1	CONTROL GP-ELECTRONIC	429
Y	*418-6381*	1	COVER GP-VALVE MECHANISM	177
Y	*510-5297*	1	CRANKSHAFT GP	186
Y	*415-3299*	1	CYLINDER BLOCK GP	190
Y	*415-5520*	1	CYLINDER HEAD GP	197
Y	*417-4187*	1	DRAIN GP-ENGINE OIL	200
Y	*432-1853*	1	DRIVE GP-FAN	211
Y	*462-9629*	1	ELBOW GP-AIR INLET	358
Y	*420-0291*	1	EXTENSION GP-FAN	219
Y	*445-0297*	1	FAN GP	336
Y	*418-6475*	1	FASTENER GP-EXHAUST MANIFOLD	359
Y	*417-4185*	1	FILLER GP-ENGINE OIL	306
Y	*416-1042*	1	FILM GP	456
Y	*416-8716*	1	FILM GP (ALTERNATOR)	457
Y	*417-4284*	1	FILM GP	458
Y	*417-3394*	1	FILTER GP-ENGINE OIL	310
Y	*441-1215*	1	FILTER GP-FUEL (WATER SEPARATOR)	402
Y	*453-7163*	1	FILTER GP-FUEL	407
Y	*431-7141*	1	FLYWHEEL GP	228
Y	*433-5258*	1	FUMES DISPOSAL GP	311
Y	*441-9155*	1	GAUGE GP-OIL LEVEL (DIPSTICK)	315
Y	*444-9659*	1	HOUSING GP-FLYWHEEL	235
Y	*415-7117*	1	HOUSING GP-FRONT	244
Y	*416-8719*	1	COVER GP-FRONT HOUSING	172
Y	*415-5522*	1	INJECTOR GP-FUEL	410
Y	*415-7948*	1	JET GP-PISTON COOLING	257
Y	*417-3458*	1	LIFTING GP-ENGINE	258
Y	*415-7119*	1	LINES GP-FUEL	413
Y	*416-9552*	1	MANIFOLD GP-EXHAUST	361
Y	*415-7949*	1	MOUNTING GP-CONTROL	455
Y	*465-3613*	1	MOUNTING GP-ENGINE	265
Y	*423-1280*	1	PAN GP-OIL	275
Y	*415-5518*	1	PISTON & ROD GP	280
Y	*417-4286*	1	PLUG GP-ENGINE	285
Y	*417-4190*	1	PLUG GP-OIL FILTER MOUNTING	318
Y	*426-3230*	1	PULLEY GP-CRANKSHAFT	296
Y	*508-3673*	1	PUMP GP-ENGINE OIL	321
Y	*415-5523*	1	PUMP GP-FUEL INJECTION	421
Y	*416-1864*	1	PUMP GP-WATER	339
Y	*432-8215*	1	RADIATOR GP	345
Y	*415-5527*	1	RAIL GP-FUEL	422
Y	*415-7947*	1	ROCKER ARM GP	299

502-7230 **ENGINE AR-PRIMARY (**contd.**)** **i06996256**

NOTE	PART NUMBER	QTY	PART NAME 1 2 3 4 5 6 (PRODUCT LEVEL)	SEE PAGE
Y	*425-9760*	1	SENSOR GP-ENGINE	432
Y	*430-5204*	1	SENSOR GP-TEMPERATURE	436
Y	*417-4371*	1	STARTING AID GP	438
Y	*415-5536*	1	STARTING MOTOR GP-ELECTRIC	439
Y	*445-1450*	1	TURBOCHARGER GP	384
Y	*417-4227*	1	WIRING GP-ENGINE	444
	462-8609	1	ELECTRONICS GP-ENGINE	
	415-9834	1	PLATE GP-SERIAL NUMBER	

Y - SEPARATE ILLUSTRATION

<END>

503-1940 ENGINE AR-PRIMARY

106 BRAKE KW (143 BHP) AT 2200 RPM
OPTIONAL FIELD REPLACEMENT ORDER 452-7386—PAGE: 193, 452-7397—PAGE: 199
PART OF 503-3757 ENGINE AR

SMCS-1000 **i06931767**

NOTE	PART NUMBER	QTY	PART NAME 1 2 3 4 5 6 (PRODUCT LEVEL)	SEE PAGE
Y	*418-7664*	1	ALTERNATOR GP-CHARGING	425
Y	*432-4983*	1	BALANCER GP	167
Y	*418-7425*	1	BELT TENSIONER GP	169
Y	*435-7778*	1	CAMSHAFT GP	170
Y	*416-1867*	1	CONNECTION GP-WATER	327
Y	*415-5535*	1	CONTROL GP-ELECTRONIC	429
Y	*452-0797*	1	COOLER GP-ENGINE OIL	333
Y	*415-7106*	1	COVER GP-VALVE MECHANISM	176
Y	*433-6323*	1	CRANKSHAFT GP	181
			—OR—	
Y	*510-5297*	1	CRANKSHAFT GP	186
Y	*415-3299*	1	CYLINDER BLOCK GP	190
Y	*415-5520*	1	CYLINDER HEAD GP	197
Y	*417-4187*	1	DRAIN GP-ENGINE OIL	200
Y	*432-1856*	1	DRIVE GP-FAN	212
Y	*432-4332*	1	FAN GP	334
Y	*418-6475*	1	FASTENER GP-EXHAUST MANIFOLD	359
Y	*417-4186*	1	FILLER GP-ENGINE OIL	307
Y	*416-1042*	1	FILM GP	456
Y	*416-8716*	1	FILM GP (ALTERNATOR)	457
Y	*417-4284*	1	FILM GP	458
Y	*417-3394*	1	FILTER GP-ENGINE OIL	310
Y	*441-1215*	1	FILTER GP-FUEL (WATER SEPARATOR)	402
Y	*453-7163*	1	FILTER GP-FUEL	407
Y	*431-7141*	1	FLYWHEEL GP	228
Y	*433-5258*	1	FUMES DISPOSAL GP	311
Y	*444-9660*	1	HOUSING GP-FLYWHEEL	236
Y	*415-7117*	1	HOUSING GP-FRONT	244
Y	*416-8719*	1	COVER GP-FRONT HOUSING	172
Y	*415-5522*	1	INJECTOR GP-FUEL	410
Y	*415-7948*	1	JET GP-PISTON COOLING	257
Y	*417-3458*	1	LIFTING GP-ENGINE	258
Y	*415-7119*	1	LINES GP-FUEL	413
Y	*421-7092*	1	MANIFOLD GP-EXHAUST	363
Y	*418-7675*	1	MANIFOLD GP-INLET	364
Y	*415-7949*	1	MOUNTING GP-CONTROL	455
Y	*416-1052*	1	GAUGE GP-OIL LEVEL (DIPSTICK)	454
Y	*452-0796*	1	PAN GP-OIL	279
Y	*415-5518*	1	PISTON & ROD GP	280
Y	*417-4286*	1	PLUG GP-ENGINE	285
Y	*446-2228*	1	PLUG GP-FLYWHEEL HOUSING	288
Y	*417-4190*	1	PLUG GP-OIL FILTER MOUNTING	318
Y	*426-3230*	1	PULLEY GP-CRANKSHAFT	296
Y	*415-5523*	1	PUMP GP-FUEL INJECTION	421
Y	*416-1864*	1	PUMP GP-WATER	339
Y	*415-5527*	1	RAIL GP-FUEL	422
Y	*415-7947*	1	ROCKER ARM GP	299

503-1940 **ENGINE AR-PRIMARY (**contd.**)** **i06931767**

NOTE	PART NUMBER	QTY	PART NAME 1 2 3 4 5 6 (PRODUCT LEVEL)	SEE PAGE
Y	*425-9760*	1	SENSOR GP-ENGINE	432
Y	*430-5204*	1	SENSOR GP-TEMPERATURE	436
Y	*417-3453*	1	STARTING AID GP	437
Y	*418-7475*	1	STARTING MOTOR GP-ELECTRIC	440
Y	*432-6668*	1	TURBOCHARGER GP	379
Y	*417-4227*	1	WIRING GP-ENGINE	444
	462-8609	1	ELECTRONICS GP-ENGINE	
	415-9834	1	PLATE GP-SERIAL NUMBER	

Y - SEPARATE ILLUSTRATION

<END>

503-4924 ENGINE AR-PRIMARY

98 BRAKE KW (132 BHP) AT 1800 RPM

OPTIONAL FIELD REPLACEMENT ORDER 452-7386—PAGE: 193, 452-7397—PAGE: 199

SMCS-1000 **i06821181**

NOTE	PART NUMBER	QTY	PART NAME 1 2 3 4 5 6 (PRODUCT LEVEL)	SEE PAGE
Y	*418-7664*	1	ALTERNATOR GP-CHARGING	425
Y	*418-7425*	1	BELT TENSIONER GP	169
Y	*433-5258*	1	FUMES DISPOSAL GP	311
Y	*470-6153*	1	CAMSHAFT GP	171
Y	*416-1867*	1	CONNECTION GP-WATER	327
Y	*415-5535*	1	CONTROL GP-ELECTRONIC	429
Y	*418-7659*	1	COOLER GP-ENGINE OIL	330
Y	*418-6381*	1	COVER GP-VALVE MECHANISM	177
Y	*433-6323*	1	CRANKSHAFT GP	181
			—OR—	
Y	*510-5297*	1	CRANKSHAFT GP	186
Y	*415-3299*	1	CYLINDER BLOCK GP	190
Y	*415-5520*	1	CYLINDER HEAD GP	197
Y	*419-8538*	1	DRAIN GP-ENGINE OIL	202
Y	*432-1853*	1	DRIVE GP-FAN	211
Y	*462-9629*	1	ELBOW GP-AIR INLET	358
Y	*420-0291*	1	EXTENSION GP-FAN	219
Y	*445-0296*	1	FAN GP	335
Y	*418-6475*	1	FASTENER GP-EXHAUST MANIFOLD	359
Y	*417-4185*	1	FILLER GP-ENGINE OIL	306
Y	*416-1042*	1	FILM GP	456
Y	*416-8716*	1	FILM GP (ALTERNATOR)	457
Y	*417-4284*	1	FILM GP	458
Y	*417-3394*	1	FILTER GP-ENGINE OIL	310
Y	*441-1215*	1	FILTER GP-FUEL (WATER SEPARATOR)	402
Y	*453-7163*	1	FILTER GP-FUEL	407
Y	*417-3391*	1	FLYWHEEL GP	225
Y	*416-1053*	1	GAUGE GP-OIL LEVEL (DIPSTICK)	312
Y	*416-1029*	1	HOUSING GP-FLYWHEEL	231
Y	*432-4972*	1	HOUSING GP-FRONT	248
Y	*432-8266*	1	HOUSING GP-FRONT	251
Y	*415-5522*	1	INJECTOR GP-FUEL	410
Y	*415-7948*	1	JET GP-PISTON COOLING	257
Y	*417-3458*	1	LIFTING GP-ENGINE	258
Y	*415-7119*	1	LINES GP-FUEL	413
Y	*416-9552*	1	MANIFOLD GP-EXHAUST	361
Y	*415-7949*	1	MOUNTING GP-CONTROL	455
Y	*465-3614*	1	MOUNTING GP-ENGINE	266
Y	*419-8519*	1	PAN GP-OIL	274
Y	*415-5519*	1	PISTON & ROD GP	282
Y	*417-4190*	1	PLUG GP-OIL FILTER MOUNTING	318
Y	*417-4286*	1	PLUG GP-ENGINE	285
Y	*426-3230*	1	PULLEY GP-CRANKSHAFT	296
Y	*416-8723*	1	PUMP GP-ENGINE OIL	320
			—OR—	
Y	*508-3673*	1	PUMP GP-ENGINE OIL	321
Y	*415-5523*	1	PUMP GP-FUEL INJECTION	421
Y	*416-1864*	1	PUMP GP-WATER	339

503-4924 **ENGINE AR-PRIMARY (**contd.**)** **i06821181**

NOTE	PART NUMBER	QTY	PART NAME 1 2 3 4 5 6 (PRODUCT LEVEL)	SEE PAGE
Y	*459-6904*	1	RADIATOR GP	350
Y	*415-5527*	1	RAIL GP-FUEL	422
Y	*415-7947*	1	ROCKER ARM GP	299
Y	*425-9760*	1	SENSOR GP-ENGINE	432
Y	*430-5204*	1	SENSOR GP-TEMPERATURE	436
Y	*417-3453*	1	STARTING AID GP	437
Y	*418-7475*	1	STARTING MOTOR GP-ELECTRIC	440
Y	*467-7639*	1	TURBOCHARGER GP	391
Y	*417-4227*	1	WIRING GP-ENGINE	444
	478-6553	1	ELECTRONICS GP-ENGINE	
	415-9834	1	PLATE GP-SERIAL NUMBER	

Y - SEPARATE ILLUSTRATION

<END>

504-3628 ENGINE AR-PRIMARY

87 BRAKE KW (117 BHP) AT 2200 RPM

OPTIONAL FIELD REPLACEMENT ORDER 452-7386—PAGE: 193, 452-7397—PAGE: 199

PART OF 504-5152 ENGINE AR

SMCS-1000 **i06931737**

NOTE	PART NUMBER	QTY	PART NAME 1 2 3 4 5 6 (PRODUCT LEVEL)	SEE PAGE
Y	*418-7664*	1	ALTERNATOR GP-CHARGING	425
Y	*432-4983*	1	BALANCER GP	167
Y	*435-7778*	1	CAMSHAFT GP	170
Y	*416-1867*	1	CONNECTION GP-WATER	327
Y	*415-5535*	1	CONTROL GP-ELECTRONIC	429
Y	*452-0797*	1	COOLER GP-ENGINE OIL	333
Y	*415-7105*	1	COVER GP-VALVE MECHANISM	175
Y	*433-6323*	1	CRANKSHAFT GP	181
			—OR—	
Y	*510-5297*	1	CRANKSHAFT GP	186
Y	*415-3299*	1	CYLINDER BLOCK GP	190
Y	*415-5520*	1	CYLINDER HEAD GP	197
Y	*417-4187*	1	DRAIN GP-ENGINE OIL	200
Y	*417-4186*	1	FILLER GP-ENGINE OIL	307
Y	*416-8716*	1	FILM GP (ALTERNATOR)	457
Y	*417-4284*	1	FILM GP	458
Y	*417-3394*	1	FILTER GP-ENGINE OIL	310
Y	*441-1215*	1	FILTER GP-FUEL (WATER SEPARATOR)	402
Y	*453-7163*	1	FILTER GP-FUEL	407
Y	*433-5258*	1	FUMES DISPOSAL GP	311
Y	*415-7116*	1	HOUSING GP-FRONT	242
Y	*416-8719*	1	COVER GP-FRONT HOUSING	172
Y	*415-5522*	1	INJECTOR GP-FUEL	410
Y	*415-7948*	1	JET GP-PISTON COOLING	257
Y	*417-3458*	1	LIFTING GP-ENGINE	258
Y	*415-7119*	1	LINES GP-FUEL	413
Y	*421-7092*	1	MANIFOLD GP-EXHAUST	363
Y	*418-7675*	1	MANIFOLD GP-INLET	364
Y	*415-7949*	1	MOUNTING GP-CONTROL	455
Y	*446-2244*	1	MOUNTING GP-ENGINE	264
Y	*416-1052*	1	GAUGE GP-OIL LEVEL (DIPSTICK)	454
Y	*452-0796*	1	PAN GP-OIL	279
Y	*415-5519*	1	PISTON & ROD GP	282
Y	*417-4286*	1	PLUG GP-ENGINE	285
Y	*417-4190*	1	PLUG GP-OIL FILTER MOUNTING	318
Y	*416-1047*	1	PULLEY GP-ALTERNATOR	291
Y	*416-1089*	1	PULLEY GP-CRANKSHAFT	294
Y	*415-5523*	1	PUMP GP-FUEL INJECTION	421
Y	*416-1864*	1	PUMP GP-WATER	339
Y	*415-5527*	1	RAIL GP-FUEL	422
Y	*415-7947*	1	ROCKER ARM GP	299
Y	*425-9760*	1	SENSOR GP-ENGINE	432
Y	*430-5204*	1	SENSOR GP-TEMPERATURE	436
Y	*417-3453*	1	STARTING AID GP	437
Y	*445-1452*	1	TURBOCHARGER GP	386
Y	*417-4227*	1	WIRING GP-ENGINE	444

504-3628 **ENGINE AR-PRIMARY (**contd.**)** **i06931737**

NOTE	PART NUMBER	QTY	PART NAME 1 2 3 4 5 6 (PRODUCT LEVEL)	SEE PAGE
	465-8599	1	ELECTRONICS GP-ENGINE	
	415-9834	1	PLATE GP-SERIAL NUMBER	

Y - SEPARATE ILLUSTRATION

<END>

504-3645 ENGINE AR-PRIMARY

106 BRAKE KW (143 BHP) AT 2200 RPM
OPTIONAL FIELD REPLACEMENT ORDER 452-7386—PAGE: 193, 452-7397—PAGE: 199
PART OF 504-5164 ENGINE AR

SMCS-1000 **i06821200**

NOTE	PART NUMBER	QTY	PART NAME 1 2 3 4 5 6 (PRODUCT LEVEL)	SEE PAGE
Y	*418-7664*	1	ALTERNATOR GP-CHARGING	425
Y	*433-5258*	1	FUMES DISPOSAL GP	311
Y	*435-7778*	1	CAMSHAFT GP	170
Y	*416-1867*	1	CONNECTION GP-WATER	327
Y	*415-5535*	1	CONTROL GP-ELECTRONIC	429
Y	*418-7659*	1	COOLER GP-ENGINE OIL	330
Y	*415-7105*	1	COVER GP-VALVE MECHANISM	175
Y	*433-6323*	1	CRANKSHAFT GP	181
			—OR—	
Y	*510-5297*	1	CRANKSHAFT GP	186
Y	*415-3299*	1	CYLINDER BLOCK GP	190
Y	*415-5520*	1	CYLINDER HEAD GP	197
Y	*417-4187*	1	DRAIN GP-ENGINE OIL	200
Y	*444-2676*	1	DRIVE GP-FAN	213
Y	*432-0065*	1	FILLER GP-ENGINE OIL	308
Y	*416-8716*	1	FILM GP (ALTERNATOR)	457
Y	*417-4284*	1	FILM GP	458
Y	*417-3394*	1	FILTER GP-ENGINE OIL	310
Y	*441-1215*	1	FILTER GP-FUEL (WATER SEPARATOR)	402
Y	*453-7163*	1	FILTER GP-FUEL	407
Y	*441-9155*	1	GAUGE GP-OIL LEVEL (DIPSTICK)	315
Y	*415-7116*	1	HOUSING GP-FRONT	242
Y	*416-8719*	1	COVER GP-FRONT HOUSING	172
Y	*415-5522*	1	INJECTOR GP-FUEL	410
Y	*415-7948*	1	JET GP-PISTON COOLING	257
Y	*417-3458*	1	LIFTING GP-ENGINE	258
Y	*415-7119*	1	LINES GP-FUEL	413
Y	*421-7092*	1	MANIFOLD GP-EXHAUST	363
Y	*418-7675*	1	MANIFOLD GP-INLET	364
Y	*415-7949*	1	MOUNTING GP-CONTROL	455
Y	*446-2244*	1	MOUNTING GP-ENGINE	264
Y	*416-8715*	1	MOUNTING GP-FAN	338
Y	*423-1280*	1	PAN GP-OIL	275
Y	*415-5518*	1	PISTON & ROD GP	280
Y	*417-4190*	1	PLUG GP-OIL FILTER MOUNTING	318
Y	*417-4286*	1	PLUG GP-ENGINE	285
Y	*416-1047*	1	PULLEY GP-ALTERNATOR	291
Y	*416-1089*	1	PULLEY GP-CRANKSHAFT	294
Y	*416-8723*	1	PUMP GP-ENGINE OIL	320
			—OR—	
Y	*508-3673*	1	PUMP GP-ENGINE OIL	321
Y	*415-5523*	1	PUMP GP-FUEL INJECTION	421
Y	*416-1864*	1	PUMP GP-WATER	339
Y	*415-5527*	1	RAIL GP-FUEL	422
Y	*415-7947*	1	ROCKER ARM GP	299
Y	*425-9760*	1	SENSOR GP-ENGINE	432
Y	*430-5204*	1	SENSOR GP-TEMPERATURE	436
Y	*417-3453*	1	STARTING AID GP	437

504-3645 **ENGINE AR-PRIMARY (**contd.**)** **i06821200**

NOTE	PART NUMBER	QTY	PART NAME 1 2 3 4 5 6 (PRODUCT LEVEL)	SEE PAGE
Y	*432-6668*	1	TURBOCHARGER GP	379
Y	*417-4227*	1	WIRING GP-ENGINE	444
	462-8609	1	ELECTRONICS GP-ENGINE	
	415-9834	1	PLATE GP-SERIAL NUMBER	

Y - SEPARATE ILLUSTRATION

<END>

508-4399 ENGINE AR-PRIMARY

106 BRAKE KW (142 BHP) AT 2200 RPM

SMCS-1000 **i07043723**

NOTE	PART NUMBER	QTY	PART NAME 1 2 3 4 5 6 (PRODUCT LEVEL)	SEE PAGE
Y	*467-0357*	1	AIR CLEANER GP	353
Y	*415-7107*	1	ALTERNATOR GP-CHARGING	424
Y	*418-7425*	1	BELT TENSIONER GP	169
Y	*435-7778*	1	CAMSHAFT GP	170
Y	*416-1867*	1	CONNECTION GP-WATER	327
Y	*415-5535*	1	CONTROL GP-ELECTRONIC	429
Y	*418-7659*	1	COOLER GP-ENGINE OIL	330
Y	*416-8719*	1	COVER GP-FRONT HOUSING	172
Y	*418-6381*	1	COVER GP-VALVE MECHANISM	177
Y	*510-5297*	1	CRANKSHAFT GP	186
Y	*415-3299*	1	CYLINDER BLOCK GP	190
Y	*415-5520*	1	CYLINDER HEAD GP	197
Y	*417-4187*	1	DRAIN GP-ENGINE OIL	200
Y	*432-1846*	1	DRIVE GP-FAN	209
Y	*416-9543*	1	ELBOW GP-AIR INLET	354
Y	*423-1281*	1	EXTENSION GP-FAN	220
Y	*445-0297*	1	FAN GP	336
Y	*418-6475*	1	FASTENER GP-EXHAUST MANIFOLD	359
Y	*417-4185*	1	FILLER GP-ENGINE OIL	306
Y	*416-1042*	1	FILM GP (MOTOR)	456
Y	*416-8716*	1	FILM GP (ALTERNATOR)	457
Y	*417-4284*	1	FILM GP (EMISSIONS)	458
Y	*417-3394*	1	FILTER GP-ENGINE OIL	310
Y	*441-1215*	1	FILTER GP-FUEL (WATER SEPARATOR) (WATER SEPARATOR)	402
Y	*453-7163*	1	FILTER GP-FUEL	407
Y	*417-3390*	1	FLYWHEEL GP	224
Y	*433-5258*	1	FUMES DISPOSAL GP	311
Y	*441-9155*	1	GAUGE GP-OIL LEVEL (DIPSTICK)	315
Y	*444-9659*	1	HOUSING GP-FLYWHEEL	235
Y	*415-7117*	1	HOUSING GP-FRONT	244
Y	*415-5522*	1	INJECTOR GP-FUEL	410
Y	*415-7948*	1	JET GP-PISTON COOLING	257
Y	*417-3458*	1	LIFTING GP-ENGINE	258
Y	*415-7119*	1	LINES GP-FUEL	413
Y	*416-9552*	1	MANIFOLD GP-EXHAUST	361
Y	*415-7949*	1	MOUNTING GP-CONTROL	455
Y	*432-8206*	1	MOUNTING GP-ENGINE	262
Y	*423-1280*	1	PAN GP-OIL	275
Y	*415-5518*	1	PISTON & ROD GP	280
Y	*417-4286*	1	PLUG GP-ENGINE	285
Y	*417-4190*	1	PLUG GP-OIL FILTER MOUNTING	318
Y	*416-1089*	1	PULLEY GP-CRANKSHAFT	294
Y	*508-3673*	1	PUMP GP-ENGINE OIL	321
Y	*415-5523*	1	PUMP GP-FUEL INJECTION	421
Y	*416-1864*	1	PUMP GP-WATER	339
Y	*415-5527*	1	RAIL GP-FUEL	422
Y	*415-7947*	1	ROCKER ARM GP	299
Y	*425-9760*	1	SENSOR GP-ENGINE	432

508-4399 **ENGINE AR-PRIMARY (**contd.**)** **i07043723**

NOTE	PART NUMBER	QTY	PART NAME 1 2 3 4 5 6 (PRODUCT LEVEL)	SEE PAGE
Y	*430-5204*	1	SENSOR GP-TEMPERATURE	436
Y	*417-4371*	1	STARTING AID GP	438
Y	*415-5536*	1	STARTING MOTOR GP-ELECTRIC	439
Y	*445-1450*	1	TURBOCHARGER GP	384
Y	*492-2945*	1	WIRING GP-ENGINE	452
	462-8609	1	ELECTRONICS GP-ENGINE	
	415-9834	1	PLATE GP-SERIAL NUMBER	
	332-0905	2	RIVET-DRIVE	
	350-8958	1	PLATE-SERIAL NUMBER (ENGINE)	
			AVAILABLE REPLACEMENT PART(S):	
Y	**452-7386**	1	CYLINDER BLOCK GP-SHORT	193
Y	**452-7397**	1	CYLINDER HEAD GP	199

Y - SEPARATE ILLUSTRATION

<END>

509-3109 ENGINE AR-PRIMARY

106 BRAKE KW (142 BHP) AT 2200 RPM
OPTIONAL FIELD REPLACEMENT ORDER 452-7386—PAGE: 193, 452-7397—PAGE: 199
PART OF 512-0355 ENGINE AR

SMCS-1000 **i06808148**

NOTE	PART NUMBER	QTY	PART NAME 1 2 3 4 5 6 (PRODUCT LEVEL)	SEE PAGE
Y	*467-0357*	1	AIR CLEANER GP	353
Y	*418-7664*	1	ALTERNATOR GP-CHARGING	425
Y	*432-4983*	1	BALANCER GP	167
Y	*418-7425*	1	BELT TENSIONER GP	169
Y	*433-5258*	1	FUMES DISPOSAL GP	311
Y	*435-7778*	1	CAMSHAFT GP	170
Y	*416-1867*	1	CONNECTION GP-WATER	327
Y	*415-5535*	1	CONTROL GP-ELECTRONIC	429
Y	*452-0797*	1	COOLER GP-ENGINE OIL	333
Y	*415-7105*	1	COVER GP-VALVE MECHANISM	175
Y	*433-6323*	1	CRANKSHAFT GP	181
Y	*415-3299*	1	CYLINDER BLOCK GP	190
Y	*415-5520*	1	CYLINDER HEAD GP	197
Y	*417-4187*	1	DRAIN GP-ENGINE OIL	200
Y	*416-1044*	1	DRIVE GP-FAN	205
Y	*462-9629*	1	ELBOW GP-AIR INLET	358
Y	*420-0291*	1	EXTENSION GP-FAN	219
Y	*445-0296*	1	FAN GP	335
Y	*418-6475*	1	FASTENER GP-EXHAUST MANIFOLD	359
Y	*432-0065*	1	FILLER GP-ENGINE OIL	308
Y	*416-1042*	1	FILM GP	456
Y	*416-8716*	1	FILM GP (ALTERNATOR)	457
Y	*417-4284*	1	FILM GP	458
Y	*417-3394*	1	FILTER GP-ENGINE OIL	310
Y	*441-1215*	1	FILTER GP-FUEL (WATER SEPARATOR)	402
Y	*453-7163*	1	FILTER GP-FUEL	407
Y	*417-3390*	1	FLYWHEEL GP	224
Y	*418-7473*	1	HOUSING GP-FLYWHEEL	233
Y	*415-7117*	1	HOUSING GP-FRONT	244
Y	*416-8719*	1	COVER GP-FRONT HOUSING	172
Y	*415-5522*	1	INJECTOR GP-FUEL	410
Y	*415-7948*	1	JET GP-PISTON COOLING	257
Y	*417-3458*	1	LIFTING GP-ENGINE	258
Y	*415-7119*	1	LINES GP-FUEL	413
Y	*416-9552*	1	MANIFOLD GP-EXHAUST	361
Y	*415-7949*	1	MOUNTING GP-CONTROL	455
Y	*465-3613*	1	MOUNTING GP-ENGINE	265
Y	*416-1052*	1	GAUGE GP-OIL LEVEL (DIPSTICK)	454
Y	*452-0796*	1	PAN GP-OIL	279
Y	*415-5518*	1	PISTON & ROD GP	280
Y	*417-4190*	1	PLUG GP-OIL FILTER MOUNTING	318
Y	*417-4286*	1	PLUG GP-ENGINE	285
Y	*416-1089*	1	PULLEY GP-CRANKSHAFT	294
Y	*415-5523*	1	PUMP GP-FUEL INJECTION	421
Y	*416-1864*	1	PUMP GP-WATER	339
Y	*432-8215*	1	RADIATOR GP	345
Y	*415-5527*	1	RAIL GP-FUEL	422

509-3109 **ENGINE AR-PRIMARY (**contd.**)** **i06808148**

NOTE	PART NUMBER	QTY	PART NAME 1 2 3 4 5 6 (PRODUCT LEVEL)	SEE PAGE
Y	*415-7947*	1	ROCKER ARM GP	299
Y	*425-9760*	1	SENSOR GP-ENGINE	432
Y	*430-5204*	1	SENSOR GP-TEMPERATURE	436
Y	*417-3453*	1	STARTING AID GP	437
Y	*418-7475*	1	STARTING MOTOR GP-ELECTRIC	440
Y	*445-1450*	1	TURBOCHARGER GP	384
Y	*417-4227*	1	WIRING GP-ENGINE	444
	462-8609	1	ELECTRONICS GP-ENGINE	
	415-9834	1	PLATE GP-SERIAL NUMBER	

Y - SEPARATE ILLUSTRATION

<END>

509-5882 ENGINE AR-PRIMARY

96.5 BRAKE KW (129.4 BHP) AT 2200-RPM

PART OF 510-3274 ENGINE AR

SMCS-1000 **i06999959**

NOTE	PART NUMBER	QTY	PART NAME 1 2 3 4 5 6 (PRODUCT LEVEL)	SEE PAGE
Y	*425-8162*	1	ALTERNATOR GP-CHARGING	426
Y	*418-7425*	1	BELT TENSIONER GP	169
Y	*435-7778*	1	CAMSHAFT GP	170
Y	*416-1867*	1	CONNECTION GP-WATER	327
Y	*415-5534*	1	CONTROL GP-ELECTRONIC	428
Y	*418-7659*	1	COOLER GP-ENGINE OIL	330
Y	*418-6381*	1	COVER GP-VALVE MECHANISM	177
Y	*433-6323*	1	CRANKSHAFT GP	181
			—OR—	
Y	*510-5297*	1	CRANKSHAFT GP	186
Y	*415-3299*	1	CYLINDER BLOCK GP	190
Y	*415-5520*	1	CYLINDER HEAD GP	197
Y	*419-8538*	1	DRAIN GP-ENGINE OIL	202
Y	*416-1044*	1	DRIVE GP-FAN	205
Y	*416-9543*	1	ELBOW GP-AIR INLET	354
Y	*416-1070*	1	FILLER GP-ENGINE OIL	305
Y	*416-1042*	1	FILM GP	456
Y	*416-8716*	1	FILM GP (ALTERNATOR)	457
Y	*417-4284*	1	FILM GP	458
Y	*417-3394*	1	FILTER GP-ENGINE OIL	310
Y	*421-3853*	1	FILTER GP-FUEL	398
Y	*441-1215*	1	FILTER GP-FUEL (WATER SEPARATOR) (WATER SEPARATOR)	402
Y	*453-7163*	1	FILTER GP-FUEL	407
Y	*423-1270*	1	FLYWHEEL GP	226
Y	*433-5258*	1	FUMES DISPOSAL GP	311
Y	*441-9154*	1	GAUGE GP-OIL LEVEL (DIPSTICK) (ENGINE)	314
Y	*416-1030*	1	HOUSING GP-FLYWHEEL	232
Y	*415-7115*	1	HOUSING GP-FRONT	240
Y	*415-5522*	1	INJECTOR GP-FUEL	410
Y	*415-7948*	1	JET GP-PISTON COOLING	257
Y	*417-3463*	1	LIFTING GP-ENGINE	260
Y	*416-9552*	1	MANIFOLD GP-EXHAUST	361
Y	*415-7949*	1	MOUNTING GP-CONTROL	455
Y	*416-8775*	1	MOUNTING GP-EXHAUST	365
Y	*416-8715*	1	MOUNTING GP-FAN	338
Y	*416-1051*	1	PAN GP-OIL	272
Y	*415-5519*	1	PISTON & ROD GP	282
Y	*417-4286*	1	PLUG GP-ENGINE	285
Y	*446-2236*	1	PLUG GP-ENGINE	287
Y	*417-3401*	1	PLUG GP-FRONT HOUSING	289
Y	*417-4190*	1	PLUG GP-OIL FILTER MOUNTING	318
Y	*416-1089*	1	PULLEY GP-CRANKSHAFT	294
Y	*416-8723*	1	PUMP GP-ENGINE OIL	320
			—OR—	
Y	*508-3673*	1	PUMP GP-ENGINE OIL	321
Y	*415-5523*	1	PUMP GP-FUEL INJECTION	421
Y	*416-1864*	1	PUMP GP-WATER	339
Y	*415-5527*	1	RAIL GP-FUEL	422

509-5882 **ENGINE AR-PRIMARY (**contd.**)** **i06999959**

NOTE	PART NUMBER	QTY	PART NAME 1 2 3 4 5 6 (PRODUCT LEVEL)	SEE PAGE
Y	*415-7947*	1	ROCKER ARM GP	299
Y	*425-9760*	1	SENSOR GP-ENGINE	432
Y	*430-5204*	1	SENSOR GP-TEMPERATURE	436
Y	*417-3453*	1	STARTING AID GP	437
Y	*425-9174*	1	STARTING MOTOR GP-ELECTRIC	442
Y	*432-6656*	1	TURBOCHARGER GP	376
Y	*492-2945*	1	WIRING GP-ENGINE	452
	462-5117	1	ELECTRONICS GP-ENGINE	

Y - SEPARATE ILLUSTRATION

<END>

509-5884 ENGINE AR-PRIMARY

106 BRAKE KW (142.1 BHP) AT 2200-RPM
PART OF 512-0317 ENGINE AR-COMPLETE

SMCS-1000 **i06931702**

NOTE	PART NUMBER	QTY	PART NAME 1 2 3 4 5 6 (PRODUCT LEVEL)	SEE PAGE
Y	*467-0357*	1	AIR CLEANER GP	353
Y	*415-7107*	1	ALTERNATOR GP-CHARGING	424
Y	*432-4983*	1	BALANCER GP	167
Y	*418-7425*	1	BELT TENSIONER GP	169
Y	*435-7778*	1	CAMSHAFT GP	170
Y	*416-1867*	1	CONNECTION GP-WATER	327
Y	*415-5535*	1	CONTROL GP-ELECTRONIC	429
Y	*452-0797*	1	COOLER GP-ENGINE OIL	333
Y	*415-7105*	1	COVER GP-VALVE MECHANISM	175
Y	*433-6323*	1	CRANKSHAFT GP	181
			—OR—	
Y	*510-5297*	1	CRANKSHAFT GP	186
Y	*415-3299*	1	CYLINDER BLOCK GP	190
Y	*415-5520*	1	CYLINDER HEAD GP	197
Y	*417-4187*	1	DRAIN GP-ENGINE OIL	200
Y	*416-1044*	1	DRIVE GP-FAN	205
Y	*462-9629*	1	ELBOW GP-AIR INLET	358
Y	*420-0291*	1	EXTENSION GP-FAN	219
Y	*445-0296*	1	FAN GP	335
Y	*418-6475*	1	FASTENER GP-EXHAUST MANIFOLD	359
Y	*432-0065*	1	FILLER GP-ENGINE OIL	308
Y	*416-1042*	1	FILM GP	456
Y	*416-8716*	1	FILM GP (ALTERNATOR)	457
Y	*417-4284*	1	FILM GP	458
Y	*417-3394*	1	FILTER GP-ENGINE OIL	310
Y	*441-1215*	1	FILTER GP-FUEL (WATER SEPARATOR)	402
Y	*453-7163*	1	FILTER GP-FUEL	407
Y	*417-3390*	1	FLYWHEEL GP	224
Y	*433-5258*	1	FUMES DISPOSAL GP	311
Y	*418-7473*	1	HOUSING GP-FLYWHEEL	233
Y	*415-7117*	1	HOUSING GP-FRONT	244
Y	*416-8719*	1	COVER GP-FRONT HOUSING	172
Y	*415-5522*	1	INJECTOR GP-FUEL	410
Y	*415-7948*	1	JET GP-PISTON COOLING	257
Y	*417-3458*	1	LIFTING GP-ENGINE	258
Y	*415-7119*	1	LINES GP-FUEL	413
Y	*416-9552*	1	MANIFOLD GP-EXHAUST	361
Y	*415-7949*	1	MOUNTING GP-CONTROL	455
Y	*465-3613*	1	MOUNTING GP-ENGINE	265
Y	*416-1052*	1	GAUGE GP-OIL LEVEL (DIPSTICK)	454
Y	*452-0796*	1	PAN GP-OIL	279
Y	*415-5518*	1	PISTON & ROD GP	280
Y	*417-4286*	1	PLUG GP-ENGINE	285
Y	*417-4190*	1	PLUG GP-OIL FILTER MOUNTING	318
Y	*416-1089*	1	PULLEY GP-CRANKSHAFT	294
Y	*415-5523*	1	PUMP GP-FUEL INJECTION	421
Y	*416-1864*	1	PUMP GP-WATER	339
Y	*432-8215*	1	RADIATOR GP	345

509-5884 **ENGINE AR-PRIMARY (**contd.**)** **i06931702**

NOTE	PART NUMBER	QTY	PART NAME 1 2 3 4 5 6 (PRODUCT LEVEL)	SEE PAGE
Y	*415-5527*	1	RAIL GP-FUEL	422
Y	*415-7947*	1	ROCKER ARM GP	299
Y	*425-9760*	1	SENSOR GP-ENGINE	432
Y	*430-5204*	1	SENSOR GP-TEMPERATURE	436
Y	*417-4371*	1	STARTING AID GP	438
Y	*415-5536*	1	STARTING MOTOR GP-ELECTRIC	439
Y	*445-1450*	1	TURBOCHARGER GP	384
Y	*417-4227*	1	WIRING GP-ENGINE	444
	462-8609	1	ELECTRONICS GP-ENGINE	

Y - SEPARATE ILLUSTRATION

<END>

510-0902 ENGINE AR-PRIMARY

106 BRAKE KW (142 BHP) AT 2200 RPM
OPTIONAL FIELD REPLACEMENT ORDER 452-7386—PAGE: 193, 452-7397—PAGE: 199
PART OF 510-2181 ENGINE AR-COMPLETE

SMCS-1000 **i06821141**

NOTE	PART NUMBER	QTY	PART NAME 1 2 3 4 5 6 (PRODUCT LEVEL)	SEE PAGE
Y	*467-0357*	1	AIR CLEANER GP	353
Y	*415-7107*	1	ALTERNATOR GP-CHARGING	424
Y	*418-7425*	1	BELT TENSIONER GP	169
Y	*435-7778*	1	CAMSHAFT GP	170
Y	*416-1867*	1	CONNECTION GP-WATER	327
Y	*415-5535*	1	CONTROL GP-ELECTRONIC	429
Y	*418-7659*	1	COOLER GP-ENGINE OIL	330
Y	*418-6381*	1	COVER GP-VALVE MECHANISM	177
Y	*510-5297*	1	CRANKSHAFT GP	186
Y	*415-3299*	1	CYLINDER BLOCK GP	190
Y	*415-5520*	1	CYLINDER HEAD GP	197
Y	*417-4187*	1	DRAIN GP-ENGINE OIL	200
Y	*432-1846*	1	DRIVE GP-FAN	209
Y	*416-9543*	1	ELBOW GP-AIR INLET	354
Y	*423-1281*	1	EXTENSION GP-FAN	220
Y	*445-0297*	1	FAN GP	336
Y	*418-6475*	1	FASTENER GP-EXHAUST MANIFOLD	359
Y	*417-4185*	1	FILLER GP-ENGINE OIL	306
Y	*416-1042*	1	FILM GP	456
Y	*416-8716*	1	FILM GP (ALTERNATOR)	457
Y	*417-4284*	1	FILM GP	458
Y	*417-3394*	1	FILTER GP-ENGINE OIL	310
Y	*441-1215*	1	FILTER GP-FUEL (WATER SEPARATOR)	402
Y	*453-7163*	1	FILTER GP-FUEL	407
Y	*417-3390*	1	FLYWHEEL GP	224
Y	*433-5258*	1	FUMES DISPOSAL GP	311
Y	*441-9155*	1	GAUGE GP-OIL LEVEL (DIPSTICK)	315
Y	*444-9659*	1	HOUSING GP-FLYWHEEL	235
Y	*415-7117*	1	HOUSING GP-FRONT	244
Y	*416-8719*	1	COVER GP-FRONT HOUSING	172
Y	*415-5522*	1	INJECTOR GP-FUEL	410
Y	*415-7948*	1	JET GP-PISTON COOLING	257
Y	*417-3458*	1	LIFTING GP-ENGINE	258
Y	*415-7119*	1	LINES GP-FUEL	413
Y	*416-9552*	1	MANIFOLD GP-EXHAUST	361
Y	*415-7949*	1	MOUNTING GP-CONTROL	455
Y	*432-8206*	1	MOUNTING GP-ENGINE	262
Y	*423-1280*	1	PAN GP-OIL	275
Y	*415-5518*	1	PISTON & ROD GP	280
Y	*417-4286*	1	PLUG GP-ENGINE	285
Y	*417-4190*	1	PLUG GP-OIL FILTER MOUNTING	318
Y	*416-1089*	1	PULLEY GP-CRANKSHAFT	294
Y	*508-3673*	1	PUMP GP-ENGINE OIL	321
Y	*415-5523*	1	PUMP GP-FUEL INJECTION	421
Y	*416-1864*	1	PUMP GP-WATER	339
Y	*415-5527*	1	RAIL GP-FUEL	422
Y	*415-7947*	1	ROCKER ARM GP	299

510-0902 **ENGINE AR-PRIMARY (**contd.**)** **i06821141**

NOTE	PART NUMBER	QTY	PART NAME 1 2 3 4 5 6 (PRODUCT LEVEL)	SEE PAGE
Y	*425-9760*	1	SENSOR GP-ENGINE	432
Y	*430-5204*	1	SENSOR GP-TEMPERATURE	436
Y	*417-4371*	1	STARTING AID GP	438
Y	*415-5536*	1	STARTING MOTOR GP-ELECTRIC	439
Y	*445-1450*	1	TURBOCHARGER GP	384
Y	*492-2945*	1	WIRING GP-ENGINE	452
	462-8609	1	ELECTRONICS GP-ENGINE	
	415-9834	1	PLATE GP-SERIAL NUMBER	

Y - SEPARATE ILLUSTRATION

<END>

512-9838 ENGINE AR-PRIMARY

97 BRAKE KW (129 BHP) AT 2200 RPM

OPTIONAL FIELD REPLACEMENT ORDER 452-7386—PAGE: 193, 452-7397—PAGE: 199

PART OF 513-0850 ENGINE AR

SMCS-1000 **i06821187**

NOTE	PART NUMBER	QTY	PART NAME 1 2 3 4 5 6 (PRODUCT LEVEL)	SEE PAGE
Y	*418-7664*	1	ALTERNATOR GP-CHARGING	425
Y	*418-7425*	1	BELT TENSIONER GP	169
Y	*433-5258*	1	FUMES DISPOSAL GP	311
Y	*435-7778*	1	CAMSHAFT GP	170
Y	*416-1867*	1	CONNECTION GP-WATER	327
Y	*415-5535*	1	CONTROL GP-ELECTRONIC	429
Y	*418-7659*	1	COOLER GP-ENGINE OIL	330
Y	*418-6381*	1	COVER GP-VALVE MECHANISM	177
Y	*433-6323*	1	CRANKSHAFT GP	181
			—OR—	
Y	*510-5297*	1	CRANKSHAFT GP	186
Y	*415-3299*	1	CYLINDER BLOCK GP	190
Y	*415-5520*	1	CYLINDER HEAD GP	197
Y	*419-8538*	1	DRAIN GP-ENGINE OIL	202
Y	*432-1853*	1	DRIVE GP-FAN	211
Y	*462-9629*	1	ELBOW GP-AIR INLET	358
Y	*420-0291*	1	EXTENSION GP-FAN	219
Y	*445-0296*	1	FAN GP	335
Y	*418-6475*	1	FASTENER GP-EXHAUST MANIFOLD	359
Y	*417-4185*	1	FILLER GP-ENGINE OIL	306
Y	*416-1042*	1	FILM GP	456
Y	*416-8716*	1	FILM GP (ALTERNATOR)	457
Y	*417-4284*	1	FILM GP	458
Y	*417-3394*	1	FILTER GP-ENGINE OIL	310
Y	*441-1215*	1	FILTER GP-FUEL (WATER SEPARATOR)	402
Y	*453-7163*	1	FILTER GP-FUEL	407
Y	*417-3391*	1	FLYWHEEL GP	225
Y	*416-1053*	1	GAUGE GP-OIL LEVEL (DIPSTICK)	312
Y	*416-1029*	1	HOUSING GP-FLYWHEEL	231
Y	*432-4972*	1	HOUSING GP-FRONT	248
Y	*432-8266*	1	HOUSING GP-FRONT	251
Y	*415-5522*	1	INJECTOR GP-FUEL	410
Y	*415-7948*	1	JET GP-PISTON COOLING	257
Y	*417-3458*	1	LIFTING GP-ENGINE	258
Y	*415-7119*	1	LINES GP-FUEL	413
Y	*416-9552*	1	MANIFOLD GP-EXHAUST	361
Y	*415-7949*	1	MOUNTING GP-CONTROL	455
Y	*465-3614*	1	MOUNTING GP-ENGINE	266
Y	*419-8519*	1	PAN GP-OIL	274
Y	*415-5519*	1	PISTON & ROD GP	282
Y	*417-4190*	1	PLUG GP-OIL FILTER MOUNTING	318
Y	*417-4286*	1	PLUG GP-ENGINE	285
Y	*426-3230*	1	PULLEY GP-CRANKSHAFT	296
Y	*416-8723*	1	PUMP GP-ENGINE OIL	320
			—OR—	
Y	*508-3673*	1	PUMP GP-ENGINE OIL	321
Y	*415-5523*	1	PUMP GP-FUEL INJECTION	421
Y	*416-1864*	1	PUMP GP-WATER	339

512-9838 **ENGINE AR-PRIMARY (**contd.**)** **i06821187**

NOTE	PART NUMBER	QTY	PART NAME 1 2 3 4 5 6 (PRODUCT LEVEL)	SEE PAGE
Y	*459-6904*	1	RADIATOR GP	350
Y	*415-5527*	1	RAIL GP-FUEL	422
Y	*415-7947*	1	ROCKER ARM GP	299
Y	*425-9760*	1	SENSOR GP-ENGINE	432
Y	*430-5204*	1	SENSOR GP-TEMPERATURE	436
Y	*417-3453*	1	STARTING AID GP	437
Y	*418-7475*	1	STARTING MOTOR GP-ELECTRIC	440
Y	*445-1450*	1	TURBOCHARGER GP	384
Y	*417-4227*	1	WIRING GP-ENGINE	444
	462-5117	1	ELECTRONICS GP-ENGINE	
	415-9834	1	PLATE GP-SERIAL NUMBER	

Y - SEPARATE ILLUSTRATION

<END>

512-9884 ENGINE AR-PRIMARY

97 BRAKE KW (129 BHP) AT 2200 RPM

OPTIONAL FIELD REPLACEMENT ORDER 452-7386—PAGE: 193, 452-7397—PAGE: 199

PART OF 513-0849 ENGINE AR

SMCS-1000 **i06821202**

NOTE	PART NUMBER	QTY	PART NAME 1 2 3 4 5 6 (PRODUCT LEVEL)	SEE PAGE
Y	*418-7664*	1	ALTERNATOR GP-CHARGING	425
Y	*418-7425*	1	BELT TENSIONER GP	169
Y	*433-5258*	1	FUMES DISPOSAL GP	311
Y	*435-7778*	1	CAMSHAFT GP	170
Y	*416-1867*	1	CONNECTION GP-WATER	327
Y	*415-5535*	1	CONTROL GP-ELECTRONIC	429
Y	*418-7659*	1	COOLER GP-ENGINE OIL	330
Y	*418-6381*	1	COVER GP-VALVE MECHANISM	177
Y	*433-6323*	1	CRANKSHAFT GP	181
			—OR—	
Y	*510-5297*	1	CRANKSHAFT GP	186
Y	*415-3299*	1	CYLINDER BLOCK GP	190
Y	*415-5520*	1	CYLINDER HEAD GP	197
Y	*419-8538*	1	DRAIN GP-ENGINE OIL	202
Y	*432-1853*	1	DRIVE GP-FAN	211
Y	*462-9629*	1	ELBOW GP-AIR INLET	358
Y	*420-0291*	1	EXTENSION GP-FAN	219
Y	*445-0296*	1	FAN GP	335
Y	*418-6475*	1	FASTENER GP-EXHAUST MANIFOLD	359
Y	*417-4185*	1	FILLER GP-ENGINE OIL	306
Y	*416-1042*	1	FILM GP	456
Y	*416-8716*	1	FILM GP (ALTERNATOR)	457
Y	*417-4284*	1	FILM GP	458
Y	*417-3394*	1	FILTER GP-ENGINE OIL	310
Y	*441-1215*	1	FILTER GP-FUEL (WATER SEPARATOR)	402
Y	*453-7163*	1	FILTER GP-FUEL	407
Y	*417-3391*	1	FLYWHEEL GP	225
Y	*416-1053*	1	GAUGE GP-OIL LEVEL (DIPSTICK)	312
Y	*416-1029*	1	HOUSING GP-FLYWHEEL	231
Y	*432-4972*	1	HOUSING GP-FRONT	248
Y	*432-8266*	1	HOUSING GP-FRONT	251
Y	*415-5522*	1	INJECTOR GP-FUEL	410
Y	*415-7948*	1	JET GP-PISTON COOLING	257
Y	*417-3458*	1	LIFTING GP-ENGINE	258
Y	*415-7119*	1	LINES GP-FUEL	413
Y	*416-9552*	1	MANIFOLD GP-EXHAUST	361
Y	*415-7949*	1	MOUNTING GP-CONTROL	455
Y	*465-3614*	1	MOUNTING GP-ENGINE	266
Y	*419-8519*	1	PAN GP-OIL	274
Y	*415-5519*	1	PISTON & ROD GP	282
Y	*417-4190*	1	PLUG GP-OIL FILTER MOUNTING	318
Y	*417-4286*	1	PLUG GP-ENGINE	285
Y	*426-3230*	1	PULLEY GP-CRANKSHAFT	296
Y	*416-8723*	1	PUMP GP-ENGINE OIL	320
			—OR—	
Y	*508-3673*	1	PUMP GP-ENGINE OIL	321
Y	*415-5523*	1	PUMP GP-FUEL INJECTION	421
Y	*416-1864*	1	PUMP GP-WATER	339

512-9884 **ENGINE AR-PRIMARY (**contd.**)** **i06821202**

NOTE	PART NUMBER	QTY	PART NAME 1 2 3 4 5 6 (PRODUCT LEVEL)	SEE PAGE
Y	*459-6904*	1	RADIATOR GP	350
Y	*415-5527*	1	RAIL GP-FUEL	422
Y	*415-7947*	1	ROCKER ARM GP	299
Y	*425-9760*	1	SENSOR GP-ENGINE	432
Y	*430-5204*	1	SENSOR GP-TEMPERATURE	436
Y	*417-3453*	1	STARTING AID GP	437
Y	*418-7475*	1	STARTING MOTOR GP-ELECTRIC	440
Y	*445-1450*	1	TURBOCHARGER GP	384
Y	*417-4227*	1	WIRING GP-ENGINE	444
	462-5117	1	ELECTRONICS GP-ENGINE	
	415-9834	1	PLATE GP-SERIAL NUMBER	

Y - SEPARATE ILLUSTRATION

<END>

514-3535 ENGINE AR-PRIMARY

75 BRAKE KW (100 BHP) AT 2200 RPM

OPTIONAL FIELD REPLACEMENT ORDER 452-7386—PAGE: 193, 452-7397—PAGE: 199

PART OF 514-4609 ENGINE AR-COMPLETE

SMCS-1000 **i07076256**

NOTE	PART NUMBER	QTY	PART NAME 1 2 3 4 5 6 (PRODUCT LEVEL)	SEE PAGE
Y	*467-0357*	1	AIR CLEANER GP	353
Y	*415-7107*	1	ALTERNATOR GP-CHARGING	424
Y	*418-7425*	1	BELT TENSIONER GP	169
Y	*435-7778*	1	CAMSHAFT GP	170
Y	*416-1867*	1	CONNECTION GP-WATER	327
Y	*415-5535*	1	CONTROL GP-ELECTRONIC	429
Y	*418-7659*	1	COOLER GP-ENGINE OIL	330
Y	*418-6381*	1	COVER GP-VALVE MECHANISM	177
Y	*510-5297*	1	CRANKSHAFT GP	186
Y	*415-3299*	1	CYLINDER BLOCK GP	190
Y	*415-5520*	1	CYLINDER HEAD GP	197
Y	*417-4187*	1	DRAIN GP-ENGINE OIL	200
Y	*416-1044*	1	DRIVE GP-FAN	205
Y	*462-9629*	1	ELBOW GP-AIR INLET	358
Y	*420-0291*	1	EXTENSION GP-FAN	219
Y	*445-0296*	1	FAN GP	335
Y	*418-6475*	1	FASTENER GP-EXHAUST MANIFOLD	359
Y	*417-4185*	1	FILLER GP-ENGINE OIL	306
Y	*416-1042*	1	FILM GP (MOTOR)	456
Y	*416-8716*	1	FILM GP (ALTERNATOR)	457
Y	*417-4284*	1	FILM GP	458
Y	*417-3394*	1	FILTER GP-ENGINE OIL	310
Y	*441-1215*	1	FILTER GP-FUEL (WATER SEPARATOR)	402
Y	*453-7163*	1	FILTER GP-FUEL	407
Y	*417-3390*	1	FLYWHEEL GP	224
Y	*433-5258*	1	FUMES DISPOSAL GP	311
Y	*441-9155*	1	GAUGE GP-OIL LEVEL (DIPSTICK)	315
Y	*444-9659*	1	HOUSING GP-FLYWHEEL	235
Y	*432-4972*	1	HOUSING GP-FRONT	248
Y	*432-8266*	1	HOUSING GP-FRONT	251
Y	*415-5522*	1	INJECTOR GP-FUEL	410
Y	*415-7948*	1	JET GP-PISTON COOLING	257
Y	*417-3458*	1	LIFTING GP-ENGINE	258
Y	*415-7119*	1	LINES GP-FUEL	413
Y	*416-9552*	1	MANIFOLD GP-EXHAUST	361
Y	*415-7949*	1	MOUNTING GP-CONTROL	455
Y	*465-3613*	1	MOUNTING GP-ENGINE	265
Y	*423-1280*	1	PAN GP-OIL	275
Y	*415-5519*	1	PISTON & ROD GP	282
Y	*417-4286*	1	PLUG GP-ENGINE	285
Y	*417-4190*	1	PLUG GP-OIL FILTER MOUNTING	318
Y	*416-1089*	1	PULLEY GP-CRANKSHAFT	294
Y	*508-3673*	1	PUMP GP-ENGINE OIL	321
Y	*415-5523*	1	PUMP GP-FUEL INJECTION	421
Y	*416-1864*	1	PUMP GP-WATER	339
Y	*432-8218*	1	RADIATOR GP	348
Y	*415-5527*	1	RAIL GP-FUEL	422

514-3535 **ENGINE AR-PRIMARY (**contd.**)** **i07076256**

NOTE	PART NUMBER	QTY	PART NAME 1 2 3 4 5 6 (PRODUCT LEVEL)	SEE PAGE
Y	*415-7947*	1	ROCKER ARM GP	299
Y	*425-9760*	1	SENSOR GP-ENGINE	432
Y	*430-5204*	1	SENSOR GP-TEMPERATURE	436
Y	*417-4371*	1	STARTING AID GP	438
Y	*415-5536*	1	STARTING MOTOR GP-ELECTRIC	439
Y	*432-6648*	1	TURBOCHARGER GP	372
Y	*417-4227*	1	WIRING GP-ENGINE	444
	464-4952	1	ELECTRONICS GP-ENGINE	
	415-9834	1	PLATE GP-SERIAL NUMBER	
	332-0905	2	RIVET-DRIVE	
	350-8958	1	PLATE-SERIAL NUMBER (ENGINE)	

Y - SEPARATE ILLUSTRATION

<END>

514-3537 ENGINE AR-PRIMARY

106 BRAKE KW (142 BHP) AT 2200 RPM
OPTIONAL FIELD REPLACEMENT ORDER 452-7386—PAGE: 193, 452-7397—PAGE: 199
PART OF 514-4611 ENGINE AR-COMPLETE

SMCS-1000 **i06996243**

NOTE	PART NUMBER	QTY	PART NAME 1 2 3 4 5 6 (PRODUCT LEVEL)	SEE PAGE
Y	*467-0357*	1	AIR CLEANER GP	353
Y	*415-7107*	1	ALTERNATOR GP-CHARGING	424
Y	*418-7425*	1	BELT TENSIONER GP	169
Y	*435-7778*	1	CAMSHAFT GP	170
Y	*416-1867*	1	CONNECTION GP-WATER	327
Y	*415-5535*	1	CONTROL GP-ELECTRONIC	429
Y	*418-7659*	1	COOLER GP-ENGINE OIL	330
Y	*418-6381*	1	COVER GP-VALVE MECHANISM	177
Y	*510-5297*	1	CRANKSHAFT GP	186
Y	*415-3299*	1	CYLINDER BLOCK GP	190
Y	*415-5520*	1	CYLINDER HEAD GP	197
Y	*417-4187*	1	DRAIN GP-ENGINE OIL	200
Y	*416-1044*	1	DRIVE GP-FAN	205
Y	*462-9629*	1	ELBOW GP-AIR INLET	358
Y	*420-0291*	1	EXTENSION GP-FAN	219
Y	*445-0296*	1	FAN GP	335
Y	*418-6475*	1	FASTENER GP-EXHAUST MANIFOLD	359
Y	*417-4185*	1	FILLER GP-ENGINE OIL	306
Y	*416-1042*	1	FILM GP	456
Y	*416-8716*	1	FILM GP (ALTERNATOR)	457
Y	*417-4284*	1	FILM GP	458
Y	*417-3394*	1	FILTER GP-ENGINE OIL	310
Y	*441-1215*	1	FILTER GP-FUEL (WATER SEPARATOR)	402
Y	*453-7163*	1	FILTER GP-FUEL	407
Y	*417-3390*	1	FLYWHEEL GP	224
Y	*433-5258*	1	FUMES DISPOSAL GP	311
Y	*441-9155*	1	GAUGE GP-OIL LEVEL (DIPSTICK)	315
Y	*444-9659*	1	HOUSING GP-FLYWHEEL	235
Y	*432-4972*	1	HOUSING GP-FRONT	248
Y	*432-8266*	1	HOUSING GP-FRONT	251
Y	*415-5522*	1	INJECTOR GP-FUEL	410
Y	*415-7948*	1	JET GP-PISTON COOLING	257
Y	*417-3458*	1	LIFTING GP-ENGINE	258
Y	*415-7119*	1	LINES GP-FUEL	413
Y	*416-9552*	1	MANIFOLD GP-EXHAUST	361
Y	*415-7949*	1	MOUNTING GP-CONTROL	455
Y	*465-3613*	1	MOUNTING GP-ENGINE	265
Y	*423-1280*	1	PAN GP-OIL	275
Y	*415-5518*	1	PISTON & ROD GP	280
Y	*417-4286*	1	PLUG GP-ENGINE	285
Y	*417-4190*	1	PLUG GP-OIL FILTER MOUNTING	318
Y	*416-1089*	1	PULLEY GP-CRANKSHAFT	294
Y	*508-3673*	1	PUMP GP-ENGINE OIL	321
Y	*415-5523*	1	PUMP GP-FUEL INJECTION	421
Y	*416-1864*	1	PUMP GP-WATER	339
Y	*432-8218*	1	RADIATOR GP	348
Y	*415-5527*	1	RAIL GP-FUEL	422

514-3537 **ENGINE AR-PRIMARY (**contd.**)** **i06996243**

NOTE	PART NUMBER	QTY	PART NAME 1 2 3 4 5 6 (PRODUCT LEVEL)	SEE PAGE
Y	*415-7947*	1	ROCKER ARM GP	299
Y	*425-9760*	1	SENSOR GP-ENGINE	432
Y	*430-5204*	1	SENSOR GP-TEMPERATURE	436
Y	*417-4371*	1	STARTING AID GP	438
Y	*415-5536*	1	STARTING MOTOR GP-ELECTRIC	439
Y	*445-1450*	1	TURBOCHARGER GP	384
Y	*417-4227*	1	WIRING GP-ENGINE	444
	462-8609	1	ELECTRONICS GP-ENGINE	
	415-9834	1	PLATE GP-SERIAL NUMBER	

Y - SEPARATE ILLUSTRATION

<END>

516-9846 ENGINE AR-PRIMARY

98 BRAKE KW (132 BHP) AT 1800 RPM

OPTIONAL FIELD REPLACEMENT ORDER 452-7386—PAGE: 193, 452-7397—PAGE: 199

PART OF 517-0060 ENGINE AR-COMPLETE

SMCS-1000 **i06812158**

NOTE	PART NUMBER	QTY	PART NAME 1 2 3 4 5 6 (PRODUCT LEVEL)	SEE PAGE
Y	*467-0357*	1	AIR CLEANER GP	353
Y	*415-7107*	1	ALTERNATOR GP-CHARGING	424
Y	*418-7425*	1	BELT TENSIONER GP	169
Y	*433-5258*	1	FUMES DISPOSAL GP	311
Y	*470-6153*	1	CAMSHAFT GP	171
Y	*416-1867*	1	CONNECTION GP-WATER	327
Y	*415-5535*	1	CONTROL GP-ELECTRONIC	429
Y	*418-7659*	1	COOLER GP-ENGINE OIL	330
Y	*415-7105*	1	COVER GP-VALVE MECHANISM	175
Y	*510-5297*	1	CRANKSHAFT GP	186
Y	*415-3299*	1	CYLINDER BLOCK GP	190
Y	*415-5520*	1	CYLINDER HEAD GP	197
Y	*417-4187*	1	DRAIN GP-ENGINE OIL	200
Y	*432-1853*	1	DRIVE GP-FAN	211
Y	*462-9629*	1	ELBOW GP-AIR INLET	358
Y	*420-0291*	1	EXTENSION GP-FAN	219
Y	*445-0296*	1	FAN GP	335
Y	*418-6475*	1	FASTENER GP-EXHAUST MANIFOLD	359
Y	*432-0065*	1	FILLER GP-ENGINE OIL	308
Y	*416-1042*	1	FILM GP	456
Y	*416-8716*	1	FILM GP (ALTERNATOR)	457
Y	*417-4284*	1	FILM GP	458
Y	*417-3394*	1	FILTER GP-ENGINE OIL	310
Y	*441-1215*	1	FILTER GP-FUEL (WATER SEPARATOR)	402
Y	*453-7163*	1	FILTER GP-FUEL	407
Y	*417-3390*	1	FLYWHEEL GP	224
Y	*418-7473*	1	HOUSING GP-FLYWHEEL	233
Y	*415-7117*	1	HOUSING GP-FRONT	244
Y	*416-8719*	1	COVER GP-FRONT HOUSING	172
Y	*415-5522*	1	INJECTOR GP-FUEL	410
Y	*415-7948*	1	JET GP-PISTON COOLING	257
Y	*417-3458*	1	LIFTING GP-ENGINE	258
Y	*415-7119*	1	LINES GP-FUEL	413
Y	*416-9552*	1	MANIFOLD GP-EXHAUST	361
Y	*415-7949*	1	MOUNTING GP-CONTROL	455
Y	*465-3613*	1	MOUNTING GP-ENGINE	265
Y	*416-1052*	1	GAUGE GP-OIL LEVEL (DIPSTICK)	454
Y	*418-7530*	1	PAN GP-OIL	273
Y	*415-5519*	1	PISTON & ROD GP	282
Y	*417-4190*	1	PLUG GP-OIL FILTER MOUNTING	318
Y	*417-4286*	1	PLUG GP-ENGINE	285
Y	*426-3230*	1	PULLEY GP-CRANKSHAFT	296
Y	*508-3673*	1	PUMP GP-ENGINE OIL	321
Y	*415-5523*	1	PUMP GP-FUEL INJECTION	421
Y	*416-1864*	1	PUMP GP-WATER	339
Y	*432-8215*	1	RADIATOR GP	345
Y	*415-5527*	1	RAIL GP-FUEL	422

516-9846 **ENGINE AR-PRIMARY (**contd.**)** **i06812158**

NOTE	PART NUMBER	QTY	PART NAME 1 2 3 4 5 6 (PRODUCT LEVEL)	SEE PAGE
Y	*415-7947*	1	ROCKER ARM GP	299
Y	*425-9760*	1	SENSOR GP-ENGINE	432
Y	*430-5204*	1	SENSOR GP-TEMPERATURE	436
Y	*417-4371*	1	STARTING AID GP	438
Y	*415-5536*	1	STARTING MOTOR GP-ELECTRIC	439
Y	*467-7639*	1	TURBOCHARGER GP	391
Y	*417-4227*	1	WIRING GP-ENGINE	444
	478-6553	1	ELECTRONICS GP-ENGINE	
	415-9834	1	PLATE GP-SERIAL NUMBER	

Y - SEPARATE ILLUSTRATION

<END>

517-0058 ENGINE AR-PRIMARY

96.5 BRAKE KW (129.4 BHP) AT 2200-RPM

SMCS-1000 **i06925193**

NOTE	PART NUMBER	QTY	PART NAME 1 2 3 4 5 6 (PRODUCT LEVEL)	SEE PAGE
Y	*418-7664*	1	ALTERNATOR GP-CHARGING	425
Y	*418-7425*	1	BELT TENSIONER GP	169
Y	*435-7778*	1	CAMSHAFT GP	170
Y	*416-1867*	1	CONNECTION GP-WATER	327
Y	*415-5535*	1	CONTROL GP-ELECTRONIC	429
Y	*418-7659*	1	COOLER GP-ENGINE OIL	330
Y	*418-6381*	1	COVER GP-VALVE MECHANISM	177
Y	*510-5297*	1	CRANKSHAFT GP	186
Y	*415-3299*	1	CYLINDER BLOCK GP	190
Y	*415-5520*	1	CYLINDER HEAD GP	197
Y	*417-4187*	1	DRAIN GP-ENGINE OIL	200
Y	*432-1853*	1	DRIVE GP-FAN	211
Y	*462-9629*	1	ELBOW GP-AIR INLET	358
Y	*420-0291*	1	EXTENSION GP-FAN	219
Y	*445-0296*	1	FAN GP	335
Y	*418-6475*	1	FASTENER GP-EXHAUST MANIFOLD	359
Y	*432-0065*	1	FILLER GP-ENGINE OIL	308
Y	*416-1042*	1	FILM GP	456
Y	*416-8716*	1	FILM GP (ALTERNATOR)	457
Y	*417-4284*	1	FILM GP	458
Y	*417-3394*	1	FILTER GP-ENGINE OIL	310
Y	*441-1215*	1	FILTER GP-FUEL (WATER SEPARATOR)	402
Y	*453-7163*	1	FILTER GP-FUEL	407
Y	*417-3391*	1	FLYWHEEL GP	225
Y	*433-5258*	1	FUMES DISPOSAL GP	311
Y	*416-1029*	1	HOUSING GP-FLYWHEEL	231
Y	*432-4972*	1	HOUSING GP-FRONT	248
Y	*432-8266*	1	HOUSING GP-FRONT	251
Y	*415-5522*	1	INJECTOR GP-FUEL	410
Y	*415-7948*	1	JET GP-PISTON COOLING	257
Y	*417-3458*	1	LIFTING GP-ENGINE	258
Y	*415-7119*	1	LINES GP-FUEL	413
Y	*416-9552*	1	MANIFOLD GP-EXHAUST	361
Y	*415-7949*	1	MOUNTING GP-CONTROL	455
Y	*465-3614*	1	MOUNTING GP-ENGINE	266
Y	*419-8519*	1	PAN GP-OIL	274
Y	*415-5519*	1	PISTON & ROD GP	282
Y	*417-4286*	1	PLUG GP-ENGINE	285
Y	*417-4190*	1	PLUG GP-OIL FILTER MOUNTING	318
Y	*447-7651*	1	PLUG GP-OIL PAN	290
Y	*426-3230*	1	PULLEY GP-CRANKSHAFT	296
Y	*508-3673*	1	PUMP GP-ENGINE OIL	321
Y	*415-5523*	1	PUMP GP-FUEL INJECTION	421
Y	*416-1864*	1	PUMP GP-WATER	339
Y	*459-6904*	1	RADIATOR GP	350
Y	*415-5527*	1	RAIL GP-FUEL	422
Y	*415-7947*	1	ROCKER ARM GP	299
Y	*425-9760*	1	SENSOR GP-ENGINE	432
Y	*430-5204*	1	SENSOR GP-TEMPERATURE	436

517-0058 **ENGINE AR-PRIMARY (**contd.**)** **i06925193**

NOTE	PART NUMBER	QTY	PART NAME 1 2 3 4 5 6 (PRODUCT LEVEL)	SEE PAGE
Y	*417-3453*	1	STARTING AID GP	437
Y	*419-8514*	1	STARTING MOTOR GP-ELECTRIC	441
Y	*445-1450*	1	TURBOCHARGER GP	384
Y	*417-4227*	1	WIRING GP-ENGINE	444
	462-5117	1	ELECTRONICS GP-ENGINE	

Y - SEPARATE ILLUSTRATION

<END>

526-8847 ENGINE AR-PRIMARY

97 BRAKE KW (129 BHP) AT 2200 RPM

OPTIONAL FIELD REPLACEMENT ORDER 452-7386—PAGE: 193, 452-7397—PAGE: 199

PART OF 526-8932 ENGINE AR

SMCS-1000 **i07034120**

NOTE	PART NUMBER	QTY	PART NAME 1 2 3 4 5 6 (PRODUCT LEVEL)	SEE PAGE
Y	*467-0357*	1	AIR CLEANER GP	353
Y	*418-7664*	1	ALTERNATOR GP-CHARGING	425
Y	*432-4983*	1	BALANCER GP	167
Y	*418-7425*	1	BELT TENSIONER GP	169
Y	*435-7778*	1	CAMSHAFT GP	170
Y	*416-1867*	1	CONNECTION GP-WATER	327
Y	*415-5535*	1	CONTROL GP-ELECTRONIC	429
Y	*452-0797*	1	COOLER GP-ENGINE OIL	333
Y	*415-7105*	1	COVER GP-VALVE MECHANISM	175
Y	*510-5297*	1	CRANKSHAFT GP	186
Y	*415-3299*	1	CYLINDER BLOCK GP	190
Y	*415-5520*	1	CYLINDER HEAD GP	197
Y	*417-4187*	1	DRAIN GP-ENGINE OIL	200
Y	*416-1044*	1	DRIVE GP-FAN	205
Y	*462-9629*	1	ELBOW GP-AIR INLET	358
Y	*420-0291*	1	EXTENSION GP-FAN	219
Y	*445-0296*	1	FAN GP	335
Y	*418-6475*	1	FASTENER GP-EXHAUST MANIFOLD	359
Y	*432-0065*	1	FILLER GP-ENGINE OIL	308
Y	*416-1042*	1	FILM GP (MOTOR)	456
Y	*416-8716*	1	FILM GP (ALTERNATOR)	457
Y	*417-4284*	1	FILM GP (EMISSIONS)	458
Y	*417-3394*	1	FILTER GP-ENGINE OIL	310
Y	*441-1215*	1	FILTER GP-FUEL (WATER SEPARATOR)	402
Y	*453-7163*	1	FILTER GP-FUEL	407
Y	*417-3390*	1	FLYWHEEL GP	224
Y	*433-5258*	1	FUMES DISPOSAL GP	311
Y	*418-7473*	1	HOUSING GP-FLYWHEEL	233
Y	*432-4972*	1	HOUSING GP-FRONT	248
Y	*432-8266*	1	HOUSING GP-FRONT	251
Y	*415-5522*	1	INJECTOR GP-FUEL	410
Y	*415-7948*	1	JET GP-PISTON COOLING	257
Y	*417-3458*	1	LIFTING GP-ENGINE	258
Y	*415-7119*	1	LINES GP-FUEL	413
Y	*416-9552*	1	MANIFOLD GP-EXHAUST	361
Y	*415-7949*	1	MOUNTING GP-CONTROL	455
Y	*465-3613*	1	MOUNTING GP-ENGINE	265
Y	*416-1052*	1	GAUGE GP-OIL LEVEL (DIPSTICK)	454
Y	*452-0796*	1	PAN GP-OIL	279
Y	*415-5519*	1	PISTON & ROD GP	282
Y	*417-4286*	1	PLUG GP-ENGINE	285
Y	*417-4190*	1	PLUG GP-OIL FILTER MOUNTING	318
Y	*416-1089*	1	PULLEY GP-CRANKSHAFT	294
Y	*415-5523*	1	PUMP GP-FUEL INJECTION	421
Y	*416-1864*	1	PUMP GP-WATER	339
Y	*432-8218*	1	RADIATOR GP	348
Y	*415-5527*	1	RAIL GP-FUEL	422

526-8847 **ENGINE AR-PRIMARY (**contd.**)** **i07034120**

NOTE	PART NUMBER	QTY	PART NAME 1 2 3 4 5 6 (PRODUCT LEVEL)	SEE PAGE
Y	*415-7947*	1	ROCKER ARM GP	299
Y	*425-9760*	1	SENSOR GP-ENGINE	432
Y	*430-5204*	1	SENSOR GP-TEMPERATURE	436
Y	*417-3453*	1	STARTING AID GP	437
Y	*418-7475*	1	STARTING MOTOR GP-ELECTRIC	440
Y	*445-1450*	1	TURBOCHARGER GP	384
Y	*417-4227*	1	WIRING GP-ENGINE	444
	462-5117	1	ELECTRONICS GP-ENGINE	
	415-9834	1	PLATE GP-SERIAL NUMBER	
	350-8958	1	PLATE-SERIAL NUMBER (ENGINE)	
	332-0905	2	RIVET-DRIVE	

Y - SEPARATE ILLUSTRATION

<END>

527-9081 ENGINE AR-PRIMARY

98 BRAKE KW (131 BHP) AT 1800 RPM
PART OF 528-3357 ENGINE AR

SMCS-1000 **i07025582**

NOTE	PART NUMBER	QTY	PART NAME 1 2 3 4 5 6 (PRODUCT LEVEL)	SEE PAGE
Y	*467-0357*	1	AIR CLEANER GP	353
Y	*415-7107*	1	ALTERNATOR GP-CHARGING	424
Y	*418-7425*	1	BELT TENSIONER GP	169
Y	*470-6153*	1	CAMSHAFT GP	171
Y	*416-1867*	1	CONNECTION GP-WATER	327
Y	*415-5535*	1	CONTROL GP-ELECTRONIC	429
Y	*419-7639*	1	COOLER GP-ENGINE OIL	331
Y	*415-7105*	1	COVER GP-VALVE MECHANISM	175
Y	*510-5297*	1	CRANKSHAFT GP	186
Y	*415-3299*	1	CYLINDER BLOCK GP	190
Y	*415-5520*	1	CYLINDER HEAD GP	197
Y	*417-4187*	1	DRAIN GP-ENGINE OIL	200
Y	*416-1044*	1	DRIVE GP-FAN	205
Y	*418-6475*	1	FASTENER GP-EXHAUST MANIFOLD	359
Y	*432-0065*	1	FILLER GP-ENGINE OIL	308
Y	*416-1042*	1	FILM GP	456
Y	*416-8716*	1	FILM GP (ALTERNATOR)	457
Y	*417-4284*	1	FILM GP	458
Y	*417-3394*	1	FILTER GP-ENGINE OIL	310
Y	*441-1215*	1	FILTER GP-FUEL (WATER SEPARATOR)	402
Y	*453-7163*	1	FILTER GP-FUEL	407
Y	*417-3390*	1	FLYWHEEL GP	224
Y	*433-5258*	1	FUMES DISPOSAL GP	311
Y	*451-2273*	1	GAUGE GP-OIL LEVEL (DIPSTICK)	317
Y	*418-7473*	1	HOUSING GP-FLYWHEEL	233
Y	*415-7117*	1	HOUSING GP-FRONT	244
Y	*416-8719*	1	COVER GP-FRONT HOUSING	172
Y	*415-5522*	1	INJECTOR GP-FUEL	410
Y	*415-7948*	1	JET GP-PISTON COOLING	257
Y	*417-3458*	1	LIFTING GP-ENGINE	258
Y	*415-7119*	1	LINES GP-FUEL	413
Y	*416-9552*	1	MANIFOLD GP-EXHAUST	361
Y	*418-7675*	1	MANIFOLD GP-INLET	364
Y	*415-7949*	1	MOUNTING GP-CONTROL	455
Y	*432-8205*	1	MOUNTING GP-ENGINE	261
Y	*416-8715*	1	MOUNTING GP-FAN	338
Y	*418-7530*	1	PAN GP-OIL	273
Y	*415-5519*	1	PISTON & ROD GP	282
Y	*417-4191*	1	PLUG GP-ENGINE	284
Y	*417-4286*	1	PLUG GP-ENGINE	285
Y	*416-1089*	1	PULLEY GP-CRANKSHAFT	294
Y	*508-3673*	1	PUMP GP-ENGINE OIL	321
Y	*415-5523*	1	PUMP GP-FUEL INJECTION	421
Y	*416-1864*	1	PUMP GP-WATER	339
Y	*415-5527*	1	RAIL GP-FUEL	422
Y	*415-7947*	1	ROCKER ARM GP	299
Y	*425-9760*	1	SENSOR GP-ENGINE	432
Y	*430-5204*	1	SENSOR GP-TEMPERATURE	436

527-9081 **ENGINE AR-PRIMARY (**contd.**)** **i07025582**

NOTE	PART NUMBER	QTY	PART NAME 1 2 3 4 5 6 (PRODUCT LEVEL)	SEE PAGE
Y	*417-4371*	1	STARTING AID GP	438
Y	*415-5536*	1	STARTING MOTOR GP-ELECTRIC	439
Y	*467-7639*	1	TURBOCHARGER GP	391
Y	*450-2854*	1	WIRING GP-ENGINE	447
	478-6553	1	ELECTRONICS GP-ENGINE	
	415-9834	1	PLATE GP-SERIAL NUMBER	

Y - SEPARATE ILLUSTRATION

<END>

538-5357 ENGINE AR-PRIMARY

SMCS-1000 **i07158189**

NOTE	PART NUMBER	QTY	PART NAME 1 2 3 4 5 6 (PRODUCT LEVEL)	SEE PAGE
Y	*418-7664*	1	ALTERNATOR GP-CHARGING	425
Y	*432-4983*	1	BALANCER GP	167
Y	*418-7425*	1	BELT TENSIONER GP	169
Y	*435-7778*	1	CAMSHAFT GP	170
Y	*416-1867*	1	CONNECTION GP-WATER	327
Y	*415-5535*	1	CONTROL GP-ELECTRONIC	429
Y	*452-0797*	1	COOLER GP-ENGINE OIL	333
Y	*416-8719*	1	COVER GP-FRONT HOUSING	172
Y	*415-7106*	1	COVER GP-VALVE MECHANISM	176
Y	*510-5297*	1	CRANKSHAFT GP	186
Y	*415-3299*	1	CYLINDER BLOCK GP	190
Y	*452-7366*	1	CYLINDER BLOCK GP-SHORT	192
Y	*452-7394*	1	CYLINDER HEAD GP (SHORT)	198
Y	*415-5520*	1	CYLINDER HEAD GP	197
Y	*417-4187*	1	DRAIN GP-ENGINE OIL	200
Y	*432-1856*	1	DRIVE GP-FAN	212
Y	*432-4332*	1	FAN GP	334
Y	*418-6475*	1	FASTENER GP-EXHAUST MANIFOLD	359
Y	*417-4186*	1	FILLER GP-ENGINE OIL	307
Y	*416-1042*	1	FILM GP	456
Y	*416-8716*	1	FILM GP (ALTERNATOR)	457
Y	*417-4284*	1	FILM GP	458
Y	*483-1195*	1	FILTER & LINES GP-FUEL	395
Y	*417-3394*	1	FILTER GP-ENGINE OIL	310
Y	*441-1215*	1	FILTER GP-FUEL (WATER SEPARATOR)	402
Y	*453-7163*	1	FILTER GP-FUEL	407
Y	*431-7141*	1	FLYWHEEL GP	228
Y	*433-5258*	1	FUMES DISPOSAL GP	311
Y	*444-9660*	1	HOUSING GP-FLYWHEEL	236
Y	*415-7117*	1	HOUSING GP-FRONT	244
Y	*415-5522*	1	INJECTOR GP-FUEL	410
Y	*415-7948*	1	JET GP-PISTON COOLING	257
Y	*417-3458*	1	LIFTING GP-ENGINE	258
Y	*421-7092*	1	MANIFOLD GP-EXHAUST	363
Y	*418-7675*	1	MANIFOLD GP-INLET	364
Y	*415-7949*	1	MOUNTING GP-CONTROL	455
Y	*416-1052*	1	GAUGE GP-OIL LEVEL (DIPSTICK)	454
Y	*452-0796*	1	PAN GP-OIL	279
Y	*415-5518*	1	PISTON & ROD GP	280
Y	*417-4286*	1	PLUG GP-ENGINE	285
Y	*446-2228*	1	PLUG GP-FLYWHEEL HOUSING	288
Y	*417-4190*	1	PLUG GP-OIL FILTER MOUNTING	318
Y	*426-3230*	1	PULLEY GP-CRANKSHAFT	296
Y	*415-5523*	1	PUMP GP-FUEL INJECTION	421
Y	*416-1864*	1	PUMP GP-WATER	339
Y	*415-5527*	1	RAIL GP-FUEL	422
Y	*415-7947*	1	ROCKER ARM GP	299
Y	*425-9760*	1	SENSOR GP-ENGINE	432
Y	*430-5204*	1	SENSOR GP-TEMPERATURE	436
Y	*417-3453*	1	STARTING AID GP	437

538-5357 **ENGINE AR-PRIMARY (**contd.**)** **i07158189**

NOTE	PART NUMBER	QTY	PART NAME 1 2 3 4 5 6 (PRODUCT LEVEL)	SEE PAGE
Y	*418-7475*	1	STARTING MOTOR GP-ELECTRIC	440
Y	*432-6668*	1	TURBOCHARGER GP	379
Y	*450-2855*	1	WIRING GP-ENGINE	448
	462-8609	1	ELECTRONICS GP-ENGINE	
	415-9834	1	PLATE GP-SERIAL NUMBER	
	332-0905	2	RIVET-DRIVE	
	350-8958	1	PLATE-SERIAL NUMBER (ENGINE)	

Y - SEPARATE ILLUSTRATION

<END>

539-3889 ENGINE AR-PRIMARY

PART OF 539-4170 ENGINE AR-COMPLETE

SMCS-1000 **i07158065**

NOTE	PART NUMBER	QTY	PART NAME 1 2 3 4 5 6 (PRODUCT LEVEL)	SEE PAGE
Y	*418-7664*	1	ALTERNATOR GP-CHARGING	425
Y	*418-7425*	1	BELT TENSIONER GP	169
Y	*435-7778*	1	CAMSHAFT GP	170
Y	*416-1867*	1	CONNECTION GP-WATER	327
Y	*415-5535*	1	CONTROL GP-ELECTRONIC	429
Y	*418-7659*	1	COOLER GP-ENGINE OIL	330
Y	*418-6381*	1	COVER GP-VALVE MECHANISM	177
Y	*510-5297*	1	CRANKSHAFT GP	186
Y	*415-3299*	1	CYLINDER BLOCK GP	190
Y	*415-5520*	1	CYLINDER HEAD GP	197
Y	*419-8538*	1	DRAIN GP-ENGINE OIL	202
Y	*432-1853*	1	DRIVE GP-FAN	211
Y	*462-9629*	1	ELBOW GP-AIR INLET	358
Y	*420-0291*	1	EXTENSION GP-FAN	219
Y	*445-0296*	1	FAN GP	335
Y	*418-6475*	1	FASTENER GP-EXHAUST MANIFOLD	359
Y	*417-4185*	1	FILLER GP-ENGINE OIL	306
Y	*416-1042*	1	FILM GP	456
Y	*416-8716*	1	FILM GP (ALTERNATOR)	457
Y	*417-4284*	1	FILM GP	458
Y	*417-3394*	1	FILTER GP-ENGINE OIL	310
Y	*441-1215*	1	FILTER GP-FUEL (WATER SEPARATOR)	402
Y	*453-7163*	1	FILTER GP-FUEL	407
Y	*417-3391*	1	FLYWHEEL GP	225
Y	*433-5258*	1	FUMES DISPOSAL GP	311
Y	*416-1053*	1	GAUGE GP-OIL LEVEL (DIPSTICK)	312
Y	*416-1029*	1	HOUSING GP-FLYWHEEL	231
Y	*432-4972*	1	HOUSING GP-FRONT	248
Y	*432-8266*	1	HOUSING GP-FRONT	251
Y	*415-5522*	1	INJECTOR GP-FUEL	410
Y	*415-7948*	1	JET GP-PISTON COOLING	257
Y	*417-3458*	1	LIFTING GP-ENGINE	258
Y	*415-7119*	1	LINES GP-FUEL	413
Y	*416-9552*	1	MANIFOLD GP-EXHAUST	361
Y	*415-7949*	1	MOUNTING GP-CONTROL	455
Y	*465-3614*	1	MOUNTING GP-ENGINE	266
Y	*419-8519*	1	PAN GP-OIL	274
Y	*415-5519*	1	PISTON & ROD GP	282
Y	*417-4286*	1	PLUG GP-ENGINE	285
Y	*417-4190*	1	PLUG GP-OIL FILTER MOUNTING	318
Y	*426-3230*	1	PULLEY GP-CRANKSHAFT	296
Y	*508-3673*	1	PUMP GP-ENGINE OIL	321
Y	*415-5523*	1	PUMP GP-FUEL INJECTION	421
Y	*416-1864*	1	PUMP GP-WATER	339
Y	*459-6904*	1	RADIATOR GP	350
Y	*415-5527*	1	RAIL GP-FUEL	422
Y	*415-7947*	1	ROCKER ARM GP	299
Y	*425-9760*	1	SENSOR GP-ENGINE	432
Y	*430-5204*	1	SENSOR GP-TEMPERATURE	436

539-3889 **ENGINE AR-PRIMARY (**contd.**)** **i07158065**

NOTE	PART NUMBER	QTY	PART NAME 1 2 3 4 5 6 (PRODUCT LEVEL)	SEE PAGE
Y	*417-3453*	1	STARTING AID GP	437
Y	*418-7475*	1	STARTING MOTOR GP-ELECTRIC	440
Y	*445-1450*	1	TURBOCHARGER GP	384
Y	*417-4227*	1	WIRING GP-ENGINE	444
	462-5117	1	ELECTRONICS GP-ENGINE	
	415-9834	1	PLATE GP-SERIAL NUMBER	
	332-0905	2	RIVET-DRIVE	
	350-8958	1	PLATE-SERIAL NUMBER (ENGINE)	

Y - SEPARATE ILLUSTRATION

<END>

541-2728 ENGINE AR-PRIMARY

PART OF 542-9131 ENGINE AR-COMPLETE

SMCS-1000 **i07236278**

NOTE	PART NUMBER	QTY	PART NAME 1 2 3 4 5 6 (PRODUCT LEVEL)	SEE PAGE
Y	*418-7664*	1	ALTERNATOR GP-CHARGING	425
Y	*416-1046*	1	BELT TENSIONER GP	168
Y	*415-5617*	1	BREATHER GP	301
Y	*435-7778*	1	CAMSHAFT GP	170
Y	*416-1867*	1	CONNECTION GP-WATER	327
Y	*415-5535*	1	CONTROL GP-ELECTRONIC	429
Y	*418-7659*	1	COOLER GP-ENGINE OIL	330
Y	*415-7105*	1	COVER GP-VALVE MECHANISM	175
Y	*510-5297*	1	CRANKSHAFT GP	186
Y	*415-3299*	1	CYLINDER BLOCK GP	190
Y	*415-5520*	1	CYLINDER HEAD GP	197
Y	*417-4187*	1	DRAIN GP-ENGINE OIL	200
Y	*444-9591*	1	DRIVE GP-FAN	216
Y	*416-9546*	1	ELBOW GP-AIR INLET	355
Y	*420-0291*	1	EXTENSION GP-FAN	219
Y	*432-0065*	1	FILLER GP-ENGINE OIL	308
Y	*416-1042*	1	FILM GP	456
Y	*416-8716*	1	FILM GP (ALTERNATOR)	457
Y	*417-4284*	1	FILM GP	458
Y	*417-3394*	1	FILTER GP-ENGINE OIL	310
Y	*441-1215*	1	FILTER GP-FUEL (WATER SEPARATOR)	402
Y	*453-7163*	1	FILTER GP-FUEL	407
Y	*416-1073*	1	FILTER GP-OIL	453
Y	*417-3390*	1	FLYWHEEL GP	224
Y	*549-5335*	1	HOUSING GP-FLYWHEEL	239
Y	*419-8508*	1	HOUSING GP-FRONT	247
Y	*415-7117*	1	HOUSING GP-FRONT	244
Y	*415-5522*	1	INJECTOR GP-FUEL	410
Y	*415-7948*	1	JET GP-PISTON COOLING	257
Y	*417-3458*	1	LIFTING GP-ENGINE	258
Y	*415-7119*	1	LINES GP-FUEL	413
Y	*421-7092*	1	MANIFOLD GP-EXHAUST	363
Y	*415-7949*	1	MOUNTING GP-CONTROL	455
Y	*471-0600*	1	MOUNTING GP-ENGINE	267
Y	*416-8775*	1	MOUNTING GP-EXHAUST	365
Y	*416-1052*	1	GAUGE GP-OIL LEVEL (DIPSTICK)	454
Y	*418-7530*	1	PAN GP-OIL	273
Y	*415-5518*	1	PISTON & ROD GP	280
Y	*417-4286*	1	PLUG GP-ENGINE	285
Y	*417-4190*	1	PLUG GP-OIL FILTER MOUNTING	318
Y	*416-1089*	1	PULLEY GP-CRANKSHAFT	294
Y	*508-3673*	1	PUMP GP-ENGINE OIL	321
Y	*415-5523*	1	PUMP GP-FUEL INJECTION	421
Y	*416-1864*	1	PUMP GP-WATER	339
Y	*415-5527*	1	RAIL GP-FUEL	422
Y	*415-7947*	1	ROCKER ARM GP	299
Y	*425-9760*	1	SENSOR GP-ENGINE	432
Y	*430-5204*	1	SENSOR GP-TEMPERATURE	436
Y	*417-3453*	1	STARTING AID GP	437

541-2728 **ENGINE AR-PRIMARY (**contd.**)** **i07236278**

NOTE	PART NUMBER	QTY	PART NAME 1 2 3 4 5 6 (PRODUCT LEVEL)	SEE PAGE
Y	*425-9174*	1	STARTING MOTOR GP-ELECTRIC	442
Y	*432-6662*	1	TURBOCHARGER GP	378
Y	*417-4227*	1	WIRING GP-ENGINE	444
	462-8609	1	ELECTRONICS GP-ENGINE	

Y - SEPARATE ILLUSTRATION

<END>

465-4990 ACCESSORY GP-ENGINE

PART OF 475-8294 ENGINE AR-PRIMARY

SMCS-1358, 1405, 1802 **i06100985**

NOTE	REF NO	GRAPHIC REF	PART NUMBER	QTY	PART NAME 1 2 3 4 5 6 (PRODUCT LEVEL)	SEE PAGE
	1	1	**067-6823**	1	PLUG	
	2	1	**113-4616**	1	CONNECTOR	
	3	1	**293-1881**	1	ELBOW	

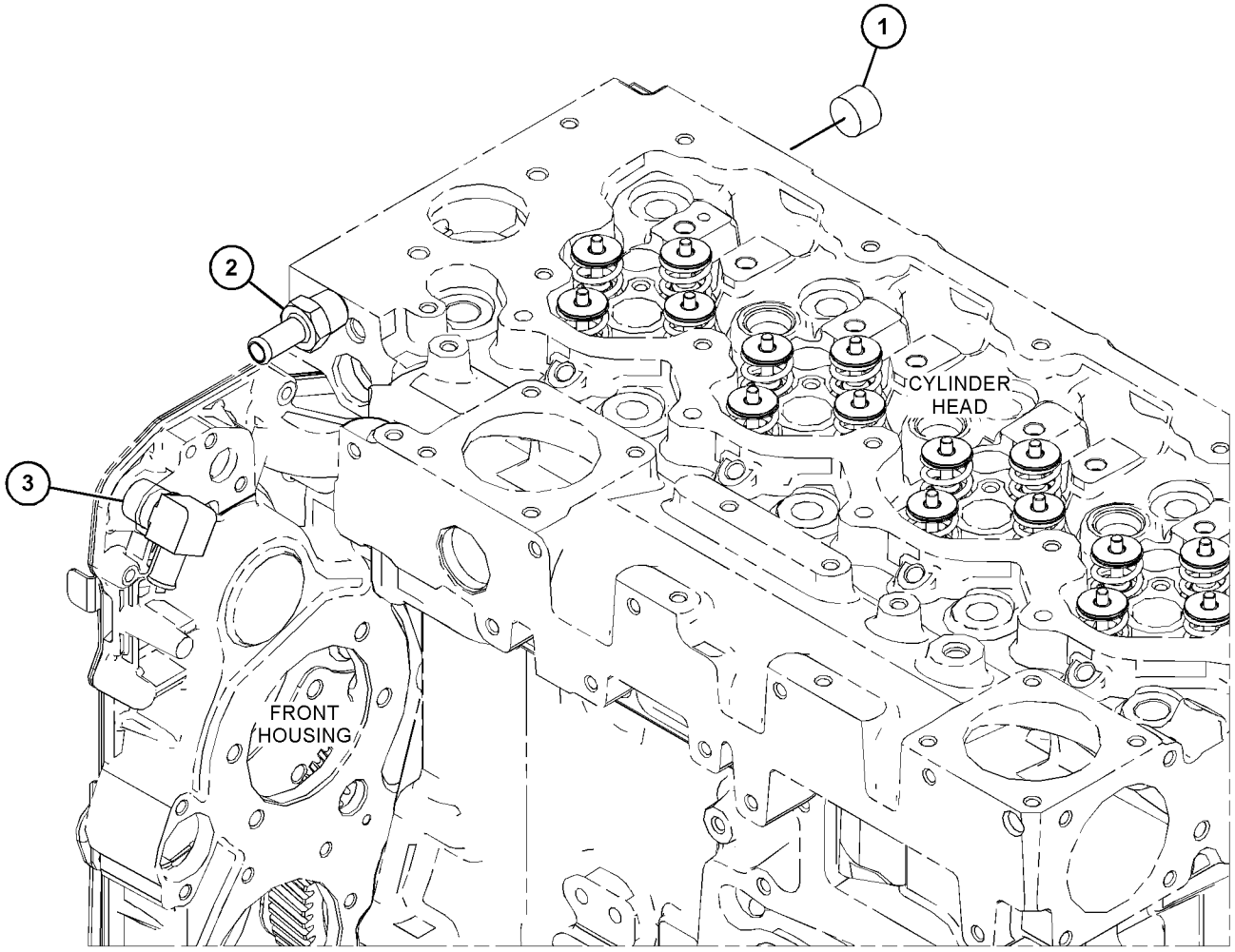

GRAPHIC #1 <END> g03856499

293-1877 ADAPTER GP-AIR COMPRESSOR

PART OF 432-4976 AIR COMPRESSOR GP

SMCS-1803 **i06950375**

NOTE	REF NO	GRAPHIC REF	PART NUMBER	QTY	PART NAME 1 2 3 4 5 6 (PRODUCT LEVEL)	SEE PAGE
M	1	1	**6I-0254**	4	BOLT (M8X1.25X30-MM)	
	2	1	**7W-2562**	1	RING-SNAP	
	3	1	**6D-0044**	2	DOWEL	
	4	1	**067-6344**	2	KEY	
	5	1	**113-4598**	2	NUT	
	6	1	**113-4604**	1	GASKET	
	7	1	**126-3216**	2	STUD	
	8	1	**224-6635**	1	BUSHING	
	9	1	**302-4332**	1	HOUSING	
					PARTS SHOWN IN GRAPHIC(S) WITHOUT A REFERENCE NUMBER ARE NOT SERVICED SEPARATELY	

M - METRIC PART

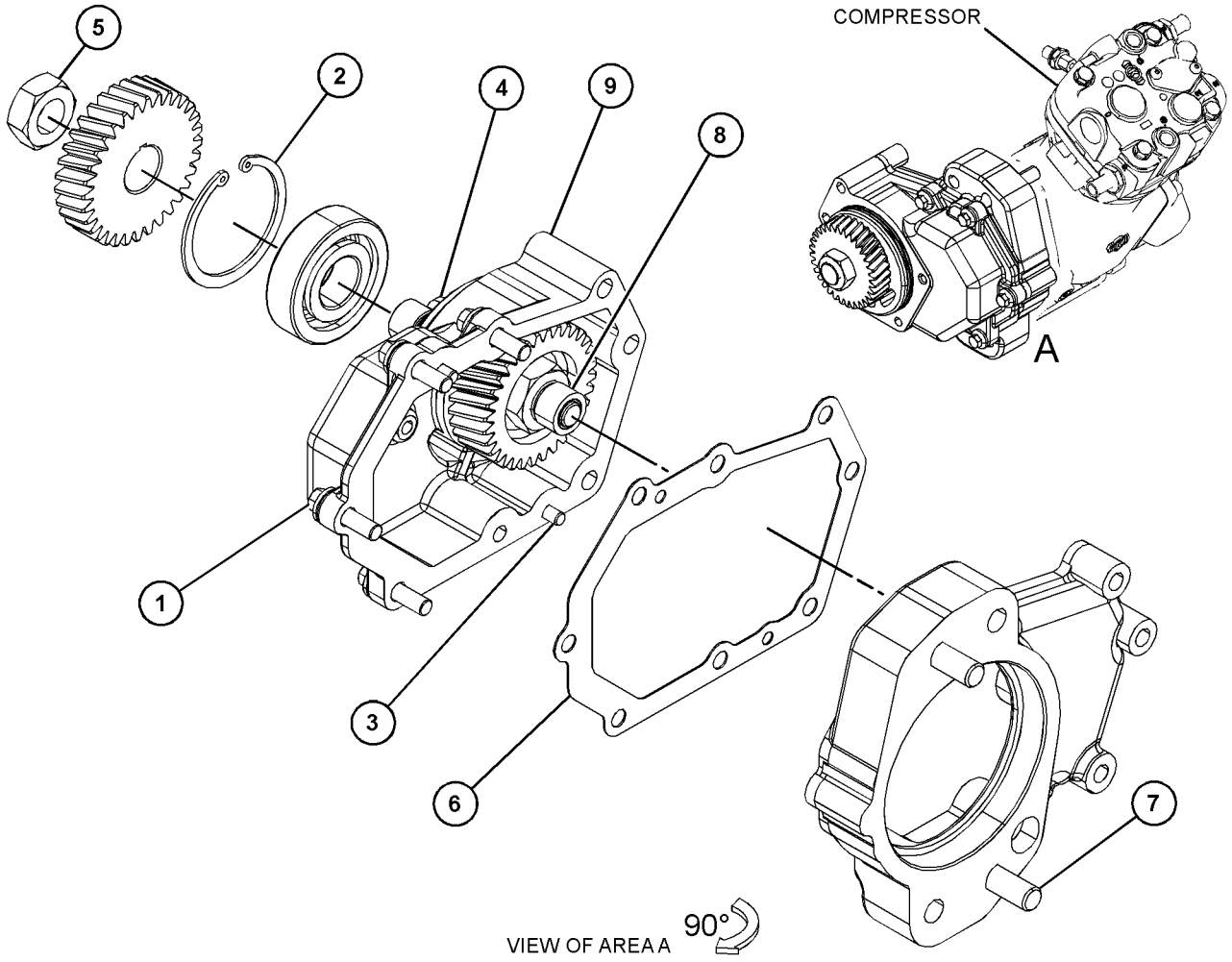

GRAPHIC #1

<END>

g06194937

432-4976 AIR COMPRESSOR GP

PART OF 475-8294 ENGINE AR-PRIMARY

SMCS-1803 **i07378181**

NOTE	REF NO	GRAPHIC REF	PART NUMBER	QTY	PART NAME 1 2 3 4 5 6 (PRODUCT LEVEL)	SEE PAGE
	1	1	**102-2073**	1	SEAL-O-RING	
	2	1	**113-4608**	1	ADAPTER	
	3	1	**113-8076**	1	PIN	
	4	1	**126-3219**	1	SEAL-O-RING	
	5	1	**198-8262**	1	COVER AS	
		1	**198-8263**	1	SEAL-O-RING	
	6	1	**214-3203**	1	WASHER (SEALING)	
	7	1	**247-4928**	2	WASHER (16.5X20.5X1.6-MM THK)	
	8	1	**259-2611**	1	HOSE	
	9	1	**259-2612**	1	HOSE	
	10	1	**259-2614**	1	BRACKET	
	11	1	**259-2623**	1	GEAR (34-TEETH)	
M	12	1	**273-3691**	4	BOLT (M8X1.25X80-MM)	
M	13	1	**293-1875**	2	BOLT (M10X1.5X16-MM)	
	14	1	**396-1190**	4	CLIP-HOSE	
	15	1	**451-1179**	1	COMPRESSOR	
M	16	1	**184-0983**	2	NUT-HEX FLANGE (M12X1.75-THD)	
M	17	1	**6I-0260**	4	BOLT (M8X1.25X25-MM)	
	18	1	**035-8017**	1	UNION	
	19	1	**209-6825**	2	ADAPTER	
	20	1	**259-2613**	1	TUBE AS	
		1	**067-6265**	2	FITTING-BRASS	
		1	**365-3308**	2	NUT-COMPRESSION	
Y	21	1	**293-1877**	1	ADAPTER GP-AIR COMPRESSOR	163

M - METRIC PART
Y - SEPARATE ILLUSTRATION

432-4976 **AIR COMPRESSOR GP (**contd.**)** **i07378181**

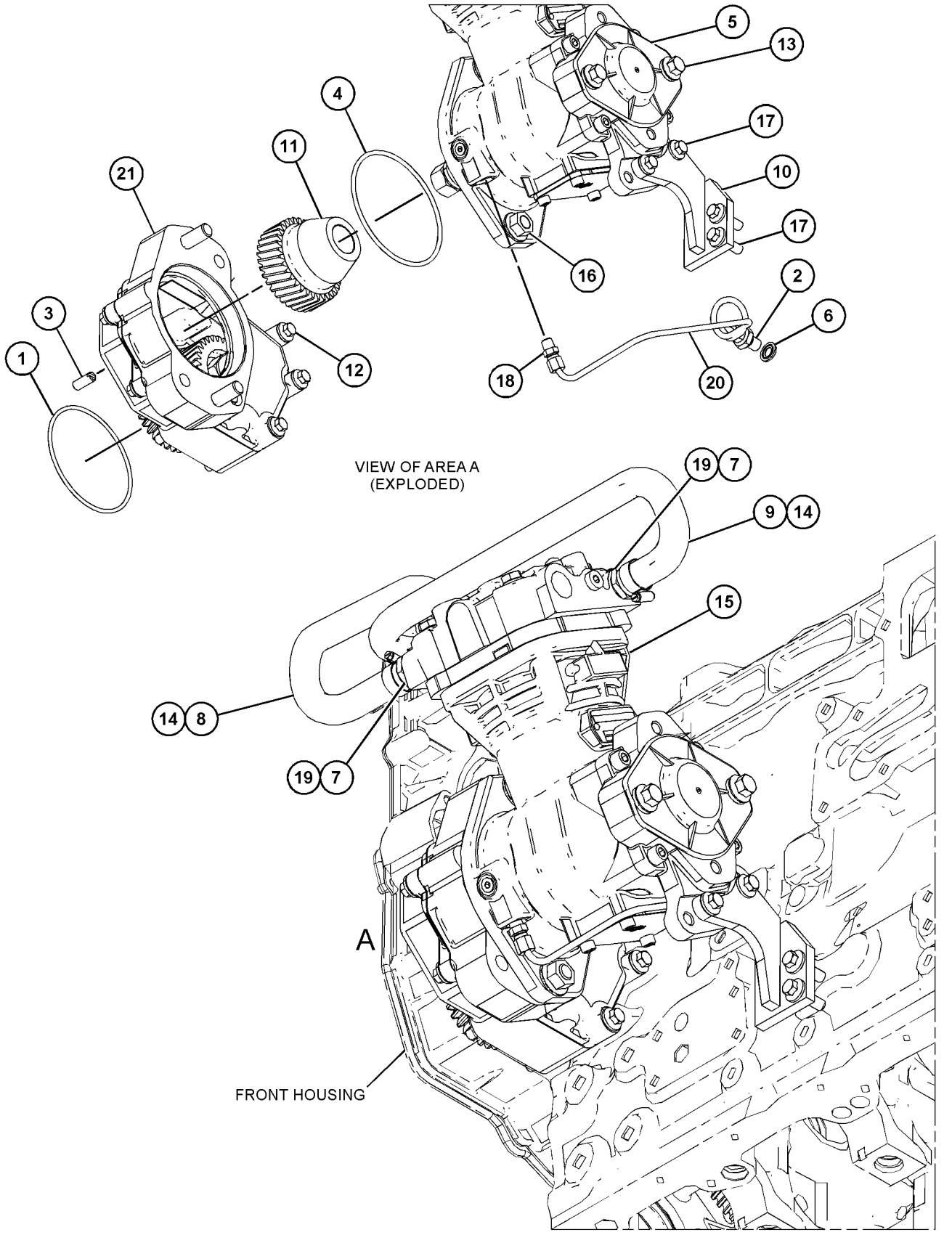

GRAPHIC #1 <END> g06003224

234-0615 BALANCER AS

PART OF 432-4983 BALANCER GP

SMCS-1220 **i06102421**

NOTE	REF NO	GRAPHIC REF	PART NUMBER	QTY	PART NAME 1 2 3 4 5 6 (PRODUCT LEVEL)	SEE PAGE
	1	1	**8N-7998**	1	DOWEL	
M	2	1	**195-2221**	1	NUT (M12X1.75-THD)	
	3	1	**234-0189**	1	BOLT	
	4	1	**234-0198**	1	SHAFT-GEAR	
	5	1	**234-0201**	1	WASHER-THRUST	
	6	1	**234-0204**	1	GEAR-BALANCER (17-TEETH)	
	7	1	**234-0205**	1	GEAR AS (44-TEETH)	
	8	1	**234-0212**	5	BOLT	
	9	1	**234-0220**	1	COVER	
	10	1	**234-0223**	1	ROTOR AS	
	11	1	**234-0614**	1	DOWEL	
	12	1	**234-0616**	1	VALVE AS-RELIEF (ENGINE OIL PRESSURE)	
	12A	1	**234-0590**	1	PLUNGER	
	12B	1	**234-0591**	1	SPRING	
	12C	1	**234-0613**	1	PLUG-RETAINER	

M - METRIC PART

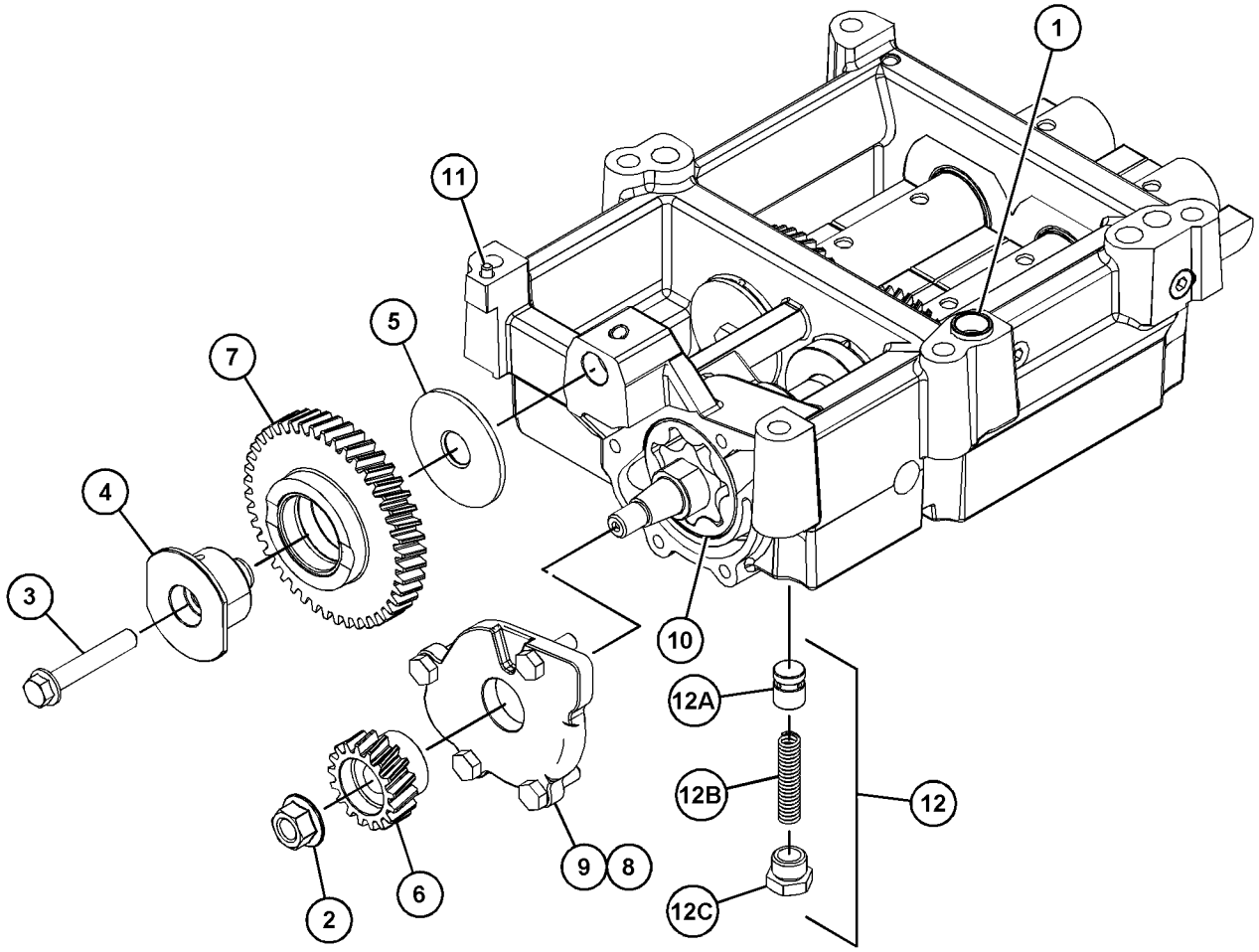

GRAPHIC #1 <END> g03813732

432-4983 BALANCER GP

PART OF 461-3168, 475-8294, 480-6065, 484-2343, 486-2471, 492-3115, 503-1940, 504-3628, 509-3109, 509-5884, 526-8847, 538-5357 ENGINE AR-PRIMARY

SMCS-1220 **i06091148**

NOTE	REF NO	GRAPHIC REF	PART NUMBER	QTY	PART NAME 1 2 3 4 5 6 (PRODUCT LEVEL)	SEE PAGE
M	1	1	**6I-0454**	6	BOLT (M10X1.5X70-MM)	
Y	2	1	**234-0615**	1	BALANCER AS	166

M - METRIC PART
Y - SEPARATE ILLUSTRATION

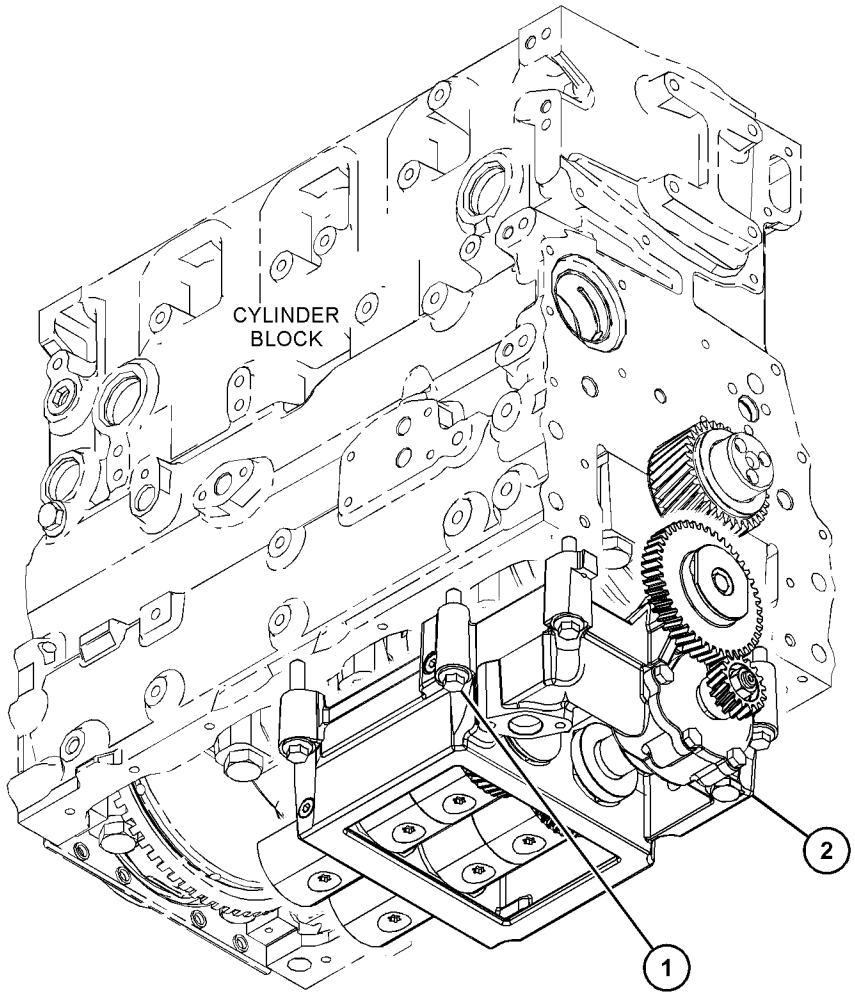

GRAPHIC #1 <END> g03812274

416-1046 BELT TENSIONER GP

PART OF 466-4382, 484-1469, 495-9687, 541-2728 ENGINE AR-PRIMARY

SMCS-1358 **i06226516**

NOTE	REF NO	GRAPHIC REF	PART NUMBER	QTY	PART NAME 1 2 3 4 5 6 (PRODUCT LEVEL)	SEE PAGE
	1	1	**261-0428**	1	PULLEY AS-IDLER	
M	1A	1	**307-2242**	1	BOLT (M10X1.5X45-MM)	
	2	1	**321-6131**	1	PULLEY (8-GROOVE)	
	3	1	**369-1255**	1	TENSIONER	

M - METRIC PART

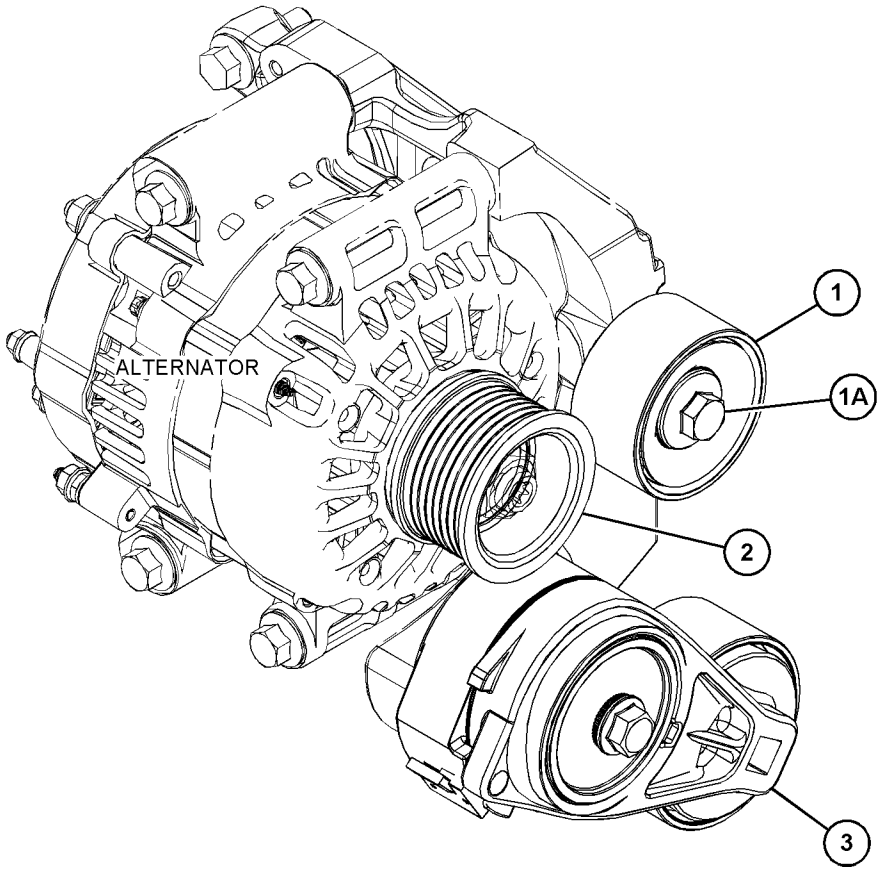

GRAPHIC #1 <END> g03863708

418-7425 BELT TENSIONER GP

PART OF 455-9378, 461-3168, 463-8820, 463-8848, 463-8910, 466-3332, 467-7465, 475-8294, 478-6560, 480-6065, 484-2343, 486-2471, 491-2522, 492-1322, 495-3005, 500-8128, 502-7230, 503-1940, 503-4924, 508-4399, 509-3109, 509-5882, 509-5884, 510-0902, 512-9838, 512-9884, 514-3535, 514-3537, 516-9846, 517-0058, 526-8847, 527-9081, 538-5357, 539-3889 ENGINE AR-PRIMARY

SMCS-1358 **i06053032**

NOTE	REF NO	GRAPHIC REF	PART NUMBER	QTY	PART NAME 1 2 3 4 5 6 (PRODUCT LEVEL)	SEE PAGE
	1	1	**321-6131**	1	PULLEY (8-GROOVE)	
	2	1	**377-9082**	1	BELT TENSIONER	

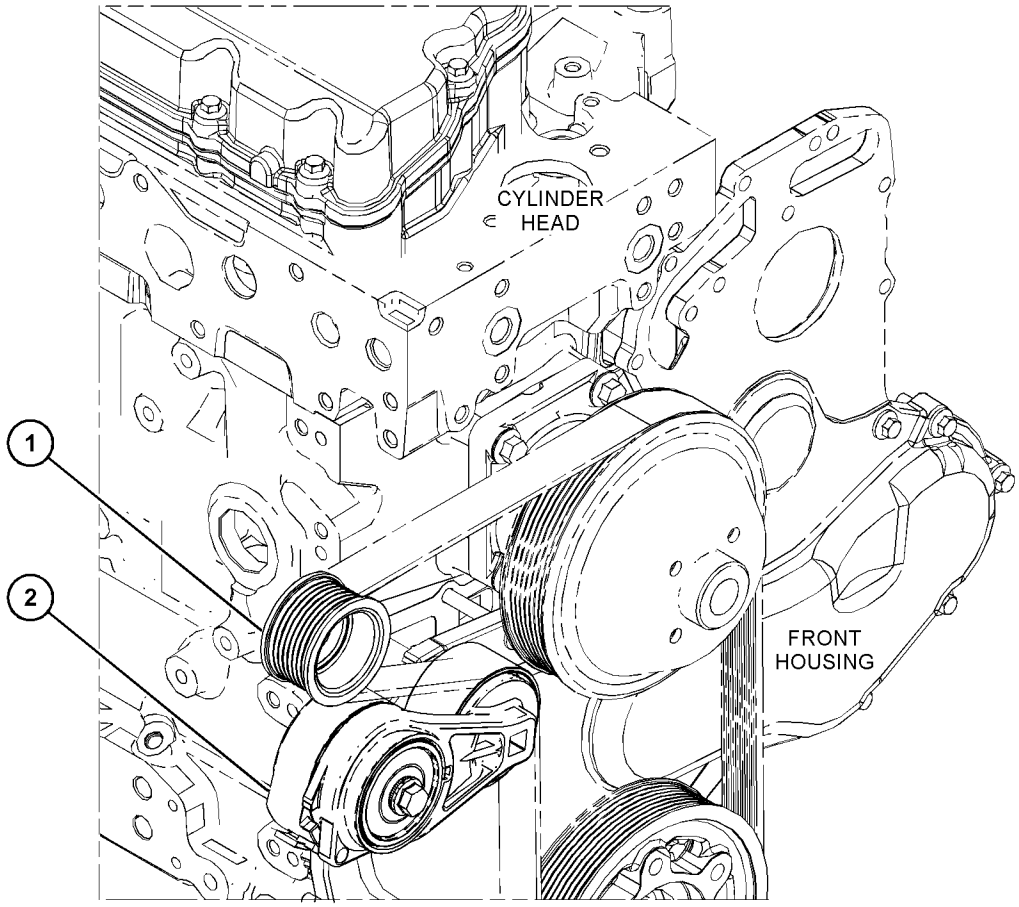

GRAPHIC #1 <END> g03817856

435-7778 CAMSHAFT GP

PART OF 455-9378, 461-3168, 463-8820, 463-8848, 463-8910, 466-3332, 466-4382, 467-7465, 469-1048, 475-8294, 477-2657, 480-6065, 484-1469, 484-2343, 486-2471, 491-2522, 492-3115, 492-3118, 495-3005, 495-9687, 500-8128, 502-7230, 503-1940, 504-3628, 504-3645, 508-4399, 509-3109, 509-5882, 509-5884, 510-0902, 512-9838, 512-9884, 514-3535, 514-3537, 517-0058, 526-8847, 538-5357, 539-3889, 541-2728 ENGINE AR-PRIMARY

SMCS-1210 **i06089766**

NOTE	REF NO	GRAPHIC REF	PART NUMBER	QTY	PART NAME 1 2 3 4 5 6 (PRODUCT LEVEL)	SEE PAGE
	1	1	**278-5126**	8	PUSHROD	
	2	1	**315-3384**	8	TAPPET	
	3	1	**454-0683**	1	CAMSHAFT GP	
	3A	1	**067-6135**	1	KEY-WOODRUFF	

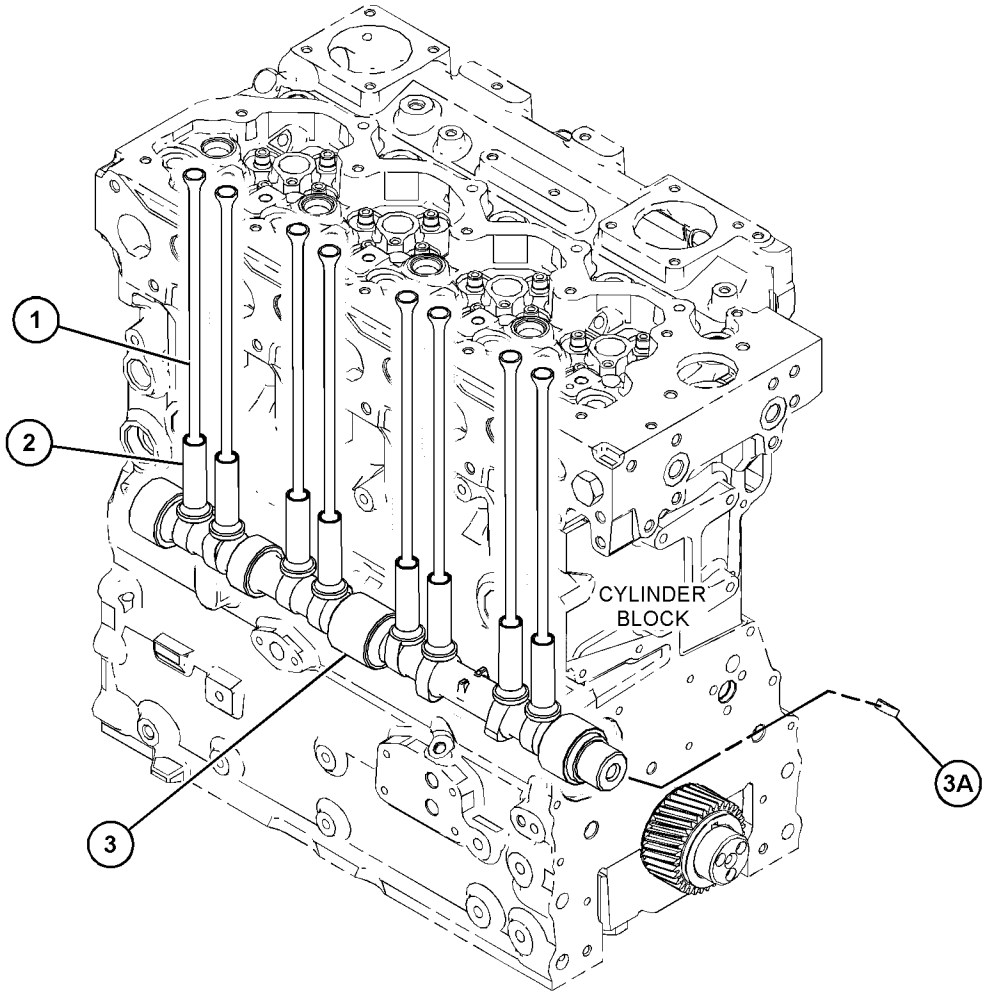

GRAPHIC #1 <END> g03811367

470-6153 CAMSHAFT GP

PART OF 478-6560, 492-1322, 503-4924, 516-9846, 527-9081 ENGINE AR-PRIMARY

SMCS-1210 **i06238809**

NOTE	REF NO	GRAPHIC REF	PART NUMBER	QTY	PART NAME 1 2 3 4 5 6 (PRODUCT LEVEL)	SEE PAGE
	1	1	**278-5126**	8	PUSHROD	
	2	1	**315-3384**	8	TAPPET	
	3	1	**364-0470**	1	CAMSHAFT AS	
	3A	1	**067-6135**	1	KEY-WOODRUFF	

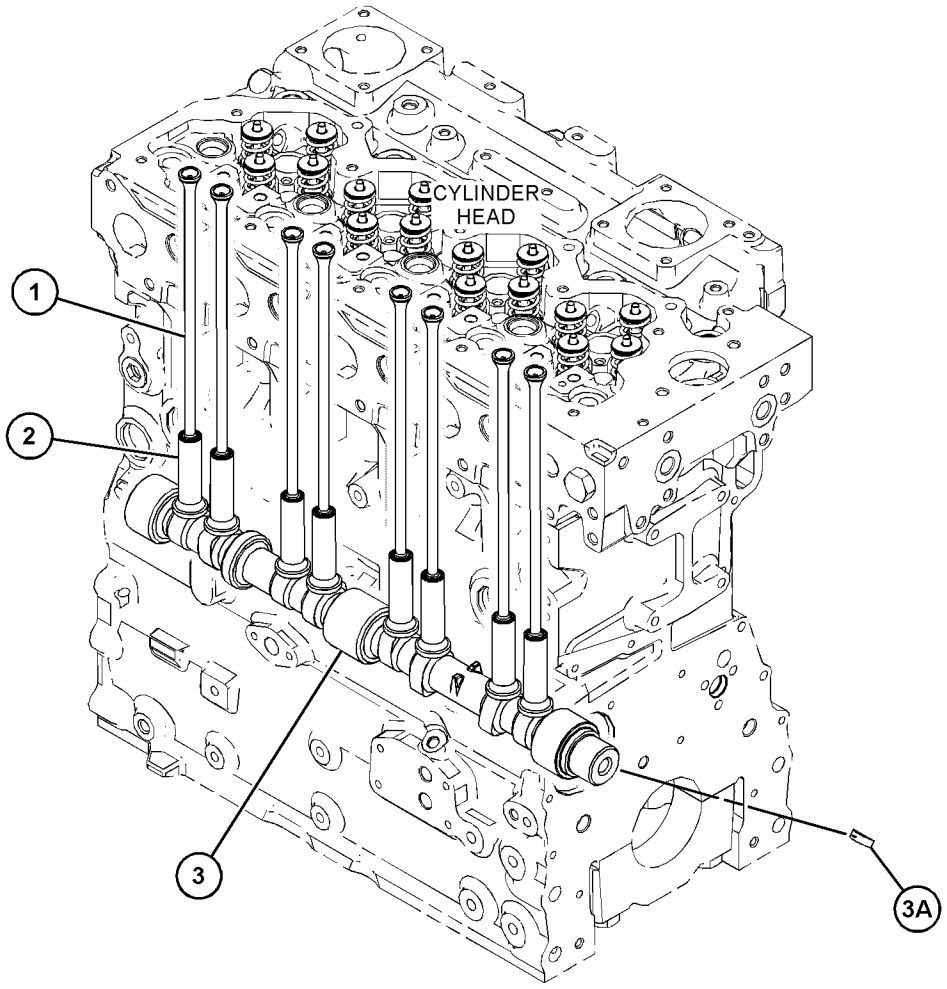

GRAPHIC #1 <END> g03875082

416-8719 COVER GP-FRONT HOUSING

PTO

PART OF 461-3168, 466-3332, 467-7465, 480-6065, 484-2343, 492-3115, 492-3118, 495-9687, 500-8128, 502-7230, 503-1940, 504-3628, 504-3645, 508-4399, 509-3109, 509-5884, 510-0902, 516-9846, 527-9081, 538-5357 ENGINE AR-PRIMARY

SMCS-1151, 1166

i06091139

NOTE	REF NO	GRAPHIC REF	PART NUMBER	QTY	PART NAME 1 2 3 4 5 6 (PRODUCT LEVEL)	SEE PAGE
M	1	1	**100-4830**	1	BOLT (M10X1.5X20-MM)	
M	2	1	**111-8222**	5	BOLT (M8X16-MM)	
	3	1	**214-3203**	1	WASHER (SEALING)	
	4	1	**329-7854**	1	PLATE AS	
	4A	1	**329-7856**	1	SEAL-O-RING	
M	5	1	**6I-0646**	1	BOLT (M10X1.5X14-MM)	

M - METRIC PART

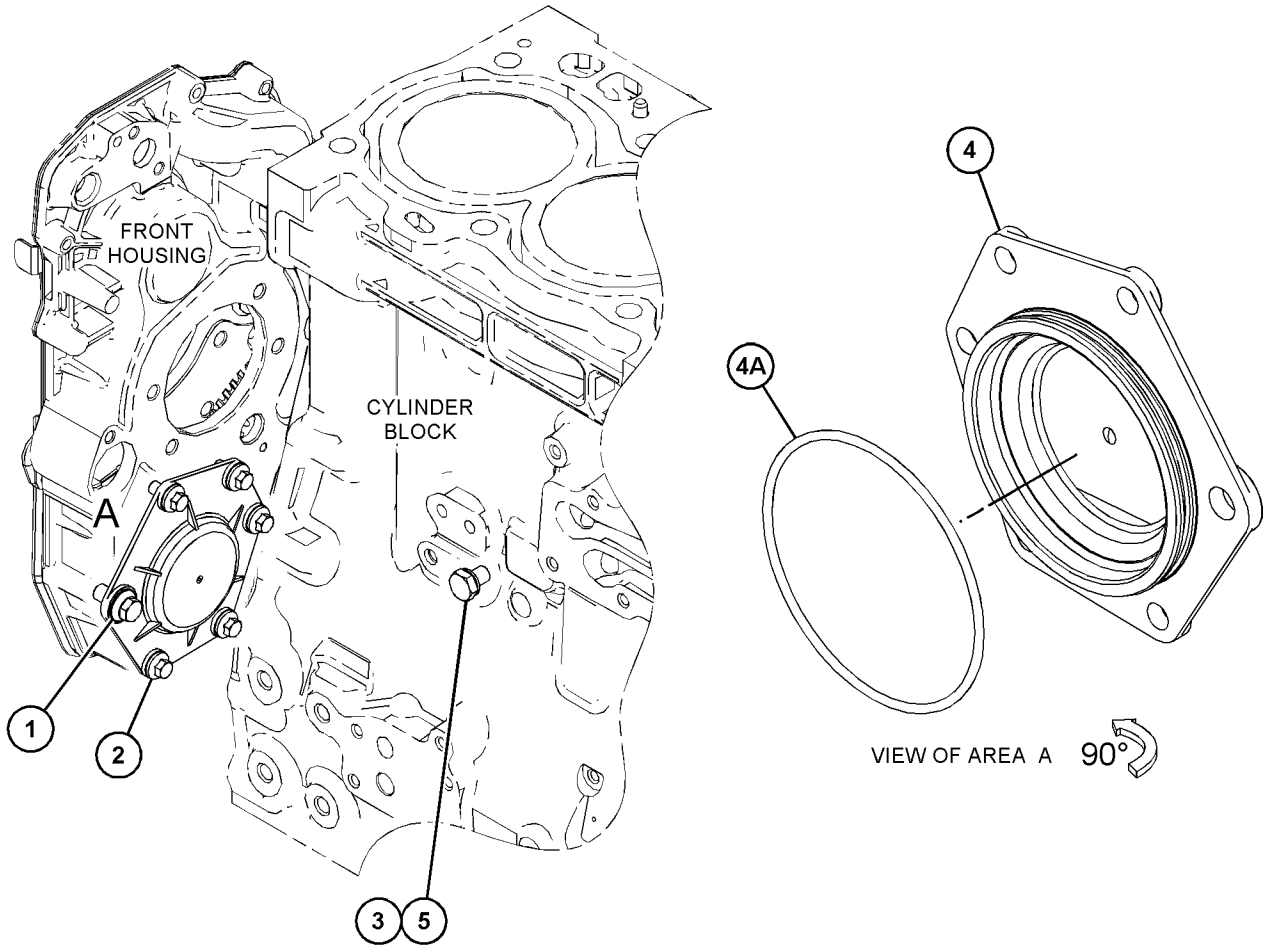

GRAPHIC #1

<END>

g03818200

392-9460 COVER GP-VALVE MECHANISM

PART OF 418-6381 COVER GP-VALVE MECHANISM

SMCS-1107 **i07189792**

NOTE	REF NO	GRAPHIC REF	PART NUMBER	QTY	PART NAME 1 2 3 4 5 6 (PRODUCT LEVEL)	SEE PAGE
	1	1	**195-9245**	3	SCREW (M4X0.7X10-MM)	
	2	1	**369-3869**	1	CAP AS-ENGINE OIL FILLER	
	2A	1	**357-0147**	1	FILM-IDENTIFICATION (OIL FILL, READ OMM)	
	2B	1	**124-0506**	1	SEAL	
	3	1	**380-9615**	1	BREATHER	
	4	1	**392-9459**	1	COVER-VALVE MECHANISM	
	5	1	**474-0599**	1	SEAL	
	6	1	**326-7289**	1	SEAL-O-RING	

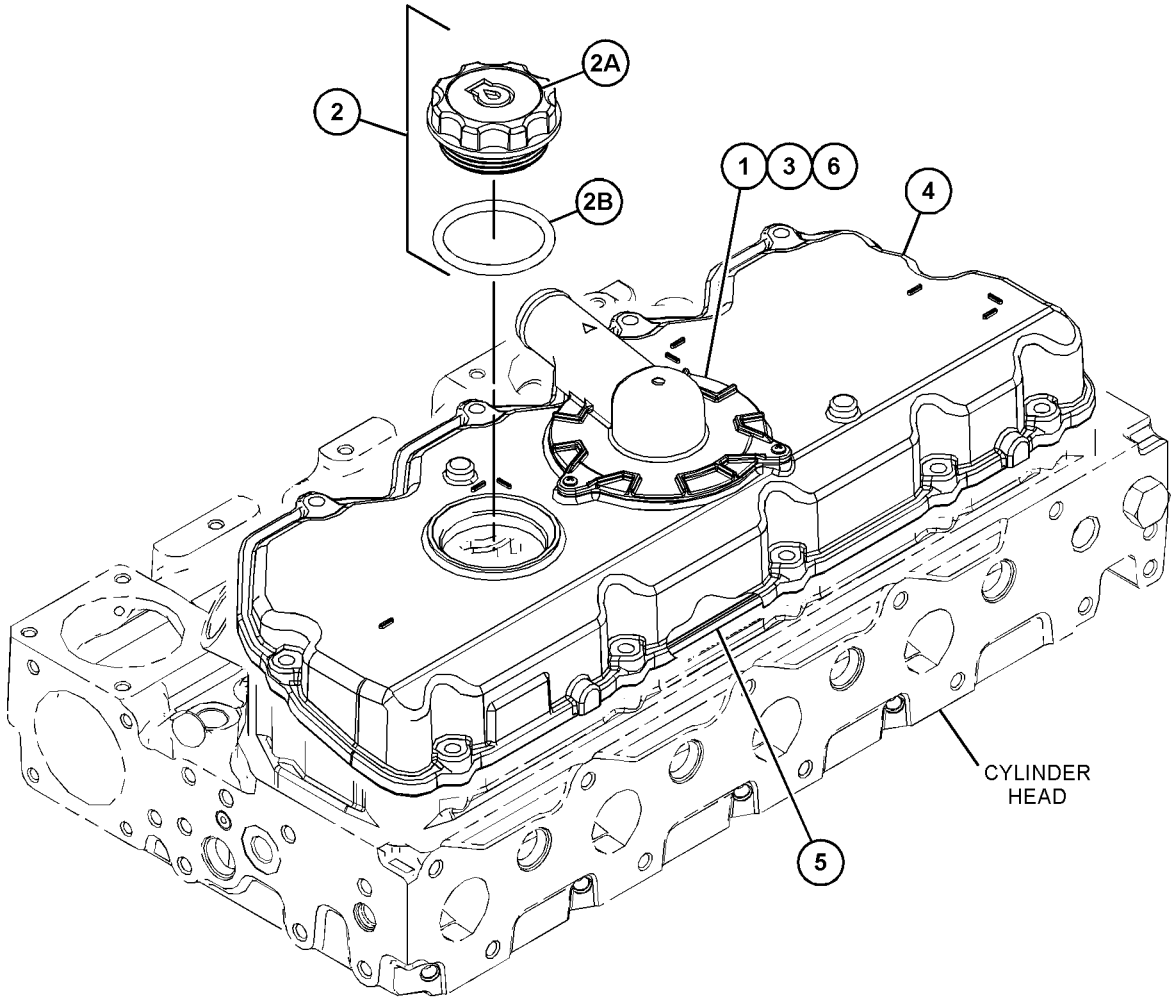

GRAPHIC #1 <END> g06243640

392-9463 COVER GP-VALVE MECHANISM

PART OF 415-7106 COVER GP-VALVE MECHANISM

SMCS-1107 **i07178044**

NOTE	REF NO	GRAPHIC REF	PART NUMBER	QTY	PART NAME 1 2 3 4 5 6 (PRODUCT LEVEL)	SEE PAGE
	1	1	**195-9245**	3	SCREW (M4X0.7X10-MM)	
	2	1	**326-7289**	1	SEAL-O-RING	
	3	1	**369-3869**	1	CAP AS-ENGINE OIL FILLER	
		1	**357-0147**	1	FILM-IDENTIFICATION (OIL FILL, READ OMM)	
		1	**124-0506**	1	SEAL	
	4	1	**380-9615**	1	BREATHER	
	5	1	**474-0599**	1	SEAL	

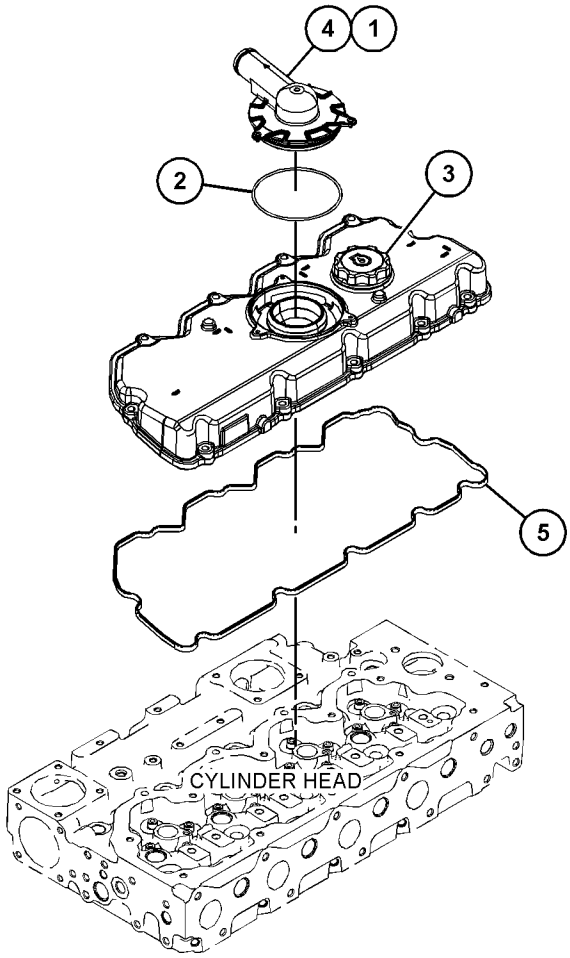

GRAPHIC #1 <END> g06246424

415-7105 COVER GP-VALVE MECHANISM

PART OF 461-3168, 463-8848, 463-8910, 466-4382, 480-6065, 484-1469, 492-3115, 492-3118, 504-3628, 504-3645, 509-3109, 509-5884, 516-9846, 526-8847, 527-9081, 541-2728 ENGINE AR-PRIMARY

SMCS-1107 **i06091154**

NOTE	REF NO	GRAPHIC REF	PART NUMBER	QTY	PART NAME 1 2 3 4 5 6 (PRODUCT LEVEL)	SEE PAGE
M	1	1	**101-3895**	7	BOLT (M8X1.25X35-MM) (S)	
M	2	1	**103-5705**	4	BOLT (M8X1.25X110-MM)	
	3	1	**392-9458**	1	COVER GP-VALVE MECHANISM	
	3A	1	**195-9245**	3	SCREW (M4X0.7X10-MM)	
	3B	1	**380-9615**	1	BREATHER (VALVE MECHANISM)	
	3C	1	**392-9471**	1	SEAL	
	4	1	**392-9472**	1	GASKET (VALVE COVER)	
	5	1	**455-6923**	1	COVER-BASE	
M	6	1	**6I-0217**	10	BOLT (M8X1.25X20-MM)	

M - METRIC PART

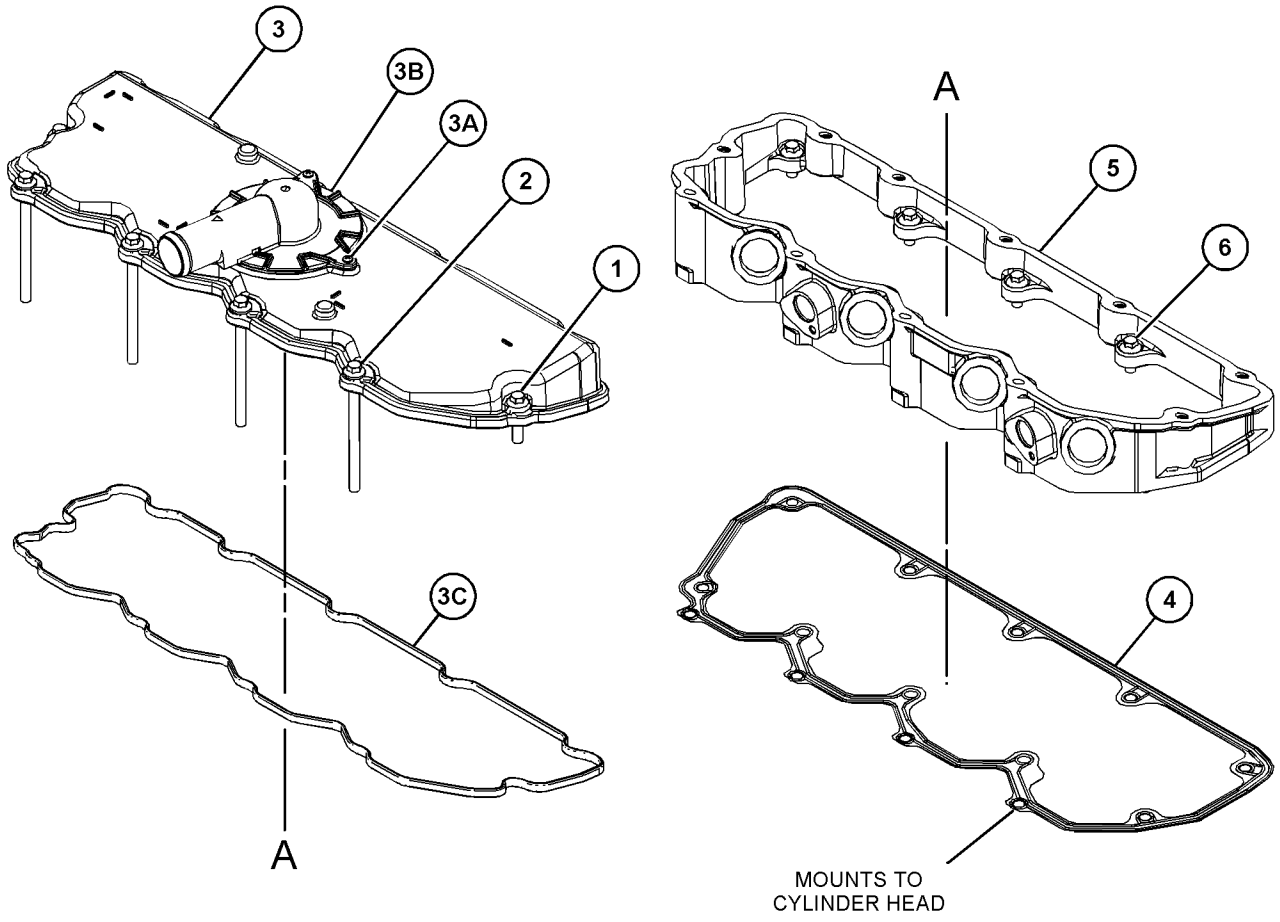

GRAPHIC #1 <END> g03814998

415-7106 COVER GP-VALVE MECHANISM

PART OF 466-3332, 467-7465, 469-1048, 477-2657, 484-2343, 491-2522, 503-1940, 538-5357 ENGINE AR-PRIMARY

SMCS-1107 **i06271726**

NOTE	REF NO	GRAPHIC REF	PART NUMBER	QTY	PART NAME 1 2 3 4 5 6 (PRODUCT LEVEL)	SEE PAGE
M	1	1	**101-3895**	7	BOLT (M8X1.25X35-MM)	
M	2	1	**103-5705**	4	BOLT (M8X1.25X110-MM)	
Y	3	1	**392-9463**	1	COVER GP-VALVE MECHANISM	174
	4	1	**392-9472**	1	GASKET (VALVE COVER)	
	5	1	**455-6923**	1	COVER-BASE	
M	6	1	**6I-0217**	10	BOLT (M8X1.25X20-MM)	

M - METRIC PART
Y - SEPARATE ILLUSTRATION

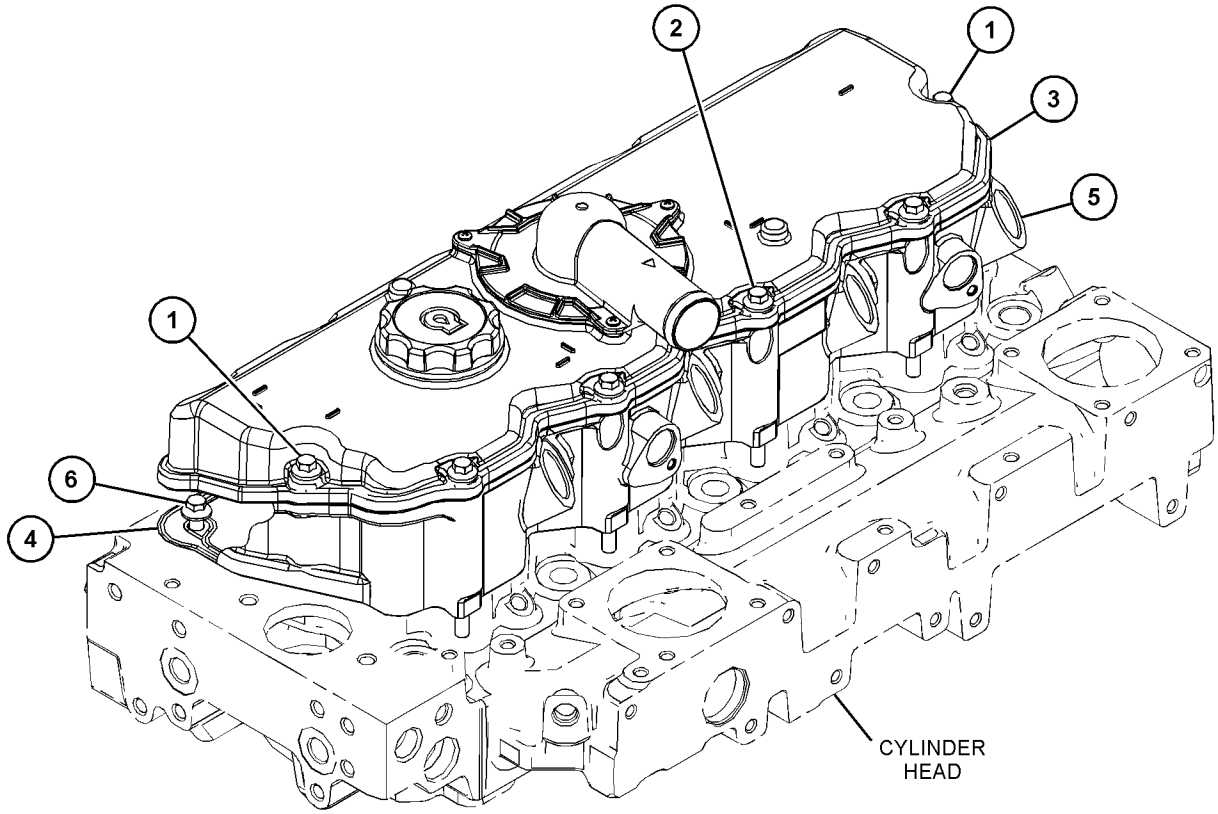

(BACKGROUND GEOMETRY OF ILLUSTRATION MAY NOT REPRESENT ALL MODELS WHERE USED)

GRAPHIC #1 <END> g03881078

418-6381 COVER GP-VALVE MECHANISM

PART OF 455-9378, 463-8820, 475-8294, 478-6560, 486-2471, 492-1322, 495-3005, 500-8128, 502-7230, 503-4924, 508-4399, 509-5882, 510-0902, 512-9838, 512-9884, 514-3535, 514-3537, 517-0058, 539-3889 ENGINE AR-PRIMARY

SMCS-1107 **i06101006**

NOTE	REF NO	GRAPHIC REF	PART NUMBER	QTY	PART NAME 1 2 3 4 5 6 (PRODUCT LEVEL)	SEE PAGE
M	1	1	**101-3895**	7	BOLT (M8X1.25X35-MM)	
M	2	1	**103-5705**	4	BOLT (M8X1.25X110-MM)	
Y	3	1	*392-9460*	1	COVER GP-VALVE MECHANISM	173
	4	1	**392-9472**	1	GASKET (VALVE COVER)	
	5	1	**455-6923**	1	COVER-BASE	
M	6	1	**6I-0217**	10	BOLT (M8X1.25X20-MM)	

M - METRIC PART
Y - SEPARATE ILLUSTRATION

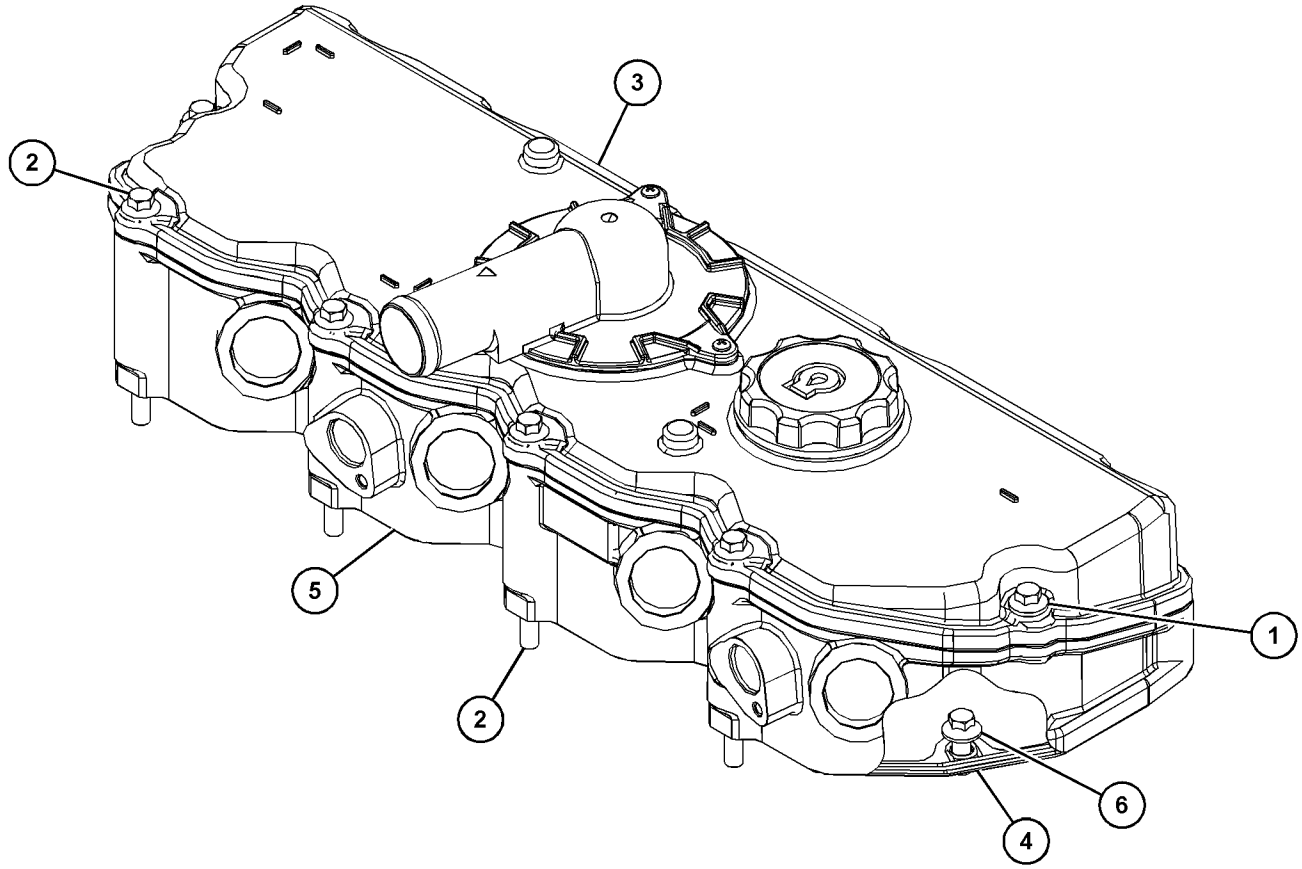

GRAPHIC #1 <END> g03828465

420-9614 COVER GP-VALVE MECHANISM

PART OF 495-9687 ENGINE AR-PRIMARY

SMCS-1107 **i07141633**

NOTE	REF NO	GRAPHIC REF	PART NUMBER	QTY	PART NAME 1 2 3 4 5 6 (PRODUCT LEVEL)	SEE PAGE
M	1	1	**6I-0631**	4	BOLT (M6X1X12-MM)	
M	2	1	**101-3895**	7	BOLT (M8X1.25X35-MM)	
M	3	1	**103-5705**	4	BOLT (M8X1.25X110-MM)	
	4	1	**392-9472**	1	GASKET (VALVE COVER)	
Y	5	1	**426-0621**	1	COVER GP-VALVE MECHANISM	179
	6	1	**432-4988**	1	SHIELD-HEAT	
	7	1	**455-6923**	1	COVER-BASE	
M	8	1	**6I-0217**	10	BOLT (M8X1.25X20-MM)	

M - METRIC PART
Y - SEPARATE ILLUSTRATION

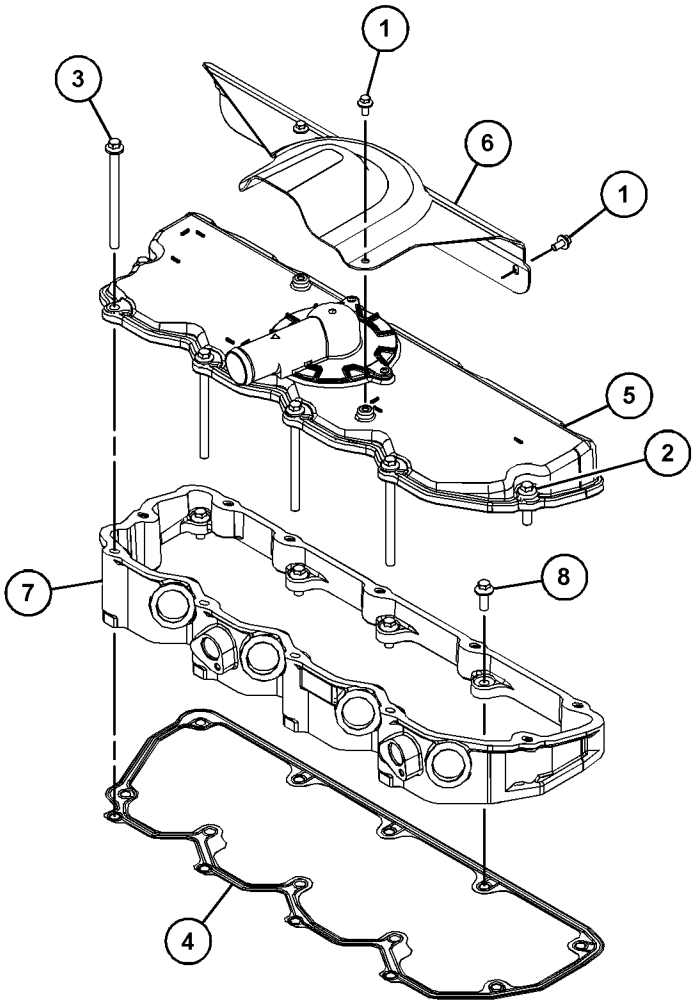

GRAPHIC #1 <END> g03826510

426-0621 COVER GP-VALVE MECHANISM

PART OF 420-9614 COVER GP-VALVE MECHANISM

SMCS-1107 **i07178045**

NOTE	REF NO	GRAPHIC REF	PART NUMBER	QTY	PART NAME 1 2 3 4 5 6 (PRODUCT LEVEL)	SEE PAGE
	1	1	**195-9245**	3	SCREW (M4X0.7X10-MM)	
	2	1	**380-9615**	1	BREATHER	
	3	1	**474-0599**	1	SEAL	
	4	1	**326-7289**	1	SEAL-O-RING	

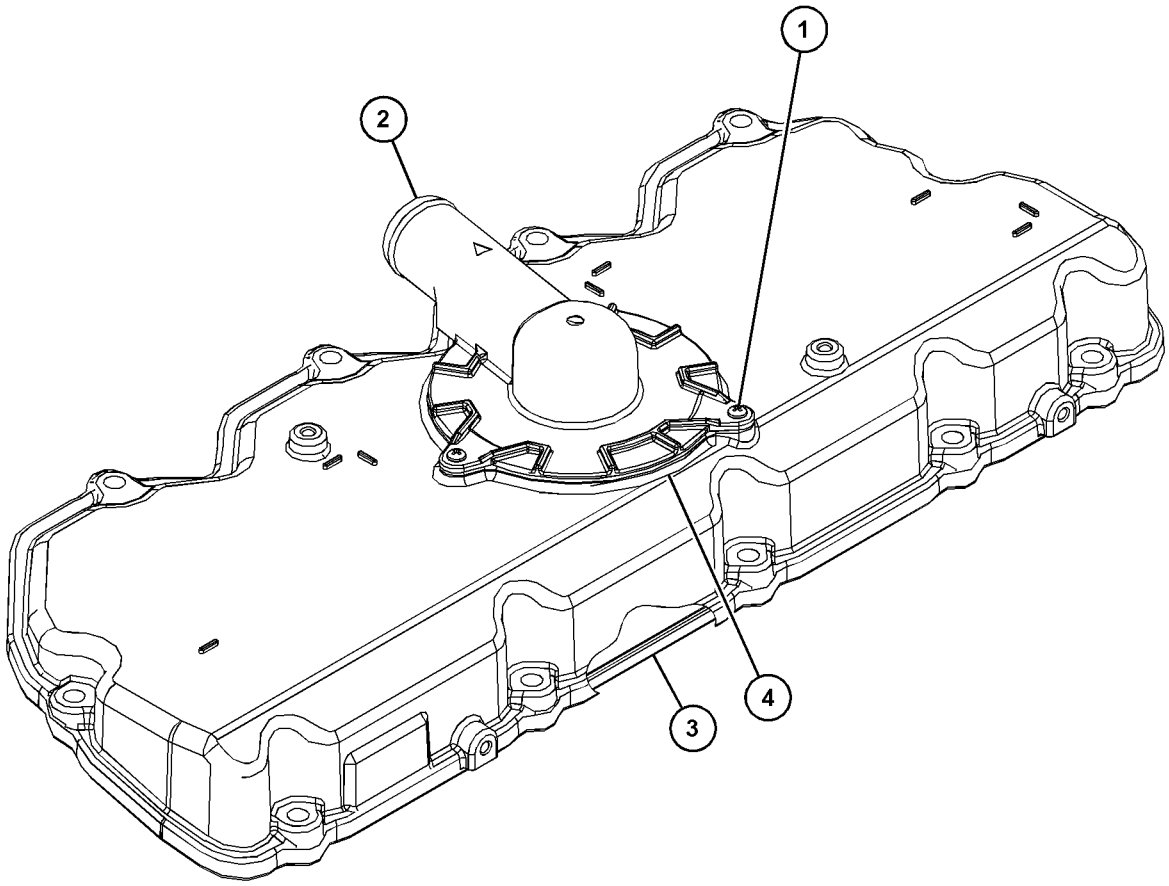

GRAPHIC #1 <END> g06244296

433-6323 CRANKSHAFT GP

PART OF 452-7386 CYLINDER BLOCK GP-SHORT, 455-9378, 461-3168, 463-8820, 463-8910, 466-3332, 469-1048, 475-8294, 477-2657, 478-6560, 480-6065, 484-1469, 491-2522, 492-1322, 492-3115, 495-3005, 495-9687, 500-8128, 503-1940, 503-4924, 504-3628, 509-3109, 509-5882, 509-5884, 512-9884 ENGINE AR-PRIMARY
TYPE 1

SMCS-1202 **i06238745**

NOTE	REF NO	GRAPHIC REF	PART NUMBER	QTY	PART NAME 1 2 3 4 5 6 (PRODUCT LEVEL)	SEE PAGE
	1	1	**032-9090**	2	WASHER-THRUST (STANDARD-UPPER) (S)	
	2	1	**339-8780**	1	DOWEL	
	3	1	**341-4028**	1	RING-TIMING	
C	4	1	*475-8373*	1	CRANKSHAFT GP	
	4A	1	**455-3693**	1	CRANKSHAFT	
	5	1	**216-8314**	1	GEAR-CRANKSHAFT (34-TEETH)	
M	6	1	**276-7394**	3	SCREW (M6X1XX12-MM)	
	7	1	**032-9091**	2	WASHER-THRUST (STANDARD-LOWER)	
	8	1	**067-6135**	1	KEY-WOODRUFF (CRANKSHAFT)	

C - CHANGE FROM PREVIOUS TYPE
M - METRIC PART

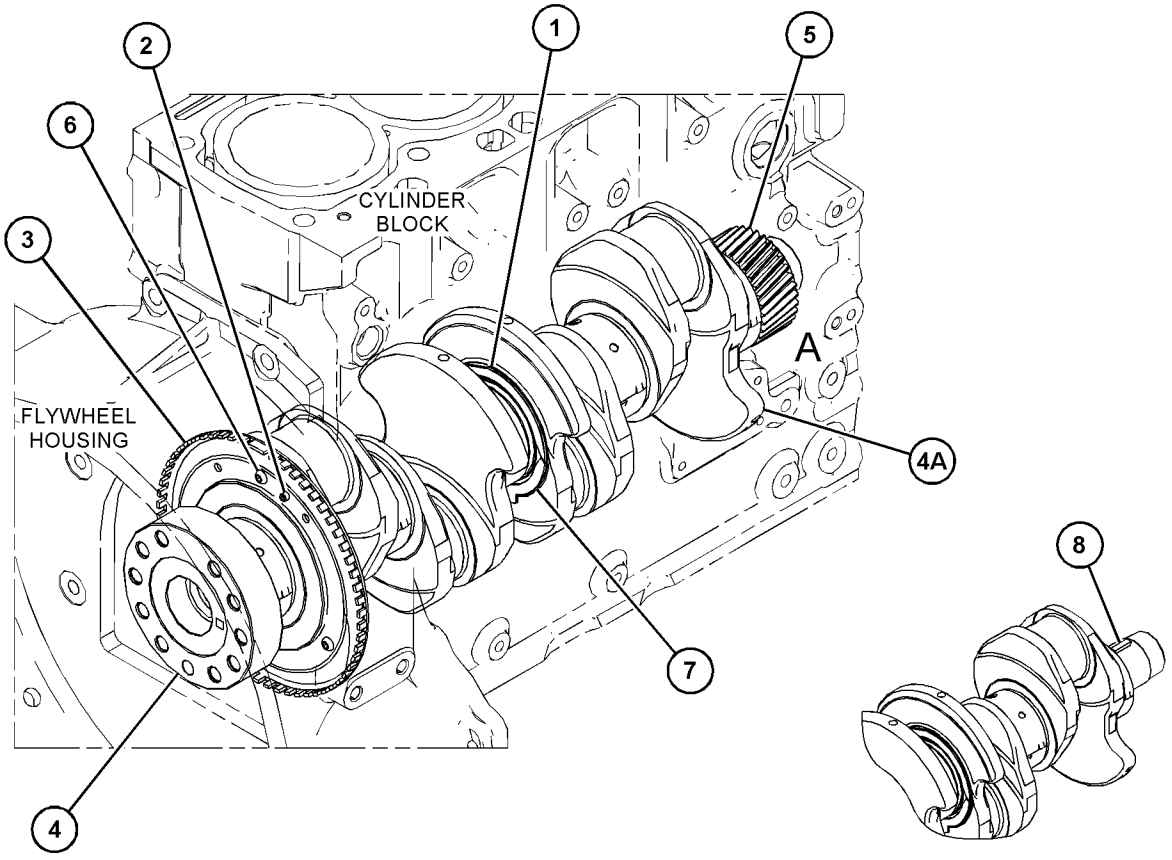

VIEW OF AREA A
(PARTS REMOVED FOR CLARITY)

GRAPHIC #1 <END> g03872708

433-6323 CRANKSHAFT GP

PART OF 461-3168 ENGINE AR-PRIMARY

SMCS-1202 **i06089329**

NOTE	REF NO	GRAPHIC REF	PART NUMBER	QTY	PART NAME 1 2 3 4 5 6 (PRODUCT LEVEL)	SEE PAGE
	1	1	**032-9090**	2	WASHER-THRUST (STANDARD-UPPER) (S)	
	2	1	**339-8780**	1	DOWEL	
	3	1	**341-4028**	1	RING-TIMING	
	4	1	*433-6521*	1	CRANKSHAFT GP	
		1	**361-2294**	1	CRANKSHAFT	
	5	1	**216-8314**	1	GEAR-CRANKSHAFT (34-TEETH)	
M	6	1	**276-7394**	3	SCREW (M6X1XX12-MM)	
	7	1	**032-9091**	2	WASHER-THRUST (STANDARD-LOWER)	
	8	1	**067-6135**	1	KEY-WOODRUFF (CRANKSHAFT)	

M - METRIC PART

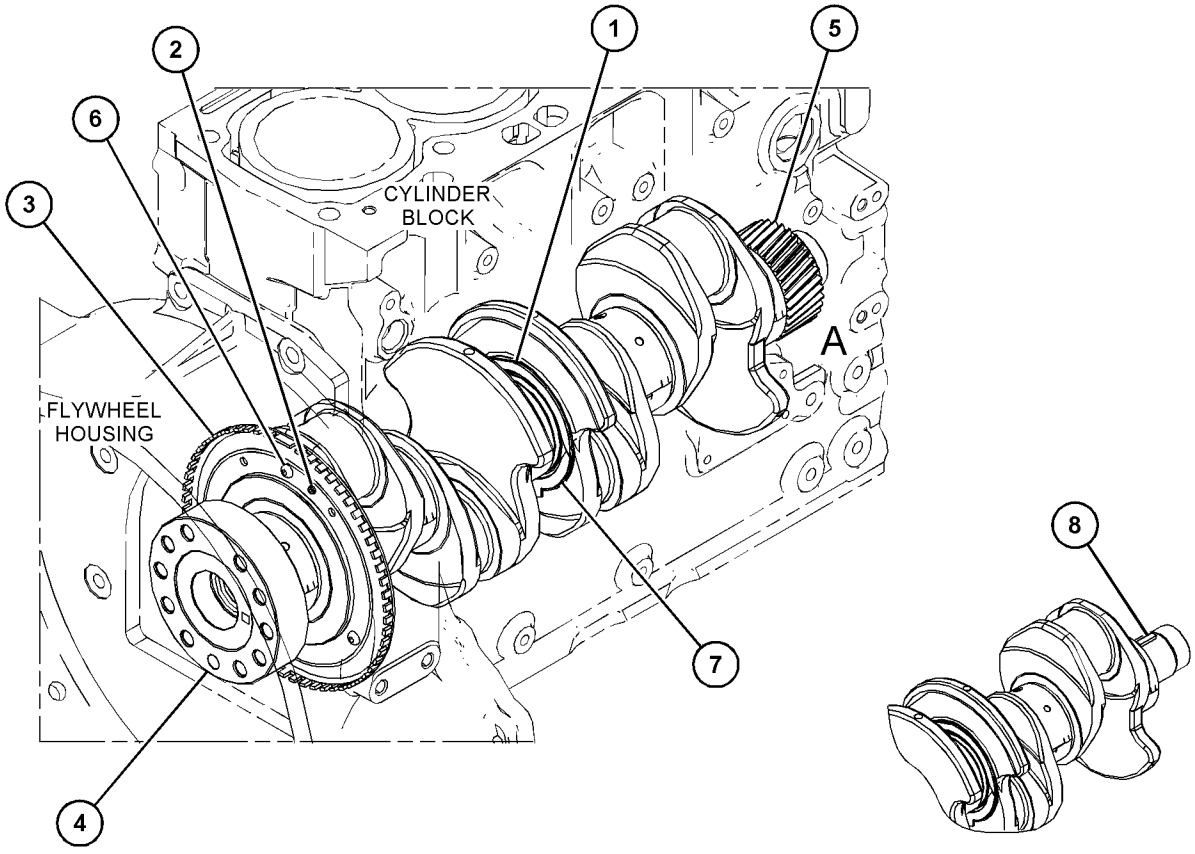

VIEW OF AREA A
(PARTS REMOVED FOR CLARITY)

GRAPHIC #1 <END> g03818280

433-6323 CRANKSHAFT GP

PART OF 452-7386 CYLINDER BLOCK GP-SHORT, 466-3332, 469-1048, 475-8294, 477-2657, 480-6065, 484-2343, 491-2522, 492-3118, 504-3645, 509-3109, 509-5882, 512-9838 ENGINE AR-PRIMARY
TYPE 2

SMCS-1202 **i07426891**

NOTE	REF NO	GRAPHIC REF	PART NUMBER	QTY	PART NAME 1 2 3 4 5 6 (PRODUCT LEVEL)	SEE PAGE
	1	1	**032-9090**	2	WASHER-THRUST (STANDARD-UPPER) (S)	
	2	1	**339-8780**	1	DOWEL	
	3	1	**341-4028**	1	RING-TIMING	
C	4	1	*475-8373*	1	CRANKSHAFT GP	
	4A	1	**455-3693**	1	CRANKSHAFT	
	5	1	**216-8314**	1	GEAR-CRANKSHAFT (34-TEETH)	
M	6	1	**276-7394**	3	SCREW (M6X1XX12-MM)	
	7	1	**032-9091**	2	WASHER-THRUST (STANDARD-LOWER)	
	8	1	**067-6135**	1	KEY-WOODRUFF (CRANKSHAFT)	
					AVAILABLE REPAIR KIT(S):	
B			**518-5437**	1	KIT-BEARING	
AB			**518-5440**	1	KIT-BEARING (0.254-MM US)	
AB			**518-5441**	1	KIT-BEARING (0.508-MM US)	
AB			**518-5885**	1	KIT-BEARING (0.762-MM US)	
B			**360-3986**	1	KIT-BEARING (CONNECTING ROD)	
AB			**468-7762**	1	KIT-BEARING (0.254-MM US)	
AB			**468-7769**	1	KIT-BEARING (0.508-MM US)	
AB			**518-5891**	1	PLATE-THRUST (STANDARD)	
AB			**518-5892**	1	PLATE-THRUST (0.191-MM US)	
AB			**518-5893**	1	PLATE-THRUST (STANDARD, 0.191-MM US)	

A - NOT PART OF THIS GROUP
B - USE AS REQUIRED
C - CHANGE FROM PREVIOUS TYPE
M - METRIC PART

433-6323 **CRANKSHAFT GP (**contd.**)** **i07426891**

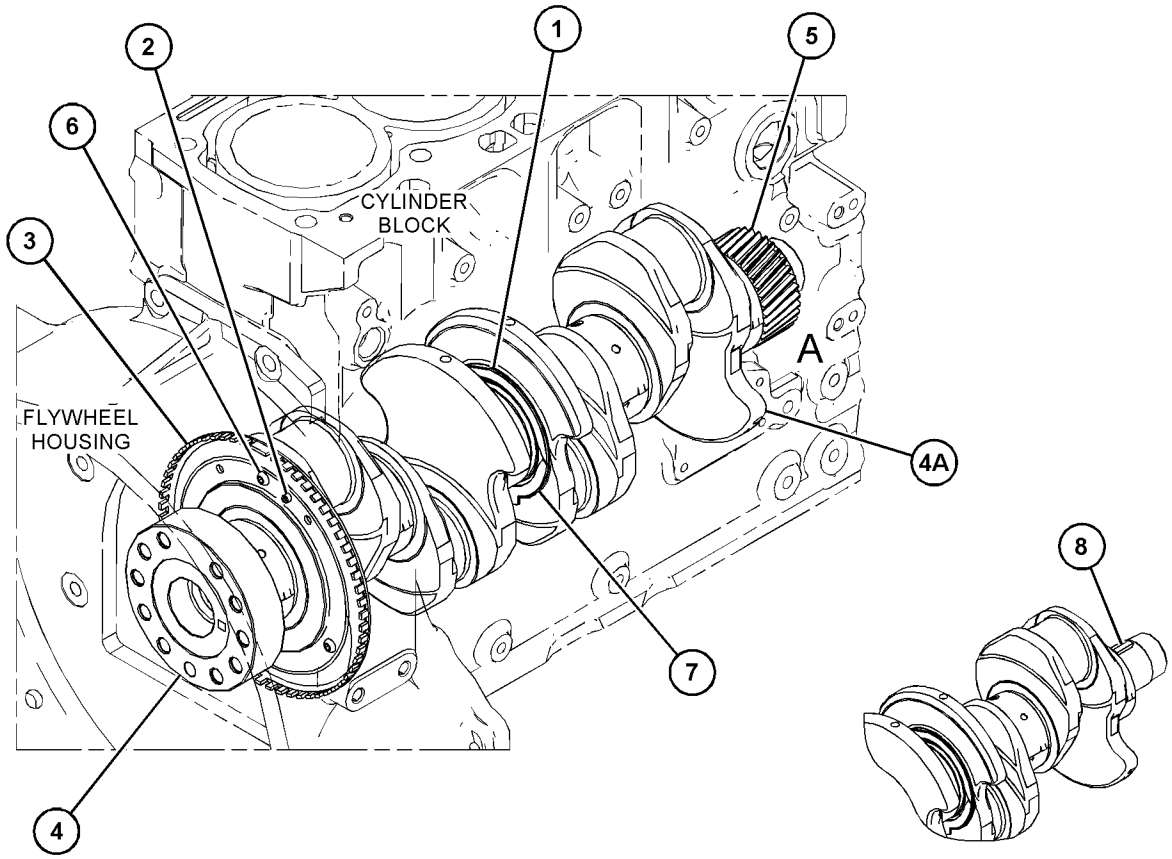

VIEW OF AREA A
(PARTS REMOVED FOR CLARITY)

GRAPHIC #1 <END> g03872708

510-5297 CRANKSHAFT GP

PART OF 455-9378, 461-3168, 463-8820, 463-8848, 463-8910, 466-4382, 467-7465, 478-6560, 484-1469, 484-2343, 486-2471, 492-1322, 492-3115, 492-3118, 495-3005, 495-9687, 500-8128, 502-7230, 503-1940, 503-4924, 504-3628, 504-3645, 508-4399, 509-5882, 509-5884, 510-0902, 512-9838, 512-9884, 514-3535, 514-3537, 516-9846, 517-0058, 526-8847, 527-9081, 538-5357, 539-3889, 541-2728 ENGINE AR-PRIMARY
TYPE 1

SMCS-1202 **i07143187**

NOTE	REF NO	GRAPHIC REF	PART NUMBER	QTY	PART NAME 1 2 3 4 5 6 (PRODUCT LEVEL)	SEE PAGE
CJ	1	1	**470-7995**	2	PLATE-THRUST (STANDARD) (UPPER)	
CJ	2	1	*470-8021*	2	PLATE-THRUST (STANDARD) (LOWER)	
	3	1	**067-6135**	1	KEY-WOODRUFF	
M	4	1	**276-7394**	3	SCREW (M6X1XX12-MM)	
	5	1	**339-8780**	1	DOWEL	
	6	1	**341-4028**	1	RING-TIMING	
	7	1	**448-2620**	1	CRANKSHAFT AS	
	8	1	**216-8314**	1	GEAR-CRANKSHAFT (34-TEETH)	
N	9	1	*470-8031*	5	BEARING	
N	10	1	*470-7971*	1	BEARING	
	11	1	**470-8023**	4	BEARING	
					AVAILABLE REPAIR KIT(S):	
N			**518-5437**	1	KIT-BEARING (CRANKSHAFT)	
					(INCLUDES BEARINGS)	
AB			**518-5440**		KIT-BEARING (0.254-MM US) (0.254-MM US)	
					(INCLUDES BEARINGS)	
AB			**518-5441**		KIT-BEARING (0.508-MM US) (0.50-MM US)	
					(INCLUDES BEARINGS)	
AB			**518-5885**		KIT-BEARING (0.762-MM US) (0.75-MM US)	
					(INCLUDES BEARINGS)	
J			**518-5891**	1	PLATE-THRUST (STANDARD) (CRANKSHAFT)	
					(INCLUDES THRUST WASHERS)	
AB			**518-5892**		PLATE-THRUST (0.191-MM US)	
					(INCLUDES THRUST WASHERS)	
AB			**518-5893**		PLATE-THRUST (STANDARD, 0.191-MM US)	
					(INCLUDES THRUST WASHERS)	

A - NOT PART OF THIS GROUP
B - USE AS REQUIRED
C - CHANGE FROM PREVIOUS TYPE
J - KIT MARKED J SERVICES PART(S) MARKED J
M - METRIC PART
N - KIT MARKED N SERVICES PART(S) MARKED N

510-5297 **CRANKSHAFT GP (**contd.**)** **i07143187**

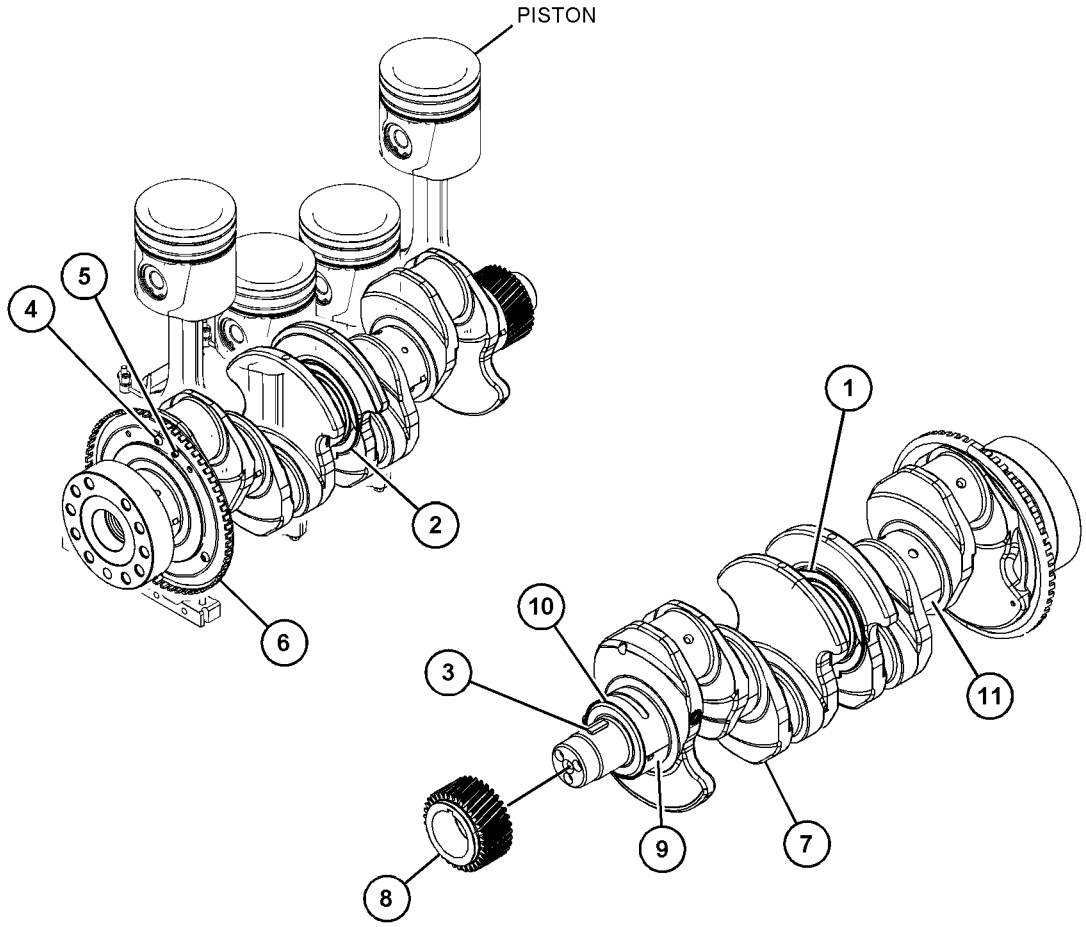

GRAPHIC #1 <END> g06157281

510-5297 CRANKSHAFT GP

PART OF 455-9378, 461-3168, 463-8820, 463-8848, 463-8910, 467-7465, 478-6560, 484-1469, 484-2343, 492-1322, 492-3115, 492-3118, 495-3005, 495-9687, 500-8128, 503-1940, 503-4924, 504-3628, 504-3645, 509-5884, 512-9838, 512-9884, 517-0058 ENGINE
AR-PRIMARY
TYPE 2

SMCS-1202 **i06791542**

NOTE	REF NO	GRAPHIC REF	PART NUMBER	QTY	PART NAME 1 2 3 4 5 6 (PRODUCT LEVEL)	SEE PAGE
P	1	1	**032-9090**	2	WASHER-THRUST (STANDARD-UPPER)	
P	2	1	**032-9091**	2	WASHER-THRUST (STANDARD-LOWER)	
	3	1	**067-6135**	1	KEY-WOODRUFF	
M	4	1	**276-7394**	3	SCREW (M6X1XX12-MM)	
	5	1	**339-8780**	1	DOWEL	
	6	1	**341-4028**	1	RING-TIMING	
	7	1	**448-2620**	1	CRANKSHAFT AS	
	8	1	**216-8314**	1	GEAR-CRANKSHAFT (34-TEETH)	
N	9	1	*417-5749*	5	BEARING	
N	10	1	*317-5487*	1	BEARING	
N	11	1	*334-9333*	4	BEARING	
					AVAILABLE REPAIR KIT(S):	
N			**353-7423**	1	KIT-BEARING (MAIN)	
					(INCLUDES BEARINGS)	
AB			**353-7424**		KIT-BEARING (0.25-MM US)	
					(INCLUDES BEARINGS)	
AB			**353-7425**		KIT-BEARING (0.50-MM US)	
					(INCLUDES BEARINGS)	
AB			**353-7426**		KIT-BEARING (0.75-MM US)	
					(INCLUDES BEARINGS)	
P			**247-2717**	1	KIT-THRUST WASHER	

A - NOT PART OF THIS GROUP
B - USE AS REQUIRED
M - METRIC PART
N - KIT MARKED N SERVICES PART(S) MARKED N
P - KIT MARKED P SERVICES PART(S) MARKED P

510-5297 **CRANKSHAFT GP (**contd.**)** **i06791542**

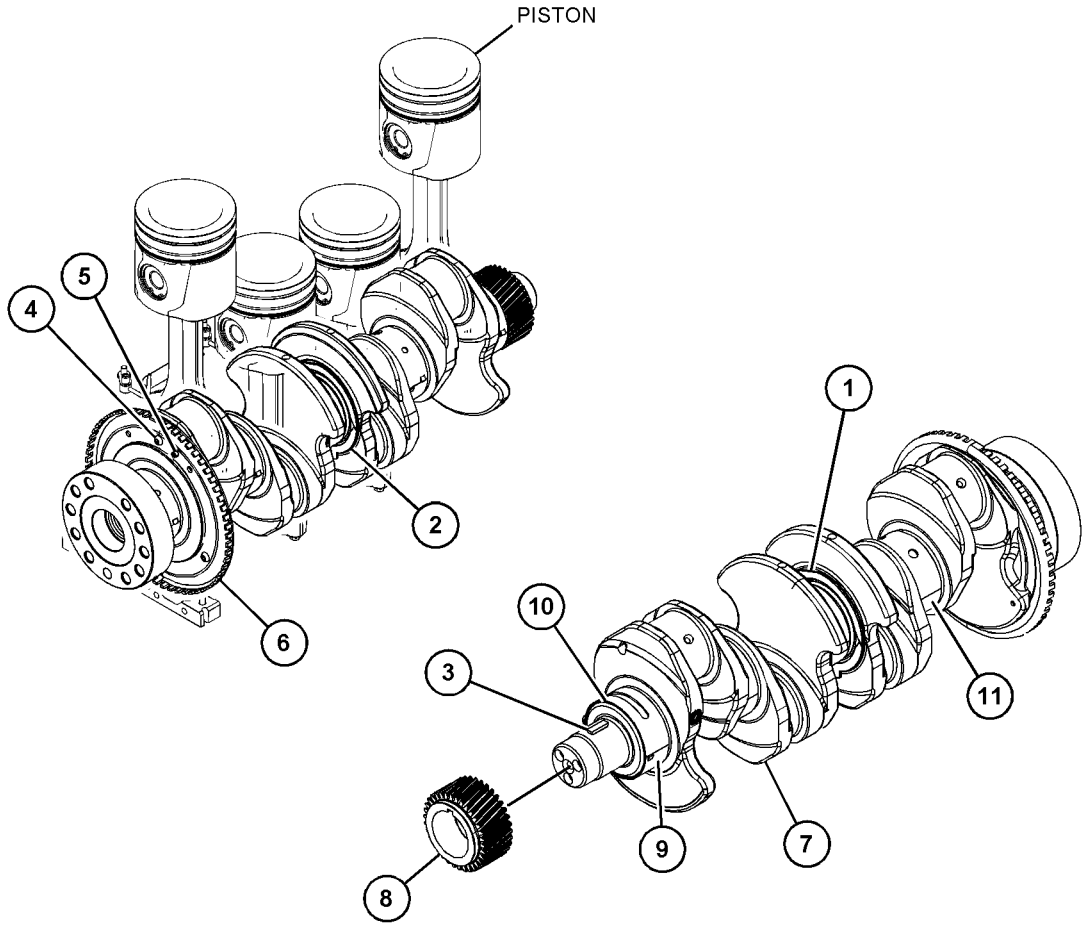

GRAPHIC #1 <END> g06157281

510-5297 CRANKSHAFT GP

PART OF 455-9378, 461-3168, 463-8820, 463-8848, 463-8910, 466-4382, 467-7465, 478-6560, 484-1469, 484-2343, 492-1322, 492-3115, 492-3118, 495-3005, 495-9687, 500-8128, 502-7230, 503-1940, 503-4924, 504-3628, 504-3645, 508-4399, 509-5882, 509-5884, 510-0902, 512-9838, 512-9884, 514-3537, 517-0058, 526-8847 ENGINE AR-PRIMARY TYPE 3

SMCS-1202 **i07039657**

NOTE	REF NO	GRAPHIC REF	PART NUMBER	QTY	PART NAME 1 2 3 4 5 6 (PRODUCT LEVEL)	SEE PAGE
	1	1	**470-7995**	2	PLATE-THRUST (STANDARD) (UPPER)	
	2	1	**470-8021**	2	PLATE-THRUST (STANDARD) (LOWER)	
	3	1	**067-6135**	1	KEY-WOODRUFF	
M	4	1	**276-7394**	3	SCREW (M6X1XX12-MM)	
	5	1	**339-8780**	1	DOWEL	
	6	1	**341-4028**	1	RING-TIMING	
	7	1	**448-2620**	1	CRANKSHAFT AS	
	8	1	**216-8314**	1	GEAR-CRANKSHAFT (34-TEETH)	
CN	9	1	*470-8031*	5	BEARING	
CN	10	1	*470-7971*	1	BEARING	
C	11	1	*470-8023*	4	BEARING	
					AVAILABLE REPAIR KIT(S):	
CN			**518-5437**	1	KIT-BEARING (CRANKSHAFT)	
					(INCLUDES BEARINGS)	
AB			**518-5440**		KIT-BEARING (0.254-MM US) (0.254-MM US)	
					(INCLUDES BEARINGS)	
AB			**518-5441**		KIT-BEARING (0.508-MM US) (0.50-MM US)	
					(INCLUDES BEARINGS)	
AB			**518-5885**		KIT-BEARING (0.762-MM US) (0.75-MM US)	
					(INCLUDES BEARINGS)	
C			**518-5891**	1	PLATE-THRUST (STANDARD) (CRANKSHAFT)	
					(INCLUDES THRUST WASHERS)	
AB			**518-5892**		PLATE-THRUST (0.191-MM US)	
					(INCLUDES THRUST WASHERS)	
AB			**518-5893**		PLATE-THRUST (STANDARD, 0.191-MM US)	
					(INCLUDES THRUST WASHERS)	

A - NOT PART OF THIS GROUP
B - USE AS REQUIRED
C - CHANGE FROM PREVIOUS TYPE
M - METRIC PART
N - KIT MARKED N SERVICES PART(S) MARKED N

510-5297 **CRANKSHAFT GP (**contd.**)** **i07039657**

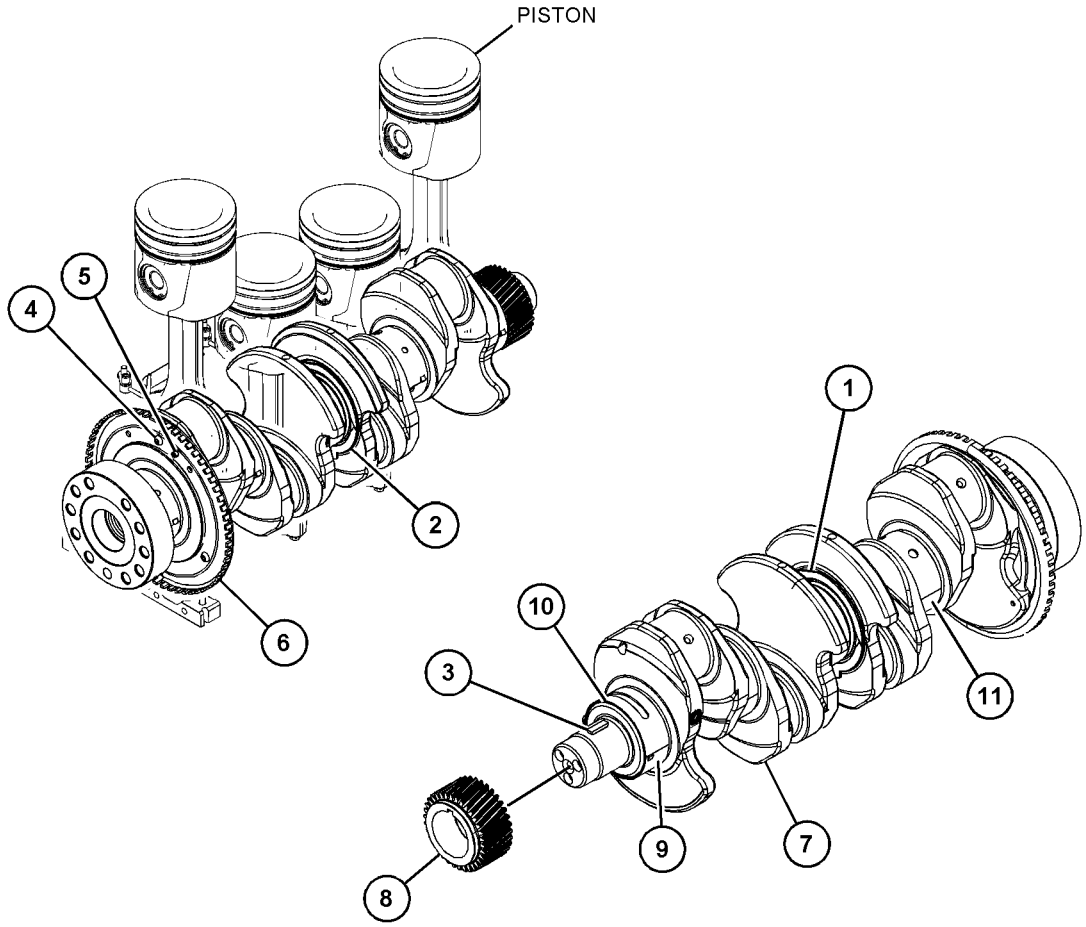

GRAPHIC #1 <END> g06157281

415-3299 CYLINDER BLOCK GP

PART OF 452-7386 CYLINDER BLOCK GP-SHORT, 455-9378, 461-3168, 463-8820, 463-8848, 463-8910, 466-3332, 466-4382, 467-7465, 469-1048, 475-8294, 477-2657, 478-6560, 480-6065, 484-1469, 484-2343, 486-2471, 491-2522, 492-1322, 492-3115, 492-3118, 495-3005, 495-9687, 500-8128, 502-7230, 503-1940, 503-4924, 504-3628, 504-3645, 508-4399, 509-3109, 509-5882, 509-5884, 510-0902, 512-9838, 512-9884, 514-3535, 514-3537, 516-9846, 517-0058, 526-8847, 527-9081, 538-5357, 539-3889, 541-2728 ENGINE AR-PRIMARY

SMCS-1201 **i06089739**

NOTE	REF NO	GRAPHIC REF	PART NUMBER	QTY	PART NAME 1 2 3 4 5 6 (PRODUCT LEVEL)	SEE PAGE
M	1	1	**209-9219**	10	BOLT (M8X1.25X16-MM)	
	2	1	**232-7449**	1	HOUSING AS	
Y	3	1	**451-7736**	1	CYLINDER BLOCK GP	191

M - METRIC PART
Y - SEPARATE ILLUSTRATION

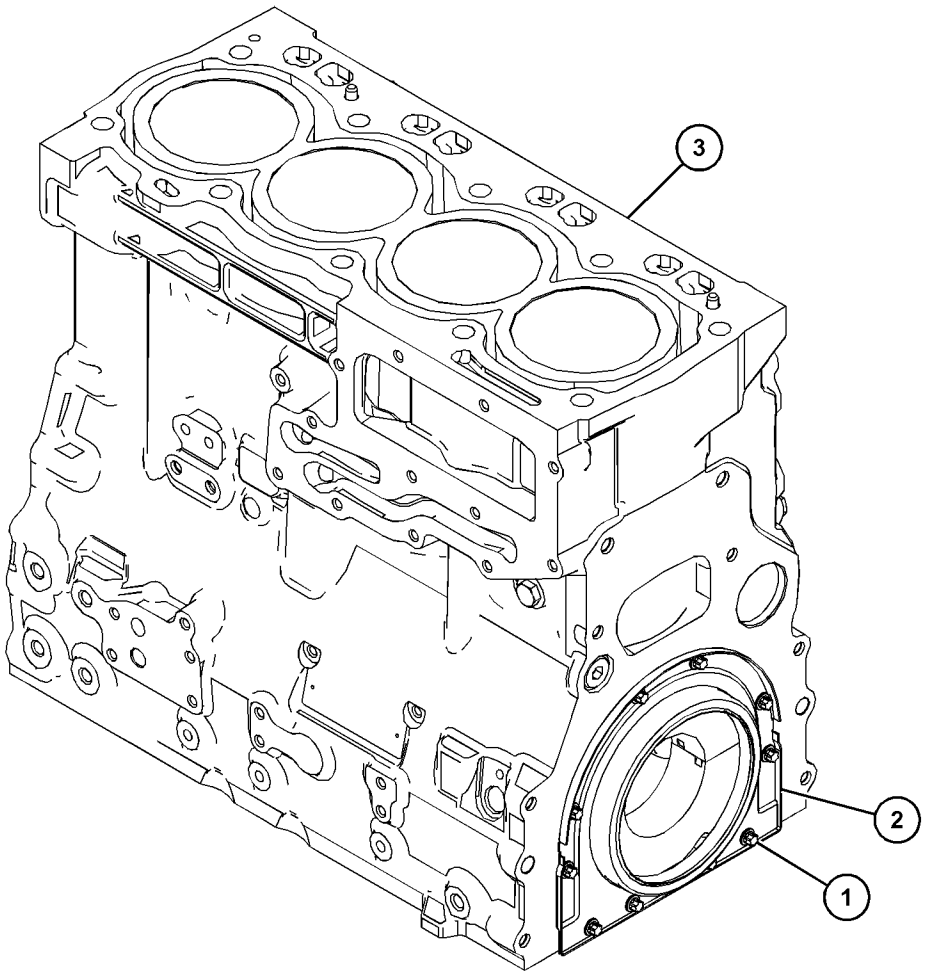

GRAPHIC #1 <END> g03813084

451-7736 CYLINDER BLOCK GP

PART OF 415-3299 CYLINDER BLOCK GP

SMCS-1201 **i06914863**

NOTE	REF NO	GRAPHIC REF	PART NUMBER	QTY	PART NAME 1 2 3 4 5 6 (PRODUCT LEVEL)	SEE PAGE
	1	1	**035-8068**	10	BOLT (5/8-18X3.75-IN)	
	2	1	**067-6006**	1	PLUG (CYLINDER BLOCK)	
	3	1	**067-6043**	1	PLUG-SIDE	
	4	1	**185-0884**	2	DOWEL	
	5	1	**225-8858**	2	PLUG	
	6	1	**232-7596**	1	PLUG	
	7	1	**232-7597**	2	PLUG	
	8	1	**232-7599**	1	PLUG	
	9	1	**366-8853**	1	BEARING	
	10	1	**067-6002**	10	DOWEL	

PARTS SHOWN IN GRAPHIC(S) WITHOUT A REFERENCE NUMBER ARE NOT SERVICED SEPARATELY

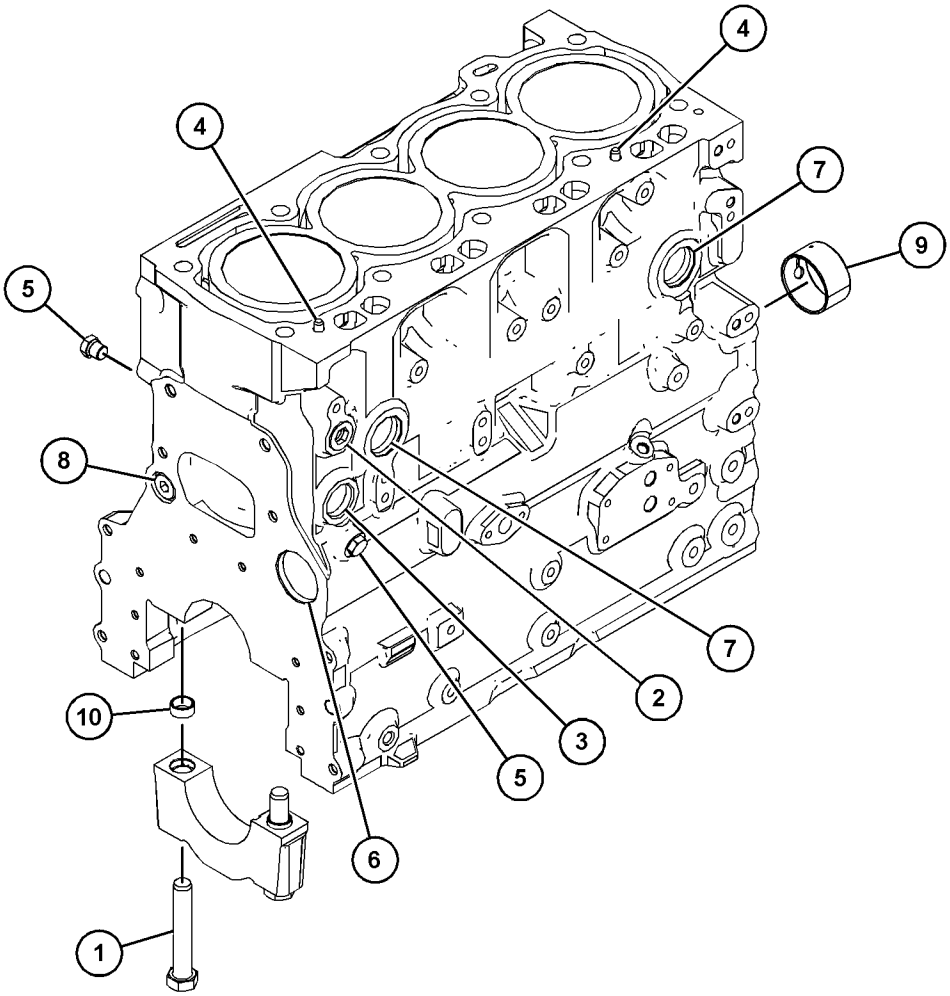

GRAPHIC #1 <END> g03811216

452-7366 CYLINDER BLOCK GP-SHORT

PART OF 467-4389, 467-4406, 467-4409, 467-4415, 467-4859, 467-5484, 467-8282, 467-8302, 467-8319, 468-2230, 469-5132, 469-5134, 469-5136, 469-5137, 469-5139, 469-5140, 469-5141, 470-0611, 472-3325, 472-4944, 475-5557, 476-2948, 477-3350, 477-3351, 477-3352, 477-6787, 478-0240, 478-0241, 478-3105, 478-6236, 478-7609, 480-6118, 486-4247, 488-4771, 488-4772, 491-5059, 492-8540, 504-5152, 504-5164, 510-3274, 512-0355, 526-8932, 528-3357 ENGINE AR, 472-6933, 482-0226, 483-1263, 484-2938, 485-1660, 486-2571, 495-3032, 495-9691, 502-7262, 510-2181, 512-0317, 514-4609, 514-4611, 517-0060, 539-4170, 542-9131 ENGINE AR-COMPLETE, 538-5357 ENGINE AR-PRIMARY

SMCS-1200 **i06676166**

NOTE	PART NUMBER	QTY	PART NAME 1 2 3 4 5 6 (PRODUCT LEVEL)	SEE PAGE
Y	**452-7386**	1	CYLINDER BLOCK GP-SHORT	193

Y - SEPARATE ILLUSTRATION

<END>

452-7386 CYLINDER BLOCK GP-SHORT

FIELD REPLACEMENT FOR 465-5141—PAGE: 42: FOR 463-8910—PAGE: 36: FOR 503-4924—PAGE: 124: FOR 461-3168—PAGE: 18: FOR 492-3118—PAGE: 112: FOR 488-4641—PAGE: 104: FOR 491-2522—PAGE: 106: FOR 488-4590—PAGE: 102: FOR 512-9884—PAGE: 142: FOR 512-9838—PAGE: 140: FOR 503-1940—PAGE: 122: FOR 492-3115—PAGE: 110: FOR 495-9687—PAGE: 116: FOR 504-3628—PAGE: 126: FOR 504-3645—PAGE: 128: FOR 484-2343—PAGE: 94: FOR 495-3005—PAGE: 114: FOR 463-8820—PAGE: 32: FOR 463-8848—PAGE: 34: FOR 469-1048—PAGE: 50: FOR 509-3109—PAGE: 132: FOR 463-9821—PAGE: 38: FOR 477-2657—PAGE: 72: FOR 516-9846—PAGE: 148: FOR 485-2322—PAGE: 98: FOR 495-9687—PAGE: 116: FOR 500-8128—PAGE: 118: FOR 483-5184—PAGE: 88: FOR 514-3537—PAGE: 146: FOR 502-7230—PAGE: 120: FOR 510-0902—PAGE: 138: FOR 526-8847—PAGE: 152: FOR 486-2471—PAGE: 100: FOR 484-2326—PAGE: 92: FOR 484-1469—PAGE: 90: FOR 475-8138—PAGE: 62

PART OF 452-7366 CYLINDER BLOCK GP-SHORT, 466-4382, 508-4399 ENGINE AR-PRIMARY

SMCS-1200 **i07368016**

NOTE	REF NO	GRAPHIC REF	PART NUMBER	QTY	PART NAME 1 2 3 4 5 6 (PRODUCT LEVEL)	SEE PAGE
Y	1	1	*415-3299*	1	CYLINDER BLOCK GP	190
Y	2	1	*415-5518*	1	PISTON & ROD GP	280
Y	3	1	*415-7948*	1	JET GP-PISTON COOLING	257
	4	1	*415-9833*	1	PLATE GP-IDENTIFICATION	
		1	**350-8959**	1	PLATE-SERIAL NUMBER	
		1	**332-0905**	2	RIVET-DRIVE	
Y	5	1	*433-6323*	1	CRANKSHAFT GP	181
	6	1	*460-6528*	1	PAN GP-OIL	
M		1	**8T-0269**	1	BOLT-SOCKET HEAD (M6X1X20-MM)	
		1	**230-8094**	1	BRIDGE	

M - METRIC PART
Y - SEPARATE ILLUSTRATION

452-7386 **CYLINDER BLOCK GP-SHORT (**contd.**)** **i07368016**

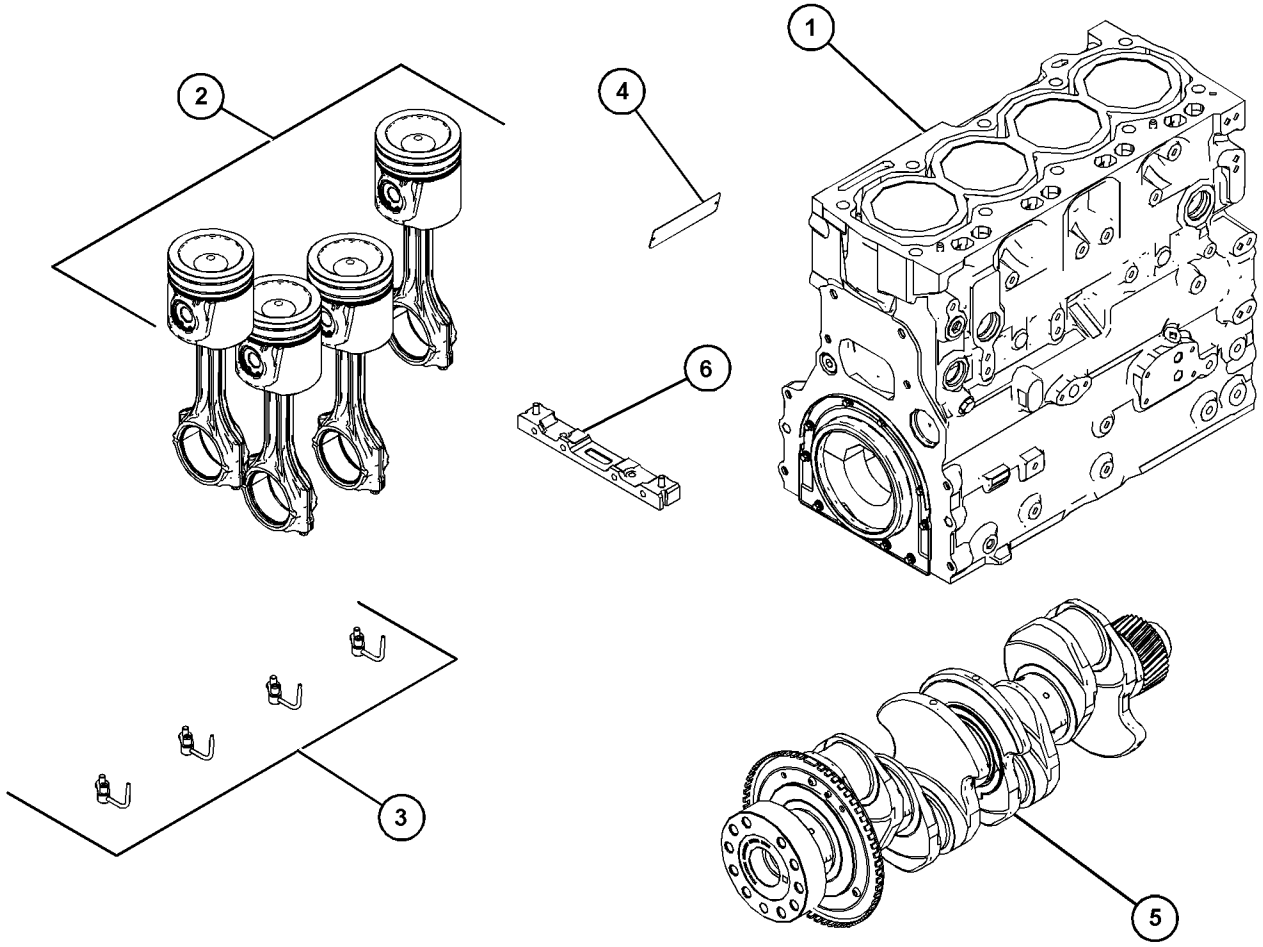

GRAPHIC #1 <END> g06100496

397-1559 CYLINDER HEAD AS

PART OF 460-7780 CYLINDER HEAD AS, 415-5520 CYLINDER HEAD GP

SMCS-1100, 1101 **i06089318**

NOTE	REF NO	GRAPHIC REF	PART NUMBER	QTY	PART NAME 1 2 3 4 5 6 (PRODUCT LEVEL)	SEE PAGE
	1	1	**276-8116**	4	PLUG-CORE	
	2	1	**377-0400**	8	INSERT-VALVE SEAT (EXHAUST)	
	3	1	**377-0399**	8	INSERT-VALVE SEAT (INTAKE)	
	4	1	**276-8117**	9	PLUG-CORE	
	5	1	**298-4528**	1	PLUG-CORE	
	6	1	**298-4527**	1	PLUG-CORE	

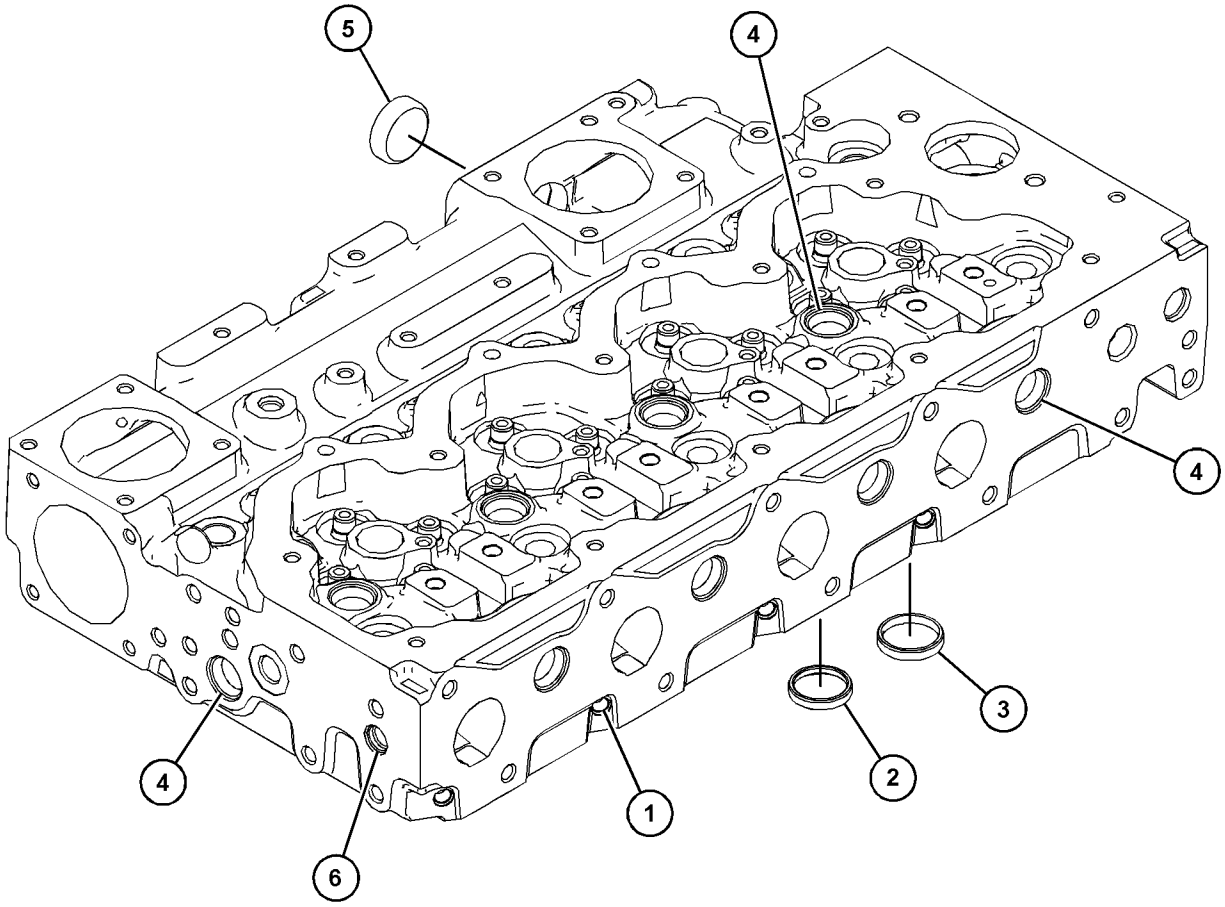

GRAPHIC #1 <END> g03813035

460-7780 CYLINDER HEAD AS

PART OF 452-7397 CYLINDER HEAD GP

SMCS-1100, 1101 **i06807033**

NOTE	REF NO	GRAPHIC REF	PART NUMBER	QTY	PART NAME 1 2 3 4 5 6 (PRODUCT LEVEL)	SEE PAGE
	1	1	**199-9751**	1	SEAL-O-RING	
Y	2	1	**397-1559**	1	CYLINDER HEAD AS	195
	3	1	**232-1322**	1	PLUG (BLANKING)	
	4	1	**295-6661**	1	PLUG	

Y - SEPARATE ILLUSTRATION

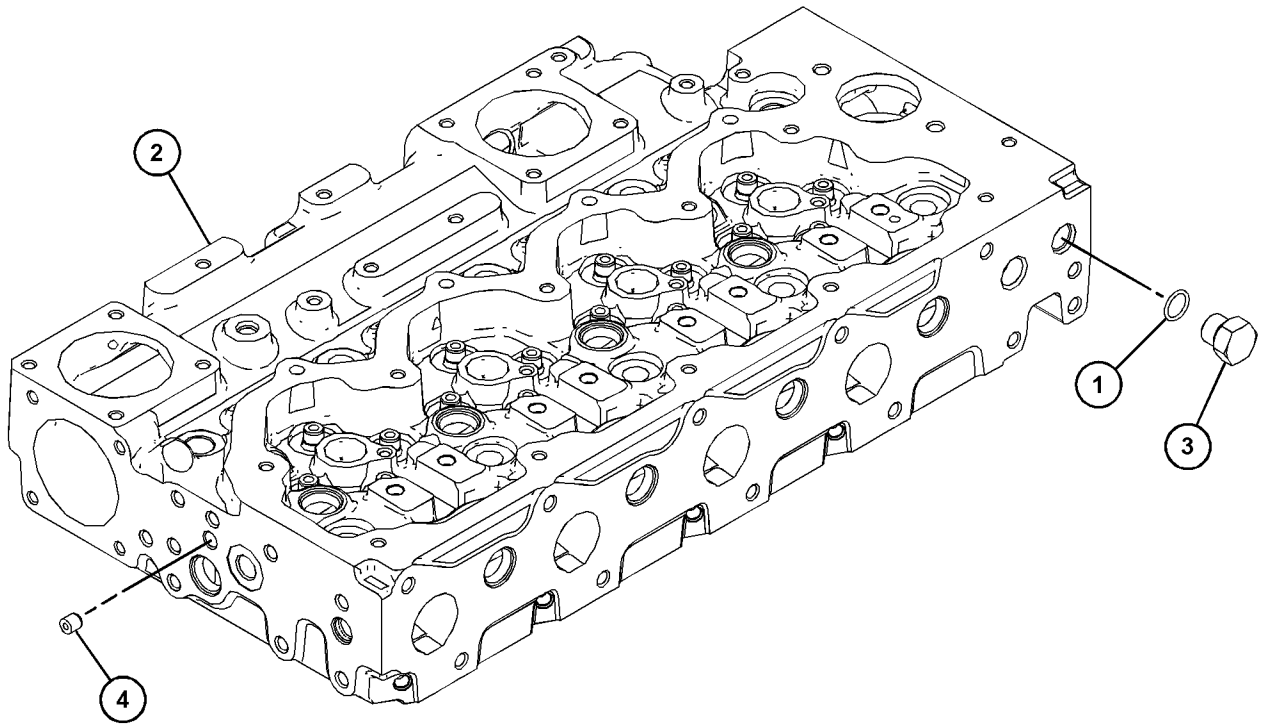

GRAPHIC #1 <END> g06110937

415-5520 CYLINDER HEAD GP

PART OF 455-9378, 461-3168, 463-8820, 463-8848, 463-8910, 466-3332, 466-4382, 467-7465, 469-1048, 475-8294, 477-2657, 478-6560, 480-6065, 484-1469, 484-2343, 486-2471, 491-2522, 492-1322, 492-3115, 492-3118, 495-3005, 495-9687, 500-8128, 502-7230, 503-1940, 503-4924, 504-3628, 504-3645, 508-4399, 509-3109, 509-5882, 509-5884, 510-0902, 512-9838, 512-9884, 514-3535, 514-3537, 516-9846, 517-0058, 526-8847, 527-9081, 538-5357, 539-3889, 541-2728 ENGINE AR-PRIMARY

SMCS-1100 **i06148781**

NOTE	REF NO	GRAPHIC REF	PART NUMBER	QTY	PART NAME 1 2 3 4 5 6 (PRODUCT LEVEL)	SEE PAGE
	1	1	**310-8520**	1	GASKET-CYLINDER HEAD	
Y	2	1	**397-1559**	1	CYLINDER HEAD AS	195
	3	1	**225-5501**	10	BOLT (M15X1.5X137-MM)	
	4	1	**295-6661**	1	PLUG	
F			**369-3707**	1	GASKET-CYLINDER HEAD	

F - NOT SHOWN
Y - SEPARATE ILLUSTRATION

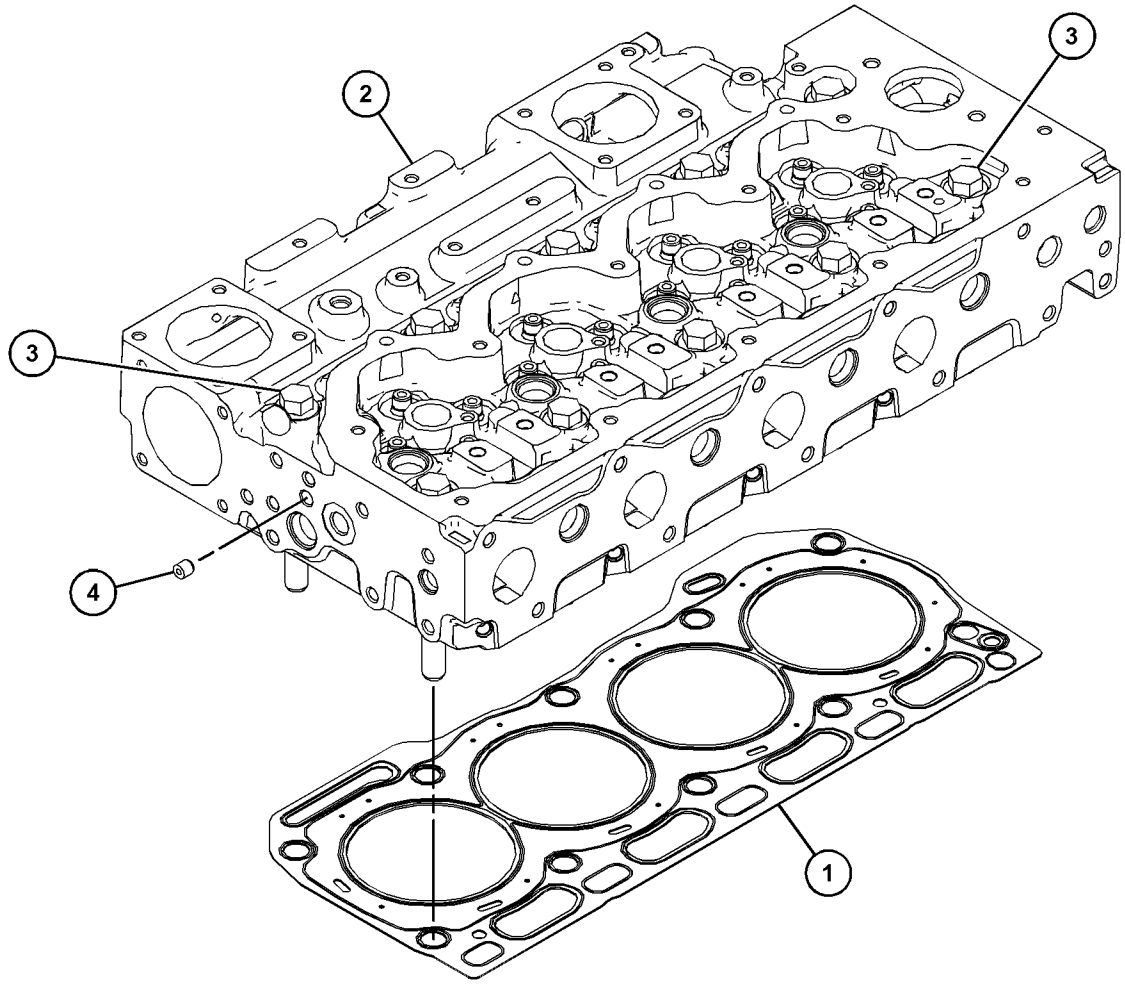

GRAPHIC #1 <END> g03828609

452-7394 CYLINDER HEAD GP

FIELD REPLACEMENT FOR 463-9821—PAGE: 38

PART OF 467-4389, 467-4406, 467-4409, 467-4415, 467-4859, 467-5484, 467-8282, 467-8302, 467-8319, 468-2230, 469-5132, 469-5134, 469-5136, 469-5137, 469-5139, 469-5140, 469-5141, 470-0611, 472-3325, 472-4944, 475-5557, 476-2948, 477-3350, 477-3351, 477-3352, 477-6787, 478-0240, 478-0241, 478-3105, 478-6236, 478-7609, 480-6118, 486-4247, 488-4771, 488-4772, 491-5059, 492-8540, 504-5152, 504-5164, 510-3274, 512-0355, 526-8932, 528-3357 ENGINE AR, 472-6933, 482-0226, 483-1263, 484-2938, 485-1660, 486-2571, 495-3032, 495-9691, 502-7262, 510-2181, 514-4609, 514-4611, 517-0060, 539-4170, 542-9131 ENGINE AR-COMPLETE, 538-5357 ENGINE AR-PRIMARY

SMCS-1100 **i06676142**

NOTE	PART NUMBER	QTY	PART NAME 1 2 3 4 5 6 (PRODUCT LEVEL)	SEE PAGE
Y	**452-7397**	1	CYLINDER HEAD GP	199

Y - SEPARATE ILLUSTRATION

<END>

452-7397 CYLINDER HEAD GP

FIELD REPLACEMENT FOR 465-5141–PAGE: 42: FOR 463-8910–PAGE: 36: FOR 503-4924–PAGE: 124: FOR 461-3168–PAGE: 18: FOR 492-3118–PAGE: 112: FOR 488-4641–PAGE: 104: FOR 491-2522–PAGE: 106: FOR 488-4590–PAGE: 102: FOR 512-9884–PAGE: 142: FOR 512-9838–PAGE: 140: FOR 503-1940–PAGE: 122: FOR 492-3115–PAGE: 110: FOR 495-9687–PAGE: 116: FOR 504-3628–PAGE: 126: FOR 504-3645–PAGE: 128: FOR 484-2343–PAGE: 94: FOR 495-3005–PAGE: 114: FOR 463-8820–PAGE: 32: FOR 469-1048–PAGE: 50: FOR 463-8848–PAGE: 34: FOR 509-3109–PAGE: 132: FOR 477-2657–PAGE: 72: FOR 477-2657–PAGE: 72: FOR 516-9846–PAGE: 148: FOR 485-2322–PAGE: 98: FOR 495-9687–PAGE: 116: FOR 500-8128–PAGE: 118: FOR 483-5184–PAGE: 88: FOR 514-3537–PAGE: 146: FOR 502-7230–PAGE: 120: FOR 510-0902–PAGE: 138: FOR 526-8847–PAGE: 152: FOR 486-2471–PAGE: 100: FOR 484-2326–PAGE: 92: FOR 484-1469–PAGE: 90: FOR 475-8138–PAGE: 62

PART OF 452-7394 CYLINDER HEAD GP, 512-0317 ENGINE AR-COMPLETE, 466-4382, 508-4399 ENGINE AR-PRIMARY

SMCS-1100 **i07311065**

NOTE	REF NO	GRAPHIC REF	PART NUMBER	QTY	PART NAME 1 2 3 4 5 6 (PRODUCT LEVEL)	SEE PAGE
Y	1	1	*460-7780*	1	CYLINDER HEAD AS	196
Y	2	1	*460-7781*	1	ROCKER ARM GP	300

Y - SEPARATE ILLUSTRATION

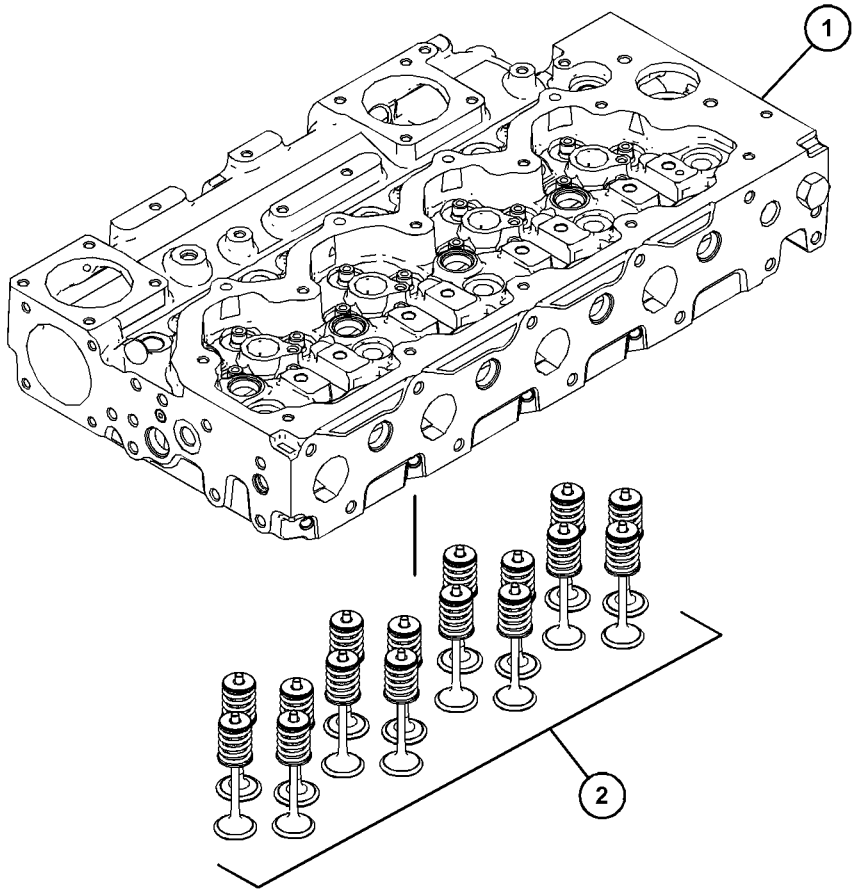

GRAPHIC #1 <END> g06116995

417-4187 DRAIN GP-ENGINE OIL

PART OF 455-9378, 461-3168, 466-3332, 466-4382, 467-7465, 469-1048, 477-2657, 478-6560, 480-6065, 484-1469, 484-2343, 486-2471, 491-2522, 492-3115, 492-3118, 495-9687, 500-8128, 502-7230, 503-1940, 504-3628, 504-3645, 508-4399, 509-3109, 509-5884, 510-0902, 514-3535, 514-3537, 516-9846, 517-0058, 526-8847, 527-9081, 538-5357, 541-2728 ENGINE AR-PRIMARY

SMCS-1302 **i06091149**

NOTE	REF NO	GRAPHIC REF	PART NUMBER	QTY	PART NAME 1 2 3 4 5 6 (PRODUCT LEVEL)	SEE PAGE
	1	1	**7C-0351**	2	PLUG-DRAIN (ENGINE OIL)	
	2	1	**335-7585**	2	SEAL	

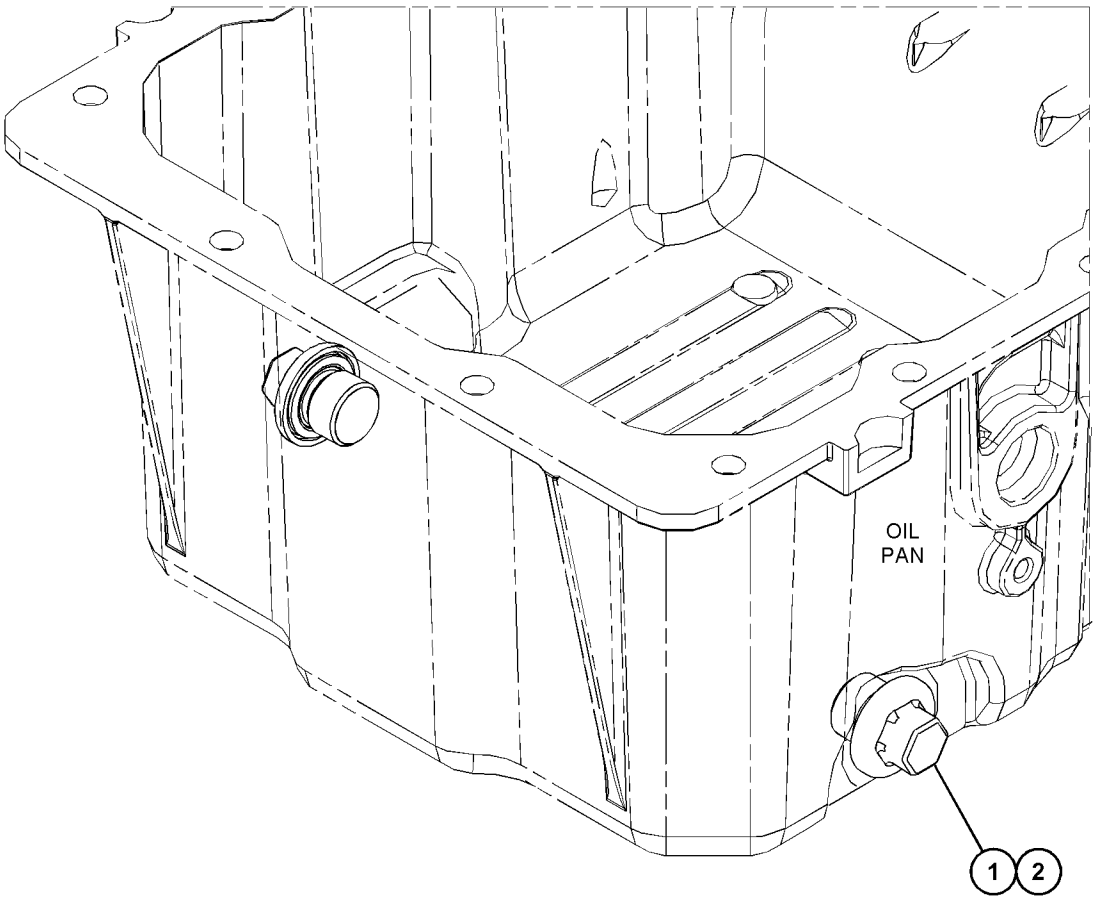

GRAPHIC #1 <END> g03817839

417-4189 DRAIN GP-ENGINE OIL

PART OF 475-8294, 492-1322 ENGINE AR-PRIMARY

SMCS-1302 **i06547699**

NOTE	REF NO	GRAPHIC REF	PART NUMBER	QTY	PART NAME 1 2 3 4 5 6 (PRODUCT LEVEL)	SEE PAGE
	1	1	**7C-0351**	1	PLUG-DRAIN (ENGINE OIL)	
	2	1	**335-7585**	1	SEAL	
	3	1	**3K-0360**	1	SEAL-O-RING	
	4	1	**6V-7238**	1	VALVE-SHUTOFF	

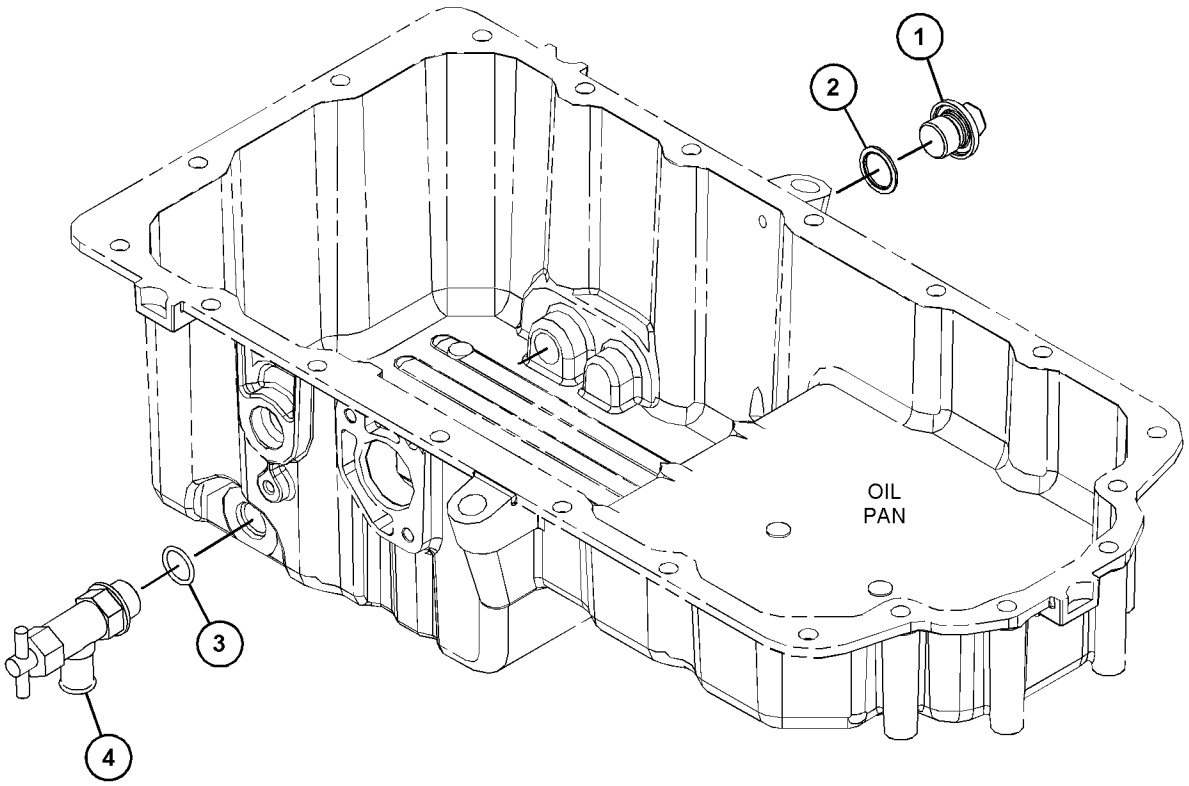

GRAPHIC #1 <END> g03842998

419-8538 DRAIN GP-ENGINE OIL

PART OF 463-8820, 463-8848, 463-8910, 495-3005, 503-4924, 509-5882, 512-9838, 512-9884, 539-3889 ENGINE AR-PRIMARY

SMCS-1302 **i06124088**

NOTE	REF NO	GRAPHIC REF	PART NUMBER	QTY	PART NAME 1 2 3 4 5 6 (PRODUCT LEVEL)	SEE PAGE
	1	1	**7C-0351**	1	PLUG-DRAIN (ENGINE OIL)	
	2	1	**335-7585**	1	SEAL	
	3	1	**3K-0360**	1	SEAL-O-RING	
	4	1	**6V-7238**	1	VALVE-SHUTOFF	

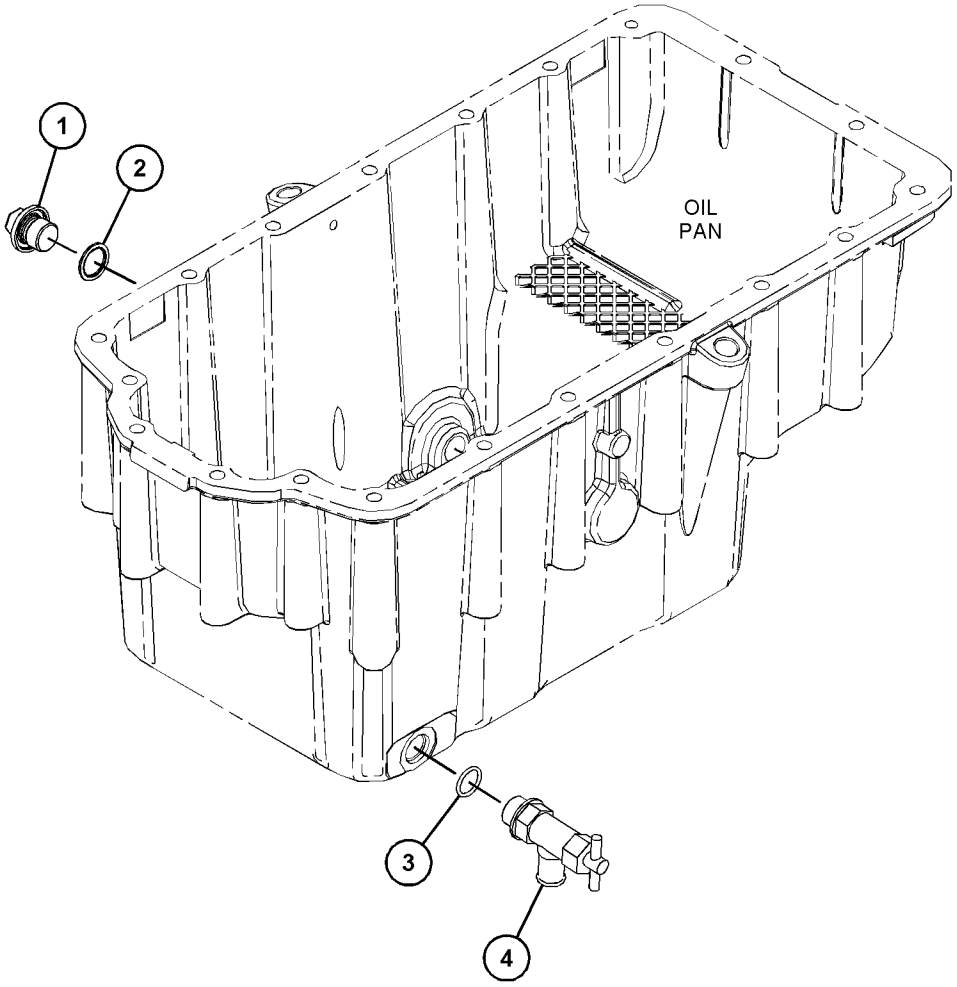

GRAPHIC #1 <END> g03821648

432-4956 DRIVE GP-AUXILIARY

PART OF 466-4382, 484-1469 ENGINE AR-PRIMARY

SMCS-1207 **i06100966**

NOTE	REF NO	GRAPHIC REF	PART NUMBER	QTY	PART NAME 1 2 3 4 5 6 (PRODUCT LEVEL)	SEE PAGE
M	1	1	**100-4830**	2	BOLT (M10X1.5X20-MM)	
	2	1	**102-2073**	1	SEAL-O-RING	
M	3	1	**102-2078**	1	BOLT (M10X1.5X25-MM)	
	4	1	**126-3212**	5	BOLT (M8X1.25X25-MM)	
	5	1	**198-8262**	1	COVER AS	
	5A	1	**198-8263**	1	SEAL-O-RING	
	6	1	**214-3203**	1	WASHER (SEALING)	
	7	1	**230-9195**	1	ADAPTER AS	
	7A	1	**6H-3957**	1	BALL BEARING	
	7B	1	**102-2075**	1	BEARING	
	7C	1	**102-2076**	1	CLIP	
	7D	1	**230-9194**	1	GEAR (33-TEETH)	
M	8	1	**6I-0646**	1	BOLT (M10X1.5X14-MM)	

M - METRIC PART

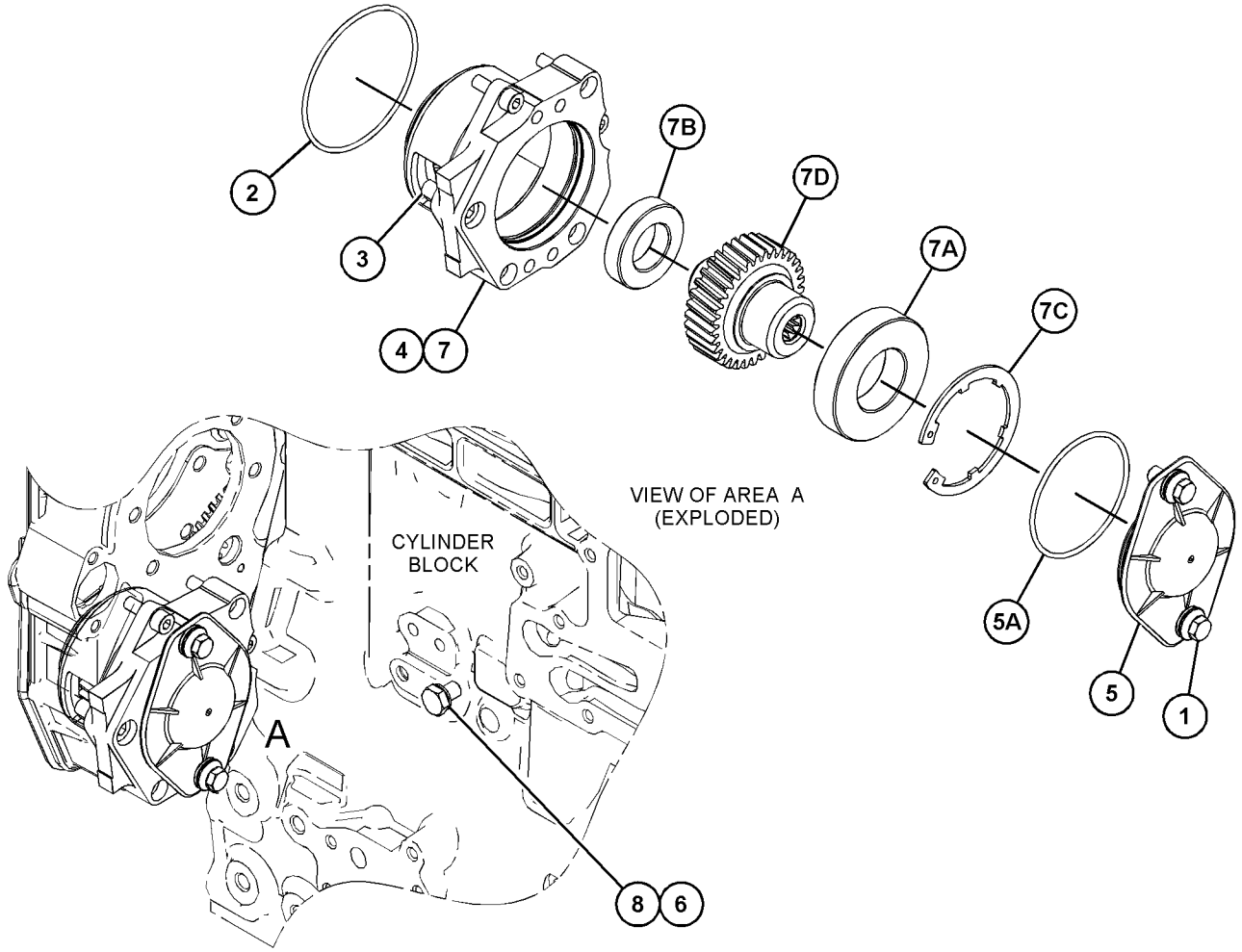

GRAPHIC #1 <END> g03868465

416-1043 DRIVE GP-FAN

PART OF 463-8848, 463-8910 ENGINE AR-PRIMARY

SMCS-1359 **i06692010**

NOTE	REF NO	GRAPHIC REF	PART NUMBER	QTY	PART NAME 1 2 3 4 5 6 (PRODUCT LEVEL)	SEE PAGE
M	1	1	**111-0859**	2	BOLT (M10X1.5X35-MM)	
	2	1	**286-7845**	1	BELT-SERPENTINE (FAN DRIVE)	
	3	1	**371-8298**	1	BRACKET	
	4	1	**377-9255**	1	PULLEY AS (8-GROOVE)	
M		1	**423-7576**	1	BOLT (M10X1.5X50-MM)	

M - METRIC PART

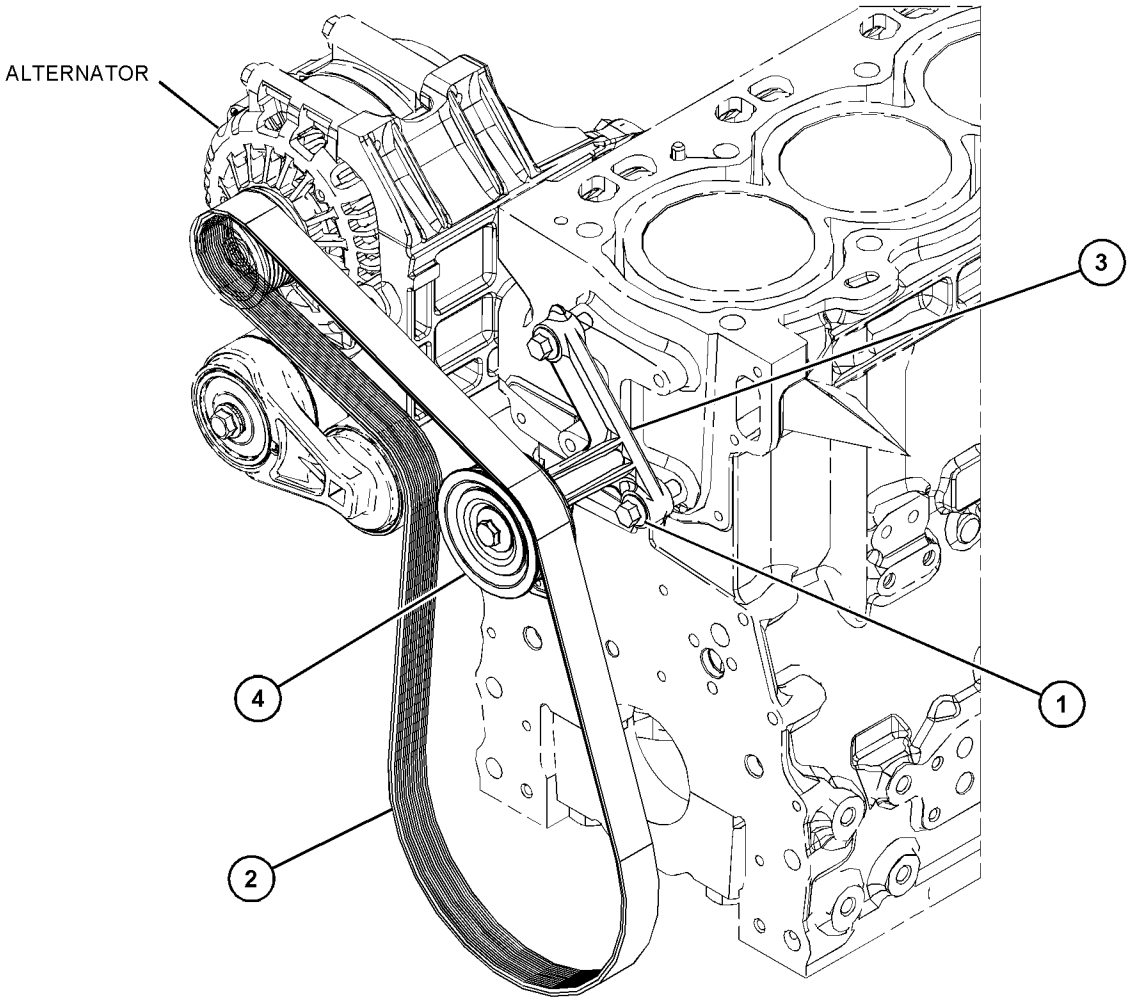

GRAPHIC #1 <END> g06023287

416-1044 DRIVE GP-FAN

PART OF 467-7465, 475-8294, 478-6560, 480-6065, 486-2471, 492-1322, 509-3109, 509-5882, 509-5884, 514-3535, 514-3537, 526-8847, 527-9081 ENGINE AR-PRIMARY

SMCS-1359 **i06089319**

NOTE	REF NO	GRAPHIC REF	PART NUMBER	QTY	PART NAME 1 2 3 4 5 6 (PRODUCT LEVEL)	SEE PAGE
	1	1	**283-4148**	1	PULLEY (8-GROOVE)	
	2	1	**289-8336**	1	HOUSING AS	
	3	1	**285-2040**	1	BELT-SERPENTINE	
M	4	1	**111-0859**	4	BOLT (M10X1.5X35-MM)	

M - METRIC PART

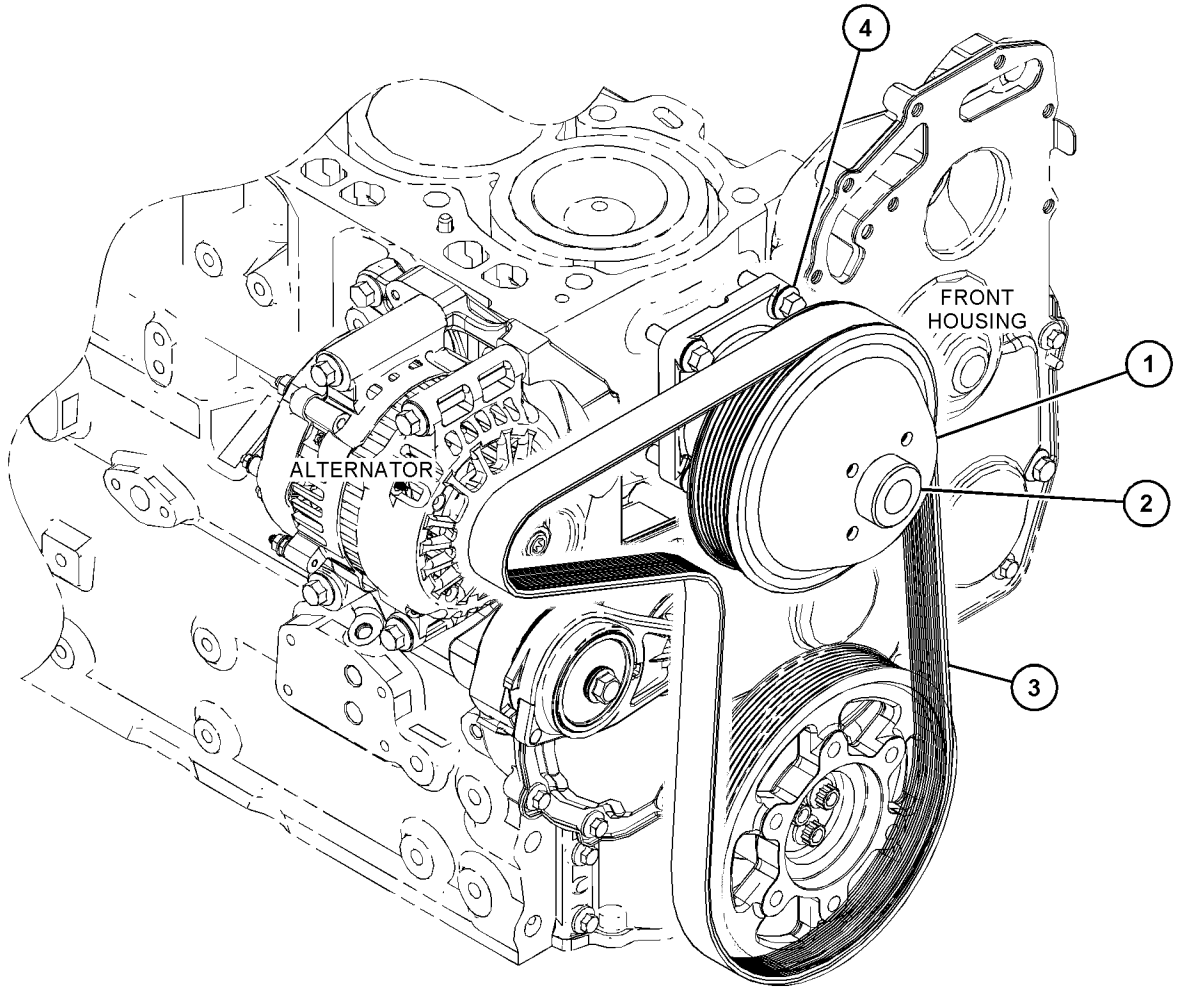

GRAPHIC #1 <END> g03828615

416-1045 DRIVE GP-FAN

PART OF 491-2522 ENGINE AR-PRIMARY

SMCS-1359 **i06548156**

NOTE	REF NO	GRAPHIC REF	PART NUMBER	QTY	PART NAME 1 2 3 4 5 6 (PRODUCT LEVEL)	SEE PAGE
M	1	1	**111-0859**	4	BOLT (M10X1.5X35-MM)	
	2	1	**284-1026**	1	PULLEY (8-GROOVE)	
	3	1	**289-8336**	1	HOUSING AS	
	4	1	**380-2619**	1	BELT-SERPENTINE	

M - METRIC PART

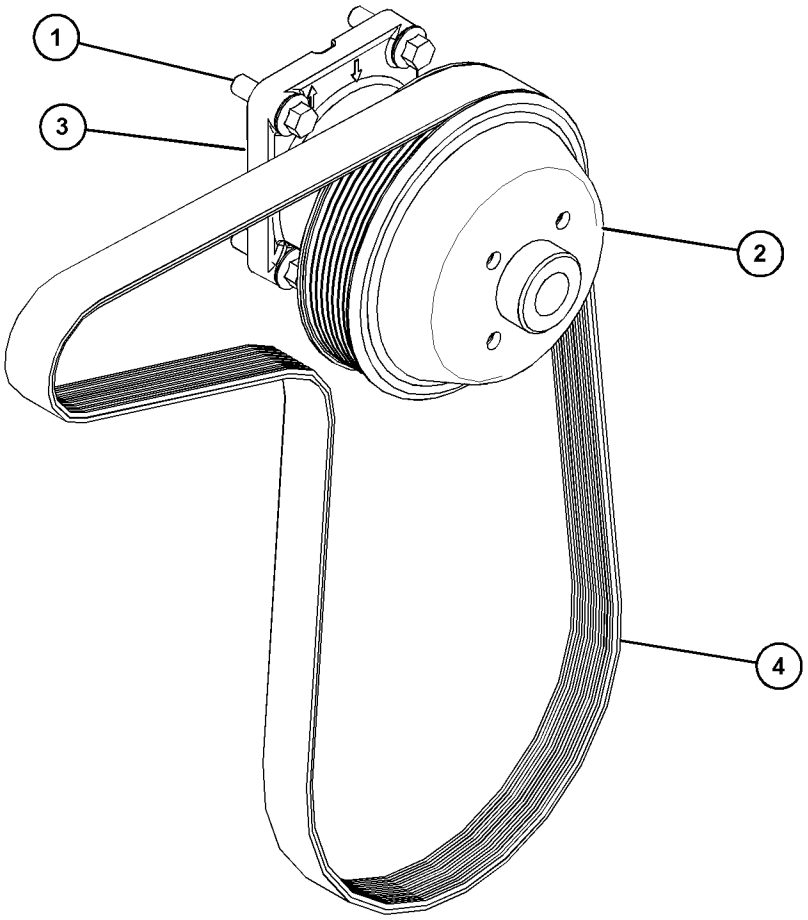

GRAPHIC #1 <END> g06108457

422-7257 DRIVE GP-FAN

SMCS-1359 **i06053052**

NOTE	REF NO	GRAPHIC REF	PART NUMBER	QTY	PART NAME 1 2 3 4 5 6 (PRODUCT LEVEL)	SEE PAGE
	1	1	**289-8336**	1	HOUSING AS	
M	2	1	**111-0859**	4	BOLT (M10X1.5X35-MM)	

M - METRIC PART

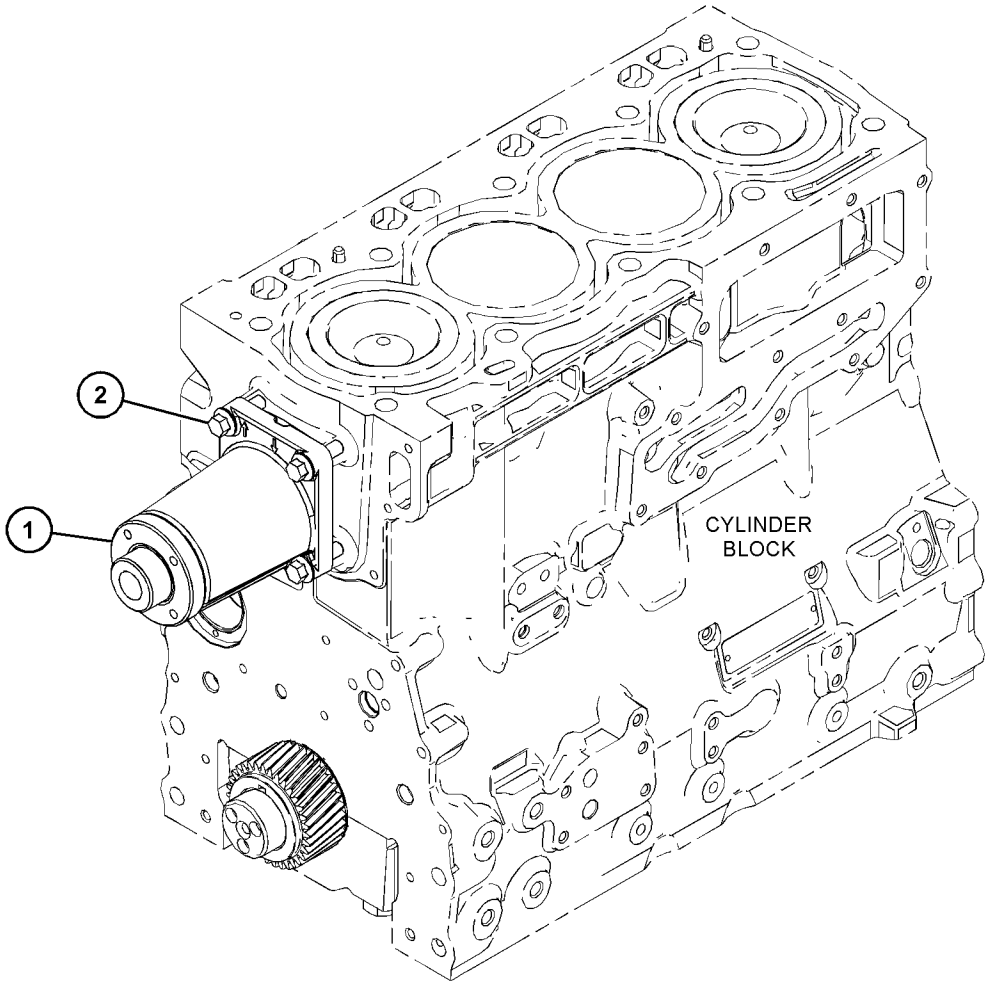

GRAPHIC #1 <END> g03865573

423-1279 DRIVE GP-FAN

SMCS-1359 **i06124354**

NOTE	REF NO	GRAPHIC REF	PART NUMBER	QTY	PART NAME 1 2 3 4 5 6 (PRODUCT LEVEL)	SEE PAGE
M	1	1	**111-0859**	4	BOLT (M10X1.5X35-MM)	
	2	1	**284-1026**	1	PULLEY (8-GROOVE)	
	3	1	**289-8336**	1	HOUSING AS	
	4	1	**371-8058**	1	BELT-SERPENTINE	

M - METRIC PART

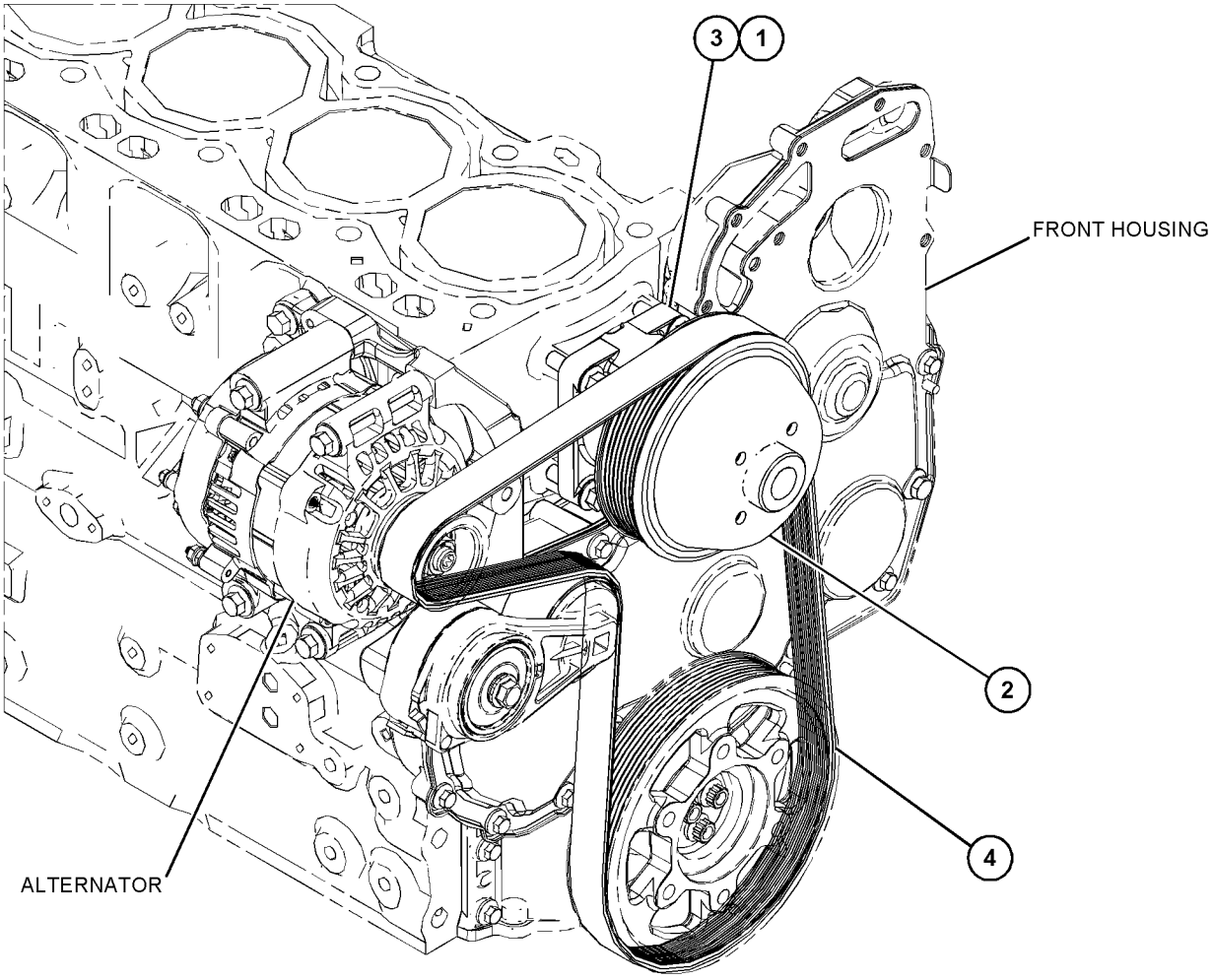

GRAPHIC #1 <END> g06008164

432-1846 DRIVE GP-FAN

PART OF 508-4399, 510-0902 ENGINE AR-PRIMARY

SMCS-1359 **i06053059**

NOTE	REF NO	GRAPHIC REF	PART NUMBER	QTY	PART NAME 1 2 3 4 5 6 (PRODUCT LEVEL)	SEE PAGE
M	1	1	**111-0859**	4	BOLT (M10X1.5X35-MM)	
	2	1	**283-4148**	1	PULLEY (8-GROOVE)	
	3	1	**289-8336**	1	HOUSING AS	
	4	1	**365-2968**	1	BELT-SERPENTINE	

M - METRIC PART

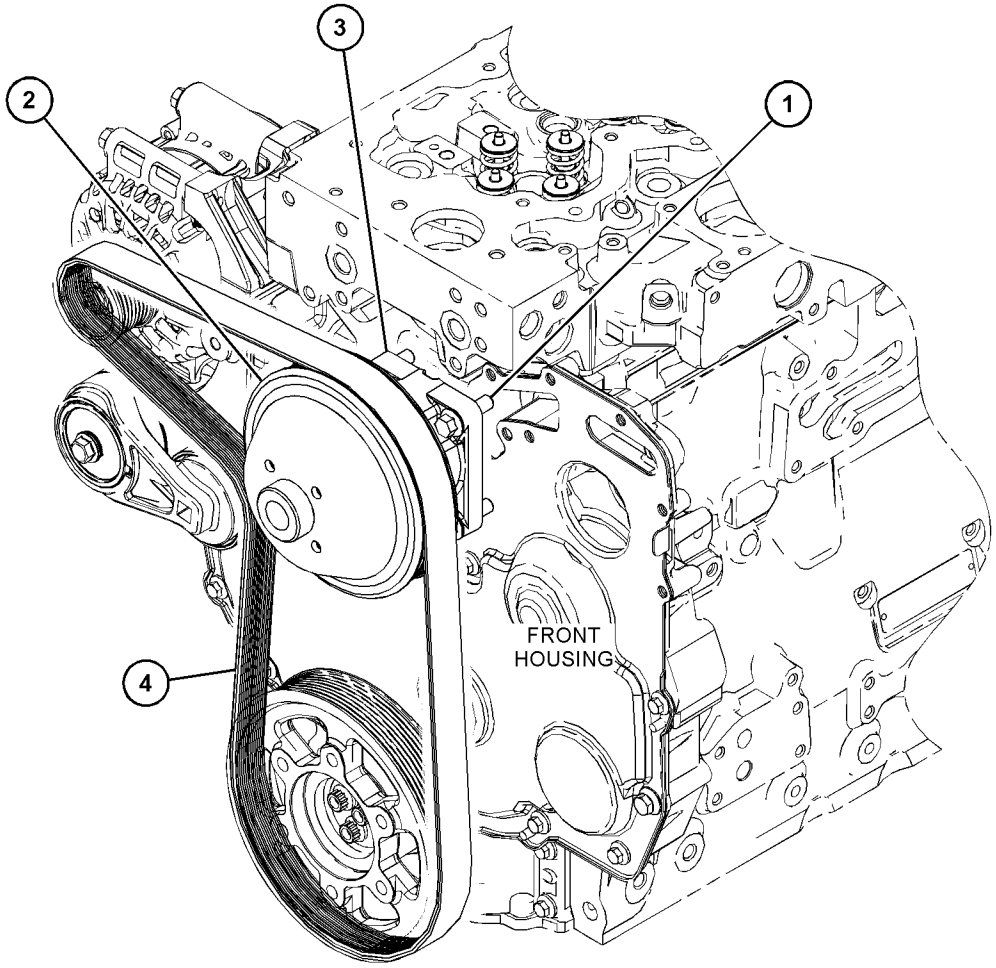

GRAPHIC #1 <END> g03869127

432-1852 DRIVE GP-FAN

SMCS-1359 **i06100965**

NOTE	REF NO	GRAPHIC REF	PART NUMBER	QTY	PART NAME 1 2 3 4 5 6 (PRODUCT LEVEL)	SEE PAGE
M	1	1	**6I-0650**	1	BOLT (M10X1.5X65-MM)	
M	2	1	**111-0859**	5	BOLT (M10X1.5X35-MM)	
	3	1	**261-0428**	1	PULLEY AS-IDLER	
M		1	**307-2242**	1	BOLT (M10X1.5X45-MM)	
	4	1	**284-1026**	1	PULLEY (8-GROOVE)	
	5	1	**382-7381**	1	BELT	
	6	1	**288-2354**	1	BRACKET	
	7	1	**326-1877**	1	HOUSING-FAN DRIVE	

M - METRIC PART

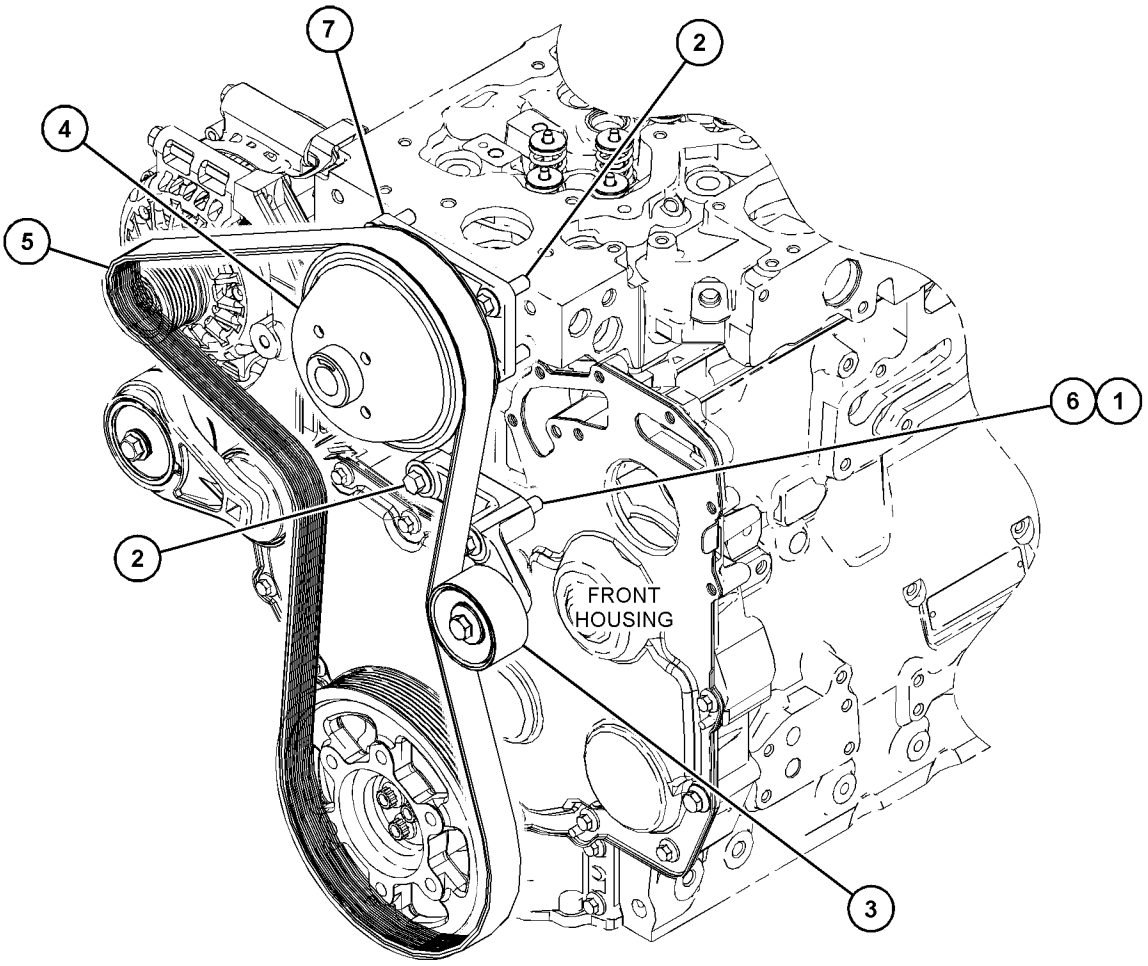

GRAPHIC #1 <END> g03869573

432-1853 DRIVE GP-FAN

262 MM FAN HEIGHT

PART OF 455-9378, 461-3168, 466-3332, 495-3005, 500-8128, 502-7230, 503-4924, 512-9838, 512-9884, 516-9846, 517-0058, 539-3889 ENGINE AR-PRIMARY

SMCS-1359 **i06091160**

NOTE	REF NO	GRAPHIC REF	PART NUMBER	QTY	PART NAME 1 2 3 4 5 6 (PRODUCT LEVEL)	SEE PAGE
M	1	1	**111-0859**	4	BOLT (M10X1.5X35-MM)	
	2	1	**283-4148**	1	PULLEY (8-GROOVE)	
	3	1	**289-8336**	1	HOUSING AS	
	4	1	**359-0191**	1	BELT-SERPENTINE	

M - METRIC PART

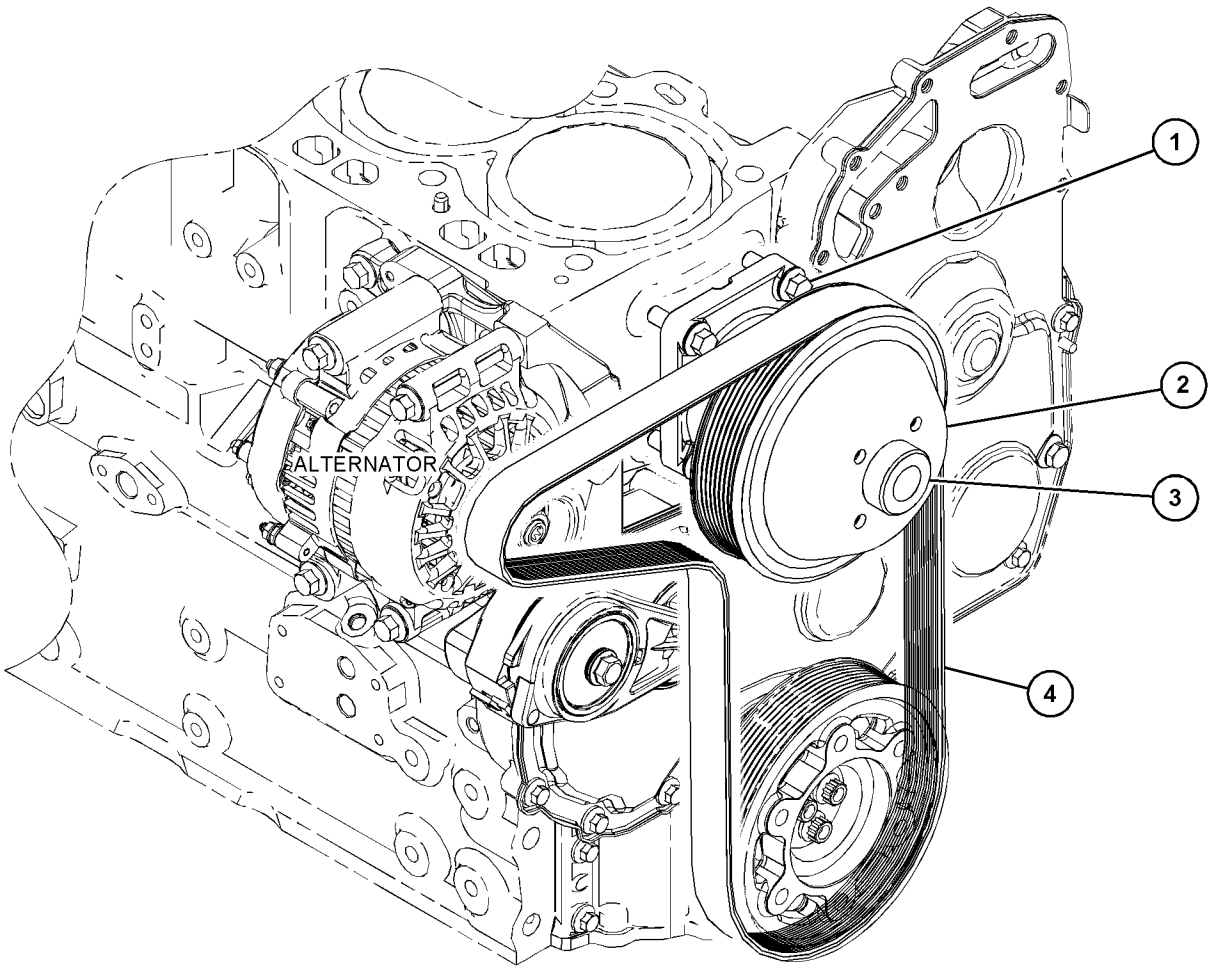

GRAPHIC #1 <END> g03812367

432-1856 DRIVE GP-FAN

PART OF 463-8820, 484-2343, 503-1940, 538-5357 ENGINE AR-PRIMARY

SMCS-1359 **i06715078**

NOTE	REF NO	GRAPHIC REF	PART NUMBER	QTY	PART NAME 1 2 3 4 5 6 (PRODUCT LEVEL)	SEE PAGE
M	1	1	**111-0859**	4	BOLT (M10X1.5X35-MM)	
	2	1	**283-4148**	1	PULLEY (8-GROOVE)	
	3	1	**289-8336**	1	HOUSING AS	
	4	1	**380-2622**	1	BELT-SERPENTINE	

M - METRIC PART

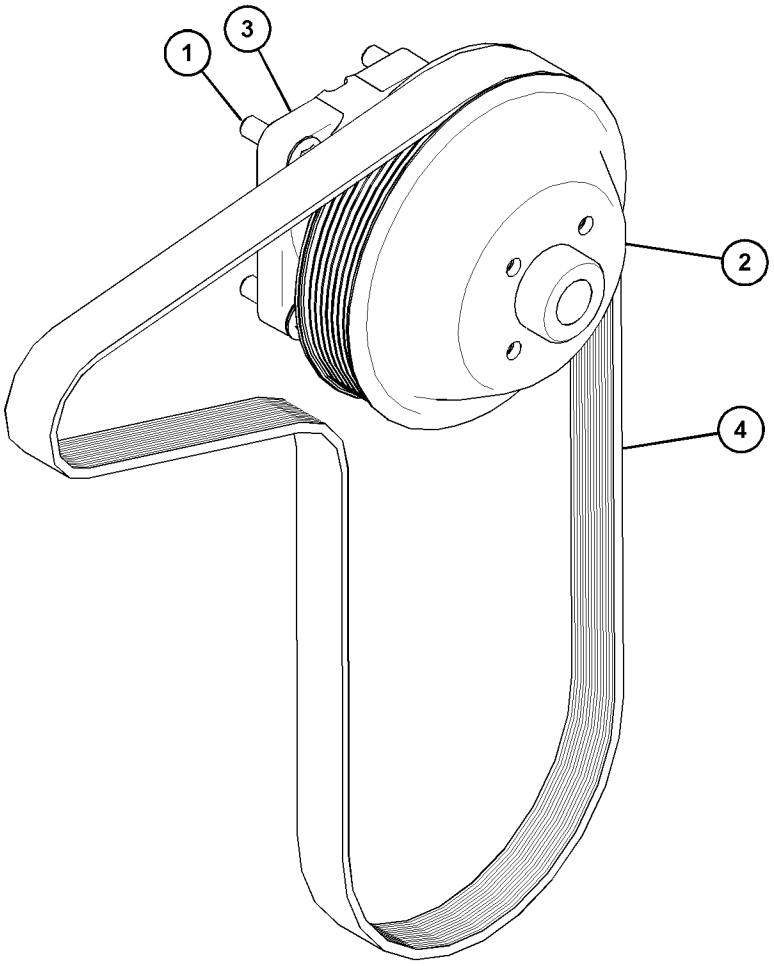

GRAPHIC #1 <END> g06111292

444-2676 DRIVE GP-FAN

PART OF 492-3118, 504-3645 ENGINE AR-PRIMARY

SMCS-1359 **i06705234**

NOTE	REF NO	GRAPHIC REF	PART NUMBER	QTY	PART NAME 1 2 3 4 5 6 (PRODUCT LEVEL)	SEE PAGE
M	1	1	**111-0859**	4	BOLT (M10X1.5X35-MM)	
	2	1	**284-1026**	1	PULLEY (8-GROOVE)	
	3	1	**289-8336**	1	HOUSING AS	

M - METRIC PART

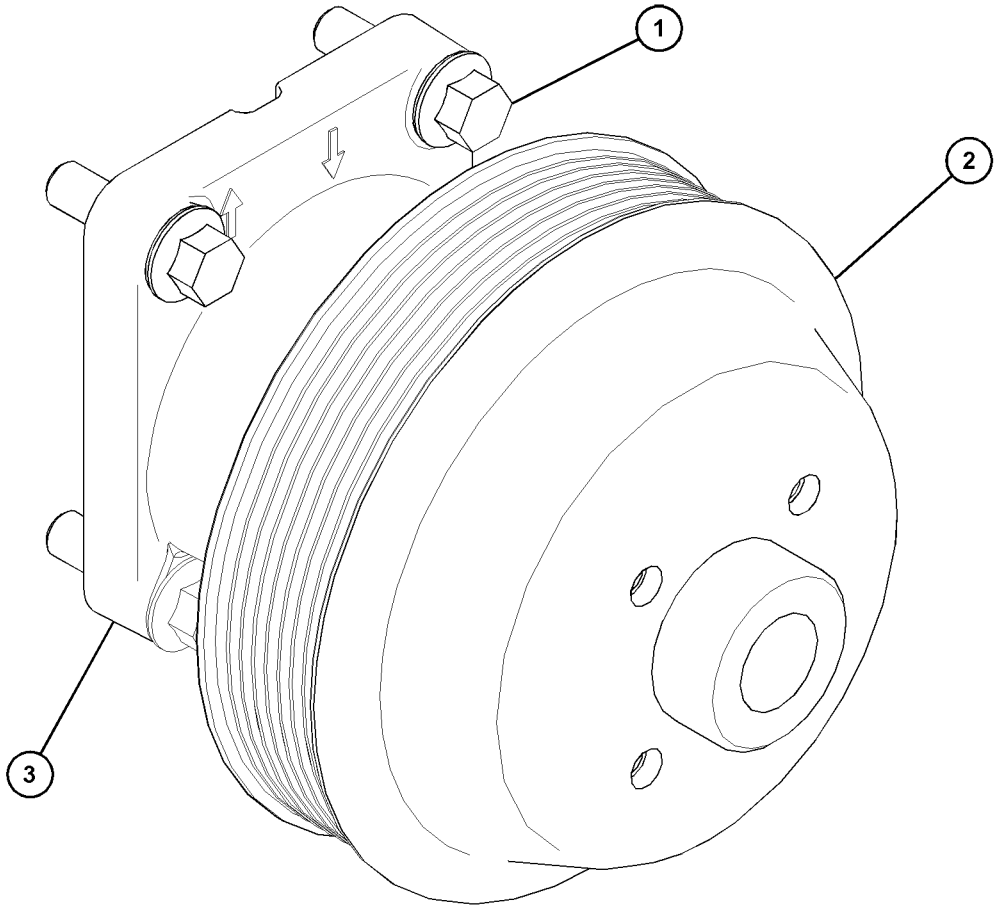

GRAPHIC #1 <END> g06115544

444-2678 DRIVE GP-FAN

PART OF 455-9378 ENGINE AR-PRIMARY

SMCS-1359 **i06621971**

NOTE	REF NO	GRAPHIC REF	PART NUMBER	QTY	PART NAME 1 2 3 4 5 6 (PRODUCT LEVEL)	SEE PAGE
M	1	1	**111-0859**	4	BOLT (M10X1.5X35-MM)	
	2	1	**283-4148**	1	PULLEY (8-GROOVE)	
	3	1	**289-8336**	1	HOUSING AS	

M - METRIC PART

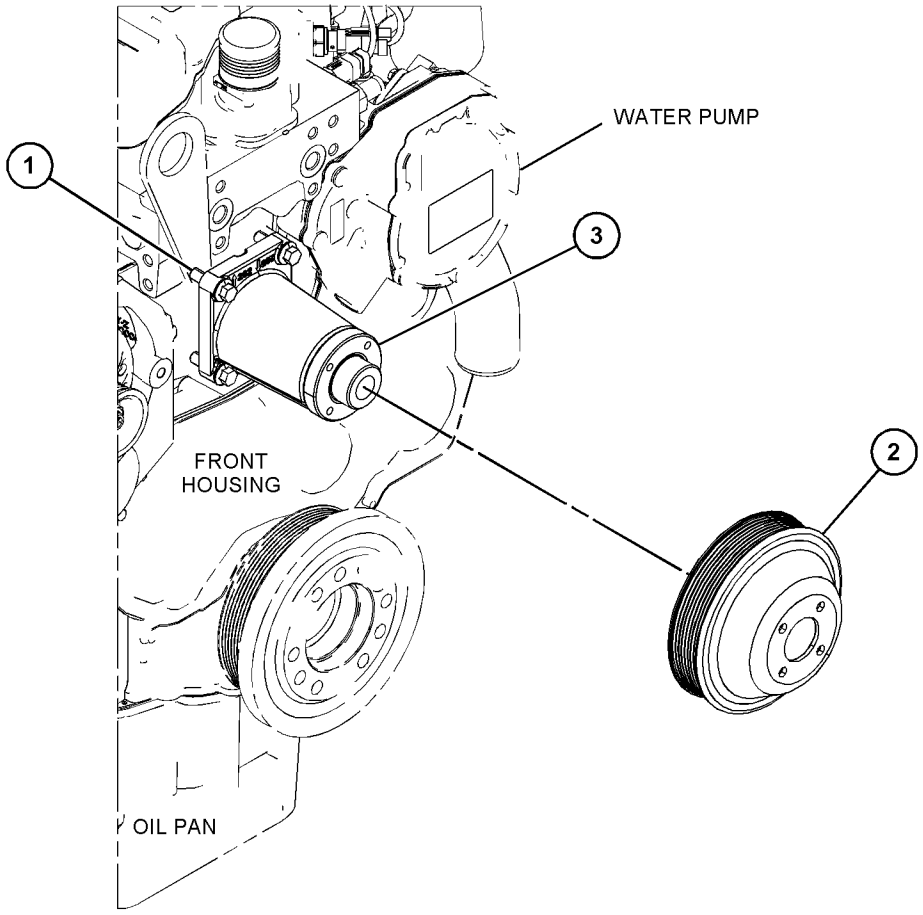

GRAPHIC #1 <END> g06118445

444-9589 DRIVE GP-FAN

PART OF 466-4382, 484-1469 ENGINE AR-PRIMARY

SMCS-1359 **i06887107**

NOTE	REF NO	GRAPHIC REF	PART NUMBER	QTY	PART NAME 1 2 3 4 5 6 (PRODUCT LEVEL)	SEE PAGE
M	1	1	**6I-0650**	1	BOLT (M10X1.5X65-MM)	
M	2	1	**111-0859**	5	BOLT (M10X1.5X35-MM)	
	3	1	**261-0428**	1	PULLEY AS-IDLER	
M		1	**307-2242**	1	BOLT (M10X1.5X45-MM)	
	4	1	**261-4320**	1	PULLEY (8-GROOVE)	
	5	1	**288-2354**	1	BRACKET	
	6	1	**326-1876**	1	HOUSING-FAN DRIVE	

M - METRIC PART

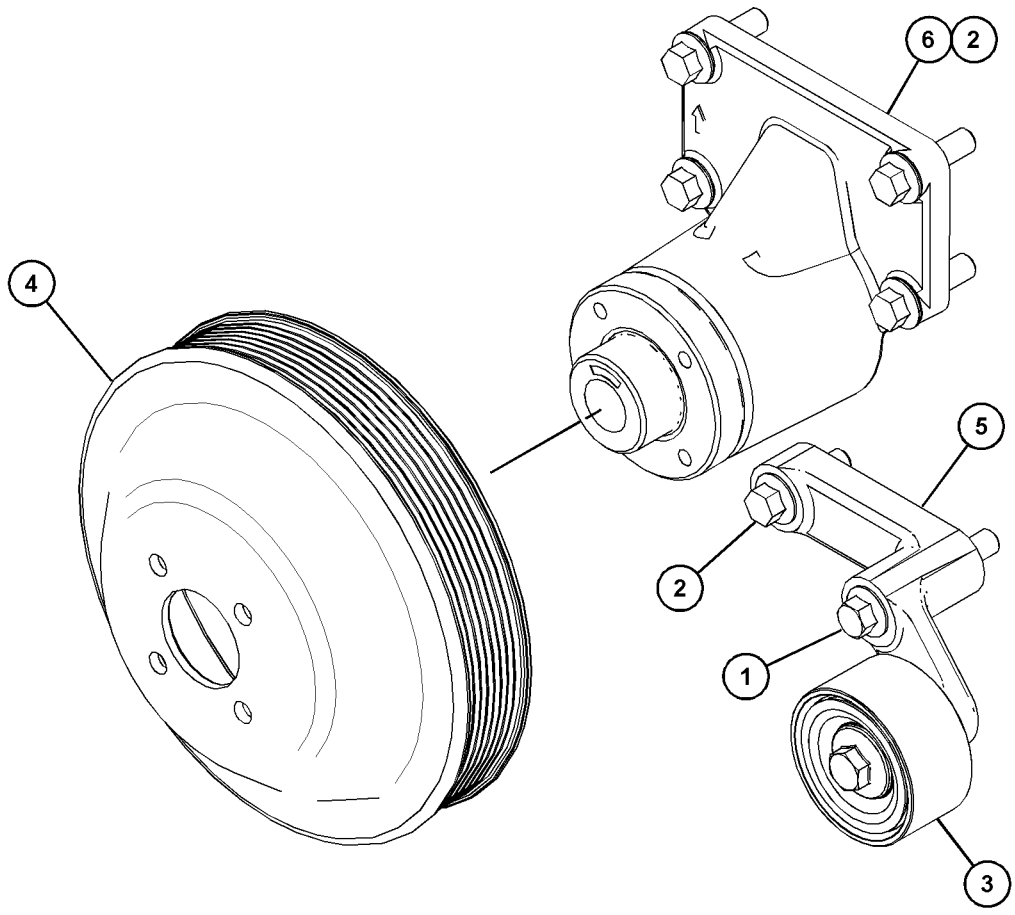

GRAPHIC #1 <END> g06172698

444-9591 DRIVE GP-FAN

PART OF 469-1048, 477-2657, 541-2728 ENGINE AR-PRIMARY

SMCS-1359 **i06810838**

NOTE	REF NO	GRAPHIC REF	PART NUMBER	QTY	PART NAME 1 2 3 4 5 6 (PRODUCT LEVEL)	SEE PAGE
M	1	1	**111-0859**	4	BOLT (M10X1.5X35-MM)	
	2	1	**283-4148**	1	PULLEY (8-GROOVE)	
	3	1	**289-8336**	1	HOUSING AS	

M - METRIC PART

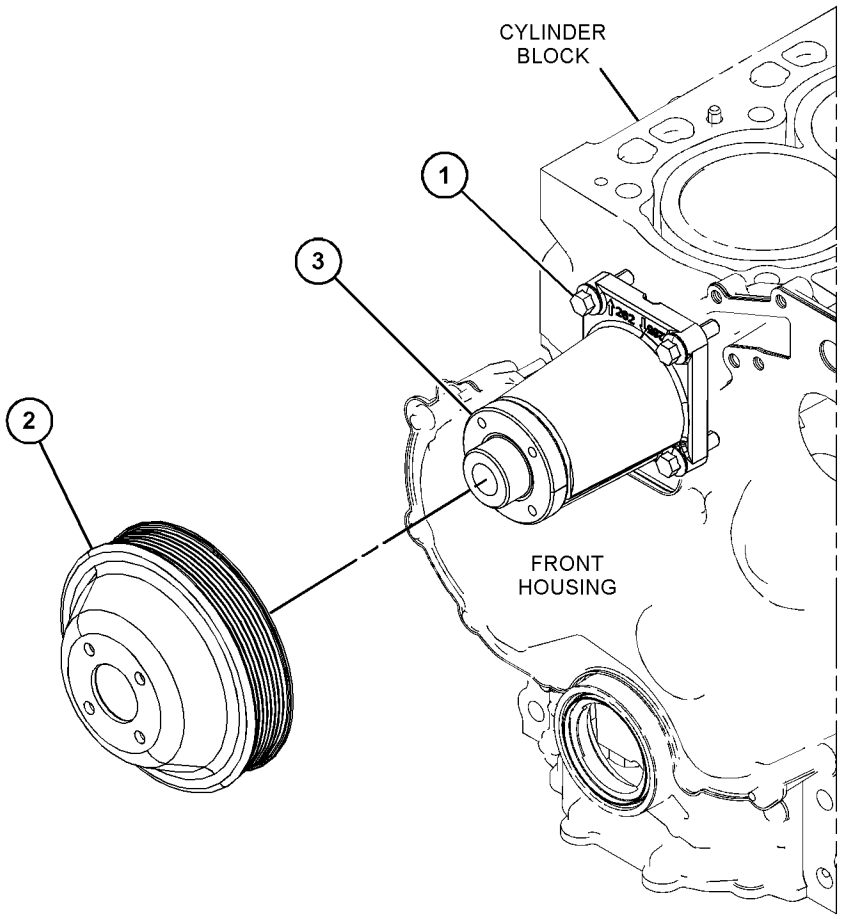

GRAPHIC #1 <END> g06143677

444-9597 DRIVE GP-FAN

SMCS-1359 **i06180159**

NOTE	REF NO	GRAPHIC REF	PART NUMBER	QTY	PART NAME 1 2 3 4 5 6 (PRODUCT LEVEL)	SEE PAGE
M	1	1	**111-0859**	4	BOLT (M10X1.5X35-MM)	
	2	1	**284-1026**	1	PULLEY (8-GROOVE)	
	3	1	**289-8336**	1	HOUSING AS	

M - METRIC PART

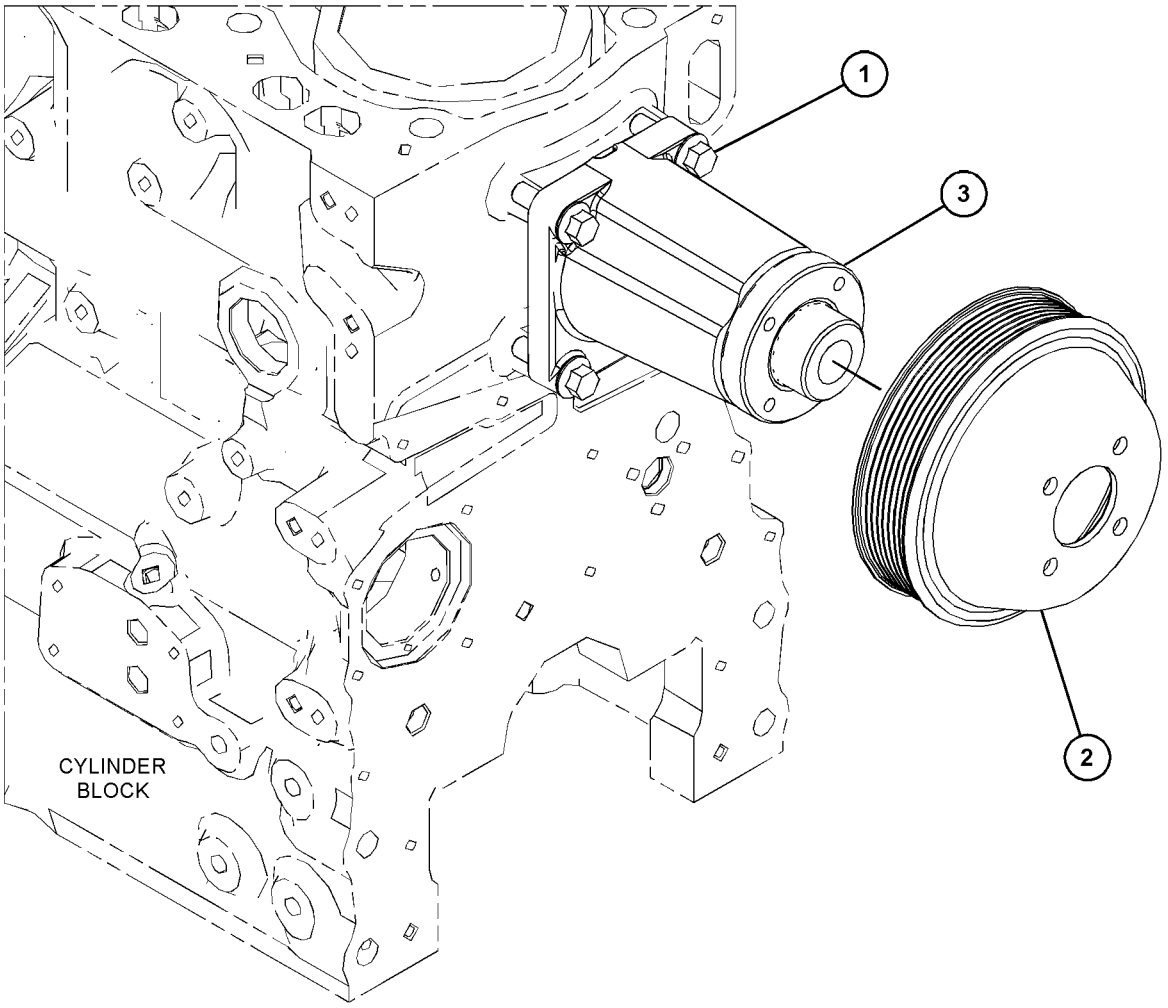

GRAPHIC #1 <END> g06005958

515-7183 DRIVE GP-FAN

SMCS-1359 **i07319943**

NOTE	REF NO	GRAPHIC REF	PART NUMBER	QTY	PART NAME 1 2 3 4 5 6 (PRODUCT LEVEL)	SEE PAGE
M	1	1	**111-0859**	4	BOLT (M10X1.5X35-MM)	
	2	1	**230-8065**	1	HOUSING AS	
	3	1	**268-3642**	1	PULLEY-FAN DRIVE	
	4	1	**276-1408**	1	V-BELT SET (INCLUDES 2-BELTS)	

M - METRIC PART

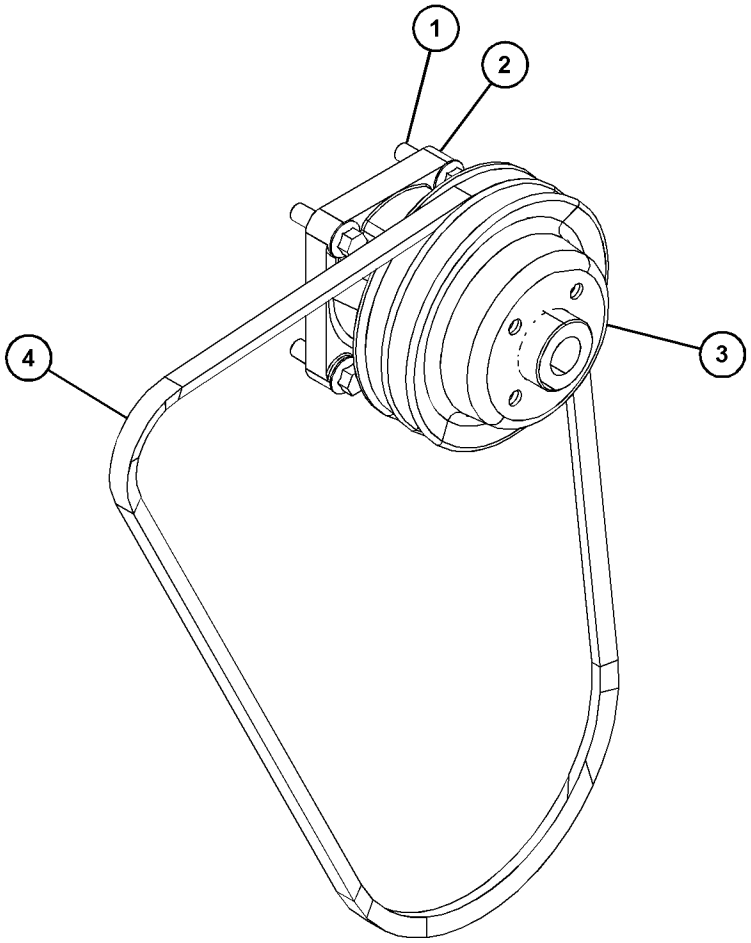

GRAPHIC #1 <END> g06285678

420-0291 EXTENSION GP-FAN

PART OF 455-9378, 461-3168, 463-8820, 466-3332, 467-7465, 475-8294, 478-6560, 480-6065, 486-2471, 492-1322, 495-3005, 500-8128, 502-7230, 503-4924, 509-3109, 509-5884, 512-9838, 512-9884, 514-3535, 514-3537, 516-9846, 517-0058, 526-8847, 539-3889, 541-2728 ENGINE AR-PRIMARY

SMCS-1359 **i06091159**

NOTE	REF NO	GRAPHIC REF	PART NUMBER	QTY	PART NAME 1 2 3 4 5 6 (PRODUCT LEVEL)	SEE PAGE
M	1	1	**6V-9189**	4	LOCKNUT (M8X1.25-THD)	
	2	1	**135-6362**	4	STUD	
	3	1	**135-6363**	1	EXTENSION-FAN	

M - METRIC PART

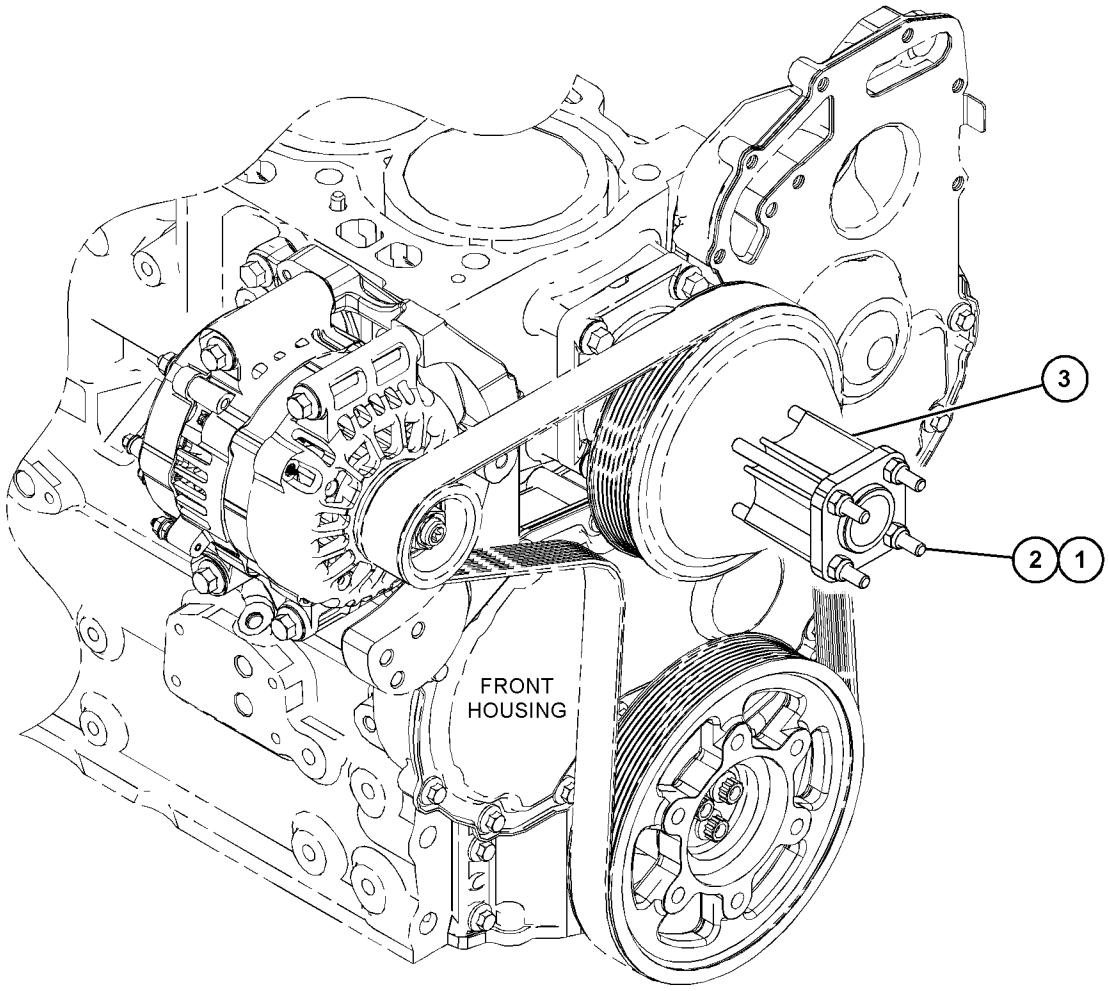

GRAPHIC #1 <END> g03812994

423-1281 EXTENSION GP-FAN

PART OF 466-4382, 484-1469, 491-2522, 508-4399, 510-0902 ENGINE AR-PRIMARY

SMCS-1359 **i06548180**

NOTE	REF NO	GRAPHIC REF	PART NUMBER	QTY	PART NAME 1 2 3 4 5 6 (PRODUCT LEVEL)	SEE PAGE
M	1	1	**6V-9189**	4	LOCKNUT (M8X1.25-THD)	
	2	1	**133-7668**	4	STUD	
	3	1	**133-7669**	1	EXTENSION-FAN	

M - METRIC PART

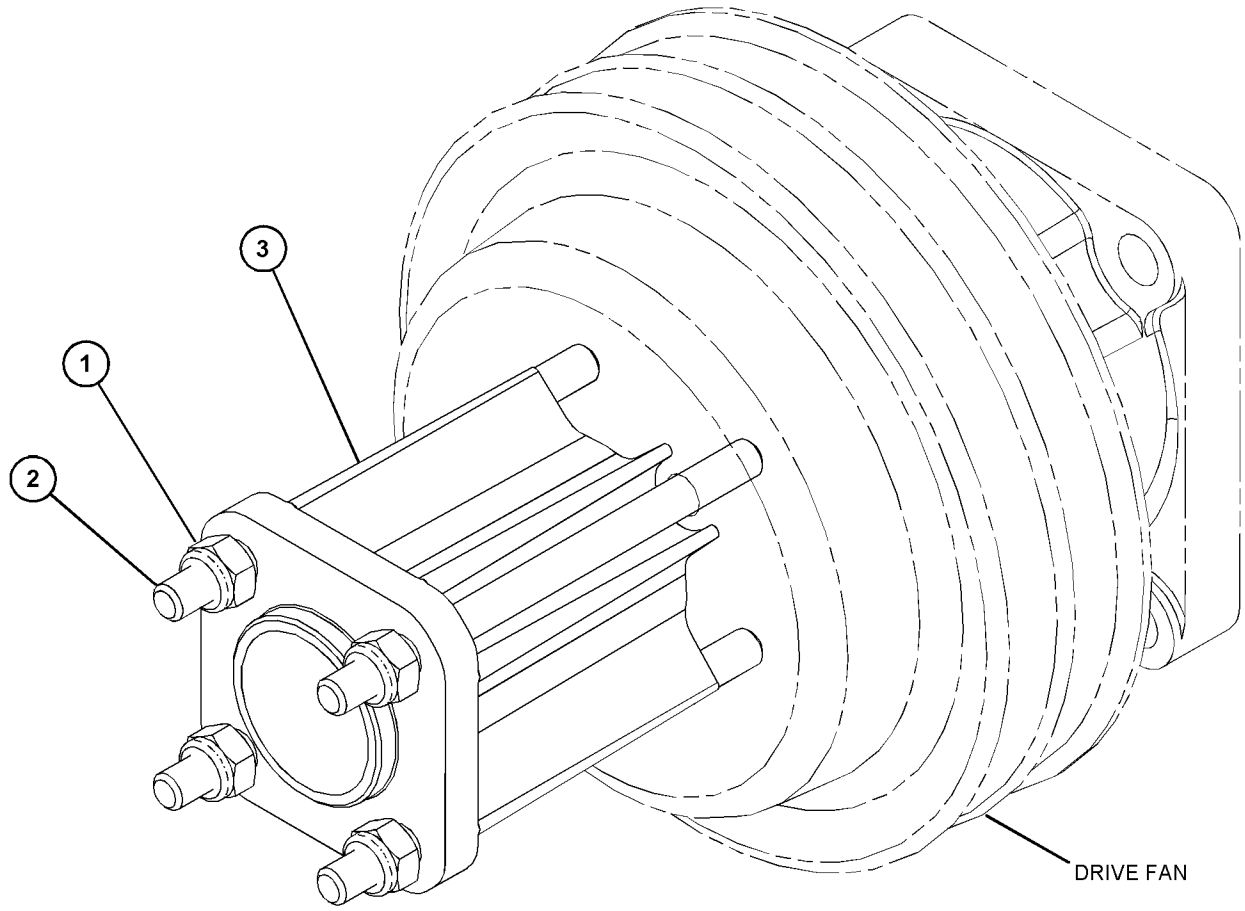

GRAPHIC #1 <END> g06078256

432-4333 EXTENSION GP-FAN

SMCS-1359 **i06180426**

NOTE	REF NO	GRAPHIC REF	PART NUMBER	QTY	PART NAME 1 2 3 4 5 6 (PRODUCT LEVEL)	SEE PAGE
M	1	1	**6V-9189**	4	LOCKNUT (M8X1.25-THD)	
	2	1	**135-5417**	4	STUD	
	3	1	**9Y-1590**	1	EXTENSION-FAN	

M - METRIC PART

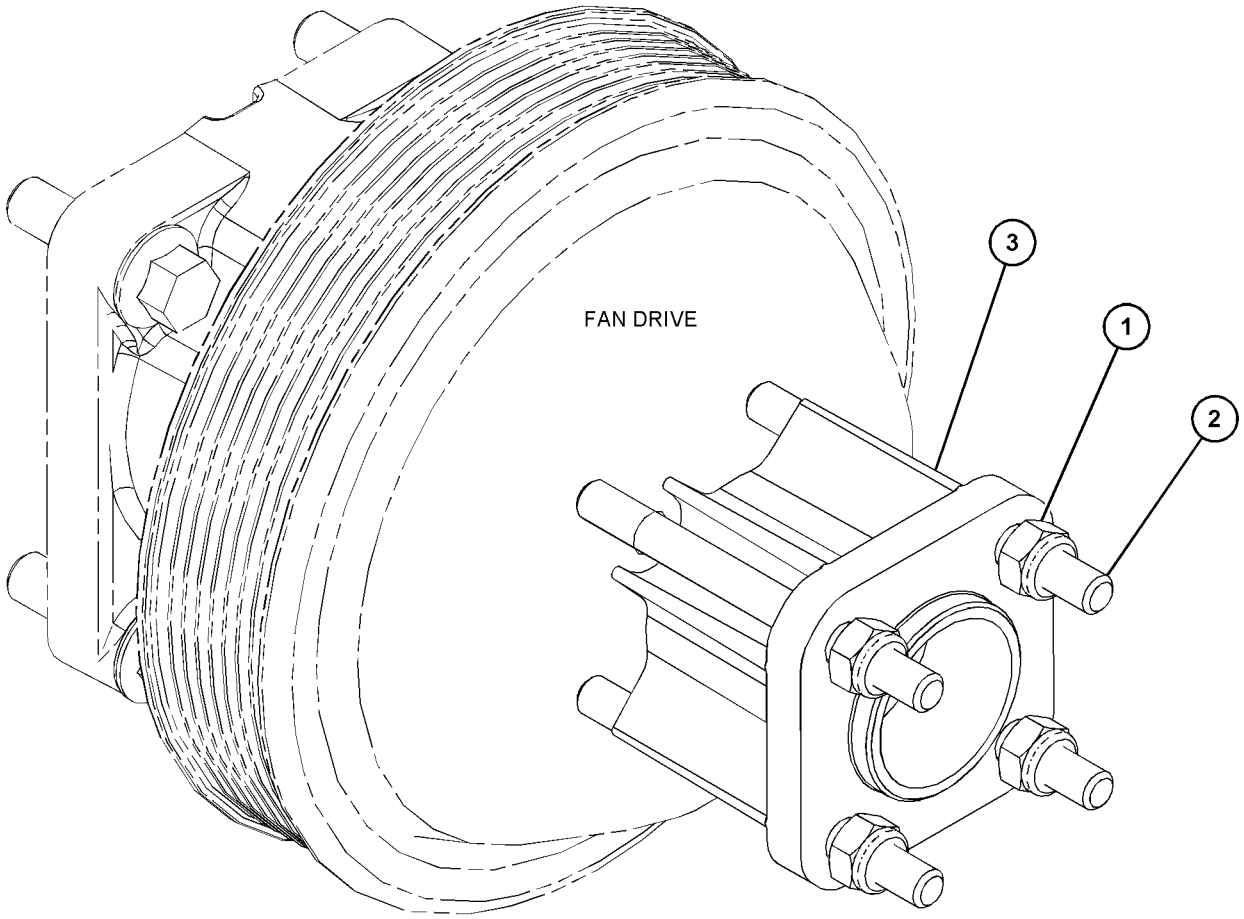

GRAPHIC #1 <END> g06001743

416-1031 FLYWHEEL GP

SMCS-1156 **i06053007**

NOTE	REF NO	GRAPHIC REF	PART NUMBER	QTY	PART NAME 1 2 3 4 5 6 (PRODUCT LEVEL)	SEE PAGE
	1	1	**145-4911**	10	WASHER	
	2	1	**367-3326**	1	FLYWHEEL AS	
	2A	1	**033-7687**	1	RING-STARTING MOTOR (126-TEETH)	
	3	1	**0S-1603**	10	BOLT (1/2-20X1.5-IN)	

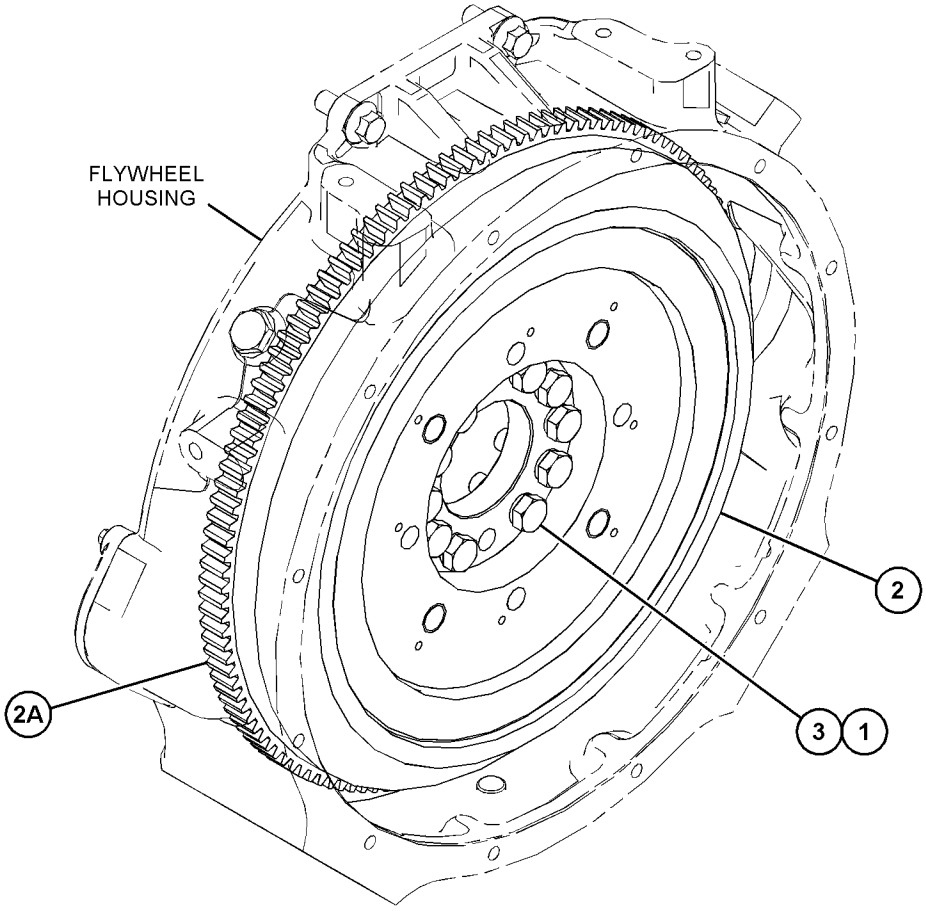

GRAPHIC #1 <END> g03865786

416-1032 FLYWHEEL GP

PART OF 466-3332 ENGINE AR-PRIMARY

SMCS-1156 **i06990126**

NOTE	REF NO	GRAPHIC REF	PART NUMBER	QTY	PART NAME 1 2 3 4 5 6 (PRODUCT LEVEL)	SEE PAGE
	1	1	**458-3400**	1	FLYWHEEL AS	
	1A	1	**033-7687**	1	RING-STARTING MOTOR (126-TEETH)	
	2	1	**145-4911**	6	WASHER	
	3	1	**0S-1603**	6	BOLT (1/2-20X1.5-IN)	

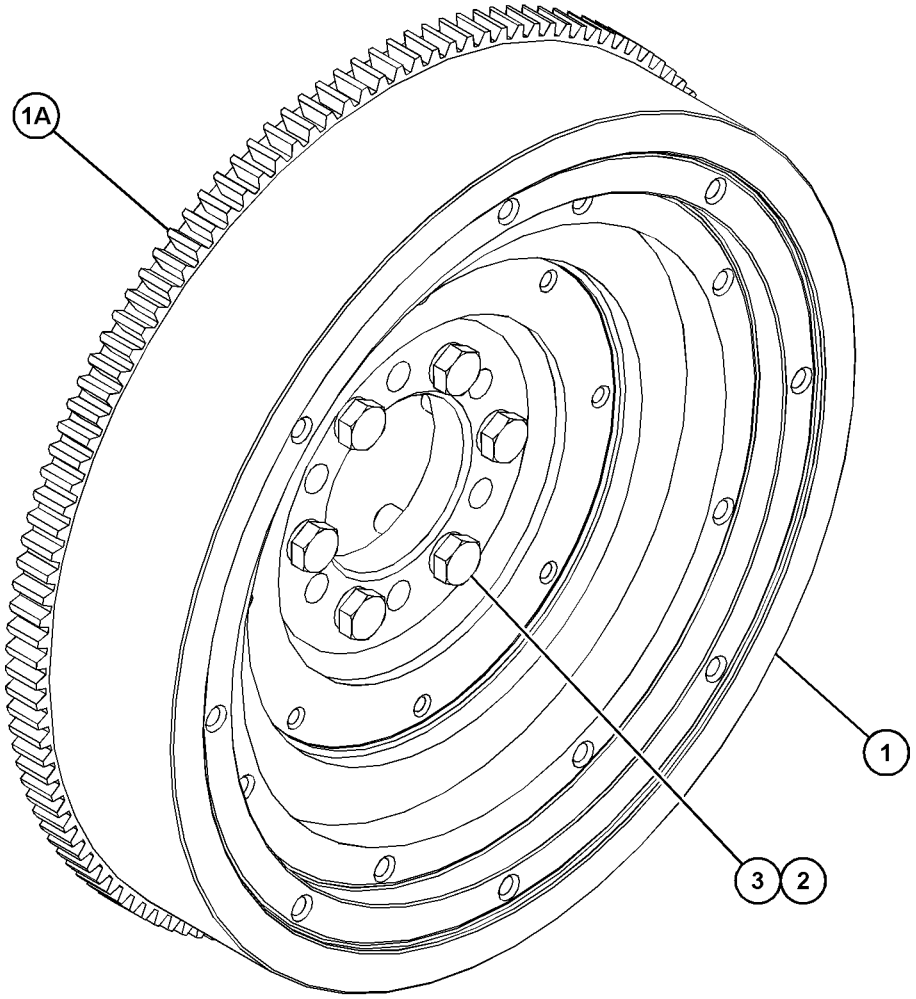

GRAPHIC #1 <END> g06003276

417-3390 FLYWHEEL GP

PART OF 461-3168, 466-4382, 467-7465, 480-6065, 484-1469, 491-2522, 500-8128, 508-4399, 509-3109, 509-5884, 510-0902, 514-3535, 514-3537, 516-9846, 526-8847, 527-9081, 541-2728 ENGINE AR-PRIMARY

SMCS-1156 **i07012594**

NOTE	REF NO	GRAPHIC REF	PART NUMBER	QTY	PART NAME 1 2 3 4 5 6 (PRODUCT LEVEL)	SEE PAGE
	1	1	**458-3400**	1	FLYWHEEL AS	
	1A	1	**033-7687**	1	RING-STARTING MOTOR (126-TEETH)	
	2	1	**0S-1603**	10	BOLT (1/2-20X1.5-IN)	
	3	1	**145-4911**	10	WASHER	

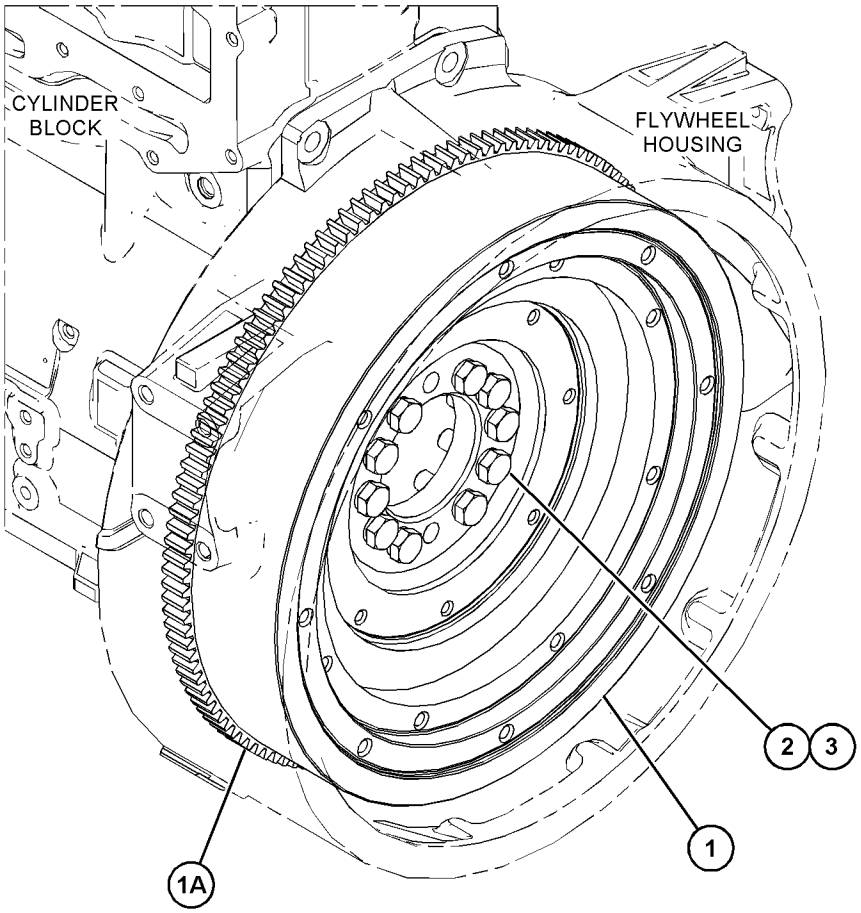

GRAPHIC #1 <END> g03817297

417-3391 FLYWHEEL GP

PART OF 455-9378, 478-6560, 492-1322, 495-3005, 503-4924, 512-9838, 512-9884, 517-0058, 539-3889 ENGINE AR-PRIMARY

SMCS-1156 **i07012600**

NOTE	REF NO	GRAPHIC REF	PART NUMBER	QTY	PART NAME 1 2 3 4 5 6 (PRODUCT LEVEL)	SEE PAGE
	1	1	**145-4911**	10	WASHER	
	2	1	**0S-1603**	10	BOLT (1/2-20X1.5-IN)	
	3	1	**165-6689**	1	FLYWHEEL AS	
	3A	1	**033-7687**	1	RING-STARTING MOTOR (126-TEETH)	

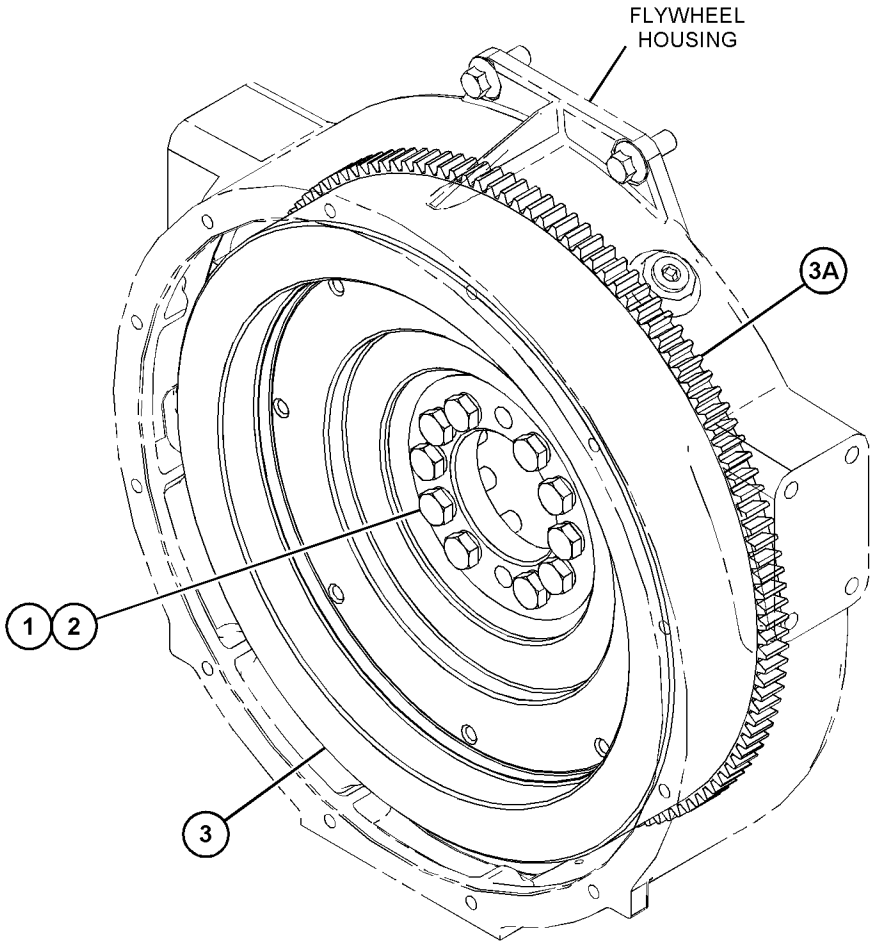

GRAPHIC #1 <END> g03842940

423-1270 FLYWHEEL GP

PART OF 463-8820, 463-8848, 463-8910, 495-9687, 509-5882 ENGINE AR-PRIMARY

SMCS-1156 **i06250005**

NOTE	REF NO	GRAPHIC REF	PART NUMBER	QTY	PART NAME 1 2 3 4 5 6 (PRODUCT LEVEL)	SEE PAGE
	1	1	**145-4911**	10	WASHER	
	2	1	**0S-1603**	10	BOLT (1/2-20X1.5-IN)	
	3	1	**243-4278**	1	FLYWHEEL AS	
		1	**033-7687**	1	RING-STARTING MOTOR (126-TEETH)	

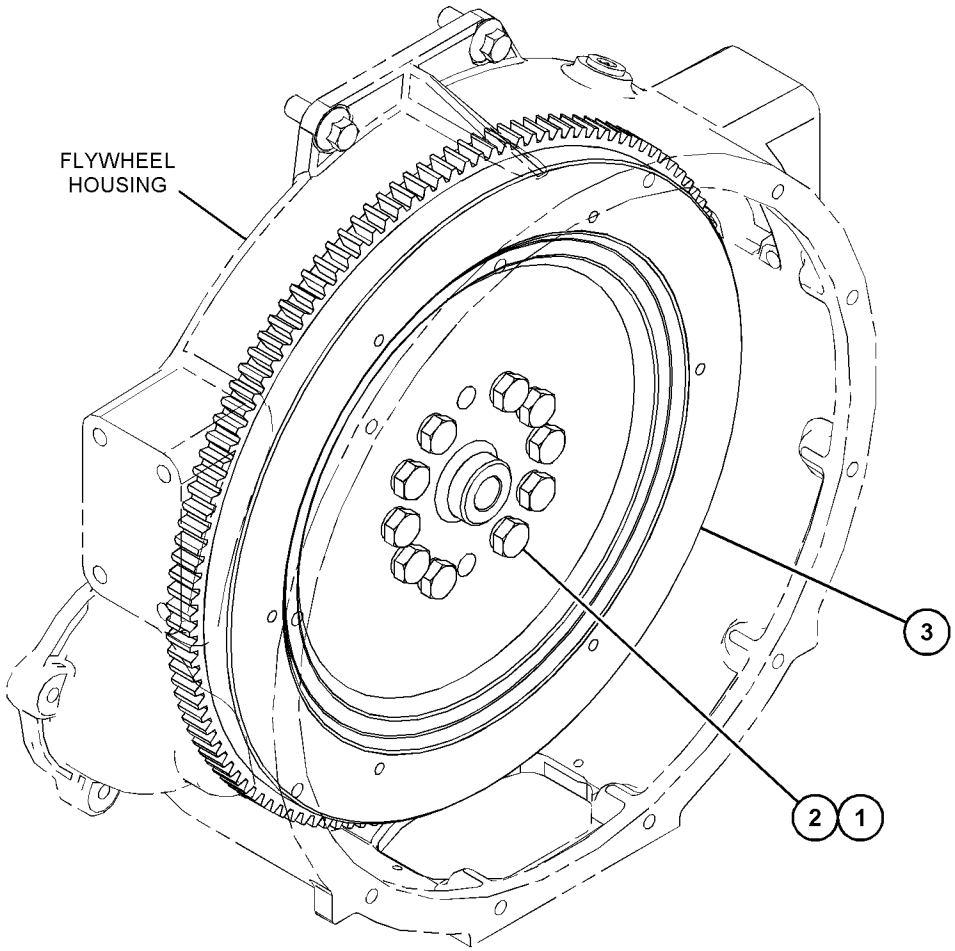

GRAPHIC #1 <END> g03824308

431-7138 FLYWHEEL GP

SMCS-1156 **i06124312**

NOTE	REF NO	GRAPHIC REF	PART NUMBER	QTY	PART NAME 1 2 3 4 5 6 (PRODUCT LEVEL)	SEE PAGE
	1	1	**114-2405**	1	FLYWHEEL AS	
	1A	1	**033-7687**	1	RING-STARTING MOTOR (126-TEETH)	
	2	1	**0S-1603**	6	BOLT (1/2-20X1.5-IN)	
	3	1	**145-4911**	6	WASHER	

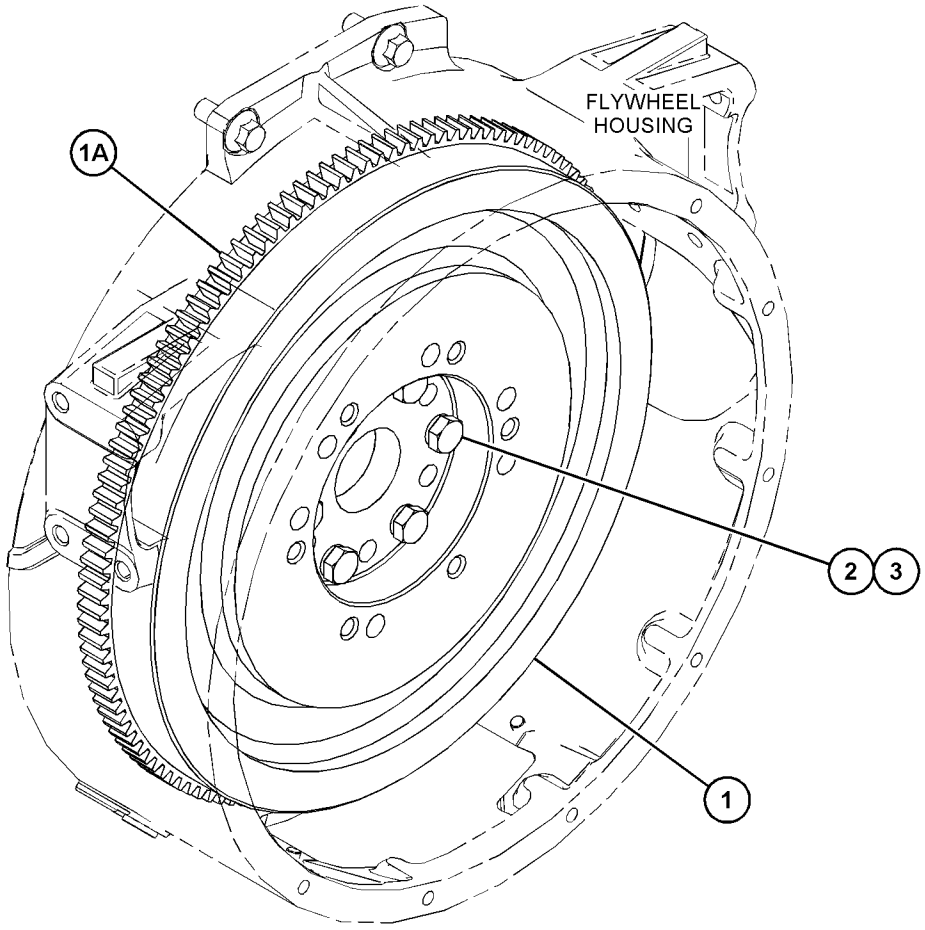

GRAPHIC #1 <END> g03868388

431-7141 FLYWHEEL GP

PART OF 469-1048, 475-8294, 477-2657, 484-2343, 486-2471, 502-7230, 503-1940, 538-5357 ENGINE AR-PRIMARY

SMCS-1156 **i06990123**

NOTE	REF NO	GRAPHIC REF	PART NUMBER	QTY	PART NAME 1 2 3 4 5 6 (PRODUCT LEVEL)	SEE PAGE
	1	1	**458-3400**	1	FLYWHEEL AS	
	1A	1	**033-7687**	1	RING-STARTING MOTOR (126-TEETH)	
	2	1	**9V-3811**	4	BOLT-12 POINT HEAD (1/2-20X2.25-IN)	
	3	1	**0S-1603**	6	BOLT (1/2-20X1.5-IN)	
	4	1	**145-4911**	6	WASHER	
	5	1	**149-5599**	1	HOUSING	

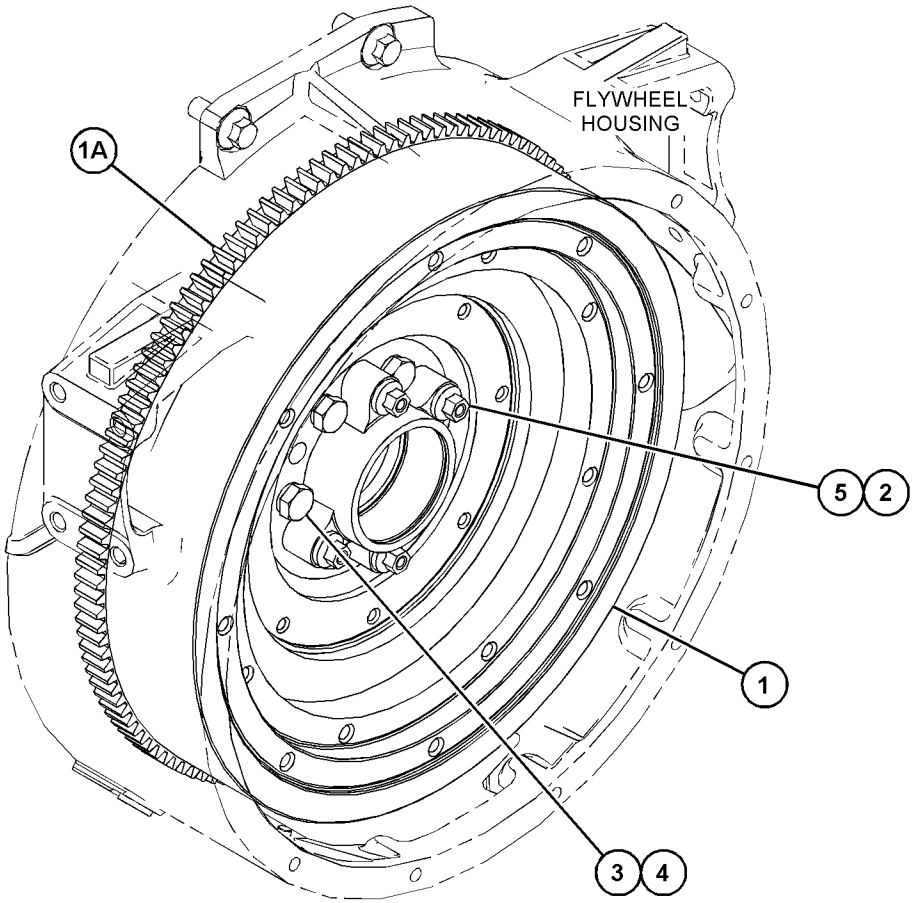

GRAPHIC #1 <END> g03868407

433-3370 FLYWHEEL GP

SMCS-1156 **i06810553**

NOTE	REF NO	GRAPHIC REF	PART NUMBER	QTY	PART NAME 1 2 3 4 5 6 (PRODUCT LEVEL)	SEE PAGE
	1	1	**145-4911**	6	WASHER	
	2	1	**0S-1603**	1	BOLT (1/2-20X1.5-IN)	
	3	1	**243-4278**	1	FLYWHEEL AS	
		1	**033-7687**	1	RING-STARTING MOTOR (126-TEETH)	

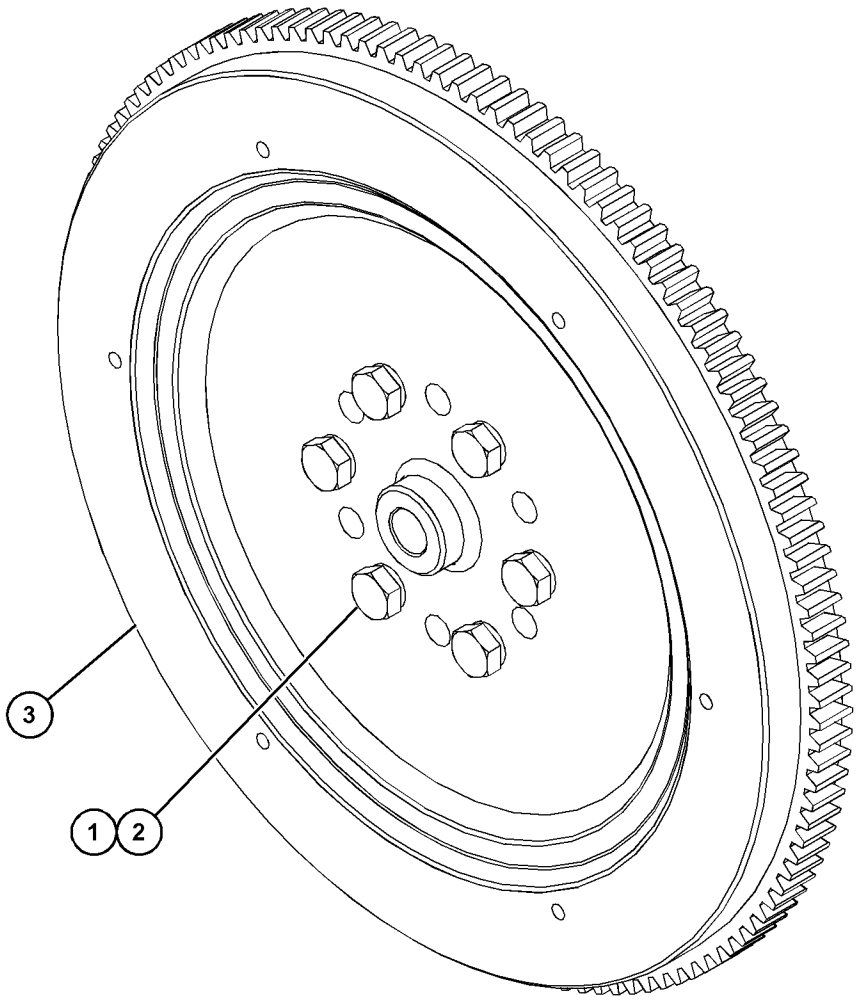

GRAPHIC #1 <END> g03890209

472-2188 FLYWHEEL GP

SMCS-1156 **i06180445**

NOTE	REF NO	GRAPHIC REF	PART NUMBER	QTY	PART NAME 1 2 3 4 5 6 (PRODUCT LEVEL)	SEE PAGE
	1	1	**145-4911**	6	WASHER	
	2	1	**397-3891**	1	FLYWHEEL AS	
	2A	1	**186-2374**	1	GEAR-RING (122-TEETH)	
	3	1	**0S-1603**	6	BOLT (1/2-20X1.5-IN)	

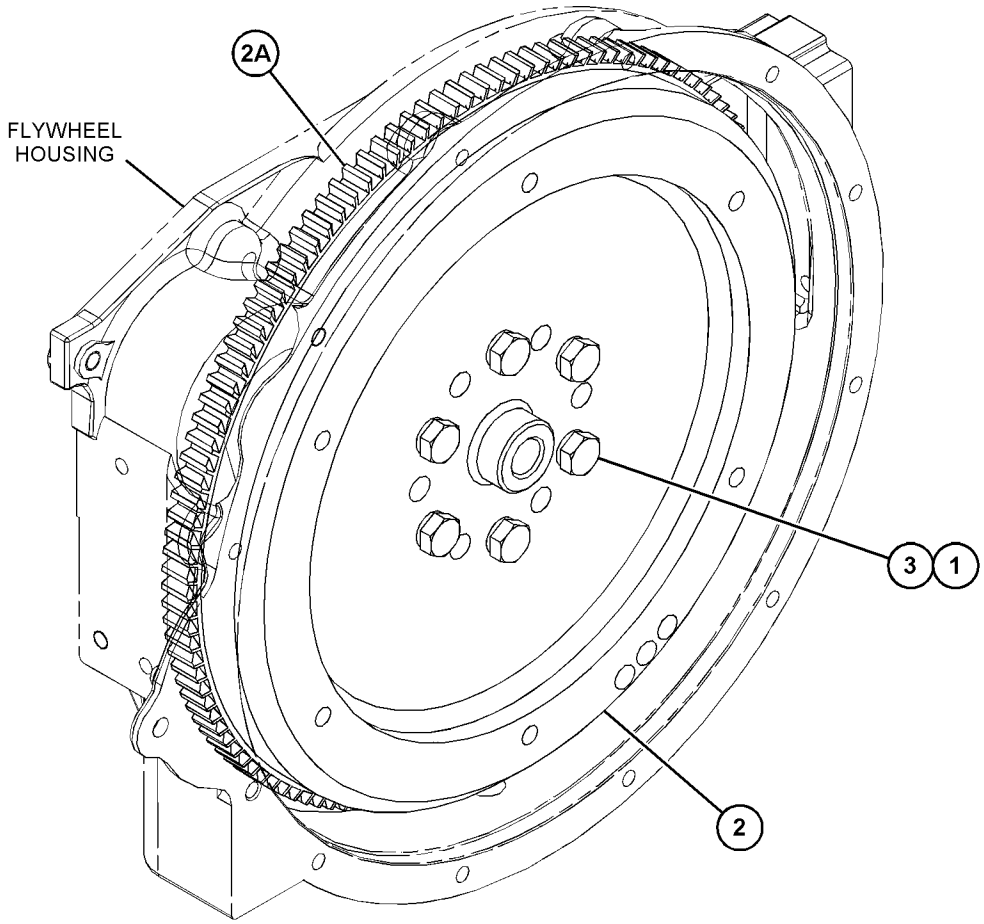

GRAPHIC #1 <END> g03873125

416-1029 HOUSING GP-FLYWHEEL

PART OF 455-9378, 478-6560, 492-1322, 495-3005, 495-9687, 503-4924, 512-9838, 512-9884, 517-0058, 539-3889 ENGINE AR-PRIMARY

SMCS-1157 **i06271386**

NOTE	REF NO	GRAPHIC REF	PART NUMBER	QTY	PART NAME 1 2 3 4 5 6 (PRODUCT LEVEL)	SEE PAGE
M	1	1	**6I-0423**	2	BOLT (M12X1.75X30-MM)	
M	2	1	**6I-0631**	2	BOLT (M6X1X12-MM)	
M	3	1	**6I-4200**	3	BOLT (M10X1.5X16-MM)	
	4	1	**102-1957**	1	PLATE	
M	5	1	**121-0883**	6	BOLT (M10X1.5X30-MM)	
	6	1	**149-9176**	1	HOUSING-FLYWHEEL	
	7	1	**199-3108**	1	PLUG	
	8	1	**199-3109**	1	PLUG	
	9	1	**287-8597**	2	DOWEL	
	10	1	**375-9272**	1	PLUG	
	11	1	**393-4006**	1	GASKET	

M - METRIC PART

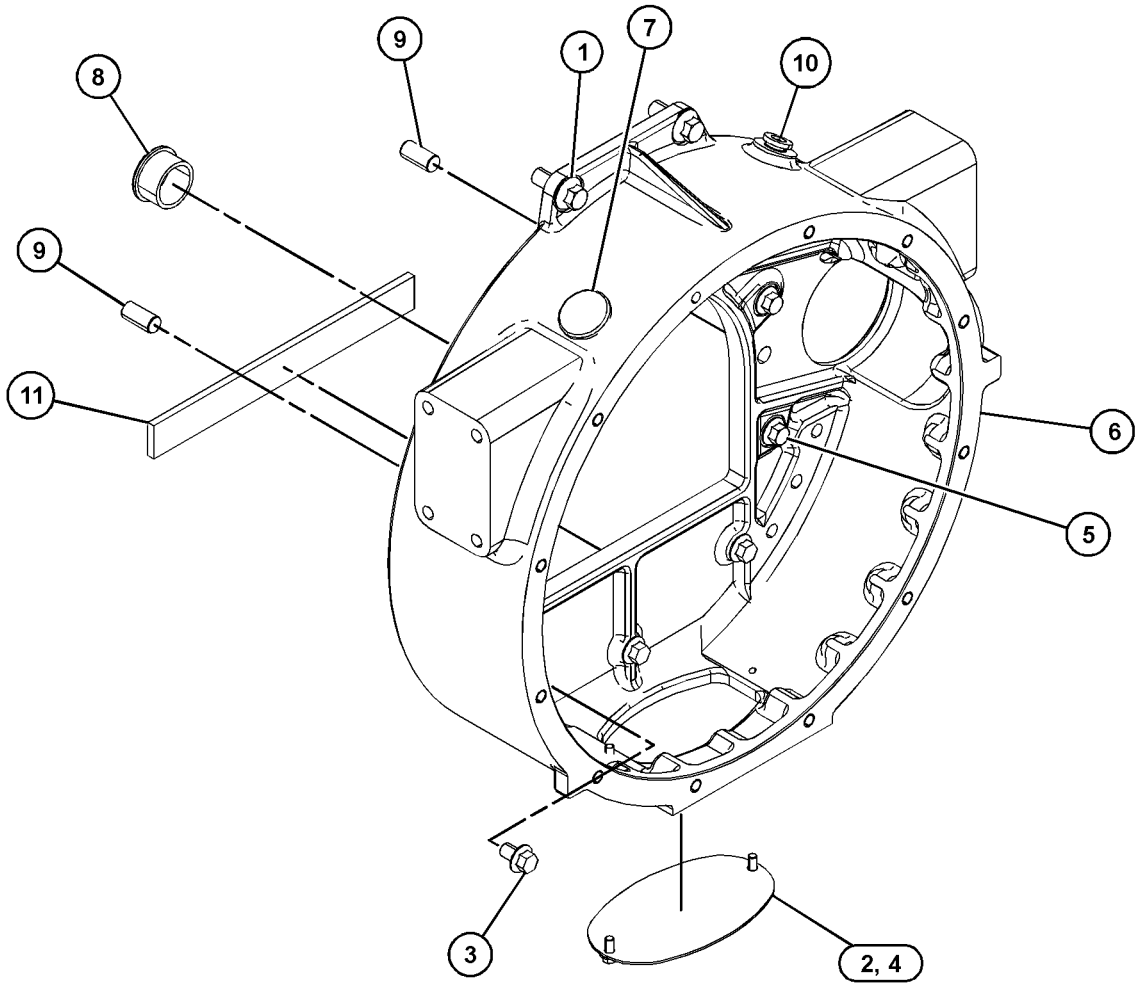

GRAPHIC #1 <END> g03840543

416-1030 HOUSING GP-FLYWHEEL

PART OF 509-5882 ENGINE AR-PRIMARY

SMCS-1157 **i06704858**

NOTE	REF NO	GRAPHIC REF	PART NUMBER	QTY	PART NAME 1 2 3 4 5 6 (PRODUCT LEVEL)	SEE PAGE
M	1	1	**6I-0423**	2	BOLT (M12X1.75X30-MM)	
M	2	1	**6I-0631**	2	BOLT (M6X1X12-MM)	
M	3	1	**6I-4200**	3	BOLT (M10X1.5X16-MM)	
	4	1	**102-1957**	1	PLATE	
M	5	1	**121-0883**	6	BOLT (M10X1.5X30-MM)	
	6	1	**199-3109**	1	PLUG	
	7	1	**287-8597**	2	DOWEL	
	8	1	**324-2981**	1	HOUSING-FLYWHEEL	
	9	1	**375-9272**	1	PLUG	
	10	1	**393-4006**	1	GASKET	

M - METRIC PART

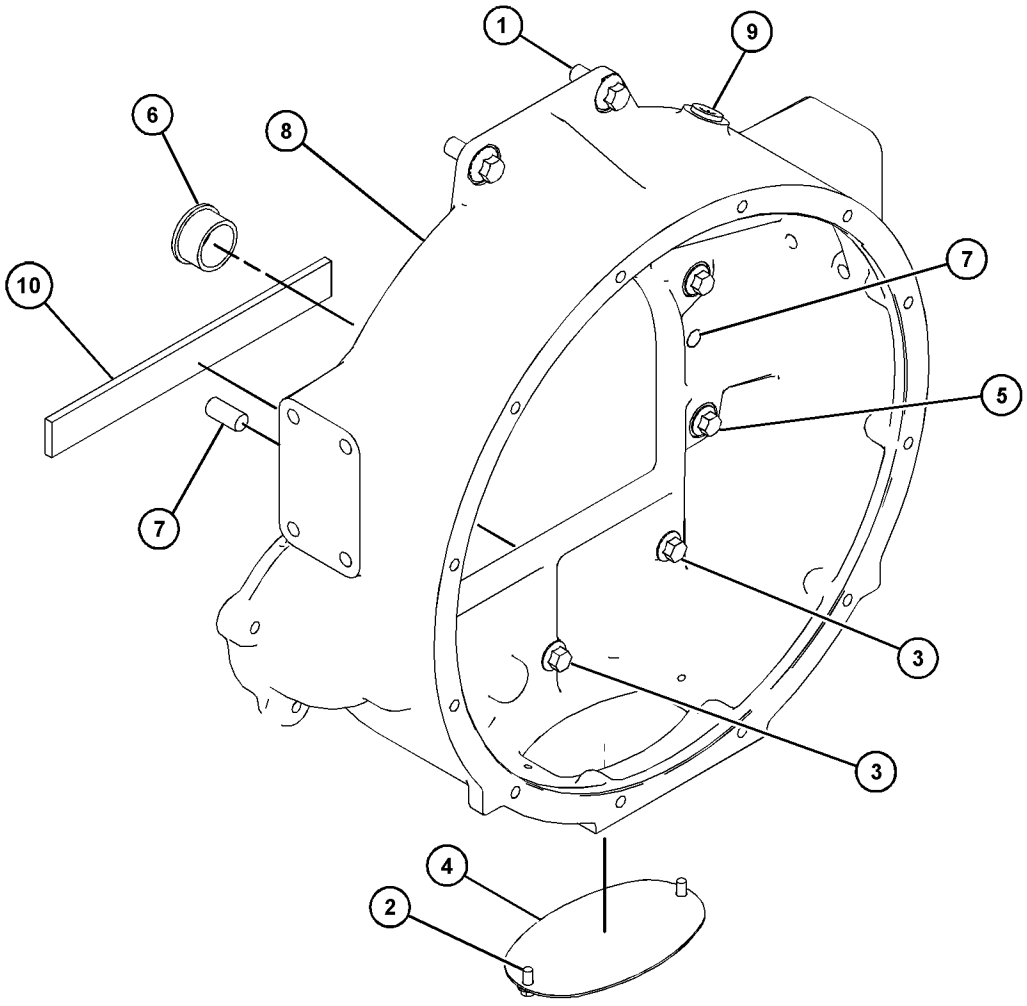

GRAPHIC #1 <END> g03852179

418-7473 HOUSING GP-FLYWHEEL

PART OF 461-3168, 475-8294, 480-6065, 486-2471, 509-3109, 509-5884, 516-9846, 526-8847, 527-9081 ENGINE AR-PRIMARY

SMCS-1157 **i06053041**

NOTE	REF NO	GRAPHIC REF	PART NUMBER	QTY	PART NAME 1 2 3 4 5 6 (PRODUCT LEVEL)	SEE PAGE
M	1	1	**6I-0423**	2	BOLT (M12X1.75X30-MM)	
M	2	1	**6I-0593**	3	BOLT (M10X1.5X30-MM)	
	3	1	**7W-1176**	1	PLATE-COVER	
M	4	1	**114-4363**	2	BOLT (M8X1.25X12-MM)	
M	5	1	**121-0883**	6	BOLT (M10X1.5X30-MM)	
	6	1	**199-3109**	1	PLUG	
	7	1	**287-8597**	2	DOWEL	
	8	1	**375-9272**	2	PLUG	
	9	1	**220-8632**	1	HOUSING-FLYWHEEL	

M - METRIC PART

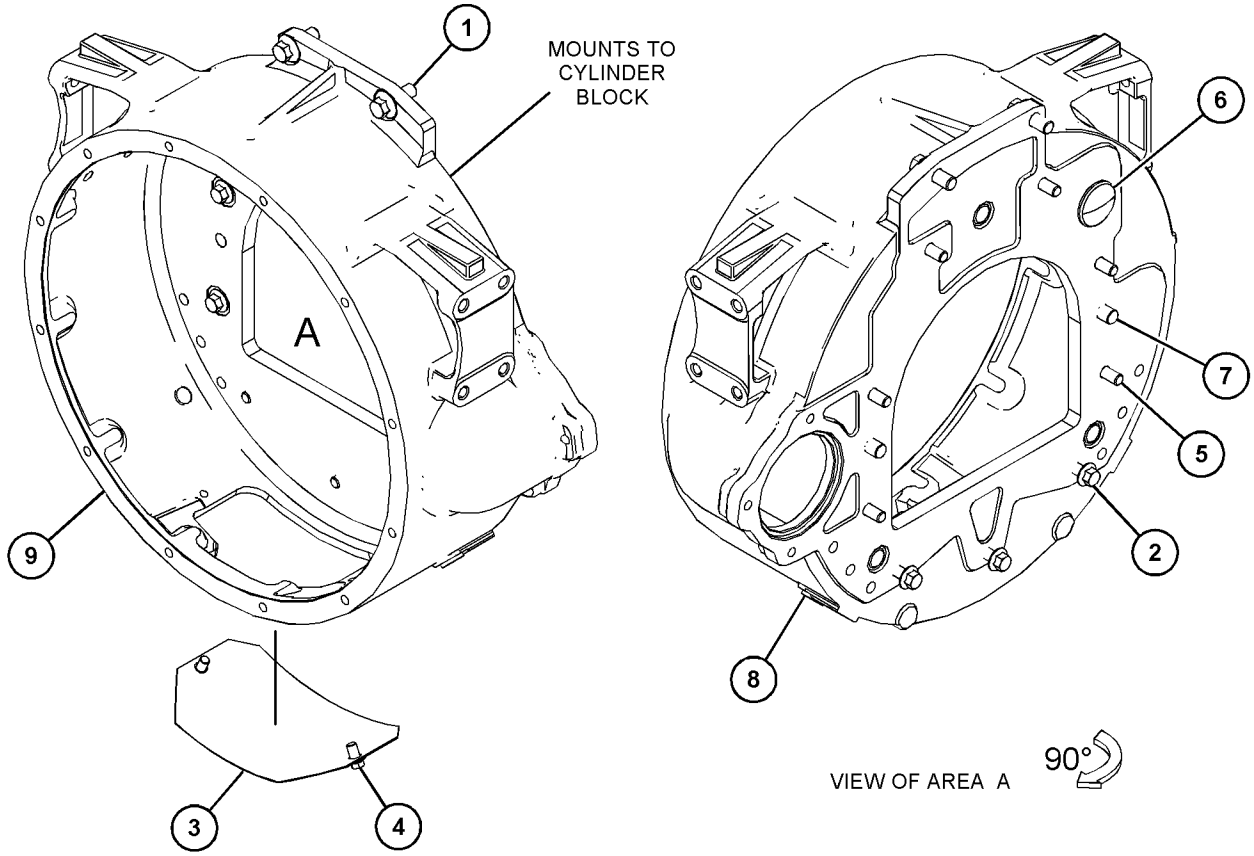

GRAPHIC #1 <END> g03818269

431-7048 HOUSING GP-FLYWHEEL

PART OF 463-8820, 463-8848, 463-8910 ENGINE AR-PRIMARY

SMCS-1157 **i06151683**

NOTE	REF NO	GRAPHIC REF	PART NUMBER	QTY	PART NAME 1 2 3 4 5 6 (PRODUCT LEVEL)	SEE PAGE
M	1	1	**6I-0423**	2	BOLT (M12X1.75X30-MM)	
M	2	1	**6I-0631**	2	BOLT (M6X1X12-MM)	
M	3	1	**6I-4200**	3	BOLT (M10X1.5X16-MM)	
	4	1	**393-4006**	1	GASKET	
M	5	1	**121-0883**	6	BOLT (M10X1.5X30-MM)	
	6	1	**287-8597**	2	DOWEL	
	7	1	**321-5594**	1	HOUSING-FLYWHEEL	
	8	1	**321-5595**	1	PLATE	
	9	1	**375-9272**	1	PLUG	

M - METRIC PART

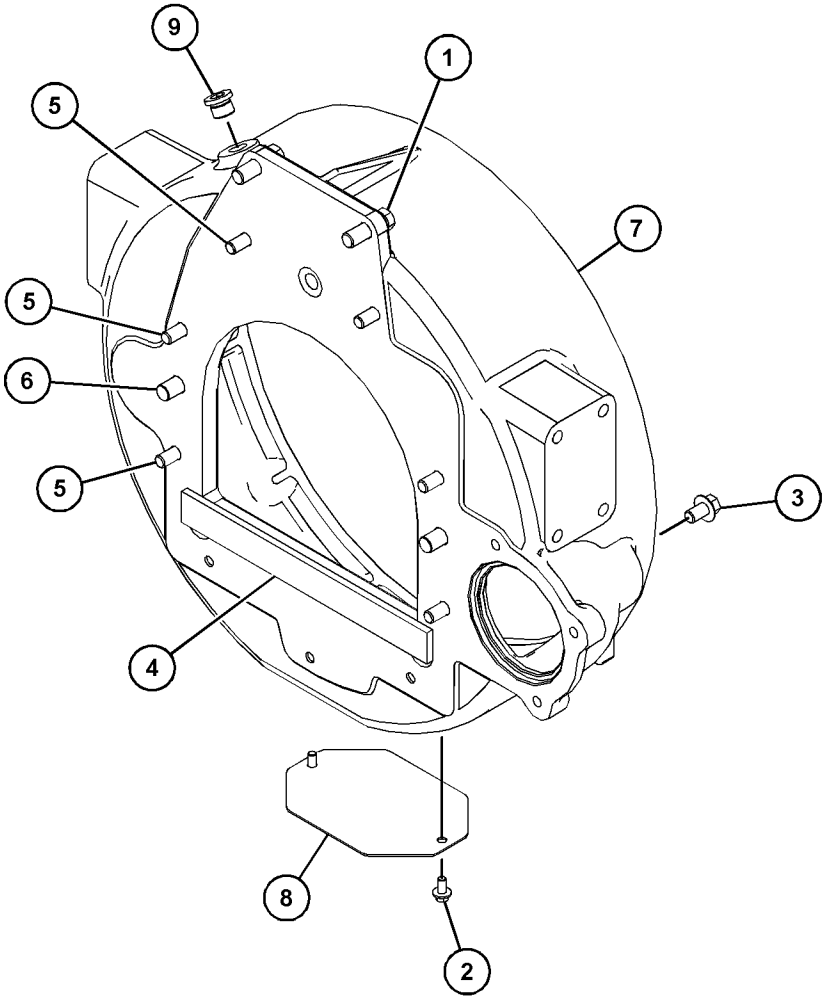

GRAPHIC #1 <END> g03833688

444-9659 HOUSING GP-FLYWHEEL

PART OF 466-3332, 466-4382, 467-7465, 469-1048, 477-2657, 484-1469, 491-2522, 500-8128, 502-7230, 508-4399, 510-0902, 514-3535, 514-3537 ENGINE AR-PRIMARY

SMCS-1157 **i06673921**

NOTE	REF NO	GRAPHIC REF	PART NUMBER	QTY	PART NAME 1 2 3 4 5 6 (PRODUCT LEVEL)	SEE PAGE
M	1	1	**6I-0423**	2	BOLT (M12X1.75X30-MM)	
	2	1	**7W-1176**	1	PLATE-COVER	
	3	1	**4H-0408**	3	PLUG-PROTECTION (10-MM)	
M	4	1	**114-4363**	2	BOLT (M8X1.25X12-MM)	
M	5	1	**121-0883**	6	BOLT (M10X1.5X30-MM)	
	6	1	**199-3109**	1	PLUG	
	7	1	**220-8632**	1	HOUSING-FLYWHEEL	
	8	1	**287-8597**	2	DOWEL	
	9	1	**375-9272**	2	PLUG	
	10	1	**393-4006**	1	GASKET	

M - METRIC PART

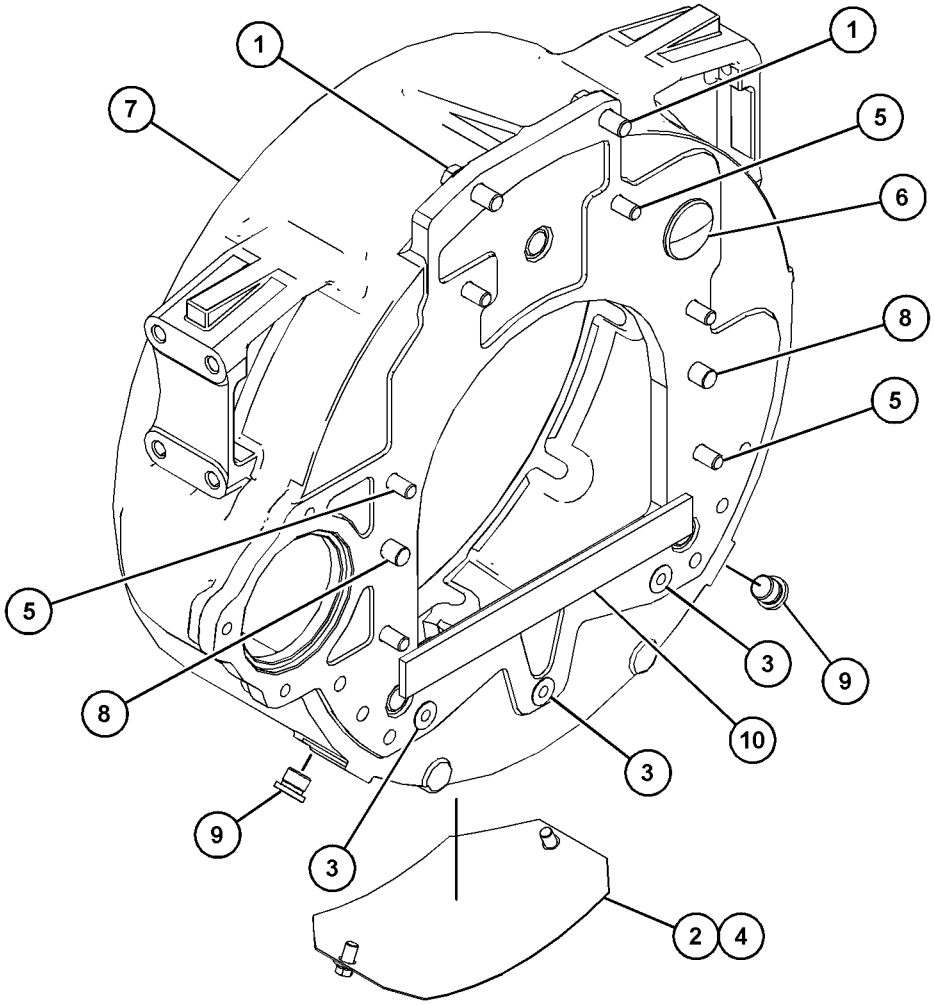

GRAPHIC #1 <END> g06005982

444-9660 HOUSING GP-FLYWHEEL

PART OF 484-2343, 503-1940, 538-5357 ENGINE AR-PRIMARY

SMCS-1157 **i06180503**

NOTE	REF NO	GRAPHIC REF	PART NUMBER	QTY	PART NAME 1 2 3 4 5 6 (PRODUCT LEVEL)	SEE PAGE
M	1	1	**6I-0423**	2	BOLT (M12X1.75X30-MM)	
M	2	1	**6I-0593**	3	BOLT (M10X1.5X30-MM)	
M	3	1	**6I-0631**	2	BOLT (M6X1X12-MM)	
	4	1	**102-1957**	1	PLATE	
M	5	1	**121-0883**	6	BOLT (M10X1.5X30-MM)	
	6	1	**199-3108**	1	PLUG	
	7	1	**199-3109**	1	PLUG	
	8	1	**287-8597**	2	DOWEL	
	9	1	**375-9272**	1	PLUG	
	10	1	**149-9176**	1	HOUSING-FLYWHEEL	

M - METRIC PART

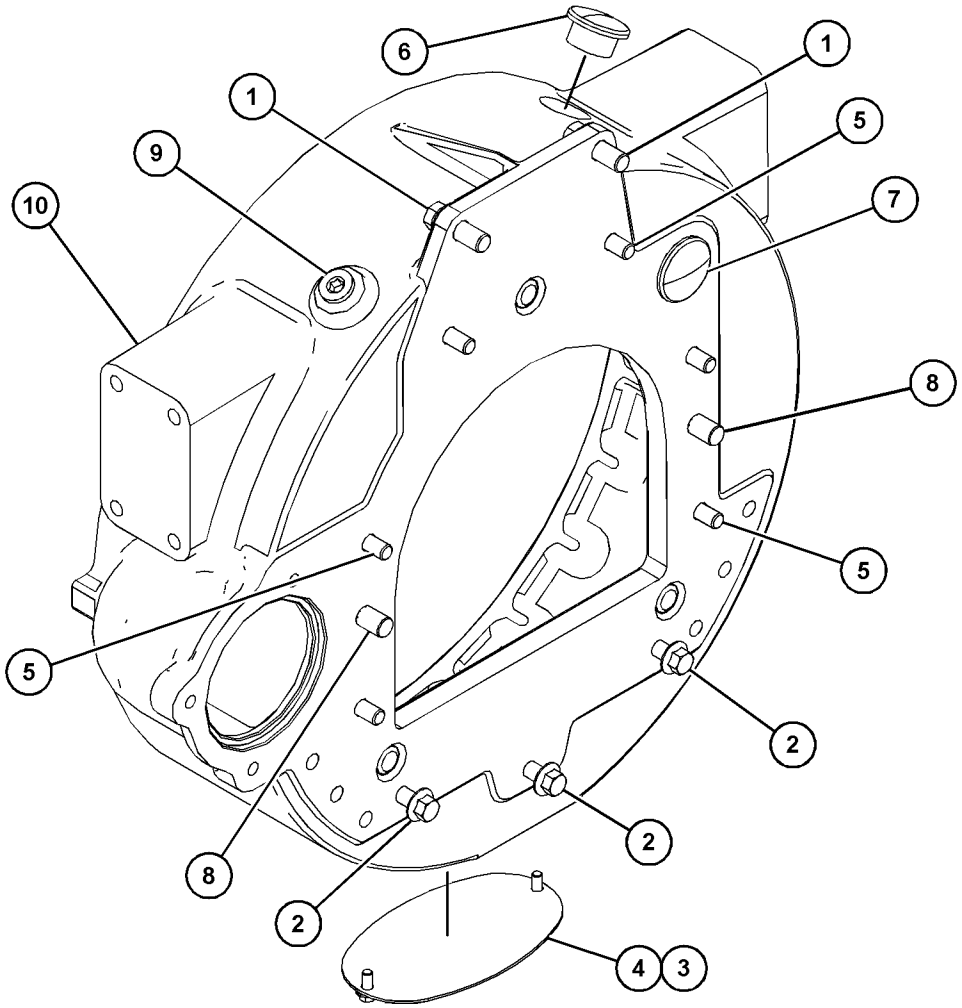

GRAPHIC #1 <END> g06006014

472-2181 HOUSING GP-FLYWHEEL

SMCS-1157 **i06721872**

NOTE	REF NO	GRAPHIC REF	PART NUMBER	QTY	PART NAME 1 2 3 4 5 6 (PRODUCT LEVEL)	SEE PAGE
M	1	1	**6I-4200**	3	BOLT (M10X1.5X16-MM)	
	2	1	**393-4006**	1	GASKET	
	3	1	**067-6006**	1	PLUG	
	4	1	**067-6823**	1	PLUG	
	5	1	**186-2364**	6	BOLT	
	6	1	**287-8597**	2	DOWEL	
	7	1	**186-2362**	1	HOUSING-FLYWHEEL	

M - METRIC PART

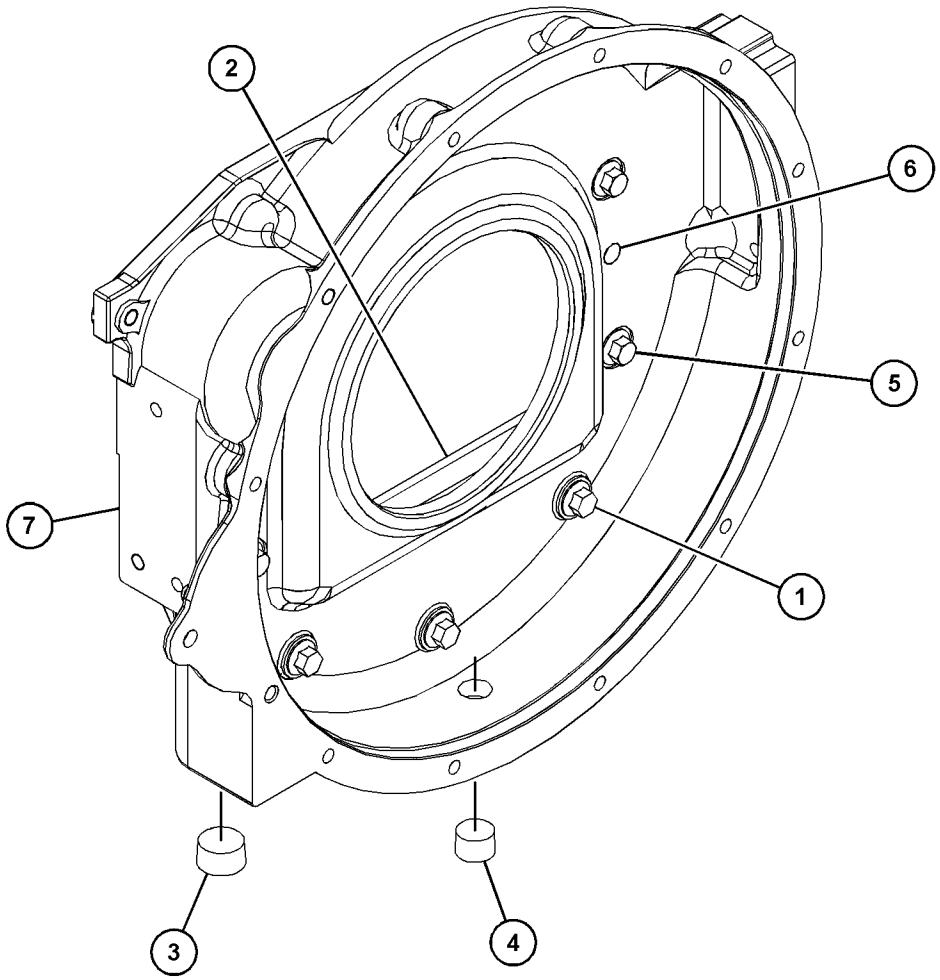

GRAPHIC #1 <END> g03873143

476-9753 HOUSING GP-FLYWHEEL

SMCS-1157 **i07001473**

NOTE	REF NO	GRAPHIC REF	PART NUMBER	QTY	PART NAME 1 2 3 4 5 6 (PRODUCT LEVEL)	SEE PAGE
M	1	1	**6I-0423**	2	BOLT (M12X1.75X30-MM)	
M	2	1	**6I-0917**	2	BOLT (M6X1X25-MM)	
	3	1	**067-6044**	1	PLUG	
M	4	1	**121-0883**	6	BOLT (M10X1.5X30-MM)	
	5	1	**287-8597**	2	DOWEL	
	6	1	**335-2092**	1	COVER-FLYWHEEL	
	7	1	**354-8322**	1	PLUG	
	8	1	**393-4006**	1	GASKET	

M - METRIC PART

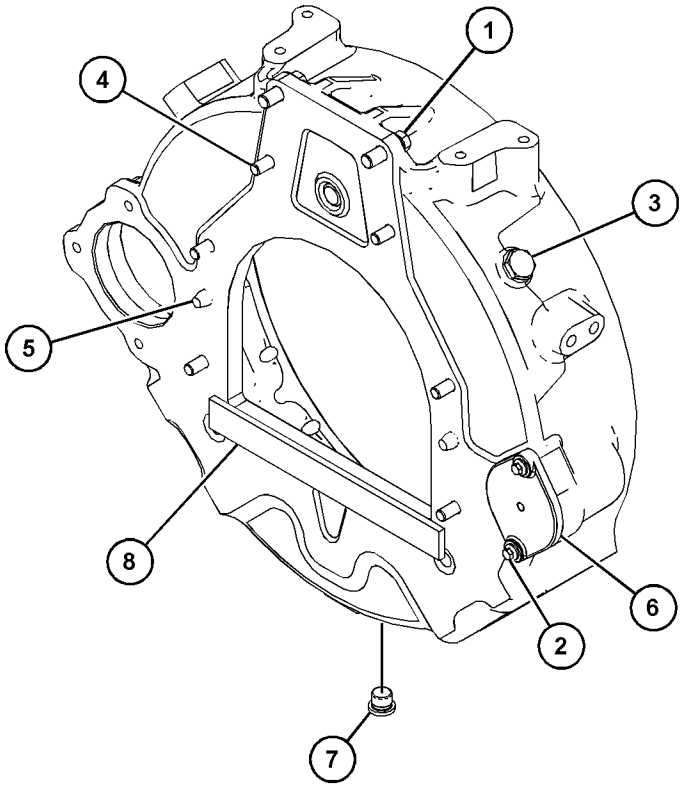

GRAPHIC #1 <END> g06193223

549-5335 HOUSING GP-FLYWHEEL

PART OF 541-2728 ENGINE AR-PRIMARY

SMCS-1157 **i07236293**

NOTE	REF NO	GRAPHIC REF	PART NUMBER	QTY	PART NAME 1 2 3 4 5 6 (PRODUCT LEVEL)	SEE PAGE
M	1	1	**6I-0423**	2	BOLT (M12X1.75X30-MM)	
	2	1	**7W-1176**	1	PLATE-COVER	
	3	1	**4H-0408**	1	PLUG-PROTECTION (10-MM)	
M	4	1	**114-4363**	2	BOLT (M8X1.25X12-MM)	
M	5	1	**121-0883**	6	BOLT (M10X1.5X30-MM)	
	6	1	**287-8597**	2	DOWEL	
	7	1	**338-0314**	1	HOUSING-FLYWHEEL	
	8	1	**393-4006**	1	GASKET	

M - METRIC PART

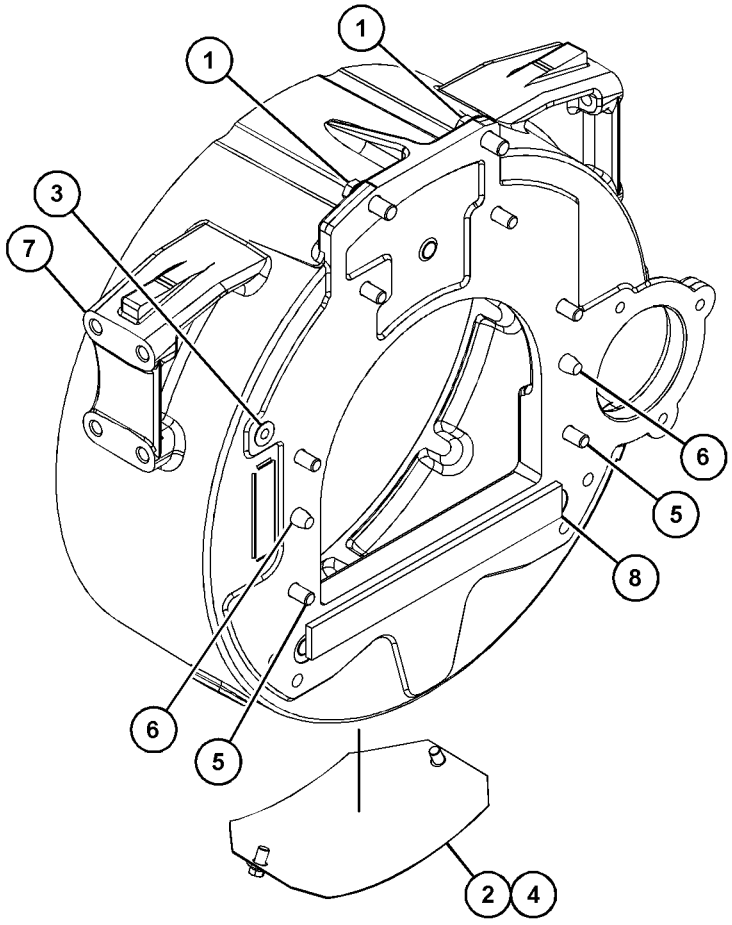

GRAPHIC #1 <END> g06262454

415-7115 HOUSING GP-FRONT

PART OF 463-8820, 469-1048, 477-2657, 509-5882 ENGINE AR-PRIMARY

SMCS-1151, 1162, 1206 **i06853042**

NOTE	REF NO	GRAPHIC REF	PART NUMBER	QTY	PART NAME 1 2 3 4 5 6 (PRODUCT LEVEL)	SEE PAGE
M	1	1	**6I-0650**	3	BOLT (M10X1.5X65-MM)	
M	2	1	**7C-4616**	1	BOLT (M12X1.75X45-MM)	
	3	1	**067-6179**	1	DOWEL	
M	4	1	**100-3751**	5	BOLT (M8X1.25X65-MM)	
M	5	1	**101-3895**	2	BOLT (M8X1.25X35-MM)	
M	6	1	**124-3815**	10	BOLT (M8X1.25X16-MM)	
	7	1	**133-1011**	1	WASHER	
	8	1	**425-7103**	1	GEAR (68-TEETH)	
	9	1	**232-3666**	1	WASHER-THRUST	
	10	1	**277-3012**	1	GASKET-COVER	
	11	1	**277-3013**	1	SEAL	
	12	1	**346-0408**	1	PLATE	
	13	1	**398-3296**	1	CASE-GEAR	
M	14	1	**6I-0217**	6	BOLT (M8X1.25X20-MM)	
M	15	1	**6I-0645**	4	BOLT (M8X1.25X25-MM)	
	16	1	**232-3657**	1	COVER AS-FRONT	
	16A	1	**225-8287**	1	GASKET	
	17	1	**324-0444**	1	HUB-IDLER GEAR	
	18	1	**346-0407**	1	GEAR-IDLER	

M - METRIC PART

415-7115 **HOUSING GP-FRONT (**contd.**)** **i06853042**

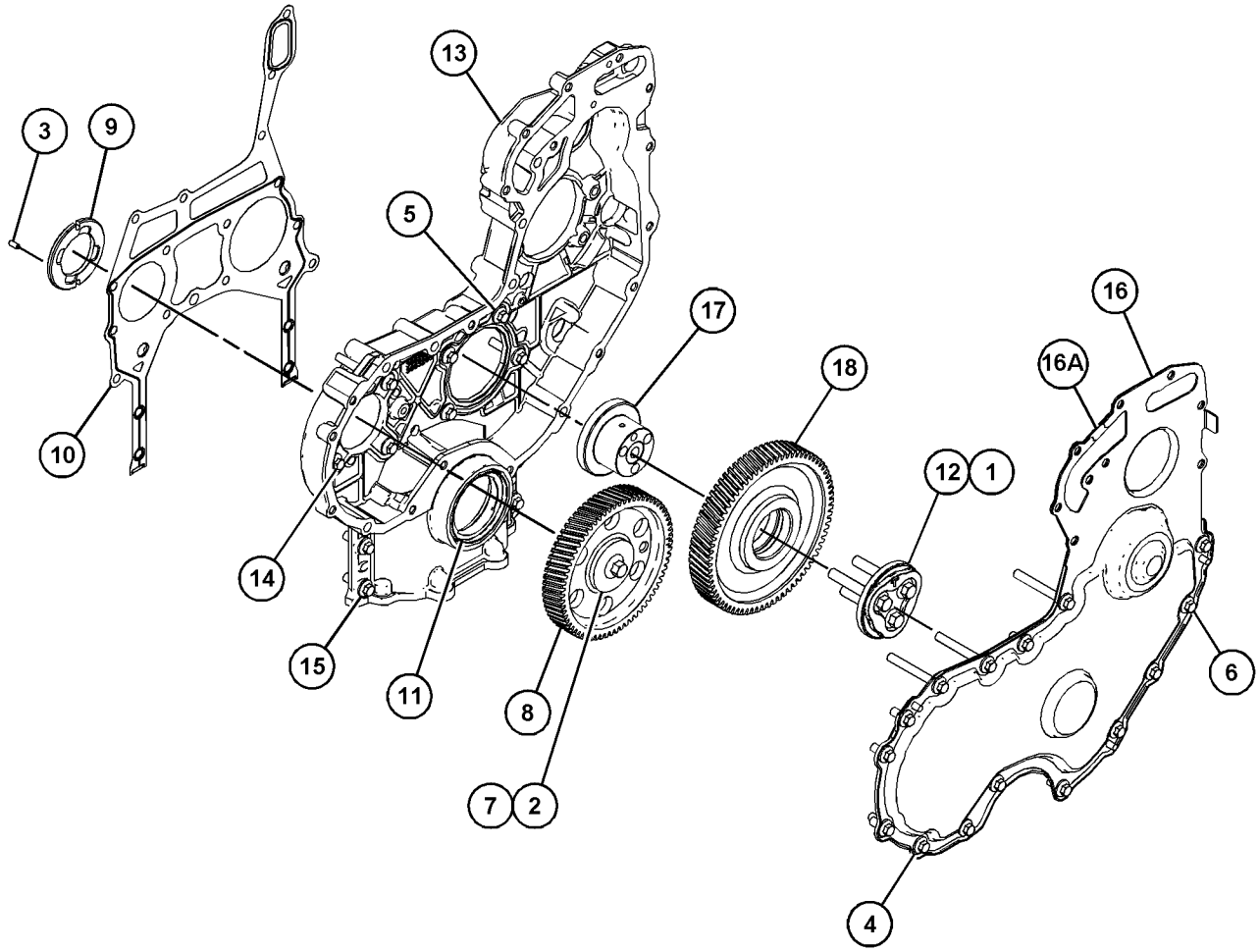

GRAPHIC #1 <END> g03816202

415-7116 HOUSING GP-FRONT

PART OF 463-8848, 463-8910, 491-2522, 492-3115, 492-3118, 495-9687, 504-3628, 504-3645 ENGINE AR-PRIMARY

SMCS-1151, 1162, 1206 **i06852994**

NOTE	REF NO	GRAPHIC REF	PART NUMBER	QTY	PART NAME 1 2 3 4 5 6 (PRODUCT LEVEL)	SEE PAGE
M	1	1	**6I-0217**	6	BOLT (M8X1.25X20-MM)	
M	2	1	**6I-0645**	4	BOLT (M8X1.25X25-MM)	
M	3	1	**6I-0650**	3	BOLT (M10X1.5X65-MM)	
M	4	1	**7C-4616**	1	BOLT (M12X1.75X45-MM)	
	5	1	**067-6179**	1	DOWEL	
M	6	1	**100-3751**	5	BOLT (M8X1.25X65-MM)	
M	7	1	**100-4830**	1	BOLT (M10X1.5X20-MM)	
M	8	1	**101-3895**	2	BOLT (M8X1.25X35-MM)	
M	9	1	**124-3815**	9	BOLT (M8X1.25X16-MM)	
	10	1	**133-1011**	1	WASHER	
	11	1	**425-7103**	1	GEAR (68-TEETH)	
	12	1	**226-8767**	1	COVER AS-FRONT	
	12A	1	**226-8766**	1	GASKET-COVER	
	13	1	**232-3666**	1	WASHER-THRUST	
	14	1	**251-4336**	1	GEAR AS-IDLER (73-TEETH)	
	15	1	**277-3012**	1	GASKET-COVER	
	16	1	**277-3013**	1	SEAL	
	17	1	**324-0444**	1	HUB-IDLER GEAR	
	18	1	**346-0408**	1	PLATE	
	19	1	**443-9253**	1	CASE-GEAR	

M - METRIC PART

415-7116 **HOUSING GP-FRONT (**contd.**)** **i06852994**

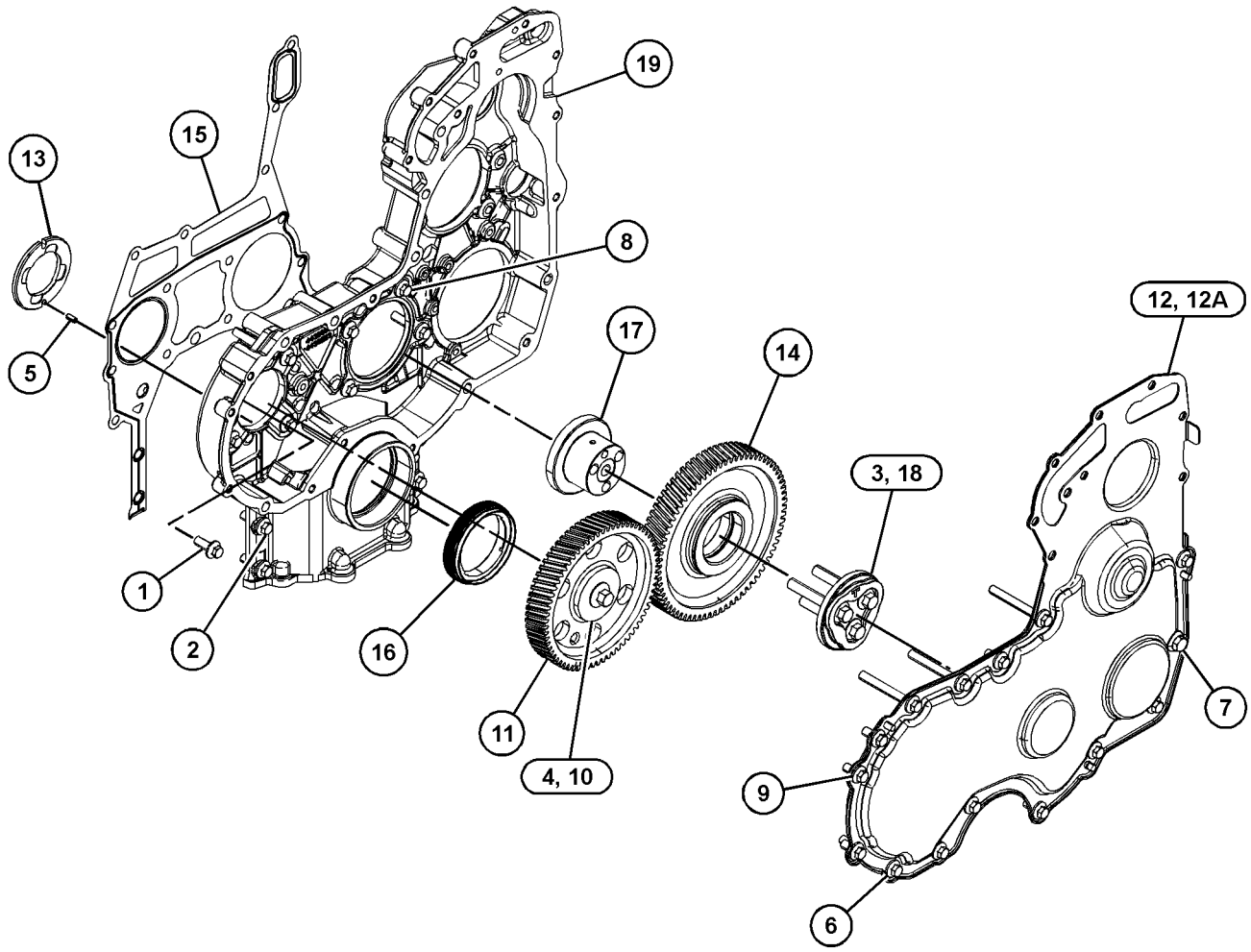

GRAPHIC #1 <END> g03831930

415-7117 HOUSING GP-FRONT

PART OF 461-3168, 466-3332, 466-4382, 467-7465, 480-6065, 484-1469, 484-2343, 500-8128, 502-7230, 503-1940, 508-4399, 509-3109, 509-5884, 510-0902, 516-9846, 527-9081, 538-5357, 541-2728 ENGINE AR-PRIMARY

SMCS-1151, 1162, 1206 **i06948329**

NOTE	REF NO	GRAPHIC REF	PART NUMBER	QTY	PART NAME 1 2 3 4 5 6 (PRODUCT LEVEL)	SEE PAGE
M	1	1	**6I-0454**	3	BOLT (M10X1.5X70-MM)	
M	2	1	**7C-4616**	1	BOLT (M12X1.75X45-MM)	
	3	1	**067-6179**	1	DOWEL	
M	4	1	**100-3751**	5	BOLT (M8X1.25X65-MM)	
M	5	1	**100-4830**	1	BOLT (M10X1.5X20-MM)	
M	6	1	**101-3895**	2	BOLT (M8X1.25X35-MM)	
M	7	1	**124-3815**	9	BOLT (M8X1.25X16-MM)	
	8	1	**133-1011**	1	WASHER	
	9	1	**425-7103**	1	GEAR (68-TEETH)	
	10	1	**226-8767**	1	COVER AS-FRONT	
	10A	1	**226-8766**	1	GASKET-COVER	
	11	1	**232-3666**	1	WASHER-THRUST	
	12	1	**277-3012**	1	GASKET-COVER	
	13	1	**277-3013**	1	SEAL	
	14	1	**291-6517**	1	PLATE	
	15	1	**359-9431**	1	GEAR-IDLER	
	16	1	**443-9253**	1	CASE-GEAR	
M	17	1	**6I-0217**	6	BOLT (M8X1.25X20-MM)	
M	18	1	**6I-0645**	4	BOLT (M8X1.25X25-MM)	

M - METRIC PART

415-7117 **HOUSING GP-FRONT (**contd.**)** **i06948329**

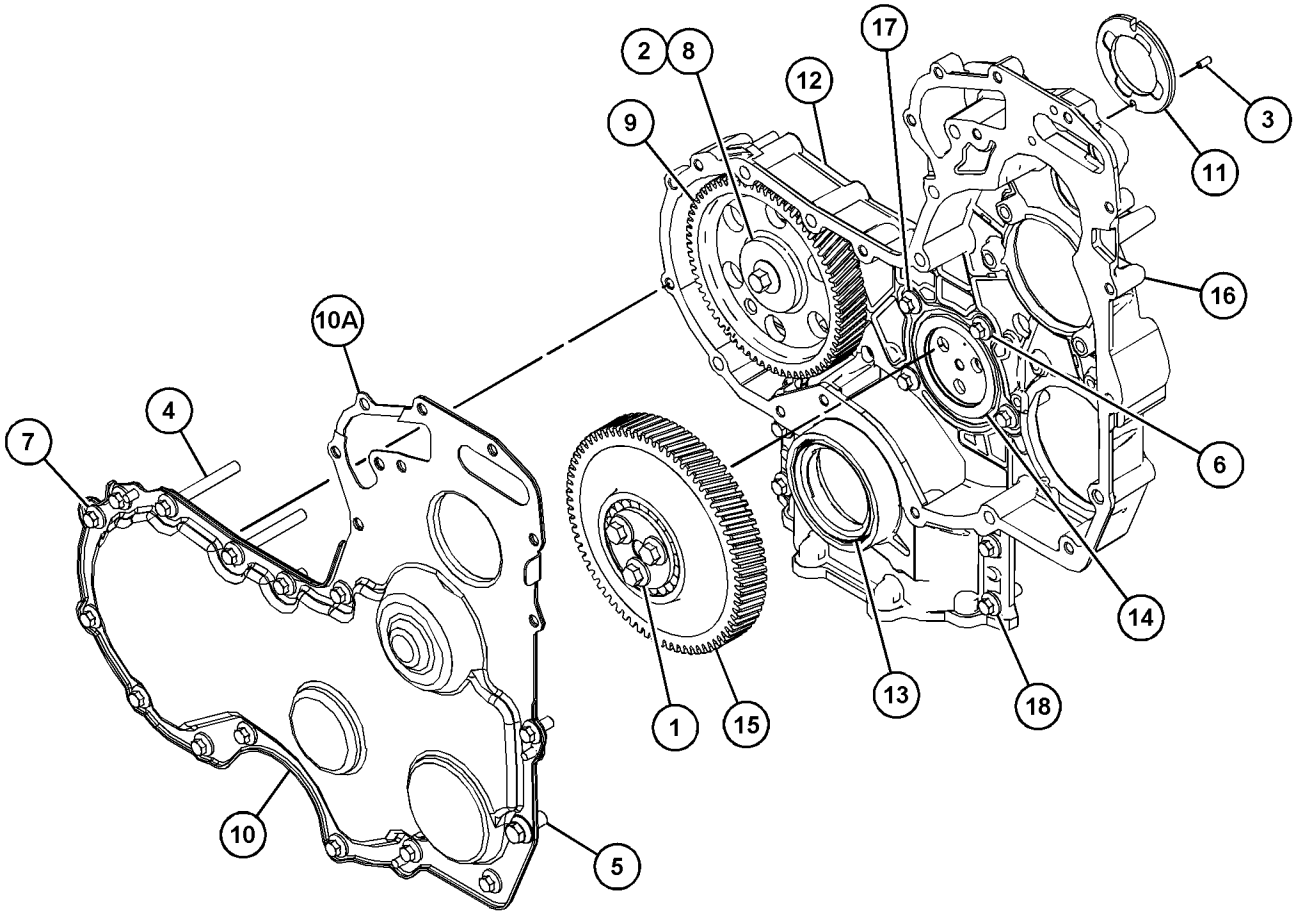

GRAPHIC #1 <END> g03813516

416-8722 HOUSING GP-FRONT

PTO

PART OF 463-8848, 463-8910 ENGINE AR-PRIMARY

SMCS-1151, 1162, 1206 **i06271488**

NOTE	REF NO	GRAPHIC REF	PART NUMBER	QTY	PART NAME 1 2 3 4 5 6 (PRODUCT LEVEL)	SEE PAGE
M	1	1	**100-4830**	2	BOLT (M10X1.5X20-MM)	
M	2	1	**102-2078**	1	BOLT (M10X1.5X25-MM)	
	3	1	**126-3212**	5	BOLT (M8X1.25X25-MM)	
	4	1	**198-8262**	1	COVER AS	
	4A	1	**198-8263**	1	SEAL-O-RING	
	5	1	**214-3203**	1	WASHER (SEALING)	
M	6	1	**6I-0646**	1	BOLT (M10X1.5X14-MM)	
	7	1	**102-2073**	1	SEAL-O-RING	
	8	1	**235-1063**	1	ADAPTER AS	
	8A	1	**6H-3957**	1	BALL BEARING	
	8B	1	**102-2075**	1	BEARING	
	8C	1	**102-2076**	1	CLIP	
	8D	1	**235-1061**	1	GEAR (33-TEETH)	

M - METRIC PART

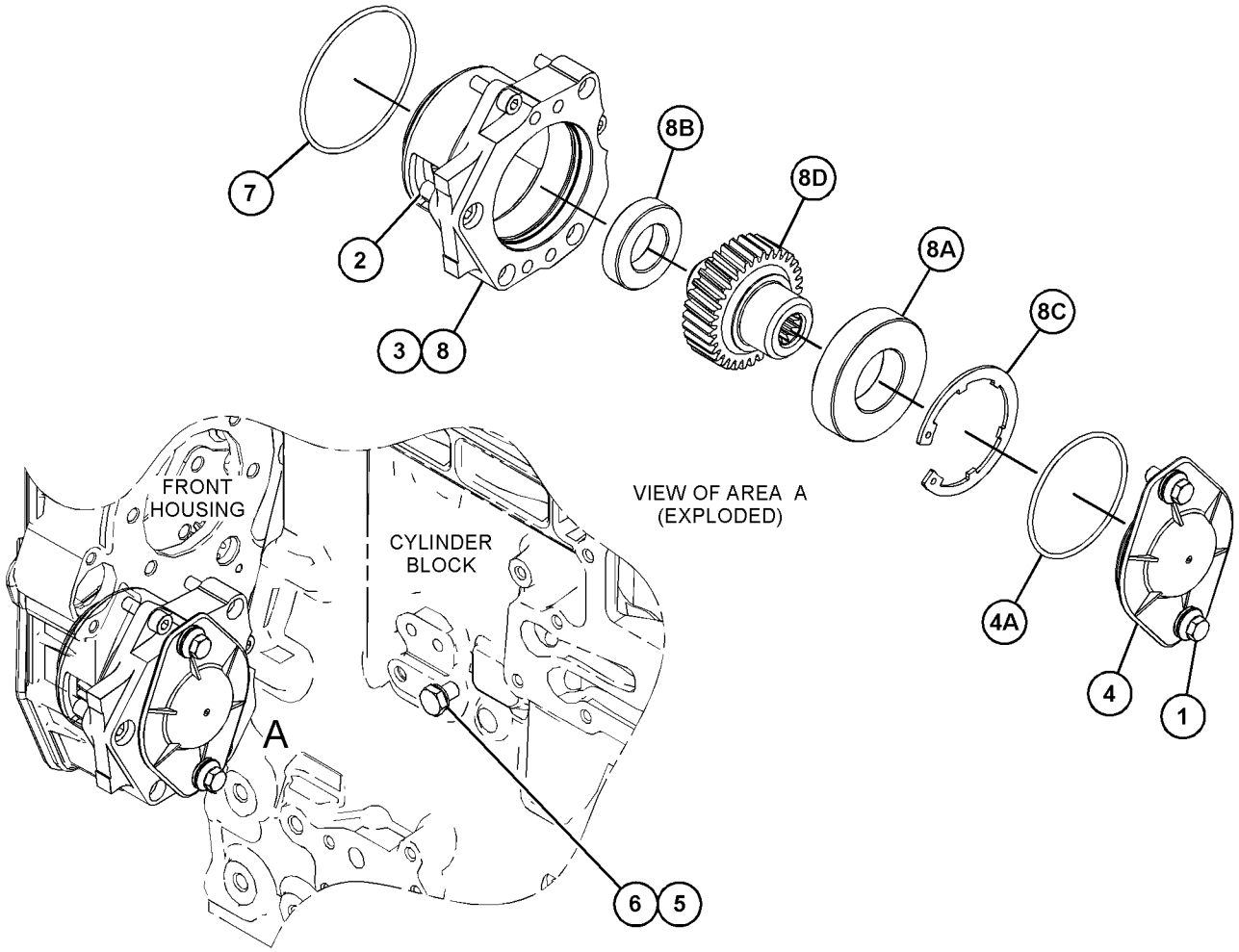

GRAPHIC #1 <END> g03881057

419-8508 HOUSING GP-FRONT

PART OF 491-2522, 541-2728 ENGINE AR-PRIMARY

SMCS-1151, 1162, 1206 **i06547744**

NOTE	REF NO	GRAPHIC REF	PART NUMBER	QTY	PART NAME 1 2 3 4 5 6 (PRODUCT LEVEL)	SEE PAGE
M	1	1	**100-4830**	2	BOLT (M10X1.5X20-MM)	
M	2	1	**102-2078**	1	BOLT (M10X1.5X25-MM)	
	3	1	**126-3212**	5	BOLT (M8X1.25X25-MM)	
	4	1	**198-8262**	1	COVER AS	
	4A	1	**198-8263**	1	SEAL-O-RING	
	5	1	**214-3203**	1	WASHER (SEALING)	
M	6	1	**6I-0646**	1	BOLT (M10X1.5X14-MM)	
	7	1	**102-2073**	1	SEAL-O-RING	
	8	1	**222-8625**	1	ADAPTER AS	
	8A	1	**6H-3957**	1	BALL BEARING	
	8B	1	**102-2075**	1	BEARING	
	8C	1	**102-2076**	1	CLIP	
	8D	1	**217-7877**	1	GEAR (33-TEETH)	

M - METRIC PART

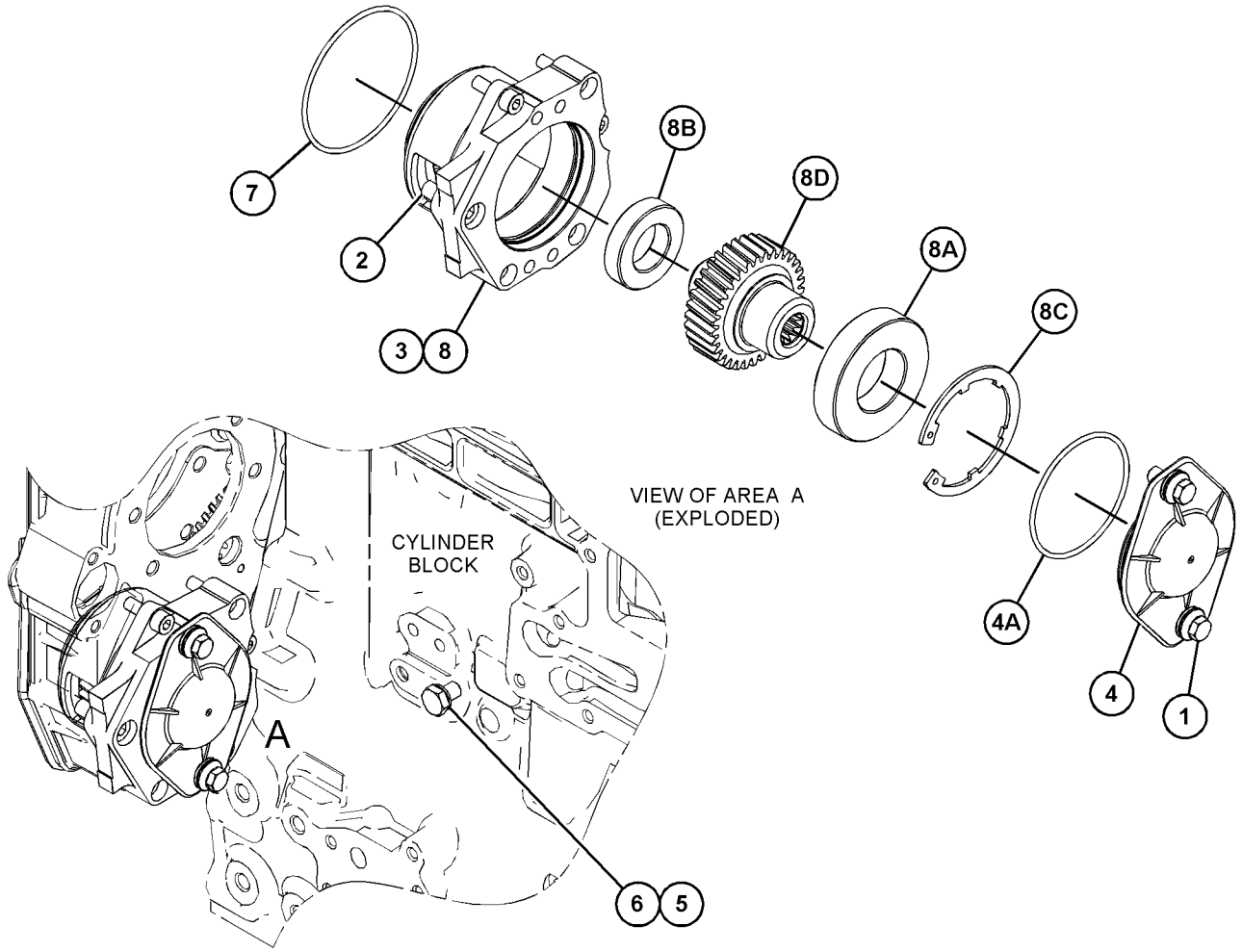

GRAPHIC #1 <END> g03873869

432-4972 HOUSING GP-FRONT

PART OF 455-9378, 478-6560, 492-1322, 495-3005, 503-4924, 512-9838, 512-9884, 514-3535, 514-3537, 517-0058, 526-8847, 539-3889 ENGINE AR-PRIMARY

SMCS-1151, 1162, 1206 **i06149713**

NOTE	REF NO	GRAPHIC REF	PART NUMBER	QTY	PART NAME 1 2 3 4 5 6 (PRODUCT LEVEL)	SEE PAGE
M	1	1	**102-9941**	2	BOLT (M12X1.75X25-MM)	
	2	1	**214-3203**	1	WASHER (SEALING)	
	3	1	**291-6526**	1	BEARING-NEEDLE	
	4	1	**291-6529**	1	CLIP	
	5	1	**293-9737**	1	GEAR (34-TEETH)	
	6	1	**369-6810**	1	COVER GP	
	6A	1	**357-2646**	1	PLATE-SEAL	
M	7	1	**6I-0646**	1	BOLT (M10X1.5X14-MM)	
	8	1	**291-6528**	1	CLIP	
	9	1	**302-6780**	1	BALL BEARING	

M - METRIC PART

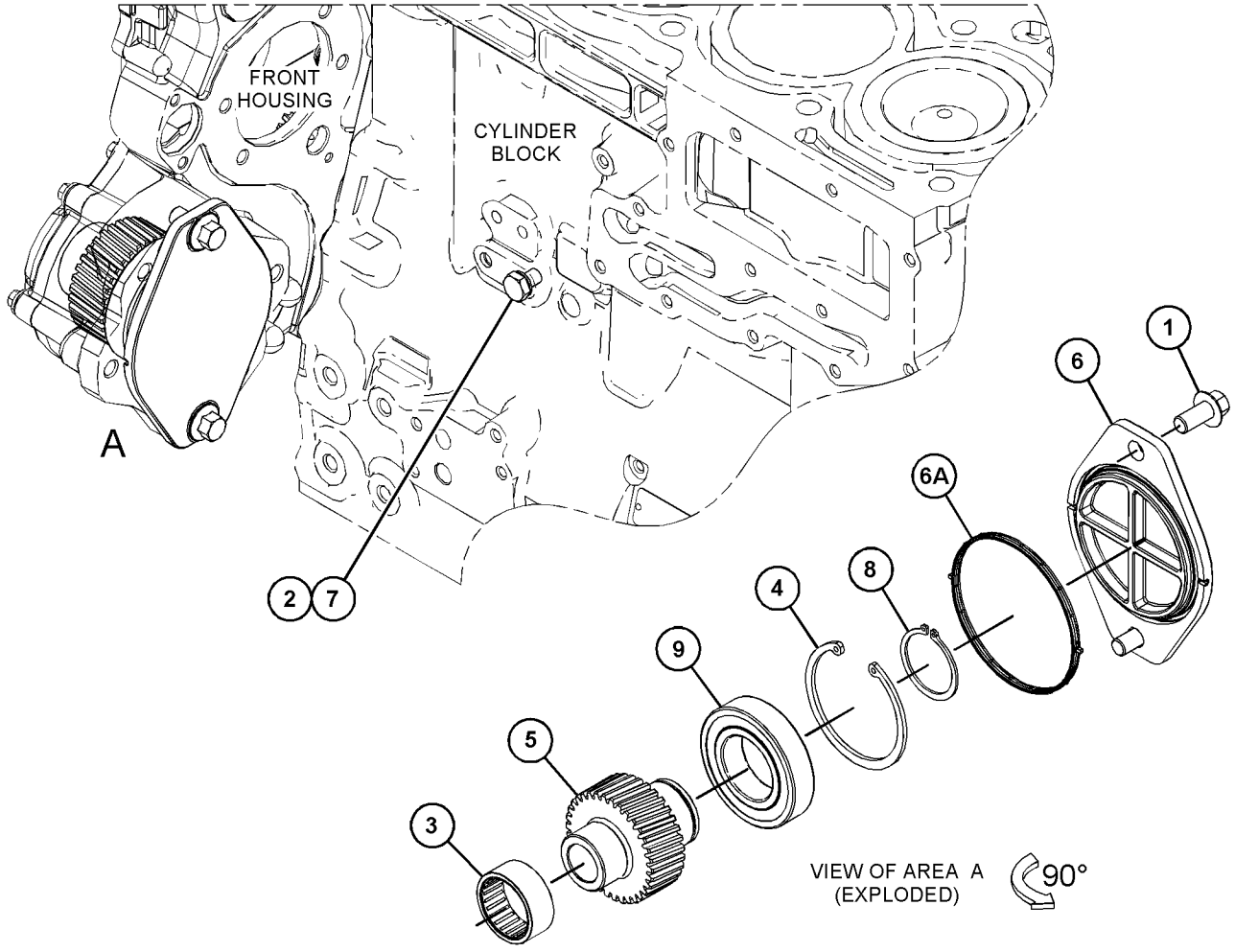

GRAPHIC #1 <END> g03874501

432-4978 HOUSING GP-FRONT

PART OF 486-2471 ENGINE AR-PRIMARY

SMCS-1151, 1162, 1206 **i07284370**

NOTE	REF NO	GRAPHIC REF	PART NUMBER	QTY	PART NAME 1 2 3 4 5 6 (PRODUCT LEVEL)	SEE PAGE
	1	1	**225-8524**	1	BOLT-SPECIAL	
M	2	1	**6I-0654**	6	BOLT (M10X1.5X25-MM)	
	3	1	**113-4608**	1	ADAPTER	
	4	1	**126-3219**	1	SEAL-O-RING	
M	5	1	**195-2221**	2	NUT (M12X1.75-THD)	
	6	1	**198-8262**	1	COVER AS	
		1	**198-8263**	1	SEAL-O-RING	
	7	1	**214-3203**	1	WASHER (SEALING)	
	8	1	**246-4361**	2	WASHER (10.5X14X1.5-MM THK)	
	9	1	**293-4776**	2	WASHER	
	10	1	**294-9392**	2	ADAPTER	
	11	1	**294-9396**	1	CLIP	
	12	1	**317-6232**	2	STUD	
	13	1	**320-8383**	1	GEAR (34-TEETH)	
	14	1	**320-8384**	1	NUT	
	15	1	**320-8385**	1	WASHER (19X34X3-MM THK)	
	16	1	**323-8761**	1	BRACKET	
	17	1	**375-9812**	1	HOSE (COOLANT)	
	18	1	**375-9813**	1	HOSE (COOLANT)	
	19	1	**381-5651**	4	CLIP	
	20	1	**451-5480**	1	COMPRESSOR	
	21	1	**481-2933**	1	PIPE AS	
M	22	1	**6I-0260**	2	BOLT (M8X1.25X25-MM)	

M - METRIC PART

432-4978 **HOUSING GP-FRONT (**contd.**)** **i07284370**

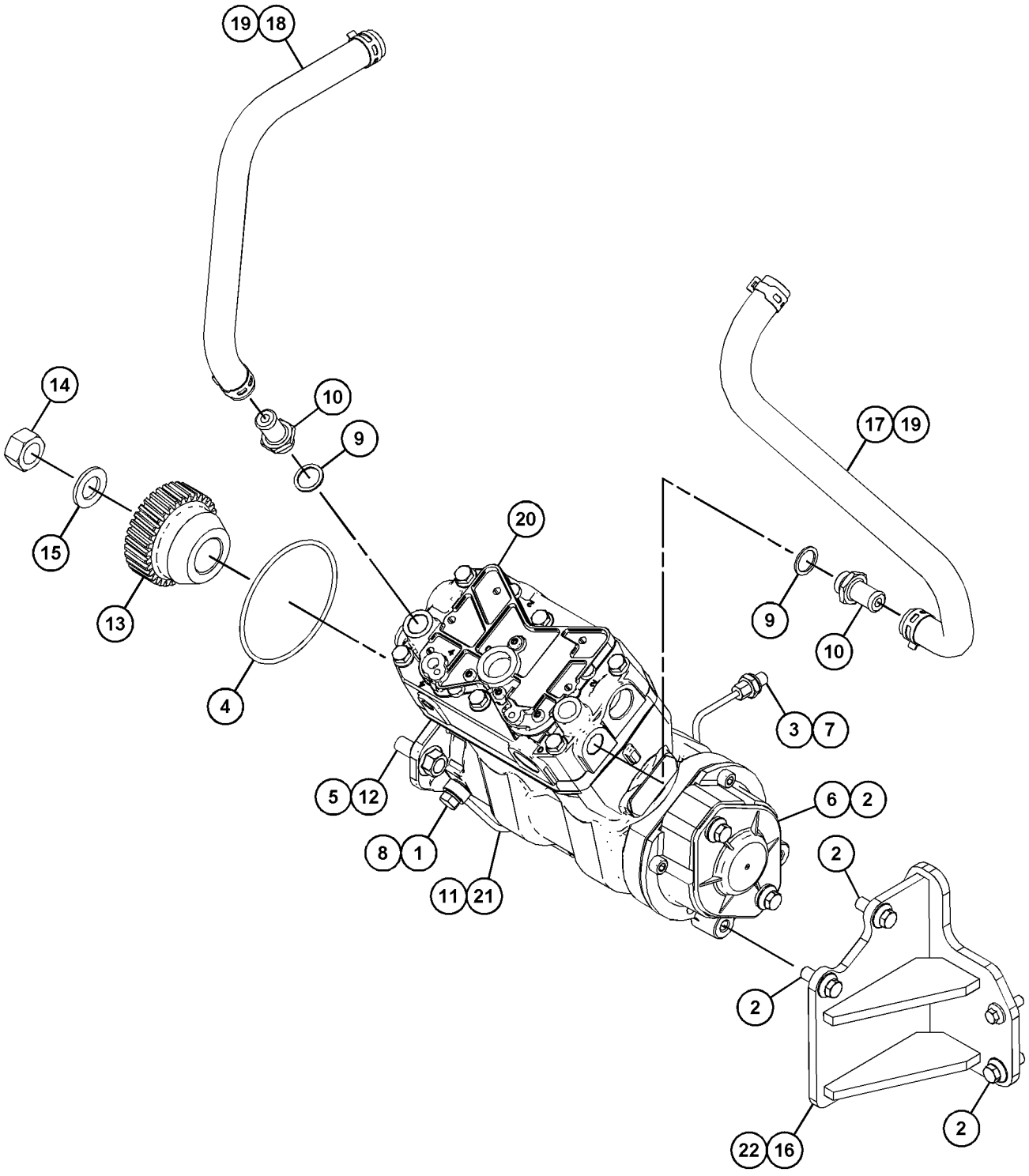

GRAPHIC #1 <END> g06273717

432-8266 HOUSING GP-FRONT

PART OF 455-9378, 478-6560, 486-2471, 492-1322, 495-3005, 503-4924, 512-9838, 512-9884, 514-3535, 514-3537, 517-0058, 526-8847, 539-3889 ENGINE AR-PRIMARY

SMCS-1151, 1162, 1206

i06895664

NOTE	REF NO	GRAPHIC REF	PART NUMBER	QTY	PART NAME 1 2 3 4 5 6 (PRODUCT LEVEL)	SEE PAGE
M	1	1	**6I-0454**	6	BOLT (M10X1.5X70-MM)	
M	2	1	**7C-4616**	1	BOLT (M12X1.75X45-MM)	
	3	1	**067-6179**	1	DOWEL	
M	4	1	**100-3751**	5	BOLT (M8X1.25X65-MM)	
M	5	1	**101-3895**	2	BOLT (M8X1.25X35-MM)	
	6	1	**133-1011**	1	WASHER	
	7	1	**425-7103**	1	GEAR (68-TEETH)	
	8	1	**232-3666**	1	WASHER-THRUST	
	9	1	**277-3012**	1	GASKET-COVER	
	10	1	**277-3013**	1	SEAL	
	11	1	**291-6517**	1	PLATE	
	12	1	**291-6521**	1	TUBE	
	13	1	**291-6522**	2	CLIP	
	14	1	**291-6523**	1	COVER-FRONT	
	15	1	**291-6524**	1	GASKET	
	16	1	**381-9252**	1	GEAR-IDLER	
	17	1	**418-7684**	1	GEAR-IDLER	
	18	1	**453-0724**	1	CASE-GEAR	
M	19	1	**6I-0217**	6	BOLT (M8X1.25X20-MM)	
M	20	1	**6I-0254**	3	BOLT (M8X1.25X30-MM)	
M	21	1	**6I-0260**	9	BOLT (M8X1.25X25-MM)	
M	22	1	**6I-0645**	4	BOLT (M8X1.25X25-MM)	

M - METRIC PART

432-8266 **HOUSING GP-FRONT (**contd.**)** **i06895664**

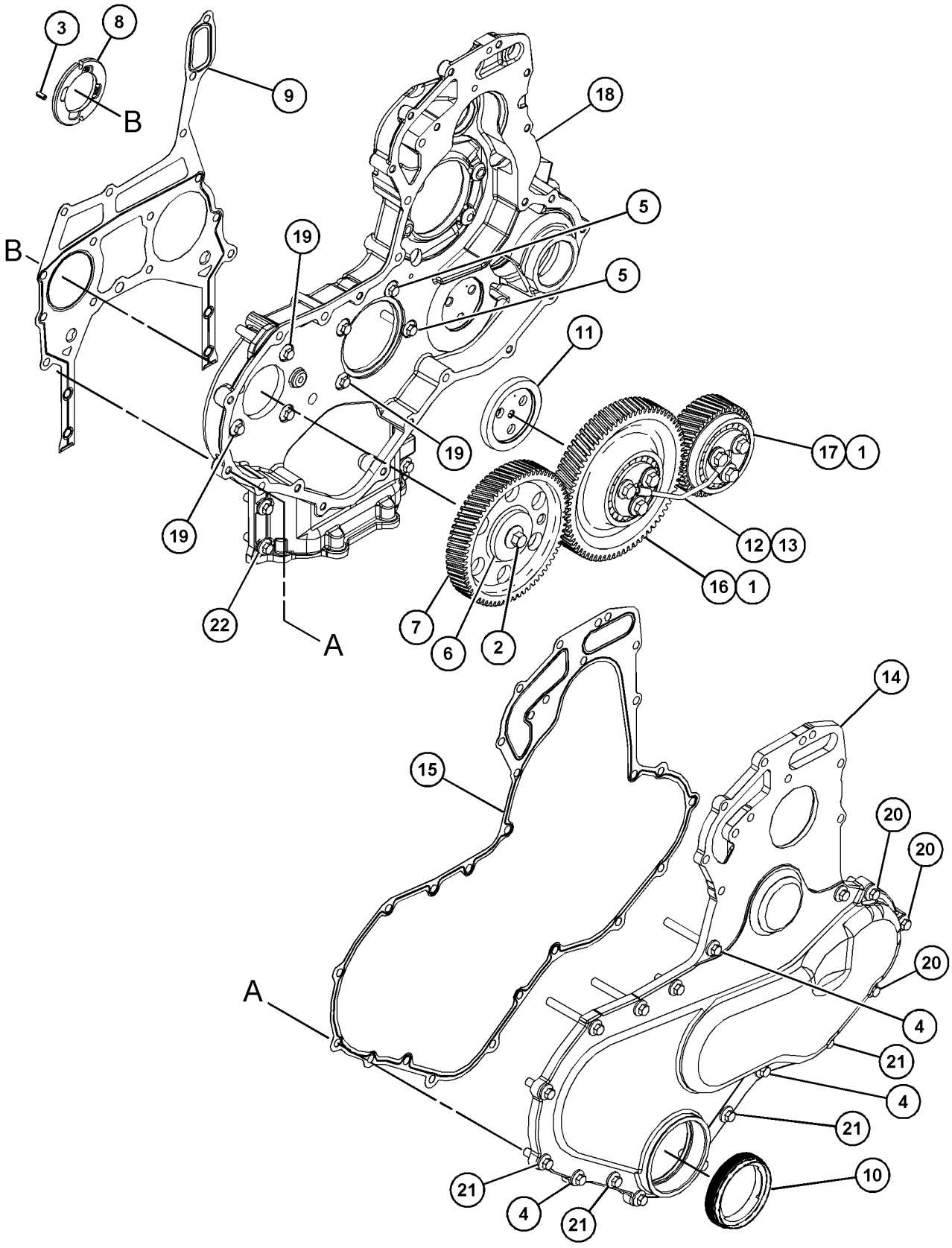

GRAPHIC #1 <END> g06001704

448-9791 HOUSING GP-FRONT

PART OF 475-8294 ENGINE AR-PRIMARY

SMCS-1151, 1162, 1206 **i06677287**

NOTE	REF NO	GRAPHIC REF	PART NUMBER	QTY	PART NAME 1 2 3 4 5 6 (PRODUCT LEVEL)	SEE PAGE
M	1	1	**6I-0650**	3	BOLT (M10X1.5X65-MM)	
M	2	1	**7C-4616**	1	BOLT (M12X1.75X45-MM)	
	3	1	**067-6179**	1	DOWEL	
M	4	1	**100-3751**	5	BOLT (M8X1.25X65-MM)	
	5	1	**273-3690**	1	BOLT	
M	6	1	**101-3895**	2	BOLT (M8X1.25X35-MM)	
M	7	1	**124-3815**	9	BOLT (M8X1.25X16-MM)	
	8	1	**133-1011**	1	WASHER	
	9	1	**232-3666**	1	WASHER-THRUST	
	10	1	**277-3013**	1	SEAL	
	11	1	**346-0408**	1	PLATE	
	12	1	**443-9253**	1	CASE-GEAR	
M	13	1	**6I-0217**	6	BOLT (M8X1.25X20-MM)	
M	14	1	**6I-0645**	4	BOLT (M8X1.25X25-MM)	
	15	1	**324-0444**	1	HUB-IDLER GEAR	
	16	1	**216-8634**	1	GEAR-CAMSHAFT (68-TEETH)	
	17	1	**226-8767**	1	COVER AS-FRONT	
		1	**226-8766**	1	GASKET-COVER	
	18	1	**251-4336**	1	GEAR AS-IDLER (73-TEETH)	
	19	1	**277-3012**	1	GASKET-COVER	

M - METRIC PART

448-9791 **HOUSING GP-FRONT (**contd.**)** **i06677287**

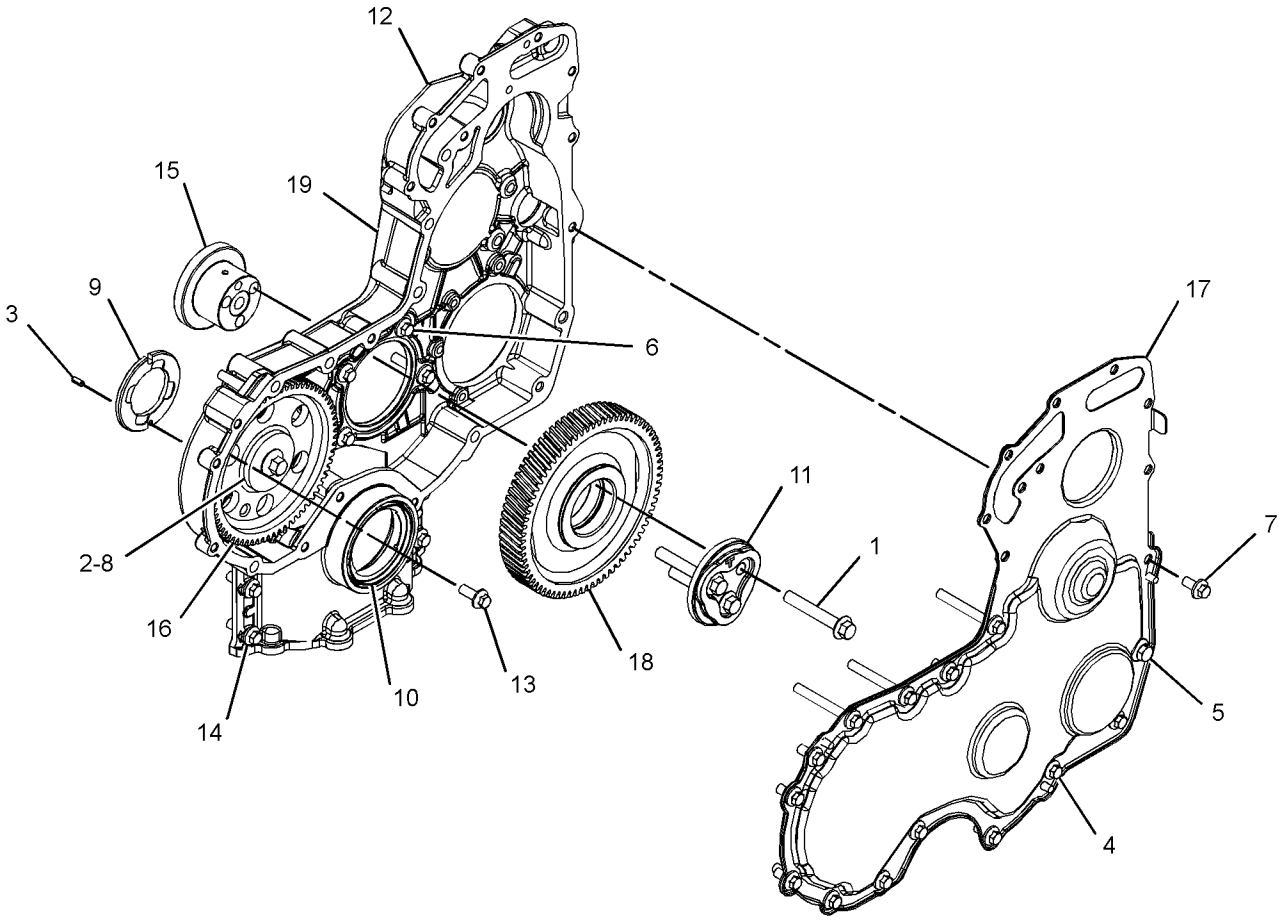

GRAPHIC #1 <END> g03378599

467-7637 HOUSING GP-FRONT

SMCS-1151, 1162, 1206 **i07310989**

NOTE	REF NO	GRAPHIC REF	PART NUMBER	QTY	PART NAME 1 2 3 4 5 6 (PRODUCT LEVEL)	SEE PAGE
	1	1	**288-0422**	1	SEAL-CRANKSHAFT	
M	2	1	**6I-0650**	3	BOLT (M10X1.5X65-MM)	
M	3	1	**7C-4616**	1	BOLT (M12X1.75X45-MM)	
	4	1	**067-6179**	1	DOWEL	
M	5	1	**100-3751**	5	BOLT (M8X1.25X65-MM)	
M	6	1	**101-3895**	2	BOLT (M8X1.25X35-MM)	
M	7	1	**124-3815**	10	BOLT (M8X1.25X16-MM)	
	8	1	**133-1011**	1	WASHER	
	9	1	**425-7103**	1	GEAR (68-TEETH)	
	10	1	**232-3666**	1	WASHER-THRUST	
	11	1	**277-3012**	1	GASKET-COVER	
	12	1	**346-0407**	1	GEAR-IDLER	
	13	1	**346-0408**	1	PLATE	
	14	1	**398-3296**	1	CASE-GEAR	
M	15	1	**6I-0217**	6	BOLT (M8X1.25X20-MM)	
M	16	1	**6I-0645**	4	BOLT (M8X1.25X25-MM)	
	17	1	**232-3657**	1	COVER AS-FRONT	
		1	**225-8287**	1	GASKET	
	18	1	**324-0444**	1	HUB-IDLER GEAR	

M - METRIC PART

467-7637 **HOUSING GP-FRONT (**contd.**)** **i07310989**

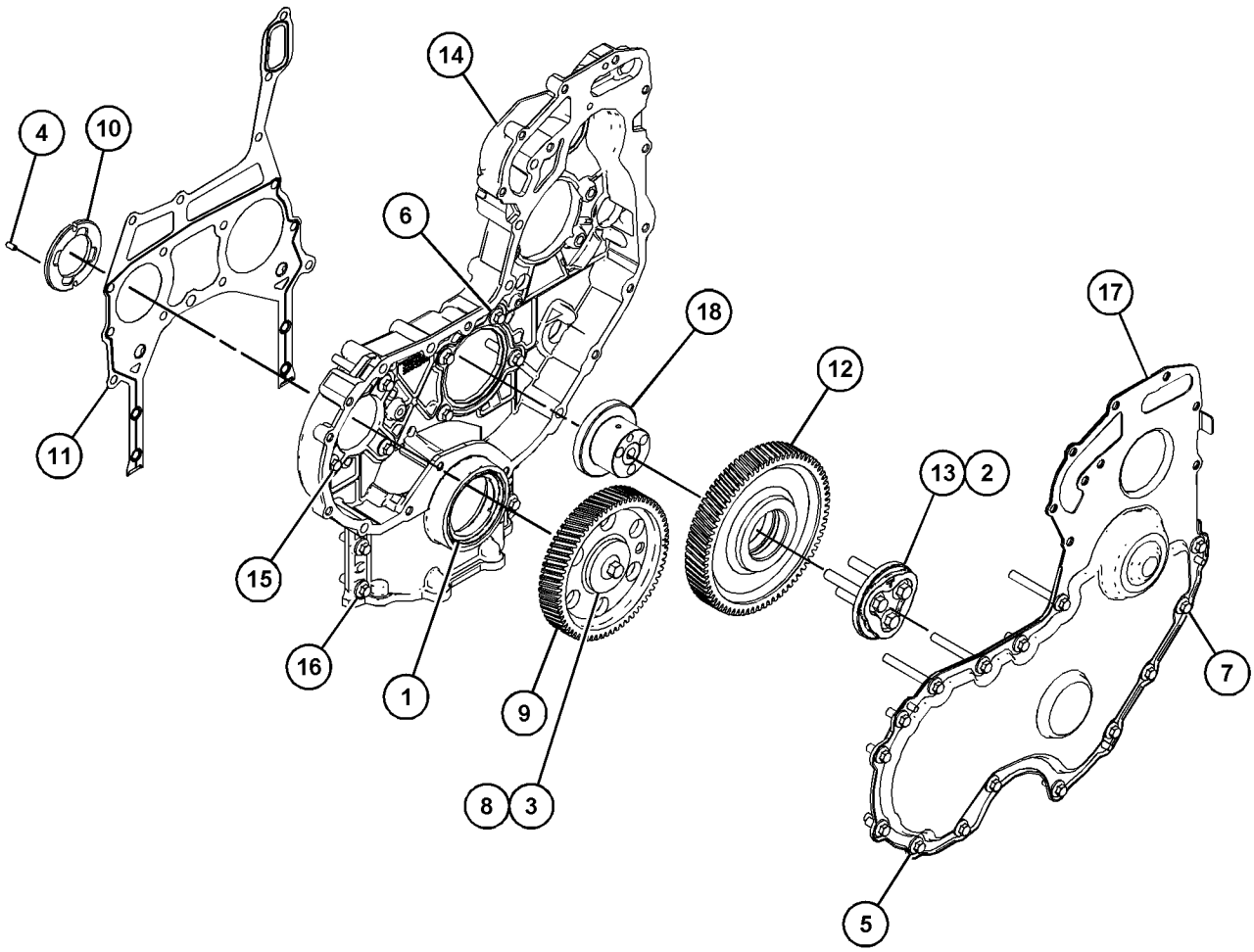

GRAPHIC #1 <END> g06078284

415-7948 JET GP-PISTON COOLING

PART OF 452-7386 CYLINDER BLOCK GP-SHORT, 455-9378, 461-3168, 463-8820, 463-8848, 463-8910, 466-3332, 466-4382, 467-7465, 469-1048, 475-8294, 477-2657, 478-6560, 480-6065, 484-1469, 484-2343, 486-2471, 491-2522, 492-1322, 492-3115, 492-3118, 495-3005, 495-9687, 500-8128, 502-7230, 503-1940, 503-4924, 504-3628, 504-3645, 508-4399, 509-3109, 509-5882, 509-5884, 510-0902, 512-9838, 512-9884, 514-3535, 514-3537, 516-9846, 517-0058, 526-8847, 527-9081, 538-5357, 539-3889, 541-2728 ENGINE AR-PRIMARY

SMCS-1331 **i06091157**

NOTE	REF NO	GRAPHIC REF	PART NUMBER	QTY	PART NAME 1 2 3 4 5 6 (PRODUCT LEVEL)	SEE PAGE
M	1	1	**100-4841**	4	BOLT (M6X1X10-MM)	
	2	1	**276-5605**	4	JET AS-PISTON COOLING	

M - METRIC PART

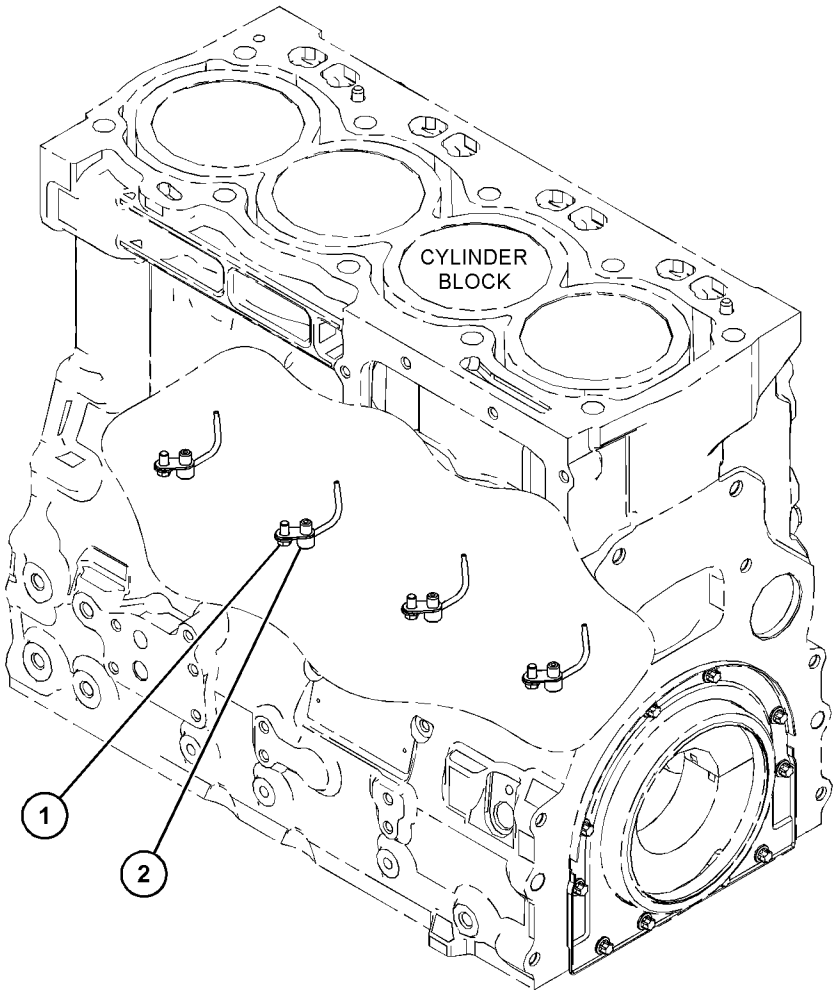

GRAPHIC #1 <END> g03813693

417-3458 LIFTING GP-ENGINE

PART OF 455-9378, 461-3168, 466-4382, 475-8294, 478-6560, 480-6065, 484-1469, 484-2343, 486-2471, 491-2522, 492-1322, 492-3115, 492-3118, 495-3005, 500-8128, 502-7230, 503-1940, 503-4924, 504-3628, 504-3645, 508-4399, 509-3109, 509-5884, 510-0902, 512-9838, 512-9884, 514-3535, 514-3537, 516-9846, 517-0058, 526-8847, 527-9081, 538-5357, 539-3889, 541-2728 ENGINE AR-PRIMARY

SMCS-1122 **i06091164**

NOTE	REF NO	GRAPHIC REF	PART NUMBER	QTY	PART NAME 1 2 3 4 5 6 (PRODUCT LEVEL)	SEE PAGE
M	1	1	**6I-0654**	4	BOLT (M10X1.5X25-MM)	
	2	1	**299-5024**	1	BRACKET	
	3	1	**299-5026**	1	BRACKET	

M - METRIC PART

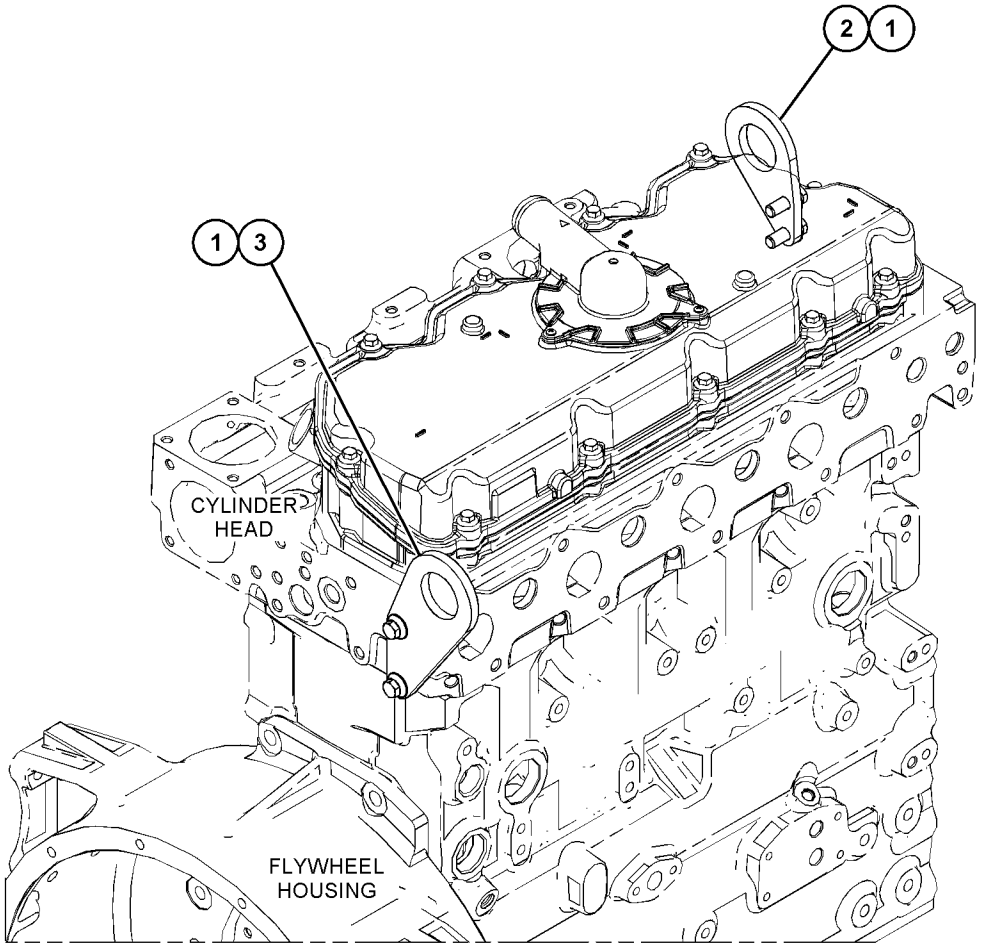

GRAPHIC #1 <END> g03817838

417-3462 LIFTING GP-ENGINE

PART OF 466-3332, 467-7465, 469-1048, 477-2657, 495-9687 ENGINE AR-PRIMARY

SMCS-1122 **i06155555**

NOTE	REF NO	GRAPHIC REF	PART NUMBER	QTY	PART NAME 1 2 3 4 5 6 (PRODUCT LEVEL)	SEE PAGE
M	1	1	**6I-0654**	4	BOLT (M10X1.5X25-MM)	
	2	1	**279-9651**	1	PLATE-LIFTING	
	3	1	**298-4604**	1	PLATE-LIFTING	

M - METRIC PART

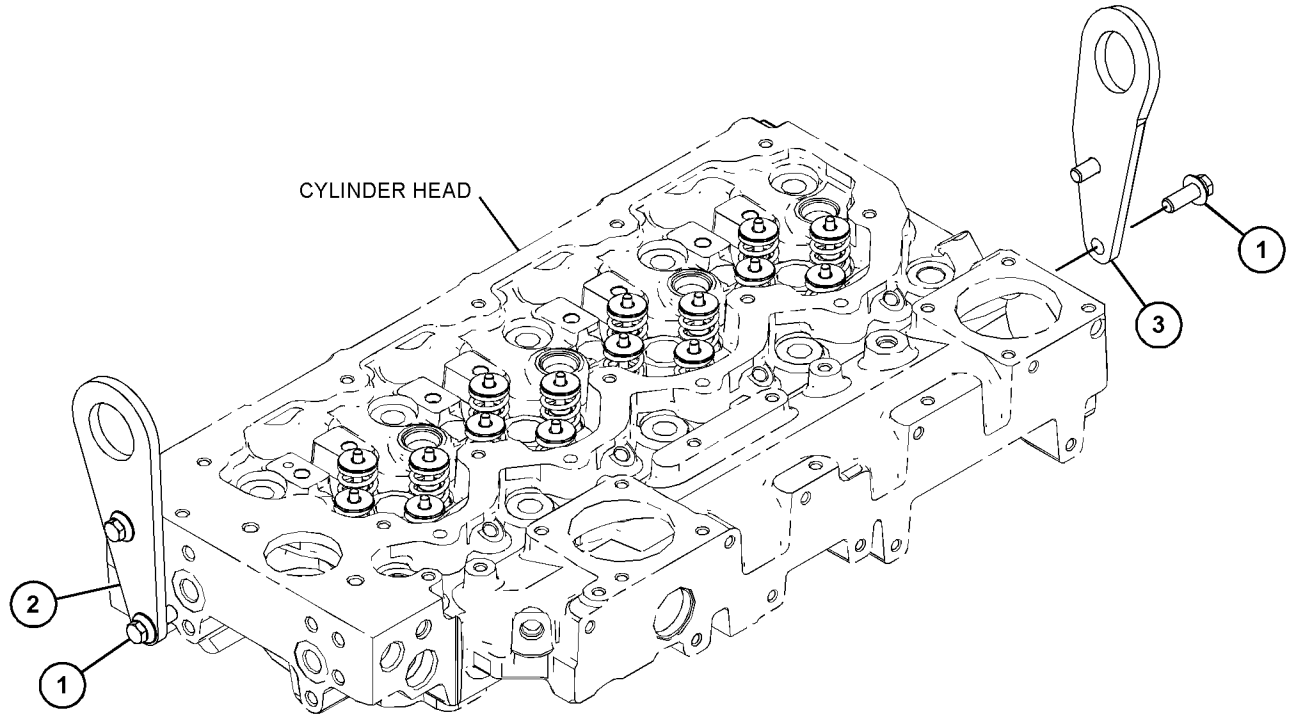

GRAPHIC #1 <END> g03826460

417-3463 LIFTING GP-ENGINE

PART OF 463-8820, 463-8848, 463-8910, 509-5882 ENGINE AR-PRIMARY

SMCS-1122 **i06100964**

NOTE	REF NO	GRAPHIC REF	PART NUMBER	QTY	PART NAME 1 2 3 4 5 6 (PRODUCT LEVEL)	SEE PAGE
M	1	1	**6I-0654**	2	BOLT (M10X1.5X25-MM)	
M	2	1	**123-2899**	3	BOLT (M10X1.5X40-MM)	
	3	1	**421-5383**	1	BRACKET-LIFTING	
	4	1	**279-9651**	1	PLATE-LIFTING	
	5	1	**326-0477**	1	SPACER	

M - METRIC PART

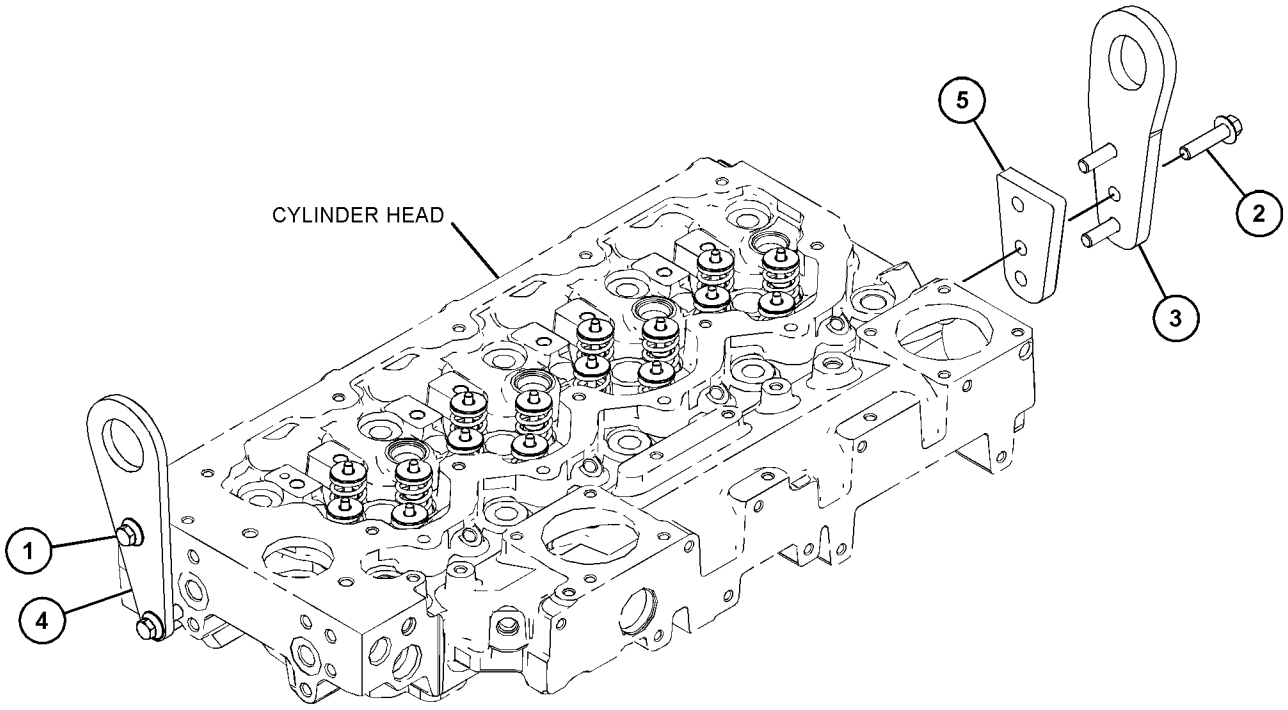

GRAPHIC #1 <END> g03826134

432-8205 MOUNTING GP-ENGINE

PART OF 527-9081 ENGINE AR-PRIMARY

SMCS-1152, 1153, 1154 **i07025664**

NOTE	REF NO	GRAPHIC REF	PART NUMBER	QTY	PART NAME 1 2 3 4 5 6 (PRODUCT LEVEL)	SEE PAGE
M	1	1	**6I-0423**	6	BOLT (M12X1.75X30-MM)	
	2	1	**233-9436**	4	PLUG	
	3	1	**101-7185**	1	BRACKET	
	4	1	**101-7186**	1	BRACKET	
	5	1	**6H-3616**	4	PLUG-PROTECTION	

M - METRIC PART

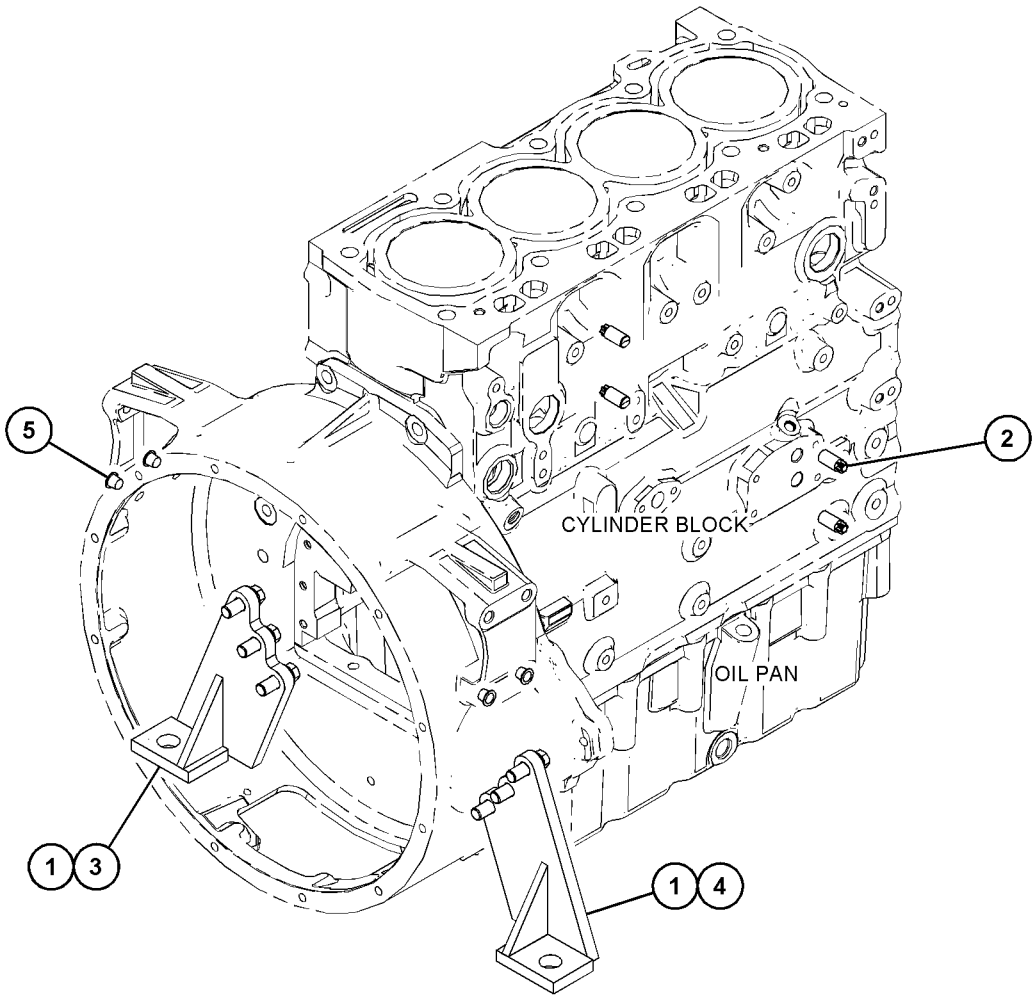

GRAPHIC #1 <END> g06216436

432-8206 MOUNTING GP-ENGINE

PART OF 508-4399, 510-0902 ENGINE AR-PRIMARY

SMCS-1152, 1153, 1154 **i06100994**

NOTE	REF NO	GRAPHIC REF	PART NUMBER	QTY	PART NAME 1 2 3 4 5 6 (PRODUCT LEVEL)	SEE PAGE
M	1	1	**6I-0423**	6	BOLT (M12X1.75X30-MM)	
	2	1	**101-7185**	1	BRACKET	
	3	1	**183-1343**	4	STUD	
M	4	1	**195-2221**	8	NUT (M12X1.75-THD)	
M	5	1	**247-8314**	4	STUD (M12X1.75X73-MM)	
	6	1	**379-6461**	1	BRACKET AS-MOUNTING	
	7	1	**379-6462**	1	BRACKET AS-MOUNTING	
	8	1	**101-7186**	1	BRACKET	
	9	1	**145-2881**	1	SPACER	
	10	1	**6H-3616**	4	PLUG-PROTECTION	

M - METRIC PART

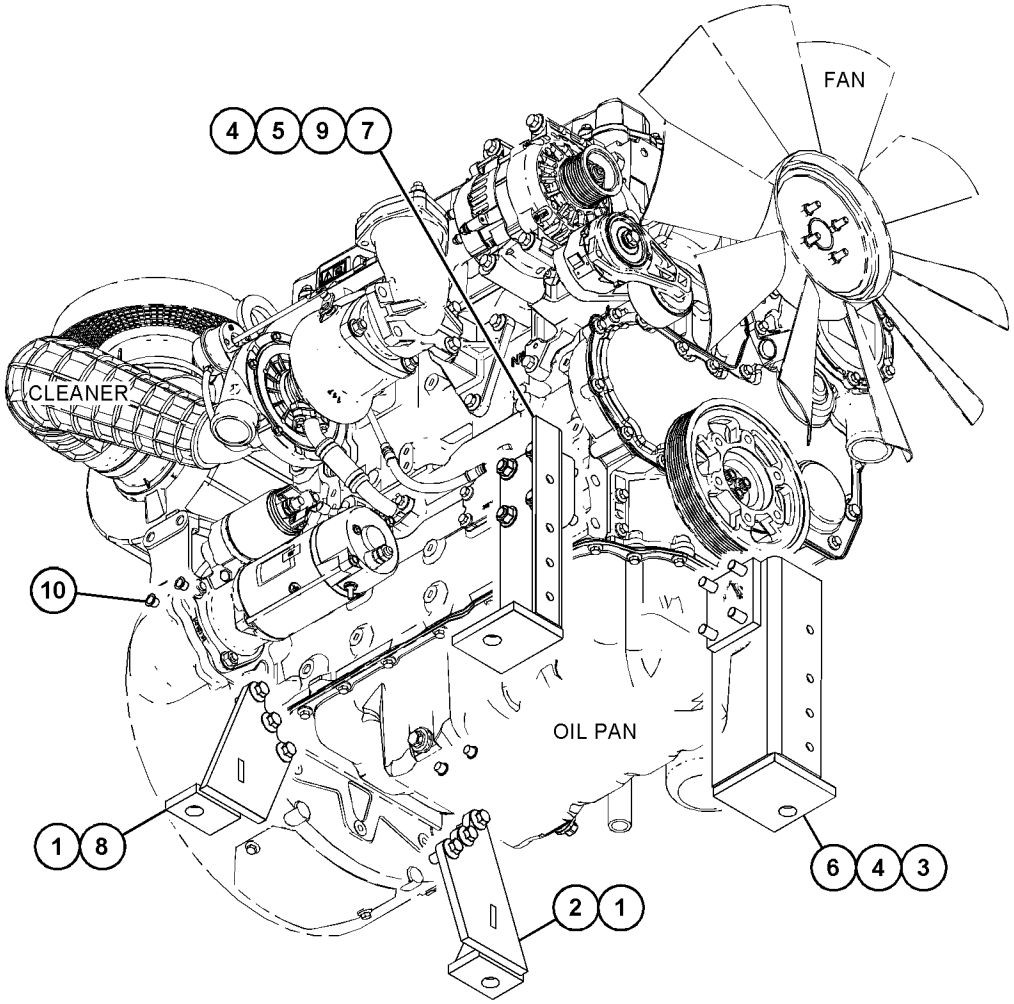

GRAPHIC #1 <END> g06123317

445-0224 MOUNTING GP-ENGINE

PART OF 466-3332, 467-7465, 469-1048, 477-2657, 491-2522 ENGINE AR-PRIMARY

SMCS-1152, 1153, 1154

i06501998

NOTE	REF NO	GRAPHIC REF	PART NUMBER	QTY	PART NAME 1 2 3 4 5 6 (PRODUCT LEVEL)	SEE PAGE
	1	1	**183-1343**	8	STUD	
M	2	1	**195-2221**	8	NUT (M12X1.75-THD)	
	3	1	**6H-3616**	10	PLUG-PROTECTION	

M - METRIC PART

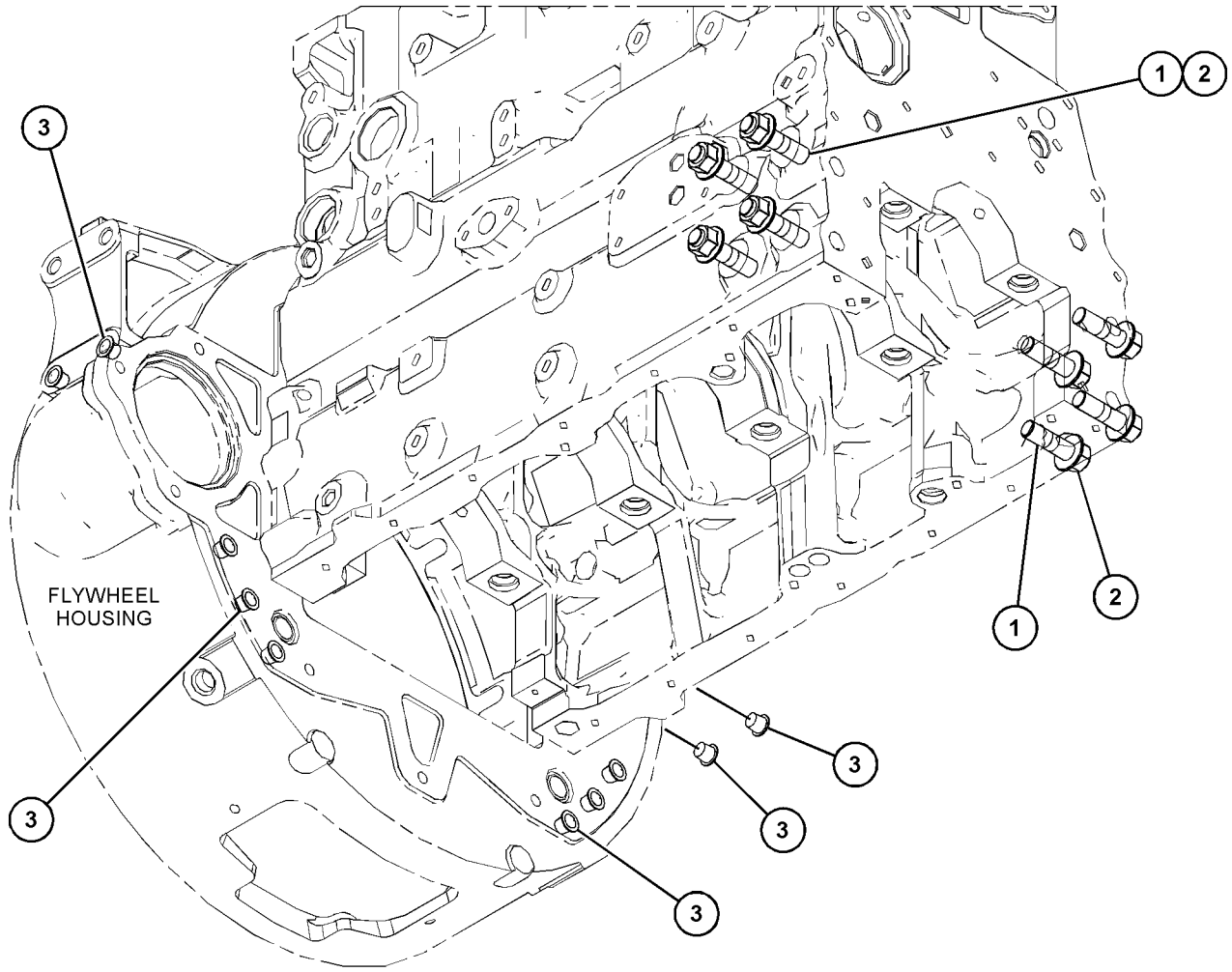

GRAPHIC #1 <END> g06002502

446-2244 MOUNTING GP-ENGINE

PART OF 492-3115, 492-3118, 504-3628, 504-3645 ENGINE AR-PRIMARY

SMCS-1152, 1153, 1154 **i06627854**

NOTE	REF NO	GRAPHIC REF	PART NUMBER	QTY	PART NAME 1 2 3 4 5 6 (PRODUCT LEVEL)	SEE PAGE
	1	1	**233-9436**	4	PLUG	

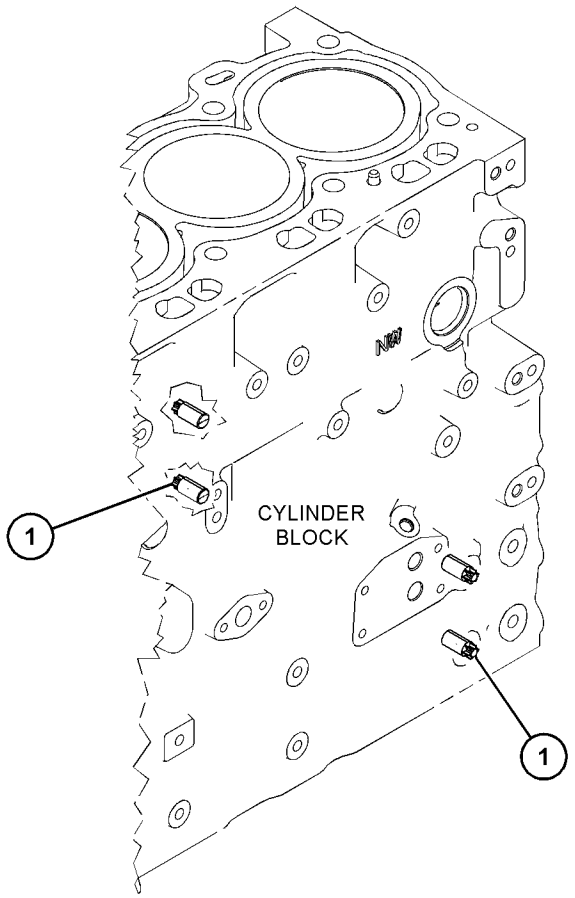

GRAPHIC #1 <END> g06134476

465-3613 MOUNTING GP-ENGINE

PART OF 461-3168, 475-8294, 480-6065, 486-2471, 500-8128, 502-7230, 509-3109, 509-5884, 514-3535, 514-3537, 516-9846, 526-8847 ENGINE AR-PRIMARY

SMCS-1152, 1153, 1154

i06091153

NOTE	REF NO	GRAPHIC REF	PART NUMBER	QTY	PART NAME 1 2 3 4 5 6 (PRODUCT LEVEL)	SEE PAGE
M	1	1	**6I-0423**	6	BOLT (M12X1.75X30-MM)	
	2	1	**101-7185**	1	BRACKET	
	3	1	**101-7186**	1	BRACKET	
	4	1	**6H-3616**	4	PLUG-PROTECTION	

M - METRIC PART

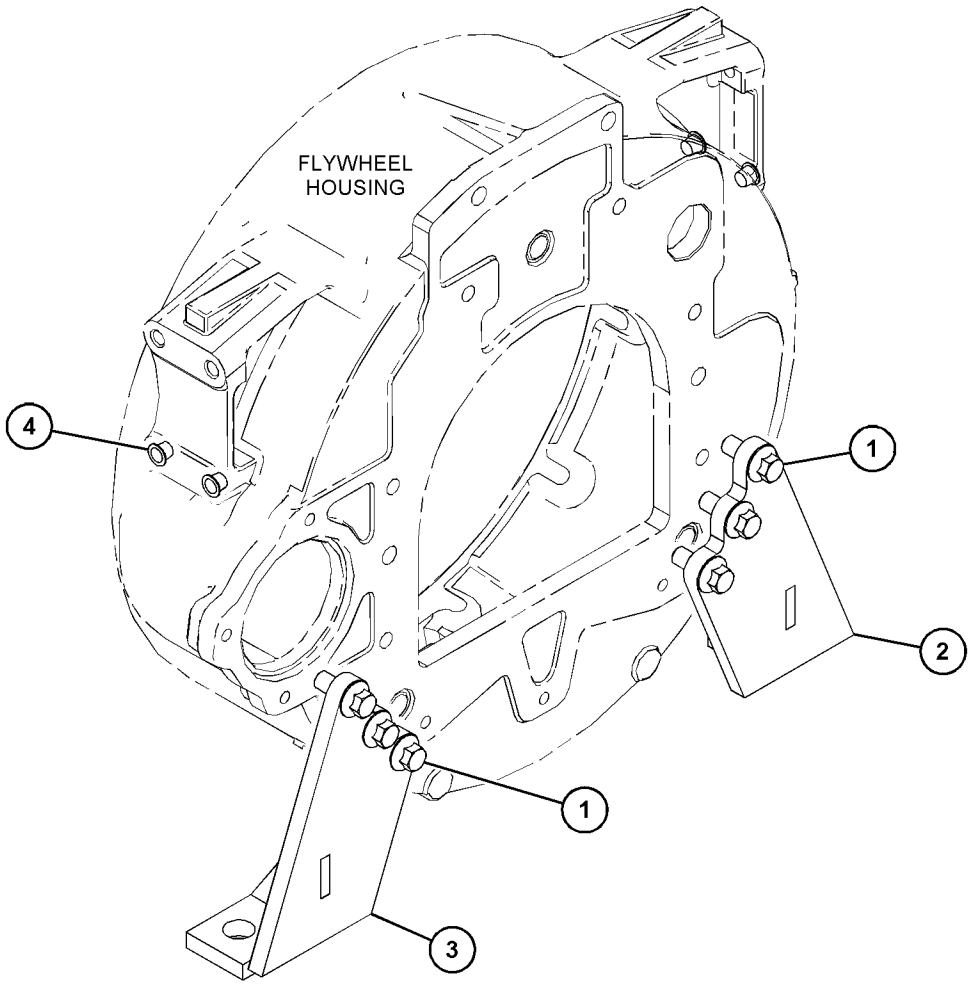

GRAPHIC #1 <END> g03808981

465-3614 MOUNTING GP-ENGINE

PART OF 455-9378, 478-6560, 492-1322, 495-3005, 503-4924, 512-9838, 512-9884, 517-0058, 539-3889 ENGINE AR-PRIMARY

SMCS-1152, 1153, 1154

i06180525

NOTE	REF NO	GRAPHIC REF	PART NUMBER	QTY	PART NAME 1 2 3 4 5 6 (PRODUCT LEVEL)	SEE PAGE
M	1	1	**6I-0423**	6	BOLT (M12X1.75X30-MM)	
	2	1	**101-7185**	1	BRACKET	
	3	1	**101-7186**	1	BRACKET	

M - METRIC PART

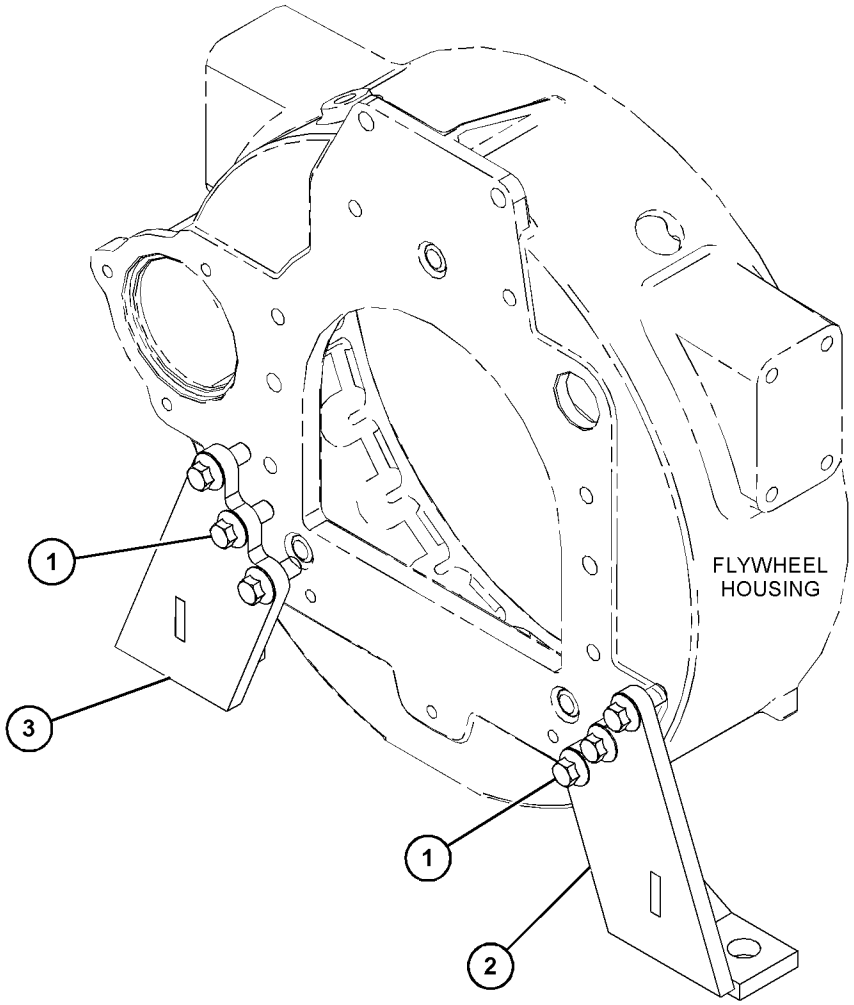

GRAPHIC #1 <END> g06008825

471-0600 MOUNTING GP-ENGINE

PART OF 541-2728 ENGINE AR-PRIMARY

SMCS-1152, 1153, 1154 **i07236302**

NOTE	REF NO	GRAPHIC REF	PART NUMBER	QTY	PART NAME 1 2 3 4 5 6 (PRODUCT LEVEL)	SEE PAGE
	1	1	**183-1343**	8	STUD	
M	2	1	**195-2221**	8	NUT (M12X1.75-THD)	

M - METRIC PART

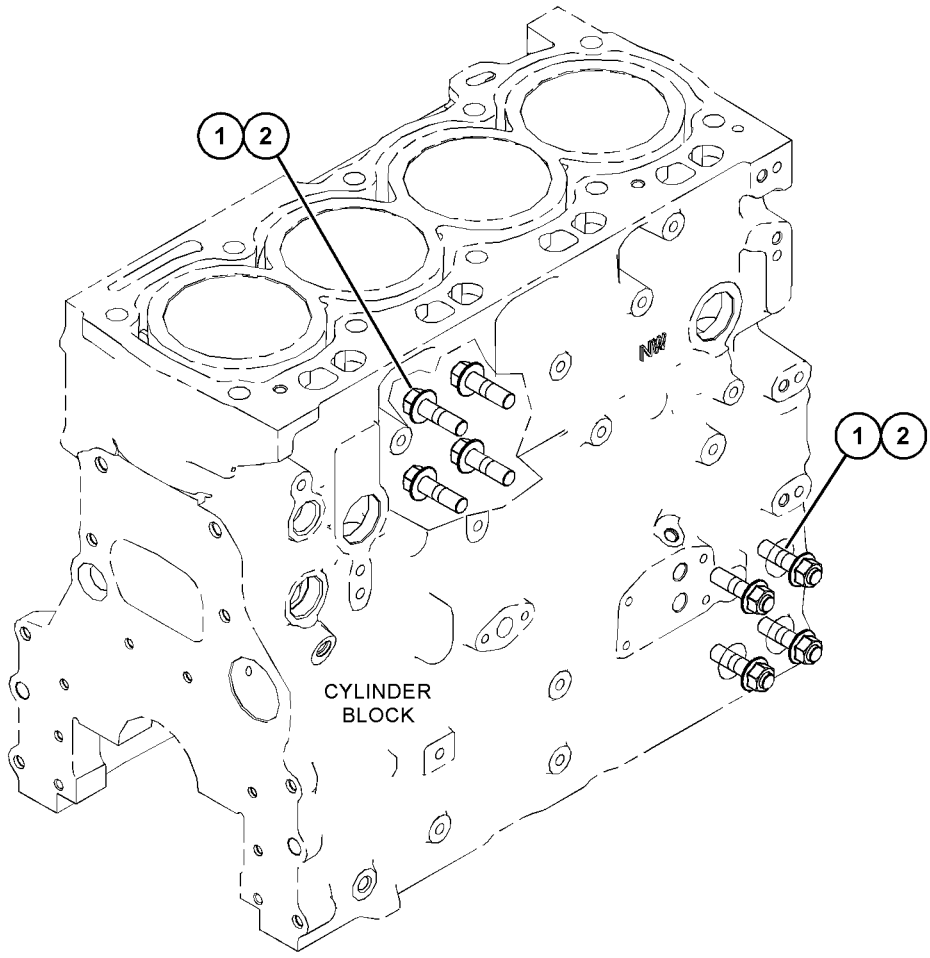

GRAPHIC #1 <END> g06262381

477-6887 MOUNTING GP-ENGINE

SMCS-1152, 1153, 1154 **i06710883**

NOTE	REF NO	GRAPHIC REF	PART NUMBER	QTY	PART NAME 1 2 3 4 5 6 (PRODUCT LEVEL)	SEE PAGE
	1	1	**233-9436**	4	PLUG	
	2	1	**0T-0642**	6	BOLT (3/8-24X0.625-IN)	

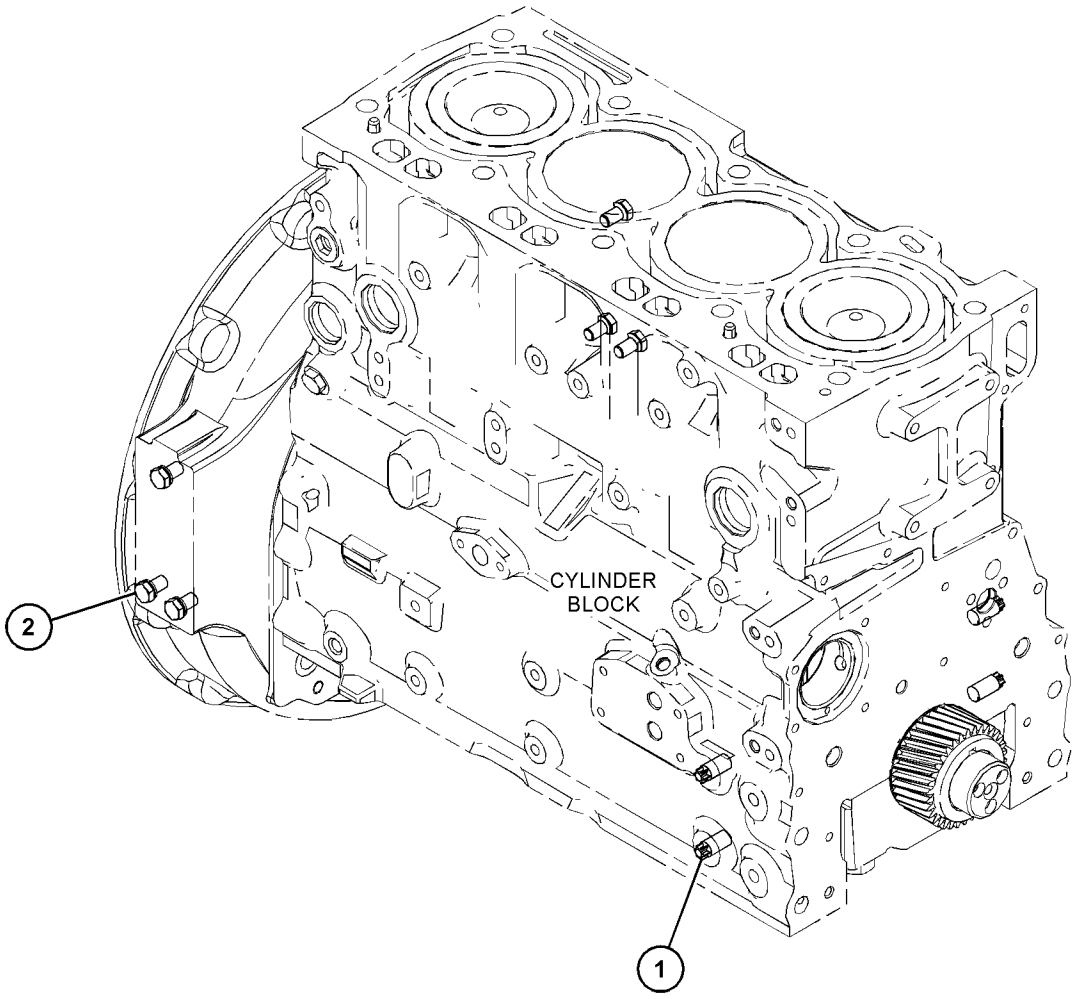

GRAPHIC #1 <END> g06100709

490-7862 MOUNTING GP-ENGINE

TYPE 1

SMCS-1152, 1153, 1154 **i06890605**

NOTE	REF NO	GRAPHIC REF	PART NUMBER	QTY	PART NAME 1 2 3 4 5 6 (PRODUCT LEVEL)	SEE PAGE
	1	1	**440-8635**	1	BRACKET-ENGINE MOUNTING	
	2	1	**440-8636**	1	BRACKET-ENGINE MOUNTING	
	3	1	**436-0220**	8	BOLT-FLANGE HEAD	
	4	1	**6H-3616**	12	PLUG-PROTECTION	

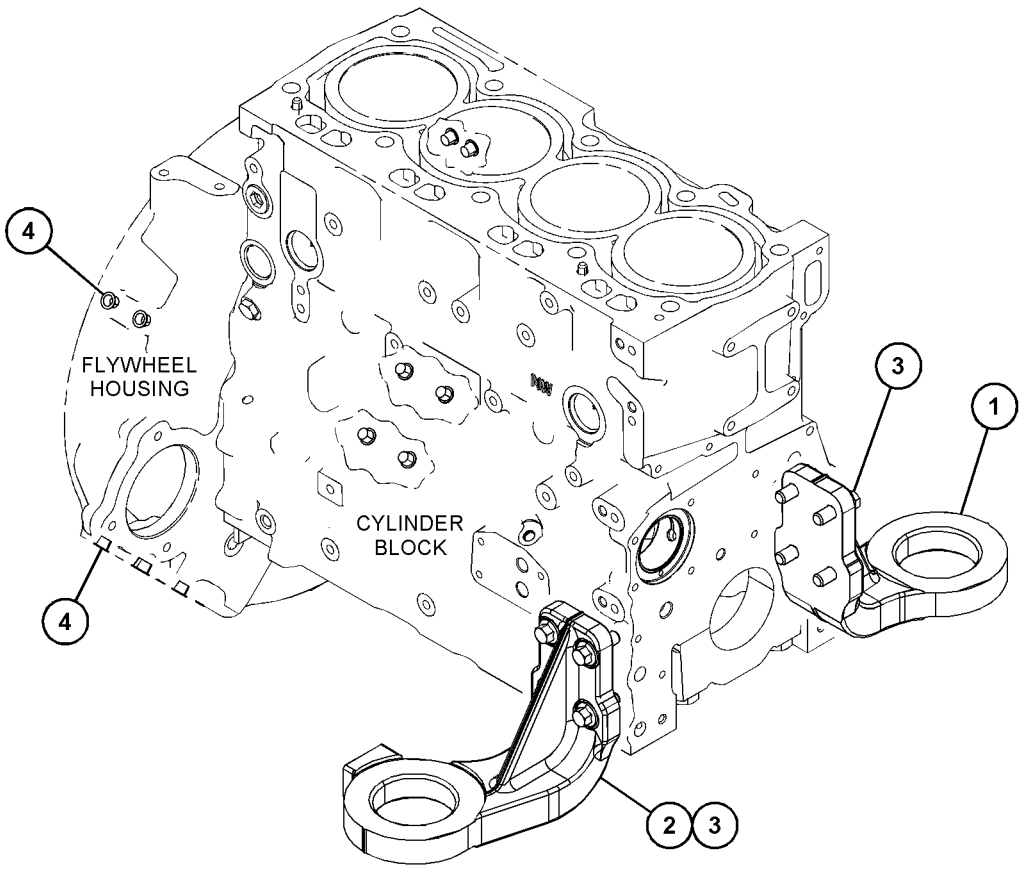

GRAPHIC #1 <END> g06169756

490-7862 MOUNTING GP-ENGINE

TYPE 2

SMCS-1152, 1153, 1154 **i07038279**

NOTE	REF NO	GRAPHIC REF	PART NUMBER	QTY	PART NAME 1 2 3 4 5 6 (PRODUCT LEVEL)	SEE PAGE
	1	1	**440-8635**	1	BRACKET-ENGINE MOUNTING	
	2	1	**440-8636**	1	BRACKET-ENGINE MOUNTING	
	3	1	**436-0220**	8	BOLT-FLANGE HEAD	

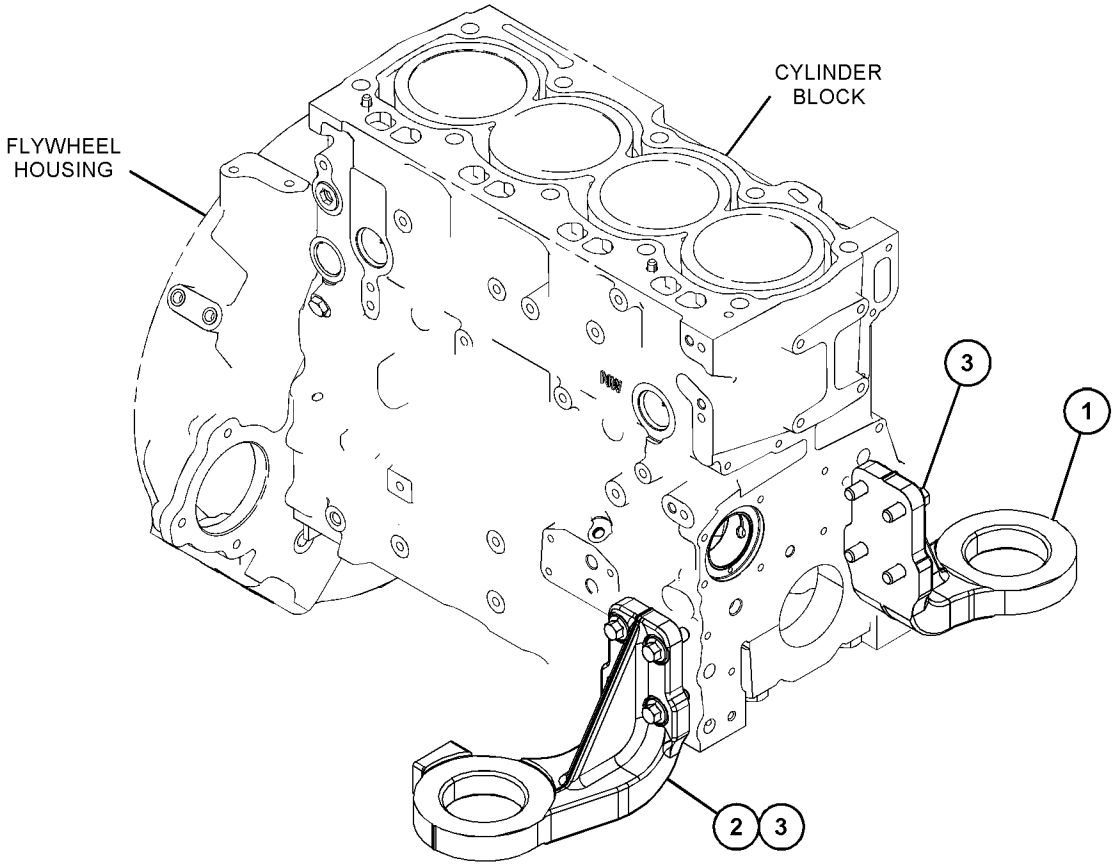

GRAPHIC #1 <END> g06210390

416-1050 PAN GP-OIL

SMCS-1302 **i06704410**

NOTE	REF NO	GRAPHIC REF	PART NUMBER	QTY	PART NAME 1 2 3 4 5 6 (PRODUCT LEVEL)	SEE PAGE
M	1	1	**6I-0363**	2	BOLT (M6X1X20-MM)	
	2	1	**067-6213**	1	GASKET	
M	3	1	**101-3805**	16	BOLT (M8X1.25X90-MM)	
	4	1	**230-8094**	1	BRIDGE	
	5	1	**425-6074**	1	PAN	
M	6	1	**6I-0260**	4	BOLT (M8X1.25X25-MM)	
M	7	1	**6I-0645**	2	BOLT (M8X1.25X25-MM)	
	8	1	**471-2882**	1	GASKET	
	9	1	**235-2435**	1	TUBE-SUCTION	

M - METRIC PART

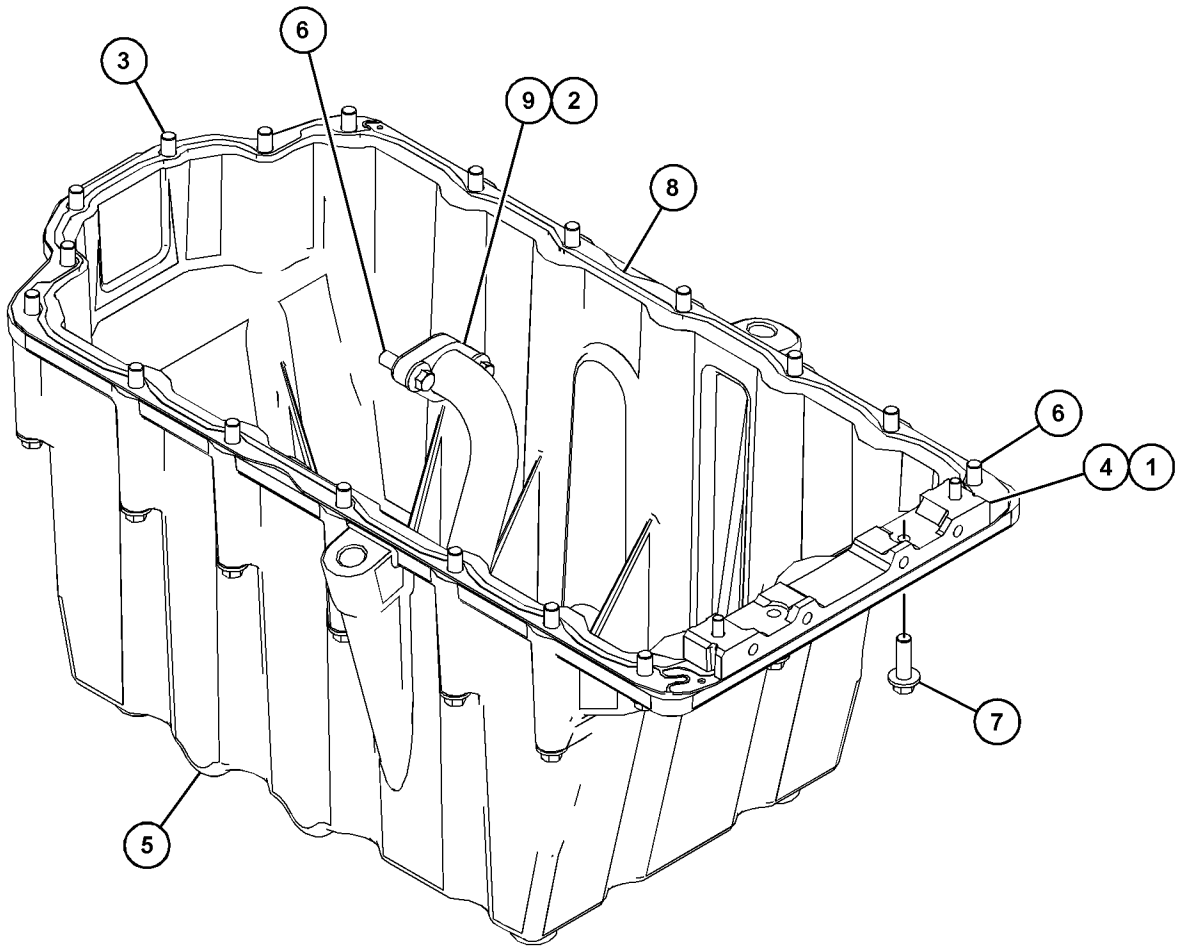

GRAPHIC #1 <END> g03865756

416-1051 PAN GP-OIL

PART OF 455-9378, 463-8848, 463-8910, 466-3332, 466-4382, 467-7465, 484-1469, 491-2522, 495-9687, 509-5882 ENGINE AR-PRIMARY

SMCS-1302 **i07176539**

NOTE	REF NO	GRAPHIC REF	PART NUMBER	QTY	PART NAME 1 2 3 4 5 6 (PRODUCT LEVEL)	SEE PAGE
M	1	1	**6I-0363**	2	BOLT (M6X1X20-MM)	
M	2	1	**101-3771**	4	BOLT (M8X1.25X85-MM)	
	3	1	**480-4406**	1	PAN	
M	4	1	**6I-0217**	12	BOLT (M8X1.25X20-MM)	
M	5	1	**6I-0260**	2	BOLT (M8X1.25X25-MM)	
M	6	1	**6I-0572**	4	BOLT (M8X1.25X20-MM)	
	7	1	**067-6213**	1	GASKET	
	8	1	**471-2882**	1	GASKET	
	9	1	**225-6041**	1	TUBE	
	10	1	**230-8094**	1	BRIDGE	

M - METRIC PART

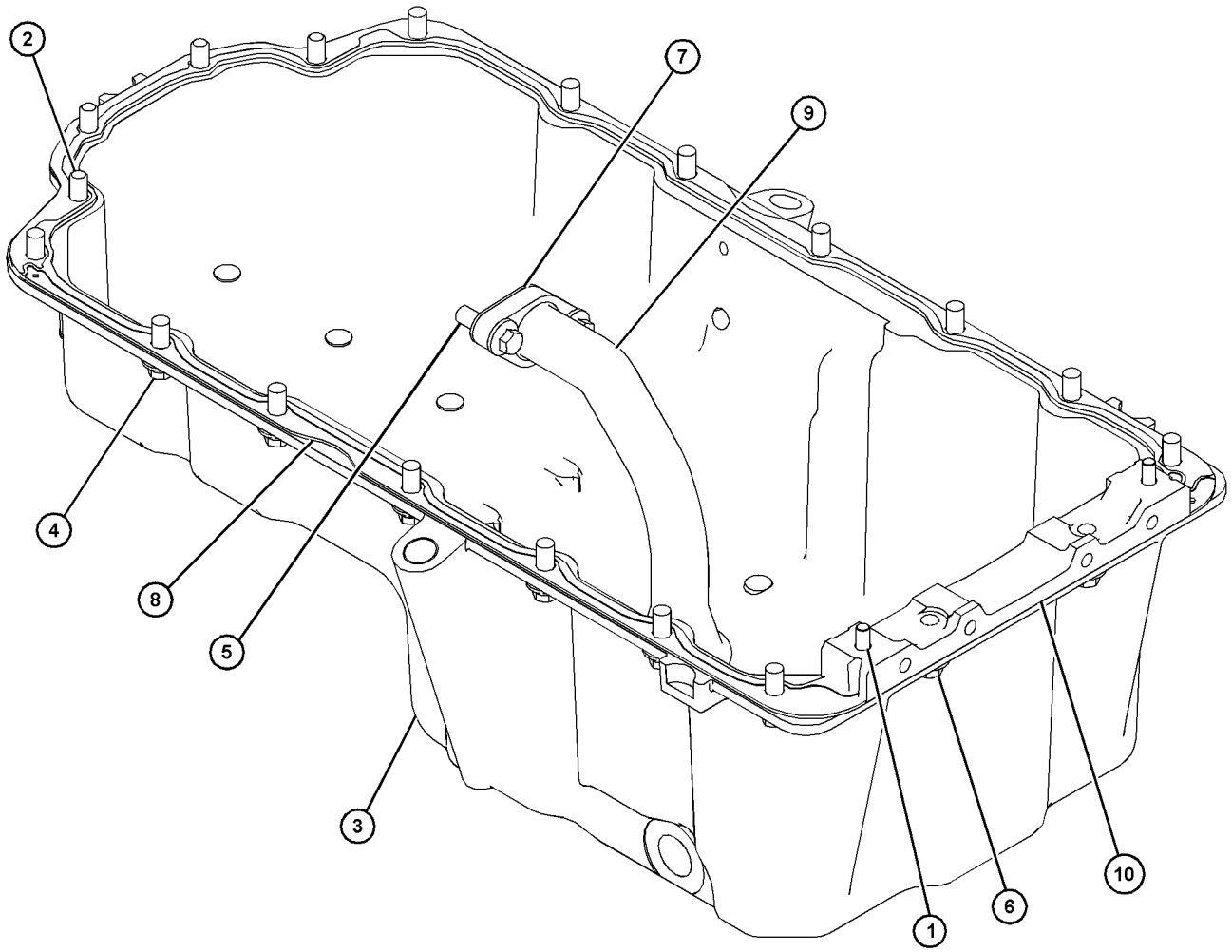

GRAPHIC #1 <END> g03841817

418-7530 PAN GP-OIL

PART OF 516-9846, 527-9081, 541-2728 ENGINE AR-PRIMARY

SMCS-1302 **i06704425**

NOTE	REF NO	GRAPHIC REF	PART NUMBER	QTY	PART NAME 1 2 3 4 5 6 (PRODUCT LEVEL)	SEE PAGE
M	1	1	**6I-0363**	2	BOLT (M6X1X20-MM)	
M	2	1	**101-3805**	16	BOLT (M8X1.25X90-MM)	
	3	1	**230-8094**	1	BRIDGE	
	4	1	**373-9786**	1	PIPE	
	5	1	**433-0344**	1	PAN AS-OIL	
		1	**360-0073**	1	PAN	
M	6	1	**6I-0260**	2	BOLT (M8X1.25X25-MM)	
M	7	1	**6I-0260**	2	BOLT (M8X1.25X25-MM)	
M	8	1	**178-3336**	2	NUT-HEX FLANGE (M8X1.25-THD)	
	9	1	**155-4828**	2	STUD	
	10	1	**471-2882**	1	GASKET	

M - METRIC PART

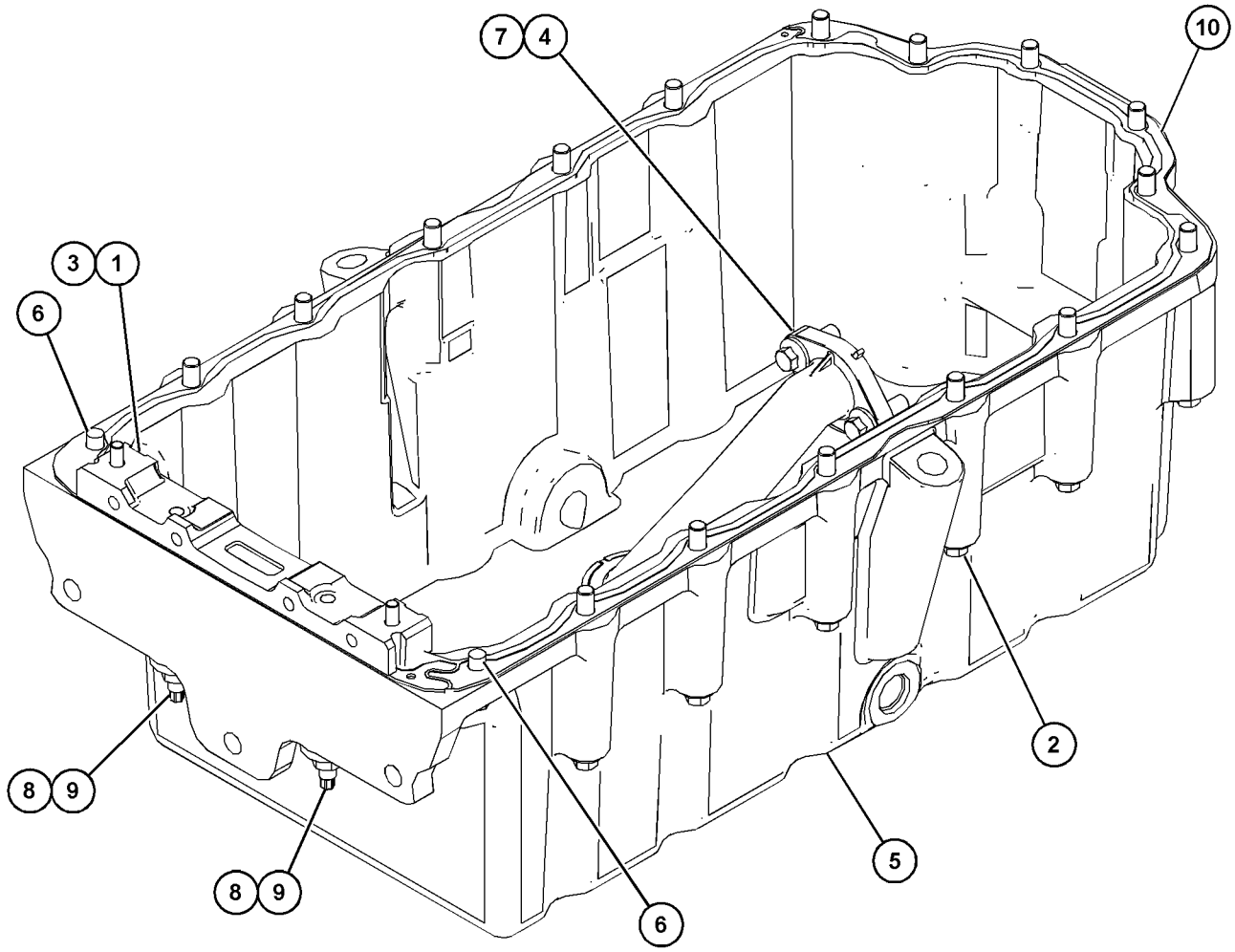

GRAPHIC #1 <END> g06003248

419-8519 PAN GP-OIL

PART OF 455-9378, 478-6560, 495-3005, 503-4924, 512-9838, 512-9884, 517-0058, 539-3889 ENGINE AR-PRIMARY

SMCS-1302 **i06919778**

NOTE	REF NO	GRAPHIC REF	PART NUMBER	QTY	PART NAME 1 2 3 4 5 6 (PRODUCT LEVEL)	SEE PAGE
M	1	1	**8T-0269**	2	BOLT-SOCKET HEAD (M6X1X20-MM)	
	2	1	**152-6730**	4	BOLT (M8X1.25X120-MM)	
	3	1	**185-7149**	4	BOLT	
	4	1	**479-1570**	1	PAN-OIL	
M	5	1	**6I-0260**	2	BOLT (M8X1.25X25-MM)	
M	6	1	**6I-0292**	12	BOLT (M8X1.25X140-MM)	
	7	1	**067-6213**	1	GASKET	
	8	1	**471-2882**	1	GASKET	
	9	1	**230-8094**	1	BRIDGE	
	10	1	**304-3698**	1	TUBE-OIL SUCTION	

M - METRIC PART

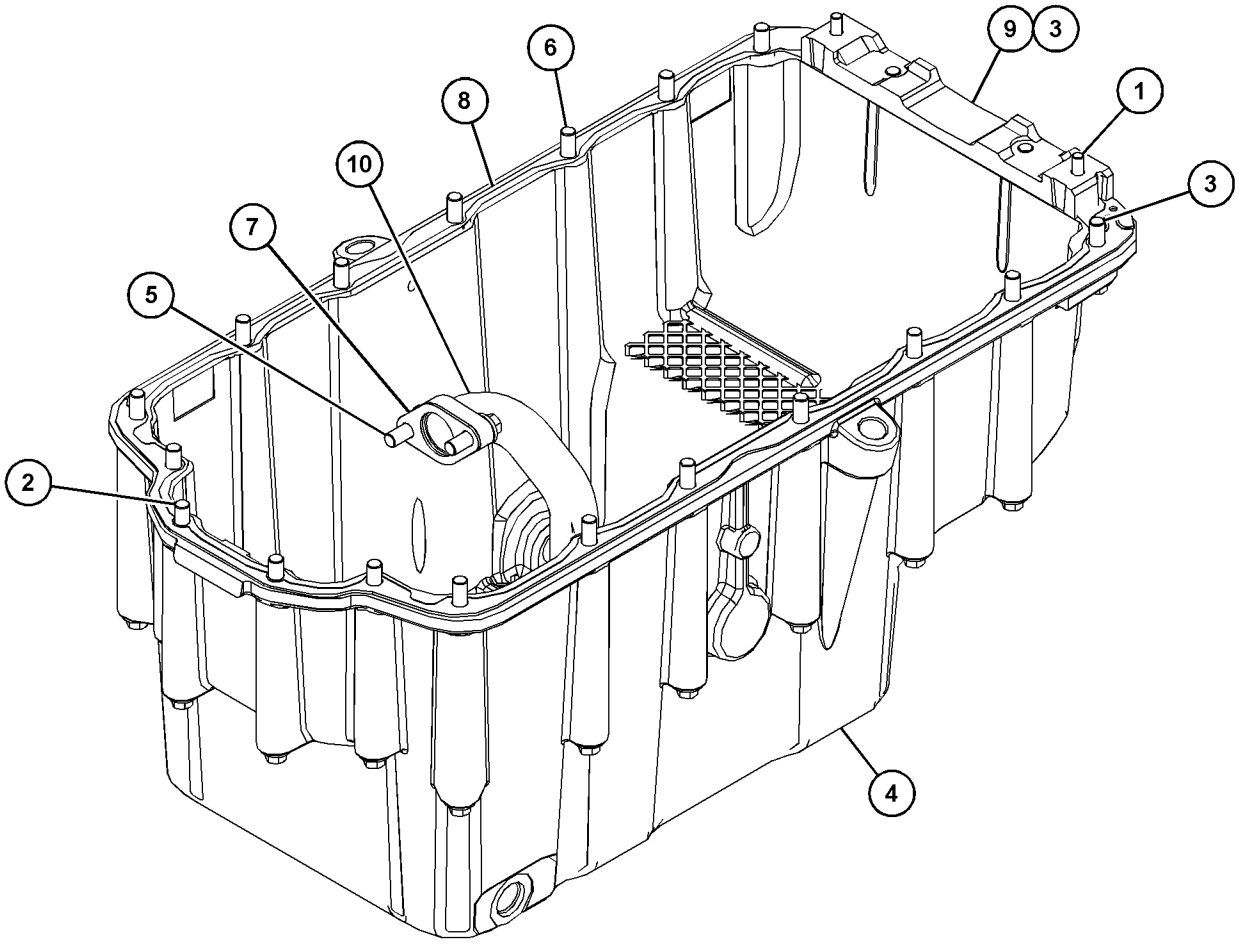

GRAPHIC #1 <END> g03829055

423-1280 PAN GP-OIL

PART OF 463-8820, 492-3118, 500-8128, 502-7230, 504-3645, 508-4399, 510-0902, 514-3535, 514-3537 ENGINE AR-PRIMARY

SMCS-1302 **i06648240**

NOTE	REF NO	GRAPHIC REF	PART NUMBER	QTY	PART NAME 1 2 3 4 5 6 (PRODUCT LEVEL)	SEE PAGE
M	1	1	**8T-0269**	2	BOLT-SOCKET HEAD (M6X1X20-MM)	
M	2	1	**124-3815**	18	BOLT (M8X1.25X16-MM)	
	3	1	**230-8094**	1	BRIDGE	
	4	1	**373-9785**	1	PIPE	
M	5	1	**6I-0260**	2	BOLT (M8X1.25X25-MM)	
M	6	1	**6I-4072**	2	BOLT (M8X1.25X14-MM)	
	7	1	**214-3281**	1	PAN-OIL	
	8	1	**471-2882**	1	GASKET	

M - METRIC PART

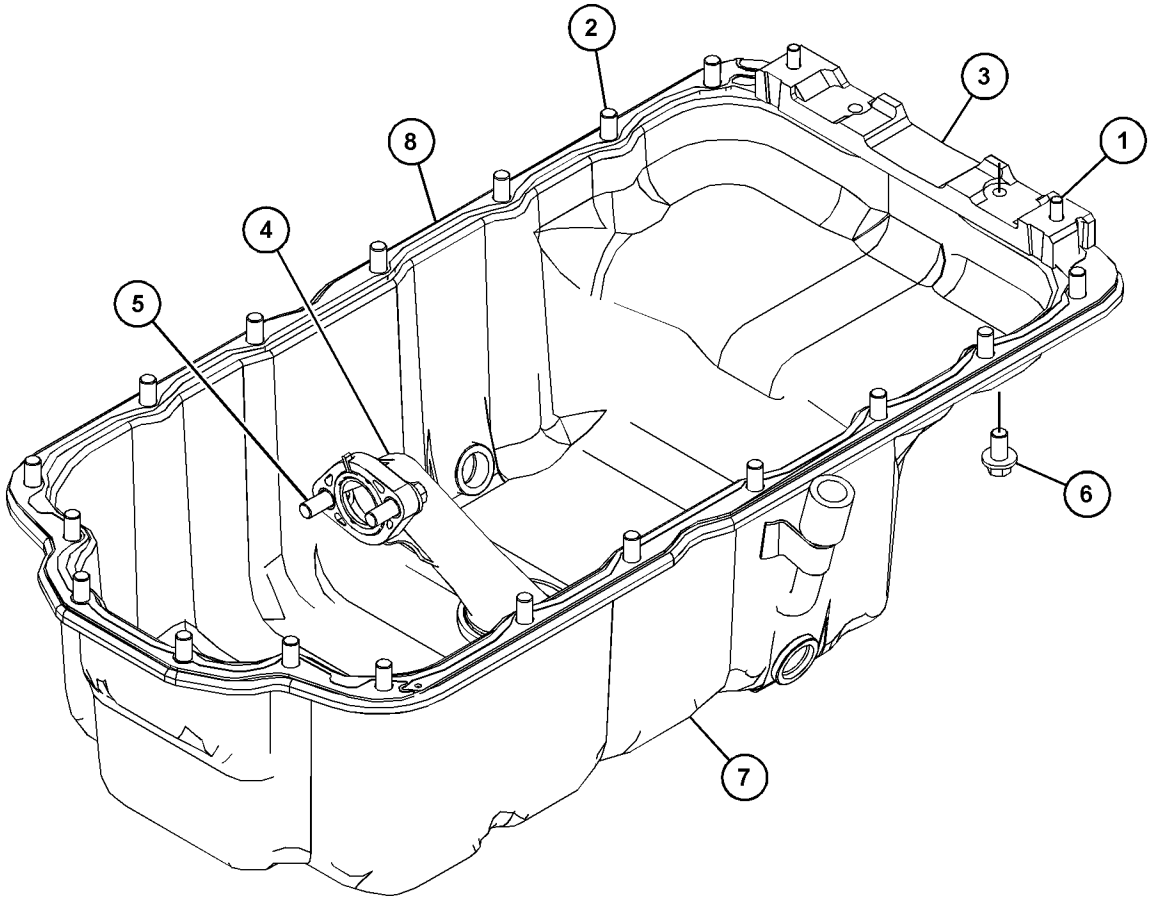

GRAPHIC #1 <END> g03822836

430-5220 PAN GP-OIL

PART OF 469-1048, 477-2657 ENGINE AR-PRIMARY
TYPE 2

SMCS-1302 **i06704396**

NOTE	REF NO	GRAPHIC REF	PART NUMBER	QTY	PART NAME 1 2 3 4 5 6 (PRODUCT LEVEL)	SEE PAGE
M	1	1	**8T-0269**	2	BOLT-SOCKET HEAD (M6X1X20-MM)	
M	2	1	**124-3815**	18	BOLT (M8X1.25X16-MM)	
	3	1	**230-8094**	1	BRIDGE	
M	4	1	**6I-0260**	2	BOLT (M8X1.25X25-MM)	
M	5	1	**6I-4072**	2	BOLT (M8X1.25X14-MM)	
	6	1	**373-9785**	1	PIPE	
	7	1	**219-4136**	1	PAN-OIL	
C	8	1	**471-2882**	1	GASKET	

C - CHANGE FROM PREVIOUS TYPE
M - METRIC PART

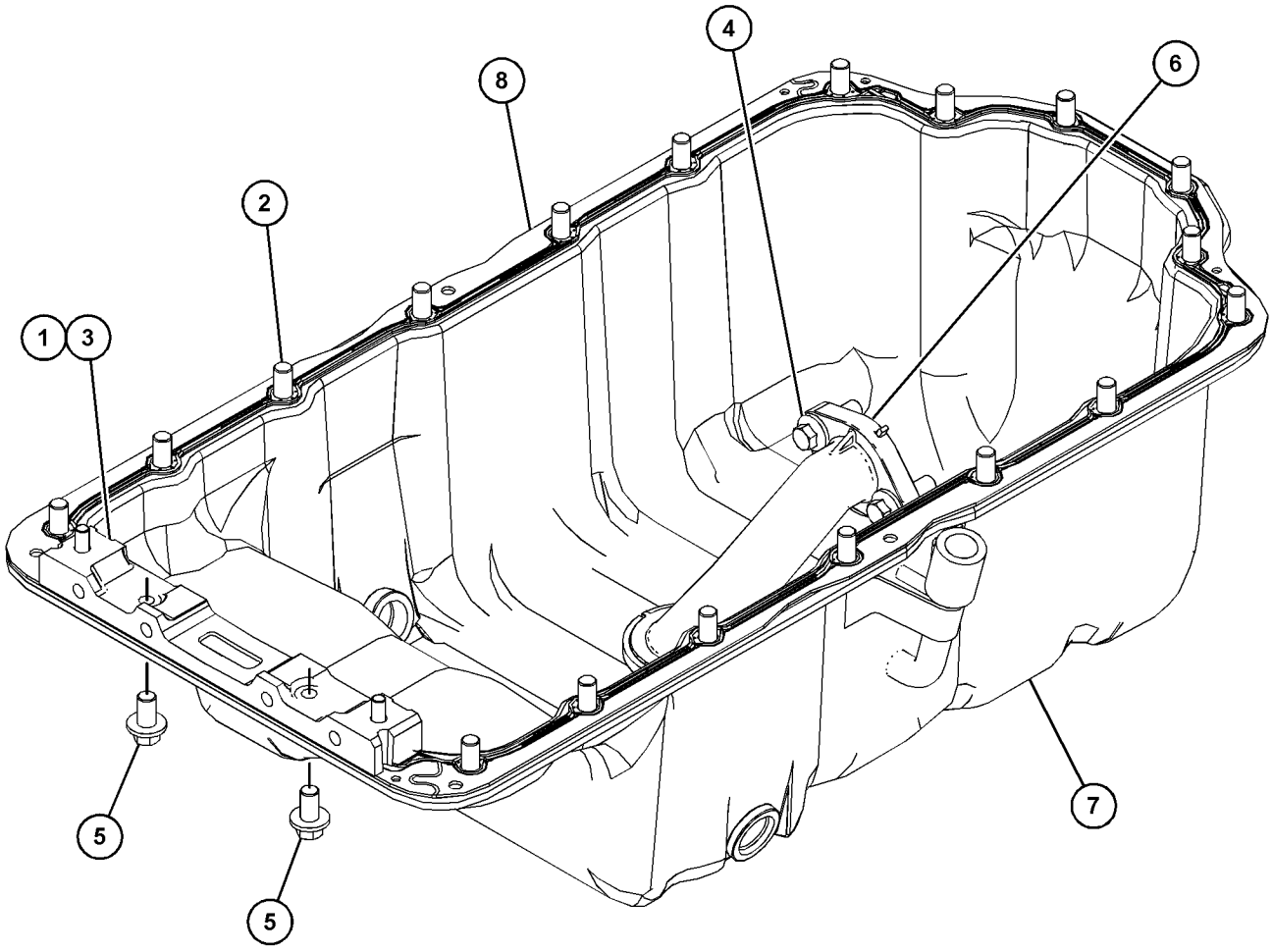

GRAPHIC #1 <END> g06160714

430-5220 PAN GP-OIL

PART OF 469-1048, 492-1322 ENGINE AR-PRIMARY

TYPE 1

SMCS-1302 **i06547709**

NOTE	REF NO	GRAPHIC REF	PART NUMBER	QTY	PART NAME 1 2 3 4 5 6 (PRODUCT LEVEL)	SEE PAGE
M	1	1	**6I-0363**	2	BOLT (M6X1X20-MM)	
M	2	1	**124-3815**	18	BOLT (M8X1.25X16-MM)	
	3	1	**230-8094**	1	BRIDGE	
M	4	1	**6I-0260**	2	BOLT (M8X1.25X25-MM)	
M	5	1	**6I-4072**	2	BOLT (M8X1.25X14-MM)	
	6	1	**067-6213**	1	GASKET	
	7	1	**219-4136**	1	PAN-OIL	
	8	1	**225-6005**	1	GASKET	
	9	1	**230-8218**	1	TUBE-SUCTION	

M - METRIC PART

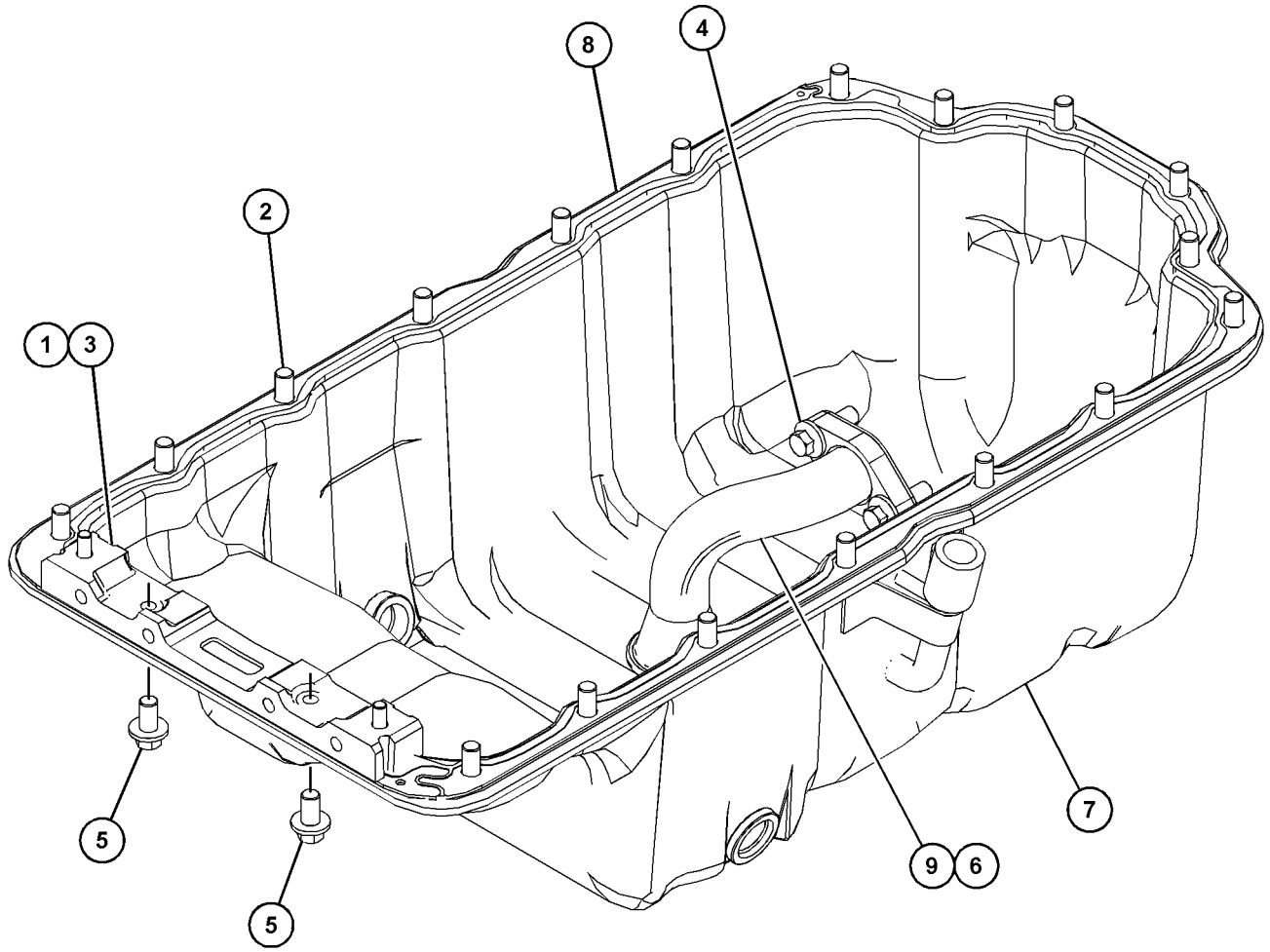

GRAPHIC #1 <END> g06035843

431-8625 PAN GP-OIL

PART OF 469-1048, 477-2657, 492-1322 ENGINE AR-PRIMARY

SMCS-1302 **i06547712**

NOTE	REF NO	GRAPHIC REF	PART NUMBER	QTY	PART NAME 1 2 3 4 5 6 (PRODUCT LEVEL)	SEE PAGE
	1	1	**6I-1497**	1	SEAL	
	2	1	**351-2098**	1	GAUGE GP-OIL LEVEL (DIPSTICK) (ENGINE)	
	2A	1	**228-7089**	1	SEAL-O-RING	
	2B	1	**275-9891**	2	SEAL-O-RING	

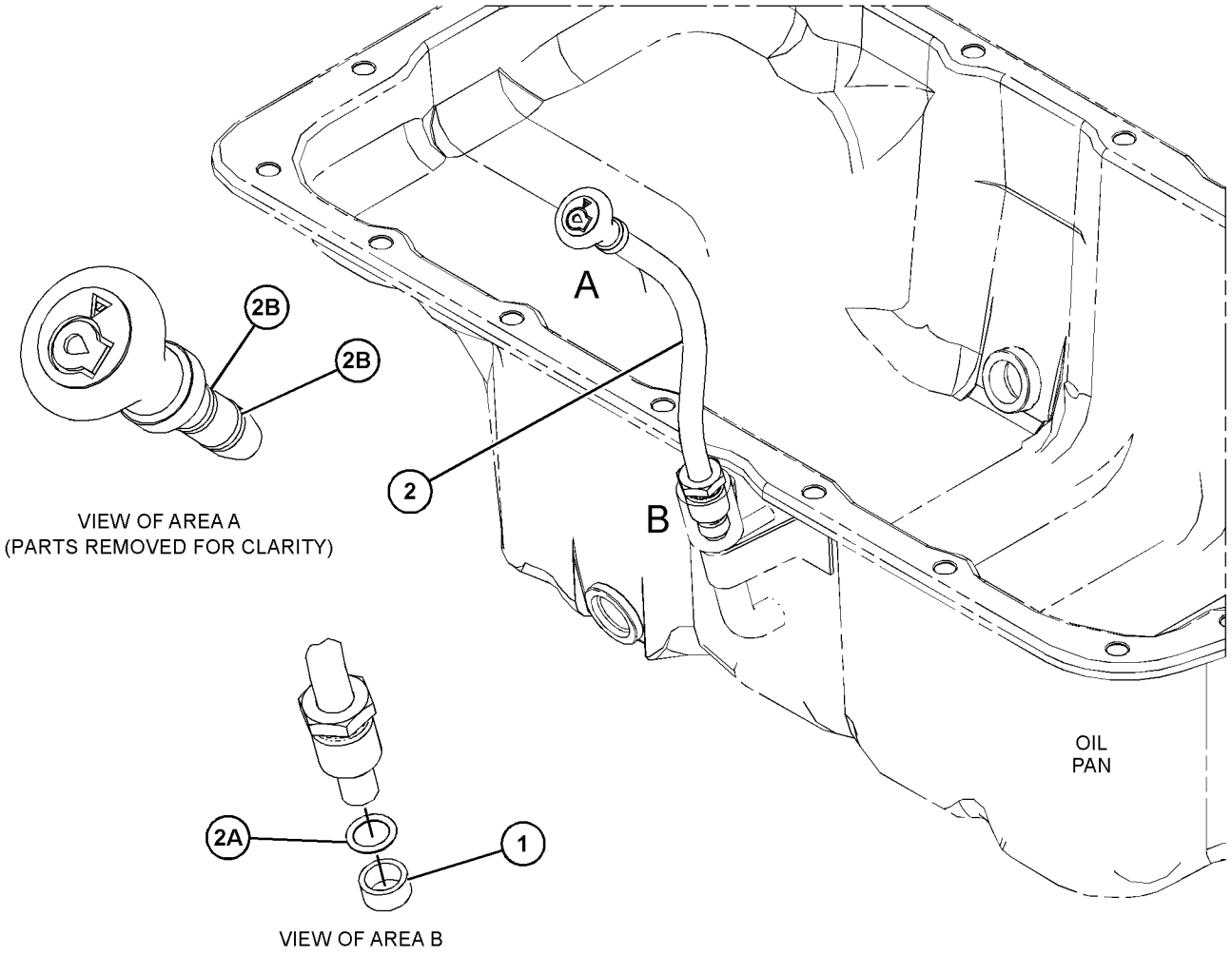

VIEW OF AREA A
(PARTS REMOVED FOR CLARITY)

VIEW OF AREA B

GRAPHIC #1 <END> g06035881

452-0796 PAN GP-OIL

PART OF 461-3168, 475-8294, 480-6065, 484-2343, 486-2471, 492-3115, 503-1940, 504-3628, 509-3109, 509-5884, 526-8847, 538-5357 ENGINE AR-PRIMARY

SMCS-1302 **i06704390**

NOTE	REF NO	GRAPHIC REF	PART NUMBER	QTY	PART NAME 1 2 3 4 5 6 (PRODUCT LEVEL)	SEE PAGE
	1	1	**067-6213**	1	GASKET	
M	2	1	**101-3805**	16	BOLT (M8X1.25X90-MM)	
M	3	1	**101-3895**	2	BOLT (M8X1.25X35-MM)	
	4	1	**230-8094**	1	BRIDGE	
	5	1	**233-8148**	1	STRAINER	
	6	1	**433-0344**	1	PAN AS-OIL	
		1	**360-0073**	1	PAN	
M	7	1	**6I-0260**	2	BOLT (M8X1.25X25-MM)	
M	8	1	**178-3336**	2	NUT-HEX FLANGE (M8X1.25-THD)	
	9	1	**155-4828**	2	STUD	
	10	1	**471-2882**	1	GASKET	
M	11	1	**8T-0269**	2	BOLT-SOCKET HEAD (M6X1X20-MM)	

M - METRIC PART

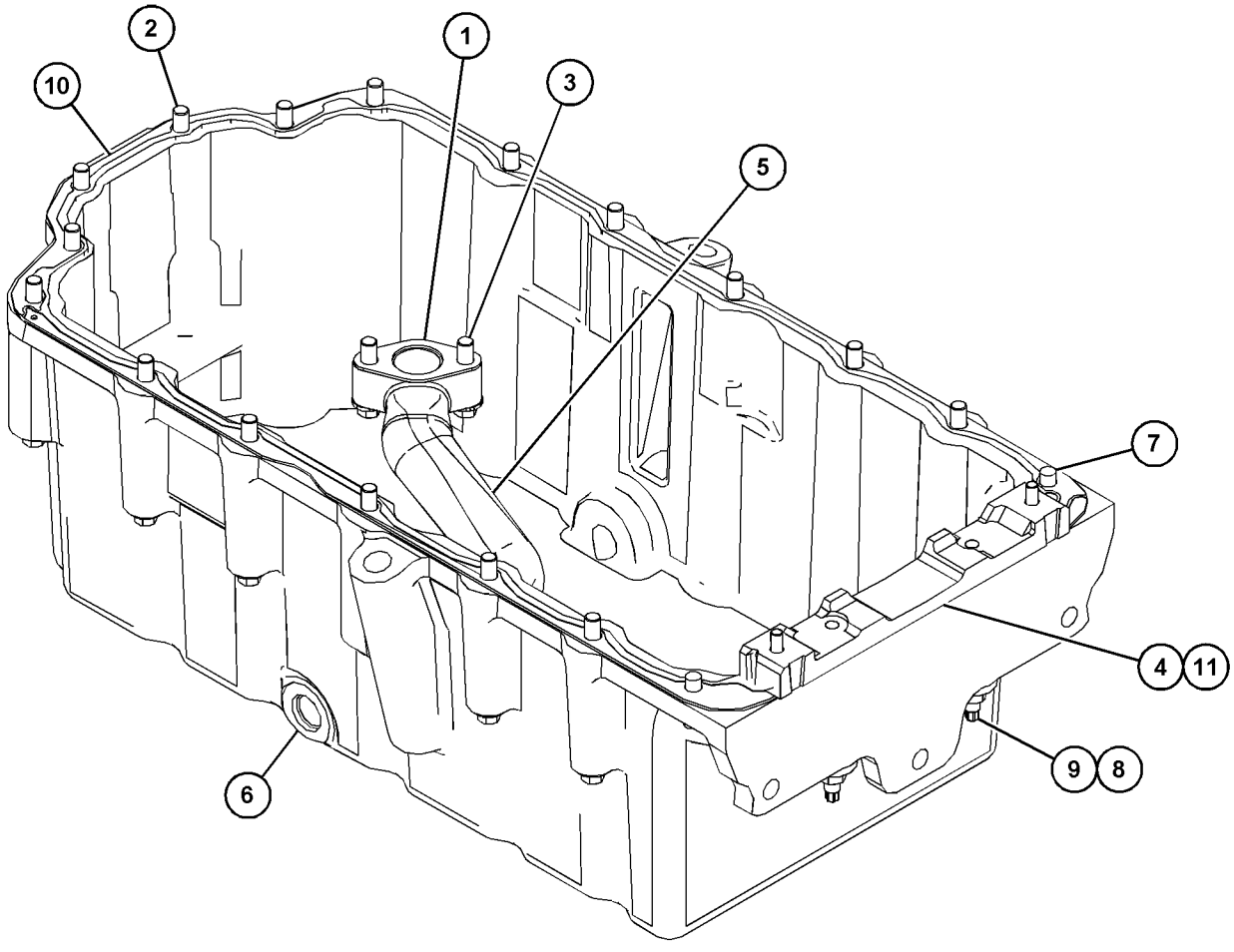

GRAPHIC #1 <END> g03809372

415-5518 PISTON & ROD GP

PART OF 452-7386 CYLINDER BLOCK GP-SHORT, 466-4382, 467-7465, 469-1048, 477-2657, 484-1469, 484-2343, 492-3118, 495-9687, 500-8128, 502-7230, 503-1940, 504-3645, 508-4399, 509-3109, 509-5884, 510-0902, 514-3537, 538-5357, 541-2728 ENGINE AR-PRIMARY

SMCS-1225 **i06091168**

NOTE	REF NO	GRAPHIC REF	PART NUMBER	QTY	PART NAME 1 2 3 4 5 6 (PRODUCT LEVEL)	SEE PAGE
	1	1	**359-0719**	4	ROD AS-CONNECTING (LENGTH R)	
					(EACH INCLUDES)	
	1A	1	**225-5438**	1	BUSHING	
	1B	1	**323-9312**	2	BOLT (M10X1X50-MM)	
	2	1	**124-3536**	8	RING-RETAINING	
					AVAILABLE REPAIR KIT(S):	
B			**360-3986**	1	KIT-BEARING (CONNECTING ROD)	
					(INCLUDES BEARINGS)	
B			**443-9543**	1	KIT-RING (PISTON)	
					(INCLUDES RINGS)	
B			**380-2065**	1	KIT-PISTON RING (0.5-MM OS)	
					(INCLUDES RINGS)	
B			**466-4849**	1	KIT-PISTON RING (1-MM OS) (PISTON)	
					(INCLUDES RINGS)	
B			**447-5251**		KIT-PISTON (STANDARD)	
					(INCLUDES PISTON, PIN & RINGS)	

B - USE AS REQUIRED

415-5518 **PISTON & ROD GP** (contd.) **i06091168**

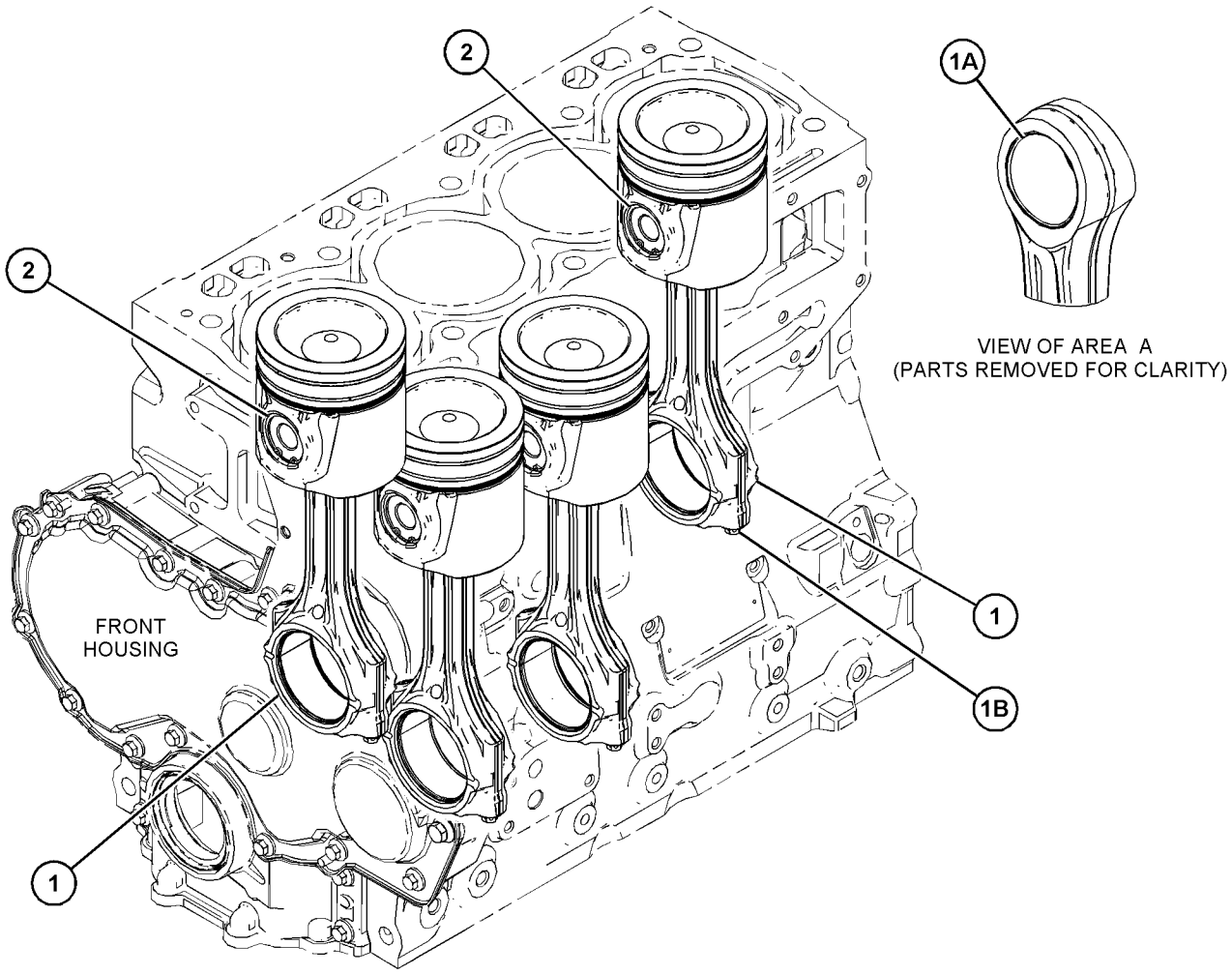

GRAPHIC #1 <END> g03814933

415-5519 PISTON & ROD GP

PART OF 455-9378, 461-3168, 463-8820, 463-8848, 463-8910, 466-3332, 475-8294, 478-6560, 480-6065, 486-2471, 491-2522, 492-1322, 492-3115, 495-3005, 503-4924, 504-3628, 509-5882, 512-9838, 512-9884, 514-3535, 516-9846, 517-0058, 526-8847, 527-9081, 539-3889 ENGINE AR-PRIMARY

SMCS-1225 **i06781886**

NOTE	REF NO	GRAPHIC REF	PART NUMBER	QTY	PART NAME 1 2 3 4 5 6 (PRODUCT LEVEL)	SEE PAGE
	1	1	**359-0719**	4	ROD AS-CONNECTING (LENGTH R)	
					(EACH INCLUDES)	
	1A	1	**225-5438**	1	BUSHING	
	1B	1	**323-9312**	2	BOLT (M10X1X50-MM)	
	2	1	**124-3536**	8	RING-RETAINING	
					PARTS SHOWN IN GRAPHIC(S) WITHOUT A REFERENCE NUMBER ARE NOT SERVICED SEPARATELY	
					AVAILABLE REPAIR KIT(S):	
B			**360-3986**	1	KIT-BEARING (CONNECTING ROD) (STANDARD)	
					(INCLUDES BEARING)	
B			**468-7762**	1	KIT-BEARING (0.254-MM US)	
					(INCLUDES BEARING)	
B			**468-7769**	1	KIT-BEARING (0.508-MM US)	
					(INCLUDES BEARING)	
B			**468-7770**	1	KIT-BEARING (0.762-MM US)	
					(INCLUDES BEARING)	
B			**443-9543**	1	KIT-RING (STANDARD)	
					(INCLUDES RINGS)	
B			**380-2065**	1	KIT-PISTON RING (0.5-MM OS)	
					(INCLUDES RINGS)	
B			**466-4849**	1	KIT-PISTON RING (1-MM OS) (PISTON)	
					(INCLUDES RINGS)	
B			**447-5252**	1	KIT-PISTON (STANDARD)	
					(INCLUDES PISTON, PIN, & RINGS)	
B			**447-5249**	1	KIT-PISTON (0.5-MM OS)	
					(INCLUDES PISTON, PIN, & RINGS)	
B			**447-5250**	1	KIT-PISTON (1-MM OS)	
					(INCLUDES PISTON, PIN, & RINGS)	

B - USE AS REQUIRED

415-5519 **PISTON & ROD GP (**contd.**)** **i06781886**

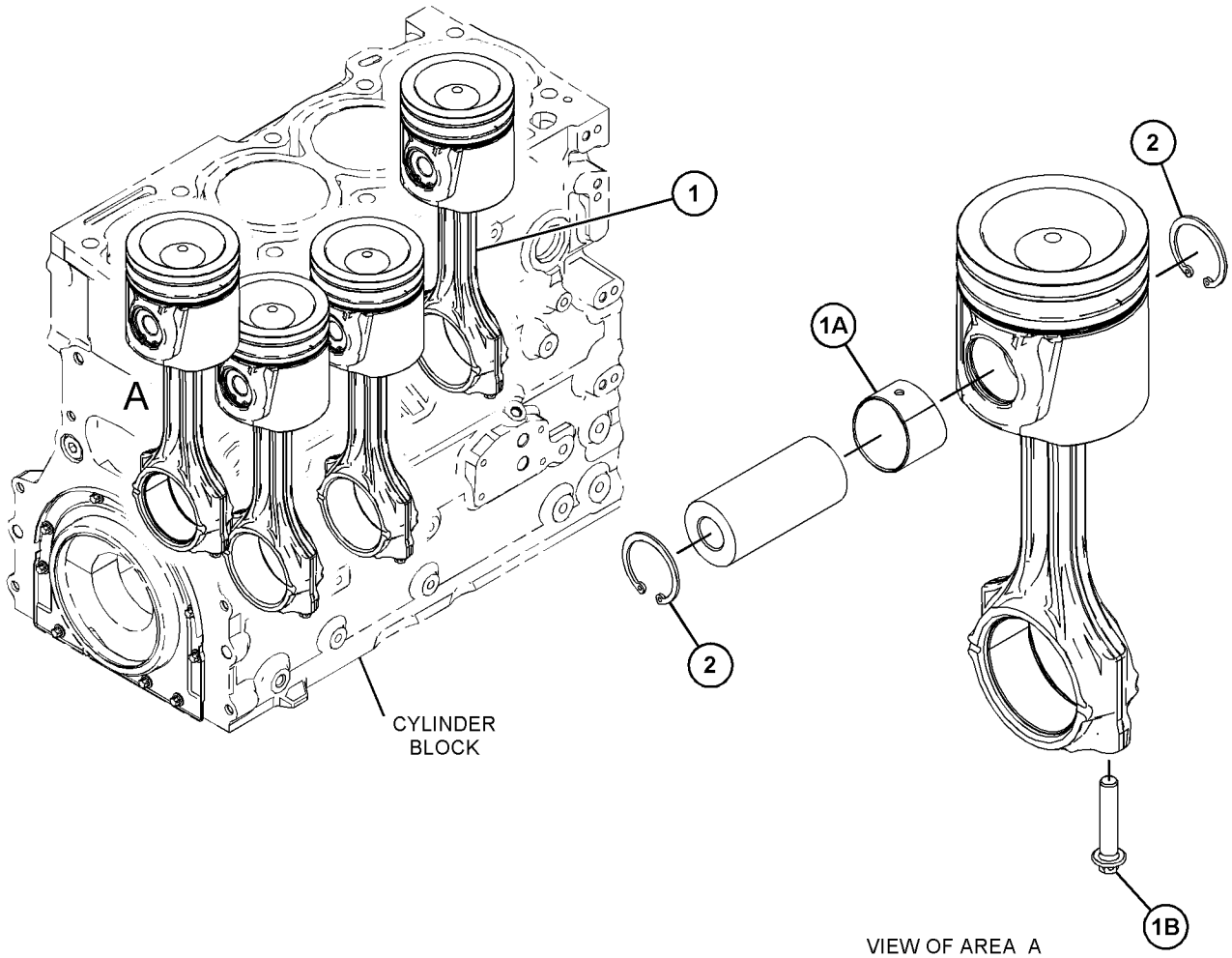

GRAPHIC #1 <END> g03826302

417-4191 PLUG GP-ENGINE

PART OF 527-9081 ENGINE AR-PRIMARY

SMCS-1100, 1201 **i06155524**

NOTE	REF NO	GRAPHIC REF	PART NUMBER	QTY	PART NAME 1 2 3 4 5 6 (PRODUCT LEVEL)	SEE PAGE
	1	1	**199-9267**	1	SEAL-O-RING	
	2	1	**225-7941**	2	PLUG	
	3	1	**232-3861**	1	PLUG (BLANKING)	
	4	1	**330-5898**	2	SEAL-O-RING	

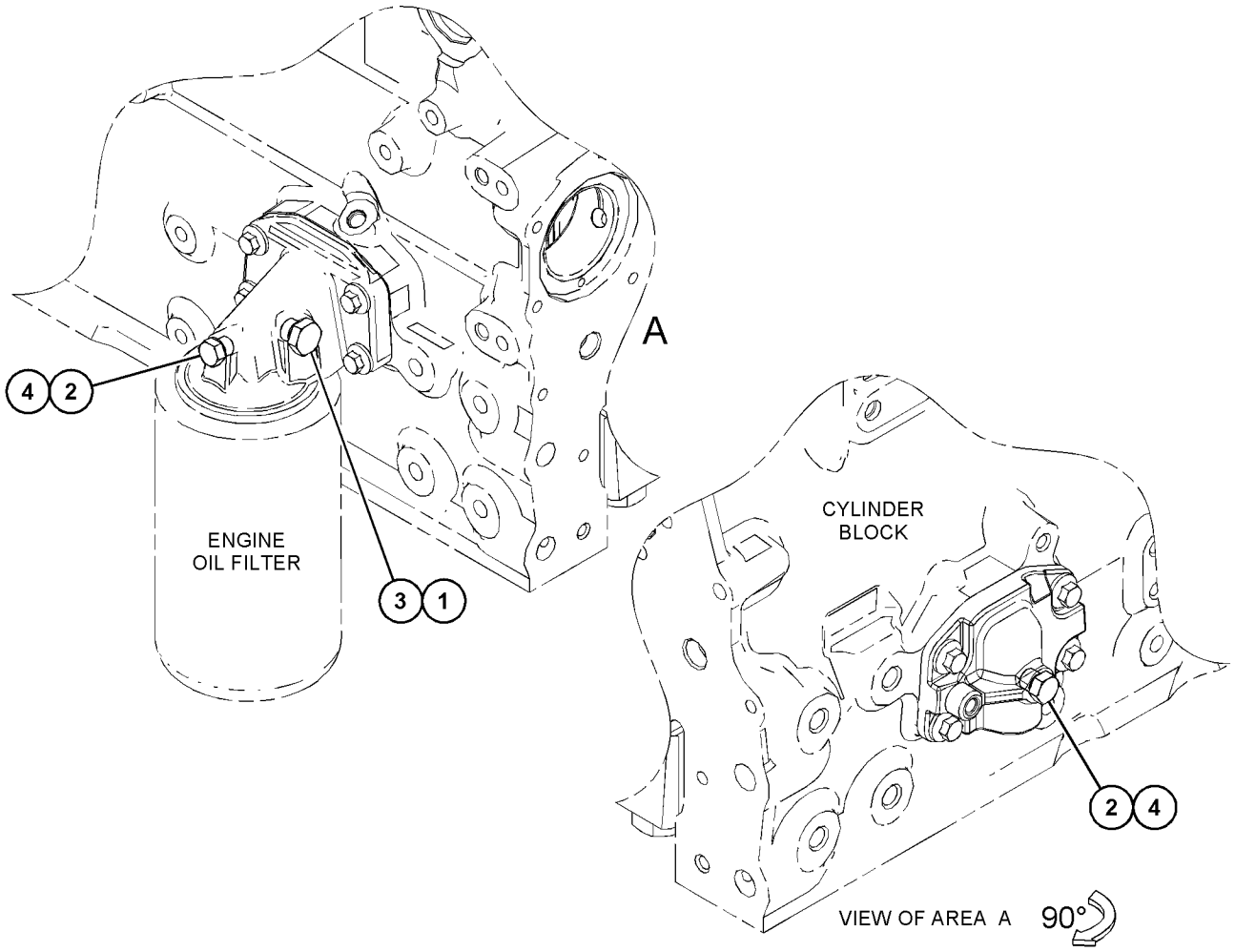

GRAPHIC #1 <END> g03831915

417-4286 PLUG GP-ENGINE

PART OF 455-9378, 461-3168, 463-8820, 463-8848, 463-8910, 466-3332, 467-7465, 478-6560, 480-6065, 484-2343, 491-2522, 492-1322, 492-3115, 492-3118, 495-3005, 500-8128, 502-7230, 503-1940, 503-4924, 504-3628, 504-3645, 508-4399, 509-3109, 509-5882, 509-5884, 510-0902, 512-9838, 512-9884, 514-3535, 514-3537, 516-9846, 517-0058, 526-8847, 527-9081, 538-5357, 539-3889, 541-2728 ENGINE AR-PRIMARY

SMCS-1100, 1201

i06091138

NOTE	REF NO	GRAPHIC REF	PART NUMBER	QTY	PART NAME 1 2 3 4 5 6 (PRODUCT LEVEL)	SEE PAGE
	1	1	**067-6823**	3	PLUG	

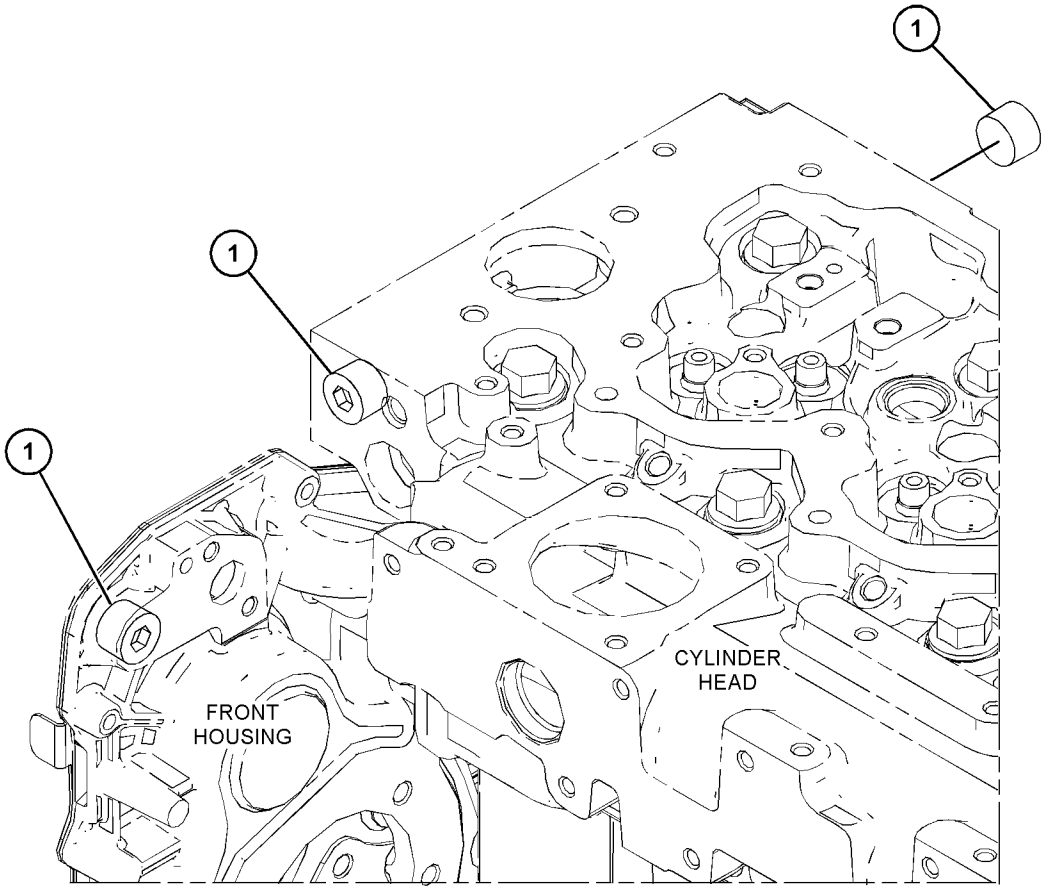

GRAPHIC #1

<END>

g03815206

418-8564 PLUG GP-ENGINE

PART OF 466-4382, 484-1469 ENGINE AR-PRIMARY

SMCS-1100, 1201 **i06124345**

NOTE	REF NO	GRAPHIC REF	PART NUMBER	QTY	PART NAME 1 2 3 4 5 6 (PRODUCT LEVEL)	SEE PAGE
	1	1	**233-9436**	4	PLUG	
	2	1	**6H-3616**	10	PLUG-PROTECTION	

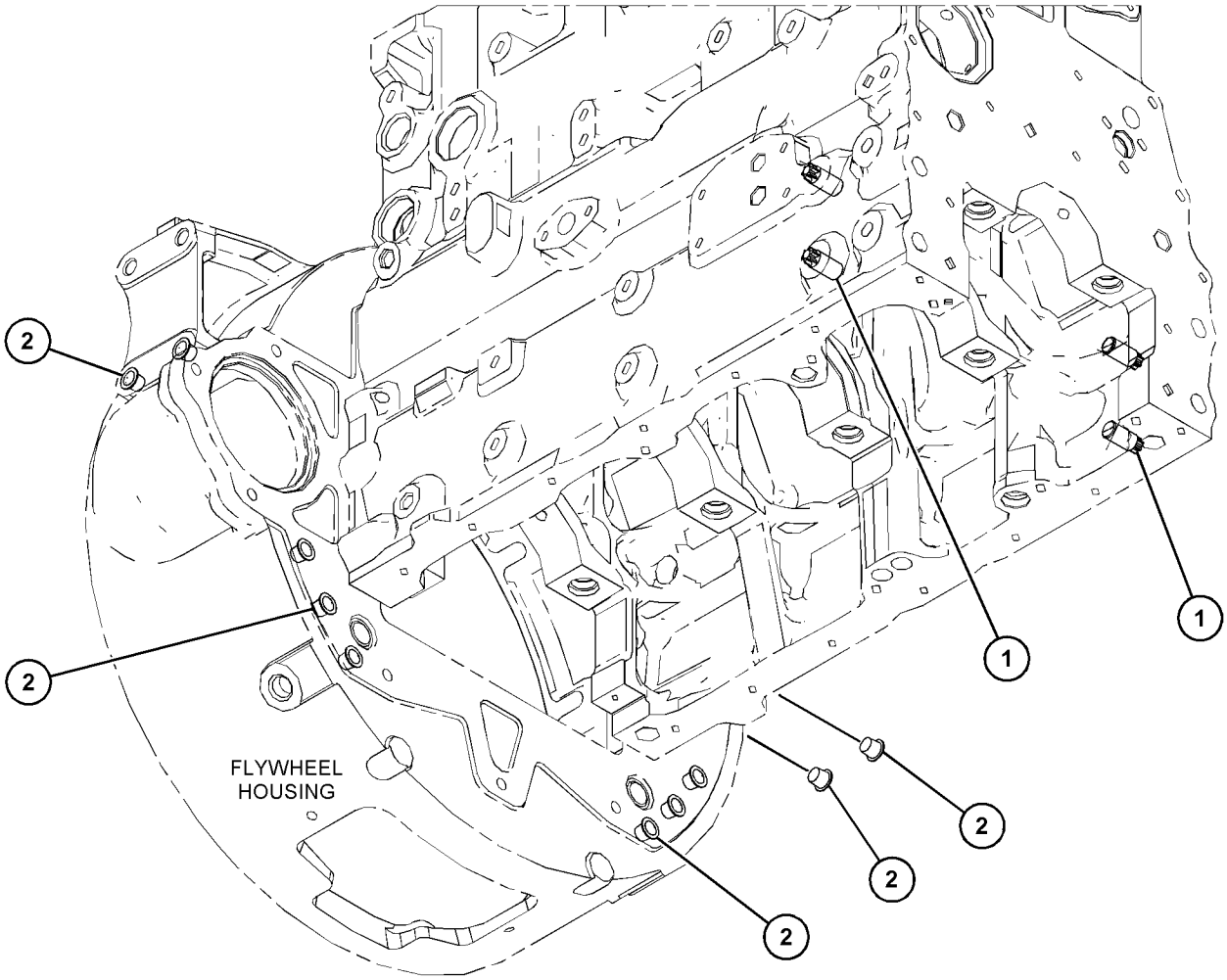

GRAPHIC #1 <END> g06005679

446-2236 PLUG GP-ENGINE

PART OF 463-8820, 463-8848, 463-8910, 509-5882 ENGINE AR-PRIMARY

SMCS-1100, 1201 **i06089336**

NOTE	REF NO	GRAPHIC REF	PART NUMBER	QTY	PART NAME 1 2 3 4 5 6 (PRODUCT LEVEL)	SEE PAGE
	1	1	**233-9436**	4	PLUG	
	2	1	**6H-3616**	4	PLUG-PROTECTION	

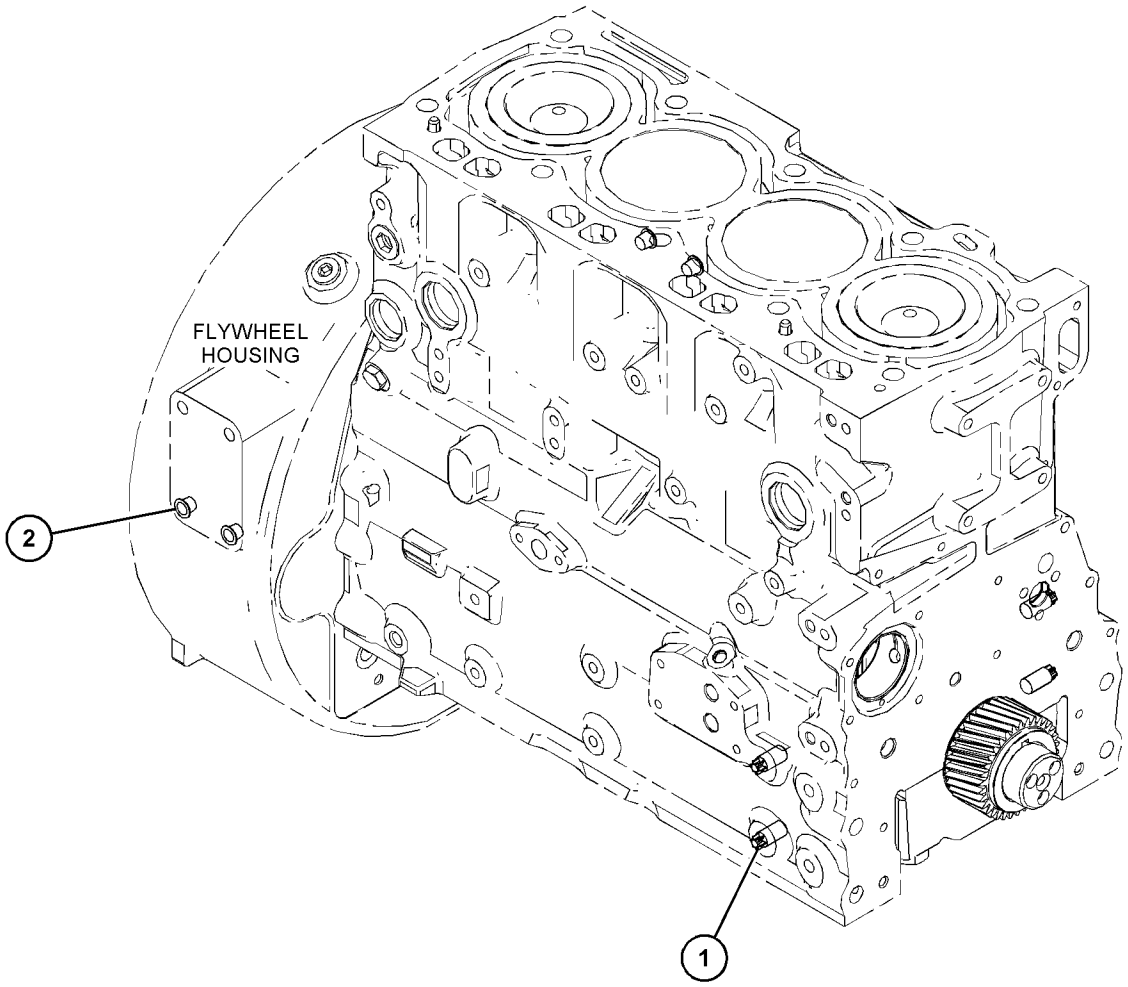

GRAPHIC #1 <END> g03830685

446-2228 PLUG GP-FLYWHEEL HOUSING

PART OF 484-2343, 495-9687, 503-1940, 538-5357 ENGINE AR-PRIMARY

SMCS-1157 **i06211793**

NOTE	REF NO	GRAPHIC REF	PART NUMBER	QTY	PART NAME 1 2 3 4 5 6 (PRODUCT LEVEL)	SEE PAGE
	1	1	**233-9436**	4	PLUG	
	2	1	**6H-3616**	6	PLUG-PROTECTION	

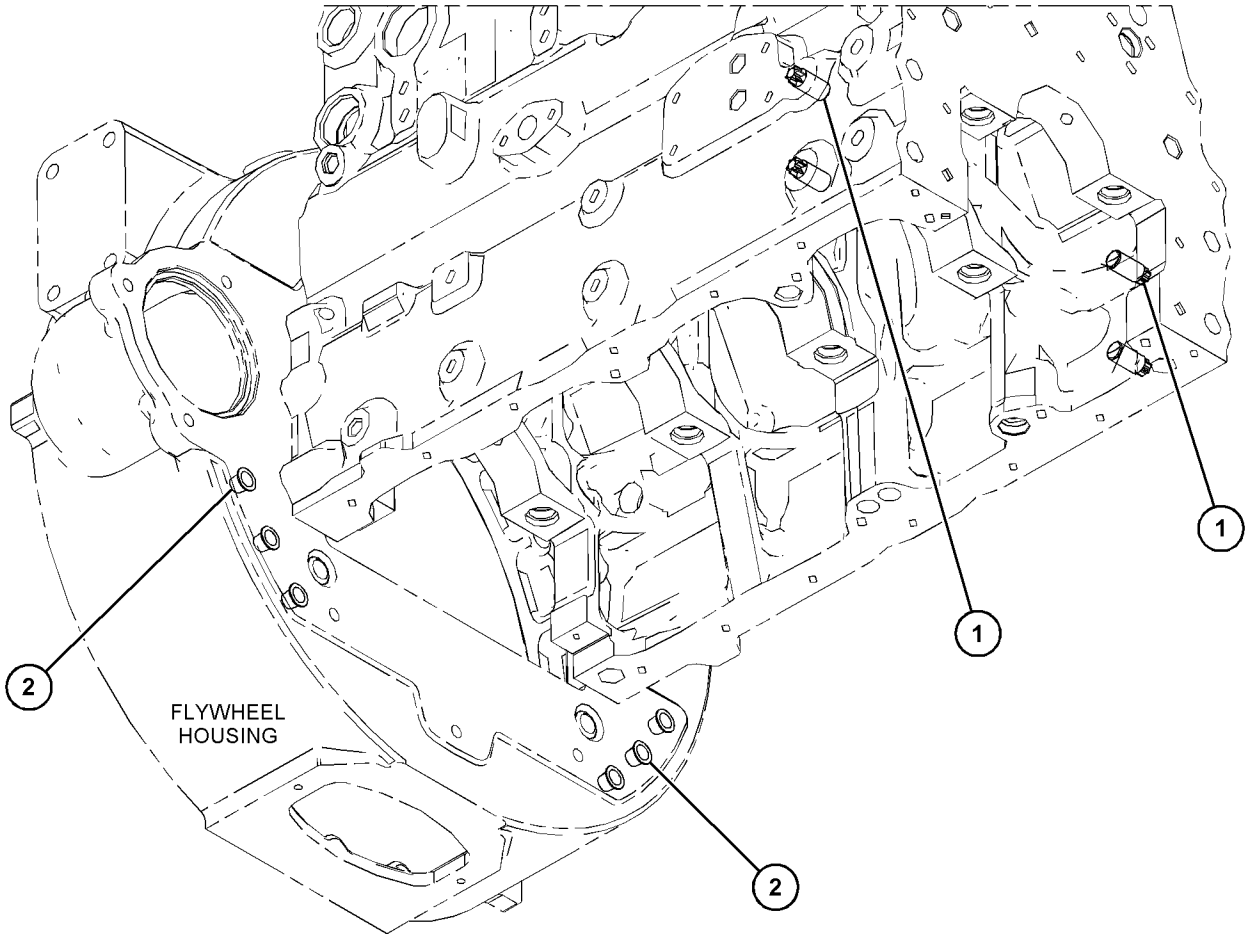

GRAPHIC #1 <END> g06006137

417-3401 PLUG GP-FRONT HOUSING

PART OF 463-8820, 469-1048, 477-2657, 509-5882 ENGINE AR-PRIMARY

SMCS-1151 **i06149596**

NOTE	REF NO	GRAPHIC REF	PART NUMBER	QTY	PART NAME 1 2 3 4 5 6 (PRODUCT LEVEL)	SEE PAGE
	1	1	**214-3203**	1	WASHER (SEALING)	
M	2	1	**6I-0646**	1	BOLT (M10X1.5X14-MM)	

M - METRIC PART

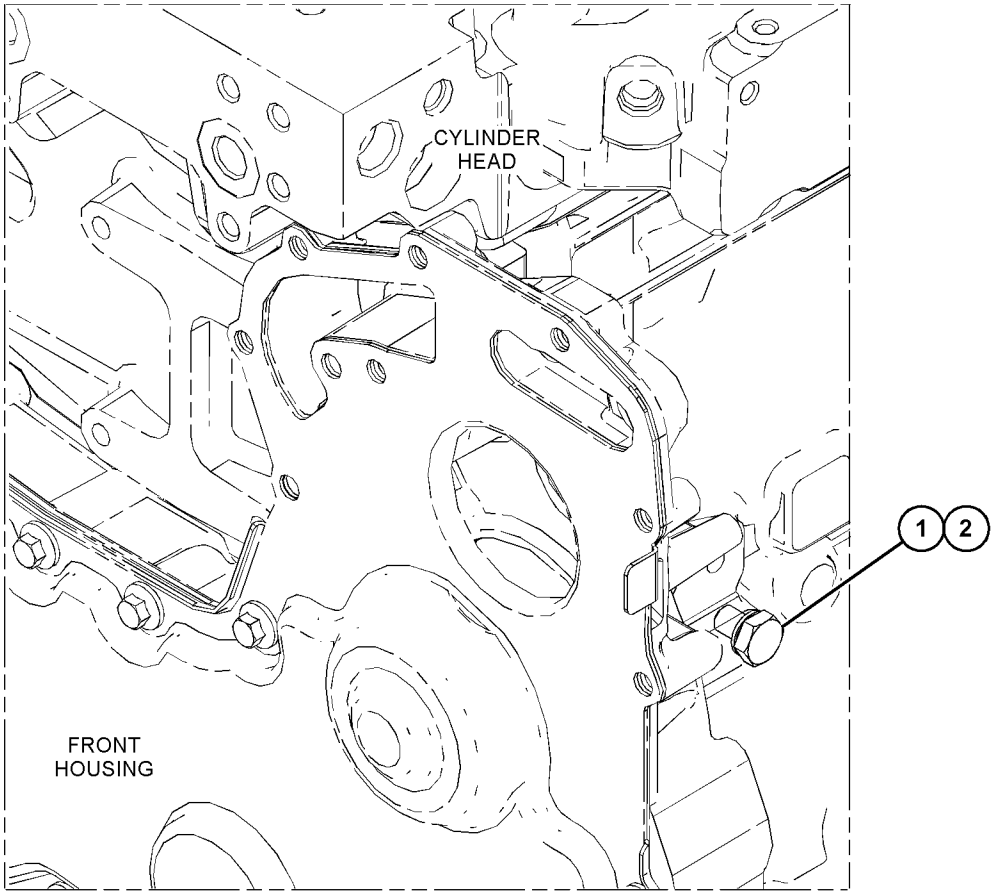

GRAPHIC #1 <END> g03816258

447-7651 PLUG GP-OIL PAN

PART OF 455-9378, 478-6560, 484-1469, 517-0058 ENGINE AR-PRIMARY

SMCS-1302 **i06238760**

NOTE	REF NO	GRAPHIC REF	PART NUMBER	QTY	PART NAME 1 2 3 4 5 6 (PRODUCT LEVEL)	SEE PAGE
	1	1	**6I-0289**	2	PLUG	

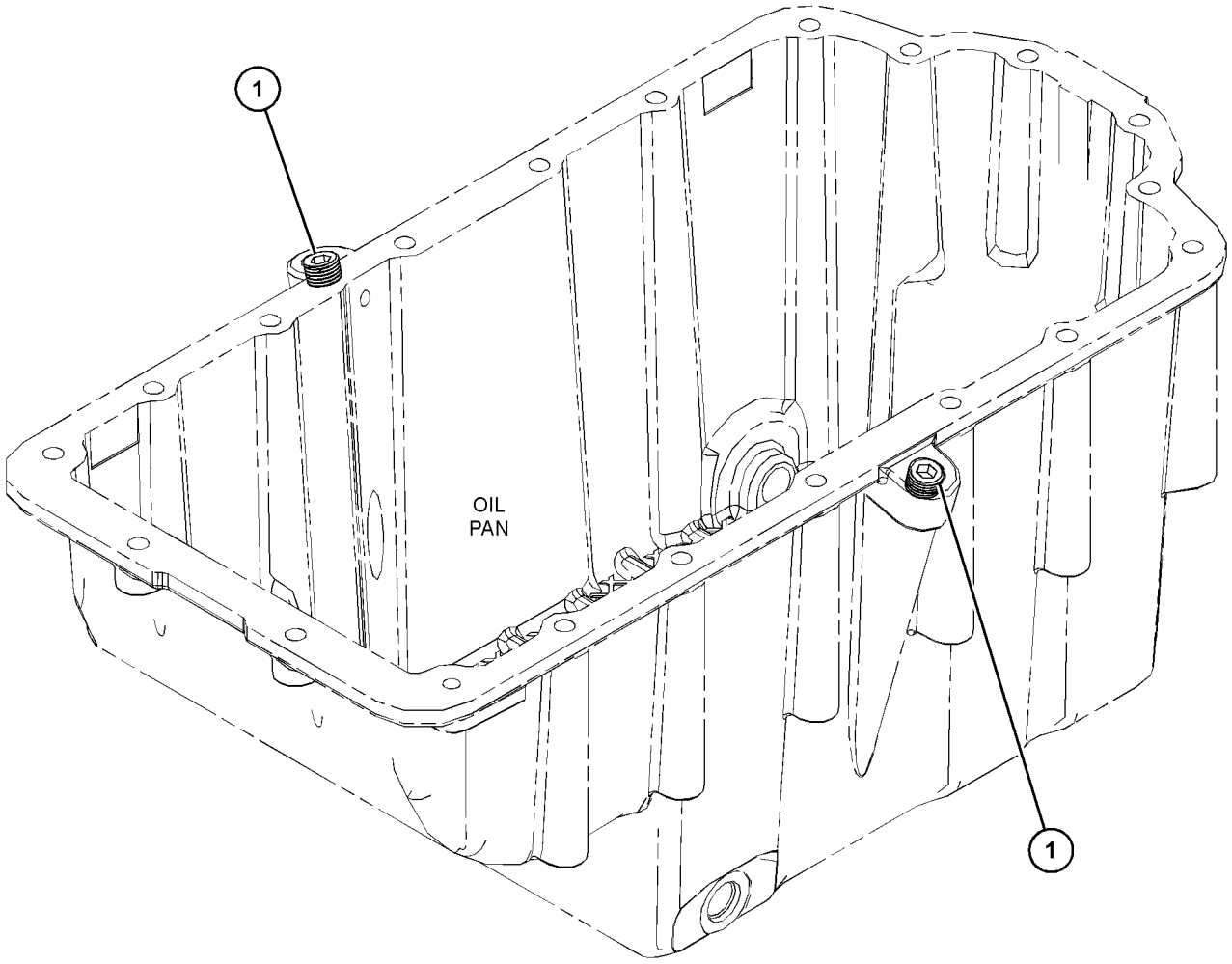

GRAPHIC #1 <END> g03883439

416-1047 PULLEY GP-ALTERNATOR

PART OF 455-9378, 469-1048, 477-2657, 492-3115, 492-3118, 504-3628, 504-3645 ENGINE
AR-PRIMARY

SMCS-1425 **i06621976**

NOTE	REF NO	GRAPHIC REF	PART NUMBER	QTY	PART NAME 1 2 3 4 5 6 (PRODUCT LEVEL)	SEE PAGE
	1	1	**321-6131**	1	PULLEY (8-GROOVE)	

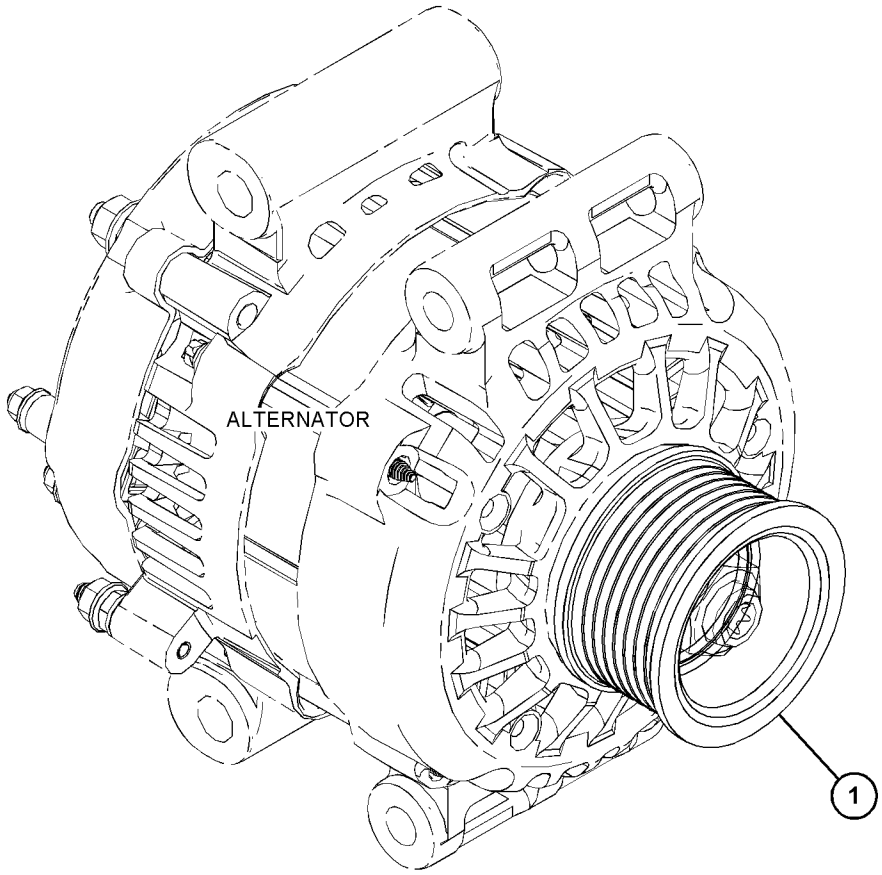

GRAPHIC #1 <END> g03829167

467-7586 PULLEY GP-ALTERNATOR

SMCS-1425 **i07310990**

NOTE	REF NO	GRAPHIC REF	PART NUMBER	QTY	PART NAME 1 2 3 4 5 6 (PRODUCT LEVEL)	SEE PAGE
	1	1	**243-4300**	1	PULLEY-ALTERNATOR	

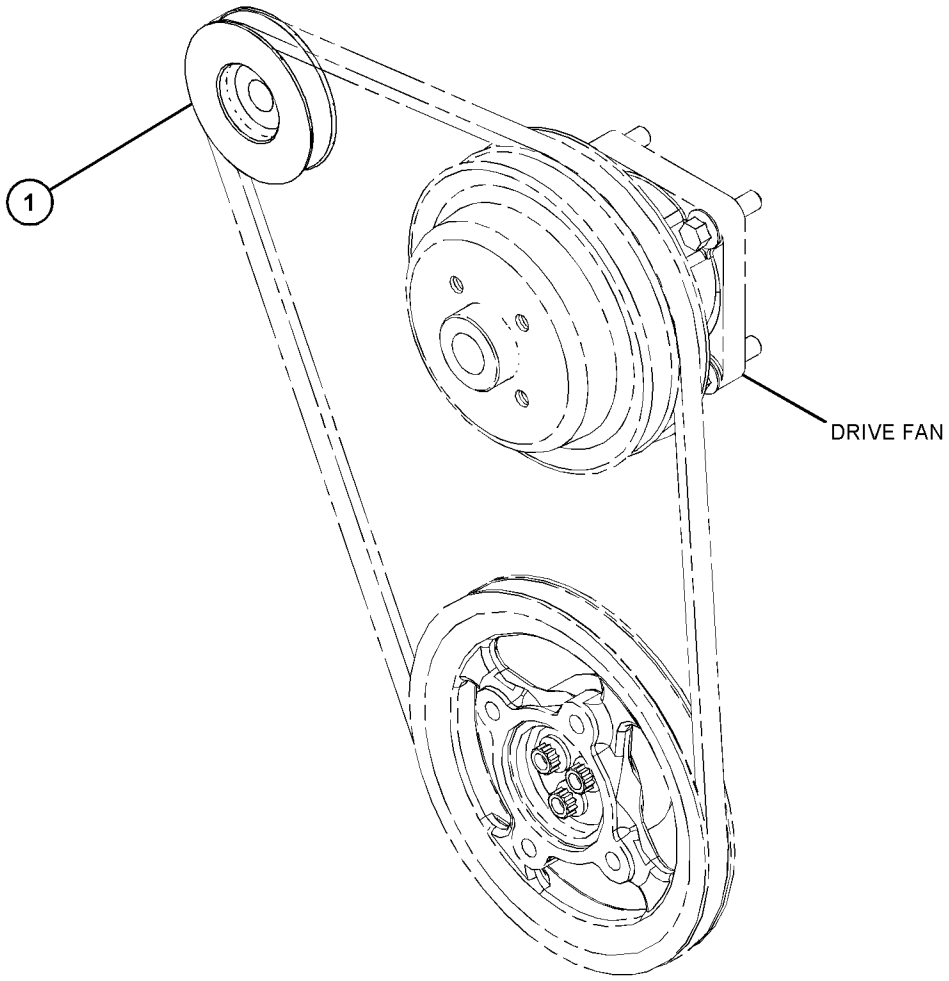

GRAPHIC #1 <END> g06078206

432-2302 PULLEY GP-AUXILIARY DRIVE

PART OF 469-1048, 477-2657 ENGINE AR-PRIMARY

SMCS-1205, 1207 **i06124357**

NOTE	REF NO	GRAPHIC REF	PART NUMBER	QTY	PART NAME 1 2 3 4 5 6 (PRODUCT LEVEL)	SEE PAGE
M	1	1	**7C-4616**	3	BOLT (M12X1.75X45-MM)	
	2	1	**283-4674**	1	PULLEY-AUXILIARY DRIVE	

M - METRIC PART

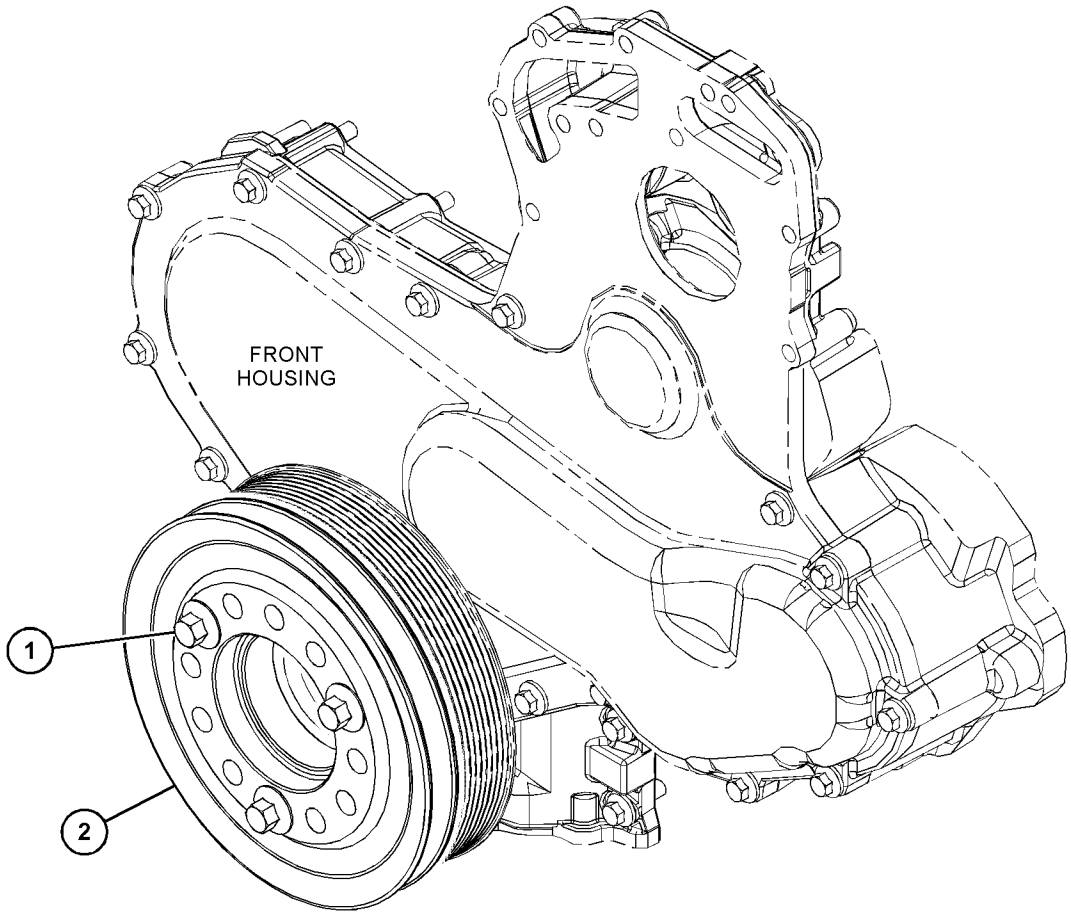

GRAPHIC #1 <END> g03869061

416-1089 PULLEY GP-CRANKSHAFT

PART OF 463-8848, 463-8910, 466-4382, 467-7465, 469-1048, 475-8294, 477-2657, 478-6560, 480-6065, 484-1469, 486-2471, 491-2522, 492-1322, 492-3115, 492-3118, 495-9687, 504-3628, 504-3645, 508-4399, 509-3109, 509-5882, 509-5884, 510-0902, 514-3535, 514-3537, 526-8847, 527-9081, 541-2728 ENGINE AR-PRIMARY

SMCS-1205 **i06105330**

NOTE	REF NO	GRAPHIC REF	PART NUMBER	QTY	PART NAME 1 2 3 4 5 6 (PRODUCT LEVEL)	SEE PAGE
	1	1	**335-8270**	1	PULLEY (8-GROOVE)	
	2	1	**334-9334**	3	BOLT	

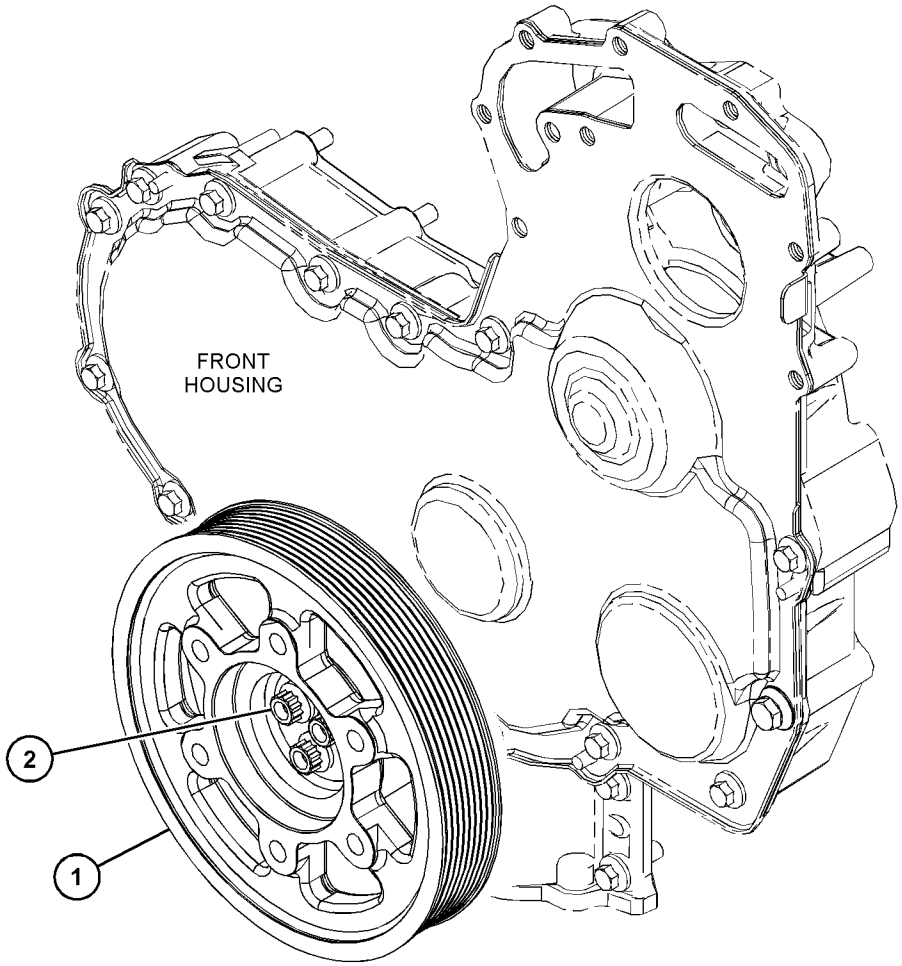

GRAPHIC #1 <END> g03814640

418-7661 PULLEY GP-CRANKSHAFT

SMCS-1205 **i07310993**

NOTE	REF NO	GRAPHIC REF	PART NUMBER	QTY	PART NAME 1 2 3 4 5 6 (PRODUCT LEVEL)	SEE PAGE
	1	1	**334-9334**	3	BOLT	
	2	1	**359-0745**	1	PULLEY-CRANKSHAFT	

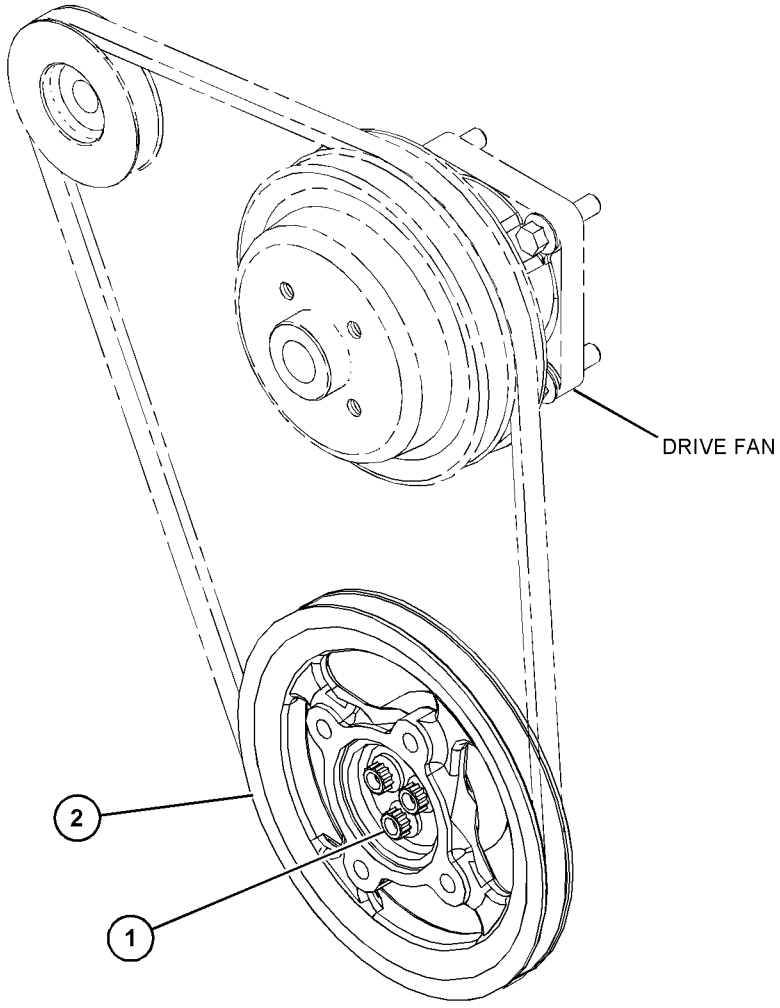

GRAPHIC #1 <END> g06078237

426-3230 PULLEY GP-CRANKSHAFT

PART OF 455-9378, 461-3168, 463-8820, 466-3332, 484-2343, 495-3005, 500-8128, 502-7230, 503-1940, 503-4924, 512-9838, 512-9884, 516-9846, 517-0058, 538-5357, 539-3889 ENGINE AR-PRIMARY

SMCS-1205 **i06091140**

NOTE	REF NO	GRAPHIC REF	PART NUMBER	QTY	PART NAME 1 2 3 4 5 6 (PRODUCT LEVEL)	SEE PAGE
	1	1	**335-8269**	1	PULLEY	
	2	1	**334-9334**	3	BOLT	

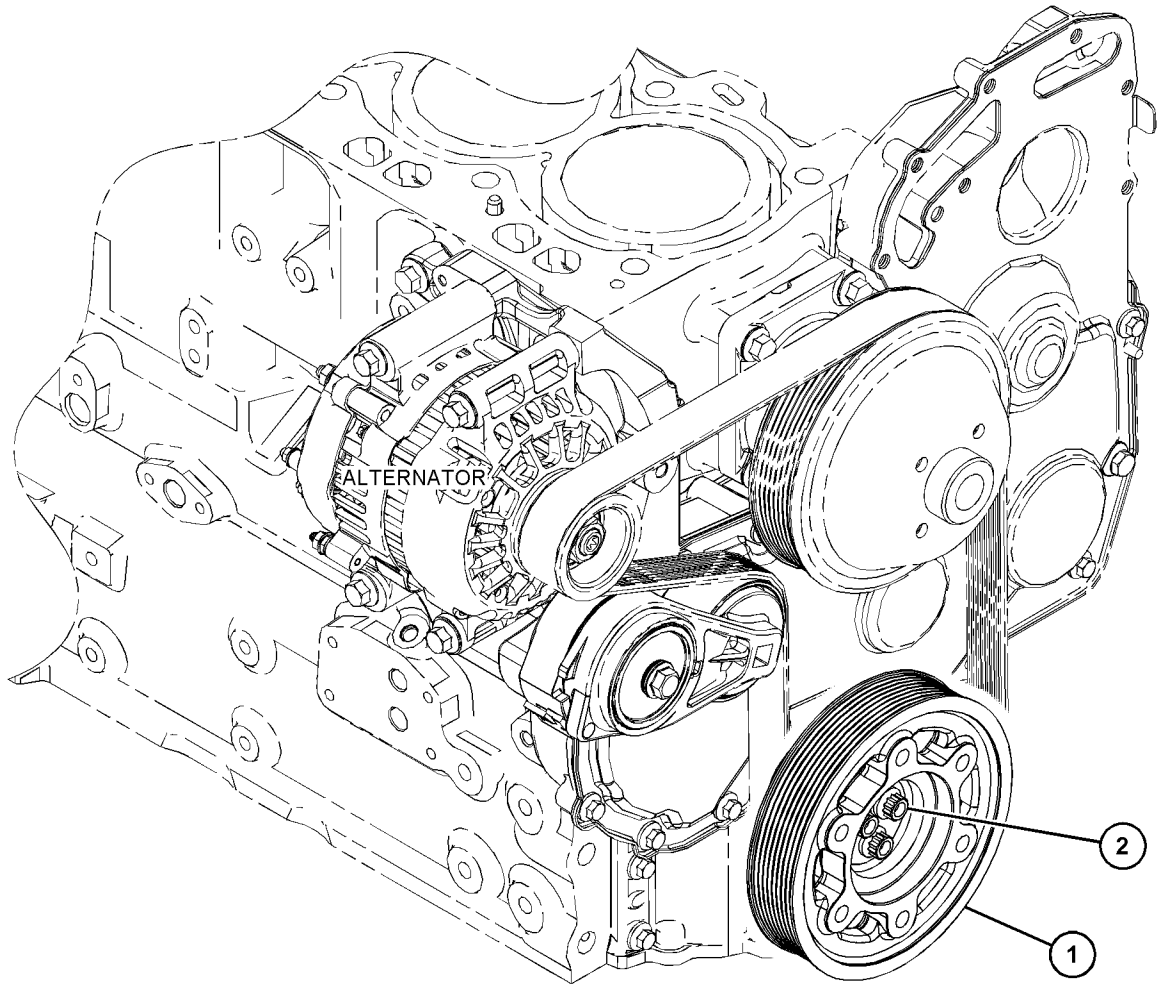

GRAPHIC #1 <END> g03812396

419-7641 PULLEY GP-FAN DRIVE

PART OF 469-1048, 477-2657 ENGINE AR-PRIMARY

SMCS-1359 **i06180150**

NOTE	REF NO	GRAPHIC REF	PART NUMBER	QTY	PART NAME 1 2 3 4 5 6 (PRODUCT LEVEL)	SEE PAGE
	1	1	**130-3881**	1	PULLEY-FAN	

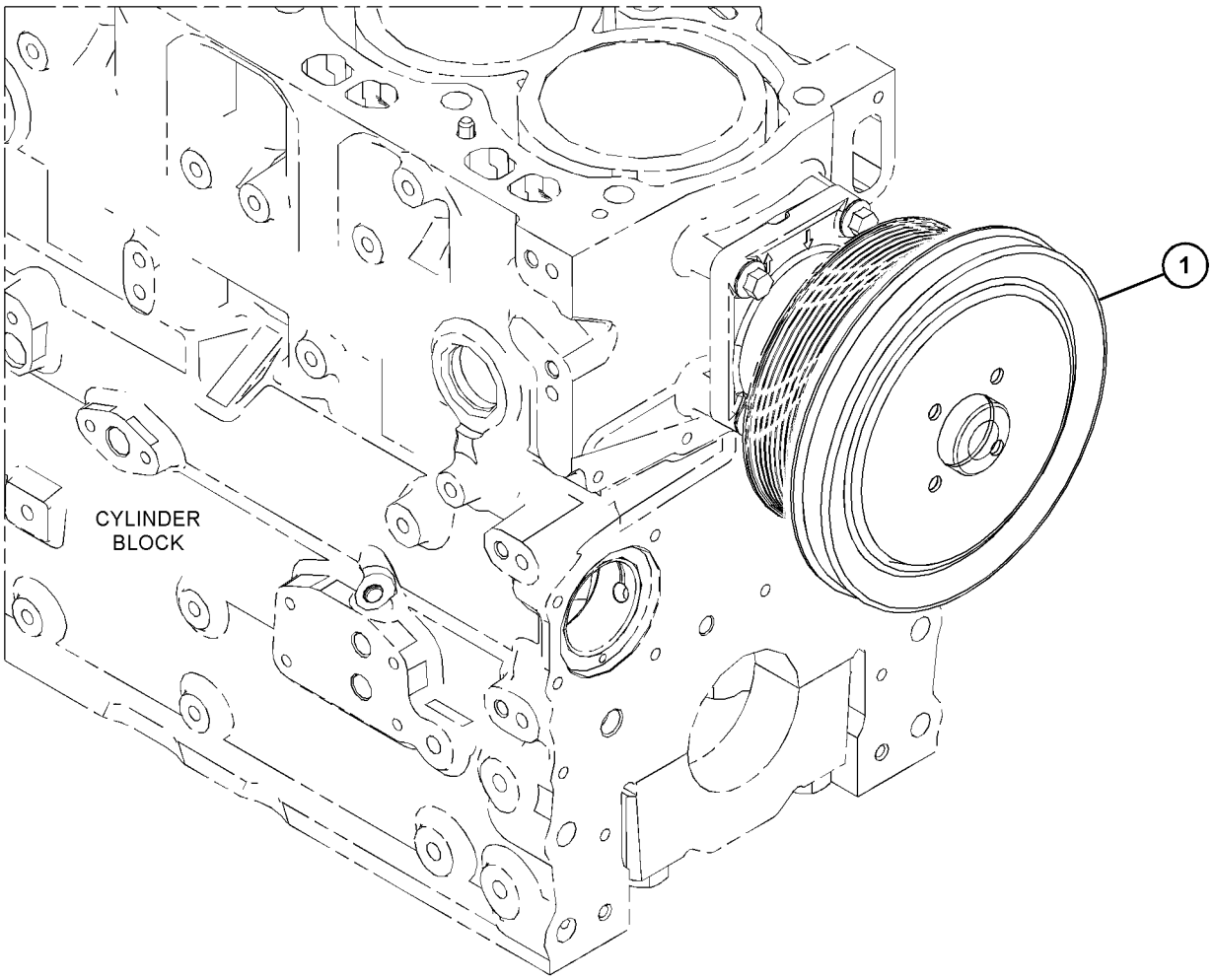

GRAPHIC #1 <END> g03872598

298-4533 ROCKER ARM GP

PART OF 415-7947 ROCKER ARM GP

SMCS-1123 **i06111060**

NOTE	REF NO	GRAPHIC REF	PART NUMBER	QTY	PART NAME 1 2 3 4 5 6 (PRODUCT LEVEL)	SEE PAGE
	1	1	**276-9200**	2	PLUG-SHAFT END	
	2	1	**276-9201**	1	CLIP	
	3	1	**276-9206**	3	SPRING-SHAFT	
	4	1	**276-9207**	1	SPRING-SHAFT	
	5	1	**278-5111**	4	ROCKER ARM AS	
	5A	1	**276-9230**	1	NUT	
	5B	1	**278-5113**	1	SCREW-ADJUSTING (TORX)	
	6	1	**278-5112**	4	ROCKER ARM AS	
	6A	1	**276-9230**	1	NUT	
	6B	1	**278-5113**	1	SCREW-ADJUSTING (TORX)	
	7	1	**280-1912**	4	BRACKET	
	8	1	**280-1913**	4	RETAINER	
	9	1	**280-1914**	8	BOLT (M8X1.25X55-MM)	

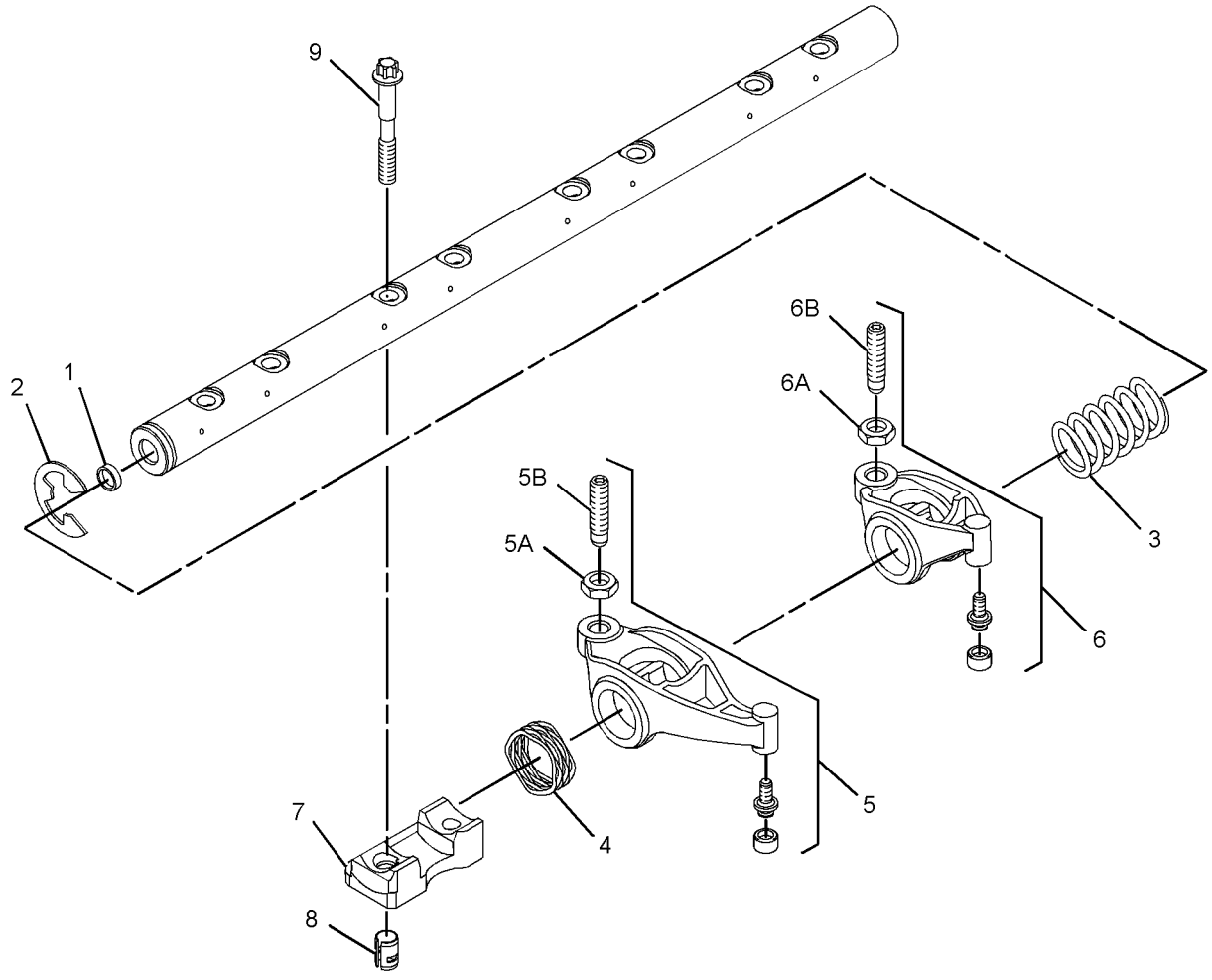

GRAPHIC #1 <END> g01532745

415-7947 ROCKER ARM GP

PART OF 455-9378, 461-3168, 463-8820, 463-8848, 463-8910, 466-3332, 466-4382, 467-7465, 469-1048, 475-8294, 477-2657, 478-6560, 480-6065, 484-1469, 484-2343, 486-2471, 491-2522, 492-1322, 492-3115, 492-3118, 495-3005, 495-9687, 500-8128, 502-7230, 503-1940, 503-4924, 504-3628, 504-3645, 508-4399, 509-3109, 509-5882, 509-5884, 510-0902, 512-9838, 512-9884, 514-3535, 514-3537, 516-9846, 517-0058, 526-8847, 527-9081, 538-5357, 539-3889, 541-2728 ENGINE AR-PRIMARY

SMCS-1123 **i06091136**

NOTE	REF NO	GRAPHIC REF	PART NUMBER	QTY	PART NAME 1 2 3 4 5 6 (PRODUCT LEVEL)	SEE PAGE
	1	1	**276-8133**	16	CAP-VALVE	
	2	1	**346-4709**	8	BRIDGE GP-VALVE	
	3	1	**436-0524**	16	SPRING-VALVE	
	4	1	**276-8123**	32	COTTER-CAP	
Y	5	1	**298-4533**	1	ROCKER ARM GP	298
	6	1	**299-5511**	16	SEAL-VALVE STEM	
	7	1	**309-6678**	8	VALVE-INLET	
	8	1	**339-9637**	8	VALVE-EXHAUST	

Y - SEPARATE ILLUSTRATION

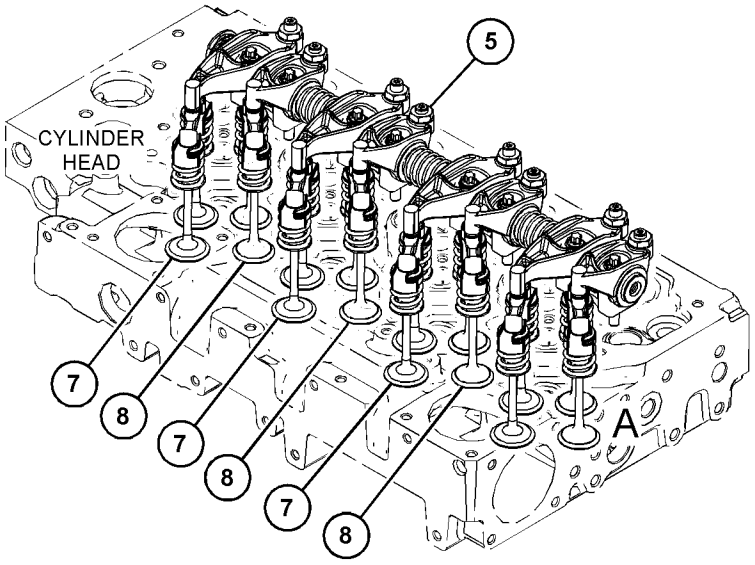

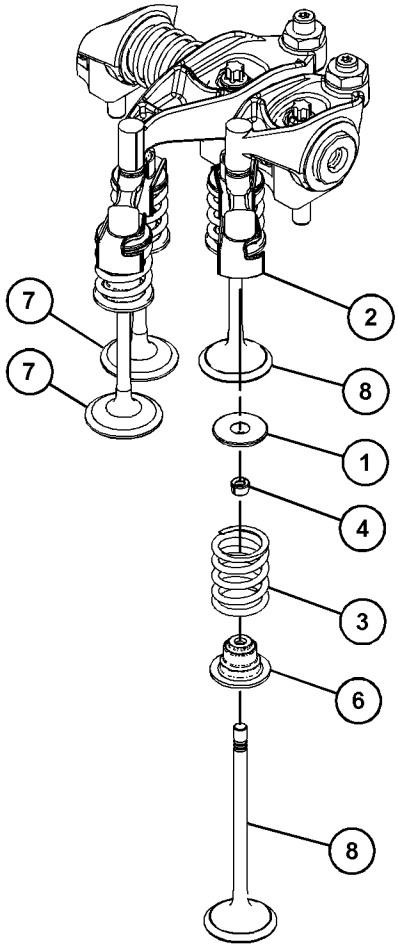

VIEW OF AREA A
(EXPLODED)

GRAPHIC #1 <END> g03815520

460-7781 ROCKER ARM GP

PART OF 452-7397 CYLINDER HEAD GP

SMCS-1123 **i06807031**

NOTE	REF NO	GRAPHIC REF	PART NUMBER	QTY	PART NAME 1 2 3 4 5 6 (PRODUCT LEVEL)	SEE PAGE
	1	1	**276-8133**	16	CAP-VALVE	
	2	1	**436-0524**	16	SPRING-VALVE	
	3	1	**276-8123**	32	COTTER-CAP	
	4	1	**299-5511**	16	SEAL-VALVE STEM	
	5	1	**309-6678**	8	VALVE-INLET	
	6	1	**339-9637**	8	VALVE-EXHAUST	

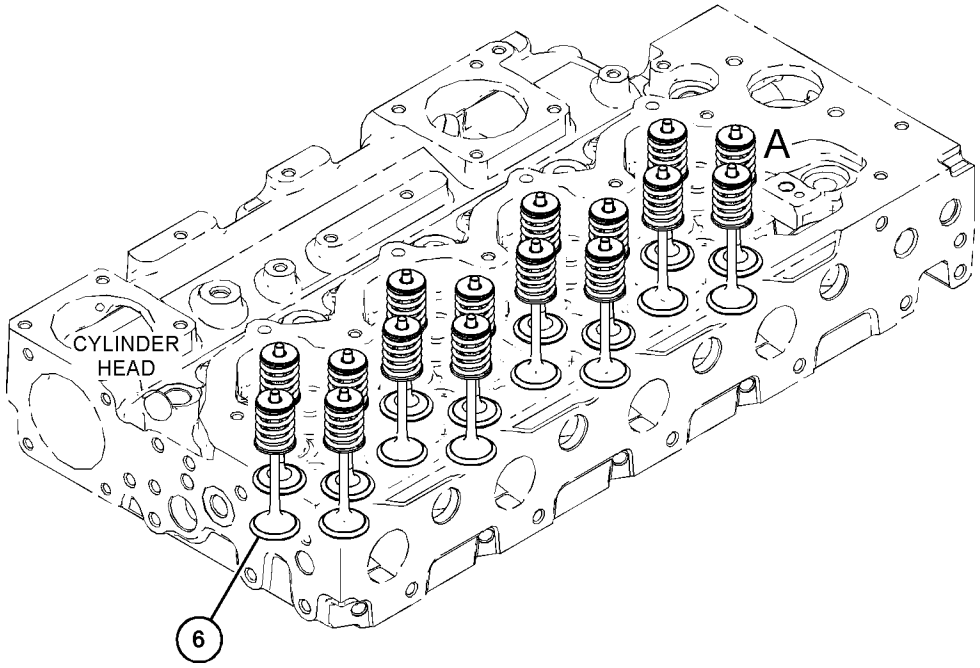

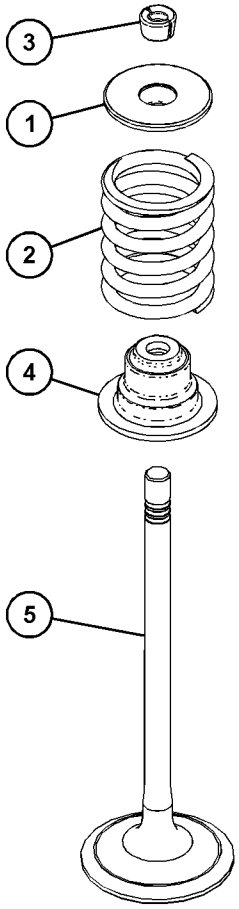

VIEW OF AREA A
(EXPLODED)

GRAPHIC #1

<END>

g06123274

415-5617 BREATHER GP

PART OF 466-3332, 467-7465, 541-2728 ENGINE AR-PRIMARY

SMCS-1317 **i06502010**

NOTE	REF NO	GRAPHIC REF	PART NUMBER	QTY	PART NAME 1 2 3 4 5 6 (PRODUCT LEVEL)	SEE PAGE
	1	1	**5V-9155**	1	CLAMP-HOSE	
	2	1	**141-6166**	1	CLAMP-HOSE	
	3	1	**316-9351**	1	MOUNTING-CABLE TIE	
	4	1	**363-5813**	1	CLAMP-HOSE	
	5	1	**399-3884**	1	HOSE	
	6	1	**399-5831**	1	HOSE	
	7	1	**424-3214**	1	BASE AS-OIL FILTER	
		1	**286-0015**	1	STEM	
	8	1	**431-4800**	1	BRACKET-FILTER	
M	9	1	**6I-0217**	2	BOLT (M8X1.25X20-MM)	
M	10	1	**6I-0260**	2	BOLT (M8X1.25X25-MM)	

M - METRIC PART

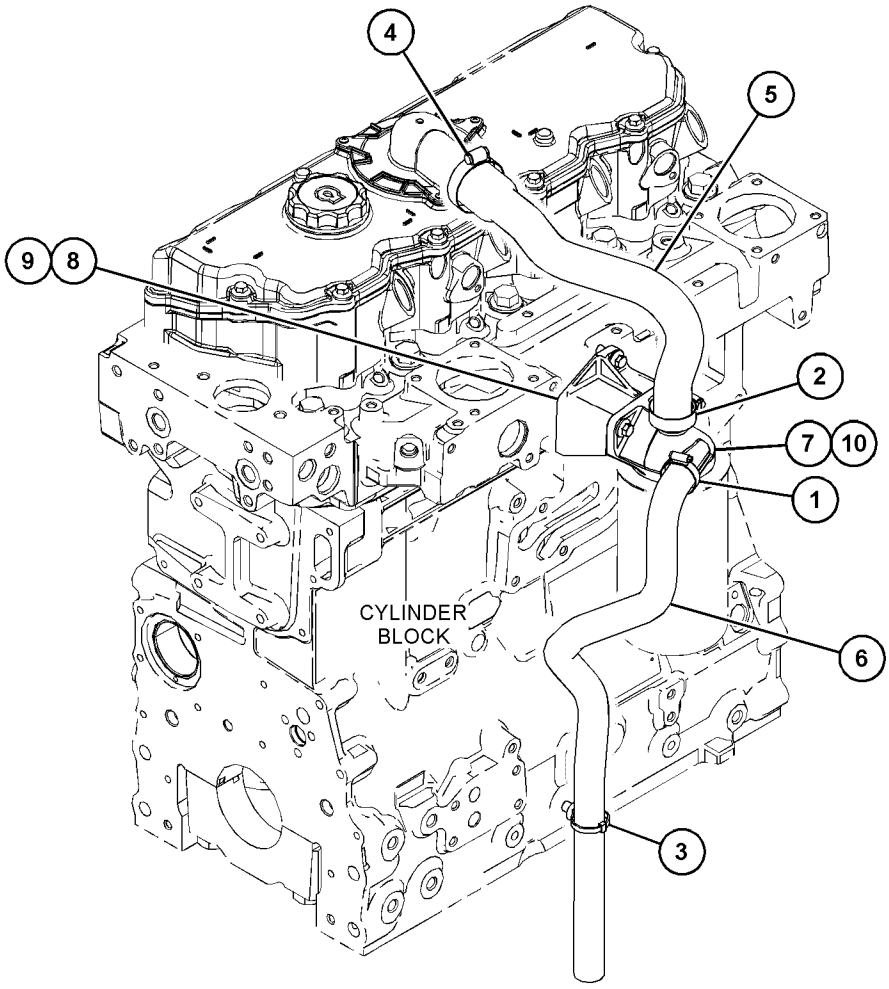

GRAPHIC #1 <END> g03873900

486-4227 BREATHER GP

PART OF 466-4382, 484-1469, 495-9687 ENGINE AR-PRIMARY

SMCS-1317 **i06782572**

NOTE	REF NO	GRAPHIC REF	PART NUMBER	QTY	PART NAME 1 2 3 4 5 6 (PRODUCT LEVEL)	SEE PAGE
	1	1	**486-4065**	1	BRACKET	
	2	1	**067-3045**	1	CLIP	
	3	1	**316-9351**	1	MOUNTING-CABLE TIE	
	4	1	**433-2688**	1	PILLAR	
	5	1	**474-3829**	1	HOSE	
M	6	1	**100-4830**	1	BOLT (M10X1.5X20-MM)	
	7	1	**127-3361**	1	BOLT (M8X1.25X95-MM)	
	8	1	**363-5813**	1	CLAMP-HOSE	

M - METRIC PART

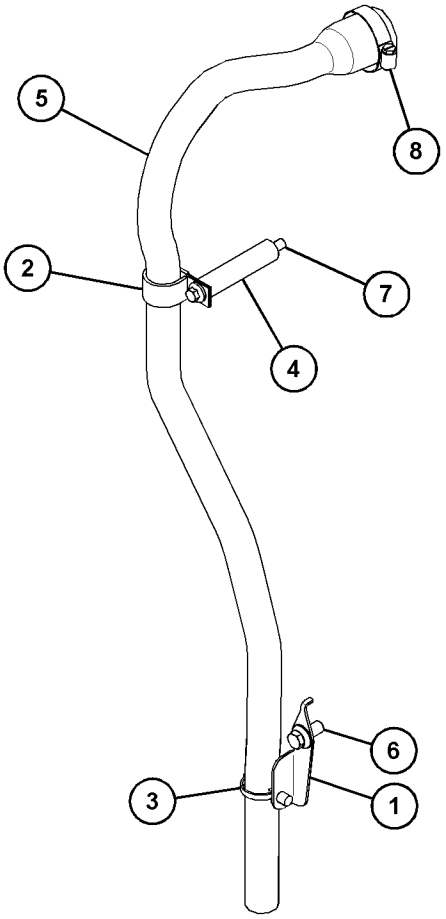

GRAPHIC #1 <END> g06115734

522-1257 BREATHER GP

PART OF 486-2471 ENGINE AR-PRIMARY

SMCS-1317 **i07284369**

NOTE	REF NO	GRAPHIC REF	PART NUMBER	QTY	PART NAME 1 2 3 4 5 6 (PRODUCT LEVEL)	SEE PAGE
	1	1	**127-3361**	1	BOLT (M8X1.25X95-MM)	
	2	1	**363-5813**	1	CLAMP-HOSE	
	3	1	**433-1900**	1	HOSE (VENT)	
	4	1	**433-2688**	1	PILLAR	
	5	1	**067-3045**	1	CLIP (LOOP)	

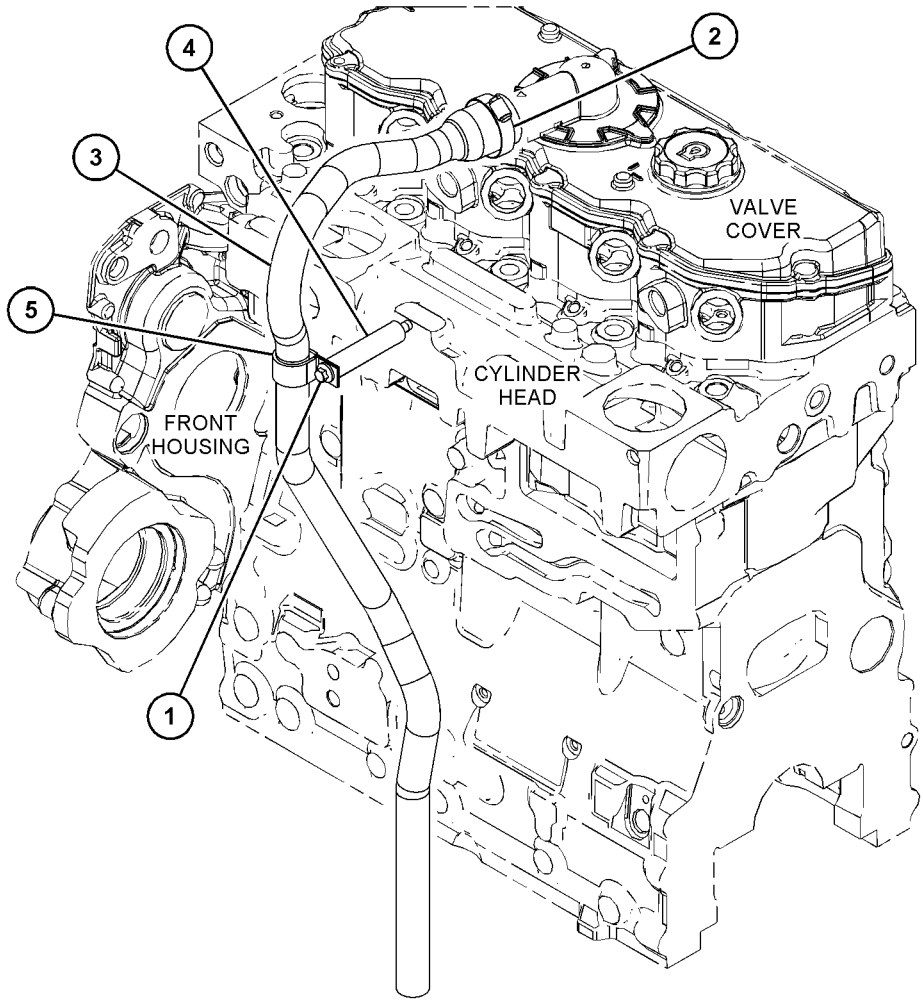

GRAPHIC #1 <END> g06273244

417-4188 DRAIN GP-OIL

SMCS-1372 **i06151771**

NOTE	REF NO	GRAPHIC REF	PART NUMBER	QTY	PART NAME 1 2 3 4 5 6 (PRODUCT LEVEL)	SEE PAGE
	1	1	**6V-7238**	1	VALVE-SHUTOFF	
	2	1	**7C-0351**	1	PLUG-DRAIN (ENGINE OIL)	
	3	1	**335-7585**	1	SEAL	
	4	1	**3K-0360**	1	SEAL-O-RING	

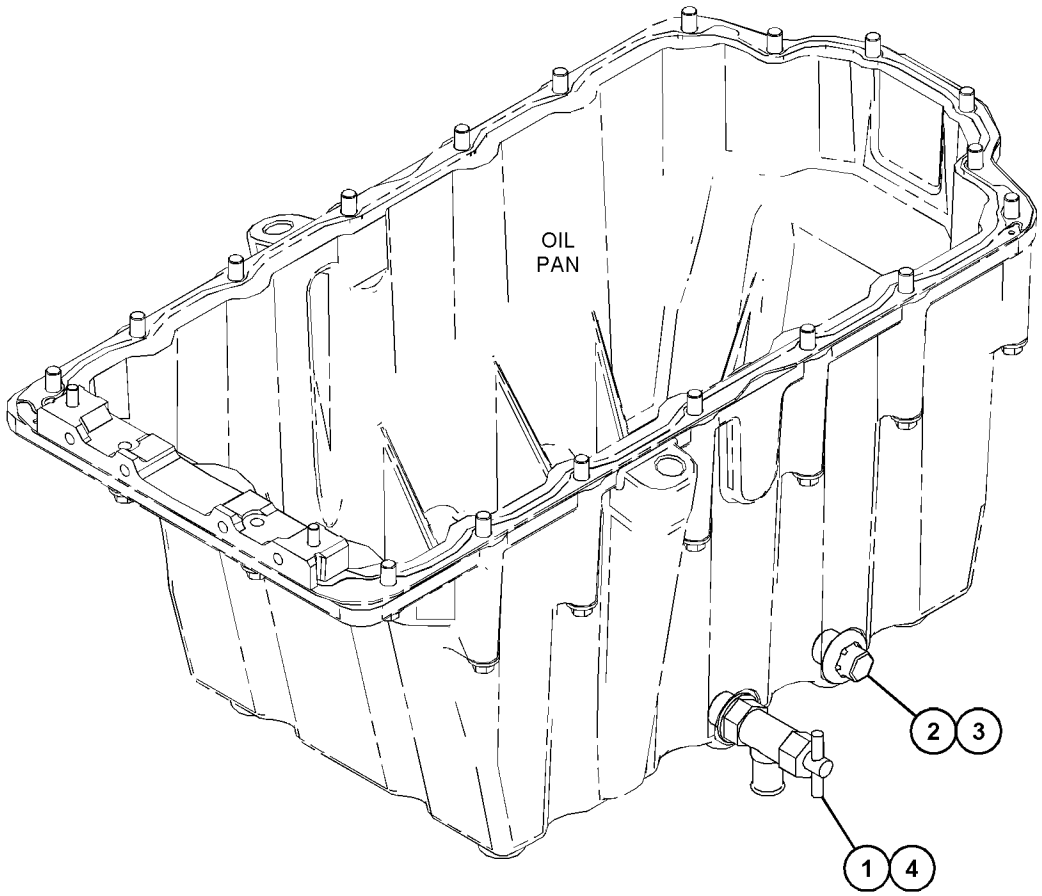

GRAPHIC #1 <END> g03865663

416-1070 FILLER GP-ENGINE OIL

PART OF 463-8820, 509-5882 ENGINE AR-PRIMARY

SMCS-1316 **i06053013**

NOTE	REF NO	GRAPHIC REF	PART NUMBER	QTY	PART NAME 1 2 3 4 5 6 (PRODUCT LEVEL)	SEE PAGE
	1	1	**225-6522**	1	PLUG-CUP	
	2	1	**225-6524**	1	PLUG-CUP	

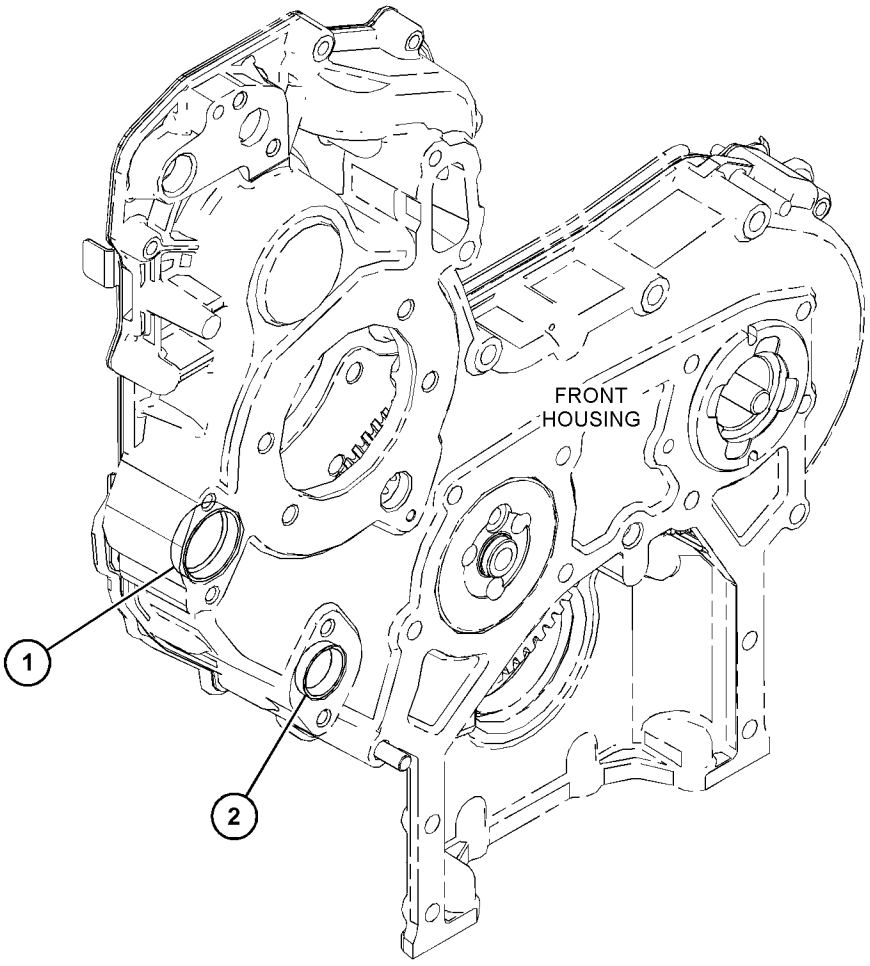

GRAPHIC #1 <END> g03828691

417-4185 FILLER GP-ENGINE OIL

PART OF 466-3332, 467-7465, 475-8294, 486-2471, 491-2522, 495-3005, 502-7230, 503-4924, 508-4399, 510-0902, 512-9838, 512-9884, 514-3535, 514-3537, 539-3889 ENGINE AR-PRIMARY

SMCS-1316 **i06053027**

NOTE	REF NO	GRAPHIC REF	PART NUMBER	QTY	PART NAME 1 2 3 4 5 6 (PRODUCT LEVEL)	SEE PAGE
	1	1	**225-6522**	1	PLUG-CUP	

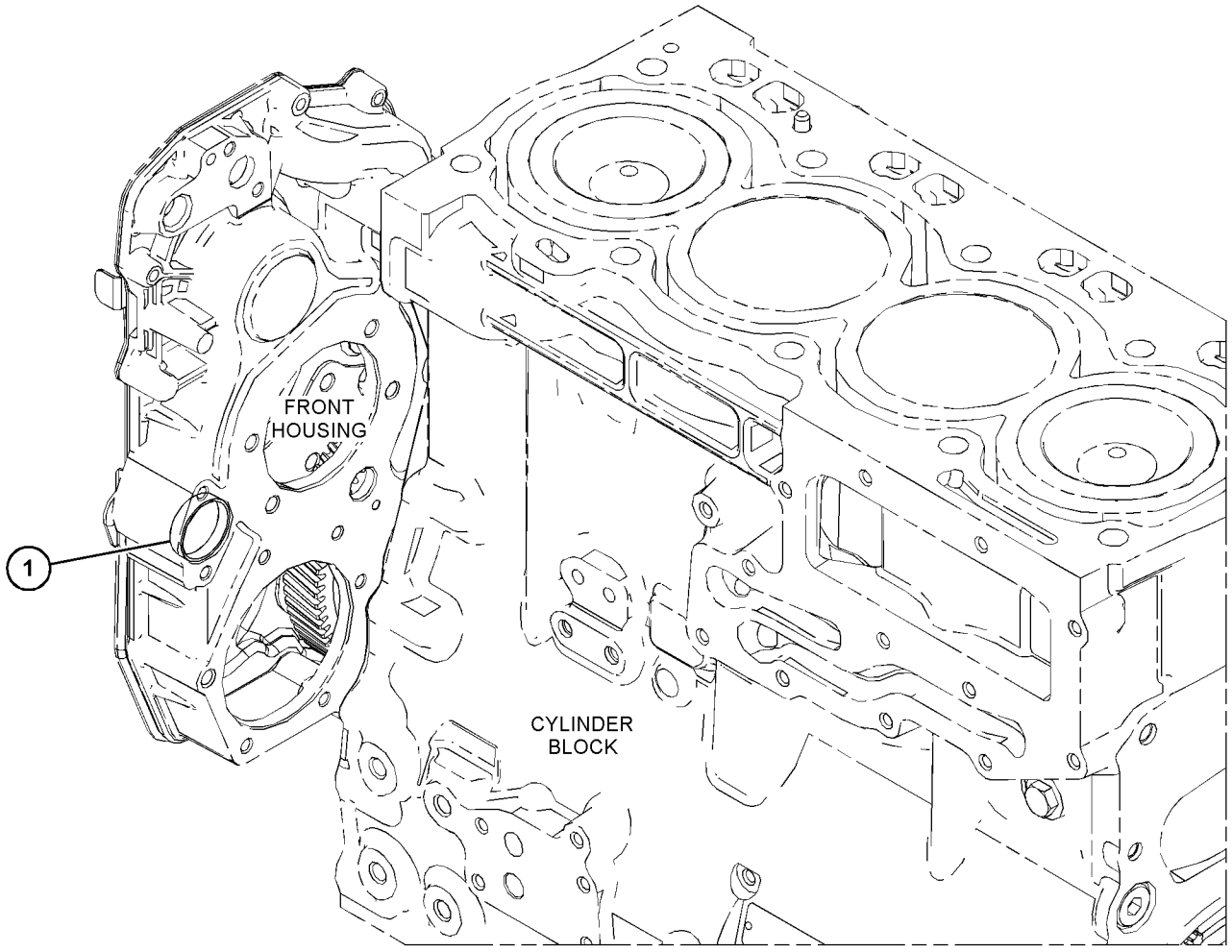

GRAPHIC #1 <END> g03871771

417-4186 FILLER GP-ENGINE OIL

PART OF 466-4382, 484-1469, 484-2343, 492-3115, 495-9687, 503-1940, 504-3628, 538-5357 ENGINE AR-PRIMARY

SMCS-1316 **i06167231**

NOTE	REF NO	GRAPHIC REF	PART NUMBER	QTY	PART NAME 1 2 3 4 5 6 (PRODUCT LEVEL)	SEE PAGE
M	1	1	**6I-0254**	1	BOLT (M8X1.25X30-MM)	
	2	1	**318-0774**	1	FILLER GP-ENGINE OIL	
M	3	1	**6I-4374**	1	BOLT (M8X1.25X60-MM)	

M - METRIC PART

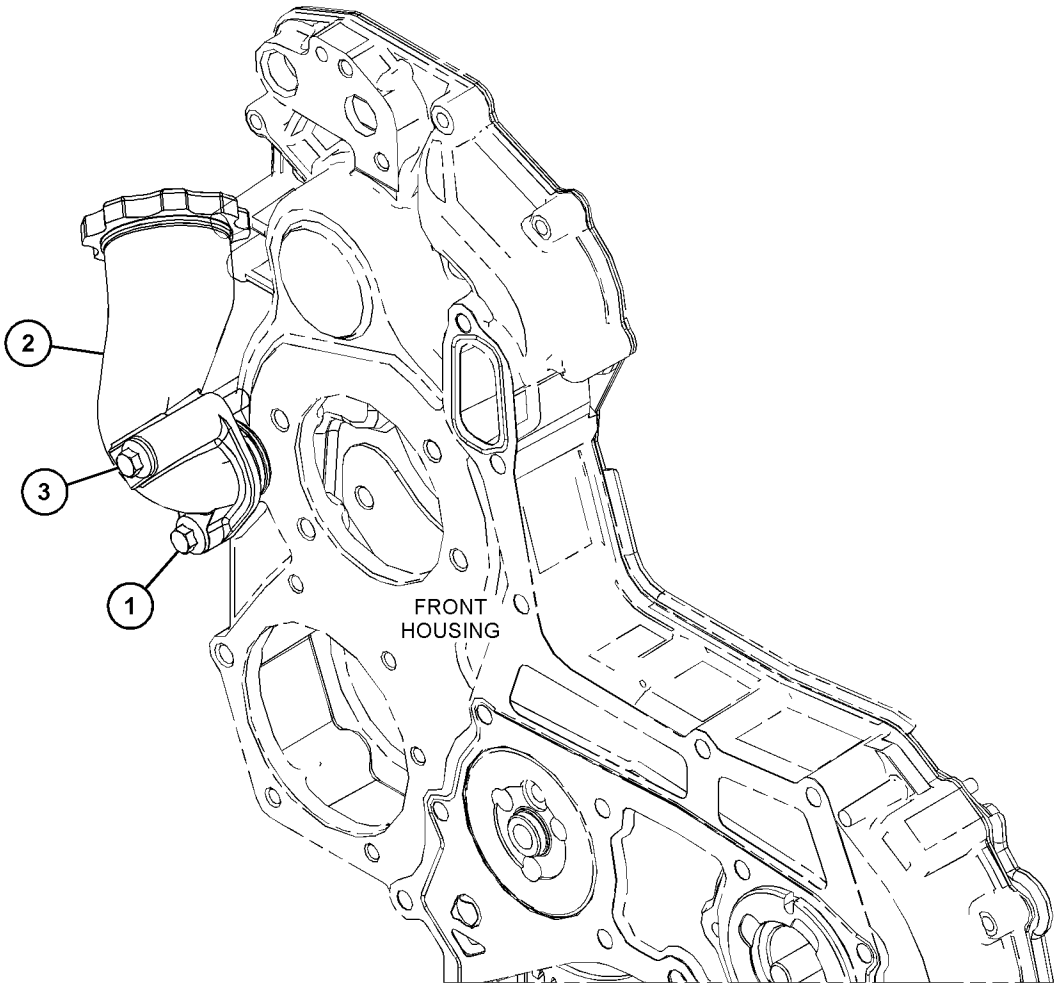

GRAPHIC #1 <END> g03871823

432-0065 FILLER GP-ENGINE OIL

PART OF 455-9378, 461-3168, 463-8848, 463-8910, 478-6560, 480-6065, 492-1322, 492-3118, 500-8128, 504-3645, 509-3109, 509-5884, 516-9846, 517-0058, 526-8847, 527-9081, 541-2728 ENGINE AR-PRIMARY

SMCS-1316 **i06091163**

NOTE	REF NO	GRAPHIC REF	PART NUMBER	QTY	PART NAME 1 2 3 4 5 6 (PRODUCT LEVEL)	SEE PAGE
M	1	1	**6I-0254**	1	BOLT (M8X1.25X30-MM)	
	2	1	**321-2383**	1	FILLER AS	
	2A	1	**306-2337**	1	SEAL-O-RING	
	2B	1	**130-9888**	1	CAP AS-OIL FILLER (ENGINE)	
	2C	1	**113-1504**	1	SEAL-O-RING	
M	3	1	**6I-4374**	1	BOLT (M8X1.25X60-MM)	

M - METRIC PART

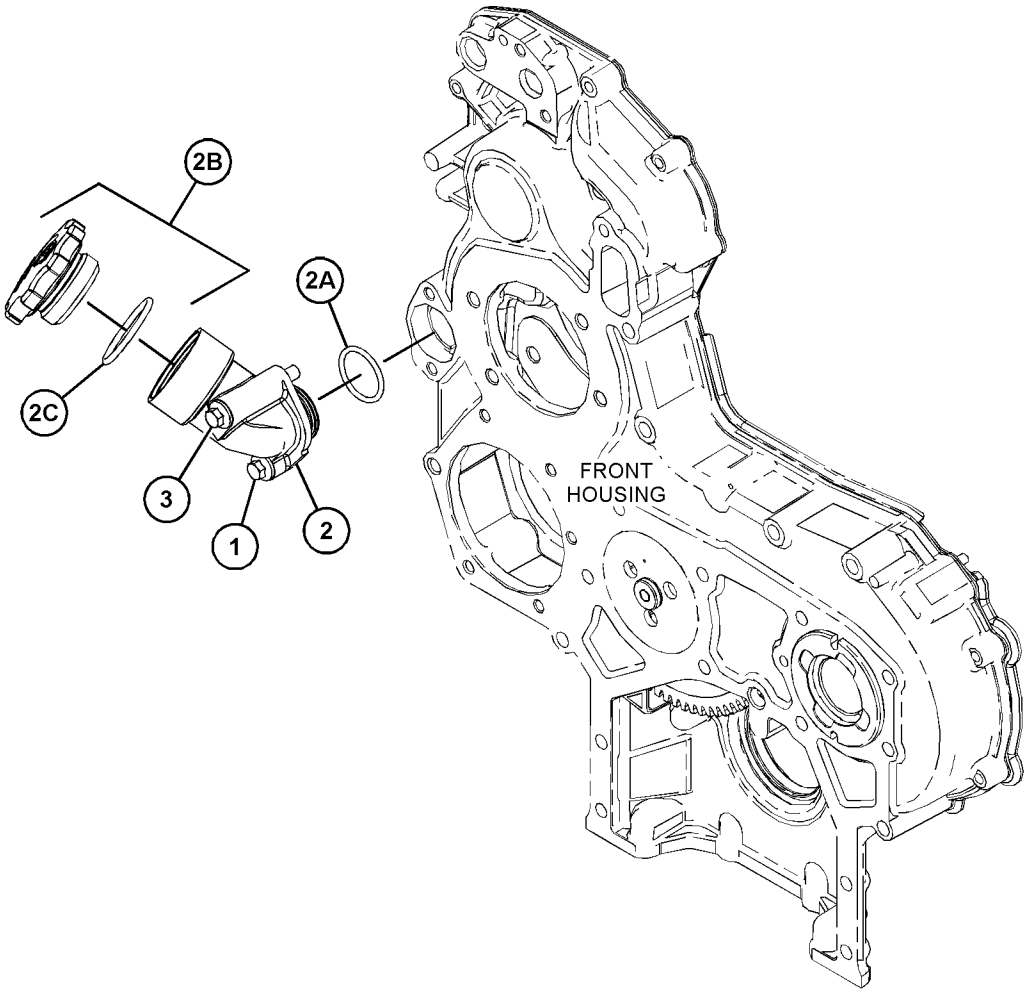

GRAPHIC #1 <END> g03812334

432-0069 FILLER GP-ENGINE OIL

PART OF 469-1048, 477-2657 ENGINE AR-PRIMARY

SMCS-1316 **i06810837**

NOTE	REF NO	GRAPHIC REF	PART NUMBER	QTY	PART NAME 1 2 3 4 5 6 (PRODUCT LEVEL)	SEE PAGE
	1	1	**225-6522**	1	PLUG-CUP	
M	2	1	**6I-0260**	2	BOLT (M8X1.25X25-MM)	
	3	1	**317-3769**	1	FILLER GP-ENGINE OIL	
	3A	1	**317-3778**	1	SEAL-O-RING	

M - METRIC PART

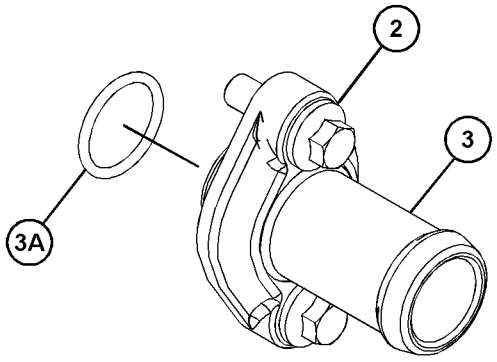

VIEW OF AREA A

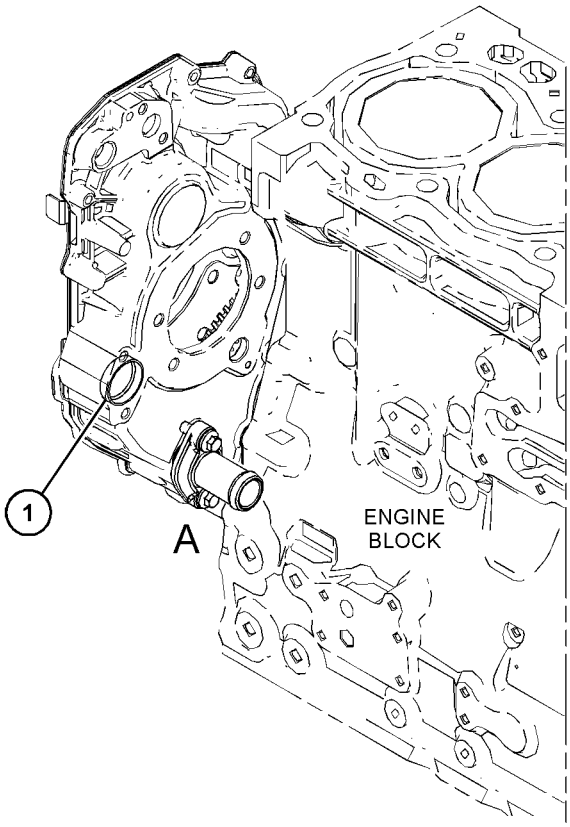

GRAPHIC #1 <END> g06140702

417-3394 FILTER GP-ENGINE OIL

PART OF 455-9378, 461-3168, 463-8820, 463-8848, 463-8910, 466-3332, 466-4382, 467-7465, 469-1048, 475-8294, 477-2657, 478-6560, 480-6065, 484-1469, 484-2343, 486-2471, 491-2522, 492-1322, 492-3115, 492-3118, 495-3005, 495-9687, 500-8128, 502-7230, 503-1940, 503-4924, 504-3628, 504-3645, 508-4399, 509-3109, 509-5882, 509-5884, 510-0902, 512-9838, 512-9884, 514-3535, 514-3537, 516-9846, 517-0058, 526-8847, 527-9081, 538-5357, 539-3889, 541-2728 ENGINE AR-PRIMARY

SMCS-1306, 1308 **i06091162**

NOTE	REF NO	GRAPHIC REF	PART NUMBER	QTY	PART NAME 1 2 3 4 5 6 (PRODUCT LEVEL)	SEE PAGE
	1	1	**7W-2326**	1	FILTER AS-ENGINE OIL	

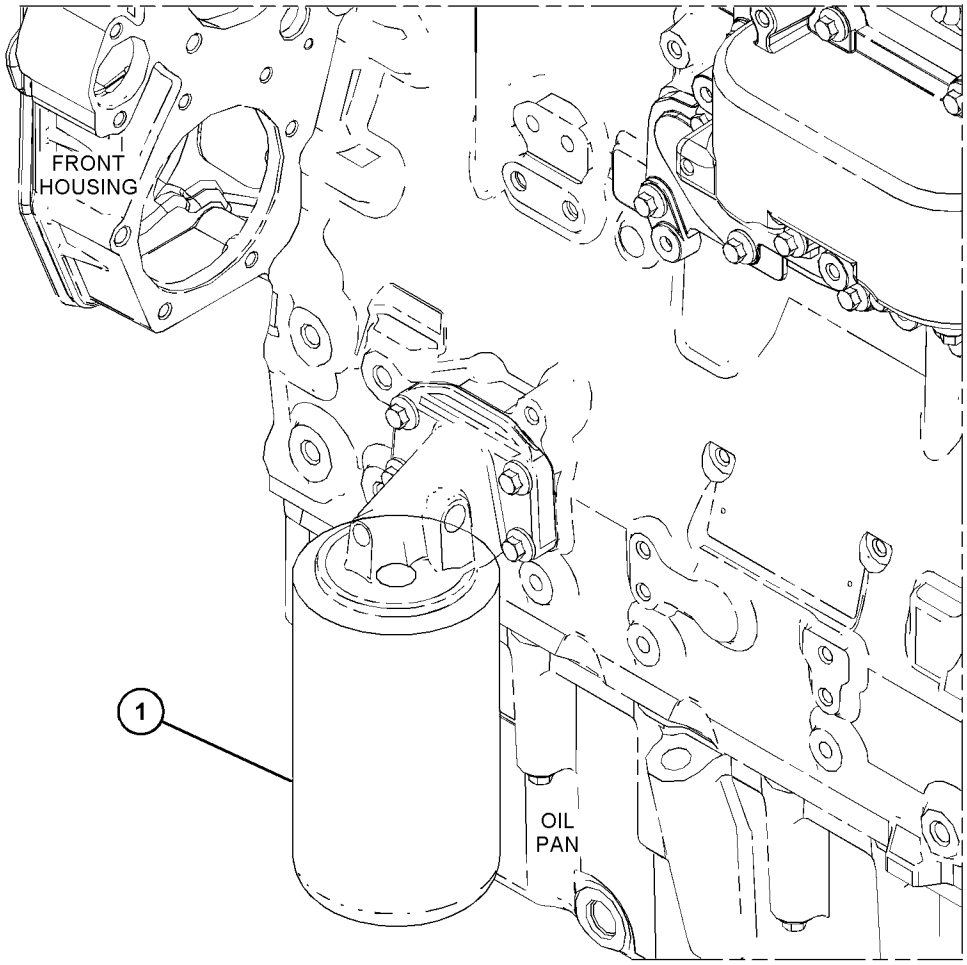

GRAPHIC #1 <END> g03817298

433-5258 FUMES DISPOSAL GP

PART OF 455-9378, 461-3168, 463-8820, 463-8848, 463-8910, 469-1048, 477-2657, 478-6560, 480-6065, 484-2343, 491-2522, 492-1322, 492-3115, 492-3118, 495-3005, 500-8128, 502-7230, 503-1940, 503-4924, 504-3628, 504-3645, 508-4399, 509-3109, 509-5882, 509-5884, 510-0902, 512-9838, 512-9884, 514-3535, 514-3537, 516-9846, 517-0058, 526-8847, 527-9081, 538-5357, 539-3889 ENGINE AR-PRIMARY

SMCS-1074, 1317

i06089783

NOTE	REF NO	GRAPHIC REF	PART NUMBER	QTY	PART NAME 1 2 3 4 5 6 (PRODUCT LEVEL)	SEE PAGE
	1	1	**127-3361**	1	BOLT (M8X1.25X95-MM)	
	2	1	**316-9351**	1	MOUNTING-CABLE TIE	
	3	1	**363-5813**	1	CLAMP-HOSE	
	4	1	**433-1900**	1	HOSE	
	5	1	**433-2688**	1	PILLAR	
	6	1	**067-3045**	1	CLIP (LOOP)	

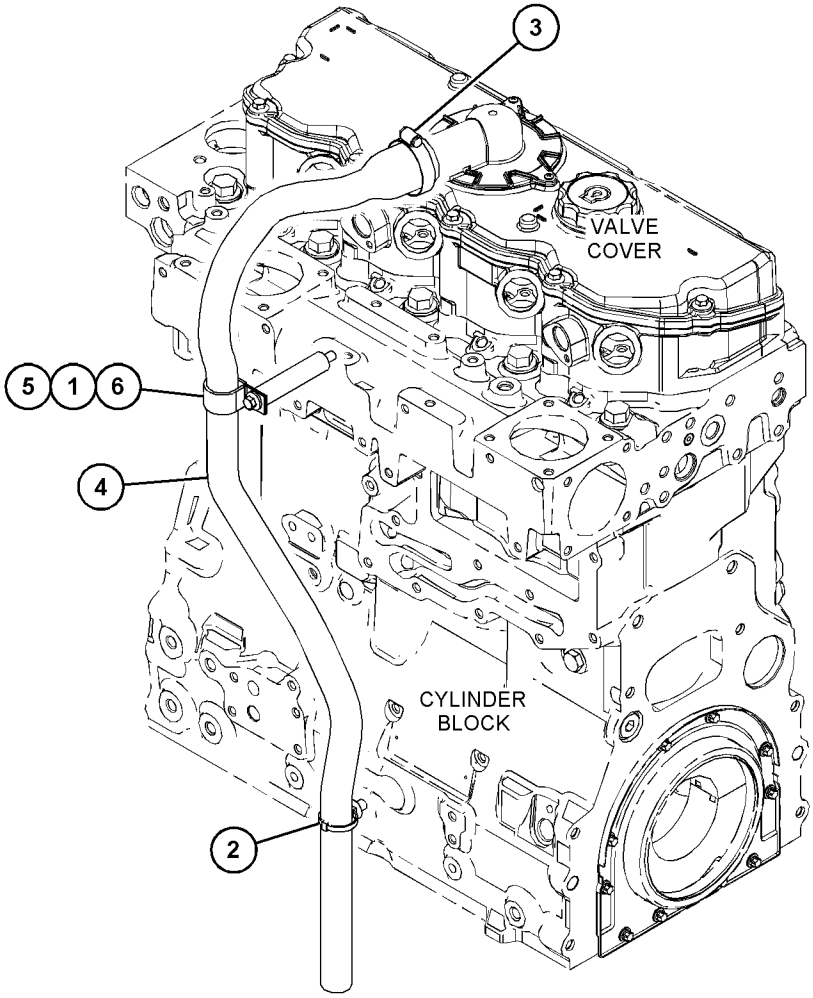

GRAPHIC #1 <END> g03811633

416-1053 GAUGE GP-OIL LEVEL (DIPSTICK)

PART OF 495-3005, 503-4924, 512-9838, 512-9884, 539-3889 ENGINE AR-PRIMARY

SMCS-1326 **i06271385**

NOTE	REF NO	GRAPHIC REF	PART NUMBER	QTY	PART NAME 1 2 3 4 5 6 (PRODUCT LEVEL)	SEE PAGE
M	1	1	**6I-0846**	1	BOLT (M6X1X14-MM)	
M	2	1	**124-3815**	1	BOLT (M8X1.25X16-MM)	
	3	1	**304-3692**	1	TUBE AS-OIL GAUGE	
	3A	1	**187-0555**	1	CLIP	
	4	1	**304-3695**	1	BRACKET	
	5	1	**304-3693**	1	GAUGE AS-OIL LEVEL (DIPSTICK)	
	6	1	**6I-0289**	1	PLUG	
	7	1	**6I-1497**	1	SEAL	

M - METRIC PART

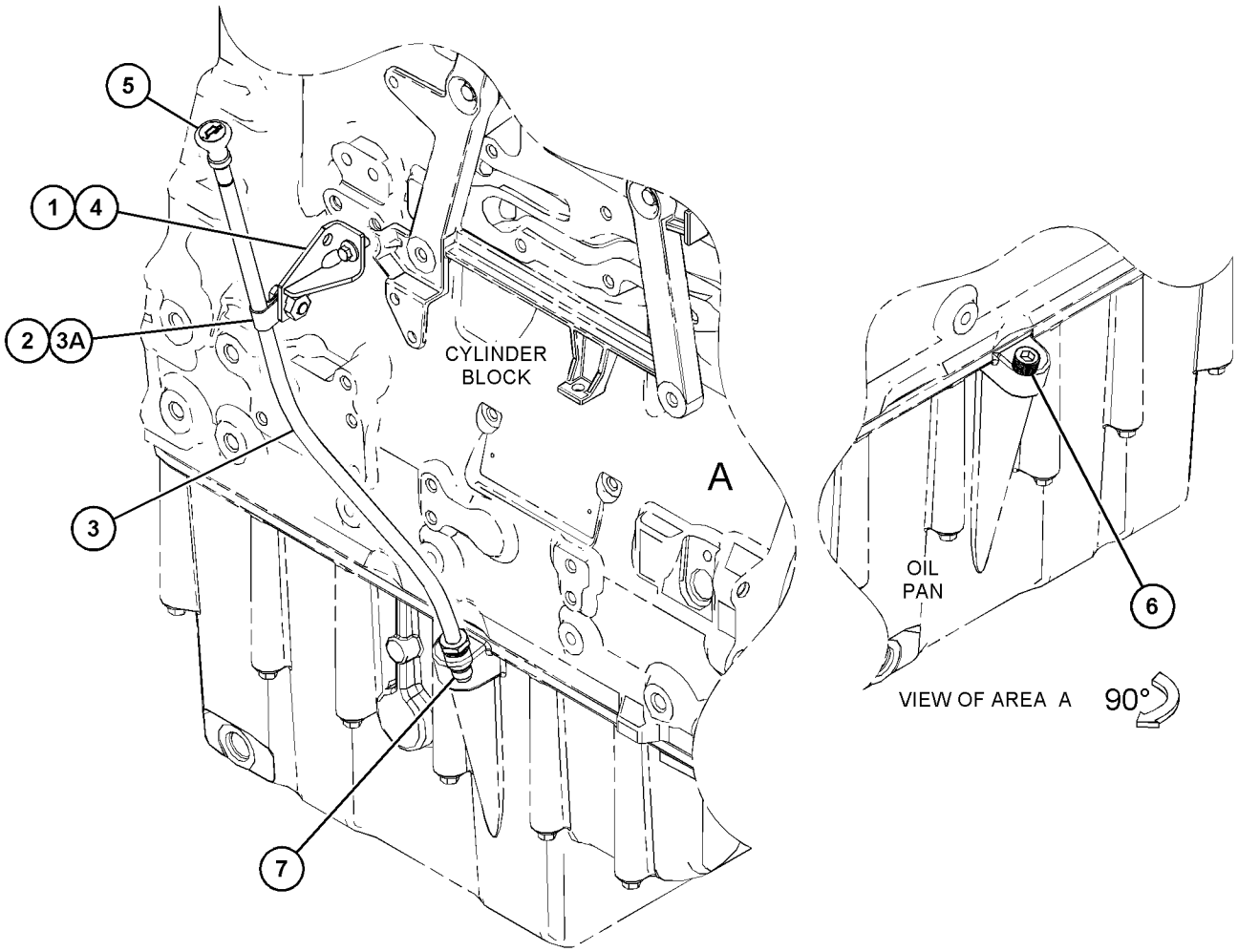

GRAPHIC #1 <END> g03831963

416-1054 GAUGE GP-OIL LEVEL (DIPSTICK)

SMCS-1326 **i06189373**

NOTE	REF NO	GRAPHIC REF	PART NUMBER	QTY	PART NAME 1 2 3 4 5 6 (PRODUCT LEVEL)	SEE PAGE
	1	1	**6I-1497**	1	SEAL	
M	2	1	**100-4830**	1	BOLT (M10X1.5X20-MM)	
M	3	1	**103-5687**	1	BOLT (M10X1.5X85-MM)	
M	4	1	**124-3815**	1	BOLT (M8X1.25X16-MM)	
	5	1	**354-8322**	1	PLUG	
	6	1	**393-5867**	1	SPACER	
	7	1	**426-1292**	1	TUBE AS-OIL GAUGE	
	7A	1	**106-8836**	2	CLIP	
	7B	1	**228-7089**	1	SEAL-O-RING	
	7C	1	*433-6270*	1	GAUGE AS-OIL LEVEL (DIPSTICK)	
	7D	1	**275-9891**	2	SEAL-O-RING	
	8	1	**459-6892**	1	BRACKET AS	
M	8A	1	**159-9540**	1	NUT-WELD (M8X1.25-THD)	

M - METRIC PART

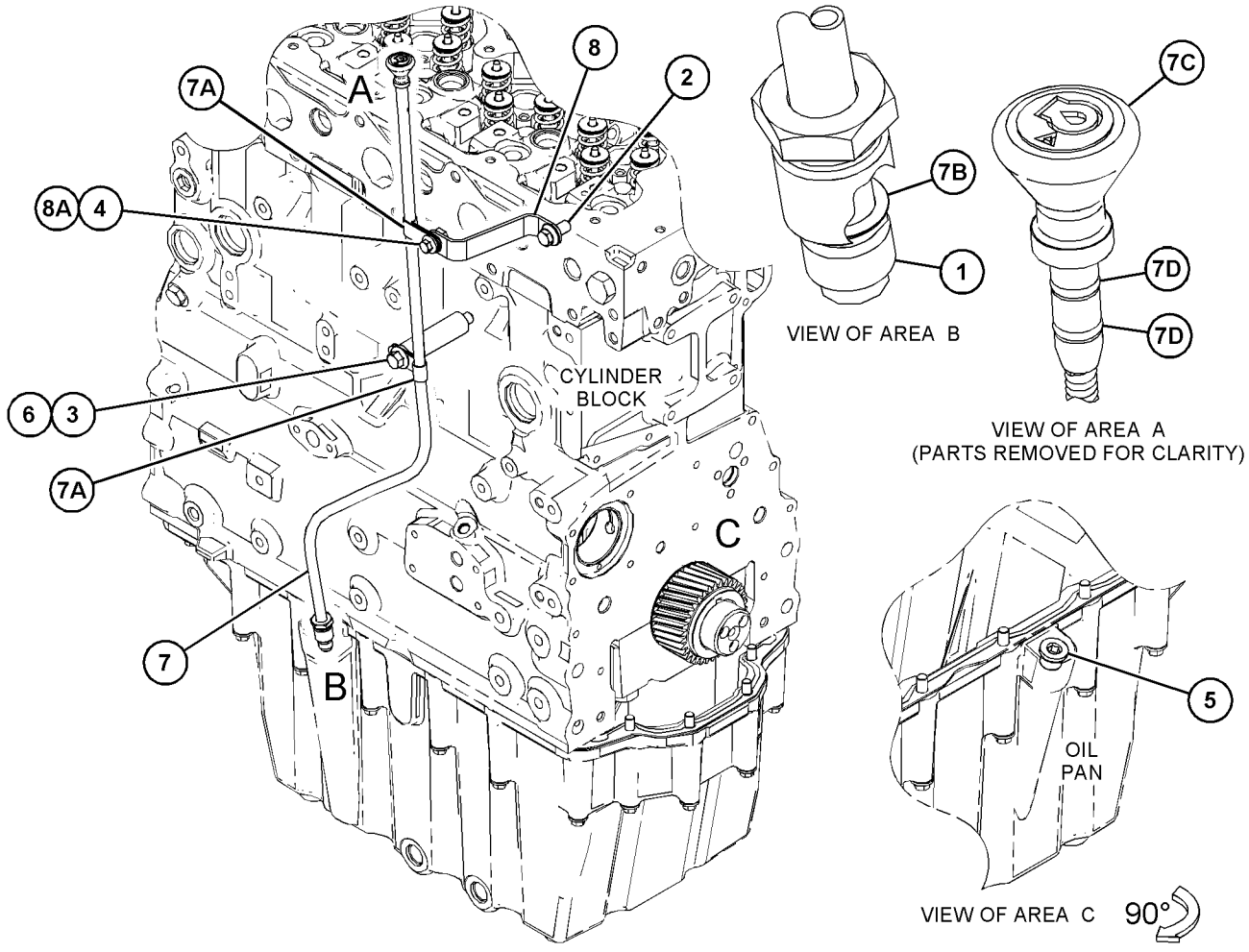

GRAPHIC #1

<END>

g03863412

441-9154 GAUGE GP-OIL LEVEL (DIPSTICK)

PART OF 455-9378, 463-8848, 463-8910, 466-3332, 466-4382, 467-7465, 484-1469, 495-9687, 509-5882 ENGINE AR-PRIMARY

SMCS-1326 **i06502006**

NOTE	REF NO	GRAPHIC REF	PART NUMBER	QTY	PART NAME 1 2 3 4 5 6 (PRODUCT LEVEL)	SEE PAGE
	1	1	**351-2100**	1	GAUGE GP-OIL LEVEL (DIPSTICK) (ENGINE)	
		1	**228-7089**	1	SEAL-O-RING	
		1	**275-9891**	2	SEAL-O-RING	
	2	1	**6I-0289**	1	PLUG	
	3	1	**6I-1497**	1	SEAL	

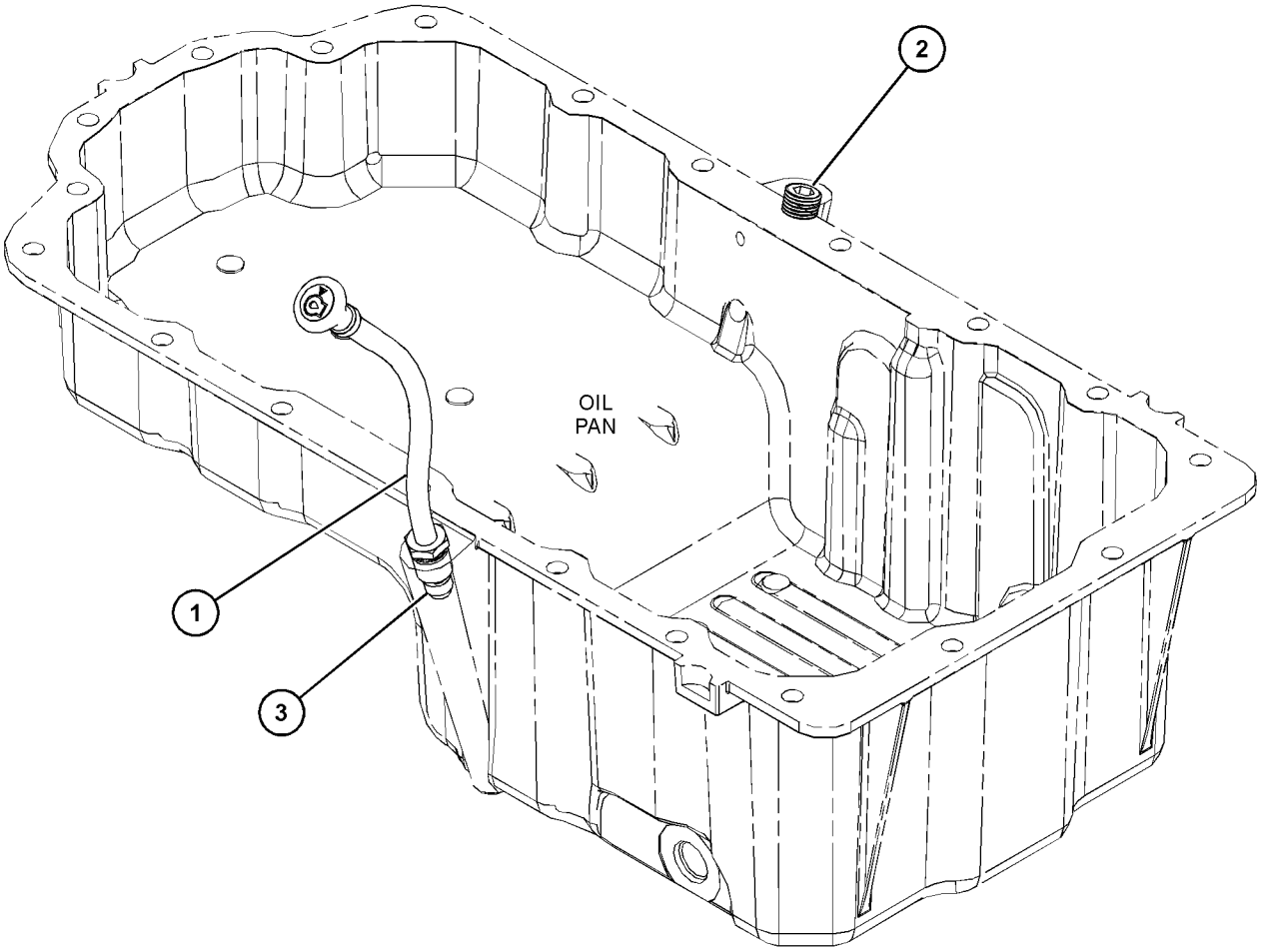

GRAPHIC #1 <END> g06002473

441-9155 GAUGE GP-OIL LEVEL (DIPSTICK)

PART OF 463-8820, 492-3118, 500-8128, 502-7230, 504-3645, 508-4399, 510-0902, 514-3535, 514-3537 ENGINE AR-PRIMARY

SMCS-1326 **i06089330**

NOTE	REF NO	GRAPHIC REF	PART NUMBER	QTY	PART NAME 1 2 3 4 5 6 (PRODUCT LEVEL)	SEE PAGE
	1	1	**6I-1497**	1	SEAL	
	2	1	**351-2098**	1	GAUGE GP-OIL LEVEL (DIPSTICK) (ENGINE)	
	2A	1	**228-7089**	1	SEAL-O-RING	
	2B	1	**275-9891**	2	SEAL-O-RING	

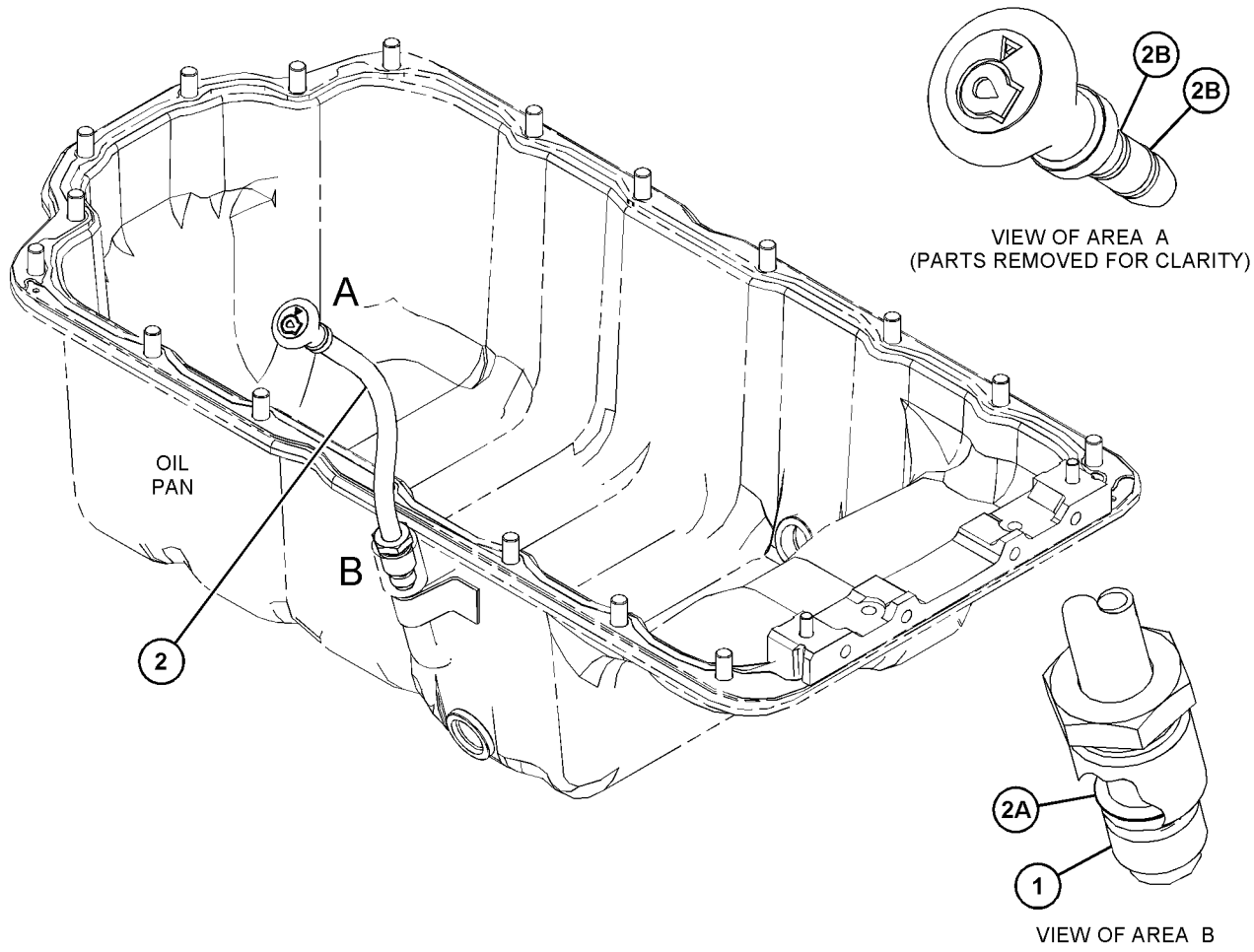

GRAPHIC #1 <END> g03828495

447-7670 GAUGE GP-OIL LEVEL (DIPSTICK)

PART OF 491-2522 ENGINE AR-PRIMARY

SMCS-1326 **i06180457**

NOTE	REF NO	GRAPHIC REF	PART NUMBER	QTY	PART NAME 1 2 3 4 5 6 (PRODUCT LEVEL)	SEE PAGE
	1	1	**6I-0289**	1	PLUG	
M	2	1	**6I-0846**	1	BOLT (M6X1X14-MM)	
	3	1	**6I-1497**	1	SEAL	
M	4	1	**124-3815**	1	BOLT (M8X1.25X16-MM)	
	5	1	**322-8417**	1	TUBE	
	5A	1	**187-0555**	1	CLIP	
	6	1	**322-8418**	1	GAUGE-OIL LEVEL (DIPSTICK)	
	7	1	**304-3695**	1	BRACKET	

M - METRIC PART

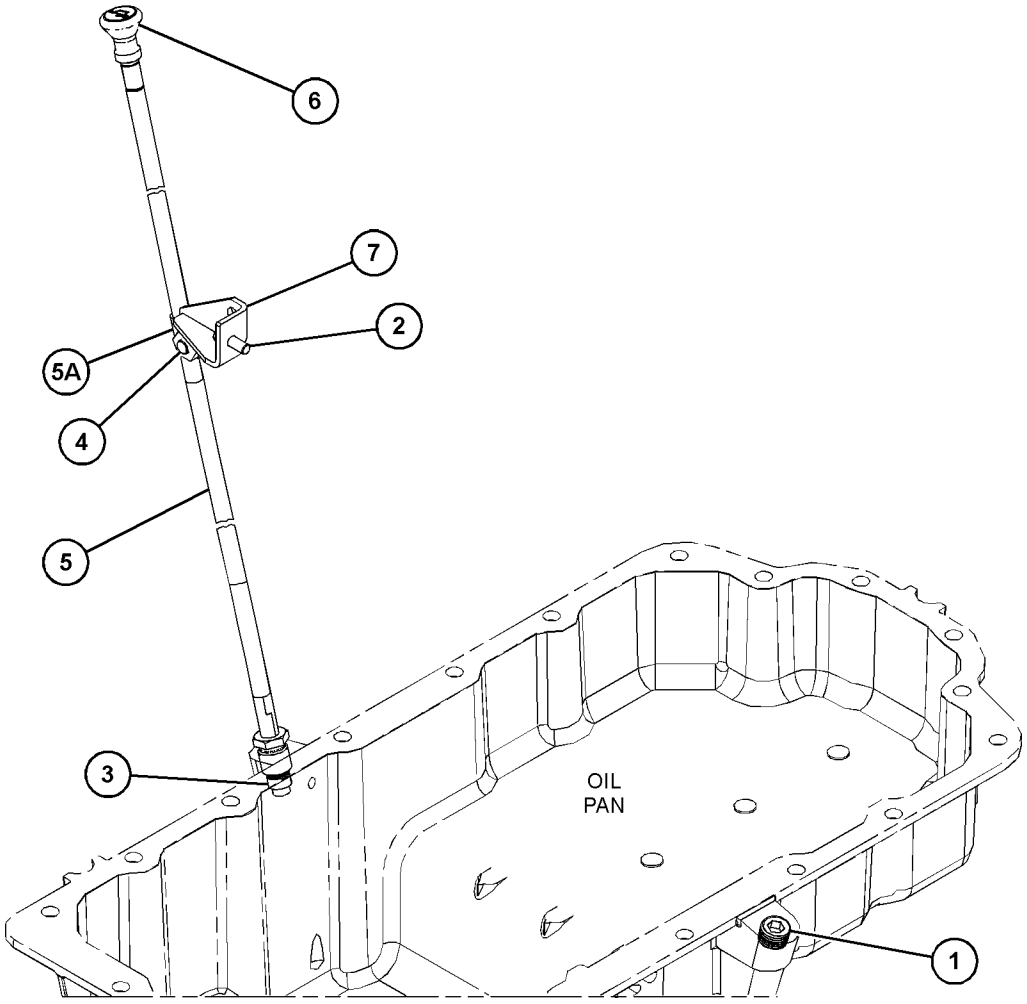

GRAPHIC #1 <END> g03883434

451-2273 GAUGE GP-OIL LEVEL (DIPSTICK)

PART OF 475-8294, 486-2471, 527-9081 ENGINE AR-PRIMARY

SMCS-1326 **i06100980**

NOTE	REF NO	GRAPHIC REF	PART NUMBER	QTY	PART NAME 1 2 3 4 5 6 (PRODUCT LEVEL)	SEE PAGE
	1	1	**6I-0289**	1	PLUG	
	2	1	**351-2104**	1	GAUGE AS-OIL LEVEL (DIPSTICK)	
		1	**228-7089**	1	SEAL-O-RING	
		1	**275-9891**	2	SEAL-O-RING	
	3	1	**6I-1497**	1	SEAL	

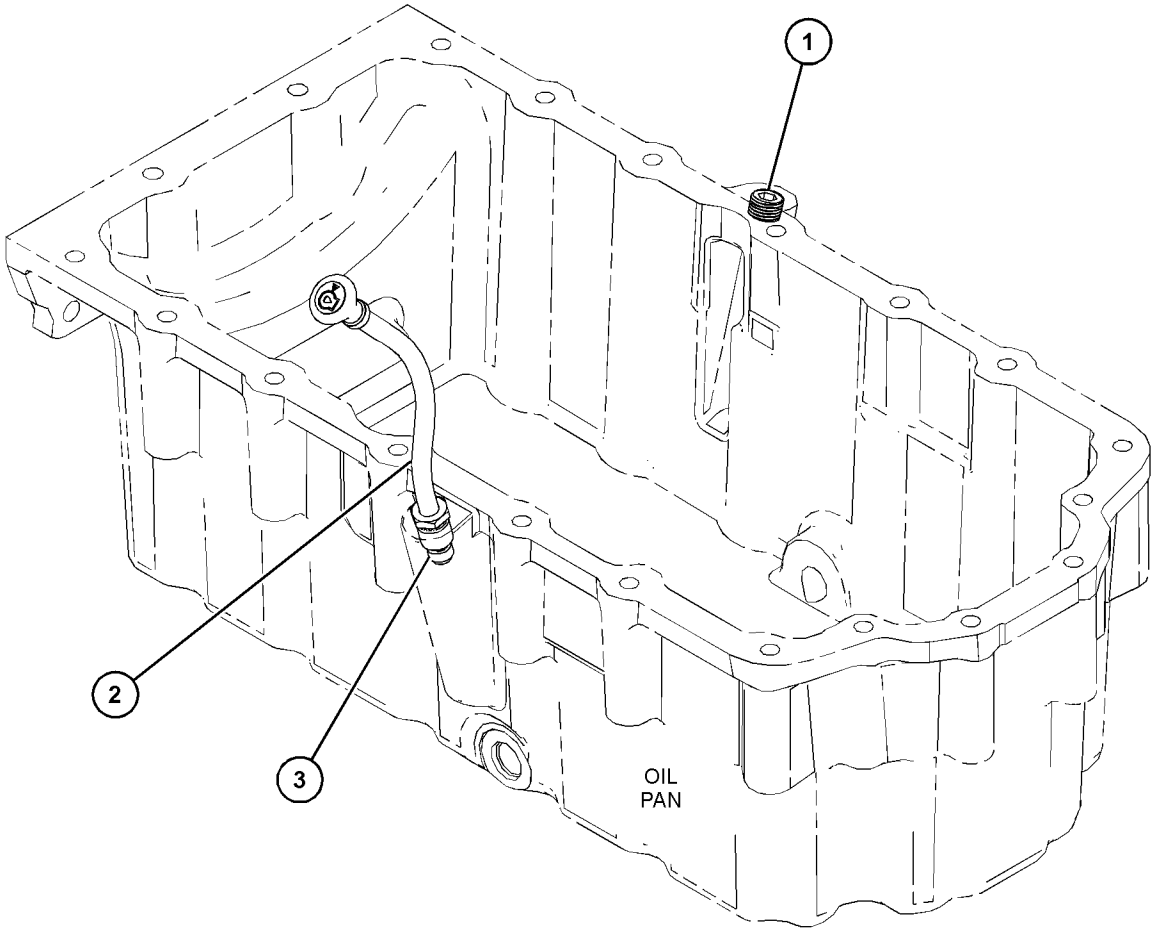

GRAPHIC #1 <END> g03883404

417-4190 PLUG GP-OIL FILTER MOUNTING

PART OF 455-9378, 461-3168, 463-8820, 463-8848, 463-8910, 466-3332, 466-4382, 467-7465, 469-1048, 477-2657, 478-6560, 480-6065, 484-1469, 484-2343, 486-2471, 492-1322, 492-3115, 492-3118, 495-3005, 495-9687, 500-8128, 502-7230, 503-1940, 503-4924, 504-3628, 504-3645, 508-4399, 509-3109, 509-5882, 509-5884, 510-0902, 512-9838, 512-9884, 514-3535, 514-3537, 516-9846, 517-0058, 526-8847, 538-5357, 539-3889, 541-2728 ENGINE AR-PRIMARY

SMCS-1306 **i06091142**

NOTE	REF NO	GRAPHIC REF	PART NUMBER	QTY	PART NAME 1 2 3 4 5 6 (PRODUCT LEVEL)	SEE PAGE
	1	1	**225-7941**	1	PLUG	
	2	1	**330-5898**	1	SEAL-O-RING	

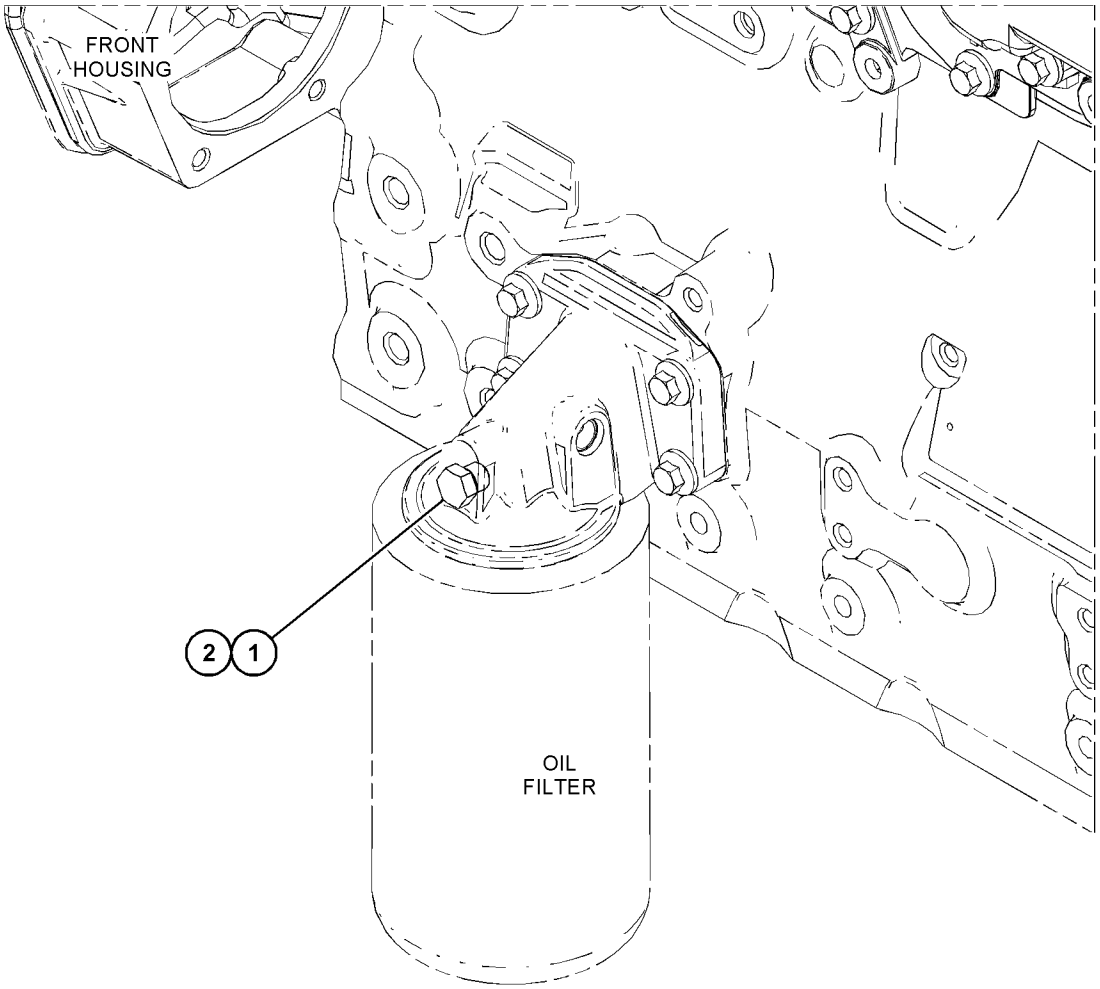

GRAPHIC #1 <END> g03815199

416-8723 PUMP GP-ENGINE OIL

PART OF 455-9378, 463-8820, 463-8910, 466-3332, 469-1048, 477-2657, 478-6560, 484-1469, 491-2522, 492-1322, 492-3118, 495-3005, 495-9687, 500-8128, 503-4924, 504-3645, 509-5882, 512-9838, 512-9884 ENGINE AR-PRIMARY
TYPE 1

SMCS-1304, 1315

i06238736

NOTE	REF NO	GRAPHIC REF	PART NUMBER	QTY	PART NAME 1 2 3 4 5 6 (PRODUCT LEVEL)	SEE PAGE
M	1	1	**100-4461**	5	BOLT (M10X1.5X50-MM)	
C	2	1	**447-8572**	1	PUMP AS-OIL	

C - CHANGE FROM PREVIOUS TYPE
M - METRIC PART

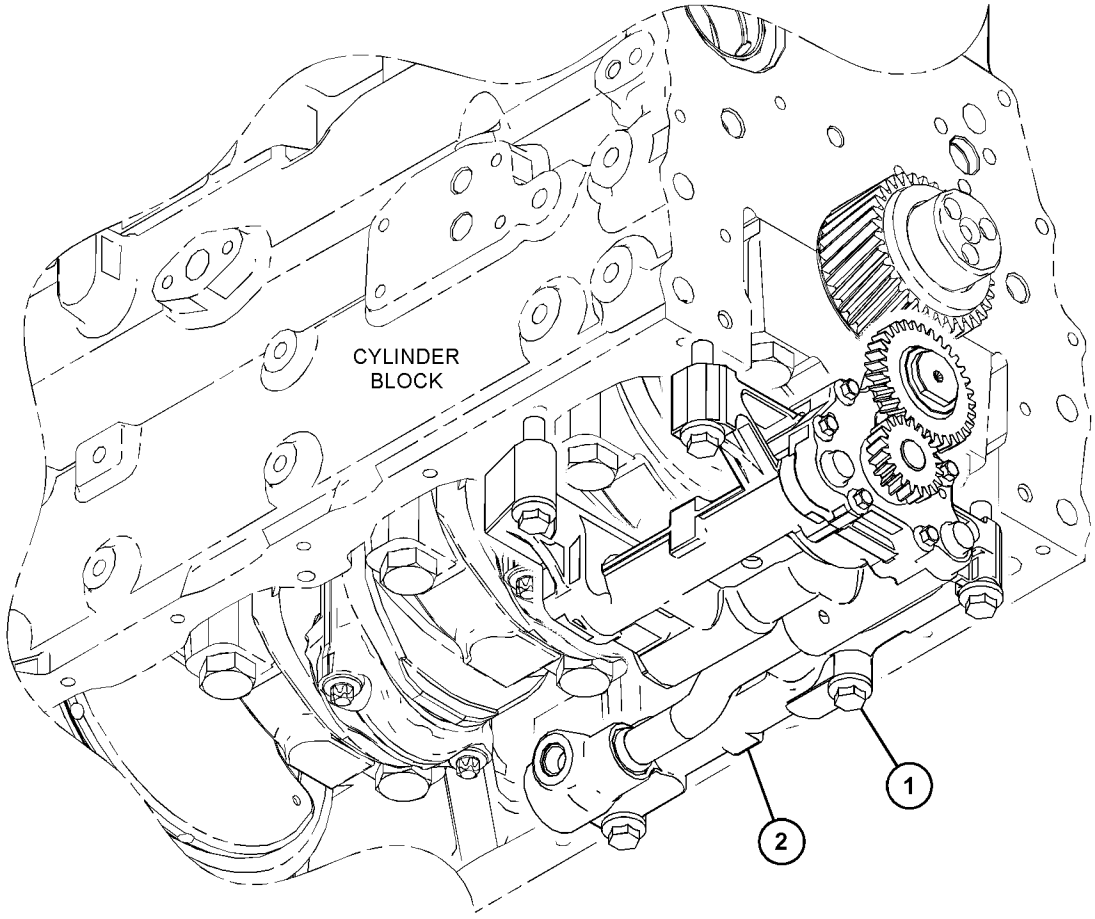

GRAPHIC #1 <END> g03822861

416-8723 PUMP GP-ENGINE OIL

TYPE 2

SMCS-1304, 1315 **i06105331**

NOTE	REF NO	GRAPHIC REF	PART NUMBER	QTY	PART NAME 1 2 3 4 5 6 (PRODUCT LEVEL)	SEE PAGE
M	1	1	**100-4461**	5	BOLT (M10X1.5X50-MM)	
	2	1	**225-8329**	1	PUMP AS-ENGINE OIL	

M - METRIC PART

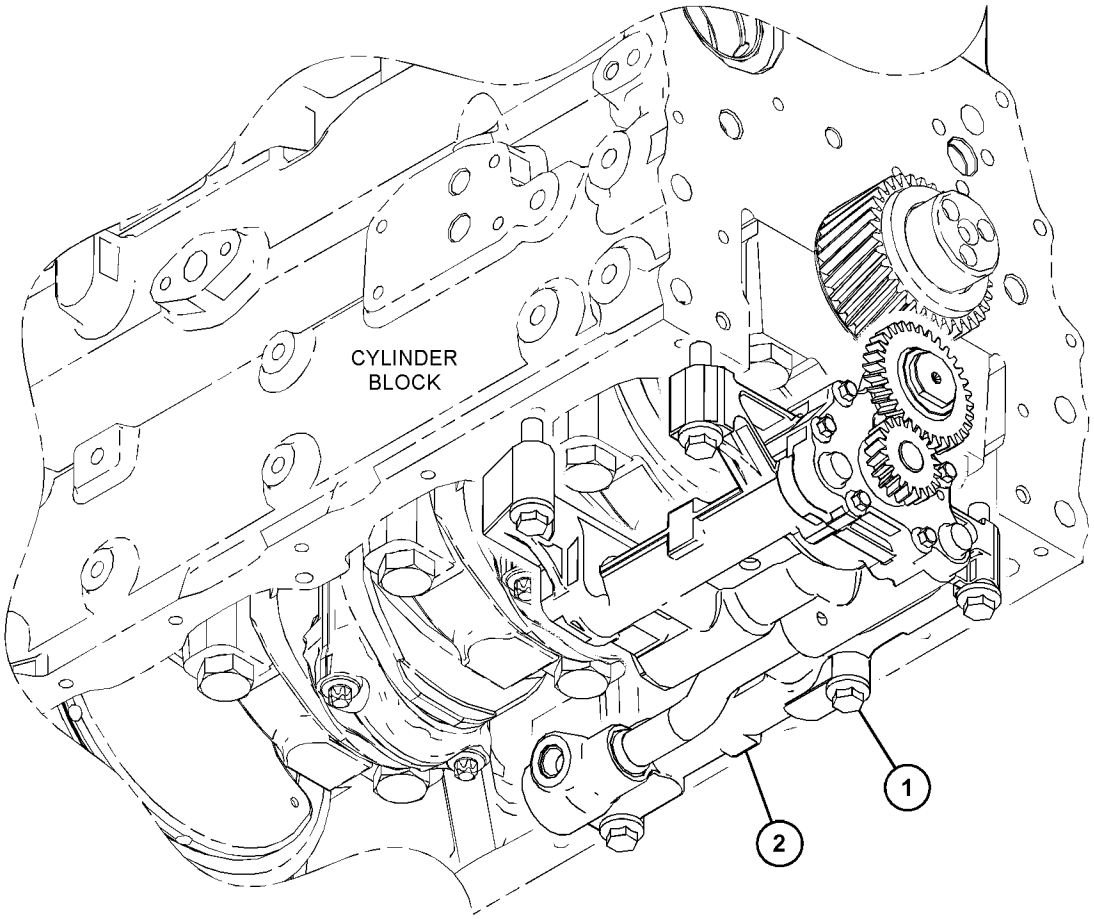

GRAPHIC #1 <END> g03814779

508-3673 PUMP GP-ENGINE OIL

PART OF 455-9378, 463-8820, 463-8848, 463-8910, 466-4382, 467-7465, 478-6560, 484-1469, 492-1322, 492-3118, 495-3005, 495-9687, 500-8128, 502-7230, 503-4924, 504-3645, 508-4399, 509-5882, 510-0902, 512-9838, 512-9884, 514-3535, 514-3537, 516-9846, 517-0058, 527-9081, 539-3889, 541-2728 ENGINE AR-PRIMARY

SMCS-1304, 1315 **i06791539**

NOTE	REF NO	GRAPHIC REF	PART NUMBER	QTY	PART NAME 1 2 3 4 5 6 (PRODUCT LEVEL)	SEE PAGE
M	1	1	**100-4461**	5	BOLT (M10X1.5X50-MM)	
	2	1	**420-0471**	1	PUMP AS-ENGINE OIL	

M - METRIC PART

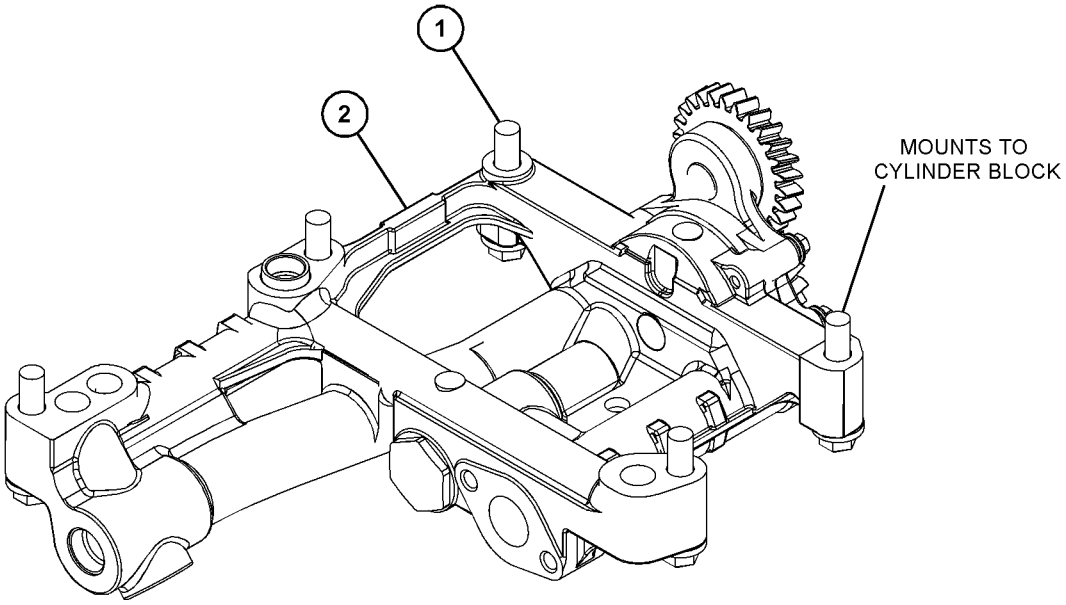

GRAPHIC #1 <END> g06152360

417-4214 VALVE GP-CHECK

PART OF 491-2522 ENGINE AR-PRIMARY

SMCS-5067 **i06155579**

NOTE	REF NO	GRAPHIC REF	PART NUMBER	QTY	PART NAME 1 2 3 4 5 6 (PRODUCT LEVEL)	SEE PAGE
	1	1	**8C-3445**	1	CAP-DUST	
	2	1	**199-9267**	1	SEAL-O-RING	
	3	1	**216-9633**	1	VALVE AS-FLUID SAMPLING (ENGINE OIL)	
	4	1	**232-3861**	1	PLUG (BLANKING)	
	5	1	**330-5898**	1	SEAL-O-RING	
	6	1	**225-7941**	1	PLUG	

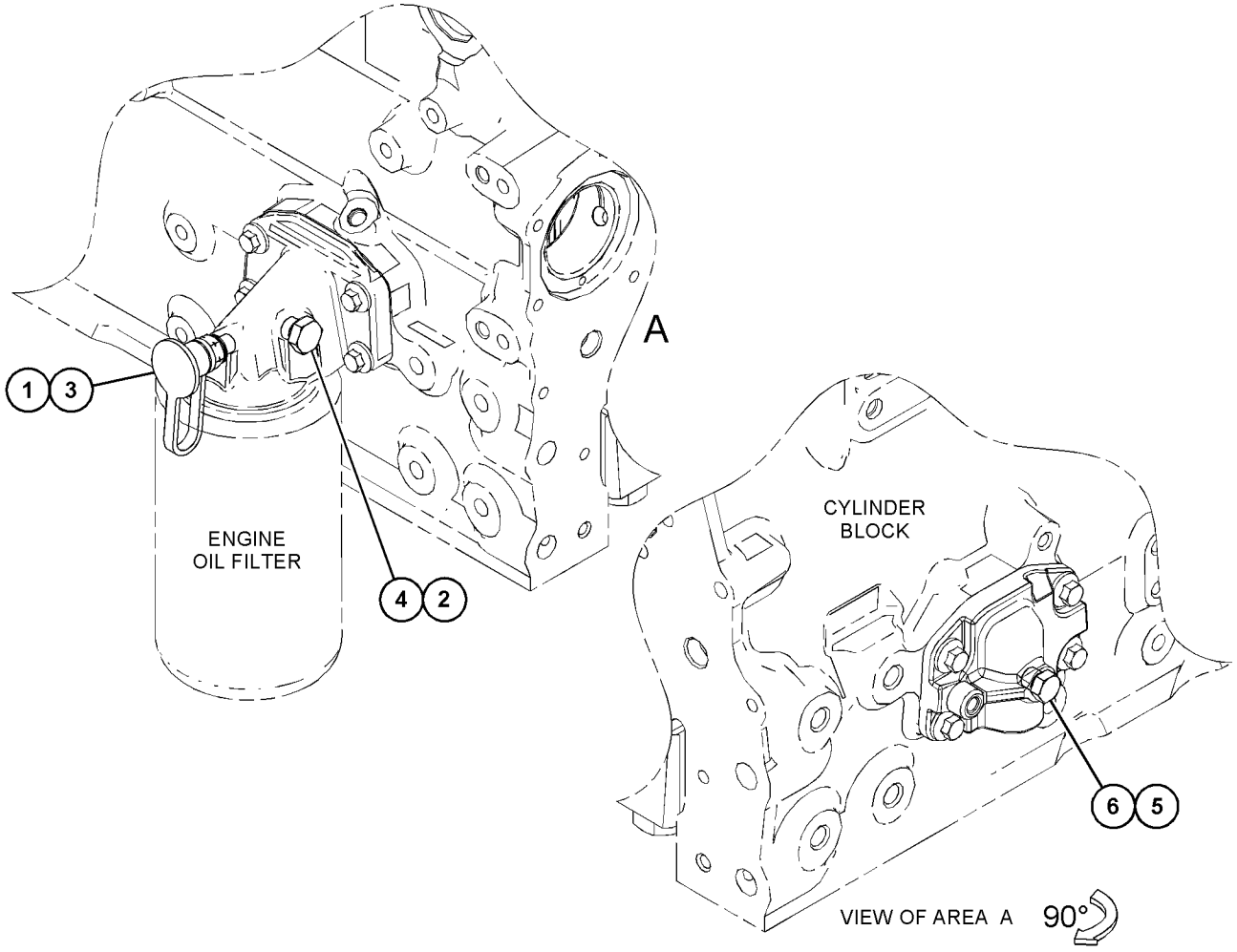

GRAPHIC #1 <END> g03831882

417-4213 VALVE GP-FLUID SAMPLING

PART OF 475-8294 ENGINE AR-PRIMARY

SMCS-7542 **i06124370**

NOTE	REF NO	GRAPHIC REF	PART NUMBER	QTY	PART NAME 1 2 3 4 5 6 (PRODUCT LEVEL)	SEE PAGE
	1	1	**8C-3445**	1	CAP-DUST	
	2	1	**216-9633**	1	VALVE AS-FLUID SAMPLING (ENGINE OIL)	

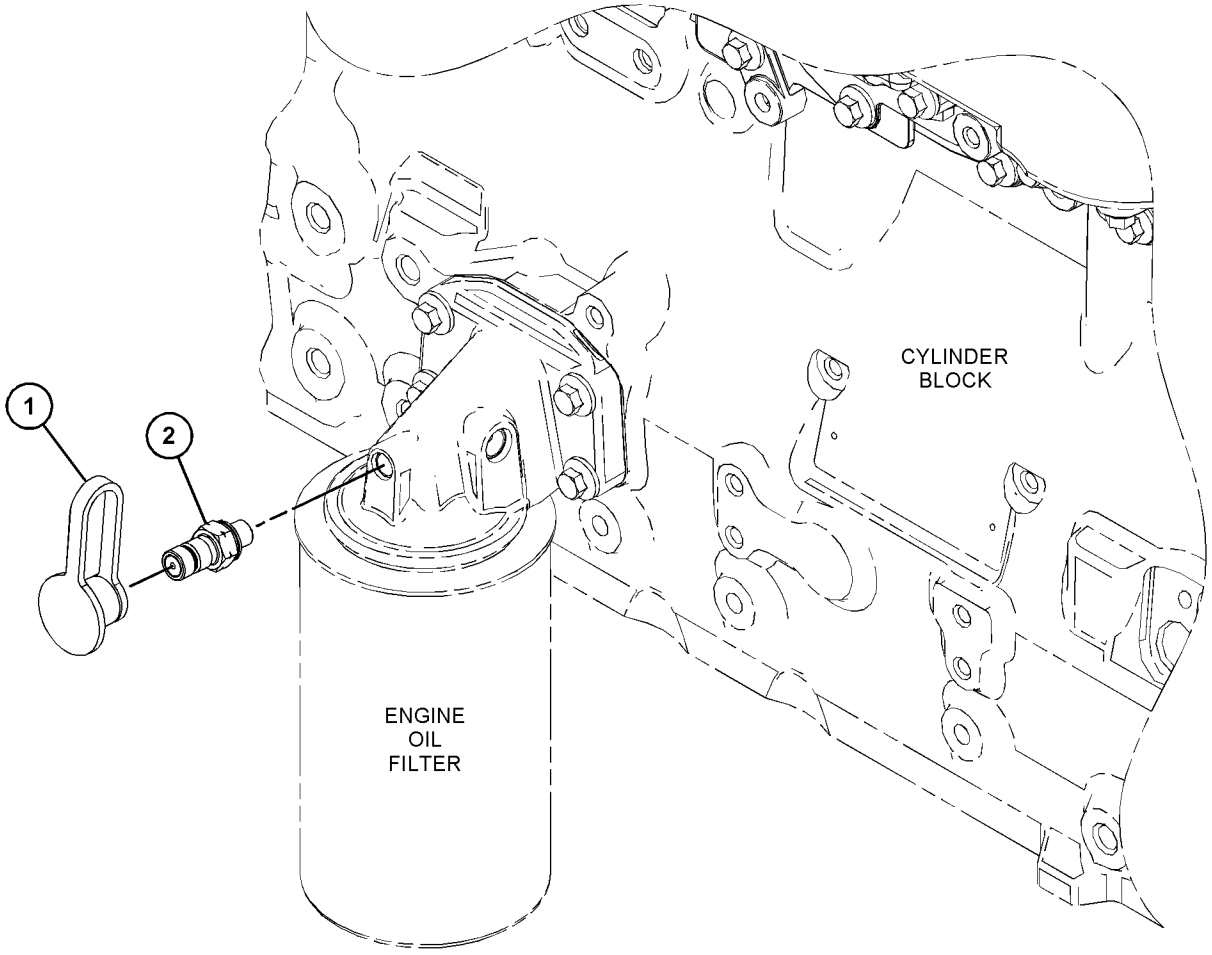

GRAPHIC #1 <END> g03826567

417-4287 CONNECTION GP-HEATER

PART OF 466-4382, 469-1048, 477-2657, 484-1469, 486-2471, 495-9687 ENGINE AR-PRIMARY

SMCS-1333, 1380, 1383 **i06226167**

NOTE	REF NO	GRAPHIC REF	PART NUMBER	QTY	PART NAME 1 2 3 4 5 6 (PRODUCT LEVEL)	SEE PAGE
	1	1	**067-6823**	1	PLUG	
	2	1	**474-1553**	1	ADAPTER	
	3	1	**9X-3959**	1	ELBOW	

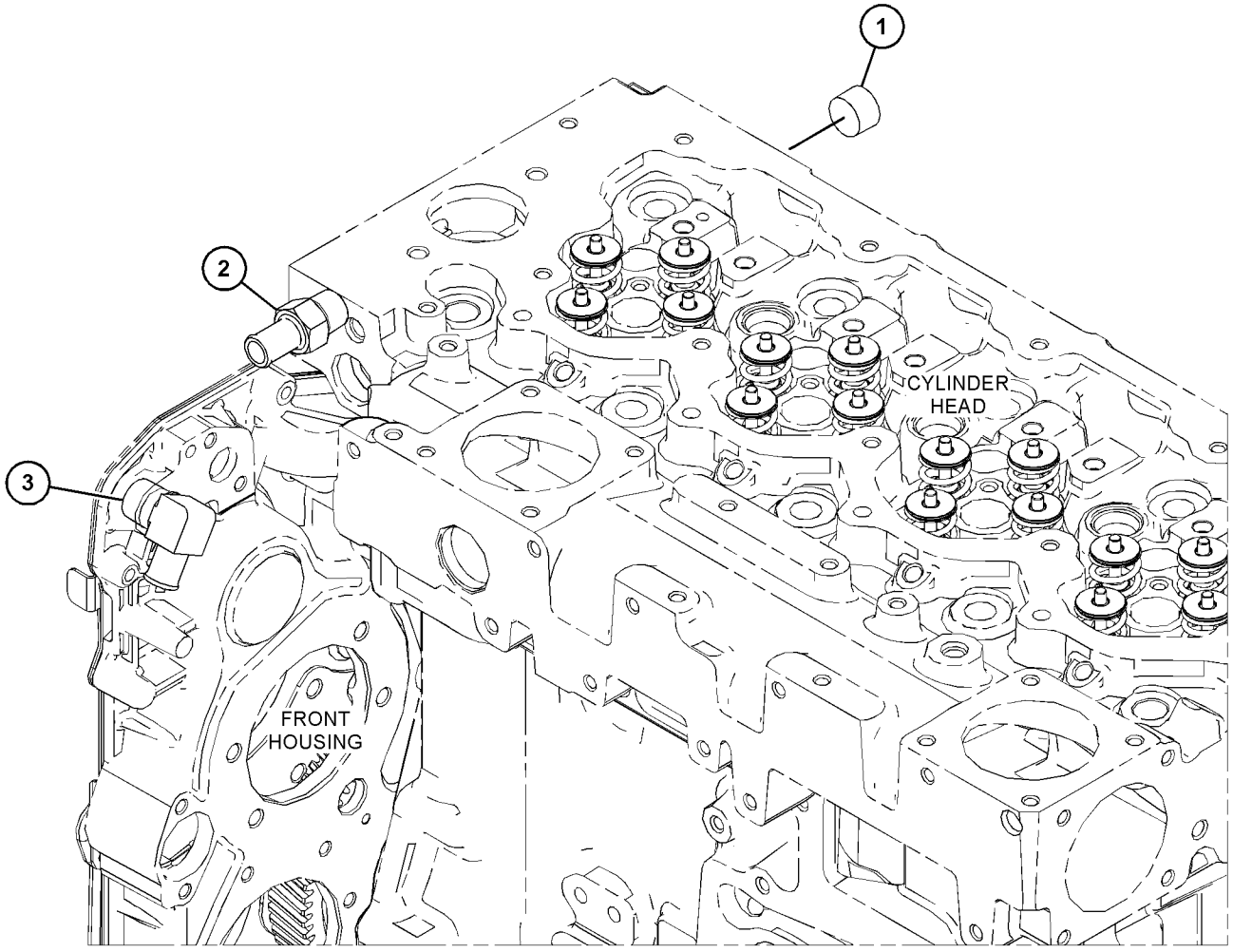

GRAPHIC #1 <END> g03829390

416-1865 CONNECTION GP-WATER

PART OF 466-3332, 467-7465, 469-1048, 477-2657, 495-9687 ENGINE AR-PRIMARY

SMCS-1380 **i06226169**

NOTE	REF NO	GRAPHIC REF	PART NUMBER	QTY	PART NAME 1 2 3 4 5 6 (PRODUCT LEVEL)	SEE PAGE
M	1	1	**103-5687**	1	BOLT (M10X1.5X85-MM)	
M	2	1	**123-2899**	1	BOLT (M10X1.5X40-MM)	
	3	1	**281-8744**	1	GASKET-WATER REGULATOR	
	4	1	**367-1817**	1	CONNECTION AS (INCLUDES TEMPERATURE REGULATOR)	
	4A	1	**367-8509**	1	SEAL-BONDED	
	4B	1	**367-8512**	1	PLUG	

M - METRIC PART

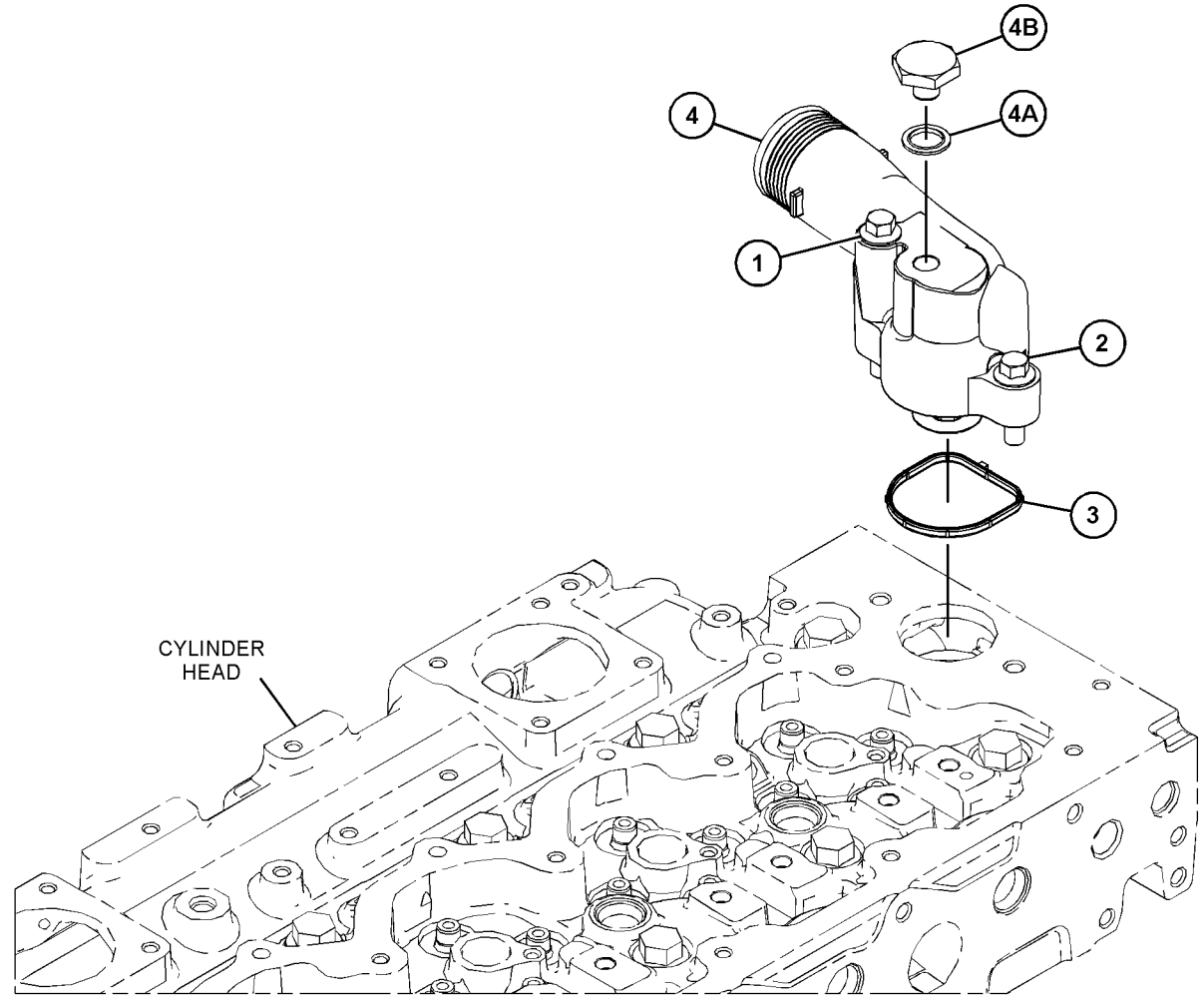

GRAPHIC #1 <END> g03843083

416-1866 CONNECTION GP-WATER

PART OF 466-4382, 484-1469 ENGINE AR-PRIMARY

SMCS-1380 **i06709762**

NOTE	REF NO	GRAPHIC REF	PART NUMBER	QTY	PART NAME 1 2 3 4 5 6 (PRODUCT LEVEL)	SEE PAGE
M	1	1	**103-5687**	1	BOLT (M10X1.5X85-MM)	
M	2	1	**123-2899**	1	BOLT (M10X1.5X40-MM)	
	3	1	**281-8744**	1	GASKET-WATER REGULATOR	
	4	1	**357-8714**	1	CONNECTION AS	
	4A	1	**367-8509**	1	SEAL-BONDED	
	4B	1	**367-8512**	1	PLUG	

M - METRIC PART

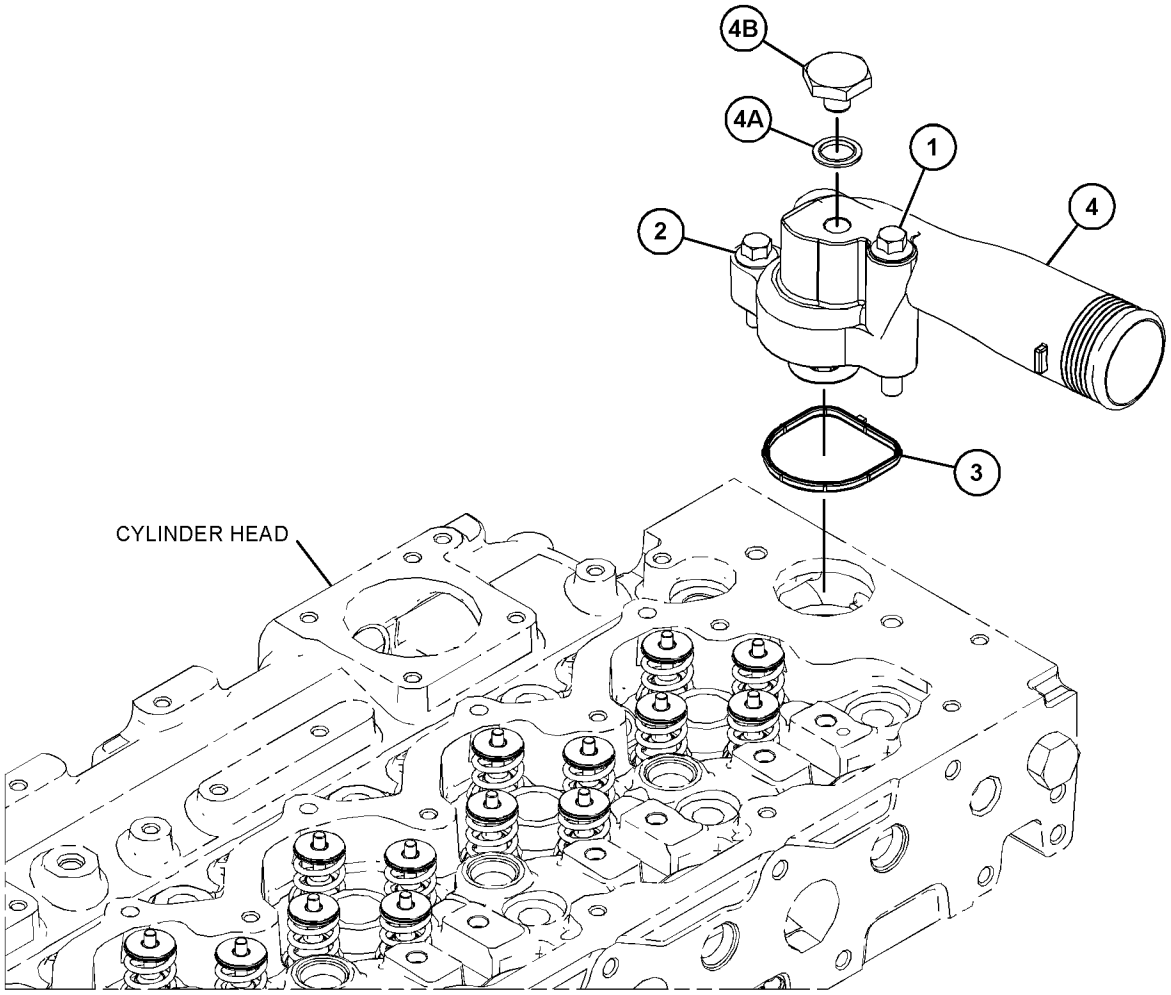

GRAPHIC #1 <END> g03848839

416-1867 CONNECTION GP-WATER

PART OF 455-9378, 461-3168, 463-8820, 463-8848, 463-8910, 475-8294, 478-6560, 480-6065, 484-2343, 486-2471, 491-2522, 492-1322, 492-3115, 492-3118, 495-3005, 500-8128, 502-7230, 503-1940, 503-4924, 504-3628, 504-3645, 508-4399, 509-3109, 509-5882, 509-5884, 510-0902, 512-9838, 512-9884, 514-3535, 514-3537, 516-9846, 517-0058, 526-8847, 527-9081, 538-5357, 539-3889, 541-2728 ENGINE AR-PRIMARY

SMCS-1380 **i06053016**

NOTE	REF NO	GRAPHIC REF	PART NUMBER	QTY	PART NAME 1 2 3 4 5 6 (PRODUCT LEVEL)	SEE PAGE
M	1	1	**123-2899**	2	BOLT (M10X1.5X40-MM)	
	2	1	**281-8744**	1	GASKET-WATER REGULATOR	
	3	1	**417-7782**	1	REGULATOR AS-WATER TEMPERATURE (INCLUDES CONNECTOR)	

M - METRIC PART

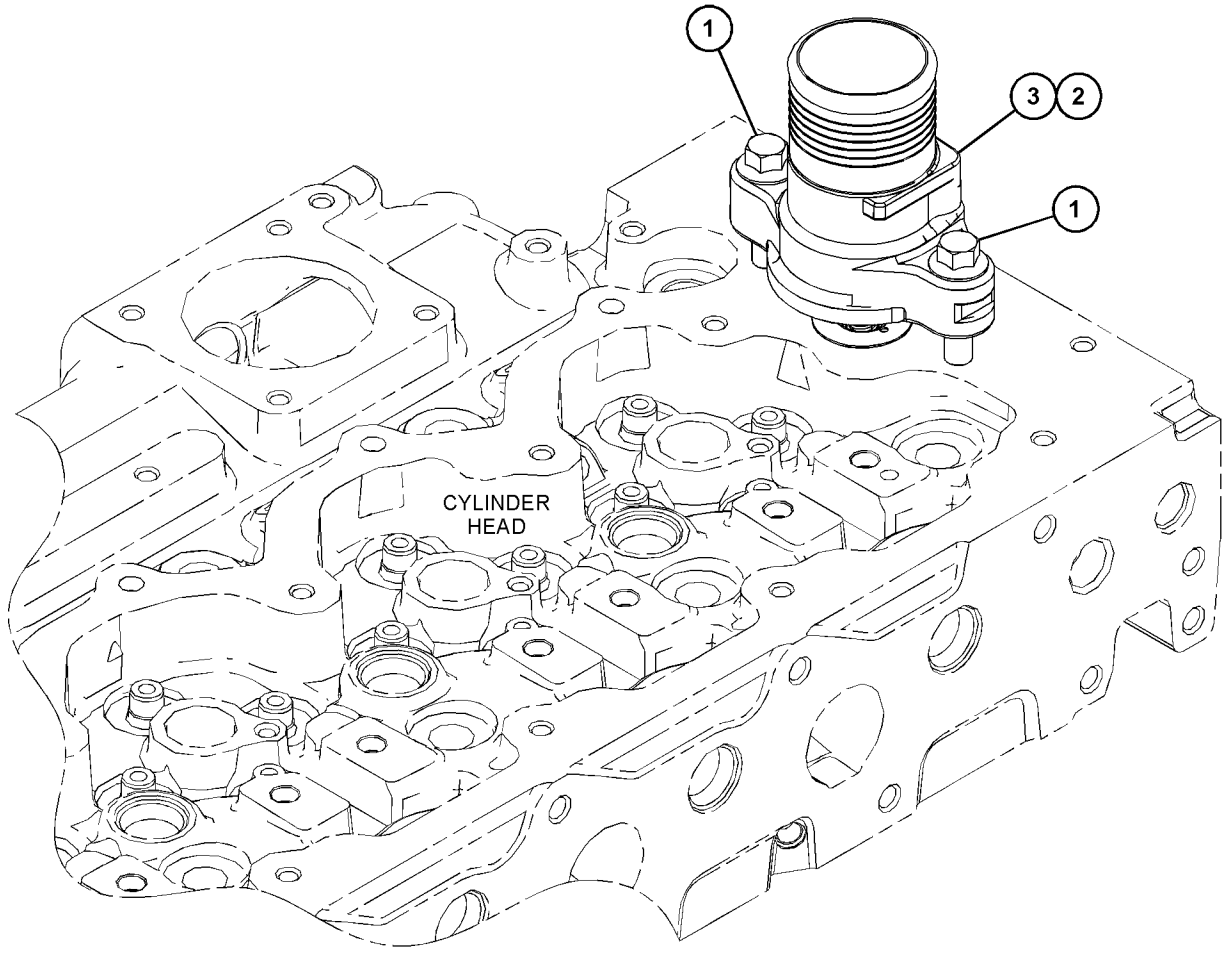

GRAPHIC #1 <END> g03818151

353-7717 COOLER GP-ENGINE OIL

PART OF 416-1084, 418-7659, 419-7639, 432-2295, 452-0797 COOLER GP-ENGINE OIL

SMCS-1378 **i06095093**

NOTE	REF NO	GRAPHIC REF	PART NUMBER	QTY	PART NAME 1 2 3 4 5 6 (PRODUCT LEVEL)	SEE PAGE
M	1	1	**6I-0217**	2	BOLT (M8X1.25X20-MM)	
M	2	1	**6I-0260**	7	BOLT (M8X1.25X25-MM)	
M	3	1	**6I-1090**	1	BOLT (M8X1.25X40-MM)	
M	4	1	**100-3751**	2	BOLT (M8X1.25X65-MM)	
	5	1	**298-4558**	1	COOLER-OIL	
	6	1	**353-7715**	1	GASKET	
	7	1	**298-4560**	2	GASKET	

M - METRIC PART

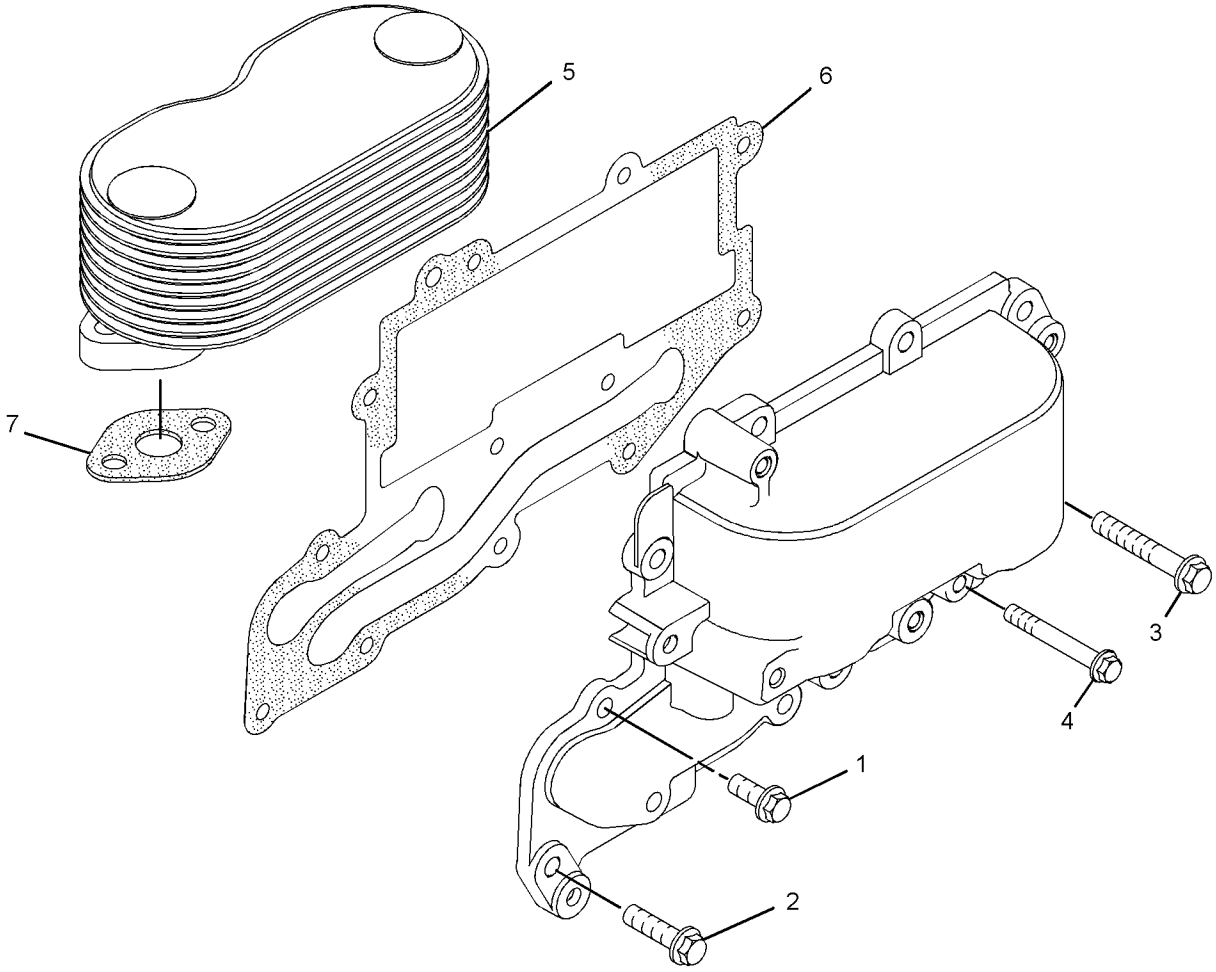

GRAPHIC #1 <END> g02196064

416-1084 COOLER GP-ENGINE OIL

SMCS-1378 **i06151772**

NOTE	REF NO	GRAPHIC REF	PART NUMBER	QTY	PART NAME 1 2 3 4 5 6 (PRODUCT LEVEL)	SEE PAGE
	1	1	**242-8660**	1	HEAD AS	
Y	2	1	**353-7717**	1	COOLER GP-ENGINE OIL	328
M	3	1	**6I-0572**	4	BOLT (M8X1.25X20-MM)	
M	4	1	**6I-0645**	4	BOLT (M8X1.25X25-MM)	
	5	1	**225-7944**	2	GASKET	
	6	1	**232-3751**	1	PLATE	

M - METRIC PART
Y - SEPARATE ILLUSTRATION

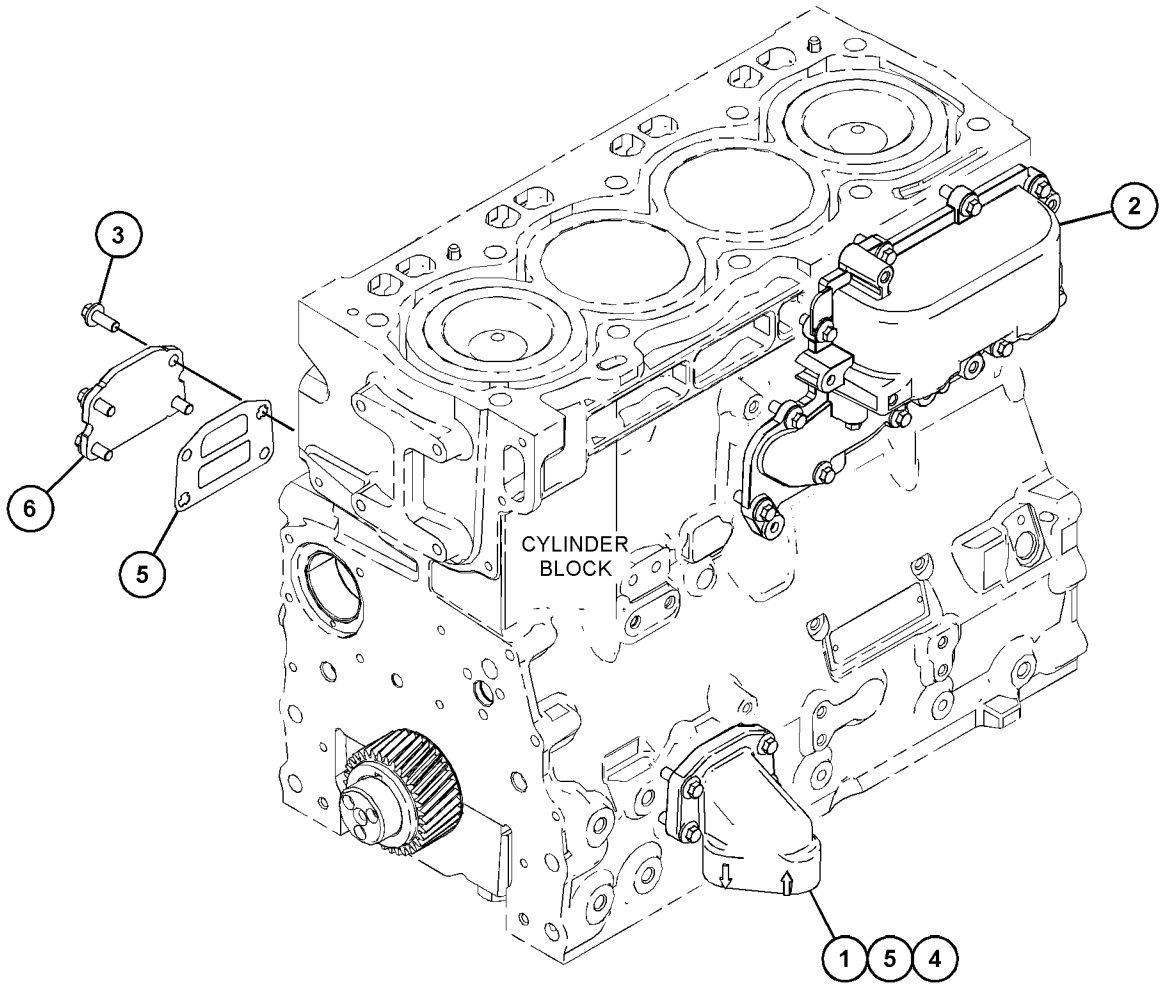

GRAPHIC #1 <END> g03865714

418-7659 COOLER GP-ENGINE OIL

PART OF 455-9378, 463-8820, 463-8848, 463-8910, 466-3332, 466-4382, 467-7465, 469-1048, 477-2657, 478-6560, 492-1322, 492-3118, 495-3005, 500-8128, 503-4924, 504-3645, 508-4399, 509-5882, 510-0902, 512-9838, 512-9884, 514-3535, 514-3537, 516-9846, 517-0058, 539-3889, 541-2728 ENGINE AR-PRIMARY

SMCS-1378 **i06124074**

NOTE	REF NO	GRAPHIC REF	PART NUMBER	QTY	PART NAME 1 2 3 4 5 6 (PRODUCT LEVEL)	SEE PAGE
	1	1	**249-0974**	1	HEAD AS-OIL FILTER	
Y	2	1	**353-7717**	1	COOLER GP-ENGINE OIL	328
M	3	1	**6I-0572**	4	BOLT (M8X1.25X20-MM)	
M	4	1	**6I-0645**	4	BOLT (M8X1.25X25-MM)	
	5	1	**225-7944**	2	GASKET (ENGINE OIL FILTER BASE)	
	6	1	**232-3751**	1	PLATE (BLANKING)	

M - METRIC PART
Y - SEPARATE ILLUSTRATION

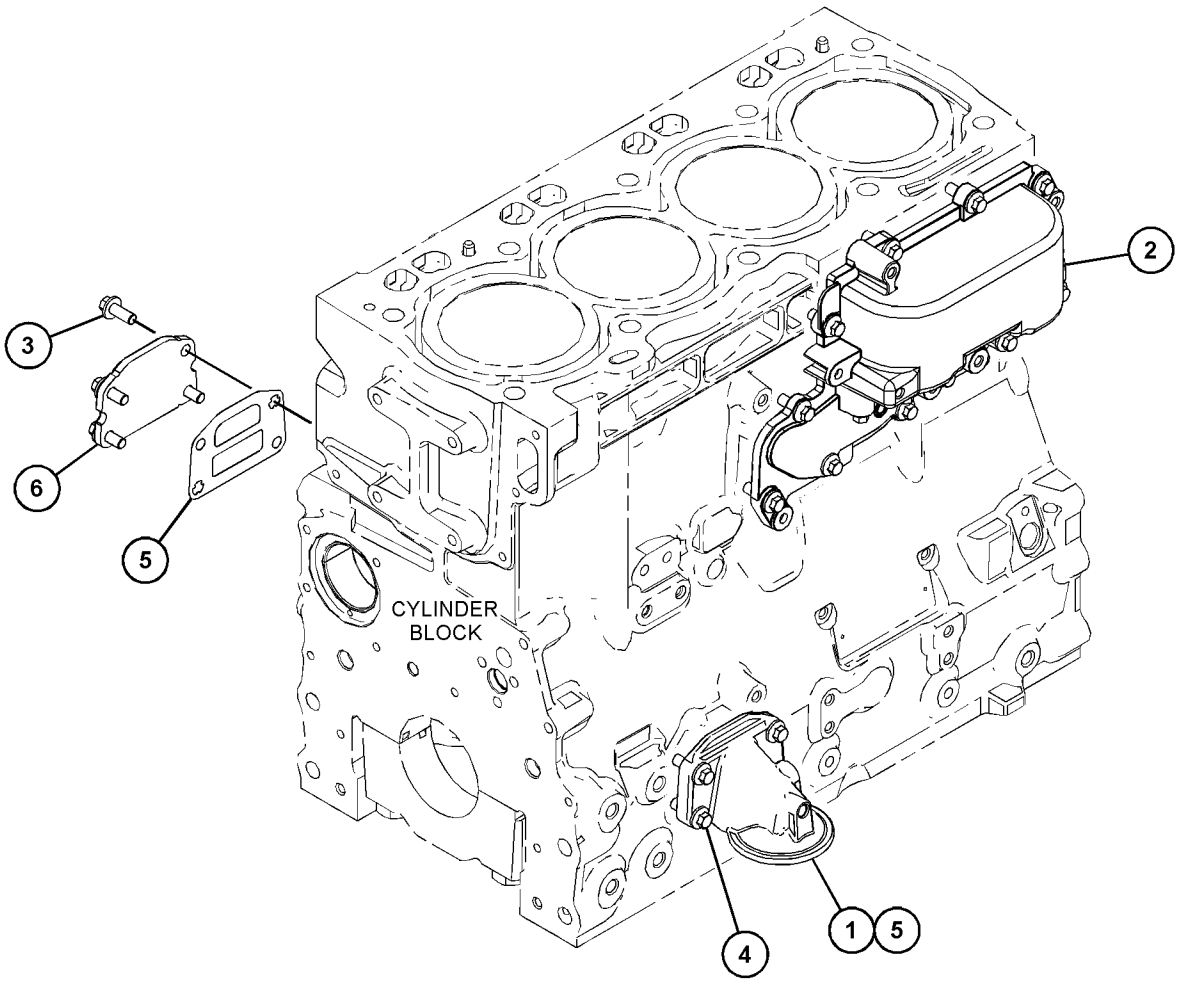

GRAPHIC #1 <END> g03821671

419-7639 COOLER GP-ENGINE OIL

PART OF 491-2522, 527-9081 ENGINE AR-PRIMARY

SMCS-1378 **i06155405**

NOTE	REF NO	GRAPHIC REF	PART NUMBER	QTY	PART NAME 1 2 3 4 5 6 (PRODUCT LEVEL)	SEE PAGE
	1	1	**249-0974**	1	HEAD AS-OIL FILTER	
Y	2	1	**353-7717**	1	COOLER GP-ENGINE OIL	328
	3	1	**423-7721**	1	ADAPTER	
M	4	1	**6I-0572**	4	BOLT (M8X1.25X20-MM)	
M	5	1	**6I-0645**	4	BOLT (M8X1.25X25-MM)	
	6	1	**225-7944**	2	GASKET (ENGINE OIL FILTER BASE)	

M - METRIC PART
Y - SEPARATE ILLUSTRATION

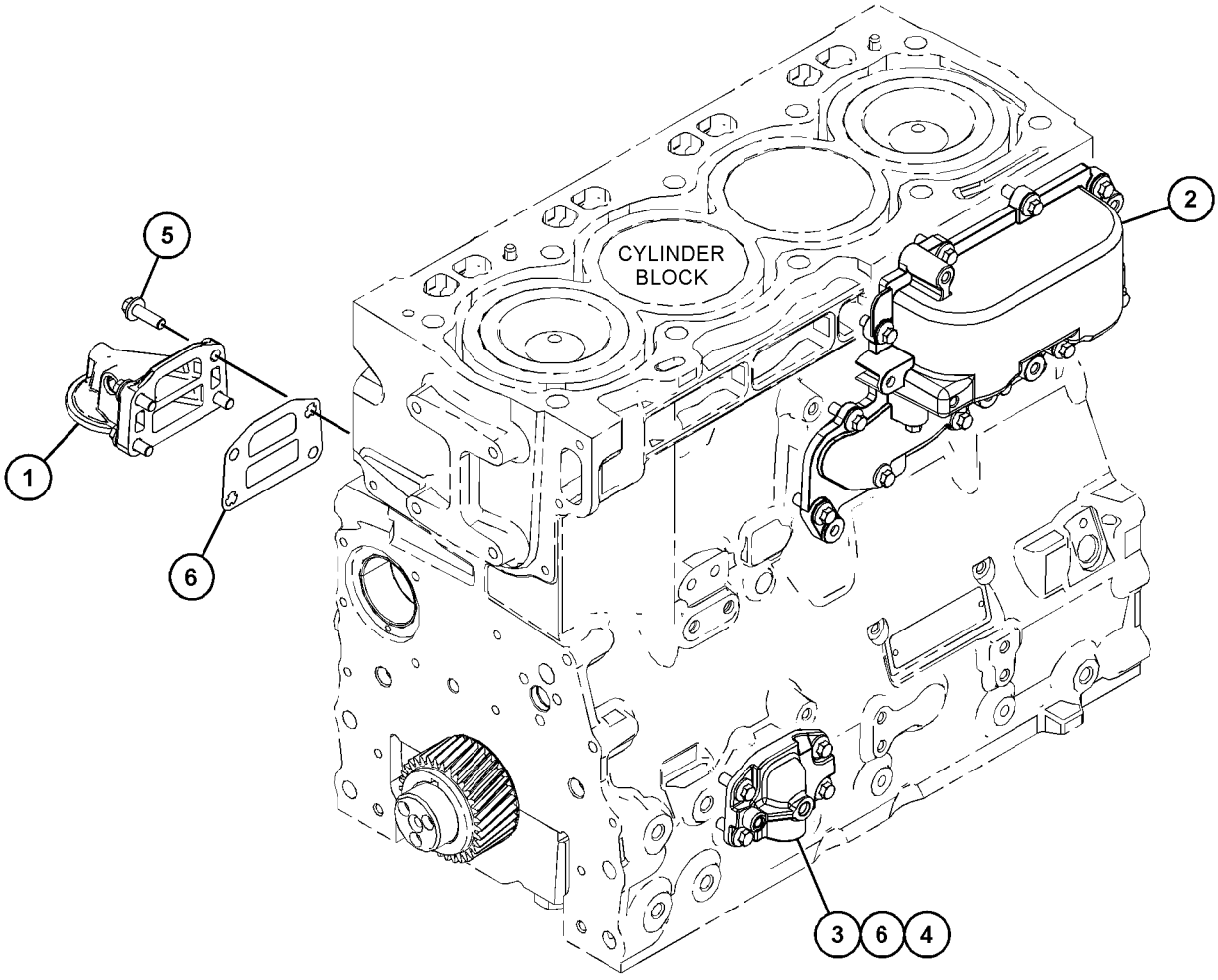

GRAPHIC #1 <END> g03832119

432-2295 COOLER GP-ENGINE OIL

PART OF 484-1469, 495-9687 ENGINE AR-PRIMARY

SMCS-1378 **i06832382**

NOTE	REF NO	GRAPHIC REF	PART NUMBER	QTY	PART NAME 1 2 3 4 5 6 (PRODUCT LEVEL)	SEE PAGE
Y	1	1	**353-7717**	1	COOLER GP-ENGINE OIL	328
M	2	1	**6I-0572**	4	BOLT (M8X1.25X20-MM)	
	3	1	**225-7944**	2	GASKET	
	4	1	**232-3751**	1	PLATE	
	5	1	**233-9408**	1	GASKET	
M	6	1	**235-2451**	4	BOLT (M8X1.25X45-MM)	
	7	1	**244-6872**	1	ADAPTER-FILTER	
	8	1	**249-0975**	1	HEAD AS-OIL FILTER	

M - METRIC PART
Y - SEPARATE ILLUSTRATION

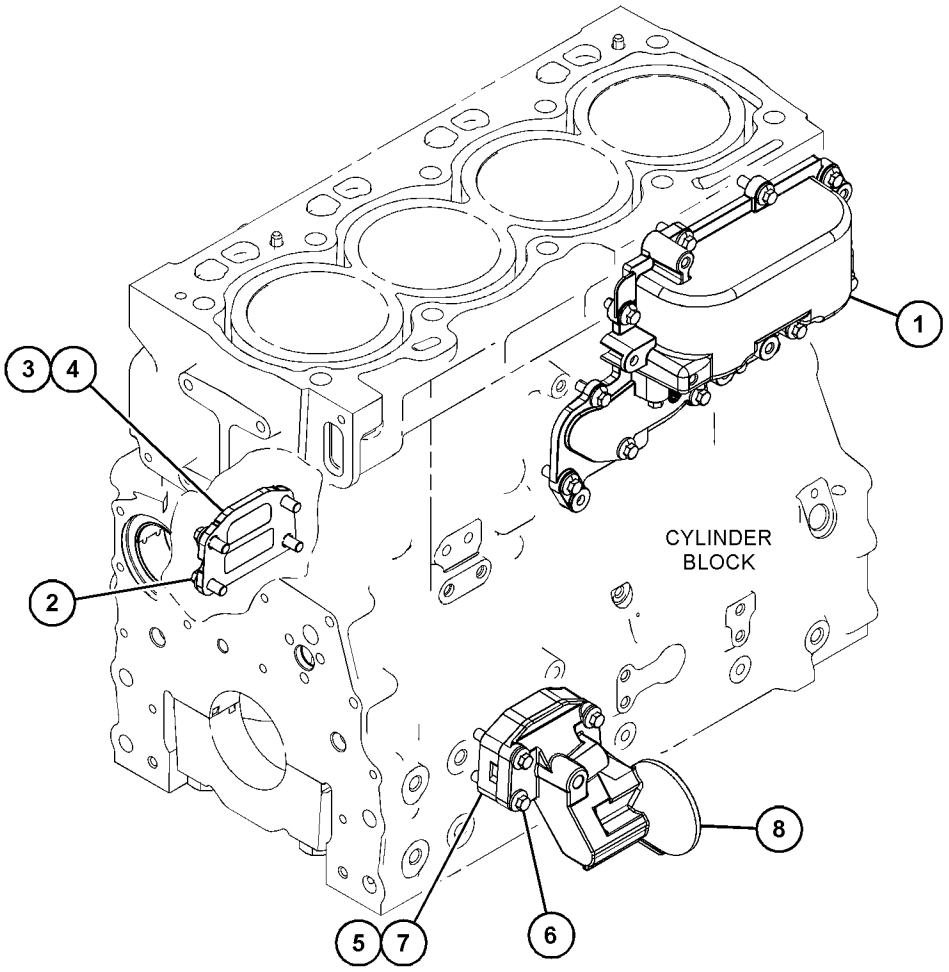

GRAPHIC #1 <END> g06143247

452-0797 COOLER GP-ENGINE OIL

PART OF 461-3168, 475-8294, 480-6065, 484-2343, 486-2471, 492-3115, 503-1940, 504-3628, 509-3109, 509-5884, 526-8847, 538-5357 ENGINE AR-PRIMARY

SMCS-1378 **i06091150**

NOTE	REF NO	GRAPHIC REF	PART NUMBER	QTY	PART NAME 1 2 3 4 5 6 (PRODUCT LEVEL)	SEE PAGE
	1	1	**249-0974**	1	HEAD AS-OIL FILTER	
Y	2	1	**353-7717**	1	COOLER GP-ENGINE OIL	328
M	3	1	**6I-0217**	4	BOLT (M8X1.25X20-MM)	
M	4	1	**6I-0645**	4	BOLT (M8X1.25X25-MM)	
	5	1	**225-7944**	1	GASKET (ENGINE OIL FILTER BASE)	
	6	1	**233-9408**	1	GASKET	
	7	1	**252-6318**	1	PLATE	

M - METRIC PART
Y - SEPARATE ILLUSTRATION

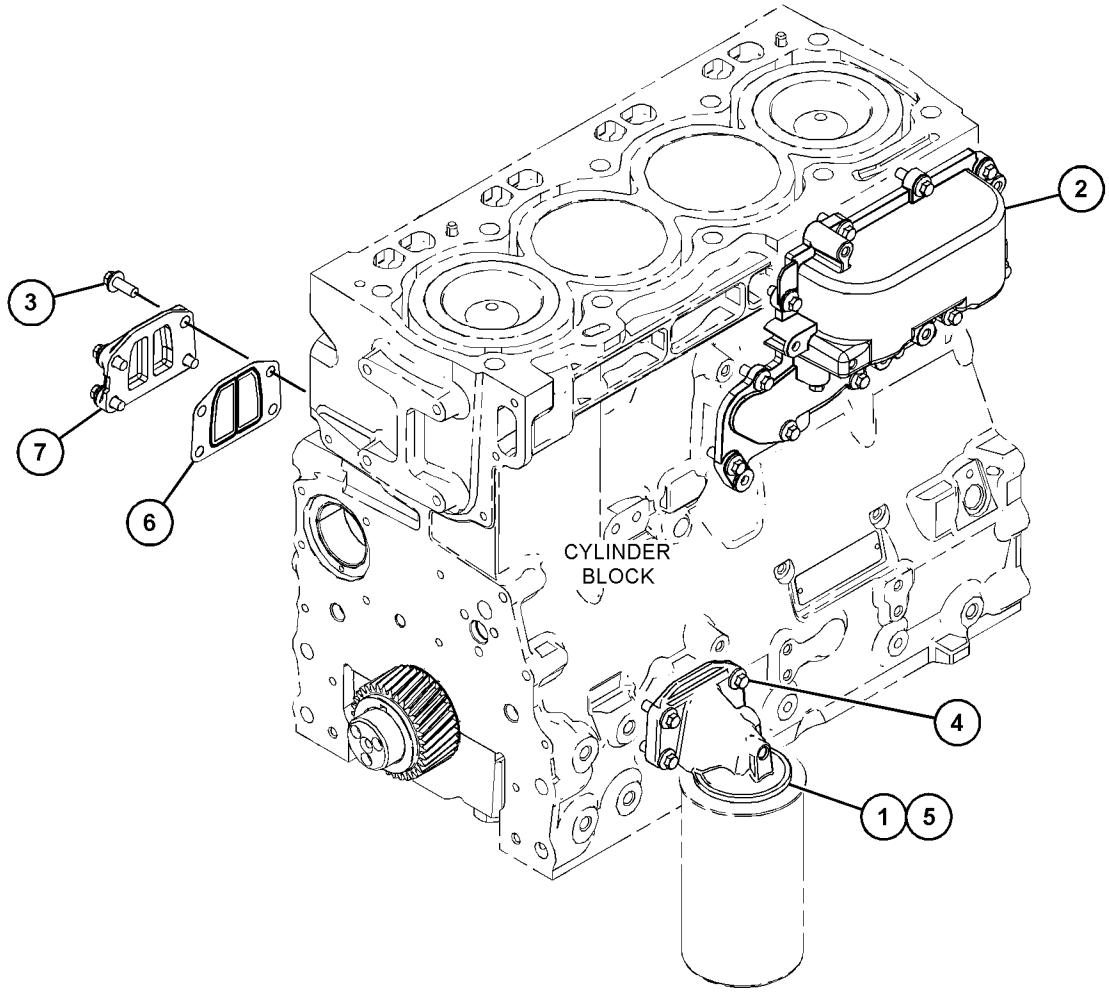

GRAPHIC #1 <END> g03809357

432-4332 FAN GP

PART OF 484-2343, 503-1940, 538-5357 ENGINE AR-PRIMARY

SMCS-1356 **i06715077**

NOTE	REF NO	GRAPHIC REF	PART NUMBER	QTY	PART NAME 1 2 3 4 5 6 (PRODUCT LEVEL)	SEE PAGE
M	1	1	**6V-9189**	4	LOCKNUT (M8X1.25-THD)	
	2	1	**122-4614**	1	EXTENSION-FAN	
	3	1	**134-4139**	4	STUD	

M - METRIC PART

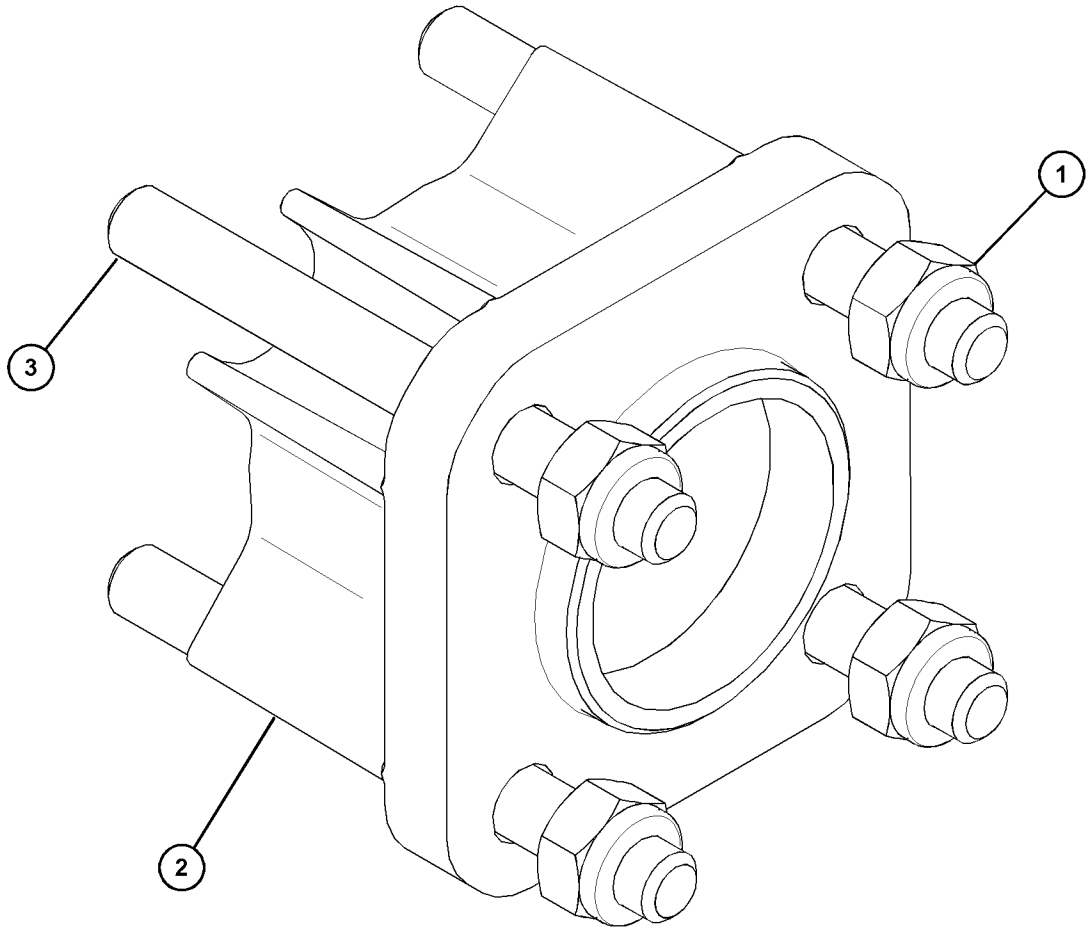

GRAPHIC #1 <END> g06111574

445-0296 FAN GP

PART OF 455-9378, 478-6560, 480-6065, 495-3005, 503-4924, 509-3109, 509-5884, 512-9838, 512-9884, 514-3535, 514-3537, 516-9846, 517-0058, 526-8847, 539-3889 ENGINE AR-PRIMARY

SMCS-1356 **i06271393**

NOTE	REF NO	GRAPHIC REF	PART NUMBER	QTY	PART NAME 1 2 3 4 5 6 (PRODUCT LEVEL)	SEE PAGE
	1	1	**111-5767**	1	FAN	

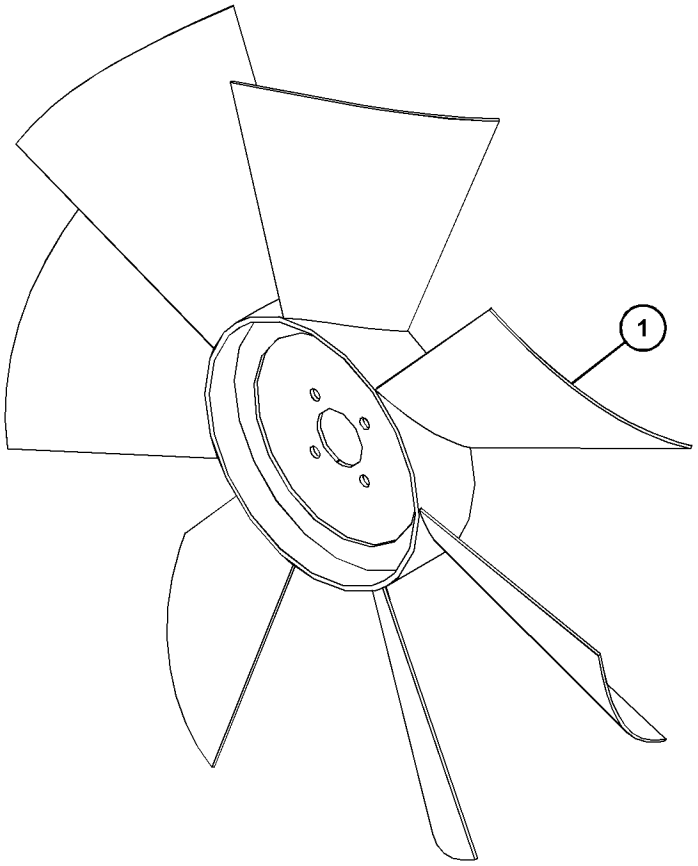

GRAPHIC #1 <END> g03880944

445-0297 FAN GP

PART OF 461-3168, 475-8294, 486-2471, 491-2522, 492-1322, 500-8128, 502-7230, 508-4399, 510-0902 ENGINE AR-PRIMARY

SMCS-1356 **i06091147**

NOTE	REF NO	GRAPHIC REF	PART NUMBER	QTY	PART NAME 1 2 3 4 5 6 (PRODUCT LEVEL)	SEE PAGE
	1	1	**114-2474**	1	FAN (10-BLADE)	

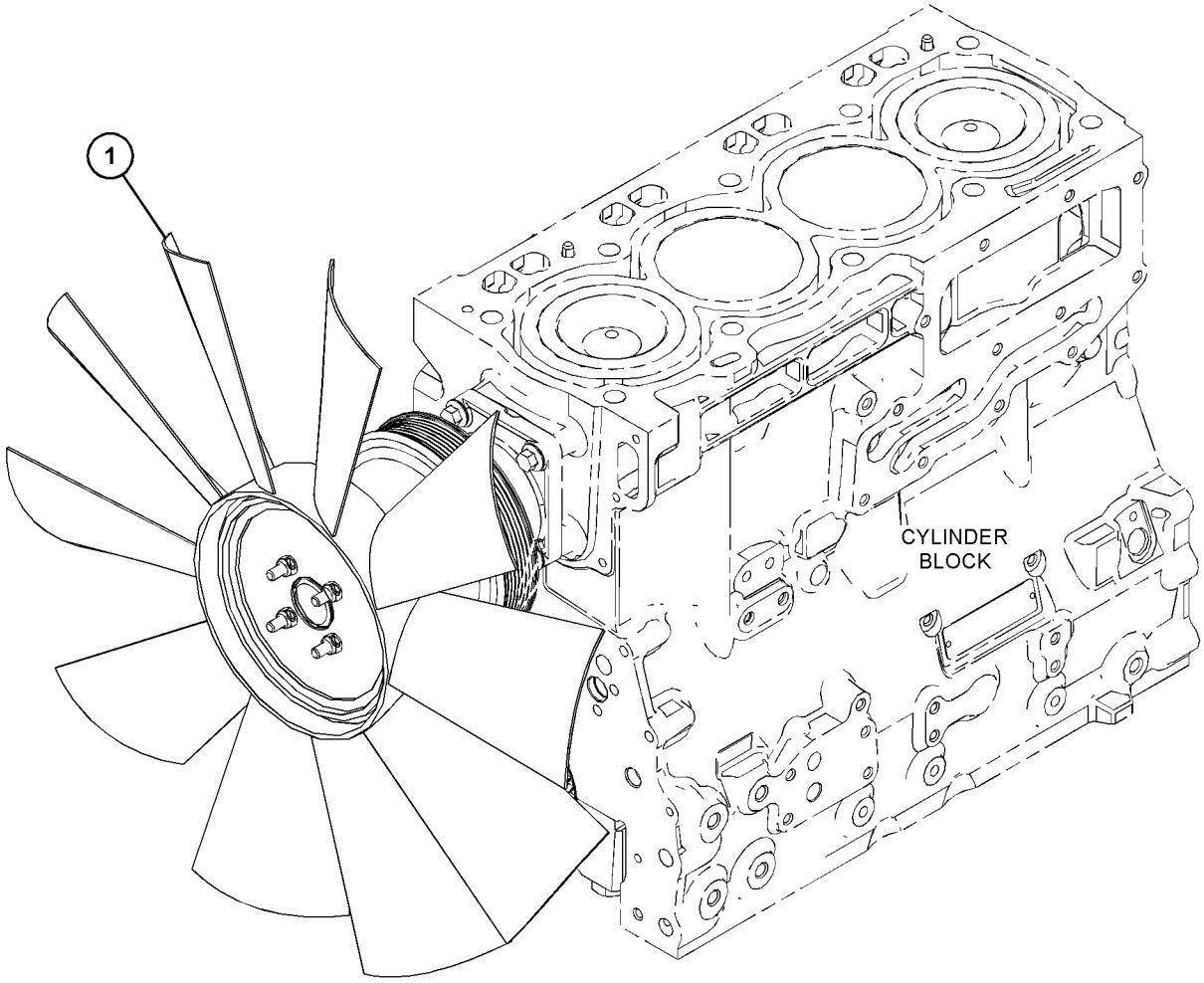

GRAPHIC #1 <END> g03811314

501-7366 FAN GP

SMCS-1356 **i07410191**

NOTE	REF NO	GRAPHIC REF	PART NUMBER	QTY	PART NAME 1 2 3 4 5 6 (PRODUCT LEVEL)	SEE PAGE
	1	1	**114-2474**	1	FAN (10-BLADE)	

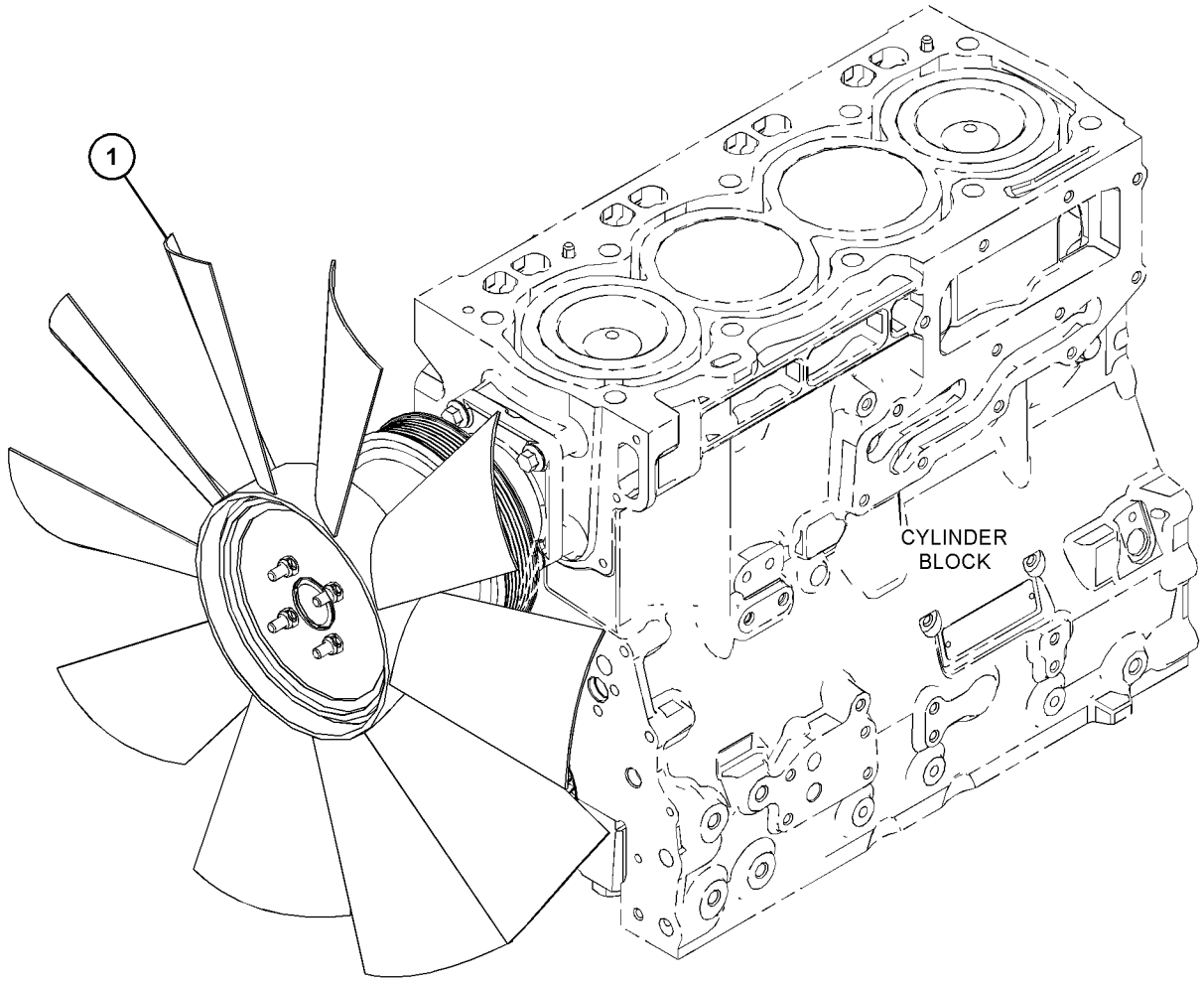

GRAPHIC #1 <END> g03811314

416-8715 MOUNTING GP-FAN

PART OF 469-1048, 477-2657, 492-3118, 504-3645, 509-5882, 527-9081 ENGINE AR-PRIMARY

SMCS-1356 **i06155289**

NOTE	REF NO	GRAPHIC REF	PART NUMBER	QTY	PART NAME 1 2 3 4 5 6 (PRODUCT LEVEL)	SEE PAGE
M	1	1	**260-6672**	4	BOLT (M8X1.25X20-MM)	

M - METRIC PART

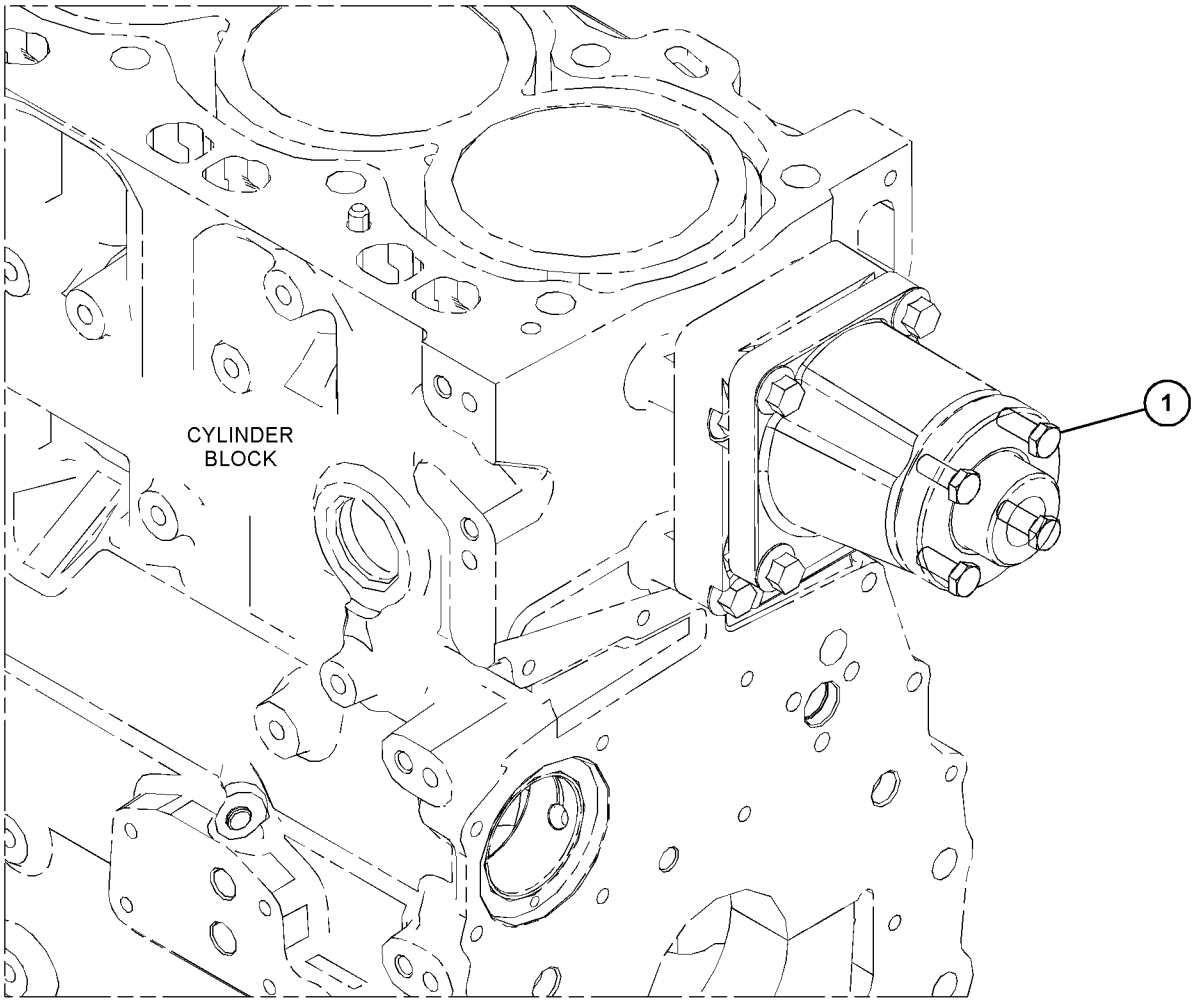

GRAPHIC #1 <END> g03829112

416-1864 PUMP GP-WATER

PART OF 455-9378, 461-3168, 463-8820, 463-8848, 463-8910, 466-3332, 467-7465, 469-1048, 475-8294, 478-6560, 480-6065, 484-1469, 491-2522, 492-1322, 492-3115, 495-3005, 495-9687, 500-8128, 503-1940, 503-4924, 504-3628, 512-9884 ENGINE AR-PRIMARY TYPE 1

SMCS-1361 **i06091167**

NOTE	REF NO	GRAPHIC REF	PART NUMBER	QTY	PART NAME 1 2 3 4 5 6 (PRODUCT LEVEL)	SEE PAGE
M	1	1	**113-8129**	2	BOLT (M8X1.25X75-MM)	
	2	1	**225-8019**	1	GASKET	
	3	1	**277-2925**	1	CONNECTION AS	
	3A	1	**277-2923**	1	GASKET	
	3B	1	**225-7738**	1	SEAL-O-RING	
J	4	1	*355-8710*	1	PUMP GP-WATER	
M	5	1	**6I-0217**	2	BOLT (M8X1.25X20-MM)	
M	6	1	**6I-0254**	2	BOLT (M8X1.25X30-MM)	
M	7	1	**6I-0839**	5	BOLT (M8X1.25X70-MM)	
					AVAILABLE REPAIR KIT(S):	
J			**354-4754**	1	PUMP GP-WATER	
					(INCLUDES GASKET & PUMP GP)	

J - KIT MARKED J SERVICES PART(S) MARKED J
M - METRIC PART

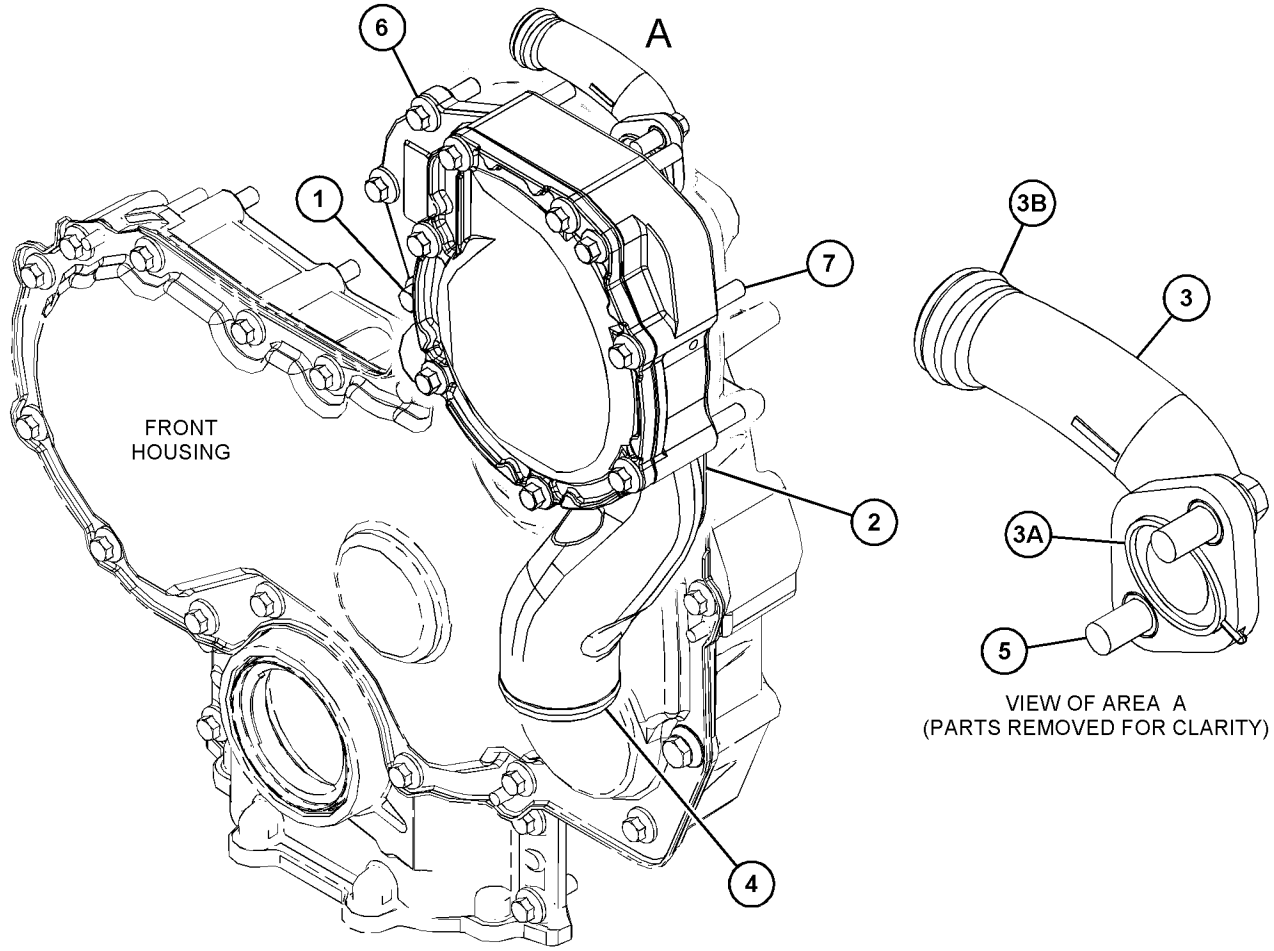

GRAPHIC #1 <END> g03819825

416-1864 PUMP GP-WATER

PART OF 455-9378, 461-3168, 463-8820, 463-8848, 463-8910, 466-3332, 466-4382, 467-7465, 469-1048, 475-8294, 477-2657, 478-6560, 480-6065, 484-1469, 484-2343, 486-2471, 491-2522, 492-1322, 492-3115, 492-3118, 495-3005, 495-9687, 500-8128, 502-7230, 503-1940, 503-4924, 504-3628, 504-3645, 508-4399, 509-3109, 509-5882, 509-5884, 510-0902, 512-9838, 512-9884, 514-3535, 514-3537, 516-9846, 517-0058, 526-8847, 527-9081, 538-5357, 539-3889, 541-2728 ENGINE AR-PRIMARY
TYPE 2

SMCS-1361 **i06797757**

NOTE	REF NO	GRAPHIC REF	PART NUMBER	QTY	PART NAME 1 2 3 4 5 6 (PRODUCT LEVEL)	SEE PAGE
M	1	1	**113-8129**	2	BOLT (M8X1.25X75-MM)	
J	2	1	**225-8019**	1	GASKET	
	3	1	**277-2925**	1	CONNECTION AS	
	3A	1	**277-2923**	1	GASKET	
	3B	1	**225-7738**	1	SEAL-O-RING	
CJ	4	1	**485-4894**	1	PUMP GP-WATER	
	4A	1	**278-3242**	3	BOLT-FLANGE HEAD (M8X1.25X18-MM)	
	4B	1	**374-4419**	1	GASKET	
M	5	1	**6I-0217**	2	BOLT (M8X1.25X20-MM)	
M	6	1	**6I-0254**	2	BOLT (M8X1.25X30-MM)	
M	7	1	**6I-0839**	5	BOLT (M8X1.25X70-MM)	
					AVAILABLE REPAIR KIT(S):	
CJ			**485-4895**	1	PUMP GP-WATER	
					(INCLUDES WATER PUMP GP & GASKET)	

C - CHANGE FROM PREVIOUS TYPE
J - KIT MARKED J SERVICES PART(S) MARKED J
M - METRIC PART

416-1864 **PUMP GP-WATER (**contd.**)** **i06797757**

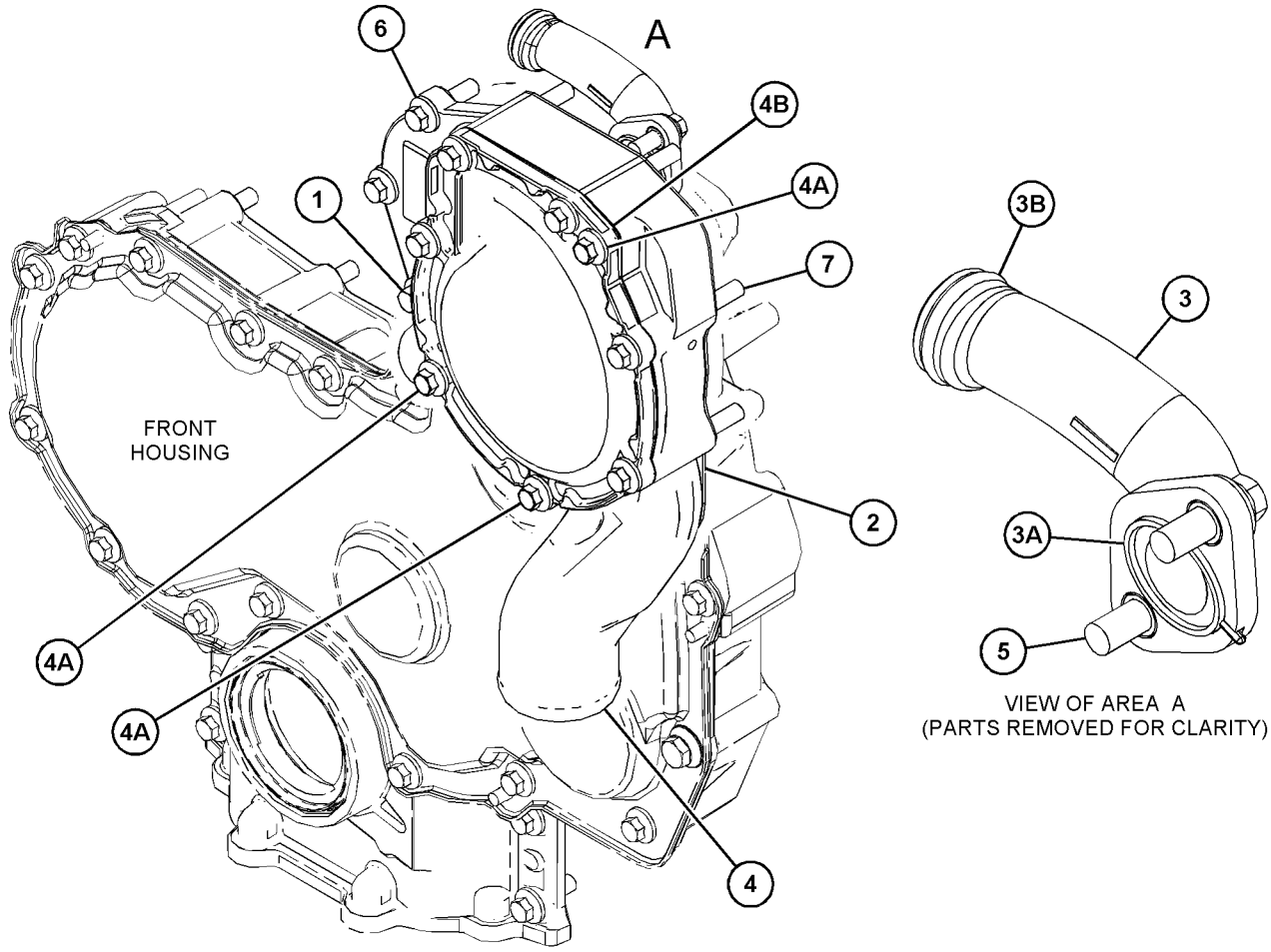

GRAPHIC #1 <END> g06120580

236-7766 RADIATOR AS

PART OF 432-8218 RADIATOR GP

SMCS-1353 **i07171658**

NOTE	REF NO	GRAPHIC REF	PART NUMBER	QTY	PART NAME 1 2 3 4 5 6 (PRODUCT LEVEL)	SEE PAGE
M	1	1	**114-4363**	12	BOLT (M8X1.25X12-MM)	
	2	1	**236-7760**	1	GUARD-RADIATOR	
	3	1	**236-7763**	1	BRACKET-MOUNTING	
	4	1	**236-7764**	1	CAP-RADIATOR	
	5	1	**236-7765**	1	PLUG-DRAIN	

M - METRIC PART

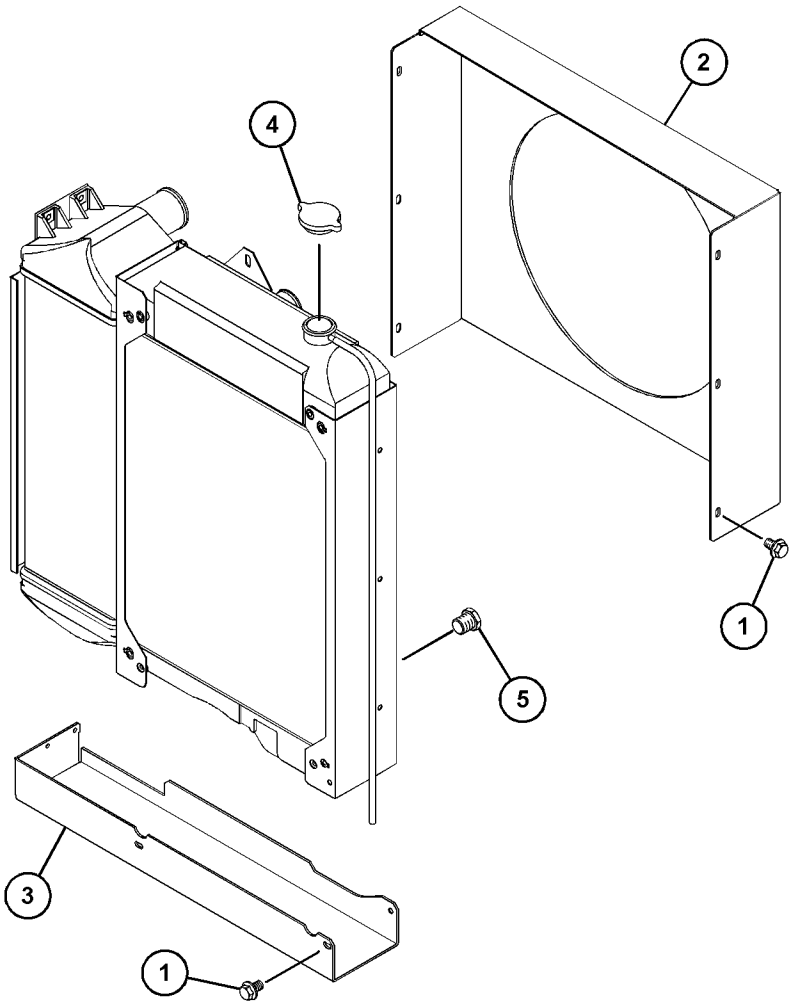

GRAPHIC #1 <END> g06124365

372-8150 RADIATOR AS

WITH SAND BLAST GRIT

PART OF 459-6904 RADIATOR GP

SMCS-1353 **i06240301**

NOTE	REF NO	GRAPHIC REF	PART NUMBER	QTY	PART NAME 1 2 3 4 5 6 (PRODUCT LEVEL)	SEE PAGE
M	1	1	**111-8222**	4	BOLT (M8X16-MM)	
M	2	1	**114-4363**	12	BOLT (M8X1.25X12-MM)	
	3	1	**236-7760**	1	GUARD-RADIATOR	
	4	1	**236-7763**	1	BRACKET-MOUNTING	
	5	1	**236-7764**	1	CAP-RADIATOR	
	6	1	**236-7765**	1	PLUG-DRAIN	
	7	1	**372-4241**	1	SCREEN	

M - METRIC PART

372-8150 **RADIATOR AS** (contd.) **i06240301**

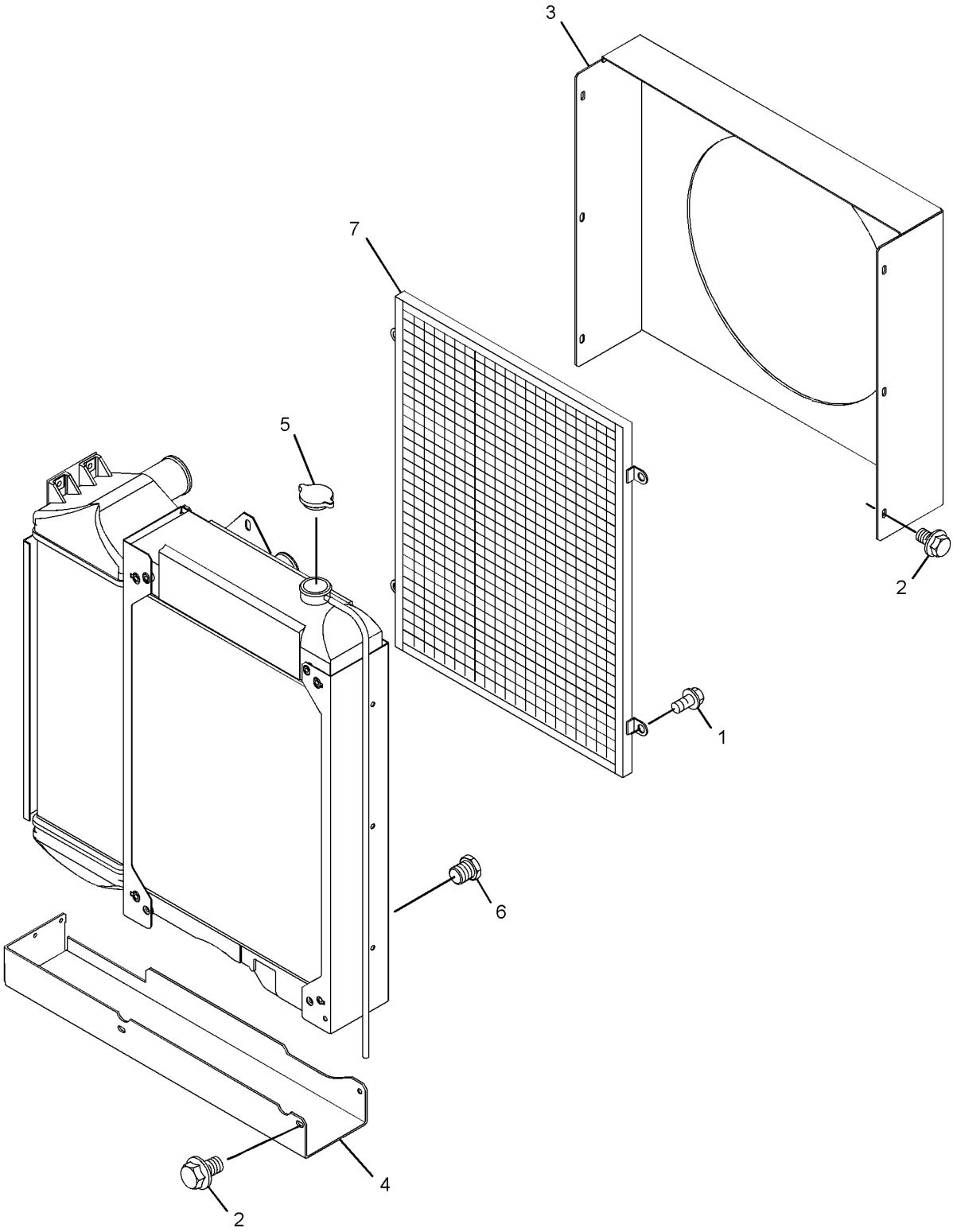

GRAPHIC #1 <END> g03236257

432-8215 RADIATOR GP

PART OF 461-3168, 475-8294, 480-6065, 500-8128, 502-7230, 509-3109, 509-5884, 516-9846 ENGINE AR-PRIMARY

SMCS-1353 **i06091155**

NOTE	REF NO	GRAPHIC REF	PART NUMBER	QTY	PART NAME 1 2 3 4 5 6 (PRODUCT LEVEL)	SEE PAGE
M	1	1	**6I-0260**	1	BOLT (M8X1.25X25-MM)	
M	2	1	**178-3336**	1	NUT-HEX FLANGE (M8X1.25-THD)	
M	3	1	**175-7141**	2	NUT-HEX FLANGE (M10X1.5-THD)	
	4	1	**7W-2601**	2	SPACER	
M	5	1	**100-4458**	2	BOLT (M8X1.25X14-MM)	
M	6	1	**100-4461**	2	BOLT (M10X1.5X50-MM)	
M	7	1	**100-4830**	2	BOLT (M10X1.5X20-MM)	
M	8	1	**101-7537**	8	BOLT (M12X1.75X35-MM)	
	9	1	**101-7538**	2	MOUNT	
	10	1	**101-7540**	2	WASHER	
M	11	1	**101-7541**	4	SCREW-FLAT HEAD (M8X1.25X25-MM)	
	12	1	**101-7546**	1	MOUNT	
	13	1	**236-7722**	1	HOSE-RADIATOR	
	14	1	**236-7734**	1	HOSE-RADIATOR	
	15	1	**236-7735**	2	HOSE-RADIATOR	
	16	1	**236-7766**	1	RADIATOR AS	
M	16A	2	**114-4363**	12	BOLT (M8X1.25X12-MM)	
	16B	2	**236-7760**	1	GUARD-RADIATOR	
	16C	2	**236-7763**	1	BRACKET-MOUNTING	
	16D	2	**236-7764**	1	CAP-RADIATOR	
	16E	2	**236-7765**	1	PLUG-DRAIN	
	17	1	**236-8773**	1	BRACKET-MOUNTING	
	18	1	**236-8777**	1	HOSE-AIR INLET	
	19	1	**236-8780**	1	TUBE	
	20	1	**236-8781**	1	HOSE-RADIATOR	
	21	1	**236-8782**	1	GUARD (RADIATOR)	
	22	1	**265-6527**	2	CLIP	
	23	1	**311-4621**	1	BRACKET	
	24	1	**311-4624**	1	TUBE-AIR	
	25	1	**317-9229**	4	CLAMP-HOSE	
	26	1	**324-3528**	3	CLAMP-HOSE	
	27	1	**103-6714**	3	CLIP	
	28	1	**462-3058**	1	BRACKET	
	29	1	**462-4788**	1	GUARD AS	

M - METRIC PART

432-8215 **RADIATOR GP (**contd.**)** **i06091155**

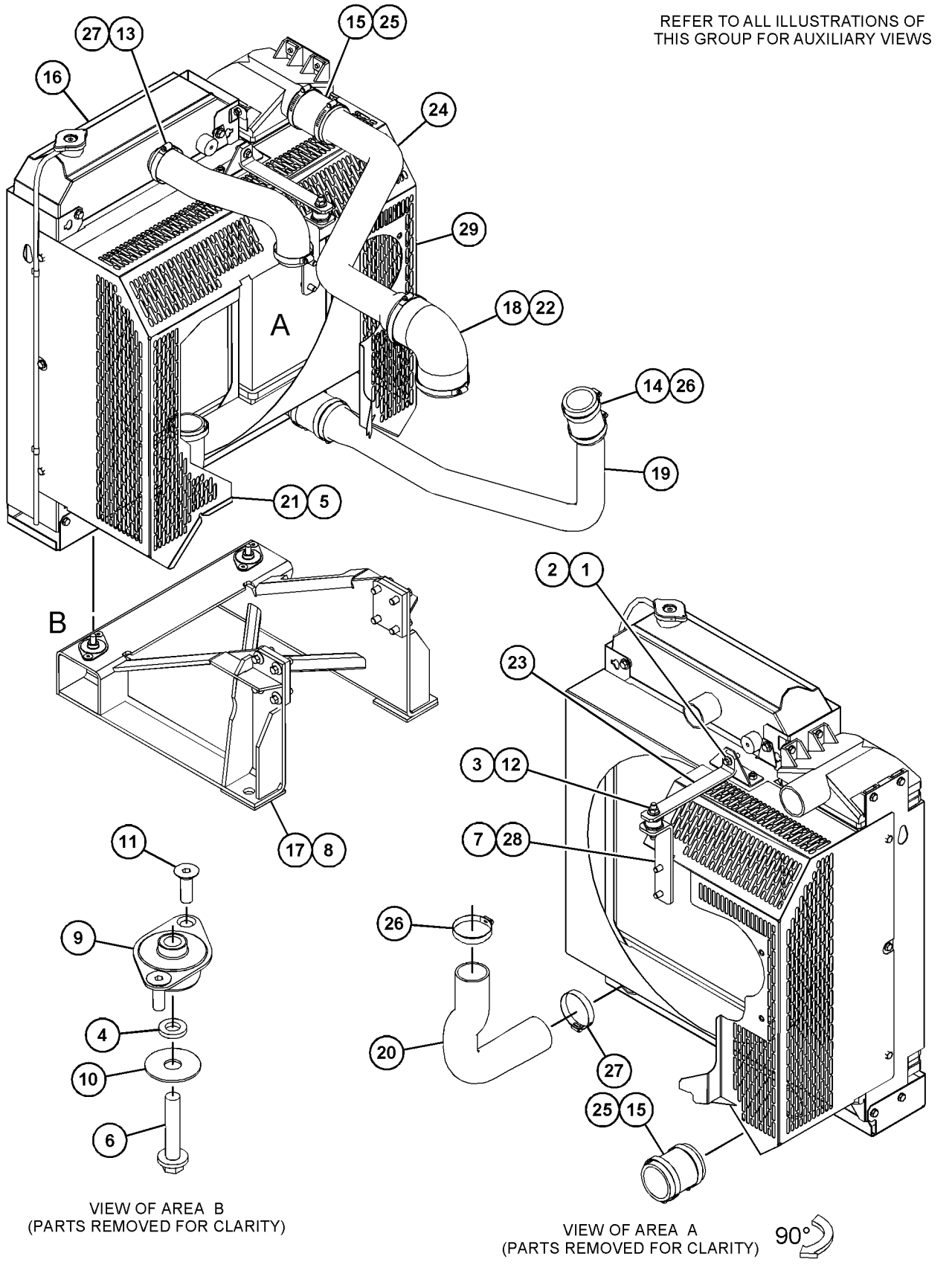

GRAPHIC #1 g03818678

432-8215 **RADIATOR GP (**contd.**)** **i06091155**

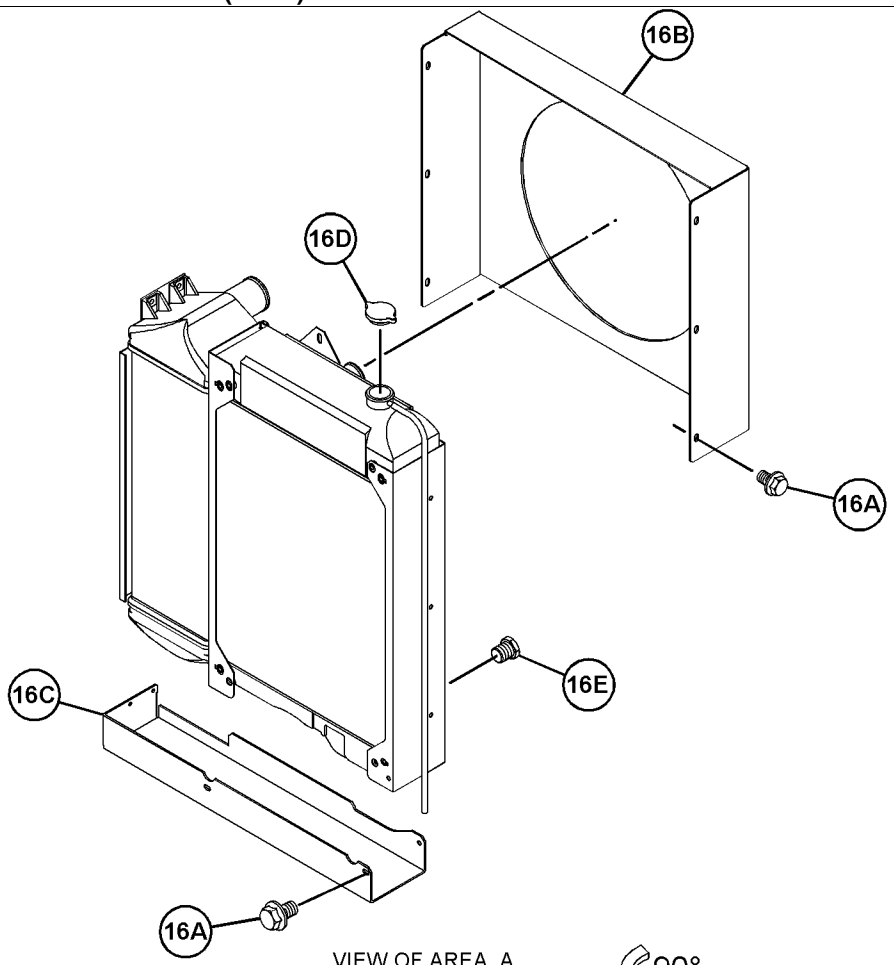

GRAPHIC #2 <END> g03818691

432-8218 RADIATOR GP

PART OF 486-2471, 492-1322, 514-3535, 514-3537, 526-8847 ENGINE AR-PRIMARY

SMCS-1353 **i06149714**

NOTE	REF NO	GRAPHIC REF	PART NUMBER	QTY	PART NAME 1 2 3 4 5 6 (PRODUCT LEVEL)	SEE PAGE
M	1	1	**6I-0260**	1	BOLT (M8X1.25X25-MM)	
M	2	1	**178-3336**	1	NUT-HEX FLANGE (M8X1.25-THD)	
M	3	1	**175-7141**	2	NUT-HEX FLANGE (M10X1.5-THD)	
	4	1	**7W-2601**	2	SPACER	
M	5	1	**100-4458**	2	BOLT (M8X1.25X14-MM)	
M	6	1	**100-4461**	2	BOLT (M10X1.5X50-MM)	
M	7	1	**100-4830**	2	BOLT (M10X1.5X20-MM)	
M	8	1	**101-7537**	8	BOLT (M12X1.75X35-MM)	
	9	1	**101-7538**	2	MOUNT	
	10	1	**101-7540**	2	WASHER	
M	11	1	**101-7541**	4	SCREW-FLAT HEAD (M8X1.25X25-MM)	
	12	1	**101-7546**	1	MOUNT	
	13	1	**236-7722**	1	HOSE-RADIATOR	
	14	1	**236-7734**	1	HOSE-RADIATOR	
	15	1	**236-7735**	2	HOSE-RADIATOR	
Y	16	1	**236-7766**	1	RADIATOR AS	342
	17	1	**236-8773**	1	BRACKET-MOUNTING	
	18	1	**236-8777**	1	HOSE-AIR INLET	
	19	1	**236-8780**	1	TUBE	
	20	1	**236-8781**	1	HOSE-RADIATOR	
	21	1	**265-6527**	2	CLIP	
	22	1	**311-4621**	1	BRACKET	
	23	1	**311-4624**	1	TUBE-AIR	
	24	1	**311-4627**	1	GUARD-RADIATOR	
	25	1	**317-9229**	4	CLAMP-HOSE	
	26	1	**324-3528**	3	CLAMP-HOSE	
	27	1	**103-6714**	3	CLIP	
	28	1	**462-3058**	1	BRACKET	
	29	1	**462-4788**	1	GUARD AS	

M - METRIC PART
Y - SEPARATE ILLUSTRATION

432-8218 **RADIATOR GP (**contd.**)** **i06149714**

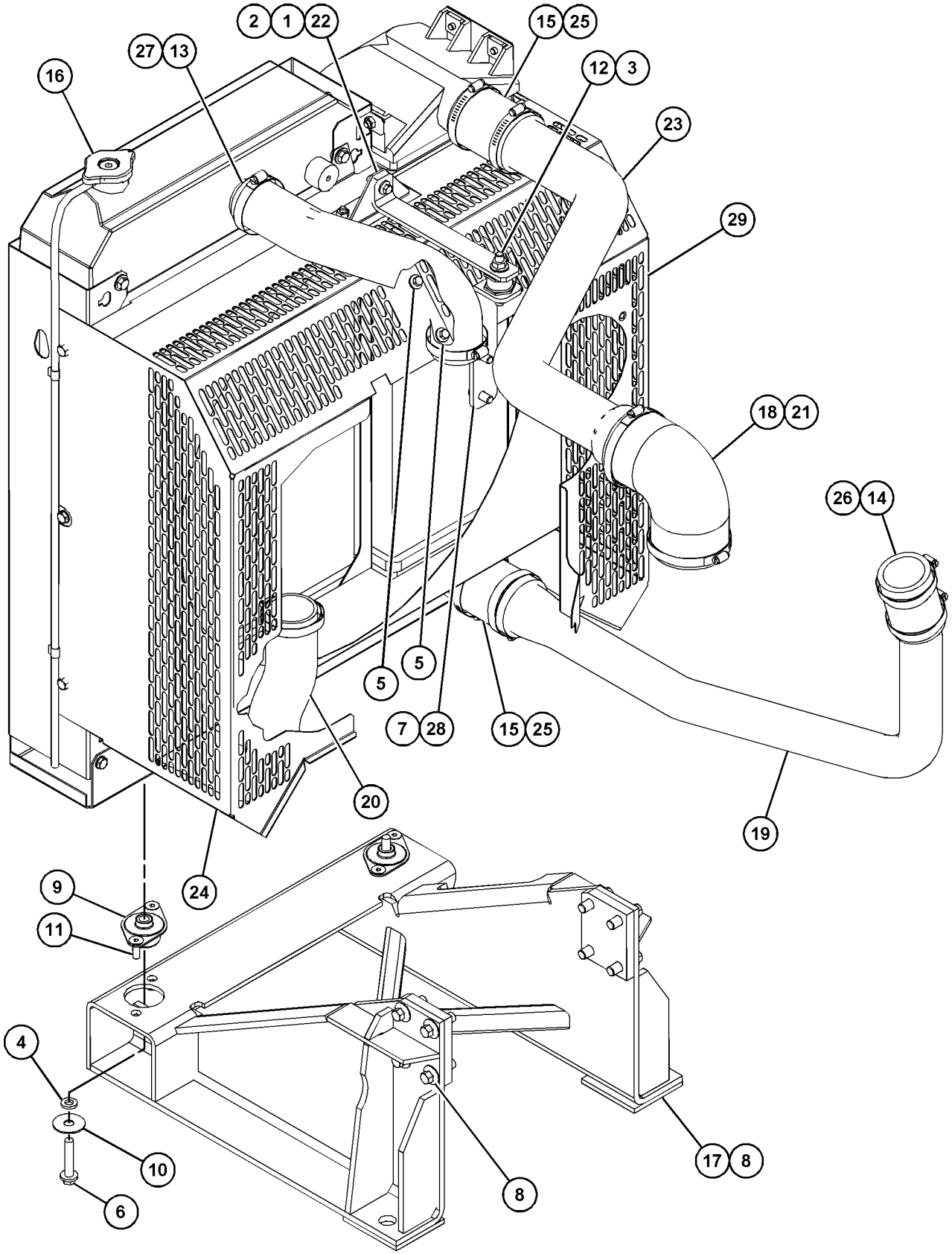

GRAPHIC #1 <END> g06002562

459-6904 RADIATOR GP

PART OF 455-9378, 478-6560, 495-3005, 503-4924, 512-9838, 512-9884, 517-0058, 539-3889 ENGINE AR-PRIMARY

SMCS-1353 **i06180510**

NOTE	REF NO	GRAPHIC REF	PART NUMBER	QTY	PART NAME 1 2 3 4 5 6 (PRODUCT LEVEL)	SEE PAGE
M	1	1	**6I-0260**	1	BOLT (M8X1.25X25-MM)	
M	2	1	**178-3336**	1	NUT-HEX FLANGE (M8X1.25-THD)	
M	3	1	**175-7141**	2	NUT-HEX FLANGE (M10X1.5-THD)	
	4	1	**7W-2601**	2	SPACER	
M	5	1	**100-4458**	2	BOLT (M8X1.25X14-MM)	
M	6	1	**100-4461**	2	BOLT (M10X1.5X50-MM)	
M	7	1	**100-4830**	2	BOLT (M10X1.5X20-MM)	
M	8	1	**101-7537**	8	BOLT (M12X1.75X35-MM)	
	9	1	**101-7538**	2	MOUNT	
	10	1	**101-7540**	2	WASHER	
M	11	1	**101-7541**	4	SCREW-FLAT HEAD (M8X1.25X25-MM)	
	12	1	**101-7546**	1	MOUNT	
	13	1	**236-7722**	1	HOSE-RADIATOR	
	14	1	**236-7734**	1	HOSE-RADIATOR	
	15	1	**236-7735**	2	HOSE-RADIATOR	
	16	1	**236-8773**	1	BRACKET-MOUNTING	
	17	1	**236-8777**	1	HOSE-AIR INLET	
	18	1	**236-8780**	1	TUBE	
	19	1	**236-8781**	1	HOSE-RADIATOR	
	20	1	**265-6527**	2	CLIP	
	21	1	**311-4621**	1	BRACKET	
	22	1	**311-4624**	1	TUBE-AIR	
	23	1	**311-4627**	1	GUARD-RADIATOR	
	24	1	**317-9229**	4	CLAMP-HOSE	
	25	1	**324-3528**	3	CLAMP-HOSE	
Y	26	1	**372-8150**	1	RADIATOR AS	343
	27	1	**103-6714**	3	CLIP	
	28	1	**462-3058**	1	BRACKET	
	29	1	**462-4788**	1	GUARD AS	

M - METRIC PART
Y - SEPARATE ILLUSTRATION

459-6904 **RADIATOR GP (**contd.**)** **i06180510**

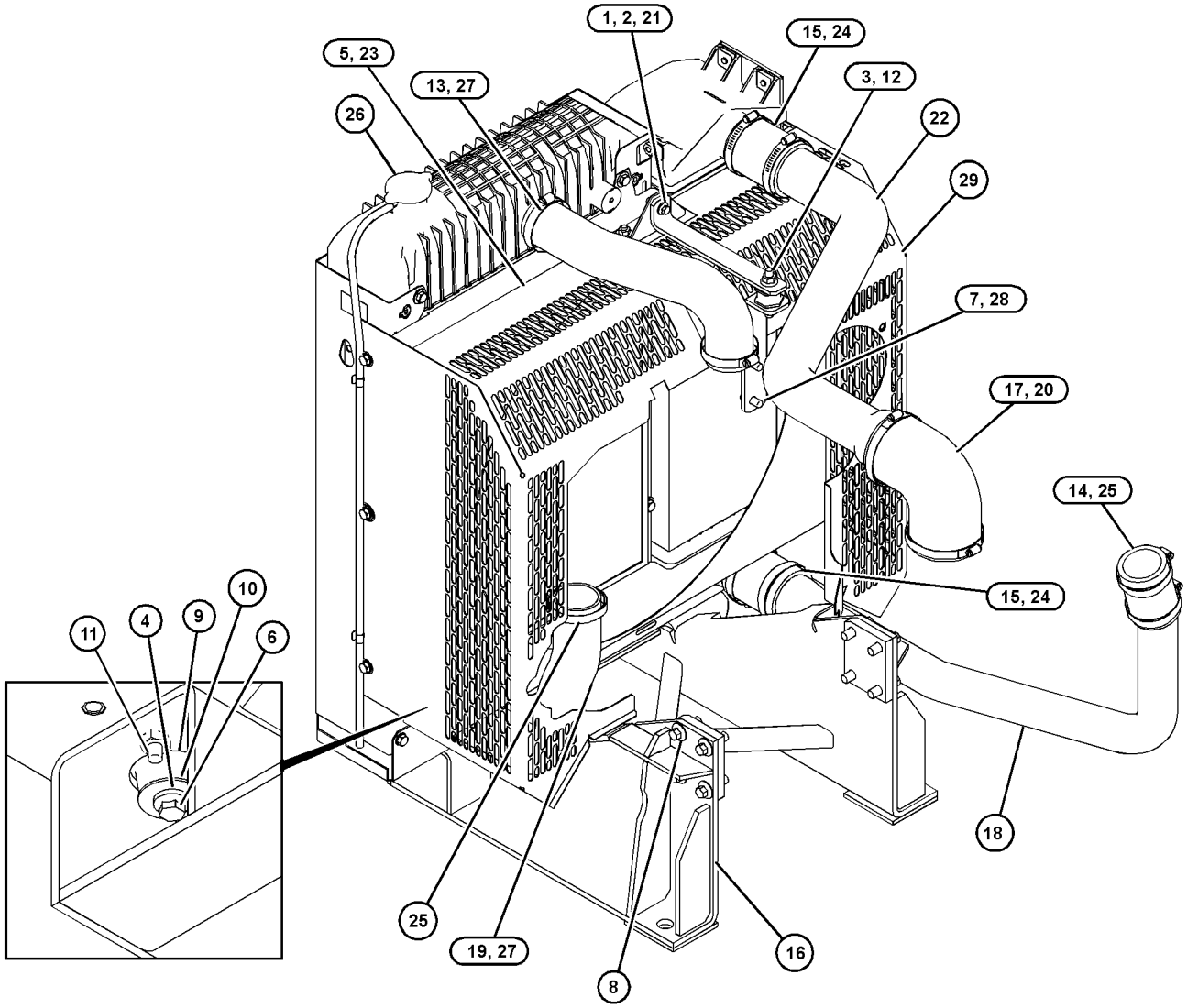

GRAPHIC #1 <END> g03868412

449-7366 AIR CLEANER GP

PART OF 467-0357 AIR CLEANER GP

SMCS-1051, 1054 **i06181242**

NOTE	REF NO	GRAPHIC REF	PART NUMBER	QTY	PART NAME 1 2 3 4 5 6 (PRODUCT LEVEL)	SEE PAGE
	1	1	**104-2083**	1	CAP (AIR CLEANER)	
	2	1	**307-2808**	1	BRACKET	
	3	1	**6V-0447**	1	CLAMP-HOSE	
	4	1	**449-9365**	1	FILTER AS-AIR	
		1	**133-7403**	1	VALVE-DUST	
		1	**206-5234**	1	FILTER ELEMENT AS-AIR (PRIMARY)	
		1	**206-5235**	1	FILTER ELEMENT AS-AIR (SECONDARY)	
		1	**451-9226**	1	COVER-AIR CLEANER	
	5	1	**315-4691**	1	INDICATOR-AIR FILTER CHANGE	

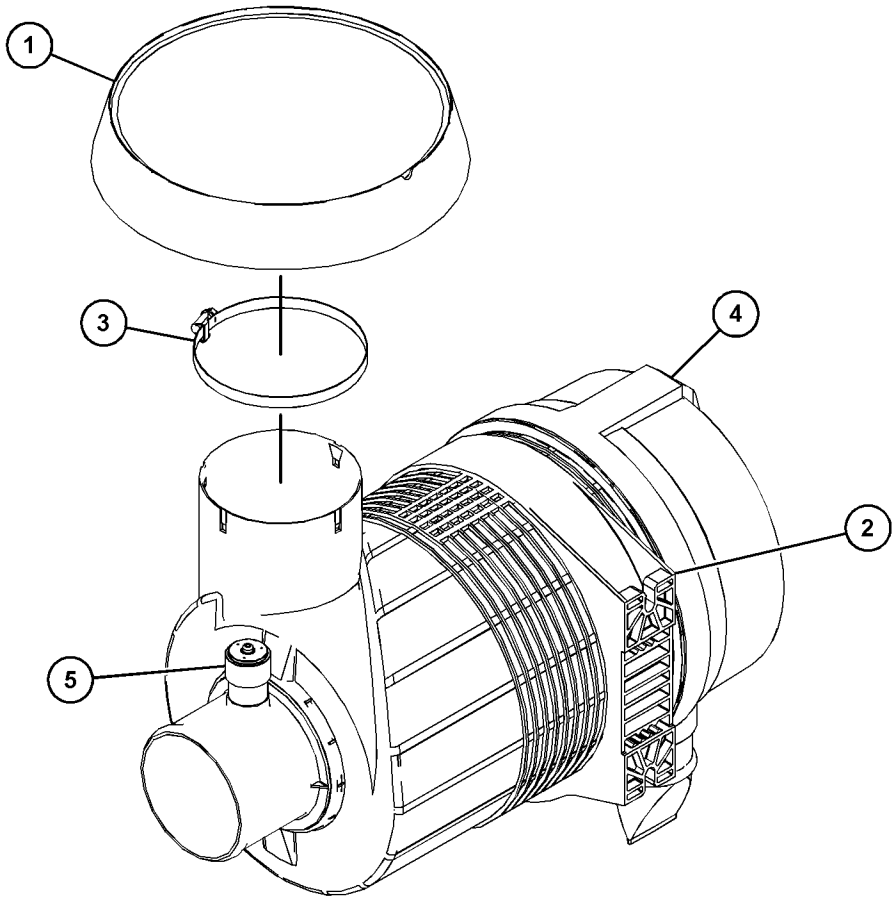

GRAPHIC #1 <END> g03832671

467-0357 AIR CLEANER GP

PART OF 461-3168, 475-8294, 480-6065, 486-2471, 500-8128, 502-7230, 508-4399, 509-3109, 509-5884, 510-0902, 514-3535, 514-3537, 516-9846, 526-8847, 527-9081 ENGINE AR-PRIMARY

SMCS-1051, 1054 **i06145398**

NOTE	REF NO	GRAPHIC REF	PART NUMBER	QTY	PART NAME 1 2 3 4 5 6 (PRODUCT LEVEL)	SEE PAGE
M	1	1	**6I-0789**	4	BOLT (M10X1.5X60-MM)	
	2	1	**385-7317**	1	CLAMP-HOSE	
	3	1	**385-7318**	1	HOSE-AIR	
	4	1	**445-1434**	1	BRACKET AS	
Y	5	1	**449-7366**	1	AIR CLEANER GP	352
M	6	1	**6I-0260**	2	BOLT (M8X1.25X25-MM)	
	7	1	**293-0598**	1	CLIP	
	8	1	**217-0099**	2	SPACER (8.2X25X2-MM THK)	

M - METRIC PART
Y - SEPARATE ILLUSTRATION

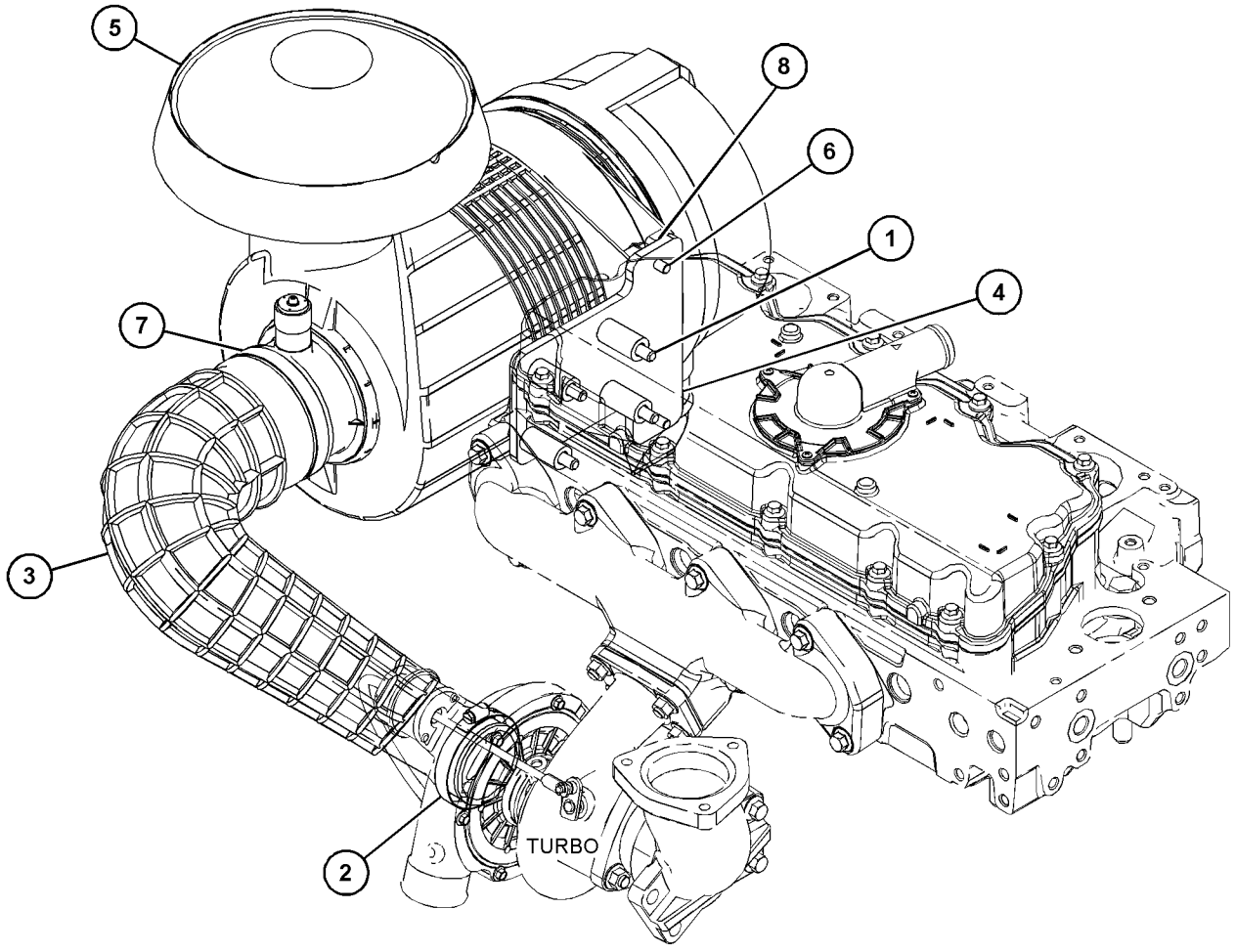

GRAPHIC #1 <END> g03839779

416-9543 ELBOW GP-AIR INLET

PART OF 463-8820, 463-8848, 463-8910, 466-4382, 484-1469, 495-9687, 508-4399, 509-5882, 510-0902 ENGINE AR-PRIMARY

SMCS-1087 **i06105325**

NOTE	REF NO	GRAPHIC REF	PART NUMBER	QTY	PART NAME 1 2 3 4 5 6 (PRODUCT LEVEL)	SEE PAGE
M	1	1	**6I-0260**	4	BOLT (M8X1.25X25-MM)	
M	2	1	**111-8222**	4	BOLT (M8X16-MM)	
M	3	1	**124-3815**	4	BOLT (M8X1.25X16-MM)	
	4	1	**185-6627**	2	PLATE	
	5	1	**419-3740**	1	CONNECTION GP-INLET	
	5A	1	**238-8288**	1	GASKET-INLET	

M - METRIC PART

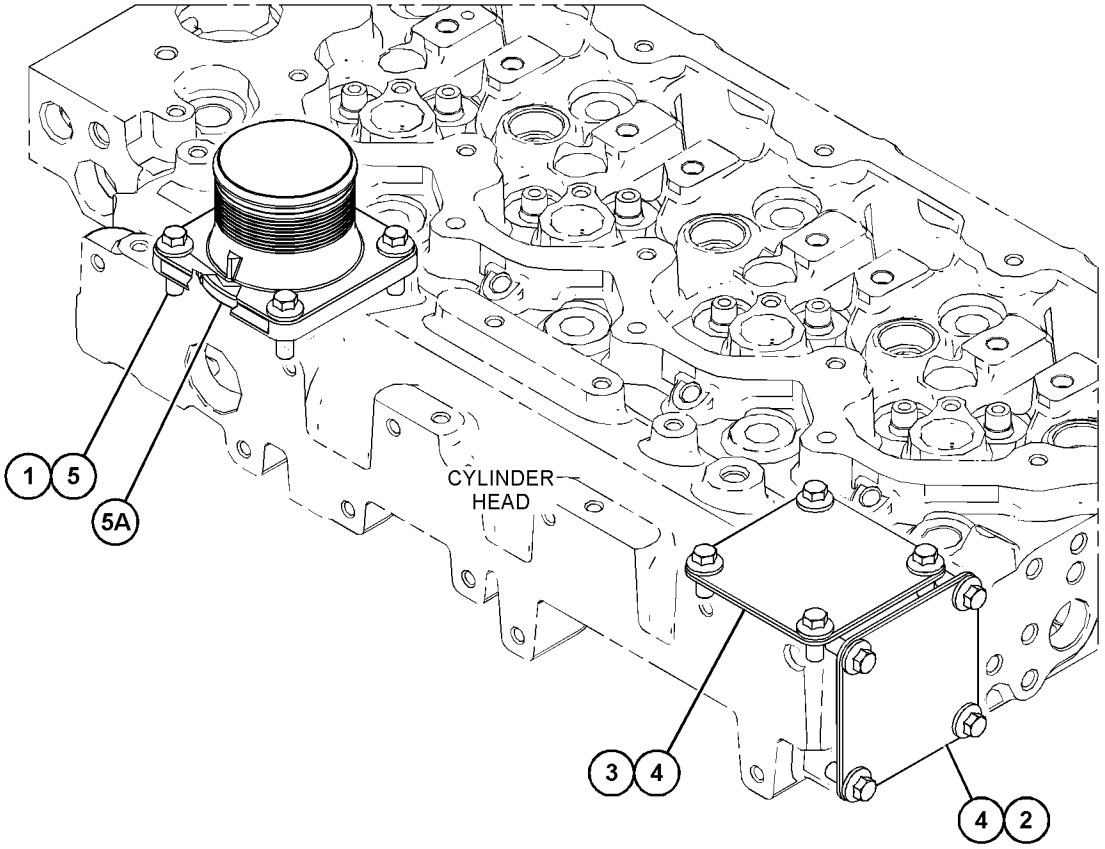

GRAPHIC #1 <END> g03816228

416-9546 ELBOW GP-AIR INLET

PART OF 541-2728 ENGINE AR-PRIMARY

SMCS-1087 **i07236286**

NOTE	REF NO	GRAPHIC REF	PART NUMBER	QTY	PART NAME 1 2 3 4 5 6 (PRODUCT LEVEL)	SEE PAGE
M	1	1	**103-5705**	2	BOLT (M8X1.25X110-MM)	
M	2	1	**111-8222**	4	BOLT (M8X16-MM)	
M	3	1	**124-3815**	4	BOLT (M8X1.25X16-MM)	
	4	1	**256-4447**	1	ELBOW AS-AIR INLET	
	4A	1	**238-8288**	1	GASKET-INLET	
	5	1	**185-6627**	2	PLATE	
M	6	1	**6I-0217**	2	BOLT (M8X1.25X20-MM)	

M - METRIC PART

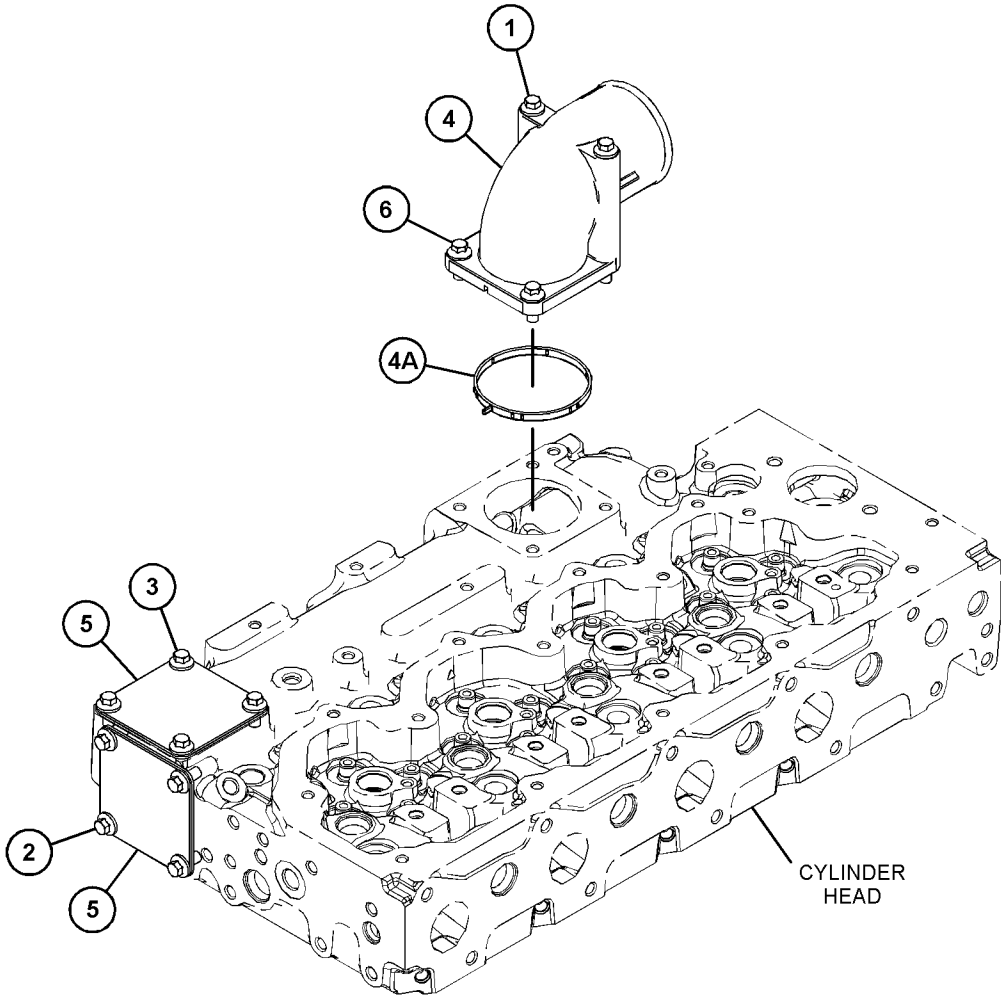

GRAPHIC #1 <END> g03829194

421-6894 ELBOW GP-AIR INLET

SMCS-1087 **i06124353**

NOTE	REF NO	GRAPHIC REF	PART NUMBER	QTY	PART NAME 1 2 3 4 5 6 (PRODUCT LEVEL)	SEE PAGE
M	1	1	**101-3895**	2	BOLT (M8X1.25X35-MM)	
M	2	1	**124-3815**	8	BOLT (M8X1.25X16-MM)	
	3	1	**199-9252**	1	SEAL-O-RING	
	4	1	**365-3308**	2	NUT-COMPRESSION	
	5	1	**434-2158**	1	HOUSING-SENSOR	
	6	1	**434-2164**	1	PIPE	
	7	1	**035-8017**	2	UNION	
	8	1	**067-6265**	2	FITTING-BRASS	
	9	1	**185-6627**	2	PLATE	
	10	1	**304-3689**	1	ADAPTER	

M - METRIC PART

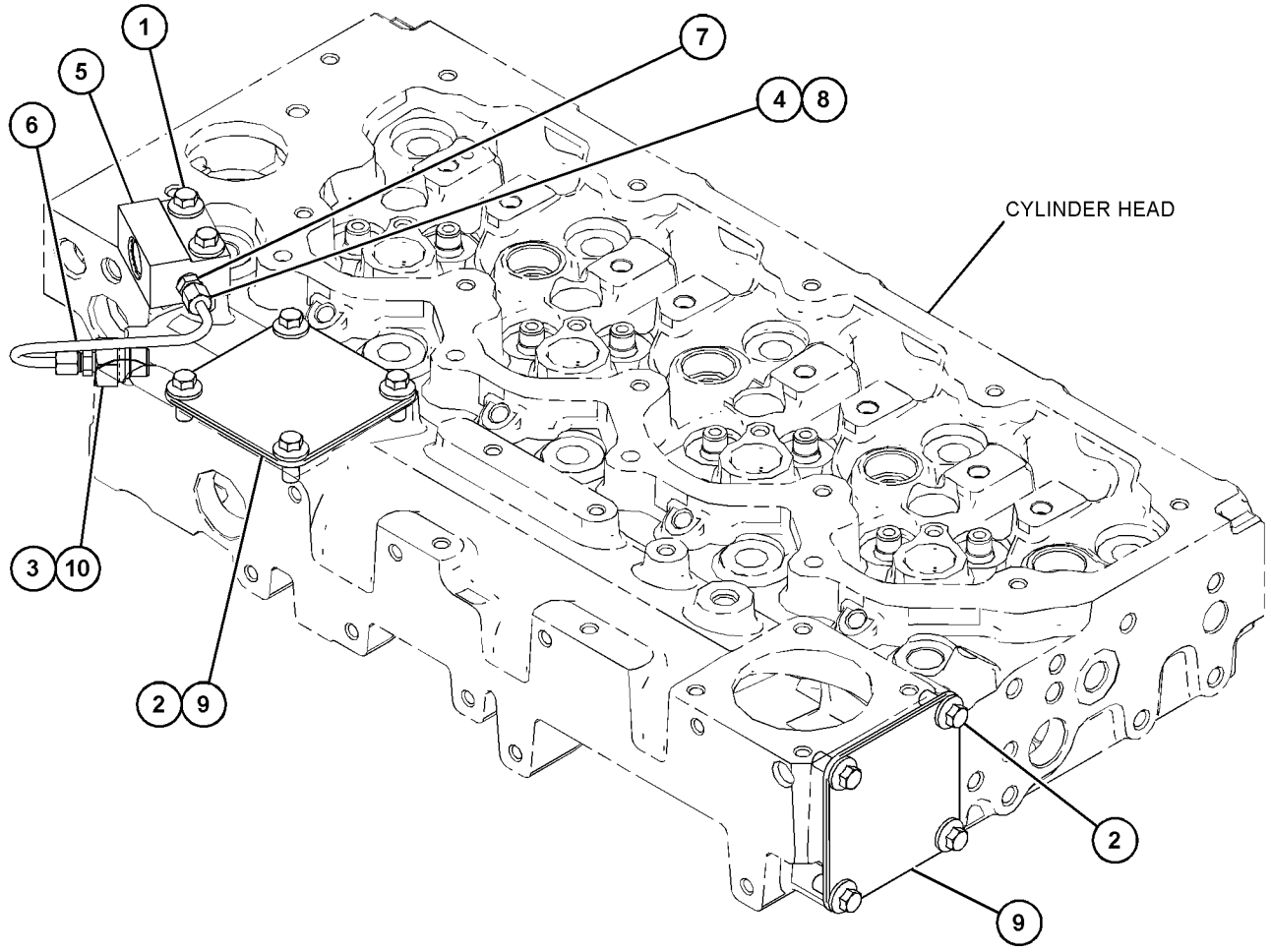

GRAPHIC #1 <END> g03891568

434-2311 ELBOW GP-AIR INLET

PART OF 466-3332 ENGINE AR-PRIMARY

SMCS-1087 **i06501990**

NOTE	REF NO	GRAPHIC REF	PART NUMBER	QTY	PART NAME 1 2 3 4 5 6 (PRODUCT LEVEL)	SEE PAGE
	1	1	**035-8017**	2	UNION	
	2	1	**067-6265**	2	FITTING-BRASS	
M	3	1	**101-3895**	2	BOLT (M8X1.25X35-MM)	
M	4	1	**124-3815**	8	BOLT (M8X1.25X16-MM)	
	5	1	**185-6627**	2	PLATE	
	6	1	**199-9252**	1	SEAL-O-RING	
	7	1	**304-3689**	1	ADAPTER	
	8	1	**365-3308**	2	NUT-COMPRESSION	
	9	1	**434-2158**	1	HOUSING-SENSOR	
	10	1	**468-4735**	1	PIPE	

M - METRIC PART

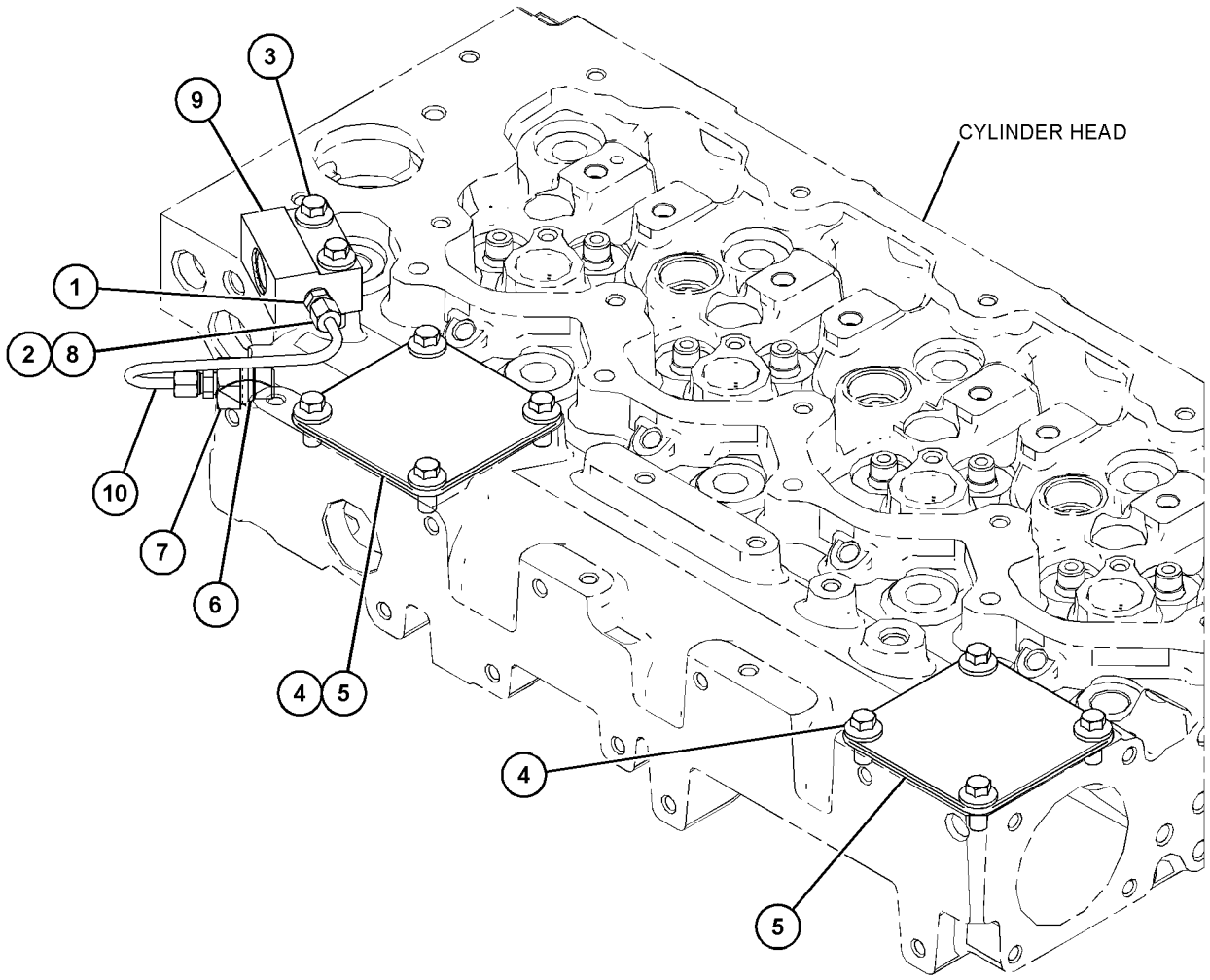

GRAPHIC #1 <END> g06002529

462-9629 ELBOW GP-AIR INLET

PART OF 455-9378, 461-3168, 475-8294, 478-6560, 480-6065, 486-2471, 492-1322, 495-3005, 500-8128, 502-7230, 503-4924, 509-3109, 509-5884, 512-9838, 512-9884, 514-3535, 514-3537, 516-9846, 517-0058, 526-8847, 539-3889 ENGINE AR-PRIMARY

SMCS-1087 **i06952872**

NOTE	REF NO	GRAPHIC REF	PART NUMBER	QTY	PART NAME 1 2 3 4 5 6 (PRODUCT LEVEL)	SEE PAGE
M	1	1	**6I-0260**	4	BOLT (M8X1.25X25-MM)	
M	2	1	**111-8222**	4	BOLT (M8X16-MM)	
M	3	1	**124-3815**	4	BOLT (M8X1.25X16-MM)	
	4	1	**185-6627**	2	PLATE	
	5	1	**492-3310**	1	GASKET	
	6	1	**462-4544**	1	CONNECTOR AS	

M - METRIC PART

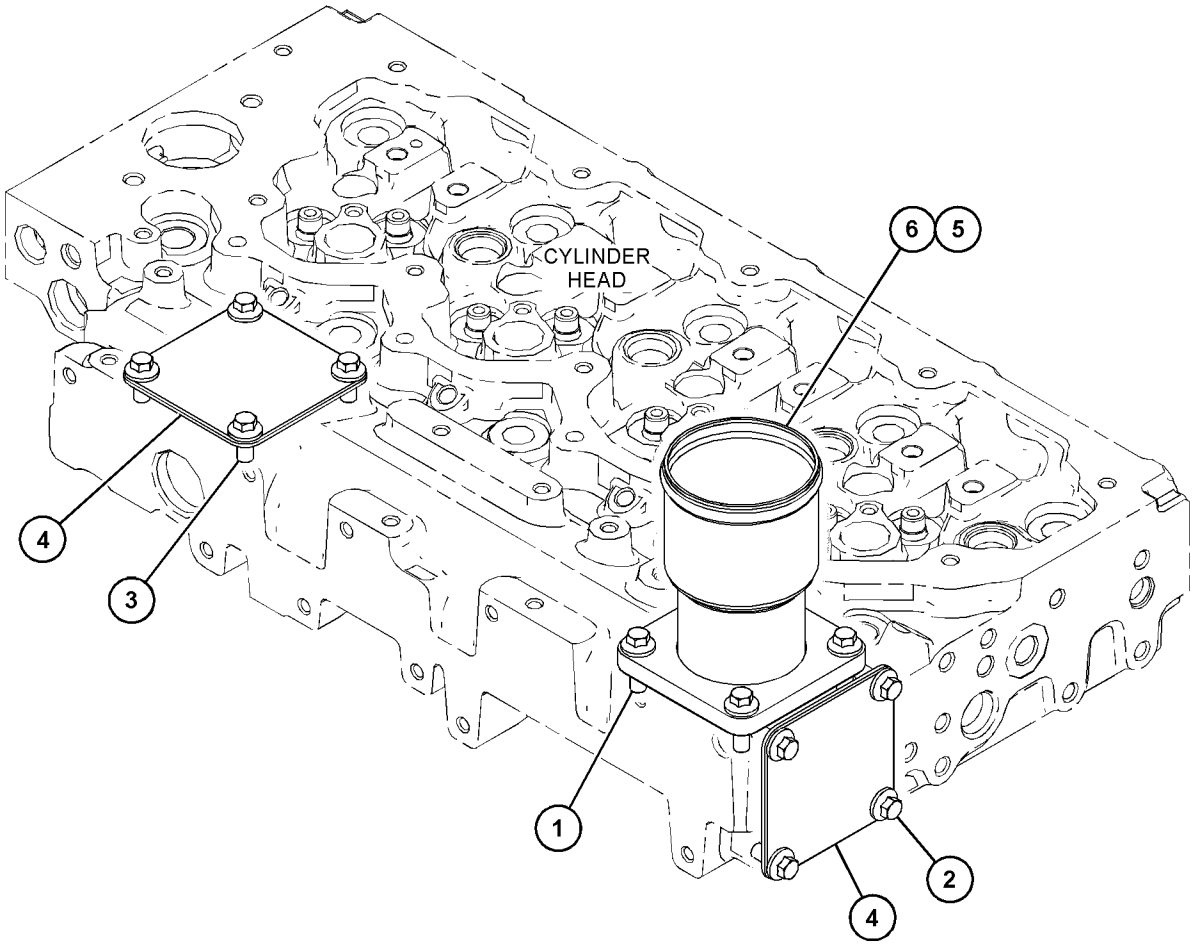

GRAPHIC #1 <END> g03808988

418-6475 FASTENER GP-EXHAUST MANIFOLD

PART OF 455-9378, 461-3168, 466-3332, 467-7465, 475-8294, 478-6560, 480-6065, 484-2343, 486-2471, 492-1322, 495-3005, 500-8128, 502-7230, 503-1940, 503-4924, 508-4399, 509-3109, 509-5884, 510-0902, 512-9838, 512-9884, 514-3535, 514-3537, 516-9846, 517-0058, 526-8847, 527-9081, 538-5357, 539-3889 ENGINE AR-PRIMARY

SMCS-1059 **i06091151**

NOTE	REF NO	GRAPHIC REF	PART NUMBER	QTY	PART NAME 1 2 3 4 5 6 (PRODUCT LEVEL)	SEE PAGE
M	1	1	**6I-0563**	3	NUT (M10X1.5-THD)	
	2	1	**6I-4012**	3	STUD	
	3	1	**6I-4013**	1	FLANGE	
	4	1	**6I-4039**	1	GASKET	

M - METRIC PART

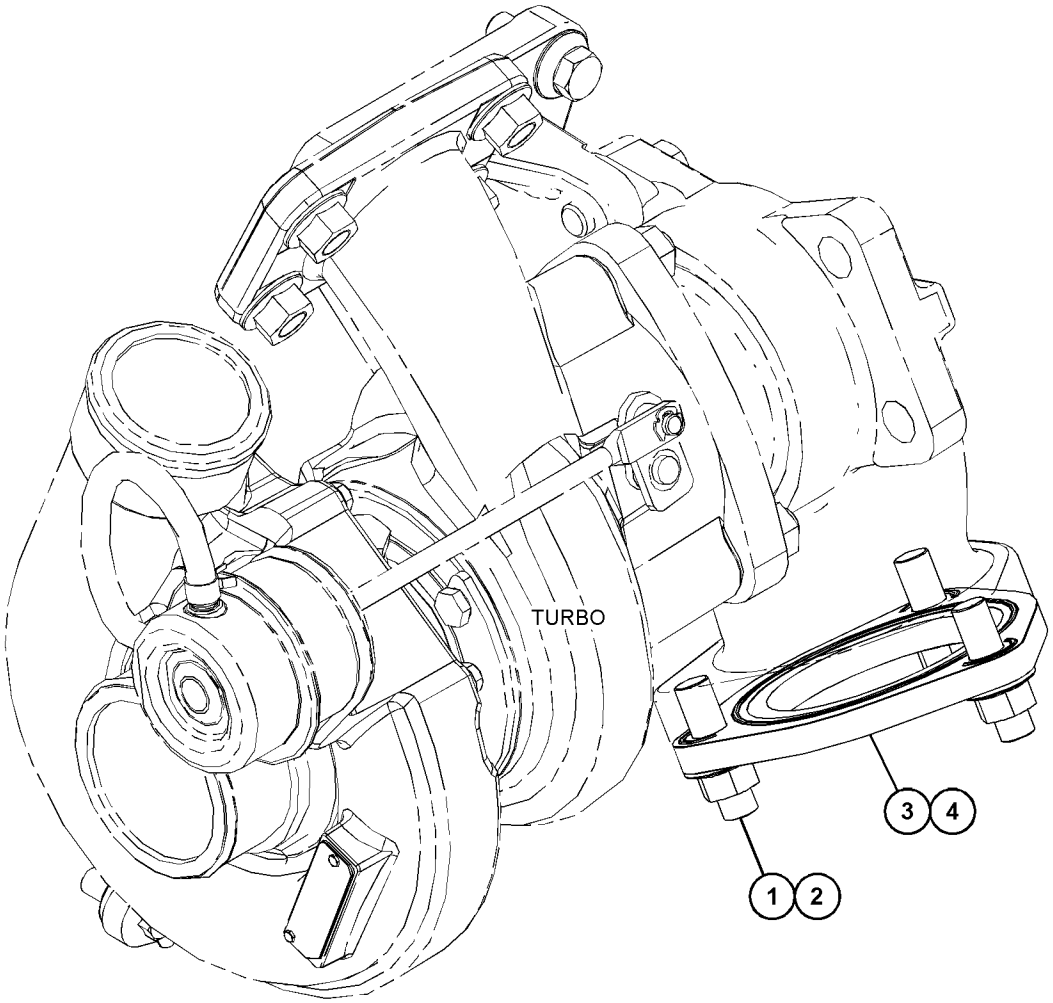

GRAPHIC #1 <END> g03815326

416-8774 FITTING GP-EXHAUST

PART OF 491-2522 ENGINE AR-PRIMARY

SMCS-1061 **i06552077**

NOTE	REF NO	GRAPHIC REF	PART NUMBER	QTY	PART NAME 1 2 3 4 5 6 (PRODUCT LEVEL)	SEE PAGE
M	1	1	**6I-0563**	3	NUT (M10X1.5-THD)	
	2	1	**6I-4012**	3	STUD	

M - METRIC PART

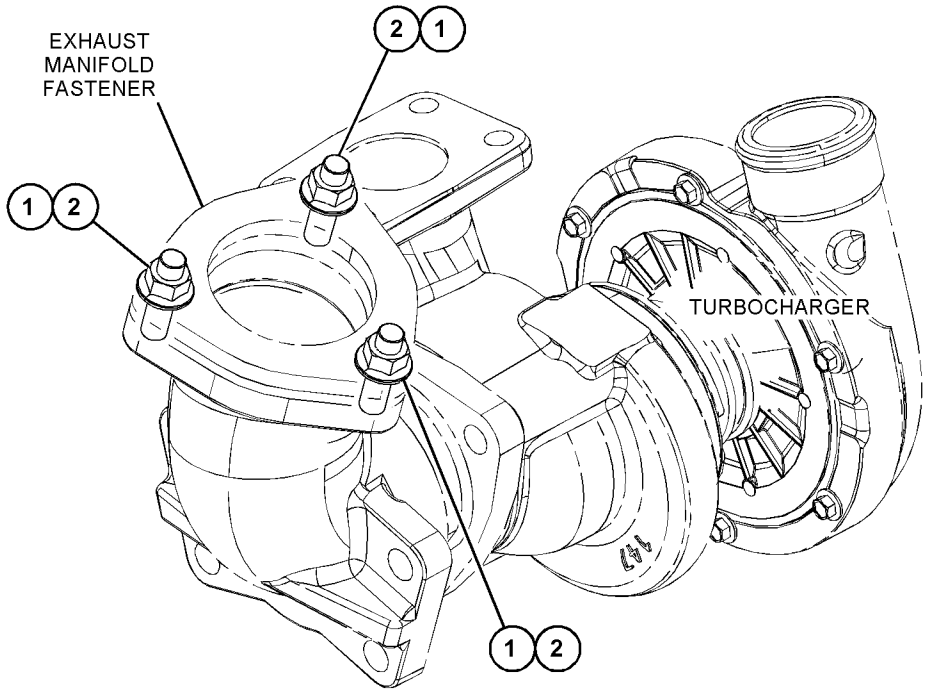

GRAPHIC #1 <END> g06107719

416-9552 MANIFOLD GP-EXHAUST

PART OF 455-9378, 461-3168, 463-8820, 463-8848, 463-8910, 466-3332, 467-7465, 475-8294, 478-6560, 480-6065, 486-2471, 491-2522, 492-1322, 495-3005, 500-8128, 502-7230, 503-4924, 508-4399, 509-3109, 509-5882, 509-5884, 510-0902, 512-9838, 512-9884, 514-3535, 514-3537, 516-9846, 517-0058, 526-8847, 527-9081, 539-3889 ENGINE AR-PRIMARY

SMCS-1059 **i06053018**

NOTE	REF NO	GRAPHIC REF	PART NUMBER	QTY	PART NAME 1 2 3 4 5 6 (PRODUCT LEVEL)	SEE PAGE
M	1	1	**278-0361**	8	BOLT (M10X1.5X45-MM)	
	2	1	**298-4570**	1	GASKET-EXHAUST MANIFOLD	
	3	1	**301-8256**	1	MANIFOLD-EXHAUST	
	4	1	**361-7519**	4	ROD-THREADED	

M - METRIC PART

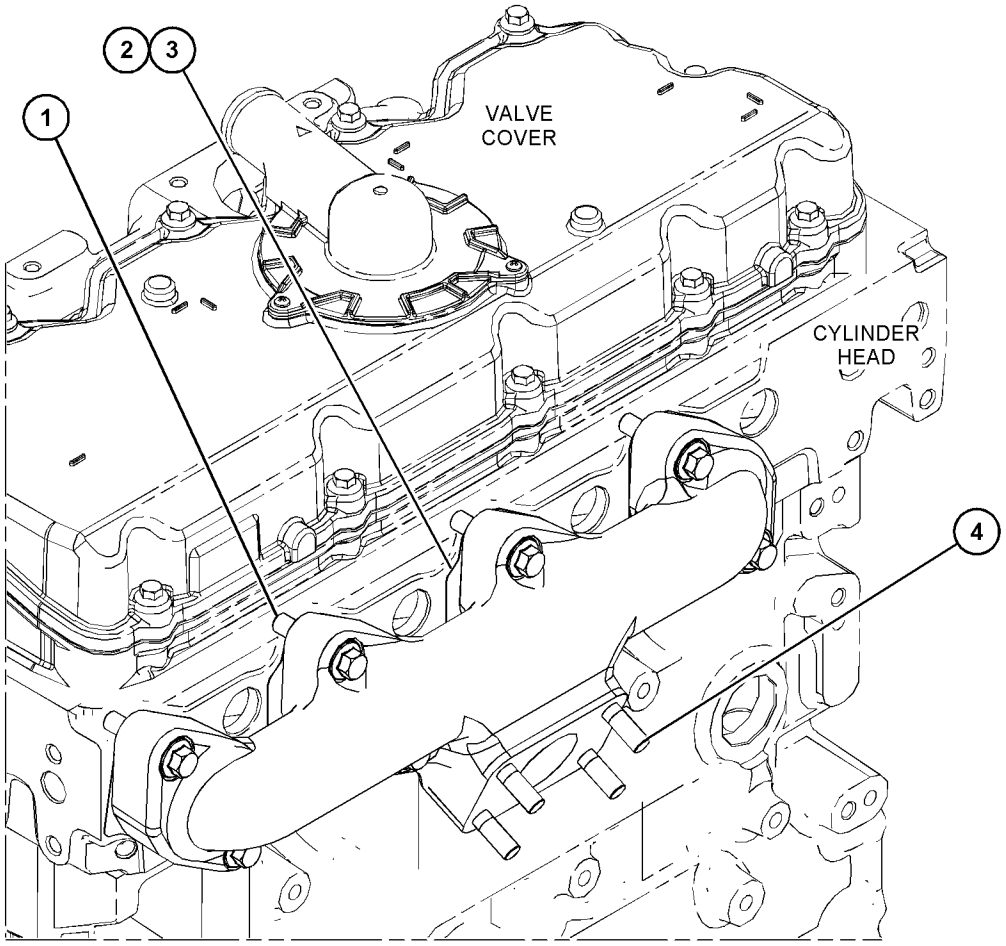

GRAPHIC #1 <END> g03817296

421-4493 MANIFOLD GP-EXHAUST

PART OF 495-9687 ENGINE AR-PRIMARY

SMCS-1059 **i06721825**

NOTE	REF NO	GRAPHIC REF	PART NUMBER	QTY	PART NAME 1 2 3 4 5 6 (PRODUCT LEVEL)	SEE PAGE
	1	1	**238-8292**	1	BOLT-FLANGE HEAD	
M	2	1	**278-0361**	7	BOLT (M10X1.5X45-MM)	
	3	1	**298-4570**	1	GASKET-EXHAUST MANIFOLD	
	4	1	**303-5788**	1	MANIFOLD-EXHAUST	
	5	1	**361-7519**	4	ROD-THREADED	

M - METRIC PART

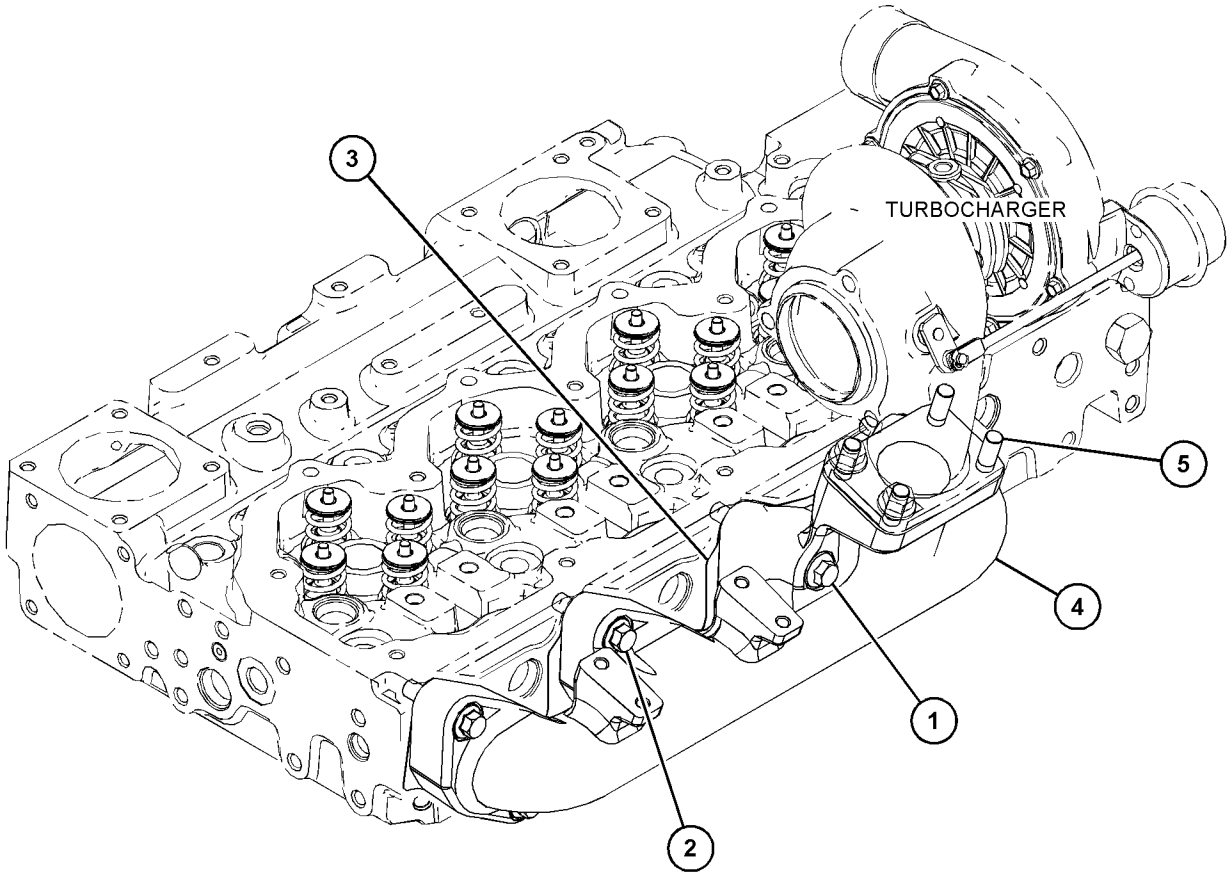

GRAPHIC #1 <END> g03829605

421-7092 MANIFOLD GP-EXHAUST

PART OF 466-4382, 469-1048, 477-2657, 484-1469, 484-2343, 492-3115, 492-3118, 503-1940, 504-3628, 504-3645, 538-5357, 541-2728 ENGINE AR-PRIMARY

SMCS-1059 **i06226170**

NOTE	REF NO	GRAPHIC REF	PART NUMBER	QTY	PART NAME 1 2 3 4 5 6 (PRODUCT LEVEL)	SEE PAGE
	1	1	**238-8292**	1	BOLT-FLANGE HEAD	
M	2	1	**278-0361**	7	BOLT (M10X1.5X45-MM)	
	3	1	**298-4569**	1	MANIFOLD-EXHAUST	
	4	1	**298-4570**	1	GASKET-EXHAUST MANIFOLD	
	5	1	**361-7519**	4	ROD-THREADED	

M - METRIC PART

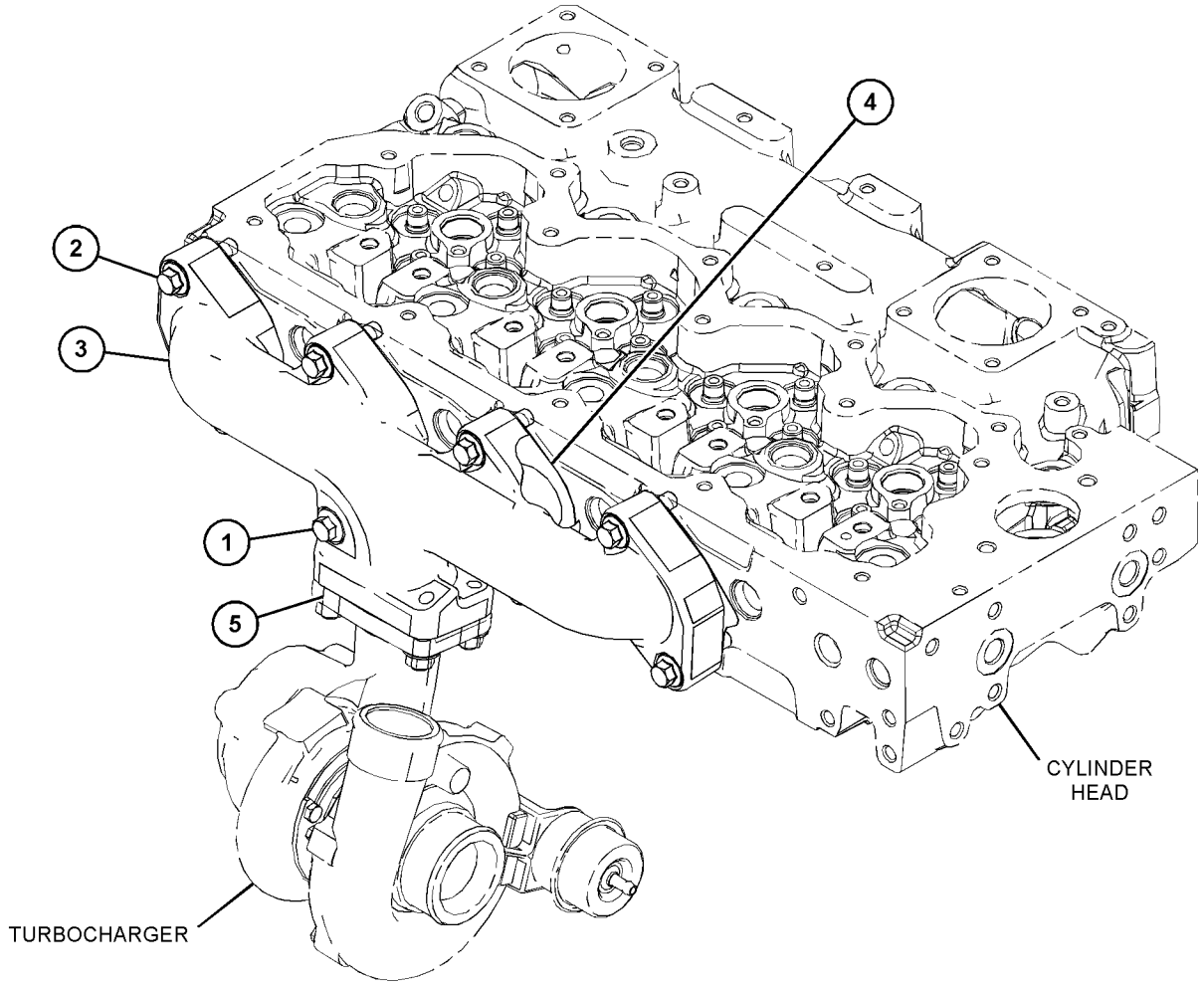

GRAPHIC #1 <END> g03848980

418-7675 MANIFOLD GP-INLET

PART OF 467-7465, 469-1048, 477-2657, 484-2343, 491-2522, 492-3115, 492-3118, 503-1940, 504-3628, 504-3645, 527-9081, 538-5357 ENGINE AR-PRIMARY

SMCS-1058 **i06124337**

NOTE	REF NO	GRAPHIC REF	PART NUMBER	QTY	PART NAME 1 2 3 4 5 6 (PRODUCT LEVEL)	SEE PAGE
M	1	1	**111-8222**	4	BOLT (M8X16-MM)	
M	2	1	**124-3815**	4	BOLT (M8X1.25X16-MM)	
	3	1	**185-6627**	2	PLATE	
	4	1	**419-3740**	1	CONNECTION GP-INLET	
	4A	1	**238-8288**	1	GASKET-INLET	
M	5	1	**6I-0260**	4	BOLT (M8X1.25X25-MM)	

M - METRIC PART

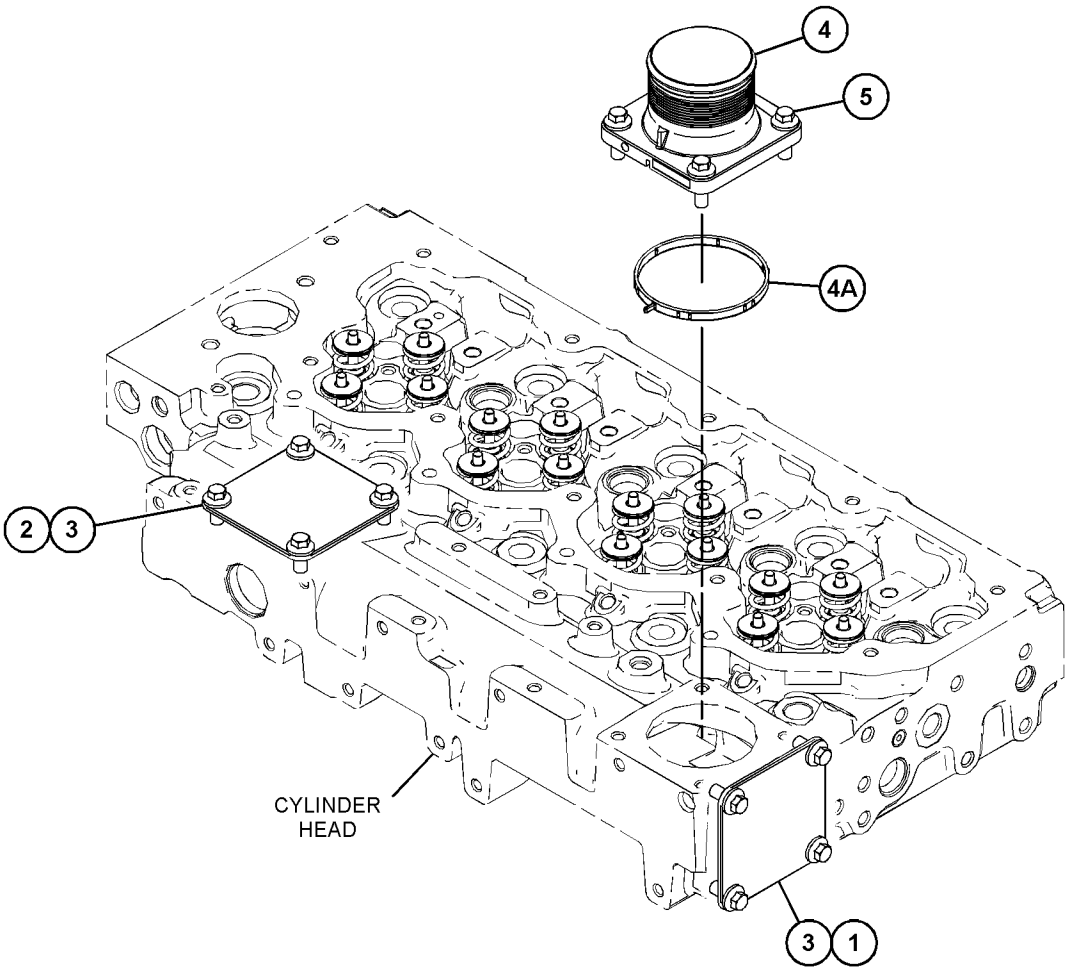

GRAPHIC #1 <END> g03842774

416-8775 MOUNTING GP-EXHAUST

HARDWARE

PART OF 463-8820, 463-8848, 463-8910, 466-4382, 484-1469, 509-5882, 541-2728 ENGINE

AR-PRIMARY

SMCS-1061 **i06229253**

NOTE	REF NO	GRAPHIC REF	PART NUMBER	QTY	PART NAME 1 2 3 4 5 6 (PRODUCT LEVEL)	SEE PAGE
M	1	1	**6I-0563**	3	NUT (M10X1.5-THD)	
	2	1	**361-7519**	3	ROD-THREADED	

M - METRIC PART

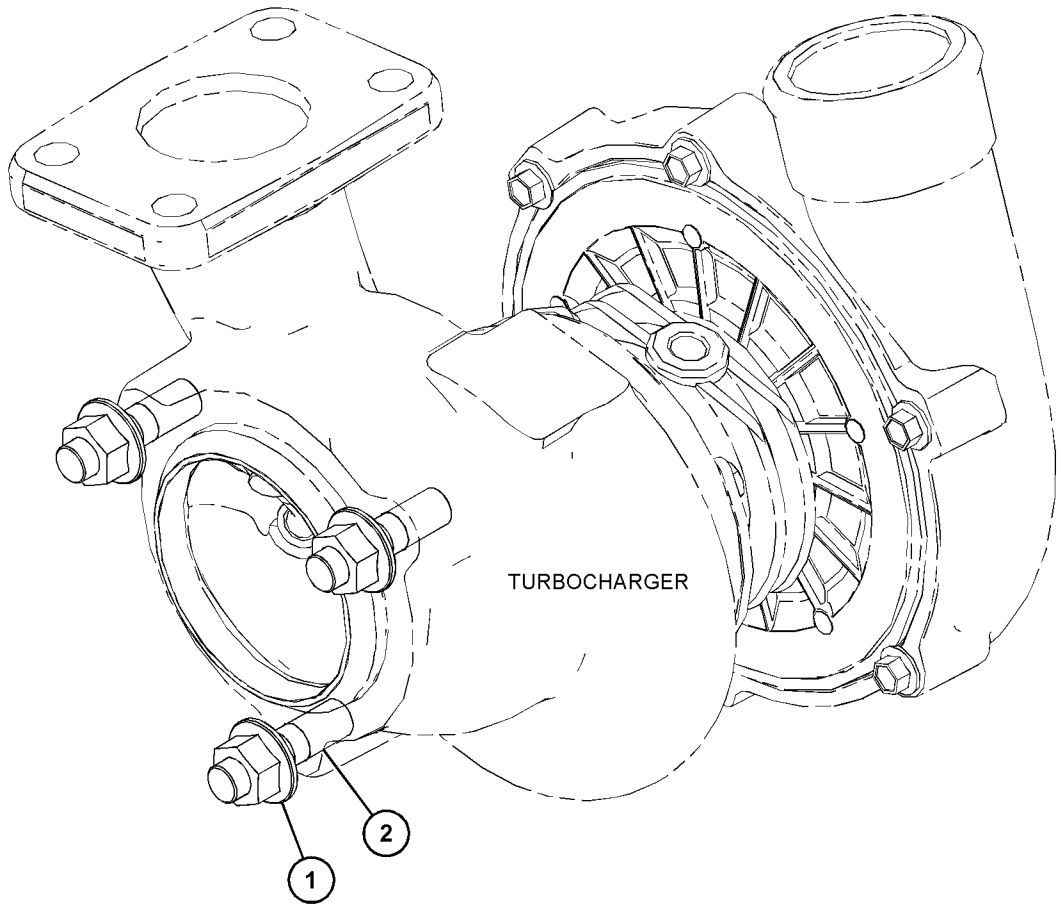

GRAPHIC #1 <END> g03828783

417-3408 TURBOCHARGER GP

SMCS-1052, 1053 **i06948899**

NOTE	REF NO	GRAPHIC REF	PART NUMBER	QTY	PART NAME 1 2 3 4 5 6 (PRODUCT LEVEL)	SEE PAGE
M	1	1	**6I-0217**	2	BOLT (M8X1.25X20-MM)	
M	2	1	**6I-0563**	7	NUT (M10X1.5-THD)	
M	3	1	**6I-0593**	2	BOLT (M10X1.5X30-MM)	
M	4	1	**6I-0654**	3	BOLT (M10X1.5X25-MM)	
M	5	1	**106-8916**	2	BOLT (M6X16-MM)	
	6	1	**194-5390**	1	GASKET-MANIFOLD	
	7	1	**227-4562**	1	ELBOW-EXHAUST	
	8	1	**507-5019**	1	LINE AS-OIL	
	8A	1	**269-3086**	2	CLAMP-BAND	
	9	1	**301-8255**	1	TUBE AS	
	9A	1	**225-8524**	2	BOLT-SPECIAL	
	9B	1	**225-8526**	4	WASHER (10.4X13.75X1.37-MM THK)	
	10	1	**302-0581**	1	ADAPTER-EXHAUST	
	11	1	**307-2805**	1	BRACKET	
	12	1	**353-3477**	1	GASKET-TURBOCHARGER	
	13	1	**353-3478**	1	GASKET-TURBOCHARGER	
	14	1	**361-7519**	3	ROD-THREADED	
	15	1	**482-0237**	1	TURBOCHARGER	

M - METRIC PART

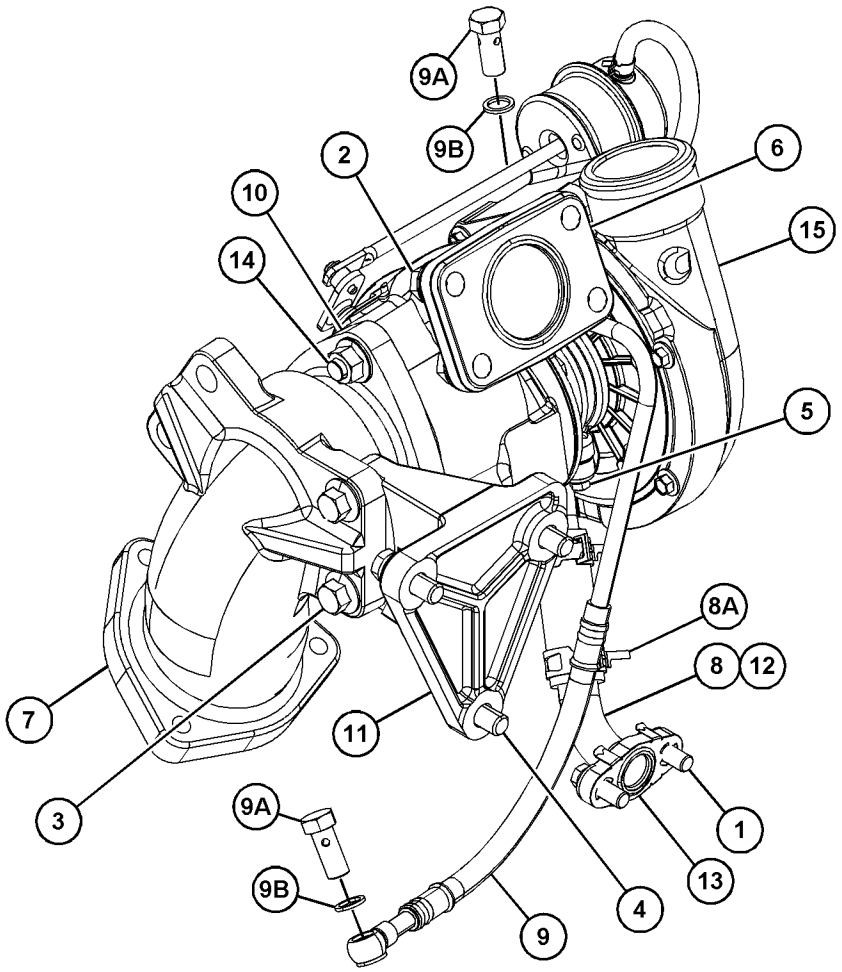

GRAPHIC #1 <END> g06204841

432-6628 TURBOCHARGER GP

PART OF 463-8820, 463-8910 ENGINE AR-PRIMARY

SMCS-1052, 1053 **i06947959**

NOTE	REF NO	GRAPHIC REF	PART NUMBER	QTY	PART NAME 1 2 3 4 5 6 (PRODUCT LEVEL)	SEE PAGE
M	1	1	**6I-0217**	2	BOLT (M8X1.25X20-MM)	
M	2	1	**6I-0563**	4	NUT (M10X1.5-THD)	
M	3	1	**106-8916**	2	BOLT (M6X16-MM)	
	4	1	**194-5390**	1	GASKET-MANIFOLD	
	5	1	**507-5019**	1	LINE AS-OIL	
	5A	1	**269-3086**		CLAMP-BAND	
	6	1	**301-8255**	1	TUBE AS	
	6A	1	**225-8524**	2	BOLT-SPECIAL	
	6B	1	**225-8526**	4	WASHER (10.4X13.75X1.37-MM THK)	
	7	1	**353-3477**	1	GASKET-TURBOCHARGER	
	8	1	**353-3478**	1	GASKET-TURBOCHARGER	
	9	1	**488-1825**	1	TURBOCHARGER	
		1	**487-8468**	1	RING	
		1	**487-8469**	1	HOSE	
		1	**487-8470**	2	CLIP	

M - METRIC PART

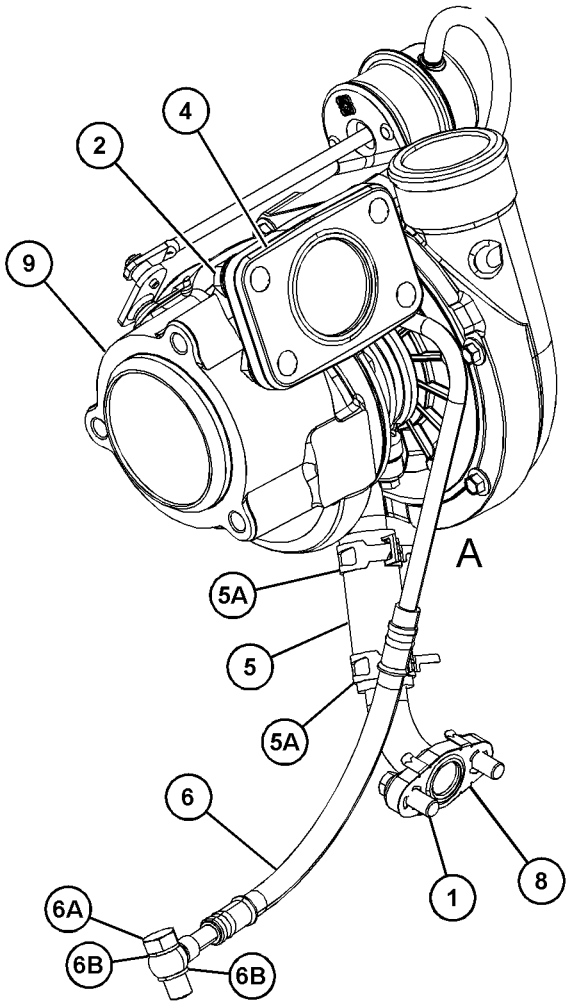

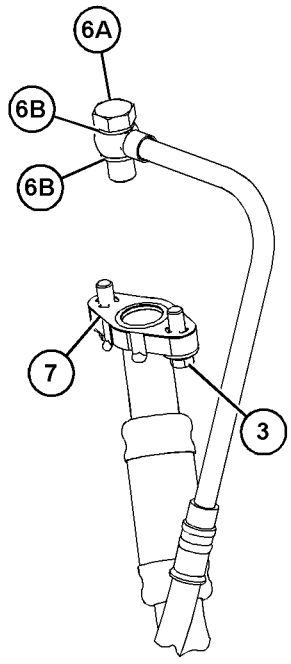

VIEW OF AREA A
(PARTS REMOVED FOR CLARITY)

GRAPHIC #1 <END> g06205219

432-6631 TURBOCHARGER GP

PART OF 466-3332 ENGINE AR-PRIMARY

SMCS-1052, 1053 **i06950250**

NOTE	REF NO	GRAPHIC REF	PART NUMBER	QTY	PART NAME 1 2 3 4 5 6 (PRODUCT LEVEL)	SEE PAGE
M	1	1	**6I-0217**	2	BOLT (M8X1.25X20-MM)	
M	2	1	**6I-0563**	7	NUT (M10X1.5-THD)	
M	3	1	**6I-0593**	2	BOLT (M10X1.5X30-MM)	
M	4	1	**6I-0645**	4	BOLT (M8X1.25X25-MM)	
M	5	1	**6I-0654**	3	BOLT (M10X1.5X25-MM)	
M	6	1	**106-8916**	2	BOLT (M6X16-MM)	
	7	1	**194-5390**	1	GASKET-MANIFOLD	
	8	1	**227-4562**	1	ELBOW-EXHAUST	
	9	1	**507-5019**	1	LINE AS-OIL	
	9A	1	**269-3086**	2	CLAMP-BAND	
	10	1	**234-3029**	1	HOSE	
	11	1	**492-3310**	1	GASKET	
	12	1	**266-7092**	2	CLAMP-HOSE	
	13	1	**301-8255**	1	TUBE AS	
	13A	1	**225-8524**	2	BOLT-SPECIAL	
	13B	1	**225-8526**	4	WASHER (10.4X13.75X1.37-MM THK)	
	14	1	**302-0581**	1	ADAPTER-EXHAUST	
	15	1	**307-2805**	1	BRACKET	
	16	1	**341-4024**	1	TUBE	
	17	1	**353-3478**	1	GASKET-TURBOCHARGER	
	18	1	**361-7519**	3	ROD-THREADED	
	19	1	**451-4495**	1	TURBOCHARGER	
	20	1	**353-3477**	1	GASKET-TURBOCHARGER	

M - METRIC PART

432-6631 **TURBOCHARGER GP (**contd.**)** **i06950250**

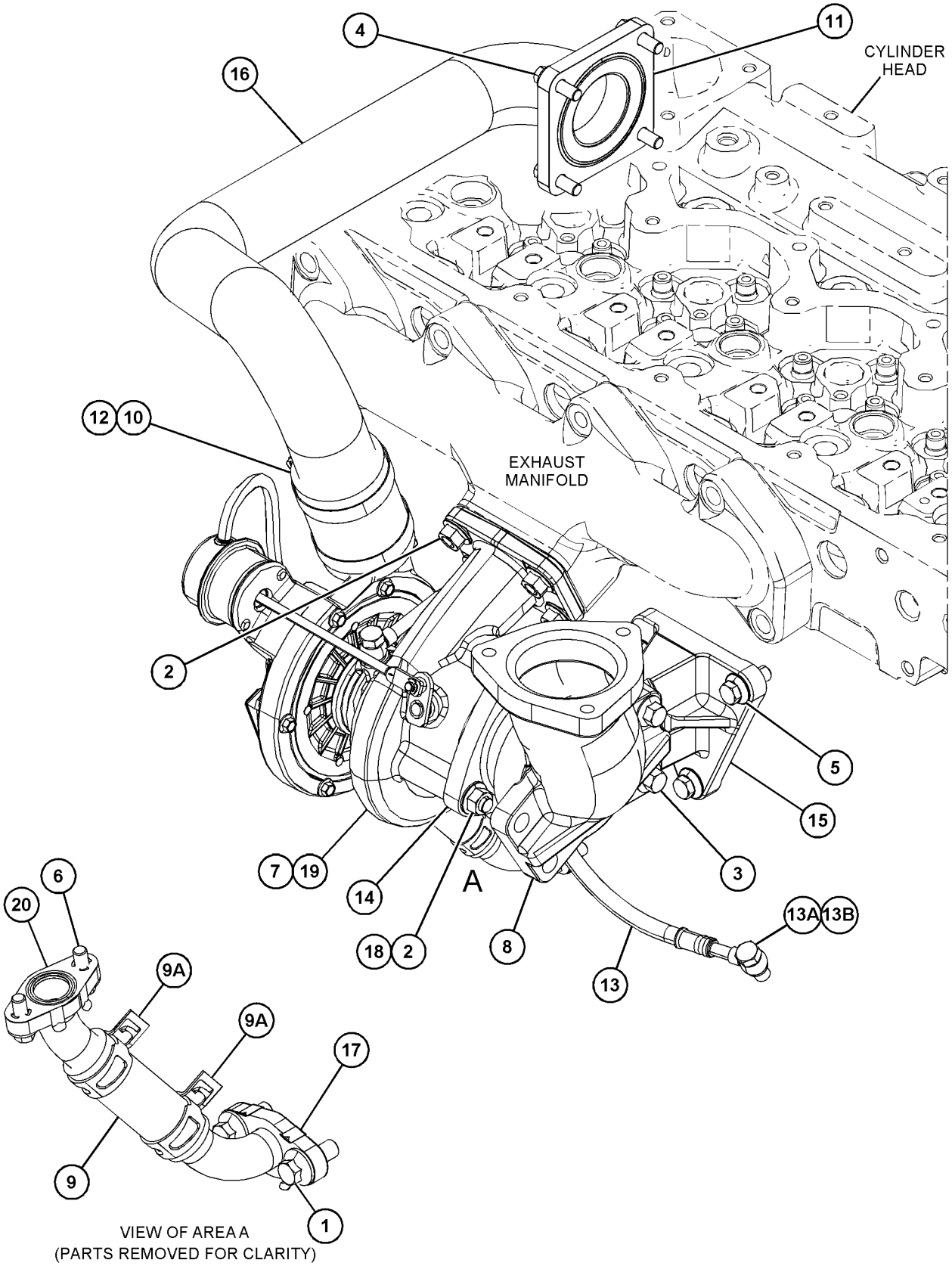

GRAPHIC #1 <END> g06204903

AIR INLET AND EXHAUST SYSTEM

432-6636 TURBOCHARGER GP

SMCS-1052, 1053 **i06998593**

NOTE	REF NO	GRAPHIC REF	PART NUMBER	QTY	PART NAME 1 2 3 4 5 6 (PRODUCT LEVEL)	SEE PAGE
M	1	1	**6I-0217**	2	BOLT (M8X1.25X20-MM)	
M	2	1	**6I-0260**	4	BOLT (M8X1.25X25-MM)	
M	3	1	**6I-0563**	7	NUT (M10X1.5-THD)	
M	4	1	**6I-0593**	2	BOLT (M10X1.5X30-MM)	
M	5	1	**6I-0654**	3	BOLT (M10X1.5X25-MM)	
M	6	1	**106-8916**	2	BOLT (M6X16-MM)	
	7	1	**194-5390**	1	GASKET-MANIFOLD	
	8	1	**227-4562**	1	ELBOW-EXHAUST	
	9	1	**507-5019**	1	LINE AS-OIL	
	9A	1	**269-3086**	2	CLAMP-BAND	
	10	1	**234-3029**	1	HOSE	
	11	1	**492-3310**	1	GASKET	
	12	1	**266-7092**	2	CLAMP-HOSE	
	13	1	**301-8255**	1	TUBE AS	
	13A	1	**225-8524**	2	BOLT-SPECIAL	
	13B	1	**225-8526**	4	WASHER (10.4X13.75X1.37-MM THK)	
	14	1	**302-0581**	1	ADAPTER-EXHAUST	
	15	1	**307-2805**	1	BRACKET	
	16	1	**353-3477**	1	GASKET-TURBOCHARGER	
	17	1	**353-3478**	1	GASKET-TURBOCHARGER	
	18	1	**361-7519**	3	ROD-THREADED	
	19	1	**436-6285**	1	PIPE AS	
	20	1	**451-4495**	1	TURBOCHARGER	

M - METRIC PART

432-6636 **TURBOCHARGER GP (**contd.**)** **i06998593**

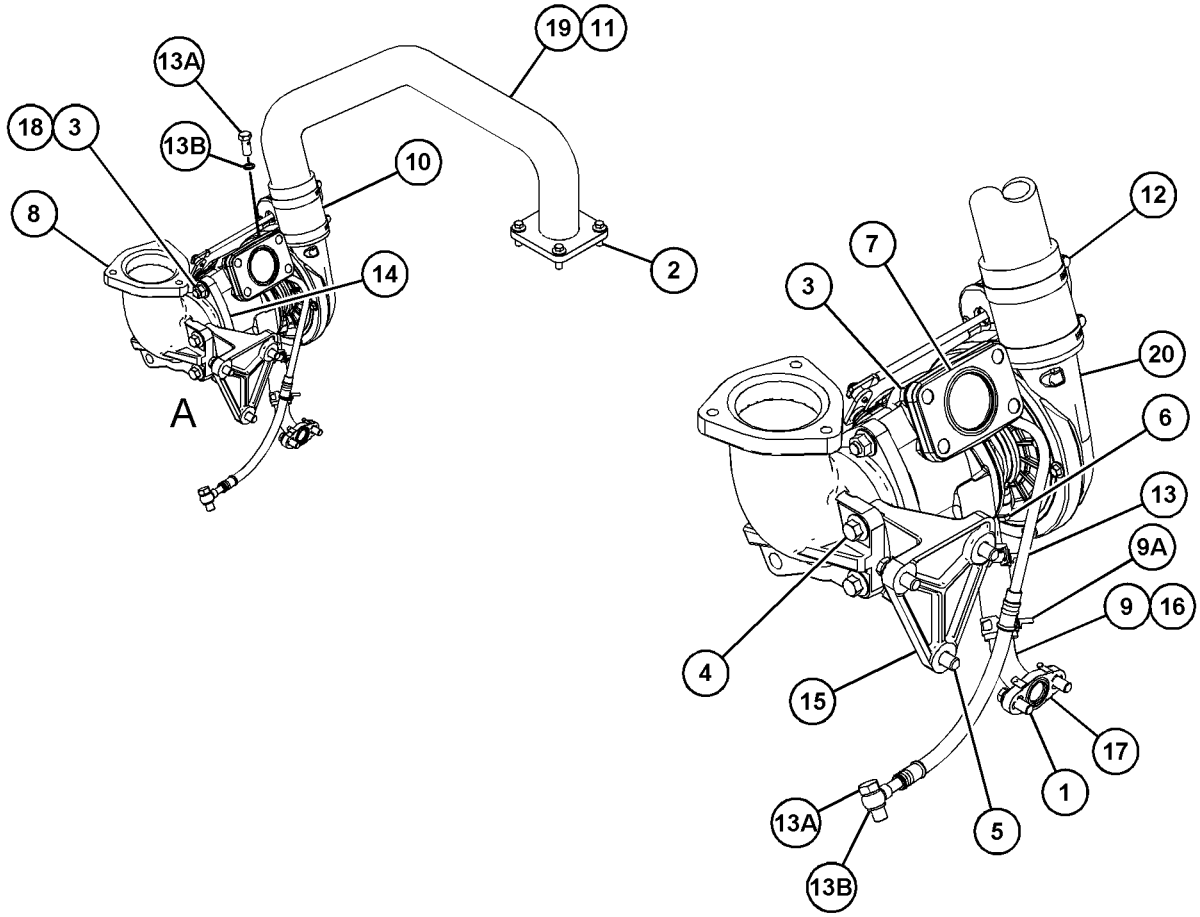

VIEW OF AREA A

GRAPHIC #1 <END> g06193704

432-6648 TURBOCHARGER GP

PART OF 514-3535 ENGINE AR-PRIMARY

SMCS-1052, 1053 **i07311471**

NOTE	REF NO	GRAPHIC REF	PART NUMBER	QTY	PART NAME 1 2 3 4 5 6 (PRODUCT LEVEL)	SEE PAGE
	1	1	**353-3477**	1	GASKET-TURBOCHARGER	
	2	1	**353-3478**	1	GASKET-TURBOCHARGER	
M	3	1	**6I-0593**	2	BOLT (M10X1.5X30-MM)	
M	4	1	**6I-0654**	3	BOLT (M10X1.5X25-MM)	
M	5	1	**106-8916**	2	BOLT (M6X16-MM)	
	6	1	**194-5390**	1	GASKET-MANIFOLD	
	7	1	**227-4562**	1	ELBOW-EXHAUST	
	8	1	**301-8255**	1	TUBE AS	
	8A	1	**225-8524**	2	BOLT-SPECIAL	
	8B	1	**225-8526**	4	WASHER (10.4X13.75X1.37-MM THK)	
	9	1	**302-0581**	1	ADAPTER-EXHAUST	
	10	1	**307-2805**	1	BRACKET	
	11	1	**488-1830**	1	TURBOCHARGER	
		1	**487-8468**	1	RING	
		1	**487-8469**	1	HOSE	
		1	**487-8470**	2	CLIP	
	12	1	**507-5019**	1	LINE AS-OIL	
		1	**269-3086**	2	CLAMP-BAND	
M	13	1	**6I-0217**	2	BOLT (M8X1.25X20-MM)	
M	14	1	**6I-0563**	7	NUT (M10X1.5-THD)	
	15	1	**361-7519**	3	ROD-THREADED	

M - METRIC PART

432-6648 **TURBOCHARGER GP (**contd.**)** **i07311471**

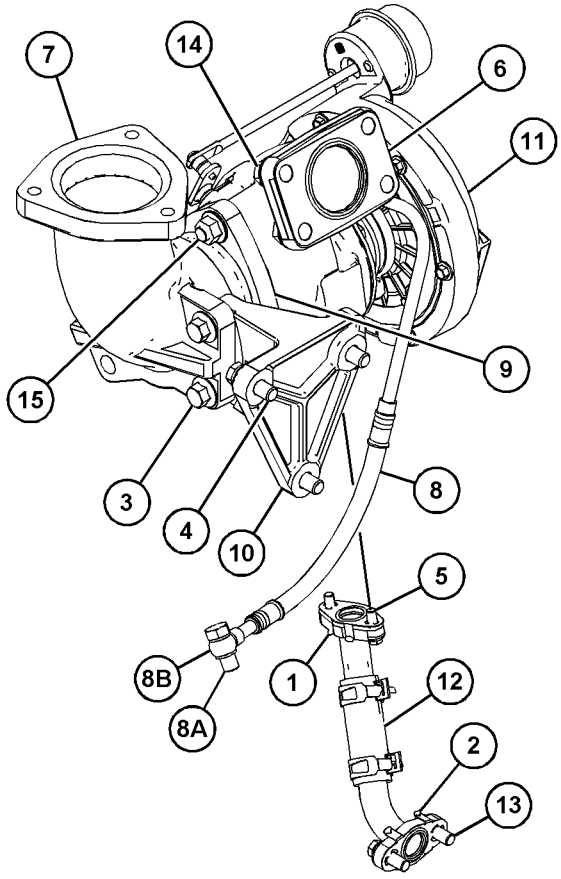

GRAPHIC #1 <END> g06299750

432-6655 TURBOCHARGER GP

PART OF 463-8848, 491-2522 ENGINE AR-PRIMARY

SMCS-1052, 1053 **i06948898**

NOTE	REF NO	GRAPHIC REF	PART NUMBER	QTY	PART NAME 1 2 3 4 5 6 (PRODUCT LEVEL)	SEE PAGE
M	1	1	**6I-0217**	2	BOLT (M8X1.25X20-MM)	
M	2	1	**6I-0563**	4	NUT (M10X1.5-THD)	
M	3	1	**106-8916**	2	BOLT (M6X16-MM)	
	4	1	**194-5390**	1	GASKET-MANIFOLD	
	5	1	**298-4566**	1	TUBE AS	
	5A	1	**225-8524**	2	BOLT-SPECIAL	
	5B	1	**225-8526**	4	WASHER (10.4X13.75X1.37-MM THK)	
	6	1	**507-5015**	1	LINE AS	
	6A	1	**269-3086**	2	CLAMP-BAND	
	7	1	**353-3477**	1	GASKET-TURBOCHARGER	
	8	1	**353-3478**	1	GASKET-TURBOCHARGER	
	9	1	**488-1831**	1	TURBOCHARGER	
	9A	1	**487-8468**	1	RING	
	9B	1	**487-8469**	1	HOSE	
	9C	1	**487-8470**	2	CLIP	

M - METRIC PART

432-6655 **TURBOCHARGER GP (**contd.**)** **i06948898**

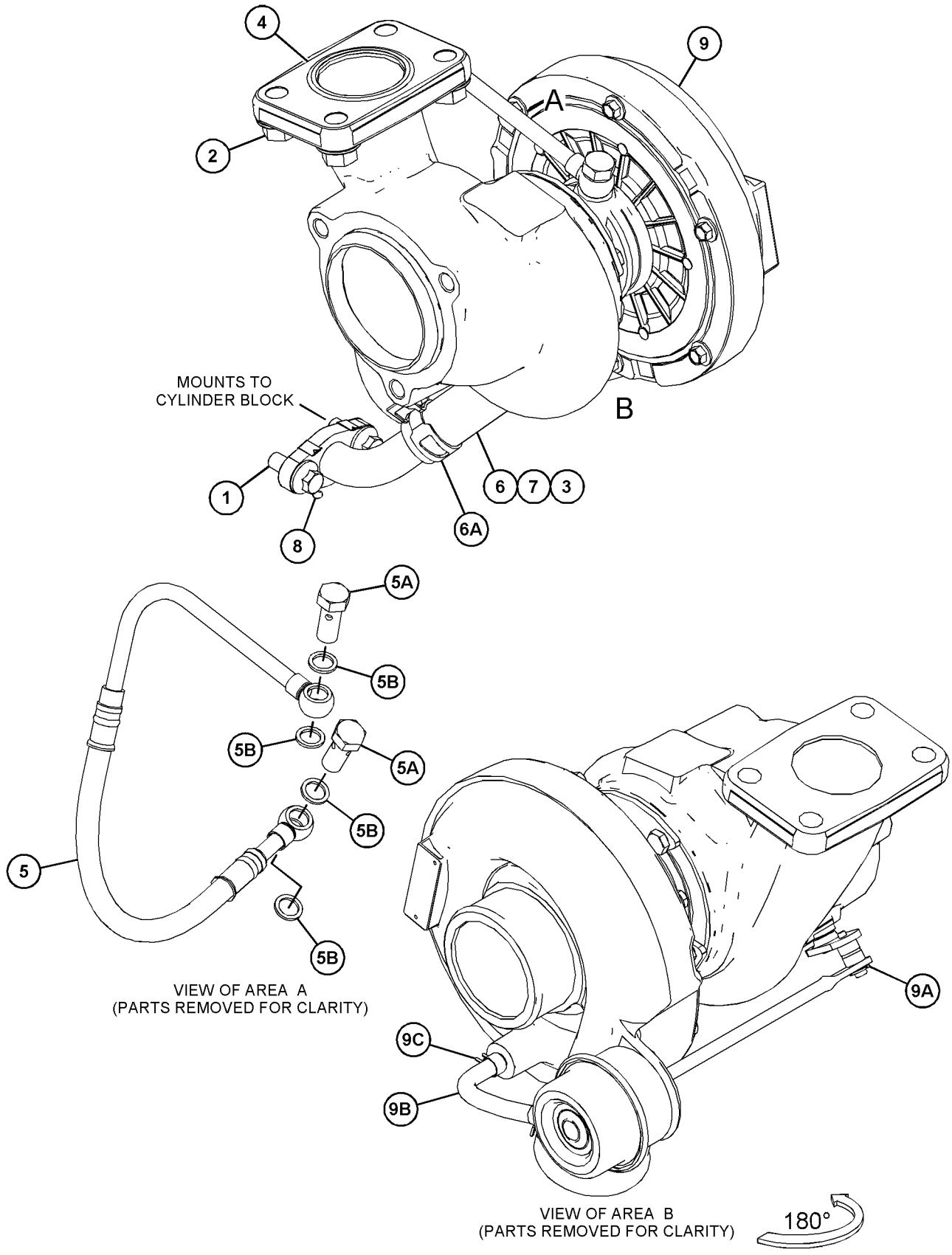

GRAPHIC #1 <END> g06212728

432-6656 TURBOCHARGER GP

PART OF 509-5882 ENGINE AR-PRIMARY

TYPE 1

SMCS-1052, 1053 **i06987907**

NOTE	REF NO	GRAPHIC REF	PART NUMBER	QTY	PART NAME 1 2 3 4 5 6 (PRODUCT LEVEL)	SEE PAGE
	1	1	**353-3477**	1	GASKET-TURBOCHARGER	
	2	1	**353-3478**	1	GASKET-TURBOCHARGER	
M	3	1	**106-8916**	2	BOLT (M6X16-MM)	
	4	1	**194-5390**	1	GASKET-MANIFOLD	
	5	1	**232-6189**	1	TUBE AS	
	6	1	**301-8255**	1	TUBE AS	
	6A	1	**225-8524**	2	BOLT-SPECIAL	
	6B	1	**225-8526**	4	WASHER (10.4X13.75X1.37-MM THK)	
	7	1	**482-0237**	1	TURBOCHARGER	
	7A	1	**487-8468**	1	RING	
	7B	1	**487-8469**	1	HOSE	
	7C	1	**487-8470**	2	CLIP	
M	8	1	**6I-0217**	2	BOLT (M8X1.25X20-MM)	
M	9	1	**6I-0563**	4	NUT (M10X1.5-THD)	

M - METRIC PART

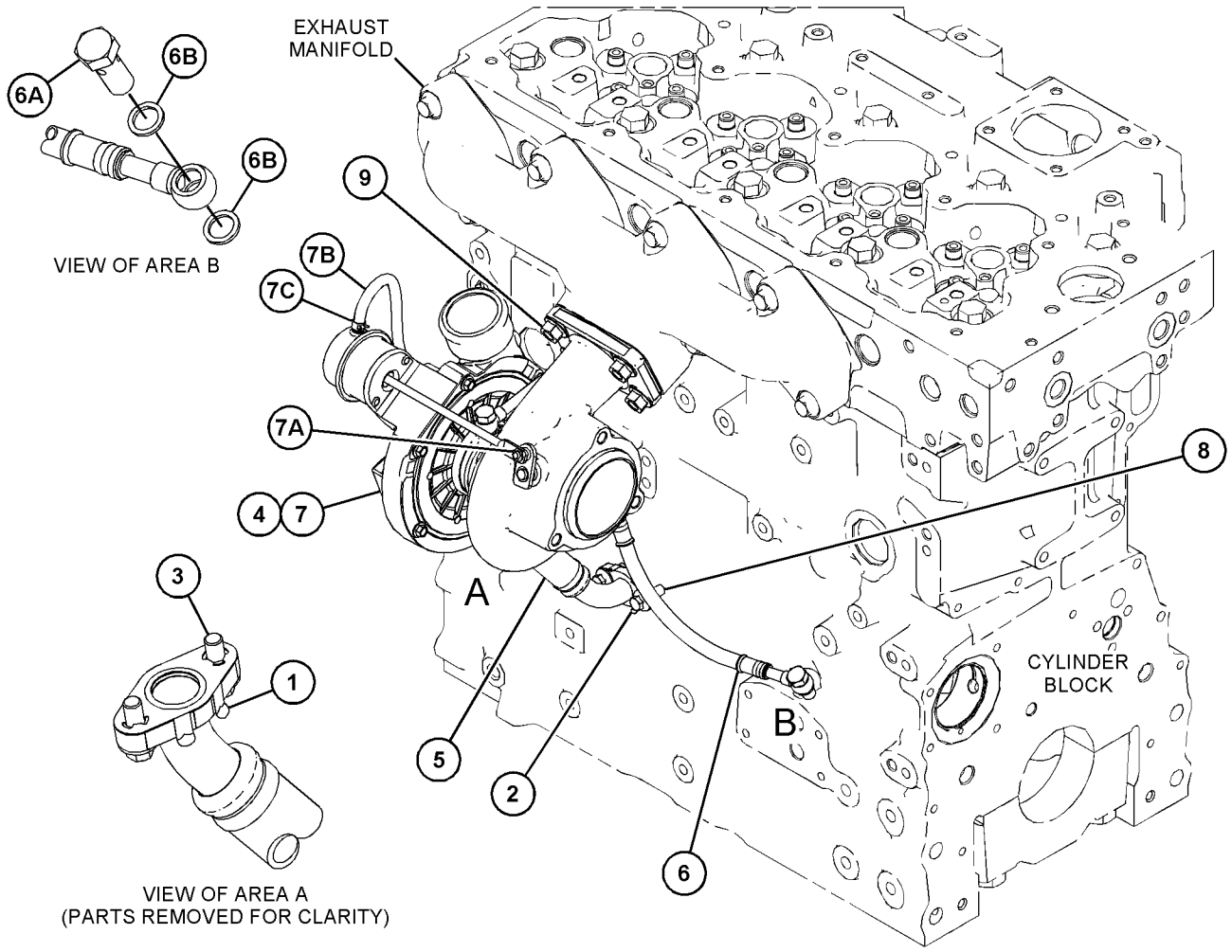

GRAPHIC #1 <END> g06191760

432-6656 TURBOCHARGER GP

PART OF 509-5882 ENGINE AR-PRIMARY

TYPE 2

SMCS-1052, 1053 **i07021100**

NOTE	REF NO	GRAPHIC REF	PART NUMBER	QTY	PART NAME 1 2 3 4 5 6 (PRODUCT LEVEL)	SEE PAGE
	1	1	**353-3477**	1	GASKET-TURBOCHARGER	
	2	1	**353-3478**	1	GASKET-TURBOCHARGER	
M	3	1	**106-8916**	2	BOLT (M6X16-MM)	
	4	1	**194-5390**	1	GASKET-MANIFOLD	
C	5	1	**507-5019**	1	LINE AS-OIL	
	5A	1	**269-3086**	2	CLAMP-BAND	
	6	1	**301-8255**	1	TUBE AS	
	6A	1	**225-8524**	2	BOLT-SPECIAL	
	6B	1	**225-8526**	4	WASHER (10.4X13.75X1.37-MM THK)	
	7	1	**482-0237**	1	TURBOCHARGER	
	7A	1	**487-8468**	1	RING	
	7B	1	**487-8469**	1	HOSE	
	7C	1	**487-8470**	2	CLIP	
M	8	1	**6I-0217**	2	BOLT (M8X1.25X20-MM)	
M	9	1	**6I-0563**	4	NUT (M10X1.5-THD)	

C - CHANGE FROM PREVIOUS TYPE
M - METRIC PART

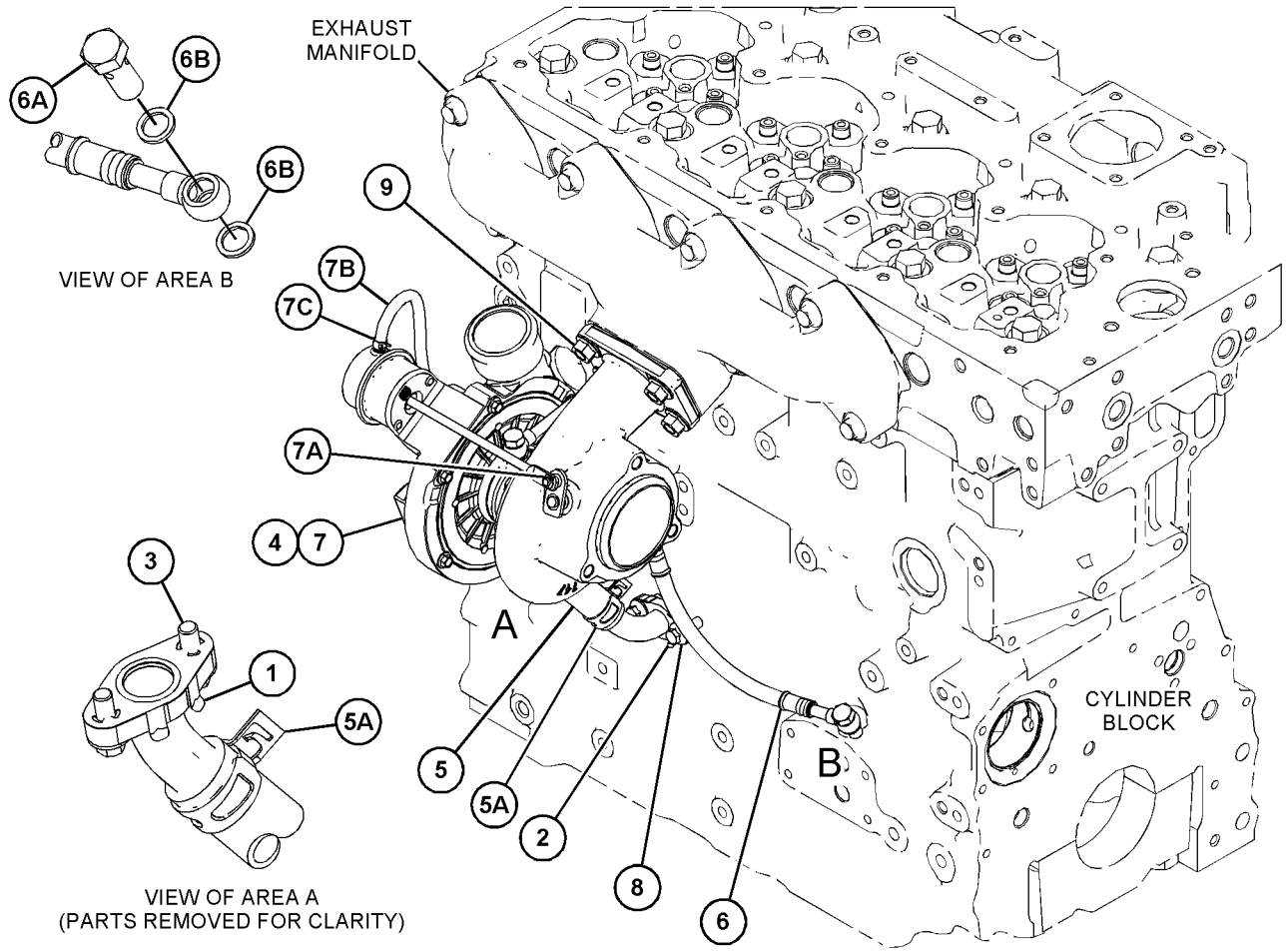

GRAPHIC #1 <END> g06199643

432-6662 TURBOCHARGER GP

PART OF 541-2728 ENGINE AR-PRIMARY

SMCS-1052, 1053 **i07236289**

NOTE	REF NO	GRAPHIC REF	PART NUMBER	QTY	PART NAME 1 2 3 4 5 6 (PRODUCT LEVEL)	SEE PAGE
	1	1	**353-3477**	1	GASKET-TURBOCHARGER	
	2	1	**353-3478**	1	GASKET-TURBOCHARGER	
M	3	1	**106-8916**	2	BOLT (M6X16-MM)	
	4	1	**194-5390**	1	GASKET-MANIFOLD	
	5	1	**298-4566**	1	TUBE AS	
	5A	1	**225-8524**	2	BOLT-SPECIAL	
	5B	1	**225-8526**	4	WASHER (10.4X13.75X1.37-MM THK)	
	6	1	**507-5015**	1	LINE AS	
	6A	1	**269-3086**	2	CLAMP-BAND	
	7	1	**482-0236**	1	TURBOCHARGER	
	7A	1	**487-8468**	1	RING	
	7B	1	**487-8469**	1	HOSE	
	7C	1	**487-8470**	2	CLIP	
M	8	1	**6I-0217**	2	BOLT (M8X1.25X20-MM)	
M	9	1	**6I-0563**	4	NUT (M10X1.5-THD)	

M - METRIC PART

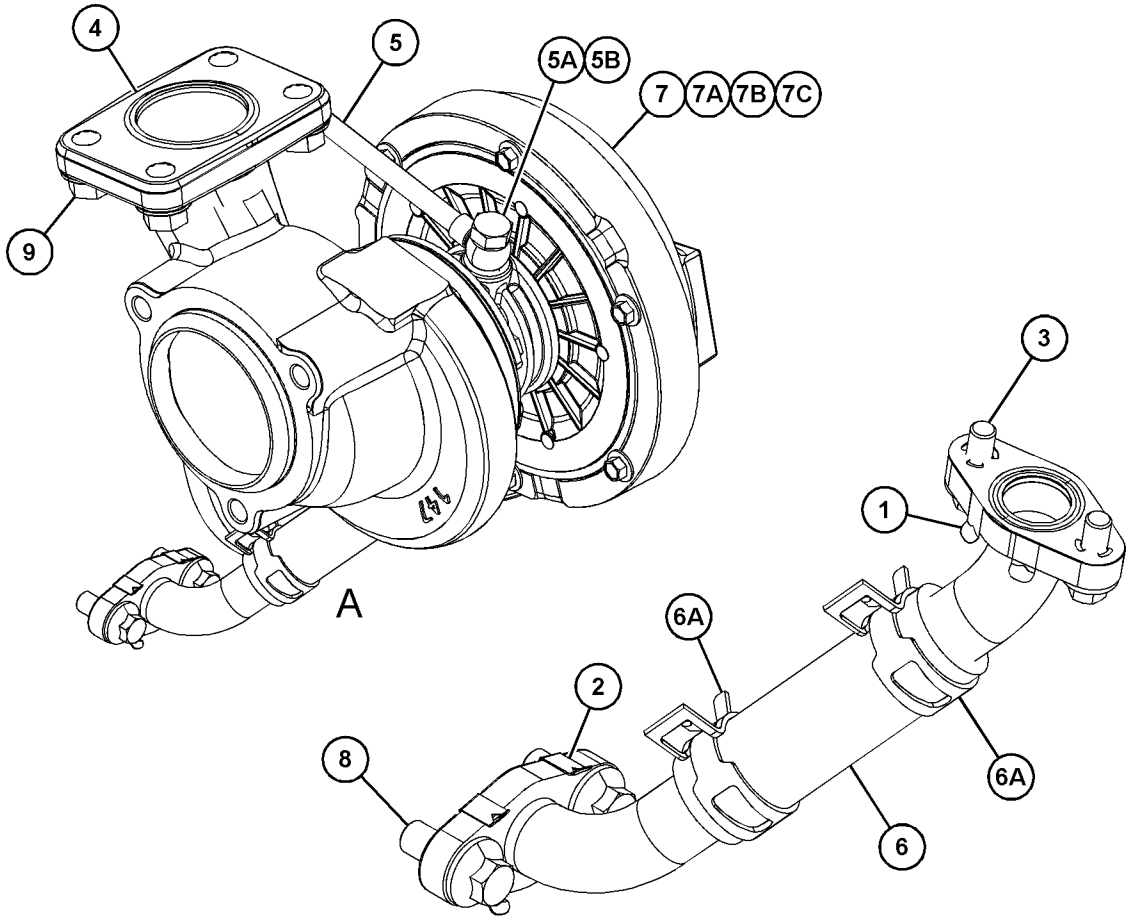

VIEW OF AREA A
(PARTS REMOVED FOR CLARITY)

GRAPHIC #1 <END> g06262486

432-6668 TURBOCHARGER GP

PART OF 484-2343, 492-3118, 503-1940, 504-3645, 538-5357 ENGINE AR-PRIMARY

SMCS-1052, 1053

i06948920

NOTE	REF NO	GRAPHIC REF	PART NUMBER	QTY	PART NAME 1 2 3 4 5 6 (PRODUCT LEVEL)	SEE PAGE
M	1	1	**6I-0217**	2	BOLT (M8X1.25X20-MM)	
M	2	1	**6I-0563**	7	NUT (M10X1.5-THD)	
M	3	1	**6I-0593**	2	BOLT (M10X1.5X30-MM)	
M	4	1	**6I-0654**	3	BOLT (M10X1.5X25-MM)	
M	5	1	**106-8916**	2	BOLT (M6X16-MM)	
	6	1	**194-5390**	1	GASKET-MANIFOLD	
	7	1	**227-4562**	1	ELBOW-EXHAUST	
	8	1	**298-4566**	1	TUBE AS	
	8A	1	**225-8524**	2	BOLT-SPECIAL	
	8B	1	**225-8526**	4	WASHER (10.4X13.75X1.37-MM THK)	
	9	1	**507-5015**	1	LINE AS	
	9A	1	**269-3086**	2	CLAMP-BAND	
	10	1	**302-0581**	1	ADAPTER-EXHAUST	
	11	1	**314-3723**	1	BRACKET	
	12	1	**353-3477**	1	GASKET-TURBOCHARGER	
	13	1	**353-3478**	1	GASKET-TURBOCHARGER	
	14	1	**361-7519**	3	ROD-THREADED	
	15	1	**482-0236**	1	TURBOCHARGER	

M - METRIC PART

432-6668 **TURBOCHARGER GP (**contd.**)** **i06948920**

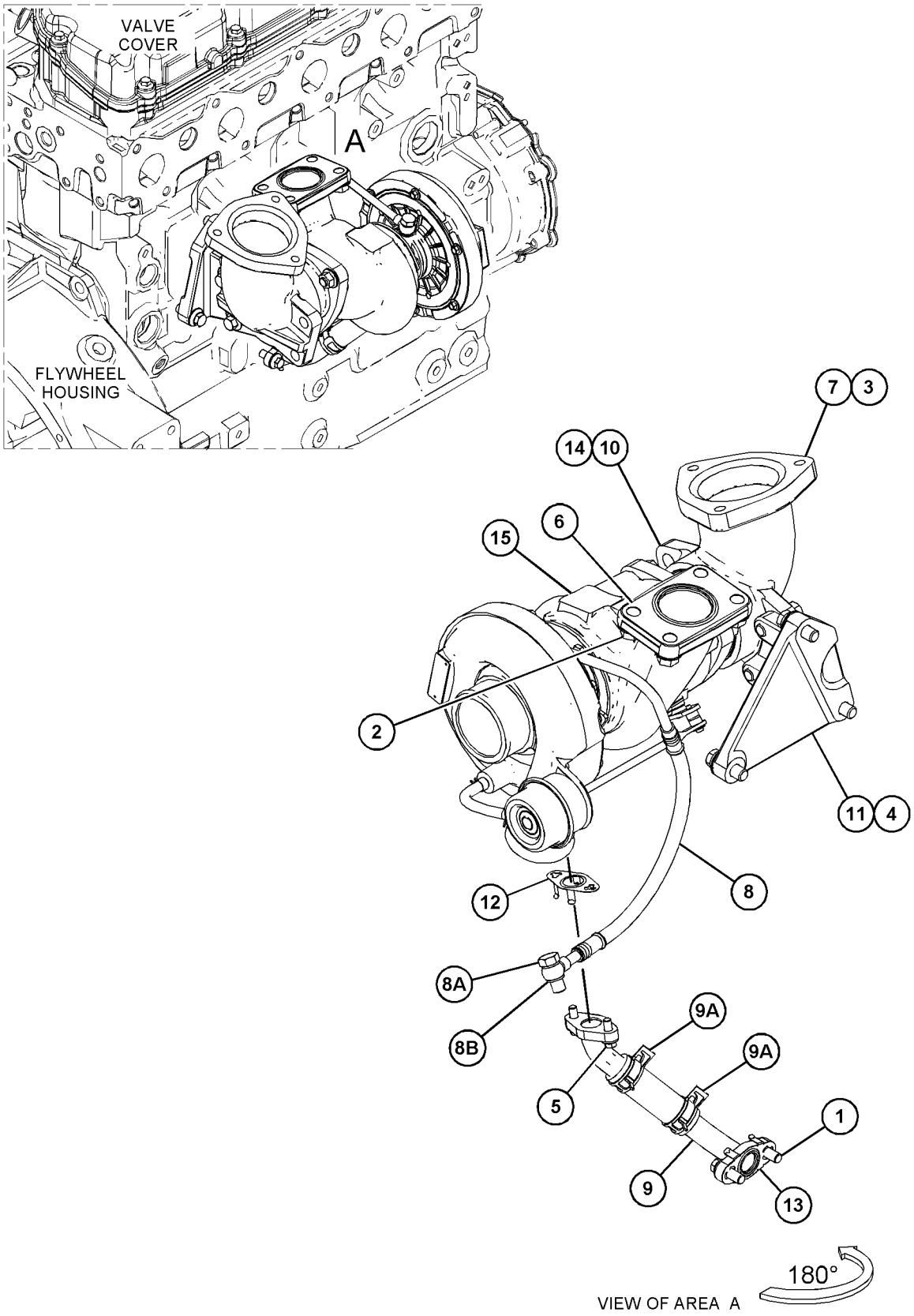

GRAPHIC #1 <END> g06204862

444-8091 TURBOCHARGER GP

PART OF 466-4382, 469-1048, 477-2657, 484-1469 ENGINE AR-PRIMARY

SMCS-1052, 1053 **i06948033**

NOTE	REF NO	GRAPHIC REF	PART NUMBER	QTY	PART NAME 1 2 3 4 5 6 (PRODUCT LEVEL)	SEE PAGE
M	1	1	**6I-0217**	2	BOLT (M8X1.25X20-MM)	
M	2	1	**6I-0563**	4	NUT (M10X1.5-THD)	
M	3	1	**106-8916**	2	BOLT (M6X16-MM)	
	4	1	**194-5390**	1	GASKET-MANIFOLD	
	5	1	**298-4566**	1	TUBE AS	
	5A	1	**225-8524**	2	BOLT-SPECIAL	
	5B	1	**225-8526**	4	WASHER (10.4X13.75X1.37-MM THK)	
	6	1	**507-5015**	1	LINE AS	
	6A	1	**269-3086**	2	CLAMP-BAND	
	7	1	**353-3477**	1	GASKET-TURBOCHARGER	
	8	1	**353-3478**	1	GASKET-TURBOCHARGER	
	9	1	**482-0233**	1	TURBOCHARGER	

M - METRIC PART

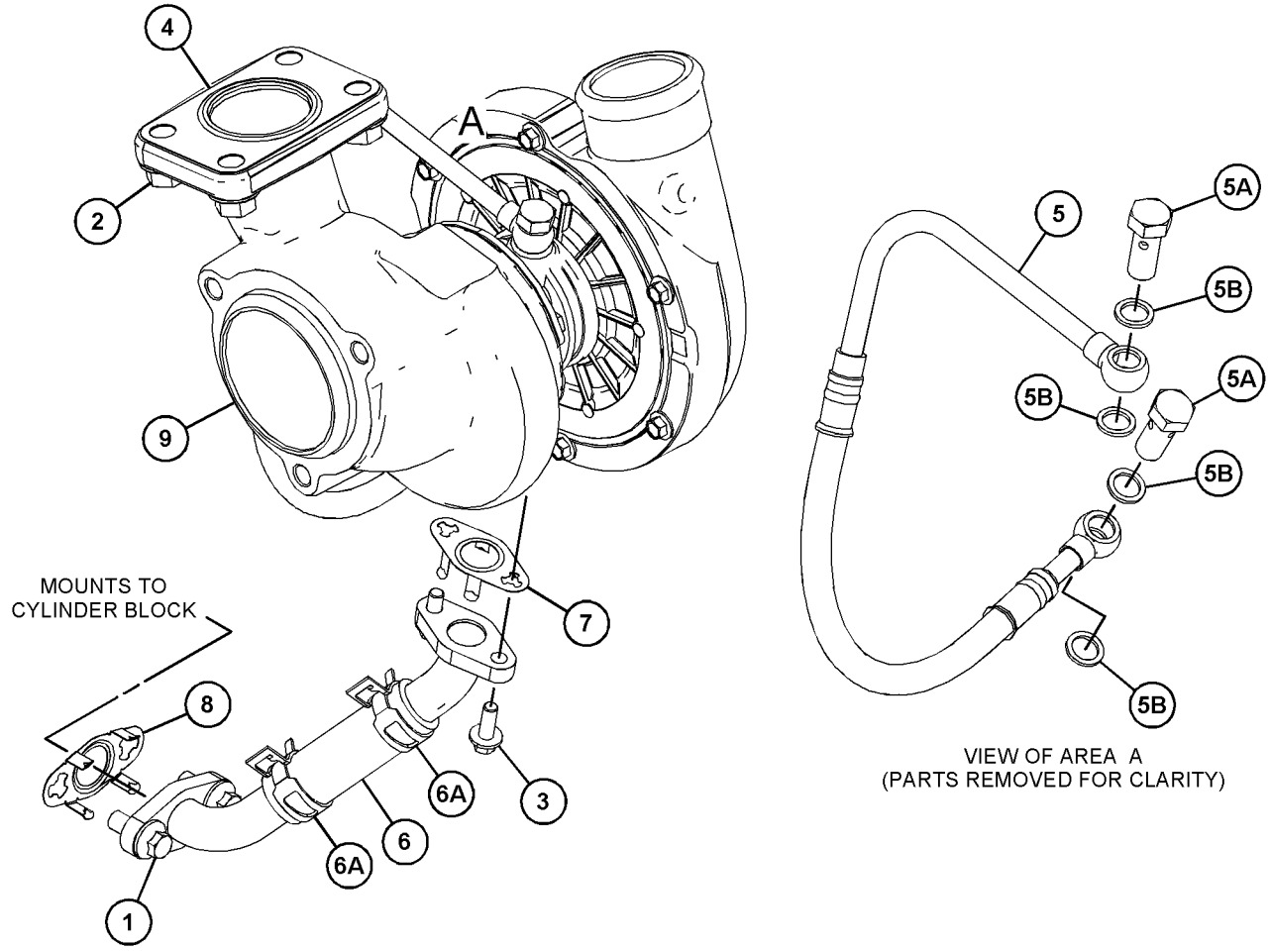

GRAPHIC #1 <END> g06187748

444-8106 TURBOCHARGER GP

PART OF 495-9687 ENGINE AR-PRIMARY

SMCS-1052, 1053 **i06721831**

NOTE	REF NO	GRAPHIC REF	PART NUMBER	QTY	PART NAME 1 2 3 4 5 6 (PRODUCT LEVEL)	SEE PAGE
M	1	1	**6I-0217**	2	BOLT (M8X1.25X20-MM)	
M	2	1	**6I-0563**	4	NUT (M10X1.5-THD)	
M	3	1	**6I-0593**	1	BOLT (M10X1.5X30-MM)	
M	4	1	**6I-0654**	1	BOLT (M10X1.5X25-MM)	
M	5	1	**106-8916**	2	BOLT (M6X16-MM)	
	6	1	**123-4038**	1	SPACER	
	7	1	**172-4325**	1	SPACER	
	8	1	**194-5390**	1	GASKET-MANIFOLD	
	9	1	**303-5787**	1	TUBE AS-TURBOCHARGER OIL (DRAIN)	
		1	**103-2135**	1	CLIP	
	10	1	**353-3477**	1	GASKET-TURBOCHARGER	
	11	1	**353-3478**	1	GASKET-TURBOCHARGER	
	12	1	**383-8543**	1	TUBE AS-TURBOCHARGER OIL	
		1	**225-8524**	2	BOLT-SPECIAL	
		1	**225-8526**	4	WASHER (10.4X13.75X1.37-MM THK)	
		1	**383-8542**	1	CLIP-PIPE	
	13	1	*482-0234*	1	TURBOCHARGER	
		1	**487-8468**	1	RING	
		1	**487-8469**	1	HOSE	
		1	**487-8470**	1	CLIP	

M - METRIC PART

444-8106 **TURBOCHARGER GP** (contd.) **i06721831**

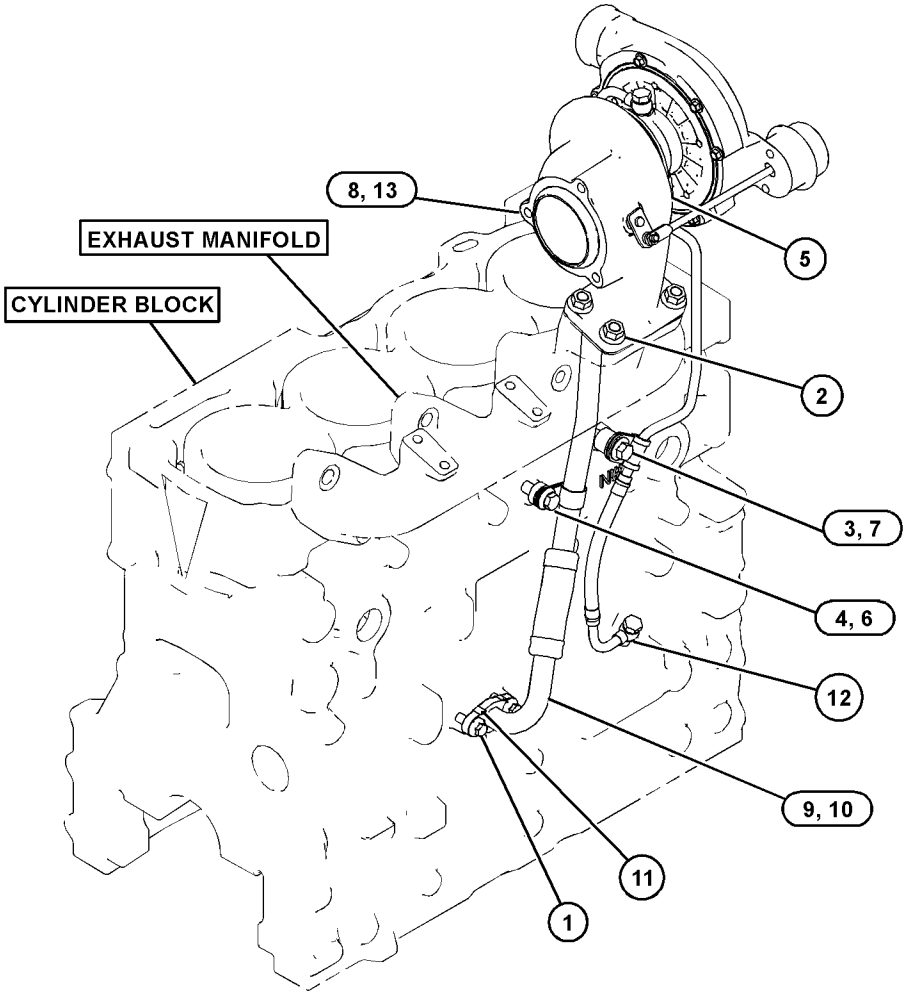

GRAPHIC #1 <END> g03840157

445-1450 TURBOCHARGER GP

PART OF 455-9378, 461-3168, 467-7465, 475-8294, 480-6065, 486-2471, 495-3005, 500-8128, 502-7230, 508-4399, 509-3109, 509-5884, 510-0902, 512-9838, 512-9884, 514-3537, 517-0058, 526-8847, 539-3889 ENGINE AR-PRIMARY

SMCS-1052, 1053 **i06948883**

NOTE	REF NO	GRAPHIC REF	PART NUMBER	QTY	PART NAME 1 2 3 4 5 6 (PRODUCT LEVEL)	SEE PAGE
M	1	1	**6I-0217**	2	BOLT (M8X1.25X20-MM)	
M	2	1	**6I-0563**	7	NUT (M10X1.5-THD)	
M	3	1	**6I-0593**	2	BOLT (M10X1.5X30-MM)	
M	4	1	**6I-0654**	3	BOLT (M10X1.5X25-MM)	
M	5	1	**106-8916**	2	BOLT (M6X16-MM)	
	6	1	**194-5390**	1	GASKET-MANIFOLD	
	7	1	**227-4562**	1	ELBOW-EXHAUST	
	8	1	**507-5019**	1	LINE AS-OIL	
	8A	1	**269-3086**	2	CLAMP-BAND	
	9	1	**301-8255**	1	TUBE AS	
	9A	1	**225-8524**	2	BOLT-SPECIAL	
	9B	1	**225-8526**	4	WASHER (10.4X13.75X1.37-MM THK)	
	10	1	**302-0581**	1	ADAPTER-EXHAUST	
	11	1	**307-2805**	1	BRACKET	
	12	1	**353-3477**	1	GASKET-TURBOCHARGER	
	13	1	**353-3478**	1	GASKET-TURBOCHARGER	
	14	1	**361-7519**	3	ROD-THREADED	
	15	1	**482-0235**	1	TURBOCHARGER	

M - METRIC PART

445-1450 **TURBOCHARGER GP (**contd.**)** **i06948883**

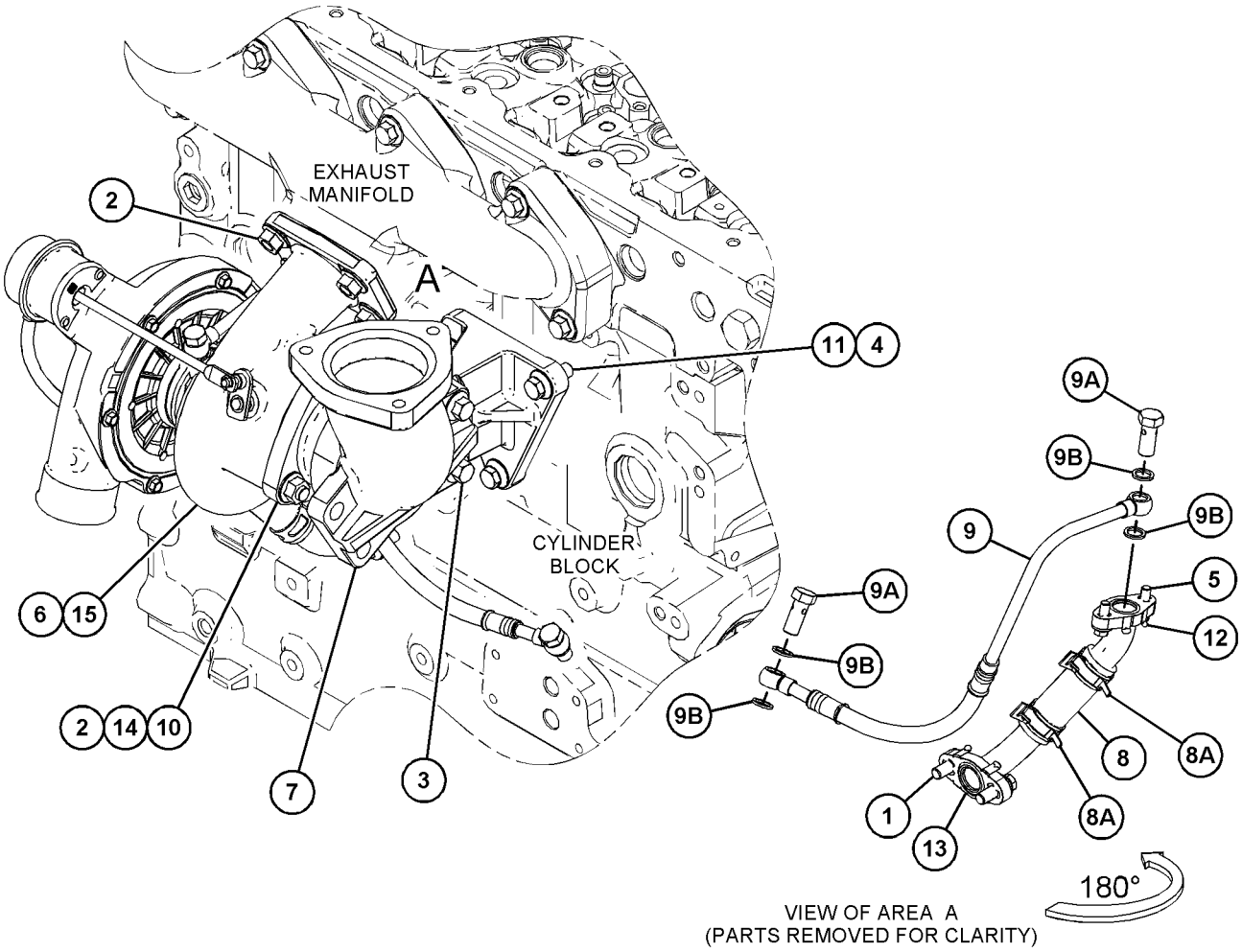

GRAPHIC #1 <END> g06204978

445-1452 TURBOCHARGER GP

PART OF 492-3115, 504-3628 ENGINE AR-PRIMARY

SMCS-1052, 1053 **i06950253**

NOTE	REF NO	GRAPHIC REF	PART NUMBER	QTY	PART NAME 1 2 3 4 5 6 (PRODUCT LEVEL)	SEE PAGE
M	1	2	**6I-0217**	2	BOLT (M8X1.25X20-MM)	
M	2	2	**6I-0563**	7	NUT (M10X1.5-THD)	
M	3	2	**6I-0593**	2	BOLT (M10X1.5X30-MM)	
M	4	2	**6I-0654**	3	BOLT (M10X1.5X25-MM)	
M	5	2	**106-8916**	2	BOLT (M6X16-MM)	
	6	1	**194-5390**	1	GASKET-MANIFOLD	
	7	2	**227-4562**	1	ELBOW-EXHAUST	
	8	2	**298-4566**	1	TUBE AS	
	8A	1,2	**225-8524**	2	BOLT-SPECIAL	
	8B	1,2	**225-8526**	4	WASHER (10.4X13.75X1.37-MM THK)	
	9	2	**507-5015**	1	LINE AS	
	9A	2	**269-3086**	2	CLAMP-BAND	
	10	2	**302-0581**	1	ADAPTER-EXHAUST	
	11	2	**314-3723**	1	BRACKET	
	12	2	**353-3477**	1	GASKET-TURBOCHARGER	
	13	2	**353-3478**	1	GASKET-TURBOCHARGER	
	14	2	**361-7519**	3	ROD-THREADED	
	15	1	**488-1831**	1	TURBOCHARGER	
	15A	2	**487-8468**	1	RING	
	15B	2	**487-8469**	1	HOSE	
	15C	2	**487-8470**	2	CLIP	

M - METRIC PART

445-1452 **TURBOCHARGER GP (**contd.**)** **i06950253**

REFER TO ALL ILLUSTRATIONS OF
THIS GROUP FOR AUXILIARY VIEWS

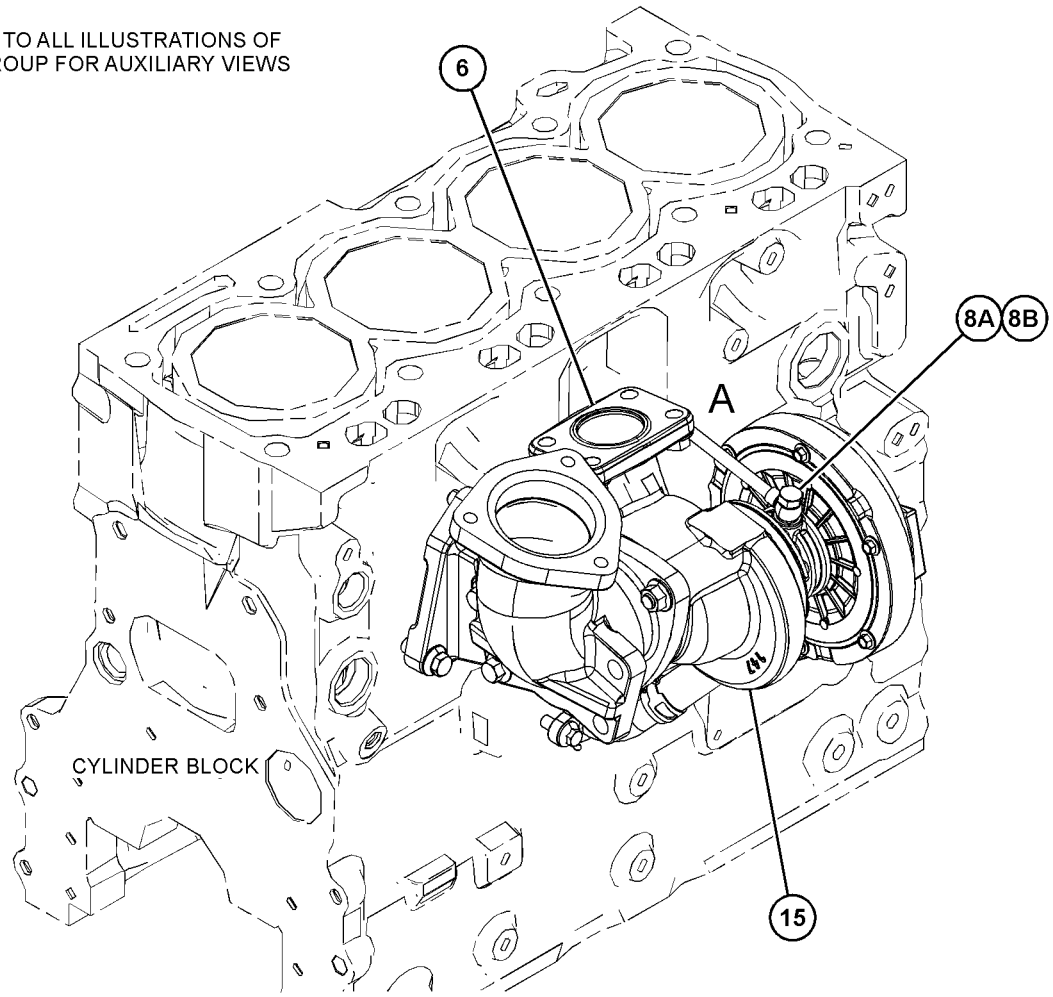

GRAPHIC #1 g06205011

445-1452 **TURBOCHARGER GP (**contd.**)** **i06950253**

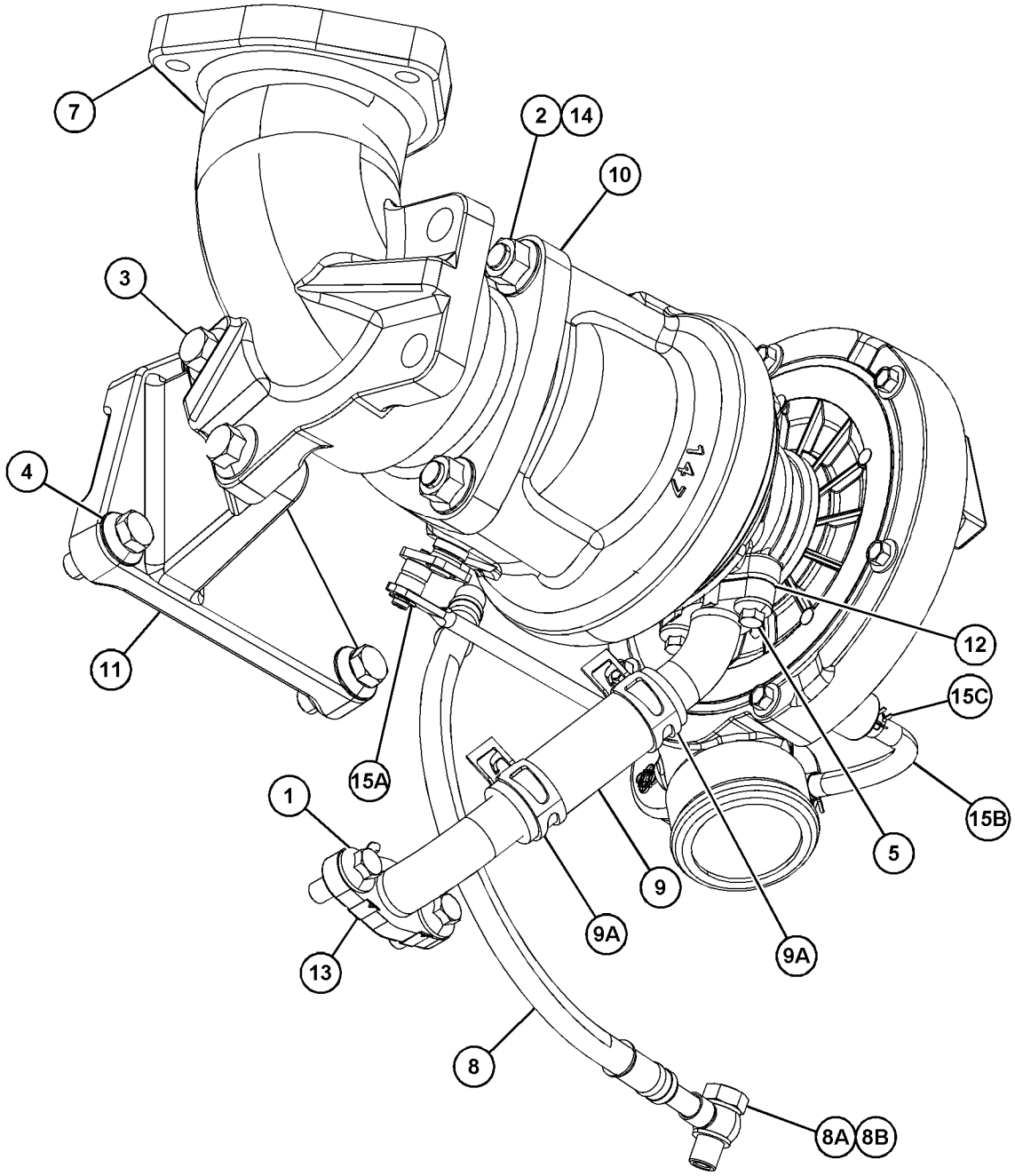

VIEW OF AREA A
(VIEWED FROM BOTTOM)

GRAPHIC #2 <END> g06205012

448-4912 TURBOCHARGER GP

SMCS-1052, 1053 **i06948951**

NOTE	REF NO	GRAPHIC REF	PART NUMBER	QTY	PART NAME 1 2 3 4 5 6 (PRODUCT LEVEL)	SEE PAGE
M	1	1	**6I-0217**	2	BOLT (M8X1.25X20-MM)	
M	2	1	**6I-0260**	4	BOLT (M8X1.25X25-MM)	
M	3	1	**6I-0563**	4	NUT (M10X1.5-THD)	
M	4	1	**106-8916**	2	BOLT (M6X16-MM)	
	5	1	**194-5390**	1	GASKET-MANIFOLD	
	6	1	**507-5019**	1	LINE AS-OIL	
	6A	1	**269-3086**	2	CLAMP-BAND	
	7	1	**234-3029**	1	HOSE	
	8	1	**492-3310**	1	GASKET	
	9	1	**266-7092**	2	CLAMP-HOSE	
	10	1	**301-8255**	1	TUBE AS	
	10A	1	**225-8524**	2	BOLT-SPECIAL	
	10B	1	**225-8526**	4	WASHER (10.4X13.75X1.37-MM THK)	
	11	1	**353-3477**	1	GASKET-TURBOCHARGER	
	12	1	**353-3478**	1	GASKET-TURBOCHARGER	
	13	1	**436-6285**	1	PIPE AS	
	14	1	**451-4495**	1	TURBOCHARGER	

M - METRIC PART

448-4912 **TURBOCHARGER GP (**contd.**)** **i06948951**

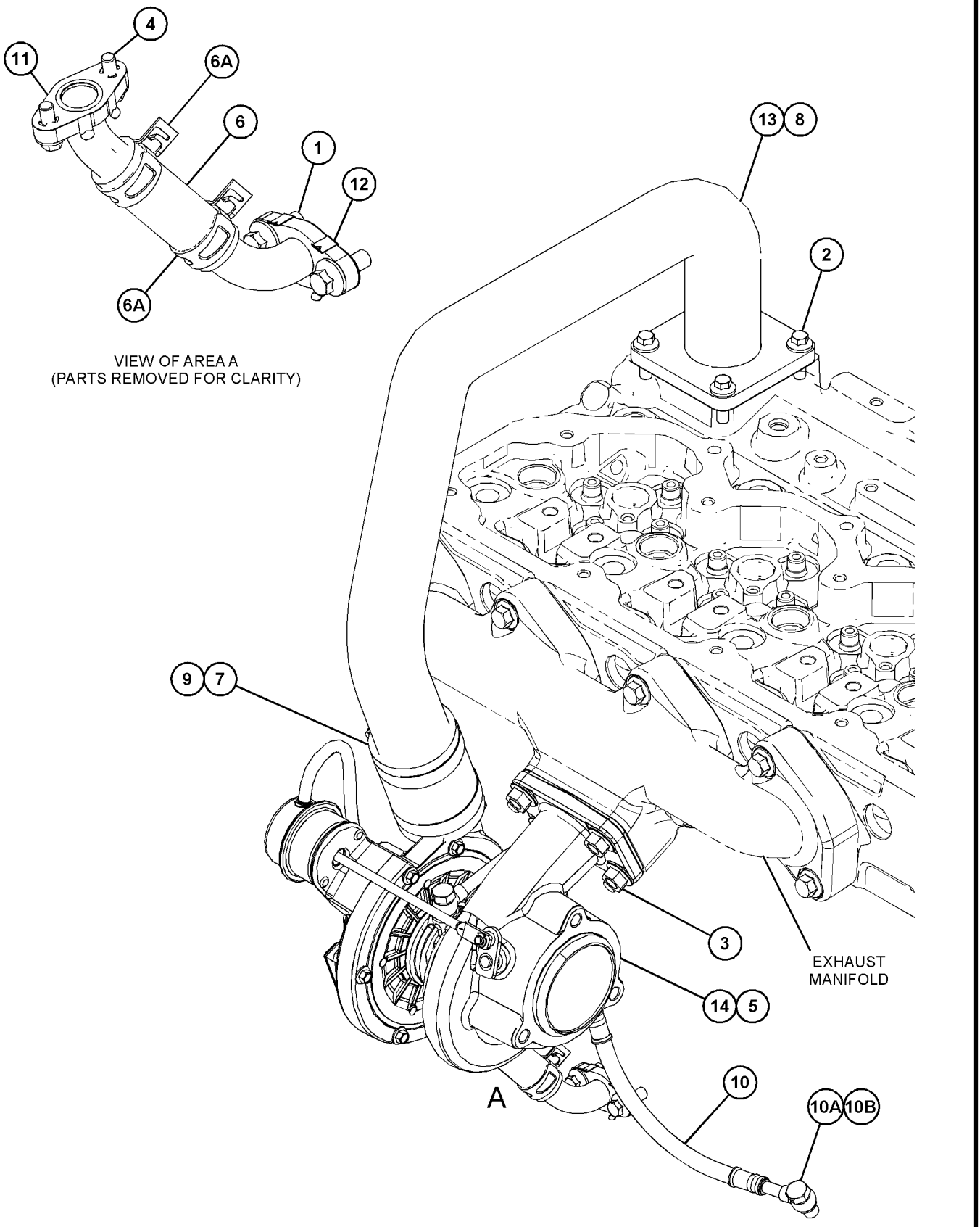

GRAPHIC #1 <END> g06210754

467-7639 TURBOCHARGER GP

PART OF 478-6560, 492-1322, 503-4924, 516-9846, 527-9081 ENGINE AR-PRIMARY

SMCS-1052, 1053 **i06948011**

NOTE	REF NO	GRAPHIC REF	PART NUMBER	QTY	PART NAME 1 2 3 4 5 6 (PRODUCT LEVEL)	SEE PAGE
M	1	1	**6I-0217**	2	BOLT (M8X1.25X20-MM)	
M	2	1	**6I-0563**	7	NUT (M10X1.5-THD)	
M	3	1	**6I-0593**	2	BOLT (M10X1.5X30-MM)	
M	4	1	**6I-0654**	3	BOLT (M10X1.5X25-MM)	
M	5	1	**106-8916**	2	BOLT (M6X16-MM)	
	6	1	**194-5390**	1	GASKET-MANIFOLD	
	7	1	**227-4562**	1	ELBOW-EXHAUST	
	8	1	**507-5019**	1	LINE AS-OIL	
	8A	1	**269-3086**	2	CLAMP-BAND	
	9	1	**301-8255**	1	TUBE AS	
	9A	1	**225-8524**	2	BOLT-SPECIAL	
	9B	1	**225-8526**	4	WASHER (10.4X13.75X1.37-MM THK)	
	10	1	**302-0581**	1	ADAPTER-EXHAUST	
	11	1	**307-2805**	1	BRACKET	
	12	1	**353-3477**	1	GASKET-TURBOCHARGER	
	13	1	**353-3478**	1	GASKET-TURBOCHARGER	
	14	1	**361-7519**	3	ROD-THREADED	
	15	1	**464-3034**	1	TURBOCHARGER	

M - METRIC PART

467-7639 **TURBOCHARGER GP (**contd.**)** **i06948011**

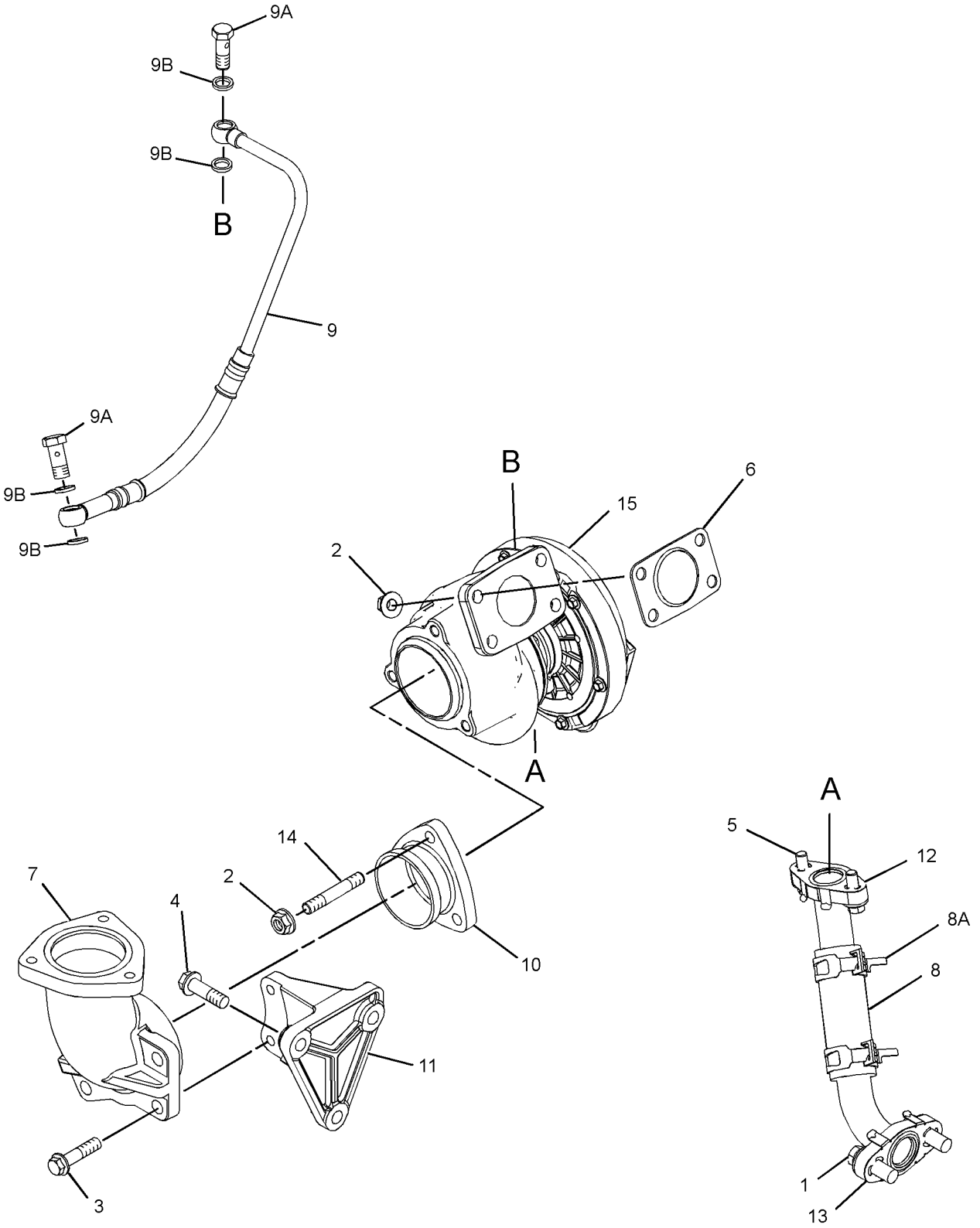

GRAPHIC #1 <END> g06182476

483-1194 FILTER & LINES GP-FUEL

PART OF 486-2471 ENGINE AR-PRIMARY

SMCS-1261, 1274 **i06725443**

NOTE	REF NO	GRAPHIC REF	PART NUMBER	QTY	PART NAME 1 2 3 4 5 6 (PRODUCT LEVEL)	SEE PAGE
M	1	1	**6I-0654**	1	BOLT (M10X1.5X25-MM)	
M	2	1	**100-4458**	5	BOLT (M8X1.25X14-MM)	
M	3	1	**103-5687**	1	BOLT (M10X1.5X85-MM)	
	4	1	**247-4928**	1	WASHER (16.5X20.5X1.6-MM THK)	
M	5	1	**293-1875**	1	BOLT (M10X1.5X16-MM)	
	6	1	*330-9723*	2	PLUG AS	
					(EACH INCLUDES)	
		1	**228-7100**	1	SEAL-O-RING	
		1	**241-6157**	1	PLUG	
	7	1	**348-0495**	1	WASHER	
	8	1	**356-3986**	4	CONNECTOR AS	
					(EACH INCLUDES)	
		1	**277-4993**	1	SEAL-O-RING	
	9	1	**366-9373**	1	CLIP	
	10	1	**376-9967**	1	CONNECTION-FUEL	
	11	1	**391-2493**	1	CONNECTION-FUEL	
	12	1	**397-8294**	1	LINE AS-FUEL	
	13	1	**432-8576**	1	LINE AS-FUEL	
		1	**398-5905**	3	CLIP	
Y	14	1	**433-1316**	1	LINES GP-FUEL	415
	15	1	**453-6400**	1	LINE AS-FUEL	
	16	1	**456-1364**	1	LINE AS-FUEL	
	16A	1	**277-4993**	1	SEAL-O-RING	
	16B	1	**286-2890**	2	WASHER	
	16C	1	**295-4670**	1	BOLT-SPECIAL (BANJO)	
	17	1	*460-8718*	1	BRACKET AS	
M		1	**159-9540**	2	NUT-WELD (M8X1.25-THD)	
M		1	**159-9541**	2	NUT-WELD (M10X1.5-THD)	
	18	1	**468-5312**	1	BRACKET	
M	19	1	**6I-0217**	2	BOLT (M8X1.25X20-MM)	
	20	1	**311-2732**	3	TIE-CABLE	

M - METRIC PART
Y - SEPARATE ILLUSTRATION

483-1194 **FILTER & LINES GP-FUEL (**contd.**)** **i06725443**

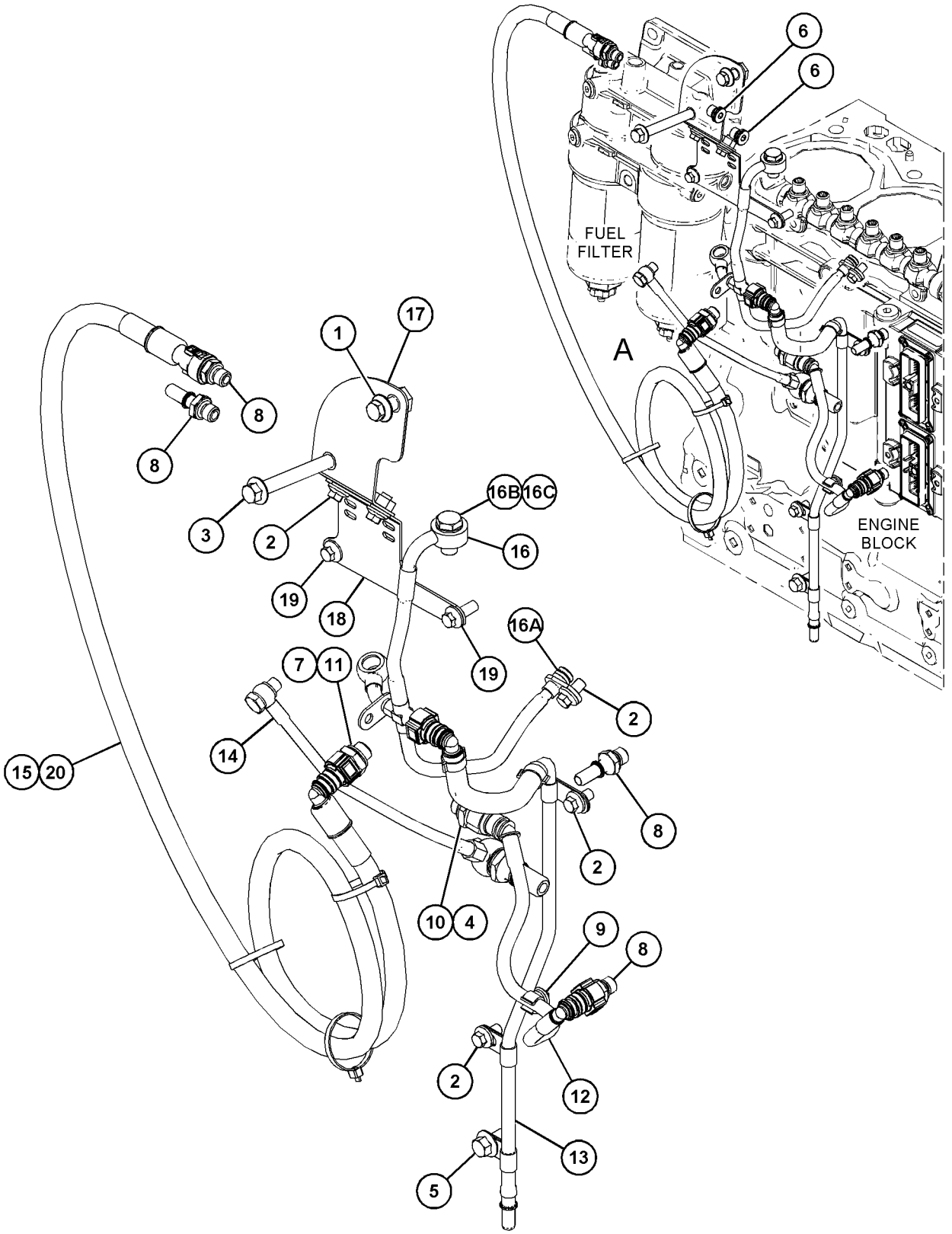

VIEW OF AREA A
(PARTS REMOVED FOR CLARITY)

GRAPHIC #1 <END> g06146981

483-1195 FILTER & LINES GP-FUEL

PART OF 484-2343, 538-5357 ENGINE AR-PRIMARY

SMCS-1261, 1274 **i07416558**

NOTE	REF NO	GRAPHIC REF	PART NUMBER	QTY	PART NAME 1 2 3 4 5 6 (PRODUCT LEVEL)	SEE PAGE
M	1	1	**6I-0654**	1	BOLT (M10X1.5X25-MM)	
M	2	1	**100-4458**	5	BOLT (M8X1.25X14-MM)	
M	3	1	**103-5687**	1	BOLT (M10X1.5X85-MM)	
	4	1	**247-4928**	1	WASHER (16.5X20.5X1.6-MM THK)	
M	5	1	**293-1875**	1	BOLT (M10X1.5X16-MM)	
	6	1	*330-9723*	2	PLUG AS	
					(EACH INCLUDES)	
		1	**228-7100**	1	SEAL-O-RING	
		1	**241-6157**	1	PLUG	
	7	1	**348-0495**	1	WASHER	
	8	1	**356-3986**	4	CONNECTOR AS	
					(EACH INCLUDES)	
		1	**277-4993**	1	SEAL-O-RING	
	9	1	**366-9373**	1	CLIP	
	10	1	**376-9967**	1	CONNECTION-FUEL	
	11	1	**391-2493**	1	CONNECTION-FUEL	
	12	1	**397-8294**	1	LINE AS-FUEL	
	13	1	**432-8576**	1	LINE AS-FUEL	
Y	14	1	**433-1316**	1	LINES GP-FUEL	415
	15	1	**443-2487**	1	LINE AS-FUEL	
	16	1	**456-1364**	1	LINE AS-FUEL	
	16A	1	**277-4993**	1	SEAL-O-RING	
	16B	1	**286-2890**	2	WASHER	
	16C	1	**295-4670**	1	BOLT-SPECIAL (BANJO)	
	17	1	*460-8718*	1	BRACKET AS	
M		1	**159-9540**	2	NUT-WELD (M8X1.25-THD)	
M		1	**159-9541**	2	NUT-WELD (M10X1.5-THD)	
	18	1	**468-5312**	1	BRACKET	
M	19	1	**6I-0217**	2	BOLT (M8X1.25X20-MM)	

M - METRIC PART
Y - SEPARATE ILLUSTRATION

483-1195 **FILTER & LINES GP-FUEL (**contd.**)** **i07416558**

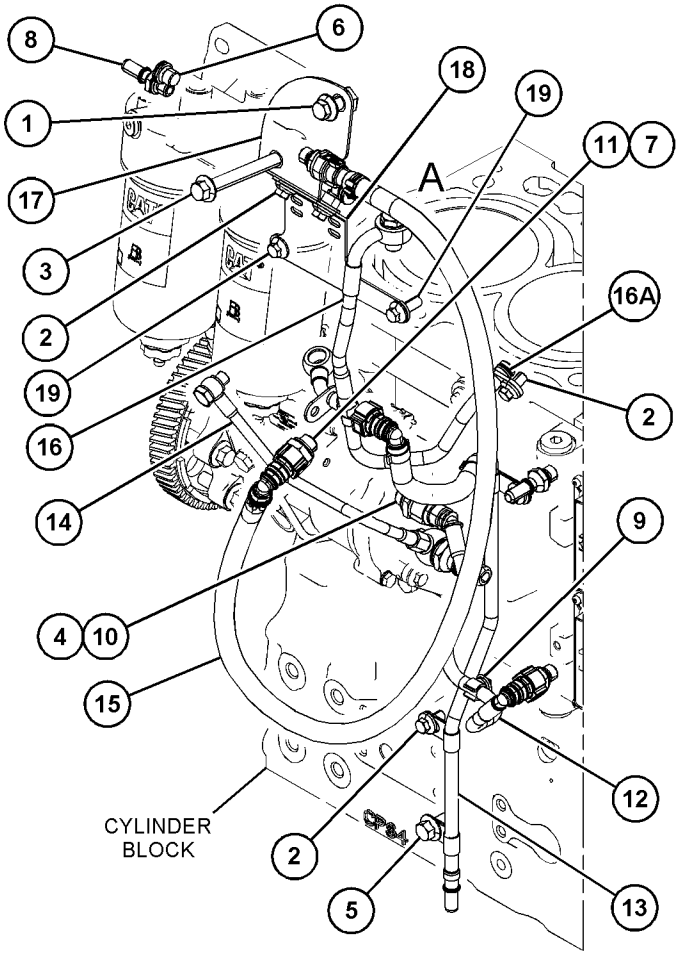

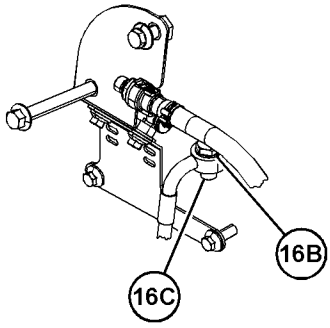

VIEW OF AREA A

GRAPHIC #1 <END> g06151062

360-8958 FILTER GP-FUEL

PART OF 421-5689, 452-8547 FILTER GP-FUEL

SMCS-1261 **i06791538**

NOTE	REF NO	GRAPHIC REF	PART NUMBER	QTY	PART NAME 1 2 3 4 5 6 (PRODUCT LEVEL)	SEE PAGE
	1	1	**360-8960**	1	FILTER ELEMENT-FUEL	
					AVAILABLE REPAIR KIT(S):	
			362-5412	1	KIT-DRAIN (FUEL FILTER)	
					(INCLUDES DRAIN, KNOB, & SEALS)	
			370-8376	1	KIT-FUEL SYSTEM PARTS	

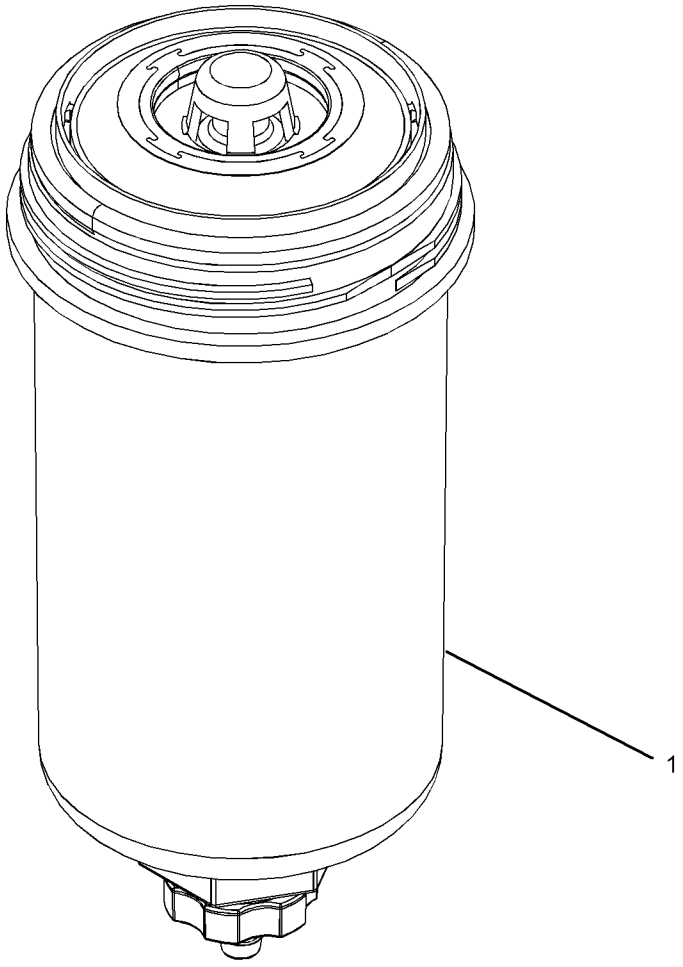

GRAPHIC #1 <END> g03173178

421-3853 FILTER GP-FUEL

PART OF 463-8820, 463-8848, 463-8910, 509-5882 ENGINE AR-PRIMARY

SMCS-1261 **i06284180**

NOTE	REF NO	GRAPHIC REF	PART NUMBER	QTY	PART NAME 1 2 3 4 5 6 (PRODUCT LEVEL)	SEE PAGE
M	1	1	**6I-0593**	2	BOLT (M10X1.5X30-MM)	
M	2	1	**100-4458**	1	BOLT (M8X1.25X14-MM)	
M	3	1	**164-7468**	1	BOLT (M10X1.5X95-MM)	
M	4	1	**293-1875**	1	BOLT (M10X1.5X16-MM) (M10X1.5X16-MM)	
	5	1	*330-9723*	2	PLUG AS	
					(EACH INCLUDES)	
		1	**228-7100**	1	SEAL-O-RING	
		1	**241-6157**	1	PLUG	
	6	1	**342-3782**	1	CLIP-PIPE	
Y	7	1	**396-2103**	1	LINES GP-FUEL	412
	8	1	**396-2421**	1	LINE AS-FUEL	
		1	**348-0495**	2	WASHER	
		1	**277-9938**	1	BOLT-SPECIAL (BANJO)	
		1	**286-2890**	2	WASHER	
		1	**295-4670**	1	BOLT-SPECIAL (BANJO)	
Y	9	1	**433-1316**	1	LINES GP-FUEL	415
	10	1	**454-9914**	1	BRACKET-FILTER	
	11	1	**456-1364**	1	LINE AS-FUEL	
		1	**277-4993**	1	SEAL-O-RING	
		1	**286-2890**	2	WASHER	
		1	**295-4670**	1	BOLT-SPECIAL (BANJO)	
M	12	1	**6I-0254**	3	BOLT (M8X1.25X30-MM)	

M - METRIC PART
Y - SEPARATE ILLUSTRATION

421-3853 **FILTER GP-FUEL (**contd.**)** **i06284180**

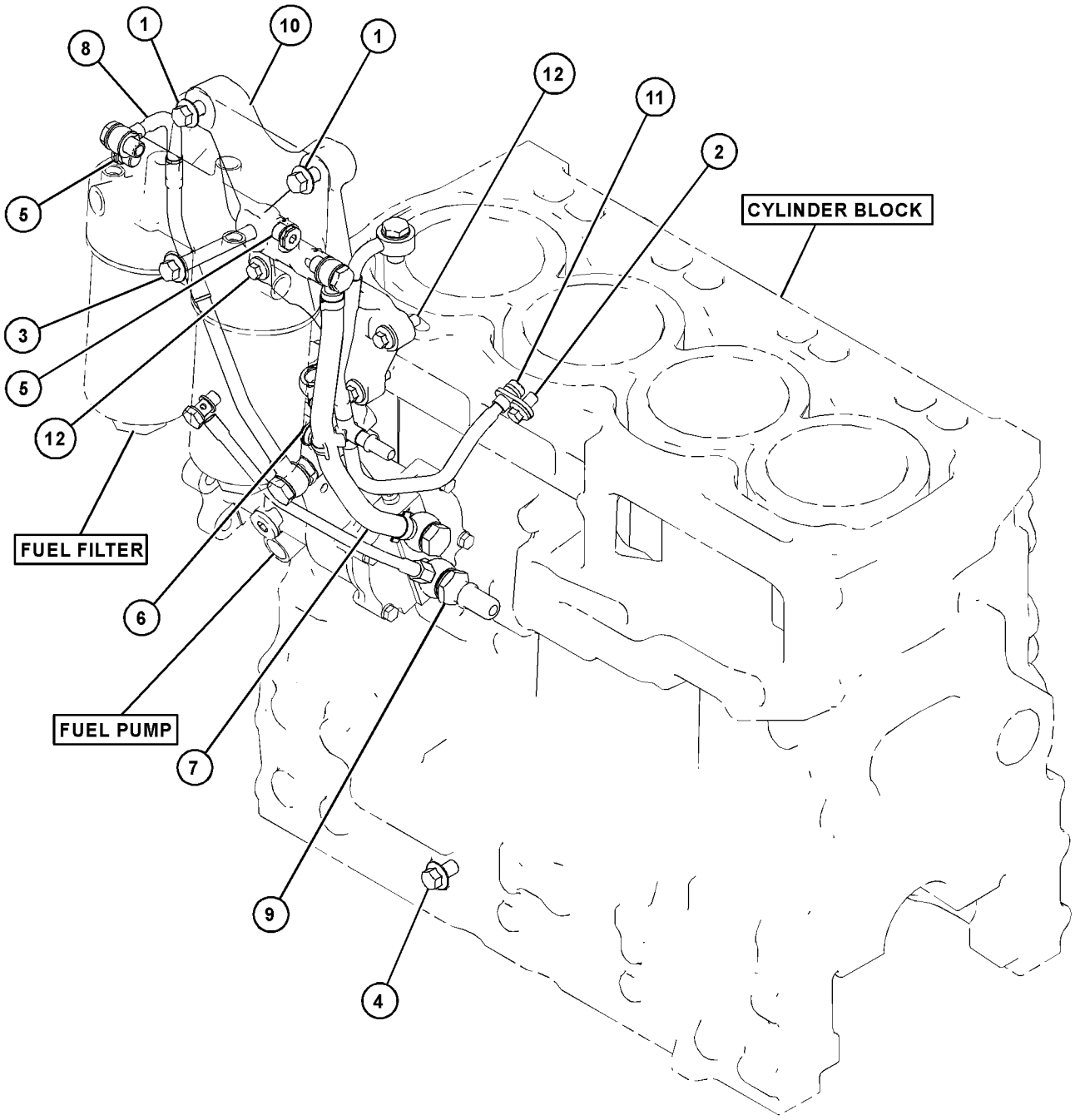

GRAPHIC #1 <END> g03823887

421-5689 FILTER GP-FUEL

PART OF 444-3242 FILTER GP-FUEL

SMCS-1261 **i06277991**

NOTE	REF NO	GRAPHIC REF	PART NUMBER	QTY	PART NAME 1 2 3 4 5 6 (PRODUCT LEVEL)	SEE PAGE
	1	1	**228-7100**	3	SEAL-O-RING	
	2	1	**320-3060**	2	SENSOR GP-PRESSURE (FUEL FILTER INLET)	
Y	3	1	**360-8958**	2	FILTER GP-FUEL	397
	4	1	**238-0112**	1	SENSOR GP-TEMPERATURE (ENGINE COOLANT)	
	5	1	**362-9689**	2	SCREW-SPECIAL	
					AVAILABLE REPAIR KIT(S):	
			362-5412	2	KIT-DRAIN	
					(EACH INCLUDES DRAIN, KNOB & SEALS)	

Y - SEPARATE ILLUSTRATION

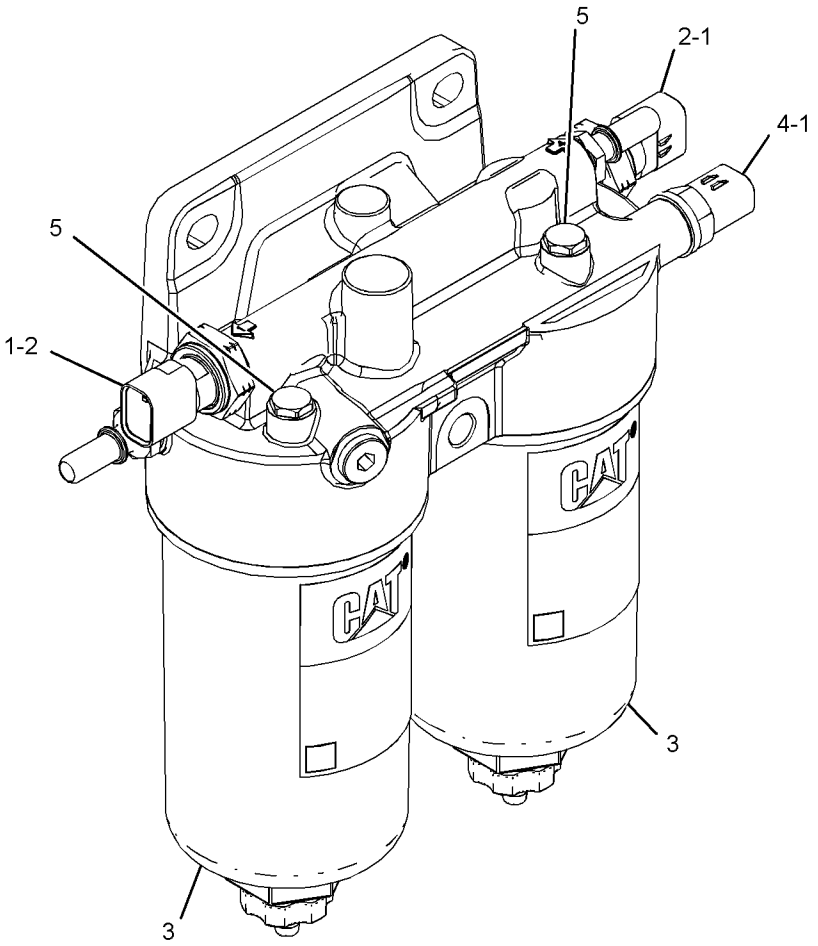

GRAPHIC #1 <END> g03882137

438-7763 FILTER GP-FUEL

PART OF 441-1215 FILTER GP-FUEL

SMCS-1261 **i07104146**

NOTE	REF NO	GRAPHIC REF	PART NUMBER	QTY	PART NAME 1 2 3 4 5 6 (PRODUCT LEVEL)	SEE PAGE
	1	1	**439-5040**	1	BOWL AS	
	2	1	*192-9207*	1	PLUG AS	
	2A	1	**126-9093**	1	SEAL	
	2B	1	**439-1841**	1	PLUG	
	3	1	**439-5037**	1	FILTER AS-WATER SEP & FUEL	
	4	1	**439-5039**	1	SENSOR GP-LIQUID LEVEL (WATER IN FUEL)	

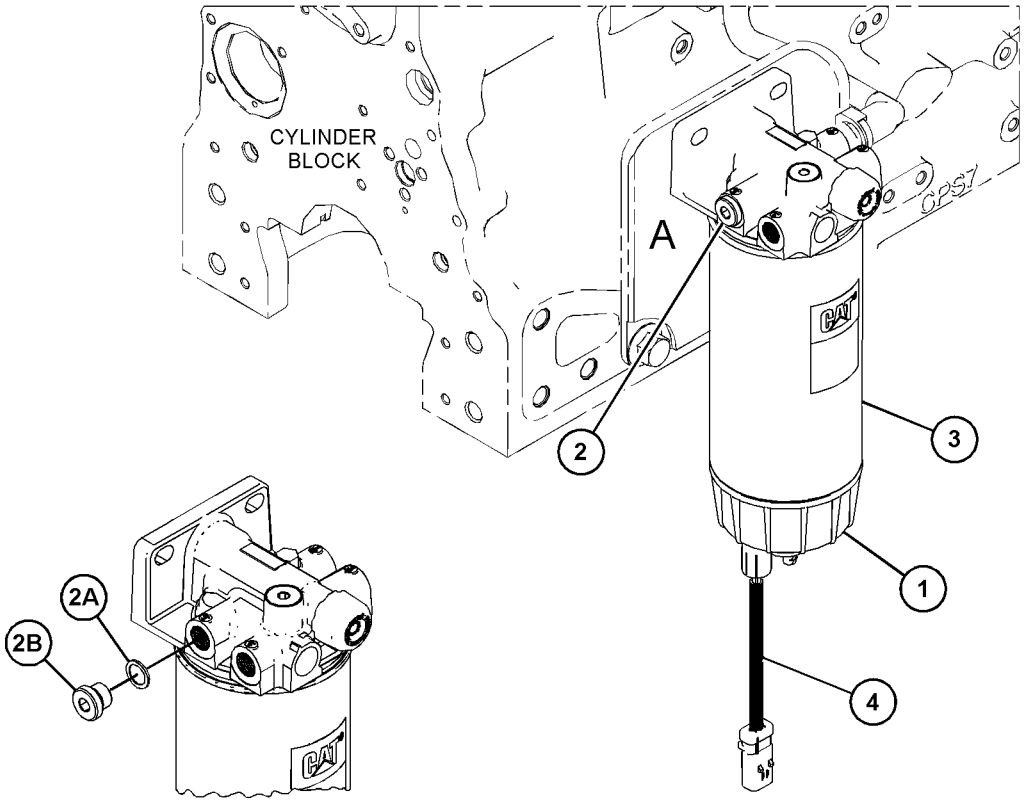

VIEW OF AREA A

GRAPHIC #1 <END> g06217269

441-1215 FILTER GP-FUEL

PART OF 455-9378, 461-3168, 463-8820, 463-8848, 463-8910, 466-3332, 466-4382, 467-7465, 469-1048, 477-2657, 478-6560, 480-6065, 484-1469, 484-2343, 491-2522, 492-1322, 492-3115, 492-3118, 495-3005, 495-9687, 500-8128, 502-7230, 503-1940, 503-4924, 504-3628, 504-3645, 508-4399, 509-3109, 509-5882, 509-5884, 510-0902, 512-9838, 512-9884, 514-3535, 514-3537, 516-9846, 517-0058, 526-8847, 527-9081, 538-5357, 539-3889, 541-2728 ENGINE AR-PRIMARY

SMCS-1261 **i05723716**

NOTE	REF NO	GRAPHIC REF	PART NUMBER	QTY	PART NAME 1 2 3 4 5 6 (PRODUCT LEVEL)	SEE PAGE
Y	1	1	**438-7763**	1	FILTER GP-FUEL	401

Y - SEPARATE ILLUSTRATION

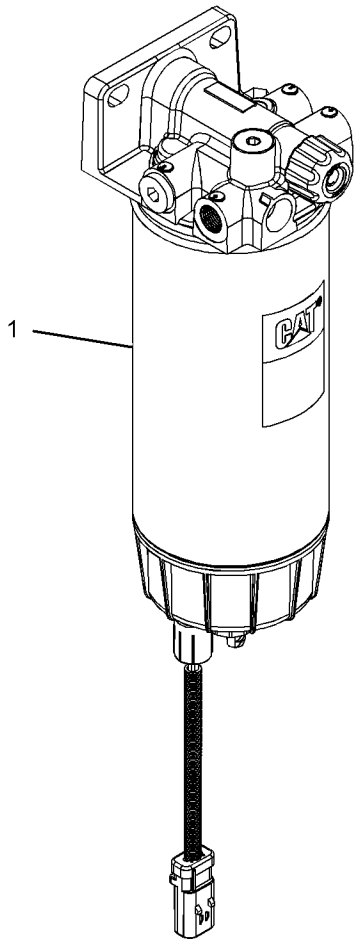

GRAPHIC #1 <END> g03535423

441-1218 FILTER GP-FUEL

PART OF 475-8294 ENGINE AR-PRIMARY

SMCS-1261 **i06100968**

NOTE	REF NO	GRAPHIC REF	PART NUMBER	QTY	PART NAME 1 2 3 4 5 6 (PRODUCT LEVEL)	SEE PAGE
Y	1	1	**444-5021**	1	FILTER GP-WATER SEP & FUEL	408

Y - SEPARATE ILLUSTRATION

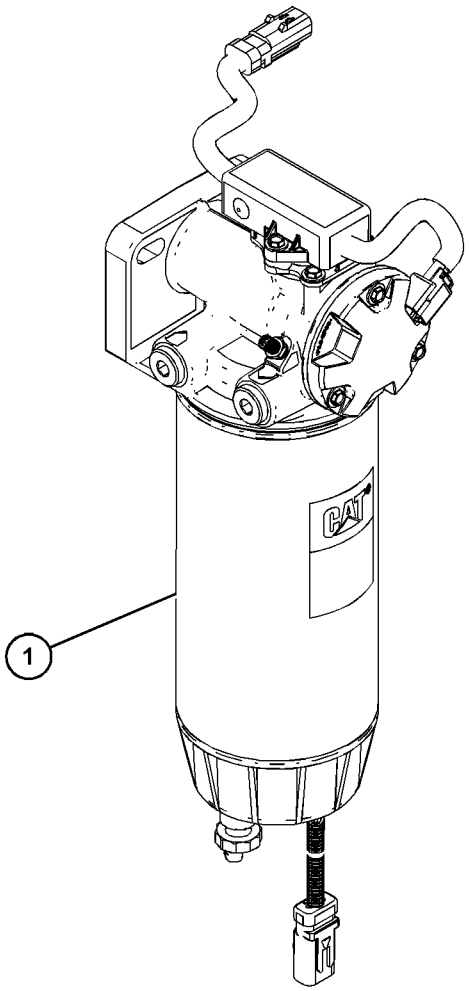

GRAPHIC #1 <END> g06004256

441-1222 FILTER GP-FUEL

PART OF 486-2471 ENGINE AR-PRIMARY

SMCS-1261 **i05716470**

NOTE	REF NO	GRAPHIC REF	PART NUMBER	QTY	PART NAME 1 2 3 4 5 6 (PRODUCT LEVEL)	SEE PAGE
Y	1	1	**444-5022**	1	FILTER GP-WATER SEP & FUEL	409

Y - SEPARATE ILLUSTRATION

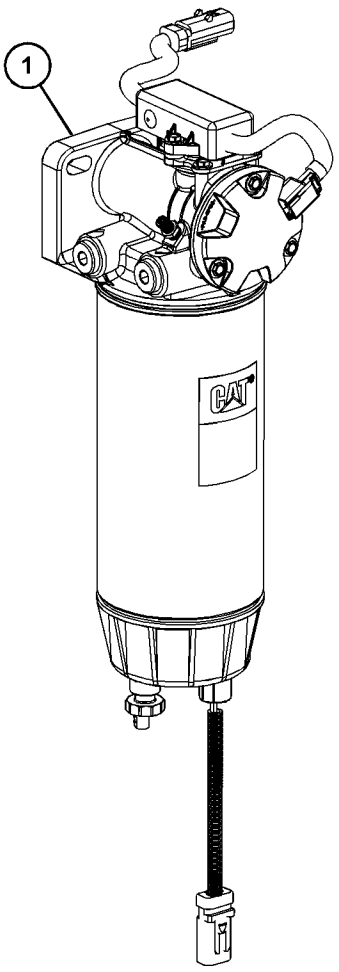

GRAPHIC #1 <END> g03651398

444-3242 FILTER GP-FUEL

SMCS-1261 **i06151651**

NOTE	REF NO	GRAPHIC REF	PART NUMBER	QTY	PART NAME 1 2 3 4 5 6 (PRODUCT LEVEL)	SEE PAGE
Y	1	1	*421-5689*	1	FILTER GP-FUEL	400

Y - SEPARATE ILLUSTRATION

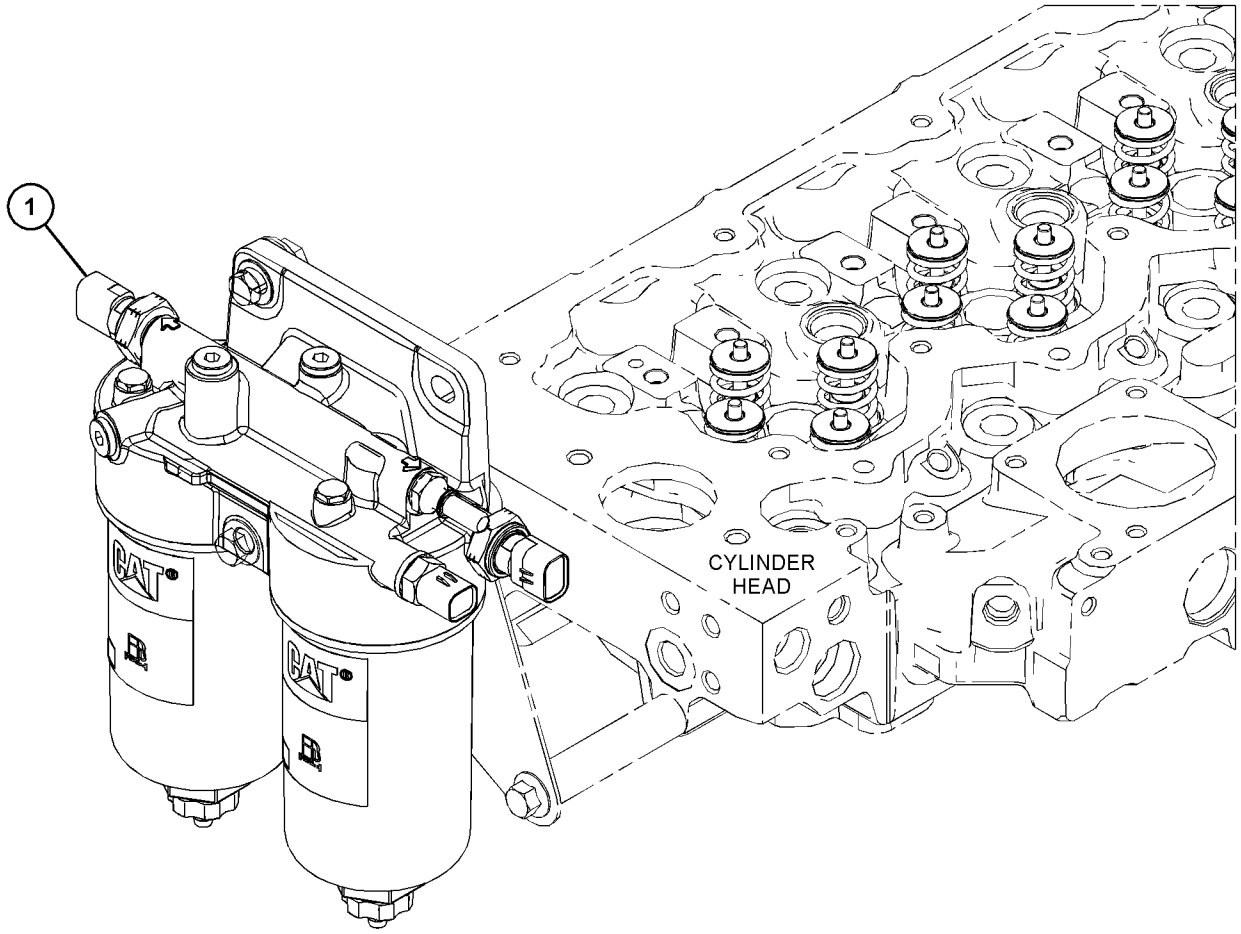

GRAPHIC #1 <END> g03865596

452-8547 FILTER GP-FUEL

PART OF 453-7163 FILTER GP-FUEL

SMCS-1261 **i05836352**

NOTE	REF NO	GRAPHIC REF	PART NUMBER	QTY	PART NAME 1 2 3 4 5 6 (PRODUCT LEVEL)	SEE PAGE
Y	1	1	**360-8958**	2	FILTER GP-FUEL	397
	2	1	**362-9689**	2	SCREW-SPECIAL	
					AVAILABLE REPAIR KIT(S):	
			362-5412	2	KIT-DRAIN	
					(EACH KIT INCLUDES DRAIN, KNOB & SEAL)	

Y - SEPARATE ILLUSTRATION

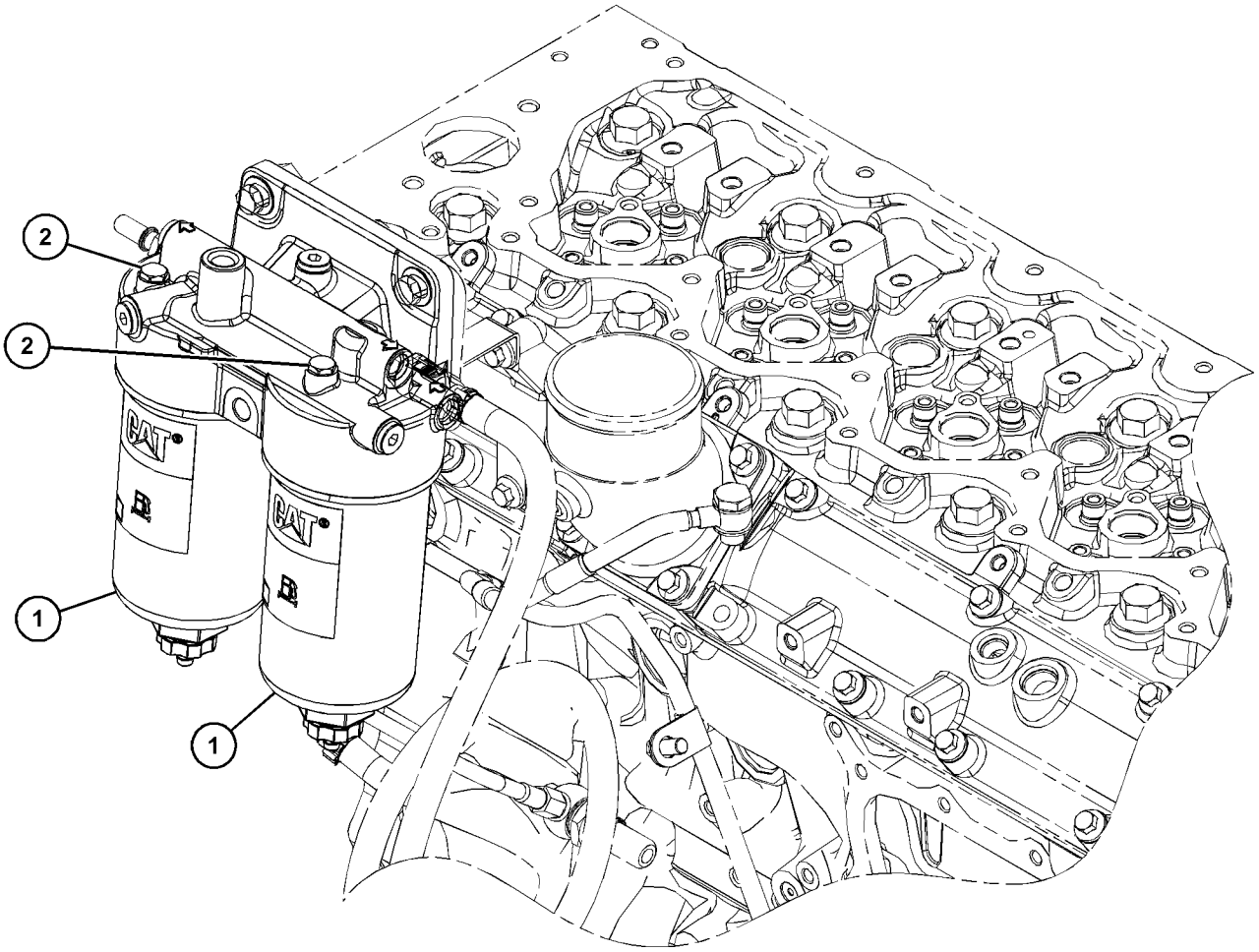

GRAPHIC #1 <END> g03701881

453-7163 FILTER GP-FUEL

PART OF 455-9378, 461-3168, 463-8820, 463-8848, 463-8910, 466-3332, 466-4382, 467-7465, 469-1048, 475-8294, 477-2657, 478-6560, 480-6065, 484-1469, 484-2343, 486-2471, 491-2522, 492-1322, 492-3115, 492-3118, 495-3005, 495-9687, 500-8128, 502-7230, 503-1940, 503-4924, 504-3628, 504-3645, 508-4399, 509-3109, 509-5882, 509-5884, 510-0902, 512-9838, 512-9884, 514-3535, 514-3537, 516-9846, 517-0058, 526-8847, 527-9081, 538-5357, 539-3889, 541-2728 ENGINE AR-PRIMARY

SMCS-1261 **i05836344**

NOTE	REF NO	GRAPHIC REF	PART NUMBER	QTY	PART NAME 1 2 3 4 5 6 (PRODUCT LEVEL)	SEE PAGE
Y	1	1	**452-8547**	1	FILTER GP-FUEL	406

Y - SEPARATE ILLUSTRATION

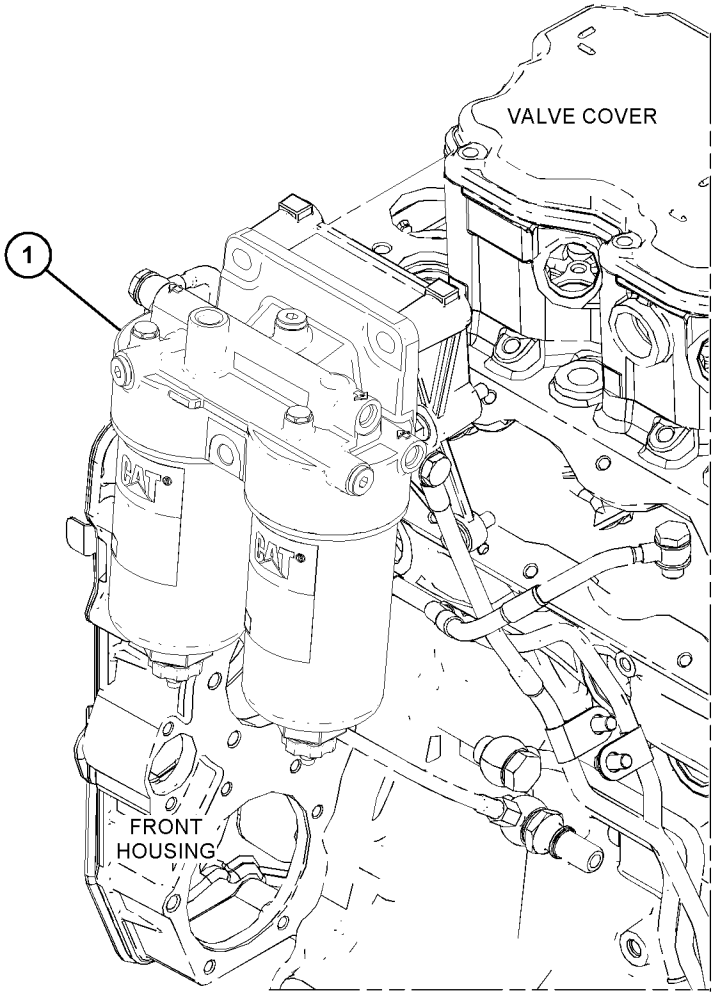

GRAPHIC #1 <END> g03695817

444-5021 FILTER GP-WATER SEP & FUEL

PART OF 441-1218 FILTER GP-FUEL

SMCS-1261, 1263 **i06100978**

NOTE	REF NO	GRAPHIC REF	PART NUMBER	QTY	PART NAME 1 2 3 4 5 6 (PRODUCT LEVEL)	SEE PAGE
	1	1	*192-9207*	2	PLUG AS	
					(EACH INCLUDES)	
		1	**126-9093**	1	SEAL	
		1	**439-1841**	1	PLUG	
	2	1	**439-5037**	1	FILTER AS-WATER SEP & FUEL	
	3	1	**439-5039**	1	SENSOR GP-LIQUID LEVEL	
	4	1	**439-5040**	1	BOWL AS	
	5	1	**445-5511**	1	VALVE AS	

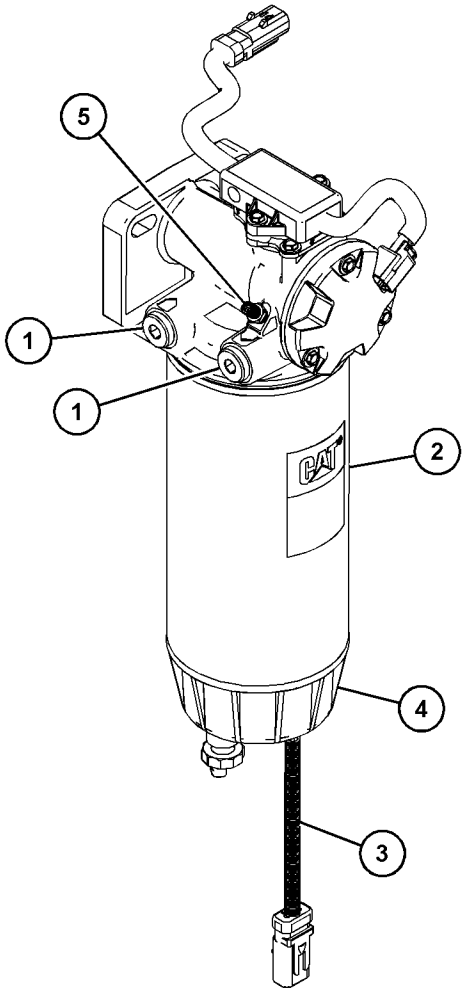

GRAPHIC #1 <END> g03875528

444-5022 FILTER GP-WATER SEP & FUEL

PART OF 441-1222 FILTER GP-FUEL

SMCS-1261, 1263 **i07377448**

NOTE	REF NO	GRAPHIC REF	PART NUMBER	QTY	PART NAME 1 2 3 4 5 6 (PRODUCT LEVEL)	SEE PAGE
	1	1	**192-9207**	2	PLUG AS	
					(EACH INCLUDES)	
	1A	1	**126-9093**	1	SEAL	
	2	1	**439-5037**	1	FILTER AS-WATER SEP & FUEL	
	3	1	**439-5039**	1	SENSOR GP-LIQUID LEVEL	
	4	1	**439-5040**	1	BOWL AS	
	5	1	**446-0105**	1	MODULE AS	
	6	1	**445-5511**	1	VALVE AS	

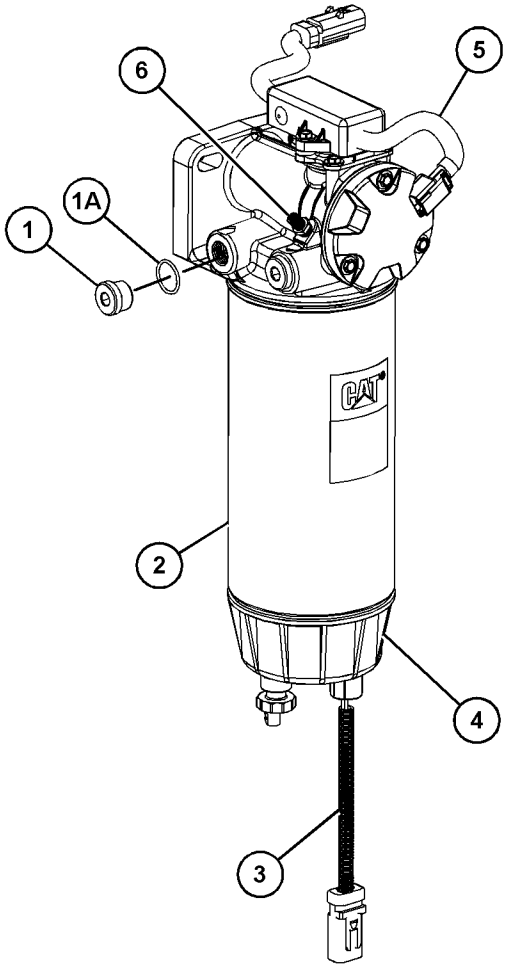

GRAPHIC #1 <END> g03651397

415-5522 INJECTOR GP-FUEL

PART OF 455-9378, 461-3168, 463-8820, 463-8848, 463-8910, 466-3332, 467-7465, 469-1048, 475-8294, 477-2657, 478-6560, 480-6065, 484-1469, 491-2522, 492-1322, 492-3115, 495-3005, 495-9687, 500-8128, 503-1940, 503-4924, 504-3628, 509-3109, 512-9884 ENGINE AR-PRIMARY
TYPE 1

SMCS-1251, 1254, 1290, 1713 **i06089750**

NOTE	REF NO	GRAPHIC REF	PART NUMBER	QTY	PART NAME 1 2 3 4 5 6 (PRODUCT LEVEL)	SEE PAGE
	1	1	**278-5170**	4	BOLT	
	2	1	**369-7799**	4	CLAMP-INJECTOR	
	3	1	**449-3315**	4	INJECTOR GP-FUEL	
	3A	1	**376-6403**	1	WASHER-SEALING	
	3B	1	**376-6405**	1	SEAL-O-RING	
	4	1	**277-5067**	4	SLEEVE	

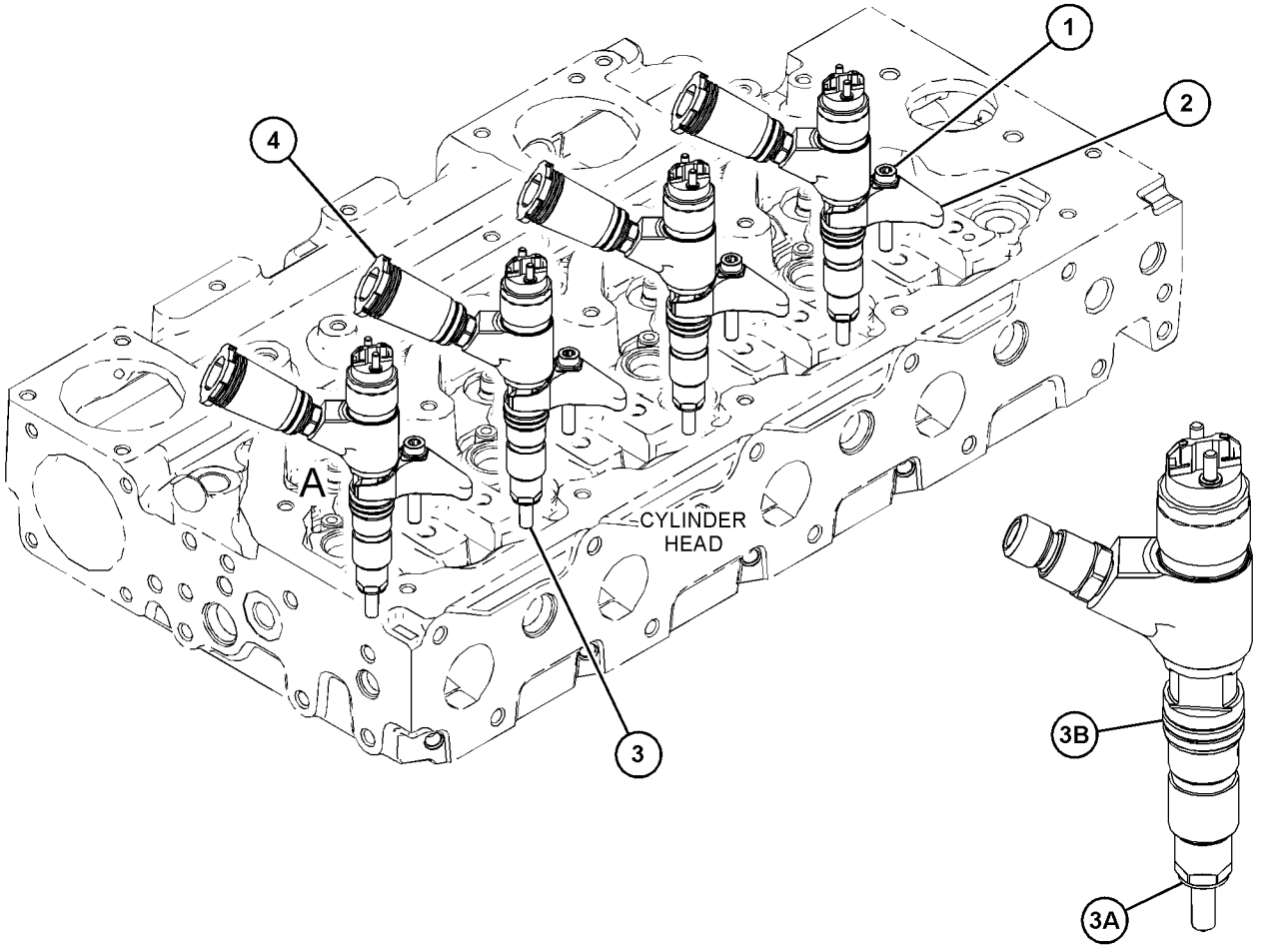

VIEW OF AREA A

GRAPHIC #1 <END> g03808813

415-5522 INJECTOR GP-FUEL

PART OF 455-9378, 461-3168, 463-8820, 463-8848, 463-8910, 466-3332, 466-4382, 467-7465, 469-1048, 475-8294, 477-2657, 478-6560, 480-6065, 484-1469, 484-2343, 486-2471, 491-2522, 492-1322, 492-3115, 492-3118, 495-3005, 495-9687, 500-8128, 502-7230, 503-1940, 503-4924, 504-3628, 504-3645, 508-4399, 509-3109, 509-5882, 509-5884, 510-0902, 512-9838, 512-9884, 514-3535, 514-3537, 516-9846, 517-0058, 526-8847, 527-9081, 538-5357, 539-3889, 541-2728 ENGINE AR-PRIMARY
TYPE 2

SMCS-1251, 1254, 1290, 1713 **i06919713**

NOTE	REF NO	GRAPHIC REF	PART NUMBER	QTY	PART NAME 1 2 3 4 5 6 (PRODUCT LEVEL)	SEE PAGE
	1	1	**278-5170**	4	BOLT	
	2	1	**369-7799**	4	CLAMP-INJECTOR	
	3	1	**449-3315**	4	INJECTOR GP-FUEL	
					(EACH INCLUDES)	
	3A	1	**376-6403**	1	WASHER-SEALING	
	3B	1	**376-6405**	1	SEAL-O-RING	
C	4	1	**517-8243**	4	SLEEVE-INJECTOR	

C - CHANGE FROM PREVIOUS TYPE

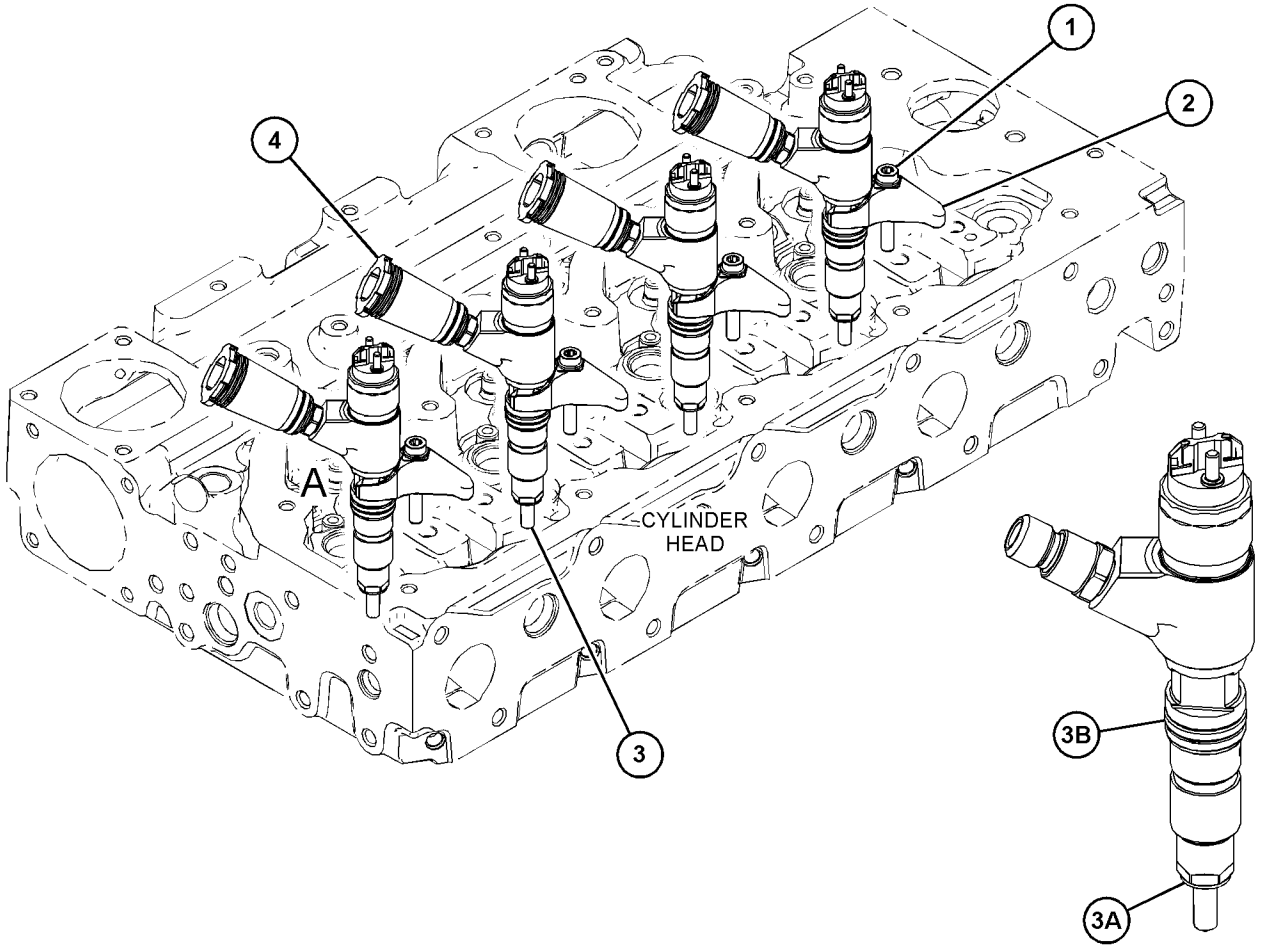

VIEW OF AREA A

GRAPHIC #1 <END> g03808813

396-2103 LINES GP-FUEL

PART OF 421-3853 FILTER GP-FUEL

SMCS-1274 **i06287729**

NOTE	REF NO	GRAPHIC REF	PART NUMBER	QTY	PART NAME 1 2 3 4 5 6 (PRODUCT LEVEL)	SEE PAGE
	1	1	**247-4928**	2	WASHER (16.5X20.5X1.6-MM THK)	
	2	1	**286-2890**	2	WASHER	
	3	1	**295-4670**	1	BOLT-SPECIAL (BANJO)	
M	4	1	**386-2737**	1	BOLT-BANJO (M16X1.5X27-MM)	
	5	1	*396-2102*	1	LINE AS-FUEL	
E		1	**347-8645**		HOSE (28-CM)	

E - ORDER BY THE CENTIMETER
M - METRIC PART

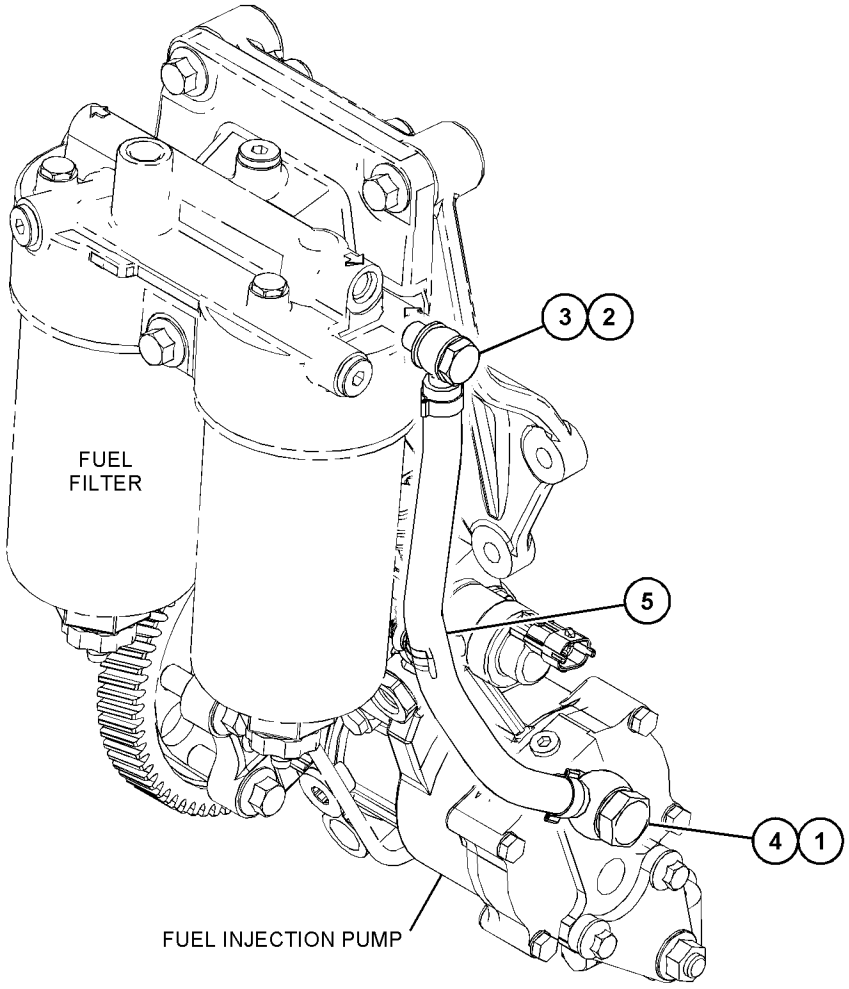

GRAPHIC #1 <END> g03824380

415-7119 LINES GP-FUEL

PART OF 455-9378, 461-3168, 466-3332, 466-4382, 467-7465, 469-1048, 477-2657, 478-6560, 480-6065, 484-1469, 491-2522, 492-1322, 492-3115, 492-3118, 495-3005, 495-9687, 500-8128, 502-7230, 503-1940, 503-4924, 504-3628, 504-3645, 508-4399, 509-3109, 509-5884, 510-0902, 512-9838, 512-9884, 514-3535, 514-3537, 516-9846, 517-0058, 526-8847, 527-9081, 539-3889, 541-2728 ENGINE AR-PRIMARY

SMCS-1274 **i06091135**

NOTE	REF NO	GRAPHIC REF	PART NUMBER	QTY	PART NAME 1 2 3 4 5 6 (PRODUCT LEVEL)	SEE PAGE
M	1	1	**6I-0593**	2	BOLT (M10X1.5X30-MM)	
M	2	1	**100-4458**	1	BOLT (M8X1.25X14-MM)	
M	3	1	**164-7468**	1	BOLT (M10X1.5X95-MM)	
	4	1	**247-4928**	1	WASHER (16.5X20.5X1.6-MM THK)	
M	5	1	**293-1875**	1	BOLT (M10X1.5X16-MM)	
	6	1	*330-9723*	2	PLUG AS	
					(EACH INCLUDES)	
	6A	1	**228-7100**	1	SEAL-O-RING	
	6B	1	**241-6157**	1	PLUG	
	7	1	**356-3986**	3	CONNECTOR AS	
					(EACH INCLUDES)	
	7A	1	**277-4993**	1	SEAL-O-RING	
	9	1	**376-9967**	1	CONNECTION-FUEL	
	10	1	**396-2421**	1	LINE AS-FUEL	
	10A	1	**277-9938**	1	BOLT-SPECIAL (BANJO)	
	10B	1	**286-2890**	2	WASHER	
	10C	1	**295-4670**	1	BOLT-SPECIAL (BANJO)	
	11	1	**397-8294**	1	LINE AS-FUEL	
	12	1	**397-8298**	1	LINE AS-FUEL	
Y	13	1	**433-1316**	1	LINES GP-FUEL	415
	14	1	**454-9914**	1	BRACKET-FILTER	
	15	1	**456-1364**	1	LINE AS-FUEL	
	15A	1	**277-4993**	1	SEAL-O-RING	
	15B	1	**286-2890**	2	WASHER	
	15C	1	**295-4670**	1	BOLT-SPECIAL (BANJO)	
M	16	1	**6I-0254**	3	BOLT (M8X1.25X30-MM)	

M - METRIC PART
Y - SEPARATE ILLUSTRATION

415-7119 **LINES GP-FUEL (**contd.**)** **i06091135**

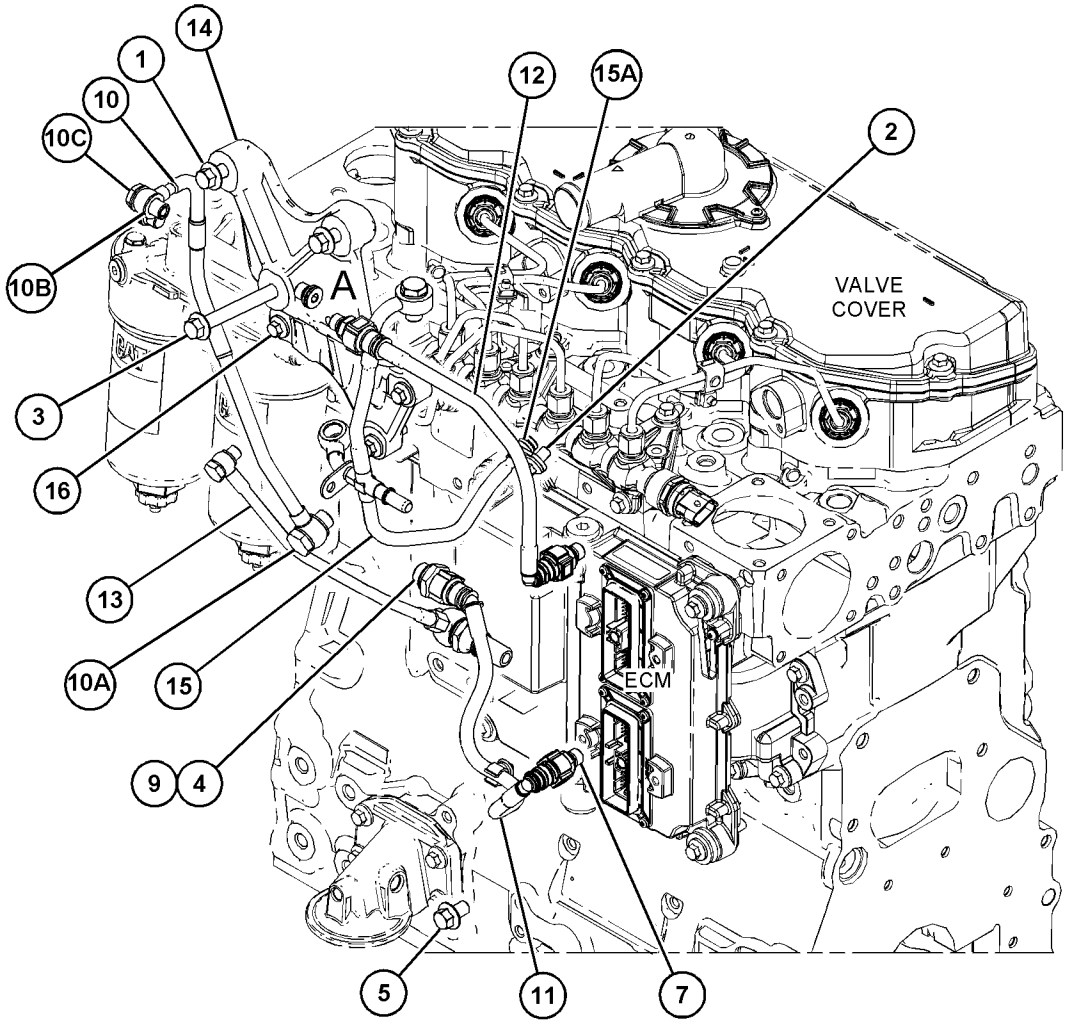

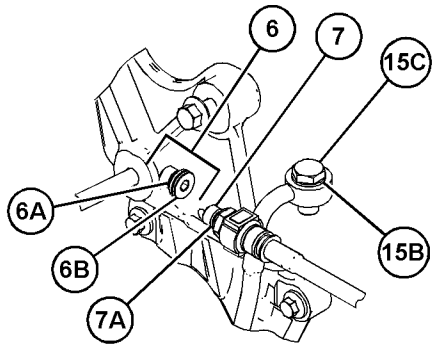

VIEW OF AREA A

GRAPHIC #1 <END> g03818209

433-1316 LINES GP-FUEL

PART OF 483-1194, 483-1195 FILTER & LINES GP-FUEL, 421-3853 FILTER GP-FUEL, 415-7119, 447-7926, 460-1998 LINES GP-FUEL

SMCS-1274 **i07174950**

NOTE	REF NO	GRAPHIC REF	PART NUMBER	QTY	PART NAME 1 2 3 4 5 6 (PRODUCT LEVEL)	SEE PAGE
	1	1	**246-4361**	2	WASHER (10.5X14X1.5-MM THK)	
	2	1	**385-1398**	1	CONNECTION-FUEL	
	3	1	**386-1864**	1	BOLT-BANJO	
	4	1	**247-4928**	2	WASHER (16.5X20.5X1.6-MM THK)	
	5	1	**433-0190**	1	LINE AS-FUEL	

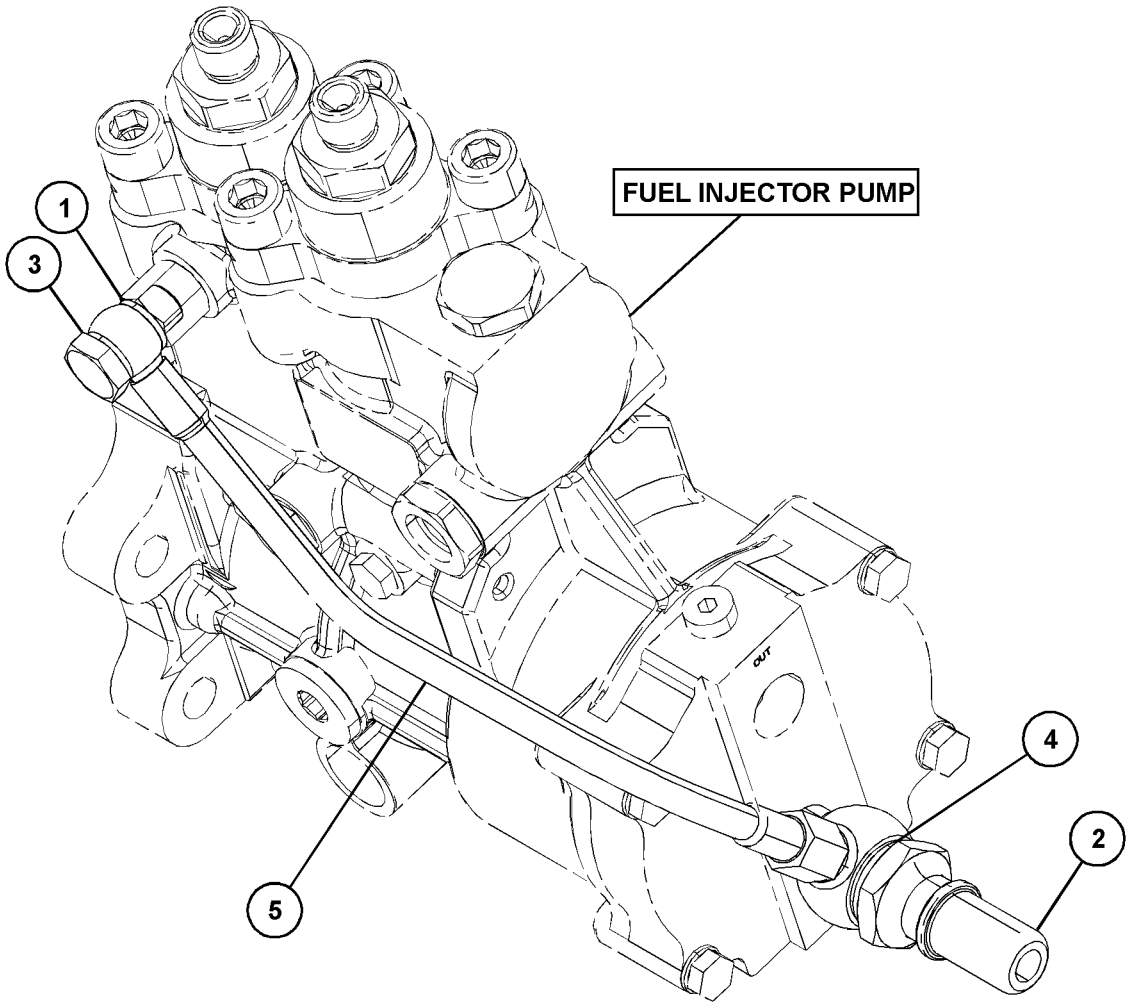

GRAPHIC #1 <END> g06240340

447-7926 LINES GP-FUEL

SMCS-1274 **i07174805**

NOTE	REF NO	GRAPHIC REF	PART NUMBER	QTY	PART NAME 1 2 3 4 5 6 (PRODUCT LEVEL)	SEE PAGE
M	1	1	**6I-0654**	1	BOLT (M10X1.5X25-MM)	
M	2	1	**100-4458**	3	BOLT (M8X1.25X14-MM)	
M	3	1	**103-5687**	1	BOLT (M10X1.5X85-MM)	
M	4	1	**113-7584**	2	BOLT (M10X1.5X110-MM)	
	5	1	**247-4928**	1	WASHER (16.5X20.5X1.6-MM THK)	
M	6	1	**293-1875**	1	BOLT (M10X1.5X16-MM)	
	7	1	**348-0495**	1	WASHER	
	8	1	*535-8994*	1	BRACKET AS	
M	8C	1	**159-9541**	3	NUT-WELD (M10X1.5-THD)	
	9	1	**376-9967**	1	CONNECTION-FUEL	
	10	1	**379-8434**	1	LINE AS-FUEL	
	10A	1	**355-0632**	1	CONNECTOR-SPECIAL	
	10B	1	**351-4318**	1	CLIP	
	11	1	**391-2493**	1	CONNECTION-FUEL	
	12	1	**432-8576**	1	LINE AS-FUEL	
	12A	1	**398-5905**	3	CLIP	
Y	13	1	**433-1316**	1	LINES GP-FUEL	415
	14	1	**456-1364**	1	LINE AS-FUEL	
	14A	1	**277-4993**	1	SEAL-O-RING	
	14B	1	**286-2890**	2	WASHER	
	14C	1	**295-4670**	1	BOLT-SPECIAL (BANJO)	
	15	1	**461-1784**	1	BRACKET	
M	16	1	**6I-0217**	2	BOLT (M8X1.25X20-MM)	
	17	1	**311-2732**	3	TIE-CABLE	

M - METRIC PART
Y - SEPARATE ILLUSTRATION

447-7926 **LINES GP-FUEL (**contd.**)** **i07174805**

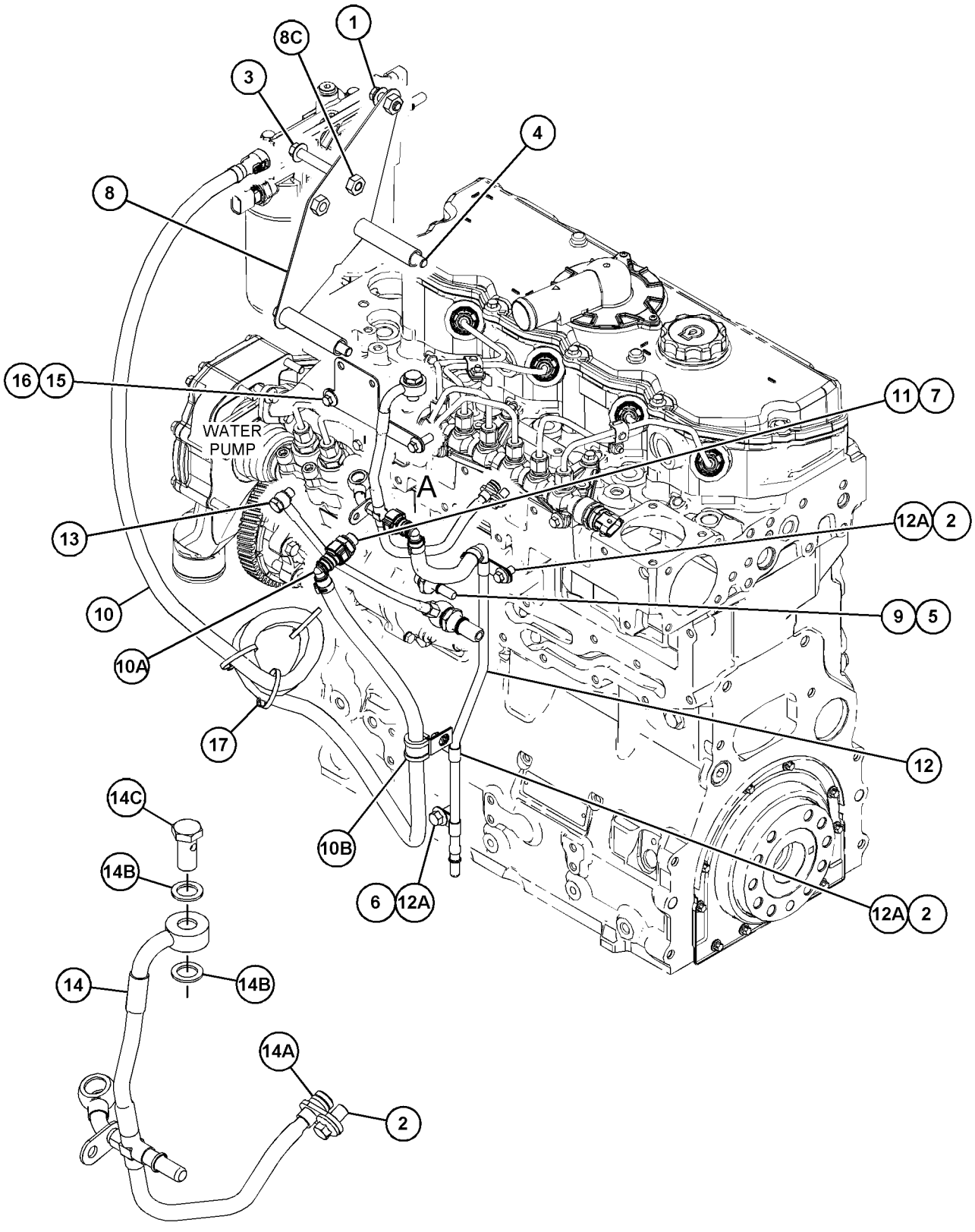

VIEW OF AREA A
(PARTS REMOVED FOR CLARITY)

GRAPHIC #1 <END> g06255443

460-1998 LINES GP-FUEL

PART OF 475-8294 ENGINE AR-PRIMARY

SMCS-1274 **i06149733**

NOTE	REF NO	GRAPHIC REF	PART NUMBER	QTY	PART NAME 1 2 3 4 5 6 (PRODUCT LEVEL)	SEE PAGE
M	1	1	**6I-0654**	1	BOLT (M10X1.5X25-MM)	
M	2	1	**100-4458**	5	BOLT (M8X1.25X14-MM)	
M	3	1	**103-5687**	1	BOLT (M10X1.5X85-MM)	
	4	1	**247-4928**	1	WASHER (16.5X20.5X1.6-MM THK)	
M	5	1	**293-1875**	1	BOLT (M10X1.5X16-MM)	
	6	1	*330-9723*	2	PLUG AS	
					(EACH INCLUDES)	
	6A	1	**228-7100**	1	SEAL-O-RING	
	6B	1	**241-6157**	1	PLUG	
	7	1	**348-0495**	1	WASHER	
	8	1	**356-3986**	2	CONNECTOR AS	
					(EACH INCLUDES)	
	8A	1	**277-4993**	1	SEAL-O-RING	
	9	1	**376-9967**	1	CONNECTION-FUEL	
	10	1	**391-2493**	1	CONNECTION-FUEL	
	11	1	**432-8576**	1	LINE AS-FUEL	
	11A	1	**398-5905**	3	CLIP	
E	11B	1	**347-8645**		HOSE (13-CM)	
	11C	1	**363-8622**	1	CONNECTOR-FUEL	
Y	12	1	**433-1316**	1	LINES GP-FUEL	415
	13	1	**453-6400**	1	LINE AS-FUEL	
E	13A	1	**347-8645**		HOSE (150-CM)	
	14	1	**456-1364**	1	LINE AS-FUEL	
	14A	1	**277-4993**	1	SEAL-O-RING	
	14B	1	**286-2890**	2	WASHER	
	14C	1	**295-4670**	1	BOLT-SPECIAL (BANJO)	
	15	1	*460-8718*	1	BRACKET AS	
M	15A	1	**159-9540**	2	NUT-WELD (M8X1.25-THD)	
M	15B	1	**159-9541**	2	NUT-WELD (M10X1.5-THD)	
	16	1	**468-5312**	1	BRACKET	
M	17	1	**6I-0217**	2	BOLT (M8X1.25X20-MM)	
	18	1	**311-2732**	3	TIE-CABLE	

E - ORDER BY THE CENTIMETER
M - METRIC PART
Y - SEPARATE ILLUSTRATION

460-1998 **LINES GP-FUEL (**contd.**)** **i06149733**

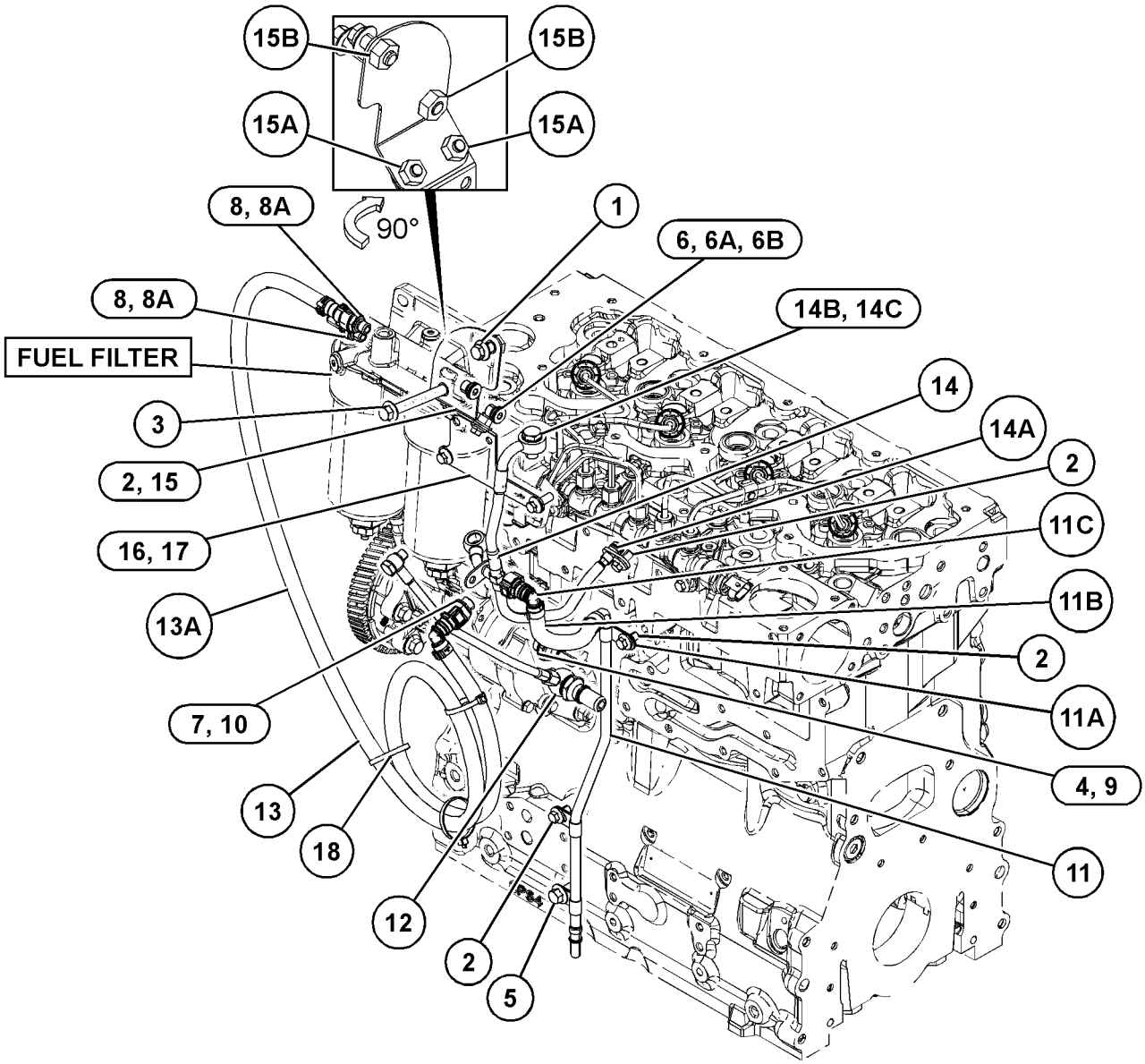

GRAPHIC #1 <END> g03836777

375-2647 PUMP GP-FUEL INJECTION*R

PART OF 415-5523 PUMP GP-FUEL INJECTION

SMCS-1251, 1290 **i07351525**

NOTE	REF NO	GRAPHIC REF	PART NUMBER	QTY	PART NAME 1 2 3 4 5 6 (PRODUCT LEVEL)	SEE PAGE
	1	1	**386-3819**	1	KEY-SHAFT	
	2	1	**375-8254**	1	VALVE	
	3	1	**376-6409**	1	SEAL	
	4	1	**376-6410**	1	RETAINER-WASHER	
	5	1	**376-6411**	1	NUT-SHAFT	
	6	1	**386-2971**	2	WASHER	
	7	1	**386-2976**	2	WASHER	
	8	1	**453-0790**	3	BOLT	
	9	1	**454-5109**	1	BOLT-BANJO	

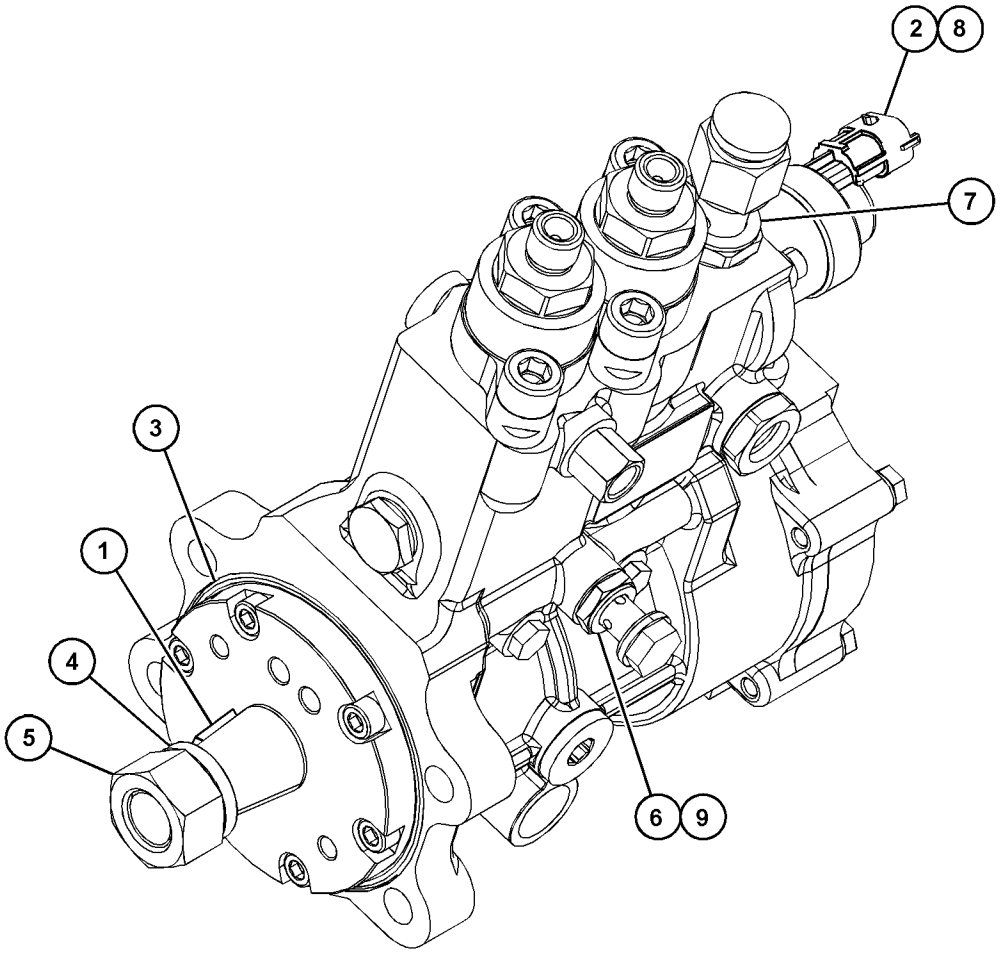

GRAPHIC #1 <END> g06182840

415-5523 PUMP GP-FUEL INJECTION

PART OF 455-9378, 461-3168, 463-8820, 463-8848, 463-8910, 466-3332, 466-4382, 467-7465, 469-1048, 475-8294, 477-2657, 478-6560, 480-6065, 484-1469, 484-2343, 486-2471, 491-2522, 492-1322, 492-3115, 492-3118, 495-3005, 495-9687, 500-8128, 502-7230, 503-1940, 503-4924, 504-3628, 504-3645, 508-4399, 509-3109, 509-5882, 509-5884, 510-0902, 512-9838, 512-9884, 514-3535, 514-3537, 516-9846, 517-0058, 526-8847, 527-9081, 538-5357, 539-3889, 541-2728 ENGINE AR-PRIMARY

SMCS-1251, 1290 **i06952347**

NOTE	REF NO	GRAPHIC REF	PART NUMBER	QTY	PART NAME 1 2 3 4 5 6 (PRODUCT LEVEL)	SEE PAGE
M	1	1	**6I-0654**	1	BOLT (M10X1.5X25-MM)	
M	2	1	**100-4830**	2	BOLT (M10X1.5X20-MM)	
M	3	1	**286-0123**	4	BOLT (M10X1.5X35-MM THK)	
	4	1	**346-0006**	1	BOLT-SPECIAL	
	5	1	**371-2691**	1	BRACKET	
YR	6	1	**375-2647**	1	PUMP GP-FUEL INJECTION	420
	7	1	**445-9016**	1	LINE AS-OIL	
	8	1	**449-3333**	1	BRACKET	
	9	1	**500-3055**	1	GEAR-FUEL PUMP	
M	10	1	**6I-0217**	2	BOLT (M8X1.25X20-MM)	
M	11	1	**175-7141**	1	NUT-HEX FLANGE (M10X1.5-THD)	
	12	1	**346-0007**	2	WASHER	

M - METRIC PART
R - REMANUFACTURED PART MAY BE AVAILABLE
Y - SEPARATE ILLUSTRATION

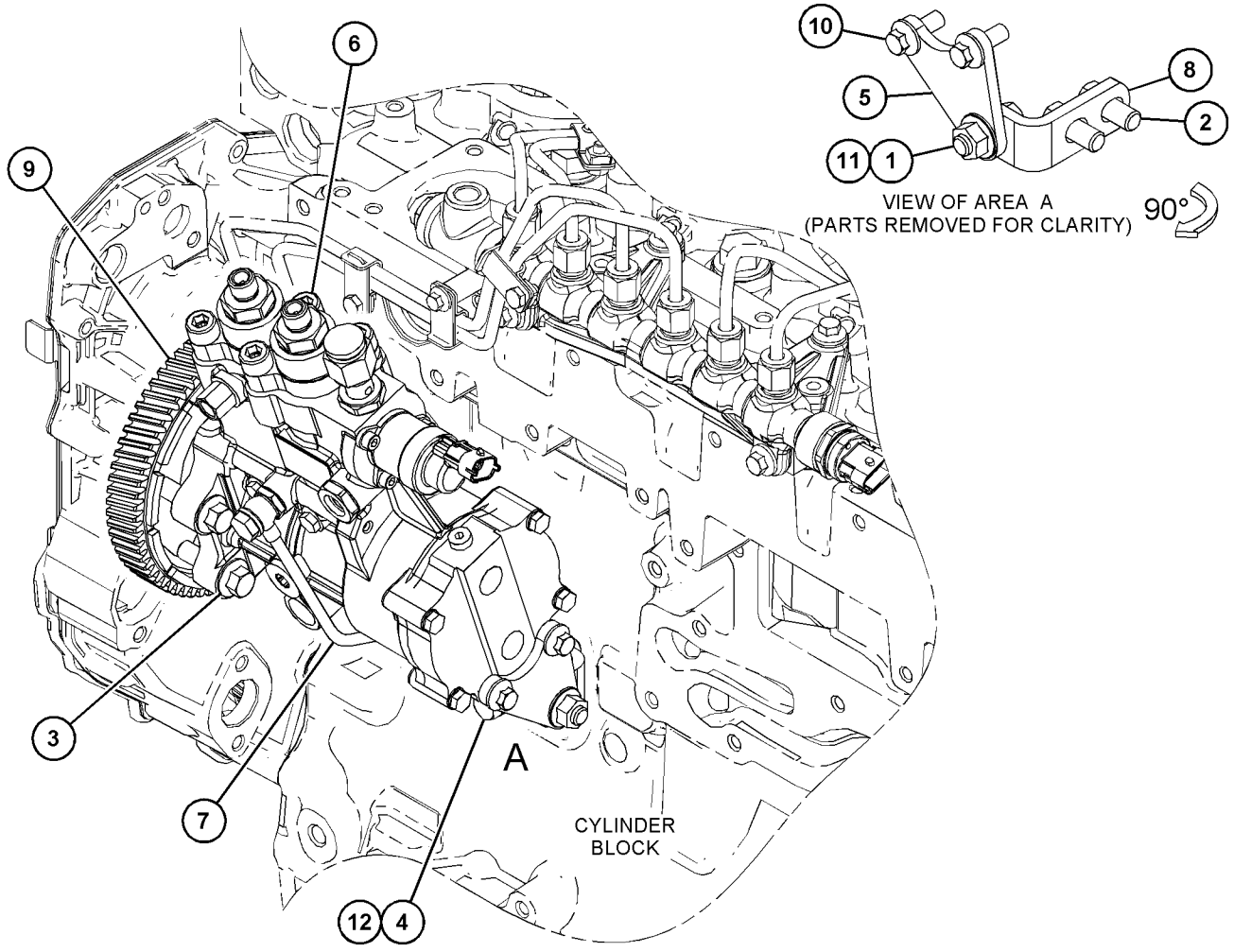

GRAPHIC #1 <END> g03808909

415-5527 RAIL GP-FUEL

PART OF 455-9378, 461-3168, 463-8820, 463-8848, 463-8910, 466-3332, 466-4382, 467-7465, 469-1048, 475-8294, 477-2657, 478-6560, 480-6065, 484-1469, 484-2343, 486-2471, 491-2522, 492-1322, 492-3115, 492-3118, 495-3005, 495-9687, 500-8128, 502-7230, 503-1940, 503-4924, 504-3628, 504-3645, 508-4399, 509-3109, 509-5882, 509-5884, 510-0902, 512-9838, 512-9884, 514-3535, 514-3537, 516-9846, 517-0058, 526-8847, 527-9081, 538-5357, 539-3889, 541-2728 ENGINE AR-PRIMARY

SMCS-1288 **i06091133**

NOTE	REF NO	GRAPHIC REF	PART NUMBER	QTY	PART NAME 1 2 3 4 5 6 (PRODUCT LEVEL)	SEE PAGE
M	1	1	**101-3895**	2	BOLT (M8X1.25X35-MM)	
M	2	1	**178-2510**	1	BOLT (M6X1X45-MM)	
	3	1	**396-2052**	1	RAIL AS-FUEL	
	3A	1	**375-6988**	1	SENSOR (FUEL RAIL PRESSURE)	
	3B	1	**398-6226**	1	VALVE (FUEL RAIL PRESSURE)	
	4	1	*396-2602*	1	LINE AS-FUEL	
	4A	1	**397-6836**	1	CLAMP AS	
		1	**396-2606**	1	LINE-FUEL	
	4B	1	**396-2607**	1	LINE-FUEL	
	5	1	*396-2603*	1	LINE AS-FUEL	
	5A	1	**397-6836**	1	CLAMP AS	
		1	**396-2608**	1	LINE-FUEL	
	5B	1	**396-2609**	1	LINE-FUEL	
	6	1	*396-2604*	1	LINE AS-FUEL	
	6A	1	**397-6836**	2	CLAMP AS	
	6B	1	**396-2610**	1	LINE-FUEL	
		1	**396-2611**	1	LINE-FUEL	
	7	1	**398-7219**	1	PILLAR	
	8	1	**399-8470**	1	BRACKET	
M	9	1	**6I-0260**	4	BOLT (M8X1.25X25-MM)	
					AVAILABLE REPAIR KIT(S):	
			463-8336	1	KIT-CLIP	
					(INCLUDES PLATE, BRACKET & INSERT)	

M - METRIC PART

415-5527 **RAIL GP-FUEL (**contd.**)** **i06091133**

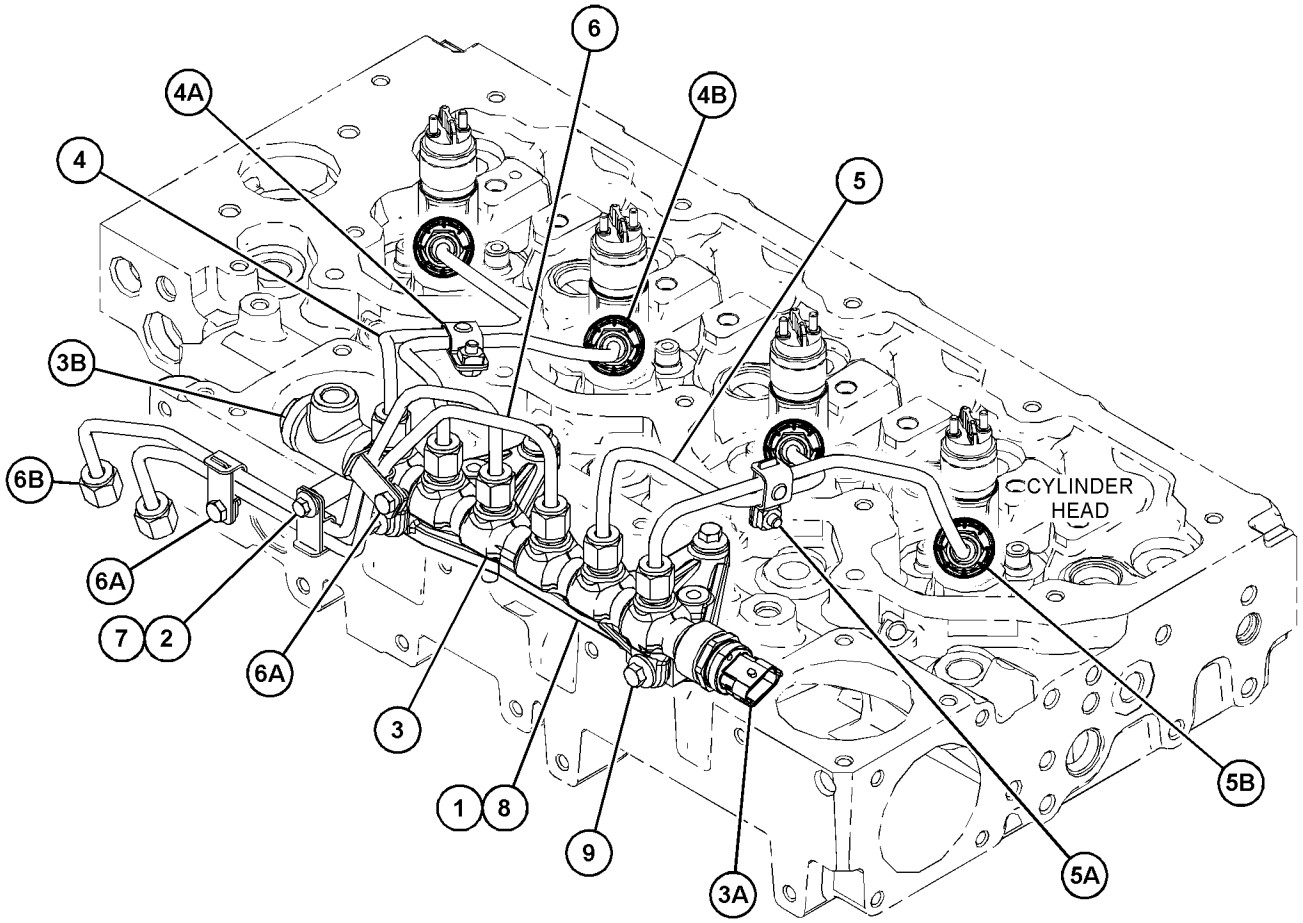

GRAPHIC #1 <END> g03815915

415-7107 ALTERNATOR GP-CHARGING

PART OF 480-6065, 486-2471, 500-8128, 502-7230, 508-4399, 509-5884, 510-0902, 514-3535, 514-3537, 516-9846, 527-9081 ENGINE AR-PRIMARY

SMCS-1405 **i06167679**

NOTE	REF NO	GRAPHIC REF	PART NUMBER	QTY	PART NAME 1 2 3 4 5 6 (PRODUCT LEVEL)	SEE PAGE
M	1	1	**111-0859**	4	BOLT (M10X1.5X35-MM)	
M	2	1	**164-7468**	4	BOLT (M10X1.5X95-MM)	
R	3	1	**321-8932**	1	ALTERNATOR (24-VOLT, 80-AMPERE)	
	4	1	**321-8952**	1	BRACKET AS	
	4A	1	**161-9820**	2	PIN	

M - METRIC PART
R - REMANUFACTURED PART MAY BE AVAILABLE

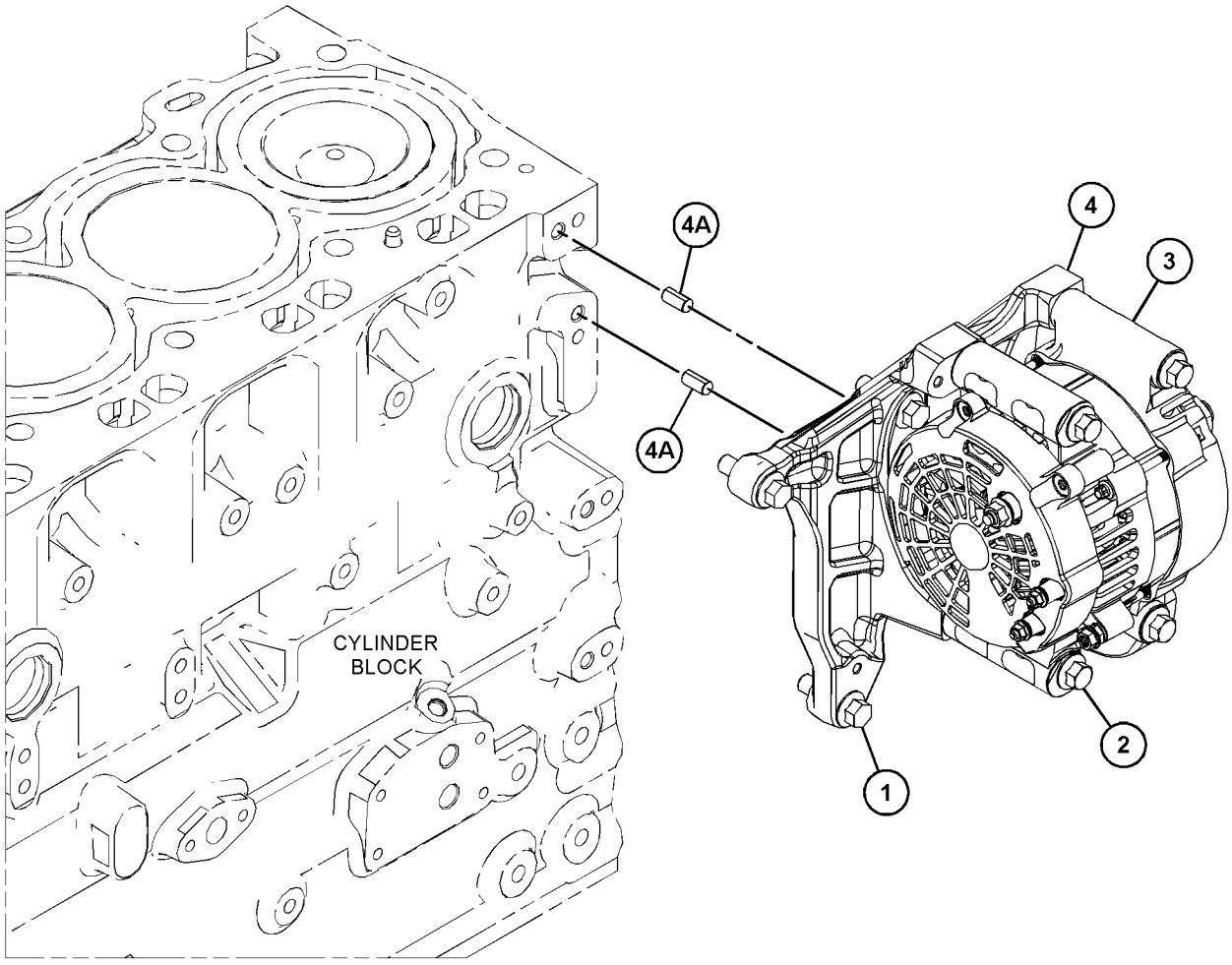

GRAPHIC #1 <END> g03863471

418-7664 ALTERNATOR GP-CHARGING

PART OF 455-9378, 461-3168, 469-1048, 475-8294, 477-2657, 478-6560, 484-2343, 491-2522, 492-1322, 492-3115, 492-3118, 495-3005, 503-1940, 503-4924, 504-3628, 504-3645, 509-3109, 512-9838, 512-9884, 517-0058, 526-8847, 538-5357, 539-3889, 541-2728 ENGINE AR-PRIMARY

SMCS-1405 **i06091161**

NOTE	REF NO	GRAPHIC REF	PART NUMBER	QTY	PART NAME 1 2 3 4 5 6 (PRODUCT LEVEL)	SEE PAGE
M	1	1	**111-0859**	4	BOLT (M10X1.5X35-MM)	
M	2	1	**164-7468**	4	BOLT (M10X1.5X95-MM)	
R	3	1	**321-8902**	1	ALTERNATOR (12-VOLT, 100-AMPERE)	
	4	1	**321-8952**	1	BRACKET AS	
	4A	1	**161-9820**	2	PIN	

M - METRIC PART
R - REMANUFACTURED PART MAY BE AVAILABLE

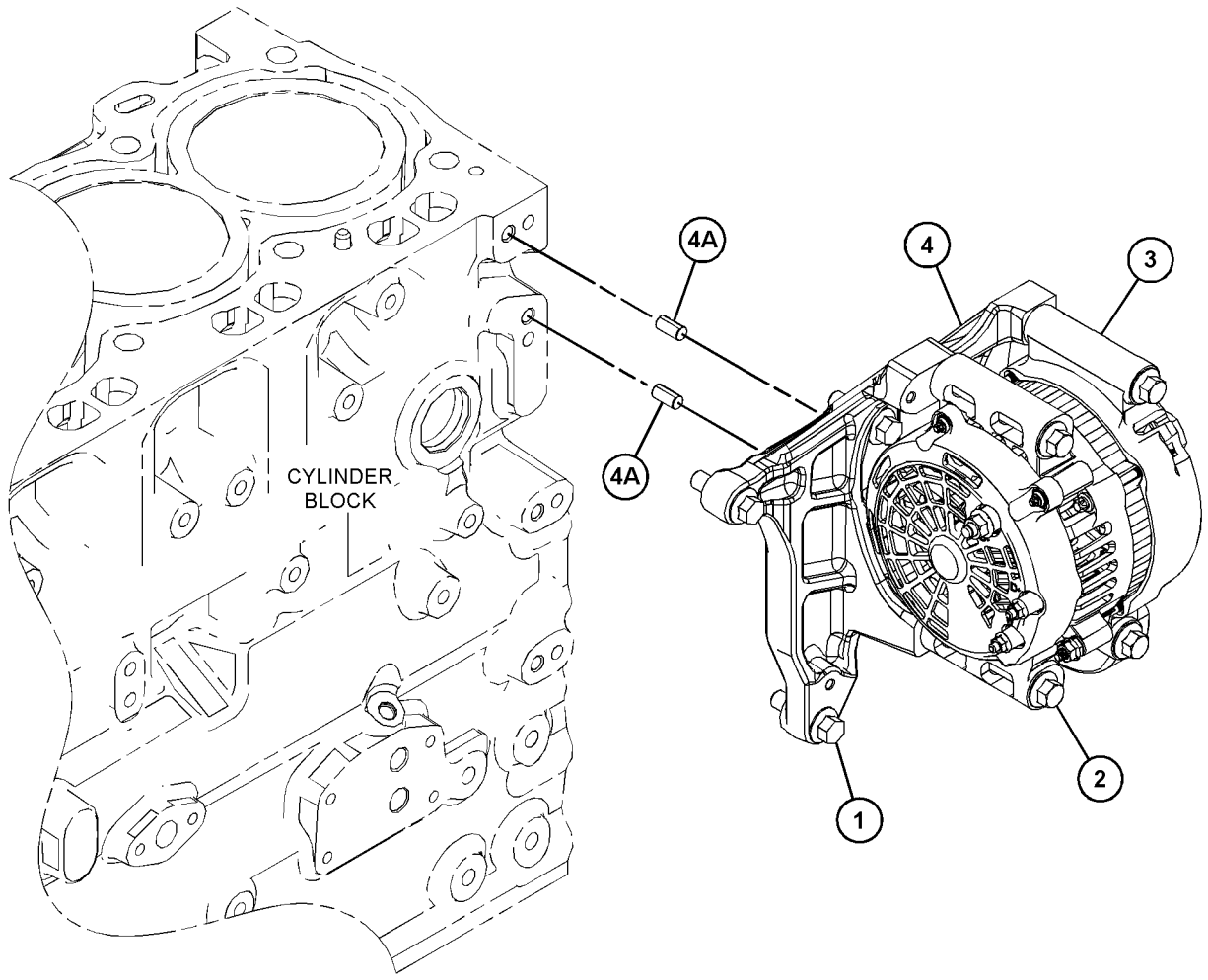

GRAPHIC #1 <END> g03812532

425-8162 ALTERNATOR GP-CHARGING

12-VOLT, 120-

PART OF 463-8820, 463-8910, 466-3332, 466-4382, 467-7465, 484-1469, 495-9687, 509-5882 ENGINE AR-PRIMARY

SMCS-1405 **i06105322**

NOTE	REF NO	GRAPHIC REF	PART NUMBER	QTY	PART NAME 1 2 3 4 5 6 (PRODUCT LEVEL)	SEE PAGE
M	1	1	**111-0859**	4	BOLT (M10X1.5X35-MM)	
M	2	1	**164-7468**	4	BOLT (M10X1.5X95-MM)	
R	3	1	**321-8928**	1	ALTERNATOR (12-VOLT, 120-AMPERE)	
	4	1	**321-8952**	1	BRACKET AS	
	4A	1	**161-9820**	2	PIN	

M - METRIC PART
R - REMANUFACTURED PART MAY BE AVAILABLE

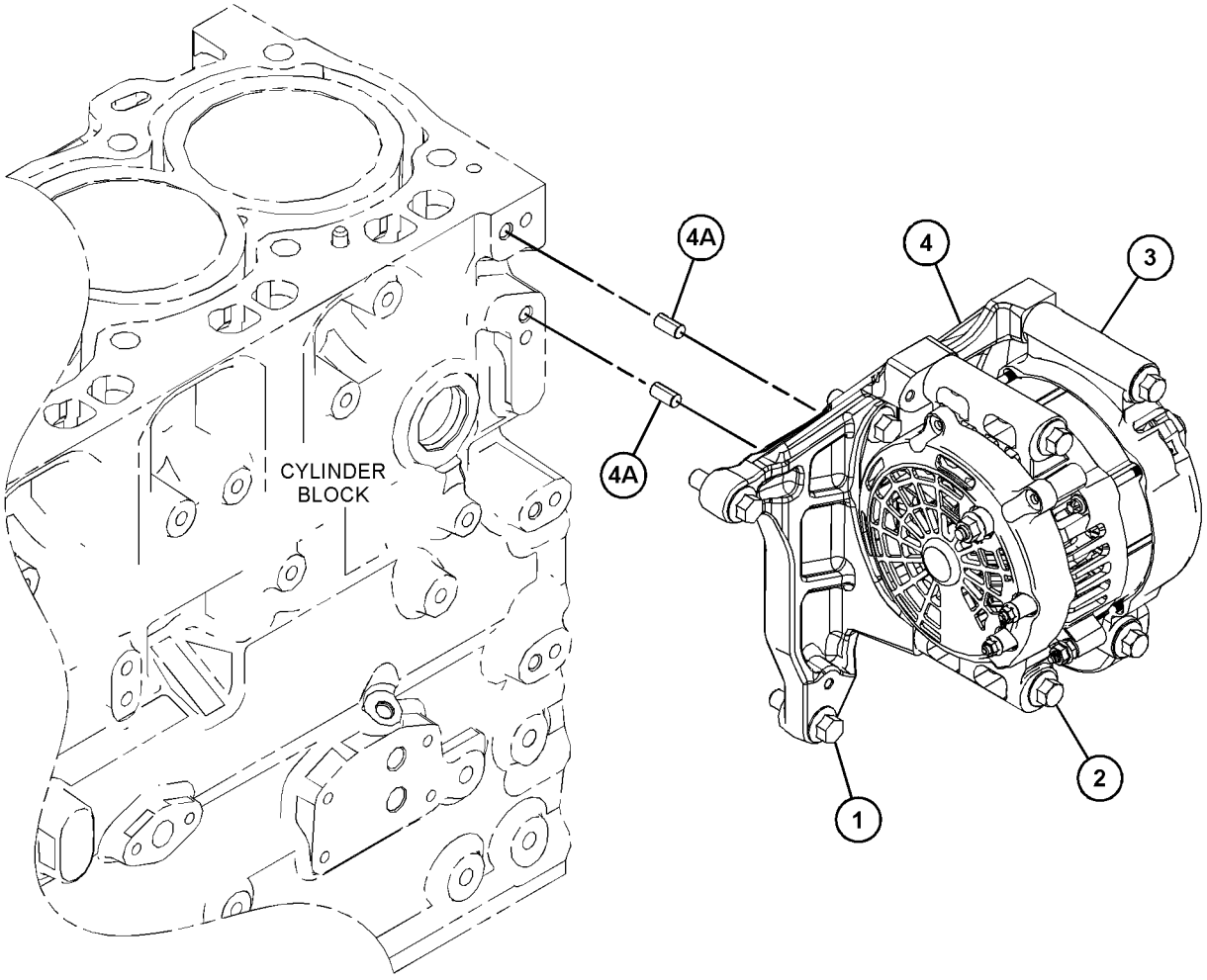

GRAPHIC #1 <END> g03814818

528-5052 ALTERNATOR GP-CHARGING

12-VOLT, 85-AMPERE

SMCS-1405 **i07310994**

NOTE	REF NO	GRAPHIC REF	PART NUMBER	QTY	PART NAME 1 2 3 4 5 6 (PRODUCT LEVEL)	SEE PAGE
M	1	1	**6I-0593**	2	BOLT (M10X1.5X30-MM)	
M	2	1	**6V-9189**	1	LOCKNUT (M8X1.25-THD)	
M	3	1	**140-8783**	2	BOLT (M10X1.5X45-MM)	
M	4	1	**359-9666**	1	BOLT-FLANGE HEAD (M8X1.25X130-MM)	
	5	1	**371-5649**	1	ALTERNATOR (12-VOLT, 85-AMPERE)	
	6	1	**453-3595**	1	BRACKET (ALTERNATOR)	
M	7	1	**6I-0254**	1	BOLT (M8X1.25X30-MM)	
	8	1	**067-6366**	1	WASHER	
	9	1	**132-8848**	1	WASHER	
	10	1	**233-9531**	1	LEVER	
	11	1	**499-0050**	1	BRACKET (ALTERNATOR)	
M	12	1	**175-7141**	1	NUT-HEX FLANGE (M10X1.5-THD)	
M	13	1	**6I-0654**	1	BOLT (M10X1.5X25-MM)	

M - METRIC PART

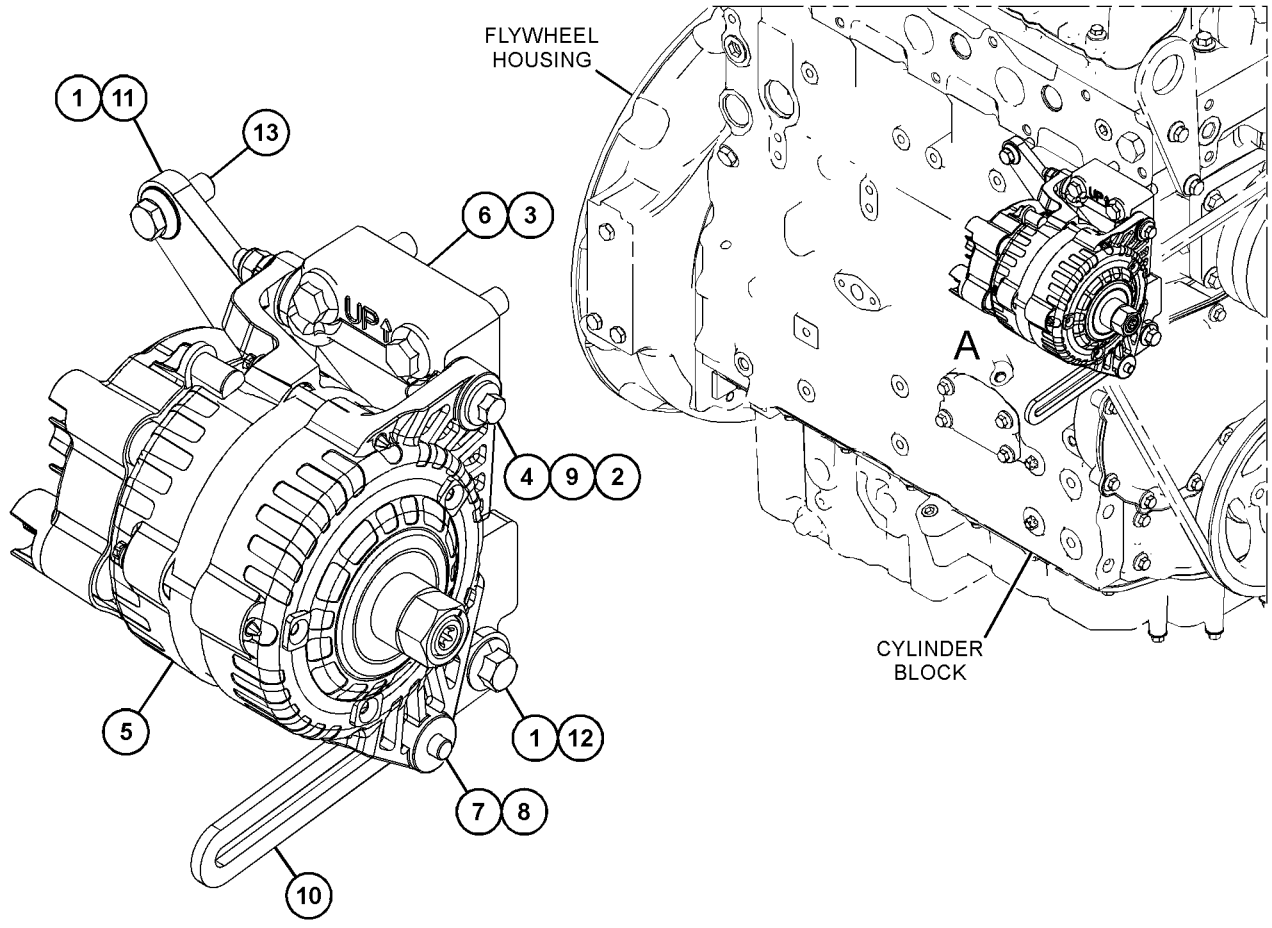

VIEW OF AREA A

GRAPHIC #1 <END> g06288074

415-5534 CONTROL GP-ELECTRONIC

PART OF 463-8820, 463-8848, 463-8910, 475-8294, 509-5882 ENGINE AR-PRIMARY

SMCS-1410, 1917, 1924, 4490 **i06155286**

NOTE	REF NO	GRAPHIC REF	PART NUMBER	QTY	PART NAME 1 2 3 4 5 6 (PRODUCT LEVEL)	SEE PAGE
M	1	1	**6I-0456**	4	BOLT (M8X1.25X45-MM)	
	2	1	**7W-2632**	1	WASHER (8.5X16.8X1.6-MM THK)	
	3	1	**217-0099**	4	SPACER (8.2X25X2-MM THK)	
	4	1	**278-5203**	4	SPACER	
R	5	1	**374-2640**	1	CONTROL GP-UNPROGRAMMED	
	6	1	**300-6714**	8	MOUNT	

M - METRIC PART
R - REMANUFACTURED PART MAY BE AVAILABLE

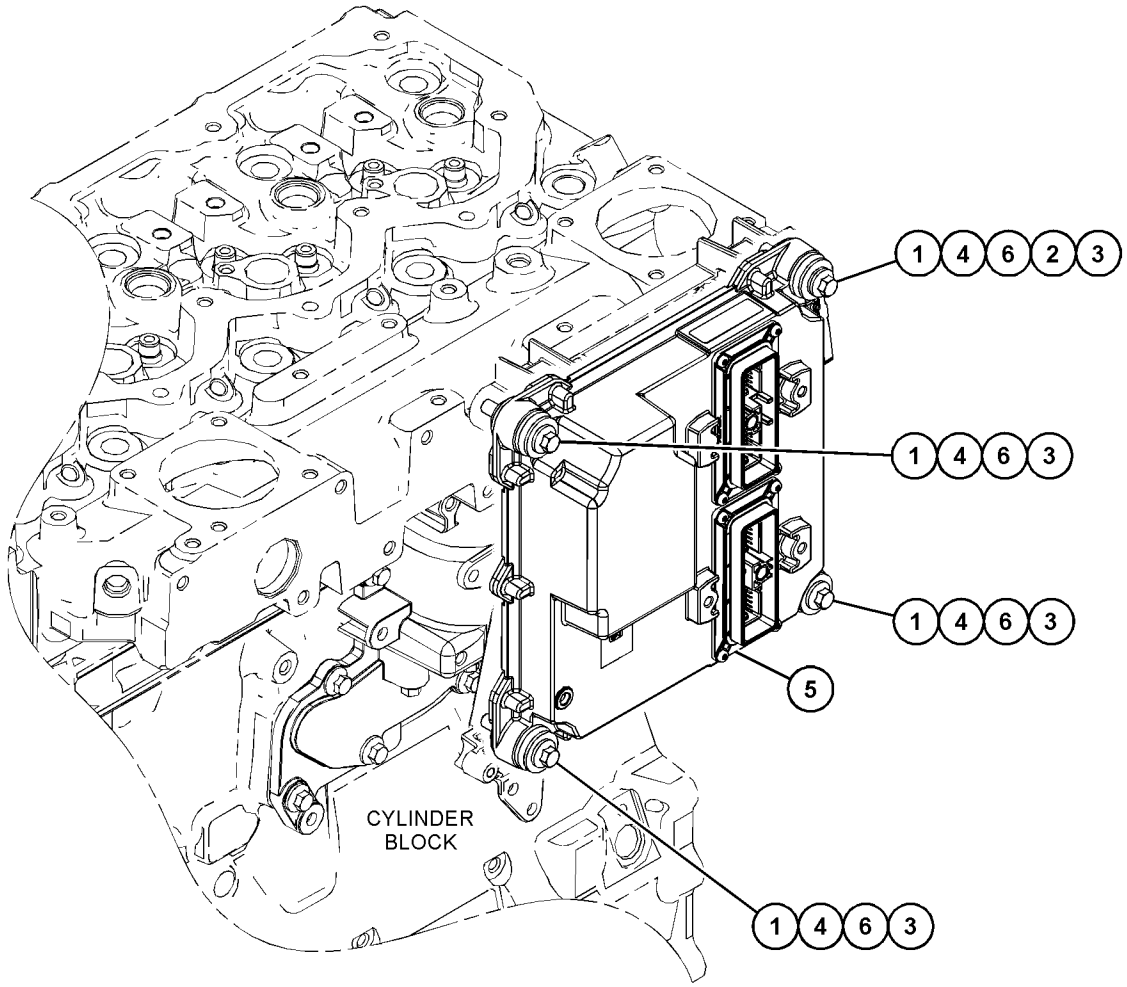

GRAPHIC #1 <END> g03824323

415-5535 CONTROL GP-ELECTRONIC

PART OF 455-9378, 461-3168, 466-3332, 466-4382, 467-7465, 469-1048, 477-2657, 478-6560, 480-6065, 484-1469, 484-2343, 486-2471, 491-2522, 492-1322, 492-3115, 492-3118, 495-3005, 495-9687, 500-8128, 502-7230, 503-1940, 503-4924, 504-3628, 504-3645, 508-4399, 509-3109, 509-5884, 510-0902, 512-9838, 512-9884, 514-3535, 514-3537, 516-9846, 517-0058, 526-8847, 527-9081, 538-5357, 539-3889, 541-2728 ENGINE AR-PRIMARY

SMCS-1410, 1917, 1924, 4490 **i06091134**

NOTE	REF NO	GRAPHIC REF	PART NUMBER	QTY	PART NAME 1 2 3 4 5 6 (PRODUCT LEVEL)	SEE PAGE
	1	1	**7W-2632**	1	WASHER (8.5X16.8X1.6-MM THK)	
	2	1	**217-0099**	4	SPACER (8.2X25X2-MM THK)	
	3	1	**278-5203**	4	SPACER	
	4	1	**300-6714**	8	MOUNT	
	5	1	**374-2641**	1	CONTROL GP-UNPROGRAMMED	
M	6	1	**6I-0456**	4	BOLT (M8X1.25X45-MM)	

M - METRIC PART

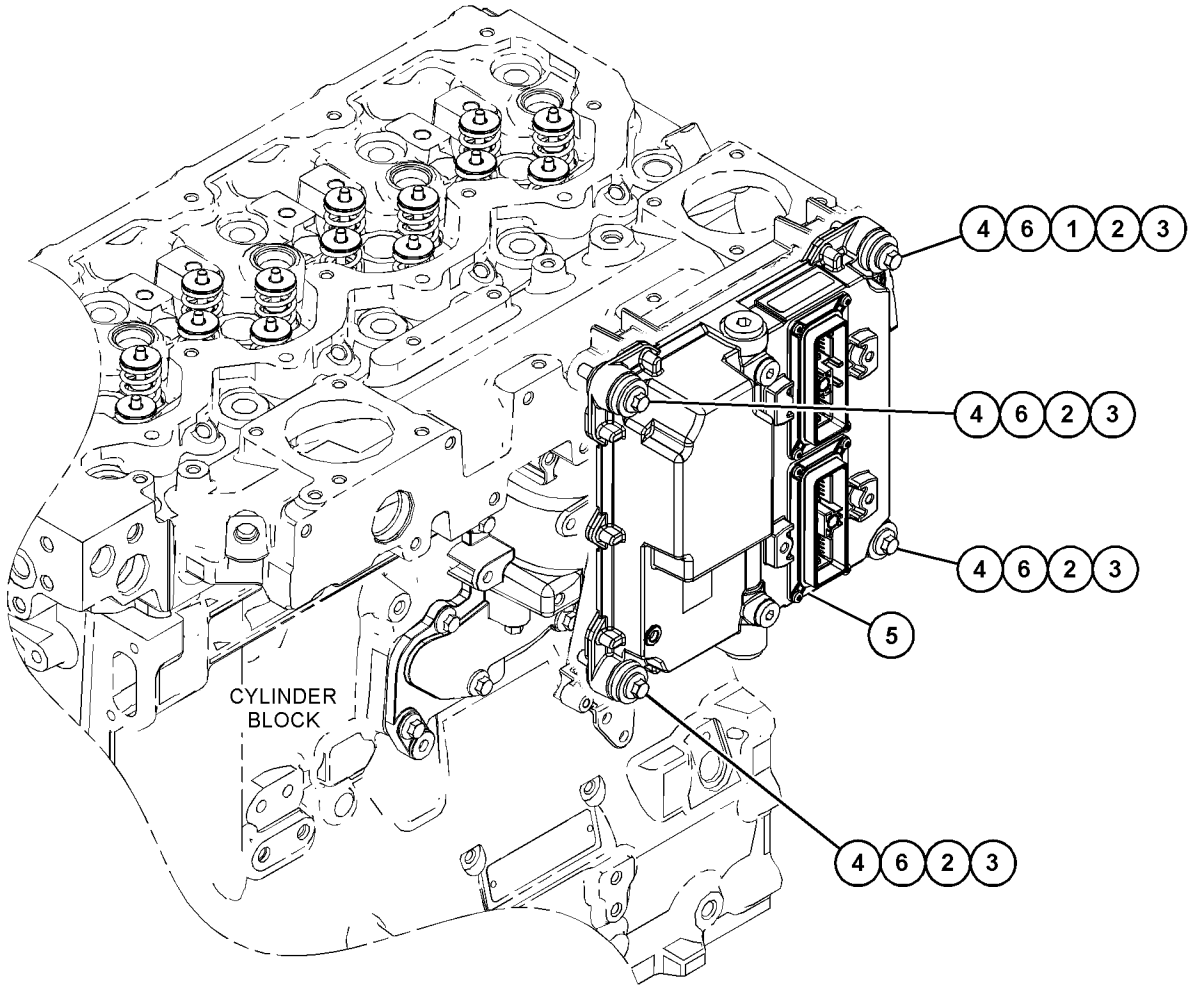

GRAPHIC #1 <END> g03813336

447-5149 HARNESS AS-ENGINE

PART OF 426-5232, 450-2852 WIRING GP-ENGINE

SMCS-1408 **i06658876**

NOTE	PART NUMBER	QTY	PART NAME 1 2 3 4 5 6 (PRODUCT LEVEL)	SEE PAGE
	155-2271	2	KIT-CONNECTING PLUG (4-PIN)	
			(EACH KIT INCLUDES PLUG AS, WEDGE & INTERFACE SEAL)	
	185-1860	5	SEAL-WIRE	
	206-1345	4	STRAP-CABLE	
	217-9039	8	STRAP-CABLE	
	230-4011	2	PLUG AS-CONNECTOR (2-PIN)	
			(EACH INCLUDES)	
	455-0704	1	SEAL-CONNECTOR	
	245-1043	1	PLUG GP-CONNECTOR (64-PIN)	
M	**267-7207**	1	BOLT-SPECIAL (M6X1-THD)	
	245-1044	2	LOCK-CONNECTOR	
	267-9572	25	SOCKET-CONNECTION (18-GA)	
	245-1048	39	PLUG-CONNECTOR (1-PIN)	
	281-8804	2	PLUG AS-CONNECTOR (3-PIN)	
			(EACH INCLUDES)	
	455-0705	1	SEAL-CONNECTOR	
E	**292-2896**		CONDUIT (21-CM)	
E	**292-2893**		CONDUIT (10.1-MM ID) (109-CM)	
	344-1686	4	SOCKET-CONNECTOR (18-GA)	
	9X-3402	18	SOCKET-CONNECTOR (16-GA TO 18-GA)	
			–OR–	
	126-1768	18	SOCKET-CONNECTOR (14-GA TO 16-GA)	
E	**125-7874**		TUBE-HEAT SHRINK (5.72-MM DIA) (10-CM)	

E - ORDER BY THE CENTIMETER
M - METRIC PART

<END>

375-8407 HARNESS AS-WIRING

PART OF 450-2855 WIRING GP-ENGINE

SMCS-1408 **i05716574**

NOTE	PART NUMBER	QTY	PART NAME 1 2 3 4 5 6 (PRODUCT LEVEL)	SEE PAGE
	102-8804	1	KIT-RECEPTACLE (4-PIN)	
			(INCLUDES RECEPTACLE AS & WEDGE)	
	113-4630	1	RECEPTACLE AS-CONNECTOR (4-PIN)	
	9X-3401	4	PIN-CONNECTOR (16-GA TO 18-GA)	
			–OR–	
	126-1767	4	PIN-CONNECTOR (14-GA TO 16-GA)	
	332-7865	1	TIE-CABLE	

<END>

448-0757 HARNESS AS-WIRING

PART OF 417-4227, 450-2854, 450-2855, 450-2856, 492-2945 WIRING GP-ENGINE

SMCS-1408 **i06548410**

NOTE	PART NUMBER	QTY	PART NAME 1 2 3 4 5 6 (PRODUCT LEVEL)	SEE PAGE
E	**292-2896**		CONDUIT (109-CM)	
	8C-6354	1	CAP-RECEPTACLE (ET CONNECTOR)	
	245-1044	2	LOCK-CONNECTOR	
	206-1345	4	STRAP-CABLE	
	316-9351	5	MOUNTING-CABLE TIE	
	9X-3401	6	PIN-CONNECTOR (16-GA TO 18-GA)	
			—OR—	
	126-1767	6	PIN-CONNECTOR (14-GA TO 16-GA)	
	155-2271	4	KIT-CONNECTING PLUG (4-PIN)	
			(EACH INCLUDES PLUG AS, WEDGE & INTERFACE SEAL)	
	230-4011	2	PLUG AS-CONNECTOR (2-PIN)	
			(EACH INCLUDES)	
	455-0704	1	SEAL-CONNECTOR	
	245-1043	1	PLUG GP-CONNECTOR (64-PIN)	
M	**267-7207**	1	BOLT-SPECIAL (M6X1-THD)	
	267-7208	1	RING-RETAINING	
	274-4990	1	SEAL	
	281-8804	2	PLUG AS-CONNECTOR (3-PIN)	
			(EACH INCLUDES)	
	455-0705	1	SEAL-CONNECTOR	
	245-1048	33	PLUG-CONNECTOR (1-PIN)	
	8T-8737	3	PLUG-SEAL	
	270-1784	1	RECEPTACLE	
	185-1860	5	SEAL-WIRE	
	267-9572	32	SOCKET-CONNECTION (18-GA)	
	344-1686	4	SOCKET-CONNECTOR (18-GA)	
	217-9039	8	STRAP-CABLE	
E	**125-7874**		TUBE-HEAT SHRINK (5.72-MM DIA) (10-CM)	

E - ORDER BY THE CENTIMETER
M - METRIC PART

<END>

425-9760 SENSOR GP-ENGINE

PART OF 455-9378, 461-3168, 463-8820, 463-8848, 463-8910, 466-4382, 467-7465, 469-1048, 475-8294, 477-2657, 478-6560, 480-6065, 484-1469, 484-2343, 486-2471, 491-2522, 492-1322, 492-3115, 492-3118, 495-3005, 495-9687, 500-8128, 502-7230, 503-1940, 503-4924, 504-3628, 504-3645, 508-4399, 509-3109, 509-5882, 509-5884, 510-0902, 512-9838, 512-9884, 514-3535, 514-3537, 516-9846, 517-0058, 526-8847, 527-9081, 538-5357, 539-3889, 541-2728 ENGINE AR-PRIMARY

SMCS-1000, 1050, 1718, 1906, 1907, 1912, 1917, 1923, 1924, 1925, 1928, 1929, 7400, 7422

i06091143

NOTE	REF NO	GRAPHIC REF	PART NUMBER	QTY	PART NAME 1 2 3 4 5 6 (PRODUCT LEVEL)	SEE PAGE
M	1	1	**124-3815**	1	BOLT (M8X1.25X16-MM)	
	2	1	**199-9252**	1	SEAL-O-RING	
	3	1	**199-9267**	1	SEAL-O-RING	
	4	1	**206-1826**	1	BOLT	
	5	1	**238-0112**	1	SENSOR GP-TEMPERATURE (ENGINE COOLANT)	
	5A	1	**238-0112**	1	SENSOR GP-TEMPERATURE (ENGINE COOLANT)	
	6	1	**274-1639**	2	SEAL	
	7	1	**278-5226**	2	SEAL-O-RING	
	8	1	**320-3060**	1	SENSOR GP-PRESSURE (ENGINE OIL)	
	9	1	**320-3062**	1	SENSOR GP-PRESSURE (INLET MANIFOLD AIR)	
	10	1	**384-3887**	1	SENSOR GP-SPEED	
	11	1	**384-3888**	1	SENSOR GP-SPEED	
	12	1	**425-9111**	1	ADAPTER	
M	13	1	**8T-1158**	1	BOLT-SOCKET HEAD (M8X1.25X20-MM)	

M - METRIC PART

425-9760 **SENSOR GP-ENGINE (**contd.**)** **i06091143**

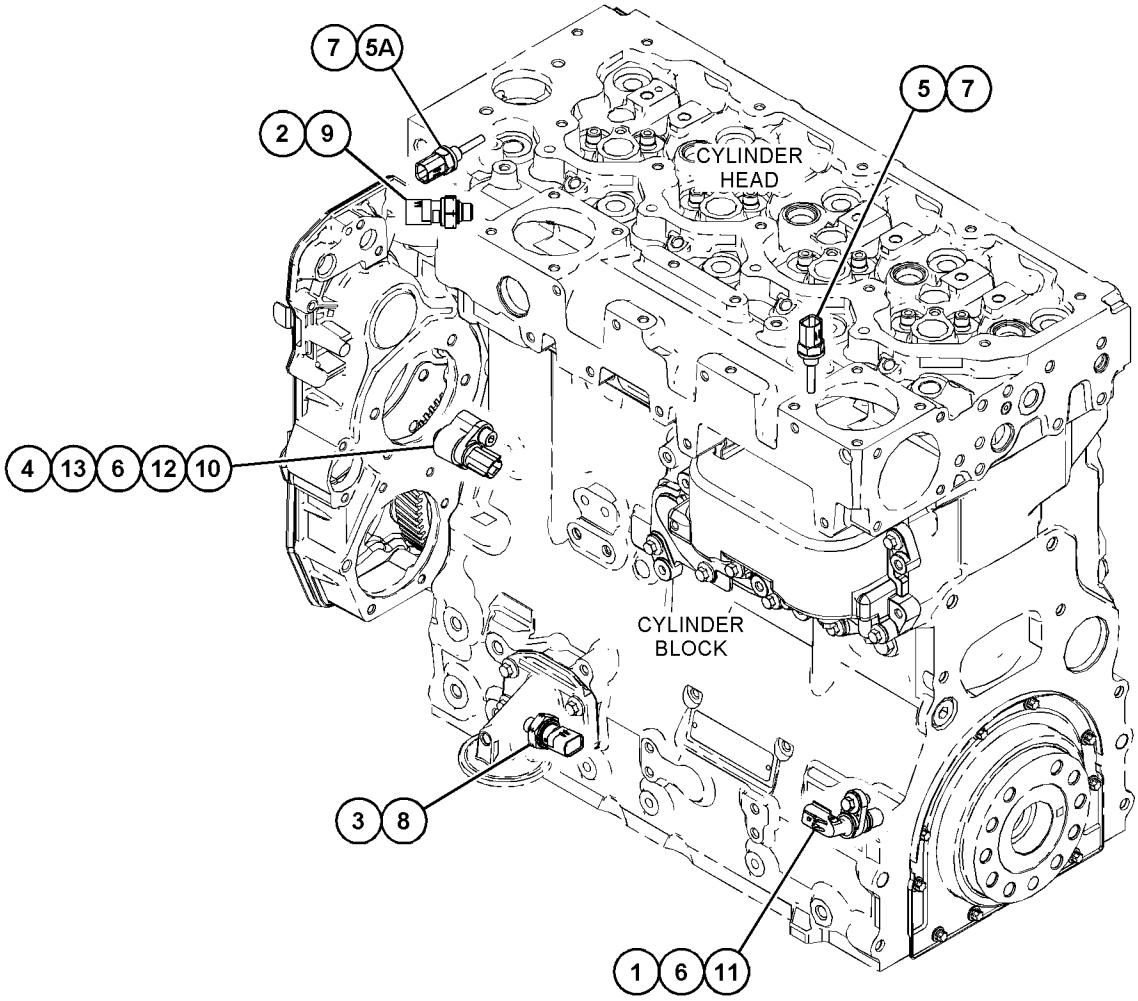

GRAPHIC #1 <END> g03814927

438-0911 SENSOR GP-ENGINE

PART OF 466-3332 ENGINE AR-PRIMARY

SMCS-1000, 1050, 1718, 1906, 1907, 1912, 1917, 1923, 1924, 1925, 1928, 1929, 7400, 7422

i06151775

NOTE	REF NO	GRAPHIC REF	PART NUMBER	QTY	PART NAME 1 2 3 4 5 6 (PRODUCT LEVEL)	SEE PAGE
M	1	1	**124-3815**	1	BOLT (M8X1.25X16-MM)	
	2	1	**199-9252**	1	SEAL-O-RING	
	3	1	**199-9267**	1	SEAL-O-RING	
	4	1	**206-1826**	1	BOLT	
	5	1	**238-0112**	1	SENSOR GP-TEMPERATURE	
	6	1	**274-1639**	2	SEAL	
	7	1	**278-5226**	2	SEAL-O-RING	
	8	1	**319-8531**	1	SENSOR-TEMPERATURE	
	9	1	**320-3060**	1	SENSOR GP-PRESSURE	
	10	1	**320-3062**	1	SENSOR GP-PRESSURE	
	11	1	**384-3887**	1	SENSOR GP-SPEED	
	12	1	**384-3888**	1	SENSOR GP-SPEED	
	13	1	**425-9111**	1	ADAPTER	
M	14	1	**8T-1158**	1	BOLT-SOCKET HEAD (M8X1.25X20-MM)	

M - METRIC PART

438-0911 **SENSOR GP-ENGINE (**contd.**)** **i06151775**

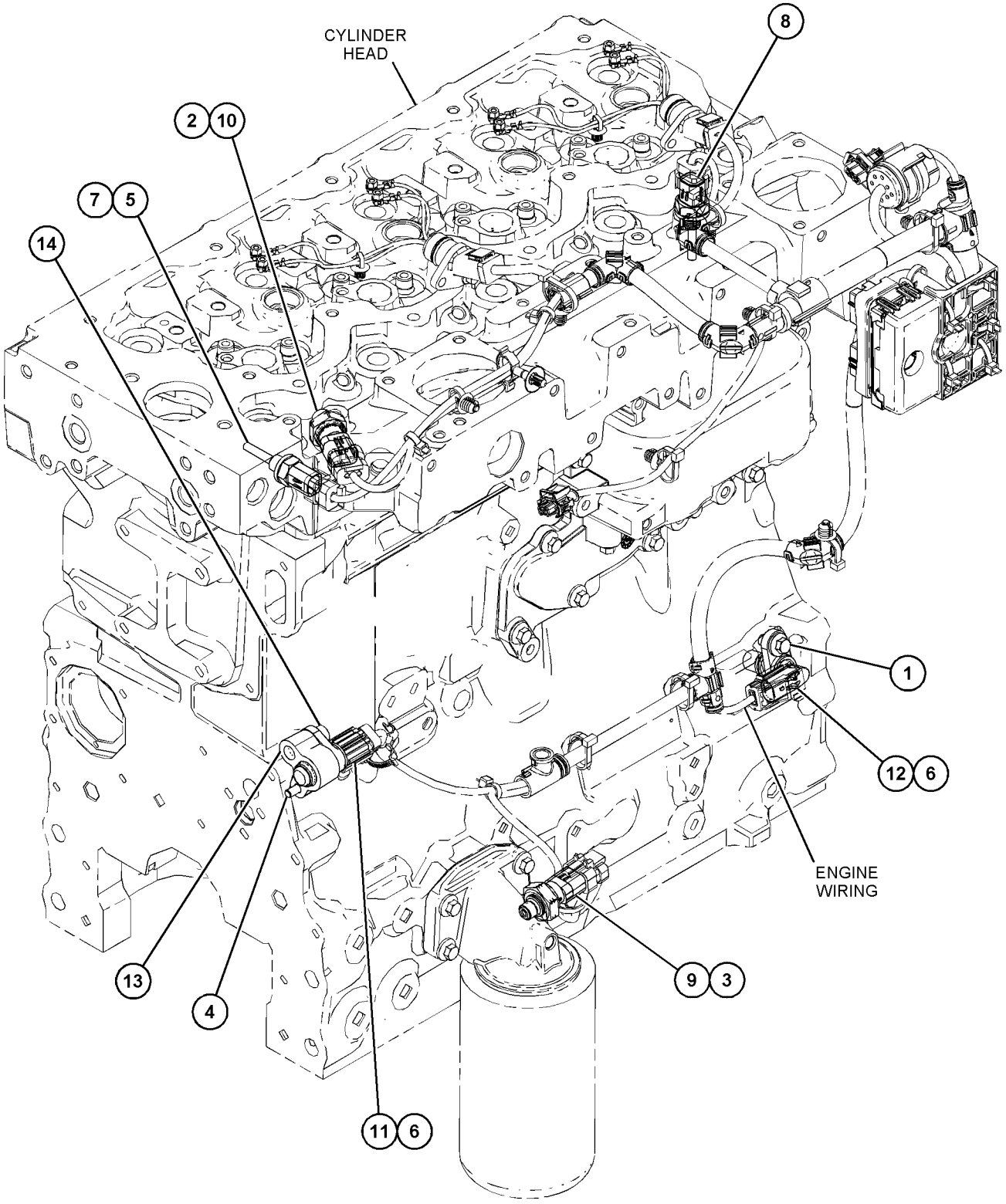

GRAPHIC #1 <END> g03890257

430-5204 SENSOR GP-TEMPERATURE

PART OF 455-9378, 461-3168, 463-8820, 463-8848, 463-8910, 466-3332, 466-4382, 467-7465, 469-1048, 475-8294, 477-2657, 478-6560, 480-6065, 484-1469, 484-2343, 486-2471, 491-2522, 492-1322, 492-3115, 492-3118, 495-3005, 495-9687, 500-8128, 502-7230, 503-1940, 503-4924, 504-3628, 504-3645, 508-4399, 509-3109, 509-5882, 509-5884, 510-0902, 512-9838, 512-9884, 514-3535, 514-3537, 516-9846, 517-0058, 526-8847, 527-9081, 538-5357, 539-3889, 541-2728 ENGINE AR-PRIMARY

SMCS-1906, 1919, 1921, 1922, 1928, 1929 **i06089785**

NOTE	REF NO	GRAPHIC REF	PART NUMBER	QTY	PART NAME 1 2 3 4 5 6 (PRODUCT LEVEL)	SEE PAGE
	1	1	**199-9751**	1	SEAL-O-RING	
	2	1	**232-1322**	1	PLUG	

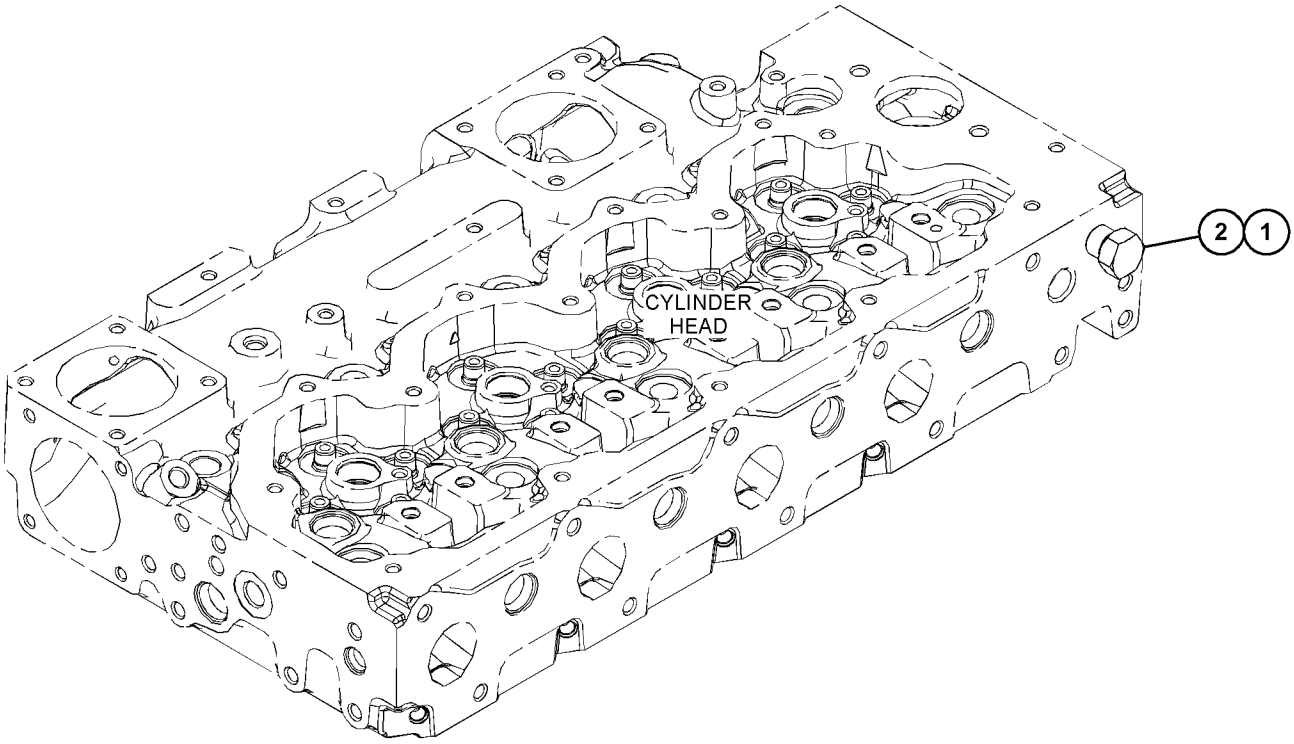

GRAPHIC #1 <END> g03812299

417-3453 STARTING AID GP

PART OF 455-9378, 461-3168, 463-8820, 463-8848, 463-8910, 466-3332, 466-4382, 467-7465, 469-1048, 475-8294, 477-2657, 478-6560, 484-1469, 484-2343, 491-2522, 492-1322, 492-3115, 492-3118, 495-3005, 495-9687, 503-1940, 503-4924, 504-3628, 504-3645, 509-3109, 509-5882, 512-9838, 512-9884, 517-0058, 526-8847, 538-5357, 539-3889, 541-2728 ENGINE AR-PRIMARY

SMCS-1090 **i06089781**

NOTE	REF NO	GRAPHIC REF	PART NUMBER	QTY	PART NAME 1 2 3 4 5 6 (PRODUCT LEVEL)	SEE PAGE
	1	1	**452-3112**	4	GLOW PLUG (12-VOLT)	
	2	1	**368-3147**	1	BUS BAR AS	

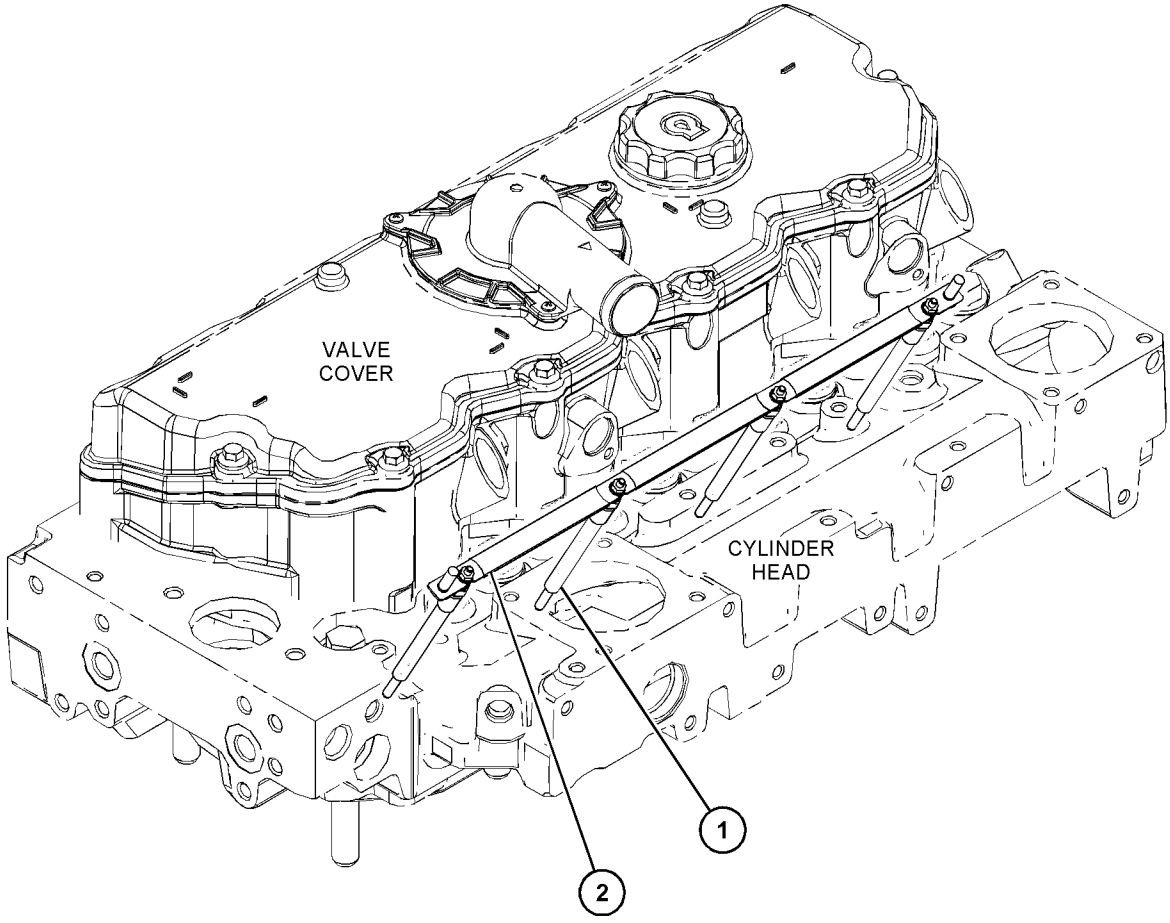

GRAPHIC #1 <END> g03817299

417-4371 STARTING AID GP

PART OF 480-6065, 486-2471, 500-8128, 502-7230, 508-4399, 509-5884, 510-0902, 514-3535, 514-3537, 516-9846, 527-9081 ENGINE AR-PRIMARY

SMCS-1090 **i06167685**

NOTE	REF NO	GRAPHIC REF	PART NUMBER	QTY	PART NAME 1 2 3 4 5 6 (PRODUCT LEVEL)	SEE PAGE
	1	1	**368-3147**	1	BUS BAR AS	
	2	1	**462-2235**	4	GLOW PLUG (24-VOLT)	

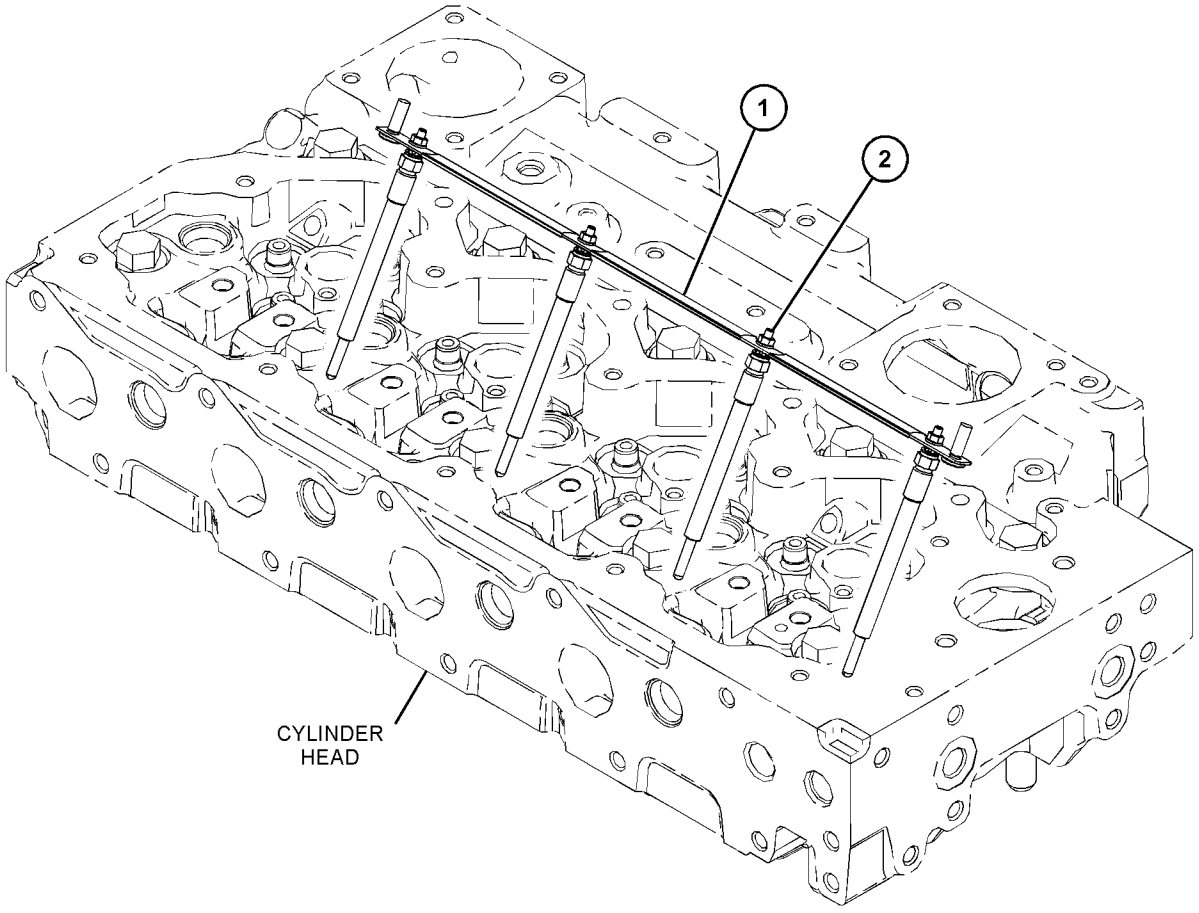

GRAPHIC #1 <END> g03842797

415-5536 STARTING MOTOR GP-ELECTRIC

24-VOLT

PART OF 480-6065, 486-2471, 500-8128, 502-7230, 508-4399, 509-5884, 510-0902, 514-3535, 514-3537, 516-9846, 527-9081 ENGINE AR-PRIMARY

SMCS-1453 **i06167677**

NOTE	REF NO	GRAPHIC REF	PART NUMBER	QTY	PART NAME 1 2 3 4 5 6 (PRODUCT LEVEL)	SEE PAGE
	1	1	**357-5205**	1	MOTOR-STARTING (24-VOLT)	
M	2	1	**175-7141**	3	NUT-HEX FLANGE (M10X1.5-THD)	
	3	1	**6I-4012**	3	STUD	

M - METRIC PART

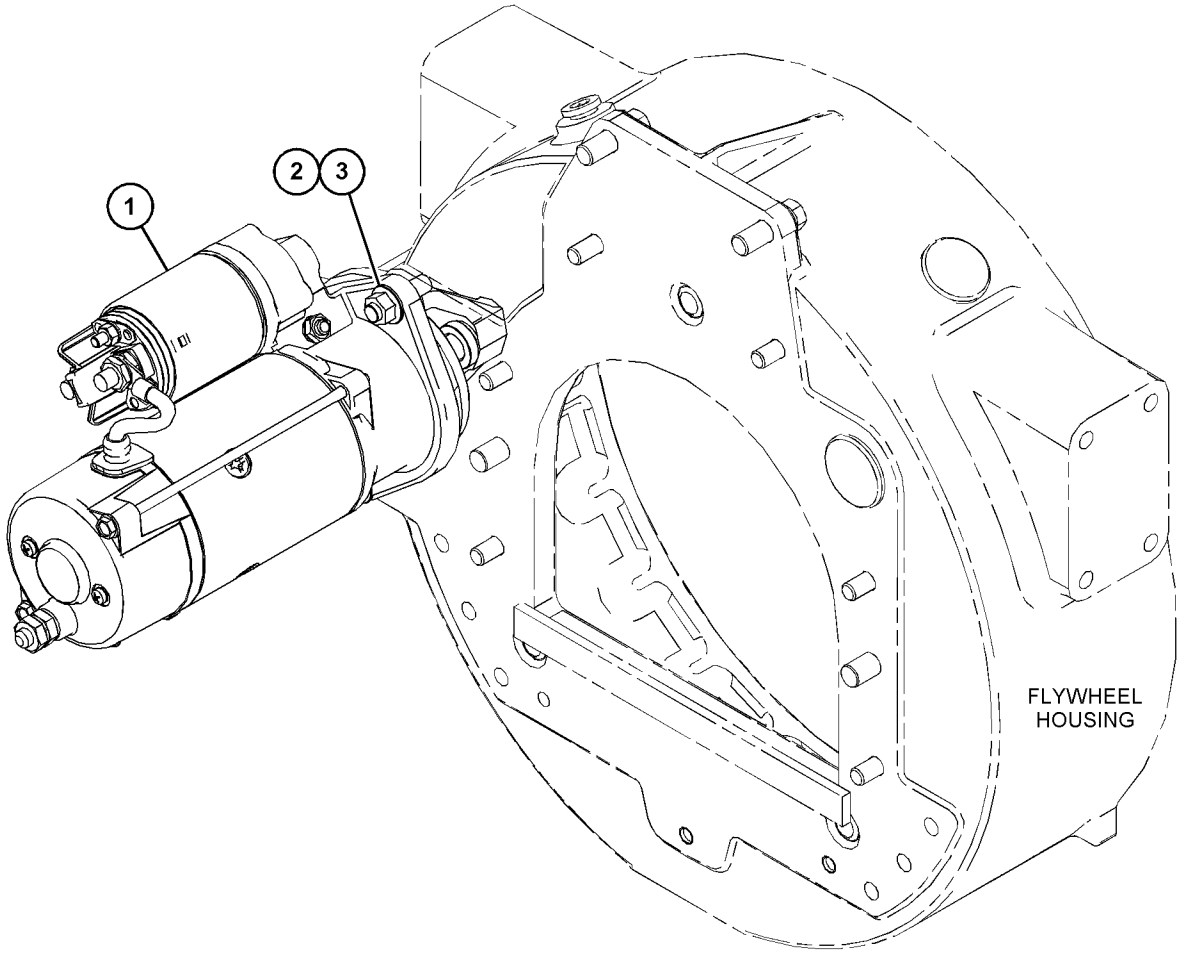

GRAPHIC #1 <END> g03842403

418-7475 STARTING MOTOR GP-ELECTRIC

12-VOLT

PART OF 455-9378, 461-3168, 469-1048, 477-2657, 484-2343, 495-3005, 503-1940, 503-4924, 509-3109, 512-9838, 512-9884, 526-8847, 538-5357, 539-3889 ENGINE AR-PRIMARY

SMCS-1453 **i07203313**

NOTE	REF NO	GRAPHIC REF	PART NUMBER	QTY	PART NAME 1 2 3 4 5 6 (PRODUCT LEVEL)	SEE PAGE
R	1	1	**526-9854**	1	STARTING MOTOR GP-ELECTRIC	
M	2	1	**175-7141**	3	NUT-HEX FLANGE (M10X1.5-THD)	
	3	1	**6I-4012**	3	STUD	

M - METRIC PART
R - REMANUFACTURED PART MAY BE AVAILABLE

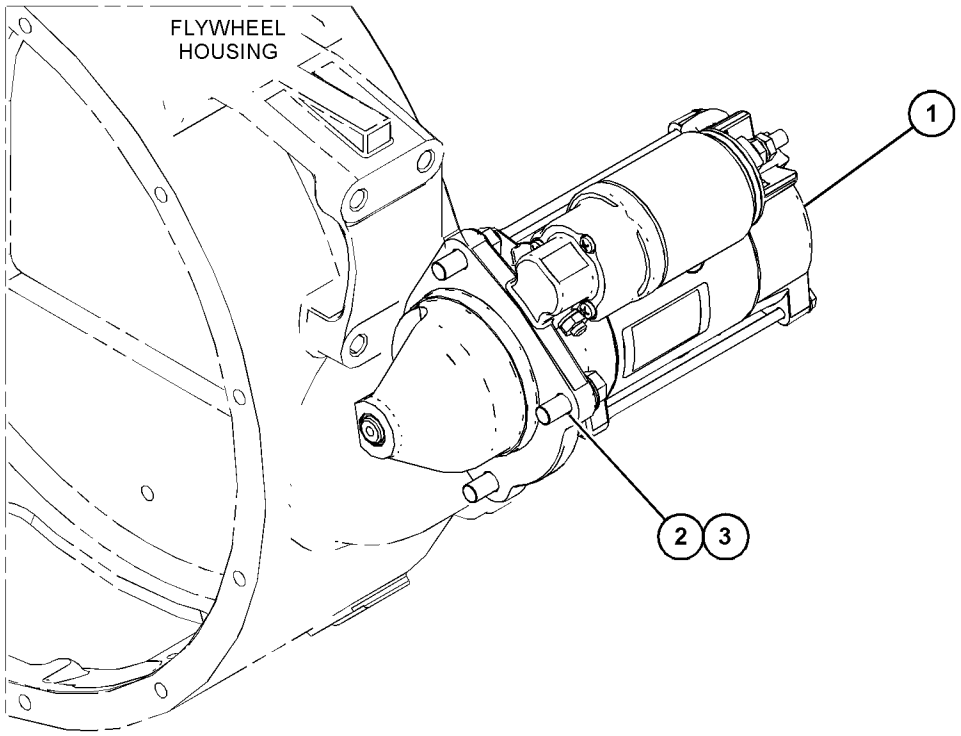

GRAPHIC #1 <END> g03815165

419-8514 STARTING MOTOR GP-ELECTRIC

12-VOLT

PART OF 455-9378, 466-3332, 466-4382, 467-7465, 475-8294, 478-6560, 484-1469, 491-2522, 492-1322, 495-9687, 517-0058 ENGINE AR-PRIMARY

SMCS-1453 **i06155557**

NOTE	REF NO	GRAPHIC REF	PART NUMBER	QTY	PART NAME 1 2 3 4 5 6 (PRODUCT LEVEL)	SEE PAGE
	1	1	**357-5204**	1	STARTING MOTOR-ELECTRIC (12-VOLT) (12-VOLT)	
M	2	1	**175-7141**	3	NUT-HEX FLANGE (M10X1.5-THD)	
	3	1	**6I-4012**	3	STUD	

M - METRIC PART

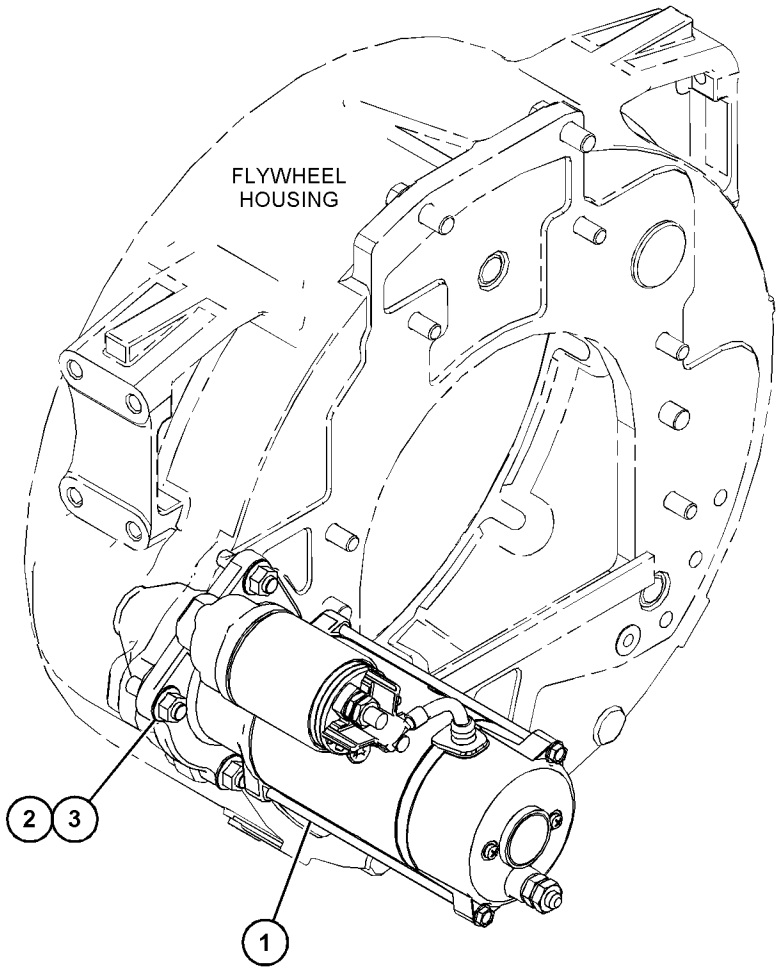

GRAPHIC #1 <END> g03829076

425-9174 STARTING MOTOR GP-ELECTRIC

PART OF 463-8820, 463-8848, 463-8910, 509-5882, 541-2728 ENGINE AR-PRIMARY

SMCS-1453 **i06124363**

NOTE	REF NO	GRAPHIC REF	PART NUMBER	QTY	PART NAME 1 2 3 4 5 6 (PRODUCT LEVEL)	SEE PAGE
R	1	1	**331-7010**	1	STARTING MOTOR-ELECTRIC (12-VOLT, 4-KW)	
M	2	1	**175-7141**	3	NUT-HEX FLANGE (M10X1.5-THD)	
	3	1	**6I-4012**	3	STUD	

M - METRIC PART
R - REMANUFACTURED PART MAY BE AVAILABLE

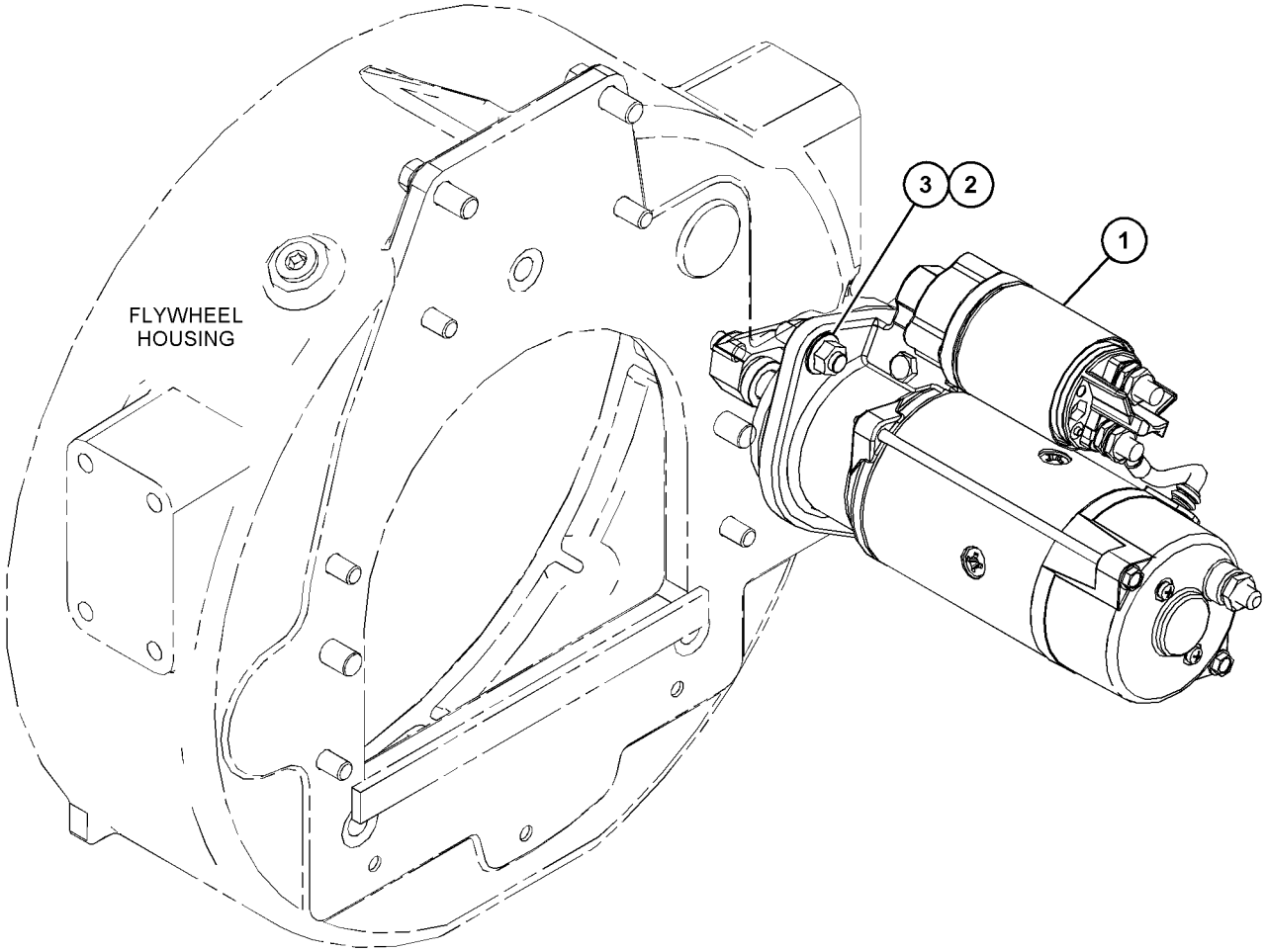

GRAPHIC #1 <END> g03822779

432-8211 SWITCH GP-HEAT START

PART OF 491-2522 ENGINE AR-PRIMARY

SMCS-1416 **i06124393**

NOTE	REF NO	GRAPHIC REF	PART NUMBER	QTY	PART NAME 1 2 3 4 5 6 (PRODUCT LEVEL)	SEE PAGE
	1	1	**7E-5218**	1	PLATE-SWITCH INDEX	
	2	1	**101-3990**	1	CONNECTOR	
	3	1	**101-3991**	6	CONNECTOR	
	4	1	**101-3992**	1	SLEEVE	
	5	1	**101-3993**	6	SLEEVE	
	6	1	**7E-5219**	1	SWITCH AS-KEY	
		1	**128-7723**	1	KEY	

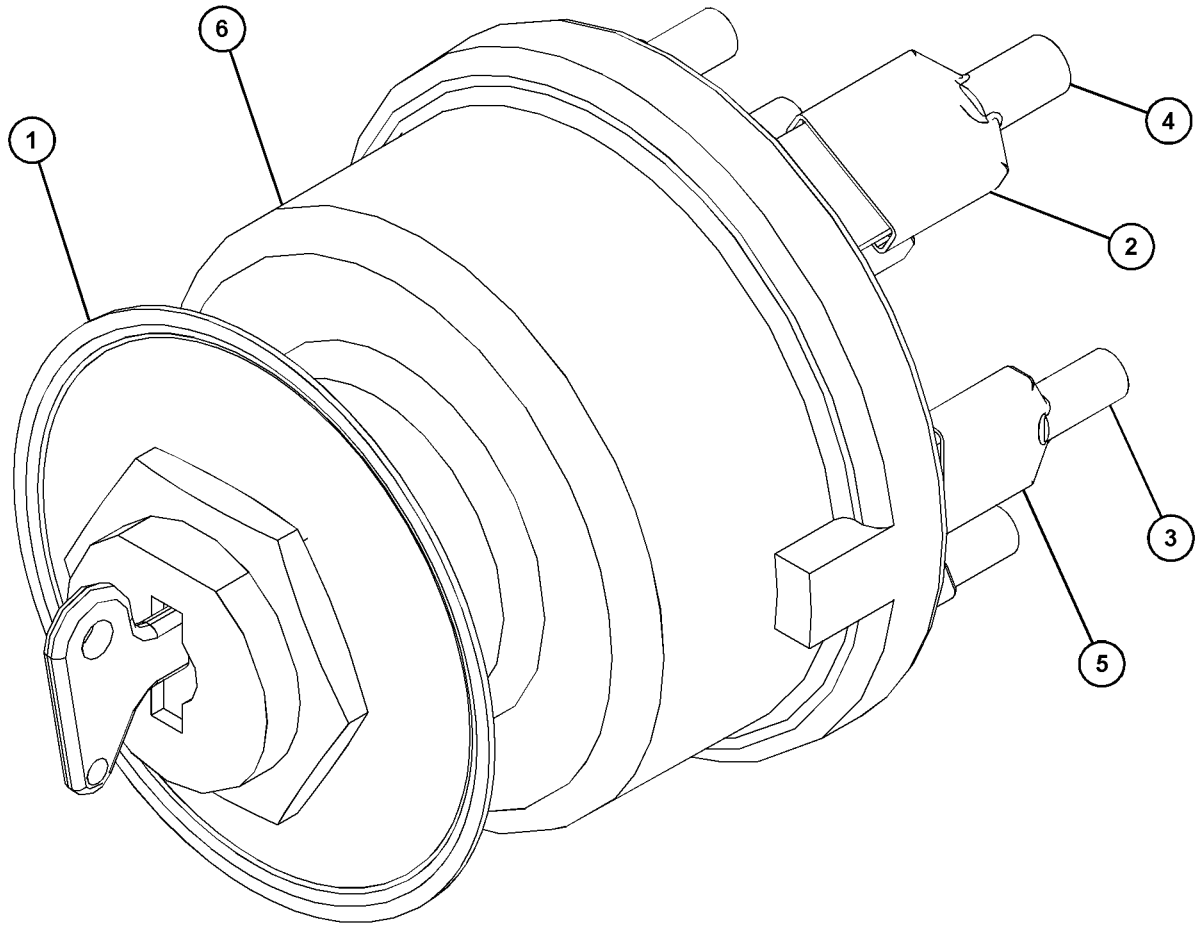

GRAPHIC #1 <END> g06003222

417-4227 WIRING GP-ENGINE

PART OF 455-9378, 461-3168, 463-8820, 466-3332, 467-7465, 478-6560, 480-6065, 492-1322, 492-3115, 492-3118, 495-3005, 500-8128, 502-7230, 503-1940, 503-4924, 504-3628, 504-3645, 509-3109, 509-5884, 512-9838, 512-9884, 514-3535, 514-3537, 516-9846, 517-0058, 526-8847, 539-3889, 541-2728 ENGINE AR-PRIMARY

SMCS-1000, 1408 **i06089335**

NOTE	REF NO	GRAPHIC REF	PART NUMBER	QTY	PART NAME 1 2 3 4 5 6 (PRODUCT LEVEL)	SEE PAGE
	1	1	**217-9039**	1	STRAP-CABLE	
	2	1	**236-5539**	1	CLIP	
Y	3	1	**448-0757**	1	HARNESS AS-WIRING	431
	4	1	**323-7347**	2	SEAL-O-RING	
	5	1	**458-3745**	2	HARNESS AS-PLATFORM	
					(EACH INCLUDES)	
	5A	1	**332-7865**	1	TIE-CABLE	
M	6	1	**232-1693**	1	BOLT-FLANGE HEAD (M6X1X35-MM)	
M	7	1	**254-3633**	2	BOLT-FLANGE HEAD (M6X1X16-MM, SELF LOCKING)	

M - METRIC PART
Y - SEPARATE ILLUSTRATION

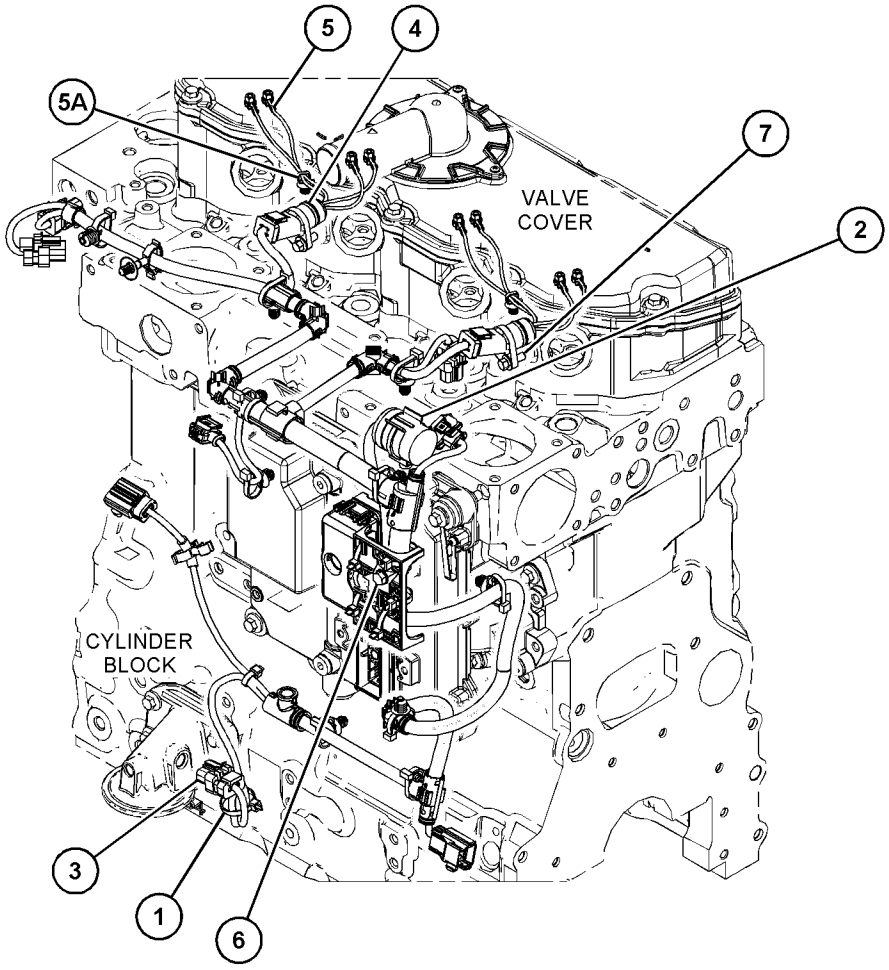

GRAPHIC #1 <END> g03818522

426-5232 WIRING GP-ENGINE

PART OF 469-1048, 477-2657 ENGINE AR-PRIMARY

SMCS-1000, 1408 **i06791633**

NOTE	REF NO	GRAPHIC REF	PART NUMBER	QTY	PART NAME 1 2 3 4 5 6 (PRODUCT LEVEL)	SEE PAGE
	1	1	**217-9039**	1	STRAP-CABLE	
Y	2	1	**447-5149**	1	HARNESS AS-ENGINE	430
	3	1	**316-9351**	1	MOUNTING-CABLE TIE	
	4	1	**458-3745**	2	HARNESS AS-PLATFORM	
					(EACH INCLUDES)	
	4A	1	**332-7865**	1	TIE-CABLE	
	4B	1	**323-7347**	1	SEAL-O-RING	
M	5	1	**232-1693**	1	BOLT-FLANGE HEAD (M6X1X35-MM)	
M	6	1	**254-3633**	2	BOLT-FLANGE HEAD (M6X1X16-MM, SELF LOCKING)	

M - METRIC PART
Y - SEPARATE ILLUSTRATION

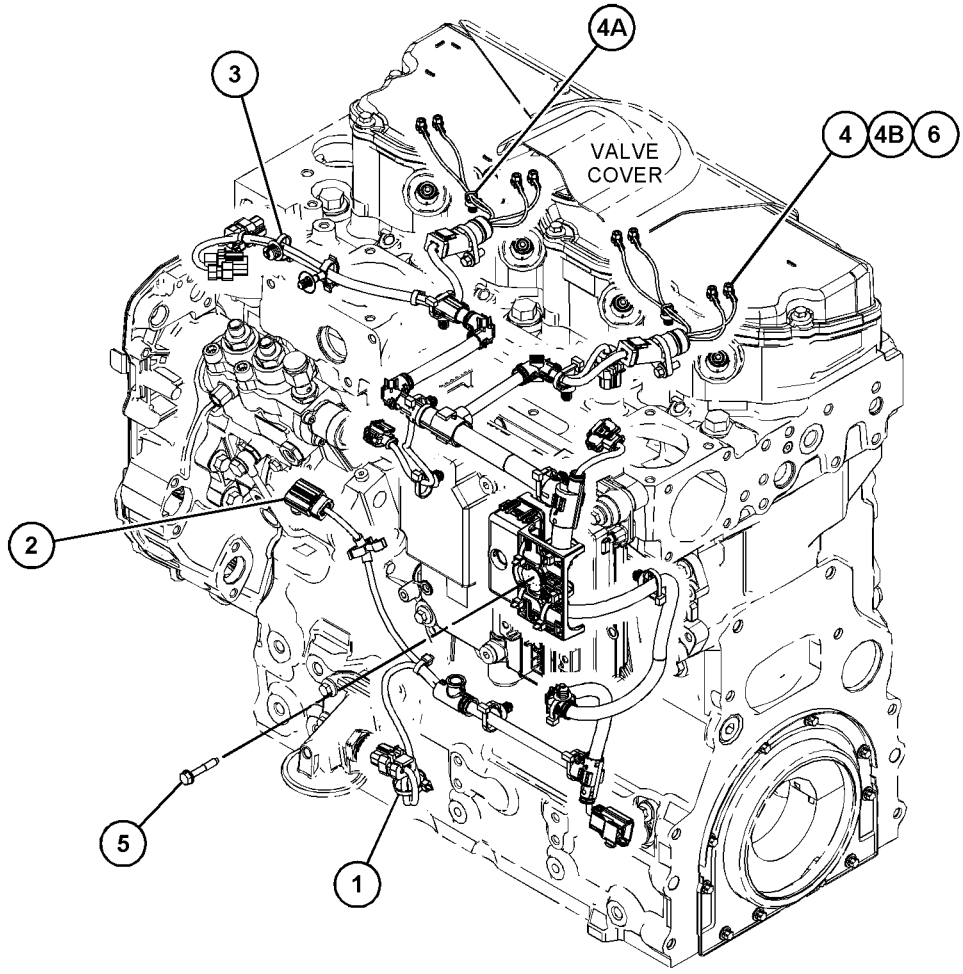

GRAPHIC #1 <END> g06082204

450-2852 WIRING GP-ENGINE

SMCS-1000, 1408 **i06619823**

NOTE	REF NO	GRAPHIC REF	PART NUMBER	QTY	PART NAME 1 2 3 4 5 6 (PRODUCT LEVEL)	SEE PAGE
	1	1	**217-9039**	3	STRAP-CABLE	
Y	2	1	**447-5149**	1	HARNESS AS-ENGINE	430
	3	1	**458-3745**	2	HARNESS AS-PLATFORM	
					(EACH INCLUDES)	
	3A	1	**332-7865**	1	TIE-CABLE	
	3B	1	**323-7347**	1	SEAL-O-RING	
M	4	1	**232-1693**	1	BOLT-FLANGE HEAD (M6X1X35-MM)	
M	5	1	**254-3633**	2	BOLT-FLANGE HEAD (M6X1X16-MM, SELF LOCKING)	

M - METRIC PART
Y - SEPARATE ILLUSTRATION

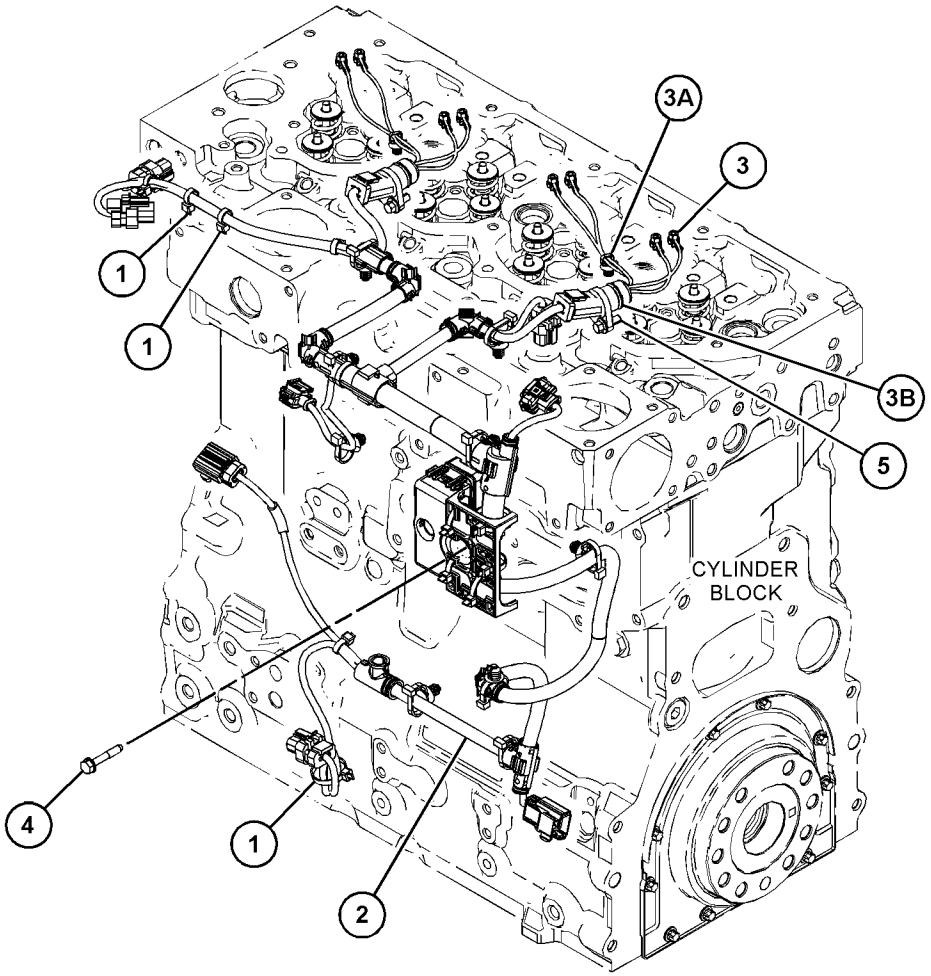

GRAPHIC #1 <END> g06061766

450-2854 WIRING GP-ENGINE

PART OF 491-2522, 527-9081 ENGINE AR-PRIMARY

SMCS-1000, 1408 **i06692230**

NOTE	REF NO	GRAPHIC REF	PART NUMBER	QTY	PART NAME 1 2 3 4 5 6 (PRODUCT LEVEL)	SEE PAGE
	1	1	**236-5539**	1	CLIP	
Y	2	1	**448-0757**	1	HARNESS AS-WIRING	431
	3	1	**268-6677**	1	BRACKET AS	
M		1	**260-3939**	1	SCREW-HEX HEAD (M6X1X25-MM)	
	4	1	**458-3745**	2	HARNESS AS-PLATFORM	
	5	1	**206-1345**	1	STRAP-CABLE	
M	6	1	**232-1693**	1	BOLT-FLANGE HEAD (M6X1X35-MM)	
M	7	1	**254-3633**	2	BOLT-FLANGE HEAD (M6X1X16-MM, SELF LOCKING)	
	8	1	**316-9351**	1	MOUNTING-CABLE TIE	

M - METRIC PART
Y - SEPARATE ILLUSTRATION

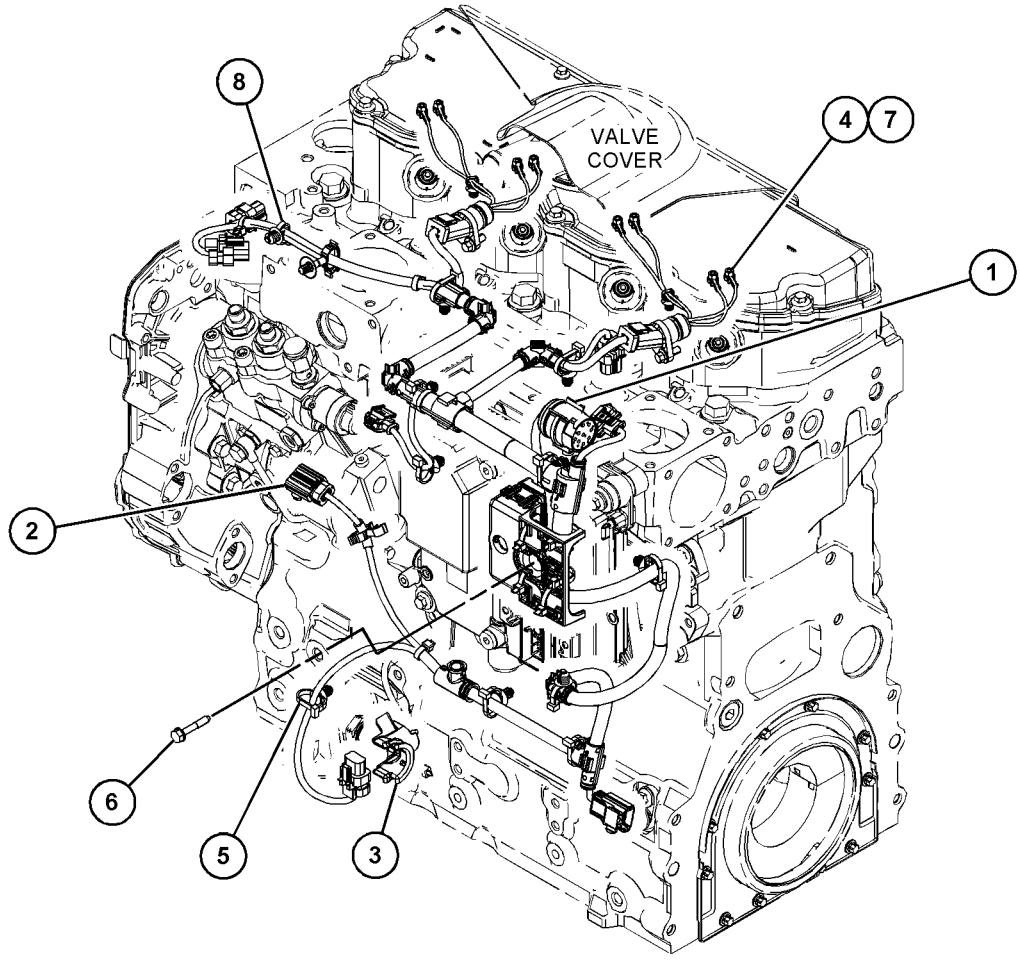

GRAPHIC #1 <END> g06142347

450-2855 WIRING GP-ENGINE

PART OF 475-8294 ENGINE AR-PRIMARY

TYPE 1

SMCS-1000, 1408 **i06100991**

NOTE	REF NO	GRAPHIC REF	PART NUMBER	QTY	PART NAME 1 2 3 4 5 6 (PRODUCT LEVEL)	SEE PAGE
	1	1	**217-9039**	1	STRAP-CABLE	
	2	1	**236-5539**	1	CLIP	
Y	3	1	**448-0757**	1	HARNESS AS-WIRING	431
Y	4	1	**375-8407**	2	HARNESS AS-WIRING	430
M	5	1	**232-1693**	1	BOLT-FLANGE HEAD (M6X1X35-MM)	
	6	1	**277-5065**	2	CLIP	
	7	1	**316-9351**	1	MOUNTING-CABLE TIE	
	8	1	**277-5064**	2	SEAL-O-RING	

M - METRIC PART
Y - SEPARATE ILLUSTRATION

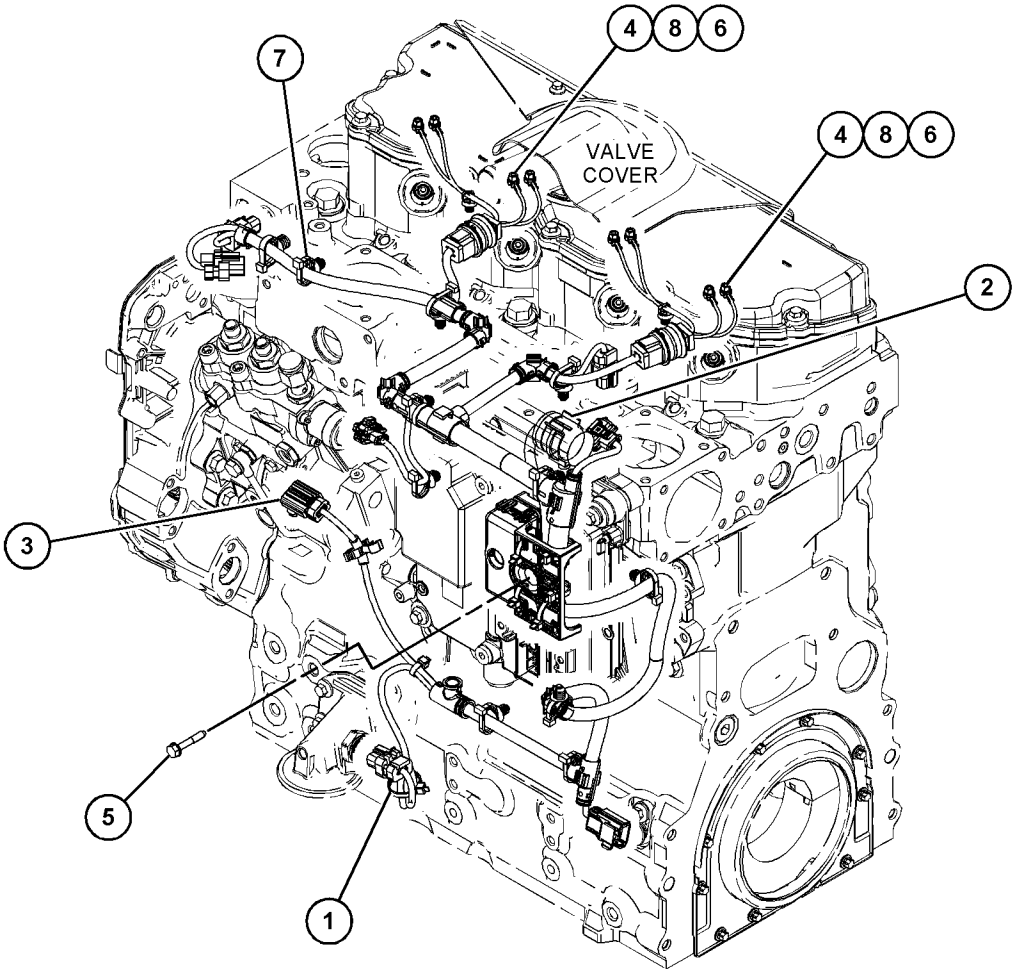

GRAPHIC #1 <END> g06109646

450-2855 WIRING GP-ENGINE

PART OF 475-8294, 484-2343, 486-2471, 538-5357 ENGINE AR-PRIMARY
TYPE 2

SMCS-1000, 1408 **i06779976**

NOTE	REF NO	GRAPHIC REF	PART NUMBER	QTY	PART NAME 1 2 3 4 5 6 (PRODUCT LEVEL)	SEE PAGE
	1	1	**217-9039**	3	STRAP-CABLE	
	2	1	**236-5539**	1	CLIP	
Y	3	1	**448-0757**	1	HARNESS AS-WIRING	431
C	4	1	**458-3745**	2	HARNESS AS-PLATFORM	
					(EACH INCLUDES)	
	4A	1	**332-7865**	1	TIE-CABLE	
	4B	1	**323-7347**	1	SEAL-O-RING	
M	5	1	**232-1693**	1	BOLT-FLANGE HEAD (M6X1X35-MM)	
CM	6	1	**254-3633**	2	BOLT-FLANGE HEAD (M6X1X16-MM, SELF LOCKING)	
	7	1	**268-6677**	1	BRACKET AS	
M	7A	1	**260-3939**	1	SCREW-HEX HEAD (M6X1X25-MM)	

C - CHANGE FROM PREVIOUS TYPE
M - METRIC PART
Y - SEPARATE ILLUSTRATION

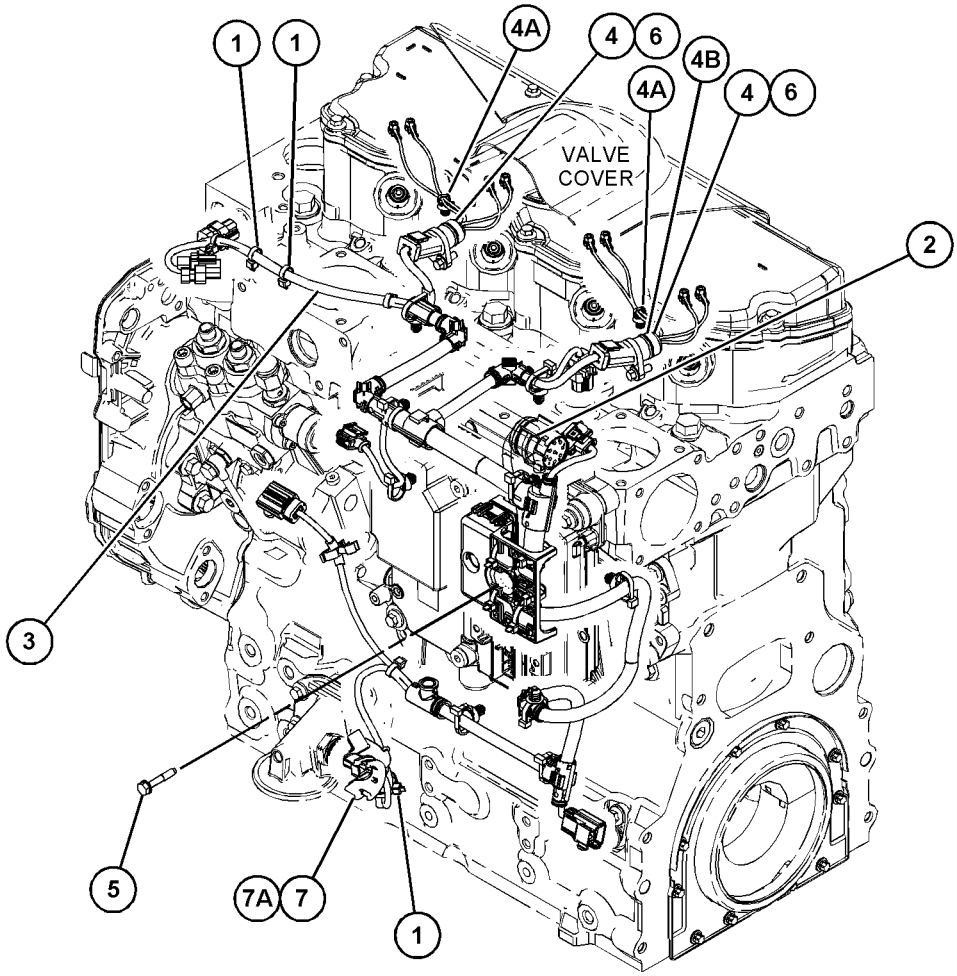

GRAPHIC #1 <END> g06131949

450-2856 WIRING GP-ENGINE

TYPE 1

SMCS-1000, 1408 **i06100982**

NOTE	REF NO	GRAPHIC REF	PART NUMBER	QTY	PART NAME 1 2 3 4 5 6 (PRODUCT LEVEL)	SEE PAGE
	1	1	**236-5539**	1	CLIP	
Y	2	1	**448-0757**	1	HARNESS AS-WIRING	431
	3	1	**458-3745**	2	HARNESS AS-PLATFORM	
					(EACH INCLUDES)	
	3A	1	**332-7865**	1	TIE-CABLE	
		1	**323-7347**	1	SEAL-O-RING	
	4	1	**206-1345**	1	STRAP-CABLE	
M	5	1	**232-1693**	1	BOLT-FLANGE HEAD (M6X1X35-MM)	
M	6	1	**254-3633**	2	BOLT-FLANGE HEAD (M6X1X16-MM, SELF LOCKING)	
	7	1	**316-9351**	1	MOUNTING-CABLE TIE	
	8	1	**323-7347**	2	SEAL-O-RING	

M - METRIC PART
Y - SEPARATE ILLUSTRATION

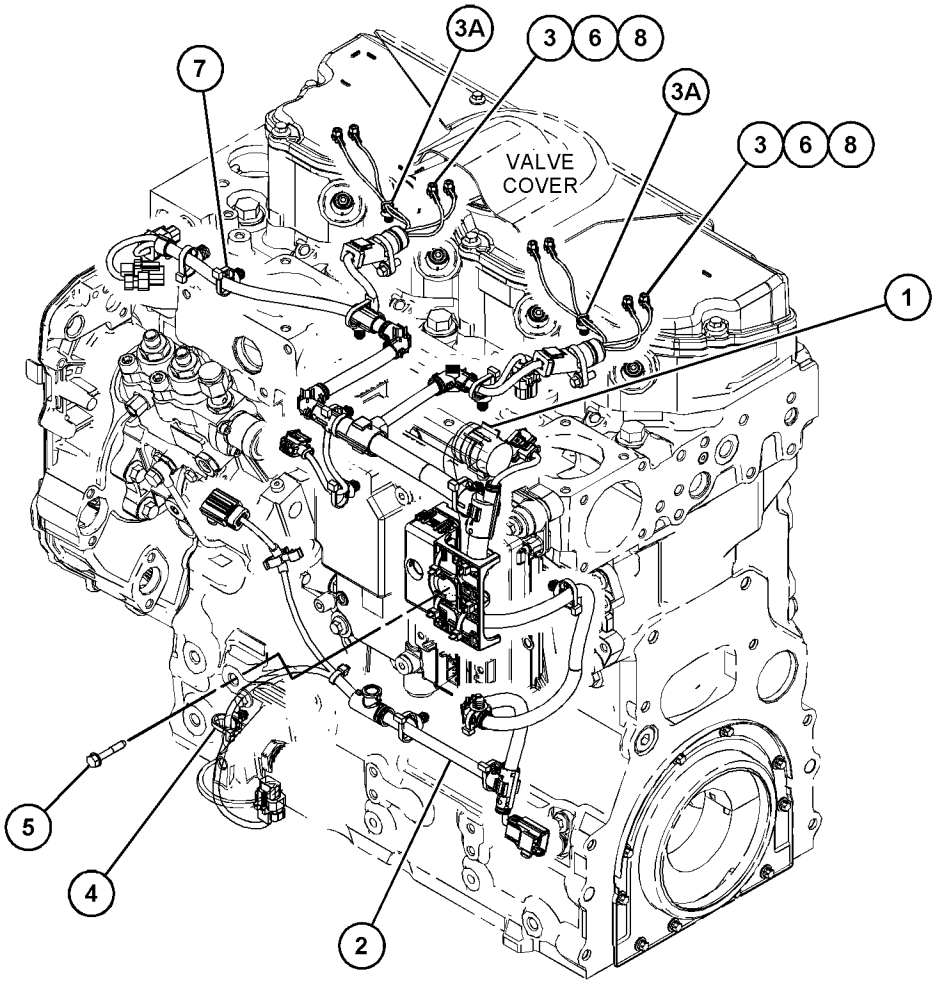

GRAPHIC #1 <END> g06015858

450-2856 WIRING GP-ENGINE

TYPE 2

SMCS-1000, 1408 **i06701769**

NOTE	REF NO	GRAPHIC REF	PART NUMBER	QTY	PART NAME 1 2 3 4 5 6 (PRODUCT LEVEL)	SEE PAGE
	1	1	**236-5539**	1	CLIP	
Y	2	1	**448-0757**	1	HARNESS AS-WIRING	431
C	3	1	**458-3745**	2	HARNESS AS-PLATFORM	
					(EACH INCLUDES)	
	3A	1	**332-7865**	1	TIE-CABLE	
	3B	1	**323-7347**	1	SEAL-O-RING	
	4	1	**206-1345**	1	STRAP-CABLE	
M	5	1	**232-1693**	1	BOLT-FLANGE HEAD (M6X1X35-MM)	
CM	6	1	**254-3633**	2	BOLT-FLANGE HEAD (M6X1X16-MM, SELF LOCKING)	
	7	1	**217-9039**	2	STRAP-CABLE	
	8	1	**268-6677**	1	BRACKET AS	

C - CHANGE FROM PREVIOUS TYPE
M - METRIC PART
Y - SEPARATE ILLUSTRATION

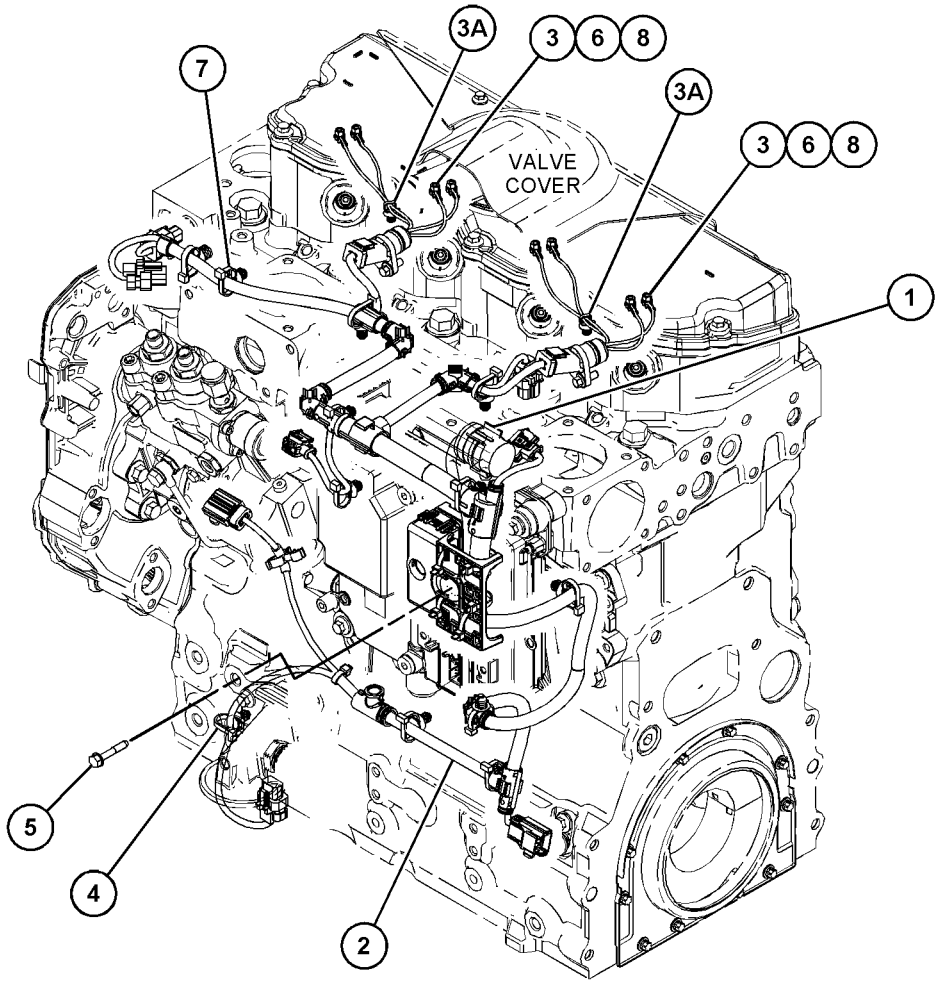

GRAPHIC #1 <END> g06015858

492-2945 WIRING GP-ENGINE

PART OF 463-8848, 463-8910, 466-4382, 484-1469, 495-9687, 508-4399, 509-5882, 510-0902 ENGINE AR-PRIMARY

SMCS-1000, 1408 **i06701268**

NOTE	REF NO	GRAPHIC REF	PART NUMBER	QTY	PART NAME 1 2 3 4 5 6 (PRODUCT LEVEL)	SEE PAGE
	1	1	**487-6726**	1	BRACKET	
	2	1	**217-9039**	1	STRAP-CABLE	
	3	1	**236-5539**	1	CLIP	
	4	1	**268-6677**	1	BRACKET AS	
M		1	**260-3939**	1	SCREW-HEX HEAD (M6X1X25-MM)	
	5	1	**396-5615**	1	MOUNT	
Y	6	1	**448-0757**	1	HARNESS AS-WIRING (POWER)	431
	7	1	**458-3745**	2	HARNESS AS-PLATFORM	
					(EACH INCLUDES)	
		1	**323-7347**	4	SEAL-O-RING	
		1	**332-7865**	1	TIE-CABLE	
M	8	1	**232-1693**	1	BOLT-FLANGE HEAD (M6X1X35-MM)	
M	9	1	**254-3633**	2	BOLT-FLANGE HEAD (M6X1X16-MM, SELF LOCKING)	
	10	1	**316-9351**	1	MOUNTING-CABLE TIE	

M - METRIC PART
Y - SEPARATE ILLUSTRATION

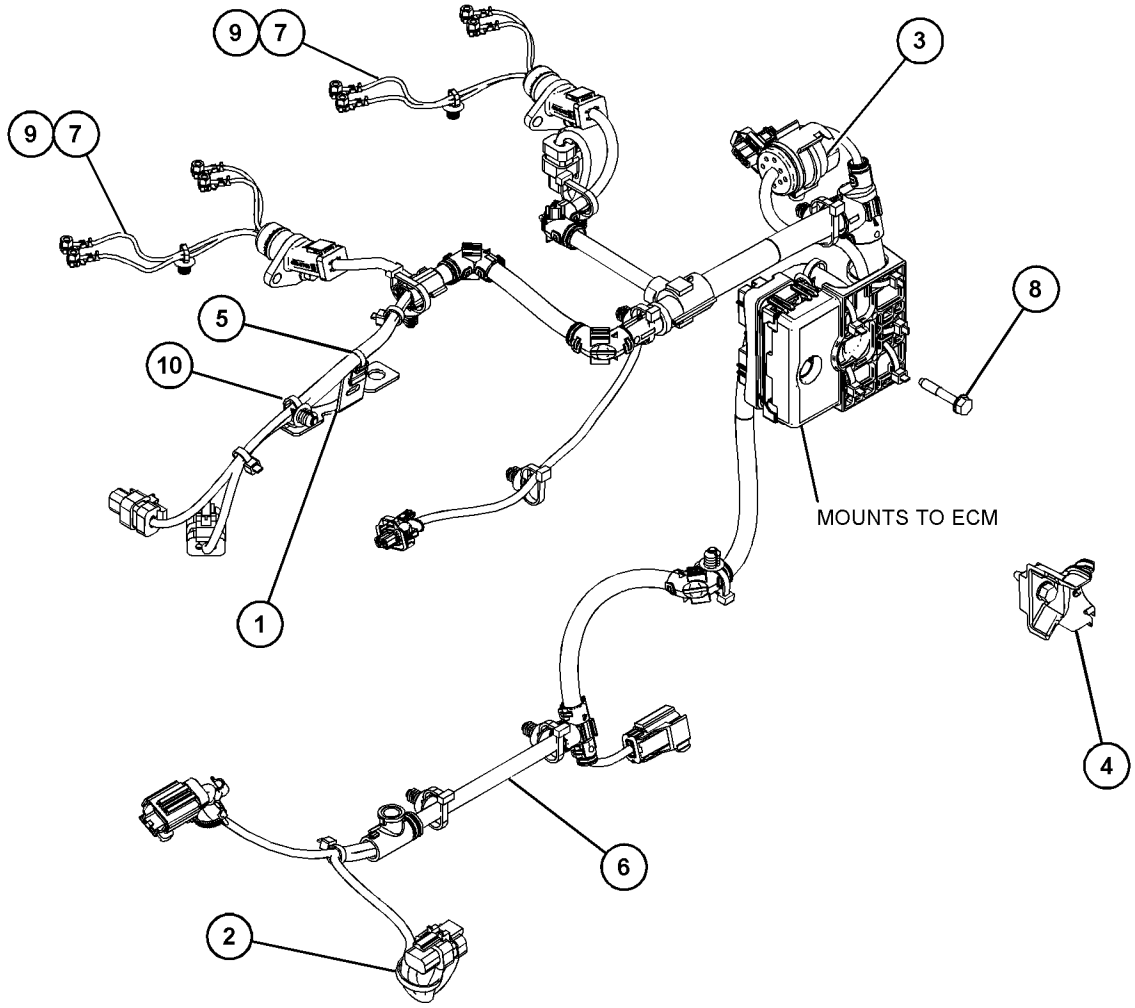

GRAPHIC #1 <END> g06077692

416-1073 FILTER GP-OIL

PART OF 466-3332, 467-7465, 541-2728 ENGINE AR-PRIMARY

SMCS-5068 **i06501994**

NOTE	REF NO	GRAPHIC REF	PART NUMBER	QTY	PART NAME 1 2 3 4 5 6 (PRODUCT LEVEL)	SEE PAGE
	1	1	**273-5711**	1	FILTER-FUMES DISPOSAL	

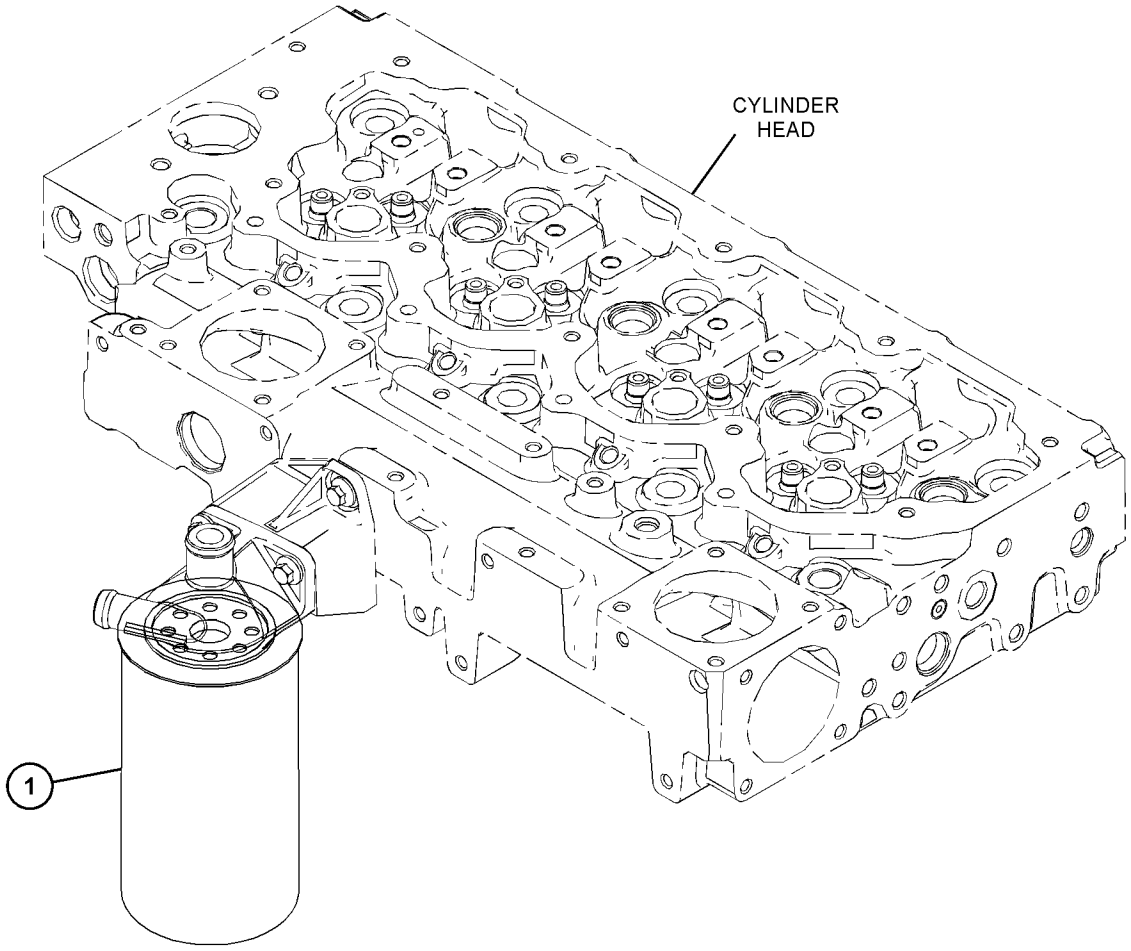

GRAPHIC #1 <END> g03873881

416-1052 GAUGE GP-OIL LEVEL (DIPSTICK)

PART OF 461-3168, 480-6065, 484-2343, 492-3115, 503-1940, 504-3628, 509-3109, 509-5884, 516-9846, 526-8847, 538-5357, 541-2728 ENGINE AR-PRIMARY

SMCS-3081, 3108 **i06053012**

NOTE	REF NO	GRAPHIC REF	PART NUMBER	QTY	PART NAME 1 2 3 4 5 6 (PRODUCT LEVEL)	SEE PAGE
	1	1	**6I-0289**	1	PLUG	
	2	1	**6I-1497**	1	SEAL	
	3	1	**351-2104**	1	GAUGE AS-OIL LEVEL (DIPSTICK) (ENGINE)	
	3A	1	**228-7089**	1	SEAL-O-RING	
	3B	1	**275-9891**	2	SEAL-O-RING	

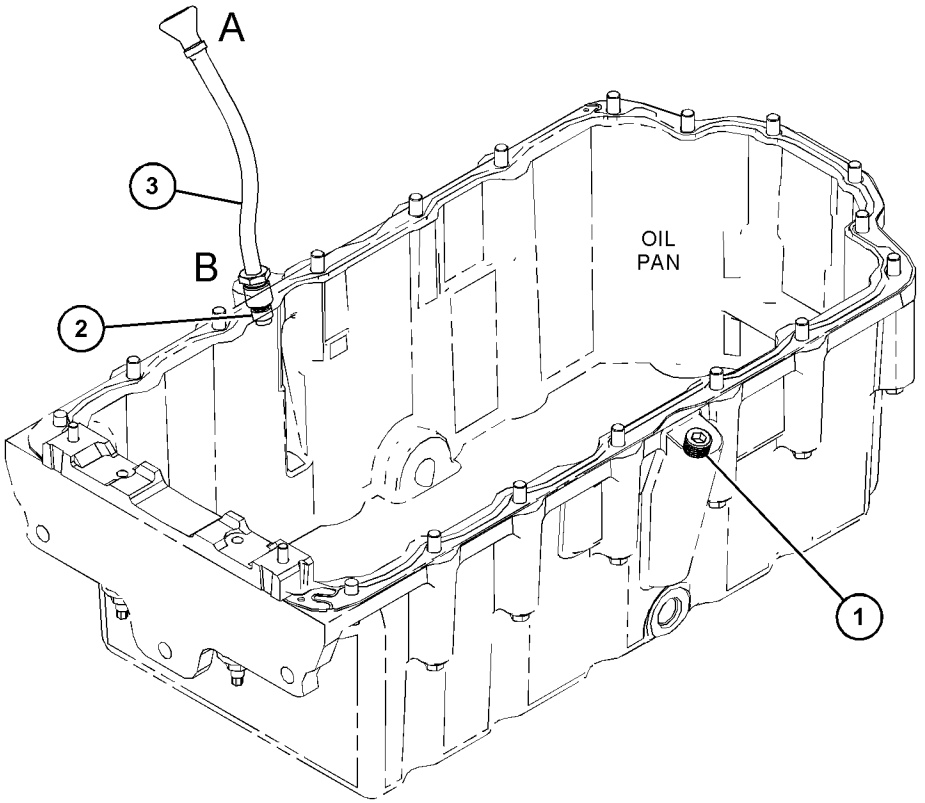

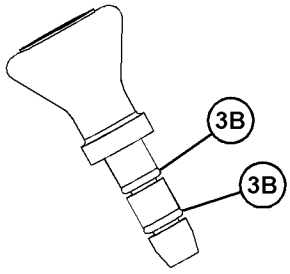

VIEW OF AREA A
(PARTS REMOVED FOR CLARITY)

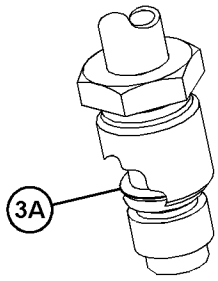

VIEW OF AREA B

GRAPHIC #1 <END> g03821546

415-7949 MOUNTING GP-CONTROL

PART OF 455-9378, 461-3168, 463-8820, 463-8848, 463-8910, 466-3332, 466-4382, 467-7465, 469-1048, 475-8294, 477-2657, 478-6560, 480-6065, 484-1469, 484-2343, 486-2471, 491-2522, 492-1322, 492-3115, 492-3118, 495-3005, 495-9687, 500-8128, 502-7230, 503-1940, 503-4924, 504-3628, 504-3645, 508-4399, 509-3109, 509-5882, 509-5884, 510-0902, 512-9838, 512-9884, 514-3535, 514-3537, 516-9846, 517-0058, 526-8847, 527-9081, 538-5357, 539-3889, 541-2728 ENGINE AR-PRIMARY

SMCS-7451 **i06091169**

NOTE	REF NO	GRAPHIC REF	PART NUMBER	QTY	PART NAME 1 2 3 4 5 6 (PRODUCT LEVEL)	SEE PAGE
	1	1	**425-9955**	1	BRACKET	
M	2	1	**6I-0572**	4	BOLT (M8X1.25X20-MM)	

M - METRIC PART

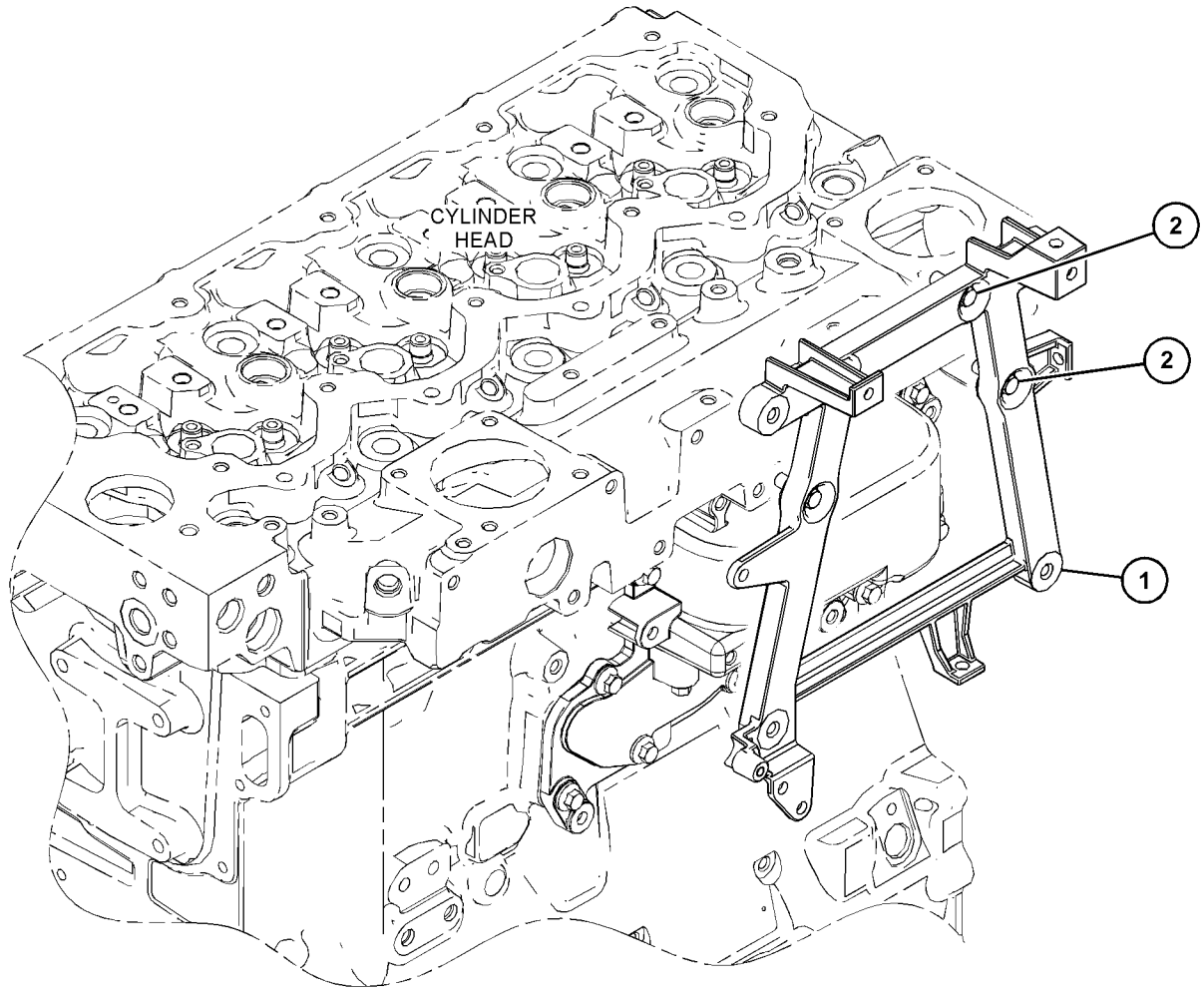

GRAPHIC #1 <END> g03818841

416-1042 FILM GP

PART OF 455-9378, 461-3168, 463-8820, 463-8848, 463-8910, 466-3332, 466-4382, 467-7465, 469-1048, 475-8294, 477-2657, 478-6560, 480-6065, 484-1469, 484-2343, 486-2471, 491-2522, 492-1322, 495-3005, 495-9687, 500-8128, 502-7230, 503-1940, 503-4924, 508-4399, 509-3109, 509-5882, 509-5884, 510-0902, 512-9838, 512-9884, 514-3535, 514-3537, 516-9846, 517-0058, 526-8847, 527-9081, 538-5357, 539-3889, 541-2728 ENGINE AR-PRIMARY

SMCS-7405, 7557 **i06089780**

NOTE	REF NO	GRAPHIC REF	PART NUMBER	QTY	PART NAME 1 2 3 4 5 6 (PRODUCT LEVEL)	SEE PAGE
	1	1	**329-7312**	1	FILM-IDENTIFICATION (CAT)	

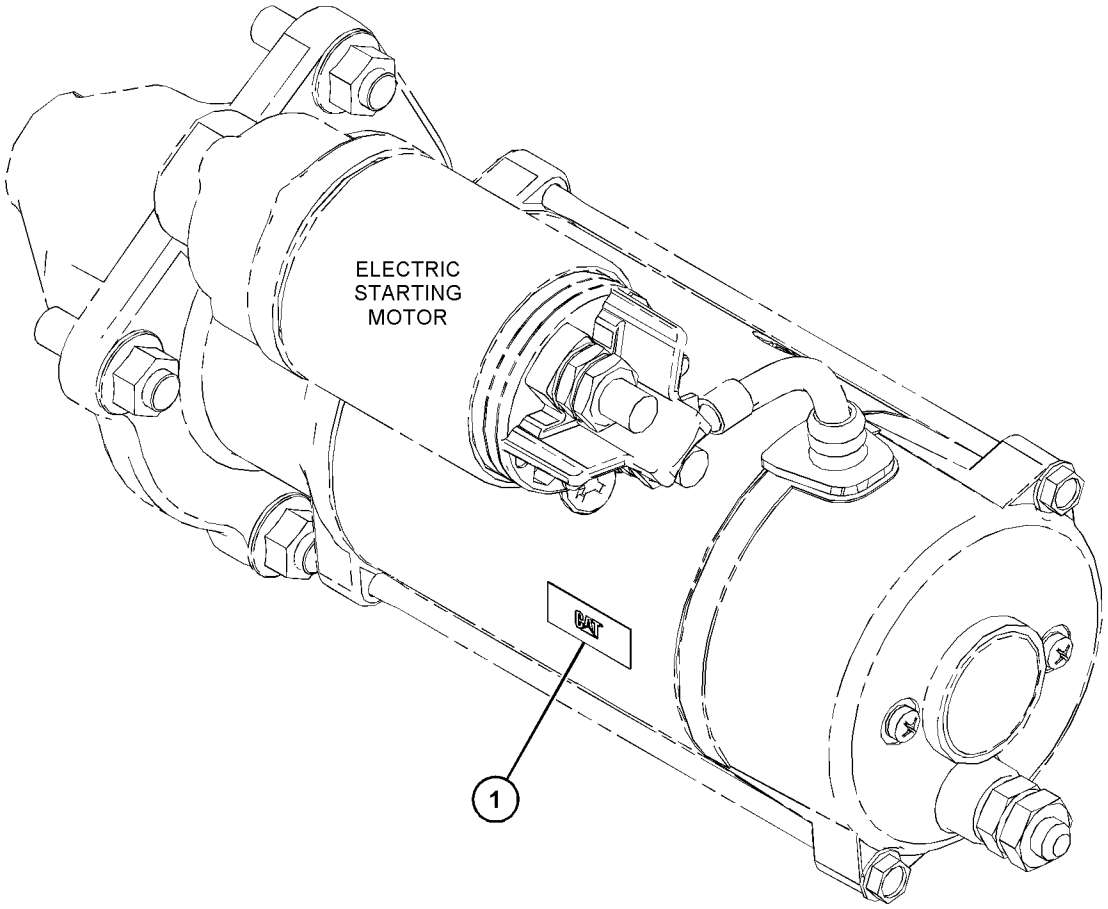

GRAPHIC #1 <END> g03818117

416-8716 FILM GP

PART OF 455-9378, 461-3168, 463-8820, 463-8848, 463-8910, 466-3332, 466-4382, 467-7465, 469-1048, 475-8294, 477-2657, 478-6560, 480-6065, 484-1469, 484-2343, 486-2471, 491-2522, 492-1322, 492-3115, 492-3118, 495-3005, 495-9687, 500-8128, 502-7230, 503-1940, 503-4924, 504-3628, 504-3645, 508-4399, 509-3109, 509-5882, 509-5884, 510-0902, 512-9838, 512-9884, 514-3535, 514-3537, 516-9846, 517-0058, 526-8847, 527-9081, 538-5357, 539-3889, 541-2728 ENGINE AR-PRIMARY

SMCS-7405, 7557 **i06089724**

NOTE	REF NO	GRAPHIC REF	PART NUMBER	QTY	PART NAME 1 2 3 4 5 6 (PRODUCT LEVEL)	SEE PAGE
	1	1	**451-7225**	1	FILM-IDENTIFICATION (CAT)	

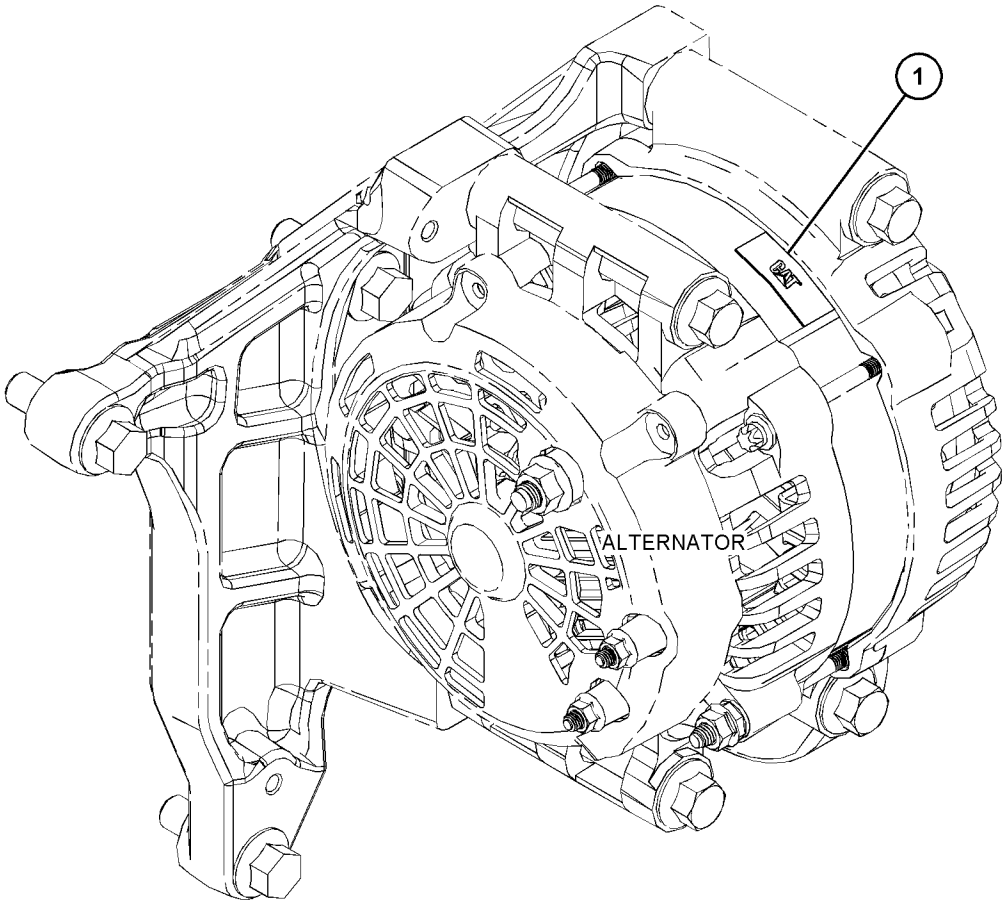

GRAPHIC #1 <END> g03818177

417-4284 FILM GP

EMISSIONS

PART OF 455-9378, 461-3168, 463-8820, 463-8848, 463-8910, 466-3332, 466-4382, 467-7465, 469-1048, 475-8294, 477-2657, 478-6560, 480-6065, 484-1469, 484-2343, 486-2471, 491-2522, 492-1322, 492-3115, 492-3118, 495-3005, 495-9687, 500-8128, 502-7230, 503-1940, 503-4924, 504-3628, 504-3645, 508-4399, 509-3109, 509-5882, 509-5884, 510-0902, 512-9838, 512-9884, 514-3535, 514-3537, 516-9846, 517-0058, 526-8847, 527-9081, 538-5357, 539-3889, 541-2728 ENGINE AR-PRIMARY

SMCS-7405, 7557 **i06801313**

NOTE	REF NO	GRAPHIC REF	PART NUMBER	QTY	PART NAME 1 2 3 4 5 6 (PRODUCT LEVEL)	SEE PAGE
	1	1	**326-9053**	1	FILM-WARNING (DO NOT SPRAY, READ OMM)	
	2	1	**346-8219**	2	FILM-WARNING (UNIVERSAL WARNING)	
	3	1	**355-3486**	1	STRIP-ADHESIVE	
	4	1	**450-9772**	1	PLATE-IDENTIFICATION (CAT)	

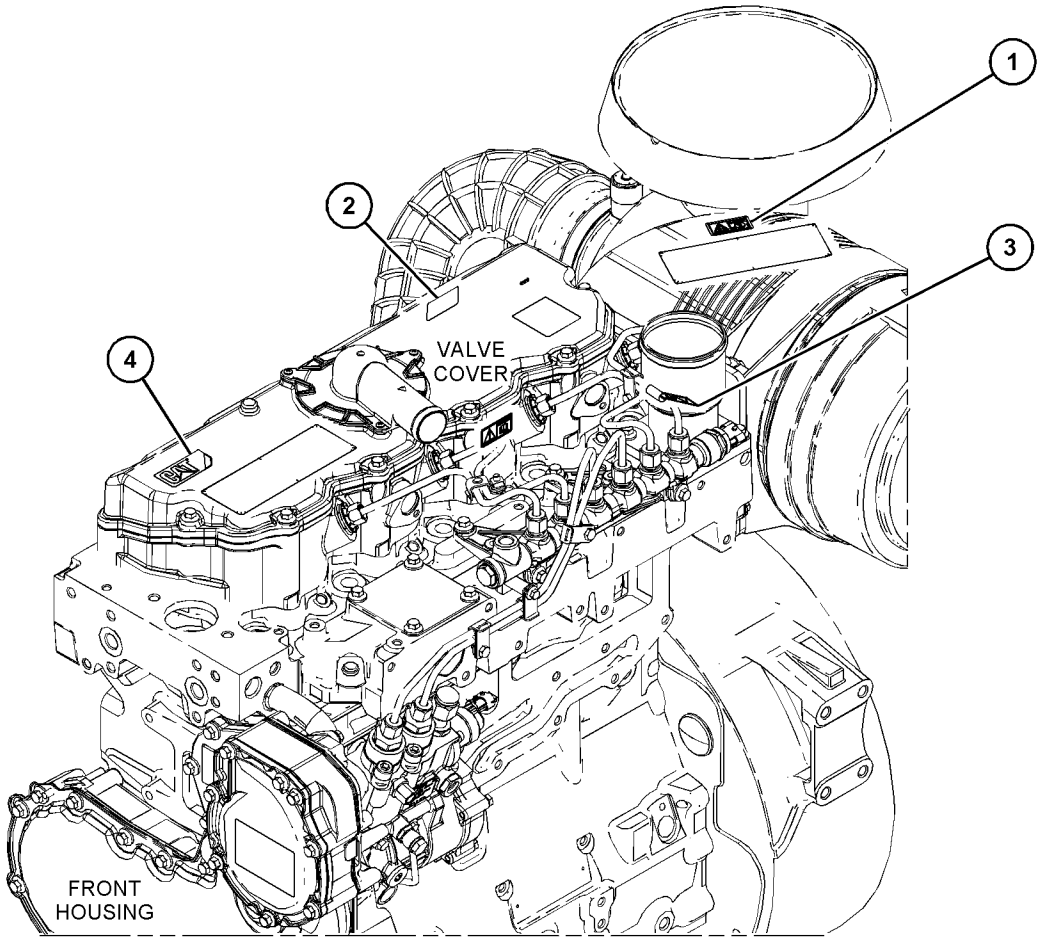

GRAPHIC #1 <END> g06117384

447-9463 FILM GP–ENGINE

SMCS-7405, 7557 **i06976398**

NOTE	REF NO	GRAPHIC REF	PART NUMBER	QTY	PART NAME 1 2 3 4 5 6 (PRODUCT LEVEL)	SEE PAGE
	1	1	**317-6198**	1	FILM-IDENTIFICATION (ENGINE SERIAL NUMBER)	
	2	1	**326-9053**	1	FILM-WARNING (DO NOT SPRAY, READ OMM)	
	3	1	**346-8219**	2	FILM-WARNING (UNIVERSAL WARNING)	
	4	1	**355-3486**	1	STRIP-ADHESIVE	
	5	1	**450-9772**	1	PLATE-IDENTIFICATION (CAT)	

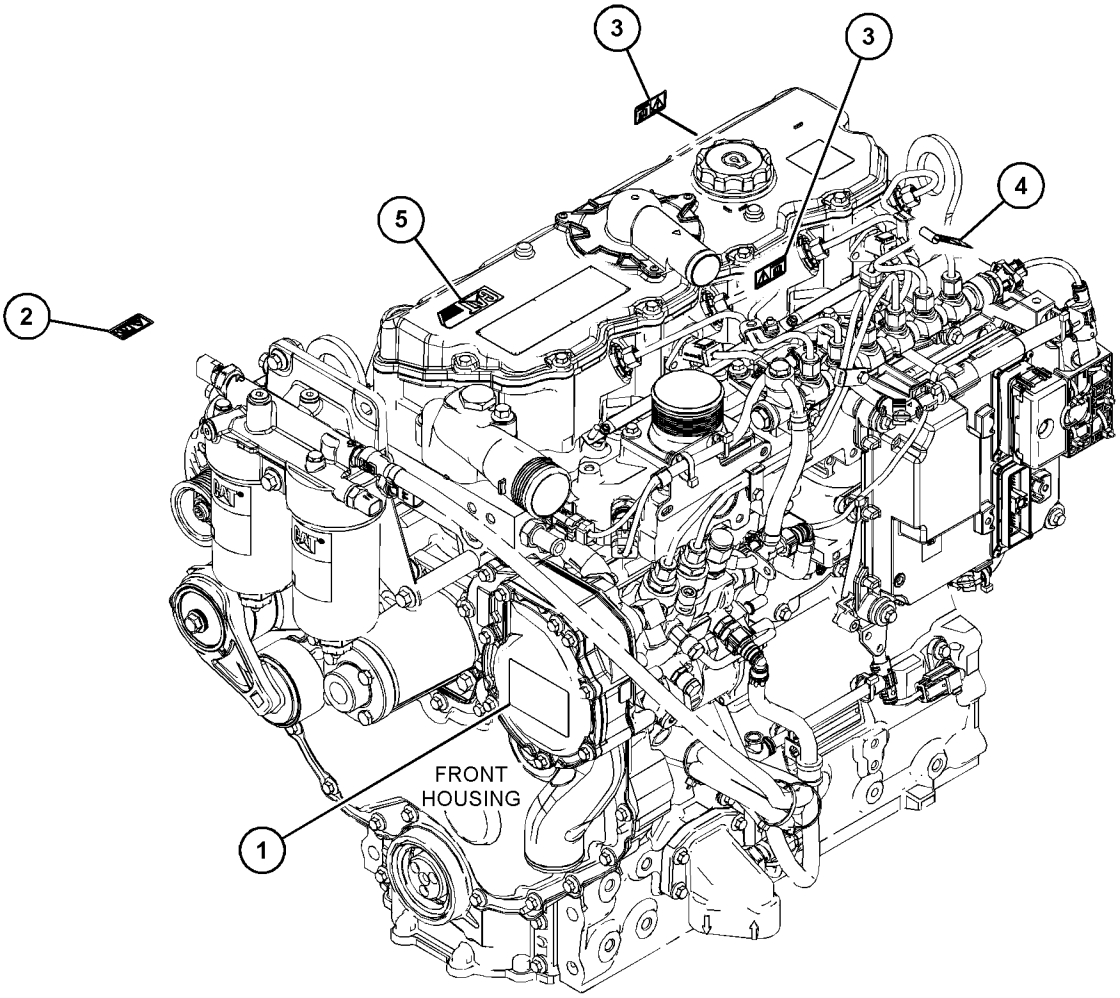

GRAPHIC #1 <END> g03865522

PART NUMBER INDEX

Part Page

0

0S-1603 222
223
224
225
226
227
228
229
230
0T-0642 268

3

3K-0360 201
202
304

4

4H-0408 235
239

5

5V-9155 301

6

6D-0044 163
6H-3616 261
262
263
265
269
286
287
288
6H-3957 203
246
247
6I-0217 175
176
177
178
240
242
244
251
253
255
272
301
328
333
339
340
355
366
367
368
370
372
374
376
377
378
379
381
382
384
386
389
391
393
395
416
418
421
6I-0254 163
251
307
308
339
340
398
413
427
6I-0260 164
249
251
271
272
273
274
275
276
277
279
301
309
328
345
348
350
353
354
358
364
370
389
422
6I-0289 290
312
314
316
317
454
6I-0292 274
6I-0363 271
272
273
277
6I-0423 231
232
233
234
235
236
238
239
261
262
265
266
6I-0454 167
244
251
6I-0456 428
429
6I-0563 359
360
365
366
367
368
370
372
374
376
377
378
379
381
382
384
386
389
391
6I-0572 272
329
330
331
332
455
6I-0593 233
236
366
368
370
372
379
382
384
386
391
398
413
427
6I-0631 178
231
232
234
236
6I-0645 240
242
244
251
253
255
271
329
330
331
333
368
6I-0646 172
203
246
247
248
289
6I-0650 210
215
240
242
253
255
6I-0654 249
258
259
260
366
368
370
372
379
382
6I-0789 353
6I-0839 339
340
6I-0846 312
316
6I-0917 238
6I-1090 328
6I-1497 278
312
313
314
315
316
317
454
6I-4012 359
360
439
440
441
442
6I-4013 359
6I-4039 359
6I-4072 275
276
277
6I-4200 231
232
234
237
6I-4374 307
308
6V-0447 352
6V-7238 201
202
304
6V-9189 219
220
221
334
427

7

7C-0351 200
201
202
304
7C-4616 240
242
244
251
253
255
293
7E-5218 443
7E-5219 443
7W-1176 233
235

PART NUMBER INDEX

Part	Page
	239
7W-2326	310
7W-2562	163
7W-2601	345
	348
	350
7W-2632	428
	429
8	
8C-3445	322
	323
8C-6354	431
8N-7998	166
8T-0269	193
	274
	275
	276
	279
8T-1158	432
	434
8T-8737	431
9	
9V-3811	228
9X-3401	430
	431
9X-3402	430
9X-3959	324
9Y-1590	221
0	
032-9090	180
	181
	182
	186
032-9091	180
	181
	182
	186
033-7687	222
	223
	224
	225
	226
	227
	228
	229
035-8017	164
	356
	357
035-8068	191
067-3045	302
	303
	311
067-6002	191
067-6006	191
	237
067-6043	191
067-6044	238
067-6135	170
	171
	180
	181
	182
	184
	186
	188
067-6179	240
	242
	244
	251
	253
	255
067-6213	271
	272
	274
	277
	279
067-6265	164
	356
	357
067-6344	163
067-6366	427
067-6823	162
	237
	285
	324
1	
100-3751	240
	242
	244
	251
	253
	255
	328
100-4458	345
	348
	350
	393
	395
	398
	413
	416
	418
100-4461	319
	320
	321
	345
	348
	350
100-4830	172
	203
	242
	244
	246
	247
	302
	313
	345
	348
	350
	421
100-4841	257
101-3771	272
101-3805	271
	273
	279
101-3895	175
	176
	177
	178
	240
	242
	244
	251
	253
	255
	279
	356
	357
	422
101-3990	443
101-3991	443
101-3992	443
101-3993	443
101-7185	261
	262
	265
	266
101-7186	261
	262
	265
	266
101-7537	345
	348
	350
101-7538	345
	348
	350
101-7540	345
	348
	350
101-7541	345
	348
	350
101-7546	345
	348
	350
102-1957	231
	232
	236
102-2073	164
	203
	246
	247
102-2075	203
	246
	247
102-2076	203
	246
	247
102-2078	203
	246
	247
102-8804	430
102-9941	248
103-2135	382
103-5687	313
	325
	326
	393
	395
	416
	418
103-5705	175
	176
	177
	178
	355
103-6714	345
	348
	350
104-2083	352
106-8836	313
106-8916	366
	367
	368
	370
	372
	374
	376
	377
	378
	379
	381
	382
	384
	386
	389
	391
111-0859	204
	205
	206
	207
	208
	209
	210
	211
	212
	213
	214
	215
	216
	217
	218
	424
	425
	426
111-5767	335
111-8222	172
	343
	354
	355
	358
	364
113-1504	308
113-4598	163
113-4604	163
113-4608	164
	249
113-4616	162
113-4630	430
113-7584	416
113-8076	164
113-8129	339
	340
114-2405	227
114-2474	336
	337
114-4363	233
	235
	239
	342
	343
	345
121-0883	231
	232
	233
	234
	235
	236
	238
	239
122-4614	334
123-2899	260
	325
	326
	327
123-4038	382
124-0506	173
	174
124-3536	280
	282

► PRIMARY REFERENCE

PART NUMBER INDEX

Part	Page
124-3815	240
	242
	244
	253
	255
	275
	276
	277
	312
	313
	316
	354
	355
	356
	357
	358
	364
	432
	434
125-7874	430
	431
126-1767	430
	431
126-1768	430
126-3212	203
	246
	247
126-3216	163
126-3219	164
	249
126-9093	401
	408
	409
127-3361	302
	303
	311
128-7723	443
130-3881	297
130-9888	308
132-8848	427
133-1011	240
	242
	244
	251
	253
	255
133-7403	352
133-7668	220
133-7669	220
134-4139	334
135-5417	221
135-6362	219
135-6363	219
140-8783	427
141-6166	301
145-2881	262
145-4911	222
	223
	224
	225
	226
	227
	228
	229
	230
149-5599	228
149-9176	231
	236
152-6730	274
155-2271	430
	431
155-4828	273
	279
159-9540	313
	393
	395
	418
159-9541	393
	395
	416
	418
161-9820	424
	425
	426
164-7468	398
	413
	424
	425
	426
165-6689	225
172-4325	382
175-7141	345
	348
	350
	421
	427
	439
	440
	441
	442
178-2510	422
178-3336	273
	279
	345
	348
	350
183-1343	262
	263
	267
184-0983	164
185-0884	191
185-1860	430
	431
185-6627	354
	355
	356
	357
	358
	364
185-7149	274
186-2362	237
186-2364	237
186-2374	230
187-0555	312
	316
192-9207	401
	408
	409
194-5390	366
	367
	368
	370
	372
	374
	376
	377
	378
	379
	381
	382
	384
	386
	389
	391
195-2221	166
	249
	262
	263
	267
195-9245	173
	174
	175
	179
198-8262	164
	203
	246
	247
	249
198-8263	164
	203
	246
	247
	249
199-3108	231
	236
199-3109	231
	232
	233
	235
	236
199-9252	356
	357
	432
	434
199-9267	284
	322
	432
	434
199-9751	196
	436
2	
206-1345	430
	431
	447
	450
	451
206-1826	432
	434
206-5234	352
206-5235	352
209-6825	164
209-9219	190
214-3203	164
	172
	203
	246
	247
	248
	249
	289
214-3281	275
216-8314	180
	181
	182
	184
	186
	188
216-8634	253
216-9633	322
	323
217-0099	353
	428
	429
217-7877	247
217-9039	430
	431
	444
	445
	446
	448
	449
	451
	452
219-4136	276
	277
220-8632	233
	235
222-8625	247
224-6635	163
225-5438	280
	282
225-5501	197
225-6005	277
225-6041	272
225-6522	305
	306
	309
225-6524	305
225-7738	339
	340
225-7941	284
	318
	322
225-7944	329
	330
	331
	332
	333
225-8019	339
	340
225-8287	240
	255
225-8329	320
225-8524	249
	366
	367
	368
	370
	372
	374
	376
	377
	378
	379
	381
	382
	384
	386
	389
	391
225-8526	366
	367
	368
	370
	372
	374
	376
	377
	378
	379
	381
	382
	384
	386
	389
	391
225-8858	191
226-8766	242
	244
	253
226-8767	242
	244

PART NUMBER INDEX

Part	Page
	253
227-4562	366
	368
	370
	372
	379
	384
	386
	391
228-7089	278
	313
	314
	315
	317
	454
228-7100	393
	395
	398
	400
	413
	418
230-4011	430
	431
230-8065	218
230-8094	193
	271
	272
	273
	274
	275
	276
	277
	279
230-8218	277
230-9194	203
230-9195	203
232-1322	196
	436
232-1693	444
	445
	446
	447
	448
	449
	450
	451
	452
232-3657	240
	255
232-3666	240
	242
	244
	251
	253
	255
232-3751	329
	330
	332
232-3861	284
	322
232-6189	376
232-7449	190
232-7596	191
232-7597	191
232-7599	191
233-8148	279
233-9408	332
	333
233-9436	261
	264
	268
	286
	287
	288
233-9531	427
234-0189	166
234-0198	166
234-0201	166
234-0204	166
234-0205	166
234-0212	166
234-0220	166
234-0223	166
234-0590	166
234-0591	166
234-0613	166
234-0614	166
234-0615	▶166
	167
234-0616	166
234-3029	368
	370
	389
235-1061	246
235-1063	246
235-2435	271
235-2451	332
236-5539	444
	447
	448
	449
	450
	451
	452
236-7722	345
	348
	350
236-7734	345
	348
	350
236-7735	345
	348
	350
236-7760	342
	343
	345
236-7763	342
	343
	345
236-7764	342
	343
	345
236-7765	342
	343
	345
236-7766	▶342
	345
	348
236-8773	345
	348
	350
236-8777	345
	348
	350
236-8780	345
	348
	350
236-8781	345
	348
	350
236-8782	345
238-0112	400
	432
	434
238-8288	354
	355
	364
238-8292	362
	363
241-6157	393
	395
	398
	413
	418
242-8660	329
243-4278	226
	229
243-4300	292
244-6872	332
245-1043	430
	431
245-1044	430
	431
245-1048	430
	431
246-4361	249
	415
247-2717	186
247-4928	164
	393
	395
	412
	413
	415
	416
	418
247-8314	262
249-0974	330
	331
	333
249-0975	332
251-4336	242
	253
252-6318	333
254-3633	444
	445
	446
	447
	449
	450
	451
	452
256-4447	355
259-2611	164
259-2612	164
259-2613	164
259-2614	164
259-2623	164
260-3939	447
	449
	452
260-6672	338
261-0428	168
	210
	215
261-4320	215
265-6527	345
	348
	350
266-7092	368
	370
	389
267-7207	430
	431
267-7208	431
267-9572	430
	431
268-3642	218
268-6677	447
	449
	451
	452
269-3086	366
	367
	368
	370
	372
	374
	377
	378
	379
	381
	384
	386
	389
	391
270-1784	431
273-3690	253
273-3691	164
273-5711	453
274-1639	432
	434
274-4990	431
275-9891	278
	313
	314
	315
	317
	454
276-1408	218
276-5605	257
276-7394	180
	181
	182
	184
	186
	188
276-8116	195
276-8117	195
276-8123	299
	300
276-8133	299
	300
276-9200	298
276-9201	298
276-9206	298
276-9207	298
276-9230	298
277-2923	339
	340
277-2925	339
	340
277-3012	240
	242
	244
	251
	253
	255
277-3013	240
	242
	244
	251
	253
277-4993	393
	395
	398
	413
	416
	418
277-5064	448
277-5065	448
277-5067	410
277-9938	398
	413
278-0361	361
	362

▶ PRIMARY REFERENCE

PART NUMBER INDEX

Part	Page
	363
278-3242	340
278-5111	298
278-5112	298
278-5113	298
278-5126	170
	171
278-5170	410
	411
278-5203	428
	429
278-5226	432
	434
279-9651	259
	260
280-1912	298
280-1913	298
280-1914	298
281-8744	325
	326
	327
281-8804	430
	431
283-4148	205
	209
	211
	212
	214
	216
283-4674	293
284-1026	206
	208
	210
	213
	217
285-2040	205
286-0015	301
286-0123	421
286-2890	393
	395
	398
	412
	413
	416
	418
286-7845	204
287-8597	231
	232
	233
	234
	235
	236
	237
	238
	239
288-0422	255
288-2354	210
	215
289-8336	205
	206
	207
	208
	209
	211
	212
	213
	214
	216
	217
291-6517	244
	251
291-6521	251
291-6522	251
291-6523	251
291-6524	251
291-6526	248
291-6528	248
291-6529	248
292-2893	430
292-2896	430
	431
293-0598	353
293-1875	164
	393
	395
	398
	413
	416
	418
293-1877	►163
	164
293-1881	162
293-4776	249
293-9737	248
294-9392	249
294-9396	249
295-4670	393
	395
	398
	412
	413
	416
	418
295-6661	196
	197
298-4527	195
298-4528	195
298-4533	►298
	299
298-4558	328
298-4560	328
298-4566	374
	378
	379
	381
	386
298-4569	363
298-4570	361
	362
	363
298-4604	259
299-5024	258
299-5026	258
299-5511	299
	300
	384
	386
	391
302-4332	163
302-6780	248
303-5787	382
303-5788	362
304-3689	356
	357
304-3692	312
304-3693	312
304-3695	312
	316
304-3698	274
306-2337	308
307-2242	168
	210
	215
307-2805	366
	368
	370
	372
	384
	391
307-2808	352
309-6678	299
	300
310-8520	197
311-2732	393
	416
	418
311-4621	345
	348
	350
311-4624	345
	348
	350
311-4627	348
	350
314-3723	379
	386
315-3384	170
	171
315-4691	352
316-9351	301
	302
	311
	431
	445
	447
	448
	450
	452
317-3769	309
317-3778	309
317-5487	186
317-6198	459
317-6232	249
317-9229	345
	348
	350
318-0774	307
319-8531	434
320-3060	400
	432
	434
320-3062	432
	434
320-8383	249
320-8384	249
320-8385	249
321-2383	308
321-5594	234
321-5595	234
321-6131	168
	169
	291
321-8902	425
321-8928	426
321-8932	424
321-8952	424
	425
	426
322-8417	316
322-8418	316
323-7347	444
	445
	446
	449
	450
	451
	452
323-8761	249
323-9312	280
	282
324-0444	240
	242
	253
	255
324-2981	232
324-3528	345
	348
	350
326-0477	260
326-1876	215
326-1877	210
326-7289	173
	174
	179
326-9053	458
	459
329-7312	456
329-7854	172
329-7856	172
330-5898	284
	318
	322
330-9723	393
	395
	398
	413
	418
331-7010	442
332-0905	41
	47
	89
	91
	93
	101
	117
	131
	145
	153
	157
	159
	193
332-7865	430
	444
	445
	446
	449
	450
	451
	452
334-9333	186
334-9334	294
	295
	296

3

► PRIMARY REFERENCE

PART NUMBER INDEX

Part	Page
335-2092	238
335-7585	200
	201
	202
	304
335-8269	296
335-8270	294
338-0314	239
339-8780	180
	181
	182
	184
	186
	188
339-9637	299
	300
341-4024	368
341-4028	180
	181
	182
	184
	186
	188
342-3782	398
344-1686	430
	431
346-0006	421
346-0007	421
346-0407	240
	255
346-0408	240
	242
	253
	255
346-4709	299
346-8219	458
	459
347-8645	412
	418
348-0495	393
	395
	398
	416
	418
350-8958	41
	47
	89
	91
	93
	101
	117
	131
	145
	153
	157
	159
350-8959	193
351-2098	278
	315
351-2100	314
351-2104	317
	454
351-4318	416
353-3477	366
	367
	368
	370
	372
	374
	376
	377
	378
	379
	381
	382
	384
	386
	389
	391
353-3478	366
	367
	368
	370
	372
	374
	376
	377
	378
	379
	381
	382
	384
	386
	389
	391
353-7423	186
353-7424	186
353-7425	186
353-7426	186
353-7715	328
353-7717	▶328
	329
	330
	331
	332
	333
354-4754	339
354-8322	238
	313
355-0632	416
355-3486	458
	459
355-8710	339
356-3986	393
	395
	413
	418
357-0147	173
	174
357-2646	248
357-5204	441
357-5205	439
357-8714	326
359-0191	211
359-0719	280
	282
359-0745	295
359-9431	244
359-9666	427
360-0073	273
	279
360-3986	182
	280
	282
360-8958	▶397
	400
	406
360-8960	397
361-2294	181
361-7519	361
	362
	363
	365
	366
	368
	370
	372
	379
	384
	386
	391
362-5412	397
	400
	406
362-9689	400
	406
363-5813	301
	302
	303
	311
363-8622	418
364-0470	171
365-2968	209
365-3308	164
	356
	357
366-8853	191
366-9373	393
	395
367-1817	325
367-3326	222
367-8509	325
	326
367-8512	325
	326
368-3147	437
	438
369-1255	168
369-3707	197
369-3869	173
	174
369-6810	248
369-7799	410
	411
370-8376	397
371-2691	421
371-5649	427
371-8058	208
371-8298	204
372-4241	343
372-8150	▶343
	350
373-9785	275
	276
373-9786	273
374-2640	428
374-2641	429
374-4419	340
375-2647	▶420
	421
375-6988	422
375-8254	420
375-8407	▶430
	448
375-9272	231
	232
	233
	234
	235
	236
375-9812	249
375-9813	249
376-6403	410
	411
376-6405	410
	411
376-6409	420
376-6410	420
376-6411	420
376-9967	393
	395
	413
	416
	418
377-0399	195
377-0400	195
377-9082	169
377-9255	204
379-6461	262
379-6462	262
379-8434	416
380-2065	280
	282
380-2619	206
380-2622	212
380-9615	173
	174
	175
	179
381-5651	249
381-9252	251
382-7381	210
383-8542	382
383-8543	382
384-3887	432
	434
384-3888	432
	434
385-1398	415
385-7317	353
385-7318	353
386-1864	415
386-2737	412
386-2971	420
386-2976	420
386-3819	420
391-2493	393
	395
	416
	418
392-9458	175
392-9459	173
392-9460	▶173
	177
392-9463	▶174
	176
392-9471	175
392-9472	175
	176
	177
	178
393-4006	231
	232
	234
	235
	237
	238
	239
393-5867	313
396-1190	164
396-2052	422
396-2102	412
396-2103	398
	▶412
396-2421	398
	413
396-2602	422
396-2603	422
396-2604	422
396-2606	422
396-2607	422
396-2608	422
396-2609	422
396-2610	422
396-2611	422
396-5615	452

PART NUMBER INDEX

Part	Page
397-1559	▶195
	196
	197
397-3891	230
397-6836	422
397-8294	393
	395
	413
397-8298	413
398-3296	240
	255
398-5905	393
	416
	418
398-6226	422
398-7219	422
399-3884	301
399-5831	301
399-8470	422

4

Part	Page
415-3299	14
	16
	18
	20
	22
	24
	26
	28
	30
	32
	34
	36
	38
	40
	42
	44
	46
	48
	50
	52
	54
	56
	58
	60
	62
	64
	66
	68
	70
	72
	74
	76
	78
	80
	82
	84
	86
	88
	90
	92
	94
	96
	98
	100
	102
	104
	106
	108
	110
	112
	114
	116
	118
	120
	122
	124
	126
	128
	130
	132
	134
	136
	138
	140
	142
	144
	146
	148
	150
	152
	154
	156
	158
	160
	▶190
	193
415-5518	24
	30
	46
	48
	50
	56
	72
	84
	90
	94
	104
	112
	116
	118
	120
	122
	128
	130
	132
	136
	138
	146
	156
	160
	193
	▶280
415-5519	14
	16
	18
	20
	22
	26
	28
	32
	34
	36
	38
	40
	42
	44
	52
	54
	58
	60
	62
	64
	66
	68
	70
	74
	76
	78
	80
	82
	86
	88
	92
	96
	98
	100
	102
	104
	106
	108
	110
	114
	124
	126
	134
	140
	142
	144
	148
	150
	152
	154
	156
	158
	▶282
415-5520	14
	16
	18
	20
	22
	24
	26
	28
	30
	32
	34
	36
	38
	40
	42
	44
	46
	48
	50
	52
	54
	56
	58
	60
	62
	64
	66
	68
	70
	72
	74
	76
	78
	80
	82
	84
	86
	88
	90
	92
	94
	96
	98
	100
	102
	104
	106
	108
	110
	112
	114
	116
	118
	120
	122
	124
	126
	128
	130
	132
	134
	136
	138
	140
	142
	144
	146
	148
	150
	152
	154
	156
	158
	160
	▶197
415-5522	14
	16
	18
	20
	22
	24
	26
	28
	30
	32
	34
	36
	38
	40
	42
	44
	46
	48
	50
	52
	54
	56
	58
	60
	62
	64
	66
	68
	70
	72
	74
	76
	78
	80
	82
	84
	86
	88
	90
	92
	94
	96
	98
	100

PART NUMBER INDEX

Part	Page
	102
	104
	106
	108
	110
	112
	114
	116
	118
	120
	122
	124
	126
	128
	130
	132
	134
	136
	138
	140
	142
	144
	146
	148
	150
	152
	154
	156
	158
	160
	▶410
	▶411
415-5523	15
	16
	18
	20
	22
	24
	26
	28
	30
	32
	34
	36
	38
	40
	42
	44
	46
	48
	50
	52
	54
	56
	58
	60
	62
	64
	66
	68
	70
	72
	74
	76
	78
	80
	82
	84
	86
	88
	90
	92
	94
	96
	98
	100
	102
	104
	106
	108
	110
	112
	114
	116
	118
	120
	122
	124
	126
	128
	130
	132
	134
	136
	138
	140
	142
	144
	146
	148
	150
	152
	154
	156
	158
	160
	▶421
415-5527	15
	16
	19
	20
	22
	24
	26
	28
	30
	32
	34
	36
	38
	40
	42
	44
	46
	48
	50
	52
	54
	56
	58
	60
	62
	64
	66
	68
	70
	72
	75
	76
	78
	81
	82
	85
	86
	89
	90
	92
	94
	96
	99
	100
	102
	104
	106
	108
	110
	112
	115
	116
	119
	120
	122
	125
	126
	128
	130
	132
	134
	137
	138
	141
	143
	144
	146
	148
	150
	152
	154
	156
	158
	160
	▶422
415-5534	30
	32
	34
	36
	38
	40
	42
	60
	64
	78
	134
	▶428
415-5535	14
	16
	18
	20
	22
	24
	26
	28
	44
	46
	48
	50
	52
	54
	56
	58
	62
	66
	68
	70
	72
	74
	76
	80
	82
	84
	86
	88
	90
	92
	94
	96
	98
	100
	102
	104
	106
	108
	110
	112
	114
	116
	118
	120
	122
	124
	126
	128
	130
	132
	136
	138
	140
	142
	144
	146
	148
	150
	152
	154
	156
	158
	160
	▶429
415-5536	21
	23
	42
	67
	83
	85
	87
	97
	101
	103
	119
	121
	131
	137
	139
	145
	147
	149
	155
	▶439
415-5617	44
	48
	160
	▶301
415-7105	16
	18
	20
	22
	24
	26
	28
	34
	36
	46
	54
	56
	58
	66

▶ PRIMARY REFERENCE

PART NUMBER INDEX

Part	Page
	82
	86
	90
	96
	102
	104
	110
	112
	126
	128
	132
	136
	148
	152
	154
	160
	▶175
415-7106	44
	48
	50
	52
	68
	70
	72
	92
	94
	106
	122
	156
	▶176
415-7107	20
	22
	42
	66
	82
	84
	86
	96
	100
	102
	118
	120
	130
	136
	138
	144
	146
	148
	154
	▶424
415-7115	30
	32
	38
	40
	42
	50
	52
	72
	134
	▶240
415-7116	34
	36
	60
	68
	70
	78
	106
	110
	112
	116
	126
	128
	▶242
415-7117	16
	18
	20
	22
	24
	44
	46
	48
	54
	56
	66
	82
	84
	86
	90
	94
	96
	102
	104
	118
	120
	122
	130
	132
	136
	138
	148
	154
	156
	160
	▶244
415-7119	14
	16
	18
	20
	22
	24
	26
	28
	44
	46
	48
	50
	52
	54
	56
	58
	62
	66
	68
	70
	72
	74
	76
	80
	82
	84
	86
	88
	90
	92
	96
	98
	102
	104
	106
	108
	110
	112
	114
	116
	118
	120
	122
	124
	126
	128
	130
	132
	136
	138
	140
	142
	144
	146
	148
	150
	152
	154
	158
	160
	▶413
415-7947	15
	16
	19
	20
	22
	24
	26
	28
	30
	33
	34
	36
	38
	40
	42
	44
	46
	48
	50
	52
	54
	56
	58
	60
	63
	64
	66
	68
	70
	72
	75
	77
	78
	81
	82
	85
	86
	89
	91
	92
	94
	96
	99
	101
	103
	105
	106
	109
	110
	112
	115
	116
	119
	120
	122
	125
	126
	128
	130
	133
	135
	137
	138
	141
	143
	145
	147
	149
	150
	153
	154
	156
	158
	160
	▶299
415-7948	14
	16
	18
	20
	22
	24
	26
	28
	30
	32
	34
	36
	38
	40
	42
	44
	46
	48
	50
	52
	54
	56
	58
	60
	62
	64
	66
	68
	70
	72
	74
	76
	78
	80
	82
	84
	86
	88
	90
	92
	94
	96
	98
	100
	102
	104
	106
	108
	110
	112
	114
	116
	118
	120
	122
	124

▶ PRIMARY REFERENCE

PART NUMBER INDEX

Part	Page
	126
	128
	130
	132
	134
	136
	138
	140
	142
	144
	146
	148
	150
	152
	154
	156
	158
	160
	193
	▶257
415-7949	14
	16
	18
	20
	22
	24
	26
	28
	30
	32
	34
	36
	38
	40
	42
	44
	46
	48
	50
	52
	54
	56
	58
	60
	62
	64
	66
	68
	70
	72
	74
	76
	78
	80
	82
	84
	86
	88
	90
	92
	94
	96
	98
	100
	102
	104
	106
	108
	110
	112
	114
	116
	118
	120
	122
	124
	126
	128
	130
	132
	134
	136
	138
	140
	142
	144
	146
	148
	150
	152
	154
	156
	158
	▶455
415-9833	193
415-9834	19
	41
	43
	47
	49
	51
	65
	73
	89
	91
	93
	95
	101
	111
	113
	115
	117
	121
	123
	125
	127
	129
	131
	133
	139
	141
	143
	145
	147
	149
	153
	155
	157
	159
416-1029	14
	76
	80
	98
	108
	114
	116
	124
	140
	142
	150
	158
	▶231
416-1030	134
	▶232
416-1031	42
	▶222
416-1032	44
	86
	96
	▶223
416-1042	15
	17
	18
	21
	23
	25
	27
	29
	30
	32
	34
	36
	38
	40
	42
	45
	46
	48
	50
	55
	57
	58
	61
	63
	64
	67
	68
	70
	72
	75
	77
	78
	81
	83
	85
	87
	88
	90
	94
	97
	99
	100
	102
	104
	106
	109
	114
	116
	119
	120
	122
	124
	130
	132
	134
	136
	138
	140
	142
	144
	146
	148
	150
	152
	154
	156
	158
	160
	▶456
416-1043	34
	36
	▶204
416-1044	16
	20
	28
	30
	38
	40
	48
	64
	74
	80
	82
	88
	100
	108
	132
	134
	136
	144
	146
	152
	154
	▶205
416-1045	106
	▶206
416-1046	42
	46
	90
	116
	160
	▶168
416-1047	14
	50
	72
	110
	112
	126
	128
	▶291
416-1050	42
	▶271
416-1051	14
	34
	36
	44
	46
	48
	52
	90
	92
	106
	116
	134
	▶272
416-1052	16
	18
	20
	22
	24
	26
	28
	54
	56
	58
	60
	62
	66
	68
	70
	78
	82
	86
	94
	96

▶ PRIMARY REFERENCE

PART NUMBER INDEX

Part	Page
	102
	104
	110
	122
	126
	132
	136
	148
	152
	156
	160
	▶454
416-1053	74
	76
	88
	98
	114
	124
	140
	142
	158
	▶312
416-1054	42
	▶313
416-1070	30
	32
	38
	40
	42
	52
	92
	134
	▶305
416-1073	44
	48
	160
	▶453
416-1084	42
	▶329
416-1089	16
	20
	28
	30
	34
	36
	38
	40
	46
	48
	50
	52
	60
	62
	64
	68
	70
	72
	74
	78
	80
	82
	86
	88
	90
	96
	100
	106
	108
	110
	112
	116
	126
	128
	130
	132
	134
	136
	138
	144
	146
	152
	154
	160
	▶294
416-1864	15
	16
	18
	20
	22
	24
	26
	28
	30
	32
	34
	36
	38
	40
	42
	44
	46
	48
	50
	52
	54
	56
	58
	60
	62
	64
	66
	68
	70
	72
	74
	76
	78
	80
	82
	84
	86
	89
	90
	92
	94
	96
	98
	100
	102
	104
	106
	108
	110
	112
	114
	116
	118
	120
	122
	124
	126
	128
	130
	132
	134
	136
	138
	140
	142
	144
	146
	148
	150
	152
	154
	156
	158
	160
	▶339
	▶340
416-1865	42
	44
	48
	50
	52
	72
	92
	116
	▶325
416-1866	46
	90
	▶326
416-1867	14
	16
	18
	20
	22
	24
	26
	28
	30
	32
	34
	36
	38
	40
	54
	56
	58
	60
	62
	64
	66
	68
	70
	74
	76
	78
	80
	82
	84
	86
	88
	94
	96
	98
	100
	102
	104
	106
	108
	110
	112
	114
	118
	120
	122
	124
	126
	128
	130
	132
	134
	136
	138
	140
	142
	144
	146
	148
	150
	152
	154
	156
	158
	160
	▶327
416-8715	42
	50
	52
	60
	68
	70
	72
	78
	92
	112
	128
	134
	154
	▶338
416-8716	14
	16
	18
	20
	22
	24
	26
	28
	30
	32
	34
	36
	38
	40
	42
	44
	46
	48
	50
	54
	56
	58
	60
	62
	64
	66
	68
	70
	72
	74
	76
	78
	80
	82
	84
	86
	88
	90
	92
	94
	96
	98
	100
	102
	104

PART NUMBER INDEX

Part	Page
	106
	108
	110
	112
	114
	116
	118
	120
	122
	124
	126
	128
	130
	132
	134
	136
	138
	140
	142
	144
	146
	148
	150
	152
	154
	156
	158
	160
	▶457
416-8719	16
	18
	20
	22
	24
	44
	48
	54
	56
	66
	82
	84
	94
	102
	104
	110
	112
	116
	118
	120
	122
	126
	128
	130
	132
	136
	138
	148
	154
	156
	▶172
416-8722	34
	36
	86
	96
	▶246
416-8723	15
	32
	36
	42
	44
	50
	52
	60
	62
	68
	70
	72
	74
	76
	78
	80
	84
	86
	88
	90
	92
	96
	98
	106
	108
	112
	114
	116
	118
	124
	128
	134
	140
	142
	▶319
	▶320
416-8774	106
	▶360
416-8775	30
	32
	34
	36
	38
	40
	46
	90
	134
	160
	▶365
416-9543	30
	32
	34
	36
	40
	42
	46
	68
	70
	90
	116
	130
	134
	138
	▶354
416-9546	160
	▶355
416-9552	14
	16
	18
	20
	22
	24
	26
	28
	30
	32
	34
	36
	38
	40
	44
	48
	52
	54
	56
	58
	60
	62
	64
	66
	68
	70
	74
	76
	78
	80
	82
	84
	86
	88
	92
	96
	98
	100
	102
	104
	106
	108
	114
	118
	120
	124
	130
	132
	134
	136
	138
	140
	142
	144
	146
	148
	150
	152
	154
	158
	▶361
417-3390	16
	18
	20
	22
	24
	26
	28
	46
	48
	54
	56
	58
	60
	66
	78
	82
	90
	102
	104
	106
	118
	130
	132
	136
	138
	144
	146
	148
	152
	154
	160
	▶224
417-3391	14
	76
	80
	98
	108
	114
	124
	140
	142
	150
	158
	▶225
417-3394	14
	16
	18
	20
	22
	24
	26
	28
	30
	32
	34
	36
	38
	40
	44
	46
	48
	50
	52
	54
	56
	58
	60
	62
	64
	66
	68
	70
	72
	74
	76
	78
	80
	82
	84
	86
	88
	90
	92
	94
	96
	98
	100
	102
	104
	106
	108
	110
	112
	114
	116
	118
	120
	122
	124
	126
	128
	130
	132
	134

▶ PRIMARY REFERENCE

PART NUMBER INDEX

Part	Page
	136
	138
	140
	142
	144
	146
	148
	150
	152
	154
	156
	158
	160
	▶310
417-3401	30
	32
	38
	40
	42
	50
	52
	72
	92
	134
	▶289
417-3408	61
	69
	79
	▶366
417-3453	15
	17
	19
	25
	27
	29
	30
	33
	34
	37
	39
	40
	44
	46
	49
	51
	52
	55
	56
	59
	61
	63
	65
	69
	71
	73
	75
	77
	78
	81
	89
	91
	93
	95
	99
	105
	107
	109
	110
	112
	115
	117
	123
	125
	126
	128
	133
	135
	141
	143
	151
	153
	156
	159
	160
	▶437
417-3458	14
	16
	18
	20
	22
	24
	26
	28
	46
	54
	56
	58
	60
	64
	66
	68
	70
	74
	76
	78
	80
	82
	84
	86
	88
	90
	94
	96
	98
	100
	102
	104
	106
	108
	110
	112
	114
	118
	120
	122
	124
	126
	128
	130
	132
	136
	138
	140
	142
	144
	146
	148
	150
	152
	154
	156
	158
	160
	▶258
417-3462	42
	44
	48
	50
	52
	62
	72
	92
	116
	▶259
417-3463	30
	32
	34
	36
	38
	40
	134
	▶260
417-4185	44
	48
	60
	62
	64
	74
	76
	78
	84
	98
	100
	106
	114
	120
	124
	130
	138
	140
	142
	144
	146
	158
	▶306
417-4186	46
	68
	70
	86
	90
	94
	96
	110
	116
	122
	126
	156
	▶307
417-4187	14
	16
	18
	20
	22
	24
	26
	28
	44
	46
	48
	50
	52
	54
	56
	58
	60
	62
	66
	68
	70
	72
	74
	78
	80
	82
	84
	86
	88
	90
	92
	94
	96
	100
	102
	104
	106
	110
	112
	116
	118
	120
	122
	126
	128
	130
	132
	136
	138
	144
	146
	148
	150
	152
	154
	156
	160
	▶200
417-4188	42
	▶304
417-4189	64
	108
	▶201
417-4190	14
	16
	18
	20
	22
	24
	26
	28
	30
	32
	34
	36
	38
	40
	44
	46
	57
	58
	66
	68
	70
	72
	74
	76
	80
	82
	84
	86
	88
	90
	92

PART NUMBER INDEX

Part	Page
	94
	96
	98
	100
	102
	104
	108
	110
	112
	114
	116
	118
	120
	122
	124
	126
	128
	130
	132
	134
	136
	138
	140
	142
	144
	146
	148
	150
	152
	156
	158
	160
	▶318
417-4191	60
	78
	154
	▶284
417-4213	65
	▶323
417-4214	63
	107
	▶322
417-4227	15
	17
	19
	21
	23
	25
	27
	29
	31
	33
	39
	45
	49
	53
	55
	57
	59
	67
	75
	77
	81
	83
	85
	87
	89
	93
	97
	99
	103
	105
	109
	110
	113
	115
	119
	121
	123
	125
	126
	129
	133
	137
	141
	143
	145
	147
	149
	151
	153
	159
	161
	▶444
417-4284	14
	16
	18
	20
	22
	24
	26
	28
	30
	32
	34
	36
	38
	40
	44
	46
	48
	50
	52
	54
	56
	58
	60
	62
	64
	66
	68
	70
	72
	74
	76
	78
	80
	82
	84
	86
	88
	90
	92
	94
	96
	98
	100
	102
	104
	106
	108
	110
	112
	114
	116
	118
	120
	122
	124
	126
	128
	130
	132
	134
	136
	138
	140
	142
	144
	146
	148
	150
	152
	154
	156
	158
	160
	▶458
417-4286	14
	16
	18
	20
	22
	24
	26
	28
	30
	32
	34
	36
	38
	40
	44
	48
	52
	54
	56
	58
	60
	62
	66
	68
	70
	74
	76
	78
	80
	82
	84
	86
	88
	92
	94
	96
	98
	102
	104
	106
	108
	110
	112
	114
	118
	120
	122
	124
	126
	128
	130
	132
	134
	136
	138
	140
	142
	144
	146
	148
	150
	152
	154
	156
	158
	160
	▶285
417-4287	42
	46
	50
	72
	90
	100
	116
	▶324
417-4371	21
	23
	42
	67
	83
	85
	87
	97
	101
	103
	119
	121
	131
	137
	139
	145
	147
	149
	155
	▶438
417-5749	186
417-7782	327
418-6381	14
	30
	32
	38
	40
	42
	60
	62
	64
	74
	76
	78
	80
	84
	88
	98
	100
	108
	114
	118
	120
	124
	130
	134
	138
	140
	142
	144
	146
	150
	158

▶ PRIMARY REFERENCE

PART NUMBER INDEX

Part	Page
	▶177
418-6475	14
	16
	18
	20
	22
	24
	26
	28
	44
	48
	52
	54
	56
	58
	60
	62
	64
	66
	68
	70
	74
	76
	78
	80
	82
	84
	86
	88
	92
	94
	96
	98
	100
	102
	104
	108
	114
	118
	120
	122
	124
	130
	132
	136
	138
	140
	142
	144
	146
	148
	150
	152
	154
	156
	158
	▶359
418-7425	14
	16
	18
	20
	22
	24
	26
	28
	30
	32
	34
	36
	38
	40
	44
	48
	54
	56
	58
	60
	62
	64
	66
	68
	70
	78
	82
	100
	102
	104
	132
	136
	148
	152
	154
	▶233
418-7475	15
	17
	19
	25
	27
	29
	51
	55
	57
	59
	61
	69
	71
	73
	75
	77
	79
	89
	95
	99
	105
	115
	123
	125
	133
	141
	143
	153
	157
	159
	▶440
418-7530	60
	62
	68
	70
	78
	86
	96
	148
	154
	160
	▶273
418-7659	14
	30
	32
	34
	36
	38
	40
	44
	46
	48
	50
	52
	68
	70
	72
	74
	76
	80
	84
	86
	88
	92
	96
	98
	108
	112
	114
	118
	124
	128
	130
	134
	138
	140
	142
	144
	146
	148
	150
	152
	154
	156
	158
	160
	▶330
418-7661	92
	▶295
418-7664	14
	16
	18
	24
	26
	28
	50
	54
	56
	58
	62
	64
	68
	70
	72
	74
	76
	80
	88
	94
	98
	104
	106
	108
	110
	112
	114
	122
	124
	126
	128
	132
	140
	142
	150
	152
	156
	158
	160
	▶425
418-7675	48
	50
	60
	72
	78
	94
	106
	110
	112
	122
	126
	128
	154
	156
	▶364
418-7684	251
418-8564	46
	62
	68
	70
	90
	▶286
419-3740	354
	364

▶ PRIMARY REFERENCE

PART NUMBER INDEX

Part	Page
419-7639	60
	62
	78
	106
	154
	▶331
419-7641	50
	72
	▶297
419-8508	106
	160
	▶247
419-8514	15
	45
	47
	49
	63
	65
	81
	91
	107
	109
	117
	151
	▶441
419-8519	14
	74
	76
	80
	88
	98
	114
	124
	140
	142
	150
	158
	▶274
419-8538	30
	32
	34
	36
	38
	40
	76
	98
	114
	124
	134
	140
	142
	158
	▶202
420-0291	14
	16
	18
	20
	22
	24
	26
	28
	30
	32
	38
	40
	44
	48
	54
	56
	58
	62
	64
	66
	74
	76
	80
	82
	84
	88
	98
	100
	102
	104
	108
	114
	118
	120
	124
	132
	136
	140
	142
	144
	146
	148
	150
	152
	158
	160
	▶219
420-0471	321
420-9614	116
	▶178
421-3853	30
	32
	34
	36
	38
	40
	134
	▶398
421-4493	116
	▶362
421-5383	260
421-5689	▶400
	405
421-6894	38
	52
	62
	86
	92
	96
	▶356
421-7092	42
	46
	50
	72
	90
	94
	110
	112
	122
	126
	128
	156
	160
	▶363
422-7257	42
	▶207
423-1270	30
	32
	34
	36
	40
	116
	134
	▶226
423-1279	62
	▶208
423-1280	30
	32
	38
	40
	84
	112
	118
	120
	128
	130
	138
	144
	146
	▶275
423-1281	46
	90
	106
	130
	138
	▶220
423-7576	204
423-7721	331
424-3214	301
425-6074	271
425-7103	240
	242
	244
	251
	255
425-8162	30
	32
	36
	38
	40
	44
	46
	48
	60
	78
	90
	116
	134
	▶426
425-9111	432
	434
425-9174	30
	33
	34
	37
	39
	40
	135
	161
	▶442
425-9760	15
	17
	19
	21
	23
	25
	27
	29
	30
	33
	34
	37
	40
	42
	46
	48
	50
	55
	56
	58
	61
	64
	66
	68
	70
	72
	75
	77
	78
	81
	82
	85
	89
	91
	95
	99
	101
	103
	105
	106
	109
	110
	112
	115
	116
	119
	121
	123
	125
	126
	128
	130
	133
	135
	137
	139
	141
	143
	145
	147
	149
	150
	153
	154
	156
	158
	160
	▶432
425-9955	455
426-0621	178
	▶179
426-1292	313
426-3230	15
	18
	22
	24
	26
	32
	42
	44
	54
	56
	58
	66
	76
	84
	94
	98
	102
	104
	114
	118
	120

▶ PRIMARY REFERENCE

PART NUMBER INDEX

Part	Page
	122
	124
	140
	142
	148
	150
	156
	158
	▶296
426-5232	51
	73
	▶445
430-5204	15
	17
	19
	21
	23
	25
	27
	29
	30
	33
	34
	37
	38
	40
	42
	44
	46
	49
	51
	52
	55
	56
	59
	61
	63
	64
	66
	68
	70
	73
	75
	77
	78
	81
	83
	85
	87
	89
	91
	93
	95
	96
	99
	101
	103
	105
	106
	109
	110
	112
	115
	116
	119
	121
	123
	125
	126
	128
	131
	133
	135
	137
	139
	141
	143
	145
	147
	149
	150
	153
	154
	156
	158
	160
	▶436
430-5220	50
	72
	108
	▶276
	▶277
431-4800	301
431-7048	30
	32
	34
	36
	38
	40
	▶234
431-7138	62
	▶227
431-7141	50
	64
	68
	70
	72
	74
	84
	88
	94
	100
	120
	122
	156
	▶228
431-8625	50
	72
	108
	▶278
432-0065	14
	16
	18
	20
	22
	24
	26
	28
	34
	36
	54
	56
	58
	66
	80
	82
	88
	102
	104
	108
	112
	118
	128
	132
	136
	148
	150
	152
	154
	160
	▶308
432-0069	50
	72
	▶309
432-1846	70
	86
	96
	130
	138
	▶209
432-1852	60
	68
	78
	▶210
432-1853	14
	18
	22
	24
	26
	44
	54
	56
	58
	66
	76
	84
	98
	102
	104
	114
	118
	120
	124
	140
	142
	148
	150
	158
	▶211
432-1856	32
	94
	122
	156
	▶212
432-2295	90
	116
	▶332
432-2302	50
	62
	72
	▶293
432-4332	94
	122
	156
	▶334
432-4333	86
	96
	▶221
432-4956	46
	60
	68
	70
	78
	90
	▶203
432-4972	14
	26
	28
	58
	62
	74
	76
	80
	88
	98
	108
	114
	124
	140
	142
	144
	146
	150
	152
	158
	▶248
432-4976	64
	▶164
432-4978	100
	▶249
432-4983	16
	18
	20
	22
	24
	26
	28
	54
	56
	58
	64
	66
	82
	94
	100
	102
	104
	110
	122
	126
	132
	136
	152
	156
	▶167
432-4988	178
432-6628	33
	37
	41
	▶367
432-6631	45
	▶368
432-6636	52
	63
	87
	93
	97
	▶370
432-6648	145
	▶372
432-6655	31
	35
	107
	▶374
432-6656	135
	▶376
	▶377
432-6662	161
	▶378
432-6668	95
	113
	123
	129
	157
	▶379
432-8205	154

PART NUMBER INDEX

Part	Page
	▶261
432-8206	60
	78
	130
	138
	▶262
432-8211	63
	107
	▶443
432-8215	16
	19
	20
	22
	24
	54
	56
	64
	66
	82
	84
	102
	104
	119
	120
	132
	136
	148
	▶345
432-8218	26
	28
	58
	74
	89
	100
	108
	144
	146
	152
	▶348
432-8266	14
	26
	28
	58
	62
	74
	76
	80
	88
	98
	100
	108
	114
	124
	140
	142
	144
	146
	150
	152
	158
	▶251
432-8576	393
	395
	416
	418
433-0190	415
433-0344	273
	279
433-1316	393
	395
	398
	413
	▶415
	416
	418
433-1900	303
	311
433-2688	302
	303
	311
433-3370	38
	▶229
433-5258	14
	16
	18
	20
	22
	24
	26
	28
	30
	32
	34
	36
	38
	40
	50
	52
	54
	56
	58
	60
	62
	66
	68
	70
	72
	74
	76
	78
	80
	82
	84
	86
	88
	92
	94
	96
	98
	102
	104
	106
	108
	110
	112
	114
	118
	120
	122
	124
	126
	128
	130
	132
	134
	136
	138
	140
	142
	144
	146
	▶311
433-6270	313
433-6323	14
	16
	18
	20
	22
	24
	26
	28
	32
	36
	42
	44
	50
	52
	54
	56
	60
	62
	64
	66
	68
	70
	72
	74
	76
	78
	80
	82
	84
	86
	88
	90
	92
	94
	96
	98
	102
	104
	106
	108
	110
	112
	114
	116
	118
	122
	124
	126
	128
	132
	134
	136
	140
	142
	▶180
	181
	182
	193
433-6521	181
434-2158	356
	357
434-2164	356
434-2311	44
	▶357
435-7778	14
	16
	18
	20
	22
	24
	26
	28
	30
	32
	34
	36
	38
	40
	42
	44
	46
	48
	50
	52
	54
	56
	58
	60
	62
	64
	66
	68
	70
	72
	74
	76
	78
	82
	84
	86
	88
	90
	92
	94
	96
	98
	100
	102
	104
	106
	110
	112
	114
	116
	118
	120
	122
	126
	128
	130
	132
	134
	136
	138
	140
	142
	144
	146
	150
	152
	156
	158
	160
	▶170
436-0220	269
	270
436-0524	299
	300
436-6285	370
	389
438-0911	38
	44
	52
	63
	86
	93
	96

▶ PRIMARY REFERENCE

PART NUMBER INDEX

Part	Page
	▶434
438-7763	▶401
	402
439-1841	401
	408
439-5037	401
	408
	409
439-5039	401
	408
	409
439-5040	401
	408
	409
440-8635	269
	270
440-8636	269
	270
441-1215	14
	16
	18
	20
	22
	24
	26
	28
	30
	32
	34
	36
	38
	40
	44
	46
	48
	50
	52
	54
	56
	58
	66
	68
	70
	72
	76
	80
	82
	84
	86
	90
	92
	94
	96
	98
	102
	104
	106
	108
	110
	112
	114
	116
	118
	120
	122
	124
	126
	128
	130
	132
	134
	136
	138
	140
	142
	144
	146
	148
	150
	152
	154
	156
	158
	160
	▶402
441-1218	60
	62
	64
	74
	78
	88
	▶403
441-1222	100
	▶404
441-9154	14
	34
	36
	44
	46
	48
	90
	116
	134
	▶314
441-9155	30
	32
	38
	40
	84
	112
	118
	120
	128
	130
	138
	144
	146
	▶315
443-2487	395
443-9253	242
	244
	253
443-9543	280
	282
444-2676	112
	128
	▶213
444-2678	14
	▶214
444-3242	42
	▶405
444-5021	403
	▶408
444-5022	404
	▶409
444-8091	42
	47
	51
	73
	91
	▶381
444-8106	117
	▶382
444-9589	46
	90
	▶215
444-9591	50
	72
	160
	▶216
444-9597	52
	▶217
444-9659	44
	46
	48
	50
	72
	74
	84
	88
	90
	106
	118
	120
	130
	138
	144
	146
	▶235
444-9660	86
	94
	96
	122
	156
	▶236
445-0224	44
	48
	50
	72
	106
	▶263
445-0296	14
	16
	20
	28
	74
	76
	80
	82
	88
	98
	114
	124
	132
	136
	140
	142
	144
	146
	148
	150
	152
	158
	▶335
445-0297	18
	22
	24
	26
	54
	56
	58
	64
	66
	84
	100
	102
	104
	106
	108
	118
	120
	130
	138
	▶336
445-1434	353
445-1450	15
	17
	19
	21
	23
	25
	27
	29
	49
	55
	57
	59
	65
	67
	71
	75
	77
	83
	85
	89
	99
	101
	103
	105
	115
	119
	121
	131
	133
	137
	139
	141
	143
	147
	151
	153
	159
	▶384
445-1452	110
	126
	▶386
445-5511	408
	409
445-9016	421
446-0105	409
446-2228	86
	94
	96
	116
	122
	156
	▶288
446-2236	30
	32
	34
	36
	38
	40
	134
	▶287
446-2244	110
	112
	126
	128
	▶264
447-5149	▶430
	445
	446
447-5249	282
447-5250	282
447-5251	280

▶ PRIMARY REFERENCE

PART NUMBER INDEX

Part	Page
447-5252	282
447-7651	14
	80
	150
	▶290
447-7670	52
	92
	106
	▶316
447-7926	42
	▶416
447-8572	319
447-9463	42
	▶459
448-0757	▶431
	444
	447
	448
	449
	450
	451
	452
448-2620	184
	186
	188
448-4912	39
	▶389
448-9791	64
	▶253
449-3315	410
	411
449-3333	421
449-7366	▶352
	353
449-9365	352
450-2852	42
	▶446
450-2854	63
	107
	155
	▶447
450-2855	65
	95
	101
	157
	▶448
	▶449
450-2856	61
	79
	▶450
	▶451
450-9772	458
	459
451-1179	164
451-2273	64
	100
	154
	▶317
451-4495	368
	370
	389
451-5480	249
451-7225	457
451-7736	190
	▶191
451-9226	352
452-0796	16
	18
	20
	22
	24
	26
	28
	54
	56
	58
	64
	66
	82
	94
	100
	102
	104
	110
	122
	126
	132
	136
	152
	156
	▶279
452-0797	16
	18
	20
	22
	24
	26
	28
	54
	56
	58
	64
	66
	82
	94
	100
	102
	104
	110
	122
	126
	132
	136
	152
	156
	▶333
452-3112	437
452-7366	1
	2
	3
	4
	5
	6
	7
	8
	9
	10
	11
	12
	13
	57
	156
	▶192
452-7386	47
	131
	192
	▶193
452-7394	1
	2
	3
	4
	5
	6
	7
	8
	9
	10
	11
	12
	13
	57
	156
	▶198
452-7397	12
	47
	131
	198
	▶199
452-8547	▶406
	407
453-0724	251
453-0790	420
453-3595	427
453-6400	393
	418
453-7163	14
	16
	18
	20
	22
	24
	26
	28
	30
	32
	34
	36
	38
	40
	44
	46
	48
	50
	52
	54
	56
	58
	60
	62
	64
	66
	68
	70
	72
	74
	76
	78
	80
	82
	84
	86
	88
	90
	92
	94
	96
	98
	100
	102
	104
	106
	108
	110
	112
	114
	116
	118
	120
	122
	124
	126
	128
	130
	132
	134
	136
	138
	140
	142
	144
	146
	148
	150
	152
	154
	156
	158
	160
	▶407
454-0683	170
454-5109	420
454-9914	398
	413
455-0704	430
	431
455-0705	430
	431
455-3693	180
	182
455-6923	175
	176
	177
	178
455-9378	2
	▶14
456-1364	393
	395
	398
	413
	416
	418
458-3400	223
	224
	228
458-3745	444
	445
	446
	447
	449
	450
	451
	452
459-6892	313
459-6904	15
	76
	80
	99
	115
	125
	141
	143
	150
	158
	▶350
460-1998	60
	64
	78
	▶418
460-6528	193
460-7780	▶196
	199
460-7781	199
	▶300
460-8718	393
	395
	418

PART NUMBER INDEX

Part	Page
461-1784	416
461-3165	3
	▶16
461-3168	3
	▶18
461-3170	3
	▶20
461-3171	3
	▶22
461-3175	3
	▶24
461-3177	4
	▶26
461-3181	4
	▶28
462-2235	438
462-3058	345
	348
	350
462-4544	358
462-4788	345
	348
	350
462-5117	15
	17
	19
	21
	23
	27
	29
	35
	55
	59
	61
	65
	67
	69
	71
	75
	77
	79
	83
	89
	99
	101
	103
	107
	115
	135
	141
	143
	151
	153
	159
462-8609	25
	31
	47
	49
	51
	57
	73
	85
	91
	95
	105
	113
	117
	119
	121
	123
	129
	131
	133
	137
	139
	147
	157
	161
462-9629	14
	16
	18
	20
	22
	24
	26
	28
	54
	56
	58
	64
	66
	74
	76
	80
	82
	84
	88
	98
	100
	102
	104
	108
	114
	118
	120
	124
	132
	136
	140
	142
	144
	146
	148
	150
	152
	▶358
463-8336	422
463-8815	1
	▶30
463-8820	2
	▶32
463-8848	1
	▶34
463-8910	2
	▶36
463-9821	1
	▶38
463-9823	1
	▶40
464-3024	31
464-3034	391
464-4952	145
465-3613	16
	18
	20
	22
	24
	26
	28
	54
	56
	58
	60
	64
	66
	74
	78
	82
	84
	88
	98
	100
	102
	104
	118
	120
	132
	136
	144
	146
	148
	152
	▶265
465-3614	14
	76
	80
	98
	108
	114
	124
	140
	142
	150
	158
	▶266
465-4990	64
	▶162
465-5141	▶42
465-8331	39
	45
	53
	87
	93
	97
465-8332	41
465-8596	63
465-8599	111
	127
465-8603	43
466-3332	4
	▶44
466-4382	4
	▶46
466-4849	280
	282
467-0357	16
	18
	20
	22
	24
	26
	28
	54
	56
	58
	60
	64
	66
	74
	78
	82
	84
	88
	98
	100
	102
	104
	118
	120
	130
	132
	136
	138
	144
	146
	148
	152
	154
	▶353
467-4389	▶1
467-4406	▶1
467-4409	▶1
467-4415	▶1
467-4859	▶1
467-5484	▶2
467-7465	2
	▶48
467-7586	92
	▶292
467-7637	92
	▶255
467-7639	81
	109
	125
	149
	155
	▶391
467-8282	▶2
467-8302	▶2
467-8319	▶2
468-2230	▶2
468-4735	357
468-5312	393
	395
	418
468-7762	182
	282
468-7769	182
	282
468-7770	282
469-1048	4
	▶50
469-5132	▶3
469-5134	▶3
469-5136	▶3
469-5137	▶3
469-5139	▶3
469-5140	▶4
469-5141	▶4
470-0611	▶4
470-4348	7
	▶52
470-6153	80
	108
	124
	148
	154
	▶171
470-7971	184
	188
470-7995	184
	188
470-8021	184
	188
470-8023	184
	188
470-8031	184
	188
471-0600	160
	▶267
471-2882	271
	272
	273
	274
	275
	276
	279
472-2181	52

PART NUMBER INDEX

Part Page

92
▶237
472-2188 52
92
▶230
472-3325 . . . . . ▶4
472-4944 . . . . . ▶4
472-5564 10
▶54
472-6933 . . . . . ▶10
474-0599 173
174
179
474-1553 324
474-3829 302
475-0560 . . . . . ▶56
475-0574 5
▶58
475-5557 . . . . . ▶5
475-7126 6
▶60
475-8138 6
▶62
475-8294 . . . . . ▶64
475-8373 180
182
476-2914 5
▶66
476-2948 . . . . . ▶5
476-9753 42
▶238
477-2654 5
▶68
477-2655 5
▶70
477-2657 5
▶72
477-3350 . . . . . ▶5
477-3351 . . . . . ▶5
477-3352 . . . . . ▶5
477-4127 6
▶74
477-5057 6
▶76
477-6787 . . . . . ▶6
477-6887 52
92
▶268
478-0240 . . . . . ▶6
478-0241 . . . . . ▶6
478-3105 . . . . . ▶6
478-6220 6
▶78
478-6236 . . . . . ▶6
478-6553 81
109
125
149
155
478-6560 7
▶80
478-7609 . . . . . ▶7
479-1570 274
480-4406 272
480-6065 7
▶82
480-6118 . . . . . ▶7
481-2933 249
481-5182 10
▶84
481-8439 10
▶86
482-0226 . . . . . ▶10
482-0233 381
482-0234 382
482-0235 384
482-0236 378
379
482-0237 366
376
377
483-1194 100
▶393
483-1195 94
156
▶395
483-1263 . . . . . ▶10
483-5184 . . . . . ▶88
484-1469 . . . . . ▶90
484-2326 11
▶92
484-2343 10
▶94
484-2938 . . . . . ▶10
484-6074 . . . . . ▶96
485-1660 . . . . . ▶11
485-2322 . . . . . ▶98
485-4894 340
485-4895 340
486-2471 11
▶100
486-2571 . . . . . ▶11
486-4065 302
486-4227 46
90
116
▶302
486-4247 . . . . . ▶7
487-6726 452
487-8468 367
372
374
376
377
378
382
386
487-8469 367
372
374
376
377
378
382
386
487-8470 367
372
374
376
377
378
382
386
488-1825 367
488-1830 372
488-1831 374
386
488-4590 7
▶102
488-4641 7
▶104
488-4771 . . . . . ▶7
488-4772 . . . . . ▶7
490-7862 42
▶269
▶270
491-2522 8
▶106
491-5059 . . . . . ▶8
492-1322 . . . . . ▶108
492-2945 35
37
41
47
68
70
91
117
131
135
139
▶452
492-3115 . . . . . ▶110
492-3118 8
▶112
492-3310 358
368
370
389
492-8540 . . . . . ▶8
495-3005 11
▶114
495-3032 . . . . . ▶11
495-9687 11
▶116
495-9691 . . . . . ▶11
499-0050 427

5

500-3055 421
500-8128 . . . . . ▶118
501-7366 62
▶337
502-7230 11
▶120
502-7262 . . . . . ▶11
503-1940 8
▶122
503-3757 . . . . . ▶8
503-4924 . . . . . ▶124
504-3628 8
▶126
504-3645 8
▶128
504-5152 . . . . . ▶8
504-5164 . . . . . ▶8
507-5015 374
378
379
381
386
507-5019 366
367
368
370
372
377
384
389
391
508-3673 15
30
32
34
36
38
40
46
48
52
60
62
74
76
80
84
86
88
90
92
94
96
98
108
112
114
116
118
120
124
128
130
134
138
140
142
144
146
148
150
154
158
160
▶321
508-4399 . . . . . ▶130
509-3109 9
▶132
509-5882 9
▶134
509-5884 12
▶136
510-0902 12
▶138
510-2181 . . . . . ▶12
510-3274 . . . . . ▶9
510-5297 14
16
18
20
22
24
26
28
30
32
34
36
38
40
46
48
52
54
58
60
62
74
76
80
84
86
88
90
92

PART NUMBER INDEX

Part	Page
	94
	96
	98
	100
	108
	110
	112
	114
	116
	118
	120
	122
	124
	126
	128
	130
	134
	136
	138
	140
	142
	144
	146
	148
	150
	152
	154
	156
	158
	160
	▶184
	▶186
	▶188
512-0317	▶12
512-0355	▶9
512-9838	9
	▶140
512-9884	9
	▶142
513-0849	▶9
513-0850	▶9
514-3535	12
	▶144
514-3537	12
	▶146
514-4609	▶12
514-4611	▶12
515-7183	92
	▶218
516-9846	12
	▶148
517-0058	▶150
517-0060	▶12
517-8243	411
518-5437	182
	184
	188
518-5440	182
	184
	188
518-5441	182
	184
	188
518-5885	182
	184
	188
518-5891	182
	184
	188
518-5892	182
	184
	188
518-5893	182
	184
	188
522-1257	100
	▶303
524-2574	37
524-2576	33
526-8847	9
	▶152
526-8932	▶9
526-9854	440
527-9081	10
	▶154
528-3357	▶10
528-5052	92
	▶427
535-8994	416
538-5357	▶156
539-3889	13
	▶158
539-4170	▶13
541-2728	13
	▶160
542-9131	▶13
549-5335	160
	▶239

▶ PRIMARY REFERENCE



©2018 Caterpillar
All Rights Reserved

CAT, CATERPILLAR, their respective logos, “Caterpillar Yellow”, and the POWER EDGE trade dress as well as corporate and product identity used herein, are trademarks of Caterpillar and may not be used without permission.