SEBU7655-08 (en-us)
July 2025

Operation and Maintenance Manual

3054C Industrial Engine

334 1-UP (Engine)
330 1-UP (Engine)
ZAS 1-UP (Engine)

Scan to find and purchase genuine Cat® parts and related service information.

Important Safety Information

Most accidents that involve product operation, maintenance and repair are caused by failure to observe basic safety rules or precautions. An accident can often be avoided by recognizing potentially hazardous situations before an accident occurs. A person must be alert to potential hazards, including human factors that can affect safety. This person should also have the necessary training, skills and tools to perform these functions properly.

Improper operation, lubrication, maintenance or repair of this product can be dangerous and could result in injury or death.

Do not operate or perform any lubrication, maintenance or repair on this product, until you verify that you are authorized to perform this work, and have read and understood the operation, lubrication, maintenance and repair information.

Safety precautions and warnings are provided in this manual and on the product. If these hazard warnings are not heeded, bodily injury or death could occur to you or to other persons.

The hazards are identified by the “Safety Alert Symbol” and followed by a “Signal Word” such as “DANGER”, “WARNING” or “CAUTION”. The Safety Alert “WARNING” label is shown below.



The meaning of this safety alert symbol is as follows:

Attention! Become Alert! Your Safety is Involved.

The message that appears under the warning explains the hazard and can be either written or pictorially presented.

A non-exhaustive list of operations that may cause product damage are identified by “NOTICE” labels on the product and in this publication.

Caterpillar cannot anticipate every possible circumstance that might involve a potential hazard. The warnings in this publication and on the product are, therefore, not all inclusive. You must not use this product in any manner different from that considered by this manual without first satisfying yourself that you have considered all safety rules and precautions applicable to the operation of the product in the location of use, including site-specific rules and precautions applicable to the worksite. If a tool, procedure, work method or operating technique that is not specifically recommended by Caterpillar is used, you must satisfy yourself that it is safe for you and for others. You should also ensure that you are authorized to perform this work, and that the product will not be damaged or become unsafe by the operation, lubrication, maintenance or repair procedures that you intend to use.

The information, specifications, and illustrations in this publication are on the basis of information that was available at the time that the publication was written. The specifications, torques, pressures, measurements, adjustments, illustrations, and other items can change at any time. These changes can affect the service that is given to the product. Obtain the complete and most current information before you start any job. Cat dealers have the most current information available.

NOTICE

When replacement parts are required for this product Caterpillar recommends using original Caterpillar® replacement parts.

Other parts may not meet certain original equipment specifications.

When replacement parts are installed, the machine owner/user should ensure that the machine remains in compliance with all applicable requirements.

In the United States, the maintenance, replacement, or repair of the emission control devices and systems may be performed by any repair establishment or individual of the owner's choosing.

Table of Contents

Foreword 4

Safety Section

Safety Messages 6

General Hazard Information 8

Burn Prevention 12

Fire Prevention and Explosion Prevention 12

Crushing Prevention and Cutting Prevention .. 14

Mounting and Dismounting 15

Before Starting Engine 15

Engine Starting 15

Engine Stopping 16

Electrical System 16

Product Information Section

Model Views 18

Product Identification Information 22

Operation Section

Lifting and Storage 25

Gauges and Indicators 26

Features and Controls 27

Engine Starting 28

Engine Operation 31

Engine Stopping 33

Cold Weather Operation 35

Maintenance Section

Refill Capacities 37

Maintenance Interval Schedule 54

Reference Information Section

Engine Ratings 92

Customer Service 94

Reference Materials 96

Index Section

Index 100

Foreword

California Proposition 65 Warning

Diesel engine exhaust and some of its constituents are known to the State of California to cause cancer, birth defects, and other reproductive harm.

WARNING – This product can expose you to chemicals including ethylene glycol, which is known to the State of California to cause birth defects or other reproductive harm. For more information go to:

www.P65Warnings.ca.gov

Do not ingest this chemical. Wash hands after handling to avoid incidental ingestion.

WARNING – This product can expose you to chemicals including lead and lead compounds, which are known to the State of California to cause cancer, birth defects, or other reproductive harm. For more information go to:

www.P65Warnings.ca.gov

Wash hands after handling components that may contain lead.

Literature Information

This manual contains safety, operation instructions, lubrication, and maintenance information. This manual should be stored in or near the engine area in a literature holder or literature storage area. Read, study, and keep it with the literature and engine information.

English is the primary language for all Cat publications. The English used facilitates translation and consistency in electronic media delivery.

Some photographs or illustrations in this manual show details or attachments that may be different from your engine. Guards and covers may have been removed for illustrative purposes. Continuing improvement and advancement of product design may have caused changes to your engine which are not included in this manual Whenever a question arises regarding your engine, or this manual, please consult with your Cat dealer for the latest available information.

Safety

This safety section lists basic safety precautions. In addition, this section identifies hazardous, warning situations. Read and understand the basic precautions listed in the safety section before operating or performing lubrication, maintenance, and repair on this product.

Operation

Operating techniques outlined in this manual are basic. They assist with developing the skills and techniques required to operate the engine more efficiently and economically. Skill and techniques develop as the operator gains knowledge of the engine and its capabilities.

The operation section is a reference for operators. Photographs and illustrations guide the operator through procedures of inspecting, starting, operating, and stopping the engine. This section also includes a discussion of electronic diagnostic information.

Maintenance

The maintenance section is a guide to engine care. The illustrated, step-by-step instructions are grouped by fuel consumption, service hours and/or calendar time maintenance intervals. Items in the maintenance schedule are referenced to detailed instructions that follow.

Use fuel consumption or service hours to determine intervals. Calendar intervals shown (daily, annually, etc.) may be used instead of service meter intervals if they provide more convenient schedules and approximate the indicated service meter reading.

Recommended service should be performed at the appropriate intervals as indicated in the Maintenance Interval Schedule. The actual operating environment of the engine also governs the Maintenance Interval Schedule. Therefore, under severe, dusty, wet, or freezing cold operating conditions, more frequent lubrication, and maintenance than is specified in the Maintenance Interval Schedule may be necessary.

The maintenance schedule items are organized for a preventive maintenance management program. If the preventive maintenance program is followed, a periodic tune-up is not required. The implementation of a preventive maintenance management program should minimize operating costs through cost avoidances resulting from reductions in unscheduled downtime and failures.

Maintenance Intervals

Perform maintenance on items at multiples of the original requirement. Each level and/or individual items in each level should be shifted ahead or back depending upon your specific maintenance practices, operation, and application. We recommend that the maintenance schedules be reproduced and displayed near the engine as a convenient reminder. We also recommend that a maintenance record be maintained as part of the engine's permanent record.

See the section in the Operation and Maintenance Manual, “Maintenance Records” for information regarding documents that are accepted as proof of maintenance or repair. Your authorized Cat dealer can assist you in adjusting your maintenance schedule to meet the needs of your operating environment.

Overhaul

Major engine overhaul details are not covered in the Operation and Maintenance Manual except for the interval and the maintenance items in that interval. Major repairs are best left to trained personnel or an authorized Cat dealer. Your Cat dealer offers various options regarding overhaul programs. If you experience a major engine failure, there are also numerous after failure overhaul options available from your Cat dealer. Consult with your dealer for information regarding these options.

Safety Section

i03698546

Safety Messages

SMCS Code: 1000; 7405

There may be several specific warning signs on an engine. The exact location of the hazards and the description of the hazards are reviewed in this section. Please become familiar with all warning signs.

Ensure that all of the warning signs are legible. Clean the warning signs or replace the warning signs if the words cannot be read or if the pictures are not visible. When the warning signs are cleaned, use a cloth, water, and soap. Do not use solvent, gasoline, or other harsh chemicals to clean the warning signs. Solvents, gasoline, or harsh chemicals could loosen the adhesive that secures the warning signs. The warning signs that are loosened could drop off of the engine.

Replace any damaged warning signs or missing warning signs. If a warning sign is attached to a part of the engine that is replaced, install a new warning sign on the replacement part. Any Caterpillar dealer can provide new warning signs.

Do not work on the engine and do not operate the engine unless the instructions and warnings in the Operation and Maintenance Manual are understood. Proper care is your responsibility. Failure to follow the instructions or failure to heed the warnings could result in injury or in death.

(1) Universal Warning

⚠ WARNING

Do not operate or work on this equipment unless you have read and understand the instructions and warnings in the Operation and Maintenance Manuals. Failure to follow the instructions or heed the warnings could result in serious injury or death.

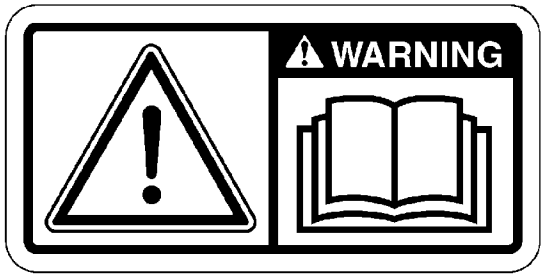

Illustration 1 g01154807

Typical example

The Universal Warning label (2) is located on the rear end of the valve mechanism cover. Refer to illustration 2 .

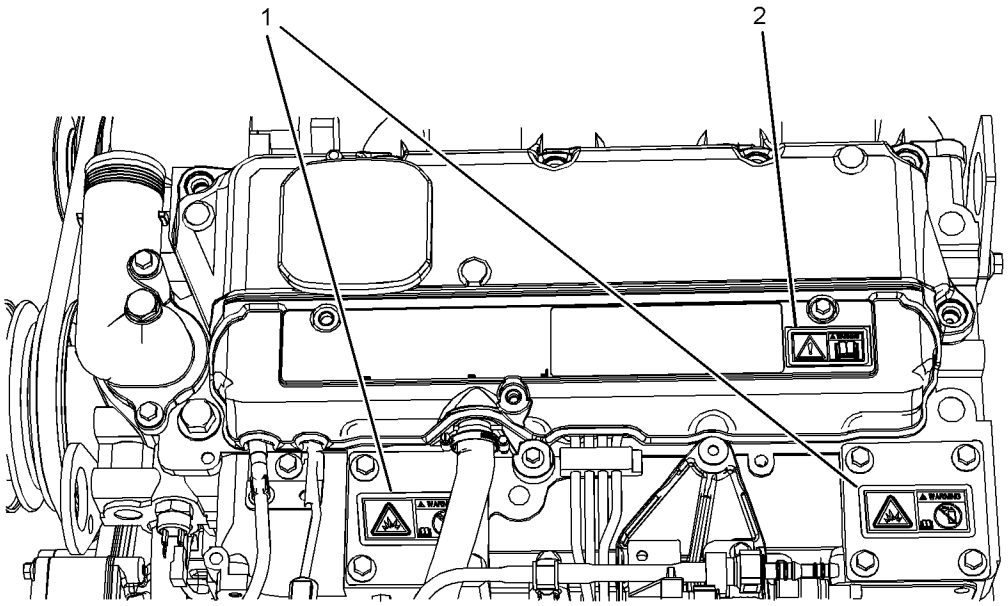

Illustration 2 g01353108

Typical example

(1) Ether Warning Label (2) Universal warning

(2) Ether

WARNING

Do not use aerosol types of starting aids such as ether. Such use could result in an explosion and personal injury.



Illustration 3 g01154809

Typical example

The ether warning label (1) is located on the inlet manifold cover. Refer to illustration 2 .

Clutch

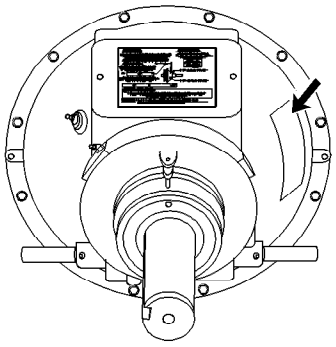

Illustration 4 g00107406

Typical example

The warning label for the clutch is located on the clutch housing (if equipped).

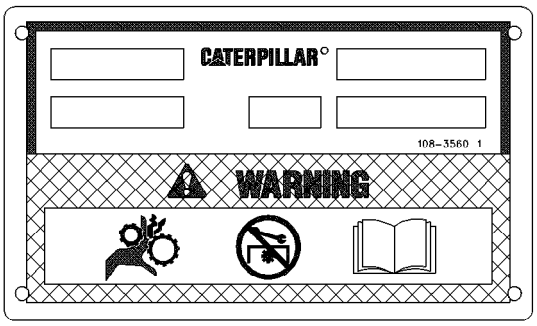

Illustration 5 g00107407

Typical example

Rotating gears can cause entanglement of fingers or entanglement of hands. Do not service this component without first reading the operator manual.

i08340590

General Hazard Information

SMCS Code: 1000; 7405

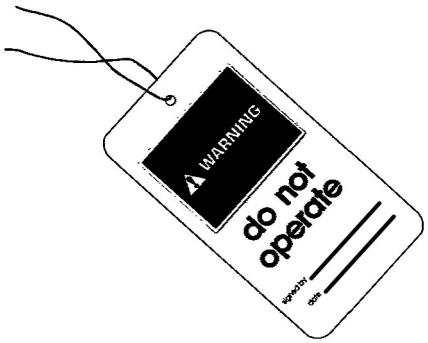

Illustration 6 g03838041

Attach a “Do Not Operate” warning tag to the start switch or controls before the engine is serviced or repaired. These warning tags (Special Instruction, SEHS7332) are available from your Cat dealer. Attach the warning tags to the engine and to each operator control station. When appropriate, disconnect the starting controls.

Do not allow unauthorized personnel on the engine, or around the engine when the engine is being serviced.

Cautiously remove the following parts. To help prevent spraying or splashing of pressurized fluids, hold a rag over the part that is being removed.

- Filler caps
- Grease fittings
- Pressure taps
- Breathers
- Drain plugs

Use caution when cover plates are removed. Gradually loosen, but do not remove the last two bolts or nuts that are located at opposite ends of the cover plate or the device. Before removing the last two bolts or nuts, pry the cover loose in order to relieve any spring pressure or other pressure.

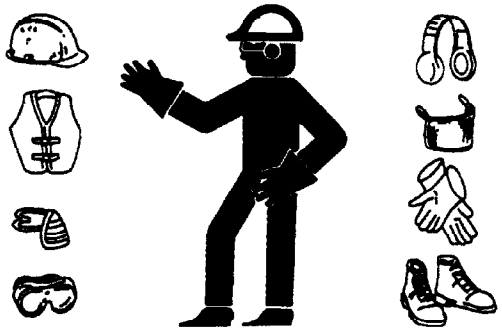

Illustration 7 g00702020

- Wear a hard hat, protective glasses, and other protective equipment, as required.
- When work is performed around an engine that is operating, wear protective devices for ears in order to help prevent damage to hearing.
- Do not wear loose clothing or jewelry that can snag on controls or on other parts of the engine.
- Ensure that all protective guards and all covers are secured in place on the engine.
- Never put maintenance fluids into glass containers. Glass containers can break.
- Use all cleaning solutions with care.
- Report all necessary repairs.

Unless other instructions are provided, perform the maintenance under the following conditions:

- The engine is stopped. Ensure that the engine cannot be started.
- The protective locks or the controls are in the applied position.
- Disconnect the batteries when maintenance is performed or when the electrical system is serviced. Disconnect the battery ground leads. Tape the leads in order to help prevent sparks.

- When starting a new engine, make provisions to stop the engine if an overspeed occurs. If an engine has not been started since service has been performed, make provisions to stop the engine if an overspeed occurs. Shutting down the engine may be accomplished by shutting off the fuel supply and/or the air supply to the engine.
- Do not attempt any repairs that are not understood. Use the proper tools. Replace any equipment that is damaged or repair the equipment.
- Start the engine with the operator controls. Never short across the starting motor terminals or the batteries. This method of starting the engine could bypass the engine neutral start system and/or the electrical system could be damaged.

Pressurized Air and Water

Pressurized air and/or water can cause debris and/or hot water to be blown out which could result in personal injury.

The maximum air pressure for cleaning purposes must be reduced to 205 kPa (30 psi) when the air nozzle is deadheaded and used with effective chip guarding (if applicable) and personal protective equipment. The maximum water pressure for cleaning purposes must be below 275 kPa (40 psi).

When pressurized air and/or pressurized water is used for cleaning, wear protective clothing, protective shoes, and eye protection. Eye protection includes goggles or a protective face shield. Always wear eye protection for cleaning the cooling system.

Avoid direct spraying of water on electrical connectors, connections, and components. When using air for cleaning, allow the machine to cool to reduce the possibility of fine debris igniting when redeposited on hot surfaces.

Fluid Penetration

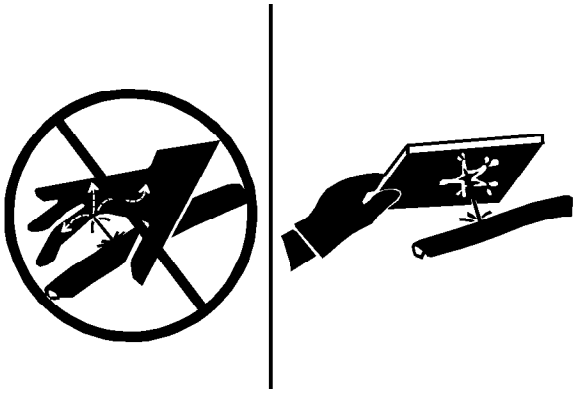

Illustration 8 g00687600

Always use a board or cardboard when you check for a leak. Leaking fluid that is under pressure can penetrate body tissue. Fluid penetration can cause serious injury and possible death. A pin hole leak can cause severe injury. If fluid is injected into your skin, you must get treatment immediately. Seek treatment from a doctor that is familiar with this type of injury.

Containing Fluid Spillage

NOTICE
Care must be taken to ensure that fluids are contained during performance of inspection, maintenance, testing, adjusting, and repair of the product. Be prepared to collect the fluid with suitable containers before opening any compartment or disassembling any component containing fluids.

Refer to Special Publication, NENG2500, “Cat Dealer Service Tool Catalog” or refer to Special Publication, PECJ0003, “Cat Shop Supplies and Tools Catalog” for tools and supplies suitable to collect and contain fluids on Cat products.

Dispose of all fluids according to local regulations and mandates.

Static Electricity Hazard when Fueling with Ultra-low Sulfur Diesel Fuel

The removal of sulfur and other compounds in ultra-low sulfur diesel fuel (ULSD fuel) decreases the conductivity of ULSD and increases the ability of ULSD to store static charge. Refineries may have treated the fuel with a static dissipating additive. Many factors can reduce the effectiveness of the additive over time. Static charges can build up in ULSD fuel while the fuel is flowing through fuel delivery systems. Static electricity discharge when combustible vapors are present could result in a fire or explosion. Ensure that the entire system used to refuel your machine (fuel supply tank, transfer pump, transfer hose, nozzle, and others) is properly grounded and bonded. Consult with your fuel or fuel system supplier to ensure that the delivery system complies with fueling standards for proper grounding and bonding.

⚠ WARNING

Avoid static electricity risk when fueling. Ultra-low sulfur diesel fuel (ULSD fuel) poses a greater static ignition hazard than earlier diesel formulations with a higher sulfur contents. Avoid death or serious injury from fire or explosion. Consult with your fuel or fuel system supplier to ensure the delivery system is in compliance with fueling standards for proper grounding and bonding practices.

Lines, Tubes, and Hoses

Do not bend or strike high-pressure lines. Do not install lines, tubes, or hoses that are damaged.

Repair any fuel lines, oil lines, tubes, or hoses that are loose or damaged. Leaks can cause fires.

Inspect all lines, tubes, and hoses carefully. Do not use bare hands to check for leaks. Always use a board or cardboard for checking engine components for leaks. Tighten all connections to the recommended torque.

Check for the following conditions:

- End fittings that are damaged or leaking
- Outer covering that is chafed or cut
- Wire that is exposed in reinforced hose
- Outer covering that is ballooning locally
- Flexible part of the hose that is kinked or crushed
- Armoring that is embedded in the outer covering

Ensure that all of the clamps, the guards, and the heat shields are installed correctly. Correct installation of these components will help to prevent these effects: vibration, rubbing against other parts and excessive heat during operation.

Inhalation

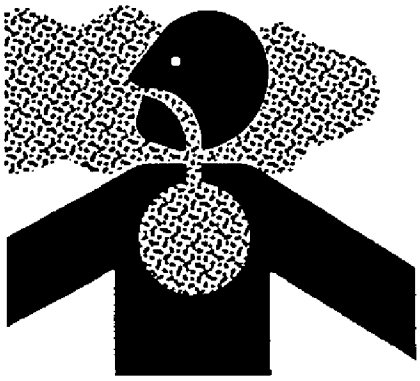

Illustration 9 g02159053

Exhaust

Use caution. Exhaust fumes can be hazardous to your health. If you operate the equipment in an enclosed area, adequate ventilation is necessary.

Hexavalent Chromium

Cat equipment and replacement parts comply with applicable regulations and requirements where originally sold. Caterpillar recommends the use of only genuine Cat replacement parts.

Hexavalent chromium has occasionally been detected on exhaust and heat shield systems on Cat engines. Although lab testing is the only accurate way to know if hexavalent chromium is, in fact, present, the presence of a yellow deposit in areas of high heat (for example, exhaust system components or exhaust insulation) may be an indication of the presence of hexavalent chromium.

Use caution if you suspect the presence of hexavalent chromium. Avoid skin contact when handling items that you suspect may contain hexavalent chromium, and avoid inhalation of any dust in the suspect area. Inhalation of, or skin contact with, hexavalent chromium dust may be hazardous to your health.

If such yellow deposits are found on the engine, engine component parts, or associated equipment or packages, Caterpillar recommends following local health and safety regulations and guidelines, utilizing good hygiene, and adhering to safe work practices when handling the equipment or parts. Caterpillar also recommends the following:

- Wear appropriate personal protective equipment (PPE).
- Wash your hands and face with soap and water prior to eating, drinking, or smoking, and also during rest room breaks, to prevent ingestion of any yellow powder.
- Never use compressed air for cleaning areas suspected of containing hexavalent chromium.
- Avoid brushing, grinding, or cutting materials suspected of containing hexavalent chromium.
- Obey environmental regulations for the disposal of all materials that may contain or have come into contact with hexavalent chromium.
- Stay away from areas that might have hexavalent chromium particles in the air.

Asbestos Information

Cat equipment and replacement parts that are shipped from Caterpillar are asbestos free. Caterpillar recommends the use of only genuine Cat replacement parts. Use the following guidelines when you handle any replacement parts that contain asbestos or when you handle asbestos debris.

Use caution. Avoid inhaling dust that might be generated when you handle components that contain asbestos fibers. Inhaling this dust can be hazardous to your health. The components that may contain asbestos fibers are brake pads, brake bands, lining material, clutch plates, and some gaskets. The asbestos that is used in these components is bound in a resin or sealed in some way. Normal handling is not hazardous unless airborne dust that contains asbestos is generated.

If dust that may contain asbestos is present, there are several guidelines that should be followed:

- Never use compressed air for cleaning.
- Avoid brushing materials that contain asbestos.
- Avoid grinding materials that contain asbestos.
- Use a wet method in order to clean up asbestos materials.
- A vacuum cleaner that is equipped with a high efficiency particulate air filter (HEPA) can also be used.
- Use exhaust ventilation on permanent machining jobs.
- Wear an approved respirator if there is no other way to control the dust.
- Comply with applicable rules and regulations for the work place. In the United States, use Occupational Safety and Health Administration (OSHA) requirements. These OSHA requirements can be found in “29 CFR 1910.1001”.
- Obey environmental regulations for the disposal of asbestos.
- Stay away from areas that might have asbestos particles in the air.

Softwrap

Keep the engine room ventilation operating at full capacity. Wear a particulate respirator that has been approved by the National Institute of Occupational Safety and Health (NIOSH). Wear appropriate protective clothing in order to minimize direct contact. Use good hygiene practices and wash hands thoroughly after handling Softwrap material. Do not smoke until washing hands thoroughly after handling Softwrap material. Clean up debris with a vacuum or by wet sweeping. Do not use pressurized air to clean up debris.

Reference: The applicable material safety data sheets can be found at the following web site by searching using part number or the name:

https://catmsds.cat.com/MSDSSearch/servlet/cat.cis.ecs.msdsSearch.controller.UserIdentificationDisplayServlet

Dispose of Waste Properly

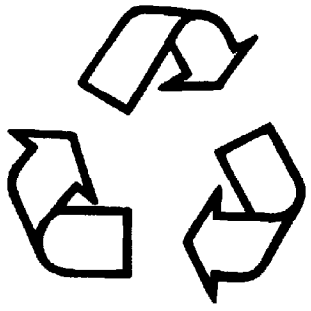

Illustration 10 g00706404

Improperly disposing of waste can threaten the environment. Potentially harmful fluids should be disposed of according to local regulations.

Always use leakproof containers when you drain fluids. Do not pour waste onto the ground, down a drain, or into any source of water.

i08162288

Burn Prevention

SMCS Code: 1000; 7405

Do not touch any part of an operating engine. Allow the engine to cool before any maintenance is performed on the engine. Relieve all pressure in the air system, hydraulic system, lubrication system, fuel system, and cooling system before any lines, fittings, or related items are disconnected.

Coolant

When the engine is at operating temperature, the engine coolant is hot. The coolant is also under pressure. The radiator and all lines to the heaters or to the engine contain hot coolant.

Any contact with hot coolant or with steam can cause severe burns. Allow cooling system components to cool before the cooling system is drained.

Check that the coolant level after the engine has stopped and the engine has been allowed to cool.

Ensure that the filler cap is cool before removing the filler cap. The filler cap must be cool enough to touch with a bare hand. Remove the filler cap slowly to relieve pressure.

Cooling system conditioner contains alkali. Alkali can cause personal injury. Do not allow alkali to contact the skin, the eyes, or the mouth.

Oils

Hot oil and hot lubricating components can cause personal injury. Do not allow hot oil to contact the skin. Also, do not allow hot components to contact the skin.

Batteries

Electrolyte is an acid. Electrolyte can cause personal injury. Do not allow electrolyte to contact the skin or the eyes. Always wear protective glasses for servicing batteries. Wash hands after touching the batteries and connectors. Use of gloves is recommended.

i08302987

Fire Prevention and Explosion Prevention

SMCS Code: 1000; 7405



Illustration 11 g00704000

Use of personal protection equipment (PPE) may be needed.

All fuels, most lubricants, and some coolant mixtures are flammable.

Always perform a Walk-Around Inspection, which may help you identify a fire hazard. Do not operate a product when a fire hazard exists. Contact your Cat dealer for service.

Flammable fluids that are leaking or spilled onto hot surfaces or onto electrical components can cause a fire. Fire may cause personal injury and property damage.

Flash fires may result if the covers for the engine crankcase are removed within 15 minutes after an emergency shutdown.

Determine whether the engine will be operated in an environment that allows combustible gases to be drawn into the air inlet system. These gases could cause the engine to overspeed. Personal injury, property damage, or engine damage could result.

If the application involves the presence of combustible gases, consult your Cat dealer for additional information about suitable protection devices.

Remove all flammable materials such as fuel, oil, and debris from the engine. Do not allow any flammable materials to accumulate on the engine.

All fluids that are captured in the fluid spill containment basin should be cleaned up immediately. Failure to clean up spilled fluids can cause a fire. Fire may cause personal injury and property damage.

Store fuels and lubricants in properly marked containers away from unauthorized persons. Store oily rags and any flammable materials in protective containers. Do not smoke in areas that are used for storing flammable materials.

Do not expose the engine to any flame.

Exhaust shields (if equipped) protect hot exhaust components from oil or fuel spray in a line, a tube, or a seal failure. Exhaust shields must be installed correctly.

Do not weld on lines or tanks that contain flammable fluids. Do not use flame to cut lines or tanks that contain flammable fluid. Clean any such lines or tanks thoroughly with a nonflammable solvent prior to welding or flame cutting.

Wiring must be kept in good condition. Properly route and attach all electrical wires. Check all electrical wires daily. Repair any wires that are loose or frayed before you operate the engine. Clean all electrical connections and tighten all electrical connections.

Eliminate all wiring that is unattached or unnecessary. Do not use any wires or cables that are smaller than the recommended gauge. Do not bypass any fuses and/or circuit breakers.

Arcing or sparking could cause a fire. Secure connections, recommended wiring, and properly maintained battery cables will help to prevent arcing or sparking.

Inspect all lines and hoses for wear or for deterioration. Properly route all hoses. The lines and hoses must have adequate support and secure clamps. Tighten all connections to the recommended torque. Leaks can cause fires.

Properly install all oil filters and fuel filters. The filter housings must be tightened to the proper torque.



Illustration 12 g00704059

Use caution when you are refueling an engine. Do not smoke while you are refueling an engine. Do not refuel an engine near open flames or sparks. Always stop the engine before refueling.

Avoid static electricity risk when fueling. Ultra Low Sulfur Diesel (ULSD) poses a greater static ignition hazard than earlier diesel formulations with a higher Sulfur content. Avoid death or serious injury from fire or explosion. Consult with your fuel or fuel system supplier to ensure that the delivery system is in compliance with fueling standards for proper grounding and bonding practices.

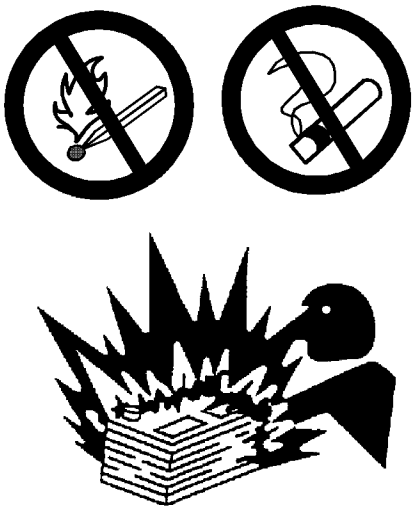

Illustration 13 g02298225

Gases from a battery can explode. Keep any open flames or sparks away from the top of a battery. Do not smoke in battery charging areas.

Never check the battery charge by placing a metal object across the terminal posts. Use a voltmeter or a hydrometer.

Improper jumper cable connections can cause an explosion that can result in injury. Refer to the Operation Section of this manual for specific instructions.

Do not charge a frozen battery. Charging a frozen battery may result in an explosion.

The batteries must be kept clean. The covers (if equipped) must be kept on the cells. Use the recommended cables, connections, and battery box covers when the engine is operated.

Fire Extinguisher

Make sure that a fire extinguisher is available. Be familiar with the operation of the fire extinguisher. Inspect the fire extinguisher and service the fire extinguisher regularly. Obey the recommendations on the instruction plate.

Ether

Ether is flammable and poisonous.

Use ether in ventilated areas. Do not smoke while you are replacing an ether cylinder or while you are using an ether spray.

Do not store ether cylinders in living areas or in the engine compartment. Do not store ether cylinders in direct sunlight or in temperatures above 49 °C (120 °F). Keep ether cylinders away from open flames or sparks.

Dispose of used ether cylinders properly. Do not puncture an ether cylinder. Keep ether cylinders away from unauthorized personnel.

Do not spray ether into an engine if the engine is equipped with a thermal starting aid for cold weather starting.

Lines, Tubes, and Hoses

Do not bend high-pressure lines. Do not strike high-pressure lines. Do not install any lines that are bent or damaged.

Repair any lines that are loose or damaged. Leaks can cause fires. Consult your Cat dealer for repair or for replacement parts.

Check lines, tubes, and hoses carefully. Do not use your bare hand to check for leaks. Use a board or cardboard to check for leaks. Tighten all connections to the recommended torque.

Replace the parts if any of the following conditions are present:

- End fittings are damaged or leaking.
- Outer coverings are chafed or cut.
- Wires are exposed.
- Outer coverings are ballooning.
- Flexible parts of the hoses are kinked.
- Outer covers have embedded armoring.
- End fittings are displaced.

Make sure that all clamps, guards, and heat shields are installed correctly to prevent vibration, rubbing against other parts, and excessive heat.

i08162291

Crushing Prevention and Cutting Prevention

SMCS Code: 1000; 7405

Support the component properly when work beneath the component is performed.

Unless other maintenance instructions are provided, never attempt adjustments while the engine is running.

Stay clear of all rotating parts and of all moving parts. Leave the guards in place until maintenance is performed. After the maintenance is performed, reinstall the guards.

Keep objects away from moving fan blades. The fan blades will throw objects or cut objects.

When objects are struck, wear protective glasses to avoid injury to the eyes.

Chips or other debris may fly off objects when objects are struck. Before objects are struck, ensure that no one will be injured by flying debris.

i08159517

Mounting and Dismounting

SMCS Code: 1000; 7405

Inspect the steps, the handholds, and the work area before mounting the engine. Keep these items clean and keep these items in good repair.

Mount the engine and dismount the engine only at locations that have steps and/or handholds. Do not climb on the engine, and do not jump off the engine.

Face the engine to mount the engine or dismount the engine. With your feet and hands, always maintain a three-point contact with the steps and designated handholds. Do not use any controls as handholds.

Do not stand on components which cannot support your weight. Use an adequate ladder or use a work platform. Secure the climbing equipment so that the equipment will not move.

Do not carry tools or supplies when you mount the engine or when you dismount the engine. Use a hand line to raise and lower tools or supplies.

i08614835

Before Starting Engine

SMCS Code: 1000

NOTICE
For initial start-up of a new or rebuilt engine, and for start-up of an engine that has been serviced, make provision to shut the engine off should an overspeed occur. This may be accomplished by shutting off the air and/or fuel supply to the engine.

⚠ WARNING

Engine exhaust contains products of combustion which may be harmful to your health. Always start and operate the engine in a well ventilated area and, if in an enclosed area, vent the exhaust to the outside.

Inspect the engine for potential hazards.

Do not start the engine if there is a “DO NOT OPERATE” warning tag or similar warning tag attached to the start switch. Do not move any of the controls if there is a “DO NOT OPERATE” warning tag or similar warning tag attached to the controls.

Before starting the engine, ensure that no one is on, underneath, or close to the engine. Ensure that the area is free of personnel.

If equipped, ensure that the lighting system for the engine is suitable for the conditions. Ensure that all lights work properly, if equipped.

All protective guards and all protective covers must be installed if the engine must be started to perform service procedures. To help prevent an accident that is caused by parts in rotation, work around the parts carefully.

Do not bypass the automatic shutoff circuits. Do not disable the automatic shutoff circuits. The circuits are provided to help prevent personal injury. The circuits are also provided to help prevent engine damage.

See the Service Manual for repairs and for adjustments.

i08467757

Engine Starting

SMCS Code: 1000

If a warning tag is attached to the engine start switch or to the controls, DO NOT start the engine or move the controls. Consult with the person that attached the warning tag before the engine is started.

All protective guards and all protective covers must be installed if the engine must be started to perform service procedures. To help prevent an accident that is caused by parts in rotation, work around the parts carefully.

If there is a possibility that unburned gas remains in the exhaust system, refer to the purge procedure in this Operation and Maintenance Manual, “Engine Starting” topic in the Operation Section.

Start the engine from the operator' compartment or from the engine start switch.

Always start the engine according to the procedure that is described in the Operation and Maintenance Manual, “Engine Starting” topic in the Operation Section. Knowing the correct procedure will help to prevent major damage to the engine components. Knowing the procedure will also help to prevent personal injury.

To ensure that the jacket water heater (if equipped) is working properly, check the water temperature during operation. To ensure that the lube oil heater (if equipped) is working properly, check the oil temperature during heater operation.

Engine exhaust contains products of combustion which can be harmful to your health. Always start the engine and operate the engine in a well-ventilated area. If the engine is started in an enclosed area, vent the engine exhaust to the outside.

i03698544

Engine Stopping

SMCS Code: 1000

Stop the engine according to the procedure in the Operation and Maintenance Manual, “Engine Stopping (Operation Section)” in order to avoid overheating of the engine and accelerated wear of the engine components.

Use the Emergency Stop Button (if equipped) ONLY in an emergency situation. Do not use the Emergency Stop Button for normal engine stopping. After an emergency stop, DO NOT start the engine until the problem that caused the emergency stop has been corrected.

Stop the engine if an overspeed condition occurs during the initial start-up of a new engine or an engine that has been overhauled. This may be accomplished by shutting off the fuel supply to the engine and/or shutting off the air supply to the engine.

i02469632

Electrical System

SMCS Code: 1000; 1400

Never disconnect any charging unit circuit or battery circuit cable from the battery when the charging unit is operating. A spark can cause the combustible gases that are produced by some batteries to ignite.

To help prevent sparks from igniting combustible gases that are produced by some batteries, the negative “−” jump start cable should be connected last from the external power source to the negative “−” terminal of the starting motor. If the starting motor is not equipped with a negative “−” terminal, connect the jump start cable to the engine block.

Check the electrical wires daily for wires that are loose or frayed. Tighten all loose electrical wires before the engine is started. Repair all frayed electrical wires before the engine is started. Refer to the “Engine Starting” section of this Operation and Maintenance Manual for specific starting instructions.

Grounding Practices

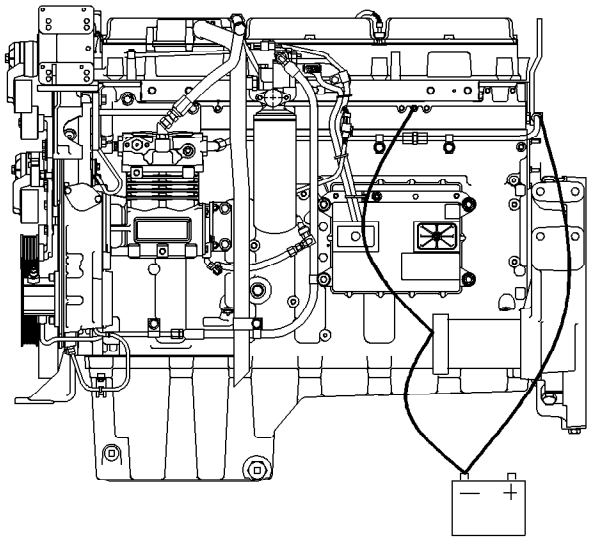

Illustration 14 g00771448

Typical example

Grounding Stud To Battery Ground

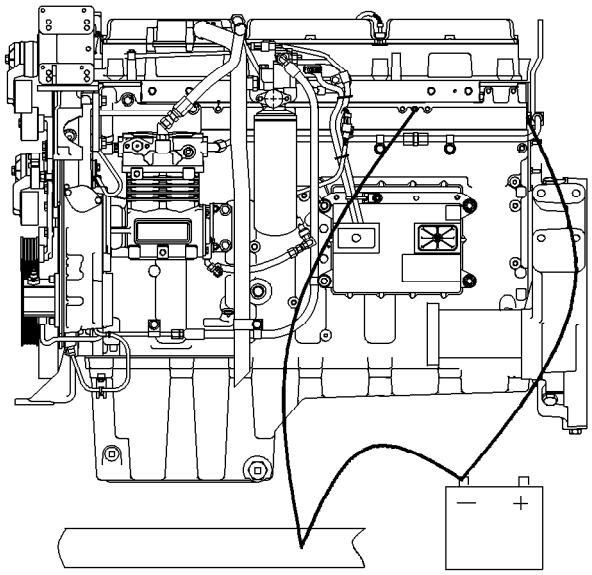

Illustration 15 g00771487

Typical example

Alternate Grounding Stud To Battery Ground

Proper grounding for the engine electrical system is necessary for optimum engine performance and reliability. Improper grounding will result in uncontrolled electrical circuit paths and in unreliable electrical circuit paths.

Uncontrolled electrical circuit paths can result in damage to main bearings, to crankshaft bearing journal surfaces, and to aluminum components.

Engines that are installed without engine-to-frame ground straps can be damaged by electrical discharge.

To ensure that the engine and the engine electrical systems function properly, an engine-to-frame ground strap with a direct path to the battery must be used. This path may be provided by way of a starting motor ground, a starting motor ground to the frame, or a direct engine ground to the frame.

All grounds should be tight and free of corrosion. The engine alternator must be grounded to the negative “-” battery terminal with a wire that is adequate to handle the full charging current of the alternator.

Product Information Section

Model Views

i10520401

Model View Illustrations

SMCS Code: 1000

Engine Model Views

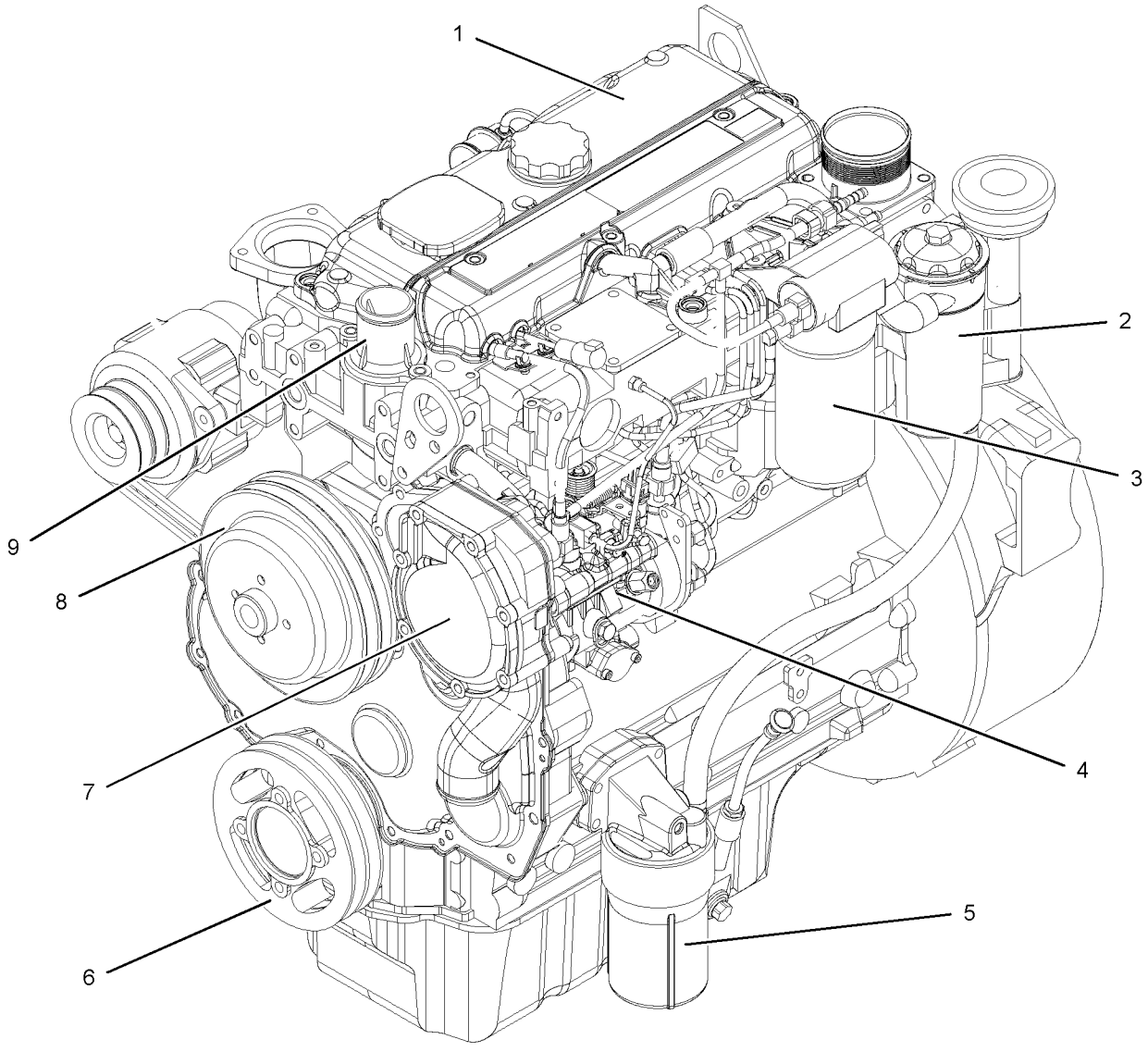

Illustration 16 g01012280

Typical example

(1) Valve mechanism cover (2) Crankcase breather (3) Fuel filter (Type 1)

(4) Fuel injection pump
(5) Engine oil filter
(6) Crankshaft pulley
(7) Water pump
(8) Fan pulley
(9) Water temperature regulator housing

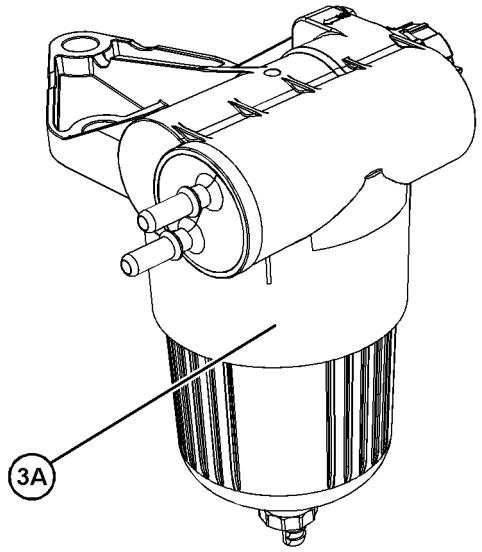

Illustration 17 g07899843

Typical example

(3A) Fuel filter (Type 2)

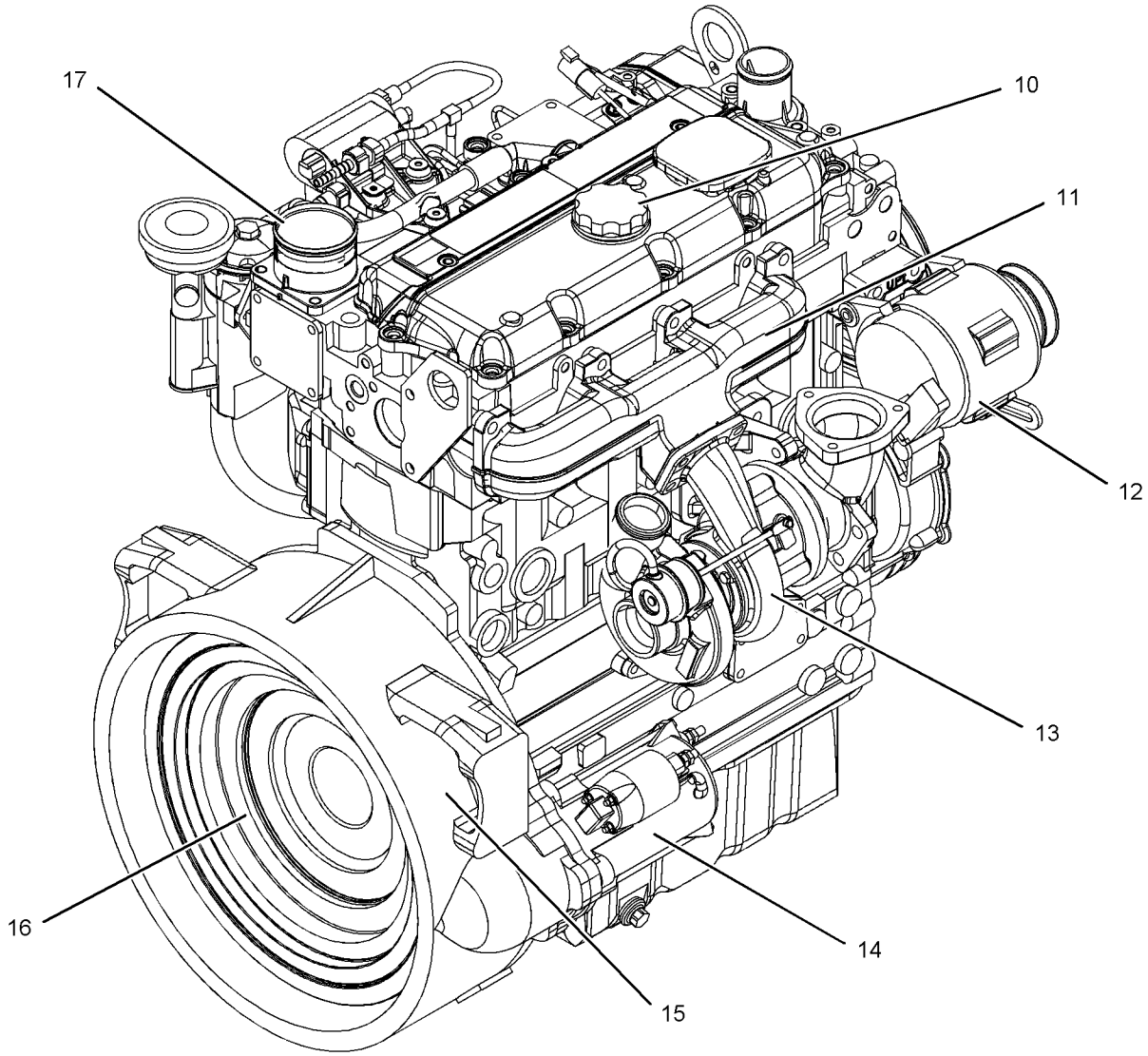

Illustration 18 g01990073

Typical example

(10) Oil filler cap
(11) Exhaust manifold
(12) Alternator
(13) Turbocharger
(14) Starting motor
(15) Flywheel housing
(16) Flywheel
(17) Air intake

i03699300

Engine Description

SMCS Code: 1000

The 3054C Industrial Engines are designed for the following applications: machine and industrial mobile equipment. The engines are available in the following types of aspiration:

- Turbocharged aftercooled
- Turbocharged
- Naturally aspirated

Engine Specifications

Note: The front end of the engine is opposite the flywheel end of the engine. The left and the right sides of the engine are determined from the flywheel end. The number 1 cylinder is the front cylinder.

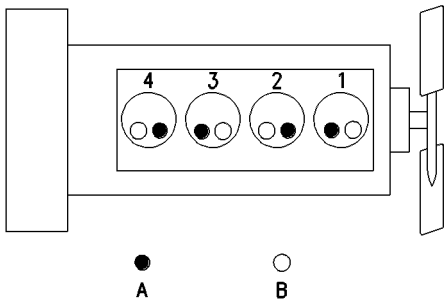

Illustration 19 g00577193

3054C

(A) Exhaust valves
(B) Inlet valves

Table 1

3054C Industrial Engine Specifications	
Number of Cylinders	4 In-Line
Bore	105 mm (4.134 inch)
Stroke	127 mm (5.0 inch)
Aspiration	Turbocharged aftercooled Turbocharged Naturally aspirated
Compression Ratio	19.25:1 NA 18.23:1 T and TA
Displacement	4.4 L (268 in^3)
Firing Order	1 3 4 2
Rotation (flywheel end)	Counterclockwise
Valve Lash Setting (Inlet)	0.20 mm (0.008 inch)
Valve Lash Setting (Exhaust)	0.45 mm (0.018 inch)

Engine Cooling and Lubrication

The cooling system consists of the following components:

- Gear-driven centrifugal water pump
- Water temperature regulators which regulate the engine coolant temperature
- Gear-driven oil pump (gear type)
- Oil cooler

The engine lubricating oil is supplied by a oil pump that is a gear type. The engine lubricating oil is cooled and the engine lubricating oil is filtered. Bypass valves provide unrestricted flow of lubrication oil to the engine parts when oil viscosity is high. Bypass valves can also provide unrestricted flow of lubrication oil to the engine parts if the oil cooler should become plugged or if the oil filter element should become plugged.

Engine efficiency, efficiency of emission controls, and engine performance depend on adherence to proper operation and maintenance recommendations. Engine performance and efficiency also depend on the use of recommended fuels, lubrication oils, and coolants. Refer to Operation and Maintenance Manual, “Maintenance Interval Schedule” for more information on maintenance items.

Engine Service Life

Engine efficiency and maximum utilization of engine performance depend on the adherence to proper operation and maintenance recommendations. In addition, use recommended fuels, coolants and lubricants. Use the Operation and Maintenance Manual as a guide for required engine maintenance.

Expected engine life is generally predicted by the average power that is demanded. The average power that is demanded is based on fuel consumption of the engine over a period of time. Reduced hours of operation at full throttle and/or operating at reduced throttle settings result in a lower average power demand. Reduced hours of operation will increase the length of operating time before an engine overhaul is required. For more information, refer to Operation and Maintenance Manual, “Overhaul Considerations”.

Aftermarket Products and Caterpillar Engines

When auxiliary devices, accessories, or consumables (filters, additives, catalysts, etc) which are made by other manufacturers are used on Caterpillar products, the Caterpillar warranty is not affected simply because of such use.

However, failures that result from the installation or use of other manufacturers' devices, accessories, or consumables are NOT Caterpillar defects. Therefore, the defects are NOT covered under the Caterpillar warranty.

Product Identification Information

i03699303

Engine Identification

SMCS Code: 1000

Caterpillar engines are identified with model numbers, and serial numbers, with performance specification numbers, and with arrangement numbers. These numbers are shown on the serial number plate that is mounted on the engine.

Caterpillar dealers need these numbers in order to determine the components that were included with the engine. This permits accurate identification of replacement part numbers.

i03699324

Serial Number Plate

SMCS Code: 1000

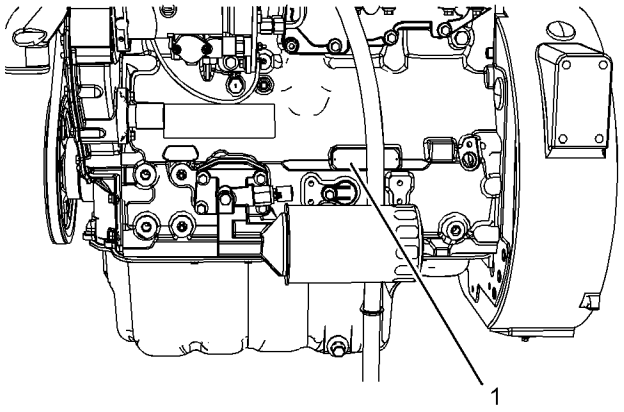

Illustration 20 g01360892

Typical example of the location of the serial number plate

The Serial Number Plate is located on the left side of the cylinder block near the rear of the engine.

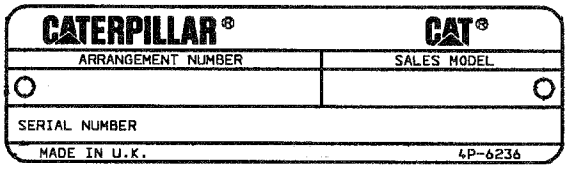

Illustration 21 g01258789

Typical example of the serial number plate

The following information is stamped on the Serial Number Plate: engine serial number, model and arrangement number.

i01484593

Information Plate

SMCS Code: 1000

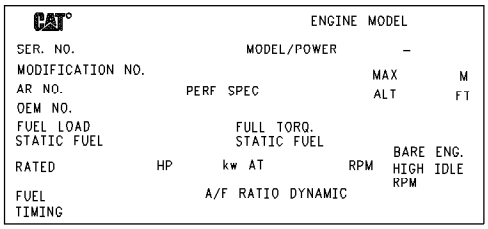

Illustration 22 g00764335

The Information Plate is on the valve cover. The following information is on the Information Plate: engine serial number, engine model, engine arrangement number, maximum altitude of the engine that is necessary to achieve the rated power, horsepower, high idle, full load rpm, fuel settings and other information.

i00610276

Reference Numbers

SMCS Code: 1000

Information for the following items may be needed to order parts. Locate the information for your engine. Record the information on the appropriate space. Make a copy of this list for a record. Retain the information for future reference.

Record for Reference

Engine Model _____

Engine Serial No. _____

Engine Arrangement No. _____

Modification No. _____

Engine Low Idle rpm _____

Engine Full Load rpm _____

Performance Specification No. _____

Primary Fuel Filter No. _____

Water Separator Element No. _____

Secondary Fuel Filter Element No. _____

Lubrication Oil Filter Element No. _____

Auxiliary Oil Filter Element No. _____

Supplemental Coolant Additive Maintenance Element No. (Optional) _____

Total Lubrication System Capacity _____

Total Cooling System Capacity _____

Air Cleaner Element No. _____

Fan Drive Belt No. _____

Alternator Belt No. _____

i03699340

Emissions Certification Film

SMCS Code: 1000; 7405

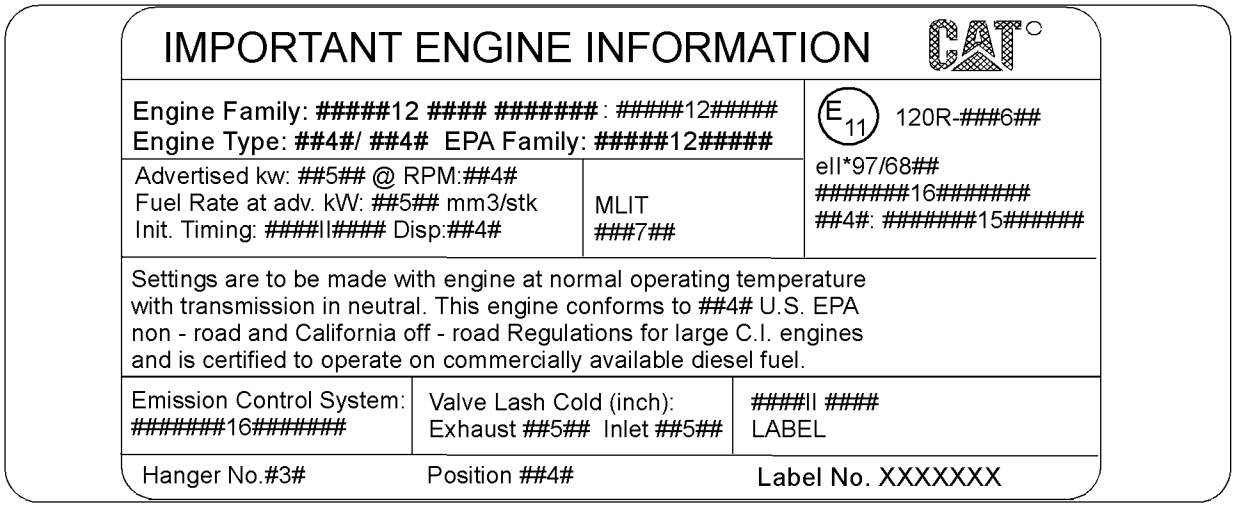

Illustration 23 g01990175

Typical example

Operation Section

Lifting and Storage

i07454544

Product Lifting

SMCS Code: 1000; 1404; 7002

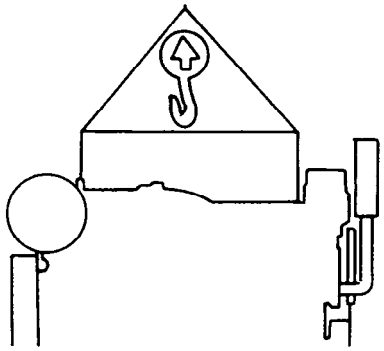

Illustration 24 g00103219

NOTICE
Always inspect lifting eyebolts and all other lifting equipment for damage before performing any lifting. Never bend the eyebolts and the brackets. Never perform product lifting if components are damaged. Only load the eyebolts and the brackets under tension. Remember that the capacity of an eyebolt is less as the angle between the supporting members and the object becomes less than 90 degrees.

Use a hoist to remove heavy components. Use an adjustable lifting beam to lift the engine. All supporting members (chains and cables) should be parallel to each other. The chains and cables should be perpendicular to the top of the object that is being lifted.

Some removals require lifting the fixtures to obtain proper balance and safety.

To remove the engine only, use the lifting eyes that are on the engine.

Lifting eyes are designed and installed for the specific engine arrangement. Alterations to the lifting eyes and/or the engine make the lifting eyes and the lifting fixtures obsolete. If alterations are made, ensure that proper lifting devices are provided. Consult your Cat dealer for information regarding fixtures for proper engine lifting.

i08257552

Product Storage

SMCS Code: 1000; 1404; 7002

If the engine will not be started for several weeks, the lubricating oil will drain from the cylinder walls and from the piston rings. Rust can form on the cylinder liner surface. Rust on the cylinder liner surface will cause increased engine wear and a reduction in engine service life.

To help prevent excessive engine wear, use the following guidelines:

- Complete all lubrication recommendations that are listed in this Operation and Maintenance Manual, “Maintenance Interval Schedule” (Maintenance Section).
- If freezing temperatures are expected, check the cooling system for adequate protection against freezing. See this Operation and Maintenance Manual, “Refill Capacities and Recommendations” (Maintenance Section).

If an engine is out of operation and if use of the engine is not planned, special precautions should be made. If the engine will be stored for more than 1 month, a complete protection procedure is recommended.

For more detailed information on engine storage, see Special Instruction, SEHS9031, “Storage Procedure For Caterpillar Products”.

Your Cat dealer can help prepare the engine for extended storage periods.

Gauges and Indicators

i01139916

Gauges and Indicators

SMCS Code: 1900; 7450

Your engine may not have the same gauges or all of the gauges that are described. For more information about the gauge package, see the OEM information.

Gauges provide indications of engine performance. Ensure that the gauges are in good working order. Determine the normal operating range by observing the gauges over a period of time.

Noticeable changes in gauge readings indicate potential gauge or engine problems. Problems may also be indicated by gauge readings that change even if the readings are within specifications. Determine and correct the cause of any significant change in the readings. Consult your Caterpillar dealer for assistance.

NOTICE
If no oil pressure is indicated, STOP the engine. If maximum coolant temperature is exceeded, STOP the engine. Engine damage can result.



Engine Oil Pressure – The oil pressure should be greatest after a cold engine is started. The typical engine oil pressure with SAE10W30 is 207 to 413 kPa (30 to 60 psi) at rated rpm.

A lower oil pressure is normal at low idle. If the load is stable and the gauge reading changes, perform the following procedure:

1. Remove the load.

2. Reduce engine speed to low idle.

3. Check and maintain the oil level.



Jacket Water Coolant Temperature – Typical temperature range is 71 to 96°C (160 to 205°F). The maximum allowable temperature with the pressurized cooling system at 48 kPa (7 psi) is 103°C (217°F). Higher temperatures may occur under certain conditions. The water temperature reading may vary according to load. The reading should never exceed the boiling point for the pressurized system that is being used.

If the engine is operating above the normal range and steam becomes apparent, perform the following procedure:

1. Reduce the load and the engine rpm.

2. Inspect the cooling system for leaks.

3. Determine if the engine must be shut down immediately or if the engine can be cooled by reducing the load.



Tachometer – This gauge indicates engine speed (rpm). When the throttle control lever is moved to the full throttle position without load, the engine is running at high idle. The engine is running at the full load rpm when the throttle control lever is at the full throttle position with maximum rated load.

NOTICE
To help prevent engine damage, never exceed the high idle rpm. Overspeeding can result in serious damage to the engine. The engine can be operated at high idle without damage, but should never be allowed to exceed high idle rpm.

Note: The high idle rpm and the full load rpm are stamped on the Information Plate.



Ammeter – This gauge indicates the amount of charge or discharge in the battery charging circuit. Operation of the indicator should be to the right side of “0” (zero).



Fuel Level – This gauge indicates the fuel level in the fuel tank. The electrically operated fuel level gauge only registers when the “START/STOP” switch is “ON” .



Service Hour Meter – This gauge indicates the total number of clock hours that the engine has operated.

Features and Controls

i01007515

Engine Shutoffs and Engine Alarms

SMCS Code: 1900; 7400; 7418

Shutoffs

Shutoffs and alarms are electrically operated or mechanically operated. The operation of all electric shutoffs and alarms utilize components which actuate switches in a sensing unit.

Shutoffs are set at critical levels for the following items: operating temperature, operating pressure, operating level and operating rpm. The particular shutoff may need to be reset before the engine will start.

NOTICE
Always determine the cause of the engine shutdown. Make necessary repairs before attempting to restart the engine.

Be familiar with the following items:

- Types and locations of shutoff
- Conditions which cause each shutoff to function
- The resetting procedure that is required to restart the engine

Alarms

Alarms consist of a switch and a contactor. The switches are wired to the contactors. The contactors activate alarm circuits in an annunciator panel. Your engine may be equipped with the following switches:

Engine oil pressure – The engine oil pressure switch indicates when oil pressure drops below rated system pressure.

Coolant level – The low coolant level switch indicates when the coolant level is low.

Coolant temperature – The coolant temperature switch indicates high jacket water coolant temperature.

Note: The sensing element of the coolant temperature switch must be submerged in coolant in order to operate.

Engines may be equipped with alarms in order to alert the operator when undesirable operating conditions occur.

NOTICE
When an alarm is activated, corrective measures must be taken before the situation becomes an emergency in order to avoid possible engine damage.

If corrective measures are not taken within a reasonable time, engine damage could result. The alarm will continue until the condition is corrected. The alarm may need to be reset.

A switch may be installed in the alarm while the engine is stopped for repairs. Before the engine is started, ensure that the switch is moved to the ON position and that the warning lights are flashing. The engine will not be protected if the switch is left in the OFF position.

Testing the Shutoff and Alarm System

Most control panels are equipped with a lamp test switch. Turn the switch to the ON position in order to check the indicator lights for proper operation. Replace defective bulbs immediately.

NOTICE
During testing, abnormal operating conditions must be simulated. Perform the tests correctly in order to help prevent possible engine damage.

Refer to the Service Manual for more information on testing procedures or consult your Caterpillar dealer.

Engine Starting

i01486758

Before Starting Engine

SMCS Code: 1000; 1400; 1450

Perform the required daily maintenance and other periodic maintenance before the engine is started. Inspect the engine compartment. This inspection can help prevent major repairs at a later date. Refer to the Operation and Maintenance Manual, “Maintenance Interval Schedule” for more information.

- For the maximum service life of the engine, make a thorough inspection before the engine is started. Look for the following items: oil leaks, coolant leaks, loose bolts and trash buildup. Remove trash buildup and arrange for repairs, as needed.
- Inspect the cooling system hoses for cracks and for loose clamps.
- Inspect the alternator and accessory drive belts for cracks, breaks, and other damage.
- Inspect the wiring for loose connections and for worn wires or frayed wires.
- Check the fuel supply. Drain water from the water separator (if equipped). Open the fuel supply valve.

NOTICE
All valves in the fuel return line must be open before and during engine operation to help prevent high fuel pressure. High fuel pressure may cause filter housing failure or other damage.

If the engine has not been started for several weeks, fuel may have drained from the fuel system. Air may have entered the filter housing. Also, when fuel filters have been changed, some air pockets will be trapped in the engine. In these instances, prime the fuel system. Refer to the Operation and Maintenance Manual, “Fuel System - Prime” for more information on priming the fuel system.

⚠ WARNING

Engine exhaust contains products of combustion which may be harmful to your health. Always start and operate the engine in a well ventilated area and, if in an enclosed area, vent the exhaust to the outside.

- Do not start the engine or move any of the controls if there is a “DO NOT OPERATE” warning tag or similar warning tag attached to the start switch or to the controls.
- Ensure that the areas around the rotating parts are clear.
- All of the guards must be put in place. Check for damaged guards or for missing guards. Repair any damaged guards. Replace damaged guards and/or missing guards.
- Disconnect any battery chargers that are not protected against the high current drain that is created when the electric starting motor (if equipped) is engaged. Check electrical cables and check the battery for poor connections and for corrosion.
- Reset all of the shutoffs or alarm components.
- Check the engine lubrication oil level. Maintain the oil level between the “ADD” mark and the “FULL” mark on the oil level gauge.
- Check the coolant level. Observe the coolant level in the coolant recovery tank (if equipped). Maintain the coolant level to the “FULL” mark on the coolant recovery tank.
- If the engine is not equipped with a coolant recovery tank maintain the coolant level within 13 mm (0.5 inch) of the bottom of the filler pipe. If the engine is equipped with a sight glass, maintain the coolant level in the sight glass.
- Observe the air cleaner service indicator (if equipped). Service the air cleaner when the yellow diaphragm enters the red zone, or when the red piston locks in the visible position.
- Ensure that any driven equipment has been disengaged. Minimize electrical loads or remove any electrical loads.

i03699360

Starting the Engine

SMCS Code: 1000; 1450

⚠ WARNING

Do not use aerosol types of starting aids such as ether. Such use could result in an explosion and personal injury.

Refer to the Service Manual for your type of controls. Use the following procedure to start the engine.

1. If equipped, move the throttle lever to the full throttle position before you start the engine.

NOTICE
Do not crank the engine for more than 30 seconds. Allow the electric starting motor to cool for two minutes before cranking the engine again.

2. Turn the engine start switch to the START position. Hold the engine start switch in the START position and crank the engine.

3. When the engine starts, release the engine start switch.

4. If equipped, slowly move the throttle lever to the low idle position and allow the engine to idle. Refer to Operation and Maintenance Manual, “After Starting Engine”.

5. If the engine does not start, release the engine start switch and allow the electric starting motor to cool. Then, repeat steps 2 through step 4.

6. Turn the engine start switch to the OFF position in order to stop the engine.

i03699380

Cold Weather Starting

SMCS Code: 1000; 1250; 1450; 1453; 1456; 1900

⚠ WARNING

Do not use aerosol types of starting aids such as ether. Such use could result in an explosion and personal injury.

Startability will be improved at temperatures below −18 °C (0 °F) from the use of a jacket water heater or extra battery capacity.

When No. 2 diesel fuel is used, the following items provide a means of minimizing starting problems and fuel problems in cold weather: engine oil pan heaters, jacket water heaters, fuel heaters and fuel line insulation.

Use the procedure that follows for cold weather starting.

1. If equipped, move the throttle lever to the full throttle position before you start the engine.

2. If equipped, turn the engine start switch to the HEAT position. Hold the engine start switch in the HEAT position for 6 seconds until the glow plug indicator light illuminates. This will activate the glow plugs and aid in the starting of the engine.

NOTICE
Do not crank the engine for more than 30 seconds. Allow the electric starting motor to cool for two minutes before cranking the engine again.

NOTICE
Do not operate the glow plugs for more than 30 seconds at one time. Damage to the glow plugs could occur.

3. While the glow plug indicator light is illuminated, turn the engine start switch to the START position and crank the engine.

Note: If the glow plug indicator light illuminates rapidly for 2 to 3 seconds, or if the glow plug indicator light fails to illuminate, a malfunction exists in the system for the cold start. Do not use ether or other starting fluids to start the engine.

4. When the engine starts, release the engine start switch key.

5. If the engine does not start, release the engine start switch and allow the starting motor to cool. Then, repeat steps 8 through step 4.

6. If the engine is equipped with a throttle allow the engine to idle for three to five minutes, or allow the engine to idle until the water temperature indicator begins to rise. The engine should run at low idle smoothly until speed is gradually increased to high idle. Allow the white smoke to disperse before proceeding with normal operation.

7. Operate the engine at low load until all systems reach operating temperature. Check the gauges during the warm-up period.

8. Turn the engine start switch to the OFF position in order to stop the engine.

i03640789

Starting with Jump Start Cables

SMCS Code: 1000; 1401; 1402; 1900

⚠ WARNING

Improper jump start cable connections can cause an explosion resulting in personal injury.

Prevent sparks near the batteries. Sparks could cause vapors to explode. Do not allow jump start cable ends to contact each other or the engine.

If the installation is not equipped with a backup battery system, it may be necessary to start the engine from an external electrical source.

For information on troubleshooting the charging system, refer to Special Instruction, REHS0354, “Charging System Troubleshooting”.

Many batteries which are considered unusable are still rechargeable. After jump starting, the alternator may not be able to fully recharge batteries that are severely discharged. The batteries must be charged to the proper voltage with a battery charger. For information on testing and charging, refer to the Special Instruction, SEHS7633, “Battery Test Procedure”.

NOTICE
Use a battery that is sourced with the same voltage as the electric starting motor. Use ONLY equal voltage for jump starting. The use of higher voltage will damage the electrical system.

Do not reverse the battery cables. The alternator can be damaged. Attach the negative battery cable last and remove the negative battery cable first.

When an external electrical source is used to start the engine, turn the control switch on the generator set to the “OFF” position. Turn all electrical accessories OFF before attaching the jump start cables.

Ensure that the main power switch is in the OFF position before jump start cables are attached to the engine that is being started.

1. Turn the start switch on the stalled engine to the OFF position. Turn off all accessories.

2. Connect one positive end of the jump start cable to the positive cable terminal of the discharged battery. Connect the other positive end of the jump start cable to the positive cable terminal of the charging or starting source.

3. Connect one negative end of the jump start cable to the negative cable terminal of the charging or starting source. Connect the other negative end of the jump start cable to the stalled engine block or to the chassis ground. This procedure helps to prevent potential sparks from igniting combustible gases that are produced by some batteries.

4. Charge the batteries. The engine will not continue to run after starting if the batteries have not been charged.

5. Start the engine.

6. Immediately after the stalled engine is started, disconnect the jump start cables in reverse order.

Refer to the Electrical Schematic for your engine. Consult your Caterpillar dealer for more information.

i01646248

After Starting Engine

SMCS Code: 1000

Note: In temperatures from 0 to 60°C (32 to 140°F), the warm-up time is approximately three minutes. In temperatures below 0°C (32°F), additional warm-up time may be required.

Note: Ensure that the self test for the monitoring system (if equipped) is completed before operating the engine under load.

When the engine idles during warm-up, observe the following conditions:

- Check for any fluid or for any air leaks at idle rpm and at one-half full rpm (no load on the engine) before operating the engine under load. This is not possible in some applications.
- Operate the engine at low idle until all systems achieve operating temperatures. Check all gauges during the warm-up period.

Note: Gauge readings should be observed and the data should be recorded frequently while the engine is operating. Comparing the data over time will help to determine normal readings for each gauge. Comparing data over time will also help detect abnormal operating developments. Significant changes in the readings should be investigated.

Engine Operation

i08487335

Engine Operation

SMCS Code: 1000

Proper operation and maintenance are key factors in obtaining the maximum life and economy of the engine. If the directions in the Operation and Maintenance Manual are followed, costs can be minimized and engine service life can be maximized.

The time that is needed for the engine to reach normal operating temperature can be less than the time taken for a walk-around inspection of the engine.

The engine can be operated at the rated rpm after the engine is started and after the engine reaches operating temperature. The engine will reach normal operating temperature sooner during a low engine speed (rpm) and during a low-power demand. This procedure is more effective than idling the engine at no load. The engine should reach operating temperature in a few minutes.

Gauge readings should be observed and the data should be recorded frequently while the engine is operating. Comparing the data over time will help to determine normal readings for each gauge. Comparing data over time will also help detect abnormal operating developments. Significant changes in the readings should be investigated.

i00613522

Engine Warm-up

SMCS Code: 1000

1. Run the engine at low idle for three to five minutes, or run the engine at low idle until the jacket water temperature starts to rise.

More time may be necessary when the temperature is below −18°C (0°F).

2. Check all of the gauges during the warm-up period.

3. Perform another walk-around inspection. Check the engine for fluid leaks and air leaks.

4. Increase the rpm to the rated rpm. Check for fluid leaks and air leaks. The engine may be operated at full rated rpm and at full load when the jacket water temperature reaches 60°C (140°F).

i01646335

Engaging the Driven Equipment

SMCS Code: 1000

1. Operate the engine at one-half of the rated rpm, when possible.

2. Engage the driven equipment without a load on the equipment, when possible.

Interrupted starts put excessive stress on the drive train. Interrupted starts also waste fuel. To get the driven equipment in motion, engage the clutch smoothly with no load on the equipment. This method should produce a start that is smooth and easy. The engine rpm should not increase and the clutch should not slip.

3. Ensure that the ranges of the gauges are normal when the engine is operating at one-half of the rated rpm. Ensure that all gauges operate properly.

4. Increase the engine rpm to the rated rpm. Always increase the engine rpm to the rated rpm before the load is applied.

5. Apply the load. Begin operating the engine at low load. Check the gauges and equipment for proper operation. After normal oil pressure is reached and the temperature gauge begins to move, the engine may be operated at full load. Check the gauges and equipment frequently when the engine is operated under load.

Extended operation at low idle or at reduced load may cause increased oil consumption and carbon buildup in the cylinders. This carbon buildup results in a loss of power and/or poor performance.

i03698887

Fuel Conservation Practices

SMCS Code: 1000; 1250

The efficiency of the engine can affect the fuel economy. Caterpillar's design and technology in manufacturing provides maximum fuel efficiency in all applications. Follow the recommended procedures in order to attain optimum performance for the life of the engine.

- Avoid spilling fuel.

Fuel expands when the fuel is warmed up. The fuel may overflow from the fuel tank. Inspect fuel lines for leaks. Repair the fuel lines, as needed.

- Be aware of the properties of the different fuels. Use only the recommended fuels.
- Avoid unnecessary idling.

Shut off the engine rather than idle for long periods of time.

- Observe the service indicator frequently. Keep the air cleaner elements clean.
- Maintain a good electrical system.

One bad battery cell will overwork the alternator. This will consume excess power and excess fuel.

- Ensure that the belts are properly adjusted. The belts should be in good condition.
- Ensure that all of the connections of the hoses are tight. The connections should not leak.
- Ensure that the driven equipment is in good working order.
- Cold engines consume excess fuel. Utilize heat from the jacket water system and the exhaust system, when possible. Keep cooling system components clean and keep cooling system components in good repair. Never operate the engine without water temperature regulators. All of these items will help maintain operating temperatures.

Engine Stopping

i01428739

Stopping the Engine

SMCS Code: 1000; 7000

NOTICE
Stopping the engine immediately after it has been working under load can result in overheating and accelerated wear of the engine components.

If the engine has been operating at high rpm and/or high loads, run at low idle for at least three minutes to reduce and stabilize internal engine temperature before stopping the engine.

Avoiding hot engine shutdowns will maximize turbocharger shaft and bearing life.

Prior to stopping an engine that is being operated at low loads, operate the engine at low idle for 30 seconds before stopping. If the engine has been operating at highway speeds and/or at high loads, operate the engine at low idle for at least three minutes. This procedure will cause the internal engine temperature to be reduced and stabilized.

Ensure that the engine stopping procedure is understood. Stop the engine according to the shutoff system on the engine or refer to the instructions that are provided by the OEM.

- To stop the engine, turn the ignition key switch to the OFF position.

i01171573

Emergency Stopping

SMCS Code: 1000; 7418

NOTICE
Emergency shutoff controls are for EMERGENCY use ONLY. DO NOT use emergency shutoff devices or controls for normal stopping procedure.

Ensure that any components for the external system that support the engine operation are secured after the engine is stopped.

Emergency Stop Button

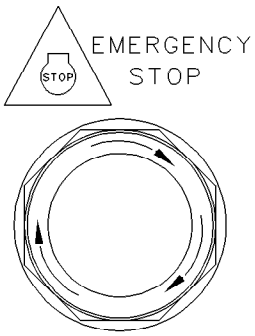

Illustration 25 g00104303

Typical emergency stop button

The emergency stop button is in the OUT position for normal engine operation. Push the emergency stop button. The engine will not start when the button is locked. Turn the button clockwise in order to reset.

NOTICE
Stopping the engine immediately after it has been working under load can result in overheating and accelerated wear of the engine components.

If the engine has been operating at high rpm and/or high loads, run the engine at low idle for at least three minutes to reduce and stabilize the internal engine temperature before stopping the engine.

i08257497

Manual Stop Procedure

SMCS Code: 1000

NOTICE
Stopping the engine immediately after it has been working under load can result in overheating and accelerated wear of the engine components.

If the engine has been operating at high rpm and/or high loads, run at low idle for at least three minutes to reduce and stabilize internal engine temperature before stopping the engine.

Avoiding hot engine shutdowns will maximize turbocharger shaft and bearing life.

Note: Individual applications have different control systems. Ensure that the shutoff procedures are understood. Use the following general guidelines to stop the engine.

1. Remove the load from the engine so that the engine has no more than 30% power.
2. Run the engine at the programmed low idle speed for at least 3 minutes.
3. After the cool down period, turn the start switch to the OFF position.

i01465494

After Stopping Engine

SMCS Code: 1000

Note: Before you check the engine oil, do not operate the engine for at least 10 minutes in order to allow the engine oil to return to the oil pan.

- Check the crankcase oil level. Maintain the oil level between the “ADD” mark and the “FULL” mark on the oil level gauge.
- If necessary, perform minor adjustments. Repair any leaks and tighten any loose bolts.
- Note the service hour meter reading. Perform the maintenance that is in the Operation and Maintenance Manual, “Maintenance Interval Schedule”.
- Fill the fuel tank in order to help prevent accumulation of moisture in the fuel. Do not overfill the fuel tank.

NOTICE
Only use antifreeze/coolant mixtures recommended in the Coolant Specifications that are in the Operation and Maintenance Manual. Failure to do so can cause engine damage.

- Allow the engine to cool. Check the coolant level.
- If freezing temperatures are expected, check the coolant for proper antifreeze protection. The cooling system must be protected against freezing to the lowest expected outside temperature. Add the proper coolant/water mixture, if necessary.
- Perform all required periodic maintenance on all driven equipment. This maintenance is outlined in the instructions from the OEM.

Cold Weather Operation

i01457051

Radiator Restrictions

SMCS Code: 1353; 1396

Caterpillar discourages the use of airflow restriction devices that are mounted in front of radiators. Airflow restriction can cause the following conditions:

- High exhaust temperatures
- Power loss
- Excessive fan usage
- Reduction in fuel economy

If an airflow restriction device must be used, the device should have a permanent opening directly in line with the fan hub. The device must have a minimum opening dimension of at least 770 cm^2 (120 in^2).

A centered opening that is directly in line with the fan hub is specified in order to prevent an interrupted airflow on the fan blades. Interrupted airflow on the fan blades could cause a fan failure.

Caterpillar recommends a warning device for the inlet manifold temperature and/or the installation of an inlet air temperature gauge. The warning device for the inlet manifold temperature should be set at 75 °C (167 °F). The inlet manifold air temperature should not exceed 75 °C (167 °F). Temperatures that exceed this limit can cause power loss and potential engine damage.

i08230315

Fuel and the Effect from Cold Weather

SMCS Code: 1000; 1250

The following fuels are the grades that are available for Cat engines:

- No. 1
- No. 2
- Blend of No. 1 and No. 2

No. 2 diesel fuel is the most commonly used fuel. Either No. 1 diesel fuel or a blend of No. 1 and No. 2 is best suited for cold-weather operation.

Quantities of No. 1 diesel fuel are limited. No. 1 diesel fuels are available during the months of the winter in the colder climates. During cold-weather operation, if No. 1 diesel fuel is not available, use No. 2 diesel fuel, if necessary.

There are three major differences between No. 1 and No. 2 diesel fuel. No. 1 diesel fuel has the following properties:

- Lower cloud point
- Lower pour point
- Lower rating of kJ (BTU) per unit volume of fuel

When No. 1 diesel fuel is used, a decrease in power and in fuel efficiency may be noticed.

The cloud point is the temperature when a cloud of wax crystals begins to form in the fuel. These crystals can cause the fuel filters to plug. The pour point is the temperature when diesel fuel will thicken. The diesel fuel becomes more resistant to flow through fuel pumps and through fuel lines.

Be aware of these values when diesel fuel is purchased. Anticipate the average ambient temperature of the area. Engines that are fueled in one climate may not operate well if the engines are moved to another climate. Problems can result due to changes in temperature.

Before troubleshooting for low power or for poor performance in the winter, check the type of fuel that is being used.

When No. 2 diesel fuel is used, the following components provide a means of minimizing problems in cold weather:

- Starting aids
- Engine oil pan heaters
- Engine coolant heaters
- Fuel heaters
- Fuel line insulation

For more information on cold-weather operation, see Special Publication, SEBU5898, “Cold-Weather Recommendations”.

i01821501

Fuel Related Components in Cold Weather

SMCS Code: 1000; 1250

Fuel Tanks

Condensation can form in partially filled fuel tanks. Top off the fuel tanks after you operate the engine.

Fuel tanks should contain some provision for draining water and sediment from the bottom of the tanks. Some fuel tanks use supply pipes that allow water and sediment to settle below the end of the fuel supply pipe.

Some fuel tanks use supply lines that take fuel directly from the bottom of the tank. If the engine is equipped with this system, regular maintenance of the fuel system filter is important.

Drain the water and sediment from any fuel storage tank at the following intervals: weekly, oil changes and refueling of the fuel tank. This will help prevent water and/or sediment from being pumped from the fuel storage tank and into the engine fuel tank.

Fuel Filters

It is possible that a primary fuel filter is installed between the fuel tank and the engine fuel inlet. After you change the fuel filter, always prime the fuel system in order to remove air bubbles from the fuel system. Refer to the Operation and Maintenance Manual in the Maintenance Section for more information on priming the fuel system.

The micron rating and the location of a primary fuel filter is important in cold weather operation. The primary fuel filter and the fuel supply line are the most common components that are affected by cold fuel.

Fuel Heaters

Fuel heaters help to prevent fuel filters from plugging in cold weather due to waxing. A fuel heater should be installed in the fuel system before the primary fuel filter.

The following fuel heaters are recommended for Caterpillar engines:

- 7C-3557 Fuel Heater Group
- 7C-3558 Heater Kit

For further information on fuel heaters, consult your Caterpillar dealer.

Disconnect the fuel heater in warm weather.

Note: Fuel heaters that are controlled by the water temperature regulator or self-regulating fuel heaters should be used with this engine. Fuel heaters that are not controlled by the water temperature regulator can heat the fuel in excess of 65°C (149°F). A loss of engine power can occur if the fuel supply temperature exceeds 37°C (100°F).

Note: Heat exchanger type fuel heaters should have a bypass provision in order to prevent overheating of the fuel in warm weather operation.

Maintenance Section

Refill Capacities

i03698892

Refill Capacities

SMCS Code: 1348; 1395; 7560

Lubrication System

The refill capacities for the engine crankcase reflect the approximate capacity of the crankcase or sump plus standard oil filters. Auxiliary oil filter systems will require additional oil. Refer to the OEM specifications for the capacity of the auxiliary oil filter. Refer to Operation and Maintenance Manual, “Maintenance Section” for more information on Lubricant Specifications.

3054C Industrial Engine

Table 2

3054C Industrial Engine		
Compartment or System	**Liters**	**Quarts**
Standard Oil Sump for the Engine Crankcase(1)	6.5	7

(1) These values are the approximate capacities for the crankcase oil sump which include the standard factory installed oil filters. Engines with auxiliary oil filters will require additional oil. Refer to the OEM specifications for the capacity of the auxiliary oil filter.

Cooling System

To maintain the cooling system, the Total Cooling System capacity must be known. The approximate capacity for the engine cooling system is listed below. External System capacities will vary among applications. Refer to the OEM specifications for the External System capacity. This capacity information will be needed in order to determine the amount of coolant/antifreeze that is required for the Total Cooling System.

3054C Industrial Engine

Table 3

3054C Industrial Naturally Aspirated Engine		
Compartment or System	**Liters**	**Quarts**
Engine Only	10.4	11
External cooling system capacity (OEM recommendation) (1)		
Total Cooling System(2)		

(1) The external cooling system includes a radiator or an expansion tank with the following components: heat exchanger, aftercooler and piping. Refer to the Caterpillar specifications and/or the OEM specifications. Enter the value for the external system capacity in this row.
(2) The Total Cooling System includes the capacity for the engine cooling system plus the capacity for the external cooling system. Enter the total in this row.

Table 4

3054C Industrial Turbocharged Engine		
Compartment or System	**Liters**	**Quarts**
Engine Only	11.4	12
External cooling System capacity (OEM recommendation)(1)		
Total Cooling System(2)		

(1) The external cooling system includes a radiator or an expansion tank with the following components: heat exchanger, aftercooler and piping. Refer to Caterpillar specifications and/or the OEM specifications. Enter the value for the external cooling system capacity in this row.
(2) The Total Cooling System includes the capacity for the engine cooling system plus the capacity for the external cooling system. Enter the total in this row.

i03702626

Fluid Recommendations
(Coolant Information)

SMCS Code: 1280; 1348; 1395; 7560

NOTICE
Never add coolant to an overheated engine. Engine damage could result. Allow the engine to cool first.

NOTICE
If the engine is to be stored in, or shipped to an area with below freezing temperatures, the cooling system must be either protected to the lowest outside temperature or drained completely to prevent damage.

NOTICE
Frequently check the specific gravity of the coolant for proper freeze protection or for anti-boil protection.

Clean the cooling system for the following reasons:

- Contamination of the cooling system
- Overheating of the engine
- Foaming of the coolant

Note: Air pockets can form in the cooling system if the cooling system is filled at a rate that is greater than 5 L (1.3 US gal) per minute.

After you drain the cooling system and after you refill the cooling system, operate the engine. Operate the engine without the filler cap until the coolant reaches normal operating temperature and the coolant level stabilizes. Ensure that the coolant is maintained to the proper level.

NOTICE
Never operate an engine without water temperature regulators in the cooling system. Water temperature regulators help to maintain the engine coolant at the proper operating temperature. Cooling system problems can develop without water temperature regulators.

Refer to Special Instruction, SEBD0518, “Know Your Cooling System” and Special Instruction, SEBD0970, “Coolant and Your Engine” for more detailed information.

Many engine failures are related to the cooling system. The following problems are related to cooling system failures: overheating, leakage of the water pump, plugged radiators or heat exchangers and pitting of the cylinder liners.

These failures can be avoided with proper cooling system maintenance. Cooling system maintenance is as important as maintenance of the fuel system and the lubrication system. Quality of the coolant is as important as the quality of the fuel and the lubricating oil.

Coolant is normally composed of three elements: water, additives and glycol.

Water

NOTICE
Never use water alone without Supplemental Coolant Additives (SCA) or without inhibited coolant. Water alone is corrosive at engine operating temperatures. Water alone does not provide adequate protection against boiling or freezing.

Water is used in the cooling system in order to transfer heat.

Distilled water or deionized water is recommended for use in engine cooling systems.

DO NOT use the following types of water in cooling systems: hard water, softened water that has been conditioned with salt and sea water.

If distilled water or deionized water is not available, use water with the properties that are listed in table 5 .

Table 5

Caterpillar Minimum Acceptable Water Requirements		
Property	**Maximum Limit**	**ASTM Test**
Chloride (Cl)	40 mL (1.4 oz)	“D512”, “D4327”
Sulfate (SO_4)	100 mL (3.4 oz)	“D516”
Total Hardness	170 mL (5.8 oz)	“D1126”
Total Solids	340 mL (11.6 oz)	“D1888”
Acidity	pH of 5.5 to 9.0	“D1293”

For a water analysis, consult one of the following sources:

- Caterpillar dealer
- Local water utility company
- Agricultural agent
- Independent laboratory

Additives

Additives help to protect the metal surfaces of the cooling system. A lack of coolant additives or insufficient amounts of additives enable the following conditions to occur:

- Corrosion
- Formation of mineral deposits
- Rust
- Scale
- Pitting and erosion from cavitation of the cylinder liner
- Foaming of the coolant

Many additives are depleted during engine operation. These additives must be replaced periodically. This can be done by adding Supplemental Coolant Additives (SCA) to Diesel Engine Antifreeze/Coolant (DEAC) or by adding ELC Extender to Extended Life Coolant (ELC).

Additives must be added at the proper concentration. Overconcentration of additives can cause the inhibitors to drop out-of-solution. The deposits can enable the following problems to occur:

- Formation of gel compounds

- Reduction of heat transfer
- Leakage of the water pump seal
- Plugging of radiators, coolers, and small passages

Glycol

Glycol in the coolant helps to provide protection against the following conditions:

- Boiling
- Freezing
- Cavitation of the water pump and the cylinder liner

For optimum performance, Caterpillar recommends a 1:1 mixture of a water/glycol solution.

Note: Use a mixture that will provide protection against the lowest ambient temperature.

Note: 100 percent pure glycol will freeze at a temperature of −23 °C (−9 °F).

Most conventional heavy-duty coolant/antifreezes use ethylene glycol. Propylene glycol may also be used. In a 1:1 mixture with water, ethylene and propylene glycol provide similar protection against freezing and boiling. Refer to table 6 and table 7 .

Table 6

Ethylene Glycol		
Concentration	**Freeze Protection**	**Boil Protection**
50 Percent	−36 °C (−33 °F)	106 °C (223 °F)
60 Percent	−51 °C (−60 °F)	111 °C (232 °F)

NOTICE
Do not use propylene glycol in concentrations that exceed 50 percent glycol because of propylene glycol's reduced heat transfer capability. Use ethylene glycol in conditions that require additional protection against boiling or freezing.

Table 7

Propylene Glycol		
Concentration	**Freeze Protection**	**Anti-Boil Protection**
50 Percent	−29 °C (−20 °F)	106 °C (223 °F)

To check the concentration of glycol, use the 1U-7298 Coolant/Battery Tester (Degrees Celsius) or use the 1U-7297 Coolant/Battery Tester (Degrees Fahrenheit). The testers give readings that are immediate and accurate. The testers can be used with ethylene or propylene glycol.

Coolant Recommendations

The following two coolants are used in Caterpillar diesel engines:

Preferred – Caterpillar Extended Life Coolant (ELC) or a commercial extended life coolant that meets the Caterpillar EC-1 specification

Acceptable – A Caterpillar Diesel Engine Antifreeze/Coolant (DEAC) or a commercial heavy-duty coolant/antifreeze that meets “ASTM D4985” or “ASTM D5345” specifications

NOTICE
Do not use a commercial coolant/antifreeze that only meets the ASTM D3306 or D4656 specification. This type of coolant/antifreeze is made for light duty automotive applications.

Caterpillar recommends a 1:1 mixture of water and glycol. This mixture of water and glycol will provide optimum heavy-duty performance as a coolant/antifreeze.

Note: Caterpillar DEAC DOES NOT require a treatment with an SCA at the initial fill. Commercial heavy-duty coolant or antifreeze that meets “ASTM D4985” or “ASTM D5345” specifications MAY require a treatment with an SCA at the initial fill. Read the label or the instructions that are provided by the OEM of the product.

In stationary engine applications and marine engine applications that do not require anti-boil protection or freeze protection, a mixture of SCA and water is acceptable. Caterpillar recommends a six percent to eight percent concentration of SCA in those cooling systems. Distilled water or deionized water is preferred. Water which has the recommended properties may be used.

NOTICE
All Caterpillar diesel engines equipped with air-to-air aftercooling (ATAAC) require a minimum of 30 percent glycol to prevent water pump cavitation.

Table 8

Coolant Service Life	
Coolant Type	**Service Life**

(continued)

(Table 8, contd)

Caterpillar ELC	6000 Service Hours or Six Years
Caterpillar DEAC	3000 Service Hours or Three Years
Commercial Heavy-Duty Coolant/Antifreeze that meets “ASTM D5345”	3000 Service Hours or Two Years
Commercial Heavy-Duty Coolant/Antifreeze that meets “ASTM D4985”	3000 Service Hours or One Year
Caterpillar SCA and Water	3000 Service Hours or Two Years
Commercial SCA and Water	3000 Service Hours or One Year

S·O·S Coolant Analysis

Testing the engine coolant is important to ensure that the engine is protected from internal cavitation and corrosion. The analysis also tests the ability of the coolant to protect the engine from boiling and freezing. S·O·S Coolant Analysis can be done at your Caterpillar dealer. Caterpillar S·O·S Coolant Analysis is the best way to monitor the condition of your coolant and your cooling system. S·O·S Coolant Analysis is a program that is based on periodic samples.

NOTICE
Do not use the same vacuum sampling pump for extracting oil samples that is used for extracting coolant samples.

A small residue of either type sample may remain in the pump and may cause a false positive analysis for the sample being taken.

Always use a designated pump for oil sampling and a designated pump for coolant sampling.

Failure to do so may cause a false analysis which could lead to customer and dealer concerns.

New Systems, Refilled Systems, and Converted Systems

Perform a coolant analysis (Level 2) at 500 service hours for new systems, for refilled systems, or for converted systems that use Cat Extended Life Coolant (ELC) or use Cat Diesel Engine Antifreeze/ Coolant (DEAC). This 500 hour check will also check for any residual cleaner that may have contaminated the system.

Recommended Interval for S·O·S Coolant Sample

Perform a coolant analysis (Level 1) at every 500 service hour interval. Perform a coolant analysis (Level 2) annually, or perform a coolant analysis (Level 2) when a problem is identified by a coolant analysis (Level 1).

Note: Check the standard coolant's Supplemental Coolant Additive (SCA) at every oil change.

S·O·S Coolant Analysis (Level 1)

A coolant analysis (Level 1) is a test of the properties of the coolant.

The following properties of the coolant are tested:

- Glycol concentration for freeze protection and boil protection
- Ability to protect from erosion and corrosion
- pH
- Conductivity
- Visual analysis
- Odor analysis

The results are reported, and appropriate recommendations are made.

S·O·S Coolant Analysis (Level 2)

A coolant analysis (Level 2) is a comprehensive chemical evaluation of the coolant. This analysis is also a check of the overall condition of the inside of the cooling system.

The S·O·S Coolant Analysis has the following features:

- Full coolant analysis (Level 1)
- Identification of the source of metal corrosion and of contaminants
- Water hardness
- Identification of buildup of the impurities that cause corrosion
- Identification of buildup of the impurities that cause scaling

The results are reported, and appropriate recommendations are made.

For more information on S·O·S Coolant Analysis, consult your Caterpillar dealer.

Extended Life Coolant (ELC)

Caterpillar provides Extended Life Coolant (ELC) for use in the following applications:

- Heavy-duty spark ignited gas engines
- Heavy-duty diesel engines
- Automotive applications

The anti-corrosion package for Caterpillar ELC is different from the anti-corrosion package for other coolants. Caterpillar ELC is an ethylene glycol base coolant. However, Caterpillar ELC contains organic corrosion inhibitors and antifoam agents with low amounts of nitrite. Caterpillar ELC has been formulated with the correct amount of these additives in order to provide superior corrosion protection for all metals in engine cooling systems.

ELC extends the service life of the coolant to 12000 service hours or three years. ELC does not require a frequent addition of a Supplemental Coolant Additive (SCA). An Extender is the only additional maintenance that is needed at 6000 service hours or one half of the ELC service life.

The ELC is available in a 1:1 premixed cooling solution with distilled water. The Premixed ELC provides freeze protection to −36 °C (−33 °F). The Premixed ELC is recommended for the initial fill of the cooling system. The Premixed ELC is also recommended for topping off the cooling system.

ELC Concentrate is also available. ELC Concentrate can be used to lower the freezing point to −51 °C (−60 °F) for arctic conditions.

Containers of several sizes are available. Consult your Caterpillar dealer for the part numbers.

Note: Caterpillar developed the EC-1 specification. The EC-1 specification is an industry standard. The EC-1 specification defines all of the performance requirements that are needed for an engine coolant to be sold as an extended life coolant for Caterpillar engines. ELC can be used in most OEM engines of the following types: diesel, gasoline and natural gas. ELC meets the performance requirements of “ASTM D4985” and “ASTM D5345” for heavy-duty low silicate antifreeze or coolants. ELC also meets the performance requirements of “ASTM D3306” and “ASTM D4656” for automotive applications.

Diesel Engine Antifreeze/Coolant (DEAC)

Caterpillar recommends using Caterpillar Diesel Engine Antifreeze/Coolant (DEAC) for cooling systems that require a heavy-duty coolant/antifreeze. Caterpillar DEAC is an alkaline single-phase ethylene glycol type antifreeze that contains corrosion inhibitors and antifoam agents.

Caterpillar DEAC is formulated with the correct amount of Caterpillar Supplemental Coolant Additive (SCA). Do not use SCA at the initial fill when DEAC is used.

Containers of several sizes are available. Consult your Caterpillar dealer for the part numbers.

If concentrated DEAC is used, Caterpillar recommends mixing the concentrate with distilled water or with deionized water. If distilled water or deionized water is not available, use water which has the required properties. For the water properties, refer to Operation and Maintenance Manual, “General Coolant Information”.

Supplemental Coolant Additive (SCA)

The use of SCA helps to prevent the following conditions from occurring:

- Corrosion
- Formation of mineral deposits
- Cavitation erosion of the cylinder liners
- Foaming of the coolant

Caterpillar Diesel Engine Antifreeze/Coolant (DEAC) is formulated with the correct level of Caterpillar SCA. When the cooling system is initially filled with DEAC, adding more SCA is not necessary until the concentration of SCA has been depleted. To ensure that the correct amount of SCA is in the cooling system, the concentration of SCA must be tested on a scheduled basis. Refer to the Operation and Maintenance Manual, “Maintenance Interval Schedule”.

Containers of Cat SCA are available in several sizes. Consult your Caterpillar dealer for the part numbers.

Commercial Heavy-Duty Coolant/ Antifreeze and SCA

If Caterpillar DEAC is not used, select a coolant/ antifreeze with low silicate content for heavy-duty applications that meets “ASTM D5345” or “ASTM D4985” specifications.

Note: When you are not using Caterpillar DEAC the cooling system must be drained one time during every year. The cooling system must be flushed at this time as well.

When a heavy-duty coolant/antifreeze is used, treat the cooling system with three to six percent Caterpillar SCA by volume. For more information, refer to Operation and Maintenance Manual, “Conventional Coolant/Antifreeze Cooling System Maintenance”.

If Caterpillar SCA is not used, select a commercial SCA. The commercial SCA must provide a minimum of 1200 mg/L, 1200 ppm or 70 grains/US gal of nitrites in the final coolant mixture.

Coolant or antifreeze that meets “ASTM D5345” or “ASTM D4985” specifications MAY require treatment with SCA at the initial fill. These coolants WILL require treatment with SCA on a maintenance basis.

When concentrated coolant or antifreeze is mixed, Caterpillar recommends mixing the concentrate with distilled water or with deionized water. If distilled water or deionized water is not available, water which has the required properties may be used. For the water properties, refer to Operation and Maintenance Manual, “General Coolant Information”.

Water and Supplemental Coolant Additive (SCA)

NOTICE
All Caterpillar diesel engines equipped with air-to-air aftercooling (ATAAC) require a minimum of 30 percent glycol to prevent water pump cavitation.

NOTICE
Never use water alone without Supplemental Coolant Additives (SCA) or without inhibited coolant. Water alone is corrosive at engine operating temperatures. Water alone does not provide adequate protection against boiling or freezing.

Note: Premix the coolant solution in order to provide protection to the lowest ambient temperature that is expected.

Note: Pure undiluted antifreeze freezes at −23 °C (−9 °F).

In engine cooling systems that use water alone, Caterpillar recommends the use of SCA. SCA helps to prevent the following conditions from occurring:

- Corrosion
- Formation of mineral deposits
- Cavitation erosion of the cylinder liner
- Foaming of the coolant

If Caterpillar SCA is not used, select a commercial SCA. The commercial SCA must provide a minimum of 2400 mg/L, 2400 ppm or 140 grains/US gal of nitrites in the final coolant mixture.

The quality of the water is a very important factor in this type of cooling system. Distilled water or deionized water is recommended for use in cooling systems. If distilled water or deionized water is not available, use water that meets the minimum requirements that are listed in the table for recommended water properties in Operation and Maintenance Manual, “General Coolant Information”.

A cooling system that uses a mixture of SCA and water only needs more SCA than a cooling system that uses a mixture of glycol and water. The SCA concentration in a cooling system that uses SCA and water should be six to eight percent by volume. Refer to Table 9 for the amount of SCA that is required for various capacities of the cooling system.

Table 9

Caterpillar SCA Requirements for SCA and Water Cooling Systems		
Cooling System Capacity	**Caterpillar SCA at Initial Fill**	**Caterpillar SCA at 250 Hours**
22 to 30 L (6 to 8 US gal)	1.75 L (64 fl oz)	0.44 L (15 fl oz)
31 to 38 L (9 to 10 US gal)	2.30 L (80 fl oz)	0.57 L (20 fl oz)
39 to 49 L (11 to 13 US gal)	3.00 L (100 fl oz)	0.75 L (25 fl oz)
50 to 64 L (14 to 17 US gal)	3.90 L (128 fl oz)	0.95 L (32 fl oz)
65 to 83 L (18 to 22 US gal)	5.00 L (168 fl oz)	1.25 L (42 fl oz)
84 to 110 L (23 to 29 US gal)	6.60 L (224 fl oz)	1.65 L (56 fl oz)
111 to 145 L (30 to 38 US gal)	8.75 L (296 fl oz)	2.19 L (74 fl oz)
146 to 190 L (39 to 50 US gal)	11.50 L (392 fl oz)	2.88 L (98 fl oz)
191 to 250 L (51 to 66 US gal)	15.00 L (512 fl oz)	3.75 L (128 fl oz)

Refer to Table 10 for part numbers and for quantities of SCA.

Table 10

Caterpillar Liquid SCA	
Part Number	**Quantity**
6V-3542	0.24 L (8 oz)
111-2372	0.36 L (12 oz)
8T-1589	0.47 L (16 oz)
3P-2044	0.94 L (32 oz)
8C-3680	19 L (5 US gal)
5P-2907	208 L (55 US gal)

Maintain the SCA in the same way as you would maintain a cooling system that uses heavy-duty coolant or antifreeze. Adjust the maintenance for the amount of SCA additions. See table 9 for the amount of SCA that is required.

Cooling Systems with Larger Capacities

Adding the SCA to Water at the Initial Fill

Use the equation that is in table 11 to determine the amount of Caterpillar SCA that is required at the initial fill. This equation is for a mixture of only SCA and water.

Table 11

Equation For Adding The SCA To Water At The Initial Fill
V × 0.07 = X
V is the total volume of the cooling system.
X is the amount of SCA that is required.

Table 12 is an example for using the equation that is in table 11 .

Table 12

Example Of The Equation For Adding The SCA To Water At The Initial Fill		
Total Volume of the Cooling System (V)	**Multiplication Factor**	**Amount of SCA that is Required (X)**
946 L (250 US gal)	× 0.07	66 L (18 US gal)

Adding the SCA to Water for Maintenance

For the recommended service interval, refer to Operation and Maintenance Manual, “Maintenance Interval Schedule”.

Use the 8T-5296 Coolant Conditioner Test Kit to test the concentration of SCA. Make the following modifications to Steps 3 and 5 of the 8T-5296 Coolant Conditioner Test Kit instructions:

STEP 3 – Add tap water to the vial up to the “20 ml” mark.

STEP 5 – When the defined procedure is used, a concentration of six to eight percent will yield between 20 drops and 27 drops. If the number of drops is below 20 drops, the concentration of SCA is low. If the number of drops is above 27 drops, the concentration of SCA is high. Make the appropriate adjustments to the concentration of SCA.

Test the concentration of SCA or submit a coolant sample to your Caterpillar dealer. Refer to Operation and Maintenance Manual, “S·O·S Coolant Analysis”.

Additions of SCA are based on the results of the test or based on the results of the coolant analysis. The size of the cooling system determines the amount of SCA that is required.

Use the equation that is in Table 11 to determine the amount of Caterpillar SCA that is required for maintenance, if necessary:

Table 13

The Addition Equation for SCA To Water For Maintenance
V × 0.023 = X
V is the total volume of the cooling system.
X is the amount of SCA that is required.

Table 14 is an example for using the equation that is in table 11 .

Table 14

The Example of an Additional Equation SCA To Water For Maintenance		
Total Volume of the Cooling System (V)	**Multiplication Factor**	**Amount of SCA that is Required (X)**
946 L (250 US gal)	× 0.023	22 L (6 US gal)

Note: Specific engine applications may require maintenance practices to be periodically evaluated in order to properly maintain the engine's cooling system.

Table 10 lists part numbers and quantities of SCA that is available from your Caterpillar dealer.

Conventional Coolant or Maintenance for Antifreeze Cooling System

NOTICE
Never operate an engine without water temperature regulators in the cooling system. Water temperature regulators help to maintain the engine coolant at the proper operating temperature. Cooling system problems can develop without water temperature regulators.

Check the coolant/antifreeze (glycol concentration) in order to ensure adequate protection against boiling or freezing. Caterpillar recommends the use of a refractometer for checking the glycol concentration. Use the 1U-7298 Coolant/Battery Tester (Degree Celsius) or use the 1U-7297 Coolant/Battery Tester (Degree Fahrenheit). The testers give readings that are immediate and accurate. The testers can be used with ethylene or with propylene glycol.

Caterpillar engine cooling systems should be tested at 250 hour intervals for the concentration of Supplemental Coolant Additive (SCA). SCA test kits are available from your Caterpillar dealer. Test the concentration of SCA or submit a coolant sample to your Caterpillar dealer at 250 hour intervals. Refer to S·O·S Coolant Analysis for more information on this topic.

Additions of SCA are based on the results of the test or based on the results of the coolant analysis. An SCA that is liquid or a maintenance element for an SCA (if equipped) may be needed at 250 hour intervals.

Table 15 lists the amount of Caterpillar SCA that is needed at the initial fill in order to treat coolant/antifreeze. These amounts of SCA are for systems that use heavy-duty coolant or antifreeze.

Table 15 also lists additions of SCA for liquid and for maintenance elements at 250 hours. The additions are required for Caterpillar DEAC and for commercial coolant/antifreezes.

Table 15

Caterpillar SCA Requirements for Heavy-Duty Coolant/Antifreeze			
Cooling System Capacity	**Initial Fill(1)**	**250 Service Hour Maintenance(2)**	**Spin-on Element at 250 Service Hour Maintenance (If Equipped)(3)**
22 to 30 L (6 to 8 US gal)	0.95 L (32 fl oz)	0.24 L (8 fl oz)	111-2370 (1)
31 to 38 L (9 to 10 US gal)	1.18 L (40 fl oz)	0.36 L (12 fl oz)	111-2369 (1)
39 to 49 L (11 to 13 US gal)	1.42 L (48 fl oz)	0.36 L (12 fl oz)	111-2369 (1)
50 to 64 L (14 to 17 US gal)	1.90 L (64 fl oz)	0.47 L (16 fl oz)	9N-3368 (1)
65 to 83 L (18 to 22 US gal)	2.37 L (80 fl oz)	0.60 L (20 fl oz)	111-2371 (1)
84 to 114 L (23 to 30 US gal)	3.32 L (112 fl oz)	0.95 L (32 fl oz)	9N-3718 (1)
115 to 163 L (31 to 43 US gal)	4.75 L (160 fl oz)	1.18 L (40 fl oz)	111-2371 (2)
164 to 242 L (44 to 64 US gal)	7.60 L (256 fl oz)	1.90 L (64 fl oz)	9N-3718 (2)

(1) When the coolant system is first filled, the SCA is not required to be used with Caterpillar DEAC.
(2) Do not exceed the six percent maximum concentration. Check the concentration of SCA with a SCA test kit.
(3) Do not use the maintenance element for the SCA and the liquid for the SCA at the same time.

Note: Specific engine applications may require maintenance practices to be periodically evaluated in order to properly maintain the engine's cooling system.

Refer to table 16 for part numbers and for quantities of SCA.

Table 16

Caterpillar Liquid SCA	
Part Number	**Quantity**
6V-3542	0.24 L (8 oz)
111-2372	0.36 L (12 oz)
8T-1589	0.47 L (16 oz)
3P-2044	0.94 L (32 oz)
8C-3680	19 L (5 US gal)
5P-2907	208 L (55 US gal)

Cooling Systems with Larger Capacities

Adding the SCA to Conventional Coolant or Antifreeze at the Initial Fill

Note: Caterpillar DEAC DOES NOT require an addition of SCA when the cooling system is initially filled.

Commercial heavy-duty coolant or antifreeze that meets “ASTM D4985” or “ASTM D5345” specifications MAY require an addition of SCA at the initial fill. Read the label or the instructions that are provided by the OEM of the product.

Use the equation that is in table 17 to determine the amount of Caterpillar SCA that is required when the cooling system is initially filled with the following fluids:

- “ASTM D4985”
- “ASTM D5345”

Table 17

Equation For Adding The SCA To Conventional Coolant/Antifreeze At The Initial Fill
V × 0.045 = X
V is the total volume of the cooling system.
X is the amount of SCA that is required.

Table 18 is an example for using the equation that is in table 17 .

Table 18

Example Of The Equation For Adding The SCA To Conventional Coolant/Antifreeze At The Initial Fill		
Total Volume of the Cooling System (V)	**Multiplication Factor**	**Amount of SCA that is Required (X)**
946 L (250 US gal)	× 0.045	43 L (11 US gal)

Adding the SCA to Conventional Coolant or Antifreeze For Maintenance

Heavy duty coolant or antifreeze of all types REQUIRE periodic additions of an SCA.

Test the coolant/antifreeze periodically for the concentration of SCA. For the interval, refer to Operation and Maintenance Manual, “Maintenance Interval Schedule”. SCA test kits are available from your Caterpillar dealer. Test the concentration of SCA or submit a coolant sample to your Caterpillar dealer. Refer to Operation and Maintenance Manual, “S·O·S Coolant Analysis”.

Additions of SCA are based on the results of the test or based on the results of the coolant analysis. The size of the cooling system determines the amount of SCA that is needed.

Use the equation that is in table 19 to determine the amount of Caterpillar SCA that is required, if necessary:

Table 19

Equation For Adding The SCA To Conventional Coolant/Antifreeze For Maintenance
V × 0.014 = X
V is the total volume of the cooling system.
X is the amount of SCA that is required.

Table 20 is an example for using the equation that is in table 19 .

Table 20

Example Of The Equation For Adding The SCA To Conventional Coolant/Antifreeze For Maintenance		
Total Volume of the Cooling System (V)	**Multiplication Factor**	**Amount of SCA that is Required (X)**
946 L (250 US gal)	× 0.014	9 L (4 US gal)

Note: Specific engine applications may require maintenance practices to be periodically evaluated in order to properly maintain the engine's cooling system.

Table 16 lists part numbers and quantities of SCA that is available from your Caterpillar dealer.

Cleaning the System of Heavy-Duty Coolant/Antifreeze

Caterpillar cooling system cleaners are designed to clean the cooling system of harmful scale and corrosion. Caterpillar cooling system cleaners dissolve mineral scale, corrosion products, light oil contamination and sludge.

- Clean the cooling system after used coolant is drained or before the cooling system is filled with new coolant.
- Clean the cooling system whenever the coolant is contaminated or whenever the coolant is foaming.

- For the recommended service interval, refer to Operation and Maintenance Manual, “Maintenance Interval Schedule”.

i03814350

Fluid Recommendations (Lubricant Information)

SMCS Code: 1280; 1348; 1395; 7560

General Information

Because of government regulations regarding the certification of exhaust emissions, the lubricant recommendations must be followed.

Engine Manufacturers Association (EMA) Oils

The “Engine Manufacturers Association Recommended Guideline on Diesel Engine Oil” is recognized by Caterpillar. For detailed information about this guideline, see the latest edition of EMA publication, “EMA LRG-1”.

API Oils

The Engine Oil Licensing and Certification System by the American Petroleum Institute (API) is recognized by Caterpillar. For detailed information about this system, see the latest edition of the “API publication No. 1509”. Engine oils that bear the API symbol are authorized by API.

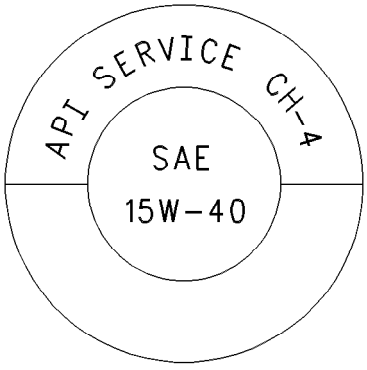

Illustration 26 g00546535

Typical API symbol

Diesel engine oils CC, CD, CD-2, and CE have not been API authorized classifications since January 1, 1996. Table 21 summarizes the status of the classifications.

Table 21

API Classifications	
Current	**Obsolete**
CI-4, CH-4, CG-4 (1)	CE
CF (2)	CC, CD
CF-2(3)	CD-2(3)

(1) API CF-4 oils are no longer recommended for Caterpillar diesel engines.
(2) API CF oils are not recommended for Caterpillar diesel engines.
(3) API CF-2 and CD-2 oils are classifications for two-cycle diesel engines. Caterpillar does not sell engines that utilize the CD-2 and the API CF-2 oils.

Grease

The classifications of grease are based on the “ASTM D217” worked penetration characteristics. These characteristics for grease are given a defined consistency number.

Terminology

Certain abbreviations follow the nomenclature of “SAE J754”. Some classifications follow “SAE J183” abbreviations, and some classifications follow the “EMA Recommended Guideline on Diesel Engine Oil”. In addition to Caterpillar definitions, there are other definitions that will be of assistance in purchasing lubricants. Recommended oil viscosities can be found in Operation and Maintenance Manual, “Engine Oil”.

Caterpillar Diesel Engine Oil

Caterpillar Oils have been developed and tested in order to provide the full performance and service life that has been designed and built into Caterpillar Engines. Caterpillar Oils are currently used to fill diesel engines at the factory. These oils are offered by Caterpillar dealers for continued use when the engine oil is changed. Consult your Caterpillar dealer for more information on these oils.

Due to significant variations in the quality and in the performance of commercially available oils, Caterpillar makes the following recommendations:

- **Caterpillar Diesel Engine Oil (10W30)**
- **Caterpillar Diesel Engine Oil (15W40)**

Caterpillar multigrade Diesel Engine Oil is formulated with the correct amounts of detergents, dispersants, and alkalinity in order to provide superior performance in Caterpillar Diesel Engines.

Caterpillar multigrade Diesel Engine Oil is available in two viscosity grades (10W30 and 15W40). For direct injection engines, see table 22 in order to choose the correct viscosity grade for the ambient temperature. Multigrade oils provide the correct viscosity for a broad range of operating temperatures.

Multigrade oils are effective in maintaining low oil consumption and low levels of piston deposits.

Caterpillar multigrade Diesel Engine Oil can be used in other diesel engines and in gasoline engines. See the engine manufacturer's guide for the recommended specifications. Compare the specifications to the specifications of Caterpillar multigrade Diesel Engine Oil. The current industry standards for Caterpillar Diesel Engine Oil are listed on the product label and on the data sheets for the product.

Consult your Caterpillar dealer for part numbers and for available sizes of containers.

Commercial Oils

The performance of commercial diesel engine oils is based on American Petroleum Institute (API) classifications. These API classifications are developed in order to provide commercial lubricants for a broad range of diesel engines that operate at various conditions.

If Caterpillar multigrade Diesel Engine Oil is not used, only use commercial oils that meet the following classifications:

- EMA LRG-1 multigrade oil (preferred oil)
- API CH-4 multigrade oil (preferred oil)
- API CG-4 multigrade oil (preferred oil)

In order to make the proper choice of a commercial oil, refer to the following explanations:

EMA LRG-1 – The Engine Manufacturers Association (EMA) has developed lubricant recommendations as an alternative to the API oil classification system. LRG-1 is a Recommended Guideline that defines a level of oil performance for these types of diesel engines: high speed, four stroke cycle, heavy-duty and light duty. LRG-1 oils may be used in Caterpillar engines when the following oils are recommended: API CH-4 and API CG-4. LRG-1 oils are intended to provide superior performance in comparison to API CG-4.

LRG-1 oils will meet the needs of high performance Caterpillar diesel engines that are operating in many applications. The tests and the test limits that are used to define LRG-1 are similar to the new API CH-4 classification. The oils will meet the requirements of the low emissions diesel engines. LRG-1 oils are designed to control the harmful effects of soot with improved wear resistance and improved resistance to plugging of the oil filter. These oils will also provide superior control of piston deposit for engines with either two-piece steel pistons or aluminum pistons.

All LRG-1 oils must complete a full test program with the base stock and with the viscosity grade of the finished commercial oil. The use of “API Base Oil Interchange Guidelines” are not appropriate for LRG-1 oils. This feature reduces the variation in performance that can occur when base stocks are changed in commercial oil formulations.

LRG-1 oils are recommended for use in extended oil change interval programs that optimize oil life. These oil change interval programs are based on oil analysis. LRG-1 oils are recommended for conditions that demand a premium oil. Your Caterpillar dealer has the specific guidelines for optimizing oil change intervals.

API CH-4 – API CH-4 oils were developed in order to meet the requirements of the new high performance diesel engines. Also, the oil was designed to meet the requirements of the low emissions diesel engines. API CH-4 oils are also acceptable for use in older diesel engines and in diesel engines that use high sulfur diesel fuel. API CH-4 oils may be used in Caterpillar engines that use API CG-4. API CH-4 oils will generally exceed the performance of API CG-4 oils in the following criteria: deposits on pistons, control of oil consumption, wear of piston rings, valve train wear, viscosity control and corrosion.

Three new engine tests were developed for the API CH-4 oil. The first test specifically evaluates deposits on pistons for engines with the two-piece steel piston. This test (piston deposit) also measures the control of oil consumption. A second test is conducted with moderate oil soot. The second test measures the following criteria: wear of piston rings, wear of cylinder liners and resistance to corrosion. A third new test measures the following characteristics with high levels of soot in the oil: wear of the valve train, resistance of the oil in plugging the oil filter and control of sludge.

In addition to the new tests, API CH-4 oils have tougher limits for viscosity control in applications that generate high soot. The oils also have improved oxidation resistance. API CH-4 oils must pass an additional test (piston deposit) for engines that use aluminum pistons (single piece). Oil performance is also established for engines that operate in areas with high sulfur diesel fuel.

All of these improvements allow the API CH-4 oil to achieve optimum oil change intervals. API CH-4 oils are recommended for use in extended oil change intervals. API CH-4 oils are recommended for conditions that demand a premium oil. Your Caterpillar dealer has specific guidelines for optimizing oil change intervals.

API CG-4 – API CG-4 oils were developed primarily for diesel engines that use a 0.05 percent level of fuel sulfur. However, API CG-4 oils can be used with higher sulfur fuels. The TBN of the new oil determines the maximum fuel sulfur level for API CG-4 oils. See illustration 27 .

API CG-4 oils are the first oils that are required to pass industry standard tests for foam control and viscosity shear loss. API CG-4 oils must also pass tests that were developed for corrosion, wear and oxidation.

Note: Do not use single grade API CF oils or multigrade API CF oils in Caterpillar Direct Injection (DI) Commercial Diesel Engines.

Some commercial oils that meet the API classifications may require reduced oil change intervals. To determine the oil change interval, closely monitor the condition of the oil and perform a wear metal analysis. Caterpillar's S·O·S oil analysis program is the preferred method.

NOTICE
Failure to follow these oil recommendations can cause shortened engine service life due to deposits and/or excessive wear.

Total Base Number (TBN) and Fuel Sulfur Levels for Direct Injection (DI) Diesel Engines

The Total Base Number (TBN) for an oil depends on the fuel sulfur level. For direct injection engines that use distillate fuel, the minimum TBN of the new oil must be 10 times the fuel sulfur level. The TBN is defined by “ASTM D2896”. The minimum TBN of the oil is 5 regardless of fuel sulfur level. Illustration 27 demonstrates the TBN.

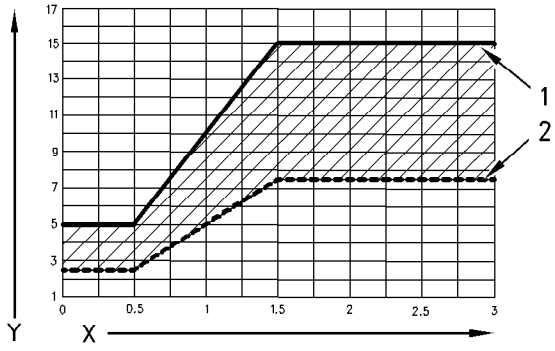

Illustration 27 g00799818

(Y) TBN by “ASTM D2896”
(X) Percentage of fuel sulfur by weight
(1) TBN of new oil
(2) Change the oil when the TBN deteriorates to 50 percent of the original TBN.

Use the following guidelines for fuel sulfur levels that exceed 1.5 percent:

- Choose an oil with the highest TBN that meets one of these classifications: EMA LRG-1, API CH-4 and API CG-4.
- Reduce the oil change interval. Base the oil change interval on the oil analysis. Ensure that the oil analysis includes the condition of the oil and a wear metal analysis.

Excessive piston deposits can be produced by an oil with a high TBN. These deposits can lead to a loss of control of the oil consumption and to the polishing of the cylinder bore.

NOTICE
Operating Direct Injection (DI) diesel engines with fuel sulfur levels over 1.0 percent may require shortened oil change intervals in order to help maintain adequate wear protection.

Lubricant Viscosity Recommendations for Direct Injection (DI) Diesel Engines

The proper SAE viscosity grade of oil is determined by the minimum ambient temperature during cold engine start-up, and the maximum ambient temperature during engine operation.

Refer to table 22 (minimum temperature) in order to determine the required oil viscosity for starting a cold engine.

Refer to table 22 (maximum temperature) in order to select the oil viscosity for engine operation at the highest ambient temperature that is anticipated.

Generally, use the highest oil viscosity that is available to meet the requirement for the temperature at start-up.

Table 22

Engine Oil Viscosity		
Caterpillar DEO Multigrade EMA LRG-1 API CH-4 API CG-4 Viscosity Grade	Ambient Temperature	
	Minimum	Maximum
SAE 0W20	−40 °C (−40 °F)	10 °C (50 °F)
SAE 0W30	−40 °C (−40 °F)	30 °C (86 °F)
SAE 0W40	−40 °C (−40 °F)	40 °C (104 °F)
SAE 5W30	−30 °C (−22 °F)	30 °C (86 °F)
SAE 5W40	−30 °C (−22 °F)	40 °C (104 °F)
SAE 10W30	−20 °C (−4 °F)	40 °C (104 °F)
SAE 15W40	−9.5 °C (15 °F)	50 °C (122 °F)

Synthetic Base Stock Oils

Synthetic base oils are acceptable for use in Caterpillar engines. **The oils must meet the performance requirements that are specified by Caterpillar for the engine.**

Synthetic base oils generally perform better than conventional oils in the following two areas:

- Synthetic base oils have improved flow at low temperatures.
- Synthetic base oils have improved oxidation stability.

Some synthetic base oils have performance characteristics that enhance the service life of the oil. Caterpillar does not recommend the automatic extension of oil drain intervals for any type of oil.

Oil drain intervals for Caterpillar engines can only be adjusted for a longer service interval after an oil analysis program that contains the following data:

- Oil condition, oil contamination, and wear metal analysis (Caterpillar S·O·S Services oil analysis)
- Trend analysis
- Fuel consumption
- Oil consumption

Re-refined Basestock Oils

Re-refined basestock oils are acceptable for use in Caterpillar engines. **The oils must meet the performance requirements that are specified by Caterpillar.**

Re-refined basestock oils can be used exclusively in finished oil or in a combination with new basestock oils. The US military specifications and the specifications of other heavy equipment manufacturers also allow the use of re-refined basestock oils that meet the same criteria.

The process that is used to make re-refined basestock oil should adequately remove all wear metals that are in the used oil and all additives that are in the used oil. Vacuum distillation and the hydrotreating of the used oil are acceptable processes that are used for producing re-refined base oil.

Note: Filtering is inadequate for the production of high quality re-refined basestock oils from used oil.

Cold Weather Lubricants

When an engine is started and an engine is operated in ambient temperatures below −20 °C (−4 °F), use multigrade oils that are capable of flowing in low temperatures.

These oils have lubricant viscosity grades of SAE 0W or SAE 5W.

When an engine is started and operated in ambient temperatures below −30 °C (−22 °F), use a synthetic base stock multigrade oil with a 0W viscosity grade or with a 5W viscosity grade. Use an oil with a pour point that is lower than −50 °C (−58 °F).

The number of acceptable lubricants is limited in cold weather conditions. Caterpillar recommends the following lubricants for use in cold weather conditions:

First Choice – Use an oil with an EMA LRG-1 Recommended Guideline or use a CH-4 oil that is API licensed with an SAE 0W20, SAE 0W30, SAE 0W40, SAE 5W30 or SAE 5W40 lubricant viscosity grade. A CG-4 oil that is API licensed with an SAE 0W20, SAE 0W30, SAE 0W40, SAE 5W30, or SAE 5W40 lubricant viscosity grade may also be used. A CF-4 oil that is API licensed with an SAE 0W20, SAE 0W30, SAE 0W40, SAE 5W30, or SAE 5W40 lubricant viscosity grade may also be used.

Second Choice – use an oil that contains the CH-4, CG-4, or CF-4 additive package although the oil has not been tested for the requirements of the API license. The oil must have an SAE 0W20, SAE 0W30, SAE 0W40, SAE 5W30 or SAE 5W40 lubricant viscosity grade.

NOTICE
Shortened engine service life could result if second choice oils are used.

Aftermarket Oil Additives

Caterpillar does not recommend the use of aftermarket additives in oil. It is not necessary to use aftermarket additives in order to achieve the engine's maximum service life or rated performance. Fully formulated, finished oils consist of base oils and of commercial additive packages. These additive packages are blended into the base oils at precise percentages in order to help provide finished oils with performance characteristics that meet industry standards.

There are no industry standard tests that evaluate the performance or the compatibility of aftermarket additives in finished oil. Aftermarket additives may not be compatible with the finished oil's additive package, which could lower the performance of the finished oil. The aftermarket additive could fail to mix with the finished oil. This could produce sludge in the crankcase. Caterpillar discourages the use of aftermarket additives in finished oils.

To achieve the best performance from a Caterpillar engine, conform to the following guidelines:

- Select the proper Caterpillar oil or a commercial oil that meets the Caterpillar recommendations.
- See the appropriate “Lubricant Viscosities” table in order to find the correct oil viscosity grade for your engine.
- At the specified interval, service the engine compartment. Use new oil and install a new oil filter.
- Perform maintenance at the intervals that are specified in the Operation and Maintenance Manual, “Maintenance Interval Schedule”.

Lubricating Grease

Caterpillar provides greases in order to cover a variety of applications and extreme temperature conditions. Consult your Caterpillar dealer for part numbers and for available sizes of containers.

Note: Some greases may not be used with other greases. When a commercial grease is used, ensure that the grease is compatible with the grease that is currently used in the system. If the commercial grease is not compatible, the system must be purged. If any questions arise concerning the compatibility of a grease, consult the supplier.

Multipurpose Greases

Multipurpose Lithium Complex Grease (MPGL)

Multipurpose Lithium Complex Grease (MPGL) is a general purpose lithium complex grease for medium-duty applications. This product has good characteristics at high temperatures such as a dropping point of 260 °C (500 °F). MPGL contains unleaded extreme pressure additives, antiwear inhibitors, and corrosion inhibitors that provide extra protection in the following applications:

- Construction
- Agricultural
- Automotive

MPGL meets the requirements for extended service intervals of automotive chassis points. MPGL also meets the requirements for extended service intervals of wheel bearings with disc brakes in automobiles, in vans and in light trucks. This product meets the NLGI certification of “GC-LB”. MPGL is also available in a NLGI No. 2 grade. Normal operating temperatures for this product are −28 to 149 °C (−18 to 300 °F). This product is also available as a white lithium complex grease.

Multipurpose Lithium Complex Grease with Molybdenum (MPGM)

Multipurpose Lithium Complex Grease with Molybdenum (MPGM) is a general purpose lithium complex grease that is used for light-duty applications and for medium-duty applications. The MPGM is available in the following grades: NLGI No. 2 grade and NLGI No. 0 grade. The MPGM is strengthened with a molybdenum disulfide and a polymer for extra lubrication and protection. MPGM contains unleaded additives. MPGM also contains antiwear inhibitors, rust inhibitors, and corrosion inhibitors that are for protection and lubrication in many environments. The MPGM is formulated with a base fluid that has high viscosity.

The MPGM has the following features:

- Increased protection against water washout
- Increased retention
- Resistance to heavy loads

This product is recommended for heavily loaded pin joints and for journal bearings. This product meets the certification of “GC-LB”. Normal operating temperatures for this product are −28 to 149 °C (−18 to 300 °F) for the NLGI No. 0 grade. Normal operating temperatures for this product are −18 to 149 °C (0 to 300 °F) for the NLGI No. 2 grade.

Note: If MPGM is not available, use a multipurpose type grease which contains three to five percent molybdenum.

Special Purpose Grease (SPG)

Bearing Lubricant (SPG)

Bearing Lubricant (SPG) is available in a NLGI No. 2 grade with a polyurea thickener. This grease is recommended for high temperature antifriction bearings in the following applications: electric starting motors, alternators, fan drives and generators. The Bearing Lubricant (SPG) has an effective operating range of −29 to 177 °C (−20 to 350 °F).

Water and Temperature Resistant Grease (WTR)

The Water and Temperature Resistant Grease is designed for use whenever the following conditions are a concern: water washout, severe corrosion and high operating temperatures. The Water and Temperature Resistant Grease provides extreme pressure protection, antiwear protection, rust protection and corrosion protection. The Water and Temperature Resistant Grease is an environmentally friendly grease which does not contain the following materials: antimony, sulfur, barium, zinc, lead and phosphorous materials. The Water and Temperature Resistant Grease has excellent shear stability. Water and Temperature Resistant Grease can also resist breakdown in the presence of water. The Water and Temperature Resistant Grease works well in the following applications:

- Construction
- Agricultural
- Automotive
- Industrial
- Marine

This product meets the NLGI certification of “GC-LB”. Normal operating temperatures for this product are −40 to 204°C (−40 to 400°F).

Caterpillar Premium Grease (CPG)

Desert Gold (CPG)

Desert Gold is a heavy-duty, premium synthetic grease that is developed for the most extreme operating environments. This grease is formulated with the following characteristics: high viscosity synthetic base fluid, polymers, molybdenum disulfide, high viscosity index and high dropping point.

Desert Gold will protect equipment against heavy shock loads. Desert Gold protects against corrosion in extreme heat, in moist conditions, or in dusty conditions. This product has excellent characteristics of adhesion and of stability. Desert Gold provides longer protection than other greases. Desert Gold is an environmentally friendly grease which does not contain the following materials: antimony, sulfur, barium, zinc, lead and phosphorous materials. Normal operating temperatures are −6 to 230 °C (21 to 450 °F). Desert Gold can operate at higher temperatures for short time periods. Desert Gold has additional extreme pressure protection for highly loaded pin joints.

Arctic Platinum (CPG)

Arctic Platinum is a super-premium extreme pressure lubricating grease that is developed for lubrication in temperatures that are below zero to moderate operating temperatures. Arctic Platinum is available in grades 000, 00, 0, 1, and 2. These grades ensure the pumpability in central lube systems in a variety of ambient temperatures from −60 to 18 °C (−76 to 65 °F). Arctic Platinum has a high dropping point. Arctic Platinum contains a five percent concentrate of molybdenum disulfide for protection against extra heavy loads. Arctic Platinum provides excellent corrosion protection and rust protection. Arctic Platinum is an environmentally friendly grease which does not contain the following materials: antimony, sulfur, barium, zinc and phosphorous.

Arctic Platinum is designed for lubrication for long life of the following components: horizontal pivot bearings, lower link bearings, steering cylinders, kingbolt bearings, upper hitch link bearings and ejector carrier roller bearings. This grease is extra tacky for retention on excavator carbody bearings. Arctic Platinum has additional extreme pressure protection for highly loaded pin joints.

S·O·S Oil Analysis

Caterpillar recommends the use of the S·O·S oil analysis program in order to monitor the condition and the maintenance requirements of the equipment. The S·O·S oil analysis program will complement the preventive maintenance program.

The S·O·S oil analysis is a diagnostic tool that is used to determine oil performance and component wear rates. Contamination can be identified and measured through the use of the S·O·S oil analysis. The S·O·S oil analysis includes the following tests:

- The Wear Rate Analysis monitors the wear of the engine's metals. The amount of wear metal and type of wear metal that is in the oil is analyzed. The increase in the rate of engine wear metal in the oil is as important as the quantity of engine wear metal in the oil. For this reason, regular sampling at specified intervals is necessary in order to establish wear rates. Intermittent sampling does not allow wear rate trend lines to be established. Engine wear metals in the oil sample are compared to established Caterpillar norms in order to determine acceptability.
- Tests are conducted in order to detect contamination of the oil by water, glycol or fuel.
- The Oil Condition Analysis determines the loss of the oil's lubricating properties. An infrared analysis is used to compare the properties of new oil to the properties of the used oil sample. This analysis allows technicians to determine the amount of deterioration of the oil during use. This analysis also allows technicians to verify the performance of the oil according to the specification during the entire oil change interval.

The test results of the oil samples will then be used as a basis for determining the oil change interval for the engine. The results of the S·O·S oil analysis may allow the engine to operate longer between oil changes without the risk of engine damage.

Table 23

S·O·S Oil Analysis Interval	
Compartment	**Interval**
Engine crankcase	Every 250 Service Hours

For more information, see Special Publication, PEDP7036, “S·O·S Fluid Analysis”. Consult your Caterpillar dealer for complete information and assistance about the program.

i07435390

Fluid Recommendations
(Fuel Recommendations)

SMCS Code: 1280; 1348; 1395; 7560

Diesel engines have the ability to burn a wide variety of fuels. These fuels are divided into two general groups. The two groups are called the preferred fuels and the permissible fuels.

The preferred fuels provide maximum engine service life and performance. The preferred fuels are distillate fuels. These fuels are commonly called diesel fuel, furnace fuel, gas oil, or kerosene.

The permissible fuels are crude oils or blended fuels. Use of these fuels can result in higher maintenance costs and in reduced engine service life.

Diesel fuels that meet the specifications in Table 24 will help to provide maximum engine service life and performance. In North America, diesel fuel that is identified as No. 1-D or No. 2-D in “ASTM D975” generally meet the specifications. Table 24 is for diesel fuels that are distilled from crude oil. Diesel fuels from other sources could exhibit detrimental properties that are not defined or controlled by this specification.

Table 24

3054C Specifications for Distillate Diesel Fuel		
Specifications	**Requirements**	**ASTM Test**
Aromatics	35% maximum	“D1319”
Ash	0.02% maximum (weight)	“D482”
Carbon Residue on 10% Bottoms	0.35% maximum (weight)	“D524”
Cetane Number	45 minimum	“D613”
Cloud Point	The cloud point must not exceed the lowest expected ambient temperature.	-
Copper Strip Corrosion	No. 3 maximum	“D130”
Distillation	10% at 282 °C (540 °F) maximum	“D86”
	90% at 360 °C (680 °F) maximum	
Flash Point	legal limit	“D93”

(continued)

(Table 24, contd)

3054C Specifications for Distillate Diesel Fuel		
Specifications	**Requirements**	**ASTM Test**
API Gravity	30 minimum	“D287”
	45 maximum	
Pour Point	6 °C (10 °F) minimum below ambient temperature	“D97”
Sulfur (1)	3% maximum	“D3605” or “D1552”
Kinematic Viscosity (2)	1.4 cSt minimum and 20.0 cSt maximum at 40 °C (104 °F)	“D445”
Water and Sediment	0.1% maximum	“D1796”
Water	0.1% maximum	“D1744”
Sediment	0.05% maximum (weight)	“D473”
Gum and Resins (3)	10 mg per 100 mL maximum	“D381”
Lubricity (4)	3100 g minimum	“D6078”
	0.45 mm (0.018 inch) maximum at 60 °C (140 °F)	“D6079”
	0.38 mm (0.015 inch) maximum at 25 °C (77 °F)	

(1) Caterpillar fuel systems and engine components can operate on high sulfur fuels. Fuel sulfur levels affect exhaust emissions. High sulfur fuels also increase the potential for corrosion of internal components. Fuel sulfur levels above 1.0 percent may significantly shorten the oil change interval. For additional information, see this publication, “Engine Oil” topic (Maintenance Section).

(2) The values of the fuel viscosity are the values as the fuel is delivered to the fuel injection pumps. If a fuel with a low viscosity is used. Cooling of the fuel may be required to maintain a 1.4 cSt viscosity at the fuel injection pump. Fuels with a high viscosity might require fuel heaters to bring down the viscosity to a 20 cSt viscosity. For additional information, see Special Publication, SEBD0717, “Diesel Fuel and Your Engine”.

(3) Follow the test conditions and procedures for gasoline (motor).

(4) The lubricity of a fuel is a concern with low sulfur fuel. To determine the lubricity of the fuel, use either the “ASTM D6078 Scuffing Load Wear Test (SBOCLE)” or the “ASTM D6079 High Frequency Reciprocating Rig (HFRR)” test. If the lubricity of a fuel does not meet the minimum requirements, consult your fuel supplier. Do not treat the fuel without consulting the fuel supplier. Some additives are not compatible. These additives can cause problems in the fuel system.

NOTICE
Operating with fuels that do not meet Caterpillar's recommendations can cause the following effects: starting difficulty, poor combustion, deposits in the fuel injectors, reduced service life of the fuel system, deposits in the combustion chamber and reduced service life of the engine.

In the USA, 0.05 percent diesel fuels have been used in all on-highway truck engines since January 1, 1994. This low sulfur diesel fuel was mandated as a means of directly reducing particulate emissions from diesel truck engines. This low sulfur fuel, will also be used in Caterpillar commercial diesel engines when low emissions are required or when the sources of the fuel provide this type of fuel. Caterpillar has not seen any detrimental effects with 0.05 percent sulfur fuel in Caterpillar diesel engines.

NOTICE
Heavy Fuel Oil (HFO), Residual fuel, or Blended fuel must NOT be used in Caterpillar diesel engines (except in 3600 Series HFO engines). Severe component wear and component failures will result if HFO type fuels are used in engines that are configured to use distillate fuel.

In extreme cold ambient conditions, you may use the distillate fuels that are specified in Table 24 . However, the fuel that is selected must meet the requirements that are specified in Table 24 . These fuels are, intended to be used in operating temperatures that are down to −54 °C (−65 °F).

Table 25

Distillate Fuels (1)	
Specification	**Grade**
“MIL-T-5624R”	JP-5
“ASTM D1655”	Jet-A-1
“MIL-T-83133D”	JP-8

(1) The fuels that are listed in this Table may not meet the requirements that are specified in the “Caterpillar Specifications for Distillate Diesel Fuel” Table. Consult the supplier for the recommended additives in order to maintain the proper fuel lubricity.

These fuels are lighter than the No. 2 grade fuels. The cetane number of the fuels in Table 24 must be at least 40. If the viscosity is below 1.4 cSt at 38 °C (100 °F), use the fuel only in temperatures below 0 °C (32 °F). Do not use any fuels with a viscosity of less than 1.2 cSt at 38 °C (100 °F). Fuel cooling may be required to maintain the minimum viscosity of 1.4 cSt at the fuel injection pump.

There are many other diesel fuel specifications that are published by governments and by technological societies. Usually, those specifications do not review all the requirements that are addressed in this specification. To ensure optimum engine performance, a complete fuel analysis should be obtained before engine operation. The fuel analysis should include all the properties that are listed in Table 24 . For more information on diesel fuels, refer to Caterpillar Commercial Diesel Engine Fluids Recommendations, SEBU6251.

i09625796

Maintenance Interval Schedule

SMCS Code: 1000; 7500

When Required

“ Battery - Replace“ 58
“ Battery or Battery Cable - Disconnect“ 59
“ Engine - Clean“ 67
“ Engine Air Cleaner Element (Dual Element) - Clean/ Replace“ 67
“ Engine Air Cleaner Element (Single Element) - Replace“ 70
“ Fuel System - Prime“ 78

Daily

“ Alternator and Fan Belts - Inspect/Adjust/ Replace“ 57
“ Cooling System Coolant Level - Check“ 63
“ Driven Equipment - Check“ 66
“ Engine Air Cleaner Service Indicator - Inspect“ . . 70
“ Engine Oil Level - Check“ 72
“ Fuel System Primary Filter/Water Separator - Drain“ 79
“Fuel System Secondary Filter/Water Separator - Drain“ . . . . . .
“ Walk-Around Inspection“ 90

Every 50 Service Hours or Weekly

“ Fuel Tank Water and Sediment - Drain“ 83

Every 250 Service Hours or 6 Months

“ Engine Oil Sample - Obtain“ 72

Every 500 Service Hours

“ Cooling System Supplemental Coolant Additive (SCA) - Test/Add“ 65

Every 500 Service Hours or 6 Months

“ Engine Protective Devices - Check“ 76

Every 500 Service Hours or 1 Year

“ Battery Electrolyte Level - Check“ 58
“ Engine Air Cleaner Element (Dual Element) - Clean/ Replace“ 67
“ Engine Air Cleaner Element (Single Element) - Replace“ 70
“Engine Oil and Filter - Change“ . . . . . .
“ Fuel System Primary Filter (Water Separator) Element - Replace“ 78
“Fuel System Secondary Filter - Replace“ . . . . . .
“ Hoses and Clamps - Inspect/Replace“ 84
“Radiator - Clean“. . . . . .

Every 1000 Service Hours

“ Engine Valve Lash - Inspect/Adjust“ 76

Every 2000 Service Hours

“ Aftercooler Core - Inspect“ 56
“ Alternator - Inspect“ 57
“ Starting Motor - Inspect“ 89

“ Water Pump - Inspect“. 90

Every 2000 Service Hours or 1 Year

“ Engine Mounts - Inspect“ 72

Every 2000 Service Hours or 2 Years

“ Cooling System Coolant Extender (ELC) - Add“ 63

Every 3000 Service Hours

“ Fuel Injection Nozzles - Test/Exchange“ 77

Every 3000 Service Hours or 2 Years

“ Cooling System Coolant (DEAC) - Change“ 59

“ Cooling System Water Temperature Regulator - Replace“ 66

Every 4000 Service Hours

“ Aftercooler Core - Clean/Test“ 56

Every 6000 Service Hours or 3 Years

“ Cooling System Coolant (ELC) - Change“ 61

Overhaul

“ Engine Crankcase Breather - Clean“ 71

“ Overhaul Considerations“ 86

i02322260

Aftercooler Core - Clean/Test

SMCS Code: 1064-070; 1064-081

1. Remove the core. Refer to the OEM information for the correct procedure.
2. Turn the aftercooler core upside-down in order to remove debris.

⚠ WARNING

Personal injury can result from air pressure.

Personal injury can result without following proper procedure. When using pressure air, wear a protective face shield and protective clothing.

Maximum air pressure at the nozzle must be less than 205 kPa (30 psi) for cleaning purposes.

3. Pressurized air is the preferred method for removing loose debris. Direct the air in the opposite direction of the fan's air flow. Hold the nozzle approximately 6 mm (.25 inch) away from the fins. Slowly move the air nozzle in a direction that is parallel with the tubes. This will remove debris that is between the tubes.
4. Pressurized water may also be used for cleaning. The maximum water pressure for cleaning purposes must be less than 275 kPa (40 psi). Use pressurized water in order to soften mud. Clean the core from both sides.

NOTICE
Do not use a high concentration of caustic cleaner to clean the core. A high concentration of caustic cleaner can attack the internal metals of the core and cause leakage. Only use the recommended concentration of cleaner.

5. Back flush the core with a suitable cleaner.
6. Steam clean the core in order to remove any residue. Flush the fins of the aftercooler core. Remove any other trapped debris.
7. Wash the core with hot, soapy water. Rinse the core thoroughly with clean water.

⚠ WARNING

Personal injury can result from air pressure.

Personal injury can result without following proper procedure. When using pressure air, wear a protective face shield and protective clothing.

Maximum air pressure at the nozzle must be less than 205 kPa (30 psi) for cleaning purposes.

8. Dry the core with compressed air. Direct the air in the reverse direction of the normal flow.
9. Inspect the core in order to ensure cleanliness. Pressure test the core. If necessary, repair the core.
10. Install the core. Refer to the OEM information for the correct procedure.
11. After cleaning, start the engine and accelerate the engine to high idle rpm. This will help in the removal of debris and drying of the core. Stop the engine. Use a light bulb behind the core in order to inspect the core for cleanliness. Repeat the cleaning, if necessary.

i02322295

Aftercooler Core - Inspect

SMCS Code: 1064-040

Note: Adjust the frequency of cleaning according to the effects of the operating environment.

Inspect the aftercooler for these items: damaged fins, corrosion, dirt, grease, insects, leaves, oil and other debris. Clean the aftercooler, if necessary.

For air-to-air aftercoolers, use the same methods that are used for cleaning radiators.

⚠ WARNING

Personal injury can result from air pressure.

Personal injury can result without following proper procedure. When using pressure air, wear a protective face shield and protective clothing.

Maximum air pressure at the nozzle must be less than 205 kPa (30 psi) for cleaning purposes.

After cleaning, start the engine and accelerate the engine to high idle rpm. This will help in the removal of debris and drying of the core. Stop the engine. Use a light bulb behind the core in order to inspect the core for cleanliness. Repeat the cleaning, if necessary.

Inspect the fins for damage. Bent fins may be opened with a “comb”.

Note: If parts of the aftercooler system are repaired or replaced, a leak test is highly recommended.

Inspect these items for good condition: Welds, mounting brackets, air lines, connections, clamps and seals. Make repairs, if necessary.

i08259468

Alternator - Inspect

SMCS Code: 1405-040

Caterpillar recommends a scheduled inspection of the alternator. Inspect the alternator for loose connections and proper battery charging. Inspect the ammeter (if equipped) during engine operation to ensure proper battery performance and/or proper performance of the electrical system. Make repairs, as required.

Check the alternator and the battery charger for proper operation. If the batteries are properly charged, the ammeter reading should be very near zero. All batteries should be kept charged. The batteries should be kept warm because temperature affects the cranking power. If the battery is too cold, the battery will not crank the engine. The battery will not crank the engine, even if the engine is warm. When the engine is not run for long periods of time or if the engine is run for short periods, the batteries may not fully charge. A battery with a low charge will freeze more easily than a battery with a full charge.

i03706461

Alternator and Fan Belts - Inspect/Adjust/Replace

SMCS Code: 1357-039

Inspection

To maximize the engine performance, inspect the belts for wear and for cracking. Replace belts that are worn or damaged.

For applications that require multiple drive belts, replace the belts in matched sets. Replacing only one belt of a matched set will cause the new belt to carry more load because the older belt is stretched. The additional load on the new belt could cause the new belt to break.

If the belts are too loose, vibration causes unnecessary wear on the belts and pulleys. Loose belts may slip enough to cause overheating.

To accurately check the belt tension, 144-0235 Belt Tension Gauge should be used.

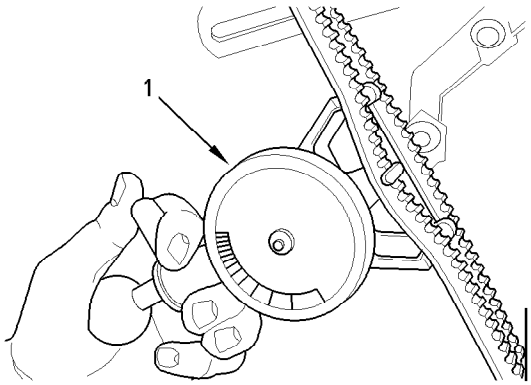

Illustration 28 g01003936

Typical example

(1) 144-0235 Belt Tension Gauge

Install the belt tension gauge (1) at the center of the longest free length and check the tension. The correct tension is 535 N (120 lb). If the tension of the belt is below 250 N (56 lb) adjust the belt to 535 N (120 lb).

If twin belts are installed, check and adjust the tension on both belts.

Adjustment

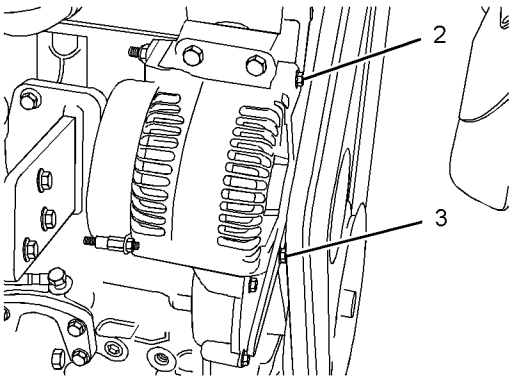

Illustration 29 g01995054

Typical example

1. Loosen The alternator pivot bolt (2) and the link bolt (3).

2. Move the alternator in order to increase or decrease the belt tension. Tighten the alternator pivot bolt and the link bolt to 22 N·m (16 lb ft).(1).

Replacement

Refer to the Disassembly and Assembly Manual for the installation procedure and the removal procedure for the belt.

i08397624

Battery - Replace

SMCS Code: 1401-510

⚠ WARNING

Batteries give off combustible gases which can explode. A spark can cause the combustible gases to ignite. This can result in severe personal injury or death.

Ensure proper ventilation for batteries that are in an enclosure. Follow the proper procedures in order to help prevent electrical arcs and/or sparks near batteries. Do not smoke when batteries are serviced.

⚠ WARNING

The battery cables or the batteries should not be removed with the battery cover in place. The battery cover should be removed before any servicing is attempted.

Removing the battery cables or the batteries with the cover in place may cause a battery explosion resulting in personal injury.

Note: Always recycle a battery. Never discard a battery. Return used batteries to an appropriate recycling facility.

1. Turn the key start switch to the OFF position. Remove the key and all electrical loads.

2. Turn OFF the battery charger. Disconnect the charger.

3. Turn battery isolator switch to OFF position.

4. The NEGATIVE "-" cable connects the NEGATIVE "-" battery terminal to the ground plane. Disconnect the cable from the NEGATIVE "-" battery terminal.

5. The POSITIVE "+" cable connects the POSITIVE "+" battery terminal to the starting motor. Disconnect the cable from the POSITIVE "+" battery terminal.

Note: Always recycle a battery. Never discard a battery. Return used batteries to an appropriate recycling facility.

6. Remove the used battery.

7. Install the new battery.

Note: Before the cables are connected, ensure that the key start switch is OFF.

8. Connect the cable from the starting motor to the POSITIVE "+" battery terminal.

9. Connect the cable from the ground plane to the NEGATIVE "-" battery terminal.

i08397645

Battery Electrolyte Level - Check

SMCS Code: 1401-535

When the engine has not run for long or short periods of time, the batteries may not fully recharge. Ensure a full charge to help prevent the battery from freezing.

In warmer climates, check the electrolyte level more frequently.

Ensure that the electrolyte level is 13 mm (0.5 inch) above the top of the separators.

⚠ WARNING

All lead-acid batteries contain sulfuric acid which can burn the skin and clothing. Always wear a face shield and protective clothing when working on or near batteries.

1. Remove the filler caps. Maintain the electrolyte level to the "FULL" mark on the battery.

If the addition of water is necessary, use distilled water. If distilled water is not available, use clean water that is low in minerals. Do not use artificially softened water.

2. Check the condition of the electrolyte with the 245-5829 Coolant Battery Tester Refractometer.

3. Keep the batteries clean.

Clean the battery case with one of the following cleaning solutions:

- A mixture of 0.1 kg (0.2 lb) of baking soda and 1 L (1 qt) of clean water
- A mixture of 0.1 L (0.11 qt) of ammonia and 1 L (1 qt) of clean water

Thoroughly rinse the battery case with clean water.

Use the 1U-9921 Battery Service Tool to clean the battery terminals. Use a wire brush to clean the cable clamps. Clean the items until the surfaces are bright or shiny. DO NOT remove material excessively. Excessive removal of material can cause the clamps to fit improperly. Coat the clamps and the terminals with the Loctite® product listed below, petroleum jelly or MPGM.

- For Americas North - Loctite LB8632
- For Europe and Africa, Middle East, CIS (AMEC) - Loctite LB8104
- For Asia Pacific - Loctite LB8801
- For Americas South - Loctite LB Superlube

For ordering the products listed above, go to the following address.

http://www.loctite.com/en/meta/meta-nav/location-selector.html

i09570426

Battery or Battery Cable - Disconnect

SMCS Code: 1402-029

⚠ WARNING

The battery cables or the batteries should not be removed with the battery cover in place. The battery cover should be removed before any servicing is attempted.

Removing the battery cables or the batteries with the cover in place may cause a battery explosion resulting in personal injury.

1. Turn the start switch to the OFF position. Turn the ignition switch (if equipped) to the OFF position and remove the key and all electrical loads.
2. Open the battery isolator. Disconnect the negative battery terminal. Ensure that the cable cannot contact the terminal. When four 12 volt batteries are involved, two negative connections must be disconnected.
3. Remove the positive connection.
4. Clean all disconnected connection and battery terminals.
5. Use a fine grade of sandpaper to clean the terminals and the cable clamps. Clean the items until the surfaces are bright or shiny. DO NOT remove material excessively. Excessive removal of material can cause the clamps to not fit correctly. Coat the clamps and the terminals with a suitable silicone lubricant or petroleum jelly.
6. Tape the cable connections to help prevent accidental starting.
7. Proceed with necessary system repairs.
8. To connect the battery, connect the positive connection before the negative connection.

i05793911

Cooling System Coolant (DEAC) - Change

SMCS Code: 1350-070; 1395-044

Clean the cooling system and flush the cooling system before the recommended maintenance interval if the following conditions exist:

- The engine overheats frequently.
- Foaming is observed.
- The oil has entered the cooling system and the coolant is contaminated.
- The fuel has entered the cooling system and the coolant is contaminated.

NOTICE
Use of commercially available cooling system cleaners may cause damage to cooling system components. Use only cooling system cleaners that are approved for Caterpillar engines.

Note: Inspect the water pump and the water temperature regulator after the cooling system has been drained. This procedure is a good opportunity to replace the water pump, the water temperature regulator, and the hoses, if necessary.

Drain

⚠ WARNING

Pressurized System: Hot coolant can cause serious burns. To open the cooling system filler cap, stop the engine and wait until the cooling system components are cool. Loosen the cooling system pressure cap slowly in order to relieve the pressure.

1. Stop the engine and allow the engine to cool. Loosen the cooling system filler cap slowly in order to relieve any pressure. Remove the cooling system filler cap.
2. Open the cooling system drain valve (if equipped). If the cooling system is not equipped with a drain valve, remove one of the drain plugs.

Note: If equipped, be sure to drain the heater and any related supply and return lines.

Allow the coolant to drain.

NOTICE
Dispose of used engine coolant properly or recycle. Various methods have been proposed to reclaim used coolant for reuse in engine cooling systems. The full distillation procedure is the only method acceptable by Caterpillar to reclaim the used coolant.

For information regarding the disposal and the recycling of used coolant, consult your Cat dealer or consult Cat Dealer Service Tool Group:

Outside Illinois 1-800-542-TOOL
Inside Illinois 1-800-541-TOOL
Canada 1-800-523-TOOL

Flush

1. Flush the cooling system with clean water in order to remove any debris.
2. Close the drain valve (if equipped). Clean the drain plugs. Install the drain plugs. Refer to the Specifications Manual, SENR3130, “Torque Specifications” for more information on the proper torques.

NOTICE
Fill the cooling system no faster than 19 L (5 US gal) per minute to avoid air locks.

3. Fill the cooling system with a mixture of clean water and Cat Quick Flush cooling system cleaner. Refer to the directions for the cleaner. For additional information on cooling system cleaners, refer to the One Safe Source catalog. Install the cooling system filler cap.
4. Start and run the engine at low idle for a minimum of 30 minutes. The coolant temperature should be at least 82 °C (180 °F).

NOTICE
Improper or incomplete rinsing of the cooling system can result in damage to copper and other metal components.

To avoid damage to the cooling system, make sure to completely flush the cooling system with clear water. Continue to flush the system until all signs of the cleaning agent are gone.

5. Stop the engine and allow the engine to cool. Loosen the cooling system filler cap slowly in order to relieve any pressure. Remove the cooling system filler cap. Open the drain valve (if equipped) or remove the cooling system drain plugs. Allow the water to drain. Flush the cooling system with clean water. If equipped, be sure to flush the heater and any related supply and return lines. Close the drain valve (if equipped). Clean the drain plugs. Install the drain plugs. Refer to the Specifications Manual, SENR3130, “Torque Specifications” for more information on the proper torques.

Cooling Systems with Heavy Deposits or Plugging

Note: For the following procedure to be effective, there must be some active flow through the cooling system components.

1. Flush the cooling system with clean water in order to remove any debris.

Note: If equipped, be sure to flush the heater and any related supply and return lines.

2. Close the drain valve (if equipped). Clean the drain plugs. Install the drain plugs. Refer to the Specifications Manual, SENR3130, “Torque Specifications” for more information on the proper torques.

NOTICE
Fill the cooling system no faster than 19 L (5 US gal) per minute to avoid air locks.

3. Fill the cooling system with a mixture of clean water and Cat Fast Acting Cooling System Cleaner. Add 0.5 L (1 pt) of cleaner per 3.8 to 7.6 L (1 to 2 US gal) of the cooling system capacity. Install the cooling system filler cap.
4. Start and run the engine at low idle for a minimum of 90 minutes. The coolant temperature should be at least 82 °C (180 °F).

NOTICE
Improper or incomplete rinsing of the cooling system can result in damage to copper and other metal components.

To avoid damage to the cooling system, make sure to completely flush the cooling system with clear water. Continue to flush the system until all signs of the cleaning agent are gone.

5. Stop the engine and allow the engine to cool. Loosen the cooling system filler cap slowly in order to relieve any pressure. Remove the cooling system filler cap. Open the drain valve (if equipped) or remove the cooling system drain plugs. Allow the water to drain. Flush the cooling system with clean water. Close the drain valve (if equipped). Clean the drain plugs. Install the drain plugs. Refer to the Specifications Manual, SENR3130, “Torque Specifications” for more information on the proper torques.

Fill

NOTICE
Fill the cooling system no faster than 19 L (5 US gal) per minute to avoid air locks.

1. Fill the cooling system with coolant/antifreeze. Refer to the Operation and Maintenance Manual, “Refill Capacities and Recommendations” topic (Maintenance Section) for more information on cooling system specifications. Do not install the cooling system filler cap.
2. Start and run the engine at low idle. Increase the engine rpm to 1500 rpm. Run the engine at high idle for 1 minute in order to purge the air from the cavities of the engine block. Stop the engine.
3. Check the coolant level. Maintain the coolant level within 13 mm (0.5 inch) below the bottom of the pipe for filling. Maintain the coolant level within 13 mm (0.5 inch) to the proper level on the sight glass (if equipped).
4. Clean the cooling system filler cap. Inspect the gasket that is on the cooling system filler cap. If the gasket that is on the cooling system filler cap is damaged, discard the cap and install a new cooling system filler cap. If the gasket that is on the cooling system filler cap is not damaged, perform a pressure test. A 9S-8140 Pressurizing Pump is used to perform the pressure test. The correct pressure for the cooling system filler cap is stamped on the face of the cooling system filler cap. If the cooling system filler cap does not retain the correct pressure, install a new cooling system filler cap.
5. Start the engine. Inspect the cooling system for leaks and for proper operating temperature.

i03292691

Cooling System Coolant (ELC) - Change

SMCS Code: 1350-070; 1395-044

Clean the cooling system and flush the cooling system before the recommended maintenance interval if the following conditions exist:

- The engine overheats frequently.
- Foaming is observed.
- The oil has entered the cooling system and the coolant is contaminated.
- The fuel has entered the cooling system and the coolant is contaminated.

Note: When the cooling system is cleaned, only clean water is needed when the ELC is drained and replaced.

Note: Inspect the water pump and the water temperature regulator after the cooling system has been drained. This is a good opportunity to replace the water pump, the water temperature regulator and the hoses, if necessary.

Drain

⚠ WARNING

Pressurized System: Hot coolant can cause serious burns. To open the cooling system filler cap, stop the engine and wait until the cooling system components are cool. Loosen the cooling system pressure cap slowly in order to relieve the pressure.

1. Stop the engine and allow the engine to cool. Loosen the cooling system filler cap slowly in order to relieve any pressure. Remove the cooling system filler cap.
2. Open the cooling system drain valve (if equipped). If the cooling system is not equipped with a drain valve, remove the cooling system drain plugs.

   Allow the coolant to drain.

NOTICE
Dispose of used engine coolant properly or recycle. Various methods have been proposed to reclaim used coolant for reuse in engine cooling systems. The full distillation procedure is the only method acceptable by Caterpillar to reclaim the used coolant.

For information regarding the disposal and the recycling of used coolant, consult your Caterpillar dealer or consult Caterpillar Dealer Service Tool Group:

Outside Illinois 1-800-542-TOOL
Inside Illinois 1-800-541-TOOL
Canada 1-800-523-TOOL

Flush

1. Flush the cooling system with clean water in order to remove any debris.

Note: If equipped, be sure to flush the heater and any related supply and return lines.

2. Close the drain valve (if equipped). Clean the drain plugs. Install the drain plugs. For the proper torque, refer to the Specifications Manual, SENR3130, “Torque Specifications”.

NOTICE
Fill the cooling system no faster than 19 L (5 US gal) per minute to avoid air locks.

3. Fill the cooling system with clean water. Install the cooling system filler cap.
4. Start and run the engine at low idle until the temperature reaches 49 to 66 °C (120 to 150 °F).
5. Stop the engine and allow the engine to cool. Loosen the cooling system filler cap slowly in order to relieve any pressure. Remove the cooling system filler cap. Open the drain valve (if equipped) or remove the cooling system drain plugs. Allow the water to drain. Flush the cooling system with clean water. Close the drain valve (if equipped). Clean the drain plugs. Install the drain plugs. For the proper torque, refer to the Specifications Manual, SENR3130, “Torque Specifications”.

Fill

NOTICE
Fill the cooling system no faster than 19 L (5 US gal) per minute to avoid air locks.

1. Fill the cooling system with Extended Life Coolant (ELC). See Special Publication, SEBU6385, “Caterpillar On-highway Diesel Truck Engine Fluids Recommendations” for more information on cooling system specifications. Do not install the cooling system filler cap.
2. Start and run the engine at low idle for 5 minutes. Then, increase the engine rpm to high idle. Run the engine at high idle for one minute in order to purge the air from the cavities of the engine block.
3. Check the coolant level. Maintain the coolant level within 13 mm (0.5 inch) below the bottom of the pipe for filling. Maintain the coolant level within 13 mm (0.5 inch) to the proper level on the sight glass (if equipped).
4. Clean the cooling system filler cap. Inspect the gasket that is on the cooling system filler cap. If the gasket that is on the cooling system filler cap is damaged, discard the old cooling system filler cap and install a new cooling system filler cap. If the gasket that is on the cooling system filler cap is not damaged, use a 9S-8140 Pressurizing Pump in order to pressure test the cooling system filler cap. The correct pressure for the cooling system filler cap is stamped on the face of the cooling system filler cap. If the cooling system filler cap does not retain the correct pressure, install a new cooling system filler cap.

5. Start the engine. Inspect the cooling system for leaks and for proper operating temperature.

i08258443

Cooling System Coolant Extender (ELC) - Add

SMCS Code: 1352-045; 1395-081

Cat ELC (Extended Life Coolant) does not require the frequent additions of any supplemental cooling additives which are associated with the present conventional coolants. The Cat ELC Extender is added once.

NOTICE
Use only Cat Extended Life Coolant (ELC) Extender with Cat ELC.

Do NOT use conventional supplemental coolant additive (SCA) with Cat ELC. Mixing Cat ELC with conventional coolants and/or conventional SCA reduces the Cat ELC service life.

Check the cooling system only when the engine is stopped and cool.

⚠ WARNING

Personal injury can result from hot coolant, steam and alkali.

At operating temperature, engine coolant is hot and under pressure. The radiator and all lines to heaters or the engine contain hot coolant or steam. Any contact can cause severe burns.

Remove cooling system pressure cap slowly to relieve pressure only when engine is stopped and cooling system pressure cap is cool enough to touch with your bare hand.

Do not attempt to tighten hose connections when the coolant is hot, the hose can come off causing burns.

Cooling System Coolant Additive contains alkali. Avoid contact with skin and eyes.

NOTICE
Care must be taken to ensure that fluids are contained during performance of inspection, maintenance, testing, adjusting, and repair of the product. Be prepared to collect the fluid with suitable containers before opening any compartment or disassembling any component containing fluids.

Refer to Special Publication, PERJ1017, “Dealer Service Tool Catalog” for tools and supplies suitable to collect and contain fluids on Cat ® products.

Dispose of all fluids according to local regulations and mandates.

1. Loosen the cooling system filler cap slowly to relieve pressure. Remove the cooling system filler cap.

2. Draining enough coolant from the cooling system to add the Cat ELC Extender may be necessary.

3. Add Cat ELC Extender according to the requirements for your engine cooling system capacity. Refer to the Operation and Maintenance Manual, “Refill Capacities and Recommendations” article for more information.

4. Clean the cooling system filler cap. Inspect the gaskets on the cooling system filler cap. Replace the cooling system filler cap if the gaskets are damaged. Install the cooling system filler cap.

i03699519

Cooling System Coolant Level - Check

SMCS Code: 1395-082

Engines With a Coolant Recovery Tank

Note: The cooling system may not have been provided by Caterpillar. The procedure that follows is for typical cooling systems. Refer to the OEM information for the correct procedures.

Check the coolant level when the engine is stopped and cool.

1. Observe the coolant level in the coolant recovery tank. Maintain the coolant level to “COLD FULL” mark on the coolant recovery tank.

⚠ WARNING

Pressurized System: Hot coolant can cause serious burns. To open the cooling system filler cap, stop the engine and wait until the cooling system components are cool. Loosen the cooling system pressure cap slowly in order to relieve the pressure.

2. Loosen filler cap slowly in order to relieve any pressure. Remove the filler cap.

3. Pour the correct coolant mixture into the tank. Refer to the Operation and Maintenance Manual, “Refill Capacities” for information on the correct mixture and type of coolant. Refer to the Operation and Maintenance Manual, “Refill Capacities” for the cooling system capacity. Do not fill the coolant recovery tank above “COLD FULL” mark.

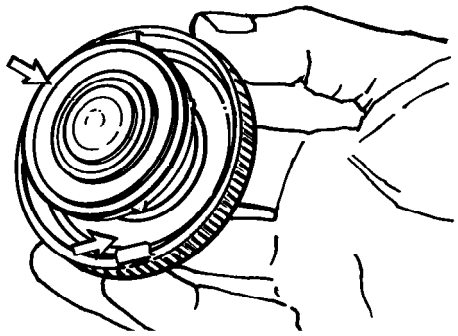

Illustration 30 g00103639

4. Clean filler cap and the receptacle. Reinstall the filler cap and inspect the cooling system for leaks.

Note: The coolant will expand as the coolant heats up during normal engine operation. The additional volume will be forced into the coolant recovery tank during engine operation. When the engine is stopped and cool, the coolant will return to the engine.

Engines Without a Coolant Recovery Tank

Check the coolant level when the engine is stopped and cool.

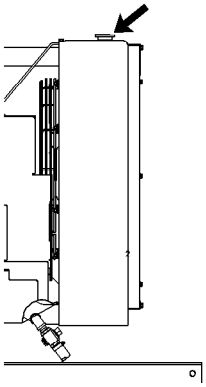

Illustration 31 g00285520

Cooling system filler cap

⚠ WARNING

Pressurized System: Hot coolant can cause serious burns. To open the cooling system filler cap, stop the engine and wait until the cooling system components are cool. Loosen the cooling system pressure cap slowly in order to relieve the pressure.

1. Remove the cooling system filler cap slowly in order to relieve pressure.

2. Maintain the coolant level within 13 mm (0.5 inch) of the bottom of the filler pipe. If the engine is equipped with a sight glass, maintain the coolant level to the correct level in the sight glass.

3. Clean the cooling system filler cap and inspect the gasket. If the gasket is damaged, discard the old filler cap and install a new filler cap. If the gasket is not damaged, use a suitable pressurizing pump in order to pressure test the filler cap. The correct pressure is stamped on the face of the filler cap. If the filler cap does not retain the correct pressure, install a new filler cap.

4. Inspect the cooling system for leaks.

i02456600

Cooling System Supplemental Coolant Additive (SCA) - Test/Add

SMCS Code: 1352-045; 1395-081

⚠ WARNING

Cooling system coolant additive contains alkali. To help prevent personal injury, avoid contact with the skin and the eyes. Do not drink cooling system coolant additive.

Note: Test the concentration of the Supplemental Coolant Additive (SCA) or test the SCA concentration as part of an S·O·S Coolant Analysis.

Test for SCA Concentration

Coolant and SCA

NOTICE
Do not exceed the recommended six percent supplemental coolant additive concentration.

Use the 8T-5296 Coolant Conditioner Test Kit or use the 4C-9301 Coolant Conditioner Test Kit in order to check the concentration of the SCA. Refer to this Operation and Maintenance Manual, “Refill Capacities and Recommendations” for more information.

Water and SCA

NOTICE
Do not exceed the recommended eight percent supplemental coolant additive concentration.

Test the concentration of the SCA with the 8T-5296 Coolant Conditioner Test Kit. Refer to the Special Publication, SEBU6251, “Caterpillar Commercial Diesel Engine Fluids Recommendations” for more information.

S·O·S Coolant Analysis

S·O·S coolant samples can be analyzed at your Caterpillar dealer. S·O·S Coolant Analysis is a program that is based on periodic samples.

Level 1

Level 1 is a basic analysis of the coolant. The following items are tested:

- Glycol Concentration
- Concentration of SCA
- pH
- Conductivity

The results are reported, and recommendations are made according to the results. Consult your Caterpillar dealer for information on the benefits of managing your equipment with an S·O·S Coolant Analysis.

Level 2

This level coolant analysis is recommended when the engine is overhauled. Refer to this Operations and Maintenance Manual, “Overhaul Considerations” for further information.

Add the SCA, If Necessary

NOTICE
Do not exceed the recommended amount of supplemental coolant additive concentration. Excessive supplemental coolant additive concentration can form deposits on the higher temperature surfaces of the cooling system, reducing the engine's heat transfer characteristics. Reduced heat transfer could cause cracking of the cylinder head and other high temperature components. Excessive supplemental coolant additive concentration could also result in radiator tube blockage, overheating, and/or accelerated water pump seal wear. Never use both liquid supplemental coolant additive and the spin-on element (if equipped) at the same time. The use of those additives together could result in supplemental coolant additive concentration exceeding the recommended maximum.

⚠ WARNING

Pressurized System: Hot coolant can cause serious burns. To open the cooling system filler cap, stop the engine and wait until the cooling system components are cool. Loosen the cooling system pressure cap slowly in order to relieve the pressure.

1. Slowly loosen the cooling system filler cap in order to relieve the pressure. Remove the cooling system filler cap.

Note: Always discard drained fluids according to local regulations.

2. If necessary, drain some coolant from the cooling system into a suitable container in order to allow space for the extra SCA.

3. Add the proper amount of SCA. Refer to the Special Publication, SEBU6251, “Caterpillar Commercial Diesel Engines Fluids Recommendations” for more information on SCA requirements.

4. Clean the cooling system filler cap. Inspect the gaskets of the cooling system filler cap. If the gaskets are damaged, replace the old cooling system filler cap with a new cooling system filler cap. Install the cooling system filler cap.

i08368581

Cooling System Water Temperature Regulator - Replace

SMCS Code: 1355-510

Replace the water temperature regulator before the water temperature regulator fails. This replacement is a recommended preventive maintenance practice. Replacing the water temperature regulator reduces the chances for unscheduled downtime. Refer to this Operation and Maintenance Manual, “Maintenance Interval Schedule” for the proper maintenance interval.

A water temperature regulator that fails in a partially opened position can cause overheating or overcooling of the engine.

A water temperature regulator that fails in the closed position can cause excessive overheating. Excessive overheating could result in cracking of the cylinder head or piston seizure problems.

A water temperature regulator that fails in the open position will cause the engine operating temperature to be too low during partial load operation. Low engine operating temperatures during partial loads could cause an excessive carbon buildup inside the cylinders. This excessive carbon buildup could result in an accelerated wear of the piston rings and wear of the cylinder liner.

NOTICE
Failure to replace your water temperature regulator on a regularly scheduled basis could cause severe engine damage.

Cat engines incorporate a shunt bypass design cooling system and require operating the engine with a water temperature regulator installed.

If the water temperature regulator is installed incorrectly, the engine may overheat, causing cylinder head damage. Ensure that the new water temperature regulator is installed in the original position. Ensure that the water temperature regulator vent hole is open.

Do not use liquid gasket material on the gasket or cylinder head surface.

Refer to two articles in the Disassembly and Assembly Manual, “Water Temperature Regulators - Remove and Water Temperature Regulators - Install” for the replacement procedure of the water temperature regulator, or consult your Cat dealer.

Note: If only the water temperature regulators are replaced, drain the coolant from the cooling system to a level that is below the water temperature regulator housing.

i08397642

Driven Equipment - Check

SMCS Code: 3279-535

Refer to the OEM specifications for more information on the following maintenance recommendations for the driven equipment:

- Inspection
- Adjustment
- Lubrication
- Other maintenance recommendations

Perform any maintenance for the driven equipment which is recommended by the OEM.

i02708606

Engine - Clean

SMCS Code: 1000-070

⚠ WARNING

Personal injury or death can result from high voltage.

Moisture can create paths of electrical conductivity.

Make sure that the electrical system is OFF. Lock out the starting controls and tag the controls "DO NOT OPERATE" .

NOTICE
Accumulated grease and oil on an engine is a fire hazard. Keep the engine clean. Remove debris and fluid spills whenever a significant quantity accumulates on the engine.

NOTICE
Failure to protect some engine components from washing may make your engine warranty invalid. Allow the engine to cool for one hour before washing the engine.

Periodic cleaning of the engine is recommended. Steam cleaning the engine will remove accumulated oil and grease. A clean engine provides the following benefits:

- Easy detection of fluid leaks
- Maximum heat transfer characteristics
- Ease of maintenance

Note: Caution must be used in order to prevent electrical components from being damaged by excessive water when the engine is cleaned. When a pressure washer or steam cleaner is used to clean the engine, a minimum distance of 300 mm (12 inch) must be maintained between the components of the engine and the jet nozzle of the pressure washer or steam cleaner. Pressure washers and steam cleaners should not be directed at any electrical connectors or the junction of cables into the rear of the connectors. Avoid electrical components such as the alternator and the starter. Protect the fuel injection pump from fluids in order to wash the engine.

i04404720

Engine Air Cleaner Element (Dual Element) - Clean/Replace

SMCS Code: 1054-510; 1054-037

NOTICE
Never run the engine without an air cleaner element installed. Never run the engine with a damaged air cleaner element. Do not use air cleaner elements with damaged pleats, gaskets or seals. Dirt entering the engine causes premature wear and damage to engine components. Air cleaner elements help to prevent airborne debris from entering the air inlet.

NOTICE
Never service the air cleaner element with the engine running since this will allow dirt to enter the engine.

Servicing the Air Cleaner Elements

If the air cleaner element becomes plugged, the air can split the material of the air cleaner element. Unfiltered air will drastically accelerate internal engine wear. Your Caterpillar dealer has the proper air cleaner elements for your application. Consult your Caterpillar dealer for the correct air cleaner element.

- Check the precleaner (if equipped) daily for accumulation of dirt and debris. Remove any dirt and debris, as needed.
- Operating conditions (dust, dirt, and debris) may require more frequent service of the air cleaner element.
- The air cleaner element may be cleaned up to six times if the element is properly cleaned and inspected.
- The air cleaner element should be replaced at least one time per year. This replacement should be performed regardless of the number of cleanings.

Replace the dirty paper air cleaner elements with clean air cleaner elements. Before installation, the air cleaner elements should be thoroughly checked for tears and/or holes in the filter material. Inspect the gasket or the seal of the air cleaner element for damage. Maintain a supply of suitable air cleaner elements for replacement purposes.

Dual Element Air Cleaners

The dual element air cleaner contains a primary air cleaner element and a secondary air cleaner element. The primary air cleaner element can be used up to six times if the element is properly cleaned and inspected. The primary air cleaner element should be replaced at least one time per year. This replacement should be performed regardless of the number of cleanings.

The secondary air cleaner element is not serviceable or washable. The secondary air cleaner element should be removed and discarded for every three cleanings of the primary air cleaner element. When the engine is operating in environments that are dusty or dirty, air cleaner elements may require more frequent replacement.

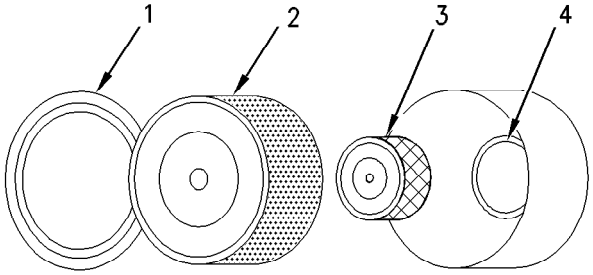

Illustration 32 g00736431

(1) Cover
(2) Primary air cleaner element
(3) Secondary air cleaner element
(4) Turbocharger air inlet

1. Remove the cover. Remove the primary air cleaner element.

2. The secondary air cleaner element should be removed and discarded for every three cleanings of the primary air cleaner element.

Note: Refer to “Cleaning the Primary Air Cleaner Elements”.

3. Cover the turbocharger air inlet with tape in order to keep out dirt.

4. Clean the inside of the air cleaner cover and body with a clean, dry cloth.

5. Remove the tape for the turbocharger air inlet. Install the secondary air cleaner element. Install a primary air cleaner element that is new or cleaned.

6. Install the air cleaner cover.

7. Reset the air cleaner service indicator.

Cleaning the Primary Air Cleaner Elements

NOTICE
Caterpillar recommends certified air filter cleaning services that are available at Cat dealers. The Cat cleaning process uses proven procedures to assure consistent quality and sufficient filter life.

Observe the following guidelines if you attempt to clean the filter element:

Do not tap or strike the filter element in order to remove dust.

Do not wash the filter element.

Use low pressure compressed air in order to remove the dust from the filter element. Air pressure must not exceed 207 kPa (30 psi). Direct the air flow up the pleats and down the pleats from the inside of the filter element. Take extreme care in order to avoid damage to the pleats.

Do not use air filters with damaged pleats, gaskets, or seals. Dirt entering the engine will cause damage to engine components.

The primary air cleaner element can be used up to six times if the element is properly cleaned and inspected. When the primary air cleaner element is cleaned, check for rips or tears in the filter material. The primary air cleaner element should be replaced at least one time per year. This replacement should be performed regardless of the number of cleanings.

Use clean primary air cleaner elements while dirty elements are being cleaned.

NOTICE
Do not clean the air cleaner elements by bumping or tapping. This could damage the seals. Do not use elements with damaged pleats, gaskets or seals. Damaged elements will allow dirt to pass through. Engine damage could result.

Visually inspect the primary air cleaner elements before cleaning. Inspect the air cleaner elements for damage to the seal, the gaskets, and the outer cover. Discard any damaged air cleaner elements.

There are two common methods that are used to clean primary air cleaner elements:

- Pressurized air
- Vacuum cleaning

Pressurized Air

Pressurized air can be used to clean primary air cleaner elements that have not been cleaned more than two times. Pressurized air will not remove deposits of carbon and oil. Use filtered, dry air with a maximum pressure of 207 kPa (30 psi).

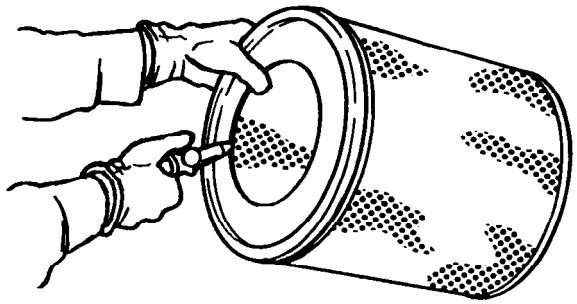

Illustration 33 g00281692

Note: When the primary air cleaner elements are cleaned, always begin with the clean side (inside) in order to force dirt particles toward the dirty side (outside).

Aim the hose so that the air flows inside the element along the length of the filter in order to help prevent damage to the paper pleats. Do not aim the stream of air directly at the primary air cleaner element. Dirt could be forced further into the pleats.

Note: Refer to “Inspecting the Primary Air Cleaner Elements”.

Vacuum Cleaning

Vacuum cleaning is a good method for cleaning primary air cleaner elements which require daily cleaning because of a dry, dusty environment. Cleaning with pressurized air is recommended prior to vacuum cleaning. Vacuum cleaning will not remove deposits of carbon and oil.

Note: Refer to “Inspecting the Primary Air Cleaner Elements”.

Inspecting the Primary Air Cleaner Elements

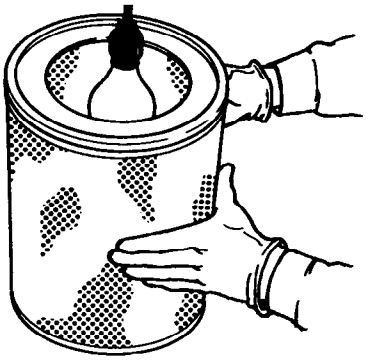

Illustration 34 g00281693

Inspect the clean, dry primary air cleaner element. Use a 60 watt blue light in a dark room or in a similar facility. Place the blue light in the primary air cleaner element. Rotate the primary air cleaner element. Inspect the primary air cleaner element for tears and/or holes. Inspect the primary air cleaner element for light that may show through the filter material. If it is necessary in order to confirm the result, compare the primary air cleaner element to a new primary air cleaner element that has the same part number.

Do not use a primary air cleaner element that has any tears and/or holes in the filter material. Do not use a primary air cleaner element with damaged pleats, gaskets, or seals. Discard damaged primary air cleaner elements.

Storing Primary Air Cleaner Elements

If a primary air cleaner element that passes inspection will not be used, the primary air cleaner element can be stored for future use.

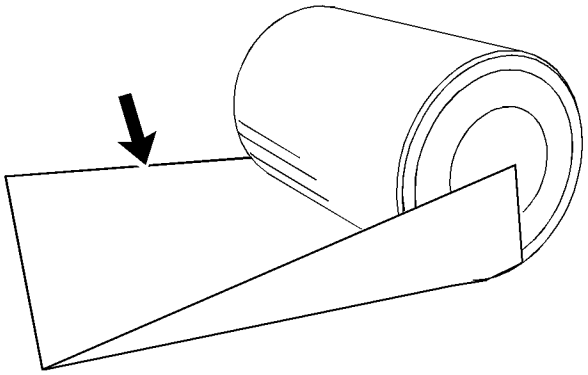

Illustration 35 g02595738
Typical example

Do not use paint, a waterproof cover, or plastic as a protective covering for storage. An airflow restriction may result. To protect against dirt and damage, wrap the primary air cleaner elements in Volatile Corrosion Inhibited (VCI) paper.

Place the primary air cleaner element into a box for storage. For identification, mark the outside of the box and mark the primary air cleaner element. Include the following information:

- Date of cleaning
- Number of cleanings

Store the box in a dry location.

i00619873

Engine Air Cleaner Element (Single Element) - Replace

SMCS Code: 1051; 1054-510

NOTICE
Never service the air cleaner element with the engine running since this will allow dirt to enter the engine.

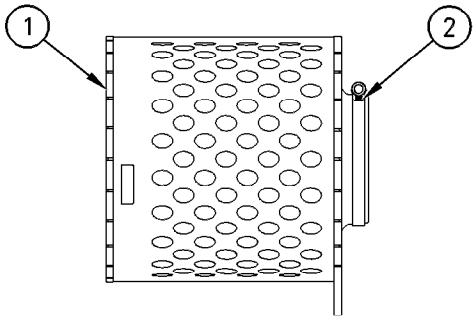

Illustration 36 g00109823
(1) Air cleaner element. (2) Clamp.

1. Loosen clamp (2) which fastens air cleaner element (1) to the air inlet. Remove the dirty air cleaner element and clamp.
2. Install clamp (2) on new air cleaner element (1).
3. Install new air cleaner element (1) to the air inlet and tighten clamp (2). Refer to the Operation and Maintenance Manual for more information on torque specifications.

i08397637

Engine Air Cleaner Service Indicator - Inspect (If Equipped)

SMCS Code: 7452-040

Some engines may be equipped with a different service indicator.

Some engines are equipped with a differential gauge for inlet air pressure. The differential gauge for inlet air pressure displays the difference in the pressure that is measured before and after the air cleaner element. As the air cleaner element becomes dirty, the pressure differential rises. If your engine is equipped with a different type of service indicator, follow the OEM recommendations in order to service the air cleaner service indicator.

The service indicator may be mounted on the clean side of the air cleaner housing or in a remote location.

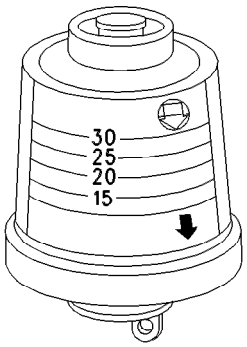

Illustration 37 g00103777
Typical service indicator

Observe the service indicator. The air cleaner element should be cleaned or the air cleaner element should be replaced when one of the following conditions occur:

- The yellow diaphragm enters the red zone.
- The red piston locks in the visible position.

Test the Service Indicator

Service indicators are important instruments.

- Check for ease of resetting. The service indicator should reset in less than three pushes.
- Check the movement of the service indicator core when the engine is run at full load speed. The core should latch approximately at the greatest vacuum that is attained.

If the service indicator does not reset easily, or if the core does not latch at the greatest vacuum, the service indicator should be replaced. If the new service indicator will not reset, the hole for the service indicator may be plugged.

If necessary, replace the service indicator more frequently in environments that are severely dusty. Replace the service indicator annually regardless of the operating conditions. Replace the service indicator when the engine is overhauled, and whenever major engine components are replaced.

Note: When a new service indicator is installed, excessive force may crack the top of the service indicator. Tighten the service indicator to a torque of 2 N·m (18 lb in).

i03701661

Engine Crankcase Breather - Clean

SMCS Code: 1317-070

NOTICE
Keep all parts clean from contaminants.

Contaminants may cause rapid wear and shortened component life.

NOTICE
Care must be taken to ensure that fluids are contained during performance of inspection, maintenance, testing, adjusting, and repair of the product. Be prepared to collect the fluid with suitable containers before opening any compartment or disassembling any component containing fluids.

Refer to Special Publication, PERJ1017, “Dealer Service Tool Catalog” for tools and supplies suitable to collect and contain fluids on Cat ® products.

Dispose of all fluids according to local regulations and mandates.

NOTICE
Make sure that the components of the breather assembly are installed correctly. Engine damage may occur if the breather assembly is not working properly.

1. The diaphragm for the crankcase breather can be inspected and cleaned. For the correct procedure to remove the diaphragm, refer to Disassembly and Assembly, “Crankcase Breather - Remove and Install”. For the correct procedure to install the diaphragm, refer to Disassembly and Assembly, “Crankcase Breather - Remove and Install”.

Note: The canister for the crankcase breather is an nonserviceable component. Damage to the canister may occur if the lid of the canister is removed in order to clean the element. Damage to the canister may occur if the element is removed. The canister should be exchanged if the lubricating oil becomes contaminated. The canister should be replaced at an overhaul of the engine.

i03699562

Engine Mounts - Inspect

SMCS Code: 1152-040

Inspect the engine mounts for deterioration and for proper bolt torque. Engine vibration can be caused by the following conditions:

- Improper mounting of the engine
- Deterioration of the engine mounts
- Loose engine mounts

Any engine mount that shows deterioration should be replaced. Refer to the Specifications Manual, SENR3130, “Torque Specifications”. Refer to your Caterpillar dealer for more information.

i03699581

Engine Oil Level - Check

SMCS Code: 1348-535-FLV

⚠ WARNING

Hot oil and hot components can cause personal injury. Do not allow hot oil or hot components to contact the skin.

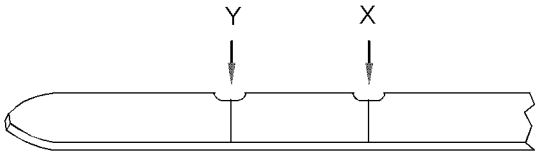

Illustration 38 g01165836

(Y) “Min” mark. (X) “Max” mark.

NOTICE
Perform this maintenance with the engine stopped.

1. Maintain the oil level between “Min” mark (Y) and “Max” mark (X) on oil level gauge (1). Do not fill the crankcase above “Max” mark (X).

NOTICE
Operating your engine when the oil level is above the “FULL” mark could cause your crankshaft to dip into the oil. The air bubbles created from the crankshaft dipping into the oil reduces the oil's lubricating characteristics and could result in the loss of power.

2. Remove the oil filler cap and add oil, if necessary. Clean the oil filler cap. Install the oil filler cap.

i08397634

Engine Oil Sample - Obtain

SMCS Code: 1000-008; 1348-554-SM; 7542-554-OC; 7542-554-SM

In addition to a good preventive maintenance program, Caterpillar recommends using S·O·S oil analysis at regularly scheduled intervals. S·O·S oil analysis provides infrared analysis, which is required for determining nitration and oxidation levels.

Obtain the Sample and the Analysis

⚠ WARNING

Hot oil and hot components can cause personal injury. Do not allow hot oil or hot components to contact the skin.

Before you take the oil sample, complete the Label, PEEP5031 for identification of the sample. To help obtain the most accurate analysis, provide the following information:

- Engine model
- Service hours on the engine
- The number of hours that have accumulated since the last oil change
- The amount of oil that has been added since the last oil change

To ensure that the sample is representative of the oil in the crankcase, obtain a warm, mixed oil sample.

To avoid contamination of the oil samples, the tools and the supplies that are used for obtaining oil samples must be clean.

Caterpillar recommends using the sampling valve to obtain oil samples. The quality and the consistency of the samples are better when the sampling valve is used. The location of the sampling valve allows oil that is flowing under pressure to be obtained during normal engine operation.

The 169-8373 Fluid Sampling Bottle is recommended for use with the sampling valve. The fluid sampling bottle includes the parts that are needed for obtaining oil samples. Instructions are also provided.

NOTICE
Always use a designated pump for oil sampling, and use a separate designated pump for coolant sampling. Using the same pump for both types of samples may contaminate the samples that are being drawn. This contaminate may cause a false analysis and an incorrect interpretation that could lead to concerns by both dealers and customers.

If the engine is not equipped with a sampling valve, use the 1U-5718 Vacuum Pump. The pump is designed to accept sampling bottles. Disposable tubing must be attached to the pump for insertion into the sump.

For instructions, see Special Publication, PEGJ0047, “How To Take A Good S·O·S Oil Sample”. Consult your Cat dealer for complete information and assistance in establishing an S·O·S program for your engine.

i10594829

Engine Oil and Filter - Change

SMCS Code: 1318-510; 1348-044

WARNING

Hot oil and hot components can cause personal injury. Do not allow hot oil or hot components to contact the skin.

Do not drain the oil when the engine is cold. As the oil cools, suspended waste particles settle on the bottom of the oil pan. The waste particles are not removed with the draining cold oil. Drain the crankcase with the engine stopped. Drain the crankcase with the oil warm. This draining method allows the waste particles that are suspended in the oil to be drained properly.

Failure to follow this recommended procedure will cause the waste particles to be recirculated through the engine lubrication system with the new oil.

Drain the Engine Oil

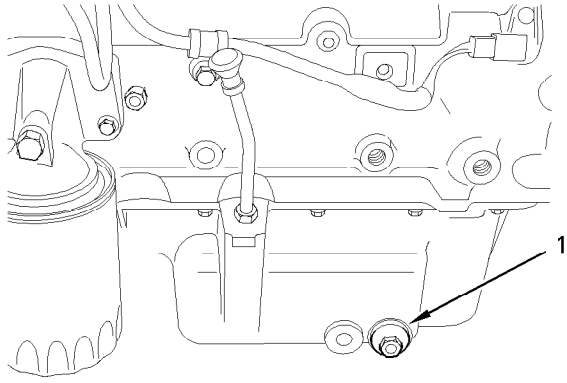

Illustration 39 g01003623
Typical example

After the engine has been run at the normal operating temperature, stop the engine. Use one of the following methods to drain the engine crankcase oil:

- If the engine is equipped with a drain valve, turn the drain valve knob counterclockwise in order to drain the oil. After the oil has drained, turn the drain valve knob clockwise in order to close the drain valve.
- If the engine is not equipped with a drain valve, remove the oil drain plug (1) in order to allow the oil to drain. If the engine is equipped with a shallow sump, remove the bottom oil drain plugs from both ends of the oil pan.

After the oil has drained, the oil drain plugs should be cleaned and installed. If necessary, renew the O ring seal on the drain plug.

Some types of oil pans have oil drain plugs that are on both sides of the oil pan, because of the shape of the pan. This type of oil pan requires the engine oil to be drained from both plugs.

Replace Oil Filter

NOTICE
Caterpillar oil filters are built to Caterpillar specifications. Use of an oil filter not recommended by Caterpillar could result in severe engine damage to the engine bearings, crankshaft, etc., as a result of the larger waste particles from unfiltered oil entering the engine lubricating system. Only use oil filters recommended by Caterpillar.

Replace the Type 1 Oil Filter

1. Remove the oil filter with a 1U-8760 Chain Wrench.

Note: The following actions can be carried out as part of the preventive maintenance program.

2. Cut the oil filter open with a 175-7546 Oil Filter Cutter Gp. Break apart the pleats and inspect the oil filter for metal debris. An excessive amount of metal debris in the oil filter may indicate early wear or a pending failure.

Use a magnet to differentiate between the ferrous metals and the nonferrous metals that are found in the oil filter element. Ferrous metals may indicate wear on the steel and cast iron parts of the engine.

Nonferrous metals may indicate wear on the aluminum parts, brass parts or bronze parts of the engine. Parts that may be affected include the following items: main bearings, rod bearings, turbocharger bearings and cylinder heads.

Due to normal wear and friction, it is not uncommon to find small amounts of debris in the oil filter.

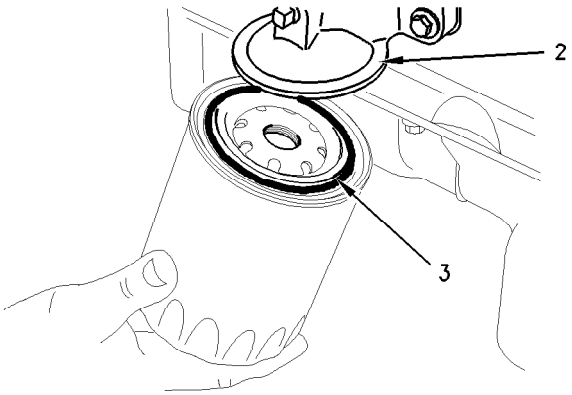

Illustration 40 g01003628

Typical example

(2) Filter head
(3) O ring seal

3. Clean the sealing surface of the oil filter head (2). Ensure that the union (not shown) in the oil filter head is secure.

4. Apply clean engine oil to the O ring seal (3) on the oil filter.

NOTICE
Do not fill the oil filters with oil before installing them. This oil would not be filtered and could be contaminated. Contaminated oil can cause accelerated wear to engine components or engine damage.

5. Install the oil filter. Tighten the oil filter by hand according to the instructions that are shown on the oil filter. Do not overtighten the oil filter.

Replace the Type 2 Oil Filter

NOTICE
Caterpillar oil filters are built to Caterpillar specifications. Use of an oil filter not recommended by Caterpillar could result in severe engine damage to the engine bearings, crankshaft, etc., as a result of the larger waste particles from unfiltered oil entering the engine lubricating system. Only use oil filters recommended by Caterpillar.

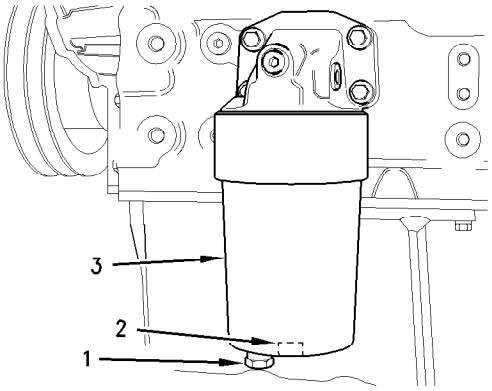

Illustration 41 g01003662

Typical example

(1) Drain plug
(2) Square hole
(3) Filter bowl

1. Place a suitable container under the oil filter. Remove the drain plug (1) and the seal, from the oil filter.

2. Locate a suitable wrench into the square hole (2) in order to remove the filter bowl (3).

3. Remove the filter bowl (3) and remove the element from the filter bowl. Clean the filter bowl.

4. Cut the oil filter open with a 175-7546 Oil Filter Cutter Gp. Break apart the pleats and inspect the oil filter for metal debris. An excessive amount of metal debris in the oil filter may indicate early wear or a pending failure.

Use a magnet to differentiate between the ferrous metals and the nonferrous metals that are found in the oil filter element. Ferrous metals may indicate wear on the steel and cast iron parts of the engine.

Nonferrous metals may indicate wear on the aluminum parts, brass parts or bronze parts of the engine. Parts that may be affected include the following items: main bearings, rod bearings, turbocharger bearings and cylinder heads.

Due to normal wear and friction, it is not uncommon to find small amounts of debris in the oil filter. Consult your Caterpillar dealer in order to arrange for a further analysis if an excessive amount of debris is found in the oil filter.

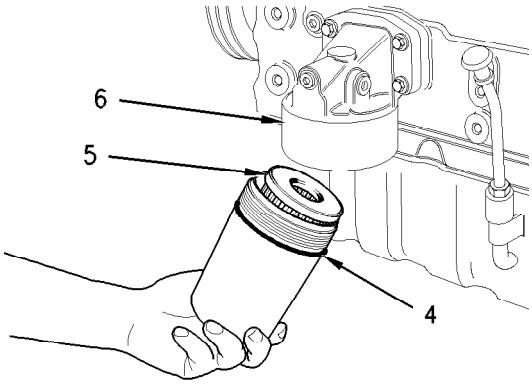

Illustration 42 g01003675

Typical example

(4) O ring seal
(5) Element
(6) Filter head

5. Install a new O ring (4) onto the filter bowl and lubricate the O ring with clean engine oil. Install the filter element (5) into the filter bowl.

NOTICE
Do not fill the oil filters with oil before installing them. This oil would not be filtered and could be contaminated. Contaminated oil can cause accelerated wear to engine components or engine damage.

6. Install the filter bowl into the oil filter head (6). Tighten the filter bowl to the following torque 25 N·m (18 lb ft).

7. Install a new seal onto the drain plug (1) and install the drain plug into the oil filter. Tighten the drain plug to the following torque 12 N·m (8 lb ft).

Note: Some engines may have a horizontally mounted oil filter. This oil filter has a drain plug that is located in the oil filter head.

Replace the Type 3 Oil Filter

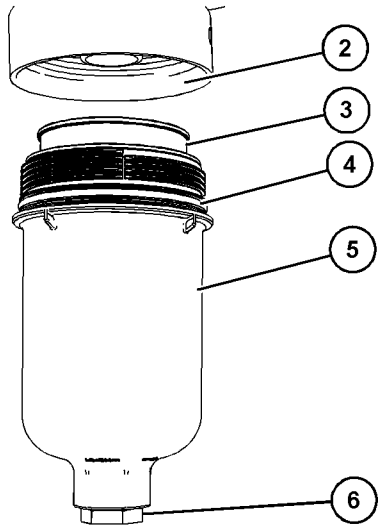

Illustration 43 g07927122

Typical example

1. Loosen the oil filter drain plug (6) to allow the oil to drain. Retighten the drain plug to 5 N·m (44 lb in).

2. Remove the housing (5) from the engine oil filter base by rotating the housing in a counterclockwise direction.

3. Rotate the element (3) in a clockwise direction and pull the element to remove the element from the housing (5).

4. Remove the O-ring seal (4) from the housing (5). Discard the O-ring seal.

5. Clean sealing surface (2).

6. Install a new O-ring seal (4) to the housing (5). Lubricate the O-ring seal with clean engine oil.

NOTICE
Do not fill the oil filters with oil before installing them. This oil would not be filtered and could be contaminated. Contaminated oil can cause accelerated wear to engine components or engine damage.

7. Install a new element (3) into the housing (5). Turn the element (3) in a counterclockwise direction to lock the new element into the housing (5).

8. Install the housing (5) to the engine oil filter base. Hand tighten the housing (5). Tighten the housing to a torque of 40 N·m (30 lb ft).

Fill the Engine Crankcase

1. Remove the oil filler cap. Refer to Operation and Maintenance Manual for more information on refill capacities and lubricant specifications.

NOTICE
If equipped with an auxiliary oil filter system or a remote oil filter system, follow the OEM or filter manufacturer's recommendations. Under filling or overfilling the crankcase with oil can cause engine damage.

NOTICE
To prevent crankshaft bearing damage, crank the engine with the fuel OFF. This will fill the oil filters before starting the engine. Do not crank the engine for more than 30 seconds.

2. Start the engine and run the engine at “LOW IDLE” for two minutes. Perform this procedure in order to ensure that the lubrication system has oil and that the oil filters are filled. Inspect the oil filter for oil leaks.

3. Stop the engine and allow the oil to drain back to the sump for a minimum of ten minutes.

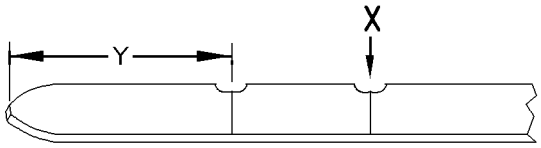

Illustration 44 g00998024
(Y) “ADD” mark. (X) “FULL” mark.

4. Remove the oil level gauge in order to check the oil level. Maintain the oil level between the “ADD” and “FULL” marks on the oil level gauge.

i08258801

Engine Protective Devices - Check

SMCS Code: 7400-535

Alarms and shutoffs must function properly. Alarms provide timely warning to the operator. Shutoffs help to prevent damage to the engine. Determining if the engine protective devices are in good working order during normal operation is impossible. Malfunctions must be simulated to test the engine protective devices.

A calibration check of the engine protective devices will ensure that the alarms and shutoffs activate at the setpoints. Ensure that the engine protective devices are functioning properly.

NOTICE
During testing, abnormal operating conditions must be simulated.

The tests must be performed correctly in order to prevent possible damage to the engine.

To prevent damage to the engine, only authorized service personnel or your Cat dealer should perform the tests.

Visual Inspection

Visually check the condition of all gauges, sensors, and wiring. Look for wiring and components that are loose, broken, or damaged. Damaged wiring or components should be repaired or replaced immediately.

i03701660

Engine Valve Lash - Inspect/ Adjust

SMCS Code: 1102-025

This maintenance is recommended by Caterpillar as part of a lubrication and preventive maintenance schedule in order to help provide maximum engine life.

NOTICE
Only qualified service personnel should perform this maintenance. Refer to the Systems Operation/Testing and Adjusting Manual, “Valve Lash and Valve Bridge Adjustment” article or consult your Caterpillar dealer for the complete valve lash adjustment procedure.

Operation of Caterpillar engines with improper valve adjustments can reduce engine efficiency. This reduced efficiency could result in excessive fuel usage and/or shortened engine component life.

⚠ WARNING

Ensure that the engine can not be started while this maintenance is being performed. To help prevent possible injury, do not use the starting motor to turn the flywheel.

Hot engine components can cause burns. Allow additional time for the engine to cool before measuring/adjusting valve lash clearance.

Ensure that the engine is stopped before measuring the valve lash. To obtain an accurate measurement, allow the valves to cool before this maintenance is performed.

Refer to Systems Operation, Testing and Adjusting, “Engine Valve Lash - Inspect/Adjust” for more information.

i00626014

Fuel Injection Nozzles - Test/Exchange

SMCS Code: 1254-013; 1254-081

⚠ WARNING

Fuel leaked or spilled onto hot surfaces or electrical components can cause a fire.

NOTICE
Do not allow dirt to enter the fuel system. Thoroughly clean the area around a fuel system component that will be disconnected. Fit a suitable cover over any disconnected fuel system components.

Fuel injection nozzles are subject to tip wear. Tip wear is a result of fuel contamination. Tip wear can cause the following problems:

- Increased fuel consumption
- Black smoke
- Misfire
- Rough running

Fuel Injection nozzles should be cleaned, inspected, tested, and replaced, if necessary. Refer to Special Instruction, SEHS7292 for using the 8S-2245 Injection Cleaning Tool Group. Consult your Caterpillar dealer about cleaning the fuel injection nozzle and testing the fuel injection nozzle.

NOTICE
Never wire brush or scrape a fuel injection nozzle. Wire brushing or scraping a fuel injection nozzle will damage the finely machine orifice. Proper tools for cleaning and testing the fuel injection nozzles can be obtained from Caterpillar dealers.

The following items are symptoms of a malfunction of the fuel injection nozzle:

- Abnormal engine operation
- Smoke emission
- Engine knock

Each fuel injection nozzle must be isolated one at a time in order to determine the malfunctioning fuel injection nozzle.

1. Start the engine.

2. Loosen each fuel line nut one at a time at the fuel injection pump. A cloth or similar material must be used in order to prevent fuel from spraying on the hot exhaust components. Tighten each nut before loosening the next nut.

3. A defective fuel injection nozzle may be identified when a fuel line nut is loosened and the following conditions are present:

   - The exhaust smoke is partially eliminated or the exhaust smoke is completely eliminated.
   - Engine performance is not affected.

   A fuel injection nozzle that is suspected of being defective should be removed. A new fuel injection nozzle should be installed in the cylinder in order to determine if the removed fuel injection nozzle is defective.

Removal and Installation of the Fuel Injection Nozzles

For the removal and the installation of fuel injection nozzles, special tooling is required. Refer to the Service Manual for more information. Consult your Caterpillar dealer for assistance.

i03701682

Fuel System - Prime

SMCS Code: 1258-548

If air enters the fuel system, the air must be purged from the fuel system before the engine can be started. Air can enter the fuel system when the following events occur:

- The fuel tank is empty or the fuel tank has been partially drained.
- The low pressure fuel lines are disconnected.
- A leak exists in the low pressure fuel system.
- The fuel filter is replaced.

Use the following procedure in order to remove air from the fuel system:

1. Turn the keyswitch to the RUN position. Leave the keyswitch in the RUN position for three minutes. If a manual purging screw is installed, the purging screw should be slackened during priming the fuel system.

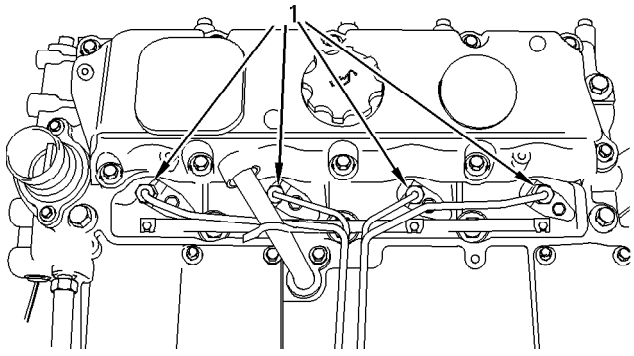

Illustration 45 g01003929

Typical example

2. Crank the engine with the throttle lever in the CLOSED position until the engine starts.

Note: If necessary, loosen the union nuts (1) on the fuel injection lines at the connection with the fuel injector until fuel is evident. Stop cranking the engine. Tighten the union nuts (1) to a torque of 30 N·m (22 lb ft).

3. Start the engine and run the engine at idle for one minute.

NOTICE
Do not crank the engine continuously for more than 30 seconds. Allow the starting motor to cool for two minutes before cranking the engine again.

4. Cycle the throttle lever from the low idle position to the high idle position three times. The cycle time for the throttle lever is one second to six seconds for one complete cycle.

Note: In order to purge air from the fuel injection pump on engines with a fixed throttle, the engine should be run at full load for thirty seconds. The load should then be decreased until the engine is at high idle. This should be repeated three times. This will assist in removing trapped air from the fuel injection pump.

5. Check for leaks in the fuel system.

i03701721

Fuel System Primary Filter (Water Separator) Element - Replace

SMCS Code: 1260-510-FQ; 1263-510-FQ

⚠ WARNING

Fuel leaked or spilled onto hot surfaces or electrical components can cause a fire. To help prevent possible injury, turn the start switch off when changing fuel filters or water separator elements. Clean up fuel spills immediately.

NOTICE
Ensure that the engine is stopped before any servicing or repair is performed.

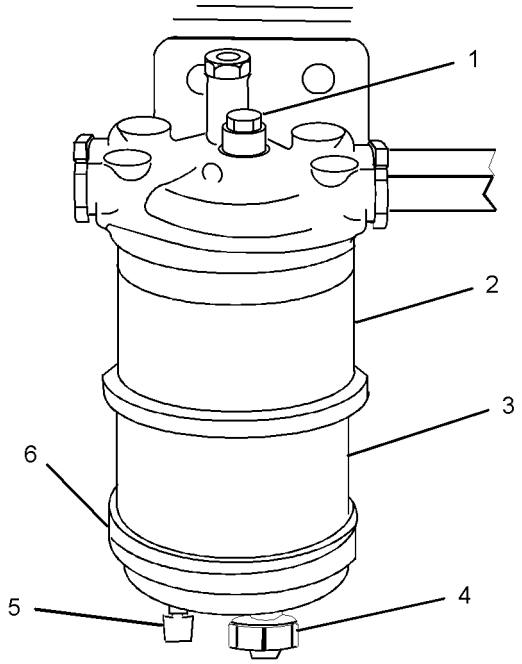

Illustration 46 g01118416

Typical example

(1) Screw
(2) Element
(3) Glass bowl
(4) Sensor connection
(5) Drain
(6) Bottom cover

1. Turn the fuel supply valve (if equipped) to the OFF position.

2. Place a suitable container under the water separator. Clean the outside of the water separator.

3. Open the drain (5). Allow the fluid to drain into the container.

4. Tighten the drain (5) by hand pressure only.

5. Hold the element (2) and remove the screw (1). Remove the element and the glass bowl (3) from the base. Discard the old element.

6. Clean the glass bowl (4). Clean the bottom cover (6).

7. Install the new O ring seal. Install the bottom cover onto the new element. Install the assembly onto the base.

8. Install the screw (1) and tighten the screw to a torque of 8 N·m (6 lb ft).

9. Remove the container and dispose of the fuel safely.

10. Open the fuel supply valve.

11. Prime the fuel system. Refer to Operation and Maintenance Manual, “Fuel System - Prime” for more information.

i03701724

Fuel System Primary Filter/ Water Separator - Drain

SMCS Code: 1260-543; 1263-543

⚠ WARNING

Fuel leaked or spilled onto hot surfaces or electrical components can cause a fire. To help prevent possible injury, turn the start switch off when changing fuel filters or water separator elements. Clean up fuel spills immediately.

NOTICE
The water separator is not a filter. The water separator separates water from the fuel. The engine should never be allowed to run with the water separator more than half full. Engine damage may result.

NOTICE
The water separator is under suction during normal engine operation. Ensure that the drain valve is tightened securely to help prevent air from entering the fuel system.

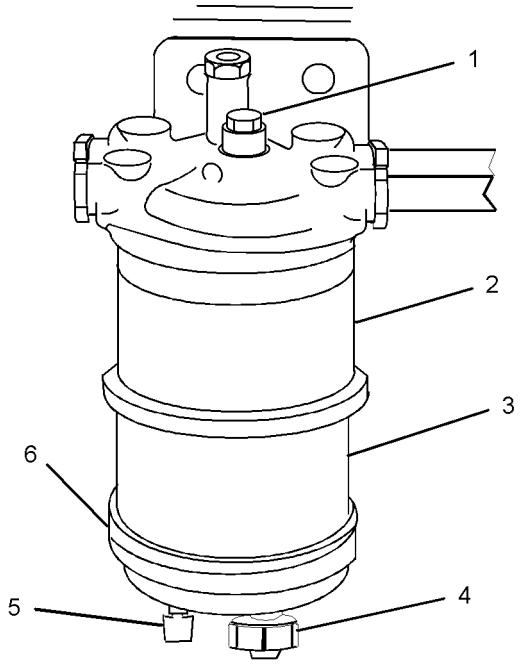

Illustration 47 g01118416

Typical example

(1) Screw
(2) Element
(3) Glass bowl
(4) Sensor connection
(5) Drain
(6) Bottom cover

1. Place a suitable container below the water separator.

2. Open the drain (5). Allow the fluid to drain into the container.

3. When clean fuel drains from the water separator close the drain (5). Tighten the drain by hand pressure only. Dispose of the drained fluid correctly.

i10520419

Fuel System Secondary Filter - Replace

SMCS Code: 1261-510-SE

⚠ WARNING

Fuel leaked or spilled onto hot surfaces or electrical components can cause a fire. To help prevent possible injury, turn the start switch off when changing fuel filters or water separator elements. Clean up fuel spills immediately.

NOTICE
Do not allow dirt to enter the fuel system. Thoroughly clean the area around a fuel system component that will be disconnected. Fit a suitable cover over any disconnected fuel system components.

NOTICE
Any filling of the fuel filter before installation is not permitted.

Element filter

Turn the valves for the fuel lines (if equipped) to the OFF position before performing this maintenance. Place a tray under the fuel filter in order to catch any fuel that might spill. Clean up any spilled fuel immediately.

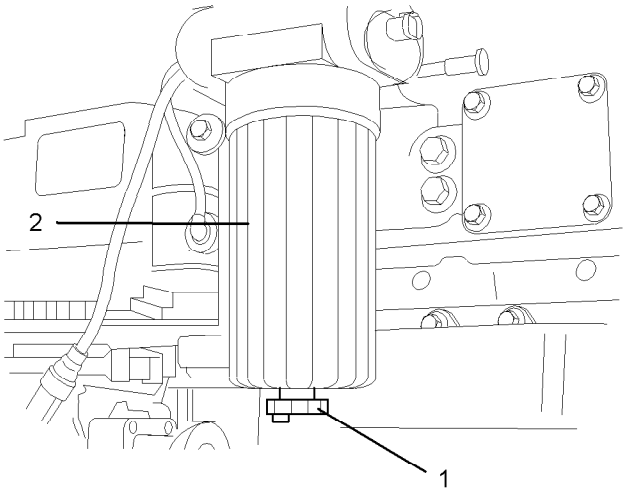

Illustration 48 g01010637

Typical example (Type 1)

(1) Drain
(2) Filter bowl

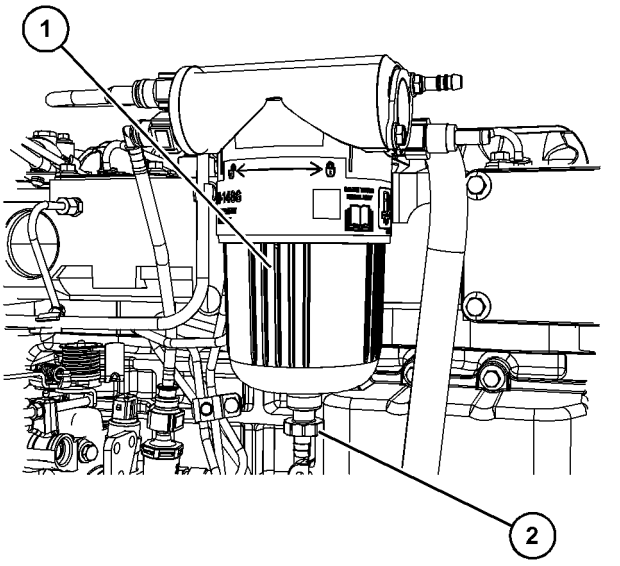

Illustration 49 g07897255

Typical example (Type 2)

(1) Drain
(2) Filter bowl

1. Close the valves for the fuel lines (if equipped).

2. Clean the outside of the fuel filter assembly. Open the fuel drain (1) and drain the fuel into a suitable container.

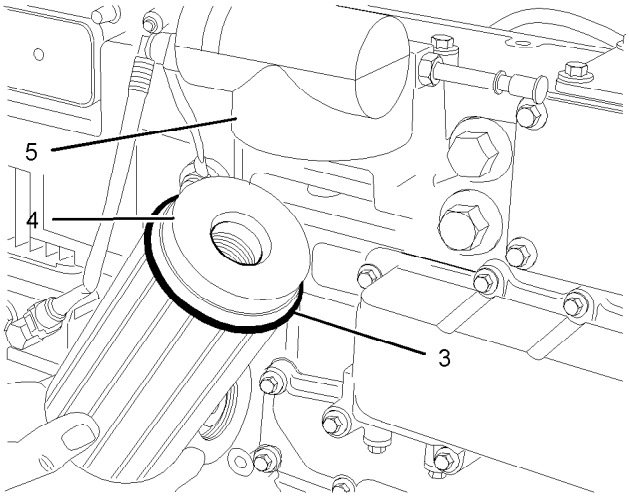

Illustration 50 g01010595

Typical example (Type 1)

(3) O ring seal
(4) Element
(5) Filter head

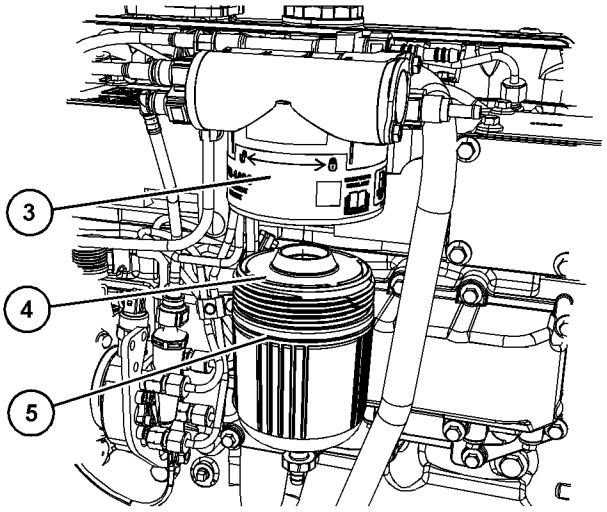

Illustration 51 g07897334

Typical example (Type 2)

(3) O ring seal
(4) Element
(5) Filter head

3. Remove the filter bowl (2) from the filter head (5). Press on the element (4). Rotate the element counterclockwise in order to release the element for the filter bowl and remove the element from the bowl. Discard the used element.

4. Remove the O ring (3) from the filter bowl and clean the filter bowl. Check that the threads of the filter bowl are not damaged.

5. Install a new O ring seal (3) to the filter bowl (2).

6. Locate a new filter element (4) into the filter bowl. Press on the element and rotate the element clockwise in order to lock the element into the filter bowl.

7. Install the filter bowl (4) into the top of the filter head (5).

8. Tighten the filter bowl by hand until the filter bowl contacts the filter head. Rotate the filter bowl through 90 degrees.

Note: Do not use a tool to tighten the filter bowl.

9. Open the valves for the fuel lines (if equipped).

Spin-on filter

Turn the valves for the fuel lines (if equipped) to the OFF position before performing this maintenance. Place a tray under the fuel filter in order to catch any fuel that might spill. Clean up any spilled fuel immediately.

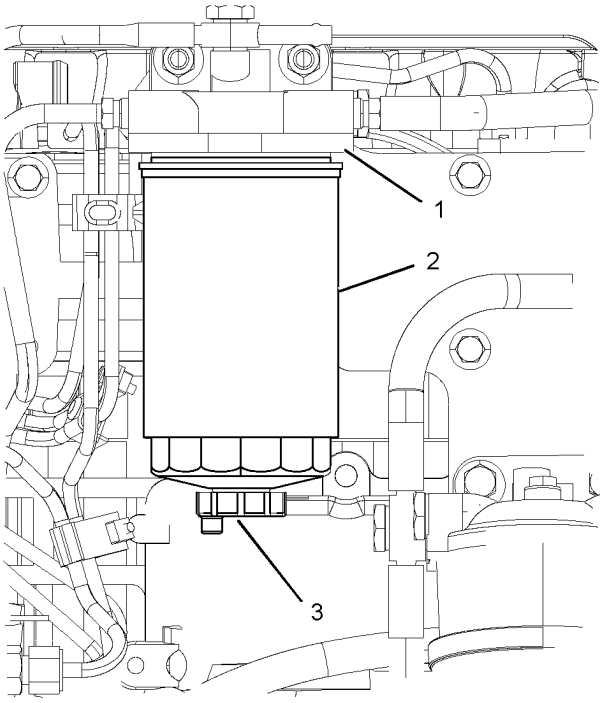

Illustration 52 g01121396

Typical example

(1) Filter Head
(2) Spin-on filter
(3) Drain

1. Clean the outside of the fuel filter assembly. Open the fuel drain (3) and drain the fuel into a suitable container.

2. Use a suitable tool in order to remove the spin-on filter (2) from the filter head (1).

3. Ensure that the fuel drain (3) on the new spin-on filter is closed.

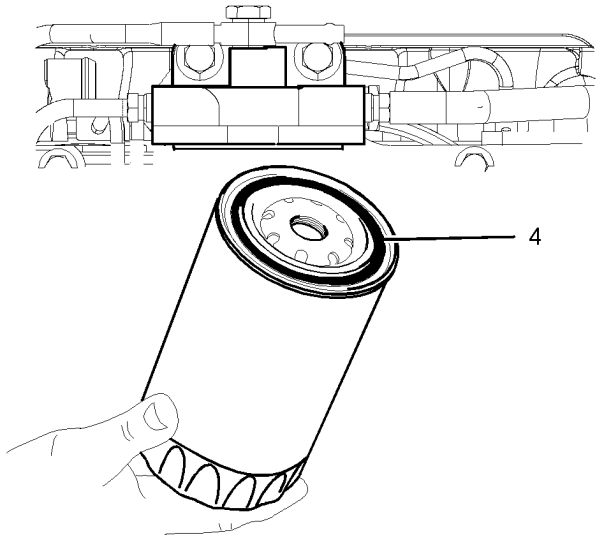

Illustration 53 g01121723

Typical example

4. Lubricate the sealing ring (4) with clean fuel oil.

5. Install the spin-on filter (2) into the top of the filter head (1).

6. Tighten the spin-on filter by hand until the sealing ring contacts the filter head. Rotate the spin-on filter through 90 degrees.

7. Prime the fuel system. Refer to Operation and Maintenance Manual, “Fuel System - Prime”.

i10517862

Fuel System Secondary Filter/ Water Separator - Drain

SMCS Code: 1261-543; 1263-543

⚠ WARNING

Fuel leaked or spilled onto hot surfaces or electrical components can cause a fire. To help prevent possible injury, turn the start switch off when changing fuel filters or water separator elements. Clean up fuel spills immediately.

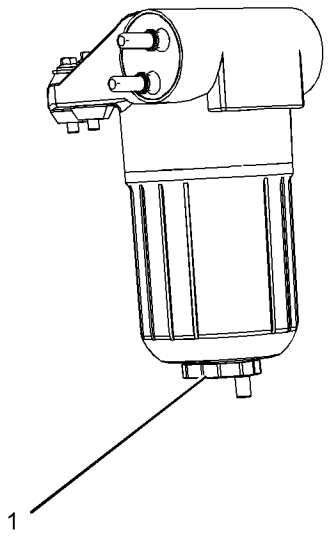

Illustration 54 g03776762
Typical example (Type 1)

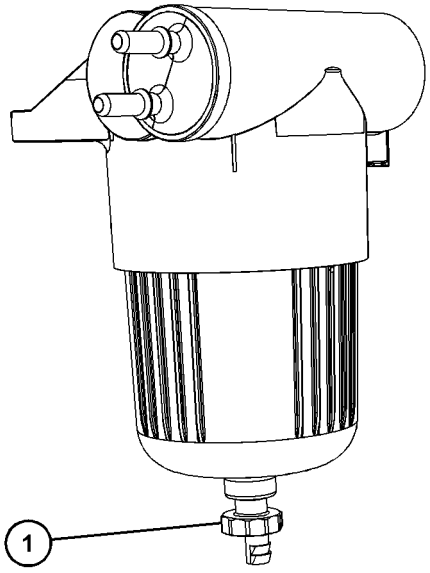

Illustration 55 g07896817
Typical example (Type 2)

1. Place a suitable container below the filter.

2. Open the drain (1) and allow fluid to drain from the filter into the container.

3. When clean fuel drains from the water separator close the drain (1). Tighten the drain by hand pressure only. Dispose of the drained fluid in accordance with local regulations.

4. Prime the fuel system. Refer to the Operation and Maintenance Manual, “Fuel System - Prime” for more information.

i08397650

Fuel Tank Water and Sediment - Drain

SMCS Code: 1273-543-M&S

NOTICE
Care must be taken to ensure that fluids are contained during performance of inspection, maintenance, testing, adjusting, and repair of the product. Be prepared to collect the fluid with suitable containers before opening any compartment or disassembling any component containing fluids.

Refer to Special Publication, NENG2500, “Cat Dealer Service Tool Catalog” or refer to Special Publication, PECJ0003, “Cat Shop Supplies and Tools Catalog” for tools and supplies suitable to collect and contain fluids on Cat products.

Dispose of all fluids according to local regulations and mandates.

Fuel Tank

Fuel quality is critical to the performance and to the service life of the engine. Water in the fuel can cause excessive wear to the fuel system. Condensation occurs during the heating and cooling of fuel. The condensation occurs as the fuel passes through the fuel system and the fuel returns to the fuel tank. This causes water to accumulate in fuel tanks. Draining the fuel tank regularly and obtaining fuel from reliable sources can help to eliminate water in the fuel. The fuel tank utilizes a fuel tank vent to prevent an air lock or vacuum. Ensure that the vent is free of debris and not damaged.

Drain the Water and the Sediment

Fuel tanks should contain some provision for draining water and draining sediment from the bottom of the fuel tanks.

Prepare to catch water and sediment in an appropriate container. Connect a hose (if necessary) to the valve prior to opening the valve.

Open the drain valve on the bottom of the fuel tank to drain the water and the sediment. Close the drain valve.

Note: Failure to close the drain properly could result in fuel leakage, which could have detrimental results to performance.

Check the fuel daily. Drain the water and sediment from the fuel tank after operating the engine. Drain the water and sediment from the fuel tank after the fuel tank has been filled. Allow 5 to 10 minutes before performing this procedure.

Fill the fuel tank after operating the engine to drive out moist air. This procedure will help prevent condensation. Do not fill the tank to the top. The fuel expands as the fuel gets warm. The tank may overflow.

Some fuel tanks use stand pipes that allow water and sediment to settle below the end of the fuel stand pipe. Some fuel tanks use supply lines that take fuel directly from the bottom of the tank. If the engine is equipped with this system, regular maintenance of the fuel system filter is important.

Fuel Storage Tanks

Drain the water and the sediment from the fuel storage tank during the following conditions:

- Weekly
- Refill of the tank

This procedure will help prevent water or sediment from being pumped from the storage tank into the engine fuel tank. A four micron(c) absolute filter for the breather vent on the fuel tank is also recommended.

If a bulk storage tank has been refilled or moved recently, allow adequate time for the sediment to settle before filling the engine fuel tank. Internal baffles in the bulk storage tank will also help trap sediment. Filtering fuel that is pumped from the storage tank helps to ensure the quality of the fuel. When possible, water separators should be used.

i08705302

Hoses and Clamps - Inspect/ Replace

SMCS Code: 7554-040; 7554-510

Hoses and clamps must be inspected periodically and replaced at the recommended interval to ensure safe and continuous operation of the engine. Failure to replace a fuel hose at the recommended change interval may result in a hazardous situation. Take proper safety precautions before inspecting or replacing hoses and clamps.

Note: Always use a board or cardboard when the engine components are checked for leaks. Leaking fluid that is under pressure can cause serious injury or possible death. Leaks that are the size of a pin hole are included. Refer to Operation and Maintenance Manual, “General Hazard Information” for more information.

Note: Ensure that the hose is compatible with the application.

Inspect Tubes, Hoses, Bellows, and Clamps

Inspect all tubes and hoses for leaks that are caused by the following conditions. Replace any tube or hose which exhibits any of the following conditions. Failure to replace a tube or hose which exhibits any of the following conditions may result in a hazardous situation.

- Hoses which are cracked
- Hoses which are soft
- Outer covering that is chafed or cut
- Exposed wire that is used for reinforcement
- Outer covering that is ballooning locally
- Flexible part of the hose that is kinked or crushed
- Armoring that is embedded in the outer covering
- Exhaust bellows for leaks or damage
- Hoses which exhibit signs of leakage which are not the result of loose couplings or clamps

Inspect all clamps for the following conditions. Replace any clamp which exhibits signs of any of the following conditions.

- Cracking
- Looseness
- Damage

Inspect all couplings for leaks. Replace any coupling which exhibits signs of leaks.

Each installation application can be different. The differences depend on the following factors:

- Type of hose
- Type of fitting material
- Anticipated expansion and contraction of the hose
- Anticipated expansion and contraction of the fittings

Due to extreme temperature changes, the hose will heat set. Heat setting causes hose clamps to loosen which can result in leaks. A constant torque hose clamp will help to prevent loose hose clamps.

Replace hoses that are cracked or soft. Replace hoses that show signs of leakage. Replace hoses that show signs of damage. Replace hose clamps that are cracked or damaged. Tighten or replace hose clamps which are loose.

Replace the Hoses and the Clamps

NOTICE
Care must be taken to ensure that fluids are contained during performance of inspection, maintenance, testing, adjusting, and repair of the product. Be prepared to collect the fluid with suitable containers before opening any compartment or disassembling any component containing fluids.

Refer to Special Publication, NENG2500, “Cat Dealer Service Tool Catalog” or refer to Special Publication, PECJ0003, “Cat Shop Supplies and Tools Catalog” for tools and supplies suitable to collect and contain fluids on Cat products.

Dispose of all fluids according to local regulations and mandates.

Cooling System

⚠ WARNING

Pressurized System: Hot coolant can cause serious burns. To open the cooling system filler cap, stop the engine and wait until the cooling system components are cool. Loosen the cooling system pressure cap slowly in order to relieve the pressure.

⚠ WARNING

Personal injury can result from removing hoses or fittings in a pressure system.

Failure to relieve pressure can cause personal injury.

Do not disconnect or remove hoses or fittings until all pressure in the system has been relieved.

1. Stop the engine.
2. Allow the engine to cool.
3. Before servicing a coolant hose, slowly loosen the filler cap for the cooling system to relieve any pressure.
4. Remove the filler cap for the cooling system.
5. Drain the coolant from the cooling system to a level that is below the hose that is being replaced. Drain the coolant into a suitable clean container. The coolant can be reused.
6. Remove the hose clamps.
7. Disconnect the old hose.
8. Replace the old hose with a new hose.
9. Install hose clamps which have been inspected or install new hose clamps. Refer to Specifications, SENR3130, “Torque Specifications” “Hose Clamps” for information about selecting and installing the proper hose clamps.
10. Refill the cooling system.
11. Clean the coolant filler cap. Inspect the gaskets on the filler cap. Inspect the gasket seat. Inspect the vacuum valve and seat for debris or damage. Replace the filler cap if the gaskets are damaged. Install the filler cap.
12. Start the engine. Inspect the cooling system for leaks.

Fuel System

⚠ WARNING

Personal injury can result from removing hoses or fittings in a pressure system.

Failure to relieve pressure can cause personal injury.

Do not disconnect or remove hoses or fittings until all pressure in the system has been relieved.

⚠ WARNING

Contact with high pressure fuel may cause fluid penetration and burn hazards. High pressure fuel spray may cause a fire hazard. Failure to follow these inspection, maintenance and service instructions may cause personal injury or death.

NOTICE
Do not bend or strike high pressure lines. Do not install bent or damaged lines, tubes or hoses. Repair any loose or damaged fuel and oil lines, tubes and hoses. Leaks can cause fires. Inspect all lines, tubes and hoses carefully. Tighten all connections to the recommended torque.

NOTICE
Do not allow dirt to enter the fuel system. Thoroughly clean the area around a fuel system component that will be disconnected. Fit a suitable cover over any disconnected fuel system components.

Note: High-pressure fuel lines may be installed between the high-pressure fuel pump and the fuel injectors. High-pressure fuel lines are constantly charged with high pressure. Do not check the high-pressure fuel lines with the engine or the starting motor in operation. Wait for 10 minutes after the engine stops before you perform any service or repair on high-pressure fuel lines. Waiting for 10 minutes will allow the pressure to be purged.

1. Drain the fuel from the fuel system to a level that is below the hose that is being replaced.
2. Remove the hose clamps.
3. Disconnect the old hose.

Note: When servicing fuel system, use cap/s or cover/s as required to protect the system and maintain fuel system cleanliness.

4. Replace the old hose with a new hose.
5. Install hose clamps which have been inspected or install new hose clamps. Refer to Specifications, SENR3130, “Torque Specifications” “Hose Clamps” for information about selecting and installing the proper hose clamps.
6. Carefully inspect the engine for any spilled fuel. Make sure that no fuel remains on or close to the engine.

Note: Fuel must be added to the fuel system ahead of the fuel filter.

7. Refill the fuel system. Refer to this Operation and Maintenance Manual, “Fuel System - Prime” for information about priming the engine with fuel.
8. Start the engine. Inspect the fuel system for leaks.

Lubrication System

⚠ WARNING

Hot oil and hot components can cause personal injury. Do not allow hot oil or hot components to contact the skin.

1. Drain the oil from the lubrication system to a level that is below the hose that is being replaced.
2. Remove the hose clamps.
3. Disconnect the old hose.
4. Replace the old hose with a new hose.
5. Install hose clamps which have been inspected or install new hose clamps. Refer to Specifications, SENR3130, “Torque Specifications” “Hose Clamps” for information about selecting and installing the proper hose clamps.
6. Refill the lubrication system. Refer to this Operation and Maintenance Manual, “Engine Oil Level - Check” to ensure that the lubrication system is filled with the proper amount of engine oil.
7. Start the engine. Inspect the lubrication system for leaks.

Air System

Note: Boost leaks could result in excessive combustion temperatures.

1. Remove the hose clamps.
2. Disconnect the old hose.
3. Replace the old hose with a new hose.
4. Install hose clamps which have been inspected or install new hose clamps. Refer to Specifications, SENR3130, “Torque Specifications” “Hose Clamps” for information about selecting and installing the proper hose clamps.

Note: The bellows and the V-clamps that are used on the exhaust bellows should never be reused.

5. Start the engine. Inspect the air lines for leaks.

i01515272

Overhaul Considerations

SMCS Code: 7595-043

Reduced hours of operation at full load will result in a lower average power demand. A decreased average power demand should increase both the engine service life and the overhaul interval.

The need for an overhaul is generally indicated by increased fuel consumption and by reduced power.

The following factors are important when a decision is being made on the proper time for an engine overhaul:

- The need for preventive maintenance
- The quality of the fuel that is being used
- The operating conditions

- The results of the S·O·S analysis

Oil Consumption as an Overhaul Indicator

Oil consumption, fuel consumption, and maintenance information can be used to estimate the total operating cost for your Caterpillar engine. Oil consumption can also be used to estimate the required capacity of a makeup oil tank that is suitable for the maintenance intervals.

Oil consumption is in proportion to the percentage of the rated engine load. As the percentage of the engine load is increased, the amount of oil that is consumed per hour also increases.

The oil consumption rate (brake specific oil consumption) is measured in grams per kW/h (lb per bhp). The brake specific oil consumption (BSOC) depends on the engine load. Consult your Caterpillar dealer for assistance in determining the typical oil consumption rate for your engine.

When an engine's oil consumption has risen to three times the original oil consumption rate due to normal wear, an engine overhaul should be scheduled. There may be a corresponding increase in blowby and a slight increase in fuel consumption.

Overhaul Options

Before Failure Overhaul

A planned overhaul before failure may be the best value for the following reasons:

- Costly unplanned downtime can be avoided.
- Many original parts can be reused according to the standards for reusable parts.
- The engine's service life can be extended without the risk of a major catastrophe due to engine failure.
- The best cost/value relationship per hour of extended life can be attained.

After Failure Overhaul

If a major engine failure occurs and the engine must be removed, many options are available. An overhaul should be performed if the engine block or the crankshaft needs to be repaired.

If the engine block is repairable and/or the crankshaft is repairable, the overhaul cost should be between 40 percent and 50 percent of the cost of a new engine with a similar exchange core.

This lower cost can be attributed to three aspects:

- Specially designed Caterpillar engine features
- Caterpillar dealer exchange components
- Caterpillar Inc. remanufactured exchange components

Overhaul Recommendation

To minimize downtime, Caterpillar Inc. recommends a scheduled engine overhaul by your Caterpillar dealer before the engine fails. This will provide you with the best cost/value relationship.

Note: Overhaul programs vary according to the engine application and according to the dealer that performs the overhaul. Consult your Caterpillar dealer for specific information about the available overhaul programs and about overhaul services for extending the engine life.

If an overhaul is performed without overhaul service from your Caterpillar dealer, be aware of the following maintenance recommendations.

Rebuild or Exchange

Cylinder Head Assembly, Oil Pump, and Fuel Transfer Pump

These components should be inspected according to the instructions that are found in various Caterpillar reusability publications. The Special Publication, SEBF8029 lists the reusability publications that are needed for inspecting the engine parts.

If the parts comply with the established inspection specifications that are expressed in the reusable parts guideline, the parts should be reused.

Parts that are not within the established inspection specifications should be dealt with in one of the following manners:

- Salvaging
- Repairing
- Replacing

Using out-of-spec parts can result in the following problems:

- Unscheduled downtime
- Costly repairs
- Damage to other engine parts
- Reduced engine efficiency
- Increased fuel consumption

Reduced engine efficiency and increased fuel consumption translates into higher operating costs. Therefore, Caterpillar Inc. recommends repairing out-of-spec parts or replacing out-of-spec parts.

Inspection and/or Replacement

Crankshaft Bearings and Crankshaft Seals

The following components may not last until the second overhaul.

- Thrust bearings
- Main bearings
- Rod bearings
- Crankshaft seals

Caterpillar Inc. recommends the installation of new parts at each overhaul period.

Inspect these parts while the engine is disassembled for an overhaul.

Inspect the crankshaft for any of the following conditions:

- Deflection
- Damage to the journals
- Bearing material that has seized to the journals

Check the journal taper and the profile of the crankshaft journals. Check these components by interpreting the wear patterns on the following components:

- Rod bearing
- Main bearings

Inspect the camshaft for damage to the journals and to the lobes.

Note: If the camshaft is removed for any reason, use the magnetic particle inspection process to check for cracks in the camshaft.

Inspect the following components for signs of wear or for signs of scuffing:

- Camshaft bearings
- Lifters

Caterpillar Inc. recommends replacing the crankshaft vibration damper.

Oil Cooler Core

During an overhaul, Caterpillar Inc. recommends the removal of the oil cooler core. Clean the oil cooler core. Then, pressure test the oil cooler core.

NOTICE
Do not use caustic cleaners to clean the core.

Caustic cleaners can attack the internal metals of the core and cause leakage.

Note: Use this cleaning procedure to clean the oil cooler core.

1. Remove the oil cooler core.
2. Remove any debris from the oil cooler core. To remove debris from the oil cooler core, turn the oil cooler core onto one end.
3. Flush the oil cooler core internally with cleaner in order to loosen foreign substances. This will also help to remove oil from the oil cooler core.

Note: Caterpillar Inc. recommends the use of Hydrosolv Liquid Cleaners. Table 26 lists the Hydrosolv Liquid Cleaners that are available from your Caterpillar dealer.

Table 26

Hydrosolv Liquid Cleaners		
Part Number	**Description**	**Size**
1U-5490	Hydrosolv 4165	19 L (5 US gal)
1U-5492	Hydrosolv 100	19 L (5 US gallon)

4. Use steam to clean the oil cooler core. This removes any remaining residue from the cleaner. Flush the fins of the oil cooler core. Remove any other trapped debris.
5. Wash the oil cooler core with hot, soapy water. Rinse the oil cooler core thoroughly with clean water.

⚠ WARNING

Personal injury can result from air pressure.

Personal injury can result without following proper procedure. When using pressure air, wear a protective face shield and protective clothing.

Maximum air pressure at the nozzle must be less than 205 kPa (30 psi) for cleaning purposes.

6. Dry the oil cooler core with compressed air. Direct the air in the reverse direction of the normal flow.
7. Inspect the components in order to ensure cleanliness. The oil cooler core should be pressure tested. Repair the oil cooler core, if necessary. Install the oil cooler core.

For more information about cleaning the cores, consult your Caterpillar dealer.

Obtain Coolant Analysis

The concentration of supplemental coolant additive (SCA) should be checked regularly with test kits or with S·O·S Coolant Analysis (Level 1). Further coolant analysis is recommended when the engine is overhauled.

For example, considerable deposits are found in the water jacket areas on the external cooling system, but the concentrations of coolant additives were carefully maintained. The coolant water probably contained minerals that were deposited on the engine over time.

A coolant analysis can be conducted in order to verify the condition of the water that is being used in the cooling system. A full water analysis can be obtained by consulting your local water utility company or an agricultural agent. Private laboratories are also available for water analysis.

Caterpillar Inc. recommends an S·O·S Coolant Analysis (Level 2).

S·O·S Coolant Analysis (Level 2)

An S·O·S Coolant Analysis (Level 2) is a comprehensive coolant analysis which completely analyzes the coolant and the effects on the cooling system. An S·O·S Coolant Analysis (Level 2) provides the following information:

- Complete S·O·S Coolant Analysis (Level 1)
- Visual inspection of properties
- Identification of metal corrosion
- Identification of contaminants
- Identification of built up impurities (corrosion and scale)

S·O·S Coolant Analysis (Level 2) provides a report of the results of both the analysis and the maintenance recommendations.

For more information about coolant analysis, see your Caterpillar dealer.

i09670468

Radiator - Clean

SMCS Code: 1353-070

Note: Adjust the frequency of cleaning according to the effects of the operating environment.

Inspect the radiator for these items: damaged fins, corrosion, dirt, grease, insects, leaves, oil, and other debris. Clean the radiator, if necessary.

⚠ WARNING

Personal injury can result from air pressure.

Personal injury can result without following proper procedure. When using pressure air, wear a protective face shield and protective clothing.

The maximum air pressure for cleaning purposes must be reduced to 205 kPa (30 psi) when the air nozzle is deadheaded.

Pressurized air is the preferred method for removing loose debris. Direct the air in the opposite direction of the air flow. Hold the nozzle approximately 6 mm (0.25 inch) away from the fins. Slowly move the air nozzle in a direction that is parallel with the tubes. This movement will remove debris that is between the tubes.

Pressurized water may also be used for cleaning. The maximum water pressure for cleaning purposes must be less than 275 kPa (40 psi). Use pressurized water to soften mud. Clean the core from the front and the rear.

Use a degreaser and steam for removal of oil and grease. Clean the front and the rear of the core. Wash the core with detergent and hot water. Thoroughly rinse the core with clean water.

After cleaning, start the engine and bring the engine to high idle. This procedure will help in the removal of debris and drying of the core. Stop the engine. Use a light bulb behind the core to inspect the core for cleanliness. Repeat the cleaning, if necessary.

Inspect the fins for damage. Bent fins may be opened with a “comb”. Inspect these items for good condition: welds, mounting brackets, air lines, connections, clamps, and seals. Make repairs, if necessary.

i00651416

Starting Motor - Inspect

SMCS Code: 1451-040; 1453-040

Caterpillar Inc. recommends a scheduled inspection of the starting motor. If the starting motor fails, the engine may not start in an emergency situation.

Check the starting motor for proper operation. Check the electrical connections and clean the electrical connections. Refer to the Service Manual for more information on the checking procedure and for specifications or consult your Caterpillar dealer for assistance.

i08397633

Walk-Around Inspection

SMCS Code: 1000-040

Inspect the Engine for Leaks and for Loose Connections

A walk-around inspection should only take a few minutes. When the time is taken to perform these checks, costly repairs and accidents can be avoided.

For maximum engine service life, make a thorough inspection of the engine compartment before starting the engine. Look for items such as oil leaks or coolant leaks, loose bolts, worn belts, loose connections and trash buildup. Make repairs, as needed:

- The guards must be in the proper place. Repair damaged guards or replace missing guards.
- Wipe all caps and plugs before the engine is serviced in order to reduce the chance of system contamination.

NOTICE
For any type of leak (coolant, lube, or fuel) clean up the fluid. If leaking is observed, find the source and correct the leak. If leaking is suspected, check the fluid levels more often than recommended until the leak is found or fixed, or until the suspicion of a leak is proved to be unwarranted.

NOTICE
Accumulated grease and/or oil on an engine or deck is a fire hazard. Remove this debris with steam cleaning or high pressure water.

- Ensure that the cooling lines are properly clamped and that the cooling lines are tight. Check for leaks. Check the condition of all pipes.
- Inspect the water pumps for coolant leaks.

Note: The water pump seal is lubricated by coolant in the cooling system. It is normal for a small amount of leakage to occur as the engine cools down and the parts contract.

Excessive coolant leakage may indicate the need to replace the water pump seal. For the removal of water pumps and the installation of water pumps and/or seals, refer to the Service Manual for the engine or consult your Caterpillar dealer.

- Inspect the lubrication system for leaks at the front crankshaft seal, the rear crankshaft seal, the oil pan, the oil filters and the valve cover.
- Inspect the fuel system for leaks. Look for loose fuel line clamps or for loose fuel line tie-wraps.
- Inspect the piping for the air inlet system and the elbows for cracks and for loose clamps. Ensure that hoses and tubes are not contacting other hoses, tubes, wiring harnesses, etc.
- Inspect the alternator belt and the accessory drive belts for cracks, breaks or other damage.

Belts for multiple groove pulleys must be replaced as matched sets. If only one belt is replaced, the belt will carry more load than the belts that are not replaced. The older belts are stretched. The additional load on the new belt could cause the belt to break.

- Drain the water and the sediment from fuel tanks on a daily basis in order to ensure that only clean fuel enters the fuel system.
- Inspect the wiring and the wiring harnesses for loose connections and for worn wires or frayed wires.
- Inspect the ground strap for a good connection and for good condition.
- Inspect the ECM to the cylinder head ground strap for a good connection and for good condition.
- Disconnect any battery chargers that are not protected against the current drain of the starting motor. Check the condition and the electrolyte level of the batteries, unless the engine is equipped with a maintenance free battery.
- Check the condition of the gauges. Replace any gauges that are cracked. Replace any gauge that can not be calibrated.

i08273264

Water Pump - Inspect

SMCS Code: 1361; 1361-040

A failed water pump might cause severe engine overheating problems that could result in the following conditions:

- Cracks in the cylinder head
- A piston seizure
- Other potential damage to the engine

A failed water pump might cause severe engine overheating problems. Overheating could result in cracks in the cylinder head, a piston seizure, or other potential damage to the engine.

Visually inspect the water pump for leaks. If leaking of the water pump seals is observed, replace all water pump seals. Refer to two articles in the Disassembly and Assembly Manual, “Water Pump - Disassemble and Water Pump - Assemble” for the disassembly and assembly procedure. If necessary to remove the water pump, refer to two articles in the Disassembly and Assembly Manual, “Water Pump - Remove and Water Pump - Install”.

Inspect the water pump for wear, cracks, pin holes, and proper operation. Refer to the Parts Manual for the correct part numbers for your engine or consult your Cat dealer if repair is needed or replacement is needed.

Reference Information Section

Engine Ratings

i08274659

Engine Rating Conditions

SMCS Code: 1000

All engine ratings are in compliance with the following standard ambient air conditions of “SAE J1349”:

- 99 kPa (29.3 inches of Hg)
- 30 percent relative humidity
- A temperature of 25 °C (77 °F)

Ratings relate to the standard conditions of “ISO8665”, of “ISO3046/1”, of “DIN6271”, and of “BS5514”.

The engine ratings are based on the following fuel specifications:

- Low heat value (LHV) of the fuel of 42 780 kJ/kg (18,390 Btu/lb) at 29 °C (84 °F)
- Gravity (API) of 35 degrees at 15 °C (60 °F)
- Specific gravity of .849 at 15 °C (60 °F)
- Density of 850 kg/m^3 (7.085 lb/US gal)

The engine ratings are gross output ratings.

Gross Output Ratings – The total output capability of the engine that is equipped with standard accessories.

Standard accessories include the following components:

- Oil pumps
- Fuel pumps
- Water pumps

Subtract the power that is required to drive auxiliary components from the gross output. This action will produce the net power that is available for the external load (flywheel).

i10270344

Engine Rating Definitions

SMCS Code: 1000

It is important to know the use of the engine so that the rating will match the operating profile. The proper rating selection is also important so that the customer's perception of price and value is realized.

In selecting a rating for a specific application, the most important consideration is the time that is spent at full throttle. These rating definitions identify the percent of time at full throttle. The definitions also identify the corresponding times below rated rpm.

Note: The examples of the applications are only for reference. For an exact determination of the appropriate rating, follow the OEM specifications or consult your Caterpillar dealer.

A Rating – This rating is used for heavy-duty applications that are operated at rated load and at rated rpm up to 100 percent. This rating is used for engines that operate without interruption of load cycling. Typical applications include the following examples: pipeline pumping and ventilation.

B Rating – This rating is used when power and/or rpm are cyclic. The engine should be run at full load. The engine should not exceed 80 percent of the duty cycle. Typical applications include the following examples: irrigation, operation where normal pump demand is 85 percent of the engine rating, oil pumping/drilling, field mechanical pumping/drilling, and stationary/plant air compressors.

C Rating – This rating is used when power and/or rpm are cyclic. The horsepower and the rpm of the engine can be utilized continuously for 1 hour. Followed by 1 hour of operation, at or below 75% of the full load power curve condition. The engine should be run at full load. Time at full load not to exceed 50% of the duty cycle or one-hour max. Load factor limited to 70%. Full load operation limited to one uninterrupted hour followed by 1 hour of operation at or below 75% of the full load power curve condition. Typical applications include the following examples: agricultural tractors, harvesters and combines, Off-Highway trucks, fire pumps, blast hole drills, rock crushers, wood chippers with high torque rise and oil field hoisting.

D Rating – This rating is used when rated power is required for periodic overloads. The maximum horsepower and the rpm of the engine can be utilized continuously for a maximum of 30 minutes. This is followed by 1 hour of operation at the C rating. The engine should be run at full load. The engine should not exceed 10 percent of the duty cycle. Typical applications include the following examples: offshore cranes, runway snow blowers, water well drills, portable air compressors, and fire pump certification power.

E Rating – This rating is used when rated power is required for a short time for initial starting or for sudden overload. The rating is also used for emergency service when standard power is not available. The horsepower and the rpm of the engine can be utilized continuously for a maximum of 15 minutes. This is followed by 1 hour of operation at the C rating or by the duration of the emergency. The engine should be run at full load. The engine should not exceed 5 percent of the duty cycle. Typical applications include the following examples: standby centrifugal water pumps, oil field well servicing, crash trucks, portable air compressors, and gas turbine starting motors.

NOTICE
Operating engines above the rating definitions can result in shorter service life before overhaul.

Customer Service

i08302979

Customer Assistance

SMCS Code: 1000

USA and Canada

When a problem arises concerning the operation or the service of an engine, the problem will normally be managed by the dealer in your area.

Your satisfaction is a primary concern to Caterpillar and to Cat dealers. If you have a problem that has not been handled to your complete satisfaction, follow these steps:

1. Discuss your problem with a manager from the dealership.

2. If your problem cannot be resolved at the dealer level, use the phone number that is listed below to talk with a Field Service Coordinator:

1-800-447-4986

The normal hours are from 8:00 to 4:30 Monday through Friday Central Standard Time.

3. If your needs have not been met still, submit the matter in writing to the following address:

Designated Compliance Officer Heavy-Duty and Nonroad Engine Group 6403-J,
US Ave, NW, Washington,
DC 20460
Email address: complianceinfo@epa.gov.

Your problem may ultimately be solved at the dealership, using the dealership facilities, equipment, and personnel. Therefore, follow the steps in sequence when a problem is experienced.

Outside of the USA and of Canada

If a problem arises outside the USA and outside Canada, and if the problem cannot be resolved at the dealer level, consult the appropriate Cat office.

Latin America, Mexico, Carribean
Caterpillar Americas Co.
701 Waterford Way, Suite 200
Miami, FL 33126-4670
USA
Phone: 305-476-6800
Fax: 305-476-6801

Europe, Africa, and Middle East
Caterpillar Overseas S.A.
76 Route de Frontenex
P.O. Box 6000
CH-1211 Geneva 6
Switzerland
Phone: 22-849-4444
Fax: 22-849-4544

Far East
Caterpillar Asia Pte. Ltd.
7 Tractor Road
Jurong, Singapore 627968
Republic of Singapore
Phone: 65-662-8333
Fax: 65-662-8302

China
Caterpillar China Ltd.
37/F., The Lee Gardens
33 Hysan Avenue
Causeway Bay
G.P.O. Box 3069
Hong Kong
Phone: 852-2848-0333
Fax: 852-2848-0440

Japan
Shin Caterpillar Mitsubishi Ltd.
SBS Tower
10-1, Yoga 4-Chome
Setagaya-Ku, Tokyo 158-8530
Japan
Phone: 81-3-5717-1150
Fax: 81-3-5717-1177

Japan
Caterpillar Power Systems, Inc.
SBS Tower (14th floor)
4-10-1, Yoga
Setagaya-Ku, Tokyo 158-0097
Phone: 81-3-5797-4300
Fax: 81-3-5797-4359

Australia and New Zealand
Caterpillar of Australia Ltd.
1 Caterpillar Drive
Private Mail Bag 4
Tullamarine, Victoria 3043
Australia
Phone: 03-9953-9333
Fax: 03-9335-3366

i08292376

Ordering Replacement Parts

SMCS Code: 7567

⚠ WARNING

When replacement parts are required for this product Caterpillar recommends using Caterpillar replacement parts or parts with equivalent specifications including, but not limited to, physical dimensions, type, strength and material.

Failure to heed this warning can lead to premature failures, product damage, personal injury or death.

Quality Cat replacement parts are available from Cat dealers throughout the world. Cat dealer parts inventories are up to date. The parts stocks include all the parts that are normally needed to protect your Cat engine investment.

When you order parts, specify the following information:

- Part number
- Part name
- Quantity

If there is a question concerning the part number, provide your dealer with a complete description of the needed item.

When a Cat engine requires maintenance and/or repair, provide the dealer with all the information that is stamped on the Information Plate. This information is described in this Operation and Maintenance Manual (Product Information Section).

Discuss the problem with the dealer. Inform the dealer about the conditions of the problem and the nature of the problem. Inform the dealer about when the problem occurs. This information will help the dealer in troubleshooting the problem and solving the problem faster.

Reference Materials

i02420633

Reference Material

SMCS Code: 1000

The following literature can be obtained through any Caterpillar dealer.

Coolants

- Special Publication, SEBD0970, “Coolant and Your Engine”
- Data Sheet, PEHJ0067, “Cat ELC (Extended Life Coolant)”
- Special Publication, SEBD0518, “Know Your Cooling System”
- Special Publication, PEEP5027, “Label - ELC Radiator Label”
- Data Sheet, PEHP7057, “S·O·S Coolant Analysis”

Fuels

- Special Publication, SEBD0717, “Diesel Fuels and Your Engine”

Lubricants

- Data Sheet, PEHJ0059, “Cat DEO (SAE 10W-30 and SAE 15W-40)” Canada, Mexico, and the United States
- Data Sheet, PEHJ0021, “Cat DEO (SAE 10W-30 and SAE 15W-40)” Worldwide except North America, Egypt, Saudi Arabia, and Brazil
- Data Sheet, PEHJ0072, “Cat DEO (SAE 10W-30 and SAE 15W-40)” Brazil
- Data Sheet, PEHJ0091, “Cat DEO (SAE 10W-30 and SAE 15W-40)” Egypt and Saudi Arabia
- Special Publication, PEHP9516, “Product Data Sheet for Special Application Engine Oil For Caterpillar 3116 and 3126 Marine Diesel Engines with Mechanical Unit Injectors”
- Special Publication, PEWP3014, “Cat Fluids Selector Dial (International)”
- Special Publication, PEWP9733, “Cat Fluids Selector Dial (North America)”
- Data Sheet, PEHJ0088, “Cat Multipurpose Grease”
- Data Sheet, PEHP0002, “Cat Advanced 3Moly Grease” NLGI grade 2
- Data Sheet, NEHP6015, “Cat High Speed Ball Bearing Grease” NLGI grade 2
- Special Publication, PEGJ0035, “Grease Selection Guide”
- Special Publication, PEHP6001, “How To Take A Good Oil Sample”
- Special Publication, SEBD0640, “Oil and Your Engine”
- Special Publications, PEDP7036, “S·O·S Fluids Analysis Cornerstone”

Miscellaneous

Special Publication, PECP6026, “One Safe Source” English language for use in NACD

Special Publication, PECP6027, “One Safe Source” English language for use in COSA

Special Publication, PECP6028, “One Safe Source” English language for use in non NACD and non COSA

- Service Manual, SENR9595, “C-9 Industrial Engine Service Manual”
- Special Publication, SEBU6251, “Caterpillar Commercial Diesel Engine Fluids Recommendations For Lubricants, Diesel Fuel, and Coolants”
- Service Manual, SENR9595, “C-9 Industrial Engine Service Manual”
- Special Publication, SEBU6251, “Caterpillar Commercial Diesel Engine Fluids Recommendations For Lubricants, Diesel Fuel, and Coolants”
- Special Publication, PECP9067, “One Safe Source”
- Special Instruction, SMHS7001, “Assembly of Fan Drive Pulley Assemblies”
- Special Instruction, SEHS7633, “Battery Test Procedure”
- Special Publication, SEBF8062, “Guideline for Reusable Parts - Procedure to Inspect and Clean Air Filters”
- Special Publication, SEBF8029, “Index to Guidelines for Reusable Parts and Salvage Operations”

- Special Publication, PEDP0026, “Power Analysis Report”
- Special Publication, NEHS0526, “Service Technology Application Guide”
- Special Instruction, SEHS9031, “Storage Procedure for Caterpillar Products”
- Specifications, SENR3130, “Torque Specifications Module”
- Special Instruction, SEHS8742, “Using the 8T-8697 Electronic Control Analyzer Programmer (ECAP)”
- Special Instruction, SEHS8622, “Using the FT-1984 Air-To-Air Aftercooler Leak Test Group”
- Special Instruction, SEHS7332, “Warning Tag - Danger Do Not Operate”
- Special Instruction, REHS0871, “Electronic Installation Guide”

i08254313

Additional Reference Material

SMCS Code: 1000

The “Society of Automotive Engineers (SAE) Specifications” can be found in your SAE handbook. This publication can also be obtained from the following locations: local technological society, local library, and local college. If necessary, consult SAE at the following address:

SAE International
400 Commonwealth Drive
Warrendale, PA, USA 15096-0001
Telephone (724) 776-4841

The “American Petroleum Institute Publication No. 1509” can be obtained from the following locations: local technological society, local library, and local college. If necessary, consult API at the following address:

American Petroleum Institute
1220 L St. N.W.
Washington, DC, USA 20005
Telephone (202) 682-8000

The International Organization for Standardization (ISO) offers information and customer service regarding international standards and standardizing activities. ISO can also supply information on the following subjects that are not controlled by ISO: national standards, regional standards, regulations, certification, and related activities. Consult the member of ISO in your country.

International Organization for Standardization (ISO)
1, rue de Varembé
Case postale 56
CH-1211 Genève 20
Switzerland
Telephone +41 22 749 01 11
Facsimile +41 22 733 34 30
E-mail central@iso.ch
Web site http://www.iso.ch

European classifications are established by the Counseil International Des Machines a Combustion (CIMAC) (International Council on Combustion Engines).

CIMAC Central Secretariat
Lyoner Strasse 18
60528 Frankfurt
Germany
Telephone +49 69 6603 1567
Facsimile +49 69 6603 1566

i08530562

Maintenance Records

SMCS Code: 1000

Caterpillar recommends the retention of accurate maintenance records. Accurate maintenance records can be used for the following purposes:

- Determine operating costs.
- Establish maintenance schedules for other engines that are operated in the same environment.
- Show compliance with the required maintenance practices and maintenance intervals.

Maintenance records can be used for various other business decisions that are related to engine maintenance.

Maintenance records are a key element of a maintenance program that is managed. Accurate maintenance records can help your Cat dealer to fine-tune the recommended maintenance intervals to meet the specific operating situation. These recommendations should result in a lower engine operating cost.

Records should be kept for the following items:

Fuel Consumption – A record of fuel consumption is essential to determine when the load sensitive components should be inspected or repaired. Fuel consumption assists in determining overhaul intervals.

Service Hours – A record of service hours is essential to determine when the speed sensitive components should be inspected or repaired.

Documents – These items should be easy to obtain, and these items should be kept in the engine history file. All documents should show this information: date, service hours, fuel consumption, unit number, and engine serial number. The following types of documents should be kept as proof of maintenance or repair for warranty:

Keep the following types of documents as proof of maintenance for warranty. Also, keep these types of documents as proof of repair for warranty:

- Dealer work orders and itemized bills
- Owner repair costs
- Owner receipts
- Maintenance log

i08254037

Maintenance Log

SMCS Code: 1000

Table 27

Engine Model		**Customer Identifier**		
Serial Number		**Arrangement Number**		
Service Hours	**Quantity Of Fuel**	**Service Item**	**Date**	**Authorization**

(continued)

(Table 27, contd)

Index

A

Additional Reference Material 97
After Starting Engine 30
After Stopping Engine 34
Aftercooler Core - Clean/Test 56
Aftercooler Core - Inspect 56
Alternator - Inspect 57
Alternator and Fan Belts - Inspect/Adjust/ Replace 57
  Adjustment 57
  Inspection 57
  Replacement 58

B

Battery - Replace 58
Battery Electrolyte Level - Check 58
Battery or Battery Cable - Disconnect 59
Before Starting Engine 15, 28
Burn Prevention 12
  Batteries 12
  Coolant 12
  Oils 12

C

Cold Weather Operation 35
Cold Weather Starting 29
Cooling System Coolant (DEAC) - Change 59
  Cooling Systems with Heavy Deposits or Plugging 60
  Drain 59
  Fill 61
  Flush 60
Cooling System Coolant (ELC) - Change 61
  Drain 61
  Fill 62
  Flush 62
Cooling System Coolant Extender (ELC) - Add 63
Cooling System Coolant Level - Check 63
  Engines With a Coolant Recovery Tank 63
  Engines Without a Coolant Recovery Tank 64
Cooling System Supplemental Coolant Additive (SCA) - Test/Add 65
  Add the SCA, If Necessary 65
  S·O·S Coolant Analysis 65
  Test for SCA Concentration 65
Cooling System Water Temperature Regulator - Replace 66
Crushing Prevention and Cutting Prevention 14
Customer Assistance 94
  Outside of the USA and of Canada 94
  USA and Canada 94
Customer Service 94

D

Driven Equipment - Check 66

E

Electrical System 16
  Grounding Practices 16
Emergency Stopping 33
  Emergency Stop Button 33
Emissions Certification Film 24
Engaging the Driven Equipment 31
Engine - Clean 67
Engine Air Cleaner Element (Dual Element) - Clean/Replace 67
  Cleaning the Primary Air Cleaner Elements 68
  Servicing the Air Cleaner Elements 67
Engine Air Cleaner Element (Single Element) - Replace 70
Engine Air Cleaner Service Indicator - Inspect (If Equipped) 70
  Test the Service Indicator 71
Engine Crankcase Breather - Clean 71
Engine Description 20
  Aftermarket Products and Caterpillar Engines 21
  Engine Cooling and Lubrication 21
  Engine Service Life 21
  Engine Specifications 20
Engine Identification 22
Engine Mounts - Inspect 72
Engine Oil and Filter - Change 73
  Drain the Engine Oil 73
  Fill the Engine Crankcase 76
  Replace Oil Filter 73
  Replace the Type 2 Oil Filter 74
Engine Oil Level - Check 72
Engine Oil Sample - Obtain 72
  Obtain the Sample and the Analysis 72
Engine Operation 31

Engine Protective Devices - Check 76
Visual Inspection 76
Engine Rating Conditions 92
Engine Rating Definitions 92
Engine Ratings 92
Engine Shutoffs and Engine Alarms 27
Alarms 27
Shutoffs 27
Testing the Shutoff and Alarm System 27
Engine Starting 15, 28
Engine Stopping 16, 33
Engine Valve Lash - Inspect/Adjust 76
Engine Warm-up 31

F

Features and Controls 27
Fire Prevention and Explosion Prevention 12
Ether 14
Fire Extinguisher 14
Lines, Tubes, and Hoses 14
Fluid Recommendations (Coolant Information) 37
Additives 38
Commercial Heavy-Duty Coolant/Antifreeze and SCA 42
Conventional Coolant or Maintenance for Antifreeze Cooling System 44
Coolant Recommendations 39
Diesel Engine Antifreeze/Coolant (DEAC) 41
Extended Life Coolant (ELC) 41
Glycol 39
S·O·S Coolant Analysis 40
Supplemental Coolant Additive (SCA) 41
Water 38
Water and Supplemental Coolant Additive (SCA) 42
Fluid Recommendations (Fuel Recommendations) 52
Fluid Recommendations (Lubricant Information) 46
Aftermarket Oil Additives 50
API Oils 46
Caterpillar Diesel Engine Oil 46
Caterpillar Premium Grease (CPG) 51
Cold Weather Lubricants 49
Commercial Oils 47
Engine Manufacturers Association (EMA) Oils 46
General Information 46
Lubricating Grease 50
Multipurpose Greases 50
Re-refined Basestock Oils 49
S·O·S Oil Analysis 52
Special Purpose Grease (SPG) 51
Synthetic Base Stock Oils 49
Total Base Number (TBN) and Fuel Sulfur Levels for Direct Injection (DI) Diesel Engines 48
Foreword 4
California Proposition 65 Warning 4
Literature Information 4
Maintenance 4
Maintenance Intervals 5
Operation 4
Overhaul 5
Safety 4
Fuel and the Effect from Cold Weather 35
Fuel Conservation Practices 31
Fuel Injection Nozzles - Test/Exchange 77
Removal and Installation of the Fuel Injection Nozzles 78
Fuel Related Components in Cold Weather 35
Fuel Filters 36
Fuel Heaters 36
Fuel Tanks 35
Fuel System - Prime 78
Fuel System Primary Filter (Water Separator) Element - Replace 78
Fuel System Primary Filter/Water Separator - Drain 79
Fuel System Secondary Filter - Replace 80
Element filter 80
Spin-on filter 82
Fuel System Secondary Filter/Water Separator - Drain 82
Fuel Tank Water and Sediment - Drain 83
Drain the Water and the Sediment 83
Fuel Storage Tanks 84
Fuel Tank 83

G

Gauges and Indicators 26
General Hazard Information 8
Containing Fluid Spillage 9
Dispose of Waste Properly 11
Fluid Penetration 9
Inhalation 10
Lines, Tubes, and Hoses 10
Pressurized Air and Water 9
Softwrap 11
Static Electricity Hazard when Fueling with Ultra-low Sulfur Diesel Fuel 10

H

Hoses and Clamps - Inspect/Replace 84
Inspect Tubes, Hoses, Bellows, and Clamps 84
Replace the Hoses and the Clamps 85

I

Important Safety Information 2
Information Plate 22

L

Lifting and Storage 25

M

Maintenance Interval Schedule 54
Daily 54
Every 1000 Service Hours 54
Every 2000 Service Hours 54
Every 2000 Service Hours or 1 Year 55
Every 2000 Service Hours or 2 Years 55
Every 250 Service Hours or 6 Months 54
Every 3000 Service Hours 55
Every 3000 Service Hours or 2 Years 55
Every 4000 Service Hours 55
Every 50 Service Hours or Weekly 54
Every 500 Service Hours 54
Every 500 Service Hours or 1 Year 54
Every 500 Service Hours or 6 Months 54
Every 6000 Service Hours or 3 Years 55
Overhaul 55
When Required 54
Maintenance Log 98
Maintenance Records 97
Maintenance Section 37
Manual Stop Procedure 33
Model View Illustrations 18
Engine Model Views 18
Model Views 18
Mounting and Dismounting 15

O

Operation Section 25
Ordering Replacement Parts 95
Overhaul Considerations 86
Oil Consumption as an Overhaul Indicator 87
Overhaul Recommendation 87

P

Product Identification Information 22
Product Information Section 18
Product Lifting 25
Product Storage 25

R

Radiator - Clean 89
Radiator Restrictions 35
Reference Information Section 92
Reference Material 96
Coolants 96
Fuels 96
Lubricants 96
Miscellaneous 96
Reference Materials 96
Reference Numbers 23
Record for Reference 23
Refill Capacities 37
Cooling System 37
Lubrication System 37

S

Safety Messages 6
(1) Universal Warning 6
(2) Ether 7
Clutch 7
Safety Section 6
Serial Number Plate 22
Starting Motor - Inspect 89
Starting the Engine 28
Starting with Jump Start Cables 29
Stopping the Engine 33

T

Table of Contents 3

W

Walk-Around Inspection 90
Inspect the Engine for Leaks and for Loose Connections 90
Water Pump - Inspect 90

Product and Dealer Information

Note: For product identification plate locations, see the section “Product Identification Information” in the Operation and Maintenance Manual.

Delivery Date: _____

Product Information

Model: _____

Product Identification Number: _____

Engine Serial Number: _____

Transmission Serial Number: _____

Generator Serial Number: _____

Attachment Serial Numbers: _____

Attachment Information: _____

Customer Equipment Number: _____

Dealer Equipment Number: _____

Dealer Information

Name: _____ Branch: _____

Address: _____

_____

_____

	Dealer Contact	Phone Number	Hours
Sales:	_____	_____	_____
Parts:	_____	_____	_____
Service:	_____	_____	_____

SEBU7655
©2025 Caterpillar
All Rights Reserved

CAT, CATERPILLAR, LET'S DO THE WORK, their respective logos, "Caterpillar Corporate Yellow", the "Power Edge" and Cat "Modern Hex" trade dress as well as corporate and product identity used herein, are trademarks of Caterpillar and may not be used without permission.