SEBU8180-04 (en-us)
May 2023

Operation and Maintenance Manual

C4.4 Industrial Engine

444 1-UP (Engine)

Scan to find and purchase genuine Cat® parts and related service information.

Important Safety Information

Most accidents that involve product operation, maintenance and repair are caused by failure to observe basic safety rules or precautions. An accident can often be avoided by recognizing potentially hazardous situations before an accident occurs. A person must be alert to potential hazards, including human factors that can affect safety. This person should also have the necessary training, skills and tools to perform these functions properly.

Improper operation, lubrication, maintenance or repair of this product can be dangerous and could result in injury or death.

Do not operate or perform any lubrication, maintenance or repair on this product, until you verify that you are authorized to perform this work, and have read and understood the operation, lubrication, maintenance and repair information.

Safety precautions and warnings are provided in this manual and on the product. If these hazard warnings are not heeded, bodily injury or death could occur to you or to other persons.

The hazards are identified by the “Safety Alert Symbol” and followed by a “Signal Word” such as “DANGER”, “WARNING” or “CAUTION”. The Safety Alert “WARNING” label is shown below.



The meaning of this safety alert symbol is as follows:

Attention! Become Alert! Your Safety is Involved.

The message that appears under the warning explains the hazard and can be either written or pictorially presented.

A non-exhaustive list of operations that may cause product damage are identified by “NOTICE” labels on the product and in this publication.

Caterpillar cannot anticipate every possible circumstance that might involve a potential hazard. The warnings in this publication and on the product are, therefore, not all inclusive. You must not use this product in any manner different from that considered by this manual without first satisfying yourself that you have considered all safety rules and precautions applicable to the operation of the product in the location of use, including site-specific rules and precautions applicable to the worksite. If a tool, procedure, work method or operating technique that is not specifically recommended by Caterpillar is used, you must satisfy yourself that it is safe for you and for others. You should also ensure that you are authorized to perform this work, and that the product will not be damaged or become unsafe by the operation, lubrication, maintenance or repair procedures that you intend to use.

The information, specifications, and illustrations in this publication are on the basis of information that was available at the time that the publication was written. The specifications, torques, pressures, measurements, adjustments, illustrations, and other items can change at any time. These changes can affect the service that is given to the product. Obtain the complete and most current information before you start any job. Cat dealers have the most current information available.

NOTICE

When replacement parts are required for this product Caterpillar recommends using original Caterpillar® replacement parts.

Other parts may not meet certain original equipment specifications.

When replacement parts are installed, the machine owner/user should ensure that the machine remains in compliance with all applicable requirements.

In the United States, the maintenance, replacement, or repair of the emission control devices and systems may be performed by any repair establishment or individual of the owner's choosing.

Table of Contents

Foreword 4

Safety Section

Safety Messages 6

General Hazard Information 9

Burn Prevention 11

Fire Prevention and Explosion Prevention 12

Crushing Prevention and Cutting Prevention 14

Mounting and Dismounting 15

High Pressure Fuel Lines 15

Before Starting Engine 17

Engine Starting 17

Engine Stopping 18

Electrical System 18

Engine Electronics 19

Product Information Section

General Information 20

Model Views 22

Product Identification Information 27

Operation Section

Lifting and Storage 30

Gauges and Indicators 31

Features and Controls 32

Engine Diagnostics 39

Engine Starting 43

Engine Operation 45

Engine Stopping 47

Cold Weather Operation 49

Maintenance Section

Refill Capacities 53

Maintenance Interval Schedule 60

Warranty Section

Warranty Information 104

Reference Information Section

Engine Ratings 105

Customer Service 106

Reference Materials 107

Index Section

Index 111

Foreword

California Proposition 65 Warning

Diesel engine exhaust and some of its constituents are known to the State of California to cause cancer, birth defects, and other reproductive harm.

WARNING – This product can expose you to chemicals including ethylene glycol, which is known to the State of California to cause birth defects or other reproductive harm. For more information go to:

www.P65Warnings.ca.gov

Do not ingest this chemical. Wash hands after handling to avoid incidental ingestion.

WARNING – This product can expose you to chemicals including lead and lead compounds, which are known to the State of California to cause cancer, birth defects, or other reproductive harm. For more information go to:

www.P65Warnings.ca.gov

Wash hands after handling components that may contain lead.

Literature Information

This manual contains safety, operation instructions, lubrication, and maintenance information. This manual should be stored in or near the engine area in a literature holder or literature storage area. Read, study, and keep it with the literature and engine information.

English is the primary language for all Cat publications. The English used facilitates translation and consistency in electronic media delivery.

Some photographs or illustrations in this manual show details or attachments that may be different from your engine. Guards and covers may have been removed for illustrative purposes. Continuing improvement and advancement of product design may have caused changes to your engine which are not included in this manual Whenever a question arises regarding your engine, or this manual, please consult with your Cat dealer for the latest available information.

Safety

This safety section lists basic safety precautions. In addition, this section identifies hazardous, warning situations. Read and understand the basic precautions listed in the safety section before operating or performing lubrication, maintenance, and repair on this product.

Operation

Operating techniques outlined in this manual are basic. They assist with developing the skills and techniques required to operate the engine more efficiently and economically. Skill and techniques develop as the operator gains knowledge of the engine and its capabilities.

The operation section is a reference for operators. Photographs and illustrations guide the operator through procedures of inspecting, starting, operating, and stopping the engine. This section also includes a discussion of electronic diagnostic information.

Maintenance

The maintenance section is a guide to engine care. The illustrated, step-by-step instructions are grouped by fuel consumption, service hours and/or calendar time maintenance intervals. Items in the maintenance schedule are referenced to detailed instructions that follow.

Use fuel consumption or service hours to determine intervals. Calendar intervals shown (daily, annually, etc.) may be used instead of service meter intervals if they provide more convenient schedules and approximate the indicated service meter reading.

Recommended service should be performed at the appropriate intervals as indicated in the Maintenance Interval Schedule. The actual operating environment of the engine also governs the Maintenance Interval Schedule. Therefore, under severe, dusty, wet, or freezing cold operating conditions, more frequent lubrication, and maintenance than is specified in the Maintenance Interval Schedule may be necessary.

The maintenance schedule items are organized for a preventive maintenance management program. If the preventive maintenance program is followed, a periodic tune-up is not required. The implementation of a preventive maintenance management program should minimize operating costs through cost avoidances resulting from reductions in unscheduled downtime and failures.

Maintenance Intervals

Perform maintenance on items at multiples of the original requirement. Each level and/or individual items in each level should be shifted ahead or back depending upon your specific maintenance practices, operation, and application. We recommend that the maintenance schedules be reproduced and displayed near the engine as a convenient reminder. We also recommend that a maintenance record be maintained as part of the engine's permanent record.

See the section in the Operation and Maintenance Manual, “Maintenance Records” for information regarding documents that are accepted as proof of maintenance or repair. Your authorized Cat dealer can assist you in adjusting your maintenance schedule to meet the needs of your operating environment.

Overhaul

Major engine overhaul details are not covered in the Operation and Maintenance Manual except for the interval and the maintenance items in that interval. Major repairs are best left to trained personnel or an authorized Cat dealer. Your Cat dealer offers various options regarding overhaul programs. If you experience a major engine failure, there are also numerous after failure overhaul options available from your Cat dealer. Consult with your dealer for information regarding these options.

Safety Section

i02872106

Safety Messages

SMCS Code: 1000; 7405

There may be several specific warning signs on your engine. The exact location and a description of the warning signs are reviewed in this section. Please become familiar with all warning signs.

Ensure that all of the warning signs are legible. Clean the warning signs or replace the warning signs if the words cannot be read or if the illustrations are not visible. Use a cloth, water, and soap to clean the warning signs. Do not use solvents, gasoline, or other harsh chemicals. Solvents, gasoline, or harsh chemicals could loosen the adhesive that secures the warning signs. The warning signs that are loosened could drop off of the engine.

Replace any warning sign that is damaged or missing. If a warning sign is attached to a part of the engine that is replaced, install a new warning sign on the replacement part. Your Caterpillar dealer can provide new warning signs.

(1) Universal Warning

⚠ WARNING

Do not operate or work on this equipment unless you have read and understand the instructions and warnings in the Operation and Maintenance Manuals. Failure to follow the instructions or heed the warnings could result in serious injury or death.

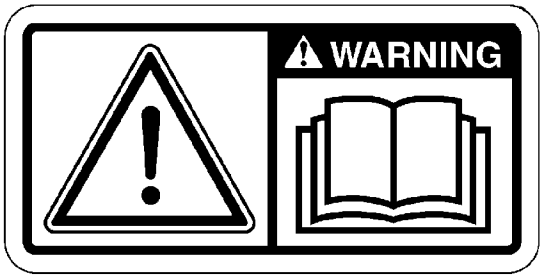

Illustration 1 g01154807

Typical example

The Universal Warning label (1) is located on both sides of the valve mechanism cover base. Refer to illustration 2 .

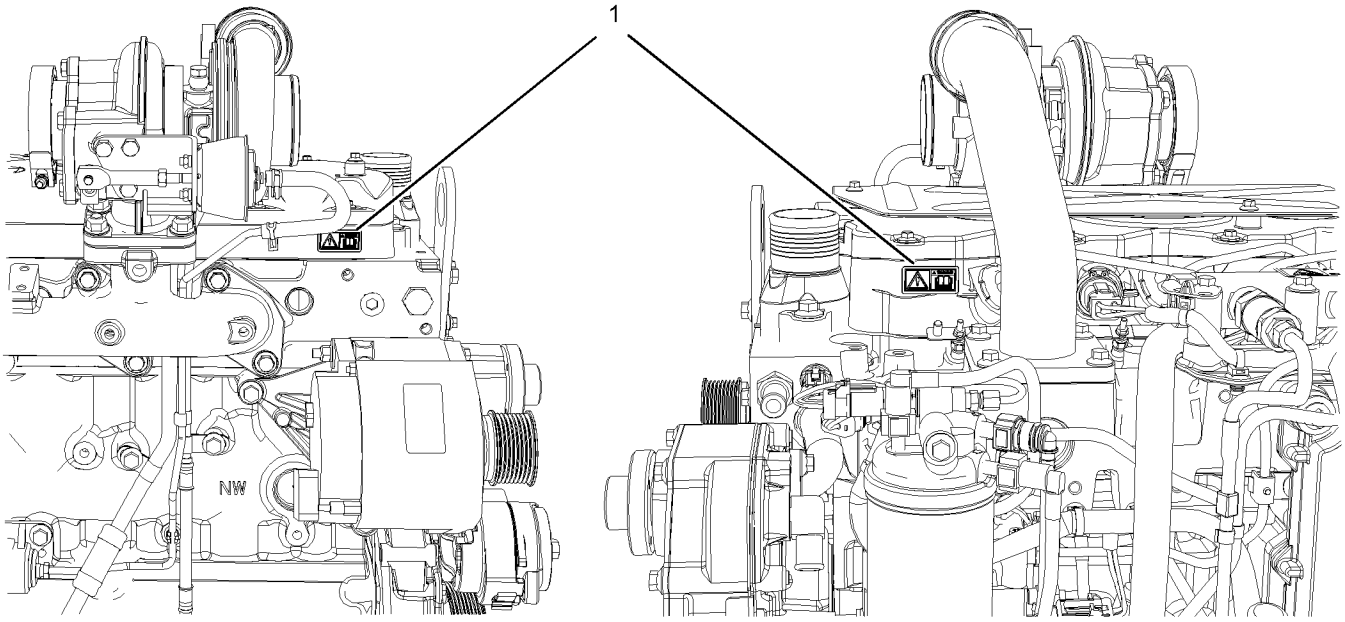

Illustration 2 g01268960

(1) Universal warning

(2) Hand (High Pressure)

⚠ WARNING

Contact with high pressure fuel may cause fluid penetration and burn hazards. High pressure fuel spray may cause a fire hazard. Failure to follow these inspection, maintenance and service instructions may cause personal injury or death.



Illustration 3 g01154858

Typical example

The warning label for the Hand (High Pressure) (2) is located on the top of the fuel manifold. Refer to illustration 4 .

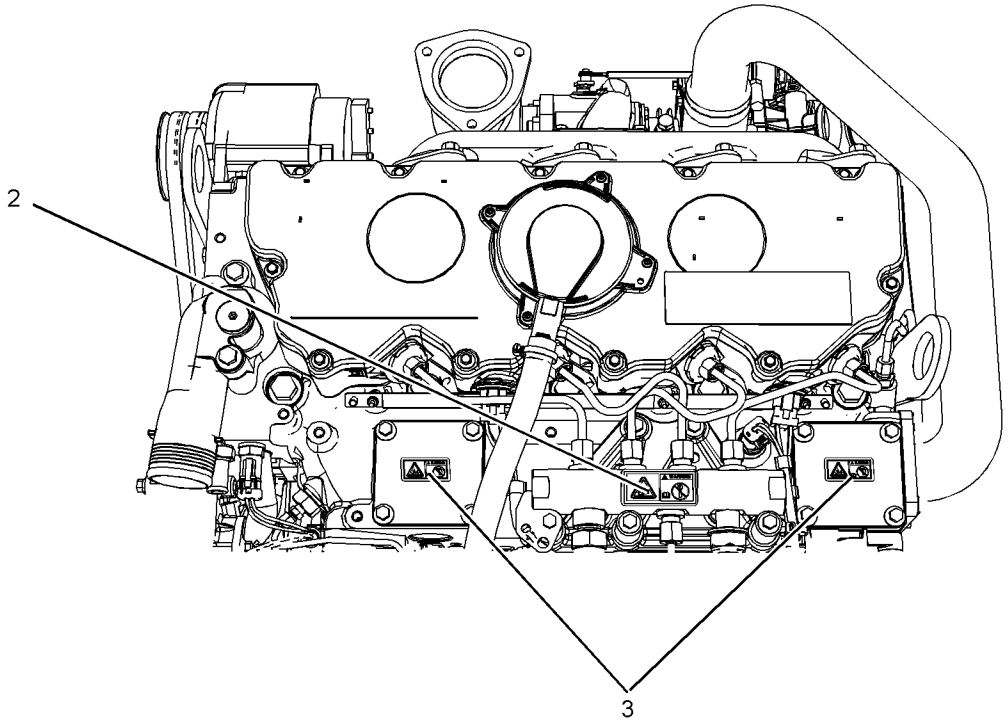

Illustration 4 g01430275

(2) Hand (High Pressure) (3) Ether

(3) Ether

⚠ WARNING

Do not use aerosol types of starting aids such as ether. Such use could result in an explosion and personal injury.



Illustration 5 g01154809

Typical example

The ether warning label (3) is located on the cover of the inlet manifold. Refer to illustration 4 .

Note: The position of this label will depend on the application on the engine.

i08330949

General Hazard Information

SMCS Code: 1000; 7405



Illustration 6 g00104545

Attach a “Do Not Operate” warning tag or a similar warning tag to the start switch or to the controls before the engine is serviced or before the engine is repaired. These warning tags (Special Instruction, SEHS7332) are available from your Caterpillar dealer. Attach the warning tags to the engine and to each operator control station. When it is appropriate, disconnect the starting controls.

Do not allow unauthorized personnel on the engine, or around the engine when the engine is being serviced.

Engine exhaust contains products of combustion which may be harmful to your health. Always start the engine and operate the engine in a well ventilated area. If the engine is in an enclosed area, vent the engine exhaust to the outside.

Cautiously remove the following parts. To help prevent spraying or splashing of pressurized fluids, hold a rag over the part that is being removed.

- Filler caps
- Grease fittings
- Pressure taps
- Breathers
- Drain plugs

Use caution when cover plates are removed. Gradually loosen, but do not remove the last two bolts or nuts that are located at opposite ends of the cover plate or the device. Before removing the last two bolts or nuts, pry the cover loose in order to relieve any spring pressure or other pressure.

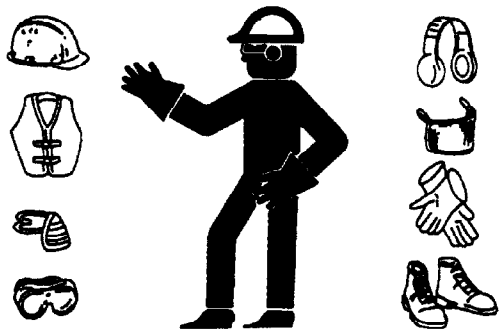

Illustration 7 g00702020

- Wear a hard hat, protective glasses, and other protective equipment, as required.
- When work is performed around an engine that is operating, wear protective devices for ears in order to help prevent damage to hearing.
- Do not wear loose clothing or jewelry that can snag on controls or on other parts of the engine.
- Ensure that all protective guards and all covers are secured in place on the engine.
- Never put maintenance fluids into glass containers. Glass containers can break.
- Use all cleaning solutions with care.
- Report all necessary repairs.

Unless other instructions are provided, perform the maintenance under the following conditions:

- The engine is stopped. Ensure that the engine cannot be started.
- Disconnect the batteries when maintenance is performed or when the electrical system is serviced. Disconnect the battery ground leads. Tape the leads in order to help prevent sparks.
- Do not attempt any repairs that are not understood. Use the proper tools. Replace any equipment that is damaged or repair the equipment.

Pressurized Air and Water

Pressurized air and/or water can cause debris and/or hot water to be blown out. This could result in personal injury.

When pressurized air and/or pressurized water is used for cleaning, wear protective clothing, protective shoes, and eye protection. Eye protection includes goggles or a protective face shield.

The maximum air pressure for cleaning purposes must be below 205 kPa (30 psi). The maximum water pressure for cleaning purposes must be below 275 kPa (40 psi).

Fluid Penetration

Pressure can be trapped in the hydraulic circuit long after the engine has been stopped. The pressure can cause hydraulic fluid or items such as pipe plugs to escape rapidly if the pressure is not relieved correctly.

Do not remove any hydraulic components or parts until pressure has been relieved or personal injury may occur. Do not disassemble any hydraulic components or parts until pressure has been relieved or personal injury may occur. Refer to the OEM information for any procedures that are required to relieve the hydraulic pressure.

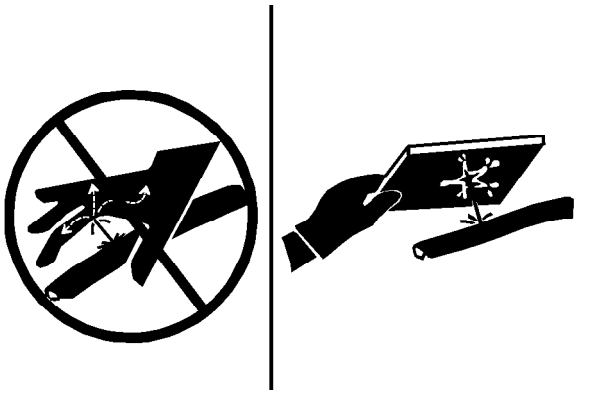

Illustration 8 g00687600

Always use a board or cardboard when you check for a leak. Leaking fluid that is under pressure can penetrate body tissue. Fluid penetration can cause serious injury and possible death. A pin hole leak can cause severe injury. If fluid is injected into your skin, you must get treatment immediately. Seek treatment from a doctor that is familiar with this type of injury.

Containing Fluid Spillage

Care must be taken in order to ensure that fluids are contained during performance of inspection, maintenance, testing, adjusting and repair of the engine. Prepare to collect the fluid with suitable containers before opening any compartment or disassembling any component that contains fluids.

Refer to Special Publication, NENG2500, “Dealer Service Tool Catalog” for the following items:

- Tools that are suitable for collecting fluids and equipment that is suitable for collecting fluids
- Tools that are suitable for containing fluids and equipment that is suitable for containing fluids

Obey all local regulations for the disposal of liquids.

Hexavalent Chromium

Caterpillar equipment and replacement parts comply with applicable regulations and requirements where originally sold. Caterpillar recommends the use of only genuine Caterpillar replacement parts.

Hexavalent chromium has occasionally been detected on exhaust and heat shield systems on Caterpillar engines. Although laboratory testing is the only accurate way to know if hexavalent chromium is, in fact, present, the presence of a yellow deposit in areas of high heat (for example, exhaust system components or exhaust insulation) may be an indication of the presence of hexavalent chromium.

Use caution if you suspect the presence of hexavalent chromium. Avoid skin contact when handling items that you suspect may contain hexavalent chromium, and avoid inhalation of any dust in the suspect area. Inhalation of, or skin contact with, hexavalent chromium dust may be hazardous to your health.

If such yellow deposits are found on the engine, engine component parts, or associated equipment or packages, Caterpillar recommends following local health and safety regulations and guidelines, utilizing good hygiene, and adhering to safe work practices when handling the equipment or parts. Caterpillar also recommends the following:

- Wear appropriate Personal Protective Equipment (PPE)
- Wash your hands and face with soap and water prior to eating, drinking, or smoking, and also during rest room breaks, to prevent ingestion of any yellow powder
- Never use compressed air for cleaning areas suspected of containing hexavalent chromium
- Avoid brushing, grinding, or cutting materials suspected of containing hexavalent chromium
- Obey environmental regulations for the disposal of all materials that may contain or have come into contact with hexavalent chromium

- Stay away from areas that might have hexavalent chromium particles in the air.

Asbestos Information



Illustration 9 g00702022

Caterpillar equipment and replacement parts that are shipped from Caterpillar are asbestos free. Caterpillar recommends the use of only genuine Caterpillar replacement parts. Use the following guidelines when you handle any replacement parts that contain asbestos or when you handle asbestos debris.

Use caution. Avoid inhaling dust that might be generated when you handle components that contain asbestos fibers. Inhaling this dust can be hazardous to your health. The components that may contain asbestos fibers are brake pads, brake bands, lining material, clutch plates, and some gaskets. The asbestos that is used in these components is usually bound in a resin or sealed in some way. Normal handling is not hazardous unless airborne dust that contains asbestos is generated.

If dust that may contain asbestos is present, there are several guidelines that should be followed:

- Never use compressed air for cleaning.
- Avoid brushing materials that contain asbestos.
- Avoid grinding materials that contain asbestos.
- Use a wet method in order to clean up asbestos materials.
- A vacuum cleaner that is equipped with a high efficiency particulate air filter (HEPA) can also be used.
- Use exhaust ventilation on permanent machining jobs.
- Wear an approved respirator if there is no other way to control the dust.
- Comply with applicable rules and regulations for the work place. In the United States, use Occupational Safety and Health Administration (OSHA) requirements. These OSHA requirements can be found in “29 CFR 1910.1001”.
- Obey environmental regulations for the disposal of asbestos.
- Stay away from areas that might have asbestos particles in the air.

Dispose of Waste Properly

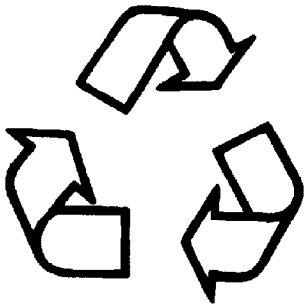

Illustration 10 g00706404

Improperly disposing of waste can threaten the environment. Potentially harmful fluids should be disposed of according to local regulations.

Always use leakproof containers when you drain fluids. Do not pour waste onto the ground, down a drain, or into any source of water.

i06039654

Burn Prevention

SMCS Code: 1000; 7405

Do not touch any part of an operating engine. Allow the engine to cool before any maintenance is performed on the engine.

⚠ WARNING

Contact with high pressure fuel may cause fluid penetration and burn hazards. High pressure fuel spray may cause a fire hazard. Failure to follow these inspection, maintenance and service instructions may cause personal injury or death.

After the engine has stopped, wait for 10 minutes in order to allow the fuel pressure to be purged from the high-pressure fuel lines before any service or repair is performed on the engine fuel lines.

Allow the pressure to be purged in the air system, in the hydraulic system, in the lubrication system, or in the cooling system before any lines, fittings, or related items are disconnected.

Coolant

When the engine is at operating temperature, the engine coolant is hot. The coolant is also under pressure. The radiator and all lines to the heaters or to the engine contain hot coolant.

Any contact with hot coolant or with steam can cause severe burns. Allow cooling system components to cool before the cooling system is drained.

Check that the coolant level after the engine has stopped and the engine has been allowed to cool.

Ensure that the filler cap is cool before removing the filler cap. The filler cap must be cool enough to touch with a bare hand. Remove the filler cap slowly in order to relieve pressure.

Cooling system conditioner contains alkali. Alkali can cause personal injury. Do not allow alkali to contact the skin, the eyes, or the mouth.

Oils

Skin may be irritated following repeated or prolonged exposure to mineral and synthetic base oils. Refer to your suppliers Material Safety Data Sheets for detailed information. Hot oil and lubricating components can cause personal injury. Do not allow hot oil to contact the skin. Appropriate personal protective equipment should be used.

Diesel Fuel

Diesel may be irritating to the eyes, respiratory system, and skin. Prolonged exposure to diesel may cause various skin conditions. Appropriate personal protective equipment should be used. Refer to supplier Material safety Data sheets for detailed information.

Batteries

Electrolyte is an acid. Electrolyte can cause personal injury. Do not allow electrolyte to contact the skin or the eyes. Always wear protective glasses for servicing batteries. Wash hands after touching the batteries and connectors. Use of gloves is recommended.

i02328452

Fire Prevention and Explosion Prevention

SMCS Code: 1000; 7405



Illustration 11 g00704000

All fuels, most lubricants, and some coolant mixtures are flammable.

Flammable fluids that are leaking or spilled onto hot surfaces or onto electrical components can cause a fire. Fire may cause personal injury and property damage.

A flash fire may result if the covers for the engine crankcase are removed within fifteen minutes after an emergency shutdown.

Determine whether the engine will be operated in an environment that allows combustible gases to be drawn into the air inlet system. These gases could cause the engine to overspeed. Personal injury, property damage, or engine damage could result.

If the application involves the presence of combustible gases, consult your Caterpillar dealer for additional information about suitable protection devices.

Remove all flammable materials such as fuel, oil, and debris from the engine. Do not allow any flammable materials to accumulate on the engine.

Store fuels and lubricants in properly marked containers away from unauthorized persons. Store oily rags and any flammable materials in protective containers. Do not smoke in areas that are used for storing flammable materials.

Do not expose the engine to any flame.

Exhaust shields (if equipped) protect hot exhaust components from oil or fuel spray in case of a line, a tube, or a seal failure. Exhaust shields must be installed correctly.

Do not weld on lines or tanks that contain flammable fluids. Do not flame cut lines or tanks that contain flammable fluid. Clean any such lines or tanks thoroughly with a nonflammable solvent prior to welding or flame cutting.

Wiring must be kept in good condition. All electrical wires must be properly routed and securely attached. Check all electrical wires daily. Repair any wires that are loose or frayed before you operate the engine. Clean all electrical connections and tighten all electrical connections.

Eliminate all wiring that is unattached or unnecessary. Do not use any wires or cables that are smaller than the recommended gauge. Do not bypass any fuses and/or circuit breakers.

Arcing or sparking could cause a fire. Secure connections, recommended wiring, and properly maintained battery cables will help to prevent arcing or sparking.

⚠ WARNING

Contact with high pressure fuel may cause fluid penetration and burn hazards. High pressure fuel spray may cause a fire hazard. Failure to follow these inspection, maintenance and service instructions may cause personal injury or death.

After the engine has stopped, you must wait for 60 seconds in order to allow the fuel pressure to be purged from the high pressure fuel lines before any service or repair is performed on the engine fuel lines.

Inspect all lines and hoses for wear or for deterioration. The hoses must be properly routed. The lines and hoses must have adequate support and secure clamps. Tighten all connections to the recommended torque. Leaks can cause fires.

Oil filters and fuel filters must be properly installed. The filter housings must be tightened to the proper torque.



Illustration 12 g00704059

Use caution when you are refueling an engine. Do not smoke while you are refueling an engine. Do not refuel an engine near open flames or sparks. Always stop the engine before refueling.

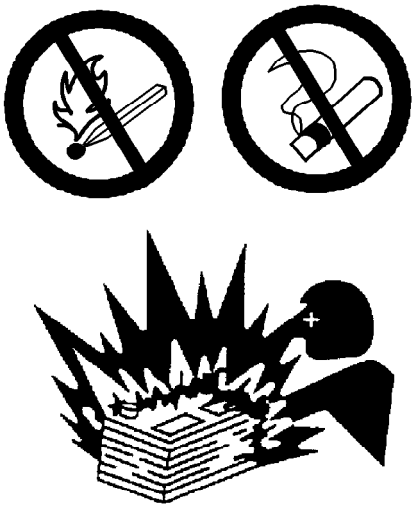

Illustration 13 g00704135

Gases from a battery can explode. Keep any open flames or sparks away from the top of a battery. Do not smoke in battery charging areas.

Never check the battery charge by placing a metal object across the terminal posts. Use a voltmeter or a hydrometer.

Improper jumper cable connections can cause an explosion that can result in injury. Refer to the Operation Section of this manual for specific instructions.

Do not charge a frozen battery. This may cause an explosion.

The batteries must be kept clean. The covers (if equipped) must be kept on the cells. Use the recommended cables, connections, and battery box covers when the engine is operated.

Fire Extinguisher

Make sure that a fire extinguisher is available. Be familiar with the operation of the fire extinguisher. Inspect the fire extinguisher and service the fire extinguisher regularly. Obey the recommendations on the instruction plate.

Ether

Ether is flammable and poisonous.

Use ether in well ventilated areas. Do not smoke while you are replacing an ether cylinder or while you are using an ether spray.

Do not store ether cylinders in living areas or in the engine compartment. Do not store ether cylinders in direct sunlight or in temperatures above 49 °C (120 °F). Keep ether cylinders away from open flames or sparks.

Dispose of used ether cylinders properly. Do not puncture an ether cylinder. Keep ether cylinders away from unauthorized personnel.

Do not spray ether into an engine if the engine is equipped with a thermal starting aid for cold weather starting.

Lines, Tubes and Hoses

Do not bend high pressure lines. Do not strike high pressure lines. Do not install any lines that are bent or damaged.

Repair any lines that are loose or damaged. Leaks can cause fires. Consult your Caterpillar dealer for repair or for replacement parts.

Check lines, tubes and hoses carefully. Do not use your bare hand to check for leaks. Use a board or cardboard to check for leaks. Tighten all connections to the recommended torque.

Replace the parts if any of the following conditions are present:

- High pressure fuel line or lines are removed.
- End fittings are damaged or leaking.
- Outer coverings are chafed or cut.
- Wires are exposed.
- Outer coverings are ballooning.
- Flexible part of the hoses are kinked.
- Outer covers have embedded armoring.
- End fittings are displaced.

Make sure that all clamps, guards, and heat shields are installed correctly. During engine operation, this will help to prevent vibration, rubbing against other parts, and excessive heat.

i08162291

Crushing Prevention and Cutting Prevention

SMCS Code: 1000; 7405

Support the component properly when work beneath the component is performed.

Unless other maintenance instructions are provided, never attempt adjustments while the engine is running.

Stay clear of all rotating parts and of all moving parts. Leave the guards in place until maintenance is performed. After the maintenance is performed, reinstall the guards.

Keep objects away from moving fan blades. The fan blades will throw objects or cut objects.

When objects are struck, wear protective glasses to avoid injury to the eyes.

Chips or other debris may fly off objects when objects are struck. Before objects are struck, ensure that no one will be injured by flying debris.

i08159517

Mounting and Dismounting

SMCS Code: 1000; 7405

Inspect the steps, the handholds, and the work area before mounting the engine. Keep these items clean and keep these items in good repair.

Mount the engine and dismount the engine only at locations that have steps and/or handholds. Do not climb on the engine, and do not jump off the engine.

Face the engine to mount the engine or dismount the engine. With your feet and hands, always maintain a three-point contact with the steps and designated handholds. Do not use any controls as handholds.

Do not stand on components which cannot support your weight. Use an adequate ladder or use a work platform. Secure the climbing equipment so that the equipment will not move.

Do not carry tools or supplies when you mount the engine or when you dismount the engine. Use a hand line to raise and lower tools or supplies.

i02861106

High Pressure Fuel Lines

SMCS Code: 1274

⚠ WARNING

Contact with high pressure fuel may cause fluid penetration and burn hazards. High pressure fuel spray may cause a fire hazard. Failure to follow these inspection, maintenance and service instructions may cause personal injury or death.

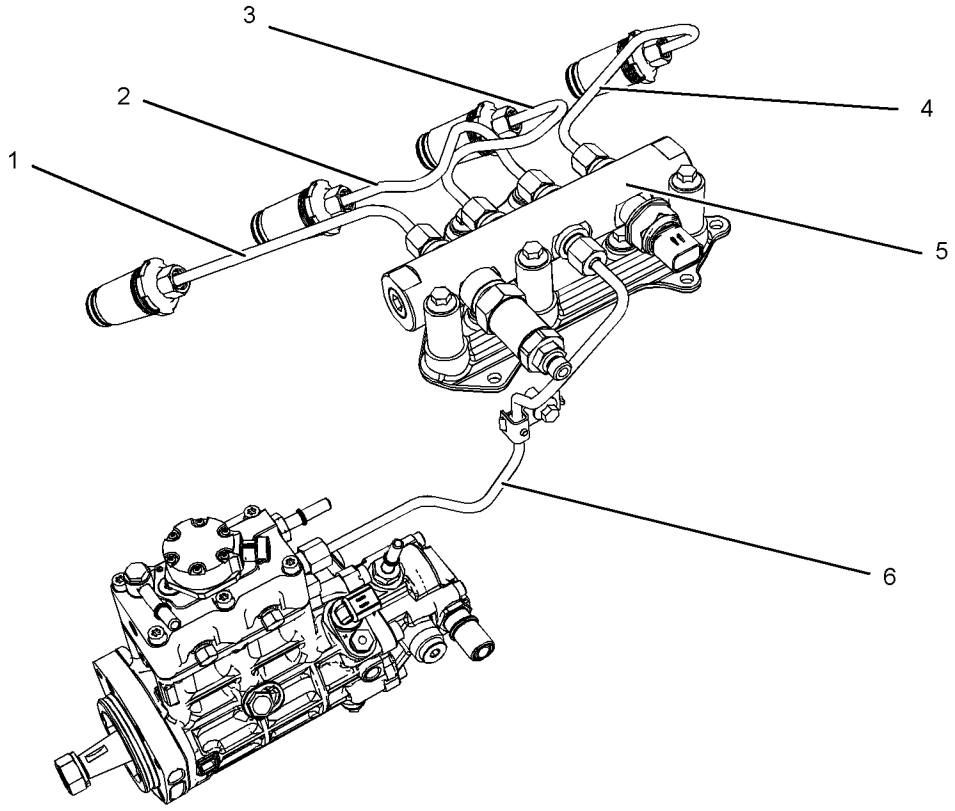

Illustration 14 g01425090

(1) High pressure line
(2) High pressure line
(3) High pressure line
(4) High pressure line
(5) High pressure fuel manifold (rail)
(6) High pressure line

The high pressure fuel lines are the fuel lines that are between the high pressure fuel pump and the high pressure fuel manifold and the fuel lines that are between the fuel manifold and cylinder head. These fuel lines are different from fuel lines on other fuel systems.

This is because of the following differences:

- The high pressure fuel lines are constantly charged with high pressure.
- The internal pressures of the high pressure fuel lines are higher than other types of fuel system.
- The high pressure fuel lines are formed to shape and then strengthened by a special process.

Do not step on the high pressure fuel lines. Do not deflect the high pressure fuel lines. Do not bend or strike the high pressure fuel lines. Deformation or damage of the high pressure fuel lines may cause a point of weakness and potential failure.

Do not check the high pressure fuel lines with the engine or the starting motor in operation. After the engine has stopped allow 60 seconds to pass in order to allow the pressure to be purged before any service or repair is performed on the engine fuel lines.

Do not loosen the high pressure fuel lines in order to remove air from the fuel system. This procedure is not required.

Visually inspect the high pressure fuel lines before the engine is started. This inspection should be each day.

If you inspect the engine in operation, always use the proper inspection procedure in order to avoid a fluid penetration hazard. Refer to Operation and Maintenance Manual, “General Hazard Information”.

- Inspect the high pressure for the following: damage, deformation, a nick, a cut, a crease, or a dent

- Do not operate the engine with a fuel leak. If there is a leak do not tighten the connection in order to stop the leak. The connection must only be tightened to the recommended torque. Refer to Disassembly and Assembly Manual, “Fuel Injection Lines - Remove and Fuel Injection Lines - Install”.
- If the high pressure fuel lines are torqued correctly and the high pressure fuel lines are leaking the high pressure fuel lines must be replaced.
- Ensure that all clips on the high pressure fuel lines are in place. Do not operate the engine with clips that are damaged, missing or clips that are loose.
- Do not attach any other item to the high pressure fuel lines.
- Loosened high pressure fuel lines must be replaced. Also removed high pressure fuel lines must be replaced. Refer to Disassembly and Assembly Manual, “ Fuel Injection Lines - Install”.

i08614835

Before Starting Engine

SMCS Code: 1000

NOTICE
For initial start-up of a new or rebuilt engine, and for start-up of an engine that has been serviced, make provision to shut the engine off should an overspeed occur. This may be accomplished by shutting off the air and/or fuel supply to the engine.

⚠ WARNING

Engine exhaust contains products of combustion which may be harmful to your health. Always start and operate the engine in a well ventilated area and, if in an enclosed area, vent the exhaust to the outside.

Inspect the engine for potential hazards.

Do not start the engine if there is a “DO NOT OPERATE” warning tag or similar warning tag attached to the start switch. Do not move any of the controls if there is a “DO NOT OPERATE” warning tag or similar warning tag attached to the controls.

Before starting the engine, ensure that no one is on, underneath, or close to the engine. Ensure that the area is free of personnel.

If equipped, ensure that the lighting system for the engine is suitable for the conditions. Ensure that all lights work properly, if equipped.

All protective guards and all protective covers must be installed if the engine must be started to perform service procedures. To help prevent an accident that is caused by parts in rotation, work around the parts carefully.

Do not bypass the automatic shutoff circuits. Do not disable the automatic shutoff circuits. The circuits are provided to help prevent personal injury. The circuits are also provided to help prevent engine damage.

See the Service Manual for repairs and for adjustments.

i02344744

Engine Starting

SMCS Code: 1000

⚠ WARNING

Do not use aerosol types of starting aids such as ether. Such use could result in an explosion and personal injury.

If a warning tag is attached to the engine start switch or to the controls DO NOT start the engine or move the controls. Consult with the person that attached the warning tag before the engine is started.

All protective guards and all protective covers must be installed if the engine must be started in order to perform service procedures. To help prevent an accident that is caused by parts in rotation, work around the parts carefully.

Start the engine from the operator's compartment or from the engine start switch.

Always start the engine according to the procedure that is described in the Operation and Maintenance Manual, “Engine Starting” topic in the Operation Section. Knowing the correct procedure will help to prevent major damage to the engine components. Knowing the procedure will also help to prevent personal injury.

To ensure that the jacket water heater (if equipped) and/or the lube oil heater (if equipped) is working correctly, check the water temperature gauge and/or the oil temperature gauge during the heater operation.

Engine exhaust contains products of combustion which can be harmful to your health. Always start the engine and operate the engine in a well ventilated area. If the engine is started in an enclosed area, vent the engine exhaust to the outside.

Note: The engine is equipped with a device for cold starting. If the engine will be operated in very cold conditions, then an extra cold starting aid may be required. Normally, the engine will be equipped with the correct type of starting aid for your region of operation.

These engines are equipped with a glow plug starting aid in each individual cylinder that heats the intake air in order to improve starting.

i02328530

Engine Stopping

SMCS Code: 1000

To avoid overheating of the engine and accelerated wear of the engine components, stop the engine according to this Operation and Maintenance Manual, “Engine Stopping” topic (Operation Section).

Use the Emergency Stop Button (if equipped) ONLY in an emergency situation. DO NOT use the Emergency Stop Button for normal engine stopping. After an emergency stop, DO NOT start the engine until the problem that caused the emergency stop has been corrected.

On the initial start-up of a new engine or an engine that has been serviced, make provisions to stop the engine if an overspeed condition occurs.

To stop an electronic controlled engine, cut the power to the engine and/or the air supply to the engine.

i02234878

Electrical System

SMCS Code: 1000; 1400

Never disconnect any charging unit circuit or battery circuit cable from the battery when the charging unit is operating. A spark can cause the combustible gases that are produced by some batteries to ignite.

To help prevent sparks from igniting combustible gases that are produced by some batteries, the negative “−” cable should be connected last from the external power source to the negative “−” terminal of the starting motor. If the starting motor is not equipped with a negative “−” terminal, connect the cable to the engine block.

Check the electrical wires daily for wires that are loose or frayed. Tighten all loose electrical connections before the engine is started. Repair all frayed electrical wires before the engine is started. See the Operation and Maintenance Manual for specific starting instructions.

Grounding Practices

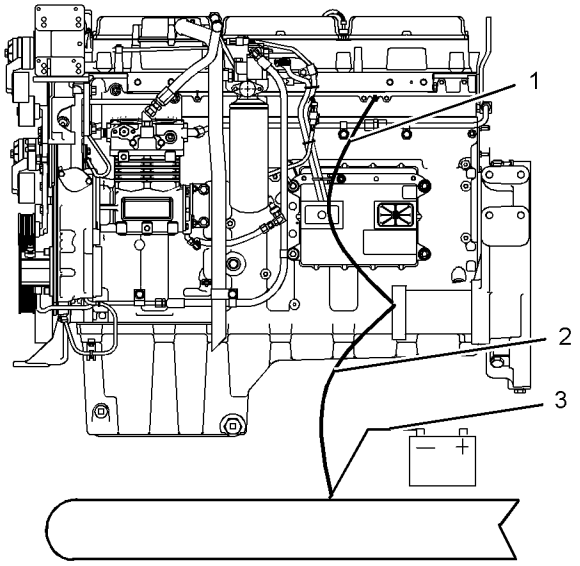

Illustration 15 g01162916

Typical example

(1) Starting motor to engine block
(2) Ground to starting motor
(3) Ground to battery

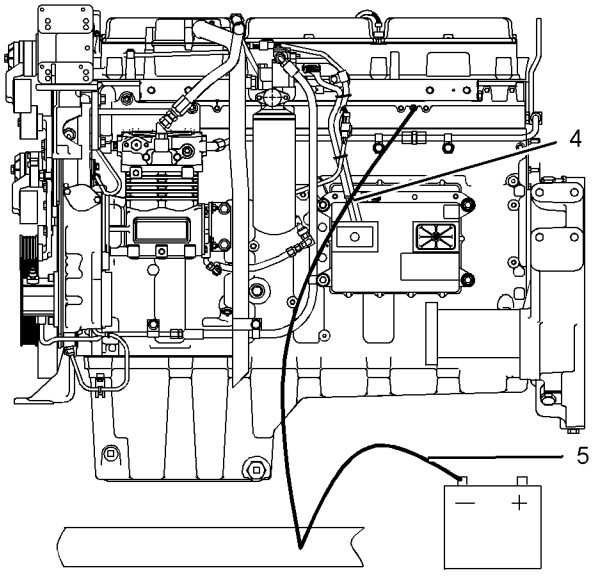

Illustration 16 g01162918

Typical example

(4) Ground to engine
(5) Ground to battery

Correct grounding for the engine electrical system is necessary for optimum engine performance and reliability. Incorrect grounding will result in uncontrolled electrical circuit paths and in unreliable electrical circuit paths.

Uncontrolled electrical circuit paths can result in damage to the crankshaft bearing journal surfaces and to aluminum components.

Engines that are installed without engine-to-frame ground straps can be damaged by electrical discharge.

To ensure that the engine and the engine electrical systems function correctly, an engine-to-frame ground strap with a direct path to the battery must be used. This path may be provided by way of a direct engine ground to the frame.

The connections for the grounds should be tight and free of corrosion. The engine alternator must be grounded to the negative “-” battery terminal with a wire that is adequate to handle the full charging current of the alternator.

The power supply connections and the ground connections for the engine electronics should always be from the isolator to the battery.

i02652709

Engine Electronics

SMCS Code: 1000; 1400; 1900

⚠ WARNING

Tampering with the electronic system installation or the OEM wiring installation can be dangerous and could result in personal injury or death and/or engine damage.

⚠ WARNING

Electrical Shock Hazard. The electronic unit injectors use DC voltage. The ECM sends this voltage to the electronic unit injectors. Do not come in contact with the harness connector for the electronic unit injectors while the engine is operating. Failure to follow this instruction could result in personal injury or death.

This engine has a comprehensive, programmable Engine Monitoring System. The Electronic Control Module (ECM) has the ability to monitor the engine operating conditions. If any of the engine parameters extend outside an allowable range, the ECM will initiate an immediate action.

The following actions are available for engine monitoring control:

- Warning
- Derate
- Shutdown

The following monitored engine operating conditions have the ability to limit engine speed and/or the engine power:

- Engine Coolant Temperature
- Engine Oil Pressure
- Engine Speed
- Intake Manifold Air Temperature

The Engine Monitoring package can vary for different engine models and different engine applications. However, the monitoring system and the engine monitoring control will be similar for all engines.

Note: Many of the engine control systems and display modules that are available for Caterpillar Engines will work in unison with the Engine Monitoring System. Together, the two controls will provide the engine monitoring function for the specific engine application. Refer to the Troubleshooting for more information on the Engine Monitoring System.

Product Information Section

General Information

i02668476

Welding on Engines with Electronic Controls

SMCS Code: 1000

NOTICE
Because the strength of the frame may decrease, some manufacturers do not recommend welding onto a chassis frame or rail. Consult the OEM of the equipment or your Caterpillar dealer regarding welding on a chassis frame or rail.

Proper welding procedures are necessary in order to avoid damage to the engine's ECM, sensors, and associated components. When possible, remove the component from the unit and then weld the component. If removal of the component is not possible, the following procedure must be followed when you weld on a unit that is equipped with a Caterpillar Electronic Engine. The following procedure is considered to be the safest procedure to weld on a component. This procedure should provide a minimum risk of damage to electronic components.

NOTICE
Do not ground the welder to electrical components such as the ECM or sensors. Improper grounding can cause damage to the drive train bearings, hydraulic components, electrical components, and other components.

Clamp the ground cable from the welder to the component that will be welded. Place the clamp as close as possible to the weld. This will help reduce the possibility of damage.

1. Stop the engine. Turn the switched power to the OFF position.

2. Disconnect the negative battery cable from the battery. If a battery disconnect switch is provided, open the switch.

3. Disconnect the J1/P1 and J2/P2 connectors from the ECM. Move the harness to a position that will not allow the harness to accidentally move back and make contact with any of the ECM pins.

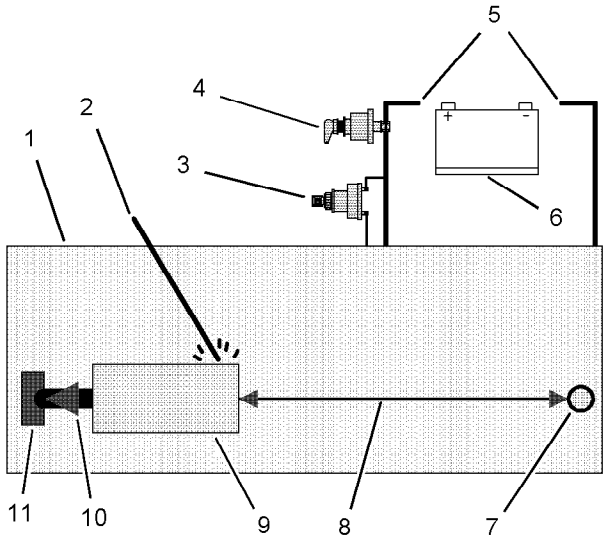

Illustration 17 g01075639

Use the example above. The current flow from the welder to the ground clamp of the welder will not cause damage to any associated components.

(1) Engine
(2) Welding electrode
(3) Keyswitch in the OFF position
(4) Battery disconnect switch in the open position
(5) Disconnected battery cables
(6) Battery
(7) Electrical/Electronic component
(8) Minimum distance between the component that is being welded and any electrical/electronic component
(9) The component that is being welded
(10) Current path of the welder
(11) Ground clamp for the welder

4. Connect the welding ground cable directly to the part that will be welded. Place the ground cable as close as possible to the weld in order to reduce the possibility of welding current damage to bearings, hydraulic components, electrical components, and ground straps.

Note: If electrical/electronic components are used as a ground for the welder, or electrical/electronic components are located between the welder ground and the weld, current flow from the welder could severely damage the component.

5. Protect the wiring harness from welding debris and spatter.

6. Use standard welding practices to weld the materials.

Model Views

i02872107

Model View Illustrations

SMCS Code: 1000

The following model views show typical features of the engines. Due to individual applications, your engine may appear different from the illustrations.

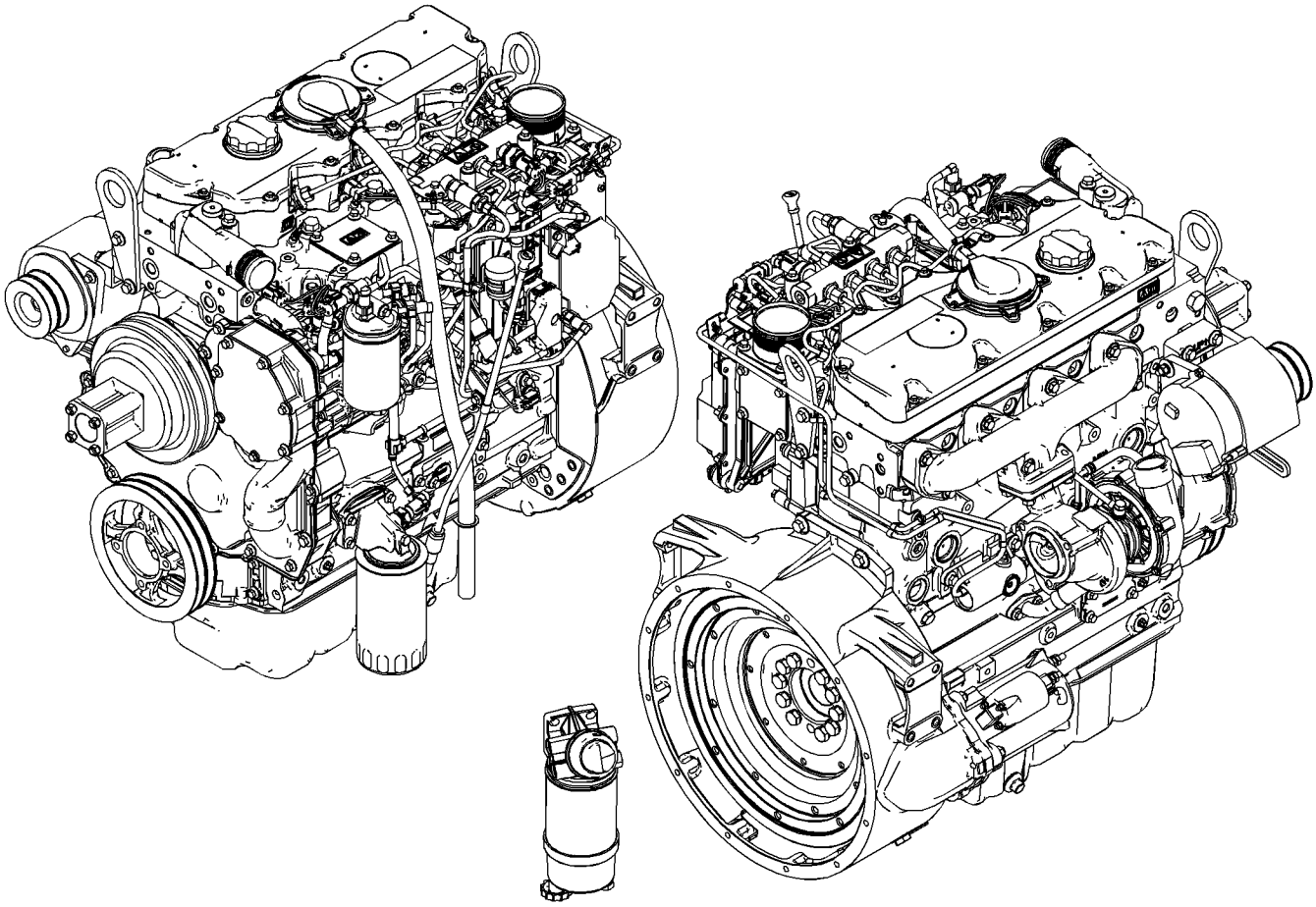

Illustration 18 g01430279

Engine view of a turbocharged aftercooled engine

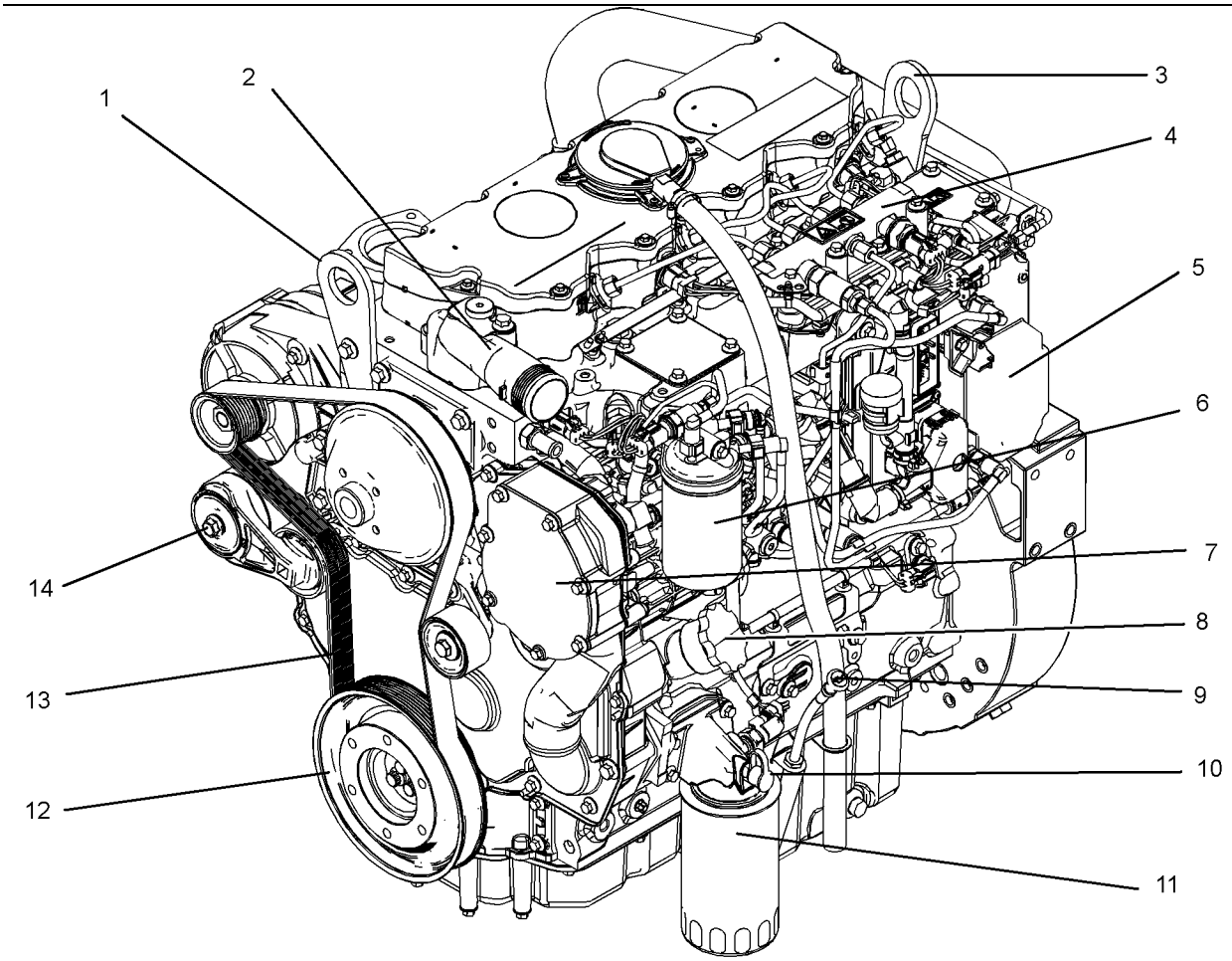

Illustration 19 g01430281

Engine view of a turbocharged engine

Front left engine view

(1) Front lifting eye
(2) Water outlet
(3) Rear lifting eye
(4) Fuel manifold (rail)
(5) Electronic control module
(6) Secondary fuel filter
(7) Water pump
(8) Oil Filler
(9) Oil gauge
(10) Oil sampling valve
(11) Oil filter
(12) Crankshaft pulley
(13) Drive Belt
(14) Belt tensioner

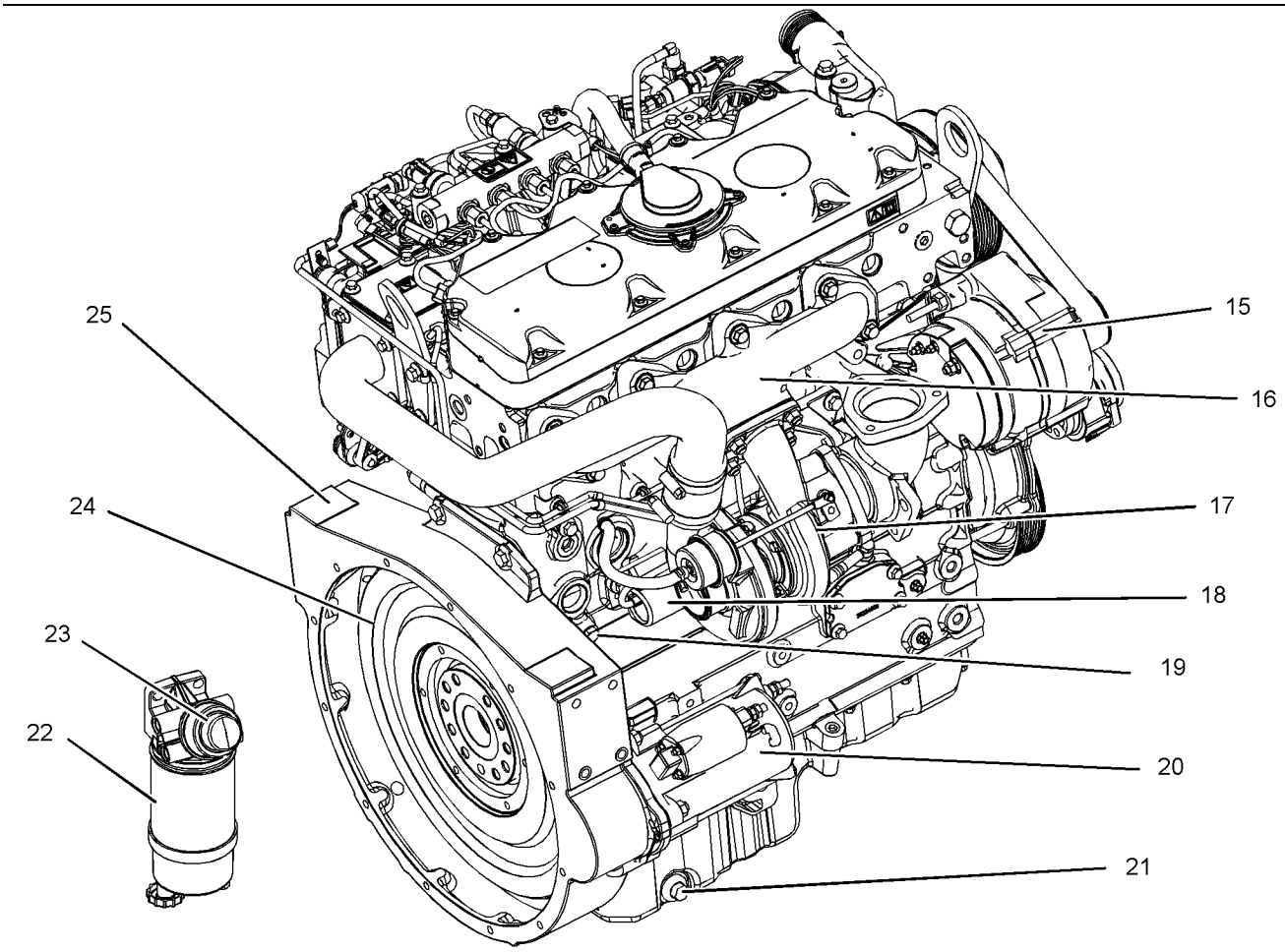

Illustration 20 g01430282

Rear right engine view

(15) Alternator
(16) Exhaust manifold
(17) Turbocharger
(18) Wastegate solenoid
(19) Drain plug or coolant sampling valve
(20) Starting Motor
(21) Oil drain plug
(22) Primary fuel filter
(23) Hand fuel priming pump
(24) Flywheel
(25) Flywheel housing

Note: The primary fuel filter may be mounted off the engine.

i02872108

Engine Description

SMCS Code: 1000

The Caterpillar C-4.4 Industrial Engine has the following characteristics:

- In-Line 4 cylinder
- Four stroke cycle
- Turbocharged
- Turbocharged aftercooled

Engine Specifications

Note: The front end of the engine is opposite the flywheel end of the engine. The left and the right sides of the engine are determined from the flywheel end. The number 1 cylinder is the front cylinder.

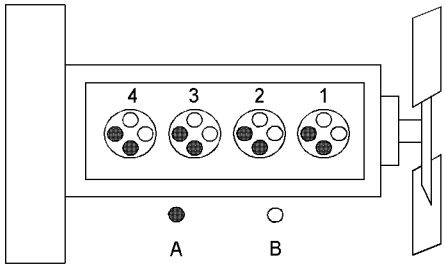

Illustration 21 g01187485

(A) Exhaust valve
(B) Inlet valve

Table 1

C-4.4 Engine Specifications	
Operating Range (rpm)	700 to 2640[1]
Arrangement and Cylinders	In-Line 4 cylinder
Bore	105 mm (4.13 inch)
Stroke	127 mm (5 inch)
Aspiration	Turbocharged, Turbocharged aftercooled
Compression Ratio	16.2:1
Displacement	4.4 L (269 in^3)
Firing Order	1-3-4-2
Rotation (flywheel end)	Counterclockwise
Valve Lash (inlet)	0.35 mm (0.013 inch)
Valve Lash (exhaust)	0.35 mm (0.013 inch)

(1) The operating rpm is dependent on the engine rating, the application and the configuration of the throttle.

Electronic Engine Features

The Caterpillar C-4.4 Engine is designed for electronic controls. The integral on board computer controls the operation of the engine. Current operating conditions are monitored. The Electronic Control Module (ECM) controls the response of the engine to these conditions and to the demands of the operator. These conditions and operator demands determine the precise control of fuel injection by the ECM. The electronic engine control system provides the following features:

- Engine monitoring
- Engine speed governing
- Control of injection pressure
- Cold start strategy
- Automatic air/fuel ratio control
- Torque rise shaping
- Injection timing control
- System diagnostics

For more information on electronic engine features, refer to the Operation and Maintenance Manual, “Engine Features and Controls” topic (Operation Section).

Engine Diagnostics

The engine has built-in diagnostics in order to ensure that the engine systems are functioning correctly. The operator will be informed of any change to a programmed limit. The operator will be alerted to the condition by a “Stop or Warning” lamp that is mounted on the dashboard. Under certain conditions, the engine horsepower and the vehicle speed may be limited. The Caterpillar Electronic Technician (ET) may be used to display the diagnostic codes.

There are three types of codes: active diagnostic, logged diagnostic and event.

Most of the diagnostic codes are logged and stored in the ECM. For additional information, refer to the Operation and Maintenance Manual, “Engine Diagnostics” topic (Operation Section).

The ECM provides an electronic governor that controls the injector output in order to maintain the desired engine rpm.

Engine Cooling and Lubrication

The cooling system consists of the following components:

- Gear-driven centrifugal water pump
- Water temperature regulator which regulates the engine coolant temperature
- Gear-driven oil pump
- Oil cooler

The engine lubricating oil is supplied by a rotor type oil pump. The engine lubricating oil is cooled and the engine lubricating oil is filtered. The bypass valves can provide unrestricted flow of lubrication oil to the engine if the oil filter element should become plugged.

Engine efficiency, efficiency of emission controls, and engine performance depend on adherence to proper operation and maintenance recommendations. Engine performance and efficiency also depend on the use of recommended fuels, lubrication oils, and coolants. Refer to this Operation and Maintenance Manual, “Maintenance Interval Schedule” for more information on maintenance items.

Engine Service Life

Engine efficiency and maximum utilization of engine performance depend on the adherence to proper operation and maintenance recommendations. In addition, use recommended fuels, coolants and lubricants. Use the Operation and Maintenance Manual as a guide for required engine maintenance.

Expected engine life is generally predicted by the average power that is demanded. The average power that is demanded is based on fuel consumption of the engine over a period of time. Reduced hours of operation at full throttle and/or operating at reduced throttle settings result in a lower average power demand. Reduced hours of operation will increase the length of operating time before an engine overhaul is required. For more information, refer to the Operation and Maintenance Manual, “Overhaul Considerations” topic (Maintenance Section).

Aftermarket Products and Caterpillar Engines

When auxiliary devices, accessories, or consumables (filters, additives, catalysts, etc) which are made by other manufacturers are used on Caterpillar products, the Caterpillar warranty is not affected simply because of such use.

However, failures that result from the installation or use of other manufacturers' devices, accessories, or consumables are NOT Caterpillar defects. Therefore, the defects are NOT covered under the Caterpillar warranty.

Welding and Caterpillar Electronic Engines

NOTICE
Because the strength of the frame may decrease, some manufacturers do not recommend welding onto a chassis frame or rail. Consult the OEM of the equipment or your Caterpillar dealer regarding welding on a chassis frame or rail.

To help avoid damage to the electronic controls, proper welding procedures are necessary. Before welding on an engine that is equipped with an electronic engine, observe the following precautions:

1. Turn off the engine. Place the key start switch in the OFF position.

2. If the machine has a battery disconnect switch, open the switch. Otherwise, disconnect the negative “-” battery cable from the battery of the vehicle.

NOTICE
Do not ground the welder to electrical components such as the ECM or sensors. Improper grounding can cause damage to the drive train bearings, hydraulic components, electrical components, and other components.

Clamp the ground cable from the welder to the component that will be welded. Place the clamp as close as possible to the weld. This will help reduce the possibility of damage.

3. Clamp the ground cable from the welder to the component that will be welded. Place the clamp as close as possible to the weld.

4. Protect wiring harnesses from welding debris and spatter. Use proper welding procedures.

Product Identification Information

i05040555

Plate Locations and Film Locations

SMCS Code: 1000

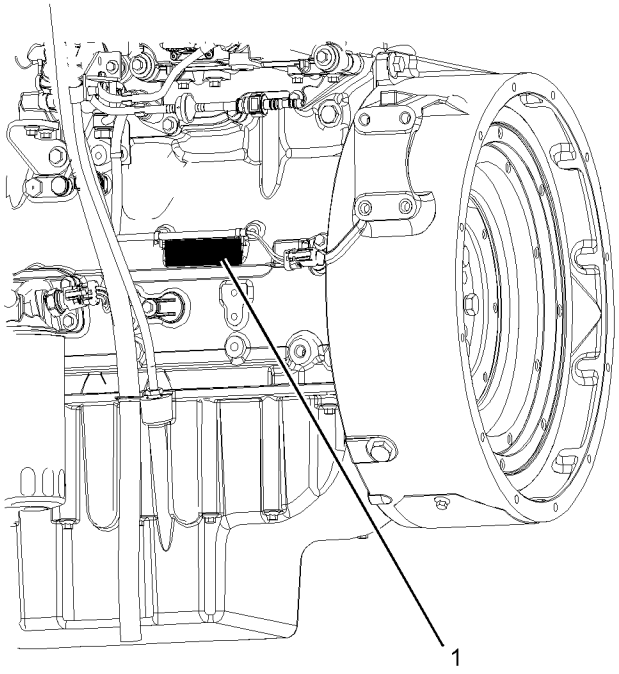

Illustration 22 g01248563

Location of the serial number plate

Serial Number Plate (1)

The engine serial number plate is located on the left side of the cylinder block to the rear of the engine.

Cat dealers need all of these numbers in order to determine the components that were included with the engine. This information permits accurate identification of replacement part numbers.

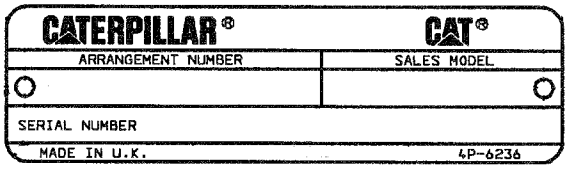

Illustration 23 g01258789

Serial number plate

i00610276

Reference Numbers

SMCS Code: 1000

Information for the following items may be needed to order parts. Locate the information for your engine. Record the information on the appropriate space. Make a copy of this list for a record. Retain the information for future reference.

Record for Reference

Engine Model _____

Engine Serial No. _____

Engine Arrangement No. _____

Modification No. _____

Engine Low Idle rpm _____

Engine Full Load rpm _____

Performance Specification No. _____

Primary Fuel Filter No. _____

Water Separator Element No. _____

Secondary Fuel Filter Element No. _____

Lubrication Oil Filter Element No. _____

Auxiliary Oil Filter Element No. _____

Supplemental Coolant Additive Maintenance Element No. (Optional) _____

Total Lubrication System Capacity _____

Total Cooling System Capacity _____

Air Cleaner Element No. _____

Fan Drive Belt No. _____

Alternator Belt No. _____

i02894858

Emissions Certification Film

SMCS Code: 1000; 7405

This information is pertinent in the United States and in Canada.

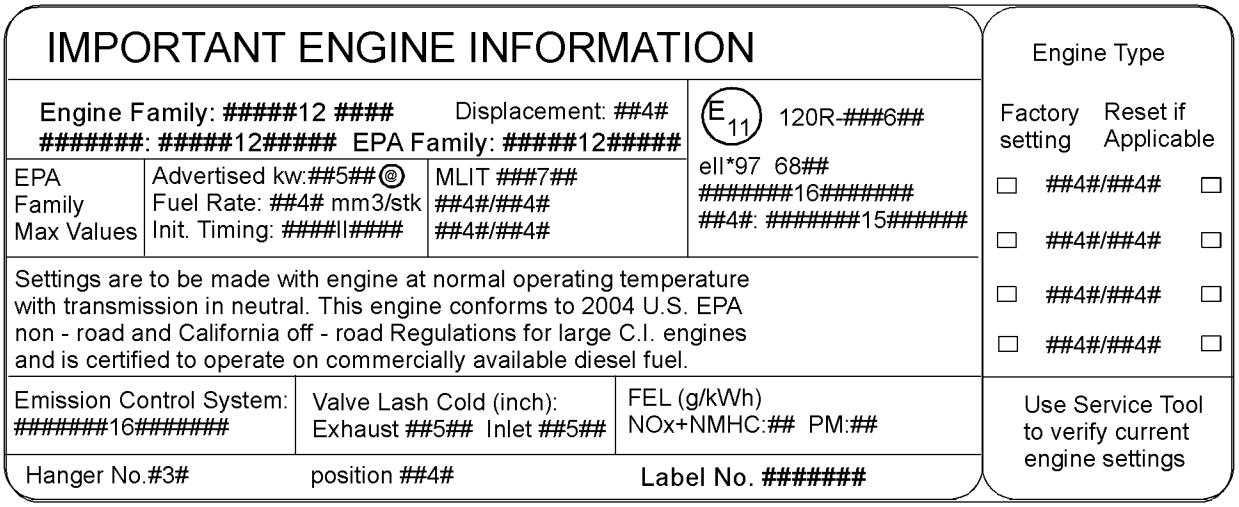

Illustration 24 g01440937

Typical example

i02238153

Customer Specified Parameters

SMCS Code: 1000

To record programmed specifications, use the following blanks.

Customer Passwords

- First Password _____
- Second Password _____

Power Rating (hp at rpm) _____

Rating Selection (A-E) _____

PTO Governor Parameters

- PTO Engine Speed Ramp Rate _____ rpm/sec

Engine Parameters

- Top Engine Limit (TEL) at 100 percent load (If Applicable) _____
- Torque Limit _____
- High Idle (If Applicable) _____
- Low Idle _____
- Intermediate Speed _____

Engine Monitoring Mode

- “OFF” _____
- “Warning” _____
- “Warning/Derate” _____
- “Warning/Derate/Shutdown” _____
- “Coolant Level Sensor Enable/Disable” _____
- “Fuel Pressure Sensor Enable/Disable” _____
- “Inlet Manifold Air Temperature Sensor Enable/Disable” _____

Equipment ID

Maintenance Indicator

- Manual-Hours
- Auto-Hours
- Manual-Fuel
- Auto-Fuel

Auxiliary Pressure

- High Warning Set Point _____

Auxiliary Temperature

- High Warning Set Point _____

Operation Section

Lifting and Storage

i07442886

Product Lifting

SMCS Code: 1000; 1404; 7002

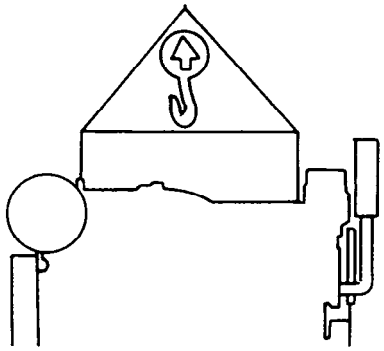

Illustration 25 g00103219

NOTICE
Always inspect lifting eyebolts and all other lifting equipment for damage before performing any lifting. Never bend the eyebolts and the brackets. Never perform product lifting if components are damaged. Only load the eyebolts and the brackets under tension. Remember that the capacity of an eyebolt is less as the angle between the supporting members and the object becomes less than 90 degrees.

When it is necessary to remove a component at an angle, only use a link bracket that is properly rated for the weight.

Use a hoist to remove heavy components. Use an adjustable lifting beam to lift the engine. All supporting members (chains and cables) should be parallel to each other. The chains and cables should be perpendicular to the top of the object that is being lifted.

Some removals require lifting the fixtures to obtain proper balance and safety.

To remove the engine ONLY, use the lifting eyes that are on the engine.

Lifting eyes are designed and installed for the specific engine arrangement. Alterations to the lifting eyes and/or the engine make the lifting eyes and the lifting fixtures obsolete. If alterations are made, ensure that proper lifting devices are provided. Consult your Caterpillar dealer for information regarding fixtures for proper engine lifting.

i08257552

Product Storage

SMCS Code: 1000; 1404; 7002

If the engine will not be started for several weeks, the lubricating oil will drain from the cylinder walls and from the piston rings. Rust can form on the cylinder liner surface. Rust on the cylinder liner surface will cause increased engine wear and a reduction in engine service life.

To help prevent excessive engine wear, use the following guidelines:

- Complete all lubrication recommendations that are listed in this Operation and Maintenance Manual, “Maintenance Interval Schedule” (Maintenance Section).
- If freezing temperatures are expected, check the cooling system for adequate protection against freezing. See this Operation and Maintenance Manual, “Refill Capacities and Recommendations” (Maintenance Section).

If an engine is out of operation and if use of the engine is not planned, special precautions should be made. If the engine will be stored for more than 1 month, a complete protection procedure is recommended.

For more detailed information on engine storage, see Special Instruction, SEHS9031, “Storage Procedure For Caterpillar Products”.

Your Cat dealer can help prepare the engine for extended storage periods.

Gauges and Indicators

i02724238

Gauges and Indicators

SMCS Code: 1900; 7450

Your engine may not have the same gauges or all of the gauges that are described. For more information about the gauge package, see the OEM information.

Gauges provide indications of engine performance. Ensure that the gauges are in good working order. Determine the normal operating range by observing the gauges over a period of time.

Noticeable changes in gauge readings indicate potential gauge or engine problems. Problems may also be indicated by gauge readings that change even if the readings are within specifications. Determine and correct the cause of any significant change in the readings. Consult your Caterpillar dealer for assistance.

Some engine applications are equipped with Indicator Lamps. Indicator lamps can be used as a diagnostic aid. There are two lamps. One lamp has an orange lens and the other lamp has a red lens.

These indicator lamps can be used in two ways:

- The indicator lamps can be used to identify the current operational status of the engine. The indicator lamps can also indicate that the engine has a fault. This system is automatically operated via the ignition switch.
- The indicator lamps can be used to identify active diagnostic codes. This system is activated by pressing the Flash Code button.

Refer to the Troubleshooting Guide, “Indicator Lamps” for further information.

NOTICE
If no oil pressure is indicated, STOP the engine. If maximum coolant temperature is exceeded, STOP the engine. Engine damage can result.

Engine Oil Pressure – The oil pressure should be greatest after a cold engine is started. The typical engine oil pressure with SAE10W40 is 350 to 450 kPa (50 to 65 psi) at rated rpm.

A lower oil pressure is normal at low idle. If the load is stable and the gauge reading changes, perform the following procedure:

1. Remove the load.

2. Stop the engine.

3. Check and maintain the oil level.

Jacket Water Coolant Temperature – Typical temperature range is 83° to 95°C (181.4° to 171°F). The maximum allowable temperature at sea level with the pressurized cooling system at 48 kPa (7 psi) is 103 °C (217.4 °F). Higher temperatures may occur under certain conditions. The water temperature reading may vary according to load. The temperature reading should never exceed 7 °C (44.6 °F) below the boiling point for the pressurized system that is being used.

A 100 kPa (14.5 psi) radiator cap may be installed on the cooling system. The temperature of this cooling system must not exceed 112 °C (233.6 °F).

If the engine is operating above the normal range and steam becomes apparent, perform the following procedure:

1. Reduce the load and the engine rpm.

2. Determine if the engine must be shut down immediately or if the engine can be cooled by reducing the load.

3. Inspect the cooling system for leaks.

Tachometer – This gauge indicates engine speed (rpm). When the throttle control lever is moved to the full throttle position without load, the engine is running at high idle. The engine is running at the full load rpm when the throttle control lever is at the full throttle position with maximum rated load.

NOTICE
To help prevent engine damage, never exceed the high idle rpm. Overspeeding can result in serious damage to the engine. Operation at speeds exceeding high idle rpm should be kept to a minimum.

Ammeter – This gauge indicates the amount of charge or discharge in the battery charging circuit. Operation of the indicator should be to the “+” side of “0” (zero).

Fuel Level – This gauge indicates the fuel level in the fuel tank. The fuel level gauge operates when the “START/STOP” switch is in the “on” position.

Service Hour Meter – The gauge indicates total operating hours of the engine.

Features and Controls

i02330192

Monitoring System

SMCS Code: 1900; 7400; 7402; 7450; 7451

Table 2

Warning Lamp	Shutdown Lamp	Lamp Status	Description of lamp status	Engine Status
ON	**ON**	Lamp check	When the engine start switch is turned to the “ON” position both lamps will illuminate for 2 seconds only.	The engine has not been started.
OFF	**OFF**	No faults	There are no active diagnostic faults.	The engine is running normally.
ON	**OFF**	Active diagnostic fault	An active diagnostic fault has been detected.	The engine is running normally.
ON	**FLASHING**	Active diagnostic fault	A serious active diagnostic fault has been detected and an engine derate has been invoked.	The engine is running but the engine has been derated.
FLASHING	**OFF**	Warning	One or more of the engine protection values has been exceeded.	The engine is running normally.
FLASHING	**FLASHING**	Derate and warning	One or more of the engine protection values has been exceeded.	The engine is running but the engine has been derated.
ON	**ON**	Engine shutdown	One or more of the engine protection values has been exceeded or a serious active diagnostic fault has been detected.	The engine is shutdown or shutdown is imminent.

i02724323

Monitoring System

SMCS Code: 1900; 7400; 7402; 7450; 7451

WARNING

If the Shutdown mode has been selected and the warning indicator activates, engine shutdown may take as little as 20 seconds from the time the warning indicator is activated. Depending on the application, special precautions should be taken to avoid personal injury. The engine can be restarted following shutdown for emergency maneuvers, if necessary.

NOTICE
The Engine Monitoring System is not a guarantee against catastrophic failures. Programmed delays and derate schedules are designed to minimize false alarms and provide time for the operator to stop the engine.

The following parameters are monitored:

- Coolant temperature
- Intake manifold air temperature
- Intake manifold air pressure
- Oil pressure
- Pressure in the fuel rail
- Engine speed/timing

Programmable Options and Systems Operation

WARNING

If the Warning/Derate/Shutdown mode has been selected and the warning indicator activates, bring the engine to a stop whenever possible. Depending on the application, special precautions should be taken to avoid personal injury.

The engine can be programmed to the following modes:

“Warning”

The “Warning” lamp and the warning signal (orange lamp) turn “ON” and the warning signal is activated continuously in order to alert the operator that one or more of the engine parameters is not within normal operating range.

“Warning/Derate”

The “Diagnostic” lamp turns “ON” and the warning signal (red lamp) is activated. After the warning, the engine power will be derated. The warning lamp will begin to flash when the derating occurs.

The engine will be derated if the engine exceeds preset operational limits. The engine derate is achieved by restricting the amount of fuel that is available for each injection. The amount of this reduction of fuel is dependent on the severity of the fault that has caused the engine derate, typically up to a limit of 50%. This reduction in fuel results in a predetermined reduction in engine power.

“Warning/Derate/Shutdown”

The “Diagnostic” lamp turns “ON” and the warning signal (red lamp) is activated. After the warning, the engine power will be derated. The engine will continue at the rpm of the set derate until a shutdown of the engine occurs. The engine can be restarted after a shutdown for use in an emergency.

A shutdown of the engine may occur in as little as 20 seconds. The engine can be restarted after a shutdown for use in an emergency. However, the cause of the initial shutdown may still exist. The engine may shut down again in as little as 20 seconds.

If there is a signal for low oil pressure or for coolant temperature, there will be a two second delay in order to verify the condition.

For each of the programmed modes, refer to Troubleshooting Guide, “Indicator Lamps” for more information on Indicator Lamps.

For more information or assistance for repairs, consult your Caterpillar dealer.

i02861773

Sensors and Electrical Components

SMCS Code: 1900; 7400

Sensor Locations

Illustration 26 shows the typical locations of the sensors and the ECM on the engine. Specific engines may appear different from the illustration due to differences in applications.

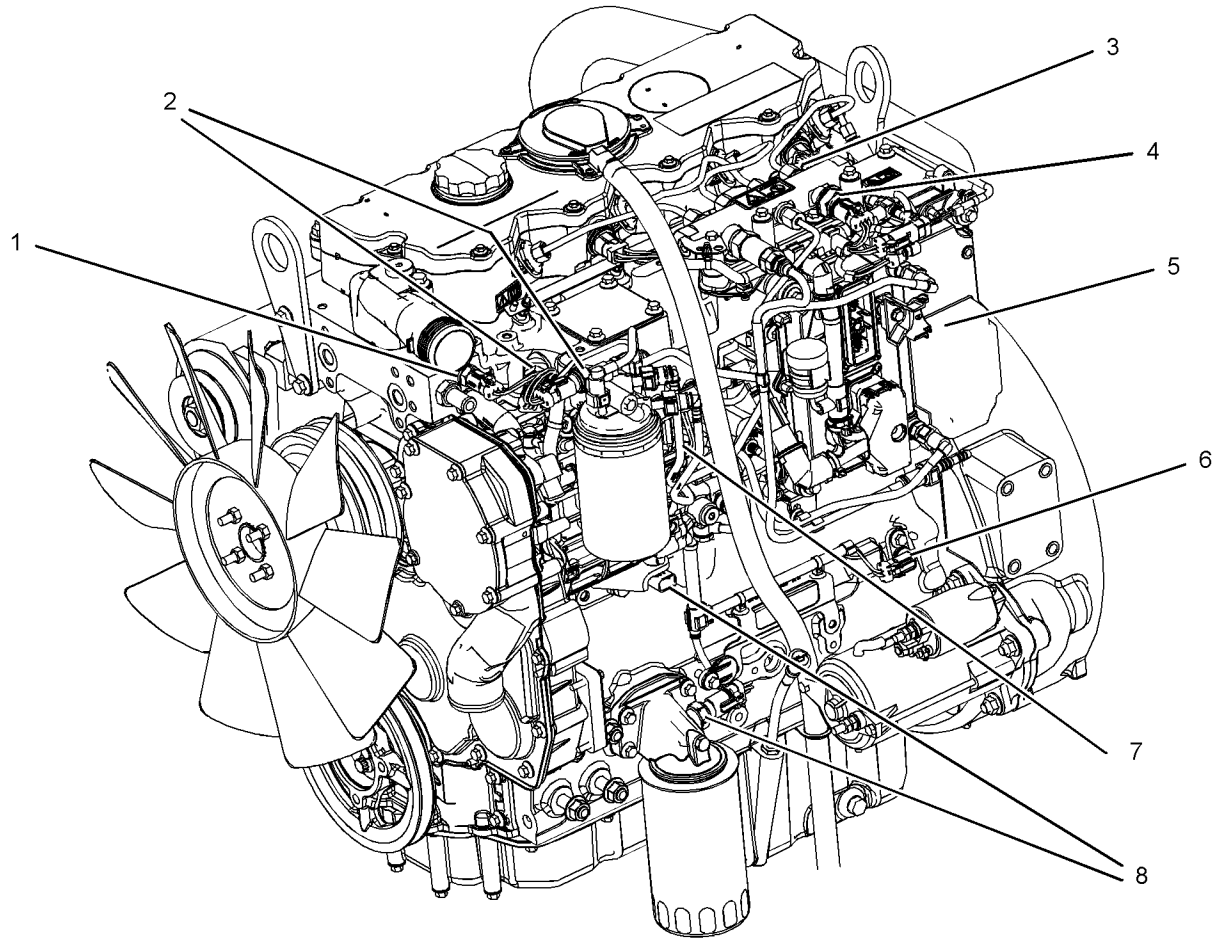

Illustration 26 g01425443

(1) Coolant temperature sensor
(2) Intake manifold pressure sensor
(3) Inlet air temperature sensor
(4) Fuel pressure sensor
(5) Electronic control module
(6) Primary position sensor
(7) Secondary position sensor
(8) Engine oil pressure sensor

Illustration 27 shows the sensors and the ECM in position on the engine.

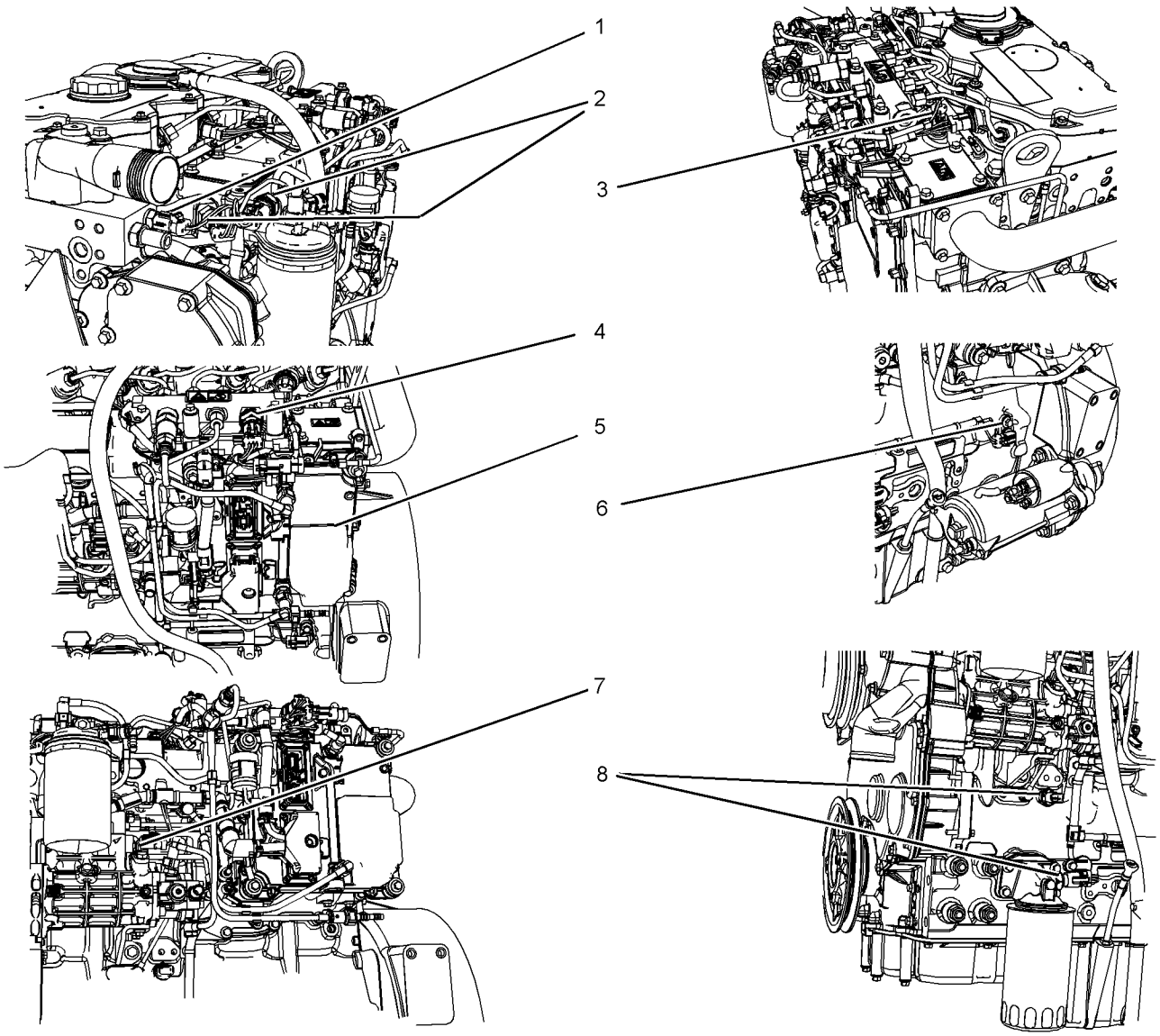

Illustration 27 g01425468

Failure of Sensors

All Sensors

A failure of any of the sensors may be caused by one of the following malfunctions:

- Sensor output is open.
- Sensor output is shorted to “- battery” or “+ battery” .
- Measured reading of the sensor is out of the specification.

Programmable Monitoring System (PMS)

The Programmable Monitoring System determines the level of action that is taken by the Electronic Control Module (ECM) in response to a condition that can damage the engine. These conditions are identified by the ECM from the signals that are produced from the following sensors.

- Coolant Temperature Sensor
- Intake manifold Air Temperature Sensor
- Intake manifold Pressure Sensor

- Fuel Pressure Sensor
- Engine Oil Pressure Sensor
- Primary Speed/Timing Sensor
- Secondary Speed/Timing Sensor

Coolant Temperature Sensor 1

The coolant temperature sensor monitors engine coolant temperature. The output of the ECM (5) can indicate a high coolant temperature through a relay or a lamp. The coolant temperature sensor is used by the ECM to determine initiation of the Cold Start Condition.

Failure of the Coolant Temperature Sensor

The ECM (5) will detect a failure of the coolant temperature sensor. The diagnostic lamp will warn the operator about the status of the coolant temperature sensor. A failure of the coolant temperature sensor will not cause a shutdown of the engine or any horsepower change. In order to check the correct operation of the sensor, refer to Troubleshooting, “Engine Temperature Sensor Circuit - Test”.

Intake Manifold Air Temperature Sensor 2

Note: This sensor can have two different locations. The location will depend on the type of engine.

The intake manifold air temperature sensor measures the intake air temperature. A signal is sent to the ECM (5). The intake manifold air temperature sensor is also used by the ECM to determine initiation of the Cold Start Strategy.

In order to check the correct operation of the sensor, refer to Troubleshooting, “EngineTemperature Sensor Circuit - Test”.

Intake Manifold Pressure Sensor 3

The intake manifold pressure sensor measures pressure in the manifold. A signal is sent to the ECM (5).

Fuel Pressure Sensor 4

The fuel pressure sensor measures the fuel pressure in the fuel manifold. A signal is sent to the ECM (5).

Electronic Control Module 5

The ECM is the control computer of the engine. The ECM provides power to the electronics. The ECM monitors data that is input from the sensors of the engine. The ECM acts as a governor in order to control the speed and the power of the engine.

The ECM adjusts injection timing and fuel pressure for the best engine performance, the best fuel economy and the best control of exhaust emissions.

Primary Speed/Timing Sensor 6

If the ECM (5) does not receive a signal from the primary speed/timing sensor , the “DIAGNOSTIC” lamp will indicate a diagnostic fault code which will be logged in the ECM memory.

If the ECM does not receive a signal from the primary speed/timing sensor (7), the ECM will read the signal from the secondary speed/timing sensor (8). The ECM continually checks in order to determine if there is a signal from both sensors.

Intermittent failure of the sensors will cause erratic engine control.

Failure of the Primary Speed/Timing Sensor

Correct operation of the primary speed/timing sensor is essential. Software in the ECM protects against reverse running of the engine. If the primary speed/timing sensor fails there is no automatic protection against reverse running. In some applications, it is possible for the transmission to run the engine in reverse. In this event, Stop the engine immediately. Turn the keyswitch to the “OFF” position.

In order to check the correct operation of the sensor, refer to Troubleshooting, “Engine speed/Timing sensor - Test”.

Secondary Speed/Timing Sensor 7

The signal from the secondary speed/timing sensor is used by the ECM (5) on engine start-up in order to check the stroke of the pistons. The secondary speed/timing sensor may be used by the ECM in order to operate the engine if the primary speed/timing sensor is faulty.

In order to check the correct operation of the sensor, refer to Troubleshooting, “Engine speed/Timing sensor-Test”.

Engine Oil Pressure Sensor 8

Note: This sensor can have two different locations. The location will depend on the type of engine.

The engine oil pressure sensor is an absolute pressure sensor that measures the engine oil pressure in the main oil gallery. The engine oil pressure sensor detects engine oil pressure for diagnostic purposes. The engine oil pressure sensor sends a signal to the ECM (5).

Low Oil Pressure Warning

The setpoint for the low pressure warning is dependent upon the engine speed. The fault will be active and logged only if the engine has been running for more than 8 seconds.

Very Low Oil Pressure Warning

The very low oil pressure setpoint is dependent upon the engine speed. If the DERATE mode of the engine monitoring system is selected, the ECM (5) will derate the engine power. The engine horsepower will be limited.

Failure of the Engine Oil Pressure Sensor

The ECM (5) will detect failure of the engine oil pressure sensor. The diagnostic lamp warns the user about the status of the engine oil pressure sensor. The engine oil pressure related strategies will be disabled in the event of a failure of the engine oil pressure sensor. A failure of the engine oil pressure sensor will not cause a shutdown of the engine or any horsepower change. In order to check the correct operation of the sensor, refer to Troubleshooting, “5 Volt Sensor Supply Circuit - Test”.

i02858345

Engine Shutoffs and Engine Alarms

SMCS Code: 1900; 7400; 7418

Shutoffs

The shutoffs are electrically operated or mechanically operated. The electrically operated shutoffs are controlled by the ECM.

Shutoffs are set at critical levels for the following items:

- Operating temperature
- Operating pressure
- Operating level
- Operating rpm

The particular shutoff may need to be reset before the engine will start.

NOTICE
Always determine the cause of the engine shutdown. Make necessary repairs before attempting to restart the engine.

Be familiar with the following items:

- Types and locations of shutoff
- Conditions which cause each shutoff to function
- The resetting procedure that is required to restart the engine

Alarms

The alarms are electrically operated. The operation of the alarms are controlled by the ECM.

The alarm is operated by a sensor or by a switch. When the sensor or the switch is activated a signal is sent to the ECM. An event code is created by the ECM. The ECM will send a signal in order to illuminate the lamp.

Your engine may be equipped with the following sensors or switches:

Coolant level – The low coolant level switch indicates when the coolant level is low.

Coolant temperature – The coolant temperature sensor indicates high jacket water coolant temperature.

Intake manifold air temperature – The intake manifold air temperature sensor indicates high intake air temperature.

Intake manifold pressure – The intake manifold pressure sensor checks the rated pressure in the engine manifold.

Fuel rail pressure – The fuel rail pressure sensor checks for high pressure or low pressure in the fuel rail.

Engine oil pressure – The engine oil pressure sensor indicates when oil pressure drops below rated system pressure, at a set engine speed.

Engine overspeed – The primary speed/timing sensor checks the engine speed. The alarm is activated at 3000 RPM.

Air filter restriction – The switch checks the air filter when the engine is operating.

User defined switch – This switch can shut down the engine remotely.

Water in fuel switch – This switch checks for water in the primary fuel filter when the engine is operating.

Note: The sensing element of the coolant temperature switch must be submerged in coolant in order to operate.

Engines may be equipped with alarms in order to alert the operator when undesirable operating conditions occur.

NOTICE
When an alarm is activated, corrective measures must be taken before the situation becomes an emergency in order to avoid possible engine damage.

If corrective measures are not taken within a reasonable time, engine damage could result. The alarm will continue until the condition is corrected. The alarm may need to be reset.

Testing

Turning the keyswitch to the ON position will check the indicator lights on the control panel. All the indicator lights will be illuminated for two seconds after the keyswitch is operated. Replace suspect bulbs immediately.

Refer to Troubleshooting for more information.

i05251914

Overspeed

SMCS Code: 1900; 1907; 1912; 7427

An overspeed condition is detected by the Electronic Control Module (ECM). The event code E190 will be logged if the engine speed exceeds 3300 rpm. The “DIAGNOSTIC” lamp will indicate a diagnostic fault code. The diagnostic fault code will remain active until the engine speed drops to 2800 rpm.

Engine Diagnostics

i01796959

Self-Diagnostics

SMCS Code: 1000; 1900; 1901; 1902

Caterpillar Electronic Engines have the capability to perform a self-diagnostics test. When the system detects an active problem, a diagnostic lamp is activated. Diagnostic codes will be stored in permanent memory in the Electronic Control Module (ECM). The diagnostic codes can be retrieved by using Caterpillar electronic service tools.

Some installations have electronic displays that provide direct readouts of the engine diagnostic codes. Refer to the manual that is provided by the OEM for more information on retrieving engine diagnostic codes.

Active codes represent problems that currently exist. These problems should be investigated first.

Logged codes represent the following items:

- Intermittent problems
- Recorded events
- Performance history

The problems may have been repaired since the logging of the code. These codes do not indicate that a repair is needed. The codes are guides or signals when a situation exists. Codes may be helpful to troubleshoot problems.

When the problems have been corrected, the corresponding logged fault codes should be cleared.

i02501517

Diagnostic Lamp

SMCS Code: 1000; 1900; 1901; 1902; 7451

A diagnostic lamp is used to indicate the existence of an active fault. A fault diagnostic code will remain active until the problem is repaired. The diagnostic code may be retrieved by using Caterpillar electronic technician (ET).

i02872126

Diagnostic Flash Code Retrieval

SMCS Code: 1000; 1900; 1901; 1902

“Diagnostic” Lamp

Use the “DIAGNOSTIC” Lamp or an electronic service tool to determine the diagnostic flash code.

Use the following procedure to retrieve the flash codes if the engine is equipped with a “DIAGNOSTIC” lamp:

1. Turn the keyswitch “ON/OFF” two times within 3 seconds.

A flashing “YELLOW” lamp indicates a 3 digit code for the engine. The sequence of flashes represents the system diagnostic message. Count the first sequence of flashes in order to determine the first digit of the flash code. After a two second pause, the second sequence of flashes will identify the second digit of the flash code. After the second pause, the third sequence of flashes will identify the flash code.

Any additional flash codes will follow after a pause. These codes will be displayed in the same manner. Flash Code 551 indicates that No Detected Faults have occurred since the ignition keyswitch has been turned to the ON position.

For further information, assistance for repairs, or troubleshooting, refer to the Service Manual or consult an authorized Caterpillar dealer.

Table 3 lists the flash codes and the table also gives a brief description of the flash codes.

Note: Table 3 indicates the potential effect on engine performance with “ACTIVE” flash codes.

Some codes record events. Also, some codes may also indicate that a mechanical system needs attention. Troubleshooting is not required for code “551” . Code 001 will not display a flash code. Some codes will limit the operation or the performance of the engine.

Table 3 indicates the potential effect on the engine performance with active flash codes. Table 3 also forms a list of Electronic diagnostic codes and descriptions.

Table 3

Flash Codes for the Industrial Engine								
Diagnostic Flash Code		Effect On Engine Performance (1)				Suggested Operator Action		
		Engine Misfire	Low Power	Reduced Engine Speed	Engine Shutdown	Shut Down the Engine (2)	Service (3)	Schedule a Service. (4)
111	Cylinder 1 Fault	X	X				X	
112	Cylinder 2 Fault	X	X				X	
113	Cylinder 3 Fault	X	X				X	
114	Cylinder 4 Fault	X	X				X	
133	Intake Manifold Temperature sensor fault (5)	X					X	
141	Primary Speed/Timing Sensor Fault			X			X	
142	Secondary Speed/Timing Sensor Fault						X	
143	Timing Calibration Fault	X						X
144	Engine Operation Mode Selector Switch Fault		X				X	
151	High Air Filter Restriction		X				X	
154	Throttle Position sensor Fault			X			X	
155	Secondary Throttle Position sensor Fault			X			X	
157	Oil Pressure Sensor Fault(5)		X	X	X	X	X	
159	Fuel Rail Pressure Sensor Fault		X				X	
162	High Pressure Fuel Pump Fault		X	X			X	
168	Coolant Temperature Sensor Fault			X	X		X	
169	Low Engine Coolant				X			X
177	Wastegate Solenoid Fault			X				
185	High Exhaust Temperature		X				X	
197	Intake Manifold Pressure Sensor Fault		X				X	
199	Glow Plug Start Relay Fault						X	
415	Incorrect Engine Software			X	X		X	
426	Machine Security System Module Fault (6)						X	

(continued)

(Table 3, contd)

Flash Codes for the Industrial Engine								
Diagnostic Flash Code		Effect On Engine Performance (1)				Suggested Operator Action		
		Engine Misfire	Low Power	Reduced Engine Speed	Engine Shutdown	Shut Down the Engine (2)	Service (3)	Schedule a Service. (4)
429	Keyswitch Fault							X
511	Intermittent Battery Power to ECM	X	X		X		X	
514	SAE J1939 Data Link Fault			X			X	
516	5 Volt Sensor DC Power Supply Fault(5)		X					X
517	8 Volt Sensor DC Power Supply Fault		X					X
527	Check Customer Parameters or System Parameters (5)		X	X				X

(1) An “X” indicates that the effect on engine performance may occur if the code is active.
(2) Shut Down the Engine: Operate the engine cautiously. Get immediate service. Severe engine damage may result.
(3) The operator should go to the nearest location that has a qualified service program.
(4) Schedule Service: The problem should be investigated when the operator has access to a qualified service program.
(5) These Flash Codes may affect the system under specific environmental conditions such as engine start-up at cold temperature and cold weather operation at high altitudes.
(6) The engine will not start.

i03840813

Fault Logging

SMCS Code: 1000; 1900; 1901; 1902

The system provides the capability of Fault Logging. When the Electronic Control Module (ECM) generates an active diagnostic code, the code will be logged in the memory of the ECM. The codes that have been logged in the memory of the ECM can be retrieved with Caterpillar electronic service tools. The codes that have been logged can be cleared with Caterpillar electronic service tools. The codes that have been logged in the memory of the ECM will be automatically cleared from the memory after 100 hours. The following faults cannot be cleared from the memory of the ECM without using a factory password: overspeed, low engine oil pressure and high engine coolant temperature.

i01797045

Engine Operation with Active Diagnostic Codes

SMCS Code: 1000; 1900; 1901; 1902

If a diagnostic lamp illuminates during normal engine operation, the system has identified a situation that is not within the specification. Use Caterpillar electronic service tools to check the active diagnostic codes.

Note: If the customer has selected “DERATE” and if there is a low oil pressure condition, the Electronic Control Module (ECM) will limit the engine power until the problem is corrected. If the oil pressure is within the normal range, the engine may be operated at the rated speed and load. However, maintenance should be performed as soon as possible.

The active diagnostic code should be investigated. The cause of the problem should be corrected as soon as possible. If the cause of the active diagnostic code is repaired and there is only one active diagnostic code, the diagnostic lamp will turn off.

Operation of the engine and performance of the engine can be limited as a result of the active diagnostic code that is generated. Acceleration rates may be significantly slower. Refer to the Troubleshooting Guide for more information on the relationship between these active diagnostic codes and engine performance.

i01797063

Engine Operation with Intermittent Diagnostic Codes

SMCS Code: 1000; 1900; 1901; 1902

If a diagnostic lamp illuminates during normal engine operation and the diagnostic lamp shuts off, an intermittent fault may have occurred. If a fault has occurred, the fault will be logged into the memory of the Electronic Control Module (ECM).

In most cases, it is not necessary to stop the engine because of an intermittent code. However, the operator should retrieve the logged fault codes and the operator should reference the appropriate information in order to identify the nature of the event. The operator should log any observation that could have caused the lamp to light.

- Low power
- Limits of the engine speed
- Excessive smoke, etc

This information can be useful to help troubleshoot the situation. The information can also be used for future reference. For more information on diagnostic codes, refer to the Troubleshooting Guide for this engine.

Engine Starting

i02837427

Before Starting Engine

SMCS Code: 1000; 1400; 1450

Perform the required daily maintenance and other periodic maintenance before the engine is started. Inspect the engine compartment. This inspection can help prevent major repairs at a later date. Refer to the Operation and Maintenance Manual, “Maintenance Interval Schedule” for more information.

- Ensure that the engine has an adequate fuel supply.
- Open the fuel supply valve (if equipped).

NOTICE
All valves in the fuel return line must be open before and during engine operation to help prevent high fuel pressure. High fuel pressure may cause filter housing failure or other damage.

If the engine has not been started for several weeks, fuel may have drained from the fuel system. Air may have entered the filter housing. Also, when fuel filters have been changed, some air pockets will be trapped in the engine. In these instances, prime the fuel system. Refer to the Operation and Maintenance Manual, “Fuel System - Prime” for more information on priming the fuel system.

⚠ WARNING

Engine exhaust contains products of combustion which may be harmful to your health. Always start and operate the engine in a well ventilated area and, if in an enclosed area, vent the exhaust to the outside.

- Do not start the engine or move any of the controls if there is a “DO NOT OPERATE” warning tag or similar warning tag attached to the start switch or to the controls.
- Reset all of the shutoffs or alarm components.
- Ensure that any driven equipment has been disengaged. Minimize electrical loads or remove any electrical loads.

i02322203

Starting the Engine

SMCS Code: 1000; 1450

Note: Do not adjust the engine speed control during start-up. The electronic control module (ECM) will control the engine speed during start-up.

Starting the Engine

1. Disengage any equipment that is driven by the engine.
2. Turn the keyswitch to the RUN position. Leave the keyswitch in the RUN position until the warning light for the glow plugs is extinguished.
3. When the warning light for the glow plugs is extinguished turn the keyswitch to the START position in order to engage the electric starting motor and crank the engine.

Note: The operating period of the warning light for the glow plugs will change due to the temperature of the engine.

NOTICE
Do not engage the starting motor when flywheel is turning. Do not start the engine under load.

If the engine fails to start within 30 seconds, release the starter switch or button and wait two minutes to allow the starting motor to cool before attempting to start the engine again.

4. Allow the keyswitch to return to the RUN position after the engine starts.
5. Repeat step 2 through step 4 if the engine fails to start.

i02344933

Starting with Jump Start Cables

SMCS Code: 1000; 1401; 1402; 1900

⚠ WARNING

Improper jump start cable connections can cause an explosion resulting in personal injury.

Prevent sparks near the batteries. Sparks could cause vapors to explode. Do not allow jump start cable ends to contact each other or the engine.

If the installation is not equipped with a backup battery system, it may be necessary to start the engine from an external electrical source.

For information on troubleshooting the charging system, refer to Special Instruction, REHS0354, “Charging System Troubleshooting”.

Many batteries which are considered unusable are still rechargeable. After jump starting, the alternator may not be able to fully recharge batteries that are severely discharged. The batteries must be charged to the proper voltage with a battery charger. For information on testing and charging, refer to the Special Instruction, SEHS7633, “Battery Test Procedure”.

NOTICE
Using a battery source with the same voltage as the electric starting motor. Use ONLY equal voltage for jump starting. The use of higher voltage will damage the electrical system.

Do not reverse the battery cables. The alternator can be damaged. Attach ground cable last and remove first.

When using an external electrical source to start the engine, turn the generator set control switch to the “OFF” position. Turn all electrical accessories OFF before attaching the jump start cables.

Ensure that the main power switch is in the OFF position before attaching the jump start cables to the engine being started.

1. Turn the start switch on the stalled engine to the OFF position. Turn off all the engine's accessories.
2. Connect one positive end of the jump start cable to the positive cable terminal of the discharged battery. Connect the other positive end of the jump start cable to the positive cable terminal of the electrical source.
3. Connect one negative end of the jump start cable to the negative cable terminal of the electrical source. Connect the other negative end of the jump start cable to the engine block or to the chassis ground. This procedure helps to prevent potential sparks from igniting the combustible gases that are produced by some batteries.
4. Start the engine.
5. Immediately after the engine is started, disconnect the jump start cables in reverse order.

After jump starting, the alternator may not be able to fully recharge batteries that are severely discharged. The batteries must be replaced or charged to the proper voltage with a battery charger after the engine is stopped. Many batteries which are considered unusable are still rechargeable. Refer to Operation and Maintenance Manual, “Battery - Replace” and Testing and Adjusting Manual, “Battery - Test”.

Refer to the Electrical Schematic for your engine. Consult your Caterpillar dealer for more information.

i02330138

After Starting Engine

SMCS Code: 1000

Note: In ambient temperatures from 0 to 60°C (32 to 140°F), the warm-up time is approximately three minutes. In temperatures below 0°C (32°F), additional warm-up time may be required.

When the engine idles during warm-up, observe the following conditions:

Do not check the high pressure fuel lines with the engine or the starting motor in operation. If you inspect the engine in operation, always use the proper inspection procedure in order to avoid a fluid penetration hazard. Refer to Operation and Maintenance Manual, “General hazard Information”.

- Check for any fluid or for any air leaks at idle rpm and at one-half full rpm (no load on the engine) before operating the engine under load. This is not possible in some applications.
- Allow the engine to idle for three to five minutes, or allow the engine to idle until the water temperature indicator begins to rise. Check all gauges during the warm-up period.

Note: Gauge readings should be observed and the data should be recorded frequently while the engine is operating. Comparing the data over time will help to determine normal readings for each gauge. Comparing data over time will also help detect abnormal operating developments. Significant changes in the readings should be investigated.

Engine Operation

i09662547

Engine Operation

SMCS Code: 1000

Proper operation and maintenance are key factors in obtaining the maximum life and economy of the engine. If the directions in the Operation and Maintenance Manual are followed, costs can be minimized and engine service life can be maximized.

The time that is needed for the engine to reach normal operating temperature can be less than the time taken for a walk-around inspection of the engine.

The engine can be operated at the rated Revolutions Per Minute (RPM) after the engine is started and after the engine reaches operating temperature. The engine will reach normal operating temperature sooner during a low engine speed RPM and during a low-power demand. This procedure is more effective than idling the engine at no load. The engine should reach operating temperature in a few minutes.

In some applications the engine warm up period (where the engine reaches normal operating temperature) may not be possible due to the configuration of the throttle.

Gauge readings should be observed and the data should be recorded frequently while the engine is operating. Comparing the data over time will help to determine normal readings for each gauge. Comparing data over time will also help detect abnormal operating developments. Significant changes in the readings should be investigated.

i01646335

Engaging the Driven Equipment

SMCS Code: 1000

1. Operate the engine at one-half of the rated rpm, when possible.
2. Engage the driven equipment without a load on the equipment, when possible.

   Interrupted starts put excessive stress on the drive train. Interrupted starts also waste fuel. To get the driven equipment in motion, engage the clutch smoothly with no load on the equipment. This method should produce a start that is smooth and easy. The engine rpm should not increase and the clutch should not slip.
3. Ensure that the ranges of the gauges are normal when the engine is operating at one-half of the rated rpm. Ensure that all gauges operate properly.
4. Increase the engine rpm to the rated rpm. Always increase the engine rpm to the rated rpm before the load is applied.
5. Apply the load. Begin operating the engine at low load. Check the gauges and equipment for proper operation. After normal oil pressure is reached and the temperature gauge begins to move, the engine may be operated at full load. Check the gauges and equipment frequently when the engine is operated under load.

   Extended operation at low idle or at reduced load may cause increased oil consumption and carbon buildup in the cylinders. This carbon buildup results in a loss of power and/or poor performance.

i07818141

Fuel Conservation Practices

SMCS Code: 1000; 1250

The efficiency of the engine can affect the fuel economy. The design and technology in manufacturing provides maximum fuel efficiency in all applications. Always ensure that genuine filters are used. Follow the recommended procedures to attain optimum performance for the life of the engine.

- Avoid spilling fuel.

Fuel expands when the fuel is warmed up. The fuel may overflow from the fuel tank. Inspect fuel lines for leaks. Repair the fuel lines, as needed.

- Be aware of the properties of the different fuels. Use only the recommended fuels. Refer to the Operations and Maintenance Manual, “Fuel Recommendations” for further information.
- Avoid unnecessary idling.
- Shut off the engine rather than idle for long periods of time.
- Observe the service indicator frequently. Keep the air cleaner elements clean.
- Ensure that the turbocharger is operating correctly so that the proper air/fuel ratio is maintained. Clean exhaust indicates proper functioning.
- Maintain a good electrical system.

One faulty battery cell will overwork the alternator and can consume excess power and excess fuel.

- Ensure that the belts are correctly adjusted. The belts should be in good condition. Refer to the Specifications manual for further information.
- Ensure that all the connections of the hoses are tight. The connections should not leak.
- Ensure that the driven equipment is in good working order.
- Cold engines consume excess fuel. Utilize heat from the jacket water system and the exhaust system, when possible. Keep cooling system components clean and keep cooling system components in good repair. Never operate the engine without water temperature regulators. All these items will help maintain operating temperatures.

Engine Stopping

i06832774

Stopping the Engine

SMCS Code: 1000; 7000

NOTICE
Stopping the engine immediately after it has been working under load, can result in overheating and accelerated wear of the engine components.

Avoid accelerating the engine prior to shutting it down.

Avoiding hot engine shutdowns will maximize turbocharger shaft and bearing life.

Note: Individual applications will have different control systems. Ensure that the shutoff procedures are understood. Use the following general guidelines to stop the engine.

1. Remove the load from the engine. Reduce the engine speed (rpm) to low idle. Allow the engine to idle for 5 minutes to cool the engine.
2. Stop the engine after the cool down period according to the shutoff system on the engine. Turn the ignition key switch to the OFF position. If necessary, refer to the instructions that are provided by the OEM.

NOTICE
Before any service or repairs are performed, ensure that the power supply to the engine is disconnected.

i06171418

Emergency Stopping

SMCS Code: 1000; 7418

NOTICE
Emergency shutoff controls are for EMERGENCY use ONLY. DO NOT use emergency shutoff devices or controls for normal stopping procedure.

Ensure that any components for the external system that support the engine operation are secured after the engine is stopped.

Emergency Stop Button (If Equipped)

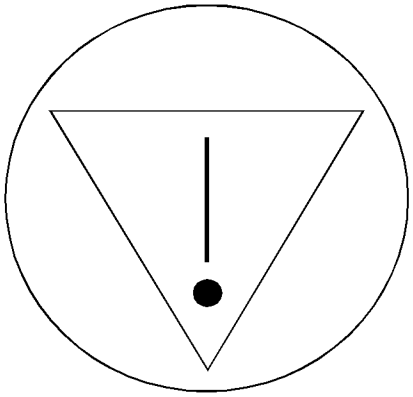

Illustration 28 g03835626
Typical emergency stop symbol located near the emergency stop button

The emergency stop button is in the OUT position for normal engine operation. Push the emergency stop button. The engine will not start when the button is locked. Turn the button clockwise in order to reset.

Refer to Operation and Maintenance Manual, “Features and Controls” for the location and the operation of the emergency stop button.

i02330274

After Stopping Engine

SMCS Code: 1000

Note: Before you check the engine oil, do not operate the engine for at least 10 minutes in order to allow the engine oil to return to the oil pan.

⚠ WARNING

Contact with high pressure fuel may cause fluid penetration and burn hazards. High pressure fuel spray may cause a fire hazard. Failure to follow these inspection, maintenance and service instructions may cause personal injury or death.

- After the engine has stopped, you must wait for 60 seconds in order to allow the fuel pressure to be purged from the high pressure fuel lines before any service or repair is performed on the engine fuel lines. If necessary, perform minor adjustments. Repair any leaks from the low pressure fuel system and from the cooling, lubrication or air systems. Replace any high pressure fuel line that has leaked. Refer to Disassembly and assembly Manual, “Fuel Injection Lines - Install”.
- Check the crankcase oil level. Maintain the oil level between the “MIN” mark and the “MAX” mark on the engine oil level gauge.
- If the engine is equipped with a service hour meter, note the reading. Perform the maintenance that is in the Operation and Maintenance Manual, “Maintenance Interval Schedule”.
- Fill the fuel tank in order to help prevent accumulation of moisture in the fuel. Do not overfill the fuel tank.

NOTICE
Only use antifreeze/coolant mixtures recommended in the Coolant Specifications that are in the Operation and Maintenance Manual. Failure to do so can cause engine damage.

⚠ WARNING

Pressurized System: Hot coolant can cause serious burns. To open the cooling system filler cap, stop the engine and wait until the cooling system components are cool. Loosen the cooling system pressure cap slowly in order to relieve the pressure.

- Allow the engine to cool. Check the coolant level.
- Check the coolant for correct antifreeze protection and the correct corrosion protection. Add the correct coolant/water mixture, if necessary.
- Perform all required periodic maintenance on all driven equipment. This maintenance is outlined in the instructions from the OEM.

Cold Weather Operation

i03898009

Cold Weather Operation

SMCS Code: 1000; 1250

Caterpillar Diesel Engines can operate effectively in cold weather. During cold weather, the starting and the operation of the diesel engine is dependent on the following items:

- The type of fuel that is used
- The viscosity of the engine oil
- The operation of the glow plugs
- Optional Cold starting aid
- Battery condition

Refer to Special Publication, SEBU5898, “Cold Weather Recommendations for Caterpillar Machines”.

This section will cover the following information:

- Potential problems that are caused by cold weather operation
- Suggest steps which can be taken in order to minimize starting problems and operating problems when the ambient air temperature is between “0° to −40 °C (32° to -40 °F)”.

The operation and maintenance of an engine in freezing temperatures is complex . This is because of the following conditions:

- Weather conditions
- Engine applications

Recommendations from your Caterpillar dealer are based on past proven practices. The information that is contained in this section provides guidelines for cold weather operation.

Hints for Cold Weather Operation

- If the engine will start, operate the engine until a minimum operating temperature of 80° C (176° F) is achieved. Achieving operating temperature will help prevent the intake valves and exhaust valves from sticking.
- The cooling system and the lubrication system for the engine do not lose heat immediately upon shutdown. This means that an engine can be shut down for a period of time and the engine can still have the ability to start readily.
- Install the correct specification of engine lubricant before the beginning of cold weather.
- Check all rubber parts (hoses, fan drive belts, etc) weekly.
- Check all electrical wiring and connections for any fraying or damaged insulation.
- Keep all batteries fully charged and warm.
- Fill the fuel tank at the end of each shift.
- Drain the water from the fuel system. Refer to this Operation and Maintenance Manual, “Fuel System Primary Filter/Water Separator - Drain”.
- Check the air cleaners and the air intake daily. Check the air intake more often when you operate in snow.
- Ensure that the glow plugs are in working order. Refer to Testing and Adjusting Manual, “Glow Plug - Test”.

⚠ WARNING

Personal injury or property damage can result from alcohol or starting fluids.

Alcohol or starting fluids are highly flammable and toxic and if improperly stored could result in injury or property damage.

⚠ WARNING

Do not use aerosol types of starting aids such as ether. Such use could result in an explosion and personal injury.

- For jump starting with cables in cold weather, refer to the Operation and Maintenance Manual, “Starting with Jump Start Cables.” for instructions.

Viscosity of the Engine Lubrication Oil

Correct engine oil viscosity is essential. Oil viscosity affects the amount of torque that is needed to crank the engine. Refer to this Operation and Maintenance Manual, “Fluid Recommendations” for the recommended viscosity of oil.

Recommendations for the Coolant

Provide cooling system protection for the lowest expected outside temperature. Refer to this Operation and Maintenance Manual, “Fluid Recommendations” for the recommended coolant mixture.

In cold weather, check the coolant often for the correct glycol concentration in order to ensure adequate freeze protection.

Engine Block Heaters

Engine block heaters (if equipped) heat the engine jacket water that surrounds the combustion chambers. This provides the following functions:

- Startability is improved.
- Warm up time is reduced.

An electric block heater can be activated once the engine is stopped. A block heater can be 110 Volts or 240 Volts. The output can be 750/1000 Watts. Consult your Caterpillar dealer for more information.

Idling the Engine

When idling after the engine is started in cold weather, increase the engine rpm from 1000 to 1200 rpm. This will warm up the engine more quickly. Maintaining an elevated low idle speed for extended periods will be easier with the installation of a hand throttle. The engine should not be “raced” in order to speed up the warm up process.

While the engine is idling, the application of a light load (parasitic load) will assist in achieving the minimum operating temperature. The minimum operating temperature is 80° C (176° F).

Recommendations for Coolant Warm Up

Warm up an engine that has cooled below normal operating temperatures due to inactivity. This should be performed before the engine is returned to full operation. During operation in very cold temperature conditions, damage to engine valve mechanisms can result from engine operation for short intervals. This can happen if the engine is started and the engine is stopped many times without being operated in order to warm up completely.

When the engine is operated below normal operating temperatures, fuel and oil are not completely burned in the combustion chamber. This fuel and oil causes soft carbon deposits to form on the valve stems. Generally, the deposits do not cause problems and the deposits are burned off during operation at normal engine operating temperatures.

When the engine is started and the engine is stopped many times without being operated in order to warm up completely, the carbon deposits become thicker. This can cause the following problems:

- Free operation of the valves is prevented.
- Valves become stuck.
- Pushrods may become bent.
- Other damage to valve train components can result.

For this reason, when the engine is started, the engine must be operated until the coolant temperature is 80° C (176° F) minimum. Carbon deposits on the valve stems will be kept at a minimum and the free operation of the valves and the valve components will be maintained.

In addition, the engine must be thoroughly warmed in order to keep other engine parts in better condition and the service life of the engine will be generally extended. Lubrication will be improved. There will be less acid and less sludge in the oil. This will provide longer service life for the engine bearings, the piston rings, and other parts. However, limit unnecessary idle time to ten minutes in order to reduce wear and unnecessary fuel consumption.

The Water Temperature Regulator and Insulated Heater Lines

The engine is equipped with a water temperature regulator. When the engine coolant is below the correct operating temperature jacket water circulates through the engine cylinder block and into the engine cylinder head. The coolant then returns to the cylinder block via an internal passage that bypasses the valve of the coolant temperature regulator. This ensures that coolant flows around the engine under cold operating conditions. The water temperature regulator begins to open when the engine jacket water has reached the correct minimum operating temperature. As the jacket water coolant temperature rises above the minimum operating temperature the water temperature regulator opens further allowing more coolant through the radiator to dissipate excess heat.

The progressive opening of the water temperature regulator operates the progressive closing of the bypass passage between the cylinder block and head. This ensures maximum coolant flow to the radiator in order to achieve maximum heat dissipation.

Note: Do not restrict the air flow. Restriction to the air flow can damage the fuel system. Caterpillar strongly discourages the use of all air flow restriction devices such as radiator shutters. Restriction of the air flow can result in the following: high exhaust temperatures, power loss, excessive fan usage and reduction in fuel economy.

A cab heater is beneficial in very cold weather. The feed from the engine and the return lines from the cab should be insulated in order to reduce heat loss to the outside air.

Insulating the Air Inlet and Engine Compartment

When temperatures below −18 °C (−0 °F) will be frequently encountered, an air cleaner inlet that is located in the engine compartment may be specified. An air cleaner that is located in the engine compartment may also minimize the entry of snow into the air cleaner. Also, heat that is rejected by the engine helps to warm the intake air.

Additional heat can be retained around the engine by insulating the engine compartment.

i01457051

Radiator Restrictions

SMCS Code: 1353; 1396

Caterpillar discourages the use of airflow restriction devices that are mounted in front of radiators. Airflow restriction can cause the following conditions:

- High exhaust temperatures
- Power loss
- Excessive fan usage
- Reduction in fuel economy

If an airflow restriction device must be used, the device should have a permanent opening directly in line with the fan hub. The device must have a minimum opening dimension of at least 770 cm^2 (120 in^2).

A centered opening that is directly in line with the fan hub is specified in order to prevent an interrupted airflow on the fan blades. Interrupted airflow on the fan blades could cause a fan failure.

Caterpillar recommends a warning device for the inlet manifold temperature and/or the installation of an inlet air temperature gauge. The warning device for the inlet manifold temperature should be set at 75 °C (167 °F). The inlet manifold air temperature should not exceed 75 °C (167 °F). Temperatures that exceed this limit can cause power loss and potential engine damage.

i08230315

Fuel and the Effect from Cold Weather

SMCS Code: 1000; 1250

The following fuels are the grades that are available for Cat engines:

- No. 1
- No. 2
- Blend of No. 1 and No. 2

No. 2 diesel fuel is the most commonly used fuel. Either No. 1 diesel fuel or a blend of No. 1 and No. 2 is best suited for cold-weather operation.

Quantities of No. 1 diesel fuel are limited. No. 1 diesel fuels are available during the months of the winter in the colder climates. During cold-weather operation, if No. 1 diesel fuel is not available, use No. 2 diesel fuel, if necessary.

There are three major differences between No. 1 and No. 2 diesel fuel. No. 1 diesel fuel has the following properties:

- Lower cloud point
- Lower pour point
- Lower rating of kJ (BTU) per unit volume of fuel

When No. 1 diesel fuel is used, a decrease in power and in fuel efficiency may be noticed.

The cloud point is the temperature when a cloud of wax crystals begins to form in the fuel. These crystals can cause the fuel filters to plug. The pour point is the temperature when diesel fuel will thicken. The diesel fuel becomes more resistant to flow through fuel pumps and through fuel lines.

Be aware of these values when diesel fuel is purchased. Anticipate the average ambient temperature of the area. Engines that are fueled in one climate may not operate well if the engines are moved to another climate. Problems can result due to changes in temperature.

Before troubleshooting for low power or for poor performance in the winter, check the type of fuel that is being used.

When No. 2 diesel fuel is used, the following components provide a means of minimizing problems in cold weather:

- Starting aids
- Engine oil pan heaters
- Engine coolant heaters
- Fuel heaters
- Fuel line insulation

For more information on cold-weather operation, see Special Publication, SEBU5898, “Cold-Weather Recommendations”.

i02785732

Fuel Related Components in Cold Weather

SMCS Code: 1000; 1250

Fuel Tanks

Condensation can form in partially filled fuel tanks. Top off the fuel tanks after you operate the engine.

Fuel tanks should contain some provision for draining water and sediment from the bottom of the tanks. Some fuel tanks use supply pipes that allow water and sediment to settle below the end of the fuel supply pipe.

Some fuel tanks use supply lines that take fuel directly from the bottom of the tank. If the engine is equipped with this system, regular maintenance of the fuel system filter is important.

Drain the water and sediment from any fuel storage tank at the following intervals: weekly, service intervals and refueling of the fuel tank. This will help prevent water and/or sediment from being pumped from the fuel storage tank and into the engine fuel tank.

Fuel Filters

After you change the fuel filter, always prime the fuel system in order to remove air bubbles from the fuel system. Refer to the Operation and Maintenance Manual in the Maintenance Section for more information on priming the fuel system.

The micron rating and the location of a primary fuel filter is important in cold weather operation. The primary fuel filter and the fuel supply line are the most common components that are affected by cold fuel.

NOTICE
In order to maximize fuel system life and prevent premature wear out from abrasive particles in the fuel, a four micron[c] absolute high efficiency fuel filter is required for all Caterpillar Hydraulic Electronic Unit Injectors. Caterpillar High Efficiency Fuel Filters meet these requirements. Consult your Caterpillar dealer for the proper part numbers.

Fuel Heaters

Fuel heaters help to prevent fuel filters from plugging in cold weather due to waxing. A fuel heater should be installed in the fuel system before the primary fuel filter.

The following fuel heaters are recommended for Caterpillar engines:

- 7C-3557 Fuel Heater Group
- 7C-3558 Heater Kit

For further information on fuel heaters, consult your Caterpillar dealer.

Disconnect the fuel heater in warm weather.

Note: Fuel heaters that are controlled by the water temperature regulator or self-regulating fuel heaters should be used with this engine. Fuel heaters that are not controlled by the water temperature regulator can heat the fuel in excess of 65°C (149°F). A loss of engine power can occur if the fuel supply temperature exceeds 37°C (100°F).

Note: Heat exchanger type fuel heaters should have a bypass provision in order to prevent overheating of the fuel in warm weather operation.

Maintenance Section

Refill Capacities

i02872195

Refill Capacities and Recommendations

SMCS Code: 1348; 1395; 7560

Engine Oil

NOTICE
These recommendations are subject to change without notice. Contact your local Caterpillar dealer for the most up to date recommendations.

API Oils

The Engine Oil Licensing and Certification System by the American Petroleum Institute (API) is recognized by Caterpillar. For detailed information about this system, see the latest edition of the “API publication No. 1509”. Engine oils that bear the API symbol are authorized by API.

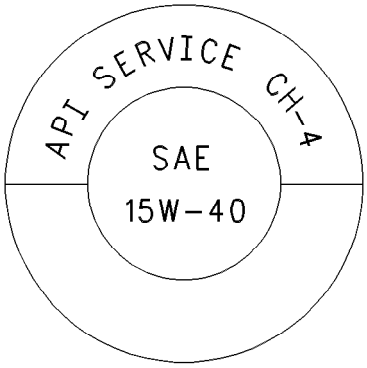

Illustration 29 g00546535
Typical API symbol

Diesel engine oils CC, CD, CD-2, and CE have not been API authorized classifications since January 1, 1996.

Table 4

API Classifications	
Current	**Obsolete**

(continued)

(Table 4, contd)

CH-4[1] CI-4	CE, CC, CD
-	CD-2 [2]

(1) **API CH-4 and CI-4 oils are acceptable if the requirements of Caterpillar's ECF-1 (Engine Crankcase Fluid specification-1) are met. CH-4 and CI-4 oils that have not met the requirements of Caterpillar's ECF-1 Specification may cause reduced engine life.**

(2) The oil CD-2 is for a two-cycle diesel engine. Caterpillar does not sell engines that utilize CD-2 oil.

Note: When oil meets more than one API classification, the applicable footnote is determined by the highest API classification that is met.

Example – An oil meets both the API CH-4 and the API CF oil classifications. In this case, the API CH-4 applies.

Cat DEO (Diesel Engine Oil)

Caterpillar Oils have been developed and tested in order to provide the full performance and service life that has been designed and built into Caterpillar Engines. Caterpillar Oils are currently used to fill diesel engines at the factory. These oils are offered by Caterpillar dealers for continued use when the engine oil is changed. Consult your Caterpillar dealer for more information on these oils.

Due to significant variations in the quality and in the performance of commercially available oils, Caterpillar makes the following recommendations:

- **Cat DEO (Diesel Engine Oil) (10W-30)**
- **Cat DEO (Diesel Engine Oil) (15W-40)**

Caterpillar multigrade DEO is formulated with the correct amounts of detergents, dispersants, and alkalinity in order to provide superior performance in Caterpillar Diesel Engines.

Caterpillar multigrade DEO is available in various viscosity grades that include SAE 10W-30 and SAE 15W-40. To choose the correct viscosity grade for the ambient temperature, see Table 6 . Multigrade oils provide the correct viscosity for a broad range of operating temperatures.

Multigrade oils are effective in maintaining low oil consumption and low levels of piston deposits.

Caterpillar multigrade DEO can be used in other diesel engines and in gasoline engines. See the engine manufacturer's guide for the recommended specifications. Compare the specifications to the specifications of Caterpillar multigrade DEO. The current industry standards for Caterpillar DEO are listed on the product label and on the data sheets for the product.

Consult your Caterpillar dealer for part numbers and for available sizes of containers.

Note: Caterpillar SAE 15W-40 multigrade DEO exceeds the performance requirements for the following API classifications: CI-4, CH-4, CG-4, CF-4 and CF. The Caterpillar multigrade DEO exceeds the requirements of the Caterpillar specification that is ECF-1 (Engine Crankcase Fluid-1). The Caterpillar SAE 15W-40 multigrade DEO passes the following proprietary tests: sticking of the piston ring, oil control tests, wear tests and soot tests. Proprietary tests help ensure that Caterpillar multigrade oil provides superior performance in Caterpillar Diesel Engines. In addition, Caterpillar multigrade oil exceeds many of the performance requirements of other manufacturers of diesel engines. Therefore, this oil is an excellent choice for many mixed fleets. **True high performance oil is produced with a combination of the following factors: industry standard tests, proprietary tests, field tests and prior experience with similar formulations. The design and the development of Caterpillar lubricants that are both high performance and high quality are based on these factors.**

Note: Non-Caterpillar commercial oils are second choice oils.

Commercial Oils

In order to select the correct engine oil for the C-4.4 electronic engine, you must refer to table 5 .

Table 5

API Classifications for the C-4.4 electronic Industrial Engine	
Oil Specification	**Maintenance Interval**
CH-4/CI-4	500 Hours
CI-4	500 Hours
CG-4	250 Hours

Note: If Caterpillar Multigrade DEO is not used, use only commercial oils that meet the following classifications.

- API CH-4 multigrade oils and API CI-4 multigrade oils are acceptable if the requirements of Caterpillar's ECF-1 (Engine Crankcase Fluid specification-1) are met. CH-4 oils and CI-4 oils that have not met the requirements of Caterpillar's ECF-1 Specification may cause reduced engine life.
- API CF-4 multigrade oils are not recommended for this series of diesel engines. For all other smaller commercial diesel engines, the oil drain interval should not exceed 50 percent of the standard oil drain interval for your engine.

NOTICE
In selecting oil for any engine application, both the oil viscosity and oil performance classification/specification as specified by the engine manufacturer must be defined and satisfied. Using only one of these parameters will not sufficiently define oil for an engine application.

In order to make the proper choice of a commercial oil, refer to the following explanations:

API CI-4 – API CI-4 oils were developed in order to meet the requirements of high performance diesel engines that use cooled Exhaust Gas Recirculation (EGR). API CI-4 oils are acceptable if the requirements of Caterpillar's ECF-1 (Engine Crankcase Fluid specification-1) are met.

API CH-4 – API CH-4 oils were developed in order to protect low emissions diesel engines that use a 0.05 percent level of fuel sulfur. However, API CH-4 oils may be used with higher sulfur fuels. API CH-4 oils are acceptable if the requirements of Caterpillar's ECF-1 (Engine Crankcase Fluid specification-1) are met.

Note: CH-4 oils and CI-4 oils that have not met the requirements of Caterpillar's ECF-1 Specification may cause reduced engine life.

NOTICE
Failure to follow these oil recommendations can cause shortened engine service life due to deposits and/or excessive wear.

Note: Refer to Special Publication, SEBU6251, “Caterpillar Commercial Diesel Engine Fluids Recommendations” for additional information that relates to lubrication for your engine.

Lubricant Viscosity Recommendations

The proper SAE viscosity grade of oil is determined by the minimum ambient temperature during cold engine start-up, and the maximum ambient temperature during engine operation.

Refer to Table 6 (minimum temperature) in order to determine the required oil viscosity for starting a cold engine.

Refer to Table 6 (maximum temperature) in order to select the oil viscosity for engine operation at the highest ambient temperature that is anticipated.

Note: Generally, use the highest oil viscosity that is available to meet the requirement for the temperature at start-up.

If ambient temperature conditions at engine start-up require the use of multigrade SAE 0W oil, SAE 0W-40 viscosity grade is preferred over SAE 0W-20 or SAE 0W-30.

Table 6

Engine Oil Viscosities for Ambient Temperatures		
	Ambient Temperature	
Viscosity Grade	Minimum	Maximum
SAE 0W-20	−40 °C (−40 °F)	10 °C (50 °F)
SAE 0W-30	−40 °C (−40 °F)	30 °C (86 °F)
SAE 0W-40	−40 °C (−40 °F)	40 °C (104 °F)
SAE 5W-30	−30 °C (−22 °F)	30 °C (86 °F)
SAE 5W-40	−30 °C (−22 °F)	50 °C (122 °F)
SAE 10W-30	−18 °C (0 °F)	40 °C (104 °F)
SAE 10W-40	−18 °C (0 °F)	50 °C (122 °F)
SAE 15W-40	−9.5 °C (15 °F)	50 °C (122 °F)

Note: Supplemental heat is recommended below the minimum recommended ambient temperature.

S·O·S Oil Analysis

Caterpillar has developed a tool for maintenance management that evaluates oil degradation and the tool also detects the early signs of wear on internal components. The Caterpillar tool for oil analysis is called S·O·S Oil Analysis and the tool is part of the S·O·S Services program. S·O·S Oil Analysis divides oil analysis into three categories:

- Wear Analysis
- Oil condition
- Additional tests

The wear analysis monitors metal particles, some oil additives, and some contaminants.

Oil condition uses infrared (IR) analysis to evaluate the chemistry of the oil. Infrared analysis is also used to detect certain types of contamination.

Additional tests are used to measure contamination levels from water, fuel, or coolant. Oil viscosity and corrosion protection can be evaluated, as needed.

Refer to Special Publication, SEBU6251, “Caterpillar Commercial Diesel Engine Fluids Recommendations” or contact your local Caterpillar dealer for additional information concerning the S·O·S Oil Analysis program.

Refill Capacities for the Lubrication System

The refill capacities for the engine crankcase reflect the approximate capacity of the crankcase or sump plus standard oil filters. Auxiliary oil filter systems will require additional oil. Refer to the OEM specifications for the capacity of the auxiliary oil filter.

Table 7

Engine Refill Capacities		
Compartment or System	**Minimum**	**Maximum**
Crankcase Oil Sump(1)	5 L (5.2834 qt)	7 L (7.3968 qt)

(1) These values are the approximate capacities for the crankcase oil sump (aluminum) which includes the standard factory installed oil filters. Engines with auxiliary oil filters will require additional oil. Refer to the OEM specifications for the capacity of the auxiliary oil filter.

Lubricating Grease

Caterpillar provides a range of moderate greases to extremely high performance greases in order to service the entire line of Caterpillar products that operate throughout the wide variety of climates. From this variety of Caterpillar grease products, you will find at least one of the Caterpillar greases that will satisfy the performance requirements for any machine or equipment application.

Before selecting a grease for any application, the performance requirements must be determined. Consult the grease recommendations that are made by the OEM for the equipment when the equipment is operated in the expected conditions. Then, consult with your Caterpillar dealer for a list of greases and the following related characteristics.

- Performance specifications
- Available sizes of containers
- Part numbers

Always choose a grease that satisfies the recommendations that are specified by the equipment manufacturer for the application.

Note: If it is necessary to choose a single grease to use for all of the equipment at one site, always choose a grease that satisfies the requirements of the most demanding application.

Do not use the cost per pound as the only factor when you choose a grease. Use the grease that yields the lowest total cost of operation. The cost analysis should include the following factors:

- Parts
- Labor

- Downtime
- Cost of the grease

Greases that barely meet the minimum performance requirements can be expected to barely produce the minimum life of the parts.

Note: Take care when you change the type of grease. Take care when you change to a different supplier of grease. Some greases are not chemically compatible. Some brands of grease can not be interchanged. **If you are in doubt about the compatibility of the old grease and the new grease, purge all of the old grease from the joint.** Consult your supplier in order to determine if the greases are compatible.

Note: All Caterpillar brand of greases are compatible with each other.

Note: Refer to Special Publication, SEBU6251, “Caterpillar Commercial Diesel Engine Fluids Recommendations” for additional information that relates to lubrication for your engine.

General Fuel Information

Diesel fuels that meet the Caterpillar Specification for Distillate Diesel Fuel are recommended. These fuels will help to provide maximum engine service life and performance. In North America, diesel fuel that is identified as No. 1-D or No. 2-D in “ASTM D975” generally meet the specifications. Diesel fuels from other sources could exhibit detrimental properties that are not defined or controlled by this specification.

NOTICE
Operating with fuels that do not meet Caterpillar's recommendations can cause the following effects: starting difficulty, poor combustion, deposits in the fuel injectors, reduced service life of the fuel system, deposits in the combustion chamber and reduced service life of the engine.

Note: Refer to Special Publication, SEBU6251, “Caterpillar Commercial Diesel Engine Fluids Recommendations” for the Caterpillar Specification for distillate fuel and for additional information that relates to fuel for your engine.

Refill Capacities for the Fuel System

Refer to the Operation and Maintenance Manual that is provided by the OEM for capacities of the fuel system.

General Coolant Information

NOTICE
These recommendations are subject to change without notice. Contact your local Caterpillar dealer for the most up to date fluids recommendations.

NOTICE
Never add coolant to an overheated engine. Engine damage could result. Allow the engine to cool first.

NOTICE
If the engine is to be stored in, or shipped to an area with below freezing temperatures, the cooling system must be either protected to the lowest outside temperature or drained completely to prevent damage.

NOTICE
Frequently check the specific gravity of the coolant for proper freeze protection or for anti-boil protection.

Clean the cooling system for the following reasons:

- Contamination of the cooling system
- Overheating of the engine
- Foaming of the coolant

Note: Air pockets can form in the cooling system if the cooling system is filled at a rate that is greater than 5 L (1.3 US gal) per minute.

After you drain the cooling system and after you refill the cooling system, operate the engine. Operate the engine without the filler cap until the coolant reaches normal operating temperature and the coolant level stabilizes. Ensure that the coolant is maintained to the proper level.

NOTICE
Never operate an engine without water temperature regulators in the cooling system. Water temperature regulators help to maintain the engine coolant at the proper operating temperature. Cooling system problems can develop without water temperature regulators.

Refer to Special Instruction, SEBD0518, “Know Your Cooling System” and Special Instruction, SEBD0970, “Coolant and Your Engine” for more detailed information.

Many engine failures are related to the cooling system. The following problems are related to cooling system failures: overheating, leakage of the water pump, plugged radiators or heat exchangers and pitting of the cylinder liners.

These failures can be avoided with proper cooling system maintenance. Cooling system maintenance is as important as maintenance of the fuel system and the lubrication system. Quality of the coolant is as important as the quality of the fuel and the lubricating oil.

Coolant is normally composed of three elements: water, additives and glycol.

Water

NOTICE
Never use water alone without Supplemental Coolant Additives (SCA) or without inhibited coolant. Water alone is corrosive at engine operating temperatures. Water alone does not provide adequate protection against boiling or freezing.

Water is used in the cooling system in order to transfer heat.

Distilled water or deionized water is recommended for use in engine cooling systems.

DO NOT use the following types of water in cooling systems: hard water, softened water that has been conditioned with salt and sea water.

If distilled water or deionized water is not available, use water with the properties that are listed in Table 8 .

Table 8

Caterpillar Minimum Acceptable Water Requirements		
Property	**Maximum Limit**	**ASTM Test**
Chloride (Cl)	40 mg/L (2.4 grains/US gal)	“D512”, “D4327”
Sulfate (SO_4)	100 mg/L (5.9 grains/US gal)	“D516”
Total Hardness	170 mg/L (10 grains/US gal)	“D1126”
Total Solids	340 mg/L (20 grain/US gal)	“D1888”
Acidity	pH of 5.5 to 9.0	“D1293”

For a water analysis, consult one of the following sources:

- Caterpillar dealer
- Local water utility company
- Agricultural agent
- Independent laboratory

Additives

Additives help to protect the metal surfaces of the cooling system. A lack of coolant additives or insufficient amounts of additives enable the following conditions to occur:

- Corrosion
- Formation of mineral deposits
- Rust
- Scale
- Pitting and erosion from cavitation of the cylinder liner
- Foaming of the coolant

Many additives are depleted during engine operation. These additives must be replaced periodically. This can be done by adding Supplemental Coolant Additives (SCA) to Diesel Engine Antifreeze/Coolant (DEAC) or by adding ELC Extender to Extended Life Coolant (ELC).

Additives must be added at the proper concentration. Overconcentration of additives can cause the inhibitors to drop out-of-solution. The deposits can enable the following problems to occur:

- Formation of gel compounds
- Reduction of heat transfer
- Leakage of the water pump seal
- Plugging of radiators, coolers, and small passages

Glycol

Glycol in the coolant helps to provide protection against the following conditions:

- Boiling
- Freezing
- Cavitation of the water pump and the cylinder liner

For optimum performance, Caterpillar recommends a 1:1 mixture of a water/glycol solution.

Note: Use a mixture that will provide protection against the lowest ambient temperature.

Note: 100 percent pure glycol will freeze at a temperature of −23 °C (−9 °F).

Most conventional heavy-duty antifreezes use ethylene glycol. Propylene glycol may also be used. In a 1:1 mixture with water, ethylene and propylene glycol provide similar protection against freezing and boiling. See Tables 9 and 10 .

Table 9

Ethylene Glycol		
Concentration	**Freeze Protection**	**Boil Protection**
50 Percent	−36 °C (−33 °F)	106 °C (223 °F)
60 Percent	−51 °C (−60 °F)	111 °C (232 °F)

NOTICE
Do not use propylene glycol in concentrations that exceed 50 percent glycol because of propylene glycol's reduced heat transfer capability. Use ethylene glycol in conditions that require additional protection against boiling or freezing.

Table 10

Propylene Glycol		
Concentration	**Freeze Protection**	**Anti-Boil Protection**
50 Percent	−29 °C (−20 °F)	106 °C (223 °F)

To check the concentration of glycol, use the 1U-7298 Coolant/Battery Tester (Degrees Celsius) or use the 1U-7297 Coolant/Battery Tester (Degrees Fahrenheit). The testers give readings that are immediate and accurate. The testers can be used with ethylene or propylene glycol.

Coolant Recommendations

NOTICE
Do not use a commercial coolant/antifreeze that only meets the ASTM D3306 specification. This type of coolant/antifreeze is made for light duty automotive applications.

The following two coolants are used in Caterpillar diesel engines:

Preferred – Caterpillar Extended Life Coolant (ELC) or a commercial extended life coolant that meets the Caterpillar EC-1 specification

Acceptable – Caterpillar Diesel Engine Antifreeze (DEAC) or a commercial heavy-duty antifreeze that meets “ASTM D4985”, or “ASTM D6210” specifications

Caterpillar recommends a 1:1 mixture of water and glycol. This mixture of water and glycol will provide optimum heavy-duty performance as a antifreeze.

Note: Caterpillar DEAC does not require a treatment with an SCA at the initial fill. A commercial heavy-duty antifreeze that meets “ASTM D4985” or “ASTM D6210” specifications MAY require a treatment with an SCA at the initial fill. These coolants WILL require a treatment with an SCA on a maintenance basis.

Refer to Special Publication, SEBU6251, “Caterpillar Commercial Diesel Engine Fluids Recommendations” for additional information that relates to coolant.

S·O·S Coolant Analysis

Table 11

Recommended Interval		
Type of Coolant	**Level 1**	**Level 2**
DEAC	Every 250 Hours	Yearly(1)
ELC	Not Required	Yearly

(1) The Level 2 Coolant Analysis should be performed sooner if a problem is identified by a Level 1 Coolant Analysis.

S·O·S Coolant Analysis (Level 1)

A coolant analysis (Level 1) is a test of the properties of the coolant.

The following properties of the coolant are tested:

- Glycol concentration for freeze protection and boil protection
- Ability to protect from erosion and corrosion
- pH
- Conductivity
- Visual analysis
- Odor analysis

The results are reported, and appropriate recommendations are made.

Refer to the Maintenance Interval Schedule in this Operation and Maintenance Manual, “Cooling System Coolant Sample (Level 1) - Obtain” for a sampling location and the maintenance interval for collecting the coolant samples.

S·O·S Coolant Analysis (Level 2)

A coolant analysis (Level 2) is a comprehensive chemical evaluation of the coolant. This analysis is also a check of the overall condition of the inside of the cooling system.

The S·O·S Coolant Analysis has the following features:

- Full coolant analysis (Level 1)
- Identification of the source of metal corrosion and of contaminants
- Water hardness

- Identification of buildup of the impurities that cause corrosion
- Identification of buildup of the impurities that cause scaling

The results are reported, and appropriate recommendations are made.

Refer to the Maintenance Interval Schedule in this Operation and Maintenance Manual, “Cooling System Coolant Sample (Level 2) - Obtain” for a sampling location and the maintenance interval for collecting the coolant samples.

Testing the engine coolant is important to ensure that the engine is protected from internal cavitation and from corrosion. The analysis also tests the ability of the coolant to protect the engine from boiling and from freezing. The S·O·S Coolant Analysis can be done at your Caterpillar dealer. Caterpillar S·O·S Coolant Analysis is the best way to monitor the condition of your coolant and your cooling system. S·O·S Coolant Analysis is a program that is based on periodic samples.

Refer to Special Publication, SEBU6251, “Caterpillar Commercial Diesel Engine Fluids Recommendations” for additional information.

Refill Capacity of the Cooling System

To maintain the cooling system, the Total Cooling System capacity must be known. The approximate capacity for the “Engine Only” cooling system is listed. External System capacities will vary among applications. Refer to the OEM specifications for the External System capacity. This capacity information will be needed in order to determine the amount of antifreeze that is required for the Total Cooling System.

Table 12

Engine Refill Capacities	
Compartment or System	**Liters**
Engine Only	7 L (7.3968 qt)
External System Per OEM(1)	

(1) The External System includes a radiator or an expansion tank with the following components: heat exchanger and piping. Refer to the OEM specifications. Enter the value for the capacity of the External System in this row.

i09848003

Maintenance Interval Schedule

SMCS Code: 1000; 7500

When Required

“ Battery - Replace“ 63
“ Battery or Battery Cable - Disconnect“ 64
“ Engine - Clean“ 74
“ Engine Air Cleaner Element (Dual Element) - Clean/ Replace“ 74
“ Fuel System - Prime“ 85
“ Severe Service Application - Check“ 98

Daily

“ Alternator Belt - Inspect/Adjust/Replace“ 63
“ Cooling System Coolant Level - Check“ 69
“ Driven Equipment - Check“ 73
“ Engine Air Cleaner Service Indicator - Inspect“ . . 77
“ Engine Air Precleaner - Check/Clean“ 78
“ Engine Oil Level - Check“ 79
“ Fuel System Primary Filter/Water Separator - Drain“ 86
“ Hoses and Clamps - Inspect/Replace“ 94
“ V-Belts - Inspect/Adjust/Replace“ 100
“ Walk-Around Inspection“ 101

Every 50 Service Hours or Weekly

“ Fuel Tank Water and Sediment - Drain“ 94

Every 250 Service Hours

“ Cooling System Coolant Sample (Level 1) - Obtain“ 70
“ Engine Oil and Filter - Change“. 80
“ Engine Oil Sample - Obtain“ 79

Initial 500 Service Hours

“ Engine Valve Lash - Inspect/Adjust“. 83

Every 500 Service Hours

“ Fan Clearance - Check“ 84
“ V-Belts - Inspect/Adjust/Replace“ 100

Every 500 Service Hours or 2 Months

“ Crankcase Breather (Canister) - Replace“. 73

Every 500 Service Hours or 1 Year

“ Battery Electrolyte Level - Check“ 64
“ Cooling System Supplemental Coolant Additive (SCA) - Test/Add“. 71
“ Engine Air Cleaner Element (Dual Element) - Clean/ Replace“ 74
“ Engine Air Cleaner Element (Single Element) - Replace“ 77
“ Engine Oil and Filter - Change“. 80
“ Fuel System Primary Filter (Water Separator) Element - Replace“ 87
“ Fuel System Secondary Filter - Replace“. 91
“ Radiator - Clean“ 98

Every 1000 Service Hours

“ Engine Valve Lash - Inspect/Adjust“. 83

Every 2000 Service Hours

“ Aftercooler Core - Inspect“ 62
“ Belt Tensioner - Inspect“ 65
“ Exhaust Manifold - Inspect“. 83
“ Starting Motor - Inspect“ 99
“ Turbocharger - Inspect“. 99
“ Water Pump - Inspect“. 102

Every 2000 Service Hours or 1 Year

“ Alternator - Inspect“. 63

“ Engine Mounts - Inspect“ 78

Every Year

“ Cooling System Coolant Sample (Level 2) - Obtain“ 71

Every 3000 Service Hours

“ Alternator Belt - Inspect/Adjust/Replace“ 63

Every 3000 Service Hours or 2 Years

“ Cooling System Coolant (DEAC) - Change“ 65

“ Cooling System Water Temperature Regulator - Replace“ 72

Every 4000 Service Hours

“ Aftercooler Core - Clean/Test“ 62

Every 6000 Service Hours or 3 Years

“ Cooling System Coolant Extender (ELC) - Add“ 69

Every 12 000 Service Hours or 6 Years

“ Cooling System Coolant (ELC) - Change“ 67

Overhaul

“ Overhaul Considerations“ 95

Commissioning

“ Fan Clearance - Check“ 84

i08772170

Aftercooler Core - Clean/Test

SMCS Code: 1064-070; 1064-081

1. Remove the core. Refer to the Service Manual for the procedure.
2. Turn the aftercooler core upside-down in order to remove debris.

NOTICE
Do not use a high concentration of caustic cleaner to clean the core. A high concentration of caustic cleaner can attack the internal metals of the core and cause leakage. Only use the recommended concentration of cleaner.

3. Back flush the core with cleaner.

   Caterpillar recommends the use of Kynetx liquid cleaner. Table 13 lists Kynetx liquid cleaners that are available from your Caterpillar dealer.

Table 13

Kynetx Liquid Cleaners(1)		
Part Number	**Description**	**Size**
486 - 1524	Kynetx 4165	208.2 L (55 US gallon)
486–6854	Kynetx 100	19 L (5 US gallon)

(1) Use a two to five percent concentration of the cleaner at temperatures up to 93°C (200°F). Refer to Application Guide, NEHS0526 or consult your Caterpillar dealer for more information.

4. Steam clean the core in order to remove any residue. Flush the fins of the aftercooler core. Remove any other trapped debris.
5. Wash the core with hot, soapy water. Rinse the core thoroughly with clean water.

⚠ WARNING

Personal injury can result from air pressure.

Personal injury can result without following proper procedure. When using pressure air, wear a protective face shield and protective clothing.

Maximum air pressure at the nozzle must be less than 205 kPa (30 psi) for cleaning purposes.

6. Dry the core with compressed air. Direct the air in the reverse direction of the normal flow.
7. Inspect the core in order to ensure cleanliness. Pressure test the core. Many shops that service radiators are equipped to perform pressure tests. If necessary, repair the core.
8. Install the core. Refer to the Service Manual for the procedure.

For more information on cleaning the core, consult your Caterpillar dealer.

i01468985

Aftercooler Core - Inspect

SMCS Code: 1064-040

Note: Adjust the frequency of cleaning according to the effects of the operating environment.

Inspect the aftercooler for these items: damaged fins, corrosion, dirt, grease, insects, leaves, oil and other debris. Clean the aftercooler, if necessary.

For air-to-air aftercoolers, use the same methods that are used for cleaning radiators.

⚠ WARNING

Personal injury can result from air pressure.

Personal injury can result without following proper procedure. When using pressure air, wear a protective face shield and protective clothing.

Maximum air pressure at the nozzle must be less than 205 kPa (30 psi) for cleaning purposes.

Pressurized air is the preferred method for removing loose debris. Direct the air in the opposite direction of the fan's air flow. Hold the nozzle approximately 6 mm (.25 inch) away from the fins. Slowly move the air nozzle in a direction that is parallel with the tubes. This will remove debris that is between the tubes.

Pressurized water may also be used for cleaning. The maximum water pressure for cleaning purposes must be less than 275 kPa (40 psi). Use pressurized water in order to soften mud. Clean the core from both sides.

Use a degreaser and steam for removal of oil and grease. Clean both sides of the core. Wash the core with detergent and hot water. Thoroughly rinse the core with clean water.

After cleaning, start the engine and accelerate the engine to high idle rpm. This will help in the removal of debris and drying of the core. Stop the engine. Use a light bulb behind the core in order to inspect the core for cleanliness. Repeat the cleaning, if necessary.

Inspect the fins for damage. Bent fins may be opened with a “comb”.

Note: If parts of the aftercooler system are repaired or replaced, a leak test is highly recommended. The FT1984 Aftercooler Testing Group is used to perform leak tests on the aftercooler. Refer to the Systems Operation/Testing and Adjusting, “Aftercooler - Test” and the Special Instruction, SEHS8622 for the proper testing procedure.

Inspect these items for good condition: welds, mounting brackets, air lines, connections, clamps and seals. Make repairs, if necessary.

For more detailed information on cleaning and inspection, see Special Publication, SEBD0518, “Know Your Cooling System”.

i08259468

Alternator - Inspect

SMCS Code: 1405-040

Caterpillar recommends a scheduled inspection of the alternator. Inspect the alternator for loose connections and proper battery charging. Inspect the ammeter (if equipped) during engine operation to ensure proper battery performance and/or proper performance of the electrical system. Make repairs, as required.

Check the alternator and the battery charger for proper operation. If the batteries are properly charged, the ammeter reading should be very near zero. All batteries should be kept charged. The batteries should be kept warm because temperature affects the cranking power. If the battery is too cold, the battery will not crank the engine. The battery will not crank the engine, even if the engine is warm. When the engine is not run for long periods of time or if the engine is run for short periods, the batteries may not fully charge. A battery with a low charge will freeze more easily than a battery with a full charge.

i02491869

Alternator Belt - Inspect/ Adjust/Replace
(Poly V-Belt)

SMCS Code: 1357-036; 1357-510

Inspection

To maximize the engine performance, inspect the belt (1) for wear and for cracking. Replace the belt if the belt is worn or damaged.

- If the belt (1) has more than four cracks per 25.4000 mm (1 inch) the belt must be replaced.
- Check the belt of cracks, splits, glazing, grease, and splitting.

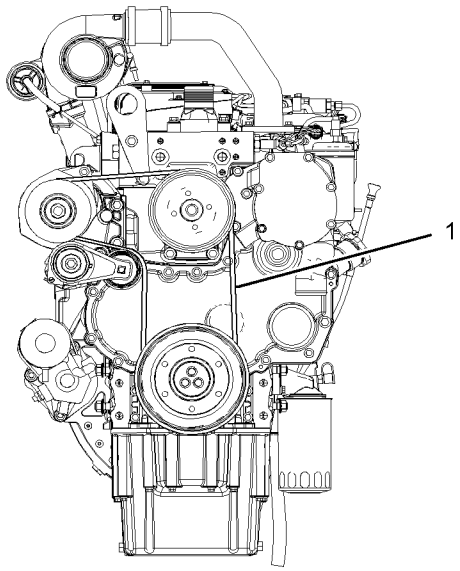

Illustration 30 g01251375
Typical example

Adjustment

This type of belt has an automatic belt tensioner.

Replace

Refer to Disassembly and Assembly manual, “Alternator Belt - Remove and Install”.

i02322315

Battery - Replace

SMCS Code: 1401-510

⚠ WARNING

Batteries give off combustible gases which can explode. A spark can cause the combustible gases to ignite. This can result in severe personal injury or death.

Ensure proper ventilation for batteries that are in an enclosure. Follow the proper procedures in order to help prevent electrical arcs and/or sparks near batteries. Do not smoke when batteries are serviced.

⚠ WARNING

The battery cables or the batteries should not be removed with the battery cover in place. The battery cover should be removed before any servicing is attempted.

Removing the battery cables or the batteries with the cover in place may cause a battery explosion resulting in personal injury.

1. Switch the engine to the OFF position. Remove all electrical loads.
2. Turn off any battery chargers. Disconnect any battery chargers.
3. The NEGATIVE "-" cable connects the NEGATIVE "-" battery terminal to the NEGATIVE "-" terminal on the starting motor. Disconnect the cable from the NEGATIVE "-" battery terminal.
4. The POSITIVE "+" cable connects the POSITIVE "+" battery terminal to the POSITIVE "+" terminal on the starting motor. Disconnect the cable from the POSITIVE "+" battery terminal.

Note: Always recycle a battery. Never discard a battery. Dispose of used batteries to an appropriate recycling facility.

5. Remove the used battery.
6. Install the new battery.

Note: Before the cables are connected, ensure that the engine start switch is OFF.

7. Connect the cable from the starting motor to the POSITIVE "+" battery terminal.
8. Connect the NEGATIVE "-" cable to the NEGATIVE "-" battery terminal.

i02724529

Battery Electrolyte Level - Check

SMCS Code: 1401-535

When the engine is not run for long periods of time or when the engine is run for short periods, the batteries may not fully recharge. Ensure a full charge in order to help prevent the battery from freezing. If batteries are properly charged, ammeter reading should be very near zero,when the engine is in operation.

⚠ WARNING

All lead-acid batteries contain sulfuric acid which can burn the skin and clothing. Always wear a face shield and protective clothing when working on or near batteries.

1. Remove the filler caps. Maintain the electrolyte level to the "FULL" mark on the battery.

   If the addition of water is necessary, use distilled water. If distilled water is not available use clean water that is low in minerals. Do not use artificially softened water.
2. Check the condition of the electrolyte with the 245-5829 Coolant Battery Tester Refractometer.
3. Keep the batteries clean.

   Clean the battery case with one of the following cleaning solutions:

   - Use a solution of 0.1 kg (0.2 lb) baking soda and 1 L (1 qt) of clean water.
   - Use a solution of ammonium hydroxide.

   Thoroughly rinse the battery case with clean water.

   Use a fine grade of sandpaper to clean the terminals and the cable clamps. Clean the items until the surfaces are bright or shiny. DO NOT remove material excessively. Excessive removal of material can cause the clamps to not fit properly. Coat the clamps and the terminals with 5N-5561 Silicone Lubricant, petroleum jelly or MPGM.

i09570426

Battery or Battery Cable - Disconnect

SMCS Code: 1402-029

⚠ WARNING

The battery cables or the batteries should not be removed with the battery cover in place. The battery cover should be removed before any servicing is attempted.

Removing the battery cables or the batteries with the cover in place may cause a battery explosion resulting in personal injury.

1. Turn the start switch to the OFF position. Turn the ignition switch (if equipped) to the OFF position and remove the key and all electrical loads.
2. Open the battery isolator. Disconnect the negative battery terminal. Ensure that the cable cannot contact the terminal. When four 12 volt batteries are involved, two negative connections must be disconnected.
3. Remove the positive connection.
4. Clean all disconnected connection and battery terminals.
5. Use a fine grade of sandpaper to clean the terminals and the cable clamps. Clean the items until the surfaces are bright or shiny. DO NOT remove material excessively. Excessive removal of material can cause the clamps to not fit correctly. Coat the clamps and the terminals with a suitable silicone lubricant or petroleum jelly.
6. Tape the cable connections to help prevent accidental starting.
7. Proceed with necessary system repairs.
8. To connect the battery, connect the positive connection before the negative connection.

i02870187

Belt Tensioner - Inspect

SMCS Code: 1358-040

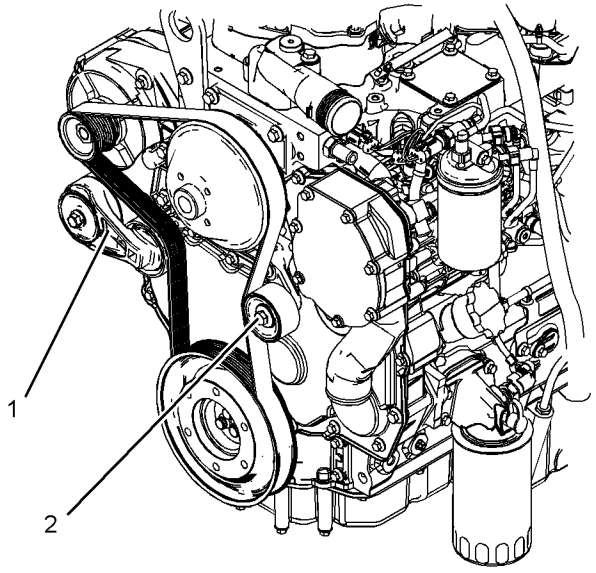

Illustration 31 g01429637
Typical example

Remove the belt. Refer to Disassembly and Assembly, “Alternator Belt - Remove and Install”.

Ensure that the belt tensioner is securely installed. Visually inspect the belt tensioner (1) for damage. Check that the roller on the tensioner rotates freely. Some engines have a guide roller (2). Ensure that the guide roller is securely installed. Visually inspect the guide roller for damage. Ensure that the guide roller can rotate freely.

Install the belt. Refer to Disassembly and Assembly, “Alternator Belt - Remove and Install”.

i02789695

Cooling System Coolant (DEAC) - Change

SMCS Code: 1350-070; 1395-044

Clean the cooling system and flush the cooling system before the recommended maintenance interval if the following conditions exist:

- The engine overheats frequently.
- Foaming is observed.
- The oil has entered the cooling system and the coolant is contaminated.
- The fuel has entered the cooling system and the coolant is contaminated.

NOTICE
Use of commercially available cooling system cleaners may cause damage to cooling system components. Use only cooling system cleaners that are approved for Caterpillar engines.

Note: Inspect the water pump and the water temperature regulator after the cooling system has been drained. This is a good opportunity to replace the water pump, the water temperature regulator and the hoses, if necessary.

Drain

⚠ WARNING

Pressurized System: Hot coolant can cause serious burns. To open the cooling system filler cap, stop the engine and wait until the cooling system components are cool. Loosen the cooling system pressure cap slowly in order to relieve the pressure.

1. Stop the engine and allow the engine to cool. Loosen the cooling system filler cap slowly in order to relieve any pressure. Remove the cooling system filler cap.

Note: Refer to Operation and Maintenance Manual, “General Hazard Information” for information on Containing Fluid Spillage.

2. Open the cooling system drain valve (if equipped). If the cooling system is not equipped with a drain valve, remove one of the drain plugs.

   Allow the coolant to drain into a suitable container.

3. Properly dispose of the drained material. Obey local regulations for the disposal of the material.

NOTICE
Dispose of used engine coolant properly or recycle. Various methods have been proposed to reclaim used coolant for reuse in engine cooling systems. The full distillation procedure is the only method acceptable by Caterpillar to reclaim the used coolant.

Flush

1. Flush the cooling system with clean water in order to remove any debris.
2. Close the drain valve (if equipped). Clean the drain plugs. Install the drain plugs. Refer to Torque Specifications, SENR3130 for more information on the correct torques.

NOTICE
Do not fill the cooling system faster than 5 L (1.3 US gal) per minute to avoid air locks.

Cooling system air locks may result in engine damage.

3. Fill the cooling system with a mixture of clean water and Caterpillar Fast Acting Cooling System Cleaner. Add 0.5 L (1 pint) of cleaner per 15 L (4 US gal) of the cooling system capacity. Install the cooling system filler cap.
4. Start and run the engine at low idle for a minimum of 30 minutes. The coolant temperature should be at least 82 °C (180 °F).

NOTICE
Improper or incomplete rinsing of the cooling system can result in damage to copper and other metal components.

To avoid damage to the cooling system, make sure to completely flush the cooling system with clear water. Continue to flush the system until all signs of the cleaning agent are gone.

5. Stop the engine and allow the engine to cool. Loosen the cooling system filler cap slowly in order to relieve any pressure. Remove the cooling system filler cap. Open the drain valve (if equipped) or remove the cooling system drain plugs. Allow the water to drain. Flush the cooling system with clean water. Close the drain valve (if equipped). Clean the drain plugs. Install the drain plugs. Refer to Torque Specifications, SENR3130 for more information on the correct torques.

Cooling Systems with Heavy Deposits or Plugging

Note: For the following procedure to be effective, there must be some active flow through the cooling system components.

1. Flush the cooling system with clean water in order to remove any debris.
2. Close the drain valve (if equipped). Clean the drain plugs. Install the drain plugs. Refer to Torque Specifications, SENR3130 for more information on the correct torques.

NOTICE
Do not fill the cooling system faster than 5 L (1.3 US gal) per minute to avoid air locks.

Cooling system air locks may result in engine damage.

3. Fill the cooling system with a mixture of clean water and Caterpillar Fast Acting Cooling System Cleaner. Add 0.5 L (1 pint) of cleaner per 3.8 to 7.6 L (1 to 2 US gal) of the cooling system capacity. Install the cooling system filler cap.
4. Start and run the engine at low idle for a minimum of 90 minutes. The coolant temperature should be at least 82 °C (180 °F).

NOTICE
Improper or incomplete rinsing of the cooling system can result in damage to copper and other metal components.

To avoid damage to the cooling system, make sure to completely flush the cooling system with clear water. Continue to flush the system until all signs of the cleaning agent are gone.

5. Stop the engine and allow the engine to cool. Loosen the cooling system filler cap slowly in order to relieve any pressure. Remove the cooling system filler cap. Open the drain valve (if equipped) or remove the cooling system drain plugs. Allow the water to drain. Flush the cooling system with clean water. Close the drain valve (if equipped). Clean the drain plugs. Install the drain plugs. Refer to Torque Specifications, SENR3130 for more information on the correct torques.

Fill

NOTICE
Do not fill the cooling system faster than 5 L (1.3 US gal) per minute to avoid air locks.

Cooling system air locks may result in engine damage.

1. Fill the cooling system with the coolant/antifreeze. Refer to this Operation and Maintenance Manual, “Refill Capacities and Recommendations” topic (Maintenance Section) for more information on cooling system specifications. Do not install the cooling system filler cap.
2. Start and run the engine at low idle. Increase the engine rpm to 1500 rpm. Run the engine at high idle for one minute in order to purge the air from the cavities of the engine block. Stop the engine.
3. Check the coolant level. Maintain the coolant level within 13 mm (0.5 inch) below the bottom of the pipe for filling. Maintain the coolant level within 13 mm (0.5 inch) to the proper level on the sight glass (if equipped).
4. Clean the cooling system filler cap. Inspect the gasket that is on the cooling system filler cap. If the gasket that is on the cooling system filler cap is damaged, discard the old cooling system filler cap and install a new cooling system filler cap. If the gasket that is on the cooling system filler cap is not damaged, perform a pressure test. A 9S-8140 Pressurizing Pump is used to perform the pressure test. The correct pressure for the cooling system filler cap is stamped on the face of the cooling system filler cap. If the cooling system filler cap does not retain the correct pressure, install a new cooling system filler cap.
5. Start the engine. Inspect the cooling system for leaks and for the correct operating temperature.

i02822203

Cooling System Coolant (ELC) - Change

SMCS Code: 1350-070; 1395-044

Clean the cooling system and flush the cooling system before the recommended maintenance interval if the following conditions exist:

- The engine overheats frequently.
- Foaming is observed.
- The oil has entered the cooling system and the coolant is contaminated.
- The fuel has entered the cooling system and the coolant is contaminated.

Note: When the cooling system is cleaned, only clean water is needed when the ELC is drained and replaced.

Note: Inspect the water pump and the water temperature regulator after the cooling system has been drained. This is a good opportunity to replace the water pump, the water temperature regulator and the hoses, if necessary.

Drain

⚠ WARNING

Pressurized System: Hot coolant can cause serious burns. To open the cooling system filler cap, stop the engine and wait until the cooling system components are cool. Loosen the cooling system pressure cap slowly in order to relieve the pressure.

1. Stop the engine and allow the engine to cool. Loosen the cooling system filler cap slowly in order to relieve any pressure. Remove the cooling system filler cap.
2. Open the cooling system drain valve (if equipped). If the cooling system is not equipped with a drain valve, remove the cooling system drain plugs.

   Allow the coolant to drain.

NOTICE
Dispose of used engine coolant properly or recycle. Various methods have been proposed to reclaim used coolant for reuse in engine cooling systems. The full distillation procedure is the only method acceptable by Caterpillar to reclaim the used coolant.

For information regarding the disposal and the recycling of used coolant, consult your Caterpillar dealer or consult Dealer Service Tools.

Flush

1. Flush the cooling system with clean water in order to remove any debris.
2. Close the drain valve (if equipped). Clean the drain plugs. Install the drain plugs. Refer to Torque Specifications, SENR3130 for more information on the correct torques.

NOTICE
Do not fill the cooling system faster than 5 L (1.3 US gal) per minute to avoid air locks.

Cooling system air locks may result in engine damage.

3. Fill the cooling system with clean water. Install the cooling system filler cap.
4. Start and run the engine at low idle until the temperature reaches 49 to 66 °C (120 to 150 °F).
5. Stop the engine and allow the engine to cool. Loosen the cooling system filler cap slowly in order to relieve any pressure. Remove the cooling system filler cap. Open the drain valve (if equipped) or remove the cooling system drain plugs. Allow the water to drain. Flush the cooling system with clean water. Close the drain valve (if equipped). Clean the drain plugs. Install the drain plugs. Refer to Torque Specifications, SENR3130 for more information on the correct torques.

Fill

NOTICE
Do not fill the cooling system faster than 5 L (1.3 US gal) per minute to avoid air locks.

Cooling system air locks may result in engine damage.

1. Fill the cooling system with Extended Life Coolant (ELC). Refer to this Operation and Maintenance Manual, “Refill Capacities and Recommendations” topic (Maintenance Section) for more information on cooling system specifications. Do not install the cooling system filler cap.
2. Start and run the engine at low idle. Increase the engine rpm to high idle. Run the engine at high idle for one minute in order to purge the air from the cavities of the engine block. Stop the engine.
3. Check the coolant level. Maintain the coolant level within 13 mm (0.5 inch) below the bottom of the pipe for filling. Maintain the coolant level within 13 mm (0.5 inch) to the proper level on the sight glass (if equipped).
4. Clean the cooling system filler cap. Inspect the gasket that is on the cooling system filler cap. If the gasket that is on the cooling system filler cap is damaged, discard the old cooling system filler cap and install a new cooling system filler cap. If the gasket that is on the cooling system filler cap is not damaged, use a 9S-8140 Pressurizing Pump in order to pressure test the cooling system filler cap. The correct pressure for the cooling system filler cap is stamped on the face of the cooling system filler cap. If the cooling system filler cap does not retain the correct pressure, install a new cooling system filler cap.

5. Start the engine. Inspect the cooling system for leaks and for proper operating temperature.

i08258443

Cooling System Coolant Extender (ELC) - Add

SMCS Code: 1352-045; 1395-081

Cat ELC (Extended Life Coolant) does not require the frequent additions of any supplemental cooling additives which are associated with the present conventional coolants. The Cat ELC Extender is added once.

NOTICE
Use only Cat Extended Life Coolant (ELC) Extender with Cat ELC.

Do NOT use conventional supplemental coolant additive (SCA) with Cat ELC. Mixing Cat ELC with conventional coolants and/or conventional SCA reduces the Cat ELC service life.

Check the cooling system only when the engine is stopped and cool.

⚠ WARNING

Personal injury can result from hot coolant, steam and alkali.

At operating temperature, engine coolant is hot and under pressure. The radiator and all lines to heaters or the engine contain hot coolant or steam. Any contact can cause severe burns.

Remove cooling system pressure cap slowly to relieve pressure only when engine is stopped and cooling system pressure cap is cool enough to touch with your bare hand.

Do not attempt to tighten hose connections when the coolant is hot, the hose can come off causing burns.

Cooling System Coolant Additive contains alkali. Avoid contact with skin and eyes.

NOTICE
Care must be taken to ensure that fluids are contained during performance of inspection, maintenance, testing, adjusting, and repair of the product. Be prepared to collect the fluid with suitable containers before opening any compartment or disassembling any component containing fluids.

Refer to Special Publication, PERJ1017, “Dealer Service Tool Catalog” for tools and supplies suitable to collect and contain fluids on Cat ® products.

Dispose of all fluids according to local regulations and mandates.

1. Loosen the cooling system filler cap slowly to relieve pressure. Remove the cooling system filler cap.

2. Draining enough coolant from the cooling system to add the Cat ELC Extender may be necessary.

3. Add Cat ELC Extender according to the requirements for your engine cooling system capacity. Refer to the Operation and Maintenance Manual, “Refill Capacities and Recommendations” article for more information.

4. Clean the cooling system filler cap. Inspect the gaskets on the cooling system filler cap. Replace the cooling system filler cap if the gaskets are damaged. Install the cooling system filler cap.

i01197583

Cooling System Coolant Level - Check

SMCS Code: 1395-082

Check the coolant level when the engine is stopped and cool.

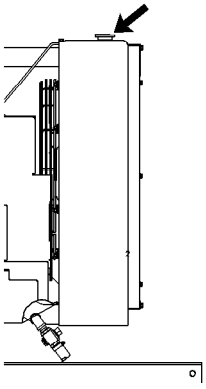

Illustration 32 g00285520
Cooling system filler cap

⚠ WARNING

Pressurized System: Hot coolant can cause serious burns. To open the cooling system filler cap, stop the engine and wait until the cooling system components are cool. Loosen the cooling system pressure cap slowly in order to relieve the pressure.

1. Remove the cooling system filler cap slowly in order to relieve pressure.

2. Maintain the coolant level within 13 mm (0.5 inch) of the bottom of the filler pipe. If the engine is equipped with a sight glass, maintain the coolant level to the proper level in the sight glass.

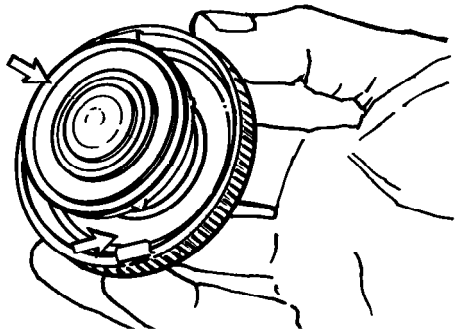

Illustration 33 g00103639
Typical filler cap gaskets

3. Clean the cooling system filler cap and check the condition of the filler cap gaskets. Replace the cooling system filler cap if the filler cap gaskets are damaged. Reinstall the cooling system filler cap.

4. Inspect the cooling system for leaks.

i08362013

Cooling System Coolant Sample (Level 1) - Obtain

SMCS Code: 1350-008; 1395-008; 1395-554; 7542

Note: Obtaining a Coolant Sample (Level 1) is optional if the cooling system is filled with Cat ELC (Extended Life Coolant). Cooling systems filled with Cat Extended LIfe Coolant (ELC) should have a Coolant Sample (Level 2) obtained at the recommended interval.

Note: Obtain a Coolant Sample (Level 1) if the cooling system is filled with any other coolant instead of Cat ELC including the following coolants:

- Commercial long life coolants that meet the Cat Engine Coolant Specification -1 (Caterpillar EC-1)
- Cat DEAC (Diesel Engine Antifreeze/Coolant)
- Commercial heavy-duty coolant/antifreeze

Table 14

Recommended Interval		
Type of Coolant	Level 1	Level 2
Cat DEAC	Every 250 service hours	Every year(1)
Conventional heavy duty-coolant		
Commercial coolant that meets the requirements of the Caterpillar EC-1 standard		
Cat ELC or conventional EC-1 coolant	Optional	Every year(1)

(1) The Level 2 Coolant Analysis should be performed sooner if a problem is suspected or identified.

NOTICE
Always use a designated pump for oil sampling, and use a separate designated pump for coolant sampling. Using the same pump for both types of samples may contaminate the samples that are being drawn. This contaminate may cause a false analysis and an incorrect interpretation that could lead to concerns by both dealers and customers.

Note: Level 1 results may indicate a need for Level 2 Analysis.

Obtain the sample of the coolant as close as possible to the recommended sampling interval. To receive the full effect of S·O·S analysis, establish a consistent trend of data. To establish a pertinent history of data, perform consistent samplings that are evenly spaced. Supplies for collecting samples can be obtained from your Cat dealer.

Use the following guidelines for proper sampling of the coolant:

- Complete the information on the label for the sampling bottle before you begin to take the samples.
- Keep the unused sampling bottles stored in plastic bags.
- Obtain coolant samples directly from the coolant sample port. You should not obtain the samples from any other location.
- Keep the lids on empty sampling bottles until you are ready to collect the sample.

- Place the sample in the mailing tube immediately after obtaining the sample to avoid contamination.
- Never collect samples from expansion bottles.
- Never collect samples from the drain for a system.

Submit the sample for Level 1 analysis.

For additional information about coolant analysis, see this Operation and Maintenance Manual, “Refill Capacities and Recommendations” or consult your Cat dealer.

i08258445

Cooling System Coolant Sample (Level 2) - Obtain

SMCS Code: 1350-008; 1395-008; 1395-554; 7542

NOTICE
Always use a designated pump for oil sampling, and use a separate designated pump for coolant sampling. Using the same pump for both types of samples may contaminate the samples that are being drawn. This contaminate may cause a false analysis and an incorrect interpretation that could lead to concerns by both dealers and customers.

NOTICE
Care must be taken to ensure that fluids are contained during performance of inspection, maintenance, testing, adjusting, and repair of the product. Be prepared to collect the fluid with suitable containers before opening any compartment or disassembling any component containing fluids.

Refer to Special Publication, NENG2500, “Cat Dealer Service Tool Catalog” or refer to Special Publication, PECJ0003, “Cat Shop Supplies and Tools Catalog” for tools and supplies suitable to collect and contain fluids on Cat products.

Dispose of all fluids according to local regulations and mandates.

Refer to Operation and Maintenance Manual, “Cooling System Coolant Sample (Level 1) - Obtain” for the guidelines for proper sampling of the coolant.

Submit the sample for Level 2 analysis.

For additional information about coolant analysis, see Special Publication, SEBU6251, “Caterpillar Commercial Diesel Engines Fluids Recommendations” or consult your Cat dealer.

i02456600

Cooling System Supplemental Coolant Additive (SCA) - Test/ Add

SMCS Code: 1352-045; 1395-081

⚠ WARNING

Cooling system coolant additive contains alkali. To help prevent personal injury, avoid contact with the skin and the eyes. Do not drink cooling system coolant additive.

Note: Test the concentration of the Supplemental Coolant Additive (SCA) or test the SCA concentration as part of an S·O·S Coolant Analysis.

Test for SCA Concentration

Coolant and SCA

NOTICE
Do not exceed the recommended six percent supplemental coolant additive concentration.

Use the 8T-5296 Coolant Conditioner Test Kit or use the 4C-9301 Coolant Conditioner Test Kit in order to check the concentration of the SCA. Refer to this Operation and Maintenance Manual, “Refill Capacities and Recommendations” for more information.

Water and SCA

NOTICE
Do not exceed the recommended eight percent supplemental coolant additive concentration.

Test the concentration of the SCA with the 8T-5296 Coolant Conditioner Test Kit. Refer to the Special Publication, SEBU6251, “Caterpillar Commercial Diesel Engine Fluids Recommendations” for more information.

S·O·S Coolant Analysis

S·O·S coolant samples can be analyzed at your Caterpillar dealer. S·O·S Coolant Analysis is a program that is based on periodic samples.

Level 1

Level 1 is a basic analysis of the coolant. The following items are tested:

- Glycol Concentration
- Concentration of SCA

- pH
- Conductivity

The results are reported, and recommendations are made according to the results. Consult your Caterpillar dealer for information on the benefits of managing your equipment with an S·O·S Coolant Analysis.

Level 2

This level coolant analysis is recommended when the engine is overhauled. Refer to this Operations and Maintenance Manual, “Overhaul Considerations” for further information.

Add the SCA, If Necessary

NOTICE
Do not exceed the recommended amount of supplemental coolant additive concentration. Excessive supplemental coolant additive concentration can form deposits on the higher temperature surfaces of the cooling system, reducing the engine's heat transfer characteristics. Reduced heat transfer could cause cracking of the cylinder head and other high temperature components. Excessive supplemental coolant additive concentration could also result in radiator tube blockage, overheating, and/or accelerated water pump seal wear. Never use both liquid supplemental coolant additive and the spin-on element (if equipped) at the same time. The use of those additives together could result in supplemental coolant additive concentration exceeding the recommended maximum.

⚠ WARNING

Pressurized System: Hot coolant can cause serious burns. To open the cooling system filler cap, stop the engine and wait until the cooling system components are cool. Loosen the cooling system pressure cap slowly in order to relieve the pressure.

1. Slowly loosen the cooling system filler cap in order to relieve the pressure. Remove the cooling system filler cap.

Note: Always discard drained fluids according to local regulations.

2. If necessary, drain some coolant from the cooling system into a suitable container in order to allow space for the extra SCA.
3. Add the proper amount of SCA. Refer to the Special Publication, SEBU6251, “Caterpillar Commercial Diesel Engines Fluids Recommendations” for more information on SCA requirements.
4. Clean the cooling system filler cap. Inspect the gaskets of the cooling system filler cap. If the gaskets are damaged, replace the old cooling system filler cap with a new cooling system filler cap. Install the cooling system filler cap.

i08368581

Cooling System Water Temperature Regulator - Replace

SMCS Code: 1355-510

Replace the water temperature regulator before the water temperature regulator fails. This replacement is a recommended preventive maintenance practice. Replacing the water temperature regulator reduces the chances for unscheduled downtime. Refer to this Operation and Maintenance Manual, “Maintenance Interval Schedule” for the proper maintenance interval.

A water temperature regulator that fails in a partially opened position can cause overheating or overcooling of the engine.

A water temperature regulator that fails in the closed position can cause excessive overheating. Excessive overheating could result in cracking of the cylinder head or piston seizure problems.

A water temperature regulator that fails in the open position will cause the engine operating temperature to be too low during partial load operation. Low engine operating temperatures during partial loads could cause an excessive carbon buildup inside the cylinders. This excessive carbon buildup could result in an accelerated wear of the piston rings and wear of the cylinder liner.

NOTICE
Failure to replace your water temperature regulator on a regularly scheduled basis could cause severe engine damage.

Cat engines incorporate a shunt bypass design cooling system and require operating the engine with a water temperature regulator installed.

If the water temperature regulator is installed incorrectly, the engine may overheat, causing cylinder head damage. Ensure that the new water temperature regulator is installed in the original position. Ensure that the water temperature regulator vent hole is open.

Do not use liquid gasket material on the gasket or cylinder head surface.

Refer to two articles in the Disassembly and Assembly Manual, “Water Temperature Regulators - Remove and Water Temperature Regulators - Install” for the replacement procedure of the water temperature regulator, or consult your Cat dealer.

Note: If only the water temperature regulators are replaced, drain the coolant from the cooling system to a level that is below the water temperature regulator housing.

i02866782

Crankcase Breather (Canister) - Replace

SMCS Code: 1317-510

NOTICE
Ensure that the engine is stopped before any servicing or repair is performed.

Note: The breather assembly is not installed on all engines.

1. Place a container under the canister (1).

2. Clean the outside of the canister. Use a suitable tool in order to remove the canister.

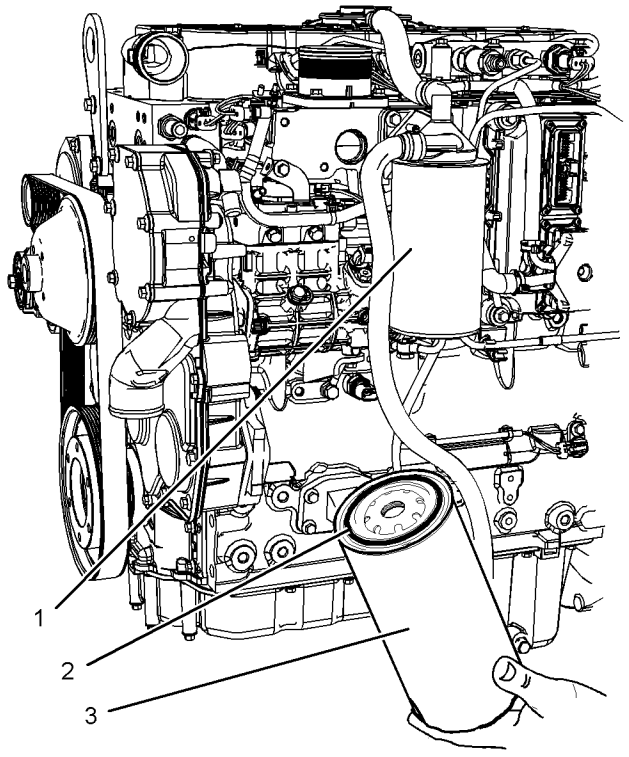

Illustration 34 g01428096
Typical example

3. Lubricate the O ring seal (2) on the new canister (3) with clean engine lubricating oil. Install the new canister. Tighten the canister to 12 N·m (8 lb ft). Do not overtighten the canister.

4. Remove the container. Dispose of the old canister and any split oil in a safe place.

i08397642

Driven Equipment - Check

SMCS Code: 3279-535

Refer to the OEM specifications for more information on the following maintenance recommendations for the driven equipment:

- Inspection
- Adjustment
- Lubrication
- Other maintenance recommendations

Perform any maintenance for the driven equipment which is recommended by the OEM.

i07307312

Engine - Clean

SMCS Code: 1000-070

⚠ WARNING

Personal injury or death can result from high voltage.

Moisture can create paths of electrical conductivity.

Make sure that the electrical system is OFF. Lock out the starting controls and tag the controls "DO NOT OPERATE" .

NOTICE
Accumulated grease and oil on an engine is a fire hazard. Keep the engine clean. Remove debris and fluid spills whenever a significant quantity accumulates on the engine.

Periodic cleaning of the engine is recommended. Steam cleaning the engine will remove accumulated oil and grease. A clean engine provides the following benefits:

- Easy detection of fluid leaks
- Maximum heat transfer characteristics
- Ease of maintenance

Note: Caution must be used to prevent electrical components from being damaged by excessive water when the engine is cleaned. Pressure washers and steam cleaners should not be directed at any electrical connectors or the junction of cables into the rear of the connectors. Avoid electrical components such as the alternator, the starter, and the ECM. Protect the fuel injection pump from fluids to wash the engine.

Ensure that care is taken that the safety labels, emission label, and any information labels are not removed during engine cleaning.

i04404720

Engine Air Cleaner Element (Dual Element) - Clean/Replace

SMCS Code: 1054-510; 1054-037

NOTICE
Never run the engine without an air cleaner element installed. Never run the engine with a damaged air cleaner element. Do not use air cleaner elements with damaged pleats, gaskets or seals. Dirt entering the engine causes premature wear and damage to engine components. Air cleaner elements help to prevent airborne debris from entering the air inlet.

NOTICE
Never service the air cleaner element with the engine running since this will allow dirt to enter the engine.

Servicing the Air Cleaner Elements

If the air cleaner element becomes plugged, the air can split the material of the air cleaner element. Unfiltered air will drastically accelerate internal engine wear. Your Caterpillar dealer has the proper air cleaner elements for your application. Consult your Caterpillar dealer for the correct air cleaner element.

- Check the precleaner (if equipped) daily for accumulation of dirt and debris. Remove any dirt and debris, as needed.
- Operating conditions (dust, dirt, and debris) may require more frequent service of the air cleaner element.
- The air cleaner element may be cleaned up to six times if the element is properly cleaned and inspected.
- The air cleaner element should be replaced at least one time per year. This replacement should be performed regardless of the number of cleanings.

Replace the dirty paper air cleaner elements with clean air cleaner elements. Before installation, the air cleaner elements should be thoroughly checked for tears and/or holes in the filter material. Inspect the gasket or the seal of the air cleaner element for damage. Maintain a supply of suitable air cleaner elements for replacement purposes.

Dual Element Air Cleaners

The dual element air cleaner contains a primary air cleaner element and a secondary air cleaner element. The primary air cleaner element can be used up to six times if the element is properly cleaned and inspected. The primary air cleaner element should be replaced at least one time per year. This replacement should be performed regardless of the number of cleanings.

The secondary air cleaner element is not serviceable or washable. The secondary air cleaner element should be removed and discarded for every three cleanings of the primary air cleaner element. When the engine is operating in environments that are dusty or dirty, air cleaner elements may require more frequent replacement.

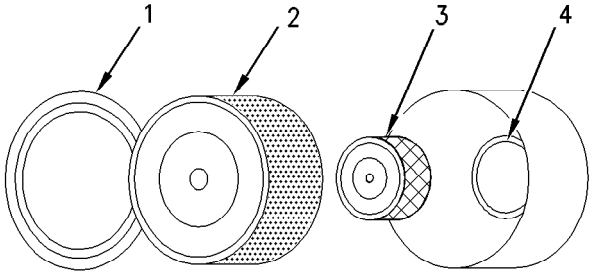

Illustration 35 g00736431

(1) Cover
(2) Primary air cleaner element
(3) Secondary air cleaner element
(4) Turbocharger air inlet

1. Remove the cover. Remove the primary air cleaner element.

2. The secondary air cleaner element should be removed and discarded for every three cleanings of the primary air cleaner element.

Note: Refer to “Cleaning the Primary Air Cleaner Elements”.

3. Cover the turbocharger air inlet with tape in order to keep out dirt.

4. Clean the inside of the air cleaner cover and body with a clean, dry cloth.

5. Remove the tape for the turbocharger air inlet. Install the secondary air cleaner element. Install a primary air cleaner element that is new or cleaned.

6. Install the air cleaner cover.

7. Reset the air cleaner service indicator.

Cleaning the Primary Air Cleaner Elements

NOTICE
Caterpillar recommends certified air filter cleaning services that are available at Cat dealers. The Cat cleaning process uses proven procedures to assure consistent quality and sufficient filter life.

Observe the following guidelines if you attempt to clean the filter element:

Do not tap or strike the filter element in order to remove dust.

Do not wash the filter element.

Use low pressure compressed air in order to remove the dust from the filter element. Air pressure must not exceed 207 kPa (30 psi). Direct the air flow up the pleats and down the pleats from the inside of the filter element. Take extreme care in order to avoid damage to the pleats.

Do not use air filters with damaged pleats, gaskets, or seals. Dirt entering the engine will cause damage to engine components.

The primary air cleaner element can be used up to six times if the element is properly cleaned and inspected. When the primary air cleaner element is cleaned, check for rips or tears in the filter material. The primary air cleaner element should be replaced at least one time per year. This replacement should be performed regardless of the number of cleanings.

Use clean primary air cleaner elements while dirty elements are being cleaned.

NOTICE
Do not clean the air cleaner elements by bumping or tapping. This could damage the seals. Do not use elements with damaged pleats, gaskets or seals. Damaged elements will allow dirt to pass through. Engine damage could result.

Visually inspect the primary air cleaner elements before cleaning. Inspect the air cleaner elements for damage to the seal, the gaskets, and the outer cover. Discard any damaged air cleaner elements.

There are two common methods that are used to clean primary air cleaner elements:

- Pressurized air
- Vacuum cleaning

Pressurized Air

Pressurized air can be used to clean primary air cleaner elements that have not been cleaned more than two times. Pressurized air will not remove deposits of carbon and oil. Use filtered, dry air with a maximum pressure of 207 kPa (30 psi).

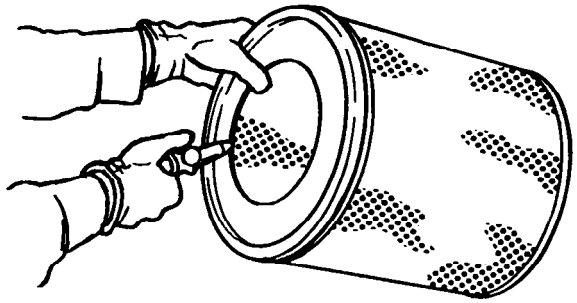

Illustration 36 g00281692

Note: When the primary air cleaner elements are cleaned, always begin with the clean side (inside) in order to force dirt particles toward the dirty side (outside).

Aim the hose so that the air flows inside the element along the length of the filter in order to help prevent damage to the paper pleats. Do not aim the stream of air directly at the primary air cleaner element. Dirt could be forced further into the pleats.

Note: Refer to “Inspecting the Primary Air Cleaner Elements”.

Vacuum Cleaning

Vacuum cleaning is a good method for cleaning primary air cleaner elements which require daily cleaning because of a dry, dusty environment. Cleaning with pressurized air is recommended prior to vacuum cleaning. Vacuum cleaning will not remove deposits of carbon and oil.

Note: Refer to “Inspecting the Primary Air Cleaner Elements”.

Inspecting the Primary Air Cleaner Elements

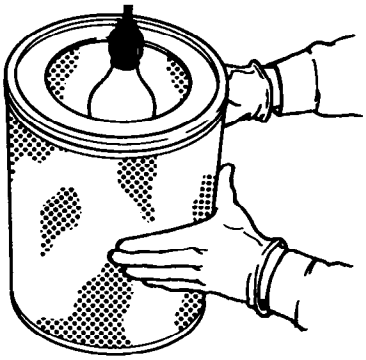

Illustration 37 g00281693

Inspect the clean, dry primary air cleaner element. Use a 60 watt blue light in a dark room or in a similar facility. Place the blue light in the primary air cleaner element. Rotate the primary air cleaner element. Inspect the primary air cleaner element for tears and/or holes. Inspect the primary air cleaner element for light that may show through the filter material. If it is necessary in order to confirm the result, compare the primary air cleaner element to a new primary air cleaner element that has the same part number.

Do not use a primary air cleaner element that has any tears and/or holes in the filter material. Do not use a primary air cleaner element with damaged pleats, gaskets, or seals. Discard damaged primary air cleaner elements.

Storing Primary Air Cleaner Elements

If a primary air cleaner element that passes inspection will not be used, the primary air cleaner element can be stored for future use.

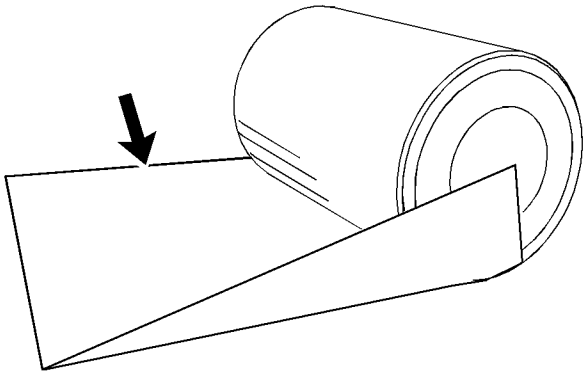

Illustration 38 g02595738
Typical example

Do not use paint, a waterproof cover, or plastic as a protective covering for storage. An airflow restriction may result. To protect against dirt and damage, wrap the primary air cleaner elements in Volatile Corrosion Inhibited (VCI) paper.

Place the primary air cleaner element into a box for storage. For identification, mark the outside of the box and mark the primary air cleaner element. Include the following information:

- Date of cleaning
- Number of cleanings

Store the box in a dry location.

i02242500

Engine Air Cleaner Element (Single Element) - Replace

SMCS Code: 1051; 1054-510

NOTICE
Never service the air cleaner element with the engine running since this will allow dirt to enter the engine.

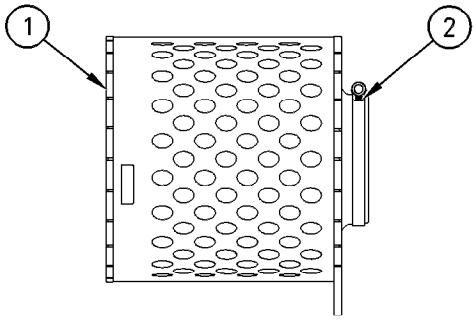

Illustration 39 g00109823
(1) Air cleaner element. (2) Clamp.

1. Loosen clamp (2) which fastens air cleaner element (1) to the air inlet. Remove the dirty air cleaner element and clamp.
2. Install clamp (2) on new air cleaner element (1).
3. Install new air cleaner element (1) to the air inlet and tighten clamp (2). Refer to Torque Specifications, SENR3130 for the correct torque.

i02335405

Engine Air Cleaner Service Indicator - Inspect

SMCS Code: 7452-040

Some engines may be equipped with a different service indicator.

Some engines are equipped with a differential gauge for inlet air pressure. The differential gauge for inlet air pressure displays the difference in the pressure that is measured before the air cleaner element and the pressure that is measured after the air cleaner element. As the air cleaner element becomes dirty, the pressure differential rises. If your engine is equipped with a different type of service indicator, follow the OEM recommendations in order to service the air cleaner service indicator.

The service indicator may be mounted on the air cleaner element or in a remote location.

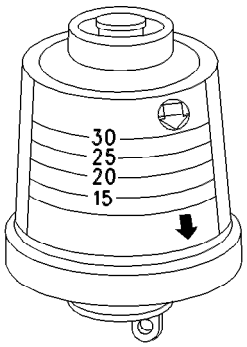

Illustration 40 g00103777

Typical service indicator

Observe the service indicator. The air cleaner element should be cleaned or the air cleaner element should be replaced when one of the following conditions occur:

- The yellow diaphragm enters the red zone.
- The red piston locks in the visible position.

Test the Service Indicator

Service indicators are important instruments.

- Check for ease of resetting. The service indicator should reset in less than three pushes.
- Check the movement of the yellow core when the engine is accelerated to the engine rated speed. The yellow core should latch at the greatest vacuum that is attained.

If the service indicator does not reset easily, or if the yellow core does not latch at the greatest vacuum, the service indicator should be replaced. If the new service indicator will not reset, the hole for the service indicator may be restricted.

The service indicator may need to be replaced frequently in environments that are severely dusty.

i07819526

Engine Air Precleaner - Check/ Clean

SMCS Code: 1055-535; 1055-070

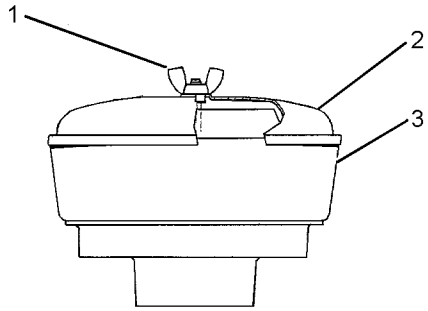

Illustration 41 g01453058

Typical engine air precleaner

(1) Wing nut
(2) Cover
(3) Body

Remove wing nut (1) and cover (2). Check for an accumulation of dirt and debris in body (3). Clean the body, if necessary.

After cleaning the precleaner, install cover (2) and wing nut (1).

Note: When the engine is operated in dusty conditions, more frequent cleaning is required.

Do not tap or strike the air cleaner element.

i02456872

Engine Mounts - Inspect

SMCS Code: 1152-040

Inspect the engine mounts for deterioration and for proper bolt torque. Engine vibration can be caused by the following conditions:

- Improper mounting of the engine
- Deterioration of the engine mounts

Any engine mount that shows deterioration should be replaced. Refer to Special Publication, SENR3130, “Torque Specifications” for the recommended torques. Refer to the OEM recommendations for more information.

i05909059

Engine Oil Level - Check

SMCS Code: 1348-535-FLV

⚠ WARNING

Hot oil and hot components can cause personal injury. Do not allow hot oil or hot components to contact the skin.

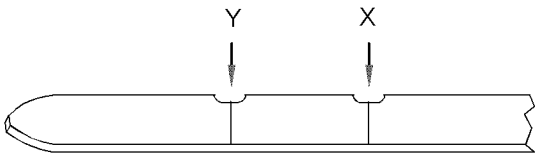

Illustration 42 g01165836

(Y) “Min” mark. (X) “Max” mark.



Illustration 43 g02173847

(L) “Min” mark. (H) “Max” mark.

NOTICE
Perform this maintenance with the engine stopped.

Note: Ensure that the engine is either level or that the engine is in the normal operating position in order to obtain a true level indication.

Note: After the engine has been switched OFF, wait for 10 minutes in order to allow the engine oil to drain to the oil pan. Then, check the oil level.

1. Maintain the oil level between the “ADD” mark (Y) and the “FULL” mark (X) on the engine oil dipstick. Or maintain the engine oil level between the H and L mark. Do not over fill the crankcase.

NOTICE
Operating your engine when the oil level is above the “FULL” mark could cause your crankshaft to dip into the oil. The air bubbles created from the crankshaft dipping into the oil reduces the oil's lubricating characteristics and could result in the loss of power.

2. Remove the oil filler cap and add oil, if necessary. Clean the oil filler cap. Install the oil filler cap.

i08397634

Engine Oil Sample - Obtain

SMCS Code: 1000-008; 1348-554-SM; 7542-554-SM; 7542-554-OC

In addition to a good preventive maintenance program, Caterpillar recommends using S·O·S oil analysis at regularly scheduled intervals. S·O·S oil analysis provides infrared analysis, which is required for determining nitration and oxidation levels.

Obtain the Sample and the Analysis

⚠ WARNING

Hot oil and hot components can cause personal injury. Do not allow hot oil or hot components to contact the skin.

Before you take the oil sample, complete the Label, PEEP5031 for identification of the sample. To help obtain the most accurate analysis, provide the following information:

- Engine model
- Service hours on the engine
- The number of hours that have accumulated since the last oil change
- The amount of oil that has been added since the last oil change

To ensure that the sample is representative of the oil in the crankcase, obtain a warm, mixed oil sample.

To avoid contamination of the oil samples, the tools and the supplies that are used for obtaining oil samples must be clean.

Caterpillar recommends using the sampling valve to obtain oil samples. The quality and the consistency of the samples are better when the sampling valve is used. The location of the sampling valve allows oil that is flowing under pressure to be obtained during normal engine operation.

The 169-8373 Fluid Sampling Bottle is recommended for use with the sampling valve. The fluid sampling bottle includes the parts that are needed for obtaining oil samples. Instructions are also provided.

NOTICE
Always use a designated pump for oil sampling, and use a separate designated pump for coolant sampling. Using the same pump for both types of samples may contaminate the samples that are being drawn. This contaminate may cause a false analysis and an incorrect interpretation that could lead to concerns by both dealers and customers.

If the engine is not equipped with a sampling valve, use the 1U-5718 Vacuum Pump. The pump is designed to accept sampling bottles. Disposable tubing must be attached to the pump for insertion into the sump.

For instructions, see Special Publication, PEGJ0047, “How To Take A Good S·O·S Oil Sample”. Consult your Cat dealer for complete information and assistance in establishing an S·O·S program for your engine.

i02869394

Engine Oil and Filter - Change (CG-4 Oil)

SMCS Code: 1318-510; 1348-044

CG-4 engine oil may be used. If this grade of engine oil is used a 250 hour service interval is required for the engine oil and the engine oil filter.

i02873596

Engine Oil and Filter - Change

SMCS Code: 1318-510; 1348-044

⚠ WARNING

Hot oil and hot components can cause personal injury. Do not allow hot oil or hot components to contact the skin.

NOTICE
Care must be taken to ensure that fluids are contained during performance of inspection, maintenance, testing, adjusting and repair of the product. Be prepared to collect the fluid with suitable containers before opening any compartment or disassembling any component containing fluids.

Dispose of all fluids according to local regulations and mandates.

NOTICE
Keep all parts clean from contaminants.

Contaminants may cause rapid wear and shortened component life.

Do not drain the engine lubricating oil when the engine is cold. As the engine lubricating oil cools, suspended waste particles settle on the bottom of the oil pan. The waste particles are not removed with draining cold oil. Drain the oil pan with the engine stopped. Drain the oil pan with the oil warm. This draining method allows the waste particles that are suspended in the oil to be drained properly.

Failure to follow this recommended procedure will cause the waste particles to be recirculated through the engine lubrication system with the new oil.

Drain the Engine Lubricating Oil

Note: Ensure that the vessel that will be used is large enough to collect the waste oil.

After the engine has been run at the normal operating temperature, stop the engine. Use one of the following methods to drain the engine oil pan:

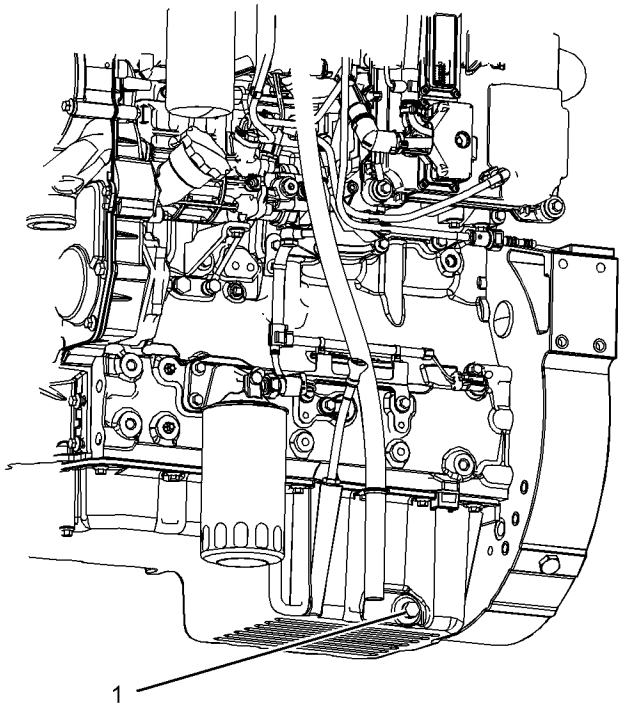

Illustration 44 g01430582
Typical example

- If the engine is equipped with a drain valve, turn the drain valve knob counterclockwise in order to drain the oil. After the oil has drained, turn the drain valve knob clockwise in order to close the drain valve.
- If the engine is not equipped with a drain valve, remove the oil drain plug (1) in order to allow the oil to drain. If the engine is equipped with a shallow oil pan, remove the bottom oil drain plugs from both ends of the oil pan.

After the oil has drained, the oil drain plugs should be cleaned and installed. If necessary, replace the O ring seal. Tighten the drain plug to 34 N·m (25 lb ft).

Replace the Oil Filter

NOTICE
Caterpillar oil filters are manufactured to Caterpillar specifications. Use of an oil filter that is not recommended by Caterpillar could result in severe damage to the engine bearings, crankshaft, etc., as a result of the larger waste particles from unfiltered oil entering the engine lubricating system. Only use oil filters recommended by Caterpillar.

1. Remove the oil filter with a 1U-8760 Chain Wrench.

Note: Some oil filters may be installed horizontally. This type of oil filter can be drained before the filter is removed. The torque for this drain plug is 12 N·m (8 lb ft).

Note: The following actions can be carried out as part of the preventive maintenance program.

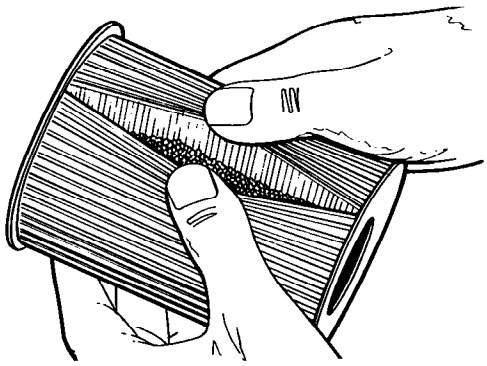

Illustration 45 g00588944
Element with debris

2. Cut the oil filter open with a 175-7546 Oil Filter Cutter . Break apart the pleats and inspect the oil filter for metal debris. An excessive amount of metal debris in the oil filter may indicate early wear or a pending failure.

Use a magnet to differentiate between the ferrous metals and the nonferrous metals that are found in the oil filter element. Ferrous metals may indicate wear on the steel and cast iron parts of the engine.

Nonferrous metals may indicate wear on the aluminum parts, brass parts or bronze parts of the engine. Parts that may be affected include the following items: main bearings, rod bearings, turbocharger bearings and cylinder heads.

Due to normal wear and friction, it is not uncommon to find small amounts of debris in the oil filter. Consult your Caterpillar dealer in order to arrange for a further analysis if an excessive amount of debris is found in the oil filter.

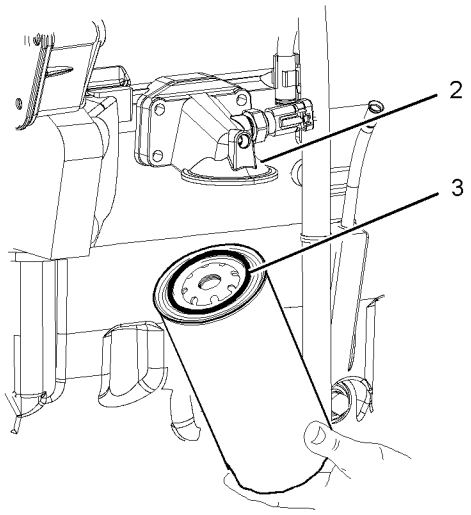

Illustration 46 g01187802
Typical example

3. Clean the sealing surface of the oil filter head (2). Ensure that the union is secure in the filter head.

4. Apply clean engine oil to the O ring seal (3) for the new oil filter.

Note: Some oil filters may be installed horizontally. Refer to the illustration . This type of oil filter assembly can be drained before the filter is removed. The torque for this drain plug (4) is 12 N·m (8 lb ft). If necessary, install a new O ring seal (5). Start at step 1 in order to remove the oil filter and install the oil filter.

NOTICE
Do not fill the oil filters with oil before installing them. This oil would not be filtered and could be contaminated. Contaminated oil can cause accelerated wear to engine components.

5.

Horizontal Oil Filter

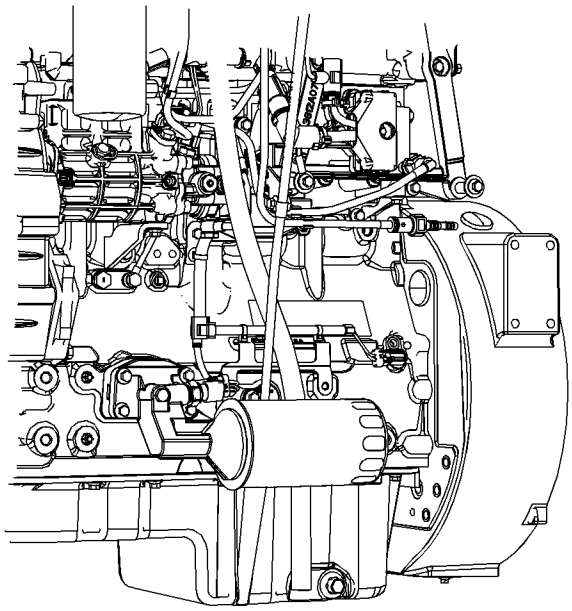

Illustration 47 g01430585
Typical example

Note: Some oil filters may be installed horizontally. Refer to illustration 47 . This type of oil filter assembly can be drained before the filter is removed. Start at step 1 in order to remove the oil filter and install the oil filter.

Fill the Oil Pan

1. Remove the oil filler cap. Refer to this Operation and Maintenance Manual, “Fluid Recommendations” for more information on suitable oils. Fill the oil pan with the correct amount of new engine lubricating oil. Refer to this Operation and Maintenance Manual, “Refill Capacities” for more information on refill capacities.

NOTICE
If equipped with an auxilliary oil filter system or a remote filter system, follow the OEM or the filter manufacture's remonmendations. Under filling or over filling the crankcase with oil can cause engine damage.

2. Start the engine and run the engine at “LOW IDLE” for two minutes. Perform this procedure in order to ensure that the lubrication system has oil and that the oil filters are filled. Inspect the oil filter for oil leaks.

3. Stop the engine and allow the oil to drain back to the oil pan for a minimum of ten minutes.

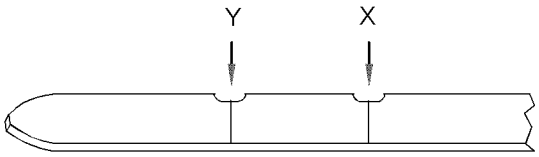

Illustration 48 g01165836
Typical example

4. Remove the engine oil level gauge in order to check the oil level. Maintain the oil level between the “MIN” and “MAX” marks on the engine oil level gauge.

i02519453

Engine Valve Lash - Inspect/ Adjust

SMCS Code: 1102-025

This maintenance is recommended by Caterpillar as part of a lubrication and preventive maintenance schedule in order to help provide maximum engine life.

NOTICE
Only qualified service personnel should perform this maintenance. Refer to the Service Manual or your Caterpillar dealer for the complete valve lash adjustment procedure.

Operation of Caterpillar engines with improper valve adjustments can reduce engine efficiency. This reduced efficiency could result in excessive fuel usage and/or shortened engine component life.

⚠ WARNING

Ensure that the engine can not be started while this maintenance is being performed. To help prevent possible injury, do not use the starting motor to turn the flywheel.

Hot engine components can cause burns. Allow additional time for the engine to cool before measuring/adjusting valve lash clearance.

Ensure that the engine is stopped before measuring the valve lash. To obtain an accurate measurement, allow the valves to cool before this maintenance is performed.

Refer to the Service Manual for more information.

i02862580

Exhaust Manifold - Inspect

SMCS Code: 1059-040

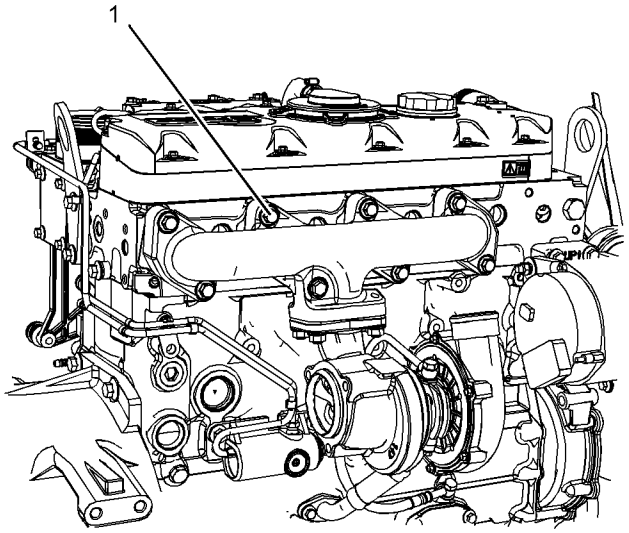

Illustration 49 g01425829

1. Inspect the exhaust manifold for damage. If necessary, replace the exhaust manifold. Refer to Disassembly and Assembly, “Exhaust Manifold - Remove and Install”.

2. Check the torque on all the bolts (1). The bolts must be tightened in the sequence that is shown in illustration 50 .

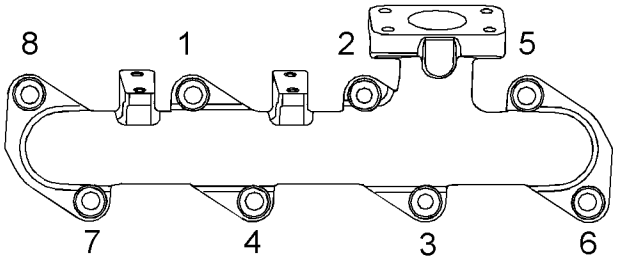

Illustration 50 g01363916

3. Tighten the bolts to the following torque 40 N·m (29.5 lb ft).

i02683336

Fan Clearance - Check

SMCS Code: 1356; 1359; 1360

There are different types of cooling systems. Refer to the OEM for information on clearance for the fan.

Ensure that the engine is stopped. Ensure that the cooling system is full. The clearance between the cover (1) and the fan (2) will require checking. The gap (A) between the edge of the cover and the tip of the fan blade must be checked in four equally spaced positions.

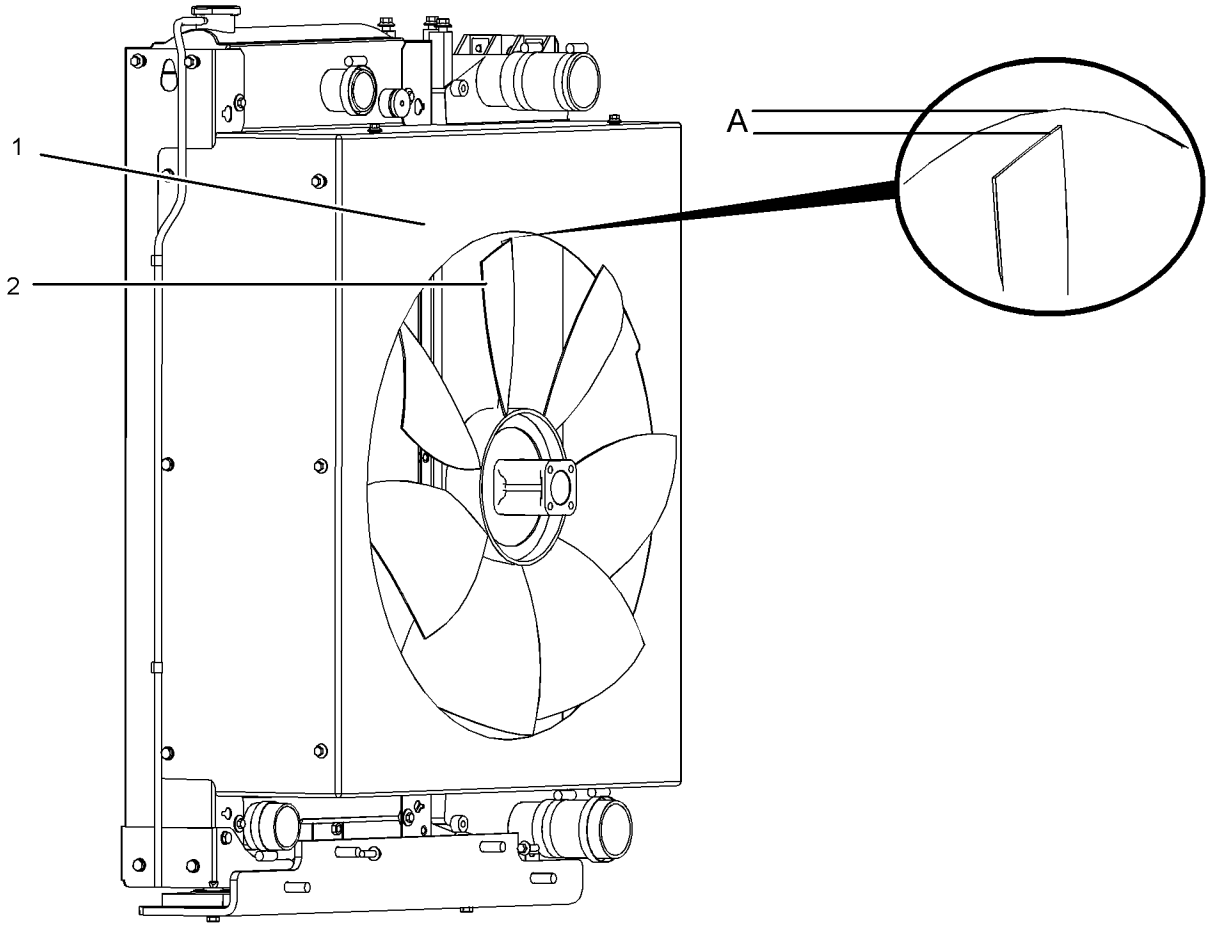

Illustration 51 g01348394

Adjustment of the cover will change the clearance (gap) between the edge of the cover and the tip of the fan blade. Ensure that the cover is centralized to the fan.

The maximum clearance is 12.5 mm (0.4921 inch). The minimum clearance is 6 mm (0.2362 inch).

i02871014

Fuel System - Prime

SMCS Code: 1258-548

⚠ WARNING

Contact with high pressure fuel may cause fluid penetration and burn hazards. High pressure fuel spray may cause a fire hazard. Failure to follow these inspection, maintenance and service instructions may cause personal injury or death.

Refer to the Operation and Maintenance Manual , "General Hazard Information and High Pressure Fuel Lines" before adjustments and repairs are performed.

Note: Refer to Systems Operation, Testing and Adjusting, "Cleanliness of Fuel System Components" for detailed information on the standards of cleanliness that must be observed during ALL work on the fuel system.

Ensure that all adjustments and repairs are performed by authorized personnel that have had the correct training.

NOTICE
Do not crank the engine continuously for more than 30 seconds. Allow the starting motor to cool for two minutes before cranking the engine again.

If air enters the fuel system, the air must be purged from the fuel system before the engine can be started. Air can enter the fuel system when the following events occur:

- The fuel tank is empty or the fuel tank has been partially drained.
- The low pressure fuel lines are disconnected.

- A leak exists in the low pressure fuel system.
- The fuel filter has been replaced.

Hand Fuel Priming Pump

Use the following procedures in order to remove air from the fuel system:

1. Ensure that the fuel system is in working order. Check that the fuel supply valve (if equipped) is in the “ON” position.

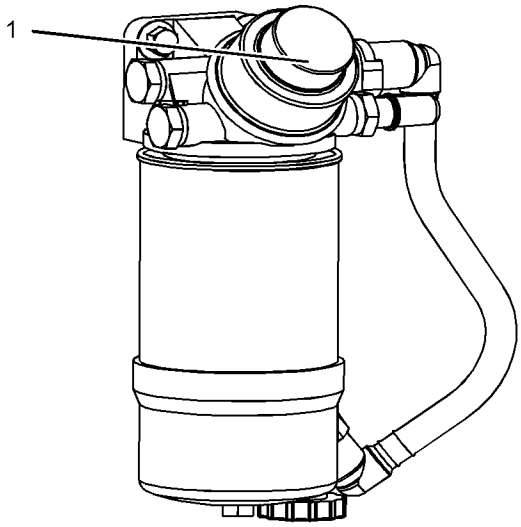

Illustration 52 g01476592
Typical example

2. Operate the fuel priming pump (1). Count the number of operations of the fuel priming pump. After 100 depressions of the fuel priming pump stop.

3. The engine fuel system should now be primed and the engine should now be able to start.

4. Operate the engine starter and crank the engine. After the engine has started, operate the engine at low idle for a minimum of five minutes, immediately after air has been removed from the fuel system.

Note: Operating the engine for this period of time will help ensure that the fuel system is free of air.

Note: Do not loosen the high pressure fuel line in order to purge air from the fuel system. This procedure is not required.

⚠ WARNING

Contact with high pressure fuel may cause fluid penetration and burn hazards. High pressure fuel spray may cause a fire hazard. Failure to follow these inspection, maintenance and service instructions may cause personal injury or death.

After the engine has stopped, you must wait for 60 seconds in order to allow the fuel pressure to be purged from the high pressure fuel lines before any service or repair is performed on the engine fuel lines. If necessary, perform minor adjustments. Repair any leaks from the low pressure fuel system and from the cooling, lubrication or air systems. Replace any high pressure fuel line that has leaked. Refer to Disassembly and Assembly Manual, “Fuel Injection Lines - Install”.

If you inspect the engine in operation, always use the proper inspection procedure in order to avoid a fluid penetration hazard. Refer to Operation and Maintenance Manual, “General hazard Information”.

i02869410

Fuel System Primary Filter/ Water Separator - Drain

SMCS Code: 1260-543; 1263-543

⚠ WARNING

Fuel leaked or spilled onto hot surfaces or electrical components can cause a fire. To help prevent possible injury, turn the start switch off when changing fuel filters or water separator elements. Clean up fuel spills immediately.

NOTICE
Ensure that the engine is stopped before any servicing or repair is performed.

After the engine has stopped, you must wait for 60 seconds in order to allow the fuel pressure to be purged from the high pressure fuel lines before any service or repair is performed on the engine fuel lines. If necessary, perform minor adjustments. Repair any leaks from the low pressure fuel system and from the cooling, lubrication or air systems. Replace any high pressure fuel line that has leaked. Refer to Disassembly and Assembly Manual, “Fuel Injection Lines - Install”.

NOTICE
The water separator can be under suction during normal engine operation. Ensure that the drain valve is tightened securely to help prevent air from entering the fuel system.

1. Place a suitable container under the water separator in order to catch any fuel that might spill. Clean up any spilled fuel.

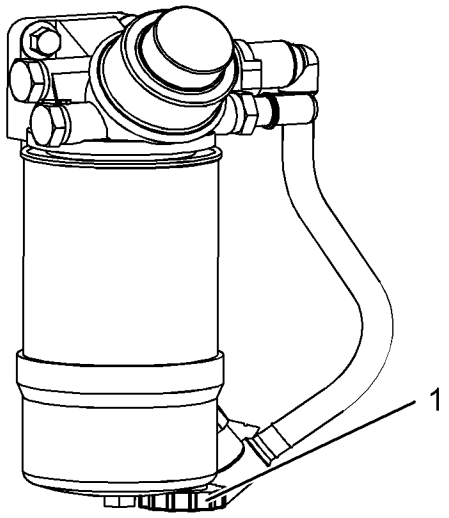

Illustration 53 g01476633
Typical example

2. Install a suitable tube onto the drain (1). Open the drain (1). Allow the fluid to drain into the container.
3. Tighten the drain (1) by hand pressure only. Remove the tube and dispose of the drained fluid in a safe place.

Primary Filter with a Vent Screw

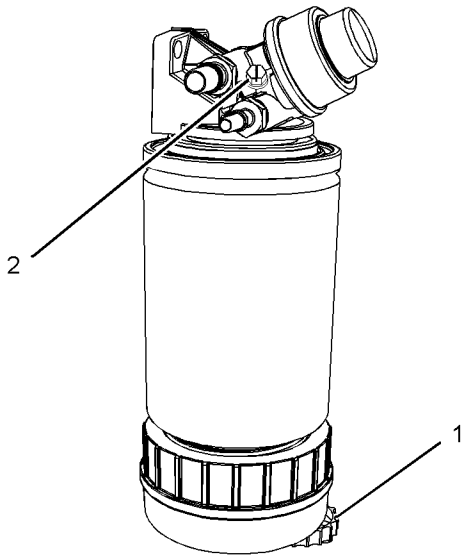

Illustration 54 g01371846
Typical example

Note: Not all primary filters require vent screw (2). This primary fuel filter that has a vent screw may be installed on a fuel system that has a low fuel tank.

1. Install a suitable tube onto drain (1). Loosen vent screw (2).
2. Open drain (1). Allow the fluid to drain into the container.
3. Tighten drain (1) by hand pressure only. Remove the tube and dispose of the drained fluid in a safe place.
4. Tighten vent screw to 6 N·m (53 lb in).

i09847951

Fuel System Primary Filter (Water Separator) Element - Replace

SMCS Code: 1260-510-FQ; 1263-510-FQ

⚠ WARNING

Fuel leaked or spilled onto hot surfaces or electrical components can cause a fire. To help prevent possible injury, turn the start switch off when changing fuel filters or water separator elements. Clean up fuel spills immediately.

Note: Refer to Testing and Adjusting Manual, "Cleanliness of Fuel System Components" for detailed information on the standards of cleanliness that must be observed during ALL work on the fuel system.

NOTICE
Ensure that the engine is stopped before any servicing or repair is performed.

NOTICE
Engines that operate under severe conditions will require more frequent maintenance intervals to ensure maximum reliability. Engine performance may be impacted if the application is operated at altitudes greater than 3000m or with fuel that is not of the correct specification as detailed in "Fluid Recommendations" (General Fuel Information) of this OMM. It is recommended that new fuel filters are installed every 250 service hours in severe operating conditions. For more information consult your Caterpillar dealer.

After the engine has stopped, you must wait for 60 seconds to allow the fuel pressure to be purged from the high-pressure fuel lines before any service or repair is performed on the engine fuel lines. If necessary, perform minor adjustments. Repair any leaks from the low-pressure fuel system and from the cooling, lubrication, or air systems. Replace any high-pressure fuel line that has leaked. Refer to Disassembly and assembly Manual, "Fuel Injection Lines - Install".

Type One

1. Turn the fuel supply valve (if equipped) to the OFF position before performing this maintenance.
2. Place a suitable container under the water separator to catch any fuel that might spill. Clean up any spilled fuel. Clean the outside of the water separator.

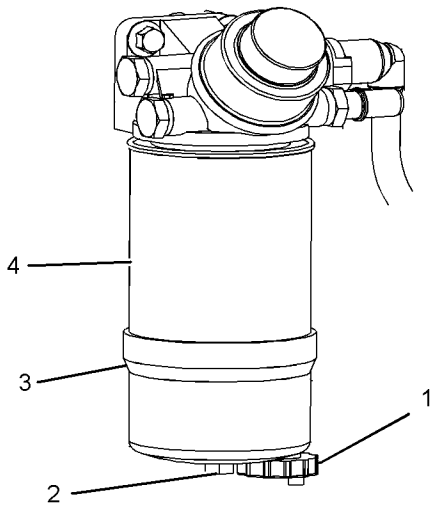

Illustration 55 g01259363
Typical example

3. Install a suitable tube onto the drain (1). Open the drain (1). Allow the fluid to drain into the container. Remove the tube.
4. Tighten the drain (1) by hand pressure only.
5. If equipped, remove the wiring harness from the sensor on the bottom of the glass bowl.
6. Hold the glass bowl (3) and remove the screw (2). Remove the glass bowl (3) from the canister (4).
7. Use a 1U-8760 Chain Wrench to remove the canister (4). Discard the old seals (5 and 6) and the canister in a safe place.
8. Clean the glass bowl (3).

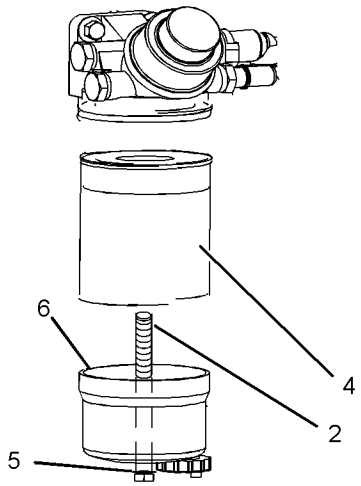

Illustration 56 g01259366
Typical example

9. Install the new canister. Do not use a tool to install the canister. Tighten the canister by hand.

10. Install the new O ring seal (5) onto the setscrew (2). Install the new O ring seal (6) into the glass bowl.

11. Align the glass bowl to the canister. Ensure that the sensor (if equipped) is in the correct position. Install the setscrew (2). Tighten the setscrew to a torque of 5 N·m (44 lb in).

12. If equipped, install the wiring harness to the sensor.

13. Remove the container and dispose of the fuel in accordance with local regulations.

14. The secondary filter must be replaced at the same time as the primary filter. Refer to the Operation and Maintenance Manual, “Fuel System Filter - Replace”.

Type Two

1. Turn the fuel supply valve (if equipped) to the OFF position before performing this maintenance.

2. Place a suitable container under the water separator to catch any fuel that might spill. Clean up any spilled fuel. Clean the outside of the water separator.

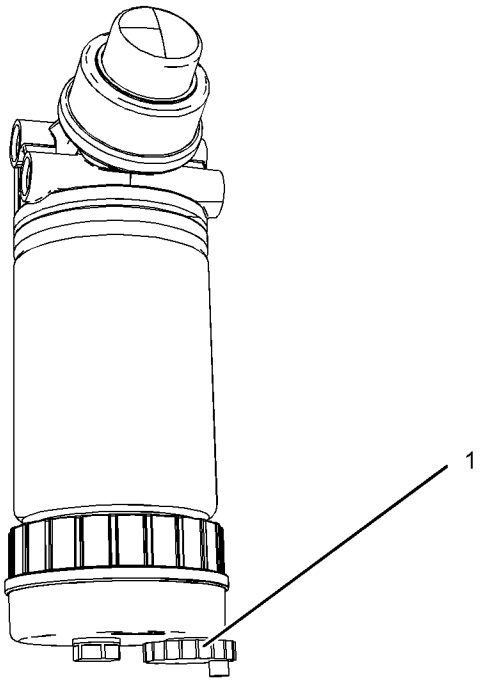

Illustration 57 g01430590

3. Install a suitable tube onto drain (1). Open drain (1). Allow the fluid to drain into the container. Remove the tube.

4. Tighten drain (1) by hand pressure only.

5. If equipped, remove the wiring harness from the sensor on the bottom of the bowl .

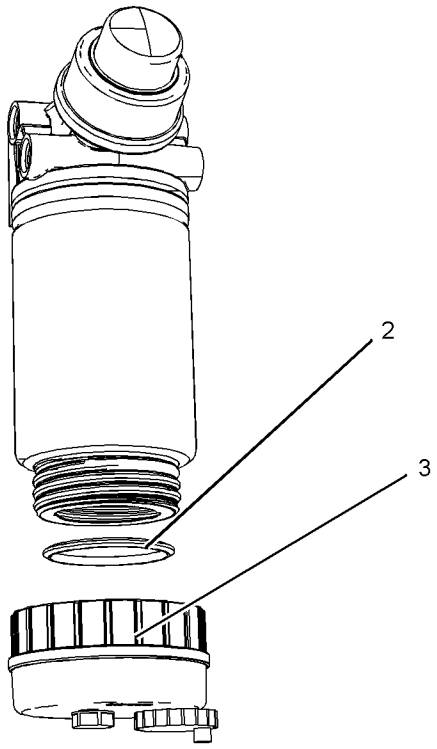

Illustration 58 g01430591

6. Rotate bowl (3) counterclockwise to remove the bowl. Remove O ring seal (2). Clean the bowl.

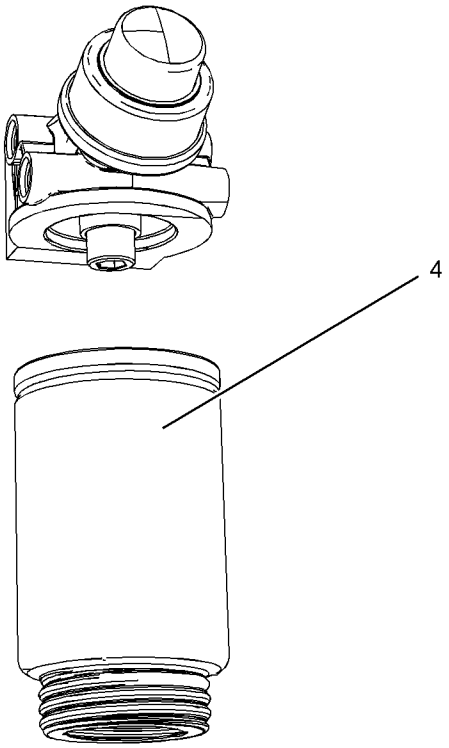

Illustration 59 g01430594

7. Use 1U-8760 Chain Wrench to remove old canister (4).

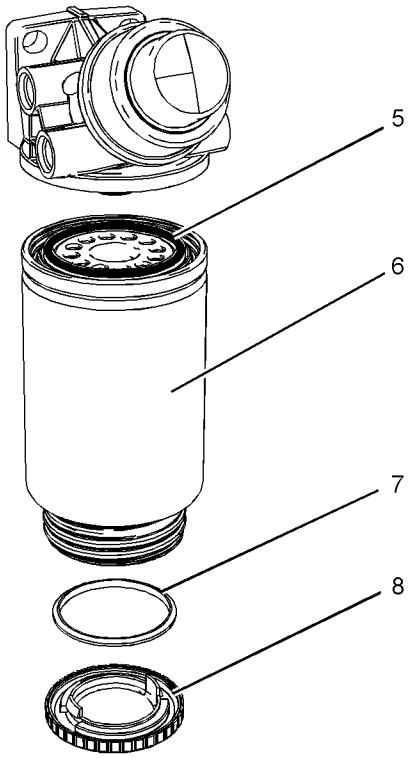

Illustration 60 g01430595

8. Lubricate O ring seal (5) with clean diesel fuel on the new canister. Install new canister (6). Spin on the canister until the O ring seal contacts the sealing surface. Then rotate the canister 360 degree to tighten the canister correctly.

9. Remove cap (8) from the threaded end of the new canister and remove new O ring seal (7). Install the new O ring seal into bowl (3).

10. Lubricate O ring seal (7) with clean diesel fuel. Install the bowl onto the new canister. Tighten the bowl to 15 N·m (11 lb ft).

11. If equipped, install the wiring harness to the sensor. Open the fuel supply valve.

12. Remove the container and dispose of the fuel in accordance with local regulations.

13. The secondary filter must be replaced at the same time as the primary filter. Refer to the Operation and Maintenance Manual, “Fuel System Filter - Replace”.

i09847996

Fuel System Secondary Filter - Replace

SMCS Code: 1261-510-SE

⚠ WARNING

Fuel leaked or spilled onto hot surfaces or electrical components can cause a fire. To help prevent possible injury, turn the start switch off when changing fuel filters or water separator elements. Clean up fuel spills immediately.

Note: Refer to Testing and Adjusting Manual, “Cleanliness of Fuel System Components” for detailed information on the standards of cleanliness that must be observed during ALL work on the fuel system.

NOTICE
Ensure that the engine is stopped before any servicing or repair is performed.

NOTICE
Engines that operate under severe conditions will require more frequent maintenance intervals to ensure maximum reliability. Engine performance may be impacted if the application is operated at altitudes greater than 3000m or with fuel that is not of the correct specification as detailed in “Fluid Recommendations” (General Fuel Information) of this OMM. It is recommended that new fuel filters are installed every 250 service hours in severe operating conditions. For more information consult your Caterpillar dealer.

Type One

Note: This fuel filter can be identified by the six drain holes in the filter. Refer to illustration 61 .

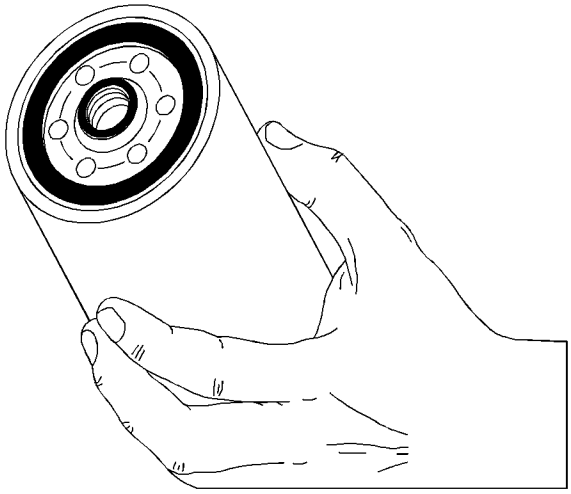

Illustration 61 g01430615

After the engine has stopped, you must wait for 60 seconds to allow the fuel pressure to be purged from the high-pressure fuel lines before any service or repair is performed on the engine fuel lines. If necessary, perform minor adjustments. Repair any leaks from the low-pressure fuel system and from the cooling, lubrication, or air systems. Replace any high-pressure fuel line that has leaked. Refer to Disassembly and assembly Manual, “Fuel Injection Lines - Install”.

NOTICE
Do not allow dirt to enter the fuel system. Thoroughly clean the area around a fuel system component that will be disconnected. Fit a suitable cover over any disconnected fuel system components.

1. Ensure that the fuel supply valve (if equipped) is in the OFF position. Place a suitable container under the fuel filter to catch any fuel that might spill. Clean up any spilled fuel.

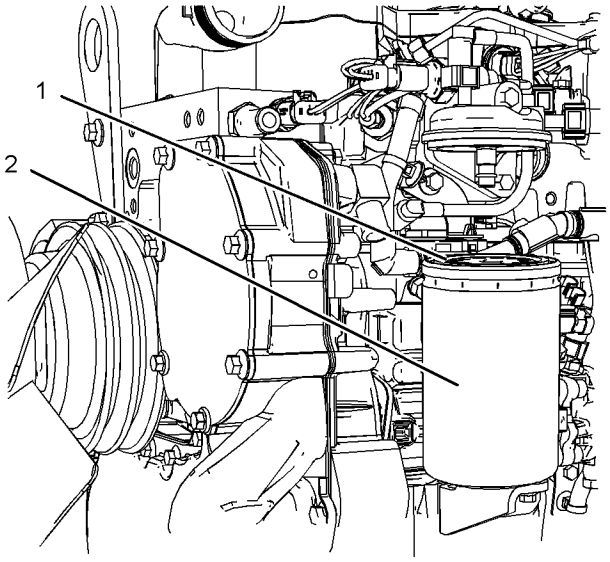

Illustration 62 g01430609
Typical example

2. Clean the outside of the fuel filter. Use 1U-8760 Chain Wrench to remove the canister (1) from the engine and dispose of the canister in accordance with local regulations.
3. Ensure that dirt cannot enter the new canister. Do not fill the canister with fuel before the canister is installed. Lubricate the O ring seal (1) with clean diesel fuel on the new canister.
4. Install the new canister. Do not use a tool to install the canister. Tighten the canister by hand.
5. Spin on the canister until the O ring seal contacts the sealing surface. The canister will require a ¾ of a full turn to tighten the canister correctly.

6. Prime the fuel system. Refer to the Operation and Maintenance Manual, “Fuel System - Prime” for more information.

Type Two



Illustration 63 g01430619

This fuel filter can be identified by the 12 drain holes in the filter. Refer to illustration 63 .

After the engine has stopped, you must wait for 60 seconds to allow the fuel pressure to be purged from the high-pressure fuel lines before any service or repair is performed on the engine fuel lines. If necessary, perform minor adjustments. Repair any leaks from the low-pressure fuel system and from the cooling, lubrication, or air systems. Replace any high-pressure fuel line that has leaked. Refer to Disassembly and Assembly Manual, “Fuel Injection Lines - Install”.

1. Ensure that the fuel supply valve (if equipped) is in the OFF position. Place a suitable container under the fuel filter to catch any fuel that might spill. Clean up any spilled fuel.

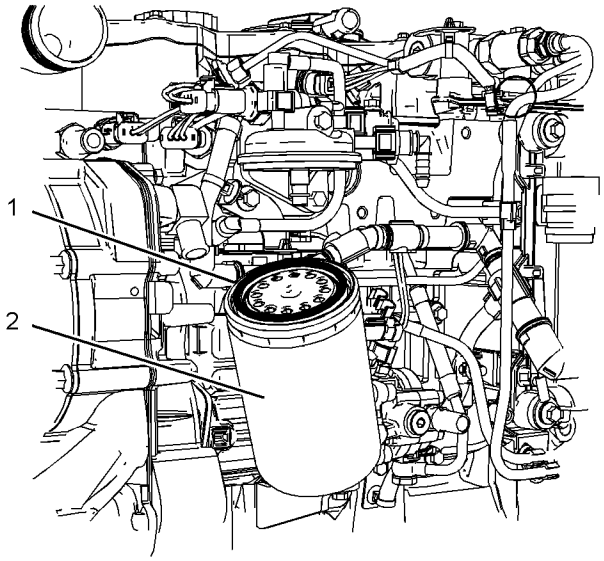

Illustration 64 g01430620
Typical example

2. Clean the outside of the fuel filter. Use 1U-8760 Chain Wrench to remove the canister (2) from the engine and dispose of the canister in accordance with local regulations.

3. Ensure that dirt cannot enter the new canister. Do not fill the canister with fuel before the canister is installed. Lubricate the O ring seal (1) with clean diesel fuel on the new canister.

4. Install the new canister. Do not use a tool to install the canister. Tighten the canister by hand.

5. Spin on the canister until the O ring seal contacts the sealing surface. Then rotate the canister 360 degree to tighten the canister correctly.

6. Remove the container and dispose of the fuel in accordance with local regulations. If equipped, open the fuel supply valve.

7. Prime the fuel system. Refer to the Operation and Maintenance Manual, “Fuel System - Prime” for more information.

i02348492

Fuel Tank Water and Sediment - Drain

SMCS Code: 1273-543-M&S

NOTICE
Care must be taken to ensure that fluids are contained during performance of inspection, maintenance, testing, adjusting and repair of the product. Be prepared to collect the fluid with suitable containers before opening any compartment or disassembling any component containing fluids.

Dispose of all fluids according to local regulations and mandates.

Fuel Tank

Fuel quality is critical to the performance and to the service life of the engine. Water in the fuel can cause excessive wear to the fuel system.

Water can be introduced into the fuel tank when the fuel tank is being filled.

Condensation occurs during the heating and cooling of fuel. The condensation occurs as the fuel passes through the fuel system and the fuel returns to the fuel tank. This causes water to accumulate in fuel tanks. Draining the fuel tank regularly and obtaining fuel from reliable sources can help to eliminate water in the fuel.

Drain the Water and the Sediment

Fuel tanks should contain some provision for draining water and draining sediment from the bottom of the fuel tanks.

Open the drain valve on the bottom of the fuel tank in order to drain the water and the sediment. Close the drain valve.

Check the fuel daily. Allow five minutes after the fuel tank has been filled before draining water and sediment from the fuel tank.

Fill the fuel tank after operating the engine in order to drive out moist air. This will help prevent condensation. Do not fill the tank to the top. The fuel expands as the fuel gets warm. The tank may overflow.

Some fuel tanks use supply pipes that allow water and sediment to settle below the end of the fuel supply pipe. Some fuel tanks use supply lines that take fuel directly from the bottom of the tank. If the engine is equipped with this system, regular maintenance of the fuel system filter is important.

Fuel Storage Tanks

Drain the water and the sediment from the fuel storage tank at the following intervals:

- Weekly
- Service intervals
- Refill of the tank

This will help prevent water or sediment from being pumped from the storage tank into the engine fuel tank.

If a bulk storage tank has been refilled or moved recently, allow adequate time for the sediment to settle before filling the engine fuel tank. Internal baffles in the bulk storage tank will also help trap sediment. Filtering fuel that is pumped from the storage tank helps to ensure the quality of the fuel. When possible, water separators should be used.

i07819616

Hoses and Clamps - Inspect/ Replace

SMCS Code: 7554-040; 7554-510

⚠ WARNING

Contact with high pressure fuel may cause fluid penetration and burn hazards. High pressure fuel spray may cause a fire hazard. Failure to follow these inspection, maintenance and service instructions may cause personal injury or death.

If you inspect the engine in operation, always use the proper inspection procedure to avoid a fluid penetration hazard. Refer to Operation and Maintenance Manual, “General hazard Information” and Operation and Maintenance Manual, “High Pressure Fuel Lines” for the correct procedures.

Inspect all hoses for leaks that are caused by the following conditions:

- Cracking
- Softness
- Loose clamps

Replace hoses that are cracked or soft. Tighten any loose clamps.

Check for the following conditions:

- End fittings that are damaged or leaking
- Outer covering that is chafed or cut
- Exposed wire that is used for reinforcement
- Outer covering that is ballooning locally
- Flexible part of the hose that is kinked or crushed
- Armoring that is embedded in the outer covering

A constant torque hose clamp can be used in place of any standard hose clamp. Ensure that the constant torque hose clamp is the same size as the standard clamp.

Due to extreme temperature changes, the hose will harden. Hardening of the hoses will cause hose clamps to loosen. This can result in leaks. A constant torque hose clamp will help to prevent loose hose clamps.

Each installation application can be different. The differences depend on the following factors:

- Type of hose
- Type of fitting material
- Anticipated expansion and contraction of the hose
- Anticipated expansion and contraction of the fittings

Replace the Hoses and the Clamps

Refer to the OEM information for further information on removing and replacing fuel hoses (if equipped).

The following text describes a typical method of replacing coolant hoses. Refer to the OEM information for further information on the coolant system and the hoses for the coolant system.

⚠ WARNING

Pressurized System: Hot coolant can cause serious burns. To open the cooling system filler cap, stop the engine and wait until the cooling system components are cool. Loosen the cooling system pressure cap slowly in order to relieve the pressure.

1. Stop the engine. Allow the engine to cool.
2. Loosen the cooling system filler cap slowly to relieve any pressure. Remove the cooling system filler cap.

Note: Drain the coolant into a suitable, clean container. The coolant can be reused.

3. Drain the coolant from the cooling system to a level that is below the hose that is being replaced.
4. Remove the hose clamps.
5. Disconnect the old hose.
6. Replace the old hose with a new hose.
7. Install the hose clamps with a torque wrench.

Note: For the correct coolant, see this Operation and Maintenance Manual, “Fluid Recommendations”.

8. Refill the cooling system. Refer to the OEM information for further information on refilling the cooling system.
9. Clean the cooling system filler cap. Inspect the cooling system filler cap's seals. Replace the cooling system filler cap if the seals are damaged. Install the cooling system filler cap.
10. Start the engine. Inspect the cooling system for leaks.

i01515272

Overhaul Considerations

SMCS Code: 7595-043

Reduced hours of operation at full load will result in a lower average power demand. A decreased average power demand should increase both the engine service life and the overhaul interval.

The need for an overhaul is generally indicated by increased fuel consumption and by reduced power.

The following factors are important when a decision is being made on the proper time for an engine overhaul:

- The need for preventive maintenance
- The quality of the fuel that is being used
- The operating conditions
- The results of the S·O·S analysis

Oil Consumption as an Overhaul Indicator

Oil consumption, fuel consumption, and maintenance information can be used to estimate the total operating cost for your Caterpillar engine. Oil consumption can also be used to estimate the required capacity of a makeup oil tank that is suitable for the maintenance intervals.

Oil consumption is in proportion to the percentage of the rated engine load. As the percentage of the engine load is increased, the amount of oil that is consumed per hour also increases.

The oil consumption rate (brake specific oil consumption) is measured in grams per kW/h (lb per bhp). The brake specific oil consumption (BSOC) depends on the engine load. Consult your Caterpillar dealer for assistance in determining the typical oil consumption rate for your engine.

When an engine's oil consumption has risen to three times the original oil consumption rate due to normal wear, an engine overhaul should be scheduled. There may be a corresponding increase in blowby and a slight increase in fuel consumption.

Overhaul Options

Before Failure Overhaul

A planned overhaul before failure may be the best value for the following reasons:

- Costly unplanned downtime can be avoided.
- Many original parts can be reused according to the standards for reusable parts.
- The engine's service life can be extended without the risk of a major catastrophe due to engine failure.
- The best cost/value relationship per hour of extended life can be attained.

After Failure Overhaul

If a major engine failure occurs and the engine must be removed, many options are available. An overhaul should be performed if the engine block or the crankshaft needs to be repaired.

If the engine block is repairable and/or the crankshaft is repairable, the overhaul cost should be between 40 percent and 50 percent of the cost of a new engine with a similar exchange core.

This lower cost can be attributed to three aspects:

- Specially designed Caterpillar engine features
- Caterpillar dealer exchange components
- Caterpillar Inc. remanufactured exchange components

Overhaul Recommendation

To minimize downtime, Caterpillar Inc. recommends a scheduled engine overhaul by your Caterpillar dealer before the engine fails. This will provide you with the best cost/value relationship.

Note: Overhaul programs vary according to the engine application and according to the dealer that performs the overhaul. Consult your Caterpillar dealer for specific information about the available overhaul programs and about overhaul services for extending the engine life.

If an overhaul is performed without overhaul service from your Caterpillar dealer, be aware of the following maintenance recommendations.

Rebuild or Exchange

Cylinder Head Assembly, Oil Pump, and Fuel Transfer Pump

These components should be inspected according to the instructions that are found in various Caterpillar reusability publications. The Special Publication, SEBF8029 lists the reusability publications that are needed for inspecting the engine parts.

If the parts comply with the established inspection specifications that are expressed in the reusable parts guideline, the parts should be reused.

Parts that are not within the established inspection specifications should be dealt with in one of the following manners:

- Salvaging
- Repairing
- Replacing

Using out-of-spec parts can result in the following problems:

- Unscheduled downtime
- Costly repairs
- Damage to other engine parts
- Reduced engine efficiency
- Increased fuel consumption

Reduced engine efficiency and increased fuel consumption translates into higher operating costs. Therefore, Caterpillar Inc. recommends repairing out-of-spec parts or replacing out-of-spec parts.

Inspection and/or Replacement

Crankshaft Bearings and Crankshaft Seals

The following components may not last until the second overhaul.

- Thrust bearings
- Main bearings

- Rod bearings
- Crankshaft seals

Caterpillar Inc. recommends the installation of new parts at each overhaul period.

Inspect these parts while the engine is disassembled for an overhaul.

Inspect the crankshaft for any of the following conditions:

- Deflection
- Damage to the journals
- Bearing material that has seized to the journals

Check the journal taper and the profile of the crankshaft journals. Check these components by interpreting the wear patterns on the following components:

- Rod bearing
- Main bearings

Inspect the camshaft for damage to the journals and to the lobes.

Note: If the camshaft is removed for any reason, use the magnetic particle inspection process to check for cracks in the camshaft.

Inspect the following components for signs of wear or for signs of scuffing:

- Camshaft bearings
- Lifters

Caterpillar Inc. recommends replacing the crankshaft vibration damper.

Oil Cooler Core

During an overhaul, Caterpillar Inc. recommends the removal of the oil cooler core. Clean the oil cooler core. Then, pressure test the oil cooler core.

NOTICE
Do not use caustic cleaners to clean the core.

Caustic cleaners can attack the internal metals of the core and cause leakage.

Note: Use this cleaning procedure to clean the oil cooler core.

1. Remove the oil cooler core.

2. Remove any debris from the oil cooler core. To remove debris from the oil cooler core, turn the oil cooler core onto one end.

3. Flush the oil cooler core internally with cleaner in order to loosen foreign substances. This will also help to remove oil from the oil cooler core.

Note: Caterpillar Inc. recommends the use of Hydrosolv Liquid Cleaners. Table 15 lists the Hydrosolv Liquid Cleaners that are available from your Caterpillar dealer.

Table 15

Hydrosolv Liquid Cleaners		
Part Number	**Description**	**Size**
1U-5490	Hydrosolv 4165	19 L (5 US gal)
1U-5492	Hydrosolv 100	19 L (5 US gallon)

4. Use steam to clean the oil cooler core. This removes any remaining residue from the cleaner. Flush the fins of the oil cooler core. Remove any other trapped debris.

5. Wash the oil cooler core with hot, soapy water. Rinse the oil cooler core thoroughly with clean water.

WARNING

Personal injury can result from air pressure.

Personal injury can result without following proper procedure. When using pressure air, wear a protective face shield and protective clothing.

Maximum air pressure at the nozzle must be less than 205 kPa (30 psi) for cleaning purposes.

6. Dry the oil cooler core with compressed air. Direct the air in the reverse direction of the normal flow.

7. Inspect the components in order to ensure cleanliness. The oil cooler core should be pressure tested. Repair the oil cooler core, if necessary. Install the oil cooler core.

For more information about cleaning the cores, consult your Caterpillar dealer.

Obtain Coolant Analysis

The concentration of supplemental coolant additive (SCA) should be checked regularly with test kits or with S·O·S Coolant Analysis (Level 1). Further coolant analysis is recommended when the engine is overhauled.

For example, considerable deposits are found in the water jacket areas on the external cooling system, but the concentrations of coolant additives were carefully maintained. The coolant water probably contained minerals that were deposited on the engine over time.

A coolant analysis can be conducted in order to verify the condition of the water that is being used in the cooling system. A full water analysis can be obtained by consulting your local water utility company or an agricultural agent. Private laboratories are also available for water analysis.

Caterpillar Inc. recommends an S·O·S Coolant Analysis (Level 2).

S·O·S Coolant Analysis (Level 2)

An S·O·S Coolant Analysis (Level 2) is a comprehensive coolant analysis which completely analyzes the coolant and the effects on the cooling system. An S·O·S Coolant Analysis (Level 2) provides the following information:

- Complete S·O·S Coolant Analysis (Level 1)
- Visual inspection of properties
- Identification of metal corrosion
- Identification of contaminants
- Identification of built up impurities (corrosion and scale)

S·O·S Coolant Analysis (Level 2) provides a report of the results of both the analysis and the maintenance recommendations.

For more information about coolant analysis, see your Caterpillar dealer.

i09670468

Radiator - Clean

SMCS Code: 1353-070

Note: Adjust the frequency of cleaning according to the effects of the operating environment.

Inspect the radiator for these items: damaged fins, corrosion, dirt, grease, insects, leaves, oil, and other debris. Clean the radiator, if necessary.

⚠ WARNING

Personal injury can result from air pressure.

Personal injury can result without following proper procedure. When using pressure air, wear a protective face shield and protective clothing.

The maximum air pressure for cleaning purposes must be reduced to 205 kPa (30 psi) when the air nozzle is deadheaded.

Pressurized air is the preferred method for removing loose debris. Direct the air in the opposite direction of the air flow. Hold the nozzle approximately 6 mm (0.25 inch) away from the fins. Slowly move the air nozzle in a direction that is parallel with the tubes. This movement will remove debris that is between the tubes.

Pressurized water may also be used for cleaning. The maximum water pressure for cleaning purposes must be less than 275 kPa (40 psi). Use pressurized water to soften mud. Clean the core from the front and the rear.

Use a degreaser and steam for removal of oil and grease. Clean the front and the rear of the core. Wash the core with detergent and hot water. Thoroughly rinse the core with clean water.

After cleaning, start the engine and bring the engine to high idle. This procedure will help in the removal of debris and drying of the core. Stop the engine. Use a light bulb behind the core to inspect the core for cleanliness. Repeat the cleaning, if necessary.

Inspect the fins for damage. Bent fins may be opened with a “comb”. Inspect these items for good condition: welds, mounting brackets, air lines, connections, clamps, and seals. Make repairs, if necessary.

i00151038

Severe Service Application - Check

SMCS Code: 1000-535

Severe service is an application of an engine that exceeds current published standards for that engine. Caterpillar maintains standards for the following engine parameters:

- Performance (power range, speed range and fuel consumption)
- Fuel quality
- Altitude range
- Maintenance intervals
- Oil selection and maintenance
- Coolant selection and maintenance
- Environmental qualities
- Installation

Refer to the standards for the engine or consult with your Caterpillar dealer in order to determine if the engine is operating within the defined parameters.

Severe service operation can accelerate component wear. Engines that operate under severe conditions may need more frequent maintenance intervals in order to ensure maximum reliability and retention of full service life.

Due to individual applications, it is not possible to identify all of the factors which can contribute to severe service operation. Consult your Caterpillar dealer for the unique maintenance that is necessary for the engine.

The operating environment, improper operating procedures and improper maintenance procedures can be factors which contribute to severe service conditions.

Environmental Factors

Ambient temperatures – The engine may be exposed to extended operation in extremely cold environments or hot environments. Valve components can be damaged by carbon buildup if the engine is frequently started and stopped in very cold temperatures. Extremely hot inlet air reduces engine performance.

Air Quality – The engine may be exposed to extended operation in an environment that is dirty or dusty, unless the equipment is cleaned regularly. Mud, dirt and dust can encase components. Maintenance can be very difficult. The buildup can contain corrosive chemicals.

Buildup – Compounds, elements, corrosive chemicals and salt can damage some components.

Altitude – Problems can arise when the engine is operated at altitudes that are higher than the intended settings for that application. Necessary adjustments should be made.

Improper Operating Procedures

- Extended operation at low idle
- Frequent hot shutdowns
- Operating at excessive loads
- Operating at excessive speeds
- Operating outside the intended application

Improper Maintenance Procedures

- Extending the maintenance intervals
- Failure to use recommended fuel, lubricants and coolant/antifreeze

i02348493

Starting Motor - Inspect

SMCS Code: 1451-040; 1453-040

Caterpillar recommends a scheduled inspection of the starting motor. If the starting motor fails, the engine may not start in an emergency situation.

Check the starting motor for correct operation. Check the electrical connections and clean the electrical connections. Refer to the Systems Operation, Testing and Adjusting Manual, “Electric Starting System - Test” for more information on the checking procedure and for specifications or consult your Caterpillar dealer for assistance.

i04144491

Turbocharger - Inspect

SMCS Code: 1052-040; 1052

A regular visual inspection of the turbocharger is recommended. If the turbocharger fails during engine operation, damage to the turbocharger compressor wheel and/or to the engine may occur. Damage to the turbocharger compressor wheel can cause additional damage to the pistons, the valves, and the cylinder head.

NOTICE
Turbocharger bearing failures can cause large quantities of oil to enter the air intake and exhaust systems. Loss of engine lubricant can result in serious engine damage.

Minor leakage of oil into a turbocharger under extended low idle operation should not cause problems as long as a turbocharger bearing failure has not occured.

When a turbocharger bearing failure is accompanied by a significant engine performance loss (exhaust smoke or engine rpm up at no load), do not continue engine operation until the turbocharger is renewed.

A visual inspection of the turbocharger can minimize unscheduled downtime. A visual inspection of the turbocharger can also reduce the chance for potential damage to other engine parts.

Removal and Installation

For options regarding the removal, installation, and replacement, consult your Carerpillar dealer. Refer to the Disassembly and Assembly, “Turbocharger - Remove and Turbocharger - Install” and Systems Operation, Testing and Adjusting, “Turbocharger - Inspect” for further information.

Inspecting

NOTICE
The compressor housing for the turbocharger must not be removed from the turbocharger for inspection or removed for the cleaning of the compressor.

1. Remove the pipe from the turbocharger exhaust outlet and remove the air intake pipe to the turbocharger. Visually inspect the piping for the presence of oil. Clean the interior of the pipes in order to prevent dirt from entering during reassembly.
2. Check for obvious heat discoloration of the turbocharger. Check for any loose bolts or any missing bolts. Check for damage to the oil supply line and the oil drain line. Check for cracks in the housing of the turbocharger. Ensure that the compressor wheel can rotate freely.
3. Check for the presence of oil. If oil is leaking from the back side of the compressor wheel, there is a possibility of a failed turbocharger oil seal.

   The presence of oil may be the result of extended engine operation at low idle. The presence of oil may also be the result of a restriction of the line for the intake air (clogged air filters), which causes the turbocharger to slobber.
4. Inspect the bore of the housing of the turbine outlet for corrosion.
5. Fasten the air intake pipe and the exhaust outlet pipe to the turbocharger housing. Ensure that all clamps are installed correctly and that all clamps are tightened securely.

i02873707

V-Belts - Inspect/Adjust/Replace

SMCS Code: 1357-510; 1357-025; 1357-040

Inspection

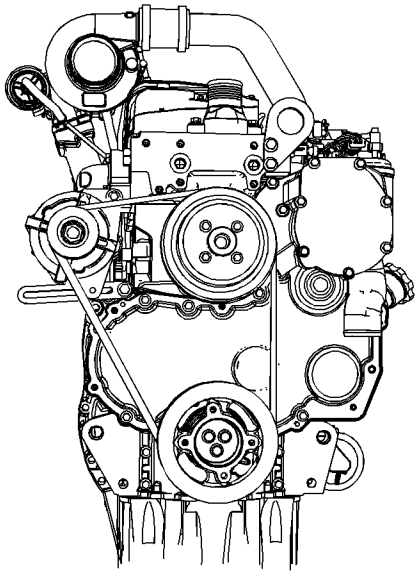

Illustration 65 g01476657
Arrangement for the V-belts

To maximize the engine performance, inspect the belts for wear and for cracking. Replace belts that are worn or damaged.

For applications that require multiple drive belts, replace the belts in matched sets. Replacing only one belt of a matched set will cause the new belt to carry more load because the older belt is stretched. The additional load on the new belt could cause the new belt to break.

If the belts are too loose, vibration causes unnecessary wear on the belts and pulleys. Loose belts may slip enough to cause overheating.

To accurately check the belt tension, install 144-0235 Belt Tension Gauge.

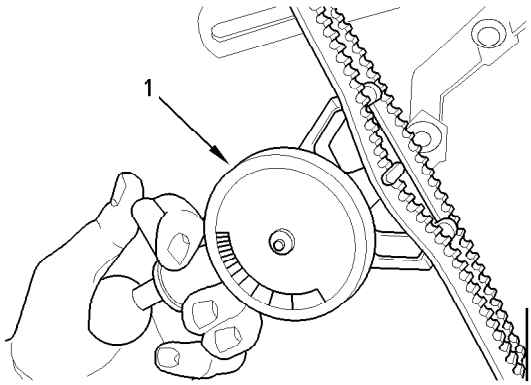

Illustration 66 g01003936

Typical example

(1) Gauge

Fit the gauge (1) at the center of the longest free length and check the tension. The correct tension for a used belt is 355 N (79.8 lb). If the tension of the belt is below 250 N (56 lb) adjust the belt to 355 N (79.8 lb).

Note: The correct tension for a new belt or new belts is 535 N (120 lb). A higher tension is required in order to compensate for the stretch that is in a new belt. Only use the higher tension on a belt that has not been used. A used belt is a belt that has been in operation for 30 minutes or a longer period of time.

If twin belts are installed, check and adjust the tension on both belts.

Adjustment

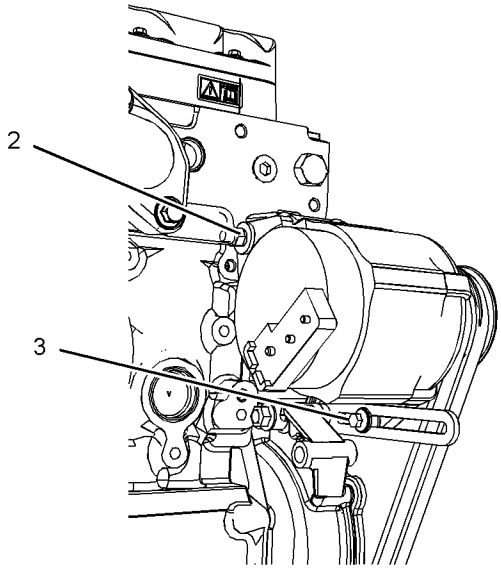

Illustration 67 g01430645

Typical example

1. Loosen The alternator pivot bolt (2) and the bolt (3).

2. Move the alternator in order to increase or decrease the belt tension. Tighten the alternator pivot bolt and the link bolt to 22 N·m (16 lb ft).(1).

Replace

Refer to Disassembly and Assembly manual for more information.

i05531489

Walk-Around Inspection

SMCS Code: 1000-040

Inspect the Engine for Leaks and for Loose Connections

A walk-around inspection should only take a few minutes. When the time is taken to perform these checks, costly repairs and accidents can be avoided.

For maximum engine service life, make a thorough inspection of the engine compartment before starting the engine. Look for items such as oil leaks or coolant leaks, loose bolts, worn belts, loose connections, and trash buildup. Make repairs, as needed:

- The guards must be in the correct place. Repair damaged guards or replace missing guards.
- Wipe all caps and plugs before the engine is serviced in order to reduce the chance of system contamination.

NOTICE
For any type of leak (coolant, lube, or fuel) clean up the fluid. If leaking is observed, find the source and correct the leak. If leaking is suspected, check the fluid levels more often than recommended until the leak is found or fixed, or until the suspicion of a leak is proved to be unwarranted.

NOTICE
Accumulated grease and/or oil on an engine is a fire hazard. Remove the accumulated grease and oil. Refer to this Operation and Maintenance Manual, “Engine - Clean” for more information.

- Ensure that the cooling system hoses are correctly clamped and that the cooling system hoses are tight. Check for leaks. Check the condition of all pipes.
- Inspect the water pump for coolant leaks.

Note: The water pump seal is lubricated by the coolant in the cooling system. It is normal for a small amount of leakage to occur as the engine cools down and the parts contract.

Excessive coolant leakage may indicate the need to replace the water pump. Remove the water pump. Refer to Disassembly and Assembly , “Water Pump - Remove and Install”. For more information, consult your Cat dealer.

- Inspect the lubrication system for leaks at the front crankshaft seal, the rear crankshaft seal, the oil pan, the oil filters, and the rocker cover.
- Inspect the piping for the air intake system and the elbows for cracks and for loose clamps. Ensure that hoses and tubes are not contacting other hoses, tubes, wiring harnesses.
- Ensure that the areas around the rotating parts are clear.
- Inspect the alternator belts and any accessory drive belts for cracks, breaks, or other damage.
- Inspect the wiring harness for damage.

Belts for multiple groove pulleys must be replaced as matched sets. If only one belt is replaced, the belt will carry more load than the belts that are not replaced. The older belts are stretched. The additional load on the new belt could cause the belt to break.

High Pressure Fuel Lines

⚠ WARNING

Contact with high pressure fuel may cause fluid penetration and burn hazards. High pressure fuel spray may cause a fire hazard. Failure to follow these inspection, maintenance and service instructions may cause personal injury or death.

After the engine has stopped, you must wait for 60 seconds in order to allow the fuel pressure to be purged from the high-pressure fuel lines before any service or repair is performed on the engine fuel lines. If necessary, perform minor adjustments. Repair any leaks from the low-pressure fuel system and from the cooling, lubrication, or air systems. Replace any high-pressure fuel line that has leaked. Refer to Disassembly and assembly Manual, “Fuel Injection Lines - Install”.

If you inspect the engine in operation, always use the proper inspection procedure in order to avoid a fluid penetration hazard. Refer to Operation and Maintenance Manual, “General hazard Information”.

Visually inspect the high-pressure fuel lines for damage or signs of fuel leakage. Replace any damaged high-pressure fuel lines or high-pressure fuel lines that have leaked.

Ensure that all clips on the high-pressure fuel lines are in place and that the clips are not loose.

- Inspect the rest of the fuel system for leaks. Look for loose fuel line clamps.
- Drain the water and the sediment from the fuel tank on a daily basis in order to ensure that only clean fuel enters the fuel system.
- Inspect the wiring and the wiring harnesses for loose connections and for worn wires or frayed wires. Check for any loose tie-wraps or missing tie-wraps.
- Inspect the ground strap for a good connection and for good condition.
- Disconnect any battery chargers that are not protected against the current drain of the starting motor. Check the condition and the electrolyte level of the batteries, unless the engine is equipped with a maintenance free battery.
- Check the condition of the gauges. Replace any gauges that are cracked. Replace any gauge that cannot be calibrated.

i02517764

Water Pump - Inspect

SMCS Code: 1361-040; 1361

A failed water pump may cause severe engine overheating problems that could result in the following conditions:

- Cracks in the cylinder head
- A piston seizure
- Other potential damage to the engine

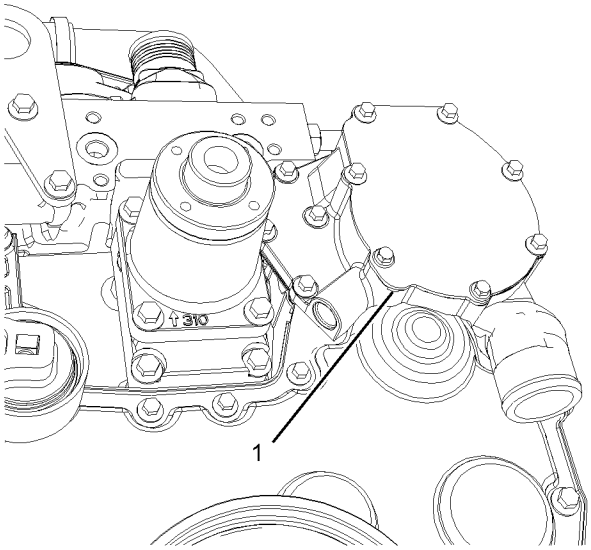

Illustration 68 g01249453

(1) Weep hole

Note: The water pump seal is lubricated by the coolant in the cooling system. It is normal for a small amount of leakage to occur as the engine cools down and parts contract.

Visually inspect the water pump for leaks. The water pump is not a serviceable item. In order to install a new water pump, refer to the Disassembly and Assembly Manual, “Water Pump - Remove and Install”, or contact your Caterpillar dealer.

Warranty Section

Warranty Information

i05549472

Emissions Warranty Information

SMCS Code: 1000

The certifying engine manufacturer warrants to the ultimate purchaser and each subsequent purchaser that:

1. New non-road diesel engines and stationary diesel engines less than 10 liters per cylinder (including Tier 1 and Tier 2 marine engines < 37 kW, but excluding locomotive and other marine engines) operated and serviced in the United States and Canada, including all parts of their emission control systems (“emission related components”), are:

a. Designed, built, and equipped so as to conform, at the time of sale, with applicable emission standards prescribed by the United States Environmental Protection Agency (EPA) by way of regulation.

b. Free from defects in materials and workmanship in emission-related components that can cause the engine to fail to conform to applicable emission standards for the warranty period.

2. New non-road diesel engines (including Tier 1 and Tier 2 marine propulsion engines < 37 kW and Tier 1 through Tier 4 marine auxiliary engines < 37 kW, but excluding locomotive and other marine engines) operated and serviced in the state of California, including all parts of their emission control systems (“emission related components”), are:

a. Designed, built, and equipped so as to conform, at the time of sale, to all applicable regulations adopted by the California Air Resources Board (ARB).

b. Free from defects in materials and workmanship which cause the failure of an emission-related component to be identical in all material respects to the component as described in the engine manufacturer's application for certification for the warranty period.

The aftertreatment system can be expected to function properly for the lifetime of the engine (emissions durability period) subject to prescribed maintenance requirements being followed.

A detailed explanation of the Emission Control Warranty that is applicable to new non-road and stationary diesel engines, including the components covered and the warranty period, is found in a supplemental Special Publication. Consult your authorized Cat dealer to determine if your engine is subject to an Emission Control Warranty and to obtain a copy of the applicable Special Publication.

Reference Information Section

Engine Ratings

i02945156

Engine Rating Conditions

SMCS Code: 1000

All engine ratings are in compliance with the following standard ambient air conditions of “SAE J1349”:

- 99 kPa (29.3 inches of Inches Hg)
- 30 percent relative humidity
- A temperature of 25 °C (77 °F)

Ratings relate to the standard conditions of “ISO8665”, of “ISO3046/1”, of “DIN6271”, and of “BS5514”.

Power for the engine ratings is set on the following fuel specification:

- Density 0.837 to 0.845 kg/l at 15 °C (59 °F)
- API Gravity 36 to 37.5 at 15 °C (59 °F)
- Viscosity 2.6 to 2.8 mm^2 /sec at 40 °C (104.0 °F)
- Cetane numbers of 48 to 52

Gross Output Ratings – The total output capability of the engine that is equipped with standard accessories.

Standard accessories include the following components:

- Oil pumps
- Fuel pumps
- Water pumps

Subtract the power that is required to drive auxiliary components from the gross output. This will produce the net power that is available for the external load (flywheel).

i02945155

Engine Rating Definitions

SMCS Code: 1000

It is important to know the use of the engine so that the rating will match the operating profile. The proper rating selection is also important so that the customer's perception of price and value is realized.

In selecting a rating for a specific application, the most important consideration is the time that is spent at full throttle. The rating definitions identify the percent of time at full throttle. The definitions also identify the corresponding times below rated rpm.

Note: For an exact determination of the appropriate rating, follow the OEM specifications or consult your Caterpillar dealer.

There is five ratings from A to E. The rating for the C4.4 industrial engine is C.

C – Intermittent service in conjunction with maximum power and/or speed are cyclic. The engine at full load should not exceed 50 percent of the duty cycle.

NOTICE
Operating engines above the rating definitions can result in shorter service life before overhaul.

Customer Service

i08292376

Ordering Replacement Parts

SMCS Code: 7567

⚠ WARNING

When replacement parts are required for this product Caterpillar recommends using Caterpillar replacement parts or parts with equivalent specifications including, but not limited to, physical dimensions, type, strength and material.

Failure to heed this warning can lead to premature failures, product damage, personal injury or death.

Quality Cat replacement parts are available from Cat dealers throughout the world. Cat dealer parts inventories are up to date. The parts stocks include all the parts that are normally needed to protect your Cat engine investment.

When you order parts, specify the following information:

- Part number
- Part name
- Quantity

If there is a question concerning the part number, provide your dealer with a complete description of the needed item.

When a Cat engine requires maintenance and/or repair, provide the dealer with all the information that is stamped on the Information Plate. This information is described in this Operation and Maintenance Manual (Product Information Section).

Discuss the problem with the dealer. Inform the dealer about the conditions of the problem and the nature of the problem. Inform the dealer about when the problem occurs. This information will help the dealer in troubleshooting the problem and solving the problem faster.

Reference Materials

i02518230

Reference Material

SMCS Code: 1000

The following literature can be obtained through any Caterpillar dealer.

Lubricants

- Special Publication, PEHP8038, “Data Sheet - Caterpillar Diesel Engine Oils (DEO) (CH-4) (North America)”
- Special Publication, PEHP9536, “Data Sheet - Caterpillar Diesel Engine Oil (DEO) (CF-4) (International only)”
- Special Publication, NEDG6022, “Cat Lubricating Grease”
- Special Publication, PEHP0002, “Data Sheet - Molybdenum (MPGM) Grease”
- Special Publication, NEHP6015, “Data Sheet - Caterpillar Special Purpose Grease (SPG)”
- Special Publication, SEBD0640, “Oil and Your Engine”
- Operation and Maintenance Manual, SEBU5898, “Cold Weather Recommendations”
- Operation and Maintenance Manual, SEBU6251, “Caterpillar Commercial Diesel Engine Fluids Recomendations”
- Special Publication, PEHP6001, “How To Take A Good Oil Sample”

Fuels

- Special Publication, SEBD0717, “Diesel Fuels and Your Engine”

Coolants

- Special Publication, PEHP4036, “Data Sheet - Extended Life Coolant”
- Special Publication, PEHP7057, “Data Sheet - S·O·S Coolant Analysis”
- Special Publication, SEBD0518, “Know Your Cooling System”
- Special Publication, SEBD0970, “Coolant and Your Engine”
- Label, PEEP5027, “Extended Life Coolant/ Antifreeze”

Miscellaneous

- Service Manual, REG1139F, “Service Manual Contents Microfiche”
- Service Manual, KENR6217, “ C4.4 Industrial Engines”
- Systems Operation, Testing and Adjusting, RENR9965, “ C4.4 Industrial Engines”
- Specifications, RENR9961, “ C4.4 Industrial Engines.”
- Disassembly and Assembly, KENR6216, “ C4.4 Industrial Engines”
- Specifications, SENR3130, “Torque Specifications”
- Special Publication, PECP9067, “One Safe Source” English language for use in NACD
- Special Publication, LEDM5615, “Caterpillar Marine Parts and Service Locations Directory”
- Special Publication, SEBF8029, “Index to Guidelines for Reusable Parts and Salvage Operations”
- Special Publication, SEBF8062, “Procedure to Inspect and Clean Air Filters”
- Special Instruction, SEHS9031, “Storage Procedure for Caterpillar Products”
- Special Publication, NEHS0526, “Service Technician Application Guide”
- Special Publication, SEBU6251, “Caterpillar Commercial Diesel Engine Fluids Recomendations”
- Special Instruction, SEHS7633, “Battery Test Procedure”

- Label, SEHS7332, “Danger Do Not Operate”

Emissions Warranty

This engine may be Certified and this engine may be covered by an Emissions Warranty. A detailed explanation of the Emissions Warranty that is applicable to Certified engines is found in Supplement, SMBU6981, “Emissions Control Warranty Information”. The engine is Certified if the engine has a special label that verifies the certification. A Caterpillar dealer can also inform you if the engine is certified.

i08254313

Additional Reference Material

SMCS Code: 1000

The “Society of Automotive Engineers (SAE) Specifications” can be found in your SAE handbook. This publication can also be obtained from the following locations: local technological society, local library, and local college. If necessary, consult SAE at the following address:

SAE International
400 Commonwealth Drive
Warrendale, PA, USA 15096-0001
Telephone (724) 776-4841

The “American Petroleum Institute Publication No. 1509” can be obtained from the following locations: local technological society, local library, and local college. If necessary, consult API at the following address:

American Petroleum Institute
1220 L St. N.W.
Washington, DC, USA 20005
Telephone (202) 682-8000

The International Organization for Standardization (ISO) offers information and customer service regarding international standards and standardizing activities. ISO can also supply information on the following subjects that are not controlled by ISO: national standards, regional standards, regulations, certification, and related activities. Consult the member of ISO in your country.

International Organization for Standardization (ISO)
1, rue de Varembé
Case postale 56
CH-1211 Genève 20
Switzerland
Telephone +41 22 749 01 11
Facsimile +41 22 733 34 30
E-mail central@iso.ch
Web site http://www.iso.ch

European classifications are established by the Counseil International Des Machines a Combustion (CIMAC) (International Council on Combustion Engines).

CIMAC Central Secretariat
Lyoner Strasse 18
60528 Frankfurt
Germany
Telephone +49 69 6603 1567
Facsimile +49 69 6603 1566

i08530562

Maintenance Records

SMCS Code: 1000

Caterpillar recommends the retention of accurate maintenance records. Accurate maintenance records can be used for the following purposes:

- Determine operating costs.
- Establish maintenance schedules for other engines that are operated in the same environment.
- Show compliance with the required maintenance practices and maintenance intervals.

Maintenance records can be used for various other business decisions that are related to engine maintenance.

Maintenance records are a key element of a maintenance program that is managed. Accurate maintenance records can help your Cat dealer to fine-tune the recommended maintenance intervals to meet the specific operating situation. These recommendations should result in a lower engine operating cost.

Records should be kept for the following items:

Fuel Consumption – A record of fuel consumption is essential to determine when the load sensitive components should be inspected or repaired. Fuel consumption assists in determining overhaul intervals.

Service Hours – A record of service hours is essential to determine when the speed sensitive components should be inspected or repaired.

Documents – These items should be easy to obtain, and these items should be kept in the engine history file. All documents should show this information: date, service hours, fuel consumption, unit number, and engine serial number. The following types of documents should be kept as proof of maintenance or repair for warranty:

Keep the following types of documents as proof of maintenance for warranty. Also, keep these types of documents as proof of repair for warranty:

- Dealer work orders and itemized bills
- Owner repair costs
- Owner receipts
- Maintenance log

i08254037

Maintenance Log

SMCS Code: 1000

Table 16

Engine Model		**Customer Identifier**		
Serial Number		**Arrangement Number**		
Service Hours	**Quantity Of Fuel**	**Service Item**	**Date**	**Authorization**

(continued)

(Table 16, contd)

Index

A

Additional Reference Material 108
After Starting Engine 44
After Stopping Engine 47
Aftercooler Core - Clean/Test 62
Aftercooler Core - Inspect 62
Alternator - Inspect 63
Alternator Belt - Inspect/Adjust/Replace (Poly V-Belt) 63
  Adjustment 63
  Inspection 63
  Replace 63

B

Battery - Replace 63
Battery Electrolyte Level - Check 64
Battery or Battery Cable - Disconnect 64
Before Starting Engine 17, 43
Belt Tensioner - Inspect 65
Burn Prevention 11
  Batteries 12
  Coolant 12
  Diesel Fuel 12
  Oils 12

C

Cold Weather Operation 49
  Hints for Cold Weather Operation 49
  Idling the Engine 50
  Recommendations for Coolant Warm Up 50
  Recommendations for the Coolant 49
  Viscosity of the Engine Lubrication Oil 49
Cooling System Coolant (DEAC) - Change 65
  Cooling Systems with Heavy Deposits or Plugging 66
  Drain 65
  Fill 67
  Flush 66
Cooling System Coolant (ELC) - Change 67
  Drain 67
  Fill 68
  Flush 68
Cooling System Coolant Extender (ELC) - Add 69
Cooling System Coolant Level - Check 69
Cooling System Coolant Sample (Level 1) - Obtain 70
Cooling System Coolant Sample (Level 2) - Obtain 71
Cooling System Supplemental Coolant Additive (SCA) - Test/Add 71
  Add the SCA, If Necessary 72
  S·O·S Coolant Analysis 71
  Test for SCA Concentration 71
Cooling System Water Temperature Regulator - Replace 72
Crankcase Breather (Canister) - Replace 73
Crushing Prevention and Cutting Prevention 14
Customer Service 106
Customer Specified Parameters 28

D

Diagnostic Flash Code Retrieval 39
  “Diagnostic” Lamp 39
Diagnostic Lamp 39
Driven Equipment - Check 73

E

Electrical System 18
  Grounding Practices 18
Emergency Stopping 47
  Emergency Stop Button (If Equipped) 47
Emissions Certification Film 28
Emissions Warranty Information 104
Engaging the Driven Equipment 45
Engine - Clean 74
Engine Air Cleaner Element (Dual Element) - Clean/Replace 74
  Cleaning the Primary Air Cleaner Elements 75
  Servicing the Air Cleaner Elements 74
Engine Air Cleaner Element (Single Element) - Replace 77
Engine Air Cleaner Service Indicator - Inspect 77
  Test the Service Indicator 78
Engine Air Precleaner - Check/Clean 78
Engine Description 24
  Aftermarket Products and Caterpillar Engines 26
  Electronic Engine Features 25
  Engine Cooling and Lubrication 25
  Engine Service Life 26
  Engine Specifications 24

Welding and Caterpillar Electronic Engines 26
Engine Diagnostics 39
Engine Electronics 19
Engine Mounts - Inspect 78
Engine Oil and Filter - Change 80
Drain the Engine Lubricating Oil 80
Fill the Oil Pan 82
Horizontal Oil Filter 82
Replace the Oil Filter 81
Engine Oil and Filter - Change (CG-4 Oil) 80
Engine Oil Level - Check 79
Engine Oil Sample - Obtain 79
Obtain the Sample and the Analysis 79
Engine Operation 45
Engine Operation with Active Diagnostic Codes 41
Engine Operation with Intermittent Diagnostic Codes 42
Engine Rating Conditions 105
Engine Rating Definitions 105
Engine Ratings 105
Engine Shutoffs and Engine Alarms 37
Alarms 37
Shutoffs 37
Testing 38
Engine Starting 17, 43
Engine Stopping 18, 47
Engine Valve Lash - Inspect/Adjust 83
Exhaust Manifold - Inspect 83

F

Fan Clearance - Check 84
Fault Logging 41
Features and Controls 32
Fire Prevention and Explosion Prevention 12
Ether 14
Fire Extinguisher 14
Lines, Tubes and Hoses 14
Foreword 4
California Proposition 65 Warning 4
Literature Information 4
Maintenance 4
Maintenance Intervals 5
Operation 4
Overhaul 5
Safety 4
Fuel and the Effect from Cold Weather 51
Fuel Conservation Practices 45
Fuel Related Components in Cold Weather 52
Fuel Filters 52
Fuel Heaters 52
Fuel Tanks 52
Fuel System - Prime 85
Hand Fuel Priming Pump 86
Fuel System Primary Filter (Water Separator) Element - Replace 87
Type One 88
Type Two 89
Fuel System Primary Filter/Water Separator - Drain 86
Primary Filter with a Vent Screw 87
Fuel System Secondary Filter - Replace 91
Type One 91
Type Two 93
Fuel Tank Water and Sediment - Drain 94
Drain the Water and the Sediment 94
Fuel Storage Tanks 94
Fuel Tank 94

G

Gauges and Indicators 31
General Hazard Information 9
Asbestos Information 11
Containing Fluid Spillage 10
Dispose of Waste Properly 11
Fluid Penetration 10
Hexavalent Chromium 10
Pressurized Air and Water 10
General Information 20

H

High Pressure Fuel Lines 15
Hoses and Clamps - Inspect/Replace 94
Replace the Hoses and the Clamps 95

I

Important Safety Information 2

L

Lifting and Storage 30

M

Maintenance Interval Schedule 60
Commissioning 61
Daily 60
Every 1000 Service Hours 60
Every 12 000 Service Hours or 6 Years 61
Every 2000 Service Hours 60

Every 2000 Service Hours or 1 Year 60
Every 250 Service Hours 60
Every 3000 Service Hours 61
Every 3000 Service Hours or 2 Years 61
Every 4000 Service Hours 61
Every 50 Service Hours or Weekly 60
Every 500 Service Hours 60
Every 500 Service Hours or 1 Year 60
Every 500 Service Hours or 2 Months 60
Every 6000 Service Hours or 3 Years 61
Every Year 61
Initial 500 Service Hours 60
Overhaul 61
When Required 60
Maintenance Log 109
Maintenance Records 108
Maintenance Section 53
Model View Illustrations 22
Model Views 22
Monitoring System 32
Programmable Options and Systems Operation 32
Mounting and Dismounting 15

O

Operation Section 30
Ordering Replacement Parts 106
Overhaul Considerations 95
Oil Consumption as an Overhaul Indicator 95
Overhaul Recommendation 96
Overspeed 38

P

Plate Locations and Film Locations 27
Serial Number Plate (1) 27
Product Identification Information 27
Product Information Section 20
Product Lifting 30
Product Storage 30

R

Radiator - Clean 98
Radiator Restrictions 51
Reference Information Section 105
Reference Material 107
Coolants 107
Emissions Warranty 108
Fuels 107
Lubricants 107
Miscellaneous 107
Reference Materials 107
Reference Numbers 27
Record for Reference 27
Refill Capacities 53
Refill Capacities and Recommendations 53
Coolant Recommendations 58
Engine Oil 53
General Coolant Information 56
General Fuel Information 56
Lubricating Grease 55
Refill Capacity of the Cooling System 59
S·O·S Coolant Analysis 58

S

Safety Messages 6
(1) Universal Warning 6
(2) Hand (High Pressure) 7
(3) Ether 8
Safety Section 6
Self-Diagnostics 39
Sensors and Electrical Components 33
Coolant Temperature Sensor 1 36
Electronic Control Module 5 36
Engine Oil Pressure Sensor 8 37
Failure of Sensors 35
Fuel Pressure Sensor 4 36
Intake Manifold Air Temperature Sensor 2 36
Intake Manifold Pressure Sensor 3 36
Primary Speed/Timing Sensor 6 36
Programmable Monitoring System (PMS) 35
Secondary Speed/Timing Sensor 7 37
Sensor Locations 33
Severe Service Application - Check 98
Environmental Factors 99
Improper Maintenance Procedures 99
Improper Operating Procedures 99
Starting Motor - Inspect 99
Starting the Engine 43
Starting the Engine 43
Starting with Jump Start Cables 43
Stopping the Engine 47

T

Table of Contents 3
Turbocharger - Inspect 99
Inspecting 100
Removal and Installation 100

V

V-Belts - Inspect/Adjust/Replace 100
Adjustment 101
Inspection 100
Replace 101

W

Walk-Around Inspection 101
High Pressure Fuel Lines 102
Inspect the Engine for Leaks and for Loose Connections 101
Warranty Information 104
Warranty Section 104
Water Pump - Inspect 102
Welding on Engines with Electronic Controls 20

Product and Dealer Information

Note: For product identification plate locations, see the section “Product Identification Information” in the Operation and Maintenance Manual.

Delivery Date: _____

Product Information

Model: _____

Product Identification Number: _____

Engine Serial Number: _____

Transmission Serial Number: _____

Generator Serial Number: _____

Attachment Serial Numbers: _____

Attachment Information: _____

Customer Equipment Number: _____

Dealer Equipment Number: _____

Dealer Information

Name: _____ Branch: _____

Address: _____

_____

_____

	Dealer Contact	Phone Number	Hours
Sales:	_____	_____	_____
Parts:	_____	_____	_____
Service:	_____	_____	_____

SEBU8180
©2023 Caterpillar
All Rights Reserved

CAT, CATERPILLAR, LET'S DO THE WORK, their respective logos, "Caterpillar Corporate Yellow", the "Power Edge" and Cat "Modern Hex" trade dress as well as corporate and product identity used herein, are trademarks of Caterpillar and may not be used without permission.