SEBU8312-07 (en-us)
May 2023

# Operation and Maintenance Manual

## C0.5, C0.7, C1.1, C1.5, C1.6 and C2.2 Industrial Engines

C6F 1-UP (Engine)
C6H 1-UP (Engine)
C7H 1-UP (Engine)
C7J 1-UP (Engine)
C6J 1-UP (Engine)
C6K 1-UP (Engine)
G8N 1-UP (Engine)
C6L 1-UP (Engine)
C7Y 1-UP (Engine)
G7P 1-UP (Engine)
C6N 1-UP (Engine)
C8W 1-UP (Engine)
G7L 1-UP (Engine)
C6M 1-UP (Engine)
C8Y 1-UP (Engine)
C8Z 1-UP (Engine)

**Scan to find and purchase genuine Cat® parts and related service information.**

# Important Safety Information

Most accidents that involve product operation, maintenance and repair are caused by failure to observe basic safety rules or precautions. An accident can often be avoided by recognizing potentially hazardous situations before an accident occurs. A person must be alert to potential hazards, including human factors that can affect safety. This person should also have the necessary training, skills and tools to perform these functions properly.

**Improper operation, lubrication, maintenance or repair of this product can be dangerous and could result in injury or death.**

**Do not operate or perform any lubrication, maintenance or repair on this product, until you verify that you are authorized to perform this work, and have read and understood the operation, lubrication, maintenance and repair information.**

Safety precautions and warnings are provided in this manual and on the product. If these hazard warnings are not heeded, bodily injury or death could occur to you or to other persons.

The hazards are identified by the “Safety Alert Symbol” and followed by a “Signal Word” such as “DANGER”, “WARNING” or “CAUTION”. The Safety Alert “WARNING” label is shown below.




The meaning of this safety alert symbol is as follows:

**Attention! Become Alert! Your Safety is Involved.**

The message that appears under the warning explains the hazard and can be either written or pictorially presented.

A non-exhaustive list of operations that may cause product damage are identified by “NOTICE” labels on the product and in this publication.

**Caterpillar cannot anticipate every possible circumstance that might involve a potential hazard. The warnings in this publication and on the product are, therefore, not all inclusive. You must not use this product in any manner different from that considered by this manual without first satisfying yourself that you have considered all safety rules and precautions applicable to the operation of the product in the location of use, including site-specific rules and precautions applicable to the worksite. If a tool, procedure, work method or operating technique that is not specifically recommended by Caterpillar is used, you must satisfy yourself that it is safe for you and for others. You should also ensure that you are authorized to perform this work, and that the product will not be damaged or become unsafe by the operation, lubrication, maintenance or repair procedures that you intend to use.**

The information, specifications, and illustrations in this publication are on the basis of information that was available at the time that the publication was written. The specifications, torques, pressures, measurements, adjustments, illustrations, and other items can change at any time. These changes can affect the service that is given to the product. Obtain the complete and most current information before you start any job. Cat dealers have the most current information available.

---

NOTICE

**When replacement parts are required for this product Caterpillar recommends using original Caterpillar® replacement parts.**

**Other parts may not meet certain original equipment specifications.**

**When replacement parts are installed, the machine owner/user should ensure that the machine remains in compliance with all applicable requirements.**

---

**In the United States, the maintenance, replacement, or repair of the emission control devices and systems may be performed by any repair establishment or individual of the owner's choosing.**

# Table of Contents

Foreword ..... 4

**Safety Section**

Safety Messages ..... 6

Safety Messages ..... 9

General Hazard Information ..... 14

Burn Prevention ..... 18

Fire Prevention and Explosion Prevention ..... 19

Crushing Prevention and Cutting Prevention .. 21

Mounting and Dismounting ..... 21

Before Starting Engine ..... 21

Engine Starting ..... 22

Engine Stopping ..... 22

Electrical System ..... 22

**Product Information Section**

Model Views ..... 24

Product Identification Information ..... 35

**Operation Section**

Lifting and Storage ..... 37

Gauges and Indicators ..... 38

Features and Controls ..... 39

Engine Starting ..... 41

Engine Operation ..... 44

Engine Stopping ..... 46

Cold Weather Operation ..... 48

**Maintenance Section**

Refill Capacities ..... 50

Maintenance Recommendations ..... 67

Maintenance Interval Schedule ..... 69

**Warranty Section**

Warranty Information ..... 108

**Reference Information Section**

Engine Ratings ..... 109

Customer Service ..... 111

Reference Materials ..... 113

**Index Section**

Index ..... 117

# Foreword

## California Proposition 65 Warning

**Diesel engine exhaust and some of its constituents are known to the State of California to cause cancer, birth defects, and other reproductive harm.**

**WARNING – This product can expose you to chemicals including ethylene glycol, which is known to the State of California to cause birth defects or other reproductive harm. For more information go to:**

**www.P65Warnings.ca.gov**

**Do not ingest this chemical. Wash hands after handling to avoid incidental ingestion.**

**WARNING – This product can expose you to chemicals including lead and lead compounds, which are known to the State of California to cause cancer, birth defects, or other reproductive harm. For more information go to:**

**www.P65Warnings.ca.gov**

**Wash hands after handling components that may contain lead.**

## Literature Information

This manual contains safety, operation instructions, lubrication, and maintenance information. This manual should be stored in or near the engine area in a literature holder or literature storage area. Read, study, and keep it with the literature and engine information.

English is the primary language for all Cat publications. The English used facilitates translation and consistency in electronic media delivery.

Some photographs or illustrations in this manual show details or attachments that may be different from your engine. Guards and covers may have been removed for illustrative purposes. Continuing improvement and advancement of product design may have caused changes to your engine which are not included in this manual Whenever a question arises regarding your engine, or this manual, please consult with your Cat dealer for the latest available information.

## Safety

This safety section lists basic safety precautions. In addition, this section identifies hazardous, warning situations. Read and understand the basic precautions listed in the safety section before operating or performing lubrication, maintenance, and repair on this product.

## Operation

Operating techniques outlined in this manual are basic. They assist with developing the skills and techniques required to operate the engine more efficiently and economically. Skill and techniques develop as the operator gains knowledge of the engine and its capabilities.

The operation section is a reference for operators. Photographs and illustrations guide the operator through procedures of inspecting, starting, operating, and stopping the engine. This section also includes a discussion of electronic diagnostic information.

## Maintenance

The maintenance section is a guide to engine care. The illustrated, step-by-step instructions are grouped by fuel consumption, service hours and/or calendar time maintenance intervals. Items in the maintenance schedule are referenced to detailed instructions that follow.

Use fuel consumption or service hours to determine intervals. Calendar intervals shown (daily, annually, etc.) may be used instead of service meter intervals if they provide more convenient schedules and approximate the indicated service meter reading.

Recommended service should be performed at the appropriate intervals as indicated in the Maintenance Interval Schedule. The actual operating environment of the engine also governs the Maintenance Interval Schedule. Therefore, under severe, dusty, wet, or freezing cold operating conditions, more frequent lubrication, and maintenance than is specified in the Maintenance Interval Schedule may be necessary.

The maintenance schedule items are organized for a preventive maintenance management program. If the preventive maintenance program is followed, a periodic tune-up is not required. The implementation of a preventive maintenance management program should minimize operating costs through cost avoidances resulting from reductions in unscheduled downtime and failures.

## Maintenance Intervals

Perform maintenance on items at multiples of the original requirement. Each level and/or individual items in each level should be shifted ahead or back depending upon your specific maintenance practices, operation, and application. We recommend that the maintenance schedules be reproduced and displayed near the engine as a convenient reminder. We also recommend that a maintenance record be maintained as part of the engine's permanent record.

See the section in the Operation and Maintenance Manual, “Maintenance Records” for information regarding documents that are accepted as proof of maintenance or repair. Your authorized Cat dealer can assist you in adjusting your maintenance schedule to meet the needs of your operating environment.

## Overhaul

Major engine overhaul details are not covered in the Operation and Maintenance Manual except for the interval and the maintenance items in that interval. Major repairs are best left to trained personnel or an authorized Cat dealer. Your Cat dealer offers various options regarding overhaul programs. If you experience a major engine failure, there are also numerous after failure overhaul options available from your Cat dealer. Consult with your dealer for information regarding these options.

# Safety Section

i02639935

## Safety Messages

**SMCS Code:** 1000; 7405

**S/N:** C6F1–Up

**S/N:** C6H1–Up

**S/N:** C7H1–Up

**S/N:** C6J1–Up

**S/N:** C7J1–Up

**S/N:** C6K1–Up

**S/N:** C6L1–Up

**S/N:** G7L1–Up

**S/N:** C6M1–Up

**S/N:** C6N1–Up

**S/N:** G8N1–Up

**S/N:** C8W1–Up

**S/N:** C7Y1–Up

**S/N:** C8Y1–Up

**S/N:** C8Z1–Up

There may be several specific safety messages on an engine. The exact location of the hazards and the description of the hazards are reviewed in this section. Please become familiar with all warning signs.

Ensure that all of the warning signs are legible. Clean the warning signs or replace the warning signs if the words cannot be read or if the pictures are not visible. When the warning signs are cleaned, use a cloth, water, and soap. Do not use solvent, gasoline, or other harsh chemicals to clean the warning signs. Solvents, gasoline, or harsh chemicals could loosen the adhesive that secures the warning signs. The warning signs that are loosened could drop off of the engine.

Replace any damaged warning signs or missing warning signs. If a warning sign is attached to a part of the engine that is replaced, install a new warning sign on the replacement part. Any Caterpillar dealer can provide new warning signs.

Do not work on the engine and do not operate the engine unless the instructions and warnings in the Operation and Maintenance Manual are understood. Correct care is your responsibility. Failure to follow the instructions or failure to heed the warnings could result in injury or in death.

The warning labels that may be found on the engine are illustrated.

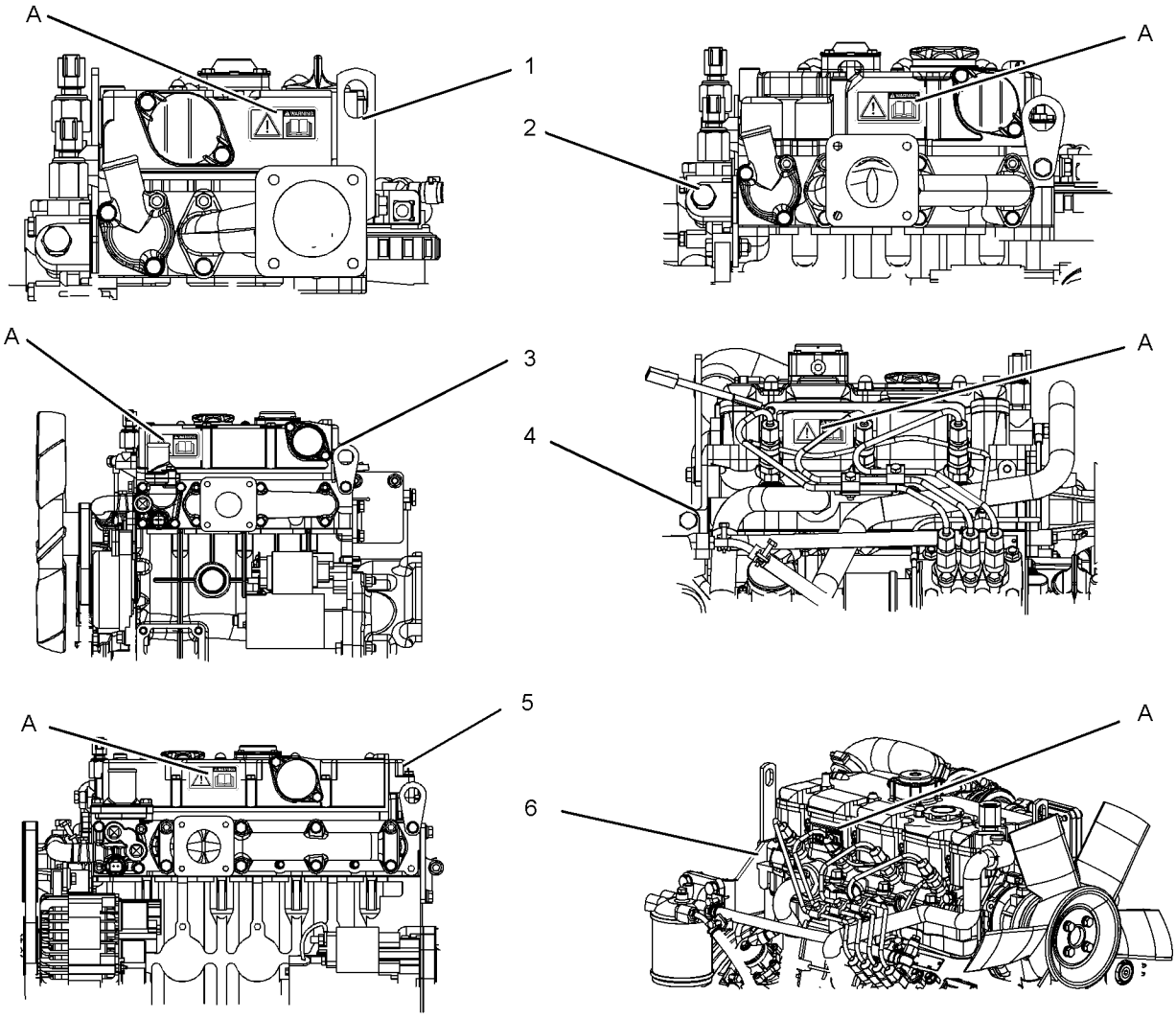


Illustration 1 g01324126

(A) Location of the warning labels
(1) C0.5
(2) C0.7
(3) C1.1
(4) C1.5
(5) C1.6
(6) C2.2

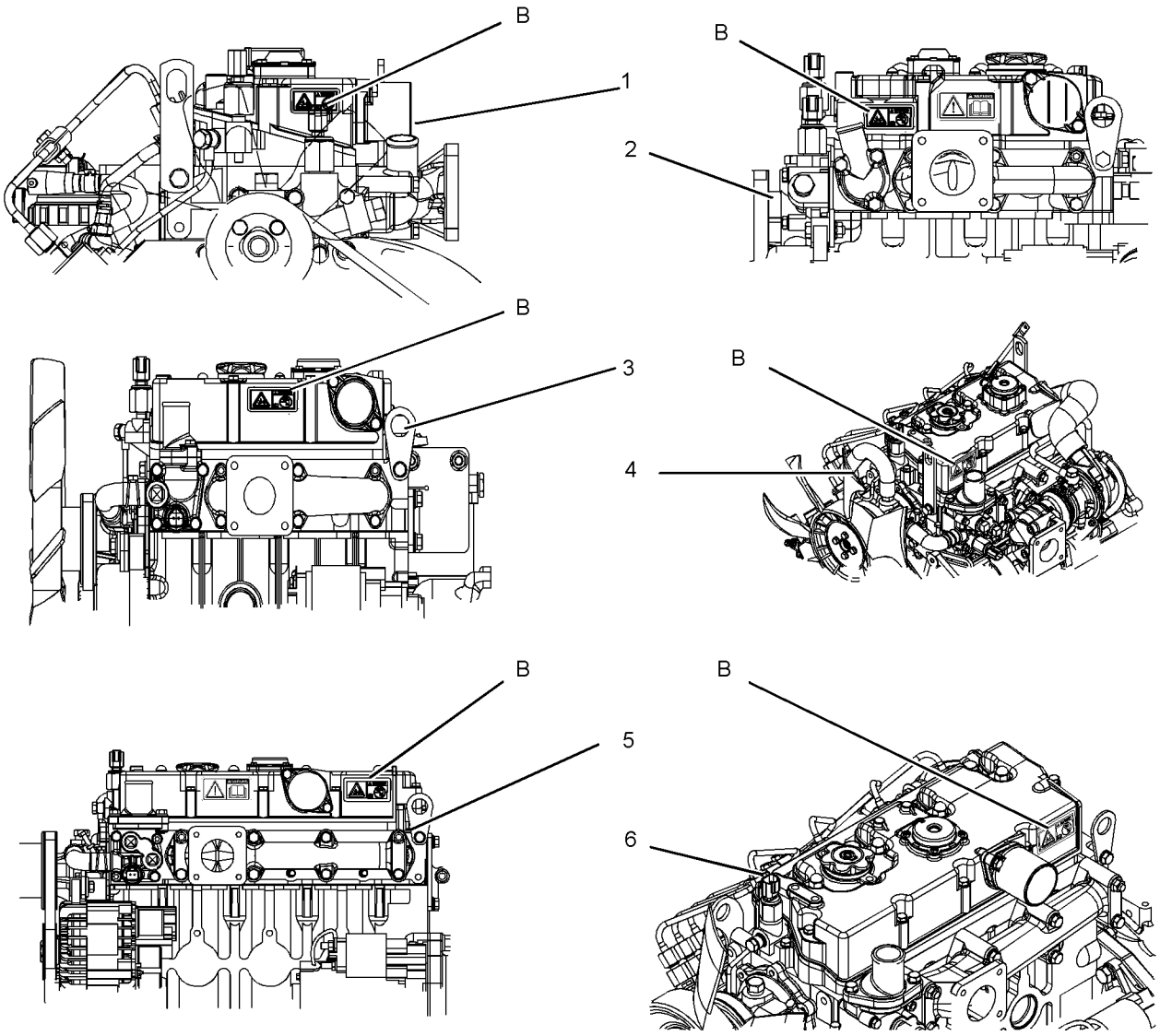


Illustration 2 g01324528

(B) Location of ether warning labels
(1) C0.5
(2) C0.7
(3) C1.1
(4) C1.5
(5) C1.6
(6) C2.2

## Universal Warning (A)

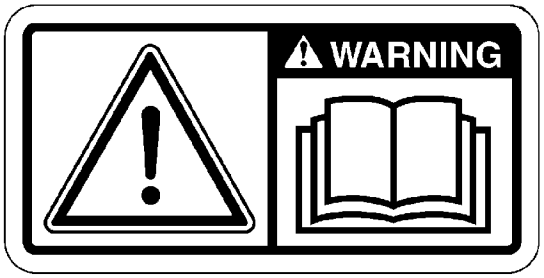


Illustration 3 g01154807

Warning label (A) is installed in different locations. The location will change according to the physical size of the engine. Refer to illustration 1 for the location of the warning labels.

**WARNING**

**Do not operate or work on this equipment unless you have read and understand the instructions and warnings in the Operation and Maintenance Manuals. Failure to follow the instructions or heed the warnings could result in serious injury or death.**

## No Ether (B)

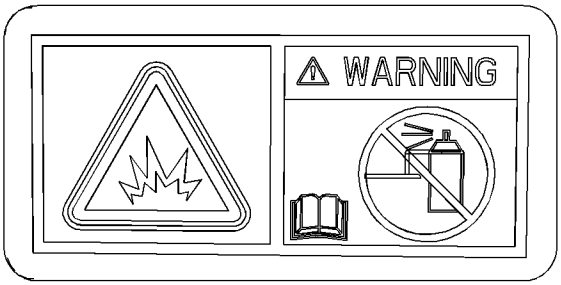


Illustration 4 g01324227

Warning label (B) is installed in different locations. The location will change according to the physical size of the engine. Refer to illustration 2 for the location of the warning labels.

**WARNING**

**Do not use aerosol types of starting aids such as ether. Such use could result in an explosion and personal injury.**

i08749667

# Safety Messages

**SMCS Code:** 1000; 7405

**S/N:** G7P1–Up

There may be several specific safety messages on your generator set. The exact location and a description of the safety messages are reviewed in this section. Become familiar with all safety messages.

Ensure that all the safety messages are legible. Clean the safety signs or replace the safety messages if the words cannot be read or if the illustrations are not visible. Use a cloth, water, and soap to clean the safety messages. Do not use solvents, gasoline, or other harsh chemicals. Solvents, gasoline, or harsh chemicals could loosen the adhesive that secures the safety messages. The safety messages that are loosened could drop off the engine.

Replace any safety message that is damaged or missing. If a safety message is attached to a part of the engine that is replaced, install a new safety message on the replacement part. Your Caterpillar dealer can provide new safety messages.

**WARNING**

**Do not operate or work on this engine unless you have read and understand the instructions and warnings in the Operation and Maintenance Manual. Failure to follow the instructions or heed the warnings could result in injury or death. Contact any Caterpillar dealer for replacement manuals. Proper care is your responsibility.**

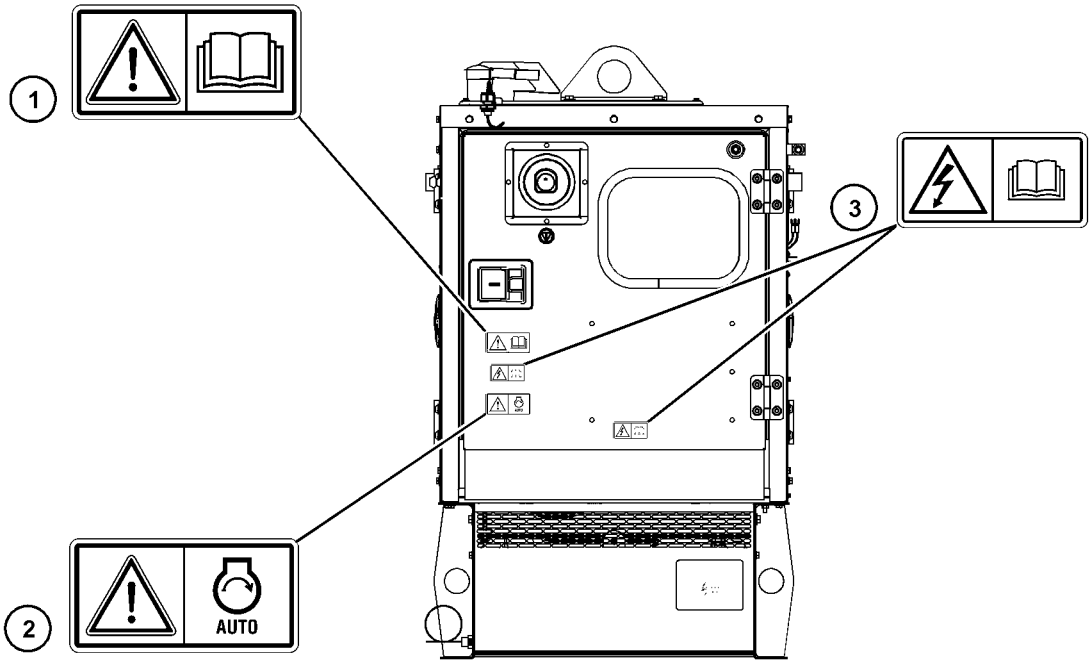


Illustration 5 g06779023

View of the control panel

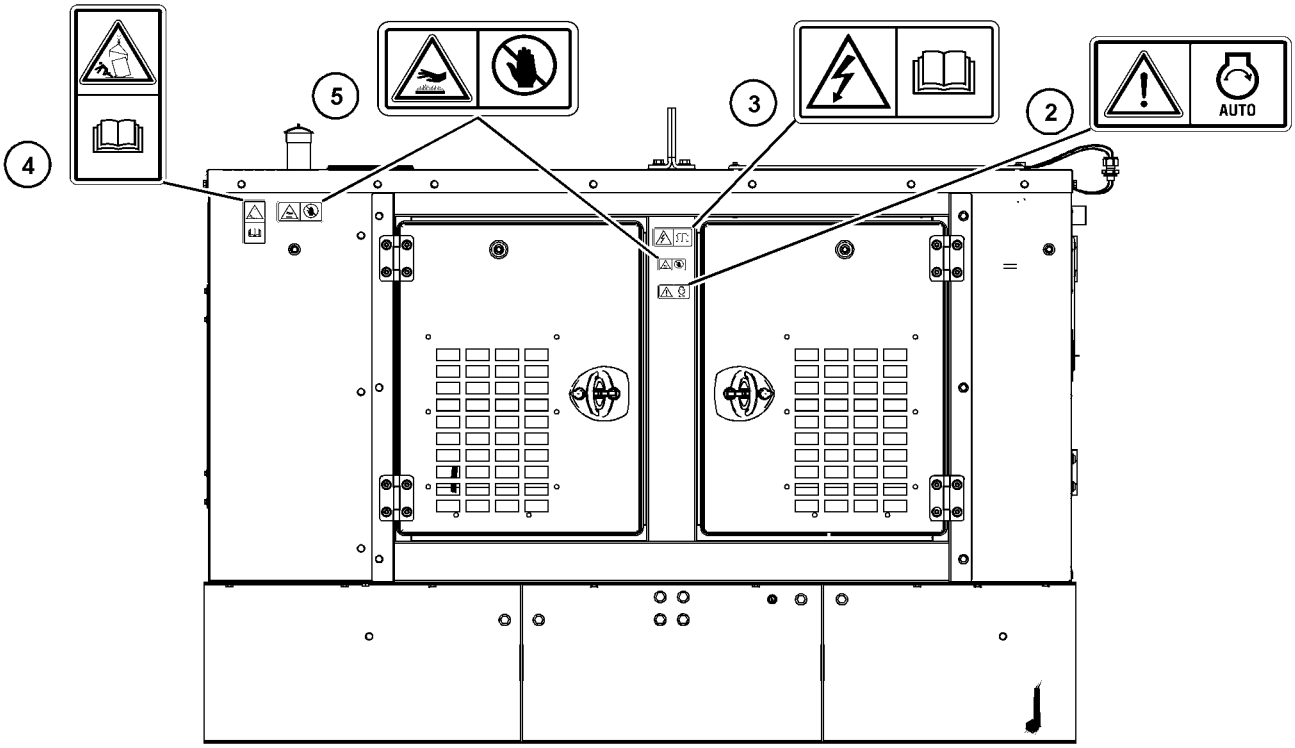


Illustration 6 g06779051

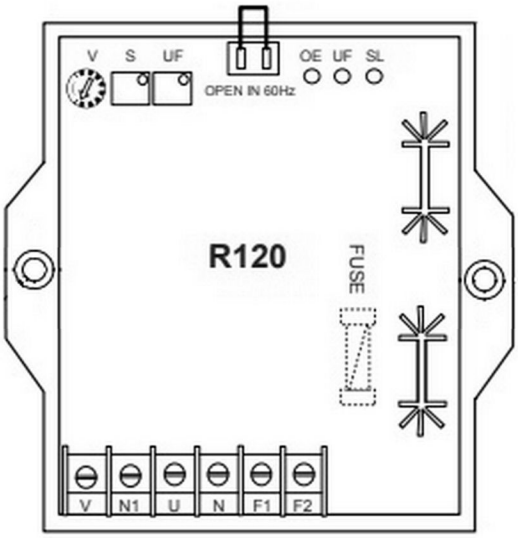


Illustration 7 g06779055

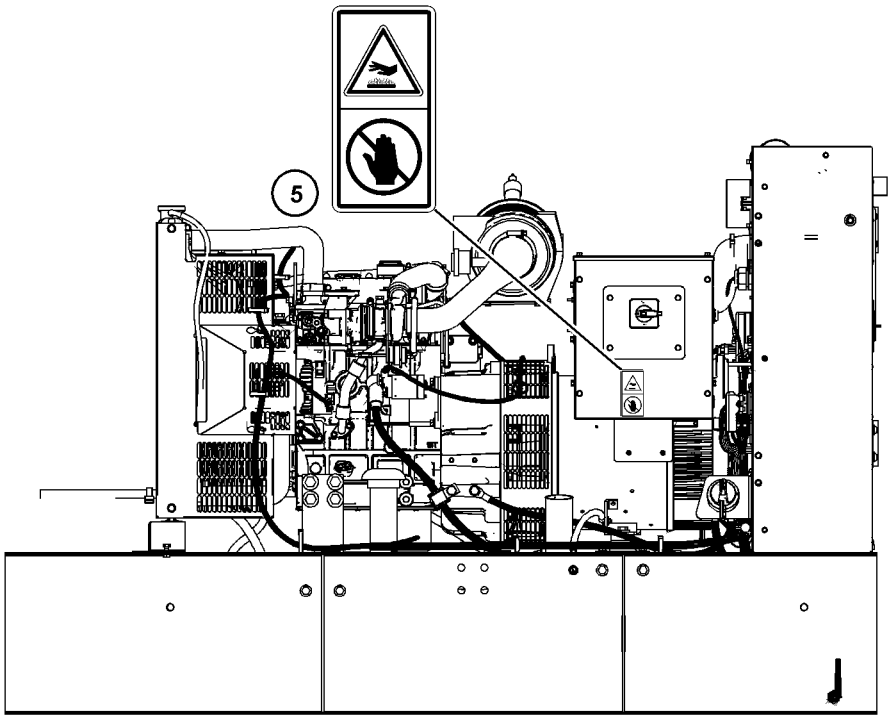


Illustration 8 g06779082

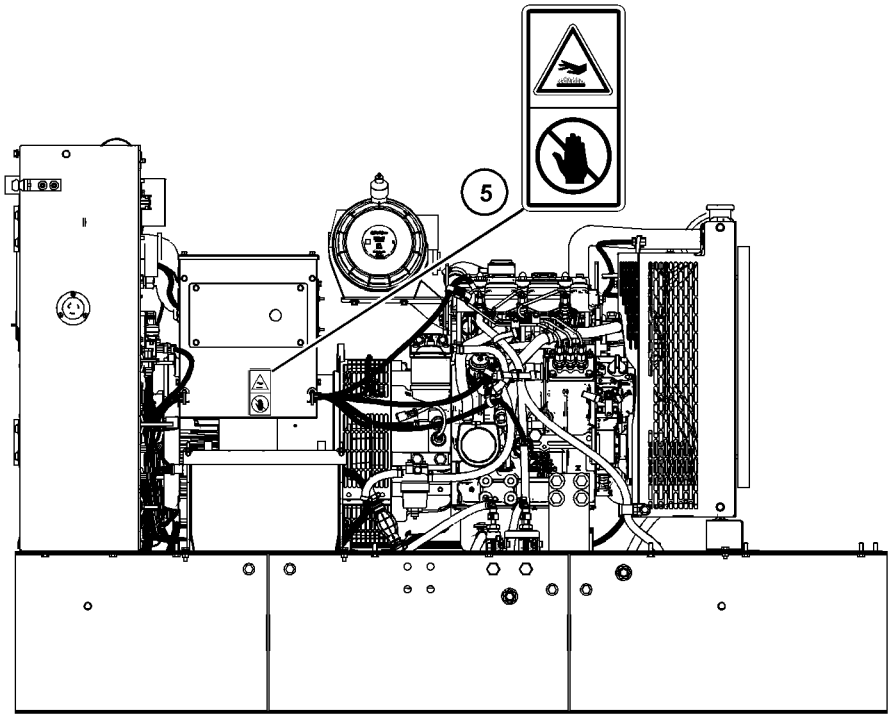


Illustration 9 g06779078

## Universal Warning (1)

This safety message is on the enclosure above the door for the control panel.



Illustration 10 g01370904

**WARNING**

**Do not operate or work on this equipment unless you have read and understand the instructions and warnings in the Operation and Maintenance Manuals. Failure to follow the instructions or heed the warnings could result in serious injury or death.**

## Automatic Starting (2)

This safety message is on the sides of the enclosure and on the enclosure above the door for the control panel.




Illustration 11 g01392484

**WARNING**

**When the engine is in the AUTOMATIC mode, the engine can start at any moment. To avoid personal injury, always remain clear of the the engine when the engine is in the AUTOMATIC mode.**

## Electrocution (3)

This safety message is on the sides of the enclosure and on the enclosure above the door for the control panel.

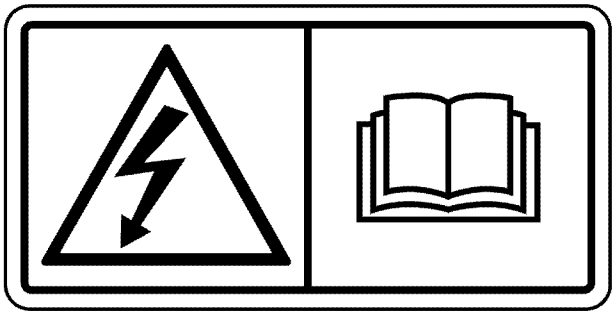

Illustration 12 g03430411

**DANGER**

**DANGER: Shock/Electrocution Hazard-Do not operate this equipment or work on this equipment unless you have read and understand the instructions and warnings in the Operation and Maintenance Manual. Failure to follow the instructions or heed the warnings will result in serious injury or death.**

**⚠ WARNING**

**Do not connect generator to a utility electrical distribution system unless it is isolated from the system. Electrical feedback into the distribution system can occur and could cause personal injury or death.**

**Open and secure main distribution system switch, or if the connection is permanent, install a double throw transfer switch to prevent electrical feedback. Some generators are specifically approved by a utility to run in parallel with the distribution system and isolation may not be required. Always check with your utility as to the applicable circumstances.**

## Crush (4)

This safety message is on the sides of the enclosure.

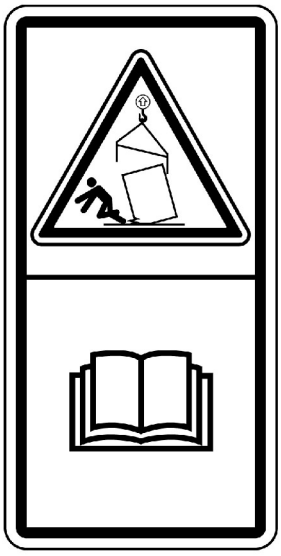

Illustration 13 g01433231

**⚠ WARNING**

**Crushing hazard! Read and understand the instructions and warnings in the Operation and Maintenance manual. Failure to follow the instructions or heed the warnings could cause serious injury or death.**

## Hot Surface (5)

This safety message is on the top of the enclosure and the sides of the enclosure.

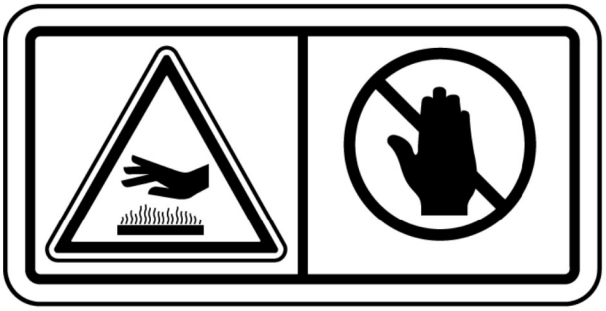

Illustration 14 g01372256

**⚠ WARNING**

**Hot parts or hot components can cause burns or personal injury. Do not allow hot parts or components to contact your skin. Use protective clothing or protective equipment to protect your skin.**

i08340590

# General Hazard Information

**SMCS Code:** 1000; 7405

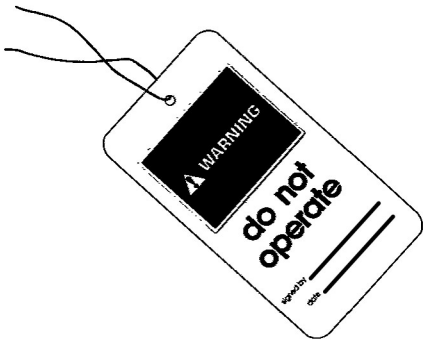


Illustration 15 g03838041

Attach a “Do Not Operate” warning tag to the start switch or controls before the engine is serviced or repaired. These warning tags (Special Instruction, SEHS7332) are available from your Cat dealer. Attach the warning tags to the engine and to each operator control station. When appropriate, disconnect the starting controls.

Do not allow unauthorized personnel on the engine, or around the engine when the engine is being serviced.

Cautiously remove the following parts. To help prevent spraying or splashing of pressurized fluids, hold a rag over the part that is being removed.

- Filler caps
- Grease fittings
- Pressure taps
- Breathers
- Drain plugs

Use caution when cover plates are removed. Gradually loosen, but do not remove the last two bolts or nuts that are located at opposite ends of the cover plate or the device. Before removing the last two bolts or nuts, pry the cover loose in order to relieve any spring pressure or other pressure.

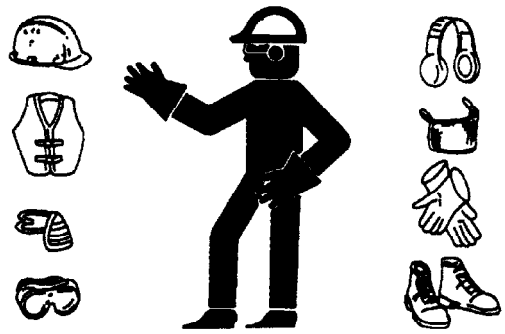

Illustration 16 g00702020

- Wear a hard hat, protective glasses, and other protective equipment, as required.
- When work is performed around an engine that is operating, wear protective devices for ears in order to help prevent damage to hearing.
- Do not wear loose clothing or jewelry that can snag on controls or on other parts of the engine.
- Ensure that all protective guards and all covers are secured in place on the engine.
- Never put maintenance fluids into glass containers. Glass containers can break.
- Use all cleaning solutions with care.
- Report all necessary repairs.

**Unless other instructions are provided, perform the maintenance under the following conditions:**

- The engine is stopped. Ensure that the engine cannot be started.
- The protective locks or the controls are in the applied position.
- Disconnect the batteries when maintenance is performed or when the electrical system is serviced. Disconnect the battery ground leads. Tape the leads in order to help prevent sparks.
- When starting a new engine, make provisions to stop the engine if an overspeed occurs. If an engine has not been started since service has been performed, make provisions to stop the engine if an overspeed occurs. Shutting down the engine may be accomplished by shutting off the fuel supply and/or the air supply to the engine.
- Do not attempt any repairs that are not understood. Use the proper tools. Replace any equipment that is damaged or repair the equipment.
- Start the engine with the operator controls. Never short across the starting motor terminals or the batteries. This method of starting the engine could bypass the engine neutral start system and/or the electrical system could be damaged.

## Pressurized Air and Water

Pressurized air and/or water can cause debris and/or hot water to be blown out which could result in personal injury.

The maximum air pressure for cleaning purposes must be reduced to 205 kPa (30 psi) when the air nozzle is deadheaded and used with effective chip guarding (if applicable) and personal protective equipment. The maximum water pressure for cleaning purposes must be below 275 kPa (40 psi).

When pressurized air and/or pressurized water is used for cleaning, wear protective clothing, protective shoes, and eye protection. Eye protection includes goggles or a protective face shield. Always wear eye protection for cleaning the cooling system.

Avoid direct spraying of water on electrical connectors, connections, and components. When using air for cleaning, allow the machine to cool to reduce the possibility of fine debris igniting when redeposited on hot surfaces.

## Fluid Penetration

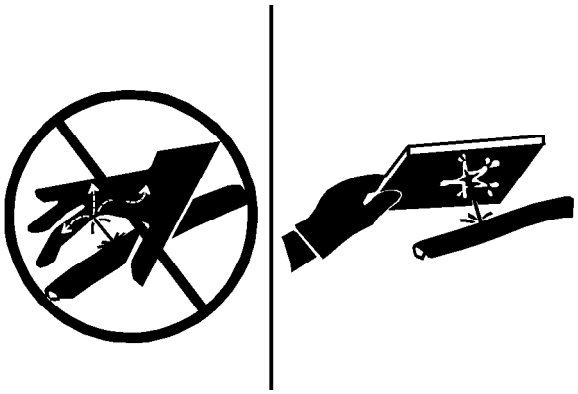

Illustration 17 g00687600

Always use a board or cardboard when you check for a leak. Leaking fluid that is under pressure can penetrate body tissue. Fluid penetration can cause serious injury and possible death. A pin hole leak can cause severe injury. If fluid is injected into your skin, you must get treatment immediately. Seek treatment from a doctor that is familiar with this type of injury.

## Containing Fluid Spillage

NOTICE
Care must be taken to ensure that fluids are contained during performance of inspection, maintenance, testing, adjusting, and repair of the product. Be prepared to collect the fluid with suitable containers before opening any compartment or disassembling any component containing fluids.

Refer to Special Publication, NENG2500, “Cat Dealer Service Tool Catalog” or refer to Special Publication, PECJ0003, “Cat Shop Supplies and Tools Catalog” for tools and supplies suitable to collect and contain fluids on Cat products.

Dispose of all fluids according to local regulations and mandates.

## Static Electricity Hazard when Fueling with Ultra-low Sulfur Diesel Fuel

The removal of sulfur and other compounds in ultra-low sulfur diesel fuel (ULSD fuel) decreases the conductivity of ULSD and increases the ability of ULSD to store static charge. Refineries may have treated the fuel with a static dissipating additive. Many factors can reduce the effectiveness of the additive over time. Static charges can build up in ULSD fuel while the fuel is flowing through fuel delivery systems. Static electricity discharge when combustible vapors are present could result in a fire or explosion. Ensure that the entire system used to refuel your machine (fuel supply tank, transfer pump, transfer hose, nozzle, and others) is properly grounded and bonded. Consult with your fuel or fuel system supplier to ensure that the delivery system complies with fueling standards for proper grounding and bonding.

**⚠ WARNING**

**Avoid static electricity risk when fueling. Ultra-low sulfur diesel fuel (ULSD fuel) poses a greater static ignition hazard than earlier diesel formulations with a higher sulfur contents. Avoid death or serious injury from fire or explosion. Consult with your fuel or fuel system supplier to ensure the delivery system is in compliance with fueling standards for proper grounding and bonding practices.**

## Lines, Tubes, and Hoses

Do not bend or strike high-pressure lines. Do not install lines, tubes, or hoses that are damaged.

Repair any fuel lines, oil lines, tubes, or hoses that are loose or damaged. Leaks can cause fires.

Inspect all lines, tubes, and hoses carefully. Do not use bare hands to check for leaks. Always use a board or cardboard for checking engine components for leaks. Tighten all connections to the recommended torque.

Check for the following conditions:

- End fittings that are damaged or leaking
- Outer covering that is chafed or cut
- Wire that is exposed in reinforced hose
- Outer covering that is ballooning locally
- Flexible part of the hose that is kinked or crushed
- Armoring that is embedded in the outer covering

Ensure that all of the clamps, the guards, and the heat shields are installed correctly. Correct installation of these components will help to prevent these effects: vibration, rubbing against other parts and excessive heat during operation.

# Inhalation

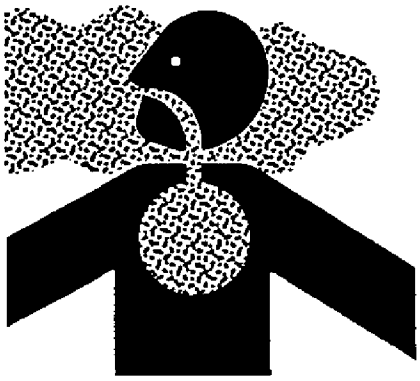

Illustration 18 g02159053

## Exhaust

Use caution. Exhaust fumes can be hazardous to your health. If you operate the equipment in an enclosed area, adequate ventilation is necessary.

## Hexavalent Chromium

Cat equipment and replacement parts comply with applicable regulations and requirements where originally sold. Caterpillar recommends the use of only genuine Cat replacement parts.

Hexavalent chromium has occasionally been detected on exhaust and heat shield systems on Cat engines. Although lab testing is the only accurate way to know if hexavalent chromium is, in fact, present, the presence of a yellow deposit in areas of high heat (for example, exhaust system components or exhaust insulation) may be an indication of the presence of hexavalent chromium.

Use caution if you suspect the presence of hexavalent chromium. Avoid skin contact when handling items that you suspect may contain hexavalent chromium, and avoid inhalation of any dust in the suspect area. Inhalation of, or skin contact with, hexavalent chromium dust may be hazardous to your health.

If such yellow deposits are found on the engine, engine component parts, or associated equipment or packages, Caterpillar recommends following local health and safety regulations and guidelines, utilizing good hygiene, and adhering to safe work practices when handling the equipment or parts. Caterpillar also recommends the following:

- Wear appropriate personal protective equipment (PPE).
- Wash your hands and face with soap and water prior to eating, drinking, or smoking, and also during rest room breaks, to prevent ingestion of any yellow powder.
- Never use compressed air for cleaning areas suspected of containing hexavalent chromium.
- Avoid brushing, grinding, or cutting materials suspected of containing hexavalent chromium.
- Obey environmental regulations for the disposal of all materials that may contain or have come into contact with hexavalent chromium.
- Stay away from areas that might have hexavalent chromium particles in the air.

## Asbestos Information

Cat equipment and replacement parts that are shipped from Caterpillar are asbestos free. Caterpillar recommends the use of only genuine Cat replacement parts. Use the following guidelines when you handle any replacement parts that contain asbestos or when you handle asbestos debris.

Use caution. Avoid inhaling dust that might be generated when you handle components that contain asbestos fibers. Inhaling this dust can be hazardous to your health. The components that may contain asbestos fibers are brake pads, brake bands, lining material, clutch plates, and some gaskets. The asbestos that is used in these components is bound in a resin or sealed in some way. Normal handling is not hazardous unless airborne dust that contains asbestos is generated.

If dust that may contain asbestos is present, there are several guidelines that should be followed:

- Never use compressed air for cleaning.
- Avoid brushing materials that contain asbestos.
- Avoid grinding materials that contain asbestos.
- Use a wet method in order to clean up asbestos materials.
- A vacuum cleaner that is equipped with a high efficiency particulate air filter (HEPA) can also be used.
- Use exhaust ventilation on permanent machining jobs.
- Wear an approved respirator if there is no other way to control the dust.

- Comply with applicable rules and regulations for the work place. In the United States, use Occupational Safety and Health Administration (OSHA) requirements. These OSHA requirements can be found in “29 CFR 1910.1001”.
- Obey environmental regulations for the disposal of asbestos.
- Stay away from areas that might have asbestos particles in the air.

## Softwrap

Keep the engine room ventilation operating at full capacity. Wear a particulate respirator that has been approved by the National Institute of Occupational Safety and Health (NIOSH). Wear appropriate protective clothing in order to minimize direct contact. Use good hygiene practices and wash hands thoroughly after handling Softwrap material. Do not smoke until washing hands thoroughly after handling Softwrap material. Clean up debris with a vacuum or by wet sweeping. Do not use pressurized air to clean up debris.

**Reference:** The applicable material safety data sheets can be found at the following web site by searching using part number or the name:

https://catmsds.cat.com/MSDSSearch/servlet/cat.cis.ecs.msdsSearch.controller.UserIdentificationDisplayServlet

## Dispose of Waste Properly

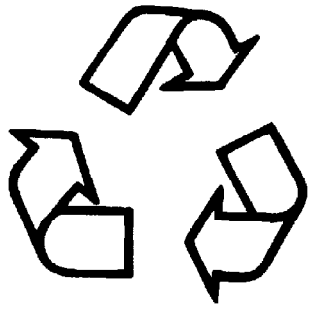

Illustration 19 g00706404

Improperly disposing of waste can threaten the environment. Potentially harmful fluids should be disposed of according to local regulations.

Always use leakproof containers when you drain fluids. Do not pour waste onto the ground, down a drain, or into any source of water.

i08162288

# Burn Prevention

**SMCS Code:** 1000; 7405

Do not touch any part of an operating engine. Allow the engine to cool before any maintenance is performed on the engine. Relieve all pressure in the air system, hydraulic system, lubrication system, fuel system, and cooling system before any lines, fittings, or related items are disconnected.

## Coolant

When the engine is at operating temperature, the engine coolant is hot. The coolant is also under pressure. The radiator and all lines to the heaters or to the engine contain hot coolant.

Any contact with hot coolant or with steam can cause severe burns. Allow cooling system components to cool before the cooling system is drained.

Check that the coolant level after the engine has stopped and the engine has been allowed to cool.

Ensure that the filler cap is cool before removing the filler cap. The filler cap must be cool enough to touch with a bare hand. Remove the filler cap slowly to relieve pressure.

Cooling system conditioner contains alkali. Alkali can cause personal injury. Do not allow alkali to contact the skin, the eyes, or the mouth.

## Oils

Hot oil and hot lubricating components can cause personal injury. Do not allow hot oil to contact the skin. Also, do not allow hot components to contact the skin.

## Batteries

Electrolyte is an acid. Electrolyte can cause personal injury. Do not allow electrolyte to contact the skin or the eyes. Always wear protective glasses for servicing batteries. Wash hands after touching the batteries and connectors. Use of gloves is recommended.

i08302987

# Fire Prevention and Explosion Prevention

**SMCS Code:** 1000; 7405



Illustration 20 g00704000

Use of personal protection equipment (PPE) may be needed.

All fuels, most lubricants, and some coolant mixtures are flammable.

Always perform a Walk-Around Inspection, which may help you identify a fire hazard. Do not operate a product when a fire hazard exists. Contact your Cat dealer for service.

Flammable fluids that are leaking or spilled onto hot surfaces or onto electrical components can cause a fire. Fire may cause personal injury and property damage.

Flash fires may result if the covers for the engine crankcase are removed within 15 minutes after an emergency shutdown.

Determine whether the engine will be operated in an environment that allows combustible gases to be drawn into the air inlet system. These gases could cause the engine to overspeed. Personal injury, property damage, or engine damage could result.

If the application involves the presence of combustible gases, consult your Cat dealer for additional information about suitable protection devices.

Remove all flammable materials such as fuel, oil, and debris from the engine. Do not allow any flammable materials to accumulate on the engine.

All fluids that are captured in the fluid spill containment basin should be cleaned up immediately. Failure to clean up spilled fluids can cause a fire. Fire may cause personal injury and property damage.

Store fuels and lubricants in properly marked containers away from unauthorized persons. Store oily rags and any flammable materials in protective containers. Do not smoke in areas that are used for storing flammable materials.

Do not expose the engine to any flame.

Exhaust shields (if equipped) protect hot exhaust components from oil or fuel spray in a line, a tube, or a seal failure. Exhaust shields must be installed correctly.

Do not weld on lines or tanks that contain flammable fluids. Do not use flame to cut lines or tanks that contain flammable fluid. Clean any such lines or tanks thoroughly with a nonflammable solvent prior to welding or flame cutting.

Wiring must be kept in good condition. Properly route and attach all electrical wires. Check all electrical wires daily. Repair any wires that are loose or frayed before you operate the engine. Clean all electrical connections and tighten all electrical connections.

Eliminate all wiring that is unattached or unnecessary. Do not use any wires or cables that are smaller than the recommended gauge. Do not bypass any fuses and/or circuit breakers.

Arcing or sparking could cause a fire. Secure connections, recommended wiring, and properly maintained battery cables will help to prevent arcing or sparking.

Inspect all lines and hoses for wear or for deterioration. Properly route all hoses. The lines and hoses must have adequate support and secure clamps. Tighten all connections to the recommended torque. Leaks can cause fires.

Properly install all oil filters and fuel filters. The filter housings must be tightened to the proper torque.



Illustration 21 g00704059

Use caution when you are refueling an engine. Do not smoke while you are refueling an engine. Do not refuel an engine near open flames or sparks. Always stop the engine before refueling.

Avoid static electricity risk when fueling. Ultra Low Sulfur Diesel (ULSD) poses a greater static ignition hazard than earlier diesel formulations with a higher Sulfur content. Avoid death or serious injury from fire or explosion. Consult with your fuel or fuel system supplier to ensure that the delivery system is in compliance with fueling standards for proper grounding and bonding practices.

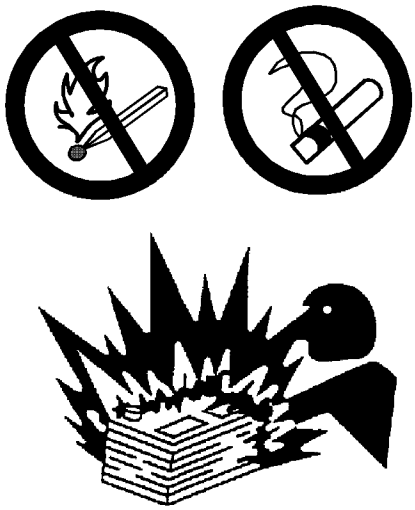

Illustration 22 g02298225

Gases from a battery can explode. Keep any open flames or sparks away from the top of a battery. Do not smoke in battery charging areas.

Never check the battery charge by placing a metal object across the terminal posts. Use a voltmeter or a hydrometer.

Improper jumper cable connections can cause an explosion that can result in injury. Refer to the Operation Section of this manual for specific instructions.

Do not charge a frozen battery. Charging a frozen battery may result in an explosion.

The batteries must be kept clean. The covers (if equipped) must be kept on the cells. Use the recommended cables, connections, and battery box covers when the engine is operated.

## Fire Extinguisher

Make sure that a fire extinguisher is available. Be familiar with the operation of the fire extinguisher. Inspect the fire extinguisher and service the fire extinguisher regularly. Obey the recommendations on the instruction plate.

## Ether

Ether is flammable and poisonous.

Use ether in ventilated areas. Do not smoke while you are replacing an ether cylinder or while you are using an ether spray.

Do not store ether cylinders in living areas or in the engine compartment. Do not store ether cylinders in direct sunlight or in temperatures above 49 °C (120 °F). Keep ether cylinders away from open flames or sparks.

Dispose of used ether cylinders properly. Do not puncture an ether cylinder. Keep ether cylinders away from unauthorized personnel.

Do not spray ether into an engine if the engine is equipped with a thermal starting aid for cold weather starting.

## Lines, Tubes, and Hoses

Do not bend high-pressure lines. Do not strike high-pressure lines. Do not install any lines that are bent or damaged.

Repair any lines that are loose or damaged. Leaks can cause fires. Consult your Cat dealer for repair or for replacement parts.

Check lines, tubes, and hoses carefully. Do not use your bare hand to check for leaks. Use a board or cardboard to check for leaks. Tighten all connections to the recommended torque.

Replace the parts if any of the following conditions are present:

- End fittings are damaged or leaking.
- Outer coverings are chafed or cut.
- Wires are exposed.
- Outer coverings are ballooning.
- Flexible parts of the hoses are kinked.
- Outer covers have embedded armoring.
- End fittings are displaced.

Make sure that all clamps, guards, and heat shields are installed correctly to prevent vibration, rubbing against other parts, and excessive heat.

i08162291

# Crushing Prevention and Cutting Prevention

**SMCS Code:** 1000; 7405

Support the component properly when work beneath the component is performed.

Unless other maintenance instructions are provided, never attempt adjustments while the engine is running.

Stay clear of all rotating parts and of all moving parts. Leave the guards in place until maintenance is performed. After the maintenance is performed, reinstall the guards.

Keep objects away from moving fan blades. The fan blades will throw objects or cut objects.

When objects are struck, wear protective glasses to avoid injury to the eyes.

Chips or other debris may fly off objects when objects are struck. Before objects are struck, ensure that no one will be injured by flying debris.

i08159517

# Mounting and Dismounting

**SMCS Code:** 1000; 7405

Inspect the steps, the handholds, and the work area before mounting the engine. Keep these items clean and keep these items in good repair.

Mount the engine and dismount the engine only at locations that have steps and/or handholds. Do not climb on the engine, and do not jump off the engine.

Face the engine to mount the engine or dismount the engine. With your feet and hands, always maintain a three-point contact with the steps and designated handholds. Do not use any controls as handholds.

Do not stand on components which cannot support your weight. Use an adequate ladder or use a work platform. Secure the climbing equipment so that the equipment will not move.

Do not carry tools or supplies when you mount the engine or when you dismount the engine. Use a hand line to raise and lower tools or supplies.

i08614835

# Before Starting Engine

**SMCS Code:** 1000

NOTICE
For initial start-up of a new or rebuilt engine, and for start-up of an engine that has been serviced, make provision to shut the engine off should an overspeed occur. This may be accomplished by shutting off the air and/or fuel supply to the engine.

**⚠ WARNING**

**Engine exhaust contains products of combustion which may be harmful to your health. Always start and operate the engine in a well ventilated area and, if in an enclosed area, vent the exhaust to the outside.**

Inspect the engine for potential hazards.

Do not start the engine if there is a “DO NOT OPERATE” warning tag or similar warning tag attached to the start switch. Do not move any of the controls if there is a “DO NOT OPERATE” warning tag or similar warning tag attached to the controls.

Before starting the engine, ensure that no one is on, underneath, or close to the engine. Ensure that the area is free of personnel.

If equipped, ensure that the lighting system for the engine is suitable for the conditions. Ensure that all lights work properly, if equipped.

All protective guards and all protective covers must be installed if the engine must be started to perform service procedures. To help prevent an accident that is caused by parts in rotation, work around the parts carefully.

Do not bypass the automatic shutoff circuits. Do not disable the automatic shutoff circuits. The circuits are provided to help prevent personal injury. The circuits are also provided to help prevent engine damage.

See the Service Manual for repairs and for adjustments.

i01185283

# Engine Starting

**SMCS Code:** 1000

**⚠ WARNING**

**Do not use aerosol types of starting aids such as ether. Such use could result in an explosion and personal injury.**

If a warning tag is attached to the engine start switch or to the controls, DO NOT start the engine or move the controls. Consult with the person that attached the warning tag before the engine is started.

All protective guards and all protective covers must be installed if the engine must be started in order to perform service procedures. To help prevent an accident that is caused by parts in rotation, work around the parts carefully.

Start the engine from the operator's compartment or from the engine start switch.

Always start the engine according to the procedure that is described in the Operation and Maintenance Manual, “Engine Starting” topic in the Operation Section. Knowing the correct procedure will help to prevent major damage to the engine components. Knowing the procedure will also help to prevent personal injury.

To ensure that the jacket water heater (if equipped) and/or the lube oil heater (if equipped) is working properly, check the water temperature gauge and the oil temperature gauge during the heater operation.

Engine exhaust contains products of combustion which can be harmful to your health. Always start the engine and operate the engine in a well ventilated area. If the engine is started in an enclosed area, vent the engine exhaust to the outside.

i08194343

# Engine Stopping

**SMCS Code:** 1000

To avoid overheating of the engine and accelerated wear of the engine components, stop the engine according to this Operation and Maintenance Manual, “Engine Stopping” topic (Operation Section).

Use the Emergency Stop Button (if equipped) ONLY in an emergency situation. DO NOT use the Emergency Stop Button for normal engine stopping. After an emergency stop, DO NOT start the engine until the problem that caused the emergency stop has been corrected.

On the initial start-up of a new engine or an engine that has been serviced, make provisions to stop the engine if an overspeed condition occurs. Engine stopping may be accomplished by shutting off the fuel supply and/or the air supply to the engine.

i02613441

# Electrical System

**SMCS Code:** 1000; 1400

Never disconnect any charging unit circuit or battery circuit cable from the battery when the charging unit is operating. A spark can cause the combustible gases that are produced by some batteries to ignite.

To help prevent sparks from igniting combustible gases that are produced by some batteries, the negative “−” jump start cable should be connected last from the external power source to the negative “−” terminal of the starting motor. If the starting motor is not equipped with a negative “−” terminal, connect the jump start cable to the engine block.

Check the electrical wires daily for wires that are loose or frayed. Tighten all loose electrical wires before the engine is started. Repair all frayed electrical wires before the engine is started. See this Operation and Maintenance Manual for specific starting instructions.

## Grounding Practices

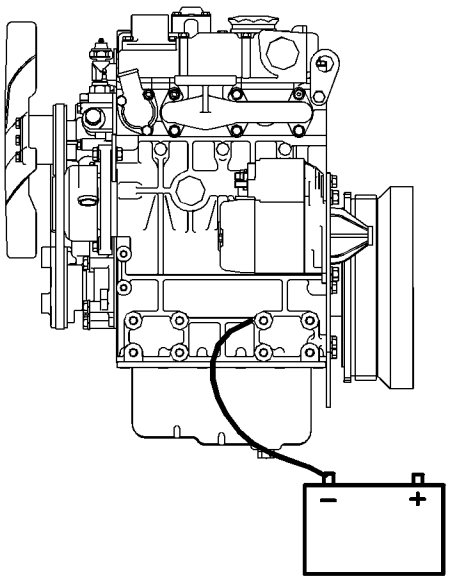

Illustration 23 g01308335

Typical example

Ground to battery

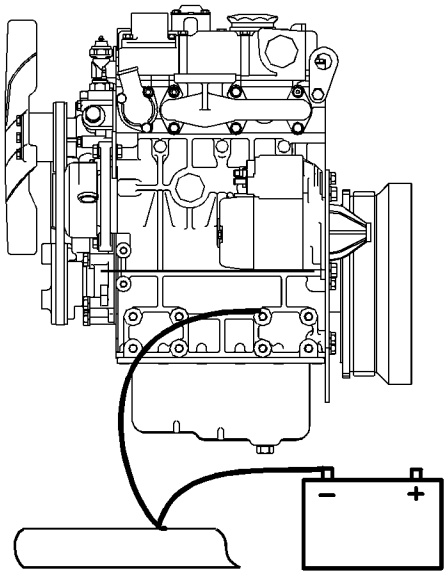

Illustration 24 g01308337

Typical example

Alternate Ground to frame

Correct grounding for the engine electrical system is necessary for optimum engine performance and reliability. Incorrect grounding will result in uncontrolled electrical circuit paths and in unreliable electrical circuit paths.

Uncontrolled electrical circuit paths can result in damage to main bearings, to crankshaft bearing journal surfaces, and to aluminum components.

Engines that are installed without engine-to-frame ground straps can be damaged by electrical discharge.

To ensure that the engine and the engine electrical systems function correctly, an engine-to-frame ground strap with a direct path to the battery must be used. This path may be provided by way of a starting motor ground, or a starting motor ground to the frame.

All grounds should be tight and free of corrosion. The engine alternator must be grounded to the negative “-” battery terminal with a wire that is adequate to handle the full charging current of the alternator.

# Product Information Section

# Model Views

i02613456

## Model View Illustrations

**SMCS Code:** 1000

**S/N:** C6F1–Up

**S/N:** C6H1–Up

**S/N:** C7H1–Up

**S/N:** C6J1–Up

**S/N:** C7J1–Up

**S/N:** C6K1–Up

**S/N:** C6L1–Up

**S/N:** G7L1–Up

**S/N:** C6M1–Up

**S/N:** C6N1–Up

**S/N:** G8N1–Up

**S/N:** C8W1–Up

**S/N:** C7Y1–Up

**S/N:** C8Y1–Up

**S/N:** C8Z1–Up

The following model views show typical features of the C0.5, C0.7, C1.1, C1.5, C1.6 and C2.2 Engines. Due to individual applications, your engine may appear different from the illustrations.

**Note:** Individual components are detailed on the C2.2 turbocharged engine only.

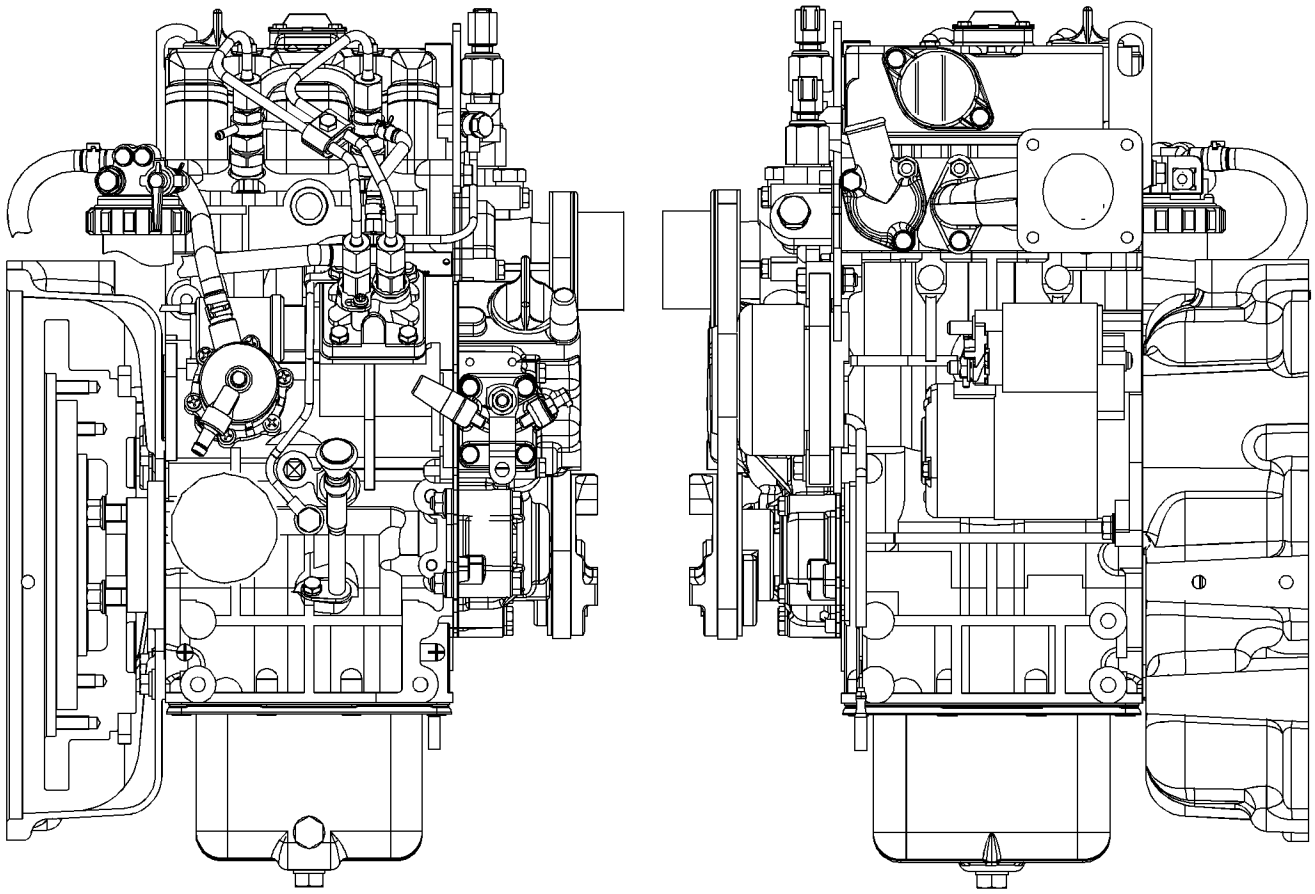

Illustration 25 g01299985

Typical view of the C0.5 Engine

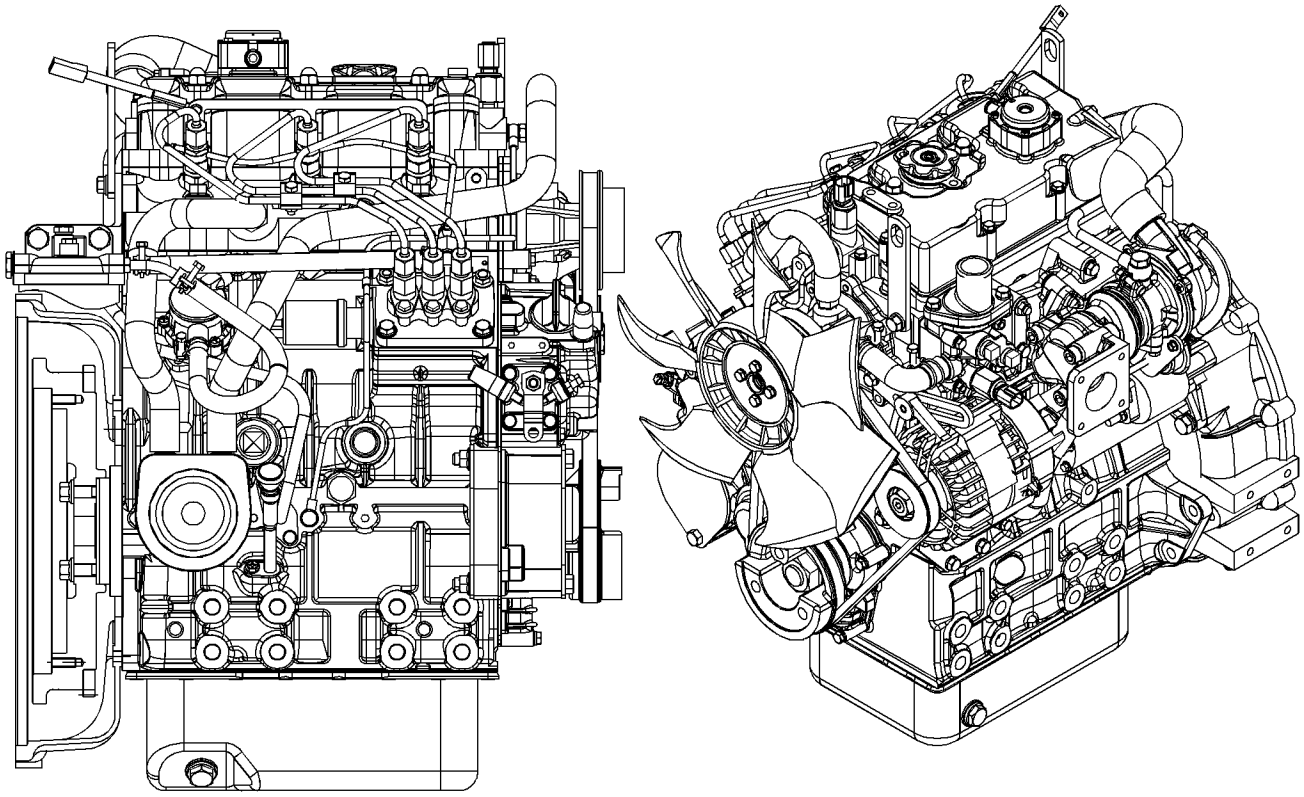

Illustration 26 g01300431

Typical view of the C1.5 turbocharged engine

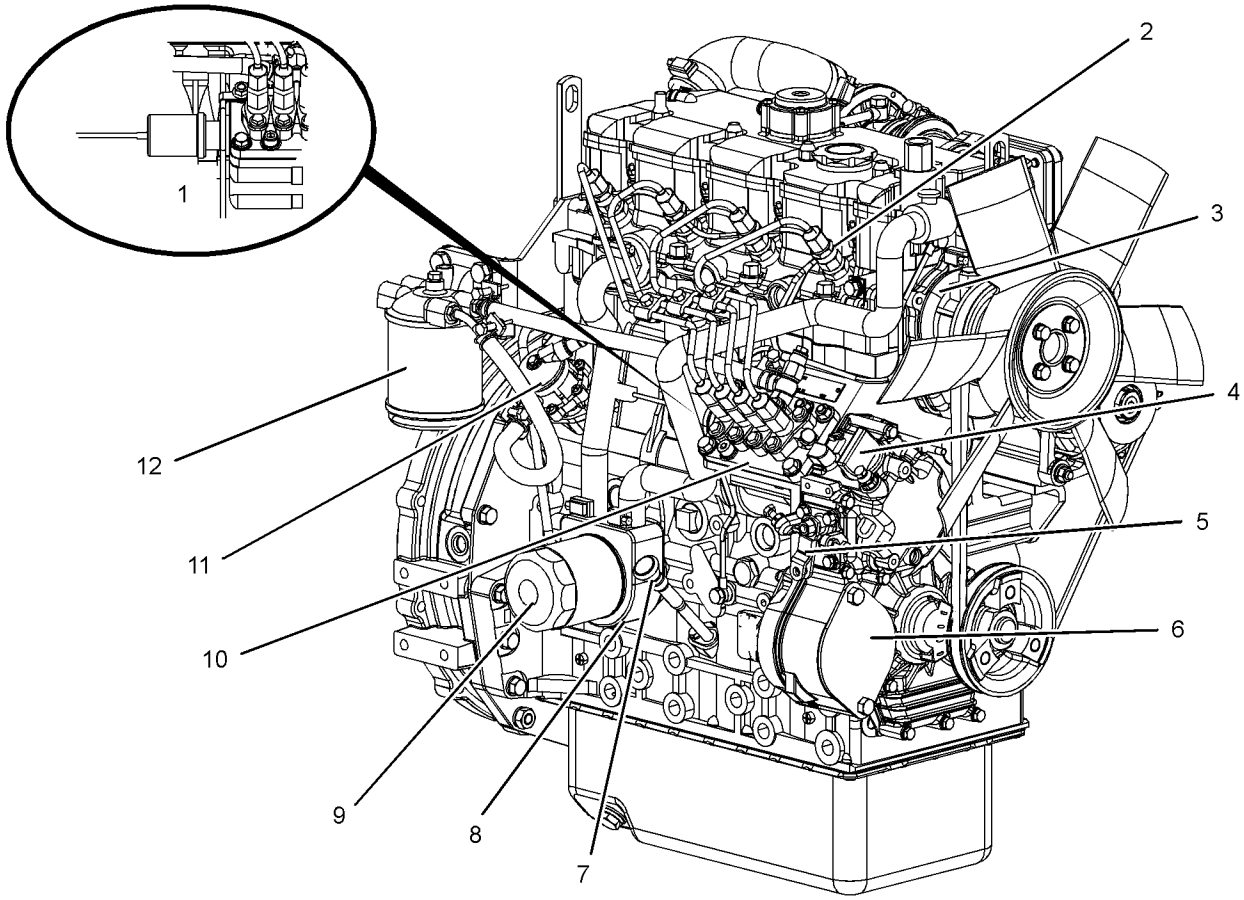


Illustration 27 g01304893

Right side view of the C2.2 turbocharged engine

(1) Fuel shutoff solenoid
(2) Number one fuel injector
(3) Water pump
(4) Lower engine oil filler cap
(5) Throttle lever
(6) Cover plate for the accessory drive
(7) Engine oil level gauge
(8) Engine oil cooler
(9) Engine oil filter
(10) Fuel injection pump
(11) Transfer pump
(12) Fuel filter

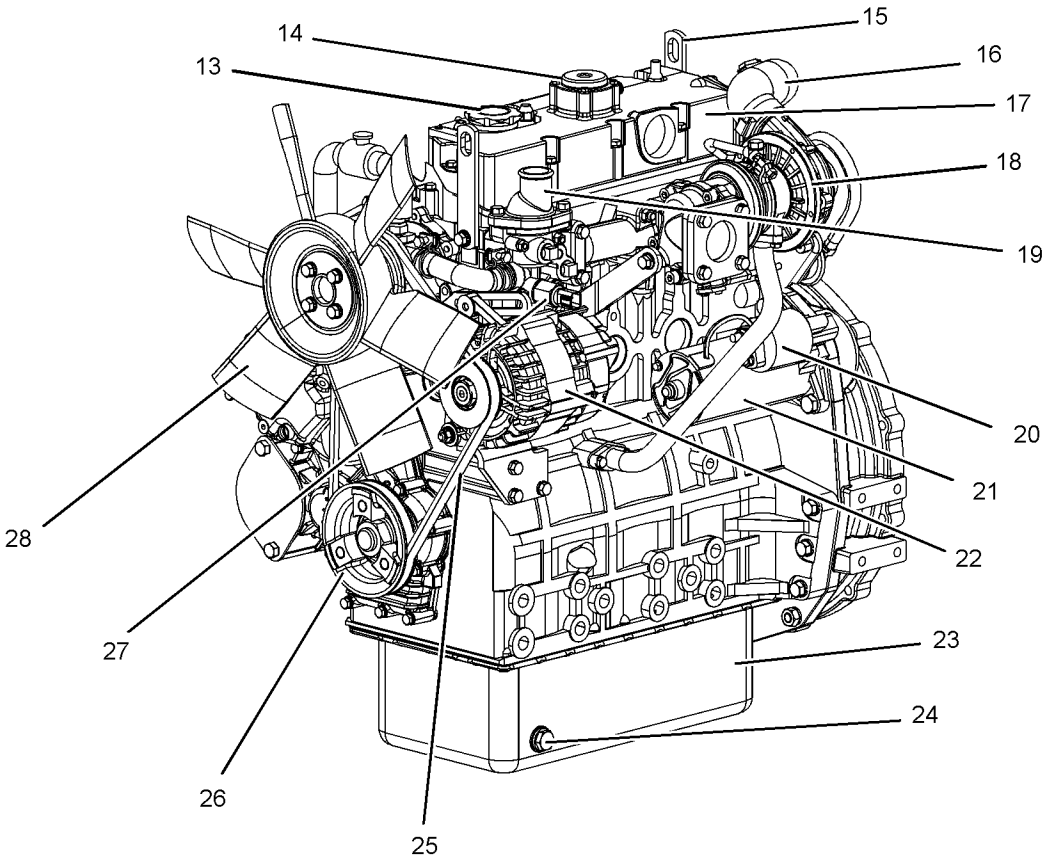


Illustration 28 g01305224

Left side view of the C2.2 Engine

(13) Top engine oil filler cap
(14) Crankcase breather
(15) Rear Lifting eye
(16) Air inlet elbow
(17) Valve mechanism cover
(18) Turbocharger
(19) Water temperature regulator housing
(20) Starting motor solenoid
(21) Electric starting motor
(22) Alternator
(23) Engine oil pan
(24) Engine oil drain plug
(25) Fan drive belt
(26) Crankshaft pulley
(27) Coolant temperature switch
(28) Cooling fan

i02613886

# Engine Description

**SMCS Code:** 1000

**S/N:** C6F1–Up

**S/N:** C6H1–Up

**S/N:** C7H1–Up

**S/N:** C6J1–Up

**S/N:** C7J1–Up

**S/N:** C6K1–Up

**S/N:** C6L1–Up

**S/N:** G7L1–Up

**S/N:** C6M1–Up

**S/N:** C6N1–Up

**S/N:** G8N1–Up

**S/N:** C8W1–Up

**S/N:** C7Y1–Up

**S/N:** C8Y1–Up

**S/N:** C8Z1–Up

The C0.5, C0.7, C1.1, C1.5, C1.6 and C2.2 engines are direct injection engines. The engines are controlled with a mechanically actuated fuel injection pump. The engine cylinders are arranged in-line.

The cylinder head assembly has one inlet valve and one exhaust valve for each cylinder. Each cylinder valve has a single valve spring.

The pistons have two compression rings and an oil control ring. It is important to ensure the correct piston height so that the piston does not contact the cylinder head. The correct piston height also ensures efficient combustion of fuel that is necessary in order to conform to requirements for emissions.

The crankshaft for a two cylinder engine has two main bearing journals. The crankshaft for a three cylinder engine has four main bearing journals. The crankshaft for a four cylinder engine has five main bearing journals. End play is controlled by the thrust washers that are located on the rear main bearing.

The timing gears are stamped with timing marks in order to ensure the correct assembly of the gears. When the No. 1 piston is at top center compression stroke, the teeth that are stamped on the crankshaft gear and the camshaft gear will be in alignment with the idler gear.

The crankshaft gear turns the idler gear which then turns the camshaft gear and the gear for the engine oil pump.

The fuel injection pump is mounted in the cylinder block. The fuel injection pump is operated by lobes on the camshaft. The fuel transfer pump is located on the right hand side of the cylinder block. The fuel transfer pump is also operated by lobes on the camshaft.

The fuel injection pump conforms to requirements for emissions. If any adjustments to the fuel injection pump timing and high idle are required you must refer to your Caterpillar dealer. Some fuel injection pumps have mechanical governors that control the engine rpm. Some fuel injection pumps have a governor that is electrically controlled.

A gerotor oil pump is located in the center of the idler gear. The engine oil pump sends lubricating oil to the main oil gallery through a pressure relief valve and an engine oil filter. The rocker arms receive pressurized oil through an externally located oil line that runs from the main oil gallery to the cylinder head.

Coolant from the bottom of the radiator passes through the belt driven centrifugal water pump. The coolant is cooled by the radiator and the temperature is regulated by a water temperature regulator.

Engine efficiency, efficiency of emission controls, and engine performance depend on adherence to proper operation and maintenance recommendations. Engine performance and efficiency also depend on the use of recommended fuels, lubrication oils, and coolants. Refer to this Operation and Maintenance Manual, “Maintenance Interval Schedule” for more information on maintenance items.

# Engine Specifications

**Note:** The front end of the engine is opposite the flywheel end of the engine. The left and the right side of the engine are determined from the flywheel end. The No. 1 cylinder is the front cylinder.

## C0.5 Engine

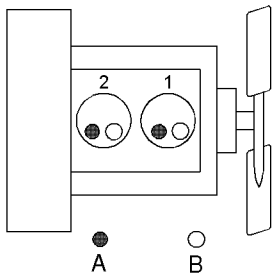


Illustration 29 g01108476

(A) Exhaust valves
(B) Inlet valves

Table 1

| C0.5 Engine Specifications | |
|---|---|
| Maximum Operating Speed (rpm) | 3600 rpm |
| Cylinders and Arrangement | In-Line two cylinder |
| Bore | 67 mm (2.64 inch) |
| Stroke | 72 mm (2.83 inch) |
| Displacement | 0.507 L (30.9390 $in^3$) |
| Aspiration | NA(1) |
| Compression Ratio | 23.5:1 |
| Firing Order | 1-2 |
| Rotation that is viewed from the flywheel | Counterclockwise |
| Valve Lash Setting (Inlet) | 0.20 mm (0.008 inch) |
| Valve Lash Setting (Exhaust) | 0.20 mm (0.008 inch) |
| Injection | Indirect |

(1) Naturally Aspirated

## C0.7 Engine

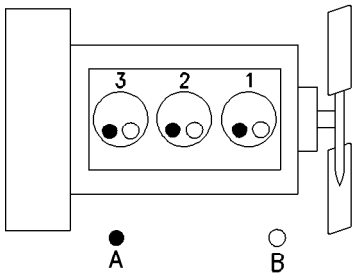


Illustration 30 g00852304

(A) Exhaust valves
(B) Inlet valves

Table 2

| C0.7 Engine Specifications | |
|---|---|
| Maximum Operating Speed (rpm) | 3600 rpm |
| Cylinders and Arrangement | In-Line three cylinder |
| Bore | 67 mm (2.64 inch) |
| Stroke | 72 mm (2.83 inch) |
| Displacement | 0.762 L (46.5001 $in^3$) |
| Aspiration | NA(1) |
| Compression Ratio | 23.5:1 |
| Firing Order | 1-2-3 |
| Rotation that is viewed from the flywheel | Counterclockwise |
| Valve Lash Setting (Inlet) | 0.20 mm (0.008 inch) |
| Valve Lash Setting (Exhaust) | 0.20 mm (0.008 inch) |
| Injection | Indirect |

(1) Naturally Aspirated

## C1.1 Engine

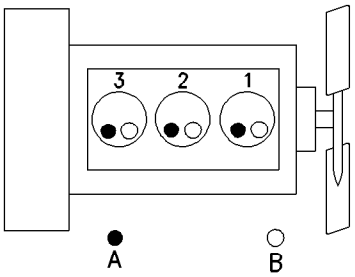


Illustration 31 g00852304

(A) Exhaust valves
(B) Inlet valves

Table 3

| C1.1 Engine Specifications | |
|---|---|
| Maximum Operating Speed (rpm) | 3600 rpm |
| Cylinders and Arrangement | In-Line three cylinder |
| Bore | 77 mm (3.03 inch) |
| Stroke | 81 mm (3.19 inch) |
| Displacement | 1.131 L (69.0178 $in^3$) |
| Aspiration | NA(1) |
| Compression Ratio | 23:1 |
| Firing Order | 1-2-3 |
| Rotation that is viewed from the flywheel | Counterclockwise |
| Valve Lash Setting (Inlet) | 0.20 mm (0.008 inch) |
| Valve Lash Setting (Exhaust) | 0.20 mm (0.008 inch) |
| Injection | Indirect |

(1) Naturally Aspirated

## C1.5 Engine

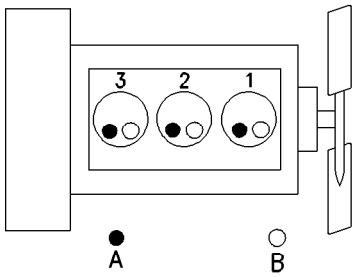


Illustration 32 g00852304

(A) Exhaust valves
(B) Inlet valves

Table 4

| C1.5 Engine Specifications | |
|---|---|
| Maximum Operating Speed (rpm) | 3000 rpm |
| Cylinders and Arrangement | In-Line three cylinder |
| Bore | 84 mm (3.31 inch) |
| Stroke | 90 mm (3.54 inch) |
| Displacement | 1.496 L (91.2915 $in^3$) |
| Aspiration | NA(1) |
| Compression Ratio | 22.5:1 |
| Firing Order | 1-2-3 |
| Rotation that is viewed from the flywheel | Counterclockwise |
| Valve Lash Setting (Inlet) | 0.20 mm (0.008 inch) |
| Valve Lash Setting (Exhaust) | 0.20 mm (0.008 inch) |
| Injection | Indirect |

(1) Naturally Aspirated

## C1.5 Turbocharged Engine

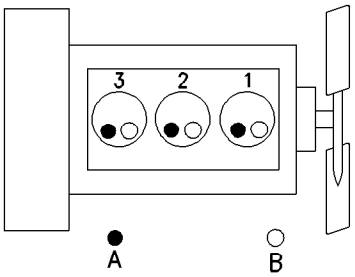


Illustration 33 g00852304

(A) Exhaust valves
(B) Inlet valves

Table 5

| C1.5 Turbocharged Engine Specifications | |
|---|---|
| Maximum Operating Speed (rpm) | 3000 rpm |
| Cylinders and Arrangement | In-Line three cylinder |
| Bore | 84 mm (3.31 inch) |
| Stroke | 90 mm (3.54 inch) |
| Displacement | 1.496 L (91.2915 $in^3$) |
| Aspiration | T(1) |
| Compression Ratio | 22.5:1 |
| Firing Order | 1-2-3 |
| Rotation that is viewed from the flywheel | Counterclockwise |
| Valve Lash Setting (Inlet) | 0.20 mm (0.008 inch) |
| Valve Lash Setting (Exhaust) | 0.20 mm (0.008 inch) |
| Injection | Indirect |

(1) Turbocharged

## C1.6 Engine

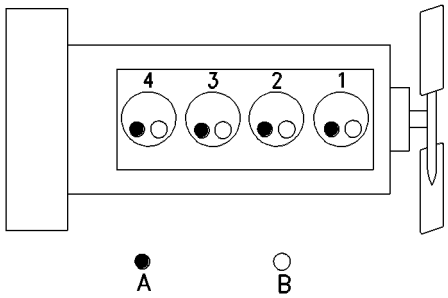


Illustration 34 g00296424

(A) Exhaust valves
(B) Inlet valves

Table 6

| C1.6 Engine Specifications | |
|---|---|
| Maximum Operating Speed (rpm) | 3000 rpm |
| Cylinders and Arrangement | In-Line four cylinder |
| Bore | 77 mm (3.03 inch) |
| Stroke | 81 mm (3.19 inch) |
| Displacement | 1.508 L (92.0238 $in^3$) |
| Aspiration | NA(1) |
| Compression Ratio | 23.5:1 |
| Firing Order | 1-3-4-2 |
| Rotation that is viewed from the flywheel | Counterclockwise |
| Valve Lash Setting (Inlet) | 0.20 mm (0.008 inch) |
| Valve Lash Setting (Exhaust) | 0.20 mm (0.008 inch) |
| Injection | Indirect |

(1) Naturally Aspirated

## C2.2 Engine

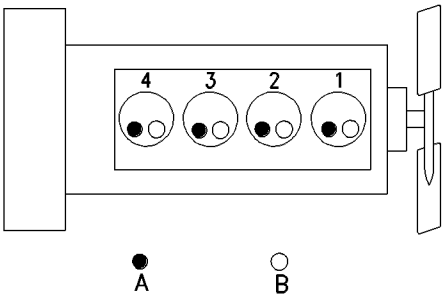


Illustration 35 g00296424

(A) Exhaust valves
(B) Inlet valves

Table 7

| C2.2 Engine Specifications | |
|---|---|
| Maximum Operating Speed (rpm) | 3000 rpm |
| Cylinders and Arrangement | In-Line four cylinder |
| Bore | 84.0 mm (3.31 inch) |
| Stroke | 100.0 mm (3.94 inch) |
| Displacement | 2.216 cc (0.1352 $in^3$) |
| Aspiration | NA(1) |
| Compression Ratio | 23.3:1 |
| Firing Order | 1-3-4-2 |
| Rotation that is viewed from the flywheel | Counterclockwise |
| Valve Lash Setting (Inlet) | 0.20 mm (0.008 inch) |
| Valve Lash Setting (Exhaust) | 0.20 mm (0.008 inch) |
| Injection | Indirect |

(1) Naturally Aspirated

## C2.2 Turbocharged Engine

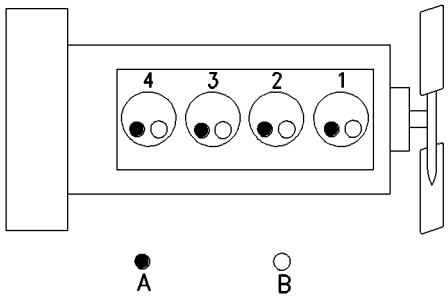


Illustration 36 g00296424

(A) Exhaust valves
(B) Inlet valves

Table 8

| C2.2 Turbocharged Engine Specifications | |
|---|---|
| Maximum Operating Speed (rpm) | 3000 rpm |
| Cylinders and Arrangement | In-Line four cylinder |
| Bore | 84.0 mm (3.31 inch) |
| Stroke | 100.0 mm (3.94 inch) |
| Displacement | 2.216 cc (0.1352 $in^3$) |
| Aspiration | T(1) |
| Compression Ratio | 23.5:1 |
| Firing Order | 1-3-4-2 |
| Rotation that is viewed from the flywheel | Counterclockwise |
| Valve Lash Setting (Inlet) | 0.20 mm (0.008 inch) |
| Valve Lash Setting (Exhaust) | 0.20 mm (0.008 inch) |
| Injection | Indirect |

(1) Turbocharged

## C2.2 Turbocharged Aftercooled Engine

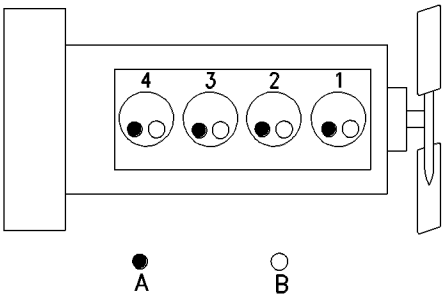


Illustration 37 g00296424

(A) Exhaust valves
(B) Inlet valves

Table 9

| C2.2 Turbocharged Aftercooled Engine Specifications | |
|---|---|
| Maximum Operating Speed (rpm) | 2800 rpm |
| Cylinders and Arrangement | In-Line four cylinder |
| Bore | 84.0 mm (3.31 inch) |
| Stroke | 100.0 mm (3.94 inch) |
| Displacement | 2.216 cc (0.1352 $in^3$) |
| Aspiration | TA(1) |
| Compression Ratio | 23.5:1 |
| Firing Order | 1-3-4-2 |
| Rotation that is viewed from the flywheel | Counterclockwise |
| Valve Lash Setting (Inlet) | 0.20 mm (0.008 inch) |
| Valve Lash Setting (Exhaust) | 0.20 mm (0.008 inch) |
| Injection | Indirect |

(1) Turbocharged aftercooled

i08749654

# Engine Description

**SMCS Code:** 1000

**S/N:** G7P1–Up

The C1.5 engines are direct injection engines. The engines are controlled with a mechanically actuated fuel injection pump. The engine cylinders are arranged in-line.

The cylinder head assembly has one inlet valve and one exhaust valve for each cylinder. Each cylinder valve has a single valve spring.

The pistons have two compression rings and an oil control ring. It is important to ensure the correct piston height so that the piston does not contact the cylinder head. The correct piston height also ensures efficient combustion of fuel that is necessary in order to conform to requirements for emissions.

The crankshaft for a two cylinder engine has two main bearing journals. The crankshaft for a three cylinder engine has four main bearing journals. The crankshaft for a four cylinder engine has five main bearing journals. End play is controlled by the thrust washers that are located on the rear main bearing.

The timing gears are stamped with timing marks in order to ensure the correct assembly of the gears. When the No. 1 piston is at top center compression stroke, the teeth that are stamped on the crankshaft gear and the camshaft gear will be in alignment with the idler gear.

The crankshaft gear turns the idler gear which then turns the camshaft gear and the gear for the engine oil pump.

The fuel injection pump is mounted in the cylinder block. The fuel injection pump is operated by lobes on the camshaft. The fuel transfer pump is located on the right-hand side of the cylinder block. The fuel transfer pump is also operated by lobes on the camshaft.

The fuel injection pump conforms to requirements for emissions. If any adjustments to the fuel injection pump timing and high idle are required you must refer to your Caterpillar dealer. Some fuel injection pumps have mechanical governors that control the engine rpm. Some fuel injection pumps have a governor that is electrically controlled.

A gerotor oil pump is located in the center of the idler gear. The engine oil pump sends lubricating oil to the main oil gallery through a pressure relief valve and an engine oil filter. The rocker arms receive pressurized oil through an externally located oil line that runs from the main oil gallery to the cylinder head.

Coolant from the bottom of the radiator passes through the belt driven centrifugal water pump. The coolant is cooled by the radiator and the temperature is regulated by a water temperature regulator.

Engine efficiency, efficiency of emission controls, and engine performance depend on adherence to proper operation and maintenance recommendations. Engine performance and efficiency also depend on the use of recommended fuels, lubrication oils, and coolants. Refer to this Operation and Maintenance Manual, “Maintenance Interval Schedule” for more information on maintenance items.

# Engine Specifications

**Note:** The front end of the engine is opposite the flywheel end of the engine. The left and the right side of the engine are determined from the flywheel end. The No. 1 cylinder is the front cylinder.

## C1.5 Turbocharged Engine

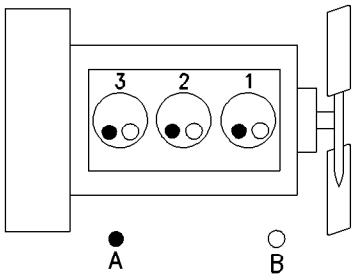


Illustration 38 g00852304

(A) Exhaust valves
(B) Inlet valves

Table 10

| C1.5 Turbocharged Engine Specifications | |
|---|---|
| Maximum Operating Speed (rpm) | 3000 rpm |
| Cylinders and Arrangement | In-Line three cylinder |
| Bore | 84 mm (3.31 inch) |
| Stroke | 90 mm (3.54 inch) |
| Displacement | 1.496 L (91.2915 $in^3$) |
| Aspiration | T(1) |
| Compression Ratio | 22.5:1 |
| Firing Order | 1-2-3 |
| Rotation that is viewed from the flywheel | Counterclockwise |
| Valve Lash Setting (Inlet) | 0.20 mm (0.008 inch) |
| Valve Lash Setting (Exhaust) | 0.20 mm (0.008 inch) |
| Injection | Indirect |

(1) Turbocharged

# Product Identification Information

i09699991

## Plate Locations and Film Locations

**SMCS Code:** 1000

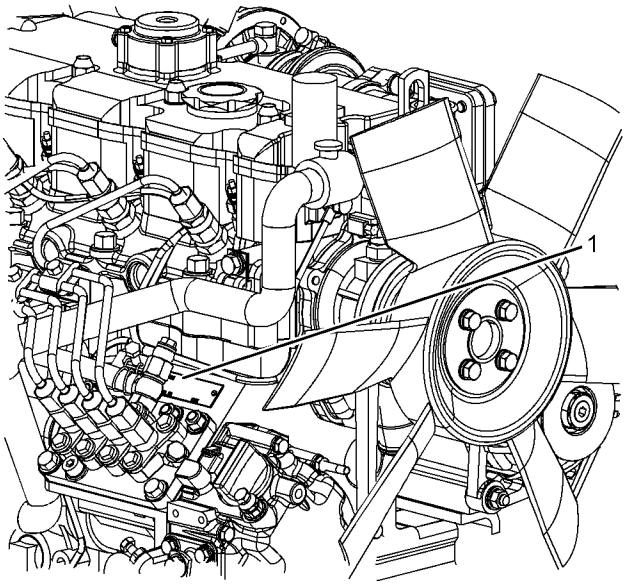


Illustration 39 g01334490

Typical example

Caterpillar engines are identified by serial numbers and by arrangement numbers. These numbers are shown on the engine serial number plate. Caterpillar dealers need these numbers to determine the components that were included with the engine. This permits accurate identification of replacement part numbers.

## Serial Number Plate (1)

The engine serial number plate is on the upper right side of the cylinder block above the fuel injection pump. The engine serial number plate is in this position for all engine models in the series.

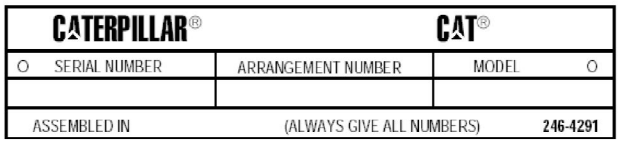


Illustration 40 g07558131

Serial number plate

i00610276

## Reference Numbers

**SMCS Code:** 1000

Information for the following items may be needed to order parts. Locate the information for your engine. Record the information on the appropriate space. Make a copy of this list for a record. Retain the information for future reference.

### Record for Reference

Engine Model _____

Engine Serial No. _____

Engine Arrangement No. _____

Modification No. _____

Engine Low Idle rpm _____

Engine Full Load rpm _____

Performance Specification No. _____

Primary Fuel Filter No. _____

Water Separator Element No. _____

Secondary Fuel Filter Element No. _____

Lubrication Oil Filter Element No. _____

Auxiliary Oil Filter Element No. _____

Supplemental Coolant Additive Maintenance Element No. (Optional) _____

Total Lubrication System Capacity _____

Total Cooling System Capacity _____

Air Cleaner Element No. _____

Fan Drive Belt No. _____

Alternator Belt No. _____

i06602168

# Emissions Certification Film

**SMCS Code:** 1000; 7405

**Note:** This information is pertinent in the United States and in Canada.

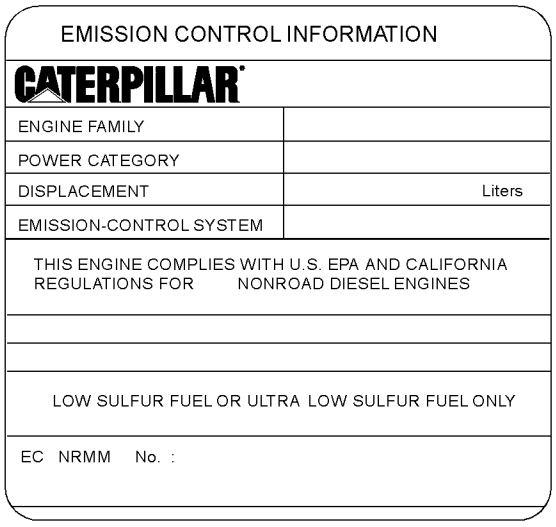


Illustration 41 g01527177

Typical example

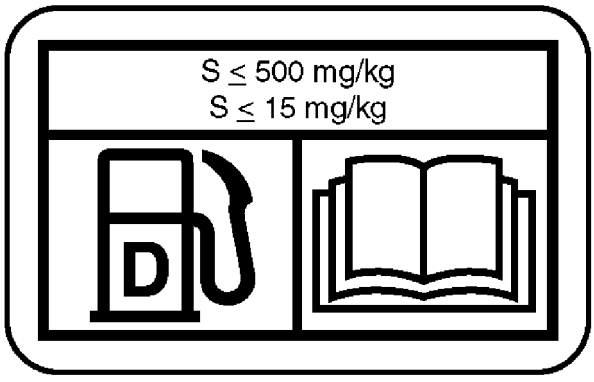


Illustration 42 g06038952

Typical example

Refer to illustration 42 . The equipment manufacturer must install the label to the equipment. This procedure is recommended by Caterpillar. The label must be attached to the equipment near the fuel inlet to comply with the EPA regulations. The equipment manufacturer may install another fuel label.

# Operation Section

# Lifting and Storage

i07454544

## Product Lifting

**SMCS Code:** 1000; 1404; 7002

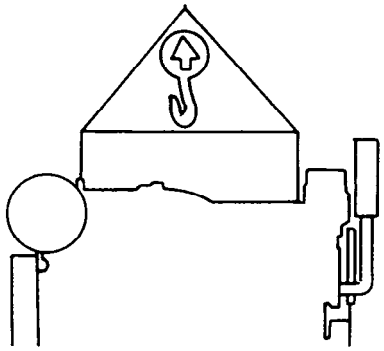

Illustration 43 g00103219

NOTICE
Always inspect lifting eyebolts and all other lifting equipment for damage before performing any lifting. Never bend the eyebolts and the brackets. Never perform product lifting if components are damaged. Only load the eyebolts and the brackets under tension. Remember that the capacity of an eyebolt is less as the angle between the supporting members and the object becomes less than 90 degrees.

Use a hoist to remove heavy components. Use an adjustable lifting beam to lift the engine. All supporting members (chains and cables) should be parallel to each other. The chains and cables should be perpendicular to the top of the object that is being lifted.

Some removals require lifting the fixtures to obtain proper balance and safety.

To remove the engine only, use the lifting eyes that are on the engine.

Lifting eyes are designed and installed for the specific engine arrangement. Alterations to the lifting eyes and/or the engine make the lifting eyes and the lifting fixtures obsolete. If alterations are made, ensure that proper lifting devices are provided. Consult your Cat dealer for information regarding fixtures for proper engine lifting.

i08267190

## Product Storage

**SMCS Code:** 1000; 1404; 7002

If the engine will not be started for several weeks, the lubricating oil will drain from the cylinder walls and from the piston rings. Rust can form on the cylinder liner surface. Rust on the cylinder liner surface will cause increased engine wear and a reduction in engine service life.

To help prevent excessive engine wear, use the following guidelines:

- Complete all lubrication recommendations that are listed in this Operation and Maintenance Manual, “Maintenance Interval Schedule” (Maintenance Section).
- If freezing temperatures are expected, check the cooling system for adequate protection against freezing. See this Operation and Maintenance Manual, “Refill Capacities and Recommendations” (Maintenance Section).

If an engine is out of operation and if use of the engine is not planned, special precautions should be made. If the engine will be stored for more than 1 month, a complete protection procedure is recommended.

For more detailed information on engine storage, see Special Instruction, SEHS9031, “Storage Procedure For Caterpillar Products”.

Your Cat dealer can help in preparing the engine for extended storage periods.

# Gauges and Indicators

i01139916

## Gauges and Indicators

**SMCS Code:** 1900; 7450

Your engine may not have the same gauges or all of the gauges that are described. For more information about the gauge package, see the OEM information.

Gauges provide indications of engine performance. Ensure that the gauges are in good working order. Determine the normal operating range by observing the gauges over a period of time.

Noticeable changes in gauge readings indicate potential gauge or engine problems. Problems may also be indicated by gauge readings that change even if the readings are within specifications. Determine and correct the cause of any significant change in the readings. Consult your Caterpillar dealer for assistance.

NOTICE
If no oil pressure is indicated, STOP the engine. If maximum coolant temperature is exceeded, STOP the engine. Engine damage can result.



**Engine Oil Pressure – The oil pressure should be greatest after a cold engine is started. The typical engine oil pressure with SAE10W30 is 207 to 413 kPa (30 to 60 psi) at rated rpm.**

A lower oil pressure is normal at low idle. If the load is stable and the gauge reading changes, perform the following procedure:

**1.** Remove the load.

**2.** Reduce engine speed to low idle.

**3.** Check and maintain the oil level.



**Jacket Water Coolant Temperature – Typical temperature range is 71 to 96°C (160 to 205°F). The maximum allowable temperature with the pressurized cooling system at 48 kPa (7 psi) is 103°C (217°F). Higher temperatures may occur under certain conditions. The water temperature reading may vary according to load. The reading should never exceed the boiling point for the pressurized system that is being used.**

If the engine is operating above the normal range and steam becomes apparent, perform the following procedure:

**1.** Reduce the load and the engine rpm.

**2.** Inspect the cooling system for leaks.

**3.** Determine if the engine must be shut down immediately or if the engine can be cooled by reducing the load.




**Tachometer – This gauge indicates engine speed (rpm). When the throttle control lever is moved to the full throttle position without load, the engine is running at high idle. The engine is running at the full load rpm when the throttle control lever is at the full throttle position with maximum rated load.**

NOTICE
To help prevent engine damage, never exceed the high idle rpm. Overspeeding can result in serious damage to the engine. The engine can be operated at high idle without damage, but should never be allowed to exceed high idle rpm.

**Note:** The high idle rpm and the full load rpm are stamped on the Information Plate.



**Ammeter – This gauge indicates the amount of charge or discharge in the battery charging circuit. Operation of the indicator should be to the right side of “0” (zero).**



**Fuel Level – This gauge indicates the fuel level in the fuel tank. The electrically operated fuel level gauge only registers when the “START/STOP” switch is “ON” .**



**Service Hour Meter – This gauge indicates the total number of clock hours that the engine has operated.**

# Features and Controls

i01007515

## Engine Shutoffs and Engine Alarms

**SMCS Code:** 1900; 7400; 7418

### Shutoffs

Shutoffs and alarms are electrically operated or mechanically operated. The operation of all electric shutoffs and alarms utilize components which actuate switches in a sensing unit.

Shutoffs are set at critical levels for the following items: operating temperature, operating pressure, operating level and operating rpm. The particular shutoff may need to be reset before the engine will start.

NOTICE
Always determine the cause of the engine shutdown. Make necessary repairs before attempting to restart the engine.

Be familiar with the following items:

- Types and locations of shutoff
- Conditions which cause each shutoff to function
- The resetting procedure that is required to restart the engine

### Alarms

Alarms consist of a switch and a contactor. The switches are wired to the contactors. The contactors activate alarm circuits in an annunciator panel. Your engine may be equipped with the following switches:

**Engine oil pressure** – The engine oil pressure switch indicates when oil pressure drops below rated system pressure.

**Coolant level** – The low coolant level switch indicates when the coolant level is low.

**Coolant temperature** – The coolant temperature switch indicates high jacket water coolant temperature.

**Note:** The sensing element of the coolant temperature switch must be submerged in coolant in order to operate.

Engines may be equipped with alarms in order to alert the operator when undesirable operating conditions occur.

NOTICE
When an alarm is activated, corrective measures must be taken before the situation becomes an emergency in order to avoid possible engine damage.

If corrective measures are not taken within a reasonable time, engine damage could result. The alarm will continue until the condition is corrected. The alarm may need to be reset.

A switch may be installed in the alarm while the engine is stopped for repairs. Before the engine is started, ensure that the switch is moved to the ON position and that the warning lights are flashing. The engine will not be protected if the switch is left in the OFF position.

### Testing the Shutoff and Alarm System

Most control panels are equipped with a lamp test switch. Turn the switch to the ON position in order to check the indicator lights for proper operation. Replace defective bulbs immediately.

NOTICE
During testing, abnormal operating conditions must be simulated. Perform the tests correctly in order to help prevent possible engine damage.

Refer to the Service Manual for more information on testing procedures or consult your Caterpillar dealer.

i08681759

## Fuel Shutoff

**SMCS Code:** 1259; 1704

The fuel shutoff actuator is on the fuel injection pump. When the fuel shutoff actuator is activated, the actuator moves the fuel rack to the “OFF” position to stop the engine.

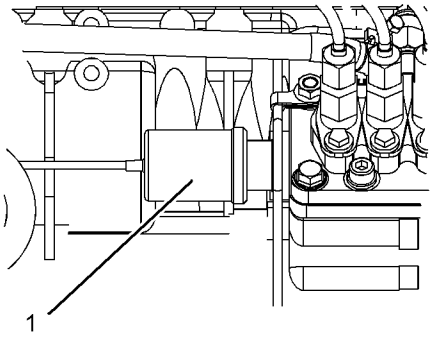


Illustration 44 g01305771
Typical example
(1) Fuel shutoff actuator

An electronically controlled governor actuator (if equipped) operates the fuel rack to reduce the fuel delivery. The reduced fuel delivery will alter the engine speed and also stop the engine.

# Engine Starting

i01486758

## Before Starting Engine

**SMCS Code:** 1000; 1400; 1450

Perform the required daily maintenance and other periodic maintenance before the engine is started. Inspect the engine compartment. This inspection can help prevent major repairs at a later date. Refer to the Operation and Maintenance Manual, “Maintenance Interval Schedule” for more information.

- For the maximum service life of the engine, make a thorough inspection before the engine is started. Look for the following items: oil leaks, coolant leaks, loose bolts and trash buildup. Remove trash buildup and arrange for repairs, as needed.
- Inspect the cooling system hoses for cracks and for loose clamps.
- Inspect the alternator and accessory drive belts for cracks, breaks, and other damage.
- Inspect the wiring for loose connections and for worn wires or frayed wires.
- Check the fuel supply. Drain water from the water separator (if equipped). Open the fuel supply valve.

NOTICE
All valves in the fuel return line must be open before and during engine operation to help prevent high fuel pressure. High fuel pressure may cause filter housing failure or other damage.

If the engine has not been started for several weeks, fuel may have drained from the fuel system. Air may have entered the filter housing. Also, when fuel filters have been changed, some air pockets will be trapped in the engine. In these instances, prime the fuel system. Refer to the Operation and Maintenance Manual, “Fuel System - Prime” for more information on priming the fuel system.

**⚠ WARNING**

**Engine exhaust contains products of combustion which may be harmful to your health. Always start and operate the engine in a well ventilated area and, if in an enclosed area, vent the exhaust to the outside.**

- Do not start the engine or move any of the controls if there is a “DO NOT OPERATE” warning tag or similar warning tag attached to the start switch or to the controls.
- Ensure that the areas around the rotating parts are clear.
- All of the guards must be put in place. Check for damaged guards or for missing guards. Repair any damaged guards. Replace damaged guards and/or missing guards.
- Disconnect any battery chargers that are not protected against the high current drain that is created when the electric starting motor (if equipped) is engaged. Check electrical cables and check the battery for poor connections and for corrosion.
- Reset all of the shutoffs or alarm components.
- Check the engine lubrication oil level. Maintain the oil level between the “ADD” mark and the “FULL” mark on the oil level gauge.
- Check the coolant level. Observe the coolant level in the coolant recovery tank (if equipped). Maintain the coolant level to the “FULL” mark on the coolant recovery tank.
- If the engine is not equipped with a coolant recovery tank maintain the coolant level within 13 mm (0.5 inch) of the bottom of the filler pipe. If the engine is equipped with a sight glass, maintain the coolant level in the sight glass.
- Observe the air cleaner service indicator (if equipped). Service the air cleaner when the yellow diaphragm enters the red zone, or when the red piston locks in the visible position.
- Ensure that any driven equipment has been disengaged. Minimize electrical loads or remove any electrical loads.

i09852852

## Starting the Engine

**SMCS Code:** 1000; 1450

**⚠ WARNING**

**Do not use aerosol types of starting aids such as ether. Such use could result in an explosion and personal injury.**

Refer to the Service Manual for your type of controls. Use the following procedure to start the engine.

**1.** Move the throttle lever to the low idle position before you start the engine.

**Note:** If necessary, increase the throttle position so that the engine will start in cold conditions. The engine speed should not exceed 1500 rev/min until the oil pressure has increased.

NOTICE
Do not operate the glow plugs for more than 60 seconds at one time. Damage to the glow plugs could occur.

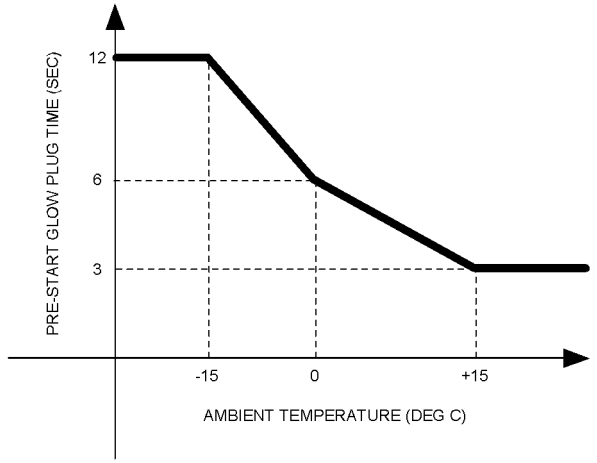


Illustration 45 g06201074

**2.** Turn the engine start switch to the HEAT position. Hold the engine start switch in the HEAT position for time shown in illustration 45 . This action will activate the glow plugs and aid in the starting of the engine.

NOTICE
Do not crank the engine for more than 30 seconds. Allow the electric starting motor to cool for two minutes before cranking the engine again.

**3.** When the glow plug indicator light is illuminated, turn the engine start switch to the START position and crank the engine.

**4.** When the engine starts, release the engine start switch.

**5.** Slowly move the throttle lever to the low idle position and allow the engine to idle. Refer to the Operation and Maintenance Manual, “After Starting Engine” topic.

**Note:** If the glow plug indicator light flashes for 2 to 3 seconds or fails to illuminate, a malfunction exists in the cold start system. Do not use ether or other starting fluids to start the engine.

**6.** If the engine does not start, release the engine start switch and allow the electric starting motor to cool. Then, repeat steps 2 through step 5.

**7.** Turn the engine start switch to the OFF position to stop the engine.

i05287569

# Cold Weather Starting

**SMCS Code:** 1000; 1250; 1450; 1453; 1456; 1900

**WARNING**

**Do not use aerosol types of starting aids such as ether. Such use could result in an explosion and personal injury.**

Startability will be improved at temperatures below −18 °C (0 °F) from the use of a jacket water heater or extra battery capacity.

When No. 2 diesel fuel is used, the following items provide a means of minimizing starting problems and fuel problems in cold weather: engine oil pan heaters, jacket water heaters, fuel heaters and fuel line insulation.

Use the procedure that follows for cold weather starting.

**1.** The governor control needs to be in the LOW IDLE position if the temperature is below 0 °C (32 °F).

NOTICE
Do not operate the glow plugs for more than 60 seconds at one time. Damage to the glow plugs could occur.

**2.** Turn the keyswitch to the HEAT position until the glow plug indicator lamp illuminates.

NOTICE
Do not crank the engine for more than 30 seconds. Allow the electric starting motor to cool for two minutes before cranking the engine again.

**3.** Turn the keyswitch to the START position.

**4.** When the engine starts, release the keyswitch.

**5.** If the engine does not start, release the keyswitch and allow the starter motor to cool. Then, repeat steps 2 through step 4.

6. Allow the engine to idle for 3 to 5 minutes, or allow the engine to idle until the water temperature indicator begins to rise. The engine should run at low idle smoothly until speed is gradually increased to high idle. Allow the white smoke to disperse before proceeding with normal operation.
7. Operate the engine at low load until all systems reach operating temperature. Check the gauges during the warm-up period.

i02242604

# Starting with Jump Start Cables

**SMCS Code:** 1000; 1401; 1402; 1900

**⚠ WARNING**

**Improper jump start cable connections can cause an explosion resulting in personal injury.**

**Prevent sparks near the batteries. Sparks could cause vapors to explode. Do not allow jump start cable ends to contact each other or the engine.**

If the installation is not equipped with a backup battery system, it may be necessary to start the engine from an external electrical source.

First, determine the reason that it is necessary to start with power from an external source.

Many batteries which are considered unusable are still rechargeable. After jump starting, the alternator may not be able to fully recharge batteries that are severely discharged. The batteries must be charged to the proper voltage with a battery charger. For information on testing and charging, refer to the Special Instruction, SEHS7633, “Battery Test Procedure”.

NOTICE
Using a battery source with the same voltage as the electric starting motor. Use ONLY equal voltage for jump starting. The use of higher voltage will damage the electrical system.

Do not reverse the battery cables. The alternator can be damaged. Attach ground cable last and remove first.

When using an external electrical source to start the engine, turn the generator set control switch to the “OFF” position. Turn all electrical accessories OFF before attaching the jump start cables.

Ensure that the main power switch is in the OFF position before attaching the jump start cables to the engine being started.

1. Turn the start switch on the stalled engine to the OFF position. Turn off all accessories.
2. Connect one positive end of the jump start cable to the positive cable terminal of the discharged battery. Connect the other positive end of the jump start cable to the positive cable terminal of the electrical source.
3. Connect one negative end of the jump start cable to the negative cable terminal of the electrical source. Connect the other negative end of the jump start cable to the engine block or to the chassis ground. This procedure helps to prevent potential sparks from igniting combustible gases that are produced by some batteries.
4. Charge the batteries. The engine will not continue to run after starting if the batteries have not been charged.
5. Start the engine.
6. Immediately after the stalled engine is started, disconnect the jump start cables in reverse order.

i01646248

# After Starting Engine

**SMCS Code:** 1000

**Note:** In temperatures from 0 to 60°C (32 to 140°F), the warm-up time is approximately three minutes. In temperatures below 0°C (32°F), additional warm-up time may be required.

**Note:** Ensure that the self test for the monitoring system (if equipped) is completed before operating the engine under load.

When the engine idles during warm-up, observe the following conditions:

- Check for any fluid or for any air leaks at idle rpm and at one-half full rpm (no load on the engine) before operating the engine under load. This is not possible in some applications.
- Operate the engine at low idle until all systems achieve operating temperatures. Check all gauges during the warm-up period.

**Note:** Gauge readings should be observed and the data should be recorded frequently while the engine is operating. Comparing the data over time will help to determine normal readings for each gauge. Comparing data over time will also help detect abnormal operating developments. Significant changes in the readings should be investigated.

# Engine Operation

i06545704

## Engine Operation

**SMCS Code:** 1000

Proper operation and maintenance are key factors in obtaining the maximum life and economy of the engine. If the directions in the Operation and Maintenance Manual are followed, costs can be minimized and engine service life can be maximized.

The time that is needed for the engine to reach normal operating temperature can be less than the time needed for a walk-around inspection of the engine.

After the engine is started and after the engine reaches normal operating temperature, the engine can be operated at the rated rpm. The engine will reach normal operating temperature faster when the engine is at rated speed. The engine will reach normal operating temperature faster when the engine is at low-power demand. This procedure is more effective than idling the engine at no load. The engine should reach operating temperature in a few minutes.

Gauge readings should be observed and the data should be recorded frequently while the engine is operating. Comparing the data over time will help to determine normal readings for each gauge. Comparing data over time will also help detect abnormal operating developments. Significant changes in the readings should be investigated.

Engines rated for constant speed use are allowed to complete a starting sequence, an operation at a single constant speed, and a shutdown sequence. Every time the engine is run, each of these operations should occur only once. The starting sequence and shutdown sequence can include a short period of operation at the low idle speed for purposes of warming up and cooling down the engine or driven equipment. The emissions type approval is not valid for operation of a constant speed engine in a manner different from that described above.

i00613522

## Engine Warm-up

**SMCS Code:** 1000

1. Run the engine at low idle for three to five minutes, or run the engine at low idle until the jacket water temperature starts to rise.

   More time may be necessary when the temperature is below −18°C (0°F).

2. Check all of the gauges during the warm-up period.
3. Perform another walk-around inspection. Check the engine for fluid leaks and air leaks.
4. Increase the rpm to the rated rpm. Check for fluid leaks and air leaks. The engine may be operated at full rated rpm and at full load when the jacket water temperature reaches 60°C (140°F).

i01646335

## Engaging the Driven Equipment

**SMCS Code:** 1000

1. Operate the engine at one-half of the rated rpm, when possible.
2. Engage the driven equipment without a load on the equipment, when possible.

   Interrupted starts put excessive stress on the drive train. Interrupted starts also waste fuel. To get the driven equipment in motion, engage the clutch smoothly with no load on the equipment. This method should produce a start that is smooth and easy. The engine rpm should not increase and the clutch should not slip.
3. Ensure that the ranges of the gauges are normal when the engine is operating at one-half of the rated rpm. Ensure that all gauges operate properly.
4. Increase the engine rpm to the rated rpm. Always increase the engine rpm to the rated rpm before the load is applied.
5. Apply the load. Begin operating the engine at low load. Check the gauges and equipment for proper operation. After normal oil pressure is reached and the temperature gauge begins to move, the engine may be operated at full load. Check the gauges and equipment frequently when the engine is operated under load.

   Extended operation at low idle or at reduced load may cause increased oil consumption and carbon buildup in the cylinders. This carbon buildup results in a loss of power and/or poor performance.

i01432412

# Fuel Conservation Practices

**SMCS Code:** 1000; 1250

The efficiency of the engine can affect the fuel economy. Caterpillar's design and technology in manufacturing provides maximum fuel efficiency in all applications. Follow the recommended procedures in order to attain optimum performance for the life of the engine.

- Avoid spilling fuel.

Fuel expands when the fuel is warmed up. The fuel may overflow from the fuel tank. Inspect fuel lines for leaks. Repair the fuel lines, as needed.

- Be aware of the properties of the different fuels. Use only the recommended fuels.
- Avoid unnecessary idling.

Shut off the engine rather than idle for long periods of time.

- Observe the service indicator frequently. Keep the air cleaner elements clean.
- Maintain a good electrical system.

One bad battery cell will overwork the alternator. This will consume excess power and excess fuel.

- Ensure that the belts are properly adjusted. The belts should be in good condition.
- Ensure that all of the connections of the hoses are tight. The connections should not leak.
- Ensure that the driven equipment is in good working order.
- Cold engines consume excess fuel. Utilize heat from the jacket water system and the exhaust system, when possible. Keep cooling system components clean and keep cooling system components in good repair. Never operate the engine without water temperature regulators. All of these items will help maintain operating temperatures.
- Settings for the fuel system and the limits for the operating altitude are stamped on the Engine Information Plate. If an engine is moved to a higher altitude, the settings must be changed by a Caterpillar dealer. Changing the settings will help to provide the maximum efficiency for the engine. Engines can be operated safely at higher altitudes, but the engines will deliver less horsepower. The fuel settings should be changed by a Caterpillar dealer in order to obtain the rated horsepower.

# Engine Stopping

i01433818

## Stopping the Engine

**SMCS Code:** 1000; 7000

**Note:** Individual applications will have different control systems. Ensure that the shutoff procedures are understood. Use the following general guidelines in order to stop the engine.

**1.** Reduce the engine rpm to low idle.

**2.** Remove the load from the engine.

**3.** If the engine has been operated at low loads, run the engine at low idle for 30 seconds before you stop the engine.

**4.** If the engine has been operated at high load, increase engine rpm to no more than 1/2 rated rpm for three to five minutes.

This reduces coolant temperatures and oil temperatures. A reduction in these temperatures stabilizes internal engine coolant and oil temperatures.

**5.** Reduce the engine rpm to low idle before stopping the engine.

**6.** After the cool down period, turn the start switch to the OFF position.

i01171573

## Emergency Stopping

**SMCS Code:** 1000; 7418

NOTICE
Emergency shutoff controls are for EMERGENCY use ONLY. DO NOT use emergency shutoff devices or controls for normal stopping procedure.

Ensure that any components for the external system that support the engine operation are secured after the engine is stopped.

### Emergency Stop Button

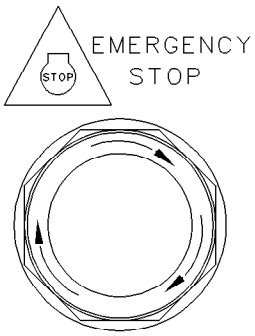


Illustration 46 g00104303
Typical emergency stop button

The emergency stop button is in the OUT position for normal engine operation. Push the emergency stop button. The engine will not start when the button is locked. Turn the button clockwise in order to reset.

NOTICE
Stopping the engine immediately after it has been working under load can result in overheating and accelerated wear of the engine components.

If the engine has been operating at high rpm and/or high loads, run the engine at low idle for at least three minutes to reduce and stabilize the internal engine temperature before stopping the engine.

i02242518

## After Stopping Engine

**SMCS Code:** 1000

**Note:** Before you check the engine oil, do not operate the engine for at least 10 minutes in order to allow the engine oil to return to the oil pan.

- Check the crankcase oil level. Maintain the oil level between the “ADD” mark and the “FULL” mark on the oil level gauge.
- If necessary, perform minor adjustments. Repair any leaks and tighten any loose bolts.
- Note the service hour meter reading. Perform the maintenance that is in the Operation and Maintenance Manual, “Maintenance Interval Schedule”.
- Fill the fuel tank in order to help prevent accumulation of moisture in the fuel. Do not overfill the fuel tank.

NOTICE
Only use antifreeze/coolant mixtures that are recommended in this Operation and Maintenance Manual, “Refill Capacities and Recommendations”.

- Allow the engine to cool. Check the coolant level. Maintain the cooling system at 13 mm (0.5 inch) from the bottom of the pipe for filling.
- If freezing temperatures are expected, check the coolant for proper antifreeze protection. The cooling system must be protected against freezing to the lowest expected outside temperature. Add the proper coolant/water mixture, if necessary.
- Perform all required periodic maintenance on all driven equipment. This maintenance is outlined in the instructions from the OEM.

# Cold Weather Operation

i01457051

## Radiator Restrictions

**SMCS Code:** 1353; 1396

Caterpillar discourages the use of airflow restriction devices that are mounted in front of radiators. Airflow restriction can cause the following conditions:

- High exhaust temperatures
- Power loss
- Excessive fan usage
- Reduction in fuel economy

If an airflow restriction device must be used, the device should have a permanent opening directly in line with the fan hub. The device must have a minimum opening dimension of at least 770 $cm^2$ (120 $in^2$).

A centered opening that is directly in line with the fan hub is specified in order to prevent an interrupted airflow on the fan blades. Interrupted airflow on the fan blades could cause a fan failure.

Caterpillar recommends a warning device for the inlet manifold temperature and/or the installation of an inlet air temperature gauge. The warning device for the inlet manifold temperature should be set at 75 °C (167 °F). The inlet manifold air temperature should not exceed 75 °C (167 °F). Temperatures that exceed this limit can cause power loss and potential engine damage.

i08230315

## Fuel and the Effect from Cold Weather

**SMCS Code:** 1000; 1250

The following fuels are the grades that are available for Cat engines:

- No. 1
- No. 2
- Blend of No. 1 and No. 2

No. 2 diesel fuel is the most commonly used fuel. Either No. 1 diesel fuel or a blend of No. 1 and No. 2 is best suited for cold-weather operation.

Quantities of No. 1 diesel fuel are limited. No. 1 diesel fuels are available during the months of the winter in the colder climates. During cold-weather operation, if No. 1 diesel fuel is not available, use No. 2 diesel fuel, if necessary.

There are three major differences between No. 1 and No. 2 diesel fuel. No. 1 diesel fuel has the following properties:

- Lower cloud point
- Lower pour point
- Lower rating of kJ (BTU) per unit volume of fuel

When No. 1 diesel fuel is used, a decrease in power and in fuel efficiency may be noticed.

The cloud point is the temperature when a cloud of wax crystals begins to form in the fuel. These crystals can cause the fuel filters to plug. The pour point is the temperature when diesel fuel will thicken. The diesel fuel becomes more resistant to flow through fuel pumps and through fuel lines.

Be aware of these values when diesel fuel is purchased. Anticipate the average ambient temperature of the area. Engines that are fueled in one climate may not operate well if the engines are moved to another climate. Problems can result due to changes in temperature.

Before troubleshooting for low power or for poor performance in the winter, check the type of fuel that is being used.

When No. 2 diesel fuel is used, the following components provide a means of minimizing problems in cold weather:

- Starting aids
- Engine oil pan heaters
- Engine coolant heaters
- Fuel heaters
- Fuel line insulation

For more information on cold-weather operation, see Special Publication, SEBU5898, “Cold-Weather Recommendations”.

i08193976

## Fuel Related Components in Cold Weather

**SMCS Code:** 1000; 1250

### Fuel Tanks

Condensation can form in partially filled fuel tanks. Top off the fuel tanks after you operate the engine.

Fuel tanks should contain some provision for draining water and sediment from the bottom of the tanks. Some fuel tanks use supply pipes that allow water and sediment to settle below the end of the fuel supply pipe.

Some fuel tanks use supply lines that take fuel directly from the bottom of the tank. If the engine is equipped with this system, regular maintenance of the fuel system filter is important.

Drain the water and sediment from any fuel storage tank at the following intervals: weekly, oil changes and refueling of the fuel tank. This procedure will help prevent water and/or sediment from being pumped from the fuel storage tank and into the engine fuel tank.

## Fuel Filters

A primary fuel filter can be installed between the fuel tank and the engine fuel inlet. After you change the fuel filter, always prime the fuel system to remove air bubbles from the fuel system. Refer to the Operation and Maintenance Manual in the Maintenance Section for more information on priming the fuel system.

The micron rating and the location of a primary fuel filter is important in cold-weather operation. The primary fuel filter and the fuel supply line are the most common components that are affected by cold fuel.

NOTICE
Caterpillar requires the use of a 4 micron(c) secondary fuel filter for the following reasons: to maximize fuel system life and to prevent premature wear out from abrasive particles in the fuel. Cat high efficiency fuel filters meet these requirements. Consult your Cat dealer for the proper part numbers.

## Fuel Heaters

Fuel heaters help to prevent fuel filters from plugging in cold weather due to waxing. A fuel heater should be installed in the fuel system before the primary fuel filter.

The following fuel heaters are recommended for Caterpillar engines:

- 7C-3557 Fuel Heater Group
- 7C-3558 Heater Kit

For further information on fuel heaters, consult your Caterpillar dealer.

Disconnect the fuel heater in warm weather.

**Note:** Fuel heaters that are controlled by the water temperature regulator or self-regulating fuel heaters should be used with this engine. Fuel heaters that are not controlled by the water temperature regulator can heat the fuel more than 65°C (149°F). A loss of engine power can occur if the fuel supply temperature exceeds 37°C (100°F).

**Note:** Heat exchanger type fuel heaters should have a bypass provision to prevent overheating of the fuel in warm-weather operation.

# Maintenance Section

# Refill Capacities

i04040209

## Refill Capacities and Recommendations

**SMCS Code:** 1348; 1395; 7560

**S/N:** C6F1–Up

**S/N:** C6H1–Up

**S/N:** C7H1–Up

**S/N:** C6J1–Up

**S/N:** C7J1–Up

**S/N:** C6K1–Up

**S/N:** C6L1–Up

**S/N:** G7L1–Up

**S/N:** C6M1–Up

**S/N:** C6N1–Up

**S/N:** G8N1–Up

**S/N:** C8W1–Up

**S/N:** C7Y1–Up

**S/N:** C8Y1–Up

**S/N:** C8Z1–Up

## Engine Oil

NOTICE
These recommendations are subject to change without notice. Contact your local Caterpillar dealer for the most up-to-date recommendations.

### API Oils

The Engine Oil Licensing and Certification System by the American Petroleum Institute (API) is recognized by Caterpillar. For detailed information about this system, see the latest edition of the “API publication No. 1509”. Engine oils that bear the API symbol are authorized by API.

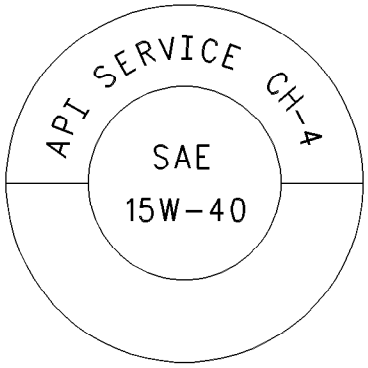


Illustration 47 g00546535
Typical API symbol

Diesel engine oils CC, CD, CD-2, and CE have not been API authorized classifications since January 1, 1996. Table 11 summarizes the status of the classifications.

Table 11

| API Classifications | |
|---|---|
| **Current** | **Obsolete** |
| CI-4(1). CH-4(1) . CG-4(2). CF-4(3) | CE |
| CF(4) | CC, CD |
| CF-2(5) | CD-2(5) |

(1) **API CH-4 and CI-4 oils are acceptable if the requirements of Caterpillar's ECF-1 (Engine Crankcase Fluid specification-1) are met. CH-4 and CI-4 oils that have not met the requirements of Caterpillar's ECF-1 Specification may cause reduced engine life.**
(2) API CG-4 oils are acceptable for all Caterpillar diesel engines. When the API CG-4 oils are used, the oil drain interval should not exceed the standard oil drain interval for your engine.
(3) API CF-4 oils are not recommended for this series of Caterpillar diesel engines. For all other commercial diesel engines, the oil drain interval should not exceed 50 percent of the standard oil drain interval for your engine with a maximum of 125 hours.
(4) API CF oils are not recommended for this series of Caterpillar engines and smaller Direct Injection (DI) diesel engines.
(5) API CF-2 and CD-2 oils are classifications for two-cycle diesel engines. Caterpillar does not sell engines that utilize the CD-2 and the API CF-2 oils.

**Note:** When oil meets more than one API classification, the applicable footnote is determined by the highest API classification that is met.

**Example** – An oil meets both the API CH-4 and the API CF oil classifications. In this case, the API CH-4 applies.

## Cat DEO (Diesel Engine Oil)

Caterpillar Oils have been developed and tested in order to provide the full performance and service life that has been designed and built into Caterpillar Engines. Caterpillar Oils are currently used to fill diesel engines at the factory. These oils are offered by Caterpillar dealers for continued use when the engine oil is changed. Consult your Caterpillar dealer for more information on these oils.

Due to significant variations in the quality and in the performance of commercially available oils, Caterpillar makes the following recommendations:

- **Cat DEO (Diesel Engine Oil) (10W-30)**
- **Cat DEO (Diesel Engine Oil) (15W-40)**

Caterpillar multigrade DEO is formulated with the correct amounts of detergents, dispersants, and alkalinity in order to provide superior performance in Caterpillar Diesel Engines.

Caterpillar multigrade DEO is available in various viscosity grades that include SAE 10W-30 and SAE 15W-40. To choose the correct viscosity grade for the ambient temperature, see Table 12 . Multigrade oils provide the correct viscosity for a broad range of operating temperatures.

Multigrade oils are effective in maintaining low oil consumption and low levels of piston deposits.

Caterpillar multigrade DEO can be used in other diesel engines and in gasoline engines. See the engine manufacturers guide for the recommended specifications. Compare the specifications to the specifications of Caterpillar multigrade DEO. The current industry standards for Caterpillar DEO are listed on the product label and on the data sheets for the product.

Consult your Caterpillar dealer for part numbers and for available sizes of containers.

**Note:** Caterpillar SAE 15W-40 multigrade DEO exceeds the performance requirements for the following API classifications: CI-4, CH-4, CG-4, CF-4 and CF. The Caterpillar multigrade DEO exceeds the requirements of the Caterpillar specification that is ECF-1 (Engine Crankcase Fluid-1). The Caterpillar SAE 15W-40 multigrade DEO passes the following proprietary tests: sticking of the piston ring, oil control tests, wear tests and soot tests. Proprietary tests help ensure that Caterpillar multigrade oil provides superior performance in Caterpillar Diesel Engines. In addition, Caterpillar multigrade oil exceeds many of the performance requirements of other manufacturers of diesel engines. Therefore, this oil is an excellent choice for many mixed fleets. **True high performance oil is produced with a combination of the following factors: industry standard tests, proprietary tests, field tests and prior experience with similar formulations. The design and the development of Caterpillar lubricants that are both high performance and high quality are based on these factors.**

**Note:** Non-Caterpillar commercial oils are second choice oils.

## Commercial Oils

**Note:** If Caterpillar Multigrade DEO is not used, use only commercial oils that meet the following classifications.

- API CH-4 multigrade oils and API CI-4 multigrade oils are acceptable if the requirements of Caterpillar's ECF-1 (Engine Crankcase Fluid specification-1) are met. CH-4 oils and CI-4 oils that have not met the requirements of Caterpillar's ECF-1 Specification may cause reduced engine life.
- API CG-4 multigrade oils are acceptable for all Caterpillar diesel engines. When the API CG-4 oils are used, the oil drain interval should not exceed the standard oil drain interval for your engine.
- API CF-4 multigrade oils are not recommended for this series of diesel engines. For all other smaller commercial diesel engines, the oil drain interval should not exceed 50 percent of the standard oil drain interval for your engine.

NOTICE
In selecting oil for any engine application, both the oil viscosity and oil performance classification/specification as specified by the engine manufacturer must be defined and satisfied. Using only one of these parameters will not sufficiently define oil for an engine application.

In order to make the proper choice of a commercial oil, refer to the following explanations:

**API CI-4** – API CI-4 oils were developed in order to meet the requirements of high performance diesel engines that use cooled Exhaust Gas Recirculation (EGR). API CI-4 oils are acceptable if the requirements of Caterpillar's ECF-1 (Engine Crankcase Fluid specification-1) are met.

**API CH-4** – API CH-4 oils were developed in order to protect low emissions diesel engines that use a 0.05 percent level of fuel sulfur. However, API CH-4 oils may be used with higher sulfur fuels. API CH-4 oils are acceptable if the requirements of Caterpillar's ECF-1 (Engine Crankcase Fluid specification-1) are met.

**Note: CH-4 oils and CI-4 oils that have not met the requirements of Caterpillar's ECF-1 Specification may cause reduced engine life.**

NOTICE
Failure to follow these oil recommendations can cause shortened engine service life due to deposits and/or excessive wear.

**Note:** Refer to Special Publication, SEBU6251, “Caterpillar Commercial Diesel Engine Fluids Recommendations” for additional information that relates to lubrication for your engine.

## Lubricant Viscosity Recommendations

The proper SAE viscosity grade of oil is determined by the minimum ambient temperature during cold engine start-up, and the maximum ambient temperature during engine operation.

Refer to Table 12 (minimum temperature) in order to determine the required oil viscosity for starting a cold engine.

Refer to Table 12 (maximum temperature) in order to select the oil viscosity for engine operation at the highest ambient temperature that is anticipated.

**Note:** Generally, use the highest oil viscosity that is available to meet the requirement for the temperature at start-up.

If ambient temperature conditions at engine start-up require the use of multigrade SAE 0W oil, SAE 0W-40 viscosity grade is preferred over SAE 0W-20 or SAE 0W-30.

Table 12

| Engine Oil Viscosities for Ambient Temperatures | | |
|---|---|---|
| | Ambient Temperature | |
| Viscosity Grade | Minimum | Maximum |

(continued)

(Table 12, contd)

| | | |
|---|---|---|
| SAE 0W-20 | −40 °C (−40 °F) | 10 °C (50 °F) |
| SAE 0W-30 | −40 °C (−40 °F) | 30 °C (86 °F) |
| SAE 0W-40 | −40 °C (−40 °F) | 40 °C (104 °F) |
| SAE 5W-30 | −30 °C (−22 °F) | 30 °C (86 °F) |
| SAE 5W-40 | −30 °C (−22 °F) | 50 °C (122 °F) |
| SAE 10W-30 | −18 °C (0 °F) | 40 °C (104 °F) |
| SAE 10W-40 | −18 °C (0 °F) | 50 °C (122 °F) |
| SAE 15W-40 | −9.5 °C (15 °F) | 50 °C (122 °F) |

**Note:** Supplemental heat is recommended below the minimum recommended ambient temperature.

## S·O·S Oil Analysis

Caterpillar has developed a tool for maintenance management that evaluates oil degradation and the tool also detects the early signs of wear on internal components. The Caterpillar tool for oil analysis is called S·O·S Oil Analysis and the tool is part of the S·O·S Services program. S·O·S Oil Analysis divides oil analysis into three categories:

- Wear Analysis
- Oil condition
- Additional tests

The wear analysis monitors metal particles, some oil additives, and some contaminants.

Oil condition uses infrared (IR) analysis to evaluate the chemistry of the oil. Infrared analysis is also used to detect certain types of contamination.

Additional tests are used to measure contamination levels from water, fuel, or coolant. Oil viscosity and corrosion protection can be evaluated, as needed.

Refer to Special Publication, SEBU6251, “Caterpillar Commercial Diesel Engine Fluids Recommendations” or contact your local Caterpillar dealer for additional information concerning the S·O·S Oil Analysis program.

## Refill Capacities for the Lubrication System

The refill capacities for the engine crankcase reflect the approximate capacity of the crankcase or sump plus standard oil filters. Auxiliary oil filter systems will require additional oil. Refer to the OEM specifications for the capacity of the auxiliary oil filter.

Table 13

| C0.5 Engine Approximate Refill Capacities | | |
|---|---|---|
| **Compartment or System** | **Min** | **Max** |
| Crankcase Oil Sump (Standard)(1) | 1.6 L (1.7 qt) | 2.01 L (2.1 qt) |
| External System (OEM)(2) | | |
| Total Lubrication System(3) | | |

(1) These values are the approximate capacities for the crankcase oil sump which include the standard oil filters that are installed at the factory.
(2) Enter the capacity for the External System in this row. Refer to either Caterpillar specifications or OEM specifications for further information. Engines with auxiliary oil filters will require additional oil. Refer to the OEM specifications for the capacity of the auxiliary oil filter.
(3) The Total Lubrication System includes the capacity for the Crankcase Oil Sump plus the capacity for the External System. Enter the total in this row.

Table 14

| C0.7 Engine Approximate Refill Capacities | | |
|---|---|---|
| **Compartment or System** | **Min** | **Max** |
| Crankcase Oil Sump (Standard)(1) | 2.35 L (2.5 qt) | 3.05 L (3.2 qt) |
| External System (OEM)(2) | | |
| Total Lubrication System(3) | | |

(1) These values are the approximate capacities for the crankcase oil sump which include the standard oil filters that are installed at the factory.
(2) Enter the capacity for the External System in this row. Refer to either Caterpillar specifications or OEM specifications for further information. Engines with auxiliary oil filters will require additional oil. Refer to the OEM specifications for the capacity of the auxiliary oil filter.
(3) The Total Lubrication System includes the capacity for the Crankcase Oil Sump plus the capacity for the External System. Enter the total in this row.

Table 15

| C1.1 Engine Approximate Refill Capacities | | |
|---|---|---|
| **Compartment or System** | **Min** | **Max** |
| Crankcase Oil Sump (Standard)(1) | 3.4 L (3.6 qt) | 4.4 L (4.6 qt) |
| External System (OEM)(2) | | |
| Total Lubrication System(3) | | |

(1) These values are the approximate capacities for the crankcase oil sump which include the standard oil filters that are installed at the factory.

(continued)

(Table 15, contd)

(2) Enter the capacity for the External System in this row. Refer to either Caterpillar specifications or OEM specifications for further information. Engines with auxiliary oil filters will require additional oil. Refer to the OEM specifications for the capacity of the auxiliary oil filter.
(3) The Total Lubrication System includes the capacity for the Crankcase Oil Sump plus the capacity for the External System. Enter the total in this row.

Table 16

| C1.5 Turbocharged Engines and Naturally Aspirated Engines Approximate Refill Capacities | | |
|---|---|---|
| **Compartment or System** | **Min** | **Max** |
| Crankcase Oil Sump (Standard)(1) | 4.5 L (4.8 qt) | 6 L (6.3 qt) |
| External System (OEM)(2) | | |
| Total Lubrication System(3) | | |

(1) These values are the approximate capacities for the crankcase oil sump which include the standard oil filters that are installed at the factory.
(2) Enter the capacity for the External System in this row. Refer to either Caterpillar specifications or OEM specifications for further information. Engines with auxiliary oil filters will require additional oil. Refer to the OEM specifications for the capacity of the auxiliary oil filter.
(3) The Total Lubrication System includes the capacity for the Crankcase Oil Sump plus the capacity for the External System. Enter the total in this row.

Table 17

| C1.6 Engine Approximate Refill Capacities | | |
|---|---|---|
| **Compartment or System** | **Min** | **Max** |
| Crankcase Oil Sump (Standard)(1) | 3.9 L (4.1 qt) | 5.6 L (6 qt) |
| External System (OEM)(2) | | |
| Total Lubrication System(3) | | |

(1) These values are the approximate capacities for the crankcase oil sump which include the standard oil filters that are installed at the factory.
(2) Enter the capacity for the External System in this row. Refer to either Caterpillar specifications or OEM specifications for further information. Engines with auxiliary oil filters will require additional oil. Refer to the OEM specifications for the capacity of the auxiliary oil filter.
(3) The Total Lubrication System includes the capacity for the Crankcase Oil Sump plus the capacity for the External System. Enter the total in this row.

Table 18

| C2.2 Turbocharged Engines and Naturally Aspirated Engines Approximate Refill Capacities | | |
|---|---|---|
| **Compartment or System** | **Min** | **Max** |
| Crankcase Oil Sump (Standard)(1) | 8.9 L (9.4 qt) | 10.6 L (11.2 qt) |
| External System (OEM)(2) | | |
| Total Lubrication System(3) | | |

(1) These values are the approximate capacities for the crankcase oil sump which include the standard oil filters that are installed at the factory.
(2) Enter the capacity for the External System in this row. Refer to either Caterpillar specifications or OEM specifications for further information. Engines with auxiliary oil filters will require additional oil. Refer to the OEM specifications for the capacity of the auxiliary oil filter.
(3) The Total Lubrication System includes the capacity for the Crankcase Oil Sump plus the capacity for the External System. Enter the total in this row.

## Lubricating Grease

Caterpillar provides a range of moderate greases to extremely high performance greases in order to service the entire line of Caterpillar products that operate throughout the wide variety of climates. From this variety of Caterpillar grease products, you will find at least one of the Caterpillar greases that will satisfy the performance requirements for any machine or equipment application.

Before selecting a grease for any application, the performance requirements must be determined. Consult the grease recommendations that are made by the OEM for the equipment when the equipment is operated in the expected conditions. Then, consult with your Caterpillar dealer for a list of greases and the following related characteristics.

- Performance specifications
- Available sizes of containers
- Part numbers

Always choose a grease that satisfies the recommendations that are specified by the equipment manufacturer for the application.

**Note: If it is necessary to choose a single grease to use for all of the equipment at one site, always choose a grease that satisfies the requirements of the most demanding application.**

Do not use the cost per pound as the only factor when you choose a grease. Use the grease that yields the lowest total cost of operation. The cost analysis should include the following factors:

- Parts
- Labor
- Downtime
- Cost of the grease

Greases that barely meet the minimum performance requirements can be expected to barely produce the minimum life of the parts.

**Note:** Take care when you change the type of grease. Take care when you change to a different supplier of grease. Some greases are not chemically compatible. Some brands of grease cannot be interchanged. **If you are in doubt about the compatibility of the old grease and the new grease, purge all of the old grease from the joint.** Consult your supplier in order to determine if the greases are compatible.

**Note: All Caterpillar brand of greases are compatible with each other.**

**Note:** Refer to Special Publication, SEBU6251, “Caterpillar Commercial Diesel Engine Fluids Recommendations” for additional information that relates to lubrication for your engine.

## General Fuel Information

Diesel fuels that meet the Caterpillar Specification for Distillate Diesel Fuel are recommended. These fuels will help to provide maximum engine service life and performance. In North America, diesel fuel that is identified as No. 1-D or No. 2-D in “ASTM D975” generally meet the specifications. Diesel fuels from other sources could exhibit detrimental properties that are not defined or controlled by this specification.

NOTICE
Operating with fuels that do not meet Caterpillar's recommendations can cause the following effects: starting difficulty, poor combustion, deposits in the fuel injectors, reduced service life of the fuel system, deposits in the combustion chamber and reduced service life of the engine.

Table 19

| Territory | Fuel Requirements from 2007 | | |
|---|---|---|---|
| EPA | Low Sulfur (500 ppm) maximum | | |
| EC | Sulfur/Power | Low sulfur (300 ppm) maximum for less than or equal to 19 kW | Sulphur (1000 ppm) maximum for greater than 19 kW |
| | Models | C0.5 and C0.7 | C1.1, C1.5NA, C1.5T, C1.6, C2.2NA, C2.2T and C2.2TA(1) |
| Non-Regulated Territories | Sulfur limit of less than 4000 ppm | | |

(1) NA is Naturally Aspirated. T is Turbocharged. TA is Turbocharged Aftercooled.

Table 20

| Territory | Fuel Requirements from 2010 | | |
|---|---|---|---|
| EPA | Ultra Low Sulfur (15 ppm) maximum | | |
| EC | Sulfur/Power | Ultra Low sulphur (10 ppm) maximum for less than or equal to 37 kW | Low sulphur (300 ppm) maximum for greater than 37 kW |
| | Models | C0.5, C0.7, C1.1, C1.5NA, C1.5T, C1.6 | C2.2NA, C2.2T and C2.2TA(1) |
| Non Regulated Territories | Sulfur limit of less than 4000 ppm | | |

(1) NA is Naturally Aspirated. T is Turbocharged. TA is Turbocharged Aftercooled.

**Note:** Refer to Special Publication, SEBU6251, “Caterpillar Commercial Diesel Engine Fluids Recommendations” for the Caterpillar Specification for distillate fuel and for additional information that relates to fuel for your engine.

### Refill Capacities for the Fuel System

Refer to the Operation and Maintenance Manual that is provided by the OEM for capacities of the fuel system.

## General Coolant Information

NOTICE
These recommendations are subject to change without notice. Contact your local Caterpillar dealer for the most up-to-date fluids recommendations.

NOTICE
Never add coolant to an overheated engine. Engine damage could result. Allow the engine to cool first.

NOTICE
If the engine is to be stored in, or shipped to an area with below freezing temperatures, the cooling system must be either protected to the lowest outside temperature or drained completely to prevent damage.

NOTICE
Frequently check the specific gravity of the coolant for proper freeze protection or for anti-boil protection.

Clean the cooling system for the following reasons:

- Contamination of the cooling system
- Overheating of the engine
- Foaming of the coolant

**Note:** Air pockets can form in the cooling system if the cooling system is filled at a rate that is greater than 5 L (1.3 US gal) per minute.

After you drain the cooling system and after you refill the cooling system, operate the engine. Operate the engine without the filler cap until the coolant reaches normal operating temperature and the coolant level stabilizes. Ensure that the coolant is maintained to the proper level.

NOTICE
Never operate an engine without water temperature regulators in the cooling system. Water temperature regulators help to maintain the engine coolant at the proper operating temperature. Cooling system problems can develop without water temperature regulators.

Refer to Special Instruction, SEBD0518, “Know Your Cooling System” and Special Instruction, SEBD0970, “Coolant and Your Engine” for more detailed information.

Many engine failures are related to the cooling system. The following problems are related to cooling system failures: overheating, leakage of the water pump, plugged radiators or heat exchangers and pitting of the cylinder liners.

These failures can be avoided with proper cooling system maintenance. Cooling system maintenance is as important as maintenance of the fuel system and the lubrication system. Quality of the coolant is as important as the quality of the fuel and the lubricating oil.

Coolant is normally composed of three elements: water, additives and glycol.

## Water

NOTICE
Never use water alone without Supplemental Coolant Additives (SCA) or without inhibited coolant. Water alone is corrosive at engine operating temperatures. Water alone does not provide adequate protection against boiling or freezing.

Water is used in the cooling system in order to transfer heat.

**Distilled water or deionized water is recommended for use in engine cooling systems.**

DO NOT use the following types of water in cooling systems: hard water, softened water that has been conditioned with salt and sea water.

If distilled water or deionized water is not available, use water with the properties that are listed in Table 21 .

Table 21

| Caterpillar Minimum Acceptable Water Requirements | | |
|---|---|---|
| **Property** | **Maximum Limit** | **ASTM Test** |
| Chloride (Cl) | 40 mg/L (2.4 grains/US gal) | “D512”, “D4327” |
| Sulfate ($SO_4$) | 100 mg/L (5.9 grains/US gal) | “D516” |
| Total Hardness | 170 mg/L (10 grains/US gal) | “D1126” |
| Total Solids | 340 mg/L (20 grain/US gal) | “D1888” |
| Acidity | pH of 5.5 to 9.0 | “D1293” |

For a water analysis, consult one of the following sources:

- Caterpillar dealer
- Local water utility company
- Agricultural agent
- Independent laboratory

## Additives

Additives help to protect the metal surfaces of the cooling system. A lack of coolant additives or insufficient amounts of additives enable the following conditions to occur:

- Corrosion
- Formation of mineral deposits
- Rust
- Scale
- Pitting and erosion from cavitation of the cylinder liner
- Foaming of the coolant

Many additives are depleted during engine operation. These additives must be replaced periodically. This can be done by adding Supplemental Coolant Additives (SCA) to Diesel Engine Antifreeze/Coolant (DEAC) or by adding ELC Extender to Extended Life Coolant (ELC).

Additives must be added at the proper concentration. Overconcentration of additives can cause the inhibitors to drop out-of-solution. The deposits can enable the following problems to occur:

- Formation of gel compounds
- Reduction of heat transfer
- Leakage of the water pump seal
- Plugging of radiators, coolers, and small passages

## Glycol

Glycol in the coolant helps to provide protection against the following conditions:

- Boiling
- Freezing
- Cavitation of the water pump and the cylinder liner

For optimum performance, Caterpillar recommends a 1:1 mixture of a water/glycol solution.

**Note:** Use a mixture that will provide protection against the lowest ambient temperature.

**Note:** 100 percent pure glycol will freeze at a temperature of −23 °C (−9 °F).

Most conventional heavy-duty Coolants use ethylene glycol. Propylene glycol may also be used. In a 1:1 mixture with water, ethylene and propylene glycol provide similar protection against freezing and boiling. See Tables 22 and 23 .

Table 22

| Ethylene Glycol | | |
|---|---|---|
| **Concentration** | **Freeze Protection** | **Boil Protection** |
| 50 Percent | −36 °C (−33 °F) | 106 °C (223 °F) |
| 60 Percent | −51 °C (−60 °F) | 111 °C (232 °F) |

NOTICE
Do not use propylene glycol in concentrations that exceed 50 percent glycol because of the reduced heat transfer capability of propylene glycol. Use ethylene glycol in conditions that require additional protection against boiling or freezing.

Table 23

| Propylene Glycol | | |
|---|---|---|
| **Concentration** | **Freeze Protection** | **Anti-Boil Protection** |
| 50 Percent | −29 °C (−20 °F) | 106 °C (223 °F) |

To check the concentration of glycol, use the 1U-7298 Coolant/Battery Tester (Degrees Celsius) or use the 1U-7297 Coolant/Battery Tester (Degrees Fahrenheit). The testers give readings that are immediate and accurate. The testers can be used with ethylene or propylene glycol.

## Coolant Recommendations

NOTICE
Do not use a commercial coolant/antifreeze that only meets the ASTM D3306 specification. This type of coolant/antifreeze is made for light duty automotive applications.

The following two coolants are used in Caterpillar diesel engines:

**Preferred** – Caterpillar Extended Life Coolant (ELC) or a commercial extended life coolant that meets the Caterpillar EC-1 specification

**Acceptable** – Caterpillar Diesel Engine Antifreeze (DEAC) or a commercial heavy-duty coolant that meets “ASTM D4985”, or “ASTM D6210” specifications

Caterpillar recommends a 1:1 mixture of water and glycol. This mixture of water and glycol will provide optimum heavy-duty performance as a coolant.

**Note:** Caterpillar DEAC does not require a treatment with an SCA at the initial fill. A commercial heavy-duty coolant that meets “ASTM D4985” or “ASTM D6210” specifications MAY require a treatment with an SCA at the initial fill. These coolants WILL require a treatment with an SCA on a maintenance basis.

Refer to Special Publication, SEBU6251, “Caterpillar Commercial Diesel Engine Fluids Recommendations” for additional information that relates to coolant.

## S·O·S Coolant Analysis

Table 24

| Recommended Interval | | |
|---|---|---|
| **Type of Coolant** | **Level 1** | **Level 2** |
| DEAC | Every 250 Hours | Yearly(1) |
| ELC | Not Required | Yearly |

(1) The Level 2 Coolant Analysis should be performed sooner if a problem is identified by a Level 1 Coolant Analysis.

**S·O·S Coolant Analysis (Level 1)**

A coolant analysis (Level 1) is a test of the properties of the coolant.

The following properties of the coolant are tested:

- Glycol concentration for freeze protection and boil protection
- Ability to protect from erosion and corrosion
- pH
- Conductivity
- Visual analysis
- Odor analysis

The results are reported, and appropriate recommendations are made.

Refer to the Maintenance Interval Schedule in this Operation and Maintenance Manual, “Cooling System Coolant Sample (Level 1) - Obtain” for a sampling location and the maintenance interval for collecting the coolant samples.

**S·O·S Coolant Analysis (Level 2)**

A coolant analysis (Level 2) is a comprehensive chemical evaluation of the coolant. This analysis is also a check of the overall condition of the inside of the cooling system.

The S·O·S Coolant Analysis has the following features:

- Full coolant analysis (Level 1)
- Identification of the source of metal corrosion and of contaminants
- Water hardness

- Identification of buildup of the impurities that cause corrosion
- Identification of buildup of the impurities that cause scaling

The results are reported, and appropriate recommendations are made.

Refer to the Maintenance Interval Schedule in this Operation and Maintenance Manual, “Cooling System Coolant Sample (Level 2) - Obtain” for a sampling location and the maintenance interval for collecting the coolant samples.

Testing the engine coolant is important to ensure that the engine is protected from internal cavitation and from corrosion. The analysis also tests the ability of the coolant to protect the engine from boiling and from freezing. The S·O·S Coolant Analysis can be done at your Caterpillar dealer. Caterpillar S·O·S Coolant Analysis is the best way to monitor the condition of your coolant and your cooling system. S·O·S Coolant Analysis is a program that is based on periodic samples.

Refer to Special Publication, SEBU6251, “Caterpillar Commercial Diesel Engine Fluids Recommendations” for additional information.

## Refill Capacity of the Cooling System

To maintain the cooling system, the Total Cooling System capacity must be known. The approximate capacity for the “Engine Only” cooling system is listed. External System capacities will vary among applications. Refer to the OEM specifications for the External System capacity. This capacity information will be needed in order to determine the amount of coolant that is required for the Total Cooling System.

Table 25

| C0.5 Engine<br>Approximate Refill Capacities | | |
|---|---|---|
| **Compartment or System** | **Liters** | **Quarts** |
| Engine Only | 1.1 | 1.2 |
| External System (OEM)(1) | | |
| Total Cooling System(2) | | |

(1) The External System includes a radiator or an expansion tank with the following components: heat exchanger, aftercooler and piping. Enter the capacity for the External System in this row. Refer to either Caterpillar specifications or OEM specifications for further information.
(2) The Total Cooling System includes the capacity for the “Engine Only” plus the capacity for the External System. Enter the total in this row.

Table 26

| C0.7 Engine<br>Approximate Refill Capacities | | |
|---|---|---|
| **Compartment or System** | **Liters** | **Quarts** |
| Engine Only | 1.2 | 1.3 |
| External System (OEM)(1) | | |
| Total Cooling System(2) | | |

(1) The External System includes a radiator or an expansion tank with the following components: heat exchanger, aftercooler and piping. Enter the capacity for the External System in this row. Refer to either Caterpillar specifications or OEM specifications for further information.
(2) The Total Cooling System includes the capacity for the “Engine Only” plus the capacity for the External System. Enter the total in this row.

Table 27

| C1.1 Engine<br>Approximate Refill Capacities | | |
|---|---|---|
| **Compartment or System** | **Liters** | **Quarts** |
| Engine Only | 1.9 | 2.0 |
| External System (OEM)(1) | | |
| Total Cooling System(2) | | |

(1) The External System includes a radiator or an expansion tank with the following components: heat exchanger, aftercooler and piping. Enter the capacity for the External System in this row. Refer to either Caterpillar specifications or OEM specifications for further information.
(2) The Total Cooling System includes the capacity for the “Engine Only” plus the capacity for the External System. Enter the total in this row.

Table 28

| C1.5 Turbocharged Engines and Naturally Aspirated Engines<br>Approximate Refill Capacities | | |
|---|---|---|
| **Compartment or System** | **Liters** | **Quarts** |
| Engine Only | 2.6 | 2.7 |
| External System (OEM)(1) | | |
| Total Cooling System(2) | | |

(1) The External System includes a radiator or an expansion tank with the following components: heat exchanger, aftercooler and piping. Enter the capacity for the External System in this row. Refer to either Caterpillar specifications or OEM specifications for further information.
(2) The Total Cooling System includes the capacity for the “Engine Only” plus the capacity for the External System. Enter the total in this row.

Table 29

| C1.6 Engine Approximate Refill Capacities | | |
|---|---|---|
| **Compartment or System** | **Liters** | **Quarts** |
| Engine Only | 2.4 | 2.5 |
| External System (OEM)(1) | | |
| Total Cooling System(2) | | |

(1) The External System includes a radiator or an expansion tank with the following components: heat exchanger, aftercooler and piping. Enter the capacity for the External System in this row. Refer to either Caterpillar specifications or OEM specifications for further information.
(2) The Total Cooling System includes the capacity for the “Engine Only” plus the capacity for the External System. Enter the total in this row.

Table 30

| C2.2 Turbocharged engines and Naturally Aspirated Engines Approximate Refill Capacities | | |
|---|---|---|
| **Compartment or System** | **Liters** | **Quarts** |
| Engine Only | 3.6 | 3.8 |
| External System (OEM)(1) | | |
| Total Cooling System(2) | | |

(1) The External System includes a radiator or an expansion tank with the following components: heat exchanger, aftercooler and piping. Enter the capacity for the External System in this row. Refer to either Caterpillar specifications or OEM specifications for further information.
(2) The Total Cooling System includes the capacity for the “Engine Only” plus the capacity for the External System. Enter the total in this row.

i08749650

# Refill Capacities and Recommendations

**SMCS Code:** 1348; 1395; 7560

**S/N:** G7P1–Up

## Engine Oil

NOTICE
These recommendations are subject to change without notice. Contact your local Caterpillar dealer for the most up-to-date recommendations.

### API Oils

The Engine Oil Licensing and Certification System by the American Petroleum Institute (API) is recognized by Caterpillar. For detailed information about this system, see the latest edition of the “API publication No. 1509”. Engine oils that bear the API symbol are authorized by API.

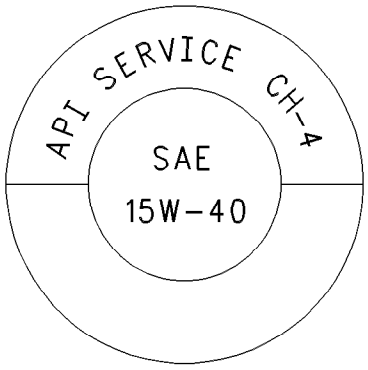


Illustration 48 g00546535
Typical API symbol

Diesel engine oils CC, CD, CD-2, and CE have not been API authorized classifications since January 1, 1996. Table 31 summarizes the status of the classifications.

Table 31

| API Classifications | |
|---|---|
| **Current** | **Obsolete** |
| CI-4(1). CH-4(1) . CG-4(2). CF-4(3) | CE |
| CF(4) | CC, CD |
| CF-2(5) | CD-2(5) |

(1) **API CH-4 and CI-4 oils are acceptable if the requirements of Caterpillar's ECF-1 (Engine Crankcase Fluid specification-1) are met. CH-4 and CI-4 oils that have not met the requirements of Caterpillar's ECF-1 Specification may cause reduced engine life.**
(2) API CG-4 oils are acceptable for all Caterpillar diesel engines. When the API CG-4 oils are used, the oil drain interval should not exceed the standard oil drain interval for your engine.
(3) API CF-4 oils are not recommended for this series of Caterpillar diesel engines. For all other commercial diesel engines, the oil drain interval should not exceed 50 percent of the standard oil drain interval for your engine with a maximum of 125 hours.
(4) API CF oils are not recommended for this series of Caterpillar engines and smaller Direct Injection (DI) diesel engines.
(5) API CF-2 and CD-2 oils are classifications for two-cycle diesel engines. Caterpillar does not sell engines that utilize the CD-2 and the API CF-2 oils.

**Note:** When oil meets more than one API classification, the applicable footnote is determined by the highest API classification that is met.

**Example** – An oil meets both the API CH-4 and the API CF oil classifications. In this case, the API CH-4 applies.

## Cat DEO (Diesel Engine Oil)

Caterpillar Oils have been developed and tested in order to provide the full performance and service life that has been designed and built into Caterpillar Engines. Caterpillar Oils are currently used to fill diesel engines at the factory. These oils are offered by Caterpillar dealers for continued use when the engine oil is changed. Consult your Caterpillar dealer for more information on these oils.

Due to significant variations in the quality and in the performance of commercially available oils, Caterpillar makes the following recommendations:

- **Cat DEO (Diesel Engine Oil) (10W-30)**
- **Cat DEO (Diesel Engine Oil) (15W-40)**

Caterpillar multigrade DEO is formulated with the correct amounts of detergents, dispersants, and alkalinity in order to provide superior performance in Caterpillar Diesel Engines.

Caterpillar multigrade DEO is available in various viscosity grades that include SAE 10W-30 and SAE 15W-40. To choose the correct viscosity grade for the ambient temperature, see Table 32 . Multigrade oils provide the correct viscosity for a broad range of operating temperatures.

Multigrade oils are effective in maintaining low oil consumption and low levels of piston deposits.

Caterpillar multigrade DEO can be used in other diesel engines and in gasoline engines. See the engine manufacturers guide for the recommended specifications. Compare the specifications to the specifications of Caterpillar multigrade DEO. The current industry standards for Caterpillar DEO are listed on the product label and on the data sheets for the product.

Consult your Caterpillar dealer for part numbers and for available sizes of containers.

**Note:** Caterpillar SAE 15W-40 multigrade DEO exceeds the performance requirements for the following API classifications: CI-4, CH-4, CG-4, CF-4 and CF. The Caterpillar multigrade DEO exceeds the requirements of the Caterpillar specification that is ECF-1 (Engine Crankcase Fluid-1). The Caterpillar SAE 15W-40 multigrade DEO passes the following proprietary tests: sticking of the piston ring, oil control tests, wear tests and soot tests. Proprietary tests help ensure that Caterpillar multigrade oil provides superior performance in Caterpillar Diesel Engines. In addition, Caterpillar multigrade oil exceeds many of the performance requirements of other manufacturers of diesel engines. Therefore, this oil is an excellent choice for many mixed fleets. **True high performance oil is produced with a combination of the following factors: industry standard tests, proprietary tests, field tests and prior experience with similar formulations. The design and the development of Caterpillar lubricants that are both high performance and high quality are based on these factors.**

**Note:** Non-Caterpillar commercial oils are second choice oils.

## Commercial Oils

**Note:** If Caterpillar Multigrade DEO is not used, use only commercial oils that meet the following classifications.

- API CH-4 multigrade oils and API CI-4 multigrade oils are acceptable if the requirements of Caterpillar's ECF-1 (Engine Crankcase Fluid specification-1) are met. CH-4 oils and CI-4 oils that have not met the requirements of Caterpillar's ECF-1 Specification may cause reduced engine life.
- API CG-4 multigrade oils are acceptable for all Caterpillar diesel engines. When the API CG-4 oils are used, the oil drain interval should not exceed the standard oil drain interval for your engine.
- API CF-4 multigrade oils are not recommended for this series of diesel engines. For all other smaller commercial diesel engines, the oil drain interval should not exceed 50 percent of the standard oil drain interval for your engine.

NOTICE
In selecting oil for any engine application, both the oil viscosity and oil performance classification/specification as specified by the engine manufacturer must be defined and satisfied. Using only one of these parameters will not sufficiently define oil for an engine application.

In order to make the proper choice of a commercial oil, refer to the following explanations:

**API CI-4** – API CI-4 oils were developed in order to meet the requirements of high performance diesel engines that use cooled Exhaust Gas Recirculation (EGR). API CI-4 oils are acceptable if the requirements of Caterpillar's ECF-1 (Engine Crankcase Fluid specification-1) are met.

**API CH-4** – API CH-4 oils were developed in order to protect low emissions diesel engines that use a 0.05 percent level of fuel sulfur. However, API CH-4 oils may be used with higher sulfur fuels. API CH-4 oils are acceptable if the requirements of Caterpillar's ECF-1 (Engine Crankcase Fluid specification-1) are met.

**Note: CH-4 oils and CI-4 oils that have not met the requirements of Caterpillar's ECF-1 Specification may cause reduced engine life.**

NOTICE
Failure to follow these oil recommendations can cause shortened engine service life due to deposits and/or excessive wear.

**Note:** Refer to Special Publication, SEBU6251, “Caterpillar Commercial Diesel Engine Fluids Recommendations” for additional information that relates to lubrication for your engine.

## Lubricant Viscosity Recommendations

The proper SAE viscosity grade of oil is determined by the minimum ambient temperature during cold engine start-up, and the maximum ambient temperature during engine operation.

Refer to Table 32 (minimum temperature) in order to determine the required oil viscosity for starting a cold engine.

Refer to Table 32 (maximum temperature) in order to select the oil viscosity for engine operation at the highest ambient temperature that is anticipated.

**Note:** Generally, use the highest oil viscosity that is available to meet the requirement for the temperature at start-up.

If ambient temperature conditions at engine start-up require the use of multigrade SAE 0W oil, SAE 0W-40 viscosity grade is preferred over SAE 0W-20 or SAE 0W-30.

Table 32

| Engine Oil Viscosities for Ambient Temperatures | | |
|---|---|---|
| | Ambient Temperature | |
| Viscosity Grade | Minimum | Maximum |

(continued)

(Table 32, contd)

| | | |
|---|---|---|
| SAE 0W-20 | −40 °C (−40 °F) | 10 °C (50 °F) |
| SAE 0W-30 | −40 °C (−40 °F) | 30 °C (86 °F) |
| SAE 0W-40 | −40 °C (−40 °F) | 40 °C (104 °F) |
| SAE 5W-30 | −30 °C (−22 °F) | 30 °C (86 °F) |
| SAE 5W-40 | −30 °C (−22 °F) | 50 °C (122 °F) |
| SAE 10W-30 | −18 °C (0 °F) | 40 °C (104 °F) |
| SAE 10W-40 | −18 °C (0 °F) | 50 °C (122 °F) |
| SAE 15W-40 | −9.5 °C (15 °F) | 50 °C (122 °F) |

**Note:** Supplemental heat is recommended below the minimum recommended ambient temperature.

## S·O·S Oil Analysis

Caterpillar has developed a tool for maintenance management that evaluates oil degradation and the tool also detects the early signs of wear on internal components. The Caterpillar tool for oil analysis is called S·O·S Oil Analysis and the tool is part of the S·O·S Services program. S·O·S Oil Analysis divides oil analysis into three categories:

- Wear Analysis
- Oil condition
- Additional tests

The wear analysis monitors metal particles, some oil additives, and some contaminants.

Oil condition uses infrared (IR) analysis to evaluate the chemistry of the oil. Infrared analysis is also used to detect certain types of contamination.

Additional tests are used to measure contamination levels from water, fuel, or coolant. Oil viscosity and corrosion protection can be evaluated, as needed.

Refer to Special Publication, SEBU6251, “Caterpillar Commercial Diesel Engine Fluids Recommendations” or contact your local Caterpillar dealer for additional information concerning the S·O·S Oil Analysis program.

## Refill Capacities for the Lubrication System

The refill capacities for the engine crankcase reflect the approximate capacity of the crankcase or sump plus standard oil filters. Auxiliary oil filter systems will require additional oil. Refer to the OEM specifications for the capacity of the auxiliary oil filter.

Table 33

| C1.5 Turbocharged Engines and Naturally Aspirated Engines<br>Approximate Refill Capacities | | |
|---|---|---|
| **Compartment or System** | **Min** | **Max** |
| Crankcase Oil Sump (Standard)(1) | 4.5 L (4.8 qt) | 6 L (6.3 qt) |
| External System (OEM)(2) | | |
| Total Lubrication System(3) | | |

(1) These values are the approximate capacities for the crankcase oil sump which include the standard oil filters that are installed at the factory.
(2) Enter the capacity for the External System in this row. Refer to either Caterpillar specifications or OEM specifications for further information. Engines with auxiliary oil filters will require additional oil. Refer to the OEM specifications for the capacity of the auxiliary oil filter.
(3) The Total Lubrication System includes the capacity for the Crankcase Oil Sump plus the capacity for the External System. Enter the total in this row.

## Lubricating Grease

Caterpillar provides a range of moderate greases to extremely high performance greases in order to service the entire line of Caterpillar products that operate throughout the wide variety of climates. From this variety of Caterpillar grease products, you will find at least one of the Caterpillar greases that will satisfy the performance requirements for any machine or equipment application.

Before selecting a grease for any application, the performance requirements must be determined. Consult the grease recommendations that are made by the OEM for the equipment when the equipment is operated in the expected conditions. Then, consult with your Caterpillar dealer for a list of greases and the following related characteristics.

- Performance specifications
- Available sizes of containers
- Part numbers

Always choose a grease that satisfies the recommendations that are specified by the equipment manufacturer for the application.

**Note: If it is necessary to choose a single grease to use for all of the equipment at one site, always choose a grease that satisfies the requirements of the most demanding application.**

Do not use the cost per pound as the only factor when you choose a grease. Use the grease that yields the lowest total cost of operation. The cost analysis should include the following factors:

- Parts
- Labor
- Downtime
- Cost of the grease

Greases that barely meet the minimum performance requirements can be expected to barely produce the minimum life of the parts.

**Note:** Take care when you change the type of grease. Take care when you change to a different supplier of grease. Some greases are not chemically compatible. Some brands of grease cannot be interchanged. **If you are in doubt about the compatibility of the old grease and the new grease, purge all of the old grease from the joint.** Consult your supplier in order to determine if the greases are compatible.

**Note: All Caterpillar brand of greases are compatible with each other.**

**Note:** Refer to Special Publication, SEBU6251, “Caterpillar Commercial Diesel Engine Fluids Recommendations” for additional information that relates to lubrication for your engine.

## General Fuel Information

Diesel fuels that meet the Caterpillar Specification for Distillate Diesel Fuel are recommended. These fuels will help to provide maximum engine service life and performance. In North America, diesel fuel that is identified as No. 1-D or No. 2-D in “ASTM D975” generally meet the specifications. Diesel fuels from other sources could exhibit detrimental properties that are not defined or controlled by this specification.

NOTICE
Operating with fuels that do not meet Caterpillar's recommendations can cause the following effects: starting difficulty, poor combustion, deposits in the fuel injectors, reduced service life of the fuel system, deposits in the combustion chamber and reduced service life of the engine.

Table 34

| Territory | Fuel Requirements from 2007 | | |
|---|---|---|---|
| EPA | Low Sulfur (500 ppm) maximum | | |
| EC | Sulfur/Power | Low sulfur (300 ppm) maximum for less than or equal to 19 kW | Sulphur (1000 ppm) maximum for greater than 19 kW |
| | Models | C0.5 and C0.7 | C1.1, C1.5NA, C1.5T, C1.6, C2.2NA, C2.2T and C2.2TA(1) |
| Non-Regulated Territories | Sulfur limit of less than 4000 ppm | | |

(1) NA is Naturally Aspirated. T is Turbocharged. TA is Turbocharged Aftercooled.

Table 35

| Territory | Fuel Requirements from 2010 | | |
|---|---|---|---|
| EPA | Ultra Low Sulfur (15 ppm) maximum | | |
| EC | Sulfur/Power | Ultra Low sulphur (10 ppm) maximum for less than or equal to 37 kW | Low sulphur (300 ppm) maximum for greater than 37 kW |
| | Models | C0.5, C0.7, C1.1, C1.5NA, C1.5T, C1.6 | C2.2NA, C2.2T and C2.2TA(1) |
| Non Regulated Territories | Sulfur limit of less than 4000 ppm | | |

(1) NA is Naturally Aspirated. T is Turbocharged. TA is Turbocharged Aftercooled.

**Note:** Refer to Special Publication, SEBU6251, “Caterpillar Commercial Diesel Engine Fluids Recommendations” for the Caterpillar Specification for distillate fuel and for additional information that relates to fuel for your engine.

### Refill Capacities for the Fuel System

Refer to the Operation and Maintenance Manual that is provided by the OEM for capacities of the fuel system.

## General Coolant Information

NOTICE
These recommendations are subject to change without notice. Contact your local Caterpillar dealer for the most up-to-date fluids recommendations.

NOTICE
Never add coolant to an overheated engine. Engine damage could result. Allow the engine to cool first.

NOTICE
If the engine is to be stored in, or shipped to an area with below freezing temperatures, the cooling system must be either protected to the lowest outside temperature or drained completely to prevent damage.

NOTICE
Frequently check the specific gravity of the coolant for proper freeze protection or for anti-boil protection.

Clean the cooling system for the following reasons:

- Contamination of the cooling system
- Overheating of the engine
- Foaming of the coolant

**Note:** Air pockets can form in the cooling system if the cooling system is filled at a rate that is greater than 5 L (1.3 US gal) per minute.

After you drain the cooling system and after you refill the cooling system, operate the engine. Operate the engine without the filler cap until the coolant reaches normal operating temperature and the coolant level stabilizes. Ensure that the coolant is maintained to the proper level.

NOTICE
Never operate an engine without water temperature regulators in the cooling system. Water temperature regulators help to maintain the engine coolant at the proper operating temperature. Cooling system problems can develop without water temperature regulators.

Refer to Special Instruction, SEBD0518, “Know Your Cooling System” and Special Instruction, SEBD0970, “Coolant and Your Engine” for more detailed information.

Many engine failures are related to the cooling system. The following problems are related to cooling system failures: overheating, leakage of the water pump, plugged radiators or heat exchangers and pitting of the cylinder liners.

These failures can be avoided with proper cooling system maintenance. Cooling system maintenance is as important as maintenance of the fuel system and the lubrication system. Quality of the coolant is as important as the quality of the fuel and the lubricating oil.

Coolant is normally composed of three elements: water, additives and glycol.

## Water

NOTICE
Never use water alone without Supplemental Coolant Additives (SCA) or without inhibited coolant. Water alone is corrosive at engine operating temperatures. Water alone does not provide adequate protection against boiling or freezing.

Water is used in the cooling system in order to transfer heat.

**Distilled water or deionized water is recommended for use in engine cooling systems.**

DO NOT use the following types of water in cooling systems: hard water, softened water that has been conditioned with salt and sea water.

If distilled water or deionized water is not available, use water with the properties that are listed in Table 36 .

Table 36

| Caterpillar Minimum Acceptable Water Requirements | | |
|---|---|---|
| **Property** | **Maximum Limit** | **ASTM Test** |
| Chloride (Cl) | 40 mg/L (2.4 grains/US gal) | “D512”, “D4327” |
| Sulfate ($SO_4$) | 100 mg/L (5.9 grains/US gal) | “D516” |
| Total Hardness | 170 mg/L (10 grains/US gal) | “D1126” |
| Total Solids | 340 mg/L (20 grain/US gal) | “D1888” |
| Acidity | pH of 5.5 to 9.0 | “D1293” |

For a water analysis, consult one of the following sources:

- Caterpillar dealer
- Local water utility company
- Agricultural agent
- Independent laboratory

## Additives

Additives help to protect the metal surfaces of the cooling system. A lack of coolant additives or insufficient amounts of additives enable the following conditions to occur:

- Corrosion
- Formation of mineral deposits
- Rust
- Scale
- Pitting and erosion from cavitation of the cylinder liner
- Foaming of the coolant

Many additives are depleted during engine operation. These additives must be replaced periodically. This can be done by adding Supplemental Coolant Additives (SCA) to Diesel Engine Antifreeze/Coolant (DEAC) or by adding ELC Extender to Extended Life Coolant (ELC).

Additives must be added at the proper concentration. Overconcentration of additives can cause the inhibitors to drop out-of-solution. The deposits can enable the following problems to occur:

- Formation of gel compounds
- Reduction of heat transfer
- Leakage of the water pump seal
- Plugging of radiators, coolers, and small passages

## Glycol

Glycol in the coolant helps to provide protection against the following conditions:

- Boiling
- Freezing
- Cavitation of the water pump and the cylinder liner

For optimum performance, Caterpillar recommends a 1:1 mixture of a water/glycol solution.

**Note:** Use a mixture that will provide protection against the lowest ambient temperature.

**Note:** 100 percent pure glycol will freeze at a temperature of −23 °C (−9 °F).

Most conventional heavy-duty Coolants use ethylene glycol. Propylene glycol may also be used. In a 1:1 mixture with water, ethylene and propylene glycol provide similar protection against freezing and boiling. See Tables 37 and 38 .

Table 37

| Ethylene Glycol | | |
|---|---|---|
| **Concentration** | **Freeze Protection** | **Boil Protection** |
| 50 Percent | −36 °C (−33 °F) | 106 °C (223 °F) |
| 60 Percent | −51 °C (−60 °F) | 111 °C (232 °F) |

NOTICE
Do not use propylene glycol in concentrations that exceed 50 percent glycol because of the reduced heat transfer capability of propylene glycol. Use ethylene glycol in conditions that require additional protection against boiling or freezing.

Table 38

| Propylene Glycol | | |
|---|---|---|
| **Concentration** | **Freeze Protection** | **Anti-Boil Protection** |
| 50 Percent | −29 °C (−20 °F) | 106 °C (223 °F) |

To check the concentration of glycol, use the 1U-7298 Coolant/Battery Tester (Degrees Celsius) or use the 1U-7297 Coolant/Battery Tester (Degrees Fahrenheit). The testers give readings that are immediate and accurate. The testers can be used with ethylene or propylene glycol.

## Coolant Recommendations

NOTICE
Do not use a commercial coolant/antifreeze that only meets the ASTM D3306 specification. This type of coolant/antifreeze is made for light duty automotive applications.

The following two coolants are used in Caterpillar diesel engines:

**Preferred** – Caterpillar Extended Life Coolant (ELC) or a commercial extended life coolant that meets the Caterpillar EC-1 specification

**Acceptable** – Caterpillar Diesel Engine Antifreeze (DEAC) or a commercial heavy-duty coolant that meets “ASTM D4985”, or “ASTM D6210” specifications

Caterpillar recommends a 1:1 mixture of water and glycol. This mixture of water and glycol will provide optimum heavy-duty performance as a coolant.

**Note:** Caterpillar DEAC does not require a treatment with an SCA at the initial fill. A commercial heavy-duty coolant that meets “ASTM D4985” or “ASTM D6210” specifications MAY require a treatment with an SCA at the initial fill. These coolants WILL require a treatment with an SCA on a maintenance basis.

Refer to Special Publication, SEBU6251, “Caterpillar Commercial Diesel Engine Fluids Recommendations” for additional information that relates to coolant.

## S·O·S Coolant Analysis

Table 39

| Recommended Interval | | |
|---|---|---|
| **Type of Coolant** | **Level 1** | **Level 2** |
| DEAC | Every 250 Hours | Yearly(1) |
| ELC | Not Required | Yearly |

(1) The Level 2 Coolant Analysis should be performed sooner if a problem is identified by a Level 1 Coolant Analysis.

**S·O·S Coolant Analysis (Level 1)**

A coolant analysis (Level 1) is a test of the properties of the coolant.

The following properties of the coolant are tested:

- Glycol concentration for freeze protection and boil protection
- Ability to protect from erosion and corrosion
- pH
- Conductivity
- Visual analysis
- Odor analysis

The results are reported, and appropriate recommendations are made.

Refer to the Maintenance Interval Schedule in this Operation and Maintenance Manual, “Cooling System Coolant Sample (Level 1) - Obtain” for a sampling location and the maintenance interval for collecting the coolant samples.

**S·O·S Coolant Analysis (Level 2)**

A coolant analysis (Level 2) is a comprehensive chemical evaluation of the coolant. This analysis is also a check of the overall condition of the inside of the cooling system.

The S·O·S Coolant Analysis has the following features:

- Full coolant analysis (Level 1)
- Identification of the source of metal corrosion and of contaminants
- Water hardness

- Identification of buildup of the impurities that cause corrosion
- Identification of buildup of the impurities that cause scaling

The results are reported, and appropriate recommendations are made.

Refer to the Maintenance Interval Schedule in this Operation and Maintenance Manual, “Cooling System Coolant Sample (Level 2) - Obtain” for a sampling location and the maintenance interval for collecting the coolant samples.

Testing the engine coolant is important to ensure that the engine is protected from internal cavitation and from corrosion. The analysis also tests the ability of the coolant to protect the engine from boiling and from freezing. The S·O·S Coolant Analysis can be done at your Caterpillar dealer. Caterpillar S·O·S Coolant Analysis is the best way to monitor the condition of your coolant and your cooling system. S·O·S Coolant Analysis is a program that is based on periodic samples.

Refer to Special Publication, SEBU6251, “Caterpillar Commercial Diesel Engine Fluids Recommendations” for additional information.

## Refill Capacity of the Cooling System

To maintain the cooling system, the Total Cooling System capacity must be known. The approximate capacity for the “Engine Only” cooling system is listed. External System capacities will vary among applications. Refer to the OEM specifications for the External System capacity. This capacity information will be needed in order to determine the amount of coolant that is required for the Total Cooling System.

Table 40

| C1.5 Turbocharged Engines and Naturally Aspirated Engines<br>Approximate Refill Capacities | | |
|---|---|---|
| **Compartment or System** | **Liters** | **Quarts** |
| Engine Only | 2.6 | 2.7 |
| External System (OEM)(1) | | |
| Total Cooling System(2) | | |

(1) The External System includes a radiator or an expansion tank with the following components: heat exchanger, aftercooler and piping. Enter the capacity for the External System in this row. Refer to either Caterpillar specifications or OEM specifications for further information.

(2) The Total Cooling System includes the capacity for the “Engine Only” plus the capacity for the External System. Enter the total in this row.

# Maintenance Recommendations

i08186078

## System Pressure Release

**SMCS Code:** 1250; 1300; 1350; 5050

### Coolant System

**⚠ WARNING**

**Pressurized system: Hot coolant can cause serious burn. To open cap, stop engine, wait until radiator is cool. Then loosen cap slowly to relieve the pressure.**

To relieve the pressure from the coolant system, turn off the engine. Allow the cooling system pressure cap to cool. Remove the cooling system pressure cap slowly to relieve pressure.

### Fuel System

To relieve the pressure from the fuel system, turn off the engine.

#### High-Pressure Fuel Lines (If Equipped)

**⚠ WARNING**

**Contact with high pressure fuel may cause fluid penetration and burn hazards. High pressure fuel spray may cause a fire hazard. Failure to follow these inspection, maintenance and service instructions may cause personal injury or death.**

The high-pressure fuel lines are between the high-pressure fuel pump and the high-pressure fuel manifold. The high-pressure fuel lines are also between the fuel manifold and cylinder head. These fuel lines are different from fuel lines on other fuel systems.

The following are the differences:

- The high-pressure fuel lines are constantly charged with high pressure.
- The internal pressures of the high-pressure fuel lines are higher than other types of fuel system.

Before any service or repair is performed on the engine fuel lines, perform the following tasks:

**1.** Stop the engine.

**2.** Wait for 10 minutes.

Do not loosen the high-pressure fuel lines to remove air pressure from the fuel system.

### Engine Oil

To relieve pressure from the lubricating system, turn off the engine.

i09570478

## Welding on Engines with Electronic Controls

**SMCS Code:** 1000

NOTICE
Because the strength of the frame may decrease, some manufacturers do not recommend welding onto a chassis frame or rail. Consult the OEM of the equipment or your Cat dealer regarding welding on a chassis frame or rail.

Proper welding procedures are necessary to avoid damage to the engine ECM, sensors, and associated components. When possible, remove the component from the unit and then weld the component. If removal of the component is not possible, the correct procedure must be followed. When welding on a unit that is equipped with a Cat Electronic Engine, the following is considered to be the safest procedure:

NOTICE
Do not ground the welder to electrical components such as the ECM or sensors. Improper grounding can cause damage to the drive train, the bearings, hydraulic components, electrical components, and other components.

Do not ground the welder across the centerline of the package. Improper grounding could cause damage to the bearings, the crankshaft, the rotor shaft, and other components.

Clamp the ground cable from the welder to the component that will be welded. Place the clamp as close as possible to the weld. This will help reduce the possibility of damage.

**Note:** Perform the welding in areas that are free from explosive hazards.

**1.** Stop the engine. Turn the switched power to the OFF position.

**2.** Disconnect the negative battery cable from the battery. If a battery disconnect switch is provided, open the switch.

**3.** Disconnect the J1/P1 and J2/P2 connectors from the ECM. Move the harness to a position that will not allow the harness to move back accidentally, and contact any of the ECM pins.

**4.** Disconnect any component with a microprocessor from the engine harness, such as:

- Engine ECM
- Product Link
- Cell/Sat Radio
- Control panel (70–pin bulkhead connector)
- DOC Identity Modules

**5.** Connect the welding ground cable directly to the part that will be welded. Place the ground cable as close as possible to the weld. This location will reduce the possibility of welding current damage to bearings, hydraulic components, electrical components, and ground straps.

**Note:** If electrical/electronic components are used as a ground for the welder, current flow from the welder could severely damage the component. Current flow from the welder could also severely damage electrical/electronic components that are located between the welder ground and the weld.

**6.** Protect the wiring harness from welding debris and spatter.

**7.** Use standard welding practices to weld the materials.

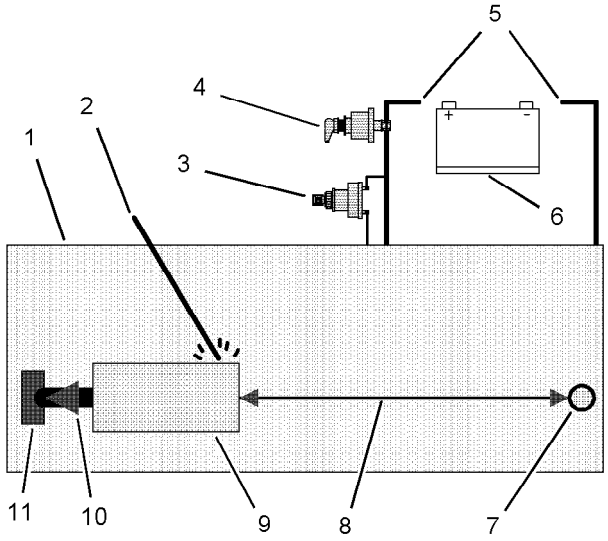


Illustration 49 g01075639

Use the example above. The current flow from the welder to the ground clamp of the welder will not damage any associated components.

(1) Engine
(2) Welding electrode
(3) Keyswitch in the OFF position
(4) Battery disconnect switch in the open position
(5) Disconnected battery cables
(6) Battery
(7) Electrical/Electronic component
(8) Minimum distance between the component that is being welded and any electrical/electronic component
(9) The component that is being welded
(10) Current path of the welder
(11) Ground clamp for the welder

i08315665

# Maintenance Interval Schedule

**SMCS Code:** 1000; 7500

## When Required

“Battery - Replace“ . . . . . .

“Battery or Battery Cable - Disconnect“ . . . . . .

“Engine - Clean“ . . . . . .

“ Engine Air Cleaner Element (Dual Element) - Clean/Replace“ . . . . . 83

“ Engine Air Cleaner Element (Single Element) - Inspect/Replace“ . . . . . 85

“ Fuel System - Prime“ . . . . . 92

“ Severe Service Application - Check“ . . . . . 104

## Daily

“ Cooling System Coolant Level - Check“ . . . . . 79

“Driven Equipment - Check“ . . . . . .

“Engine Air Cleaner Service Indicator - Inspect“ . . . . .

“ Engine Air Precleaner - Check/Clean“ . . . . . 87

“ Engine Oil Level - Check“ . . . . . 88

“ Fuel System Primary Filter/Water Separator - Drain“ . . . . . 97

“ Walk-Around Inspection“ . . . . . 106

## Every 6000 Service Hours or 3 Years

“ Cooling System Coolant Extender (ELC) - Add“ . . . . . 78

## Every 12 000 Service Hours or 6 Years

“ Cooling System Coolant (ELC) - Change“ . . . . . 77

## Every 50 Service Hours or Weekly

“Fuel Tank Water and Sediment - Drain“ . . . . . .

## Overhaul

“ Overhaul Considerations“ . . . . . 103

## Every 250 Service Hours

“Cooling System Coolant Sample (Level 1) - Obtain“ . . . . . .

## Every 250 Service Hours or 6 Months

“ Alternator and Fan Belts - Inspect/Adjust“ . . . . . 72

“Engine Oil Sample - Obtain“ . . . . . .

## Every 250 Service Hours or 1 Year

“ Cooling System Supplemental Coolant Additive (SCA) - Test/Add“ . . . . . 81

## Initial 500 Hours (for New Systems, Refilled Systems, and Converted Systems)

“ Cooling System Coolant Sample (Level 2) - Obtain“ . . . . . 80

## Every 500 Service Hours

“ Fuel System Secondary Filter - Replace“ . . . . . 97

## Every 500 Service Hours or 1 Year

“Battery Electrolyte Level - Check“ . . . . . .

“ Cooling System Supplemental Coolant Additive (SCA) - Test/Add“ . . . . . 81

“ Engine Air Cleaner Element (Dual Element) - Clean/ Replace“ . . . . . 83

“ Engine Oil and Filter - Change“. . . . . 89

“ Engine Protective Devices - Check“ . . . . . 91

“Hoses and Clamps - Inspect/Replace“ . . . . . .

“Radiator - Clean“. . . . . .

## Every 1000 Service Hours

“ Alternator and Fan Belts - Replace“ . . . . . 73

“ Engine Valve Lash - Inspect/Adjust“. . . . . 91

“ Turbocharger - Inspect“. . . . . 105

## Every 2000 Service Hours

“ Aftercooler Core - Inspect“ . . . . . 71

“ Alternator - Inspect“ . . . . . 71

“ Engine Crankcase Breather - Replace“ . . . . . 87

“ Engine Mounts - Inspect“ . . . . . 88

“ Starting Motor - Inspect“ . . . . . 105

## Every Year

“ Cooling System Coolant Sample (Level 2) - Obtain“ . . . . . 80

## Every 3000 Service Hours

“ Fuel Injector - Test/Change“ . . . . . 92

“ Water Pump - Inspect“. . . . . 107

## Every 3000 Service Hours or 2 Years

“ Cooling System Coolant (DEAC) - Change“ . . . . 75

“ Cooling System Water Temperature Regulator - Replace“ . . . . . 82

## Every 4000 Service Hours

“ Aftercooler Core - Clean/Test“ . . . . . 71

i03632427

# Aftercooler Core - Clean/Test (Air-To-Air Aftercooler)

**SMCS Code:** 1064-081; 1064-070

**S/N:** C6F1–Up

**S/N:** C6H1–Up

**S/N:** C7H1–Up

**S/N:** C6J1–Up

**S/N:** C6K1–Up

**S/N:** C6L1–Up

**S/N:** G7L1–Up

**S/N:** C6M1–Up

**S/N:** C6N1–Up

**S/N:** G8N1–Up

**S/N:** G7P1–Up

**S/N:** C8W1–Up

**S/N:** C7Y1–Up

**S/N:** C8Y1–Up

**S/N:** C8Z1–Up

The air-to-air aftercooler is OEM installed in many applications. Please refer to the OEM specifications for information that is related to the aftercooler.

i03632432

# Aftercooler Core - Inspect

**SMCS Code:** 1064-040

**Note:** Adjust the frequency of cleaning according to the effects of the operating environment.

Inspect the aftercooler for these items: damaged fins, corrosion, dirt, grease, insects, leaves, oil and other debris. Clean the aftercooler, if necessary.

For air-to-air aftercoolers, use the same methods that are used for cleaning radiators.

**⚠ WARNING**

**Personal injury can result from air pressure.**

**Personal injury can result without following proper procedure. When using pressure air, wear a protective face shield and protective clothing.**

**Maximum air pressure at the nozzle must be less than 205 kPa (30 psi) for cleaning purposes.**

Pressurized air is the preferred method for removing loose debris. Direct the air in the opposite direction of the fan's air flow. Hold the nozzle approximately 6 mm (.25 inch) away from the fins. Slowly move the air nozzle in a direction that is parallel with the tubes. This will remove debris that is between the tubes.

Pressurized water may also be used for cleaning. The maximum water pressure for cleaning purposes must be less than 275 kPa (40 psi). Use pressurized water in order to soften mud. Clean the core from both sides.

Use a degreaser and steam for removal of oil and grease. Clean both sides of the core. Wash the core with detergent and hot water. Thoroughly rinse the core with clean water.

After cleaning, start the engine and accelerate the engine to high idle rpm. This will help in the removal of debris and drying of the core. Stop the engine. Use a light bulb behind the core in order to inspect the core for cleanliness. Repeat the cleaning, if necessary.

Inspect the fins for damage. Bent fins may be opened with a “comb”.

**Note:** If parts of the aftercooler system are repaired or replaced, a leak test is highly recommended. The FT1984 Aftercooler Testing Group is used to perform leak tests on the aftercooler. Refer to the Systems Operation/Testing and Adjusting, “Aftercooler - Test” and the Special Instruction, SEHS8622 for the proper testing procedure.

Inspect these items for good condition: welds, mounting brackets, air lines, connections, clamps and seals. Make repairs, if necessary.

For more detailed information on cleaning and inspection, see Special Publication, SEBD0518, “Know Your Cooling System”.

i08259468

# Alternator - Inspect

**SMCS Code:** 1405-040

Caterpillar recommends a scheduled inspection of the alternator. Inspect the alternator for loose connections and proper battery charging. Inspect the ammeter (if equipped) during engine operation to ensure proper battery performance and/or proper performance of the electrical system. Make repairs, as required.

Check the alternator and the battery charger for proper operation. If the batteries are properly charged, the ammeter reading should be very near zero. All batteries should be kept charged. The batteries should be kept warm because temperature affects the cranking power. If the battery is too cold, the battery will not crank the engine. The battery will not crank the engine, even if the engine is warm. When the engine is not run for long periods of time or if the engine is run for short periods, the batteries may not fully charge. A battery with a low charge will freeze more easily than a battery with a full charge.

i02226340

# Alternator and Fan Belts - Inspect/Adjust

**SMCS Code:** 1357-040; 1357-025

## Inspection

To maximize the engine performance, inspect the belts for wear and for cracking. Replace belts that are worn or damaged.

For applications that require multiple drive belts, replace the belts in matched sets. Replacing only one belt of a matched set will cause the new belt to carry more load because the older belt is stretched. The additional load on the new belt could cause the new belt to break.

If the belts are too loose, vibration causes unnecessary wear on the belts and pulleys. Loose belts may slip enough to cause overheating.

To accurately check the belt tension, Gauge 144 - 0235 Belt Tension Gauge should be used.

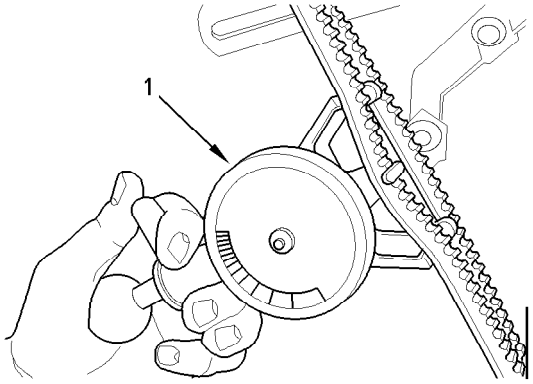


Illustration 50 g01003936

Typical example

(1) 144-0235 Belt Tension Gauge

Install the gauge (1) at the center of the belt between the alternator and the crankshaft pulley and check the belt tension. The correct tension for a new belt is 400 N (90 lb) to 489 N (110 lb). The correct tension for a used belt that has been in operation for 30 minutes or more at the rated speed is 267 N (60 lb) to 356 N (80 lb).

If twin belts are installed, check and adjust the tension on both belts.

## Adjustment

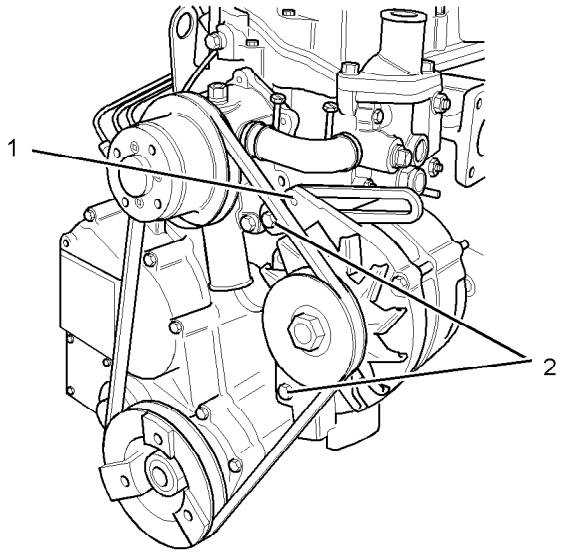


Illustration 51 g01091158

Typical example

(1) Adjusting bolt
(2) Mounting bolts

1. Loosen the mounting bolts (2) and the adjusting bolt (1).
2. Move the alternator in order to increase or decrease the belt tension.

**3.** Tighten the adjusting bolt (1). Tighten the mounting bolts (2). Refer to the Specifications Manual for the correct torque settings.

i02226343

# Alternator and Fan Belts - Replace

**SMCS Code:** 1357-510

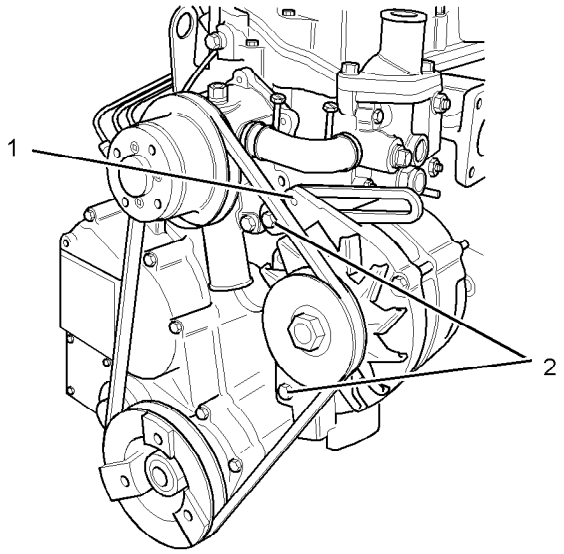


Illustration 52 g01091158

Typical example

(1) Adjusting bolt
(2) Mounting bolts

For applications that require multiple drive belts, replace the belts in matched sets. Replacing only one belt of a matched set will cause the new belt to carry more load because the older belt is stretched. The additional load on the new belt could cause the new belt to break.

**Note:** When new belts are installed, check the belt tension again after 20 hours of engine operation.

Refer to the Disassembly and Assembly Manual for the installation procedure and the removal procedure for the belt.

i08397624

# Battery - Replace

**SMCS Code:** 1401-510

**⚠ WARNING**

**Batteries give off combustible gases which can explode. A spark can cause the combustible gases to ignite. This can result in severe personal injury or death.**

**Ensure proper ventilation for batteries that are in an enclosure. Follow the proper procedures in order to help prevent electrical arcs and/or sparks near batteries. Do not smoke when batteries are serviced.**

**⚠ WARNING**

**The battery cables or the batteries should not be removed with the battery cover in place. The battery cover should be removed before any servicing is attempted.**

**Removing the battery cables or the batteries with the cover in place may cause a battery explosion resulting in personal injury.**

**Note:** Always recycle a battery. Never discard a battery. Return used batteries to an appropriate recycling facility.

**1.** Turn the key start switch to the OFF position. Remove the key and all electrical loads.

**2.** Turn OFF the battery charger. Disconnect the charger.

**3.** Turn battery isolator switch to OFF position.

**4.** The NEGATIVE “-” cable connects the NEGATIVE “-” battery terminal to the ground plane. Disconnect the cable from the NEGATIVE “-” battery terminal.

**5.** The POSITIVE “+” cable connects the POSITIVE “+” battery terminal to the starting motor. Disconnect the cable from the POSITIVE “+” battery terminal.

**Note:** Always recycle a battery. Never discard a battery. Return used batteries to an appropriate recycling facility.

**6.** Remove the used battery.

**7.** Install the new battery.

**Note:** Before the cables are connected, ensure that the key start switch is OFF.

8. Connect the cable from the starting motor to the POSITIVE “+” battery terminal.
9. Connect the cable from the ground plane to the NEGATIVE “-” battery terminal.

i08397645

# Battery Electrolyte Level - Check

**SMCS Code:** 1401-535

When the engine has not run for long or short periods of time, the batteries may not fully recharge. Ensure a full charge to help prevent the battery from freezing.

In warmer climates, check the electrolyte level more frequently.

Ensure that the electrolyte level is 13 mm (0.5 inch) above the top of the separators.

**⚠ WARNING**

**All lead-acid batteries contain sulfuric acid which can burn the skin and clothing. Always wear a face shield and protective clothing when working on or near batteries.**

1. Remove the filler caps. Maintain the electrolyte level to the “FULL” mark on the battery.

   If the addition of water is necessary, use distilled water. If distilled water is not available, use clean water that is low in minerals. Do not use artificially softened water.
2. Check the condition of the electrolyte with the 245-5829 Coolant Battery Tester Refractometer.
3. Keep the batteries clean.

   Clean the battery case with one of the following cleaning solutions:

   - A mixture of 0.1 kg (0.2 lb) of baking soda and 1 L (1 qt) of clean water
   - A mixture of 0.1 L (0.11 qt) of ammonia and 1 L (1 qt) of clean water

   Thoroughly rinse the battery case with clean water.

   Use the 1U-9921 Battery Service Tool to clean the battery terminals. Use a wire brush to clean the cable clamps. Clean the items until the surfaces are bright or shiny. DO NOT remove material excessively. Excessive removal of material can cause the clamps to fit improperly. Coat the clamps and the terminals with the Loctite® product listed below, petroleum jelly or MPGM.

   - For Americas North - Loctite LB8632
   - For Europe and Africa, Middle East, CIS (AMEC) - Loctite LB8104
   - For Asia Pacific - Loctite LB8801
   - For Americas South - Loctite LB Superlube

   For ordering the products listed above, go to the following address.

   http://www.loctite.com/en/meta/meta-nav/location-selector.html

i08357764

# Battery or Battery Cable - Disconnect

**SMCS Code:** 1402-029

**⚠ WARNING**

**The battery cables or the batteries should not be removed with the battery cover in place. The battery cover should be removed before any servicing is attempted.**

**Removing the battery cables or the batteries with the cover in place may cause a battery explosion resulting in personal injury.**

1. Turn the start switch to the OFF position. Turn the ignition switch (if equipped) to the OFF position and remove the key and all electrical loads.
2. Disconnect the negative battery terminal at the battery that goes to the start switch. Ensure that the cable cannot contact the terminal. When four 12 volt batteries are involved, the negative side of two batteries must be disconnected.
3. Tape the leads to help prevent accidental starting.
4. Proceed with necessary system repairs. Reverse the steps to reconnect all cables.

i02789695

# Cooling System Coolant (DEAC) - Change

**SMCS Code:** 1350-070; 1395-044

Clean the cooling system and flush the cooling system before the recommended maintenance interval if the following conditions exist:

- The engine overheats frequently.
- Foaming is observed.
- The oil has entered the cooling system and the coolant is contaminated.
- The fuel has entered the cooling system and the coolant is contaminated.

NOTICE
Use of commercially available cooling system cleaners may cause damage to cooling system components. Use only cooling system cleaners that are approved for Caterpillar engines.

**Note:** Inspect the water pump and the water temperature regulator after the cooling system has been drained. This is a good opportunity to replace the water pump, the water temperature regulator and the hoses, if necessary.

## Drain

**⚠ WARNING**

**Pressurized System: Hot coolant can cause serious burns. To open the cooling system filler cap, stop the engine and wait until the cooling system components are cool. Loosen the cooling system pressure cap slowly in order to relieve the pressure.**

**1.** Stop the engine and allow the engine to cool. Loosen the cooling system filler cap slowly in order to relieve any pressure. Remove the cooling system filler cap.

**Note:** Refer to Operation and Maintenance Manual, “General Hazard Information” for information on Containing Fluid Spillage.

**2.** Open the cooling system drain valve (if equipped). If the cooling system is not equipped with a drain valve, remove one of the drain plugs.

Allow the coolant to drain into a suitable container.

**3.** Properly dispose of the drained material. Obey local regulations for the disposal of the material.

NOTICE
Dispose of used engine coolant properly or recycle. Various methods have been proposed to reclaim used coolant for reuse in engine cooling systems. The full distillation procedure is the only method acceptable by Caterpillar to reclaim the used coolant.

## Flush

**1.** Flush the cooling system with clean water in order to remove any debris.

**2.** Close the drain valve (if equipped). Clean the drain plugs. Install the drain plugs. Refer to Torque Specifications, SENR3130 for more information on the correct torques.

NOTICE
Do not fill the cooling system faster than 5 L (1.3 US gal) per minute to avoid air locks.

Cooling system air locks may result in engine damage.

**3.** Fill the cooling system with a mixture of clean water and Caterpillar Fast Acting Cooling System Cleaner. Add 0.5 L (1 pint) of cleaner per 15 L (4 US gal) of the cooling system capacity. Install the cooling system filler cap.

**4.** Start and run the engine at low idle for a minimum of 30 minutes. The coolant temperature should be at least 82 °C (180 °F).

NOTICE
Improper or incomplete rinsing of the cooling system can result in damage to copper and other metal components.

To avoid damage to the cooling system, make sure to completely flush the cooling system with clear water. Continue to flush the system until all signs of the cleaning agent are gone.

**5.** Stop the engine and allow the engine to cool. Loosen the cooling system filler cap slowly in order to relieve any pressure. Remove the cooling system filler cap. Open the drain valve (if equipped) or remove the cooling system drain plugs. Allow the water to drain. Flush the cooling system with clean water. Close the drain valve (if equipped). Clean the drain plugs. Install the drain plugs. Refer to Torque Specifications, SENR3130 for more information on the correct torques.

## Cooling Systems with Heavy Deposits or Plugging

**Note:** For the following procedure to be effective, there must be some active flow through the cooling system components.

**1.** Flush the cooling system with clean water in order to remove any debris.

**2.** Close the drain valve (if equipped). Clean the drain plugs. Install the drain plugs. Refer to Torque Specifications, SENR3130 for more information on the correct torques.

NOTICE
Do not fill the cooling system faster than 5 L (1.3 US gal) per minute to avoid air locks.

Cooling system air locks may result in engine damage.

**3.** Fill the cooling system with a mixture of clean water and Caterpillar Fast Acting Cooling System Cleaner. Add 0.5 L (1 pint) of cleaner per 3.8 to 7.6 L (1 to 2 US gal) of the cooling system capacity. Install the cooling system filler cap.

**4.** Start and run the engine at low idle for a minimum of 90 minutes. The coolant temperature should be at least 82 °C (180 °F).

NOTICE
Improper or incomplete rinsing of the cooling system can result in damage to copper and other metal components.

To avoid damage to the cooling system, make sure to completely flush the cooling system with clear water. Continue to flush the system until all signs of the cleaning agent are gone.

**5.** Stop the engine and allow the engine to cool. Loosen the cooling system filler cap slowly in order to relieve any pressure. Remove the cooling system filler cap. Open the drain valve (if equipped) or remove the cooling system drain plugs. Allow the water to drain. Flush the cooling system with clean water. Close the drain valve (if equipped). Clean the drain plugs. Install the drain plugs. Refer to Torque Specifications, SENR3130 for more information on the correct torques.

## Fill

NOTICE
Do not fill the cooling system faster than 5 L (1.3 US gal) per minute to avoid air locks.

Cooling system air locks may result in engine damage.

**1.** Fill the cooling system with the coolant/antifreeze. Refer to this Operation and Maintenance Manual, “Refill Capacities and Recommendations” topic (Maintenance Section) for more information on cooling system specifications. Do not install the cooling system filler cap.

**2.** Start and run the engine at low idle. Increase the engine rpm to 1500 rpm. Run the engine at high idle for one minute in order to purge the air from the cavities of the engine block. Stop the engine.

**3.** Check the coolant level. Maintain the coolant level within 13 mm (0.5 inch) below the bottom of the pipe for filling. Maintain the coolant level within 13 mm (0.5 inch) to the proper level on the sight glass (if equipped).

**4.** Clean the cooling system filler cap. Inspect the gasket that is on the cooling system filler cap. If the gasket that is on the cooling system filler cap is damaged, discard the old cooling system filler cap and install a new cooling system filler cap. If the gasket that is on the cooling system filler cap is not damaged, perform a pressure test. A 9S-8140 Pressurizing Pump is used to perform the pressure test. The correct pressure for the cooling system filler cap is stamped on the face of the cooling system filler cap. If the cooling system filler cap does not retain the correct pressure, install a new cooling system filler cap.

**5.** Start the engine. Inspect the cooling system for leaks and for the correct operating temperature.

i02822203

# Cooling System Coolant (ELC) - Change

**SMCS Code:** 1350-070; 1395-044

Clean the cooling system and flush the cooling system before the recommended maintenance interval if the following conditions exist:

- The engine overheats frequently.
- Foaming is observed.
- The oil has entered the cooling system and the coolant is contaminated.
- The fuel has entered the cooling system and the coolant is contaminated.

**Note:** When the cooling system is cleaned, only clean water is needed when the ELC is drained and replaced.

**Note:** Inspect the water pump and the water temperature regulator after the cooling system has been drained. This is a good opportunity to replace the water pump, the water temperature regulator and the hoses, if necessary.

## Drain

**⚠ WARNING**

**Pressurized System: Hot coolant can cause serious burns. To open the cooling system filler cap, stop the engine and wait until the cooling system components are cool. Loosen the cooling system pressure cap slowly in order to relieve the pressure.**

**1.** Stop the engine and allow the engine to cool. Loosen the cooling system filler cap slowly in order to relieve any pressure. Remove the cooling system filler cap.

**2.** Open the cooling system drain valve (if equipped). If the cooling system is not equipped with a drain valve, remove the cooling system drain plugs.

Allow the coolant to drain.

NOTICE
Dispose of used engine coolant properly or recycle. Various methods have been proposed to reclaim used coolant for reuse in engine cooling systems. The full distillation procedure is the only method acceptable by Caterpillar to reclaim the used coolant.

For information regarding the disposal and the recycling of used coolant, consult your Caterpillar dealer or consult Dealer Service Tools.

## Flush

**1.** Flush the cooling system with clean water in order to remove any debris.

**2.** Close the drain valve (if equipped). Clean the drain plugs. Install the drain plugs. Refer to Torque Specifications, SENR3130 for more information on the correct torques.

NOTICE
Do not fill the cooling system faster than 5 L (1.3 US gal) per minute to avoid air locks.

Cooling system air locks may result in engine damage.

**3.** Fill the cooling system with clean water. Install the cooling system filler cap.

**4.** Start and run the engine at low idle until the temperature reaches 49 to 66 °C (120 to 150 °F).

**5.** Stop the engine and allow the engine to cool. Loosen the cooling system filler cap slowly in order to relieve any pressure. Remove the cooling system filler cap. Open the drain valve (if equipped) or remove the cooling system drain plugs. Allow the water to drain. Flush the cooling system with clean water. Close the drain valve (if equipped). Clean the drain plugs. Install the drain plugs. Refer to Torque Specifications, SENR3130 for more information on the correct torques.

## Fill

NOTICE
Do not fill the cooling system faster than 5 L (1.3 US gal) per minute to avoid air locks.

Cooling system air locks may result in engine damage.

1. Fill the cooling system with Extended Life Coolant (ELC). Refer to this Operation and Maintenance Manual, “Refill Capacities and Recommendations” topic (Maintenance Section) for more information on cooling system specifications. Do not install the cooling system filler cap.
2. Start and run the engine at low idle. Increase the engine rpm to high idle. Run the engine at high idle for one minute in order to purge the air from the cavities of the engine block. Stop the engine.
3. Check the coolant level. Maintain the coolant level within 13 mm (0.5 inch) below the bottom of the pipe for filling. Maintain the coolant level within 13 mm (0.5 inch) to the proper level on the sight glass (if equipped).
4. Clean the cooling system filler cap. Inspect the gasket that is on the cooling system filler cap. If the gasket that is on the cooling system filler cap is damaged, discard the old cooling system filler cap and install a new cooling system filler cap. If the gasket that is on the cooling system filler cap is not damaged, use a 9S-8140 Pressurizing Pump in order to pressure test the cooling system filler cap. The correct pressure for the cooling system filler cap is stamped on the face of the cooling system filler cap. If the cooling system filler cap does not retain the correct pressure, install a new cooling system filler cap.
5. Start the engine. Inspect the cooling system for leaks and for proper operating temperature.

i08258443

# Cooling System Coolant Extender (ELC) - Add

**SMCS Code:** 1352-045; 1395-081

Cat ELC (Extended Life Coolant) does not require the frequent additions of any supplemental cooling additives which are associated with the present conventional coolants. The Cat ELC Extender is added once.

NOTICE
Use only Cat Extended Life Coolant (ELC) Extender with Cat ELC.

Do NOT use conventional supplemental coolant additive (SCA) with Cat ELC. Mixing Cat ELC with conventional coolants and/or conventional SCA reduces the Cat ELC service life.

Check the cooling system only when the engine is stopped and cool.

**⚠ WARNING**

**Personal injury can result from hot coolant, steam and alkali.**

**At operating temperature, engine coolant is hot and under pressure. The radiator and all lines to heaters or the engine contain hot coolant or steam. Any contact can cause severe burns.**

**Remove cooling system pressure cap slowly to relieve pressure only when engine is stopped and cooling system pressure cap is cool enough to touch with your bare hand.**

**Do not attempt to tighten hose connections when the coolant is hot, the hose can come off causing burns.**

**Cooling System Coolant Additive contains alkali. Avoid contact with skin and eyes.**

NOTICE
Care must be taken to ensure that fluids are contained during performance of inspection, maintenance, testing, adjusting, and repair of the product. Be prepared to collect the fluid with suitable containers before opening any compartment or disassembling any component containing fluids.

Refer to Special Publication, PERJ1017, “Dealer Service Tool Catalog” for tools and supplies suitable to collect and contain fluids on Cat ® products.

Dispose of all fluids according to local regulations and mandates.

1. Loosen the cooling system filler cap slowly to relieve pressure. Remove the cooling system filler cap.
2. Draining enough coolant from the cooling system to add the Cat ELC Extender may be necessary.
3. Add Cat ELC Extender according to the requirements for your engine cooling system capacity. Refer to the Operation and Maintenance Manual, “Refill Capacities and Recommendations” article for more information.
4. Clean the cooling system filler cap. Inspect the gaskets on the cooling system filler cap. Replace the cooling system filler cap if the gaskets are damaged. Install the cooling system filler cap.

i01197583

# Cooling System Coolant Level - Check

**SMCS Code:** 1395-082

Check the coolant level when the engine is stopped and cool.

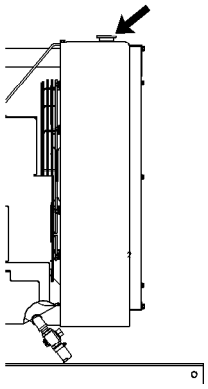

Illustration 53 g00285520

Cooling system filler cap

**⚠ WARNING**

**Pressurized System: Hot coolant can cause serious burns. To open the cooling system filler cap, stop the engine and wait until the cooling system components are cool. Loosen the cooling system pressure cap slowly in order to relieve the pressure.**

1. Remove the cooling system filler cap slowly in order to relieve pressure.
2. Maintain the coolant level within 13 mm (0.5 inch) of the bottom of the filler pipe. If the engine is equipped with a sight glass, maintain the coolant level to the proper level in the sight glass.

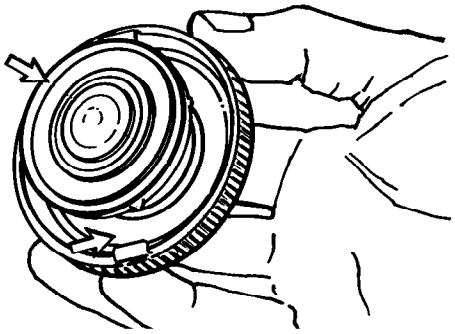

Illustration 54 g00103639

Typical filler cap gaskets

3. Clean the cooling system filler cap and check the condition of the filler cap gaskets. Replace the cooling system filler cap if the filler cap gaskets are damaged. Reinstall the cooling system filler cap.
4. Inspect the cooling system for leaks.

i08362013

# Cooling System Coolant Sample (Level 1) - Obtain

**SMCS Code:** 1350-008; 1395-008; 1395-554; 7542

**Note: Obtaining a Coolant Sample (Level 1) is optional if the cooling system is filled with Cat ELC (Extended Life Coolant).** Cooling systems filled with Cat Extended LIfe Coolant (ELC) should have a Coolant Sample (Level 2) obtained at the recommended interval.

**Note: Obtain a Coolant Sample (Level 1) if the cooling system is filled with any other coolant instead of Cat ELC including the following coolants:**

- Commercial long life coolants that meet the Cat Engine Coolant Specification -1 (Caterpillar EC-1)
- Cat DEAC (Diesel Engine Antifreeze/Coolant)
- Commercial heavy-duty coolant/antifreeze

Table 41

| Recommended Interval | | |
|---|---|---|
| Type of Coolant | Level 1 | Level 2 |
| Cat DEAC | Every 250 service hours | Every year(1) |

(continued)

(Table 41, contd)

| | | |
|---|---|---|
| Conventional heavy duty-coolant | | |
| Commercial coolant that meets the requirements of the Caterpillar EC-1 standard | | |
| Cat ELC or conventional EC-1 coolant | Optional | Every year(1) |

(1) The Level 2 Coolant Analysis should be performed sooner if a problem is suspected or identified.

NOTICE
Always use a designated pump for oil sampling, and use a separate designated pump for coolant sampling. Using the same pump for both types of samples may contaminate the samples that are being drawn. This contaminate may cause a false analysis and an incorrect interpretation that could lead to concerns by both dealers and customers.

**Note: Level 1 results may indicate a need for Level 2 Analysis.**

Obtain the sample of the coolant as close as possible to the recommended sampling interval. To receive the full effect of S·O·S analysis, establish a consistent trend of data. To establish a pertinent history of data, perform consistent samplings that are evenly spaced. Supplies for collecting samples can be obtained from your Cat dealer.

Use the following guidelines for proper sampling of the coolant:

- Complete the information on the label for the sampling bottle before you begin to take the samples.
- Keep the unused sampling bottles stored in plastic bags.
- Obtain coolant samples directly from the coolant sample port. You should not obtain the samples from any other location.
- Keep the lids on empty sampling bottles until you are ready to collect the sample.
- Place the sample in the mailing tube immediately after obtaining the sample to avoid contamination.
- Never collect samples from expansion bottles.
- Never collect samples from the drain for a system.

Submit the sample for Level 1 analysis.

For additional information about coolant analysis, see this Operation and Maintenance Manual, “Refill Capacities and Recommendations” or consult your Cat dealer.

i08258445

# Cooling System Coolant Sample (Level 2) - Obtain

**SMCS Code:** 1350-008; 1395-008; 1395-554; 7542

NOTICE
Always use a designated pump for oil sampling, and use a separate designated pump for coolant sampling. Using the same pump for both types of samples may contaminate the samples that are being drawn. This contaminate may cause a false analysis and an incorrect interpretation that could lead to concerns by both dealers and customers.

NOTICE
Care must be taken to ensure that fluids are contained during performance of inspection, maintenance, testing, adjusting, and repair of the product. Be prepared to collect the fluid with suitable containers before opening any compartment or disassembling any component containing fluids.

Refer to Special Publication, NENG2500, “Cat Dealer Service Tool Catalog” or refer to Special Publication, PECJ0003, “Cat Shop Supplies and Tools Catalog” for tools and supplies suitable to collect and contain fluids on Cat products.

Dispose of all fluids according to local regulations and mandates.

Refer to Operation and Maintenance Manual, “Cooling System Coolant Sample (Level 1) - Obtain” for the guidelines for proper sampling of the coolant.

Submit the sample for Level 2 analysis.

For additional information about coolant analysis, see Special Publication, SEBU6251, “Caterpillar Commercial Diesel Engines Fluids Recommendations” or consult your Cat dealer.

i02456600

# Cooling System Supplemental Coolant Additive (SCA) - Test/Add

**SMCS Code:** 1352-045; 1395-081

**⚠ WARNING**

**Cooling system coolant additive contains alkali. To help prevent personal injury, avoid contact with the skin and the eyes. Do not drink cooling system coolant additive.**

**Note:** Test the concentration of the Supplemental Coolant Additive (SCA) or test the SCA concentration as part of an S·O·S Coolant Analysis.

## Test for SCA Concentration

### Coolant and SCA

NOTICE
Do not exceed the recommended six percent supplemental coolant additive concentration.

Use the 8T-5296 Coolant Conditioner Test Kit or use the 4C-9301 Coolant Conditioner Test Kit in order to check the concentration of the SCA. Refer to this Operation and Maintenance Manual, “Refill Capacities and Recommendations” for more information.

### Water and SCA

NOTICE
Do not exceed the recommended eight percent supplemental coolant additive concentration.

Test the concentration of the SCA with the 8T-5296 Coolant Conditioner Test Kit. Refer to the Special Publication, SEBU6251, “Caterpillar Commercial Diesel Engine Fluids Recommendations” for more information.

## S·O·S Coolant Analysis

S·O·S coolant samples can be analyzed at your Caterpillar dealer. S·O·S Coolant Analysis is a program that is based on periodic samples.

### Level 1

Level 1 is a basic analysis of the coolant. The following items are tested:

- Glycol Concentration
- Concentration of SCA
- pH
- Conductivity

The results are reported, and recommendations are made according to the results. Consult your Caterpillar dealer for information on the benefits of managing your equipment with an S·O·S Coolant Analysis.

### Level 2

This level coolant analysis is recommended when the engine is overhauled. Refer to this Operations and Maintenance Manual, “Overhaul Considerations” for further information.

## Add the SCA, If Necessary

NOTICE
Do not exceed the recommended amount of supplemental coolant additive concentration. Excessive supplemental coolant additive concentration can form deposits on the higher temperature surfaces of the cooling system, reducing the engine's heat transfer characteristics. Reduced heat transfer could cause cracking of the cylinder head and other high temperature components. Excessive supplemental coolant additive concentration could also result in radiator tube blockage, overheating, and/or accelerated water pump seal wear. Never use both liquid supplemental coolant additive and the spin-on element (if equipped) at the same time. The use of those additives together could result in supplemental coolant additive concentration exceeding the recommended maximum.

**⚠ WARNING**

**Pressurized System: Hot coolant can cause serious burns. To open the cooling system filler cap, stop the engine and wait until the cooling system components are cool. Loosen the cooling system pressure cap slowly in order to relieve the pressure.**

1. Slowly loosen the cooling system filler cap in order to relieve the pressure. Remove the cooling system filler cap.

**Note:** Always discard drained fluids according to local regulations.

2. If necessary, drain some coolant from the cooling system into a suitable container in order to allow space for the extra SCA.

**3.** Add the proper amount of SCA. Refer to the Special Publication, SEBU6251, “Caterpillar Commercial Diesel Engines Fluids Recommendations” for more information on SCA requirements.

**4.** Clean the cooling system filler cap. Inspect the gaskets of the cooling system filler cap. If the gaskets are damaged, replace the old cooling system filler cap with a new cooling system filler cap. Install the cooling system filler cap.

i02625506

# Cooling System Water Temperature Regulator - Replace

**SMCS Code:** 1355-510

Replace the water temperature regulator before the water temperature regulator fails. This is a recommended preventive maintenance practice. Replacing the water temperature regulator reduces the chances for unscheduled downtime.

A water temperature regulator that fails in a partially opened position can cause overheating or overcooling of the engine.

A water temperature regulator that fails in the closed position can cause excessive overheating. Excessive overheating could result in cracking of the cylinder head or piston seizure problems.

A water temperature regulator that fails in the open position will cause the engine operating temperature to be too low during partial load operation. Low engine operating temperatures during partial loads could cause an excessive carbon buildup inside the cylinders. This excessive carbon buildup could result in an accelerated wear of the piston rings and wear of the cylinder liner.

NOTICE
Failure to replace your water temperature regulator on a regularly scheduled basis could cause severe engine damage.

Caterpillar engines incorporate a shunt design cooling system and require operating the engine with a water temperature regulator installed.

If the water temperature regulator is installed incorrectly, the engine may overheat, causing cylinder head damage. Ensure that the new water temperature regulator is installed in the original position. Ensure that the water temperature regulator vent hole is open.

Do not use liquid gasket material on the gasket or cylinder head surface.

Refer to Disassembly and Assembly, “Water Temperature Regulator - Remove and Install”. Consult your Caterpillar dealer for more information.

**Note:** If only the water temperature regulators are replaced, drain the coolant from the cooling system to a level that is below the water temperature regulator housing.

i08397642

# Driven Equipment - Check

**SMCS Code:** 3279-535

Refer to the OEM specifications for more information on the following maintenance recommendations for the driven equipment:

- Inspection
- Adjustment
- Lubrication
- Other maintenance recommendations

Perform any maintenance for the driven equipment which is recommended by the OEM.

i08397657

# Engine - Clean

**SMCS Code:** 1000-070

**⚠ WARNING**

**Personal injury or death can result from high voltage.**

**Moisture can create paths of electrical conductivity.**

**Make sure that the electrical system is OFF. Lock out the starting controls and tag the controls “DO NOT OPERATE” .**

NOTICE
Accumulated grease and oil on an engine is a fire hazard. Keep the engine clean. Remove debris and fluid spills whenever a significant quantity accumulates on the engine.

Periodic cleaning of the engine is recommended. Steam cleaning the engine will remove accumulated oil and grease. A clean engine provides the following benefits:

- Easy detection of fluid leaks
- Maximum heat transfer characteristics
- Ease of maintenance

**Note:** Caution must be used to prevent electrical components from being damaged by excessive water when you clean the engine. Avoid electrical components such as the alternator, the starter, and the ECM.

i04404720

# Engine Air Cleaner Element (Dual Element) - Clean/Replace

**SMCS Code:** 1054-510; 1054-037

NOTICE
Never run the engine without an air cleaner element installed. Never run the engine with a damaged air cleaner element. Do not use air cleaner elements with damaged pleats, gaskets or seals. Dirt entering the engine causes premature wear and damage to engine components. Air cleaner elements help to prevent airborne debris from entering the air inlet.

NOTICE
Never service the air cleaner element with the engine running since this will allow dirt to enter the engine.

## Servicing the Air Cleaner Elements

If the air cleaner element becomes plugged, the air can split the material of the air cleaner element. Unfiltered air will drastically accelerate internal engine wear. Your Caterpillar dealer has the proper air cleaner elements for your application. Consult your Caterpillar dealer for the correct air cleaner element.

- Check the precleaner (if equipped) daily for accumulation of dirt and debris. Remove any dirt and debris, as needed.
- Operating conditions (dust, dirt, and debris) may require more frequent service of the air cleaner element.
- The air cleaner element may be cleaned up to six times if the element is properly cleaned and inspected.
- The air cleaner element should be replaced at least one time per year. This replacement should be performed regardless of the number of cleanings.

Replace the dirty paper air cleaner elements with clean air cleaner elements. Before installation, the air cleaner elements should be thoroughly checked for tears and/or holes in the filter material. Inspect the gasket or the seal of the air cleaner element for damage. Maintain a supply of suitable air cleaner elements for replacement purposes.

### Dual Element Air Cleaners

The dual element air cleaner contains a primary air cleaner element and a secondary air cleaner element. The primary air cleaner element can be used up to six times if the element is properly cleaned and inspected. The primary air cleaner element should be replaced at least one time per year. This replacement should be performed regardless of the number of cleanings.

The secondary air cleaner element is not serviceable or washable. The secondary air cleaner element should be removed and discarded for every three cleanings of the primary air cleaner element. When the engine is operating in environments that are dusty or dirty, air cleaner elements may require more frequent replacement.

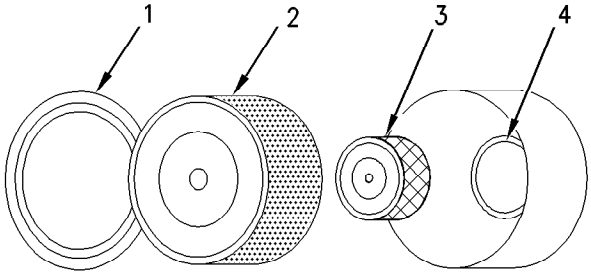


Illustration 55 g00736431

(1) Cover
(2) Primary air cleaner element
(3) Secondary air cleaner element
(4) Turbocharger air inlet

1. Remove the cover. Remove the primary air cleaner element.
2. The secondary air cleaner element should be removed and discarded for every three cleanings of the primary air cleaner element.

**Note:** Refer to “Cleaning the Primary Air Cleaner Elements”.

3. Cover the turbocharger air inlet with tape in order to keep out dirt.
4. Clean the inside of the air cleaner cover and body with a clean, dry cloth.
5. Remove the tape for the turbocharger air inlet. Install the secondary air cleaner element. Install a primary air cleaner element that is new or cleaned.
6. Install the air cleaner cover.

**7.** Reset the air cleaner service indicator.

## Cleaning the Primary Air Cleaner Elements

NOTICE
Caterpillar recommends certified air filter cleaning services that are available at Cat dealers. The Cat cleaning process uses proven procedures to assure consistent quality and sufficient filter life.

Observe the following guidelines if you attempt to clean the filter element:

Do not tap or strike the filter element in order to remove dust.

Do not wash the filter element.

Use low pressure compressed air in order to remove the dust from the filter element. Air pressure must not exceed 207 kPa (30 psi). Direct the air flow up the pleats and down the pleats from the inside of the filter element. Take extreme care in order to avoid damage to the pleats.

Do not use air filters with damaged pleats, gaskets, or seals. Dirt entering the engine will cause damage to engine components.

The primary air cleaner element can be used up to six times if the element is properly cleaned and inspected. When the primary air cleaner element is cleaned, check for rips or tears in the filter material. The primary air cleaner element should be replaced at least one time per year. This replacement should be performed regardless of the number of cleanings.

Use clean primary air cleaner elements while dirty elements are being cleaned.

NOTICE
Do not clean the air cleaner elements by bumping or tapping. This could damage the seals. Do not use elements with damaged pleats, gaskets or seals. Damaged elements will allow dirt to pass through. Engine damage could result.

Visually inspect the primary air cleaner elements before cleaning. Inspect the air cleaner elements for damage to the seal, the gaskets, and the outer cover. Discard any damaged air cleaner elements.

There are two common methods that are used to clean primary air cleaner elements:

- Pressurized air
- Vacuum cleaning

### Pressurized Air

Pressurized air can be used to clean primary air cleaner elements that have not been cleaned more than two times. Pressurized air will not remove deposits of carbon and oil. Use filtered, dry air with a maximum pressure of 207 kPa (30 psi).

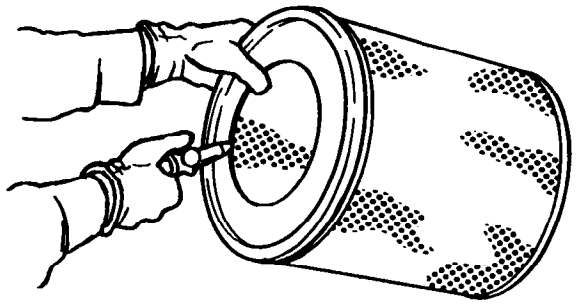

Illustration 56 g00281692

**Note:** When the primary air cleaner elements are cleaned, always begin with the clean side (inside) in order to force dirt particles toward the dirty side (outside).

Aim the hose so that the air flows inside the element along the length of the filter in order to help prevent damage to the paper pleats. Do not aim the stream of air directly at the primary air cleaner element. Dirt could be forced further into the pleats.

**Note:** Refer to “Inspecting the Primary Air Cleaner Elements”.

### Vacuum Cleaning

Vacuum cleaning is a good method for cleaning primary air cleaner elements which require daily cleaning because of a dry, dusty environment. Cleaning with pressurized air is recommended prior to vacuum cleaning. Vacuum cleaning will not remove deposits of carbon and oil.

**Note:** Refer to “Inspecting the Primary Air Cleaner Elements”.

### Inspecting the Primary Air Cleaner Elements

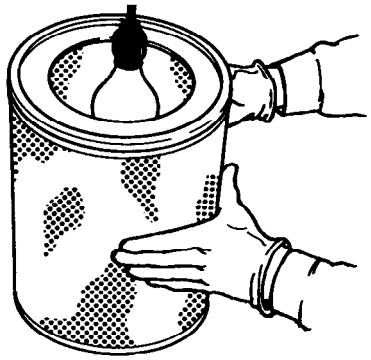

Illustration 57 g00281693

Inspect the clean, dry primary air cleaner element. Use a 60 watt blue light in a dark room or in a similar facility. Place the blue light in the primary air cleaner element. Rotate the primary air cleaner element. Inspect the primary air cleaner element for tears and/or holes. Inspect the primary air cleaner element for light that may show through the filter material. If it is necessary in order to confirm the result, compare the primary air cleaner element to a new primary air cleaner element that has the same part number.

Do not use a primary air cleaner element that has any tears and/or holes in the filter material. Do not use a primary air cleaner element with damaged pleats, gaskets, or seals. Discard damaged primary air cleaner elements.

### Storing Primary Air Cleaner Elements

If a primary air cleaner element that passes inspection will not be used, the primary air cleaner element can be stored for future use.

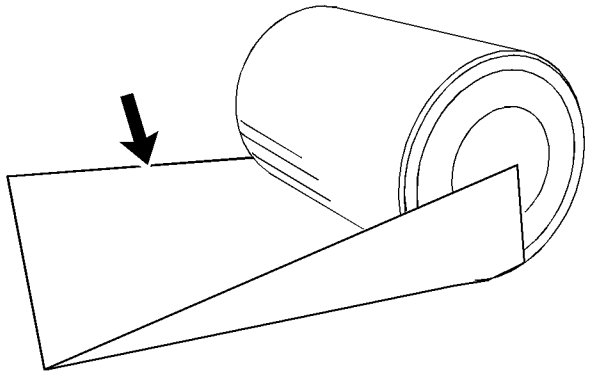

Illustration 58 g02595738
Typical example

Do not use paint, a waterproof cover, or plastic as a protective covering for storage. An airflow restriction may result. To protect against dirt and damage, wrap the primary air cleaner elements in Volatile Corrosion Inhibited (VCI) paper.

Place the primary air cleaner element into a box for storage. For identification, mark the outside of the box and mark the primary air cleaner element. Include the following information:

- Date of cleaning
- Number of cleanings

Store the box in a dry location.

i01432811

# Engine Air Cleaner Element (Single Element) - Inspect/Replace

**SMCS Code:** 1054-510; 1054-040

Perform the Operation and Maintenance Manual, “Engine Air Cleaner Service Indicator-Inspect” procedure and perform the Operation and Maintenance Manual, “Engine Air Precleaner Check/Clean” procedure (if equipped) before performing the following procedure.

NOTICE
Never run the engine without an air cleaner element installed. Never run the engine with a damaged air cleaner element. Do not use air cleaner elements with damaged pleats, gaskets or seals. Dirt entering the engine causes premature wear and damage to engine components. Air cleaner elements help to prevent airborne debris from entering the air inlet.

NOTICE
Never service the air cleaner element with the engine running since this will allow dirt to enter the engine.

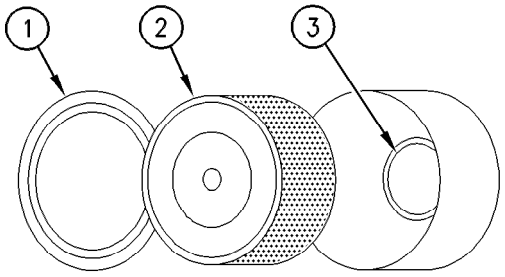


Illustration 59 g00310664

(1) Air cleaner cover
(2) Air filter element
(3) Air inlet

**1.** Remove air cleaner cover (1) and remove air filter element (2).

**2.** Cover air inlet (3) with tape or a clean cloth so that debris cannot enter the air inlet.

**3.** Clean the inside of air cleaner cover (1). Clean the body that holds the air cleaner element.

**4.** Inspect the replacement element for the following items:damage, dirt and debris.

**5.** Remove the seal from the opening of the air inlet.

**6.** Install a clean, undamaged air filter element (2).

**7.** Install air cleaner cover (1).

**8.** Reset the air cleaner service indicator.

i08397637

# Engine Air Cleaner Service Indicator - Inspect
(If Equipped)

**SMCS Code:** 7452-040

Some engines may be equipped with a different service indicator.

Some engines are equipped with a differential gauge for inlet air pressure. The differential gauge for inlet air pressure displays the difference in the pressure that is measured before and after the air cleaner element. As the air cleaner element becomes dirty, the pressure differential rises. If your engine is equipped with a different type of service indicator, follow the OEM recommendations in order to service the air cleaner service indicator.

The service indicator may be mounted on the clean side of the air cleaner housing or in a remote location.

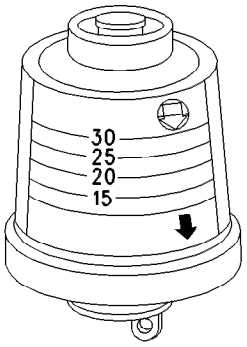


Illustration 60 g00103777

Typical service indicator

Observe the service indicator. The air cleaner element should be cleaned or the air cleaner element should be replaced when one of the following conditions occur:

- The yellow diaphragm enters the red zone.
- The red piston locks in the visible position.

## Test the Service Indicator

Service indicators are important instruments.

- Check for ease of resetting. The service indicator should reset in less than three pushes.
- Check the movement of the service indicator core when the engine is run at full load speed. The core should latch approximately at the greatest vacuum that is attained.

If the service indicator does not reset easily, or if the core does not latch at the greatest vacuum, the service indicator should be replaced. If the new service indicator will not reset, the hole for the service indicator may be plugged.

If necessary, replace the service indicator more frequently in environments that are severely dusty. Replace the service indicator annually regardless of the operating conditions. Replace the service indicator when the engine is overhauled, and whenever major engine components are replaced.

**Note:** When a new service indicator is installed, excessive force may crack the top of the service indicator. Tighten the service indicator to a torque of 2 N·m (18 lb in).

i07819526

# Engine Air Precleaner - Check/ Clean

**SMCS Code:** 1055-535; 1055-070

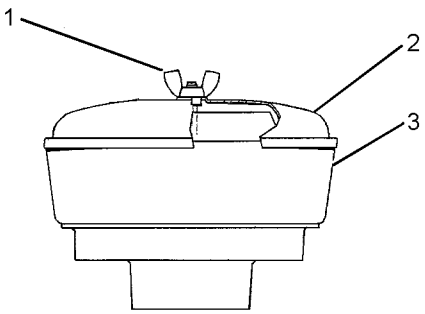


Illustration 61 g01453058

Typical engine air precleaner

(1) Wing nut
(2) Cover
(3) Body

Remove wing nut (1) and cover (2). Check for an accumulation of dirt and debris in body (3). Clean the body, if necessary.

After cleaning the precleaner, install cover (2) and wing nut (1).

**Note:** When the engine is operated in dusty conditions, more frequent cleaning is required.

Do not tap or strike the air cleaner element.

i02657607

# Engine Crankcase Breather - Replace

**SMCS Code:** 1317-510

NOTICE
Keep all parts clean from contaminants.

Contaminants may cause rapid wear and shortened component life.

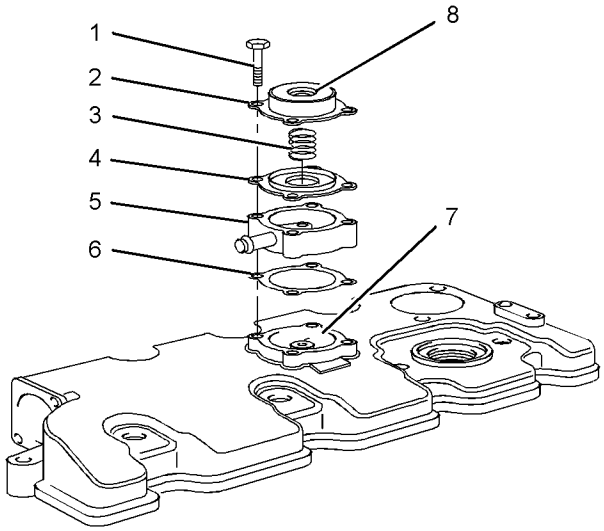


Illustration 62 g01335247

Typical example

(1) Screws for the breather cover
(2) Breather cover
(3) Spring
(4) Diaphragm and plate
(5) Spacer for turbocharged engines only
(6) Joint for turbocharged engines only
(7) Cavity
(8) Vent hole

**1.** Loosen the screws (1) and remove the breather cover (2) from the valve mechanism cover.

**2.** Remove the spring (3). Remove the diaphragm and plate (4).

**3.** For turbocharged engines, remove the spacer (5) and the joint (6).

**4.** Clean the vent hole (8) and the cavity (7) in the valve mechanism cover.

NOTICE
Make sure that the components of the breather assembly are installed correctly. Engine damage may occur if the breather assembly is not working correctly.

**5.** For turbocharged engines, install a new joint (6) and the spacer (5).

**6.** Install a new diaphragm and plate (4) for the breather assembly into the cavity (7) of the valve mechanism cover or the spacer (5) for turbocharged engines.

**7.** Install a new spring (3).

**8.** Install the breather cover (2) and the four screws (1). Tighten the screws.

i02456872

# Engine Mounts - Inspect

**SMCS Code:** 1152-040

Inspect the engine mounts for deterioration and for proper bolt torque. Engine vibration can be caused by the following conditions:

- Improper mounting of the engine
- Deterioration of the engine mounts

Any engine mount that shows deterioration should be replaced. Refer to Special Publication, SENR3130, “Torque Specifications” for the recommended torques. Refer to the OEM recommendations for more information.

i00623423

# Engine Oil Level - Check

**SMCS Code:** 1348-535-FLV

**WARNING**

**Hot oil and hot components can cause personal injury. Do not allow hot oil or hot components to contact the skin.**

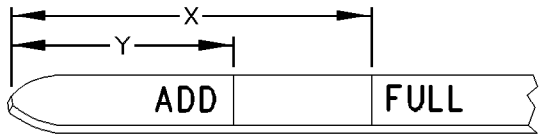


Illustration 63 g00110310

(Y) “ADD” mark. (X) “FULL” mark.

NOTICE
Perform this maintenance with the engine stopped.

**1.** Maintain the oil level between “ADD” mark (Y) and “FULL” mark (X) on oil level gauge (1). Do not fill the crankcase above “FULL” mark (X).

NOTICE
Operating your engine when the oil level is above the “FULL” mark could cause your crankshaft to dip into the oil. The air bubbles created from the crankshaft dipping into the oil reduces the oil's lubricating characteristics and could result in the loss of power.

**2.** Remove the oil filler cap and add oil, if necessary. Clean the oil filler cap. Install the oil filler cap.

i08397634

# Engine Oil Sample - Obtain

**SMCS Code:** 1000-008; 1348-554-SM; 7542-554-SM; 7542-554-OC

In addition to a good preventive maintenance program, Caterpillar recommends using S·O·S oil analysis at regularly scheduled intervals. S·O·S oil analysis provides infrared analysis, which is required for determining nitration and oxidation levels.

## Obtain the Sample and the Analysis

**WARNING**

**Hot oil and hot components can cause personal injury. Do not allow hot oil or hot components to contact the skin.**

Before you take the oil sample, complete the Label, PEEP5031 for identification of the sample. To help obtain the most accurate analysis, provide the following information:

- Engine model
- Service hours on the engine

- The number of hours that have accumulated since the last oil change
- The amount of oil that has been added since the last oil change

To ensure that the sample is representative of the oil in the crankcase, obtain a warm, mixed oil sample.

To avoid contamination of the oil samples, the tools and the supplies that are used for obtaining oil samples must be clean.

Caterpillar recommends using the sampling valve to obtain oil samples. The quality and the consistency of the samples are better when the sampling valve is used. The location of the sampling valve allows oil that is flowing under pressure to be obtained during normal engine operation.

The 169-8373 Fluid Sampling Bottle is recommended for use with the sampling valve. The fluid sampling bottle includes the parts that are needed for obtaining oil samples. Instructions are also provided.

NOTICE
Always use a designated pump for oil sampling, and use a separate designated pump for coolant sampling. Using the same pump for both types of samples may contaminate the samples that are being drawn. This contaminate may cause a false analysis and an incorrect interpretation that could lead to concerns by both dealers and customers.

If the engine is not equipped with a sampling valve, use the 1U-5718 Vacuum Pump. The pump is designed to accept sampling bottles. Disposable tubing must be attached to the pump for insertion into the sump.

For instructions, see Special Publication, PEGJ0047, “How To Take A Good S·O·S Oil Sample”. Consult your Cat dealer for complete information and assistance in establishing an S·O·S program for your engine.

i02625985

# Engine Oil and Filter - Change

**SMCS Code:** 1318-510; 1348-044

**⚠ WARNING**

**Hot oil and hot components can cause personal injury. Do not allow hot oil or hot components to contact the skin.**

NOTICE
Care must be taken to ensure that fluids are contained during performance of inspection, maintenance, testing, adjusting and repair of the product. Be prepared to collect the fluid with suitable containers before opening any compartment or disassembling any component containing fluids.

Dispose of all fluids according to local regulations and mandates.

NOTICE
Keep all parts clean from contaminants.

Contaminants may cause rapid wear and shortened component life.

Do not drain the oil when the engine is cold. As the oil cools, suspended waste particles settle on the bottom of the oil pan. The waste particles are not removed with the draining cold oil. Drain the crankcase with the engine stopped. Drain the crankcase with the oil warm. This draining method allows the waste particles that are suspended in the oil to be drained correctly.

Failure to follow this recommended procedure will cause the waste particles to be recirculated through the engine lubrication system with the new oil.

## Drain the Engine Oil

After the engine has been run at the normal operating temperature, stop the engine. Use one of the following methods to drain the engine crankcase oil:

- If the engine is equipped with a drain valve, turn the drain valve knob counterclockwise in order to drain the oil. After the oil has drained, turn the drain valve knob clockwise in order to close the drain valve.
- If the engine is not equipped with a drain valve, remove the oil drain plug in order to allow the oil to drain. After the oil has drained, the oil drain plug should be cleaned and installed.

## Replace the Oil Filter

NOTICE
Caterpillar oil filters are built to Caterpillar specifications. Use of an oil filter not recommended by Caterpillar could result in severe engine damage to the engine bearings, crankshaft, etc., as a result of the larger waste particles from unfiltered oil entering the engine lubricating system. Only use oil filters recommended by Caterpillar.

1. Remove the oil filter with a 1U-8760 Chain Wrench.

**Note:** The following actions can be carried out as part of the preventive maintenance program.

**2.** Cut the oil filter open with a 175-7546 Oil Filter Cutter Gp. Break apart the pleats and inspect the oil filter for metal debris. An excessive amount of metal debris in the oil filter may indicate early wear or a pending failure.

Use a magnet to differentiate between the ferrous metals and the nonferrous metals that are found in the oil filter element. Ferrous metals may indicate wear on the steel and cast iron parts of the engine.

Nonferrous metals may indicate wear on the aluminum parts, brass parts or bronze parts of the engine. Parts that may be affected include the following items: main bearings, rod bearings, turbocharger bearings and cylinder heads.

Due to normal wear and friction, it is not uncommon to find small amounts of debris in the oil filter. Consult your Caterpillar dealer in order to arrange for a further analysis if an excessive amount of debris is found in the oil filter.

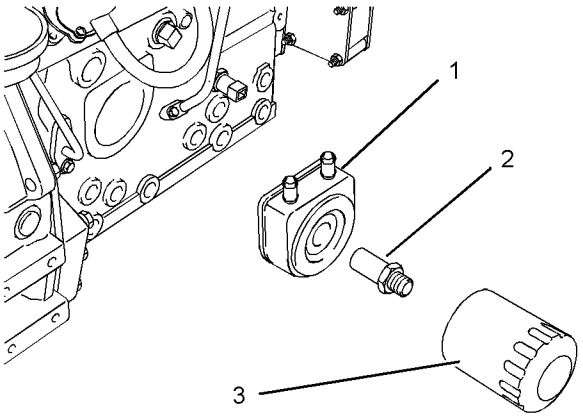


Illustration 64 g01334593

(1) Oil cooler
(2) Adapter
(3) Oil filter

**Note:** Oil cooler (1) and adapter (2) are not installed on all engines.

**3.** Clean the sealing surface of the cylinder block or the oil cooler (1).

**4.** Apply clean engine oil to the new oil filter seal (3).

NOTICE
Do not fill the oil filters with oil before installing them. This oil would not be filtered and could be contaminated. Contaminated oil can cause accelerated wear to engine components.

**5.** Install the oil filter. Tighten the oil filter until the oil filter seal contacts the cylinder block or the oil cooler. Tighten the oil filter by hand according to the instructions that are shown on the oil filter. Do not overtighten the oil filter.

## Fill the Engine Crankcase

**1.** Remove the oil filler cap. Refer to this Operation and Maintenance Manual , “Refill Capacities and Recommendations” for more information on lubricant specifications. Fill the crankcase with the correct amount of oil. Refer to this Operation and Maintenance Manual , “Refill Capacities” for more information on refill capacities.

NOTICE
If equipped with an auxiliary oil filter system or a remote oil filter system, follow the OEM or filter manufacturer's recommendations. Under filling or overfilling the crankcase with oil can cause engine damage.

NOTICE
To prevent crankshaft bearing damage, crank the engine with the fuel OFF. This will fill the oil filters before starting the engine. Do not crank the engine for more than 30 seconds.

**2.** Start the engine and run the engine at “LOW IDLE” for two minutes. Perform this procedure in order to ensure that the lubrication system has oil and that the oil filters are filled. Inspect the oil filter for oil leaks.

**3.** Stop the engine and allow the oil to drain back to the sump for a minimum of ten minutes.

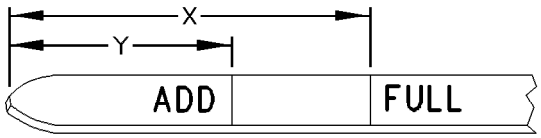


Illustration 65 g00110310

**4.** Remove the oil level gauge in order to check the oil level. Maintain the oil level between the “ADD” and “FULL” marks on the oil level gauge.

i08258801

# Engine Protective Devices - Check

**SMCS Code:** 7400-535

Alarms and shutoffs must function properly. Alarms provide timely warning to the operator. Shutoffs help to prevent damage to the engine. Determining if the engine protective devices are in good working order during normal operation is impossible. Malfunctions must be simulated to test the engine protective devices.

A calibration check of the engine protective devices will ensure that the alarms and shutoffs activate at the setpoints. Ensure that the engine protective devices are functioning properly.

NOTICE
During testing, abnormal operating conditions must be simulated.

The tests must be performed correctly in order to prevent possible damage to the engine.

To prevent damage to the engine, only authorized service personnel or your Cat dealer should perform the tests.

## Visual Inspection

Visually check the condition of all gauges, sensors, and wiring. Look for wiring and components that are loose, broken, or damaged. Damaged wiring or components should be repaired or replaced immediately.

i02676796

# Engine Valve Lash - Inspect/ Adjust

**SMCS Code:** 1102-025

This maintenance is recommended by Caterpillar as part of a lubrication and preventive maintenance schedule in order to help provide maximum engine life. The maintenance for the valve lash is important in order to keep the engine compliant.

This maintenance is recommended by Caterpillar as part of a lubrication and preventive maintenance schedule in order to help provide maximum engine life.

NOTICE
Only qualified service personnel should perform this maintenance. Refer to the Systems Operation/Testing and Adjusting Manual, “Valve Lash and Valve Bridge Adjustment”article or consult your Caterpillar dealer for the complete valve lash adjustment procedure.

Operation of Caterpillar engines with improper valve adjustments can reduce engine efficiency. This reduced efficiency could result in excessive fuel usage and/or shortened engine component life.

**⚠ WARNING**

**Ensure that the engine can not be started while this maintenance is being performed. To help prevent possible injury, do not use the starting motor to turn the flywheel.**

**Hot engine components can cause burns. Allow additional time for the engine to cool before measuring/adjusting valve lash clearance.**

Ensure that the engine is stopped before measuring the valve lash. To obtain an accurate measurement, allow the valves to cool before this maintenance is performed.

Refer to the Service Manual for more information.

i02625315

# Fuel Injector - Test/Change

**SMCS Code:** 1290-510; 1290-081

**⚠ WARNING**

**Fuel leaked or spilled onto hot surfaces or electrical components can cause a fire.**

NOTICE
Do not allow dirt to enter the fuel system. Thoroughly clean the area around a fuel system component that will be disconnected. Fit a suitable cover over disconnected fuel system component.

Fuel injectors are subject to tip wear. Tip wear is a result of fuel contamination. Tip wear can cause the following problems:

- Increased fuel consumption
- Black smoke
- Misfire
- Rough running

Fuel injectors should be cleaned, inspected, tested, and replaced, if necessary. Refer to Special Instruction, SEHS7292 for using the 8S-2245 Injector Cleaning Tool Gp. Consult your Caterpillar dealer about cleaning the fuel injectors and testing the fuel injectors.

NOTICE
Never wire brush or scrape a fuel injection nozzle. Wire brushing or scraping a fuel injection nozzle will damage the finely machine orifice. Proper tools for cleaning and testing the fuel injection nozzles can be obtained from Caterpillar dealers.

The following items are symptoms of a malfunction of the fuel injectors:

- Abnormal engine operation
- Smoke emission
- Engine knock

Each fuel injector must be isolated one at a time in order to determine the malfunctioning fuel injector.

**1.** Start the engine.

**2.** Loosen each fuel line nut one at a time at the fuel injection pump. A cloth or similar material must be used in order to prevent fuel from spraying on the hot exhaust components. Tighten each nut before loosening the next nut.

**3.** A faulty fuel injector may be identified when a fuel line nut is loosened and the following conditions are present:

- The exhaust smoke is partially eliminated or the exhaust smoke is completely eliminated.
- Engine performance is not affected.

A fuel injector that is suspected of being faulty should be removed. A new fuel injector should be installed in the cylinder in order to determine if the removed fuel injector is faulty.

## Removal and Installation of the Fuel Injection Nozzles

For the removal and the installation of fuel injectors, special tooling is required. Refer to the Service Manual for more information. Consult your Caterpillar dealer for assistance.

i08046563

# Fuel System - Prime

**SMCS Code:** 1258-548

NOTICE
Care must be taken to ensure that fluids are contained during performance of inspection, maintenance, testing, adjusting and repair of the product. Be prepared to collect the fluid with suitable containers before opening any compartment or disassembling any component containing fluids.

Dispose of all fluids according to local regulations and mandates.

Use the following procedure to prime the fuel system:

If air enters the fuel system, the air must be purged from the fuel system before the engine can be started. Air can enter the fuel system when the following events occur:

- The fuel tank is empty or the fuel tank has been partially drained.
- The low-pressure fuel lines are disconnected.
- A leak exists in the low-pressure fuel system.
- The fuel filter is replaced.

NOTICE
Care must be taken to ensure that fluids are contained during performance of inspection, maintenance, testing, adjusting and repair of the product. Be prepared to collect the fluid with suitable containers before opening any compartment or disassembling any component containing fluids.

Dispose of all fluids according to local regulations and mandates.

## Primary filter

Ensure that the air is removed from the primary fuel filter before you prime the secondary fuel filters, refer to illustration 66 .

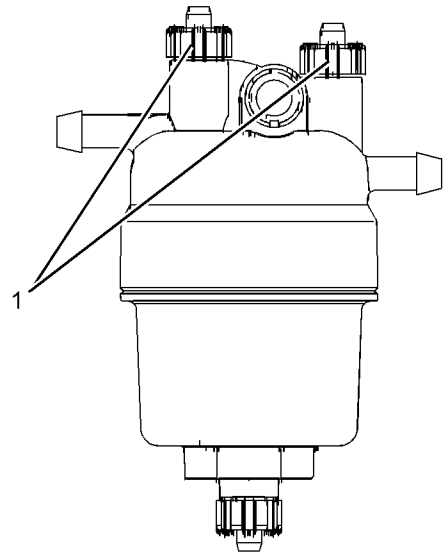


Illustration 66 g01316878

This filter may not be installed on the engine.

(1) Vent screws

## Fuel filters

There are three types of fuel filter that may be installed on the engine.

- Element
- Canister
- Spin-on filter with fuel priming pump

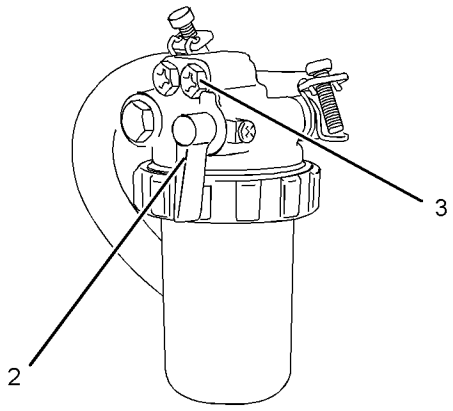


Illustration 67 g01327360

Element

(2) Fuel valve
(3) Vent screw

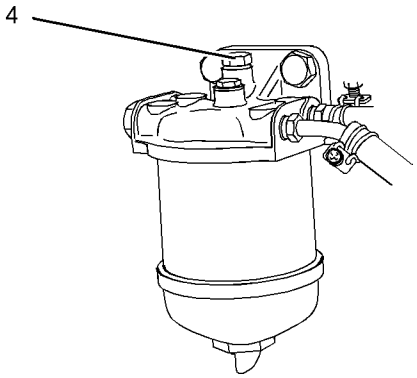


Illustration 68 g01327361

Canister

(4) Vent screw

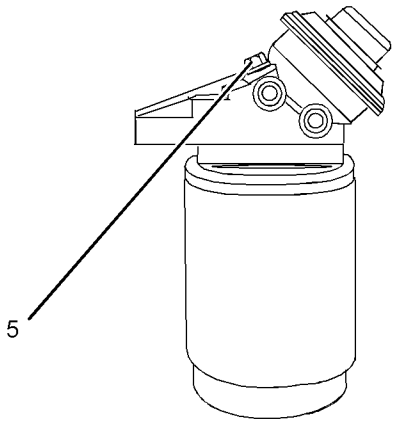


Illustration 69 g01327363

Spin-on filter with fuel priming pump

(5) Vent screw

Vent screw (3) is installed on the filter that has an element. Vent screw (4) is installed on the fuel filter that has a canister. Vent screw (5) is installed on the spin-on filter.

## Priming the system

Ensure that the air is removed from the primary filter. Loosen vent screws (1). Refer to illustration 66 . Operate the priming pump. When fuel free from air flows from the vent screw tighten the vent screw.

**Note:** Some fuel system will use gravity to prime the primary fuel filter. If gravity is used ensure that the fuel tank is full and that all stop valves in the fuel line are open.

There are four different types of systems that can be installed on the engine to prime the fuel system. Refer to illustration 70 .

- Hand priming pump
- In-line hand priming pump
- Electrical priming pump
- Transfer pump that is operated by the starting motor

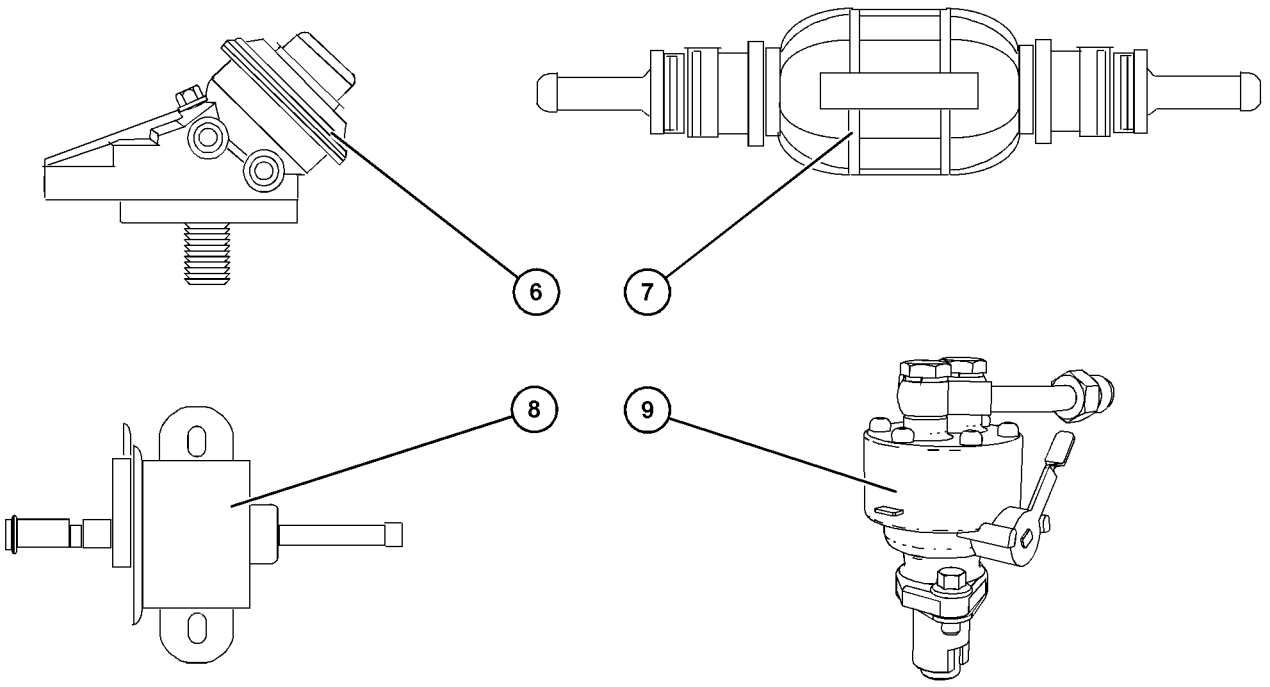


Illustration 70 g06523817

(6) Hand priming pump
(7) In-line priming pump
(8) Electrical priming pump
(9) Fuel transfer pump with hand priming

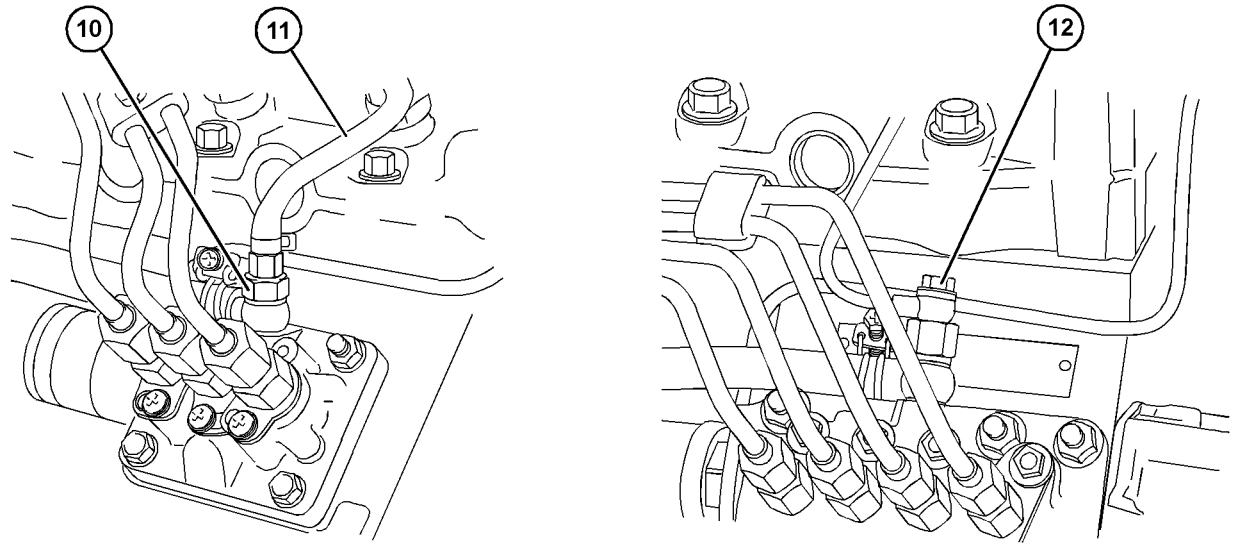


Illustration 71 g06523835

(10) Connector bolt
(11) Fuel return line
(12) Connector bolt

## Hand Priming Pump 6

To identify the hand priming pump, refer to illustration 70 .

1. Ensure that fuel valve (2) for the fuel filter that has an element is in the ON position. Refer to illustration 67 .

**2.** Loosen vent screw (3 4 or 5) on the fuel filter.

**3.** Operate hand priming pump (6). When fuel free from air flows from the vent screw tighten the vent screw.

**4.** Loosen connection (10 or 12) at the fuel injection pump. Refer to illustration 71 .

**Note:** Fuel return line (11) may need to be removed to prime the fuel system.

**5.** Operate the hand priming pump. When fuel free from air flows from the connections tighten the connecting bolt.

**6.** The engine should now be able to start. Operate the starting motor to start the engine.

**Note:** Do not operate the starting motor for more than 15 seconds. If the engine does not start after 15 seconds, stop and wait for 30 seconds before trying again.

## In-line Priming Pump 7

To identify the in-line priming pump, refer to illustration 70 .

**1.** Ensure that fuel valve (2) for the fuel filter that has an element is in the ON position. Refer to illustration 67 .

**2.** Loosen vent screw (3 4 or 5) on the fuel filter.

**3.** Operate in-line priming pump (7). When fuel free from air flows from the vent screw tighten the vent screw.

**4.** Loosen connection (10 or 12) at the fuel injection pump. Refer to illustration 71 .

**Note:** Fuel return line (11) may need to be removed to prime the fuel system.

**5.** Operate the in-line priming pump. When fuel free from air flows from the connections tighten the connecting bolt.

**6.** The engine should now be able to start. Operate the starting motor to start the engine.

**Note:** Do not operate the starting motor for more than 15 seconds. If the engine does not start after 15 seconds, stop and wait for 30 seconds before trying again.

## Electrical Priming Pump 8

To identify the electrical priming pump, refer to illustration 70 .

**1.** Ensure that fuel valve (2) for the fuel filter that has an element is in the ON position. Refer to illustration 67 .

**2.** Loosen vent screw (3 4 or 5) on the fuel filter.

**3.** Operate electrical priming pump (8). When fuel free from air flows from the vent screw tighten the vent screw. Switch off the electrical priming pump.

**4.** Loosen connection (10 or 12) at the fuel injection pump. Refer to illustration 71 .

**Note:** Fuel return line (11) may need to be removed to prime the fuel system.

**5.** Operate the in-line priming pump. When fuel free from air flows from the connections tighten the connecting bolt.

**6.** The engine should now be able to start. Operate the starting motor to start the engine.

**Note:** Do not operate the starting motor for more than 15 seconds. If the engine does not start after 15 seconds, stop and wait for 30 seconds before trying again.

## Fuel Transfer Pump 9

To identify the fuel transfer pump, refer to illustration 70 .

**Note:** If the transfer pump is not equipped with a manual priming lever and the engine is not equipped with any other priming option, you must operate the starting motor to prime the fuel system. Do not operate the starting motor for more than 15 seconds continuously. After 15 seconds, stop and wait for 30 seconds before operating the starting motor again.

**1.** Ensure that fuel valve (2) for the fuel filter that has an element is in the ON position. Refer to illustration 67 .

**2.** Loosen vent screw (3 4 or 5) on the fuel filter.

**3.** Operate fuel transfer pump (9). When fuel free from air flows from the vent screw tighten the vent screw. Stop the fuel transfer pump.

**4.** Loosen connection (10 or 12) at the fuel injection pump. Refer to illustration 71 .

**Note:** Fuel return line (11) may need to be removed to prime the fuel system.

**5.** Operate the fuel transfer pump. When fuel free from air flows from the connections tighten the connecting bolt. Stop the transfer pump.

**6.** The engine should now be able to start. Operate the starting motor to start the engine.

**Note:** Do not operate the starting motor for more than 15 seconds. If the engine does not start after 15 seconds, stop and wait for 30 seconds before trying again.

i07023784

# Fuel System Primary Filter/ Water Separator - Drain

**SMCS Code:** 1260-543; 1263-543

**WARNING**

**Fuel leaked or spilled onto hot surfaces or electrical components can cause a fire. To help prevent possible injury, turn the start switch off when changing fuel filters or water separator elements. Clean up fuel spills immediately.**

NOTICE
The water separator is under suction during normal engine operation. Ensure that the drain valve is tightened securely to help prevent air from entering the fuel system.

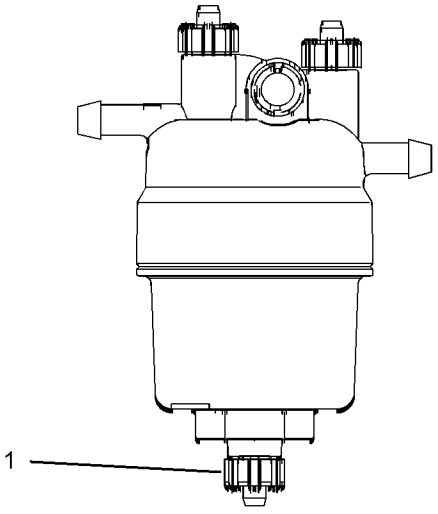


Illustration 72 g01316965
Typical example

**1.** Open drain (1). Catch the draining fluid in a suitable container. Dispose of the drained fluid correctly.

**2.** Close drain (1).

i02627769

# Fuel System Secondary Filter - Replace

**SMCS Code:** 1261-510-SE

**WARNING**

**Fuel leaked or spilled onto hot surfaces or electrical components can cause a fire. To help prevent possible injury, turn the start switch off when changing fuel filters or water separator elements. Clean up fuel spills immediately.**

NOTICE
Do not allow dirt to enter the fuel system. Thoroughly clean the area around a fuel system component that will be disconnected. Fit a suitable cover over disconnected fuel system component.

NOTICE
Care must be taken to ensure that fluids are contained during performance of inspection, maintenance, testing, adjusting and repair of the product. Be prepared to collect the fluid with suitable containers before opening any compartment or disassembling any component containing fluids.

Dispose of all fluids according to local regulations and mandates.

## Fuel Filter with Canister

**1.** Close the fuel supply valve.

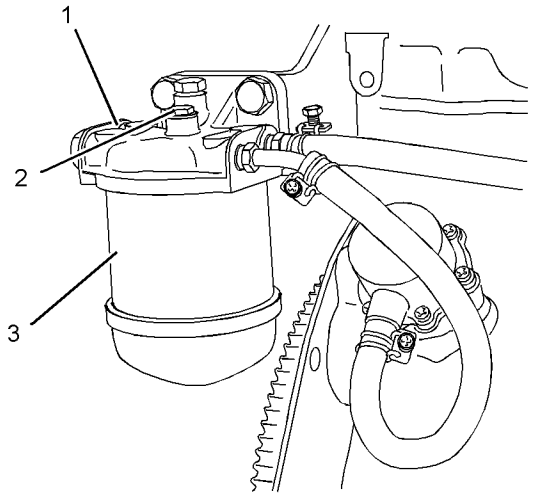


Illustration 73 g01307792
Typical example

**2.** Clean the outside of the fuel filter assembly (1).

**3.** Remove setscrew (2).

**4.** Remove the canister (3). Ensure that any fluid is drained into a suitable container.

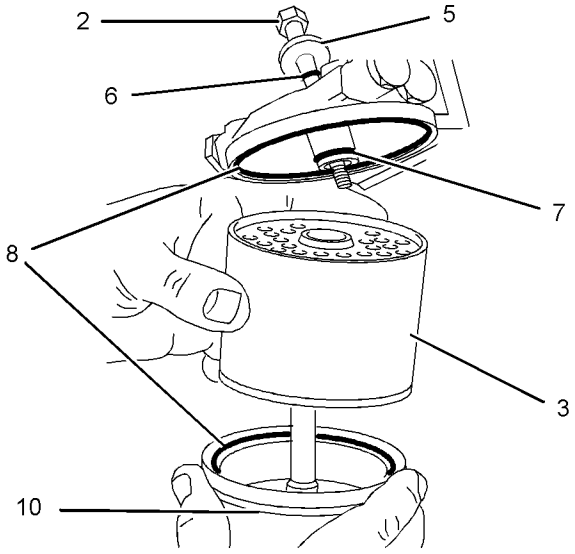


Illustration 74 g01334877
Typical example

**5.** Assemble the following items: seals (8), seal (7), canister (3) and bowl (10). Place washer (5) and seal (6) on setscrew (2).

**6.** Fasten the assembly to the fuel filter base with setscrew (2).

The fuel system will need to be primed after the new filter is installed. Refer to this Operation and Maintenance Manual, “Fuel System - Prime”.

## Fuel Filter with Element

**1.** Close the fuel supply valve (1).

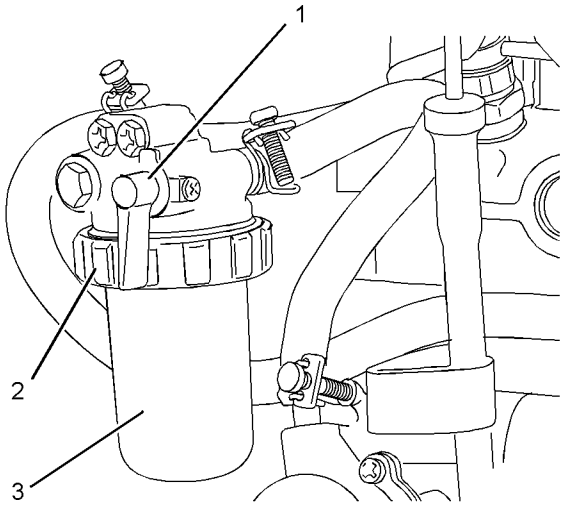


Illustration 75 g01334893
Typical example

**2.** Clean the outside of the fuel filter assembly.

**3.** Loosen locking ring (2).

**4.** Remove the casing for the filter (3) and the element. Ensure that any fluid is drained into a suitable container.

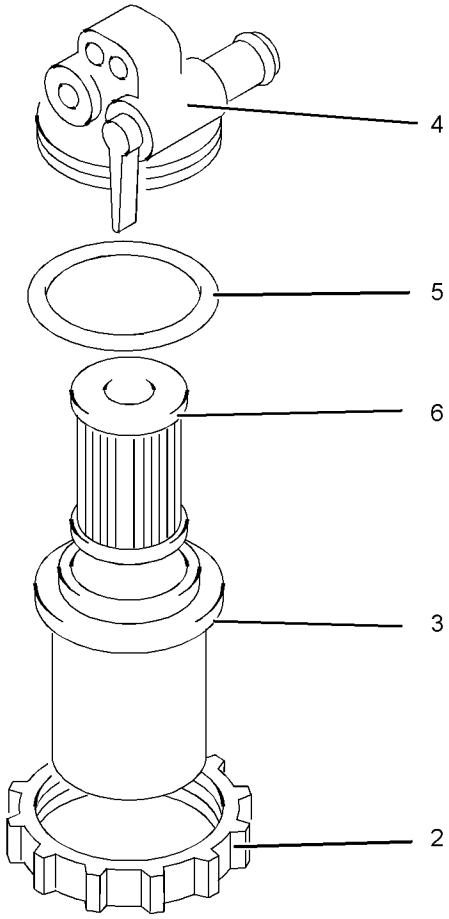


Illustration 76 g01334895
Typical example

**5.** Assemble the following items: seal (5), filter element (6) and casing (3).

**Note:** Do not fill the fuel filter with fuel. This fuel will not be filtered and the fuel could be contaminated. Contaminated fuel can damage the fuel system.

**6.** Install the assembled items to the filter base (4).

**7.** Install the locking ring (2) to the filter base. Rotate the locking ring in order to lock the assembly.

The fuel system will need to be primed after the new filter is installed. Refer to this Operation and Maintenance Manual, “Fuel System - Prime”.

## Fuel filter with priming pump

**1.** Close the fuel supply valve.

**2.** Clean the outside of the fuel filter assembly.

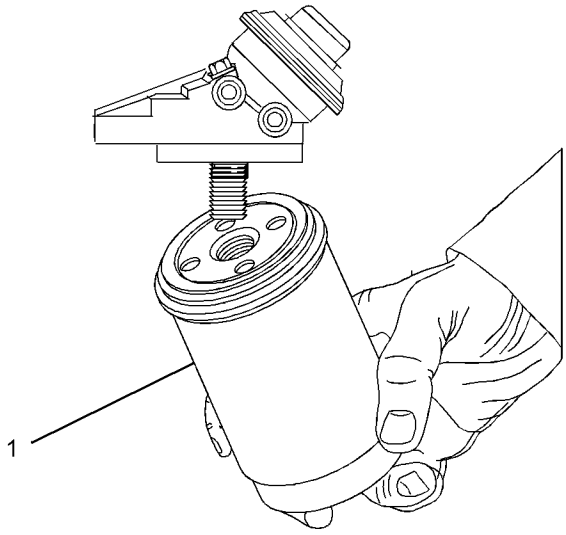


Illustration 77 g01306131
Typical example

**3.** Remove spin-on filter (1). Use a 1U-8760 Chain Wrench in order to remove the filter. Ensure that any fluid is drained into a suitable container.

**Note:** Do not fill the fuel filter with fuel. This fuel will not be filtered and the fuel could be contaminated. Contaminated fuel can damage the fuel system.

**4.** Install the new spin-on filter. Tighten the spin-on filter by hand.

The fuel system will need to be primed after the new filter is installed. Refer to this Operation and Maintenance Manual, “Fuel System - Prime”.

i08397650

# Fuel Tank Water and Sediment - Drain

**SMCS Code:** 1273-543-M&S

NOTICE
Care must be taken to ensure that fluids are contained during performance of inspection, maintenance, testing, adjusting, and repair of the product. Be prepared to collect the fluid with suitable containers before opening any compartment or disassembling any component containing fluids.

Refer to Special Publication, NENG2500, “Cat Dealer Service Tool Catalog” or refer to Special Publication, PECJ0003, “Cat Shop Supplies and Tools Catalog” for tools and supplies suitable to collect and contain fluids on Cat products.

Dispose of all fluids according to local regulations and mandates.

## Fuel Tank

Fuel quality is critical to the performance and to the service life of the engine. Water in the fuel can cause excessive wear to the fuel system. Condensation occurs during the heating and cooling of fuel. The condensation occurs as the fuel passes through the fuel system and the fuel returns to the fuel tank. This causes water to accumulate in fuel tanks. Draining the fuel tank regularly and obtaining fuel from reliable sources can help to eliminate water in the fuel. The fuel tank utilizes a fuel tank vent to prevent an air lock or vacuum. Ensure that the vent is free of debris and not damaged.

## Drain the Water and the Sediment

Fuel tanks should contain some provision for draining water and draining sediment from the bottom of the fuel tanks.

Prepare to catch water and sediment in an appropriate container. Connect a hose (if necessary) to the valve prior to opening the valve.

Open the drain valve on the bottom of the fuel tank to drain the water and the sediment. Close the drain valve.

**Note:** Failure to close the drain properly could result in fuel leakage, which could have detrimental results to performance.

Check the fuel daily. Drain the water and sediment from the fuel tank after operating the engine. Drain the water and sediment from the fuel tank after the fuel tank has been filled. Allow 5 to 10 minutes before performing this procedure.

Fill the fuel tank after operating the engine to drive out moist air. This procedure will help prevent condensation. Do not fill the tank to the top. The fuel expands as the fuel gets warm. The tank may overflow.

Some fuel tanks use stand pipes that allow water and sediment to settle below the end of the fuel stand pipe. Some fuel tanks use supply lines that take fuel directly from the bottom of the tank. If the engine is equipped with this system, regular maintenance of the fuel system filter is important.

## Fuel Storage Tanks

Drain the water and the sediment from the fuel storage tank during the following conditions:

- Weekly
- Refill of the tank

This procedure will help prevent water or sediment from being pumped from the storage tank into the engine fuel tank. A four micron(c) absolute filter for the breather vent on the fuel tank is also recommended.

If a bulk storage tank has been refilled or moved recently, allow adequate time for the sediment to settle before filling the engine fuel tank. Internal baffles in the bulk storage tank will also help trap sediment. Filtering fuel that is pumped from the storage tank helps to ensure the quality of the fuel. When possible, water separators should be used.

i08705302

# Hoses and Clamps - Inspect/ Replace

**SMCS Code:** 7554-040; 7554-510

Hoses and clamps must be inspected periodically and replaced at the recommended interval to ensure safe and continuous operation of the engine. Failure to replace a fuel hose at the recommended change interval may result in a hazardous situation. Take proper safety precautions before inspecting or replacing hoses and clamps.

**Note:** Always use a board or cardboard when the engine components are checked for leaks. Leaking fluid that is under pressure can cause serious injury or possible death. Leaks that are the size of a pin hole are included. Refer to Operation and Maintenance Manual, “General Hazard Information” for more information.

**Note:** Ensure that the hose is compatible with the application.

## Inspect Tubes, Hoses, Bellows, and Clamps

Inspect all tubes and hoses for leaks that are caused by the following conditions. Replace any tube or hose which exhibits any of the following conditions. Failure to replace a tube or hose which exhibits any of the following conditions may result in a hazardous situation.

- Hoses which are cracked
- Hoses which are soft
- Outer covering that is chafed or cut
- Exposed wire that is used for reinforcement
- Outer covering that is ballooning locally
- Flexible part of the hose that is kinked or crushed
- Armoring that is embedded in the outer covering
- Exhaust bellows for leaks or damage
- Hoses which exhibit signs of leakage which are not the result of loose couplings or clamps

Inspect all clamps for the following conditions. Replace any clamp which exhibits signs of any of the following conditions.

- Cracking
- Looseness
- Damage

Inspect all couplings for leaks. Replace any coupling which exhibits signs of leaks.

Each installation application can be different. The differences depend on the following factors:

- Type of hose
- Type of fitting material
- Anticipated expansion and contraction of the hose
- Anticipated expansion and contraction of the fittings

Due to extreme temperature changes, the hose will heat set. Heat setting causes hose clamps to loosen which can result in leaks. A constant torque hose clamp will help to prevent loose hose clamps.

Replace hoses that are cracked or soft. Replace hoses that show signs of leakage. Replace hoses that show signs of damage. Replace hose clamps that are cracked or damaged. Tighten or replace hose clamps which are loose.

## Replace the Hoses and the Clamps

NOTICE
Care must be taken to ensure that fluids are contained during performance of inspection, maintenance, testing, adjusting, and repair of the product. Be prepared to collect the fluid with suitable containers before opening any compartment or disassembling any component containing fluids.

Refer to Special Publication, NENG2500, “Cat Dealer Service Tool Catalog” or refer to Special Publication, PECJ0003, “Cat Shop Supplies and Tools Catalog” for tools and supplies suitable to collect and contain fluids on Cat products.

Dispose of all fluids according to local regulations and mandates.

### Cooling System

**⚠ WARNING**

**Pressurized System: Hot coolant can cause serious burns. To open the cooling system filler cap, stop the engine and wait until the cooling system components are cool. Loosen the cooling system pressure cap slowly in order to relieve the pressure.**

**⚠ WARNING**

**Personal injury can result from removing hoses or fittings in a pressure system.**

**Failure to relieve pressure can cause personal injury.**

**Do not disconnect or remove hoses or fittings until all pressure in the system has been relieved.**

1. Stop the engine.
2. Allow the engine to cool.
3. Before servicing a coolant hose, slowly loosen the filler cap for the cooling system to relieve any pressure.
4. Remove the filler cap for the cooling system.

**5.** Drain the coolant from the cooling system to a level that is below the hose that is being replaced. Drain the coolant into a suitable clean container. The coolant can be reused.

**6.** Remove the hose clamps.

**7.** Disconnect the old hose.

**8.** Replace the old hose with a new hose.

**9.** Install hose clamps which have been inspected or install new hose clamps. Refer to Specifications, SENR3130, “Torque Specifications” “Hose Clamps” for information about selecting and installing the proper hose clamps.

**10.** Refill the cooling system.

**11.** Clean the coolant filler cap. Inspect the gaskets on the filler cap. Inspect the gasket seat. Inspect the vacuum valve and seat for debris or damage. Replace the filler cap if the gaskets are damaged. Install the filler cap.

**12.** Start the engine. Inspect the cooling system for leaks.

## Fuel System

**⚠ WARNING**

**Personal injury can result from removing hoses or fittings in a pressure system.**

**Failure to relieve pressure can cause personal injury.**

**Do not disconnect or remove hoses or fittings until all pressure in the system has been relieved.**

**⚠ WARNING**

**Contact with high pressure fuel may cause fluid penetration and burn hazards. High pressure fuel spray may cause a fire hazard. Failure to follow these inspection, maintenance and service instructions may cause personal injury or death.**

NOTICE
Do not bend or strike high pressure lines. Do not install bent or damaged lines, tubes or hoses. Repair any loose or damaged fuel and oil lines, tubes and hoses. Leaks can cause fires. Inspect all lines, tubes and hoses carefully. Tighten all connections to the recommended torque.

NOTICE
Do not allow dirt to enter the fuel system. Thoroughly clean the area around a fuel system component that will be disconnected. Fit a suitable cover over any disconnected fuel system components.

**Note:** High-pressure fuel lines may be installed between the high-pressure fuel pump and the fuel injectors. High-pressure fuel lines are constantly charged with high pressure. Do not check the high-pressure fuel lines with the engine or the starting motor in operation. Wait for 10 minutes after the engine stops before you perform any service or repair on high-pressure fuel lines. Waiting for 10 minutes will allow the pressure to be purged.

**1.** Drain the fuel from the fuel system to a level that is below the hose that is being replaced.

**2.** Remove the hose clamps.

**3.** Disconnect the old hose.

**Note:** When servicing fuel system, use cap/s or cover/s as required to protect the system and maintain fuel system cleanliness.

**4.** Replace the old hose with a new hose.

**5.** Install hose clamps which have been inspected or install new hose clamps. Refer to Specifications, SENR3130, “Torque Specifications” “Hose Clamps” for information about selecting and installing the proper hose clamps.

**6.** Carefully inspect the engine for any spilled fuel. Make sure that no fuel remains on or close to the engine.

**Note:** Fuel must be added to the fuel system ahead of the fuel filter.

**7.** Refill the fuel system. Refer to this Operation and Maintenance Manual, “Fuel System - Prime” for information about priming the engine with fuel.

**8.** Start the engine. Inspect the fuel system for leaks.

## Lubrication System

**⚠ WARNING**

**Hot oil and hot components can cause personal injury. Do not allow hot oil or hot components to contact the skin.**

**1.** Drain the oil from the lubrication system to a level that is below the hose that is being replaced.

**2.** Remove the hose clamps.

**3.** Disconnect the old hose.

**4.** Replace the old hose with a new hose.

**5.** Install hose clamps which have been inspected or install new hose clamps. Refer to Specifications, SENR3130, “Torque Specifications” “Hose Clamps” for information about selecting and installing the proper hose clamps.

**6.** Refill the lubrication system. Refer to this Operation and Maintenance Manual, “Engine Oil Level - Check” to ensure that the lubrication system is filled with the proper amount of engine oil.

**7.** Start the engine. Inspect the lubrication system for leaks.

### Air System

**Note:** Boost leaks could result in excessive combustion temperatures.

**1.** Remove the hose clamps.

**2.** Disconnect the old hose.

**3.** Replace the old hose with a new hose.

**4.** Install hose clamps which have been inspected or install new hose clamps. Refer to Specifications, SENR3130, “Torque Specifications” “Hose Clamps” for information about selecting and installing the proper hose clamps.

**Note:** The bellows and the V-clamps that are used on the exhaust bellows should never be reused.

**5.** Start the engine. Inspect the air lines for leaks.

i02677504

# Overhaul Considerations

**SMCS Code:** 7595-043

Reduced hours of operation at full load will result in a lower average power demand. A decreased average power demand should increase both the engine service life and the overhaul interval.

The need for an overhaul is generally indicated by increased fuel consumption and by reduced power.

The following factors are important when a decision is being made on the proper time for an engine overhaul:

- The need for preventive maintenance
- The quality of the fuel that is being used
- The operating conditions
- The results of the S·O·S analysis

## Oil Consumption as an Overhaul Indicator

Oil consumption, fuel consumption, and maintenance information can be used to estimate the total operating cost for your Caterpillar engine. Oil consumption can also be used to estimate the required capacity of a makeup oil tank that is suitable for the maintenance intervals.

Oil consumption is in proportion to the percentage of the rated engine load. As the percentage of the engine load is increased, the amount of oil that is consumed per hour also increases.

The oil consumption rate (brake specific oil consumption) is measured in grams per kW/h (lb per bhp). The brake specific oil consumption (BSOC) depends on the engine load. Consult your Caterpillar dealer for assistance in determining the typical oil consumption rate for your engine.

When an engine's oil consumption has risen to three times the original oil consumption rate due to normal wear, an engine overhaul should be scheduled. There may be a corresponding increase in blowby and a slight increase in fuel consumption.

## Overhaul Recommendation

Caterpillar recommends replacement of the engine. For more information about replacement of the engine, see your Caterpillar dealer. Engine components are available in a standard size only.

### Cleaning

Caterpillar recommends the use of Hydrosolv Liquid Cleaners. Table 42 lists the Hydrosolv Liquid Cleaners that are available from your Caterpillar dealer.

Table 42

| HydrosolvLiquid Cleaners | | |
|---|---|---|
| **Part Number** | **Description** | **Size** |
| 1U-8812 | Hydrosolv4165 | 4 L (1 US gallon) |
| 1U-5490 | | 19 L (5 US gallon) |
| 8T-7570 | | 208 L (55 US gallon) |
| 1U-8804 | Hydrosolv100 | 4 L (1 US gallon) |
| 1U-5492 | | 19 L (5 US gallon) |
| 8T-5571 | | 208 L (55 US gallon) |

### Obtain Coolant Analysis

The concentration of supplemental coolant additive (SCA) should be checked regularly with test kits or with S·O·S Coolant Analysis (Level I).

A coolant analysis can be conducted in order to verify the condition of the water that is being used in the cooling system. A full water analysis can be obtained by consulting your local water utility company or an agricultural agent. Private laboratories are also available for water analysis.

Caterpillar Inc. recommends an S·O·S Coolant Analysis (Level II).

**S·O·S Coolant Analysis (Level II)**

An S·O·S Coolant Analysis (Level II) is a comprehensive coolant analysis which completely analyzes the coolant and the effects on the cooling system. An S·O·S Coolant Analysis (Level II) provides the following information:

- Complete S·O·S Coolant Analysis (Level I)
- Visual inspection of properties
- Identification of metal corrosion
- Identification of contaminants
- Identification of built up impurities (corrosion and scale)

S·O·S Coolant Analysis (Level II) provides a report of the results of both the analysis and the maintenance recommendations.

For more information about coolant analysis, see your Caterpillar dealer.

i09670468

## Radiator - Clean

**SMCS Code:** 1353-070

**Note:** Adjust the frequency of cleaning according to the effects of the operating environment.

Inspect the radiator for these items: damaged fins, corrosion, dirt, grease, insects, leaves, oil, and other debris. Clean the radiator, if necessary.

**⚠ WARNING**

**Personal injury can result from air pressure.**

**Personal injury can result without following proper procedure. When using pressure air, wear a protective face shield and protective clothing.**

**The maximum air pressure for cleaning purposes must be reduced to 205 kPa (30 psi) when the air nozzle is deadheaded.**

Pressurized air is the preferred method for removing loose debris. Direct the air in the opposite direction of the air flow. Hold the nozzle approximately 6 mm (0.25 inch) away from the fins. Slowly move the air nozzle in a direction that is parallel with the tubes. This movement will remove debris that is between the tubes.

Pressurized water may also be used for cleaning. The maximum water pressure for cleaning purposes must be less than 275 kPa (40 psi). Use pressurized water to soften mud. Clean the core from the front and the rear.

Use a degreaser and steam for removal of oil and grease. Clean the front and the rear of the core. Wash the core with detergent and hot water. Thoroughly rinse the core with clean water.

After cleaning, start the engine and bring the engine to high idle. This procedure will help in the removal of debris and drying of the core. Stop the engine. Use a light bulb behind the core to inspect the core for cleanliness. Repeat the cleaning, if necessary.

Inspect the fins for damage. Bent fins may be opened with a “comb”. Inspect these items for good condition: welds, mounting brackets, air lines, connections, clamps, and seals. Make repairs, if necessary.

i00151038

## Severe Service Application - Check

**SMCS Code:** 1000-535

Severe service is an application of an engine that exceeds current published standards for that engine. Caterpillar maintains standards for the following engine parameters:

- Performance (power range, speed range and fuel consumption)
- Fuel quality
- Altitude range
- Maintenance intervals
- Oil selection and maintenance

- Coolant selection and maintenance
- Environmental qualities
- Installation

Refer to the standards for the engine or consult with your Caterpillar dealer in order to determine if the engine is operating within the defined parameters.

Severe service operation can accelerate component wear. Engines that operate under severe conditions may need more frequent maintenance intervals in order to ensure maximum reliability and retention of full service life.

Due to individual applications, it is not possible to identify all of the factors which can contribute to severe service operation. Consult your Caterpillar dealer for the unique maintenance that is necessary for the engine.

The operating environment, improper operating procedures and improper maintenance procedures can be factors which contribute to severe service conditions.

## Environmental Factors

**Ambient temperatures** – The engine may be exposed to extended operation in extremely cold environments or hot environments. Valve components can be damaged by carbon buildup if the engine is frequently started and stopped in very cold temperatures. Extremely hot inlet air reduces engine performance.

**Air Quality** – The engine may be exposed to extended operation in an environment that is dirty or dusty, unless the equipment is cleaned regularly. Mud, dirt and dust can encase components. Maintenance can be very difficult. The buildup can contain corrosive chemicals.

**Buildup** – Compounds, elements, corrosive chemicals and salt can damage some components.

**Altitude** – Problems can arise when the engine is operated at altitudes that are higher than the intended settings for that application. Necessary adjustments should be made.

## Improper Operating Procedures

- Extended operation at low idle
- Frequent hot shutdowns
- Operating at excessive loads
- Operating at excessive speeds
- Operating outside the intended application

## Improper Maintenance Procedures

- Extending the maintenance intervals
- Failure to use recommended fuel, lubricants and coolant/antifreeze

i00651416

# Starting Motor - Inspect

**SMCS Code:** 1451-040; 1453-040

Caterpillar Inc. recommends a scheduled inspection of the starting motor. If the starting motor fails, the engine may not start in an emergency situation.

Check the starting motor for proper operation. Check the electrical connections and clean the electrical connections. Refer to the Service Manual for more information on the checking procedure and for specifications or consult your Caterpillar dealer for assistance.

i02226957

# Turbocharger - Inspect (If Equipped)

**SMCS Code:** 1052; 1052-040

A regular visual inspection of the turbocharger is recommended. Any fumes from the crankcase are filtered through the air inlet system. Therefore, by-products from oil and from combustion can collect in the turbocharger compressor housing. Over time, this buildup can contribute to loss of engine power, increased black smoke and overall loss of engine efficiency.

If the turbocharger fails during engine operation, damage to the turbocharger compressor wheel and/or to the engine may occur. Damage to the turbocharger compressor wheel can cause additional damage to the pistons, the valves, and the cylinder head.

NOTICE
Turbocharger bearing failures can cause large quantities of oil to enter the air intake and exhaust systems. Loss of engine lubricant can result in serious engine damage.

Minor leakage of oil into a turbocharger under extended low idle operation should not cause problems as long as a turbocharger bearing failure has not occured.

When a turbocharger bearing failure is accompanied by a significant engine performance loss (exhaust smoke or engine rpm up at no load), do not continue engine operation until the turbocharger is renewed.

A visual inspection of the turbocharger can minimize unscheduled downtime. A visual inspection of the turbocharger can also reduce the chance for potential damage to other engine parts.

## Removal and Installation

**Note:** The turbochargers that are supplied are nonserviceable.

For options regarding the removal, installation, repair and replacement, consult your Caterpillar dealer. Refer to the Service Manual for this engine for the procedure and specifications.

## Inspecting

NOTICE
The compressor housing for the turbocharger must not be removed from the turbocharger for cleaning.

The actuator linkage is connected to the compressor housing. If the actuator linkage is moved or disturbed the engine may not comply with emmissions legislation.

1. Remove the pipe from the turbocharger exhaust outlet and remove the air intake pipe to the turbocharger. Visually inspect the piping for the presence of oil. Clean the interior of the pipes in order to prevent dirt from entering during reassembly.
2. Check for the presence of oil. If oil is leaking from the back side of the compressor wheel, there is a possibility of a failed turbocharger oil seal.

   The presence of oil may be the result of extended engine operation at low idle. The presence of oil may also be the result of a restriction of the line for the intake air (clogged air filters), which causes the turbocharger to slobber.
3. Inspect the bore of the housing of the turbine outlet for corrosion.
4. Fasten the air intake pipe and the exhaust outlet pipe to the turbocharger housing.

i00632301

# Walk-Around Inspection

**SMCS Code:** 1000-040

## Inspect the Engine for Leaks and for Loose Connections

A walk-around inspection should only take a few minutes. When the time is taken to perform these checks, costly repairs and accidents can be avoided.

For maximum engine service life, make a thorough inspection of the engine compartment before starting the engine. Look for items such as oil leaks or coolant leaks, loose bolts, worn belts, loose connections and trash buildup. Make repairs, as needed:

- The guards must be in the proper place. Repair damaged guards or replace missing guards.
- Wipe all caps and plugs before the engine is serviced in order to reduce the chance of system contamination.

NOTICE
For any type of leak (coolant, lube, or fuel) clean up the fluid. If leaking is observed, find the source and correct the leak. If leaking is suspected, check the fluid levels more often than recommended until the leak is found or fixed, or until the suspicion of a leak is proved to be unwarranted.

NOTICE
Accumulated grease and/or oil on an engine or deck is a fire hazard. Remove this debris with steam cleaning or high pressure water.

- Ensure that cooling lines are properly clamped and tight. Check for leaks. Check the condition of all pipes.
- Inspect the water pump for coolant leaks.

**Note:** The water pump seal is lubricated by coolant in the cooling system. It is normal for a small amount of leakage to occur as the engine cools down and the parts contract.

Excessive coolant leakage may indicate the need to replace the water pump seal. For the removal of water pump and the installation of water pump and/or seals, refer to the Service Manual for the engine or consult your Caterpillar dealer.

- Inspect the lubrication system for leaks at the front crankshaft seal, the rear crankshaft seal, the oil pan, the oil filters and the valve cover.
- Inspect the fuel system for leaks. Look for loose fuel line clamps.
- Inspect the piping for the air inlet system and the elbows for cracks and for loose clamps.
- Inspect the alternator belt and the accessory drive belts for cracks, breaks or other damage.

Belts for multiple groove pulleys must be replaced as matched sets. If only one belt is replaced, the belt will carry more load than the belts that are not replaced. The older belts are stretched. The additional load on the new belt could cause the belt to break.

- Drain the water and the sediment from fuel tanks on a daily basis in order to ensure that only clean fuel enters the fuel system.
- Inspect the wiring and the wiring harnesses for loose connections and for worn wires or frayed wires.
- Inspect the ground strap for a good connection and for good condition.
- Inspect the engine-to-frame ground strap for a good connection and for good condition.
- Disconnect any battery chargers that are not protected against the current drain of the starting motor. Check the condition and the electrolyte level of the batteries, unless the engine is equipped with a maintenance free battery.
- Check the condition of the gauges. Replace any gauges which are cracked or can not be calibrated.

i02226958

# Water Pump - Inspect

**SMCS Code:** 1361-040; 1361

A failed water pump may cause severe engine overheating problems that could result in the following conditions:

- Cracks in the cylinder head
- A piston seizure
- Other potential damage to the engine

**Note:** The water pump seal is lubricated by the coolant in the cooling system. It is normal for a small amount of leakage to occur as the engine cools down and parts contract.

Visually inspect the water pump for leaks. Renew the water pump seal or the water pump if there is an excessive leakage of coolant. Refer to the Disassembly and Assembly Manual, “Water Pump - Remove and Install” for the disassembly and assembly procedure.

# Warranty Section

# Warranty Information

i05549472

## Emissions Warranty Information

**SMCS Code:** 1000

The certifying engine manufacturer warrants to the ultimate purchaser and each subsequent purchaser that:

**1.** New non-road diesel engines and stationary diesel engines less than 10 liters per cylinder (including Tier 1 and Tier 2 marine engines < 37 kW, but excluding locomotive and other marine engines) operated and serviced in the United States and Canada, including all parts of their emission control systems (“emission related components”), are:

a. Designed, built, and equipped so as to conform, at the time of sale, with applicable emission standards prescribed by the United States Environmental Protection Agency (EPA) by way of regulation.

b. Free from defects in materials and workmanship in emission-related components that can cause the engine to fail to conform to applicable emission standards for the warranty period.

**2.** New non-road diesel engines (including Tier 1 and Tier 2 marine propulsion engines < 37 kW and Tier 1 through Tier 4 marine auxiliary engines < 37 kW, but excluding locomotive and other marine engines) operated and serviced in the state of California, including all parts of their emission control systems (“emission related components”), are:

a. Designed, built, and equipped so as to conform, at the time of sale, to all applicable regulations adopted by the California Air Resources Board (ARB).

b. Free from defects in materials and workmanship which cause the failure of an emission-related component to be identical in all material respects to the component as described in the engine manufacturer's application for certification for the warranty period.

The aftertreatment system can be expected to function properly for the lifetime of the engine (emissions durability period) subject to prescribed maintenance requirements being followed.

A detailed explanation of the Emission Control Warranty that is applicable to new non-road and stationary diesel engines, including the components covered and the warranty period, is found in a supplemental Special Publication. Consult your authorized Cat dealer to determine if your engine is subject to an Emission Control Warranty and to obtain a copy of the applicable Special Publication.

# Reference Information Section

# Engine Ratings

i08274659

## Engine Rating Conditions

**SMCS Code:** 1000

All engine ratings are in compliance with the following standard ambient air conditions of “SAE J1349”:

- 99 kPa (29.3 inches of Hg)
- 30 percent relative humidity
- A temperature of 25 °C (77 °F)

Ratings relate to the standard conditions of “ISO8665”, of “ISO3046/1”, of “DIN6271”, and of “BS5514”.

The engine ratings are based on the following fuel specifications:

- Low heat value (LHV) of the fuel of 42 780 kJ/kg (18,390 Btu/lb) at 29 °C (84 °F)
- Gravity (API) of 35 degrees at 15 °C (60 °F)
- Specific gravity of .849 at 15 °C (60 °F)
- Density of 850 kg/$m^3$ (7.085 lb/US gal)

The engine ratings are gross output ratings.

**Gross Output Ratings** – The total output capability of the engine that is equipped with standard accessories.

Standard accessories include the following components:

- Oil pumps
- Fuel pumps
- Water pumps

Subtract the power that is required to drive auxiliary components from the gross output. This action will produce the net power that is available for the external load (flywheel).

i00819749

## Engine Rating Definitions

**SMCS Code:** 1000

It is important to know the use of the engine so that the rating will match the operating profile. The proper rating selection is also important so that the customer's perception of price and value is realized.

In selecting a rating for a specific application, the most important consideration is the time that is spent at full throttle. These rating definitions identify the percent of time at full throttle. The definitions also identify the corresponding times below rated rpm.

**Note:** The examples of the applications are only for reference. For an exact determination of the appropriate rating, follow the OEM specifications or consult your Caterpillar dealer.

**A Rating** – This rating is used for heavy-duty applications that are operated at rated load and at rated rpm up to 100 percent. This rating is used for engines that operate without interruption of load cycling. Typical applications include the following examples: pipeline pumping and ventilation.

**B Rating** – This rating is used when power and/or rpm are cyclic. The engine should be run at full load. The engine should not exceed 80 percent of the duty cycle. Typical applications include the following examples: irrigation, operation where normal pump demand is 85 percent of the engine rating, oil pumping/drilling, field mechanical pumping/drilling and stationary/plant air compressors.

**C Rating** – This rating is used when power and/or rpm are cyclic. The horsepower and the rpm of the engine can be utilized continuously for one hour. This is followed by one hour of operation at the A rating or below the A rating. The engine should be run at full load. The engine should not exceed 50 percent of the duty cycle. Typical applications include the following examples: agricultural tractors, harvesters and combines, off-highway trucks, fire pumps, blast hole drills, rock cursher, wood chippers with high torque rise and oil field hoisting.

**D Rating** – This rating is used when rated power is required for periodic overloads. The maximum horsepower and the rpm of the engine can be utilized continuously for a maximum of 30 minutes. This is followed by one hour of operation at the C rating. The engine should be run at full load. The engine should not exceed 10 percent of the duty cycle. Typical applications include the following examples: offshore cranes, runway snow blowers, water well drills, portable air compressors and fire pump certification power.

**E Rating** – This rating is used when rated power is required for a short time for initial starting or for sudden overload. The rating is also used for emergency service when standard power is not

available. The horsepower and the rpm of the engine can be utilized continuously for a maximum of 15 minutes. This is followed by one hour of operation at the C rating or by the duration of the emergency. The engine should be run at full load. The engine should not exceed 5 percent of the duty cycle. Typical applications include the following examples: standby centrifugal water pumps, oil field well servicing, crash trucks, portable air compressors and gas turbine starting motors.

NOTICE
Operating engines above the rating definitions can result in shorter service life before overhaul.

# Customer Service

i08302979

## Customer Assistance

**SMCS Code:** 1000

### USA and Canada

When a problem arises concerning the operation or the service of an engine, the problem will normally be managed by the dealer in your area.

Your satisfaction is a primary concern to Caterpillar and to Cat dealers. If you have a problem that has not been handled to your complete satisfaction, follow these steps:

**1.** Discuss your problem with a manager from the dealership.

**2.** If your problem cannot be resolved at the dealer level, use the phone number that is listed below to talk with a Field Service Coordinator:

1-800-447-4986

The normal hours are from 8:00 to 4:30 Monday through Friday Central Standard Time.

**3.** If your needs have not been met still, submit the matter in writing to the following address:

Designated Compliance Officer Heavy-Duty and Nonroad Engine Group 6403-J,
US Ave, NW, Washington,
DC 20460
Email address: complianceinfo@epa.gov.

Your problem may ultimately be solved at the dealership, using the dealership facilities, equipment, and personnel. Therefore, follow the steps in sequence when a problem is experienced.

### Outside of the USA and of Canada

If a problem arises outside the USA and outside Canada, and if the problem cannot be resolved at the dealer level, consult the appropriate Cat office.

Latin America, Mexico, Carribean
Caterpillar Americas Co.
701 Waterford Way, Suite 200
Miami, FL 33126-4670
USA
Phone: 305-476-6800
Fax: 305-476-6801

Europe, Africa, and Middle East
Caterpillar Overseas S.A.
76 Route de Frontenex
P.O. Box 6000
CH-1211 Geneva 6
Switzerland
Phone: 22-849-4444
Fax: 22-849-4544

Far East
Caterpillar Asia Pte. Ltd.
7 Tractor Road
Jurong, Singapore 627968
Republic of Singapore
Phone: 65-662-8333
Fax: 65-662-8302

China
Caterpillar China Ltd.
37/F., The Lee Gardens
33 Hysan Avenue
Causeway Bay
G.P.O. Box 3069
Hong Kong
Phone: 852-2848-0333
Fax: 852-2848-0440

Japan
Shin Caterpillar Mitsubishi Ltd.
SBS Tower
10-1, Yoga 4-Chome
Setagaya-Ku, Tokyo 158-8530
Japan
Phone: 81-3-5717-1150
Fax: 81-3-5717-1177

Japan
Caterpillar Power Systems, Inc.
SBS Tower (14th floor)
4-10-1, Yoga
Setagaya-Ku, Tokyo 158-0097
Phone: 81-3-5797-4300
Fax: 81-3-5797-4359

Australia and New Zealand
Caterpillar of Australia Ltd.
1 Caterpillar Drive
Private Mail Bag 4
Tullamarine, Victoria 3043
Australia
Phone: 03-9953-9333
Fax: 03-9335-3366

i08292376

# Ordering Replacement Parts

**SMCS Code:** 7567

**⚠ WARNING**

**When replacement parts are required for this product Caterpillar recommends using Caterpillar replacement parts or parts with equivalent specifications including, but not limited to, physical dimensions, type, strength and material.**

**Failure to heed this warning can lead to premature failures, product damage, personal injury or death.**

Quality Cat replacement parts are available from Cat dealers throughout the world. Cat dealer parts inventories are up to date. The parts stocks include all the parts that are normally needed to protect your Cat engine investment.

When you order parts, specify the following information:

- Part number
- Part name
- Quantity

If there is a question concerning the part number, provide your dealer with a complete description of the needed item.

When a Cat engine requires maintenance and/or repair, provide the dealer with all the information that is stamped on the Information Plate. This information is described in this Operation and Maintenance Manual (Product Information Section).

Discuss the problem with the dealer. Inform the dealer about the conditions of the problem and the nature of the problem. Inform the dealer about when the problem occurs. This information will help the dealer in troubleshooting the problem and solving the problem faster.

# Reference Materials

i02627762

## Reference Material

**SMCS Code:** 1000

The following literature can be obtained through any Caterpillar dealer.

### Lubricants

- Special Publication, PEHP8038, “Data Sheet - Caterpillar Diesel Engine Oils (DEO) (CH-4) (North America)”
- Special Publication, PEHP9536, “Data Sheet - Caterpillar Diesel Engine Oil (DEO) (CF-4) (International only)”
- Special Publication, NEDG6022, “Cat Lubricating Grease”
- Special Publication, PEHP0002, “Data Sheet - Molybdenum (MPGM) Grease”
- Special Publication, NEHP6015, “Data Sheet - Caterpillar Special Purpose Grease (SPG)”
- Special Publication, SEBD0640, “Oil and Your Engine”
- Operation and Maintenance Manual, SEBU5898, “Cold Weather Recommendations”
- Operation and Maintenance Manual, SEBU6251, “Caterpillar Commercial Diesel Engine Fluids Recomendations”
- Special Publication, PEHP6001, “How To Take A Good Oil Sample”

### Fuels

- Special Publication, SEBD0717, “Diesel Fuels and Your Engine”

### Coolants

- Special Publication, PEHP4036, “Data Sheet - Extended Life Coolant”
- Special Publication, PEHP7057, “Data Sheet - S·O·S Coolant Analysis”
- Special Publication, SEBD0518, “Know Your Cooling System”
- Special Publication, SEBD0970, “Coolant and Your Engine”
- Label, PEEP5027, “Extended Life Coolant/ Antifreeze”

### Miscellaneous

- Service Manual, REG1139F, “Service Manual Contents Microfiche”
- Service Manual, KENR6925, “ C0.5, C0.7, C1.1, C1.5, C1.6 and C2.2 Industrial Engines”
- Systems Operation, Testing and Adjusting, KENR6228, “ C0.5, C0.7, C1.1, C1.5, C1.6 and C2.2 Industrial Engines”
- Specifications, KENR6227, “ C0.5, C0.7, C1.1, C1.5, C1.6 and C2.2 Industrial Engines.”
- Disassembly and Assembly, KENR6229, “ C0.5, C0.7, C1.1, C1.5, C1.6 and C2.2 Industrial Engines”
- Specifications, SENR3130, “Torque Specifications”
- Special Publication, PECP9067, “One Safe Source” English language for use in NACD
- Special Publication, LEDM5615, “Caterpillar Marine Parts and Service Locations Directory”
- Special Publication, SEBF8029, “Index to Guidelines for Reusable Parts and Salvage Operations”
- Special Publication, SEBF8062, “Procedure to Inspect and Clean Air Filters”
- Special Instruction, SEHS9031, “Storage Procedure for Caterpillar Products”
- Special Publication, NEHS0526, “Service Technician Application Guide”
- Special Publication, SEBU6251, “Caterpillar Commercial Diesel Engine Fluids Recomendations”
- Special Instruction, SEHS7633, “Battery Test Procedure”

- Label, SEHS7332, “Danger Do Not Operate”

## Emissions Warranty

This engine may be Certified and this engine may be covered by an Emissions Warranty. A detailed explanation of the Emissions Warranty that is applicable to Certified engines is found in Supplement, SMBU6981, “Emissions Control Warranty Information”. The engine is Certified if the engine has a special label that verifies the certification. A Caterpillar dealer can also inform you if the engine is certified.

i08254313

# Additional Reference Material

**SMCS Code:** 1000

The “Society of Automotive Engineers (SAE) Specifications” can be found in your SAE handbook. This publication can also be obtained from the following locations: local technological society, local library, and local college. If necessary, consult SAE at the following address:

SAE International
400 Commonwealth Drive
Warrendale, PA, USA 15096-0001
Telephone (724) 776-4841

The “American Petroleum Institute Publication No. 1509” can be obtained from the following locations: local technological society, local library, and local college. If necessary, consult API at the following address:

American Petroleum Institute
1220 L St. N.W.
Washington, DC, USA 20005
Telephone (202) 682-8000

The International Organization for Standardization (ISO) offers information and customer service regarding international standards and standardizing activities. ISO can also supply information on the following subjects that are not controlled by ISO: national standards, regional standards, regulations, certification, and related activities. Consult the member of ISO in your country.

International Organization for Standardization (ISO)
1, rue de Varembé
Case postale 56
CH-1211 Genève 20
Switzerland
Telephone +41 22 749 01 11
Facsimile +41 22 733 34 30
E-mail central@iso.ch
Web site http://www.iso.ch

European classifications are established by the Counseil International Des Machines a Combustion (CIMAC) (International Council on Combustion Engines).

CIMAC Central Secretariat
Lyoner Strasse 18
60528 Frankfurt
Germany
Telephone +49 69 6603 1567
Facsimile +49 69 6603 1566

i08530562

# Maintenance Records

**SMCS Code:** 1000

Caterpillar recommends the retention of accurate maintenance records. Accurate maintenance records can be used for the following purposes:

- Determine operating costs.
- Establish maintenance schedules for other engines that are operated in the same environment.
- Show compliance with the required maintenance practices and maintenance intervals.

Maintenance records can be used for various other business decisions that are related to engine maintenance.

Maintenance records are a key element of a maintenance program that is managed. Accurate maintenance records can help your Cat dealer to fine-tune the recommended maintenance intervals to meet the specific operating situation. These recommendations should result in a lower engine operating cost.

Records should be kept for the following items:

**Fuel Consumption** – A record of fuel consumption is essential to determine when the load sensitive components should be inspected or repaired. Fuel consumption assists in determining overhaul intervals.

**Service Hours** – A record of service hours is essential to determine when the speed sensitive components should be inspected or repaired.

**Documents** – These items should be easy to obtain, and these items should be kept in the engine history file. All documents should show this information: date, service hours, fuel consumption, unit number, and engine serial number. The following types of documents should be kept as proof of maintenance or repair for warranty:

Keep the following types of documents as proof of maintenance for warranty. Also, keep these types of documents as proof of repair for warranty:

- Dealer work orders and itemized bills
- Owner repair costs
- Owner receipts
- Maintenance log

i08254037

# Maintenance Log

**SMCS Code:** 1000

Table 43

| **Engine Model** | | **Customer Identifier** | | |
|---|---|---|---|---|
| **Serial Number** | | **Arrangement Number** | | |
| **Service Hours** | **Quantity Of Fuel** | **Service Item** | **Date** | **Authorization** |
| | | | | |
| | | | | |
| | | | | |
| | | | | |
| | | | | |
| | | | | |
| | | | | |
| | | | | |
| | | | | |
| | | | | |
| | | | | |
| | | | | |
| | | | | |
| | | | | |
| | | | | |
| | | | | |
| | | | | |
| | | | | |
| | | | | |
| | | | | |
| | | | | |
| | | | | |
| | | | | |
| | | | | |
| | | | | |
| | | | | |

(continued)

(Table 43, contd)

| | | | | |
|---|---|---|---|---|
| | | | | |
| | | | | |
| | | | | |
| | | | | |
| | | | | |

# Index

**A**

Additional Reference Material ..... 114
After Starting Engine ..... 43
After Stopping Engine ..... 46
Aftercooler Core - Clean/Test (Air-To-Air Aftercooler) ..... 71
Aftercooler Core - Inspect ..... 71
Alternator - Inspect ..... 71
Alternator and Fan Belts - Inspect/Adjust ..... 72
  Adjustment ..... 72
  Inspection ..... 72
Alternator and Fan Belts - Replace ..... 73

**B**

Battery - Replace ..... 73
Battery Electrolyte Level - Check ..... 74
Battery or Battery Cable - Disconnect ..... 74
Before Starting Engine ..... 21, 41
Burn Prevention ..... 18
  Batteries ..... 19
  Coolant ..... 18
  Oils ..... 19

**C**

Cold Weather Operation ..... 48
Cold Weather Starting ..... 42
Cooling System Coolant (DEAC) - Change ..... 75
  Cooling Systems with Heavy Deposits or Plugging ..... 76
  Drain ..... 75
  Fill ..... 76
  Flush ..... 75
Cooling System Coolant (ELC) - Change ..... 77
  Drain ..... 77
  Fill ..... 77
  Flush ..... 77
Cooling System Coolant Extender (ELC) - Add ..... 78
Cooling System Coolant Level - Check ..... 79
Cooling System Coolant Sample (Level 1) - Obtain ..... 79
Cooling System Coolant Sample (Level 2) - Obtain ..... 80
Cooling System Supplemental Coolant Additive (SCA) - Test/Add ..... 81
  Add the SCA, If Necessary ..... 81
  S·O·S Coolant Analysis ..... 81
  Test for SCA Concentration ..... 81
Cooling System Water Temperature Regulator - Replace ..... 82
Crushing Prevention and Cutting Prevention ..... 21
Customer Assistance ..... 111
  Outside of the USA and of Canada ..... 111
  USA and Canada ..... 111
Customer Service ..... 111

**D**

Driven Equipment - Check ..... 82

**E**

Electrical System ..... 22
  Grounding Practices ..... 23
Emergency Stopping ..... 46
  Emergency Stop Button ..... 46
Emissions Certification Film ..... 36
Emissions Warranty Information ..... 108
Engaging the Driven Equipment ..... 44
Engine - Clean ..... 82
Engine Air Cleaner Element (Dual Element) - Clean/Replace ..... 83
  Cleaning the Primary Air Cleaner Elements ..... 84
  Servicing the Air Cleaner Elements ..... 83
Engine Air Cleaner Element (Single Element) - Inspect/Replace ..... 85
Engine Air Cleaner Service Indicator - Inspect (If Equipped) ..... 86
  Test the Service Indicator ..... 86
Engine Air Precleaner - Check/Clean ..... 87
Engine Crankcase Breather - Replace ..... 87
Engine Description ..... 28, 33
  Engine Specifications ..... 29, 34
Engine Mounts - Inspect ..... 88
Engine Oil and Filter - Change ..... 89
  Drain the Engine Oil ..... 89
  Fill the Engine Crankcase ..... 90
  Replace the Oil Filter ..... 89
Engine Oil Level - Check ..... 88
Engine Oil Sample - Obtain ..... 88
  Obtain the Sample and the Analysis ..... 88
Engine Operation ..... 44
Engine Protective Devices - Check ..... 91
  Visual Inspection ..... 91
Engine Rating Conditions ..... 109

Engine Rating Definitions ..... 109
Engine Ratings ..... 109
Engine Shutoffs and Engine Alarms ..... 39
Alarms ..... 39
Shutoffs ..... 39
Testing the Shutoff and Alarm System ..... 39
Engine Starting ..... 22, 41
Engine Stopping ..... 22, 46
Engine Valve Lash - Inspect/Adjust ..... 91
Engine Warm-up ..... 44

**F**

Features and Controls ..... 39
Fire Prevention and Explosion Prevention ..... 19
Ether ..... 20
Fire Extinguisher ..... 20
Lines, Tubes, and Hoses ..... 21
Foreword ..... 4
California Proposition 65 Warning ..... 4
Literature Information ..... 4
Maintenance ..... 4
Maintenance Intervals ..... 5
Operation ..... 4
Overhaul ..... 5
Safety ..... 4
Fuel and the Effect from Cold Weather ..... 48
Fuel Conservation Practices ..... 45
Fuel Injector - Test/Change ..... 92
Removal and Installation of the Fuel Injection Nozzles ..... 92
Fuel Related Components in Cold Weather ..... 48
Fuel Filters ..... 49
Fuel Heaters ..... 49
Fuel Tanks ..... 48
Fuel Shutoff ..... 39
Fuel System - Prime ..... 92
Fuel filters ..... 93
Primary filter ..... 93
Priming the system ..... 94
Fuel System Primary Filter/Water Separator - Drain ..... 97
Fuel System Secondary Filter - Replace ..... 97
Fuel Filter with Canister ..... 97
Fuel Filter with Element ..... 98
Fuel filter with priming pump ..... 99
Fuel Tank Water and Sediment - Drain ..... 100
Drain the Water and the Sediment ..... 100
Fuel Storage Tanks ..... 100
Fuel Tank ..... 100

**G**

Gauges and Indicators ..... 38
General Hazard Information ..... 14
Containing Fluid Spillage ..... 16
Dispose of Waste Properly ..... 18
Fluid Penetration ..... 16
Inhalation ..... 17
Lines, Tubes, and Hoses ..... 16
Pressurized Air and Water ..... 15
Softwrap ..... 18
Static Electricity Hazard when Fueling with Ultra-low Sulfur Diesel Fuel ..... 16

**H**

Hoses and Clamps - Inspect/Replace ..... 100
Inspect Tubes, Hoses, Bellows, and Clamps ..... 101
Replace the Hoses and the Clamps ..... 101

**I**

Important Safety Information ..... 2

**L**

Lifting and Storage ..... 37

**M**

Maintenance Interval Schedule ..... 69
Daily ..... 69
Every 1000 Service Hours ..... 70
Every 12 000 Service Hours or 6 Years ..... 69
Every 2000 Service Hours ..... 70
Every 250 Service Hours ..... 69
Every 250 Service Hours or 1 Year ..... 69
Every 250 Service Hours or 6 Months ..... 69
Every 3000 Service Hours ..... 70
Every 3000 Service Hours or 2 Years ..... 70
Every 4000 Service Hours ..... 70
Every 50 Service Hours or Weekly ..... 69
Every 500 Service Hours ..... 69
Every 500 Service Hours or 1 Year ..... 69
Every 6000 Service Hours or 3 Years ..... 69
Every Year ..... 70
Initial 500 Hours (for New Systems, Refilled Systems, and Converted Systems) ..... 69
Overhaul ..... 69
When Required ..... 69
Maintenance Log ..... 115
Maintenance Recommendations ..... 67

Maintenance Records ..... 114
Maintenance Section ..... 50
Model View Illustrations ..... 24
Model Views ..... 24
Mounting and Dismounting ..... 21

**O**

Operation Section ..... 37
Ordering Replacement Parts ..... 112
Overhaul Considerations ..... 103
  Oil Consumption as an Overhaul Indicator ..... 103
  Overhaul Recommendation ..... 103

**P**

Plate Locations and Film Locations ..... 35
  Serial Number Plate (1) ..... 35
Product Identification Information ..... 35
Product Information Section ..... 24
Product Lifting ..... 37
Product Storage ..... 37

**R**

Radiator - Clean ..... 104
Radiator Restrictions ..... 48
Reference Information Section ..... 109
Reference Material ..... 113
  Coolants ..... 113
  Emissions Warranty ..... 114
  Fuels ..... 113
  Lubricants ..... 113
  Miscellaneous ..... 113
Reference Materials ..... 113
Reference Numbers ..... 35
  Record for Reference ..... 35
Refill Capacities ..... 50
Refill Capacities and Recommendations .. 50, 59
  Coolant Recommendations ..... 57, 65
  Engine Oil ..... 50, 59
  General Coolant Information ..... 55, 63
  General Fuel Information ..... 54, 62
  Lubricating Grease ..... 54, 62
  Refill Capacity of the Cooling System ... 58, 66
  S·O·S Coolant Analysis ..... 57, 65

**S**

Safety Messages ..... 6, 9
  Automatic Starting (2) ..... 13
  Crush (4) ..... 14
  Electrocution (3) ..... 13
  Hot Surface (5) ..... 14
  No Ether (B) ..... 9
  Universal Warning (1) ..... 12
  Universal Warning (A) ..... 9
Safety Section ..... 6
Severe Service Application - Check ..... 104
  Environmental Factors ..... 105
  Improper Maintenance Procedures ..... 105
  Improper Operating Procedures ..... 105
Starting Motor - Inspect ..... 105
Starting the Engine ..... 41
Starting with Jump Start Cables ..... 43
Stopping the Engine ..... 46
System Pressure Release ..... 67
  Coolant System ..... 67
  Engine Oil ..... 67
  Fuel System ..... 67

**T**

Table of Contents ..... 3
Turbocharger - Inspect (If Equipped) ..... 105
  Inspecting ..... 106
  Removal and Installation ..... 106

**W**

Walk-Around Inspection ..... 106
  Inspect the Engine for Leaks and for Loose Connections ..... 106
Warranty Information ..... 108
Warranty Section ..... 108
Water Pump - Inspect ..... 107
Welding on Engines with Electronic Controls ..... 67

# Product and Dealer Information

Note: For product identification plate locations, see the section “Product Identification Information” in the Operation and Maintenance Manual.

**Delivery Date:** _____

## Product Information

Model: _____

Product Identification Number: _____

Engine Serial Number: _____

Transmission Serial Number: _____

Generator Serial Number: _____

Attachment Serial Numbers: _____

Attachment Information: _____

Customer Equipment Number: _____

Dealer Equipment Number: _____

## Dealer Information

Name: _____ Branch: _____

Address: _____

_____

_____

| | Dealer Contact | Phone Number | Hours |
|---|---|---|---|
| Sales: | _____ | _____ | _____ |
| Parts: | _____ | _____ | _____ |
| Service: | _____ | _____ | _____ |

SEBU8312
©2023 Caterpillar
All Rights Reserved

CAT, CATERPILLAR, LET'S DO THE WORK, their respective logos, "Caterpillar Corporate Yellow", the "Power Edge" and Cat "Modern Hex" trade dress as well as corporate and product identity used herein, are trademarks of Caterpillar and may not be used without permission.