SEBU8327-07 (en-us)
July 2025

Operation and Maintenance Manual

C4.4 (Mech) Industrial Engine

446 1-UP (Engine)
440 1-UP (Engine)
2L2 1-UP (Engine)
D44 1-UP (Engine)

Scan to find and purchase genuine Cat® parts and related service information.

Important Safety Information

Most accidents that involve product operation, maintenance and repair are caused by failure to observe basic safety rules or precautions. An accident can often be avoided by recognizing potentially hazardous situations before an accident occurs. A person must be alert to potential hazards, including human factors that can affect safety. This person should also have the necessary training, skills and tools to perform these functions properly.

Improper operation, lubrication, maintenance or repair of this product can be dangerous and could result in injury or death.

Do not operate or perform any lubrication, maintenance or repair on this product, until you verify that you are authorized to perform this work, and have read and understood the operation, lubrication, maintenance and repair information.

Safety precautions and warnings are provided in this manual and on the product. If these hazard warnings are not heeded, bodily injury or death could occur to you or to other persons.

The hazards are identified by the “Safety Alert Symbol” and followed by a “Signal Word” such as “DANGER”, “WARNING” or “CAUTION”. The Safety Alert “WARNING” label is shown below.



The meaning of this safety alert symbol is as follows:

Attention! Become Alert! Your Safety is Involved.

The message that appears under the warning explains the hazard and can be either written or pictorially presented.

A non-exhaustive list of operations that may cause product damage are identified by “NOTICE” labels on the product and in this publication.

Caterpillar cannot anticipate every possible circumstance that might involve a potential hazard. The warnings in this publication and on the product are, therefore, not all inclusive. You must not use this product in any manner different from that considered by this manual without first satisfying yourself that you have considered all safety rules and precautions applicable to the operation of the product in the location of use, including site-specific rules and precautions applicable to the worksite. If a tool, procedure, work method or operating technique that is not specifically recommended by Caterpillar is used, you must satisfy yourself that it is safe for you and for others. You should also ensure that you are authorized to perform this work, and that the product will not be damaged or become unsafe by the operation, lubrication, maintenance or repair procedures that you intend to use.

The information, specifications, and illustrations in this publication are on the basis of information that was available at the time that the publication was written. The specifications, torques, pressures, measurements, adjustments, illustrations, and other items can change at any time. These changes can affect the service that is given to the product. Obtain the complete and most current information before you start any job. Cat dealers have the most current information available.

NOTICE

When replacement parts are required for this product Caterpillar recommends using original Caterpillar® replacement parts.

Other parts may not meet certain original equipment specifications.

When replacement parts are installed, the machine owner/user should ensure that the machine remains in compliance with all applicable requirements.

In the United States, the maintenance, replacement, or repair of the emission control devices and systems may be performed by any repair establishment or individual of the owner's choosing.

Table of Contents

Foreword 4

Safety Section

Safety Messages 6

General Hazard Information 8

Burn Prevention 10

Fire Prevention and Explosion Prevention 11

Crushing Prevention and Cutting Prevention .. 13

Mounting and Dismounting 13

Before Starting Engine 13

Engine Starting 14

Engine Stopping 14

Electrical System 14

Product Information Section

Model Views 16

Product Identification Information 20

Operation Section

Lifting and Storage 23

Gauges and Indicators 24

Features and Controls 25

Engine Starting 26

Engine Operation 29

Engine Stopping 31

Cold Weather Operation 32

Maintenance Section

Refill Capacities 34

Maintenance Interval Schedule 41

Warranty Section

Warranty Information 78

Reference Information Section

Engine Ratings 79

Customer Service 81

Reference Materials 83

Index Section

Index 87

Foreword

California Proposition 65 Warning

Diesel engine exhaust and some of its constituents are known to the State of California to cause cancer, birth defects, and other reproductive harm.

WARNING – This product can expose you to chemicals including ethylene glycol, which is known to the State of California to cause birth defects or other reproductive harm. For more information go to:

www.P65Warnings.ca.gov

Do not ingest this chemical. Wash hands after handling to avoid incidental ingestion.

WARNING – This product can expose you to chemicals including lead and lead compounds, which are known to the State of California to cause cancer, birth defects, or other reproductive harm. For more information go to:

www.P65Warnings.ca.gov

Wash hands after handling components that may contain lead.

Literature Information

This manual contains safety, operation instructions, lubrication, and maintenance information. This manual should be stored in or near the engine area in a literature holder or literature storage area. Read, study, and keep it with the literature and engine information.

English is the primary language for all Cat publications. The English used facilitates translation and consistency in electronic media delivery.

Some photographs or illustrations in this manual show details or attachments that may be different from your engine. Guards and covers may have been removed for illustrative purposes. Continuing improvement and advancement of product design may have caused changes to your engine which are not included in this manual Whenever a question arises regarding your engine, or this manual, please consult with your Cat dealer for the latest available information.

Safety

This safety section lists basic safety precautions. In addition, this section identifies hazardous, warning situations. Read and understand the basic precautions listed in the safety section before operating or performing lubrication, maintenance, and repair on this product.

Operation

Operating techniques outlined in this manual are basic. They assist with developing the skills and techniques required to operate the engine more efficiently and economically. Skill and techniques develop as the operator gains knowledge of the engine and its capabilities.

The operation section is a reference for operators. Photographs and illustrations guide the operator through procedures of inspecting, starting, operating, and stopping the engine. This section also includes a discussion of electronic diagnostic information.

Maintenance

The maintenance section is a guide to engine care. The illustrated, step-by-step instructions are grouped by fuel consumption, service hours and/or calendar time maintenance intervals. Items in the maintenance schedule are referenced to detailed instructions that follow.

Use fuel consumption or service hours to determine intervals. Calendar intervals shown (daily, annually, etc.) may be used instead of service meter intervals if they provide more convenient schedules and approximate the indicated service meter reading.

Recommended service should be performed at the appropriate intervals as indicated in the Maintenance Interval Schedule. The actual operating environment of the engine also governs the Maintenance Interval Schedule. Therefore, under severe, dusty, wet, or freezing cold operating conditions, more frequent lubrication, and maintenance than is specified in the Maintenance Interval Schedule may be necessary.

The maintenance schedule items are organized for a preventive maintenance management program. If the preventive maintenance program is followed, a periodic tune-up is not required. The implementation of a preventive maintenance management program should minimize operating costs through cost avoidances resulting from reductions in unscheduled downtime and failures.

Maintenance Intervals

Perform maintenance on items at multiples of the original requirement. Each level and/or individual items in each level should be shifted ahead or back depending upon your specific maintenance practices, operation, and application. We recommend that the maintenance schedules be reproduced and displayed near the engine as a convenient reminder. We also recommend that a maintenance record be maintained as part of the engine's permanent record.

See the section in the Operation and Maintenance Manual, “Maintenance Records” for information regarding documents that are accepted as proof of maintenance or repair. Your authorized Cat dealer can assist you in adjusting your maintenance schedule to meet the needs of your operating environment.

Overhaul

Major engine overhaul details are not covered in the Operation and Maintenance Manual except for the interval and the maintenance items in that interval. Major repairs are best left to trained personnel or an authorized Cat dealer. Your Cat dealer offers various options regarding overhaul programs. If you experience a major engine failure, there are also numerous after failure overhaul options available from your Cat dealer. Consult with your dealer for information regarding these options.

Safety Section

i02710643

Safety Messages

SMCS Code: 1000; 7405

There may be several specific warning signs on your engine. The exact location and a description of the warning signs are reviewed in this section. Please become familiar with all warning signs.

Ensure that all of the warning signs are legible. Clean the warning signs or replace the warning signs if the words cannot be read or if the illustrations are not visible. Use a cloth, water, and soap to clean the warning signs. Do not use solvents, gasoline, or other harsh chemicals. Solvents, gasoline, or harsh chemicals could loosen the adhesive that secures the warning signs. The warning signs that are loosened could drop off of the engine.

Replace any warning sign that is damaged or missing. If a warning sign is attached to a part of the engine that is replaced, install a new warning sign on the replacement part. Your Caterpillar dealer or your distributor can provide new warning signs.

(1) Universal Warning

⚠ WARNING

Do not operate or work on this equipment unless you have read and understand the instructions and warnings in the Operation and Maintenance Manuals. Failure to follow the instructions or heed the warnings could result in serious injury or death.

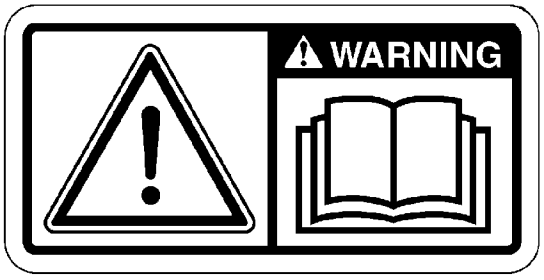

Illustration 1 g01154807

Typical example

The Universal Warning label (2) is located on the rear end of the valve mechanism cover. Refer to illustration 2 .

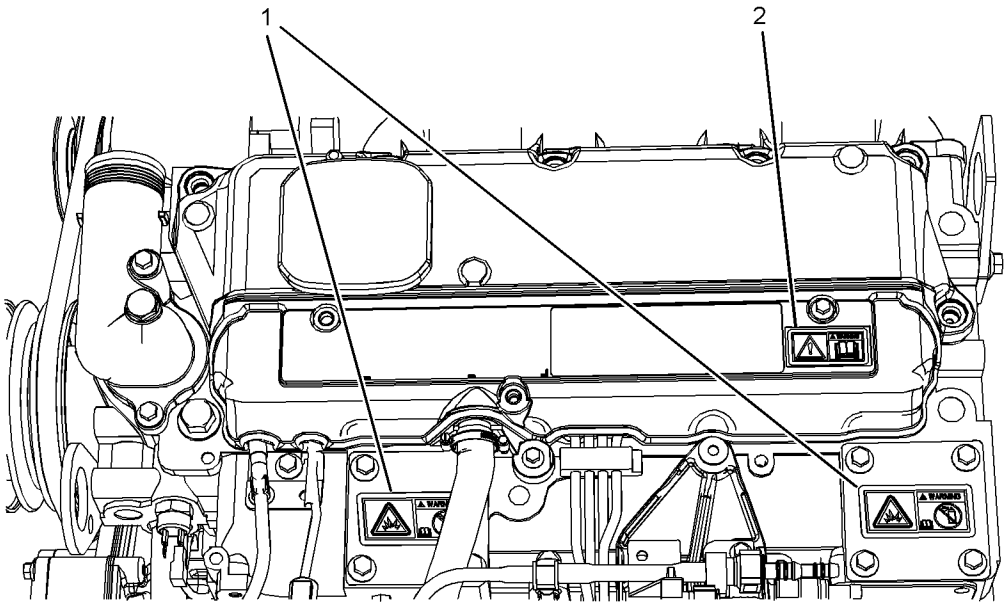

Illustration 2 g01353108

(1) Ether Warning Label (2) Universal warning

(2) Ether

⚠ WARNING

Do not use aerosol types of starting aids such as ether. Such use could result in an explosion and personal injury.



Illustration 3 g01154809

Typical example

The ether warning label (1) is located on the inlet manifold cover. Refer to illustration 2 .

i08340371

General Hazard Information

SMCS Code: 1000; 7405



Illustration 4 g00104545

Attach a “Do Not Operate” warning tag or a similar warning tag to the start switch or to the controls before the engine is serviced or before the engine is repaired. These warning tags (Special Instruction, SEHS7332) are available from your Caterpillar dealer. Attach the warning tags to the engine and to each operator control station. When it is appropriate, disconnect the starting controls.

Do not allow unauthorized personnel on the engine, or around the engine when the engine is being serviced.

Engine exhaust contains products of combustion which may be harmful to your health. Always start the engine and operate the engine in a well ventilated area. If the engine is in an enclosed area, vent the engine exhaust to the outside.

Cautiously remove the following parts. To help prevent spraying or splashing of pressurized fluids, hold a rag over the part that is being removed.

- Filler caps
- Grease fittings
- Pressure taps
- Breathers
- Drain plugs

Use caution when cover plates are removed. Gradually loosen, but do not remove the last two bolts or nuts that are located at opposite ends of the cover plate or the device. Before removing the last two bolts or nuts, pry the cover loose in order to relieve any spring pressure or other pressure.

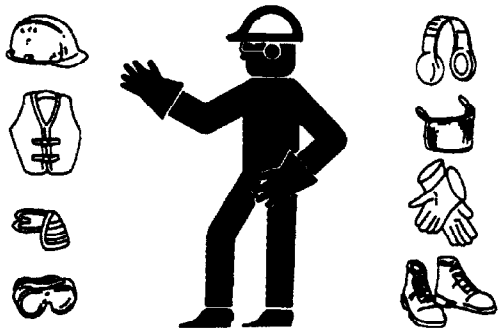

Illustration 5 g00702020

- Wear a hard hat, protective glasses, and other protective equipment, as required.
- When work is performed around an engine that is operating, wear protective devices for ears in order to help prevent damage to hearing.
- Do not wear loose clothing or jewelry that can snag on controls or on other parts of the engine.
- Ensure that all protective guards and all covers are secured in place on the engine.
- Never put maintenance fluids into glass containers. Glass containers can break.
- Use all cleaning solutions with care.
- Report all necessary repairs.

Unless other instructions are provided, perform the maintenance under the following conditions:

- The engine is stopped. Ensure that the engine cannot be started.
- Disconnect the batteries when maintenance is performed or when the electrical system is serviced. Disconnect the battery ground leads. Tape the leads in order to help prevent sparks.
- Do not attempt any repairs that are not understood. Use the proper tools. Replace any equipment that is damaged or repair the equipment.

Hexavalent Chromium

Caterpillar equipment and replacement parts comply with applicable regulations and requirements where originally sold. Caterpillar recommends the use of only genuine Caterpillar replacement parts.

Hexavalent chromium has occasionally been detected on exhaust and heat shield systems on Caterpillar engines. Although laboratory testing is the only accurate way to know if hexavalent chromium is, in fact, present, the presence of a yellow deposit in areas of high heat (for example, exhaust system components or exhaust insulation) may be an indication of the presence of hexavalent chromium.

Use caution if you suspect the presence of hexavalent chromium. Avoid skin contact when handling items that you suspect may contain hexavalent chromium, and avoid inhalation of any dust in the suspect area. Inhalation of, or skin contact with, hexavalent chromium dust may be hazardous to your health.

If such yellow deposits are found on the engine, engine component parts, or associated equipment or packages, Caterpillar recommends following local health and safety regulations and guidelines, utilizing good hygiene, and adhering to safe work practices when handling the equipment or parts. Caterpillar also recommends the following:

- Wear appropriate Personal Protective Equipment (PPE)
- Wash your hands and face with soap and water prior to eating, drinking, or smoking, and also during rest room breaks, to prevent ingestion of any yellow powder
- Never use compressed air for cleaning areas suspected of containing hexavalent chromium
- Avoid brushing, grinding, or cutting materials suspected of containing hexavalent chromium
- Obey environmental regulations for the disposal of all materials that may contain or have come into contact with hexavalent chromium
- Stay away from areas that might have hexavalent chromium particles in the air.

Pressurized Air and Water

Pressurized air and/or water can cause debris and/or hot water to be blown out. This could result in personal injury.

When pressurized air and/or pressurized water is used for cleaning, wear protective clothing, protective shoes, and eye protection. Eye protection includes goggles or a protective face shield.

The maximum air pressure for cleaning purposes must be below 205 kPa (30 psi). The maximum water pressure for cleaning purposes must be below 275 kPa (40 psi).

Fluid Penetration

Pressure can be trapped in the hydraulic circuit long after the engine has been stopped. The pressure can cause hydraulic fluid or items such as pipe plugs to escape rapidly if the pressure is not relieved correctly.

Do not remove any hydraulic components or parts until pressure has been relieved or personal injury may occur. Do not disassemble any hydraulic components or parts until pressure has been relieved or personal injury may occur. Refer to the OEM information for any procedures that are required to relieve the hydraulic pressure.

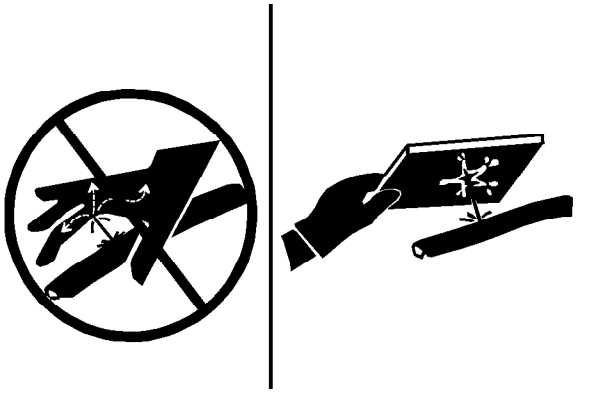

Illustration 6 g00687600

Always use a board or cardboard when you check for a leak. Leaking fluid that is under pressure can penetrate body tissue. Fluid penetration can cause serious injury and possible death. A pin hole leak can cause severe injury. If fluid is injected into your skin, you must get treatment immediately. Seek treatment from a doctor that is familiar with this type of injury.

Containing Fluid Spillage

Care must be taken in order to ensure that fluids are contained during performance of inspection, maintenance, testing, adjusting and repair of the engine. Prepare to collect the fluid with suitable containers before opening any compartment or disassembling any component that contains fluids.

Refer to Special Publication, NENG2500, “Dealer Service Tool Catalog” for the following items:

- Tools that are suitable for collecting fluids and equipment that is suitable for collecting fluids
- Tools that are suitable for containing fluids and equipment that is suitable for containing fluids

Obey all local regulations for the disposal of liquids.

Asbestos Information

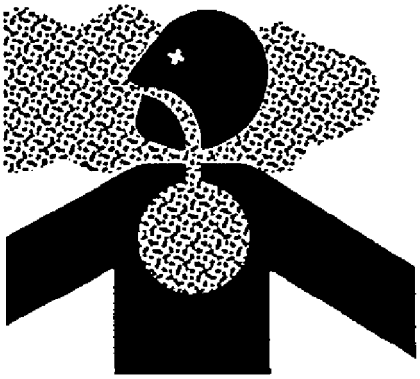

Illustration 7 g00702022

Caterpillar equipment and replacement parts that are shipped from Caterpillar are asbestos free. Caterpillar recommends the use of only genuine Caterpillar replacement parts. Use the following guidelines when you handle any replacement parts that contain asbestos or when you handle asbestos debris.

Use caution. Avoid inhaling dust that might be generated when you handle components that contain asbestos fibers. Inhaling this dust can be hazardous to your health. The components that may contain asbestos fibers are brake pads, brake bands, lining material, clutch plates, and some gaskets. The asbestos that is used in these components is usually bound in a resin or sealed in some way. Normal handling is not hazardous unless airborne dust that contains asbestos is generated.

If dust that may contain asbestos is present, there are several guidelines that should be followed:

- Never use compressed air for cleaning.
- Avoid brushing materials that contain asbestos.
- Avoid grinding materials that contain asbestos.
- Use a wet method in order to clean up asbestos materials.
- A vacuum cleaner that is equipped with a high efficiency particulate air filter (HEPA) can also be used.
- Use exhaust ventilation on permanent machining jobs.
- Wear an approved respirator if there is no other way to control the dust.
- Comply with applicable rules and regulations for the work place. In the United States, use Occupational Safety and Health Administration (OSHA) requirements. These OSHA requirements can be found in “29 CFR 1910.1001”.
- Obey environmental regulations for the disposal of asbestos.
- Stay away from areas that might have asbestos particles in the air.

Dispose of Waste Properly

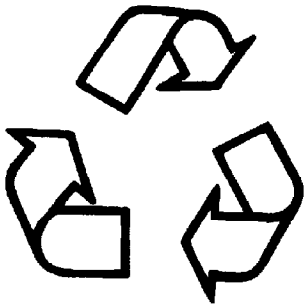

Illustration 8 g00706404

Improperly disposing of waste can threaten the environment. Potentially harmful fluids should be disposed of according to local regulations.

Always use leakproof containers when you drain fluids. Do not pour waste onto the ground, down a drain, or into any source of water.

i08162288

Burn Prevention

SMCS Code: 1000; 7405

Do not touch any part of an operating engine. Allow the engine to cool before any maintenance is performed on the engine. Relieve all pressure in the air system, hydraulic system, lubrication system, fuel system, and cooling system before any lines, fittings, or related items are disconnected.

Coolant

When the engine is at operating temperature, the engine coolant is hot. The coolant is also under pressure. The radiator and all lines to the heaters or to the engine contain hot coolant.

Any contact with hot coolant or with steam can cause severe burns. Allow cooling system components to cool before the cooling system is drained.

Check that the coolant level after the engine has stopped and the engine has been allowed to cool.

Ensure that the filler cap is cool before removing the filler cap. The filler cap must be cool enough to touch with a bare hand. Remove the filler cap slowly to relieve pressure.

Cooling system conditioner contains alkali. Alkali can cause personal injury. Do not allow alkali to contact the skin, the eyes, or the mouth.

Oils

Hot oil and hot lubricating components can cause personal injury. Do not allow hot oil to contact the skin. Also, do not allow hot components to contact the skin.

Batteries

Electrolyte is an acid. Electrolyte can cause personal injury. Do not allow electrolyte to contact the skin or the eyes. Always wear protective glasses for servicing batteries. Wash hands after touching the batteries and connectors. Use of gloves is recommended.

i08302987

Fire Prevention and Explosion Prevention

SMCS Code: 1000; 7405



Illustration 9 g00704000

Use of personal protection equipment (PPE) may be needed.

All fuels, most lubricants, and some coolant mixtures are flammable.

Always perform a Walk-Around Inspection, which may help you identify a fire hazard. Do not operate a product when a fire hazard exists. Contact your Cat dealer for service.

Flammable fluids that are leaking or spilled onto hot surfaces or onto electrical components can cause a fire. Fire may cause personal injury and property damage.

Flash fires may result if the covers for the engine crankcase are removed within 15 minutes after an emergency shutdown.

Determine whether the engine will be operated in an environment that allows combustible gases to be drawn into the air inlet system. These gases could cause the engine to overspeed. Personal injury, property damage, or engine damage could result.

If the application involves the presence of combustible gases, consult your Cat dealer for additional information about suitable protection devices.

Remove all flammable materials such as fuel, oil, and debris from the engine. Do not allow any flammable materials to accumulate on the engine.

All fluids that are captured in the fluid spill containment basin should be cleaned up immediately. Failure to clean up spilled fluids can cause a fire. Fire may cause personal injury and property damage.

Store fuels and lubricants in properly marked containers away from unauthorized persons. Store oily rags and any flammable materials in protective containers. Do not smoke in areas that are used for storing flammable materials.

Do not expose the engine to any flame.

Exhaust shields (if equipped) protect hot exhaust components from oil or fuel spray in a line, a tube, or a seal failure. Exhaust shields must be installed correctly.

Do not weld on lines or tanks that contain flammable fluids. Do not use flame to cut lines or tanks that contain flammable fluid. Clean any such lines or tanks thoroughly with a nonflammable solvent prior to welding or flame cutting.

Wiring must be kept in good condition. Properly route and attach all electrical wires. Check all electrical wires daily. Repair any wires that are loose or frayed before you operate the engine. Clean all electrical connections and tighten all electrical connections.

Eliminate all wiring that is unattached or unnecessary. Do not use any wires or cables that are smaller than the recommended gauge. Do not bypass any fuses and/or circuit breakers.

Arcing or sparking could cause a fire. Secure connections, recommended wiring, and properly maintained battery cables will help to prevent arcing or sparking.

Inspect all lines and hoses for wear or for deterioration. Properly route all hoses. The lines and hoses must have adequate support and secure clamps. Tighten all connections to the recommended torque. Leaks can cause fires.

Properly install all oil filters and fuel filters. The filter housings must be tightened to the proper torque.



Illustration 10 g00704059

Use caution when you are refueling an engine. Do not smoke while you are refueling an engine. Do not refuel an engine near open flames or sparks. Always stop the engine before refueling.

Avoid static electricity risk when fueling. Ultra Low Sulfur Diesel (ULSD) poses a greater static ignition hazard than earlier diesel formulations with a higher Sulfur content. Avoid death or serious injury from fire or explosion. Consult with your fuel or fuel system supplier to ensure that the delivery system is in compliance with fueling standards for proper grounding and bonding practices.

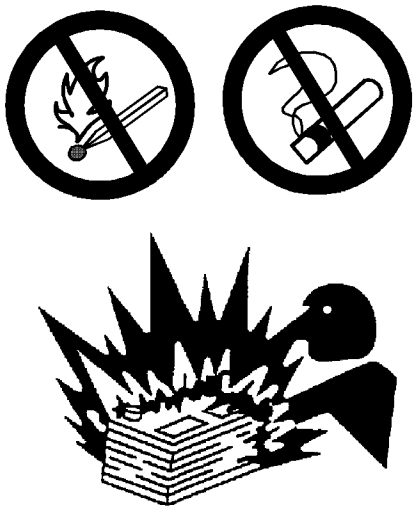

Illustration 11 g02298225

Gases from a battery can explode. Keep any open flames or sparks away from the top of a battery. Do not smoke in battery charging areas.

Never check the battery charge by placing a metal object across the terminal posts. Use a voltmeter or a hydrometer.

Improper jumper cable connections can cause an explosion that can result in injury. Refer to the Operation Section of this manual for specific instructions.

Do not charge a frozen battery. Charging a frozen battery may result in an explosion.

The batteries must be kept clean. The covers (if equipped) must be kept on the cells. Use the recommended cables, connections, and battery box covers when the engine is operated.

Fire Extinguisher

Make sure that a fire extinguisher is available. Be familiar with the operation of the fire extinguisher. Inspect the fire extinguisher and service the fire extinguisher regularly. Obey the recommendations on the instruction plate.

Ether

Ether is flammable and poisonous.

Use ether in ventilated areas. Do not smoke while you are replacing an ether cylinder or while you are using an ether spray.

Do not store ether cylinders in living areas or in the engine compartment. Do not store ether cylinders in direct sunlight or in temperatures above 49 °C (120 °F). Keep ether cylinders away from open flames or sparks.

Dispose of used ether cylinders properly. Do not puncture an ether cylinder. Keep ether cylinders away from unauthorized personnel.

Do not spray ether into an engine if the engine is equipped with a thermal starting aid for cold weather starting.

Lines, Tubes, and Hoses

Do not bend high-pressure lines. Do not strike high-pressure lines. Do not install any lines that are bent or damaged.

Repair any lines that are loose or damaged. Leaks can cause fires. Consult your Cat dealer for repair or for replacement parts.

Check lines, tubes, and hoses carefully. Do not use your bare hand to check for leaks. Use a board or cardboard to check for leaks. Tighten all connections to the recommended torque.

Replace the parts if any of the following conditions are present:

- End fittings are damaged or leaking.
- Outer coverings are chafed or cut.
- Wires are exposed.
- Outer coverings are ballooning.
- Flexible parts of the hoses are kinked.
- Outer covers have embedded armoring.
- End fittings are displaced.

Make sure that all clamps, guards, and heat shields are installed correctly to prevent vibration, rubbing against other parts, and excessive heat.

i08162291

Crushing Prevention and Cutting Prevention

SMCS Code: 1000; 7405

Support the component properly when work beneath the component is performed.

Unless other maintenance instructions are provided, never attempt adjustments while the engine is running.

Stay clear of all rotating parts and of all moving parts. Leave the guards in place until maintenance is performed. After the maintenance is performed, reinstall the guards.

Keep objects away from moving fan blades. The fan blades will throw objects or cut objects.

When objects are struck, wear protective glasses to avoid injury to the eyes.

Chips or other debris may fly off objects when objects are struck. Before objects are struck, ensure that no one will be injured by flying debris.

i08159517

Mounting and Dismounting

SMCS Code: 1000; 7405

Inspect the steps, the handholds, and the work area before mounting the engine. Keep these items clean and keep these items in good repair.

Mount the engine and dismount the engine only at locations that have steps and/or handholds. Do not climb on the engine, and do not jump off the engine.

Face the engine to mount the engine or dismount the engine. With your feet and hands, always maintain a three-point contact with the steps and designated handholds. Do not use any controls as handholds.

Do not stand on components which cannot support your weight. Use an adequate ladder or use a work platform. Secure the climbing equipment so that the equipment will not move.

Do not carry tools or supplies when you mount the engine or when you dismount the engine. Use a hand line to raise and lower tools or supplies.

i02704618

Before Starting Engine

SMCS Code: 1000

NOTICE
For initial start-up of a new or rebuilt engine, and for start-up of an engine that has been serviced, make provision to shut the engine off should an overspeed occur. This may be accomplished by shutting off the air and/or fuel supply to the engine.

Overspeed shutdown should occur automatically. If automatic shutdown does not occur, press the emergency stop button in order to cut the fuel and/or air to the engine.

Inspect the engine for potential hazards.

Before starting the engine, ensure that no one is on, underneath, or close to the engine. Ensure that the area is free of personnel.

If equipped, ensure that the lighting system for the engine is suitable for the conditions. Ensure that all lights work properly, if equipped.

All protective guards and all protective covers must be installed if the engine must be started in order to perform service procedures. To help prevent an accident that is caused by parts in rotation, work around the parts carefully.

Do not bypass the automatic shutoff circuits. Do not disable the automatic shutoff circuits. The circuits are provided in order to help prevent personal injury. The circuits are also provided in order to help prevent engine damage.

See the Service Manual for repairs and for adjustments.

i02707603

Engine Starting

SMCS Code: 1000

⚠ WARNING

Do not use aerosol types of starting aids such as ether. Such use could result in an explosion and personal injury.

If a warning tag is attached to the engine start switch or to the controls DO NOT start the engine or move the controls. Consult with the person that attached the warning tag before the engine is started.

All protective guards and all protective covers must be installed if the engine must be started in order to perform service procedures. To help prevent an accident that is caused by parts in rotation, work around the parts carefully.

Start the engine from the operator's compartment or from the engine start switch.

Always start the engine according to the procedure that is described in the Operation and Maintenance Manual, “Engine Starting” topic in the Operation Section. Knowing the correct procedure will help to prevent major damage to the engine components. Knowing the procedure will also help to prevent personal injury.

To ensure that the jacket water heater (if equipped) and/or the lube oil heater (if equipped) is working correctly, check the water temperature gauge and/or the oil temperature gauge during the heater operation.

Engine exhaust contains products of combustion which can be harmful to your health. Always start the engine and operate the engine in a well ventilated area. If the engine is started in an enclosed area, vent the engine exhaust to the outside.

Note: The engine is equipped with a device for cold starting. If the engine will be operated in very cold conditions, then an extra cold starting aid may be required. Normally, the engine will be equipped with the correct type of starting aid for your region of operation.

These engines are equipped with a glow plug starting aid in each individual cylinder that heats the intake air in order to improve starting.

i02707233

Engine Stopping

SMCS Code: 1000

Stop the engine according to the procedure in the Operation and Maintenance Manual, “Engine Stopping (Operation Section)” in order to avoid overheating of the engine and accelerated wear of the engine components.

Use the Emergency Stop Button (if equipped) ONLY in an emergency situation. Do not use the Emergency Stop Button for normal engine stopping. After an emergency stop, DO NOT start the engine until the problem that caused the emergency stop has been corrected.

Stop the engine if an overspeed condition occurs during the initial start-up of a new engine or an engine that has been overhauled. This may be accomplished by shutting off the fuel supply to the engine and/or shutting off the air supply to the engine.

i02176668

Electrical System

SMCS Code: 1000; 1400

Never disconnect any charging unit circuit or battery circuit cable from the battery when the charging unit is operating. A spark can cause the combustible gases that are produced by some batteries to ignite.

To help prevent sparks from igniting combustible gases that are produced by some batteries, the negative “−” jump start cable should be connected last from the external power source to the negative “−” terminal of the starting motor. If the starting motor is not equipped with a negative “−” terminal, connect the jump start cable to the engine block.

Check the electrical wires daily for wires that are loose or frayed. Tighten all loose electrical wires before the engine is started. Repair all frayed electrical wires before the engine is started. See the Operation and Maintenance Manual for specific starting instructions.

Grounding Practices

Correct grounding for the engine electrical system is necessary for optimum engine performance and reliability. Incorrect grounding will result in uncontrolled electrical circuit paths and in unreliable electrical circuit paths.

Uncontrolled electrical circuit paths can result in damage to main bearings, to crankshaft bearing journal surfaces, and to aluminum components.

Engines that are installed without engine-to-frame ground straps can be damaged by electrical discharge.

To ensure that the engine and the engine electrical systems function correctly, an engine-to-frame ground strap with a direct path to the battery must be used. This path may be provided by way of a direct engine ground to the frame.

All grounds should be tight and free of corrosion. The engine alternator must be grounded to the negative “-” battery terminal with a wire that is adequate to handle the full charging current of the alternator.

Product Information Section

Model Views

i10520010

Model View Illustrations

SMCS Code: 1000

Engine Model Views

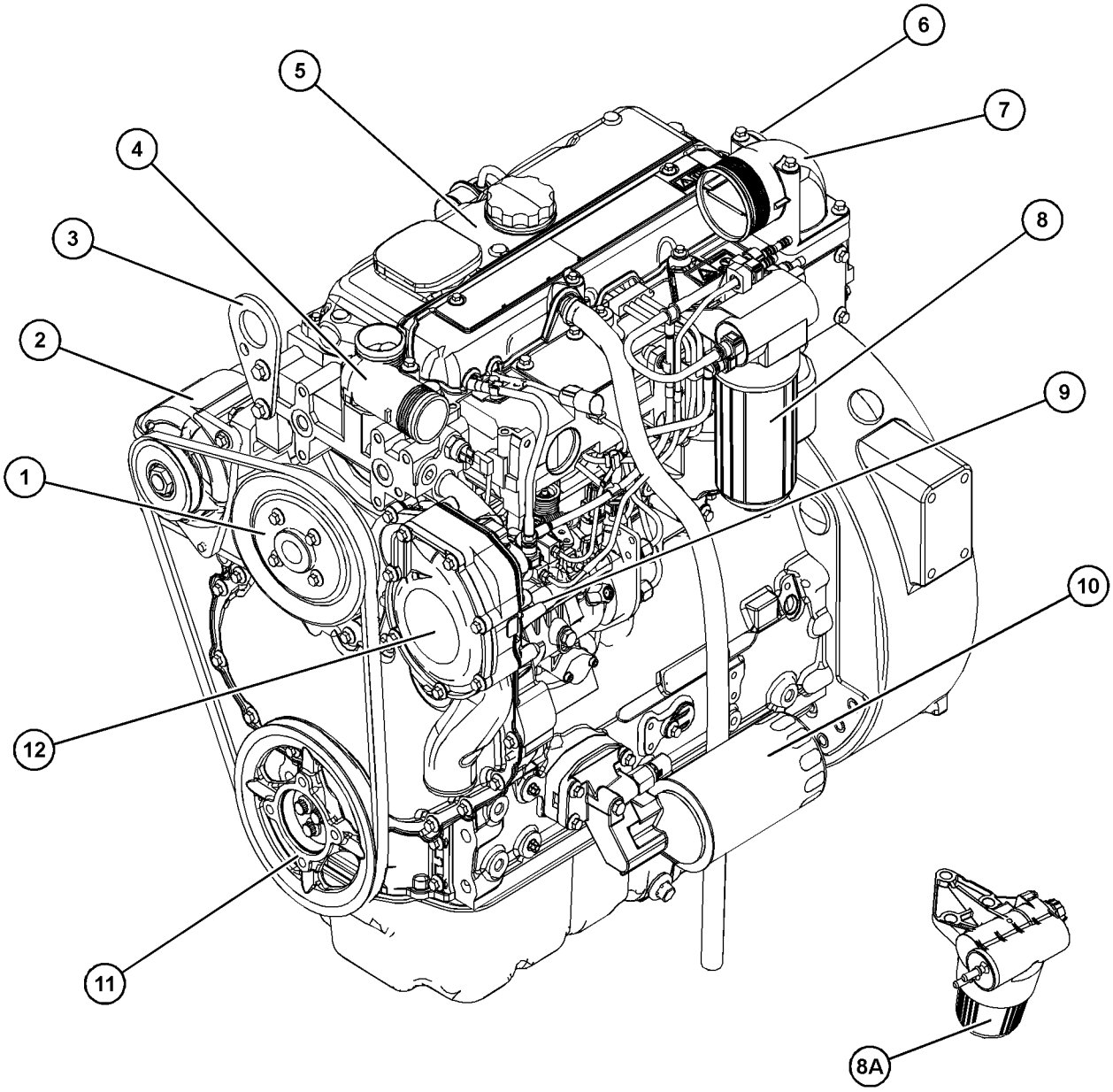

Illustration 12 g07897237

Typical example

(1) Pulley
(2) Alternator
(3) Front Lifting Eye
(4) Water Outlet
(5) Valve Mechanism Cover
(6) Rear Lifting Eye
(7) Air Intake
(8) Secondary Fuel Filter (Type 1)
(8A) Secondary Fuel Filter (Type 2)
(9) Fuel Injection Pump
(10) Oil Filter
(11) Crankshaft Pulley
(12) Water Pump

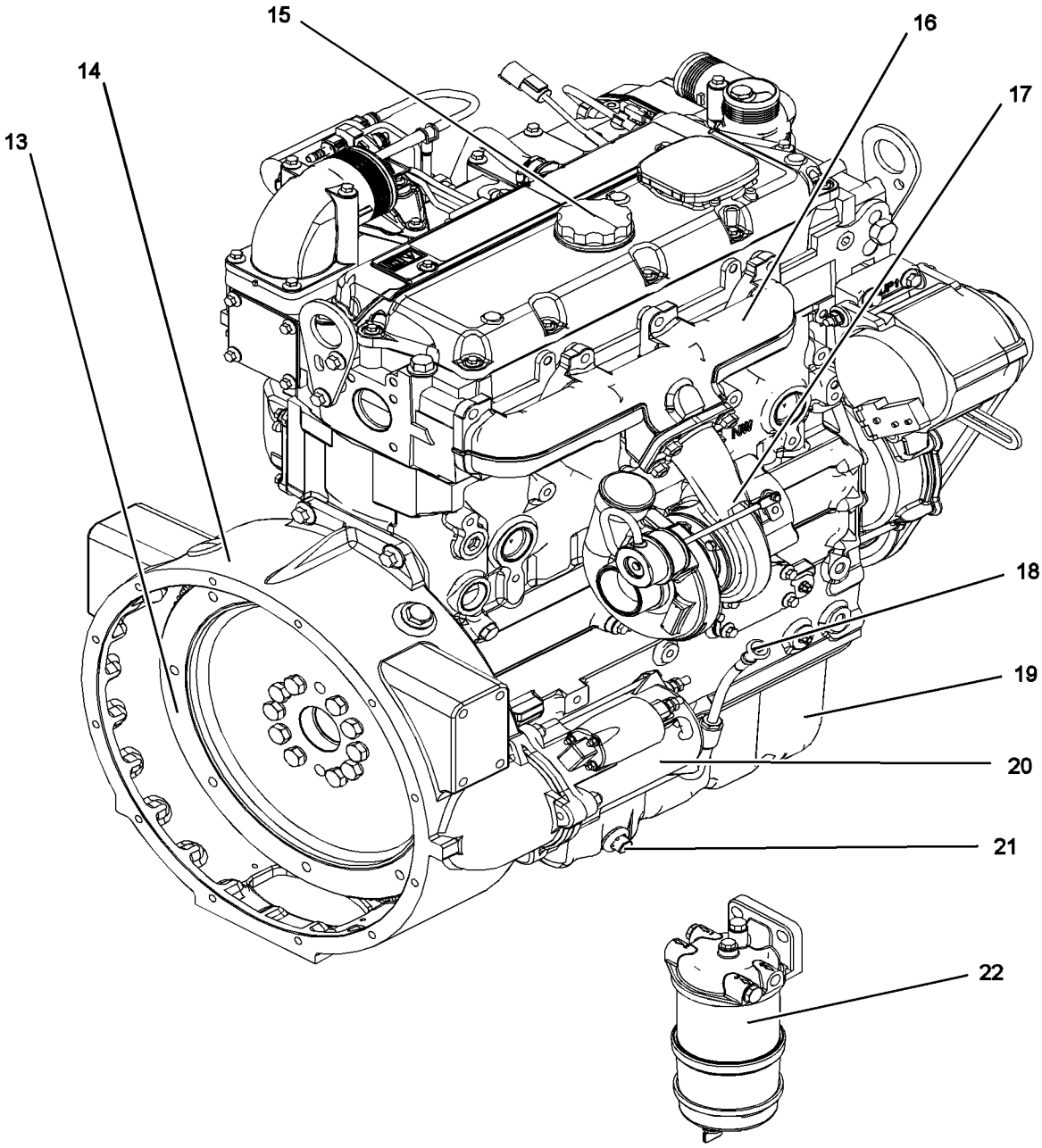

Illustration 13 g01352705

(13) Flywheel
(14) Flywheel Housing
(15) Oil Filler Cap
(16) Exhaust Manifold
(17) Turbocharger
(18) Oil Gauge
(19) Oil Pan
(20) Starting motor
(21) Oil Drain Plug
(22) Primary Fuel Filter

i04429314

Engine Description

SMCS Code: 1000

The Caterpillar C4.4 (Mech) engines are available in the following types of aspiration:

- Naturally aspirated
- Turbocharged
- Turbocharged aftercooled

Engine Specifications

Note: The front end of the engine is opposite the flywheel end of the engine. The left and the right sides of the engine are determined from the flywheel end. The number 1 cylinder is the front cylinder.

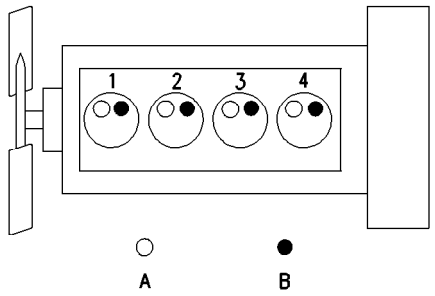

Illustration 14 g00984281

A typical example of the layout of the valves

(A) Inlet valves
(B) Exhaust valves

Table 1

C4.4 (Mech) Industrial Engine Specifications	
Number of Cylinders	4 In-Line
Bore	105 mm (4.134 inch)
Stroke	127 mm (5.0 inch)
Aspiration	Naturally aspirated Turbocharged Turbocharged aftercooled
Compression Ratio	NA 19.3:1 T, TA 18.2:1
Displacement	4.4 L (268 in^3)
Firing Order	1 3 4 2

(continued)

(Table 1, contd)

Rotation (flywheel end)	Counterclockwise
Valve Lash Setting (Inlet)	0.20 mm (0.008 inch)
Valve Lash Setting (Exhaust)	0.45 mm (0.018 inch)

Engine Cooling and Lubrication

The cooling system consists of the following components:

- Gear-driven centrifugal water pump
- Water temperature regulator which regulates the engine coolant temperature
- Gear-driven oil pump (gear type)
- Oil cooler

The engine lubricating oil is supplied by a gear type pump. The engine lubricating oil is cooled and the engine lubricating oil is filtered. Bypass valves provide unrestricted flow of lubrication oil to the engine parts when oil viscosity is high. Bypass valves can also provide unrestricted flow of lubrication oil to the engine parts if the oil cooler should become plugged or if the oil filter element should become plugged.

Engine efficiency, efficiency of emission controls, and engine performance depend on adherence to proper operation and maintenance recommendations. Engine performance and efficiency also depend on the use of recommended fuels, lubrication oils, and coolants. Refer to the Operation and Maintenance Manual, “Maintenance Interval Schedule” for more information on maintenance items.

Engine Service Life

Engine efficiency and maximum utilization of engine performance depend on the adherence to proper operation and maintenance recommendations. In addition, use recommended fuels, coolants, and lubricants. Use the Operation and Maintenance Manual as a guide for required engine maintenance.

Expected engine life is generally predicted by the average power that is demanded. The average power that is demanded is based on fuel consumption of the engine over a time period. Reduced hours of operation at full throttle and/or operating at reduced throttle settings result in a lower average power demand. Reduced hours of operation will increase the length of operating time before an engine overhaul is required.

Product Identification Information

i05037249

Plate Locations and Film Locations

SMCS Code: 1000

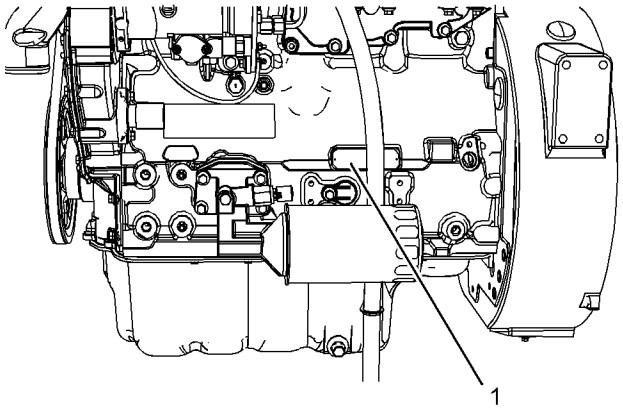

Illustration 15 g01360892

Location of the serial number plate

Serial Number Plate (1)

The engine serial number plate is located on the left side of the cylinder block to the rear of the engine.

Cat dealers need all of these numbers in order to determine the components that were included with the engine.

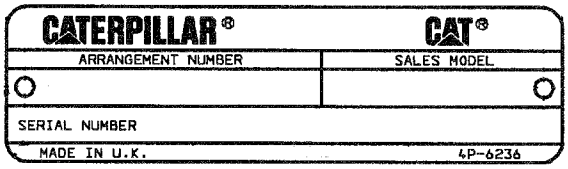

Illustration 16 g01258789

Serial number plate

i02708605

Reference Numbers

SMCS Code: 1000

Information for the following items may be needed to order parts. Locate the information for your engine. Record the information in the appropriate space. Make a copy of this list for a record. Keep the information for future reference.

Record for Reference

Engine Model _____

Engine Serial number _____

Engine Low Idle rpm _____

Engine Full Load rpm _____

Primary Fuel Filter _____

Water Separator Element _____

Secondary Fuel Filter Element _____

Lubrication Oil Filter Element _____

Auxiliary Oil Filter Element _____

Total Lubrication System Capacity _____

Total Cooling System Capacity _____

Air Cleaner Element _____

Fan Drive Belt _____

Alternator Belt

i02711190

Emissions Certification Film

SMCS Code: 1000; 7405

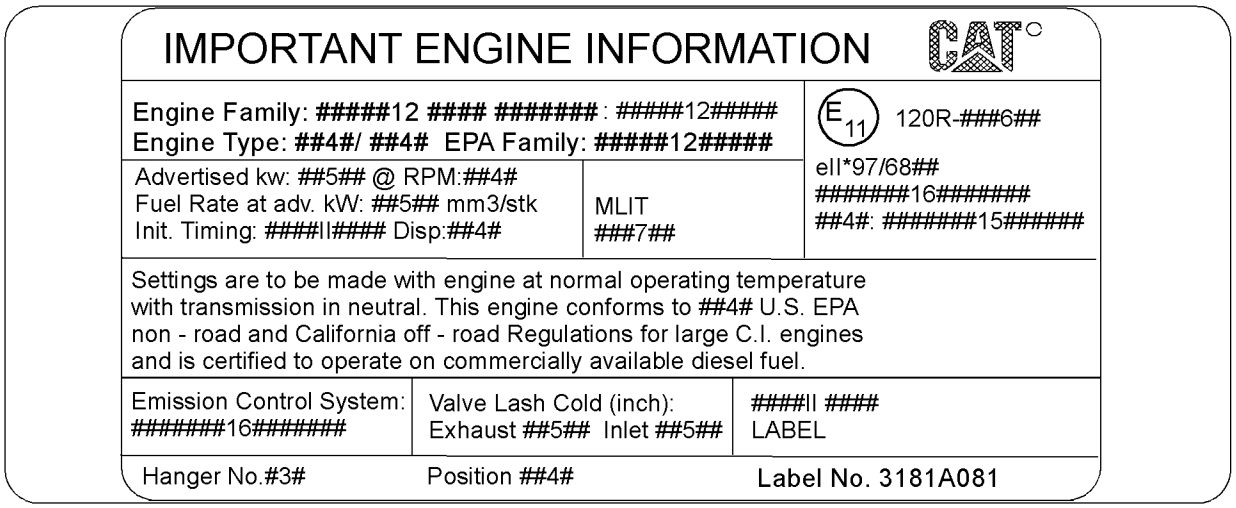

Illustration 17 g01360989

Typical example

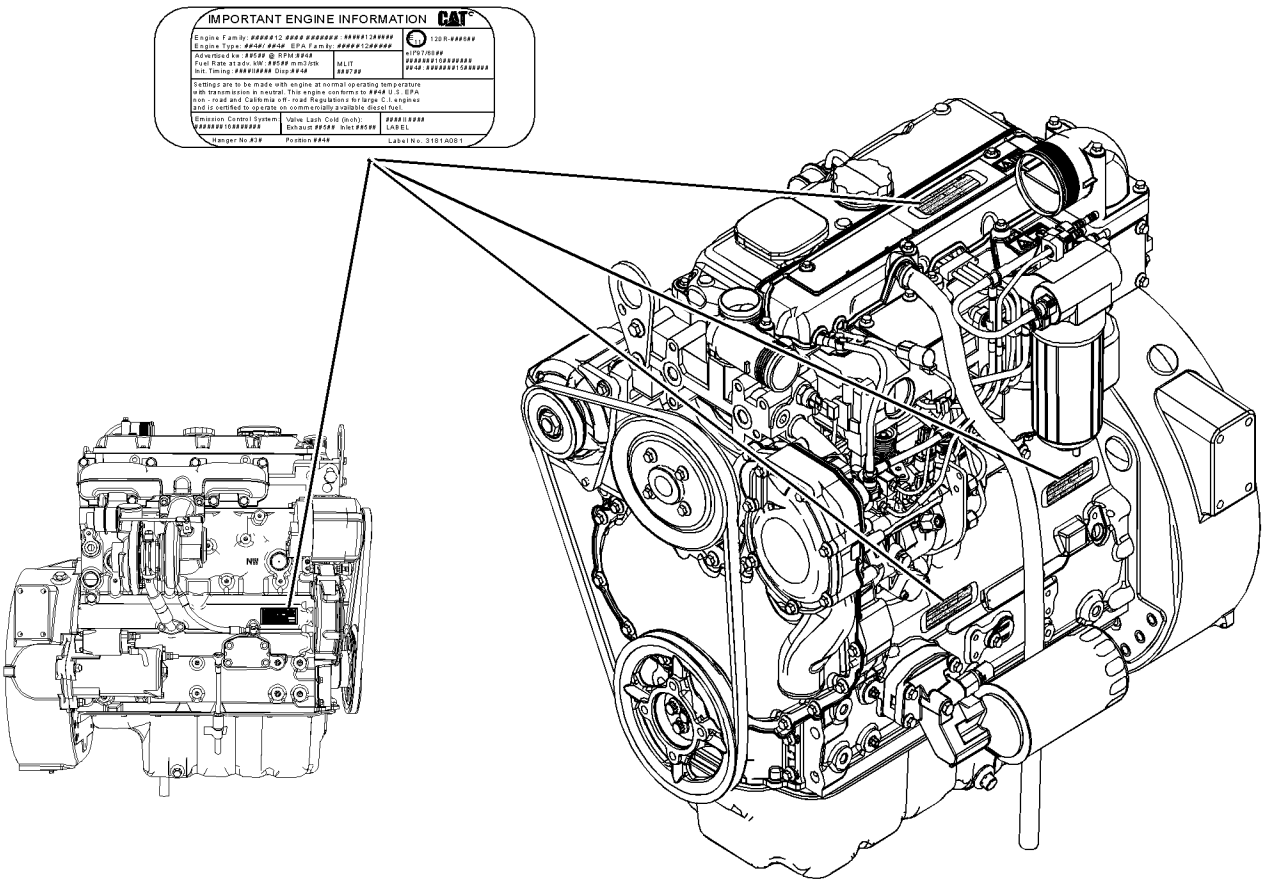

Illustration 18 g01361347

Typical locations of the Emission Certification Film

Operation Section

Lifting and Storage

i07444162

Product Lifting

SMCS Code: 1000; 1404; 7002

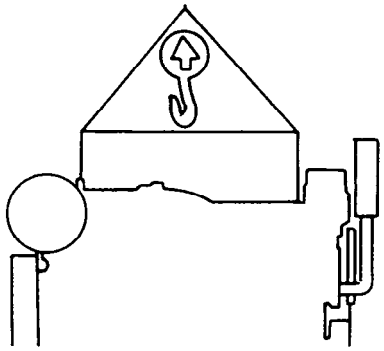

Illustration 19 g00103219

NOTICE
Always inspect lifting eyebolts and all other lifting equipment for damage before performing any lifting. Never bend the eyebolts and the brackets. Never perform product lifting if components are damaged.

NOTICE
Never bend the eyebolts and the brackets. Only load the eyebolts and the brackets under tension. Remember that the capacity of an eyebolt is less as the angle between the supporting members and the object becomes less than 90 degrees.

When it is necessary to remove a component at an angle, only use a link bracket that is properly rated for the weight.

Use a hoist to remove heavy components. Use an adjustable lifting beam to lift the engine. All supporting members (chains and cables) should be parallel to each other. The chains and cables should be perpendicular to the top of the object that is being lifted.

Some removals require lifting the fixtures to obtain proper balance and safety.

To remove the engine ONLY, use the lifting eyes that are on the engine.

Lifting eyes are designed and installed for the specific engine arrangement. Alterations to the lifting eyes and/or the engine make the lifting eyes and the lifting fixtures obsolete. If alterations are made, ensure that proper lifting devices are provided. Consult your Caterpillar dealer for information regarding fixtures for proper engine lifting.

i08257552

Product Storage

SMCS Code: 1000; 1404; 7002

If the engine will not be started for several weeks, the lubricating oil will drain from the cylinder walls and from the piston rings. Rust can form on the cylinder liner surface. Rust on the cylinder liner surface will cause increased engine wear and a reduction in engine service life.

To help prevent excessive engine wear, use the following guidelines:

- Complete all lubrication recommendations that are listed in this Operation and Maintenance Manual, “Maintenance Interval Schedule” (Maintenance Section).
- If freezing temperatures are expected, check the cooling system for adequate protection against freezing. See this Operation and Maintenance Manual, “Refill Capacities and Recommendations” (Maintenance Section).

If an engine is out of operation and if use of the engine is not planned, special precautions should be made. If the engine will be stored for more than 1 month, a complete protection procedure is recommended.

For more detailed information on engine storage, see Special Instruction, SEHS9031, “Storage Procedure For Caterpillar Products”.

Your Cat dealer can help prepare the engine for extended storage periods.

Gauges and Indicators

i02704606

Gauges and Indicators

SMCS Code: 1900; 7450

Your engine may not have the same gauges or all of the gauges that are described. For more information about the gauge package, see the OEM information.

Gauges provide indications of engine performance. Ensure that the gauges are in good working order. Determine the normal operating range by observing the gauges over a period of time.

Noticeable changes in gauge readings indicate potential gauge or engine problems. Problems may also be indicated by gauge readings that change even if the readings are within specifications. Determine and correct the cause of any significant change in the readings. Consult your Caterpillar dealer for assistance.

NOTICE
If no oil pressure is indicated, STOP the engine. If maximum coolant temperature is exceeded, STOP the engine. Engine damage can result.



Engine Oil Pressure – The oil pressure should be greatest after a cold engine is started. The typical engine oil pressure with SAE10W30 is 207 to 413 kPa (30 to 60 psi) at rated rpm.

A lower oil pressure is normal at low idle. If the load is stable and the gauge reading changes, perform the following procedure:

1. Remove the load.

2. Reduce engine speed to low idle.

3. Check and maintain the oil level.



Jacket Water Coolant Temperature – Typical temperature range is 71 to 96°C (160 to 205°F). The maximum allowable temperature with the pressurized cooling system at 48 kPa (7 psi) is 103°C (217°F). Higher temperatures may occur under certain conditions. The water temperature reading may vary according to load. The reading should never exceed the boiling point for the pressurized system that is being used.

If the engine is operating above the normal range and steam becomes apparent, perform the following procedure:

1. Reduce the load and the engine rpm.

2. Inspect the cooling system for leaks.

3. Determine if the engine must be shut down immediately or if the engine can be cooled by reducing the load.



Tachometer – This gauge indicates engine speed (rpm). When the throttle control lever is moved to the full throttle position without load, the engine is running at high idle. The engine is running at the full load rpm when the throttle control lever is at the full throttle position with maximum rated load.

NOTICE
To help prevent engine damage, never exceed the high idle rpm. Overspeeding can result in serious damage to the engine. The engine can be operated at high idle without damage, but should never be allowed to exceed high idle rpm.

Note: The high idle rpm and the full load rpm are stamped on the Information Plate.



Ammeter – This gauge indicates the amount of charge or discharge in the battery charging circuit. Operation of the indicator should be to the right side of “0” (zero).



Fuel Level – This gauge indicates the fuel level in the fuel tank. The electrically operated fuel level gauge only operates when the “START/STOP” switch is “ON” .



Service Hour Meter – This gauge indicates operating time of the engine.

Features and Controls

i02704608

Engine Shutoffs and Engine Alarms

SMCS Code: 1900; 7400; 7418

Shutoffs

Shutoffs and alarms are electrically operated or mechanically operated. The operation of all electric shutoffs and alarms utilize components which actuate switches in a sensing unit.

Shutoffs are set at critical levels for the following items: operating temperature, operating pressure, operating level and operating rpm. The particular shutoff may need to be reset before the engine will start.

NOTICE
Always determine the cause of the engine shutdown. Make necessary repairs before attempting to restart the engine.

Be familiar with the following items:

- Types and locations of shutoff
- Conditions which cause each shutoff to function
- The resetting procedure that is required to restart the engine

Alarms

Alarms consist of a switch and a contactor. The switches are wired to the contactors. The contactors activate alarm circuits in an annunciator panel. Your engine may be equipped with the following switches:

Engine oil pressure – The engine oil pressure switch indicates when oil pressure drops below rated system pressure.

Coolant level – The low coolant level switch indicates when the coolant level is low.

Coolant temperature – The coolant temperature switch indicates high jacket water coolant temperature.

Note: The sensing element of the coolant temperature switch must be submerged in coolant in order to operate.

Engines may be equipped with alarms in order to alert the operator when undesirable operating conditions occur.

NOTICE
When an alarm is activated, corrective measures must be taken before the situation becomes an emergency in order to avoid possible engine damage.

If corrective measures are not taken within a reasonable time, engine damage could result. The alarm will continue until the condition is corrected. The alarm may need to be reset.

A switch may be installed in the alarm while the engine is stopped for repairs. Before the engine is started, ensure that the switch is moved to the ON position and that the warning lights are flashing. The engine will not be protected if the switch is left in the OFF position.

Testing the Shutoff and Alarm System

Most control panels are equipped with a lamp test switch. Turn the switch to the ON position in order to check the indicator lights for proper operation. Replace worn bulbs immediately.

NOTICE
During testing, abnormal operating conditions must be simulated. Perform the tests correctly in order to help prevent possible engine damage.

Refer to the Service Manual for more information on testing procedures or consult your Caterpillar dealer.

i02704607

Fuel Shutoff

SMCS Code: 1259; 1704

The fuel shutoff solenoid is located on the fuel injection pump.

When the fuel shutoff solenoid is activated, the solenoid moves to the “Open” position.

When the fuel shutoff solenoid is deactivated, the solenoid moves to the “Closed” position.

Engine Starting

i02704617

Before Starting Engine

SMCS Code: 1000; 1400; 1450

Perform the required daily maintenance and other periodic maintenance before the engine is started. Inspect the engine compartment. This inspection can help prevent major repairs at a later date. Refer to the Operation and Maintenance Manual, “Maintenance Interval Schedule” for more information.

- For the maximum service life of the engine, make a thorough inspection before the engine is started. Look for the following items: oil leaks, coolant leaks, loose bolts and trash buildup. Remove trash buildup and arrange for repairs, as needed.
- Inspect the cooling system hoses for cracks and for loose clamps.
- Inspect the alternator and accessory drive belts for cracks, breaks, and other damage.
- Inspect the wiring for loose connections and for worn wires or frayed wires.
- Check the fuel supply. Drain water from the water separator (if equipped). Open the fuel supply valve (if equipped).

NOTICE
All valves in the fuel return line must be open before and during engine operation to help prevent high fuel pressure. High fuel pressure may cause filter housing failure or other damage.

If the engine has not been started for several weeks, fuel may have drained from the fuel system. Air may have entered the filter housing. Also, when fuel filters have been changed, some air pockets will be trapped in the engine. In these instances, prime the fuel system. Refer to the Operation and Maintenance Manual, “Fuel System - Prime” for more information on priming the fuel system.

⚠ WARNING

Engine exhaust contains products of combustion which may be harmful to your health. Always start and operate the engine in a well ventilated area and, if in an enclosed area, vent the exhaust to the outside.

- Do not start the engine or move any of the controls if there is a “DO NOT OPERATE” warning tag or similar warning tag attached to the start switch or to the controls.
- Ensure that the areas around the rotating parts are clear.
- All of the guards must be put in place. Check for damaged guards or for missing guards. Repair any damaged guards. Replace damaged guards and/or missing guards.
- Disconnect any battery chargers that are not protected against the high current drain that is created when the electric starting motor (if equipped) is engaged. Check electrical cables and check the battery for poor connections and for corrosion.
- Reset all of the shutoffs or alarm components (if equipped).
- Check the engine lubrication oil level. Maintain the oil level between the “MIN” mark and the “MAX” mark on the oil level gauge.
- Check the coolant level. Observe the coolant level in the coolant recovery tank (if equipped). Maintain the coolant level to the “FULL” mark on the coolant recovery tank.
- If the engine is not equipped with a coolant recovery tank maintain the coolant level within 13 mm (0.5 inch) of the bottom of the filler pipe. If the engine is equipped with a sight glass, maintain the coolant level in the sight glass.
- Observe the air cleaner service indicator (if equipped). Service the air cleaner when the yellow diaphragm enters the red zone, or when the red piston locks in the visible position.
- Ensure that any driven equipment has been disengaged. Minimize electrical loads or remove any electrical loads.

i02710653

Starting the Engine

SMCS Code: 1000; 1450

⚠ WARNING

Do not use aerosol types of starting aids such as ether. Such use could result in an explosion and personal injury.

Refer to the OMM for your type of controls. Use the following procedure to start the engine.

1. If equipped, move the throttle lever to the full throttle position before you start the engine.

NOTICE
Do not crank the engine for more than 30 seconds. Allow the electric starting motor to cool for two minutes before cranking the engine again.

2. Turn the engine start switch to the START position. Hold the engine start switch in the START position and crank the engine.
3. When the engine starts, release the engine start switch.
4. If equipped, slowly move the throttle lever to the low idle position and allow the engine to idle. Refer to the Operation and Maintenance Manual, “After Starting Engine” topic.
5. If the engine does not start, release the engine start switch and allow the electric starting motor to cool. Then, repeat steps 2 through step 4.
6. Turn the engine start switch to the OFF position in order to stop the engine.

i02710719

Cold Weather Starting

SMCS Code: 1000; 1250; 1450; 1453; 1456; 1900

⚠ WARNING

Do not use aerosol types of starting aids such as ether. Such use could result in an explosion and personal injury.

Startability will be improved at temperatures below −18 °C (0 °F) from the use of a jacket water heater or extra battery capacity.

When Group 2 diesel fuel is used, the following items provide a means of minimizing starting problems and fuel problems in cold weather: engine oil pan heaters, jacket water heaters, fuel heaters and fuel line insulation.

Use the procedure that follows for cold weather starting.

1. If equipped, move the throttle lever to the full throttle position before you start the engine.
2. If equipped, turn the engine start switch to the HEAT position. Hold the engine start switch in the HEAT position for 6 seconds until the glow plug indicator light illuminates. This will activate the glow plugs and aid in the starting of the engine.

NOTICE
Do not crank the engine for more than 30 seconds. Allow the electric starting motor to cool for two minutes before cranking the engine again.

3. While the glow plug indicator light is illuminated, turn the engine start switch to the START position and crank the engine.

Note: If the glow plug indicator light illuminates rapidly for 2 to 3 seconds, or if the glow plug indicator light fails to illuminate, a malfunction exists in the cold start system. Do not use ether or other starting fluids to start the engine.

4. When the engine starts, release the engine start switch key.
5. If the engine does not start, release the engine start switch and allow the starting motor to cool. Then, repeat steps 2 through step 4.
6. If the engine is equipped with a throttle allow the engine to idle for three to five minutes, or allow the engine to idle until the water temperature indicator begins to rise. The engine should run at low idle smoothly until speed is gradually increased to high idle. Allow the white smoke to disperse before proceeding with normal operation.
7. Operate the engine at low load until all systems reach operating temperature. Check the gauges during the warm-up period.
8. Turn the engine start switch to the OFF position in order to stop the engine.

i02344933

Starting with Jump Start Cables

SMCS Code: 1000; 1401; 1402; 1900

⚠ WARNING

Improper jump start cable connections can cause an explosion resulting in personal injury.

Prevent sparks near the batteries. Sparks could cause vapors to explode. Do not allow jump start cable ends to contact each other or the engine.

If the installation is not equipped with a backup battery system, it may be necessary to start the engine from an external electrical source.

For information on troubleshooting the charging system, refer to Special Instruction, REHS0354, “Charging System Troubleshooting”.

Many batteries which are considered unusable are still rechargeable. After jump starting, the alternator may not be able to fully recharge batteries that are severely discharged. The batteries must be charged to the proper voltage with a battery charger. For information on testing and charging, refer to the Special Instruction, SEHS7633, “Battery Test Procedure”.

NOTICE
Using a battery source with the same voltage as the electric starting motor. Use ONLY equal voltage for jump starting. The use of higher voltage will damage the electrical system.

Do not reverse the battery cables. The alternator can be damaged. Attach ground cable last and remove first.

When using an external electrical source to start the engine, turn the generator set control switch to the “OFF” position. Turn all electrical accessories OFF before attaching the jump start cables.

Ensure that the main power switch is in the OFF position before attaching the jump start cables to the engine being started.

1. Turn the start switch on the stalled engine to the OFF position. Turn off all the engine's accessories.
2. Connect one positive end of the jump start cable to the positive cable terminal of the discharged battery. Connect the other positive end of the jump start cable to the positive cable terminal of the electrical source.
3. Connect one negative end of the jump start cable to the negative cable terminal of the electrical source. Connect the other negative end of the jump start cable to the engine block or to the chassis ground. This procedure helps to prevent potential sparks from igniting the combustible gases that are produced by some batteries.
4. Start the engine.
5. Immediately after the engine is started, disconnect the jump start cables in reverse order.

After jump starting, the alternator may not be able to fully recharge batteries that are severely discharged. The batteries must be replaced or charged to the proper voltage with a battery charger after the engine is stopped. Many batteries which are considered unusable are still rechargeable. Refer to Operation and Maintenance Manual, “Battery - Replace” and Testing and Adjusting Manual, “Battery - Test”.

Refer to the Electrical Schematic for your engine. Consult your Caterpillar dealer for more information.

i02710753

After Starting Engine

SMCS Code: 1000

Note: In temperatures from 0 to 60°C (32 to 140°F), the warm-up time is approximately three minutes. In temperatures below 0°C (32°F), additional warm-up time may be required.

When the engine idles during warm-up, observe the following conditions:

- Check for any fluid or for any air leaks at idle rpm and at one-half full rpm (no load on the engine) before operating the engine under load. This is not possible in some applications.
- Operate the engine at low idle until all systems achieve operating temperatures. Check all gauges during the warm-up period.

Note: Gauge readings should be observed and the data should be recorded frequently while the engine is operating. Comparing the data over time will help to determine normal readings for each gauge. Comparing data over time will also help detect abnormal operating developments. Significant changes in the readings should be investigated.

Engine Operation

i02708025

Engine Operation

SMCS Code: 1000

Proper operation and maintenance are key factors in obtaining the maximum life and economy of the engine. If the directions in the Operation and Maintenance Manual are followed, costs can be minimized and engine service life can be maximized.

The time that is needed for the engine to reach normal operating temperature can be less than the time taken for a walk-around inspection of the engine.

The engine can be operated at the rated rpm after the engine is started and after the engine reaches operating temperature. The engine will reach normal operating temperature sooner during a low engine speed (rpm) and during a low power demand. This procedure is more effective than idling the engine at no load. The engine should reach operating temperature in a few minutes.

Gauge readings should be observed and the data should be recorded frequently while the engine is operating. Comparing the data over time will help to determine normal readings for each gauge. Comparing data over time will also help detect abnormal operating developments. Significant changes in the readings should be investigated.

i02707215

Engine Warm-up

SMCS Code: 1000

1. Run the engine at low idle for three to five minutes, or run the engine at low idle until the jacket water coolant temperature starts to rise.

More time may be necessary when the temperature is below −18°C (0°F).

2. Check all of the gauges during the warm-up period.

3. Perform a walk-around inspection. Check the engine for fluid leaks and air leaks.

4. Increase the rpm to the rated rpm. Check for fluid leaks and air leaks. The engine may be operated at full rated rpm and at full load when the temperature of the water jacket reaches 60°C (140°F).

i01646335

Engaging the Driven Equipment

SMCS Code: 1000

1. Operate the engine at one-half of the rated rpm, when possible.

2. Engage the driven equipment without a load on the equipment, when possible.

Interrupted starts put excessive stress on the drive train. Interrupted starts also waste fuel. To get the driven equipment in motion, engage the clutch smoothly with no load on the equipment. This method should produce a start that is smooth and easy. The engine rpm should not increase and the clutch should not slip.

3. Ensure that the ranges of the gauges are normal when the engine is operating at one-half of the rated rpm. Ensure that all gauges operate properly.

4. Increase the engine rpm to the rated rpm. Always increase the engine rpm to the rated rpm before the load is applied.

5. Apply the load. Begin operating the engine at low load. Check the gauges and equipment for proper operation. After normal oil pressure is reached and the temperature gauge begins to move, the engine may be operated at full load. Check the gauges and equipment frequently when the engine is operated under load.

Extended operation at low idle or at reduced load may cause increased oil consumption and carbon buildup in the cylinders. This carbon buildup results in a loss of power and/or poor performance.

i02707216

Fuel Conservation Practices

SMCS Code: 1000; 1250

The efficiency of the engine can affect the fuel economy. Caterpillar's design and technology in manufacturing provides maximum fuel efficiency in all applications. Follow the recommended procedures in order to attain optimum performance for the life of the engine.

- Avoid spilling fuel.

Fuel expands when the fuel is warmed up. The fuel may overflow from the fuel tank. Inspect fuel lines for leaks. Repair the fuel lines, as needed.

- Be aware of the properties of the different fuels. Use only the recommended fuels. Refer to the Operations and Maintenance Manual, “Fuel Recommendations”for further information.
- Avoid unnecessary idling.

Shut off the engine rather than idle for long periods of time.

- Observe the service indicator frequently. Keep the air cleaner elements clean.
- Ensure that the turbocharger is operating correctly so that the proper air/fuel ratio is maintained. Clean exhaust indicates proper functioning.
- Maintain a good electrical system.

One faulty battery cell will overwork the alternator. This will consume excess power and excess fuel.

- Ensure that the belts are properly adjusted. The belts should be in good condition. Refer to the Specifications manual for further information.
- Ensure that all of the connections of the hoses are tight. The connections should not leak.
- Ensure that the driven equipment is in good working order.
- Cold engines consume excess fuel. Utilize heat from the jacket water system and the exhaust system, when possible. Keep cooling system components clean and keep cooling system components in good repair. Never operate the engine without water temperature regulators. All of these items will help maintain operating temperatures.

Engine Stopping

i02710650

Stopping the Engine

SMCS Code: 1000; 7000

NOTICE
Stopping the engine immediately after it has been working under load can result in overheating and accelerated wear of the engine components.

If the engine has been operating at high rpm and/or high loads, run at low idle for at least three minutes to reduce and stabilize internal engine temperature before stopping the engine.

Avoiding hot engine shutdowns will maximize turbocharger shaft and bearing life.

Prior to stopping an engine that is being operated at low loads, operate the engine at low idle for 30 seconds before stopping. If the engine has been operating at highway speeds and/or at high loads, operate the engine at low idle for at least three minutes. This procedure will cause the internal engine temperature to be reduced and stabilized.

Ensure that the engine stopping procedure is understood. Stop the engine according to the shutoff system on the engine or refer to the instructions that are provided by the OEM.

- To stop the engine, turn the keyswitch to the OFF position.

i07764840

Emergency Stopping

SMCS Code: 1000; 7418

NOTICE
Emergency shutoff controls are for EMERGENCY use ONLY. DO NOT use emergency shutoff devices or controls for normal stopping procedure.

The Original Equipment Manufacturer (OEM) may have equipped the application with an emergency stop button. For more information about the emergency stop button, refer to the OEM information.

Ensure that any components for the external system that support the engine operation are secured after the engine is stopped.

i02704619

After Stopping Engine

SMCS Code: 1000

Note: Before you check the engine oil, do not operate the engine for at least 10 minutes in order to allow the engine oil to return to the oil pan.

- Check the crankcase oil level. Maintain the oil level between the “MIN” mark and the “MAX” mark on the oil level dipstick.
- If necessary, perform minor adjustments. Repair any leaks and tighten any loose bolts.
- Note the required service interval. Perform the maintenance that is in the Operation and Maintenance Manual, “Maintenance Interval Schedule”.
- Fill the fuel tank in order to help prevent accumulation of moisture in the fuel. Do not overfill the fuel tank.

NOTICE
Only use antifreeze/coolant mixtures recommended in the Refill Capacities and Recommendations topic that is in this Operation and Maintenance Manual. Failure to do so can cause engine damage.

- Allow the engine to cool. Check the coolant level.
- If freezing temperatures are expected, check the coolant for the correct antifreeze protection. The cooling system must be protected against freezing to the lowest expected outside temperature. Add the correct coolant/water mixture, if necessary.
- Perform all required periodic maintenance on all driven equipment. This maintenance is outlined in the instructions from the OEM.

Cold Weather Operation

i02708046

Radiator Restrictions

SMCS Code: 1353; 1396

Caterpillar discourages the use of air flow restriction devices that are mounted in front of radiators. Air flow restriction can cause the following conditions:

- High exhaust temperatures
- Power loss
- Excessive fan usage
- Reduction in fuel economy

If an air flow restriction device must be used, the device should have a permanent opening directly in line with the fan hub. The device must have a minimum opening dimension of at least 770 cm^2 (120 in^2).

A centered opening that is directly in line with the fan hub is specified in order to prevent an interrupted air flow on the fan blades. Interrupted air flow on the fan blades could cause a fan failure.

Caterpillar recommends a warning device for the inlet manifold temperature and/or the installation of an inlet air temperature gauge. The warning device for the inlet manifold temperature should be set at 75 °C (167 °F). The inlet manifold air temperature should not exceed 75 °C (167 °F). Temperatures that exceed this limit can cause power loss and potential engine damage.

i02704604

Fuel and the Effect from Cold Weather

SMCS Code: 1000; 1250

Note: Only use grades of fuel that are recommended by Caterpillar. Refer to this Operation and Maintenance Manual, “Fluid Recommendations”.

The following fuels can be used in this series of engine.

- Group 1
- Group 2
- Group 3
- Special Fuels

Caterpillar prefer only Group 1 and Group 2 fuels for use in this series of engines.

Group 1 fuels are the preferred Group of Fuels for general use by Caterpillar. Group 1 fuels maximize engine life and engine performance. Group 1 fuels are usually less available than Group 2 fuels. Frequently, Group 1 fuels are not available in colder climates during the winter.

Note: Group 2 fuels must have a maximum wear scar of 650 micrometers (HFRR to ISO 12156-1).

Group 2 fuels are considered acceptable for issues of warranty. This group of fuels may reduce the life of the engine, the engine's maximum power, and the engine's fuel efficiency.

When Group 2 diesel fuels are used the following components provide a means of minimizing problems in cold weather:

- Glow plugs (if equipped)
- Engine coolant heaters, which may be an OEM option
- Fuel heaters, which may be an OEM option
- Fuel line insulation, which may be an OEM option

There are three major differences between Group 1 fuels and Group 2 fuels. Group 1 fuels have the following different characteristics to Group 2 fuels.

- A lower cloud point
- A lower pour point
- A higher energy per unit volume of fuel

Note: Group 3 fuels reduce the life of the engine. The use of Group 3 fuels is not covered by the Caterpillar warranty.

Group 3 fuels include Low Temperature Fuels and Aviation Kerosene Fuels.

Special fuels include Biofuel.

The cloud point is a temperature that allows wax crystals to form in the fuel. These crystals can cause the fuel filters to plug.

The pour point is the temperature when diesel fuel will thicken. The diesel fuel becomes more resistant to flow through fuel lines, fuel filters,and fuel pumps.

Be aware of these facts when diesel fuel is purchased. Consider the average ambient air temperature for the engine's application. Engines that are fueled in one climate may not operate well if the engines are moved to another climate. Problems can result due to changes in temperature.

Before troubleshooting for low power or for poor performance in the winter, check the fuel for waxing.

Low temperature fuels may be available for engine operation at temperatures below 0 °C (32 °F). These fuels limit the formation of wax in the fuel at low temperatures.

For more information on cold weather operation, refer to the Operation and Maintenance Manual, “Cold Weather Operation and Fuel Related Components in Cold Weather”.

i02705983

Fuel Related Components in Cold Weather

SMCS Code: 1000; 1250

Fuel Tanks

Condensation can form in partially filled fuel tanks. Top off the fuel tanks after you operate the engine.

Fuel tanks should contain some provision for draining water and sediment from the bottom of the tanks. Some fuel tanks use supply pipes that allow water and sediment to settle below the end of the fuel supply pipe.

Some fuel tanks use supply lines that take fuel directly from the bottom of the tank. If the engine is equipped with this system, regular maintenance of the fuel system filter is important.

Drain the water and sediment from any fuel storage tank at the following intervals: weekly, oil changes and refueling of the fuel tank. This will help prevent water and/or sediment from being pumped from the fuel storage tank and into the engine fuel tank.

Fuel Filters

It is possible that a primary fuel filter is installed between the fuel tank and the engine fuel inlet. After you change the fuel filter, always prime the fuel system in order to remove air bubbles from the fuel system. Refer to the Operation and Maintenance Manual in the Maintenance Section for more information on priming the fuel system.

The micron rating and the location of a primary fuel filter is important in cold weather operation. The primary fuel filter and the fuel supply line are the most common components that are affected by cold fuel.

Fuel Heaters

Fuel heaters help to prevent fuel filters from plugging in cold weather due to waxing. A fuel heater should be installed in the fuel system before the primary fuel filter.

The following fuel heaters are recommended for Caterpillar engines:

- 7C-3557 Fuel Heater Group
- 7C-3558 Heater Kit

For further information on fuel heaters, consult your Caterpillar dealer.

Disconnect the fuel heater in warm weather.

Note: Fuel heaters that are controlled by the water temperature regulator or self-regulating fuel heaters should be used with this engine. Fuel heaters that are not controlled by the water temperature regulator can heat the fuel in excess of 65°C (149°F). A loss of engine power can occur if the fuel supply temperature exceeds 37°C (100°F).

Note: Heat exchanger type fuel heaters should have a bypass provision in order to prevent overheating of the fuel in warm weather operation.

Maintenance Section

Refill Capacities

i02501519

Refill Capacities and Recommendations

SMCS Code: 1348; 1395; 7560

Engine Oil

NOTICE
These recommendations are subject to change without notice. Contact your local Caterpillar dealer for the most up to date recommendations.

API Oils

The Engine Oil Licensing and Certification System by the American Petroleum Institute (API) is recognized by Caterpillar. For detailed information about this system, see the latest edition of the “API publication No. 1509”. Engine oils that bear the API symbol are authorized by API.

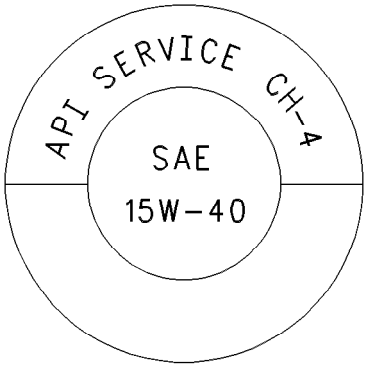

Illustration 20 g00546535
Typical API symbol

Diesel engine oils CC, CD, CD-2, and CE have not been API authorized classifications since January 1, 1996.

Table 2

API Classifications	
Current	**Obsolete**

(continued)

(Table 2, contd)

CH-4[1] CI-4	CE, CC, CD
-	CD-2 [2]

(1) **API CH-4 and CI-4 oils are acceptable if the requirements of Caterpillar's ECF-1 (Engine Crankcase Fluid specification-1) are met. CH-4 and CI-4 oils that have not met the requirements of Caterpillar's ECF-1 Specification may cause reduced engine life.**

(2) The oil CD-2 is for a two-cycle diesel engine. Caterpillar does not sell engines that utilize CD-2 oil.

Note: When oil meets more than one API classification, the applicable footnote is determined by the highest API classification that is met.

Example – An oil meets both the API CH-4 and the API CF oil classifications. In this case, the API CH-4 applies.

Cat DEO (Diesel Engine Oil)

Caterpillar Oils have been developed and tested in order to provide the full performance and service life that has been designed and built into Caterpillar Engines. Caterpillar Oils are currently used to fill diesel engines at the factory. These oils are offered by Caterpillar dealers for continued use when the engine oil is changed. Consult your Caterpillar dealer for more information on these oils.

Due to significant variations in the quality and in the performance of commercially available oils, Caterpillar makes the following recommendations:

- **Cat DEO (Diesel Engine Oil) (10W-30)**
- **Cat DEO (Diesel Engine Oil) (15W-40)**

Caterpillar multigrade DEO is formulated with the correct amounts of detergents, dispersants, and alkalinity in order to provide superior performance in Caterpillar Diesel Engines.

Caterpillar multigrade DEO is available in various viscosity grades that include SAE 10W-30 and SAE 15W-40. To choose the correct viscosity grade for the ambient temperature, see Table 3 . Multigrade oils provide the correct viscosity for a broad range of operating temperatures.

Multigrade oils are effective in maintaining low oil consumption and low levels of piston deposits.

Caterpillar multigrade DEO can be used in other diesel engines and in gasoline engines. See the engine manufacturer's guide for the recommended specifications. Compare the specifications to the specifications of Caterpillar multigrade DEO. The current industry standards for Caterpillar DEO are listed on the product label and on the data sheets for the product.

Consult your Caterpillar dealer for part numbers and for available sizes of containers.

Note: Caterpillar SAE 15W-40 multigrade DEO exceeds the performance requirements for the following API classifications: CI-4, CH-4, CG-4, CF-4 and CF. The Caterpillar multigrade DEO exceeds the requirements of the Caterpillar specification that is ECF-1 (Engine Crankcase Fluid-1). The Caterpillar SAE 15W-40 multigrade DEO passes the following proprietary tests: sticking of the piston ring, oil control tests, wear tests and soot tests. Proprietary tests help ensure that Caterpillar multigrade oil provides superior performance in Caterpillar Diesel Engines. In addition, Caterpillar multigrade oil exceeds many of the performance requirements of other manufacturers of diesel engines. Therefore, this oil is an excellent choice for many mixed fleets. **True high performance oil is produced with a combination of the following factors: industry standard tests, proprietary tests, field tests and prior experience with similar formulations. The design and the development of Caterpillar lubricants that are both high performance and high quality are based on these factors.**

Note: Non-Caterpillar commercial oils are second choice oils.

Commercial Oils

Note: If Caterpillar Multigrade DEO is not used, use only commercial oils that meet the following classifications.

- API CH-4 multigrade oils and API CI-4 multigrade oils are acceptable if the requirements of Caterpillar's ECF-1 (Engine Crankcase Fluid specification-1) are met. CH-4 oils and CI-4 oils that have not met the requirements of Caterpillar's ECF-1 Specification may cause reduced engine life.
- API CF-4 multigrade oils are not recommended for this series of diesel engines. For all other smaller commercial diesel engines, the oil drain interval should not exceed 50 percent of the standard oil drain interval for your engine.

NOTICE
In selecting oil for any engine application, both the oil viscosity and oil performance classification/specification as specified by the engine manufacturer must be defined and satisfied. Using only one of these parameters will not sufficiently define oil for an engine application.

In order to make the proper choice of a commercial oil, refer to the following explanations:

API CI-4 – API CI-4 oils were developed in order to meet the requirements of high performance diesel engines that use cooled Exhaust Gas Recirculation (EGR). API CI-4 oils are acceptable if the requirements of Caterpillar's ECF-1 (Engine Crankcase Fluid specification-1) are met.

API CH-4 – API CH-4 oils were developed in order to protect low emissions diesel engines that use a 0.05 percent level of fuel sulfur. However, API CH-4 oils may be used with higher sulfur fuels. API CH-4 oils are acceptable if the requirements of Caterpillar's ECF-1 (Engine Crankcase Fluid specification-1) are met.

Note: CH-4 oils and CI-4 oils that have not met the requirements of Caterpillar's ECF-1 Specification may cause reduced engine life.

NOTICE
Failure to follow these oil recommendations can cause shortened engine service life due to deposits and/or excessive wear.

Note: Refer to Special Publication, SEBU6251, “Caterpillar Commercial Diesel Engine Fluids Recommendations” for additional information that relates to lubrication for your engine.

Lubricant Viscosity Recommendations

The proper SAE viscosity grade of oil is determined by the minimum ambient temperature during cold engine start-up, and the maximum ambient temperature during engine operation.

Refer to Table 3 (minimum temperature) in order to determine the required oil viscosity for starting a cold engine.

Refer to Table 3 (maximum temperature) in order to select the oil viscosity for engine operation at the highest ambient temperature that is anticipated.

Note: Generally, use the highest oil viscosity that is available to meet the requirement for the temperature at start-up.

If ambient temperature conditions at engine start-up require the use of multigrade SAE 0W oil, SAE 0W-40 viscosity grade is preferred over SAE 0W-20 or SAE 0W-30.

Table 3

Engine Oil Viscosities for Ambient Temperatures		
	Ambient Temperature	
Viscosity Grade	Minimum	Maximum
SAE 0W-20	−40 °C (−40 °F)	10 °C (50 °F)

(continued)

(Table 3, contd)

SAE 0W-30	−40 °C (−40 °F)	30 °C (86 °F)
SAE 0W-40	−40 °C (−40 °F)	40 °C (104 °F)
SAE 5W-30	−30 °C (−22 °F)	30 °C (86 °F)
SAE 5W-40	−30 °C (−22 °F)	50 °C (122 °F)
SAE 10W-30	−18 °C (0 °F)	40 °C (104 °F)
SAE 10W-40	−18 °C (0 °F)	50 °C (122 °F)
SAE 15W-40	−9.5 °C (15 °F)	50 °C (122 °F)

Note: Supplemental heat is recommended below the minimum recommended ambient temperature.

S·O·S Oil Analysis

Caterpillar has developed a tool for maintenance management that evaluates oil degradation and the tool also detects the early signs of wear on internal components. The Caterpillar tool for oil analysis is called S·O·S Oil Analysis and the tool is part of the S·O·S Services program. S·O·S Oil Analysis divides oil analysis into three categories:

- Wear Analysis
- Oil condition
- Additional tests

The wear analysis monitors metal particles, some oil additives, and some contaminants.

Oil condition uses infrared (IR) analysis to evaluate the chemistry of the oil. Infrared analysis is also used to detect certain types of contamination.

Additional tests are used to measure contamination levels from water, fuel, or coolant. Oil viscosity and corrosion protection can be evaluated, as needed.

Refer to Special Publication, SEBU6251, “Caterpillar Commercial Diesel Engine Fluids Recommendations” or contact your local Caterpillar dealer for additional information concerning the S·O·S Oil Analysis program.

Refill Capacities for the Lubrication System

The refill capacities for the engine crankcase reflect the approximate capacity of the crankcase or sump plus standard oil filters. Auxiliary oil filter systems will require additional oil. Refer to the OEM specifications for the capacity of the auxiliary oil filter.

Table 4

Engine Refill Capacities		
Compartment or System	**Minimum**	**Maximum**
Crankcase Oil Sump(1)	5 L (5.2834 qt)	7 L (7.3968 qt)

(1) These values are the approximate capacities for the crankcase oil sump (aluminum) which includes the standard factory installed oil filters. Engines with auxiliary oil filters will require additional oil. Refer to the OEM specifications for the capacity of the auxiliary oil filter.

Lubricating Grease

Caterpillar provides a range of moderate greases to extremely high performance greases in order to service the entire line of Caterpillar products that operate throughout the wide variety of climates. From this variety of Caterpillar grease products, you will find at least one of the Caterpillar greases that will satisfy the performance requirements for any machine or equipment application.

Before selecting a grease for any application, the performance requirements must be determined. Consult the grease recommendations that are made by the OEM for the equipment when the equipment is operated in the expected conditions. Then, consult with your Caterpillar dealer for a list of greases and the following related characteristics.

- Performance specifications
- Available sizes of containers
- Part numbers

Always choose a grease that satisfies the recommendations that are specified by the equipment manufacturer for the application.

Note: If it is necessary to choose a single grease to use for all of the equipment at one site, always choose a grease that satisfies the requirements of the most demanding application.

Do not use the cost per pound as the only factor when you choose a grease. Use the grease that yields the lowest total cost of operation. The cost analysis should include the following factors:

- Parts
- Labor
- Downtime
- Cost of the grease

Greases that barely meet the minimum performance requirements can be expected to barely produce the minimum life of the parts.

Note: Take care when you change the type of grease. Take care when you change to a different supplier of grease. Some greases are not chemically compatible. Some brands of grease can not be interchanged. **If you are in doubt about the compatibility of the old grease and the new grease, purge all of the old grease from the joint.** Consult your supplier in order to determine if the greases are compatible.

Note: All Caterpillar brand of greases are compatible with each other.

Note: Refer to Special Publication, SEBU6251, “Caterpillar Commercial Diesel Engine Fluids Recommendations” for additional information that relates to lubrication for your engine.

General Fuel Information

Diesel fuels that meet the Caterpillar Specification for Distillate Diesel Fuel are recommended. These fuels will help to provide maximum engine service life and performance. In North America, diesel fuel that is identified as No. 1-D or No. 2-D in “ASTM D975” generally meet the specifications. Diesel fuels from other sources could exhibit detrimental properties that are not defined or controlled by this specification.

NOTICE
Operating with fuels that do not meet Caterpillar's recommendations can cause the following effects: starting difficulty, poor combustion, deposits in the fuel injectors, reduced service life of the fuel system, deposits in the combustion chamber and reduced service life of the engine.

Note: Refer to Special Publication, SEBU6251, “Caterpillar Commercial Diesel Engine Fluids Recommendations” for the Caterpillar Specification for distillate fuel and for additional information that relates to fuel for your engine.

Refill Capacities for the Fuel System

Refer to the Operation and Maintenance Manual that is provided by the OEM for capacities of the fuel system.

General Coolant Information

NOTICE
These recommendations are subject to change without notice. Contact your local Caterpillar dealer for the most up to date fluids recommendations.

NOTICE
Never add coolant to an overheated engine. Engine damage could result. Allow the engine to cool first.

NOTICE
If the engine is to be stored in, or shipped to an area with below freezing temperatures, the cooling system must be either protected to the lowest outside temperature or drained completely to prevent damage.

NOTICE
Frequently check the specific gravity of the coolant for proper freeze protection or for anti-boil protection.

Clean the cooling system for the following reasons:

- Contamination of the cooling system
- Overheating of the engine
- Foaming of the coolant

Note: Air pockets can form in the cooling system if the cooling system is filled at a rate that is greater than 5 L (1.3 US gal) per minute.

After you drain the cooling system and after you refill the cooling system, operate the engine. Operate the engine without the filler cap until the coolant reaches normal operating temperature and the coolant level stabilizes. Ensure that the coolant is maintained to the proper level.

NOTICE
Never operate an engine without water temperature regulators in the cooling system. Water temperature regulators help to maintain the engine coolant at the proper operating temperature. Cooling system problems can develop without water temperature regulators.

Refer to Special Instruction, SEBD0518, “Know Your Cooling System” and Special Instruction, SEBD0970, “Coolant and Your Engine” for more detailed information.

Many engine failures are related to the cooling system. The following problems are related to cooling system failures: overheating, leakage of the water pump, plugged radiators or heat exchangers and pitting of the cylinder liners.

These failures can be avoided with proper cooling system maintenance. Cooling system maintenance is as important as maintenance of the fuel system and the lubrication system. Quality of the coolant is as important as the quality of the fuel and the lubricating oil.

Coolant is normally composed of three elements: water, additives and glycol.

Water

NOTICE
Never use water alone without Supplemental Coolant Additives (SCA) or without inhibited coolant. Water alone is corrosive at engine operating temperatures. Water alone does not provide adequate protection against boiling or freezing.

Water is used in the cooling system in order to transfer heat.

Distilled water or deionized water is recommended for use in engine cooling systems.

DO NOT use the following types of water in cooling systems: hard water, softened water that has been conditioned with salt and sea water.

If distilled water or deionized water is not available, use water with the properties that are listed in Table 5 .

Table 5

Caterpillar Minimum Acceptable Water Requirements		
Property	**Maximum Limit**	**ASTM Test**
Chloride (Cl)	40 mg/L (2.4 grains/US gal)	“D512”, “D4327”
Sulfate (SO_4)	100 mg/L (5.9 grains/US gal)	“D516”
Total Hardness	170 mg/L (10 grains/US gal)	“D1126”
Total Solids	340 mg/L (20 grain/US gal)	“D1888”
Acidity	pH of 5.5 to 9.0	“D1293”

For a water analysis, consult one of the following sources:

- Caterpillar dealer
- Local water utility company
- Agricultural agent
- Independent laboratory

Additives

Additives help to protect the metal surfaces of the cooling system. A lack of coolant additives or insufficient amounts of additives enable the following conditions to occur:

- Corrosion
- Formation of mineral deposits
- Rust
- Scale
- Pitting and erosion from cavitation of the cylinder liner
- Foaming of the coolant

Many additives are depleted during engine operation. These additives must be replaced periodically. This can be done by adding Supplemental Coolant Additives (SCA) to Diesel Engine Antifreeze/Coolant (DEAC) or by adding ELC Extender to Extended Life Coolant (ELC).

Additives must be added at the proper concentration. Overconcentration of additives can cause the inhibitors to drop out-of-solution. The deposits can enable the following problems to occur:

- Formation of gel compounds
- Reduction of heat transfer
- Leakage of the water pump seal
- Plugging of radiators, coolers, and small passages

Glycol

Glycol in the coolant helps to provide protection against the following conditions:

- Boiling
- Freezing
- Cavitation of the water pump and the cylinder liner

For optimum performance, Caterpillar recommends a 1:1 mixture of a water/glycol solution.

Note: Use a mixture that will provide protection against the lowest ambient temperature.

Note: 100 percent pure glycol will freeze at a temperature of −23 °C (−9 °F).

Most conventional heavy-duty antifreezes use ethylene glycol. Propylene glycol may also be used. In a 1:1 mixture with water, ethylene and propylene glycol provide similar protection against freezing and boiling. See Tables 6 and 7 .

Table 6

Ethylene Glycol		
Concentration	**Freeze Protection**	**Boil Protection**
50 Percent	−36 °C (−33 °F)	106 °C (223 °F)
60 Percent	−51 °C (−60 °F)	111 °C (232 °F)

NOTICE
Do not use propylene glycol in concentrations that exceed 50 percent glycol because of propylene glycol's reduced heat transfer capability. Use ethylene glycol in conditions that require additional protection against boiling or freezing.

Table 7

Propylene Glycol		
Concentration	**Freeze Protection**	**Anti-Boil Protection**
50 Percent	−29 °C (−20 °F)	106 °C (223 °F)

To check the concentration of glycol, use the 1U-7298 Coolant/Battery Tester (Degrees Celsius) or use the 1U-7297 Coolant/Battery Tester (Degrees Fahrenheit). The testers give readings that are immediate and accurate. The testers can be used with ethylene or propylene glycol.

Coolant Recommendations

NOTICE
Do not use a commercial coolant/antifreeze that only meets the ASTM D3306 specification. This type of coolant/antifreeze is made for light duty automotive applications.

The following two coolants are used in Caterpillar diesel engines:

Preferred – Caterpillar Extended Life Coolant (ELC) or a commercial extended life coolant that meets the Caterpillar EC-1 specification

Acceptable – Caterpillar Diesel Engine Antifreeze (DEAC) or a commercial heavy-duty antifreeze that meets “ASTM D4985”, or “ASTM D6210” specifications

Caterpillar recommends a 1:1 mixture of water and glycol. This mixture of water and glycol will provide optimum heavy-duty performance as a antifreeze.

Note: Caterpillar DEAC does not require a treatment with an SCA at the initial fill. A commercial heavy-duty antifreeze that meets “ASTM D4985” or “ASTM D6210” specifications MAY require a treatment with an SCA at the initial fill. These coolants WILL require a treatment with an SCA on a maintenance basis.

Refer to Special Publication, SEBU6251, “Caterpillar Commercial Diesel Engine Fluids Recommendations” for additional information that relates to coolant.

S·O·S Coolant Analysis

Table 8

Recommended Interval		
Type of Coolant	**Level 1**	**Level 2**
DEAC	Every 250 Hours	Yearly(1)
ELC	Not Required	Yearly

(1) The Level 2 Coolant Analysis should be performed sooner if a problem is identified by a Level 1 Coolant Analysis.

S·O·S Coolant Analysis (Level 1)

A coolant analysis (Level 1) is a test of the properties of the coolant.

The following properties of the coolant are tested:

- Glycol concentration for freeze protection and boil protection
- Ability to protect from erosion and corrosion
- pH
- Conductivity
- Visual analysis
- Odor analysis

The results are reported, and appropriate recommendations are made.

Refer to the Maintenance Interval Schedule in this Operation and Maintenance Manual, “Cooling System Coolant Sample (Level 1) - Obtain” for a sampling location and the maintenance interval for collecting the coolant samples.

S·O·S Coolant Analysis (Level 2)

A coolant analysis (Level 2) is a comprehensive chemical evaluation of the coolant. This analysis is also a check of the overall condition of the inside of the cooling system.

The S·O·S Coolant Analysis has the following features:

- Full coolant analysis (Level 1)
- Identification of the source of metal corrosion and of contaminants
- Water hardness

- Identification of buildup of the impurities that cause corrosion
- Identification of buildup of the impurities that cause scaling

The results are reported, and appropriate recommendations are made.

Refer to the Maintenance Interval Schedule in this Operation and Maintenance Manual, “Cooling System Coolant Sample (Level 2) - Obtain” for a sampling location and the maintenance interval for collecting the coolant samples.

Testing the engine coolant is important to ensure that the engine is protected from internal cavitation and from corrosion. The analysis also tests the ability of the coolant to protect the engine from boiling and from freezing. The S·O·S Coolant Analysis can be done at your Caterpillar dealer. Caterpillar S·O·S Coolant Analysis is the best way to monitor the condition of your coolant and your cooling system. S·O·S Coolant Analysis is a program that is based on periodic samples.

Refer to Special Publication, SEBU6251, “Caterpillar Commercial Diesel Engine Fluids Recommendations” for additional information.

Refill Capacity of the Cooling System

To maintain the cooling system, the Total Cooling System capacity must be known. The approximate capacity for the “Engine Only” cooling system is listed. External System capacities will vary among applications. Refer to the OEM specifications for the External System capacity. This capacity information will be needed in order to determine the amount of antifreeze that is required for the Total Cooling System.

Table 9

Engine Refill Capacities	
Compartment or System	**Liters**
Engine Only	7 L (7.3968 qt)
External System Per OEM(1)	

(1) The External System includes a radiator or an expansion tank with the following components: heat exchanger and piping. Refer to the OEM specifications. Enter the value for the capacity of the External System in this row.

i09625919

Maintenance Interval Schedule

SMCS Code: 1000; 7500

When Required

“ Battery - Replace“ 43
“ Battery or Battery Cable - Disconnect“ 44
“ Engine - Clean“ 53
“ Engine Air Cleaner Element (Dual Element) - Clean/ Replace“ 54
“ Engine Air Cleaner Element (Single Element) - Inspect/Replace“ 56
“ Fuel System - Prime“ 63
“Severe Service Application - Check“ . . . . . .

Daily

“ Alternator Belt - Inspect/Adjust/Replace“ 43
“ Cooling System Coolant Level - Check“ 48
“ Driven Equipment - Check“ 53
“ Engine Air Cleaner Service Indicator - Inspect“ . . 57
“ Engine Air Precleaner - Check/Clean“ 57
“ Engine Oil Level - Check“ 58
“ Fuel System Primary Filter/Water Separator - Drain“ 65
“Fuel System Secondary Filter/Water Separator - Drain“ . . . . . .
“ V-Belts - Inspect/Adjust/Replace“ 75
“ Walk-Around Inspection“ 76

Every 50 Service Hours or Weekly

“ Fuel Tank Water and Sediment - Drain“ 69

Every 250 Service Hours

“ Cooling System Coolant Sample (Level 1) - Obtain“ 49
“ Engine Oil Sample - Obtain“ 58

Every 500 Service Hours

“ V-Belts - Inspect/Adjust/Replace“ 75

Every 500 Service Hours or 6 Months

“ Engine Protective Devices - Check“ 62

Every 500 Service Hours or 1 Year

“ Battery Electrolyte Level - Check“ 44
“ Cooling System Supplemental Coolant Additive (SCA) - Test/Add“ 51
“ Crankcase Breather (Canister) - Replace“ 52
“ Engine Air Cleaner Element (Dual Element) - Clean/ Replace“ 54
“Engine Oil and Filter - Change“ . . . . . .
“ Fuel System Primary Filter (Water Separator) Element - Replace“ 64
“Fuel System Secondary Filter - Replace“ . . . . . .
“ Hoses and Clamps - Inspect/Replace“ 69
“ Radiator - Clean“ 73

Every 1000 Service Hours

“ Engine Valve Lash - Inspect/Adjust“ 62

Every 2000 Service Hours

“ Alternator - Inspect“ 43
“ Starting Motor - Inspect“ 74
“ Turbocharger - Inspect“ 74
“ Water Pump - Inspect“ 77

Every 2000 Service Hours or 1 Year

“ Engine Mounts - Inspect“ 57

Every Year

“ Cooling System Coolant Sample (Level 2) - Obtain“ 50

Every 3000 Service Hours

“ Alternator Belt - Inspect/Adjust/Replace“ 43

“ Fuel Injection Nozzles - Test/Exchange“ 63

Every 3000 Service Hours or 2 Years

“ Cooling System Coolant (DEAC) - Change“ 45

“ Cooling System Water Temperature Regulator - Replace“ 52

Every 12 000 Service Hours or 6 Years

“ Cooling System Coolant (ELC) - Change“ 47

Overhaul

“ Overhaul Considerations“ 70

i02704667

Alternator - Inspect

SMCS Code: 1405-040

Caterpillar recommends a scheduled inspection of the alternator. Inspect the alternator for loose connections and proper battery charging. Inspect the ammeter (if equipped) during engine operation in order to ensure proper battery performance and/or proper performance of the electrical system. Make repairs, as required.

Check the alternator and the battery charger for proper operation. If the batteries are properly charged, the ammeter reading should be very near zero. All batteries should be kept charged. The batteries should be kept warm because temperature affects the cranking power. If the battery is too cold, the battery will not crank the engine. The battery will not crank the engine, even if the engine is warm. When the engine is not run for long periods of time or if the engine is run for short periods, the batteries may not fully charge. A battery with a low charge will freeze more easily than a battery with a full charge.

i02491869

Alternator Belt - Inspect/ Adjust/Replace
(Poly V-Belt)

SMCS Code: 1357-510; 1357-036

Inspection

To maximize the engine performance, inspect the belt (1) for wear and for cracking. Replace the belt if the belt is worn or damaged.

- If the belt (1) has more than four cracks per 25.4000 mm (1 inch) the belt must be replaced.
- Check the belt of cracks, splits, glazing, grease, and splitting.

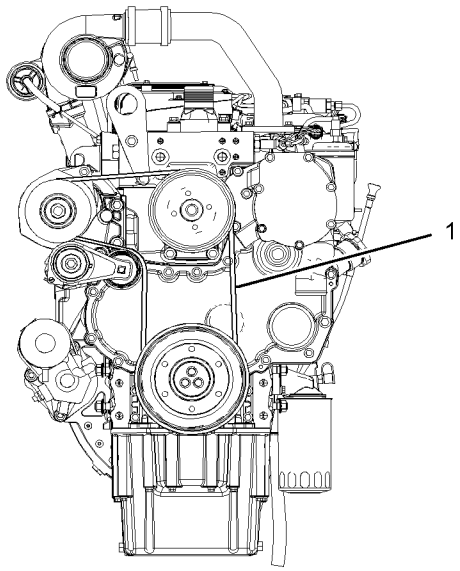

Illustration 21 g01251375
Typical example

Adjustment

This type of belt has an automatic belt tensioner.

Replace

Refer to Disassembly and Assembly manual, “Alternator Belt - Remove and Install”.

i02322315

Battery - Replace

SMCS Code: 1401-510

⚠ WARNING

Batteries give off combustible gases which can explode. A spark can cause the combustible gases to ignite. This can result in severe personal injury or death.

Ensure proper ventilation for batteries that are in an enclosure. Follow the proper procedures in order to help prevent electrical arcs and/or sparks near batteries. Do not smoke when batteries are serviced.

⚠ WARNING

The battery cables or the batteries should not be removed with the battery cover in place. The battery cover should be removed before any servicing is attempted.

Removing the battery cables or the batteries with the cover in place may cause a battery explosion resulting in personal injury.

1. Switch the engine to the OFF position. Remove all electrical loads.
2. Turn off any battery chargers. Disconnect any battery chargers.
3. The NEGATIVE "-" cable connects the NEGATIVE "-" battery terminal to the NEGATIVE "-" terminal on the starting motor. Disconnect the cable from the NEGATIVE "-" battery terminal.
4. The POSITIVE "+" cable connects the POSITIVE "+" battery terminal to the POSITIVE "+" terminal on the starting motor. Disconnect the cable from the POSITIVE "+" battery terminal.

Note: Always recycle a battery. Never discard a battery. Dispose of used batteries to an appropriate recycling facility.

5. Remove the used battery.
6. Install the new battery.

Note: Before the cables are connected, ensure that the engine start switch is OFF.

7. Connect the cable from the starting motor to the POSITIVE "+" battery terminal.
8. Connect the NEGATIVE "-" cable to the NEGATIVE "-" battery terminal.

i02710765

Battery Electrolyte Level - Check

SMCS Code: 1401-535

When the engine is not run for long periods of time or when the engine is run for short periods, the batteries may not fully recharge. Ensure a full charge in order to help prevent the battery from freezing. If batteries are properly charged, ammeter reading should be very near zero, when the engine is in operation.

⚠ WARNING

All lead-acid batteries contain sulfuric acid which can burn the skin and clothing. Always wear a face shield and protective clothing when working on or near batteries.

1. Remove the filler caps. Maintain the electrolyte level to the "FULL" mark on the battery.

   If the addition of water is necessary, use distilled water. If distilled water is not available use clean water that is low in minerals. Do not use artificially softened water.
2. Check the condition of the electrolyte with the 245-5829 Coolant Battery Tester Refractometer.
3. Keep the batteries clean.

   Clean the battery case with one of the following cleaning solutions:

   - A mixture of 0.1 kg (0.2 lb) of baking soda and 1 L (1 qt) of clean water
   - A mixture of 0.1 L (0.11 qt) of ammonia and 1 L (1 qt) of clean water

   Thoroughly rinse the battery case with clean water.

   Use a fine grade of sandpaper to clean the terminals and the cable clamps. Clean the items until the surfaces are bright or shiny. DO NOT remove material excessively. Excessive removal of material can cause the clamps to not fit properly. Coat the clamps and the terminals with 5N-5561 Silicone Lubricant, petroleum jelly or MPGM.

i09570426

Battery or Battery Cable - Disconnect

SMCS Code: 1402-029

⚠ WARNING

The battery cables or the batteries should not be removed with the battery cover in place. The battery cover should be removed before any servicing is attempted.

Removing the battery cables or the batteries with the cover in place may cause a battery explosion resulting in personal injury.

1. Turn the start switch to the OFF position. Turn the ignition switch (if equipped) to the OFF position and remove the key and all electrical loads.
2. Open the battery isolator. Disconnect the negative battery terminal. Ensure that the cable cannot contact the terminal. When four 12 volt batteries are involved, two negative connections must be disconnected.
3. Remove the positive connection.
4. Clean all disconnected connection and battery terminals.
5. Use a fine grade of sandpaper to clean the terminals and the cable clamps. Clean the items until the surfaces are bright or shiny. DO NOT remove material excessively. Excessive removal of material can cause the clamps to not fit correctly. Coat the clamps and the terminals with a suitable silicone lubricant or petroleum jelly.
6. Tape the cable connections to help prevent accidental starting.
7. Proceed with necessary system repairs.
8. To connect the battery, connect the positive connection before the negative connection.

i02710742

Cooling System Coolant (DEAC) - Change

SMCS Code: 1350-070; 1395-044

Clean the cooling system and flush the cooling system before the recommended maintenance interval if the following conditions exist:

- The engine overheats frequently.
- Foaming is observed.
- The oil has entered the cooling system and the coolant is contaminated.
- The fuel has entered the cooling system and the coolant is contaminated.

NOTICE
Use of commercially available cooling system cleaners may cause damage to cooling system components. Use only cooling system cleaners that are approved for Caterpillar engines.

Note: Inspect the water pump and the water temperature regulator after the cooling system has been drained. This is a good opportunity to replace the water pump, the water temperature regulator and the hoses, if necessary.

Drain

⚠ WARNING

Pressurized System: Hot coolant can cause serious burns. To open the cooling system filler cap, stop the engine and wait until the cooling system components are cool. Loosen the cooling system pressure cap slowly in order to relieve the pressure.

1. Stop the engine and allow the engine to cool. Loosen the cooling system filler cap slowly in order to relieve any pressure. Remove the cooling system filler cap.

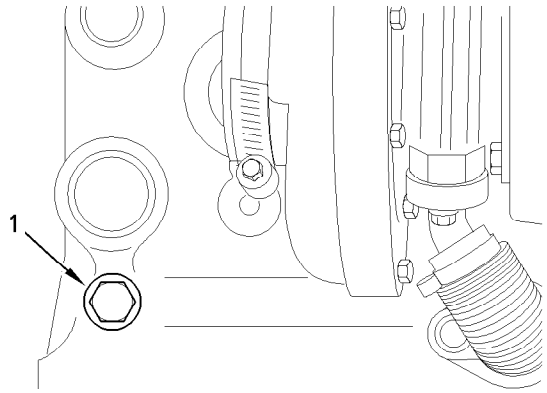

Illustration 22 g01003928

2. Open the cooling system drain valve (if equipped). If the cooling system is not equipped with a drain valve, remove the drain plug (1).

   Allow the coolant to drain.

NOTICE
Dispose of used engine coolant properly or recycle. Various methods have been proposed to reclaim used coolant for reuse in engine cooling systems. The full distillation procedure is the only method acceptable by Caterpillar to reclaim the used coolant.

For information regarding the disposal and the recycling of used coolant, consult your Caterpillar dealer or consult Dealer Service Tools Group:

Outside Illinois 1-800-542-TOOL
Inside Illinois 1-800-541-TOOL
Canada 1-800-523-TOOL

Flush

1. Flush the cooling system with clean water in order to remove any debris.

2. Close the drain valve (if equipped). Clean the drain plug (1). Install the drain plug. Refer to Torque Specifications, SENR3130 for more information on the correct torques.

NOTICE
Do not fill the cooling system faster than 5 L (1.3 US gal) per minute to avoid air locks.

Cooling system air locks may result in engine damage.

3. Fill the cooling system with a mixture of clean water and Caterpillar Fast Acting Cooling System Cleaner. Add 0.5 L (1 pint) of cleaner per 15 L (4 US gal) of the cooling system capacity. Install the cooling system filler cap.

4. Start and run the engine at low idle for a minimum of 30 minutes. The coolant temperature should be at least 82 °C (180 °F).

NOTICE
Improper or incomplete rinsing of the cooling system can result in damage to copper and other metal components.

To avoid damage to the cooling system, make sure to completely flush the cooling system with clear water. Continue to flush the system until all signs of the cleaning agent are gone.

5. Stop the engine and allow the engine to cool. Loosen the cooling system filler cap slowly in order to relieve any pressure. Remove the cooling system filler cap. Open the drain valve (if equipped) or remove the cooling system drain plug (1). Allow the water to drain. Flush the cooling system with clean water. Close the drain valve (if equipped). Clean the drain plug. Install the drain plug. Refer to Torque Specifications, SENR3130 for more information on the correct torques.

Cooling Systems with Heavy Deposits or Plugging

Note: For the following procedure to be effective, there must be some active flow through the cooling system components.

1. Flush the cooling system with clean water in order to remove any debris.

2. Close the drain valve (if equipped). Clean the drain plug (1). Install the drain plug. Refer to Torque Specifications, SENR3130 for more information on the correct torques.

NOTICE
Do not fill the cooling system faster than 5 L (1.3 US gal) per minute to avoid air locks.

Cooling system air locks may result in engine damage.

3. Fill the cooling system with a mixture of clean water and Caterpillar Fast Acting Cooling System Cleaner. Add 0.5 L (1 pint) of cleaner per 3.8 to 7.6 L (1 to 2 US gal) of the cooling system capacity. Install the cooling system filler cap.

4. Start and run the engine at low idle for a minimum of 90 minutes. The coolant temperature should be at least 82 °C (180 °F).

NOTICE
Improper or incomplete rinsing of the cooling system can result in damage to copper and other metal components.

To avoid damage to the cooling system, make sure to completely flush the cooling system with clear water. Continue to flush the system until all signs of the cleaning agent are gone.

5. Stop the engine and allow the engine to cool. Loosen the cooling system filler cap slowly in order to relieve any pressure. Remove the cooling system filler cap. Open the drain valve (if equipped) or remove the cooling system drain plug (1). Allow the water to drain. Flush the cooling system with clean water. Close the drain valve (if equipped). Clean the drain plug. Install the drain plug. Refer to Torque Specifications, SENR3130 for more information on the correct torques.

Fill

NOTICE
Do not fill the cooling system faster than 5 L (1.3 US gal) per minute to avoid air locks.

Cooling system air locks may result in engine damage.

1. Fill the cooling system with coolant or antifreeze. Refer to this Operation and Maintenance Manual, “Refill Capacities and Recommendations” topic (Maintenance Section) for more information on cooling system specifications. Do not install the cooling system filler cap.
2. Start and run the engine at low idle. Increase the engine rpm to 1500 rpm. Run the engine at high idle for one minute in order to purge the air from the cavities of the engine block. Stop the engine.
3. Check the coolant level. Maintain the coolant level within 13 mm (0.5 inch) below the bottom of the pipe for filling. Maintain the coolant level within 13 mm (0.5 inch) to the proper level on the sight glass (if equipped).
4. Clean the cooling system filler cap. Inspect the gasket that is on the cooling system filler cap. If the gasket that is on the cooling system filler cap is damaged, discard the old cooling system filler cap and install a new cooling system filler cap. If the gasket that is on the cooling system filler cap is not damaged, perform a pressure test. A 9S-8140 Pressurizing Pump is used to perform the pressure test. The correct pressure for the cooling system filler cap is stamped on the face of the cooling system filler cap. If the cooling system filler cap does not retain the correct pressure, obtain a new cooling system filler cap. Install the cooling system filler cap.
5. Start the engine. Inspect the cooling system for leaks and for the correct operating temperature.

i02822203

Cooling System Coolant (ELC) - Change

SMCS Code: 1350-070; 1395-044

Clean the cooling system and flush the cooling system before the recommended maintenance interval if the following conditions exist:

- The engine overheats frequently.
- Foaming is observed.
- The oil has entered the cooling system and the coolant is contaminated.
- The fuel has entered the cooling system and the coolant is contaminated.

Note: When the cooling system is cleaned, only clean water is needed when the ELC is drained and replaced.

Note: Inspect the water pump and the water temperature regulator after the cooling system has been drained. This is a good opportunity to replace the water pump, the water temperature regulator and the hoses, if necessary.

Drain

⚠ WARNING

Pressurized System: Hot coolant can cause serious burns. To open the cooling system filler cap, stop the engine and wait until the cooling system components are cool. Loosen the cooling system pressure cap slowly in order to relieve the pressure.

1. Stop the engine and allow the engine to cool. Loosen the cooling system filler cap slowly in order to relieve any pressure. Remove the cooling system filler cap.
2. Open the cooling system drain valve (if equipped). If the cooling system is not equipped with a drain valve, remove the cooling system drain plugs.

   Allow the coolant to drain.

NOTICE
Dispose of used engine coolant properly or recycle. Various methods have been proposed to reclaim used coolant for reuse in engine cooling systems. The full distillation procedure is the only method acceptable by Caterpillar to reclaim the used coolant.

For information regarding the disposal and the recycling of used coolant, consult your Caterpillar dealer or consult Dealer Service Tools.

Flush

1. Flush the cooling system with clean water in order to remove any debris.
2. Close the drain valve (if equipped). Clean the drain plugs. Install the drain plugs. Refer to Torque Specifications, SENR3130 for more information on the correct torques.

NOTICE
Do not fill the cooling system faster than 5 L (1.3 US gal) per minute to avoid air locks.

Cooling system air locks may result in engine damage.

3. Fill the cooling system with clean water. Install the cooling system filler cap.

4. Start and run the engine at low idle until the temperature reaches 49 to 66 °C (120 to 150 °F).

5. Stop the engine and allow the engine to cool. Loosen the cooling system filler cap slowly in order to relieve any pressure. Remove the cooling system filler cap. Open the drain valve (if equipped) or remove the cooling system drain plugs. Allow the water to drain. Flush the cooling system with clean water. Close the drain valve (if equipped). Clean the drain plugs. Install the drain plugs. Refer to Torque Specifications, SENR3130 for more information on the correct torques.

Fill

NOTICE
Do not fill the cooling system faster than 5 L (1.3 US gal) per minute to avoid air locks.

Cooling system air locks may result in engine damage.

1. Fill the cooling system with Extended Life Coolant (ELC). Refer to this Operation and Maintenance Manual, “Refill Capacities and Recommendations” topic (Maintenance Section) for more information on cooling system specifications. Do not install the cooling system filler cap.

2. Start and run the engine at low idle. Increase the engine rpm to high idle. Run the engine at high idle for one minute in order to purge the air from the cavities of the engine block. Stop the engine.

3. Check the coolant level. Maintain the coolant level within 13 mm (0.5 inch) below the bottom of the pipe for filling. Maintain the coolant level within 13 mm (0.5 inch) to the proper level on the sight glass (if equipped).

4. Clean the cooling system filler cap. Inspect the gasket that is on the cooling system filler cap. If the gasket that is on the cooling system filler cap is damaged, discard the old cooling system filler cap and install a new cooling system filler cap. If the gasket that is on the cooling system filler cap is not damaged, use a 9S-8140 Pressurizing Pump in order to pressure test the cooling system filler cap. The correct pressure for the cooling system filler cap is stamped on the face of the cooling system filler cap. If the cooling system filler cap does not retain the correct pressure, install a new cooling system filler cap.

5. Start the engine. Inspect the cooling system for leaks and for proper operating temperature.

i06030810

Cooling System Coolant Level - Check

SMCS Code: 1395-082

Engines With a Coolant Recovery Tank

Note: The cooling system may not have been provided by Caterpillar. The procedure that follows is for typical cooling systems. Refer to the OEM information for the correct procedures.

Check the coolant level when the engine is stopped and cool.

1. Observe the coolant level in the coolant recovery tank. Maintain the coolant level to “COLD FULL” mark on the coolant recovery tank.

⚠ WARNING

Pressurized System: Hot coolant can cause serious burns. To open the cooling system filler cap, stop the engine and wait until the cooling system components are cool. Loosen the cooling system pressure cap slowly in order to relieve the pressure.

2. Loosen filler cap slowly in order to relieve any pressure. Remove the filler cap.

3. Pour the correct coolant mixture into the tank. Refer to the Operation and Maintenance Manual, “Refill Capacities and Recommendations” for information on the correct mixture and type of coolant. Refer to the Operation and Maintenance Manual, “Refill Capacities and Recommendations” for the cooling system capacity. Do not fill the coolant recovery tank above “COLD FULL” mark.

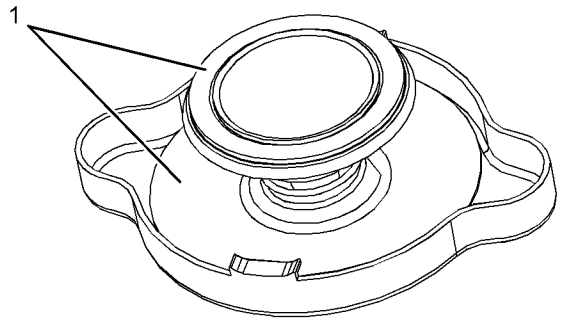

Illustration 23 g03781633

(1) Gaskets

4. Clean filler cap and the receptacle. Reinstall the filler cap and inspect the cooling system for leaks.

Note: The coolant will expand as the coolant heats up during normal engine operation. The additional volume will be forced into the coolant recovery tank during engine operation. When the engine is stopped and cool, the coolant will return to the engine.

Engines Without a Coolant Recovery Tank

Check the coolant level when the engine is stopped and cool.

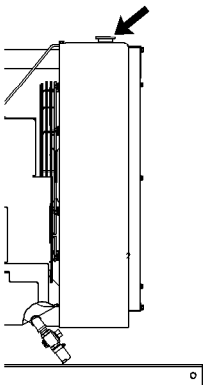

Illustration 24 g00285520

Cooling system filler cap

⚠ WARNING

Pressurized System: Hot coolant can cause serious burns. To open the cooling system filler cap, stop the engine and wait until the cooling system components are cool. Loosen the cooling system pressure cap slowly in order to relieve the pressure.

1. Remove the cooling system filler cap slowly in order to relieve pressure.

2. Maintain the coolant level within 13 mm (0.5 inch) of the bottom of the filler pipe. If the engine is equipped with a sight glass, maintain the coolant level to the correct level in the sight glass.

3. Clean the cooling system filler cap and inspect the gasket. If the gasket is damaged, discard the old filler cap and install a new filler cap. If the gasket is not damaged, use a suitable pressurizing pump in order to pressure test the filler cap. The correct pressure is stamped on the face of the filler cap. If the filler cap does not retain the correct pressure, install a new filler cap.

4. Inspect the cooling system for leaks.

i08362013

Cooling System Coolant Sample (Level 1) - Obtain

SMCS Code: 1350-008; 1395-008; 1395-554; 7542

Note: Obtaining a Coolant Sample (Level 1) is optional if the cooling system is filled with Cat ELC (Extended Life Coolant). Cooling systems filled with Cat Extended LIfe Coolant (ELC) should have a Coolant Sample (Level 2) obtained at the recommended interval.

Note: Obtain a Coolant Sample (Level 1) if the cooling system is filled with any other coolant instead of Cat ELC including the following coolants:

- Commercial long life coolants that meet the Cat Engine Coolant Specification -1 (Caterpillar EC-1)
- Cat DEAC (Diesel Engine Antifreeze/Coolant)
- Commercial heavy-duty coolant/antifreeze

Table 10

Recommended Interval		
Type of Coolant	Level 1	Level 2

(continued)

(Table 10, contd)

Cat DEAC	Every 250 service hours	Every year(1)
Conventional heavy duty-coolant		
Commercial coolant that meets the requirements of the Caterpillar EC-1 standard		
Cat ELC or conventional EC-1 coolant	Optional	Every year(1)

(1) The Level 2 Coolant Analysis should be performed sooner if a problem is suspected or identified.

NOTICE
Always use a designated pump for oil sampling, and use a separate designated pump for coolant sampling. Using the same pump for both types of samples may contaminate the samples that are being drawn. This contaminate may cause a false analysis and an incorrect interpretation that could lead to concerns by both dealers and customers.

Note: Level 1 results may indicate a need for Level 2 Analysis.

Obtain the sample of the coolant as close as possible to the recommended sampling interval. To receive the full effect of S·O·S analysis, establish a consistent trend of data. To establish a pertinent history of data, perform consistent samplings that are evenly spaced. Supplies for collecting samples can be obtained from your Cat dealer.

Use the following guidelines for proper sampling of the coolant:

- Complete the information on the label for the sampling bottle before you begin to take the samples.
- Keep the unused sampling bottles stored in plastic bags.
- Obtain coolant samples directly from the coolant sample port. You should not obtain the samples from any other location.
- Keep the lids on empty sampling bottles until you are ready to collect the sample.
- Place the sample in the mailing tube immediately after obtaining the sample to avoid contamination.
- Never collect samples from expansion bottles.
- Never collect samples from the drain for a system.

Submit the sample for Level 1 analysis.

For additional information about coolant analysis, see this Operation and Maintenance Manual, “Refill Capacities and Recommendations” or consult your Cat dealer.

i08258445

Cooling System Coolant Sample (Level 2) - Obtain

SMCS Code: 1350-008; 1395-554; 1395-008; 7542

NOTICE
Always use a designated pump for oil sampling, and use a separate designated pump for coolant sampling. Using the same pump for both types of samples may contaminate the samples that are being drawn. This contaminate may cause a false analysis and an incorrect interpretation that could lead to concerns by both dealers and customers.

NOTICE
Care must be taken to ensure that fluids are contained during performance of inspection, maintenance, testing, adjusting, and repair of the product. Be prepared to collect the fluid with suitable containers before opening any compartment or disassembling any component containing fluids.

Refer to Special Publication, NENG2500, “Cat Dealer Service Tool Catalog” or refer to Special Publication, PECJ0003, “Cat Shop Supplies and Tools Catalog” for tools and supplies suitable to collect and contain fluids on Cat products.

Dispose of all fluids according to local regulations and mandates.

Refer to Operation and Maintenance Manual, “Cooling System Coolant Sample (Level 1) - Obtain” for the guidelines for proper sampling of the coolant.

Submit the sample for Level 2 analysis.

For additional information about coolant analysis, see Special Publication, SEBU6251, “Caterpillar Commercial Diesel Engines Fluids Recommendations” or consult your Cat dealer.

i02456600

Cooling System Supplemental Coolant Additive (SCA) - Test/Add

SMCS Code: 1352-045; 1395-081

⚠ WARNING

Cooling system coolant additive contains alkali. To help prevent personal injury, avoid contact with the skin and the eyes. Do not drink cooling system coolant additive.

Note: Test the concentration of the Supplemental Coolant Additive (SCA) or test the SCA concentration as part of an S·O·S Coolant Analysis.

Test for SCA Concentration

Coolant and SCA

NOTICE
Do not exceed the recommended six percent supplemental coolant additive concentration.

Use the 8T-5296 Coolant Conditioner Test Kit or use the 4C-9301 Coolant Conditioner Test Kit in order to check the concentration of the SCA. Refer to this Operation and Maintenance Manual, “Refill Capacities and Recommendations” for more information.

Water and SCA

NOTICE
Do not exceed the recommended eight percent supplemental coolant additive concentration.

Test the concentration of the SCA with the 8T-5296 Coolant Conditioner Test Kit. Refer to the Special Publication, SEBU6251, “Caterpillar Commercial Diesel Engine Fluids Recommendations” for more information.

S·O·S Coolant Analysis

S·O·S coolant samples can be analyzed at your Caterpillar dealer. S·O·S Coolant Analysis is a program that is based on periodic samples.

Level 1

Level 1 is a basic analysis of the coolant. The following items are tested:

- Glycol Concentration
- Concentration of SCA
- pH
- Conductivity

The results are reported, and recommendations are made according to the results. Consult your Caterpillar dealer for information on the benefits of managing your equipment with an S·O·S Coolant Analysis.

Level 2

This level coolant analysis is recommended when the engine is overhauled. Refer to this Operations and Maintenance Manual, “Overhaul Considerations” for further information.

Add the SCA, If Necessary

NOTICE
Do not exceed the recommended amount of supplemental coolant additive concentration. Excessive supplemental coolant additive concentration can form deposits on the higher temperature surfaces of the cooling system, reducing the engine's heat transfer characteristics. Reduced heat transfer could cause cracking of the cylinder head and other high temperature components. Excessive supplemental coolant additive concentration could also result in radiator tube blockage, overheating, and/or accelerated water pump seal wear. Never use both liquid supplemental coolant additive and the spin-on element (if equipped) at the same time. The use of those additives together could result in supplemental coolant additive concentration exceeding the recommended maximum.

⚠ WARNING

Pressurized System: Hot coolant can cause serious burns. To open the cooling system filler cap, stop the engine and wait until the cooling system components are cool. Loosen the cooling system pressure cap slowly in order to relieve the pressure.

1. Slowly loosen the cooling system filler cap in order to relieve the pressure. Remove the cooling system filler cap.

Note: Always discard drained fluids according to local regulations.

2. If necessary, drain some coolant from the cooling system into a suitable container in order to allow space for the extra SCA.

3. Add the proper amount of SCA. Refer to the Special Publication, SEBU6251, “Caterpillar Commercial Diesel Engines Fluids Recommendations” for more information on SCA requirements.

4. Clean the cooling system filler cap. Inspect the gaskets of the cooling system filler cap. If the gaskets are damaged, replace the old cooling system filler cap with a new cooling system filler cap. Install the cooling system filler cap.

i08368581

Cooling System Water Temperature Regulator - Replace

SMCS Code: 1355-510

Replace the water temperature regulator before the water temperature regulator fails. This replacement is a recommended preventive maintenance practice. Replacing the water temperature regulator reduces the chances for unscheduled downtime. Refer to this Operation and Maintenance Manual, “Maintenance Interval Schedule” for the proper maintenance interval.

A water temperature regulator that fails in a partially opened position can cause overheating or overcooling of the engine.

A water temperature regulator that fails in the closed position can cause excessive overheating. Excessive overheating could result in cracking of the cylinder head or piston seizure problems.

A water temperature regulator that fails in the open position will cause the engine operating temperature to be too low during partial load operation. Low engine operating temperatures during partial loads could cause an excessive carbon buildup inside the cylinders. This excessive carbon buildup could result in an accelerated wear of the piston rings and wear of the cylinder liner.

NOTICE
Failure to replace your water temperature regulator on a regularly scheduled basis could cause severe engine damage.

Cat engines incorporate a shunt bypass design cooling system and require operating the engine with a water temperature regulator installed.

If the water temperature regulator is installed incorrectly, the engine may overheat, causing cylinder head damage. Ensure that the new water temperature regulator is installed in the original position. Ensure that the water temperature regulator vent hole is open.

Do not use liquid gasket material on the gasket or cylinder head surface.

Refer to two articles in the Disassembly and Assembly Manual, “Water Temperature Regulators - Remove and Water Temperature Regulators - Install” for the replacement procedure of the water temperature regulator, or consult your Cat dealer.

Note: If only the water temperature regulators are replaced, drain the coolant from the cooling system to a level that is below the water temperature regulator housing.

i02711635

Crankcase Breather (Canister) - Replace

SMCS Code: 1317-510

NOTICE
Ensure that the engine is stopped before any servicing or repair is performed.

Note: This breather assembly is not installed on all engines.

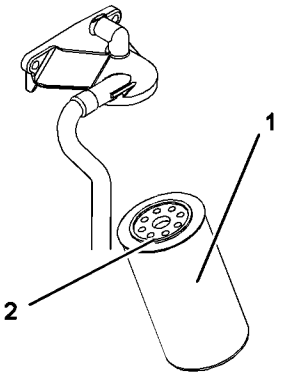

Illustration 25 g01350307
Typical example

1. Place a container under the canister (1).

2. Clean the outside of the canister. Remove the canister with a 1U-8760 Chain Wrench.

3. Lubricate the O ring seal (2) on the new canister (3) with clean engine lubricating oil. Install the new canister. Tighten the canister to 12 N·m (8 lb ft). Do not overtighten the canister.

4. Remove the container. Dispose of the old canister and any split oil in a safe place.

i08397642

Driven Equipment - Check

SMCS Code: 3279-535

Refer to the OEM specifications for more information on the following maintenance recommendations for the driven equipment:

- Inspection
- Adjustment
- Lubrication
- Other maintenance recommendations

Perform any maintenance for the driven equipment which is recommended by the OEM.

i02708606

Engine - Clean

SMCS Code: 1000-070

⚠ WARNING

Personal injury or death can result from high voltage.

Moisture can create paths of electrical conductivity.

Make sure that the electrical system is OFF. Lock out the starting controls and tag the controls "DO NOT OPERATE" .

NOTICE
Accumulated grease and oil on an engine is a fire hazard. Keep the engine clean. Remove debris and fluid spills whenever a significant quantity accumulates on the engine.

NOTICE
Failure to protect some engine components from washing may make your engine warranty invalid. Allow the engine to cool for one hour before washing the engine.

Periodic cleaning of the engine is recommended. Steam cleaning the engine will remove accumulated oil and grease. A clean engine provides the following benefits:

- Easy detection of fluid leaks
- Maximum heat transfer characteristics
- Ease of maintenance

Note: Caution must be used in order to prevent electrical components from being damaged by excessive water when the engine is cleaned. When a pressure washer or steam cleaner is used to clean the engine, a minimum distance of 300 mm (12 inch) must be maintained between the components of the engine and the jet nozzle of the pressure washer or steam cleaner. Pressure washers and steam cleaners should not be directed at any electrical connectors or the junction of cables into the rear of the connectors. Avoid electrical components such as the alternator and the starter. Protect the fuel injection pump from fluids in order to wash the engine.

i02708051

Engine Air Cleaner Element (Dual Element) - Clean/Replace

SMCS Code: 1054-037; 1054-510

NOTICE
Never run the engine without an air cleaner element installed. Never run the engine with a damaged air cleaner element. Do not use air cleaner elements with damaged pleats, gaskets or seals. Dirt entering the engine causes premature wear and damage to engine components. Air cleaner elements help to prevent airborne debris from entering the air inlet.

NOTICE
Never service the air cleaner element with the engine running since this will allow dirt to enter the engine.

Servicing the Air Cleaner Elements

Note: The air filter system may not have been provided by Catapillar. The procedure that follows is for a typical air filter system. Refer to the OEM information for the correct procedure.

If the air cleaner element becomes plugged, the air can split the material of the air cleaner element. Unfiltered air will drastically accelerate internal engine wear. Refer to the OEM information for the correct air cleaner elements for your application.

- Check the precleaner (if equipped) and the dust bowl daily for accumulation of dirt and debris. Remove any dirt and debris, as needed.
- Operating in dirty conditions may require more frequent service of the air cleaner element.
- The air cleaner element should be replaced at least one time per year. This replacement should be performed regardless of the number of cleanings.

Replace the dirty air cleaner elements with clean air cleaner elements. Before installation, the air cleaner elements should be thoroughly checked for tears and/or holes in the filter material. Inspect the gasket or the seal of the air cleaner element for damage. Maintain a supply of suitable air cleaner elements for replacement purposes.

Dual Element Air Cleaners

The dual element air cleaner contains a primary air cleaner element and a secondary air cleaner element.

The primary air cleaner element can be used up to six times if the element is properly cleaned and properly inspected. The primary air cleaner element should be replaced at least one time per year. This replacement should be performed regardless of the number of cleanings.

The secondary air cleaner element is not serviceable. Refer to the OEM information for instructions in order to replace the secondary air cleaner element.

When the engine is operating in environments that are dusty or dirty, air cleaner elements may require more frequent replacement.

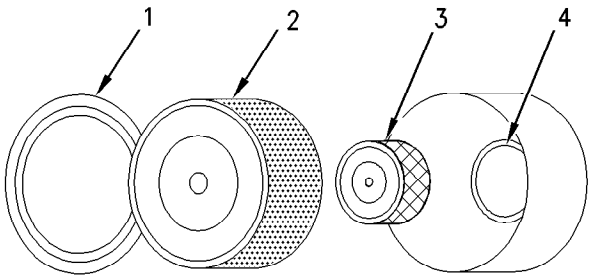

Illustration 26 g00736431

(1) Cover
(2) Primary air cleaner element
(3) Secondary air cleaner element
(4) Air inlet

1. Remove the cover. Remove the primary air cleaner element.
2. The secondary air cleaner element should be removed and discarded for every three cleanings of the primary air cleaner element.

Note: Refer to “Cleaning the Primary Air Cleaner Elements”.

3. Cover the air inlet with tape in order to keep dirt out.
4. Clean the inside of the air cleaner cover and body with a clean, dry cloth.
5. Remove the tape for the air inlet. Install the secondary air cleaner element. Install a primary air cleaner element that is new or cleaned.
6. Install the air cleaner cover.

7. Reset the air cleaner service indicator.

Cleaning the Primary Air Cleaner Elements

NOTICE
Caterpillar recommends certified air filter cleaning services that are available at Caterpillar dealers. The Caterpillar cleaning process uses proven procedures to assure consistent quality and sufficient filter life.

Observe the following guidelines if you attempt to clean the filter element:

Do not tap or strike the filter element in order to remove dust.

Do not wash the filter element.

Use low pressure compressed air in order to remove the dust from the filter element. Air pressure must not exceed 207 kPa (30 psi). Direct the air flow up the pleats and down the pleats from the inside of the filter element. Take extreme care in order to avoid damage to the pleats.

Do not use air filters with damaged pleats, gaskets, or seals. Dirt entering the engine will cause damage to engine components.

The primary air cleaner element can be used up to six times if the element is properly cleaned and properly inspected. When the primary air cleaner element is cleaned, check for rips or tears in the filter material. The primary air cleaner element should be replaced at least one time per year. This replacement should be performed regardless of the number of cleanings.

Use clean primary air cleaner elements while dirty elements are being cleaned.

NOTICE
Do not clean the air cleaner elements by bumping or tapping. This could damage the seals. Do not use elements with damaged pleats, gaskets or seals. Damaged elements will allow dirt to pass through. Engine damage could result.

Visually inspect the primary air cleaner elements before cleaning. Inspect the air cleaner elements for damage to the seal, the gaskets, and the outer cover. Discard any damaged air cleaner elements.

There are two common methods that are used to clean primary air cleaner elements:

- Pressurized air
- Vacuum cleaning

Pressurized Air

⚠ WARNING

Personal injury can result from air pressure.

Personal injury can result without following proper procedure. When using pressure air, wear a protective face shield and protective clothing.

Maximum air pressure at the nozzle must be less than 205 kPa (30 psi) for cleaning purposes.

Pressurized air can be used to clean primary air cleaner elements that have not been cleaned more than three times. Use filtered, dry air with a maximum pressure of 207 kPa (30 psi). Pressurized air will not remove deposits of carbon and oil.

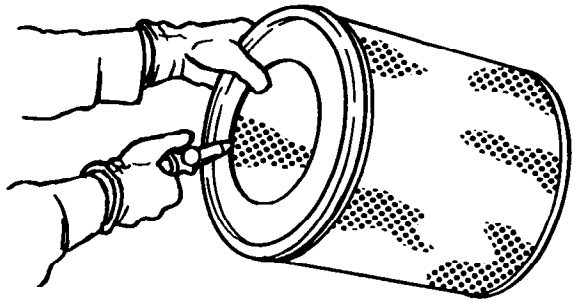

Illustration 27 g00281692

Note: When the primary air cleaner elements are cleaned, always begin with the clean side (inside) in order to force dirt particles toward the dirty side (outside).

Aim the air hose so that air flows along the length of the filter. Follow the direction of the paper pleats in order to prevent damage to the pleats. Do not aim the air directly at the face of the paper pleats.

Note: Refer to “Inspecting the Primary Air Cleaner Elements”.

Vacuum Cleaning

Vacuum cleaning is a good method for removing accumulated dirt from the dirty side (outside) of a primary air cleaner element. Vacuum cleaning is especially useful for cleaning primary air cleaner elements which require daily cleaning because of a dry, dusty environment.

Cleaning from the clean side (inside) with pressurized air is recommended prior to vacuum cleaning the dirty side (outside) of a primary air cleaner element.

Note: Refer to “Inspecting the Primary Air Cleaner Elements”.

Inspecting the Primary Air Cleaner Elements

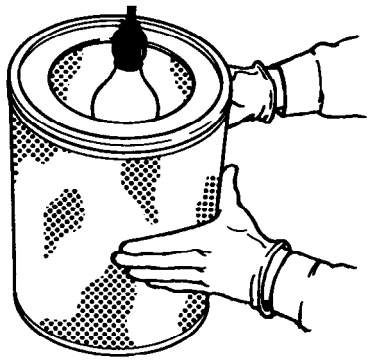

Illustration 28 g00281693

Inspect the clean, dry primary air cleaner element. Use a 60 watt blue light in a dark room or in a similar facility. Place the blue light in the primary air cleaner element. Rotate the primary air cleaner element. Inspect the primary air cleaner element for tears and/or holes. Inspect the primary air cleaner element for light that may show through the filter material. If it is necessary in order to confirm the result, compare the primary air cleaner element to a new primary air cleaner element that has the same part number.

Do not use a primary air cleaner element that has any tears and/or holes in the filter material. Do not use a primary air cleaner element with damaged pleats, gaskets or seals. Discard damaged primary air cleaner elements.

Storing Primary Air Cleaner Elements

If a primary air cleaner element that passes inspection will not be used, the primary air cleaner element can be stored for future use.

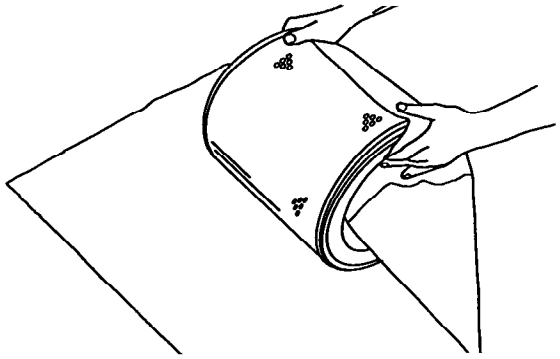

Illustration 29 g00281694

Do not use paint, a waterproof cover, or plastic as a protective covering for storage. An air flow restriction may result. To protect against dirt and damage, wrap the primary air cleaner elements in Volatile Corrosion Inhibited (VCI) paper.

Place the primary air cleaner element into a box for storage. For identification, mark the outside of the box and mark the primary air cleaner element. Include the following information:

- Date of cleaning
- Number of cleanings

Store the box in a dry location.

i02708042

Engine Air Cleaner Element (Single Element) - Inspect/Replace

SMCS Code: 1054-510; 1054-040

Refer to Operation and Maintenance Manual, “Engine Air Cleaner Service Indicator-Inspect”.

NOTICE
Never run the engine without an air cleaner element installed. Never run the engine with a damaged air cleaner element. Do not use air cleaner elements with damaged pleats, gaskets or seals. Dirt entering the engine causes premature wear and damage to engine components. Air cleaner elements help to prevent airborne debris from entering the air inlet.

NOTICE
Never service the air cleaner element with the engine running since this will allow dirt to enter the engine.

A wide variety of air cleaners may be installed for use with this engine. Consult the OEM information for the correct procedure to replace the air cleaner.

i02708041

Engine Air Cleaner Service Indicator - Inspect

SMCS Code: 7452-040

Some engines may be equipped with a different service indicator.

Some engines are equipped with a differential gauge for inlet air pressure. The differential gauge for inlet air pressure displays the difference in the pressure that is measured before the air cleaner element and the pressure that is measured after the air cleaner element. As the air cleaner element becomes dirty, the pressure differential rises. If your engine is equipped with a different type of service indicator, follow the OEM recommendations in order to service the air cleaner service indicator.

The service indicator may be mounted on the air cleaner element or in a remote location.

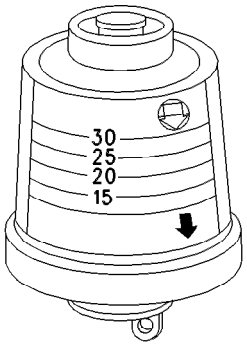

Illustration 30 g00103777

Typical service indicator

Observe the service indicator. The air cleaner element should be cleaned or the air cleaner element should be replaced when one of the following conditions occur:

- The yellow diaphragm enters the red zone.
- The red piston locks in the visible position.

Test the Service Indicator

Service indicators are important instruments.

- Check for ease of resetting. The service indicator should reset in less than three pushes.
- Check the movement of the yellow core when the engine is accelerated to the engine rated speed. The yellow core should latch at the greatest vacuum that is attained.

If the service indicator does not reset easily, or if the yellow core does not latch at the greatest vacuum, the service indicator should be replaced. If the new service indicator will not reset, the hole for the service indicator may be restricted.

The service indicator may need to be replaced frequently in environments that are severely dusty.

i02708039

Engine Air Precleaner - Check/ Clean

SMCS Code: 1055-535; 1055-070

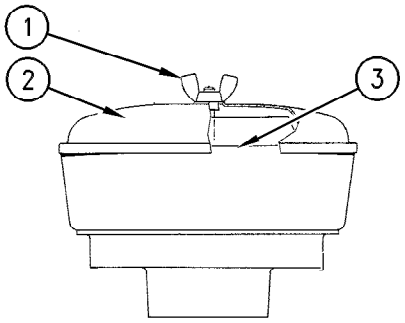

Illustration 31 g00287039

Typical precleaner

(1) Wing nut
(2) Cover
(3) Body

Remove wing nut (1) and cover (2). Check for an accumulation of dirt and debris in body (3). Clean the body, if necessary.

After cleaning the precleaner, install cover (2) and wing nut (1).

Note: When the engine is operated in dusty applications, more frequent cleaning is required.

i02456872

Engine Mounts - Inspect

SMCS Code: 1152-040

Inspect the engine mounts for deterioration and for proper bolt torque. Engine vibration can be caused by the following conditions:

- Improper mounting of the engine
- Deterioration of the engine mounts

Any engine mount that shows deterioration should be replaced. Refer to Special Publication, SENR3130, “Torque Specifications” for the recommended torques. Refer to the OEM recommendations for more information.

i02708019

Engine Oil Level - Check

SMCS Code: 1348-535-FLV

⚠ WARNING

Hot oil and hot components can cause personal injury. Do not allow hot oil or hot components to contact the skin.

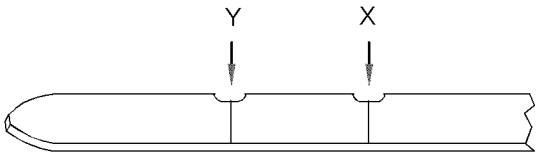

Illustration 32 g01165836

(Y) “Min” mark. (X) “Max” mark.

NOTICE
Perform this maintenance with the engine stopped.

Note: Ensure that the engine is either level or that the engine is in the normal operating position in order to obtain a true level indication.

Note: After the engine has been switched OFF, wait for ten minutes in order to allow the engine oil to drain to the oil pan before checking the oil level.

1. Maintain the oil level between the “MIN” mark (Y) and the “MAX” mark (X) on the engine oil dipstick. Do not fill the crankcase above the “MAX” mark (X).

NOTICE
Operating your engine when the oil level is above the “FULL” mark could cause your crankshaft to dip into the oil. The air bubbles created from the crankshaft dipping into the oil reduces the oil's lubricating characteristics and could result in the loss of power.

2. Remove the oil filler cap and add oil, if necessary. Clean the oil filler cap. Install the oil filler cap.

i08397634

Engine Oil Sample - Obtain

SMCS Code: 1000-008; 1348-554-SM; 7542-554-SM; 7542-554-OC

In addition to a good preventive maintenance program, Caterpillar recommends using S·O·S oil analysis at regularly scheduled intervals. S·O·S oil analysis provides infrared analysis, which is required for determining nitration and oxidation levels.

Obtain the Sample and the Analysis

⚠ WARNING

Hot oil and hot components can cause personal injury. Do not allow hot oil or hot components to contact the skin.

Before you take the oil sample, complete the Label, PEEP5031 for identification of the sample. To help obtain the most accurate analysis, provide the following information:

- Engine model
- Service hours on the engine
- The number of hours that have accumulated since the last oil change
- The amount of oil that has been added since the last oil change

To ensure that the sample is representative of the oil in the crankcase, obtain a warm, mixed oil sample.

To avoid contamination of the oil samples, the tools and the supplies that are used for obtaining oil samples must be clean.

Caterpillar recommends using the sampling valve to obtain oil samples. The quality and the consistency of the samples are better when the sampling valve is used. The location of the sampling valve allows oil that is flowing under pressure to be obtained during normal engine operation.

The 169-8373 Fluid Sampling Bottle is recommended for use with the sampling valve. The fluid sampling bottle includes the parts that are needed for obtaining oil samples. Instructions are also provided.

NOTICE
Always use a designated pump for oil sampling, and use a separate designated pump for coolant sampling. Using the same pump for both types of samples may contaminate the samples that are being drawn. This contaminate may cause a false analysis and an incorrect interpretation that could lead to concerns by both dealers and customers.

If the engine is not equipped with a sampling valve, use the 1U-5718 Vacuum Pump. The pump is designed to accept sampling bottles. Disposable tubing must be attached to the pump for insertion into the sump.

For instructions, see Special Publication, PEGJ0047, “How To Take A Good S·O·S Oil Sample”. Consult your Cat dealer for complete information and assistance in establishing an S·O·S program for your engine.

i10594725

Engine Oil and Filter - Change

SMCS Code: 1318-510; 1348-044

⚠ WARNING

Hot oil and hot components can cause personal injury. Do not allow hot oil or hot components to contact the skin.

Do not drain the oil when the engine is cold. As the oil cools, suspended waste particles settle on the bottom of the oil pan. The waste particles are not removed with the draining cold oil. Drain the crankcase with the engine stopped. Drain the crankcase with the oil warm. This draining method allows the waste particles that are suspended in the oil to be drained properly.

Failure to follow this recommended procedure will cause the waste particles to be recirculated through the engine lubrication system with the new oil.

Drain the Engine Oil

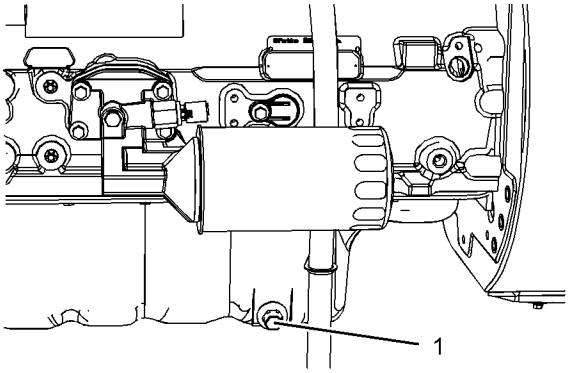

Illustration 33 g01356033
Oil drain plug

After the engine has been run at the normal operating temperature, stop the engine. Use one of the following methods to drain the engine crankcase oil:

- If the engine is equipped with a drain valve, turn the drain valve knob counterclockwise in order to drain the oil. After the oil has drained, turn the drain valve knob clockwise in order to close the drain valve.
- If the engine is not equipped with a drain valve, remove the oil drain plug (1) in order to allow the oil to drain. If the engine is equipped with a shallow sump, remove the bottom oil drain plugs from both ends of the oil pan.

After the oil has drained, the oil drain plugs should be cleaned and installed. If necessary, renew the O ring seal on the drain plug.

Some types of oil pans have oil drain plugs that are on both sides of the oil pan, because of the shape of the pan. This type of oil pan requires the engine oil to be drained from both plugs.

Replace the Oil Filter

NOTICE
Caterpillar oil filters are built to Caterpillar specifications. Use of an oil filter not recommended by Caterpillar could result in severe engine damage to the engine bearings, crankshaft, etc., as a result of the larger waste particles from unfiltered oil entering the engine lubricating system. Only use oil filters recommended by Caterpillar.

Replace the Type 1 Oil Filter

1. Remove the oil filter with a 1U-8760 Chain Wrench.

Note: The following actions can be carried out as part of the preventive maintenance program.

2. Cut the oil filter open with a 175-7546 Oil Filter Cutter Gp. Break apart the pleats and inspect the oil filter for metal debris. An excessive amount of metal debris in the oil filter may indicate early wear or a pending failure.

Use a magnet to differentiate between the ferrous metals and the nonferrous metals that are found in the oil filter element. Ferrous metals may indicate wear on the steel and cast iron parts of the engine.

Nonferrous metals may indicate wear on the aluminum parts, brass parts or bronze parts of the engine. Parts that may be affected include the following items: main bearings, rod bearings, turbocharger bearings and cylinder heads.

Due to normal wear and friction, it is not uncommon to find small amounts of debris in the oil filter. Consult your Caterpillar dealer in order to arrange for a further analysis if an excessive amount of debris is found in the oil filter.

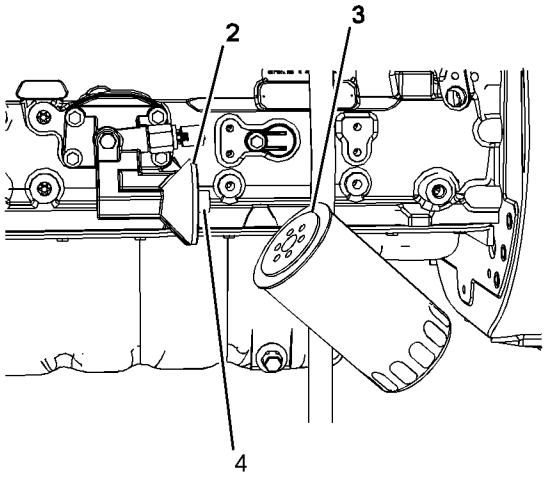

Illustration 34 g01356034

(2) Filter head
(3) O ring seal
(4) Union

3. Clean the sealing surface of the oil filter head (2). Ensure that the union (4) in the filter head is secure.

4. Clean the sealing surface of the oil filter head (2). Ensure that the union (4) in the filter head is secure.

NOTICE
Do not fill the oil filters with oil before installing them. This oil would not be filtered and could be contaminated. Contaminated oil can cause accelerated wear to engine components or engine damage.

5. Install the oil filter. Tighten the oil filter by hand according to the instructions that are shown on the oil filter. Do not overtighten the oil filter.

Note: Some oil filters may be installed vertically. Refer to illustration 35 . Start at step (1) in order to remove the oil filter and install the oil filter.

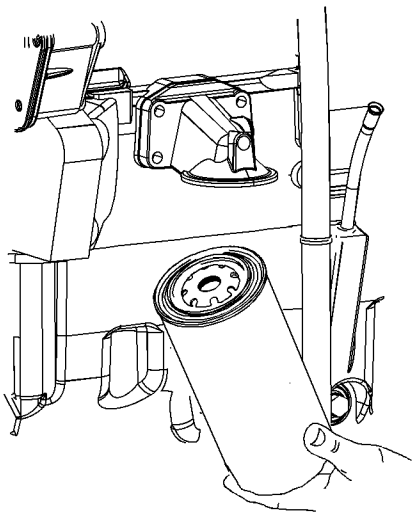

Illustration 35 g01356074
Typical example

Replace the Type 2 Oil Filter

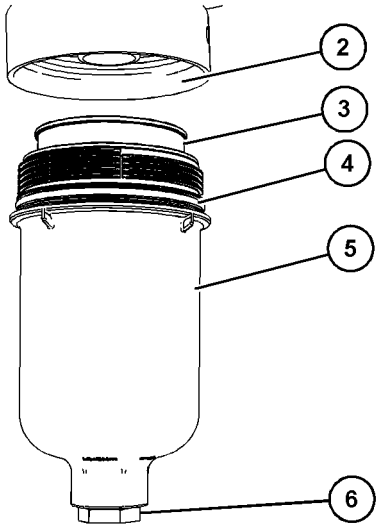

Illustration 36 g07927122
Typical example

1. Loosen the oil filter drain plug (6) to allow the oil to drain. Retighten the drain plug to 5 N·m (44 lb in).
2. Remove the housing (5) from the engine oil filter base by rotating the housing in a counterclockwise direction.
3. Rotate the element (3) in a clockwise direction and pull the element to remove the element from the housing (5).
4. Remove the O-ring seal (4) from the housing (5). Discard the O-ring seal.
5. Clean sealing surface (2).
6. Install a new O-ring seal (4) to the housing (5). Lubricate the O-ring seal with clean engine oil.

NOTICE
Do not fill the oil filters with oil before installing them. This oil would not be filtered and could be contaminated. Contaminated oil can cause accelerated wear to engine components or engine damage.

7. Install a new element (3) into the housing (5). Turn the element (3) in a counterclockwise direction to lock the new element into the housing (5).
8. Install the housing (5) to the engine oil filter base. Hand tighten the housing (5). Tighten the housing to a torque of 40 N·m (30 lb ft).

Fill the Engine Crankcase

1. Remove the oil filler cap. Refer to the Operation and Maintenance Manual for more information on lubricant specifications. Fill the crankcase with the proper amount of oil. Refer to the Operation and Maintenance Manual for more information on refill capacities.

NOTICE
If equipped with an auxiliary oil filter system or a remote oil filter system, follow the OEM or filter manufacturer's recommendations. Under filling or overfilling the crankcase with oil can cause engine damage.

NOTICE
To prevent crankshaft bearing damage, crank the engine with the fuel OFF. This will fill the oil filters before starting the engine. Do not crank the engine for more than 30 seconds.

2. Start the engine and run the engine at “LOW IDLE” for two minutes. Perform this procedure in order to ensure that the lubrication system has oil and that the oil filters are filled. Inspect the oil filter for oil leaks.
3. Stop the engine and allow the oil to drain back to the sump for a minimum of ten minutes.

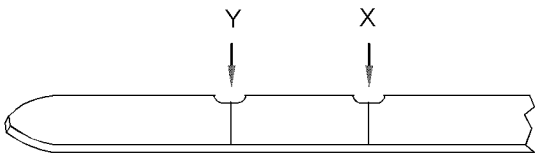

Illustration 37 g01165836

(Y) “MIN” mark. (X) “MAX” mark.

4. Remove the oil level gauge in order to check the oil level. Maintain the oil level between the “MIN” and “MAX” marks on the oil level gauge.

i08258801

Engine Protective Devices - Check

SMCS Code: 7400-535

Alarms and shutoffs must function properly. Alarms provide timely warning to the operator. Shutoffs help to prevent damage to the engine. Determining if the engine protective devices are in good working order during normal operation is impossible. Malfunctions must be simulated to test the engine protective devices.

A calibration check of the engine protective devices will ensure that the alarms and shutoffs activate at the setpoints. Ensure that the engine protective devices are functioning properly.

NOTICE
During testing, abnormal operating conditions must be simulated.

The tests must be performed correctly in order to prevent possible damage to the engine.

To prevent damage to the engine, only authorized service personnel or your Cat dealer should perform the tests.

Visual Inspection

Visually check the condition of all gauges, sensors, and wiring. Look for wiring and components that are loose, broken, or damaged. Damaged wiring or components should be repaired or replaced immediately.

i02707257

Engine Valve Lash - Inspect/ Adjust

SMCS Code: 1102-025

This maintenance is recommended by Caterpillar as part of a lubrication and preventive maintenance schedule in order to help provide maximum engine life.

NOTICE
Only qualified service personnel should perform this maintenance. Refer to the Systems Operation/Testing and Adjusting Manual, “Valve Lash and Valve Bridge Adjustment”article or consult your Caterpillar dealer for the complete valve lash adjustment procedure.

Operation of Caterpillar engines with improper valve adjustments can reduce engine efficiency. This reduced efficiency could result in excessive fuel usage and/or shortened engine component life.

⚠ WARNING

Ensure that the engine can not be started while this maintenance is being performed. To help prevent possible injury, do not use the starting motor to turn the flywheel.

Hot engine components can cause burns. Allow additional time for the engine to cool before measuring/adjusting valve lash clearance.

Ensure that the engine is stopped before measuring the valve lash. To obtain an accurate measurement, allow the valves to cool before this maintenance is performed.

Refer to the Service Manual for more information.

i02707243

Fuel Injection Nozzles - Test/ Exchange

SMCS Code: 1254-081; 1254-013

⚠ WARNING

Fuel leaked or spilled onto hot surfaces or electrical components can cause a fire.

NOTICE
Do not allow dirt to enter the fuel system. Thoroughly clean the area around a fuel system component that will be disconnected. Fit a suitable cover over any disconnected fuel system components.

Fuel injection nozzles are subject to tip wear. Tip wear is a result of fuel contamination. Tip wear can cause the following problems:

- Increased fuel consumption
- Black smoke
- Misfire
- Rough running

Fuel Injection nozzles should be cleaned, inspected, tested, and replaced, if necessary. Refer to Special Instruction, SEHS7292 for using the 8S-2245 Injector Cleaning Tool Gp. Consult your Caterpillar dealer about cleaning the fuel injection nozzle and testing the fuel injection nozzle.

NOTICE
Never wire brush or scrape a fuel injection nozzle. Wire brushing or scraping a fuel injection nozzle will damage the finely machine orifice. Proper tools for cleaning and testing the fuel injection nozzles can be obtained from Caterpillar dealers.

The following items are symptoms of a malfunction of the fuel injection nozzle:

- Abnormal engine operation
- Smoke emission
- Engine knock

Each fuel injection nozzle must be isolated one at a time in order to determine the malfunctioning fuel injection nozzle.

1. Start the engine.

2. Loosen each fuel line nut one at a time at the fuel injection pump. A cloth or similar material must be used in order to prevent fuel from spraying on the hot exhaust components. Tighten each nut before loosening the next nut.

3. Worn fuel injection nozzles or faulty fuel injection nozzles may be identified when a fuel line nut is loosened and the following conditions are present:

- The exhaust smoke is partially eliminated or the exhaust smoke is completely eliminated.
- Engine performance is not affected.

A fuel injection nozzle that is suspected of being worn and/or faulty should be removed. A new fuel injection nozzle should be installed in the cylinder in order to determine if the removed fuel injection nozzle is worn and/or faulty.

Removal and Installation of the Fuel Injection Nozzles

For the removal and the installation of fuel injection nozzles, special tooling is required. Refer to the Service Manual for more information. Consult your Caterpillar dealer for assistance.

i04429191

Fuel System - Prime

SMCS Code: 1258-548

If air enters the fuel system, the air must be purged from the fuel system before the engine can be started. Air can enter the fuel system when the following events occur:

- The fuel tank is empty or the fuel tank has been partially drained.
- The low-pressure fuel lines are disconnected.
- A leak exists in the low-pressure fuel system.
- The fuel filter is replaced.
- A new injection pump is installed.

Use the following procedure in order to remove air from the fuel system:

1. Turn the keyswitch to the RUN position. Leave the keyswitch in the RUN position for 3 minutes. If a manual purging screw is installed, the purging screw should be slackened during priming the fuel system.

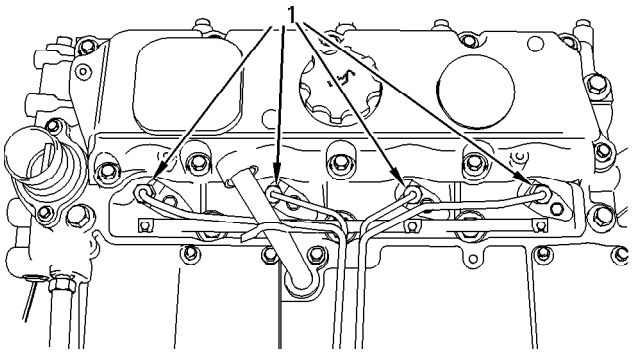

Illustration 38 g01003929

Injector nuts

2. Crank the engine with the throttle lever in the CLOSED position until the engine starts.

Note: If necessary, loosen the union nuts (1) on the fuel injection lines at the connection with the fuel injector until fuel is evident. Stop cranking the engine. Tighten the union nuts (1) to a torque of 30 N·m (22 lb ft).

3. Start the engine and run the engine at idle for 1 minute.

NOTICE
Do not crank the engine continuously for more than 30 seconds. Allow the starting motor to cool for two minutes before cranking the engine again.

4. Cycle the throttle lever from the low idle position to the high idle position three times. The cycle time for the throttle lever is one second to six seconds for one complete cycle.

Note: In order to purge air from the fuel injection pump on engines with a fixed throttle, the engine should be run at full load for 30 seconds. The load should then be decreased until the engine is at high idle. The process should be repeated three times. Repeating the process three times will assist in removing trapped air from the fuel injection pump.

5. Check for leaks in the fuel system.

i02699996

Fuel System Primary Filter (Water Separator) Element - Replace

SMCS Code: 1260-510-FQ; 1263-510-FQ

S/N: 4401–Up

S/N: 2L21–Up

S/N: 4461–Up

⚠ WARNING

Fuel leaked or spilled onto hot surfaces or electrical components can cause a fire. To help prevent possible injury, turn the start switch off when changing fuel filters or water separator elements. Clean up fuel spills immediately.

NOTICE
Do not allow dirt to enter the fuel system. Thoroughly clean the area around a fuel system component that will be disconnected. Fit a suitable cover over any disconnected fuel system components.

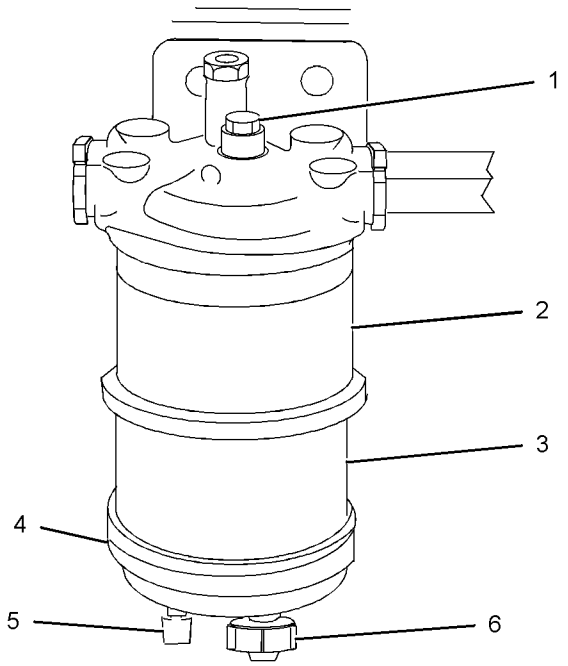

Illustration 39 g01353878

(1) Screw
(2) Element
(3) Bowl
(4) Bottom cover
(5) Drain
(6) Sensor connection

1. Turn the fuel supply valve (if equipped) to the OFF position.

2. Place a suitable container under the water separator. Clean the outside of the water separator.

3. Open the drain (5). Allow the fluid to drain into the container.

4. Tighten the drain (5) by hand pressure only.

5. Hold the element (2) and remove the screw (1). Remove the element and the bowl (3) from the base. Discard the old element.

6. Clean the bowl (4). Clean the bottom cover (6).

7. Install the new O ring seal. Install the bottom cover onto the new element. Install the assembly onto the base.

8. Install the screw (1) and tighten the screw to a torque of 8 N·m (6 lb ft).

9. Remove the container and dispose of the fuel safely.

10. Open the fuel supply valve.

11. Prime the fuel system. Refer to the Operation and Maintenance Manual, “Fuel System - Prime” for more information.

i02699081

Fuel System Primary Filter/ Water Separator - Drain

SMCS Code: 1260-543; 1263-543

⚠ WARNING

Fuel leaked or spilled onto hot surfaces or electrical components can cause a fire. To help prevent possible injury, turn the start switch off when changing fuel filters or water separator elements. Clean up fuel spills immediately.

NOTICE
The water separator is not a filter. The water separator separates water from the fuel. The engine should never be allowed to run with the water separator more than half full. Engine damage may result.

NOTICE
The water separator is under suction during normal engine operation. Ensure that the drain valve is tightened securely to help prevent air from entering the fuel system.

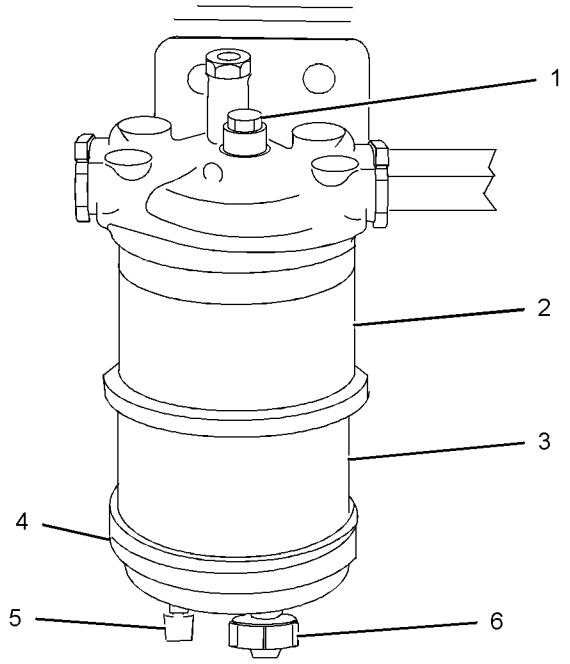

Illustration 40 g01353878

(1) Screw
(2) Element
(3) Bowl
(4) Bottom cover
(5) Drain
(6) Sensor connection

1. Place a suitable container below the water separator.

2. Open the drain (5). Allow the fluid to drain into the container.

3. When clean fuel drains from the water separator close the drain (5). Tighten the drain by hand pressure only. Dispose of the drained fluid correctly.

i10520641

Fuel System Secondary Filter - Replace

SMCS Code: 1261-510-SE

⚠ WARNING

Fuel leaked or spilled onto hot surfaces or electrical components can cause a fire. To help prevent possible injury, turn the start switch off when changing fuel filters or water separator elements. Clean up fuel spills immediately.

NOTICE
Do not allow dirt to enter the fuel system. Thoroughly clean the area around a fuel system component that will be disconnected. Fit a suitable cover over any disconnected fuel system components.

NOTICE
Any filling of the fuel filter before installation is not permitted.

Element filter

Turn the valves for the fuel lines (if equipped) to the OFF position before performing this maintenance. Place a tray under the fuel filter in order to catch any fuel that might spill. Clean up any spilled fuel immediately.

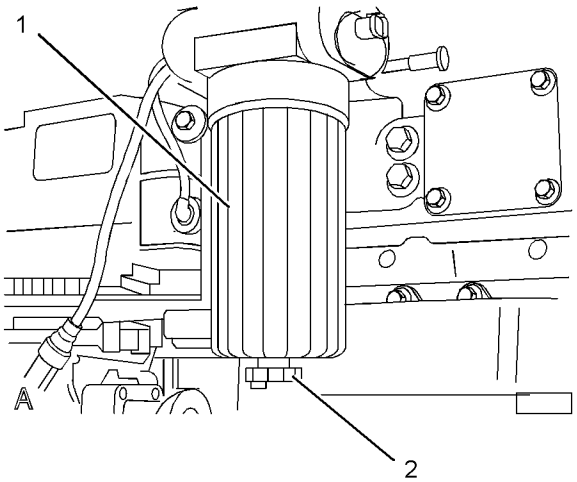

Illustration 41 g01353856

Typical example (Type 1)

(1) Filter bowl
(2) Drain

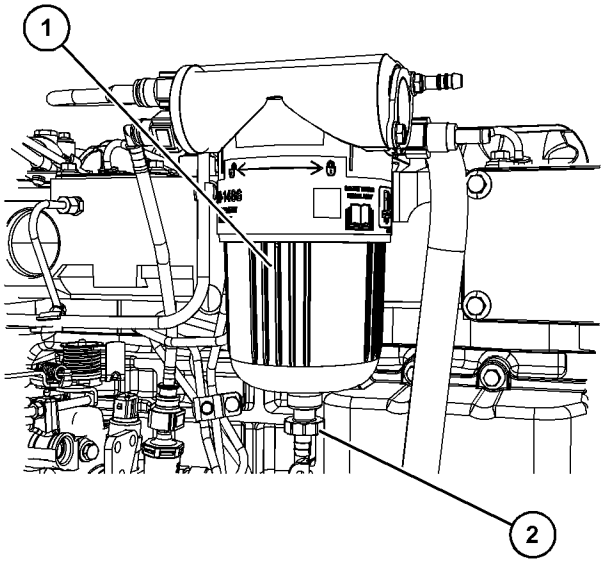

Illustration 42 g07897255

Typical example (Type 2)

(1) Drain
(2) Filter bowl

1. Close the valves for the fuel lines (if equipped).

2. Clean the outside of the fuel filter assembly. Open the fuel drain (2) and drain the fuel into a suitable container.

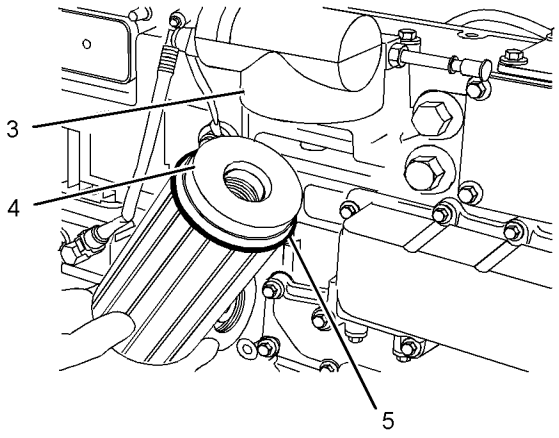

Illustration 43 g02659218

Typical example (Type 1)

(3) Filter head
(4) Element
(5) O ring seal

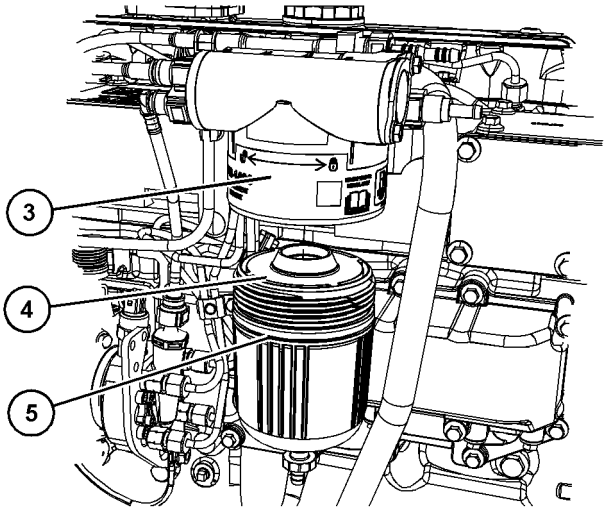

Illustration 44 g07897334

Typical example (Type 2)

(3) O ring seal
(4) Element
(5) Filter head

3. Remove the filter bowl (1) from the filter head (3). Press on the element (4). Rotate the element counterclockwise in order to release the element for the filter bowl and remove the element from the bowl. Discard the used element.

4. Remove the O ring (5) from the filter bowl and clean the filter bowl. Check that the threads of the filter bowl are not damaged.

5. Install a new O ring seal (5) to the filter bowl (1).

6. Locate a new filter element (4) into the filter bowl (1). Press on the element and rotate the element clockwise in order to lock the element into the filter bowl.

7. Install the filter bowl (1) into the top of the filter head (3).

8. Tighten the filter bowl by hand until the filter bowl contacts the filter head. Rotate the filter bowl through 90 degrees.

Note: Do not use a tool to tighten the filter bowl.

9. Open the valves for the fuel lines (if equipped).

Spin-on filter

Turn the valves for the fuel lines (if equipped) to the OFF position before performing this maintenance. Place a tray under the fuel filter in order to catch any fuel that might spill. Clean up any spilled fuel immediately.

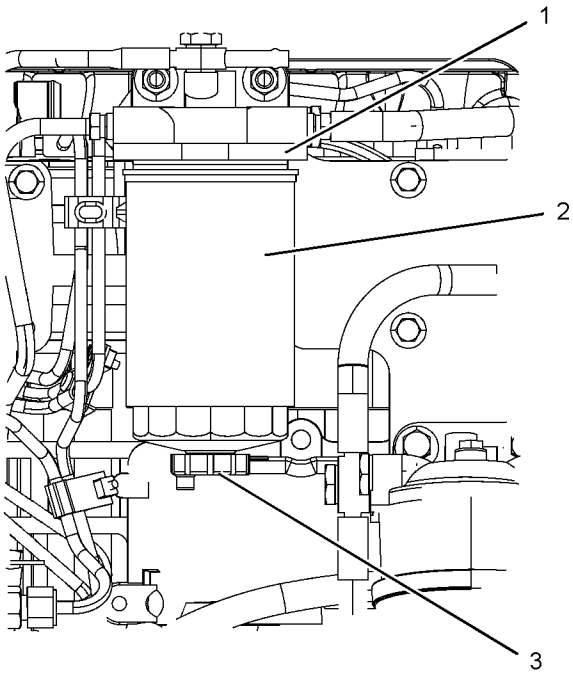

Illustration 45 g01353858

(1) Filter Head
(2) Spin-on filter
(3) Drain

1. Clean the outside of the fuel filter assembly. Open the fuel drain (3) and drain the fuel into a suitable container.

2. Use a suitable tool in order to remove the spin-on filter (2) from the filter head (1).

3. Ensure that the fuel drain (3) on the new spin-on filter is closed.

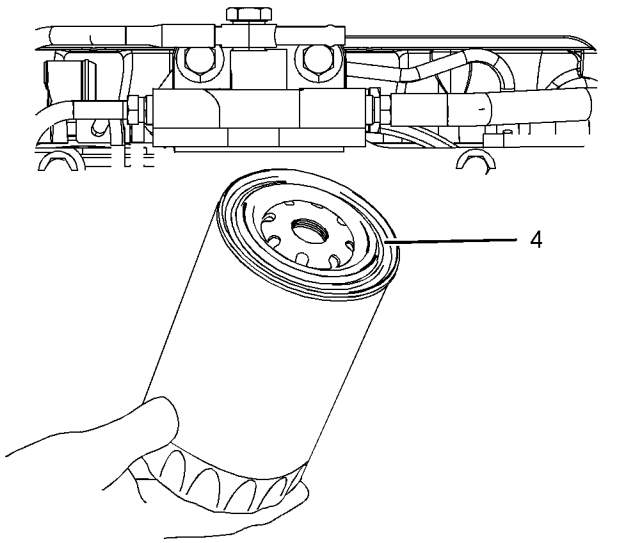

Illustration 46 g02659219
Typical example
(4) O ring seal

4. Lubricate the sealing ring (4) with clean fuel oil.

5. Install the spin-on filter (2) into the top of the filter head (1).

6. Tighten the spin-on filter by hand until the sealing ring contacts the filter head. Rotate the spin-on filter through 90 degrees.

7. Prime the fuel system. Refer to Operation and Maintenance Manual, “Fuel System - Prime”.

i10517862

Fuel System Secondary Filter/ Water Separator - Drain

SMCS Code: 1261-543; 1263-543

⚠ WARNING

Fuel leaked or spilled onto hot surfaces or electrical components can cause a fire. To help prevent possible injury, turn the start switch off when changing fuel filters or water separator elements. Clean up fuel spills immediately.

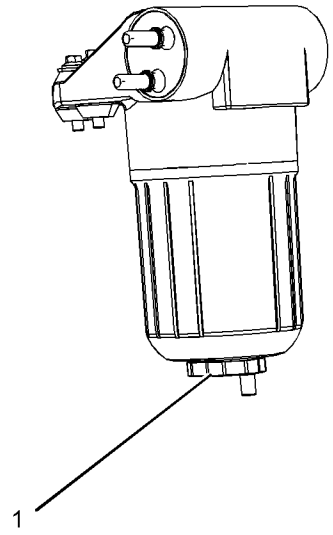

Illustration 47 g03776762
Typical example (Type 1)

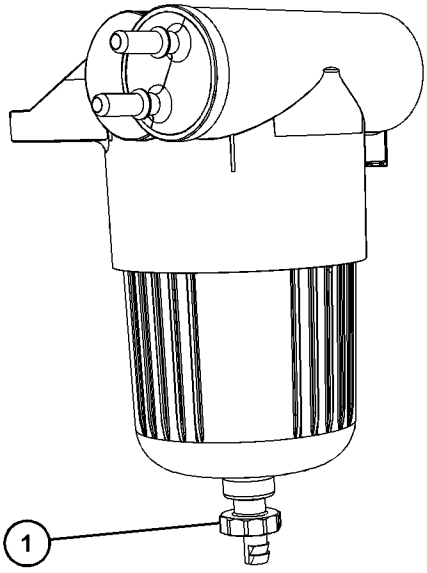

Illustration 48 g07896817
Typical example (Type 2)

1. Place a suitable container below the filter.

2. Open the drain (1) and allow fluid to drain from the filter into the container.

3. When clean fuel drains from the water separator close the drain (1). Tighten the drain by hand pressure only. Dispose of the drained fluid in accordance with local regulations.

4. Prime the fuel system. Refer to the Operation and Maintenance Manual, “Fuel System - Prime” for more information.

i02702048

Fuel Tank Water and Sediment - Drain

SMCS Code: 1273-543-M&S

NOTICE
Care must be taken to ensure that fluids are contained during performance of inspection, maintenance, testing, adjusting and repair of the product. Be prepared to collect the fluid with suitable containers before opening any compartment or disassembling any component containing fluids.

Dispose of all fluids according to local regulations and mandates.

Fuel Tank

Fuel quality is critical to the performance and to the service life of the engine. Water in the fuel can cause excessive wear to the fuel system.

Water can be introduced into the fuel tank when the fuel tank is being filled.

Condensation occurs during the heating and cooling of fuel. The condensation occurs as the fuel passes through the fuel system and the fuel returns to the fuel tank. This causes water to accumulate in fuel tanks. Draining the fuel tank regularly and obtaining fuel from reliable sources can help to eliminate water in the fuel.

Drain the Water and the Sediment

Fuel tanks should contain some provision for draining water and draining sediment from the bottom of the fuel tanks.

Open the drain valve on the bottom of the fuel tank in order to drain the water and the sediment. Close the drain valve.

Check the fuel daily. Allow five minutes after the fuel tank has been filled before draining water and sediment from the fuel tank.

Fill the fuel tank after operating the engine in order to drive out moist air. This will help prevent condensation. Do not fill the tank to the top. The fuel expands as the fuel gets warm. The tank may overflow.

Some fuel tanks use supply pipes that allow water and sediment to settle below the end of the fuel supply pipe. Some fuel tanks use supply lines that take fuel directly from the bottom of the tank. If the engine is equipped with this system, regular maintenance of the fuel system filter is important.

Fuel Storage Tanks

Drain the water and the sediment from the fuel storage tank at the following intervals:

- Weekly
- Service intervals
- Refill of the tank

This will help prevent water or sediment from being pumped from the storage tank into the engine fuel tank.

If a bulk storage tank has been refilled or moved recently, allow adequate time for the sediment to settle before filling the engine fuel tank. Internal baffles in the bulk storage tank will also help trap sediment. Filtering fuel that is pumped from the storage tank helps to ensure the quality of the fuel. When possible, water separators should be used.

i02705980

Hoses and Clamps - Inspect/ Replace

SMCS Code: 7554-040; 7554-510

Inspect all hoses for leaks that are caused by the following conditions:

- Cracking
- Softness
- Loose clamps

Replace hoses that are cracked or soft. Tighten any loose clamps.

NOTICE
Do not bend or strike high pressure lines. Do not install bent or damaged lines, tubes or hoses. Repair any loose or damaged fuel and oil lines, tubes and hoses. Leaks can cause fires. Inspect all lines, tubes and hoses carefully. Tighten all connections to the recommended torque.

Check for the following conditions:

- End fittings that are damaged or leaking
- Outer covering that is chafed or cut
- Exposed wire that is used for reinforcement

- Outer covering that is ballooning locally
- Flexible part of the hose that is kinked or crushed
- Armoring that is embedded in the outer covering

A constant torque hose clamp can be used in place of any standard hose clamp. Ensure that the constant torque hose clamp is the same size as the standard clamp.

Due to extreme temperature changes, the hose will heat set. Heat setting causes hose clamps to loosen. This can result in leaks. A constant torque hose clamp will help to prevent loose hose clamps.

Each installation application can be different. The differences depend on the following factors:

- Type of hose
- Type of fitting material
- Anticipated expansion and contraction of the hose
- Anticipated expansion and contraction of the fittings

Replace the Hoses and the Clamps

⚠ WARNING

Pressurized System: Hot coolant can cause serious burns. To open the cooling system filler cap, stop the engine and wait until the cooling system components are cool. Loosen the cooling system pressure cap slowly in order to relieve the pressure.

1. Stop the engine. Allow the engine to cool.
2. Loosen the cooling system filler cap slowly in order to relieve any pressure. Remove the cooling system filler cap.

Note: Drain the coolant into a suitable, clean container. The coolant can be reused.

3. Drain the coolant from the cooling system to a level that is below the hose that is being replaced.
4. Remove the hose clamps.
5. Disconnect the old hose.
6. Replace the old hose with a new hose.
7. Install the hose clamps with a torque wrench.

Note: Refer to the Specifications, SENR3130, “Torque Specifications” in order to locate the proper torques.

8. Refill the cooling system.
9. Clean the cooling system filler cap. Inspect the cooling system filler cap's gaskets. Replace the cooling system filler cap if the gaskets are damaged. Install the cooling system filler cap.
10. Start the engine. Inspect the cooling system for leaks.

i02708037

Overhaul Considerations

SMCS Code: 7595-043

Reduced hours of operation at full load will result in a lower average power demand. A decreased average power demand should increase both the engine service life and the overhaul interval.

The need for an overhaul is generally indicated by increased fuel consumption and by reduced power.

The following factors are important when a decision is being made on the proper time for an engine overhaul:

- The need for preventive maintenance
- The quality of the fuel that is being used
- The operating conditions
- The results of the S·O·S analysis

Oil Consumption as an Overhaul Indicator

Oil consumption, fuel consumption, and maintenance information can be used to estimate the total operating cost for your Caterpillar engine. Oil consumption can also be used to estimate the required capacity of a makeup oil tank that is suitable for the maintenance intervals.

Oil consumption is in proportion to the percentage of the rated engine load. As the percentage of the engine load is increased, the amount of oil that is consumed per hour also increases.

The oil consumption rate (brake specific oil consumption) is measured in grams per kW/h (lb per bhp). The brake specific oil consumption (BSOC) depends on the engine load. Consult your Caterpillar dealer for assistance in determining the typical oil consumption rate for your engine.

When an engine's oil consumption has risen to three times the original oil consumption rate due to normal wear, an engine overhaul should be scheduled. There may be a corresponding increase in blowby and a slight increase in fuel consumption.

Overhaul Options

Before Failure Overhaul

A planned overhaul before failure may be the best value for the following reasons:

- Costly unplanned downtime can be avoided.
- Many original parts can be reused according to the standards for reusable parts.
- The engine's service life can be extended without the risk of a major catastrophe due to engine failure.
- The best cost/value relationship per hour of extended life can be attained.

After Failure Overhaul

If a major engine failure occurs and the engine must be removed, many options are available. An overhaul should be performed if the engine block or the crankshaft needs to be repaired.

If the engine block is repairable and/or the crankshaft is repairable, the overhaul cost should be between 40 percent and 50 percent of the cost of a new engine with a similar exchange core.

This lower cost can be attributed to three aspects:

- Specially designed Caterpillar engine features
- Caterpillar dealer exchange components
- Caterpillar Inc. remanufactured exchange components

Overhaul Recommendation

To minimize downtime, Caterpillar Inc. recommends a scheduled engine overhaul by your Caterpillar dealer before the engine fails. This will provide you with the best cost/value relationship.

Note: Overhaul programs vary according to the engine application and according to the dealer that performs the overhaul. Consult your Caterpillar dealer for specific information about the available overhaul programs and about overhaul services for extending the engine life.

If an overhaul is performed without overhaul service from your Caterpillar dealer, be aware of the following maintenance recommendations.

Rebuild or Exchange

Cylinder Head Assembly, Oil Pump, and Fuel Transfer Pump

These components should be inspected according to the instructions that are found in various Caterpillar reusability publications. The Special Publication, SEBF8029 lists the reusability publications that are needed for inspecting the engine parts.

If the parts comply with the established inspection specifications that are expressed in the reusable parts guideline, the parts should be reused.

Parts that are not within the established inspection specifications should be dealt with in one of the following manners:

- Salvaging
- Repairing
- Replacing

Using out-of-spec parts can result in the following problems:

- Unscheduled downtime
- Costly repairs
- Damage to other engine parts
- Reduced engine efficiency
- Increased fuel consumption

Reduced engine efficiency and increased fuel consumption translates into higher operating costs. Therefore, Caterpillar Inc. recommends repairing out-of-spec parts or replacing out-of-spec parts.

Inspection and/or Replacement

Crankshaft Bearings and Crankshaft Seals

The following components may not last until the second overhaul.

- Thrust bearings
- Main bearings
- Rod bearings
- Crankshaft seals

Caterpillar Inc. recommends the installation of new parts at each overhaul period.

Inspect these parts while the engine is disassembled for an overhaul.

Inspect the crankshaft for any of the following conditions:

- Deflection
- Damage to the journals
- Bearing material that has seized to the journals

Check the journal taper and the profile of the crankshaft journals. Check these components by interpreting the wear patterns on the following components:

- Rod bearing
- Main bearings

Inspect the camshaft for damage to the journals and to the lobes.

Note: If the camshaft is removed for any reason, use the magnetic particle inspection process to check for cracks in the camshaft.

Inspect the following components for signs of wear or for signs of scuffing:

- Camshaft bearings
- Lifters

Caterpillar Inc. recommends replacing the crankshaft vibration damper.

Oil Cooler Core

During an overhaul, Caterpillar Inc. recommends the removal of the oil cooler core. Clean the oil cooler core. Then, pressure test the oil cooler core.

NOTICE
Do not use caustic cleaners to clean the core.

Caustic cleaners can attack the internal metals of the core and cause leakage.

Note: Use this cleaning procedure to clean the oil cooler core.

1. Remove the oil cooler core.

2. Remove any debris from the oil cooler core. To remove debris from the oil cooler core, turn the oil cooler core onto one end.

3. Flush the oil cooler core internally with cleaner in order to loosen foreign substances. This will also help to remove oil from the oil cooler core.

Note: Caterpillar Inc. recommends the use of Hydrosolv Liquid Cleaners. Table 11 lists the Hydrosolv Liquid Cleaners that are available from your Caterpillar dealer.

Table 11

Hydrosolv Liquid Cleaners		
Part Number	**Description**	**Size**
1U-5490	Hydrosolv 4165	19 L (5 US gal)
1U-5492	Hydrosolv 100	19 L (5 US gallon)

4. Use steam to clean the oil cooler core. This removes any remaining residue from the cleaner. Flush the fins of the oil cooler core. Remove any other trapped debris.

5. Wash the oil cooler core with hot, soapy water. Rinse the oil cooler core thoroughly with clean water.

WARNING

Personal injury can result from air pressure.

Personal injury can result without following proper procedure. When using pressure air, wear a protective face shield and protective clothing.

Maximum air pressure at the nozzle must be less than 205 kPa (30 psi) for cleaning purposes.

6. Dry the oil cooler core with compressed air. Direct the air in the reverse direction of the normal flow.

7. Inspect the components in order to ensure cleanliness. The oil cooler core should be pressure tested. Repair the oil cooler core, if necessary. Install the oil cooler core.

For more information about cleaning the cores, consult your Caterpillar dealer.

Obtain Coolant Analysis

The concentration of supplemental coolant additive (SCA) should be checked regularly with test kits or with S·O·S Coolant Analysis (Level 1). Further coolant analysis is recommended when the engine is overhauled.

For example, considerable deposits are found in the water jacket areas on the external cooling system, but the concentrations of coolant additives were carefully maintained. The coolant water probably contained minerals that were deposited on the engine over time.

A coolant analysis can be conducted in order to verify the condition of the water that is being used in the cooling system. A full water analysis can be obtained by consulting your local water utility company or an agricultural agent. Private laboratories are also available for water analysis.

Caterpillar Inc. recommends an S·O·S Coolant Analysis (Level 2).

S·O·S Coolant Analysis (Level 2)

An S·O·S Coolant Analysis (Level 2) is a comprehensive coolant analysis which completely analyzes the coolant and the effects on the cooling system. An S·O·S Coolant Analysis (Level 2) provides the following information:

- Complete S·O·S Coolant Analysis (Level 1)
- Visual inspection of properties
- Identification of metal corrosion
- Identification of contaminants
- Identification of built up impurities (corrosion and scale)

S·O·S Coolant Analysis (Level 2) provides a report of the results of both the analysis and the maintenance recommendations.

For more information about coolant analysis, see your Caterpillar dealer.

i02708040

Radiator - Clean

SMCS Code: 1353-070

The radiator is not usually supplied by Caterpillar. The following text describes a typical cleaning procedure for the radiator. Refer to OEM information for further information on cleaning the radiator.

Note: Adjust the frequency of cleaning according to the effects of the operating environment.

Inspect the radiator for these items: damaged fins, corrosion, dirt, grease, insects, leaves, oil and other debris. Clean the radiator, if necessary.

⚠ WARNING

Personal injury can result from air pressure.

Personal injury can result without following proper procedure. When using pressure air, wear a protective face shield and protective clothing.

Maximum air pressure at the nozzle must be less than 205 kPa (30 psi) for cleaning purposes.

Pressurized air is the preferred method for removing loose debris. Direct the air in the opposite direction of the fan's air flow. Hold the nozzle approximately 6 mm (0.25 inch) away from the fins. Slowly move the air nozzle in a direction that is parallel with the tubes. This will remove debris that is between the tubes.

Pressurized water may also be used for cleaning. The maximum water pressure for cleaning purposes must be less than 275 kPa (40 psi). Use pressurized water in order to soften mud. Clean the core from both sides.

Use a degreaser and steam for removal of oil and grease. Clean both sides of the core. Wash the core with detergent and hot water. Thoroughly rinse the core with clean water.

After cleaning, start the engine and accelerate the engine to high idle rpm. This will help in the removal of debris and drying of the core. Stop the engine. Use a light bulb behind the core in order to inspect the core for cleanliness. Repeat the cleaning, if necessary.

Inspect the fins for damage. Bent fins may be opened with a “comb”. Inspect these items for good condition: welds, mounting brackets, air lines, connections, clamps and seals. Make repairs, if necessary.

For more detailed information on cleaning and inspection, refer to Special Publication, SEBD0518, “Know Your Cooling System”.

i10576947

Severe Service Application - Check

SMCS Code: 1000-535

Severe service is an application of an engine that exceeds current published standards for that engine. Caterpillar maintains standards for the following engine parameters:

- Performance (power range, speed range and fuel consumption)
- Fuel quality
- Altitude range
- Maintenance intervals
- Oil selection and maintenance
- Coolant selection and maintenance
- Environmental qualities
- Installation

Refer to the standards for the engine or consult with your Caterpillar dealer in order to determine if the engine is operating within the defined parameters.

Severe service operation can accelerate component wear. Engines that operate under severe conditions may need more frequent maintenance intervals in order to ensure maximum reliability and retention of full service life.

Due to individual applications, it is not possible to identify all of the factors which can contribute to severe service operation. Consult your Caterpillar dealer for the unique maintenance that is necessary for the engine.

The operating environment, improper operating procedures and improper maintenance procedures can be factors which contribute to severe service conditions.

Environmental Factors

Ambient temperatures – The engine may be exposed to extended operation in extremely cold environments or hot environments. Valve components can be damaged by carbon buildup if the engine is frequently started and stopped in very cold temperatures. Extremely hot inlet air reduces engine performance.

Air Quality – The engine may be subjected to extended operation in environments that are dirty, dusty, or contaminated. If the equipment is not cleaned regularly, mud, dirt, and dust can accumulate and encase components, leading to increased wear and maintenance challenges. The ingress of contaminants that affect combustion air quality and exhaust gas composition should be avoided. It is recommended to ensure adequate workplace ventilation and to follow local air quality guidelines and regulations.

Buildup – Compounds, elements, corrosive chemicals and salt can damage some components.

Altitude – Problems can arise when the engine is operated at altitudes that are higher than the intended settings for that application. Necessary adjustments should be made.

Improper Operating Procedures

- Extended operation at low idle
- Frequent hot shutdowns
- Operating at excessive loads
- Operating at excessive speeds
- Operating outside the intended application

Improper Maintenance Procedures

- Extending the maintenance intervals
- Failure to use recommended fuel, lubricants and coolant/antifreeze

i02348493

Starting Motor - Inspect

SMCS Code: 1451-040; 1453-040

Caterpillar recommends a scheduled inspection of the starting motor. If the starting motor fails, the engine may not start in an emergency situation.

Check the starting motor for correct operation. Check the electrical connections and clean the electrical connections. Refer to the Systems Operation, Testing and Adjusting Manual, “Electric Starting System - Test” for more information on the checking procedure and for specifications or consult your Caterpillar dealer for assistance.

i02710646

Turbocharger - Inspect

SMCS Code: 1052-040; 1052

A regular visual inspection of the turbocharger is recommended. Any fumes from the crankcase are filtered through the air inlet system. Therefore, by-products from oil and from combustion can collect in the turbocharger compressor housing. Over time, this buildup can contribute to loss of engine power, increased black smoke and overall loss of engine efficiency.

If the turbocharger fails during engine operation, damage to the turbocharger compressor wheel and/or to the engine may occur. Damage to the turbocharger compressor wheel can cause additional damage to the pistons, the valves, and the cylinder head.

NOTICE
Turbocharger bearing failures can cause large quantities of oil to enter the air intake and exhaust systems. Loss of engine lubricant can result in serious engine damage.

Minor leakage of oil into a turbocharger under extended low idle operation should not cause problems as long as a turbocharger bearing failure has not occured.

When a turbocharger bearing failure is accompanied by a significant engine performance loss (exhaust smoke or engine rpm up at no load), do not continue engine operation until the turbocharger is renewed.

A visual inspection of the turbocharger can minimize unscheduled downtime. A visual inspection of the turbocharger can also reduce the chance for potential damage to other engine parts.

Removal and Installation

Note: The turbochargers that are supplied are nonserviceable.

For options regarding the removal, installation, and replacement, consult your Carerpillar dealer or your Carerpillar distributor. Refer to the Disassembly and Assembly Manual, “Turbocharger - Remove and Turbocharger - Install” for further information.

Inspecting

NOTICE
The compressor housing for the turbocharger must not be removed from the turbocharger for cleaning.

The actuator linkage is connected to the compressor housing. If the actuator linkage is moved or disturbed the engine may not comply with emmissions legislation.

1. Remove the pipe from the turbocharger exhaust outlet and remove the air intake pipe to the turbocharger. Visually inspect the piping for the presence of oil. Clean the interior of the pipes in order to prevent dirt from entering during reassembly.
2. Check for the presence of oil. If oil is leaking from the back side of the compressor wheel, there is a possibility of a failed turbocharger oil seal.

   The presence of oil may be the result of extended engine operation at low idle. The presence of oil may also be the result of a restriction of the line for the intake air (clogged air filters), which causes the turbocharger to slobber.
3. Inspect the bore of the housing of the turbine outlet for corrosion.
4. Fasten the air intake pipe and the exhaust outlet pipe to the turbocharger housing.

i02873707

V-Belts - Inspect/Adjust/Replace

SMCS Code: 1357-040; 1357-510; 1357-025

Inspection

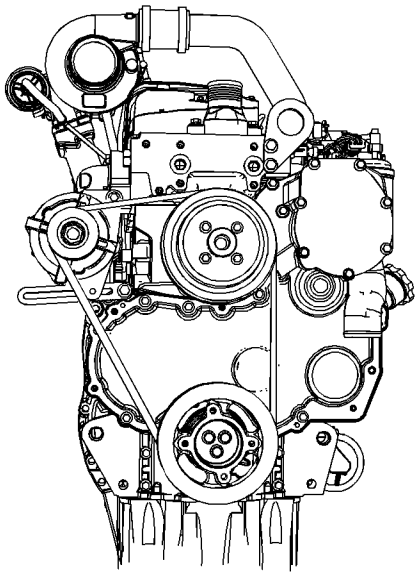

Illustration 49 g01476657
Arrangement for the V-belts

To maximize the engine performance, inspect the belts for wear and for cracking. Replace belts that are worn or damaged.

For applications that require multiple drive belts, replace the belts in matched sets. Replacing only one belt of a matched set will cause the new belt to carry more load because the older belt is stretched. The additional load on the new belt could cause the new belt to break.

If the belts are too loose, vibration causes unnecessary wear on the belts and pulleys. Loose belts may slip enough to cause overheating.

To accurately check the belt tension, install 144-0235 Belt Tension Gauge.

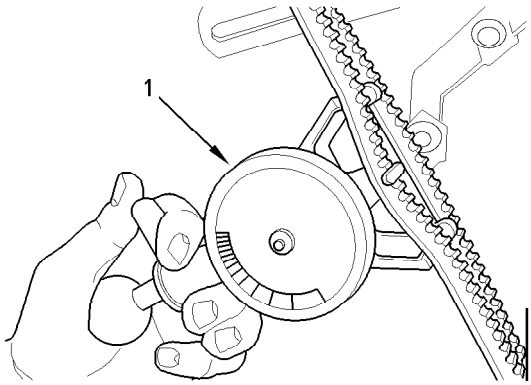

Illustration 50 g01003936
Typical example
(1) Gauge

Fit the gauge (1) at the center of the longest free length and check the tension. The correct tension for a used belt is 355 N (79.8 lb). If the tension of the belt is below 250 N (56 lb) adjust the belt to 355 N (79.8 lb).

Note: The correct tension for a new belt or new belts is 535 N (120 lb). A higher tension is required in order to compensate for the stretch that is in a new belt. Only use the higher tension on a belt that has not been used. A used belt is a belt that has been in operation for 30 minutes or a longer period of time.

If twin belts are installed, check and adjust the tension on both belts.

Adjustment

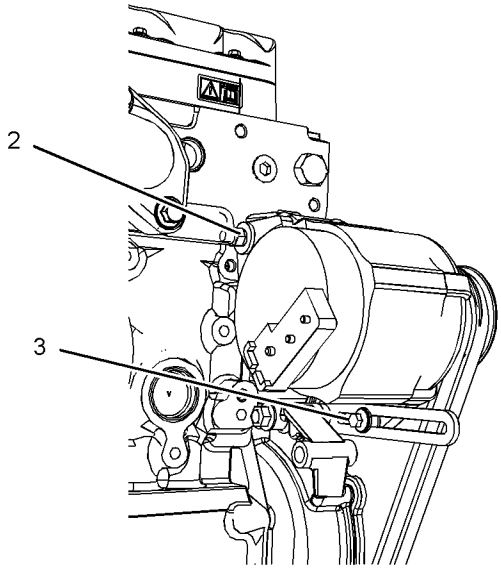

Illustration 51 g01430645
Typical example

1. Loosen The alternator pivot bolt (2) and the bolt (3).
2. Move the alternator in order to increase or decrease the belt tension. Tighten the alternator pivot bolt and the link bolt to 22 N·m (16 lb ft).(1).

Replace

Refer to Disassembly and Assembly manual for more information.

i06030797

Walk-Around Inspection

SMCS Code: 1000-040

Inspect the Engine for Leaks and for Loose Connections

A walk-around inspection should only take a few minutes. When the time is taken to perform these checks, costly repairs and accidents can be avoided.

For maximum engine service life, make a thorough inspection of the engine compartment before starting the engine. Look for items such as oil leaks or coolant leaks, loose bolts, worn belts, loose connections, and trash buildup. Make repairs, as needed:

- The guards must be in the correct place. Repair damaged guards or replace missing guards.
- Wipe all caps and plugs before the engine is serviced in order to reduce the chance of system contamination.

NOTICE
For any type of leak (coolant, lube, or fuel) clean up the fluid. If leaking is observed, find the source and correct the leak. If leaking is suspected, check the fluid levels more often than recommended until the leak is found or fixed, or until the suspicion of a leak is proved to be unwarranted.

NOTICE
Accumulated grease and/or oil on an engine is a fire hazard. Remove the accumulated grease and oil. Refer to this Operation and Maintenance Manual, “Engine - Clean” for more information.

- Ensure that the cooling system hoses are correctly clamped and that the cooling system hoses are tight. Check for leaks. Check the condition of all pipes.
- Inspect the water pump for coolant leaks.

Note: The water pump seal is lubricated by the coolant in the cooling system. A small amount of coolant leakage can occur at the seal and is normal. This leakage can occur as the engine cools down and the parts contract.

Excessive coolant leakage may indicate the need to replace the water pump seal. For the removal of the water pump and the installation of water pump and/or seal, refer to the Disassembly and Assembly Manual, “Water Pump - Remove and Install” for more information or consult your Cat dealer.

- Inspect the lubrication system for leaks at the front crankshaft seal, the rear crankshaft seal, the oil pan, the oil filters, and the rocker cover.
- Inspect the fuel system for leaks. Look for loose fuel line clamps and/or tie-wraps.
- Inspect the piping for the air intake system and the elbows for cracks and for loose clamps. Ensure that hoses and tubes are not contacting other hoses, tubes, wiring harnesses.
- Inspect the alternator belts and any accessory drive belts for cracks, breaks, or other damage.

Belts for multiple groove pulleys must be replaced as matched sets. If only one belt is replaced, the belt will carry more load than the belts that are not replaced. The older belts are stretched. The additional load on the new belt could cause the belt to break.

- Drain the water and the sediment from the fuel tank on a daily basis.
- Drain the water and the sediment from the fuel filters on a daily basis.
- Inspect the wiring and the wiring harnesses for loose connections and for worn wires or frayed wires.
- Inspect the ground strap for a good connection and for good condition.
- Disconnect any battery chargers that are not protected against the current drain of the starting motor. Check the condition and the electrolyte level of the batteries, unless the engine is equipped with a maintenance free battery.
- Check the condition of the gauges. Replace any gauges that are cracked. Replace any gauge that cannot be calibrated.

i02457735

Water Pump - Inspect

SMCS Code: 1361-040; 1361

A failed water pump may cause severe engine overheating problems that could result in the following conditions:

- Cracks in the cylinder head
- A piston seizure
- Other potential damage to the engine

Note: The water pump seal is lubricated by the coolant in the cooling system. It is normal for a small amount of leakage to occur as the engine cools down and parts contract.

Visually inspect the water pump for leaks. Renew the water pump seal or the water pump if there is an excessive leakage of coolant. Refer to Disassembly and Assembly, “Water Pump - Remove” for the disassembly procedure and then refer to Disassembly and Assembly, “Water Pump - Install” for the assembly procedure.

Warranty Section

Warranty Information

i05549472

Emissions Warranty Information

SMCS Code: 1000

The certifying engine manufacturer warrants to the ultimate purchaser and each subsequent purchaser that:

1. New non-road diesel engines and stationary diesel engines less than 10 liters per cylinder (including Tier 1 and Tier 2 marine engines < 37 kW, but excluding locomotive and other marine engines) operated and serviced in the United States and Canada, including all parts of their emission control systems (“emission related components”), are:

a. Designed, built, and equipped so as to conform, at the time of sale, with applicable emission standards prescribed by the United States Environmental Protection Agency (EPA) by way of regulation.

b. Free from defects in materials and workmanship in emission-related components that can cause the engine to fail to conform to applicable emission standards for the warranty period.

2. New non-road diesel engines (including Tier 1 and Tier 2 marine propulsion engines < 37 kW and Tier 1 through Tier 4 marine auxiliary engines < 37 kW, but excluding locomotive and other marine engines) operated and serviced in the state of California, including all parts of their emission control systems (“emission related components”), are:

a. Designed, built, and equipped so as to conform, at the time of sale, to all applicable regulations adopted by the California Air Resources Board (ARB).

b. Free from defects in materials and workmanship which cause the failure of an emission-related component to be identical in all material respects to the component as described in the engine manufacturer's application for certification for the warranty period.

The aftertreatment system can be expected to function properly for the lifetime of the engine (emissions durability period) subject to prescribed maintenance requirements being followed.

A detailed explanation of the Emission Control Warranty that is applicable to new non-road and stationary diesel engines, including the components covered and the warranty period, is found in a supplemental Special Publication. Consult your authorized Cat dealer to determine if your engine is subject to an Emission Control Warranty and to obtain a copy of the applicable Special Publication.

Reference Information Section

Engine Ratings

i08274659

Engine Rating Conditions

SMCS Code: 1000

All engine ratings are in compliance with the following standard ambient air conditions of “SAE J1349”:

- 99 kPa (29.3 inches of Hg)
- 30 percent relative humidity
- A temperature of 25 °C (77 °F)

Ratings relate to the standard conditions of “ISO8665”, of “ISO3046/1”, of “DIN6271”, and of “BS5514”.

The engine ratings are based on the following fuel specifications:

- Low heat value (LHV) of the fuel of 42 780 kJ/kg (18,390 Btu/lb) at 29 °C (84 °F)
- Gravity (API) of 35 degrees at 15 °C (60 °F)
- Specific gravity of .849 at 15 °C (60 °F)
- Density of 850 kg/m^3 (7.085 lb/US gal)

The engine ratings are gross output ratings.

Gross Output Ratings – The total output capability of the engine that is equipped with standard accessories.

Standard accessories include the following components:

- Oil pumps
- Fuel pumps
- Water pumps

Subtract the power that is required to drive auxiliary components from the gross output. This action will produce the net power that is available for the external load (flywheel).

i10270344

Engine Rating Definitions

SMCS Code: 1000

It is important to know the use of the engine so that the rating will match the operating profile. The proper rating selection is also important so that the customer's perception of price and value is realized.

In selecting a rating for a specific application, the most important consideration is the time that is spent at full throttle. These rating definitions identify the percent of time at full throttle. The definitions also identify the corresponding times below rated rpm.

Note: The examples of the applications are only for reference. For an exact determination of the appropriate rating, follow the OEM specifications or consult your Caterpillar dealer.

A Rating – This rating is used for heavy-duty applications that are operated at rated load and at rated rpm up to 100 percent. This rating is used for engines that operate without interruption of load cycling. Typical applications include the following examples: pipeline pumping and ventilation.

B Rating – This rating is used when power and/or rpm are cyclic. The engine should be run at full load. The engine should not exceed 80 percent of the duty cycle. Typical applications include the following examples: irrigation, operation where normal pump demand is 85 percent of the engine rating, oil pumping/drilling, field mechanical pumping/drilling, and stationary/plant air compressors.

C Rating – This rating is used when power and/or rpm are cyclic. The horsepower and the rpm of the engine can be utilized continuously for 1 hour. Followed by 1 hour of operation, at or below 75% of the full load power curve condition. The engine should be run at full load. Time at full load not to exceed 50% of the duty cycle or one-hour max. Load factor limited to 70%. Full load operation limited to one uninterrupted hour followed by 1 hour of operation at or below 75% of the full load power curve condition. Typical applications include the following examples: agricultural tractors, harvesters and combines, Off-Highway trucks, fire pumps, blast hole drills, rock crushers, wood chippers with high torque rise and oil field hoisting.

D Rating – This rating is used when rated power is required for periodic overloads. The maximum horsepower and the rpm of the engine can be utilized continuously for a maximum of 30 minutes. This is followed by 1 hour of operation at the C rating. The engine should be run at full load. The engine should not exceed 10 percent of the duty cycle. Typical applications include the following examples: offshore cranes, runway snow blowers, water well drills, portable air compressors, and fire pump certification power.

E Rating – This rating is used when rated power is required for a short time for initial starting or for sudden overload. The rating is also used for emergency service when standard power is not available. The horsepower and the rpm of the engine can be utilized continuously for a maximum of 15 minutes. This is followed by 1 hour of operation at the C rating or by the duration of the emergency. The engine should be run at full load. The engine should not exceed 5 percent of the duty cycle. Typical applications include the following examples: standby centrifugal water pumps, oil field well servicing, crash trucks, portable air compressors, and gas turbine starting motors.

NOTICE
Operating engines above the rating definitions can result in shorter service life before overhaul.

Customer Service

i08302979

Customer Assistance

SMCS Code: 1000

USA and Canada

When a problem arises concerning the operation or the service of an engine, the problem will normally be managed by the dealer in your area.

Your satisfaction is a primary concern to Caterpillar and to Cat dealers. If you have a problem that has not been handled to your complete satisfaction, follow these steps:

1. Discuss your problem with a manager from the dealership.

2. If your problem cannot be resolved at the dealer level, use the phone number that is listed below to talk with a Field Service Coordinator:

1-800-447-4986

The normal hours are from 8:00 to 4:30 Monday through Friday Central Standard Time.

3. If your needs have not been met still, submit the matter in writing to the following address:

Designated Compliance Officer Heavy-Duty and Nonroad Engine Group 6403-J,
US Ave, NW, Washington,
DC 20460
Email address: complianceinfo@epa.gov.

Your problem may ultimately be solved at the dealership, using the dealership facilities, equipment, and personnel. Therefore, follow the steps in sequence when a problem is experienced.

Outside of the USA and of Canada

If a problem arises outside the USA and outside Canada, and if the problem cannot be resolved at the dealer level, consult the appropriate Cat office.

Latin America, Mexico, Carribean
Caterpillar Americas Co.
701 Waterford Way, Suite 200
Miami, FL 33126-4670
USA
Phone: 305-476-6800
Fax: 305-476-6801

Europe, Africa, and Middle East
Caterpillar Overseas S.A.
76 Route de Frontenex
P.O. Box 6000
CH-1211 Geneva 6
Switzerland
Phone: 22-849-4444
Fax: 22-849-4544

Far East
Caterpillar Asia Pte. Ltd.
7 Tractor Road
Jurong, Singapore 627968
Republic of Singapore
Phone: 65-662-8333
Fax: 65-662-8302

China
Caterpillar China Ltd.
37/F., The Lee Gardens
33 Hysan Avenue
Causeway Bay
G.P.O. Box 3069
Hong Kong
Phone: 852-2848-0333
Fax: 852-2848-0440

Japan
Shin Caterpillar Mitsubishi Ltd.
SBS Tower
10-1, Yoga 4-Chome
Setagaya-Ku, Tokyo 158-8530
Japan
Phone: 81-3-5717-1150
Fax: 81-3-5717-1177

Japan
Caterpillar Power Systems, Inc.
SBS Tower (14th floor)
4-10-1, Yoga
Setagaya-Ku, Tokyo 158-0097
Phone: 81-3-5797-4300
Fax: 81-3-5797-4359

Australia and New Zealand
Caterpillar of Australia Ltd.
1 Caterpillar Drive
Private Mail Bag 4
Tullamarine, Victoria 3043
Australia
Phone: 03-9953-9333
Fax: 03-9335-3366

i08292376

Ordering Replacement Parts

SMCS Code: 7567

⚠ WARNING

When replacement parts are required for this product Caterpillar recommends using Caterpillar replacement parts or parts with equivalent specifications including, but not limited to, physical dimensions, type, strength and material.

Failure to heed this warning can lead to premature failures, product damage, personal injury or death.

Quality Cat replacement parts are available from Cat dealers throughout the world. Cat dealer parts inventories are up to date. The parts stocks include all the parts that are normally needed to protect your Cat engine investment.

When you order parts, specify the following information:

- Part number
- Part name
- Quantity

If there is a question concerning the part number, provide your dealer with a complete description of the needed item.

When a Cat engine requires maintenance and/or repair, provide the dealer with all the information that is stamped on the Information Plate. This information is described in this Operation and Maintenance Manual (Product Information Section).

Discuss the problem with the dealer. Inform the dealer about the conditions of the problem and the nature of the problem. Inform the dealer about when the problem occurs. This information will help the dealer in troubleshooting the problem and solving the problem faster.

Reference Materials

i02708607

Reference Material

SMCS Code: 1000

The following literature can be obtained through any Caterpillar dealer.

Lubricants

- Special Publication, PEHP8038, “Data Sheet - Caterpillar Diesel Engine Oils (DEO) (CH-4) (North America)”
- Special Publication, PEHP9536, “Data Sheet - Caterpillar Diesel Engine Oil (DEO) (CF-4) (International only)”
- Special Publication, NEDG6022, “Cat Lubricating Grease”
- Special Publication, PEHP0002, “Data Sheet - Molybdenum (MPGM) Grease”
- Special Publication, NEHP6015, “Data Sheet - Caterpillar Special Purpose Grease (SPG)”
- Special Publication, SEBD0640, “Oil and Your Engine”
- Operation and Maintenance Manual, SEBU5898, “Cold Weather Recommendations”
- Operation and Maintenance Manual, SEBU6251, “Caterpillar Commercial Diesel Engine Fluids Recomendations”
- Special Publication, PEHP6001, “How To Take A Good Oil Sample”

Fuels

- Special Publication, SEBD0717, “Diesel Fuels and Your Engine”

Coolants

- Special Publication, PEHP4036, “Data Sheet - Extended Life Coolant”
- Special Publication, PEHP7057, “Data Sheet - S·O·S Coolant Analysis”
- Special Publication, SEBD0518, “Know Your Cooling System”
- Special Publication, SEBD0970, “Coolant and Your Engine”
- Label, PEEP5027, “Extended Life Coolant/ Antifreeze”

Miscellaneous

- Service Manual, REG1139F, “Service Manual Contents Microfiche”
- Service Manual, KENR6217, “ C4.4 Industrial Engines”
- Systems Operation, Testing and Adjusting, RENR9965, “ C4.4 Industrial Engines”
- Specifications, RENR9961, “ C4.4 Industrial Engines.”
- Disassembly and Assembly, KENR6216, “ C4.4 Industrial Engines”
- Specifications, SENR3130, “Torque Specifications”
- Special Publication, PECP9067, “One Safe Source” English language for use in NACD
- Special Publication, LEDM5615, “Caterpillar Marine Parts and Service Locations Directory”
- Special Publication, SEBF8029, “Index to Guidelines for Reusable Parts and Salvage Operations”
- Special Publication, SEBF8062, “Procedure to Inspect and Clean Air Filters”
- Special Instruction, SEHS9031, “Storage Procedure for Caterpillar Products”
- Special Publication, NEHS0526, “Service Technician Application Guide”
- Special Publication, SEBU6251, “Caterpillar Commercial Diesel Engine Fluids Recomendations”
- Special Instruction, SEHS7633, “Battery Test Procedure”

- Label, SEHS7332, “Danger Do Not Operate”

Emissions Warranty

This engine may be Certified and this engine may be covered by an Emissions Warranty. A detailed explanation of the Emissions Warranty that is applicable to Certified engines is found in Supplement, SMBU6981, “Emissions Control Warranty Information”. The engine is Certified if the engine has a special label that verifies the certification. A Caterpillar dealer can also inform you if the engine is certified.

i08254313

Additional Reference Material

SMCS Code: 1000

The “Society of Automotive Engineers (SAE) Specifications” can be found in your SAE handbook. This publication can also be obtained from the following locations: local technological society, local library, and local college. If necessary, consult SAE at the following address:

SAE International
400 Commonwealth Drive
Warrendale, PA, USA 15096-0001
Telephone (724) 776-4841

The “American Petroleum Institute Publication No. 1509” can be obtained from the following locations: local technological society, local library, and local college. If necessary, consult API at the following address:

American Petroleum Institute
1220 L St. N.W.
Washington, DC, USA 20005
Telephone (202) 682-8000

The International Organization for Standardization (ISO) offers information and customer service regarding international standards and standardizing activities. ISO can also supply information on the following subjects that are not controlled by ISO: national standards, regional standards, regulations, certification, and related activities. Consult the member of ISO in your country.

International Organization for Standardization (ISO)
1, rue de Varembé
Case postale 56
CH-1211 Genève 20
Switzerland
Telephone +41 22 749 01 11
Facsimile +41 22 733 34 30
E-mail central@iso.ch
Web site http://www.iso.ch

European classifications are established by the Counseil International Des Machines a Combustion (CIMAC) (International Council on Combustion Engines).

CIMAC Central Secretariat
Lyoner Strasse 18
60528 Frankfurt
Germany
Telephone +49 69 6603 1567
Facsimile +49 69 6603 1566

i02707212

Maintenance Records

SMCS Code: 1000

Caterpillar Inc. recommends the retention of accurate maintenance records. Accurate maintenance records can be used for the following purposes:

- Determine operating costs.
- Establish maintenance schedules for other engines that are operated in the same environment.
- Show compliance with the required maintenance practices and maintenance intervals.

Maintenance records can be used for a variety of other business decisions that are related to engine maintenance.

Maintenance records are a key element of a maintenance program that is well managed. Accurate maintenance records can help your Caterpillar dealer to fine tune the recommended maintenance intervals in order to meet the specific operating situation. This should result in a lower engine operating cost.

Records should be kept for the following items:

Fuel Consumption – A record of fuel consumption is essential in order to determine when the load sensitive components should be inspected or repaired. Fuel consumption also determines overhaul intervals.

Service Hours – A record of service hours is essential to determine when the speed sensitive components should be inspected or repaired.

Documents – A record of all documents should be obtained, and all documents should be kept in the engine history file. All of the documents should show this information: date, service hours, fuel consumption, unit number and engine serial number. The following types of documents should be kept as proof of maintenance or repair for warranty:

Keep the following types of documents as proof of maintenance for warranty. Also, keep these types of documents as proof of repair for warranty:

- Dealer work orders and itemized bills
- Owner's repair costs
- Owner's receipts
- Maintenance log

i02705982

Maintenance Log

SMCS Code: 1000

Table 12

Engine Model		**Customer Identifier**		
Serial Number		**Arrangement Number**		
Service Hours	**Quantity Of Fuel**	**Service Item**	**Date**	**Authorization**

(continued)

(Table 12, contd)

Index

A

Additional Reference Material 84
After Starting Engine 28
After Stopping Engine 31
Alternator - Inspect 43
Alternator Belt - Inspect/Adjust/Replace (Poly V-Belt) 43
  Adjustment 43
  Inspection 43
  Replace 43

B

Battery - Replace 43
Battery Electrolyte Level - Check 44
Battery or Battery Cable - Disconnect 44
Before Starting Engine 13, 26
Burn Prevention 10
  Batteries 11
  Coolant 10
  Oils 11

C

Cold Weather Operation 32
Cold Weather Starting 27
Cooling System Coolant (DEAC) - Change 45
  Cooling Systems with Heavy Deposits or Plugging 46
  Drain 45
  Fill 46
  Flush 46
Cooling System Coolant (ELC) - Change 47
  Drain 47
  Fill 48
  Flush 47
Cooling System Coolant Level - Check 48
  Engines With a Coolant Recovery Tank 48
  Engines Without a Coolant Recovery Tank 49
Cooling System Coolant Sample (Level 1) - Obtain 49
Cooling System Coolant Sample (Level 2) - Obtain 50
Cooling System Supplemental Coolant Additive (SCA) - Test/Add 51
  Add the SCA, If Necessary 51
  S·O·S Coolant Analysis 51
  Test for SCA Concentration 51
Cooling System Water Temperature Regulator - Replace 52
Crankcase Breather (Canister) - Replace 52
Crushing Prevention and Cutting Prevention 13
Customer Assistance 81
  Outside of the USA and of Canada 81
  USA and Canada 81
Customer Service 81

D

Driven Equipment - Check 53

E

Electrical System 14
  Grounding Practices 15
Emergency Stopping 31
Emissions Certification Film 21
Emissions Warranty Information 78
Engaging the Driven Equipment 29
Engine - Clean 53
Engine Air Cleaner Element (Dual Element) - Clean/Replace 54
  Cleaning the Primary Air Cleaner Elements 55
  Servicing the Air Cleaner Elements 54
Engine Air Cleaner Element (Single Element) - Inspect/Replace 56
Engine Air Cleaner Service Indicator - Inspect 57
  Test the Service Indicator 57
Engine Air Precleaner - Check/Clean 57
Engine Description 19
  Engine Cooling and Lubrication 19
  Engine Service Life 19
  Engine Specifications 19
Engine Mounts - Inspect 57
Engine Oil and Filter - Change 59
  Drain the Engine Oil 59
  Fill the Engine Crankcase 61
  Replace the Oil Filter 60
Engine Oil Level - Check 58
Engine Oil Sample - Obtain 58
  Obtain the Sample and the Analysis 58
Engine Operation 29
Engine Protective Devices - Check 62
  Visual Inspection 62
Engine Rating Conditions 79

Engine Rating Definitions 79
Engine Ratings 79
Engine Shutoffs and Engine Alarms 25
Alarms 25
Shutoffs 25
Testing the Shutoff and Alarm System 25
Engine Starting 14, 26
Engine Stopping 14, 31
Engine Valve Lash - Inspect/Adjust 62
Engine Warm-up 29

F

Features and Controls 25
Fire Prevention and Explosion Prevention 11
Ether 12
Fire Extinguisher 12
Lines, Tubes, and Hoses 13
Foreword 4
California Proposition 65 Warning 4
Literature Information 4
Maintenance 4
Maintenance Intervals 5
Operation 4
Overhaul 5
Safety 4
Fuel and the Effect from Cold Weather 32
Fuel Conservation Practices 29
Fuel Injection Nozzles - Test/Exchange 63
Removal and Installation of the Fuel Injection Nozzles 63
Fuel Related Components in Cold Weather 33
Fuel Filters 33
Fuel Heaters 33
Fuel Tanks 33
Fuel Shutoff 25
Fuel System - Prime 63
Fuel System Primary Filter (Water Separator) Element - Replace 64
Fuel System Primary Filter/Water Separator - Drain 65
Fuel System Secondary Filter - Replace 66
Element filter 66
Spin-on filter 67
Fuel System Secondary Filter/Water Separator - Drain 68
Fuel Tank Water and Sediment - Drain 69
Drain the Water and the Sediment 69
Fuel Storage Tanks 69
Fuel Tank 69

G

Gauges and Indicators 24
General Hazard Information 8
Asbestos Information 10
Containing Fluid Spillage 9
Dispose of Waste Properly 10
Fluid Penetration 9
Hexavalent Chromium 8
Pressurized Air and Water 9

H

Hoses and Clamps - Inspect/Replace 69
Replace the Hoses and the Clamps 70

I

Important Safety Information 2

L

Lifting and Storage 23

M

Maintenance Interval Schedule 41
Daily 41
Every 1000 Service Hours 41
Every 12 000 Service Hours or 6 Years 42
Every 2000 Service Hours 41
Every 2000 Service Hours or 1 Year 41
Every 250 Service Hours 41
Every 3000 Service Hours 41
Every 3000 Service Hours or 2 Years 42
Every 50 Service Hours or Weekly 41
Every 500 Service Hours 41
Every 500 Service Hours or 1 Year 41
Every 500 Service Hours or 6 Months 41
Every Year 41
Overhaul 42
When Required 41
Maintenance Log 85
Maintenance Records 84
Maintenance Section 34
Model View Illustrations 16
Engine Model Views 16
Model Views 16
Mounting and Dismounting 13

O

Operation Section 23

Ordering Replacement Parts 82
Overhaul Considerations 70
Oil Consumption as an Overhaul Indicator .. 70
Overhaul Recommendation 71

P

Plate Locations and Film Locations 20
Serial Number Plate (1) 20
Product Identification Information 20
Product Information Section 16
Product Lifting 23
Product Storage 23

R

Radiator - Clean 73
Radiator Restrictions 32
Reference Information Section 79
Reference Material 83
Coolants 83
Emissions Warranty 84
Fuels 83
Lubricants 83
Miscellaneous 83
Reference Materials 83
Reference Numbers 20
Record for Reference 20
Refill Capacities 34
Refill Capacities and Recommendations 34
Coolant Recommendations 39
Engine Oil 34
General Coolant Information 37
General Fuel Information 37
Lubricating Grease 36
Refill Capacity of the Cooling System 40
S·O·S Coolant Analysis 39

S

Safety Messages 6
(1) Universal Warning 6
(2) Ether 7
Safety Section 6
Severe Service Application - Check 73
Environmental Factors 74
Improper Maintenance Procedures 74
Improper Operating Procedures 74
Starting Motor - Inspect 74
Starting the Engine 26
Starting with Jump Start Cables 27
Stopping the Engine 31

T

Table of Contents 3
Turbocharger - Inspect 74
Inspecting 75
Removal and Installation 75

V

V-Belts - Inspect/Adjust/Replace 75
Adjustment 76
Inspection 75
Replace 76

W

Walk-Around Inspection 76
Inspect the Engine for Leaks and for Loose Connections 76
Warranty Information 78
Warranty Section 78
Water Pump - Inspect 77

Product and Dealer Information

Note: For product identification plate locations, see the section “Product Identification Information” in the Operation and Maintenance Manual.

Delivery Date: _____

Product Information

Model: _____

Product Identification Number: _____

Engine Serial Number: _____

Transmission Serial Number: _____

Generator Serial Number: _____

Attachment Serial Numbers: _____

Attachment Information: _____

Customer Equipment Number: _____

Dealer Equipment Number: _____

Dealer Information

Name: _____ Branch: _____

Address: _____

_____

_____

	Dealer Contact	Phone Number	Hours
Sales:	_____	_____	_____
Parts:	_____	_____	_____
Service:	_____	_____	_____

SEBU8327
©2025 Caterpillar
All Rights Reserved

CAT, CATERPILLAR, LET'S DO THE WORK, their respective logos, "Caterpillar Corporate Yellow", the "Power Edge" and Cat "Modern Hex" trade dress as well as corporate and product identity used herein, are trademarks of Caterpillar and may not be used without permission.