SEBU8729-04 (en-us)
July 2025

Operation and Maintenance Manual

C7.1 (Mech) Industrial Engine

630 1-UP (Engine)
673 1-UP (Engine)
M75 1-UP (Engine)

Scan to find and purchase genuine Cat® parts and related service information.

Important Safety Information

Most accidents that involve product operation, maintenance and repair are caused by failure to observe basic safety rules or precautions. An accident can often be avoided by recognizing potentially hazardous situations before an accident occurs. A person must be alert to potential hazards, including human factors that can affect safety. This person should also have the necessary training, skills and tools to perform these functions properly.

Improper operation, lubrication, maintenance or repair of this product can be dangerous and could result in injury or death.

Do not operate or perform any lubrication, maintenance or repair on this product, until you verify that you are authorized to perform this work, and have read and understood the operation, lubrication, maintenance and repair information.

Safety precautions and warnings are provided in this manual and on the product. If these hazard warnings are not heeded, bodily injury or death could occur to you or to other persons.

The hazards are identified by the “Safety Alert Symbol” and followed by a “Signal Word” such as “DANGER”, “WARNING” or “CAUTION”. The Safety Alert “WARNING” label is shown below.



The meaning of this safety alert symbol is as follows:

Attention! Become Alert! Your Safety is Involved.

The message that appears under the warning explains the hazard and can be either written or pictorially presented.

A non-exhaustive list of operations that may cause product damage are identified by “NOTICE” labels on the product and in this publication.

Caterpillar cannot anticipate every possible circumstance that might involve a potential hazard. The warnings in this publication and on the product are, therefore, not all inclusive. You must not use this product in any manner different from that considered by this manual without first satisfying yourself that you have considered all safety rules and precautions applicable to the operation of the product in the location of use, including site-specific rules and precautions applicable to the worksite. If a tool, procedure, work method or operating technique that is not specifically recommended by Caterpillar is used, you must satisfy yourself that it is safe for you and for others. You should also ensure that you are authorized to perform this work, and that the product will not be damaged or become unsafe by the operation, lubrication, maintenance or repair procedures that you intend to use.

The information, specifications, and illustrations in this publication are on the basis of information that was available at the time that the publication was written. The specifications, torques, pressures, measurements, adjustments, illustrations, and other items can change at any time. These changes can affect the service that is given to the product. Obtain the complete and most current information before you start any job. Cat dealers have the most current information available.

NOTICE

When replacement parts are required for this product Caterpillar recommends using original Caterpillar® replacement parts.

Other parts may not meet certain original equipment specifications.

When replacement parts are installed, the machine owner/user should ensure that the machine remains in compliance with all applicable requirements.

In the United States, the maintenance, replacement, or repair of the emission control devices and systems may be performed by any repair establishment or individual of the owner's choosing.

Table of Contents

Foreword 4

Safety Section

Safety Messages 6

General Hazard Information 8

Burn Prevention 10

Fire Prevention and Explosion Prevention 11

Crushing Prevention and Cutting Prevention .. 13

Mounting and Dismounting 13

Before Starting Engine 13

Engine Starting 13

Engine Stopping 14

Electrical System 14

Engine Electronics 15

Product Information Section

General Information 16

Product Identification Information 19

Operation Section

Lifting and Storage 21

Features and Controls 22

Engine Starting 28

Engine Operation 31

Cold Weather Operation 33

Engine Stopping 37

Maintenance Section

Refill Capacities 38

Maintenance Recommendations 54

Maintenance Interval Schedule 56

Warranty Section

Warranty Information 91

Reference Information Section

Engine Ratings 92

Customer Service 93

Reference Materials 95

Index Section

Index 98

Foreword

California Proposition 65 Warning

Diesel engine exhaust and some of its constituents are known to the State of California to cause cancer, birth defects, and other reproductive harm.

WARNING – This product can expose you to chemicals including ethylene glycol, which is known to the State of California to cause birth defects or other reproductive harm. For more information go to:

www.P65Warnings.ca.gov

Do not ingest this chemical. Wash hands after handling to avoid incidental ingestion.

WARNING – This product can expose you to chemicals including lead and lead compounds, which are known to the State of California to cause cancer, birth defects, or other reproductive harm. For more information go to:

www.P65Warnings.ca.gov

Wash hands after handling components that may contain lead.

Literature Information

This manual contains safety, operation instructions, lubrication, and maintenance information. This manual should be stored in or near the engine area in a literature holder or literature storage area. Read, study, and keep it with the literature and engine information.

English is the primary language for all Cat publications. The English used facilitates translation and consistency in electronic media delivery.

Some photographs or illustrations in this manual show details or attachments that may be different from your engine. Guards and covers may have been removed for illustrative purposes. Continuing improvement and advancement of product design may have caused changes to your engine which are not included in this manual Whenever a question arises regarding your engine, or this manual, please consult with your Cat dealer for the latest available information.

Safety

This safety section lists basic safety precautions. In addition, this section identifies hazardous, warning situations. Read and understand the basic precautions listed in the safety section before operating or performing lubrication, maintenance, and repair on this product.

Operation

Operating techniques outlined in this manual are basic. They assist with developing the skills and techniques required to operate the engine more efficiently and economically. Skill and techniques develop as the operator gains knowledge of the engine and its capabilities.

The operation section is a reference for operators. Photographs and illustrations guide the operator through procedures of inspecting, starting, operating, and stopping the engine. This section also includes a discussion of electronic diagnostic information.

Maintenance

The maintenance section is a guide to engine care. The illustrated, step-by-step instructions are grouped by fuel consumption, service hours and/or calendar time maintenance intervals. Items in the maintenance schedule are referenced to detailed instructions that follow.

Use fuel consumption or service hours to determine intervals. Calendar intervals shown (daily, annually, etc.) may be used instead of service meter intervals if they provide more convenient schedules and approximate the indicated service meter reading.

Recommended service should be performed at the appropriate intervals as indicated in the Maintenance Interval Schedule. The actual operating environment of the engine also governs the Maintenance Interval Schedule. Therefore, under severe, dusty, wet, or freezing cold operating conditions, more frequent lubrication, and maintenance than is specified in the Maintenance Interval Schedule may be necessary.

The maintenance schedule items are organized for a preventive maintenance management program. If the preventive maintenance program is followed, a periodic tune-up is not required. The implementation of a preventive maintenance management program should minimize operating costs through cost avoidances resulting from reductions in unscheduled downtime and failures.

Maintenance Intervals

Perform maintenance on items at multiples of the original requirement. Each level and/or individual items in each level should be shifted ahead or back depending upon your specific maintenance practices, operation, and application. We recommend that the maintenance schedules be reproduced and displayed near the engine as a convenient reminder. We also recommend that a maintenance record be maintained as part of the engine's permanent record.

See the section in the Operation and Maintenance Manual, “Maintenance Records” for information regarding documents that are accepted as proof of maintenance or repair. Your authorized Cat dealer can assist you in adjusting your maintenance schedule to meet the needs of your operating environment.

Overhaul

Major engine overhaul details are not covered in the Operation and Maintenance Manual except for the interval and the maintenance items in that interval. Major repairs are best left to trained personnel or an authorized Cat dealer. Your Cat dealer offers various options regarding overhaul programs. If you experience a major engine failure, there are also numerous after failure overhaul options available from your Cat dealer. Consult with your dealer for information regarding these options.

Safety Section

i05034609

Safety Messages

SMCS Code: 1000; 7405

There may be several specific warning signs on your engine. The exact location and a description of the warning signs are reviewed in this section. Become familiar with all warning signs.

Ensure that all of the warning signs are legible. Clean the warning signs or replace the warning signs if the words cannot be read or if the illustrations are not visible. Use a cloth, water, and soap to clean the warning signs. Do not use solvents, gasoline, or other harsh chemicals. Solvents, gasoline, or harsh chemicals could loosen the adhesive that secures the warning signs. The warning signs that are loosened could drop off the engine.

Replace any warning sign that is damaged or missing. If a warning sign is attached to a part of the engine that is replaced, install a new warning sign on the replacement part. Your Cat dealer can provide new warning signs.

(1) Universal Warning

⚠ WARNING

Do not operate or work on this equipment unless you have read and understand the instructions and warnings in the Operation and Maintenance Manuals. Failure to follow the instructions or heed the warnings could result in serious injury or death.

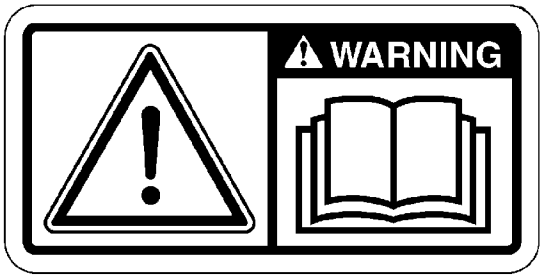

Illustration 1 g01154807

Typical example

The Universal Warning label (1) is located on both sides of the valve mechanism cover base.

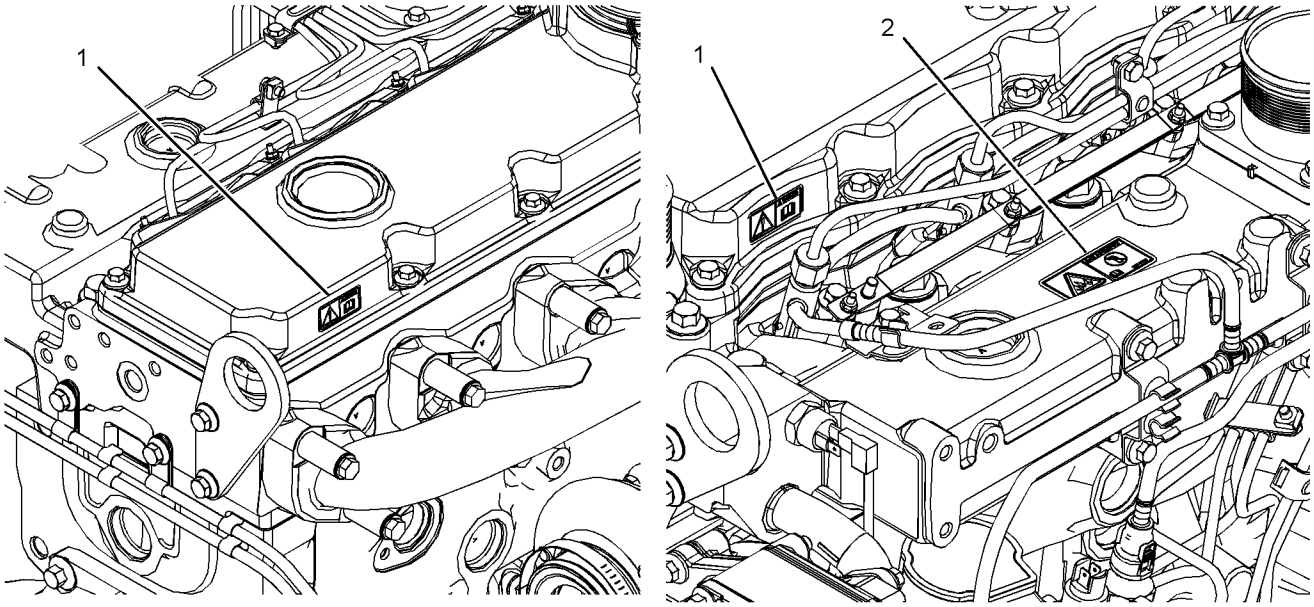

Illustration 2 g02342216

(1) Universal warning (2) Ether

(2) Ether

⚠ WARNING

Do not use aerosol types of starting aids such as ether. Such use could result in an explosion and personal injury.



Illustration 3 g01154809

Typical example

The ether warning label (2) is located on the cover of the inlet manifold.

i08330949

General Hazard Information

SMCS Code: 1000; 4450; 7405



Illustration 4 g00104545

Attach a “Do Not Operate” warning tag or a similar warning tag to the start switch or to the controls before the engine is serviced or before the engine is repaired. These warning tags (Special Instruction, SEHS7332) are available from your Caterpillar dealer. Attach the warning tags to the engine and to each operator control station. When it is appropriate, disconnect the starting controls.

Do not allow unauthorized personnel on the engine, or around the engine when the engine is being serviced.

Engine exhaust contains products of combustion which may be harmful to your health. Always start the engine and operate the engine in a well ventilated area. If the engine is in an enclosed area, vent the engine exhaust to the outside.

Cautiously remove the following parts. To help prevent spraying or splashing of pressurized fluids, hold a rag over the part that is being removed.

- Filler caps
- Grease fittings
- Pressure taps
- Breathers
- Drain plugs

Use caution when cover plates are removed. Gradually loosen, but do not remove the last two bolts or nuts that are located at opposite ends of the cover plate or the device. Before removing the last two bolts or nuts, pry the cover loose in order to relieve any spring pressure or other pressure.

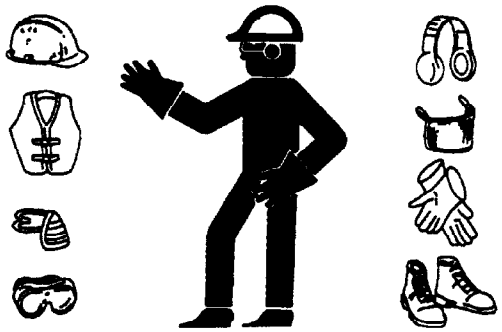

Illustration 5 g00702020

- Wear a hard hat, protective glasses, and other protective equipment, as required.
- When work is performed around an engine that is operating, wear protective devices for ears in order to help prevent damage to hearing.
- Do not wear loose clothing or jewelry that can snag on controls or on other parts of the engine.
- Ensure that all protective guards and all covers are secured in place on the engine.
- Never put maintenance fluids into glass containers. Glass containers can break.
- Use all cleaning solutions with care.
- Report all necessary repairs.

Unless other instructions are provided, perform the maintenance under the following conditions:

- The engine is stopped. Ensure that the engine cannot be started.
- Disconnect the batteries when maintenance is performed or when the electrical system is serviced. Disconnect the battery ground leads. Tape the leads in order to help prevent sparks.
- Do not attempt any repairs that are not understood. Use the proper tools. Replace any equipment that is damaged or repair the equipment.

Pressurized Air and Water

Pressurized air and/or water can cause debris and/or hot water to be blown out. This could result in personal injury.

When pressurized air and/or pressurized water is used for cleaning, wear protective clothing, protective shoes, and eye protection. Eye protection includes goggles or a protective face shield.

The maximum air pressure for cleaning purposes must be below 205 kPa (30 psi). The maximum water pressure for cleaning purposes must be below 275 kPa (40 psi).

Fluid Penetration

Pressure can be trapped in the hydraulic circuit long after the engine has been stopped. The pressure can cause hydraulic fluid or items such as pipe plugs to escape rapidly if the pressure is not relieved correctly.

Do not remove any hydraulic components or parts until pressure has been relieved or personal injury may occur. Do not disassemble any hydraulic components or parts until pressure has been relieved or personal injury may occur. Refer to the OEM information for any procedures that are required to relieve the hydraulic pressure.

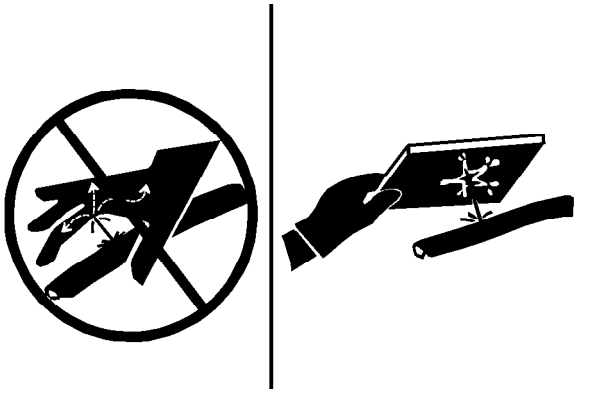

Illustration 6 g00687600

Always use a board or cardboard when you check for a leak. Leaking fluid that is under pressure can penetrate body tissue. Fluid penetration can cause serious injury and possible death. A pin hole leak can cause severe injury. If fluid is injected into your skin, you must get treatment immediately. Seek treatment from a doctor that is familiar with this type of injury.

Containing Fluid Spillage

Care must be taken in order to ensure that fluids are contained during performance of inspection, maintenance, testing, adjusting and repair of the engine. Prepare to collect the fluid with suitable containers before opening any compartment or disassembling any component that contains fluids.

Refer to Special Publication, NENG2500, “Dealer Service Tool Catalog” for the following items:

- Tools that are suitable for collecting fluids and equipment that is suitable for collecting fluids
- Tools that are suitable for containing fluids and equipment that is suitable for containing fluids

Obey all local regulations for the disposal of liquids.

Hexavalent Chromium

Caterpillar equipment and replacement parts comply with applicable regulations and requirements where originally sold. Caterpillar recommends the use of only genuine Caterpillar replacement parts.

Hexavalent chromium has occasionally been detected on exhaust and heat shield systems on Caterpillar engines. Although laboratory testing is the only accurate way to know if hexavalent chromium is, in fact, present, the presence of a yellow deposit in areas of high heat (for example, exhaust system components or exhaust insulation) may be an indication of the presence of hexavalent chromium.

Use caution if you suspect the presence of hexavalent chromium. Avoid skin contact when handling items that you suspect may contain hexavalent chromium, and avoid inhalation of any dust in the suspect area. Inhalation of, or skin contact with, hexavalent chromium dust may be hazardous to your health.

If such yellow deposits are found on the engine, engine component parts, or associated equipment or packages, Caterpillar recommends following local health and safety regulations and guidelines, utilizing good hygiene, and adhering to safe work practices when handling the equipment or parts. Caterpillar also recommends the following:

- Wear appropriate Personal Protective Equipment (PPE)
- Wash your hands and face with soap and water prior to eating, drinking, or smoking, and also during rest room breaks, to prevent ingestion of any yellow powder
- Never use compressed air for cleaning areas suspected of containing hexavalent chromium
- Avoid brushing, grinding, or cutting materials suspected of containing hexavalent chromium
- Obey environmental regulations for the disposal of all materials that may contain or have come into contact with hexavalent chromium

- Stay away from areas that might have hexavalent chromium particles in the air.

Asbestos Information



Illustration 7 g00702022

Caterpillar equipment and replacement parts that are shipped from Caterpillar are asbestos free. Caterpillar recommends the use of only genuine Caterpillar replacement parts. Use the following guidelines when you handle any replacement parts that contain asbestos or when you handle asbestos debris.

Use caution. Avoid inhaling dust that might be generated when you handle components that contain asbestos fibers. Inhaling this dust can be hazardous to your health. The components that may contain asbestos fibers are brake pads, brake bands, lining material, clutch plates, and some gaskets. The asbestos that is used in these components is usually bound in a resin or sealed in some way. Normal handling is not hazardous unless airborne dust that contains asbestos is generated.

If dust that may contain asbestos is present, there are several guidelines that should be followed:

- Never use compressed air for cleaning.
- Avoid brushing materials that contain asbestos.
- Avoid grinding materials that contain asbestos.
- Use a wet method in order to clean up asbestos materials.
- A vacuum cleaner that is equipped with a high efficiency particulate air filter (HEPA) can also be used.
- Use exhaust ventilation on permanent machining jobs.
- Wear an approved respirator if there is no other way to control the dust.
- Comply with applicable rules and regulations for the work place. In the United States, use Occupational Safety and Health Administration (OSHA) requirements. These OSHA requirements can be found in “29 CFR 1910.1001”.
- Obey environmental regulations for the disposal of asbestos.
- Stay away from areas that might have asbestos particles in the air.

Dispose of Waste Properly

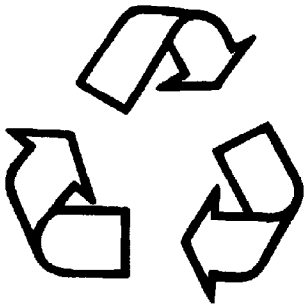

Illustration 8 g00706404

Improperly disposing of waste can threaten the environment. Potentially harmful fluids should be disposed of according to local regulations.

Always use leakproof containers when you drain fluids. Do not pour waste onto the ground, down a drain, or into any source of water.

i08162288

Burn Prevention

SMCS Code: 1000; 4450; 7405

Do not touch any part of an operating engine. Allow the engine to cool before any maintenance is performed on the engine. Relieve all pressure in the air system, hydraulic system, lubrication system, fuel system, and cooling system before any lines, fittings, or related items are disconnected.

Coolant

When the engine is at operating temperature, the engine coolant is hot. The coolant is also under pressure. The radiator and all lines to the heaters or to the engine contain hot coolant.

Any contact with hot coolant or with steam can cause severe burns. Allow cooling system components to cool before the cooling system is drained.

Check that the coolant level after the engine has stopped and the engine has been allowed to cool.

Ensure that the filler cap is cool before removing the filler cap. The filler cap must be cool enough to touch with a bare hand. Remove the filler cap slowly to relieve pressure.

Cooling system conditioner contains alkali. Alkali can cause personal injury. Do not allow alkali to contact the skin, the eyes, or the mouth.

Oils

Hot oil and hot lubricating components can cause personal injury. Do not allow hot oil to contact the skin. Also, do not allow hot components to contact the skin.

Batteries

Electrolyte is an acid. Electrolyte can cause personal injury. Do not allow electrolyte to contact the skin or the eyes. Always wear protective glasses for servicing batteries. Wash hands after touching the batteries and connectors. Use of gloves is recommended.

i04144050

Fire Prevention and Explosion Prevention

SMCS Code: 1000; 4450; 7405



Illustration 9 g00704000

All fuels, most lubricants, and some coolant mixtures are flammable.

Flammable fluids that are leaking or spilled onto hot surfaces or onto electrical components can cause a fire. Fire may cause personal injury and property damage.

A flash fire may result if the covers for the engine crankcase are removed within 15 minutes after an emergency shutdown.

Determine whether the engine will be operated in an environment that allows combustible gases to be drawn into the air inlet system. These gases could cause the engine to overspeed. Personal injury, property damage, or engine damage could result.

If the application involves the presence of combustible gases, consult your Caterpillar dealer for additional information about suitable protection devices.

Remove all flammable materials such as fuel, oil, and debris from the engine. Do not allow any flammable materials to accumulate on the engine.

Store fuels and lubricants in properly marked containers away from unauthorized persons. Store oily rags and any flammable materials in protective containers. Do not smoke in areas that are used for storing flammable materials.

Do not expose the engine to any flame.

Exhaust shields (if equipped) protect hot exhaust components from oil or fuel spray in case of a line, a tube, or a seal failure. Exhaust shields must be installed correctly.

Do not weld on lines or tanks that contain flammable fluids. Do not flame cut lines or tanks that contain flammable fluid. Clean any such lines or tanks thoroughly with a nonflammable solvent prior to welding or flame cutting.

Wiring must be kept in good condition. All electrical wires must be properly routed and securely attached. Check all electrical wires daily. Repair any wires that are loose or frayed before you operate the engine. Clean all electrical connections and tighten all electrical connections.

Eliminate all wiring that is unattached or unnecessary. Do not use any wires or cables that are smaller than the recommended gauge. Do not bypass any fuses and/or circuit breakers.

Arcing or sparking could cause a fire. Secure connections, recommended wiring, and properly maintained battery cables will help to prevent arcing or sparking.

Inspect all lines and hoses for wear or for deterioration. The hoses must be properly routed. The lines and hoses must have adequate support and secure clamps. Tighten all connections to the recommended torque. Leaks can cause fires.

Oil filters and fuel filters must be properly installed. The filter housings must be tightened to the proper torque.



Illustration 10 g00704059

Use caution when you are refueling an engine. Do not smoke while you are refueling an engine. Do not refuel an engine near open flames or sparks. Always stop the engine before refueling.

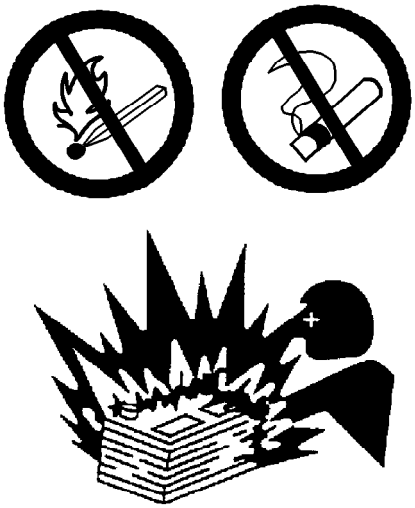

Illustration 11 g00704135

Gases from a battery can explode. Keep any open flames or sparks away from the top of a battery. Do not smoke in battery charging areas.

Never check the battery charge by placing a metal object across the terminal posts. Use a voltmeter or a hydrometer.

Improper jumper cable connections can cause an explosion that can result in injury. Refer to the Operation Section of this manual for specific instructions.

Do not charge a frozen battery. This may cause an explosion.

The batteries must be kept clean. The covers (if equipped) must be kept on the cells. Use the recommended cables, connections, and battery box covers when the engine is operated.

Fire Extinguisher

Make sure that a fire extinguisher is available. Be familiar with the operation of the fire extinguisher. Inspect the fire extinguisher and service the fire extinguisher regularly. Obey the recommendations on the instruction plate.

Ether

Ether is flammable and poisonous.

Use ether in well ventilated areas. Do not smoke while you are replacing an ether cylinder or while you are using an ether spray.

Do not store ether cylinders in living areas or in the engine compartment. Do not store ether cylinders in direct sunlight or in temperatures above 49 °C (120 °F). Keep ether cylinders away from open flames or sparks.

Dispose of used ether cylinders properly. Do not puncture an ether cylinder. Keep ether cylinders away from unauthorized personnel.

Do not spray ether into an engine if the engine is equipped with a thermal starting aid for cold weather starting.

Lines, Tubes, and Hoses

Do not bend high-pressure lines. Do not strike high-pressure lines. Do not install any lines that are bent or damaged.

Repair any lines that are loose or damaged. Leaks can cause fires. Consult your Caterpillar dealer for repair or for replacement parts.

Check lines, tubes, and hoses carefully. Do not use your bare hand to check for leaks. Use a board or cardboard to check for leaks. Tighten all connections to the recommended torque.

Replace the parts if any of the following conditions are present:

- High-pressure line or lines are removed.
- End fittings are damaged or leaking.

- Outer coverings are chafed or cut.
- Wires are exposed.
- Outer coverings are ballooning.
- Flexible part of the hoses are kinked.
- Outer covers have embedded armoring.
- End fittings are displaced.

Make sure that all clamps, guards, and heat shields are installed correctly. During engine operation, this will help to prevent vibration, rubbing against other parts, and excessive heat.

i08162291

Crushing Prevention and Cutting Prevention

SMCS Code: 1000; 4450; 7405

Support the component properly when work beneath the component is performed.

Unless other maintenance instructions are provided, never attempt adjustments while the engine is running.

Stay clear of all rotating parts and of all moving parts. Leave the guards in place until maintenance is performed. After the maintenance is performed, reinstall the guards.

Keep objects away from moving fan blades. The fan blades will throw objects or cut objects.

When objects are struck, wear protective glasses to avoid injury to the eyes.

Chips or other debris may fly off objects when objects are struck. Before objects are struck, ensure that no one will be injured by flying debris.

i04144070

Mounting and Dismounting

SMCS Code: 1000; 4450; 7405

Do not climb on the engine. The engine is not been designed with mounting or dismounting locations.

Refer to the OEM for the location of foot and hand holds for your specific application.

i04144089

Before Starting Engine

SMCS Code: 1000

NOTICE
For initial start-up of a new or rebuilt engine, and for start-up of an engine that has been serviced, make provision to shut the engine off should an overspeed occur. This may be accomplished by shutting off the air and/or fuel supply to the engine.

⚠ WARNING

Engine exhaust contains products of combustion which may be harmful to your health. Always start and operate the engine in a well ventilated area and, if in an enclosed area, vent the exhaust to the outside.

Inspect the engine for potential hazards.

Do not start the engine or move any of the controls if there is a “DO NOT OPERATE” warning tag or similar warning tag attached to the start switch or to the controls.

Before starting the engine, ensure that no one is on, underneath, or close to the engine. Ensure that the area is free of personnel.

If equipped, ensure that the lighting system for the engine is suitable for the conditions. Ensure that all lights work properly, if equipped.

All protective guards and all protective covers must be installed if the engine must be started in order to perform service procedures. To help prevent an accident that is caused by parts in rotation, work around the parts carefully.

Do not bypass the automatic shutoff circuits. Do not disable the automatic shutoff circuits. The circuits are provided in order to help prevent personal injury. The circuits are also provided in order to help prevent engine damage.

See the Service Manual for repairs and for adjustments.

i04144109

Engine Starting

SMCS Code: 1000

⚠ WARNING

Do not use aerosol types of starting aids such as ether. Such use could result in an explosion and personal injury.

If a warning tag is attached to the engine start switch or to the controls DO NOT start the engine or move the controls. Consult with the person that attached the warning tag before the engine is started.

All protective guards and all protective covers must be installed if the engine must be started in order to perform service procedures. To help prevent an accident that is caused by parts in rotation, work around the parts carefully.

Start the engine from the compartment of the operator or from the engine start switch.

Always start the engine according to the procedure that is described in the Operation and Maintenance Manual, “Engine Starting” in the Operation Section. Knowing that the correct procedure will help to prevent major damage to the engine components. Knowing that the procedure will also help to prevent personal injury.

To ensure that the jacket water heater (if equipped) and/or the lube oil heater (if equipped) is working correctly, check the water temperature gauge and/or the oil temperature gauge during the heater operation.

Engine exhaust contains products of combustion which can be harmful to your health. Always start the engine and operate the engine in a ventilated area. If the engine is started in an enclosed area, vent the engine exhaust to the outside.

These engines are equipped with a glow plug starting aid in each individual cylinder that heats the intake air in order to improve starting.

i02707233

Engine Stopping

SMCS Code: 1000

Stop the engine according to the procedure in the Operation and Maintenance Manual, “Engine Stopping (Operation Section)” in order to avoid overheating of the engine and accelerated wear of the engine components.

Use the Emergency Stop Button (if equipped) ONLY in an emergency situation. Do not use the Emergency Stop Button for normal engine stopping. After an emergency stop, DO NOT start the engine until the problem that caused the emergency stop has been corrected.

Stop the engine if an overspeed condition occurs during the initial start-up of a new engine or an engine that has been overhauled. This may be accomplished by shutting off the fuel supply to the engine and/or shutting off the air supply to the engine.

i04144111

Electrical System

SMCS Code: 1000; 1400

Never disconnect any charging unit circuit or battery circuit cable from the battery when the charging unit is operating. A spark can cause the combustible gases that are produced by some batteries to ignite.

To help prevent sparks from igniting combustible gases that are produced by some batteries, the negative “−” cable should be connected last from the external power source to the negative “−” terminal of the starting motor. If the starting motor is not equipped with a negative “−” terminal, connect the cable to the engine block.

Check the electrical wires daily for wires that are loose or frayed. Tighten all loose electrical connections before the engine is started. Repair all frayed electrical wires before the engine is started. See the Operation and Maintenance Manual for specific starting instructions.

Grounding Practices

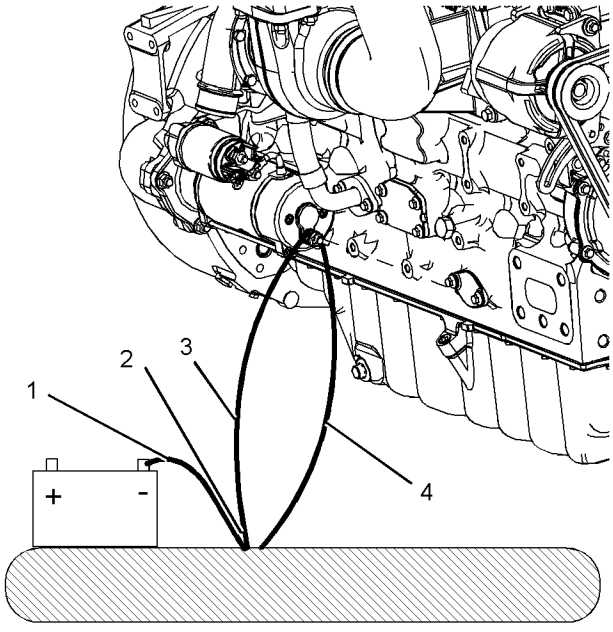

Illustration 12 g02343616

Typical example

(1) Ground to the battery
(2) Primary position for grounding
(3) Ground to the starting motor
(4) Ground to the engine block

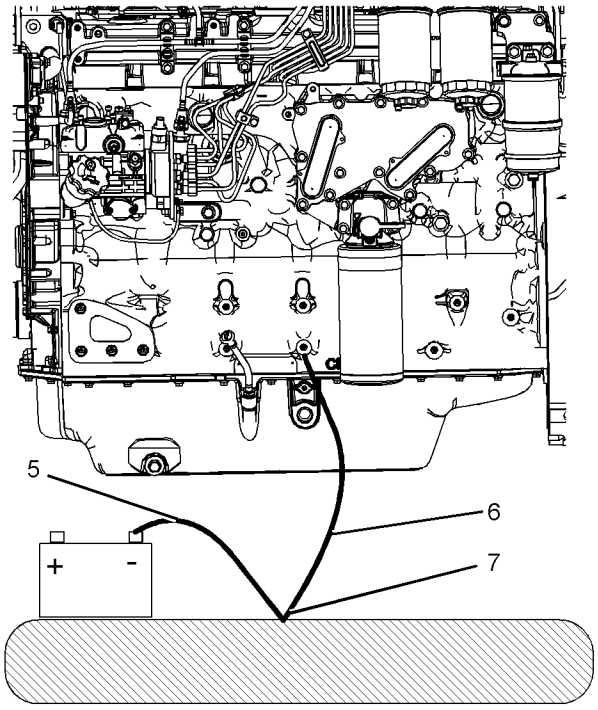

Illustration 13 g02343617

Typical example

(5) Ground to the battery
(6) Ground to the engine block
(7) Primary position for grounding

Correct grounding for the engine electrical system is necessary for optimum engine performance and reliability. Incorrect grounding will result in uncontrolled electrical circuit paths and in unreliable electrical circuit paths.

Uncontrolled electrical circuit paths can result in damage to the crankshaft bearing journal surfaces and to aluminum components.

Engines that are installed without engine-to-frame ground straps can be damaged by electrical discharge.

To ensure that the engine and the engine electrical systems function correctly, an engine-to-frame ground strap with a direct path to the battery must be used. This path may be provided by way of a direct engine ground to the frame.

The connections for the grounds should be tight and free of corrosion. The engine alternator must be grounded to the negative “-” battery terminal with a wire that is adequate to handle the full charging current of the alternator.

The power supply connections and the ground connections for the engine electronics should always be from the isolator to the battery.

i04144112

Engine Electronics

SMCS Code: 1000; 1900

⚠ WARNING

Tampering with the electronic system installation or the OEM wiring installation can be dangerous and could result in personal injury or death and/or engine damage.

This engine has a comprehensive Engine Monitoring System. An electronic control governor can be installed onto the engine. The electronic control governor can monitor certain engine operating conditions. If certain engine parameters extend outside an allowable range, the electronic control governor will initiate an immediate action.

The following monitored engine operating conditions can limit engine speed and/or the engine power:

- Engine Coolant Temperature
- Engine Oil Pressure
- Engine Speed

The Engine Monitoring package can vary for different engine models and different engine applications. However, the monitoring system and the engine monitoring control will be similar for all engines.

Note: Many of the engine control systems and display modules that are available for Caterpillar Engines will work in unison with the Engine Monitoring System. Together, the two controls will provide the engine monitoring function for the specific engine application.

Product Information Section

General Information

i07442889

Model View Illustrations

SMCS Code: 1000

The following model views show typical features of the engine. Due to individual applications, your engine may appear different from the illustrations.

Note: Only major components are identified on the following illustrations.

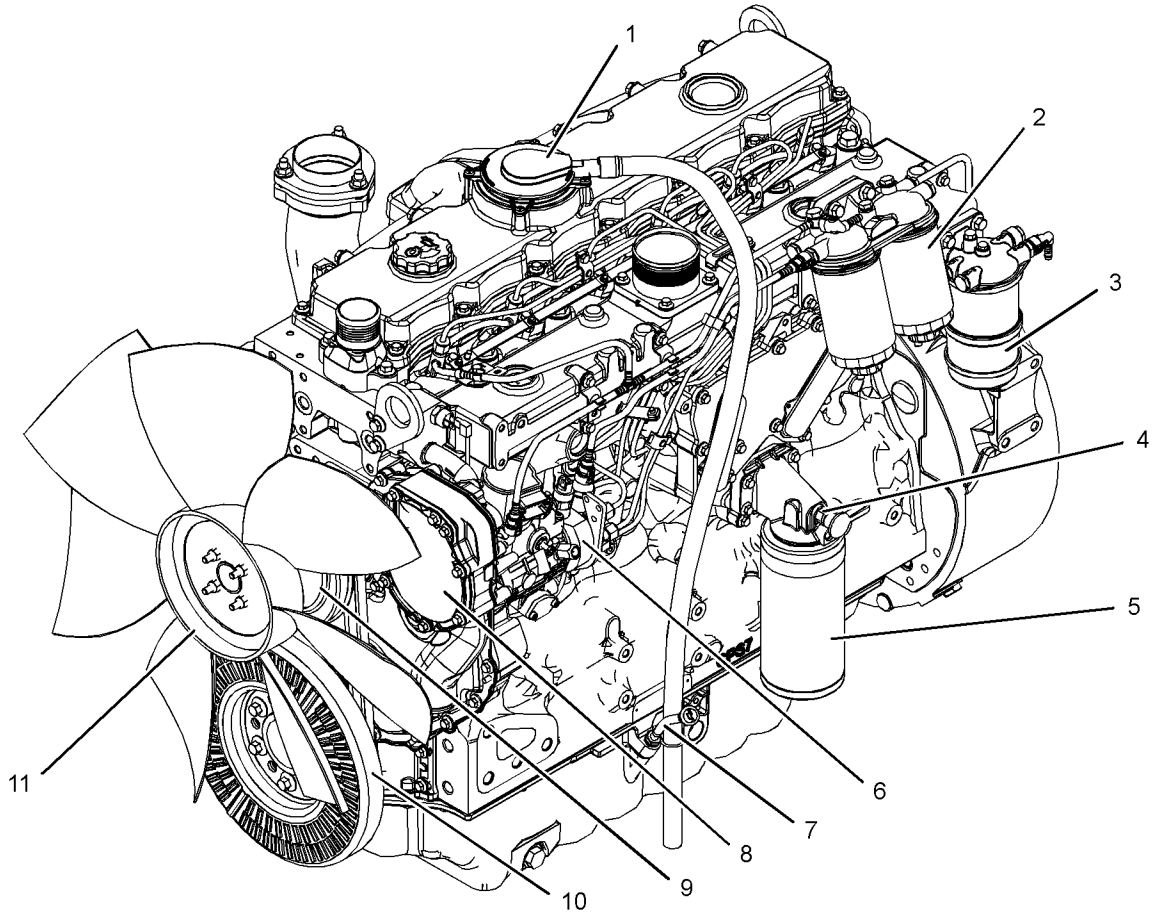

Illustration 14 g02344959

Typical example

(1) Crankcase breather
(2) Secondary fuel filters
(3) Primary fuel filter
(4) Oil sampling valve
(5) Oil filter
(6) Fuel injection pump
(7) Oil gauge (dipstick)
(8) Water pump
(9) Fan pulley
(10) Damper
(11) Fan

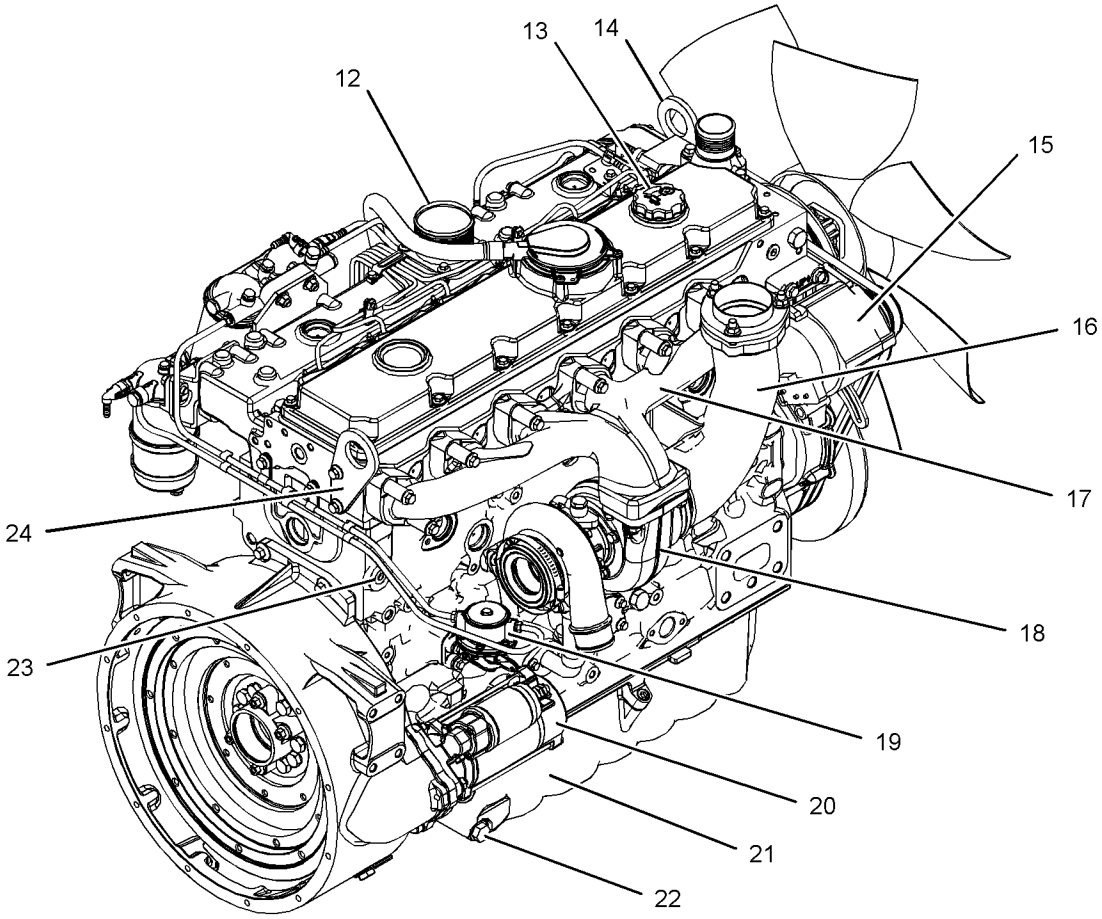

Illustration 15 g02344960

Typical example

(12) Air intake
(13) Oil filler
(14) Front lifting eye
(15) Alternator
(16) Exhaust elbow
(17) Exhaust manifold
(18) Turbocharger
(19) Fuel priming pump
(20) Starting motor
(21) Oil pan
(22) Drain plug (oil)
(23) Drain plug (coolant)
(24) Rear lifting eye

i04819260

Product Description

SMCS Code: 1000; 4450; 4491

The Caterpillar C7.1 (Mech) Industrial Engine has the following characteristics.

- In-line six cylinder
- Four stroke cycle
- Turbocharged aftercooled

Engine Specifications

Note: The front end of the engine is opposite the flywheel end of the engine. The left and the right sides of the engine are determined from the flywheel end. The number 1 cylinder is the front cylinder.

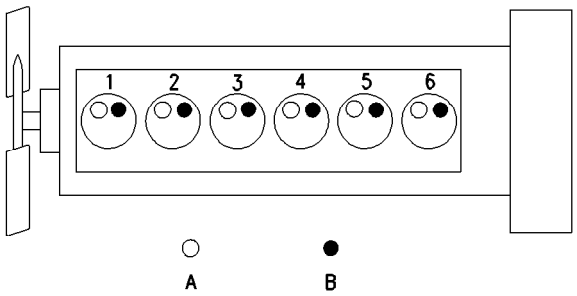

Illustration 16 g00939480

Cylinder and valve location

(A) Inlet valve
(B) Exhaust valve

Table 1

C7.1 (Mech) Engine Specifications	
Operating Range (rpm)	900 to 2800[1]
Number of Cylinders	6 In-Line
Bore	105 mm (4.13385 inch)
Stroke	135 mm (5.31495 inch)
Aspiration	Turbocharged aftercooled
Compression Ratio for the C7.1 (Mech) 6301–Up engine	16:1
Compression Ratio for the C7.1 (Mech) 6731–Up engine	18.5:1
Displacement	7.01 L (427.78 cubic inch)
Firing Order	1-5-3-6-2-4
Rotation (flywheel end)	Counterclockwise
Valve Lash Setting (Inlet)	0.35 mm (0.013 inch)
Valve Lash Setting (Exhaust)	0.45 mm (0.018 inch)

(1) The operating rpm is dependent on the engine rating, the application, and the configuration of the throttle.

Engine Cooling and Lubrication

The cooling system consists of the following components:

- Gear-driven centrifugal water pump
- Water temperature regulator which regulates the engine coolant temperature
- Gear-driven rotor type oil pump
- Oil cooler

The engine lubricating oil is supplied by a rotor type oil pump. The engine lubricating oil is cooled and the engine lubricating oil is filtered. The bypass valve can provide unrestricted flow of lubrication oil to the engine if the oil filter element should become plugged.

Engine efficiency, efficiency of emission controls, and engine performance depend on adherence to proper operation and maintenance recommendations. Engine performance and efficiency also depend on the use of recommended fuels, lubrication oils, and coolants. Refer to Operation and Maintenance Manual, “Maintenance Interval Schedule” for more information on maintenance items.

Product Identification Information

i05040170

Plate Locations and Film Locations

SMCS Code: 1000; 4450

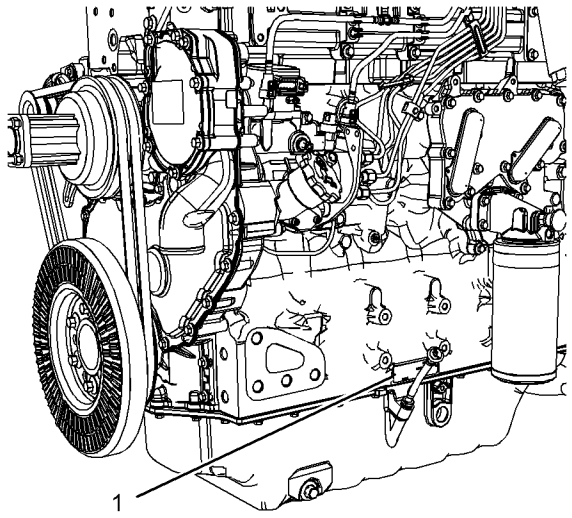

Illustration 17 g02342316

A typical example of the location of the serial number plate

Serial Number Plate (1)

The engine serial number plate is located on the left side of the cylinder block to the rear of the front engine mounting.

Cat dealers need all of these numbers in order to determine the components that were included with the engine. The Cat dealer can accurately identify replacement part numbers.

Emissions Certification Film

SMCS Code: 1000; 7405

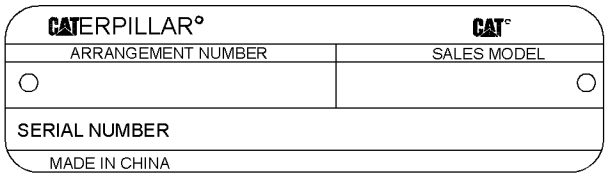

Illustration 18 g02342317

Typical example

i04145969

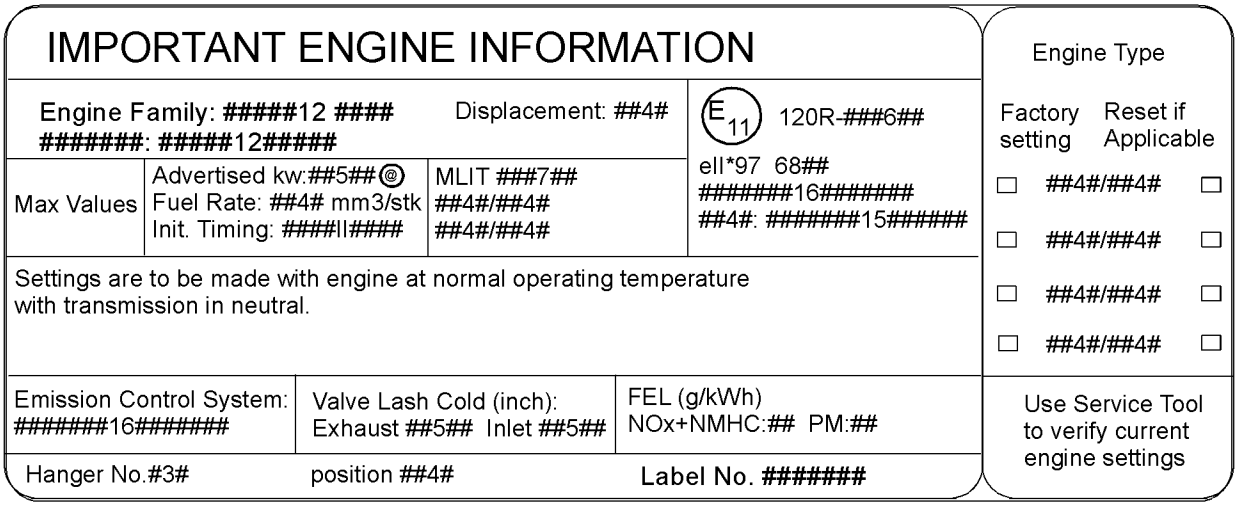

Illustration 19 g02433816
Typical example

i04148249

Reference Information

SMCS Code: 1000; 4450

Information for the following items may be needed to order parts. Locate the information for your engine. Record the information on the appropriate space. Make a copy of this list for a record. Retain the information for future reference.

Record for Reference

Engine Model _____

Engine Serial No. _____

Engine Arrangement No. _____

Modification No. _____

Engine Low Idle rpm _____

Engine Full Load rpm _____

Performance Specification No. _____

Primary Fuel Filter No. _____

Water Separator Element No. _____

Secondary Fuel Filter Element No. _____

Lubrication Oil Filter Element No. _____

Auxiliary Oil Filter Element No. _____

Supplemental Coolant Additive Maintenance Element No. (Optional) _____

Total Lubrication System Capacity _____

Total Cooling System Capacity _____

Air Cleaner Element No. _____

Fan Drive Belt No. _____

Alternator Belt No. _____

Operation Section

Lifting and Storage

i07442886

Product Lifting

SMCS Code: 7000; 7002

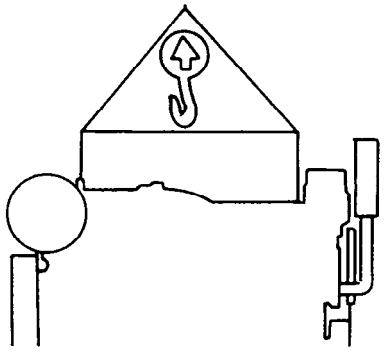

Illustration 20 g00103219

NOTICE
Always inspect lifting eyebolts and all other lifting equipment for damage before performing any lifting. Never bend the eyebolts and the brackets. Never perform product lifting if components are damaged. Only load the eyebolts and the brackets under tension. Remember that the capacity of an eyebolt is less as the angle between the supporting members and the object becomes less than 90 degrees.

When it is necessary to remove a component at an angle, only use a link bracket that is properly rated for the weight.

Use a hoist to remove heavy components. Use an adjustable lifting beam to lift the engine. All supporting members (chains and cables) should be parallel to each other. The chains and cables should be perpendicular to the top of the object that is being lifted.

Some removals require lifting the fixtures to obtain proper balance and safety.

To remove the engine ONLY, use the lifting eyes that are on the engine.

Lifting eyes are designed and installed for the specific engine arrangement. Alterations to the lifting eyes and/or the engine make the lifting eyes and the lifting fixtures obsolete. If alterations are made, ensure that proper lifting devices are provided. Consult your Caterpillar dealer for information regarding fixtures for proper engine lifting.

i08257552

Product Storage

SMCS Code: 7002

If the engine will not be started for several weeks, the lubricating oil will drain from the cylinder walls and from the piston rings. Rust can form on the cylinder liner surface. Rust on the cylinder liner surface will cause increased engine wear and a reduction in engine service life.

To help prevent excessive engine wear, use the following guidelines:

- Complete all lubrication recommendations that are listed in this Operation and Maintenance Manual, “Maintenance Interval Schedule” (Maintenance Section).
- If freezing temperatures are expected, check the cooling system for adequate protection against freezing. See this Operation and Maintenance Manual, “Refill Capacities and Recommendations” (Maintenance Section).

If an engine is out of operation and if use of the engine is not planned, special precautions should be made. If the engine will be stored for more than 1 month, a complete protection procedure is recommended.

For more detailed information on engine storage, see Special Instruction, SEHS9031, “Storage Procedure For Caterpillar Products”.

Your Cat dealer can help prepare the engine for extended storage periods.

Features and Controls

i04145970

Alarms and Shutoffs

SMCS Code: 7400

Shutoffs

Shutoffs and alarms are electrically operated or mechanically operated. The operation of all electric shutoffs and alarms utilize components which actuate switches in a sensing unit.

Shutoffs are set at critical levels for the following items: operating temperature, operating pressure, operating level and operating rpm. The particular shutoff may need to be reset before the engine will start.

NOTICE
Always determine the cause of the engine shutdown. Make necessary repairs before attempting to restart the engine.

Be familiar with the following items:

- Types and locations of shutoff
- Conditions which cause each shutoff to function
- The resetting procedure that is required to restart the engine

Alarms

Alarms consist of a switch and a contactor. The switches are wired to the contactors. The contactors activate alarm circuits in an annunciator panel. Your engine may be equipped with the following switches:

Engine oil pressure – The engine oil pressure switch indicates when oil pressure drops below rated system pressure.

Coolant temperature – The coolant temperature switch indicates high jacket water coolant temperature.

Note: The sensing element of the coolant temperature switch must be submerged in coolant in order to operate.

Engines may be equipped with alarms in order to alert the operator when undesirable operating conditions occur.

NOTICE
When an alarm is activated, corrective measures must be taken before the situation becomes an emergency in order to avoid possible engine damage.

If corrective measures are not taken within a reasonable time, engine damage could result. The alarm will continue until the condition is corrected. The alarm may need to be reset.

A switch may be installed in the alarm while the engine is stopped for repairs. Before the engine is started, ensure that the switch is moved to the ON position and that the warning lights are flashing. The engine will not be protected if the switch is left in the OFF position.

Testing the Shutoff and Alarm System

Most control panels are equipped with a lamp test switch. Turn the switch to the ON position in order to check the indicator lights for proper operation. Replace worn bulbs immediately.

NOTICE
During testing, abnormal operating conditions must be simulated. Perform the tests correctly in order to help prevent possible engine damage.

Refer to the Service Manual for more information on testing procedures or consult your Caterpillar dealer.

i02724238

Gauges and Indicators

SMCS Code: 7450

Your engine may not have the same gauges or all of the gauges that are described. For more information about the gauge package, see the OEM information.

Gauges provide indications of engine performance. Ensure that the gauges are in good working order. Determine the normal operating range by observing the gauges over a period of time.

Noticeable changes in gauge readings indicate potential gauge or engine problems. Problems may also be indicated by gauge readings that change even if the readings are within specifications. Determine and correct the cause of any significant change in the readings. Consult your Caterpillar dealer for assistance.

Some engine applications are equipped with Indicator Lamps. Indicator lamps can be used as a diagnostic aid. There are two lamps. One lamp has an orange lens and the other lamp has a red lens.

These indicator lamps can be used in two ways:

- The indicator lamps can be used to identify the current operational status of the engine. The indicator lamps can also indicate that the engine has a fault. This system is automatically operated via the ignition switch.

- The indicator lamps can be used to identify active diagnostic codes. This system is activated by pressing the Flash Code button.

Refer to the Troubleshooting Guide, “Indicator Lamps” for further information.

NOTICE
If no oil pressure is indicated, STOP the engine. If maximum coolant temperature is exceeded, STOP the engine. Engine damage can result.



Engine Oil Pressure – The oil pressure should be greatest after a cold engine is started. The typical engine oil pressure with SAE10W40 is 350 to 450 kPa (50 to 65 psi) at rated rpm.

A lower oil pressure is normal at low idle. If the load is stable and the gauge reading changes, perform the following procedure:

1. Remove the load.

2. Stop the engine.

3. Check and maintain the oil level.



Jacket Water Coolant Temperature – Typical temperature range is 83° to 95°C (181.4° to 171°F). The maximum allowable temperature at sea level with the pressurized cooling system at 48 kPa (7 psi) is 103 °C (217.4 °F). Higher temperatures may occur under certain conditions. The water temperature reading may vary according to load. The temperature reading should never exceed 7 °C (44.6 °F) below the boiling point for the pressurized system that is being used.

A 100 kPa (14.5 psi) radiator cap may be installed on the cooling system. The temperature of this cooling system must not exceed 112 °C (233.6 °F).

If the engine is operating above the normal range and steam becomes apparent, perform the following procedure:

1. Reduce the load and the engine rpm.

2. Determine if the engine must be shut down immediately or if the engine can be cooled by reducing the load.

3. Inspect the cooling system for leaks.



Tachometer – This gauge indicates engine speed (rpm). When the throttle control lever is moved to the full throttle position without load, the engine is running at high idle. The engine is running at the full load rpm when the throttle control lever is at the full throttle position with maximum rated load.

NOTICE
To help prevent engine damage, never exceed the high idle rpm. Overspeeding can result in serious damage to the engine. Operation at speeds exceeding high idle rpm should be kept to a minimum.



Ammeter – This gauge indicates the amount of charge or discharge in the battery charging circuit. Operation of the indicator should be to the “+” side of “0” (zero).



Fuel Level – This gauge indicates the fuel level in the fuel tank. The fuel level gauge operates when the “START/STOP” switch is in the “on” position.



Service Hour Meter – The gauge indicates total operating hours of the engine.

i04147992

Monitoring System

SMCS Code: 1900; 7400; 7450; 7451

WARNING

If the Shutdown mode has been selected and the warning indicator activates, engine shutdown may take as little as 20 seconds from the time the warning indicator is activated. Depending on the application, special precautions should be taken to avoid personal injury. The engine can be restarted following shutdown for emergency maneuvers, if necessary.

NOTICE
The Engine Monitoring System is not a guarantee against catastrophic failures. Programmed delays and derate schedules are designed to minimize false alarms and provide time for the operator to stop the engine.

The following parameters are monitored:

- Coolant temperature
- Oil pressure
- Engine speed/timing

For more information or assistance for repairs, consult your Caterpillar dealer.

i04147993

Overspeed

SMCS Code: 1900; 1907; 1912; 7427

An electronic control governor can be installed to the engine. An overspeed condition is detected by the electronic control governor. Refer to Special Instruction, REHS3720, “Caterpillar Logic Control Governor One (LCG1) and Caterpillar Logic Control Governor Two (LCG2)” for more information.

i04147996

Sensors and Electrical Components

SMCS Code: 1900; 7400

Switch Locations

Illustration 21 shows the typical locations of the switches for a C7.1 (Mech) Industrial Engine. Specific engines may appear different from the illustration due to differences in applications.

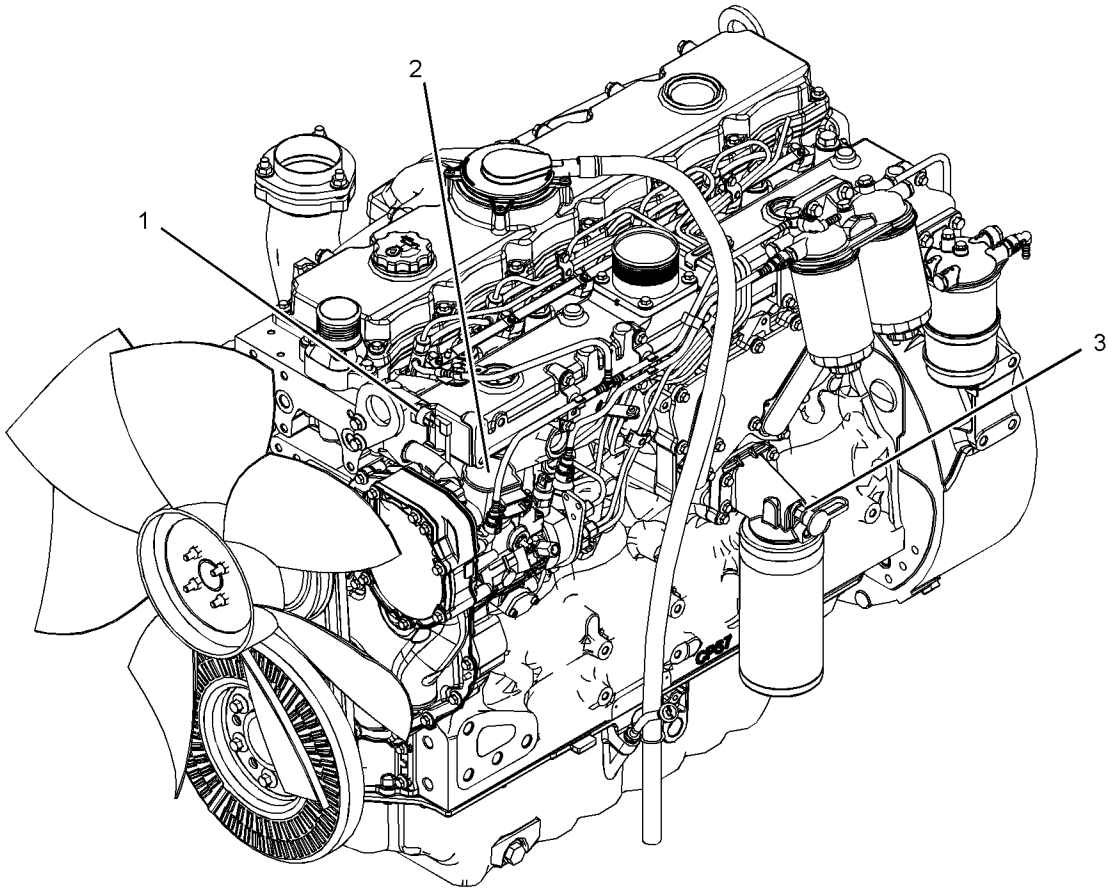

Illustration 21 g02344977

(1) Coolant temperature switch (2) Electronic control governor (if equipped) (3) Oil pressure switch

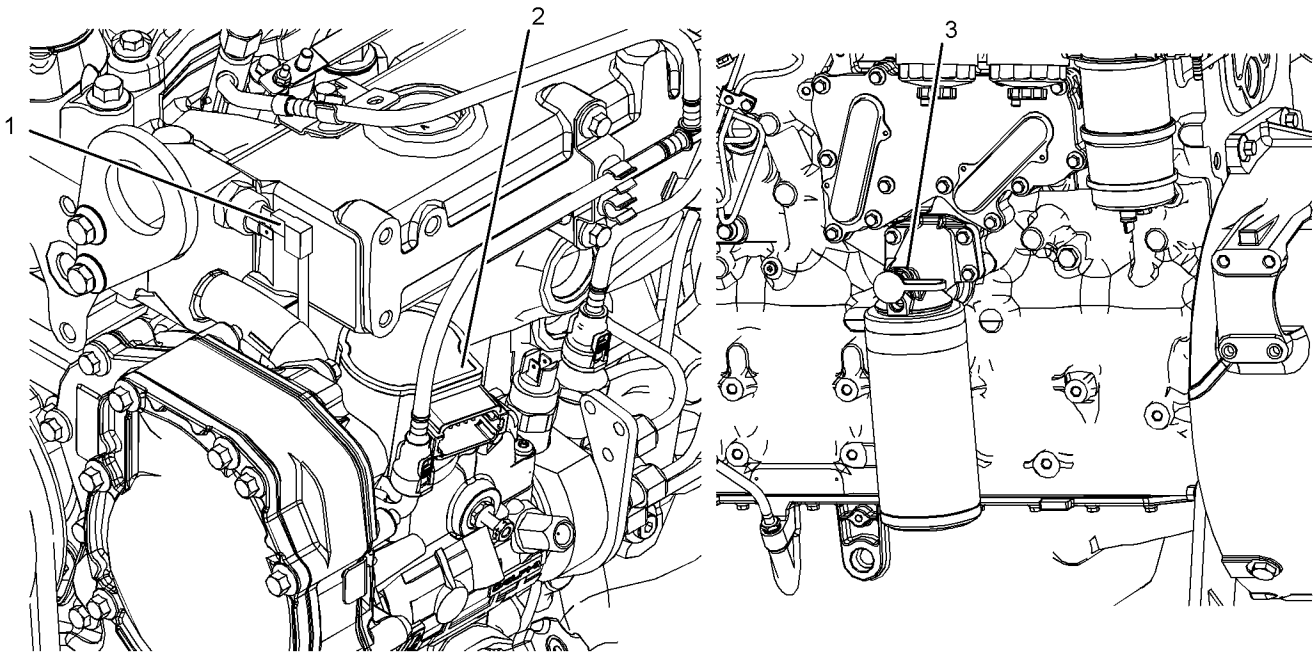

Illustration 22 g02345016

(1) Coolant temperature switch (2) Electronic control governor (if equipped) (3) Oil pressure switch

The illustration 22 shows the switches in position on the engine.

Failure of Switches

All Switches

A failure of any of the switches may be caused by one of the following malfunctions:

- Switch output is open.
- Switch output is shorted to “- battery” or “+ battery” .
- Measured reading of the switch is out of the specification.

Coolant Temperature Switch 1

The coolant temperature switch monitors engine coolant temperature. The output can indicate a high coolant temperature through a relay or a lamp. The coolant temperature sensor is used to determine initiation of the Cold Start Condition.

Failure of the Coolant Temperature Switch

The diagnostic lamp will warn the operator about the status of the coolant temperature sensor. A failure of the coolant temperature sensor will not cause a shutdown of the engine or any horsepower change.

Electronic Control Governor 2 (If equipped)

If equipped, the electronic control governor controls the engine speed. Refer to Special Instruction, REHS3720, “Caterpillar Logic Control Governor One (LCG1) and Caterpillar Logic Control Governor Two (LCG2)” for more information.

Engine Oil Pressure Switch 3

The engine oil pressure switch detects engine oil pressure for diagnostic purposes.

Low Oil Pressure Warning

The setpoint for the low-pressure warning is dependent upon the engine speed. The fault will be active and logged only if the engine has been running for more than 8 seconds.

Very Low Oil Pressure Warning

The very low oil pressure setpoint is dependent upon the engine speed.

Failure of the Engine Oil Pressure Switch

The diagnostic lamp warns the user about the status of the engine oil pressure switch. The engine oil pressure-related strategies will be disabled in the event of a failure of the engine oil pressure switch. A failure of the engine oil pressure switch will not cause a shutdown of the engine or any horsepower change.

Engine Starting

i02704617

Before Starting Engine

SMCS Code: 1000; 1400; 1450

Perform the required daily maintenance and other periodic maintenance before the engine is started. Inspect the engine compartment. This inspection can help prevent major repairs at a later date. Refer to the Operation and Maintenance Manual, “Maintenance Interval Schedule” for more information.

- For the maximum service life of the engine, make a thorough inspection before the engine is started. Look for the following items: oil leaks, coolant leaks, loose bolts and trash buildup. Remove trash buildup and arrange for repairs, as needed.
- Inspect the cooling system hoses for cracks and for loose clamps.
- Inspect the alternator and accessory drive belts for cracks, breaks, and other damage.
- Inspect the wiring for loose connections and for worn wires or frayed wires.
- Check the fuel supply. Drain water from the water separator (if equipped). Open the fuel supply valve (if equipped).

NOTICE
All valves in the fuel return line must be open before and during engine operation to help prevent high fuel pressure. High fuel pressure may cause filter housing failure or other damage.

If the engine has not been started for several weeks, fuel may have drained from the fuel system. Air may have entered the filter housing. Also, when fuel filters have been changed, some air pockets will be trapped in the engine. In these instances, prime the fuel system. Refer to the Operation and Maintenance Manual, “Fuel System - Prime” for more information on priming the fuel system.

⚠ WARNING

Engine exhaust contains products of combustion which may be harmful to your health. Always start and operate the engine in a well ventilated area and, if in an enclosed area, vent the exhaust to the outside.

- Do not start the engine or move any of the controls if there is a “DO NOT OPERATE” warning tag or similar warning tag attached to the start switch or to the controls.
- Ensure that the areas around the rotating parts are clear.
- All of the guards must be put in place. Check for damaged guards or for missing guards. Repair any damaged guards. Replace damaged guards and/or missing guards.
- Disconnect any battery chargers that are not protected against the high current drain that is created when the electric starting motor (if equipped) is engaged. Check electrical cables and check the battery for poor connections and for corrosion.
- Reset all of the shutoffs or alarm components (if equipped).
- Check the engine lubrication oil level. Maintain the oil level between the “MIN” mark and the “MAX” mark on the oil level gauge.
- Check the coolant level. Observe the coolant level in the coolant recovery tank (if equipped). Maintain the coolant level to the “FULL” mark on the coolant recovery tank.
- If the engine is not equipped with a coolant recovery tank maintain the coolant level within 13 mm (0.5 inch) of the bottom of the filler pipe. If the engine is equipped with a sight glass, maintain the coolant level in the sight glass.
- Observe the air cleaner service indicator (if equipped). Service the air cleaner when the yellow diaphragm enters the red zone, or when the red piston locks in the visible position.
- Ensure that any driven equipment has been disengaged. Minimize electrical loads or remove any electrical loads.

i02710719

Cold Weather Starting

SMCS Code: 1000; 1250; 1450; 1453; 1456; 1900

⚠ WARNING

Do not use aerosol types of starting aids such as ether. Such use could result in an explosion and personal injury.

Startability will be improved at temperatures below −18 °C (0 °F) from the use of a jacket water heater or extra battery capacity.

When Group 2 diesel fuel is used, the following items provide a means of minimizing starting problems and fuel problems in cold weather: engine oil pan heaters, jacket water heaters, fuel heaters and fuel line insulation.

Use the procedure that follows for cold weather starting.

1. If equipped, move the throttle lever to the full throttle position before you start the engine.

2. If equipped, turn the engine start switch to the HEAT position. Hold the engine start switch in the HEAT position for 6 seconds until the glow plug indicator light illuminates. This will activate the glow plugs and aid in the starting of the engine.

NOTICE
Do not crank the engine for more than 30 seconds. Allow the electric starting motor to cool for two minutes before cranking the engine again.

3. While the glow plug indicator light is illuminated, turn the engine start switch to the START position and crank the engine.

Note: If the glow plug indicator light illuminates rapidly for 2 to 3 seconds, or if the glow plug indicator light fails to illuminate, a malfunction exists in the cold start system. Do not use ether or other starting fluids to start the engine.

4. When the engine starts, release the engine start switch key.

5. If the engine does not start, release the engine start switch and allow the starting motor to cool. Then, repeat steps 2 through step 4.

6. If the engine is equipped with a throttle allow the engine to idle for three to five minutes, or allow the engine to idle until the water temperature indicator begins to rise. The engine should run at low idle smoothly until speed is gradually increased to high idle. Allow the white smoke to disperse before proceeding with normal operation.

7. Operate the engine at low load until all systems reach operating temperature. Check the gauges during the warm-up period.

8. Turn the engine start switch to the OFF position in order to stop the engine.

i02710653

Starting the Engine

SMCS Code: 1000; 1450

⚠ WARNING

Do not use aerosol types of starting aids such as ether. Such use could result in an explosion and personal injury.

Refer to the OMM for your type of controls. Use the following procedure to start the engine.

1. If equipped, move the throttle lever to the full throttle position before you start the engine.

NOTICE
Do not crank the engine for more than 30 seconds. Allow the electric starting motor to cool for two minutes before cranking the engine again.

2. Turn the engine start switch to the START position. Hold the engine start switch in the START position and crank the engine.

3. When the engine starts, release the engine start switch.

4. If equipped, slowly move the throttle lever to the low idle position and allow the engine to idle. Refer to the Operation and Maintenance Manual, “After Starting Engine” topic.

5. If the engine does not start, release the engine start switch and allow the electric starting motor to cool. Then, repeat steps 2 through step 4.

6. Turn the engine start switch to the OFF position in order to stop the engine.

i02344933

Starting with Jump Start Cables

SMCS Code: 1000; 1401; 1402; 1900

⚠ WARNING

Improper jump start cable connections can cause an explosion resulting in personal injury.

Prevent sparks near the batteries. Sparks could cause vapors to explode. Do not allow jump start cable ends to contact each other or the engine.

If the installation is not equipped with a backup battery system, it may be necessary to start the engine from an external electrical source.

For information on troubleshooting the charging system, refer to Special Instruction, REHS0354, “Charging System Troubleshooting”.

Many batteries which are considered unusable are still rechargeable. After jump starting, the alternator may not be able to fully recharge batteries that are severely discharged. The batteries must be charged to the proper voltage with a battery charger. For information on testing and charging, refer to the Special Instruction, SEHS7633, “Battery Test Procedure”.

NOTICE
Using a battery source with the same voltage as the electric starting motor. Use ONLY equal voltage for jump starting. The use of higher voltage will damage the electrical system.

Do not reverse the battery cables. The alternator can be damaged. Attach ground cable last and remove first.

When using an external electrical source to start the engine, turn the generator set control switch to the “OFF” position. Turn all electrical accessories OFF before attaching the jump start cables.

Ensure that the main power switch is in the OFF position before attaching the jump start cables to the engine being started.

1. Turn the start switch on the stalled engine to the OFF position. Turn off all the engine's accessories.
2. Connect one positive end of the jump start cable to the positive cable terminal of the discharged battery. Connect the other positive end of the jump start cable to the positive cable terminal of the electrical source.
3. Connect one negative end of the jump start cable to the negative cable terminal of the electrical source. Connect the other negative end of the jump start cable to the engine block or to the chassis ground. This procedure helps to prevent potential sparks from igniting the combustible gases that are produced by some batteries.
4. Start the engine.
5. Immediately after the engine is started, disconnect the jump start cables in reverse order.

After jump starting, the alternator may not be able to fully recharge batteries that are severely discharged. The batteries must be replaced or charged to the proper voltage with a battery charger after the engine is stopped. Many batteries which are considered unusable are still rechargeable. Refer to Operation and Maintenance Manual, “Battery - Replace” and Testing and Adjusting Manual, “Battery - Test”.

Refer to the Electrical Schematic for your engine. Consult your Caterpillar dealer for more information.

i02710753

After Starting Engine

SMCS Code: 1000

Note: In temperatures from 0 to 60°C (32 to 140°F), the warm-up time is approximately three minutes. In temperatures below 0°C (32°F), additional warm-up time may be required.

When the engine idles during warm-up, observe the following conditions:

- Check for any fluid or for any air leaks at idle rpm and at one-half full rpm (no load on the engine) before operating the engine under load. This is not possible in some applications.
- Operate the engine at low idle until all systems achieve operating temperatures. Check all gauges during the warm-up period.

Note: Gauge readings should be observed and the data should be recorded frequently while the engine is operating. Comparing the data over time will help to determine normal readings for each gauge. Comparing data over time will also help detect abnormal operating developments. Significant changes in the readings should be investigated.

Engine Operation

i02708025

Engine Operation

SMCS Code: 1000

Proper operation and maintenance are key factors in obtaining the maximum life and economy of the engine. If the directions in the Operation and Maintenance Manual are followed, costs can be minimized and engine service life can be maximized.

The time that is needed for the engine to reach normal operating temperature can be less than the time taken for a walk-around inspection of the engine.

The engine can be operated at the rated rpm after the engine is started and after the engine reaches operating temperature. The engine will reach normal operating temperature sooner during a low engine speed (rpm) and during a low power demand. This procedure is more effective than idling the engine at no load. The engine should reach operating temperature in a few minutes.

Gauge readings should be observed and the data should be recorded frequently while the engine is operating. Comparing the data over time will help to determine normal readings for each gauge. Comparing data over time will also help detect abnormal operating developments. Significant changes in the readings should be investigated.

i01646335

Engaging the Driven Equipment

SMCS Code: 1000

1. Operate the engine at one-half of the rated rpm, when possible.

2. Engage the driven equipment without a load on the equipment, when possible.

Interrupted starts put excessive stress on the drive train. Interrupted starts also waste fuel. To get the driven equipment in motion, engage the clutch smoothly with no load on the equipment. This method should produce a start that is smooth and easy. The engine rpm should not increase and the clutch should not slip.

3. Ensure that the ranges of the gauges are normal when the engine is operating at one-half of the rated rpm. Ensure that all gauges operate properly.

4. Increase the engine rpm to the rated rpm. Always increase the engine rpm to the rated rpm before the load is applied.

5. Apply the load. Begin operating the engine at low load. Check the gauges and equipment for proper operation. After normal oil pressure is reached and the temperature gauge begins to move, the engine may be operated at full load. Check the gauges and equipment frequently when the engine is operated under load.

Extended operation at low idle or at reduced load may cause increased oil consumption and carbon buildup in the cylinders. This carbon buildup results in a loss of power and/or poor performance.

i02707216

Fuel Conservation Practices

SMCS Code: 1000; 1250

The efficiency of the engine can affect the fuel economy. Caterpillar's design and technology in manufacturing provides maximum fuel efficiency in all applications. Follow the recommended procedures in order to attain optimum performance for the life of the engine.

- Avoid spilling fuel.

Fuel expands when the fuel is warmed up. The fuel may overflow from the fuel tank. Inspect fuel lines for leaks. Repair the fuel lines, as needed.

- Be aware of the properties of the different fuels. Use only the recommended fuels. Refer to the Operations and Maintenance Manual, “Fuel Recommendations”for further information.

- Avoid unnecessary idling.

Shut off the engine rather than idle for long periods of time.

- Observe the service indicator frequently. Keep the air cleaner elements clean.

- Ensure that the turbocharger is operating correctly so that the proper air/fuel ratio is maintained. Clean exhaust indicates proper functioning.

- Maintain a good electrical system.

One faulty battery cell will overwork the alternator. This will consume excess power and excess fuel.

- Ensure that the belts are properly adjusted. The belts should be in good condition. Refer to the Specifications manual for further information.

- Ensure that all of the connections of the hoses are tight. The connections should not leak.
- Ensure that the driven equipment is in good working order.
- Cold engines consume excess fuel. Utilize heat from the jacket water system and the exhaust system, when possible. Keep cooling system components clean and keep cooling system components in good repair. Never operate the engine without water temperature regulators. All of these items will help maintain operating temperatures.

Cold Weather Operation

i04145989

Cold Weather Operation

SMCS Code: 1000; 1250

Caterpillar Diesel Engines can operate effectively in cold weather. During cold weather, the starting and the operation of the diesel engine is dependent on the following items:

- The type of fuel that is used
- The viscosity of the engine oil
- The operation of the glow plugs
- Battery condition

Refer to Special Publication, SEBU5898, “Cold Weather Recommendations for Caterpillar Machines”.

This section will cover the following information:

- Potential problems that are caused by cold-weather operation
- Suggest steps which can be taken in order to minimize starting problems and operating problems when the ambient air temperature is between “0° to −40 °C (32° to -40 °F)”.

The operation and maintenance of an engine in freezing temperatures is complex . This complexity is because of the following conditions:

- Weather conditions
- Engine applications

Recommendations from your Caterpillar dealer are based on past proven practices. The information that is contained in this section provides guidelines for cold-weather operation.

Hints for Cold Weather Operation

- If the engine will start, operate the engine until a minimum operating temperature of 80° C (176° F) is achieved. Achieving operating temperature will help prevent the intake valves and exhaust valves from sticking.
- The cooling system and the lubrication system for the engine do not lose heat immediately upon shutdown. This means that an engine can be shut down for a period and the engine can still start readily.
- Install the correct specification of engine lubricant before the beginning of cold weather.
- Check all rubber parts (hoses, fan drive belts) weekly.
- Check all electrical wiring and connections for any fraying or damaged insulation.
- Keep all batteries fully charged and warm.
- Fill the fuel tank at the end of each shift.
- Drain the water from the fuel system. Refer to this Operation and Maintenance Manual, “Fuel System Primary Filter/Water Separator - Drain”.
- Check the air cleaners and the air intake daily. Check the air intake more often when you operate in snow.
- Ensure that the glow plugs are in working order. Refer to Systems Operation, Testing and Adjusting, “Glow Plug - Test”.

⚠ WARNING

Personal injury or property damage can result from alcohol or starting fluids.

Alcohol or starting fluids are highly flammable and toxic and if improperly stored could result in injury or property damage.

⚠ WARNING

Do not use aerosol types of starting aids such as ether. Such use could result in an explosion and personal injury.

- For jump starting with cables in cold weather, refer to the Operation and Maintenance Manual, “Starting with Jump Start Cables.” for instructions.

Viscosity of the Engine Lubrication Oil

Correct engine oil viscosity is essential. Oil viscosity affects the amount of torque that is needed to crank the engine. Refer to this Operation and Maintenance Manual, “Fluid Recommendations” for the recommended viscosity of oil.

Recommendations for the Coolant

Provide cooling system protection for the lowest expected outside temperature. Refer to this Operation and Maintenance Manual, “Fluid Recommendations” for the recommended coolant mixture.

In cold weather, check the coolant often for the correct glycol concentration in order to ensure adequate freeze protection.

Engine Block Heaters

Engine block heaters (if equipped) heat the engine jacket water that surrounds the combustion chambers. This heat provides the following functions:

- Startability is improved.
- Warm up time is reduced.

An electric block heater can be activated once the engine is stopped. A block heater can be 110 V or 240 V. The output can be 750/1000 W. Consult your Caterpillar dealer for more information.

Idling the Engine

When idling after the engine is started in cold weather, increase the engine rpm from 1000 to 1200 rpm. This idling will warm up the engine more quickly. Maintaining an elevated low idle speed for extended periods will be easier with the installation of a hand throttle. The engine should not be “raced” in order to speed up the warm-up process.

While the engine is idling, the application of a light load (parasitic load) will assist in achieving the minimum operating temperature. The minimum operating temperature is 80° C (176° F).

Recommendations for Coolant Warm Up

Warm up an engine that has cooled below normal operating temperatures due to inactivity. This procedure should be performed before the engine is returned to full operation. During operation in very cold temperature conditions, damage to engine valve mechanisms can result from engine operation for short intervals. This can happen if the engine is started and the engine is stopped many times without being operated in order to warm up completely.

When the engine is operated below normal operating temperatures, fuel and oil are not completely burned in the combustion chamber. This fuel and oil causes soft carbon deposits to form on the valve stems. Generally, the deposits do not cause problems and the deposits are burned off during operation at normal engine operating temperatures.

When the engine is started and the engine is stopped many times without being operated in order to warm up completely, the carbon deposits become thicker. This carbon can cause the following problems:

- Free operation of the valves is prevented.
- Valves become stuck.
- Pushrods may become bent.
- Other damage to valve train components can result.

For this reason, when the engine is started, the engine must be operated until the coolant temperature is 80° C (176° F) minimum. Carbon deposits on the valve stems will be kept at a minimum and the free operation of the valves and the valve components will be maintained.

The engine must be thoroughly warmed in order to keep other engine parts in better condition. Also, the service life of the engine will be generally extended. Lubrication will be improved. There will be less acid and less sludge in the oil. This improvement will provide longer service life for the engine bearings, the piston rings, and other parts. However, limit unnecessary idle time to 10 minutes in order to reduce wear and unnecessary fuel consumption.

The Water Temperature Regulator and Insulated Heater Lines

The engine is equipped with a water temperature regulator. When the engine coolant is below the correct operating temperature, jacket water circulates through the engine cylinder block and into the engine cylinder head. The coolant then returns to the cylinder block via an internal passage that bypasses the valve of the coolant temperature regulator. This ensures that coolant flows around the engine under cold operating conditions. The water temperature regulator begins to open when the engine jacket water has reached the correct minimum operating temperature. As the jacket water coolant temperature rises above the minimum operating temperature the water temperature regulator opens further allowing more coolant through the radiator to dissipate excess heat.

The progressive opening of the water temperature regulator operates the progressive closing of the bypass passage between the cylinder block and head. This ensures maximum coolant flow to the radiator in order to achieve maximum heat dissipation.

Note: Do not restrict the air flow. Restriction to the air flow can damage the fuel system. Caterpillar strongly discourages the use of all air flow restriction devices such as radiator shutters. Restriction of the air flow can result in the following: high exhaust temperatures, power loss, excessive fan usage and reduction in fuel economy.

A cab heater is beneficial in very cold weather. The feed from the engine and the return lines from the cab should be insulated in order to reduce heat loss to the outside air.

Insulating the Air Inlet and Engine Compartment

When temperatures below −18 °C (−0 °F) will be frequently encountered, an air cleaner inlet that is located in the engine compartment may be specified. An air cleaner that is located in the engine compartment may also minimize the entry of snow into the air cleaner. Also, heat that is rejected by the engine helps to warm the intake air.

Additional heat can be retained around the engine by insulating the engine compartment.

Recommendation for Crankcase Breather Protection

Crankcase ventilation gases contain a large quantity of water vapor. This water vapor can freeze in cold ambient conditions and can plug or damage the crankcase ventilation system. If the engine is operated in temperatures below −25° C (−13° F), measures must be taken to prevent freezing and plugging of the breather system. Insulated hoses and a heated canister assembly should be installed.

Consult with your Caterpillar dealer of the recommended breather components for operation from −25° to -40°C (−13° to -72.°F).

i01457051

Radiator Restrictions

SMCS Code: 1353; 1396

Caterpillar discourages the use of airflow restriction devices that are mounted in front of radiators. Airflow restriction can cause the following conditions:

- High exhaust temperatures
- Power loss
- Excessive fan usage
- Reduction in fuel economy

If an airflow restriction device must be used, the device should have a permanent opening directly in line with the fan hub. The device must have a minimum opening dimension of at least 770 cm^2 (120 in^2).

A centered opening that is directly in line with the fan hub is specified in order to prevent an interrupted airflow on the fan blades. Interrupted airflow on the fan blades could cause a fan failure.

Caterpillar recommends a warning device for the inlet manifold temperature and/or the installation of an inlet air temperature gauge. The warning device for the inlet manifold temperature should be set at 75 °C (167 °F). The inlet manifold air temperature should not exceed 75 °C (167 °F). Temperatures that exceed this limit can cause power loss and potential engine damage.

i04145990

Fuel and the Effect from Cold Weather

SMCS Code: 1000; 1250; 1280

The following fuels are the grades that are available for Caterpillar engines:

- No. 1
- No. 2
- Blend of No. 1 and No. 2

No. 2 diesel fuel is the most commonly used fuel. Either No. 1 diesel fuel or a blend of No. 1 and No. 2 is best suited for cold-weather operation.

Quantities of No. 1 diesel fuel are limited. No. 1 diesel fuels are usually available during the months of the winter in the colder climates. During cold-weather operation, if No. 1 diesel fuel is not available, use No. 2 diesel fuel, if necessary.

There are three major differences between No. 1 and No. 2 diesel fuel. No. 1 diesel fuel has the following properties:

- Lower cloud point
- Lower pour point
- Lower rating of kJ (BTU) per unit volume of fuel

When No. 1 diesel fuel is used, a decrease in power and in fuel efficiency may be noticed. Other operating effects should not be experienced.

The cloud point is the temperature when a cloud of wax crystals begins to form in the fuel. These crystals can cause the fuel filters to plug. The pour point is the temperature when diesel fuel will thicken. The diesel fuel becomes more resistant to flow through fuel pumps and through fuel lines.

Be aware of these values when diesel fuel is purchased. Anticipate the average ambient temperature of the area. Engines that are fueled in one climate may not operate well if the engines are moved to another climate. Problems can result due to changes in temperature.

Before troubleshooting for low power or for poor performance in the winter, check the type of fuel that is being used.

When No. 2 diesel fuel is used the following components provide a means of minimizing problems in cold weather:

- Starting aids
- Engine oil pan heaters
- Engine coolant heaters
- Fuel heaters
- Fuel line insulation

For more information on cold-weather operation, see Special Publication, SEBU5898, “Cold Weather Recommendations”.

i04145991

Fuel Related Components in Cold Weather

SMCS Code: 1000; 1250; 1280

Fuel Tanks

Condensation can form in partially filled fuel tanks. Top off the fuel tanks after you operate the engine.

Fuel tanks should contain some provision for draining water and sediment from the bottom of the tanks. Some fuel tanks use supply pipes that allow water and sediment to settle below the end of the fuel supply pipe.

Some fuel tanks use supply lines that take fuel directly from the bottom of the tank. If the engine is equipped with this system, regular maintenance of the fuel system filter is important.

Drain the water and sediment from any fuel storage tank at the following intervals: weekly, service intervals and refueling of the fuel tank. This procedure will help prevent water and/or sediment from being pumped from the fuel storage tank and into the engine fuel tank.

Fuel Filters

After you change the fuel filter, always prime the fuel system in order to remove air bubbles from the fuel system. Refer to Operation and Maintenance Manual in the Maintenance Section for more information on priming the fuel system.

The micron rating and the location of a primary fuel filter is important in cold-weather operation. The primary fuel filter and the fuel supply line are the most common components that are affected by cold fuel.

Fuel Heaters

Fuel heaters help to prevent fuel filters from plugging in cold weather due to waxing. A fuel heater should be installed in the fuel system before the primary fuel filter.

For further information on fuel heaters, consult your Caterpillar dealer.

Engine Stopping

i06832774

Stopping the Engine

SMCS Code: 1000

NOTICE
Stopping the engine immediately after it has been working under load, can result in overheating and accelerated wear of the engine components.

Avoid accelerating the engine prior to shutting it down.

Avoiding hot engine shutdowns will maximize turbocharger shaft and bearing life.

Note: Individual applications will have different control systems. Ensure that the shutoff procedures are understood. Use the following general guidelines to stop the engine.

1. Remove the load from the engine. Reduce the engine speed (rpm) to low idle. Allow the engine to idle for 5 minutes to cool the engine.
2. Stop the engine after the cool down period according to the shutoff system on the engine. Turn the ignition key switch to the OFF position. If necessary, refer to the instructions that are provided by the OEM.

NOTICE
Before any service or repairs are performed, ensure that the power supply to the engine is disconnected.

i07764840

Emergency Stopping

SMCS Code: 1000; 7418

NOTICE
Emergency shutoff controls are for EMERGENCY use ONLY. DO NOT use emergency shutoff devices or controls for normal stopping procedure.

The Original Equipment Manufacturer (OEM) may have equipped the application with an emergency stop button. For more information about the emergency stop button, refer to the OEM information.

Ensure that any components for the external system that support the engine operation are secured after the engine is stopped.

i02704619

After Stopping Engine

SMCS Code: 1000

Note: Before you check the engine oil, do not operate the engine for at least 10 minutes in order to allow the engine oil to return to the oil pan.

- Check the crankcase oil level. Maintain the oil level between the “MIN” mark and the “MAX” mark on the oil level dipstick.
- If necessary, perform minor adjustments. Repair any leaks and tighten any loose bolts.
- Note the required service interval. Perform the maintenance that is in the Operation and Maintenance Manual, “Maintenance Interval Schedule”.
- Fill the fuel tank in order to help prevent accumulation of moisture in the fuel. Do not overfill the fuel tank.

NOTICE
Only use antifreeze/coolant mixtures recommended in the Refill Capacities and Recommendations topic that is in this Operation and Maintenance Manual. Failure to do so can cause engine damage.

- Allow the engine to cool. Check the coolant level.
- If freezing temperatures are expected, check the coolant for the correct antifreeze protection. The cooling system must be protected against freezing to the lowest expected outside temperature. Add the correct coolant/water mixture, if necessary.
- Perform all required periodic maintenance on all driven equipment. This maintenance is outlined in the instructions from the OEM.

Maintenance Section

Refill Capacities

i04145950

Refill Capacities

SMCS Code: 1000; 1348; 1395; 7560

Lubrication System

The refill capacities for the engine crankcase reflect the approximate capacity of the crankcase or sump plus standard oil filters. Auxiliary oil filter systems will require additional oil. Refer to the OEM specifications for the capacity of the auxiliary oil filter. Refer to Operation and Maintenance Manual, “Maintenance Section” for more information on Lubricant Specifications.

Table 2

Engine Refill Capacities		
Compartment or System	**Minimum**	**Maximum**
Crankcase Oil Sump(1)	13.5 L (14.2653 qt)	16.5 L (17.4354 qt)

(1) These values are the approximate capacities for the crankcase oil sump (aluminum) which includes the standard factory installed oil filters. Engines with auxiliary oil filters will require additional oil. Refer to the OEM specifications for the capacity of the auxiliary oil filter.

Cooling System

To maintain the cooling system, the Total Cooling System capacity must be known. The approximate capacity for the engine cooling system is listed below. External System capacities will vary among applications. Refer to the OEM specifications for the External System capacity. This capacity information will be needed in order to determine the amount of coolant/antifreeze that is required for the Total Cooling System.

Table 3

Engine Refill Capacities	
Compartment or System	**Liters**
Engine Only	9 L (9.5102 qt)
External System Per OEM(1)	

(continued)

(Table 3, contd)

(1) The External System includes a radiator or an expansion tank with the following components: heat exchanger and piping. Refer to the OEM specifications. Enter the value for the capacity of the External System in this row.

i04147952

Fluid Recommendations (Coolant Information)

SMCS Code: 1280; 1348; 1395; 7560

NOTICE
Never add coolant to an overheated engine. Engine damage could result. Allow the engine to cool first.

NOTICE
If the engine is to be stored in, or shipped to an area with below freezing temperatures, the cooling system must be either protected to the lowest outside temperature or drained completely to prevent damage.

NOTICE
Frequently check the specific gravity of the coolant for proper freeze protection or for anti-boil protection.

Clean the cooling system for the following reasons:

- Contamination of the cooling system
- Overheating of the engine
- Foaming of the coolant

Note: Air pockets can form in the cooling system if the cooling system is filled at a rate that is greater than 5 L (1.3 US gal) per minute.

After you drain the cooling system and after you refill the cooling system, operate the engine. Operate the engine without the filler cap until the coolant reaches normal operating temperature and the coolant level stabilizes. Ensure that the coolant is maintained to the proper level.

NOTICE
Never operate an engine without water temperature regulators in the cooling system. Water temperature regulators help to maintain the engine coolant at the proper operating temperature. Cooling system problems can develop without water temperature regulators.

Refer to Special Instruction, SEBD0518, “Know Your Cooling System” and Special Instruction, SEBD0970, “Coolant and Your Engine” for more detailed information.

Many engine failures are related to the cooling system. The following problems are related to cooling system failures: overheating, leakage of the water pump, plugged radiators or heat exchangers and pitting of the cylinder liners.

These failures can be avoided with proper cooling system maintenance. Cooling system maintenance is as important as maintenance of the fuel system and the lubrication system. Quality of the coolant is as important as the quality of the fuel and the lubricating oil.

Coolant is normally composed of three elements: water, additives and glycol.

Water

NOTICE
Never use water alone without Supplemental Coolant Additives (SCA) or without inhibited coolant. Water alone is corrosive at engine operating temperatures. Water alone does not provide adequate protection against boiling or freezing.

Water is used in the cooling system in order to transfer heat.

Distilled water or deionized water is recommended for use in engine cooling systems.

DO NOT use the following types of water in cooling systems: hard water, softened water that has been conditioned with salt and sea water.

If distilled water or deionized water is not available, use water with the properties that are listed in table 4 .

Table 4

Caterpillar Minimum Acceptable Water Requirements		
Property	**Maximum Limit**	**ASTM Test**
Chloride (Cl)	40 mL (1.4 oz)	“D512”, “D4327”
Sulfate (SO_4)	100 mL (3.4 oz)	“D516”
Total Hardness	170 mL (5.8 oz)	“D1126”
Total Solids	340 mL (11.6 oz)	“D1888”
Acidity	pH of 5.5 to 9.0	“D1293”

For a water analysis, consult one of the following sources:

- Caterpillar dealer
- Local water utility company
- Agricultural agent
- Independent laboratory

Additives

Additives help to protect the metal surfaces of the cooling system. A lack of coolant additives or insufficient amounts of additives enable the following conditions to occur:

- Corrosion
- Formation of mineral deposits
- Rust
- Scale
- Pitting and erosion from cavitation of the cylinder liner
- Foaming of the coolant

Many additives are depleted during engine operation. These additives must be replaced periodically. This can be done by adding Supplemental Coolant Additives (SCA) to Diesel Engine Antifreeze/Coolant (DEAC) or by adding ELC Extender to Extended Life Coolant (ELC).

Additives must be added at the proper concentration. Overconcentration of additives can cause the inhibitors to drop out-of-solution. The deposits can enable the following problems to occur:

- Formation of gel compounds
- Reduction of heat transfer
- Leakage of the water pump seal
- Plugging of radiators, coolers, and small passages

Glycol

Glycol in the coolant helps to provide protection against the following conditions:

- Boiling
- Freezing
- Cavitation of the water pump and the cylinder liner

For optimum performance, Caterpillar recommends a 1:1 mixture of a water/glycol solution.

Note: Use a mixture that will provide protection against the lowest ambient temperature.

Note: 100 percent pure glycol will freeze at a temperature of −23 °C (−9 °F).

Most conventional heavy-duty coolant/antifreezes use ethylene glycol. Propylene glycol may also be used. In a 1:1 mixture with water, ethylene and propylene glycol provide similar protection against freezing and boiling. Refer to table 5 and table 6 .

Table 5

Ethylene Glycol		
Concentration	**Freeze Protection**	**Boil Protection**
50 Percent	−36 °C (−33 °F)	106 °C (223 °F)
60 Percent	−51 °C (−60 °F)	111 °C (232 °F)

NOTICE
Do not use propylene glycol in concentrations that exceed 50 percent glycol because of the reduced heat transfer capability of propylene glycol. Use ethylene glycol in conditions that require additional protection against boiling or freezing.

Table 6

Propylene Glycol		
Concentration	**Freeze Protection**	**Anti-Boil Protection**
50 Percent	−29 °C (−20 °F)	106 °C (223 °F)

To check the concentration of glycol, use the 1U-7298 Coolant/Battery Tester (Degrees Celsius) or use the 1U-7297 Coolant/Battery Tester (Degrees Fahrenheit). The testers give readings that are immediate and accurate. The testers can be used with ethylene or propylene glycol.

Coolant Recommendations

The following two coolants are used in Caterpillar diesel engines:

Preferred – Caterpillar Extended Life Coolant (ELC) or a commercial extended life coolant that meets the Caterpillar EC-1 specification

Acceptable – A Caterpillar Diesel Engine Antifreeze/Coolant (DEAC) or a commercial heavy-duty coolant/antifreeze that meets “ASTM D4985” or “ASTM D5345” specifications

NOTICE
Do not use a commercial coolant/antifreeze that only meets the ASTM “D3306” or equivalent specification. This type of coolant/antifreeze is made for light duty automotive applications.

Use only the coolant/antifreeze that is recommended.

Caterpillar recommends a 1:1 mixture of water and glycol. This mixture of water and glycol will provide optimum heavy-duty performance as a coolant/antifreeze.

Note: Caterpillar DEAC DOES NOT require a treatment with an SCA at the initial fill. Commercial heavy-duty coolant or antifreeze that meets “ASTM D4985” or “ASTM D5345” specifications MAY require a treatment with an SCA at the initial fill. Read the label or the instructions that are provided by the OEM of the product.

In stationary engine applications and marine engine applications that do not require anti-boil protection or freeze protection, a mixture of SCA and water is acceptable. Caterpillar recommends a six percent to eight percent concentration of SCA in those cooling systems. Distilled water or deionized water is preferred. Water which has the recommended properties may be used.

NOTICE
All Caterpillar diesel engines equipped with air-to-air aftercooling (ATAAC) require a minimum of 30 percent glycol to prevent water pump cavitation.

Table 7

Coolant Service Life	
Coolant Type	**Service Life**
Caterpillar ELC	6000 Service Hours or Six Years
Caterpillar DEAC	3000 Service Hours or Three Years
Commercial Heavy-Duty Coolant/Antifreeze that meets “ASTM D5345”	3000 Service Hours or Two Years
Commercial Heavy-Duty Coolant/Antifreeze that meets “ASTM D4985”	3000 Service Hours or One Year
Caterpillar SCA and Water	3000 Service Hours or Two Years
Commercial SCA and Water	3000 Service Hours or One Year

S·O·S Coolant Analysis

Testing the engine coolant is important to ensure that the engine is protected from internal cavitation and corrosion. The analysis also tests the ability of the coolant to protect the engine from boiling and freezing. S·O·S Coolant Analysis can be done at your Caterpillar dealer. Caterpillar S·O·S Coolant Analysis is the best way to monitor the condition of your coolant and your cooling system. S·O·S Coolant Analysis is a program that is based on periodic samples.

NOTICE
Do not use the same vacuum sampling pump for extracting oil samples that is used for extracting coolant samples.

A small residue of either type sample may remain in the pump and may cause a false positive analysis for the sample being taken.

Always use a designated pump for oil sampling and a designated pump for coolant sampling.

Failure to do so may cause a false analysis which could lead to customer and dealer concerns.

New Systems, Refilled Systems, and Converted Systems

Perform a coolant analysis (Level 2) at 500 service hours for new systems, for refilled systems, or for converted systems that use Cat Extended Life Coolant (ELC) or use Cat Diesel Engine Antifreeze/ Coolant (DEAC). This 500 hour check will also check for any residual cleaner that may have contaminated the system.

Recommended Interval for S·O·S Coolant Sample

Perform a coolant analysis (Level 1) at every 500 service hour interval. Perform a coolant analysis (Level 2) annually, or perform a coolant analysis (Level 2) when a problem is identified by a coolant analysis (Level 1).

Note: Check the standard coolant's Supplemental Coolant Additive (SCA) at every oil change.

S·O·S Coolant Analysis (Level 1)

A coolant analysis (Level 1) is a test of the properties of the coolant.

The following properties of the coolant are tested:

- Glycol concentration for freeze protection and boil protection
- Ability to protect from erosion and corrosion
- pH
- Conductivity
- Visual analysis
- Odor analysis

The results are reported, and appropriate recommendations are made.

S·O·S Coolant Analysis (Level 2)

A coolant analysis (Level 2) is a comprehensive chemical evaluation of the coolant. This analysis is also a check of the overall condition of the inside of the cooling system.

The S·O·S Coolant Analysis has the following features:

- Full coolant analysis (Level 1)
- Identification of the source of metal corrosion and of contaminants
- Water hardness
- Identification of buildup of the impurities that cause corrosion
- Identification of buildup of the impurities that cause scaling

The results are reported, and appropriate recommendations are made.

For more information on S·O·S Coolant Analysis, consult your Caterpillar dealer.

Extended Life Coolant (ELC)

Caterpillar provides Extended Life Coolant (ELC) for use in the following applications:

- Heavy-duty spark ignited gas engines
- Heavy-duty diesel engines
- Automotive applications

The anti-corrosion package for Caterpillar ELC is different from the anti-corrosion package for other coolants. Caterpillar ELC is an ethylene glycol base coolant. However, Caterpillar ELC contains organic corrosion inhibitors and antifoam agents with low amounts of nitrite. Caterpillar ELC has been formulated with the correct amount of these additives in order to provide superior corrosion protection for all metals in engine cooling systems.

ELC extends the service life of the coolant to 12000 service hours or three years. ELC does not require a frequent addition of a Supplemental Coolant Additive (SCA). An Extender is the only additional maintenance that is needed at 6000 service hours or one half of the ELC service life.

The ELC is available in a 1:1 premixed cooling solution with distilled water. The Premixed ELC provides freeze protection to −36 °C (−33 °F). The Premixed ELC is recommended for the initial fill of the cooling system. The Premixed ELC is also recommended for topping off the cooling system.

ELC Concentrate is also available. ELC Concentrate can be used to lower the freezing point to −51 °C (−60 °F) for arctic conditions.

Containers of several sizes are available. Consult your Caterpillar dealer for the part numbers.

Note: Caterpillar developed the EC-1 specification. The EC-1 specification is an industry standard. The EC-1 specification defines all of the performance requirements that are needed for an engine coolant to be sold as an extended life coolant for Caterpillar engines. ELC can be used in most OEM engines of the following types: diesel, gasoline and natural gas. ELC meets the performance requirements of “ASTM D4985” and “ASTM D5345” for heavy-duty low silicate antifreeze or coolants. ELC also meets the performance requirements of “ASTM D6210” and “ASTM D4656” for automotive applications.

Diesel Engine Antifreeze/Coolant (DEAC)

Caterpillar recommends using Caterpillar Diesel Engine Antifreeze/Coolant (DEAC) for cooling systems that require a heavy-duty coolant/antifreeze. Caterpillar DEAC is an alkaline single-phase ethylene glycol type antifreeze that contains corrosion inhibitors and antifoam agents.

Caterpillar DEAC is formulated with the correct amount of Caterpillar Supplemental Coolant Additive (SCA). Do not use SCA at the initial fill when DEAC is used.

Containers of several sizes are available. Consult your Caterpillar dealer for the part numbers.

If concentrated DEAC is used, Caterpillar recommends mixing the concentrate with distilled water or with deionized water. If distilled water or deionized water is not available, use water which has the required properties. For the water properties, refer to Operation and Maintenance Manual, “General Coolant Information”.

Supplemental Coolant Additive (SCA)

The use of SCA helps to prevent the following conditions from occurring:

- Corrosion
- Formation of mineral deposits
- Cavitation erosion of the cylinder liners
- Foaming of the coolant

Caterpillar Diesel Engine Antifreeze/Coolant (DEAC) is formulated with the correct level of Caterpillar SCA. When the cooling system is initially filled with DEAC, adding more SCA is not necessary until the concentration of SCA has been depleted. To ensure that the correct amount of SCA is in the cooling system, the concentration of SCA must be tested on a scheduled basis. Refer to the Operation and Maintenance Manual, “Maintenance Interval Schedule”.

Containers of Cat SCA are available in several sizes. Consult your Caterpillar dealer for the part numbers.

Commercial Heavy-Duty Coolant/ Antifreeze and SCA

If Caterpillar DEAC is not used, select a coolant/ antifreeze with low silicate content for heavy-duty applications that meets “ASTM D5345” or “ASTM D4985” specifications.

Note: When you are not using Caterpillar DEAC the cooling system must be drained one time during every year. The cooling system must be flushed at this time as well.

When a heavy-duty coolant/antifreeze is used, treat the cooling system with three to six percent Caterpillar SCA by volume. For more information, refer to Operation and Maintenance Manual, “Conventional Coolant/Antifreeze Cooling System Maintenance”.

If Caterpillar SCA is not used, select a commercial SCA. The commercial SCA must provide a minimum of 1200 mg/L, 1200 ppm or 70 grains/US gal of nitrites in the final coolant mixture.

Coolant or antifreeze that meets “ASTM D5345” or “ASTM D4985” specifications MAY require treatment with SCA at the initial fill. These coolants WILL require treatment with SCA on a maintenance basis.

When concentrated coolant or antifreeze is mixed, Caterpillar recommends mixing the concentrate with distilled water or with deionized water. If distilled water or deionized water is not available, water which has the required properties may be used. For the water properties, refer to Operation and Maintenance Manual, “General Coolant Information”.

Water and Supplemental Coolant Additive (SCA)

NOTICE
All Caterpillar diesel engines equipped with air-to-air aftercooling (ATAAC) require a minimum of 30 percent glycol to prevent water pump cavitation.

NOTICE
Never use water alone without Supplemental Coolant Additives (SCA) or without inhibited coolant. Water alone is corrosive at engine operating temperatures. Water alone does not provide adequate protection against boiling or freezing.

Note: Premix the coolant solution in order to provide protection to the lowest ambient temperature that is expected.

Note: Pure undiluted antifreeze freezes at −23 °C (−9 °F).

In engine cooling systems that use water alone, Caterpillar recommends the use of SCA. SCA helps to prevent the following conditions from occurring:

- Corrosion
- Formation of mineral deposits
- Cavitation erosion of the cylinder liner
- Foaming of the coolant

If Caterpillar SCA is not used, select a commercial SCA. The commercial SCA must provide a minimum of 2400 mg/L, 2400 ppm or 140 grains/US gal of nitrites in the final coolant mixture.

The quality of the water is a very important factor in this type of cooling system. Distilled water or deionized water is recommended for use in cooling systems. If distilled water or deionized water is not available, use water that meets the minimum requirements that are listed in the table for recommended water properties in Operation and Maintenance Manual, “General Coolant Information”.

A cooling system that uses a mixture of SCA and water only needs more SCA than a cooling system that uses a mixture of glycol and water. The SCA concentration in a cooling system that uses SCA and water should be six to eight percent by volume. Refer to Table 8 for the amount of SCA that is required for various capacities of the cooling system.

Table 8

Caterpillar SCA Requirements for SCA and Water Cooling Systems		
Cooling System Capacity	**Caterpillar SCA at Initial Fill**	**Caterpillar SCA at 250 Hours**
22 to 30 L (6 to 8 US gal)	1.75 L (64 fl oz)	0.44 L (15 fl oz)
31 to 38 L (9 to 10 US gal)	2.30 L (80 fl oz)	0.57 L (20 fl oz)
39 to 49 L (11 to 13 US gal)	3.00 L (100 fl oz)	0.75 L (25 fl oz)

(continued)

(Table 8, contd)

Caterpillar SCA Requirements for SCA and Water Cooling Systems		
Cooling System Capacity	**Caterpillar SCA at Initial Fill**	**Caterpillar SCA at 250 Hours**
50 to 64 L (14 to 17 US gal)	3.90 L (128 fl oz)	0.95 L (32 fl oz)
65 to 83 L (18 to 22 US gal)	5.00 L (168 fl oz)	1.25 L (42 fl oz)
84 to 110 L (23 to 29 US gal)	6.60 L (224 fl oz)	1.65 L (56 fl oz)
111 to 145 L (30 to 38 US gal)	8.75 L (296 fl oz)	2.19 L (74 fl oz)
146 to 190 L (39 to 50 US gal)	11.50 L (392 fl oz)	2.88 L (98 fl oz)
191 to 250 L (51 to 66 US gal)	15.00 L (512 fl oz)	3.75 L (128 fl oz)

Refer to Table 9 for part numbers and for quantities of SCA.

Table 9

Caterpillar Liquid SCA	
Part Number	**Quantity**
6V-3542	0.24 L (8 oz)
111-2372	0.36 L (12 oz)
8T-1589	0.47 L (16 oz)
3P-2044	0.94 L (32 oz)
8C-3680	19 L (5 US gal)
5P-2907	208 L (55 US gal)

Maintain the SCA in the same way as you would maintain a cooling system that uses heavy-duty coolant or antifreeze. Adjust the maintenance for the amount of SCA additions. See table 8 for the amount of SCA that is required.

Cooling Systems with Larger Capacities

Adding the SCA to Water at the Initial Fill

Use the equation that is in table 10 to determine the amount of Caterpillar SCA that is required at the initial fill. This equation is for a mixture of only SCA and water.

Table 10

Equation For Adding The SCA To Water At The Initial Fill
V × 0.07 = X
V is the total volume of the cooling system.
X is the amount of SCA that is required.

Table 11 is an example for using the equation that is in table 10 .

Table 11

Example Of The Equation For Adding The SCA To Water At The Initial Fill		
Total Volume of the Cooling System (V)	**Multiplication Factor**	**Amount of SCA that is Required (X)**
946 L (250 US gal)	× 0.07	66 L (18 US gal)

Adding the SCA to Water for Maintenance

For the recommended service interval, refer to Operation and Maintenance Manual, “Maintenance Interval Schedule”.

Use the 8T-5296 Coolant Conditioner Test Kit to test the concentration of SCA. Make the following modifications to Steps 3 and 5 of the 8T-5296 Coolant Conditioner Test Kit instructions:

STEP 3 – Add tap water to the vial up to the “20 ml” mark.

STEP 5 – When the defined procedure is used, a concentration of six to eight percent will yield between 20 drops and 27 drops. If the number of drops is below 20 drops, the concentration of SCA is low. If the number of drops is above 27 drops, the concentration of SCA is high. Make the appropriate adjustments to the concentration of SCA.

Test the concentration of SCA or submit a coolant sample to your Caterpillar dealer. Refer to Operation and Maintenance Manual, “S·O·S Coolant Analysis”.

Additions of SCA are based on the results of the test or based on the results of the coolant analysis. The size of the cooling system determines the amount of SCA that is required.

Use the equation that is in Table 10 to determine the amount of Caterpillar SCA that is required for maintenance, if necessary:

Table 12

The Addition Equation for SCA To Water For Maintenance
V × 0.023 = X
V is the total volume of the cooling system.
X is the amount of SCA that is required.

Table 13 is an example for using the equation that is in table 10 .

Table 13

The Example of an Additional Equation SCA To Water For Maintenance		
Total Volume of the Cooling System (V)	**Multiplication Factor**	**Amount of SCA that is Required (X)**
946 L (250 US gal)	× 0.023	22 L (6 US gal)

Note: Specific engine applications may require maintenance practices to be periodically evaluated in order to properly maintain the engine's cooling system.

Table 9 lists part numbers and quantities of SCA that is available from your Caterpillar dealer.

Conventional Coolant or Maintenance for Antifreeze Cooling System

NOTICE
Never operate an engine without water temperature regulators in the cooling system. Water temperature regulators help to maintain the engine coolant at the proper operating temperature. Cooling system problems can develop without water temperature regulators.

Check the coolant/antifreeze (glycol concentration) in order to ensure adequate protection against boiling or freezing. Caterpillar recommends the use of a refractometer for checking the glycol concentration. Use the 1U-7298 Coolant/Battery Tester (Degree Celsius) or use the 1U-7297 Coolant/Battery Tester (Degree Fahrenheit). The testers give readings that are immediate and accurate. The testers can be used with ethylene or with propylene glycol.

Caterpillar engine cooling systems should be tested at 250 hour intervals for the concentration of Supplemental Coolant Additive (SCA). SCA test kits are available from your Caterpillar dealer. Test the concentration of SCA or submit a coolant sample to your Caterpillar dealer at 250 hour intervals. Refer to S·O·S Coolant Analysis for more information on this topic.

Additions of SCA are based on the results of the test or based on the results of the coolant analysis. An SCA that is liquid or a maintenance element for an SCA (if equipped) may be needed at 250 hour intervals.

Table 14 lists the amount of Caterpillar SCA that is needed at the initial fill in order to treat coolant/antifreeze. These amounts of SCA are for systems that use heavy-duty coolant or antifreeze.

Table 14 also lists additions of SCA for liquid and for maintenance elements at 250 hours. The additions are required for Caterpillar DEAC and for commercial coolant/antifreezes.

Table 14

Caterpillar SCA Requirements for Heavy-Duty Coolant/Antifreeze			
Cooling System Capacity	**Initial Fill(1)**	**250 Service Hour Maintenance(2)**	**Spin-on Element at 250 Service Hour Maintenance (If Equipped) (3)**
22 to 30 L (6 to 8 US gal)	0.95 L (32 fl oz)	0.24 L (8 fl oz)	111-2370 (1)
31 to 38 L (9 to 10 US gal)	1.18 L (40 fl oz)	0.36 L (12 fl oz)	111-2369 (1)
39 to 49 L (11 to 13 US gal)	1.42 L (48 fl oz)	0.36 L (12 fl oz)	111-2369 (1)
50 to 64 L (14 to 17 US gal)	1.90 L (64 fl oz)	0.47 L (16 fl oz)	9N-3368 (1)
65 to 83 L (18 to 22 US gal)	2.37 L (80 fl oz)	0.60 L (20 fl oz)	111-2371 (1)
84 to 114 L (23 to 30 US gal)	3.32 L (112 fl oz)	0.95 L (32 fl oz)	9N-3718 (1)
115 to 163 L (31 to 43 US gal)	4.75 L (160 fl oz)	1.18 L (40 fl oz)	111-2371 (2)
164 to 242 L (44 to 64 US gal)	7.60 L (256 fl oz)	1.90 L (64 fl oz)	9N-3718 (2)

(1) When the coolant system is first filled, the SCA is not required to be used with Caterpillar DEAC.
(2) Do not exceed the six percent maximum concentration. Check the concentration of SCA with a SCA test kit.
(3) Do not use the maintenance element for the SCA and the liquid for the SCA at the same time.

Note: Specific engine applications may require maintenance practices to be periodically evaluated in order to properly maintain the engine's cooling system.

Refer to table 15 for part numbers and for quantities of SCA.

Table 15

Caterpillar Liquid SCA	
Part Number	**Quantity**
6V-3542	0.24 L (8 oz)
111-2372	0.36 L (12 oz)
8T-1589	0.47 L (16 oz)
3P-2044	0.94 L (32 oz)
8C-3680	19 L (5 US gal)
5P-2907	208 L (55 US gal)

Cooling Systems with Larger Capacities

Adding the SCA to Conventional Coolant or Antifreeze at the Initial Fill

Note: Caterpillar DEAC DOES NOT require an addition of SCA when the cooling system is initially filled.

Commercial heavy-duty coolant or antifreeze that meets “ASTM D4985” or “ASTM D5345” specifications MAY require an addition of SCA at the initial fill. Read the label or the instructions that are provided by the OEM of the product.

Use the equation that is in table 16 to determine the amount of Caterpillar SCA that is required when the cooling system is initially filled with the following fluids:

- “ASTM D4985”
- “ASTM D5345”

Table 16

Equation For Adding The SCA To Conventional Coolant/Antifreeze At The Initial Fill
V × 0.045 = X
V is the total volume of the cooling system.
X is the amount of SCA that is required.

Table 17 is an example for using the equation that is in table 16 .

Table 17

Example Of The Equation For Adding The SCA To Conventional Coolant/Antifreeze At The Initial Fill		
Total Volume of the Cooling System (V)	**Multiplication Factor**	**Amount of SCA that is Required (X)**
946 L (250 US gal)	× 0.045	43 L (11 US gal)

Adding the SCA to Conventional Coolant or Antifreeze For Maintenance

Heavy duty coolant or antifreeze of all types REQUIRE periodic additions of an SCA.

Test the coolant/antifreeze periodically for the concentration of SCA. For the interval, refer to Operation and Maintenance Manual, “Maintenance Interval Schedule”. SCA test kits are available from your Caterpillar dealer. Test the concentration of SCA or submit a coolant sample to your Caterpillar dealer. Refer to Operation and Maintenance Manual, “S·O·S Coolant Analysis”.

Additions of SCA are based on the results of the test or based on the results of the coolant analysis. The size of the cooling system determines the amount of SCA that is needed.

Use the equation that is in table 18 to determine the amount of Caterpillar SCA that is required, if necessary:

Table 18

Equation For Adding The SCA To Conventional Coolant/Antifreeze For Maintenance
V × 0.014 = X
V is the total volume of the cooling system.
X is the amount of SCA that is required.

Table 19 is an example for using the equation that is in table 18 .

Table 19

Example Of The Equation For Adding The SCA To Conventional Coolant/Antifreeze For Maintenance		
Total Volume of the Cooling System (V)	**Multiplication Factor**	**Amount of SCA that is Required (X)**
946 L (250 US gal)	× 0.014	9 L (4 US gal)

Note: Specific engine applications may require maintenance practices to be periodically evaluated in order to properly maintain the engine's cooling system.

Table 15 lists part numbers and quantities of SCA that is available from your Caterpillar dealer.

Cleaning the System of Heavy-Duty Coolant/Antifreeze

Caterpillar cooling system cleaners are designed to clean the cooling system of harmful scale and corrosion. Caterpillar cooling system cleaners dissolve mineral scale, corrosion products, light oil contamination and sludge.

- Clean the cooling system after used coolant is drained or before the cooling system is filled with new coolant.
- Clean the cooling system whenever the coolant is contaminated or whenever the coolant is foaming.
- For the recommended service interval, refer to Operation and Maintenance Manual, “Maintenance Interval Schedule”.

i04147953

Fluid Recommendations (Fuel Recommendations)

SMCS Code: 1280; 1348; 1395; 7560

Diesel fuels that meet the Caterpillar Specification for Distillate Diesel Fuel are recommended. Diesel fuels from other sources could exhibit detrimental properties that are not defined or controlled by this specification.

NOTICE
Operating with fuels that do not meet Caterpillar's recommendations can cause the following effects: starting difficulty, poor combustion, deposits in the fuel injectors, reduced service life of the fuel system, deposits in the combustion chamber and reduced service life of the engine.

Satisfactory engine performance is dependent on the use of a good quality fuel. The use of a good quality fuel will give the following results: long engine life and acceptable exhaust emissions levels.

Note: Refer to Special Publication, SEBU6251, “Caterpillar Commercial Diesel Engine Fluids Recommendations” for the Caterpillar Specification for distillate fuel and for additional information that relates to fuel for your engine.

Refer to the Operation and Maintenance Manual that is provided by the OEM for capacities of the fuel system.

i04147954

Fluid Recommendations (Lubricant Information)

SMCS Code: 1280; 1348; 1395; 7560

General Information

Because of government regulations regarding the certification of exhaust emissions, the lubricant recommendations must be followed.

Engine Manufacturers Association (EMA) Oils

The “Engine Manufacturers Association Recommended Guideline on Diesel Engine Oil” is recognized by Caterpillar. For detailed information about this guideline, see the latest edition of EMA publication, “EMA LRG-1”.

API Oils

The Engine Oil Licensing and Certification System by the American Petroleum Institute (API) is recognized by Caterpillar. For detailed information about this system, see the latest edition of the “API publication No. 1509”. Engine oils that bear the API symbol are authorized by API.

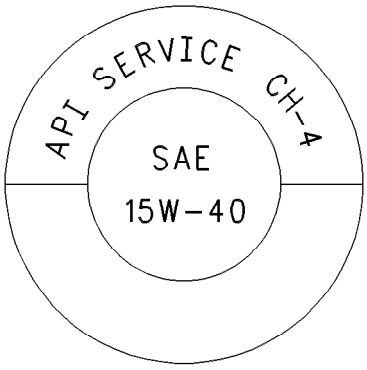

Illustration 23 g00546535

Typical API symbol

Diesel engine oils CC, CD, CD-2, and CE have not been API authorized classifications since January 1, 1996. Table 20 summarizes the status of the classifications.

Table 20

API Classifications	
Current	**Obsolete**
CI-4, CH-4, CG-4 (1)	CE

(continued)

(Table 20, contd)

CF (2)	CC, CD
CF-2(3)	CD-2(3)

(1) API CF-4 oils are no longer recommended for Caterpillar diesel engines.
(2) API CF oils are not recommended for Caterpillar diesel engines.
(3) API CF-2 and CD-2 oils are classifications for two-cycle diesel engines. Caterpillar does not sell engines that utilize the CD-2 and the API CF-2 oils.

Grease

The classifications of grease are based on the “ASTM D217” worked penetration characteristics. These characteristics for grease are given a defined consistency number.

Terminology

Certain abbreviations follow the nomenclature of “SAE J754”. Some classifications follow “SAE J183” abbreviations, and some classifications follow the “EMA Recommended Guideline on Diesel Engine Oil”. In addition to Caterpillar definitions, there are other definitions that will be of assistance in purchasing lubricants. Recommended oil viscosities can be found in Operation and Maintenance Manual, “Engine Oil”.

Caterpillar Diesel Engine Oil

Caterpillar Oils have been developed and tested in order to provide the full performance and service life that has been designed and built into Caterpillar Engines. Caterpillar Oils are currently used to fill diesel engines at the factory. These oils are offered by Caterpillar dealers for continued use when the engine oil is changed. Consult your Caterpillar dealer for more information on these oils.

Due to significant variations in the quality and in the performance of commercially available oils, Caterpillar makes the following recommendations:

- **Caterpillar Diesel Engine Oil (10W30)**
- **Caterpillar Diesel Engine Oil (15W40)**

Caterpillar multigrade Diesel Engine Oil is formulated with the correct amounts of detergents, dispersants, and alkalinity in order to provide superior performance in Caterpillar Diesel Engines.

Caterpillar multigrade Diesel Engine Oil is available in two viscosity grades (10W30 and 15W40). For direct injection engines, see table 21 in order to choose the correct viscosity grade for the ambient temperature. Multigrade oils provide the correct viscosity for a broad range of operating temperatures.

Multigrade oils are effective in maintaining low oil consumption and low levels of piston deposits.

Caterpillar multigrade Diesel Engine Oil can be used in other diesel engines and in gasoline engines. See the engine manufacturer's guide for the recommended specifications. Compare the specifications to the specifications of Caterpillar multigrade Diesel Engine Oil. The current industry standards for Caterpillar Diesel Engine Oil are listed on the product label and on the data sheets for the product.

Consult your Caterpillar dealer for part numbers and for available sizes of containers.

Commercial Oils

The performance of commercial diesel engine oils is based on American Petroleum Institute (API) classifications. These API classifications are developed in order to provide commercial lubricants for a broad range of diesel engines that operate at various conditions.

If Caterpillar multigrade Diesel Engine Oil is not used, only use commercial oils that meet the following classifications:

- EMA LRG-1 multigrade oil (preferred oil)
- API CH-4 multigrade oil (preferred oil)
- API CG-4 multigrade oil (preferred oil)

In order to make the proper choice of a commercial oil, refer to the following explanations:

EMA LRG-1 – The Engine Manufacturers Association (EMA) has developed lubricant recommendations as an alternative to the API oil classification system. LRG-1 is a Recommended Guideline that defines a level of oil performance for these types of diesel engines: high speed, 4 stroke cycle, heavy-duty and light duty. LRG-1 oils may be used in Caterpillar engines when the following oils are recommended: API CH-4 and API CG-4. LRG-1 oils are intended to provide superior performance in comparison to API CG-4.

LRG-1 oils will meet the needs of high performance Caterpillar diesel engines that are operating in many applications. The tests and the test limits that are used to define LRG-1 are similar to the new API CH-4 classification. The oils will meet the requirements of the low emissions diesel engines. LRG-1 oils are designed to control the harmful effects of soot with improved wear resistance and improved resistance to plugging of the oil filter. These oils will also provide superior control of piston deposit for engines with either two-piece steel pistons or aluminum pistons.

All LRG-1 oils must complete a full test program with the base stock and with the viscosity grade of the finished commercial oil. The use of “API Base Oil Interchange Guidelines” are not appropriate for LRG-1 oils. This feature reduces the variation in performance that can occur when base stocks are changed in commercial oil formulations.

LRG-1 oils are recommended for use in extended oil change interval programs that optimize oil life. These oil change interval programs are based on oil analysis. LRG-1 oils are recommended for conditions that demand a premium oil. Your Caterpillar dealer has the specific guidelines for optimizing oil change intervals.

API CH-4 – API CH-4 oils were developed in order to meet the requirements of the new high performance diesel engines. Also, the oil was designed to meet the requirements of the low emissions diesel engines. API CH-4 oils are also acceptable for use in older diesel engines and in diesel engines that use high sulfur diesel fuel. API CH-4 oils may be used in Caterpillar engines that use API CG-4. API CH-4 oils will generally exceed the performance of API CG-4 oils in the following criteria: deposits on pistons, control of oil consumption, wear of piston rings, valve train wear, viscosity control and corrosion.

Three new engine tests were developed for the API CH-4 oil. The first test specifically evaluates deposits on pistons for engines with the two-piece steel piston. This test (piston deposit) also measures the control of oil consumption. A second test is conducted with moderate oil soot. The second test measures the following criteria: wear of piston rings, wear of cylinder liners and resistance to corrosion. A third new test measures the following characteristics with high levels of soot in the oil: wear of the valve train, resistance of the oil in plugging the oil filter and control of sludge.

In addition to the new tests, API CH-4 oils have tougher limits for viscosity control in applications that generate high soot. The oils also have improved oxidation resistance. API CH-4 oils must pass an additional test (piston deposit) for engines that use aluminum pistons (single piece). Oil performance is also established for engines that operate in areas with high sulfur diesel fuel.

All of these improvements allow the API CH-4 oil to achieve optimum oil change intervals. API CH-4 oils are recommended for use in extended oil change intervals. API CH-4 oils are recommended for conditions that demand a premium oil. Your Caterpillar dealer has specific guidelines for optimizing oil change intervals.

API CG-4 – API CG-4 oils were developed primarily for diesel engines that use a 0.05 percent level of fuel sulfur. However, API CG-4 oils can be used with higher sulfur fuels. The TBN of the new oil determines the maximum fuel sulfur level for API CG-4 oils. See illustration 24 .

API CG-4 oils are the first oils that are required to pass industry standard tests for foam control and viscosity shear loss. API CG-4 oils must also pass tests that were developed for corrosion, wear, and oxidation.

Note: Do not use single grade API CF oils or multigrade API CF oils in Caterpillar Direct Injection (DI) Commercial Diesel Engines.

Some commercial oils that meet the API classifications may require reduced oil change intervals. To determine the oil change interval, closely monitor the condition of the oil and perform a wear metal analysis. Caterpillar's S·O·S oil analysis program is the preferred method.

NOTICE
Failure to follow these oil recommendations can cause shortened engine service life due to deposits and/or excessive wear.

Total Base Number (TBN) and Fuel Sulfur Levels for Direct Injection (DI) Diesel Engines

The Total Base Number (TBN) for an oil depends on the fuel sulfur level. For direct injection engines that use distillate fuel, the minimum TBN of the new oil must be ten times the fuel sulfur level. The TBN is defined by “ASTM D2896”. The minimum TBN of the oil is 5 regardless of fuel sulfur level. Illustration 24 demonstrates the TBN.

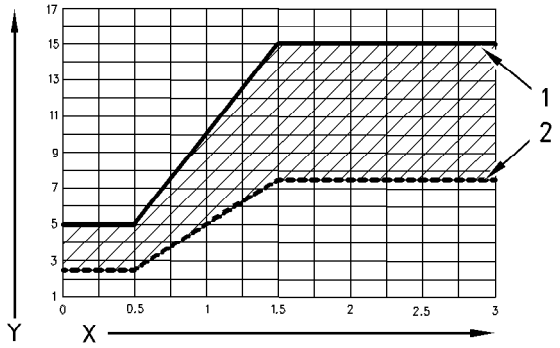

Illustration 24 g00799818

(Y) TBN by “ASTM D2896”
(X) Percentage of fuel sulfur by weight
(1) TBN of new oil
(2) Change the oil when the TBN deteriorates to 50 percent of the original TBN.

Use the following guidelines for fuel sulfur levels that exceed 1.5 percent:

- Choose an oil with the highest TBN that meets one of these classifications: EMA LRG-1, API CH-4 and API CG-4.
- Reduce the oil change interval. Base the oil change interval on the oil analysis. Ensure that the oil analysis includes the condition of the oil and a wear metal analysis.

Excessive piston deposits can be produced by an oil with a high TBN. These deposits can lead to a loss of control of the oil consumption and to the polishing of the cylinder bore.

NOTICE
Operating Direct Injection (DI) diesel engines with fuel sulfur levels over 1.0 percent may require shortened oil change intervals in order to help maintain adequate wear protection.

Lubricant Viscosity Recommendations for Direct Injection (DI) Diesel Engines

The proper SAE viscosity grade of oil is determined by the minimum ambient temperature during cold engine start-up, and the maximum ambient temperature during engine operation.

Refer to table 21 (minimum temperature) in order to determine the required oil viscosity for starting a cold engine.

Refer to table 21 (maximum temperature) in order to select the oil viscosity for engine operation at the highest ambient temperature that is anticipated.

Generally, use the highest oil viscosity that is available to meet the requirement for the temperature at start-up.

Table 21

Engine Oil Viscosity		
Caterpillar DEO Multigrade EMA LRG-1 API CH-4 API CG-4 Viscosity Grade	Ambient Temperature	
	Minimum	Maximum
SAE 0W20	−40 °C (−40 °F)	10 °C (50 °F)
SAE 0W30	−40 °C (−40 °F)	30 °C (86 °F)
SAE 0W40	−40 °C (−40 °F)	40 °C (104 °F)
SAE 5W30	−30 °C (−22 °F)	30 °C (86 °F)
SAE 5W40	−30 °C (−22 °F)	40 °C (104 °F)

(continued)

(Table 21, contd)

SAE 10W30	−20 °C (−4 °F)	40 °C (104 °F)
SAE 15W40	−9.5 °C (15 °F)	50 °C (122 °F)

Synthetic Base Stock Oils

Synthetic base oils are acceptable for use in Caterpillar engines. **The oils must meet the performance requirements that are specified by Caterpillar for the engine.**

Synthetic base oils generally perform better than conventional oils in the following two areas:

- Synthetic base oils have improved flow at low temperatures.
- Synthetic base oils have improved oxidation stability.

Some synthetic base oils have performance characteristics that enhance the service life of the oil. Caterpillar does not recommend the automatic extension of oil drain intervals for any type of oil.

Oil drain intervals for Caterpillar engines can only be adjusted for a longer service interval after an oil analysis program that contains the following data:

- Oil condition, oil contamination, and wear metal analysis (Caterpillar S·O·S Services oil analysis)
- Trend analysis
- Fuel consumption
- Oil consumption

Re-refined Basestock Oils

Re-refined basestock oils are acceptable for use in Caterpillar engines. **The oils must meet the performance requirements that are specified by Caterpillar.**

Re-refined basestock oils can be used exclusively in finished oil or in a combination with new basestock oils. The US military specifications and the specifications of other heavy equipment manufacturers also allow the use of re-refined basestock oils that meet the same criteria.

The process that is used to make re-refined basestock oil should adequately remove all wear metals that are in the used oil and all additives that are in the used oil. Vacuum distillation and the hydrotreating of the used oil are acceptable processes that are used for producing re-refined base oil.

Note: Filtering is inadequate for the production of high quality re-refined basestock oils from used oil.

Cold Weather Lubricants

When an engine is started and an engine is operated in ambient temperatures below −20 °C (−4 °F), use multigrade oils that are capable of flowing in low temperatures.

These oils have lubricant viscosity grades of SAE 0W or SAE 5W.

When an engine is started and operated in ambient temperatures below −30 °C (−22 °F), use a synthetic base stock multigrade oil with a 0W viscosity grade or with a 5W viscosity grade. Use an oil with a pour point that is lower than −50 °C (−58 °F).

The number of acceptable lubricants is limited in cold-weather conditions. Caterpillar recommends the following lubricants for use in cold-weather conditions:

First Choice – Use an oil with an EMA LRG-1 Recommended Guideline or use a CH-4 oil that is API licensed with an SAE 0W20, SAE 0W30, SAE 0W40, SAE 5W30 or SAE 5W40 lubricant viscosity grade. A CG-4 oil that is API licensed with an SAE 0W20, SAE 0W30, SAE 0W40, SAE 5W30, or SAE 5W40 lubricant viscosity grade may also be used. A CF-4 oil that is API licensed with an SAE 0W20, SAE 0W30, SAE 0W40, SAE 5W30, or SAE 5W40 lubricant viscosity grade may also be used.

Second Choice – use an oil that contains the CH-4, CG-4, or CF-4 additive package although the oil has not been tested for the requirements of the API license. The oil must have an SAE 0W20, SAE 0W30, SAE 0W40, SAE 5W30 or SAE 5W40 lubricant viscosity grade.

NOTICE
Shortened engine service life could result if second choice oils are used.

Aftermarket Oil Additives

Caterpillar does not recommend the use of aftermarket additives in oil. It is not necessary to use aftermarket additives in order to achieve the engine's maximum service life or rated performance. Fully formulated, finished oils consist of base oils and of commercial additive packages. These additive packages are blended into the base oils at precise percentages in order to help provide finished oils with performance characteristics that meet industry standards.

There are no industry standard tests that evaluate the performance or the compatibility of aftermarket additives in finished oil. Aftermarket additives may not be compatible with the finished oil's additive package, which could lower the performance of the finished oil. The aftermarket additive could fail to mix with the finished oil. This could produce sludge in the crankcase. Caterpillar discourages the use of aftermarket additives in finished oils.

To achieve the best performance from a Caterpillar engine, conform to the following guidelines:

- Select the proper Caterpillar oil or a commercial oil that meets the Caterpillar recommendations.
- See the appropriate “Lubricant Viscosities” table in order to find the correct oil viscosity grade for your engine.
- At the specified interval, service the engine compartment. Use new oil and install a new oil filter.
- Perform maintenance at the intervals that are specified in the Operation and Maintenance Manual, “Maintenance Interval Schedule”.

Lubricating Grease

Caterpillar provides greases in order to cover various applications and extreme temperature conditions. Consult your Caterpillar dealer for part numbers and for available sizes of containers.

Note: Some greases may not be used with other greases. When a commercial grease is used, ensure that the grease is compatible with the grease that is currently used in the system. If the commercial grease is not compatible, the system must be purged. If any questions arise concerning the compatibility of a grease, consult the supplier.

Multipurpose Greases

Multipurpose Lithium Complex Grease (MPGL)

Multipurpose Lithium Complex Grease (MPGL) is a general-purpose lithium complex grease for medium-duty applications. This product has good characteristics at high temperatures such as a dropping point of 260 °C (500 °F). MPGL contains unleaded extreme pressure additives, antiwear inhibitors, and corrosion inhibitors that provide extra protection in the following applications:

- Construction
- Agricultural
- Automotive

MPGL meets the requirements for extended service intervals of automotive chassis points. MPGL also meets the requirements for extended service intervals of wheel bearings with disc brakes in automobiles, in vans and in light trucks. This product meets the NLGI certification of “GC-LB”. MPGL is also available in a NLGI No. 2 grade. Normal operating temperatures for this product are −28 to 149 °C (−18 to 300 °F). This product is also available as a white lithium complex grease.

Multipurpose Lithium Complex Grease with Molybdenum (MPGM)

Multipurpose Lithium Complex Grease with Molybdenum (MPGM) is a general-purpose lithium complex grease that is used for light-duty applications and for medium-duty applications. The MPGM is available in the following grades: NLGI No. 2 grade and NLGI No. 0 grade. The MPGM is strengthened with a molybdenum disulfide and a polymer for extra lubrication and protection. MPGM contains unleaded additives. MPGM also contains antiwear inhibitors, rust inhibitors, and corrosion inhibitors that are for protection and lubrication in many environments. The MPGM is formulated with a base fluid that has high viscosity.

The MPGM has the following features:

- Increased protection against water washout
- Increased retention
- Resistance to heavy loads

This product is recommended for heavily loaded pin joints and for journal bearings. This product meets the certification of “GC-LB”. Normal operating temperatures for this product are −28 to 149 °C (−18 to 300 °F) for the NLGI No. 0 grade. Normal operating temperatures for this product are −18 to 149 °C (0 to 300 °F) for the NLGI No. 2 grade.

Note: If MPGM is not available, use a multipurpose type grease which contains 3 to 5 percent molybdenum.

Special Purpose Grease (SPG)

Bearing Lubricant (SPG)

Bearing Lubricant (SPG) is available in a NLGI No. 2 grade with a polyurea thickener. This grease is recommended for high temperature antifriction bearings in the following applications: electric starting motors, alternators, fan drives and generators. The Bearing Lubricant (SPG) has an effective operating range of −29 to 177 °C (−20 to 350 °F).

Water and Temperature Resistant Grease (WTR)

The Water and Temperature Resistant Grease is designed for use whenever the following conditions are a concern: water washout, severe corrosion and high operating temperatures. The Water and Temperature Resistant Grease provides extreme pressure protection, antiwear protection, rust protection, and corrosion protection. The Water and Temperature Resistant Grease is an environmentally friendly grease which does not contain the following materials: antimony, sulfur, barium, zinc, lead and phosphorous materials. The Water and Temperature Resistant Grease has excellent shear stability. Water and Temperature Resistant Grease can also resist breakdown in the presence of water. The Water and Temperature Resistant Grease works well in the following applications:

- Construction
- Agricultural
- Automotive
- Industrial
- Marine

This product meets the NLGI certification of “GC-LB”. Normal operating temperatures for this product are −40 to 204°C (−40 to 400°F).

Caterpillar Premium Grease (CPG)

Desert Gold (CPG)

Desert Gold is a heavy-duty, premium synthetic grease that is developed for the most extreme operating environments. This grease is formulated with the following characteristics: high viscosity synthetic base fluid, polymers, molybdenum disulfide, high viscosity index and high dropping point.

Desert Gold will protect equipment against heavy shock loads. Desert Gold protects against corrosion in extreme heat, in moist conditions, or in dusty conditions. This product has excellent characteristics of adhesion and of stability. Desert Gold provides longer protection than other greases. Desert Gold is an environmentally friendly grease which does not contain the following materials: antimony, sulfur, barium, zinc, lead and phosphorous materials. Normal operating temperatures are −6 to 230 °C (21 to 450 °F). Desert Gold can operate at higher temperatures for short time periods. Desert Gold has additional extreme pressure protection for highly loaded pin joints.

Arctic Platinum (CPG)

Arctic Platinum is a super-premium extreme pressure lubricating grease that is developed for lubrication in temperatures that are below zero to moderate operating temperatures. Arctic Platinum is available in grades 000, 00, 0, 1, and 2. These grades ensure the pumpability in central lube systems in various ambient temperatures from −60 to 18 °C (−76 to 65 °F). Arctic Platinum has a high dropping point. Arctic Platinum contains a 5 percent concentrate of molybdenum disulfide for protection against extra heavy loads. Arctic Platinum provides excellent corrosion protection and rust protection. Arctic Platinum is an environmentally friendly grease which does not contain the following materials: antimony, sulfur, barium, zinc and phosphorous.

Arctic Platinum is designed for lubrication for long life of the following components: horizontal pivot bearings, lower link bearings, steering cylinders, kingbolt bearings, upper hitch link bearings and ejector carrier roller bearings. This grease is extra tacky for retention on excavator carbody bearings. Arctic Platinum has additional extreme pressure protection for highly loaded pin joints.

S·O·S Oil Analysis

Caterpillar recommends the use of the S·O·S oil analysis program in order to monitor the condition and the maintenance requirements of the equipment. The S·O·S oil analysis program will complement the preventive maintenance program.

The S·O·S oil analysis is a diagnostic tool that is used to determine oil performance and component wear rates. Contamination can be identified and measured by using the S·O·S oil analysis. The S·O·S oil analysis includes the following tests:

- The Wear Rate Analysis monitors the wear of the engine's metals. The amount of wear metal and type of wear metal that is in the oil is analyzed. The increase in the rate of engine wear metal in the oil is as important as the quantity of engine wear metal in the oil. For this reason, regular sampling at specified intervals is necessary in order to establish wear rates. Intermittent sampling does not allow wear rate trend lines to be established. Engine wear metals in the oil sample are compared to established Caterpillar norms in order to determine acceptability.
- Tests are conducted in order to detect contamination of the oil by water, glycol, or fuel.

- The Oil Condition Analysis determines the loss of the oil lubricating properties. An infrared analysis is used to compare the properties of new oil to the properties of the used oil sample. This analysis allows technicians to determine the amount of deterioration of the oil during use. This analysis also allows technicians to verify the performance of the oil according to the specification during the entire oil change interval.

The test results of the oil samples will then be used as a basis for determining the oil change interval for the engine. The results of the S·O·S oil analysis may allow the engine to operate longer between oil changes without the risk of engine damage.

Table 22

S·O·S Oil Analysis Interval	
Compartment	**Interval**
Engine crankcase	Every 250 Service Hours

For more information, see Special Publication, PEDP7036, “S·O·S Fluid Analysis”. Consult your Caterpillar dealer for complete information and assistance about the program.

Maintenance Recommendations

i04147955

Welding on Engines with Electronic Controls

SMCS Code: 1000

NOTICE
Because the strength of the frame may decrease, some manufacturers do not recommend welding onto a chassis frame or rail. Consult the OEM of the equipment or your Caterpillar dealer regarding welding on a chassis frame or rail.

Proper welding procedures are necessary in order to avoid damage to the electrical switches and associated components. When possible, remove the component from the unit and then weld the component. If removal of the component is not possible, the following procedure must be followed when you weld on a unit that is equipped with a Caterpillar engine. The following procedure is considered to be the safest procedure to weld on a component. This procedure should provide a minimum risk of damage to electronic components.

1. Stop the engine. Turn the switched power to the OFF position.

2. Disconnect the negative battery cable from the battery. If a battery disconnect switch is provided, open the switch.

3. Disconnect the electrical connections for any switches or electronic governors that may be installed.

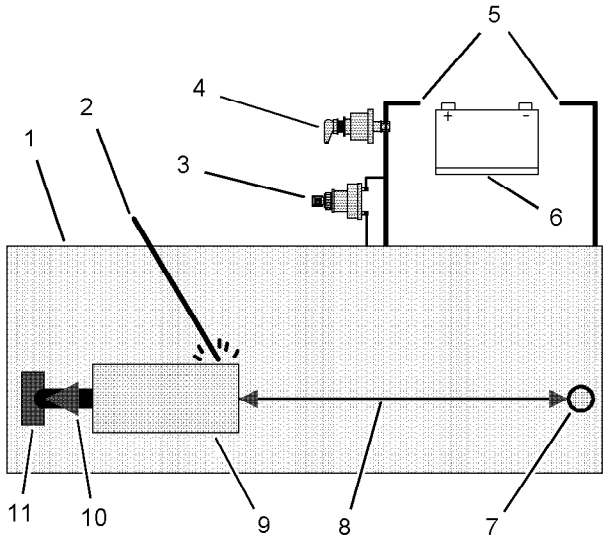

Illustration 25 g01075639

Use the example above. The current flow from the welder to the ground clamp of the welder will not damage any associated components.

(1) Engine
(2) Welding electrode
(3) Keyswitch in the OFF position
(4) Battery disconnect switch in the open position
(5) Disconnected battery cables
(6) Battery
(7) Electrical/Electronic component
(8) Minimum distance between the component that is being welded and any electrical/electronic component
(9) The component that is being welded
(10) Current path of the welder
(11) Ground clamp for the welder

4. Connect the welding ground cable directly to the part that will be welded. Place the ground cable as close as possible to the weld in order to reduce the possibility of welding current damage to bearings, hydraulic components, electrical components, and ground straps.

Note: If electrical/electronic components are used as a ground for the welder, or electrical/electronic components are located between the welder ground and the weld, current flow from the welder could severely damage the component.

5. Protect the wiring harness from welding debris and spatter.

6. Use standard welding practices to weld the materials.

i04145930

Severe Service Application

SMCS Code: 1000

Severe service is an application of an engine that exceeds current published standards for that engine. Caterpillar maintains standards for the following engine parameters:

- Performance (power range, speed range and fuel consumption)
- Fuel quality
- Altitude range
- Maintenance intervals
- Oil selection and maintenance
- Coolant selection and maintenance
- Environmental qualities
- Installation

Refer to the standards for the engine or consult with your Caterpillar dealer in order to determine if the engine is operating within the defined parameters.

Severe service operation can accelerate component wear. Engines that operate under severe conditions may need more frequent maintenance intervals in order to ensure maximum reliability and retention of full service life.

Due to individual applications, it is not possible to identify all of the factors which can contribute to severe service operation. Consult your Caterpillar dealer for the unique maintenance that is necessary for the engine.

The operating environment, improper operating procedures, and improper maintenance procedures can be factors which contribute to severe service conditions.

Environmental Factors

Ambient temperatures – The engine may be exposed to extended operation in cold environments or hot environments. Valve components can be damaged by carbon buildup if the engine is frequently started and stopped in cold temperatures. Hot inlet air reduces engine performance.

Air Quality – The engine may be exposed to extended operation in an environment that is dirty or dusty, unless the equipment is cleaned regularly. Mud, dirt, and dust can encase components. Maintenance can be difficult. The buildup can contain corrosive chemicals.

Buildup – Compounds, elements, corrosive chemicals, and salt can damage some components.

Altitude – Problems can arise when the engine is operated at altitudes that are higher than the intended settings for that application. Necessary adjustments should be made.

Improper Operating Procedures

- Extended operation at low idle
- Frequent hot shutdowns
- Operating at excessive loads
- Operating at excessive speeds
- Operating outside the intended application

Improper Maintenance Procedures

- Extending the maintenance intervals
- Failure to use recommended fuel, lubricants, and coolant/antifreeze

i08340963

Maintenance Interval Schedule

SMCS Code: 1000; 4450; 7500

When Required

“ Battery - Replace“ 59
“Battery or Battery Cable - Disconnect“ . . . . . .
“ Engine - Clean“ 68
“ Engine Air Cleaner Element (Dual Element) - Inspect/Clean/Replace“ 69
“ Engine Air Cleaner Element (Single Element) - Inspect/Clean/Replace“ 72
“ Fuel System - Prime“ 79

Daily

“ Belts - Inspect/Adjust/Replace“ 60
“ Coolant Level - Check“ 65
“Driven Equipment - Check“ . . . . . .
“ Engine Air Cleaner Service Indicator - Inspect“ . . 72
“Engine Air Precleaner - Check/Clean“ . . . . . .
“ Engine Oil Level - Check“ 74
“ Fuel System Primary Filter/Water Separator - Drain“ 81
“ Walk-Around Inspection“ 89

Every 50 Service Hours or Weekly

“ Fuel Tank Water and Sediment - Drain“ 84

Every 250 Service Hours

“ Coolant Sample (Level 1) - Obtain“ 65
“Engine Oil Sample - Obtain“ . . . . . .

Initial 500 Service Hours

“ Engine Valve Lash - Check“ 78

Every 500 Service Hours

“ Fan Clearance - Check“ 78

Every 500 Service Hours or 1 Year

“ Battery Electrolyte Level - Check“ 59
“ Cooling System Supplemental Coolant Additive (SCA) - Test/Add“ 67
“ Engine Air Cleaner Element (Dual Element) - Inspect/Clean/Replace“ 69
“ Engine Air Cleaner Element (Single Element) - Inspect/Clean/Replace“ 72
“ Engine Crankcase Breather - Replace“ 73
“Engine Oil and Filter - Change“ . . . . . .
“ Fuel System Primary Filter (Water Separator) Element - Replace“ 82
“ Fuel System Secondary Filter - Replace“. 83
“ Hoses and Clamps - Inspect/Replace“. 84
“Radiator - Clean“. . . . . .

Every 1000 Service Hours

“ Engine Valve Lash - Check“ 78
“ Water Pump - Inspect“. 90

Every 2000 Service Hours

“ Aftercooler Core - Inspect/Clean/Test“ 58
“ Engine Mounts - Inspect“ 74
“ Starting Motor - Inspect“ 88
“ Turbocharger - Inspect“. 88

Every 2000 Service Hours or 1 Year

“ Alternator - Inspect“. 59

Every Year

“ Coolant Sample (Level 2) - Obtain“ 66

Every 3000 Service Hours or 2 Years

“ Coolant (DEAC) - Change“ 61

“ Coolant Temperature Regulator - Replace“ 67

Every 4000 Service Hours

“Aftercooler Core - Clean/Test“ . . . . . .

Every 6000 Service Hours or 3 Years

“ Coolant Extender (ELC) - Add“ 64

Every 12 000 Service Hours or 6 Years

“ Coolant (ELC) - Change“. 63

Overhaul

“ Overhaul Considerations“ 85

Commissioning

“ Fan Clearance - Check“ 78

i08772170

Aftercooler Core - Clean/Test

SMCS Code: 1064-081; 1064-070

1. Remove the core. Refer to the Service Manual for the procedure.
2. Turn the aftercooler core upside-down in order to remove debris.

NOTICE
Do not use a high concentration of caustic cleaner to clean the core. A high concentration of caustic cleaner can attack the internal metals of the core and cause leakage. Only use the recommended concentration of cleaner.

3. Back flush the core with cleaner.

   Caterpillar recommends the use of Kynetx liquid cleaner. Table 23 lists Kynetx liquid cleaners that are available from your Caterpillar dealer.

Table 23

Kynetx Liquid Cleaners(1)		
Part Number	**Description**	**Size**
486 - 1524	Kynetx 4165	208.2 L (55 US gallon)
486–6854	Kynetx 100	19 L (5 US gallon)

(1) Use a two to five percent concentration of the cleaner at temperatures up to 93°C (200°F). Refer to Application Guide, NEHS0526 or consult your Caterpillar dealer for more information.

4. Steam clean the core in order to remove any residue. Flush the fins of the aftercooler core. Remove any other trapped debris.
5. Wash the core with hot, soapy water. Rinse the core thoroughly with clean water.

⚠ WARNING

Personal injury can result from air pressure.

Personal injury can result without following proper procedure. When using pressure air, wear a protective face shield and protective clothing.

Maximum air pressure at the nozzle must be less than 205 kPa (30 psi) for cleaning purposes.

6. Dry the core with compressed air. Direct the air in the reverse direction of the normal flow.
7. Inspect the core in order to ensure cleanliness. Pressure test the core. Many shops that service radiators are equipped to perform pressure tests. If necessary, repair the core.
8. Install the core. Refer to the Service Manual for the procedure.

For more information on cleaning the core, consult your Caterpillar dealer.

i04156866

Aftercooler Core - Inspect/ Clean/Test
(Aftercooler Core - Inspect)

SMCS Code: 1064-040; 1064-081; 1064-070

Note: Adjust the frequency of cleaning according to the effects of the operating environment.

Inspect the aftercooler for these items: damaged fins, corrosion, dirt, grease, insects, leaves, oil and other debris. Clean the aftercooler, if necessary.

For air-to-air aftercoolers, use the same methods that are used for cleaning radiators.

⚠ WARNING

Personal injury can result from air pressure.

Personal injury can result without following proper procedure. When using pressure air, wear a protective face shield and protective clothing.

Maximum air pressure at the nozzle must be less than 205 kPa (30 psi) for cleaning purposes.

After cleaning, start the engine and accelerate the engine to high idle rpm. This will help in the removal of debris and drying of the core. Stop the engine. Use a light bulb behind the core in order to inspect the core for cleanliness. Repeat the cleaning, if necessary.

Inspect the fins for damage. Bent fins may be opened with a “comb”.

Note: If parts of the aftercooler system are repaired or replaced, a leak test is highly recommended. The FT1984 Aftercooler Testing Group is used to perform leak tests on the aftercooler. Refer to Special Instruction, SEHS8622 for the proper testing procedure.

Inspect these items for good condition: welds, mounting brackets, air lines, connections, clamps and seals. Make repairs, if necessary.

For more detailed information on cleaning and inspection, see Special Publication, SEBD0518, “Know Your Cooling System”.

i02785788

Alternator - Inspect

SMCS Code: 1405-040

Caterpillar recommends a scheduled inspection of the alternator. Inspect the alternator for loose connections and proper battery charging. Inspect the ammeter (if equipped) during engine operation in order to ensure proper battery performance and/or proper performance of the electrical system. Make repairs, as required.

Check the alternator and the battery charger for proper operation. If the batteries are properly charged, the ammeter reading should be very near zero. All batteries should be kept charged. The batteries should be kept warm because temperature affects the cranking power of the battery. If the battery is too cold, the battery will not crank the engine.

When the engine is not run for long periods of time or if the engine is run for short periods, the batteries may not fully charge. A battery with a low charge will freeze more easily than a battery with a full charge.

i02322315

Battery - Replace

SMCS Code: 1401-510

⚠ WARNING

Batteries give off combustible gases which can explode. A spark can cause the combustible gases to ignite. This can result in severe personal injury or death.

Ensure proper ventilation for batteries that are in an enclosure. Follow the proper procedures in order to help prevent electrical arcs and/or sparks near batteries. Do not smoke when batteries are serviced.

⚠ WARNING

The battery cables or the batteries should not be removed with the battery cover in place. The battery cover should be removed before any servicing is attempted.

Removing the battery cables or the batteries with the cover in place may cause a battery explosion resulting in personal injury.

1. Switch the engine to the OFF position. Remove all electrical loads.
2. Turn off any battery chargers. Disconnect any battery chargers.
3. The NEGATIVE “-” cable connects the NEGATIVE “-” battery terminal to the NEGATIVE “-” terminal on the starting motor. Disconnect the cable from the NEGATIVE “-” battery terminal.
4. The POSITIVE “+” cable connects the POSITIVE “+” battery terminal to the POSITIVE “+” terminal on the starting motor. Disconnect the cable from the POSITIVE “+” battery terminal.

Note: Always recycle a battery. Never discard a battery. Dispose of used batteries to an appropriate recycling facility.

5. Remove the used battery.
6. Install the new battery.

Note: Before the cables are connected, ensure that the engine start switch is OFF.

7. Connect the cable from the starting motor to the POSITIVE “+” battery terminal.
8. Connect the NEGATIVE “-” cable to the NEGATIVE “-” battery terminal.

i02724529

Battery Electrolyte Level - Check

SMCS Code: 1401-535-FLV

When the engine is not run for long periods of time or when the engine is run for short periods, the batteries may not fully recharge. Ensure a full charge in order to help prevent the battery from freezing. If batteries are properly charged, ammeter reading should be very near zero,when the engine is in operation.

⚠ WARNING

All lead-acid batteries contain sulfuric acid which can burn the skin and clothing. Always wear a face shield and protective clothing when working on or near batteries.

1. Remove the filler caps. Maintain the electrolyte level to the “FULL” mark on the battery.

   If the addition of water is necessary, use distilled water. If distilled water is not available use clean water that is low in minerals. Do not use artificially softened water.
2. Check the condition of the electrolyte with the 245-5829 Coolant Battery Tester Refractometer.
3. Keep the batteries clean.

Clean the battery case with one of the following cleaning solutions:

- Use a solution of 0.1 kg (0.2 lb) baking soda and 1 L (1 qt) of clean water.
- Use a solution of ammonium hydroxide.

Thoroughly rinse the battery case with clean water.

Use a fine grade of sandpaper to clean the terminals and the cable clamps. Clean the items until the surfaces are bright or shiny. DO NOT remove material excessively. Excessive removal of material can cause the clamps to not fit properly. Coat the clamps and the terminals with 5N-5561 Silicone Lubricant, petroleum jelly or MPGM.

i09570426

Battery or Battery Cable - Disconnect

SMCS Code: 1401; 1402-029

⚠ WARNING

The battery cables or the batteries should not be removed with the battery cover in place. The battery cover should be removed before any servicing is attempted.

Removing the battery cables or the batteries with the cover in place may cause a battery explosion resulting in personal injury.

1. Turn the start switch to the OFF position. Turn the ignition switch (if equipped) to the OFF position and remove the key and all electrical loads.
2. Open the battery isolator. Disconnect the negative battery terminal. Ensure that the cable cannot contact the terminal. When four 12 volt batteries are involved, two negative connections must be disconnected.
3. Remove the positive connection.
4. Clean all disconnected connection and battery terminals.
5. Use a fine grade of sandpaper to clean the terminals and the cable clamps. Clean the items until the surfaces are bright or shiny. DO NOT remove material excessively. Excessive removal of material can cause the clamps to not fit correctly. Coat the clamps and the terminals with a suitable silicone lubricant or petroleum jelly.
6. Tape the cable connections to help prevent accidental starting.
7. Proceed with necessary system repairs.
8. To connect the battery, connect the positive connection before the negative connection.

i04145993

Belts - Inspect/Adjust/Replace

SMCS Code: 1357-025; 1357-040; 1357-510

Inspection

To maximize the engine performance, inspect the belts for wear and for cracking. Replace belts that are worn or damaged.

For applications that require multiple drive belts, replace the belts in matched sets. Replacing only one belt of a matched set will cause the new belt to carry more load because the older belt is stretched. The additional load on the new belt could cause the new belt to break.

If the belts are too loose, vibration causes unnecessary wear on the belts and pulleys. Loose belts may slip enough to cause overheating.

To accurately check the belt tension, 144-0235 Belt Tension Gauge should be used.

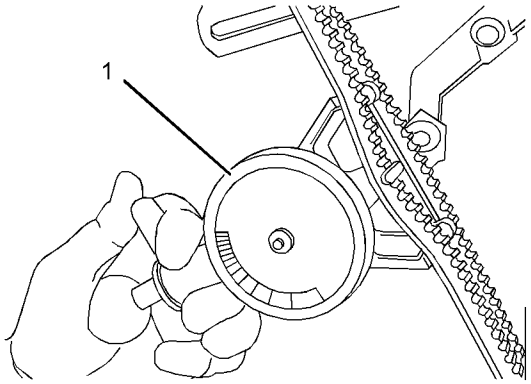

Illustration 26 g02352672

Typical example

(1) 144-0235 Belt Tension Gauge

Install the belt tension gauge (1) at the center of the longest free length and check the tension. The correct tension is 535 N (120 lb). If the tension of the belt is below 250 N (56 lb) adjust the belt to 535 N (120 lb).

If twin belts are installed, check and adjust the tension on both belts.

Adjustment

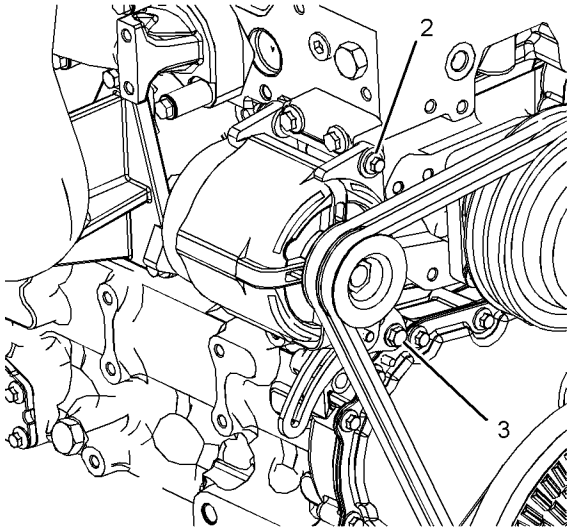

Illustration 27 g02343596
Typical example

1. Loosen the alternator pivot bolt (2) and the link bolt (3).
2. Move the alternator in order to increase or decrease the belt tension. Tighten the alternator pivot bolt and the link bolt to 22 N·m (16 lb ft).(1).

Replacement

Refer to Disassembly and Assembly for the installation procedure and the removal procedure for the belt.

i04146129

Coolant (DEAC) - Change

SMCS Code: 1350-070; 1395-044

Clean the cooling system and flush the cooling system before the recommended maintenance interval if the following conditions exist:

- The engine overheats frequently.
- Foaming is observed.
- The oil has entered the cooling system and the coolant is contaminated.
- The fuel has entered the cooling system and the coolant is contaminated.

NOTICE
Use of commercially available cooling system cleaners may cause damage to cooling system components. Use only cooling system cleaners that are approved for Caterpillar engines.

Note: Inspect the water pump and the water temperature regulator after the cooling system has been drained. This is a good opportunity to replace the water pump, the water temperature regulator, and the hoses, if necessary.

Drain

⚠ WARNING

Pressurized System: Hot coolant can cause serious burns. To open the cooling system filler cap, stop the engine and wait until the cooling system components are cool. Loosen the cooling system pressure cap slowly in order to relieve the pressure.

1. Stop the engine and allow the engine to cool. Loosen the cooling system filler cap slowly in order to relieve any pressure. Remove the cooling system filler cap.

Note: Refer to Operation and Maintenance Manual, “General Hazard Information” for information on Containing Fluid Spillage.

2. Open the cooling system drain valve (if equipped). If the cooling system is not equipped with a drain valve, remove one of the drain plugs.

   Allow the coolant to drain into a suitable container.
3. Properly dispose of the drained material. Obey local regulations for the disposal of the material.

NOTICE
Dispose of used engine coolant properly or recycle. Various methods have been proposed to reclaim used coolant for reuse in engine cooling systems. The full distillation procedure is the only method acceptable by Caterpillar to reclaim the used coolant.

Flush

1. Flush the cooling system with clean water in order to remove any debris.

2. Close the drain valve (if equipped). Clean the drain plugs. Install the drain plugs. Refer to Torque Specifications, SENR3130 for more information on the correct torques.

NOTICE
Do not fill the cooling system faster than 5 L (1.3 US gal) per minute to avoid air locks.

Cooling system air locks may result in engine damage.

3. Fill the cooling system with a mixture of clean water and Caterpillar Fast Acting Cooling System Cleaner. Add 0.5 L (1 pint) of cleaner per 15 L (4 US gal) of the cooling system capacity. Install the cooling system filler cap.

4. Start and run the engine at low idle for a minimum of 30 minutes. The coolant temperature should be at least 82 °C (180 °F).

NOTICE
Improper or incomplete rinsing of the cooling system can result in damage to copper and other metal components.

To avoid damage to the cooling system, make sure to completely flush the cooling system with clear water. Continue to flush the system until all signs of the cleaning agent are gone.

5. Stop the engine and allow the engine to cool. Loosen the cooling system filler cap slowly in order to relieve any pressure. Remove the cooling system filler cap. Open the drain valve (if equipped) or remove the cooling system drain plugs. Allow the water to drain. Flush the cooling system with clean water. Close the drain valve (if equipped). Clean the drain plugs. Install the drain plugs. Refer to Torque Specifications, SENR3130 for more information on the correct torques.

Cooling Systems with Heavy Deposits or Plugging

Note: For the following procedure to be effective, there must be some active flow through the cooling system components.

1. Flush the cooling system with clean water in order to remove any debris.

2. Close the drain valve (if equipped). Clean the drain plugs. Install the drain plugs. Refer to Torque Specifications, SENR3130 for more information on the correct torques.

NOTICE
Do not fill the cooling system faster than 5 L (1.3 US gal) per minute to avoid air locks.

Cooling system air locks may result in engine damage.

3. Fill the cooling system with a mixture of clean water and Caterpillar Fast Acting Cooling System Cleaner. Add 0.5 L (1 pint) of cleaner per 3.8 to 7.6 L (1 to 2 US gal) of the cooling system capacity. Install the cooling system filler cap.

4. Start and run the engine at low idle for a minimum of 90 minutes. The coolant temperature should be at least 82 °C (180 °F).

NOTICE
Improper or incomplete rinsing of the cooling system can result in damage to copper and other metal components.

To avoid damage to the cooling system, make sure to completely flush the cooling system with clear water. Continue to flush the system until all signs of the cleaning agent are gone.

5. Stop the engine and allow the engine to cool. Loosen the cooling system filler cap slowly in order to relieve any pressure. Remove the cooling system filler cap. Open the drain valve (if equipped) or remove the cooling system drain plugs. Allow the water to drain. Flush the cooling system with clean water. Close the drain valve (if equipped). Clean the drain plugs. Install the drain plugs. Refer to Torque Specifications, SENR3130 for more information on the correct torques.

Fill

NOTICE
Do not fill the cooling system faster than 5 L (1.3 US gal) per minute to avoid air locks.

Cooling system air locks may result in engine damage.

1. Fill the cooling system with the coolant/antifreeze. Refer to this Operation and Maintenance Manual, “Refill Capacities and Recommendations” topic (Maintenance Section) for more information on cooling system specifications. Do not install the cooling system filler cap.

2. Start and run the engine at low idle. Increase the engine rpm to 1500 rpm. Run the engine at high idle for 1 minute in order to purge the air from the cavities of the engine block. Stop the engine.

3. Check the coolant level. Maintain the coolant level within 13 mm (0.5 inch) below the bottom of the pipe for filling. Maintain the coolant level within 13 mm (0.5 inch) to the proper level on the sight glass (if equipped).
4. Clean the cooling system filler cap. Inspect the gasket that is on the cooling system filler cap. If the gasket that is on the cooling system filler cap is damaged, discard the old cooling system filler cap and install a new cooling system filler cap. If the gasket that is on the cooling system filler cap is not damaged, perform a pressure test. A 9S-8140 Pressurizing Pump is used to perform the pressure test. The correct pressure for the cooling system filler cap is stamped on the face of the cooling system filler cap. If the cooling system filler cap does not retain the correct pressure, install a new cooling system filler cap.
5. Start the engine. Inspect the cooling system for leaks and for the correct operating temperature.

i04146135

Coolant (ELC) - Change

SMCS Code: 1350-070; 1395-044

Clean the cooling system and flush the cooling system before the recommended maintenance interval if the following conditions exist:

- The engine overheats frequently.
- Foaming is observed.
- The oil has entered the cooling system and the coolant is contaminated.
- The fuel has entered the cooling system and the coolant is contaminated.

Note: When the cooling system is cleaned, only clean water is needed when the ELC is drained and replaced.

Note: Inspect the water pump and the water temperature regulator after the cooling system has been drained. This is a good opportunity to replace the water pump, the water temperature regulator, and the hoses, if necessary.

Drain

⚠ WARNING

Pressurized System: Hot coolant can cause serious burns. To open the cooling system filler cap, stop the engine and wait until the cooling system components are cool. Loosen the cooling system pressure cap slowly in order to relieve the pressure.

1. Stop the engine and allow the engine to cool. Loosen the cooling system filler cap slowly in order to relieve any pressure. Remove the cooling system filler cap.
2. Open the cooling system drain valve (if equipped). If the cooling system is not equipped with a drain valve, remove the cooling system drain plugs.

   Allow the coolant to drain.

NOTICE
Dispose of used engine coolant properly or recycle. Various methods have been proposed to reclaim used coolant for reuse in engine cooling systems. The full distillation procedure is the only method acceptable by Caterpillar to reclaim the used coolant.

For information regarding the disposal and the recycling of used coolant, consult your Caterpillar dealer or consult Dealer Service Tools.

Flush

1. Flush the cooling system with clean water in order to remove any debris.
2. Close the drain valve (if equipped). Clean the drain plugs. Install the drain plugs. Refer to Torque Specifications, SENR3130 for more information on the correct torques.

NOTICE
Do not fill the cooling system faster than 5 L (1.3 US gal) per minute to avoid air locks.

Cooling system air locks may result in engine damage.

3. Fill the cooling system with clean water. Install the cooling system filler cap.
4. Start and run the engine at low idle until the temperature reaches 49 to 66 °C (120 to 150 °F).

5. Stop the engine and allow the engine to cool. Loosen the cooling system filler cap slowly in order to relieve any pressure. Remove the cooling system filler cap. Open the drain valve (if equipped) or remove the cooling system drain plugs. Allow the water to drain. Flush the cooling system with clean water. Close the drain valve (if equipped). Clean the drain plugs. Install the drain plugs. Refer to Torque Specifications, SENR3130 for more information on the correct torques.

Fill

NOTICE
Do not fill the cooling system faster than 5 L (1.3 US gal) per minute to avoid air locks.

Cooling system air locks may result in engine damage.

1. Fill the cooling system with Extended Life Coolant (ELC). Refer to this Operation and Maintenance Manual, “Refill Capacities and Recommendations” topic (Maintenance Section) for more information on cooling system specifications. Do not install the cooling system filler cap.

2. Start and run the engine at low idle. Increase the engine rpm to high idle. Run the engine at high idle for 1 minute in order to purge the air from the cavities of the engine block. Stop the engine.

3. Check the coolant level. Maintain the coolant level within 13 mm (0.5 inch) below the bottom of the pipe for filling. Maintain the coolant level within 13 mm (0.5 inch) to the proper level on the sight glass (if equipped).

4. Clean the cooling system filler cap. Inspect the gasket that is on the cooling system filler cap. If the gasket that is on the cooling system filler cap is damaged, discard the old cooling system filler cap and install a new cooling system filler cap. If the gasket that is on the cooling system filler cap is not damaged, use a 9S-8140 Pressurizing Pump in order to pressure test the cooling system filler cap. The correct pressure for the cooling system filler cap is stamped on the face of the cooling system filler cap. If the cooling system filler cap does not retain the correct pressure, install a new cooling system filler cap.

5. Start the engine. Inspect the cooling system for leaks and for proper operating temperature.

i04146143

Coolant Extender (ELC) - Add

SMCS Code: 1352-544-NL

Cat ELC (Extended Life Coolant) does not require the frequent additions of any supplemental cooling additives which are associated with the present conventional coolants. The Cat ELC Extender only needs to be added once.

NOTICE
Use only Cat Extended Life Coolant (ELC) Extender with Cat ELC.

Do NOT use conventional supplemental coolant additive (SCA) with Cat ELC. Mixing Cat ELC with conventional coolants and/or conventional SCA reduces the Cat ELC service life.

Check the cooling system only when the engine is stopped and cool.

⚠ WARNING

Personal injury can result from hot coolant, steam and alkali.

At operating temperature, engine coolant is hot and under pressure. The radiator and all lines to heaters or the engine contain hot coolant or steam. Any contact can cause severe burns.

Remove cooling system pressure cap slowly to relieve pressure only when engine is stopped and cooling system pressure cap is cool enough to touch with your bare hand.

Do not attempt to tighten hose connections when the coolant is hot, the hose can come off causing burns.

Cooling System Coolant Additive contains alkali. Avoid contact with skin and eyes.

NOTICE
Care must be taken to ensure that fluids are contained during performance of inspection, maintenance, testing, adjusting and repair of the product. Be prepared to collect the fluid with suitable containers before opening any compartment or disassembling any component containing fluids.

Refer to Special Publication, NENG2500, “Caterpillar Dealer Service Tool Catalog” for tools and supplies suitable to collect and contain fluids on Caterpillar products.

Dispose of all fluids according to local regulations and mandates.

1. Loosen the cooling system filler cap slowly in order to relieve pressure. Remove the cooling system filler cap.
2. If necessary, drain enough coolant from the cooling system in order to add the Cat ELC Extender.
3. Add Cat ELC Extender according to the requirements for the cooling system capacity of the engine. Refer to Operation and Maintenance Manual, “Refill Capacities” for more information.
4. Clean the cooling system filler cap. Inspect the gaskets on the cooling system filler cap. Replace the cooling system filler cap if the gaskets are damaged. Install the cooling system filler cap.

i04146153

Coolant Level - Check

SMCS Code: 1395-082

Check the coolant level when the engine is stopped and cool.

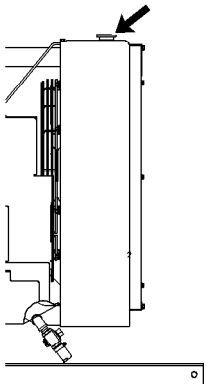

Illustration 28 g00285520
Cooling system filler cap

⚠ WARNING

Pressurized System: Hot coolant can cause serious burns. To open the cooling system filler cap, stop the engine and wait until the cooling system components are cool. Loosen the cooling system pressure cap slowly in order to relieve the pressure.

1. Remove the cooling system filler cap slowly in order to relieve pressure.
2. Maintain the coolant level within 13 mm (0.5 inch) of the bottom of the filler pipe. If the engine is equipped with a sight glass, maintain the coolant level to the proper level in the sight glass.
3. Clean the cooling system filler cap and check the condition of the filler cap gaskets. Replace the cooling system filler cap if the filler cap gaskets are damaged. Reinstall the cooling system filler cap.
4. Inspect the cooling system for leaks.

i04146164

Coolant Sample (Level 1) - Obtain

SMCS Code: 1350-008; 1395-554; 1395-008; 7542

Note: Obtaining a Coolant Sample (Level 1) is optional if the cooling system is filled with Cat ELC (Extended Life Coolant). Cooling systems filled with Cat ELC should have a Coolant Sample (Level 2) that is obtained at the recommended interval as stated in the maintenance interval schedule.

Note: Obtain a Coolant Sample (Level 1) if the cooling system is filled with any other coolant instead of Cat ELC including the following coolants:

- Commercial long life coolants that meet the Caterpillar Engine Coolant Specification -1 (Caterpillar EC-1)
- Cat DEAC (Diesel Engine Antifreeze/Coolant)
- Commercial heavy-duty coolant/antifreeze

Table 24

Recommended Interval		
Type of Coolant	Level 1	Level 2
Cat DEAC	Every 250 service hours	Every year(1)

(continued)

(Table 24, contd)

Conventional heavy duty-coolant		
Commercial coolant that meets the requirements of the Caterpillar EC-1 standard		
Cat ELC or conventional EC-1 coolant	Optional	Every year(1)

(1) The Level 2 Coolant Analysis should be performed sooner if a problem is suspected or identified.

NOTICE
Always use a designated pump for oil sampling, and use a separate designated pump for coolant sampling. Using the same pump for both types of samples may contaminate the samples that are being drawn. This contaminate may cause a false analysis and an incorrect interpretation that could lead to concerns by both dealers and customers.

Note: Level 1 results may indicate a need for Level 2 Analysis.

Obtain the sample of the coolant as close as possible to the recommended sampling interval. In order to receive the full effect of S·O·S analysis, establish a consistent trend of data. In order to establish a pertinent history of data, perform consistent samplings that are evenly spaced. Supplies for collecting samples can be obtained from your Caterpillar dealer.

Use the following guidelines for proper sampling of the coolant:

- Complete the information on the label for the sampling bottle before you begin to take the samples.
- Keep the unused sampling bottles stored in plastic bags.
- Obtain coolant samples directly from the coolant sample port. You should not obtain the samples from any other location.
- Keep the lids on empty sampling bottles until you are ready to collect the sample.
- Place the sample in the mailing tube immediately after obtaining the sample in order to avoid contamination.
- Never collect samples from expansion bottles.
- Never collect samples from the drain for a system.

Submit the sample for Level 1 analysis.

For additional information about coolant analysis, refer to Operation and Maintenance Manual, “Refill Capacities” or consult your Caterpillar dealer.

i04146167

Coolant Sample (Level 2) - Obtain

SMCS Code: 1350-008; 1395-008; 1395-554; 7542

NOTICE
Always use a designated pump for oil sampling, and use a separate designated pump for coolant sampling. Using the same pump for both types of samples may contaminate the samples that are being drawn. This contaminate may cause a false analysis and an incorrect interpretation that could lead to concerns by both dealers and customers.

NOTICE
Care must be taken to ensure that fluids are contained during performance of inspection, maintenance, testing, adjusting and repair of the product. Be prepared to collect the fluid with suitable containers before opening any compartment or disassembling any component containing fluids.

Refer to Special Publication, NENG2500, “Caterpillar Dealer Service Tool Catalog” or refer to Special Publication, PECJ0003, “Caterpillar Shop Supplies and Tools Catalog” for tools and supplies suitable to collect and contain fluids on Caterpillar products.

Dispose of all fluids according to local regulations and mandates.

Refer to Operation and Maintenance Manual, “Cooling System Coolant Sample (Level 1) - Obtain” for the guidelines for proper sampling of the coolant.

Submit the sample for Level 2 analysis.

For additional information about coolant analysis, see Special Publication, SEBU6251, “Caterpillar Commercial Diesel Engines Fluids Recommendations” or consult your Caterpillar dealer.

i04146190

Coolant Temperature Regulator - Replace

SMCS Code: 1355-510

Replace the water temperature regulator before the water temperature regulator fails. Replacing the water temperature regulator is a recommended preventive maintenance practice. Replacing the water temperature regulator reduces the chances for unscheduled downtime. Refer to Operation and Maintenance Manual, “Maintenance Interval Schedule” for the proper maintenance interval.

A water temperature regulator that fails in a partially opened position can cause overheating or overcooling of the engine.

A water temperature regulator that fails in the closed position can cause excessive overheating. Excessive overheating could result in cracking of the cylinder head or piston seizure problems.

A water temperature regulator that fails in the open position will cause the engine operating temperature to be too low during partial load operation. Low engine operating temperatures during partial loads could cause an excessive carbon buildup inside the cylinders. This excessive carbon buildup could result in an accelerated wear of the piston rings and wear of the cylinder liner.

NOTICE
Failure to replace your water temperature regulator on a regularly scheduled basis could cause severe engine damage.

Caterpillar engines incorporate a shunt design cooling system and require operating the engine with a water temperature regulator installed.

If the water temperature regulator is installed incorrectly, the engine may overheat, causing cylinder head damage. Ensure that the new water temperature regulator is installed in the original position. Ensure that the water temperature regulator vent hole is open.

Do not use liquid gasket material on the gasket or cylinder head surface.

Refer to Disassembly and Assembly Manual for the replacement procedure of the water temperature regulator, or consult your Caterpillar dealer.

Note: If only the water temperature regulators are replaced, drain the coolant from the cooling system to a level that is below the water temperature regulator housing.

i02456600

Cooling System Supplemental Coolant Additive (SCA) - Test/ Add

SMCS Code: 1352-045; 1395-081

⚠ WARNING

Cooling system coolant additive contains alkali. To help prevent personal injury, avoid contact with the skin and the eyes. Do not drink cooling system coolant additive.

Note: Test the concentration of the Supplemental Coolant Additive (SCA) or test the SCA concentration as part of an S·O·S Coolant Analysis.

Test for SCA Concentration

Coolant and SCA

NOTICE
Do not exceed the recommended six percent supplemental coolant additive concentration.

Use the 8T-5296 Coolant Conditioner Test Kit or use the 4C-9301 Coolant Conditioner Test Kit in order to check the concentration of the SCA. Refer to this Operation and Maintenance Manual, “Refill Capacities and Recommendations” for more information.

Water and SCA

NOTICE
Do not exceed the recommended eight percent supplemental coolant additive concentration.

Test the concentration of the SCA with the 8T-5296 Coolant Conditioner Test Kit. Refer to the Special Publication, SEBU6251, “Caterpillar Commercial Diesel Engine Fluids Recommendations” for more information.

S·O·S Coolant Analysis

S·O·S coolant samples can be analyzed at your Caterpillar dealer. S·O·S Coolant Analysis is a program that is based on periodic samples.

Level 1

Level 1 is a basic analysis of the coolant. The following items are tested:

- Glycol Concentration
- Concentration of SCA

- pH
- Conductivity

The results are reported, and recommendations are made according to the results. Consult your Caterpillar dealer for information on the benefits of managing your equipment with an S·O·S Coolant Analysis.

Level 2

This level coolant analysis is recommended when the engine is overhauled. Refer to this Operations and Maintenance Manual, “Overhaul Considerations” for further information.

Add the SCA, If Necessary

NOTICE
Do not exceed the recommended amount of supplemental coolant additive concentration. Excessive supplemental coolant additive concentration can form deposits on the higher temperature surfaces of the cooling system, reducing the engine's heat transfer characteristics. Reduced heat transfer could cause cracking of the cylinder head and other high temperature components. Excessive supplemental coolant additive concentration could also result in radiator tube blockage, overheating, and/or accelerated water pump seal wear. Never use both liquid supplemental coolant additive and the spin-on element (if equipped) at the same time. The use of those additives together could result in supplemental coolant additive concentration exceeding the recommended maximum.

⚠ WARNING

Pressurized System: Hot coolant can cause serious burns. To open the cooling system filler cap, stop the engine and wait until the cooling system components are cool. Loosen the cooling system pressure cap slowly in order to relieve the pressure.

1. Slowly loosen the cooling system filler cap in order to relieve the pressure. Remove the cooling system filler cap.

Note: Always discard drained fluids according to local regulations.

2. If necessary, drain some coolant from the cooling system into a suitable container in order to allow space for the extra SCA.
3. Add the proper amount of SCA. Refer to the Special Publication, SEBU6251, “Caterpillar Commercial Diesel Engines Fluids Recommendations” for more information on SCA requirements.
4. Clean the cooling system filler cap. Inspect the gaskets of the cooling system filler cap. If the gaskets are damaged, replace the old cooling system filler cap with a new cooling system filler cap. Install the cooling system filler cap.

i08397642

Driven Equipment - Check

SMCS Code: 3279-535

Refer to the OEM specifications for more information on the following maintenance recommendations for the driven equipment:

- Inspection
- Adjustment
- Lubrication
- Other maintenance recommendations

Perform any maintenance for the driven equipment which is recommended by the OEM.

i02708606

Engine - Clean

SMCS Code: 1000-070

⚠ WARNING

Personal injury or death can result from high voltage.

Moisture can create paths of electrical conductivity.

Make sure that the electrical system is OFF. Lock out the starting controls and tag the controls “DO NOT OPERATE” .

NOTICE
Accumulated grease and oil on an engine is a fire hazard. Keep the engine clean. Remove debris and fluid spills whenever a significant quantity accumulates on the engine.

NOTICE
Failure to protect some engine components from washing may make your engine warranty invalid. Allow the engine to cool for one hour before washing the engine.

Periodic cleaning of the engine is recommended. Steam cleaning the engine will remove accumulated oil and grease. A clean engine provides the following benefits:

- Easy detection of fluid leaks
- Maximum heat transfer characteristics
- Ease of maintenance

Note: Caution must be used in order to prevent electrical components from being damaged by excessive water when the engine is cleaned. When a pressure washer or steam cleaner is used to clean the engine, a minimum distance of 300 mm (12 inch) must be maintained between the components of the engine and the jet nozzle of the pressure washer or steam cleaner. Pressure washers and steam cleaners should not be directed at any electrical connectors or the junction of cables into the rear of the connectors. Avoid electrical components such as the alternator and the starter. Protect the fuel injection pump from fluids in order to wash the engine.

i04150530

Engine Air Cleaner Element (Dual Element) - Inspect/Clean/Replace

SMCS Code: 1051; 1054-040; 1054-070; 1054-510

NOTICE
Never run the engine without an air cleaner element installed. Never run the engine with a damaged air cleaner element. Do not use air cleaner elements with damaged pleats, gaskets or seals. Dirt entering the engine causes premature wear and damage to engine components. Air cleaner elements help to prevent airborne debris from entering the air inlet.

NOTICE
Never service the air cleaner element with the engine running since this will allow dirt to enter the engine.

Servicing the Air Cleaner Elements

If the air cleaner element becomes plugged, the air can split the material of the air cleaner element. Unfiltered air will drastically accelerate internal engine wear. Your Caterpillar dealer has the proper air cleaner elements for your application. Consult your Caterpillar dealer for the correct air cleaner element.

- Check the precleaner (if equipped) daily for accumulation of dirt and debris. Remove any dirt and debris, as needed.
- Operating conditions (dust, dirt, and debris) may require more frequent service of the air cleaner element.
- The air cleaner element may be cleaned up to six times if the element is properly cleaned and inspected.
- The air cleaner element should be replaced at least one time per year. This replacement should be performed regardless of the number of cleanings.

Replace the dirty paper air cleaner elements with clean air cleaner elements. Before installation, the air cleaner elements should be thoroughly checked for tears and/or holes in the filter material. Inspect the gasket or the seal of the air cleaner element for damage. Maintain a supply of suitable air cleaner elements for replacement purposes.

Dual Element Air Cleaners

The dual element air cleaner contains a primary air cleaner element and a secondary air cleaner element. The primary air cleaner element can be used up to six times if the element is properly cleaned and inspected. The primary air cleaner element should be replaced at least one time per year. This replacement should be performed regardless of the number of cleanings.

The secondary air cleaner element is not serviceable or washable. The secondary air cleaner element should be removed and discarded for every three cleanings of the primary air cleaner element. When the engine is operating in environments that are dusty or dirty, air cleaner elements may require more frequent replacement.

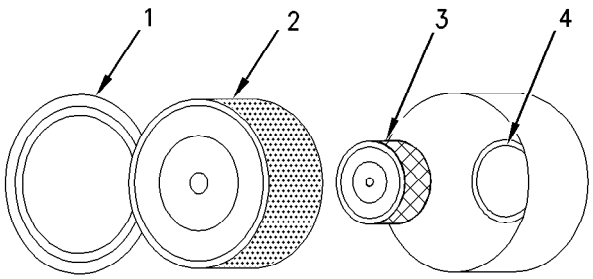

Illustration 29 g00736431

(1) Cover
(2) Primary air cleaner element
(3) Secondary air cleaner element
(4) Turbocharger air inlet

1. Remove the cover. Remove the primary air cleaner element.

2. The secondary air cleaner element should be removed and discarded for every three cleanings of the primary air cleaner element.

Note: Refer to “Cleaning the Primary Air Cleaner Elements”.

3. Cover the turbocharger air inlet with tape in order to keep out dirt.

4. Clean the inside of the air cleaner cover and body with a clean, dry cloth.

5. Remove the tape for the turbocharger air inlet. Install the secondary air cleaner element. Install a primary air cleaner element that is new or cleaned.

6. Install the air cleaner cover.

7. Reset the air cleaner service indicator.

Cleaning the Primary Air Cleaner Elements

NOTICE
Caterpillar recommends certified air filter cleaning services that are available at Cat dealers. The Cat cleaning process uses proven procedures to assure consistent quality and sufficient filter life.

Observe the following guidelines if you attempt to clean the filter element:

Do not tap or strike the filter element in order to remove dust.

Do not wash the filter element.

Use low pressure compressed air in order to remove the dust from the filter element. Air pressure must not exceed 207 kPa (30 psi). Direct the air flow up the pleats and down the pleats from the inside of the filter element. Take extreme care in order to avoid damage to the pleats.

Do not use air filters with damaged pleats, gaskets, or seals. Dirt entering the engine will cause damage to engine components.

The primary air cleaner element can be used up to six times if the element is properly cleaned and inspected. When the primary air cleaner element is cleaned, check for rips or tears in the filter material. The primary air cleaner element should be replaced at least one time per year. This replacement should be performed regardless of the number of cleanings.

Use clean primary air cleaner elements while dirty elements are being cleaned.

NOTICE
Do not clean the air cleaner elements by bumping or tapping. This could damage the seals. Do not use elements with damaged pleats, gaskets or seals. Damaged elements will allow dirt to pass through. Engine damage could result.

Visually inspect the primary air cleaner elements before cleaning. Inspect the air cleaner elements for damage to the seal, the gaskets, and the outer cover. Discard any damaged air cleaner elements.

There are two common methods that are used to clean primary air cleaner elements:

- Pressurized air
- Vacuum cleaning

Pressurized Air

Pressurized air can be used to clean primary air cleaner elements that have not been cleaned more than two times. Pressurized air will not remove deposits of carbon and oil. Use filtered, dry air with a maximum pressure of 207 kPa (30 psi).

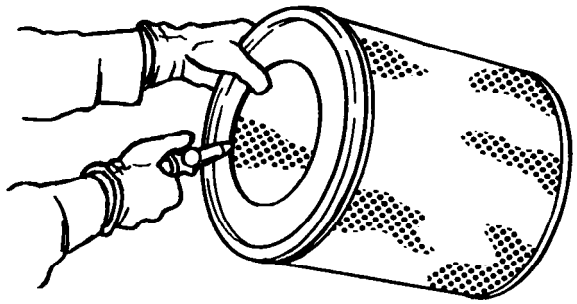

Illustration 30 g00281692

Note: When the primary air cleaner elements are cleaned, always begin with the clean side (inside) in order to force dirt particles toward the dirty side (outside).

Aim the hose so that the air flows inside the element along the length of the filter in order to help prevent damage to the paper pleats. Do not aim the stream of air directly at the primary air cleaner element. Dirt could be forced further into the pleats.

Note: Refer to “Inspecting the Primary Air Cleaner Elements”.

Vacuum Cleaning

Vacuum cleaning is a good method for cleaning primary air cleaner elements which require daily cleaning because of a dry, dusty environment. Cleaning with pressurized air is recommended prior to vacuum cleaning. Vacuum cleaning will not remove deposits of carbon and oil.

Note: Refer to “Inspecting the Primary Air Cleaner Elements”.

Inspecting the Primary Air Cleaner Elements

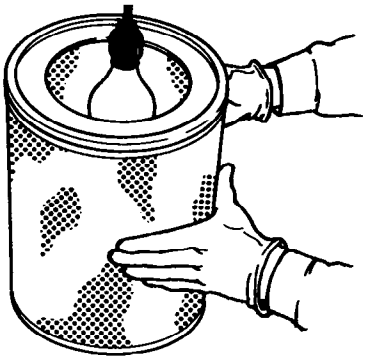

Illustration 31 g00281693

Inspect the clean, dry primary air cleaner element. Use a 60 W blue light in a dark room or in a similar facility. Place the blue light in the primary air cleaner element. Rotate the primary air cleaner element. Inspect the primary air cleaner element for tears and/or holes. Inspect the primary air cleaner element for light that may show through the filter material. If it is necessary in order to confirm the result, compare the primary air cleaner element to a new primary air cleaner element that has the same part number.

Do not use a primary air cleaner element that has any tears and/or holes in the filter material. Do not use a primary air cleaner element with damaged pleats, gaskets, or seals. Discard damaged primary air cleaner elements.

Storing Primary Air Cleaner Elements

If a primary air cleaner element that passes inspection will not be used, the primary air cleaner element can be stored for future use.

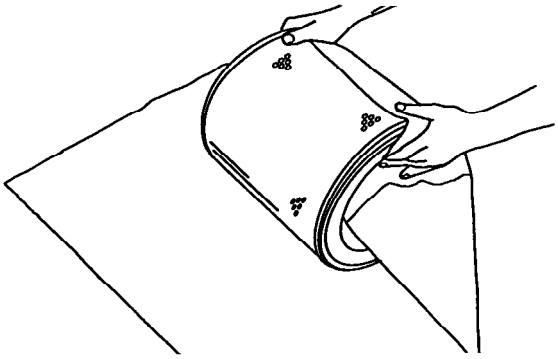

Illustration 32 g00281694

Do not use paint, a waterproof cover, or plastic as a protective covering for storage. An airflow restriction may result. To protect against dirt and damage, wrap the primary air cleaner elements in Volatile Corrosion Inhibited (VCI) paper.

Place the primary air cleaner element into a box for storage. For identification, mark the outside of the box and mark the primary air cleaner element. Include the following information:

- Date of cleaning
- Number of cleanings

Store the box in a dry location.

i04150572

Engine Air Cleaner Element (Single Element) - Inspect/ Clean/Replace

SMCS Code: 1051; 1054-510; 1054-040; 1054-070

Perform the Operation and Maintenance Manual, “Engine Air Cleaner Service Indicator-Inspect” procedure and perform the Operation and Maintenance Manual, “Engine Air Precleaner Check/ Clean” procedure (if equipped) before performing the following procedure.

NOTICE
Never run the engine without an air cleaner element installed. Never run the engine with a damaged air cleaner element. Do not use air cleaner elements with damaged pleats, gaskets or seals. Dirt entering the engine causes premature wear and damage to engine components. Air cleaner elements help to prevent airborne debris from entering the air inlet.

NOTICE
Never service the air cleaner element with the engine running since this will allow dirt to enter the engine.

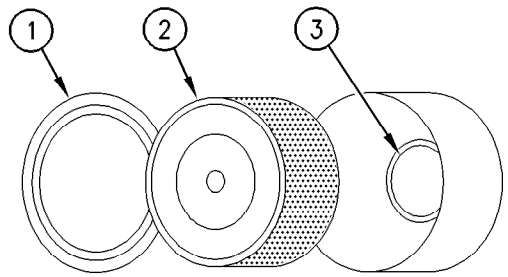

Illustration 33 g00310664

(1) Air cleaner cover
(2) Air filter element
(3) Air inlet

1. Remove air cleaner cover (1) and remove air filter element (2).
2. Cover air inlet (3) with tape or a clean cloth so that debris cannot enter the air inlet.
3. Clean the inside of air cleaner cover (1). Clean the body that holds the air cleaner element.
4. Inspect the replacement element for the following items:damage, dirt and debris.
5. Remove the seal from the opening of the air inlet.
6. Install a clean, undamaged air filter element (2).
7. Install air cleaner cover (1).
8. Reset the air cleaner service indicator.

i02335405

Engine Air Cleaner Service Indicator - Inspect

SMCS Code: 7452-040

Some engines may be equipped with a different service indicator.

Some engines are equipped with a differential gauge for inlet air pressure. The differential gauge for inlet air pressure displays the difference in the pressure that is measured before the air cleaner element and the pressure that is measured after the air cleaner element. As the air cleaner element becomes dirty, the pressure differential rises. If your engine is equipped with a different type of service indicator, follow the OEM recommendations in order to service the air cleaner service indicator.

The service indicator may be mounted on the air cleaner element or in a remote location.

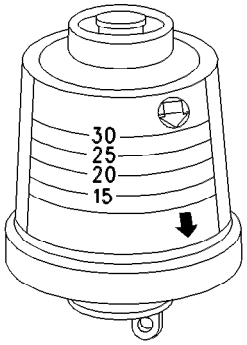

Illustration 34 g00103777

Typical service indicator

Observe the service indicator. The air cleaner element should be cleaned or the air cleaner element should be replaced when one of the following conditions occur:

- The yellow diaphragm enters the red zone.
- The red piston locks in the visible position.

Test the Service Indicator

Service indicators are important instruments.

- Check for ease of resetting. The service indicator should reset in less than three pushes.
- Check the movement of the yellow core when the engine is accelerated to the engine rated speed. The yellow core should latch at the greatest vacuum that is attained.

If the service indicator does not reset easily, or if the yellow core does not latch at the greatest vacuum, the service indicator should be replaced. If the new service indicator will not reset, the hole for the service indicator may be restricted.

The service indicator may need to be replaced frequently in environments that are severely dusty.

i10077461

Engine Air Precleaner - Check/ Clean

SMCS Code: 1055-535; 1055-070

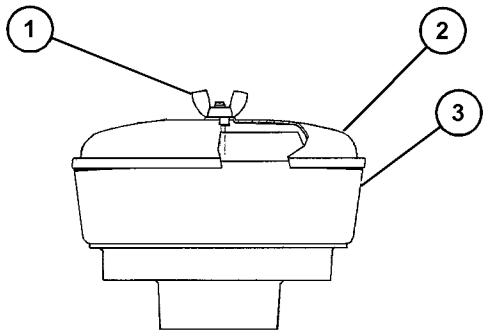

Illustration 35 g07723720

Typical engine air precleaner

(1) Wing nut
(2) Cover
(3) Body

Remove wing nut (1) and cover (2). Check for an accumulation of dirt and debris in body (3). Clean the body, if necessary.

After cleaning the precleaner, install cover (2) and wing nut (1).

Note: When the engine is operated in dusty conditions, more frequent cleaning is required.

Do not tap or strike the air cleaner element.

i04146171

Engine Crankcase Breather - Replace

SMCS Code: 1317-510

NOTICE
Ensure that the engine is stopped before any servicing or repair is performed.

Note: This breather assembly is not installed on all engines.

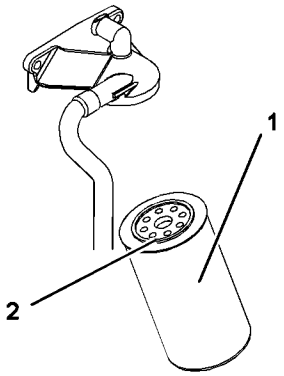

Illustration 36 g01350307
Typical example

1. Place a container under the canister (1).

2. Clean the outside of the canister. Remove the canister with a 1U-8760 Chain Wrench.

3. Lubricate the O ring seal (2) on the new canister (3) with clean engine lubricating oil. Install the new canister. Tighten the canister to 12 N·m (8 lb ft). Do not overtighten the canister.

4. Remove the container. Dispose of the old canister and any split oil in a safe place.

5. Inspect the breather tube for damage. Ensure that the outlet is clean and free from any obstructions. Ice can cause obstructions in adverse weather conditions.

i02456872

Engine Mounts - Inspect

SMCS Code: 1152-040; 1152

Inspect the engine mounts for deterioration and for proper bolt torque. Engine vibration can be caused by the following conditions:

- Improper mounting of the engine
- Deterioration of the engine mounts

Any engine mount that shows deterioration should be replaced. Refer to Special Publication, SENR3130, “Torque Specifications” for the recommended torques. Refer to the OEM recommendations for more information.

i05909059

Engine Oil Level - Check

SMCS Code: 1348-535-FLV

⚠ WARNING

Hot oil and hot components can cause personal injury. Do not allow hot oil or hot components to contact the skin.

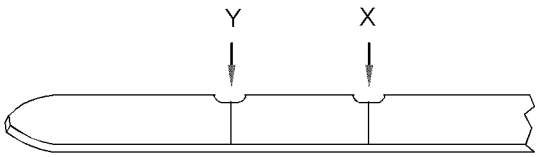

Illustration 37 g01165836
(Y) “Min” mark. (X) “Max” mark.



Illustration 38 g02173847
(L) “Min” mark. (H) “Max” mark.

NOTICE
Perform this maintenance with the engine stopped.

Note: Ensure that the engine is either level or that the engine is in the normal operating position in order to obtain a true level indication.

Note: After the engine has been switched OFF, wait for 10 minutes in order to allow the engine oil to drain to the oil pan. Then, check the oil level.

1. Maintain the oil level between the “ADD” mark (Y) and the “FULL” mark (X) on the engine oil dipstick. Or maintain the engine oil level between the H and L mark. Do not over fill the crankcase.

NOTICE
Operating your engine when the oil level is above the “FULL” mark could cause your crankshaft to dip into the oil. The air bubbles created from the crankshaft dipping into the oil reduces the oil's lubricating characteristics and could result in the loss of power.

2. Remove the oil filler cap and add oil, if necessary. Clean the oil filler cap. Install the oil filler cap.

i08397634

Engine Oil Sample - Obtain

SMCS Code: 1348-554-SM

In addition to a good preventive maintenance program, Caterpillar recommends using S·O·S oil analysis at regularly scheduled intervals. S·O·S oil analysis provides infrared analysis, which is required for determining nitration and oxidation levels.

Obtain the Sample and the Analysis

⚠ WARNING

Hot oil and hot components can cause personal injury. Do not allow hot oil or hot components to contact the skin.

Before you take the oil sample, complete the Label, PEEP5031 for identification of the sample. To help obtain the most accurate analysis, provide the following information:

- Engine model
- Service hours on the engine
- The number of hours that have accumulated since the last oil change
- The amount of oil that has been added since the last oil change

To ensure that the sample is representative of the oil in the crankcase, obtain a warm, mixed oil sample.

To avoid contamination of the oil samples, the tools and the supplies that are used for obtaining oil samples must be clean.

Caterpillar recommends using the sampling valve to obtain oil samples. The quality and the consistency of the samples are better when the sampling valve is used. The location of the sampling valve allows oil that is flowing under pressure to be obtained during normal engine operation.

The 169-8373 Fluid Sampling Bottle is recommended for use with the sampling valve. The fluid sampling bottle includes the parts that are needed for obtaining oil samples. Instructions are also provided.

NOTICE
Always use a designated pump for oil sampling, and use a separate designated pump for coolant sampling. Using the same pump for both types of samples may contaminate the samples that are being drawn. This contaminate may cause a false analysis and an incorrect interpretation that could lead to concerns by both dealers and customers.

If the engine is not equipped with a sampling valve, use the 1U-5718 Vacuum Pump. The pump is designed to accept sampling bottles. Disposable tubing must be attached to the pump for insertion into the sump.

For instructions, see Special Publication, PEGJ0047, “How To Take A Good S·O·S Oil Sample”. Consult your Cat dealer for complete information and assistance in establishing an S·O·S program for your engine.

i10594720

Engine Oil and Filter - Change

SMCS Code: 1318-510

⚠ WARNING

Hot oil and hot components can cause personal injury. Do not allow hot oil or hot components to contact the skin.

NOTICE
Care must be taken to ensure that fluids are contained during performance of inspection, maintenance, testing, adjusting and repair of the product. Be prepared to collect the fluid with suitable containers before opening any compartment or disassembling any component containing fluids.

Dispose of all fluids according to local regulations and mandates.

NOTICE
Keep all parts clean from contaminants.

Contaminants may cause rapid wear and shortened component life.

Do not drain the engine lubricating oil when the engine is cold. As the engine lubricating oil cools, suspended waste particles settle on the bottom of the oil pan. The waste particles are not removed with draining cold oil. Drain the oil pan with the engine stopped. Drain the oil pan with the oil warm. This draining method allows the waste particles that are suspended in the oil to be drained properly.

Failure to follow this recommended procedure will cause the waste particles to be recirculated through the engine lubrication system with the new oil.

Drain the Engine Lubricating Oil

Note: Ensure that the vessel that will be used is large enough to collect the waste oil.

After the engine has been run at the normal operating temperature, stop the engine. Use one of the following methods to drain the engine oil pan:

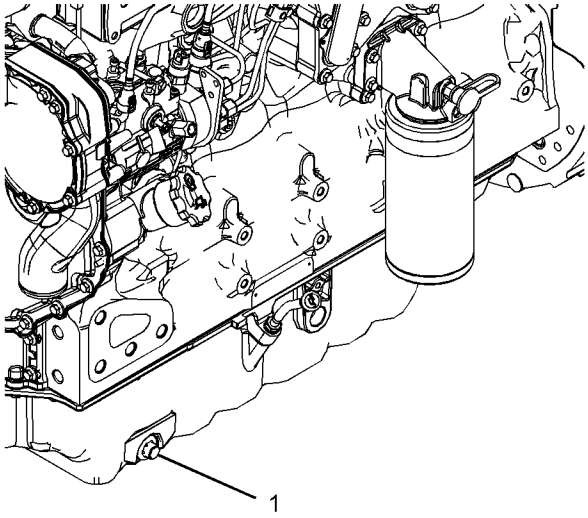

Illustration 39 g02343856
Typical example

- If the engine is equipped with a drain valve, turn the drain valve knob counterclockwise in order to drain the oil. After the oil has drained, turn the drain valve knob clockwise in order to close the drain valve.
- If the engine is not equipped with a drain valve, remove oil drain plug (1) in order to allow the oil to drain. If the engine is equipped with a shallow oil pan, remove the bottom oil drain plugs from both ends of the oil pan.

After the oil has drained, the oil drain plugs should be cleaned and installed. If necessary, replace the O ring seal. Tighten the drain plug to 34 N·m (25 lb ft).

Replace the Oil Filter

NOTICE
Caterpillar oil filters are manufactured to Caterpillar specifications. Use of an oil filter that is not recommended by Caterpillar could result in severe damage to the engine bearings, or crankshaft, as a result of the larger waste particles from unfiltered oil entering the engine lubricating system. Only use oil filters recommended by Caterpillar.

Replace the Type 1 Oil Filter

1. Remove the oil filter with a 1U-8760 Chain Wrench.

Note: Some oil filters may be installed horizontally.

Note: The following actions can be carried out as part of the preventive maintenance program.

2. Cut the oil filter open with a 175-7546 Oil Filter Cutter. Break apart the pleats and inspect the oil filter for metal debris. An excessive amount of metal debris in the oil filter may indicate early wear or a pending failure.

   Use a magnet to differentiate between the ferrous metals and the nonferrous metals that are found in the oil filter element. Ferrous metals may indicate wear on the steel and cast iron parts of the engine.

   Nonferrous metals may indicate wear on the aluminum parts, brass parts, or bronze parts of the engine. Parts that may be affected include the following items: main bearings, rod bearings, turbocharger bearings and cylinder heads.

   Due to normal wear and friction, it is not uncommon to find small amounts of debris in the oil filter. Consult your Caterpillar dealer in order to arrange for a further analysis if an excessive amount of debris is found in the oil filter.

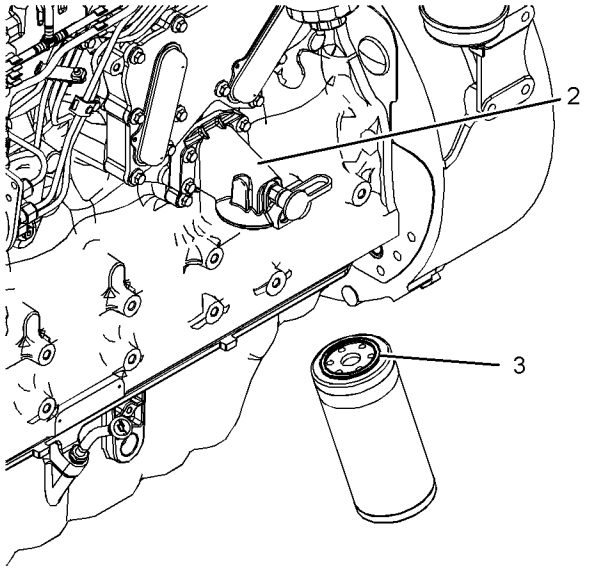

Illustration 40 g02343857
Typical example

3. Clean the sealing surface of the oil filter base (2).

4. Apply clean engine oil to the O ring seal (3) for the new oil filter.

NOTICE
Do not fill the oil filters with oil before installing them. This oil would not be filtered and could be contaminated. Contaminated oil can cause accelerated wear to engine components or engine damage.

5. Install the new oil filter. Spin on the oil filter until the O ring contacts the sealing surface (2). Then rotate the oil filter ¾ of a full turn.

Replace the Type 2 Oil Filter

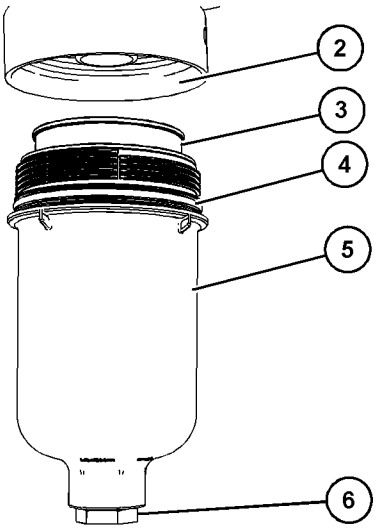

Illustration 41 g07927122
Typical example

1. Loosen the oil filter drain plug (6) to allow the oil to drain. Retighten the drain plug to 5 N·m (44 lb in).

2. Remove the housing (5) from the engine oil filter base by rotating the housing in a counterclockwise direction.

3. Rotate the element (3) in a clockwise direction and pull the element to remove the element from the housing (5).

4. Remove the O-ring seal (4) from the housing (5). Discard the O-ring seal.

5. Clean sealing surface (2).

6. Install a new O-ring seal (4) to the housing (5). Lubricate the O-ring seal with clean engine oil.

NOTICE
Do not fill the oil filters with oil before installing them. This oil would not be filtered and could be contaminated. Contaminated oil can cause accelerated wear to engine components or engine damage.

7. Install a new element (3) into the housing (5). Turn the element (3) in a counterclockwise direction to lock the new element into the housing (5).

8. Install the housing (5) to the engine oil filter base. Hand tighten the housing (5). Tighten the housing to a torque of 40 N·m (30 lb ft).

Fill the Oil Pan

1. Remove the oil filler cap. Refer to this Operation and Maintenance Manual, “Fluid Recommendations” for more information on suitable oils. Fill the oil pan with the correct amount of new engine lubricating oil. Refer to this Operation and Maintenance Manual, “Refill Capacities” for more information on refill capacities.

NOTICE
If equipped with an auxiliary oil filter system or a remote filter system, follow the OEM or the filter manufacture's recommendations. Under filling or over filling the crankcase with oil can cause engine damage.

2. Start the engine and run the engine at “LOW IDLE” for 2 minutes. Perform this procedure in order to ensure that the lubrication system has oil and that the oil filters are filled. Inspect the oil filter for oil leaks.

3. Stop the engine and allow the oil to drain back to the oil pan for a minimum of 10 minutes.

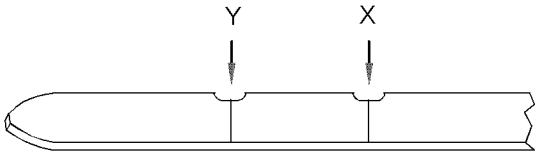

Illustration 42 g01165836
(Y) “Min” mark. (X) “Max” mark.

4. Remove the engine oil level gauge in order to check the oil level. Maintain the oil level between the “MIN” and “MAX” marks on the engine oil level gauge.

i04156942

Engine Valve Lash - Check

SMCS Code: 1105-535

This maintenance is recommended by Caterpillar as part of a lubrication and preventive maintenance schedule in order to help provide maximum engine life.

NOTICE
Only qualified service personnel should perform this maintenance. Refer to the Systems Operation, Testing and Adjusting, “Engine Valve Lash - Inspect/Adjust” article or consult your Caterpillar dealer for the complete valve lash adjustment procedure.

Operation of Caterpillar engines with improper valve adjustments can reduce engine efficiency. This reduced efficiency could result in excessive fuel usage and/or shortened engine component life.

⚠ WARNING

Ensure that the engine cannot be started while this maintenance is being performed. To help prevent possible injury, do not use the starting motor to turn the flywheel.

Hot engine components can cause burns. Allow additional time for the engine to cool before measuring/adjusting valve lash clearance.

Ensure that the engine is stopped before measuring the valve lash. To obtain an accurate measurement, allow the valves to cool before this maintenance is performed.

Refer to the Service Manual for more information.

i04145852

Fan Clearance - Check

SMCS Code: 1356; 1359; 1360

There are different types of cooling systems. Refer to the OEM for information on clearance for the fan.

Ensure that the engine is stopped. Ensure that the cooling system is full. The clearance between the cover (1) and the fan (2) will require checking. The gap (A) between the edge of the cover and the tip of the fan blade must be checked in four equally spaced positions.

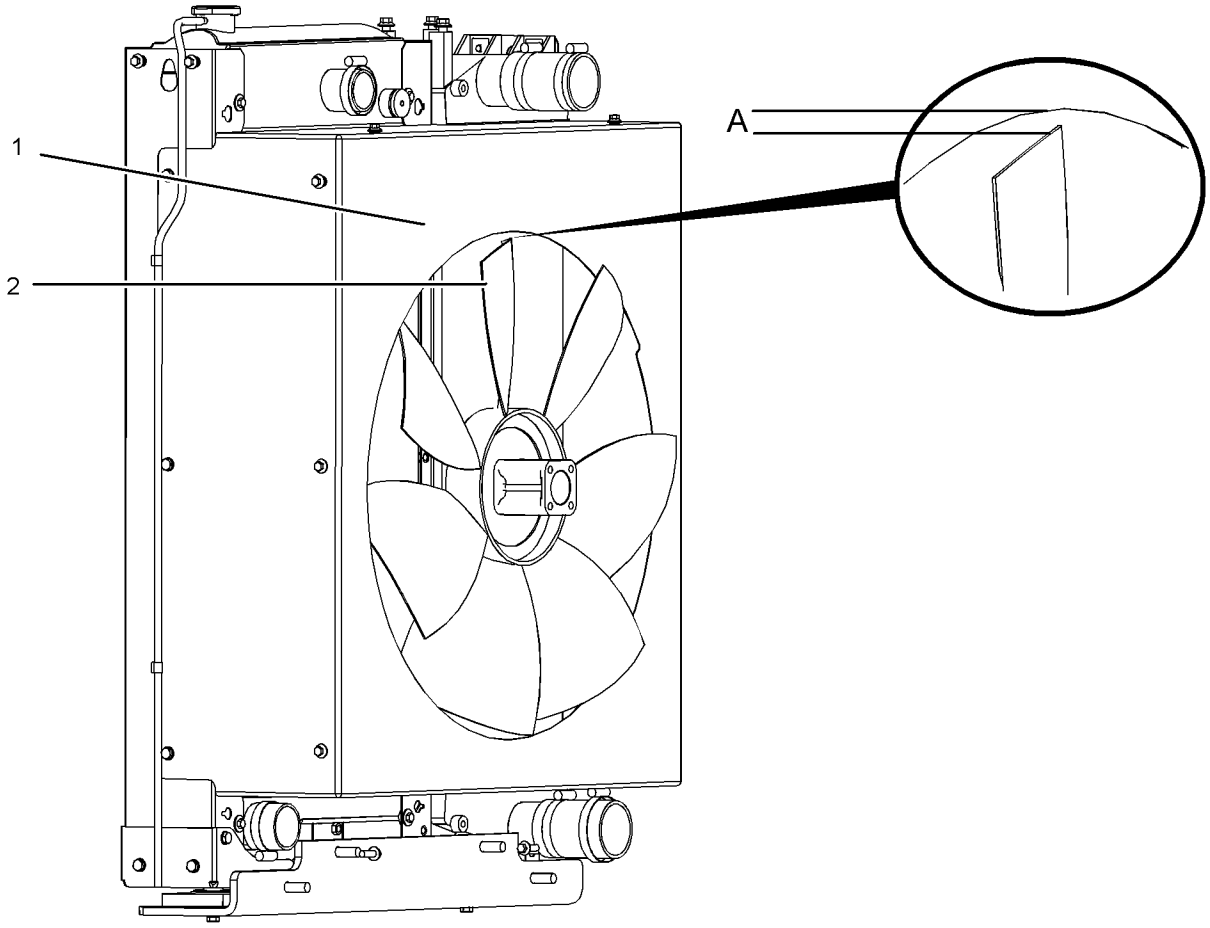

Illustration 43 g01348394
Typical example

Adjustment of the cover will change the clearance (gap) between the edge of the cover and the tip of the fan blade. Ensure that the cover is centralized to the fan.

The maximum clearance is 15 mm (0.591 inch). The minimum clearance is 10 mm (0.394 inch).

i05752227

Fuel System - Prime

SMCS Code: 1250-548; 1258-548

If air enters the fuel system, the air must be purged from the fuel system before the engine can be started. Air can enter the fuel system when the following events occur:

- The fuel tank is empty or the fuel tank has been partially drained.
- The low-pressure fuel lines are disconnected.
- A leak exists in the low-pressure fuel system.
- The fuel filter is replaced.

Use the following procedures in order to remove air from the fuel system:

Type 1 Fuel Filters

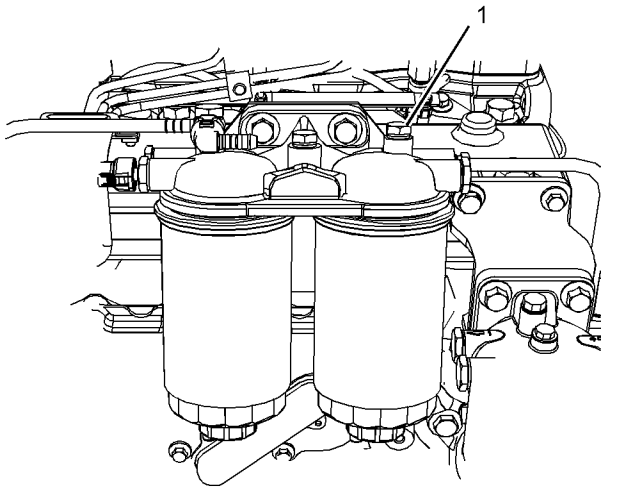

Illustration 44 g02791865
Typical example

1. Loosen the vent screw (1) on the secondary fuel filter base.

2. Operate the priming lever of the fuel priming pump to eliminate any air between the fuel priming pump and the fuel filters.

Note: The fuel priming pump is mechanically operated by the camshaft. If the lobe of the camshaft is acting upon the arm of the fuel priming pump, the ability to hand prime the fuel system will be reduced. If the resistance on the priming lever is low, rotate the crankshaft in order to move the camshaft lobe off the fuel priming pump arm.

3. Operate priming lever of the fuel priming pump by hand. Check that there is correct resistance on the fuel priming pump. Operate the fuel priming pump until fuel, free of air, comes from the vent screw.

4. Tighten the vent screw (1) to a torque of 20 N·m (15 lb ft)

5. Energize the stop solenoid on the fuel injection pump. Operate the priming lever of the fuel priming pump several times.

6. Crank the engine with the throttle lever in the CLOSED position until the engine starts.

7. Start the engine and run the engine at idle for 1 minute.

NOTICE
Do not crank the engine continuously for more than 30 seconds. Allow the starting motor to cool for two minutes before cranking the engine again.

8. Cycle the throttle lever from the low idle position to the high idle position three times. The cycle time for the throttle lever is one second to 6 seconds for one complete cycle.

Note: To purge air from the fuel injection pump on engines with a fixed throttle, the engine should be run at full load for 30 seconds. The load should then be decreased until the engine is at high idle. This should be repeated three times. This will assist in removing trapped air from the fuel injection pump.

9. Check for leaks in the fuel system.

Type 2 Fuel Filters

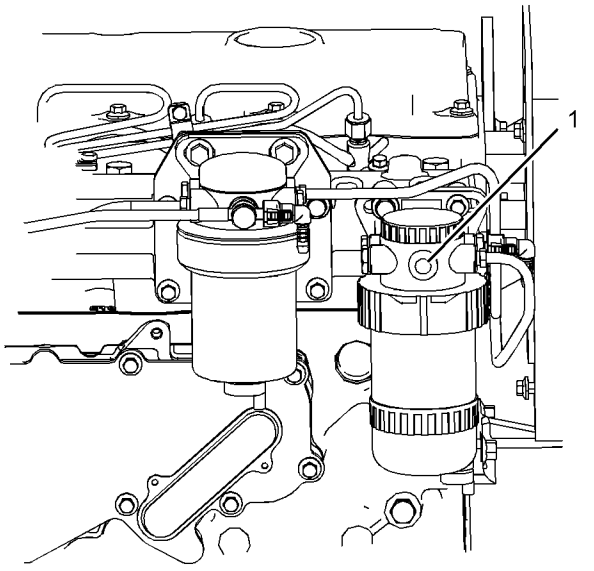

Illustration 45 g03651564
Typical example

1. Loosen the vent plug (1) on the primary fuel filter base.

2. Operate the priming lever of the fuel priming pump to eliminate any air between the fuel priming pump and the fuel filters.

Note: The fuel priming pump is mechanically operated by the camshaft. If the lobe of the camshaft is acting upon the arm of the fuel priming pump, the ability to hand prime the fuel system will be reduced. If the resistance on the priming lever is low, rotate the crankshaft in order to move the camshaft lobe off the fuel priming pump arm.

3. Operate priming lever of the fuel priming pump by hand. Check that there is correct resistance on the fuel priming pump. Operate the fuel priming pump until fuel, free of air, comes from the vent screw.

4. Tighten the vent plug (1).

5. Energize the stop solenoid on the fuel injection pump. Operate the priming lever of the fuel priming pump several times.

6. Crank the engine with the throttle lever in the CLOSED position until the engine starts.

7. Start the engine and run the engine at idle for 1 minute.

NOTICE
Do not crank the engine continuously for more than 30 seconds. Allow the starting motor to cool for two minutes before cranking the engine again.

8. Cycle the throttle lever from the low idle position to the high idle position three times. The cycle time for the throttle lever is one second to 6 seconds for one complete cycle.

Note: To purge air from the fuel injection pump on engines with a fixed throttle, the engine should be run at full load for 30 seconds. The load should then be decreased until the engine is at high idle. This should be repeated three times. This will assist in removing trapped air from the fuel injection pump.

9. Check for leaks in the fuel system.

i05752285

Fuel System Primary Filter/ Water Separator - Drain

SMCS Code: 1260-543; 1263-543

⚠ WARNING

Fuel leaked or spilled onto hot surfaces or electrical components can cause a fire. To help prevent possible injury, turn the start switch off when changing fuel filters or water separator elements. Clean up fuel spills immediately.

NOTICE
Ensure that the engine is stopped before any servicing or repair is performed.

NOTICE
The water separator can be under suction during normal engine operation. Ensure that the drain valve is tightened securely to help prevent air from entering the fuel system.

Type 1 Fuel Filter

1. Place a suitable container under the water separator in order to catch any fuel that might spill. Clean up any spilled fuel.

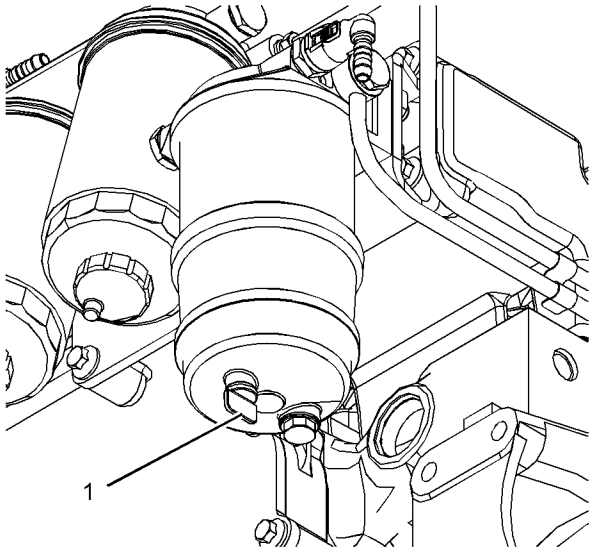

Illustration 46 g02351572
Typical example

2. Install a suitable tube onto drain (1). Open drain (1). Allow the fluid to drain into the container.

3. Tighten drain (1) by hand pressure only. Remove the tube and dispose of the drained fluid in a safe place.

Type 2 Fuel Filter

1. Place a suitable container under the water separator in order to catch any fuel that might spill. Clean up any spilled fuel.

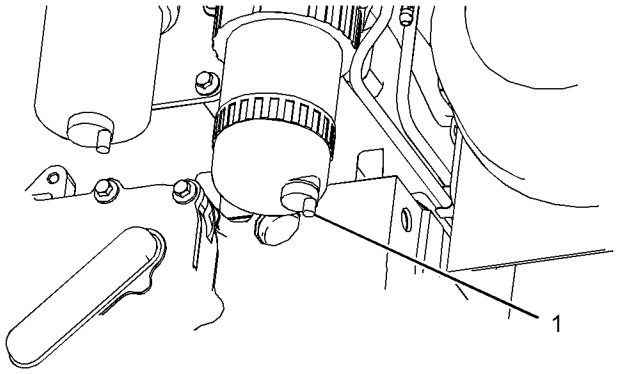

Illustration 47 g03651584
Typical example

2. Install a suitable tube onto drain (1). Open drain (1). Allow the fluid to drain into the container.

3. Tighten drain (1) by hand pressure only. Remove the tube and dispose of the drained fluid in a safe place.

i04156888

Fuel System Primary Filter (Water Separator) Element - Replace

SMCS Code: 1260-510-FQ; 1263-510-FQ

⚠ WARNING

Fuel leaked or spilled onto hot surfaces or electrical components can cause a fire. To help prevent possible injury, turn the start switch off when changing fuel filters or water separator elements. Clean up fuel spills immediately.

Note: Refer to Systems Operation, Testing and Adjusting, "Cleanliness of Fuel System Components" for detailed information on the standards of cleanliness that must be observed during ALL work on the fuel system.

NOTICE
Ensure that the engine is stopped before any servicing or repair is performed.

1. Turn the fuel supply valve (if equipped) to the OFF position before performing this maintenance.

2. Drain the water separator. Refer to Operation and Maintenance Manual, "Fuel System Primary Filter/ Water Separator - Drain" for the correct procedure.

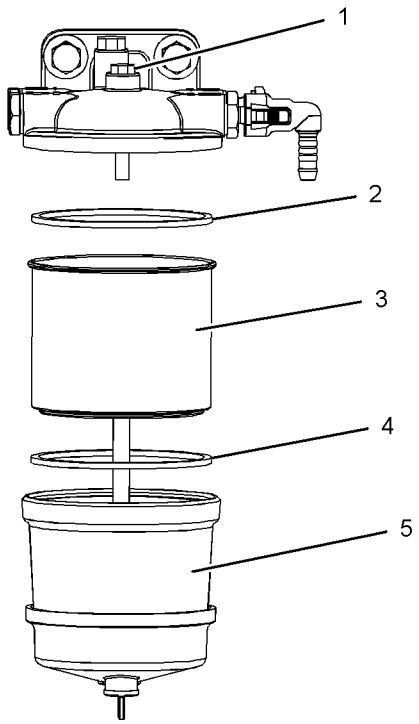

Illustration 48 g02351587
Typical example

3. Hold bowl (5) and remove screw (1). Remove bowl (5) from canister. Remove O-ring (4). Discard O-ring (4).

4. Use a 1U-8760 Chain Wrench in order to remove canister (3). Remove O-ring (2). Discard canister (3) in a safe place. Discard O-ring (2).

5. Clean bowl (5).

6. Lubricate the O ring (2) with clean engine oil on the new canister (3).

7. Install the new canister (3). Spin on the canister until the O ring (2) contacts the filter base. The canister will require a ¾ of a full turn or one full turn in order to tighten the canister correctly. Refer to the information on the canister.

8. Install new O ring (4) into the bowl.

9. Align the bowl (5) to the canister (3). Install setscrew (1). Tighten the setscrew to a torque of 5 N·m (44 lb in).

10. Remove the container and dispose of the fuel in a safe place.

11. The secondary filter must be replaced at the same time as the primary filter. Refer to the Operation and Maintenance Manual, “Fuel System Secondary Filter - Replace”.

i04156903

Fuel System Secondary Filter - Replace

SMCS Code: 1261-510-SE

⚠ WARNING

Fuel leaked or spilled onto hot surfaces or electrical components can cause a fire. To help prevent possible injury, turn the start switch off when changing fuel filters or water separator elements. Clean up fuel spills immediately.

Note: Refer to Systems Operation, Testing and Adjusting, “Cleanliness of Fuel System Components” for detailed information on the standards of cleanliness that must be observed during ALL work on the fuel system.

NOTICE
Ensure that the engine is stopped before any servicing or repair is performed.

NOTICE
Do not allow dirt to enter the fuel system. Thoroughly clean the area around a fuel system component that will be disconnected. Fit a suitable cover over disconnected fuel system component.

1. Ensure that the fuel supply valve (if equipped) is in the OFF position. Place a suitable container under the fuel filter in order to catch any fuel that might spill. Clean up any spilled fuel.

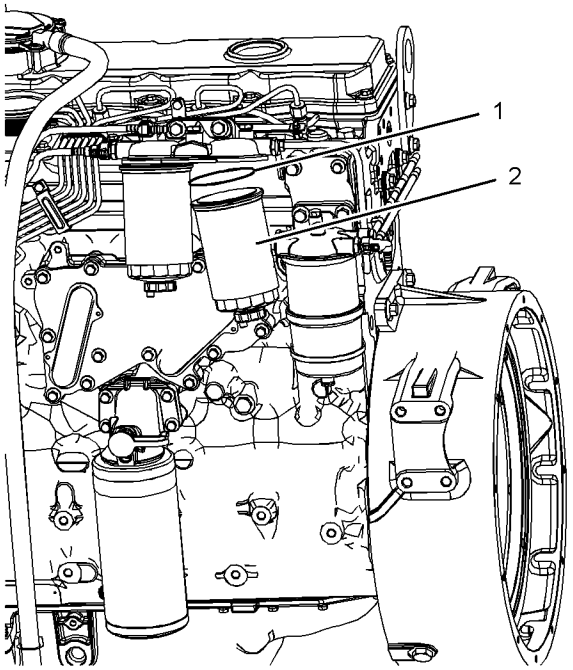

Illustration 49 g02351596
Typical example

2. Clean the outside of the fuel filter. Use 1U-8760 Chain Wrench in order to remove canister (2) from the engine and dispose of the canister in a safe place.

3. Lubricate O ring (1) with clean engine oil. Do not fill the new canister with fuel before the canister is installed.

4. Do not use a tool in order to install the canister. Tighten the canister by hand.

5. Install the new canister. Spin on the canister until the O ring seal contacts the filter base. The canister will require 3/4 of a full turn or one full turn in order to tighten the canister correctly. Refer to information on the canister.

6. Remove the container and dispose of the fluid in a safe place. If equipped, open the fuel supply valve.

7. Prime the fuel system. Refer to the Operation and Maintenance Manual, “Fuel System - Prime” for more information.

i02348492

Fuel Tank Water and Sediment - Drain

SMCS Code: 1273-543-M&S

NOTICE
Care must be taken to ensure that fluids are contained during performance of inspection, maintenance, testing, adjusting and repair of the product. Be prepared to collect the fluid with suitable containers before opening any compartment or disassembling any component containing fluids.

Dispose of all fluids according to local regulations and mandates.

Fuel Tank

Fuel quality is critical to the performance and to the service life of the engine. Water in the fuel can cause excessive wear to the fuel system.

Water can be introduced into the fuel tank when the fuel tank is being filled.

Condensation occurs during the heating and cooling of fuel. The condensation occurs as the fuel passes through the fuel system and the fuel returns to the fuel tank. This causes water to accumulate in fuel tanks. Draining the fuel tank regularly and obtaining fuel from reliable sources can help to eliminate water in the fuel.

Drain the Water and the Sediment

Fuel tanks should contain some provision for draining water and draining sediment from the bottom of the fuel tanks.

Open the drain valve on the bottom of the fuel tank in order to drain the water and the sediment. Close the drain valve.

Check the fuel daily. Allow five minutes after the fuel tank has been filled before draining water and sediment from the fuel tank.

Fill the fuel tank after operating the engine in order to drive out moist air. This will help prevent condensation. Do not fill the tank to the top. The fuel expands as the fuel gets warm. The tank may overflow.

Some fuel tanks use supply pipes that allow water and sediment to settle below the end of the fuel supply pipe. Some fuel tanks use supply lines that take fuel directly from the bottom of the tank. If the engine is equipped with this system, regular maintenance of the fuel system filter is important.

Fuel Storage Tanks

Drain the water and the sediment from the fuel storage tank at the following intervals:

- Weekly
- Service intervals
- Refill of the tank

This will help prevent water or sediment from being pumped from the storage tank into the engine fuel tank.

If a bulk storage tank has been refilled or moved recently, allow adequate time for the sediment to settle before filling the engine fuel tank. Internal baffles in the bulk storage tank will also help trap sediment. Filtering fuel that is pumped from the storage tank helps to ensure the quality of the fuel. When possible, water separators should be used.

i02705980

Hoses and Clamps - Inspect/ Replace

SMCS Code: 7554-510; 7554-040

Inspect all hoses for leaks that are caused by the following conditions:

- Cracking
- Softness
- Loose clamps

Replace hoses that are cracked or soft. Tighten any loose clamps.

NOTICE
Do not bend or strike high pressure lines. Do not install bent or damaged lines, tubes or hoses. Repair any loose or damaged fuel and oil lines, tubes and hoses. Leaks can cause fires. Inspect all lines, tubes and hoses carefully. Tighten all connections to the recommended torque.

Check for the following conditions:

- End fittings that are damaged or leaking
- Outer covering that is chafed or cut
- Exposed wire that is used for reinforcement

- Outer covering that is ballooning locally
- Flexible part of the hose that is kinked or crushed
- Armoring that is embedded in the outer covering

A constant torque hose clamp can be used in place of any standard hose clamp. Ensure that the constant torque hose clamp is the same size as the standard clamp.

Due to extreme temperature changes, the hose will heat set. Heat setting causes hose clamps to loosen. This can result in leaks. A constant torque hose clamp will help to prevent loose hose clamps.

Each installation application can be different. The differences depend on the following factors:

- Type of hose
- Type of fitting material
- Anticipated expansion and contraction of the hose
- Anticipated expansion and contraction of the fittings

Replace the Hoses and the Clamps

WARNING

Pressurized System: Hot coolant can cause serious burns. To open the cooling system filler cap, stop the engine and wait until the cooling system components are cool. Loosen the cooling system pressure cap slowly in order to relieve the pressure.

1. Stop the engine. Allow the engine to cool.
2. Loosen the cooling system filler cap slowly in order to relieve any pressure. Remove the cooling system filler cap.

Note: Drain the coolant into a suitable, clean container. The coolant can be reused.

3. Drain the coolant from the cooling system to a level that is below the hose that is being replaced.
4. Remove the hose clamps.
5. Disconnect the old hose.
6. Replace the old hose with a new hose.
7. Install the hose clamps with a torque wrench.

Note: Refer to the Specifications, SENR3130, “Torque Specifications” in order to locate the proper torques.

8. Refill the cooling system.
9. Clean the cooling system filler cap. Inspect the cooling system filler cap's gaskets. Replace the cooling system filler cap if the gaskets are damaged. Install the cooling system filler cap.
10. Start the engine. Inspect the cooling system for leaks.

i01515272

Overhaul Considerations

SMCS Code: 7595-043

Reduced hours of operation at full load will result in a lower average power demand. A decreased average power demand should increase both the engine service life and the overhaul interval.

The need for an overhaul is generally indicated by increased fuel consumption and by reduced power.

The following factors are important when a decision is being made on the proper time for an engine overhaul:

- The need for preventive maintenance
- The quality of the fuel that is being used
- The operating conditions
- The results of the S·O·S analysis

Oil Consumption as an Overhaul Indicator

Oil consumption, fuel consumption, and maintenance information can be used to estimate the total operating cost for your Caterpillar engine. Oil consumption can also be used to estimate the required capacity of a makeup oil tank that is suitable for the maintenance intervals.

Oil consumption is in proportion to the percentage of the rated engine load. As the percentage of the engine load is increased, the amount of oil that is consumed per hour also increases.

The oil consumption rate (brake specific oil consumption) is measured in grams per kW/h (lb per bhp). The brake specific oil consumption (BSOC) depends on the engine load. Consult your Caterpillar dealer for assistance in determining the typical oil consumption rate for your engine.

When an engine's oil consumption has risen to three times the original oil consumption rate due to normal wear, an engine overhaul should be scheduled. There may be a corresponding increase in blowby and a slight increase in fuel consumption.

Overhaul Options

Before Failure Overhaul

A planned overhaul before failure may be the best value for the following reasons:

- Costly unplanned downtime can be avoided.
- Many original parts can be reused according to the standards for reusable parts.
- The engine's service life can be extended without the risk of a major catastrophe due to engine failure.
- The best cost/value relationship per hour of extended life can be attained.

After Failure Overhaul

If a major engine failure occurs and the engine must be removed, many options are available. An overhaul should be performed if the engine block or the crankshaft needs to be repaired.

If the engine block is repairable and/or the crankshaft is repairable, the overhaul cost should be between 40 percent and 50 percent of the cost of a new engine with a similar exchange core.

This lower cost can be attributed to three aspects:

- Specially designed Caterpillar engine features
- Caterpillar dealer exchange components
- Caterpillar Inc. remanufactured exchange components

Overhaul Recommendation

To minimize downtime, Caterpillar Inc. recommends a scheduled engine overhaul by your Caterpillar dealer before the engine fails. This will provide you with the best cost/value relationship.

Note: Overhaul programs vary according to the engine application and according to the dealer that performs the overhaul. Consult your Caterpillar dealer for specific information about the available overhaul programs and about overhaul services for extending the engine life.

If an overhaul is performed without overhaul service from your Caterpillar dealer, be aware of the following maintenance recommendations.

Rebuild or Exchange

Cylinder Head Assembly, Oil Pump, and Fuel Transfer Pump

These components should be inspected according to the instructions that are found in various Caterpillar reusability publications. The Special Publication, SEBF8029 lists the reusability publications that are needed for inspecting the engine parts.

If the parts comply with the established inspection specifications that are expressed in the reusable parts guideline, the parts should be reused.

Parts that are not within the established inspection specifications should be dealt with in one of the following manners:

- Salvaging
- Repairing
- Replacing

Using out-of-spec parts can result in the following problems:

- Unscheduled downtime
- Costly repairs
- Damage to other engine parts
- Reduced engine efficiency
- Increased fuel consumption

Reduced engine efficiency and increased fuel consumption translates into higher operating costs. Therefore, Caterpillar Inc. recommends repairing out-of-spec parts or replacing out-of-spec parts.

Inspection and/or Replacement

Crankshaft Bearings and Crankshaft Seals

The following components may not last until the second overhaul.

- Thrust bearings
- Main bearings
- Rod bearings
- Crankshaft seals

Caterpillar Inc. recommends the installation of new parts at each overhaul period.

Inspect these parts while the engine is disassembled for an overhaul.

Inspect the crankshaft for any of the following conditions:

- Deflection
- Damage to the journals
- Bearing material that has seized to the journals

Check the journal taper and the profile of the crankshaft journals. Check these components by interpreting the wear patterns on the following components:

- Rod bearing
- Main bearings

Inspect the camshaft for damage to the journals and to the lobes.

Note: If the camshaft is removed for any reason, use the magnetic particle inspection process to check for cracks in the camshaft.

Inspect the following components for signs of wear or for signs of scuffing:

- Camshaft bearings
- Lifters

Caterpillar Inc. recommends replacing the crankshaft vibration damper.

Oil Cooler Core

During an overhaul, Caterpillar Inc. recommends the removal of the oil cooler core. Clean the oil cooler core. Then, pressure test the oil cooler core.

NOTICE
Do not use caustic cleaners to clean the core.

Caustic cleaners can attack the internal metals of the core and cause leakage.

Note: Use this cleaning procedure to clean the oil cooler core.

1. Remove the oil cooler core.

2. Remove any debris from the oil cooler core. To remove debris from the oil cooler core, turn the oil cooler core onto one end.

3. Flush the oil cooler core internally with cleaner in order to loosen foreign substances. This will also help to remove oil from the oil cooler core.

Note: Caterpillar Inc. recommends the use of Hydrosolv Liquid Cleaners. Table 25 lists the Hydrosolv Liquid Cleaners that are available from your Caterpillar dealer.

Table 25

Hydrosolv Liquid Cleaners		
Part Number	**Description**	**Size**
1U-5490	Hydrosolv 4165	19 L (5 US gal)
1U-5492	Hydrosolv 100	19 L (5 US gallon)

4. Use steam to clean the oil cooler core. This removes any remaining residue from the cleaner. Flush the fins of the oil cooler core. Remove any other trapped debris.

5. Wash the oil cooler core with hot, soapy water. Rinse the oil cooler core thoroughly with clean water.

WARNING

Personal injury can result from air pressure.

Personal injury can result without following proper procedure. When using pressure air, wear a protective face shield and protective clothing.

Maximum air pressure at the nozzle must be less than 205 kPa (30 psi) for cleaning purposes.

6. Dry the oil cooler core with compressed air. Direct the air in the reverse direction of the normal flow.

7. Inspect the components in order to ensure cleanliness. The oil cooler core should be pressure tested. Repair the oil cooler core, if necessary. Install the oil cooler core.

For more information about cleaning the cores, consult your Caterpillar dealer.

Obtain Coolant Analysis

The concentration of supplemental coolant additive (SCA) should be checked regularly with test kits or with S·O·S Coolant Analysis (Level 1). Further coolant analysis is recommended when the engine is overhauled.

For example, considerable deposits are found in the water jacket areas on the external cooling system, but the concentrations of coolant additives were carefully maintained. The coolant water probably contained minerals that were deposited on the engine over time.

A coolant analysis can be conducted in order to verify the condition of the water that is being used in the cooling system. A full water analysis can be obtained by consulting your local water utility company or an agricultural agent. Private laboratories are also available for water analysis.

Caterpillar Inc. recommends an S·O·S Coolant Analysis (Level 2).

S·O·S Coolant Analysis (Level 2)

An S·O·S Coolant Analysis (Level 2) is a comprehensive coolant analysis which completely analyzes the coolant and the effects on the cooling system. An S·O·S Coolant Analysis (Level 2) provides the following information:

- Complete S·O·S Coolant Analysis (Level 1)
- Visual inspection of properties
- Identification of metal corrosion
- Identification of contaminants
- Identification of built up impurities (corrosion and scale)

S·O·S Coolant Analysis (Level 2) provides a report of the results of both the analysis and the maintenance recommendations.

For more information about coolant analysis, see your Caterpillar dealer.

i09670468

Radiator - Clean

SMCS Code: 1353-070

Note: Adjust the frequency of cleaning according to the effects of the operating environment.

Inspect the radiator for these items: damaged fins, corrosion, dirt, grease, insects, leaves, oil, and other debris. Clean the radiator, if necessary.

⚠ WARNING

Personal injury can result from air pressure.

Personal injury can result without following proper procedure. When using pressure air, wear a protective face shield and protective clothing.

The maximum air pressure for cleaning purposes must be reduced to 205 kPa (30 psi) when the air nozzle is deadheaded.

Pressurized air is the preferred method for removing loose debris. Direct the air in the opposite direction of the air flow. Hold the nozzle approximately 6 mm (0.25 inch) away from the fins. Slowly move the air nozzle in a direction that is parallel with the tubes. This movement will remove debris that is between the tubes.

Pressurized water may also be used for cleaning. The maximum water pressure for cleaning purposes must be less than 275 kPa (40 psi). Use pressurized water to soften mud. Clean the core from the front and the rear.

Use a degreaser and steam for removal of oil and grease. Clean the front and the rear of the core. Wash the core with detergent and hot water. Thoroughly rinse the core with clean water.

After cleaning, start the engine and bring the engine to high idle. This procedure will help in the removal of debris and drying of the core. Stop the engine. Use a light bulb behind the core to inspect the core for cleanliness. Repeat the cleaning, if necessary.

Inspect the fins for damage. Bent fins may be opened with a “comb”. Inspect these items for good condition: welds, mounting brackets, air lines, connections, clamps, and seals. Make repairs, if necessary.

i02348493

Starting Motor - Inspect

SMCS Code: 1451-040; 1453-040

Caterpillar recommends a scheduled inspection of the starting motor. If the starting motor fails, the engine may not start in an emergency situation.

Check the starting motor for correct operation. Check the electrical connections and clean the electrical connections. Refer to the Systems Operation, Testing and Adjusting Manual, “Electric Starting System - Test” for more information on the checking procedure and for specifications or consult your Caterpillar dealer for assistance.

i04144491

Turbocharger - Inspect

SMCS Code: 1052-040

A regular visual inspection of the turbocharger is recommended. If the turbocharger fails during engine operation, damage to the turbocharger compressor wheel and/or to the engine may occur. Damage to the turbocharger compressor wheel can cause additional damage to the pistons, the valves, and the cylinder head.

NOTICE
Turbocharger bearing failures can cause large quantities of oil to enter the air intake and exhaust systems. Loss of engine lubricant can result in serious engine damage.

Minor leakage of oil into a turbocharger under extended low idle operation should not cause problems as long as a turbocharger bearing failure has not occured.

When a turbocharger bearing failure is accompanied by a significant engine performance loss (exhaust smoke or engine rpm up at no load), do not continue engine operation until the turbocharger is renewed.

A visual inspection of the turbocharger can minimize unscheduled downtime. A visual inspection of the turbocharger can also reduce the chance for potential damage to other engine parts.

Removal and Installation

For options regarding the removal, installation, and replacement, consult your Carerpillar dealer. Refer to the Disassembly and Assembly, “Turbocharger - Remove and Turbocharger - Install” and Systems Operation, Testing and Adjusting, “Turbocharger - Inspect” for further information.

Inspecting

NOTICE
The compressor housing for the turbocharger must not be removed from the turbocharger for inspection or removed for the cleaning of the compressor.

1. Remove the pipe from the turbocharger exhaust outlet and remove the air intake pipe to the turbocharger. Visually inspect the piping for the presence of oil. Clean the interior of the pipes in order to prevent dirt from entering during reassembly.

2. Check for obvious heat discoloration of the turbocharger. Check for any loose bolts or any missing bolts. Check for damage to the oil supply line and the oil drain line. Check for cracks in the housing of the turbocharger. Ensure that the compressor wheel can rotate freely.

3. Check for the presence of oil. If oil is leaking from the back side of the compressor wheel, there is a possibility of a failed turbocharger oil seal.

The presence of oil may be the result of extended engine operation at low idle. The presence of oil may also be the result of a restriction of the line for the intake air (clogged air filters), which causes the turbocharger to slobber.

4. Inspect the bore of the housing of the turbine outlet for corrosion.

5. Fasten the air intake pipe and the exhaust outlet pipe to the turbocharger housing. Ensure that all clamps are installed correctly and that all clamps are tightened securely.

i06030797

Walk-Around Inspection

SMCS Code: 1000-040

Inspect the Engine for Leaks and for Loose Connections

A walk-around inspection should only take a few minutes. When the time is taken to perform these checks, costly repairs and accidents can be avoided.

For maximum engine service life, make a thorough inspection of the engine compartment before starting the engine. Look for items such as oil leaks or coolant leaks, loose bolts, worn belts, loose connections, and trash buildup. Make repairs, as needed:

- The guards must be in the correct place. Repair damaged guards or replace missing guards.
- Wipe all caps and plugs before the engine is serviced in order to reduce the chance of system contamination.

NOTICE
For any type of leak (coolant, lube, or fuel) clean up the fluid. If leaking is observed, find the source and correct the leak. If leaking is suspected, check the fluid levels more often than recommended until the leak is found or fixed, or until the suspicion of a leak is proved to be unwarranted.

NOTICE
Accumulated grease and/or oil on an engine is a fire hazard. Remove the accumulated grease and oil. Refer to this Operation and Maintenance Manual, “Engine - Clean” for more information.

- Ensure that the cooling system hoses are correctly clamped and that the cooling system hoses are tight. Check for leaks. Check the condition of all pipes.
- Inspect the water pump for coolant leaks.

Note: The water pump seal is lubricated by the coolant in the cooling system. A small amount of coolant leakage can occur at the seal and is normal. This leakage can occur as the engine cools down and the parts contract.

Excessive coolant leakage may indicate the need to replace the water pump seal. For the removal of the water pump and the installation of water pump and/or seal, refer to the Disassembly and Assembly Manual, “Water Pump - Remove and Install” for more information or consult your Cat dealer.

- Inspect the lubrication system for leaks at the front crankshaft seal, the rear crankshaft seal, the oil pan, the oil filters, and the rocker cover.
- Inspect the fuel system for leaks. Look for loose fuel line clamps and/or tie-wraps.
- Inspect the piping for the air intake system and the elbows for cracks and for loose clamps. Ensure that hoses and tubes are not contacting other hoses, tubes, wiring harnesses.
- Inspect the alternator belts and any accessory drive belts for cracks, breaks, or other damage.

Belts for multiple groove pulleys must be replaced as matched sets. If only one belt is replaced, the belt will carry more load than the belts that are not replaced. The older belts are stretched. The additional load on the new belt could cause the belt to break.

- Drain the water and the sediment from the fuel tank on a daily basis.
- Drain the water and the sediment from the fuel filters on a daily basis.
- Inspect the wiring and the wiring harnesses for loose connections and for worn wires or frayed wires.
- Inspect the ground strap for a good connection and for good condition.
- Disconnect any battery chargers that are not protected against the current drain of the starting motor. Check the condition and the electrolyte level of the batteries, unless the engine is equipped with a maintenance free battery.
- Check the condition of the gauges. Replace any gauges that are cracked. Replace any gauge that cannot be calibrated.

i02794230

Water Pump - Inspect

SMCS Code: 1361-040

A failed water pump might cause severe engine overheating problems that could result in the following conditions:

- Cracks in the cylinder head
- A piston seizure
- Other potential damage to the engine

Note: The water pump seal is lubricated by the coolant in the cooling system. It is normal for a small amount of leakage to occur as the engine cools down and parts contract.

Visually inspect the water pump for leaks.

Note: If engine coolant enters the engine lubricating system the lubricating oil and the engine oil filter must be replaced. This will remove any contamination that is caused by the coolant and this will prevent any irregular oil samples.

The water pump is not a serviceable item. In order to install a new water pump, refer to the Disassembly and Assembly Manual, “Water Pump - Remove and Install” or contact your Caterpillar dealer.

Warranty Section

Warranty Information

i05549472

Emissions Warranty Information

SMCS Code: 1000

The certifying engine manufacturer warrants to the ultimate purchaser and each subsequent purchaser that:

1. New non-road diesel engines and stationary diesel engines less than 10 liters per cylinder (including Tier 1 and Tier 2 marine engines < 37 kW, but excluding locomotive and other marine engines) operated and serviced in the United States and Canada, including all parts of their emission control systems (“emission related components”), are:

a. Designed, built, and equipped so as to conform, at the time of sale, with applicable emission standards prescribed by the United States Environmental Protection Agency (EPA) by way of regulation.

b. Free from defects in materials and workmanship in emission-related components that can cause the engine to fail to conform to applicable emission standards for the warranty period.

2. New non-road diesel engines (including Tier 1 and Tier 2 marine propulsion engines < 37 kW and Tier 1 through Tier 4 marine auxiliary engines < 37 kW, but excluding locomotive and other marine engines) operated and serviced in the state of California, including all parts of their emission control systems (“emission related components”), are:

a. Designed, built, and equipped so as to conform, at the time of sale, to all applicable regulations adopted by the California Air Resources Board (ARB).

b. Free from defects in materials and workmanship which cause the failure of an emission-related component to be identical in all material respects to the component as described in the engine manufacturer's application for certification for the warranty period.

The aftertreatment system can be expected to function properly for the lifetime of the engine (emissions durability period) subject to prescribed maintenance requirements being followed.

A detailed explanation of the Emission Control Warranty that is applicable to new non-road and stationary diesel engines, including the components covered and the warranty period, is found in a supplemental Special Publication. Consult your authorized Cat dealer to determine if your engine is subject to an Emission Control Warranty and to obtain a copy of the applicable Special Publication.

Reference Information Section

Engine Ratings

i02719419

Engine Rating Conditions

SMCS Code: 1000

All engine ratings are in compliance with the following standard ambient air conditions of “SAE J1349”:

- 100 kPa (29.3 Inches Hg)
- 30 percent relative humidity
- A temperature of 25 °C (77 °F)

Ratings relate to the standard condition of “ISO14396:2002”.

The engine ratings are based on the following fuel specifications:

- The Low Heat Value (LHV) of the fuel at 29 °C (84.2 °F) at 42780 kJ/kg (18390 Btu/lb)
- Gravity (API) of 35 degrees at 15 °C (60 °F)
- Specific gravity of .849 at 15 °C (60 °F)

The engine ratings are gross output ratings.

Gross Output Ratings – The total output capability of the engine that is equipped with standard accessories.

Standard accessories include the following components:

- Oil pumps
- Fuel pumps
- Water pumps

Subtract the power that is required to drive auxiliary components from the gross output. This will produce the net power that is available for the external load (flywheel).

i02719525

Engine Rating Definitions

SMCS Code: 1000

It is important to know the use of the engine so that the rating will match the operating profile. The proper rating selection is also important so that the customer's perception of price and value is realized.

In selecting a rating for a specific application, the most important consideration is the time that is spent at full throttle. The rating definitions identify the percent of time at full throttle. The definitions also identify the corresponding times below rated rpm.

Note: For an exact determination of the appropriate rating, follow the OEM specifications or consult your Caterpillar dealer.

There is five ratings from A to E. The rating for the C6.6 industrial engine is C.

C – Intermittent service in conjunction with maximum power and/or speed are cyclic. The engine at full load should not exceed 50 percent of the duty cycle.

NOTICE
Operating engines above the rating definitions can result in shorter service life before overhaul.

Customer Service

i08302979

Customer Assistance

SMCS Code: 1000; 4450

USA and Canada

When a problem arises concerning the operation or the service of an engine, the problem will normally be managed by the dealer in your area.

Your satisfaction is a primary concern to Caterpillar and to Cat dealers. If you have a problem that has not been handled to your complete satisfaction, follow these steps:

1. Discuss your problem with a manager from the dealership.

2. If your problem cannot be resolved at the dealer level, use the phone number that is listed below to talk with a Field Service Coordinator:

1-800-447-4986

The normal hours are from 8:00 to 4:30 Monday through Friday Central Standard Time.

3. If your needs have not been met still, submit the matter in writing to the following address:

Designated Compliance Officer Heavy-Duty and Nonroad Engine Group 6403-J,
US Ave, NW, Washington,
DC 20460
Email address: complianceinfo@epa.gov.

Your problem may ultimately be solved at the dealership, using the dealership facilities, equipment, and personnel. Therefore, follow the steps in sequence when a problem is experienced.

Outside of the USA and of Canada

If a problem arises outside the USA and outside Canada, and if the problem cannot be resolved at the dealer level, consult the appropriate Cat office.

Latin America, Mexico, Carribean
Caterpillar Americas Co.
701 Waterford Way, Suite 200
Miami, FL 33126-4670
USA
Phone: 305-476-6800
Fax: 305-476-6801

Europe, Africa, and Middle East
Caterpillar Overseas S.A.
76 Route de Frontenex
P.O. Box 6000
CH-1211 Geneva 6
Switzerland
Phone: 22-849-4444
Fax: 22-849-4544

Far East
Caterpillar Asia Pte. Ltd.
7 Tractor Road
Jurong, Singapore 627968
Republic of Singapore
Phone: 65-662-8333
Fax: 65-662-8302

China
Caterpillar China Ltd.
37/F., The Lee Gardens
33 Hysan Avenue
Causeway Bay
G.P.O. Box 3069
Hong Kong
Phone: 852-2848-0333
Fax: 852-2848-0440

Japan
Shin Caterpillar Mitsubishi Ltd.
SBS Tower
10-1, Yoga 4-Chome
Setagaya-Ku, Tokyo 158-8530
Japan
Phone: 81-3-5717-1150
Fax: 81-3-5717-1177

Japan
Caterpillar Power Systems, Inc.
SBS Tower (14th floor)
4-10-1, Yoga
Setagaya-Ku, Tokyo 158-0097
Phone: 81-3-5797-4300
Fax: 81-3-5797-4359

Australia and New Zealand
Caterpillar of Australia Ltd.
1 Caterpillar Drive
Private Mail Bag 4
Tullamarine, Victoria 3043
Australia
Phone: 03-9953-9333
Fax: 03-9335-3366

i08292376

Ordering Replacement Parts

SMCS Code: 4450; 7567

⚠ WARNING

When replacement parts are required for this product Caterpillar recommends using Caterpillar replacement parts or parts with equivalent specifications including, but not limited to, physical dimensions, type, strength and material.

Failure to heed this warning can lead to premature failures, product damage, personal injury or death.

Quality Cat replacement parts are available from Cat dealers throughout the world. Cat dealer parts inventories are up to date. The parts stocks include all the parts that are normally needed to protect your Cat engine investment.

When you order parts, specify the following information:

- Part number
- Part name
- Quantity

If there is a question concerning the part number, provide your dealer with a complete description of the needed item.

When a Cat engine requires maintenance and/or repair, provide the dealer with all the information that is stamped on the Information Plate. This information is described in this Operation and Maintenance Manual (Product Information Section).

Discuss the problem with the dealer. Inform the dealer about the conditions of the problem and the nature of the problem. Inform the dealer about when the problem occurs. This information will help the dealer in troubleshooting the problem and solving the problem faster.

Reference Materials

i08530562

Maintenance Records

SMCS Code: 1000; 4450

Caterpillar recommends the retention of accurate maintenance records. Accurate maintenance records can be used for the following purposes:

- Determine operating costs.
- Establish maintenance schedules for other engines that are operated in the same environment.
- Show compliance with the required maintenance practices and maintenance intervals.

Maintenance records can be used for various other business decisions that are related to engine maintenance.

Maintenance records are a key element of a maintenance program that is managed. Accurate maintenance records can help your Cat dealer to fine-tune the recommended maintenance intervals to meet the specific operating situation. These recommendations should result in a lower engine operating cost.

Records should be kept for the following items:

Fuel Consumption – A record of fuel consumption is essential to determine when the load sensitive components should be inspected or repaired. Fuel consumption assists in determining overhaul intervals.

Service Hours – A record of service hours is essential to determine when the speed sensitive components should be inspected or repaired.

Documents – These items should be easy to obtain, and these items should be kept in the engine history file. All documents should show this information: date, service hours, fuel consumption, unit number, and engine serial number. The following types of documents should be kept as proof of maintenance or repair for warranty:

Keep the following types of documents as proof of maintenance for warranty. Also, keep these types of documents as proof of repair for warranty:

- Dealer work orders and itemized bills
- Owner repair costs
- Owner receipts
- Maintenance log

i08254037

Maintenance Log

SMCS Code: 1000; 4450

Table 26

Engine Model		**Customer Identifier**		
Serial Number		**Arrangement Number**		
Service Hours	**Quantity Of Fuel**	**Service Item**	**Date**	**Authorization**

i04144409

Reference Material

SMCS Code: 1000; 4450

The following literature can be obtained through any Caterpillar dealer.

Lubricants

- Special Publication, PEHP0002, “Data Sheet - Molybdenum (MPGM) Grease”
- Special Publication, NEHP6015, “Data Sheet - Caterpillar Special Purpose Grease (SPG)”
- Special Publication, SEBD0640, “Oil and Your Engine”
- Operation and Maintenance Manual, SEBU5898, “Cold Weather Recommendations”
- Operation and Maintenance Manual, SEBU6251, “Caterpillar Commercial Diesel Engine Fluids Recommendations”
- Special Publication, PEHP6001, “How To Take A Good Oil Sample”

Coolants

- Special Publication, PEHP7057, “Data Sheet - S·O·S Coolant Analysis”
- Special Publication, SEBD0970, “Coolant and Your Engine”

Miscellaneous

- Service Manual, REG1139F, “Service Manual Contents Microfiche”
- Service Manual, UENR0643, “ C7.1 (Mech) Industrial Engines”
- Systems Operation, Testing and Adjusting, UENR0614, “ C7.1 (Mech) Industrial Engines”
- Specifications, UENR0613, “ C7.1 (Mech) Industrial Engines.”
- Disassembly and Assembly, UENR0615, “ C7.1 (Mech) Industrial Engines”
- Specifications, SENR3130, “Torque Specifications”
- Special Publication, SEBF8029, “Index to Guidelines for Reusable Parts and Salvage Operations”
- Special Publication, SEBF8062, “Procedure to Inspect and Clean Air Filters”
- Special Instruction, SEHS9031, “Storage Procedure for Caterpillar Products”
- Special Publication, SEBU6251, “Caterpillar Commercial Diesel Engine Fluids Recommendations”
- Special Instruction, SEHS7633, “Battery Test Procedure”

Emissions Warranty

This engine may be Certified and this engine may be covered by an Emissions Warranty. A detailed explanation of the Emissions Warranty that is applicable to Certified engines is found in Supplement, SMBU6981, “Emissions Control Warranty Information”. The engine is Certified if the engine has a special label that verifies the certification. A Caterpillar dealer can also inform you if the engine is certified.

Index

A

After Starting Engine 30
After Stopping Engine 37
Aftercooler Core - Clean/Test 58
Aftercooler Core - Inspect/Clean/Test (Aftercooler Core - Inspect) 58
Alarms and Shutoffs 22
  Alarms 22
  Shutoffs 22
  Testing the Shutoff and Alarm System 22
Alternator - Inspect 59

B

Battery - Replace 59
Battery Electrolyte Level - Check 59
Battery or Battery Cable - Disconnect 60
Before Starting Engine 13, 28
Belts - Inspect/Adjust/Replace 60
  Adjustment 61
  Inspection 60
  Replacement 61
Burn Prevention 10
  Batteries 11
  Coolant 10
  Oils 11

C

Cold Weather Operation 33
  Hints for Cold Weather Operation 33
  Idling the Engine 34
  Recommendations for Coolant Warm Up 34
  Recommendations for the Coolant 33
  Viscosity of the Engine Lubrication Oil 33
Cold Weather Starting 28
Coolant (DEAC) - Change 61
  Cooling Systems with Heavy Deposits or Plugging 62
  Drain 61
  Fill 62
  Flush 61
Coolant (ELC) - Change 63
  Drain 63
  Fill 64
  Flush 63
Coolant Extender (ELC) - Add 64
Coolant Level - Check 65
Coolant Sample (Level 1) - Obtain 65
Coolant Sample (Level 2) - Obtain 66
Coolant Temperature Regulator - Replace 67
Cooling System Supplemental Coolant Additive (SCA) - Test/Add 67
  Add the SCA, If Necessary 68
  S·O·S Coolant Analysis 67
  Test for SCA Concentration 67
Crushing Prevention and Cutting Prevention 13
Customer Assistance 93
  Outside of the USA and of Canada 93
  USA and Canada 93
Customer Service 93

D

Driven Equipment - Check 68

E

Electrical System 14
  Grounding Practices 14
Emergency Stopping 37
Emissions Certification Film 19
Emissions Warranty Information 91
Engaging the Driven Equipment 31
Engine - Clean 68
Engine Air Cleaner Element (Dual Element) - Inspect/Clean/Replace 69
  Cleaning the Primary Air Cleaner Elements 70
  Servicing the Air Cleaner Elements 69
Engine Air Cleaner Element (Single Element) - Inspect/Clean/Replace 72
Engine Air Cleaner Service Indicator - Inspect 72
  Test the Service Indicator 73
Engine Air Precleaner - Check/Clean 73
Engine Crankcase Breather - Replace 73
Engine Electronics 15
Engine Mounts - Inspect 74
Engine Oil and Filter - Change 75
  Drain the Engine Lubricating Oil 76
  Fill the Oil Pan 78
  Replace the Oil Filter 76
Engine Oil Level - Check 74
Engine Oil Sample - Obtain 75
  Obtain the Sample and the Analysis 75
Engine Operation 31
Engine Rating Conditions 92

Engine Rating Definitions 92
Engine Ratings 92
Engine Starting 13, 28
Engine Stopping 14, 37
Engine Valve Lash - Check 78

F

Fan Clearance - Check 78
Features and Controls 22
Fire Prevention and Explosion Prevention 11
  Ether 12
  Fire Extinguisher 12
  Lines, Tubes, and Hoses 12
Fluid Recommendations (Coolant Information) 38
  Additives 39
  Commercial Heavy-Duty Coolant/Antifreeze and SCA 42
  Conventional Coolant or Maintenance for Antifreeze Cooling System 44
  Coolant Recommendations 40
  Diesel Engine Antifreeze/Coolant (DEAC) 42
  Extended Life Coolant (ELC) 41
  Glycol 39
  S·O·S Coolant Analysis 40
  Supplemental Coolant Additive (SCA) 42
  Water 39
  Water and Supplemental Coolant Additive (SCA) 42
Fluid Recommendations (Fuel Recommendations) 46
Fluid Recommendations (Lubricant Information) 47
  Aftermarket Oil Additives 50
  API Oils 47
  Caterpillar Diesel Engine Oil 47
  Caterpillar Premium Grease (CPG) 52
  Cold Weather Lubricants 50
  Commercial Oils 48
  Engine Manufacturers Association (EMA) Oils 47
  General Information 47
  Lubricating Grease 51
  Multipurpose Greases 51
  Re-refined Basestock Oils 50
  S·O·S Oil Analysis 52
  Special Purpose Grease (SPG) 51
  Synthetic Base Stock Oils 50
  Total Base Number (TBN) and Fuel Sulfur Levels for Direct Injection (DI) Diesel Engines 49
Foreword 4
  California Proposition 65 Warning 4
  Literature Information 4
  Maintenance 4
  Maintenance Intervals 5
  Operation 4
  Overhaul 5
  Safety 4
Fuel and the Effect from Cold Weather 35
Fuel Conservation Practices 31
Fuel Related Components in Cold Weather 36
  Fuel Filters 36
  Fuel Heaters 36
  Fuel Tanks 36
Fuel System - Prime 79
  Type 1 Fuel Filters 80
  Type 2 Fuel Filters 80
Fuel System Primary Filter (Water Separator) Element - Replace 82
Fuel System Primary Filter/Water Separator - Drain 81
  Type 1 Fuel Filter 81
  Type 2 Fuel Filter 81
Fuel System Secondary Filter - Replace 83
Fuel Tank Water and Sediment - Drain 84
  Drain the Water and the Sediment 84
  Fuel Storage Tanks 84
  Fuel Tank 84

G

Gauges and Indicators 22
General Hazard Information 8
  Asbestos Information 10
  Containing Fluid Spillage 9
  Dispose of Waste Properly 10
  Fluid Penetration 9
  Hexavalent Chromium 9
  Pressurized Air and Water 8
General Information 16

H

Hoses and Clamps - Inspect/Replace 84
  Replace the Hoses and the Clamps 85

I

Important Safety Information 2

L

Lifting and Storage 21

M

Maintenance Interval Schedule..... 56
Commissioning 57
Daily 56
Every 1000 Service Hours..... 56
Every 12 000 Service Hours or 6 Years..... 57
Every 2000 Service Hours..... 56
Every 2000 Service Hours or 1 Year 56
Every 250 Service Hours..... 56
Every 3000 Service Hours or 2 Years 56
Every 4000 Service Hours..... 57
Every 50 Service Hours or Weekly..... 56
Every 500 Service Hours..... 56
Every 500 Service Hours or 1 Year 56
Every 6000 Service Hours or 3 Years 57
Every Year 56
Initial 500 Service Hours..... 56
Overhaul 57
When Required..... 56
Maintenance Log..... 96
Maintenance Recommendations 54
Maintenance Records 95
Maintenance Section..... 38
Model View Illustrations 16
Monitoring System..... 23
Mounting and Dismounting 13

O

Operation Section..... 21
Ordering Replacement Parts..... 94
Overhaul Considerations..... 85
Oil Consumption as an Overhaul Indicator.. 85
Overhaul Recommendation..... 86
Overspeed..... 24

P

Plate Locations and Film Locations 19
Serial Number Plate (1) 19
Product Description..... 17
Engine Cooling and Lubrication 18
Engine Specifications 17
Product Identification Information 19
Product Information Section..... 16
Product Lifting 21
Product Storage 21

R

Radiator - Clean 88
Radiator Restrictions..... 35
Reference Information..... 20
Record for Reference 20
Reference Information Section 92
Reference Material..... 97
Coolants..... 97
Emissions Warranty..... 97
Lubricants 97
Miscellaneous..... 97
Reference Materials 95
Refill Capacities..... 38
Cooling System..... 38
Lubrication System 38

S

Safety Messages..... 6
(1) Universal Warning..... 6
(2) Ether..... 7
Safety Section 6
Sensors and Electrical Components..... 24
Coolant Temperature Switch 1 26
Electronic Control Governor 2 (If equipped)..... 26
Engine Oil Pressure Switch 3 26
Failure of Switches 26
Switch Locations..... 24
Severe Service Application 55
Environmental Factors..... 55
Improper Maintenance Procedures..... 55
Improper Operating Procedures..... 55
Starting Motor - Inspect..... 88
Starting the Engine..... 29
Starting with Jump Start Cables..... 29
Stopping the Engine..... 37

T

Table of Contents 3
Turbocharger - Inspect..... 88
Inspecting 89
Removal and Installation 89

W

Walk-Around Inspection 89
Inspect the Engine for Leaks and for Loose Connections..... 89
Warranty Information..... 91
Warranty Section..... 91

Water Pump - Inspect..... 90
Welding on Engines with Electronic
Controls 54

Product and Dealer Information

Note: For product identification plate locations, see the section “Product Identification Information” in the Operation and Maintenance Manual.

Delivery Date: _____

Product Information

Model: _____

Product Identification Number: _____

Engine Serial Number: _____

Transmission Serial Number: _____

Generator Serial Number: _____

Attachment Serial Numbers: _____

Attachment Information: _____

Customer Equipment Number: _____

Dealer Equipment Number: _____

Dealer Information

Name: _____ Branch: _____

Address: _____

_____

_____

	Dealer Contact	Phone Number	Hours
Sales:	_____	_____	_____
Parts:	_____	_____	_____
Service:	_____	_____	_____

SEBU8729
©2025 Caterpillar
All Rights Reserved

CAT, CATERPILLAR, LET'S DO THE WORK, their respective logos, "Caterpillar Corporate Yellow", the "Power Edge" and Cat "Modern Hex" trade dress as well as corporate and product identity used herein, are trademarks of Caterpillar and may not be used without permission.