SEBU9065-04 (en-us)
July 2025

# Operation and Maintenance Manual

## C4.4 Industrial Engine

433 1-UP (Engine)
W23 1-UP (Engine)

**Scan to find and purchase genuine Cat® parts and related service information.**

# Important Safety Information

Most accidents that involve product operation, maintenance and repair are caused by failure to observe basic safety rules or precautions. An accident can often be avoided by recognizing potentially hazardous situations before an accident occurs. A person must be alert to potential hazards, including human factors that can affect safety. This person should also have the necessary training, skills and tools to perform these functions properly.

**Improper operation, lubrication, maintenance or repair of this product can be dangerous and could result in injury or death.**

**Do not operate or perform any lubrication, maintenance or repair on this product, until you verify that you are authorized to perform this work, and have read and understood the operation, lubrication, maintenance and repair information.**

Safety precautions and warnings are provided in this manual and on the product. If these hazard warnings are not heeded, bodily injury or death could occur to you or to other persons.

The hazards are identified by the “Safety Alert Symbol” and followed by a “Signal Word” such as “DANGER”, “WARNING” or “CAUTION”. The Safety Alert “WARNING” label is shown below.




The meaning of this safety alert symbol is as follows:

**Attention! Become Alert! Your Safety is Involved.**

The message that appears under the warning explains the hazard and can be either written or pictorially presented.

A non-exhaustive list of operations that may cause product damage are identified by “NOTICE” labels on the product and in this publication.

**Caterpillar cannot anticipate every possible circumstance that might involve a potential hazard. The warnings in this publication and on the product are, therefore, not all inclusive. You must not use this product in any manner different from that considered by this manual without first satisfying yourself that you have considered all safety rules and precautions applicable to the operation of the product in the location of use, including site-specific rules and precautions applicable to the worksite. If a tool, procedure, work method or operating technique that is not specifically recommended by Caterpillar is used, you must satisfy yourself that it is safe for you and for others. You should also ensure that you are authorized to perform this work, and that the product will not be damaged or become unsafe by the operation, lubrication, maintenance or repair procedures that you intend to use.**

The information, specifications, and illustrations in this publication are on the basis of information that was available at the time that the publication was written. The specifications, torques, pressures, measurements, adjustments, illustrations, and other items can change at any time. These changes can affect the service that is given to the product. Obtain the complete and most current information before you start any job. Cat dealers have the most current information available.

---

NOTICE

**When replacement parts are required for this product Caterpillar recommends using original Caterpillar® replacement parts.**

**Other parts may not meet certain original equipment specifications.**

**When replacement parts are installed, the machine owner/user should ensure that the machine remains in compliance with all applicable requirements.**

---

**In the United States, the maintenance, replacement, or repair of the emission control devices and systems may be performed by any repair establishment or individual of the owner's choosing.**

# Table of Contents

Foreword ..... 4

**Safety Section**

Safety Messages ..... 6

General Hazard Information ..... 8

Burn Prevention ..... 11

Fire Prevention and Explosion Prevention ..... 12

Crushing Prevention and Cutting Prevention .. 14

Mounting and Dismounting ..... 15

High Pressure Fuel Lines ..... 15

Before Starting Engine ..... 17

Engine Starting ..... 17

Engine Stopping ..... 18

Electrical System ..... 18

Engine Electronics ..... 19

**Product Information Section**

General Information ..... 20

Product Identification Information ..... 27

**Operation Section**

Lifting and Storage ..... 29

Features and Controls ..... 30

Engine Diagnostics ..... 41

Engine Starting ..... 48

Engine Operation ..... 51

Cold Weather Operation ..... 52

Engine Stopping ..... 56

**Maintenance Section**

Refill Capacities ..... 58

Maintenance Recommendations ..... 62

Maintenance Interval Schedule ..... 64

**Warranty Section**

Warranty Information ..... 100

**Index Section**

Index ..... 101

# Foreword

## California Proposition 65 Warning

**Diesel engine exhaust and some of its constituents are known to the State of California to cause cancer, birth defects, and other reproductive harm.**

**WARNING – This product can expose you to chemicals including ethylene glycol, which is known to the State of California to cause birth defects or other reproductive harm. For more information go to:**

**www.P65Warnings.ca.gov**

**Do not ingest this chemical. Wash hands after handling to avoid incidental ingestion.**

**WARNING – This product can expose you to chemicals including lead and lead compounds, which are known to the State of California to cause cancer, birth defects, or other reproductive harm. For more information go to:**

**www.P65Warnings.ca.gov**

**Wash hands after handling components that may contain lead.**

## Literature Information

This manual contains safety, operation instructions, lubrication, and maintenance information. This manual should be stored in or near the engine area in a literature holder or literature storage area. Read, study, and keep it with the literature and engine information.

English is the primary language for all Cat publications. The English used facilitates translation and consistency in electronic media delivery.

Some photographs or illustrations in this manual show details or attachments that may be different from your engine. Guards and covers may have been removed for illustrative purposes. Continuing improvement and advancement of product design may have caused changes to your engine which are not included in this manual Whenever a question arises regarding your engine, or this manual, please consult with your Cat dealer for the latest available information.

## Safety

This safety section lists basic safety precautions. In addition, this section identifies hazardous, warning situations. Read and understand the basic precautions listed in the safety section before operating or performing lubrication, maintenance, and repair on this product.

## Operation

Operating techniques outlined in this manual are basic. They assist with developing the skills and techniques required to operate the engine more efficiently and economically. Skill and techniques develop as the operator gains knowledge of the engine and its capabilities.

The operation section is a reference for operators. Photographs and illustrations guide the operator through procedures of inspecting, starting, operating, and stopping the engine. This section also includes a discussion of electronic diagnostic information.

## Maintenance

The maintenance section is a guide to engine care. The illustrated, step-by-step instructions are grouped by fuel consumption, service hours and/or calendar time maintenance intervals. Items in the maintenance schedule are referenced to detailed instructions that follow.

Use fuel consumption or service hours to determine intervals. Calendar intervals shown (daily, annually, etc.) may be used instead of service meter intervals if they provide more convenient schedules and approximate the indicated service meter reading.

Recommended service should be performed at the appropriate intervals as indicated in the Maintenance Interval Schedule. The actual operating environment of the engine also governs the Maintenance Interval Schedule. Therefore, under severe, dusty, wet, or freezing cold operating conditions, more frequent lubrication, and maintenance than is specified in the Maintenance Interval Schedule may be necessary.

The maintenance schedule items are organized for a preventive maintenance management program. If the preventive maintenance program is followed, a periodic tune-up is not required. The implementation of a preventive maintenance management program should minimize operating costs through cost avoidances resulting from reductions in unscheduled downtime and failures.

## Maintenance Intervals

Perform maintenance on items at multiples of the original requirement. Each level and/or individual items in each level should be shifted ahead or back depending upon your specific maintenance practices, operation, and application. We recommend that the maintenance schedules be reproduced and displayed near the engine as a convenient reminder. We also recommend that a maintenance record be maintained as part of the engine's permanent record.

See the section in the Operation and Maintenance Manual, “Maintenance Records” for information regarding documents that are accepted as proof of maintenance or repair. Your authorized Cat dealer can assist you in adjusting your maintenance schedule to meet the needs of your operating environment.

## Overhaul

Major engine overhaul details are not covered in the Operation and Maintenance Manual except for the interval and the maintenance items in that interval. Major repairs are best left to trained personnel or an authorized Cat dealer. Your Cat dealer offers various options regarding overhaul programs. If you experience a major engine failure, there are also numerous after failure overhaul options available from your Cat dealer. Consult with your dealer for information regarding these options.

# Safety Section

i05457429

## Safety Messages

**SMCS Code:** 1000; 7405

There may be several specific warning signs on your engine. The exact location and a description of the warning signs are reviewed in this section. Become familiar with all warning signs.

Ensure that all of the warning signs are legible. Clean the warning signs or replace the warning signs if the words cannot be read or if the illustrations are not visible. Use a cloth, water, and soap to clean the warning signs. Do not use solvents, gasoline, or other harsh chemicals. Solvents, gasoline, or harsh chemicals could loosen the adhesive that secures the warning signs.

Replace any warning sign that is damaged or missing. If a warning sign is attached to a part of the engine that is replaced, install a new warning sign on the replacement part. Your Cat dealer can provide new warning signs.

### (1) Universal Warning

**⚠ WARNING**

**Do not operate or work on this equipment unless you have read and understand the instructions and warnings in the Operation and Maintenance Manuals. Failure to follow the instructions or heed the warnings could result in serious injury or death.**

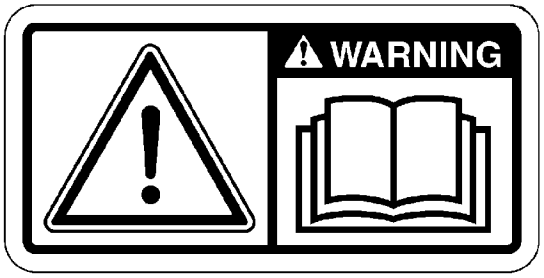


Illustration 1 g01154807

Typical example

The Universal Warning label (1) is located on both sides of the valve mechanism cover base.

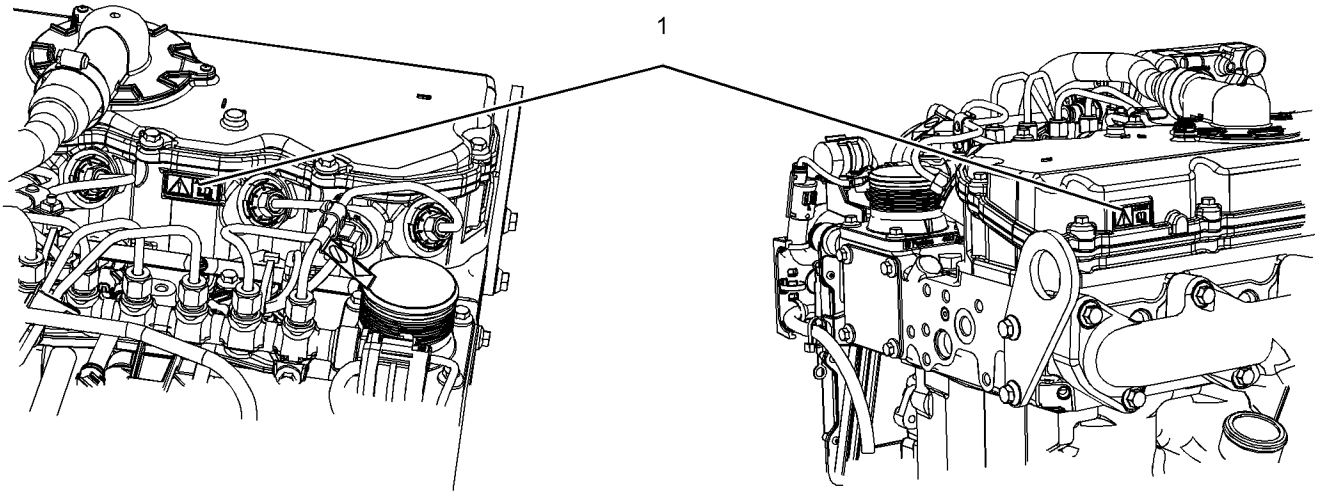


Illustration 2 g03450122

Typical example

## 2 Hand (High Pressure)

**⚠ WARNING**

**Contact with high pressure fuel may cause fluid penetration and burn hazards. High pressure fuel spray may cause a fire hazard. Failure to follow these inspection, maintenance and service instructions may cause personal injury or death.**




Illustration 3 g01154858

Typical example

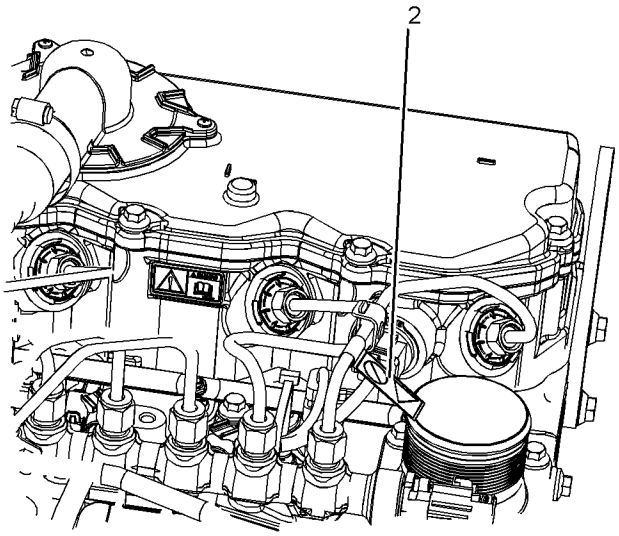


Illustration 4 g03450123

The warning label for the Hand (High Pressure) (2) is a wrap around label that is located on the rear injector line.

## Ether

**⚠ WARNING**

**Do not use aerosol types of starting aids such as ether. Such use could result in an explosion and personal injury.**




Illustration 5 g01154809

Typical example

The ether warning label is supplied loose for the original equipment manufacture to install the label.

i08314796

# General Hazard Information

**SMCS Code:** 1000; 4450; 7405




Illustration 6 g00104545

Attach a “Do Not Operate” warning tag or a similar warning tag to the start switch or to the controls before the engine is serviced or before the engine is repaired. These warning tags (Special Instruction, SEHS7332) are available from your Cat dealer. Attach the warning tags to the engine and to each operator control station. When appropriate, disconnect the starting controls.

Do not allow unauthorized personnel on the engine, or around the engine when the engine is being serviced.

- Tampering with the engine installation or tampering with the OEM supplied wiring can be dangerous. Personal injury, death and/or engine damage could result.
- Vent the engine exhaust to the outside when the engine is operated in an enclosed area.
- If the engine is not running, do not release the secondary brake or the parking brake systems unless the vehicle is blocked or unless the vehicle is restrained.
- Wear a hard hat, protective glasses, and other protective equipment, as required.
- When work is performed around an engine that is operating, wear protective devices for ears to help prevent damage to hearing.
- Do not wear loose clothing or jewelry that can snag on controls or on other parts of the engine.
- Ensure that all protective guards and all covers are secured in place on the engine.
- Never put maintenance fluids into glass containers. Glass containers can break.
- Use all cleaning solutions with care.
- Report all necessary repairs.

Unless other instructions are provided, perform the maintenance under the following conditions:

- The engine is stopped. Ensure that the engine cannot be started.
- The protective locks or the controls are in the applied position.
- Engage the secondary brakes or parking brakes.
- Block the vehicle or restrain the vehicle before maintenance or repairs are performed.
- Disconnect the batteries when maintenance is performed or when the electrical system is serviced. Disconnect the battery ground leads. Tape the leads to help prevent sparks. If equipped, allow the diesel exhaust fluid to be purged before disconnecting the battery.
- If equipped, disconnect the connectors for the unit injectors that are on the valve cover base. This action will help prevent personal injury from the high voltage to the unit injectors. Do not come in contact with the unit injector terminals while the engine is operating.
- Do not attempt any repairs or any adjustments to the engine while the engine is operating.
- Do not attempt any repairs that are not understood. Use the proper tools. Replace any equipment that is damaged or repair the equipment.

- For initial start-up of a new engine or for starting an engine that has been serviced, make provisions to stop the engine if an overspeed occurs. The stopping of the engine may be accomplished by shutting off the fuel supply and/or the air supply to the engine. Ensure that only the fuel supply line is shut off. Ensure that the fuel return line is open.
- Start the engine from the operators station (cab). Never short across the starting motor terminals or the batteries. This action could bypass the engine neutral start system and/or the electrical system could be damaged.

Engine exhaust contains products of combustion which may be harmful to your health. Always start the engine and operate the engine in a well ventilated area. If the engine is in an enclosed area, vent the engine exhaust to the outside.

Cautiously remove the following parts. To help prevent spraying or splashing of pressurized fluids, hold a rag over the part that is being removed.

- Filler caps
- Grease fittings
- Pressure taps
- Breathers
- Drain plugs

Use caution when cover plates are removed. Gradually loosen, but do not remove the last two bolts or nuts that are at opposite ends of the cover plate or the device. Before removing the last two bolts or nuts, pry the cover loose to relieve any spring pressure or other pressure.

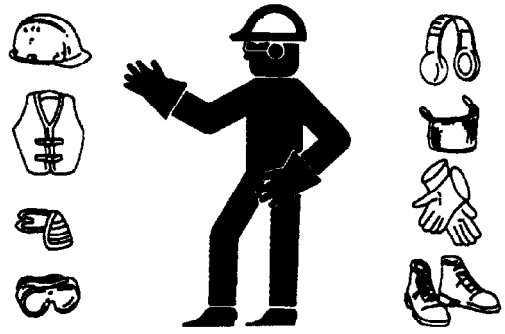

Illustration 7 g00702020

- Wear a hard hat, protective glasses, and other protective equipment, as required.
- When work is performed around an engine that is operating, wear protective devices for ears to help prevent damage to hearing.
- Do not wear loose clothing or jewelry that can snag on controls or on other parts of the engine.
- Ensure that all protective guards and all covers are secured in place on the engine.
- Never put maintenance fluids into glass containers. Glass containers can break.
- Use all cleaning solutions with care.
- Report all necessary repairs.

**Unless other instructions are provided, perform the maintenance under the following conditions:**

- The engine is stopped. Ensure that the engine cannot be started.
- Disconnect the batteries when maintenance is performed or when the electrical system is serviced. Disconnect the battery ground leads. Tape the leads to help prevent sparks.
- Do not attempt any repairs that are not understood. Use the proper tools. Replace any equipment that is damaged or repair the equipment.

## Pressurized Air and Water

Pressurized air and/or water can cause debris and/or hot water to be blown out. This action could result in personal injury.

When pressurized air and/or pressurized water is used for cleaning, wear protective clothing, protective shoes, and eye protection. Eye protection includes goggles or a protective face shield.

The maximum air pressure for cleaning purposes must be below 205 kPa (30 psi). The maximum water pressure for cleaning purposes must be below 275 kPa (40 psi).

## Fluid Penetration

Pressure can be trapped in the hydraulic circuit long after the engine has been stopped. The pressure can cause hydraulic fluid or items such as pipe plugs to escape rapidly if the pressure is not relieved correctly.

Do not remove any hydraulic components or parts until pressure has been relieved or personal injury may occur. Do not disassemble any hydraulic components or parts until pressure has been relieved or personal injury may occur. Refer to the OEM information for any procedures that are required to relieve the hydraulic pressure.

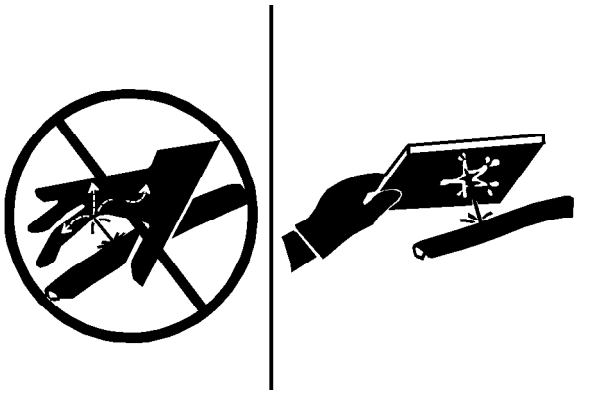

Illustration 8 g00687600

Always use a board or cardboard when you check for a leak. Leaking fluid that is under pressure can penetrate body tissue. Fluid penetration can cause serious injury and possible death. A pin hole leak can cause severe injury. If fluid is injected into your skin, you must get treatment immediately. Seek treatment from a doctor that is familiar with this type of injury.

## Containing Fluid Spillage

Care must be taken to ensure that fluids are contained during performance of inspection, maintenance, testing, adjusting, and repair of the product. Be prepared to collect the fluid with suitable containers before opening any compartment or disassembling any component containing fluids.

Refer to Special Publication, NENG2500, “Cat Dealer Service Tool Catalog” for tools and supplies suitable to collect and contain fluids on Cat products.

Dispose of all fluids according to local regulations and mandates.

## Static Electricity Hazard when Fueling with Ultra-low Sulfur Diesel Fuel

The removal of sulfur and other compounds in ultra-low sulfur diesel fuel (ULSD fuel) decreases the conductivity of ULSD and increases the ability of ULSD to store static charge. Refineries may have treated the fuel with a static dissipating additive. Many factors can reduce the effectiveness of the additive over time. Static charges can build up in ULSD fuel while the fuel is flowing through fuel delivery systems. Static electricity discharge when combustible vapors are present could result in a fire or explosion. Ensure that the entire system used to refuel your machine (fuel supply tank, transfer pump, transfer hose, nozzle, and others) is properly grounded and bonded. Consult with your fuel or fuel system supplier to ensure that the delivery system complies with fueling standards for proper grounding and bonding.

**⚠ WARNING**

**Avoid static electricity risk when fueling. Ultra-low sulfur diesel fuel (ULSD fuel) poses a greater static ignition hazard than earlier diesel formulations with a higher sulfur contents. Avoid death or serious injury from fire or explosion. Consult with your fuel or fuel system supplier to ensure the delivery system is in compliance with fueling standards for proper grounding and bonding practices.**

## Inhalation

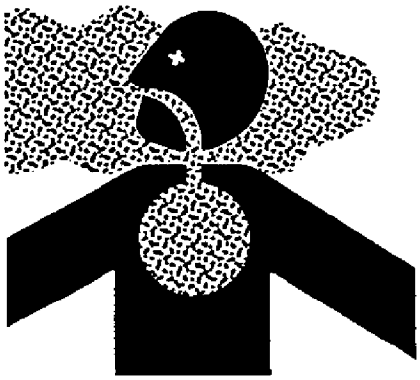

Illustration 9 g00702022

### Exhaust

Use caution. Exhaust fumes can be hazardous to health. If you operate the equipment in an enclosed area, adequate ventilation is necessary.

### Hexavalent Chromium

Caterpillar equipment and replacement parts comply with applicable regulations and requirements where originally sold. Caterpillar recommends the use of only genuine Caterpillar replacement parts.

Hexavalent chromium has occasionally been detected on exhaust and heat shield systems on Caterpillar engines. Although laboratory testing is the only accurate way to know if hexavalent chromium is, in fact, present, the presence of a yellow deposit in areas of high heat (for example, exhaust system components or exhaust insulation) may be an indication of the presence of hexavalent chromium.

Use caution if you suspect the presence of hexavalent chromium. Avoid skin contact when handling items that you suspect may contain hexavalent chromium, and avoid inhalation of any dust in the suspect area. Inhalation of, or skin contact with, hexavalent chromium dust may be hazardous to your health.

If such yellow deposits are found on the engine, engine component parts, or associated equipment or packages, Caterpillar recommends following local health and safety regulations and guidelines, utilizing good hygiene, and adhering to safe work practices when handling the equipment or parts. Caterpillar also recommends the following:

- Wear appropriate Personal Protective Equipment (PPE)
- Wash your hands and face with soap and water prior to eating, drinking, or smoking, and also during rest room breaks, to prevent ingestion of any yellow powder
- Never use compressed air for cleaning areas suspected of containing hexavalent chromium
- Avoid brushing, grinding, or cutting materials suspected of containing hexavalent chromium
- Obey environmental regulations for the disposal of all materials that may contain or have come into contact with hexavalent chromium
- Stay away from areas that might have hexavalent chromium particles in the air.

### Asbestos Information

Cat equipment and replacement parts that are shipped from Caterpillar are asbestos free. Caterpillar recommends the use of only genuine Cat replacement parts. Use the following guidelines when you handle any replacement parts that contain asbestos or when you handle asbestos debris.

Use caution. Avoid inhaling dust that might be generated when you handle components that contain asbestos fibers. Inhaling this dust can be hazardous to your health. The components that may contain asbestos fibers are brake pads, brake bands, lining material, clutch plates, and some gaskets. The asbestos that is used in these components is usually bound in a resin or sealed in some way. Normal handling is not hazardous unless airborne dust that contains asbestos is generated.

If dust that may contain asbestos is present, there are several guidelines that should be followed:

- Never use compressed air for cleaning.
- Avoid brushing materials that contain asbestos.
- Avoid grinding materials that contain asbestos.
- Use a wet method to clean up asbestos materials.
- A vacuum cleaner that is equipped with a high efficiency particulate air filter (HEPA) can also be used.
- Use exhaust ventilation on permanent machining jobs.
- Wear an approved respirator if there is no other way to control the dust.
- Comply with applicable rules and regulations for the work place. In the United States, use Occupational Safety and Health Administration (OSHA) requirements. These OSHA requirements can be found in “29 CFR 1910.1001”.
- Obey environmental regulations for the disposal of asbestos.
- Stay away from areas that might have asbestos particles in the air.

### Dispose of Waste Properly

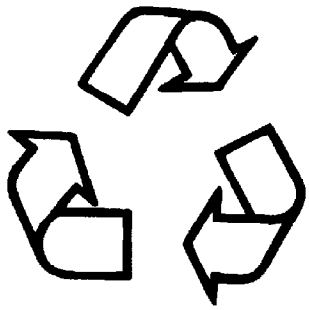

Illustration 10 g00706404

Improperly disposing of waste can threaten the environment. Potentially harmful fluids should be disposed of according to local regulations.

Always use leakproof containers when you drain fluids. Do not pour waste onto the ground, down a drain, or into any source of water.

i05298503

## Burn Prevention

**SMCS Code:** 1000; 4450; 7405

Do not touch any part of an operating engine. Allow the engine to cool before any maintenance is performed on the engine.

**⚠ WARNING**

**Contact with high pressure fuel may cause fluid penetration and burn hazards. High pressure fuel spray may cause a fire hazard. Failure to follow these inspection, maintenance and service instructions may cause personal injury or death.**

After the engine has stopped, you must wait for 60 seconds in order to allow the fuel pressure to be purged from the high-pressure fuel lines before any service or repair is performed on the engine fuel lines.

Allow the pressure to be purged in the air system, in the hydraulic system, in the lubrication system, or in the cooling system before any lines, fittings, or related items are disconnected.

NOTICE
The low-pressure fuel system can be pressurized for a time period after the engine has stopped operating. The operating pressure of the low-pressure fuel system can be 500 kPa (73 psi). The secondary fuel filters should be drained before any maintenance of the low-pressure fuel system is carried out.

## Coolant

When the engine is at operating temperature, the engine coolant is hot. The coolant is also under pressure. The radiator and all lines to the heaters or to the engine contain hot coolant.

Any contact with hot coolant or with steam can cause severe burns. Allow cooling system components to cool before the cooling system is drained.

Check that the coolant level after the engine has stopped and the engine has been allowed to cool.

Ensure that the filler cap is cool before removing the filler cap. The filler cap must be cool enough to touch with a bare hand. Remove the filler cap slowly in order to relieve pressure.

Cooling system conditioner contains alkali. Alkali can cause personal injury. Do not allow alkali to contact the skin, the eyes, or the mouth.

## Oils

Hot oil and hot lubricating components can cause personal injury. Do not allow hot oil to contact the skin. Also, do not allow hot components to contact the skin.

## Batteries

Electrolyte is an acid. Electrolyte can cause personal injury. Do not allow electrolyte to contact the skin or the eyes. Always wear protective glasses for servicing batteries. Wash hands after touching the batteries and connectors. Use of gloves is recommended.

i05298506

# Fire Prevention and Explosion Prevention

**SMCS Code:** 1000; 4450; 7405



Illustration 11 g00704000

All fuels, most lubricants, and some coolant mixtures are flammable.

Flammable fluids that are leaking or spilled onto hot surfaces or onto electrical components can cause a fire. Fire may cause personal injury and property damage.

A flash fire may result if the covers for the engine crankcase are removed within 15 minutes after an emergency shutdown.

Determine whether the engine will be operated in an environment that allows combustible gases to be drawn into the air inlet system. These gases could cause the engine to overspeed. Personal injury, property damage, or engine damage could result.

If the application involves the presence of combustible gases, consult your Cat dealer for additional information about suitable protection devices.

Remove all flammable materials such as fuel, oil, and debris from the engine. Do not allow any flammable materials to accumulate on the engine.

Store fuels and lubricants in properly marked containers away from unauthorized persons. Store oily rags and any flammable materials in protective containers. Do not smoke in areas that are used for storing flammable materials.

Do not expose the engine to any flame.

Exhaust shields (if equipped) protect hot exhaust components from oil or fuel spray in case of a line, a tube, or a seal failure. Exhaust shields must be installed correctly.

Do not weld on lines or tanks that contain flammable fluids. Do not flame cut lines or tanks that contain flammable fluid. Clean any such lines or tanks thoroughly with a nonflammable solvent prior to welding or flame cutting.

Wiring must be kept in good condition. All electrical wires must be properly routed and securely attached. Check all electrical wires daily. Repair any wires that are loose or frayed before you operate the engine. Clean all electrical connections and tighten all electrical connections.

Eliminate all wiring that is unattached or unnecessary. Do not use any wires or cables that are smaller than the recommended gauge. Do not bypass any fuses and/or circuit breakers.

Arcing or sparking could cause a fire. Secure connections, recommended wiring, and properly maintained battery cables will help to prevent arcing or sparking.

**⚠ WARNING**

**Contact with high pressure fuel may cause fluid penetration and burn hazards. High pressure fuel spray may cause a fire hazard. Failure to follow these inspection, maintenance and service instructions may cause personal injury or death.**

After the engine has stopped, you must wait for 60 seconds in order to allow the fuel pressure to be purged from the high-pressure fuel lines before any service or repair is performed on the engine fuel lines.

NOTICE

The low-pressure fuel system can be pressurized for a time period after the engine has stopped operating. The operating pressure of the low-pressure fuel system can be 500 kPa (73 psi).The secondary fuel filters should be drained before any maintenance of the low-pressure fuel system is carried out.

Inspect all lines and hoses for wear or for deterioration. The hoses must be properly routed. The lines and hoses must have adequate support and secure clamps. Tighten all connections to the recommended torque. Leaks can cause fires.

Oil filters and fuel filters must be properly installed. The filter housings must be tightened to the proper torque.



Illustration 12 g00704059

Use caution when you are refueling an engine. Do not smoke while you are refueling an engine. Do not refuel an engine near open flames or sparks. Always stop the engine before refueling.

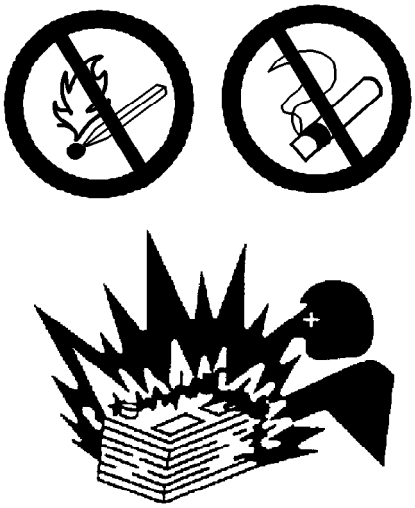

Illustration 13 g00704135

Gases from a battery can explode. Keep any open flames or sparks away from the top of a battery. Do not smoke in battery charging areas.

Never check the battery charge by placing a metal object across the terminal posts. Use a voltmeter or a hydrometer.

Improper jumper cable connections can cause an explosion that can result in injury. Refer to the Operation Section of this manual for specific instructions.

Do not charge a frozen battery, the charging may cause an explosion.

The batteries must be kept clean. The covers (if equipped) must be kept on the cells. Use the recommended cables, connections, and battery box covers when the engine is operated.

## Fire Extinguisher

Make sure that a fire extinguisher is available. Be familiar with the operation of the fire extinguisher. Inspect the fire extinguisher and service the fire extinguisher regularly. Obey the recommendations on the instruction plate.

## Ether

Ether is flammable and poisonous.

Use ether in well ventilated areas. Do not smoke while you are replacing an ether cylinder or while you are using an ether spray.

Do not store ether cylinders in living areas or in the engine compartment. Do not store ether cylinders in direct sunlight or in temperatures above 49 °C (120 °F). Keep ether cylinders away from open flames or sparks.

Dispose of used ether cylinders properly. Do not puncture an ether cylinder. Keep ether cylinders away from unauthorized personnel.

Do not spray ether into an engine if the engine is equipped with a thermal starting aid for cold weather starting.

## Lines, Tubes, and Hoses

Do not bend high-pressure lines. Do not strike high-pressure lines. Do not install any lines that are bent or damaged.

Repair any lines that are loose or damaged. Leaks can cause fires. Consult your Cat dealer for repair or for replacement parts.

Check lines, tubes, and hoses carefully. Do not use your bare hand to check for leaks. Use a board or cardboard to check for leaks. Tighten all connections to the recommended torque.

Replace the parts if any of the following conditions are present:

- High-pressure fuel line or lines are removed.
- End fittings are damaged or leaking.
- Outer coverings are chafed or cut.
- Wires are exposed.
- Outer coverings are ballooning.
- Flexible parts of the hoses are kinked.
- Outer covers have embedded armoring.
- End fittings are displaced.

Make sure that all clamps, guards, and heat shields are installed correctly. This check will help to prevent vibration, rubbing against other parts, and excessive heat.

i08162291

# Crushing Prevention and Cutting Prevention

**SMCS Code:** 1000; 4450; 7405

Support the component properly when work beneath the component is performed.

Unless other maintenance instructions are provided, never attempt adjustments while the engine is running.

Stay clear of all rotating parts and of all moving parts. Leave the guards in place until maintenance is performed. After the maintenance is performed, reinstall the guards.

Keep objects away from moving fan blades. The fan blades will throw objects or cut objects.

When objects are struck, wear protective glasses to avoid injury to the eyes.

Chips or other debris may fly off objects when objects are struck. Before objects are struck, ensure that no one will be injured by flying debris.

i05463929

# Mounting and Dismounting

**SMCS Code:** 1000; 4450; 7405

Do not climb on the engine. The engine has not been designed with mounting or dismounting locations.

Refer to the Original Equipment Manufacture (OEM) for the location of foot and hand holds for your specific application.

i05463931

# High Pressure Fuel Lines

**SMCS Code:** 1274

**⚠ WARNING**

**Contact with high pressure fuel may cause fluid penetration and burn hazards. High pressure fuel spray may cause a fire hazard. Failure to follow these inspection, maintenance and service instructions may cause personal injury or death.**

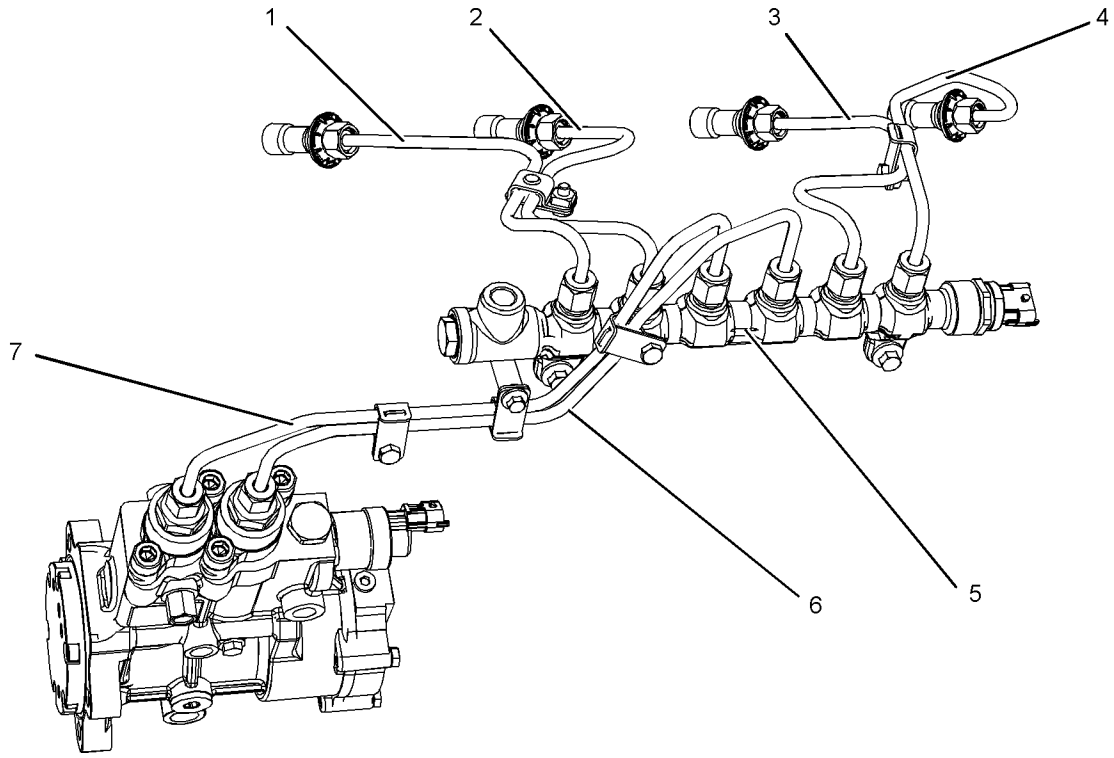


Illustration 14 g03452057

(1) High-pressure line
(2) High-pressure line
(3) High-pressure line
(4) High-pressure line
(5) High-pressure fuel manifold (rail)
(6) High-pressure supply line
(7) High-pressure supply line

The high-pressure fuel lines are the fuel lines that are between the high-pressure fuel pump and the high-pressure fuel manifold and the fuel lines that are between the fuel manifold and cylinder head. These fuel lines are different from fuel lines on other fuel systems.

This difference is because of the following items:

- The high-pressure fuel lines are constantly charged with high pressure.
- The internal pressures of the high-pressure fuel lines are higher than other types of fuel system.
- The high-pressure fuel lines are formed to shape and then strengthened by a special process.

Do not step on the high-pressure fuel lines. Do not deflect the high-pressure fuel lines. Do not bend or strike the high-pressure fuel lines. Deformation or damage of the high-pressure fuel lines may cause a point of weakness and potential failure.

Do not check the high-pressure fuel lines with the engine or the starting motor in operation. After the engine has stopped, allow 90 seconds to pass in order to allow the pressure to be purged before any service or repair is performed on the engine fuel lines.

Do not loosen the high-pressure fuel lines in order to remove air from the fuel system. This procedure is not required.

Visually inspect the high-pressure fuel lines before the engine is started. This inspection should be each day.

If you inspect the engine in operation, always use the proper inspection procedure in order to avoid a fluid penetration hazard. Refer to Operation and Maintenance Manual, “General hazard Information”.

- Inspect the high-pressure fuel lines for damage, deformation, a nick, a cut, a crease, or a dent.
- Do not operate the engine with a fuel leak. If there is a leak, do not tighten the connection in order to stop the leak. The connection must only be tightened to the recommended torque. Refer to Disassembly and Assembly, “Fuel injection lines - Remove and Fuel injection lines - Install”.
- If the high-pressure fuel lines are torqued correctly and the high-pressure fuel lines are leaking, the high-pressure fuel lines must be replaced.

- Ensure that all clips on the high-pressure fuel lines are in place. Do not operate the engine with clips that are damaged, missing, or loose.
- Do not attach any other item to the high-pressure fuel lines.
- Loosened high-pressure fuel lines must be replaced. Also removed high-pressure fuel lines must be replaced. Refer to Disassembly and assembly manual, “ Fuel Injection Lines - Install”.

NOTICE
The low-pressure fuel system can be pressurized for a time period after the engine has stopped operating. The operating pressure of the low-pressure fuel system can be 500 kPa (73 psi). The secondary fuel filters should be drained before any maintenance of the low-pressure fuel system is carried out.

i08614835

# Before Starting Engine

**SMCS Code:** 1000

NOTICE
For initial start-up of a new or rebuilt engine, and for start-up of an engine that has been serviced, make provision to shut the engine off should an overspeed occur. This may be accomplished by shutting off the air and/or fuel supply to the engine.

**⚠ WARNING**

**Engine exhaust contains products of combustion which may be harmful to your health. Always start and operate the engine in a well ventilated area and, if in an enclosed area, vent the exhaust to the outside.**

Inspect the engine for potential hazards.

Do not start the engine if there is a “DO NOT OPERATE” warning tag or similar warning tag attached to the start switch. Do not move any of the controls if there is a “DO NOT OPERATE” warning tag or similar warning tag attached to the controls.

Before starting the engine, ensure that no one is on, underneath, or close to the engine. Ensure that the area is free of personnel.

If equipped, ensure that the lighting system for the engine is suitable for the conditions. Ensure that all lights work properly, if equipped.

All protective guards and all protective covers must be installed if the engine must be started to perform service procedures. To help prevent an accident that is caused by parts in rotation, work around the parts carefully.

Do not bypass the automatic shutoff circuits. Do not disable the automatic shutoff circuits. The circuits are provided to help prevent personal injury. The circuits are also provided to help prevent engine damage.

See the Service Manual for repairs and for adjustments.

i03635086

# Engine Starting

**SMCS Code:** 1000

**⚠ WARNING**

**Do not use aerosol types of starting aids such as ether. Such use could result in an explosion and personal injury.**

If a warning tag is attached to the engine start switch or to the controls DO NOT start the engine or move the controls. Consult with the person that attached the warning tag before the engine is started.

All protective guards and all protective covers must be installed if the engine must be started in order to perform service procedures. To help prevent an accident that is caused by parts in rotation, work around the parts carefully.

Start the engine from the operator's compartment or from the engine start switch.

Always start the engine according to the procedure that is described in the Operation and Maintenance Manual, “Engine Starting” topic in the Operation Section. Knowing the correct procedure will help to prevent major damage to the engine components. Knowing the procedure will also help to prevent personal injury.

To ensure that the jacket water heater (if equipped) and/or the lube oil heater (if equipped) is working correctly, check the water temperature gauge and/or the oil temperature gauge during the heater operation.

Engine exhaust contains products of combustion which can be harmful to your health. Always start the engine and operate the engine in a well ventilated area. If the engine is started in an enclosed area, vent the engine exhaust to the outside.

These engines are equipped with a glow plug starting aid in each individual cylinder that heats the intake air in order to improve starting. Some Caterpillar engines may have a cold starting system that is controlled by the ECM that allows a controlled flow of ether into the engine. The ECM will disconnect the glow plugs before the ether is introduced. This system would be installed at the factory.

i03648639

# Engine Stopping

**SMCS Code:** 1000

To avoid overheating of the engine and accelerated wear of the engine components, stop the engine according to this Operation and Maintenance Manual, “Engine Stopping” topic (Operation Section).

Use the Emergency Stop Button (if equipped) ONLY in an emergency situation. DO NOT use the Emergency Stop Button for normal engine stopping. After an emergency stop, DO NOT start the engine until the problem that caused the emergency stop has been corrected.

On the initial start-up of a new engine or an engine that has been serviced, make provisions to stop the engine if an overspeed condition occurs.

i05464430

# Electrical System

**SMCS Code:** 1000; 1400

Never disconnect any charging unit circuit or battery circuit cable from the battery when the charging unit is operating. A spark can cause the combustible gases that are produced by some batteries to ignite.

To help prevent sparks from igniting combustible gases that are produced by some batteries, the negative “−” cable should be connected last from the external power source to the primary position for grounding.

Check the electrical wires daily for wires that are loose or frayed. Tighten all loose electrical connections before the engine is started. Repair all frayed electrical wires before the engine is started. See the Operation and Maintenance Manual for specific starting instructions.

## Grounding Practices

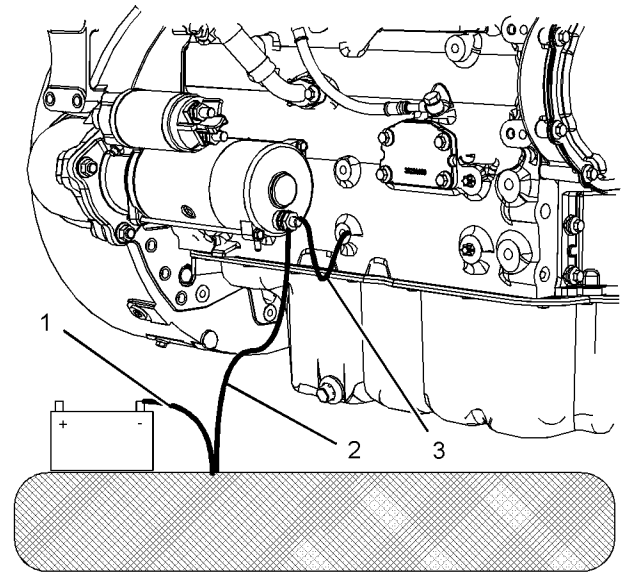


Illustration 15 g03452577

(1) Ground to battery
(2) Ground to starting motor
(3) Starting motor to engine block

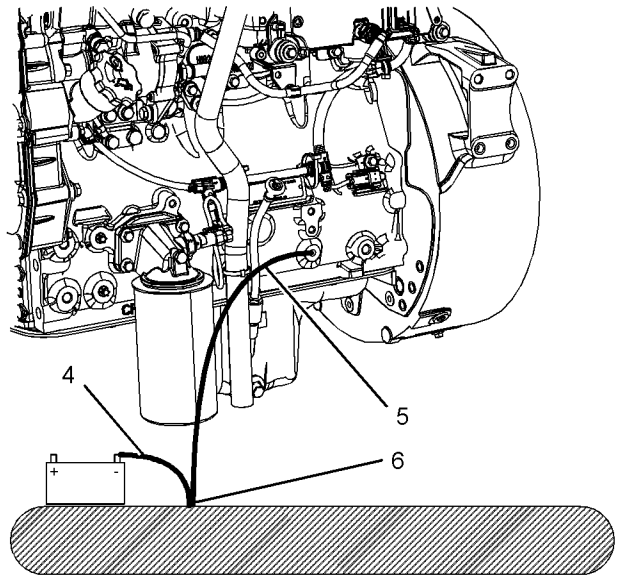


Illustration 16 g03452579

(4) Battery to ground
(5) Ground to engine block
(6) Primary position for grounding

Correct grounding for the engine electrical system is necessary for optimum engine performance and reliability. Incorrect grounding will result in uncontrolled electrical circuit paths and in unreliable electrical circuit paths.

Uncontrolled electrical circuit paths can result in damage to the crankshaft bearing journal surfaces and to aluminum components.

Engines that are installed without engine-to-frame ground straps can be damaged by electrical discharge.

To ensure that the engine and the engine electrical systems function correctly, an engine-to-frame ground strap with a direct path to the battery must be used. This path may be provided by way of a direct engine ground to the frame.

The connections for the grounds should be tight and free of corrosion. The engine alternator must be grounded to the negative “-” battery terminal. The wire used must be adequate to handle the full charging current of the alternator.

The power supply connections and the ground connections for the engine electronics should always be from the isolator to the battery.

i05241796

# Engine Electronics

**SMCS Code:** 1000; 1900

**WARNING**

**Tampering with the electronic system installation or the OEM wiring installation can be dangerous and could result in personal injury or death and/or engine damage.**

**WARNING**

**Electrical Shock Hazard. The electronic unit injectors use DC voltage. The ECM sends this voltage to the electronic unit injectors. Do not come in contact with the harness connector for the electronic unit injectors while the engine is operating. Failure to follow this instruction could result in personal injury or death.**

This engine has a comprehensive, programmable Engine Monitoring System . The Electronic Control Module (ECM) monitors the engine operating conditions. If any of the engine parameters extend outside an allowable range, the ECM will initiate an immediate action.

The following actions are available for engine monitoring control:

- Warning
- Derate
- Shutdown

The following monitored engine operating conditions have the ability to limit engine speed and/or the engine power:

- Engine Coolant Temperature
- Engine Oil Pressure
- Engine Speed
- Intake Manifold Air Temperature
- Intake Manifold Air pressure

The Engine Monitoring package can vary for different engine models and different engine applications. However, the monitoring system and the engine monitoring control will be similar for all engines.

**Note:** Many of the engine control systems and display modules that are available for Caterpillar Engines will work in unison with the Engine Monitoring System. Together, the two controls will provide the engine monitoring function for the specific engine application. Refer to the Troubleshooting for more information on the Engine Monitoring System.

# Product Information Section

# General Information

i05465680

## Model View Illustrations

**SMCS Code:** 1000

The following model views show typical features of the engine Due to individual applications, your engine may appear different from the illustrations.

### Turbocharged Aftercooled Engine

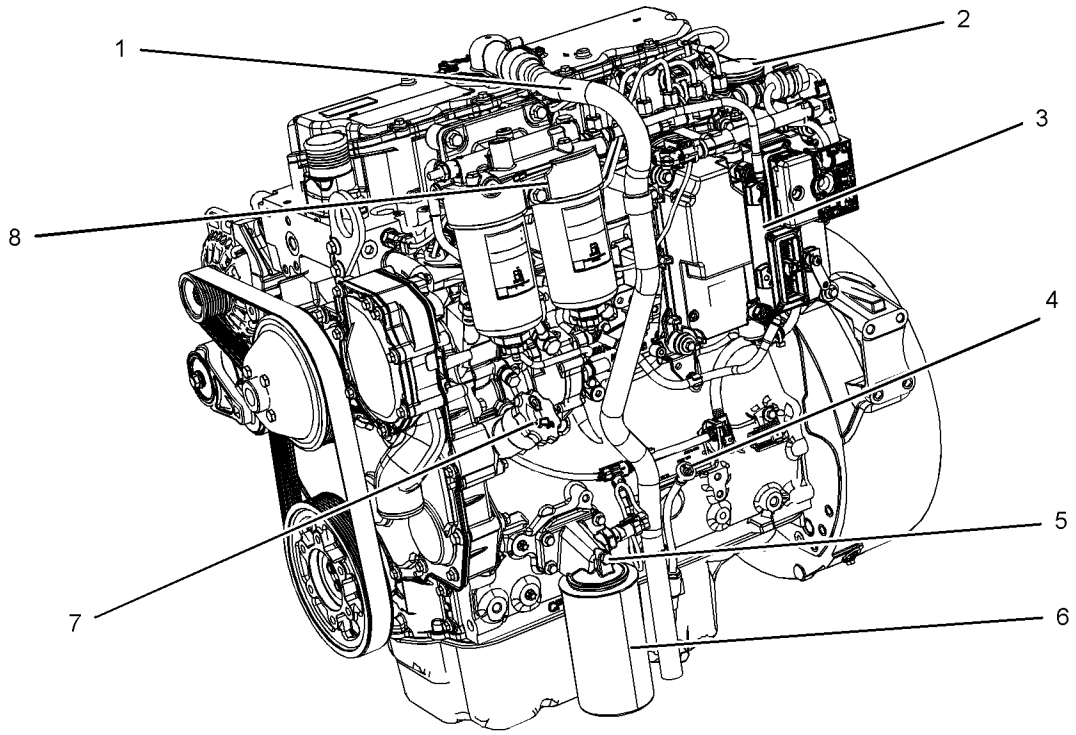


Illustration 17 g03453518

Typical example

(1) Open Breather System
(2) Air Intake
(3) Electronic Control Module
(4) Oil Level Gauge (Dipstick)
(5) Location for Oil Sample Valve
(6) Oil Filter
(7) Oil Filler
(8) Secondary Fuel Filters

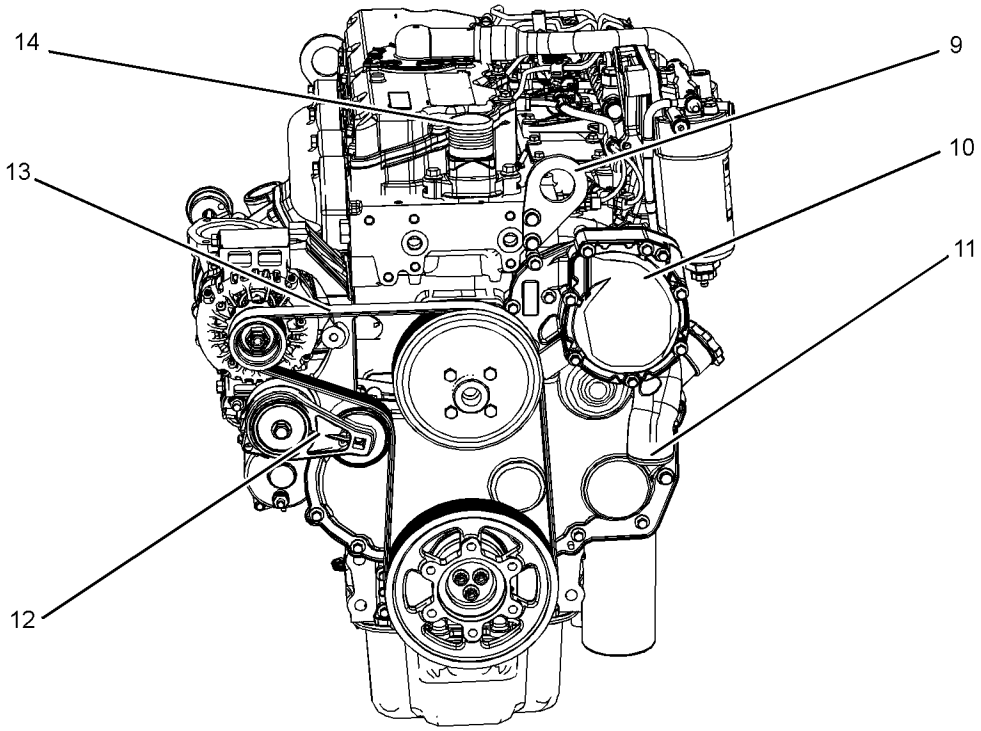


Illustration 18 g03453526

Typical example

(9) Front Lifting Eye
(10) Water Pump
(11) Coolant Intake
(12) Tensioner
(13) Belt
(14) Coolant Outlet

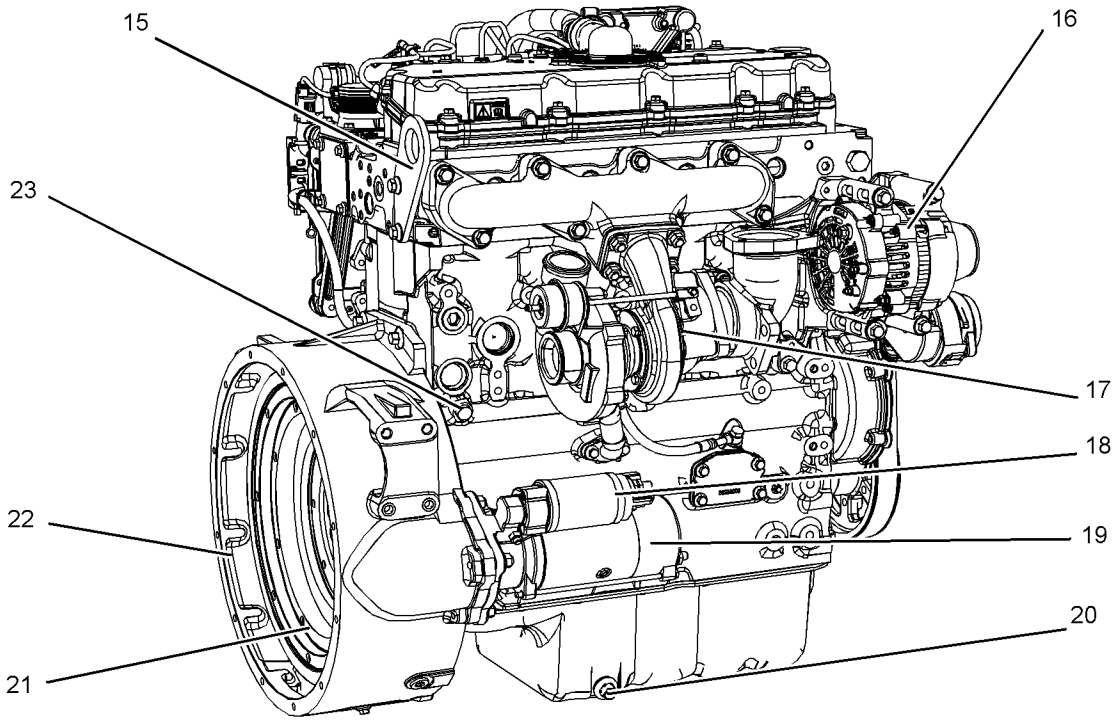


Illustration 19 g03453529

Typical example

(15) Rear Lifting Eye
(16) Alternator
(17) Turbocharger
(18) Starter Solenoid
(19) Starting Motor
(20) Oil Drain Plug
(21) Flywheel
(22) Flywheel Housing
(23) Coolant Drain Plug

## Turbocharge Engine View

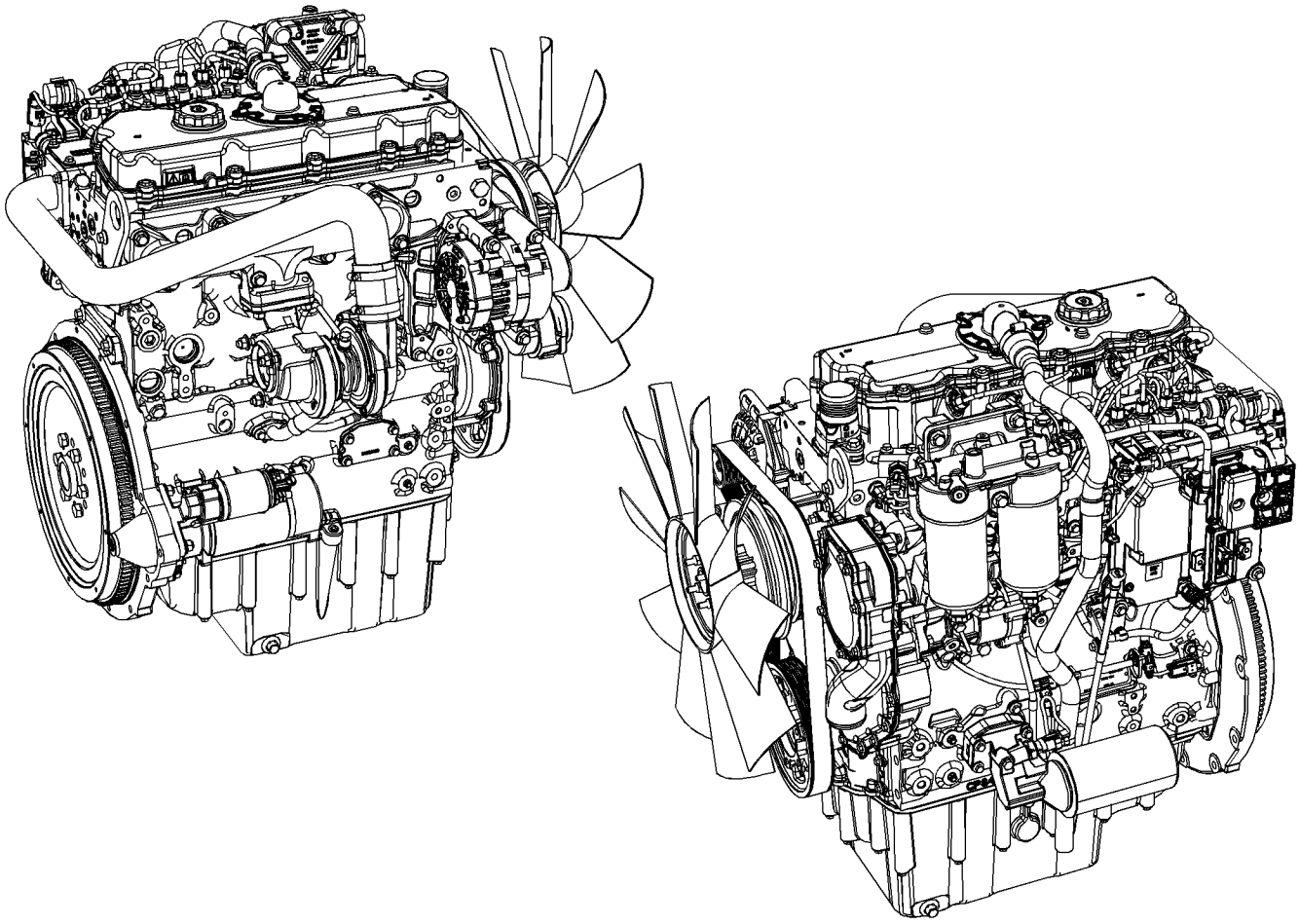

Illustration 20 g03506649
Typical example

## Off Engine Parts and Options

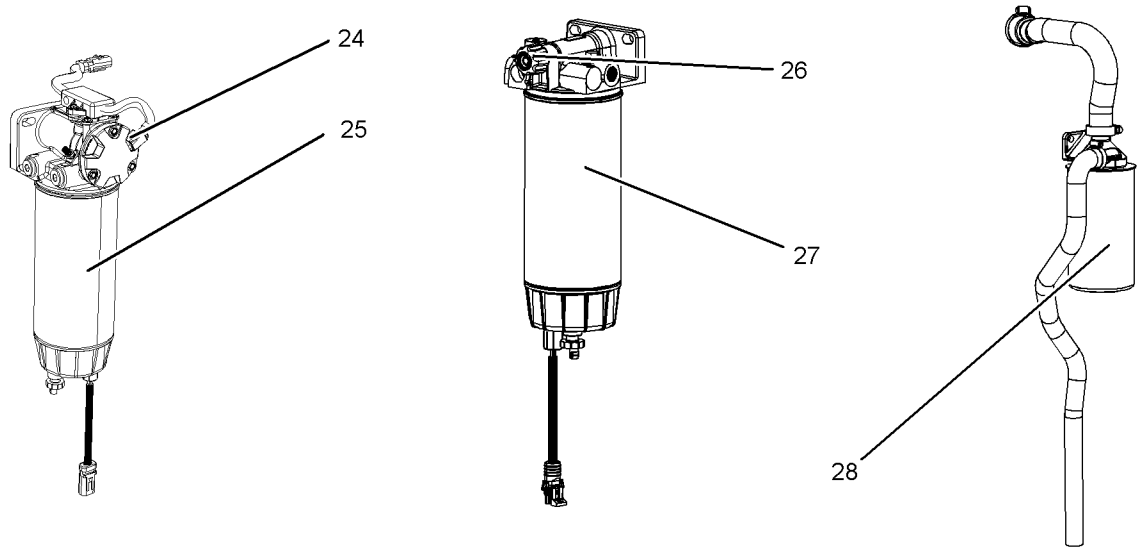


Illustration 21 g03467856

Typical examples

(24) Electric Priming Pump
(25) Primary Fuel Filter
(26) Mechanical Priming Pump
(27) Primary Fuel Filter
(28) Spin on Crankcase Breather

**Note:** Item (28) is part of the filtered breather system.

i05465703

# Product Description

**SMCS Code:** 1000; 4450; 4491

This Caterpillar C4.4 industrial engine is a Tier 3 engine. This C4.4 can be turbocharged or can be turbocharged aftercooled.

## Engine Specifications

**Note:** The front end of the engine is opposite the flywheel end of the engine. The left and the right sides of the engine are determined from the flywheel end. The number 1 cylinder is the front cylinder.

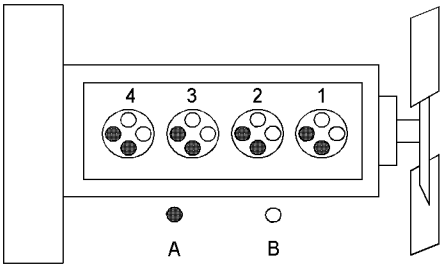


Illustration 22 g01187485

Cylinder and valve location

(A) Exhaust valves
(B) Inlet valves

Table 1

| Engine Specifications | |
|---|---|
| Operating Range (rpm) | 900 to 2800[1] |
| Number of Cylinders | 4 In-Line |
| Bore | 105 mm (4.13 inch) |
| Stroke | 127 mm (5 inch) |
| Aspiration | Turbocharged or Turbocharged aftercooled |
| Compression Ratio | 16.2:1 |
| Displacement | 4.4 L (268.5 cubic inch) |
| Firing Order | 1-3-4-2 |
| Rotation (flywheel end) | Counterclockwise |
| Number of valves for each cylinder | 4 |
| Valve Lash Setting (Inlet) | 0.35 mm (0.013 inch) |
| Valve Lash Setting (Exhaust) | 0.35 mm (0.013 inch) |

(1) The operating rpm is dependent on the engine rating, the application, and the configuration of the throttle.

## Electronic Engine Features

The engine operating conditions are monitored. The Electronic Control Module (ECM) controls the response of the engine to these conditions and to the demands of the operator. These conditions and operator demands determine the precise control of fuel injection by the ECM. The electronic engine control system provides the following features:

- Engine monitoring
- Engine speed governing
- Control of the injection pressure
- Cold start strategy
- Automatic air/fuel ratio control
- Torque rise shaping
- Injection timing control
- System diagnostics

For more information on electronic engine features, refer to the Operation and Maintenance Manual, “Features and Controls” topic (Operation Section).

## Engine Diagnostics

The engine has built-in diagnostics in order to ensure that the engine systems are functioning correctly. The operator will be alerted to the condition by a “Stop or Warning” lamp. Under certain conditions, the engine power and the engine speed may be limited. The electronic service tool may be used to display the diagnostic codes.

There are two types of diagnostic codes: active and logged.

Most of the diagnostic codes are logged and stored in the ECM. For additional information, refer to the Operation and Maintenance Manual, “Engine Diagnostics” topic (Operation Section).

The ECM provides an electronic governor that controls the injector output in order to maintain the desired engine rpm.

For more information refer to Troubleshooting manual.

## Engine Cooling and Lubrication

The cooling system consists of the following components:

- Gear-driven centrifugal water pump
- Water temperature regulator which regulates the engine coolant temperature
- Gear-driven rotor type oil pump
- Oil cooler

The engine lubricating oil is supplied by a rotor type oil pump. The engine lubricating oil is cooled and the engine lubricating oil is filtered. The bypass valve can provide unrestricted flow of lubrication oil to the engine if the oil filter element should become plugged.

Engine efficiency, efficiency of emission controls, and engine performance depend on adherence to proper operation and maintenance recommendations. Engine performance and efficiency also depend on the use of recommended fuels, lubrication oils, and coolants. Refer to this Operation and Maintenance Manual, “Maintenance Interval Schedule” for more information on maintenance items.

## Option Section

There are two different types of fuel priming pump available, hand primer or an electrically operated primer. There are two different types of crankcase breather, open breather or filtered open breather.

# Product Identification Information

i05465735

## Plate Locations and Film Locations

**SMCS Code:** 1000; 4450

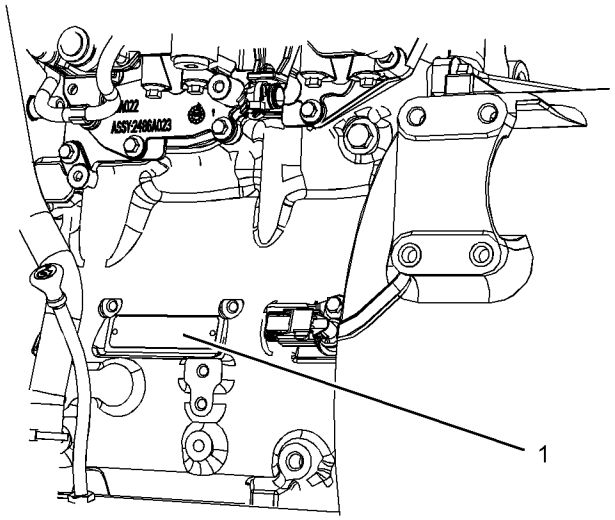


Illustration 23 g03453612

Typical example

## Serial Number Plate

The engine serial plate is located on the left side of the engine to the rear of the engine cylinder block.

Cat dealers need all these numbers in order to determine the components that were included with the engine. This information permits accurate identification of replacement part numbers.

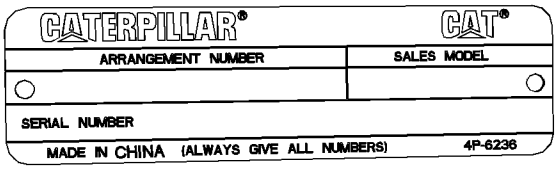


Illustration 24 g03343477

Typical example

i05485771

## Emissions Certification Film

**SMCS Code:** 1000; 7405

This information is pertinent in the United States and Canada.

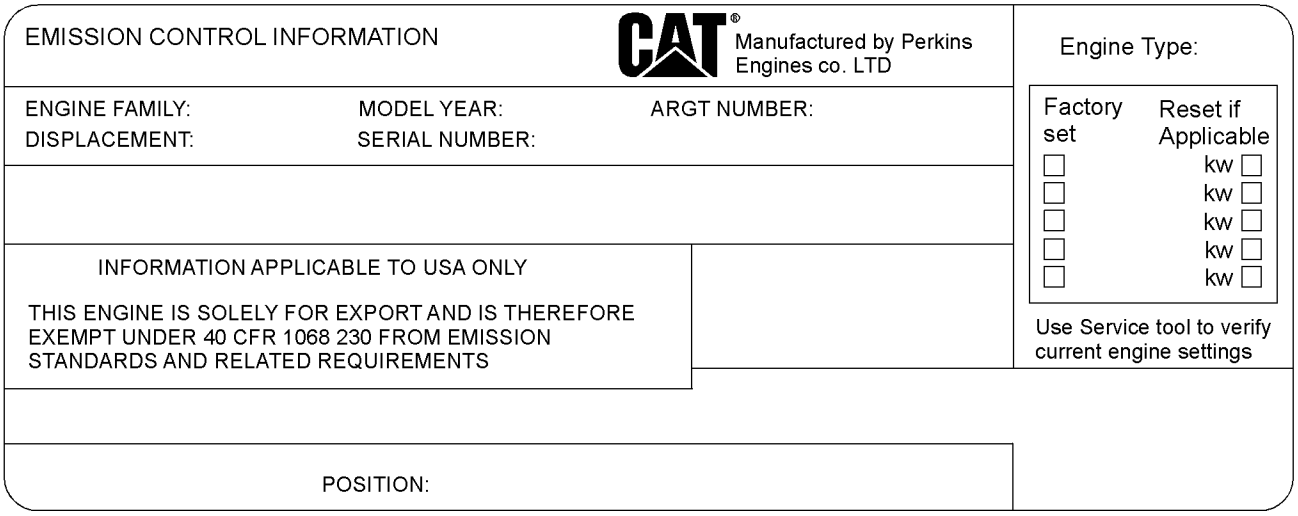


Illustration 25 g03467998

Typical example

i05465764

# Reference Information

**SMCS Code:** 1000; 4450

Information for the following items may be needed to order parts. Locate the information for your engine. Record the information in the appropriate space. Make a copy of this list for a record. Keep the information for future reference.

## Record for Reference

Engine Model _____

Engine Serial number _____

Engine Low Idle rpm _____

Engine Full Load rpm _____

Primary Fuel Filter _____

Secondary Fuel Filter Element _____

Lubrication Oil Filter _____

Total Lubrication System Capacity _____

Total Cooling System Capacity _____

Air Cleaner Element _____

Drive Belt _____

(If equipped) Filtered Breather _____

# Operation Section

# Lifting and Storage

i07437411

## Product Lifting

**SMCS Code:** 7000; 7002

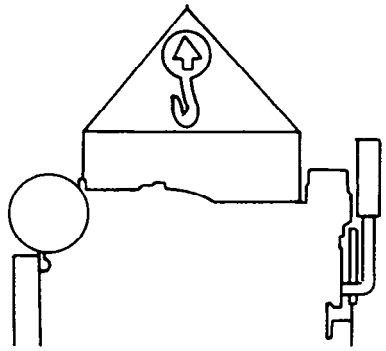

Illustration 26 g00103219

NOTICE
Never bend the eyebolts and the brackets. Only load the eyebolts and the brackets under tension. Remember that the capacity of an eyebolt is less as the angle between the supporting members and the object becomes less than 90 degrees.

When it is necessary to remove a component at an angle, only use a link bracket that is properly rated for the weight.

NOTICE
Always inspect lifting eyebolts and all other lifting equipment for damage before performing any lifting. Never Bend the eyebolts and the brackets. Never perform product lifting if the components are damaged.

Use a hoist to remove heavy components. Use an adjustable lifting beam to lift the engine. All supporting members (chains and cables) should be parallel to each other. The chains and cables should be perpendicular to the top of the object that is being lifted.

Some removals require lifting the fixtures to obtain proper balance and safety.

To remove the engine ONLY, use the lifting eyes that are on the engine.

Lifting eyes are designed and installed for the specific engine arrangement. Alterations to the lifting eyes and/or the engine make the lifting eyes and the lifting fixtures obsolete. If alterations are made, ensure that proper lifting devices are provided. Consult your Cat dealer for information regarding fixtures for proper engine lifting.

i08257552

## Product Storage

**SMCS Code:** 7002

If the engine will not be started for several weeks, the lubricating oil will drain from the cylinder walls and from the piston rings. Rust can form on the cylinder liner surface. Rust on the cylinder liner surface will cause increased engine wear and a reduction in engine service life.

To help prevent excessive engine wear, use the following guidelines:

- Complete all lubrication recommendations that are listed in this Operation and Maintenance Manual, “Maintenance Interval Schedule” (Maintenance Section).
- If freezing temperatures are expected, check the cooling system for adequate protection against freezing. See this Operation and Maintenance Manual, “Refill Capacities and Recommendations” (Maintenance Section).

If an engine is out of operation and if use of the engine is not planned, special precautions should be made. If the engine will be stored for more than 1 month, a complete protection procedure is recommended.

For more detailed information on engine storage, see Special Instruction, SEHS9031, “Storage Procedure For Caterpillar Products”.

Your Cat dealer can help prepare the engine for extended storage periods.

# Features and Controls

i05251301

## Alarms and Shutoffs

**SMCS Code:** 7400

### Shutoffs

The shutoffs are electrically operated or mechanically operated. The electrically operated shutoffs are controlled by the ECM.

Shutoffs are set at critical levels for the following items:

- Operating temperature
- Operating pressure
- Operating level
- Operating rpm

The particular shutoff may need to be reset before the engine will start.

NOTICE
Always determine the cause of the engine shutdown. Make necessary repairs before attempting to restart the engine.

Be familiar with the following items:

- Types and locations of shutoff
- Conditions which cause each shutoff to function
- The resetting procedure that is required to restart the engine

### Alarms

The alarms are electrically operated. The operation of the alarms is controlled by the ECM.

The alarm is operated by a sensor or by a switch. When the sensor or the switch is activated, a signal is sent to the ECM. An event code is created by the ECM. The ECM will send a signal in order to illuminate the lamp.

Your engine may be equipped with the following sensors or switches:

**Coolant level** – The low coolant level switch indicates when the coolant level is low.

**Coolant temperature** – The coolant temperature sensor indicates high jacket water coolant temperature.

**Intake manifold air temperature** – The intake manifold air temperature sensor indicates high intake air temperature.

**Intake manifold pressure** – The intake manifold pressure sensor checks the rated pressure in the engine manifold.

**Fuel rail pressure** – The fuel rail pressure sensor checks for high pressure or low pressure in the fuel rail.

**Engine oil pressure** – The engine oil pressure sensor indicates when oil pressure drops below rated system pressure, at a set engine speed.

**Engine overspeed** – The primary speed/timing sensor checks the engine speed. The alarm is activated at 3000 RPM.

**Air filter restriction** – The switch checks the air filter when the engine is operating.

**User-defined switch** – This switch can shut down the engine remotely.

**Water in fuel switch** – This switch checks for water in the primary fuel filter when the engine is operating.

**Note:** The sensing element of the coolant temperature switch must be submerged in coolant in order to operate.

Engines may be equipped with alarms in order to alert the operator when undesirable operating conditions occur.

NOTICE
When an alarm is activated, corrective measures must be taken before the situation becomes an emergency in order to avoid possible engine damage.

If corrective measures are not taken within a reasonable time, engine damage could result. The alarm will continue until the condition is corrected. The alarm may need to be reset.

### Testing

Turning the keyswitch to the ON position will check the indicator lights on the control panel. All the indicator lights will be illuminated for 2 seconds after the keyswitch is operated. Replace suspect bulbs immediately.

Refer to Troubleshooting for more information.

i05502469

# Gauges and Indicators

**SMCS Code:** 7450

Your engine may not have the same gauges or all of the gauges that are described. For more information about the gauge package, see the OEM information.

Gauges provide indications of engine performance. Ensure that the gauges are in good working order. Determine the normal operating range by observing the gauges over a period.

Noticeable changes in gauge readings indicate potential gauge or engine problems. Problems may also be indicated by gauge readings that change even if the readings are within specifications. Determine and correct the cause of any significant change in the readings. Consult your Cat dealer for assistance.

Some engine applications are equipped with Indicator Lamps. Indicator lamps can be used as a diagnostic aid. There are two lamps. One lamp has an orange lens and the other lamp has a red lens.

These indicator lamps can be used in two ways:

- The indicator lamps can be used to identify the current operational status of the engine. The indicator lamps can also indicate that the engine has a fault. This system is automatically operated via the ignition switch.
- The indicator lamps can be used to identify active diagnostic codes.

Refer to the Troubleshooting Guide, “Indicator Lamps” for further information.

NOTICE
If no oil pressure is indicated, STOP the engine. If maximum coolant temperature is exceeded, STOP the engine. Engine damage can result.

**Engine Oil Pressure – The oil pressure should be greatest after a cold engine is started. The typical engine oil pressure with SAE10W40 is 350 to 450 kPa ( 50 to 65 psi) at rated rpm.**

A lower oil pressure is normal at low idle. If the load is stable and the gauge reading changes, perform the following procedure:

**1.** Remove the load.

**2.** Stop the engine.

**3.** Check and maintain the oil level.

**Jacket Water Coolant Temperature – Typical temperature range is 83° to 95°C (181.4° to 171°F). The maximum allowable temperature at sea level with the pressurized cooling system at 48 kPa (7 psi) is 103 °C (217.4 °F). Higher temperatures may occur under certain conditions. The water temperature reading may vary according to load. The temperature reading should never exceed 7 °C (44.6 °F) below the boiling point for the pressurized system that is being used.**

A 100 kPa (14.5 psi) radiator cap may be installed on the cooling system. The temperature of this cooling system must not exceed 112 °C (233.6 °F).

If the engine is operating above the normal range and steam becomes apparent, perform the following procedure:

**1.** Reduce the load and the engine rpm.

**2.** Determine if the engine must be shut down immediately or if the engine can be cooled by reducing the load.

**3.** Inspect the cooling system for leaks.

**Tachometer – This gauge indicates engine speed (rpm). When the throttle control lever is moved to the full throttle position without load, the engine is running at high idle. The engine is running at the full load rpm when the throttle control lever is at the full throttle position with maximum rated load.**

NOTICE
To help prevent engine damage, never exceed the high idle rpm. Overspeeding can result in serious damage to the engine. Operation at speeds exceeding high idle rpm should be kept to a minimum.

**Ammeter – This gauge indicates the amount of charge or discharge in the battery charging circuit. Operation of the indicator should be to the “+” side of “0” (zero).**

**Fuel Level – This gauge indicates the fuel level in the fuel tank. The fuel level gauge operates when the “START/STOP” switch is in the “on” position.**

**Service Hour Meter – The gauge indicates total operating hours of the engine.**

## Indicator Lamps

There are four main indicator lamps that are available.

- Shutdown Lamp
- Warning Lamp
- Wait to Start Lamp (Glow Plug Warning Lamp)
- Low Oil Pressure Lamp

For information, refer to this manual, “Monitoring System (Table for the Indicator Lamps)” for the sequence of operation of the shutdown lamp and the warning lamp.

The function of the wait to start lamp is automatically controlled at engine start-up.

The function of the low oil pressure lamp is controlled by the engine ECM. If low oil pressure is detected, the lamp will be illuminated. The reason for the illumination of the low-pressure lamp should be investigated immediately.

All lamps will illuminate for 2 seconds in order to check that the lamps are functioning when the keyswitch is turned to the ON position. If any of the lamps stay illuminated, the reason for illumination should be investigated immediately.

The glow plug warning lamp will flash in order to show that the engine is been held at low speed. This function will be performed at engine starting and the duration will depend on ambient temperature and engine temperature.

## Instrument panels and Displays

In order to monitor the engine a wide verity of instrument panels are available. These instrument panels can contain the indicator lamps and the gauges for the application.

Also available are mini power displays and performance monitors. These displays and monitors can show the operator the following engine information.

- The system configuration parameters
- The customer specified parameters
- Diagnostic codes
- Event codes
- Coolant temperature
- Oil temperature
- Oil pressure
- Intake temperature
- Intake pressure
- Fuel temperature

i02330192

# Monitoring System

**SMCS Code:** 1900; 7400; 7450; 7451

Table 2

| Warning Lamp | Shutdown Lamp | Lamp Status | Description of lamp status | Engine Status |
|---|---|---|---|---|
| **ON** | **ON** | Lamp check | When the engine start switch is turned to the “ON” position both lamps will illuminate for 2 seconds only. | The engine has not been started. |
| **OFF** | **OFF** | No faults | There are no active diagnostic faults. | The engine is running normally. |
| **ON** | **OFF** | Active diagnostic fault | An active diagnostic fault has been detected. | The engine is running normally. |
| **ON** | **FLASHING** | Active diagnostic fault | A serious active diagnostic fault has been detected and an engine derate has been invoked. | The engine is running but the engine has been derated. |
| **FLASHING** | **OFF** | Warning | One or more of the engine protection values has been exceeded. | The engine is running normally. |
| **FLASHING** | **FLASHING** | Derate and warning | One or more of the engine protection values has been exceeded. | The engine is running but the engine has been derated. |
| **ON** | **ON** | Engine shutdown | One or more of the engine protection values has been exceeded or a serious active diagnostic fault has been detected. | The engine is shutdown or shutdown is imminent. |

i05245144

# Monitoring System

**SMCS Code:** 1900; 7400; 7450; 7451

**⚠ WARNING**

**If the Shutdown mode has been selected and the warning indicator activates, engine shutdown may take as little as 20 seconds from the time the warning indicator is activated. Depending on the application, special precautions should be taken to avoid personal injury. The engine can be restarted following shutdown for emergency maneuvers, if necessary.**

NOTICE

The Engine Monitoring System is not a guarantee against catastrophic failures. Programmed delays and derate schedules are designed to minimize false alarms and provide time for the operator to stop the engine.

The following parameters are monitored:

- Coolant temperature
- Intake manifold air temperature
- Intake manifold air pressure
- Oil pressure
- Pressure in the fuel rail
- Engine speed/timing

# Programmable Options and Systems Operation

**⚠ WARNING**

**If the Warning/Derate/Shutdown mode has been selected and the warning indicator activates, bring the engine to a stop whenever possible. Depending on the application, special precautions should be taken to avoid personal injury.**

The engine can be programmed to the following modes:

## “Warning”

The “Warning” lamp and the warning signal (orange lamp) turn “ON” and the warning signal is activated continuously in order to alert the operator that one or more of the engine parameters is not within normal operating range.

## “Warning/Derate”

The “Diagnostic” lamp turns “ON” and the warning signal (red lamp) is activated. After the warning, the engine power will be derated. The warning lamp will begin to flash when the derating occurs.

The engine will be derated if the engine exceeds preset operational limits. The engine derate is achieved by restricting the amount of fuel that is available for each injection. The amount of this reduction of fuel is dependent on the severity of the fault that has caused the engine derate, typically up to a limit of 50%. This reduction in fuel results in a predetermined reduction in engine power.

### “Warning/Derate/Shutdown”

The “Diagnostic” lamp turns “ON” and the warning signal (red lamp) is activated. After the warning, the engine power will be derated. The engine will continue at the rpm of the set derate until a shutdown of the engine occurs. The engine can be restarted after a shutdown for use in an emergency.

A shutdown of the engine may occur in as little as 20 seconds. The engine can be restarted after a shutdown for use in an emergency. However, the cause of the initial shutdown may still exist. The engine may shut down again in as little as 20 seconds.

If there is a signal for low oil pressure or for coolant temperature, there will be a two second delay in order to verify the condition.

For each of the programmed modes, refer to Troubleshooting Guide, “Indicator Lamps” for more information on Indicator Lamps.

For more information or assistance for repairs, consult your Cat dealer.

i05251914

## Overspeed

**SMCS Code:** 1900; 1907; 1912; 7427

An overspeed condition is detected by the Electronic Control Module (ECM). The event code E190 will be logged if the engine speed exceeds 3300 rpm. The “DIAGNOSTIC” lamp will indicate a diagnostic fault code. The diagnostic fault code will remain active until the engine speed drops to 2800 rpm.

i05488609

## Sensors and Electrical Components

**SMCS Code:** 1900; 7400

The illustrations within the following sections are typical location of the sensors or electrical components for an industrial engine. Specific engines may appear different due to differences in applications.

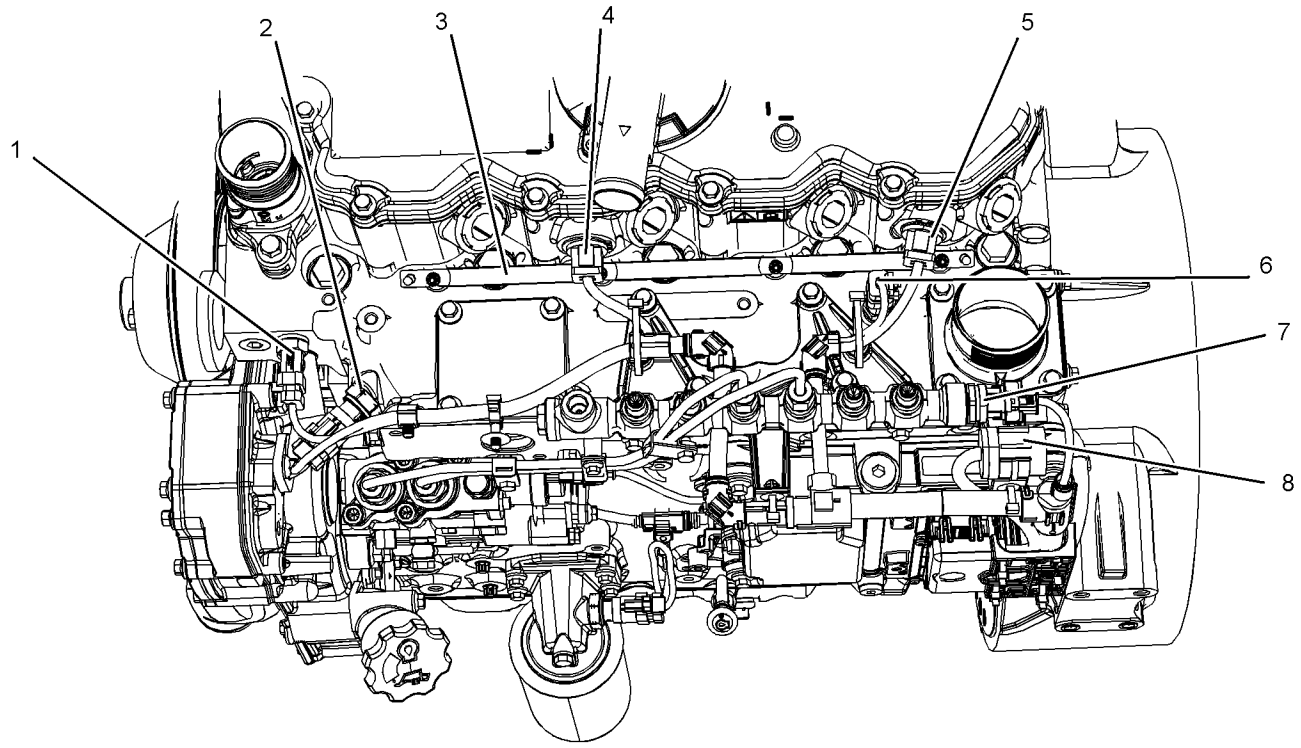


Illustration 27 g03470316

Typical example

(1) Coolant Temperature Sensor
(2) Inlet Manifold Pressure Sensor
(3) Bus Bar for Glow Plugs
(4) Connector for Injectors 1 and Injector 2
(5) Connector for Injectors 3 and Injector 4
(6) Inlet Manifold Temperature Sensor
(7) Fuel Rail Pressure Sensor
(8) Diagnostic Connector

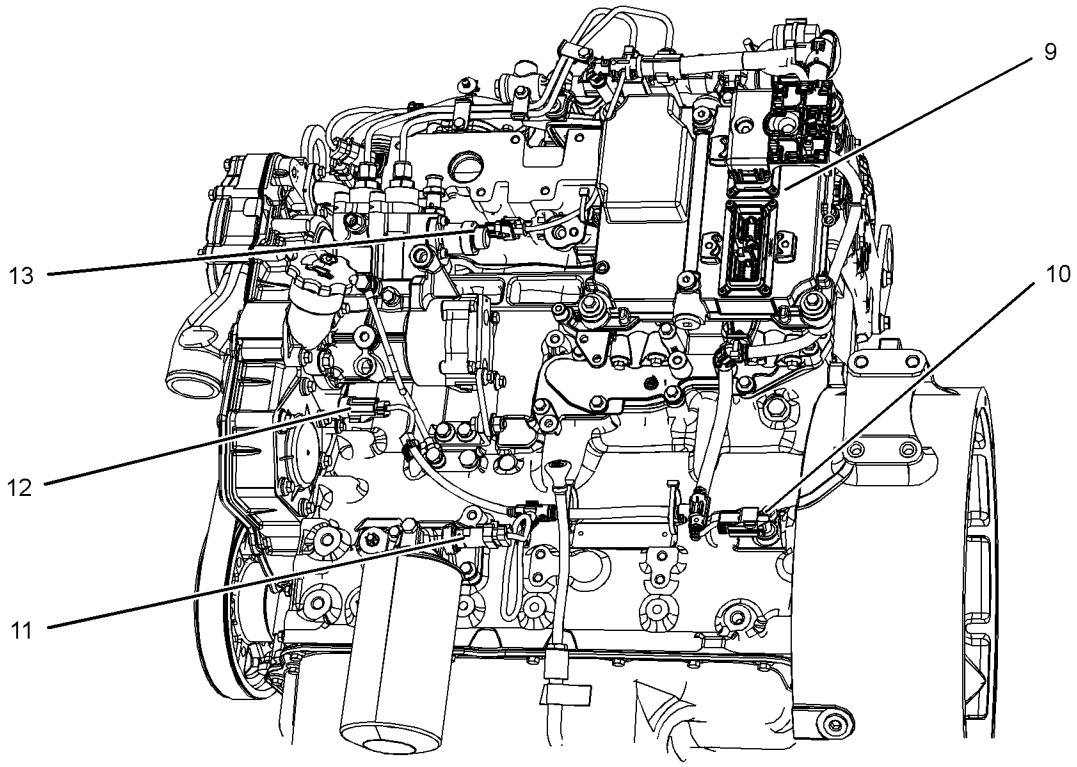


Illustration 28 g03470317

Typical example

(9) Electronic Control Module
(10) Primary Speed/Timing sensor
(11) Oil Pressure Sensor
(12) Secondary Speed/Timing sensor
(13) Solenoid for the high-pressure fuel pump

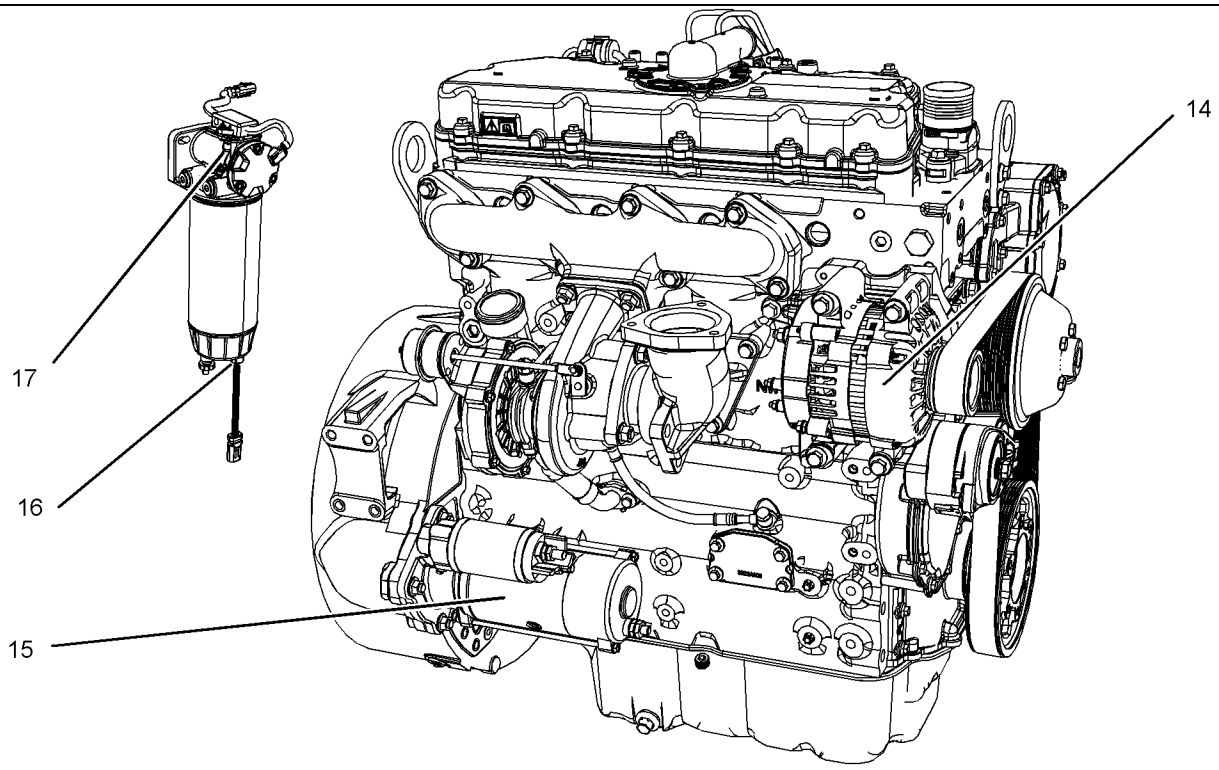


Illustration 29 g03470356

Typical example

(14) Alternator
(15) Starting Motor and solenoid
(16) Water in Fuel Switch
(17) Electric Fuel Pump/Priming Pump

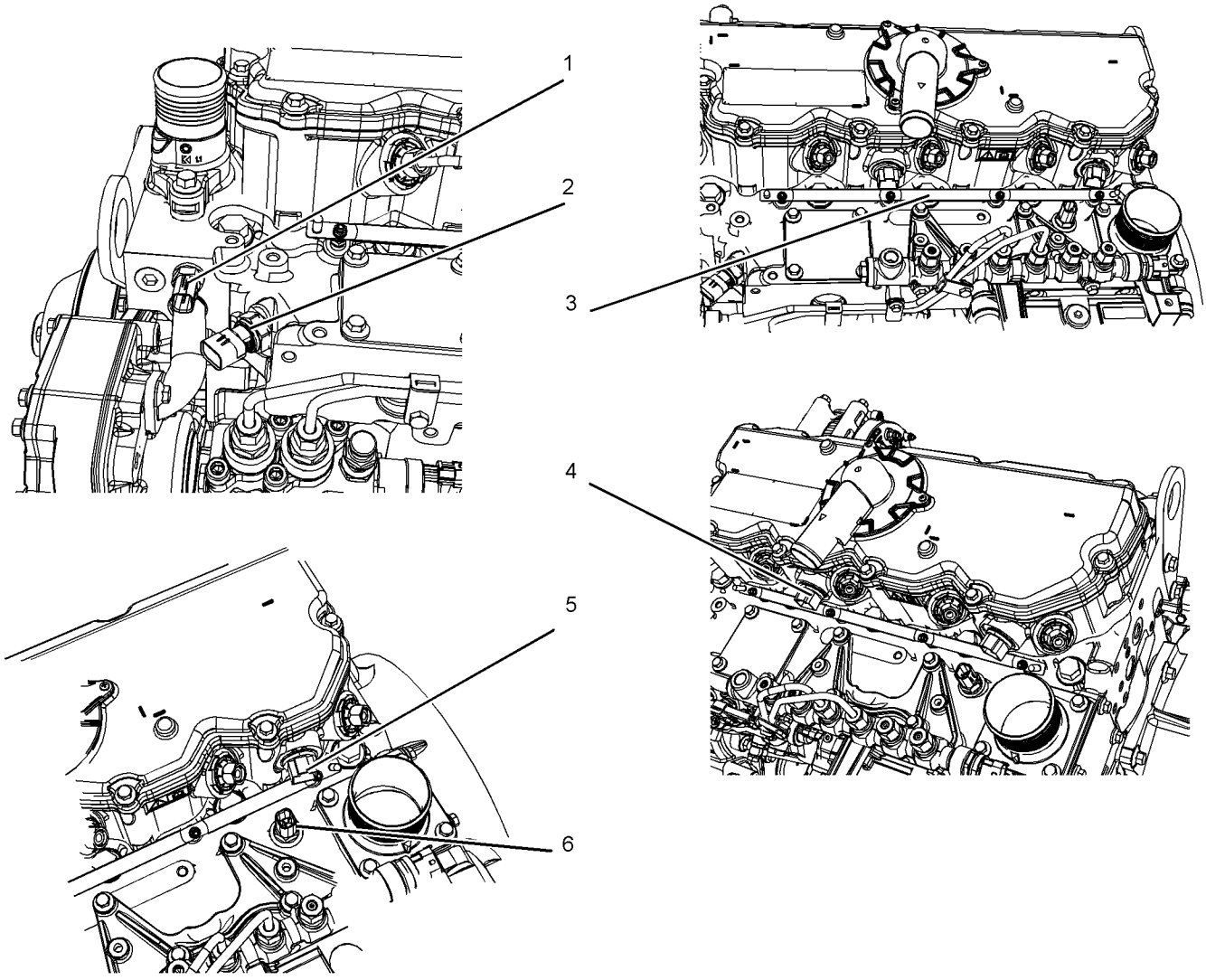


Illustration 30 g03471916

Typical example

(1) Coolant Temperature Sensor
(2) Inlet Manifold Pressure Sensor
(3) Bus Bar for Glow Plugs
(4) Connector for Injectors 1 and Injector 2
(5) Connector for Injectors 3 and Injector 4
(6) Inlet Manifold Temperature Sensor

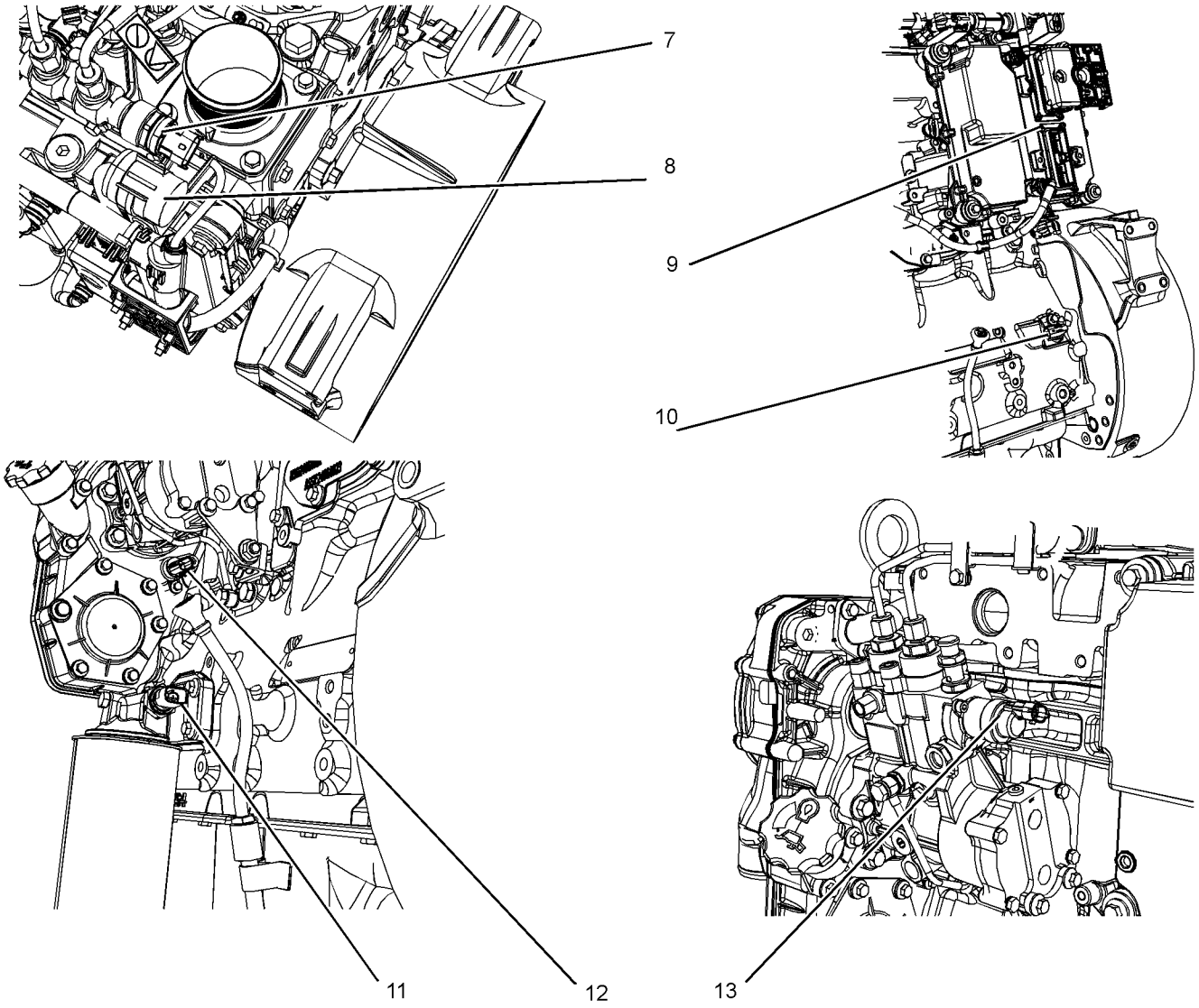


Illustration 31 g03471957

Typical example

(7) Fuel Rail Pressure Sensor
(8) Diagnostic Connector
(9) Electronic Control Module
(10) Primary Speed/Timing sensor
(11) Oil Pressure Sensor
(12) Secondary Speed/Timing sensor
(13) Solenoid for the high-pressure fuel pump

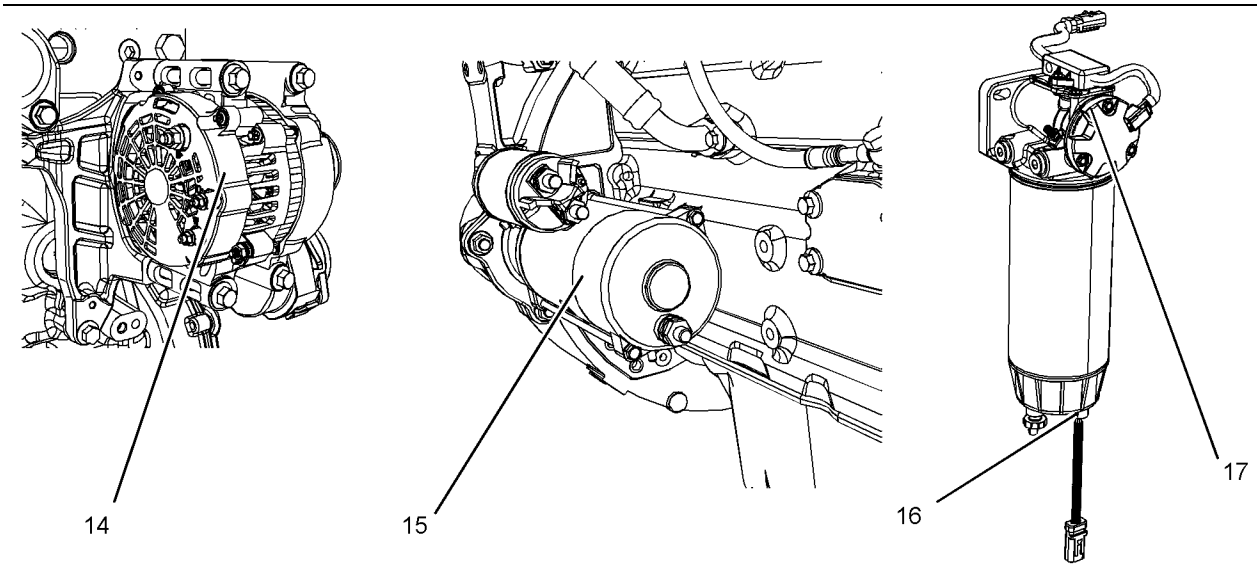


Illustration 32 g03474458

Typical example

(14) Alternator
(15) Starting Motor and solenoid
(16) Water in Fuel Switch
(17) Electric Fuel Pump/Priming Pump

# Engine Diagnostics

i01796959

## Self-Diagnostics

**SMCS Code:** 1000; 1900; 1901; 1902

Caterpillar Electronic Engines have the capability to perform a self-diagnostics test. When the system detects an active problem, a diagnostic lamp is activated. Diagnostic codes will be stored in permanent memory in the Electronic Control Module (ECM). The diagnostic codes can be retrieved by using Caterpillar electronic service tools.

Some installations have electronic displays that provide direct readouts of the engine diagnostic codes. Refer to the manual that is provided by the OEM for more information on retrieving engine diagnostic codes.

Active codes represent problems that currently exist. These problems should be investigated first.

Logged codes represent the following items:

- Intermittent problems
- Recorded events
- Performance history

The problems may have been repaired since the logging of the code. These codes do not indicate that a repair is needed. The codes are guides or signals when a situation exists. Codes may be helpful to troubleshoot problems.

When the problems have been corrected, the corresponding logged fault codes should be cleared.

i02501517

## Diagnostic Lamp

**SMCS Code:** 1000; 1900; 1901; 1902; 7451

A diagnostic lamp is used to indicate the existence of an active fault. A fault diagnostic code will remain active until the problem is repaired. The diagnostic code may be retrieved by using Caterpillar electronic technician (ET).

i05495247

## Diagnostic Flash Code Retrieval

**SMCS Code:** 1000; 1900; 1901; 1902

### “Diagnostic” Lamp

Use the “DIAGNOSTIC” lamp or an electronic service tool to determine the diagnostic flash code.

Use the following procedure to retrieve the flash codes if the engine is equipped with a “DIAGNOSTIC” lamp:

1. Move the keyswitch from the on/off two times within 3 seconds.

A flashing YELLOW lamp indicates a 3-digit code for the engine. The sequence of flashes represents the system diagnostic message. Count the first sequence of flashes in order to determine the first digit of the flash code. After a two second pause, the second sequence of flashes will identify the second digit of the flash code. After the second pause, the third sequence of flashes will identify the flash code.

Any additional flash codes will follow a pause. These codes will be displayed in the same manner. Flash Code 551 indicates that No Detected Faults have occurred since the ignition keyswitch has been turned to the ON position.

For further information, assistance for repairs, or troubleshooting, refer to the Service Manual or consult your Cat dealer.

Table3 lists the flash codes and the table also gives a brief description of the flash codes.

**Note:** Table3 indicates the potential effect on engine performance with “ACTIVE” flash codes.

Some codes record events. Also, some codes may also indicate that a mechanical system needs attention. Troubleshooting is not required for code “551” . Code 001 will not display a flash code. Some codes will limit the operation or the performance of the engine.

Table 3 indicates the potential effect on the engine performance with active flash codes. Table 3 also forms a list of Electronic diagnostic codes and descriptions.

Table 3

| **Flash Codes for the Industrial Engine** (1) | | |
|---|---|---|
| **Diagnostic Flash Code** | **Effect On Engine Performance** (2) | **Suggested Operator Action** |

(continued)

(Table 3, contd)

| | Description | Engine Misfire | Low Power | Reduced Engine Speed | Engine Shutdown | Service [3] | Schedule a Service. [4] |
|---|---|---|---|---|---|---|---|
| 111 | No. 1 Injector Fault | X | X | | | X | |
| 112 | No. 2 Injector Fault | X | X | | | X | |
| 113 | No. 3 Injector Fault | X | X | | | X | |
| 114 | No. 4 Injector Fault | X | X | | | X | |
| 133 | Intake Manifold Air Temperature sensor fault [5] | X | | | | X | |
| 141 | Primary Engine Speed/Timing Sensor Fault [6] | | | X | | X | |
| 142 | Secondary Engine Speed/ Timing Sensor Fault | | | | | X | |
| 143 | Engine Timing Calibration Fault | X | | | | | X |
| 144 | Engine Operation Mode Selector Switch Fault | | X | | | X | |
| 151 | Air Inlet Pressure Sensor | | X | | | X | |
| 154 | Throttle Position Sensor Fault | | | X | | X | |
| 155 | Secondary Throttle Position sensor Fault | | | X | | X | |
| 157 | Engine Oil Pressure Sensor Fault | | X | | | X | |
| 159 | Fuel Rail Pressure Sensor Fault | | X | | | X | |
| 162 | Fuel Rail Pressure Valve Solenoid Fault | | X | X | | X | |
| 168 | Engine Coolant Temperature Sensor Faul | | | | | X | |
| 169 | Low Engine Coolant | | | | X | | X |
| 177 | Turbo Wastegate Actuator Fault | | | X | | | |
| 185 | High Exhaust Temperature | | X | | | X | |
| 197 | Intake Manifold Boost Pressure Fault | | X | | | X | |
| 199 | Glow Plug Start Relay Fault | | | | | X | |
| 233 | Ether Injection Control Solenoid | | | | | X | |
| 245 | Idle Validation Switch 1 | | | | | X | |
| 246 | Idle Validation Switch 2 | | | | | X | |
| 253 | Engine Fuel Supply Pump Relay | | | | | X | |
| 415 | Software Mismatch | | | X | X | X | |

(continued)

(Table 3, contd)

| | | | | | | | |
|---|---|---|---|---|---|---|---|
| 426 | Machine Security Module | | | | | X | |
| 429 | Ignition Key Switch Fault | | | | | | X |
| 511 | ECM Power Supply Voltage Fault | X | X | | | | |
| 514 | SAE J1939 Data Link Fault | | | X | | X | |
| 516 | 5 Volt Sensor DC Power Supply Fault | | X | | X | X | X |
| 517 | 8 Volt Sensor DC Power Supply Fault | | X | | | | X |
| 527 | Customer/System Parmeter Fault | | X | X | | | X |
| 551 | System check<br>No faults detected | | | | | | |

(1) If warning lamps are installed, refer to this table. For installations that have electronic displays, refer to the OEM for information.
(2) An “X” indicates that the effect on engine performance may occur if the code is active.
(3) The operator should go to the nearest location that has a qualified service program.
(4) Schedule Service: The problem should be investigated when the operator has access to a qualified service program.
(5) These Flash Codes may affect the system under specific environmental conditions such as engine start-up at cold temperature and cold-weather operation at high altitudes.
(6) If the primary engine speed/timing sensor fails there is no automatic protection against reverse running. In this event, Stop the engine immediately. Turn the keyswitch to the “OFF” position. In order to check the correct operation of the sensor, refer to Troubleshooting, “Speed/Timing - Test”.

i03840813

# Fault Logging

**SMCS Code:** 1000; 1900; 1901; 1902

The system provides the capability of Fault Logging. When the Electronic Control Module (ECM) generates an active diagnostic code, the code will be logged in the memory of the ECM. The codes that have been logged in the memory of the ECM can be retrieved with Caterpillar electronic service tools. The codes that have been logged can be cleared with Caterpillar electronic service tools. The codes that have been logged in the memory of the ECM will be automatically cleared from the memory after 100 hours. The following faults cannot be cleared from the memory of the ECM without using a factory password: overspeed, low engine oil pressure and high engine coolant temperature.

i01797045

# Engine Operation with Active Diagnostic Codes

**SMCS Code:** 1000; 1900; 1901; 1902

If a diagnostic lamp illuminates during normal engine operation, the system has identified a situation that is not within the specification. Use Caterpillar electronic service tools to check the active diagnostic codes.

**Note:** If the customer has selected “DERATE” and if there is a low oil pressure condition, the Electronic Control Module (ECM) will limit the engine power until the problem is corrected. If the oil pressure is within the normal range, the engine may be operated at the rated speed and load. However, maintenance should be performed as soon as possible.

The active diagnostic code should be investigated. The cause of the problem should be corrected as soon as possible. If the cause of the active diagnostic code is repaired and there is only one active diagnostic code, the diagnostic lamp will turn off.

Operation of the engine and performance of the engine can be limited as a result of the active diagnostic code that is generated. Acceleration rates may be significantly slower. Refer to the Troubleshooting Guide for more information on the relationship between these active diagnostic codes and engine performance.

i01797063

# Engine Operation with Intermittent Diagnostic Codes

**SMCS Code:** 1000; 1900; 1901; 1902

If a diagnostic lamp illuminates during normal engine operation and the diagnostic lamp shuts off, an intermittent fault may have occurred. If a fault has occurred, the fault will be logged into the memory of the Electronic Control Module (ECM).

In most cases, it is not necessary to stop the engine because of an intermittent code. However, the operator should retrieve the logged fault codes and the operator should reference the appropriate information in order to identify the nature of the event. The operator should log any observation that could have caused the lamp to light.

- Low power
- Limits of the engine speed
- Excessive smoke, etc

This information can be useful to help troubleshoot the situation. The information can also be used for future reference. For more information on diagnostic codes, refer to the Troubleshooting Guide for this engine.

i05495474

# Configuration Parameters

**SMCS Code:** 1000; 1900; 1901; 1902

The engine electronic control module (ECM) has two types of configuration parameters. The system configuration parameters and the customer specified parameters.

The electronic service tool is required in order to alter the configuration parameters.

## System Configuration Parameters

System configuration parameters affect the emissions of the engine or the power of the engine. System configuration parameters are programmed at the factory. Normally, system configuration parameters would never require changing through the life of the engine. System configuration parameters must be reprogrammed if an ECM is replaced. System configuration parameters do not require reprogrammed if the ECM software is changed. Factory passwords are required to change these parameters.

Table 4

| System Configuration Parameters | |
|---|---|
| **Configuration Parameters** | **Record** |
| Engine Serial Number | |
| Rating | |
| Full Load Setting | |
| Full Torque Setting | |
| ECM Software Release Date | |

## Customer Specified Parameters

Customer specified parameters allow the engine to be configured to the exact needs of the application.

The electronic service tool is required in order to alter the customer configuration parameters.

Customer parameters may be changed repeatedly as operational requirements change.

Table 5

| Customer Specified Parameters | |
|---|---|
| **Specified Parameters** | **Record** |
| ECM Identification Parameters | |
| ECM Serial Number | |
| Software Group Part Number | |
| Software Group Release Date | |
| Software Group Description | |
| Selected Engine Rating | |
| Rating Number | |
| Speed Control | |
| Low Idle Speed | |
| Engine Configuration Parameters | |
| Glow Plug Start Aid Installation Status | |
| Ether Solenoid Configuration | |
| Engine Idle Shutdown | |
| Minimum Ambient Air Temperature | |
| Maximum Ambient Air Temperature | |
| Shutdown Enable Status | |
| Shutdown Delay Time | |
| Ambient Temperature Override Enable Status | |
| PTO and Throttle Lock Parameters | |
| Throttle Lock Feature Installation Status | |
| PTO Mode | |
| Throttle Lock Engine Set Speed 1 | |
| Throttle Lock Engine Set Speed 2 | |
| Throttle Lock Increment Speed Ramp Rate | |
| Throttle Lock Decrement Speed Ramp Rate | |
| Throttle Lock Engine Set Speed Increment | |
| Throttle Lock Engine Set Speed Decrement | |
| Miscellaneous | |

(continued)

(Table 5, contd)

| | |
|---|---|
| Monitoring Mode Shutdowns | |
| Monitoring Mode Derates | |
| Limp Home Desired Engine Speed | |
| Limp Home Engine Speed Ramp Rate | |
| Engine Acceleration Rate | |
| Engine Speed Decelerating Ramp Rate | |
| Intermediate Engine Speed | |
| Fan Control | |
| Engine Fan Control | |
| Engine Fan Type Configuration | |
| Pulley Ratio | |
| Temperature Error Increasing Hysteresis | |
| Temperature Error Decreasing Hysteresis | |
| Current Ramp Rate | |
| Fan Speed (Proportional) Gain Percentage | |
| Fan Speed (Integral) Stability Percentage | |
| Top Fan Speed | |
| Minimum Desired Fan Speed | |
| Solenoid Minimum Current | |
| Solenoid Maximum Current | |
| Solenoid Dither Frequency | |
| Solenoid Dither Amplitude (Peak-to-Peak) | |
| Fan Temperatures | |
| Charge Air Cooler Outlet Temperature Input Enable | |
| Maximum Air Flow Charge Air Cooler Outlet Temperature | |
| Minimum Air Flow Charge Air Cooler Outlet Temperature | |
| Coolant Temperature Input Enable Status | |
| Maximum Air Flow Coolant Temperature | |
| Minimum Air Flow Coolant Temperature | |
| Transmission Oil Temperature Input Enable Status | |
| Hydraulic Oil Temperature Input Enable Status | |
| Auxiliary #1 Temperature Input Enable Status | |
| Auxiliary #2 Temperature Input Enable Status | |
| Configurable Inputs | |
| Coolant Level Sensor | |
| Air Filter Restriction Switch Installation Status | |

(continued)

(Table 5, contd)

| | |
|---|---|
| Air Filter Restriction Switch Configuration | |
| Water in Fuel Switch Installation Status | |
| User Defined Switch Installation Status | |
| Auxiliary Temperature Sensor Installation Status | |
| Auxiliary Pressure Sensor Installation Status | |
| Engine Charge Air Cooler #1 Outlet Temperature Sensor Installation Status | |
| Engine Oil Level Sensor Installation Status | |
| J1939 Continuous Fault Handling | |
| Remote Torque Speed Control Enable Status | |
| System Settings | |
| System Operating Voltage Configuration | |
| Security Access Parameters | |
| Customer Password #1 | |
| Customer Password #2 | |
| CAN Communication Protocol Write Security | |
| CAN Communication Protocol Read Security | |
| Total Tattletale | |

# Engine Starting

i02837427

## Before Starting Engine

**SMCS Code:** 1000; 1400; 1450

Perform the required daily maintenance and other periodic maintenance before the engine is started. Inspect the engine compartment. This inspection can help prevent major repairs at a later date. Refer to the Operation and Maintenance Manual, “Maintenance Interval Schedule” for more information.

- Ensure that the engine has an adequate fuel supply.
- Open the fuel supply valve (if equipped).

NOTICE
All valves in the fuel return line must be open before and during engine operation to help prevent high fuel pressure. High fuel pressure may cause filter housing failure or other damage.

If the engine has not been started for several weeks, fuel may have drained from the fuel system. Air may have entered the filter housing. Also, when fuel filters have been changed, some air pockets will be trapped in the engine. In these instances, prime the fuel system. Refer to the Operation and Maintenance Manual, “Fuel System - Prime” for more information on priming the fuel system.

**⚠ WARNING**

**Engine exhaust contains products of combustion which may be harmful to your health. Always start and operate the engine in a well ventilated area and, if in an enclosed area, vent the exhaust to the outside.**

- Do not start the engine or move any of the controls if there is a “DO NOT OPERATE” warning tag or similar warning tag attached to the start switch or to the controls.
- Reset all of the shutoffs or alarm components.
- Ensure that any driven equipment has been disengaged. Minimize electrical loads or remove any electrical loads.

i05570730

## Cold Weather Starting

**SMCS Code:** 1000; 1250; 1450; 1453; 1456; 1900

**⚠ WARNING**

**Do not use aerosol types of starting aids such as ether. Such use could result in an explosion and personal injury.**

Startability will be improved at temperatures below −18 °C (0 °F) from the use of a jacket water heater or extra battery capacity.

When Group 2 diesel fuel is used, the following items provide a means of minimizing starting problems and fuel problems in cold weather: Engine oil pan heaters, jacket water heaters, fuel heaters and fuel line insulation.

Use the procedure that follows for cold weather starting.

**Note:** Do not adjust the engine speed control during start-up. The electronic control module (ECM) will control the engine speed during start-up.

Ensure that the correct oil specification, oil grade, and the correct fuel are used before starting. Refer to this Operation and Maintenance Manual, “Fluid Recommendation”.

**1.** Disengage any driven equipment.

**2.** Turn the keyswitch to the RUN position. Leave the keyswitch in the RUN position until the warning light for the glow plugs is extinguished.

NOTICE
Do not engage the starting motor when flywheel is turning. Do not start the engine under load.

If the engine fails to start within 30 seconds, release the starter switch or button and wait two minutes to allow the starting motor to cool before attempting to start the engine again.

**3.** When the warning light for the glow plugs is extinguished, turn the keyswitch to the START position in order to engage the electric starting motor and crank the engine.

**Note:** The operating period of the warning light for the glow plugs will change due to the temperature of the engine.

**4.** Allow the keyswitch to return to the RUN position after the engine starts.

**5.** Repeat step 2 through step 4 if the engine fails to start.

**Note:** After starting, the engine may be held at low speed for a duration between 1 and 25 seconds to allow engine systems to stabilize. The duration will depend on ambient temperature, time since last run and other factors. The glow plug warning light will flash in order to indicate that the engine is been held at low speed.

6. The engine should not be raced in order to speed up the warm-up process. Allow the engine to idle for 3 to 5 minutes, or allow the engine to idle until the water temperature indicator begins to rise. When idling after the engine has started in cold weather, increase the engine rpm from 1000 to 1200 rpm. This operation will warm up the engine more quickly. Maintaining an elevated low idle speed for extended periods will be easier with the installation of a hand throttle.
7. Operate the engine at low load until all systems reach operating temperature. Check the gauges during the warm-up period.

i06588238

# Starting the Engine

**SMCS Code:** 1000; 1450

**Note:** Do not adjust the engine speed control during start-up. The electronic control module (ECM) will control the engine speed during start-up.

## Starting the Engine

1. Disengage any equipment that is driven by the engine.
2. Turn the keyswitch to the RUN position. Leave the keyswitch in the RUN position until the warning light for the glow plugs is extinguished.
3. When the warning light for the glow plugs is extinguished, turn the keyswitch to the START position to engage the electric starting motor and crank the engine.

**Note:** The operating period of the warning light for the glow plugs will change due to the temperature of the engine.

NOTICE
Do not engage the starting motor when flywheel is turning. Do not start the engine under load.

If the engine fails to start within 30 seconds, release the starter switch or button and wait two minutes to allow the starting motor to cool before attempting to start the engine again.

4. Allow the keyswitch to return to the RUN position after the engine starts.
5. Repeat step 2 through step 4 if the engine fails to start.
6. After starting, the engine may be held at low speed for a duration between 1 and 25 seconds to allow engine systems to stabilize. The duration will depend on ambient temperature, time since last run and other factors. The glow plug warning light will flash to indicate that the engine is been held at low speed.

Refer to this Operation and Maintenance Manual, After Starting Engine for more information.

## Constant Speed Engines

After starting, the engine may be held at low speed for a duration between 1 and 25 seconds to allow engine systems to stabilize. The duration will depend on ambient temperature, time since last run and other factors. The glow plug warning light will flash to indicate that the engine is been held at low speed.

The engine should be allowed to operate at idle for 3 to 5 minutes before applying the load. Once the load is applied, the engine will operate at the rated speed that has been programmed. The engine will stay at the rated speed and will not return to idle, even if the load has been removed.

If necessary, refer to the instructions that are provided by the OEM to stop the engine.

i02344933

# Starting with Jump Start Cables

**SMCS Code:** 1000; 1401; 1402; 1900

**⚠ WARNING**

**Improper jump start cable connections can cause an explosion resulting in personal injury.**

**Prevent sparks near the batteries. Sparks could cause vapors to explode. Do not allow jump start cable ends to contact each other or the engine.**

If the installation is not equipped with a backup battery system, it may be necessary to start the engine from an external electrical source.

For information on troubleshooting the charging system, refer to Special Instruction, REHS0354, “Charging System Troubleshooting”.

Many batteries which are considered unusable are still rechargeable. After jump starting, the alternator may not be able to fully recharge batteries that are severely discharged. The batteries must be charged to the proper voltage with a battery charger. For information on testing and charging, refer to the Special Instruction, SEHS7633, “Battery Test Procedure”.

NOTICE
Using a battery source with the same voltage as the electric starting motor. Use ONLY equal voltage for jump starting. The use of higher voltage will damage the electrical system.

Do not reverse the battery cables. The alternator can be damaged. Attach ground cable last and remove first.

When using an external electrical source to start the engine, turn the generator set control switch to the “OFF” position. Turn all electrical accessories OFF before attaching the jump start cables.

Ensure that the main power switch is in the OFF position before attaching the jump start cables to the engine being started.

1. Turn the start switch on the stalled engine to the OFF position. Turn off all the engine's accessories.
2. Connect one positive end of the jump start cable to the positive cable terminal of the discharged battery. Connect the other positive end of the jump start cable to the positive cable terminal of the electrical source.
3. Connect one negative end of the jump start cable to the negative cable terminal of the electrical source. Connect the other negative end of the jump start cable to the engine block or to the chassis ground. This procedure helps to prevent potential sparks from igniting the combustible gases that are produced by some batteries.
4. Start the engine.
5. Immediately after the engine is started, disconnect the jump start cables in reverse order.

After jump starting, the alternator may not be able to fully recharge batteries that are severely discharged. The batteries must be replaced or charged to the proper voltage with a battery charger after the engine is stopped. Many batteries which are considered unusable are still rechargeable. Refer to Operation and Maintenance Manual, “Battery - Replace” and Testing and Adjusting Manual, “Battery - Test”.

Refer to the Electrical Schematic for your engine. Consult your Caterpillar dealer for more information.

i05495593

# After Starting Engine

**SMCS Code:** 1000

After starting, the engine may be held at low speed for a duration between 1 and 25 seconds to allow engine systems to stabilize. The duration will depend on ambient temperature, time since last run and other factors.

**Note:** In ambient temperatures from 0 to 60°C (32 to 140°F), the warm-up time is approximately 3 minutes. In temperatures below 0°C (32°F), additional warm-up time may be required.

When the engine idles during warm-up, observe the following conditions:

Do not check the high-pressure fuel lines with the engine or the starting motor in operation. If you inspect the engine in operation, always use the proper inspection procedure in order to avoid a fluid penetration hazard. Refer to Operation and Maintenance Manual, “General hazard Information”.

- Check for any fluid or for any air leaks at idle rpm and at one-half full rpm (no load on the engine) before operating the engine under load. This check may not possible in some applications.
- Allow the engine to idle for 3 to 5 minutes, or allow the engine to idle until the water temperature indicator begins to rise. Check all gauges during the warm-up period.

Constant speed engines should be allowed to operate at low idle for 3 minutes before used at operational speed. If the low idle option is not available, then operate the engine at operational speed with no load for 2 minutes.

**Note:** Gauge readings should be observed and the data should be recorded frequently while the engine is operating. Comparing the data over time will help to determine normal readings for each gauge. Comparing data over time will also help detect abnormal operating developments. Significant changes in the readings should be investigated.

# Engine Operation

i05570732

## Engine Operation

**SMCS Code:** 1000

Proper operation and maintenance are key factors in obtaining the maximum life and economy of the engine. If the directions in the Operation and Maintenance Manual are followed, costs can be minimized and engine service life can be maximized.

The time that is needed for the engine to reach normal operating temperature can be less than the time taken for a walk-around inspection of the engine.

When idling after the engine is started in cold weather, increase the engine rpm from 1000 to 1200 rpm. This idling will warm up the engine more quickly. Maintaining an elevated low idle speed for extended periods will be easier with the installation of a hand throttle. The engine should not be “raced” in order to speed up the warm-up process.

Gauge readings should be observed and the data should be recorded frequently while the engine is operating. Comparing the data over time will help to determine normal readings for each gauge. Comparing data over time will also help detect abnormal operating developments. Significant changes in the readings should be investigated.

i07818141

## Fuel Conservation Practices

**SMCS Code:** 1000; 1250

The efficiency of the engine can affect the fuel economy. The design and technology in manufacturing provides maximum fuel efficiency in all applications. Always ensure that genuine filters are used. Follow the recommended procedures to attain optimum performance for the life of the engine.

- Avoid spilling fuel.

Fuel expands when the fuel is warmed up. The fuel may overflow from the fuel tank. Inspect fuel lines for leaks. Repair the fuel lines, as needed.

- Be aware of the properties of the different fuels. Use only the recommended fuels. Refer to the Operations and Maintenance Manual, “Fuel Recommendations” for further information.
- Avoid unnecessary idling.
- Shut off the engine rather than idle for long periods of time.
- Observe the service indicator frequently. Keep the air cleaner elements clean.
- Ensure that the turbocharger is operating correctly so that the proper air/fuel ratio is maintained. Clean exhaust indicates proper functioning.
- Maintain a good electrical system.

One faulty battery cell will overwork the alternator and can consume excess power and excess fuel.

- Ensure that the belts are correctly adjusted. The belts should be in good condition. Refer to the Specifications manual for further information.
- Ensure that all the connections of the hoses are tight. The connections should not leak.
- Ensure that the driven equipment is in good working order.
- Cold engines consume excess fuel. Utilize heat from the jacket water system and the exhaust system, when possible. Keep cooling system components clean and keep cooling system components in good repair. Never operate the engine without water temperature regulators. All these items will help maintain operating temperatures.

# Cold Weather Operation

i05546466

## Cold Weather Operation

**SMCS Code:** 1000; 1250

Caterpillar Diesel Engines can operate effectively in cold weather. During cold weather, the starting and the operation of the diesel engine is dependent on the following items:

- The type of fuel that is used
- The viscosity of the engine oil
- The operation of the glow plugs
- Optional Cold starting aid
- Battery condition

Refer to Special Publication, SEBU5898, “Cold Weather Recommendations for Caterpillar Machines”.

This section will cover the following information:

- Potential problems that are caused by cold-weather operation
- Suggest steps which can be taken in order to minimize starting problems and operating problems when the ambient air temperature is between “0° to −40 °C (32° to -40 °F)”.

The operation and maintenance of an engine in freezing temperatures is complex . This function is because of the following conditions:

- Weather conditions
- Engine applications

Recommendations from your Cat dealer are based on past proven practices. The information that is contained in this section provides guidelines for cold-weather operation.

## Hints for Cold Weather Operation

- If the engine will start, operate the engine until a minimum operating temperature of 80° C (176° F) is achieved. Achieving operating temperature will help prevent the intake valves and exhaust valves from sticking.
- The cooling system and the lubrication system for the engine do not lose heat immediately upon shutdown. This means that an engine can be shut down for a period and the engine can still have the ability to start readily.
- Install the correct specification of engine lubricant before the beginning of cold weather. Refer to Special Publication, SEBU6251, “Caterpillar Commercial Diesel Engine Fluids Recommendations ”.
- Check all rubber parts (hoses, fan drive belts, ) weekly.
- Check all electrical wiring and connections for any fraying or damaged insulation.
- Keep all batteries fully charged and warm by ensuring that the engine is allowed to operated at normal operating temperature.
- Fill the fuel tank at the end of each shift.
- Drain the water from the fuel system. Refer to this Operation and Maintenance Manual, “Fuel System Primary Filter/Water Separator - Drain”.
- Check the air cleaners and the air intake daily. Check the air intake more often when you operate in snow.
- Ensure that the glow plugs are in working order. Refer to Testing and Adjusting Manual, “Glow Plug - Test”.

**⚠ WARNING**

**Personal injury or property damage can result from alcohol or starting fluids.**

**Alcohol or starting fluids are highly flammable and toxic and if improperly stored could result in injury or property damage.**

**⚠ WARNING**

**Do not use aerosol types of starting aids such as ether. Such use could result in an explosion and personal injury.**

- For jump starting with cables in cold weather, refer to the Operation and Maintenance Manual, “Starting with Jump Start Cables.” for instructions.

## Viscosity of the Engine Lubrication Oil

Correct engine oil viscosity is essential. Oil viscosity affects lubrication properties and wear protection that the oil provides for the engine. Refer to this Operation and Maintenance Manual, “Fluid Recommendations” for the recommended viscosity of oil.

## Recommendations for the Coolant

Provide cooling system protection for the lowest expected outside temperature. Refer to this Operation and Maintenance Manual, “Fluid Recommendations” for the recommended coolant mixture.

In cold weather, check the coolant often for the correct glycol concentration in order to ensure adequate freeze protection.

### Engine Block Heaters

Engine block heaters (if equipped) heat the engine jacket water that surrounds the combustion chambers. This equipment provides the following functions:

- Startability is improved.
- Warm up time is reduced.

An electric block heater can be activated once the engine is stopped. A block heater can be 110 V or 240 V. The output can be 750/1000 W. Consult your Cat dealer for more information.

## Idling the Engine

After starting the engine, the engine speed will be governed for a maximum period of 25 seconds. When idling after the engine is started in cold weather, increase the engine rpm from 1000 to 1200 rpm. This idling will warm up the engine more quickly. Maintaining an elevated low idle speed for extended periods will be easier with the installation of a hand throttle. The engine should not be “raced” in order to speed up the warm-up process.

While the engine is idling, the application of a light load (parasitic load) will assist in achieving the minimum operating temperature. The minimum operating temperature is 80° C (176° F).

Constant speed engines should be allowed to operate at low idle for 3 minutes before used at operational speed. If the low idle option is not available, then operate the engine at operational speed with no load for 2 minutes.

## Recommendations for Coolant Warm Up

Warm up an engine that has cooled below normal operating temperatures due to inactivity. This warm-up should be performed before the engine is returned to full operation. During operation in very cold temperature conditions, damage to engine valve mechanisms can result from engine operation for short intervals. This damage can happen if the engine is started and the engine is stopped many times without being operated in order to warm up completely.

When the engine is operated below normal operating temperatures, fuel and oil are not completely burned in the combustion chamber. This fuel and oil causes soft carbon deposits to form on the valve stems. Generally, the deposits do not cause problems and the deposits are burned off during operation at normal engine operating temperatures.

Starting and stopping the engine many times without being operated in order to warm up completely, the carbon deposits become thicker. This issue can cause the following problems:

- Free operation of the valves is prevented.
- Valves become stuck.
- Pushrods may become bent.
- Other damage to valve train components can result.

For this reason, when the engine is started, the engine must be operated until the coolant temperature is 80° C (176° F) minimum. Carbon deposits on the valve stems will be kept at a minimum. Free operation of the valves and the valve components will be maintained.

In addition, the engine must be thoroughly warmed in order to keep other engine parts in better condition. The service life of the engine will be generally extended. Lubrication will be improved. There will be less acid and less sludge in the oil. This better condition will provide longer service life for the engine bearings, the piston rings, and other parts. However, limit unnecessary idle time to 10 minutes in order to reduce wear and unnecessary fuel consumption.

### The Water Temperature Regulator and Insulated Heater Lines

The engine is equipped with a water temperature regulator. When the engine coolant is below the correct operating temperature jacket water circulates through the engine cylinder block and into the engine cylinder head. The coolant then returns to the cylinder block via an internal passage that bypasses the valve of the coolant temperature regulator. This system ensures that coolant flows around the engine under cold operating conditions. The water temperature regulator begins to open when the engine jacket water has reached the correct minimum operating temperature. As the jacket water coolant temperature rises above the minimum operating temperature the water temperature regulator opens further allowing more coolant through the radiator to dissipate excess heat.

The progressive opening of the water temperature regulator operates the progressive closing of the bypass passage between the cylinder block and head. This system ensures maximum coolant flow to the radiator in order to achieve maximum heat dissipation.

**Note:** Do not restrict the air flow across the radiator. Restriction to the air flow can damage the fuel system. Caterpillar strongly discourages the use of all air flow restriction devices such as radiator shutters. Restriction of the air flow can result in the following: high exhaust temperatures, power loss, excessive fan usage and reduction in fuel economy.

A cab heater is beneficial in cold weather. The feed from the engine and the return lines from the cab should be insulated in order to reduce heat loss to the outside air.

### Recommendation for Crankcase Breather Protection

Crankcase ventilation gases contain a large quantity of water vapor. This water vapor can freeze in cold ambient conditions and can plug or damage the crankcase ventilation system. If the engine is operated in temperatures below −25° C (−13° F), measures must be taken to prevent freezing and plugging of the breather system. An open breather system will operate more effectively in temperatures below −25° C (−13° F). In extreme weather conditions insulating the breather hose will help to protect the system.

Consult with your Cat dealer for the recommended breather components for operation from −25° to -40°C (−13° to -72.°F).

### Insulating the Air Inlet and Engine Compartment

When temperatures below −18 °C (−0 °F) will be frequently encountered, an air cleaner inlet that is located in the engine compartment may be specified. An air cleaner that is located in the engine compartment may also minimize the entry of snow into the air cleaner. Also, heat that is rejected by the engine helps to warm the intake air.

Additional heat can be retained around the engine by insulating the engine compartment.

i08230315

## Fuel and the Effect from Cold Weather

**SMCS Code:** 1000; 1250; 1280

The following fuels are the grades that are available for Cat engines:

- No. 1
- No. 2
- Blend of No. 1 and No. 2

No. 2 diesel fuel is the most commonly used fuel. Either No. 1 diesel fuel or a blend of No. 1 and No. 2 is best suited for cold-weather operation.

Quantities of No. 1 diesel fuel are limited. No. 1 diesel fuels are available during the months of the winter in the colder climates. During cold-weather operation, if No. 1 diesel fuel is not available, use No. 2 diesel fuel, if necessary.

There are three major differences between No. 1 and No. 2 diesel fuel. No. 1 diesel fuel has the following properties:

- Lower cloud point
- Lower pour point
- Lower rating of kJ (BTU) per unit volume of fuel

When No. 1 diesel fuel is used, a decrease in power and in fuel efficiency may be noticed.

The cloud point is the temperature when a cloud of wax crystals begins to form in the fuel. These crystals can cause the fuel filters to plug. The pour point is the temperature when diesel fuel will thicken. The diesel fuel becomes more resistant to flow through fuel pumps and through fuel lines.

Be aware of these values when diesel fuel is purchased. Anticipate the average ambient temperature of the area. Engines that are fueled in one climate may not operate well if the engines are moved to another climate. Problems can result due to changes in temperature.

Before troubleshooting for low power or for poor performance in the winter, check the type of fuel that is being used.

When No. 2 diesel fuel is used, the following components provide a means of minimizing problems in cold weather:

- Starting aids
- Engine oil pan heaters
- Engine coolant heaters
- Fuel heaters
- Fuel line insulation

For more information on cold-weather operation, see Special Publication, SEBU5898, “Cold-Weather Recommendations”.

i05570738

# Fuel Related Components in Cold Weather

**SMCS Code:** 1000; 1250; 1280

## Fuel Tanks

Condensation can form in partially filled fuel tanks. Top off the fuel tanks after you operate the engine.

Fuel tanks should contain some provision for draining water and sediment from the bottom of the tanks. Some fuel tanks use supply pipes that allow water and sediment to settle below the end of the fuel supply pipe.

Some fuel tanks use supply lines that take fuel directly from the bottom of the tank. If the engine is equipped with this system, regular maintenance of the fuel system filter is important.

Drain the water and sediment from any fuel storage tank at the following intervals: weekly, service intervals and refueling of the fuel tank. This procedure will help prevent water and/or sediment from being pumped from the fuel storage tank and into the engine fuel tank.

## Fuel Filters

After you change the fuel filter, always prime the fuel system in order to remove air bubbles from the fuel system. Refer to the Operation and Maintenance Manual in the Maintenance Section for more information on priming the fuel system.

The micron rating and the location of a primary fuel filter is important in cold-weather operation. The In-line filter, primary fuel filter, and the fuel supply line are the most common components that are affected by cold fuel. Caterpillar fuel filters are designed to operate in all weather conditions.

NOTICE
In order to maximize fuel system life and prevent premature wear out from abrasive particles in the fuel, a four micron[c] absolute high efficiency fuel filter is required for all Caterpillar Electronic Unit Injectors. Caterpillar High Efficiency Fuel Filters meet these requirements. Consult your Cat dealer for the proper part numbers.

## Fuel Heaters

Fuel heaters help to prevent fuel filters from plugging in cold weather due to waxing. A fuel heater should be installed in the fuel system before the electric fuel pump.

For further information on fuel heaters, consult your Cat dealer.

# Engine Stopping

i06585078

## Stopping the Engine

**SMCS Code:** 1000

NOTICE
Stopping the engine immediately after it has been working under load, can result in overheating and accelerated wear of the engine components.

Avoid accelerating the engine prior to shutting it down.

Avoiding hot engine shutdowns will maximize turbocharger shaft and bearing life.

**Note:** Individual applications will have different control systems. Ensure that the shutoff procedures are understood. Use the following general guidelines to stop the engine.

**1.** Remove the load from the engine. Reduce the engine speed (rpm) to low idle. Allow the engine to idle for 5 minutes to cool the engine.

**2.** Stop the engine after the cool down period according to the shutoff system on the engine. Turn the ignition key switch to the OFF position. If necessary, refer to the instructions that are provided by the OEM.

**3.** Allow 2 minutes after shutting down the engine before you turn the battery disconnect switch to OFF. The electric control module requires power to process information from the sensors before shutting down.

### Constant Speed Engines

For constant speed engines:

- Remove engine load
- Allow engine to operate at rated speed for 5 minutes
- After 5 minutes stop the engine, turn the ignition key switch to the OFF position.
- If necessary, refer to the instructions that are provided by the OEM.

Allow 2 minutes after shutting down the engine before you turn the battery disconnect switch to OFF. The electric control module requires power to process information from the sensors before shutting down.

i03554860

## Emergency Stopping

**SMCS Code:** 1000; 7418

NOTICE
Emergency shutoff controls are for EMERGENCY use ONLY. DO NOT use emergency shutoff devices or controls for normal stopping procedure.

Ensure that any components for the external system that support the engine operation are secured after the engine is stopped.

### Emergency Stop Button

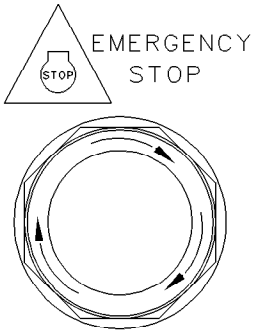


Illustration 33 g00104303
Typical emergency stop button

The emergency stop button is in the OUT position for normal engine operation. Push the emergency stop button. The engine will not start when the button is locked. Turn the button clockwise in order to reset.

Refer to Operation and Maintenance Manual, “Features and Controls” for the location and the operation of the emergency stop button.

i05298684

## After Stopping Engine

**SMCS Code:** 1000

**Note:** Before you check the engine oil, do not operate the engine for at least 10 minutes in order to allow the engine oil to return to the oil pan.

**⚠ WARNING**

**Contact with high pressure fuel may cause fluid penetration and burn hazards. High pressure fuel spray may cause a fire hazard. Failure to follow these inspection, maintenance and service instructions may cause personal injury or death.**

NOTICE
The low-pressure fuel system can be pressurized for a time period after the engine has stopped operating. The operating pressure of the low-pressure fuel system can be 500 kPa (73 psi). The secondary fuel filters should be drained before any maintenance of the low-pressure fuel system is carried out.

- After the engine has stopped, wait for 60 seconds in order to allow the fuel pressure to be purged from the high-pressure fuel lines before any service or repair is performed on the engine fuel lines. If necessary, perform minor adjustments. Repair any leaks from the low-pressure fuel system and from the cooling, lubrication, or air systems. Replace any high-pressure fuel line that has leaked. Refer to Disassembly and assembly Manual, “Fuel Injection Lines - Install”.
- Check the crankcase oil level. Maintain the oil level between the “MIN” mark and the “MAX” mark on the engine oil level gauge.
- If the engine is equipped with a service hour meter, note the reading. Perform the maintenance that is in the Operation and Maintenance Manual, “Maintenance Interval Schedule”.
- Fill the fuel tank, in order to help prevent accumulation of moisture in the fuel. Do not overfill the fuel tank.

NOTICE
Only use antifreeze/coolant mixtures recommended in this Operation and Maintenance Manual, “Refill Capacities and Recommendations” topic or in this Operation and Maintenance Manual, “Fluid Recommendations” topic. Failure to do so can cause engine damage.

**⚠ WARNING**

**Pressurized System: Hot coolant can cause serious burns. To open the cooling system filler cap, stop the engine and wait until the cooling system components are cool. Loosen the cooling system pressure cap slowly in order to relieve the pressure.**

- Allow the engine to cool. Check the coolant level.
- Check the coolant for correct antifreeze protection and the correct corrosion protection. Add the correct coolant/water mixture, if necessary.
- Perform all required periodic maintenance on all driven equipment. This maintenance is outlined in the instructions from the OEM.

# Maintenance Section

# Refill Capacities

i10084719

## Refill Capacities

**SMCS Code:** 1000; 1348; 1395; 7560

### Lubricating Oil

Table 6

| Engine Refill Capacities | | |
|---|---|---|
| **Compartment or System** | **Minimum** | **Maximum** |
| Crankcase Oil Sump(1) | 5.7 L (1.5 US gal) | 7 L (1.85 US gal) |

(1) These values are the approximate capacities for the crankcase oil sump (flat steel) which includes the standard factory installed oil filters. Engines with auxiliary oil filters will require additional oil. Refer to the OEM specifications for the capacity of the auxiliary oil filter.

### Coolant

Table 7

| Engine Refill Capacities | |
|---|---|
| **Compartment or System** | **Liters** |
| Engine Only | 7 L (1.85 US gal) |
| External System Per OEM(1) | |

(1) The External System includes a radiator or an expansion tank with the following components: heat exchanger and piping. Refer to the OEM specifications. Enter the value for the capacity of the External System in this row.

### Fuel

Refer to the Original Equipment Manufacturer (OEM) for information on the capacity of the fuel tank.

i05502738

## Fluid Recommendations
(Engine Oil)

**SMCS Code:** 1280; 1348; 1395; 7560

NOTICE
These recommendations are subject to change without notice. Contact your local Cat dealer for the most up-to-date fluids recommendations.

### Caterpillar Recommended Engine Oil

- API American Petroleum Institute
- SAE Society of Automotive Engineers Inc

### Cat DEO (Diesel Engine Oil)

Caterpillar oils have been developed and tested in order to provide the full performance and service life that has been designed and built into Caterpillar Engines. Caterpillar oils are currently used to fill diesel engines at the factory. These oils are offered by Cat dealers for continued use when the engine oil is changed. Consult your Cat dealer for more information on these oils.

Due to significant variations in the quality and in the performance of commercially available oils, Caterpillar makes the following recommendations:

- **Cat DEO (Diesel Engine Oil) (SAE 10W-30)**
- **Cat DEO (Diesel Engine Oil) (SAE 15W-40)**

Cat DEO Multigrade is formulated with the correct amounts of detergents, dispersants, and alkalinity in order to provide superior performance in Caterpillar Diesel Engines.

Cat DEO Multigrade is available in various viscosity grades that include SAE 10W-30 and SAE 15W-40. To choose the correct viscosity grade for the ambient temperature, see illustration 34 . Multigrade oils provide the correct viscosity for a broad range of operating temperatures. Multigrade oils are also effective in maintaining low oil consumption and low levels of piston deposits.

Cat DEO Multigrade can be used in other diesel engines and in gasoline engines. See the engine manufacturers guide for the recommended specifications. Compare the specifications to the specifications of Cat DEO Multigrade. The current industry standards for Cat DEO are listed on the product label and on the data sheets for the product.

Consult your Cat dealer for part numbers and for available sizes of containers.

**Note:** Cat DEO in SAE 15W-40 exceeds the performance requirements for the following API categories: CI-4, CH-4, CG-4, CF-4 and CF. Cat DEO Multigrade exceeds the requirements of the Caterpillar Engine Crankcase Fluid-1 (ECF-1) specification. Cat DEO in SAE 15W-40 passes the following proprietary tests: sticking of the piston ring, oil control tests, wear tests and soot tests. Proprietary tests help ensure that Caterpillar multigrade oil provides superior performance in Caterpillar Diesel Engines. In addition, Cat DEO Multigrade exceeds many of the performance requirements of other manufacturers of diesel engines. Therefore, this oil is an excellent choice for many mixed fleets. **True high performance oil is produced with a combination of the following factors: industry standard tests, proprietary tests, field tests and prior experience with similar formulations. The design and the development of Caterpillar lubricants that are both high performance and high quality are based on these factors.**

**Note:** Non-Caterpillar commercial oils are second choice oils.

## Commercial Oil

- API CH-4 oil specification is minimum specification that is acceptable for use.
- API CI-4 oil specification is the preferred commercial oil specification.

**Note:** Refer to Special Publication, SEBU6251, “Caterpillar Commercial Diesel Engine Fluids Recommendations” for additional information that relates to lubrication for your engine.

## Lubricant Viscosity Recommendations

The proper SAE viscosity grade of oil is determined by the minimum ambient temperature during cold engine start-up, and the maximum ambient temperature during engine operation.

Refer to illustration 34 (minimum temperature) in order to determine the required oil viscosity for starting a cold engine.

Refer to illustration 34 (maximum temperature) in order to select the oil viscosity for engine operation at the highest ambient temperature that is anticipated.

**Note:** Generally, use the highest oil viscosity that is available to meet the requirement for the temperature at start-up.

If ambient temperature conditions at engine start-up require the use of multigrade SAE 0W oil, SAE 0W-40 viscosity grade is preferred over SAE 0W-20 or SAE 0W-30.

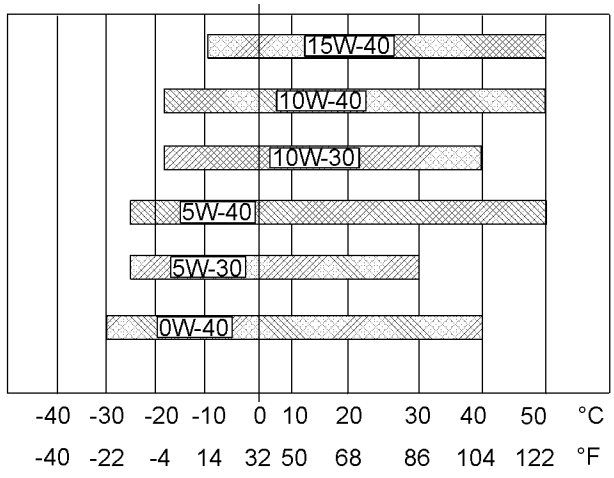


Illustration 34 g03347115

**Note:** Supplemental heat is recommended below the minimum recommended ambient temperature.

## S·O·S Oil Analysis

Caterpillar has developed a tool for maintenance management that evaluates oil degradation and the tool also detects the early signs of wear on internal components. The Caterpillar tool for oil analysis is called S·O·S Oil Analysis and the tool is part of the S·O·S Services program. S·O·S Oil Analysis divides oil analysis into three categories:

- Wear Analysis
- Oil condition
- Additional tests

The wear analysis monitors metal particles, some oil additives, and some contaminants.

Oil condition uses infrared (IR) analysis to evaluate the chemistry of the oil. Infrared analysis is also used to detect certain types of contamination.

Additional tests are used to measure contamination levels from water, fuel, or coolant. Oil viscosity and corrosion protection can be evaluated, as needed.

Refer to Special Publication, SEBU6251, “Caterpillar Commercial Diesel Engine Fluids Recommendations” or contact your local Cat dealer for additional information concerning the S·O·S Oil Analysis program.

## Additional Service Period Information

Engines that operate with high sulfur fuel will require 250 Hours oil change. Refer to this manuals Fluid Recommendations, “Fuel” for more information.

i05571033

# Fluid Recommendations (Fuel)

**SMCS Code:** 1280; 1348; 1395; 7560

## Caterpillar Fuel Specification

Diesel fuels that meet the Caterpillar Specification for Distillate Diesel Fuel are recommended. These fuels will help to provide maximum engine service life and performance. In North America, diesel fuel that is identified as No. 1-D or No. 2-D in “ASTM D975” generally meet the specifications. Diesel fuels from other sources could exhibit detrimental properties that are not defined or controlled by this specification.

NOTICE
Operating with fuels that do not meet Caterpillar's recommendations can cause the following effects: starting difficulty, poor combustion, deposits in the fuel injectors, reduced service life of the fuel system, deposits in the combustion chamber and reduced service life of the engine.

**Note:** Refer to Special Publication, SEBU6251, “Caterpillar Commercial Diesel Engine Fluids Recommendations” for the Caterpillar Specification for distillate fuel and for additional information that relates to fuel for your engine.

## Service Intervals for B20 Biodiesel and High Sulfur Fuel.

Refer to table 8 for information on servicing and B20. Refer to table 9 for information on servicing and high sulfur fuel.

Table 8

| B20 Biodiesel Engine Service |
|---|
| First 50 hours fuel filter change |
| Every 250 hours fuel filter change |
| Required 343 - 6210 Cleaner |

Table 9

| Fuel Sulfur Content Greater than 500 PPM |
|---|
| Every 250 hours engine oil and oil filter change |
| Required 256 - 4968 Conditioner. |

i10270048

# Fluid Recommendations (Coolant Specification)

**SMCS Code:** 1280; 1348; 1395; 7560

The following two coolants are used in Caterpillar diesel engines:

**Preferred** – Cat ELC (Extended Life Coolant) or a commercial extended life coolant that meets the Caterpillar EC-1 specification

**Acceptable** – A Cat DEAC (Diesel Engine Antifreeze/Coolant) or a commercial heavy-duty antifreeze that meets “ASTM D6210” specifications

NOTICE
**The Caterpillar industrial engine must be operated with a 1:1 mixture of water and glycol.**

NOTICE
Do not use a commercial coolant/antifreeze that only meets the ASTM “D3306” or equivalent specification. This type of coolant/antifreeze is made for light duty automotive applications.

Use only the coolant/antifreeze that is recommended.

Caterpillar recommends a 1:1 mixture of water and glycol. This mixture of water and glycol will provide optimum heavy-duty performance as an antifreeze.

**Note:** Cat DEAC does not require a treatment with an SCA at the initial fill. Commercial heavy-duty antifreeze that meets “ASTM D6210” specifications may require a treatment with an SCA at the initial fill. Read the label or the instructions that are provided by the OEM of the product.

In stationary engine applications that do not require anti-boil protection or freeze protection, a mixture of SCA and water is acceptable. Caterpillar recommends a 6 percent to 8 percent concentration of SCA in those cooling systems. Distilled water or deionized water is preferred. Water which has the recommended properties may be used.

Table 10

| Coolant Service Life | |
|---|---|
| **Coolant Type** | **Service Life (1)** |
| Cat ELC | 12000 Service Hours or Six Years(2) |
| Commercial coolant that meets the Caterpillar EC-1 Specification | 6000 Service Hours or Six Years (3) |
| Cat DEAC | 3000 Service Hours or Three Years |
| Commercial Heavy-Duty Coolant/Antifreeze that meets “ASTM D6210” | 3000 Service Hours or Two Years |

(1) Use the interval that occurs first. The cooling system must also be flushed out at this time.
(2) Cat ELC Extender must be added at 6000 service hours or one half of the service life of the Cat ELC. Refer to your machine Operation and Maintenance Manual for exceptions.
(3) An extender must be added at 3000 service hours or one half of the service life of the coolant.

**Note:** Refer to Special Publication, SEBU6251, “Caterpillar Commercial Diesel Engine Fluids Recommendations” for additional information that relates to coolant for your engine.

## S·O·S Coolant Analysis

Table 11

| Recommended Interval | | |
|---|---|---|
| **Type of Coolant** | **Level 1** | **Level 2** |
| DEAC | Every 250 Hours (1) | Yearly(1) |
| ELC | Optional (1) | Yearly |

(1) The Level 2 Coolant Analysis should be performed sooner if a problem is identified by a Level 1 Coolant Analysis.

### S·O·S Coolant Analysis (Level 1)

A coolant analysis (Level 1) is a test of the properties of the coolant.

The following properties of the coolant are tested:

- Glycol concentration for freeze protection and boil protection
- Ability to protect from erosion and corrosion
- pH
- Conductivity
- Visual analysis
- Odor analysis

The results are reported, and appropriate recommendations are made.

Refer to the Maintenance Interval Schedule in this Operation and Maintenance Manual in order to find the maintenance interval for collecting the coolant samples.

### S·O·S Coolant Analysis (Level 2)

A coolant analysis (Level 2) is a comprehensive chemical evaluation of the coolant. This analysis is also a check of the overall condition of the inside of the cooling system.

The S·O·S Coolant Analysis has the following features:

- Full coolant analysis (Level 1)
- Identification of the source of metal corrosion and of contaminants
- Water hardness
- Identification of buildup of the impurities that cause corrosion
- Identification of buildup of the impurities that cause scaling

The results are reported, and appropriate recommendations are made.

Refer to the Maintenance Interval Schedule in this Operation and Maintenance Manual, “Cooling System Coolant Sample (Level 2) - Obtain” for the maintenance interval for collecting the coolant samples.

Testing the engine coolant is important to ensure that the engine is protected from internal cavitation and from corrosion. The analysis also tests the ability of the coolant to protect the engine from boiling and from freezing. The S·O·S Coolant Analysis can be done at your Cat dealer. Caterpillar S·O·S Coolant Analysis is the best way to monitor the condition of your coolant and your cooling system. S·O·S Coolant Analysis is a program that is based on periodic samples.

Refer to Special Publication, SEBU6251, “Caterpillar Commercial Diesel Engine Fluids Recommendations” for additional information.

# Maintenance Recommendations

i05241802

## Welding on Engines with Electronic Controls

**SMCS Code:** 1000

NOTICE
Because the strength of the frame may decrease, some manufacturers do not recommend welding onto a chassis frame or rail. Consult the OEM of the equipment or your Caterpillar dealer regarding welding on a chassis frame or rail.

Proper welding procedures are necessary in order to avoid damage to the engines ECM, sensors, and associated components. When possible, remove the component from the unit and then weld the component. If removal of the component is not possible, the following procedure must be followed when you weld on a unit that is equipped with a Caterpillar Electronic Engine. The following procedure is considered to be the safest procedure to weld on a component. This procedure should provide a minimum risk of damage to electronic components.

NOTICE
Do not ground the welder to electrical components such as the ECM or sensors. Improper grounding can cause damage to the drive train bearings, hydraulic components, electrical components, and other components.

Clamp the ground cable from the welder to the component that will be welded. Place the clamp as close as possible to the weld. This will help reduce the possibility of damage.

**1.** Stop the engine. Turn the switched power to the OFF position.

**2.** Disconnect the negative battery cable from the battery. If a battery disconnect switch is provided, open the switch.

**3.** Disconnect the J1/P1 and J2/P2 connectors from the ECM. Move the harness to a position that will not allow the harness to move back, and contact the ECM pins.

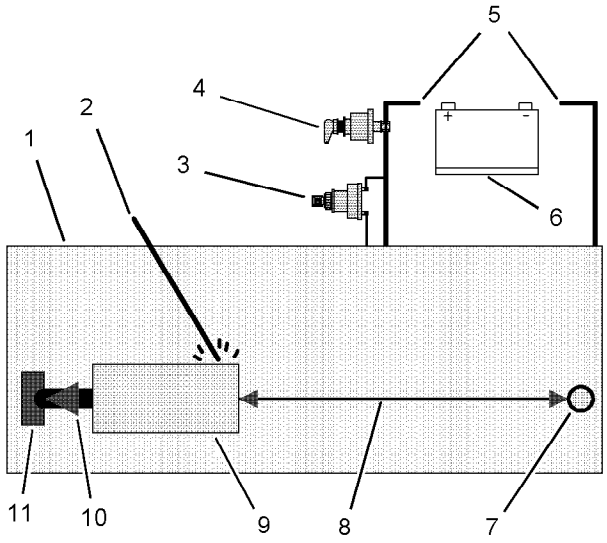


Illustration 35 g01075639

Use the example above. The current flow from the welder to the ground clamp of the welder will not cause damage to any associated components.

(1) Engine
(2) Welding electrode
(3) Keyswitch in the OFF position
(4) Battery disconnect switch in the open position
(5) Disconnected battery cables
(6) Battery
(7) Electrical/Electronic component
(8) Minimum distance between the component that is being welded and any electrical/electronic component
(9) The component that is being welded
(10) Current path of the welder
(11) Ground clamp for the welder

**4.** Connect the welding ground cable directly to the part that will be welded. Place the ground cable as close as possible to the weld. Close positioning of the cable will reduce the possibility of welding current damage to bearings, hydraulic components, electrical components, and ground straps.

**Note:** If electrical/electronic components are used as a ground for the welder, or electrical/electronic components are located between the welder ground and the weld, current flow from the welder could severely damage the component.

**5.** Protect the wiring harness from welding debris and spatter.

**6.** Use standard welding practices to weld the materials.

i10576933

# Severe Service Application

**SMCS Code:** 1000

Severe service is the application of an engine that exceeds the current published standards for that engine. Caterpillar maintains standards for the following engine parameters:

- Performance such as power range, speed range, and fuel consumption
- Fuel quality
- Operational Altitude
- Maintenance intervals
- Oil selection and maintenance
- Coolant type and maintenance
- Environmental qualities
- Installation
- The temperature of the fluid in the engine

Refer to the standards for the engine or consult your Cat dealer in order to determine if the engine is operating within the defined parameters.

Severe service operation can accelerate component wear. Engines that operate under severe conditions may need more frequent maintenance intervals in order to ensure maximum reliability and retention of full service life.

Due to individual applications, it is not possible to identify all of the factors which can contribute to severe service operation. Consult your Cat dealer for the unique maintenance that is necessary for the engine.

The operating environment, incorrect operating procedures, and incorrect maintenance procedures can be factors which contribute to a severe service application.

## Environmental Factors

**Ambient temperatures** – The engine may be exposed to extended operation in cold environments or hot environments. Valve components can be damaged by carbon buildup if the engine is frequently started and stopped in cold temperatures. Hot intake air reduces engine performance and increase oil degradation.

**Quality of the air** – The engine may be subjected to extended operation in environments that are dirty, dusty, or contaminated. If the equipment is not cleaned regularly, mud, dirt, and dust can accumulate and encase components, leading to increased wear and maintenance challenges. The ingress of contaminants that affect combustion air quality and exhaust gas composition should be avoided. It is recommended to ensure adequate workplace ventilation and to follow local air quality guidelines and regulations.

**Buildup** – Compounds, elements, corrosive chemicals, and salt can damage some components.

**Altitude** – Problems can arise when the engine is operated at altitudes that are higher than the intended settings for that application. Necessary adjustments should be made.

## Incorrect Operating Procedures

- Extended operation at low idle
- Frequent hot shutdowns
- Operating at excessive loads
- Operating at excessive speeds
- Operating outside the intended application

## Incorrect Maintenance Procedures

- Extending the maintenance intervals
- Failure to use recommended fuel, lubricants, and coolant/antifreeze

i09801030

# Maintenance Interval Schedule

**SMCS Code:** 1000; 4450; 7500

## When Required

“ Battery - Replace“ . . . . . 67
“ Battery or Battery Cable - Disconnect“ . . . . . 68
“ Engine - Clean“ . . . . . 76
“ Engine Air Cleaner Element (Dual Element/Canister Type) - Clean/Replace“ . . . . . 76
“ Engine Air Cleaner Element (Single Element) - Inspect/Replace“ . . . . . 78
“ Fuel System - Prime“ . . . . . 86
“ Radiator - Clean“ . . . . . 96

## Daily

“ Coolant Level - Check“ . . . . . 74
“ Driven Equipment - Check“ . . . . . 76
“ Engine Air Cleaner Service Indicator - Inspect“ . . 79
“Engine Air Precleaner - Check/Clean“ . . . . . .
“ Engine Oil Level - Check“ . . . . . 81
“ Fuel System Primary Filter/Water Separator - Drain“ . . . . . 90
“ Walk-Around Inspection“ . . . . . 98

## Every Week

“ Hoses and Clamps - Inspect/Replace“ . . . . . 93

## Every 50 Service Hours or Weekly

“ Fuel Tank Water and Sediment - Drain“ . . . . . 92

## Every 250 Service Hours

“ Engine Oil Sample - Obtain“ . . . . . 81

## Initial 500 Service Hours

“ Engine Valve Lash - Check“ . . . . . 85

## Every 500 Service Hours

“ Fan Clearance - Check“ . . . . . 85

## Every 500 Service Hours or 1 Year

“ Battery Electrolyte Level - Check“ . . . . . 67
“ Cooling System Supplemental Coolant Additive (SCA) - Test/Add“ . . . . . 74
“ Engine Air Cleaner Element (Dual Element/Canister Type) - Clean/Replace“ . . . . . 76
“ Engine Air Cleaner Element (Single Element) - Inspect/Replace“ . . . . . 78
“ Engine Crankcase Breather Element - Replace“ . . . . . 80
“Engine Oil and Filter - Change“ . . . . . .
“ Fuel System Primary Filter (Water Separator) Element - Replace“ . . . . . 89
“ Fuel System Secondary Filter - Replace“ . . . . . 90

## Every 1000 Service Hours

“ Belt Tensioner - Check“ . . . . . 68
“ Belt - Inspect“ . . . . . 69
“ Engine Valve Lash - Check“ . . . . . 85
“ Water Pump - Inspect“ . . . . . 99

## Every 2000 Service Hours

“ Aftercooler Core - Inspect“ . . . . . 66
“ Engine Mounts - Inspect“ . . . . . 80
“ Starting Motor - Inspect“ . . . . . 97

“ Turbocharger - Inspect“ . . . . . 97

## Every 3000 Service Hours

“ Alternator - Inspect“ . . . . . 66
“ Alternator and Fan Belts - Replace“ . . . . . 66

## Every 3000 Service Hours or 2 Years

“ Coolant (Commercial Heavy-Duty) - Change“ . . . 69

## Every 4000 Service Hours

“ Aftercooler Core - Clean/Test“ . . . . . 66

## Every 6000 Service Hours or 3 Years

“ Coolant Extender (ELC) - Add“ . . . . . 73

## Every 12 000 Service Hours or 6 Years

“ Coolant (ELC) - Change“. . . . . 71

## Overhaul

“ Overhaul Considerations“ . . . . . 94

## Commissioning

“ Fan Clearance - Check“ . . . . . 85

i01807350

# Aftercooler Core - Clean/Test (Air-To-Air Aftercooler)

**SMCS Code:** 1064-070; 1064-081

The air-to-air aftercooler is OEM installed in many applications. Please refer to the OEM specifications for information that is related to the aftercooler.

i04380914

# Aftercooler Core - Inspect

**SMCS Code:** 1064-040

**Note:** Adjust the frequency of cleaning according to the effects of the operating environment.

Inspect the aftercooler for these items: damaged fins, corrosion, dirt, grease, insects, leaves, oil and other debris. Clean the aftercooler, if necessary.

For air-to-air aftercoolers, use the same methods that are used for cleaning radiators.

**⚠ WARNING**

**Personal injury can result from air pressure.**

**Personal injury can result without following proper procedure. When using pressure air, wear a protective face shield and protective clothing.**

**Maximum air pressure at the nozzle must be less than 205 kPa (30 psi) for cleaning purposes.**

Pressurized air is the preferred method for removing loose debris. Direct the air in the opposite direction of the fans air flow. Hold the nozzle approximately 6 mm (.25 inch) away from the fins. Slowly move the air nozzle in a direction that is parallel with the tubes. The pressurized air will remove debris that is between the tubes.

Pressurized water may also be used for cleaning. The maximum water pressure for cleaning purposes must be less than 275 kPa (40 psi). Use pressurized water in order to soften mud. Clean the core from both sides.

Use a degreaser and steam for removal of oil and grease. Clean both sides of the core. Wash the core with detergent and hot water. Thoroughly rinse the core with clean water.

After cleaning, start the engine and accelerate the engine to high idle rpm. This will help in the removal of debris and drying of the core. Stop the engine. Use a light bulb behind the core in order to inspect the core for cleanliness. Repeat the cleaning, if necessary.

Inspect the fins for damage. Bent fins may be opened with a “comb”.

**Note:** If parts of the aftercooler system are repaired or replaced, a leak test is highly recommended. For more information, refer to OEM specification for the aftercooler.

Inspect these items for good condition: welds, mounting brackets, air lines, connections, clamps and seals. Make repairs, if necessary.

i03641972

# Alternator - Inspect

**SMCS Code:** 1405-040

Caterpillar recommends a scheduled inspection of the alternator. Inspect the alternator for loose connections and proper battery charging. Inspect the ammeter (if equipped) during engine operation in order to ensure proper battery performance and/or proper performance of the electrical system. Make repairs, as required.

Check the alternator and the battery charger for proper operation. If the batteries are properly charged, the ammeter reading should be very near zero. All batteries should be kept charged. The batteries should be kept warm because temperature affects the cranking power of the battery. If the battery is too cold, the battery will not crank the engine.

When the engine is not run for long periods of time or if the engine is run for short periods, the batteries may not fully charge. A battery with a low charge will freeze more easily than a battery with a full charge.

i05507877

# Alternator and Fan Belts - Replace

**SMCS Code:** 1357-510

Refer to Disassembly and Assembly Manual, “Alternator Belt - Remove and Install”.

Ensure that ALL grooved pulley and idlers that the belt operates rotate freely. Ensure that all grooves are clean and free from damage.

i03559623

# Battery - Replace

**SMCS Code:** 1401-510

**WARNING**

**Batteries give off combustible gases which can explode. A spark can cause the combustible gases to ignite. This can result in severe personal injury or death.**

**Ensure proper ventilation for batteries that are in an enclosure. Follow the proper procedures in order to help prevent electrical arcs and/or sparks near batteries. Do not smoke when batteries are serviced.**

**WARNING**

**The battery cables or the batteries should not be removed with the battery cover in place. The battery cover should be removed before any servicing is attempted.**

**Removing the battery cables or the batteries with the cover in place may cause a battery explosion resulting in personal injury.**

1. Switch the engine to the OFF position. Remove all electrical loads.
2. Turn off any battery chargers. Disconnect any battery chargers.
3. Ensure that the battery disconnect switch is in the OFF position.
4. Disconnect the NEGATIVE “-” cable from the NEGATIVE “-” battery terminal.
5. Disconnect the POSITIVE “+” cable from the POSITIVE “+” battery terminal.

**Note:** Always recycle a battery. Never discard a battery. Dispose of used batteries to an appropriate recycling facility.

6. Remove the used battery.
7. Install the new battery.

**Note:** Before the cables are connected, ensure that the battery disconnect switch is in the OFF position.

8. Connect the POSITIVE “+” cable to the POSITIVE “+” battery terminal.
9. Connect the NEGATIVE “-” cable to the NEGATIVE “-” battery terminal.
10. Turn the battery disconnect switch to the ON position.

i02724529

# Battery Electrolyte Level - Check

**SMCS Code:** 1401-535-FLV

When the engine is not run for long periods of time or when the engine is run for short periods, the batteries may not fully recharge. Ensure a full charge in order to help prevent the battery from freezing. If batteries are properly charged, ammeter reading should be very near zero,when the engine is in operation.

**WARNING**

**All lead-acid batteries contain sulfuric acid which can burn the skin and clothing. Always wear a face shield and protective clothing when working on or near batteries.**

1. Remove the filler caps. Maintain the electrolyte level to the “FULL” mark on the battery.

   If the addition of water is necessary, use distilled water. If distilled water is not available use clean water that is low in minerals. Do not use artificially softened water.
2. Check the condition of the electrolyte with the 245-5829 Coolant Battery Tester Refractometer.
3. Keep the batteries clean.

   Clean the battery case with one of the following cleaning solutions:

   - Use a solution of 0.1 kg (0.2 lb) baking soda and 1 L (1 qt) of clean water.
   - Use a solution of ammonium hydroxide.

   Thoroughly rinse the battery case with clean water.

   Use a fine grade of sandpaper to clean the terminals and the cable clamps. Clean the items until the surfaces are bright or shiny. DO NOT remove material excessively. Excessive removal of material can cause the clamps to not fit properly. Coat the clamps and the terminals with 5N-5561 Silicone Lubricant, petroleum jelly or MPGM.

i09570426

# Battery or Battery Cable - Disconnect

**SMCS Code:** 1401; 1402-029

**⚠ WARNING**

**The battery cables or the batteries should not be removed with the battery cover in place. The battery cover should be removed before any servicing is attempted.**

**Removing the battery cables or the batteries with the cover in place may cause a battery explosion resulting in personal injury.**

1. Turn the start switch to the OFF position. Turn the ignition switch (if equipped) to the OFF position and remove the key and all electrical loads.
2. Open the battery isolator. Disconnect the negative battery terminal. Ensure that the cable cannot contact the terminal. When four 12 volt batteries are involved, two negative connections must be disconnected.
3. Remove the positive connection.
4. Clean all disconnected connection and battery terminals.
5. Use a fine grade of sandpaper to clean the terminals and the cable clamps. Clean the items until the surfaces are bright or shiny. DO NOT remove material excessively. Excessive removal of material can cause the clamps to not fit correctly. Coat the clamps and the terminals with a suitable silicone lubricant or petroleum jelly.
6. Tape the cable connections to help prevent accidental starting.
7. Proceed with necessary system repairs.
8. To connect the battery, connect the positive connection before the negative connection.

i05507670

# Belt Tensioner - Check

**SMCS Code:** 1358-535

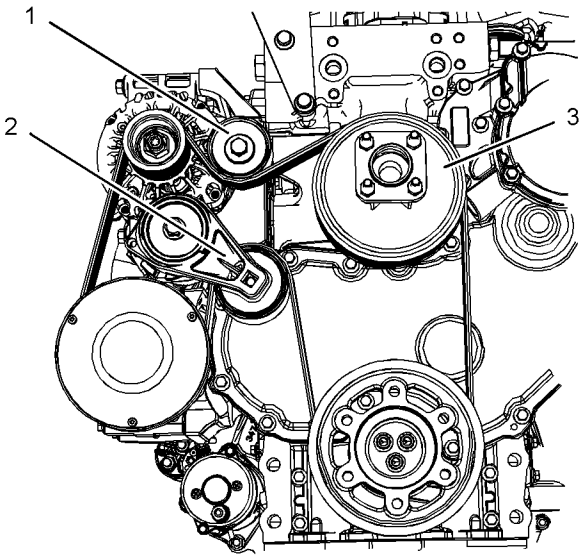


Illustration 36 g03484477
Typical example

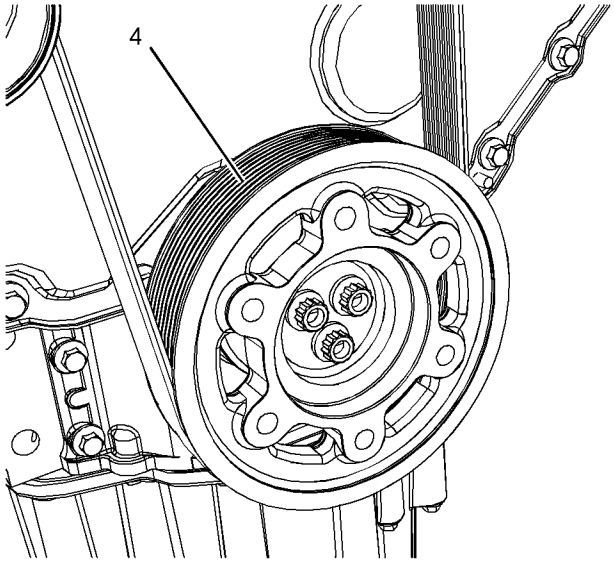


Illustration 37 g03484696
Typical example

Remove the belt. Refer to Disassembly and Assembly, “Alternator Belt - Remove and Install”.

Visually inspect the belt tensioner (2) for security and damage. Check that the pulley on the tensioner rotates freely and that the bearing is not loose.

Some engines have an idler pulley (1). Ensure that the idler pulley is securely installed. Visually inspect the idler pulley for damage. Ensure that the idler pulley can rotate freely and that the bearing is not loose.

Check the bearing shaft on the pulley (3) can rotate freely.

Check that the grooves (4) on ALL the grooved pulleys and idlers are clean and free from damage.

If necessary, replace damaged components.

Install the belt. Refer to Disassembly and Assembly, “Alternator Belt - Remove and Install”.

i05508310

# Belt - Inspect

**SMCS Code:** 1357-040; 1357; 1397-040; 1397

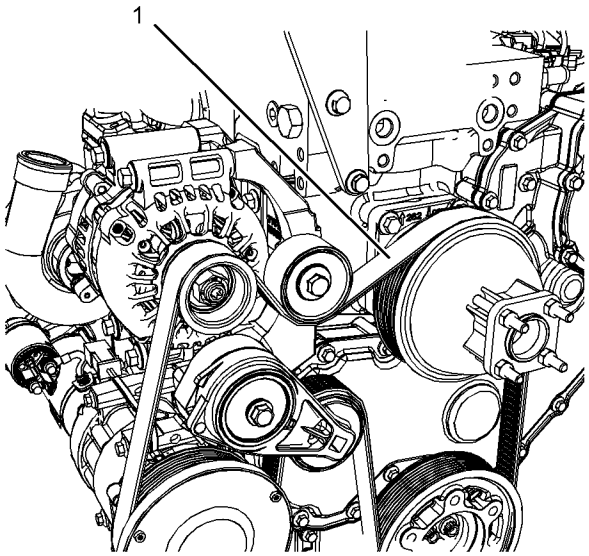


Illustration 38 g03484996
Typical example

To maximize the engine performance, inspect the belt (1) for wear and for cracking. Replace the belt if the belt is worn or damaged.

- Inspect the belt for cracks, splits, glazing, grease, displacement of the cord and evidence of fluid contamination.

The belt must be replaced if the following conditions are present.

- The belt has a crack in more than one rib.
- More than one section of the belt is displaced in one rib of a maximum length of 50.8 mm (2 inch).

To replace the belt, refer to Disassembly and Assembly, “Alternator Belt - Remove and Install”. If necessary, replace the belt tensioner. Refer to Disassembly and Assembly, “Alternator Belt - Remove and Install” for the correct procedure.

i05510553

# Coolant (Commercial Heavy-Duty) - Change

**SMCS Code:** 1350-070; 1395-044

NOTICE
Use of commercially available cooling system cleaners may cause damage to cooling system components. Use only cooling system cleaners that are approved for Caterpillar engines.

NOTICE
When any servicing or repair of the engine cooling system is performed, the procedure must be performed with the engine on level ground. Level ground will allow you to check accurately the coolant level. This procedure will also help in avoiding the risk of introducing an air lock into the coolant system.

**Note:** Inspect the water pump and the water temperature regulator after the cooling system has been drained. This inspection is a good opportunity to replace the water pump, the water temperature regulator, and the hoses, if necessary.

Clean the cooling system and flush the cooling system before the recommended maintenance interval if the following conditions exist:

- The engine overheats frequently.
- Foaming is observed.
- The oil has entered the cooling system and the coolant is contaminated.

**Note:** When the cooling system is cleaned, only clean water is needed.

## Drain

**⚠ WARNING**

**Pressurized System: Hot coolant can cause serious burns. To open the cooling system filler cap, stop the engine and wait until the cooling system components are cool. Loosen the cooling system pressure cap slowly in order to relieve the pressure.**

**1.** Stop the engine and allow the engine to cool. Loosen the cooling system filler cap slowly in order to relieve any pressure. Remove the cooling system filler cap.

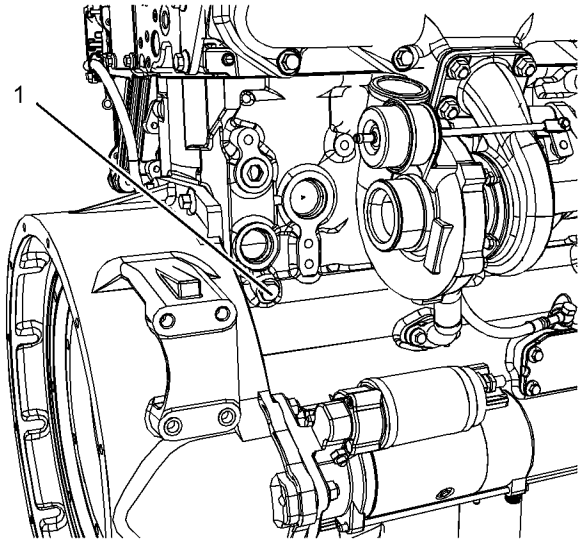


Illustration 39 g03486977

Typical example

**2.** Open the drain cock or remove the drain plug (1) on the engine. Open the drain cock or remove the drain plug on the radiator.

Allow the coolant to drain.

NOTICE
Dispose of used engine coolant properly or recycle. Various methods have been proposed to reclaim used coolant for reuse in engine cooling systems. The full distillation procedure is the only method acceptable by Caterpillar to reclaim the used coolant.

Properly dispose of the drained material. Obey local regulations for the disposal of the material.

## Flush

**1.** Flush the cooling system with clean water in order to remove any debris.

**2.** Close the drain cock or install the drain plug in the engine. Tighten drain plug in the cylinder block to 40 N·m (29 lb ft). Close the drain cock or install the drain plug on the radiator. Torque Specifications, SENR3130 for more information on the correct torques.

NOTICE
Do not fill the cooling system faster than 5 L (1.3 US gal) per minute to avoid air locks.

Cooling system air locks may result in engine damage.

**3.** Fill the cooling system with a mixture of clean water and Caterpillar Fast Acting Cooling System Cleaner. Add 0.5 L (1 pt) of cleaner per 15 L (4 US gal) of the cooling system capacity. Install the cooling system filler cap.

**4.** Start and run the engine at low idle for a minimum of 30 minutes. The coolant temperature should be at least 82 °C (180 °F).

**5.** Stop the engine and allow the engine to cool. Loosen the cooling system filler cap slowly in order to relieve any pressure. Remove the cooling system filler cap. Remove the connection hose or remove the cooling system drain plugs. Allow the water to drain. Flush the cooling system with clean water. Install the connection hose. Clean the drain plug and install the drain plug in the cylinder block. Tighten drain plug in the cylinder block to 40 N·m (29 lb ft). Close the drain cock or install the drain plug on the radiator. Torque Specifications, SENR3130 for more information on the correct torques.

## Fill

NOTICE
Do not fill the cooling system faster than 5 L (1.3 US gal) per minute to avoid air locks.

Cooling system air locks may result in engine damage.

**1.** Fill the cooling system with Commercial Heavy-Duty Coolant. Add Supplemental Coolant Additive to the coolant. For the correct amount, refer to the Operation and Maintenance Manual, “Refill Capacities” topic (Maintenance Section) for more information on cooling system specifications. Do not install the cooling system filler cap.

**2.** Start and run the engine at low idle. Increase the engine rpm to high idle. Operate the engine in order to open the engine thermostat. This operation will allow any air in the system to be purged. Decrease the engine speed to low idle. Stop the engine.

**3.** Check the coolant level. Maintain the coolant level within 13 mm (0.5 inch) below the bottom of the pipe for filling. Maintain the coolant level in the expansion tank (if equipped) at the correct level.

**4.** Clean the cooling system filler cap. Inspect the gasket that is on the cooling system filler cap. If the gasket that is on the cooling system filler cap is damaged, discard the old cooling system filler cap and install a new cooling system filler cap. If the gasket that is on the cooling system filler cap is not damaged, perform a pressure test. A 9S-8140 Pressurizing Pump is used to perform the pressure test. The correct pressure for the cooling system filler cap is stamped on the face of the cooling system filler cap. If the cooling system filler cap does not retain the correct pressure, install a new cooling system filler cap.

**5.** Start the engine. Inspect the cooling system for leaks and for correct operating temperature.

**Note:** Caterpillar have various products in order to clean heavy deposits from the coolant system. Contact your Cat dealer for more information.

### Coolant Drain Plug for Cylinder Block

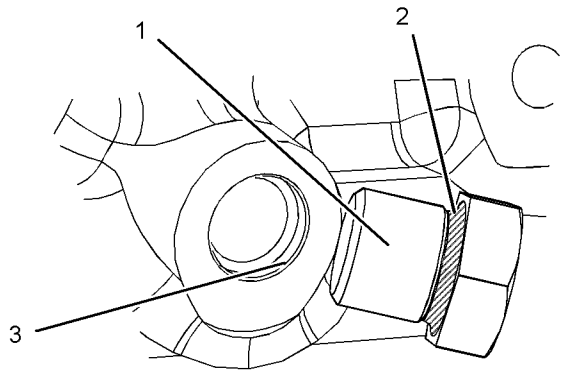


Illustration 40 g03487216
Typical example

The coolant cylinder drain plug (1) has a special concave bead of sealant in position (2) on the drain plug. The drain plug may be reused, but if the sealant is damaged or missing the drain plug must be replaced. Ensure that the sealing surface (3) in the cylinder block is clean and free from dirt, before installing the drain plug.

i05517853

## Coolant (ELC) - Change

**SMCS Code:** 1350-070; 1395-044

NOTICE
Care must be taken to ensure that fluids are contained during performance of inspection, maintenance, testing, adjusting and repair of the product. Be prepared to collect the fluid with suitable containers before opening any compartment or disassembling any component containing fluids.

Dispose of all fluids according to Local regulations and mandates.

NOTICE
Keep all parts clean from contaminants.

Contaminants may cause rapid wear and shortened component life.

Clean the cooling system and flush the cooling system before the recommended maintenance interval if the following conditions exist:

- The engine overheats frequently.
- Foaming of the coolant is observed.
- The oil has entered the cooling system and the coolant is contaminated.
- The fuel has entered the cooling system and the coolant is contaminated.

**Note:** When the cooling system is cleaned, only clean water is needed when the ELC is drained and replaced.

**Note:** Inspect the water pump and the water temperature regulator after the cooling system has been drained. This inspection is a good opportunity to replace the water pump, the water temperature regulator, and the hoses, if necessary.

## Drain

**⚠ WARNING**

**Pressurized System: Hot coolant can cause serious burns. To open the cooling system filler cap, stop the engine and wait until the cooling system components are cool. Loosen the cooling system pressure cap slowly in order to relieve the pressure.**

**1.** Stop the engine and allow the engine to cool. Loosen the cooling system filler cap slowly in order to relieve any pressure. Remove the cooling system filler cap.

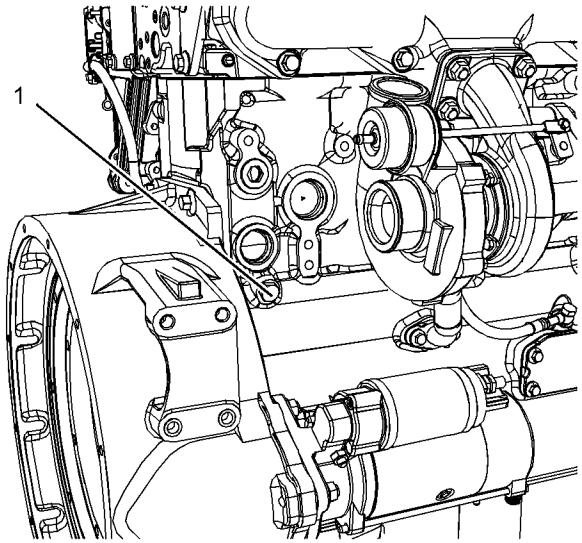


Illustration 41 g03486977
Typical example

**2.** Open the drain cock or remove the drain plug (1) on the engine. Open the drain cock or remove the drain plug on the radiator.

Allow the coolant to drain.

NOTICE
Dispose of used engine coolant or recycle. Various methods have been proposed to reclaim used coolant for reuse in engine cooling systems. The full distillation procedure is the only method acceptable by Caterpillar to reclaim the coolant.

For information regarding the disposal and the recycling of used coolant, consult your Cat dealer

## Flush

**1.** Flush the cooling system with clean water in order to remove any debris.

**2.** Close the drain cock or install the drain plug in the engine. Tighten drain plug in the cylinder block to 40 N·m (29 lb ft). Close the drain cock or install the drain plug on the radiator.

NOTICE
Do not fill the cooling system faster than 5 L (1.3 US gal) per minute to avoid air locks.

Cooling system air locks may result in engine damage.

**3.** Fill the cooling system with clean water. Install the cooling system filler cap.

**4.** Start and run the engine at low idle until the temperature reaches 49 to 66 °C (120 to 150 °F).

**5.** Stop the engine and allow the engine to cool. Loosen the cooling system filler cap slowly in order to relieve any pressure. Remove the cooling system filler cap. Open the drain cock or remove the drain plug on the engine. Open the drain cock or remove the drain plug on the radiator. Allow the water to drain. Flush the cooling system with clean water.

## Fill

**1.** Close the drain cock or install the drain plug on the engine. Tighten drain plug in the cylinder block to 40 N·m (29 lb ft). Close the drain cock or install the drain plug on the radiator.

NOTICE
Do not fill the cooling system faster than 5 L (1.3 US gal) per minute to avoid air locks.

Cooling system air locks may result in engine damage.

**2.** Fill the cooling system with Extended Life Coolant (ELC). Refer to the Operation and Maintenance Manual, “Fluid Recommendations” for more information on cooling system specifications. Do not install the cooling system filler cap.

3. Start and run the engine at low idle. Increase the engine rpm to high idle. Run the engine at high idle for 1 minute in order to purge the air from the cavities of the engine block. Decrease the engine speed to low idle. Stop the engine.

4. Check the coolant level. Maintain the coolant level within 13 mm (0.5 inch) below the bottom of the pipe for filling. Maintain the coolant level in the expansion bottle (if equipped) at the correct level.

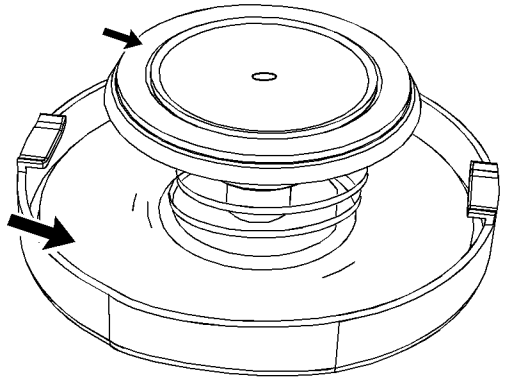

Illustration 42 g03495956
Filler cap

5. Clean the cooling system filler cap and inspect the gasket. If the gasket is damaged, discard the old filler cap and install a new filler cap. If the gasket is not damaged, use a 9S-8140 Pressurizing Pump in order to pressure test the filler cap. The correct pressure is stamped on the face of the filler cap. If the filler cap does not retain the correct pressure, install a new filler cap.

6. Start the engine. Inspect the cooling system for leaks and for correct operating temperature.

## Coolant Drain Plug for Cylinder Block

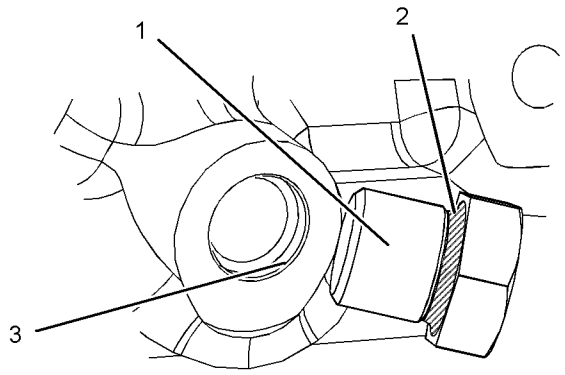


Illustration 43 g03487216
Typical example

The coolant cylinder drain plug (1) has a special concave bead of sealant in position (2) on the drain plug. The drain plug may be reused, but if the sealant is damaged or missing the drain plug must be replaced. Ensure that the sealing surface in the cylinder block (3) is clean and free from dirt, before installing drain plug.

i04913503

# Coolant Extender (ELC) - Add

**SMCS Code:** 1352-544-NL

Cat ELC (Extended Life Coolant) does not require the frequent additions of any supplemental cooling additives which are associated with the present conventional coolants. The Cat ELC Extender only needs adding once.

NOTICE
Use only Cat Extended Life Coolant (ELC) Extender with Cat ELC.

Do NOT use conventional supplemental coolant additive (SCA) with Cat ELC. Mixing Cat ELC with conventional coolants and/or conventional SCA reduces the Cat ELC service life.

Check the cooling system only when the engine is stopped and cool.

**⚠ WARNING**

**Personal injury can result from hot coolant, steam and alkali.**

**At operating temperature, engine coolant is hot and under pressure. The radiator and all lines to heaters or the engine contain hot coolant or steam. Any contact can cause severe burns.**

**Remove cooling system pressure cap slowly to relieve pressure only when engine is stopped and cooling system pressure cap is cool enough to touch with your bare hand.**

**Do not attempt to tighten hose connections when the coolant is hot, the hose can come off causing burns.**

**Cooling System Coolant Additive contains alkali. Avoid contact with skin and eyes.**

NOTICE
Care must be taken to ensure that fluids are contained during performance of inspection, maintenance, testing, adjusting, and repair of the product. Be prepared to collect the fluid with suitable containers before opening any compartment or disassembling any component containing fluids.

Refer to Special Publication, NENG2500, “Cat Dealer Service Tool Catalog” or refer to Special Publication, PECJ0003, “Cat Shop Supplies and Tools Catalog” for tools and supplies suitable to collect and contain fluids on Cat products.

Dispose of all fluids according to local regulations and mandates.

NOTICE
When any servicing or repair of the engine cooling system is performed, the procedure must be performed with the engine on level ground. This procedure will allow you to check accurately the coolant level. This procedure will also help in avoiding the risk of introducing an air lock into the coolant system.

**1.** Loosen the cooling system filler cap slowly in order to relieve pressure. Remove the cooling system filler cap.

**2.** If necessary, drain enough coolant from the cooling system in order to add the Cat ELC Extender.

**3.** Add Cat ELC Extender according to the requirements for your engines cooling system capacity. Refer to the Operation and Maintenance Manual, “Refill Capacities and Recommendations” article for more information.

**4.** Clean the cooling system filler cap. Inspect the gaskets on the cooling system filler cap. Replace the cooling system filler cap if the gaskets are damaged. Install the cooling system filler cap.

i05525293

# Coolant Level - Check

**SMCS Code:** 1395-082

**⚠ WARNING**

**Pressurized System: Hot coolant can cause serious burns. To open the cooling system filler cap, stop the engine and wait until the cooling system components are cool. Loosen the cooling system pressure cap slowly in order to relieve the pressure.**

Check the coolant level when the engine is stopped and the engine has cooled.

NOTICE
When any servicing or repair of the engine cooling system is performed, the procedure must be performed with the engine on level ground. This procedure will allow you to check accurately the coolant level. This procedure will also help in avoiding the risk of introducing an air lock into the coolant system.

**1.** Remove the cooling system filler cap slowly in order to relieve pressure.

**2.** Maintain the coolant level at the maximum mark that is correct for your application. If the engine is equipped with a sight glass, maintain the coolant level to the correct level in the sight glass.

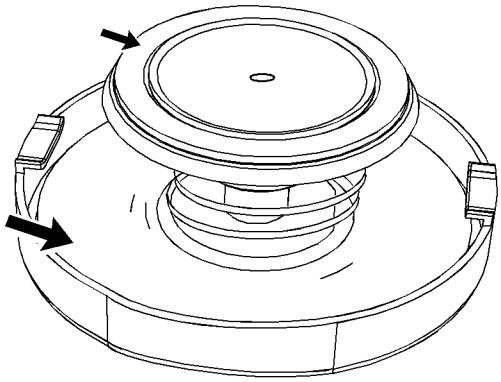

Illustration 44 g03495956
Typical filler cap gaskets

**3.** Clean the cooling system filler cap and check the condition of the filler cap gaskets. Replace the cooling system filler cap if the filler cap gaskets are damaged. Reinstall the cooling system filler cap.

**4.** Inspect the cooling system for leaks.

i03644817

# Cooling System Supplemental Coolant Additive (SCA) - Test/ Add

**SMCS Code:** 1352-045; 1395-081

**⚠ WARNING**

**Cooling system coolant additive contains alkali. To help prevent personal injury, avoid contact with the skin and the eyes. Do not drink cooling system coolant additive.**

**Note:** Test the concentration of the Supplemental Coolant Additive (SCA) or test the SCA concentration as part of an S·O·S Coolant Analysis.

## Test for SCA Concentration

### Coolant and SCA

NOTICE
Do not exceed the recommended six percent supplemental coolant additive concentration.

Use the 8T-5296 Coolant Conditioner Test Kit or use the 4C-9301 Coolant Conditioner Test Kit in order to check the concentration of the SCA. Refer to this Operation and Maintenance Manual, “Refill Capacities and Recommendations” for more information.

### Water and SCA

NOTICE
Do not exceed the recommended eight percent supplemental coolant additive concentration.

Test the concentration of the SCA with the 8T-5296 Coolant Conditioner Test Kit. Refer to the Special Publication, SEBU6251, “Caterpillar Commercial Diesel Engine Fluids Recommendations” for more information.

## S·O·S Coolant Analysis

S·O·S coolant samples can be analyzed at your Caterpillar dealer. S·O·S Coolant Analysis is a program that is based on periodic samples.

### Level 1

Level 1 is a basic analysis of the coolant. The following items are tested:

- Glycol Concentration
- Concentration of SCA
- pH
- Conductivity

The results are reported, and recommendations are made according to the results. Consult your Caterpillar dealer for information on the benefits of managing your equipment with an S·O·S Coolant Analysis.

### Level 2

This level coolant analysis is recommended when the engine is overhauled. Refer to this Operations and Maintenance Manual, “Overhaul Considerations” for further information.

## Add the SCA, If Necessary

NOTICE
Do not exceed the recommended amount of supplemental coolant additive concentration. Excessive supplemental coolant additive concentration can form deposits on the higher temperature surfaces of the cooling system, reducing the engine's heat transfer characteristics. Reduced heat transfer could cause cracking of the cylinder head and other high temperature components. Excessive supplemental coolant additive concentration could also result in radiator tube blockage, overheating, and/or accelerated water pump seal wear. Never use both liquid supplemental coolant additive and the spin-on element (if equipped) at the same time. The use of those additives together could result in supplemental coolant additive concentration exceeding the recommended maximum.

**⚠ WARNING**

**Pressurized System: Hot coolant can cause serious burns. To open the cooling system filler cap, stop the engine and wait until the cooling system components are cool. Loosen the cooling system pressure cap slowly in order to relieve the pressure.**

NOTICE
When any servicing or repair of the engine cooling system is performed the procedure must be performed with the engine on level ground. This will allow you to accurately check the coolant level. This will also help in avoiding the risk of introducing an air lock into the coolant system.

1. Slowly loosen the cooling system filler cap in order to relieve the pressure. Remove the cooling system filler cap.

**Note:** Always discard drained fluids according to local regulations.

2. If necessary, drain some coolant from the cooling system into a suitable container in order to allow space for the extra SCA.
3. Add the proper amount of SCA. Refer to the Special Publication, SEBU6251, “Caterpillar Commercial Diesel Engines Fluids Recommendations” for more information on SCA requirements.

**4.** Clean the cooling system filler cap. Inspect the gaskets of the cooling system filler cap. If the gaskets are damaged, replace the old cooling system filler cap with a new cooling system filler cap. Install the cooling system filler cap.

i08397642

# Driven Equipment - Check

**SMCS Code:** 3279-535

Refer to the OEM specifications for more information on the following maintenance recommendations for the driven equipment:

- Inspection
- Adjustment
- Lubrication
- Other maintenance recommendations

Perform any maintenance for the driven equipment which is recommended by the OEM.

i05525491

# Engine - Clean

**SMCS Code:** 1000-070

**⚠ WARNING**

**Personal injury or death can result from high voltage.**

**Moisture can create paths of electrical conductivity.**

**Make sure that the electrical system is OFF. Lock out the starting controls and tag the controls "DO NOT OPERATE" .**

NOTICE
Accumulated grease and oil on an engine is a fire hazard. Keep the engine clean. Remove debris and fluid spills whenever a significant quantity accumulates on the engine.

Periodic cleaning of the engine is recommended. Steam cleaning the engine will remove accumulated oil and grease. A clean engine provides the following benefits:

- Easy detection of fluid leaks
- Maximum heat transfer characteristics
- Ease of maintenance

**Note:** Caution must be used in order to prevent electrical components from being damaged by excessive water when the engine is cleaned. Pressure washers and steam cleaners should not be directed at any electrical connectors or the junction of cables into the rear of the connectors. Avoid electrical components such as the alternator, the starter, and the ECM. Protect the high-pressure pump from fluids in order to wash the engine.

i05525549

# Engine Air Cleaner Element (Dual Element/Canister Type) - Clean/Replace
(If Equipped)

**SMCS Code:** 1054-070; 1054-510

NOTICE
Never run the engine without an air cleaner element installed. Never run the engine with a damaged air cleaner element. Do not use air cleaner elements with damaged pleats, gaskets or seals. Dirt entering the engine causes premature wear and damage to engine components. Air cleaner elements help to prevent airborne debris from entering the air inlet.

NOTICE
Never service the air cleaner element with the engine running since this will allow dirt to enter the engine.

## Servicing the Air Cleaner Elements

If the air cleaner element becomes plugged, the air can split the material of the air cleaner element. Unfiltered air will drastically accelerate internal engine wear. Your Cat dealer has the proper air cleaner elements for your application. Consult your Cat dealer for the correct air cleaner element.

- Check the precleaner (if equipped) daily for accumulation of dirt and debris. Remove any dirt and debris, as needed.
- Operating conditions (dust, dirt, and debris) may require more frequent service of the air cleaner element.
- The air cleaner element may be cleaned up to six times if the element has been properly cleaned and inspected.
- The air cleaner element should be replaced at least one time per year. This replacement should be performed regardless of the number of cleanings.

Replace the dirty paper air cleaner elements with clean air cleaner elements. Before installation, check the air cleaner elements thoroughly for tears and/or holes in the filter material. Inspect the gasket or the seal of the air cleaner element for damage. Maintain a supply of suitable air cleaner elements for replacement purposes.

### Dual Element Air Cleaners

The dual element air cleaner contains a primary air cleaner element and a secondary air cleaner element. The primary air cleaner element can be used up to six times if the element has been properly cleaned and inspected. The primary air cleaner element should be replaced at least one time per year. This replacement should be performed regardless of the number of cleanings.

The secondary air cleaner element is not serviceable or washable. The secondary air cleaner element should be removed and discarded for every three cleanings of the primary air cleaner element. When the engine is operating in environments that are dusty or dirty, air cleaner elements may require more frequent replacement.

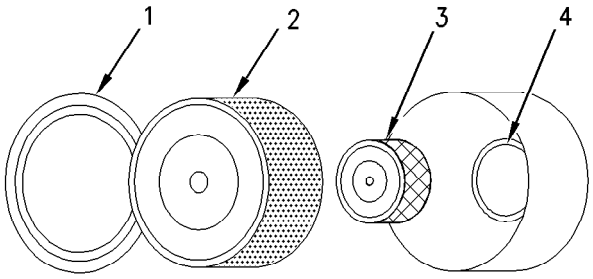


Illustration 45 g00736431

(1) Cover
(2) Primary air cleaner element
(3) Secondary air cleaner element
(4) Air inlet for the turbocharger

**1.** Remove the cover. Remove the primary air cleaner element.

**2.** The secondary air cleaner element should be removed and discarded for every three cleanings of the primary air cleaner element.

**Note:** Refer to “Cleaning the Primary Air Cleaner Elements”.

**3.** Cover the air inlet to the turbocharger with tape in order to keep out dirt.

**4.** Clean the inside of the air cleaner cover and body with a clean, dry cloth.

**5.** Remove the tape from the air inlet of the turbocharger. Install the secondary air cleaner element. Install a primary air cleaner element that is new or cleaned.

**6.** Install the air cleaner cover.

**7.** Reset the air cleaner service indicator.

## Cleaning the Primary Air Cleaner Elements

NOTICE
Caterpillar recommends certified air filter cleaning services that are available at Cat dealers. The Cat cleaning process uses proven procedures to assure consistent quality and sufficient filter life.

Observe the following guidelines if you attempt to clean the filter element:

Do not tap or strike the filter element in order to remove dust.

Do not wash the filter element.

Use low pressure compressed air in order to remove the dust from the filter element. Air pressure must not exceed 207 kPa (30 psi). Direct the air flow up the pleats and down the pleats from the inside of the filter element. Take extreme care in order to avoid damage to the pleats.

Do not use air filters with damaged pleats, gaskets, or seals. Dirt entering the engine will cause damage to engine components.

The primary air cleaner element can be used up to six times if the element has been properly cleaned and inspected. When the primary air cleaner element is cleaned, check for rips or tears in the filter material. The primary air cleaner element should be replaced at least one time per year. This replacement should be performed regardless of the number of cleanings.

Use clean primary air cleaner elements while dirty elements are being cleaned.

NOTICE
Do not clean the air cleaner elements by bumping or tapping. This could damage the seals. Do not use elements with damaged pleats, gaskets or seals. Damaged elements will allow dirt to pass through. Engine damage could result.

Visually inspect the primary air cleaner elements before cleaning. Inspect the air cleaner elements for damage to the seal, the gaskets, and the outer cover. Discard any damaged air cleaner elements.

There are two common methods that are used to clean primary air cleaner elements:

- Pressurized air

- Vacuum cleaning

### Pressurized Air

Pressurized air can be used to clean primary air cleaner elements that have not been cleaned more than two times. Pressurized air will not remove deposits of carbon and oil. Use filtered, dry air with a maximum pressure of 207 kPa (30 psi).

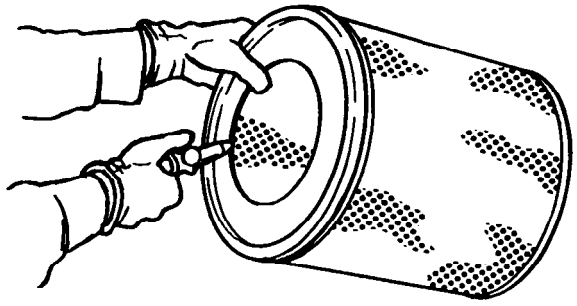

Illustration 46 g00281692

**Note:** When the primary air cleaner elements are cleaned, always begin with the clean side (inside) in order to force dirt particles toward the dirty side (outside).

Aim the hose so that the air flows inside the element along the length of the filter to prevent damage to the paper pleats. Do not aim the stream of air directly at the primary air cleaner element. Dirt could be forced further into the pleats.

**Note:** Refer to “Inspecting the Primary Air Cleaner Elements”.

### Vacuum Cleaning

Vacuum cleaning is a good method for cleaning primary air cleaner elements which require daily cleaning because of a dry, dusty environment. Cleaning with pressurized air is recommended prior to vacuum cleaning. Vacuum cleaning will not remove deposits of carbon and oil.

**Note:** Refer to “Inspecting the Primary Air Cleaner Elements”.

### Inspecting the Primary Air Cleaner Elements

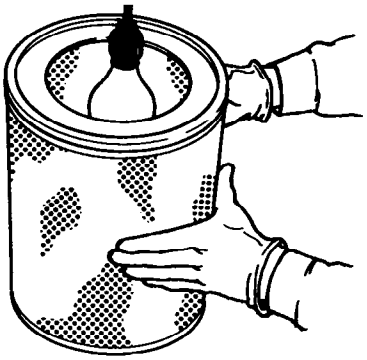

Illustration 47 g00281693

Inspect the clean, dry primary air cleaner element. Use a 60w blue light in a dark room or in a similar facility. Place the blue light in the primary air cleaner element. Rotate the primary air cleaner element. Inspect the primary air cleaner element for tears and/or holes. Inspect the primary air cleaner element for light that may show through the filter material. To confirm the result, compare the primary air cleaner element to a new air cleaner element that has the same part number.

Do not use a primary air cleaner element that has any tears and/or holes in the filter material. Do not use a primary air cleaner element with damaged pleats, gaskets, or seals. Discard damaged primary air cleaner elements.

i01432811

## Engine Air Cleaner Element (Single Element) - Inspect/Replace

**SMCS Code:** 1051; 1054-040; 1054-510

Perform the Operation and Maintenance Manual, “Engine Air Cleaner Service Indicator-Inspect” procedure and perform the Operation and Maintenance Manual, “Engine Air Precleaner Check/Clean” procedure (if equipped) before performing the following procedure.

NOTICE
Never run the engine without an air cleaner element installed. Never run the engine with a damaged air cleaner element. Do not use air cleaner elements with damaged pleats, gaskets or seals. Dirt entering the engine causes premature wear and damage to engine components. Air cleaner elements help to prevent airborne debris from entering the air inlet.

NOTICE
Never service the air cleaner element with the engine running since this will allow dirt to enter the engine.

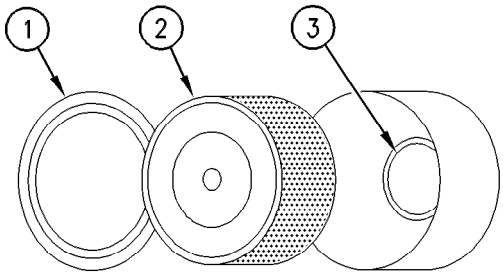


Illustration 48 g00310664

(1) Air cleaner cover
(2) Air filter element
(3) Air inlet

**1.** Remove air cleaner cover (1) and remove air filter element (2).

**2.** Cover air inlet (3) with tape or a clean cloth so that debris cannot enter the air inlet.

**3.** Clean the inside of air cleaner cover (1). Clean the body that holds the air cleaner element.

**4.** Inspect the replacement element for the following items:damage, dirt and debris.

**5.** Remove the seal from the opening of the air inlet.

**6.** Install a clean, undamaged air filter element (2).

**7.** Install air cleaner cover (1).

**8.** Reset the air cleaner service indicator.

i02335405

# Engine Air Cleaner Service Indicator - Inspect

**SMCS Code:** 7452-040

Some engines may be equipped with a different service indicator.

Some engines are equipped with a differential gauge for inlet air pressure. The differential gauge for inlet air pressure displays the difference in the pressure that is measured before the air cleaner element and the pressure that is measured after the air cleaner element. As the air cleaner element becomes dirty, the pressure differential rises. If your engine is equipped with a different type of service indicator, follow the OEM recommendations in order to service the air cleaner service indicator.

The service indicator may be mounted on the air cleaner element or in a remote location.

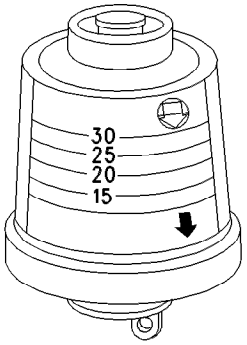


Illustration 49 g00103777

Typical service indicator

Observe the service indicator. The air cleaner element should be cleaned or the air cleaner element should be replaced when one of the following conditions occur:

- The yellow diaphragm enters the red zone.
- The red piston locks in the visible position.

## Test the Service Indicator

Service indicators are important instruments.

- Check for ease of resetting. The service indicator should reset in less than three pushes.
- Check the movement of the yellow core when the engine is accelerated to the engine rated speed. The yellow core should latch at the greatest vacuum that is attained.

If the service indicator does not reset easily, or if the yellow core does not latch at the greatest vacuum, the service indicator should be replaced. If the new service indicator will not reset, the hole for the service indicator may be restricted.

The service indicator may need to be replaced frequently in environments that are severely dusty.

i10077461

# Engine Air Precleaner - Check/ Clean

**SMCS Code:** 1055-070; 1055-535

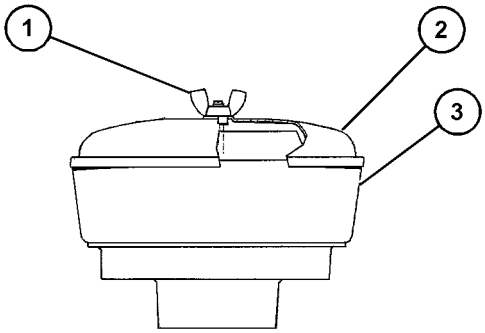


Illustration 50 g07723720

Typical engine air precleaner

(1) Wing nut
(2) Cover
(3) Body

Remove wing nut (1) and cover (2). Check for an accumulation of dirt and debris in body (3). Clean the body, if necessary.

After cleaning the precleaner, install cover (2) and wing nut (1).

**Note:** When the engine is operated in dusty conditions, more frequent cleaning is required.

Do not tap or strike the air cleaner element.

i05525613

# Engine Crankcase Breather Element - Replace

**SMCS Code:** 1317-510-FQ

NOTICE
Ensure that the engine is stopped before any servicing or repair is performed.

**1.** Place a container under canister (2).

**2.** Clean the outside of the canister. Remove the canister with a 1U-8760 Chain Wrench.

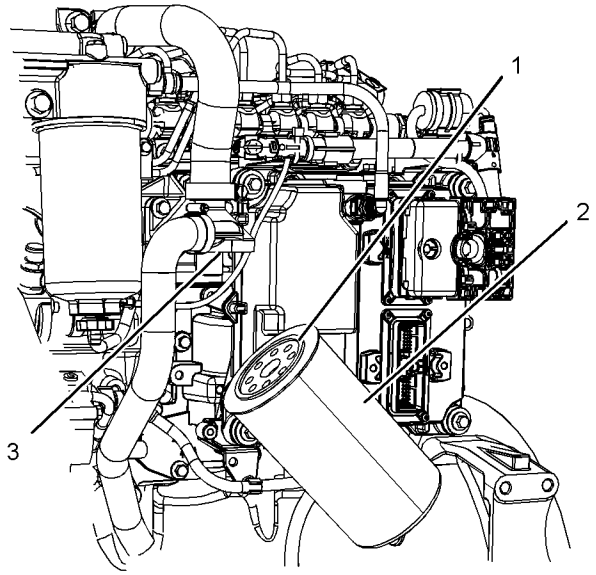


Illustration 51 g03498157

Typical example

**3.** Lubricate O ring seal (1) on the new canister with clean engine lubricating oil.

**4.** Install the new canister. Spin on the canister until the O ring seal contacts the base (3). Rotate the canister ¾ of a full turn.

**5.** Remove the container. Dispose of the old canister and any split oil in accordance with local regulations.

i02456872

# Engine Mounts - Inspect

**SMCS Code:** 1152; 1152-040

Inspect the engine mounts for deterioration and for proper bolt torque. Engine vibration can be caused by the following conditions:

- Improper mounting of the engine
- Deterioration of the engine mounts

Any engine mount that shows deterioration should be replaced. Refer to Special Publication, SENR3130, “Torque Specifications” for the recommended torques. Refer to the OEM recommendations for more information.

i05300117

# Engine Oil Level - Check

**SMCS Code:** 1348-535-FLV

**WARNING**

**Hot oil and hot components can cause personal injury. Do not allow hot oil or hot components to contact the skin.**

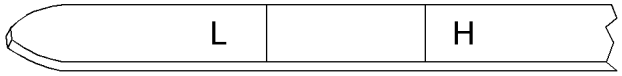


Illustration 52 g02173847

"L" Low
"H" High

NOTICE
Perform this maintenance with the engine stopped.

**Note:** Ensure that the engine is either level or that the engine is in the normal operating position in order to obtain a true level indication.

**Note:** After the engine has been switched OFF, wait for 10 minutes in order to allow the engine oil to drain to the oil pan before checking the oil level.

**1.** Maintain the oil level between the mark (L) and the mark (H) on the engine oil dipstick. Do not fill the crankcase above the "H" .

NOTICE
Operating your engine when the oil level is above the "H" mark could cause your crankshaft to dip into the oil. The air bubbles created from the crankshaft dipping into the oil reduces the oils lubricating characteristics and could result in the loss of power.

**2.** Remove the oil filler cap and add oil, if necessary. Clean the oil filler cap. Install the oil filler cap.

If an increase in the oil level is noticed, refer to Troubleshooting, "Oil Contains Fuel".

i08397634

# Engine Oil Sample - Obtain

**SMCS Code:** 1348-554-SM

In addition to a good preventive maintenance program, Caterpillar recommends using S·O·S oil analysis at regularly scheduled intervals. S·O·S oil analysis provides infrared analysis, which is required for determining nitration and oxidation levels.

## Obtain the Sample and the Analysis

**WARNING**

**Hot oil and hot components can cause personal injury. Do not allow hot oil or hot components to contact the skin.**

Before you take the oil sample, complete the Label, PEEP5031 for identification of the sample. To help obtain the most accurate analysis, provide the following information:

- Engine model
- Service hours on the engine
- The number of hours that have accumulated since the last oil change
- The amount of oil that has been added since the last oil change

To ensure that the sample is representative of the oil in the crankcase, obtain a warm, mixed oil sample.

To avoid contamination of the oil samples, the tools and the supplies that are used for obtaining oil samples must be clean.

Caterpillar recommends using the sampling valve to obtain oil samples. The quality and the consistency of the samples are better when the sampling valve is used. The location of the sampling valve allows oil that is flowing under pressure to be obtained during normal engine operation.

The 169-8373 Fluid Sampling Bottle is recommended for use with the sampling valve. The fluid sampling bottle includes the parts that are needed for obtaining oil samples. Instructions are also provided.

NOTICE
Always use a designated pump for oil sampling, and use a separate designated pump for coolant sampling. Using the same pump for both types of samples may contaminate the samples that are being drawn. This contaminate may cause a false analysis and an incorrect interpretation that could lead to concerns by both dealers and customers.

If the engine is not equipped with a sampling valve, use the 1U-5718 Vacuum Pump. The pump is designed to accept sampling bottles. Disposable tubing must be attached to the pump for insertion into the sump.

For instructions, see Special Publication, PEGJ0047, “How To Take A Good S·O·S Oil Sample”. Consult your Cat dealer for complete information and assistance in establishing an S·O·S program for your engine.

i10594664

# Engine Oil and Filter - Change

**SMCS Code:** 1318-510

**⚠ WARNING**

**Hot oil and hot components can cause personal injury. Do not allow hot oil or hot components to contact the skin.**

NOTICE
Care must be taken to ensure that fluids are contained during performance of inspection, maintenance, testing, adjusting and repair of the product. Be prepared to collect the fluid with suitable containers before opening any compartment or disassembling any component containing fluids.

Dispose of all fluids according to local regulations and mandates.

NOTICE
Keep all parts clean from contaminants.

Contaminants may cause rapid wear and shortened component life.

Do not drain the engine lubricating oil when the engine is cold. As the engine lubricating oil cools, suspended waste particles settle on the bottom of the oil pan. The waste particles are not removed with draining cold oil. Drain the oil pan with the engine stopped. Drain the oil pan with the oil warm. This draining method allows the waste particles that are suspended in the oil to be drained properly.

Failure to follow this recommended procedure will cause the waste particles to be recirculated through the engine lubrication system with the new oil.

## Drain the Engine Lubricating Oil

**Note:** Ensure that the vessel that will be used is large enough to collect the waste oil.

After the engine has been run at the normal operating temperature, stop the engine. Use one of the following methods to drain the engine oil pan:

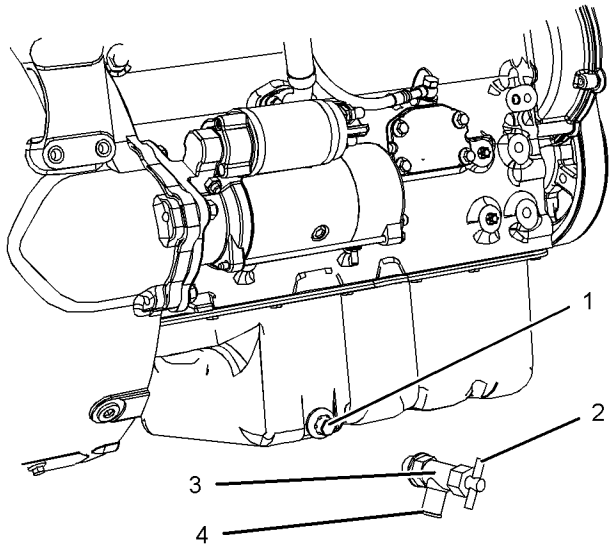


Illustration 53 g03499937
Typical example

**1.** Remove the drain plug (1) in order to allow the oil to drain.

a. If the engine as an oil drain valve (3) installed, install a suitable flexible hose onto the valve (4). Turn the handle (2) counter clockwise and allow the oil to drain.

b. When the oil has drained, turn the handle clockwise and tighten securely. Remove the flexible hose.

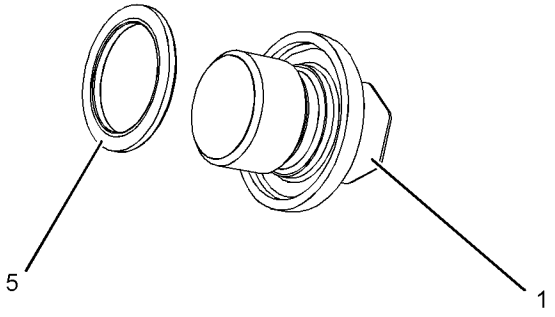


Illustration 54 g03350650
Typical example

**2.** Remove O ring seal (5) and install new O ring seal.

**3.** Install drain plug and tighten drain plug to a torque of 34 N·m (25 lb ft).

## Replace the Oil filter

NOTICE
Caterpillar oil filters are manufactured to Caterpillar specifications. Use of an oil filter that is not recommended by Caterpillar could result in severe damage to the engine bearings, crankshaft, as a result of the larger waste particles from unfiltered oil entering the engine lubricating system. Only use oil filters recommended by Caterpillar.

### Replace the Type 1 Oil Filter

**1.** Remove the oil filter (3) with a 1U-8760 Chain Wrench.

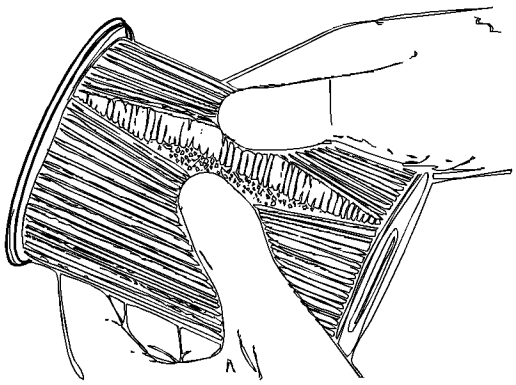

Illustration 55 g01999595
Element with debris

**2.** Cut the oil filter open with a 175-7546 Oil Filter Cutter. Break apart the pleats and inspect the oil filter for metal debris. An excessive amount of metal debris in the oil filter may indicate early wear or a pending failure.

Use a magnet to differentiate between the ferrous metals and the nonferrous metals that are found in the oil filter element. Ferrous metals may indicate wear on the steel and cast iron parts of the engine.

Nonferrous metals may indicate wear on the aluminum parts, brass parts, or bronze parts of the engine. Parts that may be affected include the following items: main bearings, rod bearings, turbocharger bearings and cylinder heads.

Due to normal wear and friction, it is not uncommon to find small amounts of debris in the oil filter. Consult your Cat dealer in order to arrange for a further analysis if an excessive amount of debris is found in the oil filter.

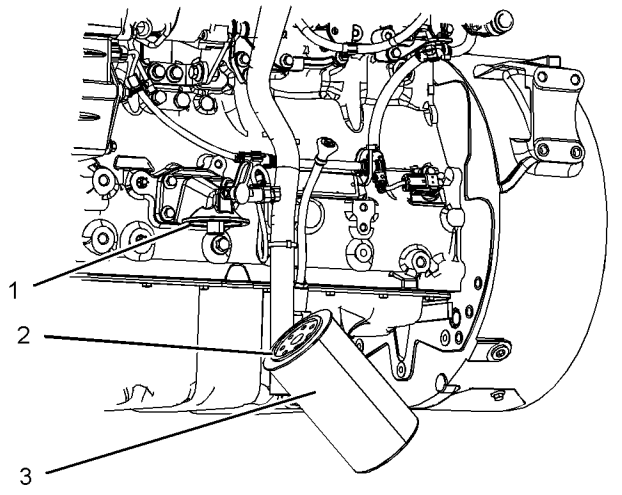


Illustration 56 g03499938
Typical example

**3.** Clean the sealing surface of the oil filter base (1).

**4.** Apply clean engine oil to the O ring seal (2) on the new oil filter.

**5.** Install the engine oil filter. Spin on the new oil filter until the O ring seal contacts the oil filter base. Rotate the oil filter ¾ of a full turn.

### Replace the Type 2 Oil Filter

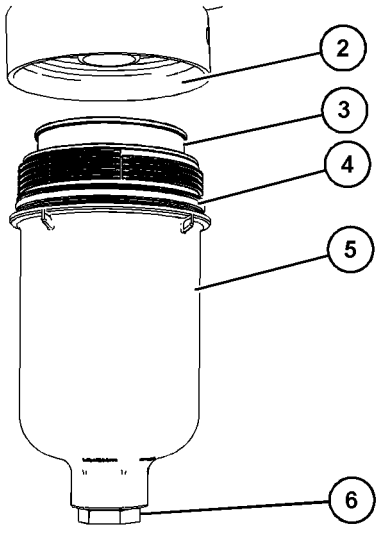


Illustration 57 g07927122
Typical example

**1.** Loosen the oil filter drain plug (6) to allow the oil to drain. Retighten the drain plug to 5 N·m (44 lb in).

**2.** Remove the housing (5) from the engine oil filter base by rotating the housing in a counterclockwise direction.

**3.** Rotate the element (3) in a clockwise direction and pull the element to remove the element from the housing (5).

**4.** Remove the O-ring seal (4) from the housing (5). Discard the O-ring seal.

**5.** Clean sealing surface (2).

**6.** Install a new O-ring seal (4) to the housing (5). Lubricate the O-ring seal with clean engine oil.

NOTICE
Do not fill the oil filters with oil before installing them. This oil would not be filtered and could be contaminated. Contaminated oil can cause accelerated wear to engine components or engine damage.

**7.** Install a new element (3) into the housing (5). Turn the element (3) in a counterclockwise direction to lock the new element into the housing (5).

**8.** Install the housing (5) to the engine oil filter base. Hand tighten the housing (5). Tighten the housing to a torque of 40 N·m (30 lb ft).

## Horizontally Installed Oil Filter

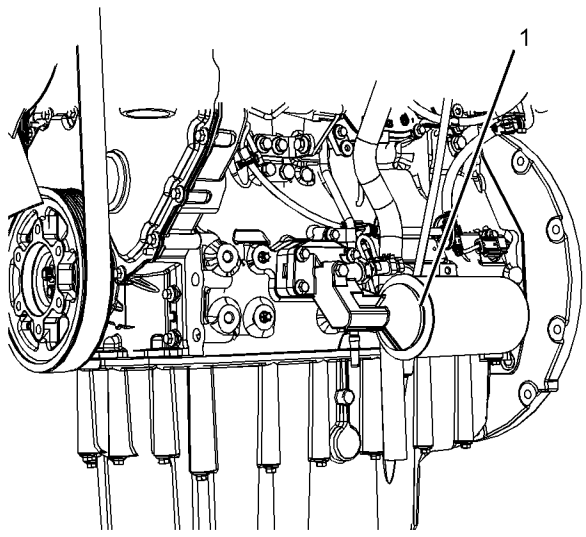


Illustration 58 g03499939
(1) Horizontal oil filter

Before removing the horizontal oil filter, place a suitable container below oil filter. Loosen oil filter and allow oil to drain from oil filter before removing oil filter. For installation of the oil filter follow step 3 to step 5. Remove container.

## Fill the Oil Pan

1. Remove the oil filler cap. Refer to this Operation and Maintenance Manual, “Fluid Recommendations” for more information on suitable oils. Fill the oil pan with the correct amount of new engine lubricating oil. Refer to this Operation and Maintenance Manual, “Refill Capacities” for more information on refill capacities.

NOTICE
If equipped with an auxiliary oil filter system or a remote filter system, follow the OEM or the filter manufactures recommendations. Under filling or over filling the crankcase with oil can cause engine damage.

2. Start the engine and run the engine at “LOW IDLE” for 2 minutes. Perform this procedure in order to ensure that the lubrication system has oil and that the oil filters are filled. Inspect the oil filter for oil leaks.
3. Stop the engine and allow the oil to drain back to the oil pan for a minimum of 10 minutes.




Illustration 59 g02173847
“L” Low
“H” High

4. Remove the engine oil level gauge in order to check the oil level. Maintain the oil level between the “L” and “H” marks on the engine oil level gauge. Do not fill the crankcase above the “H” mark.

i05264840

# Engine Valve Lash - Check

**SMCS Code:** 1105-535

This maintenance is recommended by Caterpillar as part of a lubrication and preventive maintenance schedule in order to help provide maximum engine life.

**⚠ WARNING**

**Ensure that the engine can not be started while this maintenance is being performed. To help prevent possible injury, do not use the starting motor to turn the flywheel.**

**Hot engine components can cause burns. Allow additional time for the engine to cool before measuring/adjusting valve lash clearance.**

NOTICE
Only qualified service personnel should perform this maintenance. Refer to the Service Manual or your Cat dealer for the complete valve lash adjustment procedure.

Operation of Caterpillar engines with improper valve adjustments can reduce engine efficiency. This reduced efficiency could result in excessive fuel usage and/or shortened engine component life.

Ensure that the engine is stopped before measuring the valve lash. To obtain an accurate measurement, allow the valves to cool before this maintenance is performed.

Refer to the System Operation Testing and Adjusting, “Engine Valve lash - Inspect/Adjust” for more information.

i05531410

# Fan Clearance - Check

**SMCS Code:** 1356; 1359; 1360

There are different types of cooling systems. Refer to the OEM for information on clearance for the fan.

Ensure that the engine is stopped. Ensure that the cooling system is full. The clearance between the cover (1) and the fan (2) will require checking. The gap (A) between the edge of the cover and the tip of the fan blade must be checked in four equally spaced positions.

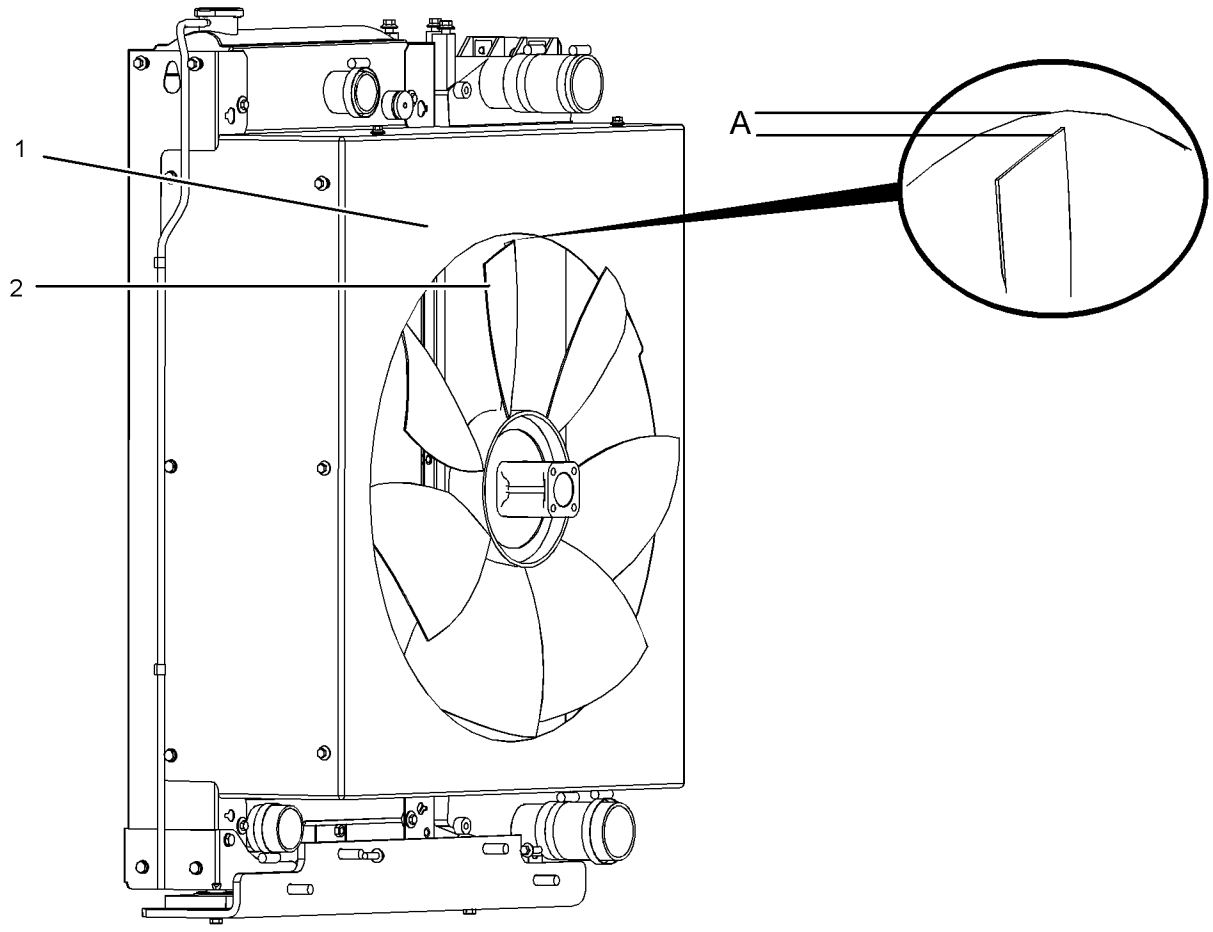


Illustration 60 g01348394
Typical example

Adjustment of the cover will change the clearance (gap) between the edge of the cover and the tip of the fan blade. Ensure that the cover is centralized to the fan.

The maximum clearance is 12.5 mm (0.4921 inch). The minimum clearance is 6 mm (0.2362 inch).

i05570761

# Fuel System - Prime

**SMCS Code:** 1250-548; 1258-548

**⚠ WARNING**

**Contact with high pressure fuel may cause fluid penetration and burn hazards. High pressure fuel spray may cause a fire hazard. Failure to follow these inspection, maintenance and service instructions may cause personal injury or death.**

Refer to Operation and Maintenance Manual, “General Hazard Information and High Pressure Fuel Lines” before adjustments and repairs are performed.

**Note: Refer to Systems Operation, Testing and Adjusting, “Cleanliness of Fuel System Components” for detailed information on the standards of cleanliness that must be observed during ALL work on the fuel system.**

Ensure that all adjustments and repairs are performed by authorized personnel that have had the correct training.

NOTICE
Do not crank the engine continuously for more than 30 seconds. Allow the starting motor to cool for two minutes before cranking the engine again.

If air enters the fuel system, the air must be purged from the fuel system before the engine can be started. Air can enter the fuel system when the following events occur:

- The fuel tank is empty or the fuel tank has been partially drained.
- The low-pressure fuel lines are disconnected.
- A leak exists in the low-pressure fuel system.
- The fuel filter has been replaced.
- The engine has not been in use for an extended period.

## Hand Fuel Priming Pump

DO NOT loosen the high-pressure fuel lines in order to purge air from the fuel system. This procedure is not required.

Use the following procedures in order to remove air from the fuel system:

**1.** Ensure that the fuel system is in working order to remove air from the fuel system. Ensure that the primary filter is clean and free from dirt.

**2.** Check that the fuel supply valve (if equipped) is in the ON position.

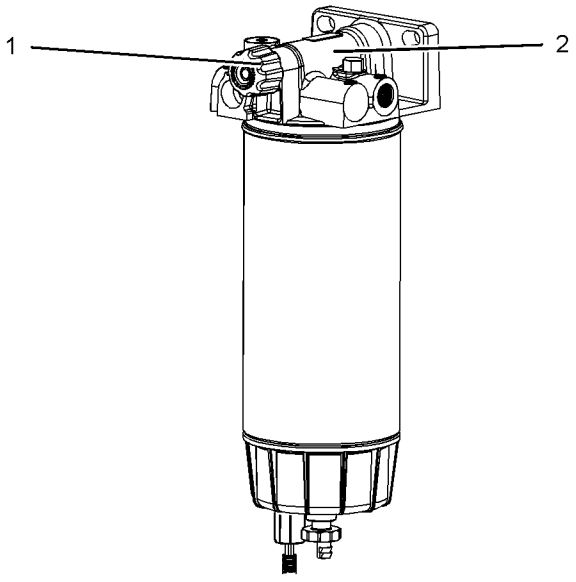


Illustration 61 g03352705

**3.** Unlock priming pump handle (1) by turning handle counterclockwise.

**Note:** During priming the hand pressure required to prime the fuel system will increase.

**4.** Operate the hand priming pump, the fuel system will require approximately 200 depression of the pump before the system will be primed. Lock and priming handle by securing the handle into pump body (2). Push handle in and turn handle clockwise to lock.

**Note:** Ensure priming handle (1) is locked correctly into place . If the priming handle is not locked into place, fuel flow to the fuel system will be obstructed.

**5.** If the engine will not start, repeat steps 2 to step 4

**6.** Refer to the Operation and Maintenance Manual, “Starting the Engine or Cold Weather Starting” for information on starting the engine.

After the engine has stopped, you must wait for 10 minutes in order to allow the fuel pressure to be purged from the high-pressure fuel lines before any service or repair is performed on the engine fuel lines. If necessary, perform minor adjustments. Repair any leaks from the low-pressure fuel system and from the cooling, lubrication, or air systems. Replace any high-pressure fuel line that has leaked. Refer to Disassembly and Assembly, “Fuel Injection Lines - Install”.

If you inspect the engine in operation, always use the proper inspection procedure in order to avoid a fluid penetration hazard. Refer to Operation and Maintenance Manual, “General hazard Information”.

NOTICE
The low-pressure fuel system can be pressurized for a time period after the engine has stopped operating. The operating pressure of the low-pressure fuel system can be 500 kPa (73 psi). The secondary fuel filters should be drained before any maintenance of the low-pressure fuel system is carried out.

If the engine will not start, refer to Troubleshooting, “Engine Cranks but will not Start”.

## Electric Prime

NOTICE
Do not crank the engine continuously for more than 30 seconds. Allow the starting motor to cool for two minutes before cranking the engine again.

DO NOT loosen the high-pressure fuel lines in order to purge air from the fuel system. This procedure is not required.

The electric priming pump only operates during the priming of the fuel system, during engine operation the electric priming pump is turned off.

**1.** Ensure that the fuel system is in working order. Check that the fuel supply valve (if equipped) is in the ON position.

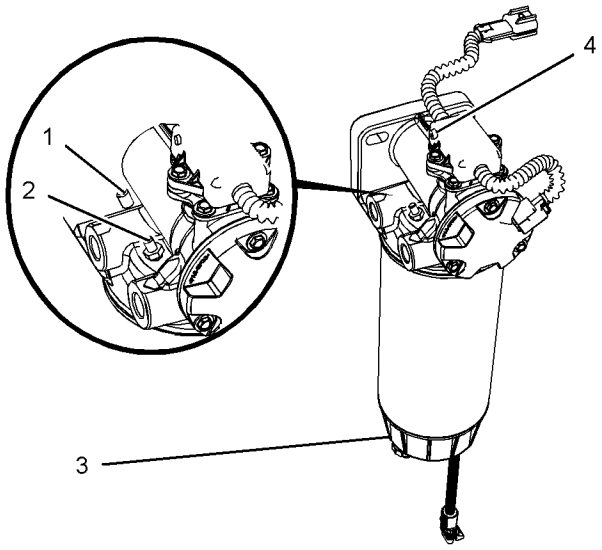


Illustration 62 g03409849
Typical example

**2.** Ensure that the battery disconnect switch is in the ON position. Ensure that the keyswitch is in the OFF position.

**3.** Remove the protection cap (1). Depress valve (2) in order to purge air. Caterpillar recommend that a tire inflator with a suitable length of clear hose attached to be used. Refer to illustration 63 .

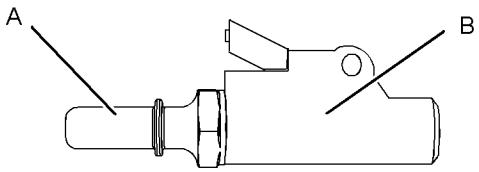


Illustration 63 g02948436
(A) Connection for clear hose
(B) Inflator

**Note:** The electric priming pump will only operate with the keyswitch in the OFF position.

**4.** With tool (B) installed to valve (2) press button (4) and keep the button depressed. The button will illuminate and the priming pump will start to operate.

**5.** When fuel has filled the bowl at the bottom of the filter (3), the tool (B) can be removed. Ensure that the protection cap (1) is install. The electric priming pump will stop once the button is released.

**6.** Press again the button (4) and keep the button depressed for approximately 2 minutes. After the 2 minutes, the fuel system will be primed and the engine is ready to start.

**7.** Start the engine, refer to this Operation and Maintenance Manual, “Starting the Engine or Cold Weather Starting” for more information.

**8.** If the engine will not start repeat step 6 to step 7. Ensure that the keyswitch is in the OFF position during fuel system prime.

- After the engine has stopped, you must wait for 10 minutes in order to allow the fuel pressure to be purged from the high-pressure fuel lines before any service or repair is performed on the engine fuel lines. If necessary, perform minor adjustments. Repair any leaks from the low-pressure fuel system and from the cooling, lubrication, or air systems. Replace any high-pressure fuel line that has leaked. Refer to Disassembly and Assembly, “Fuel Injection Lines - Install”.
- If the engine will not start, refer to Troubleshooting, “Engine Cranks but will not Start”.
- If you inspect the engine in operation, always use the proper inspection procedure in order to avoid a fluid penetration hazard. Refer to Operation and Maintenance Manual, “General hazard Information”.

NOTICE
The low-pressure fuel system can be pressurized for a time period after the engine has stopped operating. The operating pressure of the low-pressure fuel system can be 500 kPa (73 psi). The secondary fuel filters should be drained before any maintenance of the low-pressure fuel system is carried out.

i09800830

# Fuel System Primary Filter (Water Separator) Element - Replace

**SMCS Code:** 1260-510-FQ; 1263-510-FQ

**⚠ WARNING**

**Fuel leaked or spilled onto hot surfaces or electrical components can cause a fire. To help prevent possible injury, turn the start switch off when changing fuel filters or water separator elements. Clean up fuel spills immediately.**

**Note: Refer to Testing and Adjusting Manual, "Cleanliness of Fuel System Components" for detailed information on the standards of cleanliness that must be observed during ALL work on the fuel system.**

NOTICE
Ensure that the engine is stopped before any servicing or repair is performed.

NOTICE
Engines that operate under severe conditions will require more frequent maintenance intervals to ensure maximum reliability. Engine performance may be impacted if the application is operated at altitudes greater than 3000m or with fuel that is not of the correct specification as detailed in "Fluid Recommendations" (General Fuel Information) of this OMM. It is recommended that new fuel filters are installed every 250 service hours in severe operating conditions. For more information consult your Caterpillar dealer.

**1.** Turn the fuel supply valve (if equipped) to the OFF position before performing this maintenance.

**2.** Place a suitable container under the water separator. Clean the outside of the water separator.

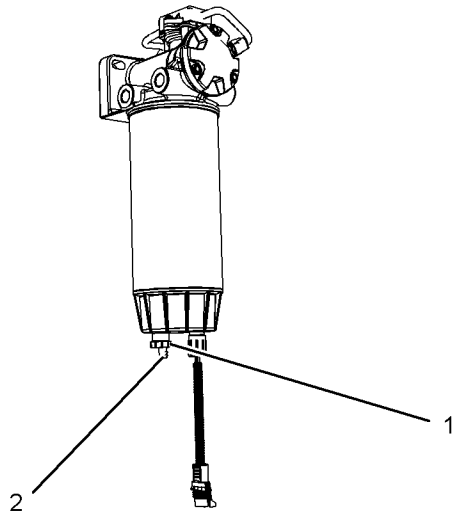


Illustration 64 g03352638
Typical example

**3.** Install a suitable tube onto connection (2) and open drain valve (1) and drain the filter. Allow the fluid to drain into the container. Remove the tube.

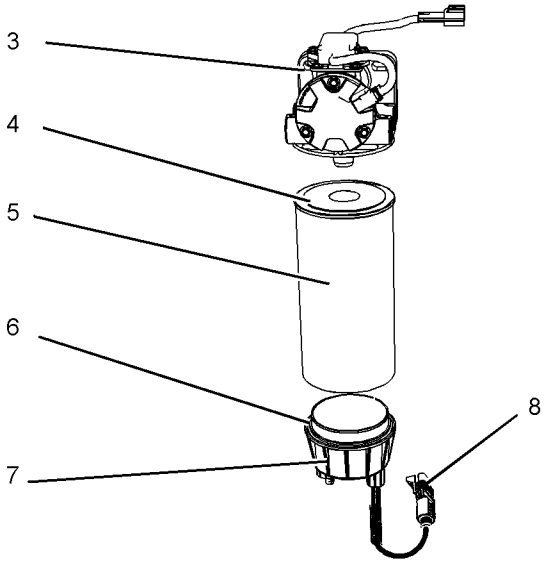


Illustration 65 g03352754
Typical example

**4.** Disconnect the electrical connector (8) and remove connecting bowl (7) by hand. Remove the old O ring seal (6). Clean connecting bowl (7).

**5.** Use a 1U-8760 Chain Wrench to remove the fuel filter (5).

**6.** Lubricate the O ring seal (4) with clean engine oil on the new filter. Install the new spin on fuel filter (5). Spin on the filter until the O ring seal contacts the filter base (3). The filter will require a ¾ of a full turn.

**7.** Install new O ring seal (6) onto connecting bowl (7). Lubricate the O ring seal (6) with clean diesel fuel and tighten the connecting bowl by hand. When the O ring seal contacts the filter, tighten the connecting bowl ¾ of a full turn.

**8.** Install the electrical connector (8). Remove the container and dispose of the fuel in accordance with local regulations. If necessary, turn the fuel supply valve to the ON position.

**9.** The secondary filter must be replaced at the same time as the primary filter. Refer to the Operation and Maintenance Manual, “Fuel System Secondary Filter - Replace”.

i05570811

# Fuel System Primary Filter/ Water Separator - Drain

**SMCS Code:** 1260-543; 1263-543

**⚠ WARNING**

**Fuel leaked or spilled onto hot surfaces or electrical components can cause a fire. To help prevent possible injury, turn the start switch off when changing fuel filters or water separator elements. Clean up fuel spills immediately.**

NOTICE
Ensure that the engine is stopped before any servicing or repair is performed.

NOTICE
The water separator can be under suction during normal engine operation. Ensure that the drain valve is tightened securely to help prevent air from entering the fuel system.

Use the same method when draining the primary fuel filter with a hand priming pump installed.

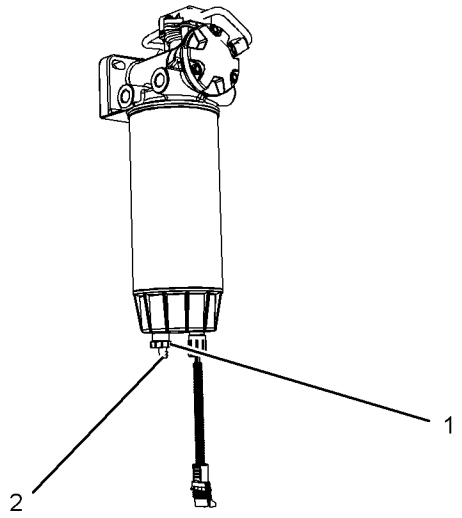


Illustration 66 g03352638
Typical example

**1.** Place a suitable container under the water separator in order to catch fluid to be drained.

**2.** Install a suitable tube onto connection (2).

**3.** Open drain valve (1) and allow the fluid to drain from filter.

**4.** When clean fuel can be seen to drain, tighten the drain valve securely, by hand pressure only.

**5.** Remove the tube. and dispose of any fluid in accordance with local regulations. Ensure that the filter is dry before engine operation.

**6.** If necessary, prime the fuel system, refer to this Operation and Maintenance Manual, “Fuel System - Prime”.

i09800836

# Fuel System Secondary Filter - Replace

**SMCS Code:** 1261-510-SE

**⚠ WARNING**

**Fuel leaked or spilled onto hot surfaces or electrical components can cause a fire. To help prevent possible injury, turn the start switch off when changing fuel filters or water separator elements. Clean up fuel spills immediately.**

**Note: Refer to Systems Operation, Testing and Adjusting, “Cleanliness of Fuel System Components” for detailed information on the standards of cleanliness that must be observed during ALL work on the fuel system.**

NOTICE
Ensure that the engine is stopped before any servicing or repair is performed.

NOTICE
Engines that operate under severe conditions will require more frequent maintenance intervals to ensure maximum reliability. Engine performance may be impacted if the application is operated at altitudes greater than 3000m or with fuel that is not of the correct specification as detailed in “Fluid Recommendations” (General Fuel Information) of this OMM. It is recommended that new fuel filters are installed every 250 service hours in severe operating conditions. For more information consult your Caterpillar dealer.

NOTICE
Do not allow dirt to enter the fuel system. Thoroughly clean the area around a fuel system component that will be disconnected. Fit a suitable cover over any disconnected fuel system components.

NOTICE
The low-pressure fuel system can be pressurized for a time period after the engine has stopped operating. The operating pressure of the low-pressure fuel system can be 500 kPa (73 psi).

**Note:** Both fuel filter elements must be replaced.

## Remove the Element

**1.** Ensure that the fuel supply valve (if equipped) is in the OFF position. Place a suitable container under the fuel filters to catch any fuel that might spill. Clean up any spilled fuel.

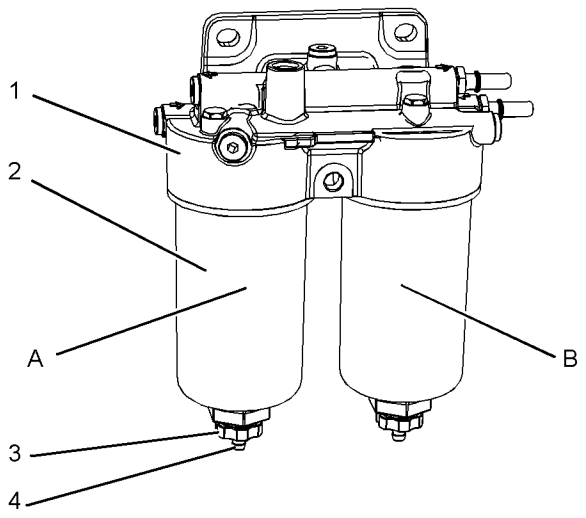


Illustration 67 g03353094
Typical example

**2.** Install a suitable tube onto connection (4). Rotate the drain valve (3) counterclockwise. Two full turns are required.

**3.** Allow the fuel to drain into the container and remove the tube.

**4.** Remove the filter bowl (2) from filter body (1). Rotate the filter bowl counterclockwise to remove the assembly.

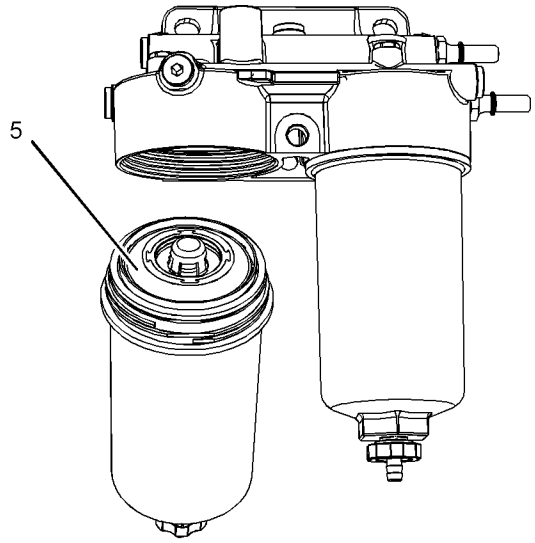


Illustration 68 g03353105
Typical example

**5.** Rotate the filter element (5) counterclockwise and remove the filter element. Clean the filter bowl.

## Install the Element

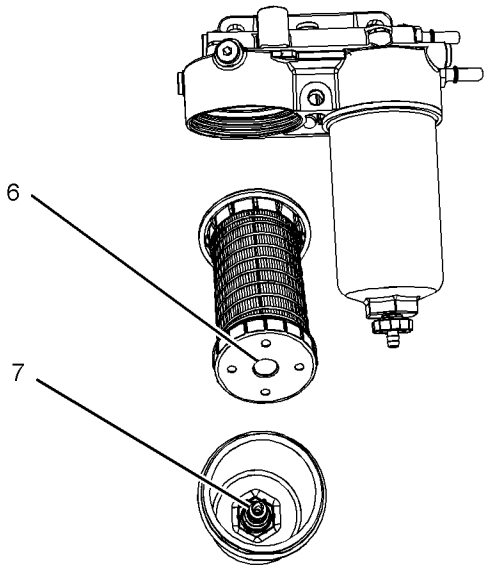


Illustration 69 g03353115

Typical example

**1.** Locate the thread (7) in the filter element onto the threads (6). Spin on the new filter element and tighten the drain valve (3) by hand.

**2.** Lubricate the seal on the filter element (5) with clean diesel fuel. Do NOT fill the filter bowl (2) with fuel before the filter assembly is installed.

**3.** Do not use a tool to install the filter assembly. Tighten the assembly by hand. Install the filter bowl (2). Turn the filter bowl clockwise until the filter bowl locks into position against the stops.

**4.** Filter assembly (A) is now complete. Perform the same procedure on filter assembly (B).

**5.** When both filter elements have been replaced with new filter elements the fuel system can be primed, if the primary filter has also been renewed. If necessary, turn the fuel supply valve to the ON position.

**6.** Prime the fuel system. Refer to the Operation and Maintenance Manual, “Fuel System - Prime” for more information.

i02348492

# Fuel Tank Water and Sediment - Drain

**SMCS Code:** 1273-543-M&S

NOTICE
Care must be taken to ensure that fluids are contained during performance of inspection, maintenance, testing, adjusting and repair of the product. Be prepared to collect the fluid with suitable containers before opening any compartment or disassembling any component containing fluids.

Dispose of all fluids according to local regulations and mandates.

## Fuel Tank

Fuel quality is critical to the performance and to the service life of the engine. Water in the fuel can cause excessive wear to the fuel system.

Water can be introduced into the fuel tank when the fuel tank is being filled.

Condensation occurs during the heating and cooling of fuel. The condensation occurs as the fuel passes through the fuel system and the fuel returns to the fuel tank. This causes water to accumulate in fuel tanks. Draining the fuel tank regularly and obtaining fuel from reliable sources can help to eliminate water in the fuel.

## Drain the Water and the Sediment

Fuel tanks should contain some provision for draining water and draining sediment from the bottom of the fuel tanks.

Open the drain valve on the bottom of the fuel tank in order to drain the water and the sediment. Close the drain valve.

Check the fuel daily. Allow five minutes after the fuel tank has been filled before draining water and sediment from the fuel tank.

Fill the fuel tank after operating the engine in order to drive out moist air. This will help prevent condensation. Do not fill the tank to the top. The fuel expands as the fuel gets warm. The tank may overflow.

Some fuel tanks use supply pipes that allow water and sediment to settle below the end of the fuel supply pipe. Some fuel tanks use supply lines that take fuel directly from the bottom of the tank. If the engine is equipped with this system, regular maintenance of the fuel system filter is important.

## Fuel Storage Tanks

Drain the water and the sediment from the fuel storage tank at the following intervals:

- Weekly
- Service intervals
- Refill of the tank

This will help prevent water or sediment from being pumped from the storage tank into the engine fuel tank.

If a bulk storage tank has been refilled or moved recently, allow adequate time for the sediment to settle before filling the engine fuel tank. Internal baffles in the bulk storage tank will also help trap sediment. Filtering fuel that is pumped from the storage tank helps to ensure the quality of the fuel. When possible, water separators should be used.

i07819616

# Hoses and Clamps - Inspect/ Replace

**SMCS Code:** 7554-510; 7554-040

**⚠ WARNING**

**Contact with high pressure fuel may cause fluid penetration and burn hazards. High pressure fuel spray may cause a fire hazard. Failure to follow these inspection, maintenance and service instructions may cause personal injury or death.**

If you inspect the engine in operation, always use the proper inspection procedure to avoid a fluid penetration hazard. Refer to Operation and Maintenance Manual, “General hazard Information” and Operation and Maintenance Manual, “High Pressure Fuel Lines” for the correct procedures.

Inspect all hoses for leaks that are caused by the following conditions:

- Cracking
- Softness
- Loose clamps

Replace hoses that are cracked or soft. Tighten any loose clamps.

Check for the following conditions:

- End fittings that are damaged or leaking
- Outer covering that is chafed or cut
- Exposed wire that is used for reinforcement
- Outer covering that is ballooning locally
- Flexible part of the hose that is kinked or crushed
- Armoring that is embedded in the outer covering

A constant torque hose clamp can be used in place of any standard hose clamp. Ensure that the constant torque hose clamp is the same size as the standard clamp.

Due to extreme temperature changes, the hose will harden. Hardening of the hoses will cause hose clamps to loosen. This can result in leaks. A constant torque hose clamp will help to prevent loose hose clamps.

Each installation application can be different. The differences depend on the following factors:

- Type of hose
- Type of fitting material
- Anticipated expansion and contraction of the hose
- Anticipated expansion and contraction of the fittings

## Replace the Hoses and the Clamps

Refer to the OEM information for further information on removing and replacing fuel hoses (if equipped).

The following text describes a typical method of replacing coolant hoses. Refer to the OEM information for further information on the coolant system and the hoses for the coolant system.

**⚠ WARNING**

**Pressurized System: Hot coolant can cause serious burns. To open the cooling system filler cap, stop the engine and wait until the cooling system components are cool. Loosen the cooling system pressure cap slowly in order to relieve the pressure.**

1. Stop the engine. Allow the engine to cool.
2. Loosen the cooling system filler cap slowly to relieve any pressure. Remove the cooling system filler cap.

**Note:** Drain the coolant into a suitable, clean container. The coolant can be reused.

**3.** Drain the coolant from the cooling system to a level that is below the hose that is being replaced.

**4.** Remove the hose clamps.

**5.** Disconnect the old hose.

**6.** Replace the old hose with a new hose.

**7.** Install the hose clamps with a torque wrench.

**Note:** For the correct coolant, see this Operation and Maintenance Manual, “Fluid Recommendations”.

**8.** Refill the cooling system. Refer to the OEM information for further information on refilling the cooling system.

**9.** Clean the cooling system filler cap. Inspect the cooling system filler cap's seals. Replace the cooling system filler cap if the seals are damaged. Install the cooling system filler cap.

**10.** Start the engine. Inspect the cooling system for leaks.

i05299624

# Overhaul Considerations

**SMCS Code:** 7595-043

Reduced hours of operation at full load will result in a lower average power demand. A decreased average power demand should increase both the engine service life and the overhaul interval.

The need for an overhaul is indicated by increased fuel consumption, increased oil consumption, excessive engine blowby, and reduced power. Arctic temperatures, extreme high temperatures, corrosive environments, or extreme dusty conditions contribute to premature wear and the need for an overhaul.

The following factors are important when a decision is being made on the proper time for an engine overhaul:

- The need for preventive maintenance
- The quality of the fuel that is being used
- The operating conditions
- The results of the S·O·S analysis

## Oil Consumption as an Overhaul Indicator

Oil consumption, fuel consumption, and maintenance information can be used to estimate the total operating cost for your Caterpillar engine. Oil consumption can also be used to estimate the required capacity of a makeup oil tank that is suitable for the maintenance intervals.

Oil consumption is in proportion to the percentage of the rated engine load. As the percentage of the engine load is increased, the amount of oil that is consumed per hour also increases.

The oil consumption rate (brake-specific oil consumption) is measured in grams per kW/h (lb per bhp). The brake-specific oil consumption (BSOC) depends on the engine load. Consult your Cat dealer for assistance in determining the typical oil consumption rate for your engine.

When an engines oil consumption has risen to three times the original oil consumption rate due to normal wear, an engine overhaul should be scheduled. There may be a corresponding increase in blowby and a slight increase in fuel consumption.

## Overhaul Options

#### Before Failure Overhaul

A planned overhaul before failure may be the best value for the following reasons:

- Costly unplanned downtime can be avoided.
- Many original parts can be reused according to the standards for reusable parts.
- The engines service life can be extended without the risk of a major catastrophe due to engine failure.
- The best cost/value relationship per hour of extended life can be attained.

#### After Failure Overhaul

If a major engine failure occurs and the engine must be removed, many options are available. An overhaul should be performed if the engine block or the crankshaft needs to be repaired.

If the engine block is repairable and/or the crankshaft is repairable, the overhaul cost will be less than the cost of a new engine with a similar exchange core.

This lower cost can be attributed to three aspects:

- Specially designed Caterpillar  engine features
- Cat  dealer exchange components
- Caterpillar Inc. remanufactured exchange components

## Overhaul Recommendation

To minimize downtime, Caterpillar Inc. recommends a scheduled engine overhaul by your Cat dealer before the engine fails. This process will provide you with the best cost/value relationship.

**Note:** Overhaul programs vary according to the engine application and according to the dealer that performs the overhaul. Consult your Cat dealer for specific information about the available overhaul programs and about overhaul services for extending the engine life.

## Rebuild or Exchange

If an overhaul is performed without overhaul service from your Cat dealer, be aware of the following maintenance recommendations.

**Cylinder Head Assembly, Oil Pump, and Fuel Transfer Pump**

These components should be inspected according to the instructions that are found in various Caterpillar reusability publications. The Special Publication, SEBF8029 lists the reusability publications that are needed for inspecting the engine parts.

If the parts comply with the established inspection specifications that are expressed in the reusable parts guideline, the parts should be reused.

Parts that are not within the established inspection specifications should be dealt with in one of the following manners:

- Salvaging
- Repairing
- Replacing

Using out-of-spec parts can result in the following problems:

- Unscheduled downtime
- Costly repairs
- Damage to other engine parts
- Reduced engine efficiency
- Increased fuel consumption

Reduced engine efficiency and increased fuel consumption translates into higher operating costs. Therefore, Caterpillar Inc. recommends repairing out-of-spec parts or replacing out-of-spec parts.

## Inspection and/or Replacement

**Crankshaft Bearings Crankshaft Seals and Pistons**

The following components may not last until the second overhaul.

- Thrust bearings
- Main bearings
- Rod bearings
- Crankshaft seals
- Piston assembly

Caterpillar Inc. recommends the installation of new parts at each overhaul period.

Inspect these parts while the engine is disassembled for an overhaul.

Inspect the crankshaft for any of the following conditions:

- Deflection
- Damage to the journals
- Bearing material that has seized to the journals

Check the journal taper and the profile of the crankshaft journals. If the wear patterns on the rod bearing or the main bearing show a problem, the crankshaft will need to be measured with specialist equipment.

Inspect the camshaft for damage to the journals and to the lobes.

**Note:** If the camshaft is removed for any reason, use the magnetic particle inspection process to check for cracks in the camshaft.

Inspect the following components for signs of wear or for signs of scuffing:

- Camshaft bearings
- Lifters

Caterpillar Inc. recommends replacing the crankshaft vibration damper.

**Oil Cooler Core**

During an overhaul, Caterpillar Inc. recommends the removal of the oil cooler core. Clean the oil cooler core. Then, pressure test the oil cooler core.

NOTICE
Do not use caustic cleaners to clean the core.

Caustic cleaners can attack the internal metals of the core and cause leakage.

**Note:** Use this cleaning procedure to clean the oil cooler core.

1. Remove the oil cooler core.
2. Remove any debris from the oil cooler core. To remove debris from the oil cooler core, turn the oil cooler core onto one end.

**3.** Flush the oil cooler core internally with cleaner in order to loosen foreign substances. This flushing will also help to remove oil from the oil cooler core.

**Note:** Caterpillar Inc. recommends the use of Hydrosolv Liquid Cleaners. Table 12 lists the Hydrosolv Liquid Cleaners that are available from your Cat dealer.

Table 12

| HydrosolvLiquid Cleaners | | |
|---|---|---|
| **Part Number** | **Description** | **Size** |
| 1U-8812 | Hydrosolv4165 | 4 L (1 US gallon) |
| 1U-5490 | | 19 L (5 US gallon) |
| 8T-7570 | | 208 L (55 US gallon) |
| 1U-8804 | Hydrosolv100 | 4 L (1 US gallon) |
| 1U-5492 | | 19 L (5 US gallon) |
| 8T-5571 | | 208 L (55 US gallon) |

**4.** Use steam to clean the oil cooler core. The steam will remove any remaining residue from the cleaner. Flush the fins of the oil cooler core. Remove any other trapped debris.

**5.** Wash the oil cooler core with hot, soapy water. Rinse the oil cooler core thoroughly with clean water.

**⚠ WARNING**

**Personal injury can result from air pressure.**

**Personal injury can result without following proper procedure. When using pressure air, wear a protective face shield and protective clothing.**

**Maximum air pressure at the nozzle must be less than 205 kPa (30 psi) for cleaning purposes.**

**6.** Dry the oil cooler core with compressed air. Direct the air in the reverse direction of the normal flow.

**7.** Inspect the components in order to ensure cleanliness. The oil cooler core should be pressure tested. Repair the oil cooler core, if necessary. Install the oil cooler core.

For more information about cleaning the cores, consult your Cat dealer.

## Obtain Coolant Analysis

The concentration of supplemental coolant additive (SCA) should be checked regularly with test kits or with S·O·S Coolant Analysis (Level 1). Further coolant analysis is recommended when the engine is overhauled.

For example, considerable deposits are found in the water jacket areas on the external cooling system, but the concentrations of coolant additives were carefully maintained. The coolant probably contained minerals that were deposited on the engine over time.

A coolant analysis can be conducted in order to verify the condition of the water that is being used in the cooling system. A full water analysis can be obtained by consulting your local water utility company or an agricultural agent. Private laboratories are also available for water analysis.

Caterpillar Inc. recommends an S·O·S Coolant Analysis (Level 2).

**S·O·S Coolant Analysis (Level 2)**

An S·O·S Coolant Analysis (Level 2) is a comprehensive coolant analysis which completely analyzes the coolant and the effects on the cooling system. An S·O·S Coolant Analysis (Level 2) provides the following information:

- Complete S·O·S Coolant Analysis (Level 1)
- Visual inspection of properties
- Identification of metal corrosion
- Identification of contaminants
- Identification of built up impurities (corrosion and scale)

S·O·S Coolant Analysis (Level 2) provides a report of the results of both the analysis and the maintenance recommendations.

For more information about coolant analysis, see your Cat dealer.

i09670468

# Radiator - Clean

**SMCS Code:** 1353-070

**Note:** Adjust the frequency of cleaning according to the effects of the operating environment.

Inspect the radiator for these items: damaged fins, corrosion, dirt, grease, insects, leaves, oil, and other debris. Clean the radiator, if necessary.

**⚠ WARNING**

**Personal injury can result from air pressure.**

**Personal injury can result without following proper procedure. When using pressure air, wear a protective face shield and protective clothing.**

**The maximum air pressure for cleaning purposes must be reduced to 205 kPa (30 psi) when the air nozzle is deadheaded.**

Pressurized air is the preferred method for removing loose debris. Direct the air in the opposite direction of the air flow. Hold the nozzle approximately 6 mm (0.25 inch) away from the fins. Slowly move the air nozzle in a direction that is parallel with the tubes. This movement will remove debris that is between the tubes.

Pressurized water may also be used for cleaning. The maximum water pressure for cleaning purposes must be less than 275 kPa (40 psi). Use pressurized water to soften mud. Clean the core from the front and the rear.

Use a degreaser and steam for removal of oil and grease. Clean the front and the rear of the core. Wash the core with detergent and hot water. Thoroughly rinse the core with clean water.

After cleaning, start the engine and bring the engine to high idle. This procedure will help in the removal of debris and drying of the core. Stop the engine. Use a light bulb behind the core to inspect the core for cleanliness. Repeat the cleaning, if necessary.

Inspect the fins for damage. Bent fins may be opened with a “comb”. Inspect these items for good condition: welds, mounting brackets, air lines, connections, clamps, and seals. Make repairs, if necessary.

i02348493

# Starting Motor - Inspect

**SMCS Code:** 1451-040; 1453-040

Caterpillar recommends a scheduled inspection of the starting motor. If the starting motor fails, the engine may not start in an emergency situation.

Check the starting motor for correct operation. Check the electrical connections and clean the electrical connections. Refer to the Systems Operation, Testing and Adjusting Manual, “Electric Starting System - Test” for more information on the checking procedure and for specifications or consult your Caterpillar dealer for assistance.

i04144491

# Turbocharger - Inspect

**SMCS Code:** 1052-040

A regular visual inspection of the turbocharger is recommended. If the turbocharger fails during engine operation, damage to the turbocharger compressor wheel and/or to the engine may occur. Damage to the turbocharger compressor wheel can cause additional damage to the pistons, the valves, and the cylinder head.

NOTICE
Turbocharger bearing failures can cause large quantities of oil to enter the air intake and exhaust systems. Loss of engine lubricant can result in serious engine damage.

Minor leakage of oil into a turbocharger under extended low idle operation should not cause problems as long as a turbocharger bearing failure has not occured.

When a turbocharger bearing failure is accompanied by a significant engine performance loss (exhaust smoke or engine rpm up at no load), do not continue engine operation until the turbocharger is renewed.

A visual inspection of the turbocharger can minimize unscheduled downtime. A visual inspection of the turbocharger can also reduce the chance for potential damage to other engine parts.

## Removal and Installation

For options regarding the removal, installation, and replacement, consult your Carerpillar dealer. Refer to the Disassembly and Assembly, “Turbocharger - Remove and Turbocharger - Install” and Systems Operation, Testing and Adjusting, “Turbocharger - Inspect” for further information.

## Inspecting

NOTICE
The compressor housing for the turbocharger must not be removed from the turbocharger for inspection or removed for the cleaning of the compressor.

1. Remove the pipe from the turbocharger exhaust outlet and remove the air intake pipe to the turbocharger. Visually inspect the piping for the presence of oil. Clean the interior of the pipes in order to prevent dirt from entering during reassembly.

**2.** Check for obvious heat discoloration of the turbocharger. Check for any loose bolts or any missing bolts. Check for damage to the oil supply line and the oil drain line. Check for cracks in the housing of the turbocharger. Ensure that the compressor wheel can rotate freely.

**3.** Check for the presence of oil. If oil is leaking from the back side of the compressor wheel, there is a possibility of a failed turbocharger oil seal.

The presence of oil may be the result of extended engine operation at low idle. The presence of oil may also be the result of a restriction of the line for the intake air (clogged air filters), which causes the turbocharger to slobber.

**4.** Inspect the bore of the housing of the turbine outlet for corrosion.

**5.** Fasten the air intake pipe and the exhaust outlet pipe to the turbocharger housing. Ensure that all clamps are installed correctly and that all clamps are tightened securely.

i05531489

# Walk-Around Inspection

**SMCS Code:** 1000-040

## Inspect the Engine for Leaks and for Loose Connections

A walk-around inspection should only take a few minutes. When the time is taken to perform these checks, costly repairs and accidents can be avoided.

For maximum engine service life, make a thorough inspection of the engine compartment before starting the engine. Look for items such as oil leaks or coolant leaks, loose bolts, worn belts, loose connections, and trash buildup. Make repairs, as needed:

- The guards must be in the correct place. Repair damaged guards or replace missing guards.
- Wipe all caps and plugs before the engine is serviced in order to reduce the chance of system contamination.

NOTICE
For any type of leak (coolant, lube, or fuel) clean up the fluid. If leaking is observed, find the source and correct the leak. If leaking is suspected, check the fluid levels more often than recommended until the leak is found or fixed, or until the suspicion of a leak is proved to be unwarranted.

NOTICE
Accumulated grease and/or oil on an engine is a fire hazard. Remove the accumulated grease and oil. Refer to this Operation and Maintenance Manual, “Engine - Clean” for more information.

- Ensure that the cooling system hoses are correctly clamped and that the cooling system hoses are tight. Check for leaks. Check the condition of all pipes.
- Inspect the water pump for coolant leaks.

**Note:** The water pump seal is lubricated by the coolant in the cooling system. It is normal for a small amount of leakage to occur as the engine cools down and the parts contract.

Excessive coolant leakage may indicate the need to replace the water pump. Remove the water pump. Refer to Disassembly and Assembly , “Water Pump - Remove and Install”. For more information, consult your Cat dealer.

- Inspect the lubrication system for leaks at the front crankshaft seal, the rear crankshaft seal, the oil pan, the oil filters, and the rocker cover.
- Inspect the piping for the air intake system and the elbows for cracks and for loose clamps. Ensure that hoses and tubes are not contacting other hoses, tubes, wiring harnesses.
- Ensure that the areas around the rotating parts are clear.
- Inspect the alternator belts and any accessory drive belts for cracks, breaks, or other damage.
- Inspect the wiring harness for damage.

Belts for multiple groove pulleys must be replaced as matched sets. If only one belt is replaced, the belt will carry more load than the belts that are not replaced. The older belts are stretched. The additional load on the new belt could cause the belt to break.

## High Pressure Fuel Lines

**⚠ WARNING**

**Contact with high pressure fuel may cause fluid penetration and burn hazards. High pressure fuel spray may cause a fire hazard. Failure to follow these inspection, maintenance and service instructions may cause personal injury or death.**

After the engine has stopped, you must wait for 60 seconds in order to allow the fuel pressure to be purged from the high-pressure fuel lines before any service or repair is performed on the engine fuel lines. If necessary, perform minor adjustments. Repair any leaks from the low-pressure fuel system and from the cooling, lubrication, or air systems. Replace any high-pressure fuel line that has leaked. Refer to Disassembly and assembly Manual, “Fuel Injection Lines - Install”.

If you inspect the engine in operation, always use the proper inspection procedure in order to avoid a fluid penetration hazard. Refer to Operation and Maintenance Manual, “General hazard Information”.

Visually inspect the high-pressure fuel lines for damage or signs of fuel leakage. Replace any damaged high-pressure fuel lines or high-pressure fuel lines that have leaked.

Ensure that all clips on the high-pressure fuel lines are in place and that the clips are not loose.

- Inspect the rest of the fuel system for leaks. Look for loose fuel line clamps.
- Drain the water and the sediment from the fuel tank on a daily basis in order to ensure that only clean fuel enters the fuel system.
- Inspect the wiring and the wiring harnesses for loose connections and for worn wires or frayed wires. Check for any loose tie-wraps or missing tie-wraps.
- Inspect the ground strap for a good connection and for good condition.
- Disconnect any battery chargers that are not protected against the current drain of the starting motor. Check the condition and the electrolyte level of the batteries, unless the engine is equipped with a maintenance free battery.
- Check the condition of the gauges. Replace any gauges that are cracked. Replace any gauge that cannot be calibrated.

i05298898

# Water Pump - Inspect

**SMCS Code:** 1361-040

A failed water pump may cause severe engine overheating problems that could result in the following conditions:

- Cracks in the cylinder head
- A piston seizure
- Other potential damage to the engine

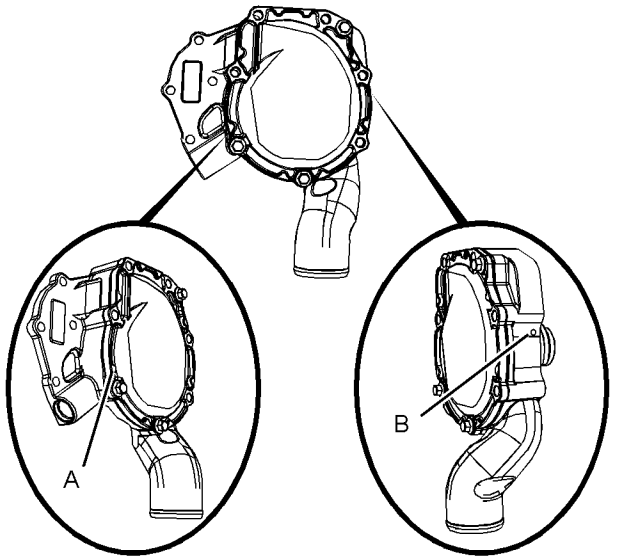


Illustration 70 g03364302

(A) Weep hole
(B) Vent hole

**Note:** The water pump seals are lubricated by the coolant in the cooling system. A small amount of leakage will occur normally. Refer to illustration 70 for the position of the weep hole and the vent hole.

Visually inspect the water pump for leaks.

**Note:** If engine coolant enters the engine lubricating system, the lubricating oil and the engine oil filter must be replaced. This operation will remove any contamination that is caused by the coolant and this action will prevent any irregular oil samples.

The water pump is not a serviceable item. In order to install a new water pump, refer to the Disassembly and Assembly Manual, “Water Pump - Remove and Install”.

# Warranty Section

# Warranty Information

i05549472

## Emissions Warranty Information

**SMCS Code:** 1000

The certifying engine manufacturer warrants to the ultimate purchaser and each subsequent purchaser that:

**1.** New non-road diesel engines and stationary diesel engines less than 10 liters per cylinder (including Tier 1 and Tier 2 marine engines < 37 kW, but excluding locomotive and other marine engines) operated and serviced in the United States and Canada, including all parts of their emission control systems (“emission related components”), are:

a. Designed, built, and equipped so as to conform, at the time of sale, with applicable emission standards prescribed by the United States Environmental Protection Agency (EPA) by way of regulation.

b. Free from defects in materials and workmanship in emission-related components that can cause the engine to fail to conform to applicable emission standards for the warranty period.

**2.** New non-road diesel engines (including Tier 1 and Tier 2 marine propulsion engines < 37 kW and Tier 1 through Tier 4 marine auxiliary engines < 37 kW, but excluding locomotive and other marine engines) operated and serviced in the state of California, including all parts of their emission control systems (“emission related components”), are:

a. Designed, built, and equipped so as to conform, at the time of sale, to all applicable regulations adopted by the California Air Resources Board (ARB).

b. Free from defects in materials and workmanship which cause the failure of an emission-related component to be identical in all material respects to the component as described in the engine manufacturer's application for certification for the warranty period.

The aftertreatment system can be expected to function properly for the lifetime of the engine (emissions durability period) subject to prescribed maintenance requirements being followed.

A detailed explanation of the Emission Control Warranty that is applicable to new non-road and stationary diesel engines, including the components covered and the warranty period, is found in a supplemental Special Publication. Consult your authorized Cat dealer to determine if your engine is subject to an Emission Control Warranty and to obtain a copy of the applicable Special Publication.

# Index

**A**

After Starting Engine ..... 50
After Stopping Engine ..... 56
Aftercooler Core - Clean/Test (Air-To-Air Aftercooler) ..... 66
Aftercooler Core - Inspect ..... 66
Alarms and Shutoffs ..... 30
  Alarms ..... 30
  Shutoffs ..... 30
  Testing ..... 30
Alternator - Inspect ..... 66
Alternator and Fan Belts - Replace ..... 66

**B**

Battery - Replace ..... 67
Battery Electrolyte Level - Check ..... 67
Battery or Battery Cable - Disconnect ..... 68
Before Starting Engine ..... 17, 48
Belt - Inspect ..... 69
Belt Tensioner - Check ..... 68
Burn Prevention ..... 11
  Batteries ..... 12
  Coolant ..... 12
  Oils ..... 12

**C**

Cold Weather Operation ..... 52
  Hints for Cold Weather Operation ..... 52
  Idling the Engine ..... 53
  Recommendations for Coolant Warm Up ..... 53
  Recommendations for the Coolant ..... 53
  Viscosity of the Engine Lubrication Oil ..... 53
Cold Weather Starting ..... 48
Configuration Parameters ..... 44
  Customer Specified Parameters ..... 45
  System Configuration Parameters ..... 44
Coolant (Commercial Heavy-Duty) - Change ..... 69
  Drain ..... 69
  Fill ..... 70
  Flush ..... 70
Coolant (ELC) - Change ..... 71
  Drain ..... 72
  Fill ..... 72
  Flush ..... 72
Coolant Extender (ELC) - Add ..... 73
Coolant Level - Check ..... 74
Cooling System Supplemental Coolant Additive (SCA) - Test/Add ..... 74
  Add the SCA, If Necessary ..... 75
  S·O·S Coolant Analysis ..... 75
  Test for SCA Concentration ..... 75
Crushing Prevention and Cutting Prevention ..... 14

**D**

Diagnostic Flash Code Retrieval ..... 41
  “Diagnostic” Lamp ..... 41
Diagnostic Lamp ..... 41
Driven Equipment - Check ..... 76

**E**

Electrical System ..... 18
  Grounding Practices ..... 18
Emergency Stopping ..... 56
  Emergency Stop Button ..... 56
Emissions Certification Film ..... 27
Emissions Warranty Information ..... 100
Engine - Clean ..... 76
Engine Air Cleaner Element (Dual Element/ Canister Type) - Clean/Replace (If Equipped) ..... 76
  Cleaning the Primary Air Cleaner Elements ..... 77
  Servicing the Air Cleaner Elements ..... 76
Engine Air Cleaner Element (Single Element) - Inspect/Replace ..... 78
Engine Air Cleaner Service Indicator - Inspect ..... 79
  Test the Service Indicator ..... 79
Engine Air Precleaner - Check/Clean ..... 80
Engine Crankcase Breather Element - Replace ..... 80
Engine Diagnostics ..... 41
Engine Electronics ..... 19
Engine Mounts - Inspect ..... 80
Engine Oil and Filter - Change ..... 82
  Drain the Engine Lubricating Oil ..... 82
  Fill the Oil Pan ..... 85
  Horizontally Installed Oil Filter ..... 84
  Replace the Oil filter ..... 83
Engine Oil Level - Check ..... 81
Engine Oil Sample - Obtain ..... 81
  Obtain the Sample and the Analysis ..... 81
Engine Operation ..... 51

Engine Operation with Active Diagnostic Codes ..... 43
Engine Operation with Intermittent Diagnostic Codes ..... 43
Engine Starting ..... 17, 48
Engine Stopping ..... 18, 56
Engine Valve Lash - Check ..... 85

**F**

Fan Clearance - Check ..... 85
Fault Logging ..... 43
Features and Controls ..... 30
Fire Prevention and Explosion Prevention ..... 12
  Ether ..... 14
  Fire Extinguisher ..... 14
  Lines, Tubes, and Hoses ..... 14
Fluid Recommendations (Coolant Specification) ..... 60
  S·O·S Coolant Analysis ..... 61
Fluid Recommendations (Engine Oil) ..... 58
  Additional Service Period Information ..... 60
  Caterpillar Recommended Engine Oil ..... 58
Fluid Recommendations (Fuel) ..... 60
  Caterpillar Fuel Specification ..... 60
  Service Intervals for B20 Biodiesel and High Sulfur Fuel ..... 60
Foreword ..... 4
  California Proposition 65 Warning ..... 4
  Literature Information ..... 4
  Maintenance ..... 4
  Maintenance Intervals ..... 5
  Operation ..... 4
  Overhaul ..... 5
  Safety ..... 4
Fuel and the Effect from Cold Weather ..... 54
Fuel Conservation Practices ..... 51
Fuel Related Components in Cold Weather ..... 55
  Fuel Filters ..... 55
  Fuel Heaters ..... 55
  Fuel Tanks ..... 55
Fuel System - Prime ..... 86
  Electric Prime ..... 87
  Hand Fuel Priming Pump ..... 87
Fuel System Primary Filter (Water Separator) Element - Replace ..... 89
Fuel System Primary Filter/Water Separator - Drain ..... 90
Fuel System Secondary Filter - Replace ..... 90
  Install the Element ..... 92
  Remove the Element ..... 91
Fuel Tank Water and Sediment - Drain ..... 92
  Drain the Water and the Sediment ..... 92
  Fuel Storage Tanks ..... 93
  Fuel Tank ..... 92

**G**

Gauges and Indicators ..... 31
  Indicator Lamps ..... 31
  Instrument panels and Displays ..... 32
General Hazard Information ..... 8
  Containing Fluid Spillage ..... 10
  Dispose of Waste Properly ..... 11
  Fluid Penetration ..... 9
  Inhalation ..... 10
  Pressurized Air and Water ..... 9
  Static Electricity Hazard when Fueling with Ultra-low Sulfur Diesel Fuel ..... 10
General Information ..... 20

**H**

High Pressure Fuel Lines ..... 15
Hoses and Clamps - Inspect/Replace ..... 93
  Replace the Hoses and the Clamps ..... 93

**I**

Important Safety Information ..... 2

**L**

Lifting and Storage ..... 29

**M**

Maintenance Interval Schedule ..... 64
  Commissioning ..... 65
  Daily ..... 64
  Every 1000 Service Hours ..... 64
  Every 12 000 Service Hours or 6 Years ..... 65
  Every 2000 Service Hours ..... 64
  Every 250 Service Hours ..... 64
  Every 3000 Service Hours ..... 65
  Every 3000 Service Hours or 2 Years ..... 65
  Every 4000 Service Hours ..... 65
  Every 50 Service Hours or Weekly ..... 64
  Every 500 Service Hours ..... 64
  Every 500 Service Hours or 1 Year ..... 64
  Every 6000 Service Hours or 3 Years ..... 65
  Every Week ..... 64
  Initial 500 Service Hours ..... 64
  Overhaul ..... 65
  When Required ..... 64

Maintenance Recommendations ..... 62
Maintenance Section..... 58
Model View Illustrations ..... 20
Off Engine Parts and Options..... 24
Turbocharge Engine View ..... 23
Turbocharged Aftercooled Engine..... 20
Monitoring System..... 32–33
Programmable Options and Systems Operation ..... 33
Mounting and Dismounting ..... 15

**O**

Operation Section..... 29
Overhaul Considerations..... 94
Oil Consumption as an Overhaul Indicator.. 94
Overhaul Recommendation..... 94
Overspeed..... 34

**P**

Plate Locations and Film Locations ..... 27
Serial Number Plate..... 27
Product Description..... 24
Electronic Engine Features ..... 25
Engine Cooling and Lubrication ..... 25
Engine Diagnostics..... 25
Engine Specifications ..... 24
Option Section ..... 26
Product Identification Information ..... 27
Product Information Section..... 20
Product Lifting ..... 29
Product Storage ..... 29

**R**

Radiator - Clean ..... 96
Reference Information..... 28
Record for Reference ..... 28
Refill Capacities..... 58
Coolant ..... 58
Fuel..... 58
Lubricating Oil..... 58

**S**

Safety Messages..... 6
(1) Universal Warning..... 6
2 Hand (High Pressure)..... 7
Ether ..... 7
Safety Section ..... 6
Self-Diagnostics ..... 41
Sensors and Electrical Components..... 34
Severe Service Application ..... 63
Environmental Factors..... 63
Incorrect Maintenance Procedures ..... 63
Incorrect Operating Procedures ..... 63
Starting Motor - Inspect..... 97
Starting the Engine..... 49
Constant Speed Engines..... 49
Starting the Engine ..... 49
Starting with Jump Start Cables..... 49
Stopping the Engine..... 56
Constant Speed Engines..... 56

**T**

Table of Contents ..... 3
Turbocharger - Inspect..... 97
Inspecting ..... 97
Removal and Installation ..... 97

**W**

Walk-Around Inspection..... 98
High Pressure Fuel Lines ..... 98
Inspect the Engine for Leaks and for Loose Connections..... 98
Warranty Information..... 100
Warranty Section..... 100
Water Pump - Inspect..... 99
Welding on Engines with Electronic Controls ..... 62

# Product and Dealer Information

Note: For product identification plate locations, see the section “Product Identification Information” in the Operation and Maintenance Manual.

**Delivery Date:** _____

## Product Information

Model: _____

Product Identification Number: _____

Engine Serial Number: _____

Transmission Serial Number: _____

Generator Serial Number: _____

Attachment Serial Numbers: _____

Attachment Information: _____

Customer Equipment Number: _____

Dealer Equipment Number: _____

## Dealer Information

Name: _____ Branch: _____

Address: _____

_____

_____

| | Dealer Contact | Phone Number | Hours |
|---|---|---|---|
| Sales: | _____ | _____ | _____ |
| Parts: | _____ | _____ | _____ |
| Service: | _____ | _____ | _____ |

SEBU9065
©2025 Caterpillar
All Rights Reserved

CAT, CATERPILLAR, LET'S DO THE WORK, their respective logos, "Caterpillar Corporate Yellow", the "Power Edge" and Cat "Modern Hex" trade dress as well as corporate and product identity used herein, are trademarks of Caterpillar and may not be used without permission.