UENR4459-04
January 2025

Schematic

C4.4 Industrial Engine
Electrical System

W23 1-UP

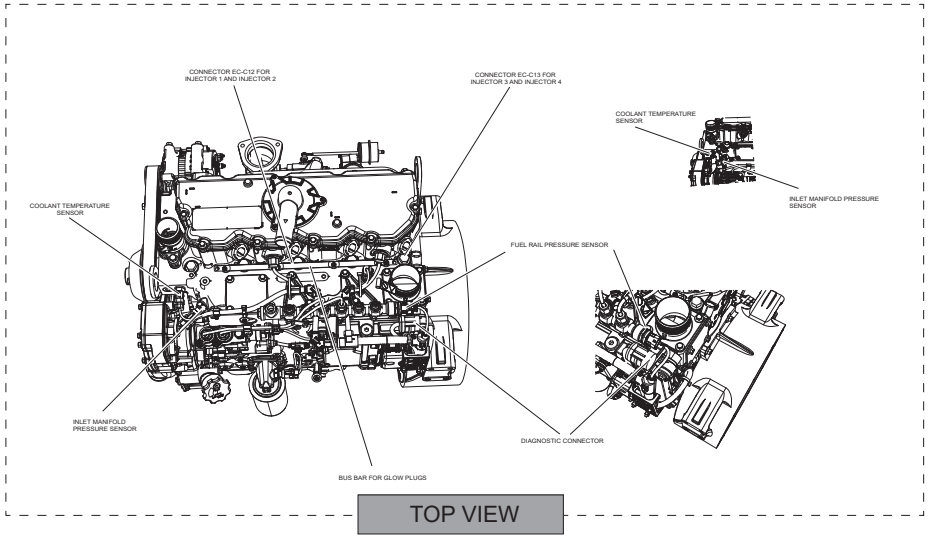

TOP VIEW

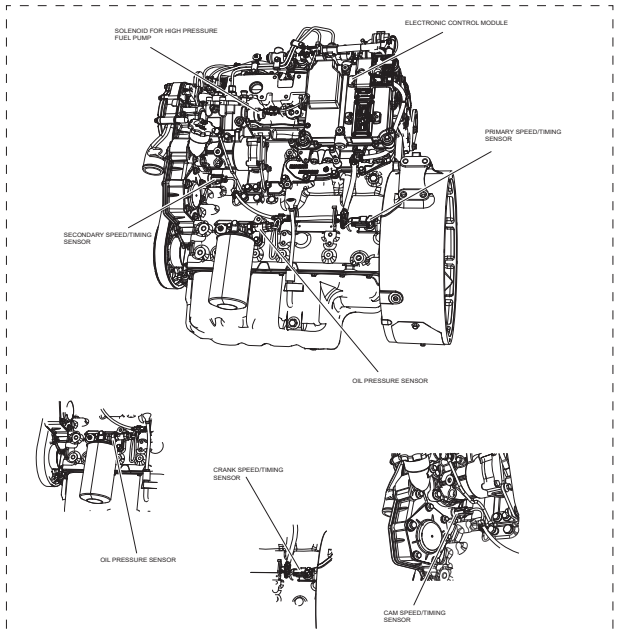

LEFT SIDE VIEW

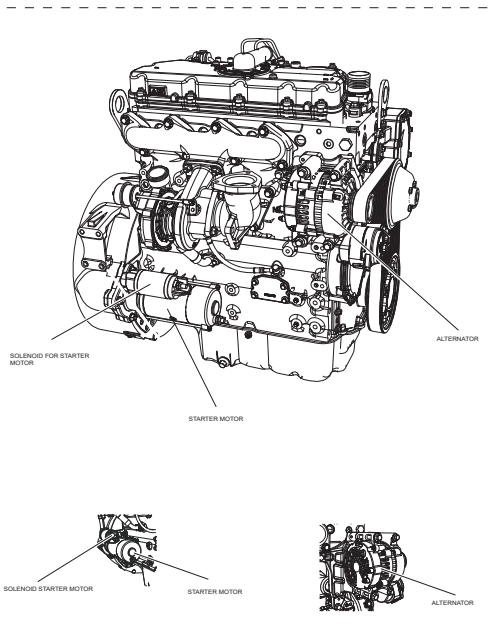

RIGHT SIDE VIEW

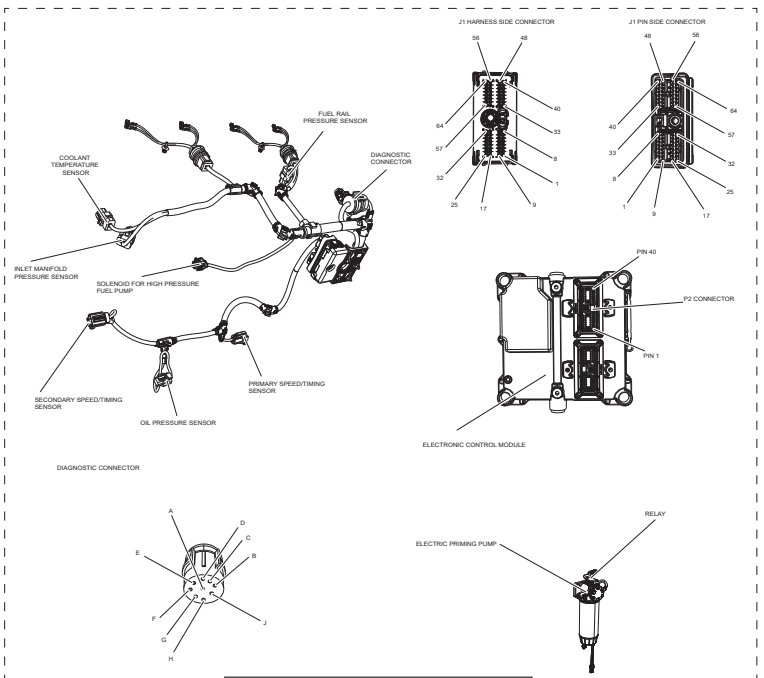

ADDITIONAL INFORMATION

Harness And Wire Electrical Schematic Symbols

Symbols

Pressure Symbol | Temperature Symbol | Level Symbol | Flow Symbol | Circuit Breaker Symbol

Symbols and Definitions

Fuse: A component in an electrical circuit that will open the circuit if too much current flows through it.

Switch (Normally Open): A switch that will close at a specified point (temp, press, etc.) The circle indicates that the component has screw terminals and a wire can be disconnected from it.

Switch (Normally Closed): A switch that will open at a specified point (temp, press, etc.). No circle indicates that the wire cannot be disconnected from the component.

Ground (Wired): This indicates that the component is connected to a grounded wire. The grounded wire is fastened to the machine.

Ground (Case): This indicates that the component does not have a wire connected to ground. It is grounded by being fastened to the machine.

Reed Switch: A switch whose contacts are controlled by a magnet. A magnet closes the contacts of a normally open reed switch; it opens the contacts of a normally closed reed switch.

Sender: A component that is used with a temperature or pressure gauge. The sender measures the temperature or pressure. Its resistance changes to give an indication to the gauge of the temperature or pressure.

Relay (Magnetic Switch): A relay is an electrical component that is activated by electricity. It has a coil that makes an electromagnet when current flows through it. The electromagnet can open or close the switch part of the relay.

Solenoid: A solenoid is an electrical component that is activated by electricity. It has a coil that makes an electromagnet when current flows through it. The electromagnet can open or close a valve or move a piece of metal that can do work.

Magnetic Latch Solenoid: A magnetic latch solenoid is an electrical component that is activated by electricity and held latched by a permanent magnet. It has two coils (latch and unlatch) that make electromagnet when current flows through them. It also has an internal switch that places the latch coil circuit open at the time the coil latches.

Harness and Wire Symbols

Wire, Cable, or Harness Assembly Identification: Includes Harness Identification Letters and Harness Connector Serialization Codes (see sample).

AG-C4 111-7898 — L-C12 3E-5179 — L-C12 3E-5179

Part Number: for Connector Plug — **Part Number:** for Connector Receptacle

Harness Identification Letter(s): (A, B, C, ... AA, AB, AC, ...)

Harness Connector Serialization Code: The "C" stands for "Connector" and the number indicates which connector in the harness (C1, C2, C3, ...).

Plug — **Receptacle Pin or Socket Number**

Fuse (5 Amps) — 9K-1123 — Component Part Number

Deutsch connector: Typical representation of a Deutsch connector. The plug contains all sockets and the receptacle contains all pins.

Sure-Seal connector: Typical representation of a Sure-Seal connector. The plug and receptacle contain both pins and sockets.

Harness identification code: This example indicates wire group 325, wire 135 in harness "AG".

325-AG-135 — PK-14

Wire Gauge/ Wire Color

©2022 Caterpillar. All Rights Reserved. CAT, CATERPILLAR, LET'S DO THE WORK, their respective logos, "Caterpillar Yellow," the "Power Edge" and Cat "Modern Hex" trade dress, as well as corporate and product identity used herein, are trademarks of Caterpillar and may not be used without permission.

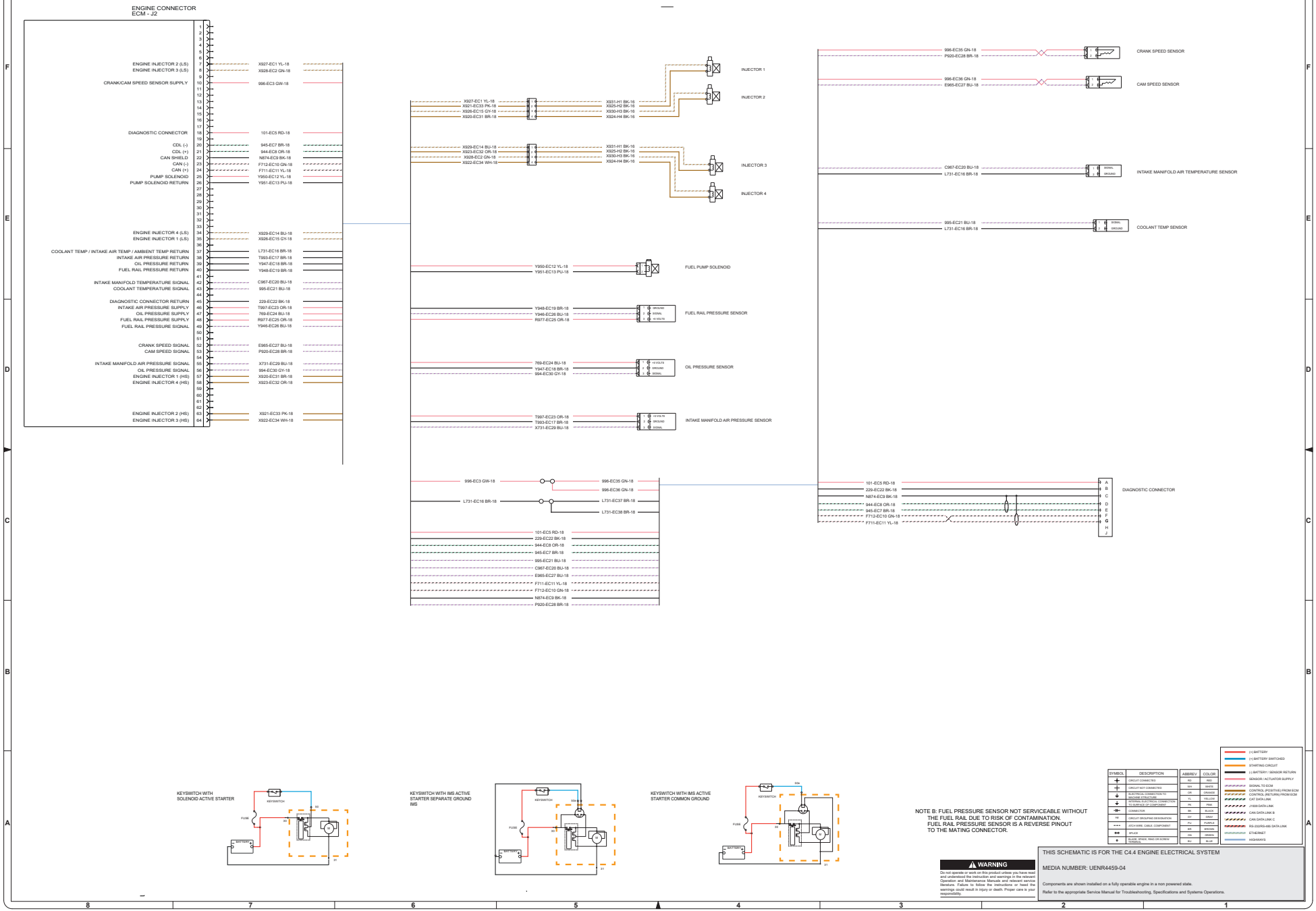

KEYSWITCH WITH SOLENOID ACTIVE STARTER

KEYSWITCH WITH IMS ACTIVE STARTER SEPARATE GROUND IMS

KEYSWITCH WITH IMS ACTIVE STARTER COMMON GROUND

NOTE B: FUEL PRESSURE SENSOR NOT SERVICEABLE WITHOUT THE FUEL RAIL DUE TO RISK OF CONTAMINATION. FUEL RAIL PRESSURE SENSOR IS A REVERSE PINOUT TO THE MATING CONNECTOR.

SYMBOL	DESCRIPTION
	CIRCUIT CONNECTED
	CIRCUIT NOT CONNECTED
	ELECTRICAL CONNECTION TO MACHINE STRUCTURE
	ELECTRICAL CONNECTION TO SURFACE OF COMPONENT
	CONNECTOR
TR	CIRCUIT GROUPING DESIGNATION
	JUTC/HYDRIL CABLE COMPONENT
	SPLICE
	BLADE, SPADE, RING OR SCREW TERMINAL

ABBREV	COLOR
RD	RED
WH	WHITE
OR	ORANGE
YL	YELLOW
PK	PINK
BK	BLACK
GY	GRAY
PU	PURPLE
BR	BROWN
GN	GREEN
BU	BLUE

(+) BATTERY
(+) BATTERY SWITCHED
STARTING CIRCUIT
(-) BATTERY / SENSOR RETURN
SENSOR / ACTUATOR SUPPLY
SIGNAL TO ECM
CONTROL (POSITIVE) FROM ECM
CONTROL (RETURN) FROM ECM
CAT DATA LINK
J1939 DATA LINK
CAN DATA LINK B
CAN DATA LINK C
RS-232/RS-485 DATA LINK
ETHERNET
HIGHWAYS

⚠ WARNING

Do not operate or work on this product unless you have read and understand the instructions and warnings in the Operation and Maintenance Manuals and relevant service literature. Failure to follow the instructions or heed the warnings could result in injury or death. Proper care is your responsibility.

THIS SCHEMATIC IS FOR THE C4.4 ENGINE ELECTRICAL SYSTEM

MEDIA NUMBER: UENR4459-04

Components are shown installed on a fully operable engine in a non powered state.

Refer to the appropriate Service Manual for Troubleshooting, Specifications and Systems Operations.